WKE SEPTEMBER 2016

PROJECT ID: 2140-13-70
WITH: N/A

COUNTY: MILWAUKEE

ORDER OF SHEETS


| | | |
|---|---|---|
| Section No. | 1 | Title |
| Section No. | 2 | Typical Sections and Details |
| Section No. | 3 | Estimate of Quantities |
| Section No. | 3 | Miscellaneous Quantities |
| Section No. | 4 | Right of Way Plat |
| Section No. | 5 | Plan and Profile |
| Section No. | 6 | Standard Detail Drawings |
| Section No. | 7 | Sign Plates |
| Section No. | 8 | Structure Plans |
| Section No. | 9 | Computer Earthwork Data |
| Section No. | 9 | Cross Sections |


TOTAL SHEETS = 594

| STATE PROJECT | FEDERAL PROJECT | |
|---|---|---|
| | PROJECT | CONTRACT |
| 2140-13-70 | WISC 2016306 | 1 |

# STATE OF WISCONSIN
# DEPARTMENT OF TRANSPORTATION

## PLAN OF PROPOSED IMPROVEMENT

# N. 76TH STREET, CITY OF MILWAUKEE

## GRANTOSA DRIVE TO FLORIST AVENUE

## STH 181

## MILWAUKEE COUNTY

STATE PROJECT NUMBER
**2140-13-70**

N

DESIGN DESIGNATION

| | | | |
|---|---|---|---|
| A.A.D.T. | 2018 | = | 35,700 |
| A.A.D.T. | 2038 | = | 39,100 |
| D.H.V. | 4.2% | = | 3,871 |
| D.D. | | = | 58/42 |
| T. | | = | 5.3% |
| DESIGN SPEED | | = | 40 MPH |
| ESALS | | = | 6,314,500 |

END PROJECT
STA. 147+19.48

EXISTING STRUCTURE B-40-255 & B-40-256
NET EXCEPTION TO CENTERLINE LENGTH
STA. 102+55.40 TO STA. 105+44.84

BEGIN PROJECT
STA. 87+23.21
Y = 325,823.73
X = 580,189.99

STRUCTURE R-40-605
STA. 121+57.05

STRUCTURE B-40-766
STA. 121+05.05

STRUCTURE R-40-604
STA. 120+53.05

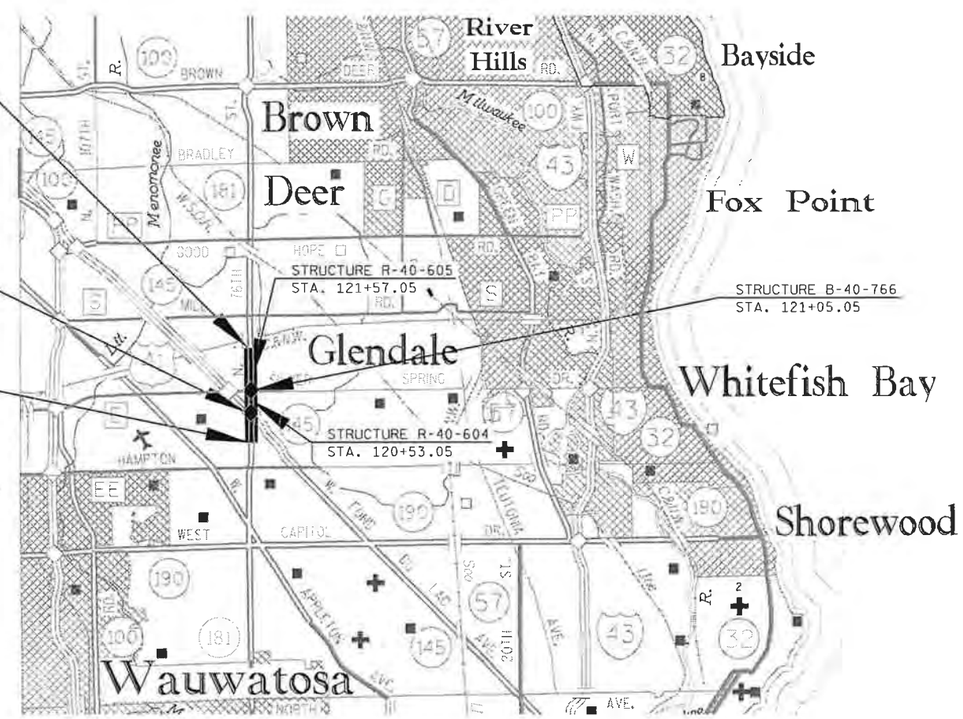


CONVENTIONAL SYMBOLS

PLAN

- CORPORATE LIMITS
- PROPERTY LINE
- LOT LINE
- LIMITED HIGHWAY EASEMENT
- EXISTING RIGHT OF WAY
- PROPOSED OR NEW R/W LINE
- SLOPE INTERCEPT
- REFERENCE LINE
- EXISTING CULVERT
- PROPOSED CULVERT (Box or Pipe)
- COMBUSTIBLE FLUIDS — CAUTION
- MARSH AREA
- WOODED OR SHRUB AREA

PROFILE

- GRADE LINE
- ORIGINAL GROUND
- MARSH OR ROCK PROFILE (To be noted as such) — ROCK
- SPECIAL DITCH — LABEL
- GRADE ELEVATION — 95.36
- CULVERT (Profile View)

UTILITIES

- ELECTRIC — E
- FIBER OPTIC — FO
- GAS — G
- SANITARY SEWER — SAN
- STORM SEWER — SS
- TELEPHONE — T
- WATER — W
- UTILITY PEDESTAL
- POWER POLE
- TELEPHONE POLE

LAYOUT
SCALE 0 — 1 MI.

TOTAL NET LENGTH OF CENTERLINE = 1.081 MI.

COORDINATES ON THIS PLAN ARE REFERENCED TO THE WISCONSIN COUNTY COORDINATE SYSTEM (WCCS), MILWAUKEE COUNTY, NAD 1983 (2007)

ELEVATIONS SHOWN ON THIS PLAN ARE REFERENCED TO THE NORTH AMERICAN VERTICAL DATUM OF 1988 - NAVD88 (2007)

ORIGINAL PLANS PREPARED BY

GRAEF

WISCONSIN
STEVE L. HUBERTY
32396
WAUWATOSA, WI
PROFESSIONAL ENGINEER

4/26/16 (Date) (Signature)

STATE OF WISCONSIN
DEPARTMENT OF TRANSPORTATION

PREPARED BY

| | |
|---|---|
| Surveyor | EMCS |
| Designer | GRAEF |
| Project Manager | TRACI GENGLER |
| Regional Examiner | |
| Regional Supervisor | BEN ERUCHALA |
| C.O. Examiner | |

APPROVED FOR THE DEPARTMENT
DATE: 4/26/16 (Signature)

E

## GENERAL NOTES

NO TREES OR SHRUBS ARE TO BE REMOVED UNLESS INDICATED FOR REMOVAL BY THE ENGINEER.

THE EXACT LOCATION OF PRIVATE ENTRANCES IS TO BE DETERMINED IN THE FIELD BY THE ENGINEER.

ALL HOLES OR OPENINGS BELOW SUBGRADE RESULTING FROM THE ABANDONMENT OR REMOVAL OF EXISTING STRUCTURES OR FROM GRUBBING OF TREES OR STUMPS SHALL BE BACKFILLED WITH GRANULAR BACKFILL. BACKFILL GRANULAR WILL BE PAID FOR SEPARATELY UNDER THE BACKFILL GRANULAR BID ITEM.

ALL RADIUS DIMENSIONS FOR CURB & GUTTER ARE GIVEN TO THE FLANGE. ALL ELEVATIONS ALONG CURB & GUTTER ARE GIVEN TO THE FLANGE. OFFSETS NOTED ARE TO THE FLANGE OR EDGE OF LANE IF NO CURB, UNLESS OTHERWISE NOTED.

CONTRACTOR SHALL CONTACT SOUTHEASTERN WISCONSIN REGIONAL PLANNING COMMISSION (SEWRPC) BEFORE DISTURBING ANY PUBLIC SURVEY MONUMENTS. CONTACT JOHN WASHBURN AT (262) 547-6721 FOR MONUMENT RELOCATION PROCEDURES. CONTRACTOR SHALL ALSO CONTACT THOMAS LIPSKY AT WISDOT SOUTHEAST REGION AT (262) 548-6737.

THE LOCATION OF KNOWN EXISTING UTILITIES IN THE VICINITY OF THE PROJECT ON THE PLANS IS APPROXIMATE. THERE MAY BE OTHER UTILITIES IN THE AREA THAT ARE NOT SHOWN.

HMA PAVEMENT WHERE INDICATED ON THE PLANS, SHALL CONSIST OF LAYERS AS FOLLOWS, UNLESS OTHERWISE NOTED ON THE PLANS OR DIRECTED BY THE ENGINEER.

| | |
|---|---|
| 1¾" DEPTH | 1¾" OF HMA PAVEMENT 4 MT 58-28 S AS THE UPPER LAYER |
| 4" DEPTH | 2¼" OF HMA PAVEMENT 3 MT 58-28 S AS THE LOWER LAYER<br>1¾" OF HMA PAVEMENT 4 MT 58-28 S AS THE UPPER LAYER |
| 6" DEPTH | 3½"" OF HMA PAVEMENT 3 MT 58-28 S AS THE LOWER LAYER<br>2½"" OF HMA PAVEMENT 4 MT 58-28 S AS THE UPPER LAYER |

ALL EROSION CONTROL MEASURES SHALL BE ADJUSTED TO MEET FIELD CONDITIONS AT THE TIME OF CONSTRUCTION AND SHALL BE INSTALLED PRIOR TO ANY GRADING OR DISTURBANCE OF EXISTING SURFACE MATERIAL ON THE SITE.

SILT FENCE SHALL BE INSTALLED IN THE LOCATIONS SHOWN ON THE PLANS, OR AS DIRECTED BY THE ENGINEER.

ASPHALT AND CONCRETE DRIVEWAYS SHALL BE SAWCUT AT THE MATCH LINE AS SHOWN ON THE PLANS OR AS DIRECTED BY THE ENGINEER.

THE CONTRACTOR SHALL NOTIFY DIGGERS HOTLINE AND AFFECTED UTILITIES PRIOR TO THE START OF WORK. ANY LOCAL MUNICIPAL UTILITY WHICH IS NOT A MEMBER OF THE DIGGERS HOTLINE MUST BE CONTACTED SEPARATELY.

INLET PROTECTION IS REQUIRED AT ALL INLETS AS PER DETAIL OR AS DIRECTED BY THE ENGINEER.

REMOVAL OF EROSION CONTROL DEVICES IS INCLUDED IN THE COST OF THEIR RESPECTIVE BID ITEMS.

SIGNS IN CONFLICT WITH TRAFFIC CONTROL "IN USE" SHALL BE COVERED AS DIRECTED BY THE ENGINEER AND PAID FOR UNDER THE ITEM TRAFFIC CONTROL COVERING SIGNS.

TRAFFIC CONTROL DEVICES SHALL BE ADJUSTED TO FIT FIELD CONDITIONS AS DIRECTED BY THE ENGINEER.

CONCRETE JOINTS SHALL MATCH ABUTTING PAVEMENT AND CURB AND GUTTER JOINTS UNLESS OTHERWISE DESIGNATED BY THE ENGINEER.

ALL TIE OR DOWEL BARS INSERTED INTO A HOLE DRILLED IN THE EXISTING CONCRETE SHALL BE PAID FOR UNDER THE ITEM "DRILLED PAVEMENT TIES" AND "DRILLED DOWEL BARS." ALL OTHER TIE OR DOWEL BARS INCORPORATED INTO NEW POURED CONCRETE SHALL BE INCIDENTAL TO THE APPROPRIATE ITEM.

THE LOCATIONS OF LONGITUDINAL JOINTS IN HMA PAVEMENT SHALL BE APPROVED BY THE ENGINEER.

## STANDARD ABBREVIATIONS

| | |
|---|---|
| AEW | APRON END WALL |
| AGG | AGGREGATE |
| BAD | BASE AGGREGATE DENSE |
| BM | BENCH MARK |
| C&G | CURB AND GUTTER |
| C/L | CENTER OR CONSTRUCTION LINE |
| CONC | CONCRETE |
| CP | CULVERT PIPE |
| CPCM | CULVERT PIPE CORRUGATED METAL |
| CPRC | CULVERT PIPE REINFORCED CONCRETE |
| CPRCHE | CULVERT PIPE REINFORCED CONCRETE HORIZONTAL ELLIPTICAL |
| CSCP | CORRUGATED STEEL CULVERT PIPE |
| CSPA | CORRUGATED STEEL PIPE ARCH |
| CSD | CONCRETE SURFACE DRAIN |
| CY | CUBIC-YARD |
| D | DEGREE OF CURVE |
| | DELTA |
| DISCH | DISCHARGE |
| FE | FIELD ENTRANCE |
| HERCP | HORIZONTAL ELLIPTICAL REINFORCED CONCRETE PIPE |
| HMA | HOT MIX ASPHALT |
| INV | INVERT |
| L | LENGTH OF CURVE |
| LHF | LEFT HAND FORWARD |
| LT | LEFT |
| MIN | MINIMUM |
| M/L | MATCHLINE |
| NB | NORTHBOUND |
| NC | NORMAL CROWN |
| NTS | NOT TO SCALE |
| PAVT | PAVEMENT |
| PB | PULL BOX |
| PC | POINT-OF-CURVE |
| PCC | POINT OF COMPOUND CURVE |
| PE | PRIVATE ENTRANCE |
| PI | POINT OF INTERSECTION |
| PLE | PERMANENT LIMITED EASEMENT |
| PT | POINT OF TANGENT |
| PVC | POINT OF VERTICAL CURVE |
| PVI | POINT OF VERTICAL INTERSECTION |
| PVT | POINT OF VERTICAL TANGENT |
| R | RADIUS OF CURVE |
| R/L | REFERENCE LINE |
| R/W | RIGHT OF WAY |
| RAD | RADIUS |
| RC | REVERSE CROWN |
| RCAEW | APRON ENDWALL FOR CULVERT PIPE REINFORCED CONCRETE |
| RCHESS | REINFORCED CONCRETE HORIZONTAL ELLIPTICAL STORM SEWER |
| RCPSS | REINFORCED CONCRETE PIPE - STORM SEWER |
| REQD | REQUIRED |
| RHF | RIGHT HAND FORWARD |
| RO | RUN OFF LENGTH |
| RT | RIGHT |
| SALV | SALVAGED |
| SB | SIGNAL BASE |
| SDD | STANDARD DETAIL DRAWING |
| SE | SUPER ELEVATION |
| SF | SQUARE FOOT |
| STA | STATION |
| SY | SQUARE YARD |
| T | TANGENT LENGTH |
| TC | TOP OF CURB |
| TLE | TEMPORARY LIMITED EASEMENT |

2

## UTILITIES

WE ENERGIES (ELECTRIC)
SEND ALL CORRESPONDENCE TO:

MR. LATROY BRUMFIELD, PROJECT MANAGER
333 W. EVERETT STREET, A299
MILWAUKEE, WI 53203
(414)221-5617 / FAX: (414)221-2336
LATROY.BRUMFIELD@WE-ENERGIES.COM

CONSTRUCTION FIELD CONTACT:
MR. KEN FRANECKI
500 S. 16TH STREET
WEST ALLIS, WI 53214
(414) 944-5531; MOBILE (414) 939-1039
KENNETH.FRANECKI@WE-ENERGIES.COM

WE ENERGIES (GAS OPERATIONS)
SEND ALL CORRESPONDENCE TO:

MR. LATROY BRUMFIELD, PROJECT MANAGER
333 W. EVERETT STREET, A299
MILWAUKEE, WI 53203
(414)221-5617 / FAX: (414)221-2336
LATROY.BRUMFIELD@WE-ENERGIES.COM

CONSTRUCTION FIELD CONTACT:
MR. PAUL OSMANSKI
WE ENERGIES (GAS OPERATIONS)
500 S. 116TH STREET
WEST ALLIS, WI 53214
(414) 944-5796; MOBILE (414) 315-1278

WISDOT SIGNAL OPERATIONS
141 NW BARSTOW ST.
WAUKESHA, WI 53187-0798
(414) 750-2605

WISDOT SIGNALS
935 S 60TH STREET
WEST ALLIS, WI 53214
(414) 266-1170

WISDOT LIGHTING
MR. ERIC PEREA
WISDOT ELECTRICAL FIELD UNIT
141 NW BARSTOW STREET
WAUKESHA, WI 53187
(262) 574-5422

MR. RICK PODOLAK
AT&T WISCONSIN
304 S. DEWEY STREET, 4TH FLOOR
EAU CLAIRE, WI 53701
(715) 839-5565
RICK.T.PODOLAK@ATT.COM

MS. DEBRA JENSEN
MILWAUKEE METROPOLITAN SEWERAGE DISTRICT
260 W. SEEBOTH ST.
MILWAUKEE, WI 53204-1446
(414)225-2143
DJENSEN@MMSD.COMMR. JIM KOSTUCH

PAETEC BUSINESS SERVICES
13935 BISHOPS DRIVE
BROOKFIELD, WI 53005
(262) 792-7938
JAMES.KOSTUCH@WINDSTREAM.COM

MS. DEBBIE SADDLER
TELEPORT COMMUNICATIONS AMERICA
C/O NORTHWIND TECHNICAL
6070 N. FLINT ROAD
GLENDALE, WI 53209
(414) 459-3572; MOBILE (414) 651-0036
D.SADDLER@NORTHWINDTECH.COM

TIME WARNER CABLING ENGINEER
TIME WARNER CABLE
1320 N. DR. MARTIN LUTHER KING JR DRIVE
MILWAUKEE, WI 53212
(414) 277-4045
WIS.ENGINEERING@TWCABLE.COM

CITY OF MILWAUKEE - SEWER
MR. SAMIR AMIN
841 N. BROADWAY
MILWAUKEE, WI 53202
(414) 286-2461

CITY OF MILWAUKEE - WATER
(MILWAUKEE WATER WORKS)
MR. DAVE GOLDAPP
841 N. BROADWAY, ROOM 409
MILWAUKEE, WI 53202
(414) 286-6301; MOBILE (414) 708-2695
DAVE.GOLDAPP@MILWAUKEE.GOV

CITY OF MILWAUKEE - LIGHTING
MR. DENNIS MILLER
1540 W. CANAL STREET
MILWAUKEE, WI 53233
(414) 286-5492; MOBILE (414) 708-4251
DENNIS.MILLER@MILWAUKEE.GOV

## AGENCIES

MR. JEFFREY POLENSKE
CITY OF MILWAUKEE
841 N. BROADWAY, ROOM 701
MILWAUKEE, WI 53202
(414) 286-3701
JEFFREY.POLENSKE@MILWAUKEE.GOV

MS. ANDREA WEDDLE-HENNING
MILWAUKEE COUNTY DEPT OF TRANSPORTATION
2711 WEST WELLS STREET, SUITE 300
MILWAUKEE, WI 53208
414-257-5934
EMAIL: ANDREA.WEDDLE-HENNING@MILWCNTY.COM

MS. MELANIE FLYNN
MILWAUKEE COUNTY TRANSIT SYSTEM
1942 N. 17TH STREET
MILWAUKEE, WI 53205
(414) 343-1764
MFLYNN@MCTS.ORG

MR. JOHN WASHBURN
SOUTHEASTERN WISCONSIN REGIONAL
PLANNING COMMISSION
W239N1812 RROCKWOOD DRIVE
P.O. BOX 1607
WAUKESHA, WI 53187-1607
(262) 953-4295
JWASHBURN@SEWRPC.ORG

## WISDOT CONTACT

MS. TRACI GENGLER
WISCONSIN DEPT OF TRANSPORTATION, SE REGION
141 NW BARSTOW STREET
P.O. BOX 798
WAUKESHA, WI 53187-0798
(262) 548-8727

## DESIGN CONTACT

MR. STEVE HUBERTY
GRAEF
HONEY CREEK CORPORATE CENTER
125 S. 84TH STREET, SUITE 401
MILWAUKEE, WI 53212
(414) 266-9090

## DNR CONTACT

MS. KRISTINA BETZOLD
WISCONSIN DEPT. OF NATURAL RESOURCES
2300 N. MARTIN LUTHER KING JR. DRIVE
MILWAUKEE, WI 53212
(414) 263-8517

DIGGERS HOTLINE
Dial 811 or (800) 242-8511
www.DiggersHotline.com

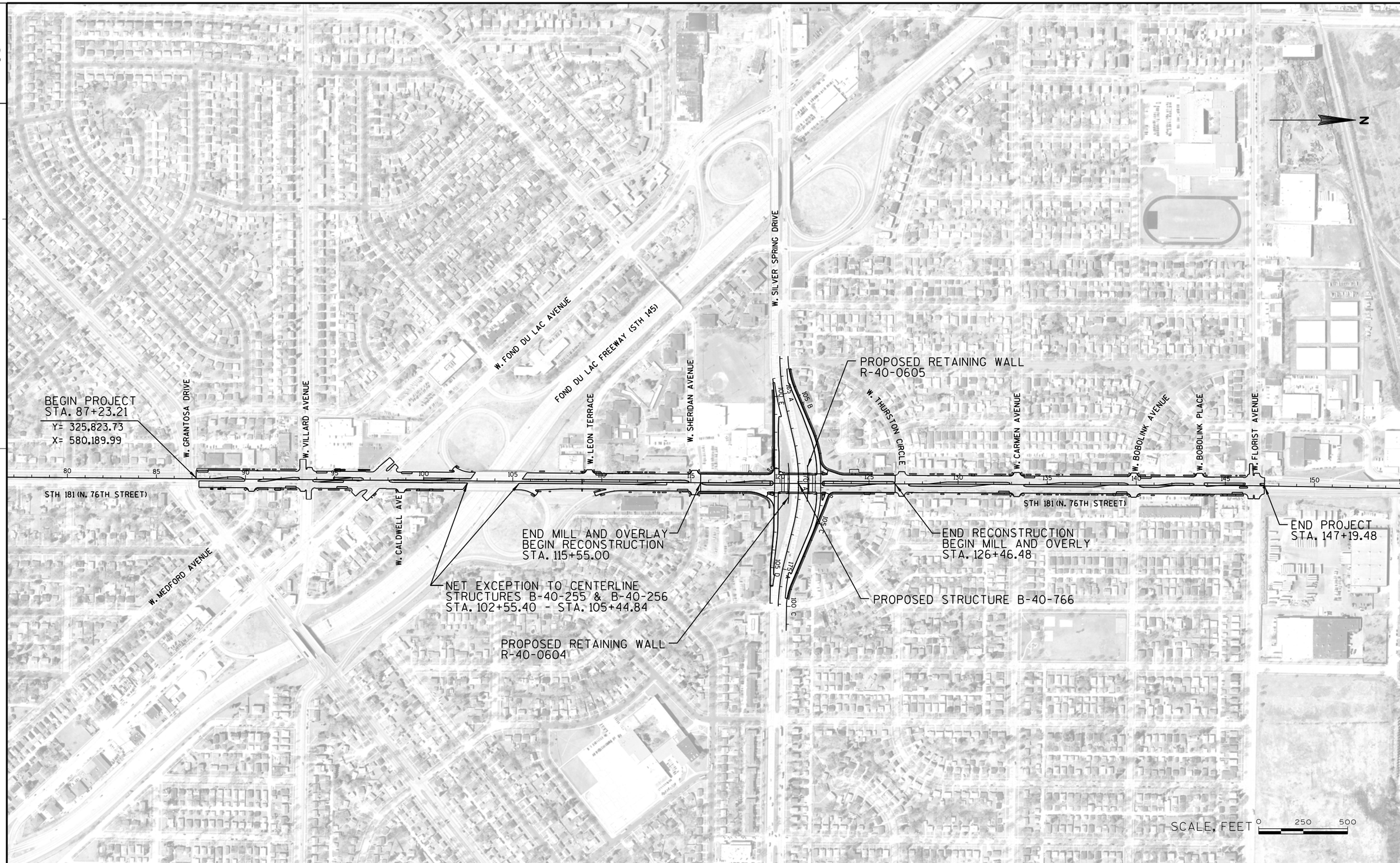


| PROJECT NO: 2140-13-70 | HWY: STH 181 | COUNTY: MILWAUKEE | PROJECT OVERVIEW | SHEET 4 | E |
|---|---|---|---|---|---|

2

## LEGEND

- (A) MILL 3½" & REPLACE 4" HMA PAVEMENT
- (B) MILL 1½" & REPLACE 1¾" HMA PAVEMENT
- (C) CONCRETE PAVEMENT 7-INCH
- (D) CONCRETE PAVEMENT 9½-INCH
- (E) 4" BASE AGGREGATE DENSE 1¼-INCH
- (F) 6" BASE AGGREGATE DENSE 1¼-INCH
- (G) CONCRETE CURB & GUTTER 30-INCH TYPE A
- (H) CONCRETE SIDEWALK 5-INCH
- (I) TIE BAR
- (J) 6" TOPSOIL, FERTILIZER & SOD
- (K) EXISTING 9" REINFORCED CONCRETE PAVEMENT
- (L) EXISTING 6" GRAVEL OR CRUSHED STONE BASE COURSE
- (M) EXISTING CONCRETE SIDEWALK
- (N) EXISTING 30" CONCRETE CURB & GUTTER; OR CONCRETE CURB & GUTTER 30-INCH TYPE A (HMA OVERLAY); OR CONCRETE CURB & GUTTER 30-INCH TYPE A (MODIFIED)
- (O) EXISTING TIE BAR
- (P) EXISTING 3½" ASPHALTIC OVERLAY
- (Q) EXISTING 1½" ASPHALTIC OVERLAY
- (R) EXISTING 3" ASPHALTIC OVERLAY
- (S) CONCRETE BASE 9-INCH

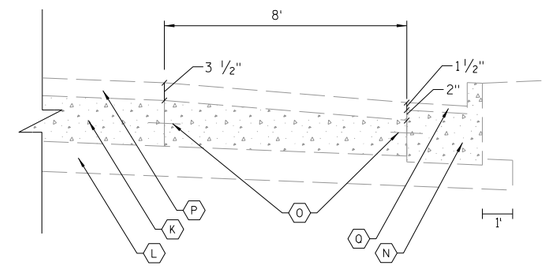


DETAIL OF OUTSIDE LANE EXISTING OVERLAY

STH 181 (N. 76TH STREET)
STA. 87+23.21 - STA. 147+19.48

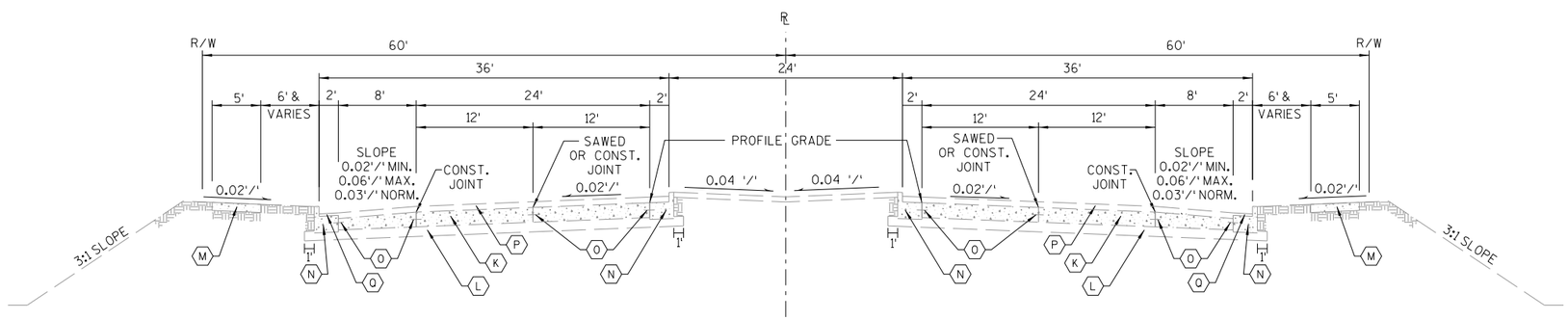


TYPICAL EXISTING SECTION
STH 181 (N. 76TH STREET)
STA. 87+23.21 - STA. 147+19.48

2

## LEGEND

- (A) MILL 3½" & REPLACE 4" HMA PAVEMENT
- (B) MILL 1½" & REPLACE 1¾" HMA PAVEMENT
- (C) CONCRETE PAVEMENT 7-INCH
- (D) CONCRETE PAVEMENT 9½-INCH
- (E) 4" BASE AGGREGATE DENSE 1¼-INCH
- (F) 6" BASE AGGREGATE DENSE 1¼-INCH
- (G) CONCRETE CURB & GUTTER 30-INCH TYPE A
- (H) CONCRETE SIDEWALK 5-INCH
- (I) TIE BAR
- (J) 6" TOPSOIL, FERTILIZER & SOD
- (K) EXISTING 9" REINFORCED CONCRETE PAVEMENT
- (L) EXISTING 6" GRAVEL OR CRUSHED STONE BASE COURSE
- (M) EXISTING CONCRETE SIDEWALK
- (N) EXISTING 30" CONCRETE CURB & GUTTER; OR CONCRETE CURB & GUTTER 30-INCH TYPE A (HMA OVERLAY); OR CONCRETE CURB & GUTTER 30-INCH TYPE A (MODIFIED)
- (O) EXISTING TIE BAR
- (P) EXISTING 3½" ASPHALTIC OVERLAY
- (Q) EXISTING 1½" ASPHALTIC OVERLAY
- (R) EXISTING 3" ASPHALTIC OVERLAY
- (S) CONCRETE BASE 9-INCH

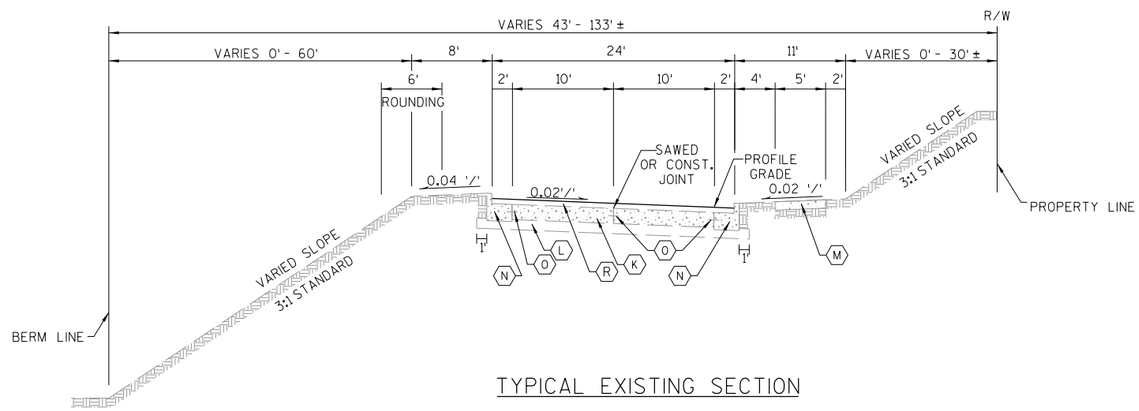


TYPICAL EXISTING SECTION

N.W., S.W., & N.E. RAMPS

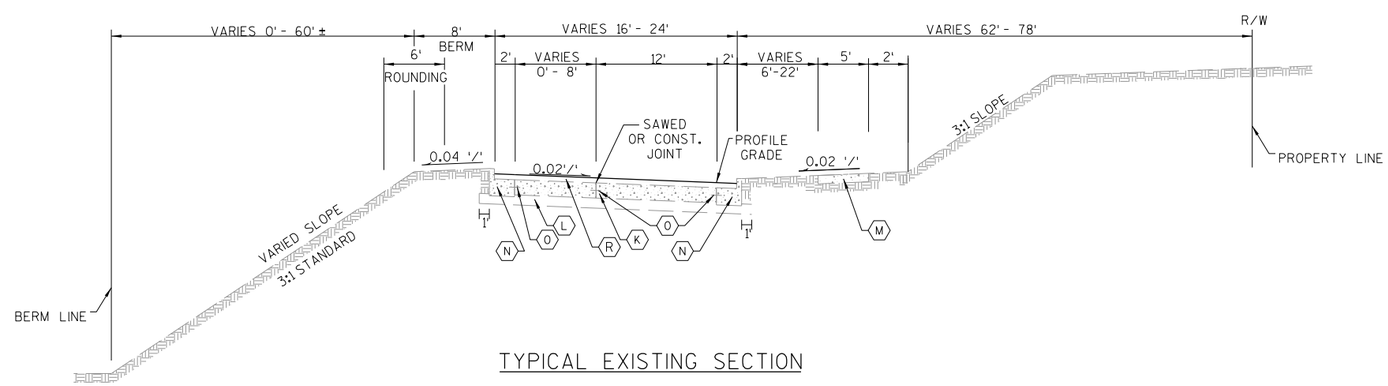


TYPICAL EXISTING SECTION

S.E. RAMP

2

| PROJECT NO:2140-13-70 | HWY:STH 181 | COUNTY:MILWAUKEE | TYPICAL EXISTING SECTIONS | SHEET 6 | E |
|---|---|---|---|---|---|

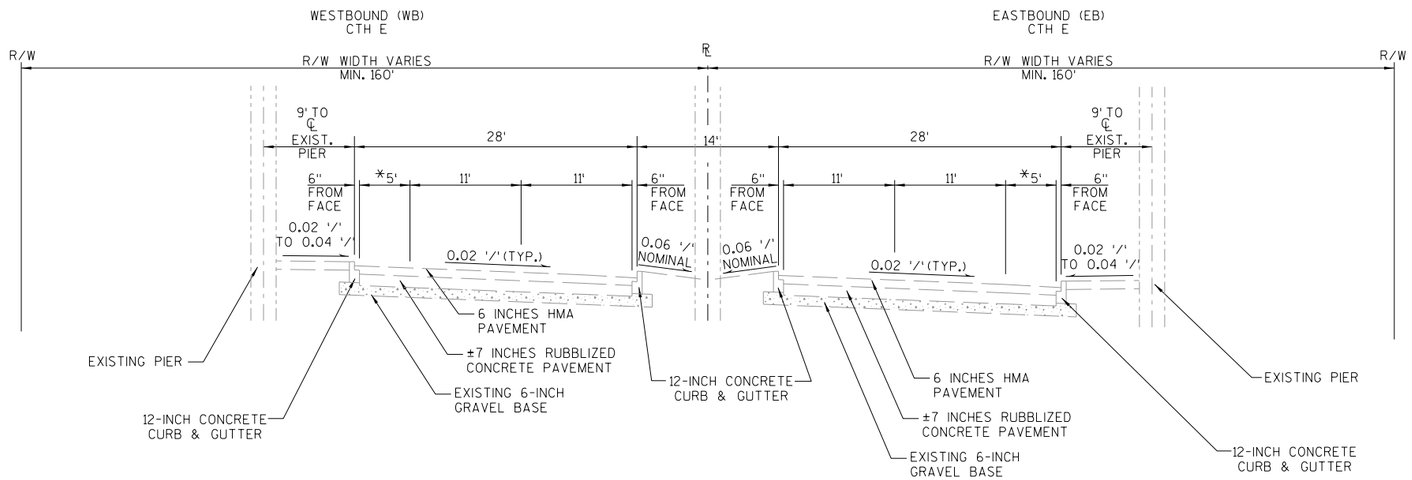


TYPICAL EXISTING SECTION W. SILVER SPRING DR. (CTH E)-MAINLINE

STA. 168+59.65 "A" TO STA. 171+48.00 "A"

*BIKE LANE IS STRIPED IN PROJECT LIMITS

2

## LEGEND

- (A) MILL 3½" & REPLACE 4" HMA PAVEMENT
- (B) MILL 1½" & REPLACE 1¾" HMA PAVEMENT
- (C) CONCRETE PAVEMENT 7-INCH
- (D) CONCRETE PAVEMENT 9½-INCH
- (E) 4" BASE AGGREGATE DENSE 1¼-INCH
- (F) 6" BASE AGGREGATE DENSE 1¼-INCH
- (G) CONCRETE CURB & GUTTER 30-INCH TYPE A
- (H) CONCRETE SIDEWALK 5-INCH
- (I) TIE BAR
- (J) 6" TOPSOIL, FERTILIZER & SOD
- (K) EXISTING 9" REINFORCED CONCRETE PAVEMENT
- (L) EXISTING 6" GRAVEL OR CRUSHED STONE BASE COURSE
- (M) EXISTING CONCRETE SIDEWALK
- (N) EXISTING 30" CONCRETE CURB & GUTTER; OR CONCRETE CURB & GUTTER 30-INCH TYPE A (HMA OVERLAY); OR CONCRETE CURB & GUTTER 30-INCH TYPE A (MODIFIED)
- (O) EXISTING TIE BAR
- (P) EXISTING 3½" ASPHALTIC OVERLAY
- (Q) EXISTING 1½" ASPHALTIC OVERLAY
- (R) EXISTING 3" ASPHALTIC OVERLAY
- (S) CONCRETE BASE 9-INCH

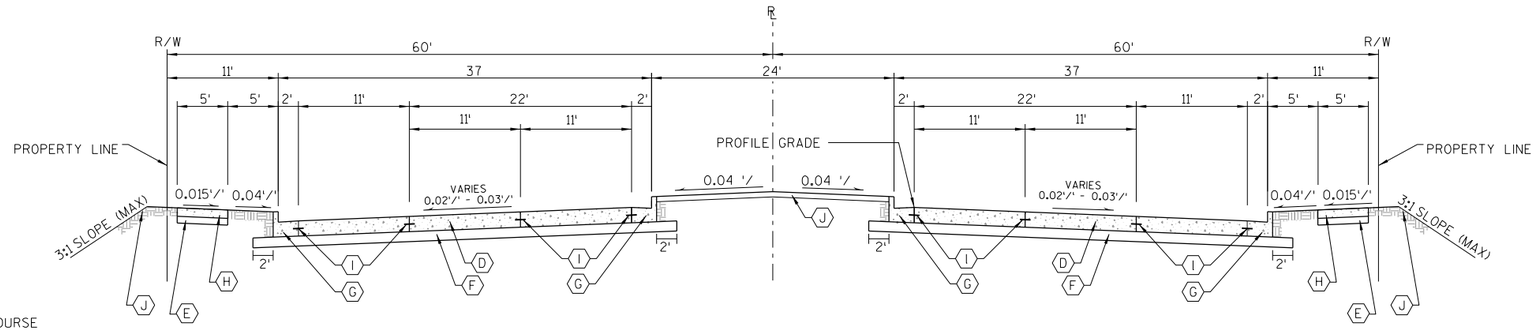


TYPICAL FINISHED SECTION

STH 181 (N. 76TH STREET)

STA. 115+55.00- STA. 120+44.75
STA. 121+63.25 - STA. 126+46.50

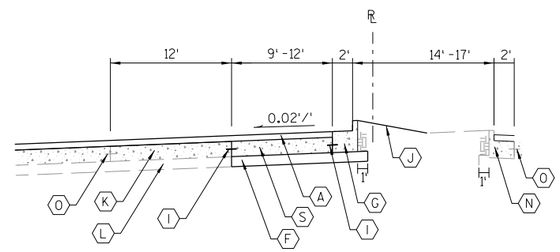


MEDIAN LEFT TURN LANE EXTENSIONS

STA. 87+23.21 - STA. 115+55.00
STA. 125+86.00 - STA. 147+19.48

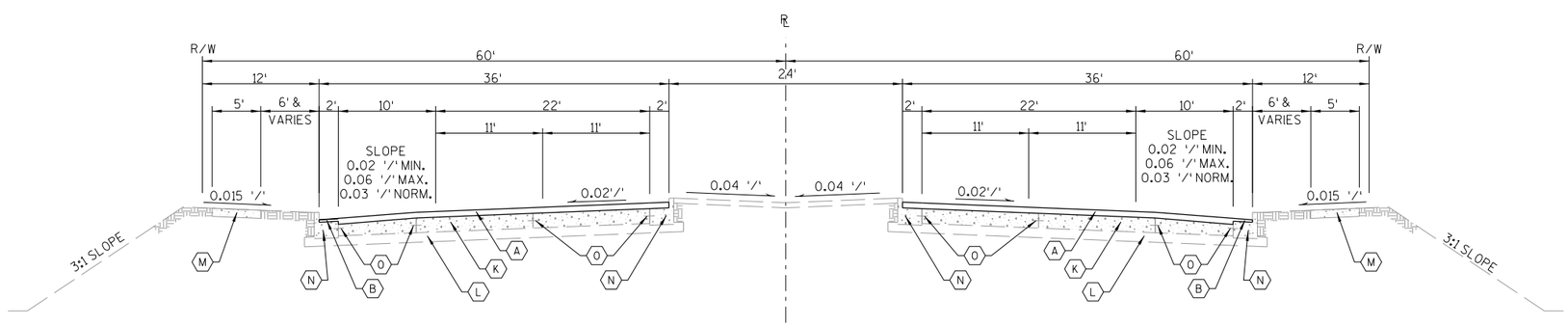


TYPICAL FINISHED SECTION

STH 181 (N. 76TH STREET)

STA. 87+23.21 - STA. 115+55.00
STA. 126+46.50 - STA. 147+19.48

| PROJECT NO: 2140-13-70 | HWY: STH 181 | COUNTY: MILWAUKEE | TYPICAL FINISHED SECTIONS | SHEET 8 | E |
|---|---|---|---|---|---|

2

## LEGEND

- (A) MILL 3½" & REPLACE 4" HMA PAVEMENT
- (B) MILL 1½" & REPLACE 1¾" HMA PAVEMENT
- (C) CONCRETE PAVEMENT 7-INCH
- (D) CONCRETE PAVEMENT 9½-INCH
- (E) 4" BASE AGGREGATE DENSE 1¼-INCH
- (F) 6" BASE AGGREGATE DENSE 1¼-INCH
- (G) CONCRETE CURB & GUTTER 30-INCH TYPE A
- (H) CONCRETE SIDEWALK 5-INCH
- (I) TIE BAR
- (J) 6" TOPSOIL, FERTILIZER & SOD
- (K) EXISTING 9" REINFORCED CONCRETE PAVEMENT
- (L) EXISTING 6" GRAVEL OR CRUSHED STONE BASE COURSE
- (M) EXISTING CONCRETE SIDEWALK
- (N) EXISTING 30" CONCRETE CURB & GUTTER; OR CONCRETE CURB & GUTTER 30-INCH TYPE A (HMA OVERLAY); OR CONCRETE CURB & GUTTER 30-INCH TYPE A (MODIFIED)
- (O) EXISTING TIE BAR
- (P) EXISTING 3½" ASPHALTIC OVERLAY
- (Q) EXISTING 1½" ASPHALTIC OVERLAY
- (R) EXISTING 3" ASPHALTIC OVERLAY
- (S) CONCRETE BASE 9-INCH

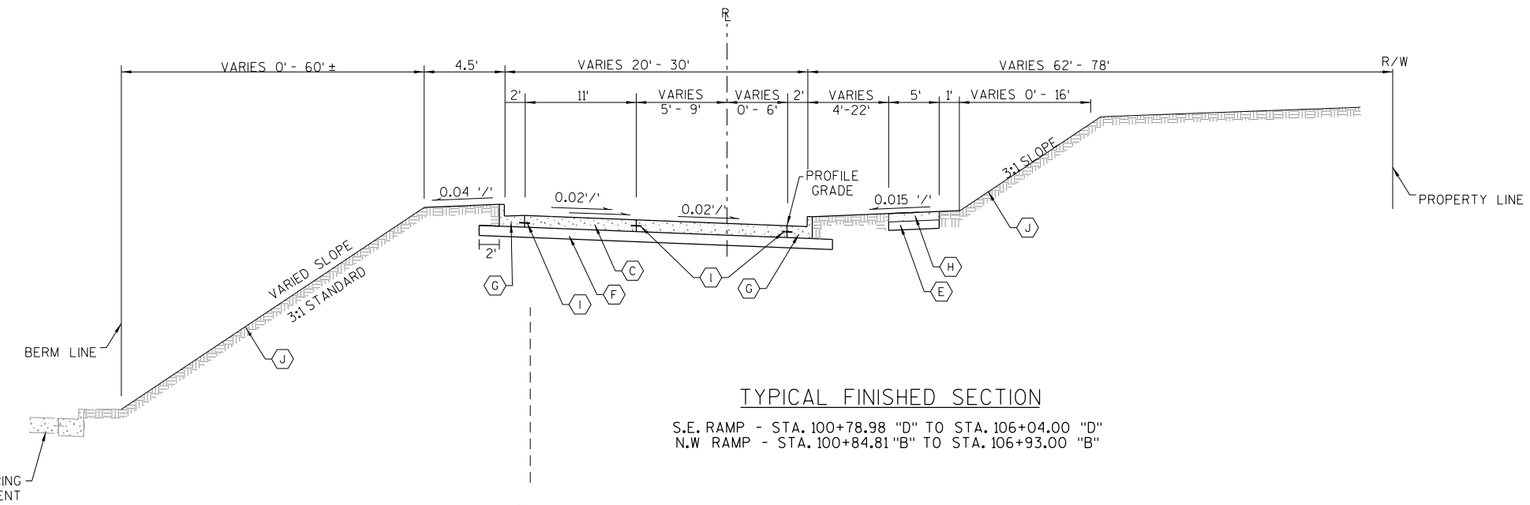


TYPICAL FINISHED SECTION

S.E. RAMP - STA. 100+78.98 "D" TO STA. 106+04.00 "D"
N.W RAMP - STA. 100+84.81 "B" TO STA. 106+93.00 "B"

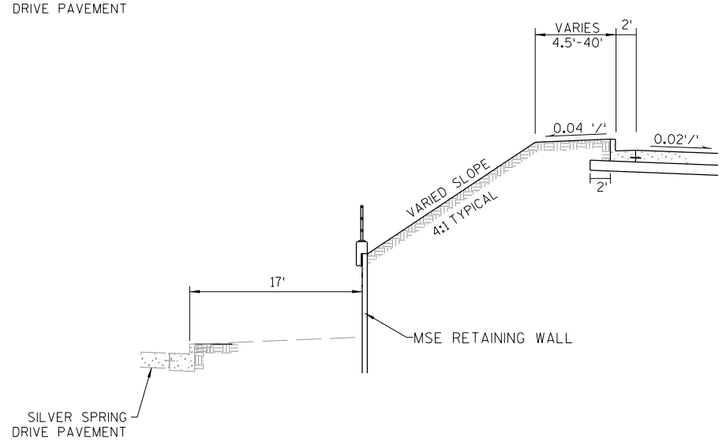


RETAINING WALL
ADJACENT TO RAMPS

S.E. RAMP - STA. 100+78.98 "D" TO STA. 101+39.30 "D"
N.W. RAMP - STA. 100+84.81 "B" TO STA. 101+40.49 "B"

2

## LEGEND

- (A) MILL 3½" & REPLACE 4" HMA PAVEMENT
- (B) MILL 1½" & REPLACE 1¾" HMA PAVEMENT
- (C) CONCRETE PAVEMENT 7-INCH
- (D) CONCRETE PAVEMENT 9½-INCH
- (E) 4" BASE AGGREGATE DENSE 1¼-INCH
- (F) 6" BASE AGGREGATE DENSE 1¼-INCH
- (G) CONCRETE CURB & GUTTER 30-INCH TYPE A
- (H) CONCRETE SIDEWALK 5-INCH
- (I) TIE BAR
- (J) 6" TOPSOIL, FERTILIZER & SOD
- (K) EXISTING 9" REINFORCED CONCRETE PAVEMENT
- (L) EXISTING 6" GRAVEL OR CRUSHED STONE BASE COURSE
- (M) EXISTING CONCRETE SIDEWALK
- (N) EXISTING 30" CONCRETE CURB & GUTTER; OR CONCRETE CURB & GUTTER 30-INCH TYPE A (HMA OVERLAY); OR CONCRETE CURB & GUTTER 30-INCH TYPE A (MODIFIED)
- (O) EXISTING TIE BAR
- (P) EXISTING 3½" ASPHALTIC OVERLAY
- (Q) EXISTING 1½" ASPHALTIC OVERLAY
- (R) EXISTING 3" ASPHALTIC OVERLAY
- (S) CONCRETE BASE 9-INCH

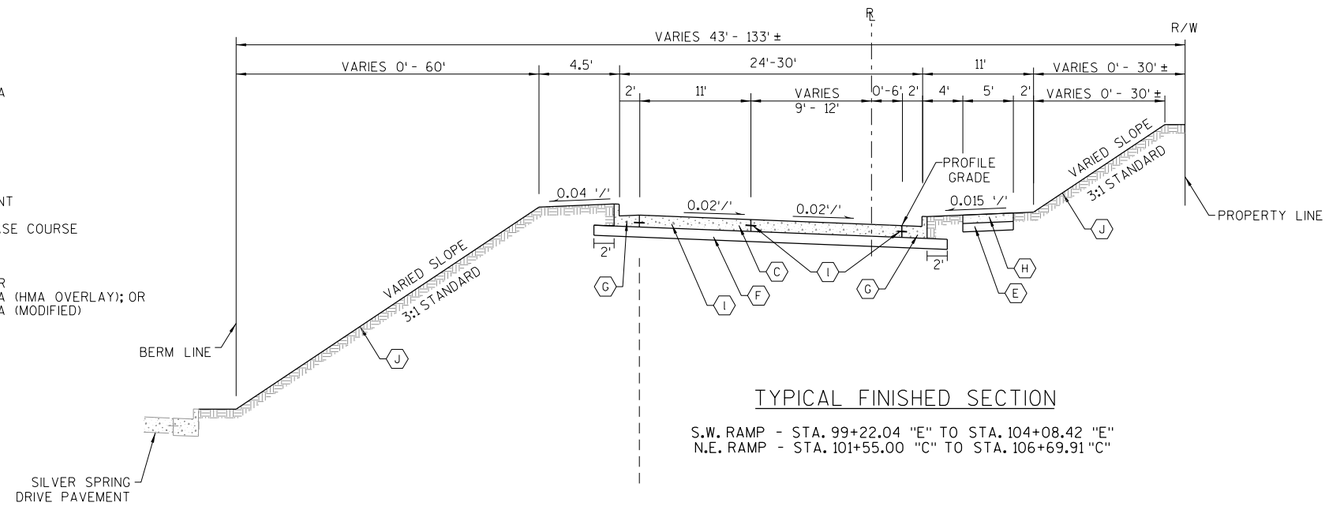


TYPICAL FINISHED SECTION

S.W. RAMP - STA. 99+22.04 "E" TO STA. 104+08.42 "E"
N.E. RAMP - STA. 101+55.00 "C" TO STA. 106+69.91 "C"

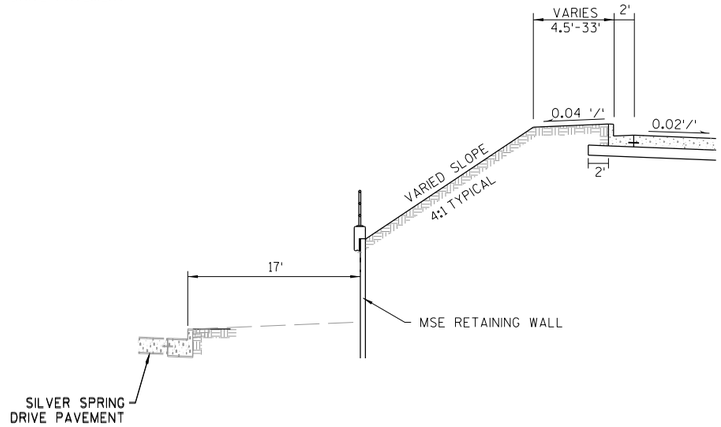


RETAINING WALL
ADJACENT TO RAMPS

S.W. RAMP - STA. 103+73.58 "E" TO STA. 104+08.42 "E"
N.E. RAMP - STA. 106+13.84 "C" TO STA. 106+69.91 "C"

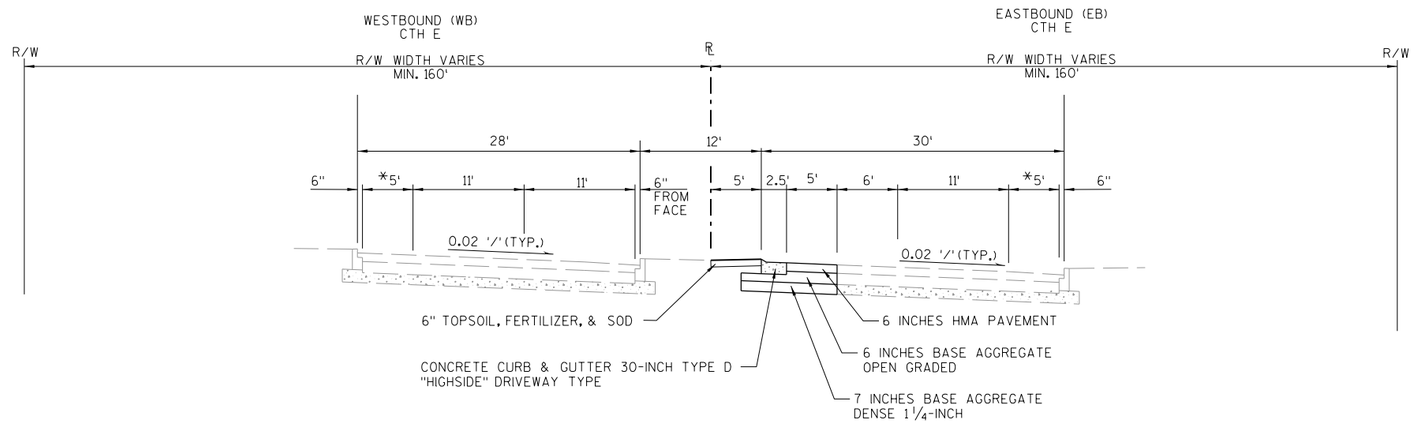


TYPICAL FINISHED SECTION W. SILVER SPRING DR. (CTH E)-MAINLINE

STA. 168+59.65 "A" TO STA. 169+17.91 "A"

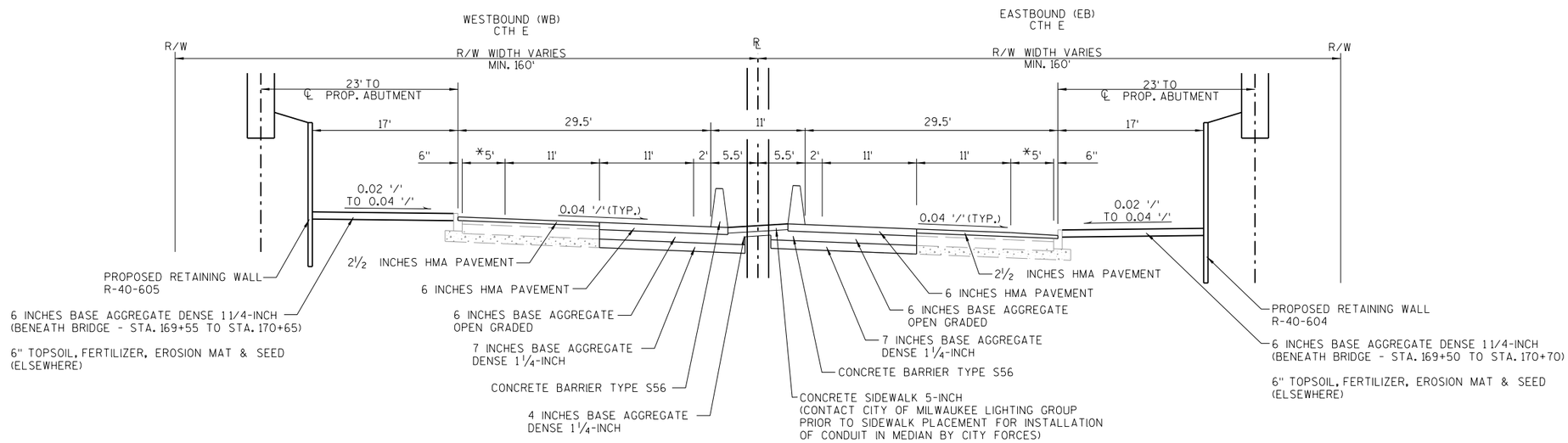


TYPICAL FINISHED SECTION W. SILVER SPRING DR. (CTH E)-MAINLINE

STA. 169+17.91 "A" TO STA. 171+01.92 "A"

*BIKE LANE IS STRIPED IN PROJECT LIMITS

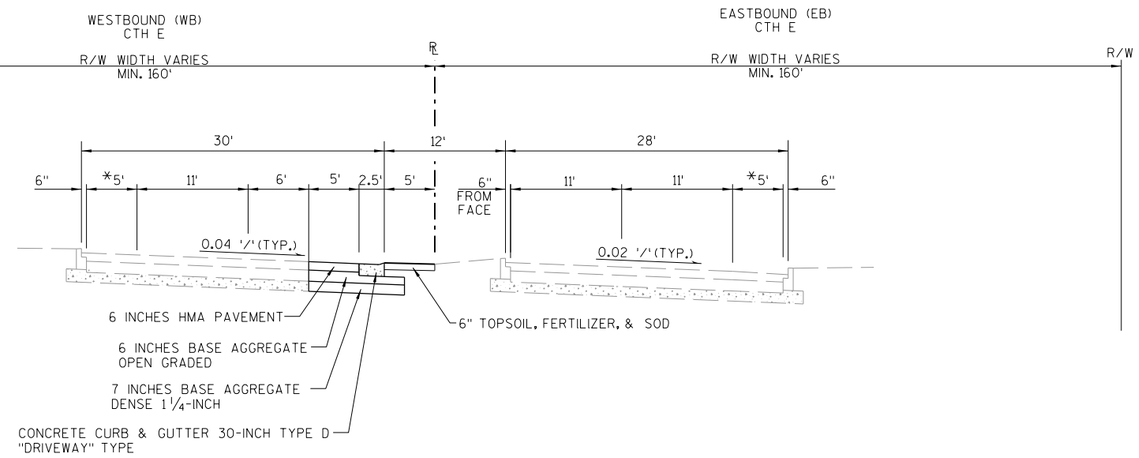


TYPICAL FINISHED SECTION W. SILVER SPRING DR. (CTH E)-MAINLINE

STA. 171+01.92 "A" TO STA. 171+48.00 "A"

*BIKE LANE IS STRIPED IN PROJECT LIMITS

2

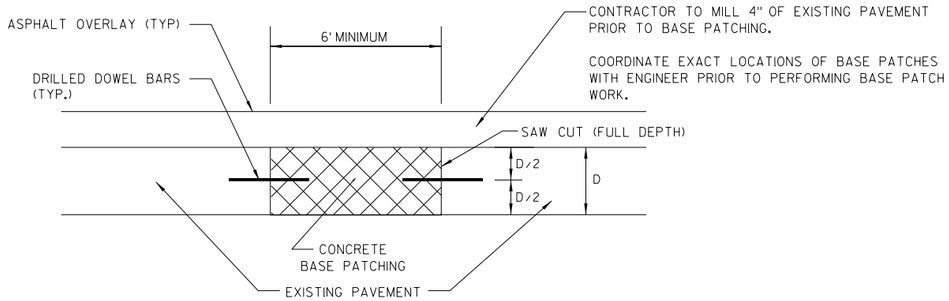


NOTES: CONTRACTOR SHALL REMOVE ALL UNSUITABLE MATERIAL BELOW BASE PATCH AREA AND REPLACE WITH BASE AGGREGATE DENSE 1-1/4".

LOCATION AND AREA OF BASE PATCHING SHALL BE PLACED AS SHOWN ON PLANS AND AS DIRECTED BY THE ENGINEER.

## DETAIL OF BASE PATCH, CONCRETE

DETAIL TO BE USED IN CLOSED LANES AND NON SIGNLAIZED INTERSECTIONS
SEE S.D.D. "BASE PATCHING CONCRETE" FOR ADDITIONAL DETAILS

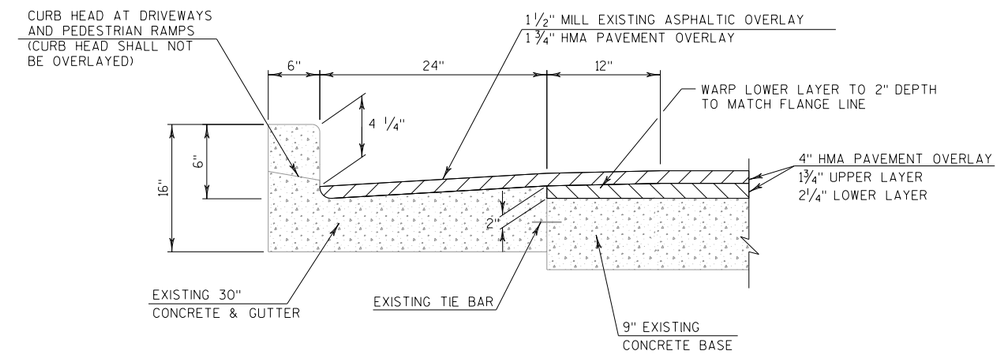


## HMA OVERLAY (EXISTING CURB & GUTTER)

DETAIL FOR OUTSIDE LANE CURB

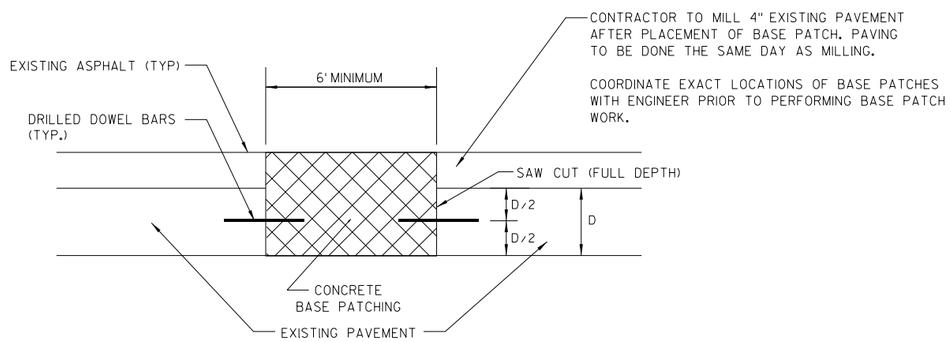


NOTES: CONTRACTOR SHALL REMOVE ALL UNSUITABLE MATERIAL BELOW BASE PATCH AREA AND REPLACE WITH BASE AGGREGATE DENSE 1-1/4".

LOCATION AND AREA OF BASE PATCHING SHALL BE PLACED AS SHOWN ON PLANS AND AS DIRECTED BY THE ENGINEER.

## DETAIL OF BASE PATCH, CONCRETE SHES

DETAIL TO BE USED FOR SIGNALIZED INTERSECTIONS
SEE S.D.D. "BASE PATCHING CONCRETE" FOR ADDITIONAL DETAILS

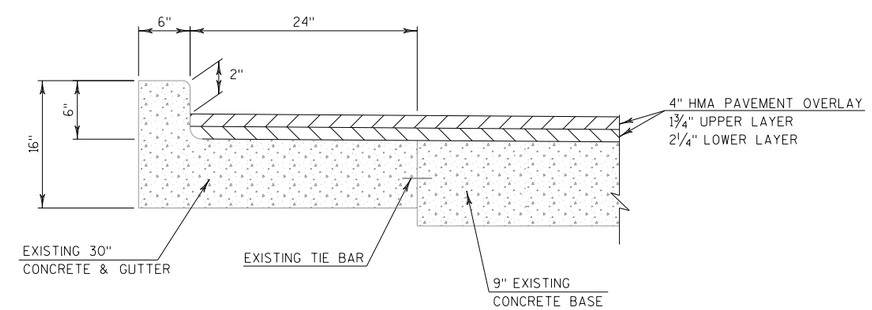


## HMA OVERLAY (EXISTING CURB & GUTTER)

DETAIL FOR MEDIAN CURB

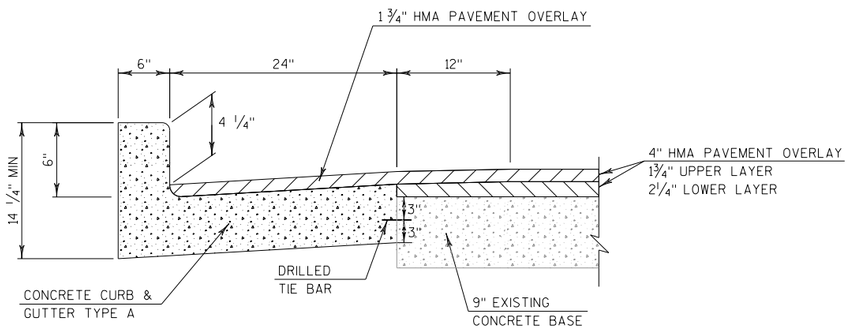


30B CONCRETE CURB & GUTTER 30-INCH TYPE A (HMA OVERLAY)

DETAIL FOR FOR HMA OVERLAY OF NEW OUTSIDE LANE CURB

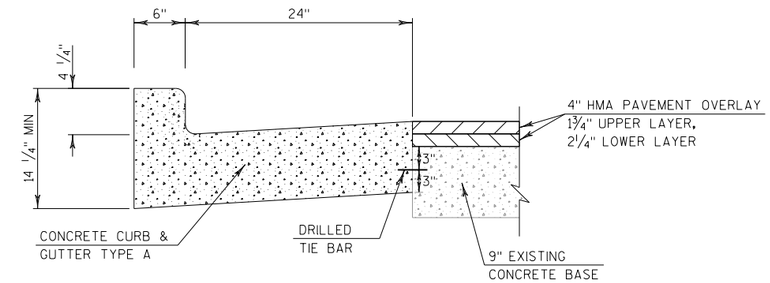


30M CONCRETE CURB & GUTTER 30-INCH TYPE A (MODIFIED)

NOTE: TRADITIONAL GUTTER PAN SLOPE SHOWN, USE
REVERSE SLOPE GUTTER IN MEDIAN.

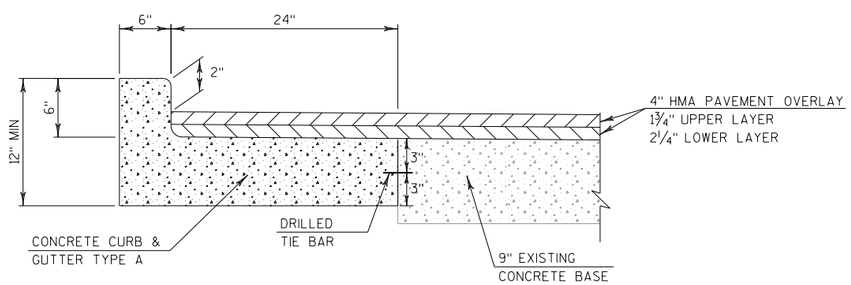


30B CONCRETE CURB & GUTTER 30-INCH TYPE A WITH HMA OVERLAY

DETAIL FOR HMA OVERLAY OF NEW MEDIAN CURB
(PAID FOR AS CONCRETE CURB & GUTTER 30-INCH TYPE A)

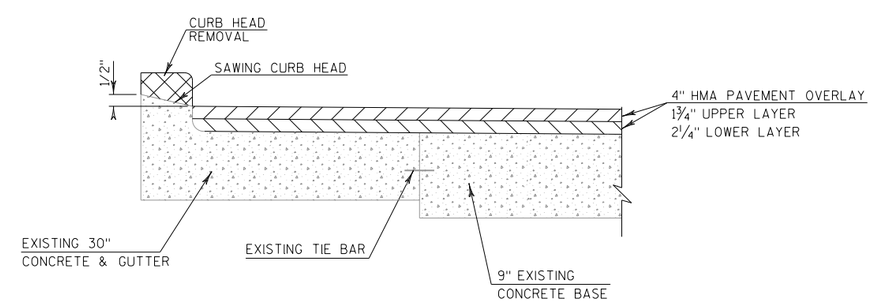


SAWING CURB HEAD

STA 100+55 - 101+42 RT
STA 106+58 - 107+71 LT

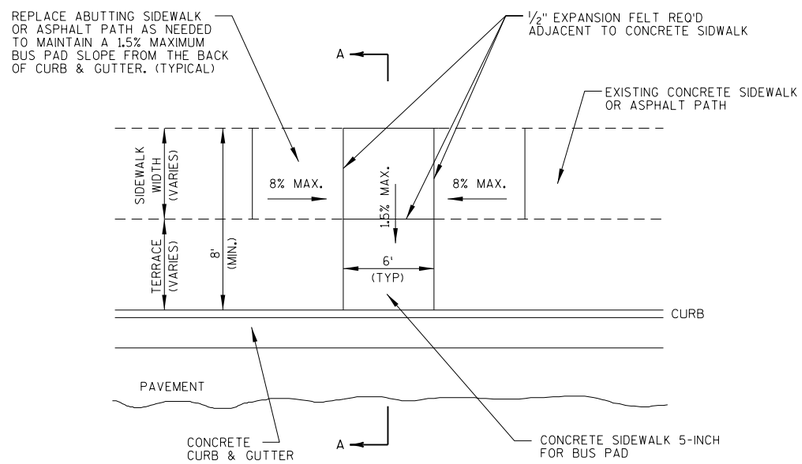


PLAN VIEW - SIDEWALK WITH TERRACE

NOTE: DEPRESS SIDEWALK AS NEEDED TO MAINTAIN 1.5% MAXIMUM CROSS SLOPE IN TERRACE AREA.

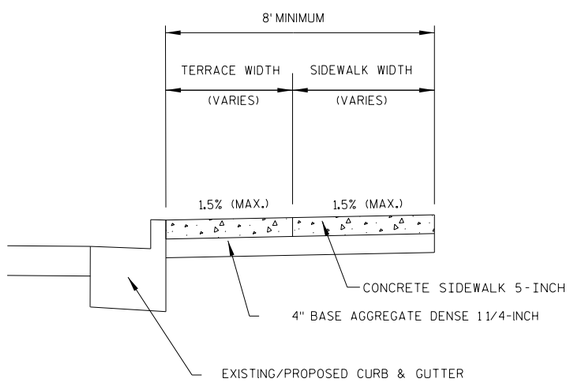


SECTION A-A

CONCRETE BUS PAD DETAIL

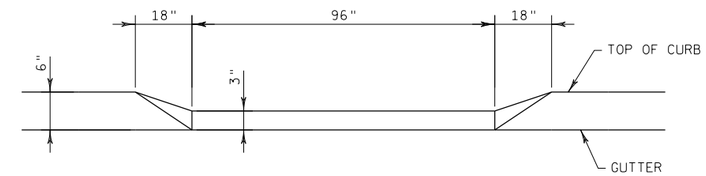


ELEVATION

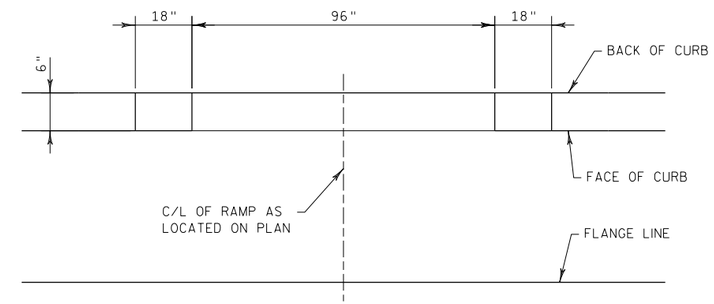


PLAN

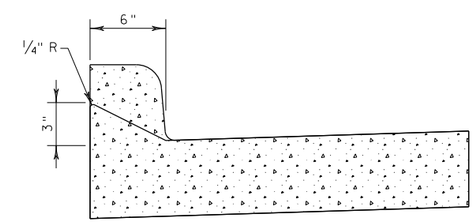


SECTION A-A

MAINTENANCE RAMP

STA. 113+45
STA. 117+05
STA. 125+55
STA. 128+10

NOTE: PAID FOR AS "CONCRETE CURB & GUTTER 30-INCH TYPE A" OR "CONCRETE CURB & GUTTER 30-INCH TYPE A (MODIFIED)" AS MEASURED ALONG THE FACE OF CURB.

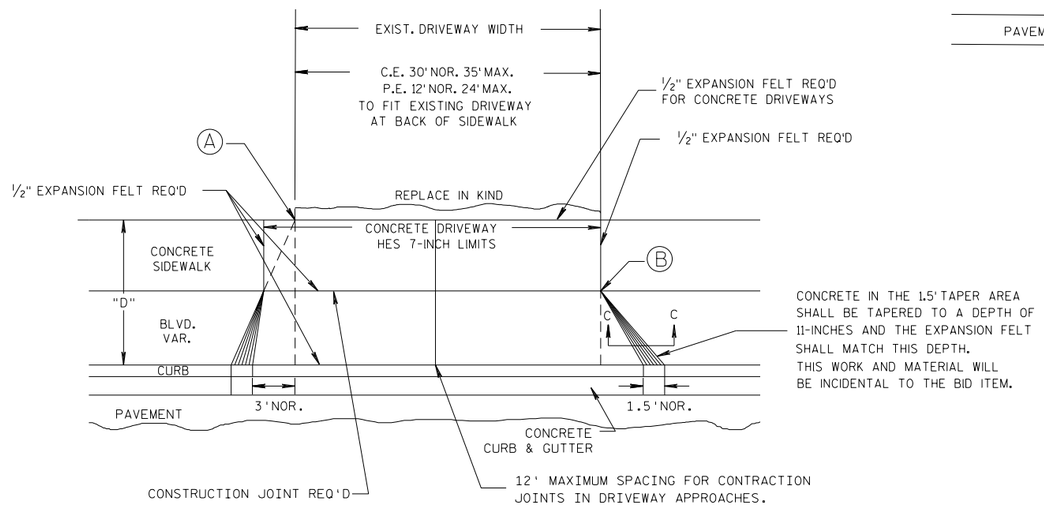


CONCRETE IN THE 1.5' TAPER AREA SHALL BE TAPERED TO A DEPTH OF 11-INCHES AND THE EXPANSION FELT SHALL MATCH THIS DEPTH. THIS WORK AND MATERIAL WILL BE INCIDENTAL TO THE BID ITEM.

PLAN VIEW

(A) WHEN "D" IS 13' OR LESS, ALIGN TAPER WITH BACK OF SIDEWALK

(B) WHEN "D" IS GREATER THAN 13', ALIGN TAPER WITH FRONT OF SIDEWALK

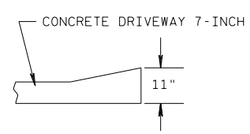


SECTION C-C

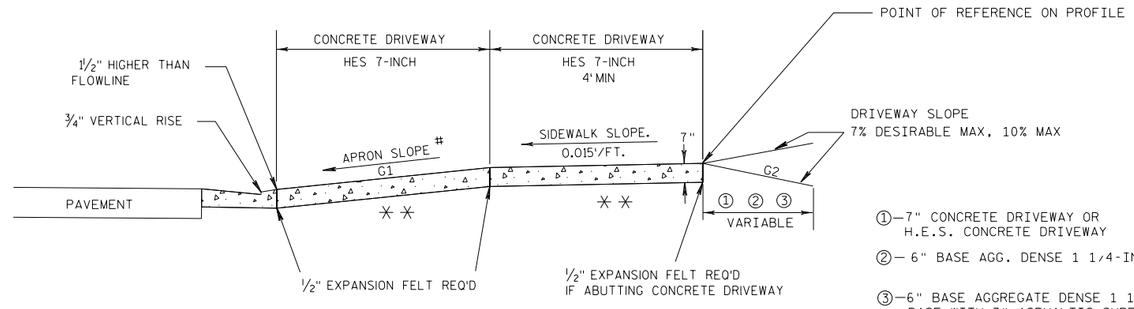


TYPICAL SIDEWALK SECTION

① — 7" CONCRETE DRIVEWAY OR H.E.S. CONCRETE DRIVEWAY

② — 6" BASE AGG. DENSE 1 1/4-INCH

③ — 6" BASE AGGREGATE DENSE 1 1/4-INCH BASE WITH 3" ASPHALTIC SURFACE

✳✳ = 6" BASE AGGREGATE DENSE 1 1/4-INCH REQ'D UNDER CONCRETE DRWY

#

| TERRACE | APRON SLOPE (G1) | | |
|---|---|---|---|
| WIDTH | MIN % | DESIRABLE % | MAX % |
| 3 FT | 7.0 | 8.5 | 9.0 |
| 4 FT | 5.0 | 7.0 | 9.0 |
| 5 FT | 4.0 | 7.0 | 9.0 |
| 6 FT | 4.0 | 7.0 | 9.0 |
| 7 FT | 3.5 | 7.0 | 9.0 |
| 8 FT | 3.0 | 7.0 | 9.0 |

NOTE: ALGEBRAIC DIFFERENCE BETWEEN TANGENT GRADES G1 & G2 TO NOT EXCEED 15%

DEPRESS SIDEWALK PROFILE IF DRIVEWAY APRON EXCEEDS MAX SLOPE

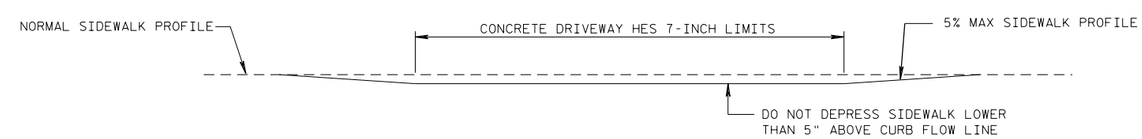


DEPRESSED SIDEWALK PROFILE DETAIL

## DRIVEWAY ENTRANCE DETAIL WITH SIDEWALK, CURB & GUTTER

(WITH TERRACE)

2

STEP 1

PRIOR TO REMOVING ASPHALT SURFACE:

A. REMOVE AND STORE MANHOLE COVER
B. FURNISH AND INSTALL TEMPORARY COVER PLATE
C. BACKFILL USING ASPHALT SURFACE, PATCHING.

WORK LISTED ABOVE IS INCLUDED OR IS CONSIDERED INCIDENTAL TO PAY ITEMS ADJUSTING MANHOLE COVERS OR ADJUSTING INLET COVERS UNLESS OTHERWISE NOTED.

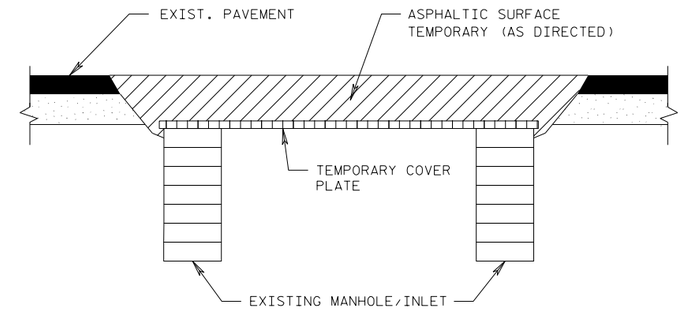


STEP 2

AFTER PAVING LOWER LAYER

A. EXCAVATE AND REMOVE TEMP. COVER PLATE
B. ADJUST MANHOLE AND REINSTALL MANHOLE FRAME
   AND COVER TO FINISHED GRADE

(BACKFILL AND OTHER WORK TO BE DONE SHALL BE IN ACCORDANCE WITH ITEM - ADJUSTING MANHOLE COVERS)

WORK LISTED ABOVE IS INCLUDED OR IS CONSIDERED INCIDENTAL TO PAY ITEMS ADJUSTING MANHOLE COVERS.

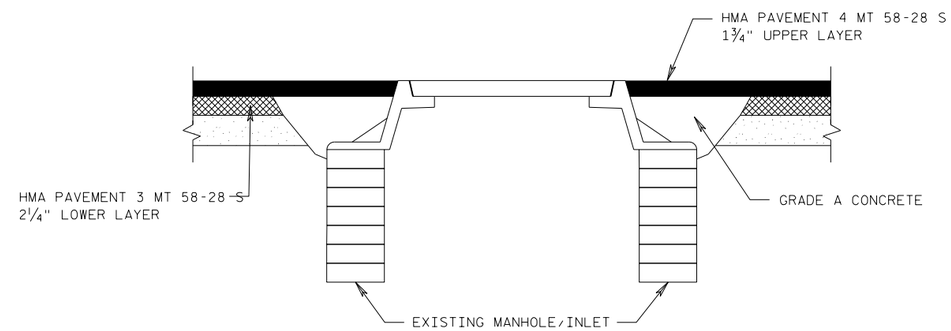


## COVER PLATES, TEMPORARY

A. DESCRIPTION
THIS WORK CONSISTS OF FURNISHING, INSTALLING AND REMOVING A STEEL PLATE TO COVER AND SUPPORT BACKFILL AND TRAFFIC LOADING AT MANHOLES.

B. MATERIALS
MATERIAL FURNISHED AND USED IN THE WORK SHALL BE 1/4-INCH MINIMUM THICKNESS STEEL PLATE THAT EXTENDS AT LEAST TO THE OUTSIDE EDGE OF EXISTING MANHOLE MASONRY.

C. METHOD OF MEASUREMENT AND BASIS OF PAYMENT
TEMPORARY COVER PLATES WILL BE MEASURED SEPARATELY AS UNITS AND WILL BE PAID FOR AT CONTRACT UNIT PRICE EACH. WHICH PRICE SHALL BE FULL COMPENSATION FOR FURNISHING, INSTALLING AND REMOVING THE COVER PLATES; AND FOR ALL LABOR, TOOLS, EQUIPMENT AND INCIDENTALS NECESSARY TO COMPLETE THE WORK. THE STEEL PLATES SHALL BECOME THE PROPERTY OF THE CONTRACTOR WHEN NO LONGER NEEDED IN THE CONTRACT WORK.

## ADJUSTING MANHOLE/INLET COVERS

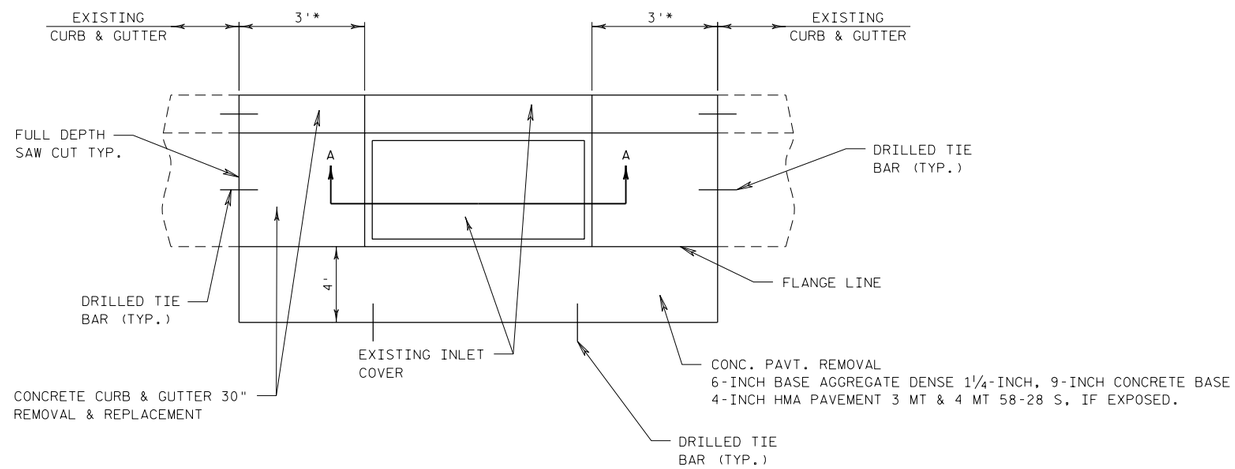


* REMOVE 3' CURB & GUTTER MIN.
OR TO THE NEAREST JOINT 6' MAX.
UNLESS OTHERWISE DIRECTED

PLAN VIEW

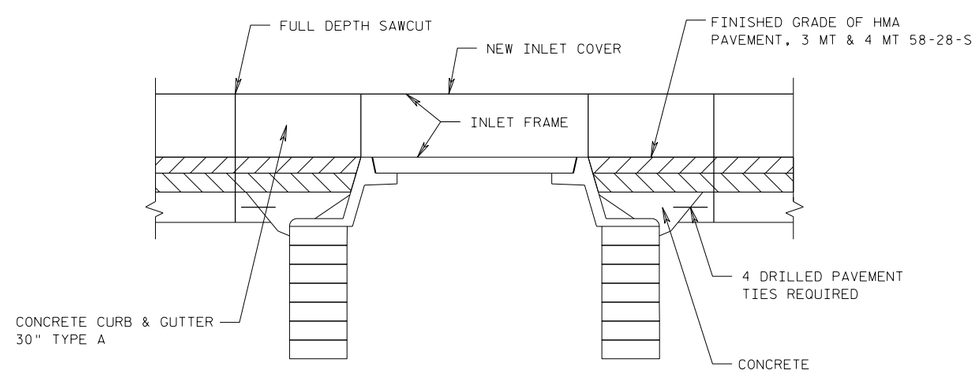


SECTION A-A

GENERAL DRAINAGE STRUCTURE NOTES:

1. LOCATIONS OF STRUCTURES IN THE DRAINAGE TABLE REFER TO CENTERLINE OF STRUCTURE.
2. GRATE ELEVATIONS ARE GIVEN AT FLOW LINE OF INLET COVER.
3. WHEN NEW COVERS ARE PLACED, THE FIRST 6" OF ADJUSTMENT OR REPAIRING SHALL BE INCIDENTAL TO THE COST OF THE NEW COVER. ANY ADJUSTMENT OR REPAIR OF BRICKWORK BETWEEN 6" AND 12" WILL BE PAID AS ADJUSTING COVERS. REPAIRS GREATER THAN 12" WILL BE PAID AS RECONSTRUCTING INLETS OR MANHOLES.
4. WHEN A NEW INLET COVER IS SPECIFIED, BOTH THE FRAME AND GRATE ARE INCLUDED.
5. THE CURB BOX OPENING SHALL BE SEALED BEFORE POURING CONCRETE CURB TO PREVENT CONCRETE FROM ENTERING STRUCTURE.
6. SAWING OF EXISTING CURB AND GUTTER AND PAVEMENT SHALL BE PAID FOR AS "SAWING CONCRETE"
7. LOCATIONS TO BE DETERMINED BY ENGINEER IN THE FIELD.

## ADJUSTING/RECONSTRUCTING INLET DETAIL

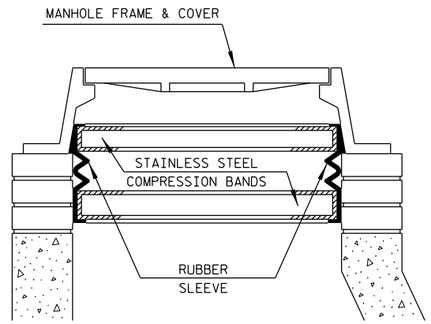


SANITARY MANHOLE SEAL INTERNAL

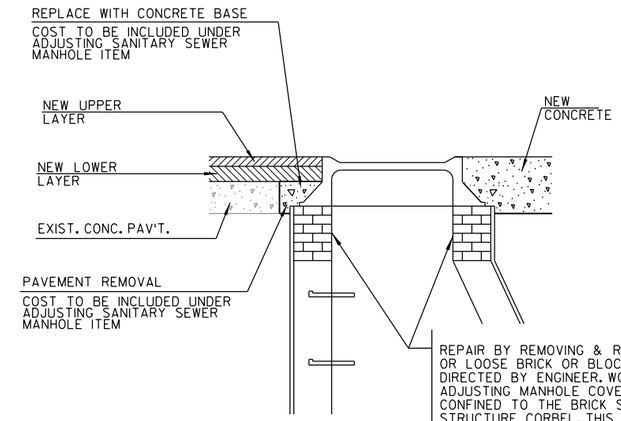


REPAIR BY REMOVING & REPLACING DAMAGED OR LOOSE BRICK OR BLOCK TO DEPTH AS DIRECTED BY ENGINEER. WORK UNDER ADJUSTING MANHOLE COVERS SHALL BE CONFINED TO THE BRICK SHIMMING ABOVE THE STRUCTURE CORBEL. THIS SHIMMING SHALL NOT EXCEED 1 FOOT BETWEEN THE TOP OF THE CORBEL AND THE FRAME BOTTOM. ANY WORK MORE EXTENSIVE THAN DESCRIBED IMMEDIATELY ABOVE SHALL BE CONSTRUCTED AS WORK UNDER RECONSTRUCTING MANHOLES. DEPTHS OF BRICK-WORK TO BE REPAIRED, AS INDICATED ON THE PLAN, ARE ESTIMATES ONLY AND MAY VARY AT TIME OF CONSTRUCTION.

ADJUSTING SANITARY SEWER MANHOLES

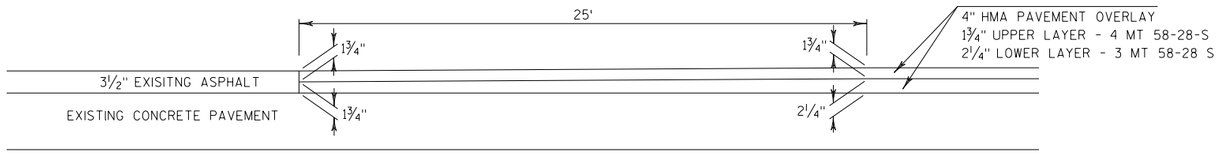


BUTT JOINT

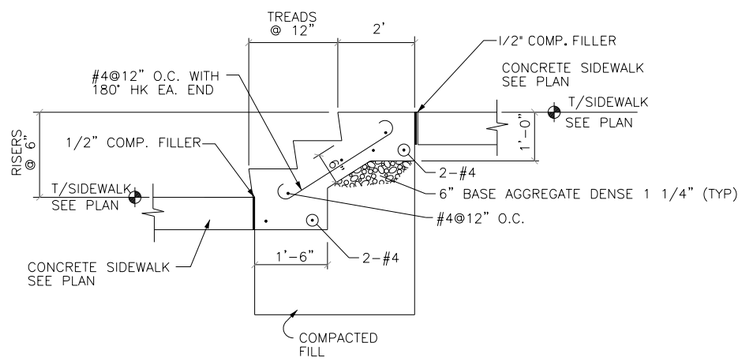


CONCRETE STEPS

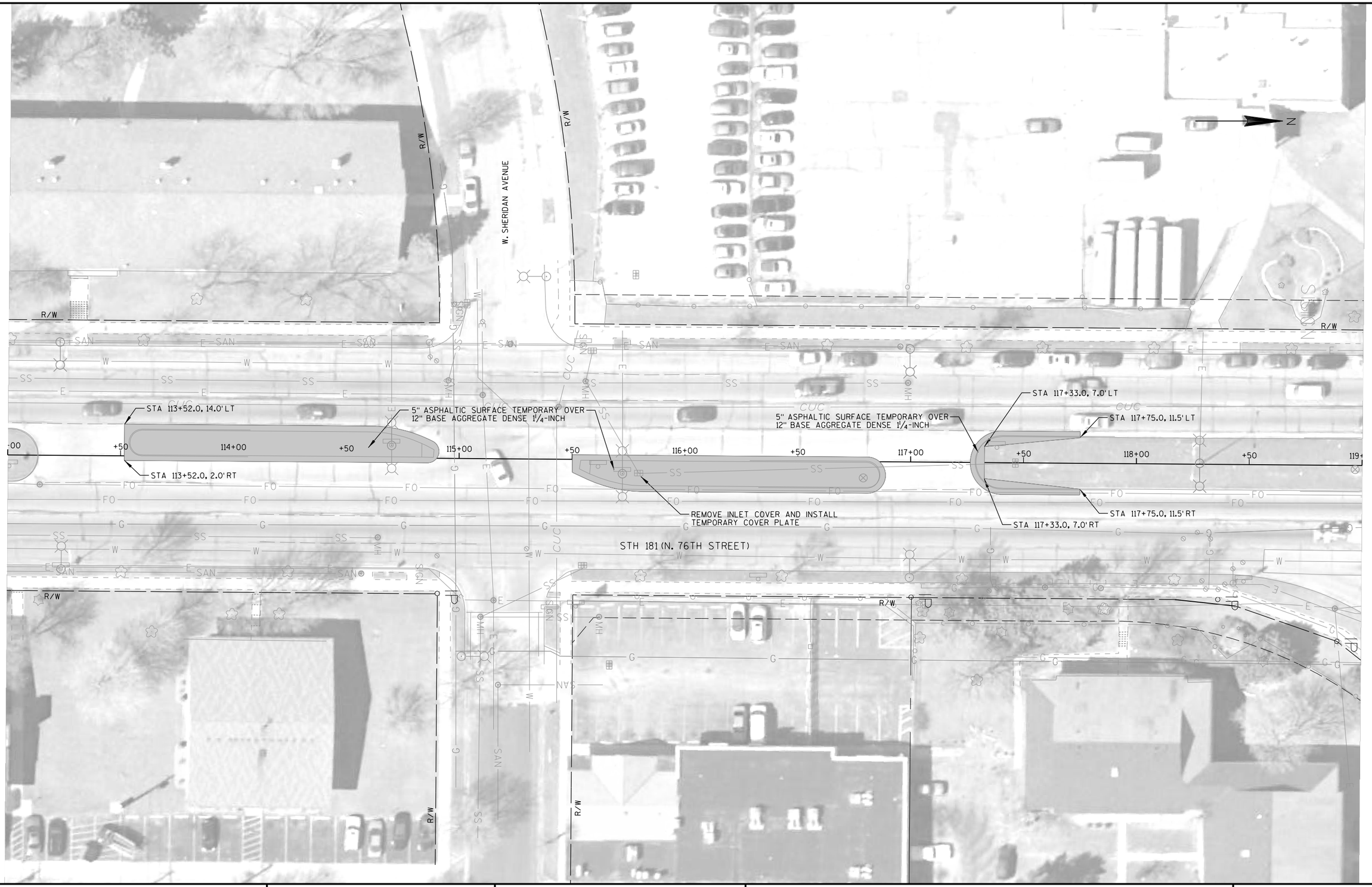


| PROJECT NO:2140-13-70 | HWY:STH 181 | COUNTY:MILWAUKEE | TEMPORARY PAVEMENT FOR TRAFFIC CONTROL | SHEET 21 | E |
|---|---|---|---|---|---|

2

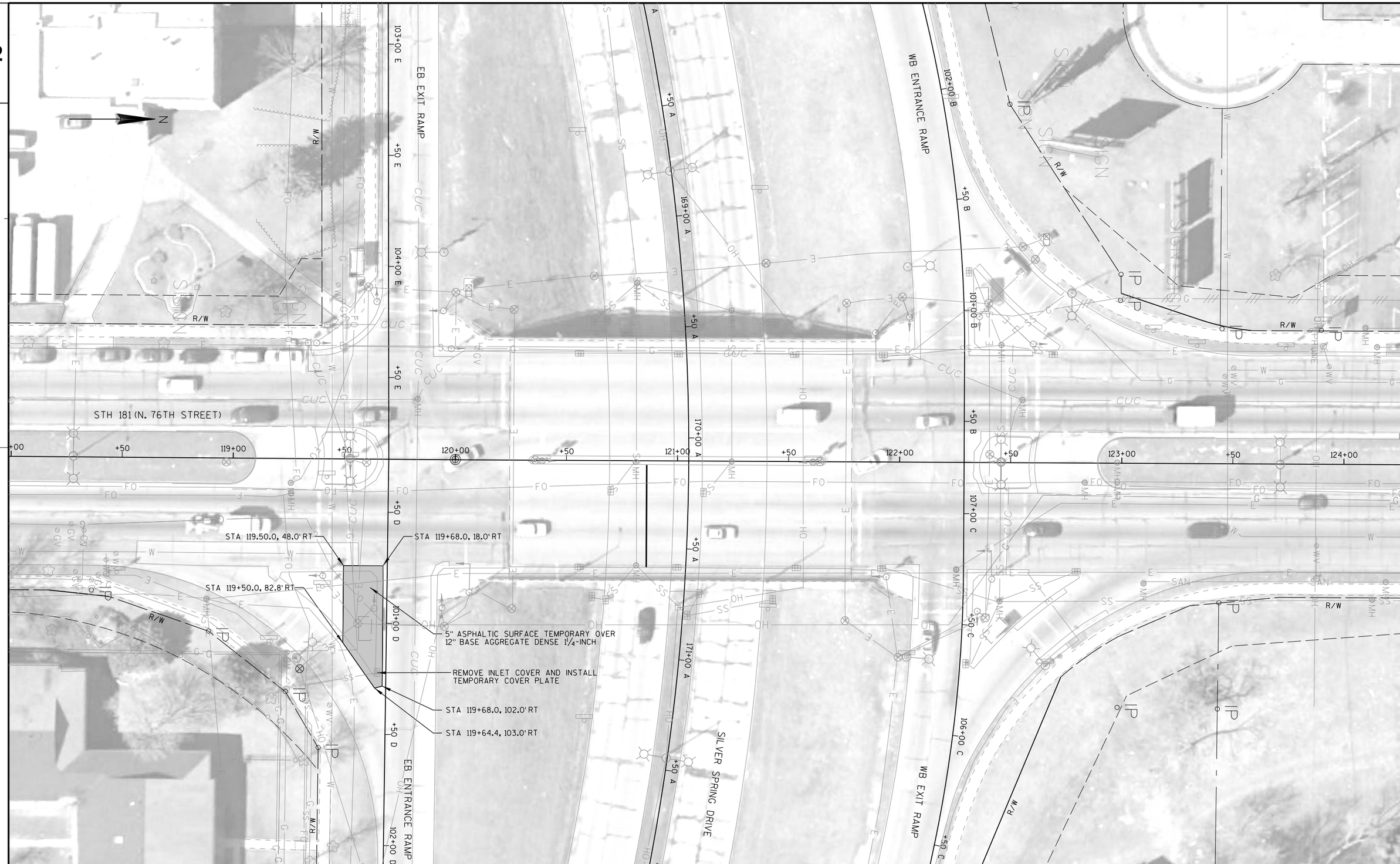


2

| PROJECT NO:2140-13-70 | HWY:STH 181 | COUNTY:MILWAUKEE | TEMPORARY PAVEMENT FOR TRAFFIC CONTROL | SHEET 22 | E |
|---|---|---|---|---|---|

FILE NAME : L:\Jobs2010\20100384\CAD\WisDOT_Trans\dgn\00\021001b_cd.dgn PLOT DATE : 5/1/2016 PLOT BY : GRAEF PLOT NAME : PLOT SCALE : 40.0000 sf / in.

WISDOT/CADDS SHEET 42

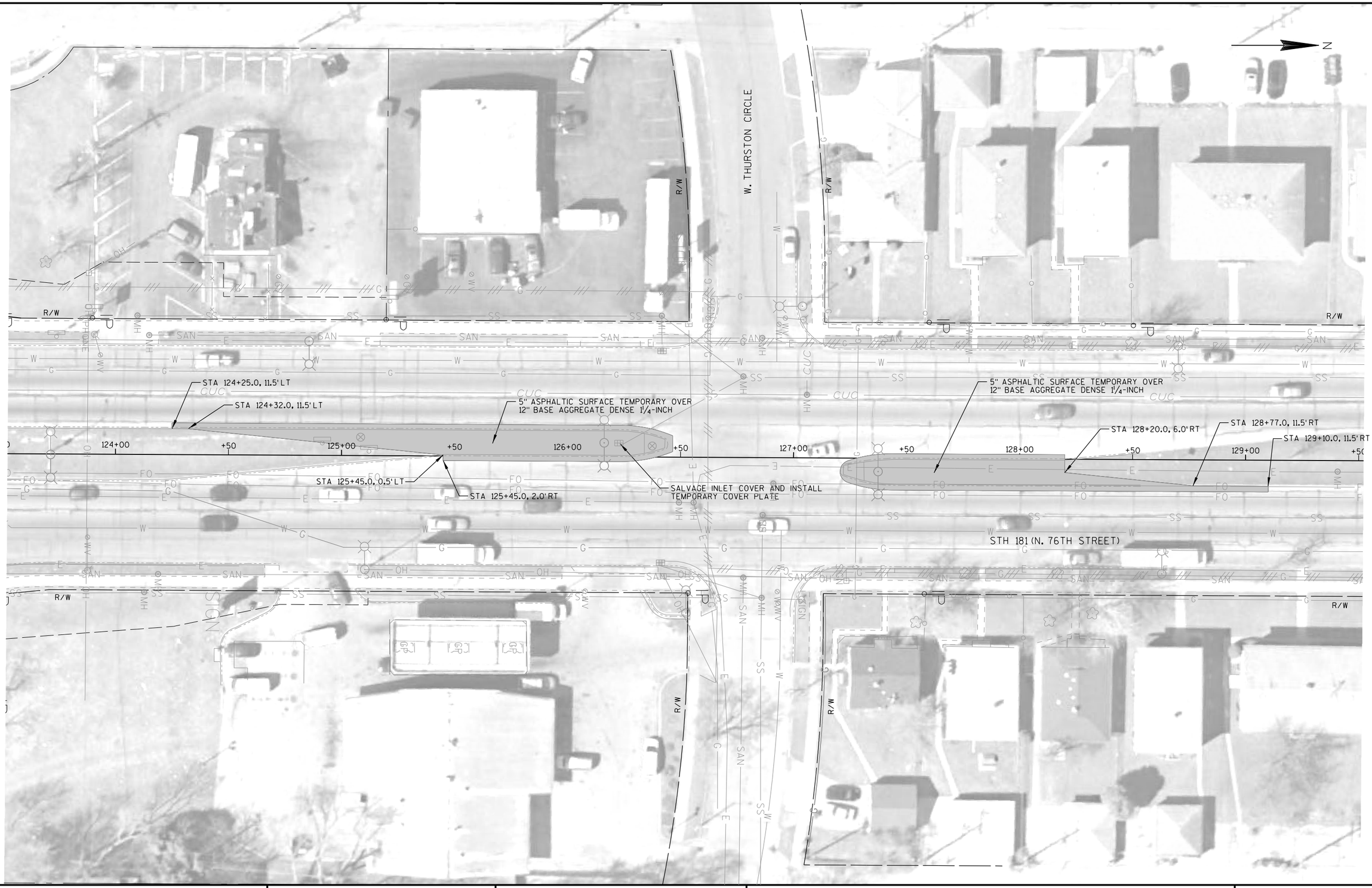
N
W. THURSTON CIRCLE
R/W
STA 124+25.0, 11.5' LT
STA 124+32.0, 11.5' LT
5" ASPHALTIC SURFACE TEMPORARY OVER
12" BASE AGGREGATE DENSE 1¼-INCH
124+00
+50
125+00
+50
126+00
+50
127+00
+50
128+00
+50
129+00
STA 125+45.0, 0.5' LT
STA 125+45.0, 2.0' RT
SALVAGE INLET COVER AND INSTALL
TEMPORARY COVER PLATE
5" ASPHALTIC SURFACE TEMPORARY OVER
12" BASE AGGREGATE DENSE 1¼-INCH
STA 128+20.0, 6.0' RT
STA 128+77.0, 11.5' RT
STA 129+10.0, 11.5' RT
STH 181 (N. 76TH STREET)

2

2

| PROJECT NO:2140-13-70 | HWY:STH 181 | COUNTY:MILWAUKEE | CONSTRUCTION DETAIL - LIGHT POLE REMOVAL | SHEET 24 | E |
|---|---|---|---|---|---|

## REMOVAL PLAN GENERAL NOTES: (ALL SHEETS)

1. CURB AND GUTTER REMOVALS SHALL BE SAWCUT OR REMOVED TO THE NEAREST JOINT AS DIRECTED BY THE ENGINEER.
2. SIDEWALK REMOVALS SHALL BE PERFORMED TO THE NEAREST JOINT. THE NEED FOR SAWCUTS SHALL BE DETERMINED BY THE ENGINEER.
3. AN UNDISTRIBUTED QUANTITY OF CONCRETE BASE PATCHING HAS BEEN INCLUDED IN THE PLANS BASED ON A FIELD REVIEW OF THE PROJECT CORRIDOR WITH WISDOT SOUTHEAST REGION MAINTENANCE STAFF ON DECEMBER 4, 2015. THE CONTRACTOR WILL BE REQUIRED TO MILL OFF THE EXISTING ASPHALT OVERLAY TO DETERMINE EXACT BASE PATCHING LOCATIONS AS APPROVED BY THE ENGINEER UNLESS OTHERWISED NOTED. NO BASE PATCHING SHALL BE PERFORMED WITHOUT THE APPROVAL OF THE ENGINEER.
4. THE EXISTING ASHPALT OVERLAY THROUGH SIGNALIZED INTERSECTIONS AND PAVEMENT USED FOR LEFT LANES DURING STAGING OF THE SIGNALIZED INTERSECTIONS SHALL NOT BE MILLED BEFORE BASE PATCHING. BASE PATCHES AT THESE LOCATIONS SHALL BE HIGH EARLY STRENGTH AND PLACED UP TO THE EXISTING ASPHALT OVERLAY SURFACE.
5. MILLING THROUGH INTERSECTIONS AND LEFT TURN LANES AT SIGNALIZED INTERSECTIONS SHALL BE PERFORMED THE SAME DAY AS PAVING OPERATIONS.
6. HIGH EARLY STRENGTH BASE PATCHING SHALL BE USED IN FRONT OF DRIVEWAYS SIDE ROADS, WITHIN INTERSECTIONS AND PAVEMENT USED FOR LEFT TURN LANES AT SIGNALIZED INTERSECTIONS TO REDUCE IMPACTS TO ACCESS DURING CONSTRUCTION.
7. BASE PATCHING IS REQUIRED AT THE TRAFFIC SIGNAL LOOP REPLACEMENT LOCATIONS. REFER TO THE TRAFFIC SIGNAL PLANS FOR SPECIFIC LOCATIONS.

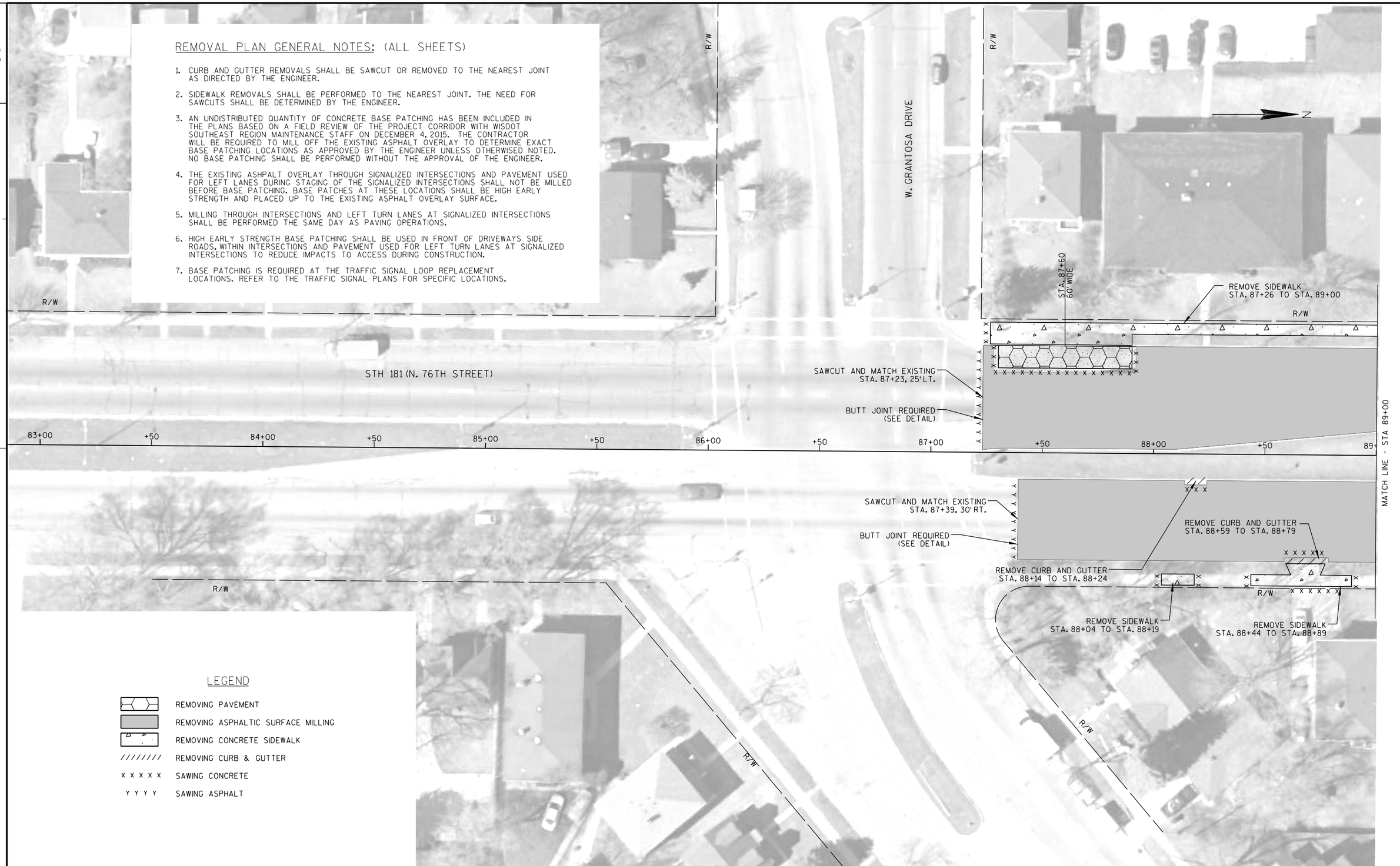

2

## LEGEND

- REMOVING PAVEMENT
- REMOVING ASPHALTIC SURFACE MILLING
- REMOVING CONCRETE SIDEWALK
- REMOVING CURB & GUTTER
- SAWING CONCRETE
- SAWING ASPHALT

REFER TO REMOVAL PLAN GENERAL NOTES FOR ADDITIONAL INFORMATION AND REQUIREMENTS.

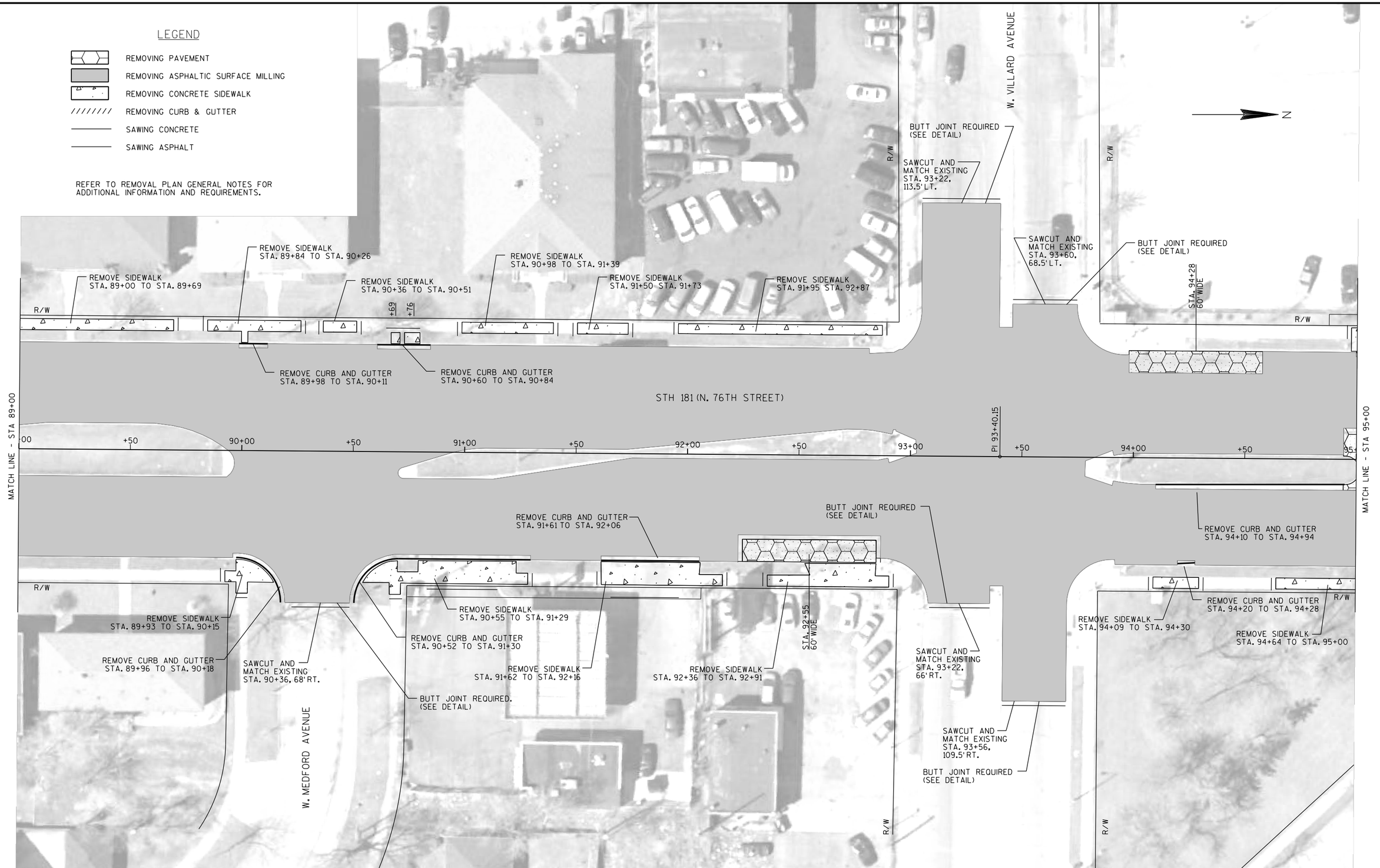


2

| PROJECT NO: 2140-13-70 | HWY: STH 181 | COUNTY: MILWAUKEE | REMOVAL PLAN | SHEET 26 | E |
|---|---|---|---|---|---|

2

## LEGEND

- REMOVING PAVEMENT
- REMOVING ASPHALTIC SURFACE MILLING
- REMOVING CONCRETE SIDEWALK
- //////// REMOVING CURB & GUTTER
- X X X X X SAWING CONCRETE
- Y Y Y Y SAWING ASPHALT

REFER TO REMOVAL PLAN GENERAL NOTES FOR ADDITIONAL INFORMATION AND REQUIREMENTS.

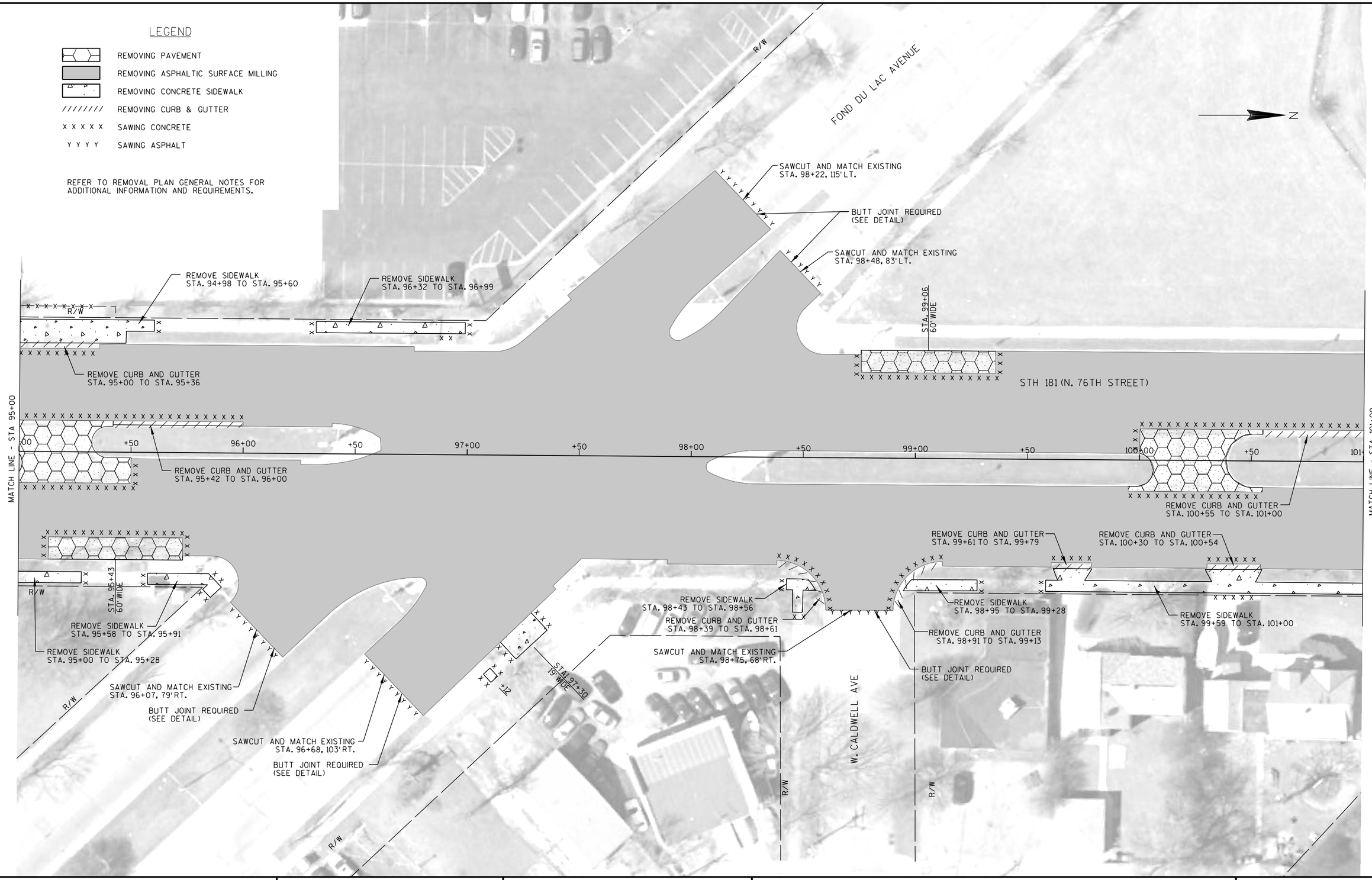


2

| PROJECT NO: 2140-13-70 | HWY: STH 181 | COUNTY: MILWAUKEE | REMOVAL PLAN | SHEET 27 | E |
|---|---|---|---|---|---|

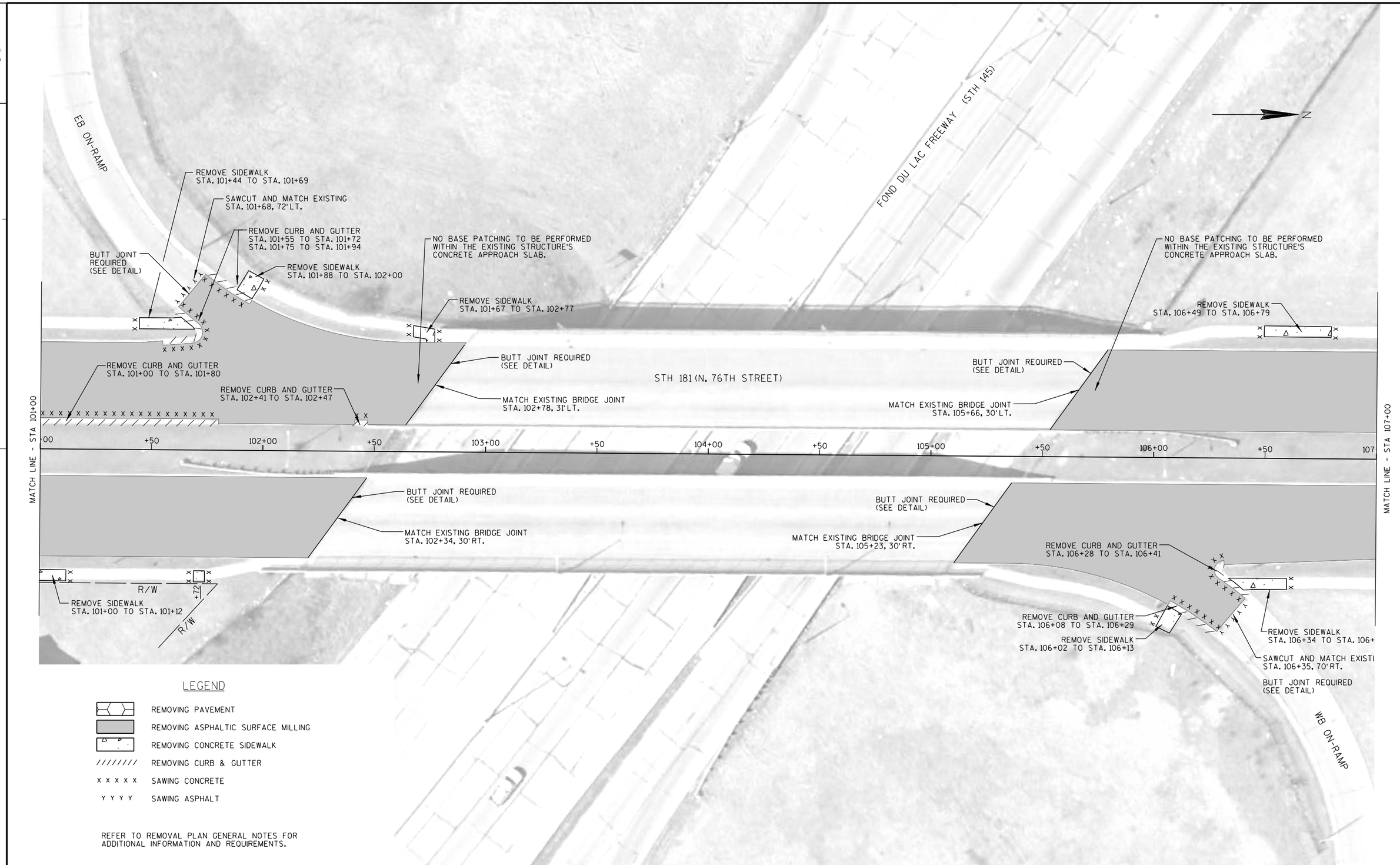


LEGEND

- REMOVING PAVEMENT
- REMOVING ASPHALTIC SURFACE MILLING
- REMOVING CONCRETE SIDEWALK
- //////// REMOVING CURB & GUTTER
- X X X X X SAWING CONCRETE
- Y Y Y Y SAWING ASPHALT

REFER TO REMOVAL PLAN GENERAL NOTES FOR ADDITIONAL INFORMATION AND REQUIREMENTS.

| PROJECT NO:2140-13-70 | HWY:STH 181 | COUNTY:MILWAUKEE | REMOVAL PLAN | SHEET 28 | E |
|---|---|---|---|---|---|

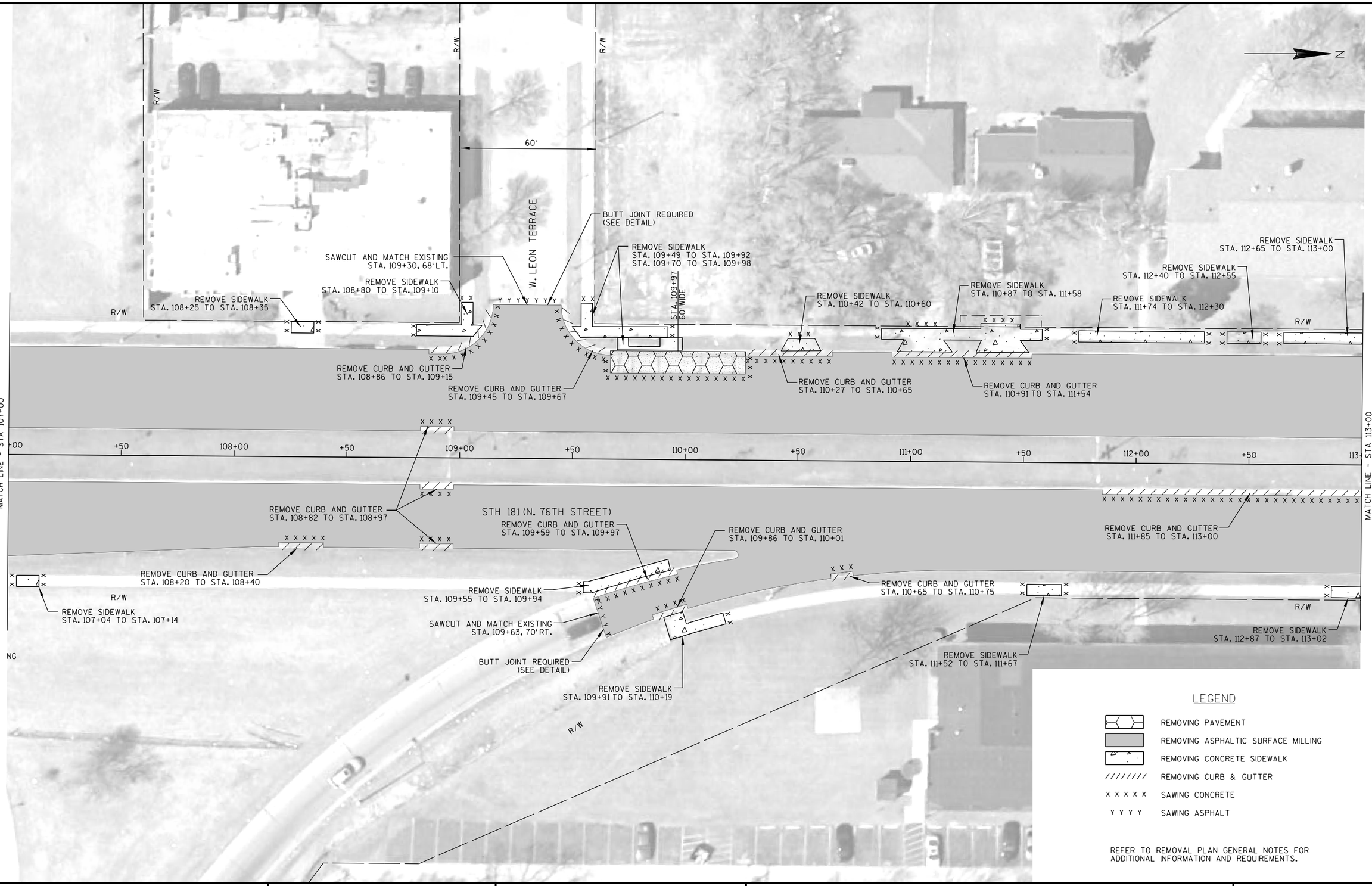


| PROJECT NO: 2140-13-70 | HWY: STH 181 | COUNTY: MILWAUKEE | REMOVAL PLAN | SHEET 29 | E |
|---|---|---|---|---|---|

2

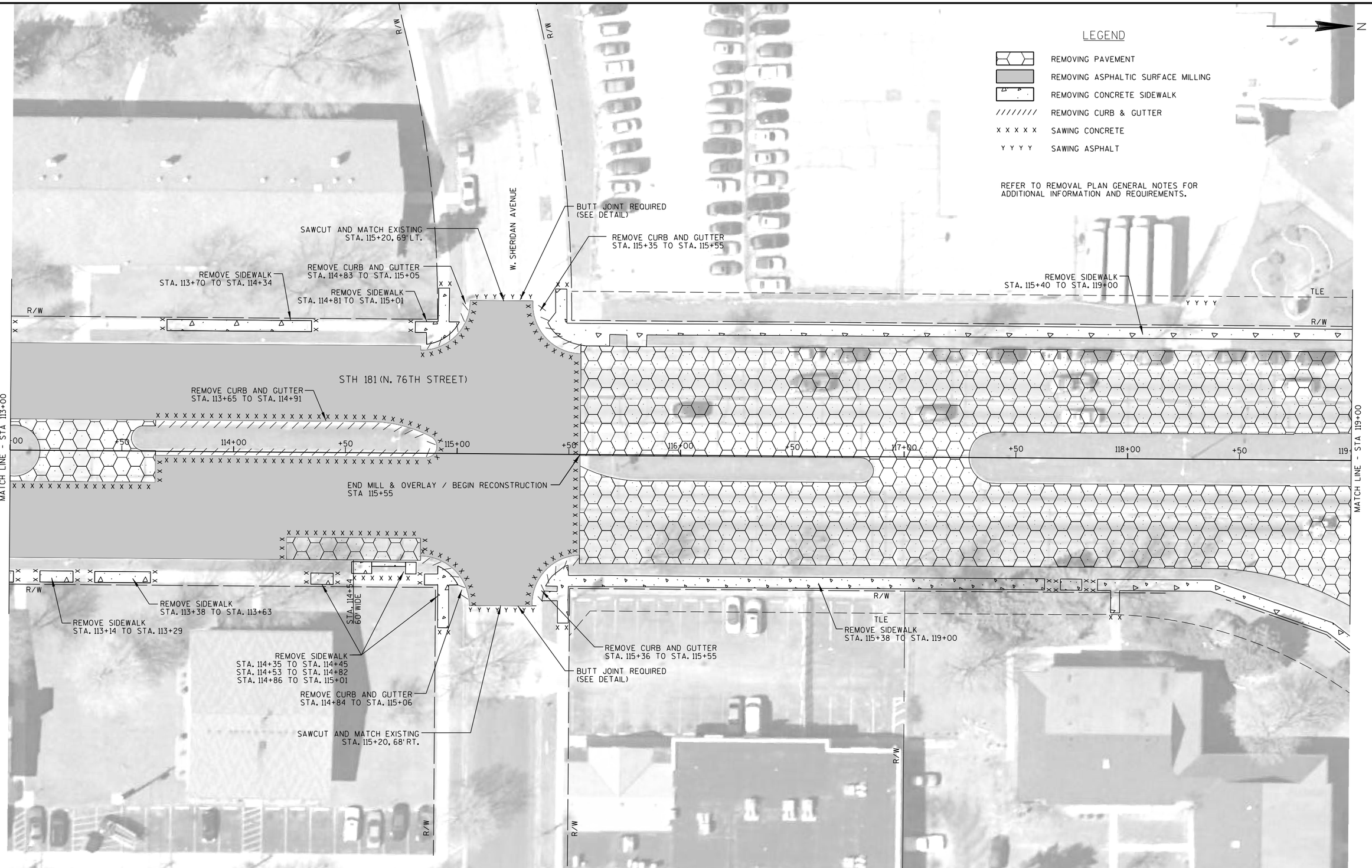


2

| PROJECT NO: 2140-13-70 | HWY: STH 181 | COUNTY: MILWAUKEE | REMOVAL PLAN | SHEET 30 | E |
|---|---|---|---|---|---|

2

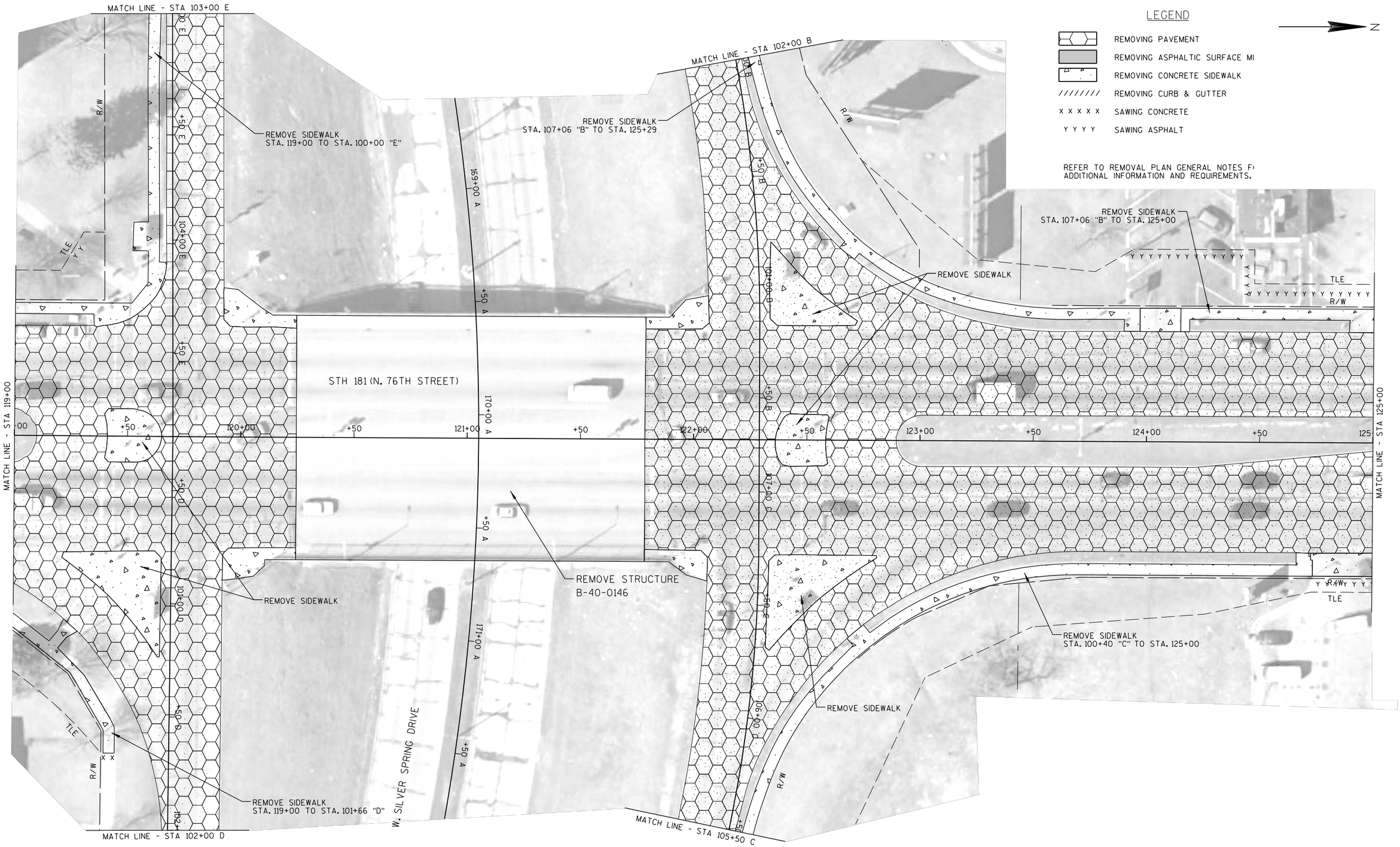


2

| PROJECT NO: 2140-13-70 | HWY: STH 181 | COUNTY: MILWAUKEE | REMOVAL PLAN | SHEET 31 | E |
|---|---|---|---|---|---|

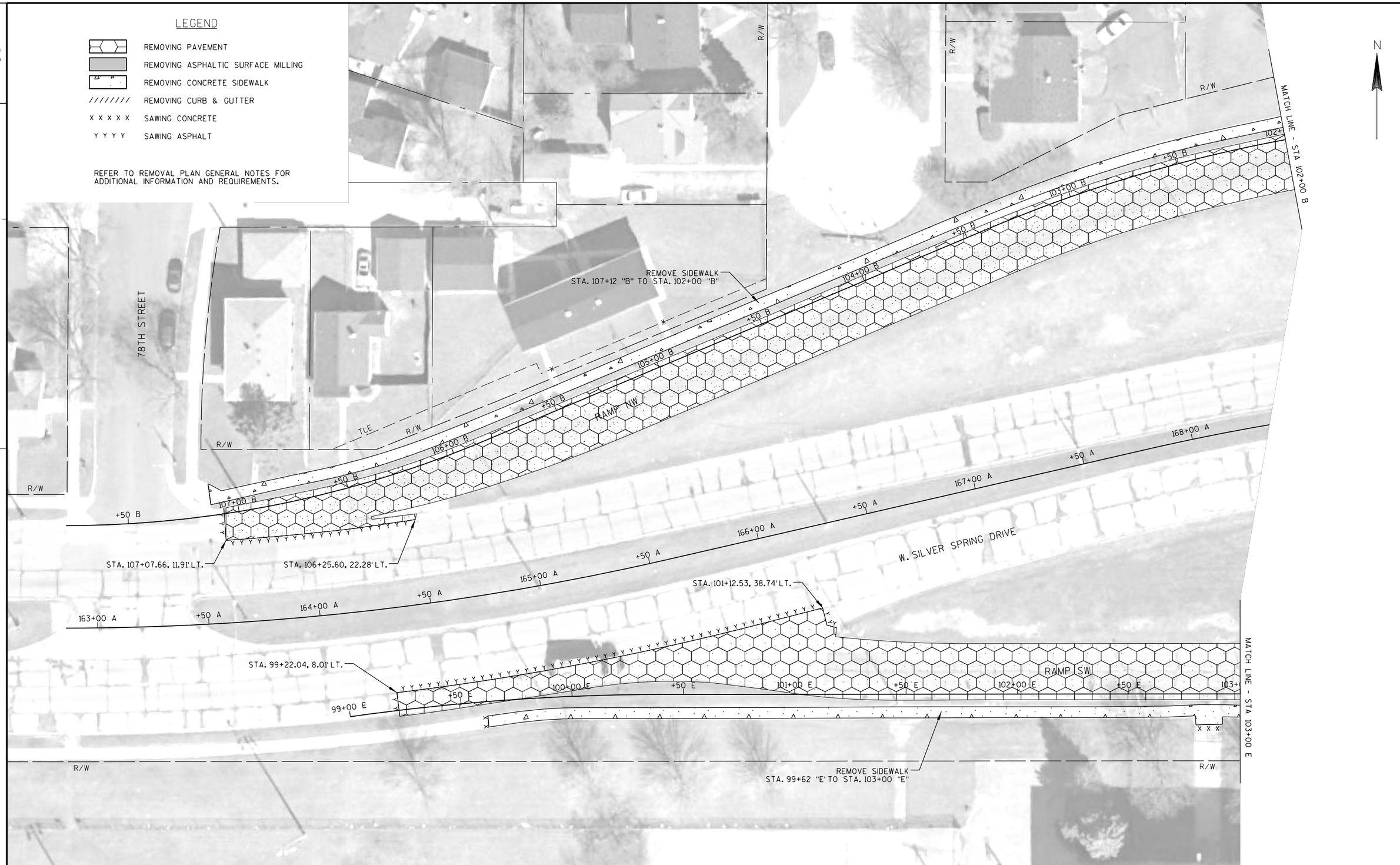




| PROJECT NO:2140-13-70 | HWY:STH 181 | COUNTY:MILWAUKEE | REMOVAL PLAN | SHEET 32 | E |
|---|---|---|---|---|---|

2

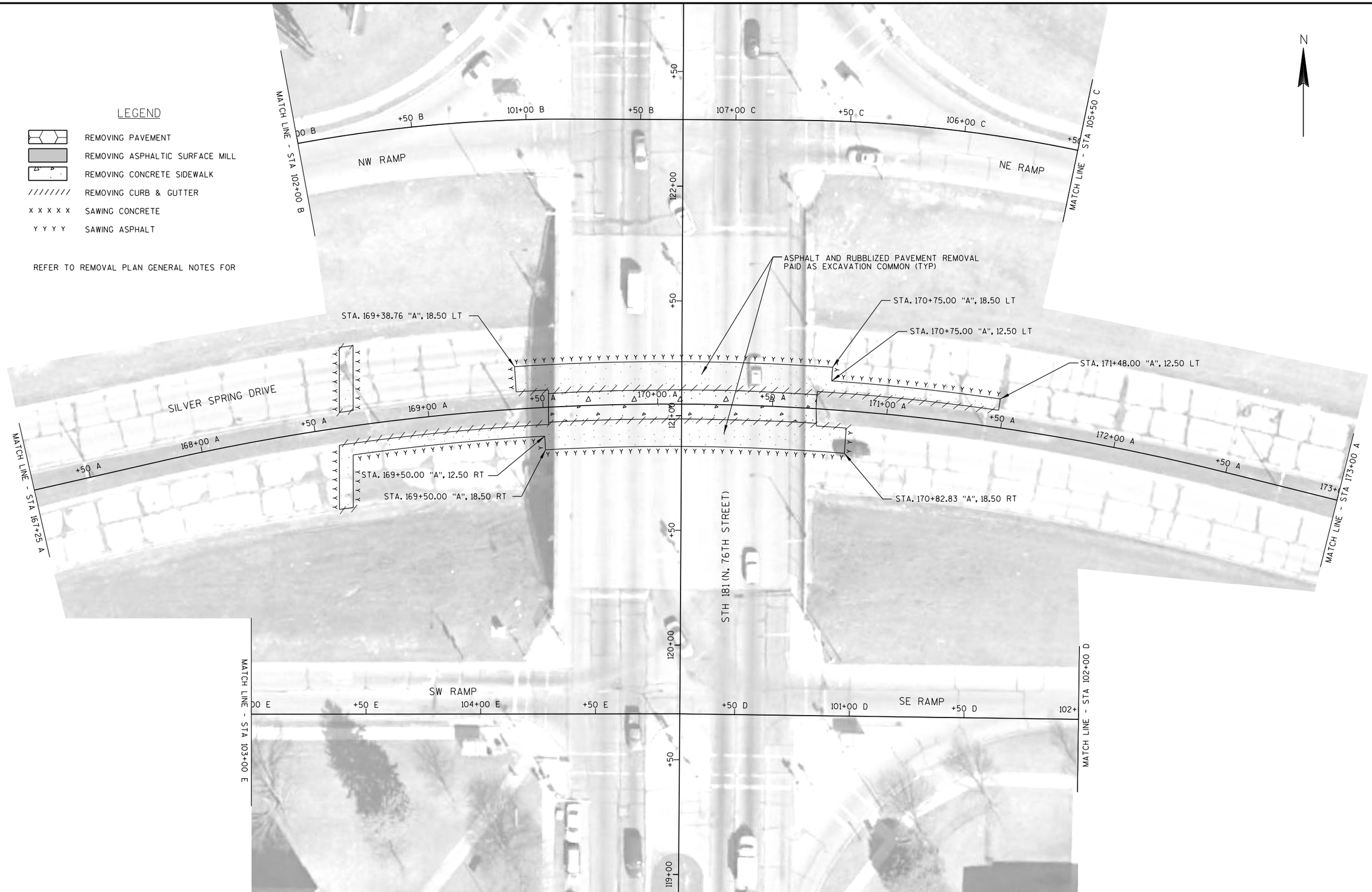


2

| PROJECT NO:2140-13-70 | HWY:STH 181 | COUNTY:MILWAUKEE | REMOVAL PLAN | SHEET 33 | E |
|---|---|---|---|---|---|

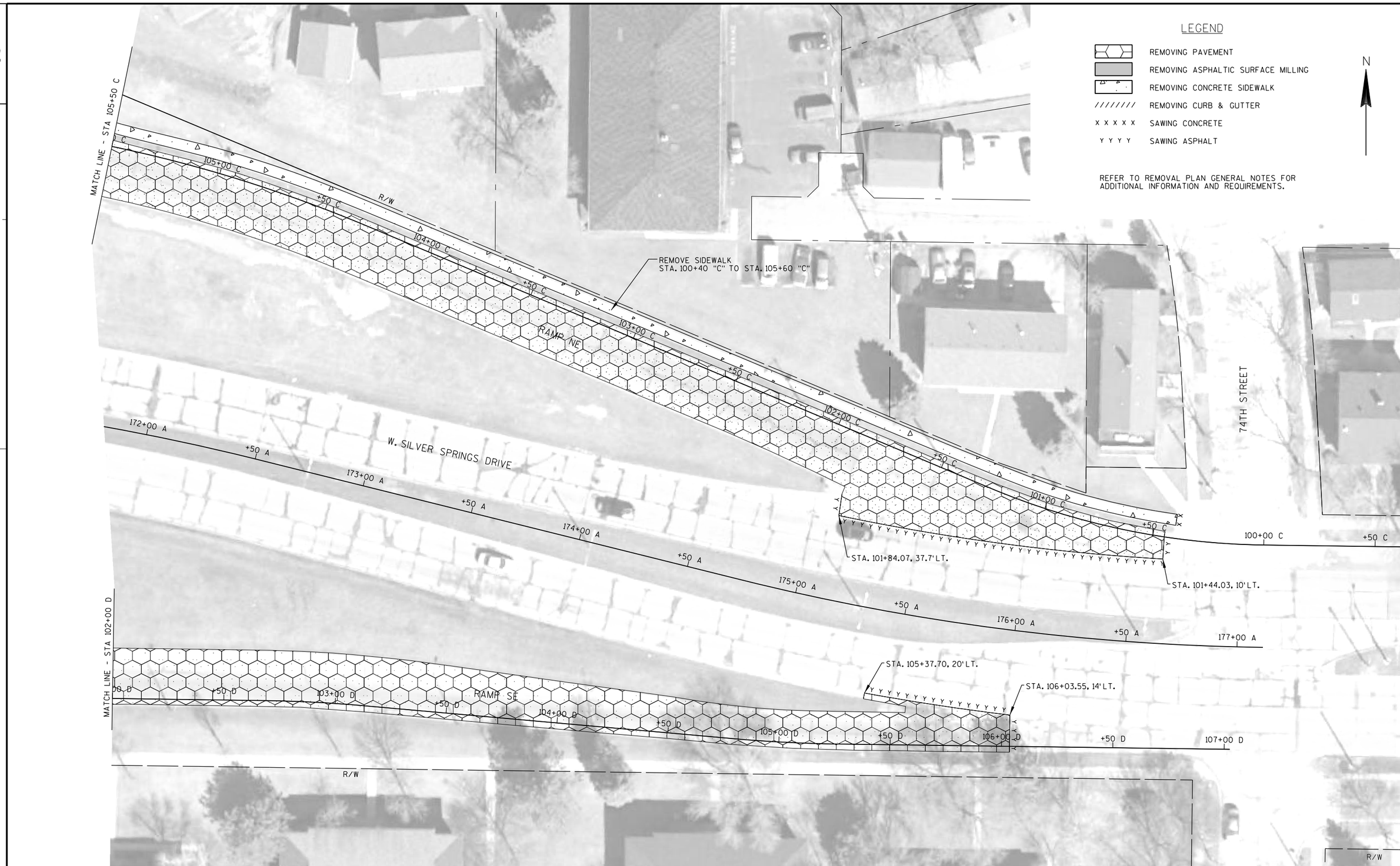




| PROJECT NO:2140-13-70 | HWY:STH 181 | COUNTY:MILWAUKEE | REMOVAL PLAN | SHEET 34 | E |
|---|---|---|---|---|---|

2

2

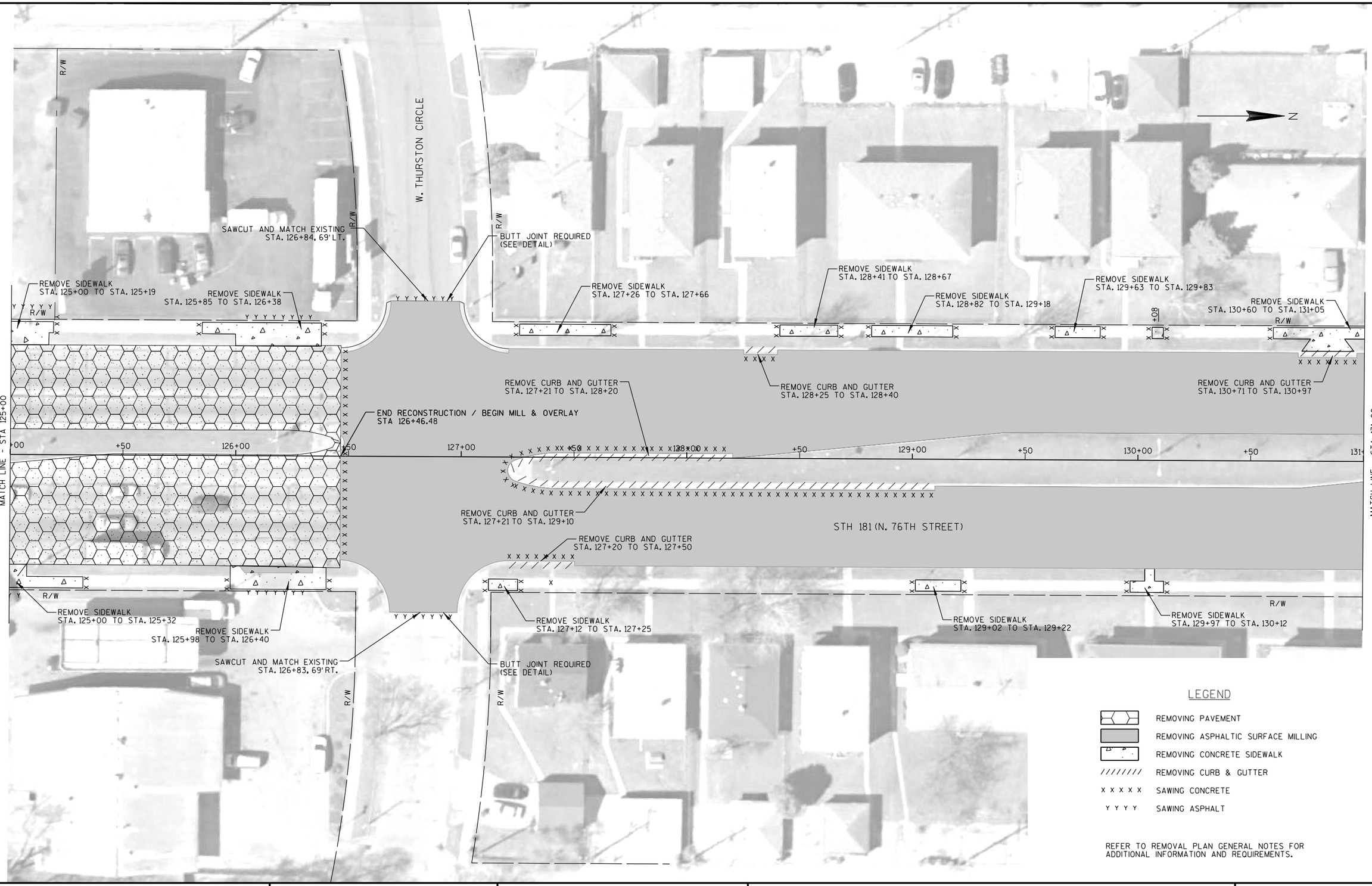


| PROJECT NO: 2140-13-70 | HWY: STH 181 | COUNTY: MILWAUKEE | REMOVAL PLAN | SHEET 35 | E |
|---|---|---|---|---|---|

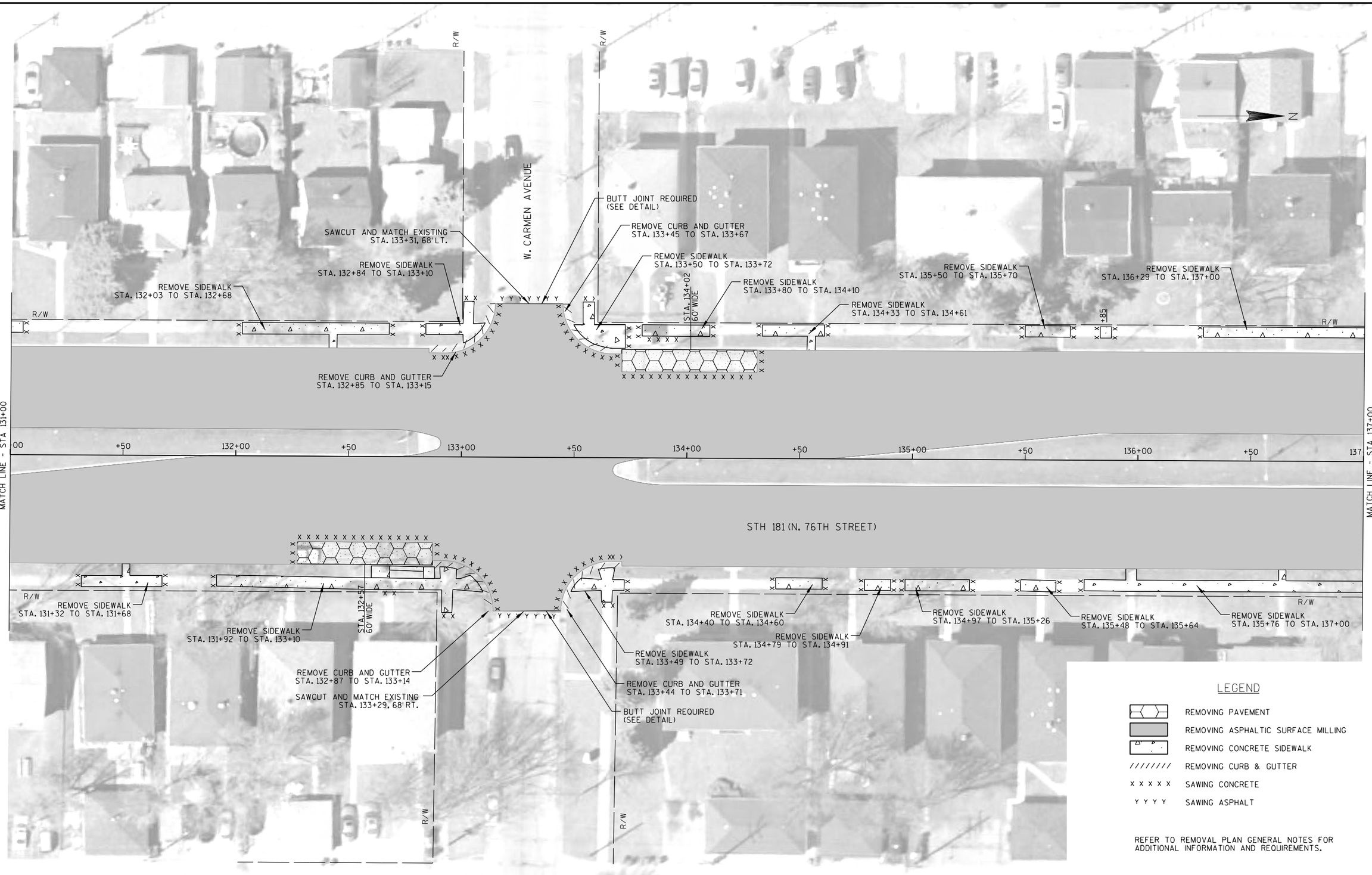


| PROJECT NO:2140-13-70 | HWY:STH 181 | COUNTY:MILWAUKEE | REMOVAL PLAN | SHEET 36 | E |
|---|---|---|---|---|---|

2

## LEGEND

- REMOVING PAVEMENT
- REMOVING ASPHALTIC SURFACE MILLING
- REMOVING CONCRETE SIDEWALK
- //////// REMOVING CURB & GUTTER
- X X X X X SAWING CONCRETE
- Y Y Y Y SAWING ASPHALT

REFER TO REMOVAL PLAN GENERAL NOTES FOR ADDITIONAL INFORMATION AND REQUIREMENTS.

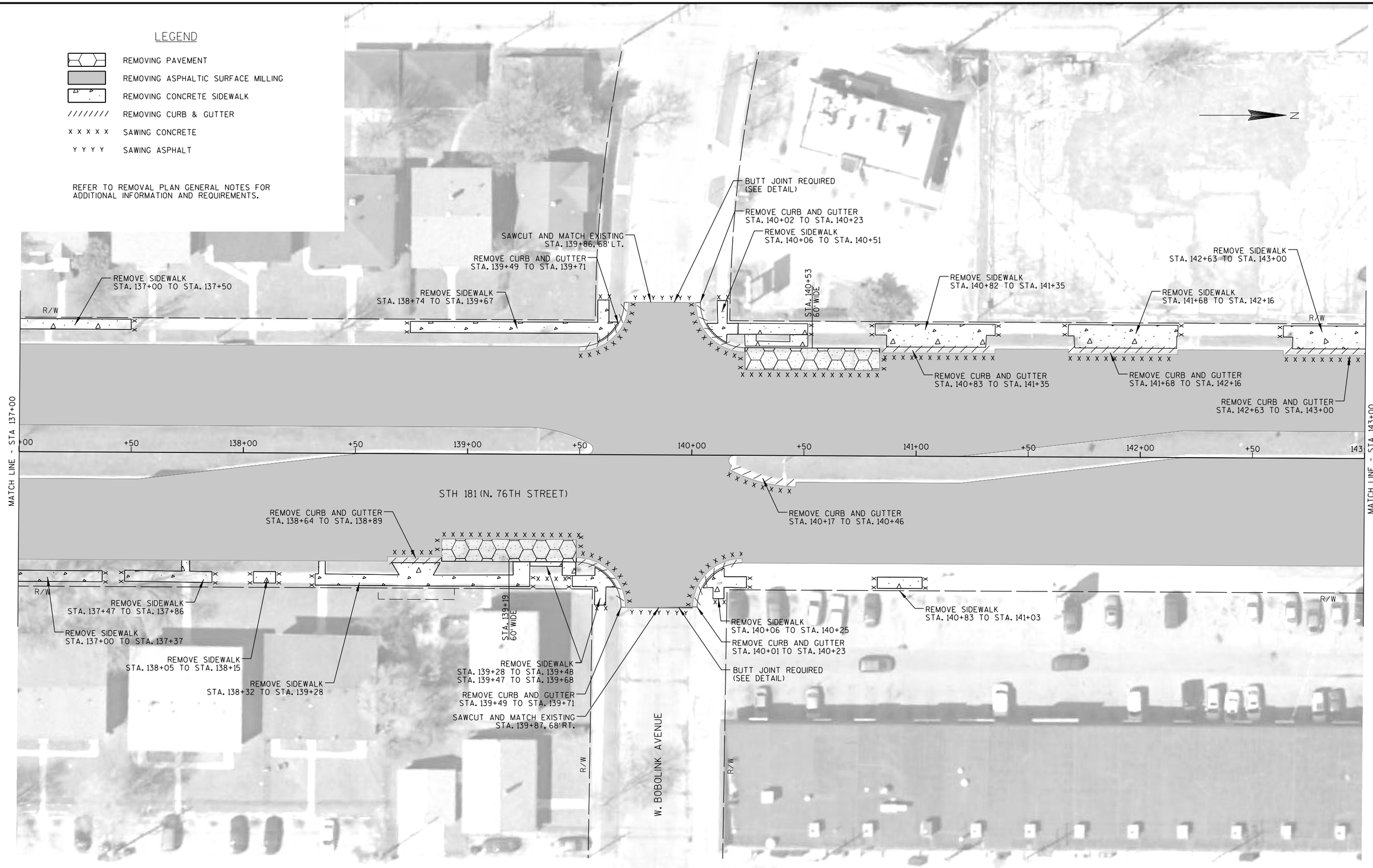


2

| PROJECT NO: 2140-13-70 | HWY: STH 181 | COUNTY: MILWAUKEE | REMOVAL PLAN | SHEET 37 | E |
|---|---|---|---|---|---|

FILE NAME : L:\Jobs2010\20100384\CAD\WisDOT_Trans\dgn\00\021010_rm.dgn PLOT DATE : 5/1/2016 PLOT BY : GRAEF PLOT NAME : PLOT SCALE : 40.0000 sf / in. WISDOT/CADDS SHEET 42

2

W. BOBOLINK PLACE

R/W

REMOVE SIDEWALK
STA. 143+00 TO STA. 143+35

REMOVE CURB AND GUTTER
STA. 143+00 TO STA. 143+40

SAWCUT AND MATCH EXISTING
STA. 143+55, 68' LT.

REMOVE CURB AND GUTTER
STA. 143+70 TO STA. 144+40

REMOVE SIDEWALK
STA. 143+75 TO STA. 143+99

REMOVE SIDEWALK
STA. 143+99 TO STA. 144+33

BUTT JOINT REQUIRED
(SEE DETAIL)

REMOVE SIDEWALK
STA. 144+73 TO STA. 145+34

BUTT JOINT REQUIRED
(SEE DETAIL)

SAWCUT AND MATCH EXISTING
STA. 146+44, 123' LT.

REMOVE SIDEWALK
STA. 145+79 TO STA. 146+13

REMOVE SIDEWALK
STA. 145+57 TO STA. 145+66

W. FLORIST AVENUE

BUTT JOINT REQUIRED
(SEE DETAIL)

SAWCUT AND MATCH EXISTING
STA. 146+76, 71' LT.

NOTE:

BASE PATCHING REQUIRED FOR TRAFFIC SIGNAL LOOP REPLACEMENT NORTH OF FLORIST AVENUE. REFER TO TRAFFIC SIGNAL PLAN FOR LOCATION.

N

STH 181 (N. 76TH STREET)

MATCH LINE - STA 143+00

+00 +50 144+00 +50 145+00 +50 146+00 +50 PI 146+57.24 147+00 +50 148+00 +50 149+00

BUTT JOINT REQUIRED
(SEE DETAIL)

SAWCUT AND MATCH EXISTING
STA. 147+19

BUTT JOINT REQUIRED
(SEE DETAIL)

REMOVE CURB AND GUTTER
STA. 143+10 TO STA. 143+87

REMOVE SIDEWALK
STA. 143+03 TO STA. 144+39

REMOVE CURB AND GUTTER
STA. 144+74 TO STA. 145+38

REMOVE SIDEWALK
STA. 144+72 TO STA. 146+03

STA. 145+68
60' WIDE

SAWCUT AND MATCH EXISTING
STA. 146+42, 73' RT.

BUTT JOINT REQUIRED
(SEE DETAIL)

SAWCUT AND MATCH EXISTING
STA. 146+78, 73' RT.

LEGEND

| | |
|---|---|
| | REMOVING PAVEMENT |
| | REMOVING ASPHALTIC SURFACE MILLING |
| | REMOVING CONCRETE SIDEWALK |
| //////// | REMOVING CURB & GUTTER |
| X X X X X | SAWING CONCRETE |
| Y Y Y Y | SAWING ASPHALT |

REFER TO REMOVAL PLAN GENERAL NOTES FOR ADDITIONAL INFORMATION AND REQUIREMENTS.

| PROJECT NO: 2140-13-70 | HWY: STH 181 | COUNTY: MILWAUKEE | REMOVAL PLAN | SHEET 38 | E |
|---|---|---|---|---|---|

2

# CURB RAMP DETAIL A

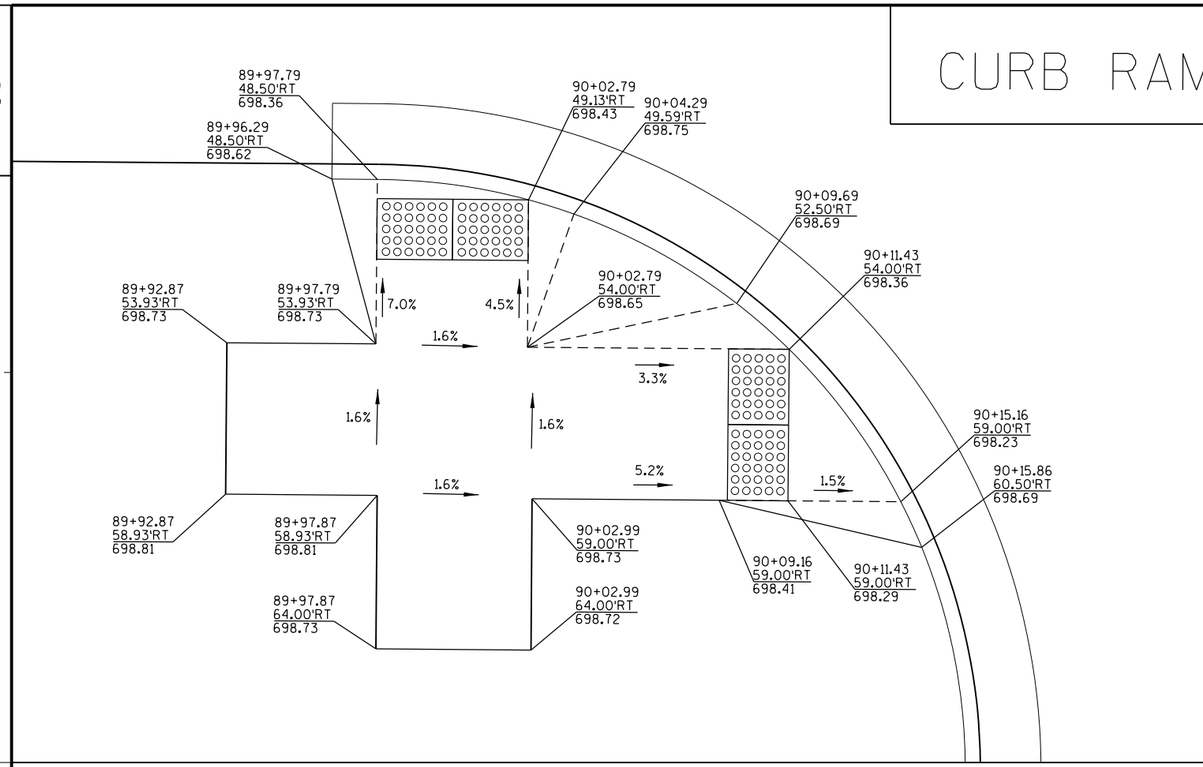


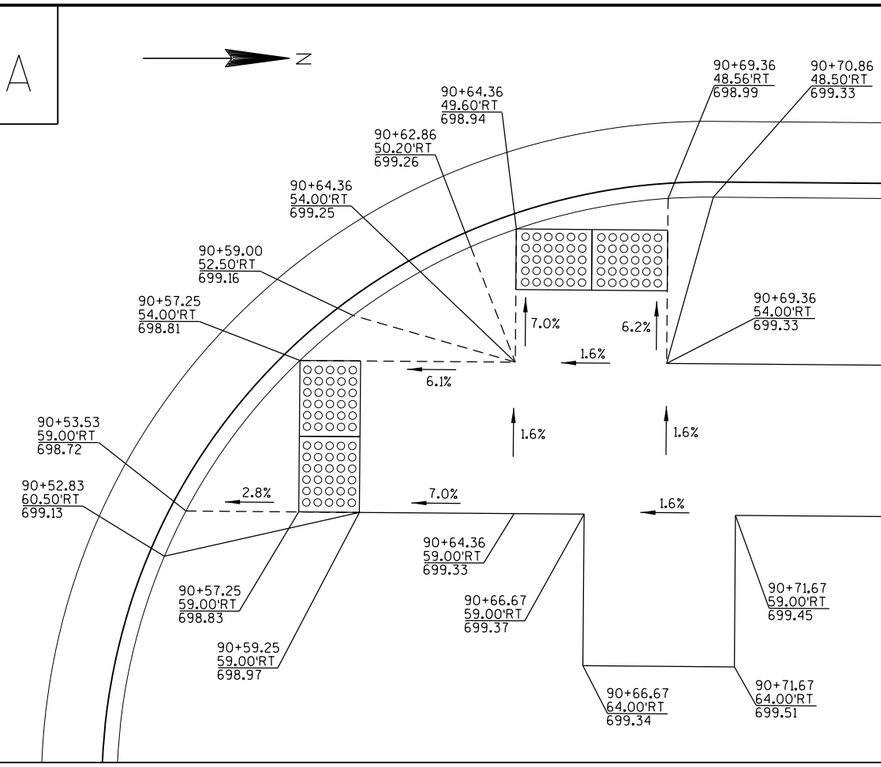


2

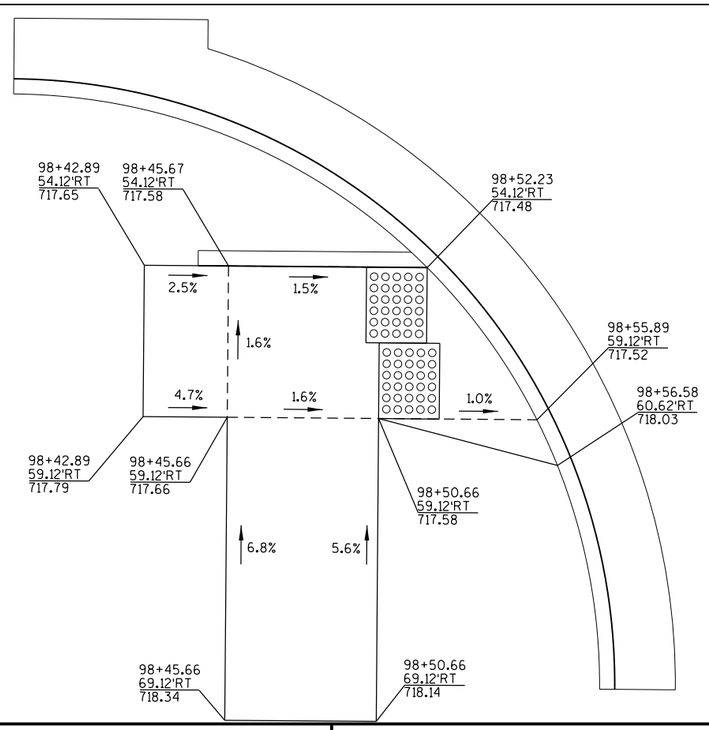


# CURB RAMP DETAIL B

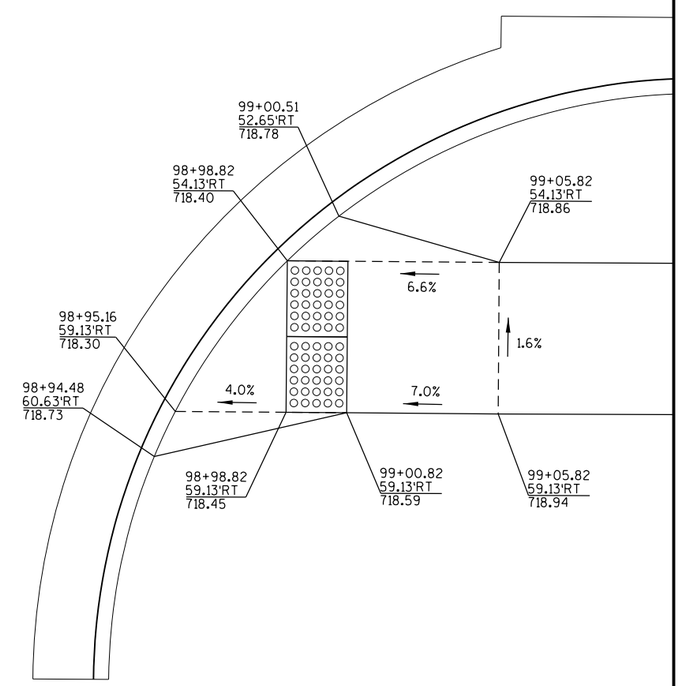


| PROJECT NO:2140-13-70 | HWY:STH 181 | COUNTY:MILWAUKEE | PLAN DETAIL | SHEET 39 | E |
|---|---|---|---|---|---|

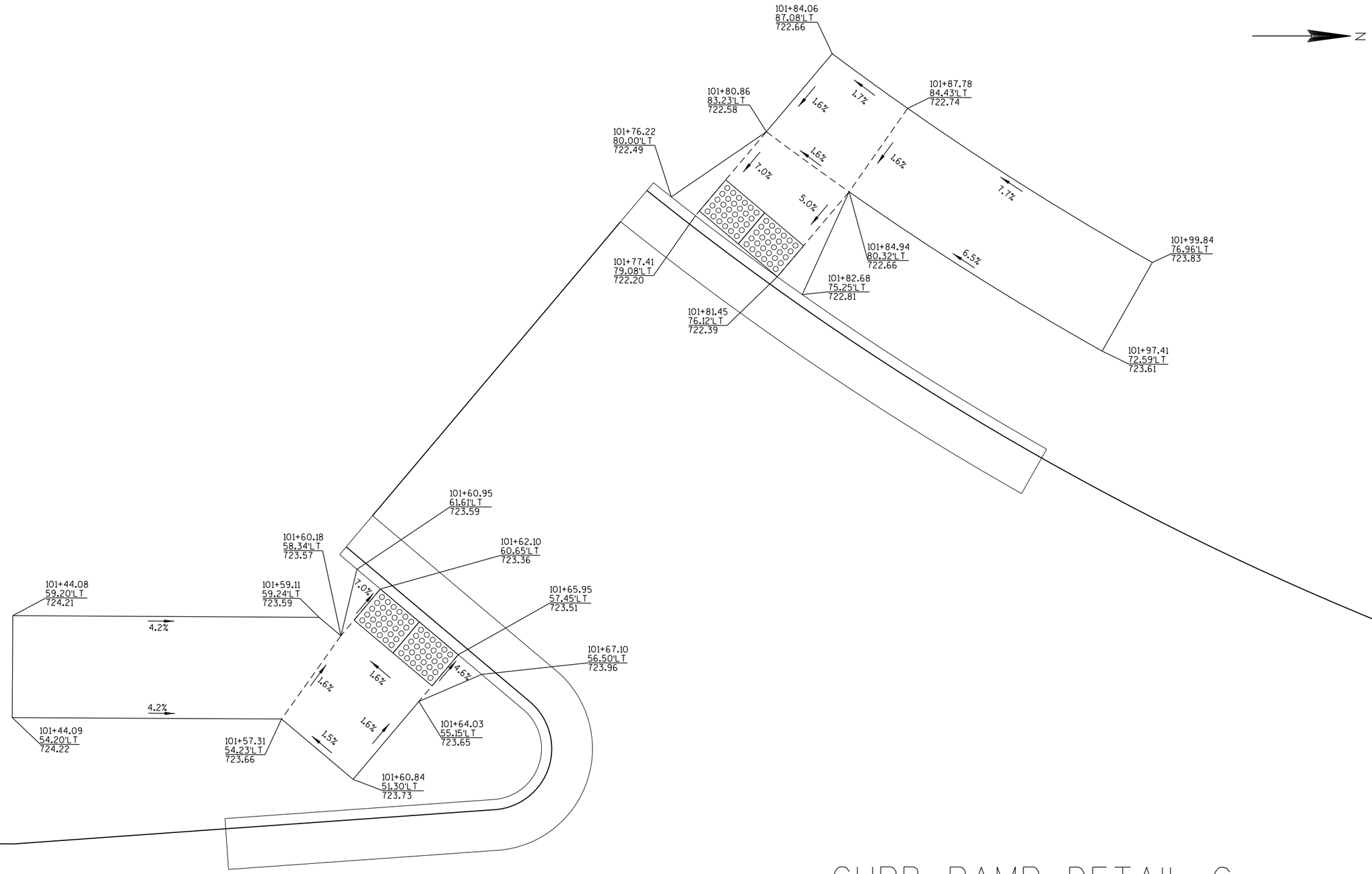


# CURB RAMP DETAIL C

| PROJECT NO:2140-13-70 | HWY:STH 181 | COUNTY:MILWAUKEE | PLAN DETAIL | SHEET 40 | E |
|---|---|---|---|---|---|

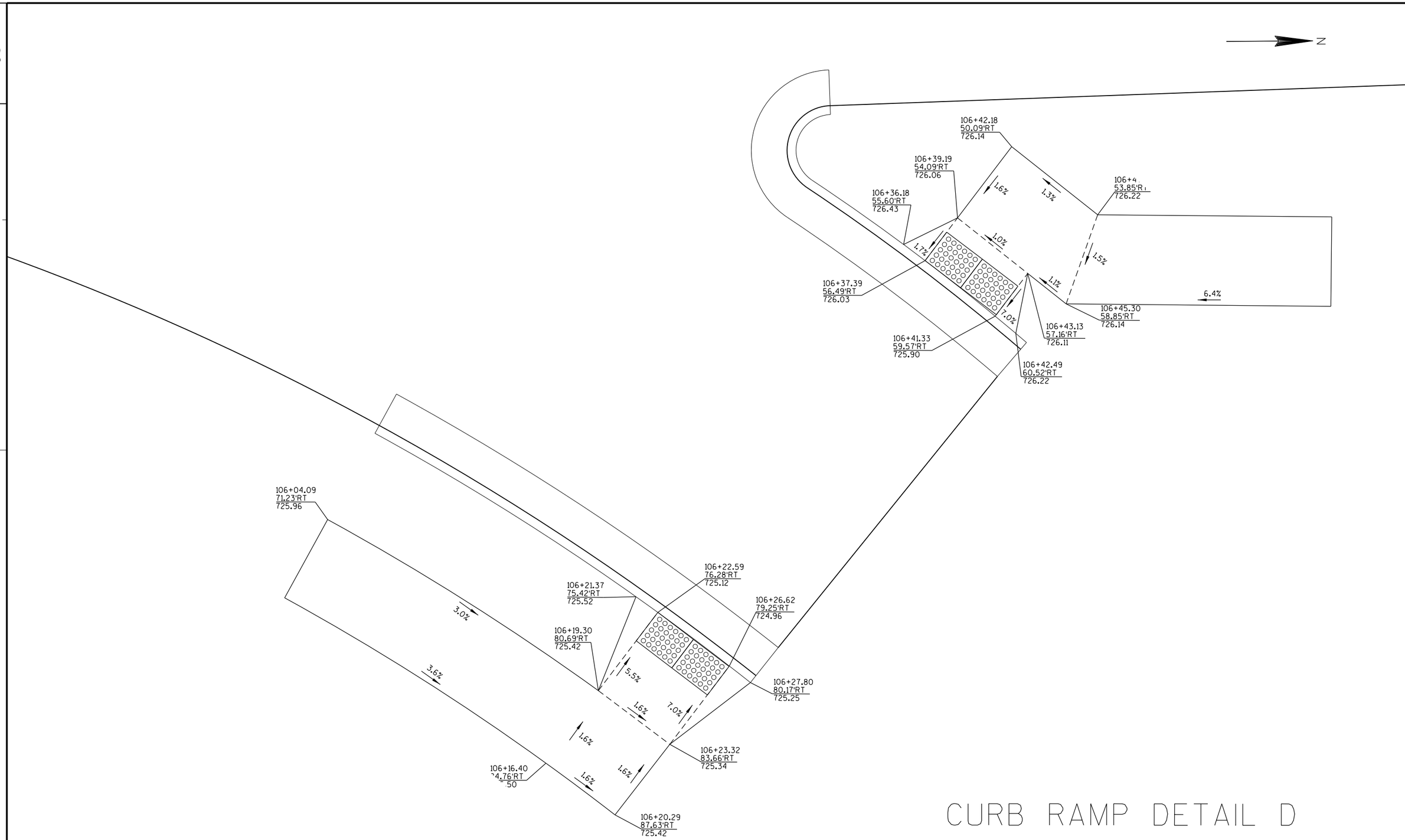


# CURB RAMP DETAIL D

| PROJECT NO:2140-13-70 | HWY:STH 181 | COUNTY:MILWAUKEE | PLAN DETAIL | SHEET 41 | E |
|---|---|---|---|---|---|

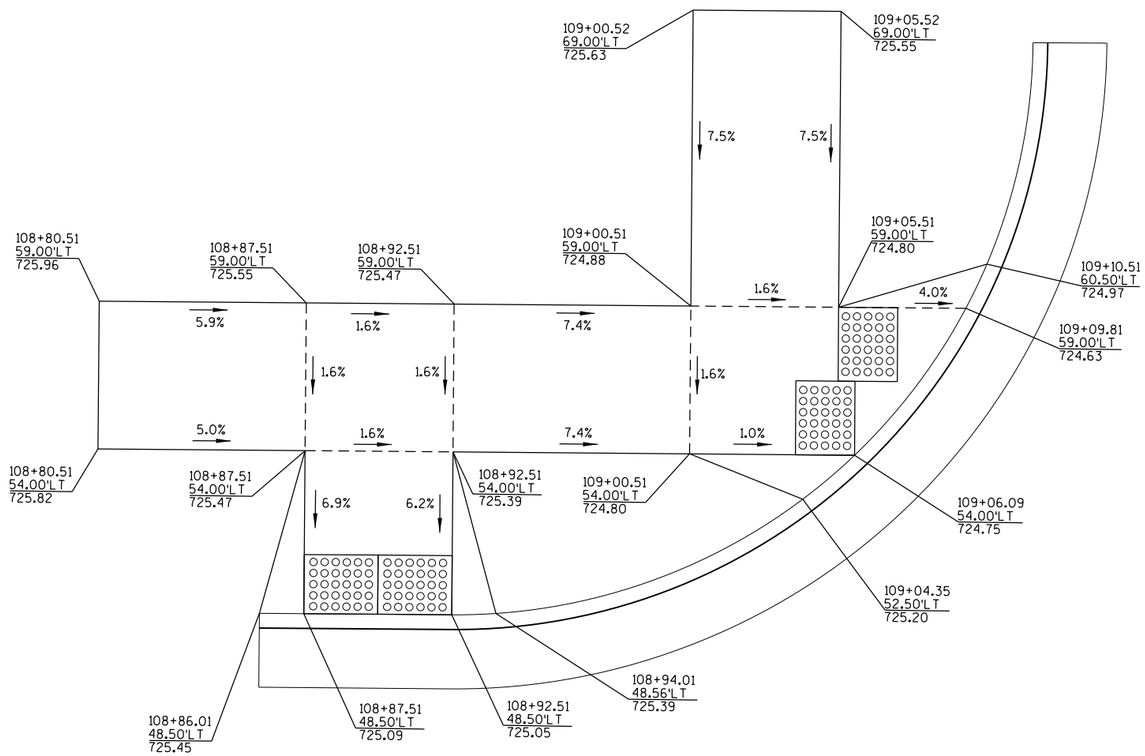


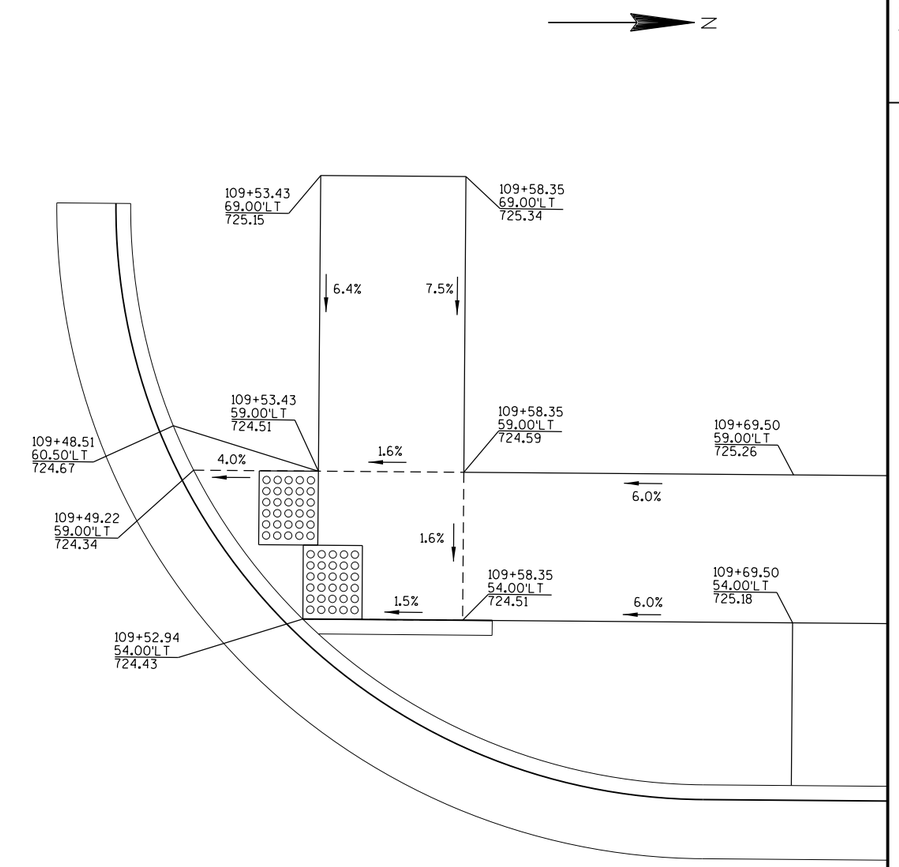


# CURB RAMP DETAIL E

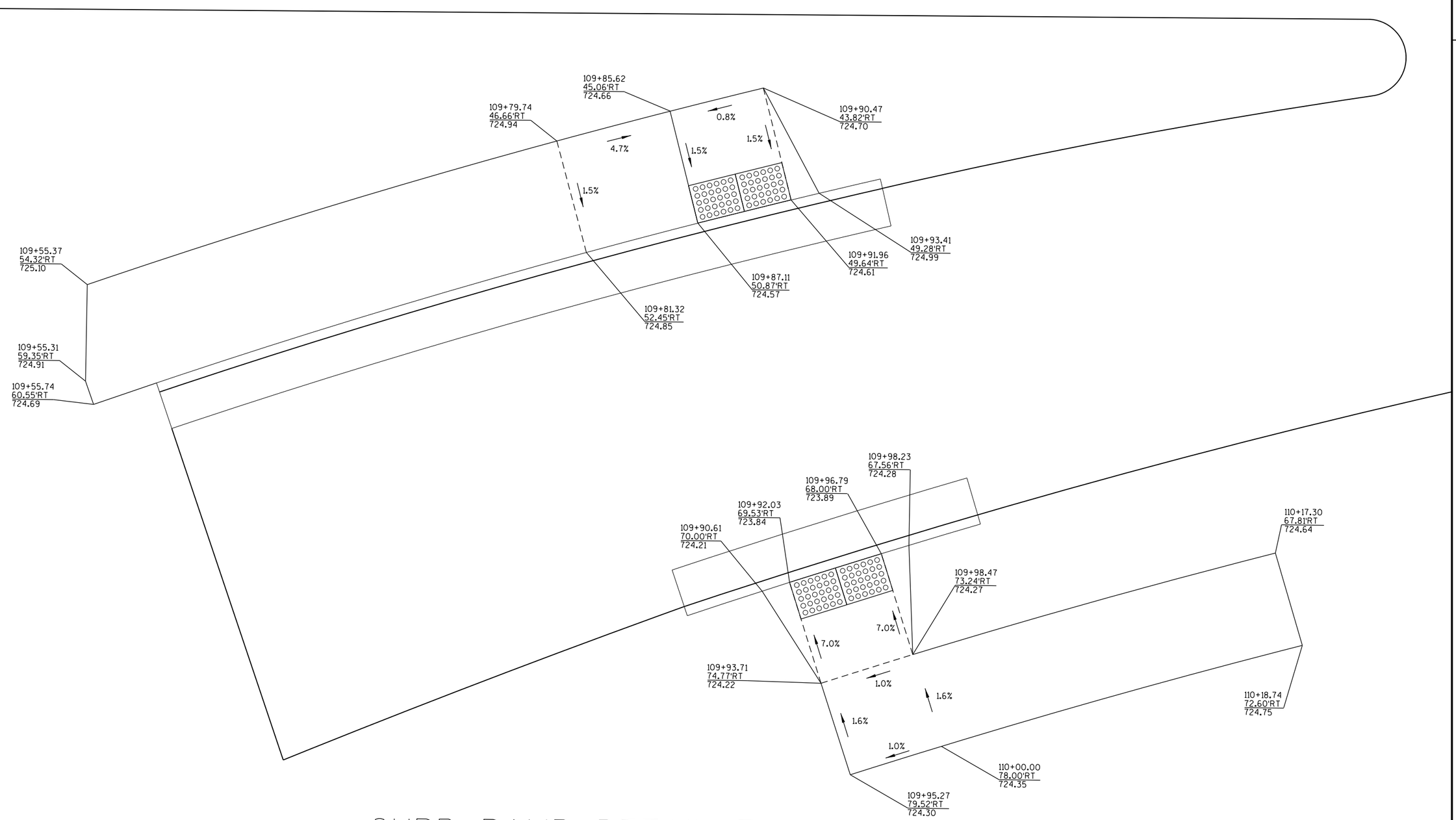


# CURB RAMP DETAIL F

| PROJECT NO:2140-13-70 | HWY:STH 181 | COUNTY:MILWAUKEE | PLAN DETAIL | SHEET 43 | E |
|---|---|---|---|---|---|

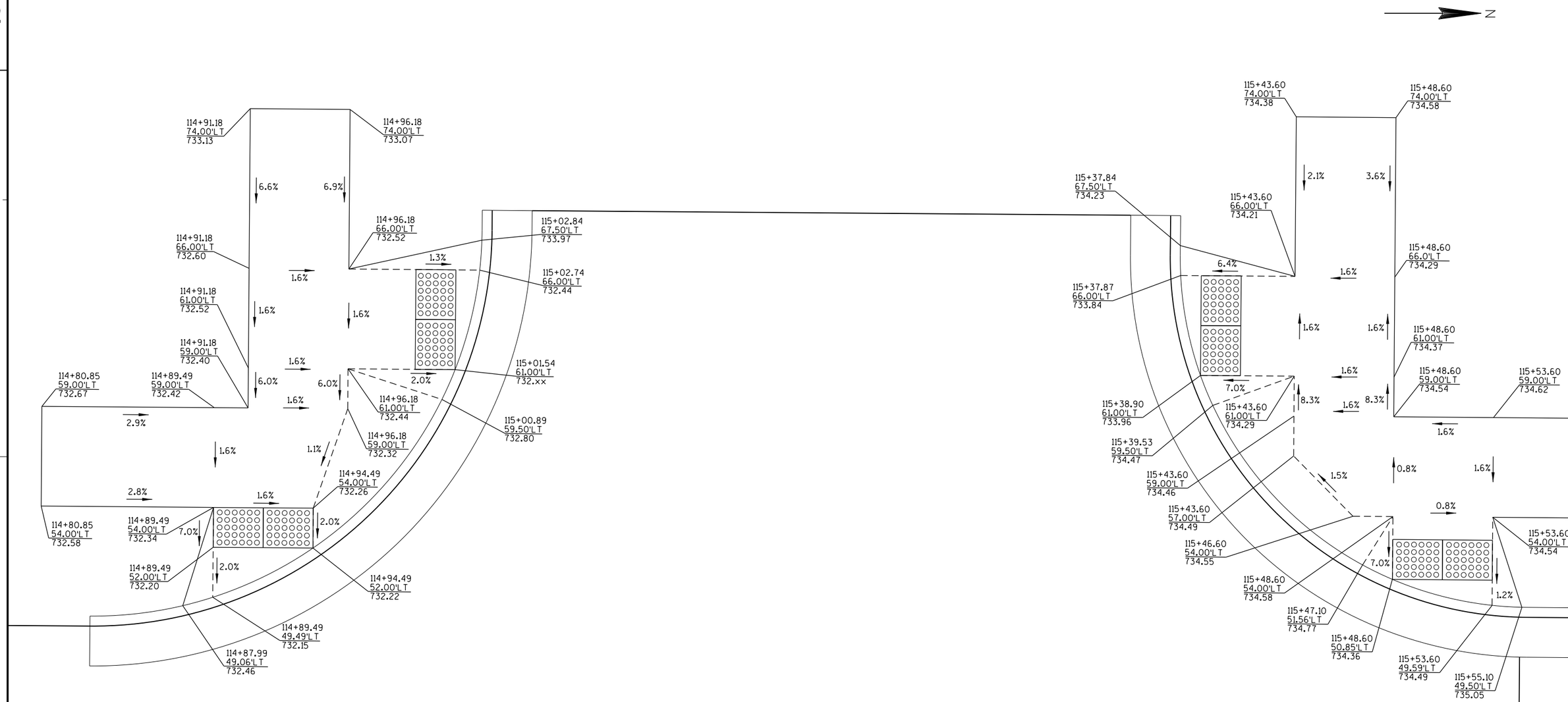


# CURB RAMP DETAIL G

| PROJECT NO:2140-13-70 | HWY:STH 181 | COUNTY:MILWAUKEE | PLAN DETAIL | SHEET 44 | E |
|---|---|---|---|---|---|

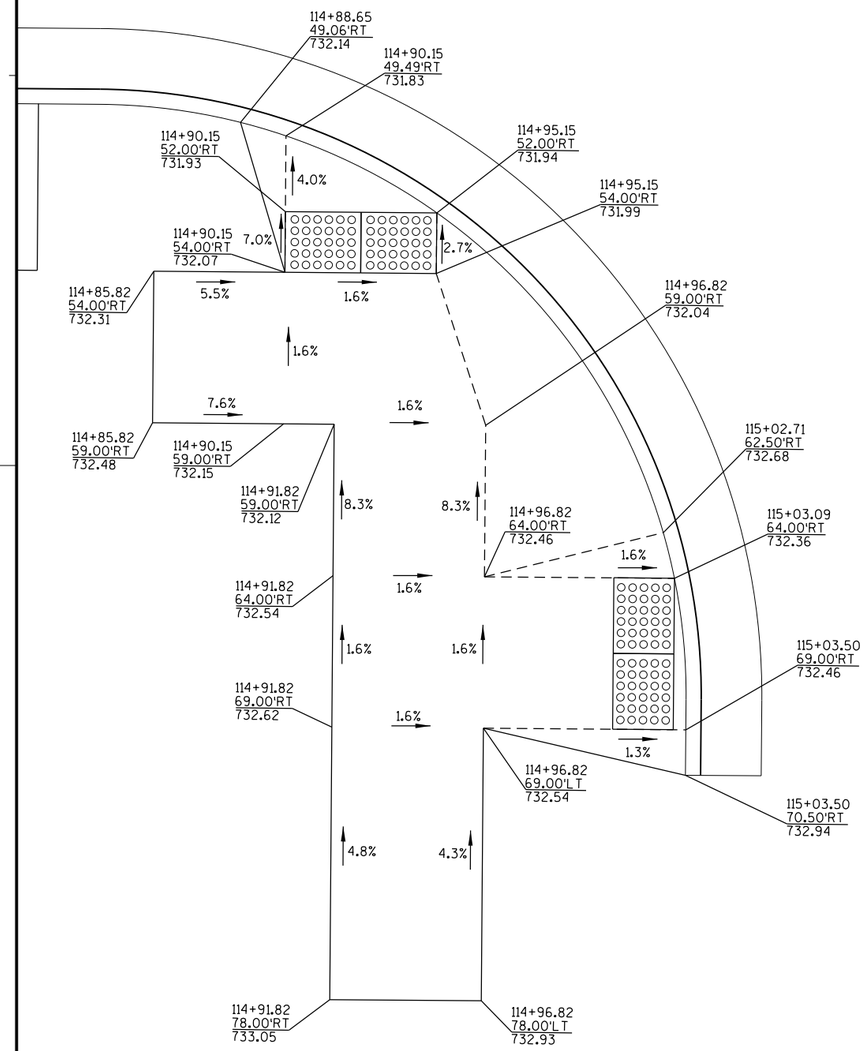


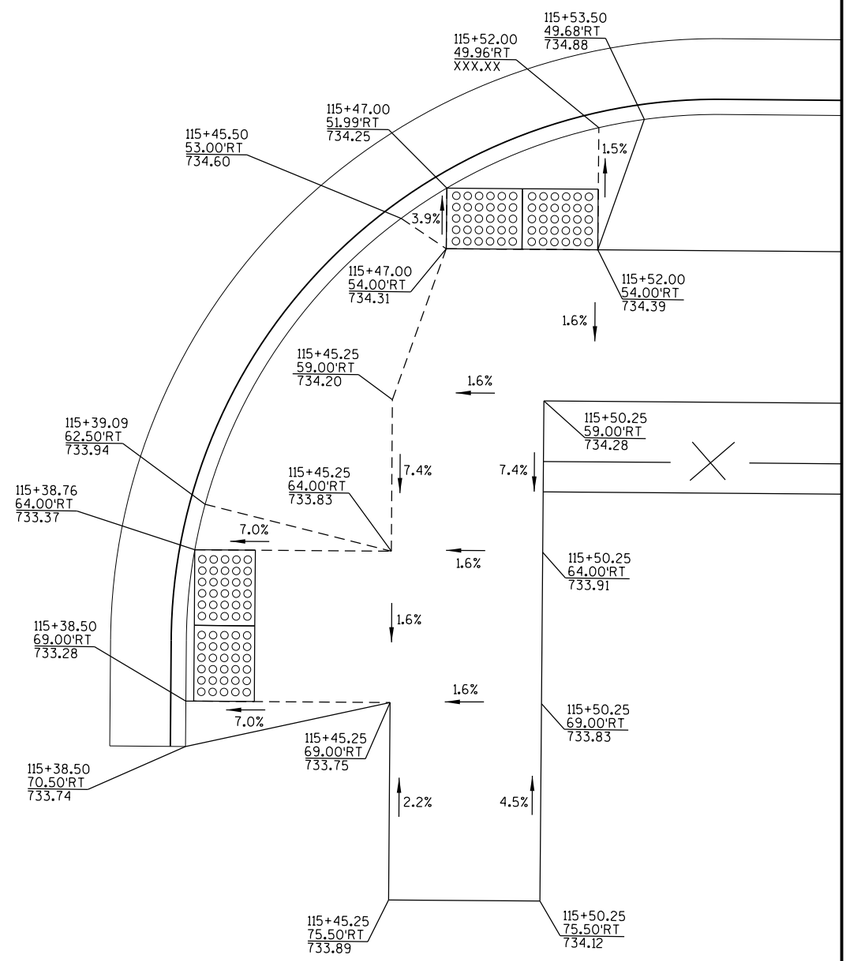


# CURB RAMP DETAIL H

| PROJECT NO:2140-13-70 | HWY:STH 181 | COUNTY:MILWAUKEE | PLAN DETAIL | SHEET 45 | E |
|---|---|---|---|---|---|

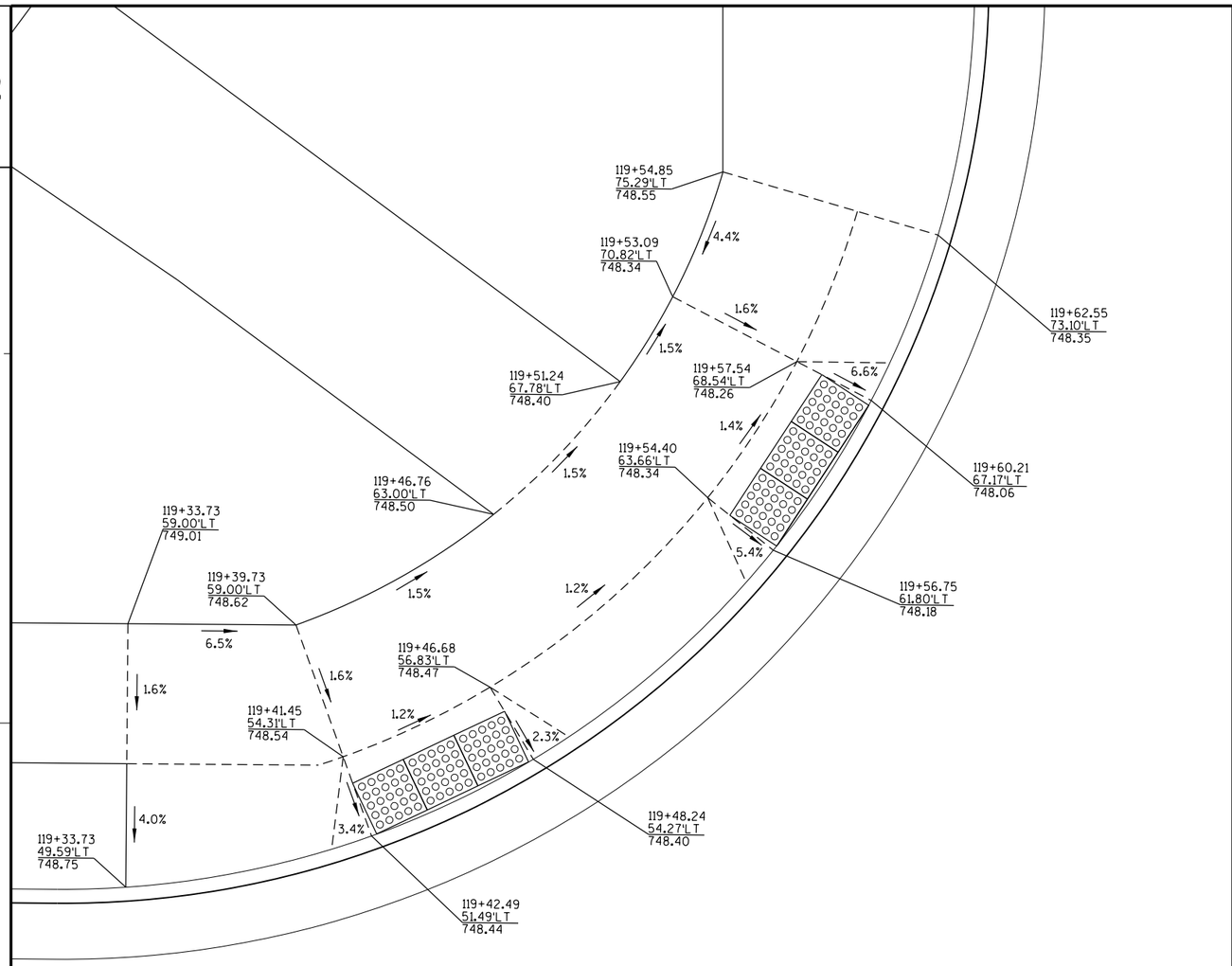


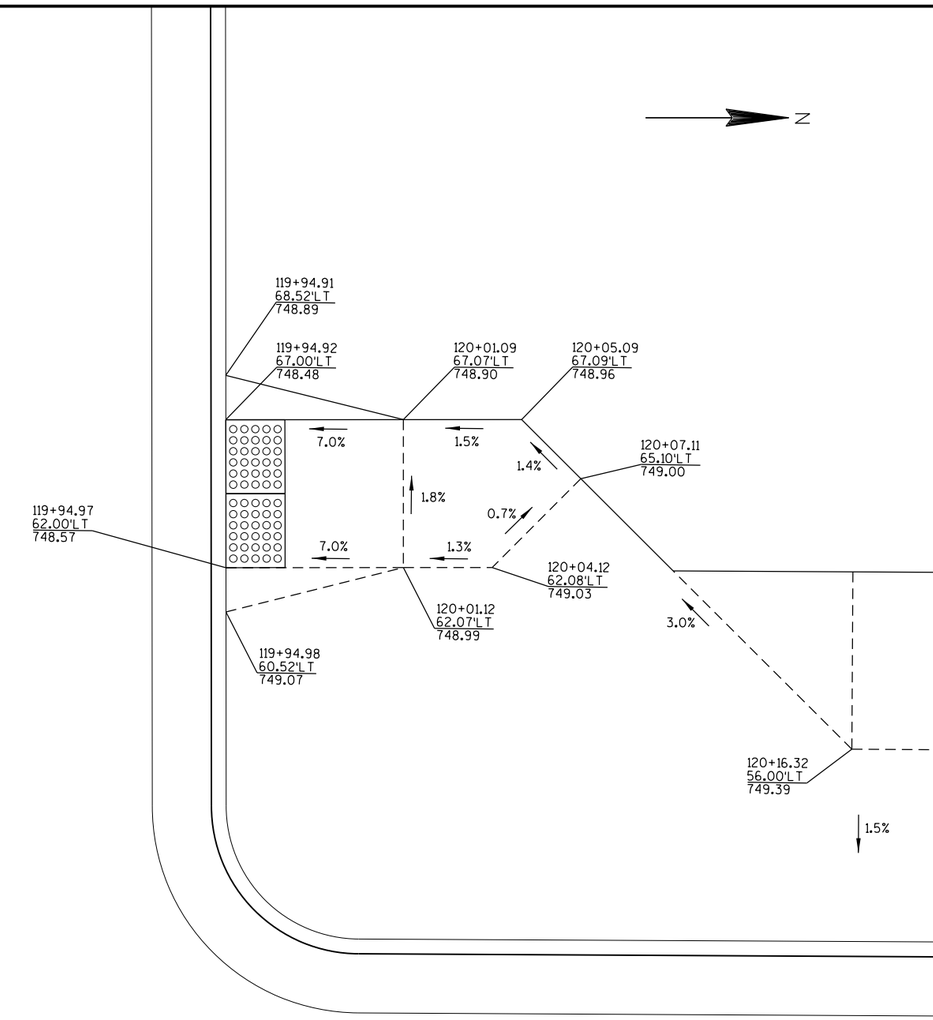




# CURB RAMP DETAIL 1

| PROJECT NO:2140-13-70 | HWY:STH 181 | COUNTY:MILWAUKEE | PLAN DETAIL | SHEET 46 | E |
|---|---|---|---|---|---|

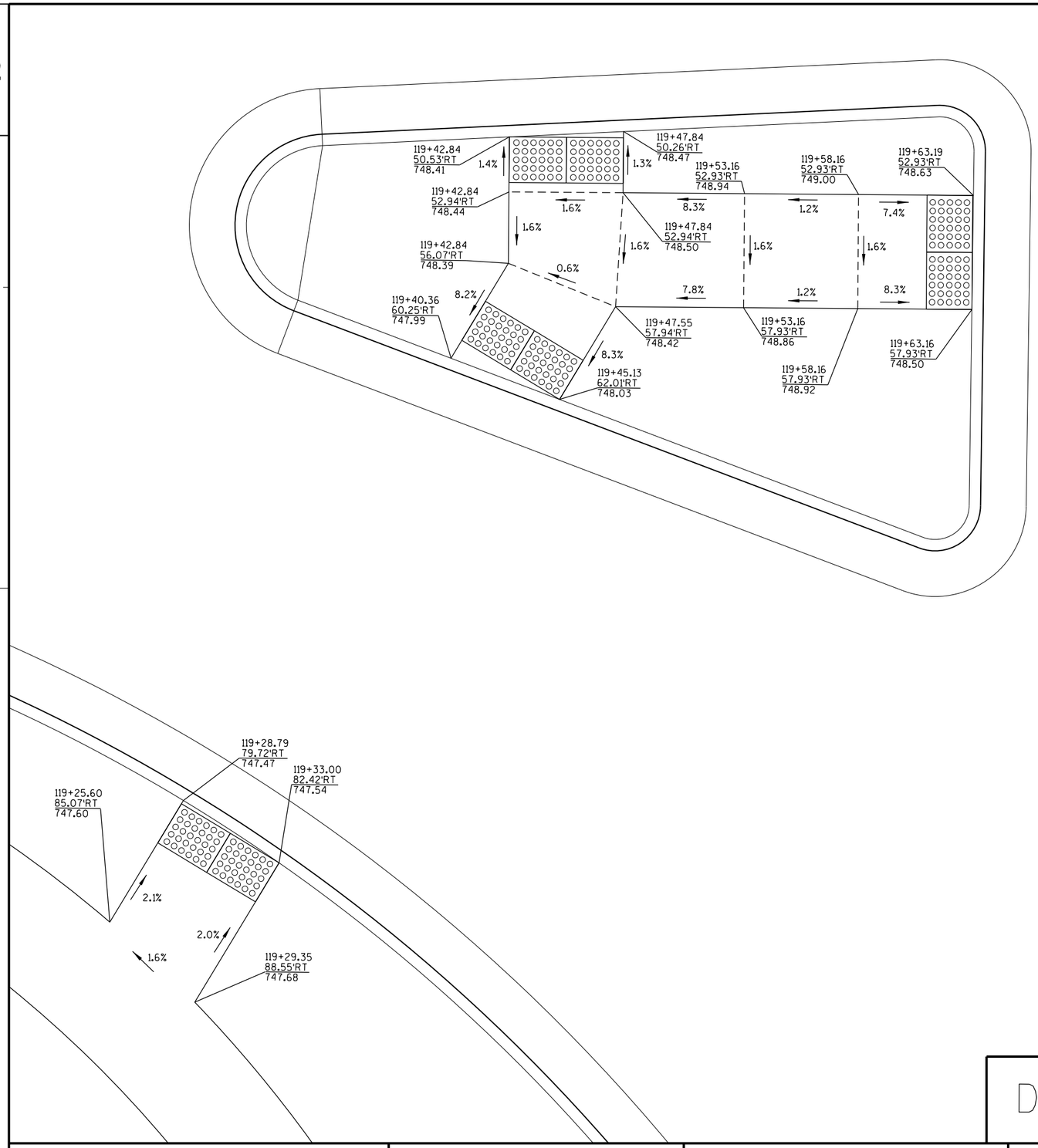
119+42.84
50.53'RT
748.41
1.4%
119+47.84
50.26'RT
748.47
1.3%
119+53.16
52.93'RT
748.94
119+58.16
52.93'RT
749.00
119+63.19
52.93'RT
748.63
119+42.84
52.94'RT
748.44
1.6%
8.3%
1.2%
7.4%
1.6%
119+47.84
52.94'RT
748.50
1.6%
1.6%
1.6%
119+42.84
56.07'RT
748.39
0.6%
8.2%
7.8%
1.2%
8.3%
119+40.36
60.25'RT
747.99
119+47.55
57.94'RT
748.42
119+53.16
57.93'RT
748.86
119+63.16
57.93'RT
748.50
8.3%
119+45.13
62.01'RT
748.03
119+58.16
57.93'RT
748.92
119+28.79
79.72'RT
747.47
119+33.00
82.42'RT
747.54
119+25.60
85.07'RT
747.60
2.1%
2.0%
1.6%
119+29.35
88.55'RT
747.68

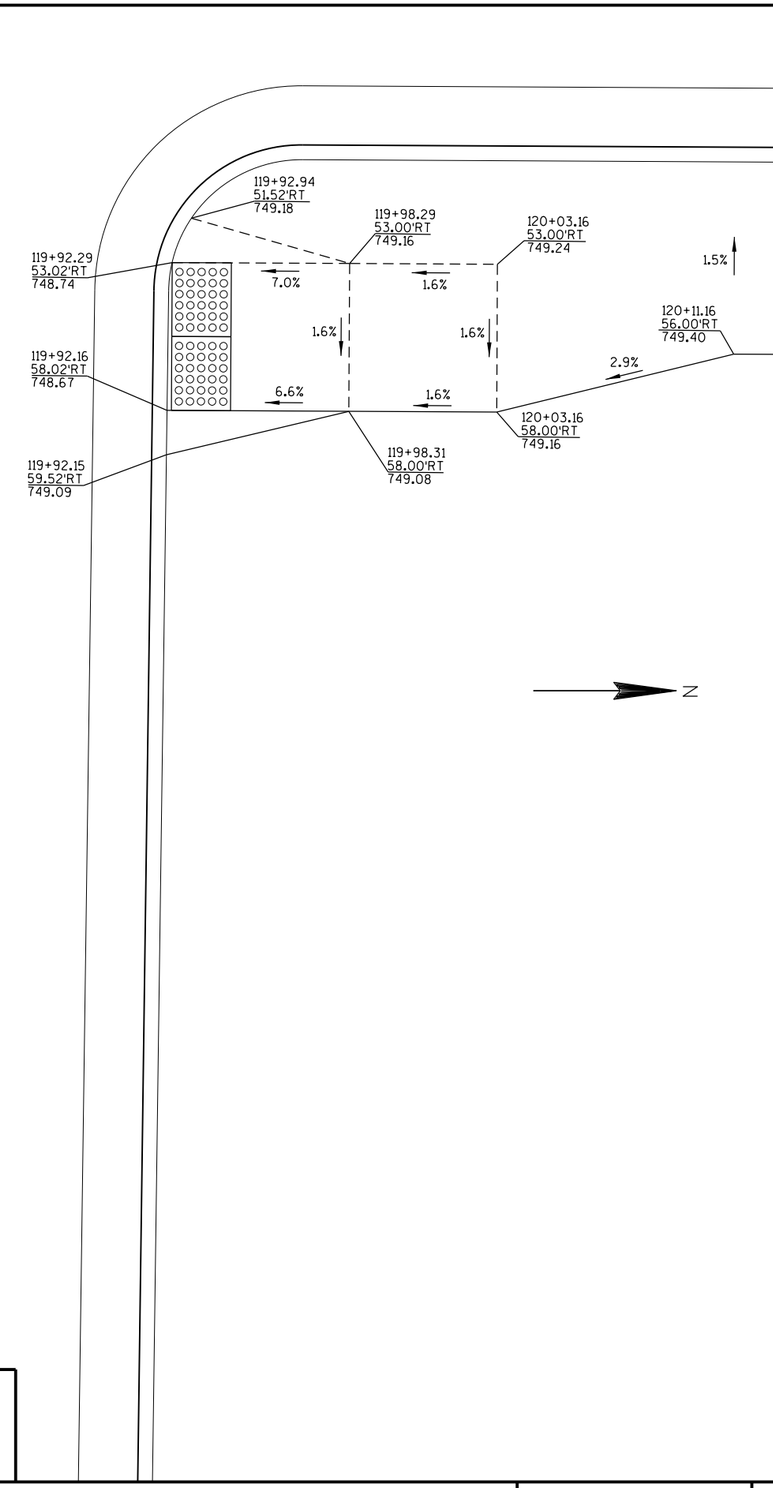
119+92.94
51.52'RT
749.18
119+98.29
53.00'RT
749.16
120+03.16
53.00'RT
749.24
1.5%
119+92.29
53.02'RT
748.74
7.0%
1.6%
120+11.16
56.00'RT
749.40
1.6%
1.6%
2.9%
119+92.16
58.02'RT
748.67
6.6%
1.6%
120+03.16
58.00'RT
749.16
119+98.31
58.00'RT
749.08
119+92.15
59.52'RT
749.09
N

DETAIL J

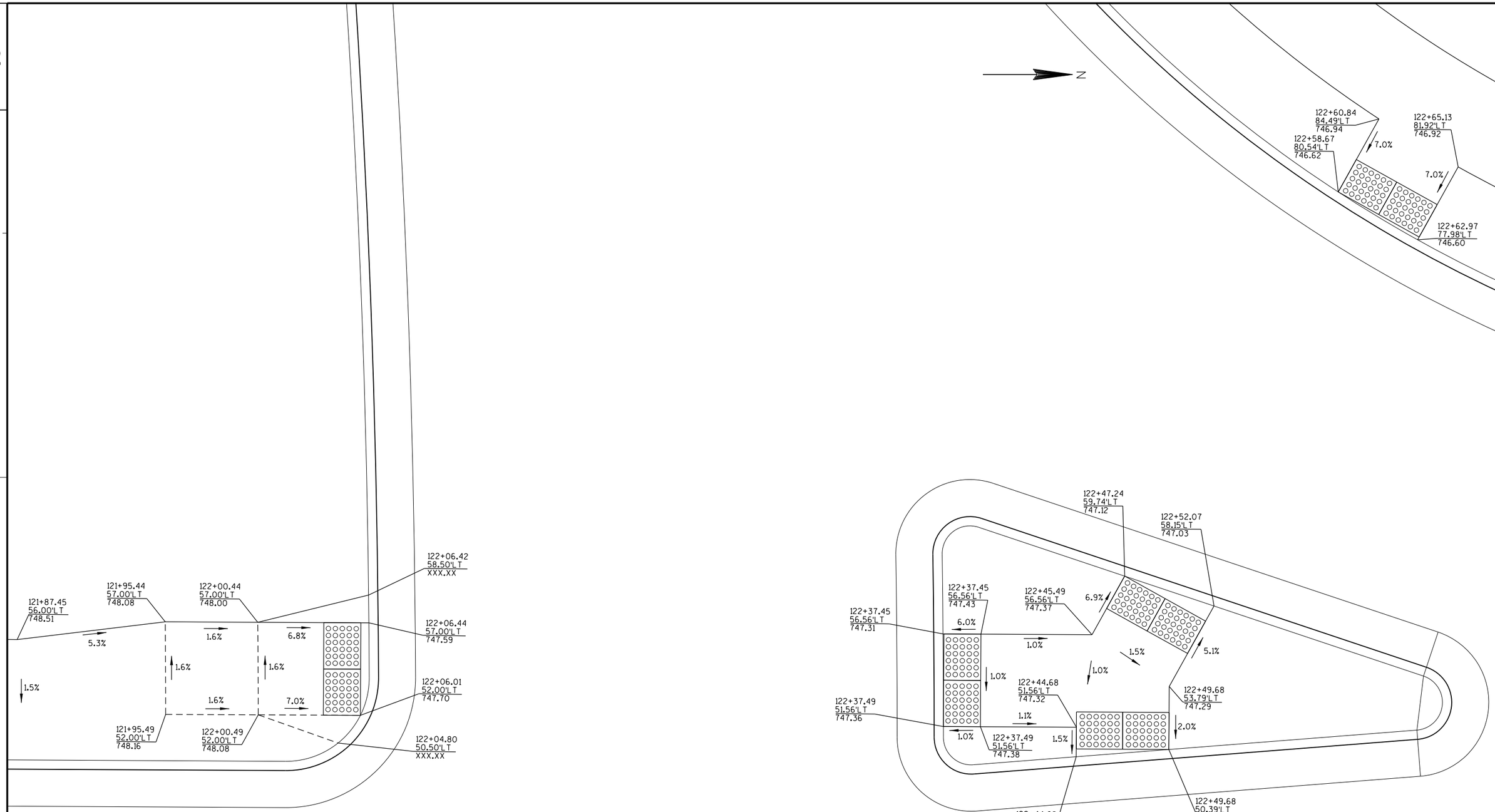


# CURB RAMP DETAIL K

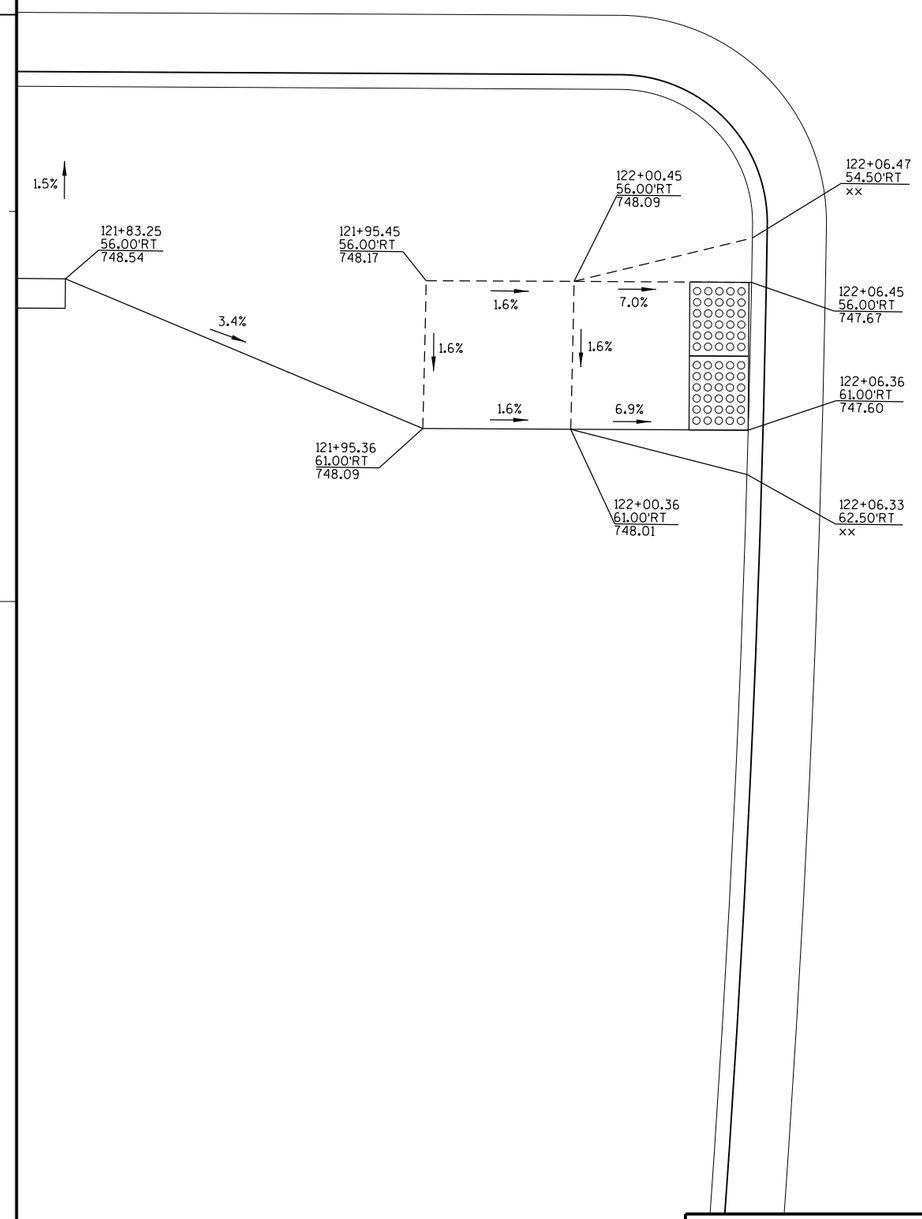


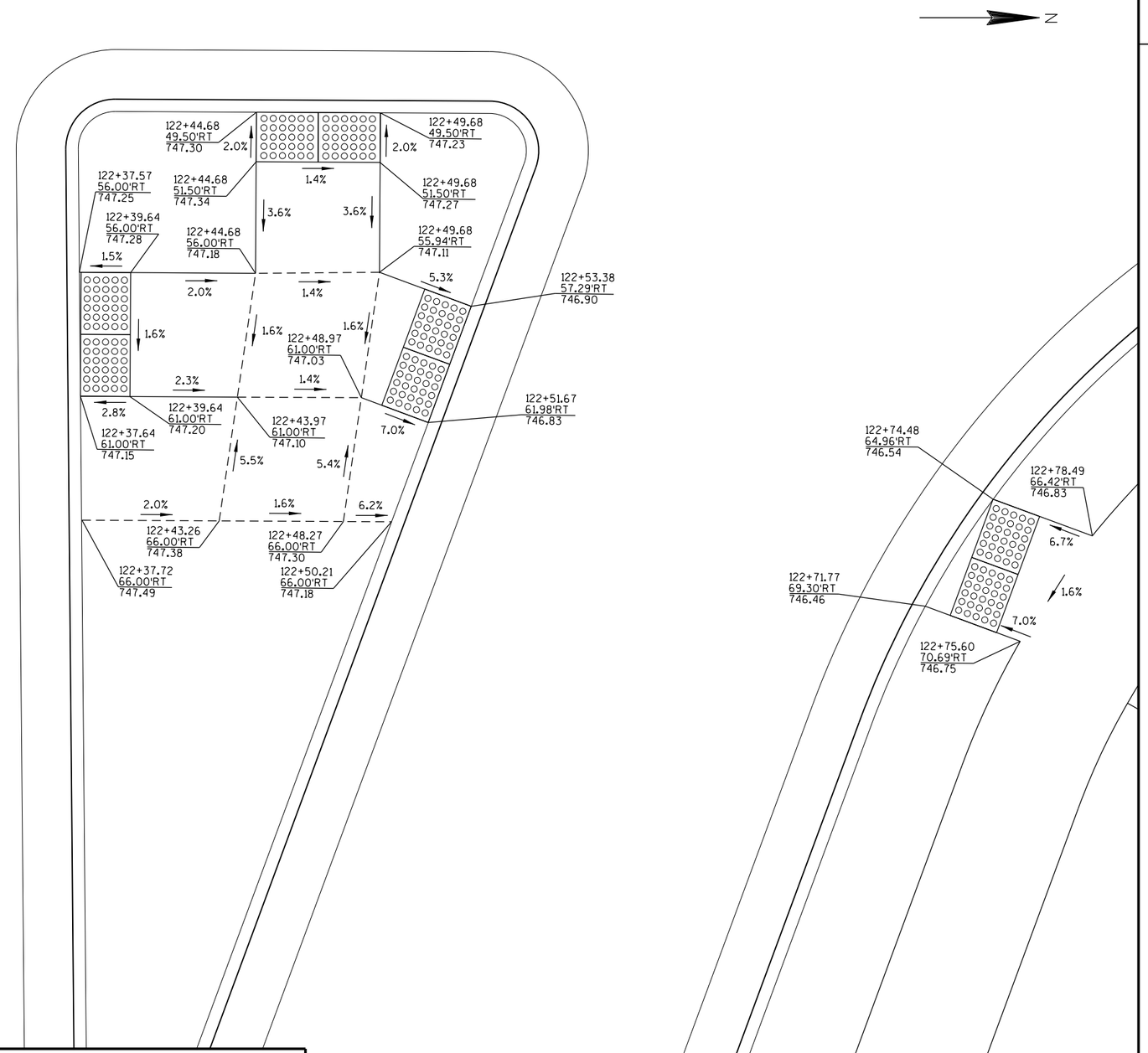


# CURB RAMP DETAIL L

| PROJECT NO:2140-13-70 | HWY:STH 181 | COUNTY:MILWAUKEE | PLAN DETAIL | SHEET 49 | E |
|---|---|---|---|---|---|

2

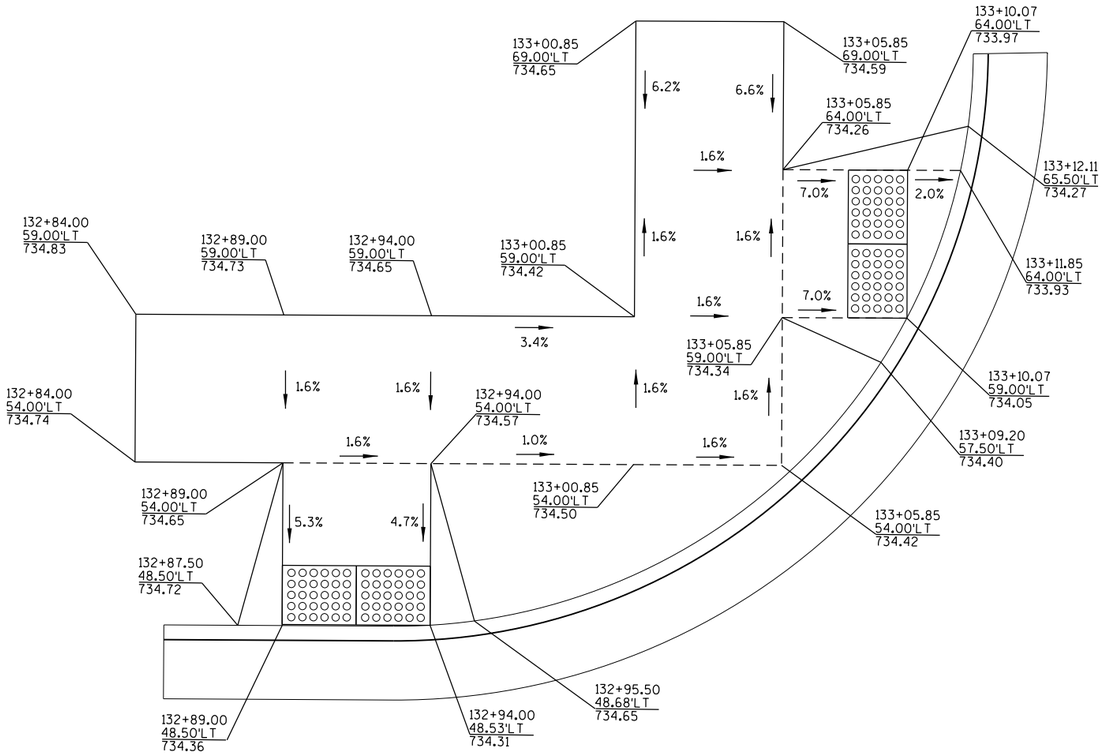


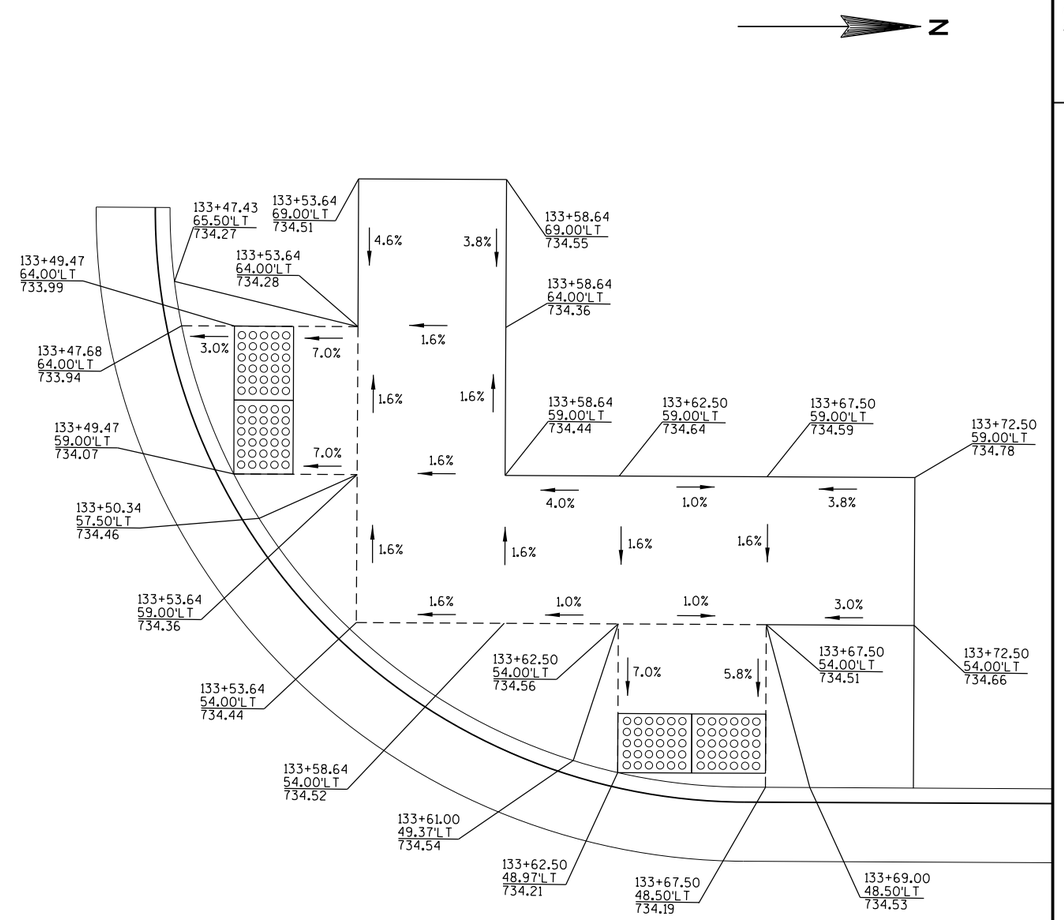


2

# CURB RAMP DETAIL M

| PROJECT NO:2140-13-70 | HWY:STH 181 | COUNTY:MILWAUKEE | PLAN DETAIL | SHEET 50 | E |
|---|---|---|---|---|---|

2

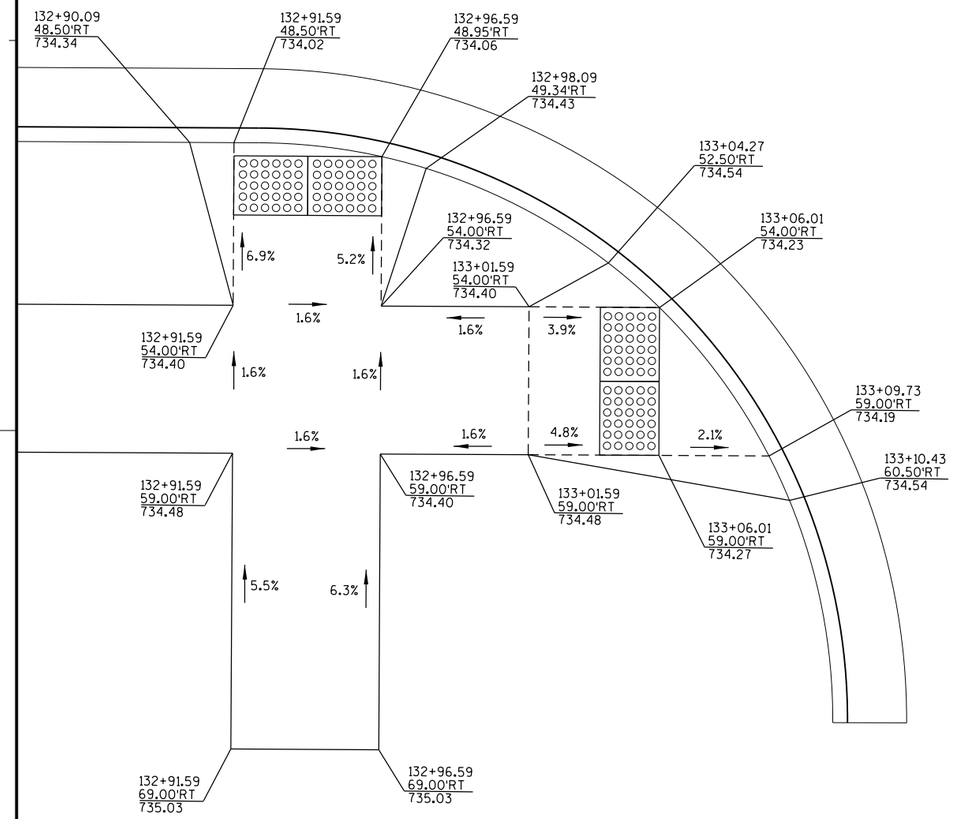


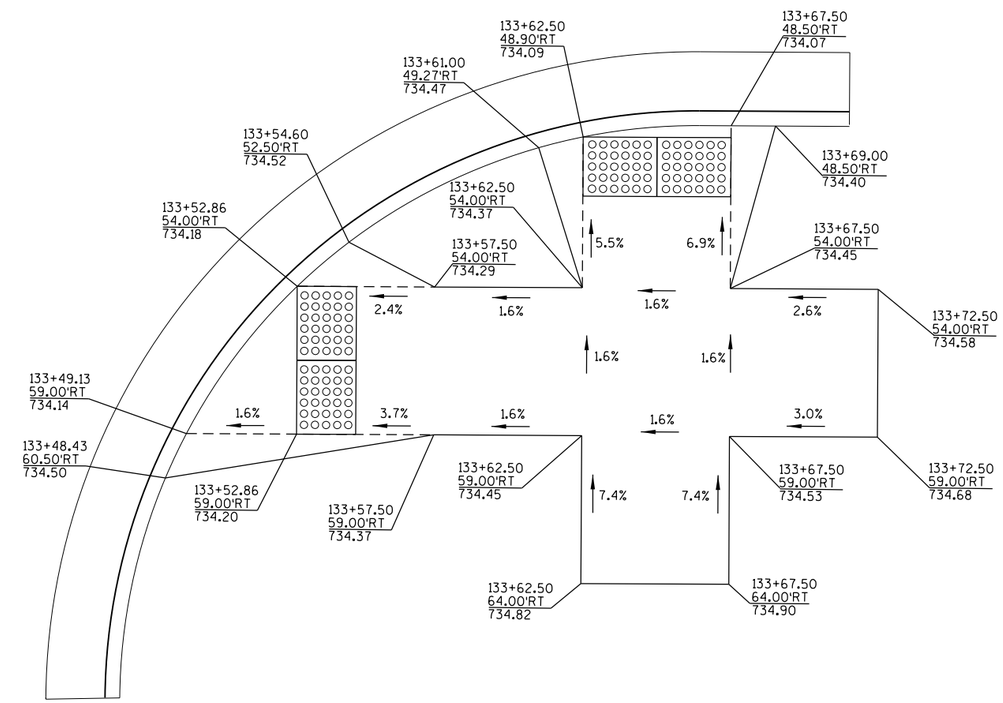


# CURB RAMP DETAIL N

| PROJECT NO:2140-13-70 | HWY:STH 181 | COUNTY:MILWAUKEE | PLAN DETAIL | SHEET 51 | E |
|---|---|---|---|---|---|

2

# CURB RAMP DETAIL O

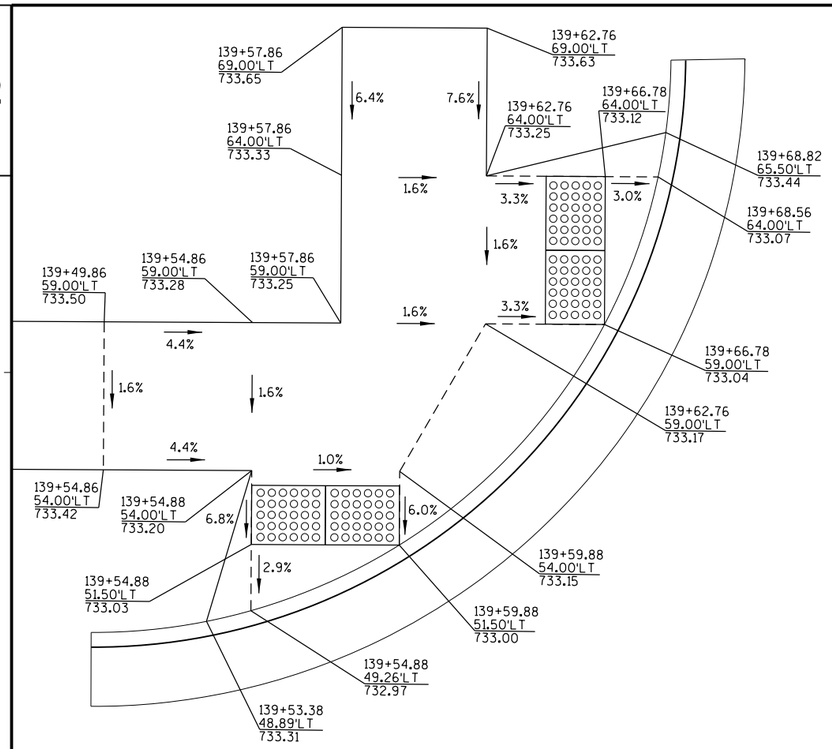


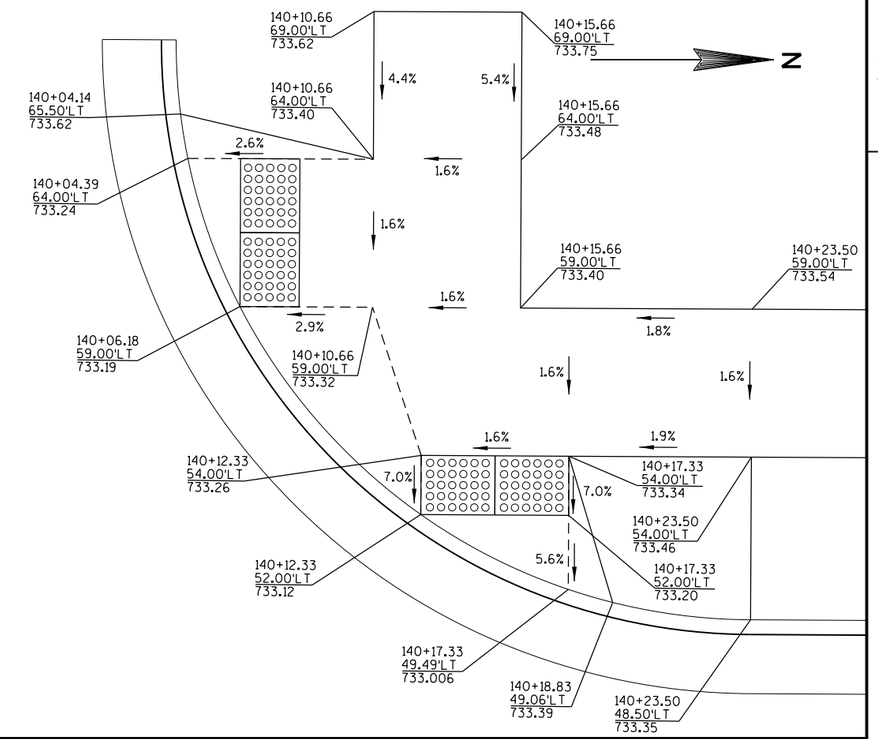


2

# CURB RAMP DETAIL P

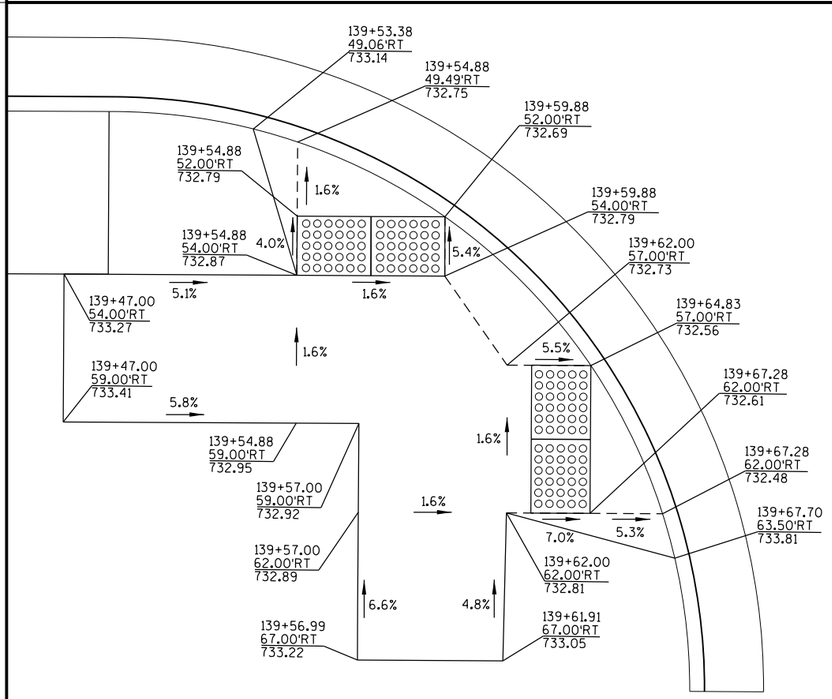


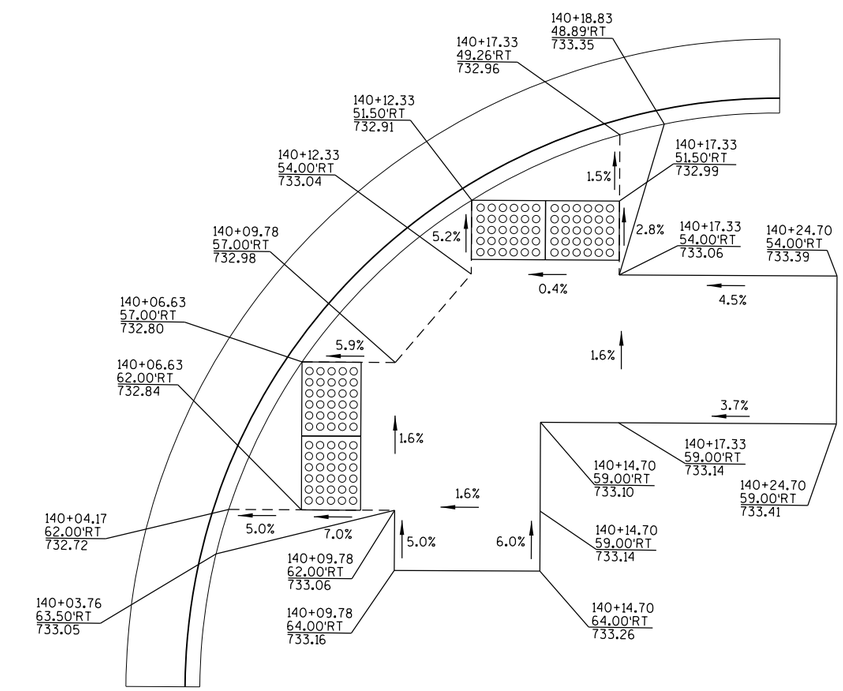


| PROJECT NO: 2140-13-70 | HWY: STH 181 | COUNTY: MILWAUKEE | PLAN DETAIL | SHEET 52 | E |
|---|---|---|---|---|---|

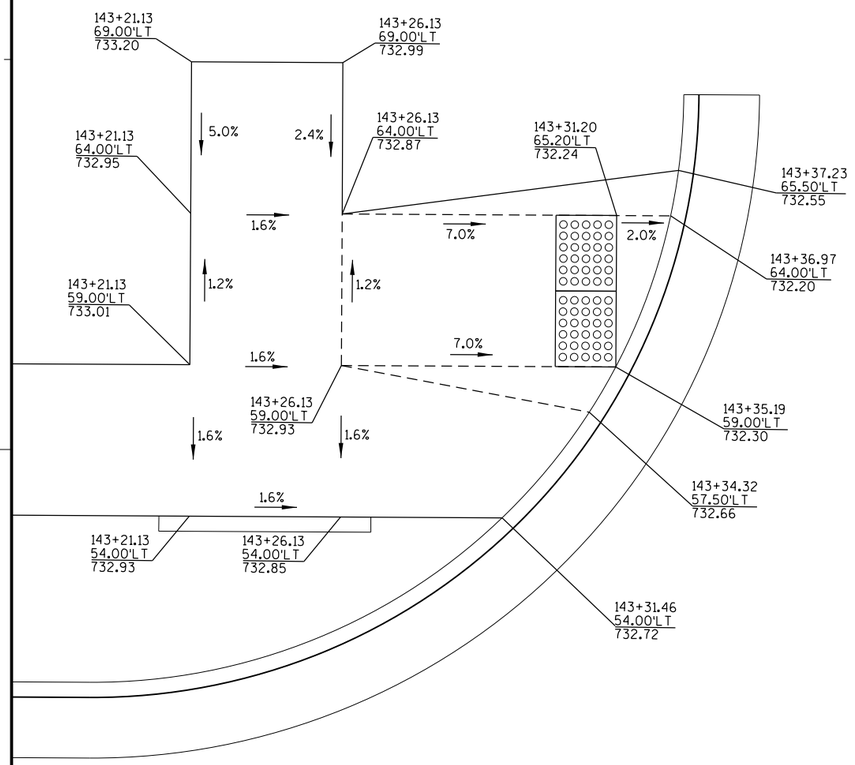


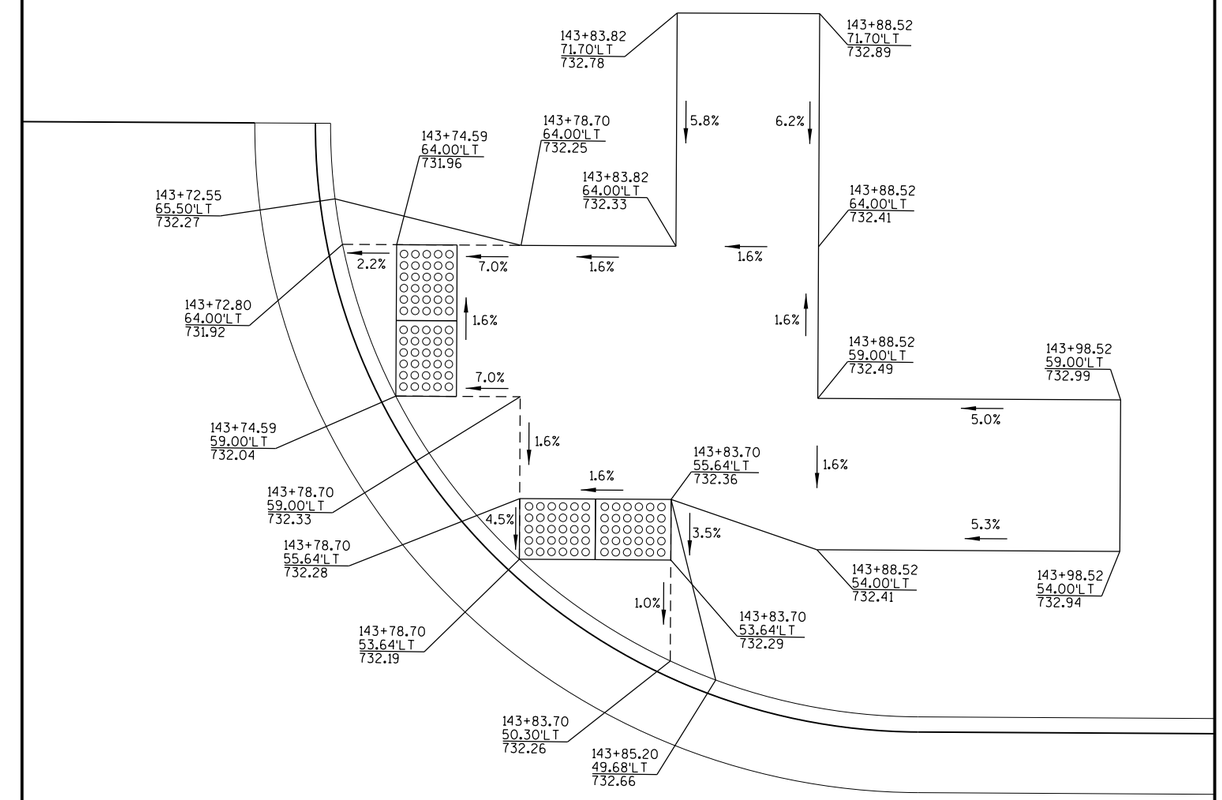


# CURB RAMP DETAIL Q

| PROJECT NO:2140-13-70 | HWY:STH 181 | COUNTY:MILWAUKEE | PLAN DETAIL | SHEET 53 | E |
|---|---|---|---|---|---|

## DATA TABLE

STH 181 (N. 76TH STREET)

| POINT NO. | STATION | OFFSET | COMMENTS |
|---|---|---|---|
| 1 | 87+30.00 | 46.00' LT | BEGIN CURB & GUTTER / BUS PAD |
| 2 | 87+90.00 | 46.00' LT | END CURB & GUTTER / BUS PAD |

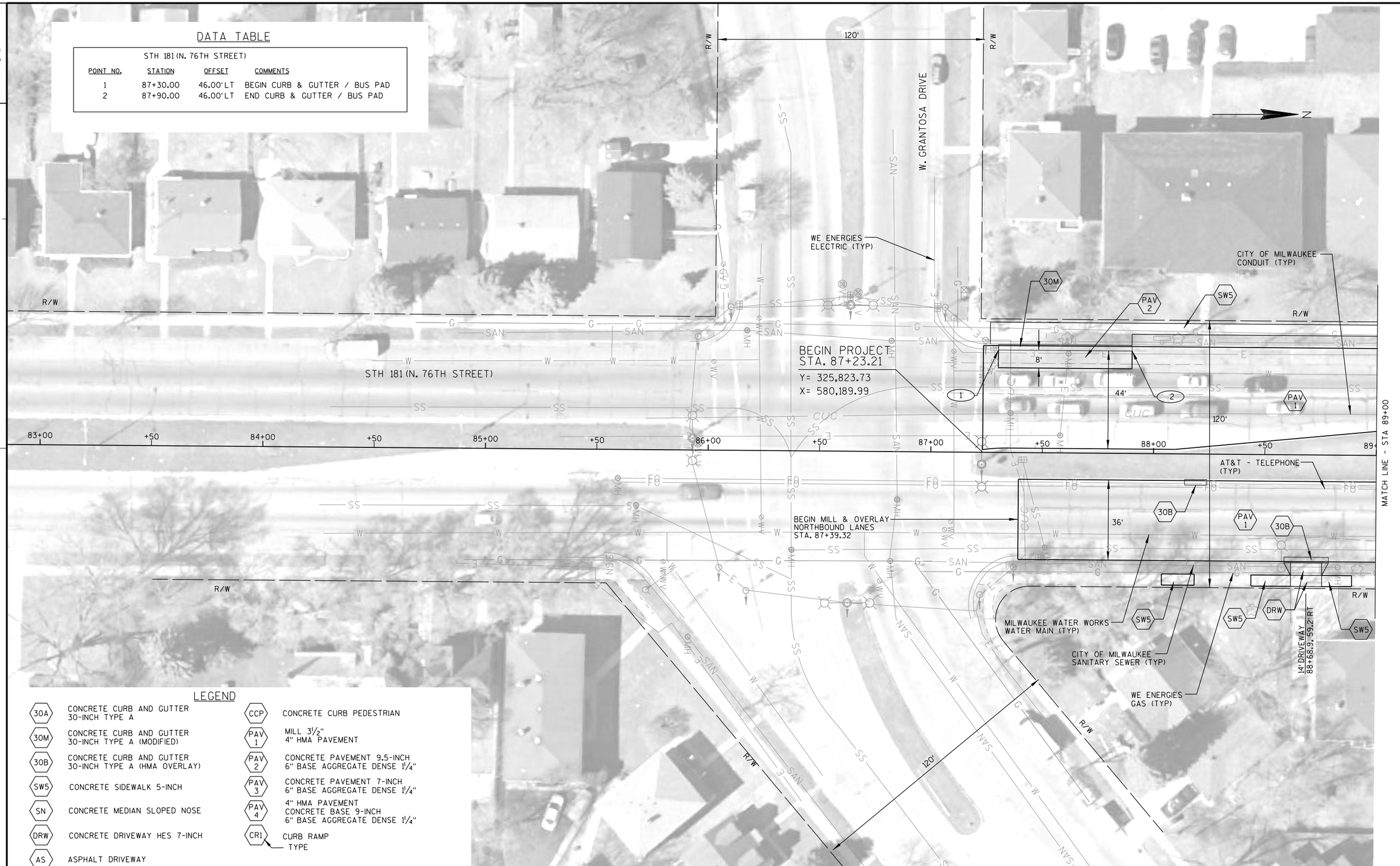


## LEGEND

| | | | |
|---|---|---|---|
| 30A | CONCRETE CURB AND GUTTER 30-INCH TYPE A | CCP | CONCRETE CURB PEDESTRIAN |
| 30M | CONCRETE CURB AND GUTTER 30-INCH TYPE A (MODIFIED) | PAV 1 | MILL 3½" 4" HMA PAVEMENT |
| 30B | CONCRETE CURB AND GUTTER 30-INCH TYPE A (HMA OVERLAY) | PAV 2 | CONCRETE PAVEMENT 9.5-INCH 6" BASE AGGREGATE DENSE 1¼" |
| SW5 | CONCRETE SIDEWALK 5-INCH | PAV 3 | CONCRETE PAVEMENT 7-INCH 6" BASE AGGREGATE DENSE 1¼" |
| SN | CONCRETE MEDIAN SLOPED NOSE | PAV 4 | 4" HMA PAVEMENT CONCRETE BASE 9-INCH 6" BASE AGGREGATE DENSE 1¼" |
| DRW | CONCRETE DRIVEWAY HES 7-INCH | CR1 | CURB RAMP TYPE |
| AS | ASPHALT DRIVEWAY | | |

| PROJECT NO: 2140-13-70 | HWY: STH 181 | COUNTY: MILWAUKEE | PLAN DETAIL | SHEET 54 | E |
|---|---|---|---|---|---|

2

## DATA TABLE

STH 181 (N. 76TH STREET)

| POINT NO. | STATION | OFFSET | COMMENTS |
|---|---|---|---|
| 1 | 89+98.32 | 46.00' LT | BEGIN CURB & GUTTER |
| 2 | 90+11.32 | 46.00' LT | END CURB & GUTTER |
| 3 | 90+60.36 | 46.00' LT | BEGIN CURB & GUTTER |
| 4 | 90+84.36 | 46.00' LT | END CURB & GUTTER |
| 5 | 89+96.29 | 46.00' RT | BEGIN CURB & GUTTER |
| 6 | 89+97.86 | 68.00' RT | 22' RADIUS |
| 7 | 90+19.86 | 68.00' RT | END CURB & GUTTER |
| 8 | 90+48.83 | 68.00' RT | BEGIN CURB & GUTTER |
| 9 | 90+70.83 | 68.00' RT | 22' RADIUS |
| 10 | 90+70.86 | 46.00' RT | END RADIUS |
| 11 | 92+24.93 | 46.00' RT | BEGIN CURB & GUTTER, BEGIN BUS PAD |
| 12 | 92+84.93 | 46.00' RT | END CURB & GUTTER, END BUS PAD |
| 13 | 94+10.00 | 14.00' RT | BEGIN CURB & GUTTER |
| 14 | 93+97.76 | 46.00' LT | BEGIN CURB & GUTTER, BEGIN BUS PAD |
| 15 | 94+57.76 | 46.00' LT | END CURB & GUTTER, END BUS PAD |
| 16 | 94+94.00 | 4.00' LT | BEGIN CURB & GUTTER |

RADIUS SHOWN IS TO CURB FLANGE

## LEGEND

| | | | |
|---|---|---|---|
| 30A | CONCRETE CURB AND GUTTER 30-INCH TYPE A | CCP | CONCRETE CURB PEDESTRIAN |
| 30M | CONCRETE CURB AND GUTTER 30-INCH TYPE A (MODIFIED) | PAV 1 | MILL 3½" 4" HMA PAVEMENT |
| 30B | CONCRETE CURB AND GUTTER 30-INCH TYPE A (HMA OVERLAY) | PAV 2 | CONCRETE PAVEMENT 9.5-INCH 6" BASE AGGREGATE DENSE 1¼" |
| SW5 | CONCRETE SIDEWALK 5-INCH | PAV 3 | CONCRETE PAVEMENT 7-INCH 6" BASE AGGREGATE DENSE 1¼" |
| SN | CONCRETE MEDIAN SLOPED NOSE | PAV 4 | 4" HMA PAVEMENT CONCRETE BASE 9-INCH 6" BASE AGGREGATE DENSE 1¼" |
| DRW | CONCRETE DRIVEWAY HES 7-INCH | CR1 | CURB RAMP TYPE |
| AS | ASPHALT DRIVEWAY | | |

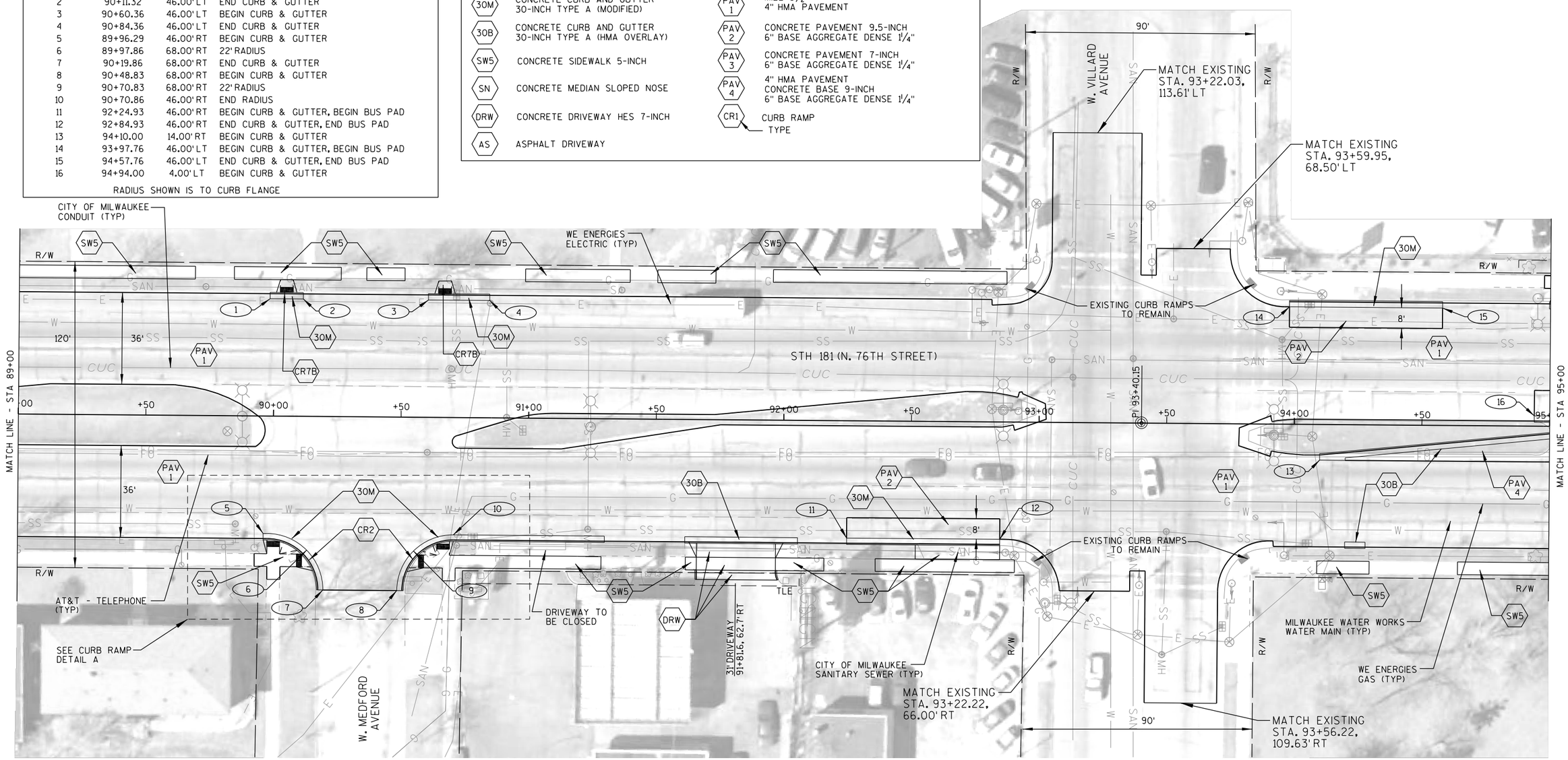


2

| PROJECT NO: 2140-13-70 | HWY: STH 181 | COUNTY: MILWAUKEE | PLAN DETAIL | SHEET 55 | E |
|---|---|---|---|---|---|

## DATA TABLE

STH 181 (N. 76TH STREET)

| POINT NO. | STATION | OFFSET | COMMENTS |
|---|---|---|---|
| 1 | 95+00.00 | 5.00' RT | CURB & GUTTER TAPER POINT |
| 2 | 95+50.00 | 5.00' RT | END CURB & GUTTER |
| 3 | 96+00.00 | 14.00' LT | END CURB & GUTTER |
| 4 | 98+38.53 | 46.00' RT | BEGIN CURB & GUTTER |
| 5 | 98+38.53 | 68.00' RT | 22' RADIUS |
| 6 | 98+60.53 | 68.00' RT | END CURB & GUTTER |
| 7 | 98+90.53 | 68.00' RT | BEGIN CURB & GUTTER |
| 8 | 99+12.53 | 68.00' RT | 22' RADIUS |
| 9 | 99+12.53 | 46.00' RT | END CURB & GUTTER |
| 10 | 99+95.00 | 14.00' RT | BEGIN CURB & GUTTER |
| 11 | 100+55.00 | 14.00' RT | END CURB & GUTTER |
| 12 | 100+00.00 | 5.00' LT | BEGIN CURB & GUTTER |
| 13 | 100+67.50 | 5.00' LT | CURB & GUTTER TAPER POINT |
| 14 | 95+13.38 | 46.00' RT | BEGIN CURB & GUTTER; BEGIN BUS PAD |
| 15 | 95+73.38 | 46.00' RT | END CURB & GUTTER; END BUS PAD |
| 16 | 98+75.53 | 46.00' LT | BEGIN CURB & GUTTER; BEGIN BUS PAD |
| 17 | 99+35.53 | 46.00' LT | END CURB & GUTTER; END BUS PAD |

RADIUS SHOWN IS TO CURB FLANGE

## LEGEND

| | | | |
|---|---|---|---|
| 30A | CONCRETE CURB AND GUTTER 30-INCH TYPE A | CCP | CONCRETE CURB PEDESTRIAN |
| 30M | CONCRETE CURB AND GUTTER 30-INCH TYPE A (MODIFIED) | PAV 1 | MILL 3½" 4" HMA PAVEMENT |
| 30B | CONCRETE CURB AND GUTTER 30-INCH TYPE A (HMA OVERLAY) | PAV 2 | CONCRETE PAVEMENT 9.5-INCH 6" BASE AGGREGATE DENSE 1¼" |
| SW5 | CONCRETE SIDEWALK 5-INCH | PAV 3 | CONCRETE PAVEMENT 7-INCH 6" BASE AGGREGATE DENSE 1¼" |
| SN | CONCRETE MEDIAN SLOPED NOSE | PAV 4 | 4" HMA PAVEMENT CONCRETE BASE 9-INCH 6" BASE AGGREGATE DENSE 1¼" |
| DRW | CONCRETE DRIVEWAY HES 7-INCH | CR1 | CURB RAMP TYPE |
| AS | ASPHALT DRIVEWAY | | |

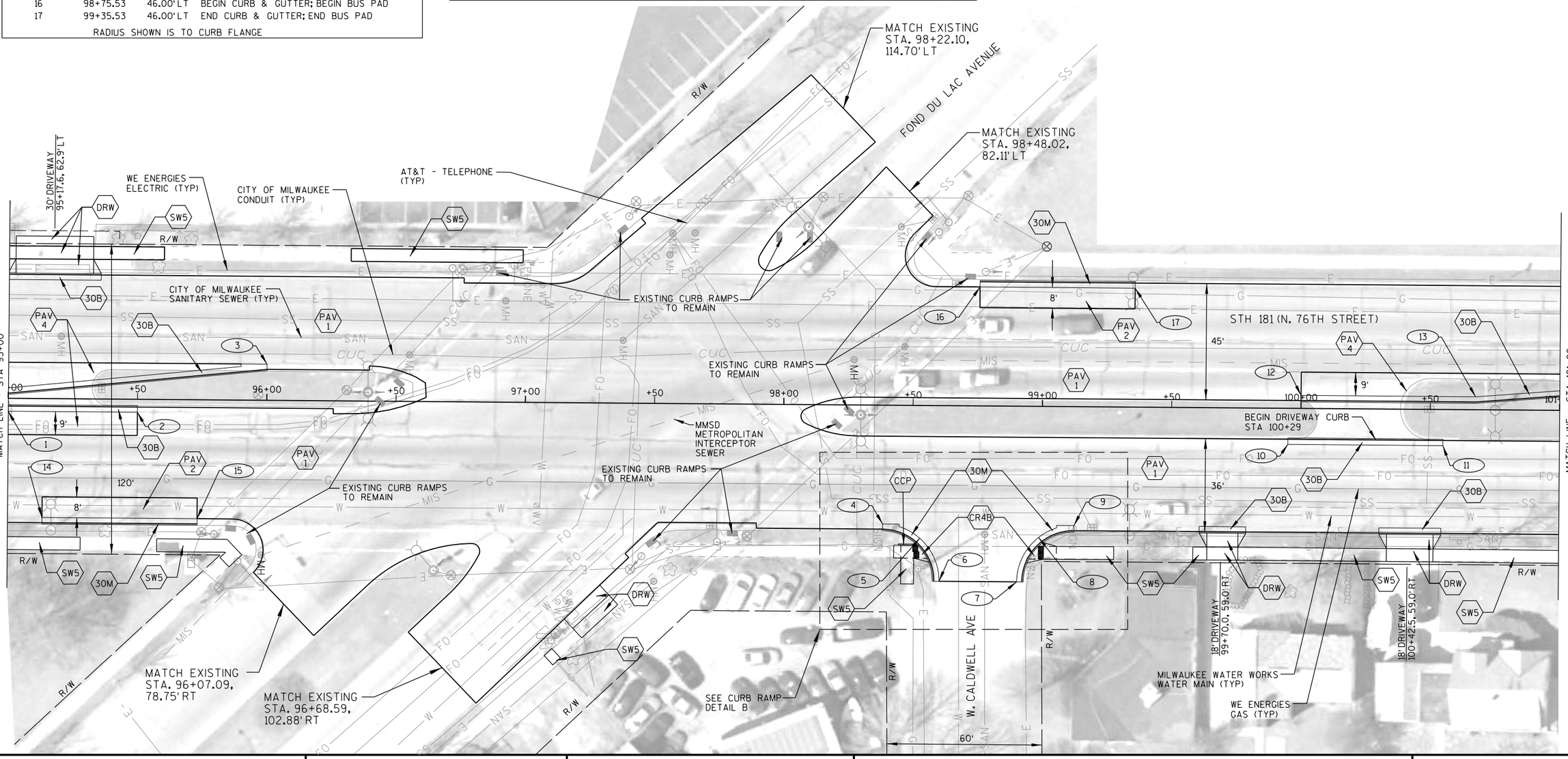


| PROJECT NO: 2140-13-70 | HWY: STH 181 | COUNTY: MILWAUKEE | PLAN DETAIL | SHEET 56 | E |
|---|---|---|---|---|---|

## DATA TABLE

STH 181 (N. 76TH STREET)

| POINT NO. | STATION | OFFSET | COMMENTS |
|---|---|---|---|
| 1 | 101+73.74 | 78.76' LT | BEGIN CURB & GUTTER |
| 2 | 101+93.51 | 65.58' LT | END CURB & GUTTER |
| 3 | 101+61.69 | 64.24' LT | BEGIN CURB & GUTTER |
| 4 | 101+67.57 | 52.86' LT | 5' RADIUS |
| 5 | 101+54.77 | 46.83' LT | END CURB & GUTTER |
| 6 | 101+80.00 | 14.00' LT | END CURB & GUTTER |
| 7 | 106+07.88 | 64.19' RT | BEGIN CURB & GUTTER |
| 8 | 106+29.34 | 78.20' RT | END CURB & GUTTER |
| 9 | 106+41.48 | 62.94' RT | BEGIN CURB & GUTTER |
| 10 | 106+32.12 | 50.37' RT | 4.5' RADIUS |
| 11 | 106+31.92 | 45.87' RT | END CURB & GUTTER |

RADIUS SHOWN IS TO CURB FLANGE

## LEGEND

| | | | |
|---|---|---|---|
| 30A | CONCRETE CURB AND GUTTER 30-INCH TYPE A | CCP | CONCRETE CURB PEDESTRIAN |
| 30M | CONCRETE CURB AND GUTTER 30-INCH TYPE A (MODIFIED) | PAV 1 | MILL 3½" 4" HMA PAVEMENT |
| 30B | CONCRETE CURB AND GUTTER 30-INCH TYPE A (HMA OVERLAY) | PAV 2 | CONCRETE PAVEMENT 9.5-INCH 6" BASE AGGREGATE DENSE 1¼" |
| SW5 | CONCRETE SIDEWALK 5-INCH | PAV 3 | CONCRETE PAVEMENT 7-INCH 6" BASE AGGREGATE DENSE 1¼" |
| SN | CONCRETE MEDIAN SLOPED NOSE | PAV 4 | 4" HMA PAVEMENT CONCRETE BASE 9-INCH 6" BASE AGGREGATE DENSE 1¼" |
| DRW | CONCRETE DRIVEWAY HES 7-INCH | CR1 | CURB RAMP TYPE |
| AS | ASPHALT DRIVEWAY | | |

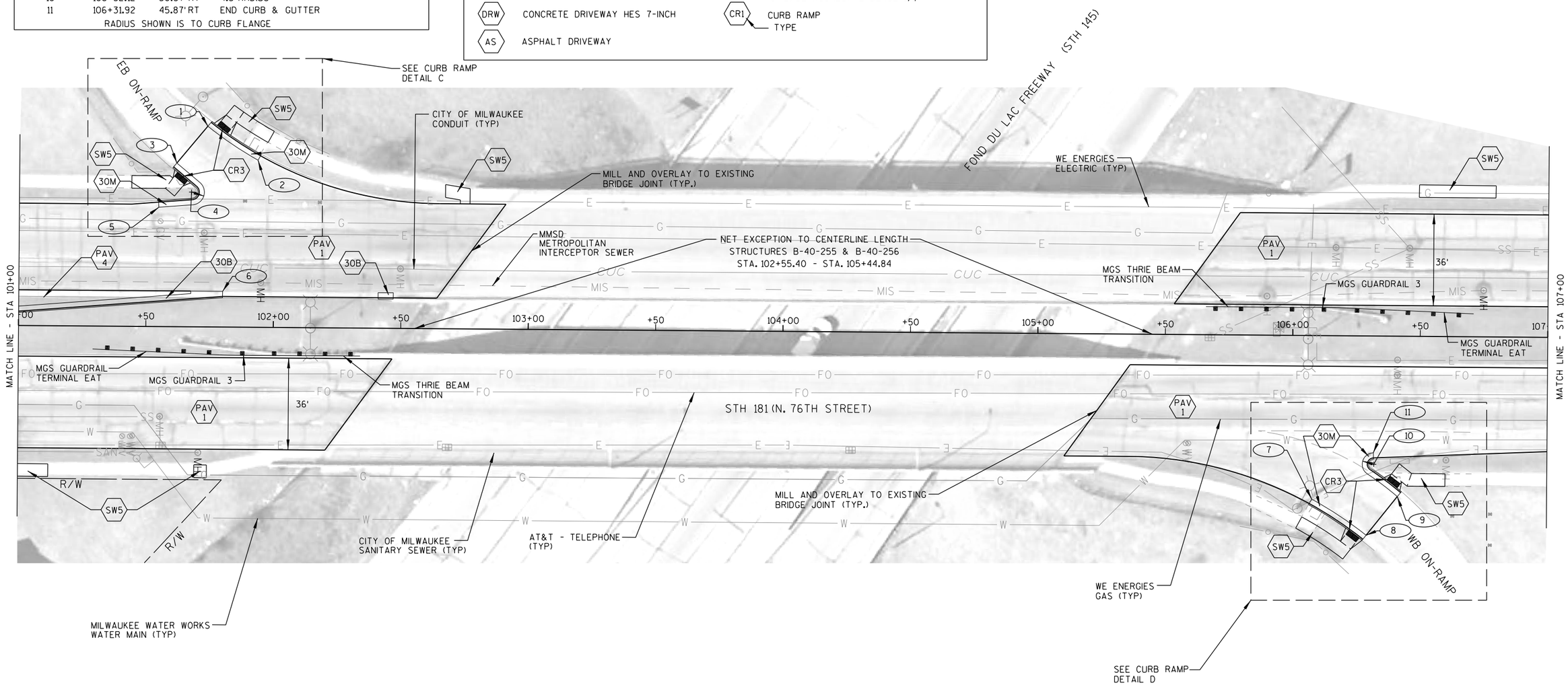

2

## DATA TABLE

STH 181 (N. 76TH STREET)

| POINT NO. | STATION | OFFSET | COMMENTS |
|---|---|---|---|
| 1 | 108+92.51 | 46.00' LT | BEGIN CURB & GUTTER |
| 2 | 108+92.51 | 68.00' LT | 22' RADIUS |
| 3 | 109+14.51 | 68.00' LT | END CURB AND GUTTER |
| 4 | 109+44.51 | 68.00' LT | BEGIN CURB & GUTTER |
| 5 | 109+66.51 | 68.00' LT | 22' RADIUS |
| 6 | 109+66.50 | 46.00' LT | BEGIN BUS PAD |
| 7 | 109+59.83 | 61.77' RT | BEGIN CURB & GUTTER |
| 8 | 109+97.17 | 50.94' RT | END CURB AND GUTTER |
| 9 | 109+85.92 | 68.94' RT | BEGIN CURB & GUTTER |
| 10 | 110+01.22 | 64.03' RT | END CURB AND GUTTER |
| 11 | 111+85.00 | 14.00' RT | BEGIN CURB & GUTTER |
| 12 | 110+26.50 | 46.00' RT | END BUS PAD |

RADIUS SHOWN IS TO CURB FLANGE

## LEGEND

| | | | |
|---|---|---|---|
| 30A | CONCRETE CURB AND GUTTER 30-INCH TYPE A | CCP | CONCRETE CURB PEDESTRIAN |
| 30M | CONCRETE CURB AND GUTTER 30-INCH TYPE A (MODIFIED) | PAV 1 | MILL 3½" 4" HMA PAVEMENT |
| 30B | CONCRETE CURB AND GUTTER 30-INCH TYPE A (HMA OVERLAY) | PAV 2 | CONCRETE PAVEMENT 9.5-INCH 6" BASE AGGREGATE DENSE 1¼" |
| SW5 | CONCRETE SIDEWALK 5-INCH | PAV 3 | CONCRETE PAVEMENT 7-INCH 6" BASE AGGREGATE DENSE 1¼" |
| SN | CONCRETE MEDIAN SLOPED NOSE | PAV 4 | 4" HMA PAVEMENT CONCRETE BASE 9-INCH 6" BASE AGGREGATE DENSE 1¼" |
| DRW | CONCRETE DRIVEWAY HES 7-INCH | CR1 | CURB RAMP TYPE |
| AS | ASPHALT DRIVEWAY | | |

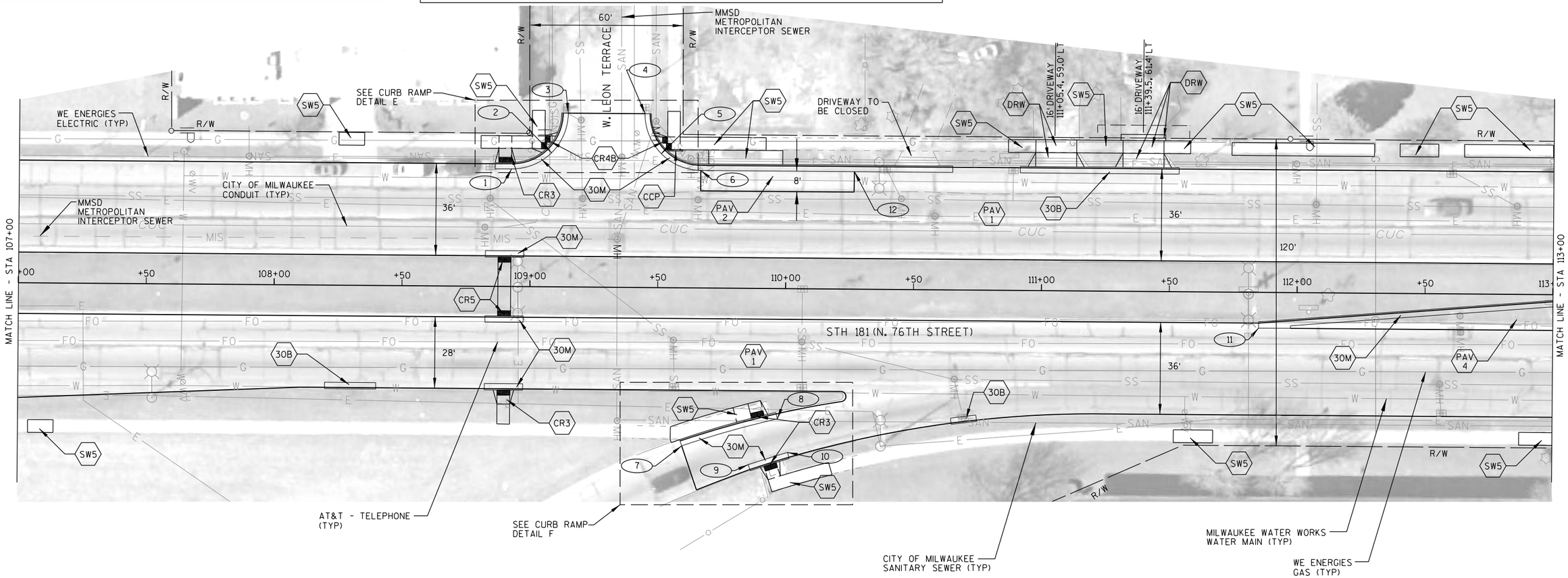


2

| PROJECT NO: 2140-13-70 | HWY: STH 181 | COUNTY: MILWAUKEE | PLAN DETAIL | SHEET 58 | E |
|---|---|---|---|---|---|

2

## DATA TABLE

| POINT NO. | STH 181 (N. 76TH STREET) STATION | OFFSET | COMMENTS | POINT NO. | STH 181 (N. 76TH STREET) STATION | OFFSET | COMMENTS |
|---|---|---|---|---|---|---|---|
| 1 | 113+00.06 | 14.00' LT | BEGIN CURB & GUTTER | 18 | 118+19.91 | 47.00' RT | BEGIN 200' RADIUS |
| 2 | 113+35.00 | 2.00' RT | END 12.5 : 1 TAPER | 19 | 118+19.91 | 247.00' RT | 200' RADIUS |
| 3 | 113+65.00 | 2.00' RT | END PAVEMENT REPLACEMENT | 20 | 114+24.00 | 46.00' RT | BEGIN CURB & GUTTER / BUS PAD |
| 4 | 114+83.34 | 46.00' LT | BEGIN CURB & GUTTER | 21 | 115+36.00 | 70.50' RT | BEGIN CURB AND GUTTER |
| 5 | 114+83.34 | 68.00' LT | 22' RADIUS | 22 | 115+64.63 | 2.00' LT | BEGIN 5' RADIUS |
| 6 | 115+05.34 | 69.00' LT | END CURB & GUTTER | 23 | 115+64.63 | 3.00' RT | 5' RADIUS |
| 7 | 115+35.34 | 69.00' LT | BEGIN CURB & GUTTER | 24 | 115+62.56 | 7.55' RT | END 5' RADIUS, BEGIN 72' RADIUS |
| 8 | 115+55.34 | 67.00' LT | 20' RADIUS | 25 | 115+92.34 | 58.00' LT | 72' RADIUS |
| 9 | 115+55.34 | 47.00' LT | CURB & GUTTER TANGENT POINT | 26 | 115+92.34 | 14.00' RT | END 72' RADIUS |
| 10 | 114+84.00 | 46.00' RT | BEGIN 22' RADIUS, END BUS PAD | 27 | 114+61.00 | 14.00' LT | BEGIN 60' RADIUS |
| 11 | 114+84.00 | 68.00' RT | 22' RADIUS | 28 | 114+61.00 | 46.00' RT | 60' RADIUS |
| 12 | 115+06.00 | 68.00' RT | CURB & GUTTER RADIUS POINT | 29 | 114+88.25 | 7.45' LT | END 60' RADIUS, BEGIN 5' RADIUS |
| 13 | 115+36.00 | 67.00' RT | CURB & GUTTER RADIUS POINT | 30 | 114+85.98 | 3.00' LT | 5' RADIUS |
| 14 | 115+56.00 | 67.00' RT | 20' RADIUS | 31 | 114+85.98 | 2.00' RT | END 5' RADIUS |
| 15 | 115+56.00 | 47.00' RT | CURB & GUTTER RADIUS POINT | 32 | 115+05.34 | 68.00' LT | CURB & GUTTER RADIUS POINT |
| 16 | 117+15.00 | 2.00' LT | CURB & GUTTER TAPER POINT | 33 | 115+35.34 | 67.00' LT | CURB & GUTTER RADIUS POINT |
| 17 | 118+65.00 | 14.00' LT | CURB & GUTTER TAPER POINT | 34 | 115+06.00 | 70.50' RT | END CURB & GUTTER |

RADIUS SHOWN IS TO CURB FLANGE

## LEGEND

| | | | |
|---|---|---|---|
| 30A | CONCRETE CURB AND GUTTER 30-INCH TYPE A | CCP | CONCRETE CURB PEDESTRIAN |
| 30M | CONCRETE CURB AND GUTTER 30-INCH TYPE A (MODIFIED) | PAV 1 | MILL 3½" 4" HMA PAVEMENT |
| 30B | CONCRETE CURB AND GUTTER 30-INCH TYPE A (HMA OVERLAY) | PAV 2 | CONCRETE PAVEMENT 9.5-INCH 6" BASE AGGREGATE DENSE 1¼" |
| SW5 | CONCRETE SIDEWALK 5-INCH | PAV 3 | CONCRETE PAVEMENT 7-INCH 6" BASE AGGREGATE DENSE 1¼" |
| SN | CONCRETE MEDIAN SLOPED NOSE | PAV 4 | 4" HMA PAVEMENT CONCRETE BASE 9-INCH 6" BASE AGGREGATE DENSE 1¼" |
| DRW | CONCRETE DRIVEWAY HES 7-INCH | CR1 | CURB RAMP TYPE |
| AS | ASPHALT DRIVEWAY | | |

N

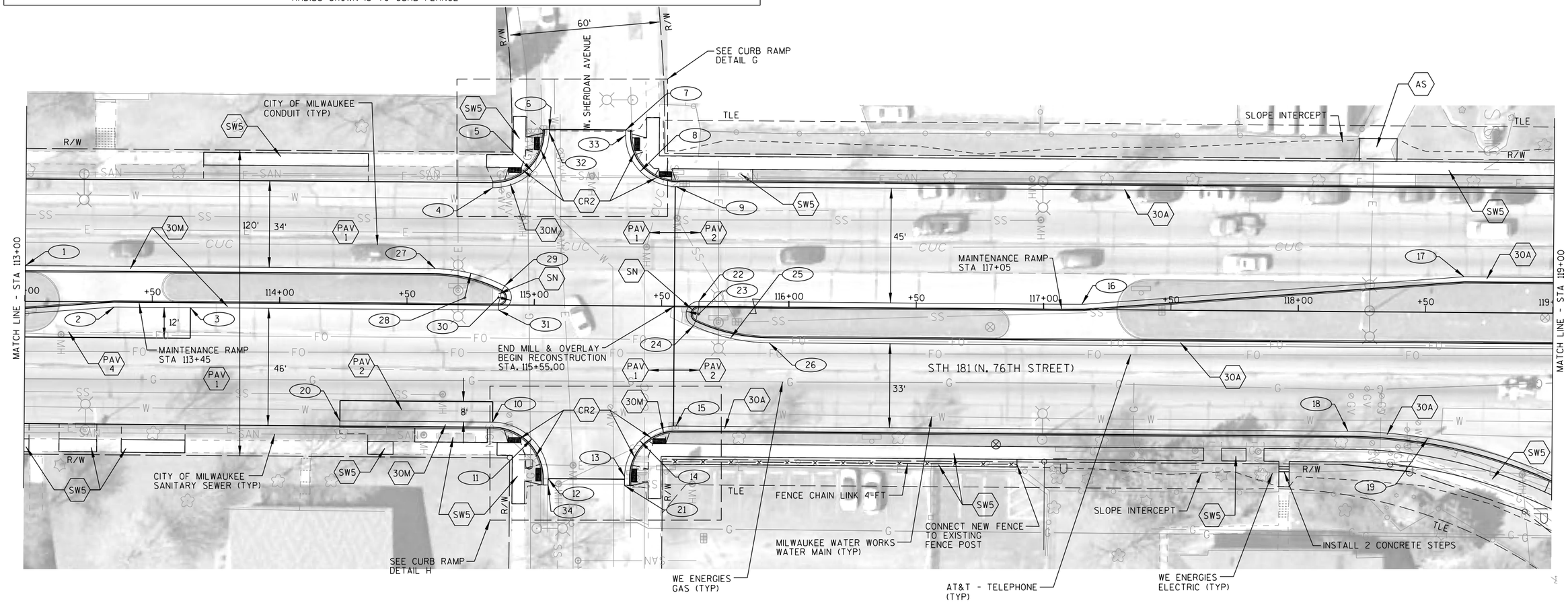


2

| PROJECT NO: 2140-13-70 | HWY: STH 181 | COUNTY: MILWAUKEE | PLAN DETAIL | SHEET 59 | E |
|---|---|---|---|---|---|

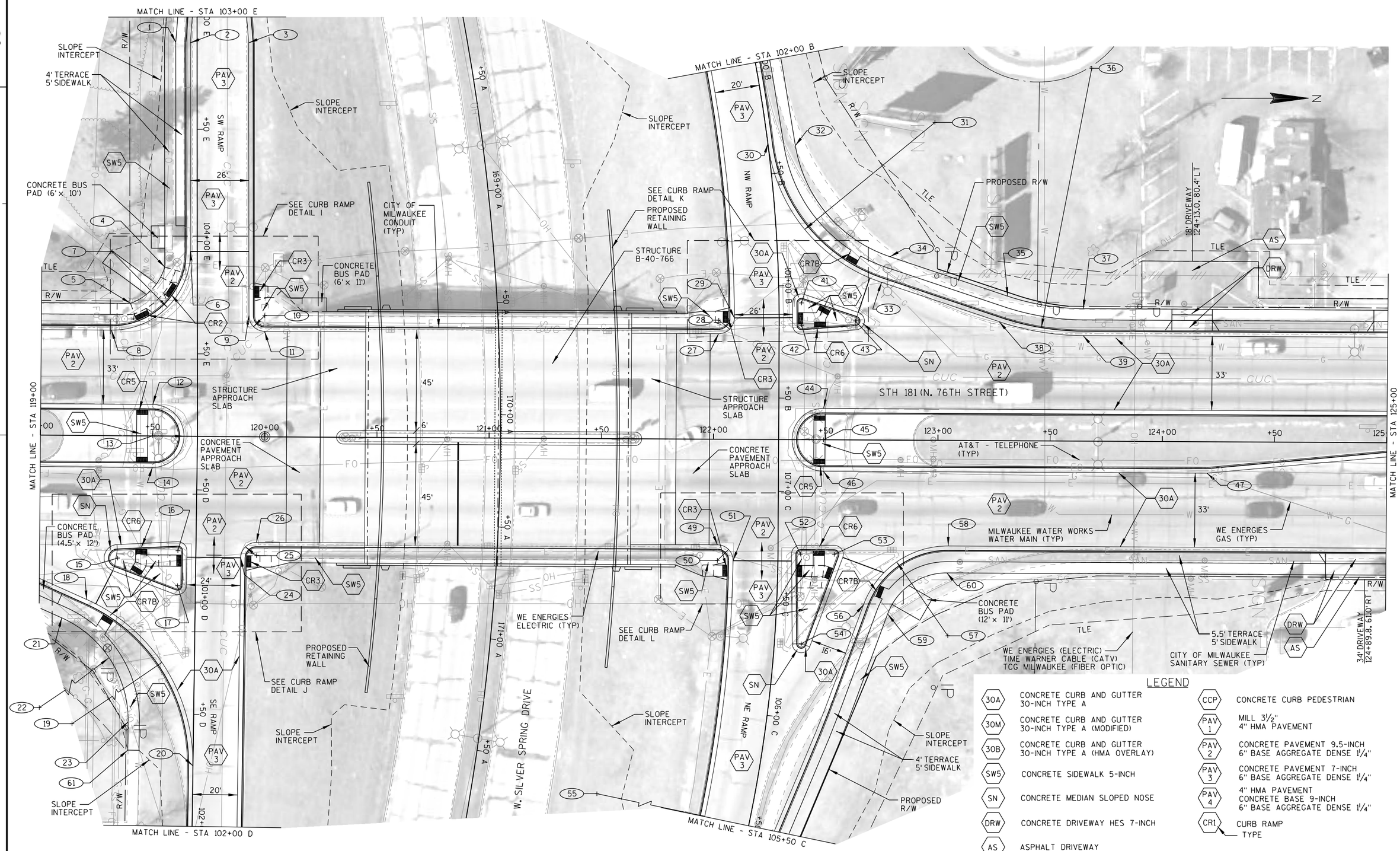
MATCH LINE - STA 103+00 E
MATCH LINE - STA 102+00 B
MATCH LINE - STA 119+00
MATCH LINE - STA 125+00
MATCH LINE - STA 102+00 D
MATCH LINE - STA 105+50 C
SLOPE INTERCEPT
4' TERRACE 5' SIDEWALK
CONCRETE BUS PAD (6' x 10')
SEE CURB RAMP DETAIL I
CITY OF MILWAUKEE CONDUIT (TYP)
CONCRETE BUS PAD (6' x 11')
STRUCTURE APPROACH SLAB
CONCRETE PAVEMENT APPROACH SLAB
CONCRETE BUS PAD (4.5' x 12')
SEE CURB RAMP DETAIL K
PROPOSED RETAINING WALL
STRUCTURE B-40-766
PROPOSED R/W
18' DRIVEWAY 124+13.0, 80.4' LT
STH 181 (N. 76TH STREET)
AT&T - TELEPHONE (TYP)
MILWAUKEE WATER WORKS WATER MAIN (TYP)
WE ENERGIES GAS (TYP)
WE ENERGIES ELECTRIC (TYP)
SEE CURB RAMP DETAIL L
SEE CURB RAMP DETAIL J
CONCRETE BUS PAD (12' x 11')
WE ENERGIES (ELECTRIC) TIME WARNER CABLE (CATV) TCG MILWAUKEE (FIBER OPTIC)
CITY OF MILWAUKEE SANITARY SEWER (TYP)
5.5' TERRACE 5' SIDEWALK
34' DRIVEWAY 124+89.8, 61.0' RT
W. SILVER SPRING DRIVE
SW RAMP
NW RAMP
SE RAMP
NE RAMP
LEGEND
30A CONCRETE CURB AND GUTTER 30-INCH TYPE A
30M CONCRETE CURB AND GUTTER 30-INCH TYPE A (MODIFIED)
30B CONCRETE CURB AND GUTTER 30-INCH TYPE A (HMA OVERLAY)
SW5 CONCRETE SIDEWALK 5-INCH
SN CONCRETE MEDIAN SLOPED NOSE
DRW CONCRETE DRIVEWAY HES 7-INCH
AS ASPHALT DRIVEWAY
CCP CONCRETE CURB PEDESTRIAN
PAV 1 MILL 3½" 4" HMA PAVEMENT
PAV 2 CONCRETE PAVEMENT 9.5-INCH 6" BASE AGGREGATE DENSE 1¼"
PAV 3 CONCRETE PAVEMENT 7-INCH 6" BASE AGGREGATE DENSE 1¼"
PAV 4 4" HMA PAVEMENT CONCRETE BASE 9-INCH 6" BASE AGGREGATE DENSE 1¼"
CR1 CURB RAMP TYPE

## DATA TABLE

| POINT NO. | STATION | OFFSET | COMMENTS |
|---|---|---|---|
| 1 | 103+11.24 E | 9.50' RT | END SIDEWALK TAPER |
| 2 | 103+11.50 E | 3.00' RT | END TAPER |
| 3 | 103+11.50 E | 23.00' LT | END TAPER |
| 4 | 104+11.36 E | 14.50' RT | SIDEWALK PI |
| 5 | 119+39.73 | 59.00' LT | SIDEWALK PI |
| 6 | 104+04.43 E | 3.00' RT | BEGIN 35' RADIUS |
| 7 | 119+31.29 | 82.00' LT | 35' RADIUS |
| 8 | 119+31.29 | 47.00' LT | END 35' RADIUS |
| 9 | 104+33.02 E | 23.00' LT | BEGIN 7' RADIUS |
| 10 | 119+99.54 | 54.00' LT | 7' RADIUS |
| 11 | 119+99.56 | 47.00' LT | END 7' RADIUS |
| 12 | 119+50.00 | 14.00' LT | BEGIN 14' RADIUS |
| 13 | 119+50.00 | 0.00' LT | 14' RADIUS |
| 14 | 119+50.00 | 14.00' RT | END 14' RADIUS |
| 15 | 119+34.85 | 54.47' RT | 6' RADIUS |
| 16 | 119+61.70 | 51.00' RT | 4' RADIUS |
| 17 | 119+61.61 | 66.52' RT | 4' RADIUS |
| 18 | 100+99.46 D | 48.35' RT | BEGIN 80' RADIUS |
| 19 | 101+72.93 D | 80.00' RT | 80' RADIUS |
| 20 | 101+72.93 D | 0.00' LT | END 80' RADIUS |
| 21 | 101+07.78 D | 59.36' RT | BEGIN 50' RADIUS |
| 22 | 101+53.70 D | 79.14' RT | 50' RADIUS |
| 23 | 101+53.70 D | 29.14' RT | END 50' RADIUS |
| 24 | 119+89.68 | 53.97' RT | BEGIN 7' RADIUS |
| 25 | 119+96.68 | 54.01' RT | 7' RADIUS |
| 26 | 119+96.67 | 47.01' RT | END 7' RADIUS |
| 27 | 122+01.97 | 47.00' LT | BEGIN 7' RADIUS |
| 28 | 122+01.97 | 54.00' LT | 7' RADIUS |
| 29 | 122+08.97 | 54.07' LT | END 7' RADIUS |
| 30 | 101+63.51 B | 0.00' RT | END 75' RADIUS, BEGIN 641.46' RADIUS |
| 31 | 101+63.51 B | 75.00' RT | 75' RADIUS |
| 32 | 101+61.20 B | 12.05' RT | END 62' RADIUS, END TAPER |

RADIUS SHOWN IS TO CURB FLANGE

## DATA TABLE

| POINT NO. | STATION | OFFSET | COMMENTS |
|---|---|---|---|
| 33 | 101+00.32 B | 45.84' RT | BEGIN 75' RADIUS |
| 34 | 101+10.78 B | 50.04' RT | BEGIN 62' RADIUS, END SIDEWALK TAPER |
| 35 | 123+30.76 | 64.40' LT | END 107' RADIUS, BEGIN SIDEWALK TAPER |
| 36 | 123+64.48 | 167.00' LT | 120' RADIUS |
| 37 | 123+64.48 | 59.00' LT | BEGIN 107' RADIUS |
| 38 | 123+27.02 | 53.00' LT | END 120' RADIUS, BEGIN TAPER |
| 39 | 123+64.48 | 47.00' LT | BEGIN 120' RADIUS |
| 40 | NOT USED | -- | -- |
| 41 | 122+38.88 | 60.91' LT | 4' RADIUS |
| 42 | 122+39.00 | 51.00' LT | 4' RADIUS |
| 43 | 122+62.94 | 53.00' LT | 4' RADIUS |
| 44 | 122+49.00 | 14.00' LT | BEGIN 14' RADIUS |
| 45 | 122+49.00 | 0.00' LT | 14' RADIUS |
| 46 | 122+49.00 | 14.00' RT | END 14' RADIUS |
| 47 | 124+20.00 | 14.00' RT | BEGIN TAPER |
| 48 | NOT USED | -- | -- |
| 49 | 122+01.97 | 47.00' RT | BEGIN 7' RADIUS |
| 50 | 122+01.97 | 54.00' RT | 7' RADIUS |
| 51 | 122+08.97 | 54.07' RT | END 7' RADIUS, BEGIN 602' RADIUS |
| 52 | 122+39.00 | 51.00' RT | 4' RADIUS |
| 53 | 122+54.08 | 51.00' RT | 4' RADIUS |
| 54 | 106+32.95 C | 12.00' RT | 4' RADIUS |
| 55 | 105+74.91 C | 622.0' LT | 602' RADIUS |
| 56 | 106+51.21 C | 38.71' RT | BEGIN 40' RADIUS, BEGIN TAPER |
| 57 | 123+04.82 | 87.00' RT | 40' RADIUS |
| 58 | 123+04.82 | 47.00' RT | END 40' RADIUS |
| 59 | 122+77.98 | 77.42' RT | BEGIN 27' RADIUS |
| 60 | 123+04.29 | 59.00' RT | END 27' RADIUS |
| 61 | 101+66.33 D | 29.14' RT | END SIDEWALK |

RADIUS SHOWN IS TO CURB FLANGE

2

## DATA TABLE

| POINT NO. | STATION | OFFSET | COMMENTS |
|---|---|---|---|
| 1 | 107+06.53 B | 6.50' RT | END SIDEWALK, END 478' RADIUS |
| 2 | 107+06.73 B | 0.00' RT | END 485' RADIUS, END CURB & GUTTER |
| 3 | 106+25.60 B | 22.28' LT | END 3' RADIUS, END CURB & GUTTER |
| 4 | 106+26.95 B | 19.00' LT | 3' RADIUS |
| 5 | 106+26.95 B | 16.00' LT | BEGIN 3' RADIUS, END 500.98' RADIUS |
| 6 | 105+85.23 B | 484.98' RT | 485' RADIUS |
| 7 | 105+85.23 B | 6.50' RT | BEGIN 478' RADIUS |
| 8 | 105+85.23 B | 0.00' LT | BEGIN 485' RADIUS |
| 9 | 105+85.23 B | 484.98' RT | 500.98' RADIUS |
| 10 | 105+85.23 B | 16.00' LT | BEGIN 500.98' RADIUS |
| 11 | 103+38.62 B | 6.50' RT | END 648' RADIUS |
| 12 | 103+38.62 B | 0.00' LT | END 641' RADIUS |
| 13 | 103+15.52 B | 20.00' LT | END 621.46' RADIUS, BEGIN TAPER |
| 14 | 100+79.73 B | 641.46' LT | 621.46' RADIUS |
| 15 | 101+87.48 B | 6.50' RT | BEGIN 648' RADIUS |
| 16 | 107+06.73 B | 12.00' LT | MATCH EXISTING PAVEMENT |

RADIUS SHOWN IS TO CURB FLANGE

## DATA TABLE

| POINT NO. | STATION | OFFSET | COMMENTS |
|---|---|---|---|
| 17 | 99+61.99 E | 11.50' RT | BEGIN SIDEWALK |
| 18 | 99+22.00 E | 0.00' RT | BEGIN CURB & GUTTER, 1000' RADIUS |
| 19 | 100+40.83 E | 1000.00' RT | 1000' RADIUS |
| 20 | 100+40.83 E | 0.00' RT | END 1000' RADIUS |
| 21 | 99+22.00 E | 8.00' LT | MATCH EXISTING PAVEMENT |
| 22 | 101+12.53 E | 38.74' LT | MATCH EXISTING PAVEMENT |
| 23 | 101+14.51 E | 31.02' LT | BEGIN CURB & GUTTER, BEGIN 4' RADIUS |
| 24 | 101+15.50 E | 27.14' LT | 4' RADIUS |
| 25 | 101+15.09 E | 23.16' LT | END 4' RADIUS, BEGIN 602' RADIUS |
| 26 | 101+76.74 E | 622.00' LT | 602' RADIUS |
| 27 | 101+76.74 E | 20.00' LT | END 602' RADIUS |
| 28 | 102+74.00 E | 20.00' LT | BEGIN TAPER |
| 29 | 102+74.00 E | 0.00' LT | BEGIN TAPER |
| 30 | 102+73.54 E | 11.50' RT | BEGIN SIDEWALK TAPER |
| 31 | 104+38.49 B | 16.00 LT | END TAPER |

RADIUS SHOWN IS TO CURB FLANGE

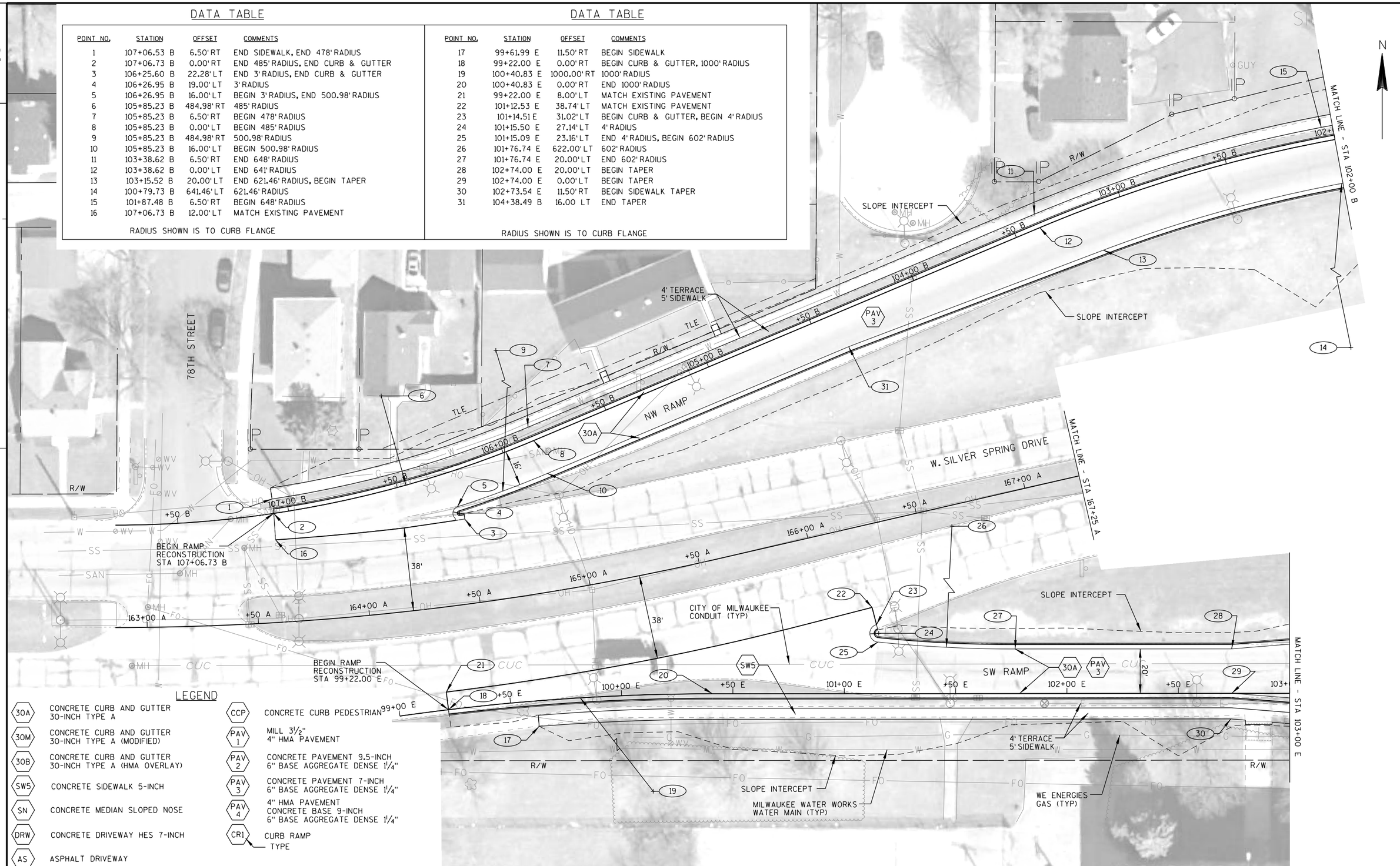


## LEGEND

| | |
|---|---|
| 30A | CONCRETE CURB AND GUTTER 30-INCH TYPE A |
| 30M | CONCRETE CURB AND GUTTER 30-INCH TYPE A (MODIFIED) |
| 30B | CONCRETE CURB AND GUTTER 30-INCH TYPE A (HMA OVERLAY) |
| SW5 | CONCRETE SIDEWALK 5-INCH |
| SN | CONCRETE MEDIAN SLOPED NOSE |
| DRW | CONCRETE DRIVEWAY HES 7-INCH |
| AS | ASPHALT DRIVEWAY |
| CCP | CONCRETE CURB PEDESTRIAN |
| PAV 1 | MILL 3½" 4" HMA PAVEMENT |
| PAV 2 | CONCRETE PAVEMENT 9.5-INCH 6" BASE AGGREGATE DENSE 1¼" |
| PAV 3 | CONCRETE PAVEMENT 7-INCH 6" BASE AGGREGATE DENSE 1¼" |
| PAV 4 | 4" HMA PAVEMENT CONCRETE BASE 9-INCH 6" BASE AGGREGATE DENSE 1¼" |
| CR1 | CURB RAMP TYPE |

2

| PROJECT NO:2140-13-70 | HWY:STH 181 | COUNTY:MILWAUKEE | PLAN DETAIL | SHEET 62 | E |
|---|---|---|---|---|---|

## DATA TABLE

W. SILVER SPRING DRIVE

| POINT NO. | STATION | OFFSET | COMMENTS |
|---|---|---|---|
| 1 | 168+59.65 A | 7.50' RT | BEGIN CURB & GUTTER |
| 2 | 168+69.65 A | 7.50' RT | BEGIN FULL WIDTH CURB & GUTTER |
| 3 | 168+80.00 A | 7.50' RT | BEGIN "DRIVEWAY" CURB & GUTTER |
| 4 | 169+17.91 A | 4.00' RT | BEGIN CONCRETE BARRIER |
| 5 | 169+37.79 A | 7.50' RT | END "DRIVEWAY" CURB & GUTTER |
| 6 | 169+38.76 A | 7.50' LT | BEGIN CURB & GUTTER |
| 7 | 169+53.68 A | 7.50' LT | END CURB & GUTTER |
| 8 | 169+53.68 A | 5.50' LT | BEGIN CONCRETE BARRIER |
| 9 | 169+53.05 A | 5.50' RT | CONCRETE BARRIER ANGLE POINT |
| 10 | 170+67.11 A | 5.50' LT | CONCRETE BARRIER ANGLE POINT |
| 11 | 170+67.74 A | 5.50' RT | END CONCRETE BARRIER |
| 12 | 170+67.74 A | 7.50' RT | BEGIN CURB & GUTTER |
| 13 | 170+82.83 A | 7.50' RT | END CURB & GUTTER |
| 14 | 170+80.52 A | 7.29' LT | BEGIN "DRIVEWAY" CURB & GUTTER |
| 15 | 170+85.40 A | 7.50' LT | ANGLE POINT |
| 16 | 171+01.92 A | 4.00' LT | END CONCRETE BARRIER |
| 17 | 171+38.00 A | 7.50' LT | END FULL WIDTH CURB & GUTTTER |
| 18 | 171+48.00 A | 7.50' LT | END "DRIVEWAY" CURB & GUTTER |

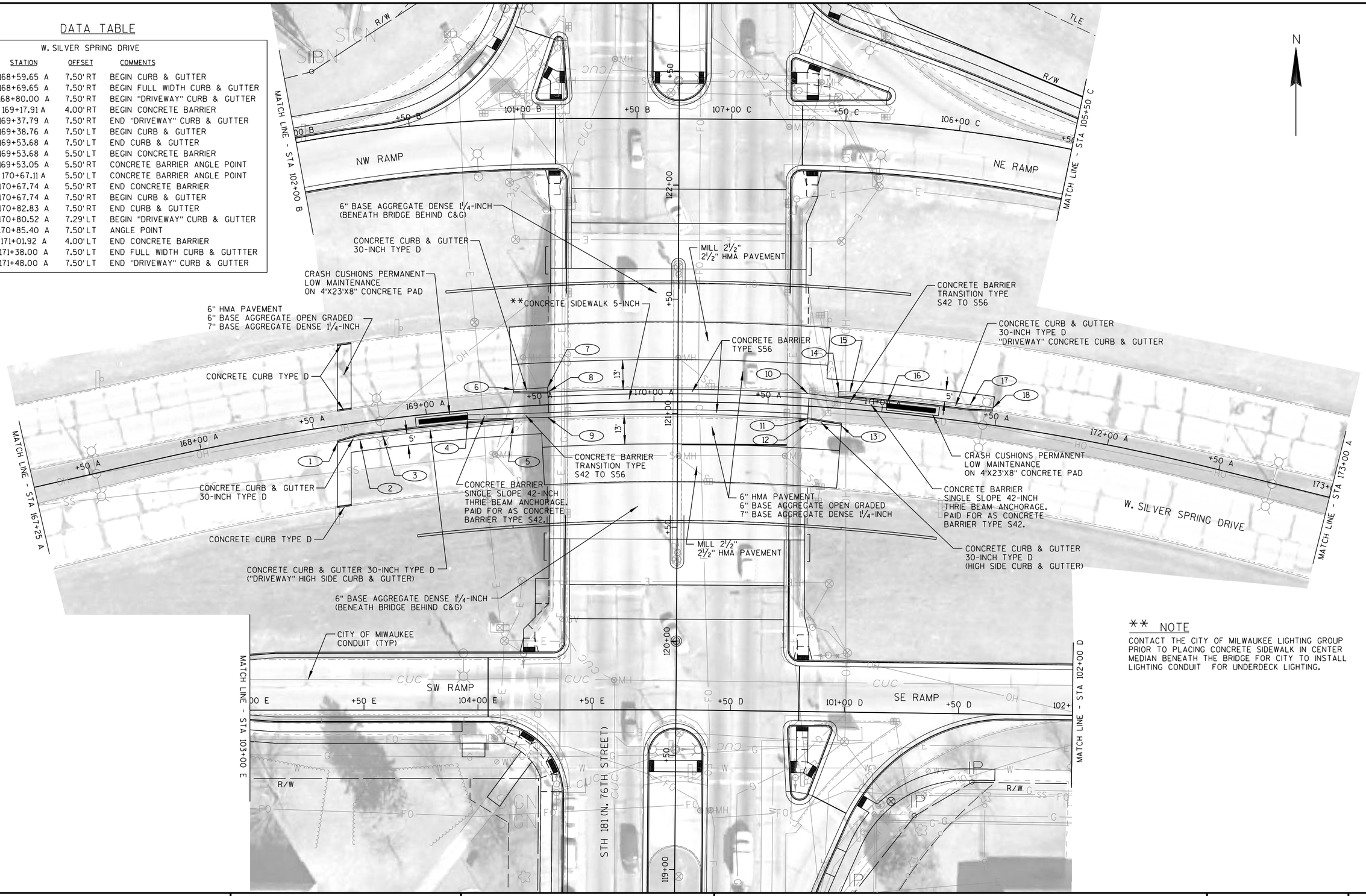


## ** NOTE

CONTACT THE CITY OF MILWAUKEE LIGHTING GROUP PRIOR TO PLACING CONCRETE SIDEWALK IN CENTER MEDIAN BENEATH THE BRIDGE FOR CITY TO INSTALL LIGHTING CONDUIT FOR UNDERDECK LIGHTING.

## LEGEND

| | | | |
|---|---|---|---|
| 30A | CONCRETE CURB AND GUTTER 30-INCH TYPE A | CCP | CONCRETE CURB PEDESTRIAN |
| 30M | CONCRETE CURB AND GUTTER 30-INCH TYPE A (MODIFIED) | PAV 1 | MILL 3½" 4" HMA PAVEMENT |
| 30B | CONCRETE CURB AND GUTTER 30-INCH TYPE A (HMA OVERLAY) | PAV 2 | CONCRETE PAVEMENT 9.5-INCH 6" BASE AGGREGATE DENSE 1¼" |
| SW5 | CONCRETE SIDEWALK 5-INCH | PAV 3 | CONCRETE PAVEMENT 7-INCH 6" BASE AGGREGATE DENSE 1¼" |
| SN | CONCRETE MEDIAN SLOPED NOSE | PAV 4 | 4" HMA PAVEMENT CONCRETE BASE 9-INCH 6" BASE AGGREGATE DENSE 1¼" |
| DRW | CONCRETE DRIVEWAY HES 7-INCH | CR1 | CURB RAMP TYPE |
| AS | ASPHALT DRIVEWAY | | |

## DATA TABLE

| POINT NO. | STATION | OFFSET | COMMENTS |
|---|---|---|---|
| | NE RAMP | | |
| 1 | 104+30.57 C | 20.00' LT | END 602' RADIUS |
| 2 | 101+40.45 C | 5.86' RT | BEGIN SIDEWALK |
| 3 | 101+84.53 C | 37.60' LT | MATCH EXISTING PAVEMENT |
| 4 | 101+84.53 C | 20.00' LT | END 602' RADIUS, BEGIN 4' RADIUS |
| 5 | 101+84.53 C | 25.00' LT | 4' RADIUS |
| 6 | 101+85.86 C | 30.69' LT | END 4' RADIUS, END CURB & GUTTER |
| 7 | 101+26.53 C | 0.00' LT | BEGIN 329' RADIUS |
| 8 | 101+26.53 C | 329.19' RT | 329' RADIUS |
| 9 | 100+44.91 C | 0.00' LT | END 329' RADIUS, END CURB & GUTTER |
| 10 | 100+44.91 C | 10.00' LT | MATCH EXISTING PAVEMENT |
| | SE RAMP | | |
| 11 | 104+68.75 D | 16.29' LT | END 100' TAPER, BEGIN 582' RADIUS |
| 12 | 105+38.37 D | 16.00' LT | END 582' RADIUS |
| 13 | 105+38.37 D | 19.50' LT | 4' RADIUS |
| 14 | 105+38.27 D | 22.95' LT | BEGIN 4' RADIUS |
| 15 | 106+04.00 D | 14.00' LT | MATCH EXISTING PAVEMENT |
| 16 | 103+12.46 D | 0.00' RT | END 602' RADIUS |
| 17 | 104+80.91 D | 0.00' RT | BEGIN 598' RADIUS |
| 18 | 105+25.77 D | 598.00' LT | 598' RADIUS |
| 19 | 105+25.77 D | 0.00' RT | END 598' RADIUS |
| 20 | 106+04.00 D | 0.00' RT | END CURB & GUTTER |
| 21 | 103+25.45 D | 19.69' LT | END 622' RADIUS, BEGIN 100' TAPER |

RADIUS SHOWN IS TO CURB FLANGE

2

## DATA TABLE

STH 181 (N. 76TH STREET)

| POINT NO. | STATION | OFFSET | COMMENTS |
|---|---|---|---|
| 1 | 126+46.48 | 47.00' LT | END CURB & GUTTER |
| 2 | NOT USED | | |
| 3 | NOT USED | | |
| 4 | NOT USED | | |
| 5 | NOT USED | | |
| 6 | NOT USED | | |
| 7 | 125+18.95 | 59.00' LT | END SIDEWALK |
| 8 | 126+23.48 | 14.00' LT | BEGIN 60' RADIUS |
| 9 | 126+23.48 | 46.00' RT | 60' RADIUS |
| 10 | 126+46.48 | 9.42' LT | END SLOPE NOSE |
| 11 | 126+46.48 | 2.50' LT | END SLOPE NOSE |
| 12 | 126+23.68 | 58.00' LT | 60' RADIUS |
| 13 | 126+23.68 | 2.00' RT | BEGIN 60' RADIUS |
| 14 | 125+45.00 | 2.00' RT | CURB & GUTTER TAPER POINT |

RADIUS SHOWN IS TO CURB FLANGE

## DATA TABLE

STH 181 (N. 76TH STREET)

| POINT NO. | STATION | OFFSET | COMMENTS |
|---|---|---|---|
| 15 | 126+46.48 | 47.00' RT | END CURB & GUTTER |
| 16 | NOT USED | | |
| 17 | NOT USED | | |
| 18 | 128+20.00 | 2.00' LT | END CURB & GUTTER |
| 19 | 127+43.48 | 2.00' LT | BEGIN 60' RADIUS |
| 20 | 127+43.48 | 58.00' RT | 60' RADIUS |
| 21 | 127+24.04 | 1.23' RT | END 60' RADIUS, BEGIN 5' RADIUS |
| 22 | 127+25.66 | 5.97' RT | 5' RADIUS |
| 23 | 127+24.02 | 10.69' RT | END 5' RADIUS, BEGIN 60' RADIUS |
| 24 | 127+43.68 | 46.00' LT | 60' RADIUS |
| 25 | 127+43.68 | 14.00' RT | END 60' RADIUS |
| 26 | 129+10.00 | 14.00' RT | END CURB & GUTTER |
| 27 | 125+32.53 | 59.00' RT | END SIDEWALK |

RADIUS SHOWN IS TO CURB FLANGE

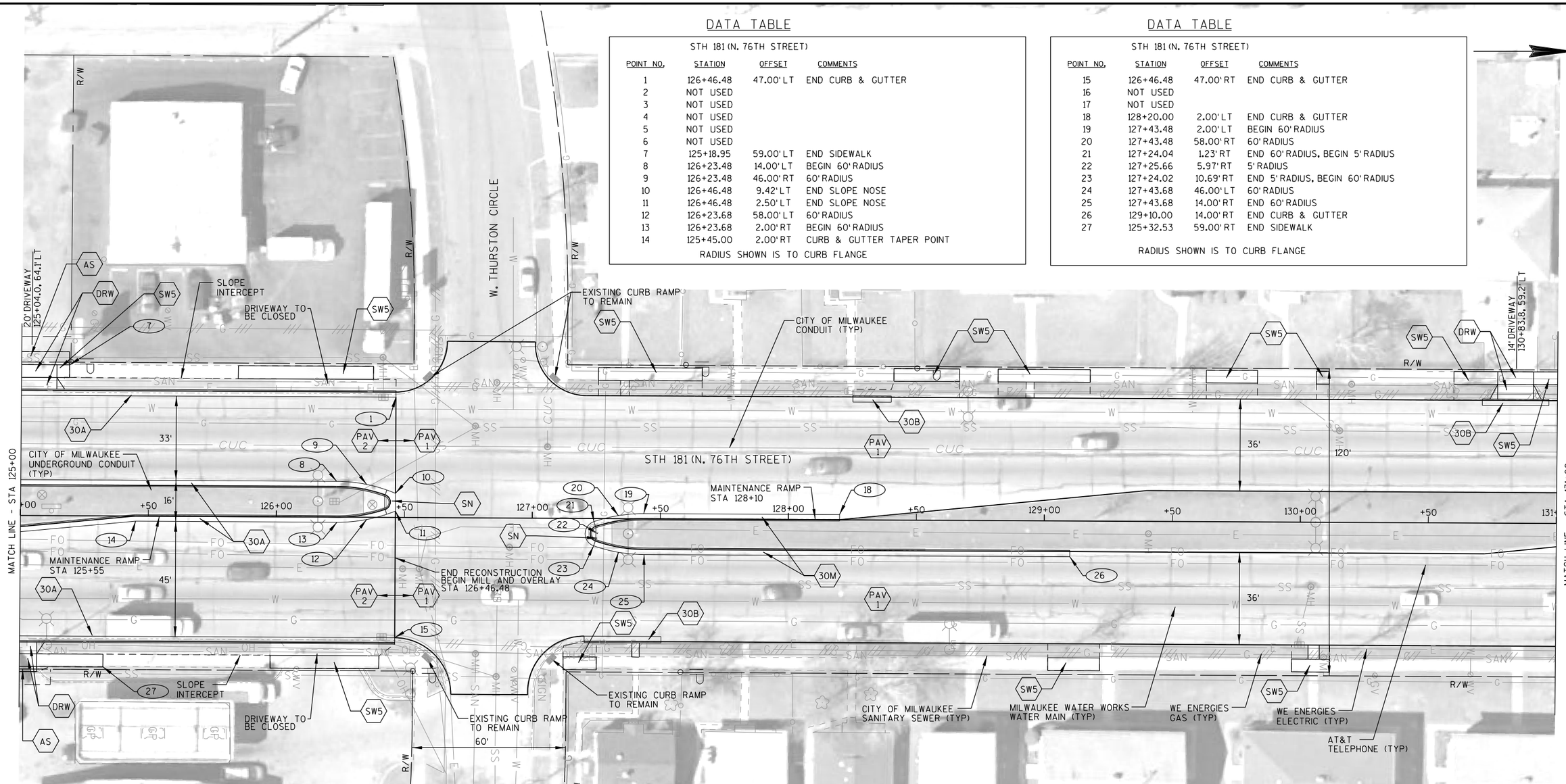


## LEGEND

| | |
|---|---|
| 30A | CONCRETE CURB AND GUTTER 30-INCH TYPE A |
| 30M | CONCRETE CURB AND GUTTER 30-INCH TYPE A (MODIFIED) |
| 30B | CONCRETE CURB AND GUTTER 30-INCH TYPE A (HMA OVERLAY) |
| SW5 | CONCRETE SIDEWALK 5-INCH |
| SN | CONCRETE MEDIAN SLOPED NOSE |
| DRW | CONCRETE DRIVEWAY HES 7-INCH |
| AS | ASPHALT DRIVEWAY |
| CCP | CONCRETE CURB PEDESTRIAN |
| PAV 1 | MILL 3½" 4" HMA PAVEMENT |
| PAV 2 | CONCRETE PAVEMENT 9.5-INCH 6" BASE AGGREGATE DENSE 1¼" |
| PAV 3 | CONCRETE PAVEMENT 7-INCH 6" BASE AGGREGATE DENSE 1¼" |
| PAV 4 | 4" HMA PAVEMENT CONCRETE BASE 9-INCH 6" BASE AGGREGATE DENSE 1¼" |
| CR1 | CURB RAMP TYPE |

2

| PROJECT NO: 2140-13-70 | HWY: STH 181 | COUNTY: MILWAUKEE | PLAN DETAIL | SHEET 65 | E |
|---|---|---|---|---|---|

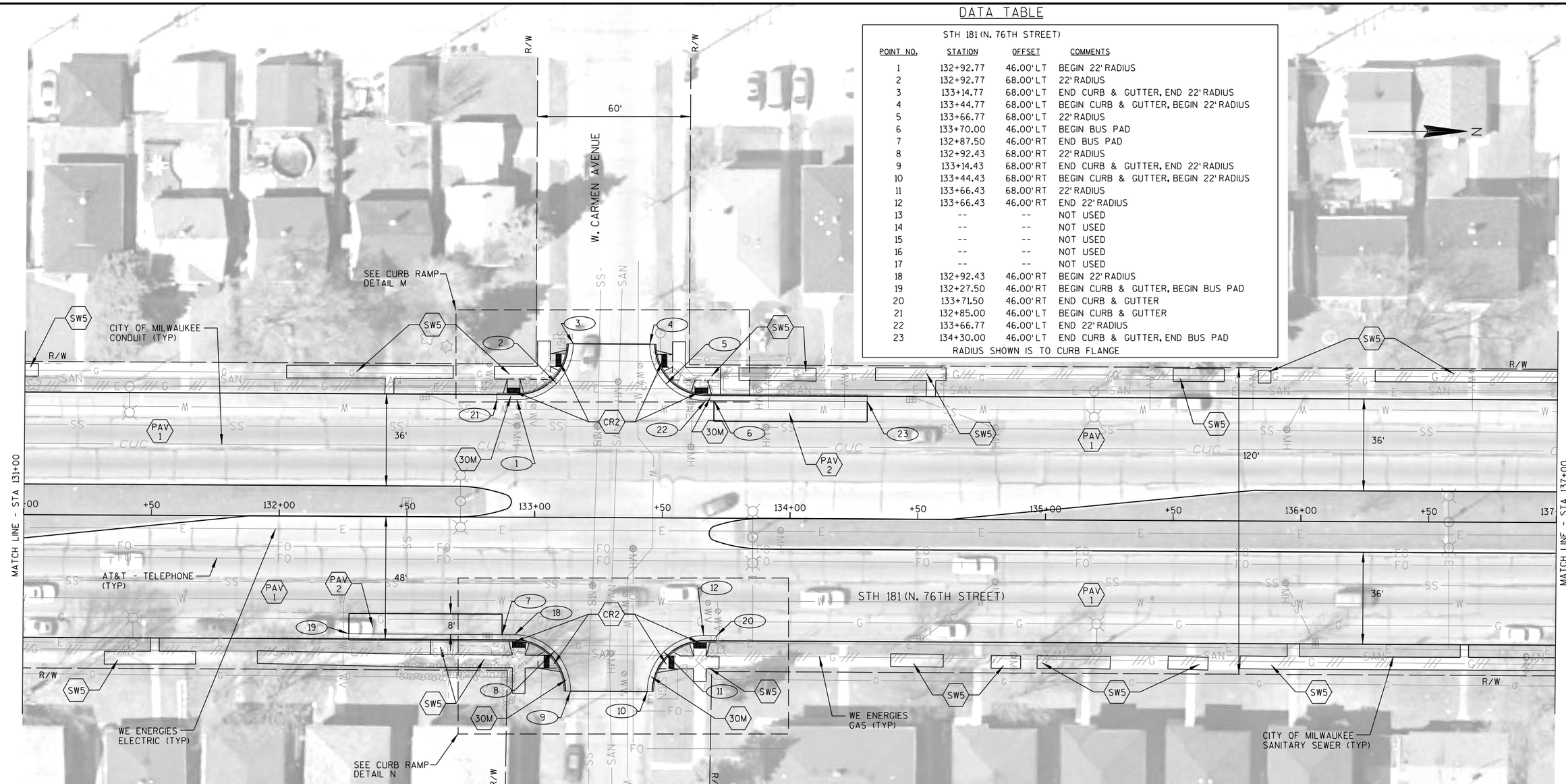


## DATA TABLE

STH 181 (N. 76TH STREET)

| POINT NO. | STATION | OFFSET | COMMENTS |
|---|---|---|---|
| 1 | 132+92.77 | 46.00' LT | BEGIN 22' RADIUS |
| 2 | 132+92.77 | 68.00' LT | 22' RADIUS |
| 3 | 133+14.77 | 68.00' LT | END CURB & GUTTER, END 22' RADIUS |
| 4 | 133+44.77 | 68.00' LT | BEGIN CURB & GUTTER, BEGIN 22' RADIUS |
| 5 | 133+66.77 | 68.00' LT | 22' RADIUS |
| 6 | 133+70.00 | 46.00' LT | BEGIN BUS PAD |
| 7 | 132+87.50 | 46.00' RT | END BUS PAD |
| 8 | 132+92.43 | 68.00' RT | 22' RADIUS |
| 9 | 133+14.43 | 68.00' RT | END CURB & GUTTER, END 22' RADIUS |
| 10 | 133+44.43 | 68.00' RT | BEGIN CURB & GUTTER, BEGIN 22' RADIUS |
| 11 | 133+66.43 | 68.00' RT | 22' RADIUS |
| 12 | 133+66.43 | 46.00' RT | END 22' RADIUS |
| 13 | -- | -- | NOT USED |
| 14 | -- | -- | NOT USED |
| 15 | -- | -- | NOT USED |
| 16 | -- | -- | NOT USED |
| 17 | -- | -- | NOT USED |
| 18 | 132+92.43 | 46.00' RT | BEGIN 22' RADIUS |
| 19 | 132+27.50 | 46.00' RT | BEGIN CURB & GUTTER, BEGIN BUS PAD |
| 20 | 133+71.50 | 46.00' RT | END CURB & GUTTER |
| 21 | 132+85.00 | 46.00' LT | BEGIN CURB & GUTTER |
| 22 | 133+66.77 | 46.00' LT | END 22' RADIUS |
| 23 | 134+30.00 | 46.00' LT | END CURB & GUTTER, END BUS PAD |

RADIUS SHOWN IS TO CURB FLANGE

## LEGEND

| | |
|---|---|
| 30A | CONCRETE CURB AND GUTTER 30-INCH TYPE A |
| 30M | CONCRETE CURB AND GUTTER 30-INCH TYPE A (MODIFIED) |
| 30B | CONCRETE CURB AND GUTTER 30-INCH TYPE A (HMA OVERLAY) |
| SW5 | CONCRETE SIDEWALK 5-INCH |
| SN | CONCRETE MEDIAN SLOPED NOSE |
| DRW | CONCRETE DRIVEWAY HES 7-INCH |
| AS | ASPHALT DRIVEWAY |
| CCP | CONCRETE CURB PEDESTRIAN |
| PAV 1 | MILL 3½" 4" HMA PAVEMENT |
| PAV 2 | CONCRETE PAVEMENT 9.5-INCH 6" BASE AGGREGATE DENSE 1¼" |
| PAV 3 | CONCRETE PAVEMENT 7-INCH 6" BASE AGGREGATE DENSE 1¼" |
| PAV 4 | 4" HMA PAVEMENT CONCRETE BASE 9-INCH 6" BASE AGGREGATE DENSE 1¼" |
| CR1 | CURB RAMP TYPE |

## DATA TABLE

STH 181 (N. 76TH STREET)

| POINT NO. | STATION | OFFSET | COMMENTS |
|---|---|---|---|
| 1 | 139+49.48 | 46.00' LT | BEGIN CURB & GUTTER, BEGIN 22' RADIUS |
| 2 | 139+49.48 | 68.00' LT | 22' RADIUS |
| 3 | 139+71.48 | 68.00' LT | END CURB & GUTTER, END 22' RADIUS |
| 4 | 140+01.48 | 68.00' LT | BEGIN CURB & GUTTER, BEGIN 22' RADIUS |
| 5 | 140+23.48 | 68.00' LT | 22' RADIUS |
| 6 | 140+23.48 | 46.00' LT | END 22' RADIUS, BEGIN BUS PAD |
| 7 | 140+83.50 | 46.00' LT | END CURB & GUTTER, END BUS PAD |
| 8 | 139+48.73 | 46.00' RT | BEGIN 22' RADIUS, END BUS PAD |
| 9 | 139+48.73 | 68.00' RT | 22' RADIUS |
| 10 | 139+70.73 | 68.00' RT | END CURB & GUTTER, END 22' RADIUS |
| 11 | 140+00.73 | 68.00' RT | BEGIN CURB & GUTTER, BEGIN 22' RADIUS |
| 12 | 140+22.73 | 68.00' RT | 22' RADIUS |
| 13 | 140+22.73 | 46.00' RT | END CURB & GUTTER, END 22' RADIUS |
| 14 | 138+88.73 | 46.00' RT | BEGIN BUS PAD |
| 15 | 141+67.50 | 46.00' LT | BEGIN CURB & GUTTER |
| 16 | 142+16.50 | 46.00' LT | END CURB & GUTTER |
| 17 | 142+63.50 | 46.00' LT | BEGIN CURB & GUTTER |
| 18 | 140+16.83 | 6.45' RT | BEGIN CURB & GUTTER, BEGIN 62' RADIUS |
| 19 | 140+46.48 | 48.00' LT | 62' RADIUS |
| 20 | 140+46.48 | 14.00' RT | END 62' RADIUS, END CURB & GUTTER |

RADIUS SHOWN IS TO CURB FLANGE

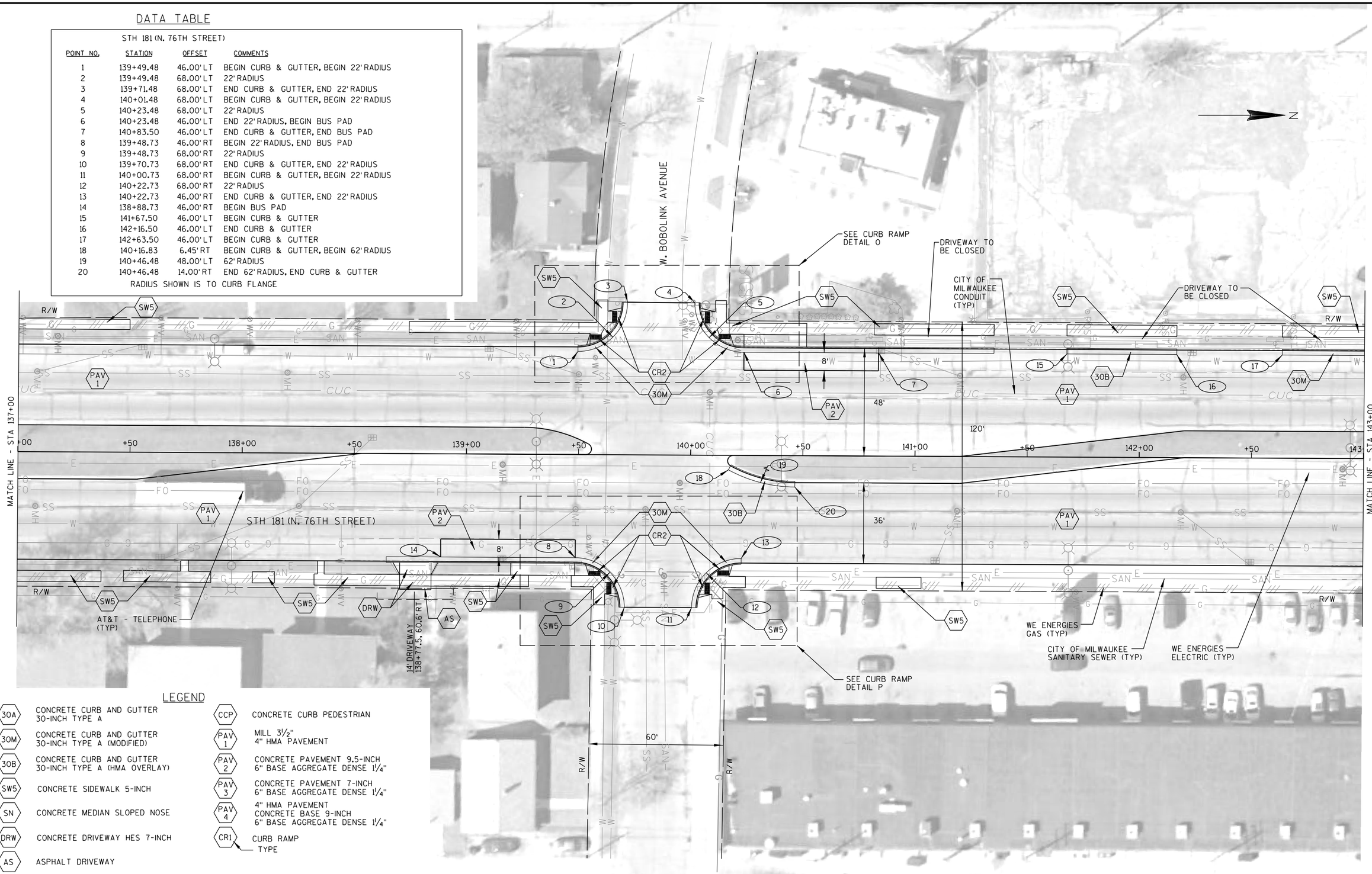


## LEGEND

| | | | |
|---|---|---|---|
| 30A | CONCRETE CURB AND GUTTER 30-INCH TYPE A | CCP | CONCRETE CURB PEDESTRIAN |
| 30M | CONCRETE CURB AND GUTTER 30-INCH TYPE A (MODIFIED) | PAV 1 | MILL 3½" 4" HMA PAVEMENT |
| 30B | CONCRETE CURB AND GUTTER 30-INCH TYPE A (HMA OVERLAY) | PAV 2 | CONCRETE PAVEMENT 9.5-INCH 6" BASE AGGREGATE DENSE 1¼" |
| SW5 | CONCRETE SIDEWALK 5-INCH | PAV 3 | CONCRETE PAVEMENT 7-INCH 6" BASE AGGREGATE DENSE 1¼" |
| SN | CONCRETE MEDIAN SLOPED NOSE | PAV 4 | 4" HMA PAVEMENT CONCRETE BASE 9-INCH 6" BASE AGGREGATE DENSE 1¼" |
| DRW | CONCRETE DRIVEWAY HES 7-INCH | CR1 | CURB RAMP TYPE |
| AS | ASPHALT DRIVEWAY | | |

## DATA TABLE

STH 181 (N. 76TH STREET)

| POINT NO. | STATION | OFFSET | COMMENTS |
|---|---|---|---|
| 1 | 143+17.89 | 46.00' LT | BEGIN 22' RADIUS |
| 2 | 143+17.89 | 68.00' LT | 22' RADIUS |
| 3 | 143+39.89 | 68.00' LT | END CURB & GUTTER, END 22' RADIUS |
| 4 | 143+69.89 | 68.00' LT | BEGIN CURB & GUTTER, BEGIN 22' RADIUS |
| 5 | 143+91.89 | 68.00' LT | 22' RADIUS |
| 6 | 143+91.89 | 46.00' LT | END CUB & GUTTER, END 22' RADIUS |
| 7 | 143+09.62 | 46.00' RT | BEGIN CURB & GUTTER |
| 8 | 143+87.00 | 46.00' RT | END CURB & GUTTER |
| 9 | 145+38.00 | 46.00' RT | BEGIN BUS PAD |
| 10 | 145+98.00 | 46.00' RT | END CURB & GUTTER, END BUS PAD |

RADIUS SHOWN IS TO CURB FLANGE

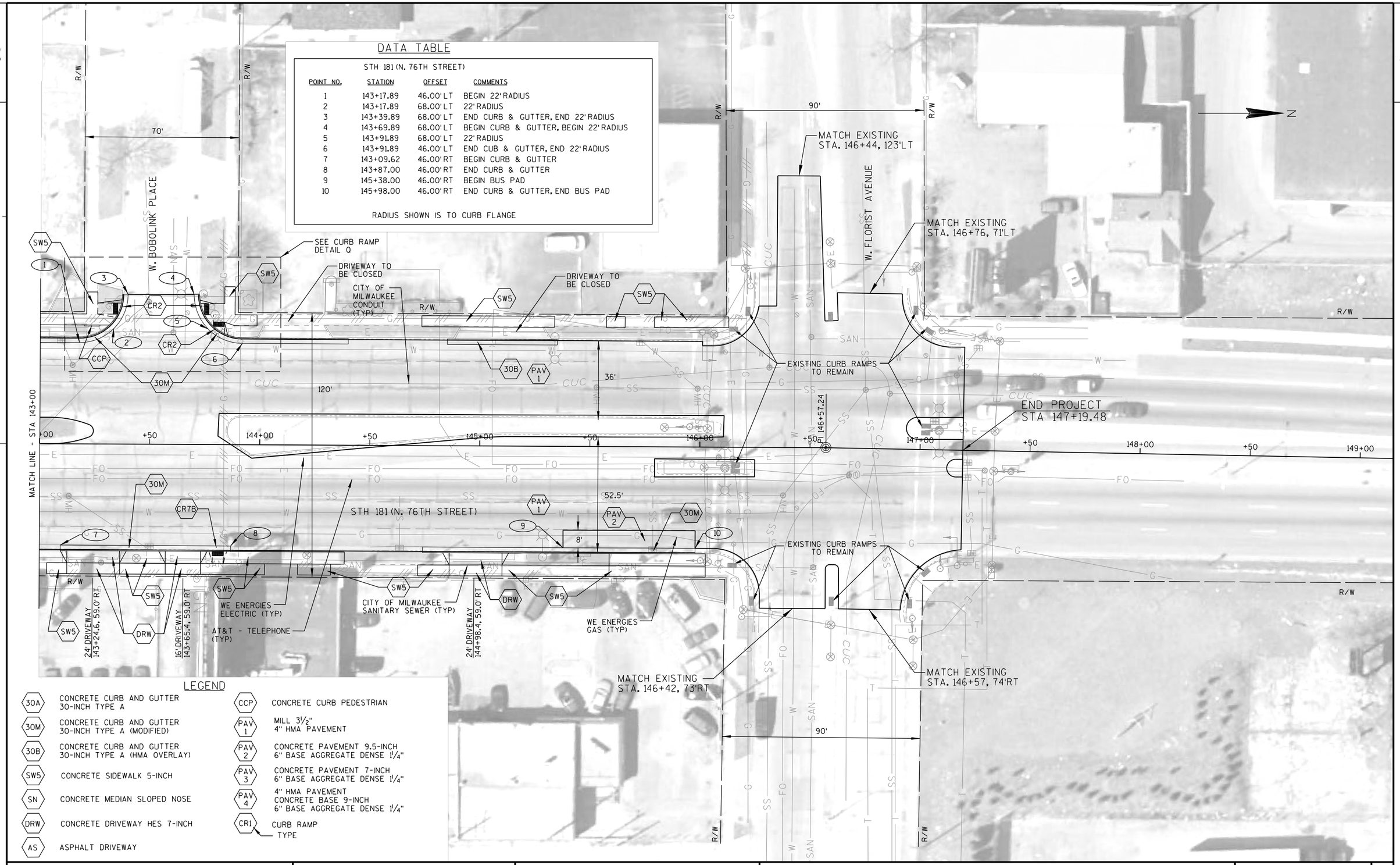


## LEGEND

| | |
|---|---|
| 30A | CONCRETE CURB AND GUTTER 30-INCH TYPE A |
| 30M | CONCRETE CURB AND GUTTER 30-INCH TYPE A (MODIFIED) |
| 30B | CONCRETE CURB AND GUTTER 30-INCH TYPE A (HMA OVERLAY) |
| SW5 | CONCRETE SIDEWALK 5-INCH |
| SN | CONCRETE MEDIAN SLOPED NOSE |
| DRW | CONCRETE DRIVEWAY HES 7-INCH |
| AS | ASPHALT DRIVEWAY |
| CCP | CONCRETE CURB PEDESTRIAN |
| PAV 1 | MILL 3½" 4" HMA PAVEMENT |
| PAV 2 | CONCRETE PAVEMENT 9.5-INCH 6" BASE AGGREGATE DENSE 1¼" |
| PAV 3 | CONCRETE PAVEMENT 7-INCH 6" BASE AGGREGATE DENSE 1¼" |
| PAV 4 | 4" HMA PAVEMENT CONCRETE BASE 9-INCH 6" BASE AGGREGATE DENSE 1¼" |
| CR1 | CURB RAMP TYPE |

| PROJECT NO: 2140-13-70 | HWY: STH 181 | COUNTY: MILWAUKEE | PLAN DETAIL | SHEET 68 | E |
|---|---|---|---|---|---|

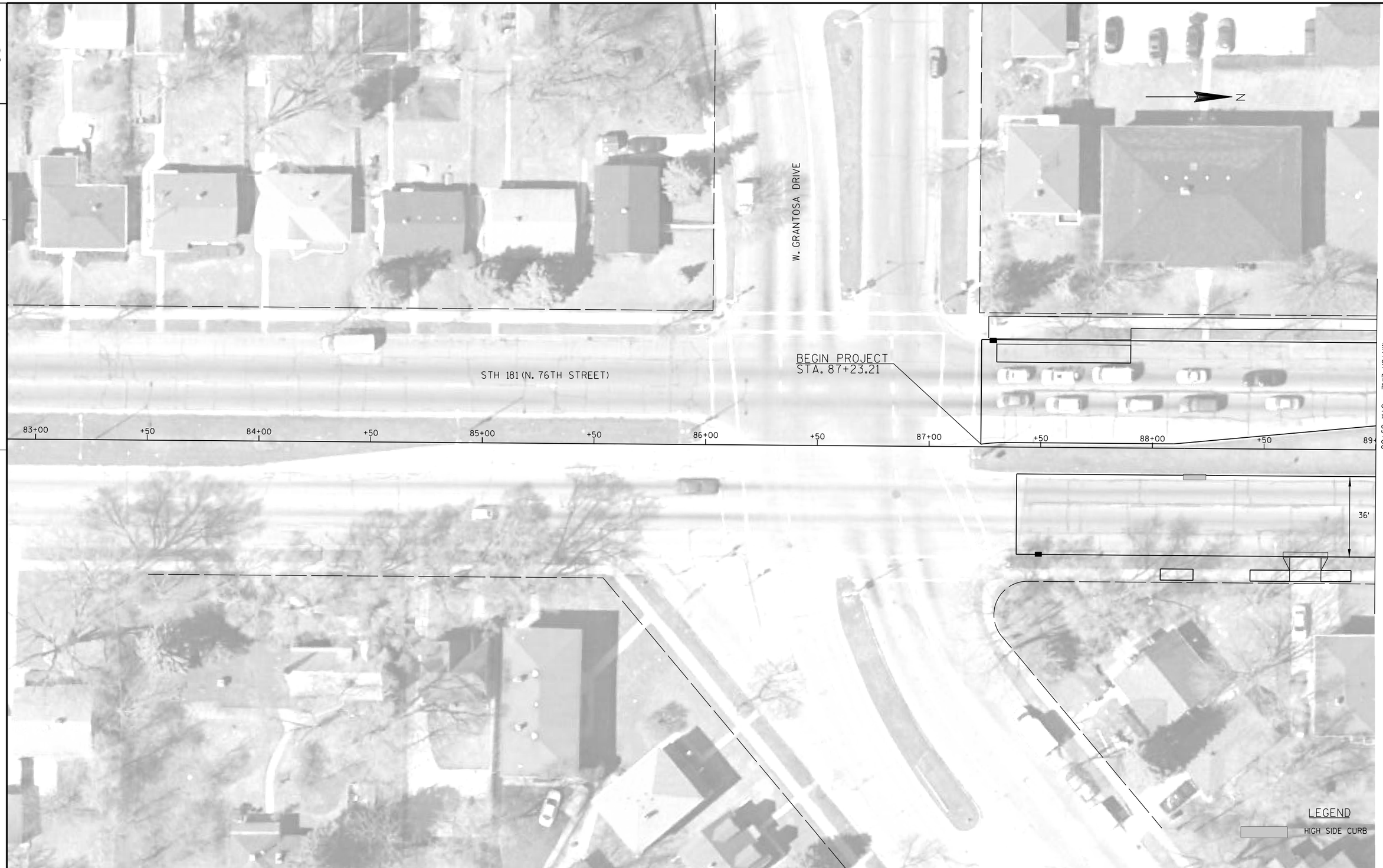


2

| PROJECT NO:2140-13-70 | HWY:STH 181 | COUNTY:MILWAUKEE | JOINTING AND PAVEMENT ELEVATION PLAN | SHEET 69 | E |
|---|---|---|---|---|---|

N
W. VILLARD AVENUE
STH 181 (N. 76TH STREET)
36'
36'
MATCH LINE - STA 89+00
MATCH LINE - STA 95+00
+50
90+00
+50
91+00
+50
92+00
+50
93+00
PI 93+40.15
+50
94+00
+50
706.43
707.18
708.26
(705.98)(706.40)
(707.10)
(708.13)
LEGEND
HIGH SIDE CURB

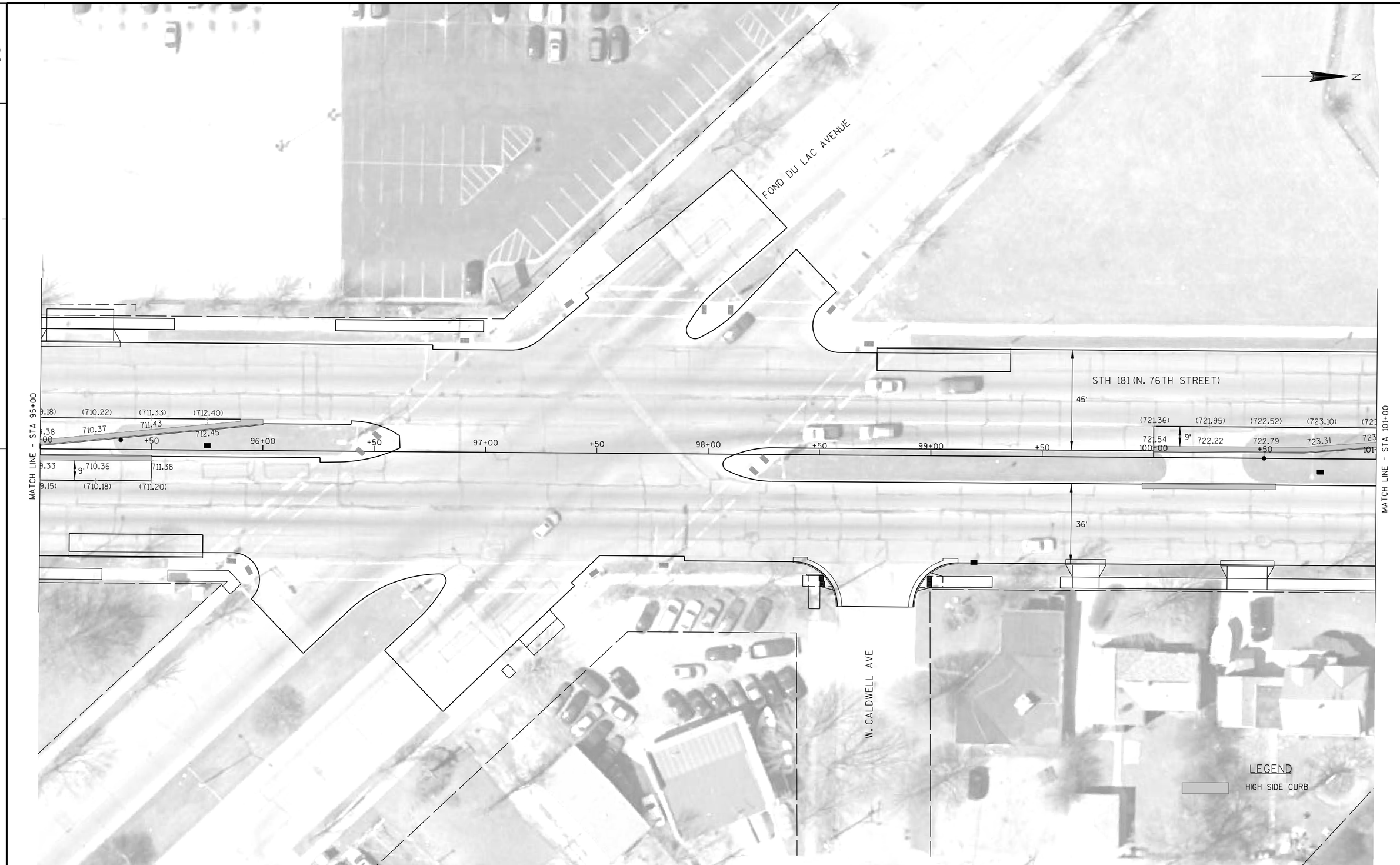


| PROJECT NO:2140-13-70 | HWY:STH 181 | COUNTY:MILWAUKEE | JOINTING AND PAVEMENT ELEVATION PLAN | SHEET 71 | E |
|---|---|---|---|---|---|

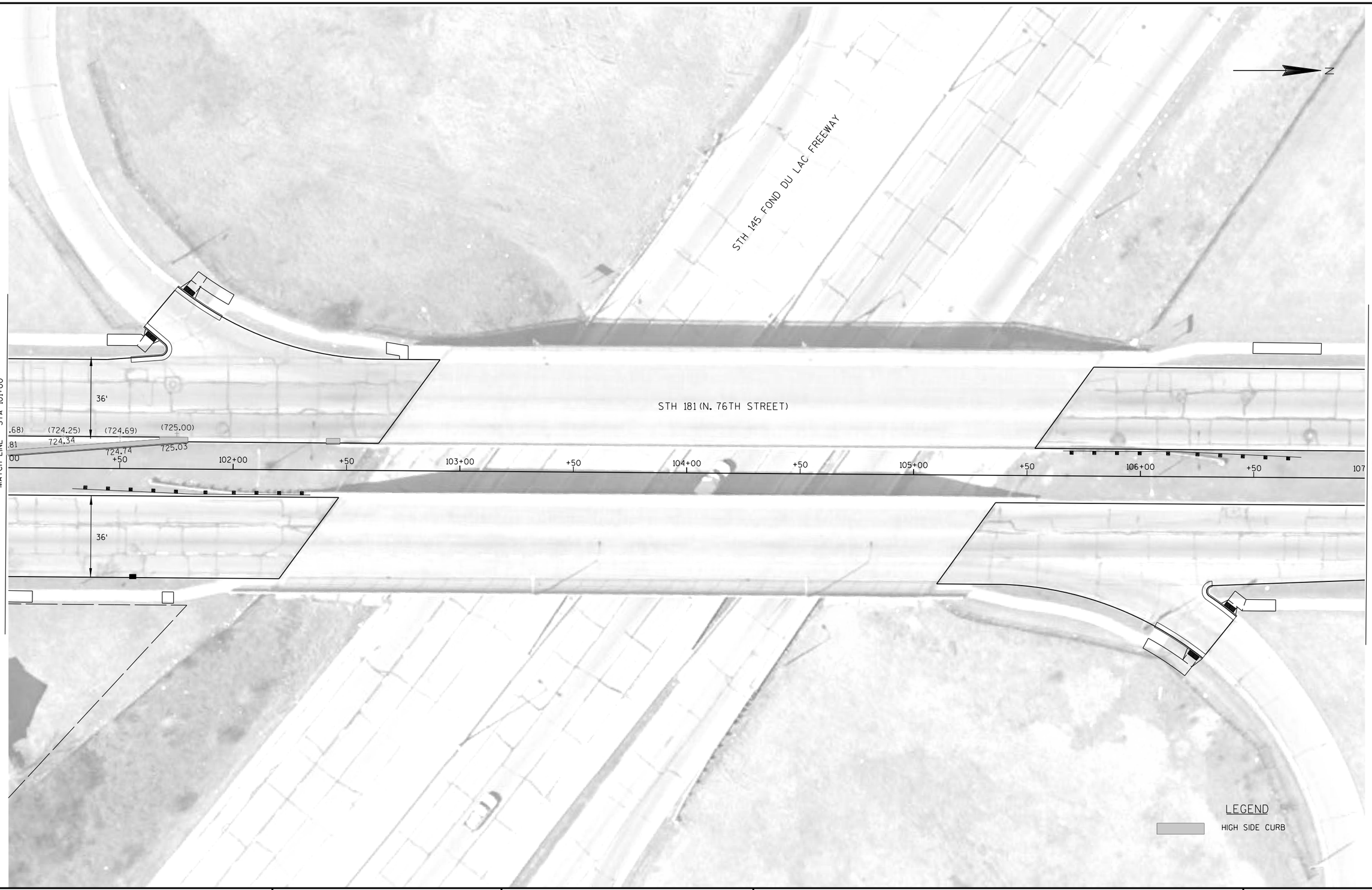


| PROJECT NO:2140-13-70 | HWY:STH 181 | COUNTY:MILWAUKEE | JOINTING AND PAVEMENT ELEVATION PLAN | SHEET 72 | E |
|---|---|---|---|---|---|

| PROJECT NO:2140-13-70 | HWY:STH 181 | COUNTY:MILWAUKEE | JOINTING AND PAVEMENT ELEVATION PLAN | SHEET 73 | E |
|---|---|---|---|---|---|

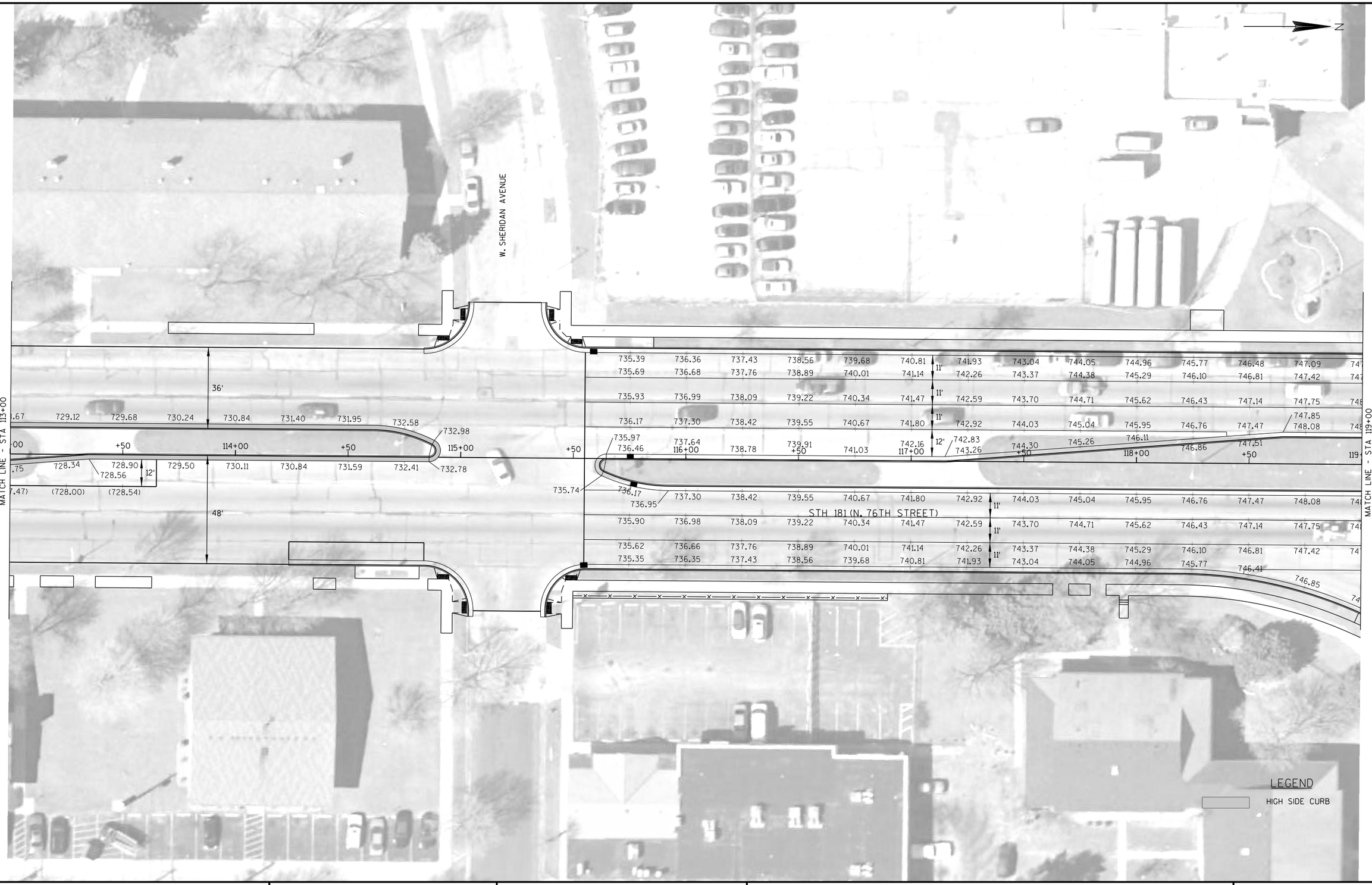


| PROJECT NO:2140-13-70 | HWY:STH 181 | COUNTY:MILWAUKEE | JOINTING AND PAVEMENT ELEVATION PLAN | SHEET 74 | E |
|---|---|---|---|---|---|

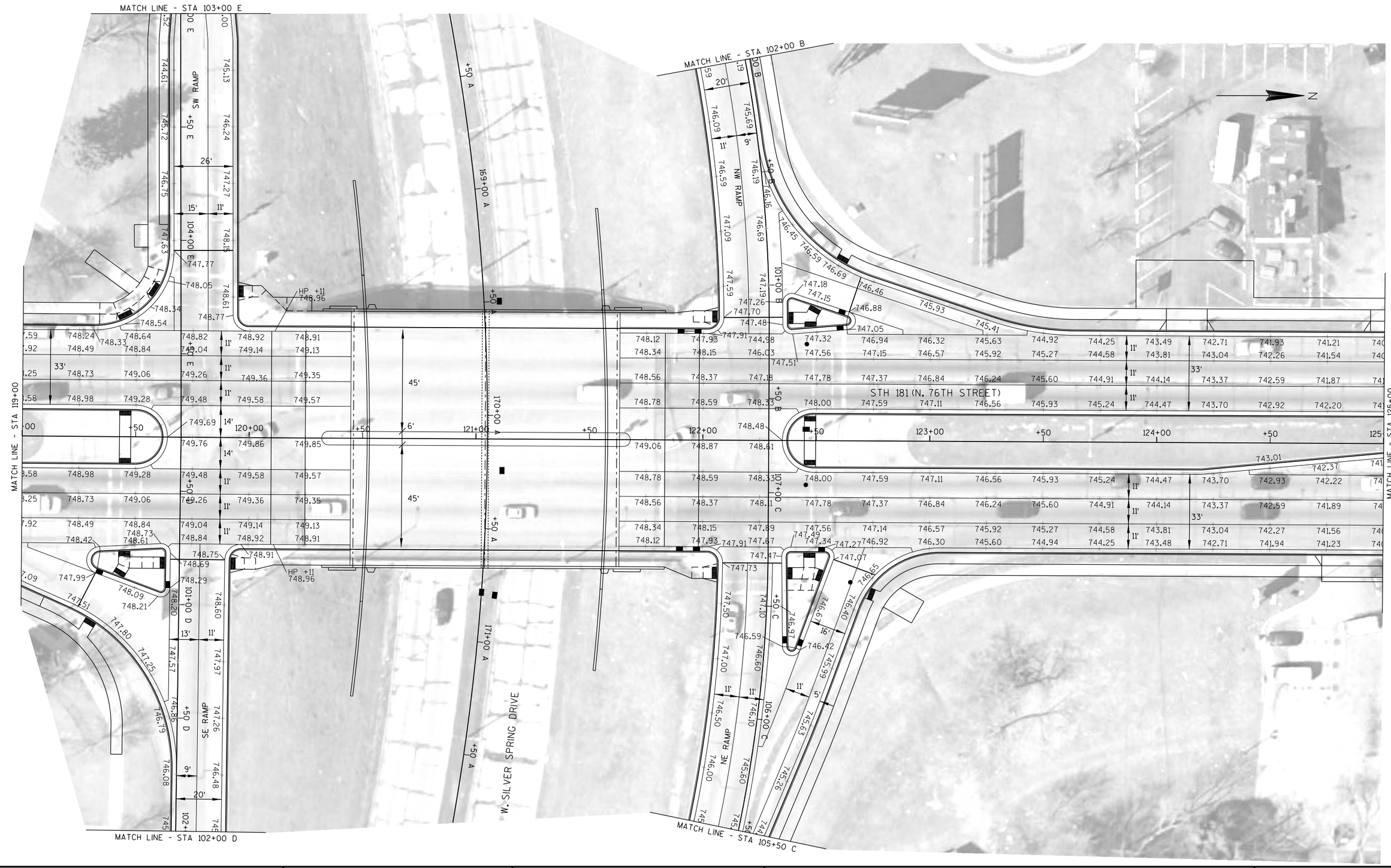


| PROJECT NO:2140-13-70 | HWY:STH 181 | COUNTY:MILWAUKEE | JOINTING AND PAVEMENT ELEVATION PLAN | SHEET 75 | E |
|---|---|---|---|---|---|

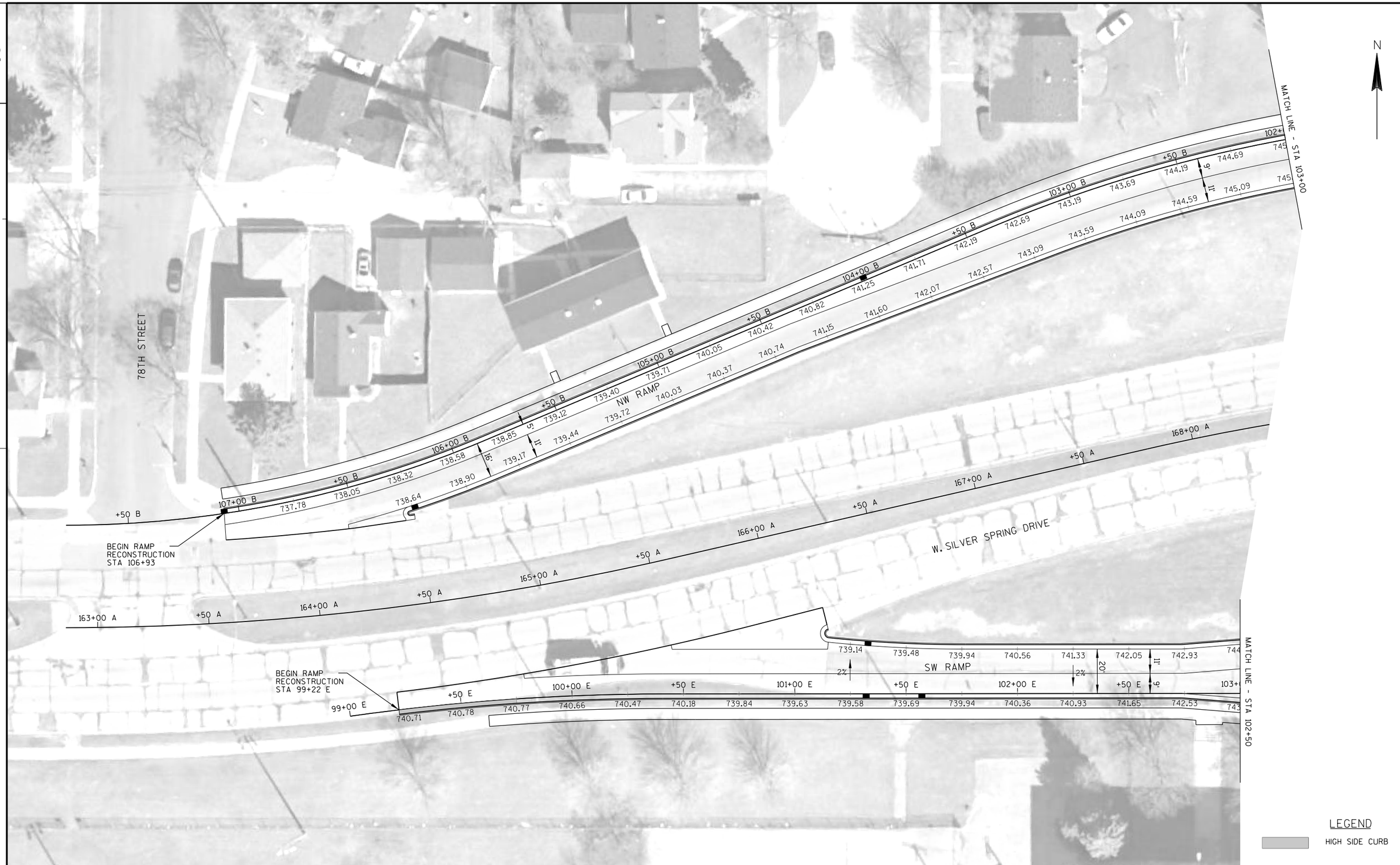




| PROJECT NO:2140-13-70 | HWY:STH 181 | COUNTY:MILWAUKEE | JOINTING AND PAVEMENT ELEVATION PLAN | SHEET 76 | E |
|---|---|---|---|---|---|

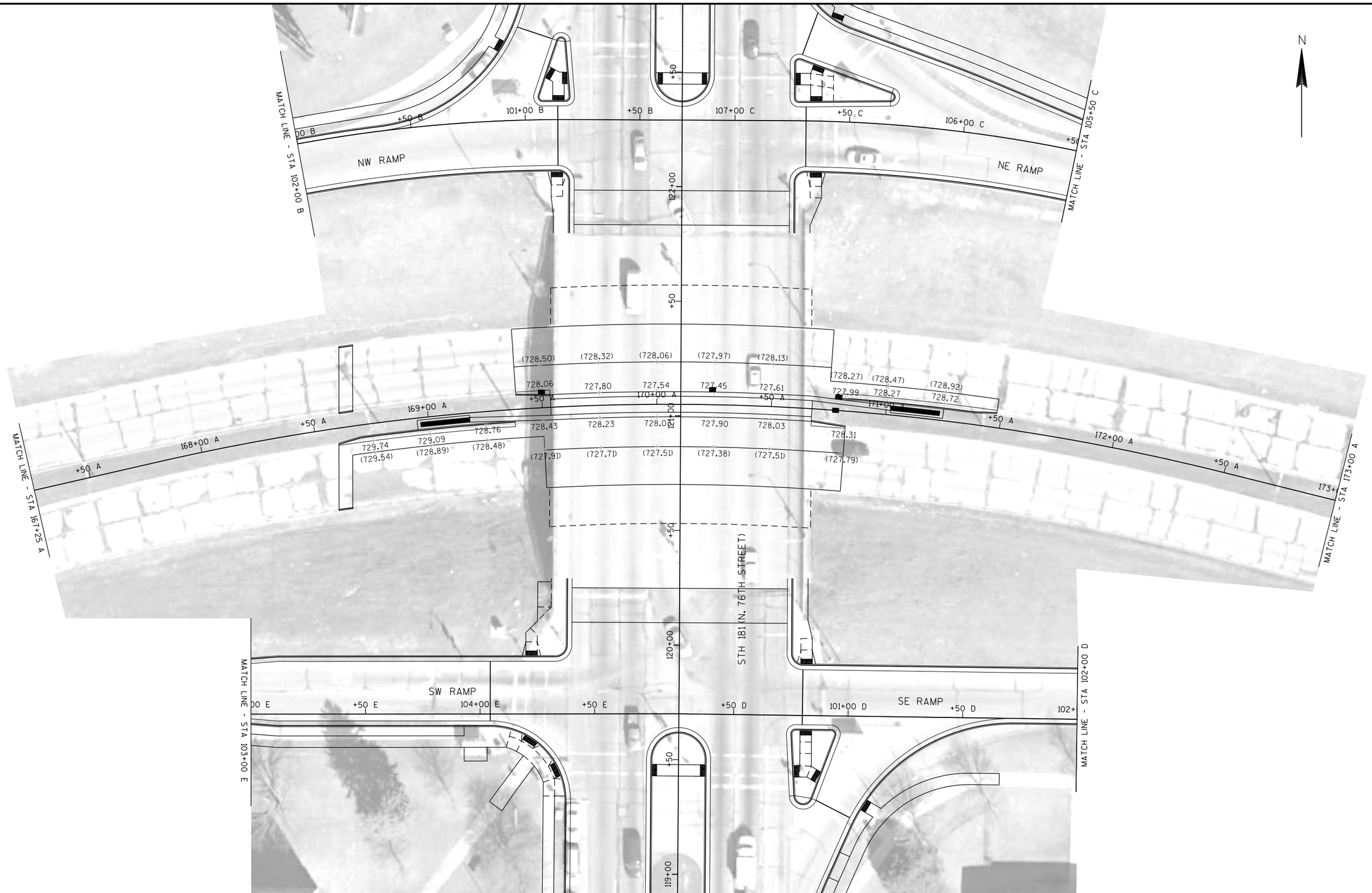


| PROJECT NO:2140-13-70 | HWY:STH 181 | COUNTY:MILWAUKEE | JOINTING AND PAVEMENT ELEVATION PLAN | SHEET 77 | E |
|---|---|---|---|---|---|

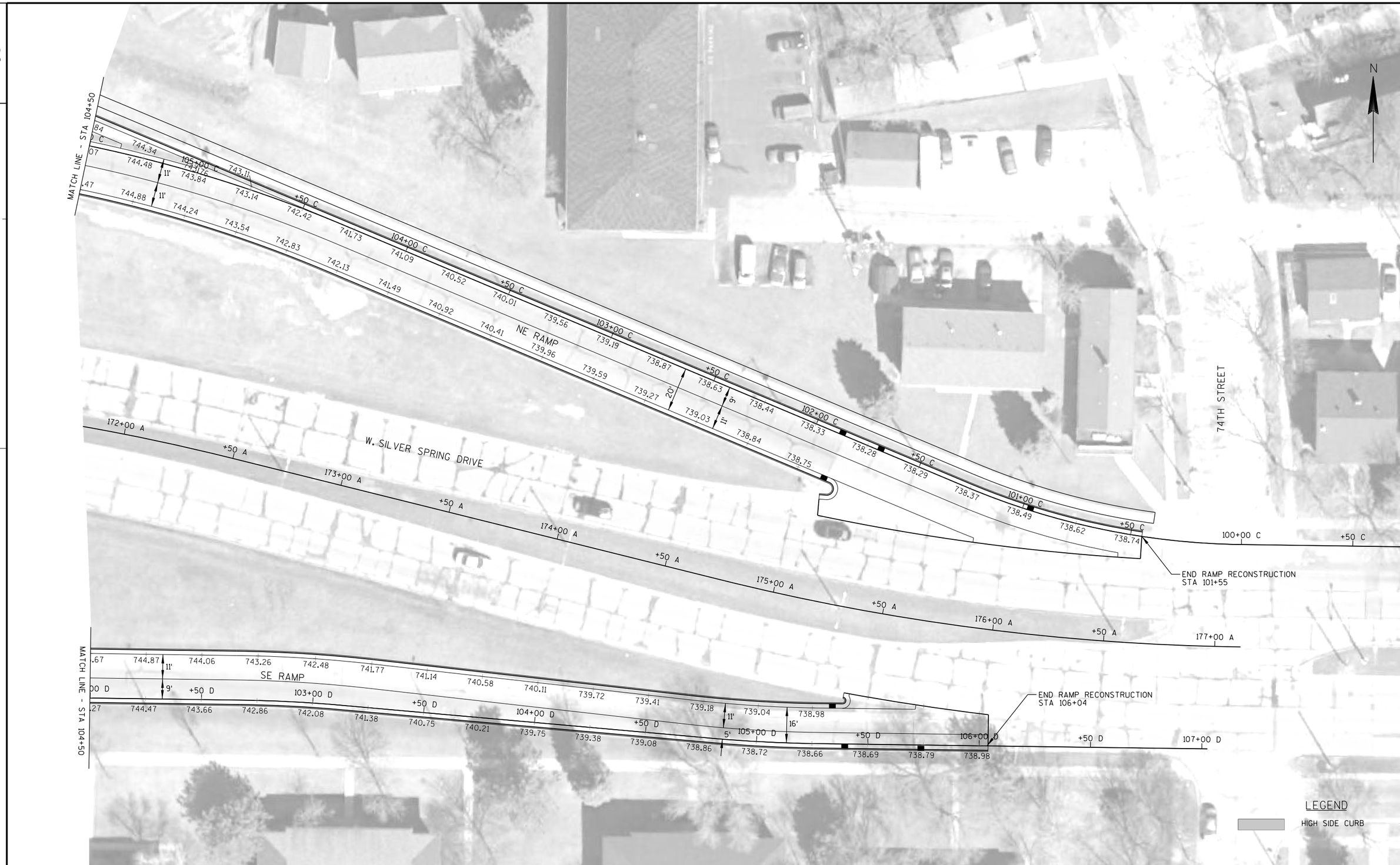


| PROJECT NO:2140-13-70 | HWY:STH 181 | COUNTY:MILWAUKEE | JOINTING AND PAVEMENT ELEVATION PLAN | SHEET 78 | E |
|---|---|---|---|---|---|

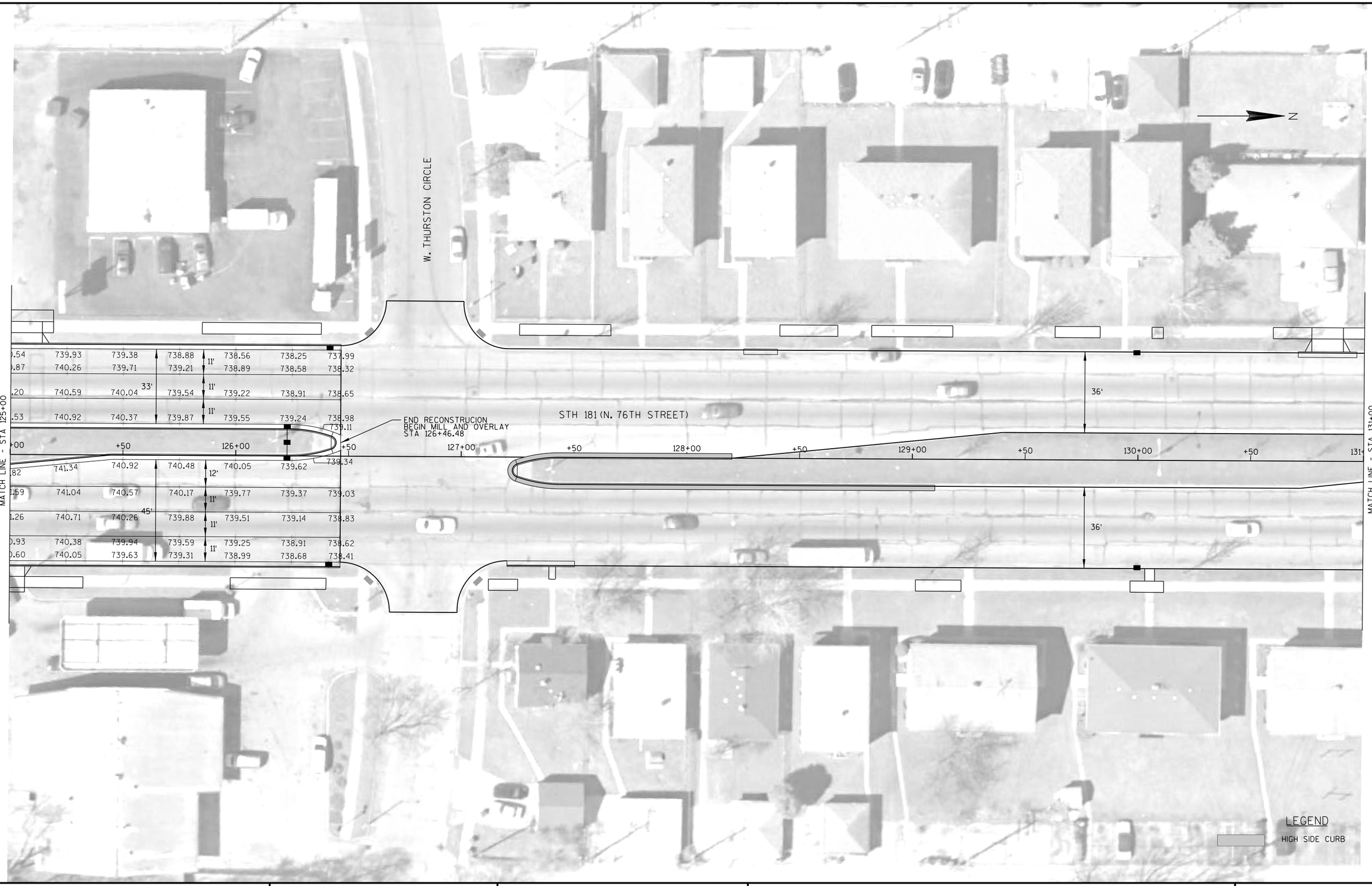


| PROJECT NO:2140-13-70 | HWY:STH 181 | COUNTY:MILWAUKEE | JOINTING AND PAVEMENT ELEVATION PLAN | SHEET 79 | E |
|---|---|---|---|---|---|

2

## EROSION CONTROL GENERAL NOTES

RE-TOPSOIL OF GRADED AREAS, AS DESIGNATED BY THE ENGINEER, IMMEDIATELY AFTER GRADING IS COMPLETED WITHIN THOSE AREAS. SEED, FERTILIZE, AND MULCH/EROSION MAT TOP-SOILED AREAS, AS DESIGNATED BY THE ENGINEER, WITHIN FIVE (5) CALENDAR DAYS AFTER PLACEMENT OF TOPSOIL. IF GRADED AREAS ARE LEFT EXPOSED FOR MORE THAN (14) CALENDAR DAYS, SEED THOSE AREAS WITH TEMPORARY SEED.

STOCKPILE EXCESS MATERIAL OR SPOILS ON UPLAND AREAS AWAY FROM WETLANDS, FLOODPLAINS AND WATERWAYS. STOCKPILED SOIL SHALL BE PROTECTED AGAINST EROSION. IF STOCKPILED MATERIAL IS LEFT FOR MORE THAN FOURTEEN (14) CALENDAR DAYS, SEED THE STOCKPILE WITH TEMPORARY SEED.

EROSION CONTROL BMP'S ARE AT SUGGESTED LOCATIONS. THE ACTUAL LOCATIONS WILL BE DETERMINED BY THE CONTRACTORS ECIP AND BY THE ENGINEER. EROSION CONTROL BMP'S SHALL BE MAINTAINED UNTIL PERMANENT VEGETATION IS ESTABLISHED OR UNTIL THE ENGINEER DETERMINES THAT THE BMP IS NO LONGER REQUIRED.

## LEGEND

- SOD LAWN
- EROSION MAT URBAN CLASS 1 TYPE B, SEEDING MIXTURE NO. 40 & FERTIZER TYPE B
- SILT FENCE
- (A) INLET PROTECTION TYPE
- SLOPE INTERCEPT

2

| PROJECT NO: 2140-13-70 | HWY: STH 181 | COUNTY: MILWAUKEE | EROSION CONTROL | SHEET 80 | E |
|---|---|---|---|---|---|

2

LEGEND

SOD LAWN

EROSION MAT URBAN CLASS 1 TYPE B, SEEDING MIXTURE NO. 40 & FERTIZER TYPE B

SILT FENCE

(A) INLET PROTECTION TYPE

SLOPE INTERCEPT

N

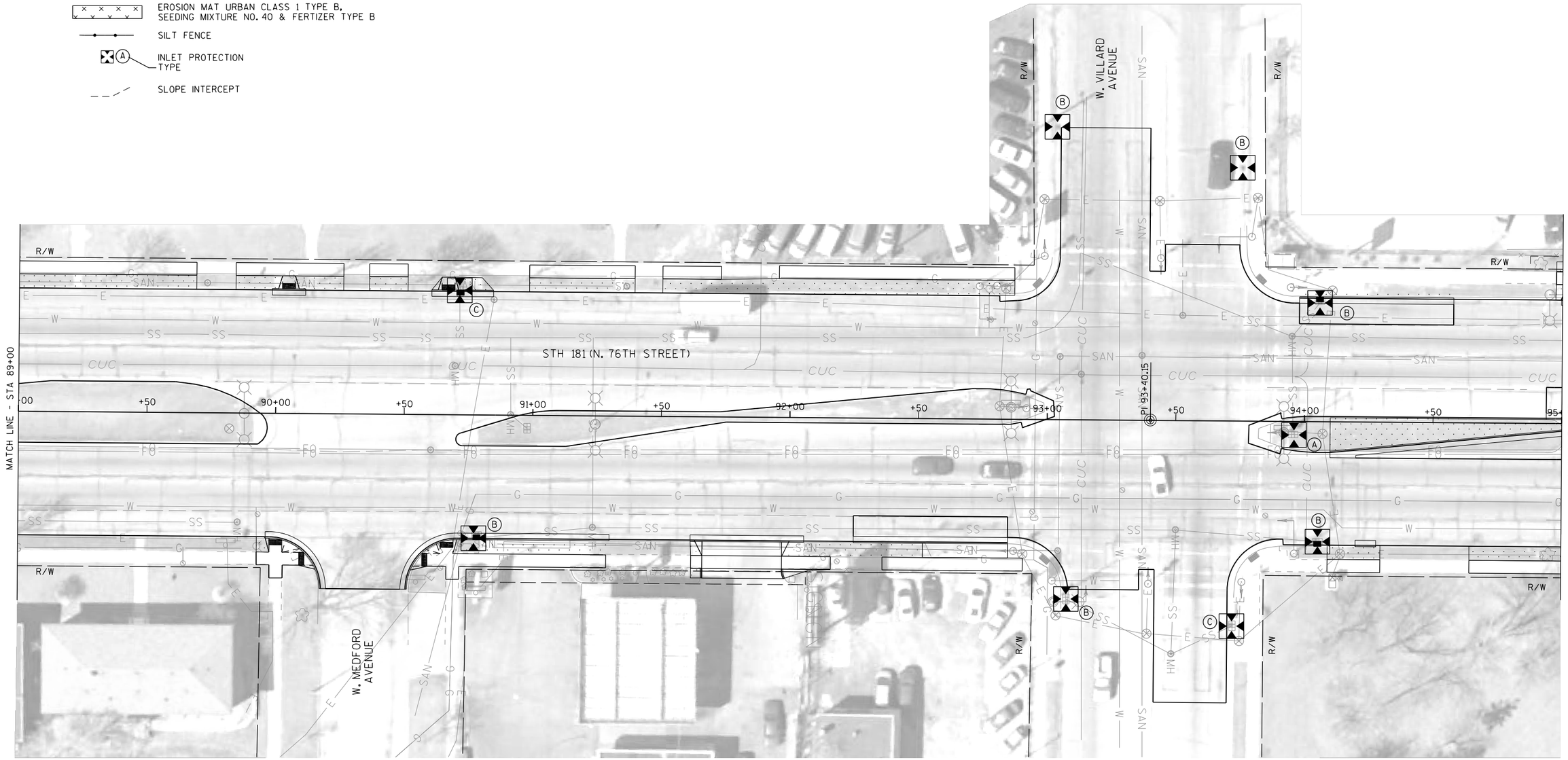


2

| PROJECT NO:2140-13-70 | HWY:STH 181 | COUNTY:MILWAUKEE | EROSION CONTROL | SHEET 81 | E |
|---|---|---|---|---|---|

LEGEND

- SOD LAWN
- EROSION MAT URBAN CLASS 1 TYPE B, SEEDING MIXTURE NO. 40 & FERTIZER TYPE B
- SILT FENCE
- (A) INLET PROTECTION TYPE
- SLOPE INTERCEPT

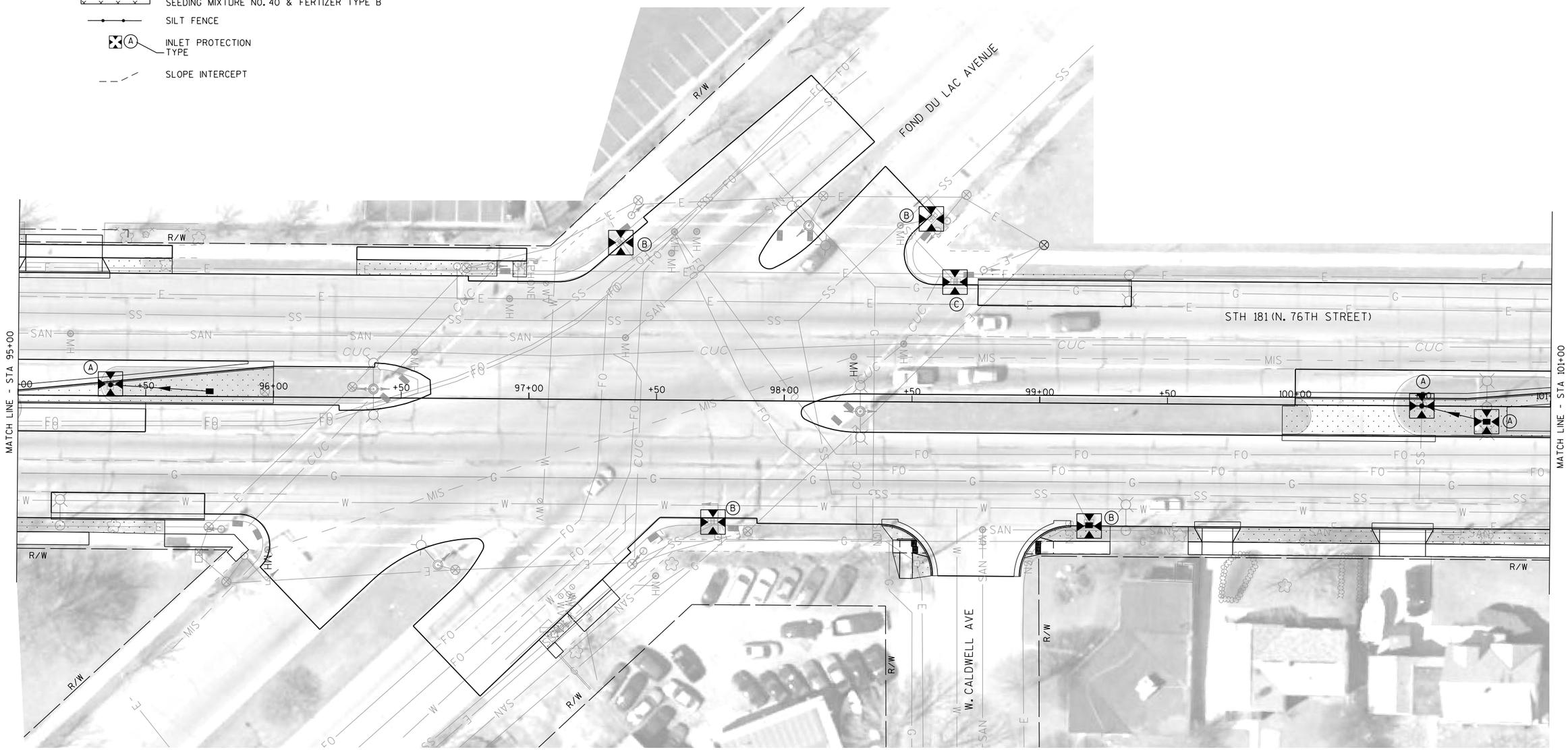

2

## LEGEND

- SOD LAWN
- EROSION MAT URBAN CLASS 1 TYPE B, SEEDING MIXTURE NO. 40 & FERTIZER TYPE B
- SILT FENCE
- (A) INLET PROTECTION TYPE
- SLOPE INTERCEPT

N

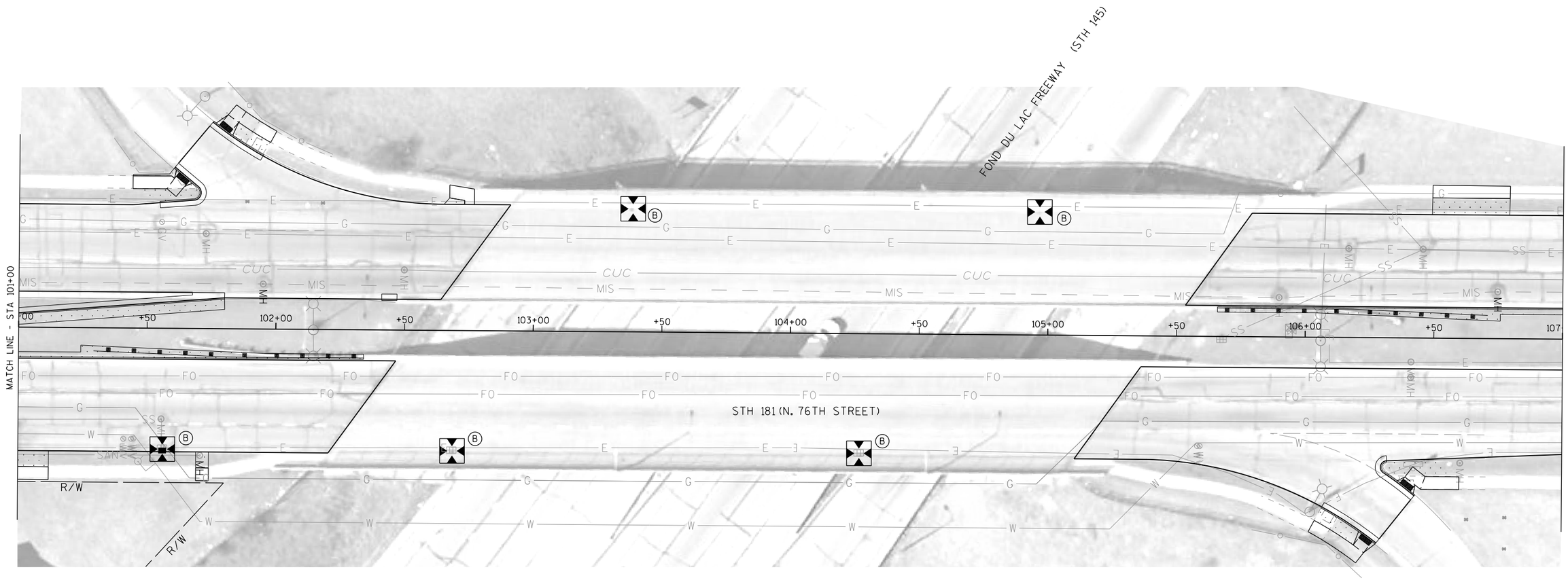


2

| PROJECT NO: 2140-13-70 | HWY: STH 181 | COUNTY: MILWAUKEE | EROSION CONTROL | SHEET 83 | E |
|---|---|---|---|---|---|

FILE NAME : L:\Jobs2010\20100384\CAD\WisDOT_Trans\dgn\00\022004_ec.dgn PLOT DATE : 5/1/2016 PLOT BY : GRAEF PLOT NAME : PLOT SCALE : 40.0000 sf / in. WISDOT/CADDS SHEET 42

2

LEGEND

SOD LAWN

EROSION MAT URBAN CLASS 1 TYPE B.
SEEDING MIXTURE NO. 40 & FERTIZER TYPE B

SILT FENCE

(A) INLET PROTECTION TYPE

SLOPE INTERCEPT

N

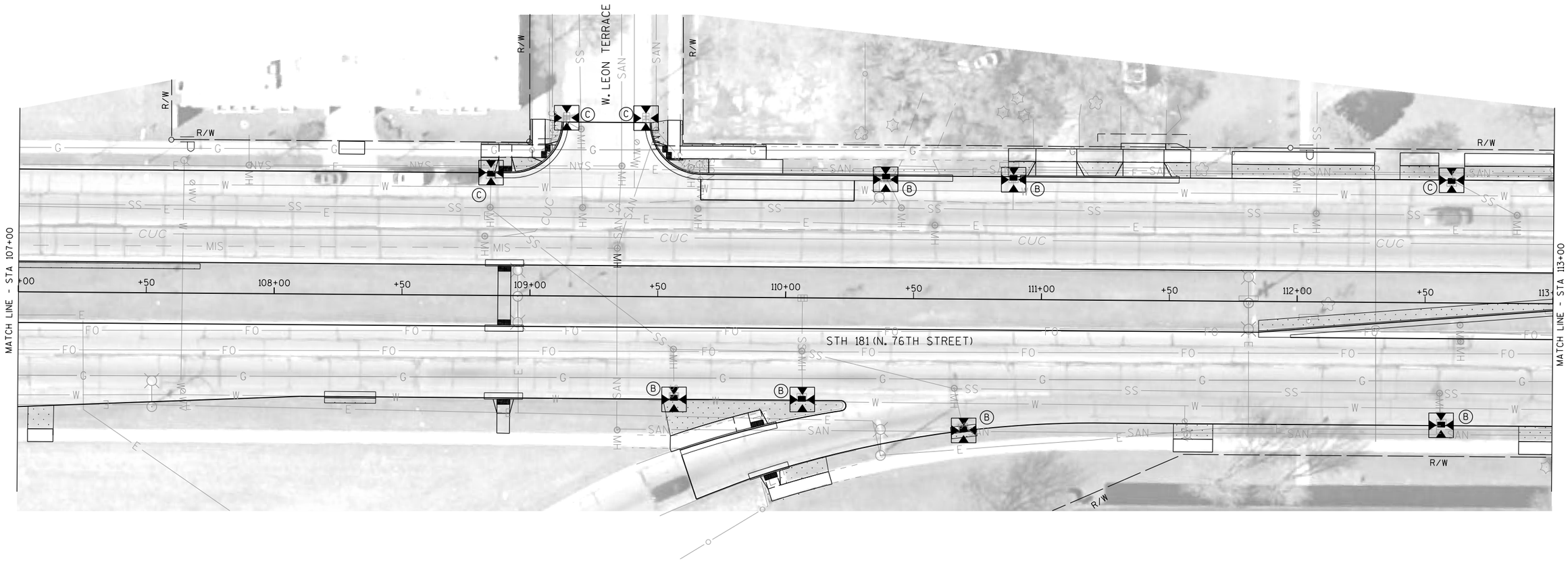


2

| PROJECT NO: 2140-13-70 | HWY: STH 181 | COUNTY: MILWAUKEE | EROSION CONTROL | SHEET 84 | E |
|---|---|---|---|---|---|

2

## LEGEND

- SOD LAWN
- EROSION MAT URBAN CLASS 1 TYPE B, SEEDING MIXTURE NO. 40 & FERTIZER TYPE B
- SILT FENCE
- (A) INLET PROTECTION TYPE
- SLOPE INTERCEPT

N

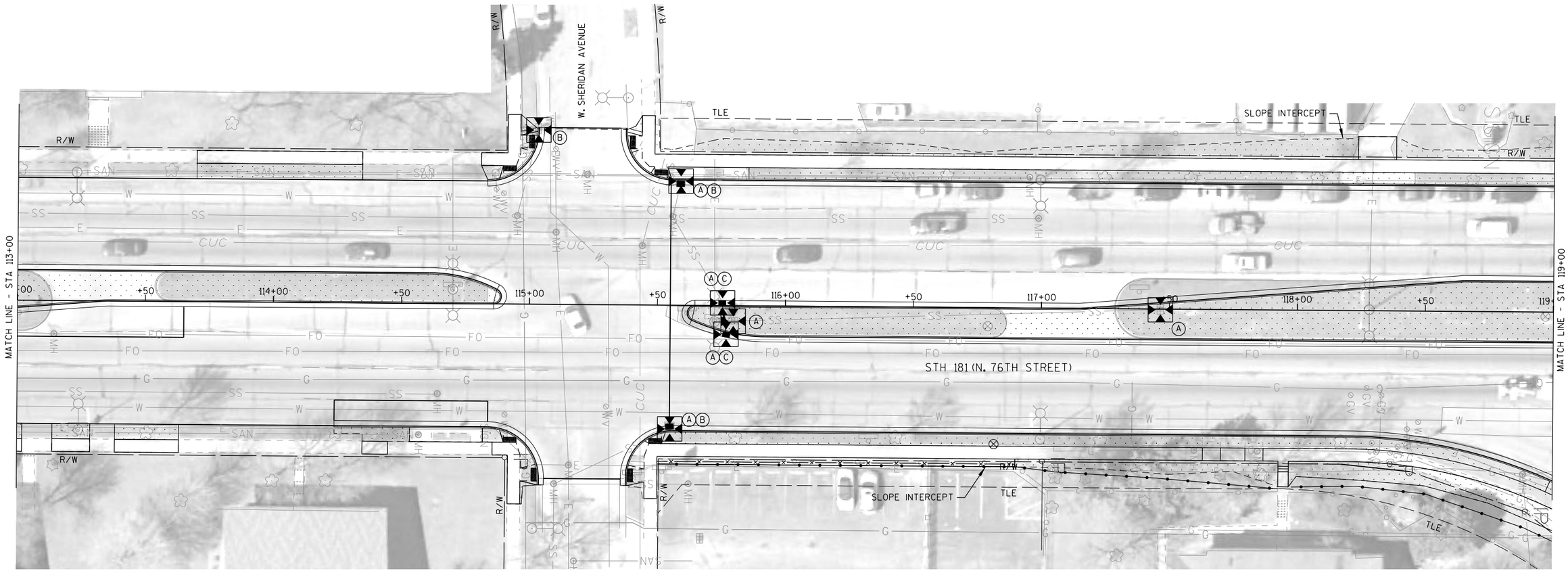


2

| PROJECT NO:2140-13-70 | HWY:STH 181 | COUNTY:MILWAUKEE | EROSION CONTROL | SHEET 85 | E |
|---|---|---|---|---|---|

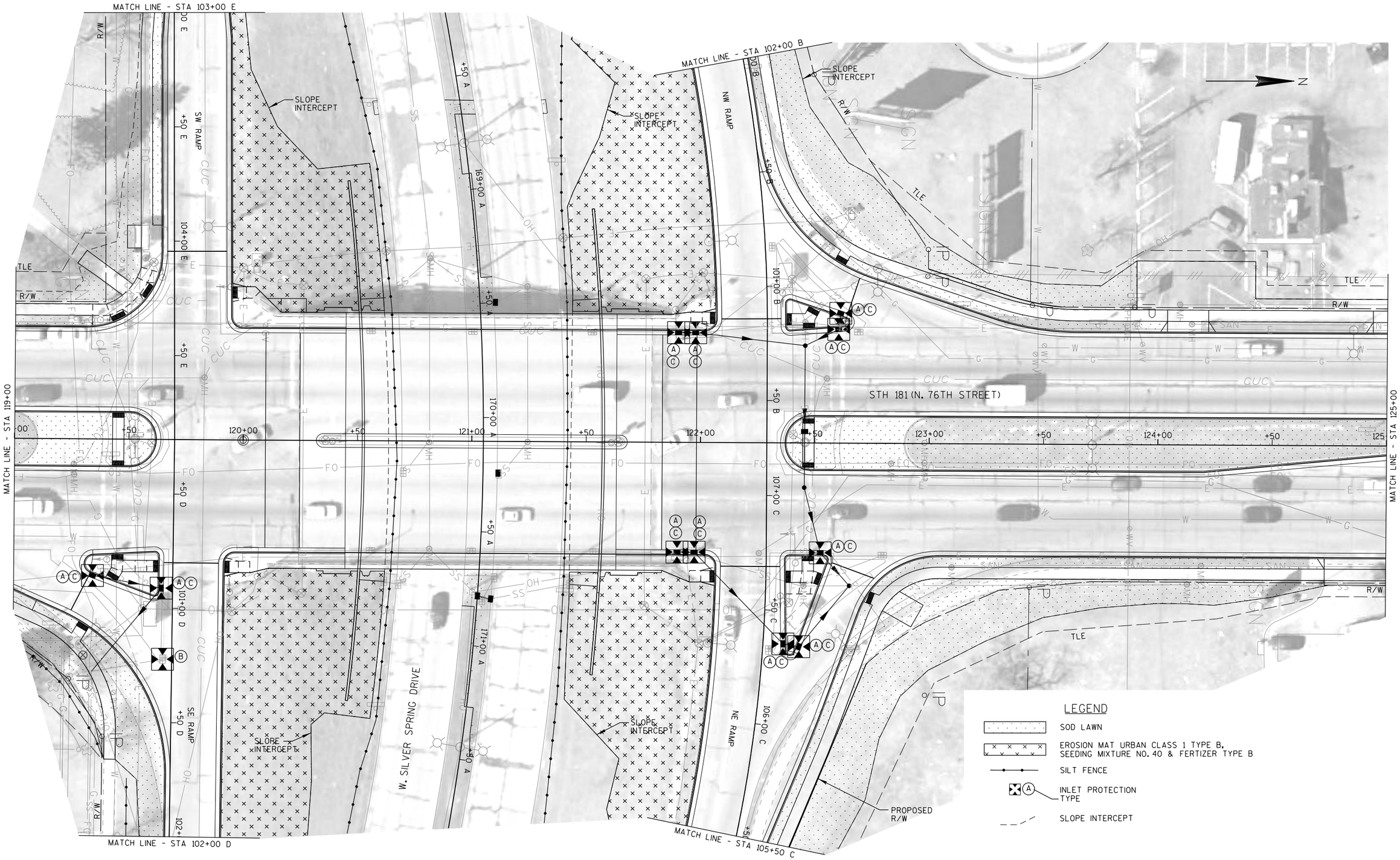


| PROJECT NO: 2140-13-70 | HWY: STH 181 | COUNTY: MILWAUKEE | EROSION CONTROL | SHEET 86 | E |
|---|---|---|---|---|---|

2

## LEGEND

- SOD LAWN
- EROSION MAT URBAN CLASS 1 TYPE B, SEEDING MIXTURE NO. 40 & FERTIZER TYPE B
- SILT FENCE
- (A) INLET PROTECTION TYPE
- SLOPE INTERCEPT

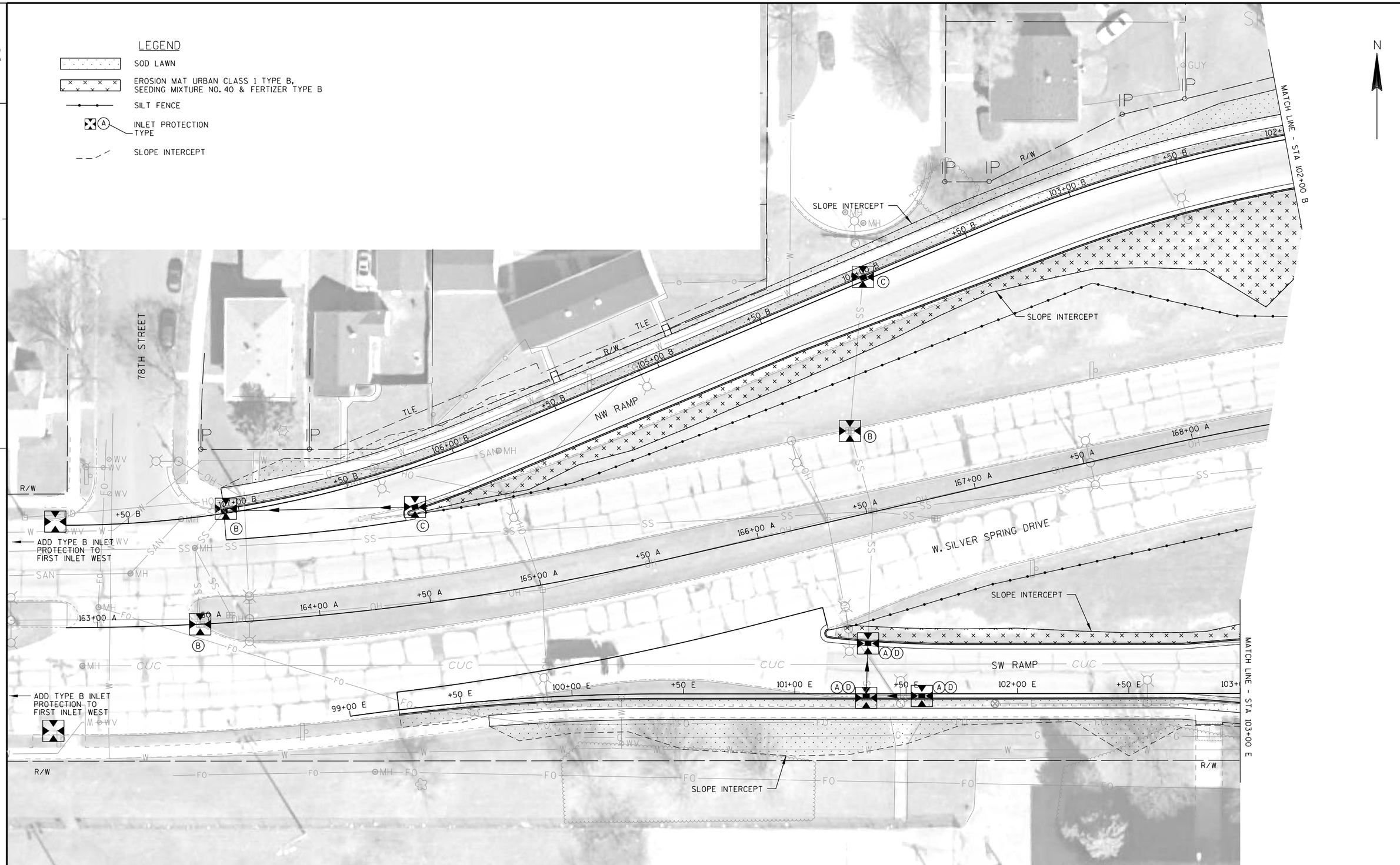


| PROJECT NO: 2140-13-70 | HWY: STH 181 | COUNTY: MILWAUKEE | EROSION CONTROL | SHEET 87 | E |
|---|---|---|---|---|---|

2

LEGEND

- SOD LAWN
- EROSION MAT URBAN CLASS 1 TYPE B, SEEDING MIXTURE NO. 40 & FERTIZER TYPE B
- SILT FENCE
- (A) INLET PROTECTION TYPE
- SLOPE INTERCEPT

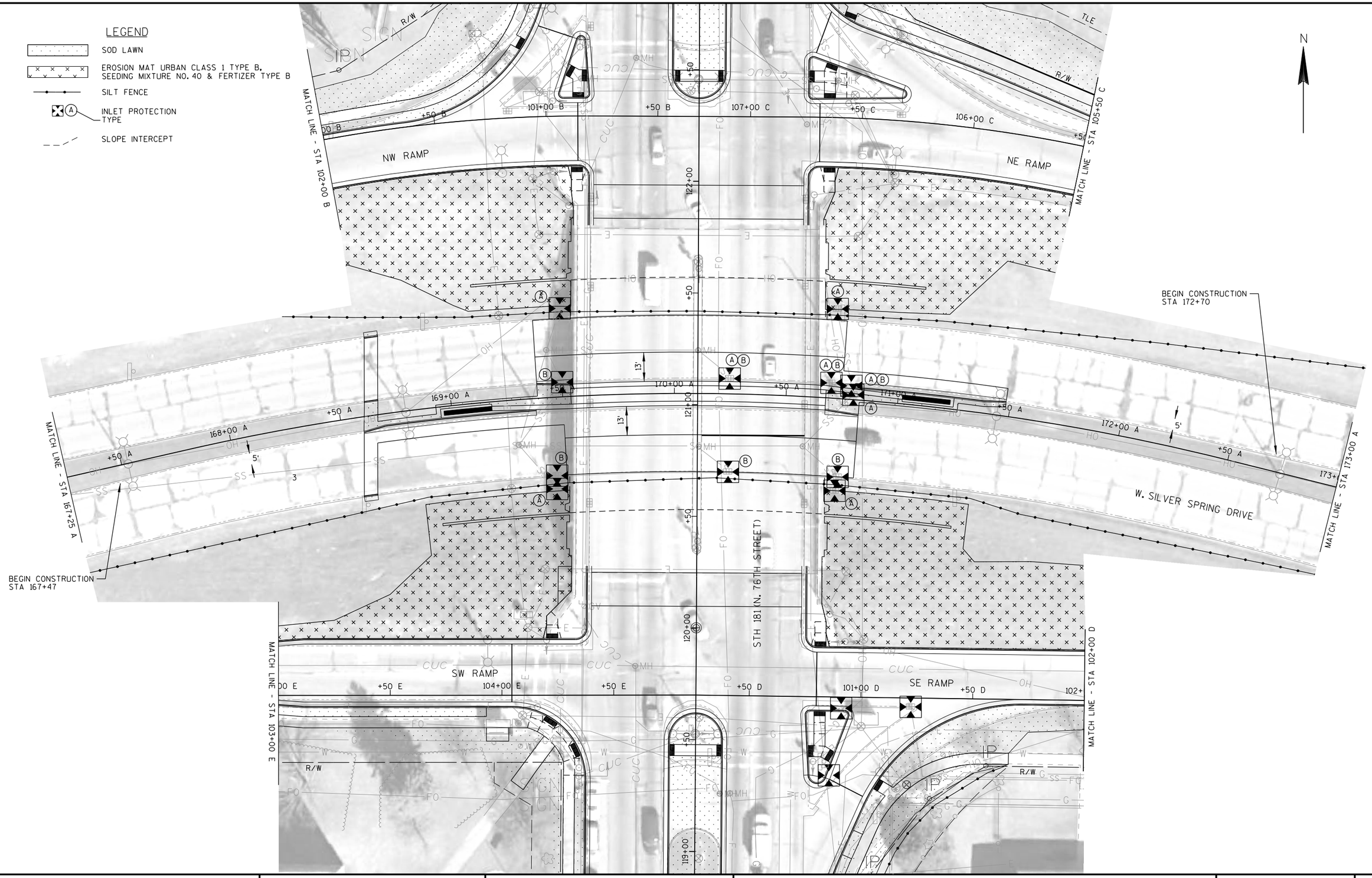


2

| PROJECT NO: 2140-13-70 | HWY: STH 181 | COUNTY: MILWAUKEE | EROSION CONTROL | SHEET 88 | E |
|---|---|---|---|---|---|

FILE NAME : L:\Jobs2010\20100384\CAD\WisDOT_Trans\dgn\00\022007B_ec.dgn PLOT DATE : 5/1/2016 PLOT BY : GRAEF PLOT NAME : PLOT SCALE : 40.0000 sf / in.

WISDOT/CADDS SHEET 42

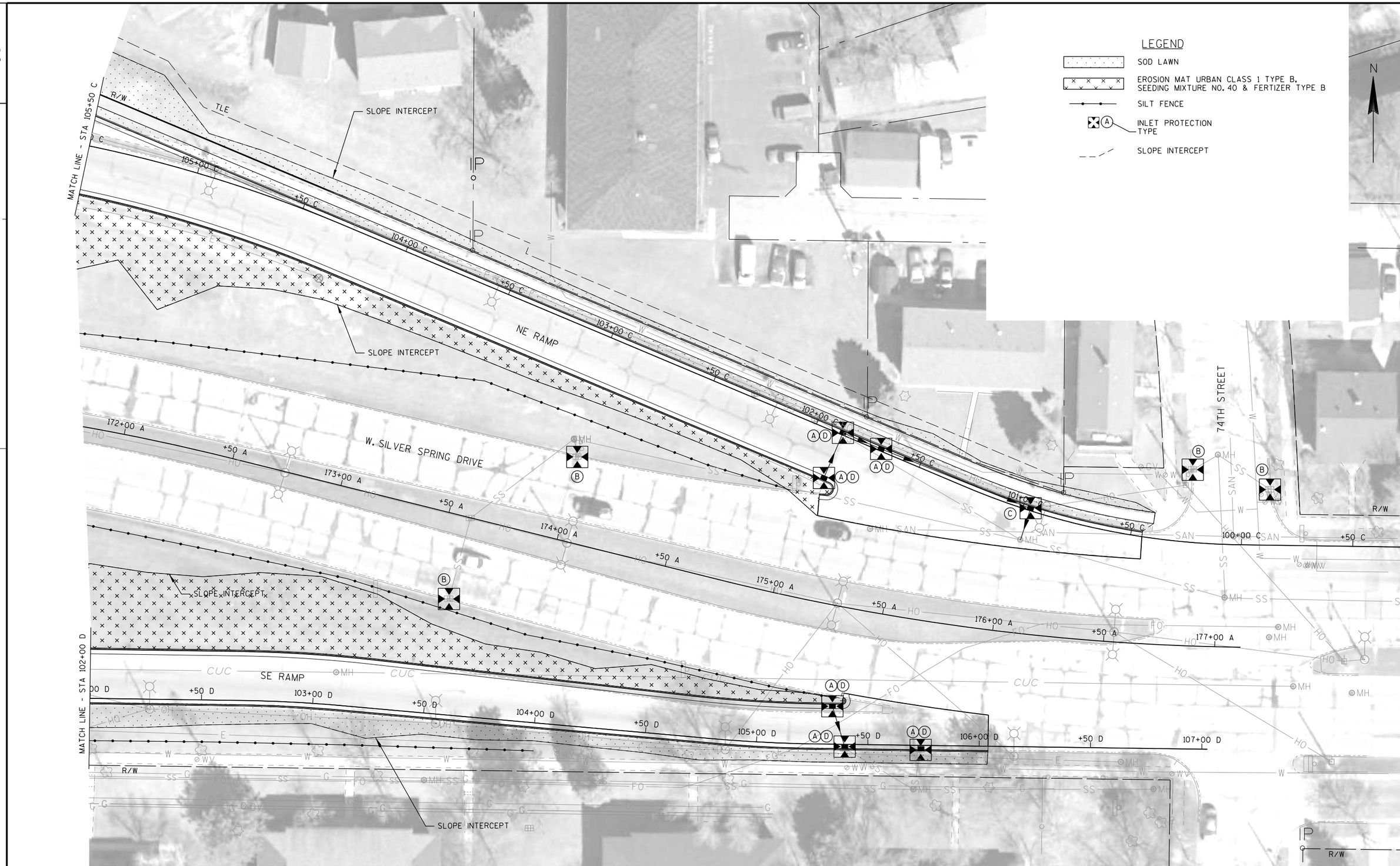


| PROJECT NO: 2140-13-70 | HWY: STH 181 | COUNTY: MILWAUKEE | EROSION CONTROL | SHEET 89 | E |
|---|---|---|---|---|---|

2

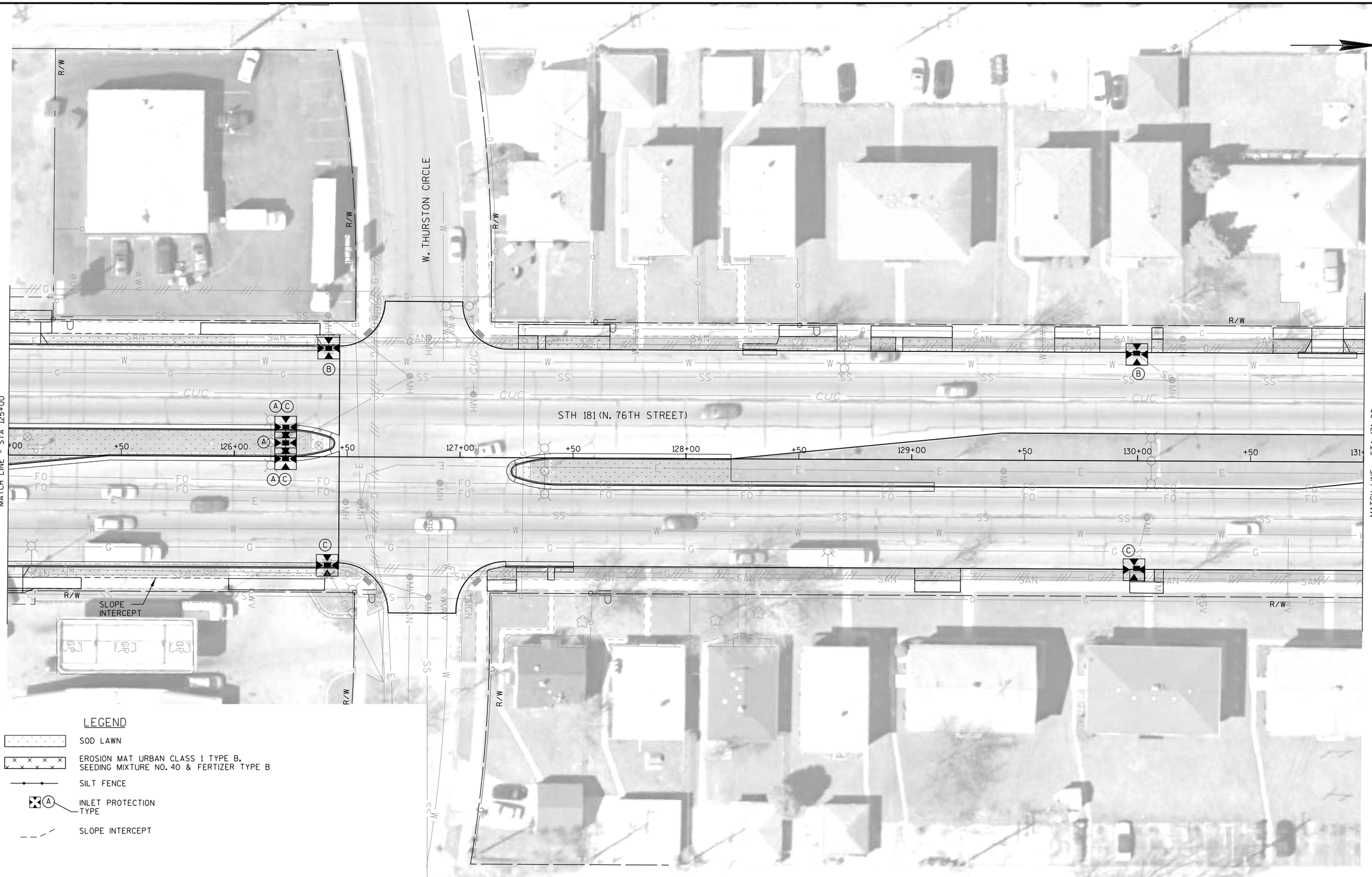


2

| PROJECT NO:2140-13-70 | HWY:STH 181 | COUNTY:MILWAUKEE | EROSION CONTROL | SHEET 90 | E |
|---|---|---|---|---|---|

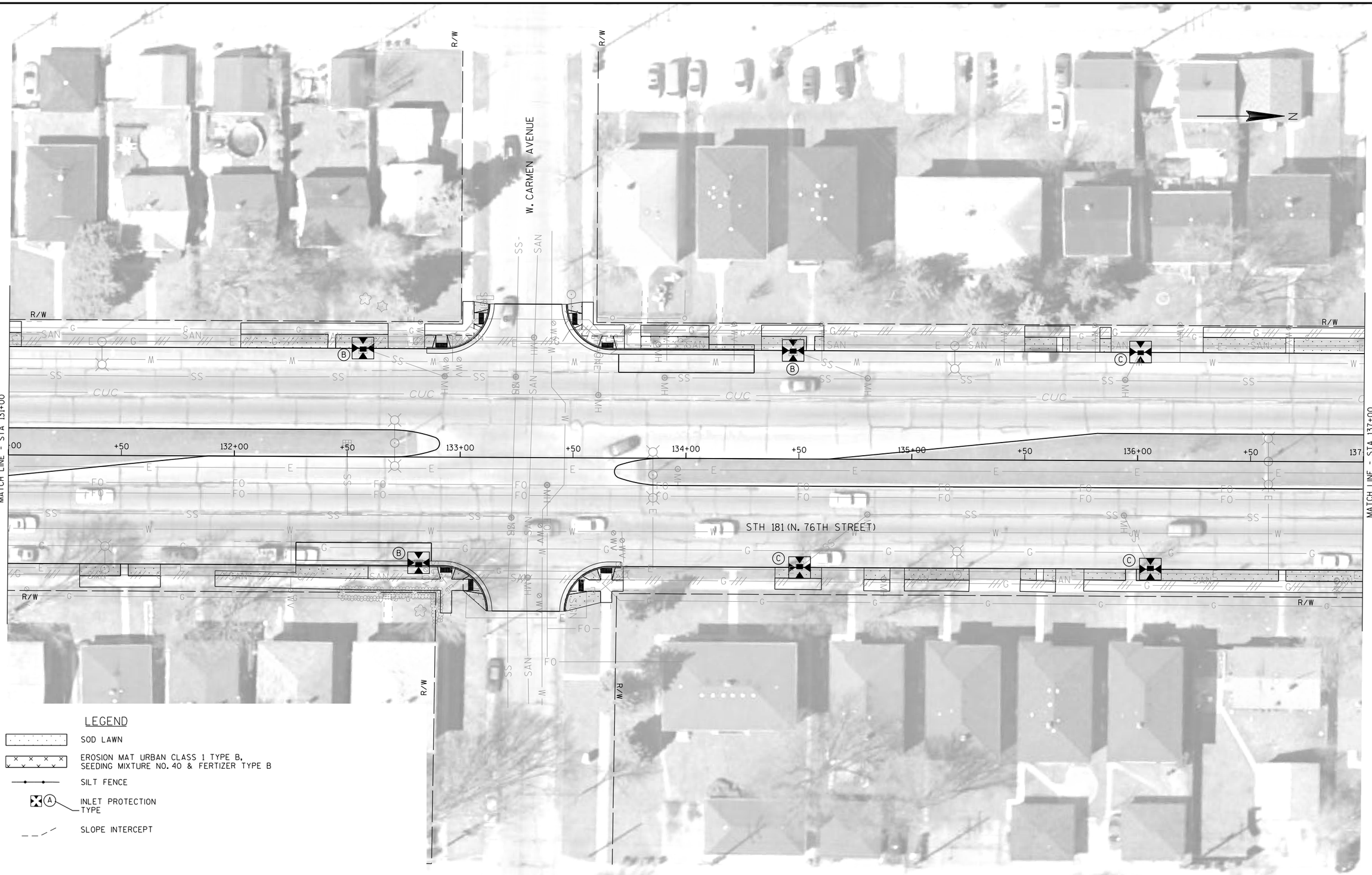


LEGEND

- SOD LAWN
- EROSION MAT URBAN CLASS I TYPE B, SEEDING MIXTURE NO. 40 & FERTIZER TYPE B
- SILT FENCE
- (A) INLET PROTECTION TYPE
- SLOPE INTERCEPT

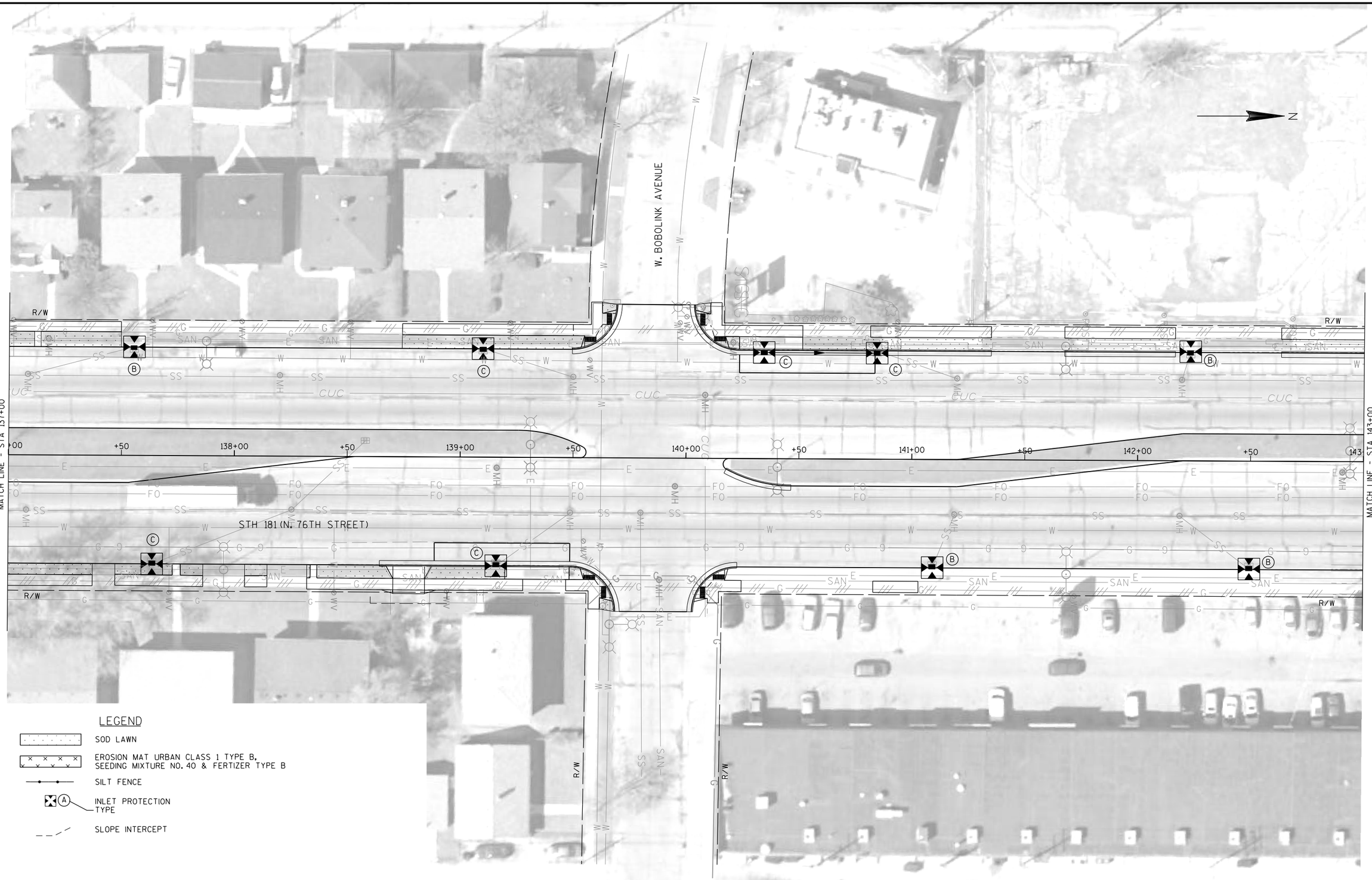
N
W. BOBOLINK AVENUE
STH 181(N. 76TH STREET)
MATCH LINE - STA 137+00
MATCH LINE - STA 143+00
138+00
139+00
140+00
141+00
142+00
143
+50
R/W
CUC
SAN
SS
W
E
FO
G
WV
WM
HW
LEGEND
SOD LAWN
EROSION MAT URBAN CLASS 1 TYPE B, SEEDING MIXTURE NO. 40 & FERTIZER TYPE B
SILT FENCE
INLET PROTECTION TYPE
SLOPE INTERCEPT

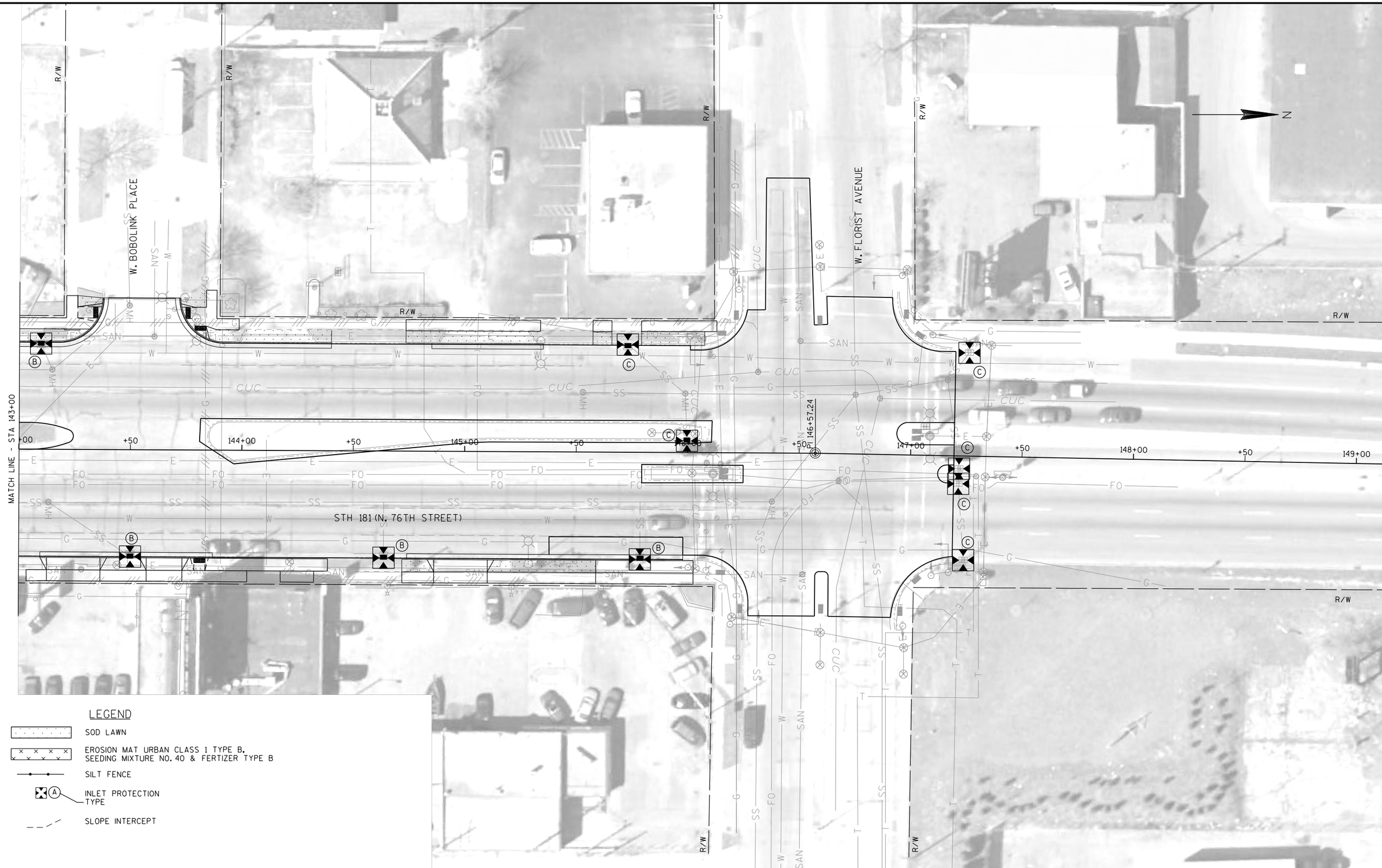


2

| PROJECT NO:2140-13-70 | HWY:STH 181 | COUNTY:MILWAUKEE | EROSION CONTROL | SHEET 93 | E |
|---|---|---|---|---|---|

2

2

| PROJECT NO:2140-13-70 | HWY:STH 181 | COUNTY:MILWAUKEE | STORM SEWER PLAN | SHEET 94 | E |
|---|---|---|---|---|---|

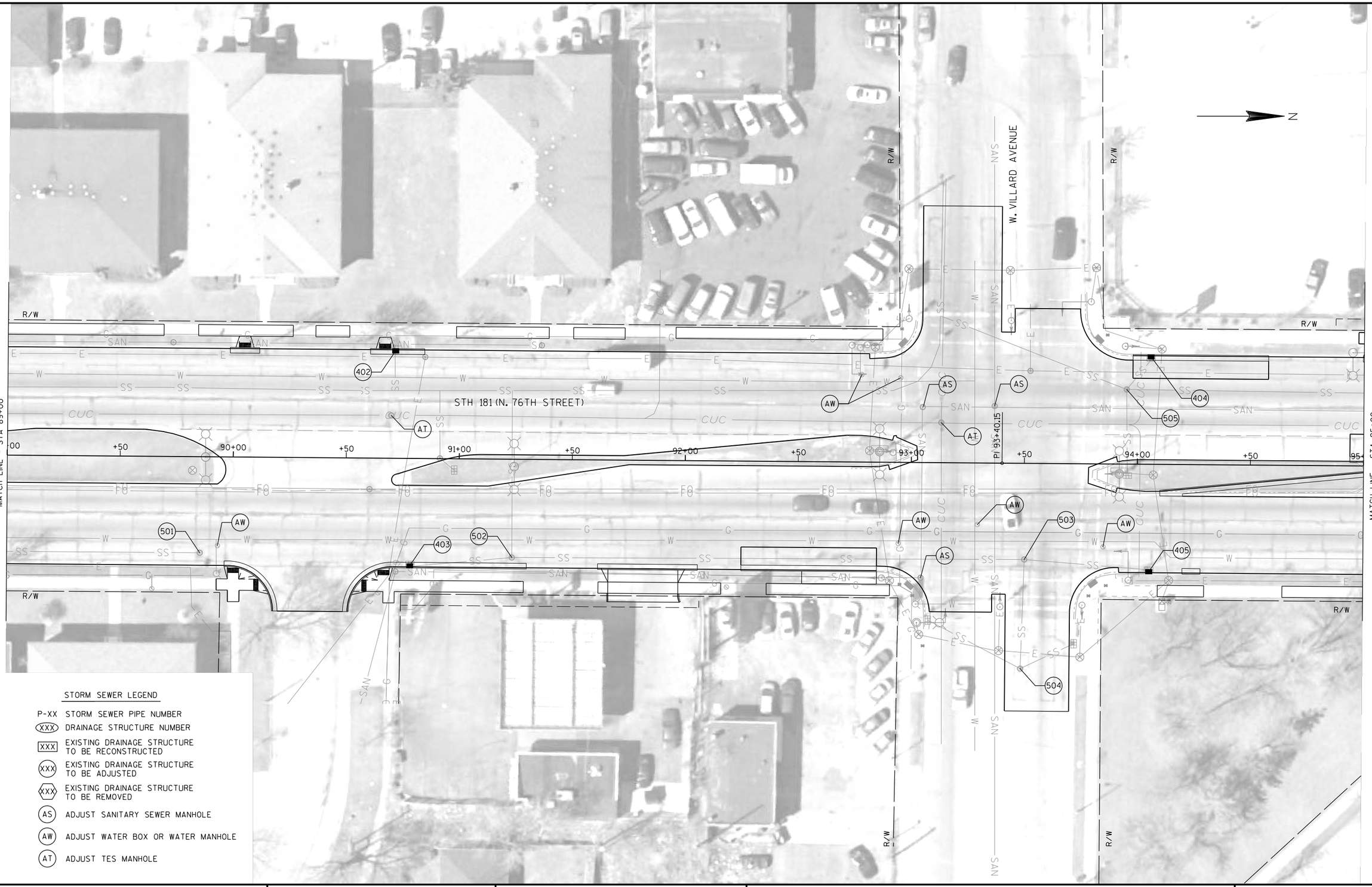


STORM SEWER LEGEND

| | |
|---|---|
| P-XX | STORM SEWER PIPE NUMBER |
| (XXX) | DRAINAGE STRUCTURE NUMBER |
| [XXX] | EXISTING DRAINAGE STRUCTURE TO BE RECONSTRUCTED |
| (XXX) | EXISTING DRAINAGE STRUCTURE TO BE ADJUSTED |
| (XXX) | EXISTING DRAINAGE STRUCTURE TO BE REMOVED |
| (AS) | ADJUST SANITARY SEWER MANHOLE |
| (AW) | ADJUST WATER BOX OR WATER MANHOLE |
| (AT) | ADJUST TES MANHOLE |

| PROJECT NO:2140-13-70 | HWY:STH 181 | COUNTY:MILWAUKEE | STORM SEWER PLAN | SHEET 95 | E |
|---|---|---|---|---|---|

STORM SEWER LEGEND

- P-XX STORM SEWER PIPE NUMBER
- (XXX) DRAINAGE STRUCTURE NUMBER
- [XXX] EXISTING DRAINAGE STRUCTURE TO BE RECONSTRUCTED
- (XXX) EXISTING DRAINAGE STRUCTURE TO BE ADJUSTED
- (XXX) EXISTING DRAINAGE STRUCTURE TO BE REMOVED
- (AS) ADJUST SANITARY SEWER MANHOLE
- (AW) ADJUST WATER BOX OR WATER MANHOLE
- (AT) ADJUST TES MANHOLE

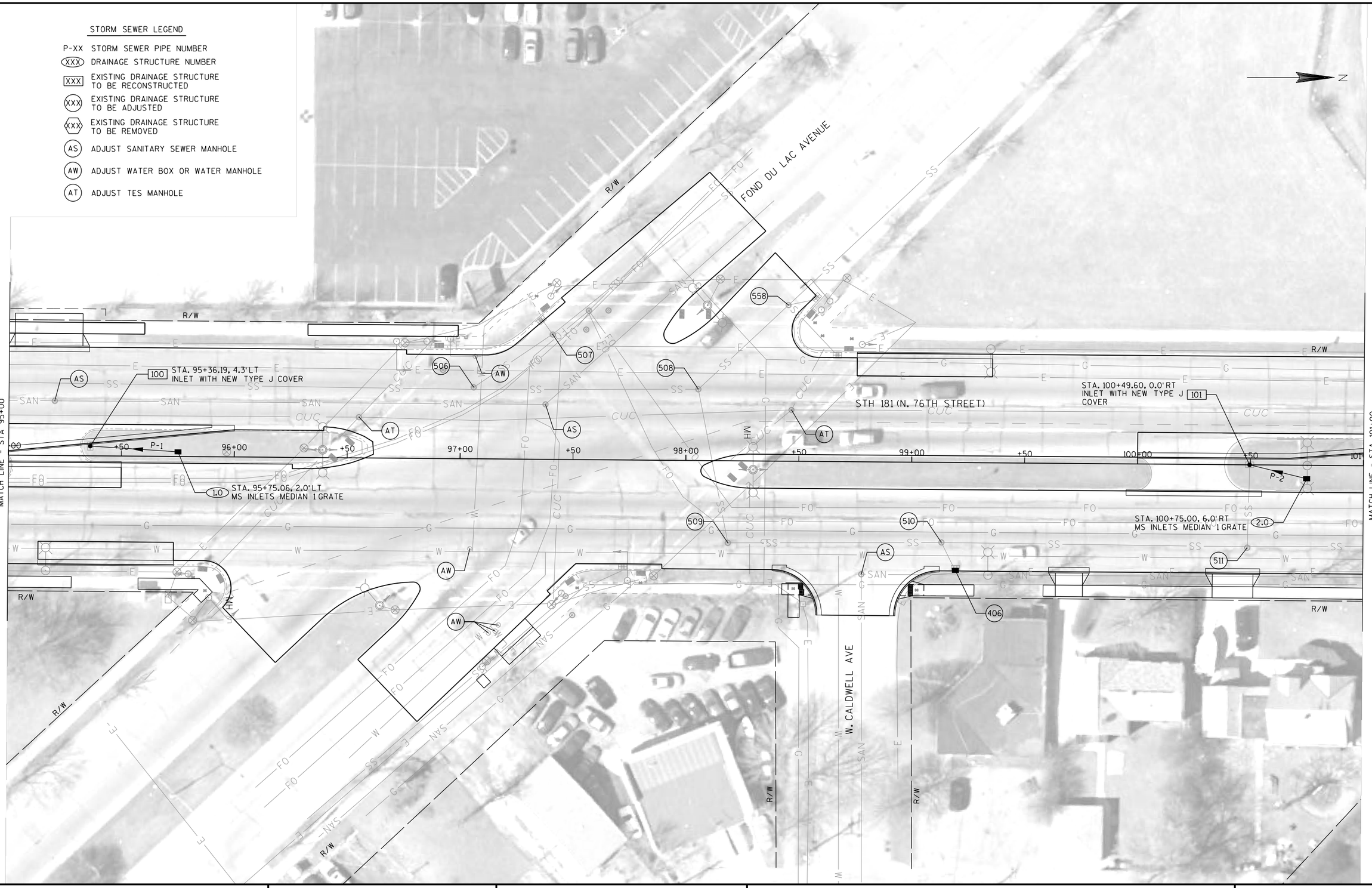


| PROJECT NO: 2140-13-70 | HWY: STH 181 | COUNTY: MILWAUKEE | STORM SEWER PLAN | SHEET 96 | E |
|---|---|---|---|---|---|

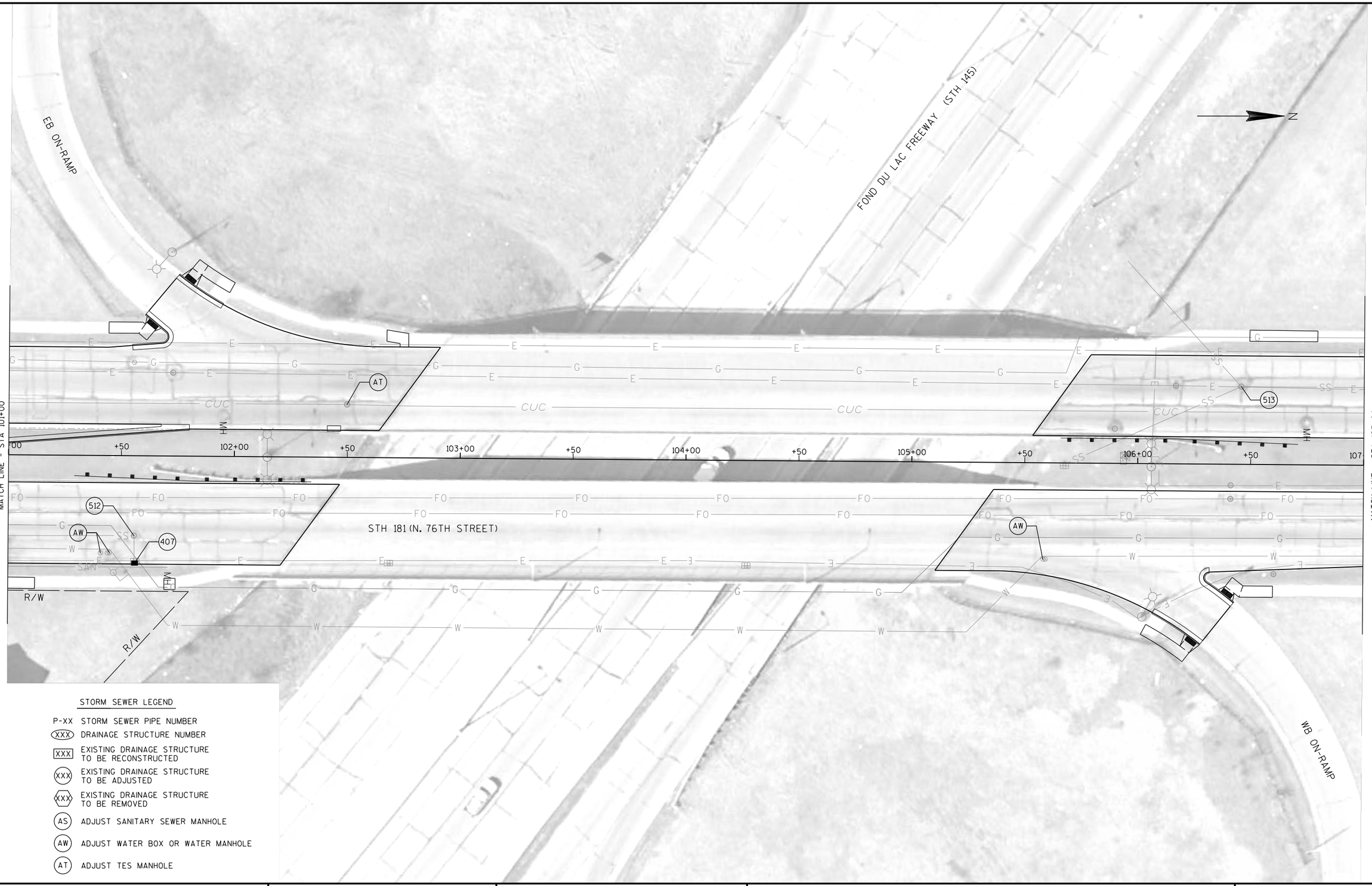


STORM SEWER LEGEND

| | |
|---|---|
| P-XX | STORM SEWER PIPE NUMBER |
| (XXX) | DRAINAGE STRUCTURE NUMBER |
| [XXX] | EXISTING DRAINAGE STRUCTURE TO BE RECONSTRUCTED |
| (XXX) | EXISTING DRAINAGE STRUCTURE TO BE ADJUSTED |
| (XXX) | EXISTING DRAINAGE STRUCTURE TO BE REMOVED |
| (AS) | ADJUST SANITARY SEWER MANHOLE |
| (AW) | ADJUST WATER BOX OR WATER MANHOLE |
| (AT) | ADJUST TES MANHOLE |

| PROJECT NO:2140-13-70 | HWY:STH 181 | COUNTY:MILWAUKEE | STORM SEWER PLAN | SHEET 97 | E |
|---|---|---|---|---|---|

STORM SEWER LEGEND

| | |
|---|---|
| P-XX | STORM SEWER PIPE NUMBER |
| (XXX) | DRAINAGE STRUCTURE NUMBER |
| [XXX] | EXISTING DRAINAGE STRUCTURE TO BE RECONSTRUCTED |
| (XXX) | EXISTING DRAINAGE STRUCTURE TO BE ADJUSTED |
| ⟨XXX⟩ | EXISTING DRAINAGE STRUCTURE TO BE REMOVED |
| (AS) | ADJUST SANITARY SEWER MANHOLE |
| (AW) | ADJUST WATER BOX OR WATER MANHOLE |
| (AT) | ADJUST TES MANHOLE |

| PROJECT NO:2140-13-70 | HWY:STH 181 | COUNTY:MILWAUKEE | STORM SEWER PLAN | SHEET 98 | E |
|---|---|---|---|---|---|

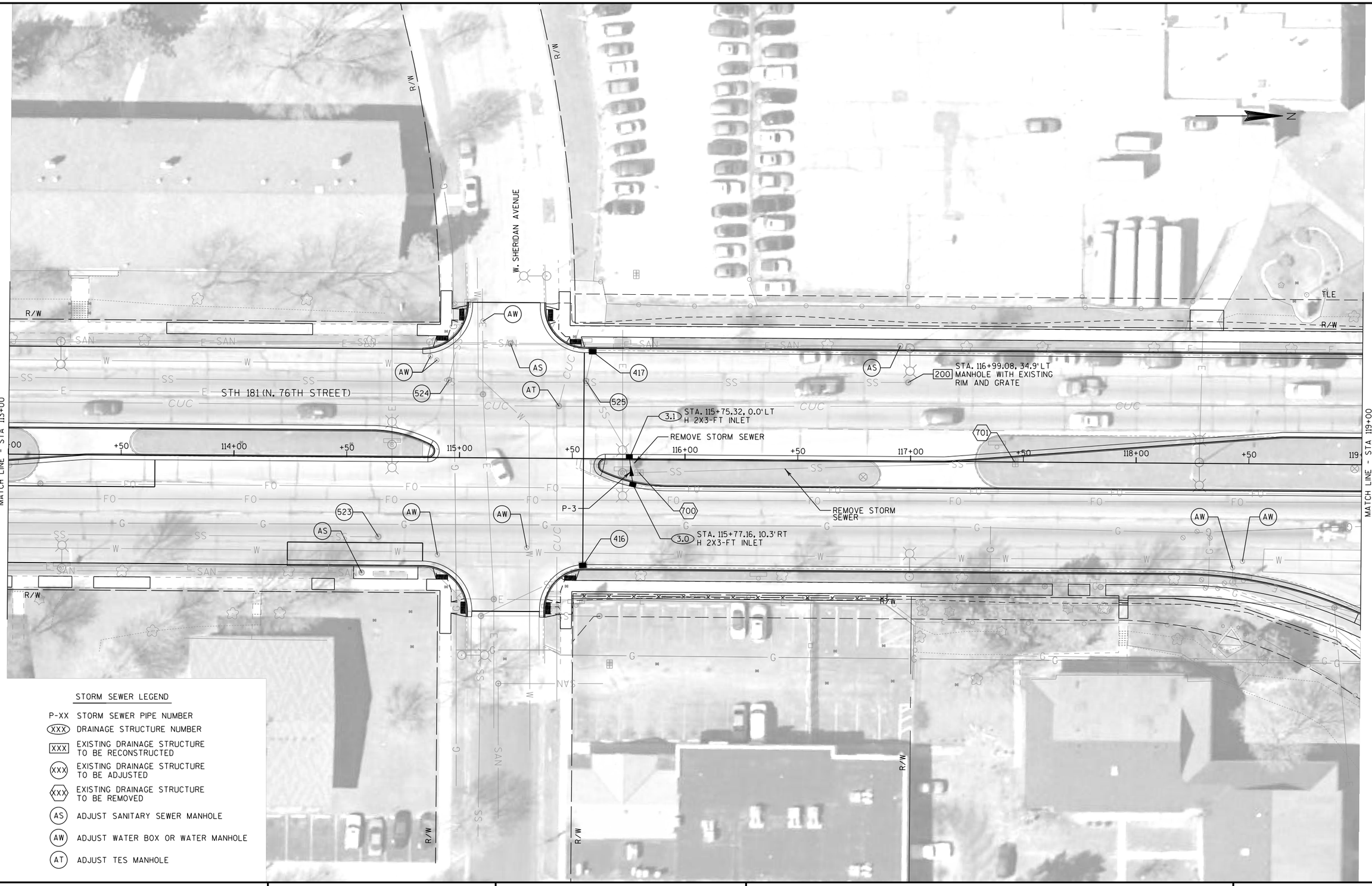


| PROJECT NO:2140-13-70 | HWY:STH 181 | COUNTY:MILWAUKEE | STORM SEWER PLAN | SHEET 99 | E |
|---|---|---|---|---|---|

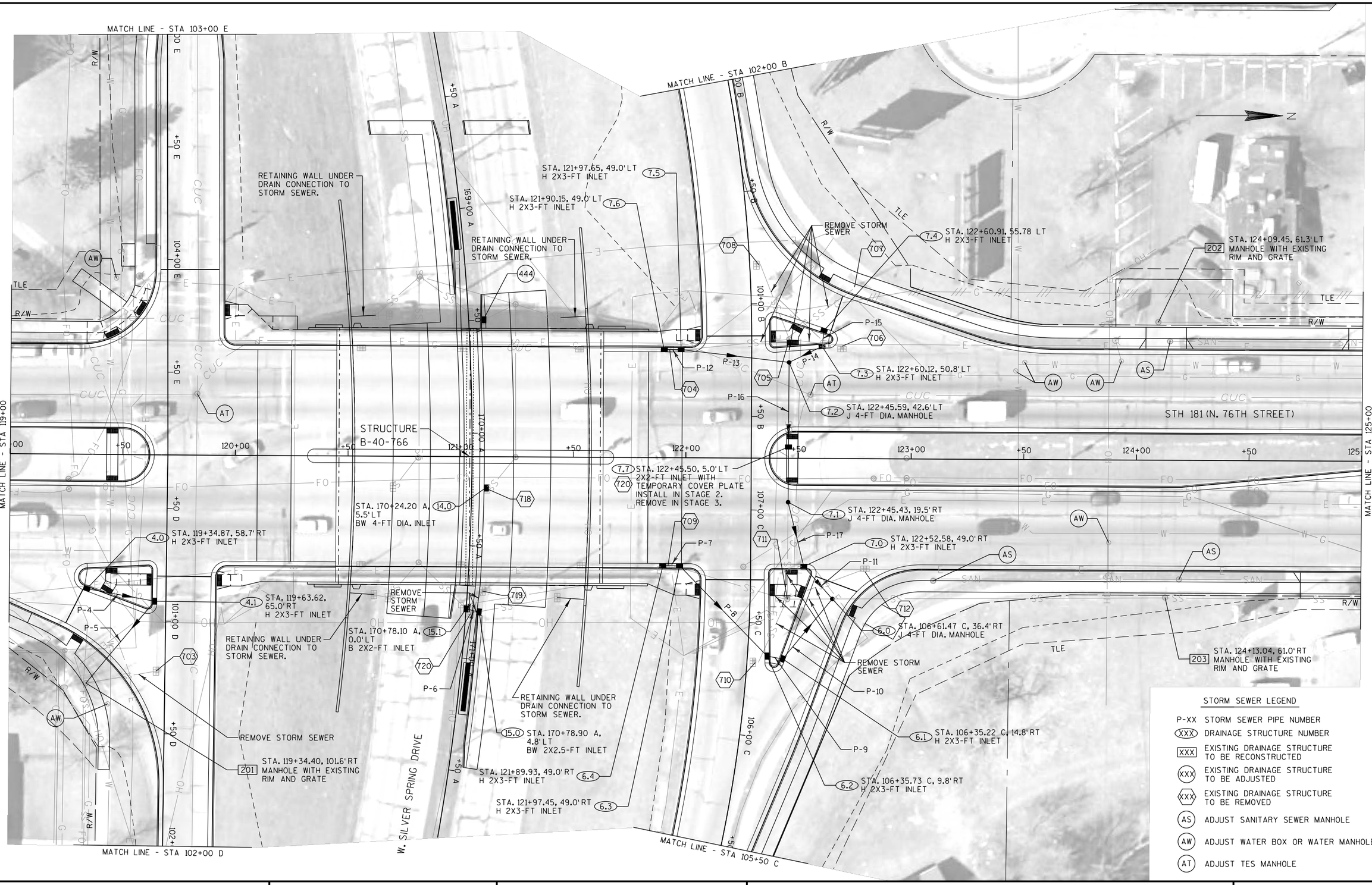
MATCH LINE - STA 103+00 E
MATCH LINE - STA 102+00 B
MATCH LINE - STA 119+00
MATCH LINE - STA 125+00
MATCH LINE - STA 102+00 D
MATCH LINE - STA 105+50 C
STH 181 (N. 76TH STREET)
W. SILVER SPRING DRIVE
N
RETAINING WALL UNDER DRAIN CONNECTION TO STORM SEWER.
STA. 121+97.65, 49.0'LT H 2X3-FT INLET
STA. 121+90.15, 49.0'LT H 2X3-FT INLET
REMOVE STORM SEWER
STA. 122+60.91, 55.78 LT H 2X3-FT INLET
STA. 124+09.45, 61.3'LT MANHOLE WITH EXISTING RIM AND GRATE
STA. 122+60.12, 50.8'LT H 2X3-FT INLET
STA. 122+45.59, 42.6'LT J 4-FT DIA. MANHOLE
STRUCTURE B-40-766
STA. 122+45.50, 5.0'LT 2X2-FT INLET WITH TEMPORARY COVER PLATE INSTALL IN STAGE 2. REMOVE IN STAGE 3.
STA. 170+24.20 A, 5.5'LT BW 4-FT DIA. INLET
STA. 122+45.43, 19.5'RT J 4-FT DIA. MANHOLE
STA. 122+52.58, 49.0'RT H 2X3-FT INLET
STA. 119+34.87, 58.7'RT H 2X3-FT INLET
STA. 119+63.62, 65.0'RT H 2X3-FT INLET
STA. 170+78.10 A, 0.0'LT B 2X2-FT INLET
STA. 106+61.47 C, 36.4'RT J 4-FT DIA. MANHOLE
STA. 124+13.04, 61.0'RT MANHOLE WITH EXISTING RIM AND GRATE
STA. 170+78.90 A, 4.8'LT BW 2X2.5-FT INLET
STA. 119+34.40, 101.6'RT MANHOLE WITH EXISTING RIM AND GRATE
STA. 121+89.93, 49.0'RT H 2X3-FT INLET
STA. 121+97.45, 49.0'RT H 2X3-FT INLET
STA. 106+35.22 C, 14.8'RT H 2X3-FT INLET
STA. 106+35.73 C, 9.8'RT H 2X3-FT INLET
STORM SEWER LEGEND
P-XX STORM SEWER PIPE NUMBER
XXX DRAINAGE STRUCTURE NUMBER
XXX EXISTING DRAINAGE STRUCTURE TO BE RECONSTRUCTED
XXX EXISTING DRAINAGE STRUCTURE TO BE ADJUSTED
XXX EXISTING DRAINAGE STRUCTURE TO BE REMOVED
AS ADJUST SANITARY SEWER MANHOLE
AW ADJUST WATER BOX OR WATER MANHOLE
AT ADJUST TES MANHOLE

STORM SEWER LEGEND

- P-XX STORM SEWER PIPE NUMBER
- (XXX) DRAINAGE STRUCTURE NUMBER
- [XXX] EXISTING DRAINAGE STRUCTURE TO BE RECONSTRUCTED
- (XXX) EXISTING DRAINAGE STRUCTURE TO BE ADJUSTED
- (XXX) EXISTING DRAINAGE STRUCTURE TO BE REMOVED
- (AS) ADJUST SANITARY SEWER MANHOLE
- (AW) ADJUST WATER BOX OR WATER MANHOLE
- (AT) ADJUST TES MANHOLE

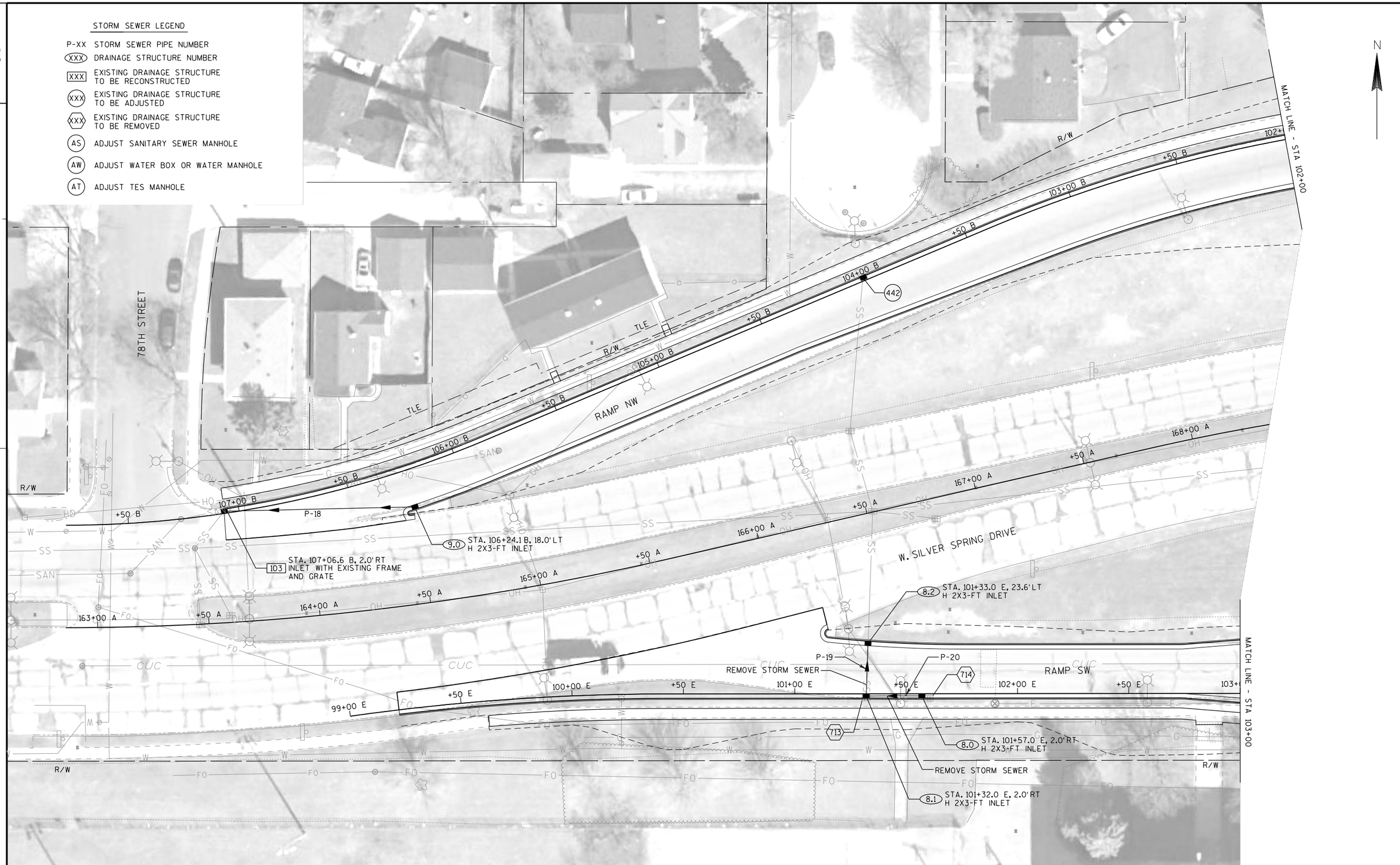

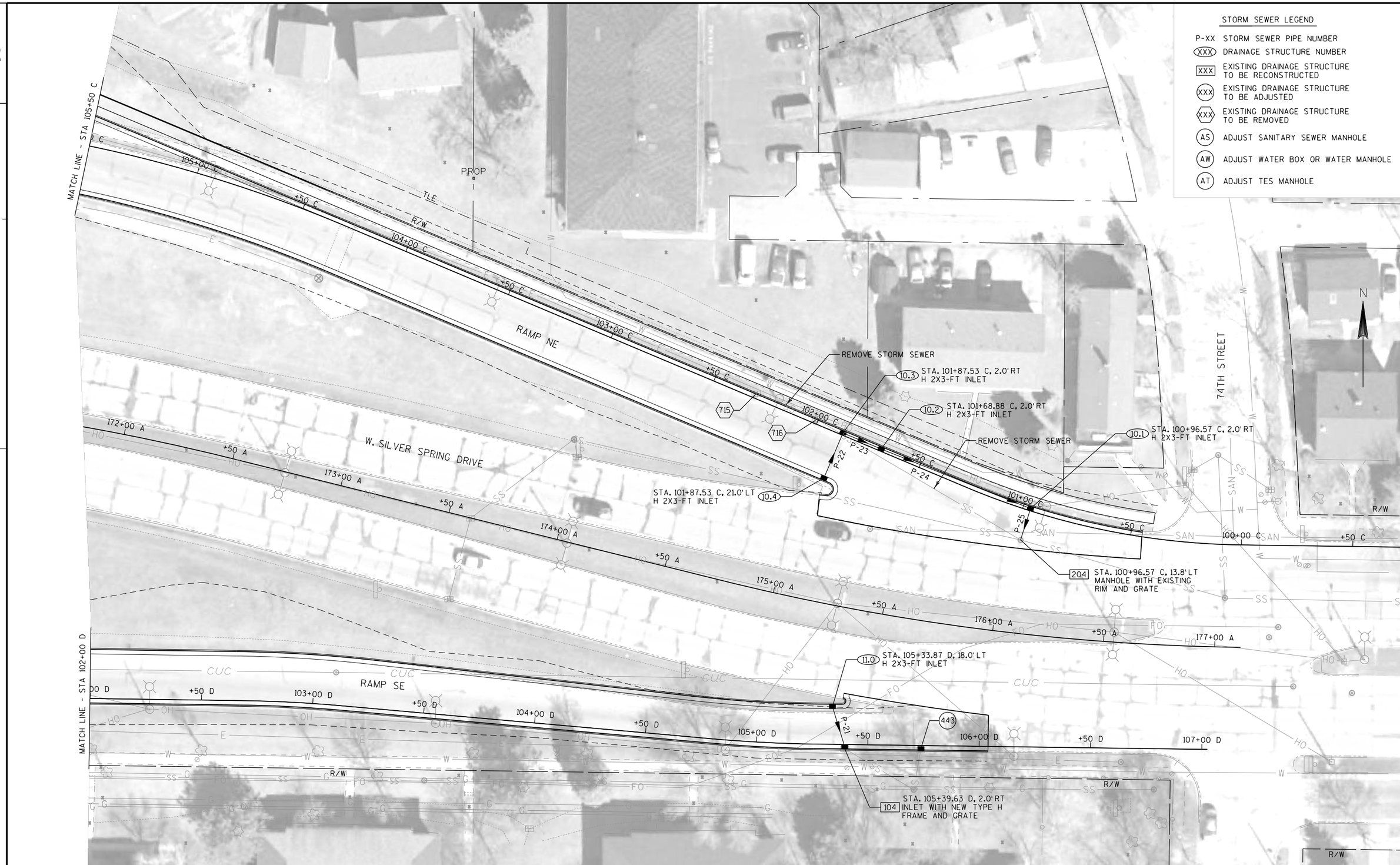


| PROJECT NO:2140-13-70 | HWY:STH 181 | COUNTY:MILWAUKEE | STORM SEWER PLAN | SHEET 102 | E |
|---|---|---|---|---|---|

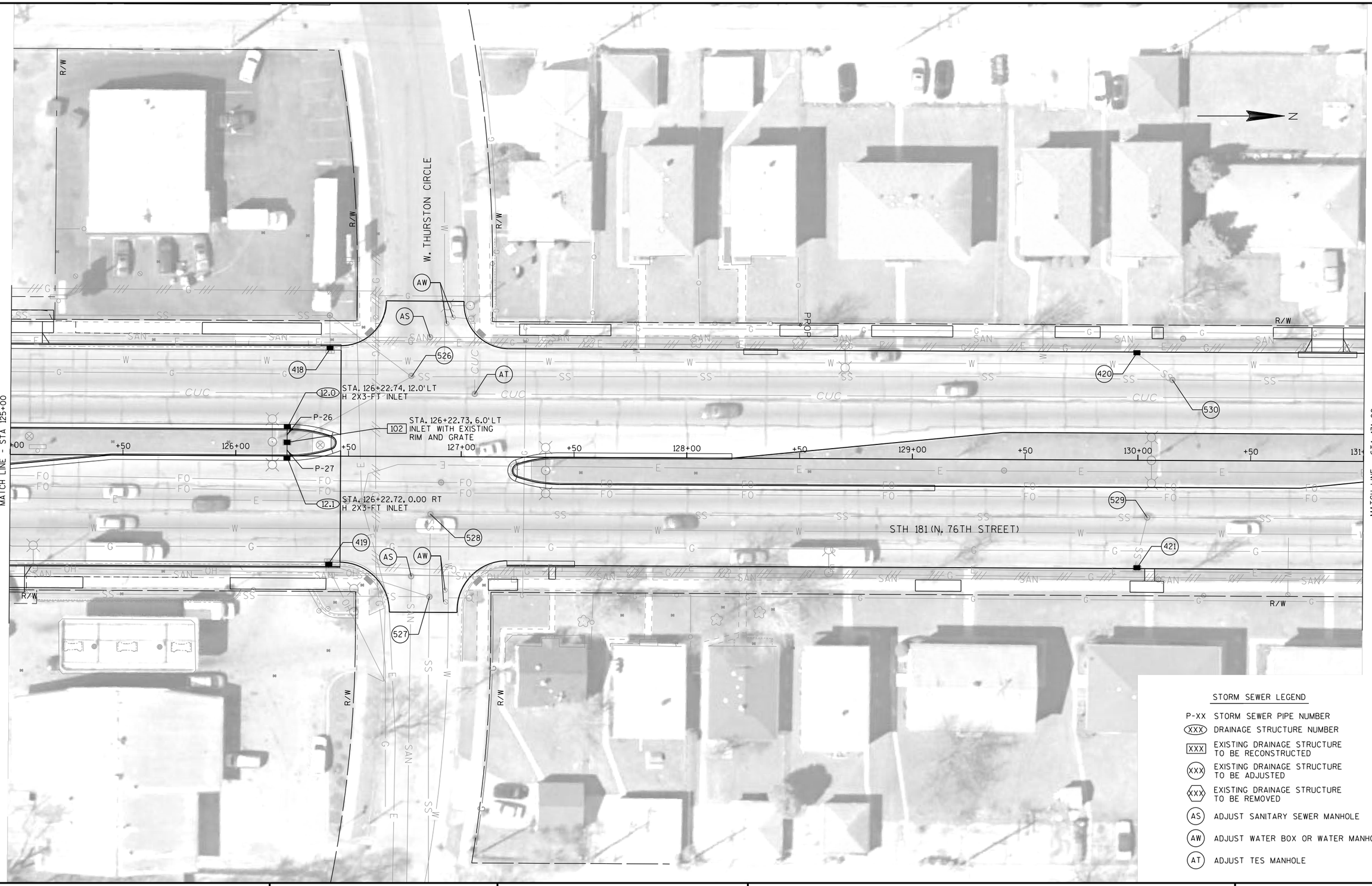


STORM SEWER LEGEND

| | |
|---|---|
| P-XX | STORM SEWER PIPE NUMBER |
| (XXX) | DRAINAGE STRUCTURE NUMBER |
| [XXX] | EXISTING DRAINAGE STRUCTURE TO BE RECONSTRUCTED |
| (XXX) | EXISTING DRAINAGE STRUCTURE TO BE ADJUSTED |
| ⟨XXX⟩ | EXISTING DRAINAGE STRUCTURE TO BE REMOVED |
| (AS) | ADJUST SANITARY SEWER MANHOLE |
| (AW) | ADJUST WATER BOX OR WATER MANHOLE |
| (AT) | ADJUST TES MANHOLE |

| PROJECT NO:2140-13-70 | HWY:STH 181 | COUNTY:MILWAUKEE | STORM SEWER PLAN | SHEET 103 | E |
|---|---|---|---|---|---|

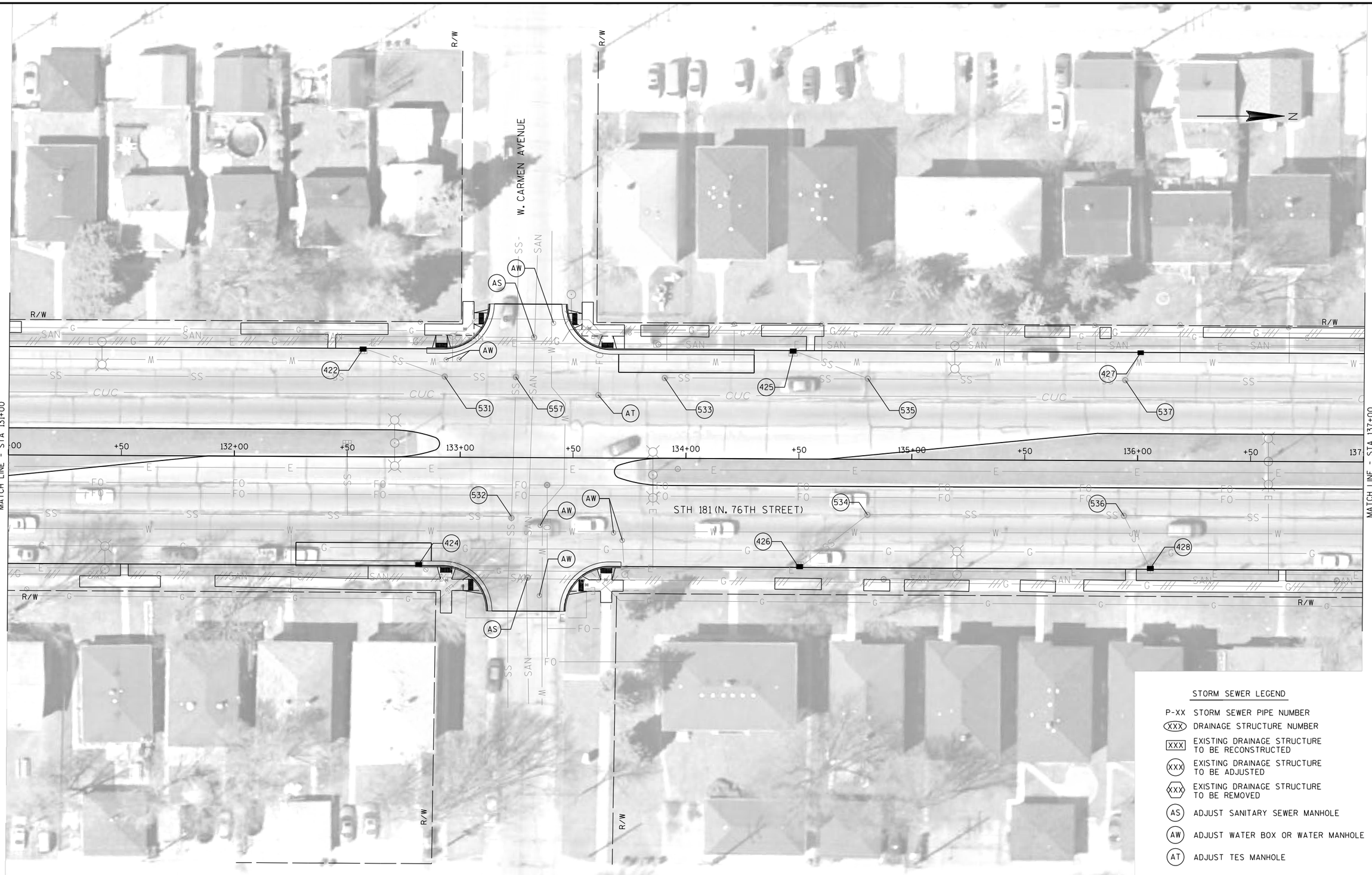


| PROJECT NO:2140-13-70 | HWY:STH 181 | COUNTY:MILWAUKEE | STORM SEWER PLAN | SHEET 104 | E |
|---|---|---|---|---|---|

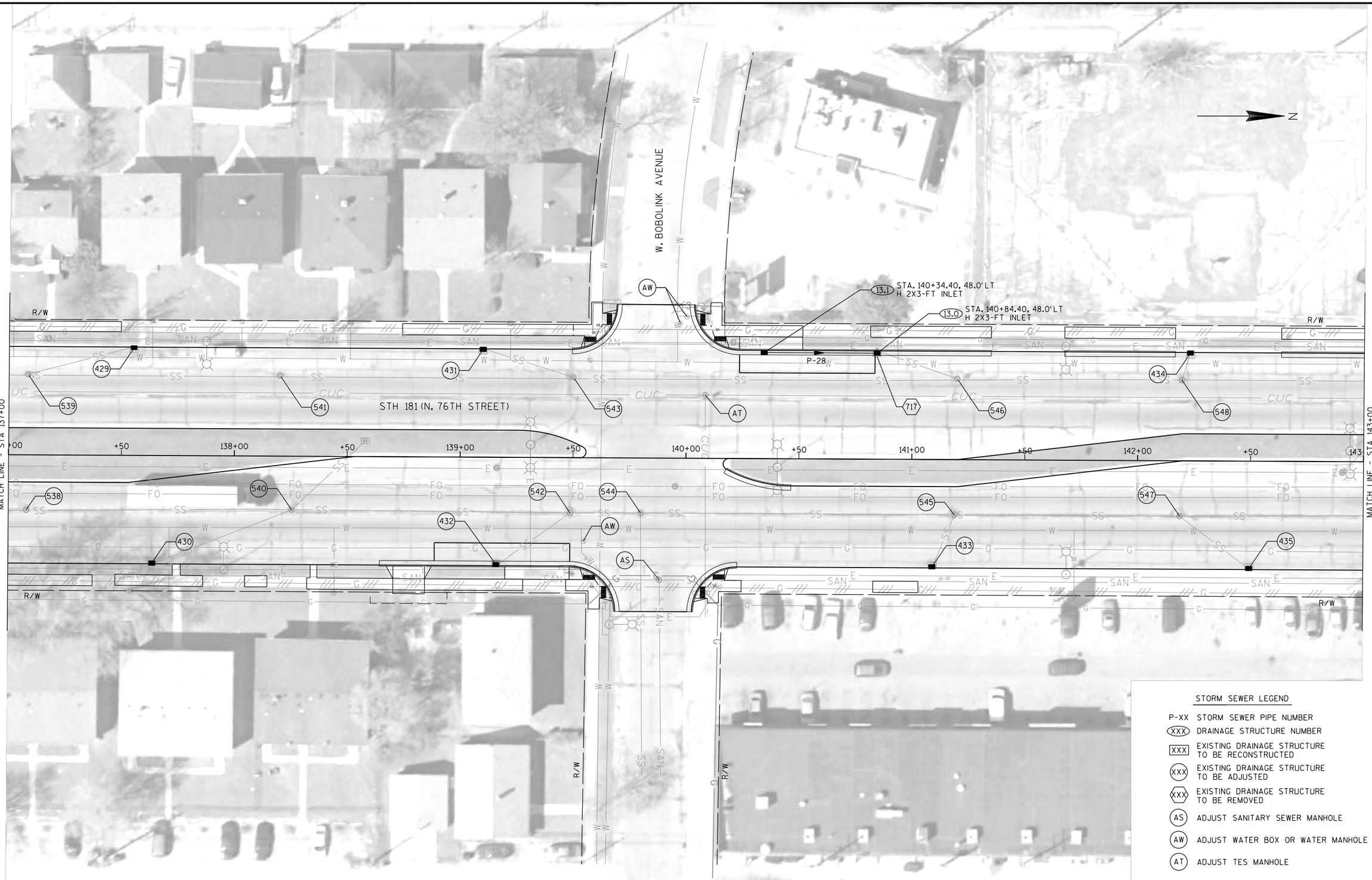


| PROJECT NO:2140-13-70 | HWY:STH 181 | COUNTY:MILWAUKEE | STORM SEWER PLAN | SHEET 105 | E |
|---|---|---|---|---|---|

| PROJECT NO:2140-13-70 | HWY:STH 181 | COUNTY:MILWAUKEE | STORM SEWER PLAN | SHEET 106 | E |
|---|---|---|---|---|---|

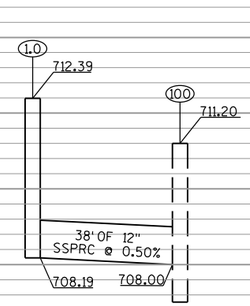
1.0
712.39
100
711.20
38' OF 12"
SSPRC @ 0.50%
708.19
708.00

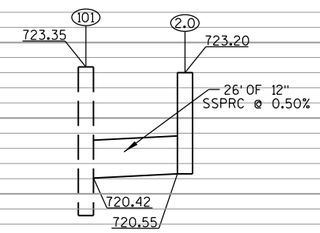
101
723.35
2.0
723.20
26' OF 12"
SSPRC @ 0.50%
720.42
720.55

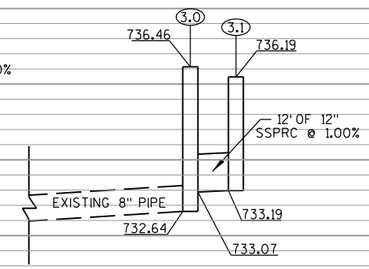
3.0
736.46
3.1
736.19
12' OF 12"
SSPRC @ 1.00%
EXISTING 8" PIPE
732.64
733.19
733.07

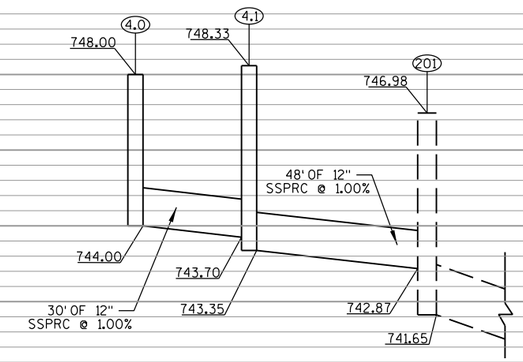
4.0
748.00
4.1
748.33
201
746.98
48' OF 12"
SSPRC @ 1.00%
744.00
743.70
743.35
30' OF 12"
SSPRC @ 1.00%
742.87
741.65

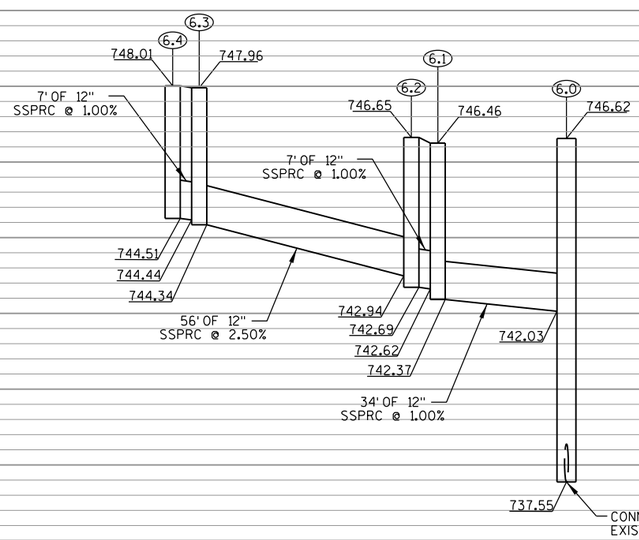
6.3
6.4
748.01
747.96
7' OF 12"
SSPRC @ 1.00%
6.1
6.2
746.65
746.46
7' OF 12"
SSPRC @ 1.00%
6.0
746.62
744.51
744.44
744.34
56' OF 12"
SSPRC @ 2.50%
742.94
742.69
742.62
742.37
34' OF 12"
SSPRC @ 1.00%
742.03
737.55
CONNECT TO
EXISTING 12" PIPE

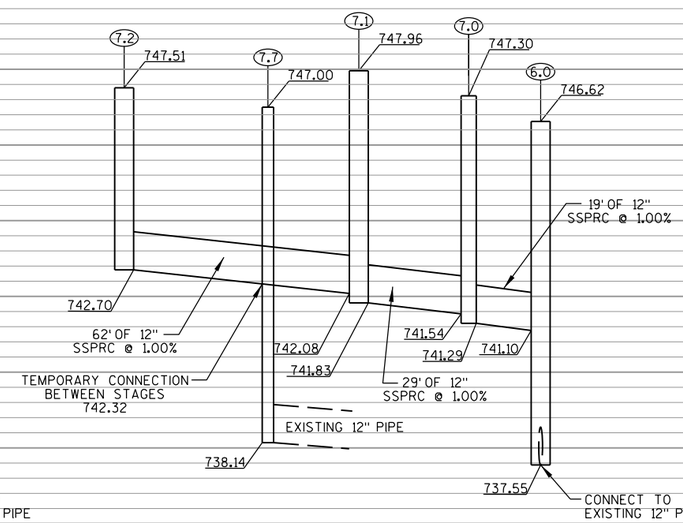
7.2
747.51
7.7
747.00
7.1
747.96
7.0
747.30
6.0
746.62
19' OF 12"
SSPRC @ 1.00%
742.70
62' OF 12"
SSPRC @ 1.00%
TEMPORARY CONNECTION
BETWEEN STAGES
742.32
742.08
741.83
741.54
741.29
741.10
29' OF 12"
SSPRC @ 1.00%
EXISTING 12" PIPE
738.14
737.55
CONNECT TO
EXISTING 12" PIPE

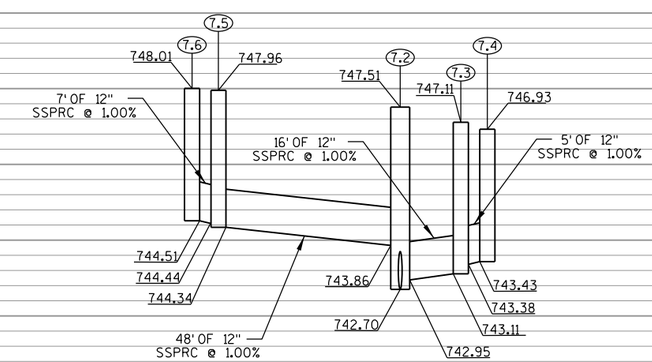
7.5
7.6
748.01
747.96
7' OF 12"
SSPRC @ 1.00%
7.2
747.51
7.3
747.11
7.4
746.93
16' OF 12"
SSPRC @ 1.00%
5' OF 12"
SSPRC @ 1.00%
744.51
744.44
744.34
48' OF 12"
SSPRC @ 1.00%
743.86
742.70
743.43
743.38
743.11
742.95

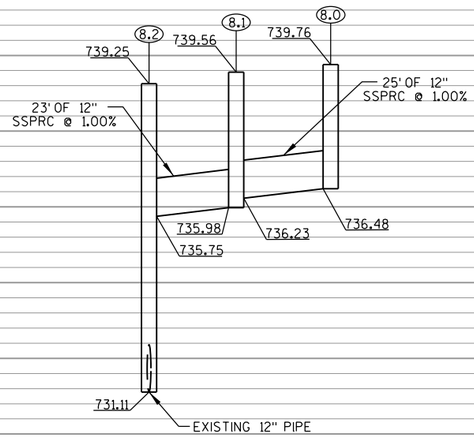


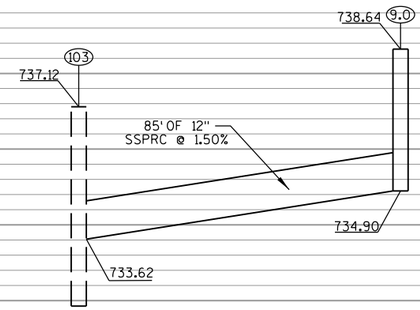


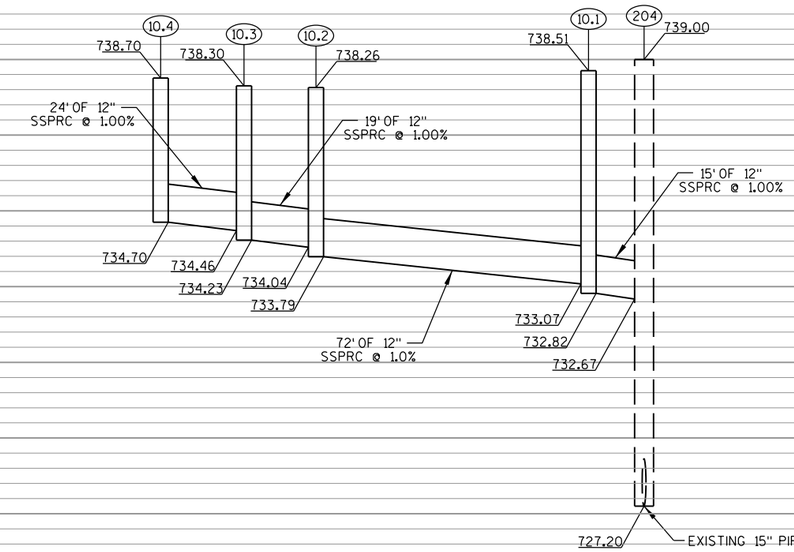


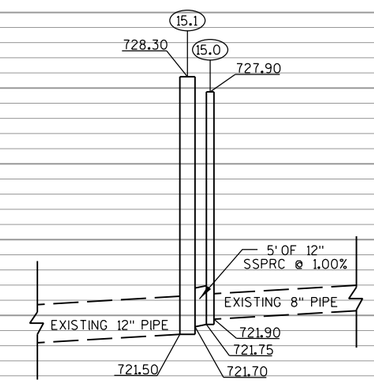


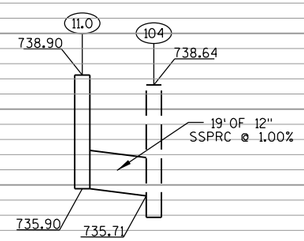


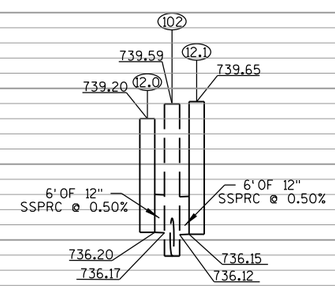


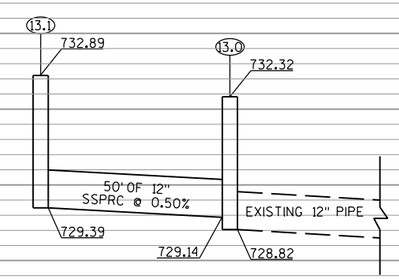


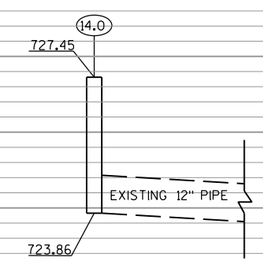


| PROJECT NO:2140-13-70 | HWY:STH 181 | COUNTY:MILWAUKEE | STORM SEWER PROFILES | SHEET 108 | E |
|---|---|---|---|---|---|

2

2

| STRUCTURE NO. | STATION | OFFSET | INLET TYPE & COVER | MANHOLE TYPE & COVER | RIM/GRATE ELEV. | DEPTH (FT.) | PIPE SIZE (IN.) | INVERT ELEV. | DISCHARGE ELEV. | LENGTH (FT.) | SLOPE (%) | TO STRUCTURE | PIPE CLASS | REMARKS |
|---|---|---|---|---|---|---|---|---|---|---|---|---|---|---|
| 1.0 | 95+75.06 | 2.0' LT | MEDIAN 1 GRATE - MS GRATE | - | 712.39 | 4.20 | 12 | 708.19 | 708.00 | 38 | 0.50 | 100 | III | CONNECT TO EXISTING INLET |
| 100 | 95+36.19 | 4.3' LT | INLET W/ NEW TYPE 'J' FRAME & GRATE | - | 711.20 | - | - | - | - | - | - | - | - | |
| 2.0 | 100+75.00 | 6.0' RT | MEDIAN 1 GRATE - MS GRATE | - | 723.20 | 2.65 | 12 | 720.55 | 720.42 | 26 | 0.50 | 101 | III | CONNECT TO EXISTING INLET |
| 101 | 100+49.60 | 0.0' RT | INLET W/ NEW TYPE 'J' FRAME & GRATE | - | 723.35 | - | - | - | - | - | - | - | - | |
| 3.0 | 115+77.16 | 10.3' RT | 2X3-FT INLET - 'H' COVER | - | 736.19 | 3.00 | 12 | 733.19 | 733.07 | 12 | 1.00 | 3.1 | III | |
| 3.1 | 115+75.32 | 0.0' LT | 2X3-FT INLET - 'H' COVER | - | 736.46 | 3.82 | 12 | 732.64 | - | - | - | 525 | - | CONNECT TO EXISTING PIPE, 8" SW I.E. 732.64 +/- |
| 4.0 | 119+34.87 | 58.7' RT | 2X3-FT INLET - 'H' COVER | - | 748.00 | 4.00 | 12 | 744.00 | 743.70 | 30 | 1.00 | 4.1 | III | |
| 4.1 | 119+63.62 | 65.0' RT | 2X3-FT INLET - 'H' COVER | - | 748.33 | 4.98 | 12 | 743.35 | 742.87 | 48 | 1.00 | 201 | III | CONNECT TO EXISTING MANHOLE |
| 201 | 119+34.40 | 101.6' RT | - | EXISTING | 746.98 | - | - | - | - | - | - | - | - | |
| 6.4 | 121+89.93 | 49.0' RT | 2X3-FT INLET - 'H' COVER | - | 748.01 | 3.50 | 12 | 744.51 | 744.44 | 7 | 1.00 | 6.3 | III | |
| 6.3 | 121+97.45 | 49.0' RT | 2X3-FT INLET - 'H' COVER | - | 747.96 | 3.62 | 12 | 744.34 | 742.94 | 56 | 2.50 | 6.2 | III | |
| 6.2 | 106+35.73 C | 9.8' RT | 2X3-FT INLET - 'H' COVER | - | 746.65 | 3.96 | 12 | 742.69 | 742.62 | 7 | 1.00 | 6.1 | III | |
| 6.1 | 106+35.22 C | 14.8' RT | 2X3-FT INLET - 'H' COVER | - | 746.46 | 4.09 | 12 | 742.37 | 742.03 | 34 | 1.00 | 6.0 | III | |
| 6.0 | 106+61.47 C | 36.4' RT | - | 4-FT DIA. - 'J' COVER | 746.62 | 9.07 | 12 | 737.55 | - | - | - | - | - | CONNECT TO EXISTING PIPE, 12" N I.E. = 737.55+/- |
| 7.7 | 122+45.50 | 5.0' LT | 2X2-FT INLET - TEMPORARY COVER PLATE | - | 747.00 | 8.86 | 12 | 738.14 | - | - | - | - | - | CONNECT TO PROPOSED PIPE, 12" W I.E. 742.32 |
| 7.6 | 121+90.15 | 49.0' LT | 2X3-FT INLET - 'H' COVER | - | 748.01 | 3.50 | 12 | 744.51 | 744.44 | 7 | 1.00 | 7.5 | III | |
| 7.5 | 121+97.65 | 49.0' LT | 2X3-FT INLET - 'H' COVER | - | 747.96 | 3.62 | 12 | 744.34 | 743.86 | 48 | 1.00 | 7.2 | III | |
| 7.4 | 122+60.91 | 55.78' LT | 2X3-FT INLET - 'H' COVER | - | 746.93 | 3.50 | 12 | 743.43 | 743.38 | 5 | 1.00 | 7.3 | III | |
| 7.3 | 122+60.12 | 50.8' LT | 2X3-FT INLET - 'H' COVER | - | 747.11 | 4.00 | 12 | 743.11 | 742.95 | 16 | 1.00 | 7.2 | III | |
| 7.2 | 122+45.59 | 42.6' LT | - | 4-FT DIA. - 'J' COVER | 747.51 | 4.81 | 12 | 742.70 | 742.08 | 62 | 1.00 | 7.1 | III | |
| 7.1 | 122+45.43 | 19.5' RT | - | 4-FT DIA. - 'J' COVER | 747.96 | 6.13 | 12 | 741.83 | 741.54 | 29 | 1.00 | 7.0 | III | |
| 7.0 | 122+52.58 | 49.0' RT | 2X3-FT INLET - 'H' COVER | - | 747.30 | 6.01 | 12 | 741.29 | 741.10 | 19 | 1.00 | 6.0 | III | |
| 8.0 | 101+57.0 E | 2.0' RT | 2X3-FT INLET - 'H' COVER | - | 739.76 | 3.28 | 12 | 736.48 | 736.23 | 25 | 1.00 | 8.1 | III | |
| 8.1 | 101+32.0 E | 2.0' RT | 2X3-FT INLET - 'H' COVER | - | 739.56 | 3.58 | 12 | 735.98 | 735.75 | 23 | 1.00 | 8.2 | III | |
| 8.2 | 101+33.0 E | 23.6' LT | 2X3-FT INLET - 'H' COVER | - | 739.25 | 8.14 | 12 | 731.11 | - | - | - | - | - | CONNECT TO EXISTING PIPE, 12" N I.E. = 731.11 +/- |
| 9.0 | 106+24.1 B | 18.0' LT | 2X3-FT INLET - 'H' COVER | - | 738.64 | 3.74 | 12 | 734.90 | 733.62 | 85 | 1.50 | 103 | III | CONNECT TO EXISTING MANHOLE |
| 103 | 107+06.6 B | 2.0' RT | EXISTING | - | 737.12 | - | - | - | - | - | - | - | - | |
| 10.4 | 101+87.53 C | 21.0' LT | 2X3-FT INLET - 'H' COVER | - | 738.70 | 4.00 | 12 | 734.70 | 734.46 | 24 | 1.00 | 10.3 | III | |
| 10.3 | 101+87.53 C | 2.0' RT | 2X3-FT INLET - 'H' COVER | - | 738.30 | 4.07 | 12 | 734.23 | 734.04 | 19 | 1.00 | 10.2 | III | |
| 10.2 | 101+68.88 C | 2.0' RT | 2X3-FT INLET - 'H' COVER | - | 738.26 | 4.47 | 12 | 733.79 | 733.07 | 72 | 1.00 | 10.1 | III | |
| 10.1 | 100+96.57 C | 2.0' RT | 2X3-FT INLET - 'H' COVER | - | 738.51 | 5.69 | 12 | 732.82 | 732.67 | 15 | 1.00 | 204 | III | CONNECT TO EXISTING MANHOLE |
| 10.0 | 100+96.57 C | 13.8' LT | - | EXISTING | 739.00 | - | - | - | - | - | - | - | - | |
| 11.0 | 105+33.87 D | 18.0' LT | 2X3-FT INLET - 'H' COVER | - | 738.90 | 3.00 | 12 | 735.90 | 735.71 | 19 | 1.00 | 104 | III | CONNECT TO EXISTING INLET |
| 104 | 105+39.63 D | 2.0' RT | INLET W/ NEW TYPE 'H' FRAME & GRATE | - | 738.64 | - | - | - | - | - | - | - | - | |
| 12.0 | 126+22.74 | 12.0' LT | 2X3-FT INLET - 'H' COVER | - | 739.20 | 3.00 | 12 | 736.20 | 736.17 | 6 | 0.5 | 102 | III | CONNECT TO EXISTING INLET |
| 102 | 126+22.73 | 6.0' LT | EXISTING | - | 739.59 | - | - | - | - | - | - | - | - | |
| 12.1 | 126+22.72 | 0.0' RT | 2X3-FT INLET - 'H' COVER | - | 739.65 | 3.50 | 12 | 736.15 | 736.12 | 6 | 0.5 | 102 | III | CONNECT TO EXISTING INLET |
| 13.1 | 140+34.40 | 48.0' LT | 2X3-FT INLET - 'H' COVER | - | 732.89 | 3.50 | 12 | 729.39 | 729.14 | 50 | 0.5 | 12.0 | III | |
| 13.0 | 140+84.40 | 48.0' LT | 2X3-FT INLET - 'H' COVER | - | 732.32 | 3.50 | 12 | 728.82 | - | - | - | - | - | CONNECT TO EXISTING PIPE, 12" NE I.E. 728.82 +/- |
| 14.0 | 170+24.20 | 5.5' LT | 4-FT DIA. INLET - 'BW' COVER | - | 727.45 | 3.59 | 12 | 723.86 | - | - | - | - | - | CONNECT TO EXISTING PIPE, 12" NW I.E. = 723.86+/- |
| 15.0 | 170+78.90 | 4.8' LT | 2X2.5-FT INLET - 'BW' COVER | - | 727.90 | 6.15 | 12 | 721.75 | 721.70 | 5 | 1.00 | 15.1 | III | CONNECT TO EXISTING PIPE, 8" N I.E. = 721.90+/- |
| 15.1 | 170+78.10 | 0.0' LT | 2X2-FT INLET - 'B' COVER | - | 728.30 | 6.80 | 12 | 721.50 | - | - | - | - | - | CONNECT TO EXISTING PIPE, 12" SW I.E = 721.50 +/- |

NOTES:
1. STATIONS AND OFFSETS TO MANHOLES AND INLETS MEDIAN 1 GRATE ARE GIVEN TO THE CENTER OF STRUCTURE.
2. STATIONS AND OFFSETS TO INLETS ARE GIVEN TO THE FACE OF CURB.
3. MANHOLE RIM/GRATE ELEVATIONS ARE GIVEN TO THE CENTER OF STRUCTURE.
4. INLET RIM/GRATE ELEVATIONS ARE GIVEN TO THE FLANGE LINE.
5. DEPTH OF MANHOLES AND INLETS ARE MEASURED FROM THE LOWEST INVERT OF THE STRUCTURE TO THE RIM/GRATE ELEVATION.
6. PIPE LENGTHS ARE SHOWN FROM CENTER OF STRUCTURE TO CENTER OF STRUCTURE.

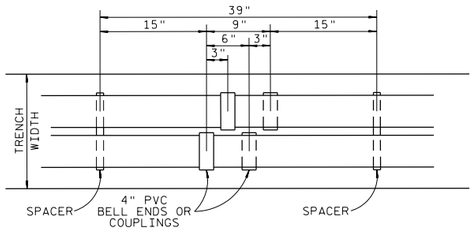


PLAN VIEW

N.T.S.

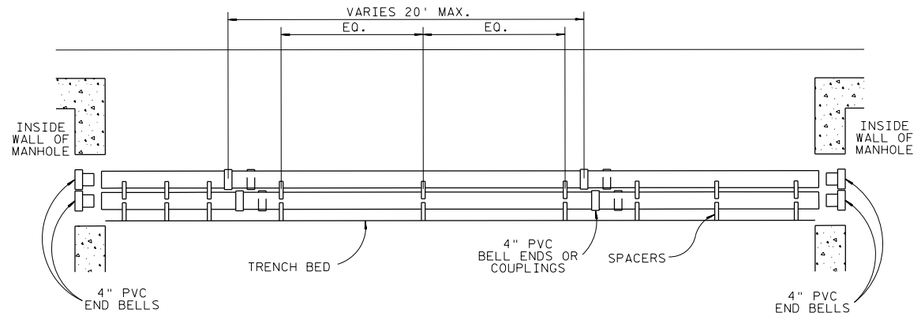


SECTION VIEW

N.T.S.

NOTE:
BACK FILL TRENCH WITH SLURRY MATERIAL WHEN CROSSING SILVER SPRING DRIVE PAVEMENT. SLURRY DEPTH SHALL BE FROM TOP OF ENCASED CONDUIT TO THE BOTTOM OF AGGREGATE BASE BEING PLACED FOR PAVEMENT RESTORATION.

SLURRY BACKFILL TO BE PAID UNDER BID ITEM "BACKFILL CONTROLLED LOW STRENGTH"

| COND. | 3" | 4" |
|---|---|---|
| A | 10" | 11 ½" |
| B | 5" | 5 ⅝" |
| C | 1 ½" | 1 ¼" |
| D | 3 ¼" | 3 ¼" |
| E | 1" | 1" |

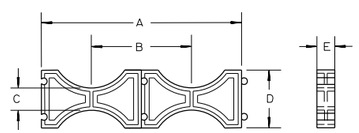


INTERMEDIATE SPACER

| COND. | 3" | 4" |
|---|---|---|
| A | 10" | 11 ¼" |
| B | 5" | 5 ⅝" |
| C | 3" | 3" |
| D | 3 ⅛" | 4 ⅛" |
| E | 1" | 1" |
| F | 2 ½" | 2 ½" |

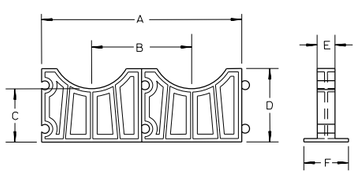


BASE SPACER

INTERMEDIATE AND BASE SPACER DETAIL

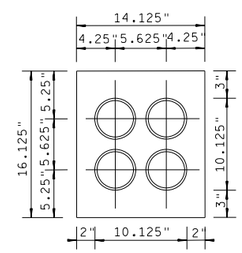


CROSS SECTION VIEW

N.T.S.

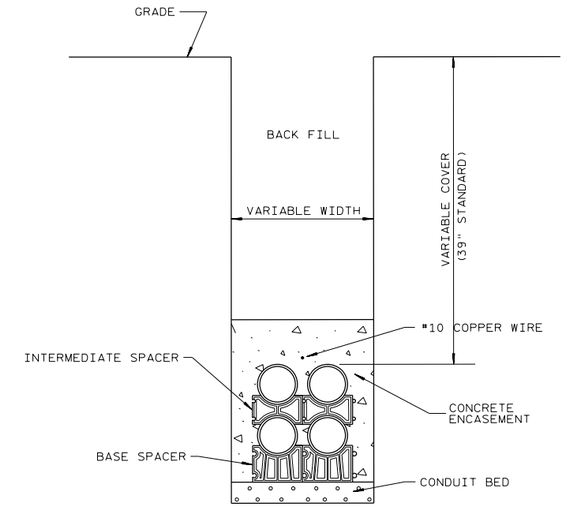


CROSS SECTION VIEW, TYP.

N.T.S.

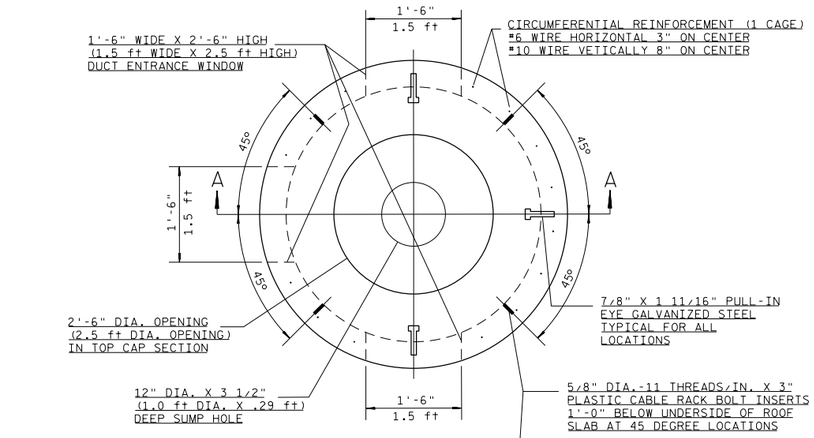


TOP VIEW

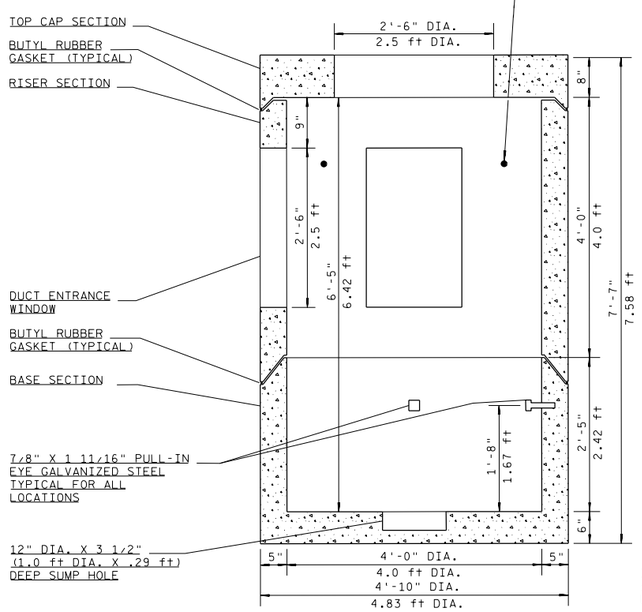


NOTES;
THE JOINTS MAY BE EITHER "BELL UP" OR "SPIGOT UP", THE NUMBER OF PULL-IN IRONS AND CABLE RACK BOLT INSERTS MAY VARY BY ORDER.

REINFORCING IN THE FLOOR & TOP CAP SECTION SHALL CONFORM TO ASTM SPECIFICATION C-478.

SIZE, LOCATION, SHAPE AND NUMBER OF KNOCK-OUT AREA AND THE SIZE, LOCATION, SHAPE AND NUMBER OF WINDOWS MAY VARY. (3 WINDOWS SHOWN). UNIT PRICE OF MANHOLE SHALL NOT VARY FOR NUMBER OF OPENINGS.

3 WINDOW OPENING
4' DIA. X 6'-5" HEADROOM
PRECAST CONCRETE MANHOLE

SECTION VIEW "A-A"

N.T.S.

## 4' DIAMETER STANDARD MANHOLE

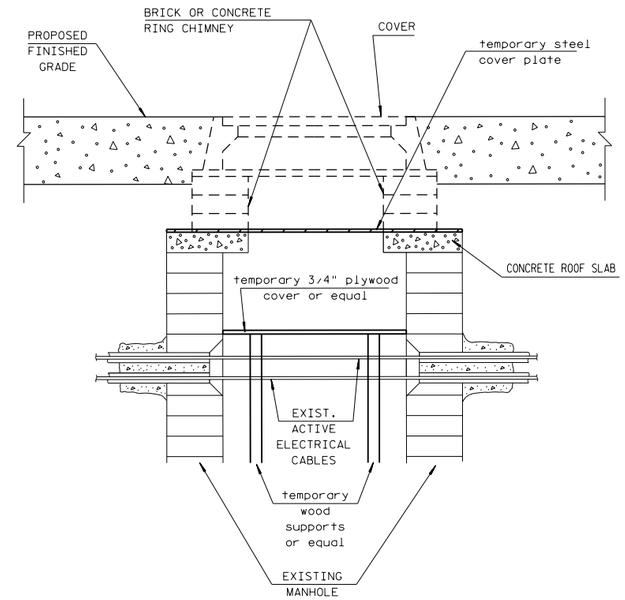


## BLOCK OR PRECAST MANHOLE

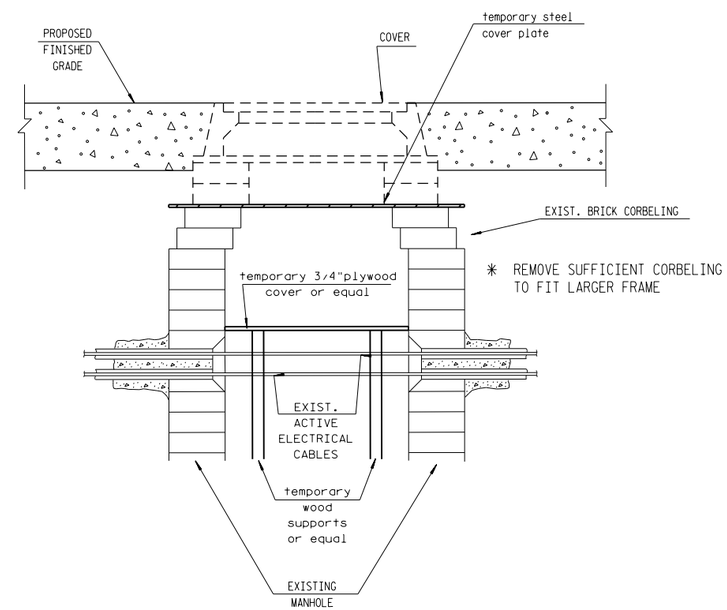


## BRICK ROUND MANHOLE

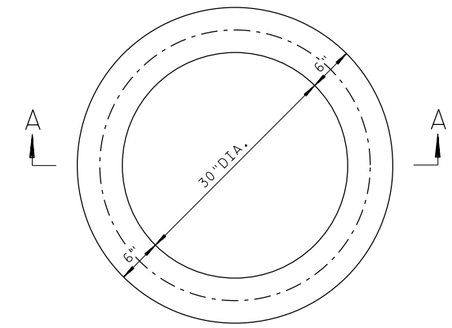


PLAN

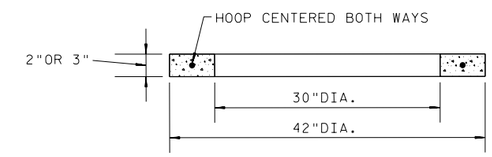


SECTION A-A

THE ADJUSTING RING SHALL BE 2" OR 3" IN HEIGHT.

THE CIRCUMFERENTIAL STEEL SHALL BE CENTERED WITHIN THE RING.

AREA OF CIRCUMFERENTIAL STEEL = 0.07 SQ. INCH PER VERTICAL FOOT WITH A MINIMUM OF .024 SQ. INCH IN ANY ONE RING.

THE MINIMUM COMPRESSIVE STRENGTH OF THE CONCRETE CORE SHALL BE 4000 P.S.I.

## CONCRETE ADJUSTING RING

## ADJUSTING TES MANHOLES

LEGEND

- PROPOSED 4-INCH CEMENT ENCASED NONMETALLIC CONDUIT, NUMBER OF RUNS AS NOTED.
- PROPOSED 4' MANHOLE TYPE TES
- PROPOSED TRAFFIC SIGNAL CABINET (SEE TRAFFIC SIGNAL PLAN)
- ADJUSTING TES MANHOLE
- EXISTING CONDUIT
- ABANDON CONDUIT

STORM SEWER CROSSINGS

1. 21" STORM SEWER INVERT APPROX. 720.17 TES DUCT INVERT APPROX. 724.00
2. 12" STORM SEWER INVERT APPROX. 744.06 TES DUCT INVERT APPROX. 742.00
3. 12" STORM SEWER INVERT APPROX. 742.59 TES DUCT INVERT APPROX. 740.59

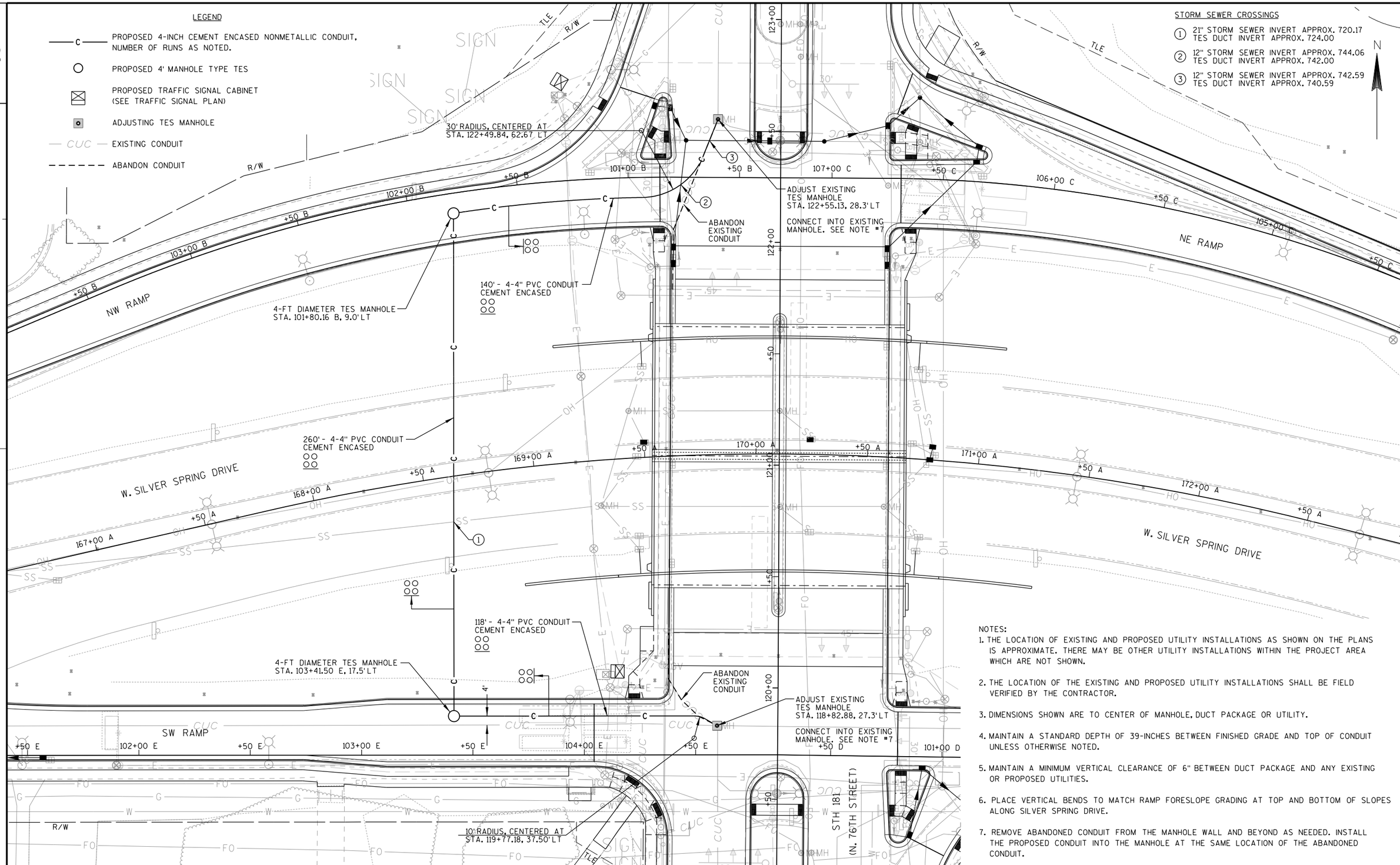


NOTES:

1. THE LOCATION OF EXISTING AND PROPOSED UTILITY INSTALLATIONS AS SHOWN ON THE PLANS IS APPROXIMATE. THERE MAY BE OTHER UTILITY INSTALLATIONS WITHIN THE PROJECT AREA WHICH ARE NOT SHOWN.
2. THE LOCATION OF THE EXISTING AND PROPOSED UTILITY INSTALLATIONS SHALL BE FIELD VERIFIED BY THE CONTRACTOR.
3. DIMENSIONS SHOWN ARE TO CENTER OF MANHOLE, DUCT PACKAGE OR UTILITY.
4. MAINTAIN A STANDARD DEPTH OF 39-INCHES BETWEEN FINISHED GRADE AND TOP OF CONDUIT UNLESS OTHERWISE NOTED.
5. MAINTAIN A MINIMUM VERTICAL CLEARANCE OF 6" BETWEEN DUCT PACKAGE AND ANY EXISTING OR PROPOSED UTILITIES.
6. PLACE VERTICAL BENDS TO MATCH RAMP FORESLOPE GRADING AT TOP AND BOTTOM OF SLOPES ALONG SILVER SPRING DRIVE.
7. REMOVE ABANDONED CONDUIT FROM THE MANHOLE WALL AND BEYOND AS NEEDED. INSTALL THE PROPOSED CONDUIT INTO THE MANHOLE AT THE SAME LOCATION OF THE ABANDONED CONDUIT.

| PROJECT NO: 2140-13-70 | HWY: STH 181 | COUNTY: MILWAUKEE | UTILITY PLAN - UNDERGROUND CONDUIT (TES) | SHEET 112 | E |
|---|---|---|---|---|---|

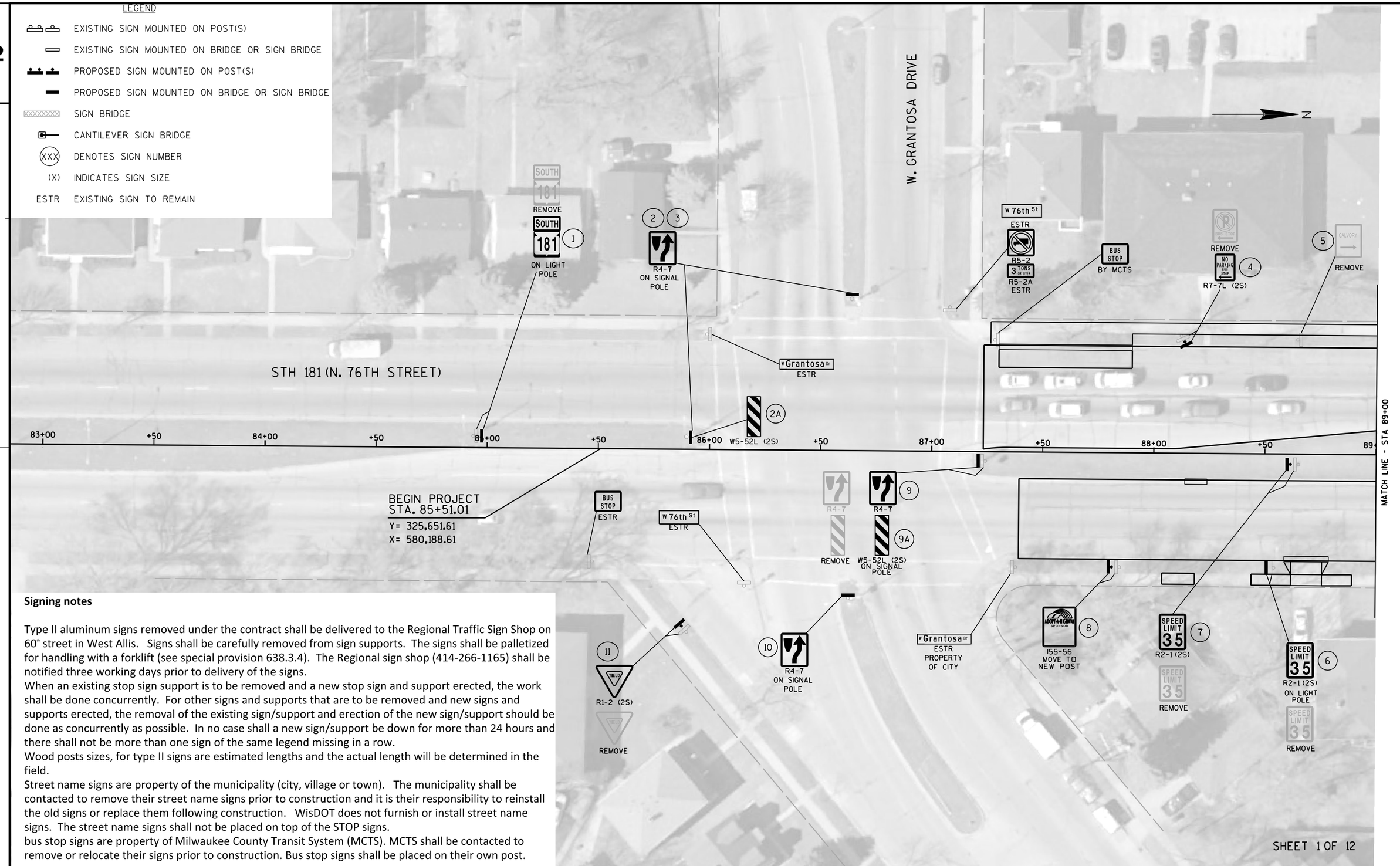


**Signing notes**

Type II aluminum signs removed under the contract shall be delivered to the Regional Traffic Sign Shop on 60th street in West Allis. Signs shall be carefully removed from sign supports. The signs shall be palletized for handling with a forklift (see special provision 638.3.4). The Regional sign shop (414-266-1165) shall be notified three working days prior to delivery of the signs.

When an existing stop sign support is to be removed and a new stop sign and support erected, the work shall be done concurrently. For other signs and supports that are to be removed and new signs and supports erected, the removal of the existing sign/support and erection of the new sign/support should be done as concurrently as possible. In no case shall a new sign/support be down for more than 24 hours and there shall not be more than one sign of the same legend missing in a row.

Wood posts sizes, for type II signs are estimated lengths and the actual length will be determined in the field.

Street name signs are property of the municipality (city, village or town). The municipality shall be contacted to remove their street name signs prior to construction and it is their responsibility to reinstall the old signs or replace them following construction. WisDOT does not furnish or install street name signs. The street name signs shall not be placed on top of the STOP signs.

bus stop signs are property of Milwaukee County Transit System (MCTS). MCTS shall be contacted to remove or relocate their signs prior to construction. Bus stop signs shall be placed on their own post.

| PROJECT NO: 2140-13-70 | HWY: STH 181 | COUNTY: MILWAUKEE | PERMANENT SIGNING | SHEET | E |
|---|---|---|---|---|---|

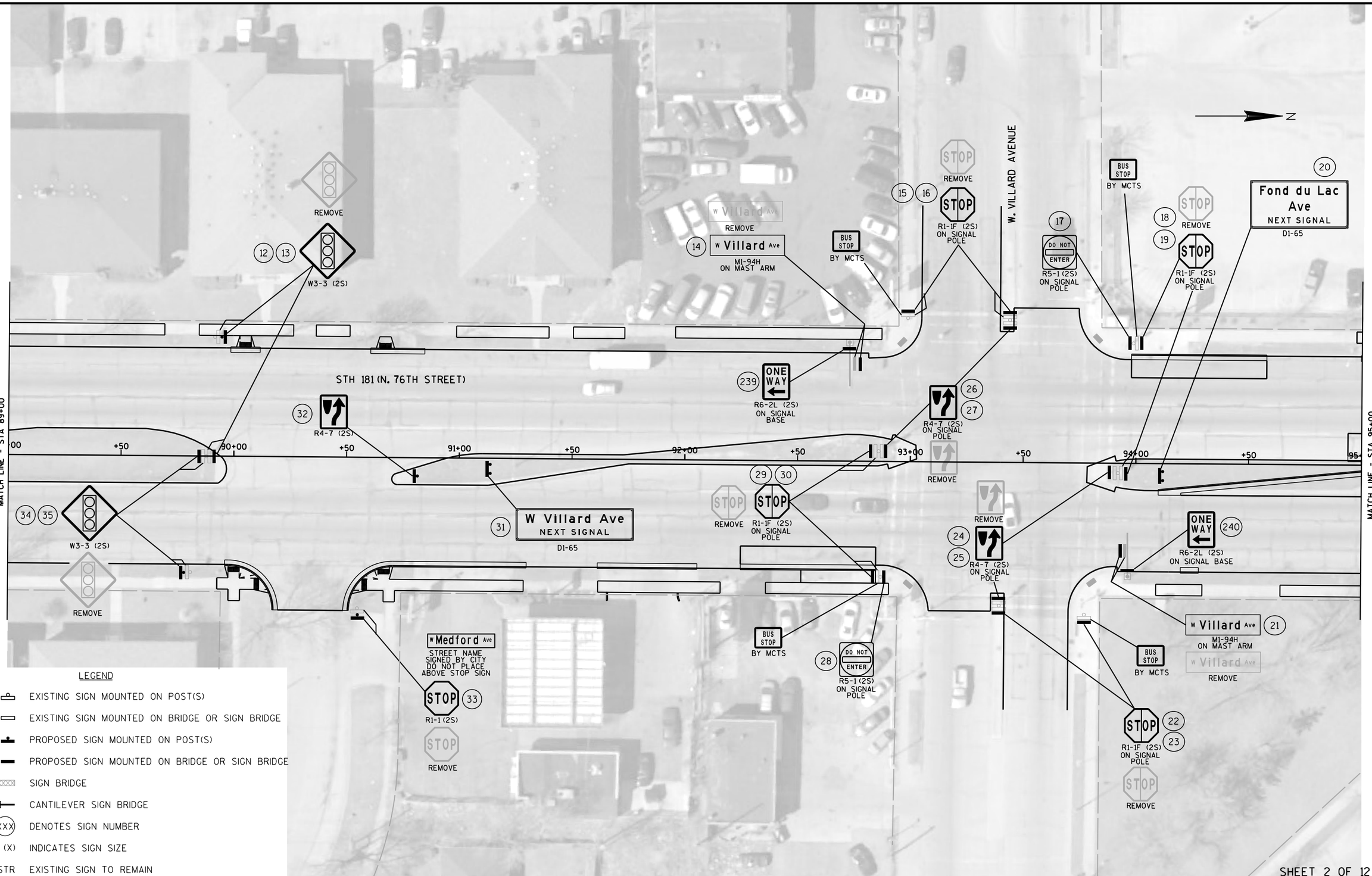


SHEET 2 OF 12

| PROJECT NO: 2140-13-70 | HWY: STH 181 | COUNTY: MILWAUKEE | PERMANENT SIGNING | SHEET | E |
|---|---|---|---|---|---|

LEGEND

- EXISTING SIGN MOUNTED ON POST(S)
- EXISTING SIGN MOUNTED ON BRIDGE OR SIGN BRIDGE
- PROPOSED SIGN MOUNTED ON POST(S)
- PROPOSED SIGN MOUNTED ON BRIDGE OR SIGN BRIDGE
- SIGN BRIDGE
- CANTILEVER SIGN BRIDGE
- (XXX) DENOTES SIGN NUMBER
- (X) INDICATES SIGN SIZE
- ESTR EXISTING SIGN TO REMAIN

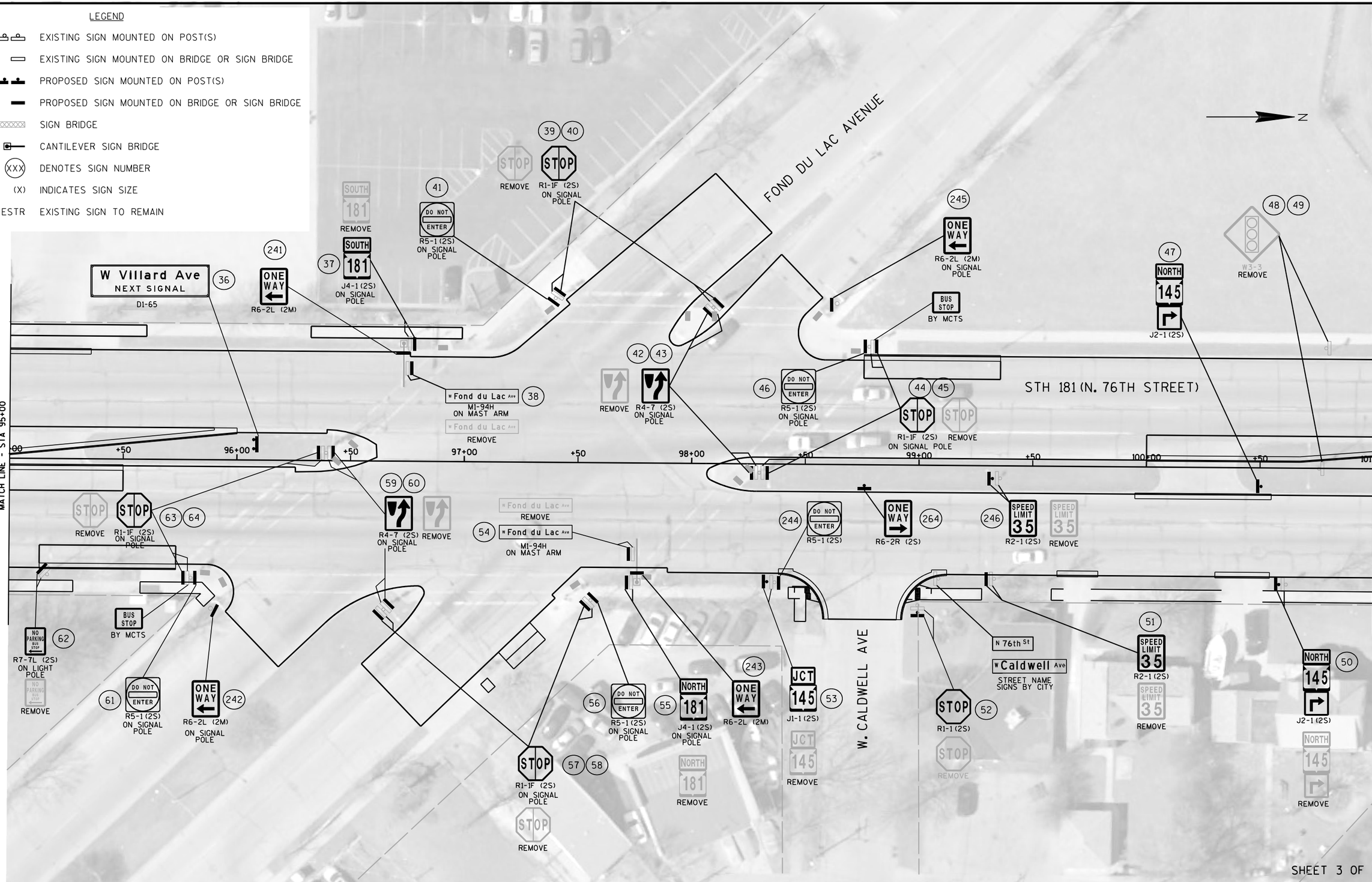


| PROJECT NO: 2140-13-70 | HWY: STH 181 | COUNTY: MILWAUKEE | PERMANENT SIGNING | SHEET | E |
|---|---|---|---|---|---|

FILE NAME : J:\projects\D2_214013181\70\SIGN\023203_ps.dgn PLOT DATE : 23-MAR-2016 08:35 PLOT BY : MSCBXD PLOT NAME : PLOT SCALE : 40:1



WISDOT/CADDS SHEET 42

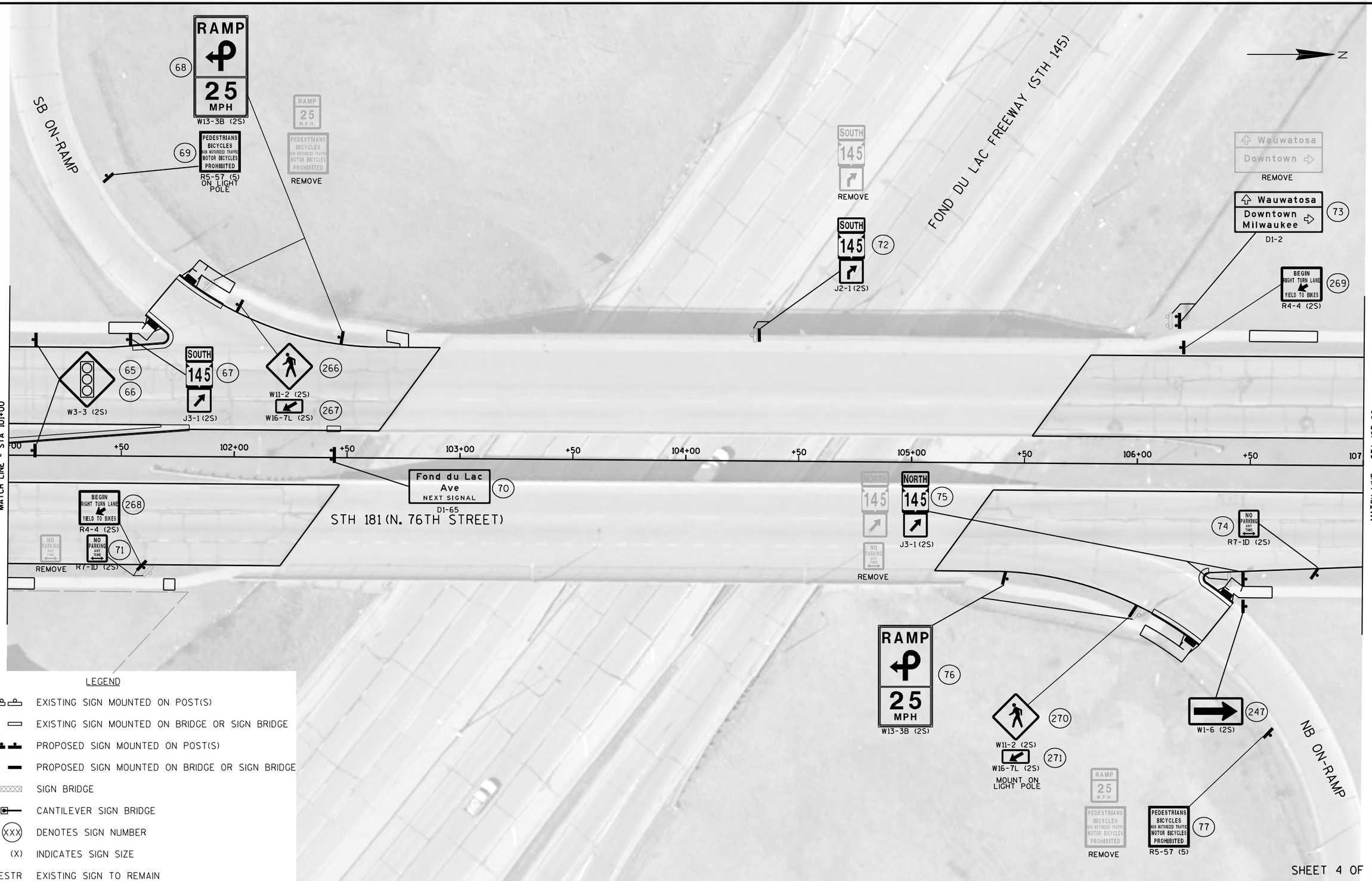


LEGEND

- EXISTING SIGN MOUNTED ON POST(S)
- EXISTING SIGN MOUNTED ON BRIDGE OR SIGN BRIDGE
- PROPOSED SIGN MOUNTED ON POST(S)
- PROPOSED SIGN MOUNTED ON BRIDGE OR SIGN BRIDGE
- SIGN BRIDGE
- CANTILEVER SIGN BRIDGE
- (XXX) DENOTES SIGN NUMBER
- (X) INDICATES SIGN SIZE
- ESTR EXISTING SIGN TO REMAIN

SHEET 4 OF 12

| PROJECT NO: 2140-13-70 | HWY: STH 181 | COUNTY: MILWAUKEE | PERMANENT SIGNING | SHEET | E |
|---|---|---|---|---|---|

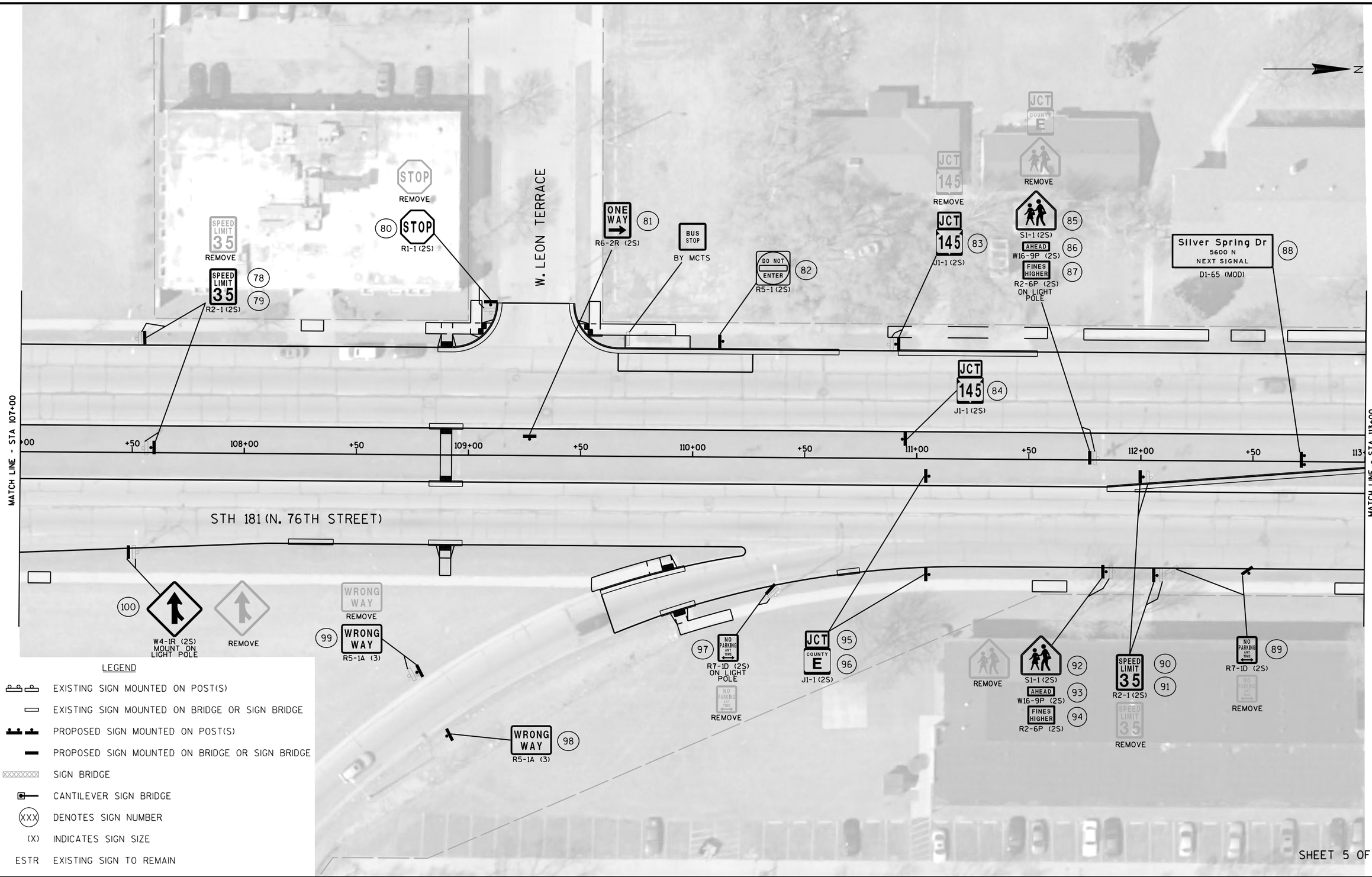


| PROJECT NO: 2140-13-70 | HWY: STH 181 | COUNTY: MILWAUKEE | PERMANENT SIGNING | SHEET | E |
|---|---|---|---|---|---|

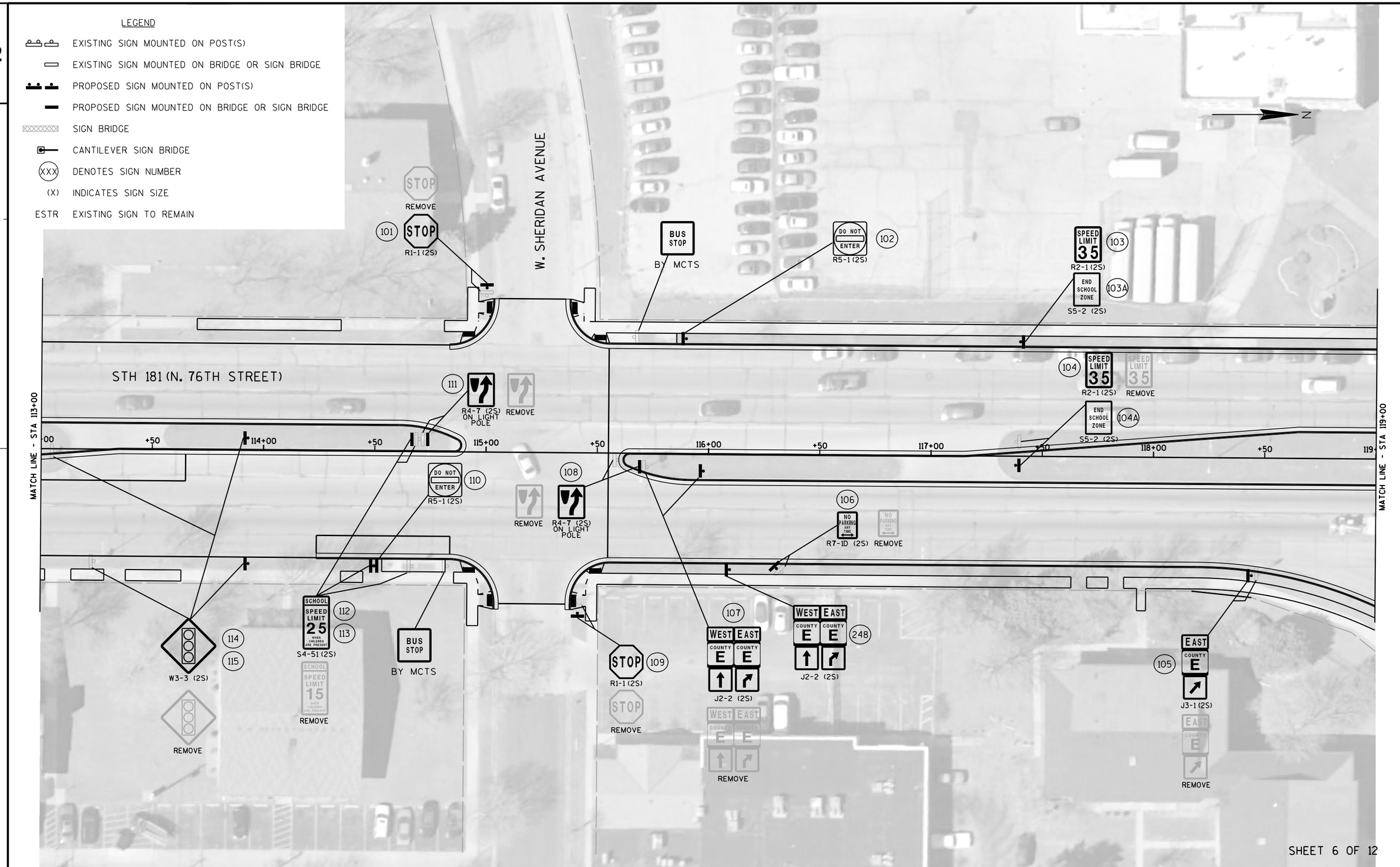


SHEET 6 OF 12

| PROJECT NO: 2140-13-70 | HWY: STH 181 | COUNTY: MILWAUKEE | PERMANENT SIGNING | SHEET | E |
|---|---|---|---|---|---|

FILE NAME : J:\projects\D2_214013181\70\SIGN\023206_ps.dgn PLOT DATE : 22-MAR-2016 14:03 PLOT BY : MSCBXD PLOT NAME : PLOT SCALE : 40:1 WISDOT/CADDS SHEET 42

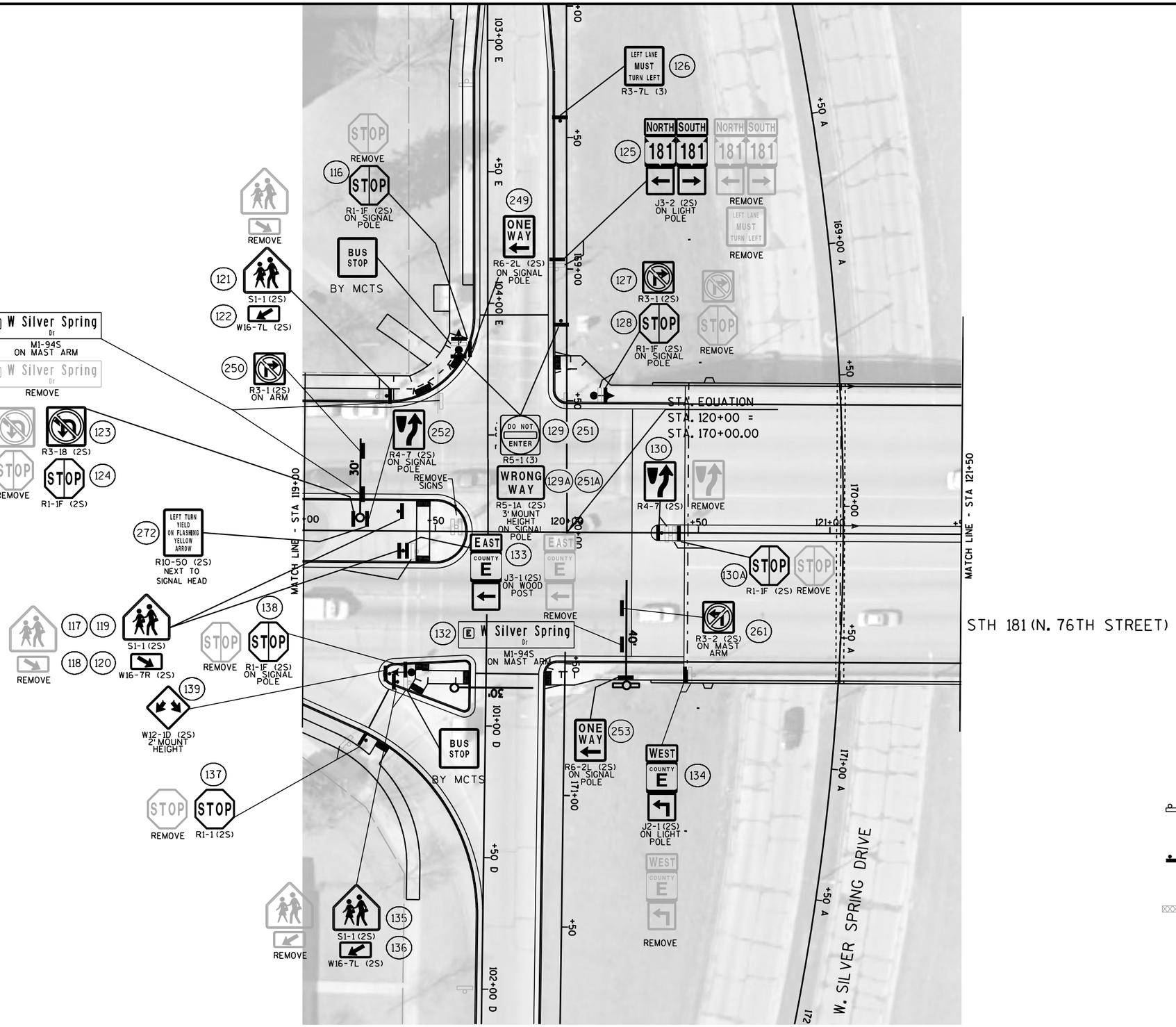


LEGEND

- EXISTING SIGN MOUNTED ON POST(S)
- EXISTING SIGN MOUNTED ON BRIDGE OR SIGN BRIDGE
- PROPOSED SIGN MOUNTED ON POST(S)
- PROPOSED SIGN MOUNTED ON BRIDGE OR SIGN BRIDGE
- SIGN BRIDGE
- CANTILEVER SIGN BRIDGE
- (XXX) DENOTES SIGN NUMBER
- (X) INDICATES SIGN SIZE
- ESTR EXISTING SIGN TO REMAIN

SHEET 7 OF 12

| PROJECT NO: 2140-13-70 | HWY: STH 181 | COUNTY: MILWAUKEE | PERMANENT SIGNING | SHEET | E |
|---|---|---|---|---|---|

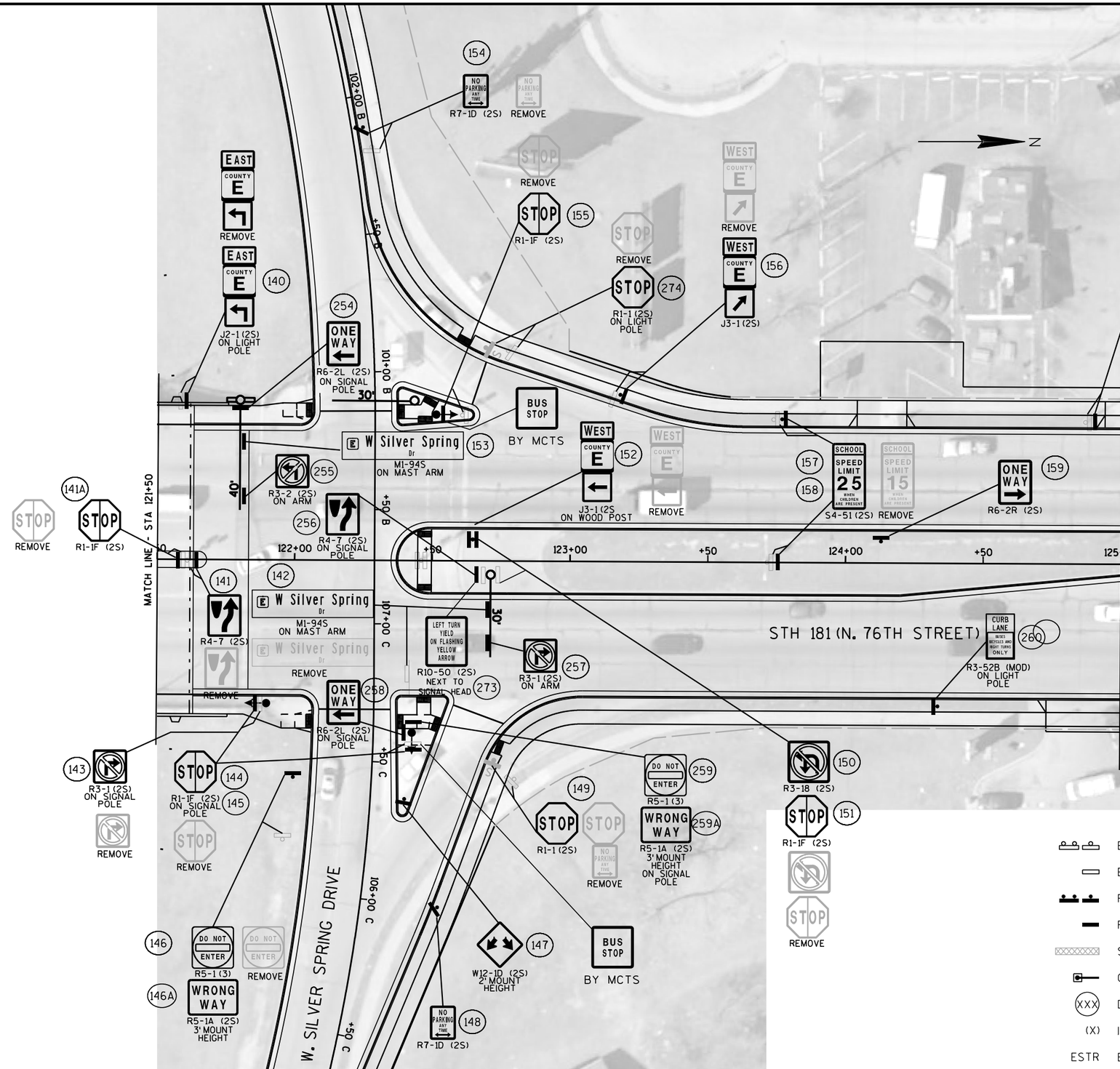


LEGEND

- EXISTING SIGN MOUNTED ON POST(S)
- EXISTING SIGN MOUNTED ON BRIDGE OR SIGN BRIDGE
- PROPOSED SIGN MOUNTED ON POST(S)
- PROPOSED SIGN MOUNTED ON BRIDGE OR SIGN BRIDGE
- SIGN BRIDGE
- CANTILEVER SIGN BRIDGE
- (XXX) DENOTES SIGN NUMBER
- (X) INDICATES SIGN SIZE
- ESTR EXISTING SIGN TO REMAIN

SHEET 8 OF 12

| PROJECT NO: 2140-13-70 | HWY: STH 181 | COUNTY: MILWAUKEE | PERMANENT SIGNING | SHEET | E |
|---|---|---|---|---|---|

LEGEND

- EXISTING SIGN MOUNTED ON POST(S)
- EXISTING SIGN MOUNTED ON BRIDGE OR SIGN BRIDGE
- PROPOSED SIGN MOUNTED ON POST(S)
- PROPOSED SIGN MOUNTED ON BRIDGE OR SIGN BRIDGE
- SIGN BRIDGE
- CANTILEVER SIGN BRIDGE
- (XXX) DENOTES SIGN NUMBER
- (X) INDICATES SIGN SIZE
- ESTR EXISTING SIGN TO REMAIN

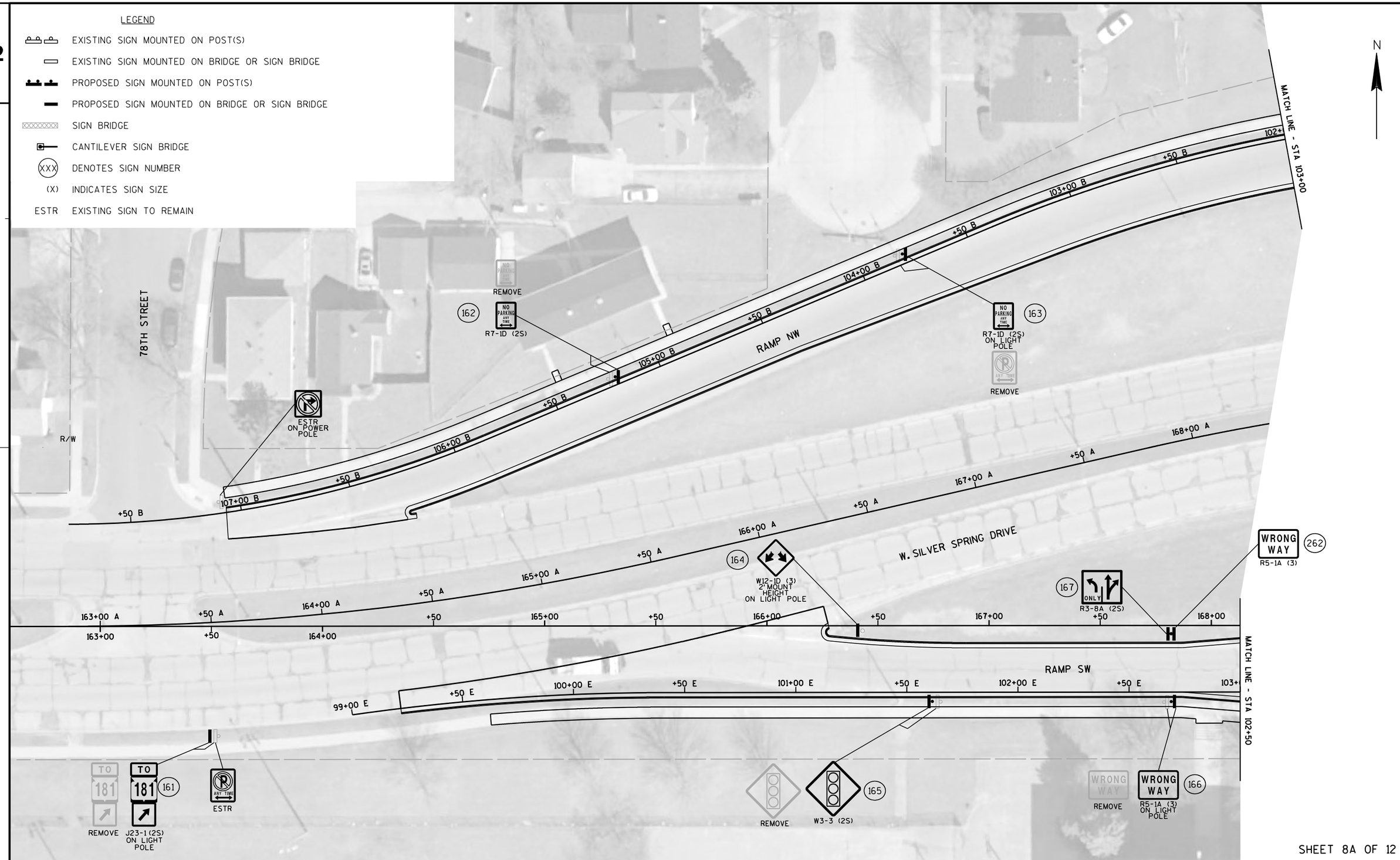


SHEET 8A OF 12

| PROJECT NO: 2140-13-70 | HWY: STH 181 | COUNTY: MILWAUKEE | PERMANENT SIGNING | SHEET | E |
|---|---|---|---|---|---|

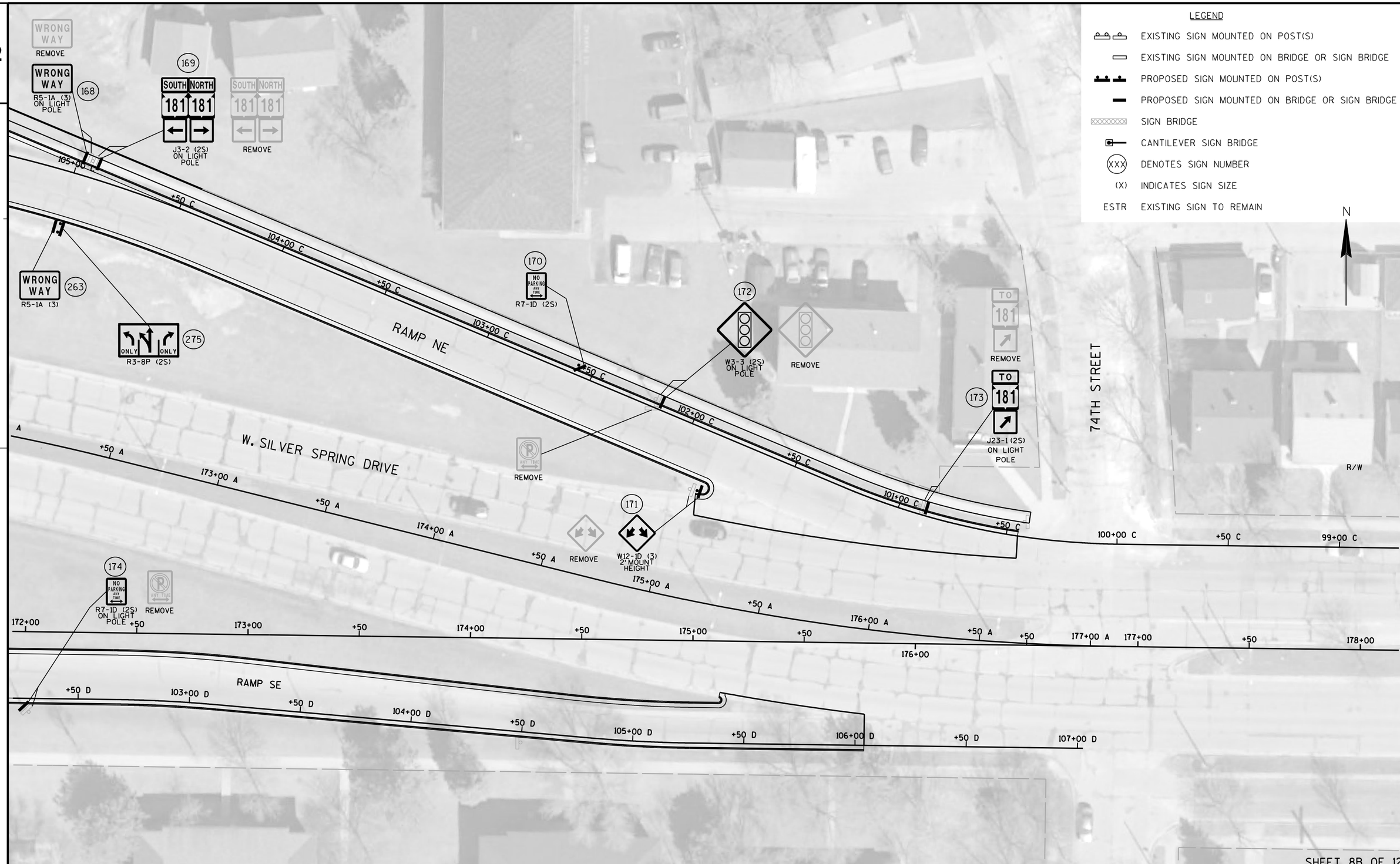


| PROJECT NO: 2140-13-70 | HWY: STH 181 | COUNTY: MILWAUKEE | PERMANENT SIGNING | SHEET | E |
|---|---|---|---|---|---|

FILE NAME : J:\projects\D2_214013181\70\SIGN\023208B_ps.dgn PLOT DATE : 20-APR-2016 10:27 PLOT BY : MSCBXD PLOT NAME : PLOT SCALE : 40:1 WISDOT/CADDS SHEET 42

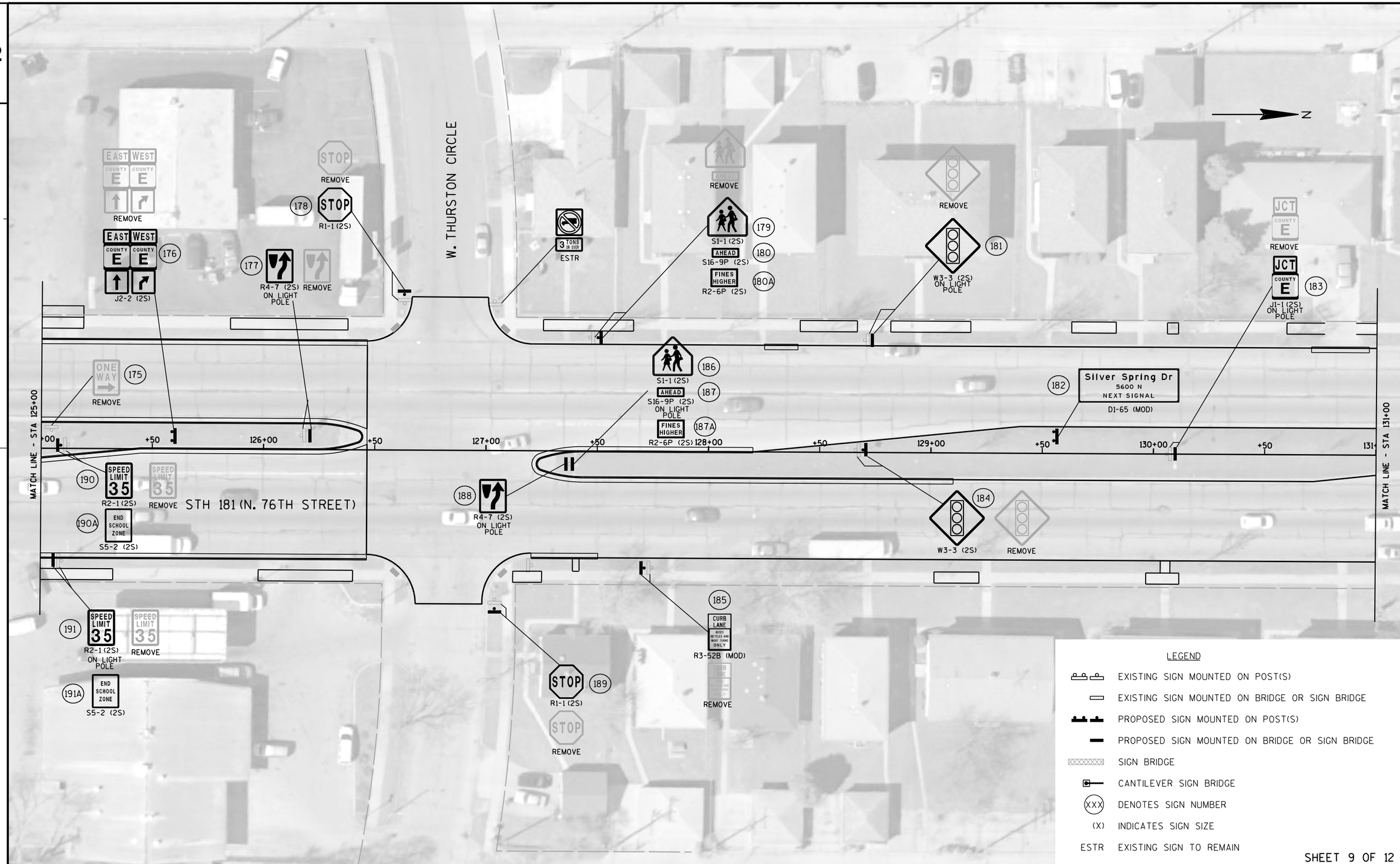


SHEET 9 OF 12

| PROJECT NO: 2140-13-70 | HWY: STH 181 | COUNTY: MILWAUKEE | PERMANENT SIGNING | SHEET | E |
|---|---|---|---|---|---|

FILE NAME : J:\projects\D2_214013181\70\SIGN\023209_ps.dgn PLOT DATE : 22-JUL-2016 06:18 PLOT BY : MSCBXD PLOT NAME : PLOT SCALE : 40:1



WISDOT/CADLS SHEET 42

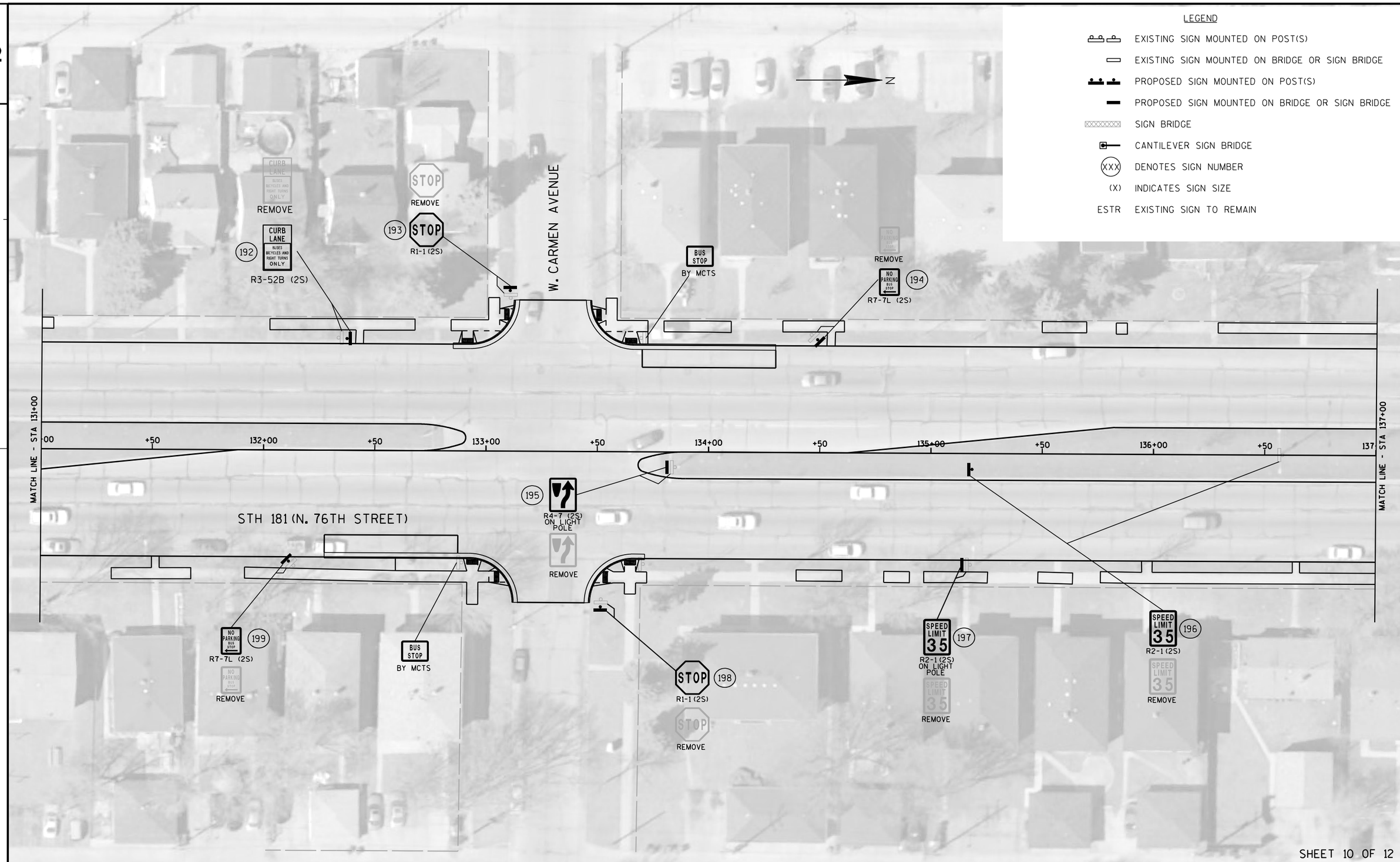


| PROJECT NO: 2140-13-70 | HWY: STH 181 | COUNTY: MILWAUKEE | PERMANENT SIGNING | SHEET | E |
|---|---|---|---|---|---|

FILE NAME : J:\projects\D2_214013181\70\SIGN\023210_ps.dgn PLOT DATE : 20-APR-2016 10:30 PLOT BY : MSCBXD PLOT NAME : PLOT SCALE : 40:1



WISDOT/CADDS SHEET 42

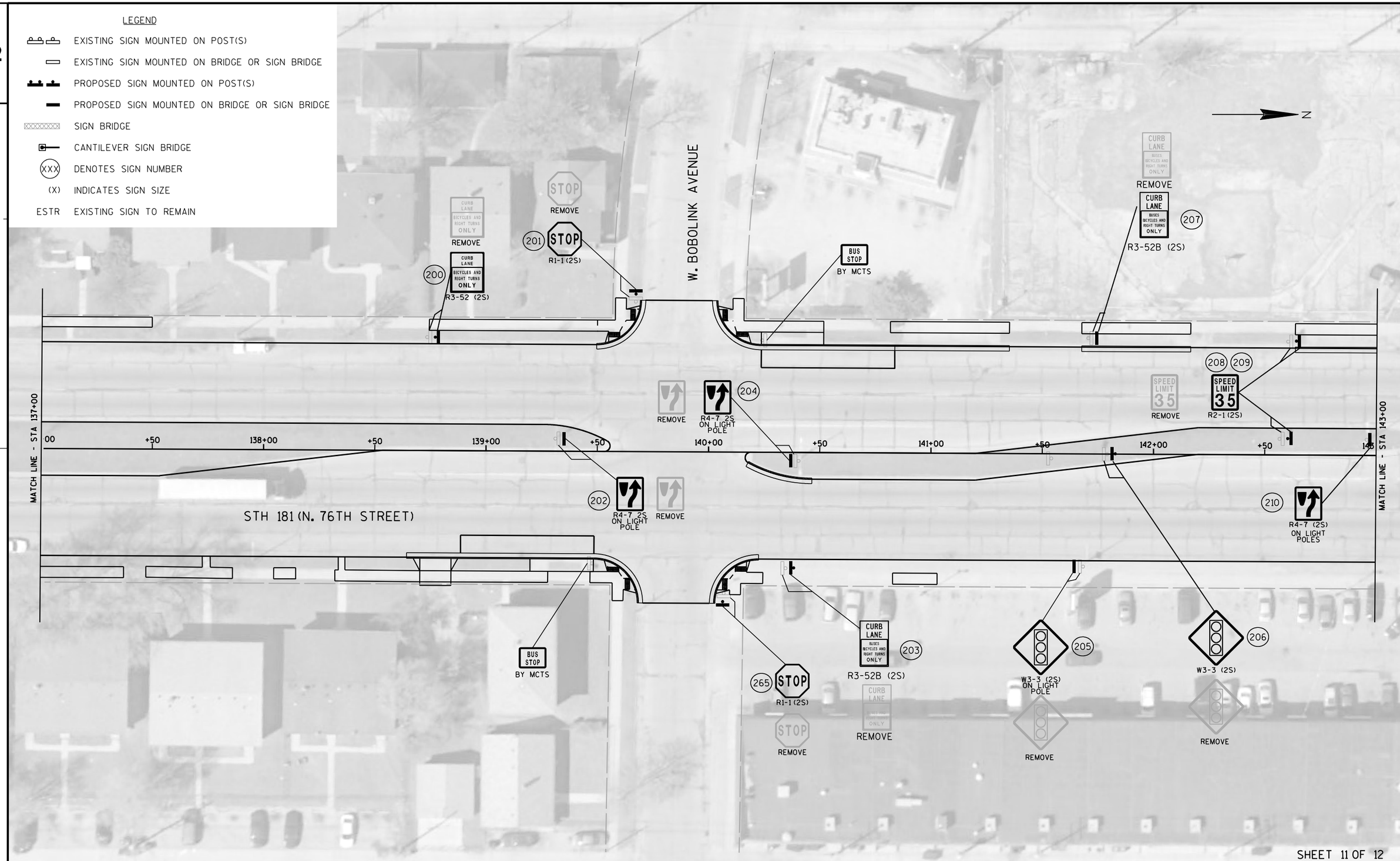


SHEET 11 OF 12

| PROJECT NO: 2140-13-70 | HWY: STH 181 | COUNTY: MILWAUKEE | PERMANENT SIGNING | SHEET | E |
|---|---|---|---|---|---|

FILE NAME : J:\projects\D2_214013181\70\SIGN\023211_ps.dgn PLOT DATE : 20-APR-2016 10:31 PLOT BY : MSCBXD PLOT NAME : PLOT SCALE : 40:1

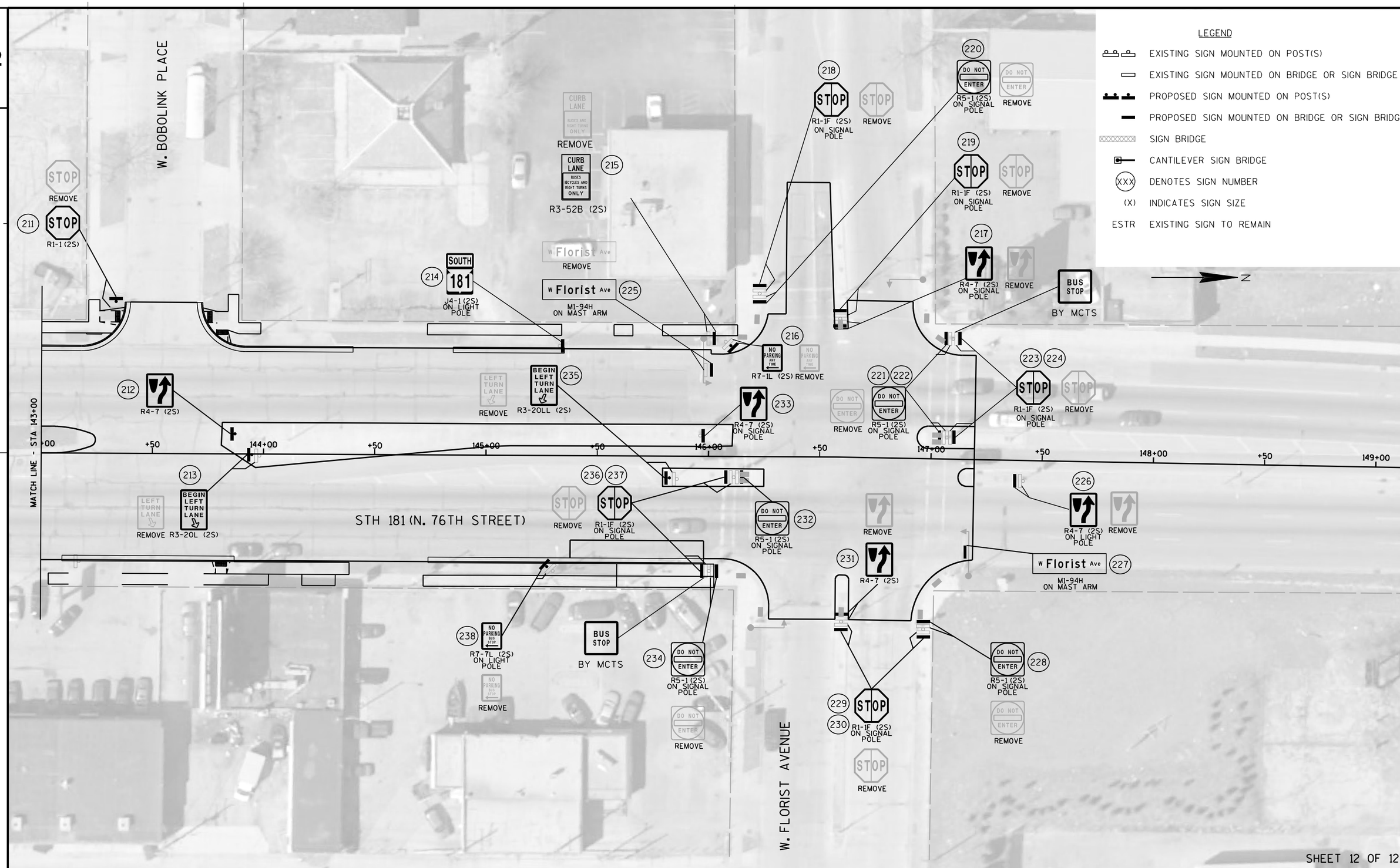


| PROJECT NO: 2140-13-70 | HWY: STH 181 | COUNTY: MILWAUKEE | PERMANENT SIGNING | SHEET | E |
|---|---|---|---|---|---|

FILE NAME : J:\projects\D2_214013181\70\SIGN\023212_ps.dgn PLOT DATE : 20-APR-2016 10:33 PLOT BY : MSCBXD PLOT NAME : PLOT SCALE : 40:1

WISDOT/CADLITE

2

## STREET LIGHTING GENERAL NOTES:

PRIOR TO CONSTRUCTION, THE LOCATION OF UNDERGROUND UTILITIES SHALL BE DETERMINED IN THE FIELD BY CONTACTING "DIGGERS HOTLINE."

THE CONTRACTOR IS RESPONSIBLE FOR ALL COSTS INCLUDING REPAIRS, REPLACEMENT OR RELOCATION ETC. OF STREET LIGHTING OR TRAFFIC SIGNAL FACILITIES IF THE CONTRACTOR DOES ANY DEVIATION FROM THE STREET LIGHTING OR TRAFFIC SIGNAL DESIGN WITHOUT THE STREET LIGHTING ENGINEERS SIGNED PERMISSION.

STREET LIGHTING & TRAFFIC SIGNALS SHALL BE INSTALLED IN COMPLIANCE WITH WISCONSIN DEPARTMENT OF TRANSPORTATION STANDARD SPECIFICATIONS SECTION 652 EXCEPT:

1. DETAILS OF CONSTRUCTION MATERIALS AND WORKMANSHIP NOT SHOWN ON THIS DRAWING SHALL CONFORM TO THE PERTINENT REQUIREMENTS OF THE CONTRACT

2. LOCATIONS OF THE PVC CONDUITS WHERE THEY ARE REQUIRED ARE IDENTIFIED IN THE PRINTS. HOWEVER, INSTALLATION MAY REQUIRE INTEGRATION WITH EXISTING FIELD CONDITIONS. APPROPRIATE ADJUSTMENT ON CONDUIT LOCATIONS MAY BE MADE IF THE FIELD CONDITIONS ARE SUCH THAT THE CONDUIT CANNOT BE INSTALLED AT THE SPECIFIED LOCATIONS. ANY RELOCATIONS MUST BE APPROVED BY THE ENGINEER. FIELD MARK EACH CONDUIT LOCATION BY STAMPING AND PAINTING WITH RED PAINT ON TOP AND BACKSIDE OF CURB.

3. TYPICAL CONDUIT INSTALLED UP TO DIRECT BURIED STREET LIGHT POLES IS AS FOLLOWS 3-INCH OR 2.5-INCH (AS NOTED) SCHEDULE 40 RIGID PVC TO STREET LIGHTING METAL HOUSING (PEDESTAL), THE 1.5-INCH SCHEDULE 40 RIGID PVC TO STREET LIGHT POLE CABLE SLOT, AND THE 2-INCH SCHEDULE 40 RIGID PVC TO SIGNAL STANDARD BASE AND RISER FOR TRAFFIC SIGNAL ON STREET LIGHT POLE.

4. DEPTH OF CONDUIT INSTALLED BELOW THE STREETS, HIGHWAYS, ROADS, AND ALLEYS SHALL BE 24-INCHES MINIMUM AND 36-INCHES MAXIMUM. (MEASURED FROM FINISHED FLANGE LINE)

5. CONDUIT INSTALLED BEHIND CURB, AND UNDER DRIVEWAYS SHALL BE INSTALLED AT A DISTANCE OF 6 INCHES AWAY FROM THE BACK OF CURB TO THE CENTER LINE OF CONDUIT, AND 18 INCHES DOWN MEASURED FROM THE TOP OF CURB OR FINISHED GRADE TO THE TOP OF CONDUIT.

6. WHEN THERE IS MORE THAN ONE CONDUIT TO BE INSTALLED, PLACE ALL CONDUITS IN THE SAME TRENCH.

7. ANY EXCEPTION TO THE MINIMUM OR MAXIMUM DEPTH SHALL BE ONLY WITH THE WRITTEN APPROVAL OF THE ENGINEER.

8. BENDING OF PVC ELECTRICAL CONDUIT SHALL BE ACCOMPLISHED BY USING A BLANKET OR IMMERSION TYPE TANK DESIGNED FOR THE PURPOSE OF BENDING PVC ELECTRICAL CONDUIT.

9. THE CONTRACTOR OR HIS SUBCONTRACTOR MUST MAKE SURE THE AREA BEHIND CURB AND/OR TRENCH SHALL BE FREE OF DEBRIS AND OVERPOUR AND SHALL NOT BE BACKFILLED PRIOR TO INSPECTION OF THE CONDUIT.

10. ALL CUT ENDS SHALL BE TRIMMED INSIDE AND OUTSIDE TO REMOVE ALL ROUGH EDGES ON ALL CONDUITS. (SEE NEC 352.28 2008 CODE)

11. ALL CONDUIT BEING FURNISHED AND INSTALLED SHALL HAVE THE U.L. LABEL FIRMLY ATTACHED.

12. PRIOR TO CONDUIT ACCEPTANCE, ALL CONDUIT ENDS SHALL BE THOROUGHLY CLEANED AND BE CAPPED IMMEDIATELY AFTER INSTALLATION WITH THE APPROPRIATE CAST PLASTIC CAP WHICH FITS SNUGGLY ON THE CONDUIT, BUT EASILY REMOVED IN THE FUTURE. DUCT TAPE OR ANY OTHER CAPPING METHOD IS NOT ACCEPTABLE.

13. CONDUIT RUNS SHALL BE THE SAME SIZE PIPE FROM ONE END TO THE OTHER (FROM PULL BOX TO PULL BOX OR JUNCTION BOX OR BASE TO BASE, ETC.).

14. PULL ROPE (3/8-INCH NYLON) SHALL BE INSTALLED IN ALL NEW CONDUIT.

15. ALL CONDUIT RUNS SHALL BE STRAIGHT (WITHOUT BENDS) FROM PULL BOX TO PULL BOX, PULL BOX TO BASE AND BASE TO BASE AS SHOWN ON THE PLANS UNLESS OTHERWISE APPROVED BY THE STREET LIGHTING ENGINEER.

16. WHEN ENDS OF CONDUIT DO NOT CONNECT TO A VAULT AND WILL END UP UNDER CONCRETE WALK. THE CONTRACTOR IS REQUIRED TO LEAVE A 24" X 24" BOX FORM CENTERED OVER THE END OF CONDUIT AND FILL THE BOXFORM WITH CRUSHED GRAVEL. (PER WISDOT SPEC 209.2.1(1) GRANULAR BACKFILL)

17. ALL PIPE CROSSINGS AND VAULTS SHALL BE AT LEAST SIX (6) FEET AWAY FROM FIRE HYDRANTS, UNLESS NOTED OTHERWISE, OR APPROVED BY THE STREET LIGHTING ENGINEER.

18. ALL POLES AND TRAFFIC STANDARDS IN CONCRETE ARE REQUIRED TO HAVE A 30"X30" BOX SHAPED JOINT PLACED AROUND THEM USING AN EXPANSION JOINT FILLER. UNLESS NOTED OTHERWISE (SEE DETAIL 122)

19. TYPICAL RECTANGULAR VAULTS SHOULD BE INSTALLED AS SHOWN ON PLANS, BUT WHEN IT IS NOT POSSIBLE, A 5 FT. TO 6 FT. OFFSET FROM STREET LIGHT POLES, SIGNAL STANDARDS AND FIRE HYDRANTS SHOULD BE USED, OTHERWISE APPROVED BY THE STREET LIGHTING ENGINEER.

20. COORDINATE NEW CONDUIT CONNECTIONS WITH EXISTING CONDUIT, DUCT PACKAGES, AND VAULTS/ MANHOLES WITH CITY OF MILWAUKEE STREET LIGHTING. THE CITY REQUIRES THREE WORKING DAYS ADVANCED NOTICE. CONTACT ELECTRICAL SUPERVISOR STREET LIGHTING - DENNIS MILLER (OFFICE) 414-286-5942 (CELL) 414-708-4251 OR DISPATCHER @ 414-286-5944 TRAFFIC SIGNALS - AL NICHOLS (OFFICE) 414-286-3687 (CELL) 414-708-5148 OR DISPATCHER @ 414-286-3687

21. CONDUIT WILL ONLY BE INSTALLED AFTER THE CURB IS POURED, UNLESS APPROVED BY BOTH THE ENGINEER & STREET LIGHTING SHOP SUPERVISOR.

22. IMMEDIATELY AFTER THE CONTRACTOR HAS COMPLETED ALL THE ELECTRICAL VAULT, CONDUIT AND CONDUIT CONNECTIONS, AND JUST BEFORE ELECTRICAL WORK IS COVERED UP WITH CONCRETE, SOIL, OR ETC. THE CONTRACTOR IS REQUIRED TO CONTACT THE CITY OF MILWAUKEE ELECTRICAL SHOP SUPERVISORS FOR FINAL INSPECTION AND APPROVAL OF ALL WORK.
STREET LIGHTING - DENNIS MILLER (OFFICE) 414-286-5942 (CELL) 414-708-4251
STREET LIGHTING - GEORGE BERDINE (OFFICE) 414-286-5943 (CELL) 414-708-4245
STREET LIGHTING - THOMAS HUGHES (OFFICE) 414-286-3457 (CELL) 414-708-3175
STREET LIGHTING - DISPATCHER @ 414-286-5944
TRAFFIC SIGNALS - AL NICHOLS (OFFICE) 414-286-5941 (CELL) 414-708-5148
TRAFFIC SIGNALS - DISPATCHER @ 414-286-3687

2

2

NOTE:

1.) KEEP AREA BEHIND CURB FREE OF DEBRIS AND CONCRETE OVERPOUR.

2.) CONDUIT TO BE PLACED WITHIN A 6" AREA DIRECTLY BEHIND CURB, UNLESS NOTED OR APPROVED BY ENGINEER.

3.) ANY DEVIATIONS FROM DETAIL WILL REQUIRE PERMISSION FROM STREET LIGHTING FORCES. CONTACT DISPATCHER AT (414) 286-5944 FOR THE APPROPRIATE SHOP SUPERVISOR.

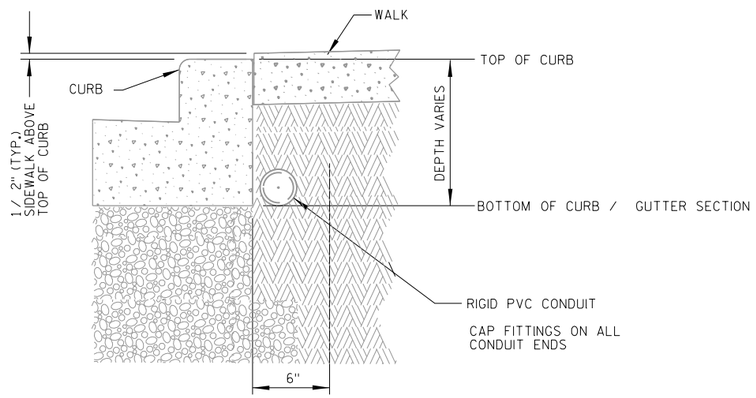


100 TYPICAL CONDUIT INSTALLATION
BEHIND CURB BENEATH SIDEWALK

NOTE:

1.) KEEP AREA BEHIND CURB FREE OF DEBRIS AND CONCRETE OVERPOUR.

2.) CONDUIT TO BE PLACED WITHIN A 6" AREA DIRECTLY BEHIND CURB, UNLESS NOTED OR APPROVED BY ENGINEER.

3.) ANY DEVIATIONS FROM DETAIL WILL REQUIRE PERMISSION FROM STREET LIGHTING FORCES. CONTACT DISPATCHER AT (414) 286-5944 FOR THE APPROPRIATE SHOP SUPERVISOR.

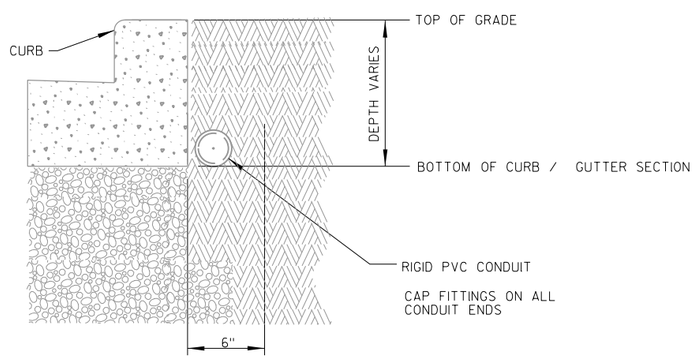


100 TYPICAL CONDUIT INSTALLATION
BEHIND CURB IN GRASS TERRACE

2

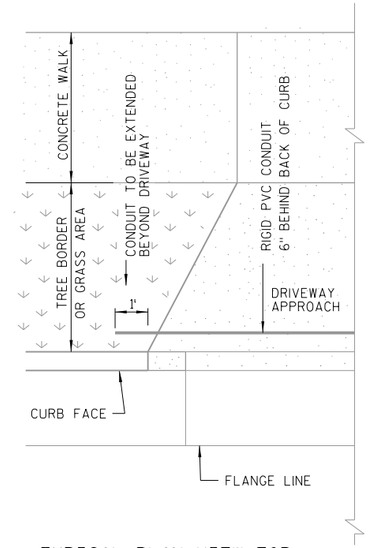


TYPICAL PLAN VIEW FOR
FLARED DRIVEWAY

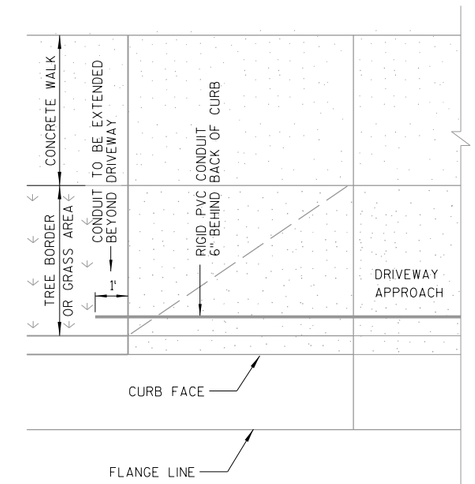


TYPICAL PLAN VIEW FOR
DEPRESSED DRIVEWAY

NOTE:

1.) KEEP AREA BEHIND CURB FREE OF DEBRIS AND CONCRETE OVERPOUR.

2.) CONDUIT TO BE PLACED WITHIN A 6" AREA DIRECTLY BEHIND CURB, UNLESS NOTED OR APPROVED BY ENGINEER.

3.) ANY DEVIATIONS FROM DETAIL WILL REQUIRE PERMISSION FROM STREET LIGHTING FORCES. CONTACT DISPATCHER AT (414) 286-5944 FOR THE APPROPRIATE SHOP SUPERVISOR.

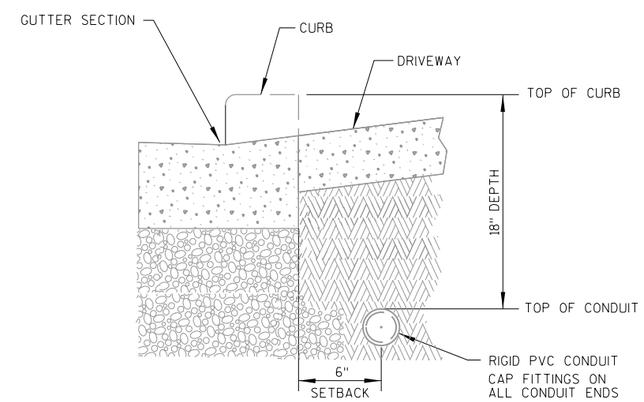


101 TYPICAL CONDUIT INSTALLATION
UNDER DRIVEWAYS OR PEDESTRIAN RAMPS

2

NOTE:

1.) KEEP AREA BEHIND CURB FREE OF DEBRIS AND CONCRETE OVERPOUR.

2.) CONDUIT TO BE PLACED WITHIN A 6" AREA DIRECTLY BEHIND CURB, UNLESS NOTED OR APPROVED BY ENGINEER.

3.) ANY DEVIATIONS FROM DETAIL WILL REQUIRE PERMISSION FROM STREET LIGHTING FORCES. CONTACT DISPATCHER AT (414) 286-5944 FOR THE APPROPRIATE SHOP SUPERVISOR.

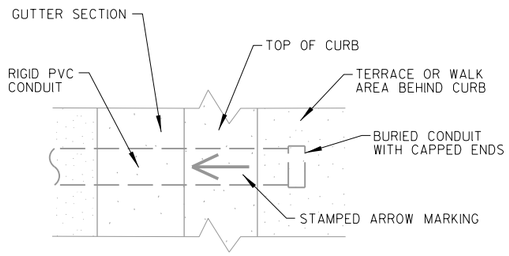


TOP VIEW OF CURB STAMPING

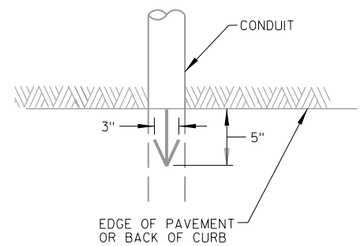


ARROW MARK

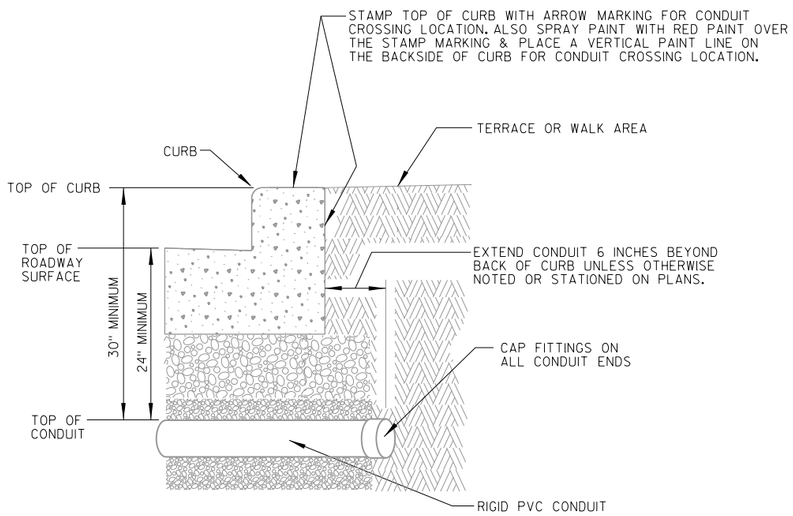


102 TYPICAL CONDUIT INSTALLATION FOR CROSSING ROADWAYS

NOTE:

1.) ANY DEVIATIONS FROM DETAIL WILL REQUIRE PERMISSION FROM STREET LIGHTING FORCES. CONTACT DISPATCHER AT (414) 286-5944 FOR THE APPROPRIATE SHOP SUPERVISOR.

2

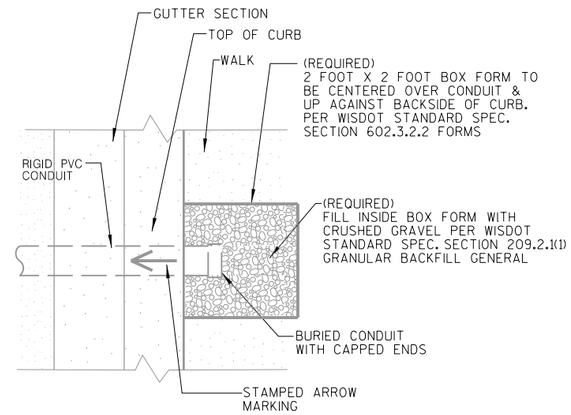


TOP VIEW OF CURB STAMPING

NOTE:

ARROW MARK SHALL BE INSCRIBED IN PAVEMENT SURFACE 1/4-INCH TO 3/8-INCH DEEP AT EACH LOCATION WHERE CONDUITS ARE PLACED UNDER THE PAVEMENT.

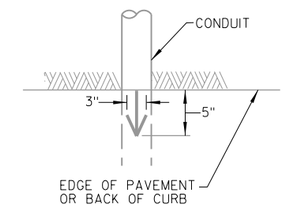


ARROW MARK

THE CONTRACTOR IS REQUIRED TO FORM OUT A OPENING IN THE CONCRETE WALK BEFORE POURING THE CONCRETE WALK AROUND TRAFFIC AND STREET LIGHTING FACILITIES. (AS SHOWN IN DETAIL)

THE CONTRACTOR IS REQUIRED TO FILL IN THE FORMED OUT AREA OPENING IN THE CONCRETE WALK WITH CRUSHED GRAVEL. AFTER POURING THE CONCRETE WALK AROUND TRAFFIC AND STREET LIGHTING FACILITIES. (AS SHOWN IN DETAIL)

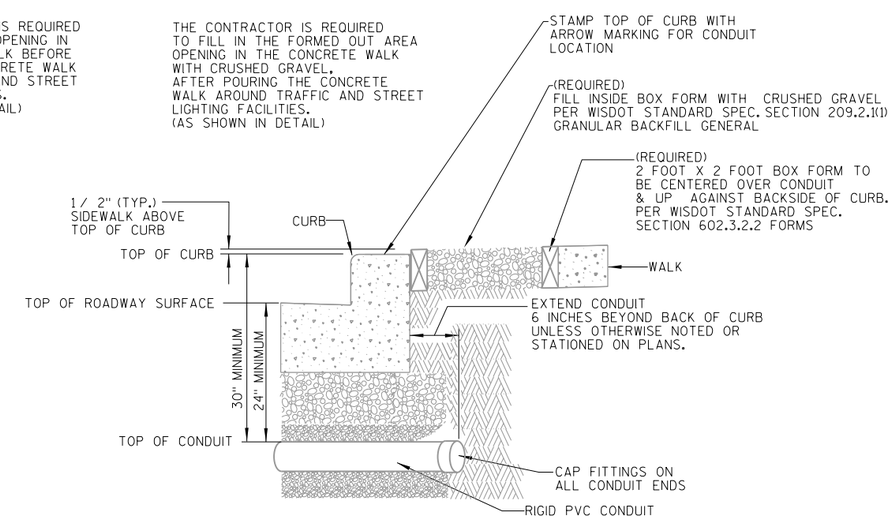


103 TYPICAL CONDUIT INSTALLATION FOR CROSSING ROADWAYS FROM FULL WALK AREAS

2

LEGEND

CONDUIT RIGID NONMETALLIC SCHEDULE 40

PROPOSED MUNICIPAL BES POLE WITH DUAL ARMS AND LUMINAIRES (TO BE INSTALLED BY CITY OF MILWAUKEE STREET LIGHTING)

PROPOSED MUNICIPAL BES POLE WITH SINGLE ARM AND LUMINAIRE (TO BE INSTALLED BY CITY OF MILWAUKEE STREET LIGHTING)

EXISTING MUNICIPAL BES POLE WITH DUAL ARMS AND LUMINAIRES

EXISTING MUNICIPAL BES POLE WITH SINGLE ARM AND LUMINAIRE

100 LIGHTING DETAIL NUMBER

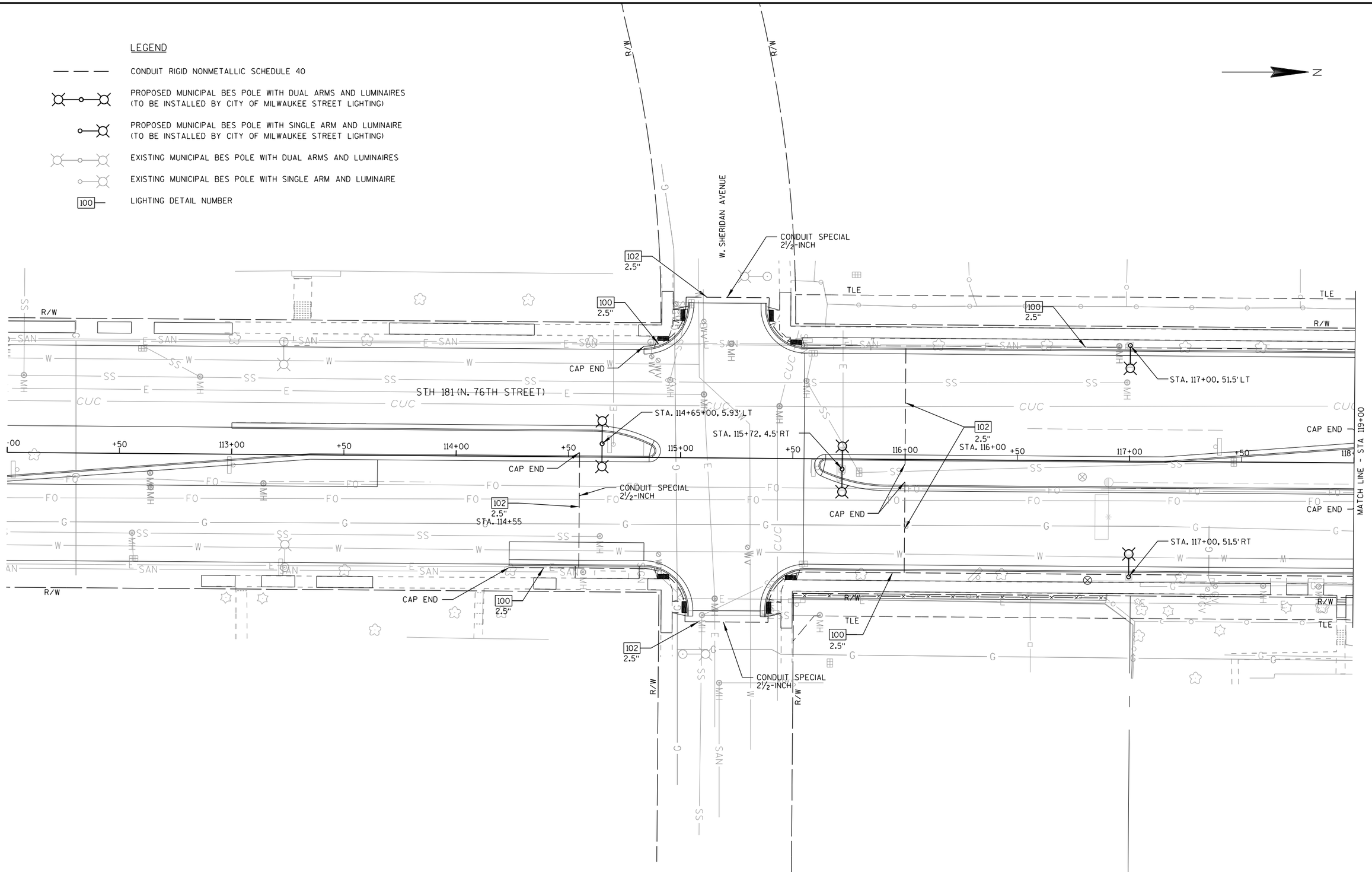


| PROJECT NO:2140-13-70 | HWY:STH 181 | COUNTY:MILWAUKEE | LIGHTING PLAN - CONDUIT INSTALLATION | SHEET 130 | E |
|---|---|---|---|---|---|

FILE NAME : L:\Jobs2010\20100384\CAD\WisDOT_Trans\dgn\00\023503_lp.dgn PLOT DATE : 5/1/2016 PLOT BY : GRAEF PLOT NAME : PLOT SCALE : 40.0000 sf / in.

WISDOT/CADDS SHEET 42

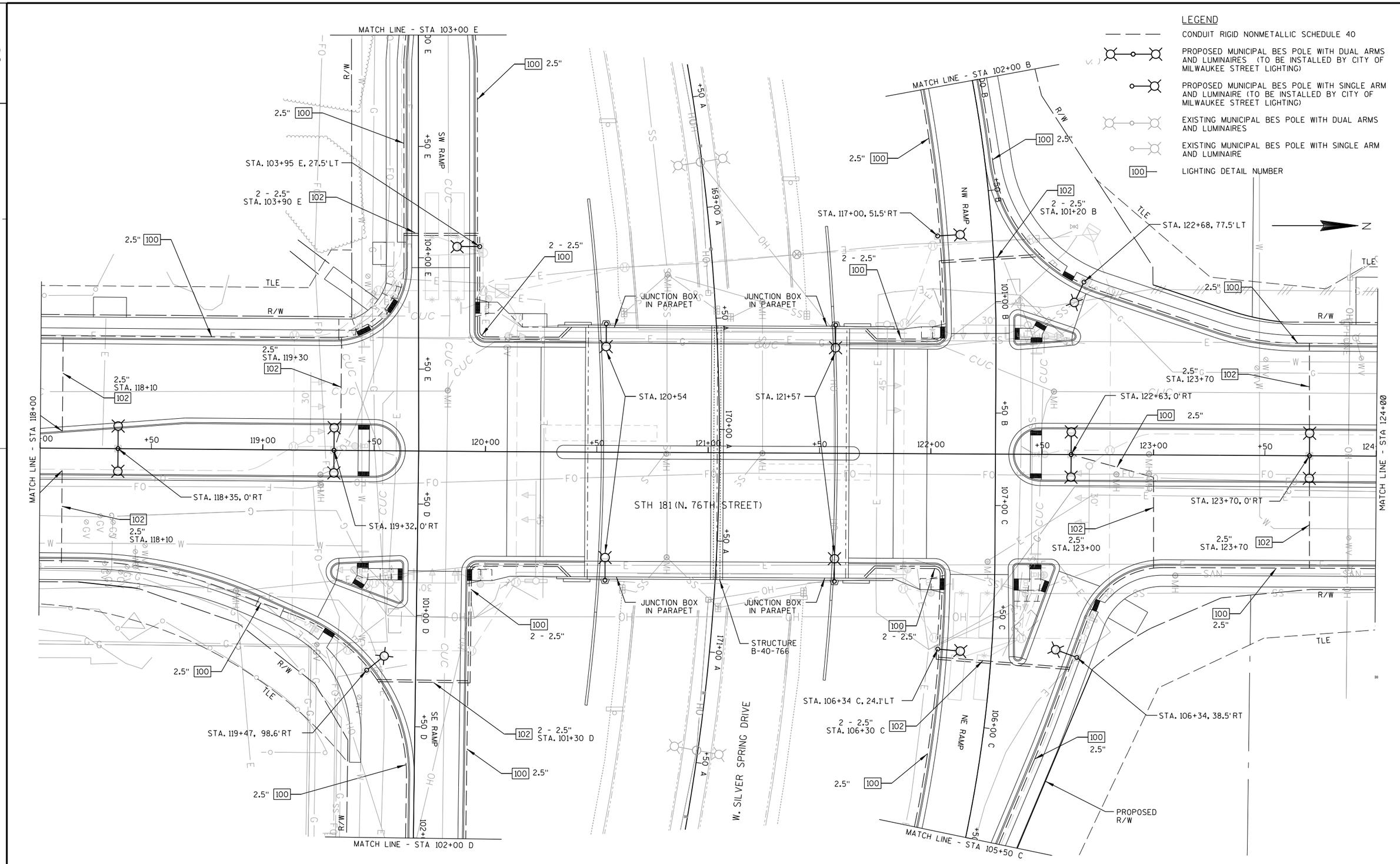


| PROJECT NO: 2140-13-70 | HWY: STH 181 | COUNTY: MILWAUKEE | LIGHTING PLAN - CONDUIT INSTALLATION | SHEET 131 | E |
|---|---|---|---|---|---|

2

LEGEND

CONDUIT RIGID NONMETALLIC SCHEDULE 40

PROPOSED MUNICIPAL BES POLE WITH DUAL ARMS AND LUMINAIRES (TO BE INSTALLED BY CITY OF MILWAUKEE STREET LIGHTING)

PROPOSED MUNICIPAL BES POLE WITH SINGLE ARM AND LUMINAIRE (TO BE INSTALLED BY CITY OF MILWAUKEE STREET LIGHTING)

EXISTING MUNICIPAL BES POLE WITH DUAL ARMS AND LUMINAIRES

EXISTING MUNICIPAL BES POLE WITH SINGLE ARM AND LUMINAIRE

100 LIGHTING DETAIL NUMBER

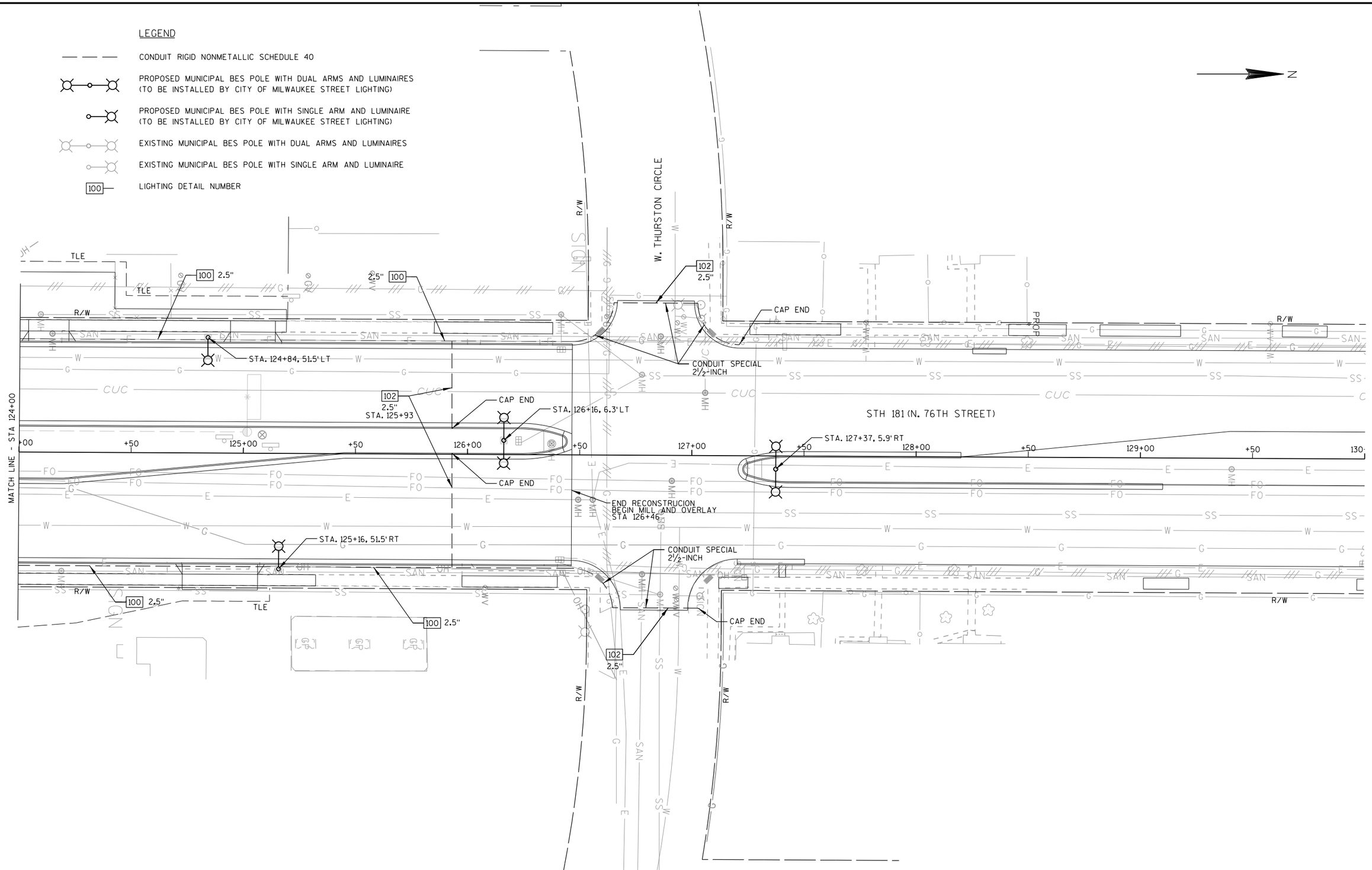


| PROJECT NO:2140-13-70 | HWY:STH 181 | COUNTY:MILWAUKEE | LIGHTING PLAN - CONDUIT INSTALLATION | SHEET 132 | E |
|---|---|---|---|---|---|

2

LEGEND

CONDUIT RIGID NONMETALLIC SCHEDULE 40

PROPOSED MUNICIPAL BES POLE WITH DUAL ARMS AND LUMINAIRES (TO BE INSTALLED BY CITY OF MILWAUKEE STREET LIGHTING)

PROPOSED MUNICIPAL BES POLE WITH SINGLE ARM AND LUMINAIRE (TO BE INSTALLED BY CITY OF MILWAUKEE STREET LIGHTING)

EXISTING MUNICIPAL BES POLE WITH DUAL ARMS AND LUMINAIRES

EXISTING MUNICIPAL BES POLE WITH SINGLE ARM AND LUMINAIRE

100 LIGHTING DETAIL NUMBER

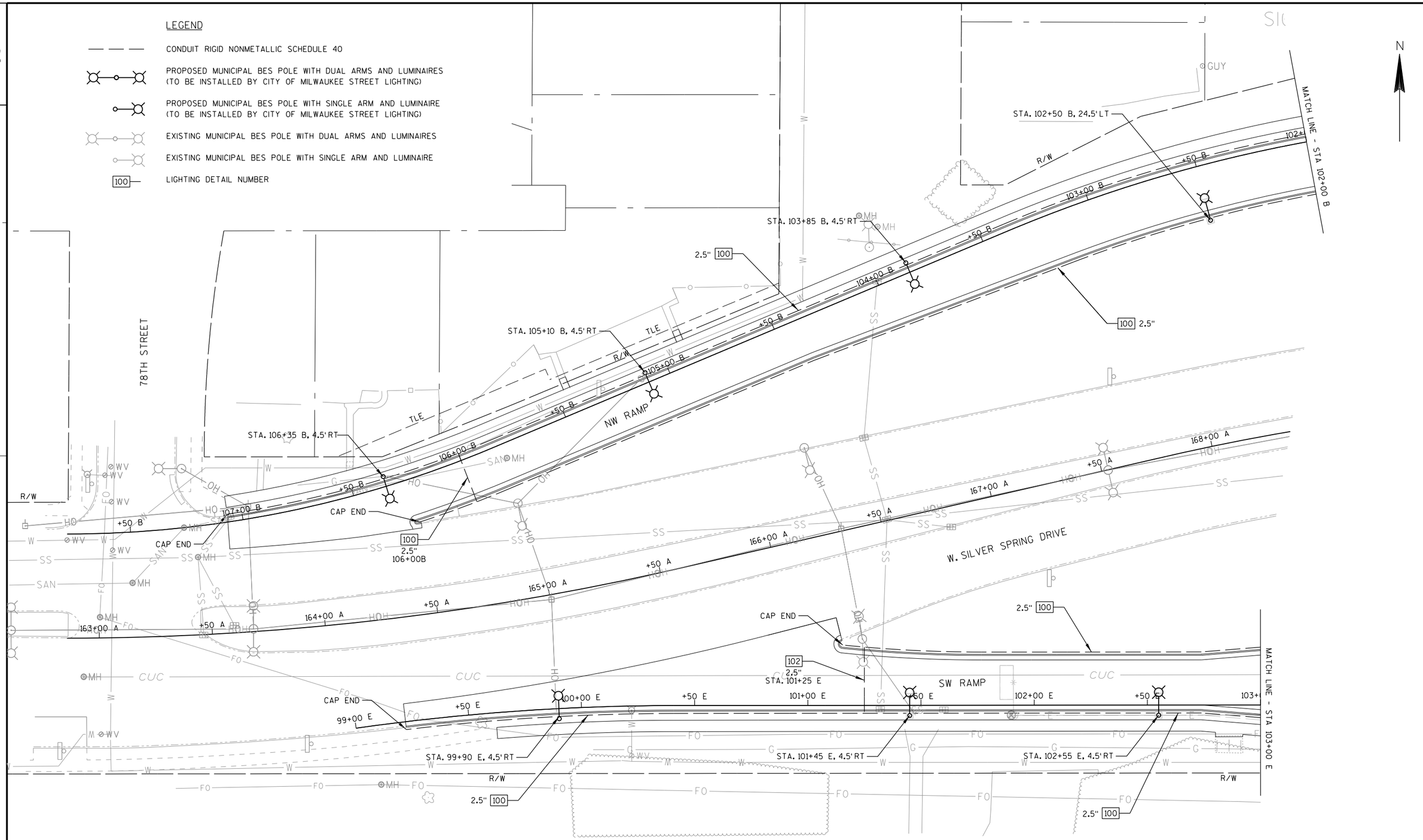


2

| PROJECT NO:2140-13-70 | HWY:STH 181 | COUNTY:MILWAUKEE | LIGHTING PLAN - CONDUIT INSTALLATION | SHEET 133 | E |
|---|---|---|---|---|---|

2

LEGEND

CONDUIT RIGID NONMETALLIC SCHEDULE 40

PROPOSED MUNICIPAL BES POLE WITH DUAL ARMS AND LUMINAIRES (TO BE INSTALLED BY CITY OF MILWAUKEE STREET LIGHTING)

PROPOSED MUNICIPAL BES POLE WITH SINGLE ARM AND LUMINAIRE (TO BE INSTALLED BY CITY OF MILWAUKEE STREET LIGHTING)

EXISTING MUNICIPAL BES POLE WITH DUAL ARMS AND LUMINAIRES

EXISTING MUNICIPAL BES POLE WITH SINGLE ARM AND LUMINAIRE

100 LIGHTING DETAIL NUMBER

N

MATCH LINE - STA 105+50 C

R/W

TLE

STA. 104+90 C, 7.4' RT

105+00 C

+50 C

PROP

STA. 103+55 C, 4.5' RT

100 2.5"

104+00 C

+50 C

NE RAMP

103+00 C

2.5" 100

STA. 102+20, 4.5' RT

+50 C

102+00 C

W. SILVER SPRING DRIVE

102 2.5" STA. 102+00 C

+50 C

101+00 C

STA. 109+90, 4.5' RT

74TH STREET

R/W

CAP END

CAP END

100+00 C

+50 C

172+00 A

+50 A

173+00 A

+50 A

174+00 A

+50 A

175+00 A

+50 A

176+00 A

+50 A

177+00 A

2.5" 100

2.5" STA. 104+90 D 102

SE RAMP

CAP END

CAP END

MATCH LINE - STA 102+00 D

00 D

+50 D

103+00 D

+50 D

104+00 D

+50 D

105+00 D

+50 D

106+00 D

+50 D

107+00 D

STA. 102+25 D, 4.5' RT

100 2.5"

STA. 103+55 D, 4.5' RT

STA. 104+85 D, 4.5' RT

R/W

R/W

2

| PROJECT NO: 2140-13-70 | HWY: STH 181 | COUNTY: MILWAUKEE | LIGHTING PLAN - CONDUIT INSTALLATION | SHEET 134 | E |
|---|---|---|---|---|---|

2

LEGEND

- CONTROL CABINET
- NONMETALLIC CONDUIT 2", UNLESS OTHERWISE NOTED
- LOOP DETECTOR CONDUIT 1" NONMETALLIC
- SIGNAL HEAD, TRAFFIC SIGNAL STANDARD, PEDESTAL BASE
- (XX) SIGNAL HEAD, TRAFFIC SIGNAL POLE, TRANSFORMER BASE
- PEDESTRIAN HEAD WITH PUSH BUTTON
- PUSH BUTTON
- LUMINAIRE UNDER PERMIT TO LOCAL MUNICIPALITY
- LUMINAIRE, TRAFFIC POLE, TRANSFORMER BASE
- LOOP DETECTOR IN 1" NONMETALLIC CONDUIT
- PULL BOX, 24" X 36"
- PULL BOX, 24" X 42"
- XX SIGNAL HEAD NUMBER
- WALK/DON'T WALK INDICATOR 16" (COUNTDOWN TIMER)
- R RED CIRCULAR INDICATOR
- Y YELLOW CIRCULAR INDICATOR
- G GREEN CIRCULAR INDICATOR
- LANE DESIGNATION FOR INFO ONLY

NOTE: ALL LENSES ARE 12-INCH GRAYSHADE REPRESENTS EXISTING

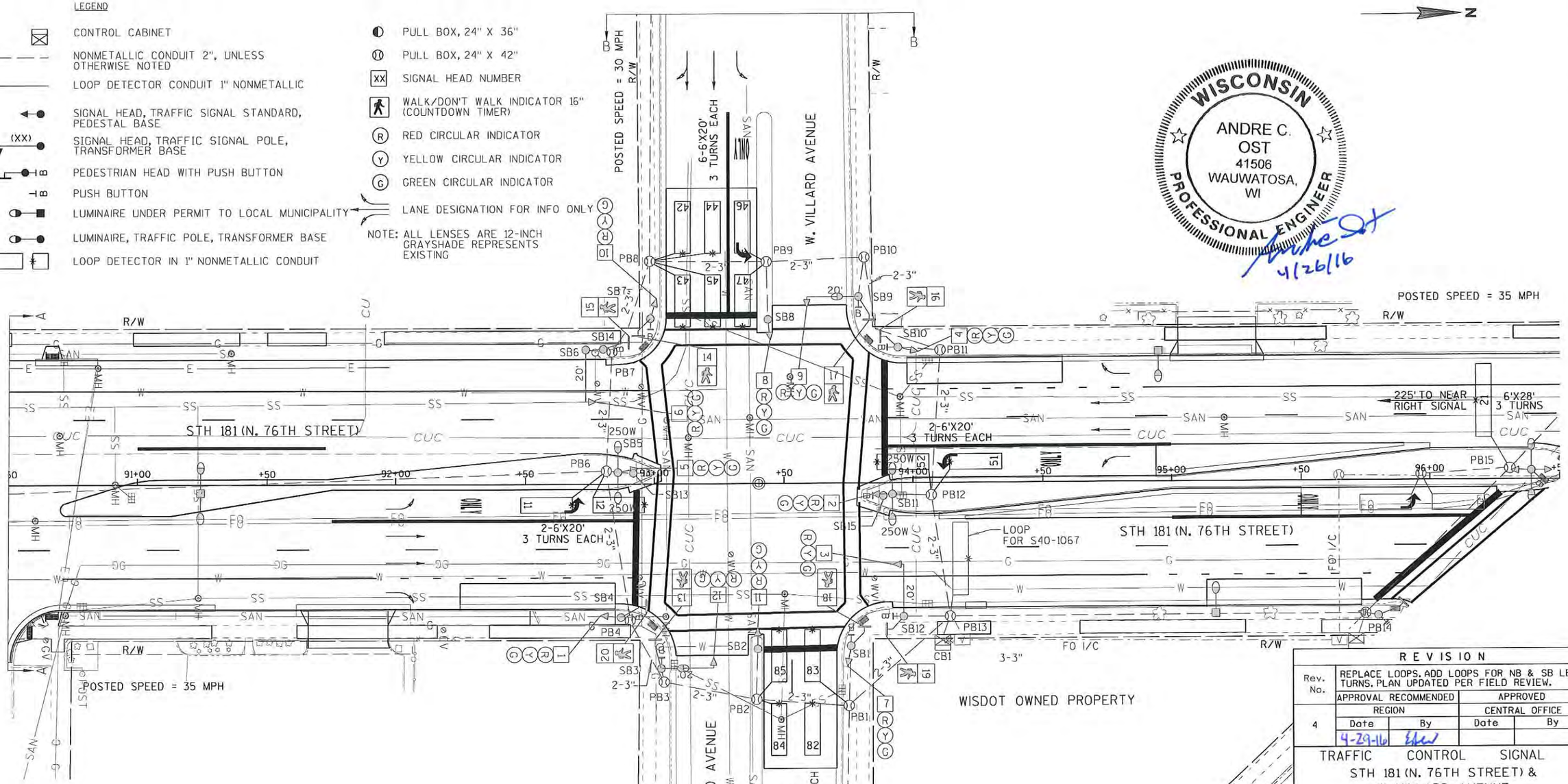


WISCONSIN PROFESSIONAL ENGINEER
ANDRE C. OST
41506
WAUWATOSA, WI
4/26/16

CONSTRUCTION NOTES:

1. * LOCATION IS TO FRONT CENTER OF DETECTION LOOP.
2. THE CONTRACTOR SHALL HAVE THE PULL BOXES AND CONDUIT RUNS INSPECTED 5 WORKING DAYS PRIOR TO PLACING SIGNAL CABLE INTO SYSTEM. CONTACT THE REGIONAL ELECTRICAL FIELD UNIT AT (414) 266-1170.
3. THE LOCATIONS OF EXISTING AND PROPOSED UTILITY INSTALLATIONS ARE APPROXIMATE. THERE MAY BE OTHER UTILITY INSTALLATIONS WITHIN THE PROJECT WHICH ARE NOT SHOWN.
4. ALL LUMINAIRES ARE 150W HPS UNLESS OTHERWISE NOTED.
5. ABANDON EXISTING LOOPS WHICH ARE BEING REPLACED. LOOP DETECTOR WIRE AND LOOP DETECTOR LEAD-IN CABLE TO BE REMOVED BY CONTRACTOR.

| REVISION | |
|---|---|
| Rev. No. | REPLACE LOOPS. ADD LOOPS FOR NB & SB LEFT TURNS. PLAN UPDATED PER FIELD REVIEW. |
| 4 | APPROVAL RECOMMENDED: REGION — Date 4-29-16, By [illegible]; APPROVED: CENTRAL OFFICE — Date, By |

4-29-16 PSV

TRAFFIC CONTROL SIGNAL
STH 181 (N. 76TH STREET) &
W. VILLARD AVENUE
CITY OF MILWAUKEE
MILWAUKEE COUNTY

SIGNAL NO. S40-1142 CABINET TYPE: TS1 CONTROLLER TYPE: EPAC

WISCONSIN DEPARTMENT OF TRANSPORTATION

APPROVAL RECOMMENDED Date 2-24-72 ROBERT MOE, REGION TRAFFIC ENGINEER

APPROVED Date 3-3-72 WAYNE VOLK, STATE TRAFFIC ENGINEER

REGION CONTACT: ELIZABETH LLOYD-WEIS
DESIGNED BY:
REVISED BY: GRAEF

PAGE 1 OF 3

| |
|---|
| 7-28-06 INTERSECTION REHAB |
| 1-18-96 NEW CABINET & CONTROLLER |
| 4-22-87 REVISED CONDUIT ADDED PULLBOXES |
| 12-11-72 INITIAL INSTALLATION |

| PROJECT NO: 2140-13-70 | HWY: STH 181 | COUNTY: MILWAUKEE | TRAFFIC SIGNAL PLAN | SHEET 135 | E |
|---|---|---|---|---|---|

FILE NAME : L:\Jobs2010\20100384\CAD\WisDOT_Trans\dgn\00\01_Villard\024021_sp.dgn PLOT DATE : 4/25/2016 PLOT BY : GRAEF PLOT NAME : PLOT SCALE : 40.0000 sf / in. WISDOT/CADDS SHEET 42

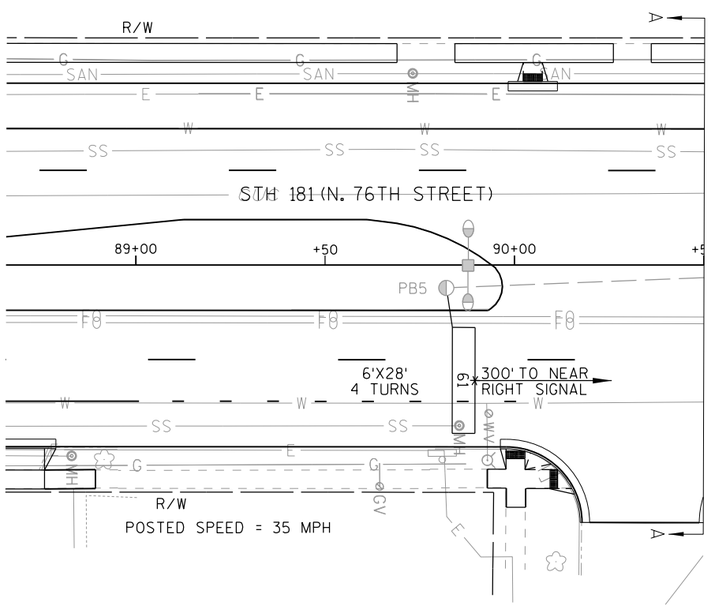


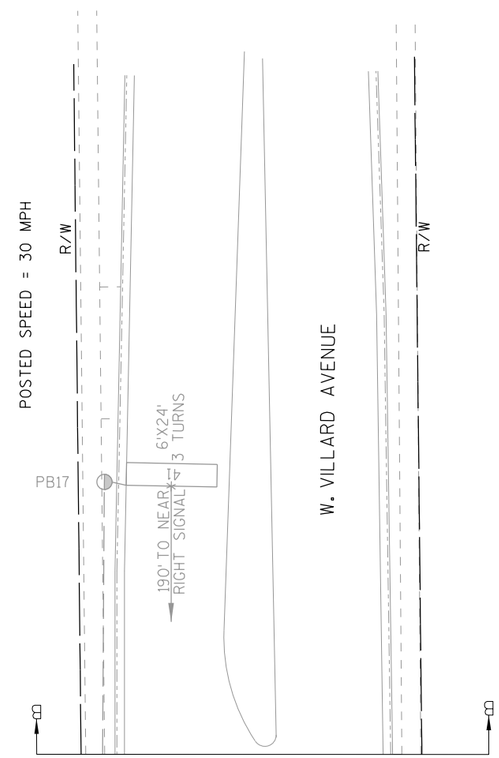


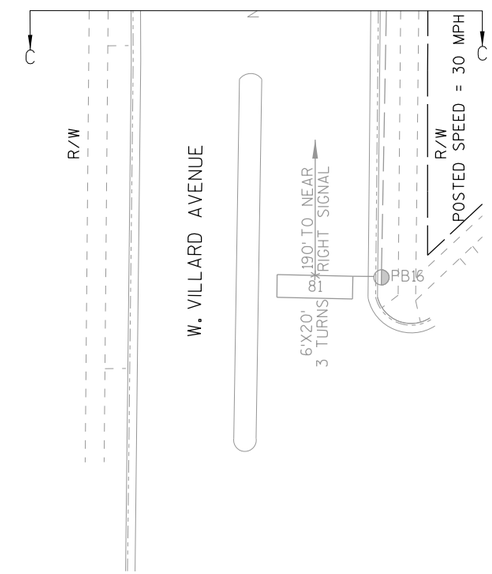


TRAFFIC CONTROL SIGNAL
STH 181 (N. 76TH STREET) &
W. VILLARD AVENUE
CITY OF MILWAUKEE
MILWAUKEE COUNTY

SIGNAL NO. S40-1142

REGION CONTACT: ELIZABETH LLOYD-WEIS
DESIGNED BY:
REVISED BY: GRAEF

PAGE 2 OF 3

| PROJECT NO: 2140-13-70 | HWY: STH 181 | COUNTY: MILWAUKEE | TRAFFIC SIGNAL PLAN | SHEET 136 | E |
|---|---|---|---|---|---|

| | HEAD NUMBERS | FLASH |
|---|---|---|
| Ø1 | | |
| Ø2 | 4,5,6 | R |
| Ø3 | | |
| Ø4 | 10,11,12 | R |
| Ø5 | | |
| Ø6 | 1,2,3 | R |
| Ø7 | | |
| Ø8 | 7,8,9 | R |
| Ø2P | 15,16 | -- |
| Ø4P | 13,14 | -- |
| Ø6P | 19,20 | -- |
| Ø8P | 17,18 | -- |
| OLA | -- | -- |
| OLB | -- | -- |
| OLC | -- | -- |
| OLD | -- | -- |

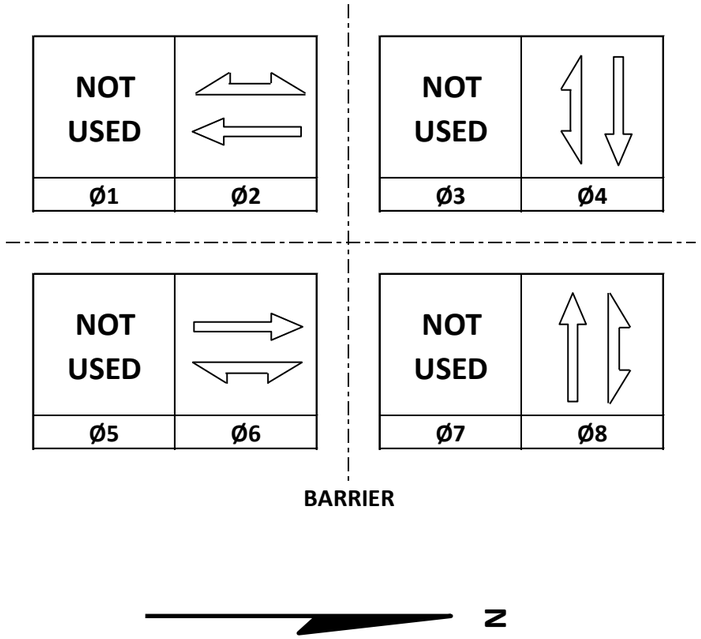


## DETECTOR LOGIC

| DETECTOR NUMBER | AMPLIFIER CHANNEL | DETECTOR OPERATION | | | PHASE CALLED | PHASE EXTENDED | DETECTOR DISCONNECT PHASE | CALLING DELAY | EXTENSION STRETCH | SIZE | NUMBER OF TURNS |
|---|---|---|---|---|---|---|---|---|---|---|---|
| | | CALLS AND EXTENDS | CALLS ONLY | EXTENDS ONLY | | | | | | | |
| 11 | 1 | X | | | 6 | 6 | | | | 6'x20' | 3 |
| 12 | 1 | X | | | 6 | 6 | | | | 6'x20' | 3 |
| 21 | 2 | X | | | 2 | 2 | | | | 6'x28' | 3 |
| 41 | 3 | | | X | | 4 | | | X | 6'x24' | 3 |
| 42 | 4 | X | | | 4 | 4 | | X | | 6'x20' | 3 |
| 43 | 4 | X | | | 4 | 4 | | X | | 6'x20' | 3 |
| 44 | 5 | X | | | 4 | 4 | | | | 6'x20' | 3 |
| 45 | 5 | X | | | 4 | 4 | | | | 6'x20' | 3 |
| 46 | 6 | X | | | 4 | 4 | | | | 6'x20' | 3 |
| 47 | 6 | X | | | 4 | 4 | | | | 6'x20' | 3 |
| 51 | 7 | X | | | 2 | 2 | | | | 6'x20' | 3 |
| 52 | 7 | X | | | 2 | 2 | | | | 6'x20' | 3 |
| 61 | 8 | X | | | 6 | 6 | | | | 6'x28' | 4 |
| 81 | 9 | | | X | | 8 | | | X | 6'x20' | 3 |
| 82 | 10 | X | | | 8 | 8 | | X | | 6'x20' | 3 |
| 83 | 10 | X | | | 8 | 8 | | X | | 6'x20' | 3 |
| 84 | 11 | X | | | 8 | 8 | | | | 6'x20' | 3 |
| 85 | 11 | X | | | 8 | 8 | | | | 6'x20' | 3 |

## CONTROLLER LOGIC

| PHASE NUMBER | PHASE LOCKING | DUAL ENTRY W / Ø | PHASE RECALL | PHASE ACTIVE |
|---|---|---|---|---|
| 1 | | | | |
| 2 | X | 6 | MIN. | X |
| 3 | | | | |
| 4 | | 8 | | X |
| 5 | | | | |
| 6 | X | 2 | MIN. | X |
| 7 | | | | |
| 8 | | 4 | | X |

| TYPE OF INTERCONNECT/COMMUNICATION | |
|---|---|
| NONE | |
| CLOSED LOOP | |
| TWISTED PAIR | |
| FIBER OPTIC* | |
| FIBER OPTIC (ETHERNET) | X |
| RADIO | |
| CELL MODEM | |

| TYPE OF COORDINATION | |
|---|---|
| NONE | |
| TBC | X |
| TRAFFIC RESPONSIVE | |
| ADAPTIVE | |
| *LOCATION OF MASTER CONTROLLER NO: | S- |
| SIGNAL SYSTEM NO: | SS- 0018 |

| TYPE OF LIGHTING | |
|---|---|
| BY OTHER AGENCY | |
| IN TRAFFIC CABINET | X |
| IN SEPARATE DOT LIGHTING CABINET | |

| TYPE OF PRE-EMPT | |
|---|---|
| NONE | X |
| RAILROAD | |
| EMERGENCY VEHICLE | |
| GTT | |
| TOMAR | |
| HARDWIRE | |
| OTHER | |
| LIFT BRIDGE | |
| QUEUE DETECTION | |

STH 181 (N. 76TH STREET) & W. VILLARD AVENUE
CITY OF MILWAUKEE
MILWAUKEE COUNTY

SIGNAL NO: S40-1142 CABINET TYPE: TS1
CONTROLLER TYPE: EPAC
DATE: 4/16 PAGE NO. 3 OF 3

LEGEND

- CONTROL CABINET
- NONMETALLIC CONDUIT 2", UNLESS OTHERWISE NOTED
- LOOP DETECTOR CONDUIT 1" NONMETALLIC
- SIGNAL HEAD, TRAFFIC SIGNAL STANDARD, PEDESTAL BASE
- (XX) SIGNAL HEAD, TRAFFIC SIGNAL POLE, TRANSFORMER BASE
- PEDESTRIAN HEAD WITH PUSH BUTTON
- PUSH BUTTON
- LUMINAIRE UNDER PERMIT TO LOCAL MUNICIPALITY
- LUMINAIRE, TRAFFIC POLE, TRANSFORMER BASE
- LOOP DETECTOR IN 1" NONMETALLIC CONDUIT
- LANE DESIGNATION FOR INFO ONLY
- PULL BOX, 24" X 36"
- PULL BOX, 24" X 42"
- XX SIGNAL HEAD NUMBER
- WALK/DON'T WALK INDICATOR 16" (COUNTDOWN TIMER)
- R RED CIRCULAR INDICATOR
- Y YELLOW CIRCULAR INDICATOR
- G GREEN CIRCULAR INDICATOR
- Y YELLOW ARROW
- G GREEN ARROW
- CIRCULAR INDICATOR WITH TUNNEL VISOR

NOTE: ALL LENSES ARE 12-INCH
GRAYSHADE REPRESENTS EXISTING

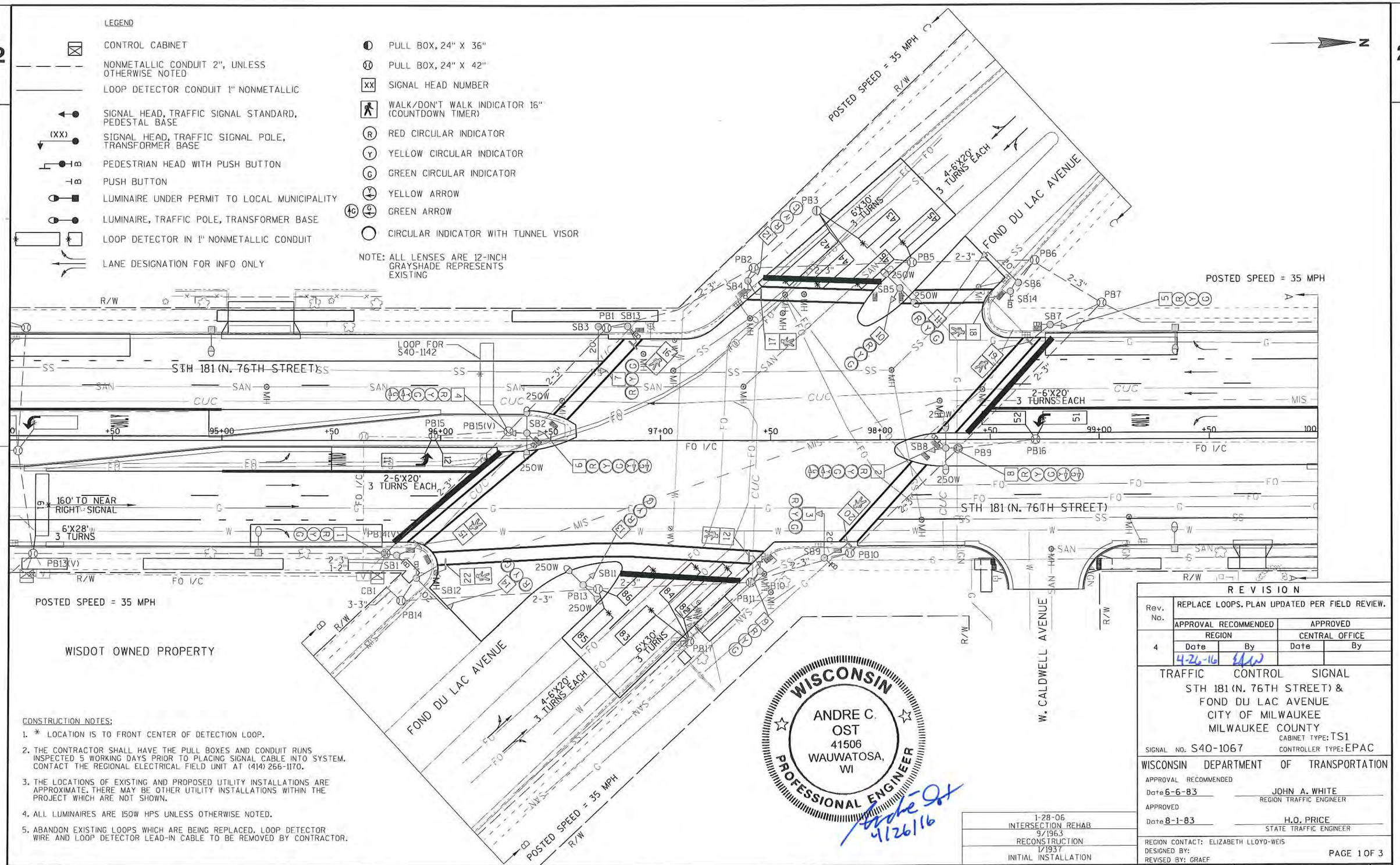


CONSTRUCTION NOTES:

1. * LOCATION IS TO FRONT CENTER OF DETECTION LOOP.
2. THE CONTRACTOR SHALL HAVE THE PULL BOXES AND CONDUIT RUNS INSPECTED 5 WORKING DAYS PRIOR TO PLACING SIGNAL CABLE INTO SYSTEM. CONTACT THE REGIONAL ELECTRICAL FIELD UNIT AT (414) 266-1170.
3. THE LOCATIONS OF EXISTING AND PROPOSED UTILITY INSTALLATIONS ARE APPROXIMATE. THERE MAY BE OTHER UTILITY INSTALLATIONS WITHIN THE PROJECT WHICH ARE NOT SHOWN.
4. ALL LUMINAIRES ARE 150W HPS UNLESS OTHERWISE NOTED.
5. ABANDON EXISTING LOOPS WHICH ARE BEING REPLACED. LOOP DETECTOR WIRE AND LOOP DETECTOR LEAD-IN CABLE TO BE REMOVED BY CONTRACTOR.

WISCONSIN ANDRE C. OST 41506 WAUWATOSA, WI PROFESSIONAL ENGINEER

Andre Ost 4/26/16

1-28-06 INTERSECTION REHAB
9/1963 RECONSTRUCTION
1/1937 INITIAL INSTALLATION

REVISION

| Rev. No. | REPLACE LOOPS. PLAN UPDATED PER FIELD REVIEW. | | | |
|---|---|---|---|---|
| | APPROVAL RECOMMENDED | | APPROVED | |
| | REGION | | CENTRAL OFFICE | |
| 4 | Date | By | Date | By |
| | 4-26-16 | EHW | | |

TRAFFIC CONTROL SIGNAL
STH 181 (N. 76TH STREET) &
FOND DU LAC AVENUE
CITY OF MILWAUKEE
MILWAUKEE COUNTY

SIGNAL NO. S40-1067 CABINET TYPE: TS1 CONTROLLER TYPE: EPAC

WISCONSIN DEPARTMENT OF TRANSPORTATION

APPROVAL RECOMMENDED
Date 6-6-83 JOHN A. WHITE, REGION TRAFFIC ENGINEER

APPROVED
Date 8-1-83 H.O. PRICE, STATE TRAFFIC ENGINEER

REGION CONTACT: ELIZABETH LLOYD-WEIS
DESIGNED BY:
REVISED BY: GRAEF

PAGE 1 OF 3

| PROJECT NO: 2140-13-70 | HWY: STH 181 | COUNTY: MILWAUKEE | TRAFFIC SIGNAL PLAN | SHEET E |
|---|---|---|---|---|

FILE NAME : L:\Jobs2010\20100384\CAD\WisDOT_Trans\dgn\00\02_Fond_du_Lac\024021_sp.dgn PLOT DATE : 4/25/2016 PLOT BY : GRAEF PLOT NAME : PLOT SCALE : 40.0000 sf / in. WISDOT/CADDS SHEET 42



PSV 4-26-16

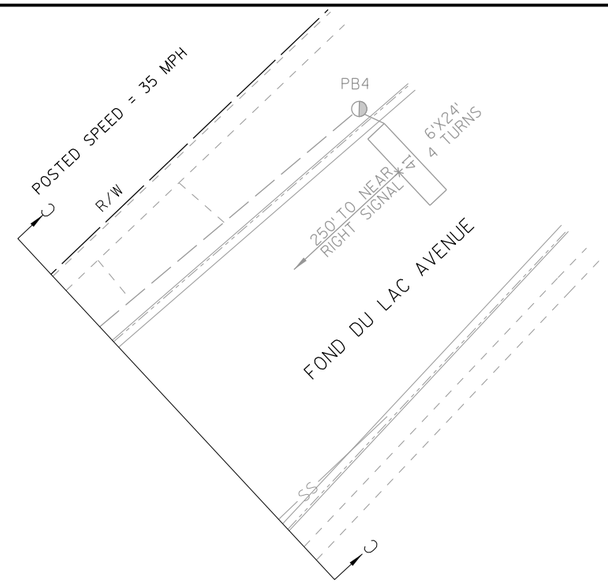


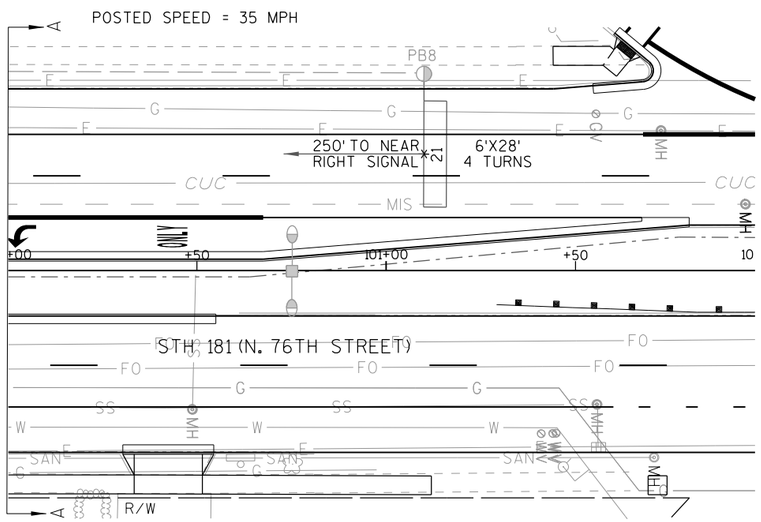


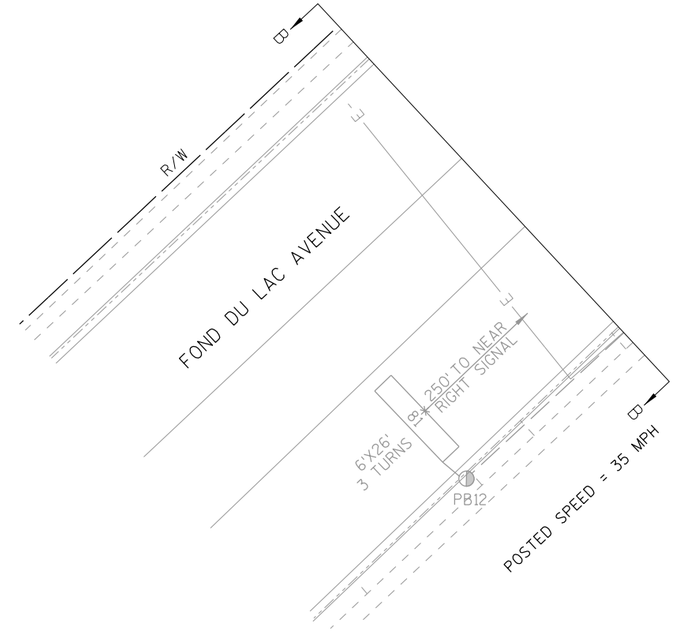


TRAFFIC CONTROL SIGNAL
STH 181 (N. 76TH STREET) &
FOND DU LAC AVENUE
CITY OF MILWAUKEE
MILWAUKEE COUNTY

SIGNAL NO. S40-1067

REGION CONTACT: ELIZABETH LLOYD-WEIS
DESIGNED BY:
REVISED BY: GRAEF

PAGE 2 OF 3

| PROJECT NO: 2140-13-70 | HWY: STH 181 | COUNTY: MILWAUKEE | TRAFFIC SIGNAL PLAN | SHEET 139 | E |
|---|---|---|---|---|---|

| | HEAD NUMBERS | FLASH |
|---|---|---|
| Ø1 | 2,4 | -- |
| Ø2 | 5,6,7,8 | R |
| Ø3 | | |
| Ø4 | 12,13,14 | R |
| Ø5 | 6,8 | -- |
| Ø6 | 1,2,3,4 | R |
| Ø7 | | |
| Ø8 | 9,10,11 | R |
| Ø2P | 17,18 | -- |
| Ø4P | 15,16 | -- |
| Ø6P | 21,22 | -- |
| Ø8P | 19,20 | -- |
| OLA | -- | -- |
| OLB | -- | -- |
| OLC | -- | -- |
| OLD | -- | -- |

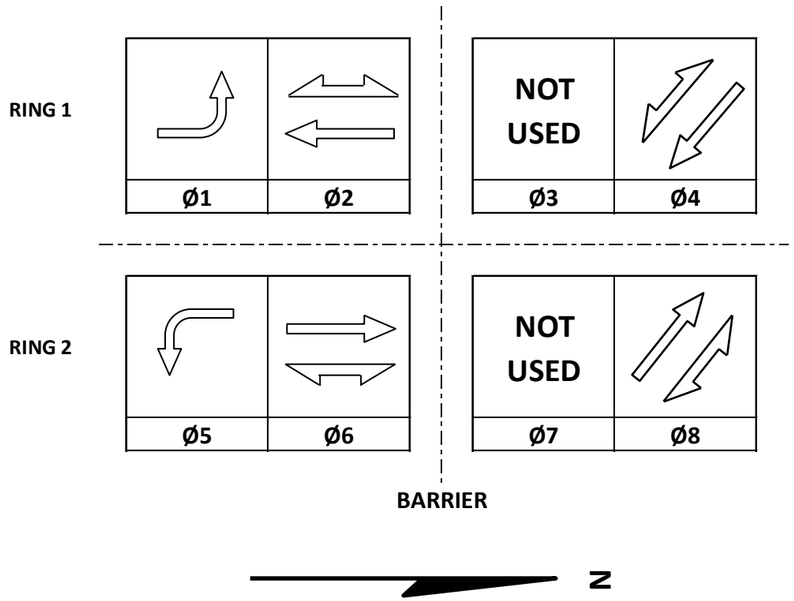


## DETECTOR LOGIC

| DETECTOR NUMBER | AMPLIFIER CHANNEL | DETECTOR OPERATION | | | PHASE CALLED | PHASE EXTENDED | DETECTOR DISCONNECT PHASE | CALLING DELAY | EXTENSION STRETCH | SIZE | NUMBER OF TURNS |
|---|---|---|---|---|---|---|---|---|---|---|---|
| | | CALLS AND EXTENDS | CALLS ONLY | EXTENDS ONLY | | | | | | | |
| 11 | 1 | X | | | 1 | 1 | | | | 6'x20' | 3 |
| 12 | 1 | X | | | 1 | 1 | | | | 6'x20' | 3 |
| 21 | 2 | X | | | 2 | 2 | | | | 6'x28' | 4 |
| 41 | 3 | | | X | | 4 | | | X | 6'x24' | 4 |
| 42 | 4 | X | | | 4 | 4 | | X | | 6'x30' | 3 |
| 43 | 5 | X | | | 4 | 4 | | X | | 6'x20' | 3 |
| 44 | 5 | X | | | 4 | 4 | | X | | 6'x20' | 3 |
| 45 | 6 | X | | | 4 | 4 | | | | 6'x20' | 3 |
| 46 | 6 | X | | | 4 | 4 | | | | 6'x20' | 3 |
| 51 | 7 | X | | | 5 | 5 | | | | 6'x20' | 3 |
| 52 | 7 | X | | | 5 | 5 | | | | 6'x20' | 3 |
| 61 | 8 | X | | | 6 | 6 | | | | 6'x28' | 3 |
| 81 | 9 | | | X | | 8 | | | X | 6'x26' | 3 |
| 82 | 10 | X | | | 8 | 8 | | X | | 6'x30' | 3 |
| 83 | 11 | X | | | 8 | 8 | | X | | 6'x20' | 3 |
| 84 | 11 | X | | | 8 | 8 | | X | | 6'x20' | 3 |
| 85 | 12 | X | | | 8 | 8 | | | | 6'x20' | 3 |
| 86 | 12 | X | | | 8 | 8 | | | | 6'x20' | 3 |

## CONTROLLER LOGIC

| PHASE NUMBER | PHASE LOCKING | DUAL ENTRY W / Ø | PHASE RECALL | PHASE ACTIVE |
|---|---|---|---|---|
| 1 | | 6 | | X |
| 2 | X | 6 | MIN. | X |
| 3 | | | | |
| 4 | | 8 | | X |
| 5 | | 2 | | X |
| 6 | X | 2 | MIN. | X |
| 7 | | | | |
| 8 | | 4 | | X |

| TYPE OF INTERCONNECT/COMMUNICATION | |
|---|---|
| NONE | |
| CLOSED LOOP | |
| TWISTED PAIR | |
| FIBER OPTIC* | |
| FIBER OPTIC (ETHERNET) | X |
| RADIO | |
| CELL MODEM | |

| TYPE OF COORDINATION | |
|---|---|
| NONE | |
| TBC | X |
| TRAFFIC RESPONSIVE | |
| ADAPTIVE | |
| *LOCATION OF MASTER CONTROLLER NO: | S- |
| SIGNAL SYSTEM NO: | SS- 0018 |

| TYPE OF LIGHTING | |
|---|---|
| BY OTHER AGENCY | |
| IN TRAFFIC CABINET | X |
| IN SEPARATE DOT LIGHTING CABINET | |

| TYPE OF PRE-EMPT | |
|---|---|
| NONE | X |
| RAILROAD | |
| EMERGENCY VEHICLE | |
| GTT | |
| TOMAR | |
| HARDWIRE | |
| OTHER | |
| LIFT BRIDGE | |
| QUEUE DETECTION | |

STH 181 (N. 76TH STREET) & FOND DU LAC AVENUE
CITY OF MILWAUKEE
MILWAUKEE COUNTY

SIGNAL NO: S40-1167 CABINET TYPE: TS1
CONTROLLER TYPE: EPAC
DATE: 4/16 PAGE NO. 3 OF 3

2

LEGEND

- WORK AREA
- SIGNAL HEAD, OVERHEAD MOUNT
- CLASS 4 WOOD POLE
- 4X4 WOOD POST OR SKID
- CABLE - OVERHEAD
- PEDESTRIAN HEAD
- SIGNAL HEAD NUMBER
- (R) RED CIRCULAR INDICATOR
- (Y) YELLOW CIRCULAR INDICATOR
- (G) GREEN CIRCULAR INDICATOR
- (R) RED ARROW
- (Y) YELLOW ARROW
- (G) GREEN ARROW
- WALK/DON'T WALK INDICATOR 16" (COUNTDOWN TIMER)
- B PUSH BUTTON
- S STOP SIGN
- TRAFFIC SIGNAL HEAD TO BE COVERED AND DE-ENERGIZED

NOTE: ALL LENSES ARE 12-INCH

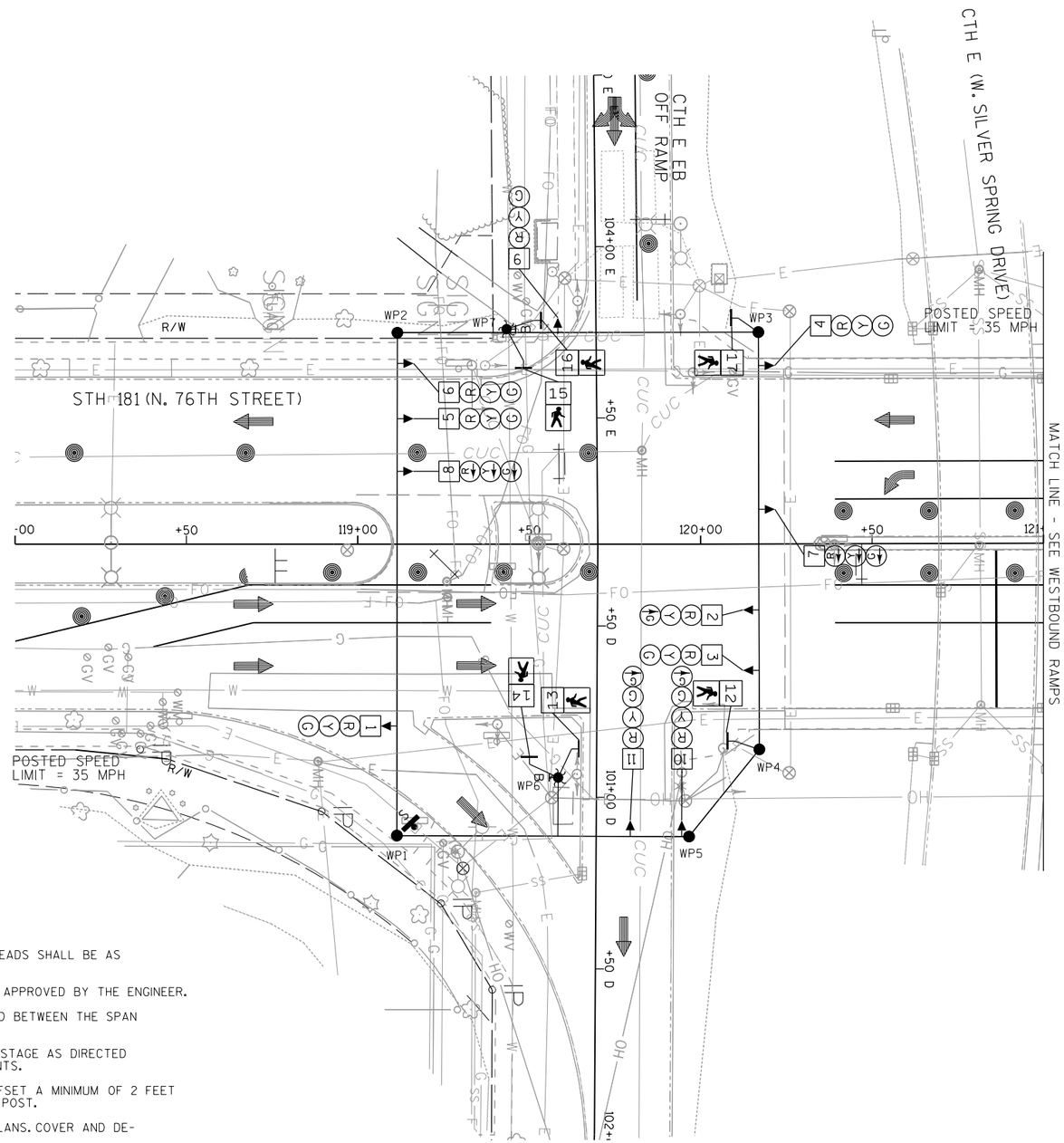


SUMMARY OF TEMPORARY SIGNAL QUANTITIES
INTERSECTION OF STH 181 & CTH E EB RAMPS

| QUANTITY | UNIT | DESCRIPTION |
|---|---|---|
| 2 | EACH | 4X4 WOOD POST OR SKID |
| 5 | EACH | CLASS 4 WOOD POLE |
| 492 | FEET | SPAN WIRE |
| 2 | EACH | PUSH BUTTONS |

CONSTRUCTION NOTES:

1. FINAL LOCATION OF SIGNAL POLES, SIGNAL CABINET AND HEADS SHALL BE AS DIRECTED BY THE ENGINEER.
2. GUYING OF POLES IS REQUIRED AND LOCATIONS SHALL BE APPROVED BY THE ENGINEER.
3. ALL NEAR RIGHT TRAFFIC SIGNAL HEADS SHALL BE PLACED BETWEEN THE SPAN WIRE AND TETHER WIRE.
4. ADJUST TEMPORARY SIGNALS WITHIN EACH CONSTRUCTION STAGE AS DIRECTED BY THE ENGINEER TO MAINTAIN MUTCD SIGNAL REQUIREMENTS.
5. POLES AND POSTS INSTALLED BEHIND CURB SHALL BE OFFSET A MINIMUM OF 2 FEET FROM THE FACE OF CURB TO THE SIDE OF THE POLE OR POST.
6. MAINTAINING CROSSWALK ACCESS AS SHOWN IN STAGING PLANS. COVER AND DE-ENERGIZE PEDESTRIAN HEADS WHEN NOT IN USE.
7. TEMPORARY LIGHTING TO BE PROVIDED BY THE CITY OF MILWAUKEE.

TRAFFIC CONTROL SIGNAL

STH 181 (N. 76TH STREET) &
CTH E (W. SILVER SPRING DRIVE)
EASTBOUND RAMPS
CITY OF MILWAUKEE
MILWAUKEE COUNTY

SIGNAL NO. S40-1126

REGION CONTACT: ELIZABETH LLOYD WEIS
DESIGNED BY: GRAEF
REVISED BY:

PAGE 1 OF 5

| PROJECT NO: 2140-13-70 | HWY: STH 181 | COUNTY: MILWAUKEE | TEMPORARY TRAFFIC SIGNAL PLAN - STAGE 1 | SHEET 141 | E |
|---|---|---|---|---|---|

FILE NAME : L:\Jobs2010\20100384\CAD\WisDOT_Trans\dgn\00\03_Silver Spring\EB_024001_sp.dgn PLOT DATE : 4/29/2016 PLOT BY : GRAEF PLOT NAME : PLOT SCALE : 40.0000 sf / in.

WISDOT/CADDS SHEET 42

2

LEGEND

- WORK AREA
- SIGNAL HEAD, OVERHEAD MOUNT
- CLASS 4 WOOD POLE
- 4X4 WOOD POST OR SKID
- CABLE - OVERHEAD
- PEDESTRIAN HEAD
- SIGNAL HEAD NUMBER
- (R) RED CIRCULAR INDICATOR
- (Y) YELLOW CIRCULAR INDICATOR
- (G) GREEN CIRCULAR INDICATOR
- (R) RED ARROW
- (Y) YELLOW ARROW
- (G) GREEN ARROW
- WALK/DON'T WALK INDICATOR 16" (COUNTDOWN TIMER)
- PUSH BUTTON
- S STOP SIGN
- TRAFFIC SIGNAL HEAD TO BE COVERED AND DE-ENERGIZED

NOTE: ALL LENSES ARE 12-INCH

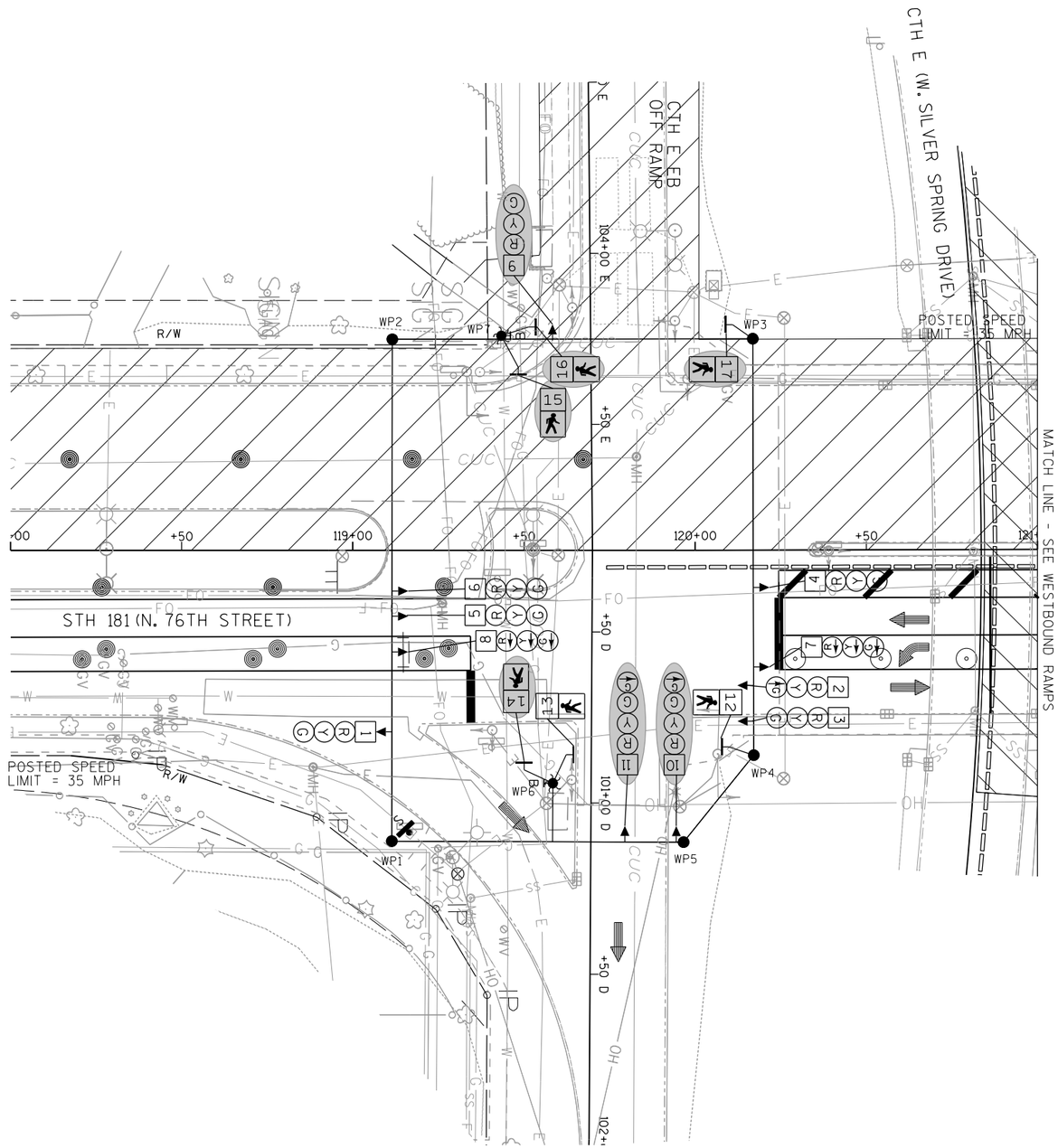


TRAFFIC CONTROL SIGNAL

STH 181 (N. 76TH STREET) &
CTH E (W. SILVER SPRING DRIVE)
EASTBOUND RAMPS
CITY OF MILWAUKEE
MILWAUKEE COUNTY

SIGNAL NO. S40-1126

REGION CONTACT: ELIZABETH LLOYD WEIS
DESIGNED BY: GRAEF
REVISED BY:

PAGE 2 OF 5

| PROJECT NO: 2140-13-70 | HWY: STH 181 | COUNTY: MILWAUKEE | TEMPORARY TRAFFIC SIGNAL PLAN - STAGE 2 | SHEET 142 | E |
|---|---|---|---|---|---|

2

LEGEND

- WORK AREA
- SIGNAL HEAD, OVERHEAD MOUNT
- CLASS 4 WOOD POLE
- 4X4 WOOD POST OR SKID
- CABLE - OVERHEAD
- PEDESTRIAN HEAD
- SIGNAL HEAD NUMBER
- (R) RED CIRCULAR INDICATOR
- (Y) YELLOW CIRCULAR INDICATOR
- (G) GREEN CIRCULAR INDICATOR
- (R) RED ARROW
- (Y) YELLOW ARROW
- (G) GREEN ARROW
- WALK/DON'T WALK INDICATOR 16" (COUNTDOWN TIMER)
- PUSH BUTTON
- STOP SIGN
- TRAFFIC SIGNAL HEAD TO BE COVERED AND DE-ENERGIZED

NOTE: ALL LENSES ARE 12-INCH

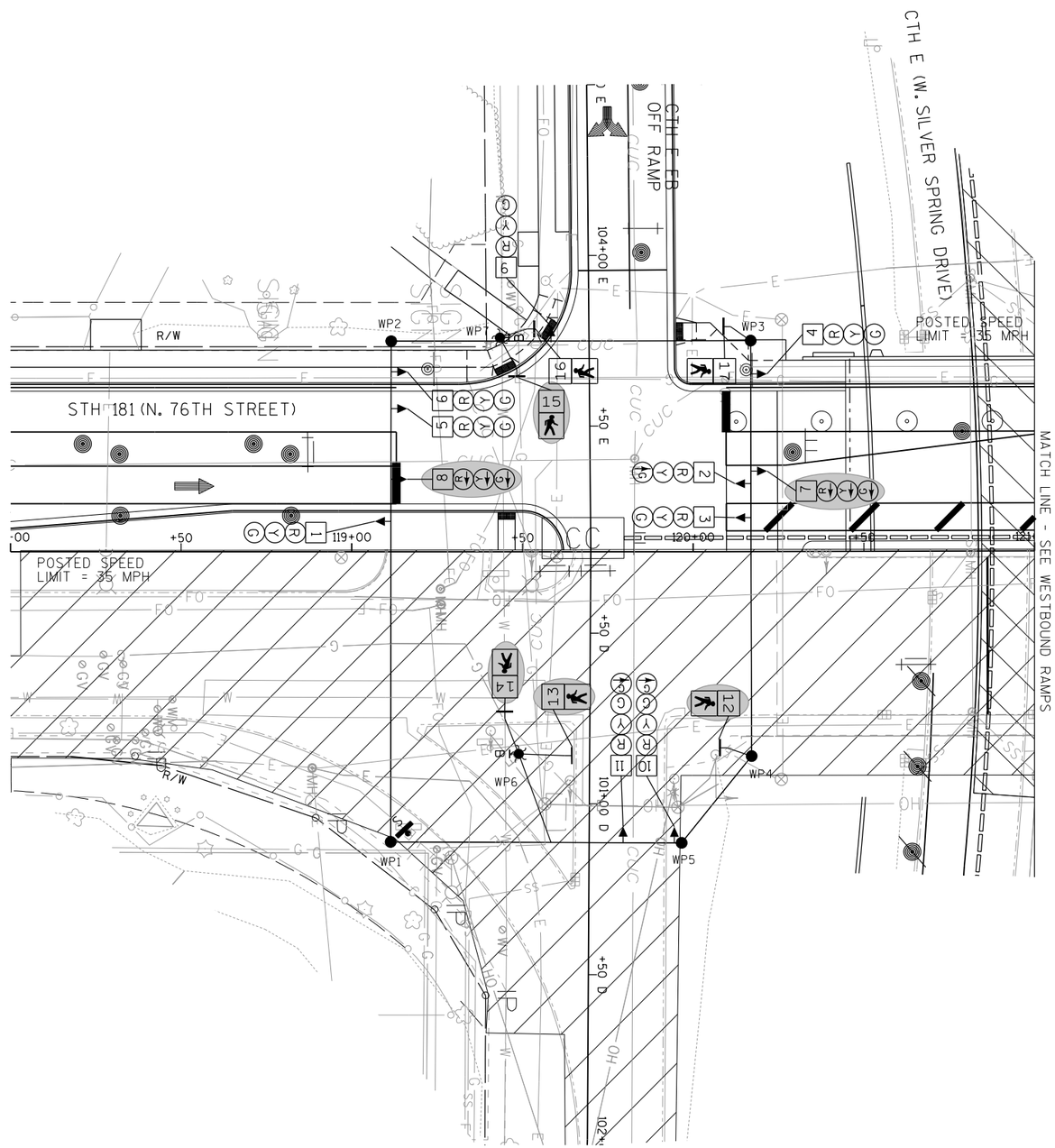


TRAFFIC CONTROL SIGNAL

STH 181 (N. 76TH STREET) &
CTH E (W. SILVER SPRING DRIVE)
EASTBOUND RAMPS
CITY OF MILWAUKEE
MILWAUKEE COUNTY

SIGNAL NO. S40-1126

REGION CONTACT: ELIZABETH LLOYD WEIS
DESIGNED BY: GRAEF
REVISED BY:

PAGE 3 OF 5

| PROJECT NO: 2140-13-70 | HWY: STH 181 | COUNTY: MILWAUKEE | TEMPORARY TRAFFIC SIGNAL PLAN - STAGE 3 | SHEET 143 | E |
|---|---|---|---|---|---|

2

LEGEND

- WORK AREA
- SIGNAL HEAD, OVERHEAD MOUNT
- CLASS 4 WOOD POLE
- 4X4 WOOD POST OR SKID
- CABLE - OVERHEAD
- PEDESTRIAN HEAD
- SIGNAL HEAD NUMBER
- RED CIRCULAR INDICATOR
- YELLOW CIRCULAR INDICATOR
- GREEN CIRCULAR INDICATOR
- RED ARROW
- YELLOW ARROW
- GREEN ARROW
- WALK/DON'T WALK INDICATOR 16" (COUNTDOWN TIMER)
- PUSH BUTTON
- STOP SIGN
- TRAFFIC SIGNAL HEAD TO BE COVERED AND DE-ENERGIZED

NOTE: ALL LENSES ARE 12-INCH

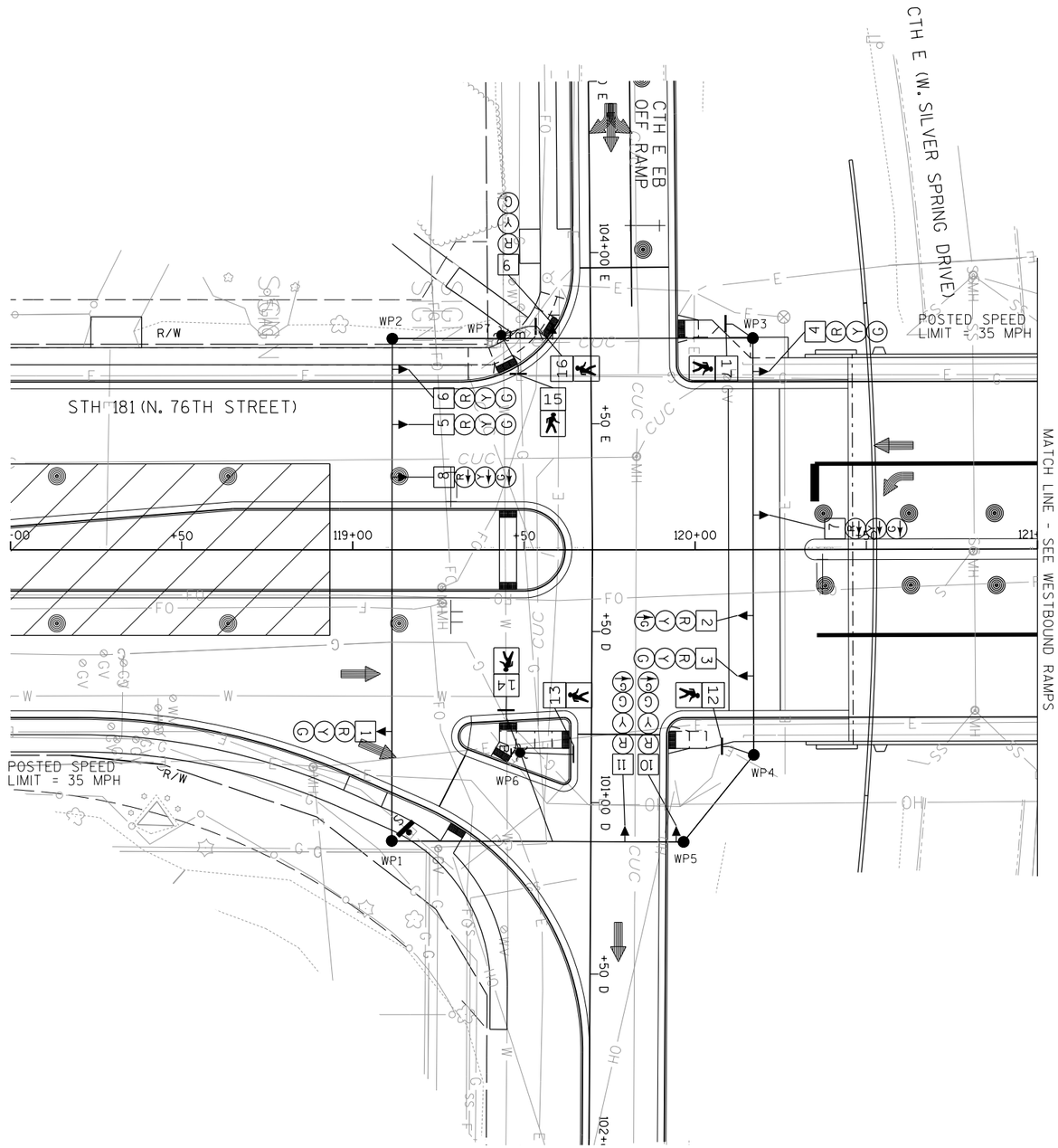


TRAFFIC CONTROL SIGNAL

STH 181 (N. 76TH STREET) &
CTH E (W. SILVER SPRING DRIVE)
EASTBOUND RAMPS
CITY OF MILWAUKEE
MILWAUKEE COUNTY

SIGNAL NO. S40-1126

REGION CONTACT: ELIZABETH LLOYD WEIS
DESIGNED BY: GRAEF
REVISED BY:

PAGE 4 OF 5

| PROJECT NO: 2140-13-70 | HWY: STH 181 | COUNTY: MILWAUKEE | TEMPORARY TRAFFIC SIGNAL PLAN - STAGE 4 | SHEET 144 | E |
|---|---|---|---|---|---|

| | HEAD NUMBERS | FLASH |
|---|---|---|
| Ø1 | | |
| Ø2 | 4,5,6 | R |
| Ø3 | | |
| Ø4 | 9,10,11 | R |
| Ø5 | 7,8 | R ← |
| Ø6 | 1,2,3 | R |
| Ø7 | | |
| Ø8 | | |
| Ø2P | 16,17 | |
| Ø4P | 14,15 | |
| Ø6P | 12,13 | |
| Ø8P | | |
| OLA | | |
| OLB | | |
| OLC | | |
| OLD | | |

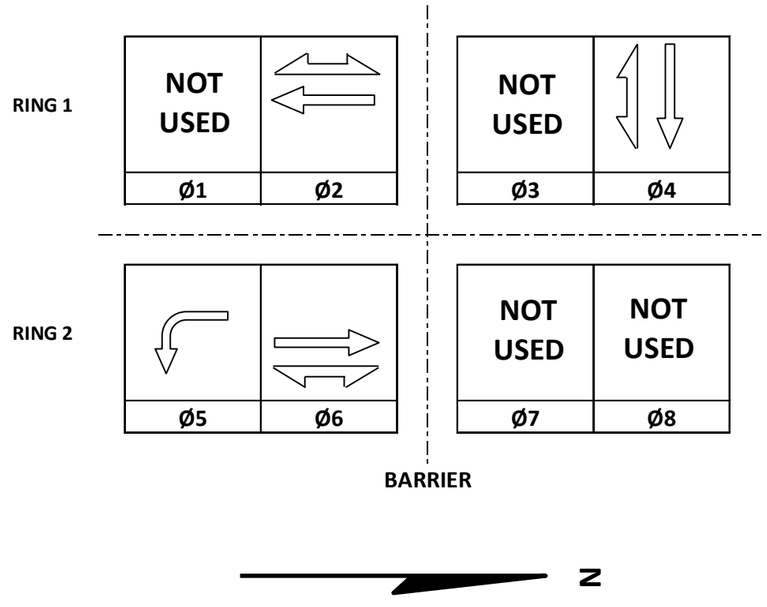


## CONTROLLER LOGIC

| PHASE NUMBER | PHASE LOCKING | DUAL ENTRY W / Ø | PHASE RECALL | PHASE ACTIVE |
|---|---|---|---|---|
| 1 | | | | |
| 2 | X | 6 | MAX | X |
| 3 | | | | |
| 4 | | | MAX | X |
| 5 | | 2 | MAX | X |
| 6 | X | 2 | MAX | X |
| 7 | | | | |
| 8 | | | | |

| TYPE OF INTERCONNECT/COMMUNICATION | |
|---|---|
| NONE | X |
| CLOSED LOOP | |
| TWISTED PAIR | |
| FIBER OPTIC* | |
| FIBER OPTIC (ETHERNET) | |
| RADIO | |
| CELL MODEM | |

| TYPE OF COORDINATION | |
|---|---|
| NONE | |
| TBC | X |
| TRAFFIC RESPONSIVE | |
| ADAPTIVE | |
| *LOCATION OF MASTER CONTROLLER NO: S- | |
| SIGNAL SYSTEM NO: SS- | |

| TYPE OF LIGHTING | |
|---|---|
| BY OTHER AGENCY | X |
| IN TRAFFIC CABINET | |
| IN SEPARATE DOT LIGHTING CABINET | |

| TYPE OF PRE-EMPT | |
|---|---|
| NONE | X |
| RAILROAD | |
| EMERGENCY VEHICLE | |
| GTT | |
| TOMAR | |
| HARDWIRE | |
| OTHER | |
| LIFT BRIDGE | |
| QUEUE DETECTION | |

## GENERAL NOTES:

1. ANY ACTUATED PHASE FOR WHICH THERE IS NO CALL SHALL BE SKIPPED.
2. OMIT PHASE 4, PED PHASE 2 & PED PHASE 4 DURING STAGE 2.
3. OMIT PHASE 5, PED PHASE 4 & PED PHASE 6 DURING STAGE 3.

STH 181 & CTH E EASTBOUND RAMPS
CITY OF MILWAUKEE
MILWAUKEE COUNTY

SIGNAL NO: S40-1126 CABINET TYPE: TEMP
CONTROLLER TYPE: TEMP
DATE: 4/16 PAGE NO. 5 OF 5

2

LEGEND

- WORK AREA
- SIGNAL HEAD, OVERHEAD MOUNT
- CLASS 4 WOOD POLE
- 4X4 WOOD POST OR SKID
- CABLE - OVERHEAD
- PEDESTRIAN HEAD
- SIGNAL HEAD NUMBER
- (R) RED CIRCULAR INDICATOR
- (Y) YELLOW CIRCULAR INDICATOR
- (G) GREEN CIRCULAR INDICATOR
- (R) RED ARROW
- (Y) YELLOW ARROW
- (G) GREEN ARROW
- WALK/DON'T WALK INDICATOR 16" (COUNTDOWN TIMER)
- PUSH BUTTON
- STOP SIGN
- TRAFFIC SIGNAL HEAD TO BE COVERED AND DE-ENERGIZED

NOTE: ALL LENSES ARE 12-INCH

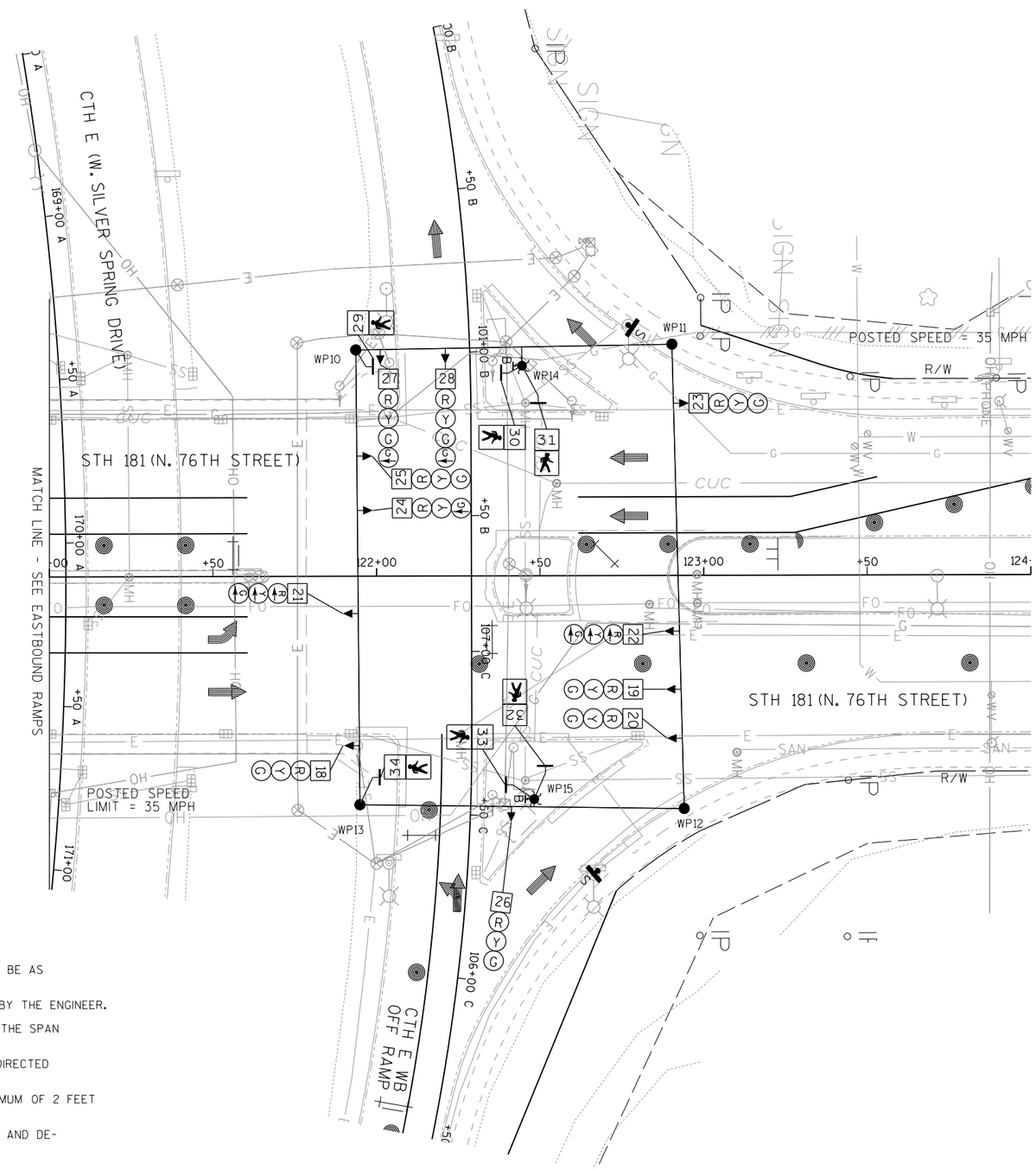


SUMMARY OF TEMPORARY SIGNAL QUANTITIES
INTERSECTION OF STH 181 & CTH E WB RAMPS

| QUANTITY | UNIT | DESCRIPTION |
|---|---|---|
| 2 | EACH | 4X4 WOOD POST OR SKID |
| 4 | EACH | CLASS 4 WOOD POLE |
| 477 | FEET | SPAN WIRE |
| 2 | EACH | PUSH BUTTONS |

CONSTRUCTION NOTES:

1. FINAL LOCATION OF SIGNAL POLES, SIGNAL CABINET AND HEADS SHALL BE AS DIRECTED BY THE ENGINEER.
2. GUYING OF POLES IS REQUIRED AND LOCATIONS SHALL BE APPROVED BY THE ENGINEER.
3. ALL NEAR RIGHT TRAFFIC SIGNAL HEADS SHALL BE PLACED BETWEEN THE SPAN WIRE AND TETHER WIRE.
4. ADJUST TEMPORARY SIGNALS WITHIN EACH CONSTRUCTION STAGE AS DIRECTED BY THE ENGINEER TO MAINTAIN MUTCD SIGNAL REQUIREMENTS.
5. POLES AND POSTS INSTALLED BEHIND CURB SHALL BE OFFSET A MINIMUM OF 2 FEET FROM THE FACE OF CURB TO THE SIDE OF THE POLE OR POST.
6. MAINTAINING CROSSWALK ACCESS AS SHOWN IN STAGING PLANS. COVER AND DE-ENERGIZE PEDESTRIAN HEADS WHEN NOT IN USE.
7. TEMPORARY LIGHTING TO BE PROVIDED BY THE CITY OF MILWAUKEE.

TRAFFIC CONTROL SIGNAL
STH 181 (N. 76TH STREET) &
CTH E (W. SILVER SPRING DRIVE)
WESTBOUND RAMPS
CITY OF MILWAUKEE
MILWAUKEE COUNTY

SIGNAL NO. S40-1126

REGION CONTACT: ELIZABETH LLOYD WEIS
DESIGNED BY: GRAEF
REVISED BY:

PAGE 1 OF 5

| PROJECT NO: 2140-13-70 | HWY: STH 181 | COUNTY: MILWAUKEE | TEMPORARY TRAFFIC SIGNAL PLAN - STAGE 1 | SHEET 146 | E |
|---|---|---|---|---|---|

FILE NAME : L:\Jobs2010\20100384\CAD\WisDOT_Trans\dgn\00\03_Silver Spring\WB_024001_sp.dgn PLOT DATE : 4/29/2016 PLOT BY : GRAEF PLOT NAME : PLOT SCALE : 40.0000 sf / in.

WISDOT/CADDS SHEET 42

2

LEGEND

- WORK AREA
- SIGNAL HEAD, OVERHEAD MOUNT
- CLASS 4 WOOD POLE
- 4X4 WOOD POST OR SKID
- CABLE - OVERHEAD
- PEDESTRIAN HEAD
- SIGNAL HEAD NUMBER
- (R) RED CIRCULAR INDICATOR
- (Y) YELLOW CIRCULAR INDICATOR
- (G) GREEN CIRCULAR INDICATOR
- (R) RED ARROW
- (Y) YELLOW ARROW
- (G) GREEN ARROW
- WALK/DON'T WALK INDICATOR 16" (COUNTDOWN TIMER)
- B PUSH BUTTON
- S STOP SIGN
- TRAFFIC SIGNAL HEAD TO BE COVERED AND DE-ENERGIZED

NOTE: ALL LENSES ARE 12-INCH

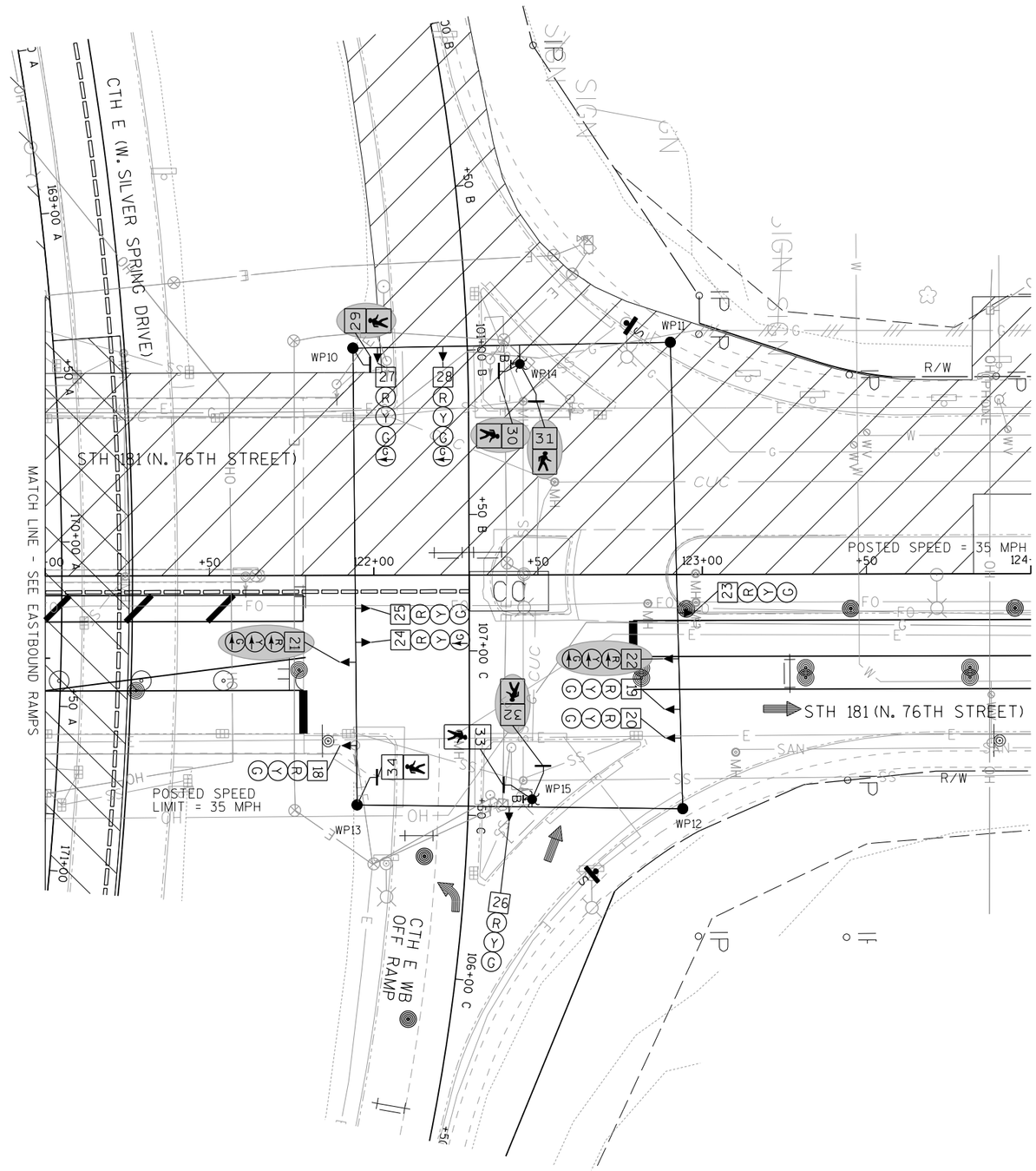


TRAFFIC CONTROL SIGNAL

STH 181 (N. 76TH STREET) &
CTH E (W. SILVER SPRING DRIVE)
WESTBOUND RAMPS
CITY OF MILWAUKEE
MILWAUKEE COUNTY

SIGNAL NO. S40-1126

REGION CONTACT: ELIZABETH LLOYD WEIS
DESIGNED BY: GRAEF
REVISED BY:

PAGE 2 OF 5

| PROJECT NO: 2140-13-70 | HWY: STH 181 | COUNTY: MILWAUKEE | TEMPORARY TRAFFIC SIGNAL PLAN - STAGE 2 | SHEET 147 | E |
|---|---|---|---|---|---|

FILE NAME : L:\Jobs2010\20100384\CAD\WisDOT_Trans\dgn\00\03_Silver Spring\WB_024002_sp.dgn PLOT DATE : 4/29/2016 PLOT BY : GRAEF PLOT NAME : PLOT SCALE : 40.0000 sf / in.

WISDOT/CADDS SHEET 42

LEGEND

- WORK AREA
- SIGNAL HEAD, OVERHEAD MOUNT
- CLASS 4 WOOD POLE
- 4X4 WOOD POST OR SKID
- CABLE - OVERHEAD
- PEDESTRIAN HEAD
- SIGNAL HEAD NUMBER
- (R) RED CIRCULAR INDICATOR
- (Y) YELLOW CIRCULAR INDICATOR
- (G) GREEN CIRCULAR INDICATOR
- (R) RED ARROW
- (Y) YELLOW ARROW
- (G) GREEN ARROW
- WALK/DON'T WALK INDICATOR 16" (COUNTDOWN TIMER)
- B PUSH BUTTON
- S STOP SIGN
- TRAFFIC SIGNAL HEAD TO BE COVERED AND DE-ENERGIZED

NOTE: ALL LENSES ARE 12-INCH

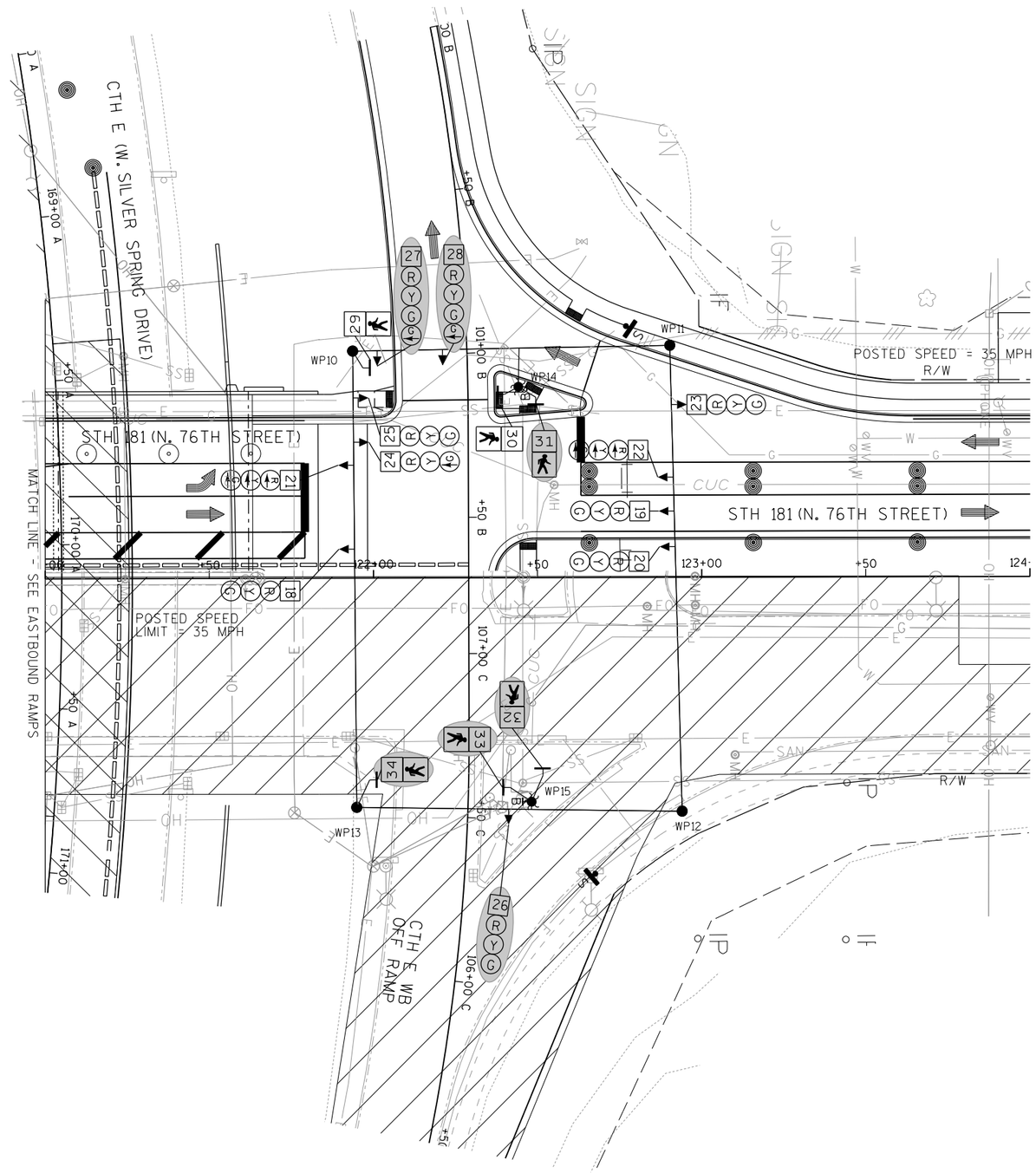


TRAFFIC CONTROL SIGNAL

STH 181 (N. 76TH STREET) &
CTH E (W. SILVER SPRING DRIVE)
WESTBOUND RAMPS
CITY OF MILWAUKEE
MILWAUKEE COUNTY

SIGNAL NO. S40-1126

REGION CONTACT: ELIZABETH LLOYD WEIS
DESIGNED BY: GRAEF
REVISED BY:

PAGE 3 OF 5

| PROJECT NO:2140-13-70 | HWY:STH 181 | COUNTY:MILWAUKEE | TEMPORARY TRAFFIC SIGNAL PLAN - STAGE 3 | SHEET 148 | E |
|---|---|---|---|---|---|

2

LEGEND

- WORK AREA
- SIGNAL HEAD, OVERHEAD MOUNT
- CLASS 4 WOOD POLE
- 4X4 WOOD POST OR SKID
- CABLE - OVERHEAD
- PEDESTRIAN HEAD
- SIGNAL HEAD NUMBER
- RED CIRCULAR INDICATOR
- YELLOW CIRCULAR INDICATOR
- GREEN CIRCULAR INDICATOR
- RED ARROW
- YELLOW ARROW
- GREEN ARROW
- WALK/DON'T WALK INDICATOR 16" (COUNTDOWN TIMER)
- PUSH BUTTON
- STOP SIGN
- TRAFFIC SIGNAL HEAD TO BE COVERED AND DE-ENERGIZED

NOTE: ALL LENSES ARE 12-INCH

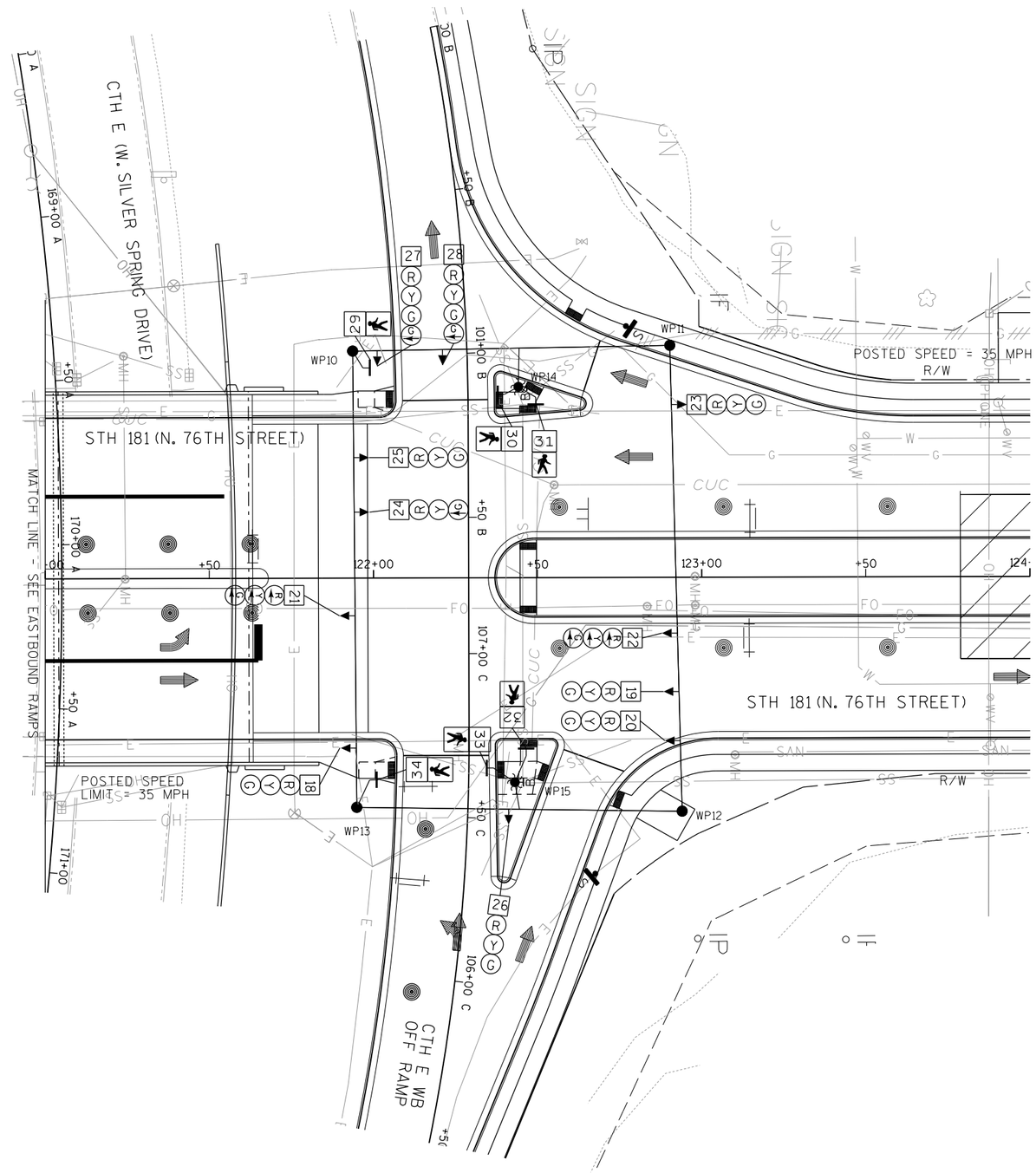


TRAFFIC CONTROL SIGNAL

STH 181 (N. 76TH STREET) &
CTH E (W. SILVER SPRING DRIVE)
WESTBOUND RAMPS
CITY OF MILWAUKEE
MILWAUKEE COUNTY

SIGNAL NO. S40-1126

REGION CONTACT: ELIZABETH LLOYD WEIS
DESIGNED BY: GRAEF
REVISED BY:

PAGE 4 OF 5

| PROJECT NO: 2140-13-70 | HWY: STH 181 | COUNTY: MILWAUKEE | TEMPORARY TRAFFIC SIGNAL PLAN - STAGE 4 | SHEET 149 | E |
|---|---|---|---|---|---|

FILE NAME : L:\Jobs2010\20100384\CAD\WisDOT_Trans\dgn\00\03_Silver Spring\WB_024004_sp.dgn PLOT DATE : 4/29/2016 PLOT BY : GRAEF PLOT NAME : PLOT SCALE : 40.0000 sf / in.

WISDOT/CADDS SHEET 42

| | HEAD NUMBERS | FLASH |
|---|---|---|
| Ø1 | 21,22 | R ← |
| Ø2 | 23,24,25 | R |
| Ø3 | | |
| Ø4 | | |
| Ø5 | | |
| Ø6 | 18,19,20 | R |
| Ø7 | | |
| Ø8 | 26,27,28 | R |
| Ø2P | 29,30 | |
| Ø4P | | |
| Ø6P | 33,34 | |
| Ø8P | 31,32 | |
| OLA | | |
| OLB | | |
| OLC | | |
| OLD | | |

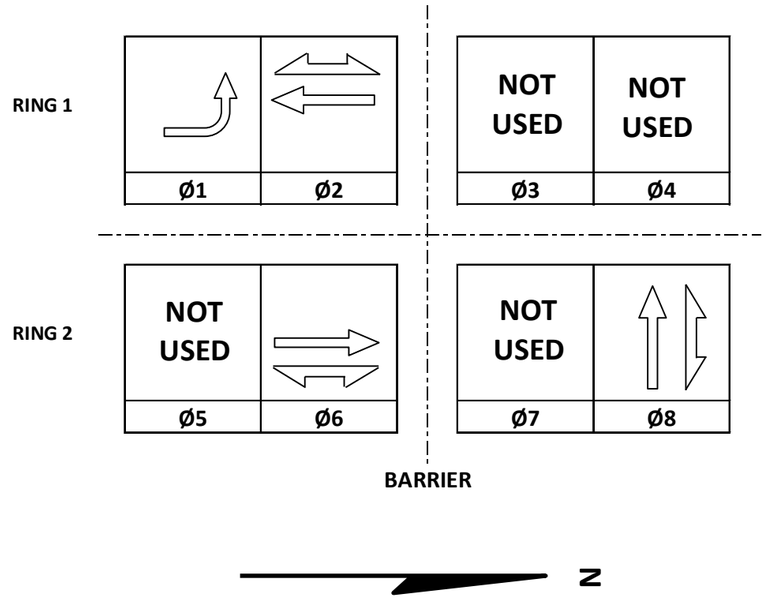


## CONTROLLER LOGIC

| PHASE NUMBER | PHASE LOCKING | DUAL ENTRY W / Ø | PHASE RECALL | PHASE ACTIVE |
|---|---|---|---|---|
| 1 | | 6 | MAX | X |
| 2 | X | 6 | MAX | X |
| 3 | | | | |
| 4 | | | | |
| 5 | | | | |
| 6 | X | 2 | MAX | X |
| 7 | | | | |
| 8 | | | MAX | X |

| TYPE OF INTERCONNECT/COMMUNICATION | |
|---|---|
| NONE | X |
| CLOSED LOOP | |
| TWISTED PAIR | |
| FIBER OPTIC* | |
| FIBER OPTIC (ETHERNET) | |
| RADIO | |
| CELL MODEM | |

| TYPE OF COORDINATION | |
|---|---|
| NONE | |
| TBC | X |
| TRAFFIC RESPONSIVE | |
| ADAPTIVE | |
| *LOCATION OF MASTER CONTROLLER NO: S- | |
| SIGNAL SYSTEM NO: SS- | |

| TYPE OF LIGHTING | |
|---|---|
| BY OTHER AGENCY | X |
| IN TRAFFIC CABINET | |
| IN SEPARATE DOT LIGHTING CABINET | |

| TYPE OF PRE-EMPT | |
|---|---|
| NONE | X |
| RAILROAD | |
| EMERGENCY VEHICLE | |
| GTT | |
| TOMAR | |
| HARDWIRE | |
| OTHER | |
| LIFT BRIDGE | |
| QUEUE DETECTION | |

## GENERAL NOTES:

1. ANY ACTUATED PHASE FOR WHICH THERE IS NO CALL SHALL BE SKIPPED.
2. OMIT PHASE 1, PED PHASE 2 & PED PHASE 8 DURING STAGE 2.
3. OMIT PHASE 8, PED PHASE 6 & PED PHASE 8 DURING STAGE 3.

STH 181 & CTH E WESTBOUND RAMPS
CITY OF MILWAUKEE
MILWAUKEE COUNTY

SIGNAL NO: S40-1126 CABINET TYPE: TEMP
CONTROLLER TYPE: TEMP
DATE: 4/16 PAGE NO. 5 OF 5

LEGEND

- NONMETALLIC CONDUIT 2", UNLESS OTHERWISE NOTED
- LOOP DETECTOR CONDUIT, 1" NONMETALLIC
- LOOP DETECTOR IN 1" NONMETALLIC CONDUIT
- SIGNAL HEAD, TRAFFIC SIGNAL STANDARD, PEDESTAL BASE
- (XX) SIGNAL HEAD, TRAFFIC SIGNAL POLE, TRANSFORMER BASE
- JUNCTION BOX (FRE)
- PULL BOX, 18" X 24"
- PULL BOX, 24" X 36"
- PULL BOX, 24" X 42"
- MUNICIPAL LUMINAIRE
- PEDESTRIAN HEAD WITH PUSH BUTTON

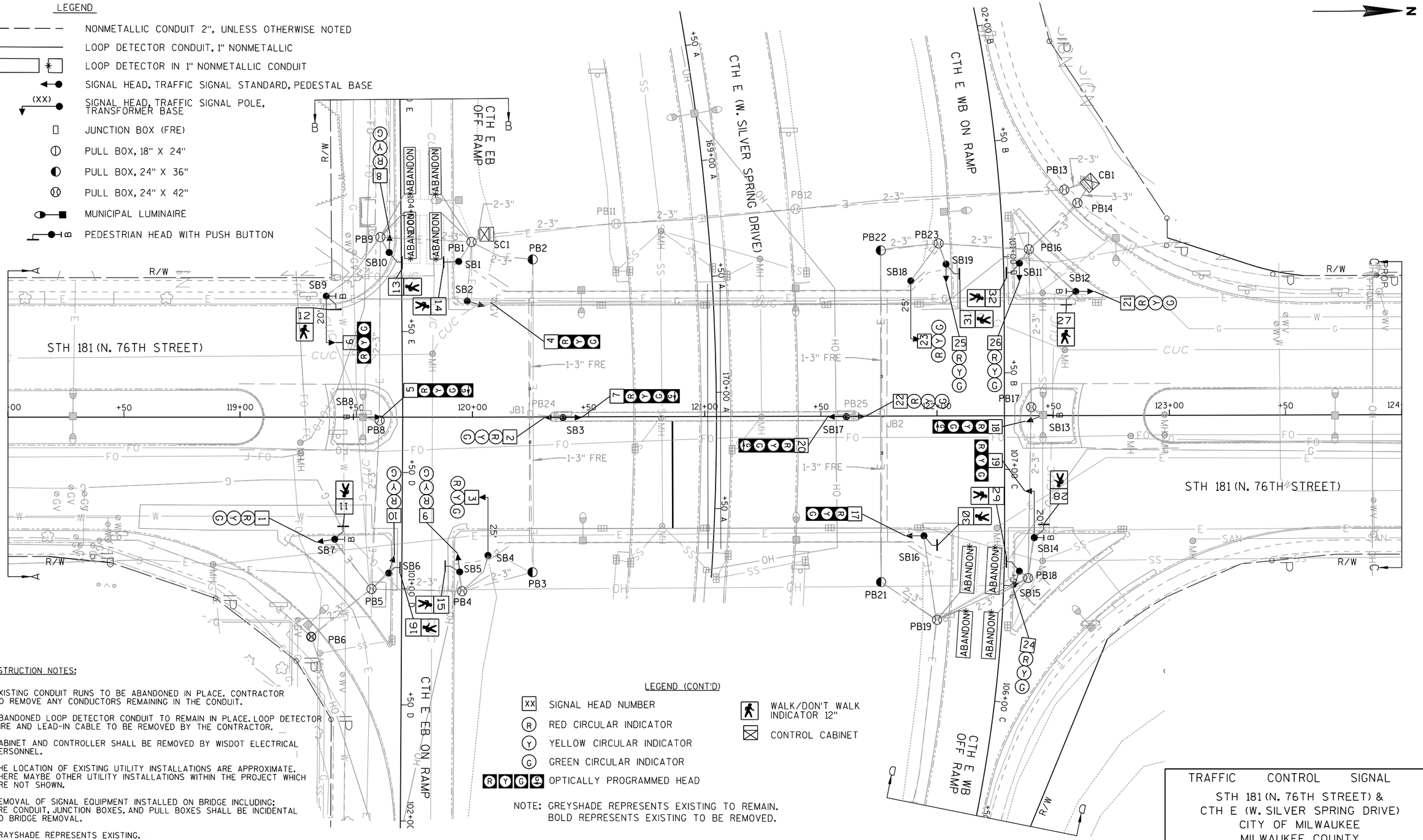


CONSTRUCTION NOTES:

1. EXISTING CONDUIT RUNS TO BE ABANDONED IN PLACE. CONTRACTOR TO REMOVE ANY CONDUCTORS REMAINING IN THE CONDUIT.
2. ABANDONED LOOP DETECTOR CONDUIT TO REMAIN IN PLACE. LOOP DETECTOR WIRE AND LEAD-IN CABLE TO BE REMOVED BY THE CONTRACTOR.
3. CABINET AND CONTROLLER SHALL BE REMOVED BY WISDOT ELECTRICAL PERSONNEL.
4. THE LOCATION OF EXISTING UTILITY INSTALLATIONS ARE APPROXIMATE. THERE MAYBE OTHER UTILITY INSTALLATIONS WITHIN THE PROJECT WHICH ARE NOT SHOWN.
5. REMOVAL OF SIGNAL EQUIPMENT INSTALLED ON BRIDGE INCLUDING: FRE CONDUIT, JUNCTION BOXES, AND PULL BOXES SHALL BE INCIDENTAL TO BRIDGE REMOVAL.
6. GRAYSHADE REPRESENTS EXISTING. BOLD REPRESENTS ITEMS TO BE REMOVED.

LEGEND (CONT'D)

- XX SIGNAL HEAD NUMBER
- R RED CIRCULAR INDICATOR
- Y YELLOW CIRCULAR INDICATOR
- G GREEN CIRCULAR INDICATOR
- R Y G OPTICALLY PROGRAMMED HEAD
- WALK/DON'T WALK INDICATOR 12"
- CONTROL CABINET

NOTE: GREYSHADE REPRESENTS EXISTING TO REMAIN. BOLD REPRESENTS EXISTING TO BE REMOVED.

TRAFFIC CONTROL SIGNAL

STH 181 (N. 76TH STREET) &
CTH E (W. SILVER SPRING DRIVE)
CITY OF MILWAUKEE
MILWAUKEE COUNTY

SIGNAL NO. S40-1126

REGION CONTACT: ELIZABETH LLOYD-WEIS
DESIGNED BY: GRAEF
REVISED BY:

PAGE 1 OF 3

| PROJECT NO: 2140-13-70 | HWY: STH 181 | COUNTY: MILWAUKEE | TRAFFIC SIGNAL REMOVAL PLAN | SHEET 151 | E |
|---|---|---|---|---|---|

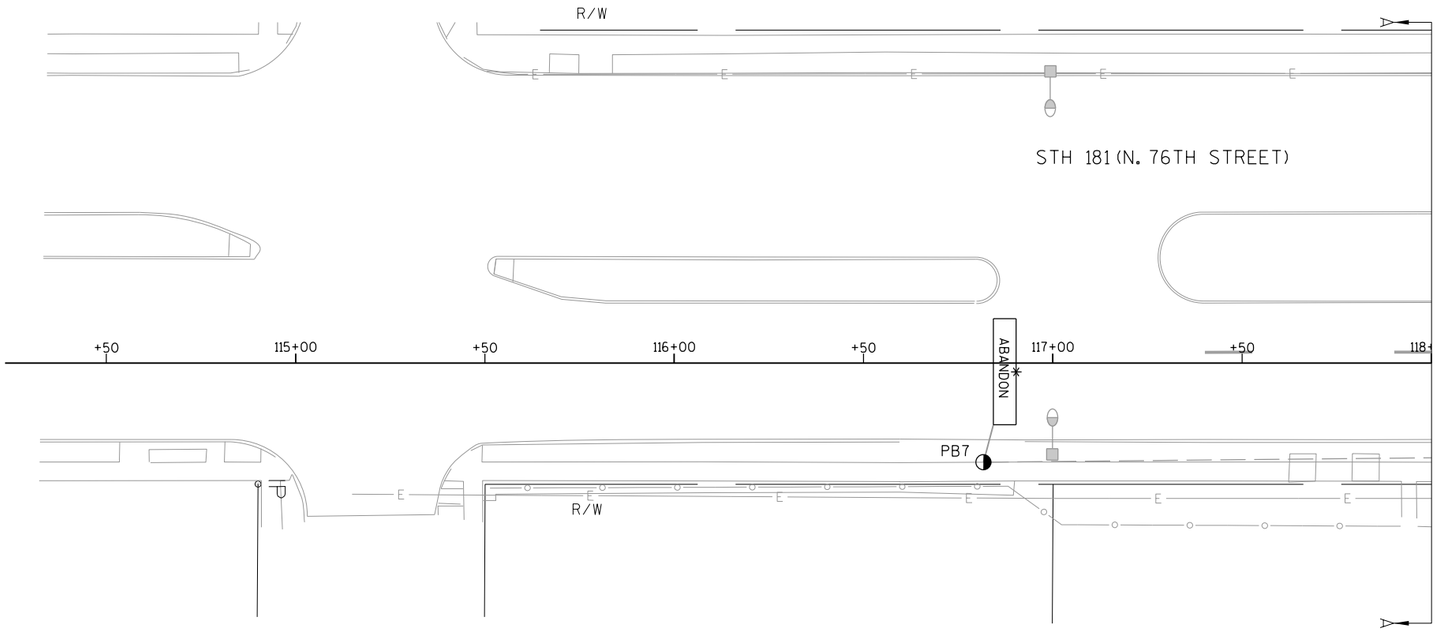


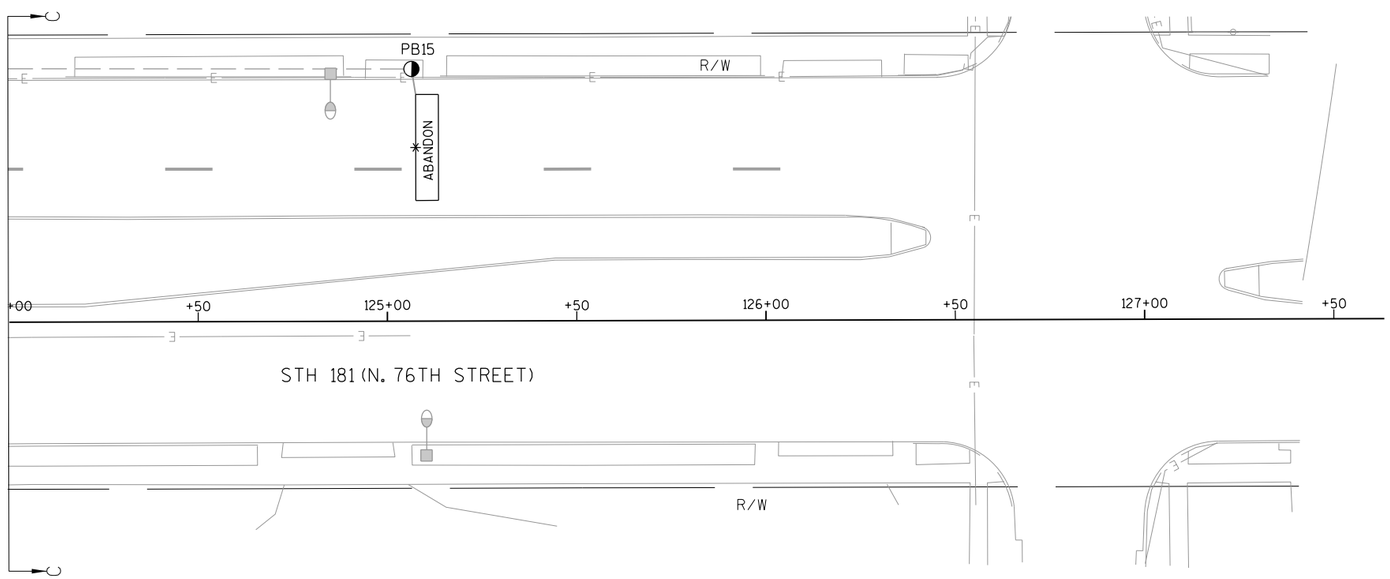


TRAFFIC CONTROL SIGNAL
STH 181 (N. 76TH STREET) &
CTH E (W. SILVER SPRING DRIVE)
CITY OF MILWAUKEE
MILWAUKEE COUNTY

SIGNAL NO. S40-1126

REGION CONTACT: ELIZABETH LLOYD-WEIS
DESIGNED BY: GRAEF
REVISED BY:

PAGE 2 OF 3

| PROJECT NO: 2140-13-70 | HWY: STH 181 | COUNTY: MILWAUKEE | TRAFFIC SIGNAL REMOVAL PLAN | SHEET 152 | E |
|---|---|---|---|---|---|

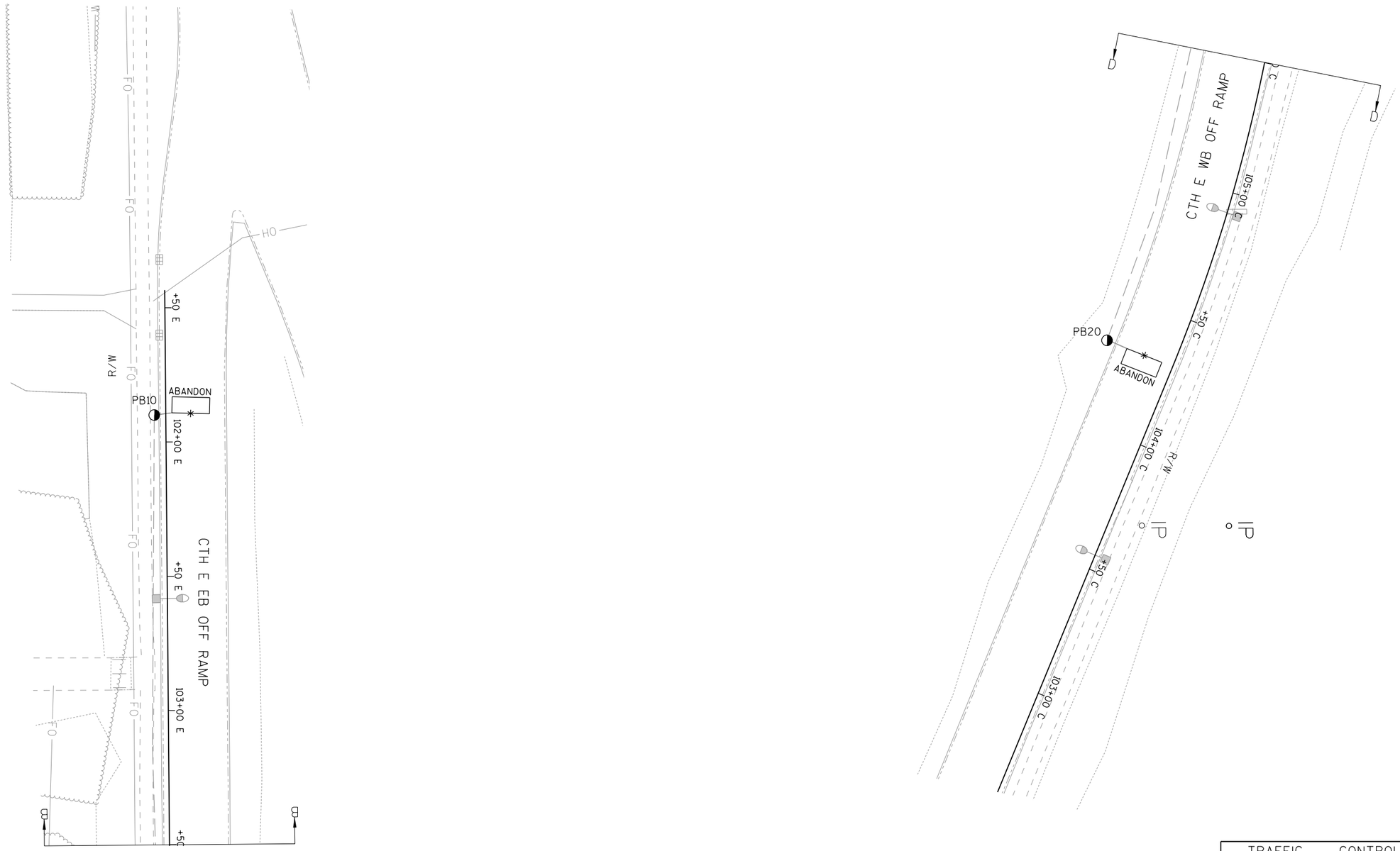


TRAFFIC CONTROL SIGNAL
STH 181 (N. 76TH STREET) &
CTH E (W. SILVER SPRING DRIVE)
CITY OF MILWAUKEE
MILWAUKEE COUNTY

SIGNAL NO. S40-1126

REGION CONTACT: ELIZABETH LLOYD-WEIS
DESIGNED BY: GRAEF
REVISED BY:

PAGE 3 OF 3

| PROJECT NO: 2140-13-70 | HWY: STH 181 | COUNTY: MILWAUKEE | TRAFFIC SIGNAL REMOVAL PLAN | SHEET 153 | E |
|---|---|---|---|---|---|

FILE NAME : L:\Jobs2010\20100384\CAD\WisDOT_Trans\dgn\00\03_Silver Spring\024013_sp.dgn PLOT DATE : 4/25/2016 PLOT BY : GRAEF PLOT NAME : PLOT SCALE : 40.0000 sf / in. WISDOT/CADDS SHEET 42

2

LEGEND

- CONTROL CABINET
- NONMETALLIC CONDUIT 2", UNLESS OTHERWISE NOTED
- LOOP DETECTOR CONDUIT, 1" NONMETALLIC
- SIGNAL HEAD, TRAFFIC SIGNAL STANDARD, PEDESTAL BASE
- (XX) MONOTUBE BASE, POLE, 15'-30' ARM
- (XX) MONOTUBE BASE, POLE, 35'-55' ARM
- MUNICIPAL LUMINAIRE
- PEDESTRIAN HEAD WITH PUSH BUTTON
- PUSH BUTTON
- LOOP DETECTOR IN 1" NONMETALLIC CONDUIT

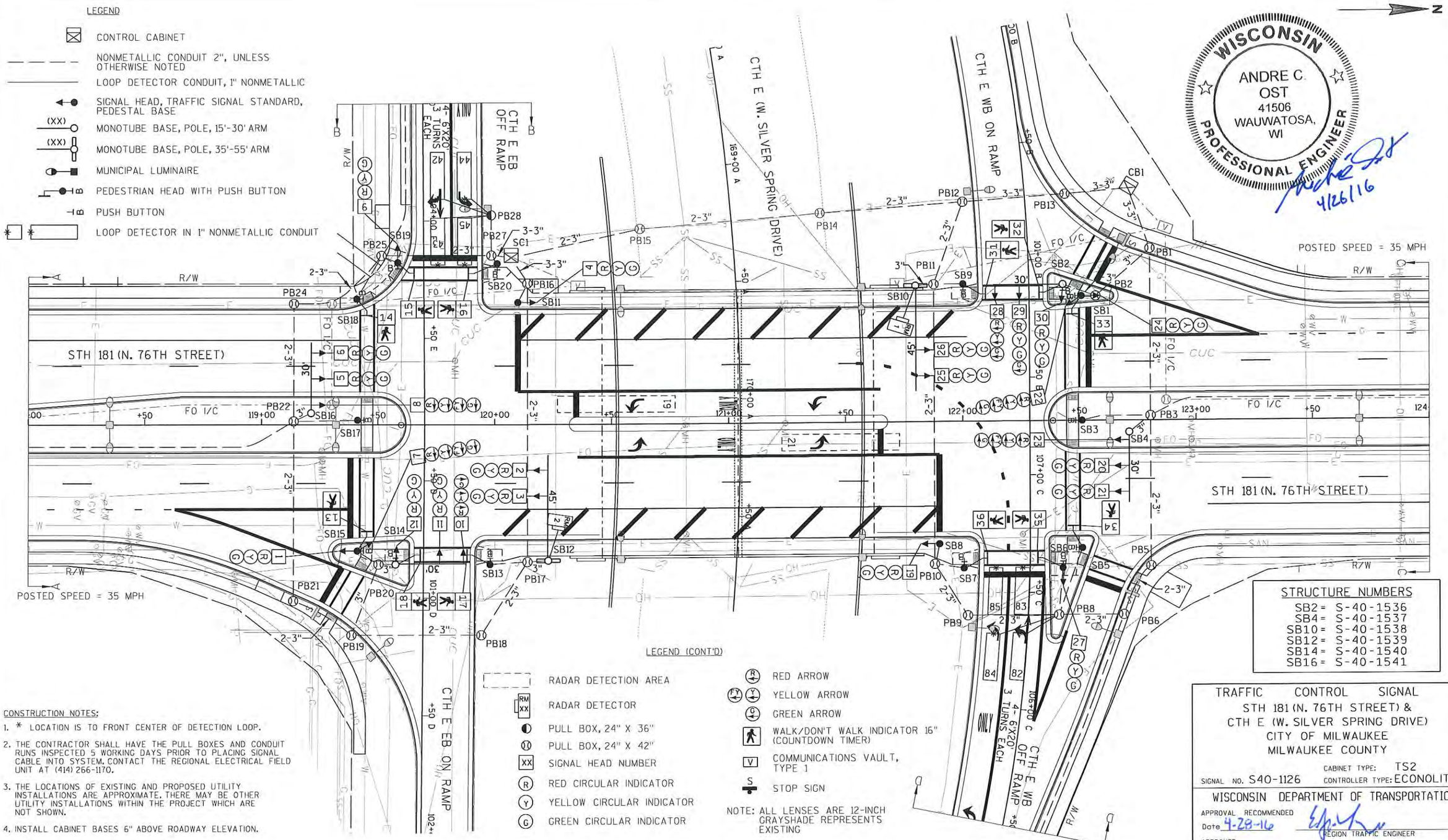


STRUCTURE NUMBERS

| | |
|---|---|
| SB2 = | S-40-1536 |
| SB4 = | S-40-1537 |
| SB10 = | S-40-1538 |
| SB12 = | S-40-1539 |
| SB14 = | S-40-1540 |
| SB16 = | S-40-1541 |

CONSTRUCTION NOTES:

1. * LOCATION IS TO FRONT CENTER OF DETECTION LOOP.
2. THE CONTRACTOR SHALL HAVE THE PULL BOXES AND CONDUIT RUNS INSPECTED 5 WORKING DAYS PRIOR TO PLACING SIGNAL CABLE INTO SYSTEM. CONTACT THE REGIONAL ELECTRICAL FIELD UNIT AT (414) 266-1170.
3. THE LOCATIONS OF EXISTING AND PROPOSED UTILITY INSTALLATIONS ARE APPROXIMATE. THERE MAY BE OTHER UTILITY INSTALLATIONS WITHIN THE PROJECT WHICH ARE NOT SHOWN.
4. INSTALL CABINET BASES 6" ABOVE ROADWAY ELEVATION.

LEGEND (CONT'D)

- RADAR DETECTION AREA
- RM XX RADAR DETECTOR
- PULL BOX, 24" X 36"
- PULL BOX, 24" X 42"
- XX SIGNAL HEAD NUMBER
- R RED CIRCULAR INDICATOR
- Y YELLOW CIRCULAR INDICATOR
- G GREEN CIRCULAR INDICATOR
- R RED ARROW
- Y YELLOW ARROW
- G GREEN ARROW
- WALK/DON'T WALK INDICATOR 16" (COUNTDOWN TIMER)
- V COMMUNICATIONS VAULT, TYPE 1
- S STOP SIGN

NOTE: ALL LENSES ARE 12-INCH GRAYSHADE REPRESENTS EXISTING

TRAFFIC CONTROL SIGNAL
STH 181 (N. 76TH STREET) &
CTH E (W. SILVER SPRING DRIVE)
CITY OF MILWAUKEE
MILWAUKEE COUNTY

SIGNAL NO. S40-1126 CABINET TYPE: TS2 CONTROLLER TYPE: ECONOLITE

WISCONSIN DEPARTMENT OF TRANSPORTATION

APPROVAL RECOMMENDED Date 4-28-16 REGION TRAFFIC ENGINEER

APPROVED Date STATE TRAFFIC ENGINEER

REGION CONTACT: ELIZABETH LLOYD-WEIS
DESIGNED BY: GRAEF
REVISED BY:

PAGE 1 OF 4

4-29-16 PSV

| PROJECT NO: 2140-13-70 | HWY: STH 181 | COUNTY: MILWAUKEE | TRAFFIC SIGNAL PLAN | SHEET E |
|---|---|---|---|---|



FILE NAME : L:\Jobs2010\20100384\CAD\WisDOT_Trans\dgn\00\03_Silver Spring\024021_sp.dgn PLOT DATE : 4/26/2016 PLOT BY : GRAEF PLOT NAME : PLOT SCALE : 40.0000 sf / in. WISDOT/CADDS SHEET 42

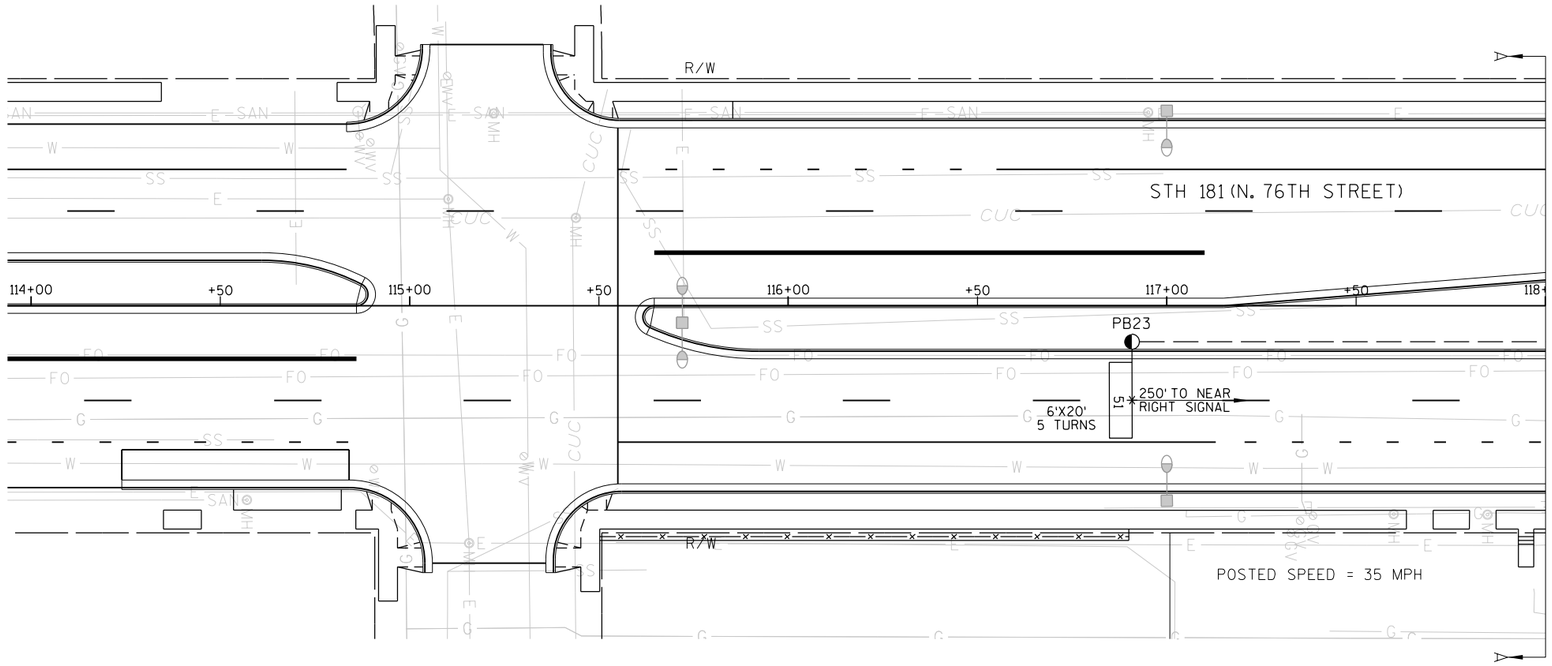


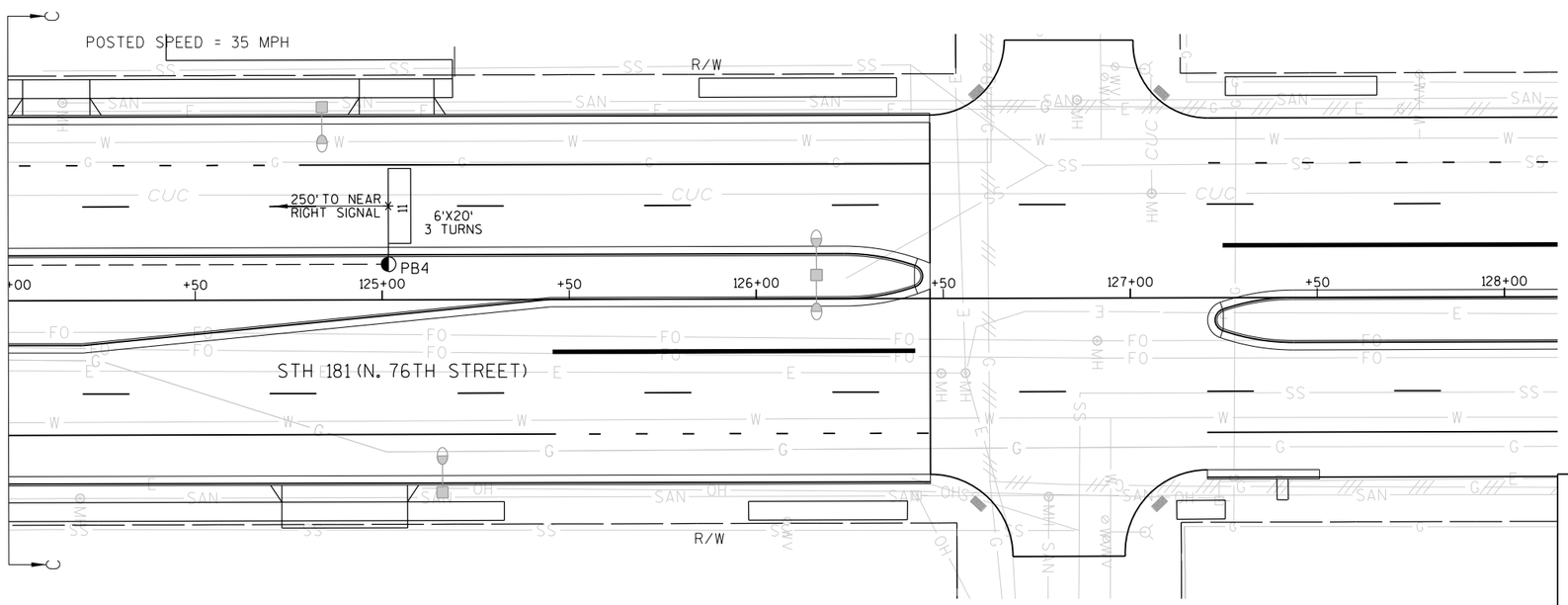


TRAFFIC CONTROL SIGNAL
STH 181 (N. 76TH STREET) &
CTH E (W. SILVER SPRING DRIVE)
CITY OF MILWAUKEE
MILWAUKEE COUNTY

SIGNAL NO. S40-1126

REGION CONTACT: ELIZABETH LLOYD-WEIS
DESIGNED BY: GRAEF
REVISED BY:

PAGE 2 OF 4

| PROJECT NO: 2140-13-70 | HWY: STH 181 | COUNTY: MILWAUKEE | TRAFFIC SIGNAL PLAN | SHEET 155 | E |
|---|---|---|---|---|---|

FILE NAME : L:\Jobs2010\20100384\CAD\WisDOT_Trans\dgn\00\03_Silver Spring\024022_sp.dgn PLOT DATE : 4/25/2016 PLOT BY : GRAEF PLOT NAME : PLOT SCALE : 40.0000 sf / in.

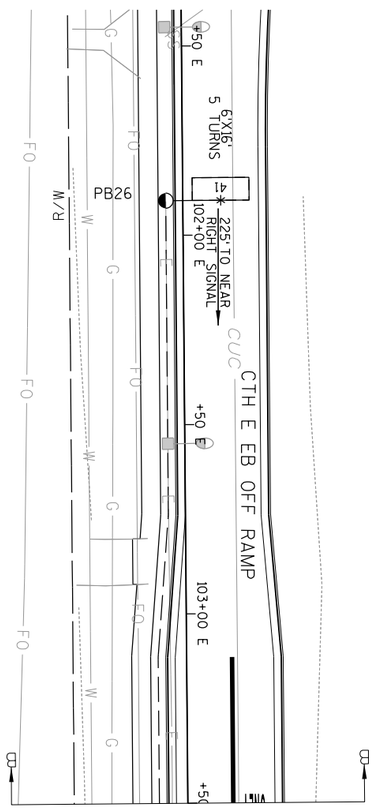


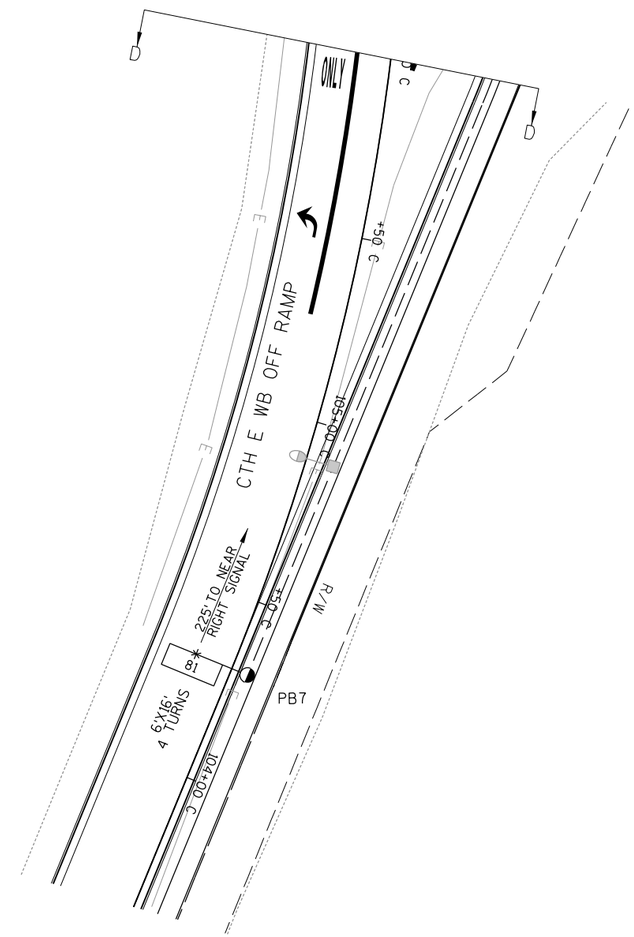


TRAFFIC CONTROL SIGNAL
STH 181 (N. 76TH STREET) &
CTH E (W. SILVER SPRING DRIVE)
CITY OF MILWAUKEE
MILWAUKEE COUNTY

SIGNAL NO. S40-1126

REGION CONTACT: ELIZABETH LLOYD-WEIS
DESIGNED BY: GRAEF
REVISED BY:

PAGE 3 OF 4

| PROJECT NO: 2140-13-70 | HWY: STH 181 | COUNTY: MILWAUKEE | TRAFFIC SIGNAL PLAN | SHEET 156 | E |
|---|---|---|---|---|---|

| | HEAD NUMBERS | FLASH |
|---|---|---|
| Ø1 | 24,25,26 | R |
| Ø2 | 22,23 | R ← |
| Ø3 | | |
| Ø4 | 9,10,11,12 | R. R ← |
| Ø5 | 1,2,3 | R |
| Ø6 | 7,8 | R ← |
| Ø7 | | |
| Ø8 | 27,28,29,30 | R, R ← |
| Ø1P | 15,16,31,32 | -- |
| Ø4P | 13,14 | -- |
| Ø5P | 17,18,35,36 | -- |
| Ø8P | 33,34 | -- |
| OLA | 4,5,6 | R |
| OLB | 19,20,21 | R |
| OLE | 22,23 | -- |
| OLG | 7,8 | -- |

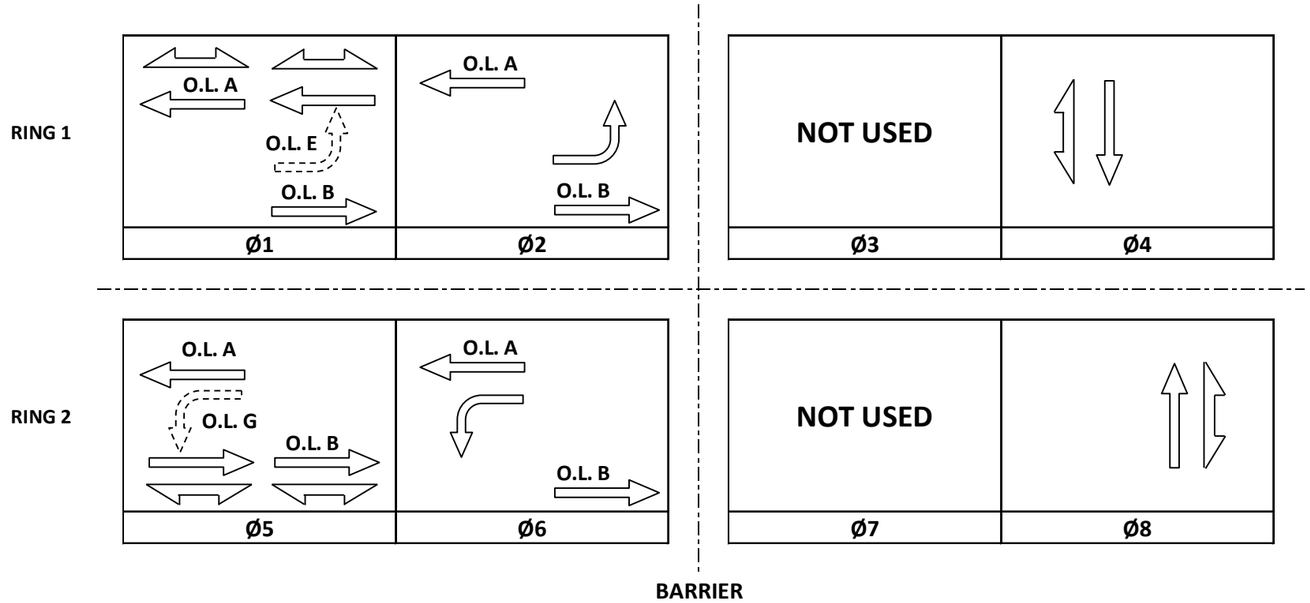


## CONTROLLER LOGIC

| PHASE NUMBER | PHASE LOCKING | DUAL ENTRY W / Ø | PHASE RECALL | PHASE ACTIVE |
|---|---|---|---|---|
| 1 | X | 5 | MIN. | X |
| 2 | | 5 | | X |
| 3 | | | | |
| 4 | | 8 | | X |
| 5 | X | 1 | MIN. | X |
| 6 | | 1 | | X |
| 7 | | | | |
| 8 | | 4 | | X |

| TYPE OF INTERCONNECT/COMMUNICATION | |
|---|---|
| NONE | |
| CLOSED LOOP | |
| TWISTED PAIR | |
| FIBER OPTIC* | |
| FIBER OPTIC (ETHERNET) | X |
| RADIO | |
| CELL MODEM | |

| TYPE OF COORDINATION | |
|---|---|
| NONE | |
| TBC | X |
| TRAFFIC RESPONSIVE | |
| ADAPTIVE | |
| *LOCATION OF MASTER CONTROLLER NO: | S- |
| SIGNAL SYSTEM NO: | SS- 0018 |

| TYPE OF LIGHTING | |
|---|---|
| BY OTHER AGENCY | X |
| IN TRAFFIC CABINET | |
| IN SEPARATE DOT LIGHTING CABINET | |

| TYPE OF PRE-EMPT | |
|---|---|
| NONE | X |
| RAILROAD | |
| EMERGENCY VEHICLE | |
| GTT | |
| TOMAR | |
| HARDWIRE | |
| OTHER | |
| LIFT BRIDGE | |
| QUEUE DETECTION | |

## DETECTOR LOGIC

| | | | | | | | | | | | | | | | | | |
|---|---|---|---|---|---|---|---|---|---|---|---|---|---|---|---|---|---|
| DETECTOR INPUT | 3 | 1 | 7 | 5 | 11 | 9 | 15 | 13 | 19 | 17 | 23 | 21 | 27 | 25 | 31 | 29 | DETECTOR INPUT |
| PLAN LOOP DETECTOR*(S) | 11 | 42 | 44 | 51 | 82 | 84 | | | 21 | | | | | | | | PLAN LOOP DETECTOR*(S) |
| CALLED PHASE | 1 | 4 | 4 | 5 | 8 | 8 | | | 2 | | | | | | | | CALLED PHASE |
| CALL OPTION | X | X | X | X | X | X | | | X | | | | | | | | CALL OPTION |
| DELAY TIME | | X | | | | | | | | | | | | | | | DELAY TIME |
| EXTENTION OPTION | X | X | X | X | X | X | | | X | | | | | | | | EXTENTION OPTION |
| EXTEND TIME | | | | | | | | | | | | | | | | | EXTEND TIME |
| USE ADDED INITIAL | X | | | X | | | | | | | | | | | | | USE ADDED INITIAL |
| CROSS SWITCH PHASE | | | | | | | | | 1 | | | | | | | | CROSS SWITCH PHASE |

| | | | | | | | | | | | | | | | | | |
|---|---|---|---|---|---|---|---|---|---|---|---|---|---|---|---|---|---|
| DETECTOR INPUT | 4 | 2 | 8 | 6 | 12 | 10 | 16 | 14 | 20 | 18 | 24 | 22 | 28 | 26 | 32 | 30 | DETECTOR INPUT |
| PLAN LOOP DETECTOR*(S) | 41 | 43 | 45 | 81 | 83 | 85 | | | 61 | | | | | | | | PLAN LOOP DETECTOR*(S) |
| CALLED PHASE | 4 | 4 | 4 | 8 | 8 | 8 | | | 6 | | | | | | | | CALLED PHASE |
| CALL OPTION | | X | X | | X | X | | | X | | | | | | | | CALL OPTION |
| DELAY TIME | | X | | | | | | | | | | | | | | | DELAY TIME |
| EXTENTION OPTION | X | X | X | X | X | X | | | X | | | | | | | | EXTENTION OPTION |
| EXTEND TIME | X | | | X | | | | | | | | | | | | | EXTEND TIME |
| USE ADDED INITIAL | | | | | | | | | | | | | | | | | USE ADDED INITIAL |
| CROSS SWITCH PHASE | | | | | | | | | 5 | | | | | | | | CROSS SWITCH PHASE |

STH 181 (N. 76TH STREET) & CTH E (W. SILVER SPRING DRIVE)
CITY OF MILWAUKEE
MILWAUKEE COUNTY

SIGNAL NO: S40-1126 CABINET TYPE: TS2
CONTROLLER TYPE: ECONOLITE
DATE: 4/16 PAGE NO. 4 OF 4

2

| PROJECT ID: | 2140-13-70 |
|---|---|
| INTERSECTION: | STH 181 (N. 76th Street) & CTH E (W. Silver Spring Drive) |

| SIGNAL WIRE COLOR CODING | BLK-BLACK | RED-RED | GRN-GREEN |
|---|---|---|---|
| | WHT-WHITE | BLU-BLUE | ORG-ORANGE |

| CB1 TO | AWG14 # OF CONDUCTORS | HEAD NO. | SIGNAL INDICATION WIRE COLOR | | | | | | | | | PED BUTTON |
|---|---|---|---|---|---|---|---|---|---|---|---|---|
| | | | RED | YELLOW | GREEN | <RED> | <YELLOW> | <GREEN> | FLASHING <YELLOW> | D/WALK | WALK | |
| SB1 | 12 | | | | | | | | | | | |
| | | 22 | | | | RED | ORG | GRN | BLK/WHT | | | |
| | | 24 | RED/BLK | ORG/BLK | GRN/BLK | | | | | | | |
| | | 33 | | | | | | | | BLK | BLU | |
| | | BUTTON | | | | | | | | | | WHT/BLK |
| SB2 | 12 | | | | | | | | | | | |
| | | 28 | | | | RED | ORG | GRN | | | | |
| | | 29 | RED | ORG | GRN | | | GRN | | | | |
| | | 30 | RED | ORG | GRN | | | | | | | |
| | | 32 | | | | | | | | BLK | BLU | |
| | | BUTTON | | | | | | | | | | WHT/BLK |
| SB3 | 7 | | | | | | | | | | | |
| | | BUTTON | | | | | | | | | | WHT/BLK |
| SB4 | 12 | | | | | | | | | | | |
| | | 20 | RED | ORG | GRN | | | | | | | |
| | | 21 | RED | ORG | GRN | | | | | | | |
| | | 23 | | | | RED/BLK | ORG/BLK | GRN/BLK | BLK/WHT | | | |
| SB5 | 7 | | | | | | | | | | | |
| | | 34 | | | | | | | | BLK | BLU | |
| | | BUTTON | | | | | | | | | | WHT/BLK |
| SB6 | 12 | | | | | | | | | | | |
| | | 27 | RED | ORG | GRN | | | | | | | |
| | | 35 | | | | | | | | BLK | BLU | |
| | | BUTTON | | | | | | | | | | WHT/BLK |
| SB7 | 7 | | | | | | | | | | | |
| | | 36 | | | | | | | | BLK | BLU | |
| | | BUTTON | | | | | | | | | | WHT/BLK |
| SB8 | 12 | | | | | | | | | | | |
| | | 19 | RED | ORG | GRN | | | | | | | |
| SB9 | 7 | | | | | | | | | | | |
| | | 31 | | | | | | | | BLK | BLU | |
| | | BUTTON | | | | | | | | | | WHT/BLK |
| SB10 | 12 | | | | | | | | | | | |
| | | 25 | RED | ORG | GRN | | | | | | | |
| | | 26 | RED | ORG | GRN | | | | | | | |

| EQUIPMENT GROUNDING CONDUCTOR 10 AWG GRN XLP | |
|---|---|
| FROM | TO |
| CB1 | SB1 |
| SB1 | SB2 |
| SB2 | SB3 |
| SB3 | SB4 |
| SB4 | SB5 |
| SB5 | SB6 |
| SB6 | SB7 |
| SB7 | SB8 |
| SB8 | SB9 |
| SB9 | SB10 |
| SB10 | CB1 |

| PULL BOX BONDING JUMPER 10 AWG GRN XLP | |
|---|---|
| FROM | TO |
| PB1 | CB1 |
| PB2 | SB1 |
| PB3 | SB4 |
| PB5 | SB4 |
| PB6 | SB6 |
| PB8 | SB6 |
| PB9 | SB8 |
| PB10 | SB8 |
| PB11 | SB10 |
| PB12 | SB10 |
| PB13 | CB1 |
| PB14 | SB10 |

| SC1 TO | AWG14 # OF CONDUCTORS | HEAD NO. | SIGNAL INDICATION WIRE COLOR | | | | | | | | | PED BUTTON |
|---|---|---|---|---|---|---|---|---|---|---|---|---|
| | | | RED | YELLOW | GREEN | <RED> | <YELLOW> | <GREEN> | FLASHING <YELLOW> | D/WALK | WALK | |
| SB11 | 12 | | | | | | | | | | | |
| | | 4 | RED | ORG | GRN | | | | | | | |
| SB12 | 12 | | | | | | | | | | | |
| | | 2 | RED | ORG | GRN | | | | | | | |
| | | 3 | RED | ORG | GRN | | | | | | | |
| SB13 | 7 | | | | | | | | | | | |
| | | 17 | | | | | | | | BLK | BLU | |
| | | BUTTON | | | | | | | | | | WHT/BLK |
| SB14 | 12 | | | | | | | | | | | |
| | | 10 | | | | RED | ORG | GRN | | | | |
| | | 11 | RED | ORG | GRN | | | | | | | |
| | | 12 | RED | ORG | GRN | | | | | | | |
| | | 18 | | | | | | | | BLK | BLU | |
| | | BUTTON | | | | | | | | | | WHT/BLK |
| SB15 | 12 | | | | | | | | | | | |
| | | 1 | RED | ORG | GRN | | | | | | | |
| | | 7 | | | | RED/BLK | ORG/BLK | GRN/BLK | BLK/WHT | | | |
| | | 13 | | | | | | | | BLK | BLU | |
| | | BUTTON | | | | | | | | | | WHT/BLK |
| SB16 | 12 | | | | | | | | | | | |
| | | 5 | RED | ORG | GRN | | | | | | | |
| | | 6 | RED | ORG | GRN | | | | | | | |
| | | 8 | | | | RED/BLK | ORG/BLK | GRN/BLK | BLK/WHT | | | |
| SB17 | 7 | | | | | | | | | | | |
| | | BUTTON | | | | | | | | | | WHT/BLK |
| SB18 | 7 | | | | | | | | | | | |
| | | 14 | | | | | | | | BLK | BLU | |
| | | BUTTON | | | | | | | | | | WHT/BLK |
| SB19 | 12 | | | | | | | | | | | |
| | | 9 | RED | ORG | GRN | | | | | | | |
| | | 15 | | | | | | | | BLK | BLU | |
| | | BUTTON | | | | | | | | | | WHT/BLK |
| SB20 | 7 | | | | | | | | | | | |
| | | 16 | | | | | | | | BLK | BLU | |
| | | BUTTON | | | | | | | | | | WHT/BLK |

| EQUIPMENT GROUNDING CONDUCTOR 10 AWG GRN XLP | |
|---|---|
| FROM | TO |
| SC1 | SB11 |
| SB11 | SB12 |
| SB12 | SB13 |
| SB13 | SB14 |
| SB14 | SB15 |
| SB15 | SB16 |
| SB16 | SB17 |
| SB17 | SB18 |
| SB18 | SB19 |
| SB19 | SB20 |
| SB20 | SC1 |

| PULL BOX BONDING JUMPER 10 AWG GRN XLP | |
|---|---|
| FROM | TO |
| PB15 | SC1 |
| PB16 | SB11 |
| PB17 | SB12 |
| PB18 | SB12 |
| PB19 | SB14 |
| PB20 | SB14 |
| PB21 | SB14 |
| PB22 | SB16 |
| PB24 | SB16 |
| PB25 | SB19 |
| PB27 | SC1 |

NOTES:
*USE WHITE CONDUCTOR IN THE SIGNAL CABLE AS THE GROUNDED CONDUCTOR FOR ALL TRAFFIC SIGNAL INDICATIONS.
*ENSURE THE GROUNDED CONDUCTOR IN THE FEEDER CABLE AND THE POLE CABLES ARE BOTH 18" LONGER THAN THE UNGROUNDED CONDUCTORS.
*RECONNECT THE GROUNDING CONDUCTORS WHENEVER THE CIRCUIT HAS BEEN INTERRUPTED TO ENSURE THE GROUNDING CIRCUIT IS COMPLETE.

TRAFFIC CONTROL SIGNAL
STH 181 (N. 76TH STREET) &
CTH E (W. SILVER SPRING DRIVE)
CITY OF MILWAUKEE
MILWAUKEE COUNTY

SIGNAL NO. S40-1126

REGION CONTACT: ELIZABETH LLOYD-WEIS
DESIGNED BY: GRAEF
REVISED BY:

PAGE 1 OF 2

| PROJECT ID: | 2140-13-70 |
|---|---|
| INTERSECTION: | STH 181 (N. 76th Street) & CTH E (W. Silver Spring Drive) |

| SIGNAL WIRE COLOR CODING | BLK-BLACK | RED-RED | GRN-GREEN |
|---|---|---|---|
| | WHT-WHITE | BLU-BLUE | ORG-ORANGE |

| CB1 TO | AWG12 # OF CONDUCTORS | HEAD NO. | SIGNAL INDICATION WIRE COLOR | | | | | | | | | PED BUTTON |
|---|---|---|---|---|---|---|---|---|---|---|---|---|
| | | | RED | YELLOW | GREEN | <RED> | <YELLOW> | <GREEN> | FLASHING <YELLOW> | D/WALK | WALK | |
| FEEDER #1 | 19 | | | | | | | | | | | |
| SC1 | | 1 | RED | ORG | GRN | | | | | | | |
| | (NB) | 2 | RED | ORG | GRN | | | | | | | |
| | | 3 | RED | ORG | GRN | | | | | | | |
| | | | | | | | | | | | | |
| | | 4 | RED/BLK | ORG/BLK | GRN/BLK | | | | | | | |
| | (SB) | 5 | RED/BLK | ORG/BLK | GRN/BLK | | | | | | | |
| | | 6 | RED/BLK | ORG/BLK | GRN/BLK | | | | | | | |
| | | | | | | | | | | | | |
| | (SB LT) | 7 | | | | RED/BLK | ORG/BLK | GRN/WHT | BLK/WHT | | | |
| | | 8 | | | | RED/BLK | ORG/BLK | GRN/WHT | BLK/WHT | | | |
| | | | | | | | | | | | | |
| | | 13 | | | | | | | | BLK | BLU | |
| | (SOUTH PED) | 14 | | | | | | | | BLK | BLU | |
| | | BUTTON | | | | | | | | | | WHT/BLK |
| | | | | | | | | | | | | |
| FEEDER #2 | 19 | | | | | | | | | | | |
| SC1 | | 9 | RED | ORG | GRN | | | | | | | |
| | (EB) | 10 | RED | ORG | GRN | | | | | | | |
| | | 11 | RED | ORG | GRN | | | | | | | |
| | | 12 | RED | ORG | GRN | | | | | | | |
| | | | | | | | | | | | | |
| | | 17 | | | | | | | | BLK | BLU | |
| | (EAST PED) | 18 | | | | | | | | BLK | BLU | |
| | | BUTTON | | | | | | | | | | WHT/BLK |
| | | | | | | | | | | | | |
| | | 15 | | | | | | | | BLK/RED | BLU/WHT | |
| | (WEST PED) | 16 | | | | | | | | BLK/RED | BLU/WHT | |
| | | BUTTON | | | | | | | | | | WHT/RED |
| | | | | | | | | | | | | |

| EQUIPMENT GROUNDING CONDUCTOR 6 AWG GRN XLP | |
|---|---|
| FROM | TO |
| CB1 | SC1 |
| | |

| NEUTRAL CONDUCTOR 6 AWG WHT XLP | |
|---|---|
| FROM | TO |
| CB1 | SC1 |
| | |

NOTES:
*USE WHITE CONDUCTOR IN THE SIGNAL CABLE AS THE GROUNDED CONDUCTOR FOR ALL TRAFFIC SIGNAL INDICATIONS.
*ENSURE THE GROUNDED CONDUCTOR IN THE FEEDER CABLE AND THE POLE CABLES ARE BOTH 18" LONGER THAN THE UNGROUNDED CONDUCTORS.
*RECONNECT THE GROUNDING CONDUCTORS WHENEVER THE CIRCUIT HAS BEEN INTERRUPTED TO ENSURE THE GROUNDING CIRCUIT IS COMPLETE.

TRAFFIC CONTROL SIGNAL
STH 181 (N. 76TH STREET) &
CTH E (W. SILVER SPRING DRIVE)
CITY OF MILWAUKEE
MILWAUKEE COUNTY

SIGNAL NO. S40-1126

REGION CONTACT: ELIZABETH LLOYD-WEIS
DESIGNED BY: GRAEF
REVISED BY:

PAGE 2 OF 2

LEGEND

- CONTROL CABINET
- NONMETALLIC CONDUIT 2", UNLESS OTHERWISE NOTED
- LOOP DETECTOR CONDUIT 1" NONMETALLIC
- SIGNAL HEAD, TRAFFIC SIGNAL STANDARD, PEDESTAL BASE
- (XX) SIGNAL HEAD, TRAFFIC SIGNAL POLE, TRANSFORMER BASE
- PEDESTRIAN HEAD WITH PUSH BUTTON
- PUSH BUTTON
- LUMINAIRE UNDER PERMIT TO LOCAL MUNICIPALITY
- LUMINAIRE, TRAFFIC POLE, TRANSFORMER BASE
- LOOP DETECTOR IN 1" NONMETALLIC CONDUIT
- PULL BOX, 24" X 36"
- PULL BOX, 24" X 42"
- XX SIGNAL HEAD NUMBER
- WALK/DON'T WALK INDICATOR 16" (COUNTDOWN TIMER)
- R RED CIRCULAR INDICATOR
- Y YELLOW CIRCULAR INDICATOR
- G GREEN CIRCULAR INDICATOR
- YELLOW ARROW
- GREEN ARROW
- LANE DESIGNATION FOR INFO ONLY

NOTE: ALL LENSES ARE 12-INCH
GRAYSHADE REPRESENTS
EXISTING

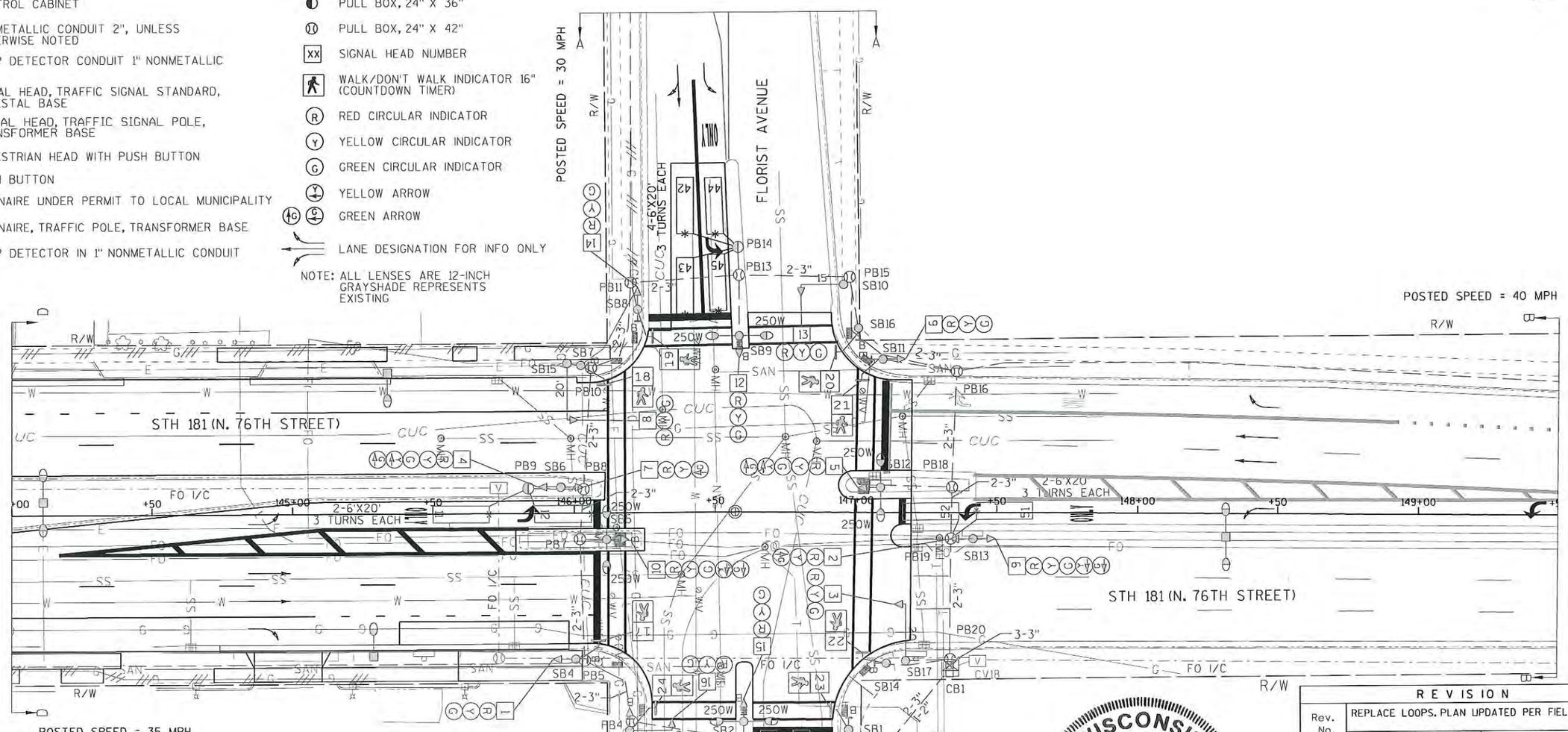


CONSTRUCTION NOTES:

1. * LOCATION IS TO FRONT CENTER OF DETECTION LOOP.
2. THE CONTRACTOR SHALL HAVE THE PULL BOXES AND CONDUIT RUNS INSPECTED 5 WORKING DAYS PRIOR TO PLACING SIGNAL CABLE INTO SYSTEM. CONTACT THE REGIONAL ELECTRICAL FIELD UNIT AT (414) 266-1170.
3. THE LOCATIONS OF EXISTING AND PROPOSED UTILITY INSTALLATIONS ARE APPROXIMATE. THERE MAY BE OTHER UTILITY INSTALLATIONS WITHIN THE PROJECT WHICH ARE NOT SHOWN.
4. ALL LUMINAIRES ARE 150W HPS UNLESS OTHERWISE NOTED.
5. ABANDON EXISTING LOOPS WHICH ARE BEING REPLACED. LOOP DETECTOR WIRE AND LOOP DETECTOR LEAD-IN CABLE TO BE REMOVED BY CONTRACTOR.

WISCONSIN
ANDRE C. OST
41506
WAUWATOSA, WI
PROFESSIONAL ENGINEER
4/26/16

7-28-06
INTERSECTION REHAB

10/1983
INSTALLED NORTH AND SOUTHBOUND LEFT TURN ARROWS, INSTALLED SOUTHBOUND QUEUE LOOP, INSTALLED PRETIMED CONTROLLER

2-8-70
INITIAL INSTALLATION

REVISION

| Rev. No. | REPLACE LOOPS. PLAN UPDATED PER FIELD REVIEW. | | | |
|---|---|---|---|---|
| | APPROVAL RECOMMENDED | | APPROVED | |
| | REGION | | CENTRAL OFFICE | |
| 4 | Date | By | Date | By |
| | 4-28-16 | SLW | | |

TRAFFIC CONTROL SIGNAL
STH 181 (N. 76TH STREET) &
FLORIST AVENUE
CITY OF MILWAUKEE
MILWAUKEE COUNTY

SIGNAL NO. S40-1128
CABINET TYPE: TS1
CONTROLLER TYPE: EPAC

WISCONSIN DEPARTMENT OF TRANSPORTATION

APPROVAL RECOMMENDED
Date 11-14-69 — ROBERT MOE, REGION TRAFFIC ENGINEER

APPROVED
Date 11-19-69 — WAYNE VOLK, STATE TRAFFIC ENGINEER

REGION CONTACT: ELIZABETH LLOYD-WEIS
DESIGNED BY:
REVISED BY: GRAEF

PAGE 1 OF 4

4-29-16 PSV

| PROJECT NO: 2140-13-70 | HWY: STH 181 | COUNTY: MILWAUKEE | TRAFFIC SIGNAL PLAN | SHEET 160 | E |
|---|---|---|---|---|---|

FILE NAME : L:\Jobs2010\20100384\CAD\WisDOT_Trans\dgn\00\04_Florist\024021_sp.dgn PLOT DATE : 4/26/2016 PLOT BY : GRAEF PLOT NAME : PLOT SCALE : 40.0000 sf / in. WISDOT/CADDS SHEET 42

2

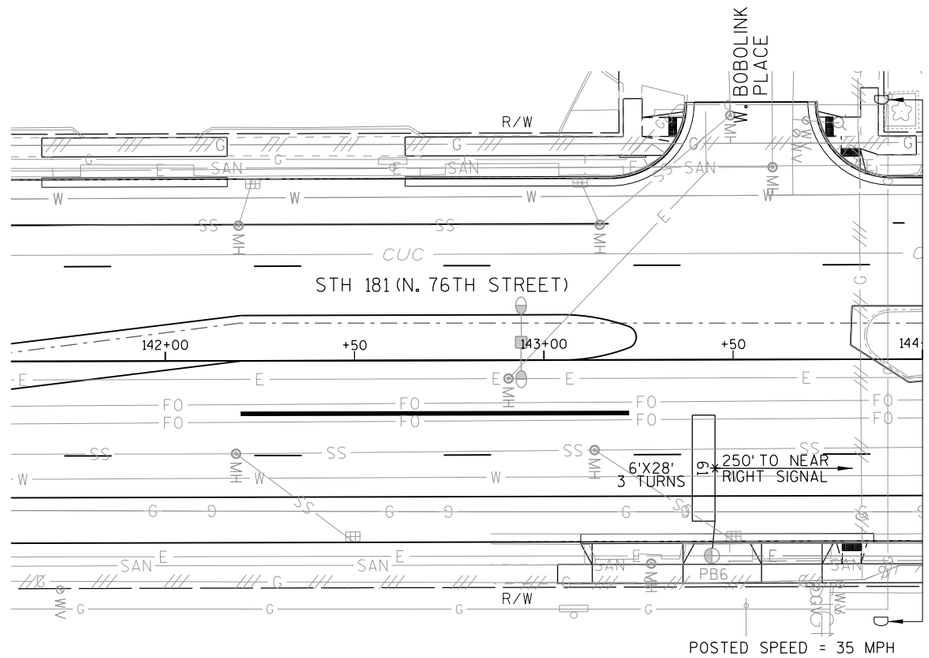


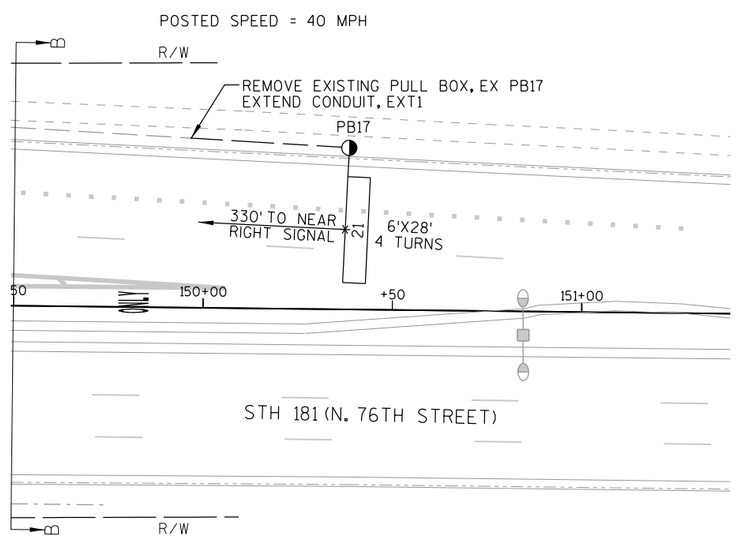


TRAFFIC CONTROL SIGNAL
STH 181 (N. 76TH STREET) &
FLORIST AVENUE
CITY OF MILWAUKEE
MILWAUKEE COUNTY

SIGNAL NO. S40-1128

REGION CONTACT: ELIZABETH LLOYD-WEIS
DESIGNED BY:
REVISED BY: GRAEF

PAGE 2 OF 4

| PROJECT NO: 2140-13-70 | HWY: STH 181 | COUNTY: MILWAUKEE | TRAFFIC SIGNAL PLAN | SHEET 161 | E |
|---|---|---|---|---|---|

FILE NAME : L:\Jobs2010\20100384\CAD\WisDOT_Trans\dgn\00\04_Florist\024022_sp.dgn PLOT DATE : 4/25/2016 PLOT BY : GRAEF PLOT NAME : PLOT SCALE : 40.0000 sf / in.

WISDOT/CADDS SHEET 42

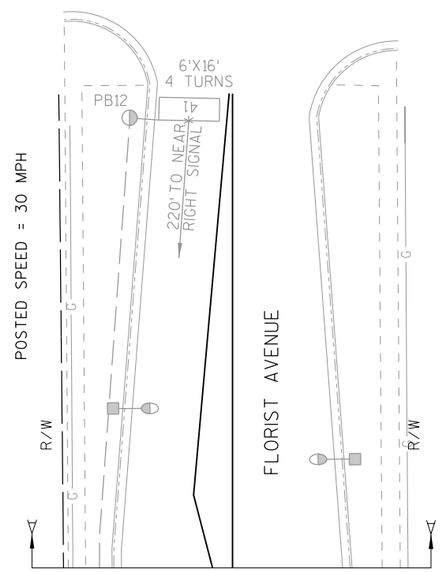


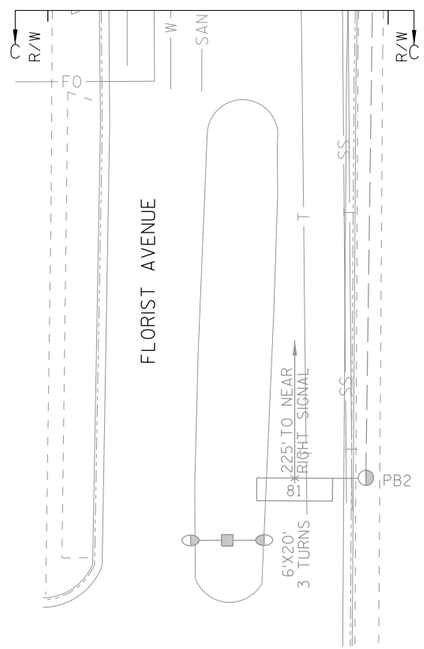


TRAFFIC CONTROL SIGNAL
STH 181 (N. 76TH STREET) &
FLORIST AVENUE
CITY OF MILWAUKEE
MILWAUKEE COUNTY

SIGNAL NO. S40-1128

REGION CONTACT: ELIZABETH LLOYD-WEIS
DESIGNED BY:
REVISED BY: GRAEF

PAGE 3 OF 4

| PROJECT NO:2140-13-70 | HWY:STH 181 | COUNTY:MILWAUKEE | TRAFFIC SIGNAL PLAN | SHEET 162 | E |
|---|---|---|---|---|---|

| | HEAD NUMBERS | FLASH |
|---|---|---|
| Ø1 | 4,5 | -- |
| Ø2 | 6,7,8,9,10 | R |
| Ø3 | | |
| Ø4 | 14,15,16 | R |
| Ø5 | 9,10 | -- |
| Ø6 | 1,2,3,4,5 | R |
| Ø7 | | |
| Ø8 | 11,12,13 | R |
| Ø2P | 19,20 | -- |
| Ø4P | 17,18 | -- |
| Ø6P | 23,24 | -- |
| Ø8P | 21,22 | -- |
| OLA | -- | -- |
| OLB | -- | -- |
| OLC | -- | -- |
| OLD | -- | -- |

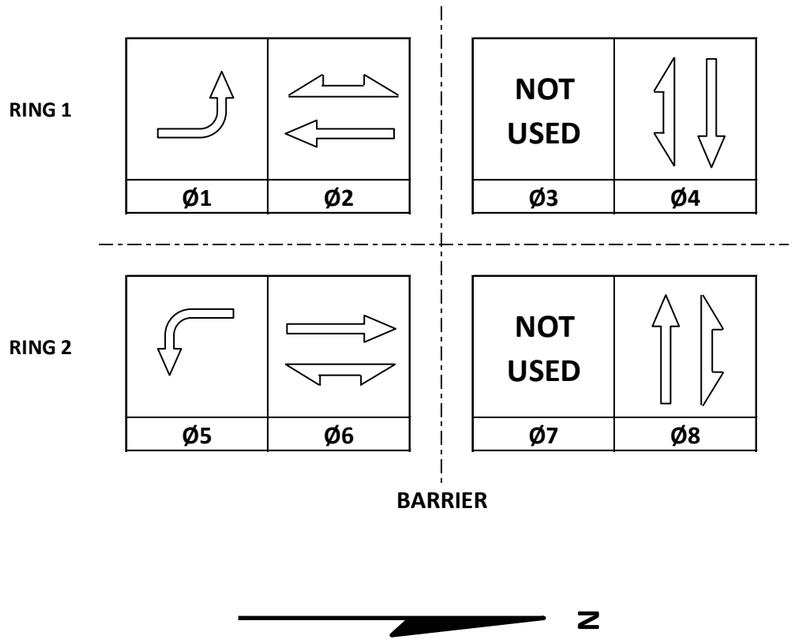


## DETECTOR LOGIC

| DETECTOR NUMBER | AMPLIFIER CHANNEL | DETECTOR OPERATION | | | PHASE CALLED | PHASE EXTENDED | DETECTOR DISCONNECT PHASE | CALLING DELAY | EXTENSION STRETCH | SIZE | NUMBER OF TURNS |
|---|---|---|---|---|---|---|---|---|---|---|---|
| | | CALLS AND EXTENDS | CALLS ONLY | EXTENDS ONLY | | | | | | | |
| 11 | 1 | X | | | 1 | 1 | | | | 6'x20' | 3 |
| 12 | 1 | X | | | 1 | 1 | | | | 6'x20' | 3 |
| 21 | 2 | X | | | 2 | 2 | | | | 6'x28' | 4 |
| 41 | 3 | | | X | | 4 | | | X | 6'x16' | 4 |
| 42 | 4 | X | | | 4 | 4 | | X | | 6'x20' | 3 |
| 43 | 4 | X | | | 4 | 4 | | X | | 6'x20' | 3 |
| 44 | 5 | X | | | 4 | 4 | | | | 6'x20' | 3 |
| 45 | 5 | X | | | 4 | 4 | | | | 6'x20' | 3 |
| 51 | 6 | X | | | 5 | 5 | | | | 6'x20' | 3 |
| 52 | 6 | X | | | 5 | 5 | | | | 6'x20' | 3 |
| 61 | 7 | X | | | 6 | 6 | | | | 6'x28' | 3 |
| 81 | 8 | | | X | | 8 | | | X | 6'x20' | 3 |
| 82 | 9 | X | | | 8 | 8 | | X | | 6'x20' | 3 |
| 83 | 9 | X | | | 8 | 8 | | X | | 6'x20' | 3 |
| 84 | 10 | X | | | 8 | 8 | | | | 6'x20' | 3 |
| 85 | 10 | X | | | 8 | 8 | | | | 6'x20' | 3 |

## CONTROLLER LOGIC

| PHASE NUMBER | PHASE LOCKING | DUAL ENTRY W / Ø | PHASE RECALL | PHASE ACTIVE |
|---|---|---|---|---|
| 1 | | 6 | | X |
| 2 | X | 6 | MIN. | X |
| 3 | | | | |
| 4 | | 8 | | X |
| 5 | | 2 | | X |
| 6 | X | 2 | MIN. | X |
| 7 | | | | |
| 8 | | 4 | | X |

| TYPE OF INTERCONNECT/COMMUNICATION | |
|---|---|
| NONE | |
| CLOSED LOOP | |
| TWISTED PAIR | |
| FIBER OPTIC* | |
| FIBER OPTIC (ETHERNET) | X |
| RADIO | |
| CELL MODEM | |

| TYPE OF COORDINATION | |
|---|---|
| NONE | |
| TBC | X |
| TRAFFIC RESPONSIVE | |
| ADAPTIVE | |
| *LOCATION OF MASTER CONTROLLER NO: | S- |
| SIGNAL SYSTEM NO: | SS- 0018 |

| TYPE OF LIGHTING | |
|---|---|
| BY OTHER AGENCY | |
| IN TRAFFIC CABINET | X |
| IN SEPARATE DOT LIGHTING CABINET | |

| TYPE OF PRE-EMPT | |
|---|---|
| NONE | X |
| RAILROAD | |
| EMERGENCY VEHICLE | |
| GTT | |
| TOMAR | |
| HARDWIRE | |
| OTHER | |
| LIFT BRIDGE | |
| QUEUE DETECTION | |

STH 181 (N. 76TH STREET) & FLORIST AVENUE
CITY OF MILWAUKEE
MILWAUKEE COUNTY

SIGNAL NO: S40-1128 CABINET TYPE: TS1
CONTROLLER TYPE: EPAC
DATE: 4/16 PAGE NO. 4 OF 4

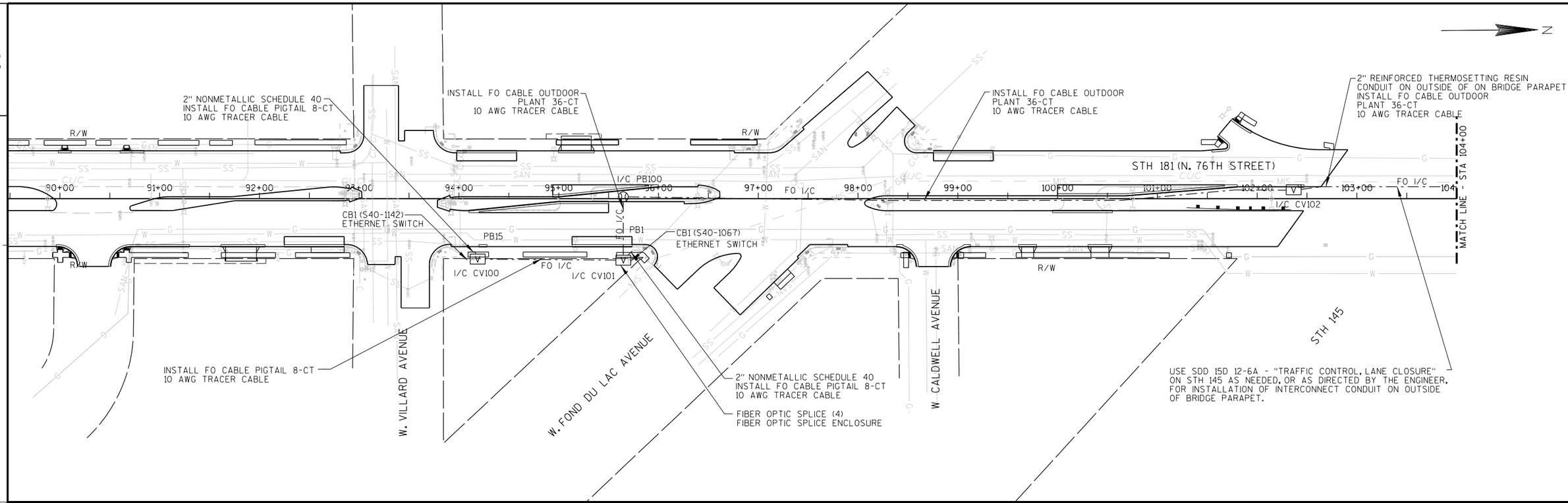


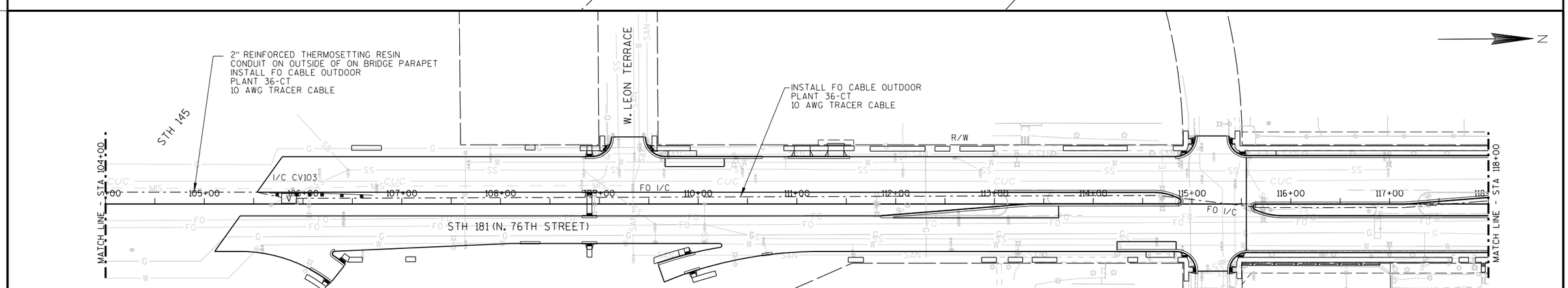


CONSTRUCTION NOTES:

1. THE CONTRACTOR SHALL HAVE THE PULL BOXES AND CONDUIT RUNS INSPECTED 5 WORKING DAYS PRIOR TO PLACING INTERCONNECT CABLE INTO SYSTEM. CONTACT THE REGIONAL ELECTRICAL FIELD UNIT AT (414) 266-1170.
2. THE LOCATIONS OF EXISTING AND PROPOSED UTILITY INSTALLATIONS ARE APPROXIMATE. THERE MAY BE OTHER UTILITY INSTALLATIONS WITHIN THE PROJECT WHICH ARE NOT SHOWN.
3. THE ENGINEER MAY ADJUST THE LOCATIONS OF ITEMS UNDER THIS CONTRACT TO AVOID CONFLICT WITH EXISTING UTILITY FACILITIES.
4. LEAVE 100-FEET OF FIBER OPTIC INTERCONNECT CABLE COILED IN EACH INTERCONNECT VAULT. LEAVE 30-FEET OF FIBER OPTIC CABLE COILED IN EACH INTERCONNECT PULL BOX.
5. INSTALL 10 AWG TRACER CABLE IN INTERCONNECT CONDUIT.
6. SEE MISCELLANEOUS QUANTITIES FOR LOCATIONS OF FIBER OPTIC WARNING TAPE.
7. MAINLINE SPLICES SHALL BE AS DIRECTED BY THE ENGINEER IN THE FIELD.
8. THE ENTIRE MAINLINE FIBER OPTIC CABLE SHALL NOT BE CUT AND/OR SPLICED IN THE VAULTS NEAREST THE TRAFFIC SIGNAL CABINET WHILE MAKING THE PIGTAIL CONNECTION. ONLY THE REQUIRED BUFFER TUBE SHALL BE CUT AND SPLICED WITH THE PIGTAIL CONNECTION.
9. HDPE INTERCONNECT CONDUIT SHALL BE INSTALLED AS SHOWN ON THE MISCELLANEOUS QUANTITIES TABLES.

LEGEND

- CONDUIT HDPE 1-DUCT 2-INCH, UNLESS OTHERWISE NOTED
- [V] TRAFFIC SIGNAL INTERCONNECT VAULT
- CONTROL CABINET
- PULL BOX, 24" X 42"

NOTE: GRAYSHADE REPRESENTS EXISTING

TRAFFIC CONTROL INTERCONNECT
STH 181 (N. 76TH STREET)
CITY OF MILWAUKEE
MILWAUKEE COUNTY

SIGNAL NO. S40-1142, S40-1067, S40-1126, S40-1128

REGION CONTACT: ELIZABETH LLOYD-WEIS
DESIGNED BY: GRAEF
REVISED BY:

PAGE 1 OF 2

| PROJECT NO: 2140-13-70 | HWY: STH 181 | COUNTY: MILWAUKEE | TRAFFIC SIGNAL INTERCONNECT PLAN | SHEET 164 | E |
|---|---|---|---|---|---|

2

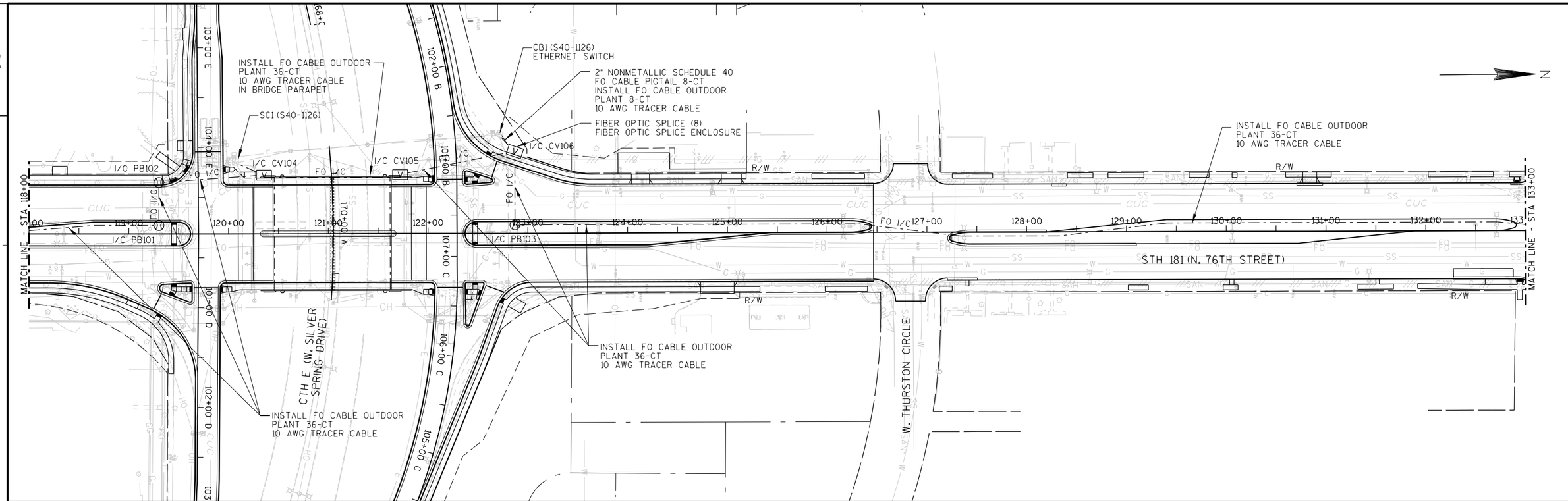


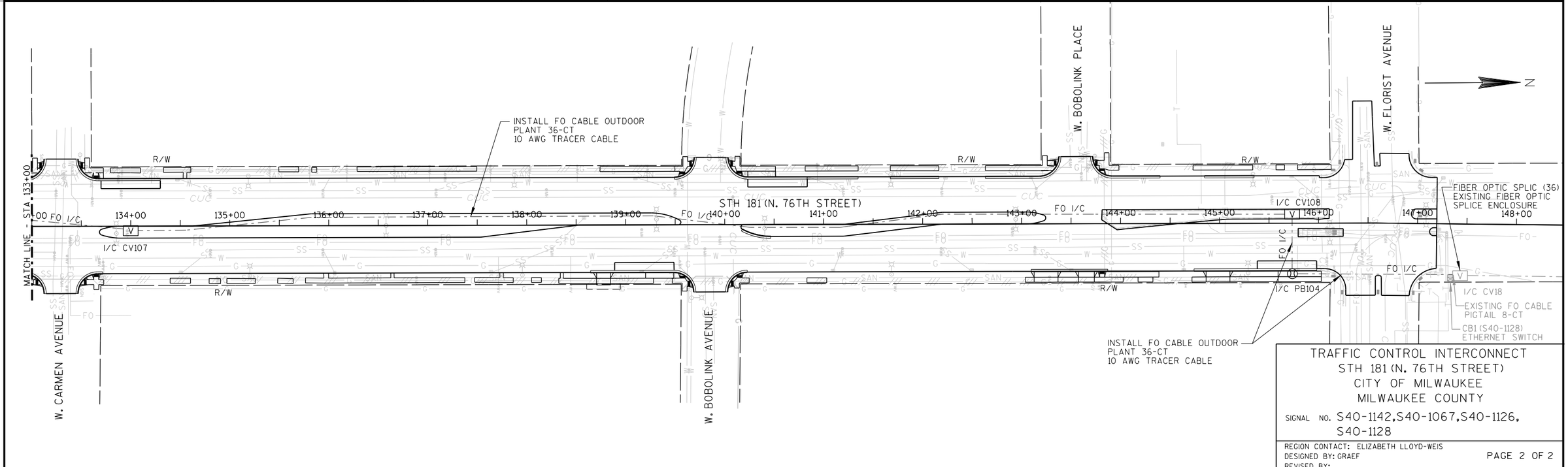


TRAFFIC CONTROL INTERCONNECT
STH 181 (N. 76TH STREET)
CITY OF MILWAUKEE
MILWAUKEE COUNTY

SIGNAL NO. S40-1142, S40-1067, S40-1126, S40-1128

REGION CONTACT: ELIZABETH LLOYD-WEIS
DESIGNED BY: GRAEF
REVISED BY:

PAGE 2 OF 2

| PROJECT NO: 2140-13-70 | HWY: STH 181 | COUNTY: MILWAUKEE | TRAFFIC SIGNAL INTERCONNECT PLAN | SHEET 165 | E |
|---|---|---|---|---|---|

KEY

- SM EQUIPMENT CONNECTION FIBER OPTIC JUMPER
- SM FIBER OPTIC PIGTAIL
- BARE FIBER LEFT COILED IN SPLICE TRAY
- EXISTING / PROPOSED FUSION SPLICE
- PROPOSED FUSION SPLICE OF ALL FIBER OPTIC STRANDS. # INDICATES NUMBER OF FIBER OPTIC STRANDS TO BE SPLICED
- PATCH PANEL MODULE

NOTE: DASHED LINES DENOTE EXISTING CABLES, DEVICES, OR ENCLOSURES.

NOT TO SCALE

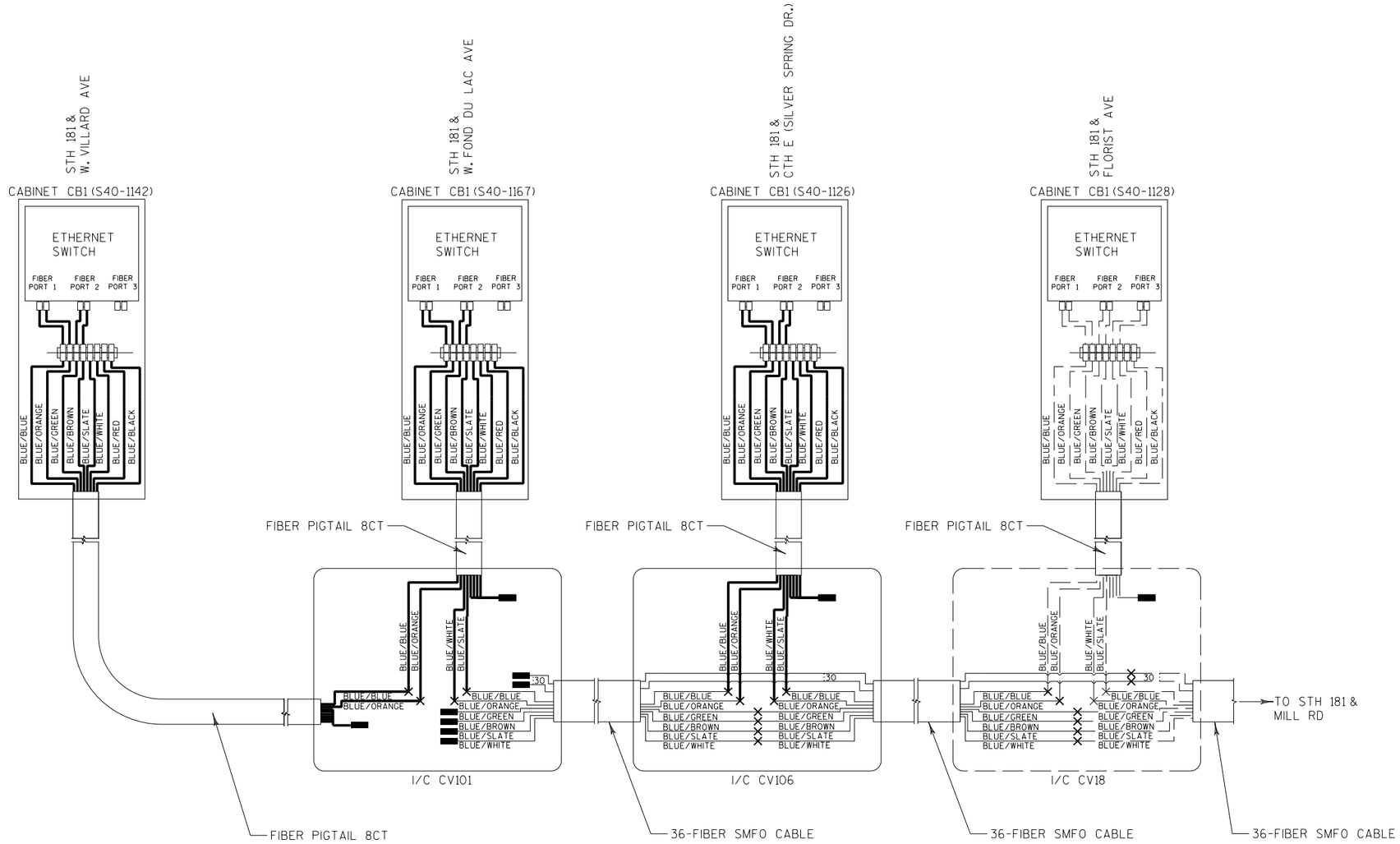


NOTES

1. COORDINATE FIBER ASSIGNMENTS WITH DON SCHELL, STOC, AT 414-227-2148 BEFORE SPLICING FIBER OPTIC CABLE
2. MAXIMUM SPLICE LOSS SHALL BE 0.1 dB
3. NO INTERMEDIATE SPLICES ALLOWED
4. ALL SPLICES SHALL BE FUSION SPLICES

TRAFFIC CONTROL INTERCONNECT
STH 181 (N. 76TH STREET)
CITY OF MILWAUKEE
MILWAUKEE COUNTY

SIGNAL NO. S40-1142, S40-1067, S40-1126, S40-1128

REGION CONTACT: ELIZABETH LLOYD-WEIS
DESIGNED BY: GRAEF
REVISED BY:

PAGE 1 OF 1

| PROJECT NO: 2140-13-70 | HWY: STH 181 | COUNTY: MILWAUKEE | FIBER ASSIGNMENT DETAIL | SHEET 166 | E |
|---|---|---|---|---|---|

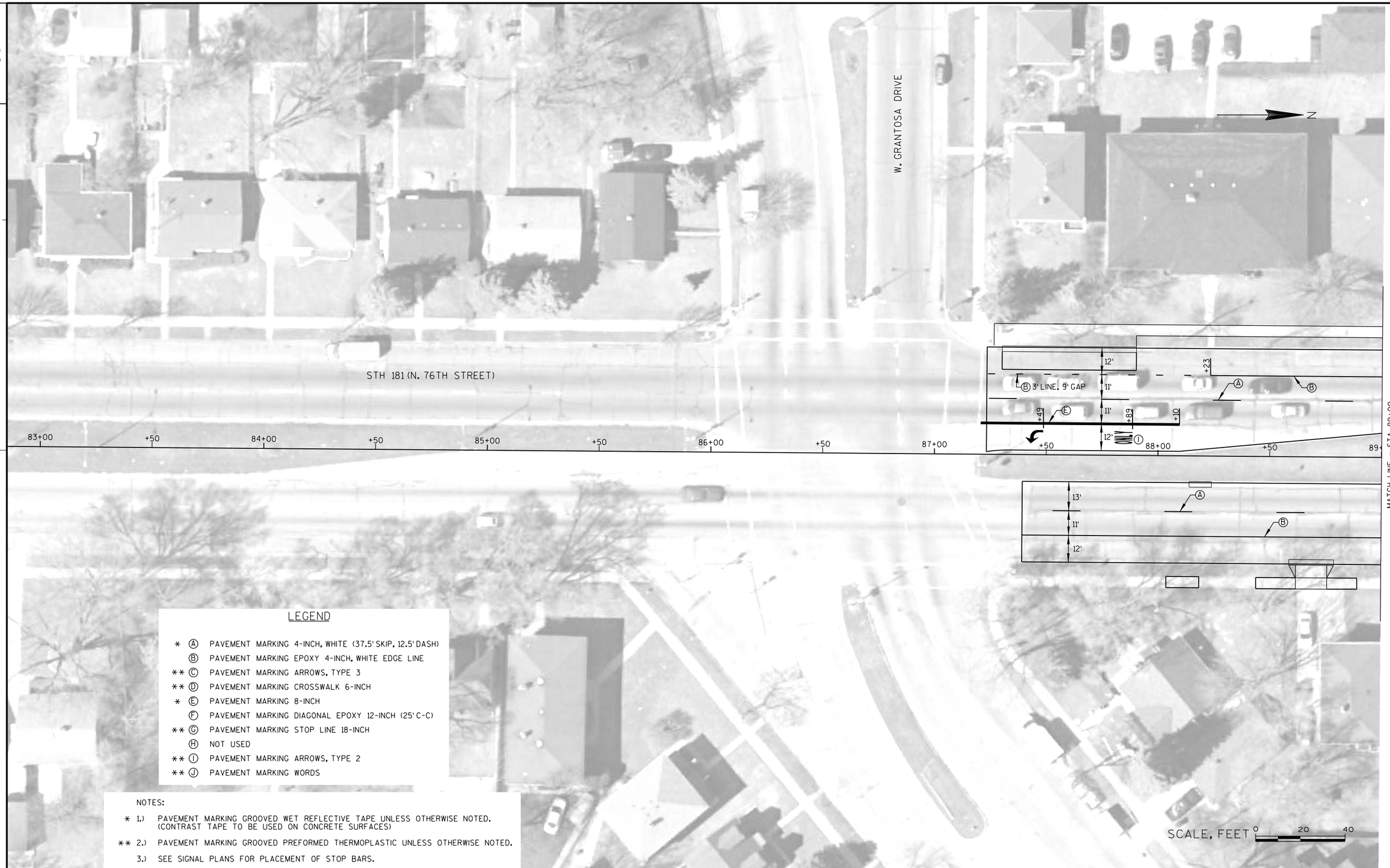


## LEGEND

| | | |
|---|---|---|
| * | Ⓐ | PAVEMENT MARKING 4-INCH, WHITE (37.5' SKIP, 12.5' DASH) |
| | Ⓑ | PAVEMENT MARKING EPOXY 4-INCH, WHITE EDGE LINE |
| ** | Ⓒ | PAVEMENT MARKING ARROWS, TYPE 3 |
| ** | Ⓓ | PAVEMENT MARKING CROSSWALK 6-INCH |
| * | Ⓔ | PAVEMENT MARKING 8-INCH |
| | Ⓕ | PAVEMENT MARKING DIAGONAL EPOXY 12-INCH (25' C-C) |
| ** | Ⓖ | PAVEMENT MARKING STOP LINE 18-INCH |
| | Ⓗ | NOT USED |
| ** | Ⓘ | PAVEMENT MARKING ARROWS, TYPE 2 |
| ** | Ⓙ | PAVEMENT MARKING WORDS |

NOTES:

* 1.) PAVEMENT MARKING GROOVED WET REFLECTIVE TAPE UNLESS OTHERWISE NOTED. (CONTRAST TAPE TO BE USED ON CONCRETE SURFACES)

** 2.) PAVEMENT MARKING GROOVED PREFORMED THERMOPLASTIC UNLESS OTHERWISE NOTED.

3.) SEE SIGNAL PLANS FOR PLACEMENT OF STOP BARS.

2

## LEGEND

- * Ⓐ PAVEMENT MARKING 4-INCH, WHITE (37.5' SKIP, 12.5' DASH)
- Ⓑ PAVEMENT MARKING EPOXY 4-INCH, WHITE EDGE LINE
- ** Ⓒ PAVEMENT MARKING ARROWS, TYPE 3
- ** Ⓓ PAVEMENT MARKING CROSSWALK 6-INCH
- * Ⓔ PAVEMENT MARKING 8-INCH
- Ⓕ PAVEMENT MARKING DIAGONAL EPOXY 12-INCH (25' C-C)
- ** Ⓖ PAVEMENT MARKING STOP LINE 18-INCH
- Ⓗ NOT USED
- ** Ⓘ PAVEMENT MARKING ARROWS, TYPE 2
- ** Ⓙ PAVEMENT MARKING WORDS

NOTES:

* 1.) PAVEMENT MARKING GROOVED WET REFLECTIVE TAPE UNLESS OTHERWISE NOTED. (CONTRAST TAPE TO BE USED ON CONCRETE SURFACES)

** 2.) PAVEMENT MARKING GROOVED PREFORMED THERMOPLASTIC UNLESS OTHERWISE NOTED.

3.) SEE SIGNAL PLANS FOR PLACEMENT OF STOP BARS.

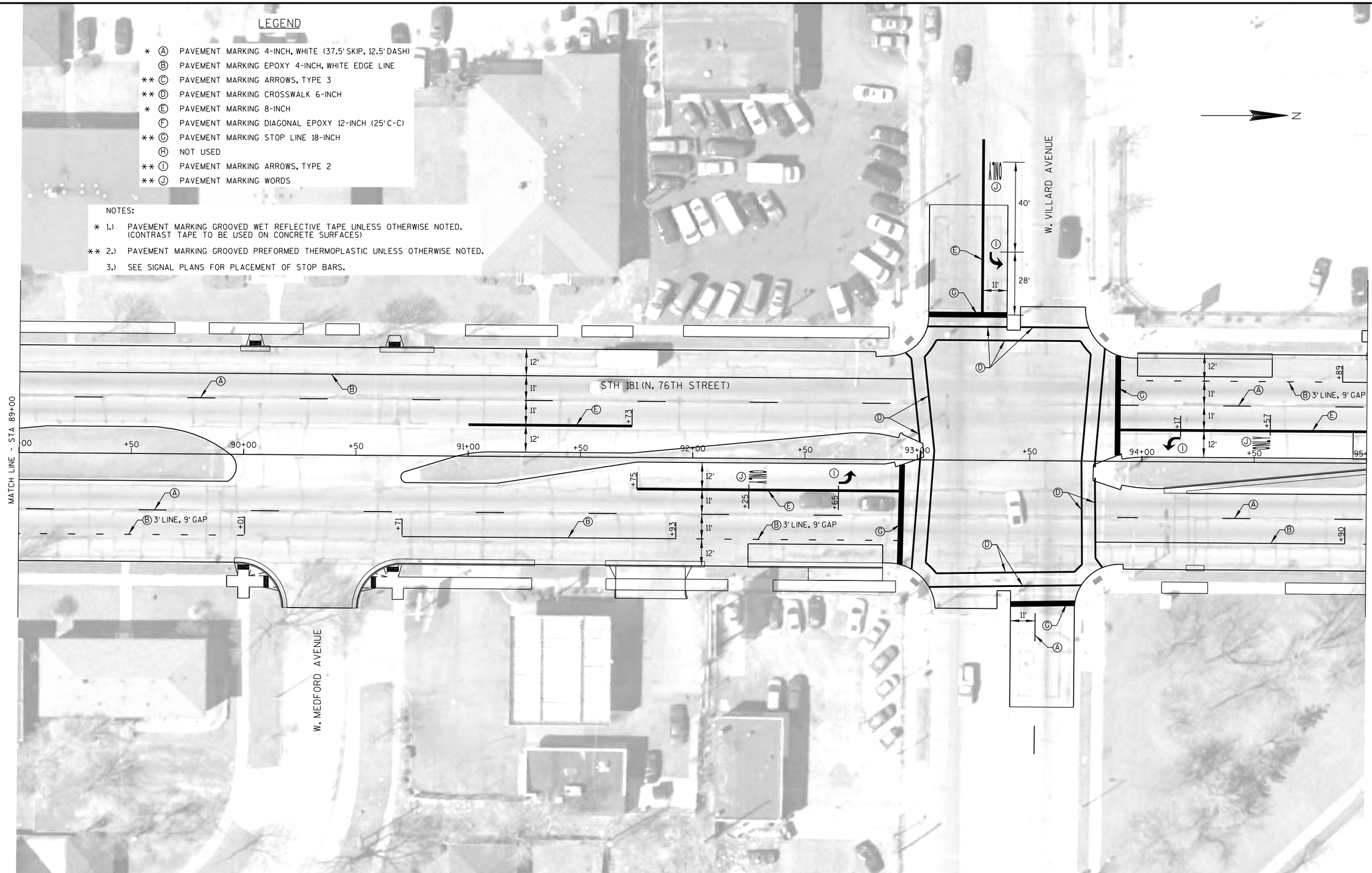


2

| PROJECT NO: 2140-13-70 | HWY: STH 181 | COUNTY: MILWAUKEE | PAVEMENT MARKING | SHEET 168 | E |
|---|---|---|---|---|---|

## LEGEND

- * Ⓐ PAVEMENT MARKING 4-INCH, WHITE (37.5' SKIP, 12.5' DASH)
- Ⓑ PAVEMENT MARKING EPOXY 4-INCH, WHITE EDGE LINE
- ** Ⓒ PAVEMENT MARKING ARROWS, TYPE 3
- ** Ⓓ PAVEMENT MARKING CROSSWALK 6-INCH
- * Ⓔ PAVEMENT MARKING 8-INCH
- Ⓕ PAVEMENT MARKING DIAGONAL EPOXY 12-INCH (25' C-C)
- ** Ⓖ PAVEMENT MARKING STOP LINE 18-INCH
- Ⓗ NOT USED
- ** Ⓘ PAVEMENT MARKING ARROWS, TYPE 2
- ** Ⓙ PAVEMENT MARKING WORDS

NOTES:

* 1.) PAVEMENT MARKING GROOVED WET REFLECTIVE TAPE UNLESS OTHERWISE NOTED. (CONTRAST TAPE TO BE USED ON CONCRETE SURFACES)

** 2.) PAVEMENT MARKING GROOVED PREFORMED THERMOPLASTIC UNLESS OTHERWISE NOTED.

3.) SEE SIGNAL PLANS FOR PLACEMENT OF STOP BARS.

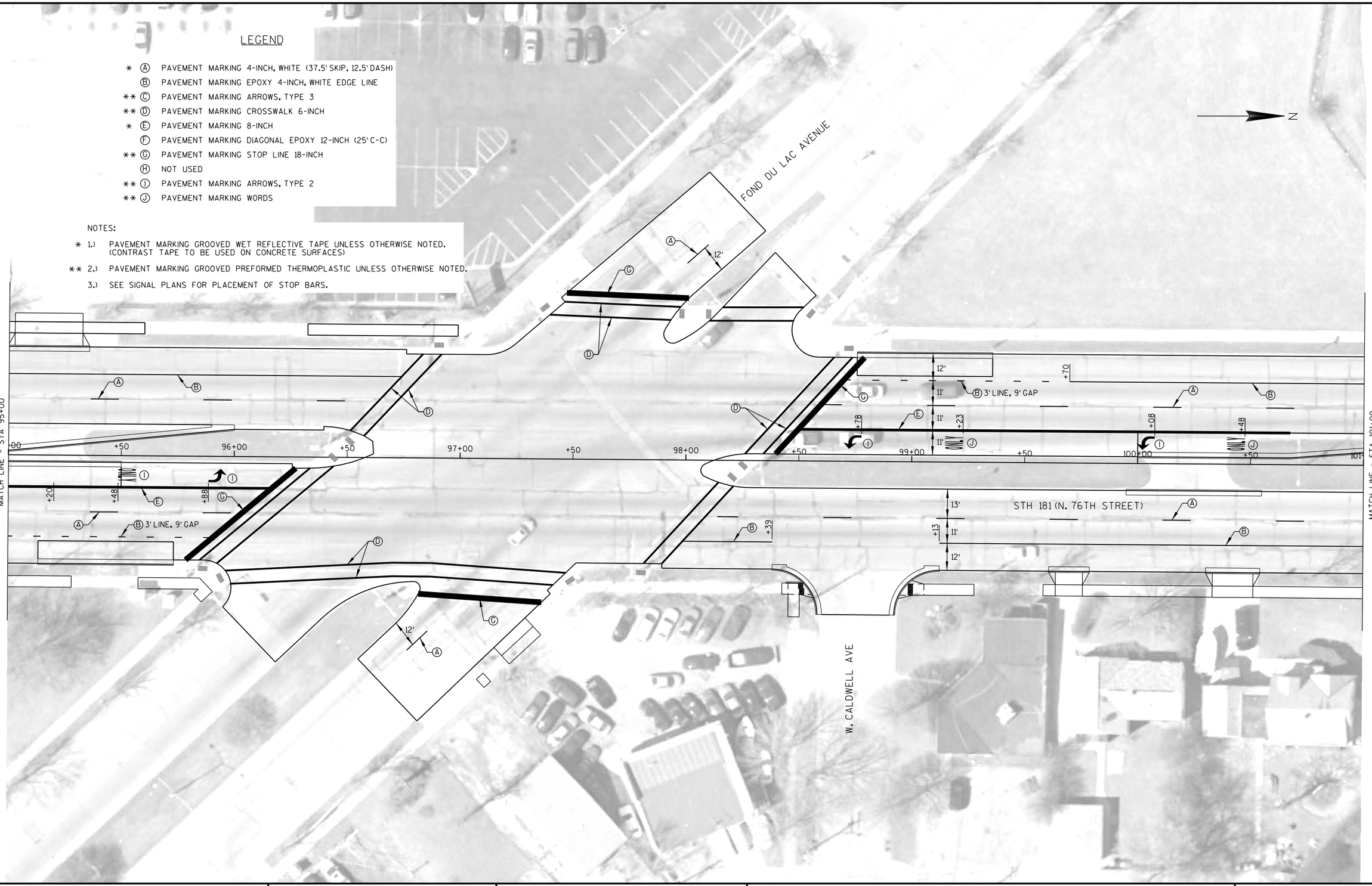


| PROJECT NO: 2140-13-70 | HWY: STH 181 | COUNTY: MILWAUKEE | PAVEMENT MARKING | SHEET 169 | E |
|---|---|---|---|---|---|

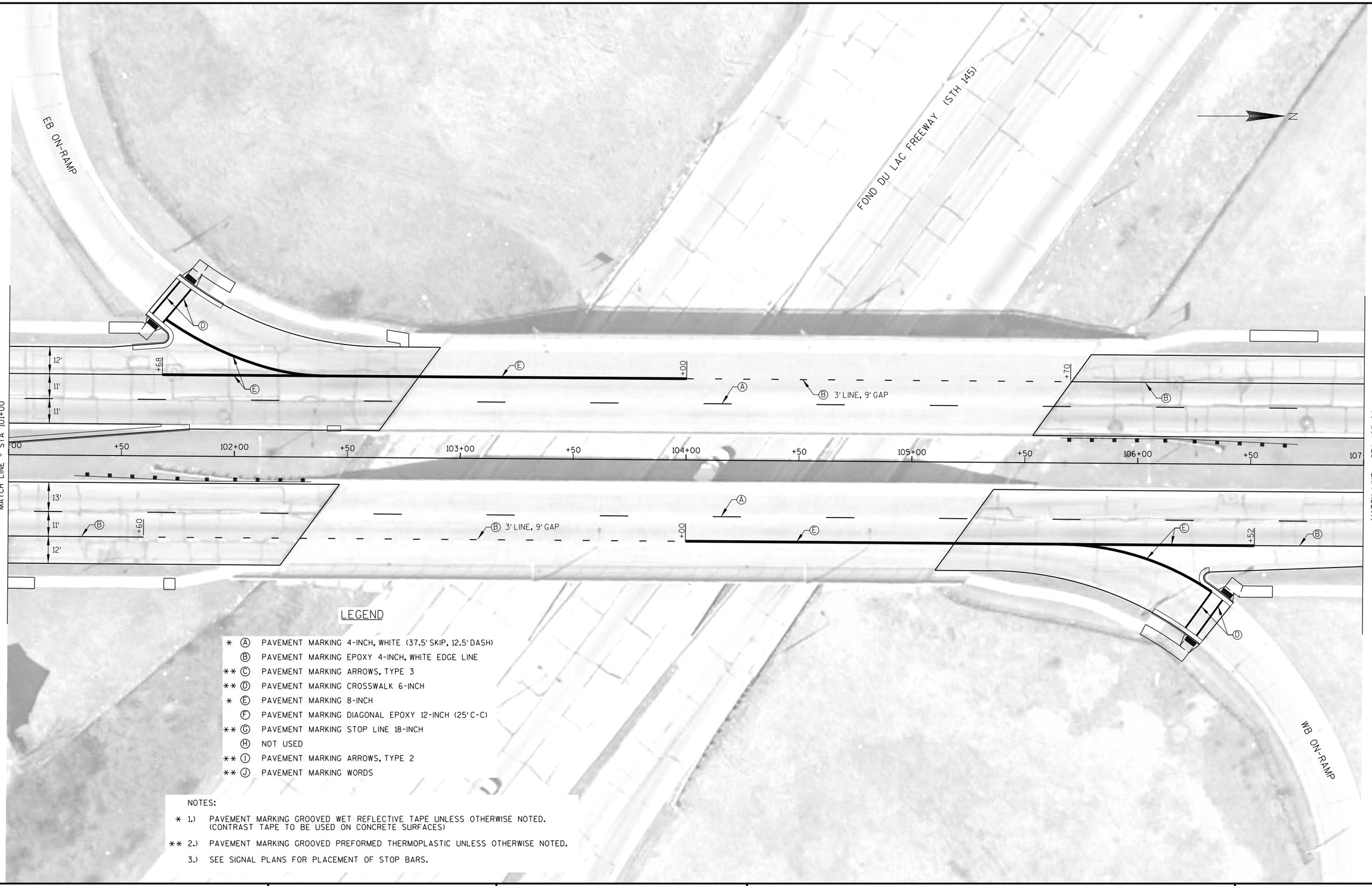


## LEGEND

| | | |
|---|---|---|
| * | Ⓐ | PAVEMENT MARKING 4-INCH, WHITE (37.5' SKIP, 12.5' DASH) |
| | Ⓑ | PAVEMENT MARKING EPOXY 4-INCH, WHITE EDGE LINE |
| ** | Ⓒ | PAVEMENT MARKING ARROWS, TYPE 3 |
| ** | Ⓓ | PAVEMENT MARKING CROSSWALK 6-INCH |
| * | Ⓔ | PAVEMENT MARKING 8-INCH |
| | Ⓕ | PAVEMENT MARKING DIAGONAL EPOXY 12-INCH (25' C-C) |
| ** | Ⓖ | PAVEMENT MARKING STOP LINE 18-INCH |
| | Ⓗ | NOT USED |
| ** | Ⓘ | PAVEMENT MARKING ARROWS, TYPE 2 |
| ** | Ⓙ | PAVEMENT MARKING WORDS |

NOTES:

* 1.) PAVEMENT MARKING GROOVED WET REFLECTIVE TAPE UNLESS OTHERWISE NOTED. (CONTRAST TAPE TO BE USED ON CONCRETE SURFACES)

** 2.) PAVEMENT MARKING GROOVED PREFORMED THERMOPLASTIC UNLESS OTHERWISE NOTED.

3.) SEE SIGNAL PLANS FOR PLACEMENT OF STOP BARS.

| PROJECT NO: 2140-13-70 | HWY: STH 181 | COUNTY: MILWAUKEE | PAVEMENT MARKING | SHEET 170 | E |
|---|---|---|---|---|---|

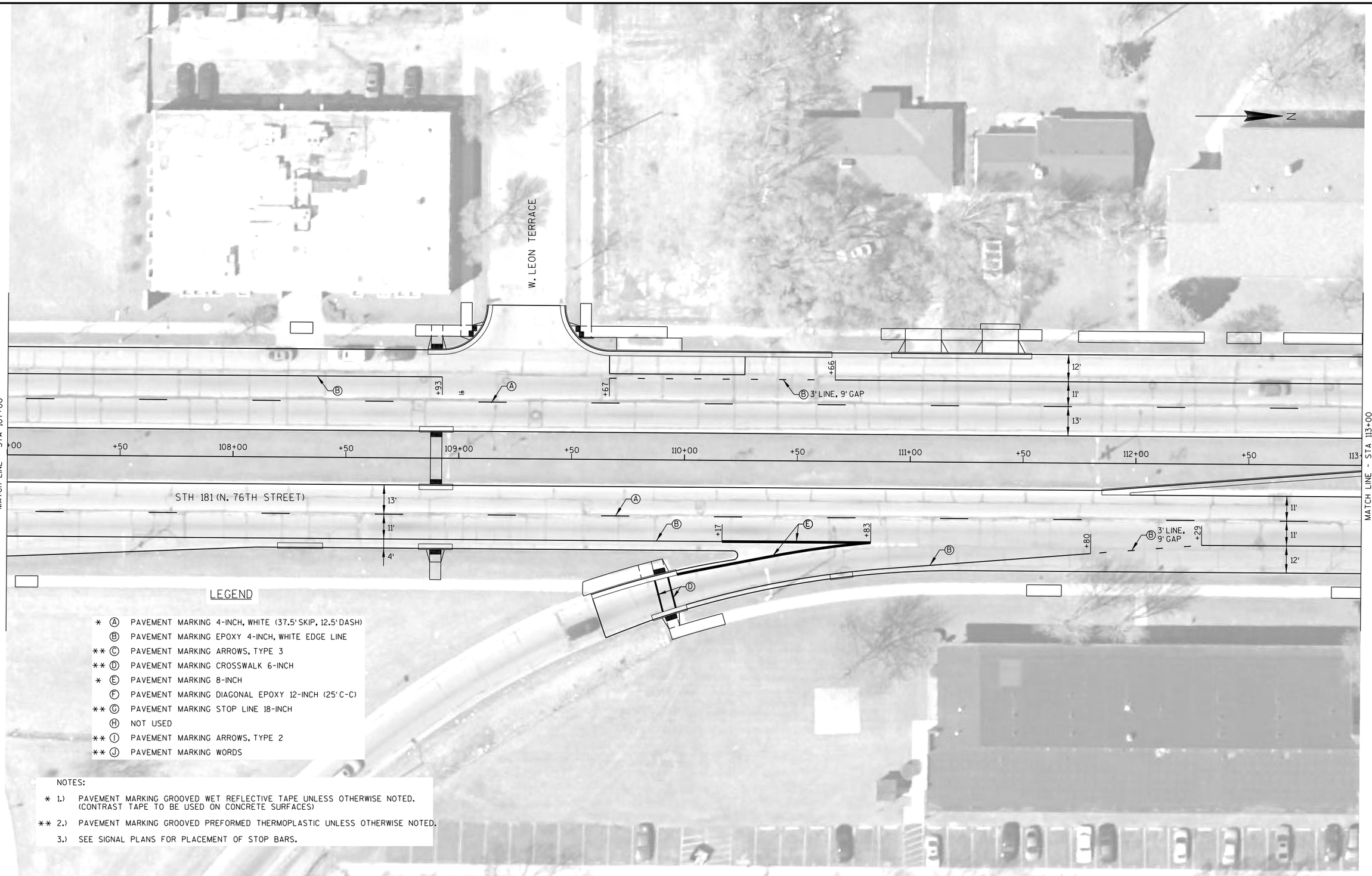


| PROJECT NO: 2140-13-70 | HWY: STH 181 | COUNTY: MILWAUKEE | PAVEMENT MARKING | SHEET 171 | E |
|---|---|---|---|---|---|

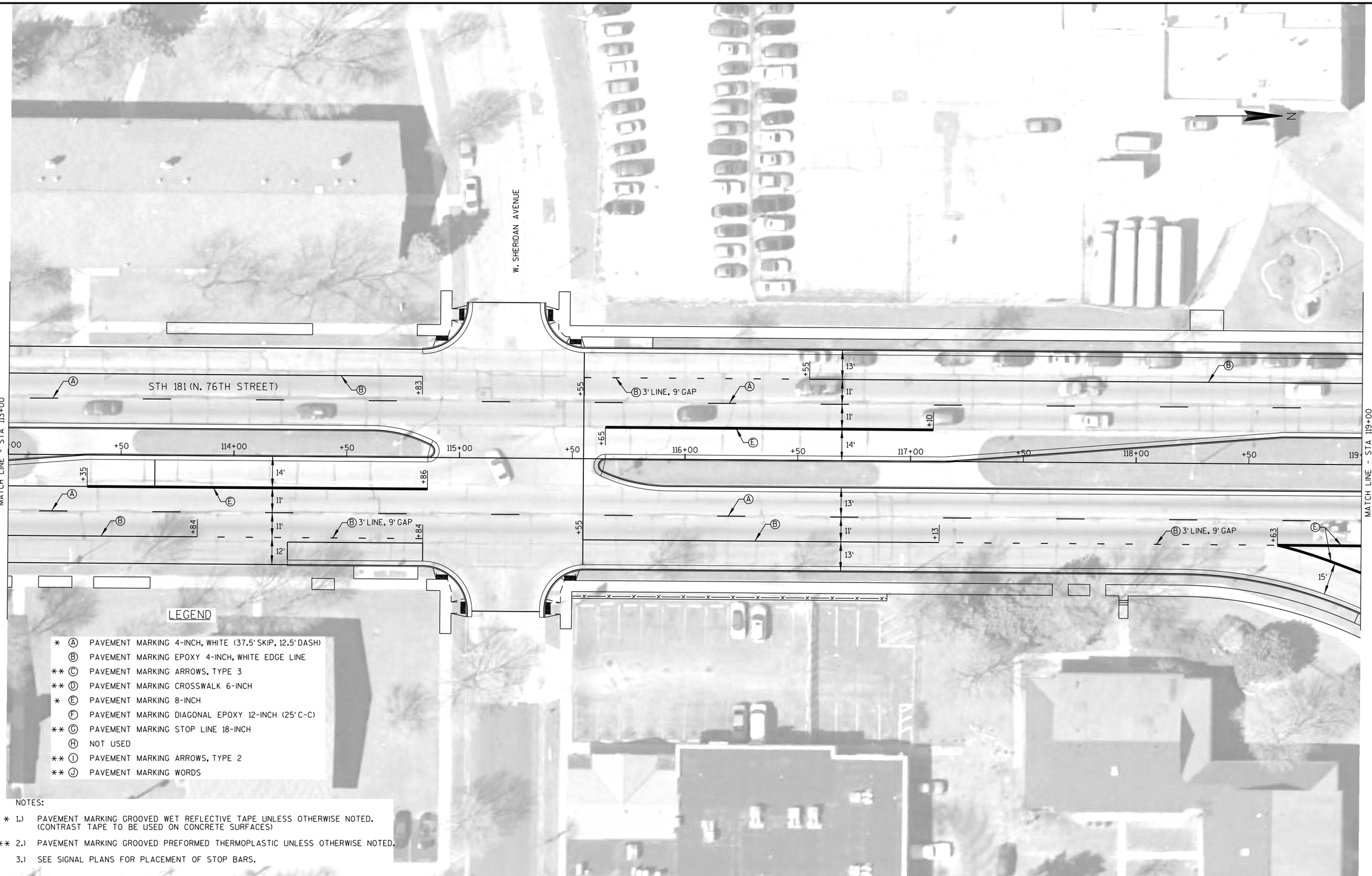


LEGEND

- * Ⓐ PAVEMENT MARKING 4-INCH, WHITE (37.5' SKIP, 12.5' DASH)
- Ⓑ PAVEMENT MARKING EPOXY 4-INCH, WHITE EDGE LINE
- ** Ⓒ PAVEMENT MARKING ARROWS, TYPE 3
- ** Ⓓ PAVEMENT MARKING CROSSWALK 6-INCH
- * Ⓔ PAVEMENT MARKING 8-INCH
- Ⓕ PAVEMENT MARKING DIAGONAL EPOXY 12-INCH (25' C-C)
- ** Ⓖ PAVEMENT MARKING STOP LINE 18-INCH
- Ⓗ NOT USED
- ** Ⓘ PAVEMENT MARKING ARROWS, TYPE 2
- ** Ⓙ PAVEMENT MARKING WORDS

NOTES:

* 1.) PAVEMENT MARKING GROOVED WET REFLECTIVE TAPE UNLESS OTHERWISE NOTED. (CONTRAST TAPE TO BE USED ON CONCRETE SURFACES)

** 2.) PAVEMENT MARKING GROOVED PREFORMED THERMOPLASTIC UNLESS OTHERWISE NOTED.

3.) SEE SIGNAL PLANS FOR PLACEMENT OF STOP BARS.

| PROJECT NO: 2140-13-70 | HWY: STH 181 | COUNTY: MILWAUKEE | PAVEMENT MARKING | SHEET 172 | E |
|---|---|---|---|---|---|

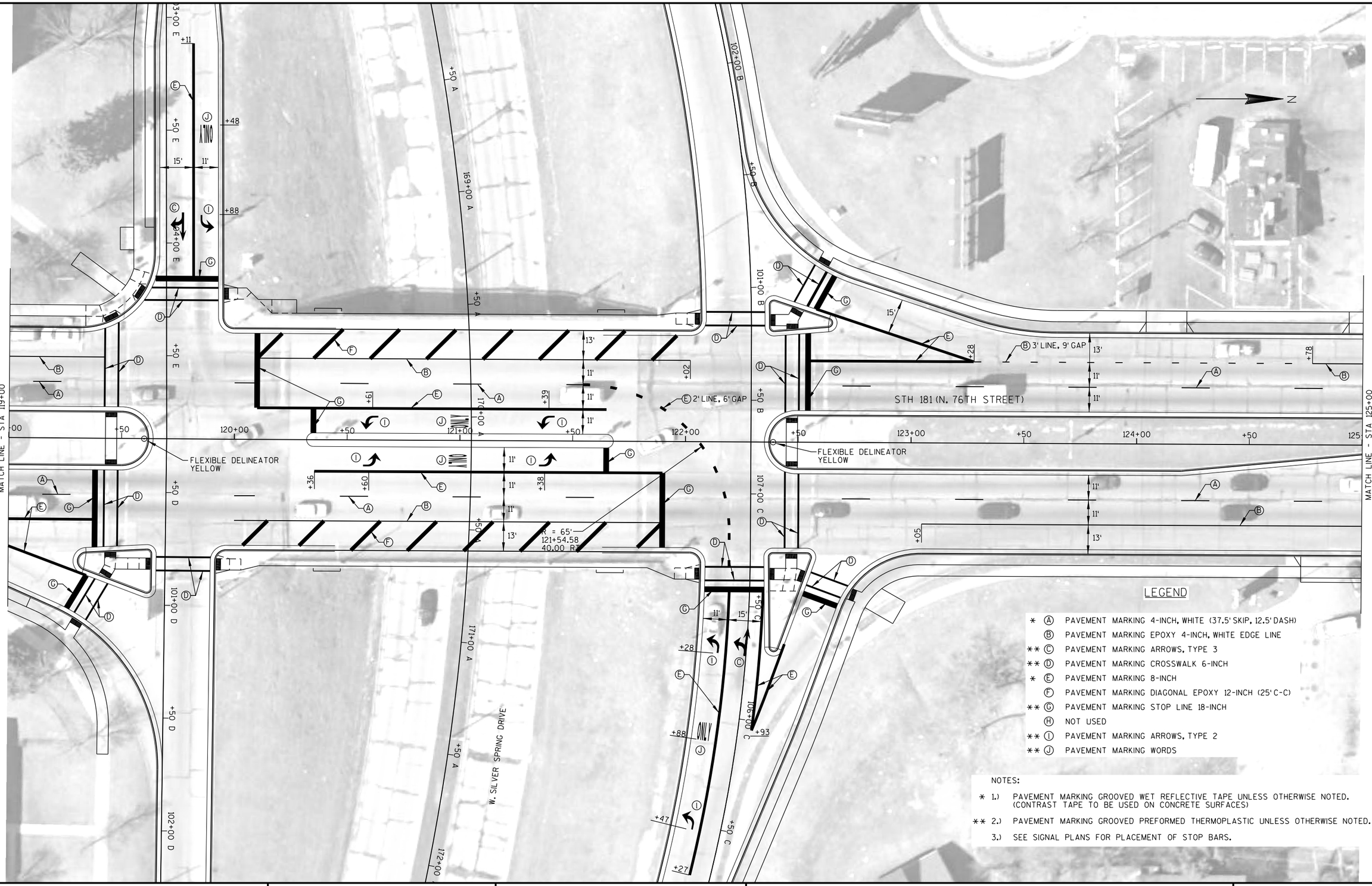


| PROJECT NO: 2140-13-70 | HWY: STH 181 | COUNTY: MILWAUKEE | PAVEMENT MARKING | SHEET 173 | E |
|---|---|---|---|---|---|

2

## LEGEND

- * Ⓐ PAVEMENT MARKING 4-INCH, WHITE (37.5' SKIP, 12.5' DASH)
- Ⓑ PAVEMENT MARKING EPOXY 4-INCH, WHITE EDGE LINE
- ** Ⓒ PAVEMENT MARKING ARROWS, TYPE 3
- ** Ⓓ PAVEMENT MARKING CROSSWALK 6-INCH
- * Ⓔ PAVEMENT MARKING 8-INCH
- Ⓕ PAVEMENT MARKING DIAGONAL EPOXY 12-INCH (25'C-C)
- ** Ⓖ PAVEMENT MARKING STOP LINE 18-INCH
- Ⓗ NOT USED
- ** Ⓘ PAVEMENT MARKING ARROWS, TYPE 2
- ** Ⓙ PAVEMENT MARKING WORDS

NOTES:

* 1.) PAVEMENT MARKING GROOVED WET REFLECTIVE TAPE UNLESS OTHERWISE NOTED. (CONTRAST TAPE TO BE USED ON CONCRETE SURFACES)

** 2.) PAVEMENT MARKING GROOVED PREFORMED THERMOPLASTIC UNLESS OTHERWISE NOTED.

3.) SEE SIGNAL PLANS FOR PLACEMENT OF STOP BARS.

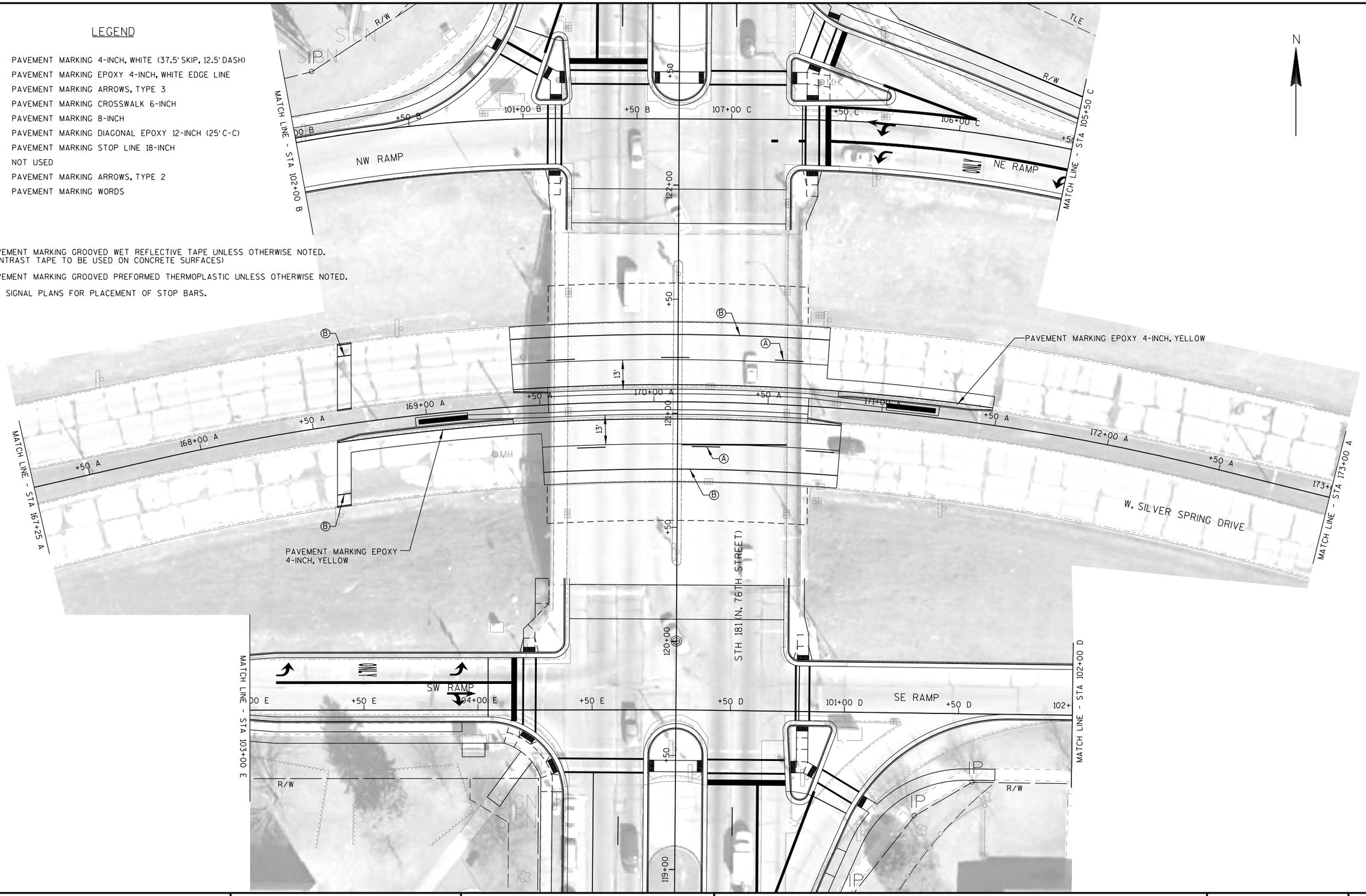


2

| PROJECT NO:2140-13-70 | HWY:STH 181 | COUNTY:MILWAUKEE | PAVEMENT MARKING | SHEET 174 | E |
|---|---|---|---|---|---|

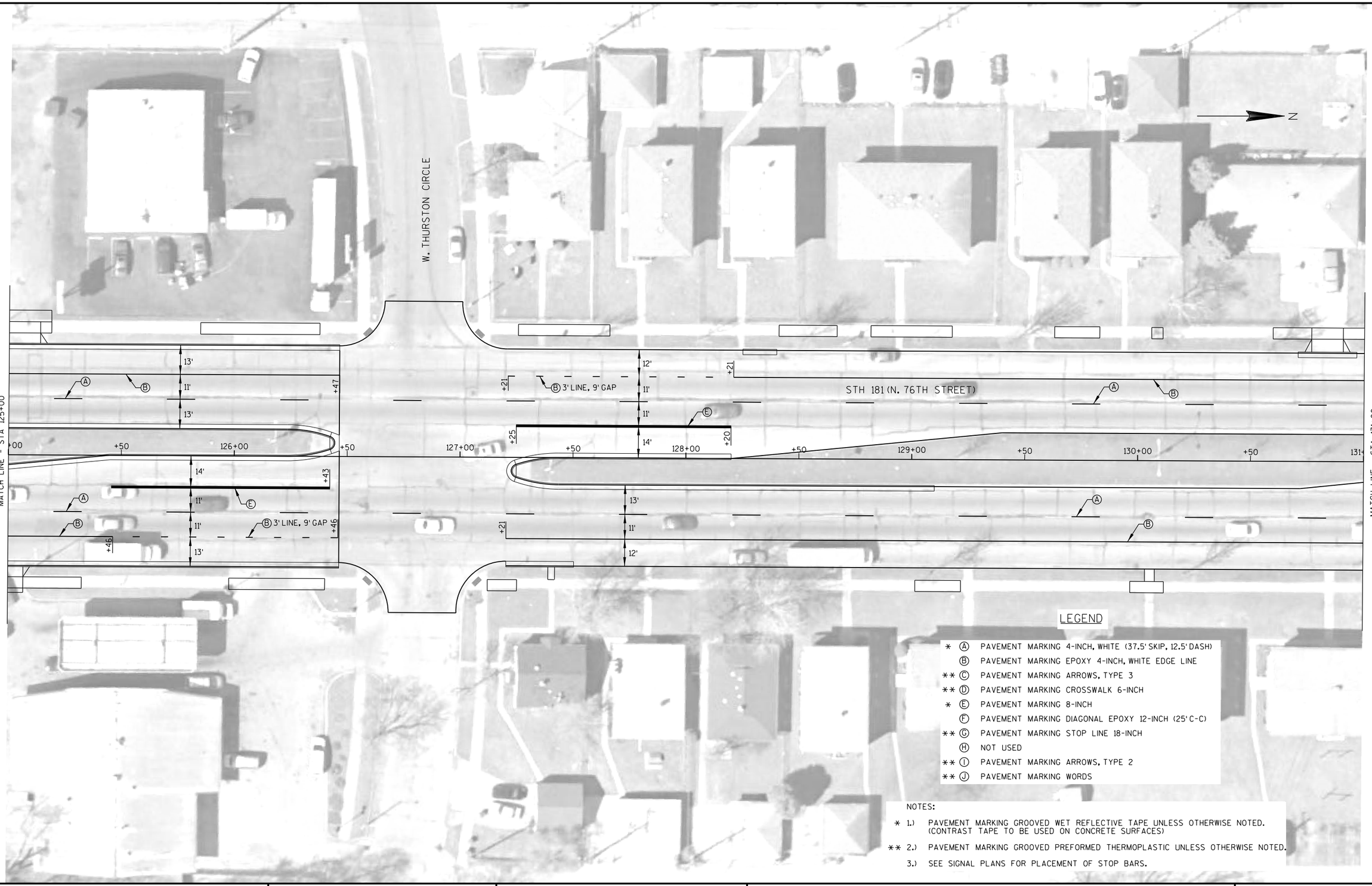


## LEGEND

| | | |
|---|---|---|
| * | Ⓐ | PAVEMENT MARKING 4-INCH, WHITE (37.5' SKIP, 12.5' DASH) |
| | Ⓑ | PAVEMENT MARKING EPOXY 4-INCH, WHITE EDGE LINE |
| ** | Ⓒ | PAVEMENT MARKING ARROWS, TYPE 3 |
| ** | Ⓓ | PAVEMENT MARKING CROSSWALK 6-INCH |
| * | Ⓔ | PAVEMENT MARKING 8-INCH |
| | Ⓕ | PAVEMENT MARKING DIAGONAL EPOXY 12-INCH (25' C-C) |
| ** | Ⓖ | PAVEMENT MARKING STOP LINE 18-INCH |
| | Ⓗ | NOT USED |
| ** | Ⓘ | PAVEMENT MARKING ARROWS, TYPE 2 |
| ** | Ⓙ | PAVEMENT MARKING WORDS |

NOTES:

* 1.) PAVEMENT MARKING GROOVED WET REFLECTIVE TAPE UNLESS OTHERWISE NOTED. (CONTRAST TAPE TO BE USED ON CONCRETE SURFACES)

** 2.) PAVEMENT MARKING GROOVED PREFORMED THERMOPLASTIC UNLESS OTHERWISE NOTED.

3.) SEE SIGNAL PLANS FOR PLACEMENT OF STOP BARS.

| PROJECT NO: 2140-13-70 | HWY: STH 181 | COUNTY: MILWAUKEE | PAVEMENT MARKING | SHEET 175 | E |
|---|---|---|---|---|---|

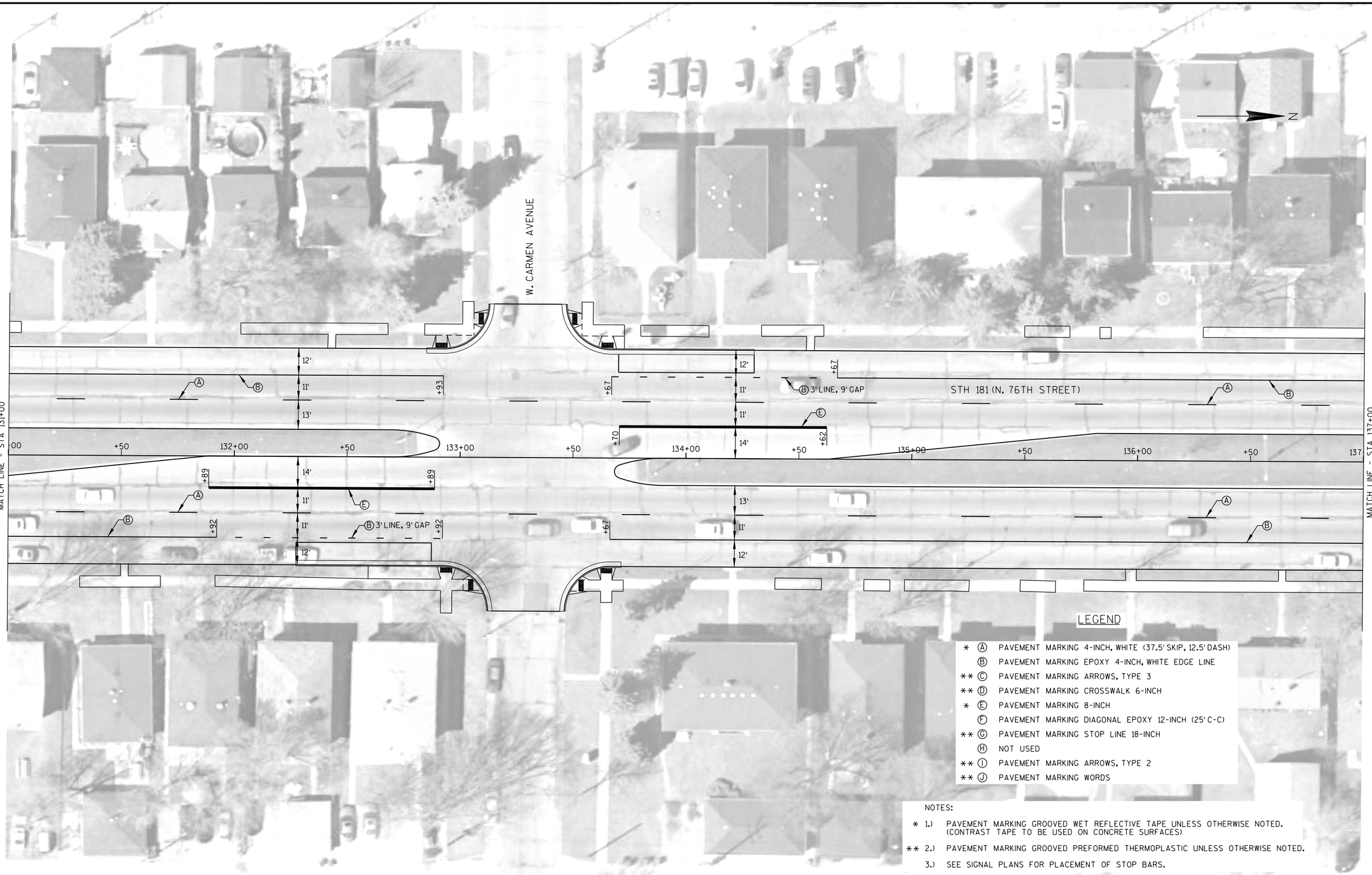


| PROJECT NO: 2140-13-70 | HWY: STH 181 | COUNTY: MILWAUKEE | PAVEMENT MARKING | SHEET 176 | E |
|---|---|---|---|---|---|

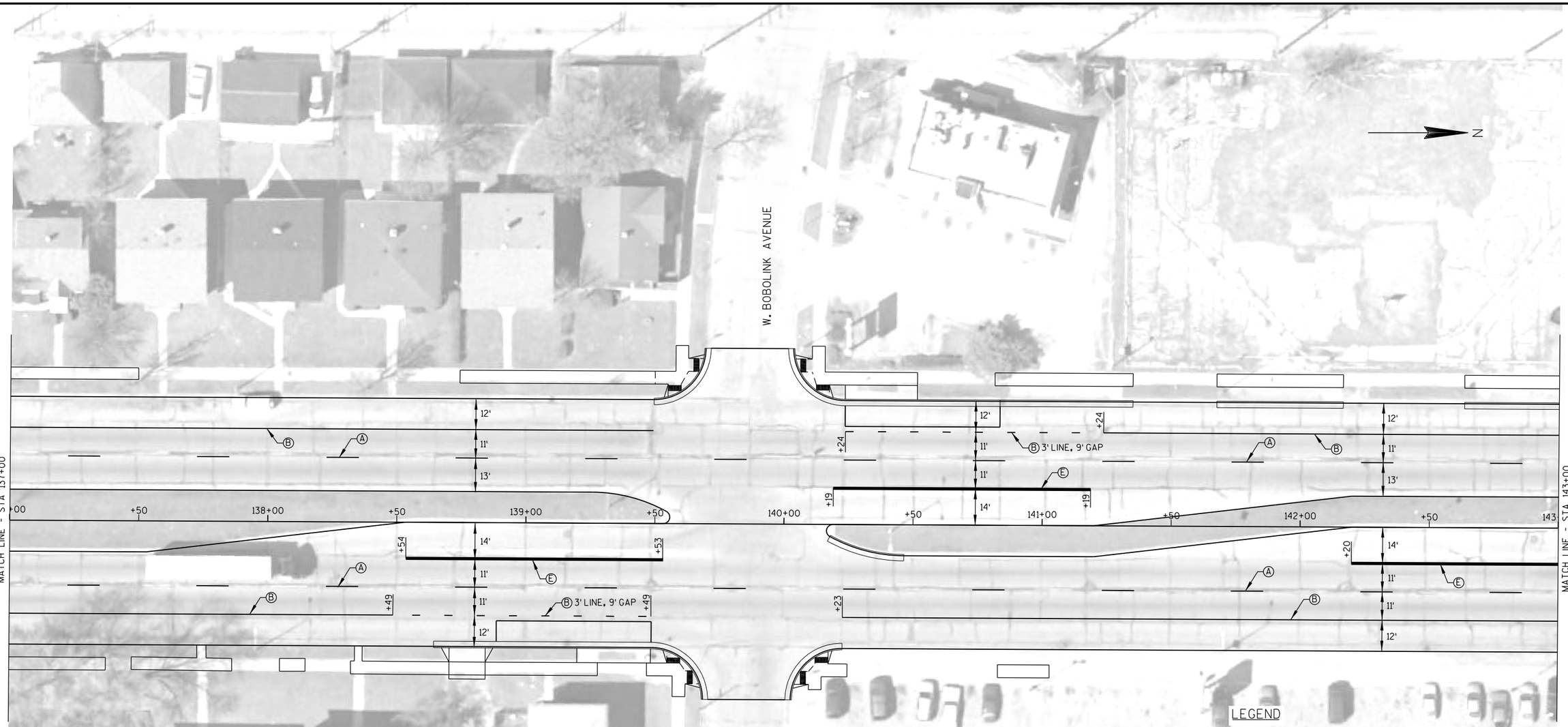


## LEGEND

| | | |
|---|---|---|
| * | Ⓐ | PAVEMENT MARKING 4-INCH, WHITE (37.5' SKIP, 12.5' DASH) |
| | Ⓑ | PAVEMENT MARKING EPOXY 4-INCH, WHITE EDGE LINE |
| ** | Ⓒ | PAVEMENT MARKING ARROWS, TYPE 3 |
| ** | Ⓓ | PAVEMENT MARKING CROSSWALK 6-INCH |
| * | Ⓔ | PAVEMENT MARKING 8-INCH |
| | Ⓕ | PAVEMENT MARKING DIAGONAL EPOXY 12-INCH (25' C-C) |
| ** | Ⓖ | PAVEMENT MARKING STOP LINE 18-INCH |
| | Ⓗ | NOT USED |
| ** | Ⓘ | PAVEMENT MARKING ARROWS, TYPE 2 |
| ** | Ⓙ | PAVEMENT MARKING WORDS |

NOTES:

* 1.) PAVEMENT MARKING GROOVED WET REFLECTIVE TAPE UNLESS OTHERWISE NOTED. (CONTRAST TAPE TO BE USED ON CONCRETE SURFACES)

** 2.) PAVEMENT MARKING GROOVED PREFORMED THERMOPLASTIC UNLESS OTHERWISE NOTED.

3.) SEE SIGNAL PLANS FOR PLACEMENT OF STOP BARS.

| PROJECT NO: 2140-13-70 | HWY: STH 181 | COUNTY: MILWAUKEE | PAVEMENT MARKING | SHEET 177 | E |
|---|---|---|---|---|---|

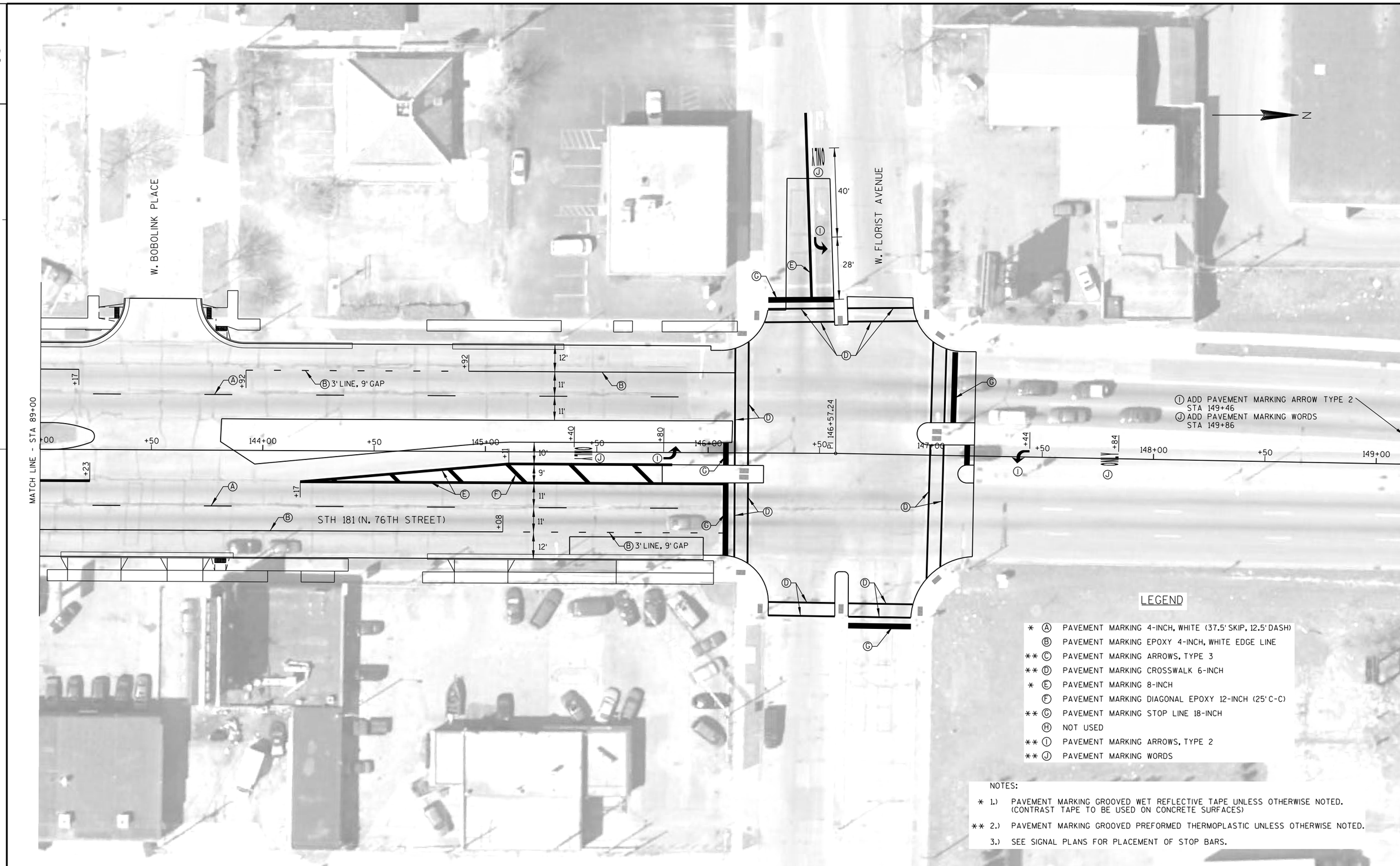


| PROJECT NO: 2140-13-70 | HWY: STH 181 | COUNTY: MILWAUKEE | PAVEMENT MARKING | SHEET 178 | E |
|---|---|---|---|---|---|

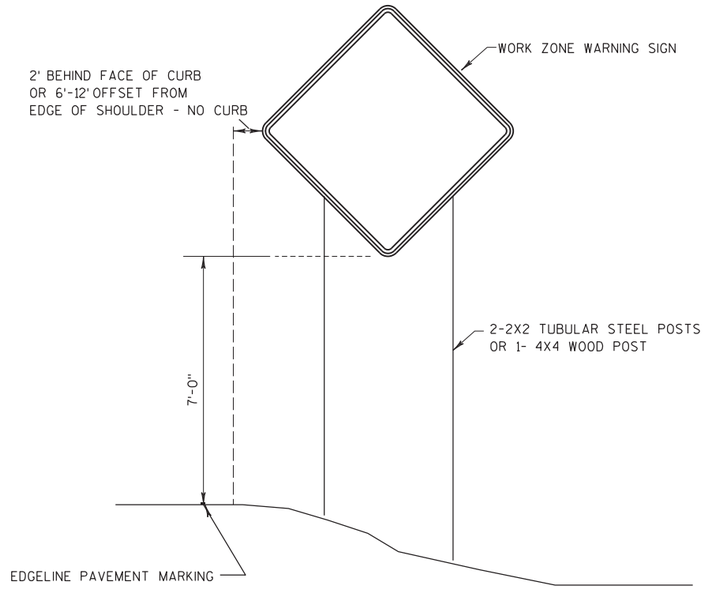


TYPICAL TEMPORARY TRAFFIC CONTROL DETAIL
MOUNTING ON FIXED SUPPORT

LONG TERM
7 DAYS OR MORE

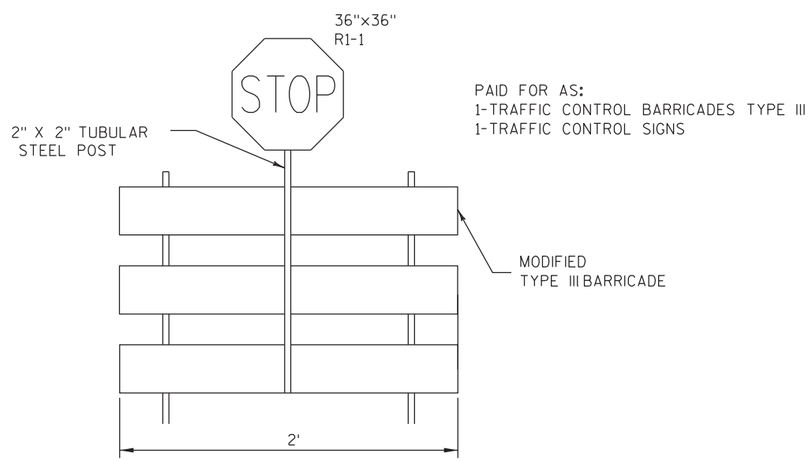


TEMPORARY STOP SIGN

## GENERAL NOTES FOR TRAFFIC CONTROL

(NOTES APPLY TO ALL TRAFFIC CONTROL AND STAGING SHEETS.)

PHASE CURB RAMP, CROSSOVER WORK AND INTERSECTION WORK TO MAINTAIN PEDESTRIAN ACCESS. SEE SDD "TRAFFIC CONTROL, PEDESTRIAN ACCOMODATION".

ALL SIGNS ARE 48-INCH X 48-INCH UNLESS OTHERWISE NOTED.

"WO" SIGNS ARE THE SAME AS "W" SIGNS EXCEPT THE BACKGROUND IS REFLECTIVE ORANGE.

THE EXACT NUMBER, LOCATION, AND SPACING OF ALL SIGNS AND DEVICES SHALL BE ADJUSTED TO FIT FIELD CONDITIONS AS APPROVED BY THE ENGINEER.

ALL SIGNS INAPPROPRIATE TO THE STATUS OF THE CONTROL ZONE INCLUDING EXISTING SIGNING IN THE VICINITY, SHALL BE COVERED OR REMOVED AS SPECIFIED IN THE PLANS AND/OR THE SPECIAL PROVISIONS OR AS DIRECTED BY THE ENGINEER.

SEE SPECIAL PROVISIONS FOR ADDITIONAL TRAFFIC CONTROL/STAGING REQUIREMENTS.

BARRICADES OR DRUMS THAT MUST BE MOVED FOR A WORK OPERATION SHALL BE IMMEDIATELY RE-ESTABLISHED UPON COMPLETION OF THE OPERATION OR, FOR CONTINUING OPERATIONS, AT THE END OF EACH WORKING DAY.

REMOVE ALL EXISTING PAVEMENT MARKINGS WHICH CONFLICT WITH THE TRAFFIC CONTROL.

TRAFFIC CONTROL DRUMS IN TAPERS SHALL BE EQUIPPED WITH WARNING LIGHTS, TYPE "C", ONE WAY LIGHTS IN TAPERS ONLY, UNLESS OTHERWISE SHOWN.

BARRICADE STRIPES ARE TO BE SLOPED DOWNWARD IN THE DIRECTION OF TRAFFIC FLOW.

CONTRACTOR TO CONTACT JAMES BROWN (414-286-3276) OR SHARON BETTHAUSER (414-286-3632) WITH THE CITY OF MILWAUKEE FIVE WORKING DAYS IN ADVANCE OF NEED FOR POSTING OF TEMPORARY NO-PARKING SIGNS.

CONTRACTOR TO PROVIDE AND MAINTAIN TEMPORARY ASPHALT WEDGE THROUGH CROSS STREETS IN MILLED AREAS TO MAINTAIN ACCESS.

CONTRACTOR TO PROVIDE AND MAINTAIN GRAVEL WEDGE IN FRONT OF DRIVEWAYS TO MAINTAIN ACCESS.

DO NOT REMOVE ROUTE MARKERS DURING CONSTRUCTION.

PROVIDE R1-1F SIGNS AT TEMPORARY SIGNAL LOCATIONS DURING CONSTRUCTION.

CONTRACTOR TO MAINTAIN ONE THRU AND ONE LEFT TURN LANE AT SIGNALIZED INTERSECTIONS. STAGE LEFT TURN LANE BASE PATCHING, MILLING AND PAVING OPERATIONS TO MAINTAIN LEFT TURN LANE.

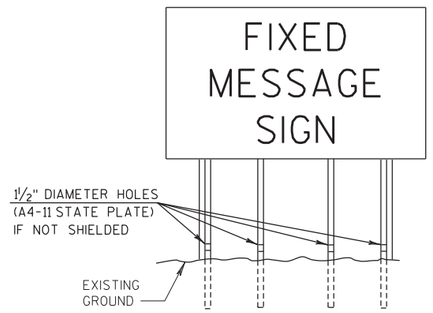


FRONT VIEW

NOTES

1. SEE TRAFFIC CONTROL SHEETS FOR SIGN LOCATIONS.

2. SEE TABLES BELOW FOR REQUIRED NUMBER OF POSTS.

* 6' FROM EDGE OF A PAVED SHOULDER OR 12' FROM THE EDGE OF PAVEMENT (EDGE LINE LOCATION) OR 2' FROM OUTSIDE EDGE OF GRAVEL, WHICHEVER IS GREATER UNLESS DIRECTED BY PROJECT ENGINEER.

** THE EXISTENCE OF CURB AND GUTTER DOES NOT IN ITSELF MANDATE THE VERTICAL CLEARANCE ILLUSTRATED. THAT HEIGHT IS TYPICALLY MEASURED WHERE THERE IS SIDEWALK ADJACENT TO THE ROADWAY OR PARKING IS PERMITTED. IN THE ABSENCE OF SIDEWALK, VERTICAL CLEARANCE IS MEASURED FROM THE TOP OF THE CURB. IF NO SIDEWALK AND NO PARKING, VERTICAL CLEARANCE MAY BE REDUCED TO 5' MINIMUM. OFFSET OF SIGNS IS MEASURED FROM THE CURB FLOWLINE.

3. 4X6 WOOD POSTS SHALL HAVE TWO HOLES PER STATE PLATE A4-11

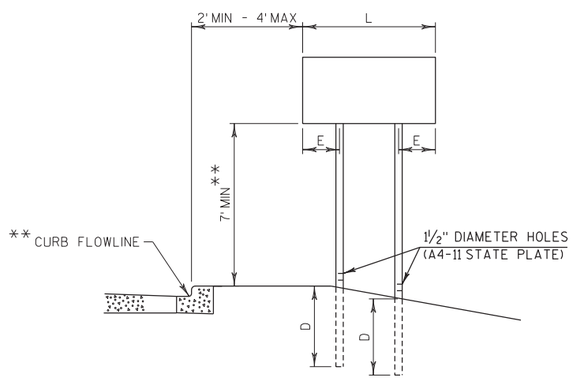


URBAN AREA

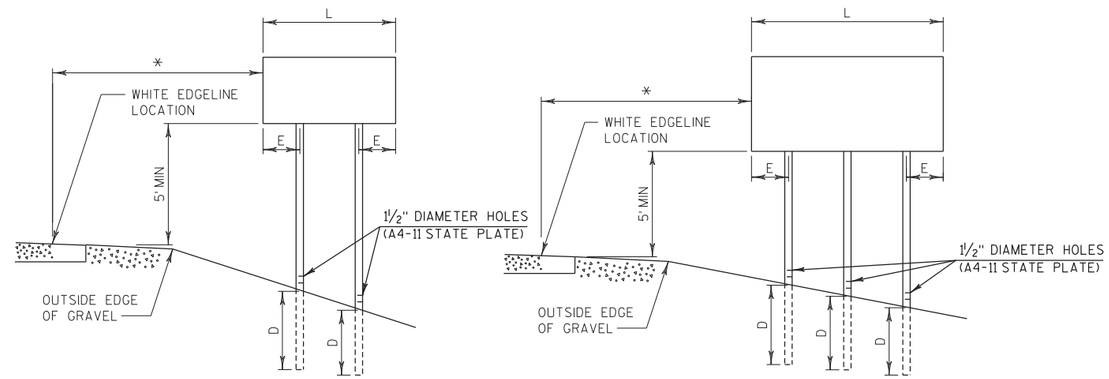


RURAL AREA

| SIGN SHAPE OTHER THAN DIAMOND (TWO POSTS REQUIRED) | |
|---|---|
| L | E |
| GREATER THAN 48" LESS THAN 60" | 12" |
| 60" TO 120" | L/5 |

| SIGN SHAPE OTHER THAN DIAMOND (THREE POSTS REQUIRED) | |
|---|---|
| L | E |
| GREATER THAN 120" LESS THAN 168" | 12" |

| SIGN SHAPE OTHER THAN DIAMOND (FOUR POSTS REQUIRED) | |
|---|---|
| L | E |
| 168" AND GREATER | 12" |

POST EMBEDMENT DEPTH

| AREA OF SIGN INSTALLATION (SQ. FT.) | D (MIN) |
|---|---|
| 20 OR LESS | 4' |
| GREATER THAN 20 | 5' |

NOTE TO DESIGNERS: SHOW POSTS ON FMS SIGN DETAILS.

## POST MOUNTING DETAIL FOR TRAFFIC CONTROL FIXED MESSAGE SIGNS

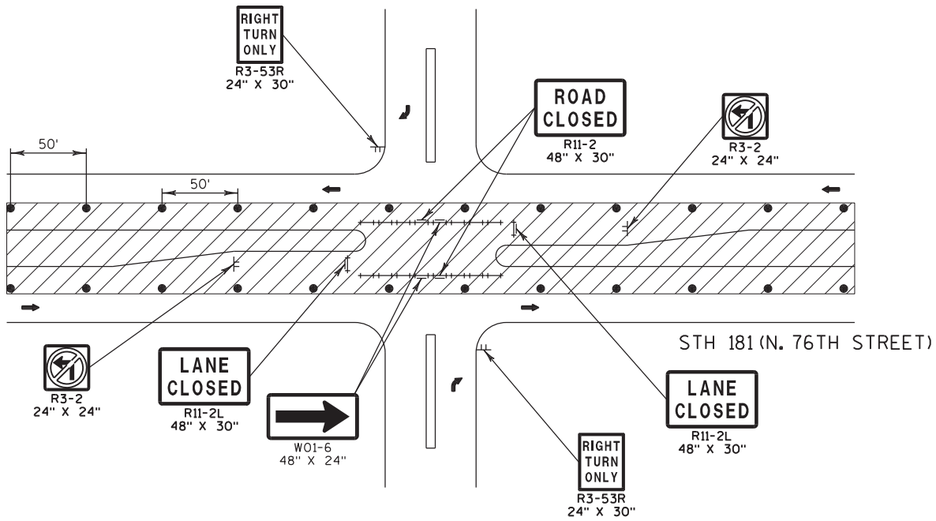


TRAFFIC CONTROL FOR INTERSECTION WITHIN SINGLE INSIDE LANE CLOSURE WHILE INTERSECTION IS CLOSED

W. CARMEN AVENUE
W. BOBOLINK AVENUE

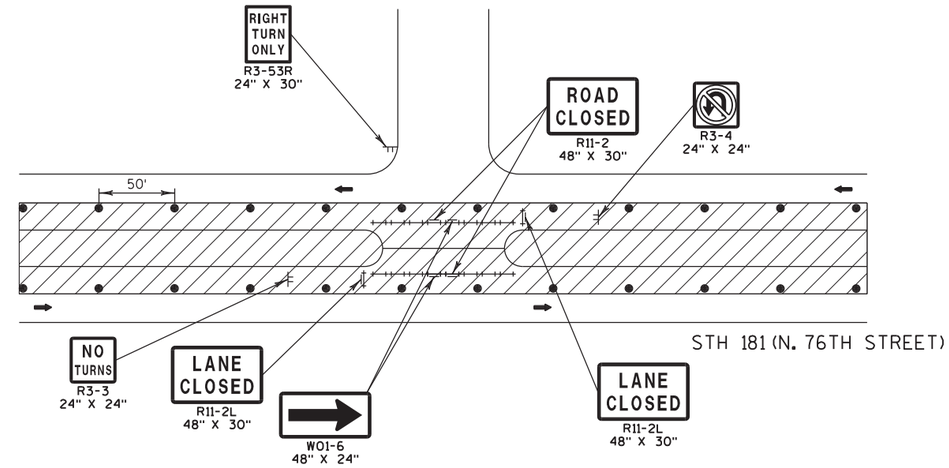


TRAFFIC CONTROL FOR MEDIAN OPENING CLOSED TO TRAFFIC WITHIN INSIDE LANE CLOSURE

W. MEDFORD AVENUE
W. BOBOLINK PLACE

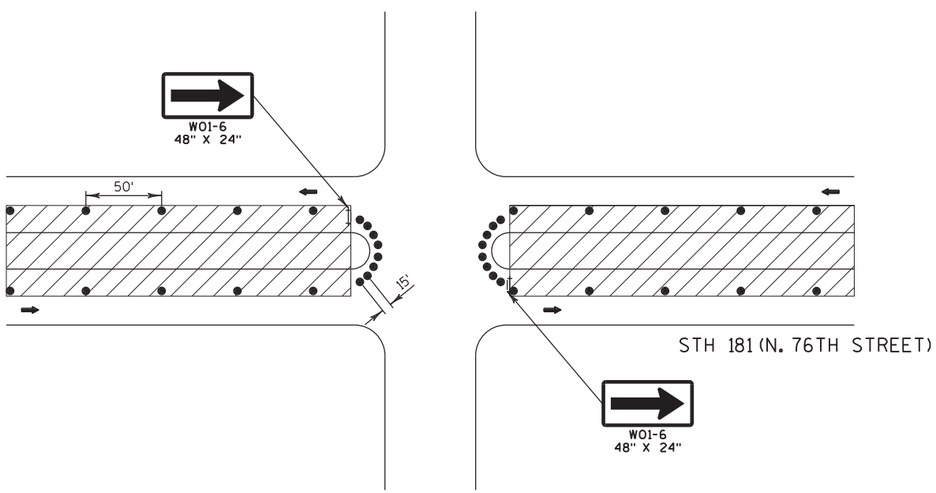


TRAFFIC CONTROL FOR MEDIAN OPENING OPEN TO TRAFFIC WITHIN INSIDE LANE CLOSURE

W. MEDFORD AVENUE
W. CARMEN AVENUE
W. BOBOLINK AVENUE
W. BOBOLINK PLACE

LEGEND

- WORK ZONE
- DIRECTION OF TRAFFIC
- TRAFFIC CONTROL DRUM
- SIGN ON TEMPORARY SUPPORT
- TYPE III BARRICADE WITH/WITHOUT SIGN
- TYPE III BARRICADE WITH ATTACHED SIGN AND TYPE "A" WARNING LIGHT (FLASHING)

| PROJECT NO: 2140-13-70 | HWY: STH 181 | COUNTY: MILWAUKEE | TRAFFIC CONTROL DETAILS FOR INSIDE LANE CLOSURE | SHEET 181 | E |
|---|---|---|---|---|---|

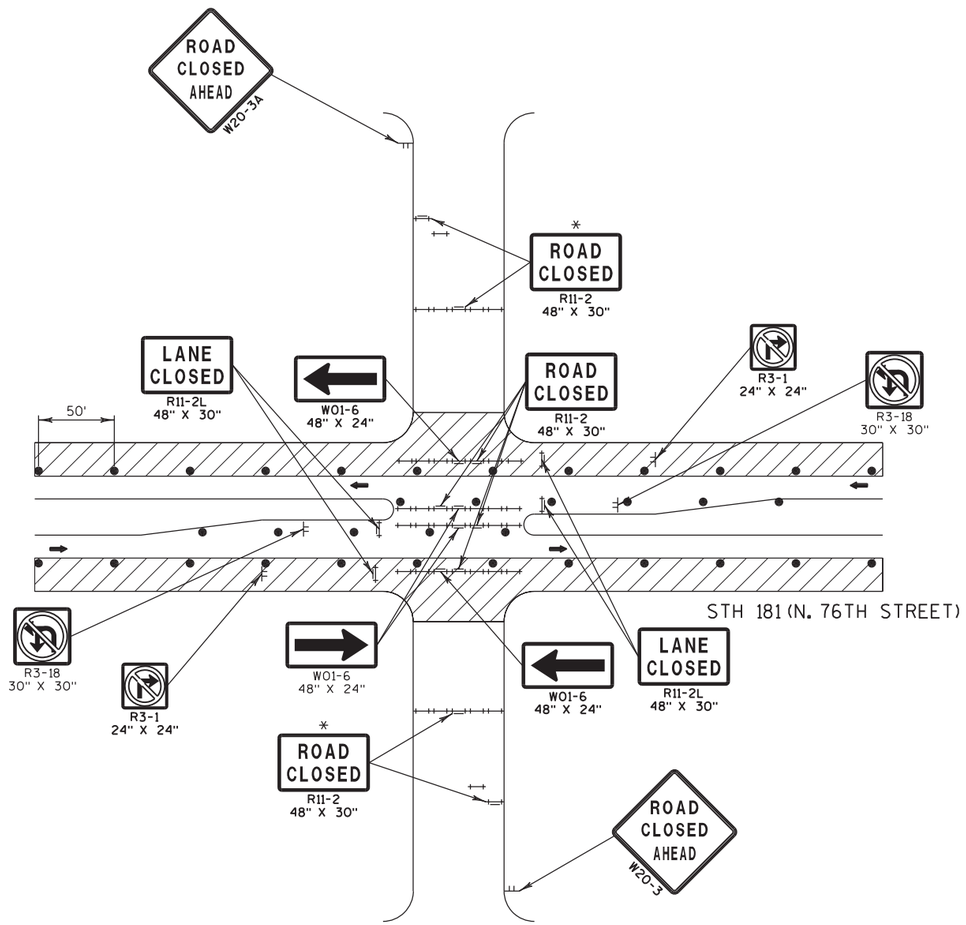


TRAFFIC CONTROL FOR INTERSECTION WITHIN SINGLE OUTSIDE LANE CLOSURE WHILE INTERSECTION IS CLOSED

W. CARMEN AVENUE
W. BOBOLINK AVENUE

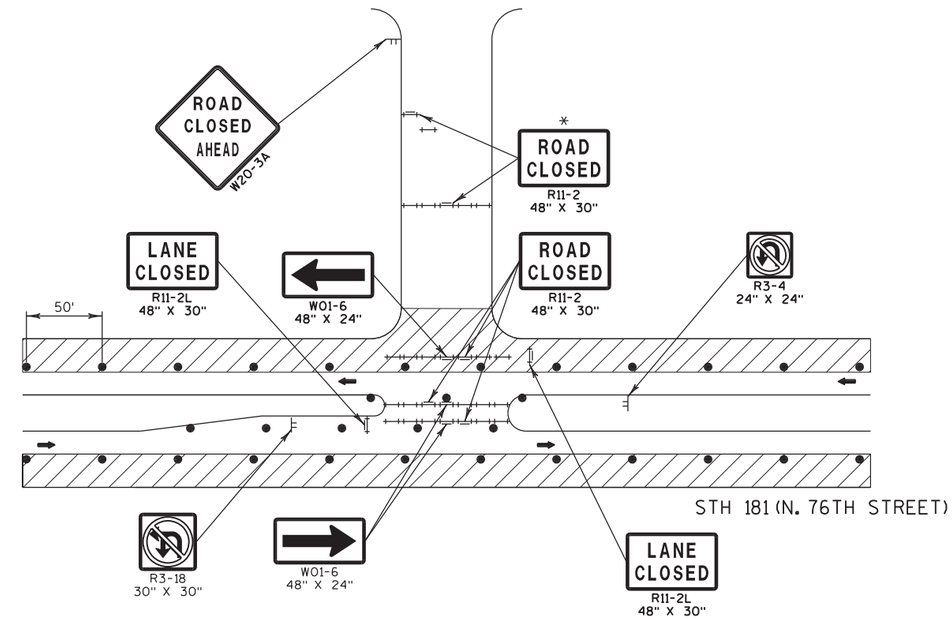


TRAFFIC CONTROL FOR MEDIAN OPENING CLOSED TO TRAFFIC WITHIN OUTSIDE LANE CLOSURE

W. MEDFORD AVENUE
W. BOBOLINK PLACE

LEGEND

- WORK ZONE
- DIRECTION OF TRAFFIC
- TRAFFIC CONTROL DRUM
- SIGN ON TEMPORARY SUPPORT
- TYPE III BARRICADE WITH/WITHOUT SIGN
- * TYPE III BARRICADE WITH ATTACHED SIGN AND TYPE "A" WARNING LIGHT (FLASHING)

| PROJECT NO: 2140-13-70 | HWY: STH 181 | COUNTY: MILWAUKEE | TRAFFIC CONTROL DETAILS FOR OUTSIDE LANE CLOSURE | SHEET 182 | E |
|---|---|---|---|---|---|

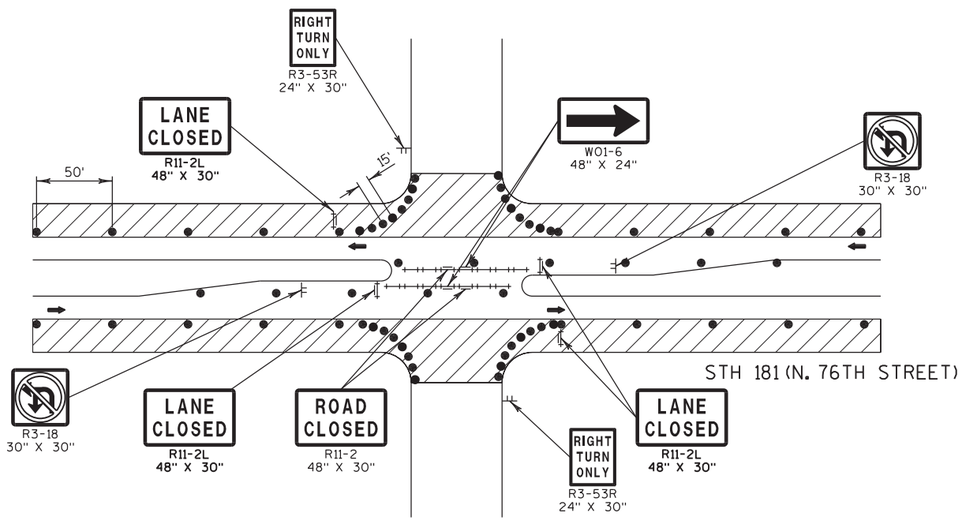


TRAFFIC CONTROL FOR INTERSECTION WITHIN SINGLE OUTSIDE LANE CLOSURE WHILE INTERSECTION IS CLOSED

W. CARMEN AVENUE
W. BOBOLINK AVENUE

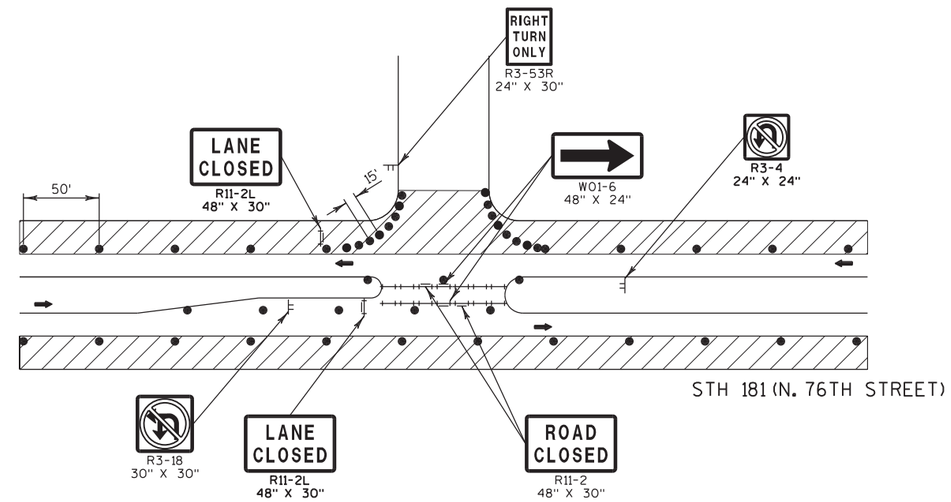


TRAFFIC CONTROL FOR SIDE ROAD OPEN TO TRAFFIC WITHIN OUTSIDE LANE CLOSURE

W. MEDFORD AVENUE
W. BOBOLINK PLACE

LEGEND

- WORK ZONE
- DIRECTION OF TRAFFIC
- TRAFFIC CONTROL DRUM
- SIGN ON TEMPORARY SUPPORT
- TYPE III BARRICADE WITH/WITHOUT SIGN
- TYPE III BARRICADE WITH ATTACHED SIGN AND TYPE "A" WARNING LIGHT (FLASHING)

| PROJECT NO: 2140-13-70 | HWY: STH 181 | COUNTY: MILWAUKEE | TRAFFIC CONTROL DETAILS FOR OUTSIDE LANE CLOSURE | SHEET 183 | E |
|---|---|---|---|---|---|

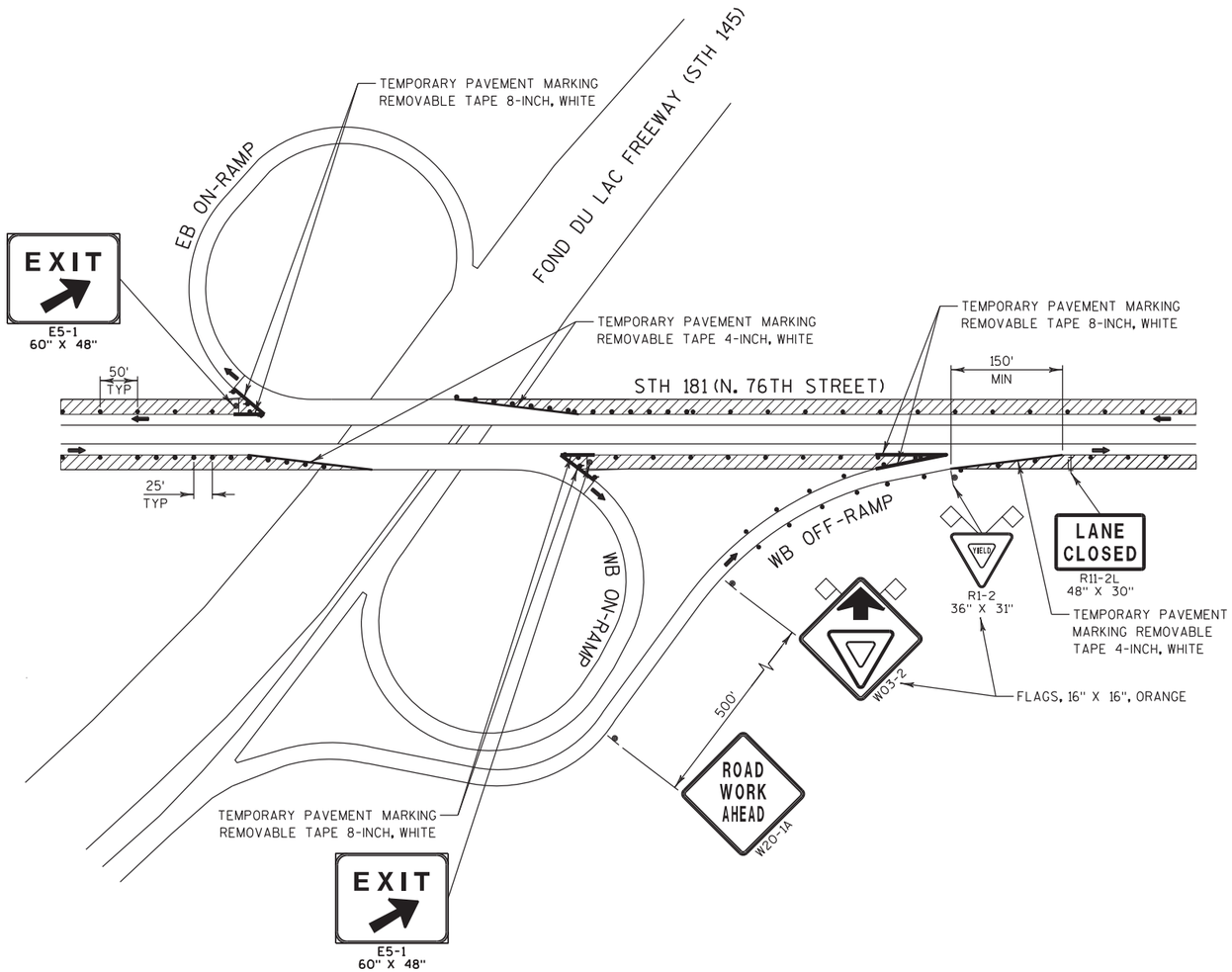


TRAFFIC CONTROL FOR ENTRANCE RAMP WITHIN LANE CLOSURE WHILE RAMP IS OPEN

EB ENTRANCE RAMP TO FOND DU LAC FREEWAY (STH 145)
WB ENTRANCE RAMP TO FOND DU LAC FREEWAY (STH 145)
NB EXIT RAMP TO STH 181 (N. 76TH STREET)

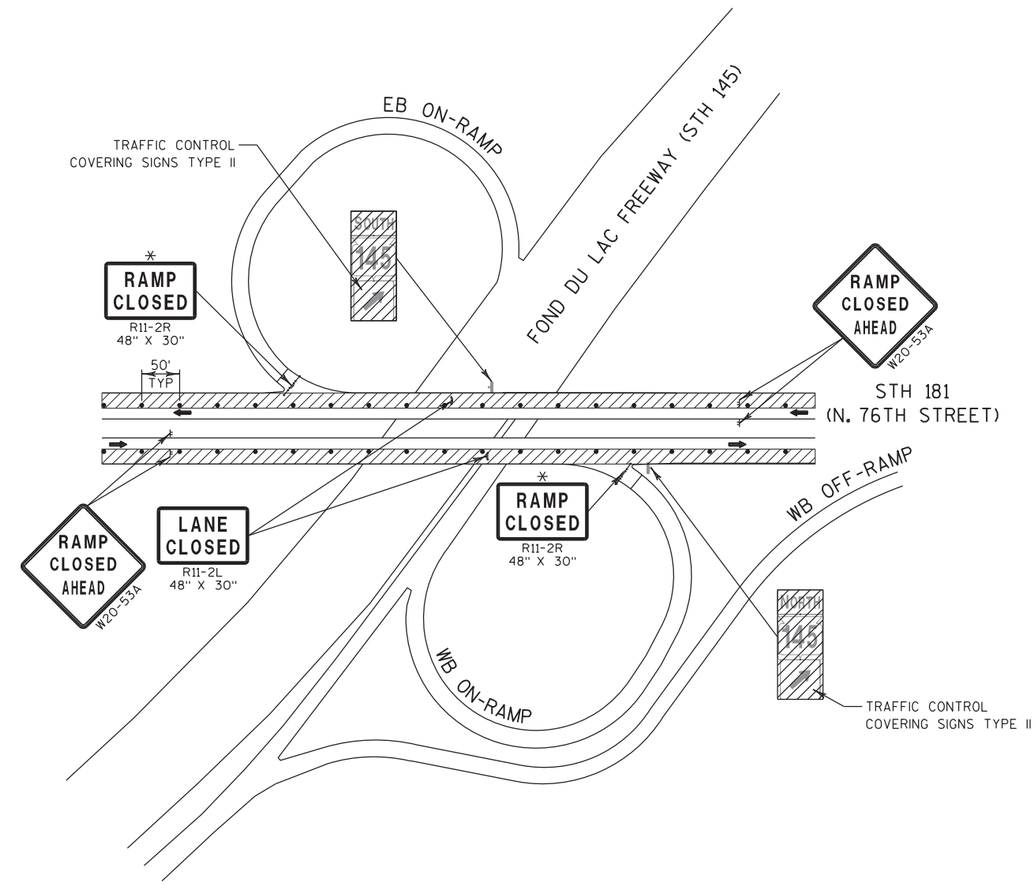


TRAFFIC CONTROL FOR ENTRANCE RAMP WITHIN LANE CLOSURE WHILE RAMP IS CLOSED (SHORT TERM ONLY)

EB ENTRANCE RAMP TO FOND DU LAC FREEWAY (STH 145)
WB ENTRANCE RAMP TO FOND DU LAC FREEWAY (STH 145)

LEGEND

- WORK ZONE
- DIRECTION OF TRAFFIC
- TRAFFIC CONTROL DRUM
- SIGN ON TEMPORARY SUPPORT
- TYPE III BARRICADE WITH/WITHOUT SIGN
- TYPE III BARRICADE WITH ATTACHED SIGN AND TYPE "A" WARNING LIGHT (FLASHING)

| PROJECT NO: 2140-13-70 | HWY: STH 181 | COUNTY: MILWAUKEE | TRAFFIC CONTROL FOR ENTRANCE RAMP | SHEET 184 | E |
|---|---|---|---|---|---|

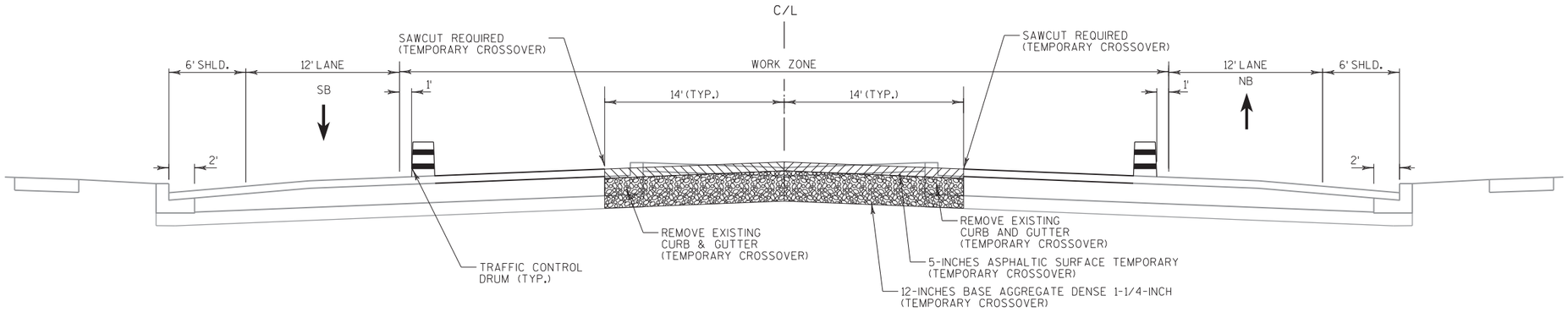


STAGE 1 - STH 181 (N. 76TH STREET)

W. GRANTOSA DRIVE TO W. FLORIST AVENUE

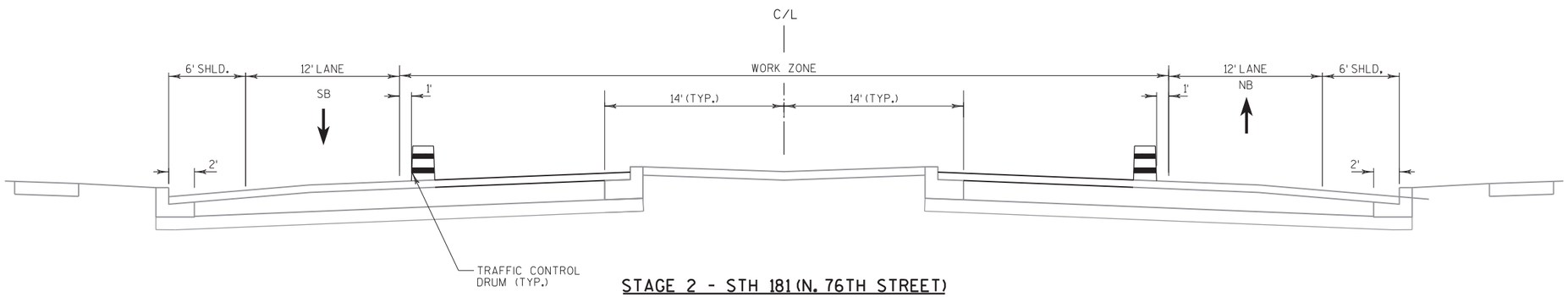


STAGE 2 - STH 181 (N. 76TH STREET)

W. GRANTOSA DRIVE TO W. SHERIDAN AVENUE
W. THURSTON CIRCLE TO W. FLORIST AVENUE

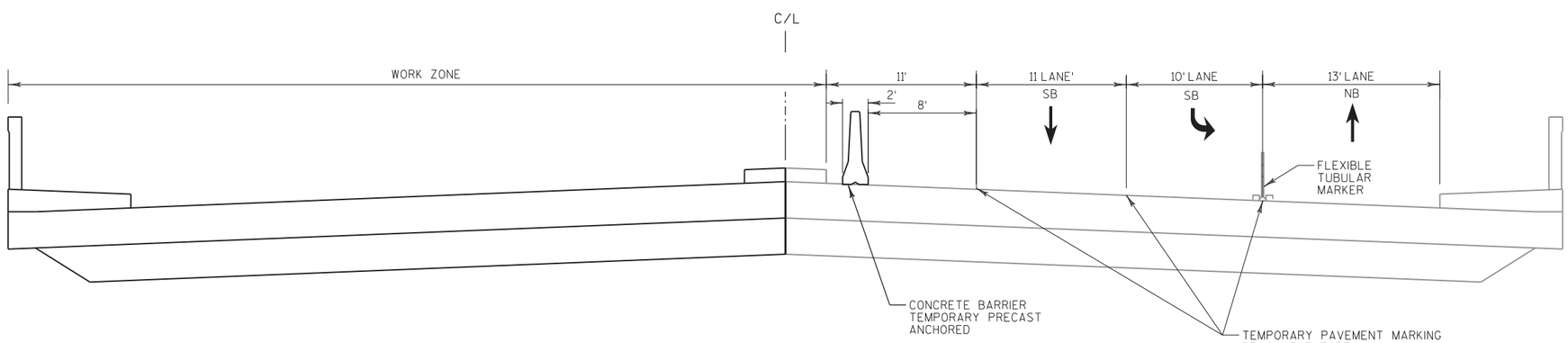


STAGE 2 - STH 181 (N. 76TH STREET)

W. SHERIDAN AVENUE TO W. THURSTON CIRCLE

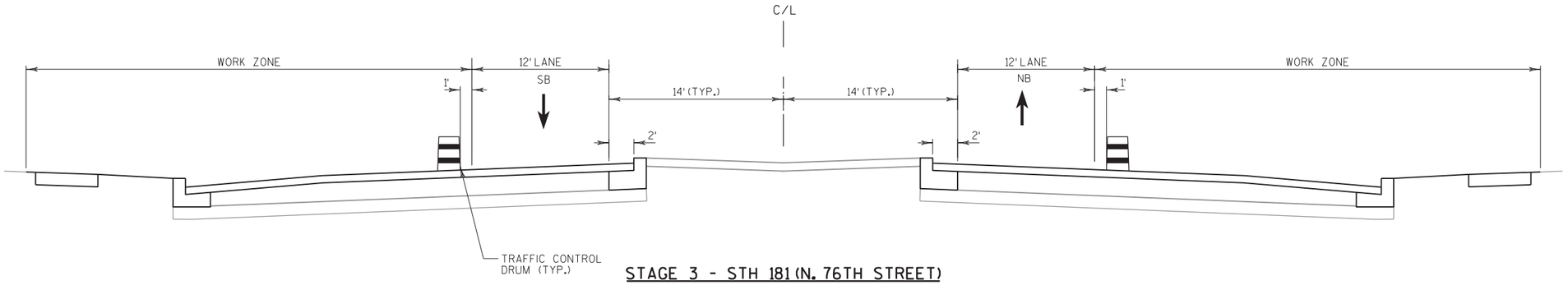


STAGE 3 - STH 181 (N. 76TH STREET)

W. GRANTOSA DRIVE TO W. SHERIDAN AVENUE
W. THURSTON CIRCLE TO W. FLORIST AVENUE

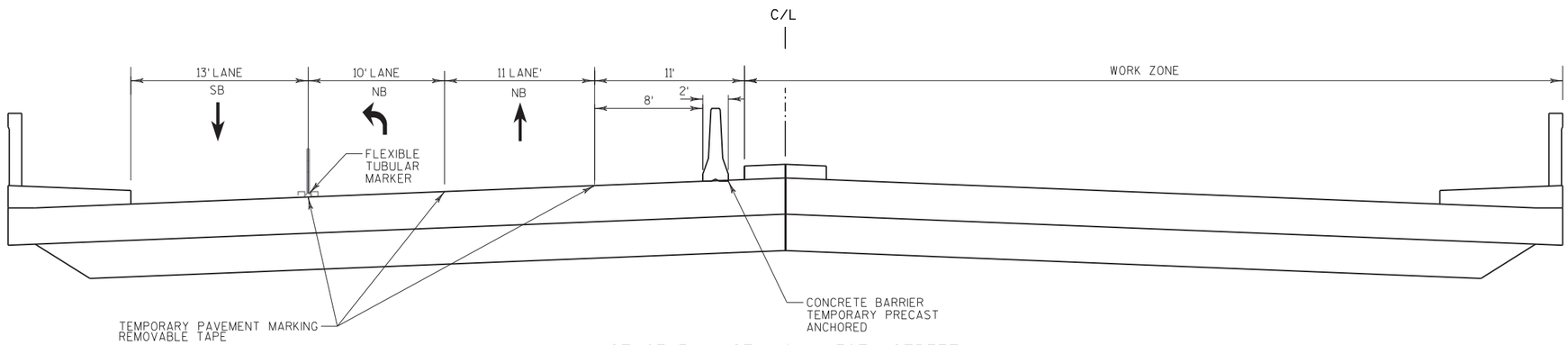


STAGE 3 - STH 181 (N. 76TH STREET)

W. SHERIDAN AVENUE TO W. THURSTON CIRCLE

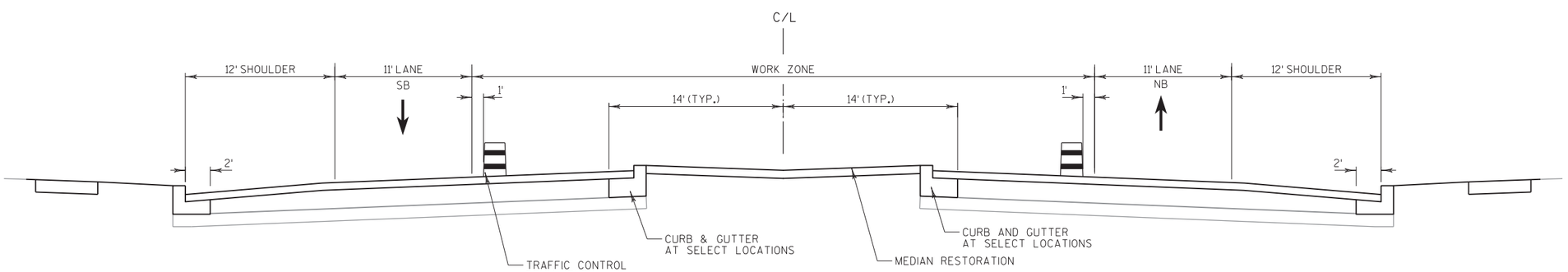


STAGE 4 - STH 181 (N. 76TH STREET)

W. GRANTOSA DRIVE TO W. FLORIST AVENUE

| PROJECT NO: 2140-13-70 | HWY: STH 181 | COUNTY: MILWAUKEE | CONSTRUCTION STAGING - TYPICAL SECTIONS | SHEET 186 | E |
|---|---|---|---|---|---|

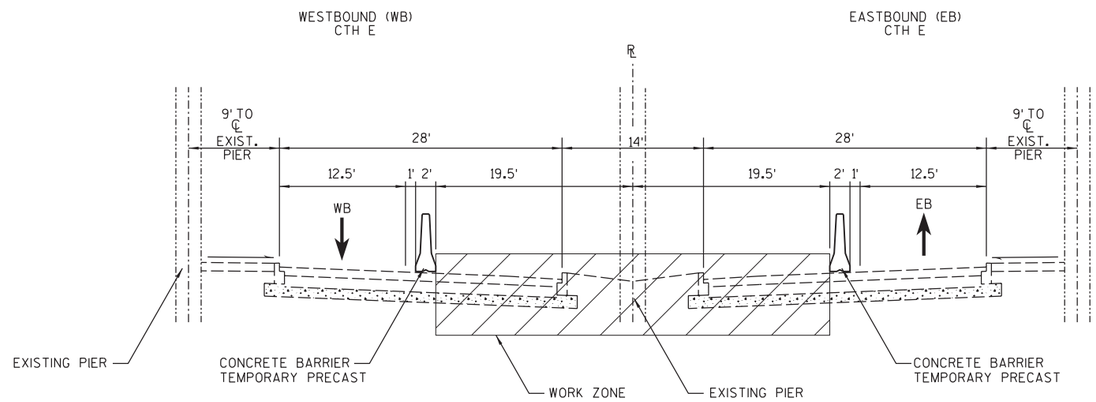


STAGE 2 AND 3 - W. SILVER SPRING DRIVE (CTH E)

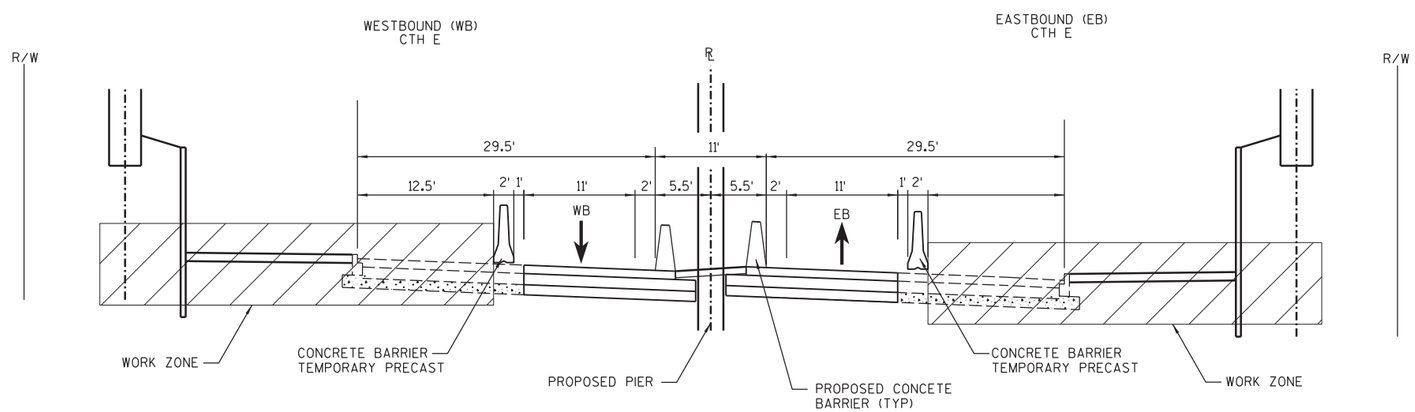


STAGE 2B AND 3B - W. SILVER SPRING DRIVE (CTH E)

| PROJECT NO:2140-13-70 | HWY:STH 181 | COUNTY:MILWAUKEE | CONSTRUCTION STAGING - TYPICAL SECTIONS | SHEET 187 | E |
|---|---|---|---|---|---|

## NOTES

TRAFFIC CONTROL STAGE 1
-REDUCE TRAFFIC TO ONE OUTSIDE LANE, EACH DIRECTION
-CONSTRUCT TEMPORARY CROSSOVERS
-SEE CONSTRUCTION DETAILS FOR TRAFFIC CONTROL
 WHILE MEDIAN OPENING IS CLOSED TO TRAFFIC
 AND WHILE MEDIAN OPENING IS OPEN TO TRAFFIC
-DO NOT CLOSE TWO CONSECUTIVE INTERSECTIONS AT ANY TIME
-SEE "TRAFFIC CONTROL, INTERSECTION WITHIN SINGLE LANE CLOSURE" SDD
 FOR TRAFFIC CONTROL WHILE INTERSECTION REMAINS OPEN
-SEE CONSTRUCTION DETAIL FOR TRAFFIC CONTROL
 FOR INTERSECTION WITHIN SINGLE INSIDE LANE CLOSURE
 WHILE INTERSECTION IS CLOSED
-PLACE "ROAD WORK AHEAD" AND "END ROAD WORK" SIGNS A MINIMUM OF 150' IN ADVANCE
 OF THE INTERSECTION IN ACCORDANCE WITH "TRAFFIC CONTROL, INTERSECTION WITHIN SINGLE
 LANE CLOSURE" SDD AS APPROVED BY FIELD ENGINEER AND AS FIELD CONDITIONS FIT

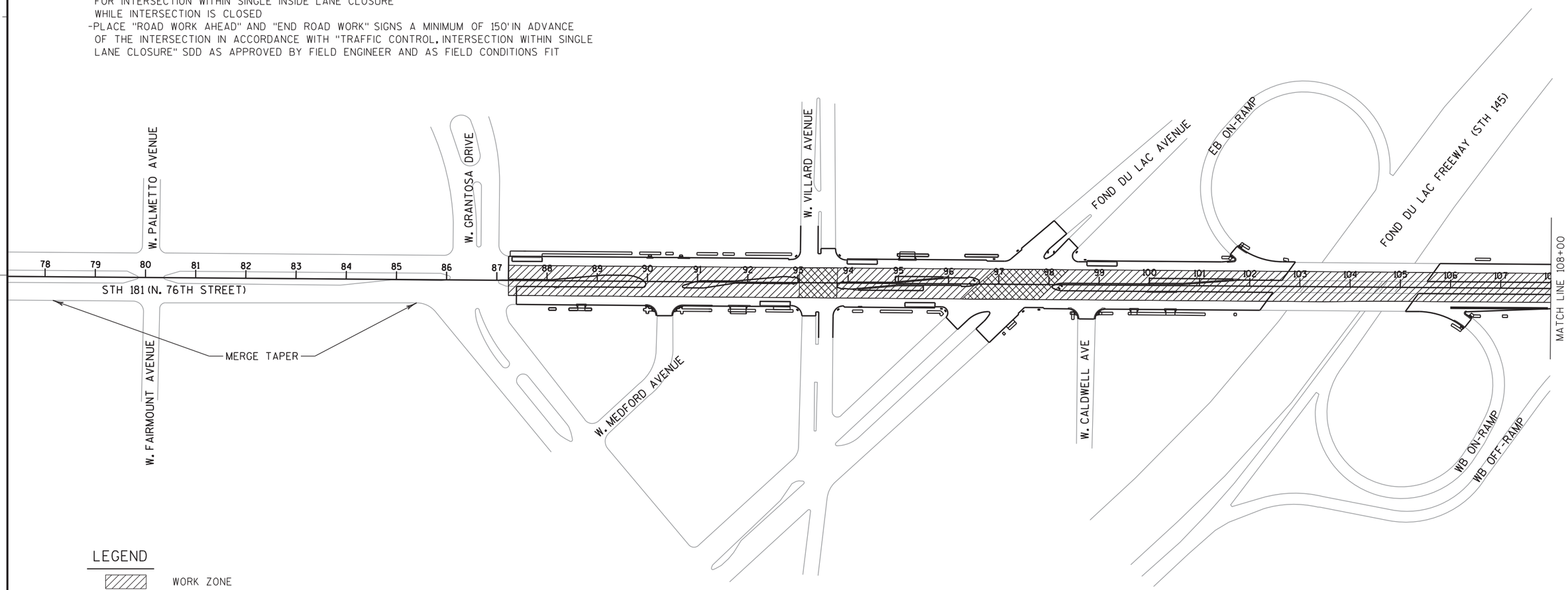


## LEGEND

WORK ZONE

CONSTRUCTION WORK UNDER TRAFFIC

| PROJECT NO: 2140-13-70 | HWY: STH 181 | COUNTY: MILWAUKEE | CONSTRUCTION STAGING OVERVIEW - STAGE 1 | SHEET 188 | E |
|---|---|---|---|---|---|

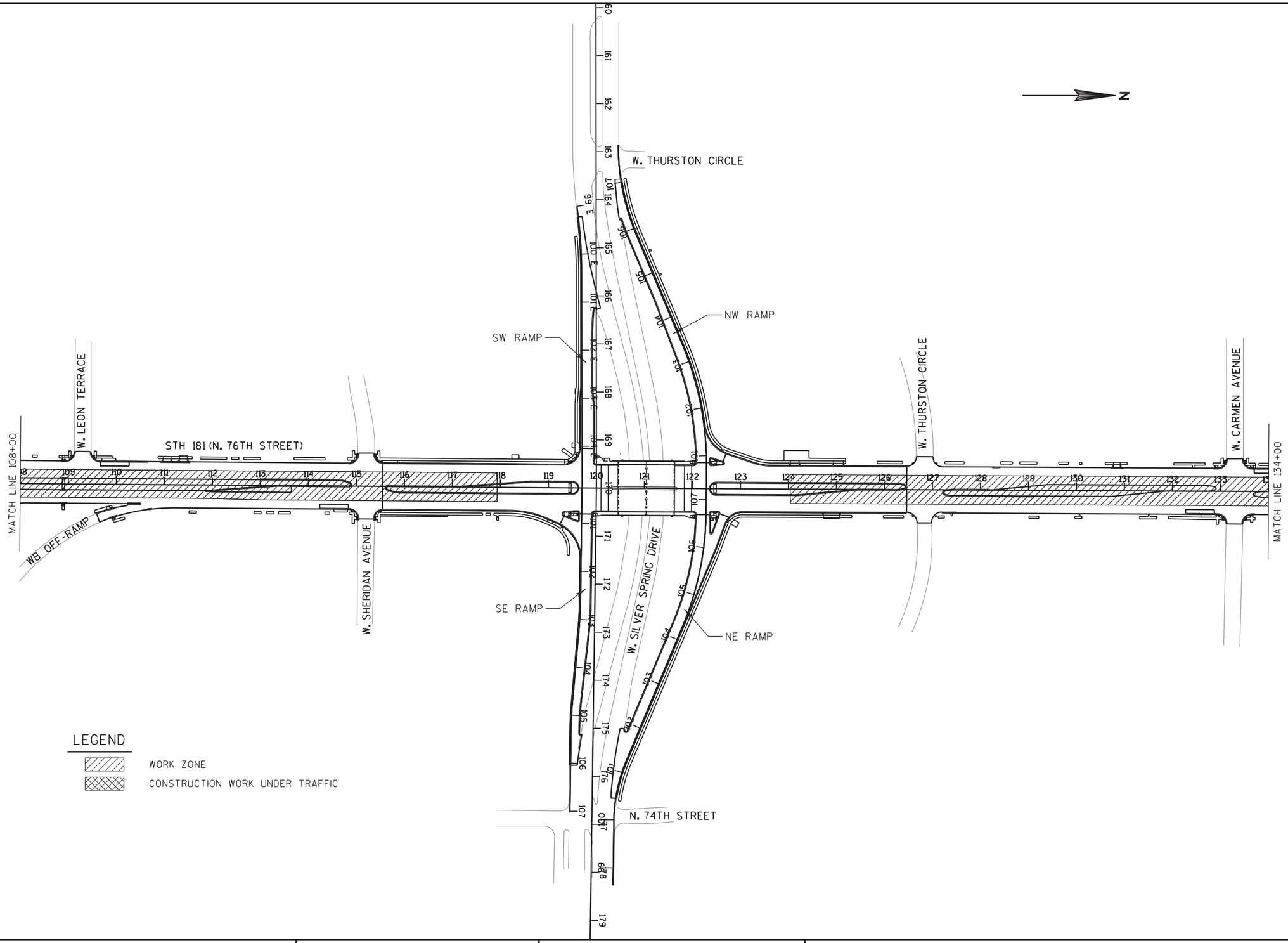


| PROJECT NO: 2140-13-70 | HWY: STH 181 | COUNTY: MILWAUKEE | CONSTRUCTION STAGING OVERVIEW - STAGE 1 | SHEET 189 | E |
|---|---|---|---|---|---|

FILE NAME : P:\46xx\4635_DS.N76.MIL\CADDS\Plan\026002_s1.dgn PLOT DATE : 4/19/2016 PLOT BY : kes PLOT NAME : PLOT SCALE : 1:200

WISDOT/CADDS SHEET 42

2

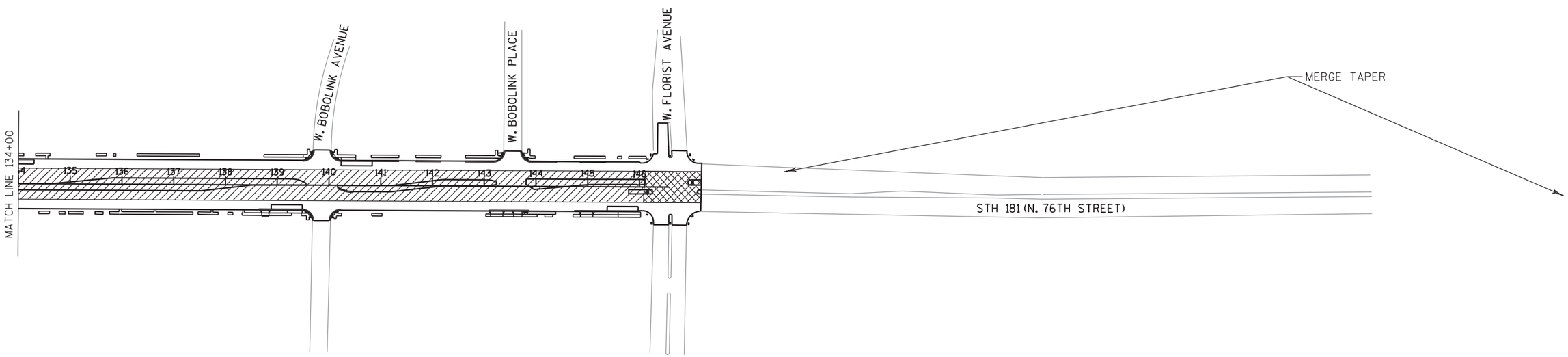


LEGEND

WORK ZONE

CONSTRUCTION WORK UNDER TRAFFIC

| PROJECT NO: 2140-13-70 | HWY: STH 181 | COUNTY: MILWAUKEE | CONSTRUCTION STAGING OVERVIEW - STAGE 1 | SHEET 190 | E |
|---|---|---|---|---|---|

FILE NAME : P:\46xx\4635_DS.N76.MIL\CADDS\Plan\026003_s1.dgn PLOT DATE : 4/19/2016 PLOT BY : kes PLOT NAME : PLOT SCALE : 1:200

LEGEND

- WORK ZONE
- CONSTRUCTION WORK UNDER TRAFFIC
- TEMPORARY PAVEMENT
- DIRECTION OF TRAFFIC
- SIGN ON PERMANENT/TEMPORARY SUPPORT
- TYPE III BARRICADE WITH TYPE A LIGHTS WITH/WITHOUT ATTACHED SIGN
- TRAFFIC CONTROL DRUM WITH/WITHOUT TYPE C LIGHT
- CONCRETE BARRIER TEMPORARY PRECAST ANCHORED
- CC — CONCRETE BARRIER TEMPORARY PRECAST
- FLEXIBLE TUBULAR MARKER POSTS AND BASES
- RPM — REMOVING PAVEMENT MARKING
- 4WR — TEMPORARY PAVEMENT MARKING REMOVABLE TAPE 4-INCH, WHITE
- 4YR — TEMPORARY PAVEMENT MARKING REMOVABLE TAPE 4-INCH, YELLOW
- 4WD — TEMPORARY PAVEMENT MARKING REMOVABLE TAPE 4-INCH, WHITE (12.5 FT LINE, 37.5 FT SPACE)
- 8WR — TEMPORARY PAVEMENT MARKING REMOVABLE TAPE 8-INCH, WHITE
- 18WSR — TEMPORARY PAVEMENT MARKING STOP LINE REMOVABLE TAPE, 18-INCH
- 12WDR — TEMPORARY PAVEMENT MARKING DIAGONAL REMOVABLE TAPE, 12-INCH
- PAVEMENT MARKING PLACED IN PREVIOUS STAGE

* SIGN SPACING SCHEMATICS
ADVANCE WARNING SIGNS SHALL BE PLACED IN ADVANCE OF WORK ZONE IN ACCORDANCE WITH "TRAFFIC CONTROL, SINGLE LANE CLOSURE NON-FREEWAY/EXPRESSWAY" SDD AS APPROVED BY THE FIELD ENGINEER AND AS FIELD CONDITIONS FIT

| PROJECT NO: 2140-13-70 | HWY: STH 181 | COUNTY: MILWAUKEE | TRAFFIC CONTROL STAGE 1 | SHEET 191 | E |
|---|---|---|---|---|---|

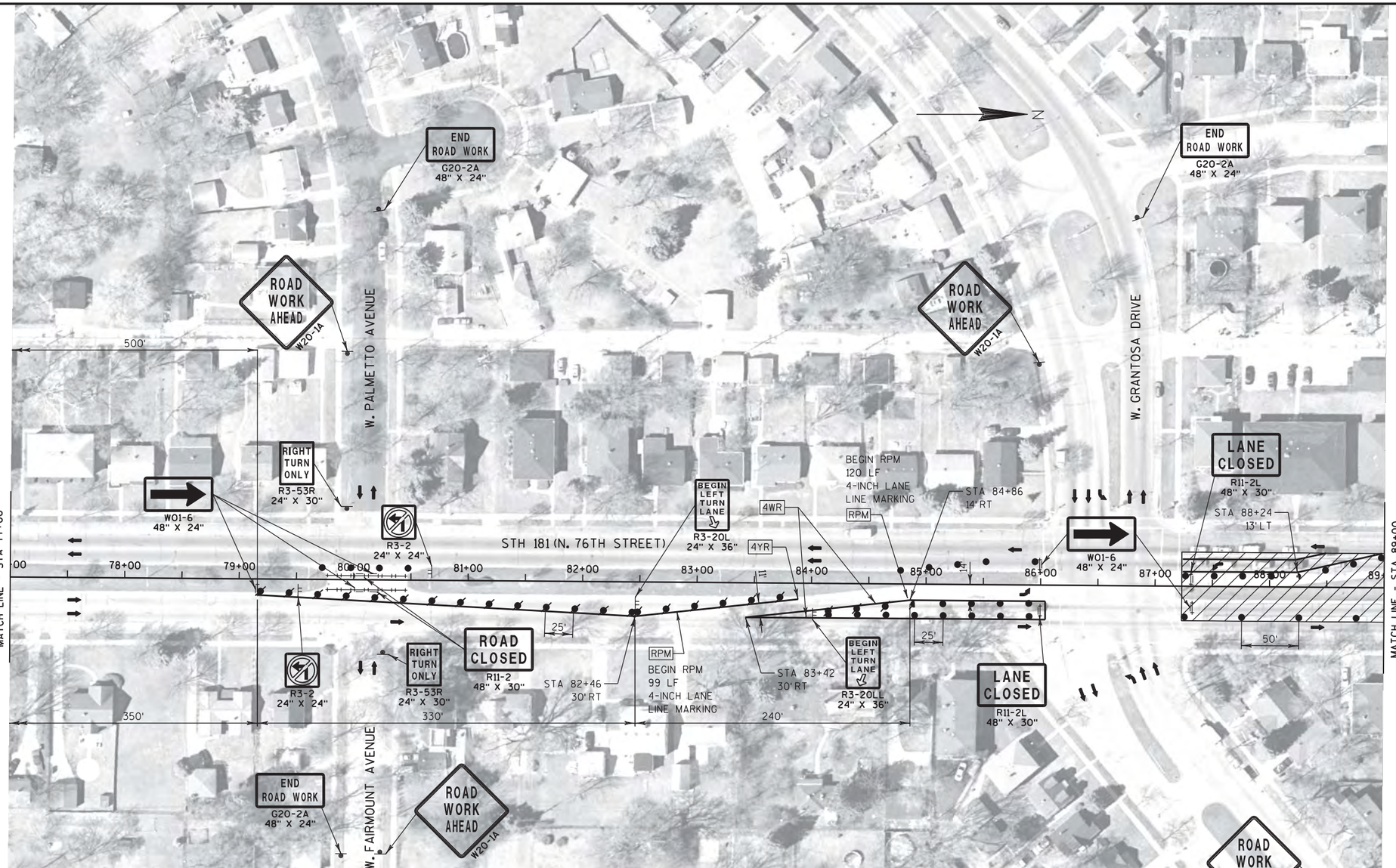


## LEGEND

- WORK ZONE
- CONSTRUCTION WORK UNDER TRAFFIC
- TEMPORARY PAVEMENT
- DIRECTION OF TRAFFIC
- SIGN ON PERMANENT/TEMPORARY SUPPORT
- TYPE III BARRICADE WITH TYPE A LIGHTS WITH/WITHOUT ATTACHED SIGN
- TRAFFIC CONTROL DRUM WITH/WITHOUT TYPE C LIGHT
- CONCRETE BARRIER TEMPORARY PRECAST ANCHORED
- CC — CONCRETE BARRIER TEMPORARY PRECAST
- FLEXIBLE TUBULAR MARKER POSTS AND BASES
- RPM — REMOVING PAVEMENT MARKING
- 4WR — TEMPORARY PAVEMENT MARKING REMOVABLE TAPE 4-INCH, WHITE
- 4YR — TEMPORARY PAVEMENT MARKING REMOVABLE TAPE 4-INCH, YELLOW
- 4WD — TEMPORARY PAVEMENT MARKING REMOVABLE TAPE 4-INCH, WHITE (12.5 FT LINE, 37.5 FT SPACE)
- 8WR — TEMPORARY PAVEMENT MARKING REMOVABLE TAPE 8-INCH, WHITE
- 18WSR — TEMPORARY PAVEMENT MARKING STOP LINE REMOVABLE TAPE, 18-INCH
- 12WDR — TEMPORARY PAVEMENT MARKING DIAGONAL REMOVABLE TAPE, 12-INCH
- PAVEMENT MARKING PLACED IN PREVIOUS STAGE

| PROJECT NO: 2140-13-70 | HWY: STH 181 | COUNTY: MILWAUKEE | TRAFFIC CONTROL STAGE 1 | SHEET 192 | E |
|---|---|---|---|---|---|

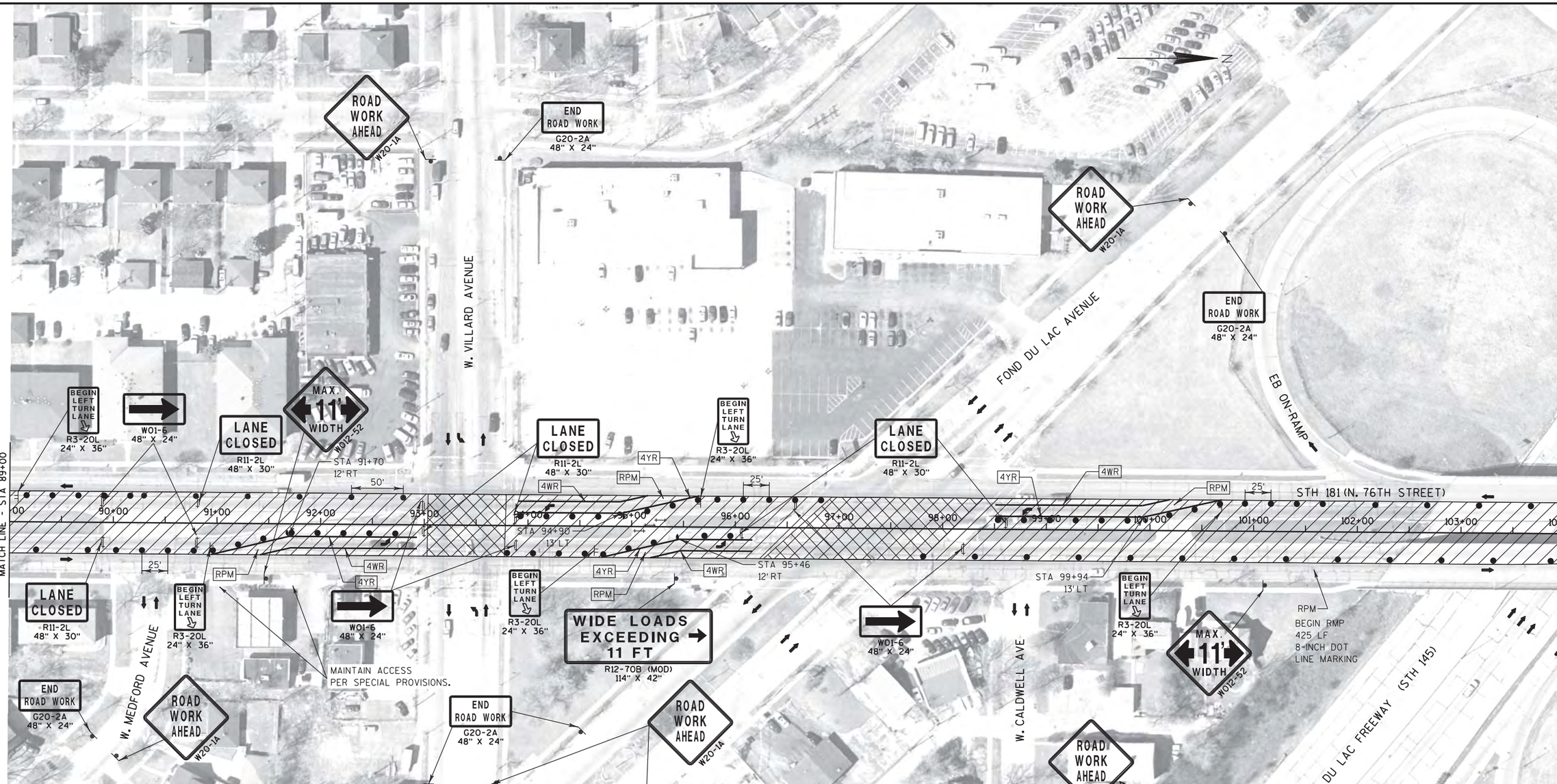


## LEGEND

- WORK ZONE
- CONSTRUCTION WORK UNDER TRAFFIC
- TEMPORARY PAVEMENT
- DIRECTION OF TRAFFIC
- SIGN ON PERMANENT/TEMPORARY SUPPORT
- TYPE III BARRICADE WITH TYPE A LIGHTS WITH/WITHOUT ATTACHED SIGN
- TRAFFIC CONTROL DRUM WITH/WITHOUT TYPE C LIGHT
- CONCRETE BARRIER TEMPORARY PRECAST ANCHORED
- CC — CONCRETE BARRIER TEMPORARY PRECAST
- FLEXIBLE TUBULAR MARKER POSTS AND BASES
- RPM — REMOVING PAVEMENT MARKING
- 4WR — TEMPORARY PAVEMENT MARKING REMOVABLE TAPE 4-INCH, WHITE
- 4YR — TEMPORARY PAVEMENT MARKING REMOVABLE TAPE 4-INCH, YELLOW
- 4WD — TEMPORARY PAVEMENT MARKING REMOVABLE TAPE 4-INCH, WHITE (12.5 FT LINE, 37.5 FT SPACE)
- 8WR — TEMPORARY PAVEMENT MARKING REMOVABLE TAPE 8-INCH, WHITE
- 18WSR — TEMPORARY PAVEMENT MARKING STOP LINE REMOVABLE TAPE, 18-INCH
- 12WDR — TEMPORARY PAVEMENT MARKING DIAGONAL REMOVABLE TAPE, 12-INCH
- PAVEMENT MARKING PLACED IN PREVIOUS STAGE

| PROJECT NO: 2140-13-70 | HWY: STH 181 | COUNTY: MILWAUKEE | TRAFFIC CONTROL STAGE 1 | SHEET 193 | E |
|---|---|---|---|---|---|

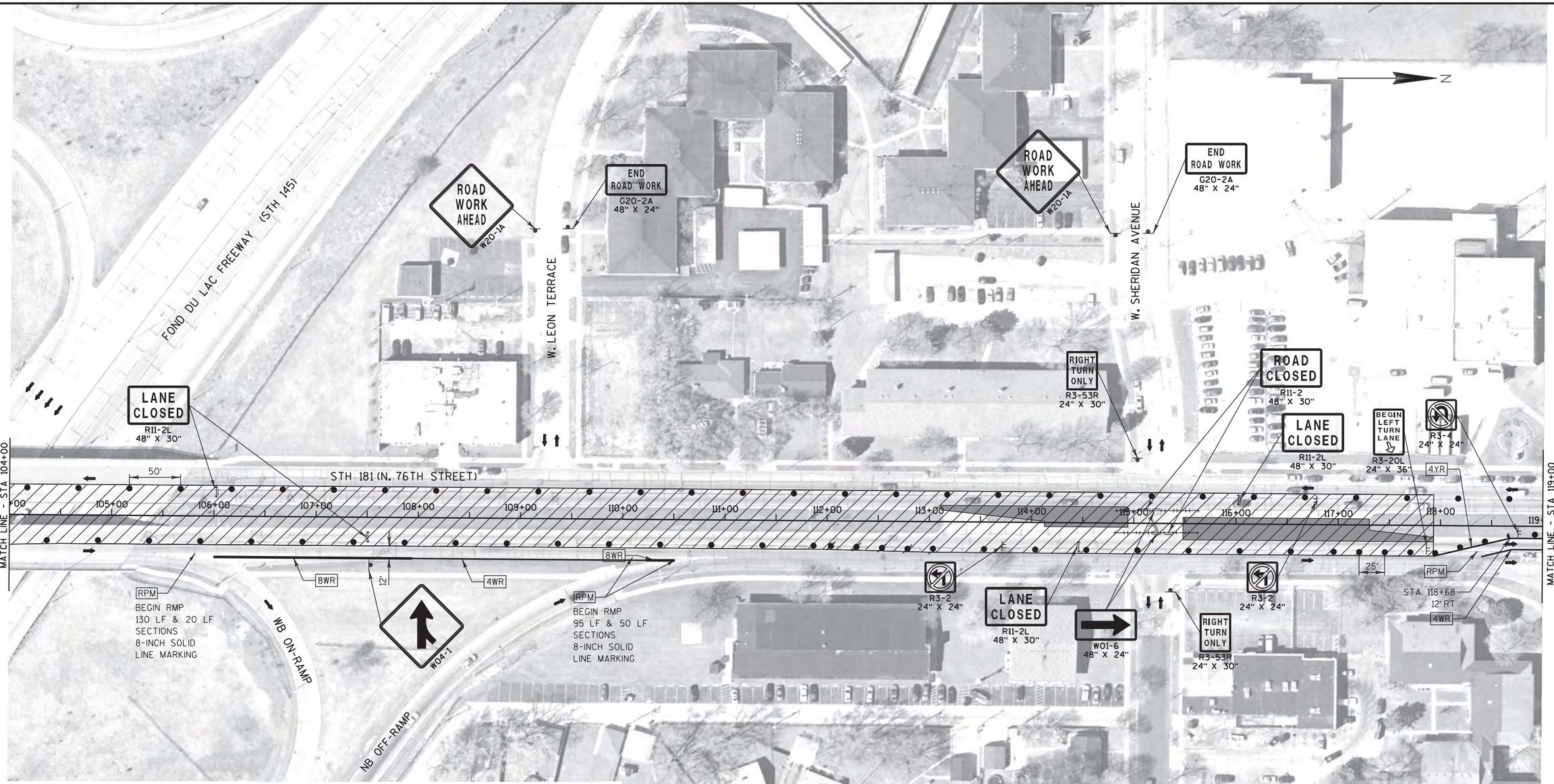


## LEGEND

- WORK ZONE
- CONSTRUCTION WORK UNDER TRAFFIC
- TEMPORARY PAVEMENT
- DIRECTION OF TRAFFIC
- SIGN ON PERMANENT/TEMPORARY SUPPORT
- TYPE III BARRICADE WITH TYPE A LIGHTS WITH/WITHOUT ATTACHED SIGN
- TRAFFIC CONTROL DRUM WITH/WITHOUT TYPE C LIGHT
- CONCRETE BARRIER TEMPORARY PRECAST ANCHORED
- CC — CONCRETE BARRIER TEMPORARY PRECAST
- FLEXIBLE TUBULAR MARKER POSTS AND BASES
- RPM — REMOVING PAVEMENT MARKING
- 4WR — TEMPORARY PAVEMENT MARKING REMOVABLE TAPE 4-INCH, WHITE
- 4YR — TEMPORARY PAVEMENT MARKING REMOVABLE TAPE 4-INCH, YELLOW
- 4WD — TEMPORARY PAVEMENT MARKING REMOVABLE TAPE 4-INCH, WHITE (12.5 FT LINE, 37.5 FT SPACE)
- 8WR — TEMPORARY PAVEMENT MARKING REMOVABLE TAPE 8-INCH, WHITE
- 18WSR — TEMPORARY PAVEMENT MARKING STOP LINE REMOVABLE TAPE, 18-INCH
- 12WDR — TEMPORARY PAVEMENT MARKING DIAGONAL REMOVABLE TAPE, 12-INCH
- PAVEMENT MARKING PLACED IN PREVIOUS STAGE

| PROJECT NO:2140-13-70 | HWY:STH 181 | COUNTY:MILWAUKEE | TRAFFIC CONTROL STAGE 1 | SHEET 194 | E |
|---|---|---|---|---|---|

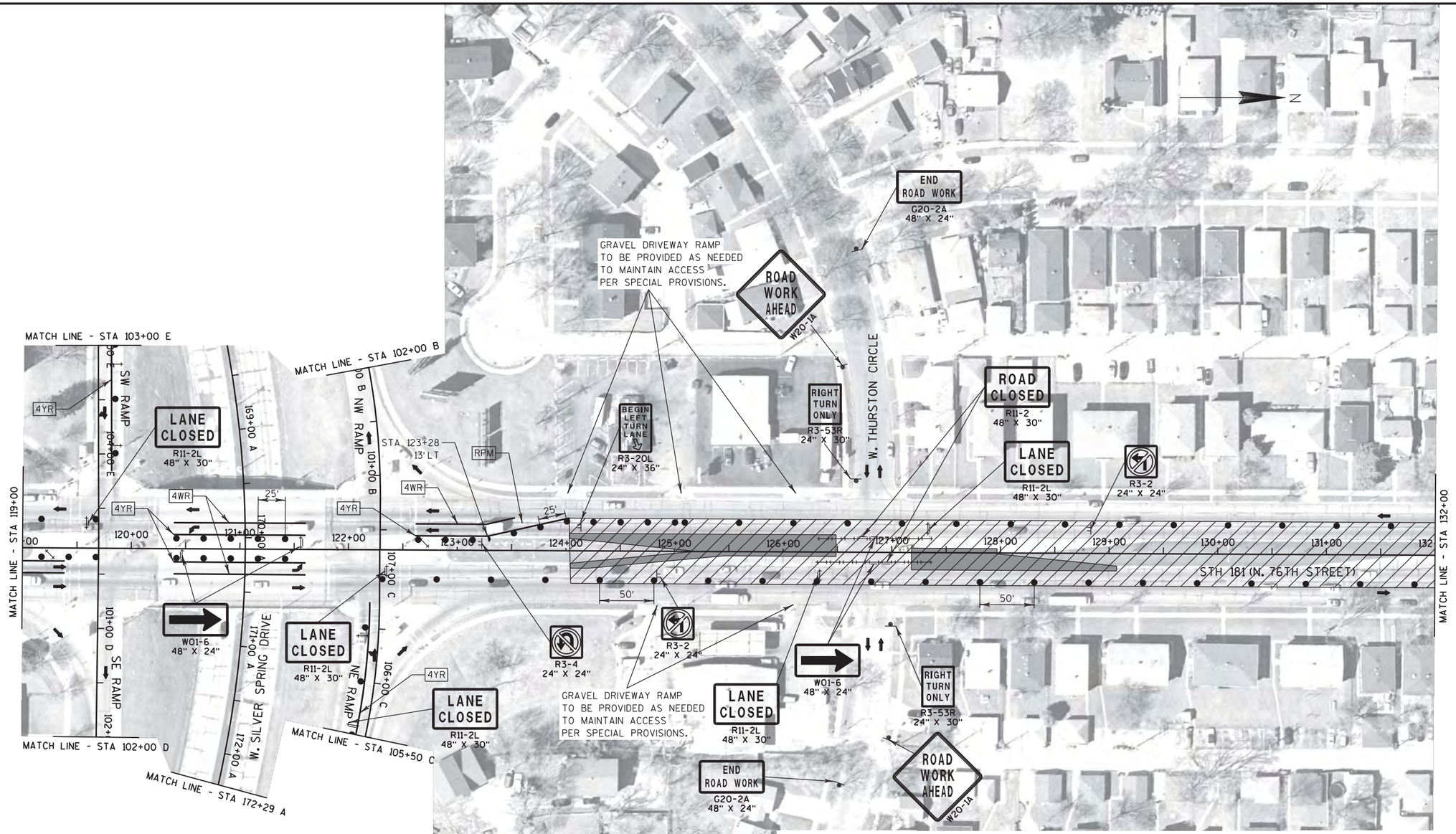


| PROJECT NO: 2140-13-70 | HWY: STH 181 | COUNTY: MILWAUKEE | TRAFFIC CONTROL STAGE 1 | SHEET 195 | E |
|---|---|---|---|---|---|

2

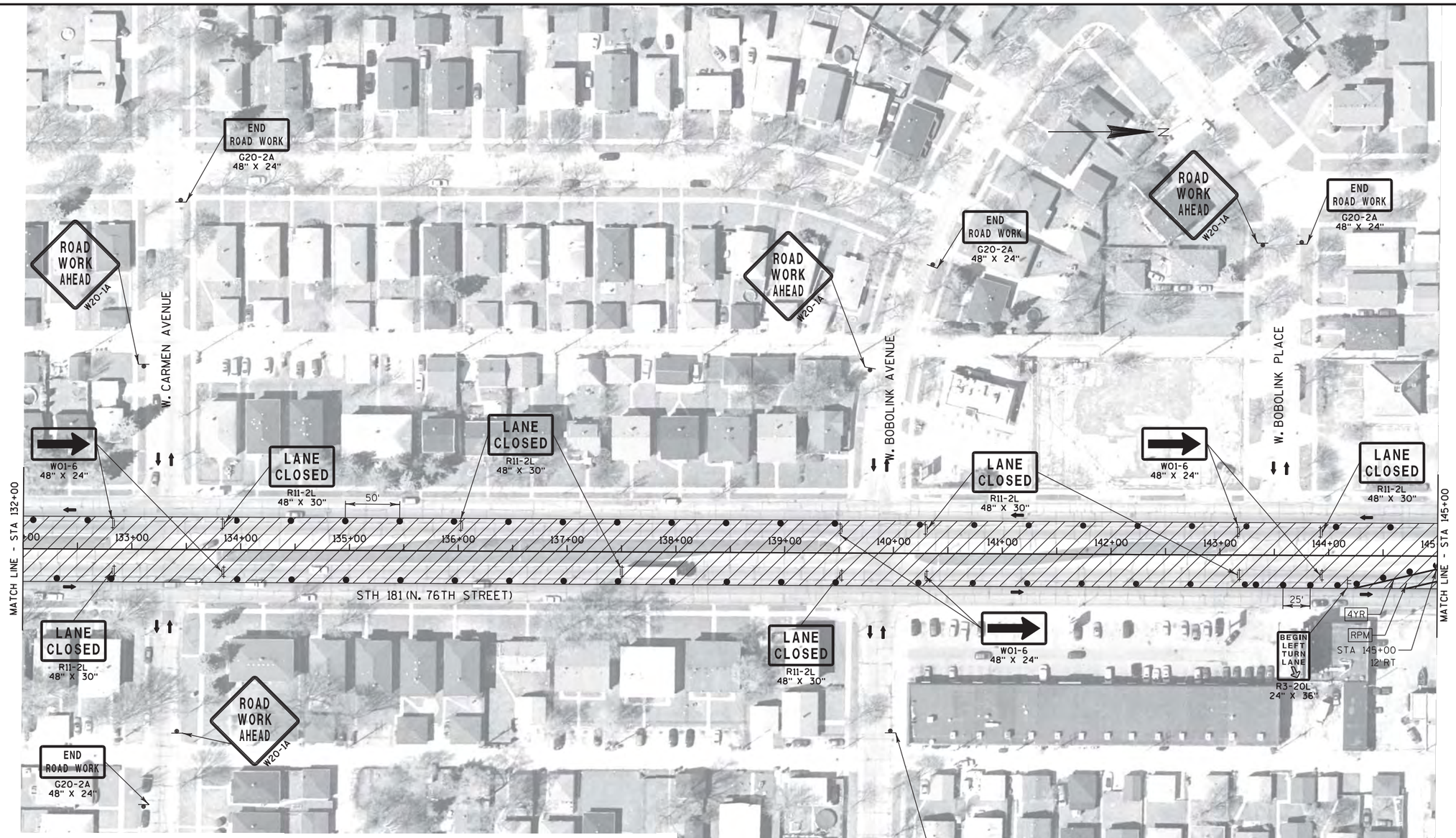


LEGEND

| | |
|---|---|
| | WORK ZONE |
| | CONSTRUCTION WORK UNDER TRAFFIC |
| | TEMPORARY PAVEMENT |
| | DIRECTION OF TRAFFIC |
| | SIGN ON PERMANENT/TEMPORARY SUPPORT |
| | TYPE III BARRICADE WITH TYPE A LIGHTS WITH/WITHOUT ATTACHED SIGN |
| | TRAFFIC CONTROL DRUM WITH/WITHOUT TYPE C LIGHT |
| | CONCRETE BARRIER TEMPORARY PRECAST ANCHORED |
| CC | CONCRETE BARRIER TEMPORARY PRECAST |
| | FLEXIBLE TUBULAR MARKER POSTS AND BASES |
| RPM | REMOVING PAVEMENT MARKING |
| 4WR | TEMPORARY PAVEMENT MARKING REMOVABLE TAPE 4-INCH, WHITE |
| 4YR | TEMPORARY PAVEMENT MARKING REMOVABLE TAPE 4-INCH, YELLOW |
| 4WD | TEMPORARY PAVEMENT MARKING REMOVABLE TAPE 4-INCH, WHITE (12.5 FT LINE, 37.5 FT SPACE) |
| 8WR | TEMPORARY PAVEMENT MARKING REMOVABLE TAPE 8-INCH, WHITE |
| 18WSR | TEMPORARY PAVEMENT MARKING STOP LINE REMOVABLE TAPE, 18-INCH |
| 12WDR | TEMPORARY PAVEMENT MARKING DIAGONAL REMOVABLE TAPE, 12-INCH |
| | PAVEMENT MARKING PLACED IN PREVIOUS STAGE |

| PROJECT NO: 2140-13-70 | HWY: STH 181 | COUNTY: MILWAUKEE | TRAFFIC CONTROL STAGE 1 | SHEET 196 | E |
|---|---|---|---|---|---|

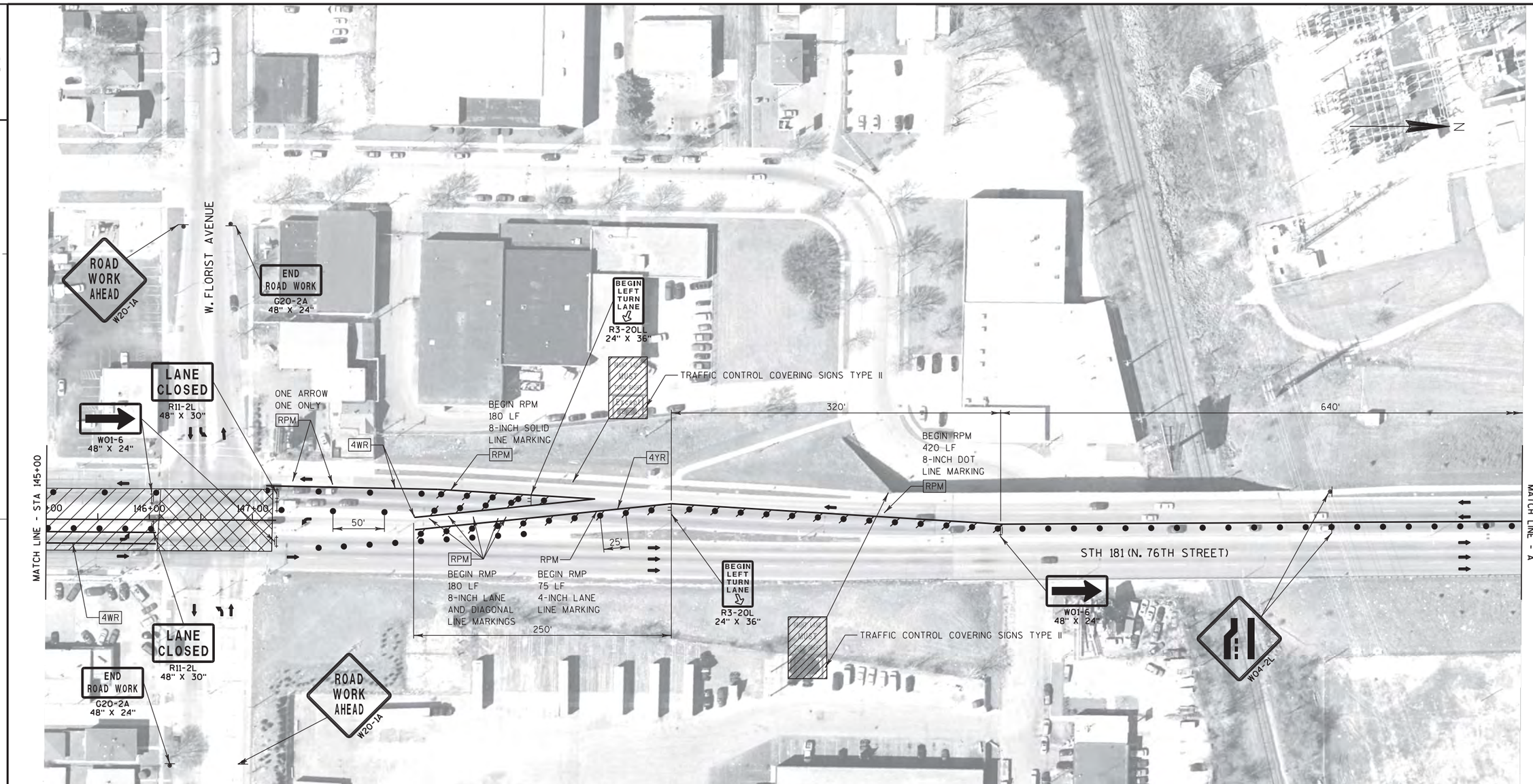


## LEGEND

- WORK ZONE
- CONSTRUCTION WORK UNDER TRAFFIC
- TEMPORARY PAVEMENT
- DIRECTION OF TRAFFIC
- SIGN ON PERMANENT/TEMPORARY SUPPORT
- TYPE III BARRICADE WITH TYPE A LIGHTS WITH/WITHOUT ATTACHED SIGN
- TRAFFIC CONTROL DRUM WITH/WITHOUT TYPE C LIGHT
- CONCRETE BARRIER TEMPORARY PRECAST ANCHORED
- CC — CONCRETE BARRIER TEMPORARY PRECAST
- FLEXIBLE TUBULAR MARKER POSTS AND BASES
- RPM — REMOVING PAVEMENT MARKING
- 4WR — TEMPORARY PAVEMENT MARKING REMOVABLE TAPE 4-INCH, WHITE
- 4YR — TEMPORARY PAVEMENT MARKING REMOVABLE TAPE 4-INCH, YELLOW
- 4WD — TEMPORARY PAVEMENT MARKING REMOVABLE TAPE 4-INCH, WHITE (12.5 FT LINE, 37.5 FT SPACE)
- 8WR — TEMPORARY PAVEMENT MARKING REMOVABLE TAPE 8-INCH, WHITE
- 18WSR — TEMPORARY PAVEMENT MARKING STOP LINE REMOVABLE TAPE, 18-INCH
- 12WDR — TEMPORARY PAVEMENT MARKING DIAGONAL REMOVABLE TAPE, 12-INCH
- PAVEMENT MARKING PLACED IN PREVIOUS STAGE

| PROJECT NO: 2140-13-70 | HWY: STH 181 | COUNTY: MILWAUKEE | TRAFFIC CONTROL STAGE 1 | SHEET 197 | E |
|---|---|---|---|---|---|

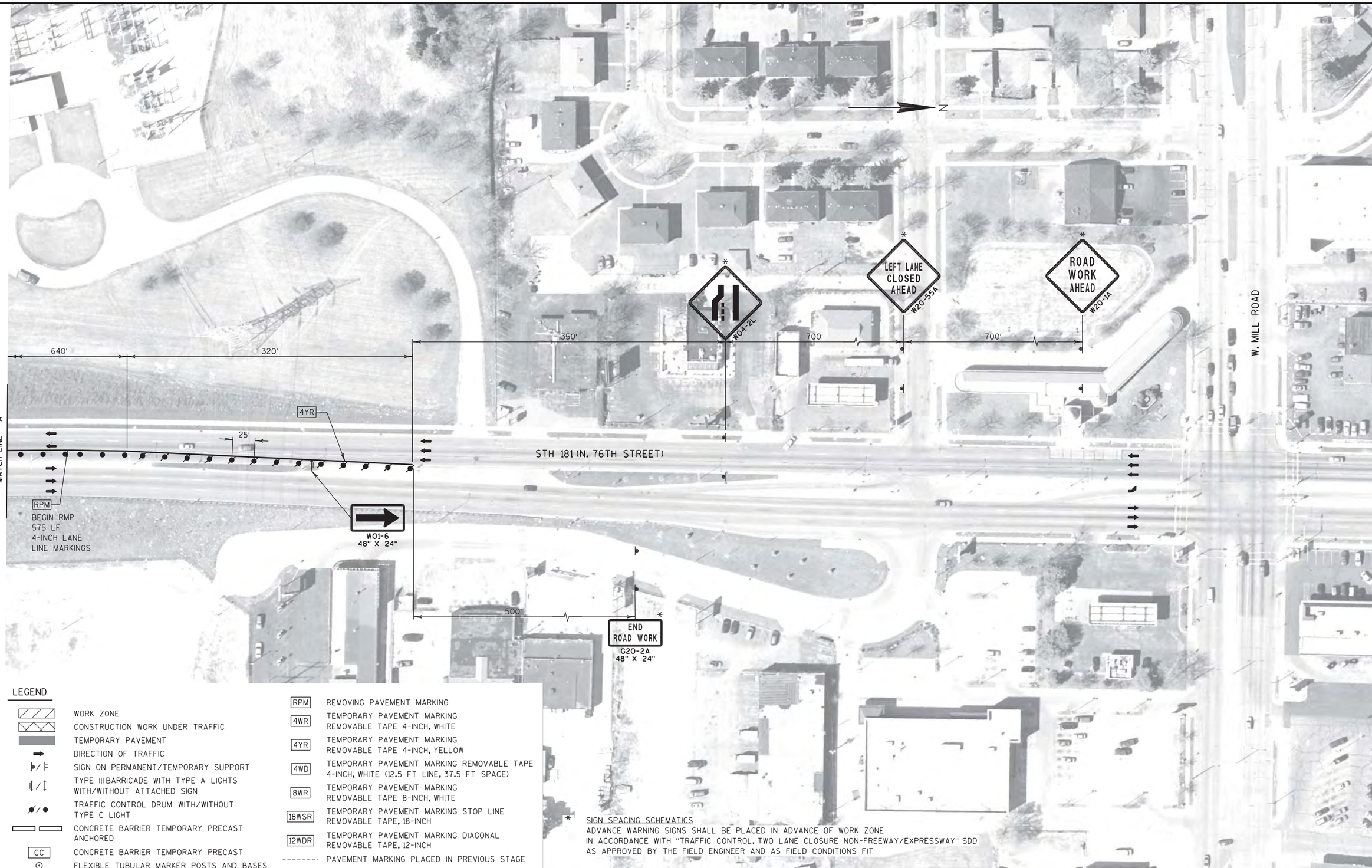


LEGEND

- WORK ZONE
- CONSTRUCTION WORK UNDER TRAFFIC
- TEMPORARY PAVEMENT
- DIRECTION OF TRAFFIC
- SIGN ON PERMANENT/TEMPORARY SUPPORT
- TYPE III BARRICADE WITH TYPE A LIGHTS WITH/WITHOUT ATTACHED SIGN
- TRAFFIC CONTROL DRUM WITH/WITHOUT TYPE C LIGHT
- CONCRETE BARRIER TEMPORARY PRECAST ANCHORED
- CC — CONCRETE BARRIER TEMPORARY PRECAST
- FLEXIBLE TUBULAR MARKER POSTS AND BASES
- RPM — REMOVING PAVEMENT MARKING
- 4WR — TEMPORARY PAVEMENT MARKING REMOVABLE TAPE 4-INCH, WHITE
- 4YR — TEMPORARY PAVEMENT MARKING REMOVABLE TAPE 4-INCH, YELLOW
- 4WD — TEMPORARY PAVEMENT MARKING REMOVABLE TAPE 4-INCH, WHITE (12.5 FT LINE, 37.5 FT SPACE)
- 8WR — TEMPORARY PAVEMENT MARKING REMOVABLE TAPE 8-INCH, WHITE
- 18WSR — TEMPORARY PAVEMENT MARKING STOP LINE REMOVABLE TAPE, 18-INCH
- 12WDR — TEMPORARY PAVEMENT MARKING DIAGONAL REMOVABLE TAPE, 12-INCH
- PAVEMENT MARKING PLACED IN PREVIOUS STAGE

* SIGN SPACING SCHEMATICS
ADVANCE WARNING SIGNS SHALL BE PLACED IN ADVANCE OF WORK ZONE IN ACCORDANCE WITH "TRAFFIC CONTROL, TWO LANE CLOSURE NON-FREEWAY/EXPRESSWAY" SDD AS APPROVED BY THE FIELD ENGINEER AND AS FIELD CONDITIONS FIT

| PROJECT NO: 2140-13-70 | HWY: STH 181 | COUNTY: MILWAUKEE | TRAFFIC CONTROL STAGE 1 | SHEET 198 | E |
|---|---|---|---|---|---|

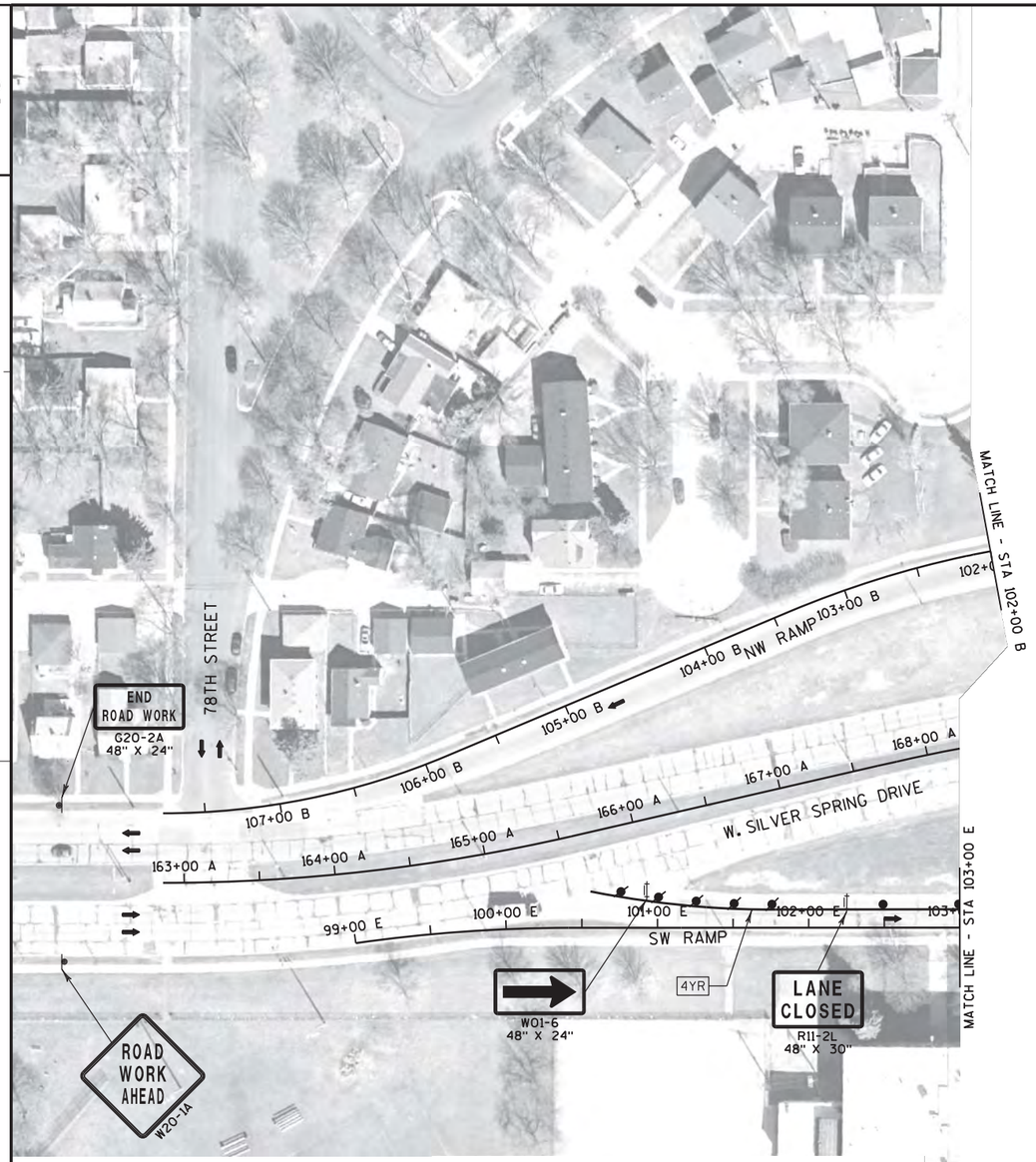


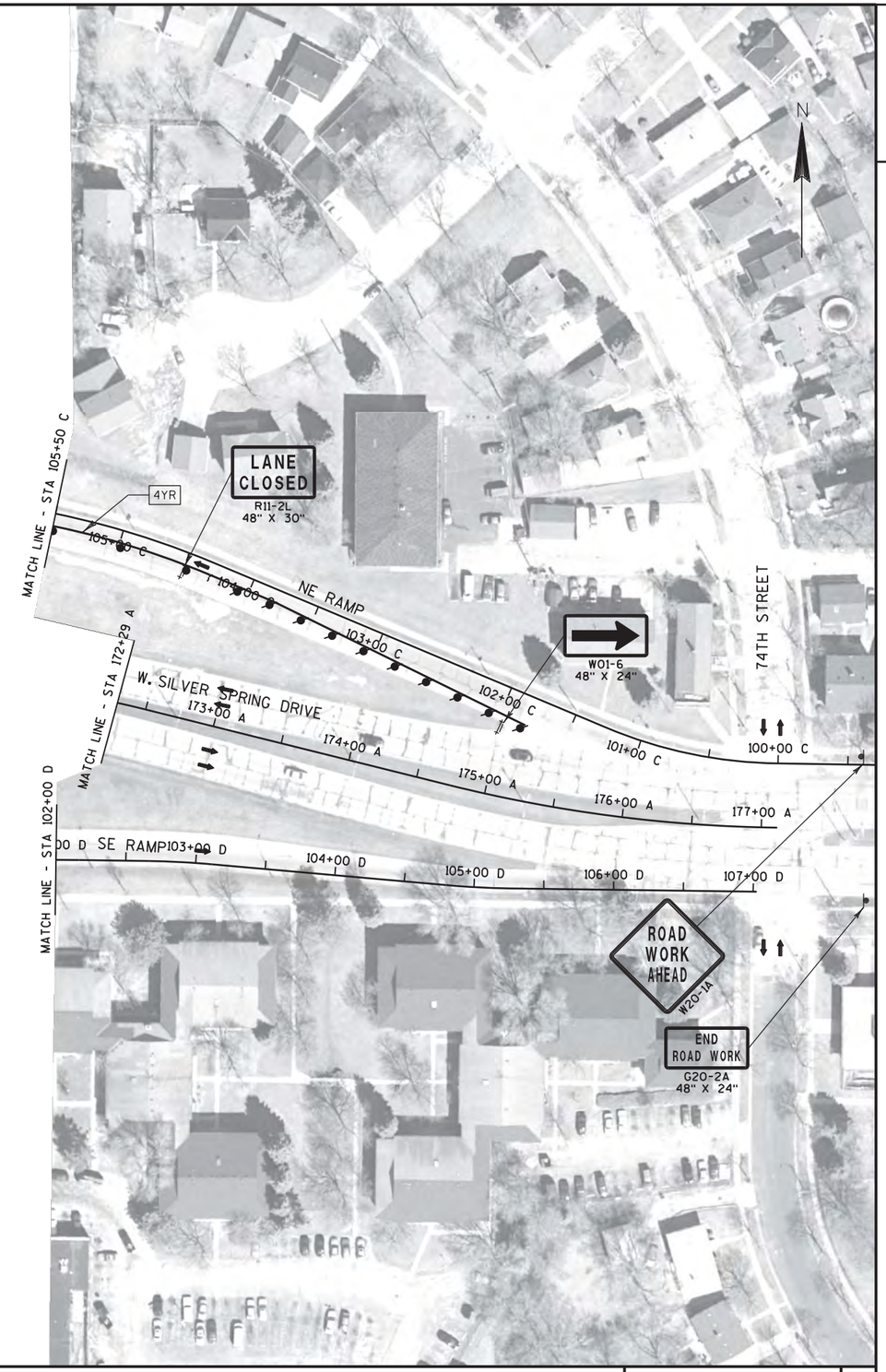


## LEGEND

- WORK ZONE
- CONSTRUCTION WORK UNDER TRAFFIC
- TEMPORARY PAVEMENT
- DIRECTION OF TRAFFIC
- SIGN ON PERMANENT/TEMPORARY SUPPORT
- TYPE III BARRICADE WITH TYPE A LIGHTS WITH/WITHOUT ATTACHED SIGN
- TRAFFIC CONTROL DRUM WITH/WITHOUT TYPE C LIGHT
- CONCRETE BARRIER TEMPORARY PRECAST ANCHORED
- CC — CONCRETE BARRIER TEMPORARY PRECAST
- FLEXIBLE TUBULAR MARKER POSTS AND BASES
- RPM — REMOVING PAVEMENT MARKING
- 4WR — TEMPORARY PAVEMENT MARKING REMOVABLE TAPE 4-INCH, WHITE
- 4YR — TEMPORARY PAVEMENT MARKING REMOVABLE TAPE 4-INCH, YELLOW
- 4WD — TEMPORARY PAVEMENT MARKING REMOVABLE TAPE 4-INCH, WHITE (12.5 FT LINE, 37.5 FT SPACE)
- 8WR — TEMPORARY PAVEMENT MARKING REMOVABLE TAPE 8-INCH, WHITE
- 18WSR — TEMPORARY PAVEMENT MARKING STOP LINE REMOVABLE TAPE, 18-INCH
- 12WDR — TEMPORARY PAVEMENT MARKING DIAGONAL REMOVABLE TAPE, 12-INCH
- PAVEMENT MARKING PLACED IN PREVIOUS STAGE

| PROJECT NO:2140-13-70 | HWY:STH 181 | COUNTY:MILWAUKEE | TRAFFIC CONTROL STAGE 1 - SILVER SPRING DRIVE | SHEET 199 | E |
|---|---|---|---|---|---|

## NOTES

TRAFFIC CONTROL STAGE 2
-MAINTAIN SINGLE OUTSIDE LANE, EACH DIRECTION
-SHIFT SOUTHBOUND TRAFFIC TO NORTHBOUND LANES (BETWEEN W. SHERIDAN AVE AND W. THURSTON CIR)
-CONSTRUCT SB BRIDGE (B-40-766) AND CENTER PIER
-CONSTRUCT NW AND SW RAMPS
-CONSTRUCT PAVEMENT OF THE INSIDE SHOULDERS AS WELL AS CURB & GUTTER ON SILVER SPRING DRIVE
-SEE DETOUR PLAN FOR NW AND SW RAMP DETOURS
-CONSECUTIVE MEDIAN OPENINGS SHALL NOT BE CONSTRUCTED AT THE SAME TIME
-SEE CONSTRUCTION DETAILS FOR TRAFFIC CONTROL WHILE MEDIAN OPENING IS CLOSED TO TRAFFIC AND WHILE MEDIAN OPENING IS OPEN TO TRAFFIC
-DO NOT CLOSE TWO CONSECUTIVE INTERSECTIONS AT ANY TIME
-SEE "TRAFFIC CONTROL, INTERSECTION WITHIN SINGLE LANE CLOSURE" SDD FOR TRAFFIC CONTROL WHILE INTERSECTION REMAINS OPEN
-SEE CONSTRUCTION DETAIL FOR TRAFFIC CONTROL FOR INTERSECTION WITHIN SINGLE INSIDE LANE CLOSURE WHILE INTERSECTION IS CLOSED
-PLACE "ROAD WORK AHEAD" AND "END ROAD WORK" SIGNS A MINIMUM OF 150' IN ADVANCE OF THE INTERSECTION IN ACCORDANCE WITH "TRAFFIC CONTROL, INTERSECTION WITHIN SINGLE LANE CLOSURE" SDD AS APPROVED BY FIELD ENGINEER AND AS FIELD CONDITIONS FIT

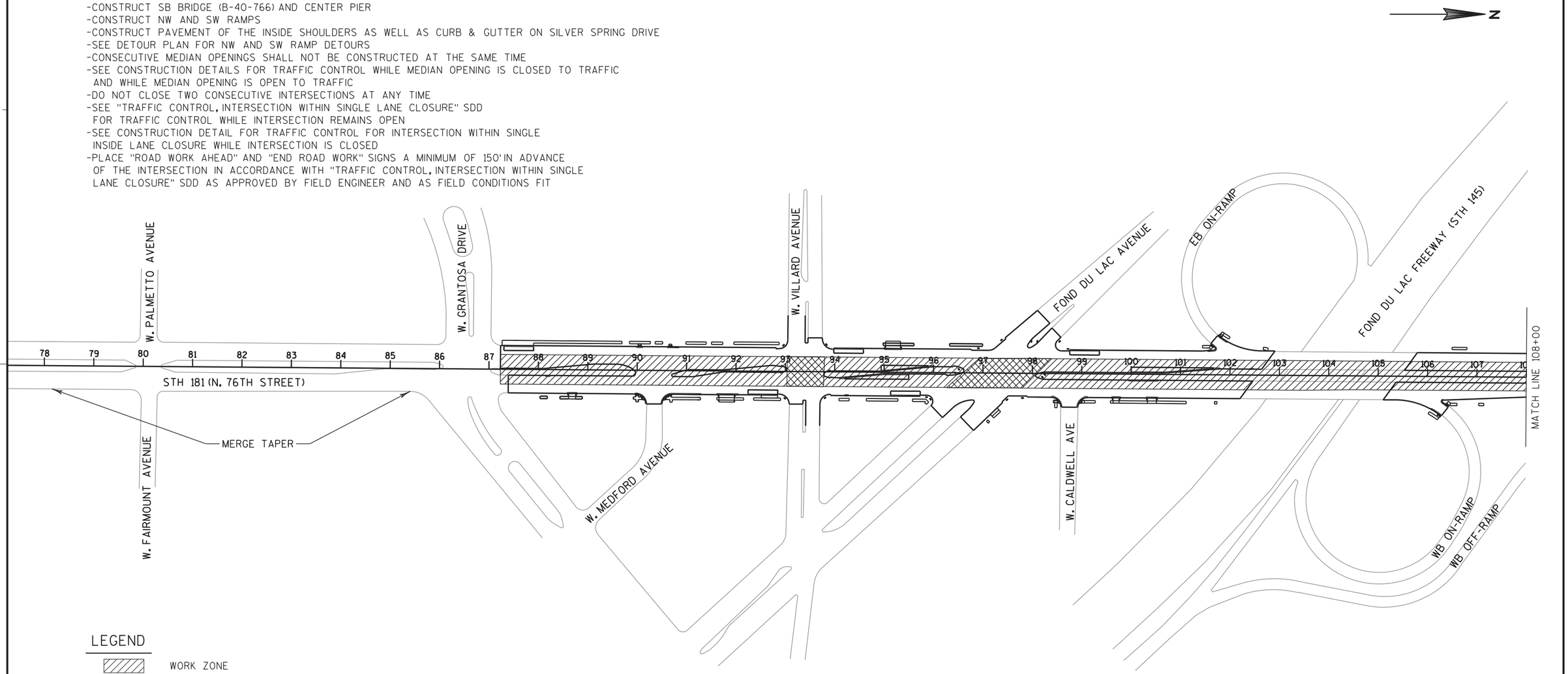


## LEGEND

WORK ZONE

CONSTRUCTION WORK UNDER TRAFFIC

| PROJECT NO: 2140-13-70 | HWY: STH 181 | COUNTY: MILWAUKEE | CONSTRUCTION STAGING OVERVIEW - STAGE 2 | SHEET 200 | E |
|---|---|---|---|---|---|

2

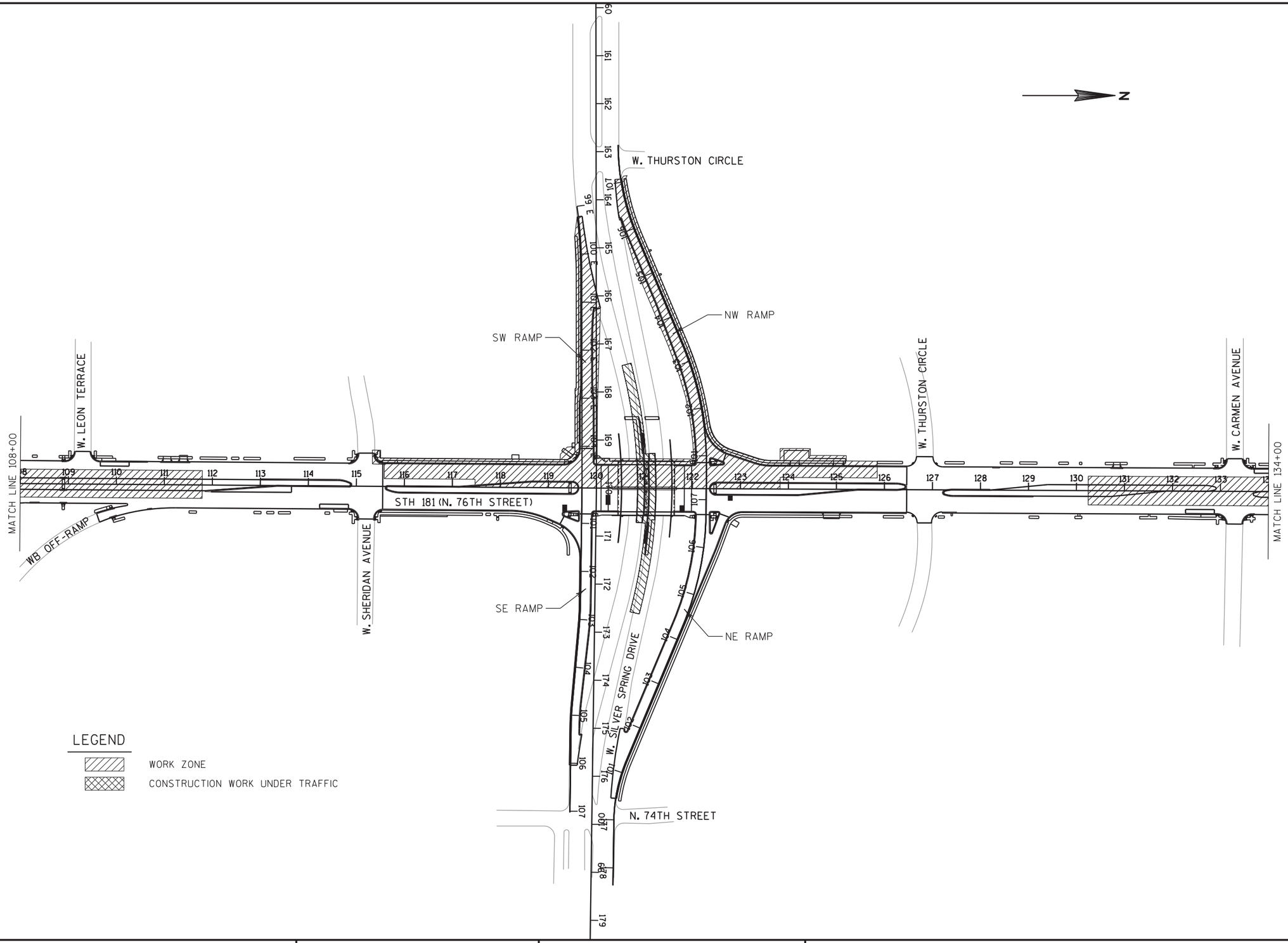


2

| PROJECT NO: 2140-13-70 | HWY: STH 181 | COUNTY: MILWAUKEE | CONSTRUCTION STAGING OVERVIEW - STAGE 2 | SHEET 201 | E |
|---|---|---|---|---|---|

FILE NAME : P:\46xx\4635_DS.N76.MIL\CADDS\Plan\026102_s2.dgn PLOT DATE : 4/19/2016 PLOT BY : kes PLOT NAME : PLOT SCALE : 1:200

WISDOT/CADDS SHEET 42

2

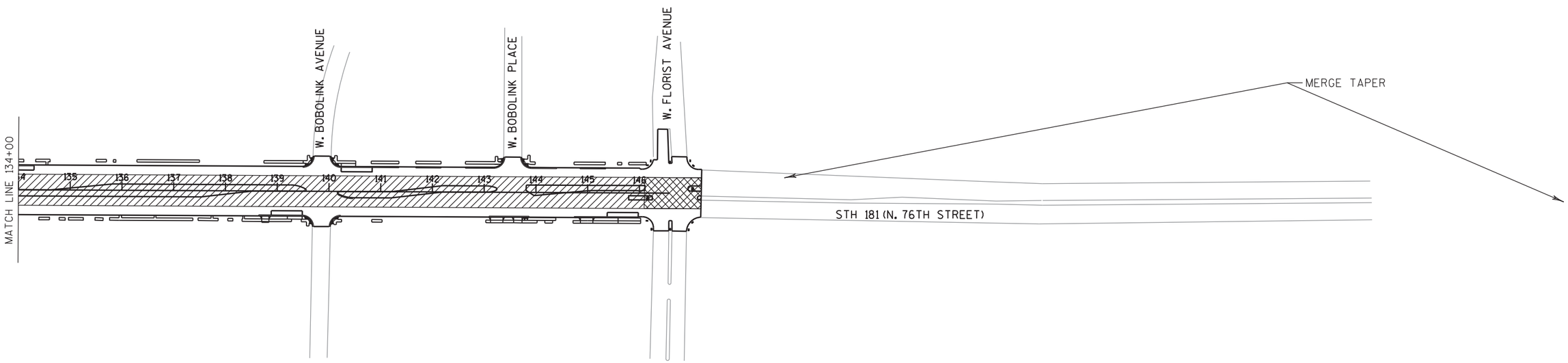


LEGEND

WORK ZONE

CONSTRUCTION WORK UNDER TRAFFIC

| PROJECT NO:2140-13-70 | HWY:STH 181 | COUNTY:MILWAUKEE | CONSTRUCTION STAGING OVERVIEW - STAGE 2 | SHEET 202 | E |
|---|---|---|---|---|---|

LEGEND

- WORK ZONE
- CONSTRUCTION WORK UNDER TRAFFIC
- TEMPORARY PAVEMENT
- DIRECTION OF TRAFFIC
- SIGN ON PERMANENT/TEMPORARY SUPPORT
- TYPE III BARRICADE WITH TYPE A LIGHTS WITH/WITHOUT ATTACHED SIGN
- TRAFFIC CONTROL DRUM WITH/WITHOUT TYPE C LIGHT
- CONCRETE BARRIER TEMPORARY PRECAST ANCHORED
- CC — CONCRETE BARRIER TEMPORARY PRECAST
- FLEXIBLE TUBULAR MARKER POSTS AND BASES
- RPM — REMOVING PAVEMENT MARKING
- 4WR — TEMPORARY PAVEMENT MARKING REMOVABLE TAPE 4-INCH, WHITE
- 4YR — TEMPORARY PAVEMENT MARKING REMOVABLE TAPE 4-INCH, YELLOW
- 4WD — TEMPORARY PAVEMENT MARKING REMOVABLE TAPE 4-INCH, WHITE (12.5 FT LINE, 37.5 FT SPACE)
- 8WR — TEMPORARY PAVEMENT MARKING REMOVABLE TAPE 8-INCH, WHITE
- 18WSR — TEMPORARY PAVEMENT MARKING STOP LINE REMOVABLE TAPE, 18-INCH
- 12WDR — TEMPORARY PAVEMENT MARKING DIAGONAL REMOVABLE TAPE, 12-INCH
- PAVEMENT MARKING PLACED IN PREVIOUS STAGE

* SIGN SPACING SCHEMATICS
ADVANCE WARNING SIGNS SHALL BE PLACED IN ADVANCE OF WORK ZONE IN ACCORDANCE WITH "TRAFFIC CONTROL, SINGLE LANE CLOSURE NON-FREEWAY/EXPRESSWAY" SDD AS APPROVED BY THE FIELD ENGINEER AND AS FIELD CONDITIONS FIT

| PROJECT NO: 2140-13-70 | HWY: STH 181 | COUNTY: MILWAUKEE | TRAFFIC CONTROL STAGE 2 | SHEET 203 | E |
|---|---|---|---|---|---|

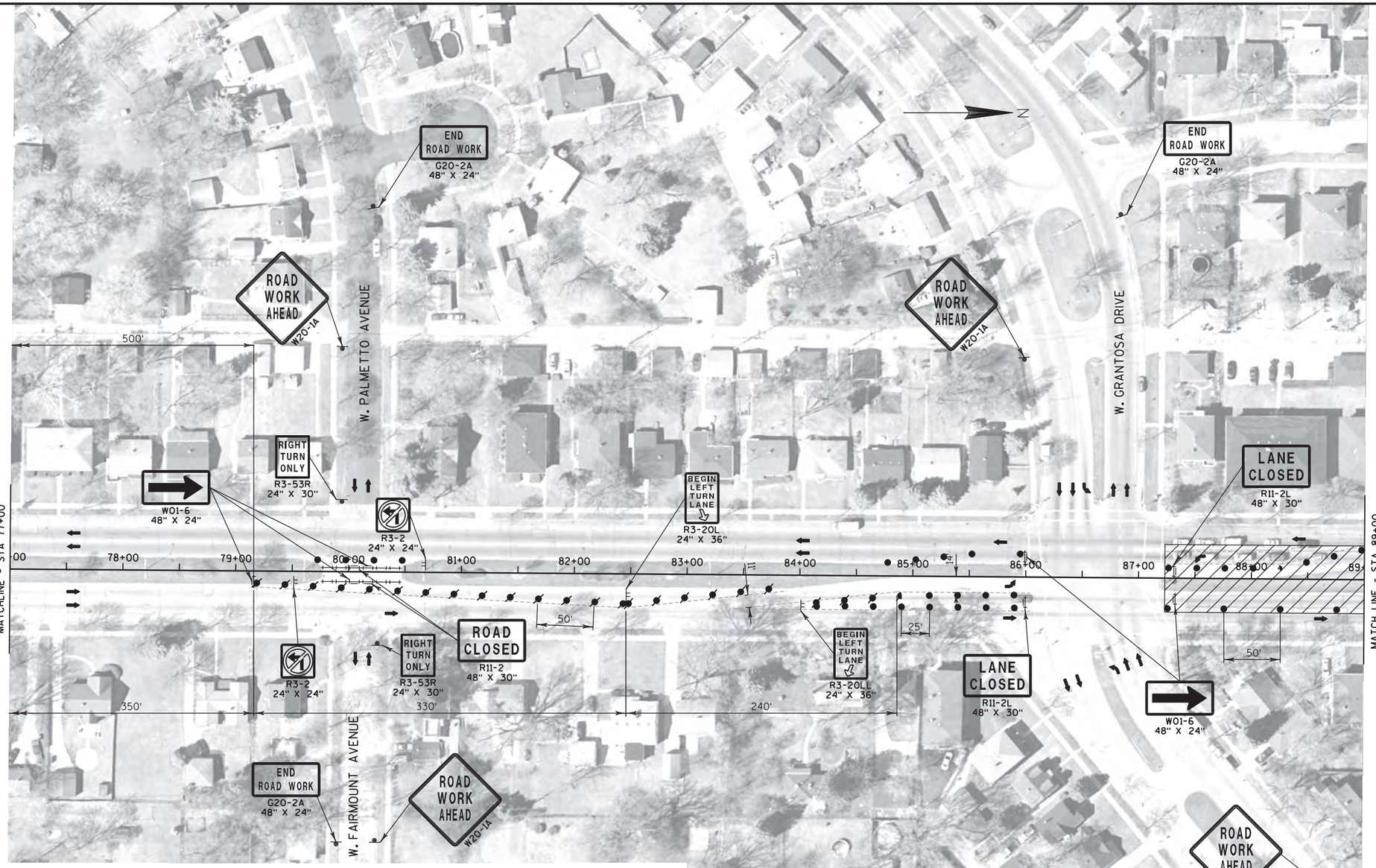


## LEGEND

- WORK ZONE
- CONSTRUCTION WORK UNDER TRAFFIC
- TEMPORARY PAVEMENT
- DIRECTION OF TRAFFIC
- SIGN ON PERMANENT/TEMPORARY SUPPORT
- TYPE III BARRICADE WITH TYPE A LIGHTS WITH/WITHOUT ATTACHED SIGN
- TRAFFIC CONTROL DRUM WITH/WITHOUT TYPE C LIGHT
- CONCRETE BARRIER TEMPORARY PRECAST ANCHORED
- CC — CONCRETE BARRIER TEMPORARY PRECAST
- FLEXIBLE TUBULAR MARKER POSTS AND BASES
- RPM — REMOVING PAVEMENT MARKING
- 4WR — TEMPORARY PAVEMENT MARKING REMOVABLE TAPE 4-INCH, WHITE
- 4YR — TEMPORARY PAVEMENT MARKING REMOVABLE TAPE 4-INCH, YELLOW
- 4WD — TEMPORARY PAVEMENT MARKING REMOVABLE TAPE 4-INCH, WHITE (12.5 FT LINE, 37.5 FT SPACE)
- 8WR — TEMPORARY PAVEMENT MARKING REMOVABLE TAPE 8-INCH, WHITE
- 18WSR — TEMPORARY PAVEMENT MARKING STOP LINE REMOVABLE TAPE, 18-INCH
- 12WDR — TEMPORARY PAVEMENT MARKING DIAGONAL REMOVABLE TAPE, 12-INCH
- PAVEMENT MARKING PLACED IN PREVIOUS STAGE

| PROJECT NO:2140-13-70 | HWY:STH 181 | COUNTY:MILWAUKEE | TRAFFIC CONTROL STAGE 2 | SHEET 204 | E |
|---|---|---|---|---|---|

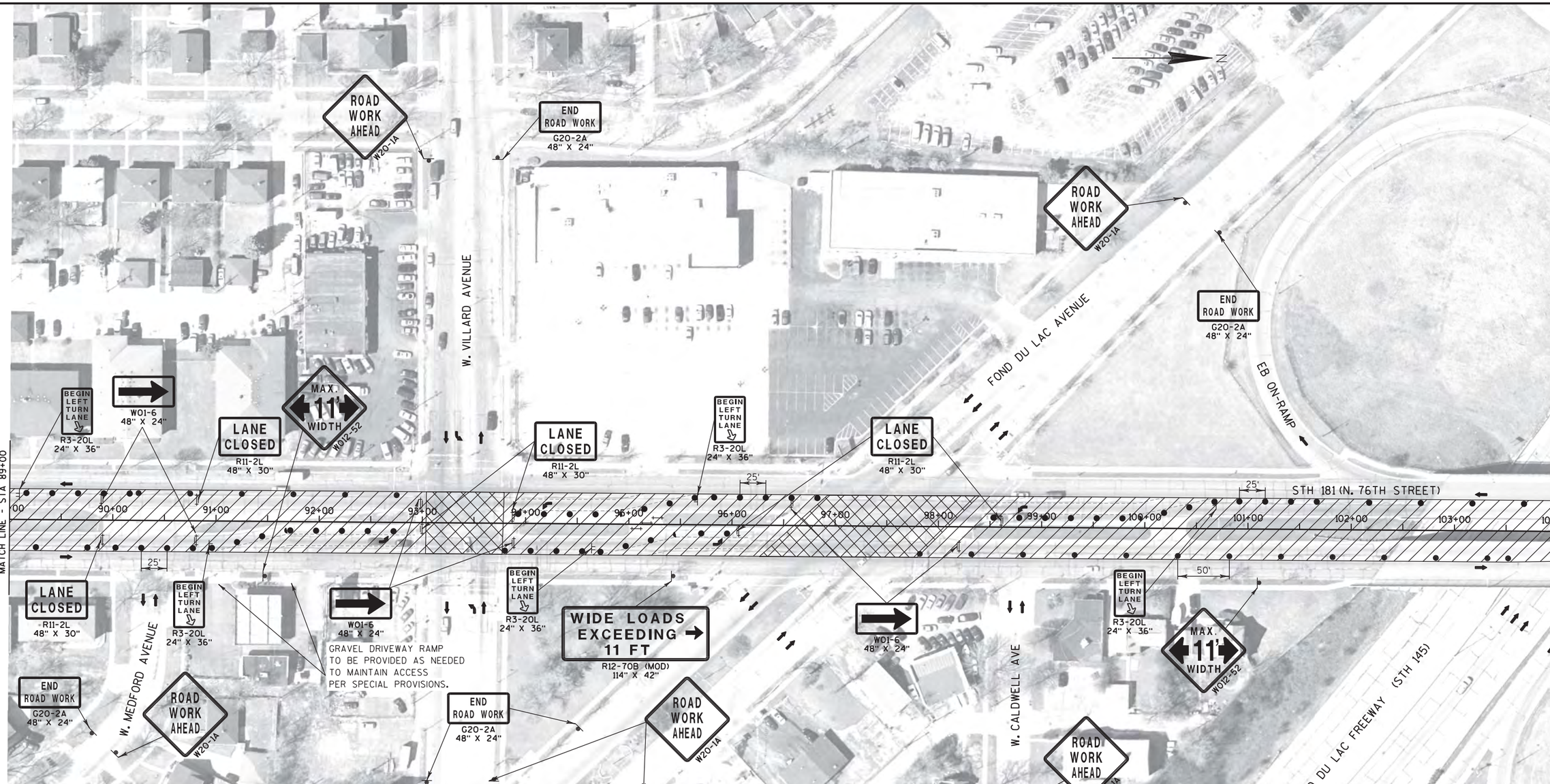


## LEGEND

- WORK ZONE
- CONSTRUCTION WORK UNDER TRAFFIC
- TEMPORARY PAVEMENT
- DIRECTION OF TRAFFIC
- SIGN ON PERMANENT/TEMPORARY SUPPORT
- TYPE III BARRICADE WITH TYPE A LIGHTS WITH/WITHOUT ATTACHED SIGN
- TRAFFIC CONTROL DRUM WITH/WITHOUT TYPE C LIGHT
- CONCRETE BARRIER TEMPORARY PRECAST ANCHORED
- CC — CONCRETE BARRIER TEMPORARY PRECAST
- FLEXIBLE TUBULAR MARKER POSTS AND BASES
- RPM — REMOVING PAVEMENT MARKING
- 4WR — TEMPORARY PAVEMENT MARKING REMOVABLE TAPE 4-INCH, WHITE
- 4YR — TEMPORARY PAVEMENT MARKING REMOVABLE TAPE 4-INCH, YELLOW
- 4WD — TEMPORARY PAVEMENT MARKING REMOVABLE TAPE 4-INCH, WHITE (12.5 FT LINE, 37.5 FT SPACE)
- 8WR — TEMPORARY PAVEMENT MARKING REMOVABLE TAPE 8-INCH, WHITE
- 18WSR — TEMPORARY PAVEMENT MARKING STOP LINE REMOVABLE TAPE, 18-INCH
- 12WDR — TEMPORARY PAVEMENT MARKING DIAGONAL REMOVABLE TAPE, 12-INCH
- PAVEMENT MARKING PLACED IN PREVIOUS STAGE

| PROJECT NO: 2140-13-70 | HWY: STH 181 | COUNTY: MILWAUKEE | TRAFFIC CONTROL STAGE 2 | SHEET 205 | E |
|---|---|---|---|---|---|

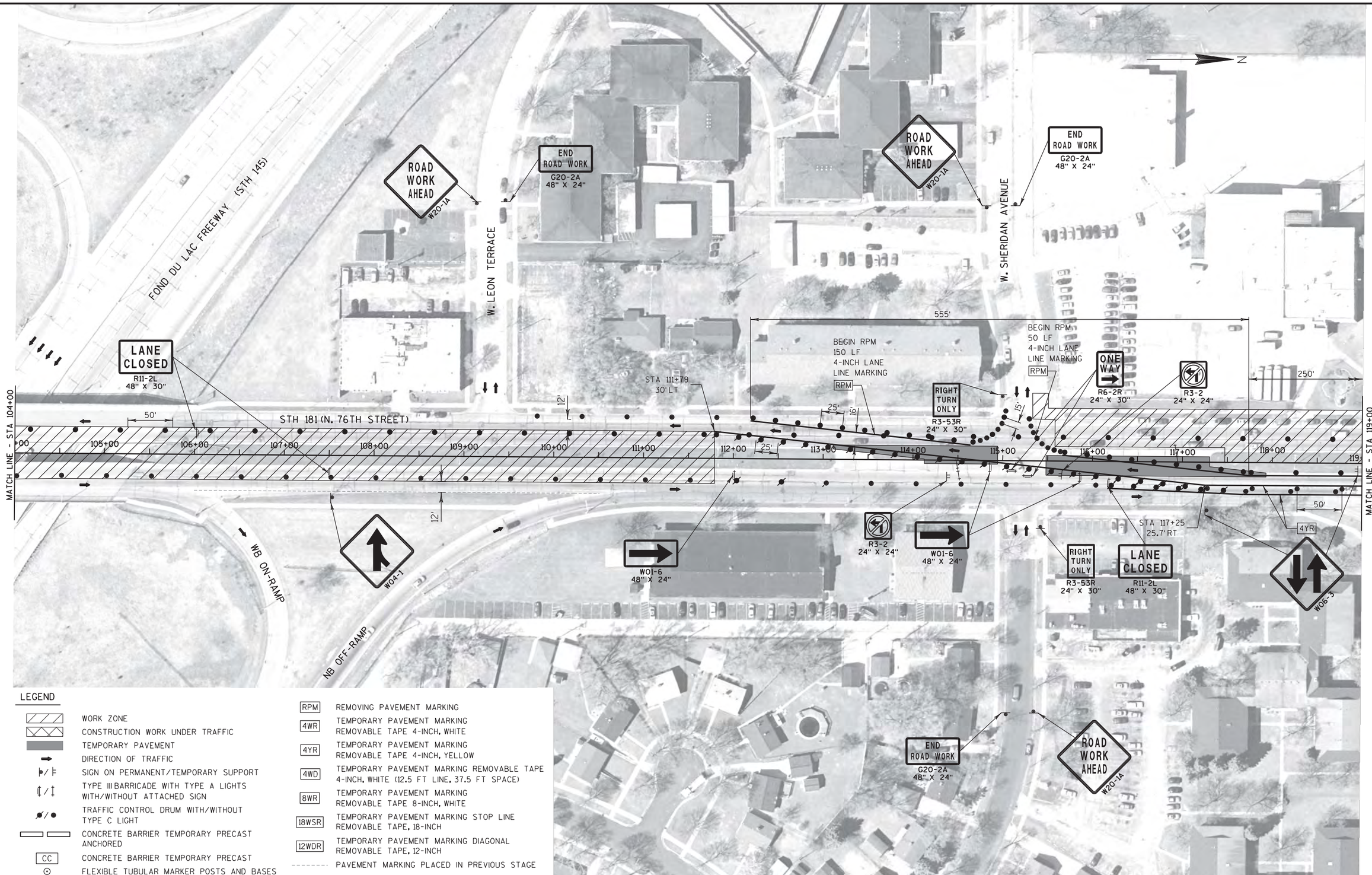


LEGEND

| | |
|---|---|
| | WORK ZONE |
| | CONSTRUCTION WORK UNDER TRAFFIC |
| | TEMPORARY PAVEMENT |
| | DIRECTION OF TRAFFIC |
| | SIGN ON PERMANENT/TEMPORARY SUPPORT |
| | TYPE III BARRICADE WITH TYPE A LIGHTS WITH/WITHOUT ATTACHED SIGN |
| | TRAFFIC CONTROL DRUM WITH/WITHOUT TYPE C LIGHT |
| | CONCRETE BARRIER TEMPORARY PRECAST ANCHORED |
| CC | CONCRETE BARRIER TEMPORARY PRECAST |
| | FLEXIBLE TUBULAR MARKER POSTS AND BASES |
| RPM | REMOVING PAVEMENT MARKING |
| 4WR | TEMPORARY PAVEMENT MARKING REMOVABLE TAPE 4-INCH, WHITE |
| 4YR | TEMPORARY PAVEMENT MARKING REMOVABLE TAPE 4-INCH, YELLOW |
| 4WD | TEMPORARY PAVEMENT MARKING REMOVABLE TAPE 4-INCH, WHITE (12.5 FT LINE, 37.5 FT SPACE) |
| 8WR | TEMPORARY PAVEMENT MARKING REMOVABLE TAPE 8-INCH, WHITE |
| 18WSR | TEMPORARY PAVEMENT MARKING STOP LINE REMOVABLE TAPE, 18-INCH |
| 12WDR | TEMPORARY PAVEMENT MARKING DIAGONAL REMOVABLE TAPE, 12-INCH |
| - - - - - | PAVEMENT MARKING PLACED IN PREVIOUS STAGE |

| PROJECT NO: 2140-13-70 | HWY: STH 181 | COUNTY: MILWAUKEE | TRAFFIC CONTROL STAGE 2 | SHEET 206 | E |
|---|---|---|---|---|---|

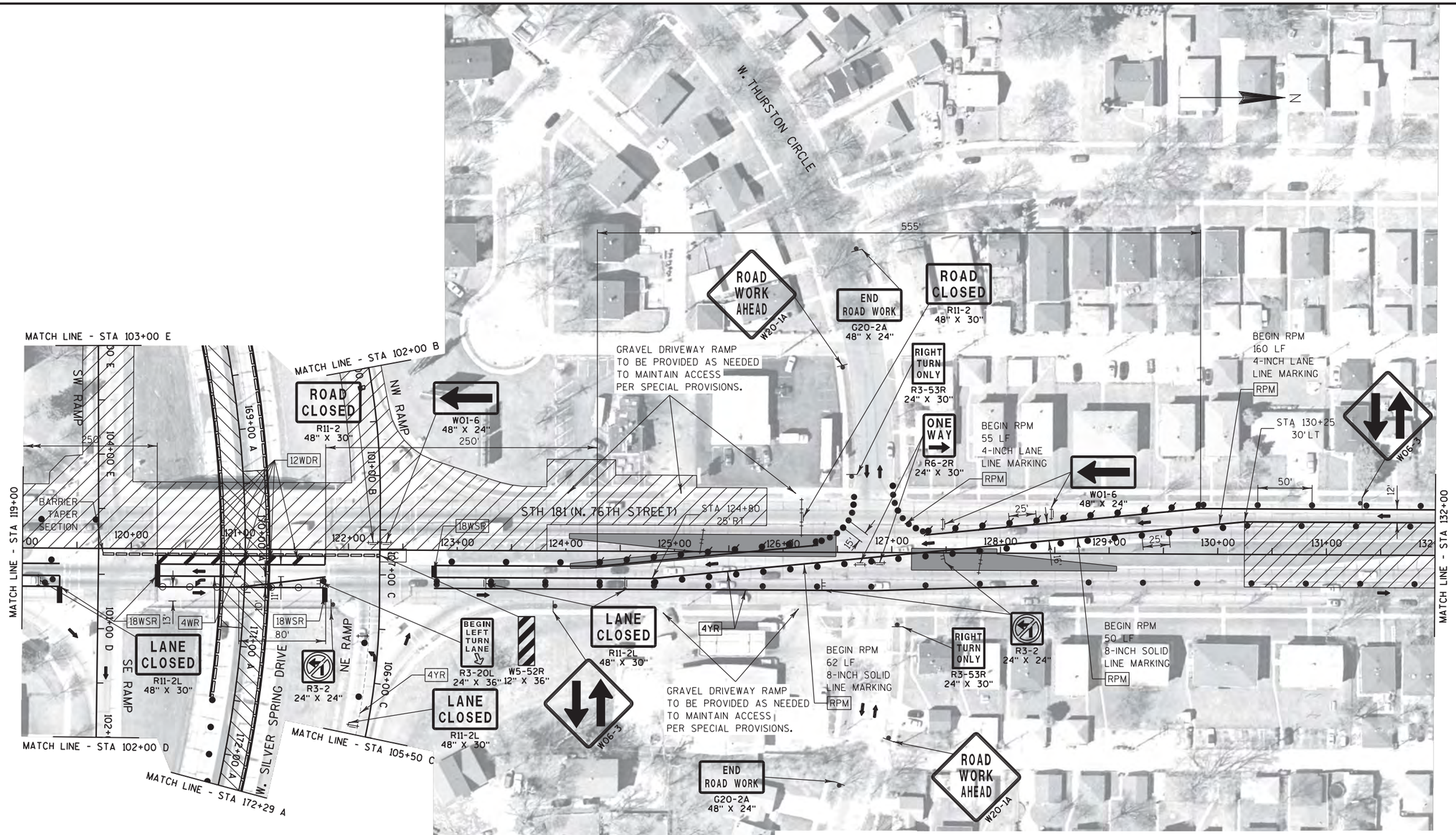


## LEGEND

- WORK ZONE
- CONSTRUCTION WORK UNDER TRAFFIC
- TEMPORARY PAVEMENT
- DIRECTION OF TRAFFIC
- SIGN ON PERMANENT/TEMPORARY SUPPORT
- TYPE III BARRICADE WITH TYPE A LIGHTS WITH/WITHOUT ATTACHED SIGN
- TRAFFIC CONTROL DRUM WITH/WITHOUT TYPE C LIGHT
- CONCRETE BARRIER TEMPORARY PRECAST ANCHORED
- CC — CONCRETE BARRIER TEMPORARY PRECAST
- FLEXIBLE TUBULAR MARKER POSTS AND BASES
- RPM — REMOVING PAVEMENT MARKING
- 4WR — TEMPORARY PAVEMENT MARKING REMOVABLE TAPE 4-INCH, WHITE
- 4YR — TEMPORARY PAVEMENT MARKING REMOVABLE TAPE 4-INCH, YELLOW
- 4WD — TEMPORARY PAVEMENT MARKING REMOVABLE TAPE 4-INCH, WHITE (12.5 FT LINE, 37.5 FT SPACE)
- 8WR — TEMPORARY PAVEMENT MARKING REMOVABLE TAPE 8-INCH, WHITE
- 18WSR — TEMPORARY PAVEMENT MARKING STOP LINE REMOVABLE TAPE, 18-INCH
- 12WDR — TEMPORARY PAVEMENT MARKING DIAGONAL REMOVABLE TAPE, 12-INCH
- PAVEMENT MARKING PLACED IN PREVIOUS STAGE

| PROJECT NO: 2140-13-70 | HWY: STH 181 | COUNTY: MILWAUKEE | TRAFFIC CONTROL STAGE 2 | SHEET 207 | E |
|---|---|---|---|---|---|

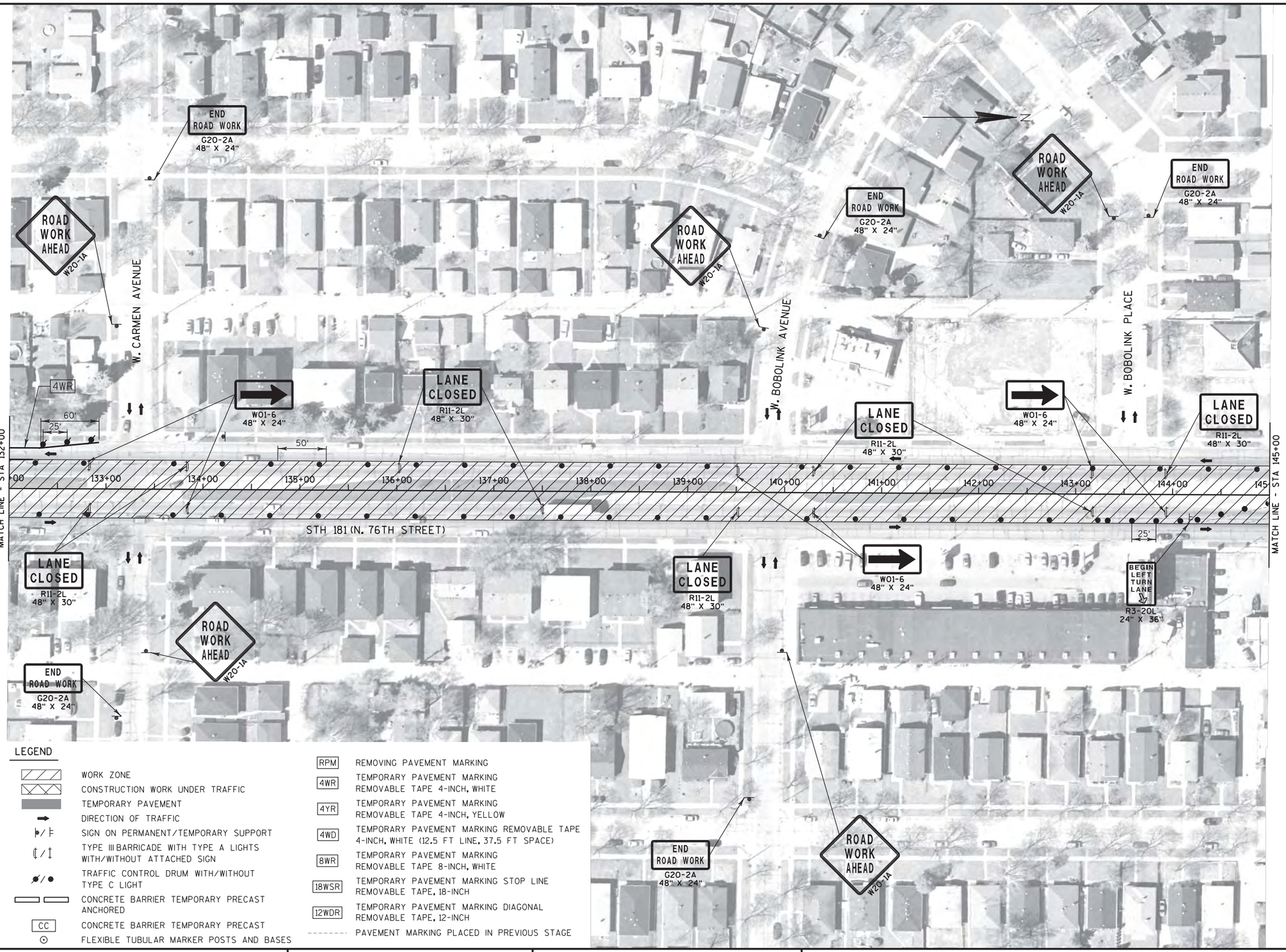


LEGEND

| | |
|---|---|
| | WORK ZONE |
| | CONSTRUCTION WORK UNDER TRAFFIC |
| | TEMPORARY PAVEMENT |
| | DIRECTION OF TRAFFIC |
| | SIGN ON PERMANENT/TEMPORARY SUPPORT |
| | TYPE III BARRICADE WITH TYPE A LIGHTS WITH/WITHOUT ATTACHED SIGN |
| | TRAFFIC CONTROL DRUM WITH/WITHOUT TYPE C LIGHT |
| | CONCRETE BARRIER TEMPORARY PRECAST ANCHORED |
| CC | CONCRETE BARRIER TEMPORARY PRECAST |
| | FLEXIBLE TUBULAR MARKER POSTS AND BASES |
| RPM | REMOVING PAVEMENT MARKING |
| 4WR | TEMPORARY PAVEMENT MARKING REMOVABLE TAPE 4-INCH, WHITE |
| 4YR | TEMPORARY PAVEMENT MARKING REMOVABLE TAPE 4-INCH, YELLOW |
| 4WD | TEMPORARY PAVEMENT MARKING REMOVABLE TAPE 4-INCH, WHITE (12.5 FT LINE, 37.5 FT SPACE) |
| 8WR | TEMPORARY PAVEMENT MARKING REMOVABLE TAPE 8-INCH, WHITE |
| 18WSR | TEMPORARY PAVEMENT MARKING STOP LINE REMOVABLE TAPE, 18-INCH |
| 12WDR | TEMPORARY PAVEMENT MARKING DIAGONAL REMOVABLE TAPE, 12-INCH |
| - - - - - - | PAVEMENT MARKING PLACED IN PREVIOUS STAGE |

| PROJECT NO: 2140-13-70 | HWY: STH 181 | COUNTY: MILWAUKEE | TRAFFIC CONTROL STAGE 2 | SHEET 208 | E |
|---|---|---|---|---|---|

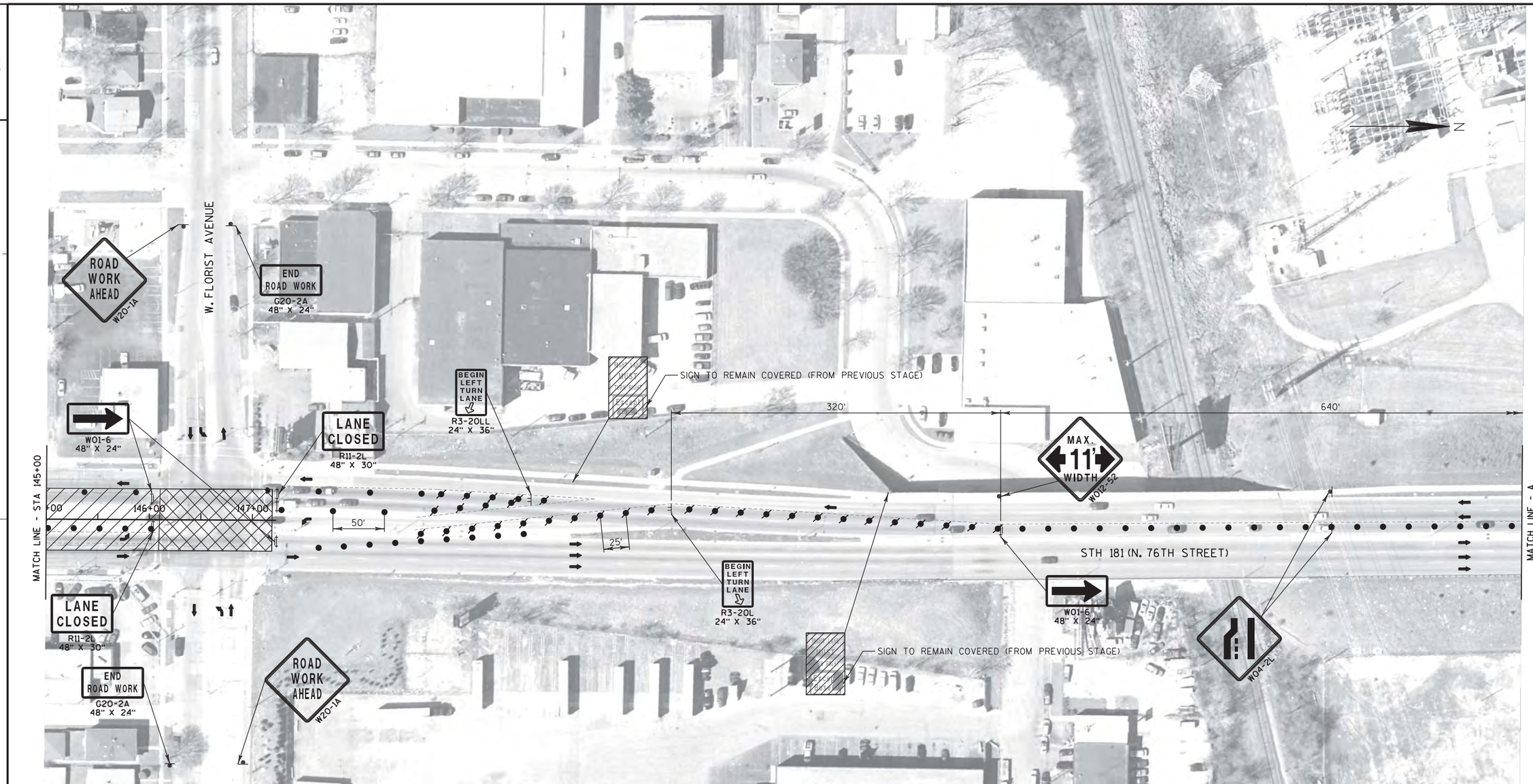


## LEGEND

- WORK ZONE
- CONSTRUCTION WORK UNDER TRAFFIC
- TEMPORARY PAVEMENT
- DIRECTION OF TRAFFIC
- SIGN ON PERMANENT/TEMPORARY SUPPORT
- TYPE III BARRICADE WITH TYPE A LIGHTS WITH/WITHOUT ATTACHED SIGN
- TRAFFIC CONTROL DRUM WITH/WITHOUT TYPE C LIGHT
- CONCRETE BARRIER TEMPORARY PRECAST ANCHORED
- CC — CONCRETE BARRIER TEMPORARY PRECAST
- FLEXIBLE TUBULAR MARKER POSTS AND BASES
- RPM — REMOVING PAVEMENT MARKING
- 4WR — TEMPORARY PAVEMENT MARKING REMOVABLE TAPE 4-INCH, WHITE
- 4YR — TEMPORARY PAVEMENT MARKING REMOVABLE TAPE 4-INCH, YELLOW
- 4WD — TEMPORARY PAVEMENT MARKING REMOVABLE TAPE 4-INCH, WHITE (12.5 FT LINE, 37.5 FT SPACE)
- 8WR — TEMPORARY PAVEMENT MARKING REMOVABLE TAPE 8-INCH, WHITE
- 18WSR — TEMPORARY PAVEMENT MARKING STOP LINE REMOVABLE TAPE, 18-INCH
- 12WDR — TEMPORARY PAVEMENT MARKING DIAGONAL REMOVABLE TAPE, 12-INCH
- PAVEMENT MARKING PLACED IN PREVIOUS STAGE

| PROJECT NO: 2140-13-70 | HWY: STH 181 | COUNTY: MILWAUKEE | TRAFFIC CONTROL STAGE 2 | SHEET 209 | E |
|---|---|---|---|---|---|

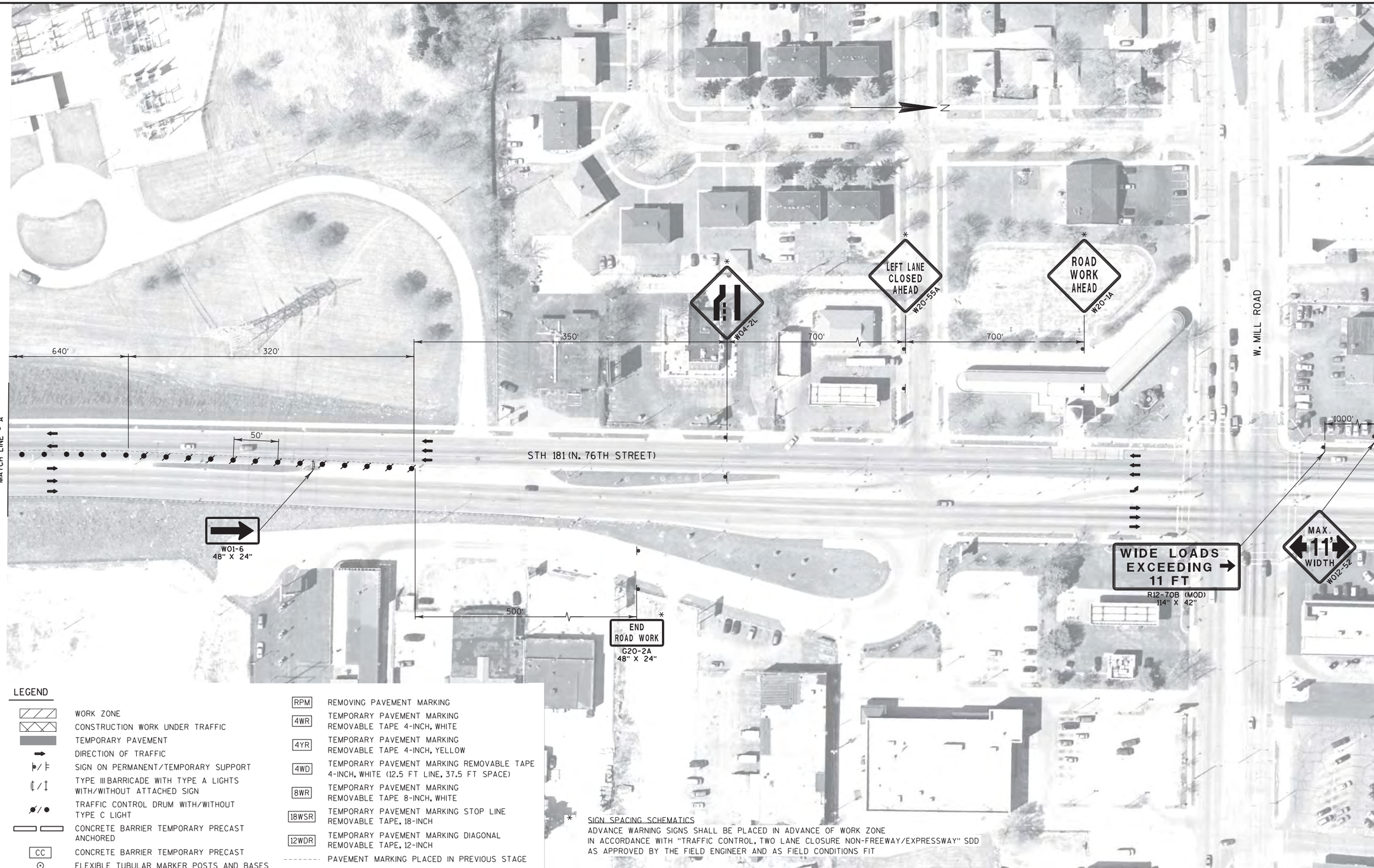


LEGEND

- WORK ZONE
- CONSTRUCTION WORK UNDER TRAFFIC
- TEMPORARY PAVEMENT
- DIRECTION OF TRAFFIC
- SIGN ON PERMANENT/TEMPORARY SUPPORT
- TYPE III BARRICADE WITH TYPE A LIGHTS WITH/WITHOUT ATTACHED SIGN
- TRAFFIC CONTROL DRUM WITH/WITHOUT TYPE C LIGHT
- CONCRETE BARRIER TEMPORARY PRECAST ANCHORED
- CC — CONCRETE BARRIER TEMPORARY PRECAST
- FLEXIBLE TUBULAR MARKER POSTS AND BASES
- RPM — REMOVING PAVEMENT MARKING
- 4WR — TEMPORARY PAVEMENT MARKING REMOVABLE TAPE 4-INCH, WHITE
- 4YR — TEMPORARY PAVEMENT MARKING REMOVABLE TAPE 4-INCH, YELLOW
- 4WD — TEMPORARY PAVEMENT MARKING REMOVABLE TAPE 4-INCH, WHITE (12.5 FT LINE, 37.5 FT SPACE)
- 8WR — TEMPORARY PAVEMENT MARKING REMOVABLE TAPE 8-INCH, WHITE
- 18WSR — TEMPORARY PAVEMENT MARKING STOP LINE REMOVABLE TAPE, 18-INCH
- 12WDR — TEMPORARY PAVEMENT MARKING DIAGONAL REMOVABLE TAPE, 12-INCH
- PAVEMENT MARKING PLACED IN PREVIOUS STAGE

* SIGN SPACING SCHEMATICS
ADVANCE WARNING SIGNS SHALL BE PLACED IN ADVANCE OF WORK ZONE IN ACCORDANCE WITH "TRAFFIC CONTROL, TWO LANE CLOSURE NON-FREEWAY/EXPRESSWAY" SDD AS APPROVED BY THE FIELD ENGINEER AND AS FIELD CONDITIONS FIT

| PROJECT NO: 2140-13-70 | HWY: STH 181 | COUNTY: MILWAUKEE | TRAFFIC CONTROL STAGE 2 | SHEET 210 | E |
|---|---|---|---|---|---|

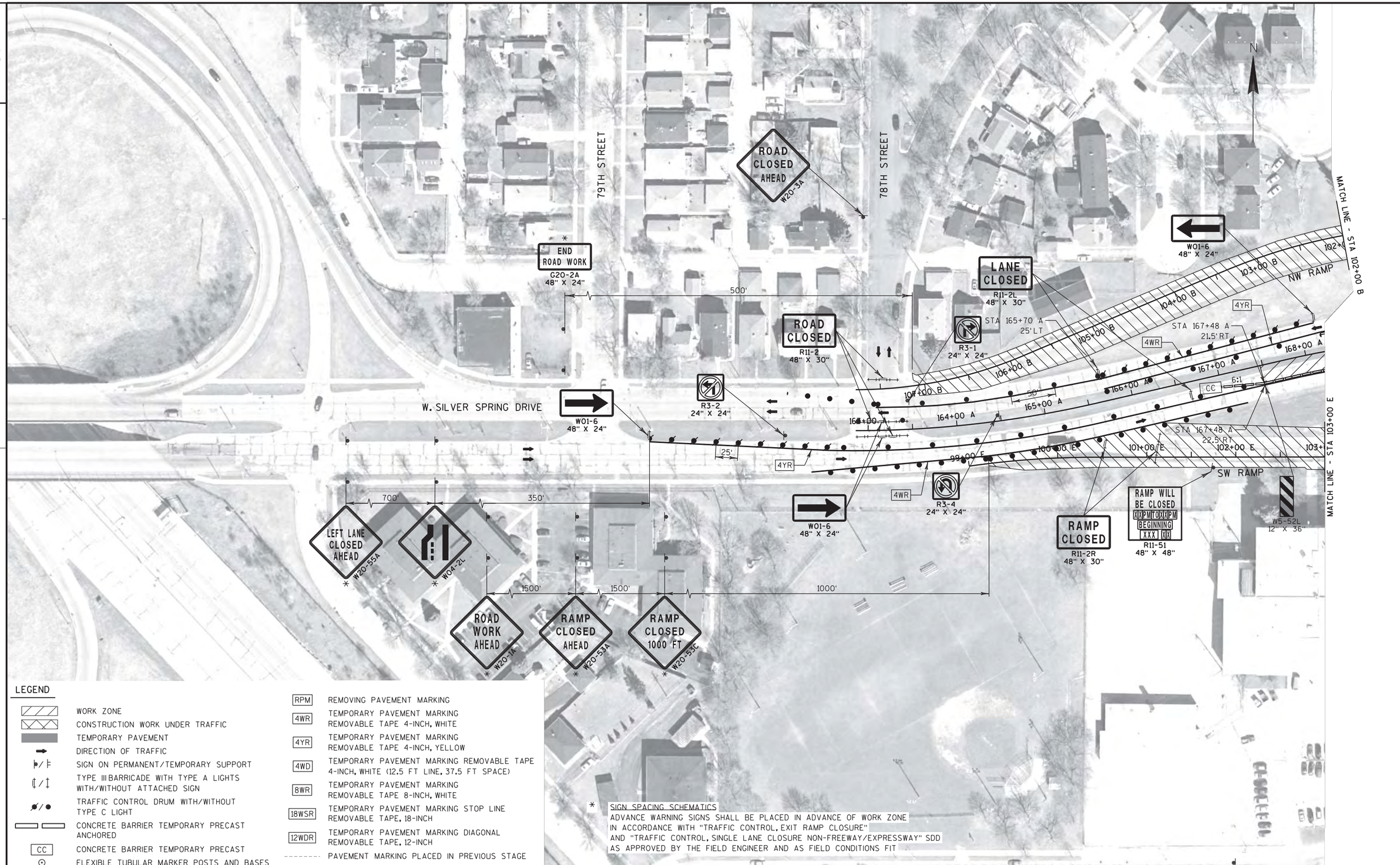


LEGEND

- WORK ZONE
- CONSTRUCTION WORK UNDER TRAFFIC
- TEMPORARY PAVEMENT
- DIRECTION OF TRAFFIC
- SIGN ON PERMANENT/TEMPORARY SUPPORT
- TYPE III BARRICADE WITH TYPE A LIGHTS WITH/WITHOUT ATTACHED SIGN
- TRAFFIC CONTROL DRUM WITH/WITHOUT TYPE C LIGHT
- CONCRETE BARRIER TEMPORARY PRECAST ANCHORED
- CC — CONCRETE BARRIER TEMPORARY PRECAST
- FLEXIBLE TUBULAR MARKER POSTS AND BASES
- RPM — REMOVING PAVEMENT MARKING
- 4WR — TEMPORARY PAVEMENT MARKING REMOVABLE TAPE 4-INCH, WHITE
- 4YR — TEMPORARY PAVEMENT MARKING REMOVABLE TAPE 4-INCH, YELLOW
- 4WD — TEMPORARY PAVEMENT MARKING REMOVABLE TAPE 4-INCH, WHITE (12.5 FT LINE, 37.5 FT SPACE)
- 8WR — TEMPORARY PAVEMENT MARKING REMOVABLE TAPE 8-INCH, WHITE
- 18WSR — TEMPORARY PAVEMENT MARKING STOP LINE REMOVABLE TAPE, 18-INCH
- 12WDR — TEMPORARY PAVEMENT MARKING DIAGONAL REMOVABLE TAPE, 12-INCH
- PAVEMENT MARKING PLACED IN PREVIOUS STAGE

* SIGN SPACING SCHEMATICS
ADVANCE WARNING SIGNS SHALL BE PLACED IN ADVANCE OF WORK ZONE IN ACCORDANCE WITH "TRAFFIC CONTROL, EXIT RAMP CLOSURE" AND "TRAFFIC CONTROL, SINGLE LANE CLOSURE NON-FREEWAY/EXPRESSWAY" SDD AS APPROVED BY THE FIELD ENGINEER AND AS FIELD CONDITIONS FIT

| PROJECT NO: 2140-13-70 | HWY: STH 181 | COUNTY: MILWAUKEE | TRAFFIC CONTROL STAGE 2 - SILVER SPRING DRIVE | SHEET 211 | E |
|---|---|---|---|---|---|

FILE NAME : P:\46xx\4635_DS.N76.MIL\CADDS\Plan\026112_s2.dgn PLOT DATE : 4/19/2016 PLOT BY : kes PLOT NAME : PLOT SCALE : 1:100

WISDOT/CADDS SHEET 42

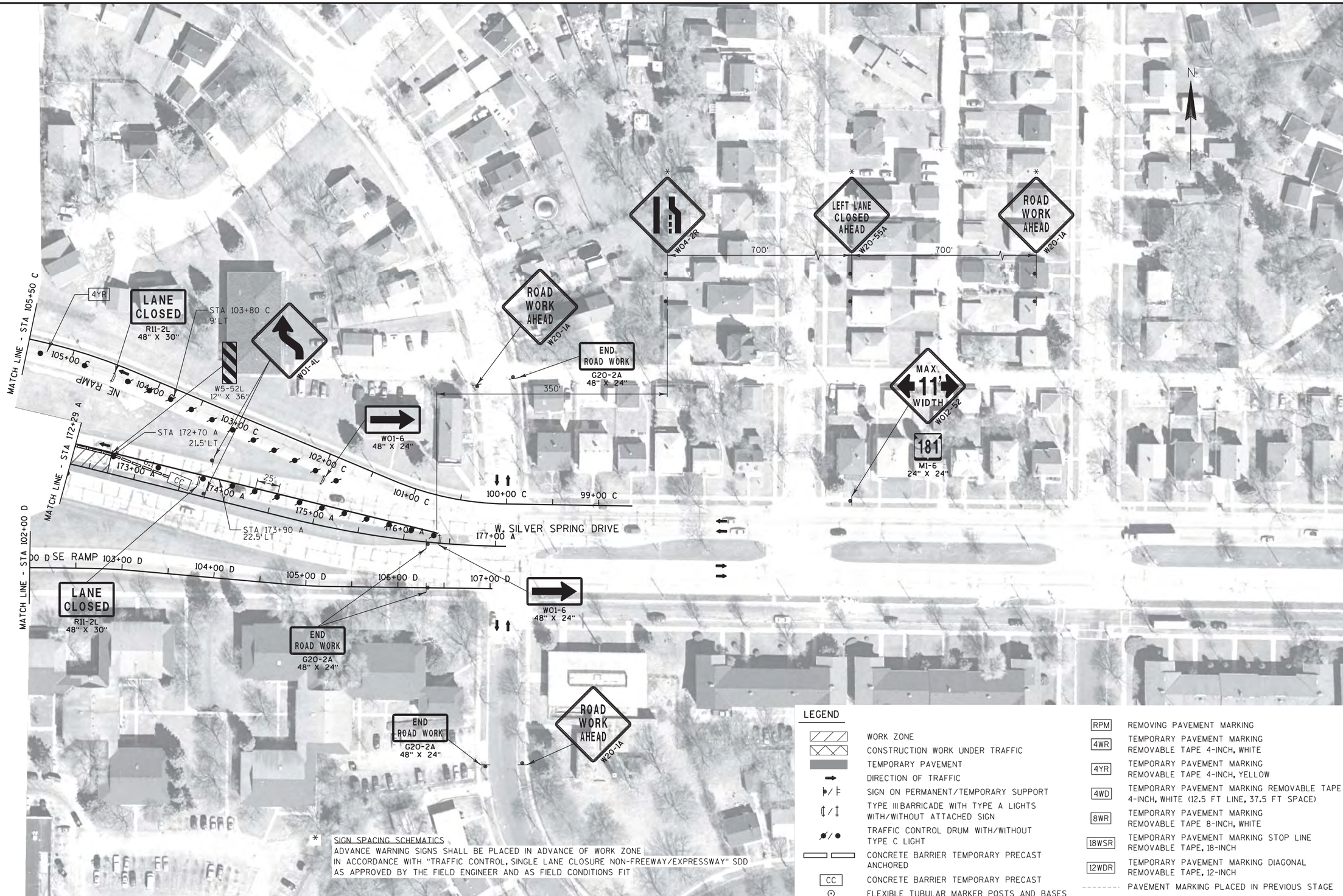


* SIGN SPACING SCHEMATICS
ADVANCE WARNING SIGNS SHALL BE PLACED IN ADVANCE OF WORK ZONE IN ACCORDANCE WITH "TRAFFIC CONTROL, SINGLE LANE CLOSURE NON-FREEWAY/EXPRESSWAY" SDD AS APPROVED BY THE FIELD ENGINEER AND AS FIELD CONDITIONS FIT

## LEGEND

- WORK ZONE
- CONSTRUCTION WORK UNDER TRAFFIC
- TEMPORARY PAVEMENT
- DIRECTION OF TRAFFIC
- SIGN ON PERMANENT/TEMPORARY SUPPORT
- TYPE III BARRICADE WITH TYPE A LIGHTS WITH/WITHOUT ATTACHED SIGN
- TRAFFIC CONTROL DRUM WITH/WITHOUT TYPE C LIGHT
- CONCRETE BARRIER TEMPORARY PRECAST ANCHORED
- CC — CONCRETE BARRIER TEMPORARY PRECAST
- FLEXIBLE TUBULAR MARKER POSTS AND BASES
- RPM — REMOVING PAVEMENT MARKING
- 4WR — TEMPORARY PAVEMENT MARKING REMOVABLE TAPE 4-INCH, WHITE
- 4YR — TEMPORARY PAVEMENT MARKING REMOVABLE TAPE 4-INCH, YELLOW
- 4WD — TEMPORARY PAVEMENT MARKING REMOVABLE TAPE 4-INCH, WHITE (12.5 FT LINE, 37.5 FT SPACE)
- 8WR — TEMPORARY PAVEMENT MARKING REMOVABLE TAPE 8-INCH, WHITE
- 18WSR — TEMPORARY PAVEMENT MARKING STOP LINE REMOVABLE TAPE, 18-INCH
- 12WDR — TEMPORARY PAVEMENT MARKING DIAGONAL REMOVABLE TAPE, 12-INCH
- PAVEMENT MARKING PLACED IN PREVIOUS STAGE

| PROJECT NO:2140-13-70 | HWY:STH 181 | COUNTY:MILWAUKEE | TRAFFIC CONTROL STAGE 2 - SILVER SPRING DRIVE | SHEET 212 | E |
|---|---|---|---|---|---|

2

## NOTES

TRAFFIC CONTROL STAGE 2B
- MAINTAIN SINGLE OUTSIDE LANE, EACH DIRECTION
- SHIFT SOUTHBOUND TRAFFIC TO NORTHBOUND LANES (BETWEEN W. SHERIDAN AVE AND W. THURSTON CIR)
- CONSTRUCT SB BRIDGE (B-40-766) AND ABUTMENT AND RETAINING WALL ON SILVER SPRING DRIVE
- CONSTRUCT NW AND SW RAMPS
- SEE DETOUR PLAN FOR NW AND SW RAMP DETOURS
- CONSECUTIVE MEDIAN OPENINGS SHALL NOT BE CONSTRUCTED AT THE SAME TIME
- SEE CONSTRUCTION DETAILS FOR TRAFFIC CONTROL WHILE MEDIAN OPENING IS CLOSED TO TRAFFIC AND WHILE MEDIAN OPENING IS OPEN TO TRAFFIC
- DO NOT CLOSE TWO CONSECUTIVE INTERSECTIONS AT ANY TIME
- SEE "TRAFFIC CONTROL, INTERSECTION WITHIN SINGLE LANE CLOSURE" SDD FOR TRAFFIC CONTROL WHILE INTERSECTION REMAINS OPEN
- SEE CONSTRUCTION DETAIL FOR TRAFFIC CONTROL FOR INTERSECTION WITHIN SINGLE INSIDE LANE CLOSURE WHILE INTERSECTION IS CLOSED
- PLACE "ROAD WORK AHEAD" AND "END ROAD WORK" SIGNS A MINIMUM OF 150' IN ADVANCE OF THE INTERSECTION IN ACCORDANCE WITH "TRAFFIC CONTROL, INTERSECTION WITHIN SINGLE LANE CLOSURE" SDD AS APPROVED BY FIELD ENGINEER AND AS FIELD CONDITIONS FIT

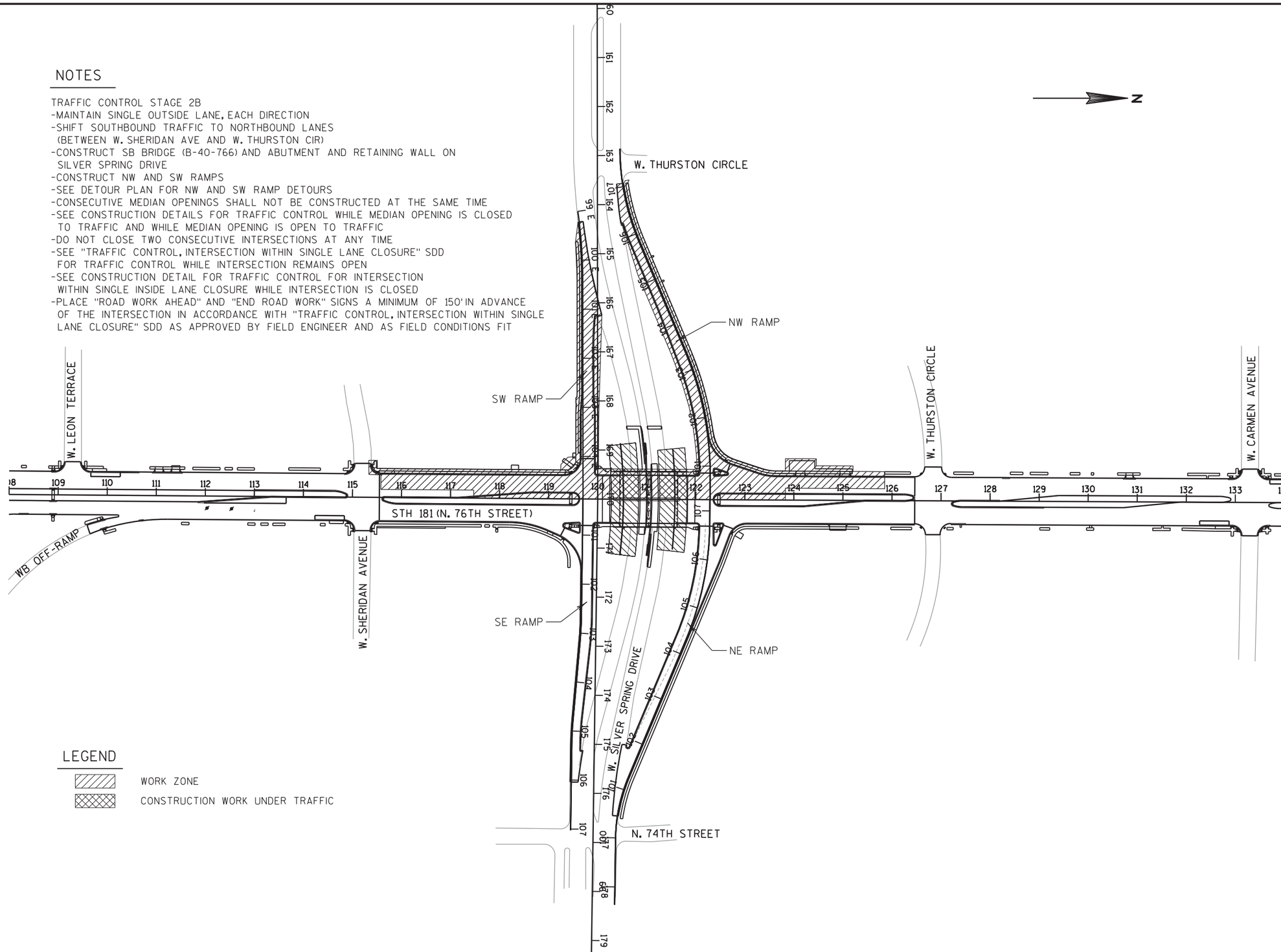


## LEGEND

WORK ZONE

CONSTRUCTION WORK UNDER TRAFFIC

| PROJECT NO: 2140-13-70 | HWY: STH 181 | COUNTY: MILWAUKEE | CONSTRUCTION STAGING OVERVIEW - STAGE 2B | SHEET 213 | E |
|---|---|---|---|---|---|

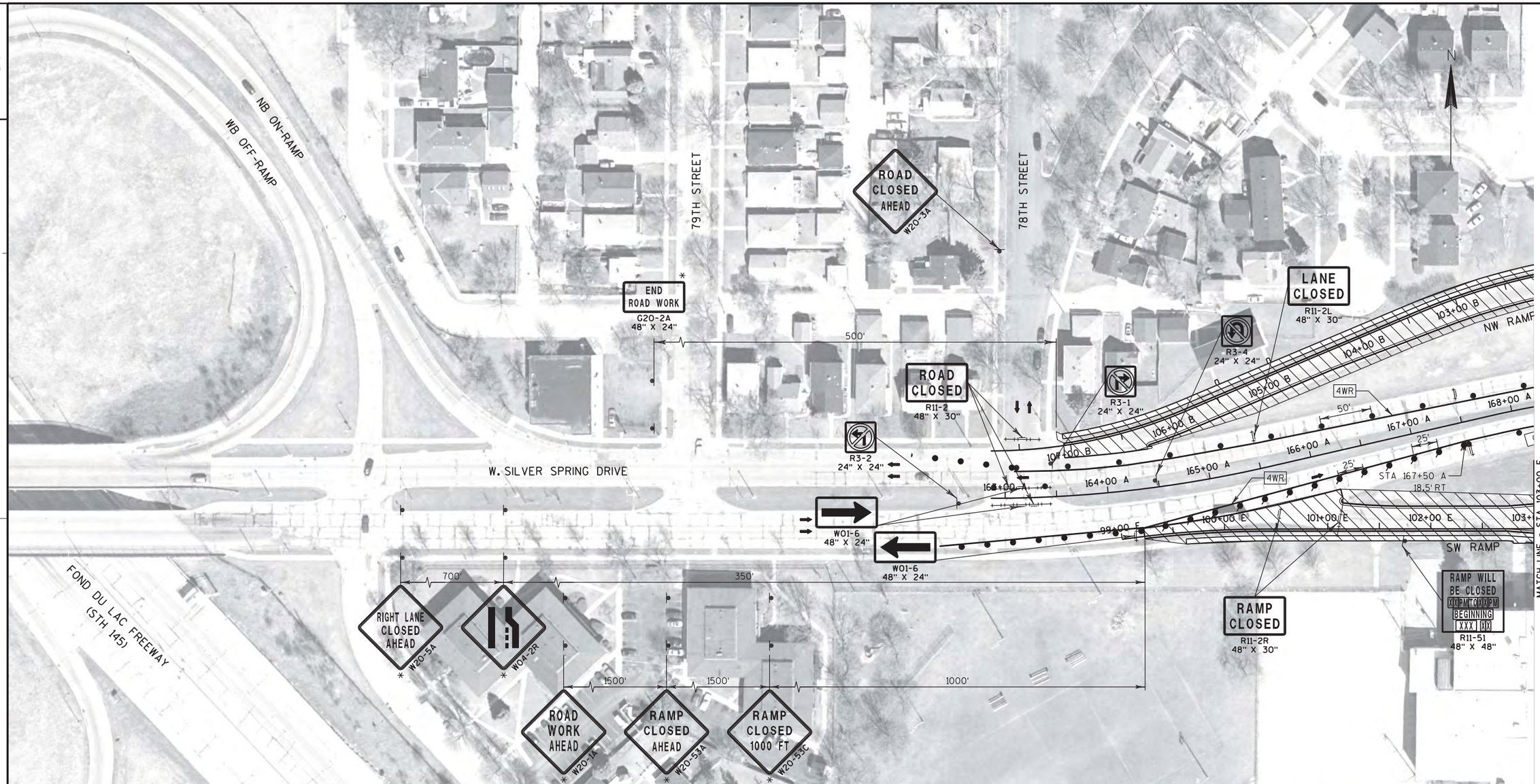


LEGEND

- WORK ZONE
- CONSTRUCTION WORK UNDER TRAFFIC
- TEMPORARY PAVEMENT
- DIRECTION OF TRAFFIC
- SIGN ON PERMANENT/TEMPORARY SUPPORT
- TYPE III BARRICADE WITH TYPE A LIGHTS WITH/WITHOUT ATTACHED SIGN
- TRAFFIC CONTROL DRUM WITH/WITHOUT TYPE C LIGHT
- CONCRETE BARRIER TEMPORARY PRECAST ANCHORED
- CC — CONCRETE BARRIER TEMPORARY PRECAST
- FLEXIBLE TUBULAR MARKER POSTS AND BASES
- RPM — REMOVING PAVEMENT MARKING
- 4WR — TEMPORARY PAVEMENT MARKING REMOVABLE TAPE 4-INCH, WHITE
- 4YR — TEMPORARY PAVEMENT MARKING REMOVABLE TAPE 4-INCH, YELLOW
- 4WD — TEMPORARY PAVEMENT MARKING REMOVABLE TAPE 4-INCH, WHITE (12.5 FT LINE, 37.5 FT SPACE)
- 8WR — TEMPORARY PAVEMENT MARKING REMOVABLE TAPE 8-INCH, WHITE
- 18WSR — TEMPORARY PAVEMENT MARKING STOP LINE REMOVABLE TAPE, 18-INCH
- 12WDR — TEMPORARY PAVEMENT MARKING DIAGONAL REMOVABLE TAPE, 12-INCH
- PAVEMENT MARKING PLACED IN PREVIOUS STAGE

* SIGN SPACING SCHEMATICS
ADVANCE WARNING SIGNS SHALL BE PLACED IN ADVANCE OF WORK ZONE IN ACCORDANCE WITH "TRAFFIC CONTROL, EXIT RAMP CLOSURE" AND "TRAFFIC CONTROL, SINGLE LANE CLOSURE NON-FREEWAY/EXPRESSWAY" SDD AS APPROVED BY THE FIELD ENGINEER AND AS FIELD CONDITIONS FIT

| PROJECT NO: 2140-13-70 | HWY: STH 181 | COUNTY: MILWAUKEE | TRAFFIC CONTROL STAGE 2B - SILVER SPRING DRIVE | SHEET 214 | E |
|---|---|---|---|---|---|

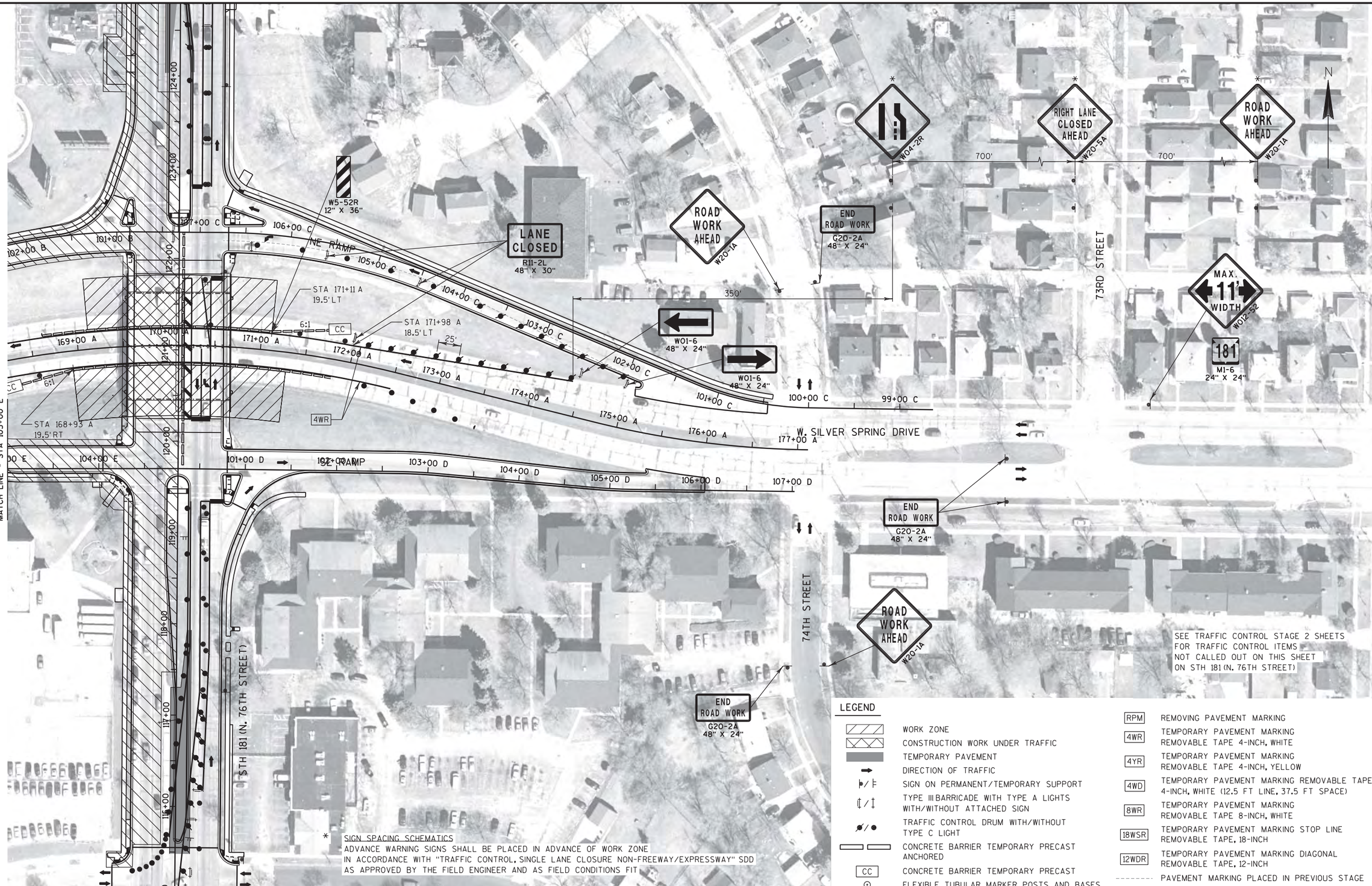


* SIGN SPACING SCHEMATICS
ADVANCE WARNING SIGNS SHALL BE PLACED IN ADVANCE OF WORK ZONE IN ACCORDANCE WITH "TRAFFIC CONTROL, SINGLE LANE CLOSURE NON-FREEWAY/EXPRESSWAY" SDD AS APPROVED BY THE FIELD ENGINEER AND AS FIELD CONDITIONS FIT

| PROJECT NO: 2140-13-70 | HWY: STH 181 | COUNTY: MILWAUKEE | TRAFFIC CONTROL STAGE 2B - SILVER SPRING DRIVE | SHEET 215 | E |
|---|---|---|---|---|---|

## NOTES

TRAFFIC CONTROL STAGE 3
-SHIFT TRAFFIC TO ONE INSIDE LANE, EACH DIRECTION
-SHIFT NORTHBOUND TRAFFIC TO SOUTHBOUND LANES (BETWEEN W. SHERIDAN AVE AND W. THURSTON CIR)
-CONSTRUCT NB BRIDGE (B-40-766) AND CENTER PIER
-CONSTRUCT NE AND SE RAMPS
-CONSTRUCT PAVEMENT OF THE INSIDE SHOULDERS AS WELL AS CURB & GUTTER ON SILVER SPRING DRIVE
-SEE DETOUR PLAN FOR NE AND SE RAMP DETOURS
-REPLACEMENT OF SIDEWALK ALONG SOUTHBOUND 76TH STREET TO BE COMPLETED BEFORE REPLACEMENT OF SIDEWALK ALONG NORTHBOUND 76TH STREET
-MAINTAIN PEDESTRIAN ACCESS PER "TRAFFIC CONTROL, PEDESTRIAN ACCOMODATION" SDD FOR TRAFFIC CONTROL WHILE SIDEWALK REMAINS CLOSED FOR REPLACEMENT
-ALL MEDIAN OPENINGS CLOSED TO TRAFFIC, SEE CONSTRUCTION DETAIL FOR TRAFFIC CONTROL
-DO NOT CLOSE TWO CONSECUTIVE INTERSECTIONS AT ANY TIME
-SEE "TRAFFIC CONTROL, INTERSECTION WITHIN SINGLE LANE CLOSURE" SDD FOR TRAFFIC CONTROL WHILE INTERSECTION REMAINS OPEN
-SEE CONSTRUCTION DETAIL FOR TRAFFIC CONTROL FOR INTERSECTION WITHIN SINGLE OUTSIDE LANE CLOSURE WHILE INTERSECTION IS CLOSED
-PLACE "ROAD WORK AHEAD" AND "END ROAD WORK" SIGNS A MINIMUM OF 150' IN ADVANCE OF THE INTERSECTION IN ACCORDANCE WITH "TRAFFIC CONTROL, INTERSECTION WITHIN SINGLE LANE CLOSURE" SDD AS APPROVED BY FIELD ENGINEER AND AS FIELD CONDITIONS FIT

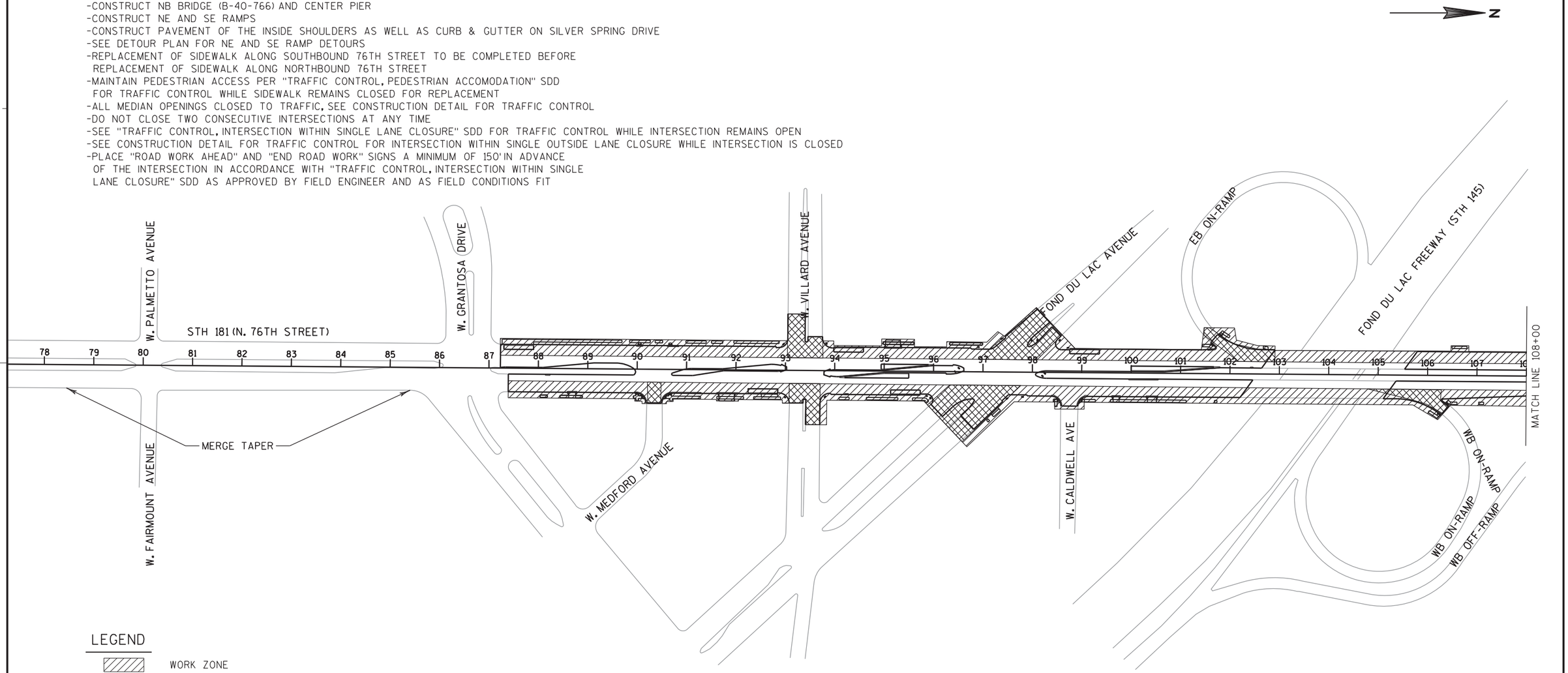


## LEGEND

WORK ZONE

CONSTRUCTION WORK UNDER TRAFFIC

| PROJECT NO: 2140-13-70 | HWY: STH 181 | COUNTY: MILWAUKEE | CONSTRUCTION STAGING OVERVIEW - STAGE 3 | SHEET 216 | E |
|---|---|---|---|---|---|

2

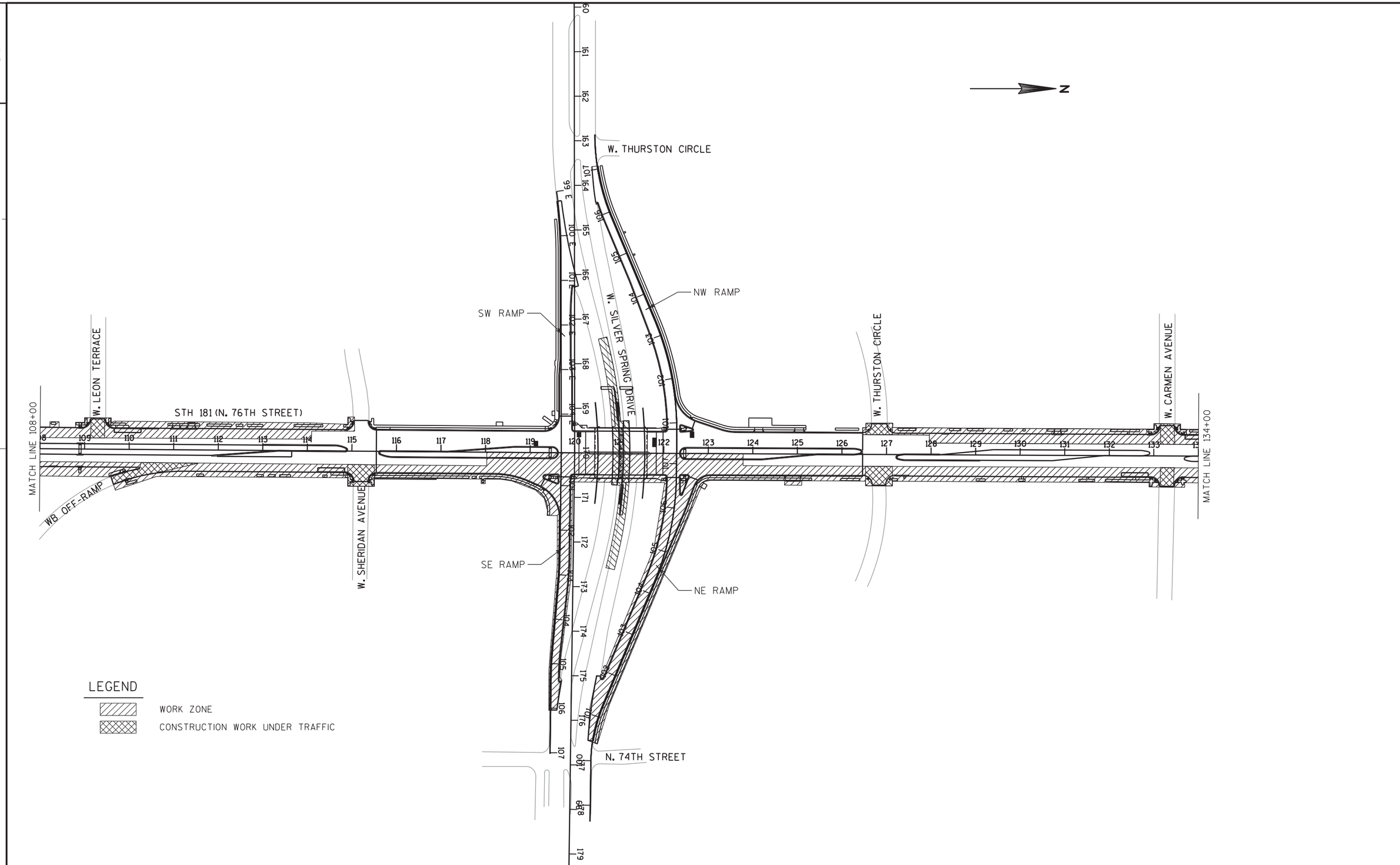


2

| PROJECT NO:2140-13-70 | HWY:STH 181 | COUNTY:MILWAUKEE | CONSTRUCTION STAGING OVERVIEW - STAGE 3 | SHEET 217 | E |
|---|---|---|---|---|---|

FILE NAME : P:\46xx\4635_DS.N76.MIL\CADDS\Plan\026202_s3.dgn PLOT DATE : 4/19/2016 PLOT BY : kes PLOT NAME : PLOT SCALE : 1:200

WISDOT/CADDS SHEET 42

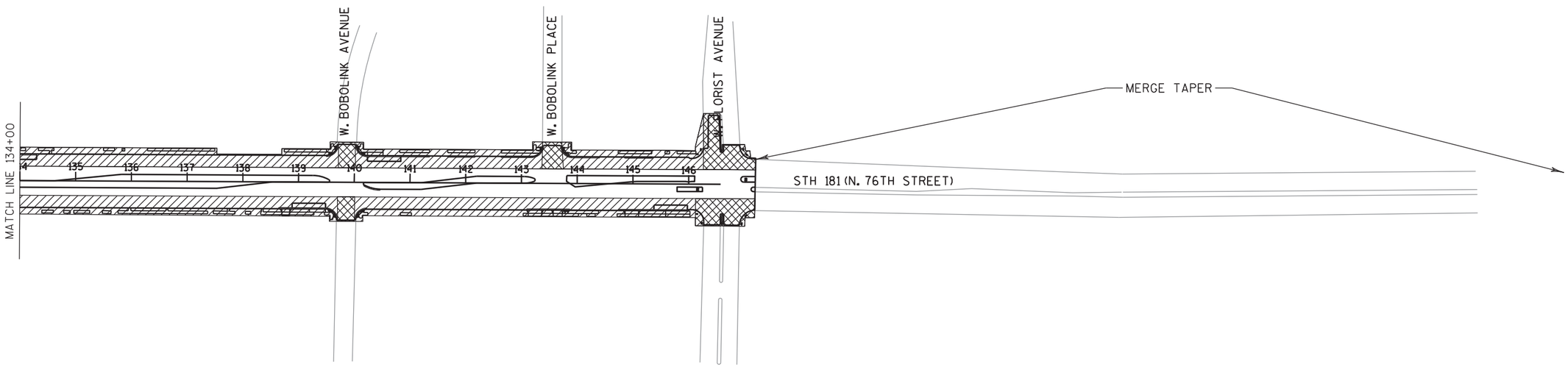


LEGEND

WORK ZONE

CONSTRUCTION WORK UNDER TRAFFIC

| PROJECT NO: 2140-13-70 | HWY: STH 181 | COUNTY: MILWAUKEE | CONSTRUCTION STAGING OVERVIEW - STAGE 3 | SHEET 218 | E |
|---|---|---|---|---|---|

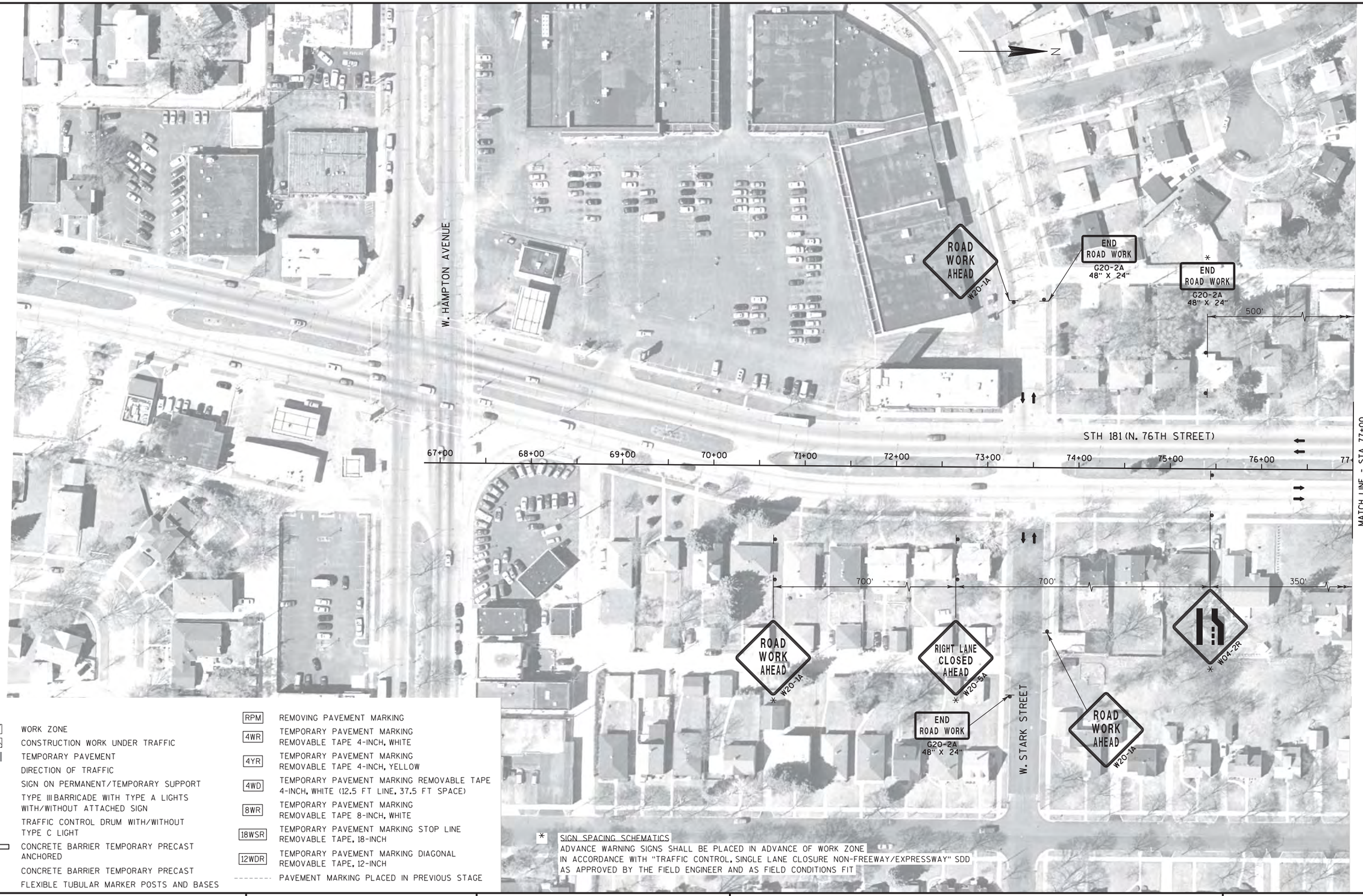


| PROJECT NO: 2140-13-70 | HWY: STH 181 | COUNTY: MILWAUKEE | TRAFFIC CONTROL STAGE 3 | SHEET 219 | E |
|---|---|---|---|---|---|

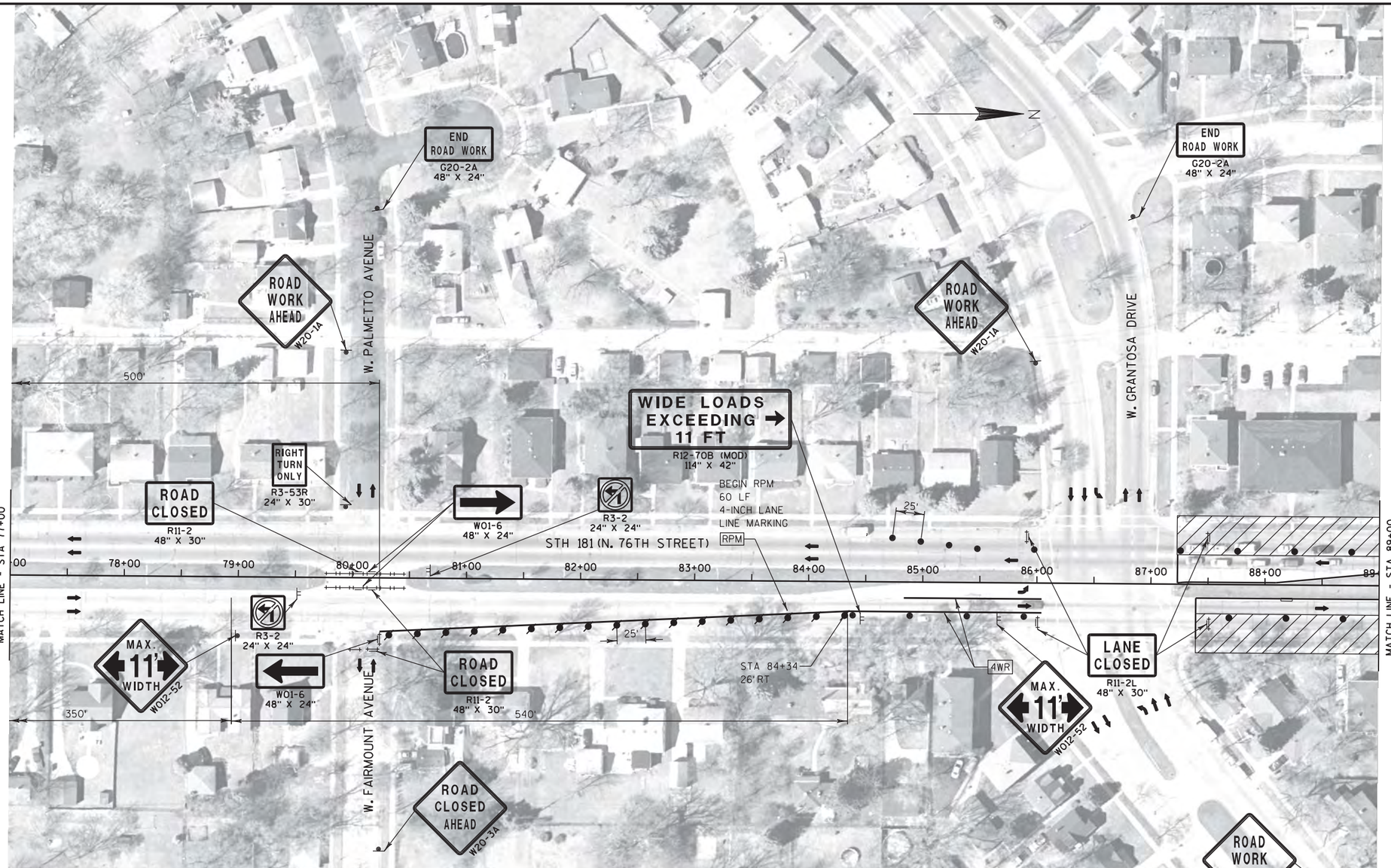


## LEGEND

| | |
|---|---|
| | WORK ZONE |
| | CONSTRUCTION WORK UNDER TRAFFIC |
| | TEMPORARY PAVEMENT |
| | DIRECTION OF TRAFFIC |
| | SIGN ON PERMANENT/TEMPORARY SUPPORT |
| | TYPE III BARRICADE WITH TYPE A LIGHTS WITH/WITHOUT ATTACHED SIGN |
| | TRAFFIC CONTROL DRUM WITH/WITHOUT TYPE C LIGHT |
| | CONCRETE BARRIER TEMPORARY PRECAST ANCHORED |
| CC | CONCRETE BARRIER TEMPORARY PRECAST |
| | FLEXIBLE TUBULAR MARKER POSTS AND BASES |
| RPM | REMOVING PAVEMENT MARKING |
| 4WR | TEMPORARY PAVEMENT MARKING REMOVABLE TAPE 4-INCH, WHITE |
| 4YR | TEMPORARY PAVEMENT MARKING REMOVABLE TAPE 4-INCH, YELLOW |
| 4WD | TEMPORARY PAVEMENT MARKING REMOVABLE TAPE 4-INCH, WHITE (12.5 FT LINE, 37.5 FT SPACE) |
| 8WR | TEMPORARY PAVEMENT MARKING REMOVABLE TAPE 8-INCH, WHITE |
| 18WSR | TEMPORARY PAVEMENT MARKING STOP LINE REMOVABLE TAPE, 18-INCH |
| 12WDR | TEMPORARY PAVEMENT MARKING DIAGONAL REMOVABLE TAPE, 12-INCH |
| | PAVEMENT MARKING PLACED IN PREVIOUS STAGE |

| PROJECT NO: 2140-13-70 | HWY: STH 181 | COUNTY: MILWAUKEE | TRAFFIC CONTROL STAGE 3 | SHEET 220 | E |
|---|---|---|---|---|---|

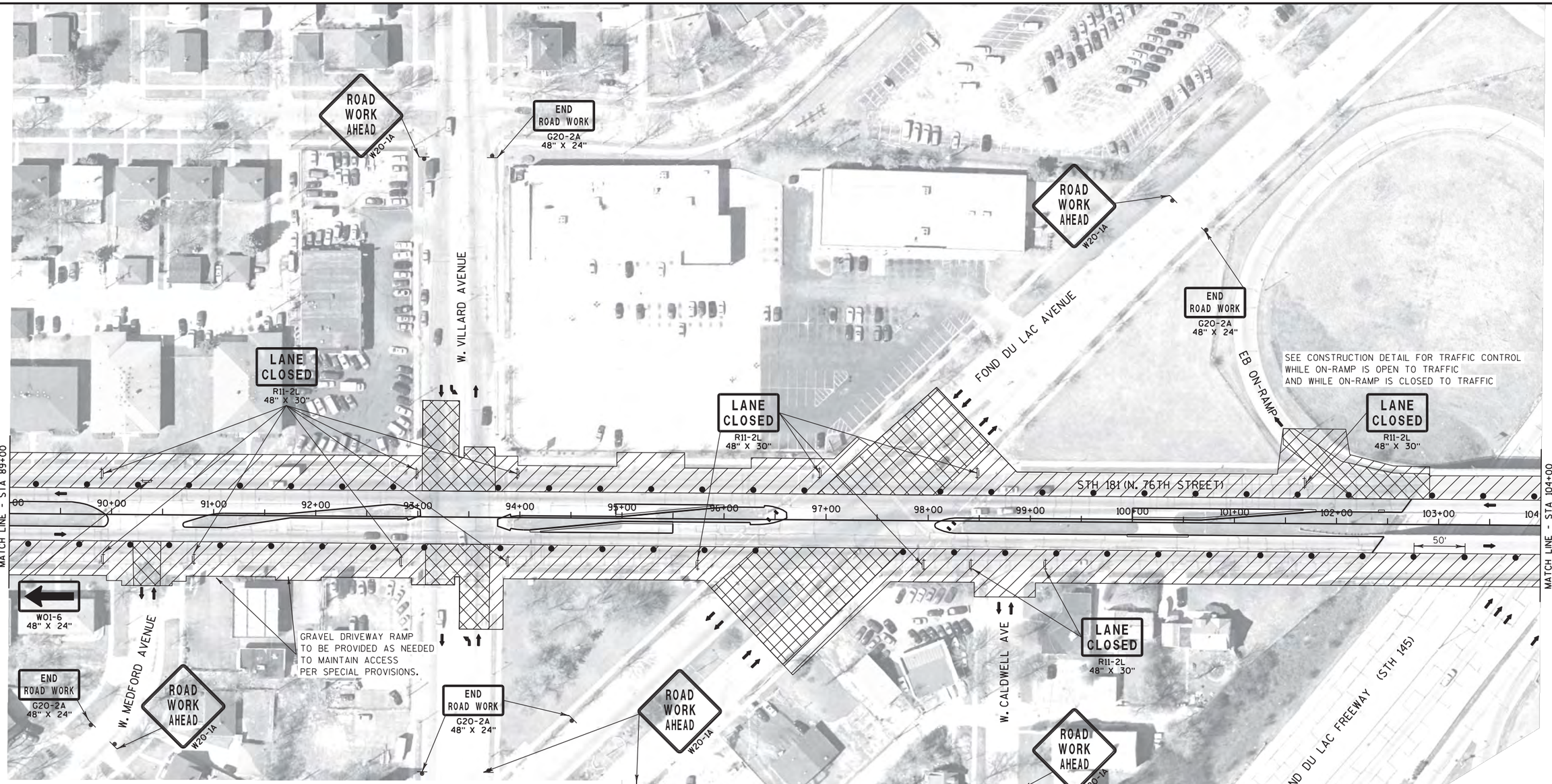


## LEGEND

- WORK ZONE
- CONSTRUCTION WORK UNDER TRAFFIC
- TEMPORARY PAVEMENT
- DIRECTION OF TRAFFIC
- SIGN ON PERMANENT/TEMPORARY SUPPORT
- TYPE III BARRICADE WITH TYPE A LIGHTS WITH/WITHOUT ATTACHED SIGN
- TRAFFIC CONTROL DRUM WITH/WITHOUT TYPE C LIGHT
- CONCRETE BARRIER TEMPORARY PRECAST ANCHORED
- CC — CONCRETE BARRIER TEMPORARY PRECAST
- FLEXIBLE TUBULAR MARKER POSTS AND BASES
- RPM — REMOVING PAVEMENT MARKING
- 4WR — TEMPORARY PAVEMENT MARKING REMOVABLE TAPE 4-INCH, WHITE
- 4YR — TEMPORARY PAVEMENT MARKING REMOVABLE TAPE 4-INCH, YELLOW
- 4WD — TEMPORARY PAVEMENT MARKING REMOVABLE TAPE 4-INCH, WHITE (12.5 FT LINE, 37.5 FT SPACE)
- 8WR — TEMPORARY PAVEMENT MARKING REMOVABLE TAPE 8-INCH, WHITE
- 18WSR — TEMPORARY PAVEMENT MARKING STOP LINE REMOVABLE TAPE, 18-INCH
- 12WDR — TEMPORARY PAVEMENT MARKING DIAGONAL REMOVABLE TAPE, 12-INCH
- PAVEMENT MARKING PLACED IN PREVIOUS STAGE

| PROJECT NO: 2140-13-70 | HWY: STH 181 | COUNTY: MILWAUKEE | TRAFFIC CONTROL STAGE 3 | SHEET 221 | E |
|---|---|---|---|---|---|

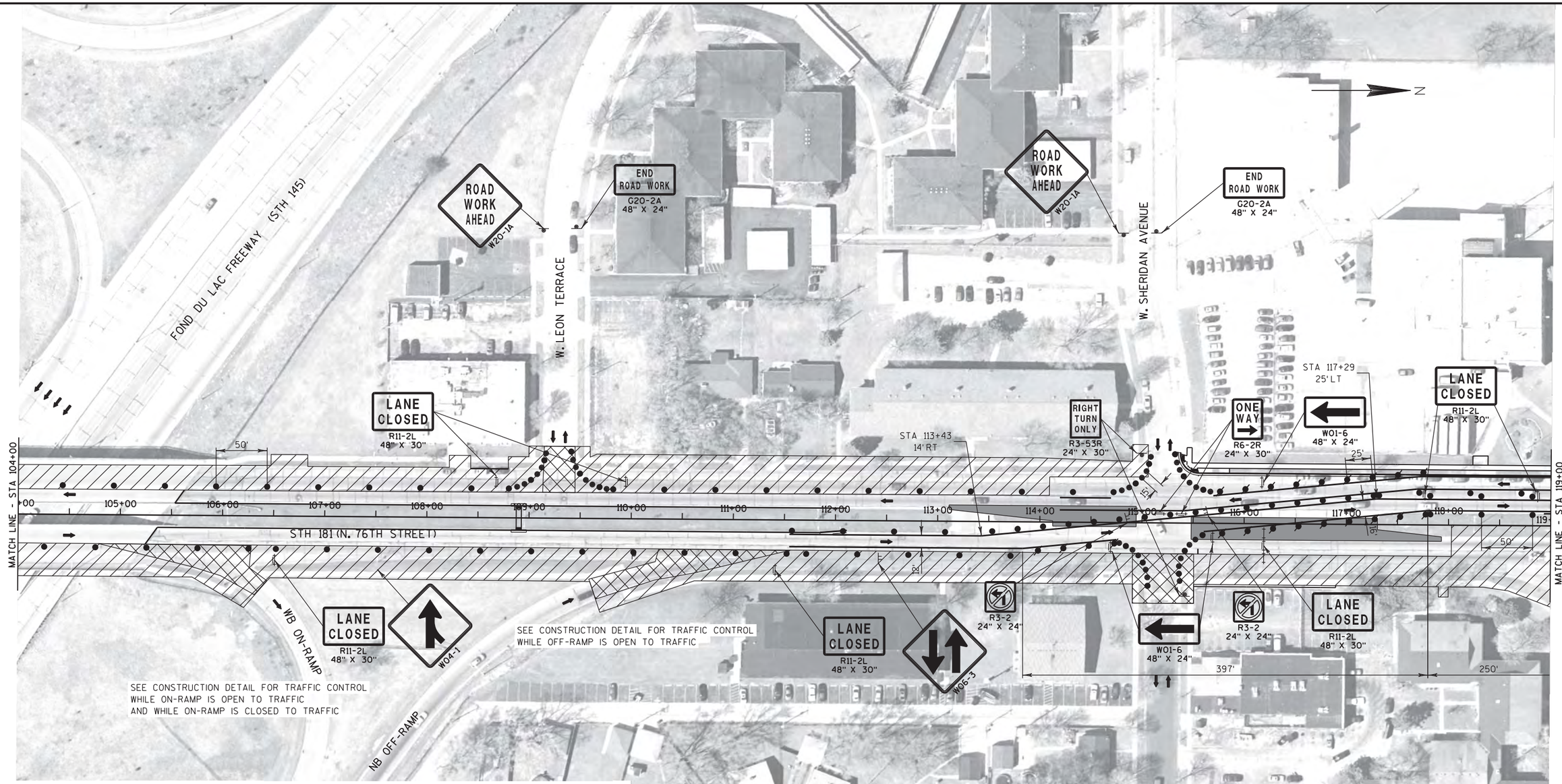


## LEGEND

- WORK ZONE
- CONSTRUCTION WORK UNDER TRAFFIC
- TEMPORARY PAVEMENT
- DIRECTION OF TRAFFIC
- SIGN ON PERMANENT/TEMPORARY SUPPORT
- TYPE III BARRICADE WITH TYPE A LIGHTS WITH/WITHOUT ATTACHED SIGN
- TRAFFIC CONTROL DRUM WITH/WITHOUT TYPE C LIGHT
- CONCRETE BARRIER TEMPORARY PRECAST ANCHORED
- CC — CONCRETE BARRIER TEMPORARY PRECAST
- FLEXIBLE TUBULAR MARKER POSTS AND BASES
- RPM — REMOVING PAVEMENT MARKING
- 4WR — TEMPORARY PAVEMENT MARKING REMOVABLE TAPE 4-INCH, WHITE
- 4YR — TEMPORARY PAVEMENT MARKING REMOVABLE TAPE 4-INCH, YELLOW
- 4WD — TEMPORARY PAVEMENT MARKING REMOVABLE TAPE 4-INCH, WHITE (12.5 FT LINE, 37.5 FT SPACE)
- 8WR — TEMPORARY PAVEMENT MARKING REMOVABLE TAPE 8-INCH, WHITE
- 18WSR — TEMPORARY PAVEMENT MARKING STOP LINE REMOVABLE TAPE, 18-INCH
- 12WDR — TEMPORARY PAVEMENT MARKING DIAGONAL REMOVABLE TAPE, 12-INCH
- PAVEMENT MARKING PLACED IN PREVIOUS STAGE

| PROJECT NO: 2140-13-70 | HWY: STH 181 | COUNTY: MILWAUKEE | TRAFFIC CONTROL STAGE 3 | SHEET 222 | E |
|---|---|---|---|---|---|

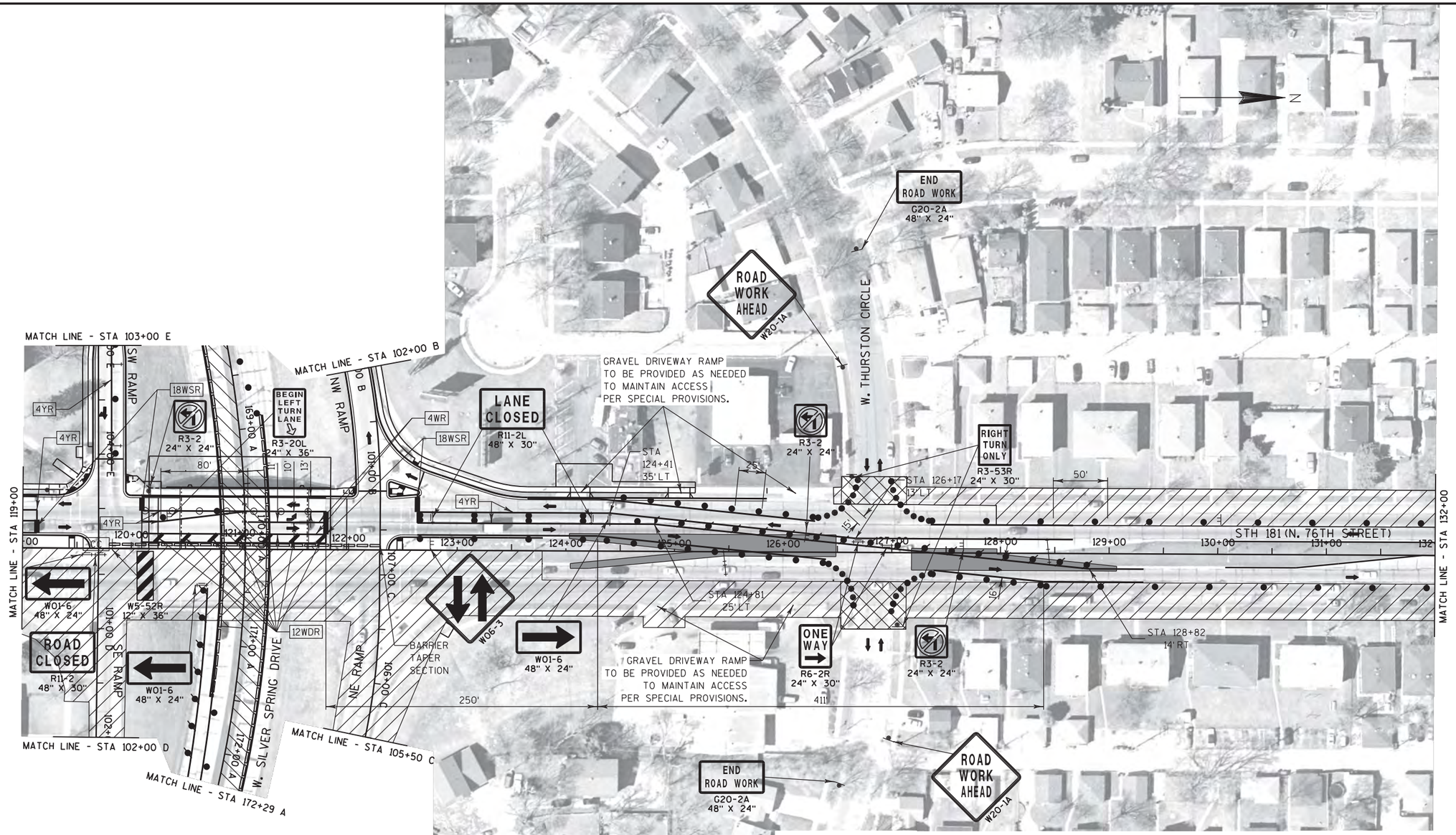


## LEGEND

- WORK ZONE
- CONSTRUCTION WORK UNDER TRAFFIC
- TEMPORARY PAVEMENT
- DIRECTION OF TRAFFIC
- SIGN ON PERMANENT/TEMPORARY SUPPORT
- TYPE III BARRICADE WITH TYPE A LIGHTS WITH/WITHOUT ATTACHED SIGN
- TRAFFIC CONTROL DRUM WITH/WITHOUT TYPE C LIGHT
- CONCRETE BARRIER TEMPORARY PRECAST ANCHORED
- CC — CONCRETE BARRIER TEMPORARY PRECAST
- FLEXIBLE TUBULAR MARKER POSTS AND BASES

| | |
|---|---|
| RPM | REMOVING PAVEMENT MARKING |
| 4WR | TEMPORARY PAVEMENT MARKING REMOVABLE TAPE 4-INCH, WHITE |
| 4YR | TEMPORARY PAVEMENT MARKING REMOVABLE TAPE 4-INCH, YELLOW |
| 4WD | TEMPORARY PAVEMENT MARKING REMOVABLE TAPE 4-INCH, WHITE (12.5 FT LINE, 37.5 FT SPACE) |
| 8WR | TEMPORARY PAVEMENT MARKING REMOVABLE TAPE 8-INCH, WHITE |
| 18WSR | TEMPORARY PAVEMENT MARKING STOP LINE REMOVABLE TAPE, 18-INCH |
| 12WDR | TEMPORARY PAVEMENT MARKING DIAGONAL REMOVABLE TAPE, 12-INCH |
| -------- | PAVEMENT MARKING PLACED IN PREVIOUS STAGE |

| PROJECT NO: 2140-13-70 | HWY: STH 181 | COUNTY: MILWAUKEE | TRAFFIC CONTROL STAGE 3 | SHEET 223 | E |
|---|---|---|---|---|---|

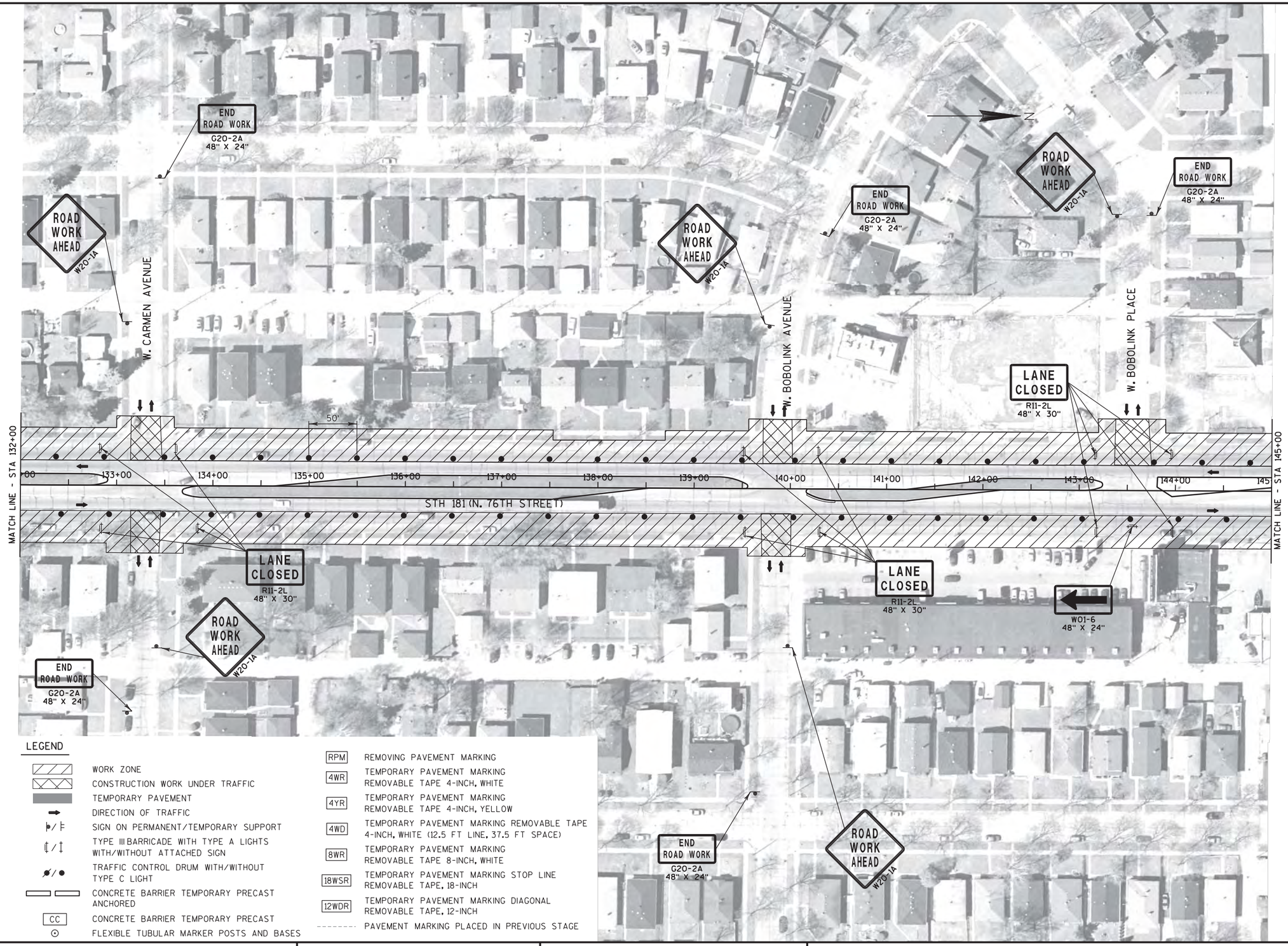


LEGEND

- WORK ZONE
- CONSTRUCTION WORK UNDER TRAFFIC
- TEMPORARY PAVEMENT
- DIRECTION OF TRAFFIC
- SIGN ON PERMANENT/TEMPORARY SUPPORT
- TYPE III BARRICADE WITH TYPE A LIGHTS WITH/WITHOUT ATTACHED SIGN
- TRAFFIC CONTROL DRUM WITH/WITHOUT TYPE C LIGHT
- CONCRETE BARRIER TEMPORARY PRECAST ANCHORED
- CC — CONCRETE BARRIER TEMPORARY PRECAST
- FLEXIBLE TUBULAR MARKER POSTS AND BASES
- RPM — REMOVING PAVEMENT MARKING
- 4WR — TEMPORARY PAVEMENT MARKING REMOVABLE TAPE 4-INCH, WHITE
- 4YR — TEMPORARY PAVEMENT MARKING REMOVABLE TAPE 4-INCH, YELLOW
- 4WD — TEMPORARY PAVEMENT MARKING REMOVABLE TAPE 4-INCH, WHITE (12.5 FT LINE, 37.5 FT SPACE)
- 8WR — TEMPORARY PAVEMENT MARKING REMOVABLE TAPE 8-INCH, WHITE
- 18WSR — TEMPORARY PAVEMENT MARKING STOP LINE REMOVABLE TAPE, 18-INCH
- 12WDR — TEMPORARY PAVEMENT MARKING DIAGONAL REMOVABLE TAPE, 12-INCH
- PAVEMENT MARKING PLACED IN PREVIOUS STAGE

| PROJECT NO: 2140-13-70 | HWY: STH 181 | COUNTY: MILWAUKEE | TRAFFIC CONTROL STAGE 3 | SHEET 224 | E |
|---|---|---|---|---|---|

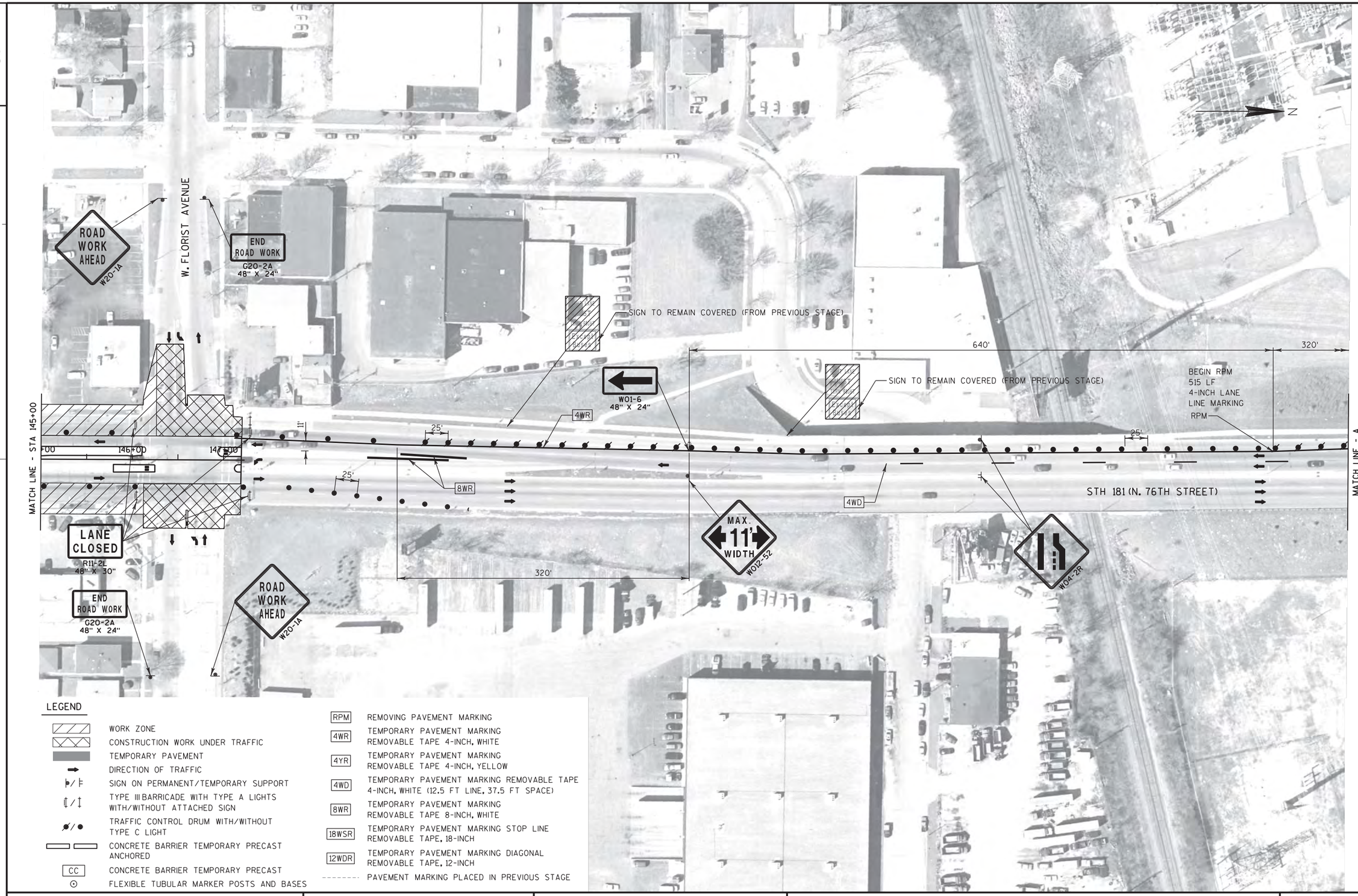


LEGEND

- WORK ZONE
- CONSTRUCTION WORK UNDER TRAFFIC
- TEMPORARY PAVEMENT
- DIRECTION OF TRAFFIC
- SIGN ON PERMANENT/TEMPORARY SUPPORT
- TYPE III BARRICADE WITH TYPE A LIGHTS WITH/WITHOUT ATTACHED SIGN
- TRAFFIC CONTROL DRUM WITH/WITHOUT TYPE C LIGHT
- CONCRETE BARRIER TEMPORARY PRECAST ANCHORED
- CC — CONCRETE BARRIER TEMPORARY PRECAST
- FLEXIBLE TUBULAR MARKER POSTS AND BASES
- RPM — REMOVING PAVEMENT MARKING
- 4WR — TEMPORARY PAVEMENT MARKING REMOVABLE TAPE 4-INCH, WHITE
- 4YR — TEMPORARY PAVEMENT MARKING REMOVABLE TAPE 4-INCH, YELLOW
- 4WD — TEMPORARY PAVEMENT MARKING REMOVABLE TAPE 4-INCH, WHITE (12.5 FT LINE, 37.5 FT SPACE)
- 8WR — TEMPORARY PAVEMENT MARKING REMOVABLE TAPE 8-INCH, WHITE
- 18WSR — TEMPORARY PAVEMENT MARKING STOP LINE REMOVABLE TAPE, 18-INCH
- 12WDR — TEMPORARY PAVEMENT MARKING DIAGONAL REMOVABLE TAPE, 12-INCH
- PAVEMENT MARKING PLACED IN PREVIOUS STAGE

| PROJECT NO: 2140-13-70 | HWY: STH 181 | COUNTY: MILWAUKEE | TRAFFIC CONTROL STAGE 3 | SHEET 225 | E |
|---|---|---|---|---|---|

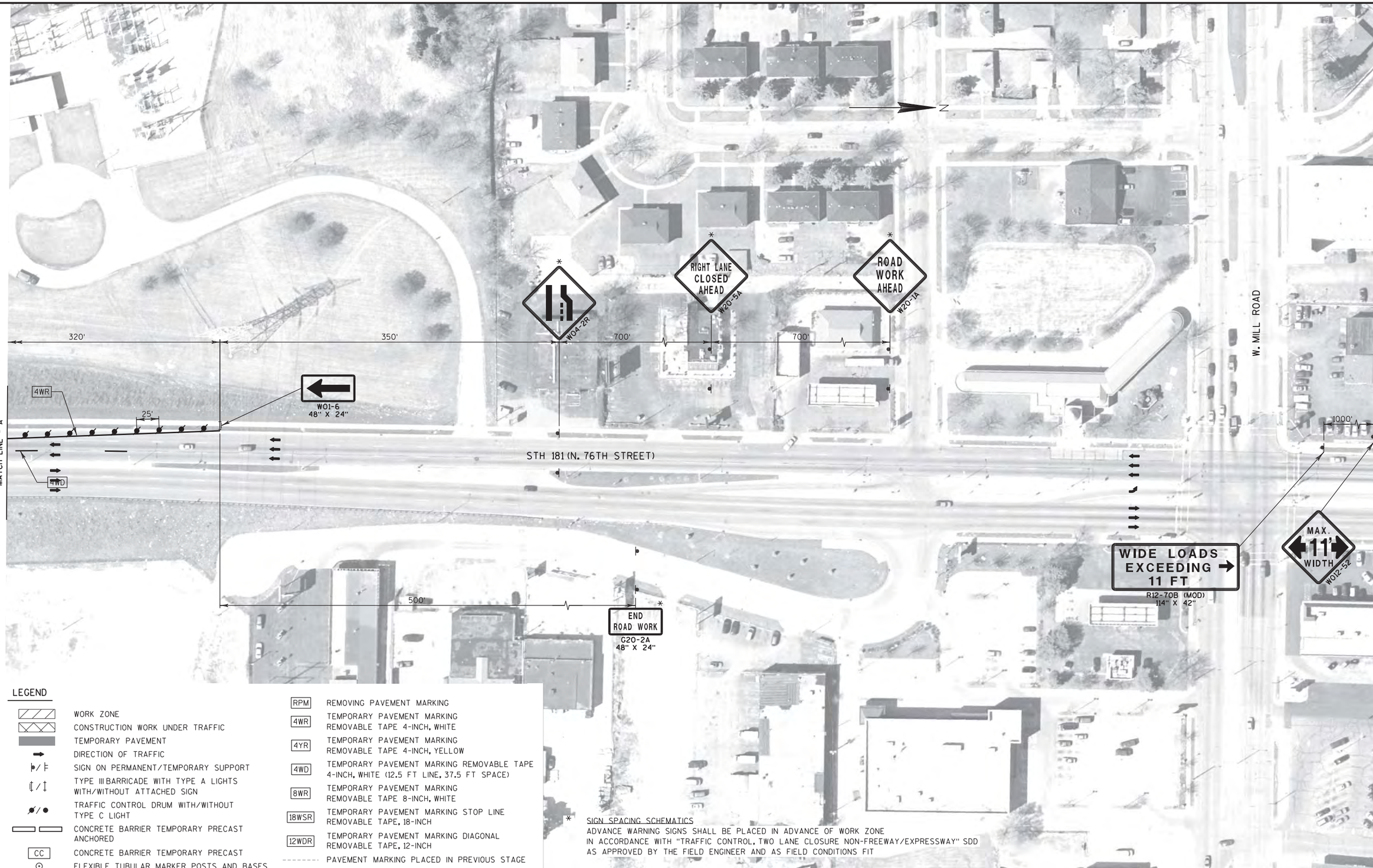


## LEGEND

- WORK ZONE
- CONSTRUCTION WORK UNDER TRAFFIC
- TEMPORARY PAVEMENT
- DIRECTION OF TRAFFIC
- SIGN ON PERMANENT/TEMPORARY SUPPORT
- TYPE III BARRICADE WITH TYPE A LIGHTS WITH/WITHOUT ATTACHED SIGN
- TRAFFIC CONTROL DRUM WITH/WITHOUT TYPE C LIGHT
- CONCRETE BARRIER TEMPORARY PRECAST ANCHORED
- CC — CONCRETE BARRIER TEMPORARY PRECAST
- FLEXIBLE TUBULAR MARKER POSTS AND BASES
- RPM — REMOVING PAVEMENT MARKING
- 4WR — TEMPORARY PAVEMENT MARKING REMOVABLE TAPE 4-INCH, WHITE
- 4YR — TEMPORARY PAVEMENT MARKING REMOVABLE TAPE 4-INCH, YELLOW
- 4WD — TEMPORARY PAVEMENT MARKING REMOVABLE TAPE 4-INCH, WHITE (12.5 FT LINE, 37.5 FT SPACE)
- 8WR — TEMPORARY PAVEMENT MARKING REMOVABLE TAPE 8-INCH, WHITE
- 18WSR — TEMPORARY PAVEMENT MARKING STOP LINE REMOVABLE TAPE, 18-INCH
- 12WDR — TEMPORARY PAVEMENT MARKING DIAGONAL REMOVABLE TAPE, 12-INCH
- PAVEMENT MARKING PLACED IN PREVIOUS STAGE

* SIGN SPACING SCHEMATICS
ADVANCE WARNING SIGNS SHALL BE PLACED IN ADVANCE OF WORK ZONE IN ACCORDANCE WITH "TRAFFIC CONTROL, TWO LANE CLOSURE NON-FREEWAY/EXPRESSWAY" SDD AS APPROVED BY THE FIELD ENGINEER AND AS FIELD CONDITIONS FIT

| PROJECT NO: 2140-13-70 | HWY: STH 181 | COUNTY: MILWAUKEE | TRAFFIC CONTROL STAGE 3 | SHEET 226 | E |
|---|---|---|---|---|---|

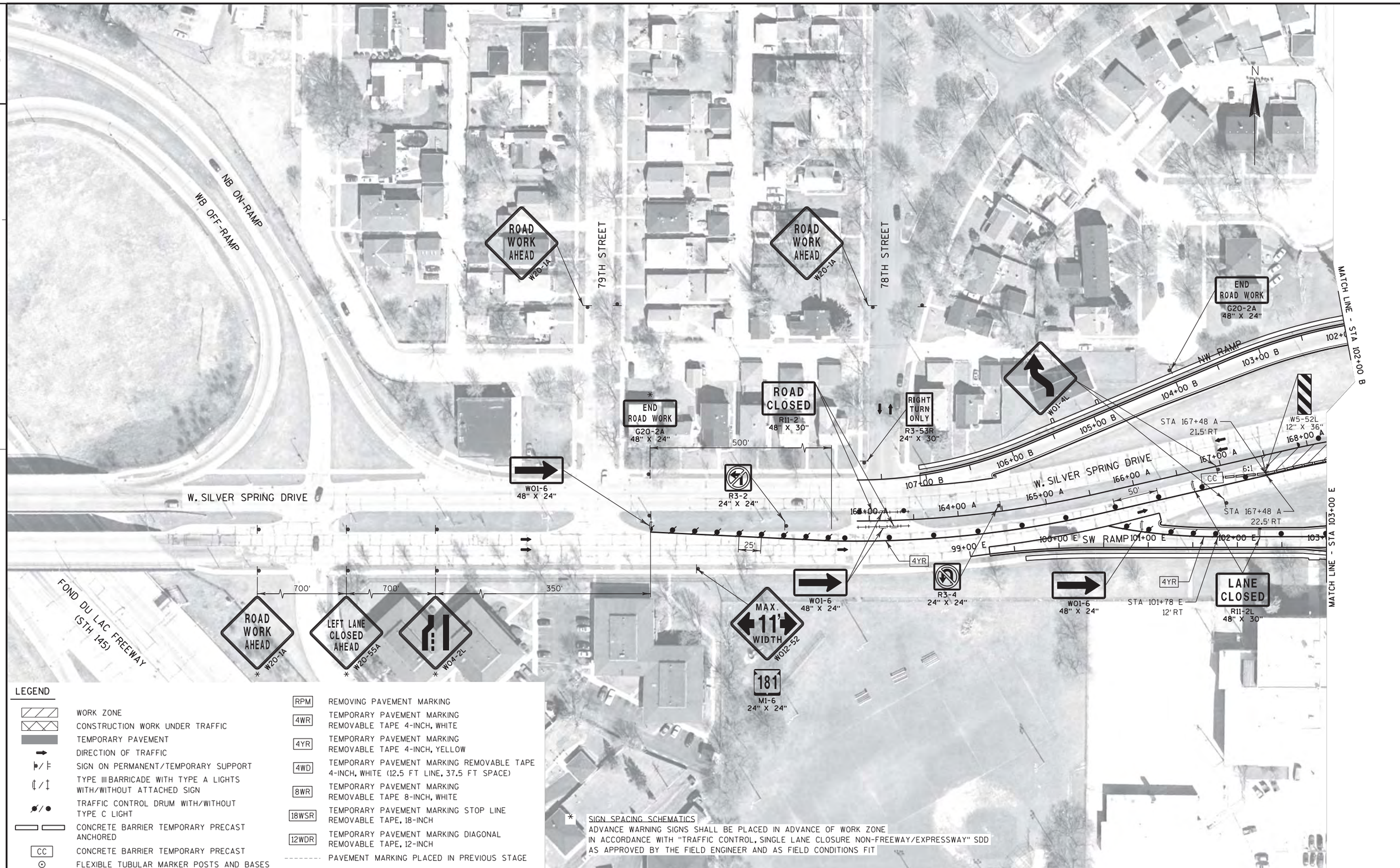


LEGEND

- WORK ZONE
- CONSTRUCTION WORK UNDER TRAFFIC
- TEMPORARY PAVEMENT
- DIRECTION OF TRAFFIC
- SIGN ON PERMANENT/TEMPORARY SUPPORT
- TYPE III BARRICADE WITH TYPE A LIGHTS WITH/WITHOUT ATTACHED SIGN
- TRAFFIC CONTROL DRUM WITH/WITHOUT TYPE C LIGHT
- CONCRETE BARRIER TEMPORARY PRECAST ANCHORED
- CC — CONCRETE BARRIER TEMPORARY PRECAST
- FLEXIBLE TUBULAR MARKER POSTS AND BASES
- RPM — REMOVING PAVEMENT MARKING
- 4WR — TEMPORARY PAVEMENT MARKING REMOVABLE TAPE 4-INCH, WHITE
- 4YR — TEMPORARY PAVEMENT MARKING REMOVABLE TAPE 4-INCH, YELLOW
- 4WD — TEMPORARY PAVEMENT MARKING REMOVABLE TAPE 4-INCH, WHITE (12.5 FT LINE, 37.5 FT SPACE)
- 8WR — TEMPORARY PAVEMENT MARKING REMOVABLE TAPE 8-INCH, WHITE
- 18WSR — TEMPORARY PAVEMENT MARKING STOP LINE REMOVABLE TAPE, 18-INCH
- 12WDR — TEMPORARY PAVEMENT MARKING DIAGONAL REMOVABLE TAPE, 12-INCH
- PAVEMENT MARKING PLACED IN PREVIOUS STAGE

* SIGN SPACING SCHEMATICS
ADVANCE WARNING SIGNS SHALL BE PLACED IN ADVANCE OF WORK ZONE IN ACCORDANCE WITH "TRAFFIC CONTROL, SINGLE LANE CLOSURE NON-FREEWAY/EXPRESSWAY" SDD AS APPROVED BY THE FIELD ENGINEER AND AS FIELD CONDITIONS FIT

| PROJECT NO: 2140-13-70 | HWY: STH 181 | COUNTY: MILWAUKEE | TRAFFIC CONTROL STAGE 3 - SILVER SPRING DRIVE | SHEET 227 | E |
|---|---|---|---|---|---|

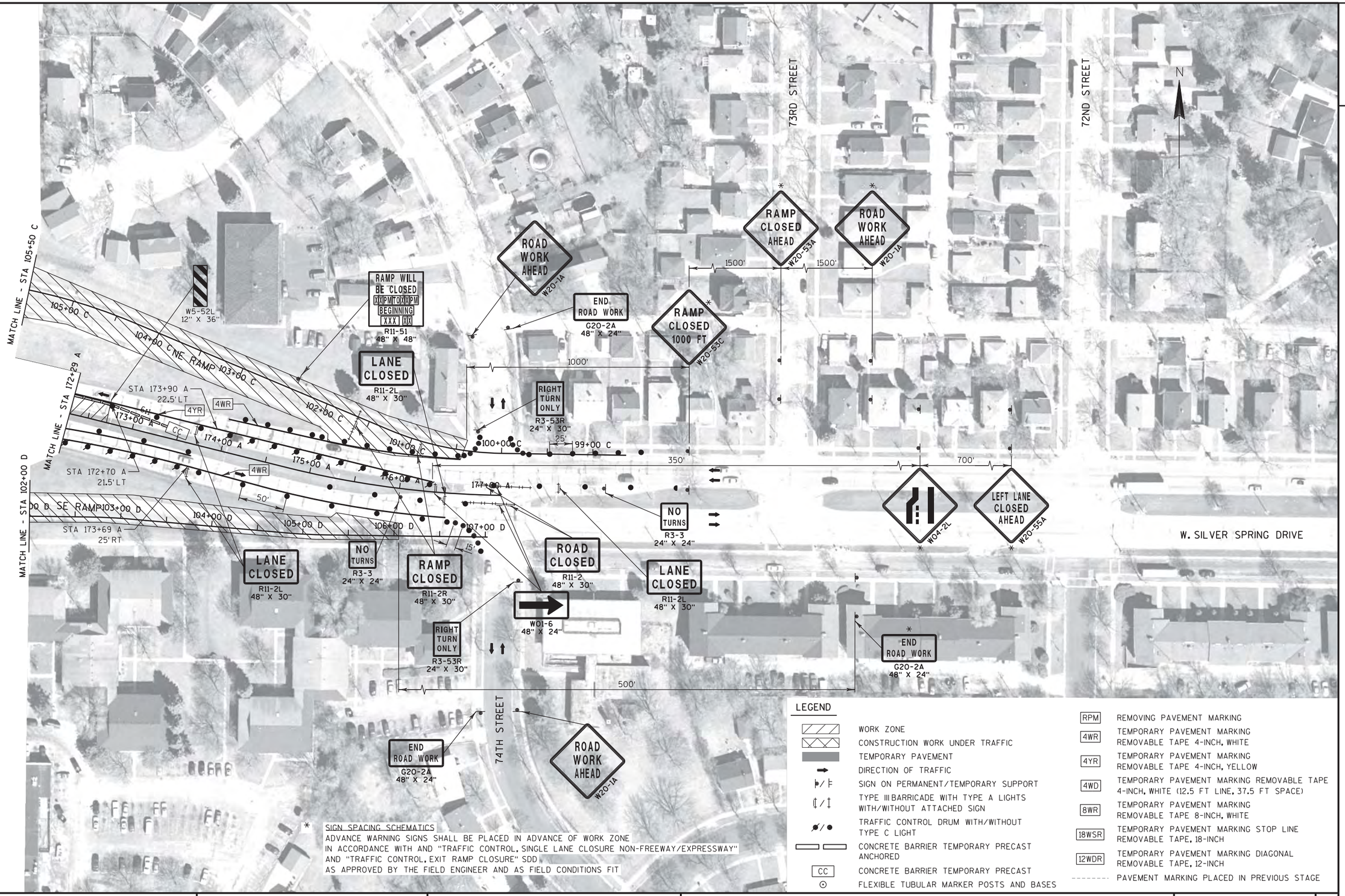


| PROJECT NO: 2140-13-70 | HWY: STH 181 | COUNTY: MILWAUKEE | TRAFFIC CONTROL STAGE 3 - SILVER SPRING DRIVE | SHEET 228 | E |
|---|---|---|---|---|---|

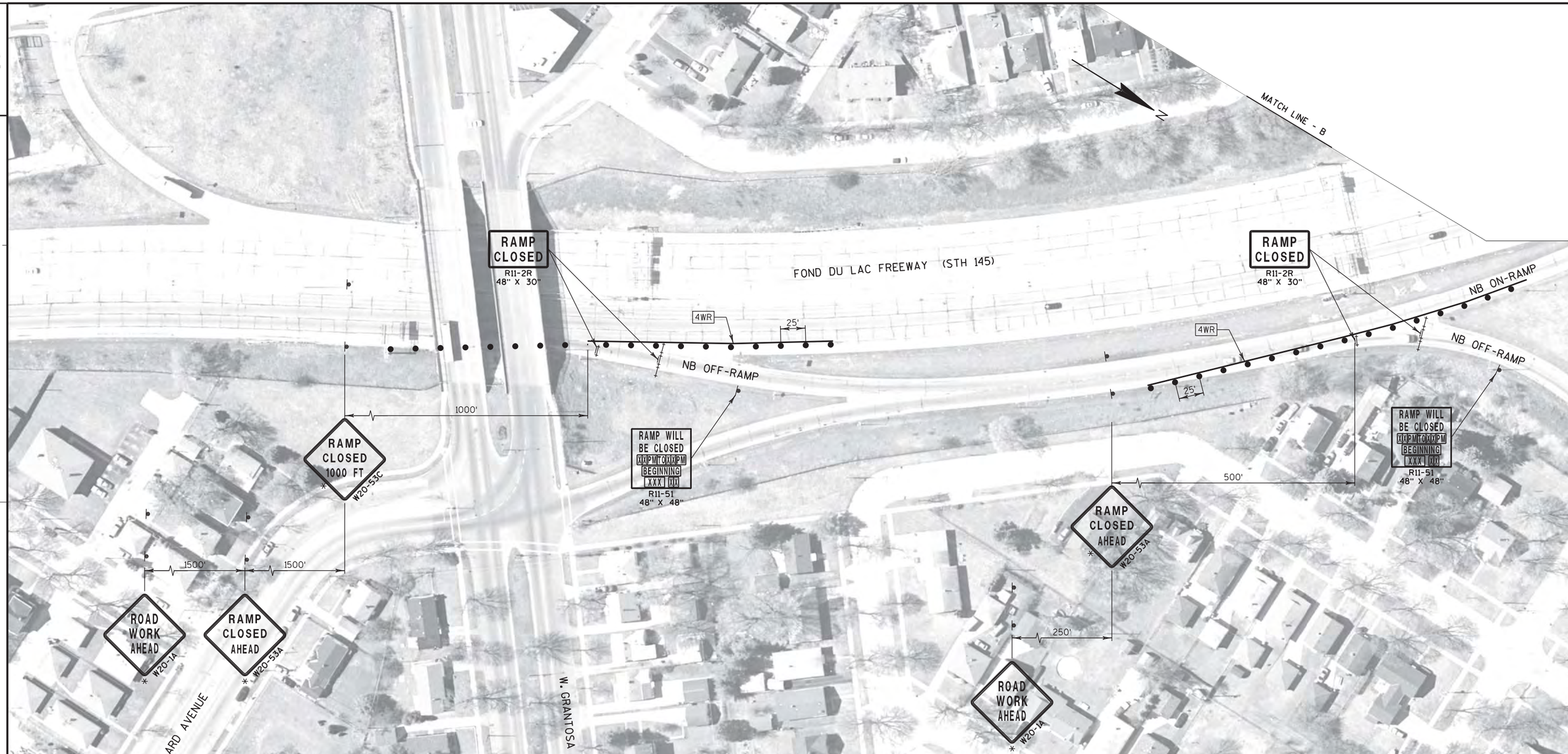


LEGEND

- WORK ZONE
- CONSTRUCTION WORK UNDER TRAFFIC
- TEMPORARY PAVEMENT
- DIRECTION OF TRAFFIC
- SIGN ON PERMANENT/TEMPORARY SUPPORT
- TYPE III BARRICADE WITH TYPE A LIGHTS WITH/WITHOUT ATTACHED SIGN
- TRAFFIC CONTROL DRUM WITH/WITHOUT TYPE C LIGHT
- CONCRETE BARRIER TEMPORARY PRECAST ANCHORED
- CC — CONCRETE BARRIER TEMPORARY PRECAST
- FLEXIBLE TUBULAR MARKER POSTS AND BASES
- RPM — REMOVING PAVEMENT MARKING
- 4WR — TEMPORARY PAVEMENT MARKING REMOVABLE TAPE 4-INCH, WHITE
- 4YR — TEMPORARY PAVEMENT MARKING REMOVABLE TAPE 4-INCH, YELLOW
- 4WD — TEMPORARY PAVEMENT MARKING REMOVABLE TAPE 4-INCH, WHITE (12.5 FT LINE, 37.5 FT SPACE)
- 8WR — TEMPORARY PAVEMENT MARKING REMOVABLE TAPE 8-INCH, WHITE
- 18WSR — TEMPORARY PAVEMENT MARKING STOP LINE REMOVABLE TAPE, 18-INCH
- 12WDR — TEMPORARY PAVEMENT MARKING DIAGONAL REMOVABLE TAPE, 12-INCH
- PAVEMENT MARKING PLACED IN PREVIOUS STAGE

* SIGN SPACING SCHEMATICS
ADVANCE WARNING SIGNS SHALL BE PLACED IN ADVANCE OF WORK ZONE IN ACCORDANCE WITH "TRAFFIC CONTROL, EXIT RAMP CLOSURE" SDD AS APPROVED BY THE FIELD ENGINEER AND AS FIELD CONDITIONS FIT

| PROJECT NO: 2140-13-70 | HWY: STH 181 | COUNTY: MILWAUKEE | TRAFFIC CONTROL STAGE 3 - STH 145 | SHEET 229 | E |
|---|---|---|---|---|---|

## NOTES

TRAFFIC CONTROL STAGE 3B
- SHIFT TRAFFIC TO ONE INSIDE LANE, EACH DIRECTION
- SHIFT NORTHBOUND TRAFFIC TO SOUTHBOUND LANES (BETWEEN W. SHERIDAN AVE AND W. THURSTON CIR)
- CONSTRUCT NB BRIDGE (B-40-766) AND ABUTMENT AND RETAINING WALL ON SILVER SPRING DRIVE
- CONSTRUCT NE AND SE RAMPS
- SEE DETOUR PLAN FOR NE, SE AND SW RAMP DETOURS
- REPLACEMENT OF SIDEWALK ALONG SOUTHBOUND 76TH STREET TO BE COMPLETED BEFORE REPLACEMENT OF SIDEWALK ALONG NORTHBOUND 76TH STREET
- MAINTAIN PEDESTRIAN ACCESS PER "TRAFFIC CONTROL, PEDESTRIAN ACCOMODATION" SDD FOR TRAFFIC CONTROL WHILE SIDEWALK REMAINS CLOSED FOR REPLACEMENT
- ALL MEDIAN OPENINGS CLOSED TO TRAFFIC, SEE CONSTRUCTION DETAIL FOR TRAFFIC CONTROL
- DO NOT CLOSE TWO CONSECUTIVE INTERSECTIONS AT ANY TIME
- SEE "TRAFFIC CONTROL, INTERSECTION WITHIN SINGLE LANE CLOSURE" SDD FOR TRAFFIC CONTROL WHILE INTERSECTION REMAINS OPEN
- SEE CONSTRUCTION DETAIL FOR TRAFFIC CONTROL FOR INTERSECTION WITHIN SINGLE OUTSIDE LANE CLOSURE WHILE INTERSECTION IS CLOSED
- PLACE "ROAD WORK AHEAD" AND "END ROAD WORK" SIGNS A MINIMUM OF 150' IN ADVANCE OF THE INTERSECTION IN ACCORDANCE WITH "TRAFFIC CONTROL, INTERSECTION WITHIN SINGLE LANE CLOSURE" SDD AS APPROVED BY FIELD ENGINEER AND AS FIELD CONDITIONS FIT

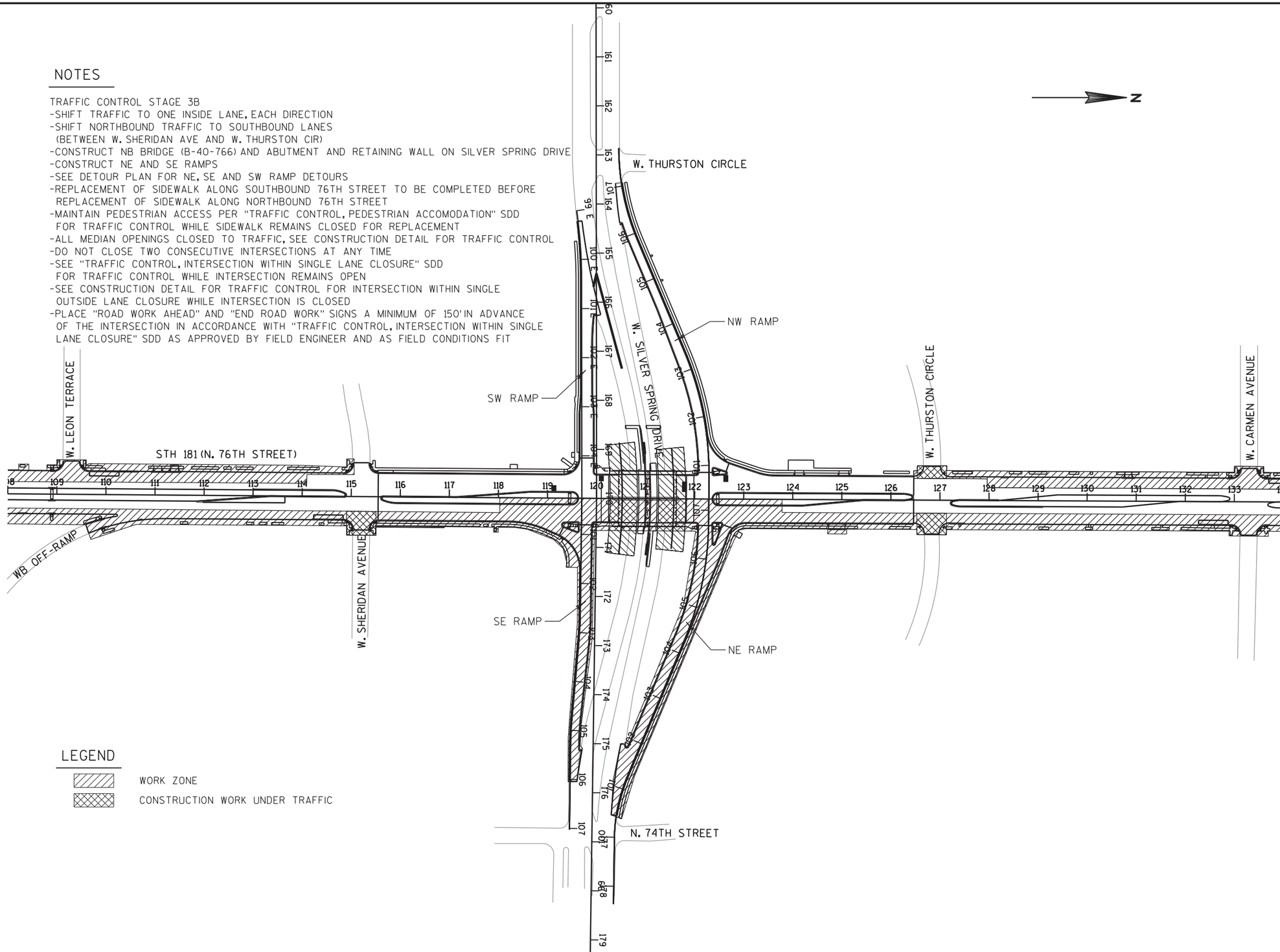


## LEGEND

- WORK ZONE
- CONSTRUCTION WORK UNDER TRAFFIC

| PROJECT NO: 2140-13-70 | HWY: STH 181 | COUNTY: MILWAUKEE | CONSTRUCTION STAGING OVERVIEW - STAGE 3B | SHEET 230 | E |
|---|---|---|---|---|---|

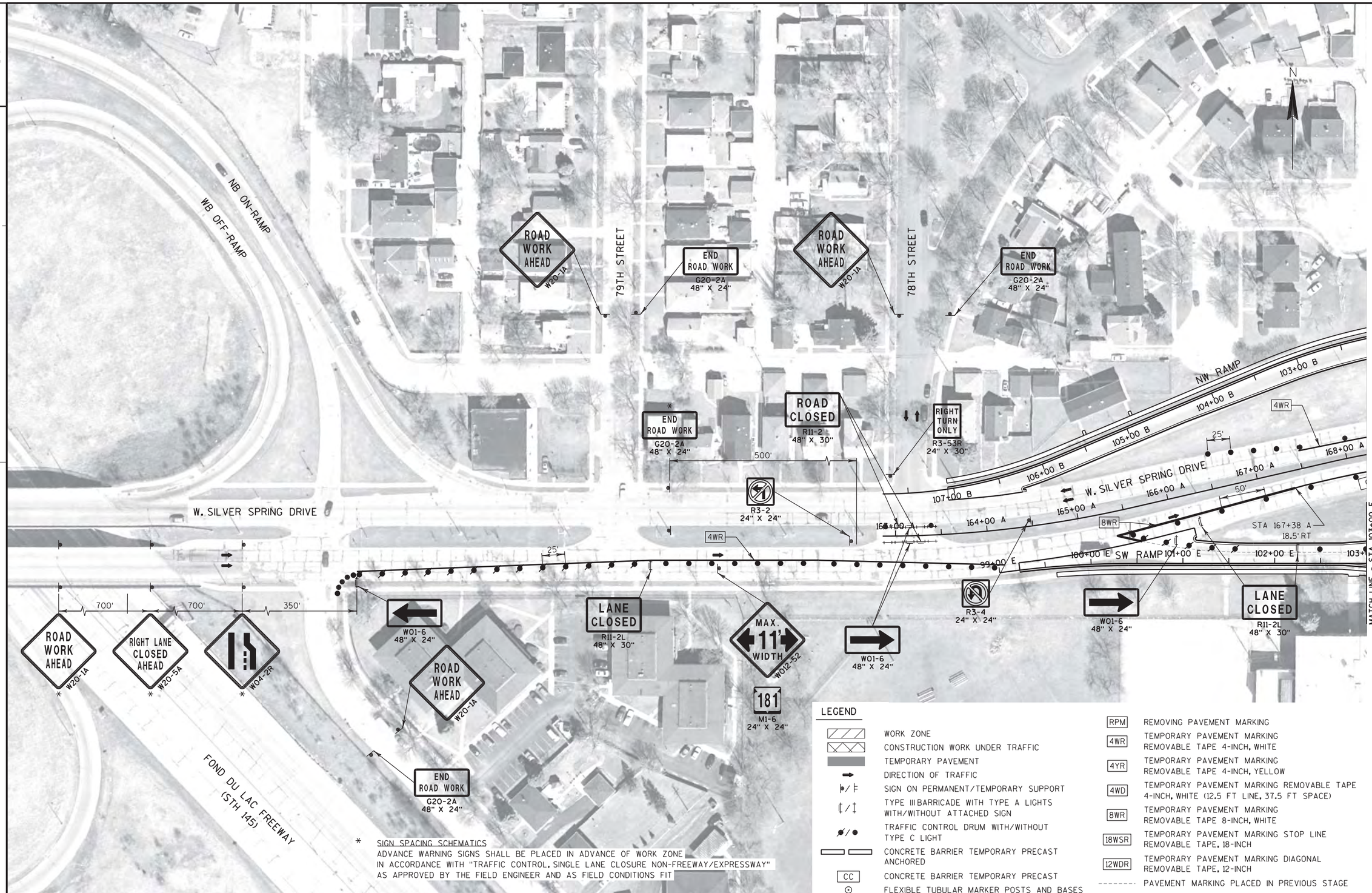


* SIGN SPACING SCHEMATICS
ADVANCE WARNING SIGNS SHALL BE PLACED IN ADVANCE OF WORK ZONE IN ACCORDANCE WITH "TRAFFIC CONTROL, SINGLE LANE CLOSURE NON-FREEWAY/EXPRESSWAY" AS APPROVED BY THE FIELD ENGINEER AND AS FIELD CONDITIONS FIT

## LEGEND

- WORK ZONE
- CONSTRUCTION WORK UNDER TRAFFIC
- TEMPORARY PAVEMENT
- DIRECTION OF TRAFFIC
- SIGN ON PERMANENT/TEMPORARY SUPPORT
- TYPE III BARRICADE WITH TYPE A LIGHTS WITH/WITHOUT ATTACHED SIGN
- TRAFFIC CONTROL DRUM WITH/WITHOUT TYPE C LIGHT
- CONCRETE BARRIER TEMPORARY PRECAST ANCHORED
- CC — CONCRETE BARRIER TEMPORARY PRECAST
- FLEXIBLE TUBULAR MARKER POSTS AND BASES
- RPM — REMOVING PAVEMENT MARKING
- 4WR — TEMPORARY PAVEMENT MARKING REMOVABLE TAPE 4-INCH, WHITE
- 4YR — TEMPORARY PAVEMENT MARKING REMOVABLE TAPE 4-INCH, YELLOW
- 4WD — TEMPORARY PAVEMENT MARKING REMOVABLE TAPE 4-INCH, WHITE (12.5 FT LINE, 37.5 FT SPACE)
- 8WR — TEMPORARY PAVEMENT MARKING REMOVABLE TAPE 8-INCH, WHITE
- 18WSR — TEMPORARY PAVEMENT MARKING STOP LINE REMOVABLE TAPE, 18-INCH
- 12WDR — TEMPORARY PAVEMENT MARKING DIAGONAL REMOVABLE TAPE, 12-INCH
- PAVEMENT MARKING PLACED IN PREVIOUS STAGE

| PROJECT NO: 2140-13-70 | HWY: STH 181 | COUNTY: MILWAUKEE | TRAFFIC CONTROL STAGE 3B - SILVER SPRING DRIVE | SHEET 231 | E |
|---|---|---|---|---|---|

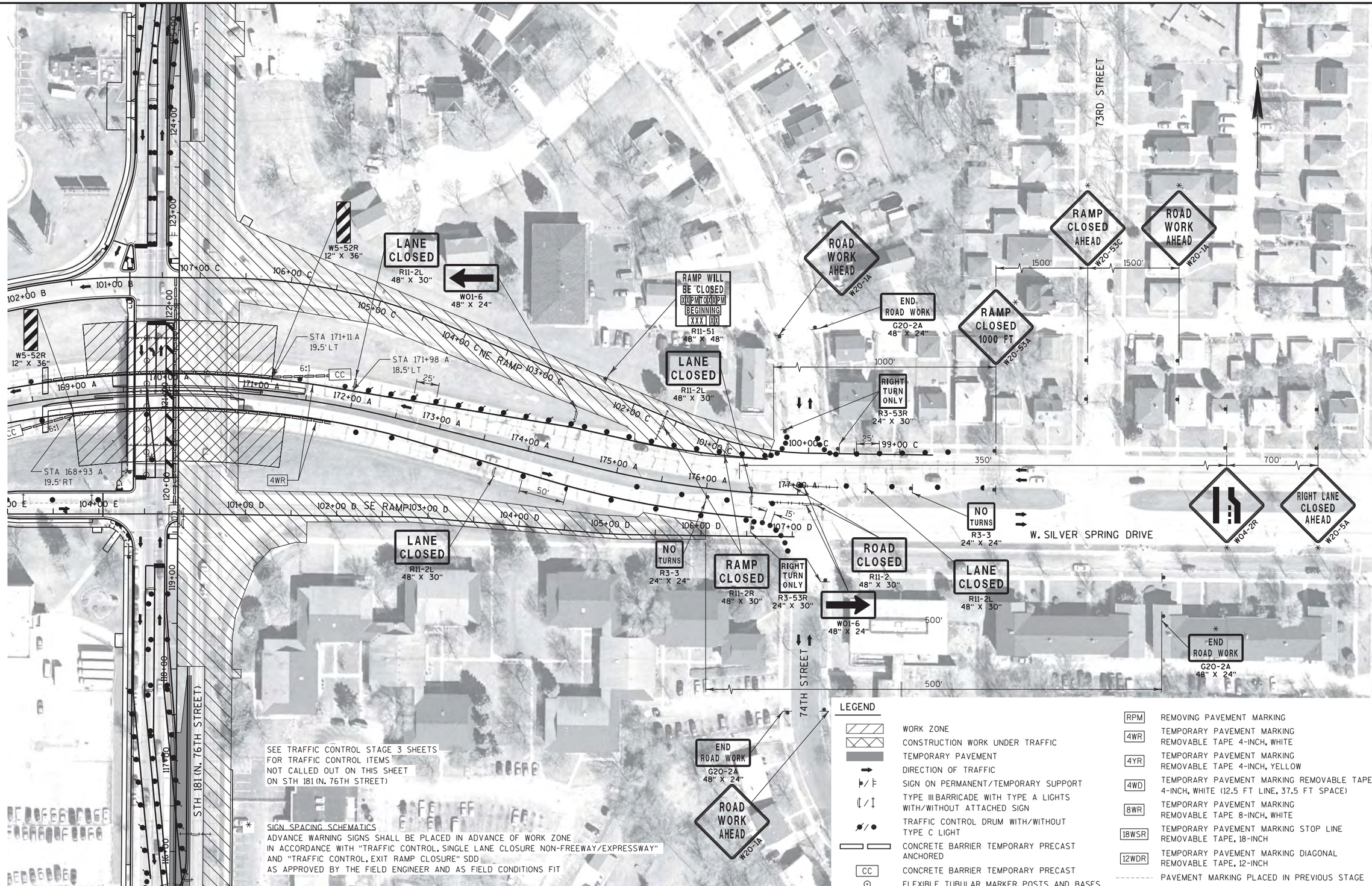


SEE TRAFFIC CONTROL STAGE 3 SHEETS
FOR TRAFFIC CONTROL ITEMS
NOT CALLED OUT ON THIS SHEET
ON STH 181 (N. 76TH STREET)

SIGN SPACING SCHEMATICS
ADVANCE WARNING SIGNS SHALL BE PLACED IN ADVANCE OF WORK ZONE
IN ACCORDANCE WITH "TRAFFIC CONTROL, SINGLE LANE CLOSURE NON-FREEWAY/EXPRESSWAY"
AND "TRAFFIC CONTROL, EXIT RAMP CLOSURE" SDD
AS APPROVED BY THE FIELD ENGINEER AND AS FIELD CONDITIONS FIT

LEGEND

- WORK ZONE
- CONSTRUCTION WORK UNDER TRAFFIC
- TEMPORARY PAVEMENT
- DIRECTION OF TRAFFIC
- SIGN ON PERMANENT/TEMPORARY SUPPORT
- TYPE III BARRICADE WITH TYPE A LIGHTS WITH/WITHOUT ATTACHED SIGN
- TRAFFIC CONTROL DRUM WITH/WITHOUT TYPE C LIGHT
- CONCRETE BARRIER TEMPORARY PRECAST ANCHORED
- CC — CONCRETE BARRIER TEMPORARY PRECAST
- FLEXIBLE TUBULAR MARKER POSTS AND BASES
- RPM — REMOVING PAVEMENT MARKING
- 4WR — TEMPORARY PAVEMENT MARKING REMOVABLE TAPE 4-INCH, WHITE
- 4YR — TEMPORARY PAVEMENT MARKING REMOVABLE TAPE 4-INCH, YELLOW
- 4WD — TEMPORARY PAVEMENT MARKING REMOVABLE TAPE 4-INCH, WHITE (12.5 FT LINE, 37.5 FT SPACE)
- 8WR — TEMPORARY PAVEMENT MARKING REMOVABLE TAPE 8-INCH, WHITE
- 18WSR — TEMPORARY PAVEMENT MARKING STOP LINE REMOVABLE TAPE, 18-INCH
- 12WDR — TEMPORARY PAVEMENT MARKING DIAGONAL REMOVABLE TAPE, 12-INCH
- PAVEMENT MARKING PLACED IN PREVIOUS STAGE

| PROJECT NO: 2140-13-70 | HWY: STH 181 | COUNTY: MILWAUKEE | TRAFFIC CONTROL STAGE 3B - SILVER SPRING DRIVE | SHEET 232 | E |
|---|---|---|---|---|---|

## NOTES

TRAFFIC CONTROL STAGE 4
- RESTORATION OF MEDIAN AND LANES IN TEMPORARY CROSSOVER LOCATION
- INSTALL PERMANENT PAVEMENT MARKING
- MAINTAIN PEDESTRIAN ACCESS PER "TRAFFIC CONTROL, PEDESTRIAN ACCOMODATION" SDD FOR TRAFFIC CONTROL WHILE SIDEWALK REMAINS CLOSED FOR REPLACEMENT
- UPON COMPLETION OF CONSTUCTION OF SOUTHBOUND INSIDE LANES, SHIFT TRAFFIC TO SOUTHBOUND INSIDE LANE TO CONSTRUCT SOUTHBOUND OUTSIDE LANE AND APRONS AT W. SHERIDAN AVENUE AND W. THURSTON CIRCLE
- PLACE "ROAD WORK AHEAD" AND "END ROAD WORK" SIGNS A MINIMUM OF 150' IN ADVANCE OF THE INTERSECTION IN ACCORDANCE WITH "TRAFFIC CONTROL, INTERSECTION WITHIN SINGLE LANE CLOSURE" SDD AS APPROVED BY FIELD ENGINEER AND AS FIELD CONDITIONS FIT

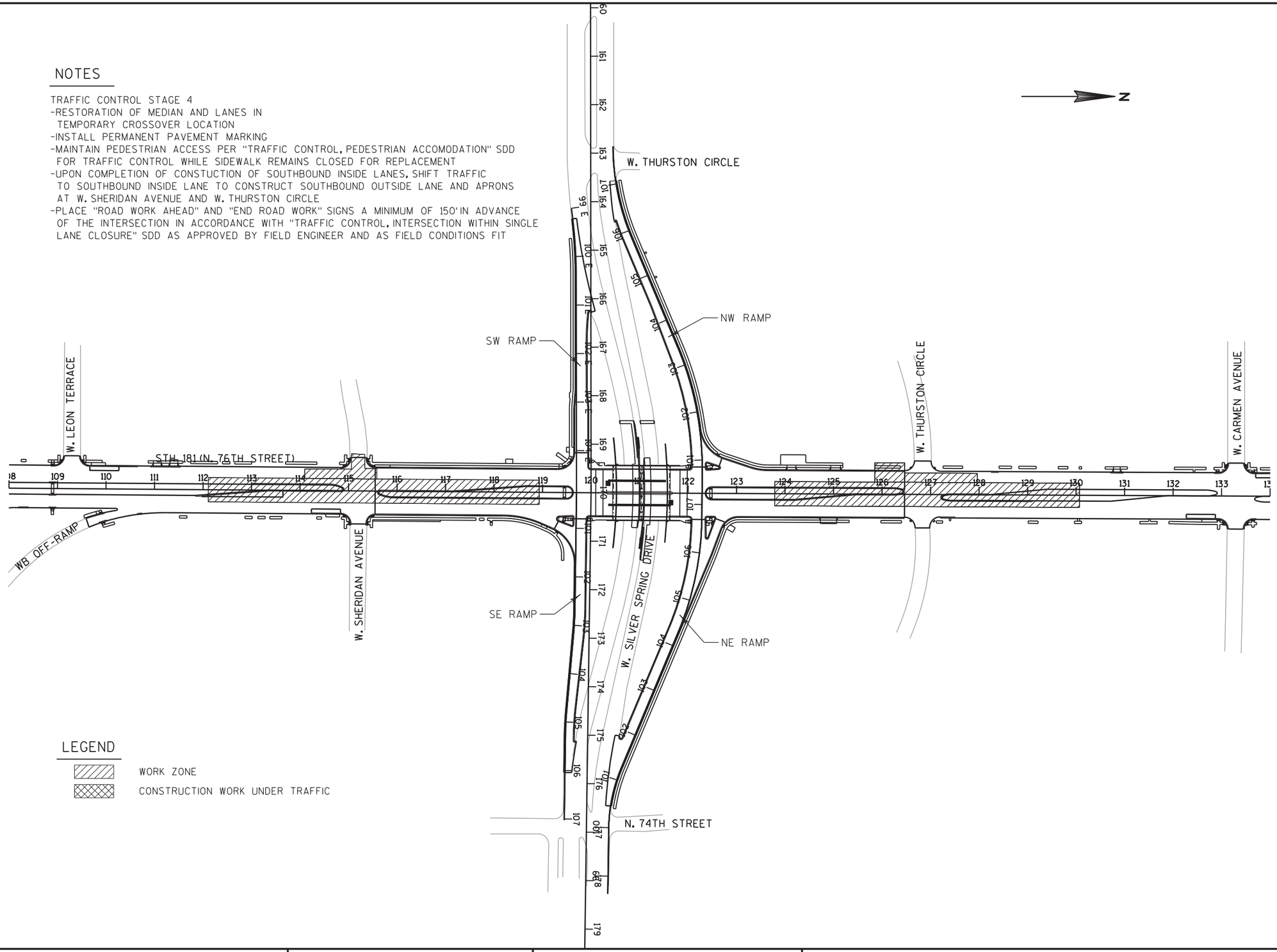


## LEGEND

WORK ZONE

CONSTRUCTION WORK UNDER TRAFFIC

| PROJECT NO: 2140-13-70 | HWY: STH 181 | COUNTY: MILWAUKEE | CONSTRUCTION STAGING OVERVIEW - STAGE 4 | SHEET 233 | E |
|---|---|---|---|---|---|

2

2

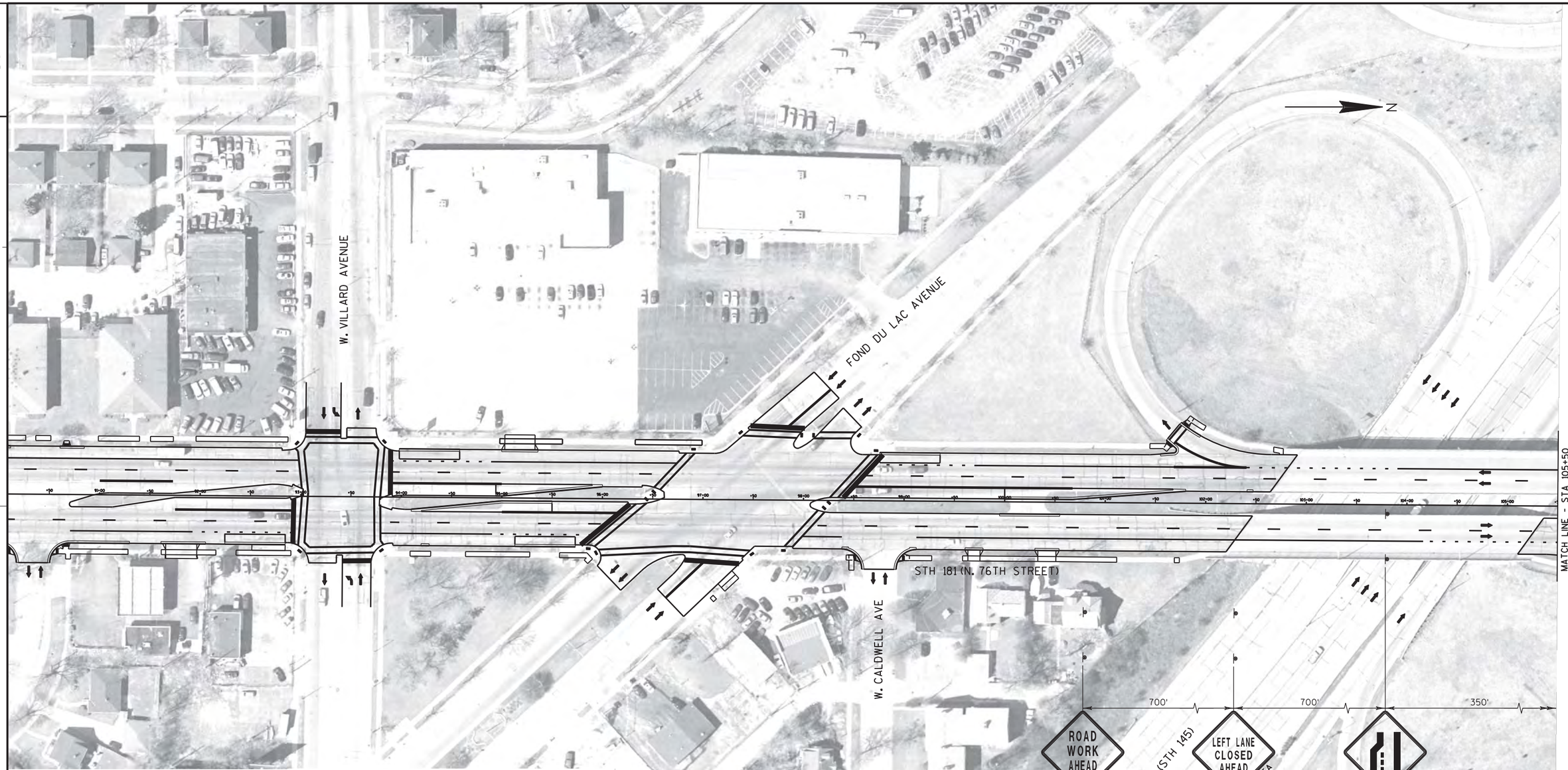


LEGEND

- WORK ZONE
- CONSTRUCTION WORK UNDER TRAFFIC
- TEMPORARY PAVEMENT
- DIRECTION OF TRAFFIC
- SIGN ON PERMANENT/TEMPORARY SUPPORT
- TYPE III BARRICADE WITH TYPE A LIGHTS WITH/WITHOUT ATTACHED SIGN
- TRAFFIC CONTROL DRUM WITH/WITHOUT TYPE C LIGHT
- CONCRETE BARRIER TEMPORARY PRECAST ANCHORED
- CC — CONCRETE BARRIER TEMPORARY PRECAST
- FLEXIBLE TUBULAR MARKER POSTS AND BASES
- RPM — REMOVING PAVEMENT MARKING
- 4WR — TEMPORARY PAVEMENT MARKING REMOVABLE TAPE 4-INCH, WHITE
- 4YR — TEMPORARY PAVEMENT MARKING REMOVABLE TAPE 4-INCH, YELLOW
- 4WD — TEMPORARY PAVEMENT MARKING REMOVABLE TAPE 4-INCH, WHITE (12.5 FT LINE, 37.5 FT SPACE)
- 8WR — TEMPORARY PAVEMENT MARKING REMOVABLE TAPE 8-INCH, WHITE
- 18WSR — TEMPORARY PAVEMENT MARKING STOP LINE REMOVABLE TAPE, 18-INCH
- 12WDR — TEMPORARY PAVEMENT MARKING DIAGONAL REMOVABLE TAPE, 12-INCH
- PAVEMENT MARKING PLACED IN PREVIOUS STAGE

* SIGN SPACING SCHEMATICS
ADVANCE WARNING SIGNS SHALL BE PLACED IN ADVANCE OF WORK ZONE IN ACCORDANCE WITH "TRAFFIC CONTROL, SINGLE LANE CLOSURE NON-FREEWAY/EXPRESSWAY" SDD AS APPROVED BY THE FIELD ENGINEER AND AS FIELD CONDITIONS FIT

| PROJECT NO: 2140-13-70 | HWY: STH 181 | COUNTY: MILWAUKEE | TRAFFIC CONTROL STAGE 4 | SHEET 234 | E |
|---|---|---|---|---|---|

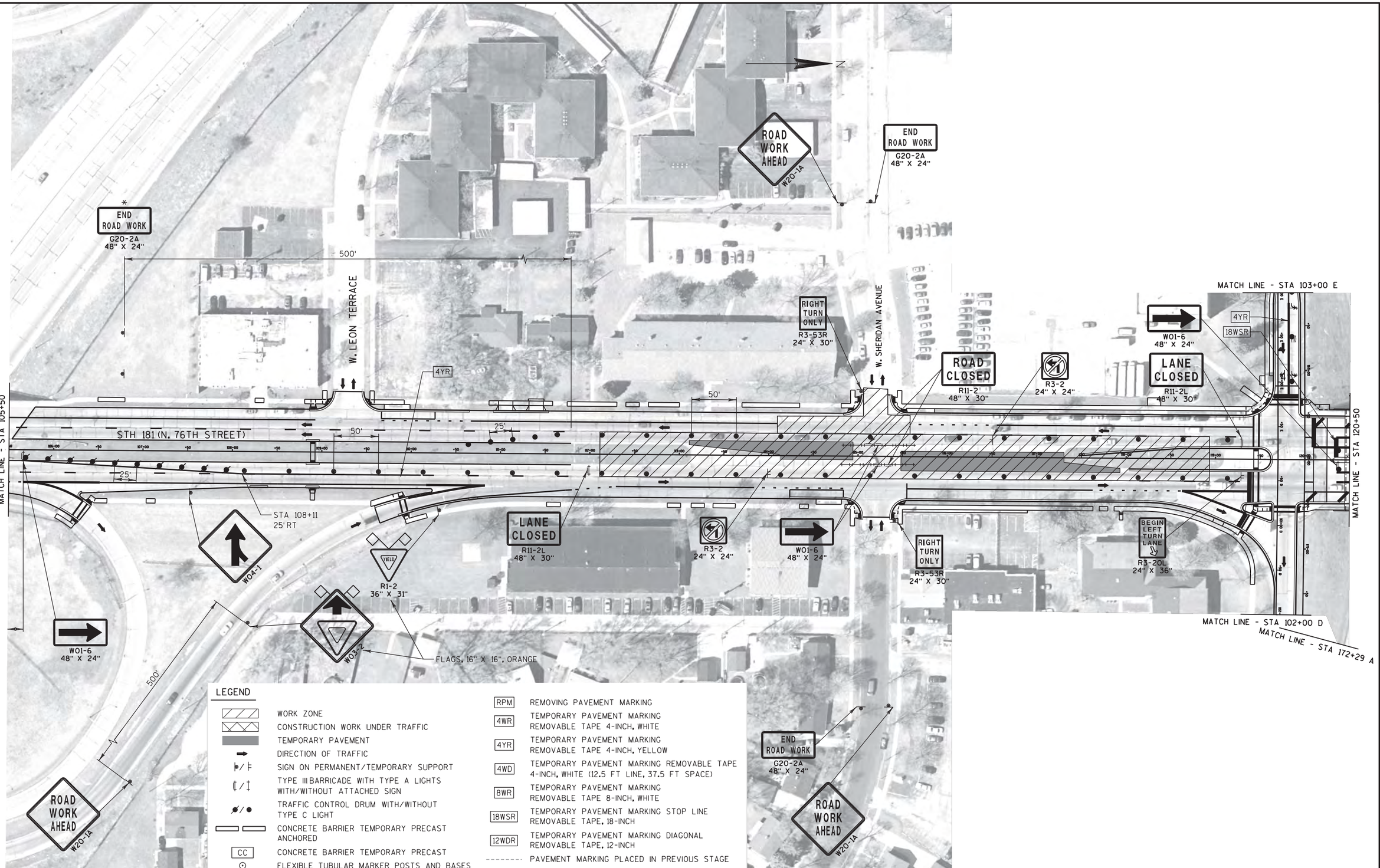


| PROJECT NO: 2140-13-70 | HWY: STH 181 | COUNTY: MILWAUKEE | TRAFFIC CONTROL STAGE 4 | SHEET 235 | E |
|---|---|---|---|---|---|

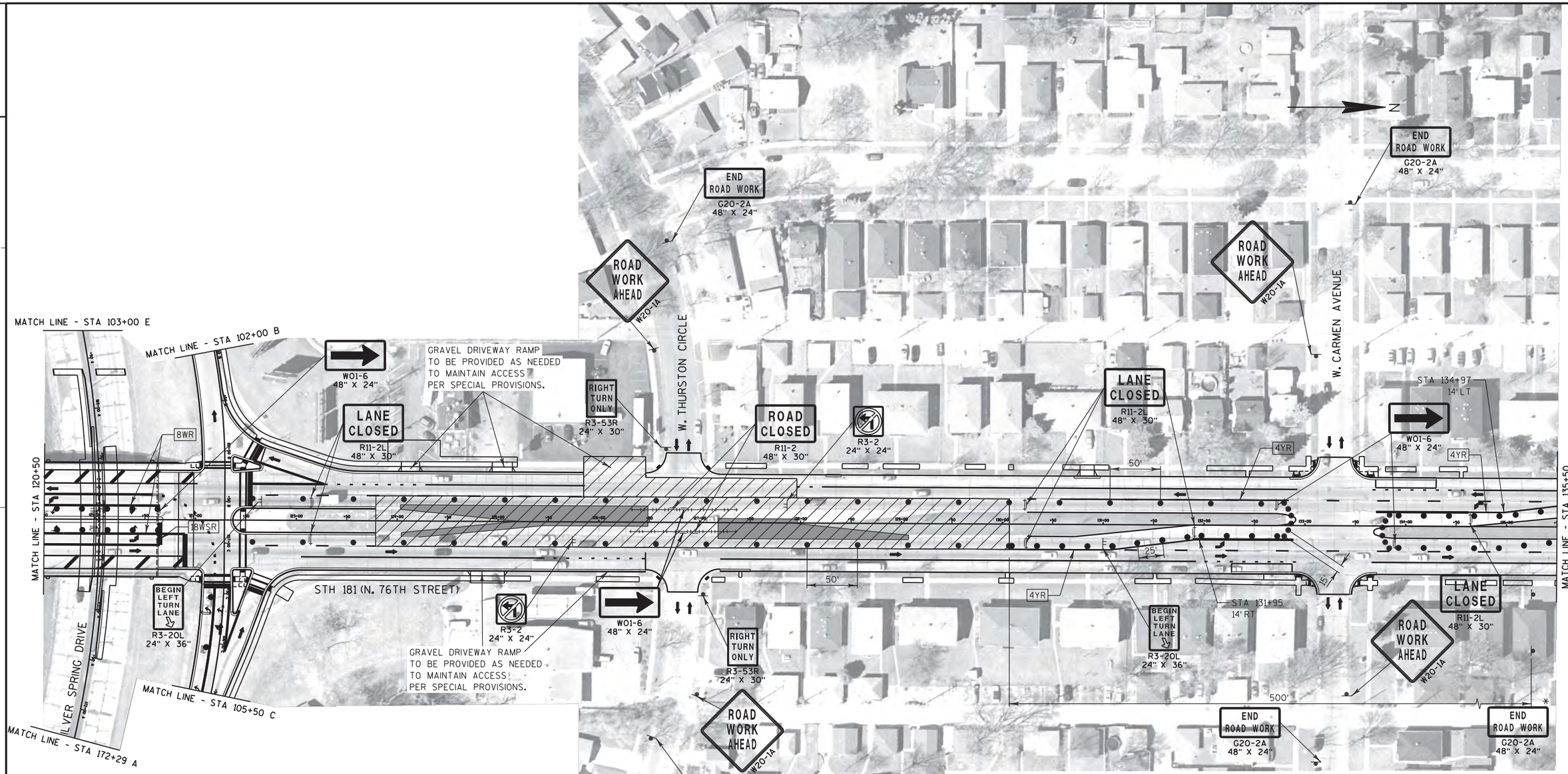


## LEGEND

- WORK ZONE
- CONSTRUCTION WORK UNDER TRAFFIC
- TEMPORARY PAVEMENT
- DIRECTION OF TRAFFIC
- SIGN ON PERMANENT/TEMPORARY SUPPORT
- TYPE III BARRICADE WITH TYPE A LIGHTS WITH/WITHOUT ATTACHED SIGN
- TRAFFIC CONTROL DRUM WITH/WITHOUT TYPE C LIGHT
- CONCRETE BARRIER TEMPORARY PRECAST ANCHORED
- CC — CONCRETE BARRIER TEMPORARY PRECAST
- FLEXIBLE TUBULAR MARKER POSTS AND BASES
- RPM — REMOVING PAVEMENT MARKING
- 4WR — TEMPORARY PAVEMENT MARKING REMOVABLE TAPE 4-INCH, WHITE
- 4YR — TEMPORARY PAVEMENT MARKING REMOVABLE TAPE 4-INCH, YELLOW
- 4WD — TEMPORARY PAVEMENT MARKING REMOVABLE TAPE 4-INCH, WHITE (12.5 FT LINE, 37.5 FT SPACE)
- 8WR — TEMPORARY PAVEMENT MARKING REMOVABLE TAPE 8-INCH, WHITE
- 18WSR — TEMPORARY PAVEMENT MARKING STOP LINE REMOVABLE TAPE, 18-INCH
- 12WDR — TEMPORARY PAVEMENT MARKING DIAGONAL REMOVABLE TAPE, 12-INCH
- PAVEMENT MARKING PLACED IN PREVIOUS STAGE

| PROJECT NO: 2140-13-70 | HWY: STH 181 | COUNTY: MILWAUKEE | TRAFFIC CONTROL STAGE 4 | SHEET 236 | E |
|---|---|---|---|---|---|

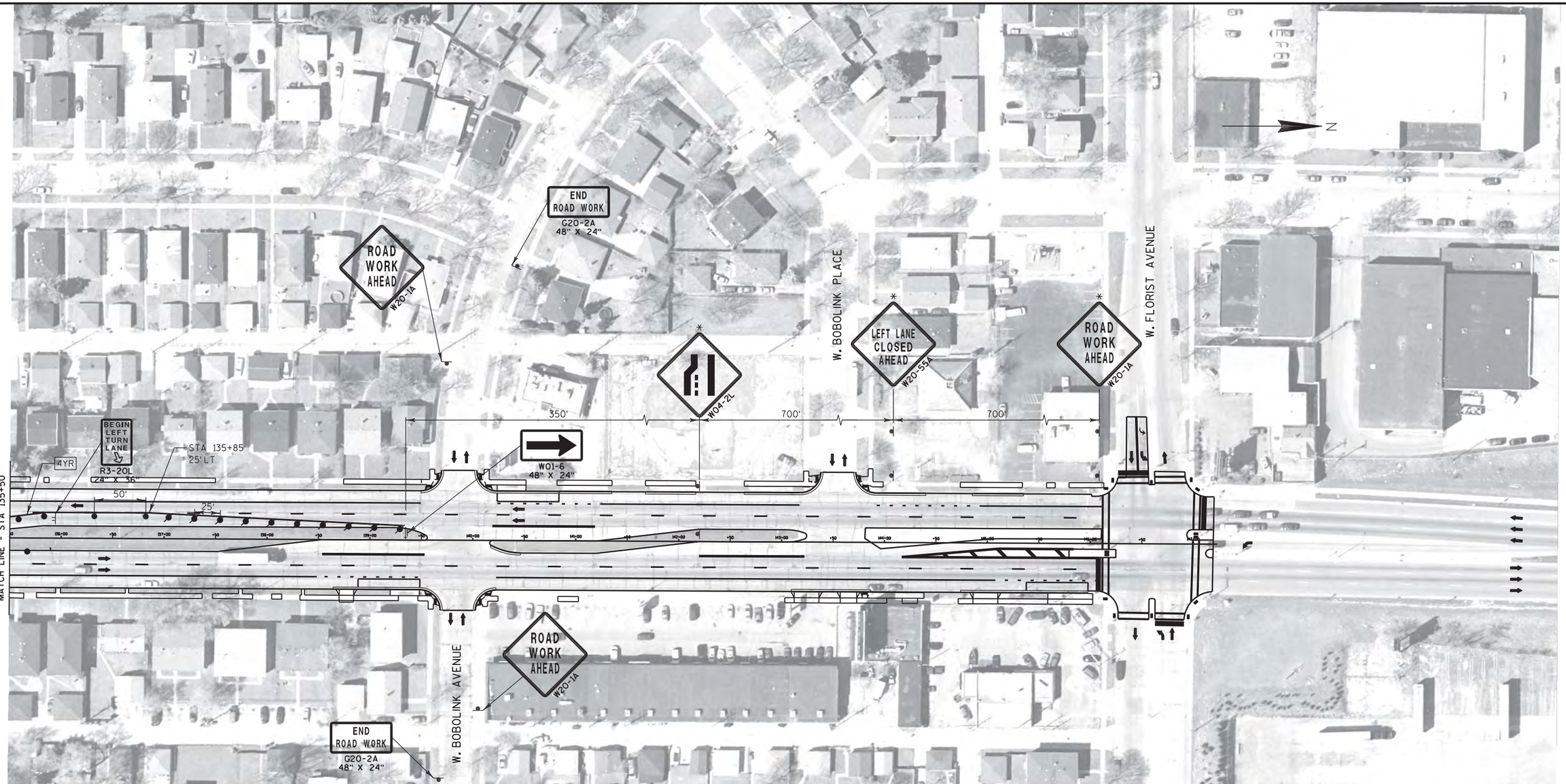


## LEGEND

- WORK ZONE
- CONSTRUCTION WORK UNDER TRAFFIC
- TEMPORARY PAVEMENT
- DIRECTION OF TRAFFIC
- SIGN ON PERMANENT/TEMPORARY SUPPORT
- TYPE III BARRICADE WITH TYPE A LIGHTS WITH/WITHOUT ATTACHED SIGN
- TRAFFIC CONTROL DRUM WITH/WITHOUT TYPE C LIGHT
- CONCRETE BARRIER TEMPORARY PRECAST ANCHORED
- CC — CONCRETE BARRIER TEMPORARY PRECAST
- FLEXIBLE TUBULAR MARKER POSTS AND BASES
- RPM — REMOVING PAVEMENT MARKING
- 4WR — TEMPORARY PAVEMENT MARKING REMOVABLE TAPE 4-INCH, WHITE
- 4YR — TEMPORARY PAVEMENT MARKING REMOVABLE TAPE 4-INCH, YELLOW
- 4WD — TEMPORARY PAVEMENT MARKING REMOVABLE TAPE 4-INCH, WHITE (12.5 FT LINE, 37.5 FT SPACE)
- 8WR — TEMPORARY PAVEMENT MARKING REMOVABLE TAPE 8-INCH, WHITE
- 18WSR — TEMPORARY PAVEMENT MARKING STOP LINE REMOVABLE TAPE, 18-INCH
- 12WDR — TEMPORARY PAVEMENT MARKING DIAGONAL REMOVABLE TAPE, 12-INCH
- PAVEMENT MARKING PLACED IN PREVIOUS STAGE

* SIGN SPACING SCHEMATICS
ADVANCE WARNING SIGNS SHALL BE PLACED IN ADVANCE OF WORK ZONE IN ACCORDANCE WITH "TRAFFIC CONTROL, SINGLE LANE CLOSURE NON-FREEWAY/EXPRESSWAY" SDD AS APPROVED BY THE FIELD ENGINEER AND AS FIELD CONDITIONS FIT

| PROJECT NO: 2140-13-70 | HWY: STH 181 | COUNTY: MILWAUKEE | TRAFFIC CONTROL STAGE 4 | SHEET 237 | E |
|---|---|---|---|---|---|

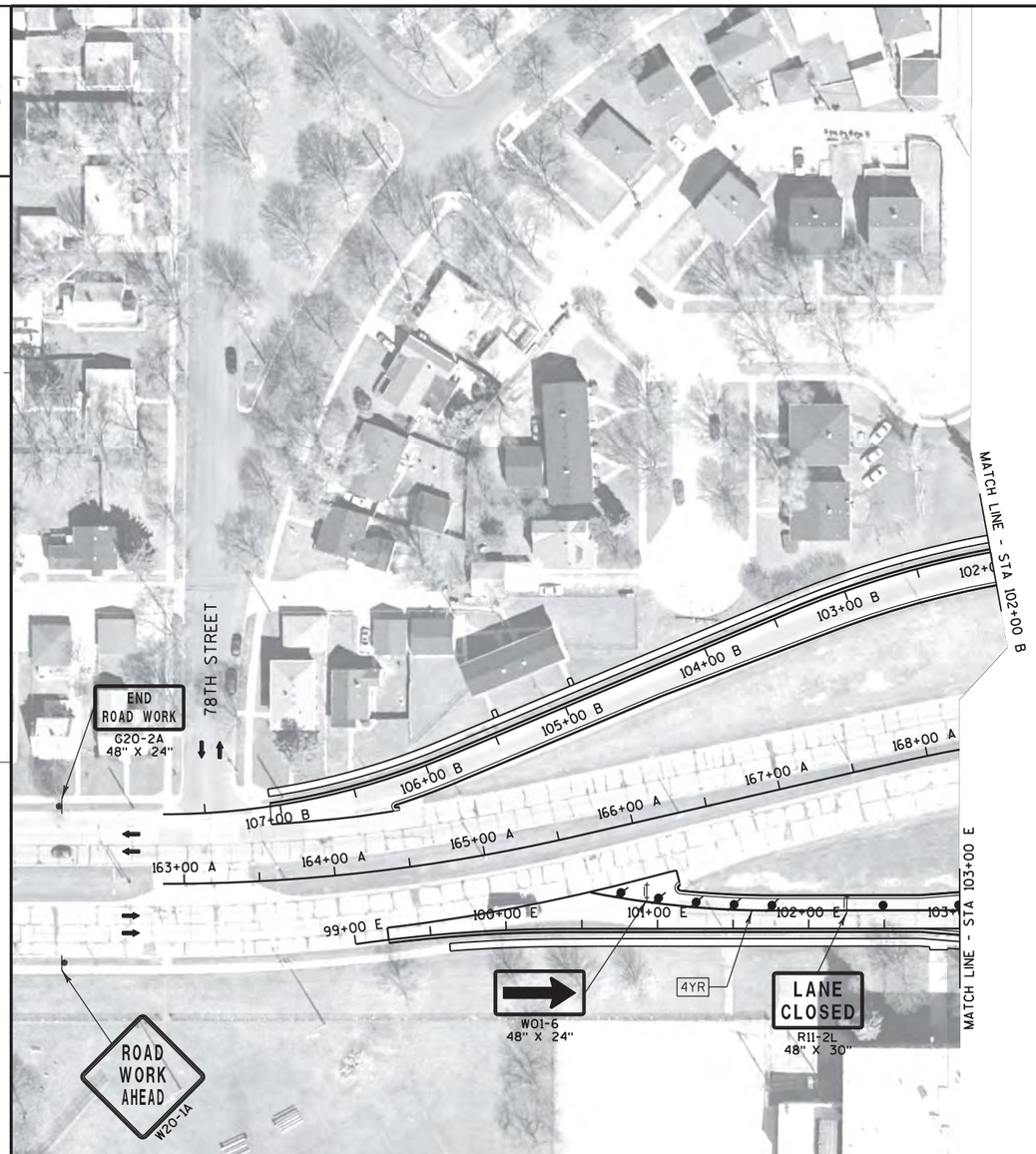


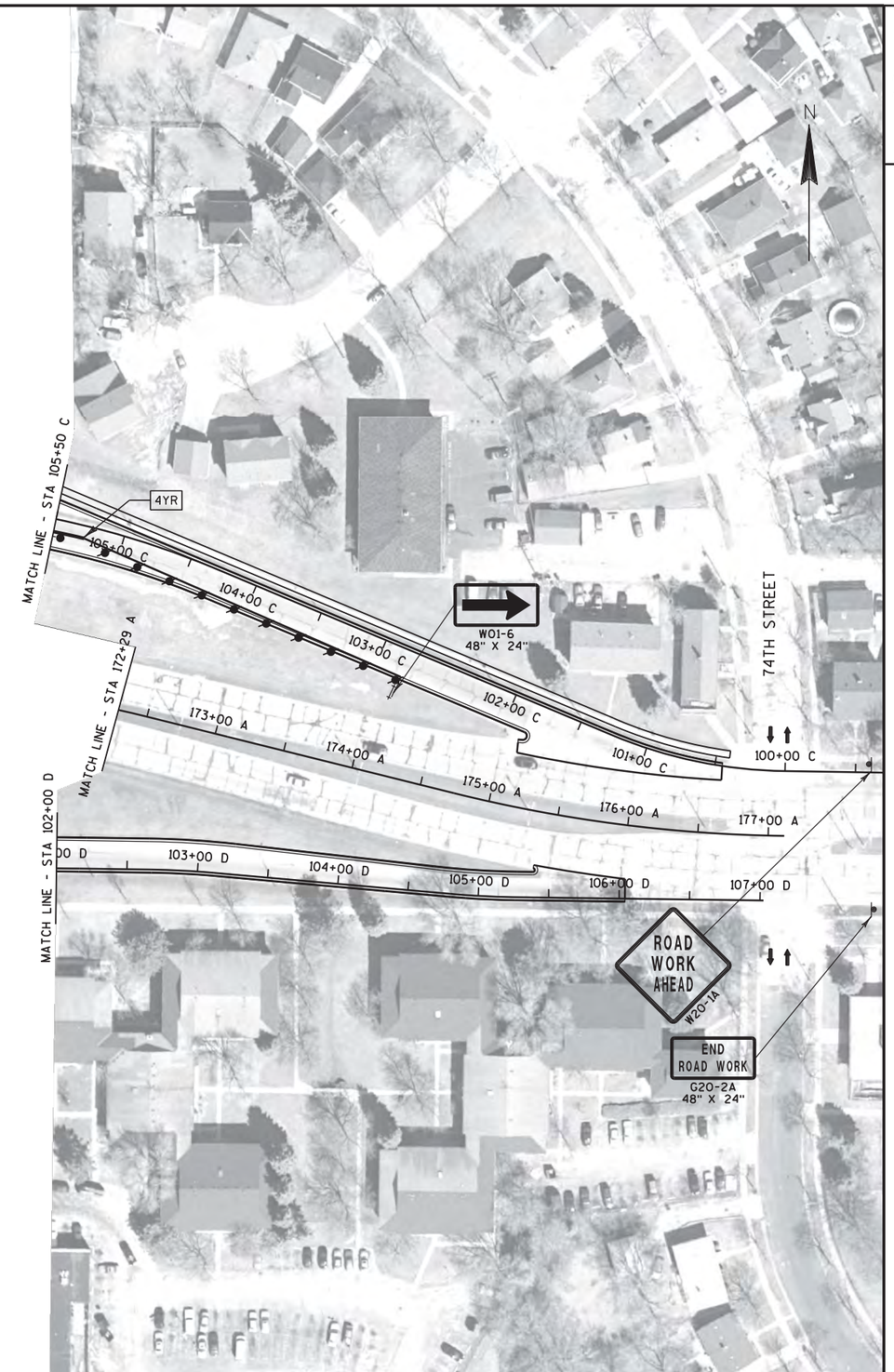


## LEGEND

- WORK ZONE
- CONSTRUCTION WORK UNDER TRAFFIC
- TEMPORARY PAVEMENT
- DIRECTION OF TRAFFIC
- SIGN ON PERMANENT/TEMPORARY SUPPORT
- TYPE III BARRICADE WITH TYPE A LIGHTS WITH/WITHOUT ATTACHED SIGN
- TRAFFIC CONTROL DRUM WITH/WITHOUT TYPE C LIGHT
- CONCRETE BARRIER TEMPORARY PRECAST ANCHORED
- CC — CONCRETE BARRIER TEMPORARY PRECAST
- FLEXIBLE TUBULAR MARKER POSTS AND BASES
- RPM — REMOVING PAVEMENT MARKING
- 4WR — TEMPORARY PAVEMENT MARKING REMOVABLE TAPE 4-INCH, WHITE
- 4YR — TEMPORARY PAVEMENT MARKING REMOVABLE TAPE 4-INCH, YELLOW
- 4WD — TEMPORARY PAVEMENT MARKING REMOVABLE TAPE 4-INCH, WHITE (12.5 FT LINE, 37.5 FT SPACE)
- 8WR — TEMPORARY PAVEMENT MARKING REMOVABLE TAPE 8-INCH, WHITE
- 18WSR — TEMPORARY PAVEMENT MARKING STOP LINE REMOVABLE TAPE, 18-INCH
- 12WDR — TEMPORARY PAVEMENT MARKING DIAGONAL REMOVABLE TAPE, 12-INCH
- PAVEMENT MARKING PLACED IN PREVIOUS STAGE

| PROJECT NO:2140-13-70 | HWY:STH 181 | COUNTY:MILWAUKEE | TRAFFIC CONTROL STAGE 4 - SILVER SPRING DRIVE | SHEET 238 | E |
|---|---|---|---|---|---|

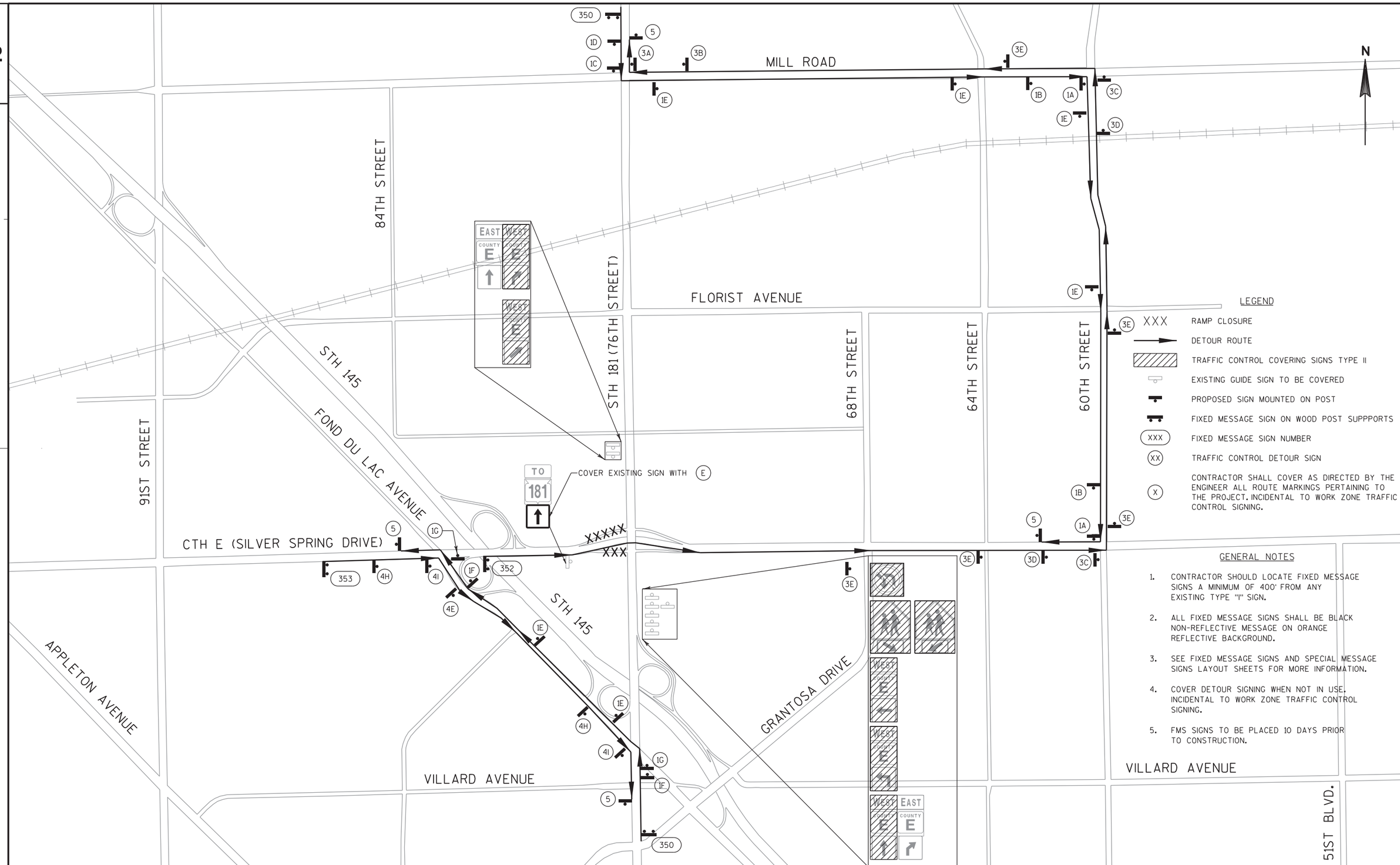


| PROJECT NO: 2140-13-70 | HWY: STH 181 | COUNTY: MILWAUKEE | DETOUR PLAN - STAGE 2 (SILVER SPRING DRIVE RAMPS) | SHEET 239 | E |
|---|---|---|---|---|---|

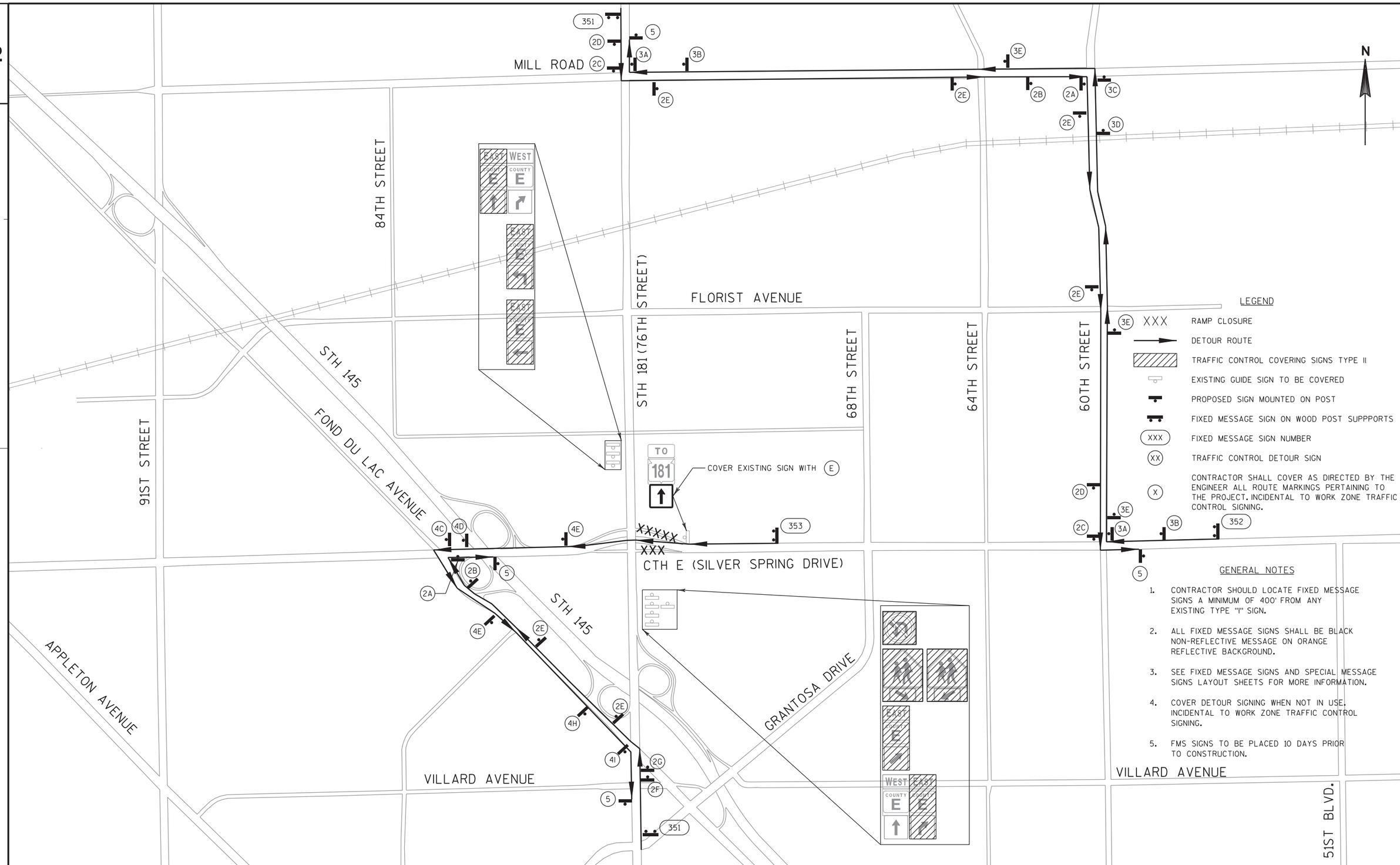


| PROJECT NO: 2140-13-70 | HWY: STH 181 | COUNTY: MILWAUKEE | DETOUR PLAN - STAGE 3 (SILVER SPRING DRIVE RAMPS) | SHEET 240 | E |
|---|---|---|---|---|---|

FILE NAME : P:\46xx\4635_DS.N76.MIL\CADDS\Plan\027002_dt.dgn PLOT DATE : 4/19/2016 PLOT BY : kes PLOT NAME : PLOT SCALE : 1:1000

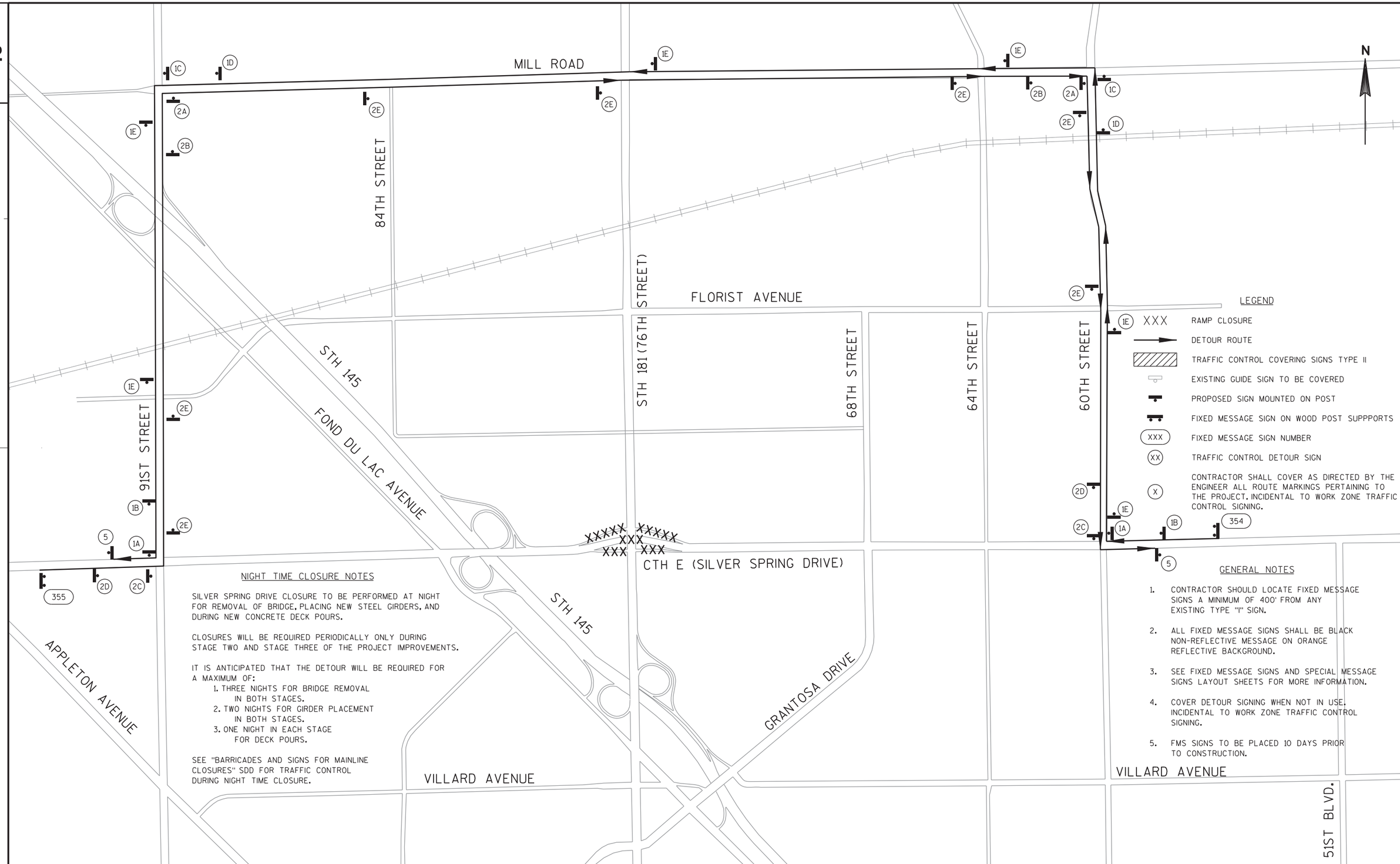


| PROJECT NO: 2140-13-70 | HWY: STH 181 | COUNTY: MILWAUKEE | DETOUR PLAN - SILVER SPRING DRIVE NIGHT TIME CLOSURES | SHEET 241 | E |
|---|---|---|---|---|---|

FILE NAME : P:\46xx\4635_DS.N76.MIL\CADDS\Plan\027003_dt.dgn PLOT DATE : 4/19/2016 PLOT BY : kes PLOT NAME : PLOT SCALE : 1:1000

WISDOT/CADDS SHEET 42

2

MILL ROAD

N

84TH STREET

STH 181 (76TH STREET)

FLORIST AVENUE

STH 145

FOND DU LAC AVENUE

91ST STREET

68TH STREET

64TH STREET

60TH STREET

W. THURSTON CIR

XXXXX

XXX

W. SHERIDAN AVE

W. LEON TERRACE

STH 145

CTH E (SILVER SPRING DRIVE)

GRANTOSA DRIVE

APPLETON AVENUE

VILLARD AVENUE

VILLARD AVENUE

51ST BLVD.

2

PEDESTRIAN DETOUR NOTES

CONTRACTOR SHALL PLACE TRAFFIC CONTROL DEVICES AND SIGNAGE IN ACCORDANCE WITH "TRAFFIC CONTROL, PEDESTRIAN ACCOMODATION" SDD FOR PEDESTRIAN DETOUR ROUTES.

LEGEND

| | |
|---|---|
| XXX | RAMP CLOSURE |
| → | DETOUR ROUTE |
| | TRAFFIC CONTROL COVERING SIGNS TYPE II |
| | EXISTING GUIDE SIGN TO BE COVERED |
| | PROPOSED SIGN MOUNTED ON POST |
| | FIXED MESSAGE SIGN ON WOOD POST SUPPPORTS |
| XXX | FIXED MESSAGE SIGN NUMBER |
| XX | TRAFFIC CONTROL DETOUR SIGN |
| X | CONTRACTOR SHALL COVER AS DIRECTED BY THE ENGINEER ALL ROUTE MARKINGS PERTAINING TO THE PROJECT. INCIDENTAL TO WORK ZONE TRAFFIC CONTROL SIGNING. |

GENERAL NOTES

1. CONTRACTOR SHOULD LOCATE FIXED MESSAGE SIGNS A MINIMUM OF 400' FROM ANY EXISTING TYPE "I" SIGN.
2. ALL FIXED MESSAGE SIGNS SHALL BE BLACK NON-REFLECTIVE MESSAGE ON ORANGE REFLECTIVE BACKGROUND.
3. SEE FIXED MESSAGE SIGNS AND SPECIAL MESSAGE SIGNS LAYOUT SHEETS FOR MORE INFORMATION.
4. COVER DETOUR SIGNING WHEN NOT IN USE. INCIDENTAL TO WORK ZONE TRAFFIC CONTROL SIGNING.
5. FMS SIGNS TO BE PLACED 10 DAYS PRIOR TO CONSTRUCTION.

| PROJECT NO: 2140-13-70 | HWY: STH 181 | COUNTY: MILWAUKEE | PEDESTRIAN DETOUR PLAN - STAGE 2 (SILVER SPRING DRIVE RAMPS) | SHEET 242 | E |
|---|---|---|---|---|---|

2

MILL ROAD

84TH STREET

STH 181 (76TH STREET)

FLORIST AVENUE

68TH STREET

64TH STREET

60TH STREET

STH 145

FOND DU LAC AVENUE

91ST STREET

W. THURSTON CIR

XXXXX

XXX

N. 74TH STREET

W. SHERIDAN AVE

CTH E (SILVER SPRING DRIVE)

STH 145

APPLETON AVENUE

GRANTOSA DRIVE

VILLARD AVENUE

VILLARD AVENUE

51ST BLVD.

N

2

LEGEND

| | |
|---|---|
| XXX | RAMP CLOSURE |
| | DETOUR ROUTE |
| | TRAFFIC CONTROL COVERING SIGNS TYPE II |
| | EXISTING GUIDE SIGN TO BE COVERED |
| | PROPOSED SIGN MOUNTED ON POST |
| | FIXED MESSAGE SIGN ON WOOD POST SUPPPORTS |
| XXX | FIXED MESSAGE SIGN NUMBER |
| XX | TRAFFIC CONTROL DETOUR SIGN |
| X | CONTRACTOR SHALL COVER AS DIRECTED BY THE ENGINEER ALL ROUTE MARKINGS PERTAINING TO THE PROJECT. INCIDENTAL TO WORK ZONE TRAFFIC CONTROL SIGNING. |

PEDESTRIAN DETOUR NOTES

CONTRACTOR SHALL PLACE TRAFFIC CONTROL DEVICES AND SIGNAGE IN ACCORDANCE WITH "TRAFFIC CONTROL, PEDESTRIAN ACCOMODATION" SDD FOR PEDESTRIAN DETOUR ROUTES.

GENERAL NOTES

1. CONTRACTOR SHOULD LOCATE FIXED MESSAGE SIGNS A MINIMUM OF 400' FROM ANY EXISTING TYPE "I" SIGN.
2. ALL FIXED MESSAGE SIGNS SHALL BE BLACK NON-REFLECTIVE MESSAGE ON ORANGE REFLECTIVE BACKGROUND.
3. SEE FIXED MESSAGE SIGNS AND SPECIAL MESSAGE SIGNS LAYOUT SHEETS FOR MORE INFORMATION.
4. COVER DETOUR SIGNING WHEN NOT IN USE. INCIDENTAL TO WORK ZONE TRAFFIC CONTROL SIGNING.
5. FMS SIGNS TO BE PLACED 10 DAYS PRIOR TO CONSTRUCTION.

| PROJECT NO: 2140-13-70 | HWY: STH 181 | COUNTY: MILWAUKEE | PEDESTRIAN DETOUR PLAN - STAGE 3 (SILVER SPRING DRIVE RAMPS) | SHEET 243 | E |
|---|---|---|---|---|---|

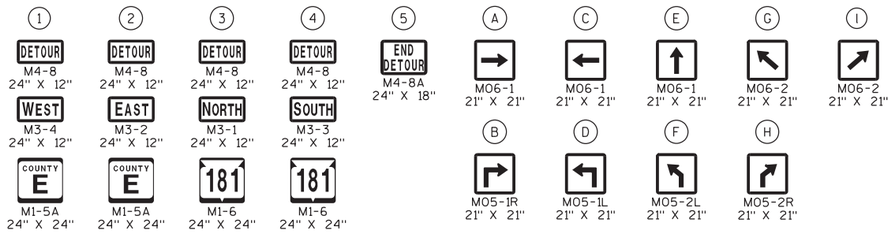


## GENERAL NOTES

1. ALL SIGNS TO HAVE FLUORESCENT REFLECTIVE SHEETING - REFERENCE: "WISDOT STANDARD SPECIFICATIONS FOR ROAD AND BRIDGE CONSTRUCTION," LATEST EDITION. THIS NOTE DOES NOT APPLY TO ROUTE MARKER SIGNS.

2. AFTER SIGNS HAVE BEEN LOCATED IN THE FIELD, BUT BEFORE INSTALLATION, THE PROJECT ENGINEER SHALL VERIFY EACH SIGN LOCATION.

3. ALL SIGNS TO BE MOUNTED ON WOODEN POST SUPPORTS (4"x6"). THE NUMBER OF POSTS REQUIRED FOR EACH LAYOUT IS SHOWN.

4. SIGNS ON THIS SHEET TO BE PAID UNDER THE ITEM "FIXED MESSAGE SIGNS" OR THE ITEM "TRAFFIC CONTROL DETOUR SIGNS."

   (XXX) FIXED MESSAGE SIGN NUMBER

   (XX) TRAFFIC CONTROL DETOUR SIGN

5. SIGNS SHALL BE BLACK NON-REFLECTIVE MESSAGE ON ORANGE FLUORESCENT REFLECTIVE BACKGROUND PER SPEC 643 & 637. THIS NOTE DOES NOT APPLY TO ROUTE MARKER SIGNS.

6. ALL SIGNS SHALL HAVE CAPITAL LETTERS AND NUMERALS: 6" CAPS SHALL BE SERIES "C"

7. ALL SIGNS SHALL HAVE BORDER & RADIUS OF BORDERS AS FOLLOWS:

| SIGN AREA | WIDTH OF BORDER |
|---|---|
| LESS THAN 60 SQ FT | 1" |

| RADIUS<br>SMALLEST OUTSIDE DIMENSION | CORNER RADIUS |
|---|---|
| ≥ 6 FT | 9" |
| ≥ 4 FT | 6" |

8. CONTRACTOR SHALL SUBMIT SHOP DRAWINGS TO ENGINEER FOR REVIEW PRIOR TO MANUFACTURING.

9. SIGN BASE MATERIAL SHALL BE ACCORDING TO SECTION 643 & 637.

10. SIGNS TO BE IN PLACE 10 DAYS PRIOR TO CONSTRUCTION.

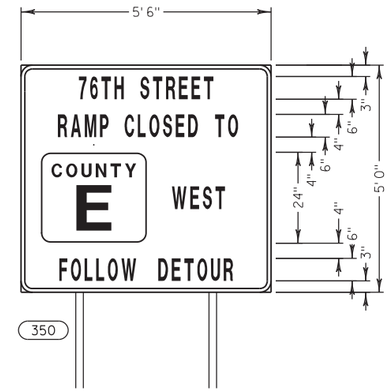


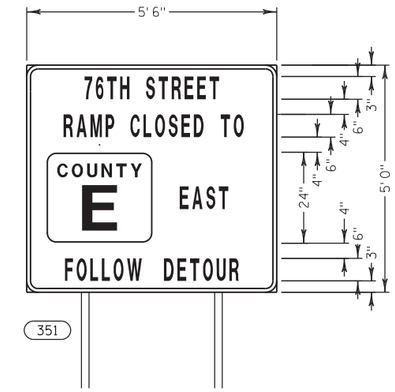


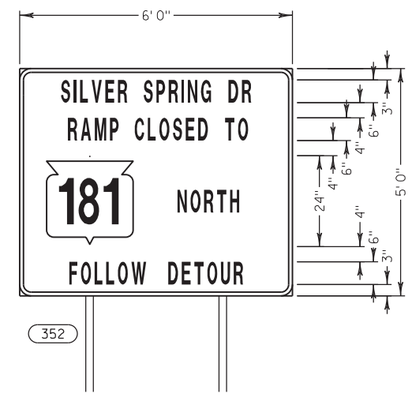


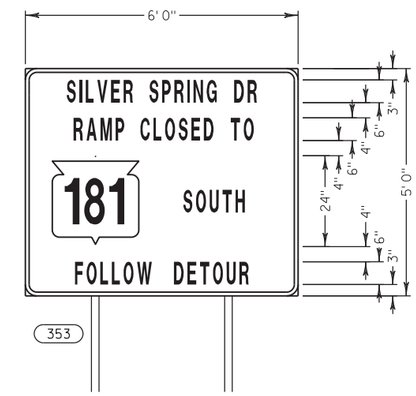


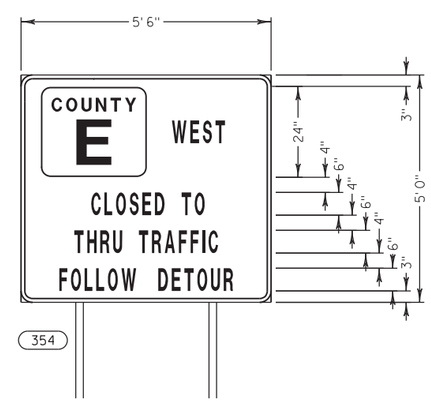


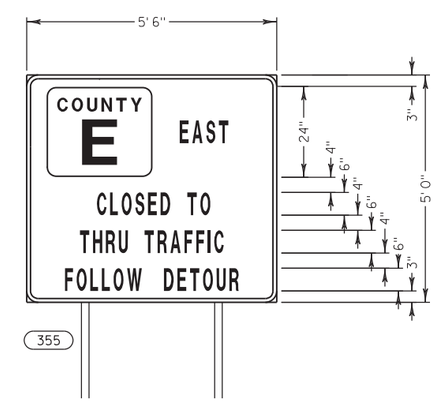

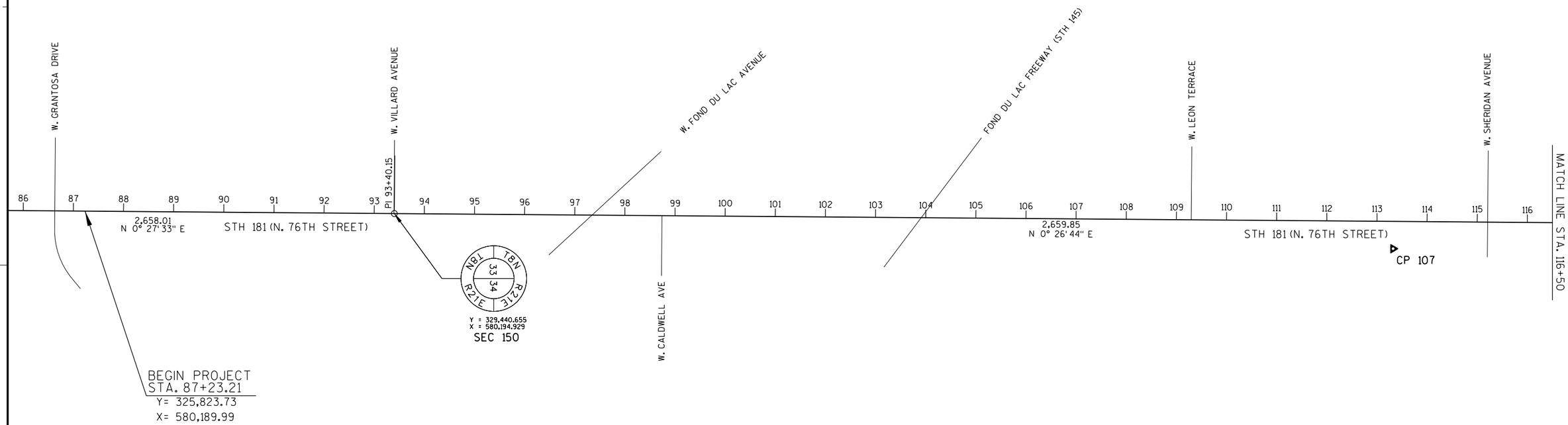


**BENCHMARKS**

| Point # | Northing | Easting | Elevation | Description |
|---|---|---|---|---|
| SEC 150 | 326440.655 | 580194.929 | 705.08 | SECTION CORNER, STH 181 AT W, VILLARD AVENUE |

**CONTROL POINTS**

| Point # | Northing | Easting | Elevation | Description | |
|---|---|---|---|---|---|
| CP 107 | 328432.72 | 580264.92 | N/A | CP CHIS X | 76 th St. +/-150' south of Sheridan |

SCALE, FEET 0 100 200

| PROJECT NO:2140-13-70 | HWY:STH 181 | COUNTY:MILWAUKEE | ALIGNMENT PLAN | SHEET 245 | E |
|---|---|---|---|---|---|

**BENCHMARKS**

| Point # | Northing | Easting | Elevation | Description |
|---|---|---|---|---|
| SEC137 | 329100.426 | 580215.609 | 747.52 | SECTION CORNER, STH 181 AT W. SILVER SPRING DRIVE |
| SEC124 | 331757.633 | 580229.449 | 732.86 | SECTION CORNER, STH 181 AT W. FLORIST AVENUE |

**CONTROL POINTS**

| Point # | Northing | Easting | Elevation | Description | |
|---|---|---|---|---|---|
| 100 | 329097.27 | 580304.51 | 746.63 | CP 3/4" Rebar w/ EMCS cap | SE quad of bridge over W. Silver Spring |
| 101 | 329296.60 | 580295.49 | 744.77 | CP 3/4" Rebar w/ EMCS cap | NE quad of bridge over W. Silver Spring |
| 102 | 330343.46 | 580169.65 | 734.90 | CP CHIS X | w/s 76th St. +/- 80' south of Carmen, in DWY near curb |
| 105 | 329829.59 | 580276.03 | 738.12 | CP CHIS X | NE quad 76th & Thurston |
| 106 | 328936.55 | 580273.08 | 745.44 | CP CHIS X | 76th St. +/- 200' north of Sheridan |

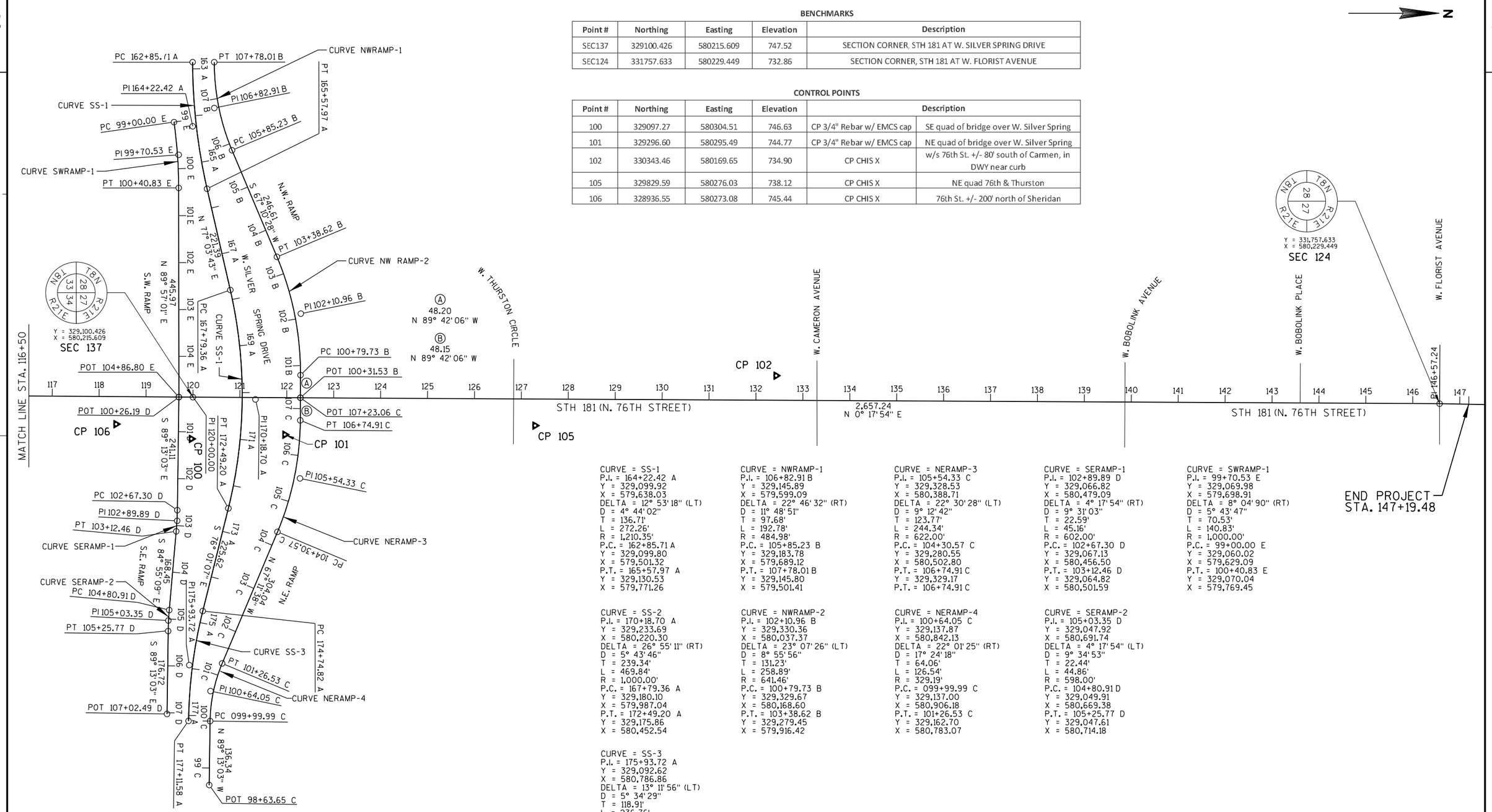


CURVE = SS-1
P.I. = 164+22.42 A
Y = 329,099.92
X = 579,638.03
DELTA = 12° 53' 18" (LT)
D = 4° 44' 02"
T = 136.71'
L = 272.26'
R = 1,210.35'
P.C. = 162+85.71 A
Y = 329,099.80
X = 579,501.32
P.T. = 165+57.97 A
Y = 329,130.53
X = 579,771.26

CURVE = NWRAMP-1
P.I. = 106+82.91 B
Y = 329,145.89
X = 579,599.09
DELTA = 22° 46' 32" (RT)
D = 11° 48' 51"
T = 97.68'
L = 192.78'
R = 484.98'
P.C. = 105+85.23 B
Y = 329,183.78
X = 579,689.12
P.T. = 107+78.01 B
Y = 329,145.80
X = 579,501.41

CURVE = NERAMP-3
P.I. = 105+54.33 C
Y = 329,328.53
X = 580,388.71
DELTA = 22° 30' 28" (LT)
D = 9° 12' 42"
T = 123.77'
L = 244.34'
R = 622.00'
P.C. = 104+30.57 C
Y = 329,280.55
X = 580,502.80
P.T. = 106+74.91 C
Y = 329,329.17
P.T. = 106+74.91 C

CURVE = SERAMP-1
P.I. = 102+89.89 D
Y = 329,066.82
X = 580,479.09
DELTA = 4° 17' 54" (RT)
D = 9° 31' 03"
T = 22.59'
L = 45.16'
R = 602.00'
P.C. = 102+67.30 D
Y = 329,067.13
X = 580,456.50
P.T. = 103+12.46 D
Y = 329,064.82
X = 580,501.59

CURVE = SWRAMP-1
P.I. = 99+70.53 E
Y = 329,069.98
X = 579,698.91
DELTA = 8° 04' 90" (RT)
D = 5° 43' 47"
T = 70.53'
L = 140.83'
R = 1,000.00'
P.C. = 99+00.00 E
Y = 329,060.02
X = 579,629.09
P.T. = 100+40.83 E
Y = 329,070.04
X = 579,769.45

CURVE = SS-2
P.I. = 170+18.70 A
Y = 329,233.69
X = 580,220.30
DELTA = 26° 55' 11" (RT)
D = 5° 43' 46"
T = 239.34'
L = 469.84'
R = 1,000.00'
P.C. = 167+79.36 A
Y = 329,180.10
X = 579,987.04
P.T. = 172+49.20 A
Y = 329,175.86
X = 580,452.54

CURVE = NWRAMP-2
P.I. = 102+10.96 B
Y = 329,330.36
X = 580,037.37
DELTA = 23° 07' 26" (LT)
D = 8° 55' 56"
T = 131.23'
L = 258.89'
R = 641.46'
P.C. = 100+79.73 B
Y = 329,329.67
X = 580,168.60
P.T. = 103+38.62 B
Y = 329,279.45
X = 579,916.42

CURVE = NERAMP-4
P.I. = 100+64.05 C
Y = 329,137.87
X = 580,842.13
DELTA = 22° 01' 25" (RT)
D = 17° 24' 18"
T = 64.06'
L = 126.54'
R = 329.19'
P.C. = 099+99.99 C
Y = 329,137.00
X = 580,906.18
P.T. = 101+26.53 C
Y = 329,162.70
X = 580,783.07

CURVE = SERAMP-2
P.I. = 105+03.35 D
Y = 329,047.92
X = 580,691.74
DELTA = 4° 17' 54" (LT)
D = 9° 34' 53"
T = 22.44'
L = 44.86'
R = 598.00'
P.C. = 104+80.91 D
Y = 329,049.91
X = 580,669.38
P.T. = 105+25.77 D
Y = 329,047.61
X = 580,714.18

CURVE = SS-3
P.I. = 175+93.72 A
Y = 329,092.62
X = 580,786.86
DELTA = 13° 11' 56" (LT)
D = 5° 34' 29"
T = 118.91'
L = 236.76'
R = 1,027.76'
P.C. = 174+74.82 A
Y = 329,121.35
X = 580,671.48
P.T. = 177+11.58 A
Y = 329,091.00
X = 580,905.76

SCALE, FEET 0 100 200

| PROJECT NO: 2140-13-70 | HWY: STH 181 | COUNTY: MILWAUKEE | ALIGNMENT PLAN | SHEET 246 | E |
|---|---|---|---|---|---|

DATE 14JUL16 E S T I M A T E O F Q U A N T I T I E S

| LINE NUMBER | ITEM | ITEM DESCRIPTION | UNIT | TOTAL | 2140-13-70 QUANTITY |
|---|---|---|---|---|---|
| 0010 | 201.0105 | Clearing | STA | 4.000 | 4.000 |
| 0020 | 201.0120 | Clearing | ID | 149.000 | 149.000 |
| 0030 | 201.0205 | Grubbing | STA | 4.000 | 4.000 |
| 0040 | 201.0220 | Grubbing | ID | 149.000 | 149.000 |
| 0050 | 203.0200 | Removing Old Structure (station) 01. STA. 121+05 | LS | 1.000 | 1.000 |
| 0060 | 203.0225.S | Debris Containment (structure) 01. B-40-766 | LS | 1.000 | 1.000 |
| 0070 | 204.0100 | Removing Pavement | SY | 16,927.000 | 16,927.000 |
| 0080 | 204.0125 | Removing Asphaltic Surface Milling | TON | 8,433.000 | 8,433.000 |
| 0090 | 204.0150 | Removing Curb & Gutter | LF | 3,158.000 | 3,158.000 |
| 0100 | 204.0155 | Removing Concrete Sidewalk | SY | 5,305.000 | 5,305.000 |
| 0110 | 204.0165 | Removing Guardrail | LF | 140.000 | 140.000 |
| 0120 | 204.0170 | Removing Fence | LF | 140.000 | 140.000 |
| 0130 | 204.0195 | Removing Concrete Bases | EACH | 19.000 | 19.000 |
| 0140 | 204.0210 | Removing Manholes | EACH | 3.000 | 3.000 |
| 0150 | 204.0220 | Removing Inlets | EACH | 18.000 | 18.000 |
| 0160 | 204.0245 | Removing Storm Sewer (size) 01. 12-Inch | LF | 808.000 | 808.000 |
| 0170 | 205.0100 | Excavation Common | CY | 10,632.000 | 10,632.000 |
| 0180 | 206.1000 | Excavation for Structures Bridges (structure) 01. B-40-766 | LS | 1.000 | 1.000 |
| 0190 | 208.0100 | Borrow | CY | 8,987.000 | 8,987.000 |
| 0200 | 209.0100 | Backfill Granular | CY | 2,690.000 | 2,690.000 |
| 0210 | 209.0200.S | Backfill Controlled Low Strength | CY | 20.000 | 20.000 |
| 0220 | 210.0100 | Backfill Structure | CY | 440.000 | 440.000 |
| 0230 | 213.0100 | Finishing Roadway (project) 01. Project ID 2140-13-70 | EACH | 1.000 | 1.000 |
| 0240 | 305.0120 | Base Aggregate Dense 1 1/4-Inch | TON | 10,410.000 | 10,410.000 |
| 0250 | 310.0110 | Base Aggregate Open-Graded | TON | 162.000 | 162.000 |
| 0260 | 311.0110 | Breaker Run | TON | 1,800.000 | 1,800.000 |
| 0270 | 320.0155 | Concrete Base 9-Inch | SY | 419.000 | 419.000 |
| 0280 | 390.0303 | Base Patching Concrete | SY | 2,486.000 | 2,486.000 |
| 0290 | 390.0403 | Base Patching Concrete Shes | SY | 131.000 | 131.000 |
| 0300 | 415.0070 | Concrete Pavement 7-Inch | SY | 5,495.000 | 5,495.000 |
| 0310 | 415.0095 | Concrete Pavement 9 1/2-Inch | SY | 8,217.000 | 8,217.000 |
| 0320 | 415.0210 | Concrete Pavement Gaps | EACH | 3.000 | 3.000 |
| 0330 | 415.0410 | Concrete Pavement Approach Slab | SY | 314.000 | 314.000 |
| 0340 | 415.1095 | Concrete Pavement HES 9 1/2-Inch | SY | 350.000 | 350.000 |
| 0350 | 416.0270 | Concrete Driveway HES 7-Inch | SY | 400.000 | 400.000 |
| 0360 | 416.0610 | Drilled Tie Bars | EACH | 3,528.000 | 3,528.000 |
| 0370 | 416.0620 | Drilled Dowel Bars | EACH | 10,080.000 | 10,080.000 |
| 0380 | 440.4410 | Incentive IRI Ride | DOL | 8,650.000 | 8,650.000 |
| 0390 | 455.0605 | Tack Coat | GAL | 9,124.000 | 9,124.000 |
| 0400 | 460.2000 | Incentive Density HMA Pavement | DOL | 6,350.000 | 6,350.000 |
| 0410 | 465.0120 | Asphaltic Surface Driveways and Field Entrances | TON | 39.000 | 39.000 |
| 0420 | 465.0125 | Asphaltic Surface Temporary | TON | 291.000 | 291.000 |
| 0430 | 502.0100 | Concrete Masonry Bridges | CY | 1,105.000 | 1,105.000 |
| 0440 | 502.2000 | Compression Joint Sealer Preformed Elastomeric (width) 01. 2 1/4 Inch | LF | 161.000 | 161.000 |
| 0450 | 502.3200 | Protective Surface Treatment | SY | 2,066.000 | 2,066.000 |
| 0460 | 502.3210 | Pigmented Surface Sealer | SY | 126.000 | 126.000 |
| 0470 | 505.0400 | Bar Steel Reinforcement HS Structures | LB | 17,590.000 | 17,590.000 |
| 0480 | 505.0600 | Bar Steel Reinforcement HS Coated Structures | LB | 172,290.000 | 172,290.000 |

3

DATE 14JUL16 E S T I M A T E O F Q U A N T I T I E S

| LINE NUMBER | ITEM | ITEM DESCRIPTION | UNIT | TOTAL | 2140-13-70 QUANTITY |
|---|---|---|---|---|---|
| 0490 | 505.0800.S | Bar Steel Reinforcement HS Stainless Structures | LB | 3,940.000 | 3,940.000 |
| 0500 | 506.0605 | Structural Steel HS | LB | 332,140.000 | 332,140.000 |
| 0510 | 506.2605 | Bearing Pads Elastomeric Non-Laminated | EACH | 36.000 | 36.000 |
| 0520 | 506.3015 | Welded Stud Shear Connectors 7/8x6-Inch | EACH | 8,448.000 | 8,448.000 |
| 0530 | 506.4000 | Steel Diaphragms (structure) 01. B-40-766 | EACH | 80.000 | 80.000 |
| 0540 | 506.5000 | Bearing Assemblies Fixed (structure) 01. B-40-766 | EACH | 18.000 | 18.000 |
| 0550 | 511.1200 | Temporary Shoring (structure) 01. B-40-766 | SF | 998.000 | 998.000 |
| 0560 | 513.4091 | Railing Tubular Screening (structure) 01. B-40-766 | LF | 317.000 | 317.000 |
| 0570 | 516.0500 | Rubberized Membrane Waterproofing | SY | 52.000 | 52.000 |
| 0580 | 517.0600 | Painting Epoxy System (structure) 01. B-40-766 | LS | 1.000 | 1.000 |
| 0590 | 532.0750.S | Temporary Wall Wire Faced Mechanically Stabilized Earth | SF | 1,631.000 | 1,631.000 |
| 0600 | 550.2106 | Piling CIP Concrete 10 3/4 X 0.365-Inch | LF | 5,400.000 | 5,400.000 |
| 0610 | 601.0110 | Concrete Curb Type D | LF | 18.000 | 18.000 |
| 0620 | 601.0409 | Concrete Curb & Gutter 30-Inch Type A | LF | 8,259.000 | 8,259.000 |
| 0630 | 601.0411 | Concrete Curb & Gutter 30-Inch Type D | LF | 176.000 | 176.000 |
| 0640 | 601.0600 | Concrete Curb Pedestrian | LF | 21.000 | 21.000 |
| 0650 | 602.0410 | Concrete Sidewalk 5-Inch | SF | 43,791.000 | 43,791.000 |
| 0660 | 602.0505 | Curb Ramp Detectable Warning Field Yellow | SF | 704.000 | 704.000 |
| 0670 | 602.1500 | Concrete Steps | SF | 16.000 | 16.000 |
| 0680 | 603.1142 | Concrete Barrier Type S42 | LF | 21.000 | 21.000 |
| 0690 | 603.1156 | Concrete Barrier Type S56 | LF | 228.000 | 228.000 |
| 0700 | 603.3559 | Concrete Barrier Transition Type S42 to S56 | EACH | 2.000 | 2.000 |
| 0710 | 603.8000 | Concrete Barrier Temporary Precast Delivered | LF | 3,687.000 | 3,687.000 |
| 0720 | 603.8125 | Concrete Barrier Temporary Precast Installed | LF | 3,687.000 | 3,687.000 |
| 0730 | 604.0400 | Slope Paving Concrete | SY | 674.000 | 674.000 |
| 0740 | 608.0312 | Storm Sewer Pipe Reinforced Concrete Class III 12-Inch | LF | 755.000 | 755.000 |
| 0750 | 611.0420 | Reconstructing Manholes | EACH | 5.000 | 5.000 |
| 0760 | 611.0430 | Reconstructing Inlets | EACH | 5.000 | 5.000 |
| 0770 | 611.0530 | Manhole Covers Type J | EACH | 5.000 | 5.000 |
| 0780 | 611.0606 | Inlet Covers Type B | EACH | 1.000 | 1.000 |
| 0790 | 611.0610 | Inlet Covers Type BW | EACH | 2.000 | 2.000 |
| 0800 | 611.0624 | Inlet Covers Type H | EACH | 27.000 | 27.000 |
| 0810 | 611.0642 | Inlet Covers Type MS | EACH | 2.000 | 2.000 |
| 0820 | 611.2004 | Manholes 4-FT Diameter | EACH | 3.000 | 3.000 |
| 0830 | 611.3220 | Inlets 2x2-FT | EACH | 2.000 | 2.000 |
| 0840 | 611.3225 | Inlets 2x2.5-FT | EACH | 2.000 | 2.000 |
| 0850 | 611.3230 | Inlets 2x3-FT | EACH | 26.000 | 26.000 |
| 0860 | 611.3901 | Inlets Median 1 Grate | EACH | 2.000 | 2.000 |
| 0870 | 611.8110 | Adjusting Manhole Covers | EACH | 59.000 | 59.000 |
| 0880 | 611.8115 | Adjusting Inlet Covers | EACH | 44.000 | 44.000 |
| 0890 | 611.8120.S | Cover Plates Temporary | EACH | 91.000 | 91.000 |
| 0900 | 611.9710 | Salvaged Inlet Covers | EACH | 1.000 | 1.000 |
| 0910 | 612.0406 | Pipe Underdrain Wrapped 6-Inch | LF | 744.000 | 744.000 |

3

3

DATE 14JUL16 E S T I M A T E O F Q U A N T I T I E S

| LINE NUMBER | ITEM | ITEM DESCRIPTION | UNIT | TOTAL | 2140-13-70 QUANTITY |
|---|---|---|---|---|---|
| 0920 | 614.0805 | Crash Cushions Permanent Low Maintenance | EACH | 2.000 | 2.000 |
| 0930 | 614.0905 | Crash Cushions Temporary | EACH | 10.000 | 10.000 |
| 0940 | 614.2300 | MGS Guardrail 3 | LF | 25.000 | 25.000 |
| 0950 | 614.2500 | MGS Thrie Beam Transition | LF | 78.660 | 78.660 |
| 0960 | 614.2610 | MGS Guardrail Terminal EAT | EACH | 2.000 | 2.000 |
| 0970 | 616.0204 | Fence Chain Link 4-FT | LF | 140.000 | 140.000 |
| 0980 | 616.0700.S | Fence Safety | LF | 200.000 | 200.000 |
| 0990 | 619.1000 | Mobilization | EACH | 1.000 | 1.000 |
| 1000 | 620.0300 | Concrete Median Sloped Nose | SF | 218.000 | 218.000 |
| 1010 | 624.0100 | Water | MGAL | 90.000 | 90.000 |
| 1020 | 625.0100 | Topsoil | SY | 12,766.000 | 12,766.000 |
| 1030 | 628.1504 | Silt Fence | LF | 2,863.000 | 2,863.000 |
| 1040 | 628.1520 | Silt Fence Maintenance | LF | 2,863.000 | 2,863.000 |
| 1050 | 628.1905 | Mobilizations Erosion Control | EACH | 4.000 | 4.000 |
| 1060 | 628.1910 | Mobilizations Emergency Erosion Control | EACH | 2.000 | 2.000 |
| 1070 | 628.2008 | Erosion Mat Urban Class I Type B | SY | 4,804.000 | 4,804.000 |
| 1080 | 628.7005 | Inlet Protection Type A | EACH | 41.000 | 41.000 |
| 1090 | 628.7010 | Inlet Protection Type B | EACH | 55.000 | 55.000 |
| 1100 | 628.7015 | Inlet Protection Type C | EACH | 39.000 | 39.000 |
| 1110 | 628.7020 | Inlet Protection Type D | EACH | 13.000 | 13.000 |
| 1120 | 628.7560 | Tracking Pads | EACH | 4.000 | 4.000 |
| 1130 | 628.7570 | Rock Bags | EACH | 50.000 | 50.000 |
| 1140 | 629.0210 | Fertilizer Type B | CWT | 2.800 | 2.800 |
| 1150 | 630.0140 | Seeding Mixture No. 40 | LB | 81.000 | 81.000 |
| 1160 | 631.0300 | Sod Water | MGAL | 195.000 | 195.000 |
| 1170 | 631.1000 | Sod Lawn | SY | 8,678.000 | 8,678.000 |
| 1180 | 633.0200 | Delineators Flexible | EACH | 2.000 | 2.000 |
| 1190 | 634.0618 | Posts Wood 4x6-Inch X 18-FT | EACH | 17.000 | 17.000 |
| 1200 | 634.0814 | Posts Tubular Steel 2x2-Inch X 14-FT | EACH | 121.000 | 121.000 |
| 1210 | 637.2210 | Signs Type II Reflective H | SF | 1,469.580 | 1,469.580 |
| 1220 | 637.2215 | Signs Type II Reflective H Folding | SF | 177.120 | 177.120 |
| 1230 | 637.2230 | Signs Type II Reflective F | SF | 295.500 | 295.500 |
| 1240 | 638.2102 | Moving Signs Type II | EACH | 1.000 | 1.000 |
| 1250 | 638.2602 | Removing Signs Type II | EACH | 154.000 | 154.000 |
| 1260 | 638.3000 | Removing Small Sign Supports | EACH | 66.000 | 66.000 |
| 1270 | 642.5201 | Field Office Type C | EACH | 1.000 | 1.000 |
| 1280 | 643.0100 | Traffic Control (project) 01. Project ID 2140-13-70 | EACH | 1.000 | 1.000 |
| 1290 | 643.0300 | Traffic Control Drums | DAY | 134,970.000 | 134,970.000 |
| 1300 | 643.0410 | Traffic Control Barricades Type II | DAY | 2,346.000 | 2,346.000 |
| 1310 | 643.0420 | Traffic Control Barricades Type III | DAY | 41,144.000 | 41,144.000 |
| 1320 | 643.0500 | Traffic Control Flexible Tubular Marker Posts | EACH | 26.000 | 26.000 |
| 1330 | 643.0600 | Traffic Control Flexible Tubular Marker Bases | EACH | 26.000 | 26.000 |
| 1340 | 643.0705 | Traffic Control Warning Lights Type A | DAY | 73,153.000 | 73,153.000 |
| 1350 | 643.0715 | Traffic Control Warning Lights Type C | DAY | 26,285.000 | 26,285.000 |
| 1360 | 643.0900 | Traffic Control Signs | DAY | 60,664.000 | 60,664.000 |
| 1370 | 643.0920 | Traffic Control Covering Signs Type II | EACH | 16.000 | 16.000 |
| 1380 | 643.1000 | Traffic Control Signs Fixed Message | SF | 285.000 | 285.000 |
| 1390 | 643.1050 | Traffic Control Signs PCMS | DAY | 320.000 | 320.000 |
| 1400 | 643.2000 | Traffic Control Detour (project) 01. Project ID 2140-13-70 | EACH | 1.000 | 1.000 |
| 1410 | 643.3000 | Traffic Control Detour Signs | DAY | 7,728.000 | 7,728.000 |

3

DATE 14JUL16 E S T I M A T E O F Q U A N T I T I E S

| LINE NUMBER | ITEM | ITEM DESCRIPTION | UNIT | TOTAL | 2140-13-70 QUANTITY |
|---|---|---|---|---|---|
| 1420 | 644.1410.S | Temporary Pedestrian Surface Asphalt | SF | 480.000 | 480.000 |
| 1430 | 644.1420.S | Temporary Pedestrian Surface Plywood | SF | 80.000 | 80.000 |
| 1440 | 644.1601.S | Temporary Curb Ramp | EACH | 36.000 | 36.000 |
| 1450 | 646.0106 | Pavement Marking Epoxy 4-Inch | LF | 8,271.000 | 8,271.000 |
| 1460 | 646.0600 | Removing Pavement Markings | LF | 1,784.000 | 1,784.000 |
| 1470 | 646.0841.S | Pavement Marking Grooved Wet Reflective Contrast Tape 4-Inch | LF | 475.000 | 475.000 |
| 1480 | 646.0843.S | Pavement Marking Grooved Wet Reflective Contrast Tape 8-Inch | LF | 1,221.000 | 1,221.000 |
| 1490 | 646.0881.S | Pavement Marking Grooved Wet Reflective Tape 4-Inch | LF | 2,300.000 | 2,300.000 |
| 1500 | 646.0883.S | Pavement Marking Grooved Wet Reflective Tape 8-Inch | LF | 2,768.000 | 2,768.000 |
| 1510 | 647.0606 | Pavement Marking Island Nose Epoxy | EACH | 20.000 | 20.000 |
| 1520 | 647.0726 | Pavement Marking Diagonal Epoxy 12-Inch | LF | 330.000 | 330.000 |
| 1530 | 647.0955 | Removing Pavement Markings Arrows | EACH | 1.000 | 1.000 |
| 1540 | 647.0965 | Removing Pavement Markings Words | EACH | 1.000 | 1.000 |
| 1550 | 649.0400 | Temporary Pavement Marking Removable Tape 4-Inch | LF | 32,710.000 | 32,710.000 |
| 1560 | 649.0801 | Temporary Pavement Marking Removable Tape 8-Inch | LF | 630.000 | 630.000 |
| 1570 | 649.1200 | Temporary Pavement Marking Stop Line Removable Tape 18-Inch | LF | 140.000 | 140.000 |
| 1580 | 649.1600 | Temporary Pavement Marking Diagonal Removable Tape 12-Inch | LF | 150.000 | 150.000 |
| 1590 | 650.4000 | Construction Staking Storm Sewer | EACH | 35.000 | 35.000 |
| 1600 | 650.4500 | Construction Staking Subgrade | LF | 3,232.000 | 3,232.000 |
| 1610 | 650.5500 | Construction Staking Curb Gutter and Curb & Gutter | LF | 2,798.000 | 2,798.000 |
| 1620 | 650.6500 | Construction Staking Structure Layout (structure) 01. B-40-766 | LS | 1.000 | 1.000 |
| 1630 | 650.6500 | Construction Staking Structure Layout (structure) 02. R-40-604 | LS | 1.000 | 1.000 |
| 1640 | 650.6500 | Construction Staking Structure Layout (structure) 03. R-40-605 | LS | 1.000 | 1.000 |
| 1650 | 650.7000 | Construction Staking Concrete Pavement | LF | 3,232.000 | 3,232.000 |
| 1660 | 650.7500 | Construction Staking Concrete Barrier | LF | 298.000 | 298.000 |
| 1670 | 650.8000 | Construction Staking Resurfacing Reference | LF | 4,905.000 | 4,905.000 |
| 1680 | 650.8500 | Construction Staking Electrical Installations (project) 01. Project ID 2140-13-70 | LS | 1.000 | 1.000 |
| 1690 | 650.9910 | Construction Staking Supplemental Control (project) 01. Project ID 2140-13-70 | LS | 1.000 | 1.000 |
| 1700 | 650.9920 | Construction Staking Slope Stakes | LF | 3,232.000 | 3,232.000 |
| 1710 | 652.0225 | Conduit Rigid Nonmetallic Schedule 40 2-Inch | LF | 1,245.000 | 1,245.000 |
| 1720 | 652.0230 | Conduit Rigid Nonmetallic Schedule 40 2 1/2-Inch | LF | 7,862.000 | 7,862.000 |
| 1730 | 652.0235 | Conduit Rigid Nonmetallic Schedule 40 3-Inch | LF | 2,369.000 | 2,369.000 |
| 1740 | 652.0405 | Conduit Reinforced Thermosetting Resin 2-Inch | LF | 350.000 | 350.000 |
| 1750 | 652.0610 | Conduit Special 2 1/2-Inch | LF | 275.000 | 275.000 |
| 1760 | 652.0700.S | Install Conduit into Existing Item | EACH | 2.000 | 2.000 |
| 1770 | 652.0800 | Conduit Loop Detector | LF | 4,150.000 | 4,150.000 |

3

DATE 14JUL16 E S T I M A T E O F Q U A N T I T I E S

| LINE NUMBER | ITEM | ITEM DESCRIPTION | UNIT | TOTAL | 2140-13-70 QUANTITY |
|---|---|---|---|---|---|
| 1780 | 653.0135 | Pull Boxes Steel 24x36-Inch | EACH | 6.000 | 6.000 |
| 1790 | 653.0140 | Pull Boxes Steel 24x42-Inch | EACH | 26.000 | 26.000 |
| 1800 | 653.0222 | Junction Boxes 18x12x6-Inch | EACH | 4.000 | 4.000 |
| 1810 | 653.0905 | Removing Pull Boxes | EACH | 23.000 | 23.000 |
| 1820 | 654.0101 | Concrete Bases Type 1 | EACH | 14.000 | 14.000 |
| 1830 | 654.0110 | Concrete Bases Type 10 | EACH | 4.000 | 4.000 |
| 1840 | 654.0113 | Concrete Bases Type 13 | EACH | 2.000 | 2.000 |
| 1850 | 654.0217 | Concrete Control Cabinet Bases Type 9 Special | EACH | 2.000 | 2.000 |
| 1860 | 655.0230 | Cable Traffic Signal 5-14 AWG | LF | 982.000 | 982.000 |
| 1870 | 655.0240 | Cable Traffic Signal 7-14 AWG | LF | 1,783.000 | 1,783.000 |
| 1880 | 655.0260 | Cable Traffic Signal 12-14 AWG | LF | 2,473.000 | 2,473.000 |
| 1890 | 655.0280 | Cable Traffic Signal 19-14 AWG | LF | 688.000 | 688.000 |
| 1900 | 655.0515 | Electrical Wire Traffic Signals 10 AWG | LF | 8,828.000 | 8,828.000 |
| 1910 | 655.0525 | Electrical Wire Traffic Signals 6 AWG | LF | 688.000 | 688.000 |
| 1920 | 655.0700 | Loop Detector Lead In Cable | LF | 13,827.000 | 13,827.000 |
| 1930 | 655.0800 | Loop Detector Wire | LF | 13,594.000 | 13,594.000 |
| 1940 | 656.0200 | Electrical Service Meter Breaker Pedestal (location) 01. CB1 - STH 181 & CTH E | LS | 1.000 | 1.000 |
| 1950 | 656.0200 | Electrical Service Meter Breaker Pedestal (location) 02. Temporary STH 181 & CTH E EB Ramps | LS | 1.000 | 1.000 |
| 1960 | 657.0100 | Pedestal Bases | EACH | 14.000 | 14.000 |
| 1970 | 657.0405 | Traffic Signal Standards Aluminum 3.5-FT | EACH | 2.000 | 2.000 |
| 1980 | 657.0420 | Traffic Signal Standards Aluminum 13-FT | EACH | 4.000 | 4.000 |
| 1990 | 657.0425 | Traffic Signal Standards Aluminum 15-FT | EACH | 2.000 | 2.000 |
| 2000 | 657.0430 | Traffic Signal Standards Aluminum 10-FT | EACH | 6.000 | 6.000 |
| 2010 | 657.1345 | Install Poles Type 9 | EACH | 4.000 | 4.000 |
| 2020 | 657.1355 | Install Poles Type 12 | EACH | 2.000 | 2.000 |
| 2030 | 657.1530 | Install Monotube Arms 30-FT | EACH | 4.000 | 4.000 |
| 2040 | 657.1545 | Install Monotube Arms 45-FT | EACH | 2.000 | 2.000 |
| 2050 | 657.6005.S | Anchor Assemblies Light Poles on Structures | EACH | 4.000 | 4.000 |
| 2060 | 658.0110 | Traffic Signal Face 3-12 Inch Vertical | EACH | 19.000 | 19.000 |
| 2070 | 658.0115 | Traffic Signal Face 4-12 Inch Vertical | EACH | 5.000 | 5.000 |
| 2080 | 658.0215 | Backplates Signal Face 3 Section 12-Inch | EACH | 19.000 | 19.000 |
| 2090 | 658.0220 | Backplates Signal Face 4 Section 12-Inch | EACH | 5.000 | 5.000 |
| 2100 | 658.0416 | Pedestrian Signal Face 16-Inch | EACH | 12.000 | 12.000 |
| 2110 | 658.0500 | Pedestrian Push Buttons | EACH | 14.000 | 14.000 |
| 2120 | 658.0600 | Led Modules 12-Inch Red Ball | EACH | 18.000 | 18.000 |
| 2130 | 658.0605 | Led Modules 12-Inch Yellow Ball | EACH | 18.000 | 18.000 |
| 2140 | 658.0610 | Led Modules 12-Inch Green Ball | EACH | 18.000 | 18.000 |
| 2150 | 658.0615 | Led Modules 12-Inch Red Arrow | EACH | 6.000 | 6.000 |
| 2160 | 658.0620 | Led Modules 12-Inch Yellow Arrow | EACH | 10.000 | 10.000 |
| 2170 | 658.0625 | Led Modules 12-Inch Green Arrow | EACH | 7.000 | 7.000 |
| 2180 | 658.0635 | Led Modules Pedestrian Countdown Timer 16-Inch | EACH | 12.000 | 12.000 |
| 2190 | 658.5069 | Signal Mounting Hardware (location) 01. STH 181 & CTH E | LS | 1.000 | 1.000 |
| 2200 | 661.0200 | Temporary Traffic Signals for Intersections (location) 01. STH 181 & CTH E WB Ramps | LS | 1.000 | 1.000 |

3

DATE 14JUL16 E S T I M A T E O F Q U A N T I T I E S

| LINE NUMBER | ITEM | ITEM DESCRIPTION | UNIT | TOTAL | 2140-13-70 QUANTITY |
|---|---|---|---|---|---|
| 2210 | 661.0200 | Temporary Traffic Signals for Intersections (location) 02. STH 181 & CTH E EB Ramps | LS | 1.000 | 1.000 |
| 2220 | 661.0300 | Generators | DAY | 4.000 | 4.000 |
| 2230 | 670.0100 | Field System Integrator | LS | 1.000 | 1.000 |
| 2240 | 670.0200 | ITS Documentation | LS | 1.000 | 1.000 |
| 2250 | 671.0112 | Conduit HDPE 1-Duct 2-Inch | LF | 3,880.000 | 3,880.000 |
| 2260 | 671.0212 | Conduit HDPE Directional Bore 1-Duct 2-Inch | LF | 1,220.000 | 1,220.000 |
| 2270 | 673.0105 | Communication Vault Type 1 | EACH | 9.000 | 9.000 |
| 2280 | 678.0036 | Install Fiber Optic Cable Outdoor Plant 36-CT | LF | 6,495.000 | 6,495.000 |
| 2290 | 678.0200 | Fiber Optic Splice Enclosure | EACH | 3.000 | 3.000 |
| 2300 | 678.0300 | Fiber Optic Splice | EACH | 84.000 | 84.000 |
| 2310 | 678.0400 | Fiber Optic Termination | EACH | 12.000 | 12.000 |
| 2320 | 678.0500 | Communication System Testing | LS | 1.000 | 1.000 |
| 2330 | 690.0150 | Sawing Asphalt | LF | 1,872.000 | 1,872.000 |
| 2340 | 690.0250 | Sawing Concrete | LF | 6,045.000 | 6,045.000 |
| 2350 | 715.0415 | Incentive Strength Concrete Pavement | DOL | 970.000 | 970.000 |
| 2360 | 715.0502 | Incentive Strength Concrete Structures | DOL | 6,630.000 | 6,630.000 |
| 2370 | ASP.1T0A | On-the-Job Training Apprentice at $5.00/HR | HRS | 3,600.000 | 3,600.000 |
| 2380 | ASP.1T0G | On-the-Job Training Graduate at $5.00/HR | HRS | 2,000.000 | 2,000.000 |
| 2390 | SPV.0060 | Special 01. Pavement Marking Arrows Grooved Preformed Thermoplastic Type 2 | EACH | 18.000 | 18.000 |
| 2400 | SPV.0060 | Special 02. Pavement Marking Arrows Grooved Preformed Thermoplastic Type 3 | EACH | 2.000 | 2.000 |
| 2410 | SPV.0060 | Special 03. Pavement Marking Words Grooved Preformed Thermoplastic | EACH | 15.000 | 15.000 |
| 2420 | SPV.0060 | Special 04. Adjust Sanitary Sewer Manholes | EACH | 24.000 | 24.000 |
| 2430 | SPV.0060 | Special 05. Internal Sanitary Manhole Seal | EACH | 24.000 | 24.000 |
| 2440 | SPV.0060 | Special 06. Adjusting Water Boxes | EACH | 55.000 | 55.000 |
| 2450 | SPV.0060 | Special 07. Landmark Reference Monument Special | EACH | 7.000 | 7.000 |
| 2460 | SPV.0060 | Special 08. Adjusting TES Manhole Covers | EACH | 16.000 | 16.000 |
| 2470 | SPV.0060 | Special 09. 4' Diameter Manhole Type TES | EACH | 2.000 | 2.000 |
| 2480 | SPV.0090 | Special 01. Sawing Curb Head | LF | 200.000 | 200.000 |
| 2490 | SPV.0090 | Special 02. 4-Duct Conduit, Cement Encased, 4-Inch Rigid Nonmetallic Conduit DB-60 | LF | 518.000 | 518.000 |
| 2500 | SPV.0090 | Special 03. Removing Existing Timber Piling | LF | 840.000 | 840.000 |
| 2510 | SPV.0090 | Special 04. Railing Tubular Steel Galvanized Pedestrian R-40-604 | LF | 231.000 | 231.000 |
| 2520 | SPV.0090 | Special 05. Railing Tubular Steel Galvanized Pedestrian R-40-605 | LF | 206.000 | 206.000 |
| 2530 | SPV.0090 | Special 06. Pavement Marking Grooved Preformed Thermoplastic Stop Line 18-Inch | LF | 754.000 | 754.000 |
| 2540 | SPV.0090 | Special 07. Pavement Marking Grooved Preformed Thermoplastic Crosswalk 6-Inch | LF | 3,135.000 | 3,135.000 |
| 2550 | SPV.0090 | Special 08. Concrete Curb & Gutter 30-Inch (Modified) | LF | 2,923.000 | 2,923.000 |
| 2560 | SPV.0090 | Special 09. Concrete Curb & Gutter 30-Inch (HMA Overlay) | LF | 528.000 | 528.000 |

3

DATE 14JUL16 E S T I M A T E O F Q U A N T I T I E S

| LINE NUMBER | ITEM | ITEM DESCRIPTION | UNIT | TOTAL | 2140-13-70 QUANTITY |
|---|---|---|---|---|---|
| 2570 | SPV.0090 | Special 10. Longitudinal Joint Repair | LF | 1,500.000 | 1,500.000 |
| 2580 | SPV.0105 | Special 01. Remove Traffic Signals (STH 181 & CTH E) | LS | 1.000 | 1.000 |
| 2590 | SPV.0105 | Special 02. Remove Loop Detector Wire and Lead- In Cable, STH 181 & W. Villard Ave | LS | 1.000 | 1.000 |
| 2600 | SPV.0105 | Special 03. Remove Loop Detector Wire and Lead- In Cable, STH 181 & Fond Du Lac Ave | LS | 1.000 | 1.000 |
| 2610 | SPV.0105 | Special 04. Remove Loop Detector Wire and Lead- In Cable, STH 181 & CTH E | LS | 1.000 | 1.000 |
| 2620 | SPV.0105 | Special 05. Remove Loop Detector Wire and Lead- In Cable, STH 181 & Florist Ave | LS | 1.000 | 1.000 |
| 2630 | SPV.0105 | Special 08. Transporting Traffic Signal Materials, STH 181 & CTH E | LS | 1.000 | 1.000 |
| 2640 | SPV.0105 | Special 09. Install Fiber Optic Communications in Cabinet, STH 181 & W. Villard Ave | LS | 1.000 | 1.000 |
| 2650 | SPV.0105 | Special 10. Install Fiber Optic Communications in Cabinet, STH 181 & Fond Du Lac Ave | LS | 1.000 | 1.000 |
| 2660 | SPV.0105 | Special 11. Install Fiber Optic Communications in Cabinet, STH 181 & CTH E | LS | 1.000 | 1.000 |
| 2670 | SPV.0105 | Special 12. Remove Light Pole & Reconnect Lighting Circuit | LS | 1.000 | 1.000 |
| 2680 | SPV.0105 | Special 13. Metalizing B-40-766 | LS | 1.000 | 1.000 |
| 2690 | SPV.0105 | Special 14. Concrete Pavement Joint Layout | LS | 1.000 | 1.000 |
| 2700 | SPV.0105 | Special 15. Transport & Install Traffic Signal Cabinet Materials, STH 181 & CTH E | LS | 1.000 | 1.000 |
| 2710 | SPV.0105 | Special 16. Transport & Install State Furnished Radar Detection System, STH 181 & CTH E | LS | 1.000 | 1.000 |
| 2720 | SPV.0165 | Special 01. Wall Concrete Panel Mechanically Stabilized Earth **P** | SF | 5,487.000 | 5,487.000 |
| 2730 | SPV.0195 | Special 01. HMA Pavement 3 MT 58-28 S 3% VA Regression Special | TON | 5,557.000 | 5,557.000 |
| 2740 | SPV.0195 | Special 02. HMA Pavement 4 MT 58-28 S 3% VA Regression Special | TON | 4,384.000 | 4,384.000 |

3

3

3

## CLEARING AND GRUBBING

| STREET | STATION | TO | STATION | OFFSET | CAT 10 201.0105 CLEARING STA | CAT 10 201.0120 CLEARING ID | CAT 10 201.0205 GRUBBING STA | CAT 10 201.0220 GRUBBING ID |
|---|---|---|---|---|---|---|---|---|
| STH 181 | 87+23 | - | 104+00 | LT | - | 21 | - | 21 |
| STH 181 | 104+00 | - | 115+55 | LT & RT | - | - | - | - |
| STH 181 | 115+55 | - | 126+46 | LT & RT | - | 105 | - | 105 |
| STH 181 | 126+46 | - | 139+90 | LT & RT | 1 | 17 | 1 | 17 |
| STH 181 | 139+90 | - | 147+19 | LT & RT | - | - | - | - |
| RAMP NW | 100+86B | - | 107+08B | LT & RT | 1 | - | 1 | - |
| RAMP NE | 100+44C | - | 106+69C | LT & RT | - | - | - | - |
| RAMP SE | 100+80D | - | 106+04D | RT | - | 6 | - | 6 |
| RAMP SW | 99+22E | - | 104+04E | LT & RT | 2 | - | 2 | - |
| | | | | PROJECT TOTALS | 4 | 149 | 4 | 149 |

## REMOVING PAVEMENT

| STREET | FROM | TO | CAT 10 204.0100 SY |
|---|---|---|---|
| STH 181 | 87+23 | 104+00 | 615 |
| STH 181 | 104+00 | 115+55 | 299 |
| STH 181 | 115+55 | 126+46 | 9,253 |
| STH 181 | 126+46 | 139+90 | 206 |
| STH 181 | 139+90 | 147+19 | 133 |
| RAMP NW | 100+86B | 107+08B | 1,802 |
| RAMP NE | 100+44C | 106+69C | 1,950 |
| RAMP SE | 100+80D | 106+04D | 1,475 |
| RAMP SW | 99+22E | 104+04E | 1,194 |
| SILVER SPRING DRIVE | 170+74 | 172+70 | 590 |
| | | PROJECT TOTAL | 16,927 |

3

## REMOVING ASPHALTIC SURFACE MILLING

| STREET | FROM | TO | DEPTH (IN) | CAT 10 204.0125 TONS |
|---|---|---|---|---|
| STH 181 | 87+23 | 104+00 | 3.5 | 2976 |
| STH 181 | 104+00 | 115+55 | 3.5 | 1613 |
| STH 181 | 115+55 | 126+46 | 3.5 | 0 |
| STH 181 | 126+46 | 139+90 | 3.5 | 2359 |
| STH 181 | 139+90 | 147+19 | 3.5 | 1417 |
| SILVER SPRING | 169+38.76 | 170+82.83 | 2.5 | 68 |
| | | | PROJECT TOTAL | 8433 |

## REMOVING CURB & GUTTER

| STREET | FROM | | TO | CAT 10 204.0150 LF |
|---|---|---|---|---|
| STH 181 | 121+00 | - | 136+00 | 725 |
| STH 181 | 104+00 | - | 115+55 | 839 |
| STH 181 | 115+55 | - | 126+46 | 0 |
| STH 181 | 126+46 | - | 139+90 | 594 |
| STH 181 | 139+90 | - | 147+19 | 549 |
| SILVER SPRING | 168+55 A | - | 171+48 A | 451 |
| | | | PROJECT TOTAL | 3,158 |

## REMOVING CONCRETE SIDEWALK

| STREET | FROM | | TO | CAT 10 204.0155 SY | CAT 60 204.0155 SY |
|---|---|---|---|---|---|
| STH 181 | 87+23 | - | 104+00 | 420 | 478 |
| STH 181 | 104+00 | - | 115+55 | 294 | 166 |
| STH 181 | 115+55 | - | 126+46 | 1,384 | 0 |
| STH 181 | 126+46 | - | 139+90 | 259 | 516 |
| STH 181 | 139+90 | - | 147+19 | 478 | 144 |
| RAMP NW | 100+86B | - | 107+08B | 340 | 0 |
| RAMP NE | 100+44C | - | 106+69C | 355 | 0 |
| RAMP SE | 100+80D | - | 106+04D | 53 | 0 |
| RAMP SW | 99+22E | - | 104+04E | 257 | 0 |
| SILVER SPRING | 169+52A | - | 170+70A | 163 | 0 |
| | | | PROJECT TOTAL | 4,001 | 1,304 |

## REMOVING GUARDRAIL

| STREET | FROM | | TO | CAT 10 204.0165 LF |
|---|---|---|---|---|
| STH 181 | 101+62 | - | 102+32 | 70 |
| STH 181 | 105+68 | - | 106+38 | 70 |
| | | | PROJECT TOTAL | 140 |

## REMOVING FENCE

| STREET | FROM | | TO | CAT 10 204.0170 LF |
|---|---|---|---|---|
| STH 181 | 115+50 | - | 116+90 | 140 |
| | | | PROJECT TOTAL | 140 |

## REMOVING MANHOLES

| STRUCTURE NO. | STATION | OFFSET | 204.0210 EACH |
|---|---|---|---|
| 705 | 122+46 | 53' LT | 1 |
| 711 | 122+45 | 63' RT | 1 |
| 720 | 170+80 A | 2' LT | 1 |
| | | PROJECT TOTAL | 3 |

## REMOVING INLETS

| STRUCTURE NO. | STATION | OFFSET | 204.0220 EACH |
|---|---|---|---|
| 700 | 115+80 | 6' RT | 1 |
| 701 | 117+47 | 1' RT | 1 |
| 703 | 119+65 | 96' RT | 1 |
| 704 | 121+94 | 48' LT | 1 |
| 706 | 122+69 | 50' LT | 1 |
| 707 | 122+75 | 76' LT | 1 |
| 708 | 122+32 | 86' LT | 1 |
| 709 | 121+93 | 48' RT | 1 |
| 710 | 122+31 | 90' RT | 1 |
| 712 | 122+78 | 78' RT | 1 |
| 713 | 101+32 E | 2' RT | 1 |
| 714 | 101+60 E | 2' RT | 1 |
| 715 | 102+30 C | 2' RT | 1 |
| 716 | 102+01 C | 2' RT | 1 |
| 717 | 140+84 | 48' LT | 1 |
| 718 | 170+25 A | 7' LT | 1 |
| 719 | 170+70 A | 7' LT | 1 |
| 720 | 122+45 | 5' LT | 1 |
| | | PROJECT TOTAL | 18 |

## REMOVING STORM SEWER (12-INCH)

| STATION | - | STATION | LOCATION | 204.0245 LF |
|---|---|---|---|---|
| 115+80 | - | 117+47 | RT | 167 |
| 119+34 | - | 119+65 | RT | 31 |
| 121+94 | - | 122+46 | LT | 52 |
| 122+69 | - | 122+46 | LT | 24 |
| 122+75 | - | 122+46 | LT | 37 |
| 122+32 | - | 122+46 | LT | 36 |
| 122+46 | - | 122+45 | LT & RT | 115 |
| 121+93 | - | 122+45 | RT | 54 |
| 122+31 | - | 122+45 | RT | 31 |
| 122+78 | - | 122+45 | RT | 35 |
| 122+45 | - | 122+65 | RT | 20 |
| 101+60 E | - | 101+32 E | RT | 28 |
| 101+32 E | - | 101+33 E | RT & LT | 25 |
| 102+30 C | - | 102+01 C | RT | 29 |
| 102+01 C | - | 100+97 C | RT & LT | 107 |
| 170+70 A | - | 170+80 A | LT | 11 |
| 170+80 A | - | 170+80 A | LT | 6 |
| | | | PROJECT TOTAL | 808 |

ALL QUANTITIES ARE CATEGORY 10 UNLESS OTHERWISE NOTED

3

EARTHWORK SUMMARY - CATEGORY 0010

| Stage | From/To Station | Location | Common Excavation (1) Cut (2) | (item # 205.0100) EBS Excavation (3) | Salvaged/ Unusable Pavement Material (4) | Available Material (5) | Unexpanded Fill | Expanded Fill (6) Factor 1.25 | Breaker Run (7) (item # 310.0110) | Mass Ordinate +/- (8) | Waste | Borrow (9) (item # 208.0100 ) | Comment: |
|---|---|---|---|---|---|---|---|---|---|---|---|---|---|
| | | | CY | CY | CY | CY | CY | CY | TON | CY | CY | CY | |
| STAGE 1 | 113+50 TO 118+00 | STH 181 (CROSSOVER WORK ONLY) | 351 | 0 | 19 | 332 | 35 | 44 | - | 288 | 288 | - | STAGE 1 WORK ASSUMES EARTHWORK |
| | 119+50 TO 120+00 | STH 181/SE RAMP ISLAND | 10 | 0 | 5 | 5 | 1 | 1 | - | 4 | 4 | - | QUANTITIES FOR TEMPORARY |
| | 124+25 TO 129+25 | STH 181 (CROSSOVER WORK ONLY) | 324 | 0 | 49 | 275 | 32 | 41 | - | 234 | 234 | - | CROSSOVER INSTALLATION ONLY. |
| STAGE 1 SUBTOTAL | | | 685 | 0 | 73 | 612 | 69 | 86 | - | 526 | 526 | 0 | |
| STAGE 2 | 87+23 TO 115+56 | STH 181 (MEDIAN WORK SOUTH OF RECONSTRUCTION) | 355 | 0 | 114 | 240 | 0 | 35 | - | 205 | | | |
| | 115+56 TO 126+46 | STH 181 (SOUTHBOUND RECONSTRUCTION) | 1299 | 0 | 1146 | 153 | 2075 | 2594 | - | -2441 | | | |
| | 126+46 TO 147+20 | STH 181 (MEDIAN WORK NORTH OF RECONSTRUCTION) | 8 | 0 | 0 | 8 | 1 | 1 | - | 7 | | | |
| | 101+00B TO 107+07B | RAMP NW | 728 | 0 | 562 | 166 | 1221 | 1526 | - | -1360 | | | |
| | 99+22E TO 104+25E | RAMP SW | 591 | 0 | 399 | 192 | 666 | 833 | - | -641 | | | |
| | 168+60 TO 170+00 | W. SILVER SPRING DRIVE (WEST OF STRUCTURE) | 202 | 0 | 84 | 118 | 0 | 0 | - | 118 | | | |
| STAGE 2 SUBTOTAL | | | 3182 | 0 | 2304 | 878 | 3963 | 4990 | - | -4112 | 0 | 4112 | |
| STAGE 3 | 87+23 TO 115+56 | STH 181 (OUTSIDE WORK SOUTH OF RECONSTRUCTION) | 917 | 0 | 130 | 787 | 92 | 115 | - | 673 | | | |
| | 115+56 TO 126+46 | STH 181 (NORTHBOUND RECONSTRUCTION) | 1187 | 0 | 1034 | 153 | 2370 | 2962 | - | -2809 | | | |
| | 126+46 TO 147+20 | STH 181 (OUTSIDE WORK NORTH OF RECONSTRUCTION) | 785 | 0 | 93 | 693 | 79 | 98 | - | 594 | | | |
| | 100+45C TO 106+50C | RAMP NE | 832 | 0 | 598 | 234 | 1353 | 1691 | - | -1457 | | | |
| | 101+00D TO 106+04D | RAMP SE | 628 | 0 | 449 | 180 | 1028 | 1285 | - | -1106 | | | |
| | 170+00 TO 171+48 | W. SILVER SPRING DRIVE (EAST OF STRUCTURE) | 230 | 0 | 95 | 135 | 0 | 0 | - | 135 | | | |
| STAGE 3 SUBTOTAL | | | 4580 | 0 | 2397 | 2182 | 4921 | 6152 | - | -3970 | 0 | 3970 | |
| STAGE 4 | 113+50 TO 115+56 | STH 181 (CROSSOVER REMOVAL AND MEDIAN WORK) | 79 | 0 | 79 | 0 | 8 | 10 | - | -10 | - | 10 | |
| | 115+56 TO 126+46 | STH 181 (MEDIAN RECONSTRUCTION) | 1036 | 0 | 891 | 145 | 825 | 1031 | - | -886 | - | 886 | |
| | 126+46 TO 129+25 | STH 181 (CROSSOVER REMOVAL AND MEDIAN WORK) | 70 | 0 | 70 | 0 | 7 | 9 | - | -9 | - | 9 | |
| STAGE 4 SUBTOTAL | | | 1186 | 0 | 1041 | 145 | 840 | 1050 | - | -905 | 0 | 905 | |
| UNDISTRIBUTED | | | 0 | 1000 | 0 | 0 | 0 | 0 | 1800 | 0 | 0 | 0 | |
| | | | 9632 | 1000 | | | | | | | | | |
| CATEGORY 0010 TOTAL | | | Total Common Ex | 10632 | 5816 | 3816 | 9793 | 12277 | 1800 | -8460 | 526 | 8987 | |

1) Common Excavation is the sum of the Cut and EBS Excavation columns. Item number 205.0100
2) Salvaged/Unsuable Pavement Material is included in Cut.
3) EBS Excavation to be backfilled with Breaker Run material. Note: Quantities for Breaker Run shown elsewhere in plans.
4) Salvaged/Unusable Pavement Material
5) Available Material = Cut - Salvaged/Unusuable Pavement Material
6) Expanded Fill. Factor = 1.25
7) Breaker Run = 1.8 Ton/CY of EBS (Column 3)
8) The Mass Ordinate + or - Qty calculated for the Division. Plus quantity indicates an excess of material within the Division. Minus indicates a shortage of material within the Division.
9) Borrow Excavation.

ALL QUANTITIES ARE CATEGORY 10 UNLESS OTHERWISE NOTED

3

## BACKFILL GRANULAR

| STREET | CAT 10 209.0100 CY |
|---|---|
| UNDISTRIBUTED | 10 |
| | 10 |

## BACKFILL CONTROLLED LOW STRENGTH

| STREET | CAT 10 209.0200.S CY | CAT 60 209.0200.S CY |
|---|---|---|
| SILVER SPRING DRIVE | - | 10 |
| UNDISTRIBUTED | 10 | - |
| | 10 | 10 |

## FINISHING ROADWAY (2140-13-70)

| STREET | CAT 10 213.0100 EACH |
|---|---|
| PROJECT 2140-13-70 | 1 |
| | 1 |

## BASE AGGREGATE OPEN GRADED

| STREET | FROM | | TO | 310.0110 TON |
|---|---|---|---|---|
| SILVER SPRING | 168+55 A | - | 171+48 A | 162 |
| | | | PROJECT TOTAL | 162 |

## BASE PATCHING

| STREET | FROM | | TO | BASE PATCHING 390.0103 SY | BASE PATCHING CONCRETE SHES 390.0403 SY |
|---|---|---|---|---|---|
| STH 181 | 87+23 | - | 104+00 | 669 | 35 |
| STH 181 | 104+00 | - | 115+55 | 521 | 27 |
| STH 181 | 115+55 | - | 126+46 | 0 | 0 |
| STH 181 | 126+46 | - | 139+90 | 744 | 39 |
| STH 181 | 139+90 | - | 147+19 | 327 | 17 |
| UNDISTRIBUTED | | | | 226 | 12 |
| | | | PROJECT TOTAL | 2,486 | 131 |

## BASE AGGREGATE DENSE 1-1/4 INCH

| STREET | FROM | | TO | CAT 10 305.0120 TON | CAT 60 305.0120 TON |
|---|---|---|---|---|---|
| STH 181 | 87+23 | - | 104+00 | 504 | 100 |
| STH 181 | 104+00 | - | 115+55 | 506 | 36 |
| STH 181 | 115+55 | - | 126+46 | 4,062 | 0 |
| STH 181 | 126+46 | - | 139+90 | 394 | 114 |
| STH 181 | 139+90 | - | 147+19 | 242 | 30 |
| RAMP NW | 100+86B | - | 107+08B | 726 | 0 |
| RAMP NE | 100+44C | - | 106+69C | 864 | 0 |
| RAMP SE | 100+80D | - | 106+04D | 590 | 0 |
| RAMP SW | 99+22E | - | 104+04E | 566 | 0 |
| SILVER SPRING DRIVE | 168+55A | - | 171+48A | 254 | 0 |
| TEMPORARY CROSSOVER | 113+50 | - | 129+25 | 686 | 0 |
| | | | CATEGORY TOTALS | 9,394 | 280 |
| | | | PROJECT TOTAL | 9674 | |

** ADDITIONAL QUANTITY SHOWN ELSEWHERE IN PLANS (STRUCTURE)

## CONCRETE BASE 9-INCH

| STREET | FROM | TO | CAT 10 320.0155 SY |
|---|---|---|---|
| STH 181 | 87+23 | 104+00 | 279 |
| STH 181 | 104+00 | 115+55 | 139 |
| STH 181 | 115+55 | 126+46 | 0 |
| STH 181 | 126+46 | 139+90 | 0 |
| STH 181 | 139+90 | 147+19 | 0 |
| RAMP NW | 100+86B | 107+08B | 0 |
| RAMP NE | 100+44C | 106+69C | 0 |
| RAMP SE | 100+80D | 106+04D | 0 |
| RAMP SW | 99+22E | 104+04E | 0 |
| | | PROJECT TOTAL | 419 |

## CONCRETE PAVEMENT 7-INCH

| STREET | FROM | TO | CAT 10 415.0070 SY |
|---|---|---|---|
| STH 181 | 87+23 | 104+00 | 0 |
| STH 181 | 104+00 | 115+55 | 0 |
| STH 181 | 115+55 | 126+46 | 0 |
| STH 181 | 126+46 | 139+90 | 0 |
| STH 181 | 139+90 | 147+19 | 0 |
| RAMP NW | 100+86B | 107+08B | 1,361 |
| RAMP NE | 100+44C | 106+69C | 1,770 |
| RAMP SE | 100+80D | 106+04D | 1,236 |
| RAMP SW | 99+22E | 104+04E | 1,129 |
| | | PROJECT TOTAL | 5,495 |

ALL QUANTITIES ARE CATEGORY 10 UNLESS OTHERWISE NOTED

3

## CONCRETE PAVEMENT 9 1/2-INCH

| STREET | FROM | TO | CAT 10 CONCRETE PAVEMENT 9 1/2-INCH 415.0095 SY | CAT 10 CONCRETE PAVEMENT HES 9 1/2-INCH 415.1095 SY |
|---|---|---|---|---|
| STH 181 | 87+23 | 104+00 | 267 | 0 |
| STH 181 | 104+00 | 115+55 | 107 | 0 |
| STH 181 | 115+55 | 126+46 | 7,577 | 350 |
| STH 181 | 126+46 | 139+90 | 160 | 0 |
| STH 181 | 139+90 | 147+19 | 107 | 0 |
| RAMP NW | 100+86B | 107+08B | 0 | 0 |
| RAMP NE | 100+44C | 106+69C | 0 | 0 |
| RAMP SE | 100+80D | 106+04D | 0 | 0 |
| RAMP SW | 99+22E | 104+04E | 0 | 0 |
| | | PROJECT TOTAL | 8,217 | 350 |

## CONCRETE PAVEMENT GAPS

| STATION | 415.0210 EACH |
|---|---|
| 124+00 - 126+00 | 3 |
| PROJECT TOTAL | 3 |

## CONCRETE PAVEMENT APPOACH SLAB

| STATION | 415.0410 SY |
|---|---|
| 120+09.75 TO 120+24.75 | 157 |
| 121+83.25 TO 121+98.25 | 157 |
| PROJECT TOTAL | 314 |

## DRILLED TIE BARS

| STREET | FROM | | TO | CAT 10 416.0610 EACH |
|---|---|---|---|---|
| STH 181 | 87+23 | - | 104+00 | 691 |
| STH 181 | 104+00 | - | 115+55 | 577 |
| STH 181 | 115+55 | - | 126+46 | 30 |
| STH 181 | 126+46 | - | 139+90 | 541 |
| STH 181 | 139+90 | - | 147+19 | 335 |
| RAMP NW | 100+86B | - | 107+08B | 4 |
| RAMP NE | 100+44C | - | 106+69C | 2 |
| RAMP SE | 100+80D | - | 106+04D | 2 |
| RAMP SW | 99+22E | - | 104+04E | 7 |
| SILVER SPRING DRIVE | 167+50 | - | 172+70 | 284 |
| STH 181 CURB (HMA OVERLAY AND MODIFIED ONLY) | 87+23 | - | 147+19 | 1,056 |
| | | | PROJECT TOTAL | 3,528 |

3

## CONCRETE DRIVEWAY HES 7-INCH

| STREET | FROM | TO | CAT 10 416.0270 SY |
|---|---|---|---|
| STH 181 | 87+23 | 104+00 | 157 |
| STH 181 | 104+00 | 115+55 | 46 |
| STH 181 | 115+55 | 126+46 | 80 |
| STH 181 | 126+46 | 139+90 | 37 |
| STH 181 | 139+90 | 147+19 | 80 |
| | | PROJECT TOTALS | 400 |

## ASPHALTIC PAVEMENT

| STREET | FROM | | TO | CAT 10 455.0605 TACK COAT GAL | CAT 70 SPV.0195.01 HMA PAVEMENT 3 MT 58-28 S 3% VA REGRESSION SPECIAL TON | CAT 70 SPV.0195.02 HMA PAVEMENT 4 MT 58-28 S 3% VA REGRESSION SPECIAL TON | CAT 10 465.0120 ASPHALTIC SURFACE DRIVEWAYS AND FIELD ENTRANCES TON | CAT 10 465.0125 ASPHALTIC SURFACE TEMPORARY TON |
|---|---|---|---|---|---|---|---|---|
| STH 181 | 87+23 | - | 104+00 | 3176 | 1965 | 1529 | 0 | 0 |
| STH 181 | 104+00 | - | 115+55 | 1712 | 1059 | 824 | 0 | 66 |
| STH 181 | 115+55 | - | 126+46 | 0 | 0 | 0 | 38 | 166 |
| STH 181 | 126+46 | - | 139+90 | 2456 | 1519 | 1182 | 1 | 59 |
| STH 181 | 139+90 | - | 147+19 | 1478 | 915 | 712 | 0 | 0 |
| SILVER SPRING | 170+48 | - | 172+70 | 302 | 99 | 138 | 0 | 0 |
| PROJECT TOTALS | | | | 9124 | 5557 | 4384 | 39 | 291 |

## DRILLED DOWEL BARS

| STREET | FROM | | TO | CAT 10 416.0620 EACH |
|---|---|---|---|---|
| STH 181 | 87+23 | - | 104+00 | 1,552 |
| STH 181 | 104+00 | - | 115+55 | 1,152 |
| STH 181 | 115+55 | - | 126+46 | 0 |
| STH 181 | 126+46 | - | 139+90 | 1,616 |
| STH 181 | 139+90 | - | 147+19 | 720 |
| UNDISTRIBUTED | | | | 5,040 |
| | | | PROJECT TOTAL | 10,080 |

## CONCRETE CURB & GUTTER
(ALL ITEMS CAT 10)

| STREET | FROM | TO | CONCRETE CURB TYPE D 601.0110 LF | 30-INCH TYPE A 601.0409 LF | 30-INCH TYPE D 601.0411 LF | CONCRETE CURB PEDESTRIAN 601.0600 LF | 30-INCH MODIFIED SPV.0090.08 LF | 30-INCH HMA OVERLAY SPV.0090.09 LF |
|---|---|---|---|---|---|---|---|---|
| STH 181 | 87+23 | 104+00 | 0 | 487 | 0 | 15 | 579 | 166 |
| STH 181 | 104+00 | 115+55 | 0 | 0 | 0 | 6 | 1001 | 92 |
| STH 181 | 115+55 | 126+46 | 0 | 3548 | 0 | 0 | 0 | 0 |
| STH 181 | 126+46 | 139+90 | 0 | 0 | 0 | 0 | 702 | 71 |
| STH 181 | 139+90 | 147+19 | 0 | 30 | 0 | 0 | 541 | 99 |
| RAMP NW | 100+86B | 107+08B | 0 | 1193 | 0 | 0 | 0 | 0 |
| RAMP NE | 100+44C | 106+69C | 0 | 1190 | 0 | 0 | 0 | 0 |
| RAMP SE | 100+80D | 106+04D | 0 | 1034 | 0 | 0 | 0 | 0 |
| RAMP SW | 99+22E | 104+04E | 0 | 777 | 0 | 0 | 0 | 0 |
| SILVER SPRING DRIVE | 16859 | 17148 | 18 | 0 | 176 | 0 | 0 | 0 |
| UNDISTRIBUTED | 8723 | 14719 | 0 | 0 | 0 | 0 | 100 | 100 |
| | | PROJECT TOTAL | 18 | 8,259 | 176 | 21 | 2,923 | 528 |

ALL QUANTITIES ARE CATEGORY 10 UNLESS OTHERWISE NOTED

3

## CONCRETE SIDEWALK 5-INCH

| STREET | FROM | | TO | CAT 10 602.0410 SF | CAT 60 602.0410 SF |
|---|---|---|---|---|---|
| STH 181 | 87+23 | - | 104+00 | 2,578 | 4,038 |
| STH 181 | 104+00 | - | 115+55 | 2,761 | 1,498 |
| STH 181 | 115+55 | - | 126+46 | 12,335 | 0 |
| STH 181 | 126+46 | - | 139+90 | 2,349 | 4,644 |
| STH 181 | 139+90 | - | 147+19 | 2,781 | 1,196 |
| RAMP NW | 100+86B | - | 107+08B | 3,029 | 0 |
| RAMP NE | 100+44C | - | 106+69C | 3,113 | 0 |
| RAMP SE | 100+80D | - | 106+04D | 268 | 0 |
| RAMP SW | 99+22E | - | 104+04E | 2,403 | 0 |
| SILVER SPRING | 169+53A | - | 170+68A | 798 | 0 |
| | | | CATEGORY TOTAL | 32,415 | 11,376 |
| | | | PROJECT TOTAL | 43,791 | |

## CURB RAMP DETECTABLE WARNING FIELD YELLOW

| STREET | FROM | TO | CAT 10 602.0505 SF |
|---|---|---|---|
| STH 181 | 87+23 | 104+00 | 100 |
| STH 181 | 104+00 | 115+55 | 180 |
| STH 181 | 115+55 | 126+46 | 224 |
| STH 181 | 126+46 | 139+90 | 120 |
| STH 181 | 139+90 | 147+19 | 80 |
| | | PROJECT TOTAL | 704 |

## CONCRETE STEPS

| STATION | 602.1500 SF |
|---|---|
| 117+95 RT | 16 |
| | 16 |

3

## CONCRETE BARRIER TYPE S42

| STREET | FROM | TO | OFFSET | 603.1142 LF |
|---|---|---|---|---|
| SILVER SPRING | 169+17.91 | 169+28.41 | RT | 10.5 |
| SILVER SPRING | 170+91.42 | 171+01.92 | LT | 10.5 |
| | | | PROJECT TOTAL | 21 |

## CONCRETE BARRIER TYPE S56

| STREET | FROM | TO | OFFSET | 603.1156 LF |
|---|---|---|---|---|
| SILVER SPRING | 169+53.74 | 170+67.74 | RT | 114.0 |
| SILVER SPRING | 169+53.68 | 170+67.68 | LT | 114.0 |
| | | | PROJECT TOTAL | 228 |

## CONCRETE BARRIER TRANSITION TYPE S42 TO S56

| STREET | FROM | TO | OFFSET | 603.3559 EACH |
|---|---|---|---|---|
| SILVER SPRING | 169+28.55 | 169+53.05 | RT | 1 |
| SILVER SPRING | 170+67.11 | 170+91.61 | LT | 1 |
| | | | PROJECT TOTAL | 2 |

## TEMPORARY BARRIER ITEMS

| CATEGORY | STAGE | LOCATION | STATION | OFFSET | TO | STATION | OFFSET | ALIGNMENT | 603.8000 CONCRETE BARRIER TEMPORARY PRECAST DELIVERED LF | 603.8125 CONCRETE BARRIER TEMPORARY PRECAST INSTALLED LF | 614.0905 CRASH CUSHIONS TEMPORARY EACH | BACK WIDTH FT | OBJECT MARKING PATTERN | CRASH TEST LEVEL | TRAFFIC DIRECTION | TRAFFIC LOCATION | CRASH CUSHION SHIELDS |
|---|---|---|---|---|---|---|---|---|---|---|---|---|---|---|---|---|---|
| 0010 | 2 | STH 181 | | | | | | | | | | | | | | | |
| | | | 119+74 | 5' RT | - | 122+29 | 5' RT | 76TH STREET | 255 | 255 | 1 | 2 | OM-3R | TL-2 | BIDIRECTIONAL | L | TEMPORARY CONCRETE BARRIER |
| | | SILVER SPRING DRIVE | | | | | | | | | | | | | | | |
| | | | 167+00 | 17' RT | - | 171+50 | 19' RT | A | 445 | 445 | 1 | 2 | OM-3L | TL-2 | UNIDIRECTIONAL | R | TEMPORARY CONCRETE BARRIER |
| | | | 168+21 | 19' LT | - | 173+37 | 18' LT | A | 524 | 524 | 1 | 2 | OM-3L | TL-2 | UNIDIRECTIONAL | R | TEMPORARY CONCRETE BARRIER |
| | | SUBTOTAL | | | | | | | 1,224 | 1,224 | 3 | | | | | | |
| | 2B | SILVER SPRING DRIVE | | | | | | | | | | | | | | | |
| | | | 168+33 | 23' RT | - | 171+82 | 23' RT | A | 341 | 341 | 1 | 2 | OM-3R | TL-2 | UNIDIRECTIONAL | L | TEMPORARY CONCRETE BARRIER |
| | | | 168+63 | 23' LT | - | 171+70 | 23' LT | A | 316 | 316 | 1 | 2 | OM-3R | TL-2 | UNIDIRECTIONAL | L | TEMPORARY CONCRETE BARRIER |
| | | SUBTOTAL | | | | | | | 657 | 657 | 2 | | | | | | |
| | 3 | STH 181 | | | | | | | | | | | | | | | |
| | | | 119+80 | 5' LT | - | 122+29 | 5' LT | 76TH STREET | 249 | 249 | 1 | 2 | OM-3R | TL-2 | BIDIRECTIONAL | L | TEMPORARY CONCRETE BARRIER |
| | | SILVER SPRING DRIVE | | | | | | | | | | | | | | | |
| | | | 167+00 | 17' RT | - | 171+50 | 19' RT | A | 445 | 445 | 1 | 2 | OM-3L | TL-2 | UNIDIRECTIONAL | R | TEMPORARY CONCRETE BARRIER |
| | | | 168+87 | 19' LT | - | 173+37 | 19' LT | A | 455 | 455 | 1 | 2 | OM-3L | TL-2 | UNIDIRECTIONAL | R | TEMPORARY CONCRETE BARRIER |
| | | SUBTOTAL | | | | | | | 1,149 | 1,149 | 3 | | | | | | |
| | 3B | SILVER SPRING DRIVE | | | | | | | | | | | | | | | |
| | | | 168+33 | 23' RT | - | 171+82 | 23' RT | A | 341 | 341 | 1 | 2 | OM-3R | TL-2 | UNIDIRECTIONAL | L | TEMPORARY CONCRETE BARRIER |
| | | | 168+63 | 23' LT | - | 171+70 | 23' LT | A | 316 | 316 | 1 | 2 | OM-3R | TL-2 | UNIDIRECTIONAL | L | TEMPORARY CONCRETE BARRIER |
| | | SUBTOTAL | | | | | | | 657 | 657 | 2 | | | | | | |
| | | PROJECT TOTAL | | | | | | | 3,687 | 3,687 | 10 | | | | | | |

ALL QUANTITIES ARE CATEGORY 10 UNLESS OTHERWISE NOTED

3

## STORM SEWER SUMMARY

| ITEM NUMBER | ITEM | | |
|---|---|---|---|
| 608.0312 | Storm Sewer Pipe Reinforced Concrete Class III 12-Inch | 755 | LF |
| 611.0530 | Manhole Covers Type J | 5 | EACH |
| 611.0606 | Inlet Covers Type B | 1 | EACH |
| 611.0610 | Inlet Covers Type BW | 2 | EACH |
| 611.0624 | Inlet Covers Type H | 27 | EACH |
| 611.0642 | Inlet Covers Type MS | 2 | EACH |
| 611.2004 | Manholes 4-FT Diameter | 3 | EACH |
| 611.3220 | Inlets 2x2-FT | 2 | EACH |
| 611.3225 | Inlets 2x2.5-FT | 2 | EACH |
| 611.3230 | Inlets 2x3-FT | 26 | EACH |
| 611.3901 | Inlets Median 1 Grate | 2 | EACH |

## RECONSTRUCTING MANHOLES

| STRUCTURE NO. | STATION | OFFSET | 611.0420 EACH |
|---|---|---|---|
| 200 | 116+99 | 35' LT | 1 |
| 201 | 119+34 | 102' RT | 1 |
| 202 | 124+09 | 61' LT | 1 |
| 203 | 124+13 | 61' RT | 1 |
| 204 | 100+97 C | 14' LT | 1 |
| | | PROJECT TOTAL | 5 |

## RECONSTRUCTING INLETS

| STRUCTURE NO. | STATION | OFFSET | 611.0430 EACH |
|---|---|---|---|
| 100 | 95+36 | 4' LT | 1 |
| 101 | 100+50 | 0' RT | 1 |
| 102 | 126+23 | 6' LT | 1 |
| 103 | 107+07 B | 2' RT | 1 |
| 104 | 105+40 D | 2' RT | 1 |
| | | PROJECT TOTAL | 5 |

## COVER PLATES TEMPORARY

| STATION | OFFSET | * 611.8120.S EACH |
|---|---|---|
| 115+80.00 | 5' RT | 1 |
| 101+22.00 | 4' RT | 1 |
| 122+45.50 | 5' LT | 1 |
| 126+23.00 | 6' LT | 1 |
| | * PROJECT TOTAL | 4 |

* ADDITIONAL QUANTITIES SHOWN ELSEWHERE

## ADJUSTING MANHOLE COVERS

| STRUCTURE NO. | STATION | OFFSET | 611.8110 EACH | COVER PLATES TEMPORARY *611.8120.S EACH |
|---|---|---|---|---|
| 500 | 87+52 | 43' RT | 1 | 1 |
| 501 | 89+85 | 43' RT | 1 | 1 |
| 502 | 91+24 | 43' RT | 1 | 1 |
| 503 | 93+50 | 43' RT | 1 | 1 |
| 504 | 93+49 | 91' RT | 1 | 1 |
| 505 | 93+95 | 33' LT | 1 | 1 |
| 506 | 97+06 | 32' LT | 1 | 1 |
| 507 | 97+40 | 56' LT | 1 | 1 |
| 508 | 98+05 | 32' LT | 1 | 1 |
| 509 | 98+19 | 36' RT | 1 | 1 |
| 510 | 99+13 | 35' RT | 1 | 1 |
| 511 | 100+49 | 37' RT | 1 | 1 |
| 512 | 101+56 | 35' RT | 1 | 1 |
| 513 | 106+46 | 34' LT | 1 | 1 |
| 514 | 108+84 | 34' LT | 1 | 1 |
| 515 | 109+20 | 35' LT | 1 | 1 |
| 516 | 109+56 | 21' RT | 1 | 1 |
| 517 | 110+07 | 21' RT | 1 | 1 |
| 518 | 110+45 | 35' LT | 1 | 1 |
| 519 | 110+66 | 35' RT | 1 | 1 |
| 520 | 112+07 | 34' LT | 1 | 1 |
| 521 | 112+56 | 36' RT | 1 | 1 |
| 522 | 112+86 | 34' LT | 1 | 1 |
| 523 | 114+64 | 35' RT | 1 | 1 |
| 524 | 114+95 | 35' LT | 1 | 1 |
| 525 | 115+56 | 34' LT | 1 | -- |
| 526 | 126+78 | 35' LT | 1 | 1 |
| 527 | 126+86 | 62' RT | 1 | 1 |
| 528 | 126+86 | 25' RT | 1 | 1 |
| 529 | 130+04 | 25' RT | 1 | 1 |
| 530 | 130+15 | 36' LT | 1 | 1 |
| 531 | 132+93 | 36' LT | 1 | 1 |
| 532 | 133+23 | 27' RT | 1 | 1 |
| 533 | 133+90 | 36' LT | 1 | 1 |
| 534 | 134+81 | 24' RT | 1 | 1 |
| 535 | 134+80 | 36' LT | 1 | 1 |
| 536 | 135+94 | 24' RT | 1 | 1 |
| 537 | 135+94 | 36' LT | 1 | 1 |
| 538 | 137+08 | 24' RT | 1 | 1 |
| 539 | 137+09 | 36' LT | 1 | 1 |
| 540 | 138+25 | 24' RT | 1 | 1 |
| 541 | 138+20 | 36' LT | 1 | 1 |
| 542 | 139+49 | 25' RT | 1 | 1 |
| 543 | 139+50 | 36' LT | 1 | 1 |
| 544 | 139+80 | 24' RT | 1 | 1 |
| 545 | 141+19 | 24' RT | 1 | 1 |
| 546 | 141+20 | 36' LT | 1 | 1 |
| 547 | 142+19 | 25' RT | 1 | 1 |
| 548 | 142+19 | 36' LT | 1 | 1 |
| 549 | 143+13 | 24' RT | 1 | 1 |
| 550 | 143+15 | 36' LT | 1 | 1 |
| 551 | 143+49 | 65' LT | 1 | 1 |
| 552 | 145+53 | 27' LT | 1 | 1 |
| 553 | 145+99 | 26' LT | 1 | 1 |
| 554 | 146+38 | 22' RT | 1 | 1 |
| 555 | 146+75 | 27' LT | 1 | 1 |
| 556 | 109+20 | 65' LT | 1 | 1 |
| 557 | 133+25 | 36' LT | 1 | 1 |
| 558 | 98+45 | 69' LT | 1 | 1 |
| | | PROJECT TOTAL | 59 | 58 |

* ADDITIONAL QUANTITIES SHOWN ELSEWHERE

## ADJUSTING INLET COVERS

| STRUCTURE NO. | STATION | OFFSET | 611.8115 EACH |
|---|---|---|---|
| 400 | 87+28 | 48' LT | 1 |
| 401 | 87+49 | 48' RT | 1 |
| 402 | 90+71 | 48' LT | 1 |
| 403 | 90+77 | 48' RT | 1 |
| 404 | 94+06 | 48' LT | 1 |
| 405 | 94+06 | 48' RT | 1 |
| 406 | 99+20 | 48' RT | 1 |
| 407 | 101+56 | 48' RT | 1 |
| 408 | 108+84 | 48' LT | 1 |
| 409 | 109+57 | 40' RT | 1 |
| 410 | 110+07 | 40' RT | 1 |
| 411 | 110+39 | 48' LT | 1 |
| 412 | 110+70 | 51' RT | 1 |
| 413 | 110+89 | 48' LT | 1 |
| 414 | 112+60 | 48' LT | 1 |
| 415 | 112+57 | 48' RT | 1 |
| 416 | 115+55 | 48' RT | 1 |
| 417 | 115+59 | 48' LT | 1 |
| 418 | 126+42 | 48' LT | 1 |
| 419 | 126+41 | 48' RT | 1 |
| 420 | 129+99 | 48' LT | 1 |
| 421 | 129+99 | 48' RT | 1 |
| 422 | 132+57 | 48' LT | 1 |
| 424 | 132+82 | 48' RT | 1 |
| 425 | 134+47 | 48' LT | 1 |
| 426 | 134+51 | 48' RT | 1 |
| 427 | 136+01 | 48' LT | 1 |
| 428 | 136+06 | 48' RT | 1 |
| 429 | 137+56 | 48' LT | 1 |
| 430 | 137+64 | 48' RT | 1 |
| 431 | 139+10 | 48' LT | 1 |
| 432 | 139+16 | 48' RT | 1 |
| 433 | 141+09 | 48' RT | 1 |
| 434 | 142+23 | 48' LT | 1 |
| 435 | 142+50 | 48' RT | 1 |
| 436 | 143+10 | 48' LT | 1 |
| 437 | 143+50 | 48' RT | 1 |
| 438 | 144+64 | 48' RT | 1 |
| 439 | 145+73 | 48' LT | 1 |
| 440 | 145+79 | 48' RT | 1 |
| 441 | 146+00 | 4' LT | 1 |
| 442 | 104+00 B | 2' RT | 1 |
| 443 | 105+74 D | 2' RT | 1 |
| 444 | 169+50 A | 7' LT | 1 |
| | | PROJECT TOTAL | 44 |

## SALVAGED INLET COVERS

| STRUCTURE NO. | STATION | OFFSET | 611.9710 EACH |
|---|---|---|---|
| 102 | 126+23 | 6' LT | 1 |
| | | PROJECT TOTAL | 1 |

ALL QUANTITIES ARE CATEGORY 10 UNLESS OTHERWISE NOTED

3

CRASH CUSHIONS PERMANENT LOW MAINTENANCE

| LOCATION | STA | OFFSET | CAT 10 614.0805 EACH | OBJECT MARKING PATTERN | CRASH TEST LEVEL |
|---|---|---|---|---|---|
| SILVER SPRING | 169+18 A | RT | 1 | OM-3C | TL-2 |
| SILVER SPRING | 171+02 A | LT | 1 | OM-3C | TL-2 |
| | | PROJECT TOTAL | 2 | | |

MGS GUARDRAIL

| STATION | OFFSET | MGS GUARDRAIL 3 614.2300 LF | THRIE BEAM TRANSITION 614.2500 LF | MGS GUARDRAIL TERMINAL EAT 614.2610 EACH |
|---|---|---|---|---|
| 101+29 TO 102+34 | RT | 12.5 | 39.33 | 1 |
| 105+65 TO 106+71 | LT | 12.5 | 39.33 | 1 |
| PROJECT TOTAL | | 25 | 78.66 | 2 |

FENCE CHAIN LINK 4-FT

| STREET | FROM | | TO | CAT 10 616.0204 LF |
|---|---|---|---|---|
| STH 181 | 115+50 | - | 116+90 | 140 |
| | | | PROJECT TOTAL | 140 |

3

FENCE SAFETY

| STREET | LOCATION | 616.0700.S LF |
|---|---|---|
| STH 181 | UNDISTRIBUTED | 200 |
| | PROJECT TOTAL | 200 |

MOBILIZATION

| LOCATION | 619.1000 EACH |
|---|---|
| STH 181 | 1 |
| PROJECT TOTAL | 1 |

CONCRETE MEDIAN SLOPED NOSE

| STREET | FROM | TO | CAT 10 620.0300 SF |
|---|---|---|---|
| STH 181 | 104+00 | 115+55 | 32 |
| STH 181 | 115+55 | 126+46 | 156 |
| STH 181 | 126+46 | 139+90 | 30 |
| | | PROJECT TOTALS | 218 |

WATER

| STREET | FROM | TO | 624.0100 MGAL |
|---|---|---|---|
| STH 181 | 87+23 | 104+00 | 6 |
| STH 181 | 104-00 | 115+55 | 5 |
| STH 181 | 115-55 | 126+46 | 41 |
| STH 181 | 126-46 | 139+90 | 5 |
| STH 181 | 139-90 | 147+19 | 3 |
| RAMP NW | 100+86B | 107+08B | 7 |
| RAMP NE | 100+44C | 106+69C | 9 |
| RAMP SE | 100+80D | 106+04D | 6 |
| RAMP SW | 99+22E | 104+04E | 6 |
| SILVER SPRING DRIVE | 167-50 | 172+70 | 3 |
| | | PROJECT TOTAL | 90 |

EROSION CONTROL MOBILIZATIONS

| LOCATION | 628.1905 MOBILIZATIONS EROSION CONTROL EACH | 628.1910 MOBILIZATIONS EMERGENCY EROSION CONTROL EACH |
|---|---|---|
| PROJECT 2140-13-70 | 4 | 2 |
| PROJECT TOTAL | 4 | 2 |

EROSION MAT

| STREET | FROM | TO | 628.2008 URBAN CLASS 1 TYPE B SY |
|---|---|---|---|
| RAMP NW | 100+86 B | 107+08 B | 1,326 |
| RAMP NE | 100+44 C | 106+69 C | 1,260 |
| RAMP SE | 100+80 D | 106+04 D | 1,504 |
| RAMP SW | 99+22 E | 104+04 E | 714 |
| | | PROJECT TOTAL | 4,804 |

ALL QUANTITIES ARE CATEGORY 10 UNLESS OTHERWISE NOTED

3

## SOD QUANTITIES

| STREET | FROM | TO | 625.0100 TOPSOIL SY | 631.0300 SOD WATER MGAL | 631.1000 SOD LAWN SY |
|---|---|---|---|---|---|
| STH 181 | 87+23 | 104+00 | 1,031 | 23 | 1,031 |
| STH 181 | 104+00 | 115+55 | 776 | 15 | 685 |
| STH 181 | 115+55 | 126+46 | 3,255 | 68 | 3,016 |
| STH 181 | 126+46 | 139+90 | 779 | 20 | 905 |
| STH 181 | 139+90 | 147+19 | 270 | 6 | 288 |
| RAMP NW | 100+86 B | 107+08 B | 1,970 | 16 | 725 |
| RAMP NE | 100+44 C | 106+69 C | 1,624 | 20 | 872 |
| RAMP SE | 100+80 D | 106+04 D | 1,948 | 11 | 505 |
| RAMP SW | 99+22 E | 104+04 E | 1,037 | 13 | 575 |
| SILVER SPRING | 168+55 A | 171+48 A | 76 | 2 | 76 |
| | | PROJECT TOTAL | 12,766 | 195 | 8,678 |

## SILT FENCE

| STREET | FROM | TO | 628.1504 SILT FENCE LF | 628.1520 SILT FENCE MAINTENANCE LF |
|---|---|---|---|---|
| STH 181 | 115+55 | 119+50 | 412 | 412 |
| RAMP NW | 100+86 B | 107+08 B | 577 | 577 |
| RAMP NE | 100+44 C | 106+69 C | 498 | 498 |
| RAMP SE | 100+80 D | 106+04 D | 745 | 745 |
| RAMP SW | 99+22 E | 104+04 E | 371 | 371 |
| | | PROJECT TOTAL | 2,863 | 2,863 |

3

## INLET PROTECTION

| STREET | FROM | TO | 628.7005 INLET PROTECTION TYPE A EACH | 628.7010 INLET PROTECTION TYPE B EACH | 628.7015 INLET PROTECTION TYPE C EACH | 628.7020 INLET PROTECTION TYPE D EACH |
|---|---|---|---|---|---|---|
| STH 181 | 87+23 | 104+00 | 4 | 16 | 3 | - |
| STH 181 | 104+00 | 115+55 | - | 9 | 4 | 4 |
| STH 181 | 115+55 | 126+46 | 18 | 3 | 14 | - |
| STH 181 | 126+46 | 139+90 | - | 5 | 7 | - |
| STH 181 | 139+90 | 147+19 | - | 7 | 8 | - |
| RAMP NW | 100+86 B | 108+00 B | - | 4 | 2 | - |
| RAMP NE | 100+44 C | 106+69 C | 5 | - | 1 | 3 |
| RAMP SE | 100+80 D | 106+04 D | 3 | 1 | - | 3 |
| RAMP SW | 99+22 E | 104+04 E | 3 | - | - | 3 |
| SILVER SPRING DRIVE | 167+50 | 172+72 | 8 | 10 | - | - |
| | | PROJECT TOTAL | 41 | 55 | 39 | 13 |

## TRACKING PAD

| STREET | FROM | TO | 628.7560 EACH |
|---|---|---|---|
| STH 181 | 115+55 | 126+46 | 2 |
| RAMP NW | 100+86B | 107+08B | 1 |
| RAMP SE | 100+80D | 106+04D | 1 |
| | | PROJECT TOTAL | 4 |

## ROCK BAGS

| STREET | LOCATION | 628.7570 EACH |
|---|---|---|
| STH 181 | UNDISTRIBUTED | 50 |
| | PROJECT TOTAL | 50 |

## SEEDING QUANTITIES

| STREET | FROM | TO | 630.0140 MIXTURE NO. 40 LB | 629.0210 FERTILIZER TYPE B CWT |
|---|---|---|---|---|
| RAMP NW | 100+86 B | 107+08 B | 22 | 0.8 |
| RAMP NE | 100+44 C | 106+69 C | 21 | 0.7 |
| RAMP SE | 100+80 D | 106+04 D | 26 | 0.9 |
| RAMP SW | 99+22 E | 104+04 E | 12 | 0.4 |
| | | PROJECT TOTAL | 81 | 2.8 |

| STATION | DELINEATORS FLEXIBLE 633.0200 EACH |
|---|---|
| 119+60 | 1 |
| 122+40 | 1 |
| PROJECT TOTAL | 2 |

## FIELD OFFICE TYPE C

| LOCATION | 642.5201 EACH |
|---|---|
| PROJECT 2140-13-70 | 1 |
| PROJECT TOTAL | 1 |

## TRAFFIC CONTROL (PROJECT)

| CATEGORY | STAGE | LOCATION | 643.0100 TRAFFIC CONTROL (PROJECT) EACH |
|---|---|---|---|
| 0010 | ALL | PROJECT | 1 |
| | | PROJECT | 1 |

ALL QUANTITIES ARE CATEGORY 10 UNLESS OTHERWISE NOTED

3

| SIGN NO. | SIGN CODE & SIZE | SIGN MESSAGE | SIGN SIZE W [IN.] | x | H [IN.] | 637.2210 SIGNS TYPE II REFLC H [SF] | 637.2230 SIGNS TYPE II REFLC F [SF] | 637.2215 SIGNS TYPE II REFLC H FOLDING [SF] | 638.2602 REM SIGNS TYPE II [EA] | 638.3000 REM SMALL SIGN SUP [EA] | 634.0618 WOOD POSTS 4"X 6"x18' [EA] | 634.0814 TUBULAR STEEL POSTS 2"X2"X14' [EA] | 638.2102 MOVE SIGNS TYPE II [EA] | MOUNT ON SAME POST AS SIGN # | REMARKS / NEW SIGN LOCATION |
|---|---|---|---|---|---|---|---|---|---|---|---|---|---|---|---|
| 1 | J4-1(2S) | -- | 24 | x | 36 | 6.000 | -- | -- | 1 | -- | -- | -- | -- | -- | MOUNT ON LIGHT POLE |
| | M3-3 | -- | 24 | x | 12 | | | | | | | | | | |
| | M1-6 | STH 181 | 24 | x | 24 | | | | | | | | | | |
| 2 | R4-7(2S) | -- | 24 | x | 30 | 5.000 | -- | -- | -- | -- | -- | -- | -- | -- | MOUNT ON SIGNAL POLE |
| 2A | W5-52L(2S) | -- | 12 | x | 36 | -- | 3.000 | -- | -- | -- | -- | -- | -- | 2 | MOUNT BELOW SIGN #2 |
| 3 | R4-7(2S) | -- | 24 | x | 30 | 5.000 | -- | -- | -- | -- | -- | -- | -- | -- | MOUNT ON SIGNAL POLE |
| 4 | R7-7L(2S) | -- | 18 | x | 24 | 3.000 | -- | -- | 1 | 1 | -- | 1 | -- | -- | -- |
| 5 | -- | CHURCH SIGN | -- | x | -- | -- | -- | -- | 1 | -- | -- | -- | -- | -- | REMOVE FROM LIGHT POLE |
| 6 | R2-1(2S) | 35 MPH | 24 | x | 30 | 5.000 | -- | -- | 1 | -- | -- | -- | -- | -- | MOUNT ON LIGHT POLE |
| 7 | R2-1(2S) | 35 MPH | 24 | x | 30 | 5.000 | -- | -- | 1 | 1 | -- | 1 | -- | -- | -- |
| 8 | I55-56 | -- | -- | x | -- | -- | -- | -- | -- | 1 | -- | 1 | 1 | -- | MOVE TO NEW POST |
| 9 | R4-7(2S) | -- | 24 | x | 30 | 5.000 | -- | -- | 1 | -- | -- | -- | -- | -- | MOUNT ON SIGNAL POLE |
| 9A | W5-52L(2S) | -- | 12 | x | 36 | -- | 3.000 | -- | -- | -- | -- | -- | -- | 9 | MOUNT BELOW SIGN #9 |
| 10 | R4-7(2S) | -- | 24 | x | 30 | 5.000 | -- | -- | -- | -- | -- | -- | -- | -- | MOUNT ON SIGNAL POLE |
| 11 | R1-2(2S) | -- | 36 | x | 31 | 3.880 | -- | -- | 1 | 1 | -- | 1 | -- | -- | -- |
| 12 | W3-3(2S) | -- | 36 | x | 36 | -- | 9.000 | -- | 1 | 1 | -- | 1 | -- | -- | -- |
| 13 | W3-3(2S) | -- | 36 | x | 36 | -- | 9.000 | -- | 1 | -- | -- | -- | -- | -- | MOUNT ON LIGHT POLE |
| 14 | M1-94H | W VILLARD AVE | 66 | x | 18 | 8.250 | -- | -- | 1 | -- | -- | -- | -- | -- | MOUNT ON MAST ARM |
| 15 | R1-1F(2S) | -- | 30 | x | 30 | -- | -- | 5.180 | 1 | -- | -- | -- | -- | -- | MOUNT ON SIGNAL POLE |
| 16 | R1-1F(2S) | -- | 30 | x | 30 | -- | -- | 5.180 | 1 | -- | -- | -- | -- | -- | MOUNT ON SIGNAL POLE |
| 17 | R5-1(2S) | -- | 30 | x | 30 | 6.250 | -- | -- | -- | -- | -- | -- | -- | -- | MOUNT ON SIGNAL POLE |
| 18 | R1-1F(2S) | -- | 30 | x | 30 | -- | -- | 5.180 | 1 | -- | -- | -- | -- | -- | MOUNT ON SIGNAL POLE |
| 19 | R1-1F(2S) | -- | 30 | x | 30 | -- | -- | 5.180 | 1 | -- | -- | -- | -- | -- | MOUNT ON SIGNAL POLE |
| 20 | D1-65 | FOND DU LAC AVE NEXT SIGNAL | 72 | x | 30 | 15.000 | -- | -- | -- | -- | -- | 2 | -- | -- | -- |
| 21 | M1-94H | W VILLARD AVE | 66 | x | 18 | 8.250 | -- | -- | 1 | -- | -- | -- | -- | -- | MOUNT ON MAST ARM |
| 22 | R1-1F(2S) | -- | 30 | x | 30 | -- | -- | 5.180 | 1 | -- | -- | -- | -- | -- | MOUNT ON SIGNAL POLE |
| 23 | R1-1F(2S) | -- | 30 | x | 30 | -- | -- | 5.180 | 1 | -- | -- | -- | -- | -- | MOUNT ON SIGNAL POLE |
| 24 | R4-7(2S) | -- | 24 | x | 30 | 5.000 | -- | -- | -- | -- | -- | -- | -- | -- | MOUNT ON SIGNAL POLE |
| 25 | R4-7(2S) | -- | 24 | x | 30 | 5.000 | -- | -- | -- | -- | -- | -- | -- | -- | MOUNT ON SIGNAL POLE |
| 26 | R4-7(2S) | -- | 24 | x | 30 | 5.000 | -- | -- | 1 | -- | -- | -- | -- | -- | MOUNT ON SIGNAL POLE |
| 27 | R4-7(2S) | -- | 24 | x | 30 | 5.000 | -- | -- | -- | -- | -- | -- | -- | -- | MOUNT ON SIGNAL POLE |
| 28 | R5-1(2S) | -- | 30 | x | 30 | 6.250 | -- | -- | 1 | -- | -- | -- | -- | -- | MOUNT ON SIGNAL POLE |
| 29 | R1-1F(2S) | -- | 30 | x | 30 | -- | -- | 5.180 | -- | -- | -- | -- | -- | -- | MOUNT ON SIGNAL POLE |
| 30 | R1-1F(2S) | -- | 30 | x | 30 | -- | -- | 5.180 | -- | -- | -- | -- | -- | -- | MOUNT ON SIGNAL POLE |
| 31 | D1-65 | W VILLARD AVE NEXT SIGNAL | 78 | x | 21 | 11.375 | -- | -- | -- | -- | -- | 2 | -- | -- | -- |
| 32 | R4-7(2S) | -- | 24 | x | 30 | 5.000 | -- | -- | -- | -- | -- | 1 | -- | -- | -- |
| 33 | R1-1(2S) | -- | 30 | x | 30 | 5.180 | -- | -- | 1 | 1 | -- | 1 | -- | -- | -- |
| 34 | W3-3(2S) | -- | 36 | x | 36 | -- | 9.000 | -- | 1 | 1 | -- | 1 | -- | -- | -- |
| 35 | W3-3(2S) | -- | 36 | x | 36 | -- | 9.000 | -- | -- | -- | -- | -- | -- | -- | MOUNT ON LIGHT POLE |
| 36 | D1-65 | W VILLARD AVE NEXT SIGNAL | 78 | x | 21 | 11.375 | -- | -- | -- | -- | -- | 2 | -- | -- | -- |

3

| SIGN NO. | SIGN CODE & SIZE | SIGN MESSAGE | SIGN SIZE W [IN.] | x | H [IN.] | 637.2210 SIGNS TYPE II REFLC H [SF] | 637.2230 SIGNS TYPE II REFLC F [SF] | 637.2215 SIGNS TYPE II REFLC H FOLDING [SF] | 638.2602 REM SIGNS TYPE II [EA] | 638.3000 REM SMALL SIGN SUP [EA] | 634.0618 WOOD POSTS 4"X 6"x18' [EA] | 634.0814 TUBULAR STEEL POSTS 2"X2"X14' [EA] | 638.2102 MOVE SIGNS TYPE II [EA] | MOUNT ON SAME POST AS SIGN # | REMARKS / NEW SIGN LOCATION |
|---|---|---|---|---|---|---|---|---|---|---|---|---|---|---|---|
| 37 | J4-1(2S) | -- | 24 | x | 36 | 6.000 | -- | -- | 1 | -- | -- | -- | -- | -- | MOUNT ON SIGNAL POLE |
| | M3-3 | -- | 24 | x | 12 | | | | | | | | | | |
| | M1-6 | STH 181 | 24 | x | 24 | | | | | | | | | | |
| 38 | M1-94H | W FOND DU LAC AVE | 96 | x | 18 | 12.000 | -- | -- | 1 | -- | -- | -- | -- | -- | MOUNT ON MAST ARM |
| 39 | R1-1F(2S) | -- | 30 | x | 30 | -- | -- | 5.180 | 1 | -- | -- | -- | -- | -- | MOUNT ON SIGNAL POLE |
| 40 | R1-1F(2S) | -- | 30 | x | 30 | -- | -- | 5.180 | 1 | -- | -- | -- | -- | -- | MOUNT ON SIGNAL POLE |
| 41 | R5-1(2S) | -- | 30 | x | 30 | 6.250 | -- | -- | -- | -- | -- | -- | -- | -- | MOUNT ON SIGNAL POLE |
| 42 | R4-7(2S) | -- | 24 | x | 30 | 5.000 | -- | -- | -- | -- | -- | -- | -- | -- | MOUNT ON SIGNAL POLE |
| 43 | R4-7(2S) | -- | 24 | x | 30 | 5.000 | -- | -- | 1 | -- | -- | -- | -- | -- | MOUNT ON SIGNAL POLE |
| 44 | R1-1F(2S) | -- | 30 | x | 30 | -- | -- | 5.180 | 1 | -- | -- | -- | -- | -- | MOUNT ON SIGNAL POLE |
| 45 | R1-1F(2S) | -- | 30 | x | 30 | -- | -- | 5.180 | -- | -- | -- | -- | -- | -- | MOUNT ON SIGNAL POLE |
| 46 | R5-1(2S) | -- | 30 | x | 30 | 6.250 | -- | -- | -- | -- | -- | -- | -- | -- | MOUNT ON SIGNAL POLE |
| 47 | J2-1(2S) | -- | 24 | x | 57 | 9.500 | -- | -- | -- | -- | 1 | -- | -- | -- | -- |
| | M3-1 | -- | 24 | x | 12 | | | | | | | | | | |
| | M1-6 | STH 145 | 24 | x | 24 | | | | | | | | | | |
| | M5-1R | -- | 21 | x | 21 | | | | | | | | | | |
| 48 | W3-3 | -- | -- | x | -- | -- | -- | -- | 1 | 1 | -- | -- | -- | -- | -- |
| 49 | W3-3 | -- | -- | x | -- | -- | -- | -- | 1 | -- | -- | -- | -- | -- | REMOVE FROM LIGHT POLE |
| 50 | J2-1(2S) | -- | 24 | x | 57 | 9.500 | -- | -- | 1 | 1 | 1 | -- | -- | -- | -- |
| | M3-1 | -- | 24 | x | 12 | | | | | | | | | | |
| | M1-6 | STH 145 | 24 | x | 24 | | | | | | | | | | |
| | M5-1R | -- | 21 | x | 21 | | | | | | | | | | |
| 51 | R2-1(2S) | 35 MPH | 24 | x | 30 | 5.000 | -- | -- | 1 | -- | -- | -- | -- | -- | MOUNT ON LIGHT POLE |
| 52 | R1-1(2S) | -- | 30 | x | 30 | 5.180 | -- | -- | 1 | 1 | -- | 1 | -- | -- | -- |
| 53 | J1-1(2S) | -- | 24 | x | 39 | 6.500 | -- | -- | 1 | 1 | 1 | -- | -- | 244 | -- |
| | M2-1 | -- | 21 | x | 15 | | | | | | | | | | |
| | M1-6 | STH 145 | 24 | x | 24 | | | | | | | | | | |
| 54 | M1-94H | W FOND DU LAC AVE | 96 | x | 18 | 12.000 | -- | -- | 1 | -- | -- | -- | -- | -- | MOUNT ON MAST ARM |
| 55 | J4-1(2S) | -- | 24 | x | 36 | 6.000 | -- | -- | 1 | -- | -- | -- | -- | -- | MOUNT ON SIGNAL POLE |
| | M3-1 | -- | 24 | x | 12 | | | | | | | | | | |
| | M1-6 | STH 181 | 24 | x | 24 | | | | | | | | | | |
| 56 | R5-1(2S) | -- | 30 | x | 30 | 6.250 | -- | -- | -- | -- | -- | -- | -- | -- | MOUNT ON SIGNAL POLE |
| 57 | R1-1F(2S) | -- | 30 | x | 30 | -- | -- | 5.180 | 1 | -- | -- | -- | -- | -- | MOUNT ON SIGNAL POLE |
| 58 | R1-1F(2S) | -- | 30 | x | 30 | -- | -- | 5.180 | 1 | -- | -- | -- | -- | -- | MOUNT ON SIGNAL POLE |
| 59 | R4-7(2S) | -- | 24 | x | 30 | 5.000 | -- | -- | -- | -- | -- | -- | -- | -- | MOUNT ON SIGNAL POLE |
| 60 | R4-7(2S) | -- | 24 | x | 30 | 5.000 | -- | -- | 1 | -- | -- | -- | -- | -- | MOUNT ON SIGNAL POLE |
| 61 | R5-1(2S) | -- | 30 | x | 30 | 6.250 | -- | -- | -- | -- | -- | -- | -- | -- | MOUNT ON SIGNAL POLE |
| 62 | R7-7L(2S) | -- | 18 | x | 24 | 3.000 | -- | -- | 1 | -- | -- | -- | -- | -- | MOUNT ON LIGHT POLE |
| 63 | R1-1F(2S) | -- | 30 | x | 30 | -- | -- | 5.180 | 1 | -- | -- | -- | -- | -- | MOUNT ON SIGNAL POLE |
| 64 | R1-1F(2S) | -- | 30 | x | 30 | -- | -- | 5.180 | -- | -- | -- | -- | -- | -- | MOUNT ON SIGNAL POLE |
| 65 | W3-3(2S) | -- | 36 | x | 36 | -- | 9.000 | -- | -- | -- | -- | 1 | -- | -- | -- |
| 66 | W3-3(2S) | -- | 36 | x | 36 | -- | 9.000 | -- | -- | -- | -- | 1 | -- | -- | -- |

3

| SIGN NO. | SIGN CODE & SIZE | SIGN MESSAGE | SIGN SIZE W [IN.] | x | H [IN.] | 637.2210 SIGNS TYPE II REFLC H [SF] | 637.2230 SIGNS TYPE II REFLC F [SF] | 637.2215 SIGNS TYPE II REFLC H FOLDING [SF] | 638.2602 REM SIGNS TYPE II [EA] | 638.3000 REM SMALL SIGN SUP [EA] | 634.0618 WOOD POSTS 4"X 6"x18' [EA] | 634.0814 TUBULAR STEEL POSTS 2"X2"X14' [EA] | 638.2102 MOVE SIGNS TYPE II [EA] | MOUNT ON SAME POST AS SIGN # | REMARKS / NEW SIGN LOCATION |
|---|---|---|---|---|---|---|---|---|---|---|---|---|---|---|---|
| 67 | J3-1(2S) | -- | 24 | x | 57 | 9.500 | -- | -- | -- | -- | 1 | -- | -- | -- | -- |
| | M3-3 | -- | 24 | x | 12 | | | | | | | | | | |
| | M1-6 | STH 145 | 24 | x | 24 | | | | | | | | | | |
| | M6-2 | -- | 21 | x | 21 | | | | | | | | | | |
| 68 | W13-3B(2S) | 25 MPH | 36 | x | 60 | -- | 15.000 | -- | 1 | -- | -- | 2 | -- | -- | -- |
| 69 | R5-57(5) | -- | 36 | x | 36 | 9.000 | -- | -- | -- | -- | -- | 1 | -- | -- | -- |
| 70 | D1-65 | FOND DU LAC AVE | 72 | x | 30 | 15.000 | -- | -- | -- | -- | -- | 2 | -- | -- | -- |
| | | NEXT SIGNAL | | | | | | | | | | | | | |
| 71 | R7-1L(2S) | -- | 18 | x | 24 | 3.000 | -- | -- | 1 | 1 | -- | 1 | -- | -- | -- |
| 72 | J2-1(2S) | -- | 24 | x | 57 | 9.500 | -- | -- | 1 | -- | -- | -- | -- | -- | MOUNT ON LIGHT POLE |
| | M3-3 | -- | 24 | x | 12 | | | | | | | | | | |
| | M1-6 | STH 145 | 24 | x | 24 | | | | | | | | | | |
| | M5-2R | -- | 21 | x | 21 | | | | | | | | | | |
| 73 | D1-3 | [A] WAUWATOSA | 78 | x | 36 | 19.500 | -- | -- | 1 | 2 | -- | 3 | -- | -- | -- |
| | | DOWNTOWN [A] | | | | | | | | | | | | | |
| | | MILWAUKEE | | | | | | | | | | | | | |
| 74 | R7-1D(2S) | -- | 18 | x | 24 | 3.000 | -- | -- | 1 | 1 | -- | 1 | -- | -- | -- |
| 75 | J3-1(2S) | -- | 24 | x | 57 | 9.500 | -- | -- | 1 | 1 | 1 | -- | -- | -- | -- |
| | M3-1 | -- | 24 | x | 12 | | | | | | | | | | |
| | M1-6 | STH 145 | 24 | x | 24 | | | | | | | | | | |
| | M6-2 | -- | 21 | x | 21 | | | | | | | | | | |
| 76 | W13-3B(2S) | 25 MPH | 36 | x | 60 | -- | 15.000 | -- | 1 | -- | -- | 2 | -- | -- | -- |
| 77 | R5-57(5) | -- | 36 | x | 36 | 9.000 | -- | -- | -- | -- | -- | 1 | -- | -- | -- |
| 78 | R2-1(2S) | 35 MPH | 24 | x | 30 | 5.000 | -- | -- | 1 | -- | -- | -- | -- | -- | MOUNT ON LIGHT POLE |
| 79 | R2-1(2S) | 35 MPH | 24 | x | 30 | 5.000 | -- | -- | 1 | 1 | -- | 1 | -- | -- | -- |
| 80 | R1-1(2S) | -- | 30 | x | 30 | 5.180 | -- | -- | 1 | 1 | -- | 1 | -- | -- | -- |
| 81 | R6-2R(2S) | -- | 24 | x | 30 | 5.000 | -- | -- | -- | -- | -- | 1 | -- | -- | -- |
| 82 | R5-1(2S) | -- | 30 | x | 30 | 6.250 | -- | -- | -- | -- | -- | 1 | -- | -- | -- |
| 83 | J1-1(2S) | -- | 24 | x | 39 | 6.500 | -- | -- | 1 | 1 | 1 | -- | -- | -- | -- |
| | M2-1 | -- | 21 | x | 15 | | | | | | | | | | |
| | M1-6 | STH 145 | 24 | x | 24 | | | | | | | | | | |
| 84 | J1-1(2S) | -- | 24 | x | 39 | 6.500 | -- | -- | -- | -- | 1 | -- | -- | -- | -- |
| | M2-1 | -- | 21 | x | 15 | | | | | | | | | | |
| | M1-6 | STH 145 | 24 | x | 24 | | | | | | | | | | |
| 85 | S1-1(2S) | -- | 36 | x | 36 | -- | 6.750 | -- | 1 | -- | -- | -- | -- | -- | MOUNT ON LIGHT POLE |
| 86 | S16-9P(2S) | -- | 30 | x | 18 | -- | 3.750 | -- | -- | -- | -- | -- | -- | 85 | MOUNT ON LIGHT POLE |
| 87 | R2-6P(2S) | -- | 24 | x | 18 | 3.000 | -- | -- | -- | -- | -- | -- | -- | 85 | MOUNT ON LIGHT POLE |
| 88 | D1-65(MOD) | SILVER SPRING DR | 90 | x | 30 | 18.750 | -- | -- | -- | -- | -- | 3 | -- | -- | -- |
| | | 5600 N | | | | | | | | | | | | | |
| | | NEXT SIGNAL | | | | | | | | | | | | | |
| 89 | R7-1D(2S) | -- | 18 | x | 24 | 3.000 | -- | -- | 1 | 1 | -- | 1 | -- | -- | -- |
| 90 | R2-1(2S) | 35 MPH | 24 | x | 30 | 5.000 | -- | -- | 1 | 1 | -- | 1 | -- | -- | -- |
| 91 | R2-1(2S) | 35 MPH | 24 | x | 30 | 5.000 | -- | -- | -- | -- | -- | 1 | -- | -- | -- |

3

| SIGN NO. | SIGN CODE & SIZE | SIGN MESSAGE | SIGN SIZE W [IN.] | x | H [IN.] | 637.2210 SIGNS TYPE II REFLC H [SF] | 637.2230 SIGNS TYPE II REFLC F [SF] | 637.2215 SIGNS TYPE II REFLC H FOLDING [SF] | 638.2602 REM SIGNS TYPE II [EA] | 638.3000 REM SMALL SIGN SUP [EA] | 634.0618 WOOD POSTS 4"X 6"x18' [EA] | 634.0814 TUBULAR STEEL POSTS 2"X2"X14' [EA] | 638.2102 MOVE SIGNS TYPE II [EA] | MOUNT ON SAME POST AS SIGN # | REMARKS / NEW SIGN LOCATION |
|---|---|---|---|---|---|---|---|---|---|---|---|---|---|---|---|
| 92 | S1-1(2S) | -- | 36 | x | 36 | -- | 6.750 | -- | 1 | 1 | -- | 2 | -- | -- | -- |
| 93 | S16-9P(2S) | -- | 30 | x | 18 | -- | 3.750 | -- | -- | -- | -- | -- | -- | 92 | -- |
| 94 | R2-6P(2S) | -- | 24 | x | 18 | 3.000 | -- | -- | -- | -- | -- | -- | -- | 92 | -- |
| 95 | J1-1(2S) | -- | 24 | x | 39 | 6.500 | -- | -- | -- | -- | 1 | -- | -- | -- | -- |
| | M2-1 | -- | 21 | x | 15 | | | | | | | | | | |
| | M1-5A | CTH E | 24 | x | 24 | | | | | | | | | | |
| 96 | J1-1(2S) | -- | 24 | x | 39 | 6.500 | -- | -- | -- | -- | 1 | -- | -- | -- | -- |
| | M2-1 | -- | 21 | x | 15 | | | | | | | | | | |
| | M1-5A | CTH E | 24 | x | 24 | | | | | | | | | | |
| 97 | R7-1D(2S) | -- | 18 | x | 24 | 3.000 | -- | -- | 1 | -- | -- | -- | -- | -- | MOUNT ON LIGHT POLE |
| 98 | R5-1A(3) | -- | 42 | x | 30 | 8.750 | -- | -- | -- | -- | 1 | -- | -- | -- | -- |
| 99 | R5-1A(3) | -- | 42 | x | 30 | 8.750 | -- | -- | 1 | 1 | 1 | -- | -- | -- | -- |
| 100 | W4-1R(2S) | -- | 36 | x | 36 | -- | 9.000 | -- | 1 | -- | -- | -- | -- | -- | MOUNT ON LIGHT POLE |
| 101 | R1-1(2S) | -- | 30 | x | 30 | 5.180 | -- | -- | 1 | 1 | -- | 1 | -- | -- | -- |
| 102 | R5-1(2S) | -- | 30 | x | 30 | 6.250 | -- | -- | -- | -- | -- | 1 | -- | -- | -- |
| 103 | R2-1(2S) | 35 MPH | 24 | x | 30 | 5.000 | -- | -- | -- | -- | -- | 2 | -- | -- | -- |
| 103A | S5-2(2S) | -- | 24 | x | 30 | 5.000 | -- | -- | -- | -- | -- | -- | -- | 103 | -- |
| 104 | R2-1(2S) | 35 MPH | 24 | x | 30 | 5.000 | -- | -- | 1 | 1 | -- | 2 | -- | -- | -- |
| 104A | S5-2(2S) | -- | 24 | x | 30 | 5.000 | -- | -- | -- | -- | -- | -- | -- | 104 | -- |
| 105 | J3-1(2S) | -- | 24 | x | 57 | 9.500 | -- | -- | 1 | 1 | 1 | -- | -- | -- | -- |
| | M3-2 | -- | 24 | x | 12 | | | | | | | | | | |
| | M1-5A | CTH E | 24 | x | 24 | | | | | | | | | | |
| | M6-2 | -- | 21 | x | 21 | | | | | | | | | | |
| 106 | R7-1D(2S) | -- | 18 | x | 24 | 3.000 | -- | -- | 1 | 1 | -- | 1 | -- | -- | -- |
| 107 | J2-2(2S) | -- | 48 | x | 57 | 19.000 | -- | -- | 1 | -- | 1 | -- | -- | -- | REMOVE FROM LIGHT POLE |
| | M3-4 | -- | 24 | x | 12 | | | | | | | | | | |
| | M1-5A | CTH E | 24 | x | 24 | | | | | | | | | | |
| | M6-1 | -- | 21 | x | 21 | | | | | | | | | | |
| | M3-2 | -- | 24 | x | 12 | | | | | | | | | | |
| | M1-5A | CTH E | 24 | x | 24 | | | | | | | | | | |
| | M5-2R | -- | 21 | x | 21 | | | | | | | | | | |
| 108 | R4-7(2S) | -- | 24 | x | 30 | 5.000 | -- | -- | 1 | 1 | -- | -- | -- | -- | MOUNT ON LIGHT POLE |
| 109 | R1-1(2S) | -- | 30 | x | 30 | 5.180 | -- | -- | 1 | 1 | -- | 1 | -- | -- | -- |
| 110 | R5-1(2S) | -- | 30 | x | 30 | 6.250 | -- | -- | -- | -- | -- | 1 | -- | -- | -- |
| 111 | R4-7(2S) | -- | 24 | x | 30 | 5.000 | -- | -- | 1 | -- | -- | -- | -- | -- | MOUNT ON LIGHT POLE |
| 112 | S4-51(2S) | 25 MPH | 24 | x | 48 | 8.000 | -- | -- | -- | -- | -- | -- | -- | 111 | MOUNT ON LIGHT POLE |
| 113 | S4-51(2S) | 25 MPH | 24 | x | 48 | 8.000 | -- | -- | 1 | 1 | -- | -- | -- | 110 | BACK OF SIGN #110 |
| 114 | W3-3(2S) | -- | 36 | x | 36 | -- | 9.000 | -- | 1 | 1 | -- | 1 | -- | -- | -- |
| 115 | W3-3(2S) | -- | 36 | x | 36 | -- | 9.000 | -- | 1 | -- | -- | 1 | -- | -- | -- |
| 116 | R1-1F(2S) | -- | 30 | x | 30 | -- | -- | 5.180 | 1 | -- | -- | -- | -- | -- | MOUNT ON SIGNAL POLE |
| 117 | S1-1(2S) | -- | 36 | x | 36 | -- | 6.750 | -- | 1 | -- | -- | 2 | -- | -- | -- |
| 118 | S16-7R(2S) | -- | 30 | x | 18 | -- | 3.750 | -- | -- | -- | -- | -- | -- | 117 | -- |
| 119 | S1-1(2S) | -- | 36 | x | 36 | -- | 6.750 | -- | 1 | 1 | 1 | -- | -- | 133 | -- |
| 120 | S16-7R(2S) | -- | 30 | x | 18 | -- | 3.750 | -- | -- | -- | -- | -- | -- | 119 | -- |

3

| SIGN NO. | SIGN CODE & SIZE | SIGN MESSAGE | SIGN SIZE W [IN.] | x | H [IN.] | 637.2210 SIGNS TYPE II REFLC H [SF] | 637.2230 SIGNS TYPE II REFLC F [SF] | 637.2215 SIGNS TYPE II REFLC H FOLDING [SF] | 638.2602 REM SIGNS TYPE II [EA] | 638.3000 REM SMALL SIGN SUP [EA] | 634.0618 WOOD POSTS 4"X 6"x18' [EA] | 634.0814 TUBULAR STEEL POSTS 2"X2"X14' [EA] | 638.2102 MOVE SIGNS TYPE II [EA] | MOUNT ON SAME POST AS SIGN # | REMARKS / NEW SIGN LOCATION |
|---|---|---|---|---|---|---|---|---|---|---|---|---|---|---|---|
| 121 | S1-1(2S) | -- | 36 | x | 36 | -- | 6.750 | -- | 1 | 1 | -- | 2 | -- | -- | -- |
| 122 | S16-7L(2S) | -- | 30 | x | 18 | -- | 3.750 | -- | -- | -- | -- | -- | -- | 121 | -- |
| 123 | R3-18(2S) | -- | 24 | x | 24 | 4.000 | -- | -- | 1 | -- | -- | -- | -- | -- | MOUNT ON SIGNAL POLE |
| 124 | R1-1F(2S) | -- | 30 | x | 30 | -- | -- | 5.180 | -- | -- | -- | -- | -- | -- | MOUNT ON SIGNAL POLE |
| 125 | J3-2(2S) | -- | 48 | x | 57 | 19.000 | -- | -- | 1 | -- | -- | -- | -- | -- | MOUNT ON LIGHT POLE |
| | M3-1 | -- | 24 | x | 12 | | | | | | | | | | |
| | M1-6 | STH 181 | 24 | x | 24 | | | | | | | | | | |
| | M6-1 | -- | 21 | x | 21 | | | | | | | | | | |
| | M3-3 | -- | 24 | x | 12 | | | | | | | | | | |
| | M1-6 | STH 181 | 24 | x | 24 | | | | | | | | | | |
| | M6-1 | -- | 21 | x | 21 | | | | | | | | | | |
| 126 | R3-7L(3) | -- | 36 | x | 36 | 9.000 | -- | -- | -- | -- | -- | 1 | -- | -- | -- |
| 127 | R3-1(2S) | -- | 24 | x | 24 | 4.000 | -- | -- | 1 | -- | -- | -- | -- | -- | MOUNT ON SIGNAL POLE |
| 128 | R1-1F(2S) | -- | 30 | x | 30 | -- | -- | 5.180 | -- | -- | -- | -- | -- | -- | MOUNT ON SIGNAL POLE |
| 129 | R5-1(3) | -- | 36 | x | 36 | 9.000 | -- | -- | -- | -- | -- | -- | -- | -- | MOUNT ON SIGNAL POLE |
| 129A | R5-1A(2S) | -- | 36 | x | 24 | 6.000 | -- | -- | -- | -- | -- | -- | -- | -- | 3 FT MOUNT HEIGHT ON SIGNAL POLE |
| 130 | R4-7(2S) | -- | 24 | x | 30 | 5.000 | -- | -- | 1 | -- | -- | 1 | -- | -- | ALSO REMOVE FOLDING STOP SIGN |
| 130A | R1-1F(2S) | -- | 30 | x | 30 | -- | -- | 5.180 | -- | -- | -- | -- | -- | 130 | -- |
| 131 | M1-94S | [E] W SILVER SPRING DR | 132 | x | 30 | 27.500 | -- | -- | 1 | -- | -- | -- | -- | -- | MOUNT ON MAST ARM |
| 132 | M1-94S | [E] W SILVER SPRING DR | 132 | x | 30 | 27.500 | -- | -- | -- | -- | -- | -- | -- | -- | MOUNT ON MAST ARM |
| 133 | J3-1(2S) | -- | 24 | x | 57 | 9.500 | -- | -- | -- | -- | -- | -- | -- | 119 | BACK OF SIGN #119 |
| | M3-2 | -- | 24 | x | 12 | | | | | | | | | | |
| | M1-5A | CTH E | 24 | x | 24 | | | | | | | | | | |
| | M6-1 | -- | 21 | x | 21 | | | | | | | | | | |
| 134 | J2-1(2S) | -- | 24 | x | 57 | 9.500 | -- | -- | 1 | -- | -- | -- | -- | -- | MOUNT ON LIGHT POLE |
| | M3-4 | -- | 24 | x | 12 | | | | | | | | | | |
| | M1-5A | CTH E | 24 | x | 24 | | | | | | | | | | |
| | M5-1L | -- | 21 | x | 21 | | | | | | | | | | |
| 135 | S1-1(2S) | -- | 36 | x | 36 | -- | 6.750 | -- | 1 | 1 | -- | 2 | -- | -- | -- |
| 136 | S16-7L(2S) | -- | 30 | x | 18 | -- | 3.750 | -- | -- | -- | -- | -- | -- | 135 | -- |
| 137 | R1-1(2S) | -- | 30 | x | 30 | 5.180 | -- | -- | 1 | 1 | -- | 1 | -- | -- | -- |
| 138 | R1-1F(2S) | -- | 30 | x | 30 | -- | -- | 5.180 | 1 | -- | -- | -- | -- | -- | MOUNT ON SIGNAL POLE |
| 139 | W12-1D(2S) | -- | 24 | x | 24 | -- | 4.000 | -- | -- | -- | -- | 1 | -- | -- | 2' MOUNTING HEIGHT |
| 140 | J2-1(2S) | -- | 24 | x | 57 | 9.500 | -- | -- | 1 | -- | -- | -- | -- | -- | MOUNT ON LIGHT POLE |
| | M3-2 | -- | 24 | x | 12 | | | | | | | | | | |
| | M1-5A | CTH E | 24 | x | 24 | | | | | | | | | | |
| | M5-1L | -- | 21 | x | 21 | | | | | | | | | | |
| 141 | R4-7(2S) | -- | 24 | x | 30 | 5.000 | -- | -- | 1 | -- | -- | 1 | -- | -- | ALSO REMOVE FOLDING STOP SIGN |
| 141A | R1-1F(2S) | -- | 30 | x | 30 | -- | -- | 5.180 | -- | -- | -- | -- | -- | 141 | -- |
| 142 | M1-94S | [E] W SILVER SPRING DR | 132 | x | 30 | 27.500 | -- | -- | 1 | -- | -- | -- | -- | -- | MOUNT ON MAST ARM |
| 143 | R3-1(2S) | -- | 24 | x | 24 | 4.000 | -- | -- | 1 | -- | -- | -- | -- | -- | MOUNT ON SIGNAL POLE |
| 144 | R1-1F(2S) | -- | 30 | x | 30 | -- | -- | 5.180 | -- | -- | -- | -- | -- | -- | -- |
| 145 | R1-1F(2S) | -- | 30 | x | 30 | -- | -- | 5.180 | 1 | -- | -- | -- | -- | -- | MOUNT ON SIGNAL POLE |

3

| SIGN NO. | SIGN CODE & SIZE | SIGN MESSAGE | SIGN SIZE W [IN.] | x | H [IN.] | 637.2210 SIGNS TYPE II REFLC H [SF] | 637.2230 SIGNS TYPE II REFLC F [SF] | 637.2215 SIGNS TYPE II REFLC H FOLDING [SF] | 638.2602 REM SIGNS TYPE II [EA] | 638.3000 REM SMALL SIGN SUP [EA] | 634.0618 WOOD POSTS 4"X 6"x18' [EA] | 634.0814 TUBULAR STEEL POSTS 2"X2"X14' [EA] | 638.2102 MOVE SIGNS TYPE II [EA] | MOUNT ON SAME POST AS SIGN # | REMARKS / NEW SIGN LOCATION |
|---|---|---|---|---|---|---|---|---|---|---|---|---|---|---|---|
| 146 | R5-1(3) | -- | 36 | x | 36 | 9.000 | -- | -- | 1 | 1 | -- | 2 | -- | -- | -- |
| 146A | R5-1A(2S) | -- | 36 | x | 24 | 6.000 | -- | -- | -- | -- | -- | -- | -- | 146 | 3' MOUNT HEIGHT |
| 147 | W12-1D(2S) | -- | 24 | x | 24 | -- | 4.000 | -- | -- | -- | -- | 1 | -- | -- | 2' MOUNTING HEIGHT |
| 148 | R7-1D(2S) | -- | 18 | x | 24 | 3.000 | -- | -- | -- | -- | -- | 1 | -- | -- | -- |
| 149 | R1-1(2S) | -- | 30 | x | 30 | 5.180 | -- | -- | 1 | -- | -- | 1 | -- | -- | -- |
| 150 | R3-18(2S) | -- | 24 | x | 24 | 4.000 | -- | -- | 1 | -- | -- | -- | -- | 152 | BACK OF SIGN #152 |
| 151 | R1-1F(2S) | -- | 30 | x | 30 | -- | -- | 5.180 | -- | -- | -- | -- | -- | 152 | BACK OF SIGN #152 |
| 152 | J3-1(2S) | -- | 24 | x | 57 | 9.500 | -- | -- | -- | -- | 1 | -- | -- | -- | -- |
| | M3-4 | -- | 24 | x | 12 | | | | | | | | | | |
| | M1-5A | CTH E | 24 | x | 24 | | | | | | | | | | |
| | M6-1 | -- | 21 | x | 21 | | | | | | | | | | |
| 153 | M1-94S | [E] W SILVER SPRING DR | 132 | x | 30 | 27.500 | -- | -- | -- | -- | -- | -- | -- | -- | MOUNT ON MAST ARM |
| 154 | R7-1D(2S) | -- | 18 | x | 24 | 3.000 | -- | 1.000 | 1 | 1 | -- | 1 | -- | -- | -- |
| 155 | R1-1F(2S) | -- | 30 | x | 30 | -- | -- | 5.180 | 1 | -- | -- | -- | -- | -- | MOUNT ON SIGNAL POLE |
| 156 | J3-1(2S) | -- | 24 | x | 57 | 9.500 | -- | -- | 1 | 1 | 1 | -- | -- | -- | -- |
| | M3-4 | -- | 24 | x | 12 | | | | | | | | | | |
| | M1-5A | CTH E | 24 | x | 24 | | | | | | | | | | |
| | M6-2 | -- | 21 | x | 21 | | | | | | | | | | |
| 157 | S4-51(2S) | 25 MPH | 24 | x | 48 | 8.000 | -- | -- | 1 | 1 | -- | 1 | -- | -- | -- |
| 158 | S4-51(2S) | 25 MPH | 24 | x | 48 | 8.000 | -- | -- | 1 | -- | -- | -- | -- | -- | MOUNT ON LIGHT POLE |
| 159 | R6-2R(2S) | -- | 24 | x | 30 | 5.000 | -- | -- | -- | -- | -- | 1 | -- | -- | -- |
| 160 | R3-52B(MOD)(2S) | BUSES, BICYCLES & RIGHT TURN | 30 | x | 48 | 10.000 | -- | -- | 1 | -- | -- | -- | -- | -- | MOUNT ON LIGHT POLE |
| 161 | J23-1(2S) | -- | 24 | x | 57 | 9.500 | -- | -- | 1 | -- | -- | -- | -- | -- | MOUNT ON LIGHT POLE |
| | M4-5 | -- | 24 | x | 12 | | | | | | | | | | |
| | M1-6 | STH 181 | 24 | x | 24 | | | | | | | | | | |
| | M6-2 | -- | 21 | x | 21 | | | | | | | | | | |
| 162 | R7-1D(2S) | -- | 18 | x | 24 | 3.000 | -- | -- | 1 | 1 | -- | 1 | -- | -- | -- |
| 163 | R7-1D(2S) | -- | 18 | x | 24 | 3.000 | -- | -- | 1 | -- | -- | -- | -- | -- | MOUNT ON LIGHT POLE |
| 164 | W12-1D(2S) | -- | 24 | x | 24 | -- | 4.000 | -- | 1 | -- | -- | -- | -- | -- | 2' HEIGHT ON LIGHT POLE |
| 165 | W3-3(2S) | -- | 36 | x | 36 | -- | 9.000 | -- | 1 | 1 | -- | 1 | -- | -- | -- |
| 166 | R5-1A(3) | -- | 42 | x | 30 | 8.750 | -- | -- | 1 | -- | -- | -- | -- | -- | MOUNT ON LIGHT POLE |
| 167 | R3-8A(2S) | -- | 36 | x | 30 | 7.500 | -- | -- | -- | -- | -- | 1 | -- | 262 | -- |
| 168 | R5-1A(3) | -- | 42 | x | 30 | 8.750 | -- | -- | 1 | -- | -- | -- | -- | -- | MOUNT ON LIGHT POLE |
| 169 | J3-2(2S) | -- | 48 | x | 57 | 19.000 | -- | -- | -- | -- | -- | -- | -- | -- | MOUNT ON LIGHT POLE |
| | M3-3 | -- | 24 | x | 12 | | | | | | | | | | |
| | M1-6 | STH 181 | 24 | x | 24 | | | | | | | | | | |
| | M6-1 | -- | 21 | x | 21 | | | | | | | | | | |
| | M3-1 | -- | 24 | x | 12 | | | | | | | | | | |
| | M1-6 | STH 181 | 24 | x | 24 | | | | | | | | | | |
| | M6-1 | -- | 21 | x | 21 | | | | | | | | | | |
| 170 | R7-1D(2S) | -- | 18 | x | 24 | 3.000 | -- | -- | -- | -- | -- | 1 | -- | -- | -- |
| 171 | W12-1D(2S) | -- | 24 | x | 24 | -- | 4.000 | -- | 1 | 1 | -- | 1 | -- | -- | 2' MOUNTING HEIGHT |
| 172 | W3-3(2S) | -- | 36 | x | 36 | -- | 9.000 | -- | 1 | -- | -- | -- | -- | -- | MOUNT ON LIGHT POLE |

3

| SIGN NO. | SIGN CODE & SIZE | SIGN MESSAGE | SIGN SIZE W [IN.] | x | H [IN.] | 637.2210 SIGNS TYPE II REFLC H [SF] | 637.2230 SIGNS TYPE II REFLC F [SF] | 637.2215 SIGNS TYPE II REFLC H FOLDING [SF] | 638.2602 REM SIGNS TYPE II [EA] | 638.3000 REM SMALL SIGN SUP [EA] | 634.0618 WOOD POSTS 4"X 6"x18' [EA] | 634.0814 TUBULAR STEEL POSTS 2"X2"X14' [EA] | 638.2102 MOVE SIGNS TYPE II [EA] | MOUNT ON SAME POST AS SIGN # | REMARKS / NEW SIGN LOCATION |
|---|---|---|---|---|---|---|---|---|---|---|---|---|---|---|---|
| 173 | J23-1(2S) | -- | 24 | x | 57 | 9.500 | -- | -- | 1 | -- | -- | -- | -- | -- | MOUNT ON LIGHT POLE |
| | M4-5 | -- | 24 | x | 12 | | | | | | | | | | |
| | M1-6 | STH 181 | 24 | x | 24 | | | | | | | | | | |
| | M6-2 | -- | 21 | x | 21 | | | | | | | | | | |
| 174 | R7-1D(2S) | -- | 18 | x | 24 | 3.000 | -- | -- | 1 | -- | -- | -- | -- | -- | MOUNT ON LIGHT POLE |
| 175 | R6-2R | -- | -- | x | -- | -- | -- | -- | 1 | 1 | -- | -- | -- | -- | -- |
| 176 | J2-2(2S) | -- | 48 | x | 57 | 19.000 | -- | -- | 1 | -- | -- | 2 | -- | -- | MOUNT ON LIGHT POLE |
| | M3-2 | -- | 24 | x | 12 | | | | | | | | | | |
| | M1-5A | CTH E | 24 | x | 24 | | | | | | | | | | |
| | M6-1 | -- | 21 | x | 21 | | | | | | | | | | |
| | M3-4 | -- | 24 | x | 12 | | | | | | | | | | |
| | M1-5A | CTH E | 24 | x | 24 | | | | | | | | | | |
| | M5-2R | -- | 21 | x | 21 | | | | | | | | | | |
| 177 | R4-7(2S) | -- | 24 | x | 30 | 5.000 | -- | -- | -- | -- | -- | -- | -- | -- | MOUNT ON LIGHT POLE |
| 178 | R1-1(2S) | -- | 30 | x | 30 | 5.180 | -- | -- | 1 | 1 | -- | 1 | -- | -- | -- |
| 179 | S1-1(2S) | -- | 36 | x | 36 | -- | 6.750 | -- | 1 | 1 | -- | 1 | -- | -- | -- |
| 180 | S16-9P(2S) | -- | 30 | x | 18 | -- | 3.750 | -- | -- | -- | -- | -- | -- | 179 | -- |
| 180A | R2-6P(2S) | -- | 24 | x | 18 | 3.000 | -- | -- | -- | -- | -- | -- | -- | 179 | -- |
| 181 | W3-3(2S) | -- | 36 | x | 36 | -- | 9.000 | -- | 1 | -- | -- | -- | -- | -- | MOUNT ON LIGHT POLE |
| 182 | D1-65(MOD) | W SILVER SPRING DR 5600 N NEXT SIGNAL | 90 | x | 30 | 18.750 | -- | -- | -- | -- | -- | 2 | -- | -- | -- |
| 183 | J1-1(2S) | -- | 24 | x | 39 | 6.500 | -- | -- | 1 | -- | -- | -- | -- | -- | MOUNT ON LIGHT POLE |
| | M2-1 | -- | 21 | x | 15 | | | | | | | | | | |
| | M1-5A | CTH E | 24 | x | 24 | | | | | | | | | | |
| 184 | W3-3(2S) | -- | 36 | x | 36 | -- | 9.000 | -- | 1 | 1 | -- | 1 | -- | -- | -- |
| 185 | R3-52B(MOD)(2S) | BUSES, BICYCLES & RIGHT TURN | 30 | x | 48 | 10.000 | -- | -- | 1 | 1 | -- | 2 | -- | -- | -- |
| 186 | S1-1(2S) | -- | 36 | x | 36 | -- | 6.750 | -- | -- | -- | -- | -- | -- | -- | MOUNT ON LIGHT POLE |
| 187 | S16-9P(2S) | -- | 30 | x | 18 | -- | 3.750 | -- | -- | -- | -- | -- | -- | 186 | MOUNT ON LIGHT POLE |
| 187A | R2-6P(2S) | -- | 24 | x | 18 | 3.000 | -- | -- | -- | -- | -- | -- | -- | 186 | MOUNT ON LIGHT POLE |
| 188 | R4-7(2S) | -- | 24 | x | 30 | 5.000 | -- | -- | -- | -- | -- | -- | -- | -- | MOUNT ON LIGHT POLE |
| 189 | R1-1(2S) | -- | 30 | x | 30 | 5.180 | -- | -- | 1 | 1 | -- | 1 | -- | -- | -- |
| 190 | R2-1(2S) | 35 MPH | 24 | x | 30 | 5.000 | -- | -- | 1 | 1 | -- | 2 | -- | -- | -- |
| 190A | S5-2(2S) | -- | 24 | x | 30 | 5.000 | -- | -- | -- | -- | -- | -- | -- | 190 | -- |
| 191 | R2-1(2S) | 35 MPH | 24 | x | 30 | 5.000 | -- | -- | 1 | -- | -- | -- | -- | -- | MOUNT ON LIGHT POLE |
| 191A | S5-2(2S) | -- | 24 | x | 30 | 5.000 | -- | -- | -- | -- | -- | -- | -- | 191 | MOUNT ON LIGHT POLE |
| 192 | R3-52B(MOD)(2S) | BUSES, BICYCLES & RIGHT TURN | 30 | x | 48 | 10.000 | -- | -- | 1 | 1 | -- | 2 | -- | -- | -- |
| 193 | R1-1(2S) | -- | 30 | x | 30 | 5.180 | -- | -- | 1 | 1 | -- | 1 | -- | -- | -- |
| 194 | R7-7L(2S) | -- | 18 | x | 24 | 3.000 | -- | -- | 1 | 1 | -- | 1 | -- | -- | -- |
| 195 | R4-7(2S) | -- | 24 | x | 30 | 5.000 | -- | -- | 1 | -- | -- | -- | -- | -- | MOUNT ON LIGHT POLE |
| 196 | R2-1(2S) | 35 MPH | 24 | x | 30 | 5.000 | -- | -- | 1 | -- | -- | 1 | -- | -- | -- |
| 197 | R2-1(2S) | 35 MPH | 24 | x | 30 | 5.000 | -- | -- | 1 | -- | -- | -- | -- | -- | MOUNT ON LIGHT POLE |
| 198 | R1-1(2S) | -- | 30 | x | 30 | 5.180 | -- | -- | 1 | 1 | -- | 1 | -- | -- | -- |
| 199 | R7-7L(2S) | -- | 18 | x | 24 | 3.000 | -- | -- | 1 | 1 | -- | 1 | -- | -- | -- |

3

| SIGN NO. | SIGN CODE & SIZE | SIGN MESSAGE | SIGN SIZE W [IN.] | x | H [IN.] | 637.2210 SIGNS TYPE II REFLC H [SF] | 637.2230 SIGNS TYPE II REFLC F [SF] | 637.2215 SIGNS TYPE II REFLC H FOLDING [SF] | 638.2602 REM SIGNS TYPE II [EA] | 638.3000 REM SMALL SIGN SUP [EA] | 634.0618 WOOD POSTS 4"X 6"x18' [EA] | 634.0814 TUBULAR STEEL POSTS 2"X2"X14' [EA] | 638.2102 MOVE SIGNS TYPE II [EA] | MOUNT ON SAME POST AS SIGN # | REMARKS / NEW SIGN LOCATION |
|---|---|---|---|---|---|---|---|---|---|---|---|---|---|---|---|
| 200 | R3-52B(2S) | BUSES, BICYCLES & RIGHT TURN | 30 | x | 48 | 10.000 | -- | -- | 1 | 1 | -- | 1 | -- | -- | -- |
| 201 | R1-1(2S) | -- | 30 | x | 30 | 5.180 | -- | -- | 1 | 1 | -- | 1 | -- | -- | -- |
| 202 | R4-7(2S) | -- | 24 | x | 30 | 5.000 | -- | -- | 1 | -- | -- | -- | -- | -- | MOUNT ON LIGHT POLE |
| 203 | R3-52B(MOD)(2S) | BUSES, BICYCLES & RIGHT TURN | 30 | x | 48 | 10.000 | -- | -- | 1 | 1 | -- | 2 | -- | -- | -- |
| 204 | R4-7(2S) | -- | 24 | x | 30 | 5.000 | -- | -- | 1 | -- | -- | -- | -- | -- | MOUNT ON LIGHT POLE |
| 205 | W3-3(2S) | -- | 36 | x | 36 | -- | 9.000 | -- | 1 | -- | -- | -- | -- | -- | MOUNT ON LIGHT POLE |
| 206 | W3-3(2S) | -- | 36 | x | 36 | -- | 9.000 | -- | 1 | 1 | -- | 1 | -- | -- | -- |
| 207 | R3-52B(MOD)(2S) | BUSES, BICYCLES & RIGHT TURN | 30 | x | 48 | 10.000 | -- | -- | 1 | -- | -- | -- | -- | -- | MOUNT ON LIGHT POLE |
| 208 | R2-1(2S) | 35 MPH | 24 | x | 30 | 5.000 | -- | -- | 1 | 1 | -- | 1 | -- | -- | -- |
| 209 | R2-1(2S) | 35 MPH | 24 | x | 30 | 5.000 | -- | -- | 1 | 1 | -- | 1 | -- | -- | -- |
| 210 | R4-7(2S) | -- | 24 | x | 30 | 5.000 | -- | -- | -- | -- | -- | -- | -- | -- | MOUNT ON LIGHT POLE |
| 211 | R1-1(2S) | -- | 30 | x | 30 | 5.180 | -- | -- | 1 | 1 | -- | 1 | -- | -- | -- |
| 212 | R4-7(2S) | -- | 24 | x | 30 | 5.000 | -- | -- | -- | -- | -- | 1 | -- | -- | -- |
| 213 | R3-20L(2S) | -- | 24 | x | 36 | 6.000 | -- | -- | 1 | 1 | -- | 1 | -- | -- | -- |
| 214 | J4-1(2S) | -- | 24 | x | 36 | 6.000 | -- | -- | -- | -- | -- | -- | -- | -- | MOUNT ON LIGHT POLE |
| | M3-4 | -- | 24 | x | 12 | | | | | | -- | | | | |
| | M1-6 | STH 181 | 24 | x | 24 | | | | | | STH 181 | | | | |
| 215 | R3-52B(MOD)(2S) | BUSES, BICYCLES & RIGHT TURN | 30 | x | 48 | 10.000 | -- | -- | 1 | -- | -- | -- | -- | -- | MOUNT ON SIGNAL POLE |
| 216 | R7-1L(2S) | -- | 18 | x | 24 | 3.000 | -- | -- | 1 | 1 | -- | 1 | -- | -- | -- |
| 217 | R4-7(2S) | -- | 24 | x | 30 | 5.000 | -- | -- | 1 | -- | -- | -- | -- | -- | MOUNT ON SIGNAL POLE |
| 218 | R1-1F(2S) | -- | 30 | x | 30 | -- | -- | 5.180 | 1 | -- | -- | -- | -- | -- | MOUNT ON SIGNAL POLE |
| 219 | R1-1F(2S) | -- | 30 | x | 30 | -- | -- | 5.180 | -- | -- | -- | -- | -- | -- | MOUNT ON SIGNAL POLE |
| 220 | R5-1(2S) | -- | 30 | x | 30 | 6.250 | -- | -- | -- | -- | -- | -- | -- | -- | MOUNT ON SIGNAL POLE |
| 221 | R5-1(2S) | -- | 30 | x | 30 | 6.250 | -- | -- | 1 | -- | -- | -- | -- | -- | MOUNT ON SIGNAL POLE |
| 222 | R5-1(2S) | -- | 30 | x | 30 | 6.250 | -- | -- | 1 | -- | -- | -- | -- | -- | MOUNT ON SIGNAL POLE |
| 223 | R1-1F(2S) | -- | 30 | x | 30 | -- | -- | 5.180 | -- | -- | -- | -- | -- | -- | MOUNT ON SIGNAL POLE |
| 224 | R1-1F(2S) | -- | 30 | x | 30 | -- | -- | 5.180 | -- | -- | -- | -- | -- | -- | MOUNT ON SIGNAL POLE |
| 225 | M1-94H | W FLORIST AVE | 66 | x | 18 | 8.250 | -- | -- | 1 | -- | -- | -- | -- | -- | MOUNT ON MAST ARM |
| 226 | R4-7(2S) | -- | 24 | x | 30 | 5.000 | -- | -- | 1 | -- | -- | -- | -- | -- | MOUNT ON LIGHT POLE |
| 227 | M1-94H | W FLORIST AVE | 66 | x | 18 | 8.250 | -- | -- | -- | -- | -- | -- | -- | -- | MOUNT ON MAST ARM |
| 228 | R5-1(2S) | -- | 30 | x | 30 | 6.250 | -- | -- | 1 | -- | -- | -- | -- | -- | MOUNT ON SIGNAL POLE |
| 229 | R1-1F(2S) | -- | 30 | x | 30 | -- | -- | 5.180 | -- | -- | -- | -- | -- | -- | MOUNT ON SIGNAL POLE |
| 230 | R1-1F(2S) | -- | 30 | x | 30 | -- | -- | 5.180 | -- | -- | -- | -- | -- | -- | MOUNT ON SIGNAL POLE |
| 231 | R4-7(2S) | -- | 24 | x | 30 | 5.000 | -- | -- | 1 | -- | -- | -- | -- | -- | MOUNT ON SIGNAL POLE |
| 232 | R5-1(2S) | -- | 30 | x | 30 | 6.250 | -- | -- | -- | -- | -- | -- | -- | -- | MOUNT ON SIGNAL POLE |
| 233 | R4-7(2S) | -- | 24 | x | 30 | 5.000 | -- | -- | -- | -- | -- | -- | -- | -- | MOUNT ON SIGNAL POLE |
| 234 | R5-1(2S) | -- | 30 | x | 30 | 6.250 | -- | -- | 1 | -- | -- | -- | -- | -- | MOUNT ON SIGNAL POLE |
| 235 | R3-20LL(2S) | -- | 24 | x | 36 | 6.000 | -- | -- | 1 | 1 | -- | 1 | -- | -- | -- |
| 236 | R1-1F(2S) | -- | 30 | x | 30 | -- | -- | 5.180 | 1 | -- | -- | -- | -- | -- | MOUNT ON SIGNAL POLE |
| 237 | R1-1F(2S) | -- | 30 | x | 30 | -- | -- | 5.180 | -- | -- | -- | -- | -- | -- | MOUNT ON SIGNAL POLE |
| 238 | R7-7L(2S) | -- | 18 | x | 24 | 3.000 | -- | -- | 1 | -- | -- | -- | -- | -- | MOUNT ON LIGHT POLE |
| 239 | R6-2L(2S) | -- | 24 | x | 30 | 5.000 | -- | -- | -- | -- | -- | -- | -- | -- | MOUNT ON SIGNAL POLE - SHEET 2 OF 12 |
| 240 | R6-2L(2S) | -- | 24 | x | 30 | 5.000 | -- | -- | -- | -- | -- | -- | -- | -- | MOUNT ON SIGNAL POLE - SHEET 2 OF 12 |
| 241 | R6-2L(2M) | -- | 30 | x | 36 | 7.500 | -- | -- | -- | -- | -- | -- | -- | -- | MOUNT ON SIGNAL POLE - SHEET 3 OF 12 |
| 242 | R6-2L(2M) | -- | 30 | x | 36 | 7.500 | -- | -- | -- | -- | -- | -- | -- | -- | MOUNT ON SIGNAL POLE - SHEET 3 OF 12 |

3

| SIGN NO. | SIGN CODE & SIZE | SIGN MESSAGE | SIGN SIZE W [IN.] | x | H [IN.] | 637.2210 SIGNS TYPE II REFLC H [SF] | 637.2230 SIGNS TYPE II REFLC F [SF] | 637.2215 SIGNS TYPE II REFLC H FOLDING [SF] | 638.2602 REM SIGNS TYPE II [EA] | 638.3000 REM SMALL SIGN SUP [EA] | 634.0618 WOOD POSTS 4"X 6"x18' [EA] | 634.0814 TUBULAR STEEL POSTS 2"X2"X14' [EA] | 638.2102 MOVE SIGNS TYPE II [EA] | MOUNT ON SAME POST AS SIGN # | REMARKS / NEW SIGN LOCATION |
|---|---|---|---|---|---|---|---|---|---|---|---|---|---|---|---|
| 243 | R6-2L(2M) | -- | 30 | x | 36 | 7.500 | -- | -- | -- | -- | -- | -- | -- | -- | MOUNT ON SIGNAL POLE - SHEET 3 OF 12 |
| 244 | R5-1(2S) | -- | 30 | x | 30 | 6.250 | -- | -- | -- | -- | -- | -- | -- | 53 | BACK OF SIGN #53 - SHEET 3 OF 12 |
| 245 | R6-2L(2M) | -- | 30 | x | 36 | 7.500 | -- | -- | -- | -- | -- | -- | -- | -- | MOUNT ON SIGNAL POLE - SHEET 3 OF 12 |
| 246 | R2-1(2S) | 35 MPH | 24 | x | 30 | 5.000 | -- | -- | 1 | 1 | -- | 1 | -- | -- | SHEET 3 OF 12 |
| 247 | W1-6(2S) | -- | 48 | x | 24 | -- | 8.000 | -- | -- | -- | -- | 1 | -- | -- | SHEET 4 OF 12 |
| 248 | J2-2(2S) | -- | 48 | x | 57 | 19.000 | -- | -- | -- | -- | 1 | -- | -- | -- | SHEET 6 OF 12 |
| | M3-4 | -- | 24 | x | 12 | | | | | | -- | | | | |
| | M1-5A | CTH E | 24 | x | 24 | | | | | | CTH E | | | | |
| | M6-1 | -- | 21 | x | 21 | | | | | | -- | | | | |
| | M3-2 | -- | 24 | x | 12 | | | | | | -- | | | | |
| | M1-5A | CTH E | 24 | x | 24 | | | | | | CTH E | | | | |
| | M5-2R | -- | 21 | x | 21 | | | | | | -- | | | | |
| 249 | R6-2L(2S) | -- | 24 | x | 30 | 5.000 | -- | -- | -- | -- | -- | -- | -- | -- | MOUNT ON SIGNAL POLE- SHEET 7 OF 12 |
| 250 | R3-1(2S) | -- | 24 | x | 24 | 4.000 | -- | -- | -- | -- | -- | -- | -- | -- | MOUNT ON MAST ARM - SHEET 7 OF 12 |
| 251 | R5-1(3) | -- | 36 | x | 36 | 9.000 | -- | -- | -- | -- | -- | 2 | -- | -- | SHEET 7 OF 12 |
| 251A | R5-1A(2S) | -- | 36 | x | 24 | 6.000 | -- | -- | -- | -- | -- | -- | -- | 251 | 3' MOUNT HEIGHT - SHEET 7 OF 12 |
| 252 | R4-7(2S) | -- | 24 | x | 30 | 5.000 | -- | -- | -- | -- | -- | -- | -- | -- | MOUNT ON SIGNAL POLE - SHEET 7 OF 12 |
| 253 | R6-2L(2S) | -- | 24 | x | 30 | 5.000 | -- | -- | -- | -- | -- | -- | -- | -- | MOUNT ON SIGNAL POLE - SHEET 7 OF 12 |
| 254 | R6-2L(2S) | -- | 24 | x | 30 | 5.000 | -- | -- | -- | -- | -- | -- | -- | -- | MOUNT ON SIGNAL POLE - SHEET 8 OF 12 |
| 255 | R3-2(2S) | -- | 24 | x | 24 | 4.000 | -- | -- | -- | -- | -- | -- | -- | -- | MOUNT ON MAST ARM - SHEET 8 OF 12 |
| 256 | R4-7(2S) | -- | 24 | x | 30 | 5.000 | -- | -- | -- | -- | -- | -- | -- | -- | MOUNT ON SIGNAL POLE - SHEET 8 OF 12 |
| 257 | R3-1(2S) | -- | 24 | x | 24 | 4.000 | -- | -- | -- | -- | -- | -- | -- | -- | MOUNT ON MAST ARM - SHEET 8 OF 12 |
| 258 | R6-2L(2S) | -- | 24 | x | 30 | 5.000 | -- | -- | -- | -- | -- | -- | -- | -- | MOUNT ON SIGNAL POLE - SHEET 8 OF 12 |
| 259 | R5-1(3) | -- | 36 | x | 36 | 9.000 | -- | -- | -- | -- | -- | -- | -- | -- | MOUNT ON SIGNAL POLE - SHEET 8 OF 12 |
| 259A | R5-1A(2S) | -- | 36 | x | 24 | 6.000 | -- | -- | -- | -- | -- | -- | -- | -- | 3' MOUNT HEIGHT - SHEET 8 OF 12 |
| 260 | R3-52B(MOD)(2S) | BUSES, BICYCLES & RIGHT TURN | 30 | x | 48 | 10.000 | -- | -- | -- | -- | -- | 2 | -- | -- | SHEET 8 OF 12 |
| 261 | R3-2(2S) | -- | 24 | x | 24 | 4.000 | -- | -- | -- | -- | -- | -- | -- | -- | MOUNT ON MAST ARM - SHEET 7 OF 12 |
| 262 | R5-1A(3) | -- | 42 | x | 30 | 8.750 | -- | -- | -- | -- | -- | -- | -- | 167 | BACK OF SIGN #167 - SHEET 8A OF 12 |
| 263 | R5-1A(3) | -- | 42 | x | 30 | 8.750 | -- | -- | -- | -- | -- | -- | -- | 275 | BACK OF SIGN #275 - SHEET 8B OF 12 |
| 264 | R6-2R(2S) | -- | 24 | x | 30 | 5.000 | -- | -- | -- | -- | -- | 1 | -- | -- | SHEET 3 OF 12 |
| 265 | R1-1(2S) | -- | 30 | x | 30 | 5.180 | -- | -- | 1 | 1 | -- | 1 | -- | -- | SHEET 11 OF 12 |
| 266 | W11-2(2S) | -- | 30 | x | 30 | -- | 6.250 | -- | -- | -- | -- | 1 | -- | -- | SHEET 4 OF 12 |
| 267 | W16-7L(2S) | -- | 24 | x | 12 | -- | 2.000 | -- | -- | -- | -- | -- | -- | 266 | SHEET 4 OF 12 |
| 268 | R4-4(2S) | -- | 36 | x | 30 | 7.500 | -- | -- | -- | -- | -- | -- | -- | 71 | SHEET 4 OF 12 |
| 269 | R4-4(2S) | -- | 36 | x | 30 | 7.500 | -- | -- | -- | -- | -- | 1 | -- | -- | SHEET 4 OF 12 |
| 270 | W11-2(2S) | -- | 30 | x | 30 | -- | 6.250 | -- | -- | -- | -- | 1 | -- | -- | SHEET 4 OF 12 |
| 271 | W16-7L(2S) | -- | 24 | x | 12 | -- | 2.000 | -- | -- | -- | -- | -- | -- | 270 | SHEET 4 OF 12 |
| 272 | R10-50(2S) | -- | 30 | x | 36 | 7.500 | -- | -- | -- | -- | -- | -- | -- | -- | NEXT TO SIGNAL HEAD - SHEET 7 OF 12 |
| 273 | R10-50(2S) | -- | 30 | x | 36 | 7.500 | -- | -- | -- | -- | -- | -- | -- | -- | NEXT TO SIGNAL HEAD - SHEET 8 OF 12 |
| 274 | R1-1(2S) | -- | 30 | x | 30 | 5.180 | -- | -- | -- | -- | -- | -- | -- | -- | MOUNT ON LIGHT POLE - SHEET 8 OF 12 |
| 275 | R3-8P(2S) | -- | 54 | x | 30 | 11.250 | -- | -- | -- | -- | -- | 2 | -- | 263 | SHEET 8B OF 12 |
| TOTALS | | | | | | 1472.080 | 295.500 | 177.120 | 154 | 66 | 17 | 121 | 1 | | |

3

SHEET 9 OF 9

3

## TRAFFIC CONTROL ITEMS

| CATEGORY | STAGE | LOCATION | STAGE DURATION DAYS | 643.0300 TRAFFIC CONTROL DRUMS NO. | 643.0300 TRAFFIC CONTROL DRUMS DAY | 643.0410 TRAFFIC CONTROL BARRICADES TYPE II NO. | 643.0410 TRAFFIC CONTROL BARRICADES TYPE II DAY | 643.0420 TRAFFIC CONTROL BARRICADES TYPE III NO. | 643.0420 TRAFFIC CONTROL BARRICADES TYPE III DAY | 643.0500 TRAFFIC CONTROL FLEXIBLE TUBULAR MARKER POSTS NO. | 643.0500 TRAFFIC CONTROL FLEXIBLE TUBULAR MARKER POSTS EACH | 643.0600 TRAFFIC CONTROL FLEXIBLE TUBULAR MARKER BASES NO. | 643.0600 TRAFFIC CONTROL FLEXIBLE TUBULAR MARKER BASES EACH | 643.0705 TRAFFIC CONTROL WARNING LIGHTS TYPE A NO. | 643.0705 TRAFFIC CONTROL WARNING LIGHTS TYPE A DAY | 643.0715 TRAFFIC CONTROL WARNING LIGHTS TYPE C NO. | 643.0715 TRAFFIC CONTROL WARNING LIGHTS TYPE C DAY | 643.0900 TRAFFIC CONTROL SIGNS NO. | 643.0900 TRAFFIC CONTROL SIGNS DAY | 643.1050 TRAFFIC CONTROL SIGNS PCMS NO. | 643.1050 TRAFFIC CONTROL SIGNS PCMS DAY |
|---|---|---|---|---|---|---|---|---|---|---|---|---|---|---|---|---|---|---|---|---|---|
| 0010 | 1 | STH 181 | 11 | 386 | 4,246 | -- | -- | 101 | 1,111 | -- | -- | -- | -- | 202 | 2,222 | 71 | 781 | 158 | 1,738 | -- | -- |
| | | RAMP NE | 11 | 15 | 165 | -- | -- | 4 | 44 | -- | -- | -- | -- | 8 | 88 | 10 | 110 | 3 | 33 | -- | -- |
| | | RAMP SW | 11 | 9 | 99 | -- | -- | 4 | 44 | -- | -- | -- | -- | 8 | 88 | 5 | 55 | 2 | 22 | -- | -- |
| | | UNDISTRIBUTED OPEN AND CLOSED MEDIANS AND INTERSECTIONS | 11 | 20 | 220 | -- | -- | 20 | 220 | -- | -- | -- | -- | 40 | 440 | -- | -- | 12 | 127 | -- | -- |
| | | SUBTOTAL | | | 4,730 | | -- | | 1,419 | | -- | | -- | | 2,838 | | 946 | | 1,920 | | -- |
| | 2 | STH 181 | 33 | 536 | 17,495 | -- | -- | 83 | 2,709 | 6 | 6 | 6 | 6 | 166 | 5,418 | 117 | 3,819 | 163 | 5,320 | 4 | 40 |
| | | SILVER SPRING DRIVE | 33 | 80 | 2,611 | -- | -- | 27 | 881 | -- | -- | -- | -- | 54 | 1,763 | 28 | 914 | 81 | 2,644 | 4 | 40 |
| | | RAMP NE | 33 | 15 | 490 | -- | -- | -- | -- | -- | -- | -- | -- | -- | -- | 10 | 326 | 3 | 98 | -- | -- |
| | | UNDISTRIBUTED OPEN AND CLOSED MEDIANS AND INTERSECTIONS | 33 | 20 | 653 | -- | -- | 20 | 653 | -- | -- | -- | -- | 40 | 1,306 | -- | -- | 12 | 375 | -- | -- |
| | | SUBTOTAL | | | 21,249 | | -- | | 4,243 | | 6 | | 6 | | 8,486 | | 5,059 | | 8,437 | | 80 |
| | 2B | STH 181 | 63 | 536 | 33,961 | -- | -- | 83 | 5,259 | 6 | 6 | 6 | 6 | 166 | 10,677 | 117 | 7,413 | 163 | 10,484 | 4 | 40 |
| | | SILVER SPRING DRIVE | 63 | 57 | 3,612 | -- | -- | 27 | 1,711 | -- | -- | -- | -- | 54 | 3,473 | 23 | 1,457 | 81 | 5,210 | 4 | 40 |
| | | RAMP NE | 63 | 15 | 950 | -- | -- | -- | -- | -- | -- | -- | -- | -- | -- | 10 | 634 | 3 | 193 | -- | -- |
| | | UNDISTRIBUTED OPEN AND CLOSED MEDIANS AND INTERSECTIONS | 63 | 20 | 1,267 | -- | -- | 20 | 1,267 | -- | -- | -- | -- | 40 | 2,573 | -- | -- | 12 | 740 | -- | -- |
| | | SUBTOTAL | | | 39,790 | | -- | | 8,237 | | 6 | | 6 | | 16,723 | | 9,504 | | 16,627 | | 80 |
| | 3 | STH 181 | 31 | 553 | 17,298 | -- | -- | 77 | 2,409 | 7 | 7 | 7 | 7 | 154 | 4,817 | 78 | 2,440 | 150 | 4,692 | 4 | 40 |
| | | FOND DU LAC FREEWAY | 31 | 34 | 1,064 | -- | -- | 8 | 250 | -- | -- | -- | -- | 16 | 500 | -- | -- | 16 | 500 | -- | -- |
| | | SILVER SPRING DRIVE | 31 | 124 | 3,879 | -- | -- | 35 | 1,095 | -- | -- | -- | -- | 70 | 2,190 | 30 | 938 | 92 | 2,878 | 4 | 40 |
| | | RAMP SW | 31 | 9 | 282 | -- | -- | 50 | 1,564 | -- | -- | -- | -- | 100 | 3,128 | 5 | 156 | 2 | 63 | -- | -- |
| | | UNDISTRIBUTED OPEN AND CLOSED MEDIANS AND INTERSECTIONS | 31 | -- | -- | -- | -- | 59 | 1,853 | -- | -- | -- | -- | 119 | 3,707 | -- | -- | 37 | 1,142 | -- | -- |
| | | UNDISTRIBUTED MAINTAIN PEDESTRIAN ACCESS ITEMS | 31 | -- | -- | 25 | 782 | 50 | 1,564 | -- | -- | -- | -- | -- | -- | -- | -- | 50 | 1,564 | -- | -- |
| | | SUBTOTAL | | | 22,522 | | 782 | | 8,735 | | 7 | | 7 | | 14,342 | | 3,535 | | 10,839 | | 80 |
| | 3B | STH 181 | 61 | 553 | 33,578 | -- | -- | 77 | 4,675 | 7 | 7 | 7 | 7 | 154 | 9,351 | 78 | 4,736 | 150 | 9,108 | 4 | 40 |
| | | FOND DU LAC FREEWAY | 61 | 34 | 2,064 | -- | -- | 8 | 486 | -- | -- | -- | -- | 16 | 972 | -- | -- | 16 | 972 | -- | -- |
| | | SILVER SPRING DRIVE | 61 | 108 | 6,558 | -- | -- | 39 | 2,368 | -- | -- | -- | -- | 78 | 4,736 | 23 | 1,397 | 91 | 5,526 | 4 | 40 |
| | | RAMP SW | 61 | 9 | 546 | -- | -- | 50 | 3,036 | -- | -- | -- | -- | 100 | 6,072 | 5 | 304 | 2 | 121 | -- | -- |
| | | UNDISTRIBUTED OPEN AND CLOSED MEDIANS AND INTERSECTIONS | 61 | -- | -- | -- | -- | 59 | 3,598 | -- | -- | -- | -- | 119 | 7,195 | -- | -- | 37 | 2,216 | -- | -- |
| | | UNDISTRIBUTED MAINTAIN PEDESTRIAN ACCESS ITEMS | 61 | -- | -- | 25 | 1,518 | 50 | 3,036 | -- | -- | -- | -- | -- | -- | -- | -- | 50 | 3,036 | -- | -- |
| | | SUBTOTAL | | | 42,747 | | 1,518 | | 17,199 | | 7 | | 7 | | 28,326 | | 6,436 | | 20,979 | | 80 |
| | 4 | STH 181 | 23 | 149 | 3,427 | -- | -- | 46 | 1,058 | -- | -- | -- | -- | 92 | 2,116 | 20 | 460 | 73 | 1,679 | -- | -- |
| | | RAMP NE | 23 | 13 | 299 | -- | -- | 3 | 69 | -- | -- | -- | -- | 6 | 138 | 10 | 230 | 2 | 46 | -- | -- |
| | | RAMP SW | 23 | 9 | 207 | -- | -- | 4 | 92 | -- | -- | -- | -- | 8 | 184 | 5 | 115 | 2 | 46 | -- | -- |
| | | UNDISTRIBUTED MAINTAIN PEDESTRIAN ACCESS ITEMS | 23 | -- | -- | 2 | 46 | 4 | 92 | -- | -- | -- | -- | -- | -- | -- | -- | 4 | 92 | -- | -- |
| | | SUBTOTAL | | | 3,933 | | 46 | | 1,311 | | -- | | -- | | 2,438 | | 805 | | 1,863 | | -- |
| | | PROJECT TOTAL | | | 134,970 | | 2,346 | | 41,144 | | 26 | | 26 | | 73,153 | | 26,285 | | 60,664 | | 320 |

ALL QUANTITIES ARE CATEGORY 10 UNLESS OTHERWISE NOTED

3

## TRAFFIC CONTROL ITEMS-DETOUR

| CATEGORY | STAGE | LOCATION | STAGE DURATION DAYS | 643.0920 TRAFFIC CONTROL COVERING SIGNS TYPE II NO. | CYCLES | EACH | 643.3000 TRAFFIC CONTROL DETOUR SIGNS NO. | DAY |
|---|---|---|---|---|---|---|---|---|
| 0010 | 2 | STAGE 2 DETOURS | 96 | | | | | |
| | | | | 8 | 1 | 8 | 37 | 3,552 |
| | 3 | STAGE 3 DETOURS | 92 | | | | | |
| | | | | 8 | 1 | 8 | 40 | 3,680 |
| | 2/3 | STAGE 2&3 DETOURS-NIGHT CLOSURE | 16 | | | | | |
| | | | | -- | -- | -- | 31 | 496 |
| | | PROJECT TOTAL | | | | 16 | | 7,728 |

## TRAFFIC CONTROL SIGNS FIXED MESSAGE

| CATEGORY | STAGE | LOCATION | SIGN NUMBER | NUMBER REQUIRED | 643.1000 SIGN SIZE W X H FT X | SF |
|---|---|---|---|---|---|---|
| 0010 | 2 | STAGE 2 DETOURS | | | | |
| | | SILVER SPRING DRIVE WB | 350 | 2 | .5 X 5 | 55.00 |
| | | STH 181 NB | 352 | 1 | .0 X 5 | 30.00 |
| | | STH 181 SB | 353 | 1 | .0 X 5 | 30.00 |
| | | SUBTOTAL | | | | 115.00 |
| | 3 | STAGE 3 DETOURS | | | | |
| | | SILVER SPRING DRIVE EB | 351 | 2 | .5 X 5 | 55.00 |
| | | STH 181 NB | 352 | 1 | .0 X 5 | 30.00 |
| | | STH 181 SB | 353 | 1 | .0 X 5 | 30.00 |
| | | SUBTOTAL | | | | 115.00 |
| | 2/3 | STAGE 2&3 DETOURS-NIGHT CLOSURE | | | | |
| | | SILVER SPRING DRIVE WB | 354 | 1 | .5 X 5 | 27.50 |
| | | SILVER SPRING DRIVE EB | 355 | 1 | .5 X 5 | 27.50 |
| | | SUBTOTAL | | | | 55.00 |
| | | PROJECT TOTAL | | | | 285.00 |

## TRAFFIC CONTROL DETOUR (PROJECT)

| CATEGORY | STAGE | LOCATION | 643.2000 TRAFFIC CONTROL DETOUR (PROJECT) EACH |
|---|---|---|---|
| 0010 | ALL | PROJECT | 1 |
| | | PROJECT | 1 |

3

## PEDESTRIAN WALKWAY ACCOMMODATIONS

| CATEGORY | STAGE | LOCATION | 644.1410.S TEMPORARY PEDESTRIAN SURFACE ASPHALT SF | 644.1420.S TEMPORARY PEDESTRIAN SURFACE PLYWOOD SF | 644.1601.S TEMPORARY CURB RAMP EACH |
|---|---|---|---|---|---|
| 0010 | 1 | UNDISTRIBUTED | -- | -- | 12 |
| | 2 | UNDISTRIBUTED | -- | -- | 12 |
| | 3 | UNDISTRIBUTED | 480 | 80 | 12 |
| | | PROJECT TOTAL | 480 | 80 | 36 |

## PAVEMENT MARKING

| STREET | LOCATION | | | 646.0106 PAVEMENT MARKING EPOXY 4-INCH LF | 646.0841.S PAVEMENT MARKING GROOVED WET REFLECTIVE CONTRAST TAPE 4-INCH LF | 646.0843.S PAVEMENT MARKING GROOVED WET REFLECTIVE CONTRAST TAPE 8-INCH LF | 646.0881.S PAVEMENT MARKING GROOVED WET REFLECTIVE TAPE 4-INCH LF | 646.0883.S PAVEMENT MARKING GROOVED WET REFLECTIVE TAPE 8-INCH LF | 647.0606 PAVEMENT MARKING ISLAND NOSE EPOXY EACH | 647.0726 PAVEMENT MARKING DIAGONAL EPOXY 12-INCH LF | SPV.0060.01 PAVEMENT MARKING ARROWS GROOVED PREFORMED THERMOPLASTIC TYPE 2 EACH | SPV.0060.02 PAVEMENT MARKING ARROWS GROOVED PREFORMED THERMOPLASTIC TYPE 3 EACH | SPV.0060.03 PAVEMENT MARKING WORDS GROOVED PREFORMED THERMOPLASTIC EACH | SPV.0090.06 PAVEMENT MARKING STOP LINE GROOVED PREFORMED THERMOPLASTIC 18-INCH LF | SPV.0090.07 PAVEMENT MARKING CROSSWALK GROOVED PREFORMED THERMOPLASTIC 6-INCH LF |
|---|---|---|---|---|---|---|---|---|---|---|---|---|---|---|---|
| STH 181 | 87+23 | - | 104+00 | 1749 | - | - | 742 | 1109 | 6 | - | 7 | - | 7 | 383 | 1612 |
| STH 181 | 104+00 | - | 115+55 | 1545 | - | - | 578 | 627 | 1 | - | - | - | - | - | 68 |
| STH 181 | 115+55 | - | 126+46 | 1362 | 475 | 892 | - | - | 4 | 278 | 4 | - | 2 | 239 | 803 |
| STH 181 | 126+46 | - | 139+90 | 2008 | - | - | 672 | 387 | 4 | - | - | - | - | - | - |
| STH 181 | 139+90 | - | 150+00 | 873 | - | - | 309 | 645 | 5 | 52 | 4 | - | 4 | 132 | 652 |
| RAMP NW | 100+86B | - | 107+08B | - | - | - | - | - | - | - | - | - | - | - | - |
| RAMP NE | 100+44C | - | 106+69C | - | - | 236 | - | - | - | - | 2 | 1 | 1 | - | - |
| RAMP SE | 100+80D | - | 106+04D | - | - | - | - | - | - | - | - | - | - | - | - |
| RAMP SW | 99+22E | - | 104+04E | - | - | 93 | - | - | - | - | 1 | 1 | 1 | - | - |
| SILVER SPRING DRIVE | 170+48 | - | 172+70 | 734 | - | - | - | - | - | - | - | - | - | - | - |
| | | PROJECT TOTAL | | 8,271 | 475 | 1,221 | 2,300 | 2,768 | 20 | 330 | 18 | 2 | 15 | 754 | 3,135 |

ALL QUANTITIES ARE CATEGORY 10 UNLESS OTHERWISE NOTED

3

## TEMPORARY PAVEMENT MARKING ITEMS

| CATEGORY | STAGE | LOCATION | STATION TO STATION | ALIGNMENT | 646.0600 REMOVING PAVEMENT MARKINGS LF | 647.0955 REMOVING PAVEMENT MARKINGS ARROWS LF | 647.0965 REMOVING PAVEMENT MARKINGS WORDS LF | 649.0400 TEMPORARY PAVEMENT MARKING REMOVABLE TAPE 4-INCH 12.5' LINE 37.5' SKIP WHITE LF | 649.0400 12.5' LINE 37.5' SKIP YELLOW LF | 649.0400 SOLID WHITE LF | 649.0400 SOLID YELLOW LF | 649.0801 TEMPORARY PAVEMENT MARKING REMOVABLE TAPE 8-INCH LF | 649.1200 TEMPORARY PAVEMENT MARKING STOP LINE REMOVABLE TAPE 18-INCH LF | 649.1600 TEMPORARY PAVEMENT MARKING DIAGONAL REMOVABLE TAPE 12-INCH LF |
|---|---|---|---|---|---|---|---|---|---|---|---|---|---|---|
| 0010 | 1 | STH 181 NB | | | | | | | | | | | | |
| | | | 79+16 - 146+07 | STH 181 | 657 | -- | -- | -- | -- | 1,380 | 1,280 | 220 | -- | -- |
| | | STH 181 SB | | | | | | | | | | | | |
| | | | 93+90 - 147+23 | STH 181 | 1,017 | 1 | 1 | -- | -- | 1,000 | 2,190 | -- | -- | -- |
| | | RAMP NE | | | | | | | | | | | | |
| | | | 101+80 - 106+76 | C | -- | -- | -- | -- | -- | -- | 490 | -- | -- | -- |
| | | RAMP SW | | | | | | | | | | | | |
| | | | 100+56 - 104+16 | E | -- | -- | -- | -- | -- | -- | 360 | -- | -- | -- |
| | | SUBTOTAL | | | 1,673 | 1 | 1 | -- | -- | 2,380 | 4,320 | 220 | -- | -- |
| | 2 | STH 181 NB | | | | | | | | | | | | |
| | | | 116+18 - 128+36 | STH 181 | -- | -- | -- | -- | -- | -- | 1,040 | -- | 30 | -- |
| | | STH 181 SB | | | | | | | | | | | | |
| | | | 111+79 - 132+93 | STH 181 | 81 | -- | -- | -- | -- | 1,930 | 1,790 | -- | 30 | 70 |
| | | SILVER SPRING DRIVE | | | | | | | | | | | | |
| | | | 163+00 - 176+35 | A | -- | -- | -- | -- | -- | 1,000 | 2,170 | -- | -- | -- |
| | | SUBTOTAL | | | 81 | -- | -- | -- | -- | 2,930 | 5,000 | -- | 60 | 70 |
| | 2B | SILVER SPRING DRIVE | | | | | | | | | | | | |
| | | | 163+00 - 174+41 | A | -- | -- | -- | -- | -- | 2,150 | -- | -- | -- | -- |
| | | SUBTOTAL | | | -- | -- | -- | -- | -- | 2,150 | -- | -- | -- | -- |
| | 3 | STH 181 NB | | | | | | | | | | | | |
| | | | 80+24 - 129+32 | STH 181 | -- | -- | -- | -- | -- | 2,370 | 1,560 | -- | 30 | 80 |
| | | STH 181 SB | | | | | | | | | | | | |
| | | | 140+19 - 147+23 | STH 181 | 30 | -- | -- | 160 | -- | 2,420 | 1,270 | 160 | 30 | -- |
| | | FOND DU LAC FREEWAY | | | | | | | | | | | | |
| | | | - - - | - | -- | -- | -- | -- | -- | 640 | -- | -- | -- | -- |
| | | SILVER SPRING DRIVE | | | | | | | | | | | | |
| | | | 163+00 - 176+64 | A | -- | -- | -- | -- | -- | 860 | 2,060 | -- | -- | -- |
| | | RAMP SW | | | | | | | | | | | | |
| | | | 100+56 - 104+16 | E | -- | -- | -- | -- | -- | -- | 360 | -- | -- | -- |
| | | SUBTOTAL | | | 30 | -- | -- | 160 | -- | 6,290 | 5,250 | 160 | 60 | 80 |
| | 3B | SILVER SPRING DRIVE | | | | | | | | | | | | |
| | | | 164+29 - 176+64 | A | -- | -- | -- | -- | -- | 2,140 | -- | -- | -- | -- |
| | | SUBTOTAL | | | -- | -- | -- | -- | -- | 2,140 | -- | -- | -- | -- |
| | 4 | STH 181 NB | | | | | | | | | | | | |
| | | | 105+16 - 132+76 | STH 181 | -- | -- | -- | -- | -- | -- | 720 | 130 | 10 | -- |
| | | STH 181 SB | | | | | | | | | | | | |
| | | | 120+35 - 139+32 | STH 181 | -- | -- | -- | -- | -- | -- | 760 | 120 | 10 | -- |
| | | RAMP NE | | | | | | | | | | | | |
| | | | 102+81 - 105+27 | C | -- | -- | -- | -- | -- | -- | 250 | -- | -- | -- |
| | | RAMP SW | | | | | | | | | | | | |
| | | | 100+56 - 104+16 | E | -- | -- | -- | -- | -- | -- | 360 | -- | -- | -- |
| | | SUBTOTAL | | | -- | -- | -- | -- | -- | -- | 2,090 | 250 | 20 | -- |
| | | CATEGORY SUBTOTAL | | | | | | 160 | -- | 15,890 | 16,660 | | | |
| | | PROJECT TOTAL | | | 1,784 | 1 | 1 | | | 32,710 | | 630 | 140 | 150 |

3

ALL QUANTITIES ARE CATEGORY 10 UNLESS OTHERWISE NOTED

3

## CONSTRUCTION STAKING

| ITEM | QUANTITY | UNIT | DESCRIPTION | CATEGORY |
|---|---|---|---|---|
| 650.4000 | 35 | EACH | CONSTRUCTION STAKING STORM SEWER | 0010 |
| 650.4500 | 3,232 | LF | CONSTRUCTION STAKING SUBGRADE | 0010 |
| 650.5500 | 2,798 | LF | CONSTRUCTION STAKING CURB GUTTER AND CURB & GUTTER | 0010 |
| 650.6500 | 1 | LS | CONSTRUCTION STAKING STRUCTURE LAYOUT (B-40-766) | 0030 |
| 650.6500 | 1 | LS | CONSTRUCTION STAKING STRUCTURE LAYOUT (R-40-604) | 0040 |
| 650.6500 | 1 | LS | CONSTRUCTION STAKING STRUCTURE LAYOUT (R-40-605) | 0050 |
| 650.7000 | 3,232 | LF | CONSTRUCTION STAKING CONCRETE PAVEMENT | 0010 |
| 650.7500 | 298 | LF | CONSTRUCTION STAKING CONCRETE BARRIER | 0010 |
| 650.8000 | 4,905 | LF | CONSTRUCTION STAKING RESURFACING REFERENCE | 0010 |
| 650.8500 | 1 | LS | CONSTRUCTION STAKING ELECTRICAL INSTALLATIONS (ID 3738-02-73) | 0020 |
| 650.9910 | 1 | LS | CONSTRUCTION STAKING SUPPLEMENTAL CONTROL (ID 3738-02-73) | 0010 |
| 650.9920 | 3,232 | LF | CONSTRUCTION STAKING SLOPE STAKES | 0010 |

## SAWING ASPHALT

| STREET | STATION | | TO STATION | CAT 10 690.0150 LF |
|---|---|---|---|---|
| STH 181 | 87+23 | - | 104+00 | 446 |
| STH 181 | 104+00 | - | 115+55 | 161 |
| STH 181 | 115+55 | - | 126+46 | 236 |
| STH 181 | 126+46 | - | 139+90 | 162 |
| STH 181 | 139+90 | - | 147+19 | 300 |
| RAMP NW | 100+86B | - | 107+08B | 100 |
| RAMP NE | 100+44C | - | 106+69C | 167 |
| RAMP SE | 100+80D | - | 106+04D | 82 |
| RAMP SW | 99+22E | - | 104+04E | 218 |
| SILVER SPRING | 167+50 | - | 172+70 | 0 |
| | | | PROJECT TOTAL | 1,872 |

3

## SAWING CONCRETE

| STREET | STATION | | TO STATION | CAT 10 690.0250 LF |
|---|---|---|---|---|
| STH 181 | 87+23 | - | 104+00 | 1,727 |
| STH 181 | 104+00 | - | 115+55 | 1,442 |
| STH 181 | 115+55 | - | 126+46 | 74 |
| STH 181 | 126+46 | - | 139+90 | 1,352 |
| STH 181 | 139+90 | - | 147+19 | 837 |
| RAMP NW | 100+86B | - | 107+08B | 11 |
| RAMP NE | 100+44C | - | 106+69C | 5 |
| RAMP SE | 100+80D | - | 106+04D | 5 |
| RAMP SW | 99+22E | - | 104+04E | 17 |
| SILVER SPRING | 167+50 | - | 172+70 | 575 |
| | | | PROJECT TOTAL | 6,045 |

## LANDMARK REFERENCE MONUMENTS SPECIAL

| STA | STA | OFSET | CAT 10 SPV.0060.07 EACH |
|---|---|---|---|
| SECTION CORNER | 93+40 | 0' LT | 1 |
| SECTION CORNER | 120+00 | 0' LT | 1 |
| WITNESS MONUMENT | 119+06 | 71.37' RT | 1 |
| WITNESS MONUMENT | 119+32 | 49.88' LT | 1 |
| WITNESS MONUMENT | 120+16 | 56.48' LT | 1 |
| WITNESS MONUMENT | 120+18 | 57.56' RT | 1 |
| SECTION CORNER | 146+57 | 0' LT | 1 |
| | | PROJECT TOTAL | 7 |

## SAWING CURB HEAD

| STREET | FROM | | TO | CAT 10 SPV.0090.01 LF |
|---|---|---|---|---|
| STH 181 | 100+55 | - | 101+42 | 87 |
| STH 181 | 106+58 | - | 107+71 | 113 |
| | | | PROJECT TOTAL | 200 |

## LONGITUDINAL JOINT REPAIR

| STREET | LOCATION | CAT 10 SPV.0090.10 LF |
|---|---|---|
| STH 181 | UNDISTRIBUTED | 1500 |
| | PROJECT TOTAL | 1500 |

## REMOVE LIGHT POLE & RECONNECT LIGHTING CONDUIT

| STA | STA | OFSET | CAT 20 SPV.0105.12 LS |
|---|---|---|---|
| PROJECT ID 2140-13-70 | | | 1 |
| | | PROJECT TOTAL | 1 |

ALL QUANTITIES ARE CATEGORY 10 UNLESS OTHERWISE NOTED

3

STH 181 & W. VILLARD AVENUE

CONDUIT LOOP DETECTOR
LOOP DETECTOR LEAD IN CABLE
LOOP DETECTOR WIRE

| LOOP NO. | HOME RUN PB | STATION | LOCATION | SIZE | NO. OF TURNS | SDD INSTALLATION REFERENCE | 652.0800 CONDUIT LOOP DETECTOR L.F. | 655.0700 LOOP DETECTOR LEAD IN CABLE L.F. | 655.0800 LOOP DETECTOR WIRE L.F. |
|---|---|---|---|---|---|---|---|---|---|
| 11 | PB6 | 92+68.2 | 8.0 RT | 6'x20' | 3 | LOOP DETECTOR INSTALLED IN BASE COURSE WITH PULL (SPLICE) BOX OFF ROADWAY (OPTION 1) | 86 | 236 | 268 |
| 12 | PB6 | 92+96.2 | 8.0 RT | 6'x20' | 3 | LOOP DETECTOR INSTALLED IN BASE COURSE WITH PULL (SPLICE) BOX OFF ROADWAY (OPTION 1) | 74 | 236 | 232 |
| 21 | PB15 | 96+17.8 | 30.5 LT | 6'x28' | 3 | LOOP DETECTOR INSTALLED IN BASE COURSE WITH PULL (SPLICE) BOX OFF ROADWAY (OPTION 1) | 104 | 266 | 322 |
| 42 | PB8 | 93+10.9 | 88.6 LT | 6'x20' | 3 | LOOP DETECTOR INSTALLED IN BASE COURSE WITH PULL (SPLICE) BOX OFF ROADWAY (OPTION 1) | 72 | 308 | 226 |
| 43 | PB8 | 93+10.9 | 60.3 LT | 6'x20' | 3 | LOOP DETECTOR INSTALLED IN BASE COURSE WITH PULL (SPLICE) BOX OFF ROADWAY (OPTION 1) | 74 | 243 | 232 |
| 44 | PB8 | 93+22.4 | 88.6 LT | 6'x20' | 3 | LOOP DETECTOR INSTALLED IN BASE COURSE WITH PULL (SPLICE) BOX OFF ROADWAY (OPTION 2) | 94 | 243 | 292 |
| 45 | PB8 | 93+22.4 | 60.3 LT | 6'x20' | 3 | LOOP DETECTOR INSTALLED IN BASE COURSE WITH PULL (SPLICE) BOX OFF ROADWAY (OPTION 2) | 96 | 243 | 298 |
| 46 | PB9 | 93+33.9 | 88.6 LT | 6'x20' | 3 | LOOP DETECTOR INSTALLED IN BASE COURSE WITH PULL (SPLICE) BOX OFF ROADWAY (OPTION 1) | 66 | 198 | 208 |
| 47 | PB9 | 93+33.9 | 60.3 LT | 6'x20' | 3 | LOOP DETECTOR INSTALLED IN BASE COURSE WITH PULL (SPLICE) BOX OFF ROADWAY (OPTION 1) | 68 | 198 | 214 |
| 51 | PB12 | 94+14.0 | 8.0 LT | 6'x20' | 3 | LOOP DETECTOR INSTALLED IN BASE COURSE WITH PULL (SPLICE) BOX OFF ROADWAY (OPTION 1) | 76 | 74 | 238 |
| 52 | PB12 | 93+86.0 | 8.0 LT | 6'x20' | 3 | LOOP DETECTOR INSTALLED IN BASE COURSE WITH PULL (SPLICE) BOX OFF ROADWAY (OPTION 1) | 72 | 74 | 226 |
| 61 | PB5 | 89+89.5 | 30.5 RT | 6'x28' | 4 | LOOP DETECTOR INSTALLED IN BASE COURSE WITH PULL (SPLICE) BOX OFF ROADWAY (OPTION 1) | 90 | 536 | 370 |
| 82 | PB1 | 93+61.0 | 84.6 RT | 6'x20' | 3 | LOOP DETECTOR INSTALLED IN BASE COURSE WITH PULL (SPLICE) BOX OFF ROADWAY (OPTION 1) | 74 | 79 | 232 |
| 83 | PB1 | 93+61.0 | 56.3 RT | 6'x20' | 3 | LOOP DETECTOR INSTALLED IN BASE COURSE WITH PULL (SPLICE) BOX OFF ROADWAY (OPTION 1) | 80 | 79 | 250 |
| 84 | PB2 | 93+48.0 | 84.6 RT | 6'x20' | 3 | LOOP DETECTOR INSTALLED IN BASE COURSE WITH PULL (SPLICE) BOX OFF ROADWAY (OPTION 1) | 64 | 115 | 202 |
| 85 | PB2 | 93+48.0 | 56.3 RT | 6'x20' | 3 | LOOP DETECTOR INSTALLED IN BASE COURSE WITH PULL (SPLICE) BOX OFF ROADWAY (OPTION 1) | 70 | 115 | 220 |
| | | | | | | *** TOTALS | 1260 | 3243 | 4030 |

* STATION AND LOCATION IS TO FRONT CENTER OF DETECTION LOOP
** FINAL LOCATION TO BE DETERMINED BY THE ENGINEER IN THE FIELD
*** ADDITIONAL QUANTITIES SHOWN ELSEWHERE

REMOVE LOOP DETECTOR WIRE AND LEAD-IN CABLE, STH 181 & VILLARD AVENUE

| LOCATION | SPV.0105.02 REMOVE LOOP DETECTOR WIRE AND LEAD-IN CABLE L.S. |
|---|---|
| STH 181 & VILLARD AVENUE | 1 |
| TOTAL | 1 |

SHEET 1 OF 1

3

STH 181 & FOND DU LAC AVENUE

CONDUIT LOOP DETECTOR
LOOP DETECTOR LEAD IN CABLE
LOOP DETECTOR WIRE

| LOOP NO. | HOME RUN PB | STATION | LOCATION | SIZE | NO. OF TURNS | SDD INSTALLATION REFERENCE | 652.0800 CONDUIT LOOP DETECTOR L.F. | 655.0700 LOOP DETECTOR LEAD IN CABLE L.F. | 655.0800 LOOP DETECTOR WIRE L.F. |
|---|---|---|---|---|---|---|---|---|---|
| 11 | PB15 | 95+92.5 | 8.8 RT | 6'x20' | 3 | LOOP DETECTOR INSTALLED IN BASE COURSE WITH PULL (SPLICE) BOX OFF ROADWAY (OPTION 1) | 74 | 140 | 232 |
| 12 | PB15 | 96+20.5 | 8.8 RT | 6'x20' | 3 | LOOP DETECTOR INSTALLED IN BASE COURSE WITH PULL (SPLICE) BOX OFF ROADWAY (OPTION 1) | 72 | 140 | 226 |
| 21 | PB8 | 101+10.0 | 30.8 LT | 6'x28' | 4 | LOOP DETECTOR INSTALLED IN BASE COURSE WITH PULL (SPLICE) BOX OFF ROADWAY (OPTION 1) | 82 | 621 | 338 |
| 42 | PB3 | 97+56.5 | 72.2 LT | 6'x30' | 3 | LOOP DETECTOR INSTALLED IN BASE COURSE WITH PULL (SPLICE) BOX OFF ROADWAY (OPTION 1) | 94 | 284 | 292 |
| 43 | PB3 | 97+92.3 | 89.2 LT | 6'x20' | 3 | LOOP DETECTOR INSTALLED IN BASE COURSE WITH PULL (SPLICE) BOX OFF ROADWAY (OPTION 2) | 98 | 284 | 304 |
| 44 | PB3 | 97+71.3 | 70.6 LT | 6'x20' | 3 | LOOP DETECTOR INSTALLED IN BASE COURSE WITH PULL (SPLICE) BOX OFF ROADWAY (OPTION 2) | 98 | 284 | 304 |
| 45 | PB5 | 98+10.5 | 89.3 LT | 6'x20' | 3 | LOOP DETECTOR INSTALLED IN BASE COURSE WITH PULL (SPLICE) BOX OFF ROADWAY (OPTION 1) | 66 | 318 | 208 |
| 46 | PB5 | 97+89.6 | 70.7 LT | 6'x20' | 3 | LOOP DETECTOR INSTALLED IN BASE COURSE WITH PULL (SPLICE) BOX OFF ROADWAY (OPTION 1) | 68 | 318 | 214 |
| 51 | PB16 | 98+74.3 | 9.6 LT | 6'x20' | 3 | LOOP DETECTOR INSTALLED IN BASE COURSE WITH PULL (SPLICE) BOX OFF ROADWAY (OPTION 1) | 66 | 307 | 208 |
| 52 | PB16 | 98+46.3 | 9.6 LT | 6'x20' | 3 | LOOP DETECTOR INSTALLED IN BASE COURSE WITH PULL (SPLICE) BOX OFF ROADWAY (OPTION 1) | 68 | 307 | 214 |
| 61 | PB13(V) | 94+21.2 | 29.3 LT | 6'x28' | 3 | LOOP DETECTOR INSTALLED IN BASE COURSE WITH PULL (SPLICE) BOX OFF ROADWAY (OPTION 1) | 84 | 178 | 262 |
| 82 | PB17 | 97+30.4 | 57.9 RT | 6'x30' | 3 | LOOP DETECTOR INSTALLED IN BASE COURSE WITH PULL (SPLICE) BOX OFF ROADWAY (OPTION 1) | 94 | 230 | 292 |
| 83 | PB17 | 96+96.0 | 76.8 RT | 6'x20' | 3 | LOOP DETECTOR INSTALLED IN BASE COURSE WITH PULL (SPLICE) BOX OFF ROADWAY (OPTION 2) | 92 | 230 | 286 |
| 84 | PB17 | 97+16.3 | 57.5 RT | 6'x20' | 3 | LOOP DETECTOR INSTALLED IN BASE COURSE WITH PULL (SPLICE) BOX OFF ROADWAY (OPTION 2) | 92 | 230 | 286 |
| 85 | PB13 | 96+79.6 | 79.1 RT | 6'x20' | 3 | LOOP DETECTOR INSTALLED IN BASE COURSE WITH PULL (SPLICE) BOX OFF ROADWAY (OPTION 1) | 70 | 123 | 220 |
| 86 | PB13 | 96+96.9 | 58.8 RT | 6'x20' | 3 | LOOP DETECTOR INSTALLED IN BASE COURSE WITH PULL (SPLICE) BOX OFF ROADWAY (OPTION 1) | 70 | 123 | 220 |
| | | | | | | *** TOTALS | 1288 | 4117 | 4106 |

* STATION AND LOCATION IS TO FRONT CENTER OF DETECTION LOOP
** FINAL LOCATION TO BE DETERMINED BY THE ENGINEER IN THE FIELD
*** ADDITIONAL QUANTITIES SHOWN ELSEWHERE

REMOVE LOOP DETECTOR WIRE AND LEAD-IN CABLE, STH 181 & FOND DU LAC

| LOCATION | SPV.0105.03 REMOVE LOOP DETECTOR WIRE AND LEAD-IN CABLE L.S. |
|---|---|
| STH 181 & FOND DU LAC | 1 |
| TOTAL | 1 |

SHEET 1 OF 1

3

REMOVING CONCRETE BASES

| EXISTING BASE NO. | 204.0195 REMOVING CONCRETE BASES EACH |
|---|---|
| SC1 | 1 |
| SB1 | 1 |
| SB2 | 1 |
| SB4 | 1 |
| SB5 | 1 |
| SB6 | 1 |
| SB7 | 1 |
| SB8 | 1 |
| SB9 | 1 |
| SB10 | 1 |
| CB1 | 1 |
| SB11 | 1 |
| SB12 | 1 |
| SB13 | 1 |
| SB14 | 1 |
| SB15 | 1 |
| SB16 | 1 |
| SB18 | 1 |
| SB19 | 1 |
| | 19 |

SB3 & SB17 INCIDENTAL TO STRUCTURE REMOVAL

REMOVING PULL BOXES

| PULL BOX NO. | 653.0905 REMOVING PULL BOXES EACH |
|---|---|
| PB1 | 1 |
| PB2 | 1 |
| PB3 | 1 |
| PB4 | 1 |
| PB5 | 1 |
| PB6 | 1 |
| PB7 | 1 |
| PB8 | 1 |
| PB9 | 1 |
| PB10 | 1 |
| PB13 | 1 |
| PB14 | 1 |
| PB15 | 1 |
| PB16 | 1 |
| PB17 | 1 |
| PB18 | 1 |
| PB19 | 1 |
| PB20 | 1 |
| PB21 | 1 |
| PB22 | 1 |
| PB23 | 1 |
| PB24 | 1 |
| | 22 |

***ADDITIONAL QUANTITES SHOWN ELSEWHERE
PB 25 & PB 26 INCIDENTAL TO STRUCTURE REMOVAL

CONDUIT RIGID NONMETALLIC SCHEDULE 40 2-INCH
CONDUIT RIGID NONMETALLIC SCHEDULE 40 3-INCH

| FROM | TO | 652.0225*** CONDUIT RIGID NONMETALLIC SCHEDULE 40 2-INCH L.F. | 652.0235 CONDUIT RIGID NONMETALLIC SCHEDULE 40 3-INCH L.F. |
|---|---|---|---|
| CB1 | PB1 | -- | 81 |
| PB1 | PB2 | -- | 31 |
| PB1 | PB3 | -- | 142 |
| PB3 | PB4 | 221 | -- |
| PB3 | PB5 | -- | 128 |
| PB5 | PB6 | -- | 48 |
| PB6 | PB7 | 221 | -- |
| PB6 | PB8 | -- | 56 |
| PB8 | PB9 | -- | 78 |
| PB9 | PB10 | -- | 52 |
| PB10 | PB11 | -- | 238 |
| PB11 | PB12 | -- | 37 |
| PB12 | PB13 | -- | 132 |
| PB13 | CB1 | -- | 81 |
| PB12 | PB14 | -- | 122 |
| PB15 | SC1 | -- | 112 |
| SC1 | PB16 | -- | 39 |
| PB16 | PB17 | -- | 238 |
| PB17 | PB18 | -- | 74 |
| PB18 | PB19 | -- | 72 |
| PB19 | PB20 | -- | 32 |
| PB19 | PB21 | -- | 58 |
| PB21 | PB22 | -- | 152 |
| PB22 | PB23 | 223 | -- |
| PB22 | PB24 | -- | 100 |
| PB24 | PB25 | -- | 86 |
| PB25 | PB26 | 224 | -- |
| PB25 | PB27 | -- | 94 |
| PB27 | PB28 | 17 | -- |
| PB27 | SC1 | -- | 27 |
| PB2 | SB1 | 6 | -- |
| PB2 | SB2 | -- | 15 |
| PB3 | SB3 | 28 | -- |
| PB3 | SB4 | -- | 12 |
| PB8 | SB5 | 30 | -- |
| PB8 | SB6 | 20 | -- |
| PB10 | SB7 | 13 | -- |
| PB10 | SB8 | 9 | -- |
| PB11 | SB9 | 13 | -- |
| PB11 | SB10 | -- | 8 |
| PB16 | SB11 | 9 | -- |
| PB17 | SB12 | -- | 9 |
| PB17 | SB13 | 16 | -- |
| PB20 | SB14 | -- | 7 |
| PB20 | SB15 | 11 | -- |
| PB22 | SB16 | -- | 8 |
| PB22 | SB17 | 28 | -- |
| PB25 | SB18 | 21 | -- |
| PB25 | SB19 | 8 | -- |
| PB27 | SB20 | 4 | -- |
| | ***TOTALS | 1122 | 2369 |

*** ADDITIONAL QUANTITIES SHOWN ELSEWHERE

PULL BOXES STEEL 24X36 INCH
PULL BOXES STEEL 24X42-INCH

| PULL BOX NO. | STATION | OFFSET | 653.0135 PULL BOXES STEEL 24X36-INCH EACH | 653.0140 PULL BOXES STEEL 24X42-INCH EACH |
|---|---|---|---|---|
| PB1 | 122+80.4 | 73.1 LT | -- | 1 |
| PB2 | 122+57.2 | 53.1 LT | -- | 1 |
| PB3 | 122+80.4 | 2.0 LT | -- | 1 |
| PB4 | 125+01.7 | 9.5 LT | 1 | -- |
| PB5 | 122+80.4 | 62.0 RT | -- | 1 |
| PB6 | 122+68.6 | 82.6 RT | -- | 1 |
| PB7 | 121+86.0 | 287.5 RT | 1 | -- |
| PB8 | 122+41.0 | 82.6 RT | -- | 1 |
| PB9 | 122+01.9 | 82.6 RT | -- | 1 |
| PB10 | 121+87.9 | 60.6 RT | -- | 1 |
| PB11 | 121+87.9 | 58.5 LT | -- | 1 |
| PB12 | 122+00.4 | 93.4 LT | -- | 1 |
| PB13 | 122+44.4 | 96.5 LT | -- | 1 |
| PB16 | 120+14.0 | 60.1 LT | -- | 1 |
| PB17 | 120+14.0 | 58.5 RT | -- | 1 |
| PB18 | 119+94.5 | 89.6 RT | -- | 1 |
| PB19 | 119+39.0 | 89.6 RT | -- | 1 |
| PB20 | 119+50.4 | 59.4 RT | -- | 1 |
| PB21 | 119+13.8 | 74.9 RT | -- | 1 |
| PB22 | 119+13.8 | 1.5 LT | -- | 1 |
| PB23 | 116+90.8 | 9.5 RT | 1 | -- |
| PB24 | 119+13.8 | 51.5 LT | -- | 1 |
| PB25 | 119+51.4 | 71.9 LT | -- | 1 |
| PB26 | 119+62.9 | 295.9 LT | 1 | -- |
| PB27 | 119+98.4 | 72.1 LT | -- | 1 |
| PB28 | 119+98.2 | 89.2 LT | 1 | -- |
| | | ***TOTALS | 5 | 21 |

* FINAL LOCATION TO BE DETERMINED BY THE ENGINEER IN THE FIELD
*** ADDITIONAL QUANTITIES SHOWN ELSEWHERE

3

SHEET 1 OF 6

3

CONDUIT LOOP DETECTOR
LOOP DETECTOR LEAD IN CABLE
LOOP DETECTOR WIRE

| LOOP NO. | HOME RUN PB | STATION | LOCATION | SIZE | NO. OF TURNS | SDD INSTALLATION REFERENCE | 652.0800 CONDUIT LOOP DETECTOR L.F. | 655.0700 LOOP DETECTOR LEAD IN CABLE L.F. | 655.0800 LOOP DETECTOR WIRE L.F. |
|---|---|---|---|---|---|---|---|---|---|
| 11 | PB4 | 125+01.7 | 25.1 LT | 6'x20' | 3 | LOOP DETECTOR INSTALLED IN BASE COURSE WITH PULL (SPLICE) BOX OFF ROADWAY (OPTION 1) | 84 | 357 | 262 |
| 41 | PB26 | 101+90.8 E | 10.1 LT | 6'x16' | 5 | LOOP DETECTOR INSTALLED IN BASE COURSE WITH PULL (SPLICE) BOX OFF ROADWAY (OPTION 1) | 74 | 600 | 380 |
| 42 | PB28 | 103+90.8 E | 6.1 LT | 6'x20' | 3 | LOOP DETECTOR INSTALLED IN BASE COURSE WITH PULL (SPLICE) BOX OFF ROADWAY (OPTION 2) | 100 | 346 | 310 |
| 43 | PB28 | 104+18.8 E | 6.1 LT | 6'x20' | 3 | LOOP DETECTOR INSTALLED IN BASE COURSE WITH PULL (SPLICE) BOX OFF ROADWAY (OPTION 2) | 114 | 346 | 352 |
| 44 | PB28 | 103+90.8 E | 17.6 LT | 6'x20' | 3 | LOOP DETECTOR INSTALLED IN BASE COURSE WITH PULL (SPLICE) BOX OFF ROADWAY (OPTION 1) | 78 | 346 | 244 |
| 45 | PB28 | 104+18.8 E | 17.6 LT | 6'x20' | 3 | LOOP DETECTOR INSTALLED IN BASE COURSE WITH PULL (SPLICE) BOX OFF ROADWAY (OPTION 1) | 100 | 346 | 310 |
| 51 | PB23 | 116+90.8 | 24.9 RT | 6'x20' | 5 | LOOP DETECTOR INSTALLED IN BASE COURSE WITH PULL (SPLICE) BOX OFF ROADWAY (OPTION 1) | 82 | 692 | 420 |
| 81 | PB7 | 104+31.1 C | 10.1 LT | 6'x16' | 4 | LOOP DETECTOR INSTALLED IN BASE COURSE WITH PULL (SPLICE) BOX OFF ROADWAY (OPTION 1) | 74 | 445 | 306 |
| 82 | PB8 | 106+32.4 C | 3.2 LT | 6'x20' | 3 | LOOP DETECTOR INSTALLED IN BASE COURSE WITH PULL (SPLICE) BOX OFF ROADWAY (OPTION 1) | 88 | 252 | 274 |
| 83 | PB8 | 106+60.5 C | 3.2 LT | 6'x20' | 3 | LOOP DETECTOR INSTALLED IN BASE COURSE WITH PULL (SPLICE) BOX OFF ROADWAY (OPTION 1) | 102 | 252 | 316 |
| 84 | PB8 | 106+31.5 C | 14.7 LT | 6'x20' | 3 | LOOP DETECTOR INSTALLED IN BASE COURSE WITH PULL (SPLICE) BOX OFF ROADWAY (OPTION 2) | 110 | 252 | 340 |
| 85 | PB8 | 106+60.3 C | 14.7 LT | 6'x20' | 3 | LOOP DETECTOR INSTALLED IN BASE COURSE WITH PULL (SPLICE) BOX OFF ROADWAY (OPTION 2) | 120 | 252 | 370 |
| | | | | | | *** TOTALS | 1126 | 4486 | 3884 |

* STATION AND LOCATION IS TO FRONT CENTER OF DETECTION LOOP
** FINAL LOCATION TO BE DETERMINED BY THE ENGINEER IN THE FIELD
*** ADDITIONAL QUANTITIES SHOWN ELSEWHERE

CONCRETE BASES TYPE 1
CONCRETE BASES TYPE 10
CONCRETE BASES TYPE 13
CONCRETE CONTROL CABINET BASE TYPE 9 SPECIAL

| BASE NO. | STATION | OFFSET | 654.0101 CONCRETE BASES TYPE 1 EACH | 654.0110 CONCRETE BASES TYPE 10 EACH | 654.0113 CONCRETE BASES TYPE 13 EACH | 654.0217 CONCRETE CONTROL CABINET BASE TYPE 9 SPECIAL EACH |
|---|---|---|---|---|---|---|
| CB1 | 122+71.1 | 98.9 LT | -- | -- | -- | 1 |
| SB1 | 122+51.2 | 53.1 LT | 1 | -- | -- | -- |
| SB2 | 122+43.3 | 58.1 LT | -- | 1 | -- | -- |
| SB3 | 122+51.2 | 0.0 LT | 1 | -- | -- | -- |
| SB4 | 122+71.2 | 5.0 RT | -- | 1 | -- | -- |
| SB5 | 122+51.2 | 54.1 RT | 1 | -- | -- | -- |
| SB6 | 122+42.8 | 62.5 RT | 1 | -- | -- | -- |
| SB7 | 122+00.4 | 62.5 RT | 1 | -- | -- | -- |
| SB8 | 121+89.9 | 52.0 RT | 1 | -- | -- | -- |
| SB9 | 122+00.4 | 58.5 LT | 1 | -- | -- | -- |
| SB10 | 121+80.0 | 58.0 LT | -- | -- | 1 | -- |
| SC1 | 120+07.1 | 71.1 LT | -- | -- | -- | 1 |
| SB11 | 120+10.0 | 52.0 LT | 1 | -- | -- | -- |
| SB12 | 120+23.0 | 58.0 RT | -- | -- | 1 | -- |
| SB13 | 119+98.2 | 59.5 RT | 1 | -- | -- | -- |
| SB14 | 119+57.7 | 59.4 RT | -- | 1 | -- | -- |
| SB15 | 119+41.3 | 53.7 RT | 1 | -- | -- | -- |
| SB16 | 119+21.3 | 5.0 LT | -- | 1 | -- | -- |
| SB17 | 119+41.4 | 2.0 LT | 1 | -- | -- | -- |
| SB18 | 119+40.9 | 53.6 LT | 1 | -- | -- | -- |
| SB19 | 119+58.3 | 69.1 LT | 1 | -- | -- | -- |
| SB20 | 120+01.1 | 68.6 LT | 1 | -- | -- | -- |
| | | TOTALS | 14 | 4 | 2 | 2 |

* FINAL LOCATION TO BE DETERMINED BY THE ENGINEER IN THE FIELD

3

CABLE TRAFFIC SIGNAL 5-14 AWG
CABLE TRAFFIC SIGNAL 7-14 AWG
CABLE TRAFFIC SIGNAL 12-14 AWG
CABLE TRAFFIC SIGNAL 19-12 AWG

| FROM | TO | 655.0230 CABLE TRAFFIC SIGNAL 5-14 AWG L.F. | 655.0240 CABLE TRAFFIC SIGNAL 7-14 AWG L.F. | 655.0260 CABLE TRAFFIC SIGNAL 12-14 AWG L.F. | 655.0275 CABLE TRAFFIC SIGNAL 19-12 AWG L.F. |
|---|---|---|---|---|---|
| CB1 | SB1 | -- | -- | 107 | -- |
| SB1 | HEAD 22 | -- | 22 | -- | -- |
| SB1 | HEAD 24 | 21 | -- | -- | -- |
| SB1 | HEAD 33 | 20 | -- | -- | -- |
| CB1 | SB2 | -- | -- | 116 | -- |
| SB2 | HEAD 28 | 54 | | -- | -- |
| SB2 | HEAD 29 | -- | 45 | -- | -- |
| SB2 | HEAD 30 | 25 | -- | -- | -- |
| SB2 | HEAD 32 | 20 | | -- | -- |
| CB1 | SB3 | -- | 187 | -- | -- |
| CB1 | SB4 | -- | -- | 153 | -- |
| SB4 | HEAD 20 | 39 | -- | -- | -- |
| SB4 | HEAD 21 | 50 | -- | -- | -- |
| SB4 | HEAD 23 | -- | 29 | -- | -- |
| CB1 | SB5 | -- | 335 | -- | -- |
| SB5 | HEAD 34 | 20 | -- | -- | -- |
| CB1 | SB6 | -- | -- | 325 | -- |
| SB6 | HEAD 27 | 21 | -- | -- | -- |
| SB6 | HEAD 35 | 20 | -- | -- | -- |
| CB1 | SB7 | -- | 315 | -- | -- |
| SB7 | HEAD 36 | 20 | -- | -- | -- |
| CB1 | SB8 | -- | -- | 311 | -- |
| SB8 | HEAD 19 | 21 | -- | -- | -- |
| CB1 | SB9 | -- | 180 | -- | -- |
| SB9 | HEAD 31 | 20 | -- | -- | -- |
| CB1 | SB10 | -- | -- | 175 | -- |
| SB10 | HEAD 25 | 64 | -- | -- | -- |
| SB10 | HEAD 26 | 53 | -- | -- | -- |
| SC1 | SB11 | -- | -- | 49 | -- |
| SB11 | HEAD 4 | 21 | -- | -- | -- |
| SC1 | SB12 | -- | -- | 184 | -- |
| SB12 | HEAD 2 | 64 | -- | -- | -- |
| SB12 | HEAD 3 | 53 | -- | -- | -- |
| SC1 | SB13 | -- | 191 | -- | -- |
| SB13 | HEAD 17 | 20 | | -- | -- |
| SC1 | SB14 | -- | -- | 355 | -- |
| SB14 | HEAD 10 | 54 | -- | -- | -- |
| SB14 | HEAD 11 | 44 | -- | -- | -- |
| SB14 | HEAD 12 | 25 | -- | -- | -- |
| SB14 | HEAD 18 | 20 | -- | -- | -- |
| SC1 | SB15 | -- | -- | 359 | -- |
| SB15 | HEAD 1 | 21 | -- | -- | -- |
| SB15 | HEAD 7 | -- | 22 | -- | -- |
| SB15 | HEAD 13 | 20 | -- | -- | -- |
| SC1 | SB16 | -- | -- | 232 | -- |
| SB16 | HEAD 5 | 40 | -- | -- | -- |
| SB16 | HEAD 6 | 51 | -- | -- | -- |
| SB16 | HEAD 8 | -- | 29 | -- | -- |
| SC1 | SB17 | -- | 268 | -- | -- |
| SC1 | SB18 | -- | 120 | -- | -- |
| SB18 | HEAD 14 | 20 | -- | -- | -- |
| SC1 | SB19 | -- | -- | 107 | -- |
| SB19 | HEAD 9 | 21 | -- | -- | -- |
| SB19 | HEAD 15 | 20 | -- | -- | -- |
| SC1 | SB20 | -- | 40 | -- | -- |
| SB20 | HEAD 16 | 20 | -- | -- | -- |
| CB1 | SC1 | -- | -- | -- | 688 |
| | TOTALS | 982 | 1,783 | 2,473 | 688 |

Note: Total length of 19-12 AWG cable is for 2 feeder cables of equal length

3

ELECTRICAL WIRE TRAFFIC SIGNALS

| FROM | TO | 655.0515*** ELECTRICAL WIRE TRAFFIC SIGNALS 10 AWG L.F. | 655.0525 ELECTRICAL WIRE TRAFFIC SIGNALS 6 AWG L.F. | WIRE COLOR |
|---|---|---|---|---|
| CB1 | SB1 | 107 | -- | GREEN |
| SB1 | SB2 | 45 | -- | GREEN |
| SB2 | SB3 | 219 | -- | GREEN |
| SB3 | SB4 | 82 | -- | GREEN |
| SB4 | SB5 | 230 | -- | GREEN |
| SB5 | SB6 | 74 | -- | GREEN |
| SB6 | SB7 | 154 | -- | GREEN |
| SB7 | SB8 | 46 | -- | GREEN |
| SB8 | SB9 | 181 | -- | GREEN |
| SB9 | SB10 | 45 | -- | GREEN |
| SB10 | CB1 | 175 | -- | GREEN |
| SC1 | SB11 | 49 | -- | GREEN |
| SB11 | SB12 | 177 | -- | GREEN |
| SB12 | SB13 | 49 | -- | GREEN |
| SB13 | SB14 | 220 | -- | GREEN |
| SB14 | SB15 | 42 | -- | GREEN |
| SB15 | SB16 | 228 | -- | GREEN |
| SB16 | SB17 | 76 | -- | GREEN |
| SB17 | SB18 | 214 | -- | GREEN |
| SB18 | SB19 | 53 | -- | GREEN |
| SB19 | SB20 | 99 | -- | GREEN |
| SB20 | SC1 | 40 | -- | GREEN |
| PB1 | CB1 | 40 | -- | GREEN |
| PB2 | SB1 | 16 | -- | GREEN |
| PB3 | SB4 | 22 | -- | GREEN |
| PB5 | SB4 | 92 | -- | GREEN |
| PB6 | SB6 | 64 | -- | GREEN |
| PB8 | SB6 | 30 | -- | GREEN |
| PB9 | SB8 | 51 | -- | GREEN |
| PB10 | SB8 | 19 | -- | GREEN |
| PB11 | SB10 | 18 | -- | GREEN |
| PB12 | SB10 | 61 | -- | GREEN |
| PB13 | CB1 | 40 | -- | GREEN |
| PB14 | SB10 | 128 | -- | GREEN |
| PB15 | SC1 | 67 | -- | GREEN |
| PB16 | SB11 | 19 | -- | GREEN |
| PB17 | SB12 | 19 | -- | GREEN |
| PB18 | SB12 | 62 | -- | GREEN |
| PB19 | SB14 | 55 | -- | GREEN |
| PB20 | SB14 | 17 | -- | GREEN |
| PB21 | SB14 | 90 | -- | GREEN |
| PB22 | SB16 | 18 | -- | GREEN |
| PB24 | SB16 | 74 | -- | GREEN |
| PB25 | SB19 | 18 | -- | GREEN |
| PB27 | SC1 | 22 | -- | GREEN |
| CB1 | SC1 | -- | 344 | GREEN |
| CB1 | SC1 | -- | 344 | WHITE |
| | TOTALS | 3647 | 688 | |

*** ADDITIONAL QUANTITES SHOWN ELSEWHERE

3

PEDESTAL BASES
TRAFFIC SIGNAL STANDARDS ALUMINUM 3.5-FT
TRAFFIC SIGNAL STANDARDS ALUMINUM 13-FT
TRAFFIC SIGNAL STANDARDS ALUMINUM 15-FT
TRAFFIC SIGNAL STANDARDS ALUMINUM 10-FT
INSTALL POLES TYPE 9
INSTALL POLES TYPE 12
INSTALL MONOTUBE ARMS 30-FT
INSTALL MONOTUBE ARMS 45-FT
PEDESTRIAN PUSH BUTTONS

| SIGNAL BASE NO. | 657.0100 PEDESTAL BASES EACH | 657.0405 TRAFFIC SIGNAL STANDARDS ALUMINUM 3.5-FT EACH | 657.0420 TRAFFIC SIGNAL STANDARDS ALUMINUM 13-FT EACH | 657.0425 TRAFFIC SIGNAL STANDARDS ALUMINUM 15-FT EACH | 657.0430 TRAFFIC SIGNAL STANDARDS ALUMINUM 10-FT EACH | 657.1345 INSTALL POLES TYPE 9 EACH | 657.1355 INSTALL POLES TYPE 12 EACH | 657.1530 INSTALL MONOTUBE ARMS 30-FT EACH | 657.1545 INSTALL MONOTUBE ARMS 45-FT EACH | 658.0500 PEDESTRIAN PUSH BUTTONS EACH |
|---|---|---|---|---|---|---|---|---|---|---|
| SB1 | 1 | -- | -- | 1 | -- | -- | -- | -- | -- | 1 |
| SB2 | -- | -- | -- | -- | -- | 1 | -- | 1 | -- | 1 |
| SB3 | 1 | 1 | -- | -- | -- | -- | -- | -- | -- | 1 |
| SB4 | -- | -- | -- | -- | -- | 1 | -- | 1 | -- | -- |
| SB5 | 1 | -- | -- | -- | 1 | -- | -- | -- | -- | 1 |
| SB6 | 1 | -- | 1 | -- | -- | -- | -- | -- | -- | 1 |
| SB7 | 1 | -- | -- | -- | 1 | -- | -- | -- | -- | 1 |
| SB8 | 1 | -- | 1 | -- | -- | -- | -- | -- | -- | -- |
| SB9 | 1 | -- | -- | -- | 1 | -- | -- | -- | -- | 1 |
| SB10 | -- | -- | -- | -- | -- | -- | 1 | -- | 1 | -- |
| SB11 | 1 | -- | 1 | -- | -- | -- | -- | -- | -- | -- |
| SB12 | -- | -- | -- | -- | -- | -- | 1 | -- | 1 | -- |
| SB13 | 1 | -- | -- | -- | 1 | -- | -- | -- | -- | 1 |
| SB14 | -- | -- | -- | -- | -- | 1 | -- | 1 | -- | 1 |
| SB15 | 1 | -- | -- | 1 | -- | -- | -- | -- | -- | 1 |
| SB16 | -- | -- | -- | -- | -- | 1 | -- | 1 | -- | -- |
| SB17 | 1 | 1 | -- | -- | -- | -- | -- | -- | -- | 1 |
| SB18 | 1 | -- | -- | -- | 1 | -- | -- | -- | -- | 1 |
| SB19 | 1 | -- | 1 | -- | -- | -- | -- | -- | -- | 1 |
| SB20 | 1 | -- | -- | -- | 1 | -- | -- | -- | -- | 1 |
| TOTALS | 14 | 2 | 4 | 2 | 6 | 4 | 2 | 4 | 2 | 14 |

ELECTRICAL SERVICE METER BREAKER PEDESTAL

| LOCATION | 656.0200.01 ELECTRICAL SERVICE METER BREAKER PEDESTAL STH 181 & CTH E L.S. | 656.0200.02 ELECTRICAL SERVICE METER BREAKER PEDESTAL TEMPORARY STH 181 & CTH E EB RAMPS L.S. |
|---|---|---|
| CB1 - STH 181 & CTH E | 1 | -- |
| TEMPORARY STH 181 & CTH E EB RAMPS | -- | 1 |
| TOTALS | 1 | 1 |

3

TRAFFIC SIGNAL FACE 3-12 INCH VERTICAL
TRAFFIC SIGNAL FACE 4-12 INCH VERTICAL
BACKPLATES SIGNAL FACE 3 SECTION 12-INCH
BACKPLATES SIGNAL FACE 4 SECTION 12-INCH
PEDESTRIAN SIGNAL FACE 16-INCH
LED MODULES 12-INCH RED BALL
LED MODULES 12-INCH YELLOW BALL
LED MODULES 12-INCH GREEN BALL
LED MODULES 12-INCH RED ARROW
LED MODULES 12-INCH YELLOW ARROW
LED MODULES 12-INCH GREEN ARROW
LED MODULES PEDESTRIAN COUNTDOWN TIMER 16-INCH

| SIGNAL HEAD NO. | SIGNAL BASE NO. | 658.0110 TRAFFIC SIGNAL FACE 3-12 INCH VERTICAL EACH | 658.0115 TRAFFIC SIGNAL FACE 4-12 INCH VERTICAL EACH | 658.0215 BACKPLATES SIGNAL FACE 3 SECTION 12-INCH EACH | 658.0220 BACKPLATES SIGNAL FACE 4 SECTION 12-INCH EACH | 658.0416 PEDESTRIAN SIGNAL FACE 16-INCH EACH | 658.0600 LED MODULES 12-INCH RED BALL EACH | 658.0605 LED MODULES 12-INCH YELLOW BALL EACH | 658.0610 LED MODULES 12-INCH GREEN BALL EACH | 658.0615 LED MODULES 12-INCH RED ARROW EACH | 658.0620 LED MODULES 12-INCH YELLOW ARROW EACH | 658.0625 LED MODULES 12-INCH GREEN ARROW EACH | 658.0635 LED MODULES PEDESTRIAN COUNTDOWN TIMER 16-INCH EACH |
|---|---|---|---|---|---|---|---|---|---|---|---|---|---|
| 1 | SB15 | 1 | -- | 1 | -- | -- | 1 | 1 | 1 | -- | -- | -- | -- |
| 2 | SB12 | 1 | -- | 1 | -- | -- | 1 | 1 | 1 | -- | -- | -- | -- |
| 3 | SB12 | 1 | -- | 1 | -- | -- | 1 | 1 | 1 | -- | -- | -- | -- |
| 4 | SB11 | 1 | -- | 1 | -- | -- | 1 | 1 | 1 | -- | -- | -- | -- |
| 5 | SB16 | 1 | -- | 1 | -- | -- | 1 | 1 | 1 | -- | -- | -- | -- |
| 6 | SB16 | 1 | -- | 1 | -- | -- | 1 | 1 | 1 | -- | -- | -- | -- |
| 7 | SB15 | -- | 1 | -- | 1 | -- | -- | -- | -- | 1 | 2 | 1 | -- |
| 8 | SB16 | -- | 1 | -- | 1 | -- | -- | -- | -- | 1 | 2 | 1 | -- |
| 9 | SB19 | 1 | -- | 1 | -- | -- | 1 | 1 | 1 | -- | -- | -- | -- |
| 10 | SB14 | 1 | -- | 1 | -- | -- | -- | -- | -- | 1 | 1 | 1 | -- |
| 11 | SB14 | 1 | -- | 1 | -- | -- | 1 | 1 | 1 | -- | -- | -- | -- |
| 12 | SB14 | 1 | -- | 1 | -- | -- | 1 | 1 | 1 | -- | -- | -- | -- |
| 13 | SB15 | -- | -- | -- | -- | 1 | -- | -- | -- | -- | -- | -- | 1 |
| 14 | SB18 | -- | -- | -- | -- | 1 | -- | -- | -- | -- | -- | -- | 1 |
| 15 | SB19 | -- | -- | -- | -- | 1 | -- | -- | -- | -- | -- | -- | 1 |
| 16 | SB20 | -- | -- | -- | -- | 1 | -- | -- | -- | -- | -- | -- | 1 |
| 17 | SB13 | -- | -- | -- | -- | 1 | -- | -- | -- | -- | -- | -- | 1 |
| 18 | SB14 | -- | -- | -- | -- | 1 | -- | -- | -- | -- | -- | -- | 1 |
| 19 | SB8 | 1 | -- | 1 | -- | -- | 1 | 1 | 1 | -- | -- | -- | -- |
| 20 | SB4 | 1 | -- | 1 | -- | -- | 1 | 1 | 1 | -- | -- | -- | -- |
| 21 | SB4 | 1 | -- | 1 | -- | -- | 1 | 1 | 1 | -- | -- | -- | -- |
| 22 | SB1 | -- | 1 | -- | 1 | -- | -- | -- | -- | 1 | 2 | 1 | -- |
| 23 | SB4 | -- | 1 | -- | 1 | -- | -- | -- | -- | 1 | 2 | 1 | -- |
| 24 | SB1 | 1 | -- | 1 | -- | -- | 1 | 1 | 1 | -- | -- | -- | -- |
| 25 | SB10 | 1 | -- | 1 | -- | -- | 1 | 1 | 1 | -- | -- | -- | -- |
| 26 | SB10 | 1 | -- | 1 | -- | -- | 1 | 1 | 1 | -- | -- | -- | -- |
| 27 | SB6 | 1 | -- | 1 | -- | -- | 1 | 1 | 1 | -- | -- | -- | -- |
| 28 | SB2 | 1 | -- | 1 | -- | -- | -- | -- | -- | 1 | 1 | 1 | -- |
| 29 | SB2 | -- | 1 | -- | 1 | -- | 1 | 1 | 1 | -- | -- | 1 | -- |
| 30 | SB2 | 1 | -- | 1 | -- | -- | 1 | 1 | 1 | -- | -- | -- | -- |
| 31 | SB9 | -- | -- | -- | -- | 1 | -- | -- | -- | -- | -- | -- | 1 |
| 32 | SB2 | -- | -- | -- | -- | 1 | -- | -- | -- | -- | -- | -- | 1 |
| 33 | SB1 | -- | -- | -- | -- | 1 | -- | -- | -- | -- | -- | -- | 1 |
| 34 | SB5 | -- | -- | -- | -- | 1 | -- | -- | -- | -- | -- | -- | 1 |
| 35 | SB6 | -- | -- | -- | -- | 1 | -- | -- | -- | -- | -- | -- | 1 |
| 36 | SB7 | -- | -- | -- | -- | 1 | -- | -- | -- | -- | -- | -- | 1 |
| | TOTALS | 19 | 5 | 19 | 5 | 12 | 18 | 18 | 18 | 6 | 10 | 7 | 12 |

SHEET 5 OF 6

3

SIGNAL MOUNTING HARDWARE

| LOCATION | 658.5069.01 L.S. |
|---|---|
| STH 181 & CTH E | 1 |
| TOTAL | 1 |

TEMPORARY TRAFFIC SIGNALS FOR INTERSECTIONS, STH 181 & CTH E WB RAMPS
TEMPORARY TRAFFIC SIGNALS FOR INTERSECTIONS, STH 181 & CTH E EB RAMPS
GENERATORS

| LOCATION | 661.0200.01 TEMPORARY TRAFFIC SIGNALS FOR INTERSECTIONS L.S. | 661.0200.02 TEMPORARY TRAFFIC SIGNALS FOR INTERSECTIONS L.S. | 661.0300 GENERATORS DAYS |
|---|---|---|---|
| STH 181 & CTH E WB RAMPS | 1 | -- | 2 |
| STH 181 & CTH E EB RAMPS | -- | 1 | 2 |
| TOTALS | 1 | 1 | 4 |

REMOVE TRAFFIC SIGNALS, STH 181 & CTH E
REMOVE LOOP DETECTOR WIRE AND LEAD-IN CABLE, STH 181 & CTH E

| LOCATION | SPV.0105.01 REMOVE TRAFFIC SIGNALS L.S. | SPV.0105.04 REMOVE LOOP DETECTOR WIRE AND LEAD-IN CABLE L.S. |
|---|---|---|
| STH 181 & CTH E | 1 | 1 |
| TOTALS | 1 | 1 |

3

TRANSPORTING TRAFFIC SIGNAL MATERIALS, STH 181 & CTH E
TRANSPORT & INSTALL TRAFFIC SIGNAL CABINET MATERIALS, STH 181 & CTH E
TRANSPORT & INSTALL RADAR DETECTION SYSTEM, STH 181 & CTH E

| LOCATION | SPV.0105.08 TRANSPORTING TRAFFIC SIGNAL MATERIALS L.S. | SPV.0105.15 TRANSPORT & INSTALL TRAFFIC SIGNAL CABINET MATERIALS L.S. | SPV.0105.16 TRANSPORT & INSTALL RADAR DECTION SYSTEM L.S. |
|---|---|---|---|
| STH 181 & CTH E | 1 | 1 | 1 |
| TOTALS | 1 | 1 | 1 |

SUMMARY OF STATE FURNISHED MATERIALS - FOR INFORMATION ONLY

| QUANTITY | UNIT | DESCRIPTION |
|---|---|---|
| 1 | LS | TRAFFIC SIGNAL CONTROLLER, CABINET AND SPLICE CABINET |
| 4 | EACH | POLES TYPE 9 |
| 2 | EACH | POLES TYPE 12 |
| 4 | EACH | MONOTUBE ARMS 30-FT |
| 2 | EACH | MONOTUBE ARMS 45-FT |
| 1 | LS | RADAR DETECTION SYSTEM |

SHEET 6 OF 6

INTERSECTION OF
STH 181 & W. FLORIST AVENUE
ALL ITEMS CATEGORY 0020

3

CONDUIT RIGID NONMETALLIC SCHEDULE 40 2-INCH

| FROM | TO | 652.0225*** CONDUIT RIGID NONMETALLIC SCHEDULE 40 2-INCH L.F. |
|---|---|---|
| EXT1 | PB17 | 42 |
| | ***TOTALS | 42 |

*** ADDITIONAL QUANTITIES SHOWN ELSEWHERE

PULL BOXES STEEL 24X36 INCH
REMOVING PULL BOXES

| PULL BOX NO. | STATION | OFFSET | 653.0135 PULL BOXES STEEL 24X36-INCH EACH | 653.0905 REMOVING PULL BOXES EACH |
|---|---|---|---|---|
| EX PB17 | 149+96.5 | 44.8 LT | 1 | -- |
| PB17 | 150+38.1 | 42.6 LT | -- | 1 |
| | | ***TOTALS | 1 | 1 |

* FINAL LOCATION TO BE DETERMINED BY THE ENGINEER IN THE FIELD
*** ADDITIONAL QUANTITIES SHOWN ELSEWHERE

3

STH 181 & W. FLORIST AVENUE

CONDUIT LOOP DETECTOR
LOOP DETECTOR LEAD IN CABLE
LOOP DETECTOR WIRE

| LOOP NO. | HOME RUN PB | STATION | LOCATION | SIZE | NO. OF TURNS | SDD INSTALLATION REFERENCE | 652.0800 CONDUIT LOOP DETECTOR L.F. | 655.0700 LOOP DETECTOR LEAD IN CABLE L.F. | 655.0800 LOOP DETECTOR WIRE L.F. |
|---|---|---|---|---|---|---|---|---|---|
| 21 | PB17 | 150+37.3 | 21.1 LT | 6'x28' | 3 | LOOP DETECTOR INSTALLED IN BASE COURSE WITH PULL (SPLICE) BOX OFF ROADWAY (OPTION 1) | 88 | 426 | 274 |
| 42 | PB14 | 146+39.7 | 98.4 LT | 6'x20' | 3 | LOOP DETECTOR INSTALLED IN BASE COURSE WITH PULL (SPLICE) BOX OFF ROADWAY (OPTION 2) | 86 | 232 | 268 |
| 43 | PB14 | 146+39.7 | 69.8 LT | 6'x20' | 3 | LOOP DETECTOR INSTALLED IN BASE COURSE WITH PULL (SPLICE) BOX OFF ROADWAY (OPTION 2) | 86 | 232 | 268 |
| 44 | PB14 | 146+50.5 | 98.2 LT | 6'x20' | 3 | LOOP DETECTOR INSTALLED IN BASE COURSE WITH PULL (SPLICE) BOX OFF ROADWAY (OPTION 1) | 66 | 232 | 208 |
| 45 | PB14 | 146+51.5 | 71.0 LT | 6'x20' | 3 | LOOP DETECTOR INSTALLED IN BASE COURSE WITH PULL (SPLICE) BOX OFF ROADWAY (OPTION 1) | 64 | 232 | 202 |
| 61 | PB6 | 143+45.0 | 28.6 RT | 6'x28' | 4 | LOOP DETECTOR INSTALLED IN BASE COURSE WITH PULL (SPLICE) BOX OFF ROADWAY (OPTION 1) | 86 | 608 | 354 |
| | | | | | | *** TOTALS | 476 | 1962 | 1574 |

* STATION AND LOCATION IS TO FRONT CENTER OF DETECTION LOOP
** FINAL LOCATION TO BE DETERMINED BY THE ENGINEER IN THE FIELD
*** ADDITIONAL QUANTITIES SHOWN ELSEWHERE

REMOVE LOOP DETECTOR WIRE AND LEAD-IN CABLE, STH 181 & FLORIST AVENUE

| LOCATION | SPV.0105.05 REMOVE LOOP DETECTOR WIRE AND LEAD-IN CABLE L.S. |
|---|---|
| STH 181 & FLORIST AVENUE | 1 |
| TOTAL | 1 |

SHEET 1 OF 1

3

INSTALL FIBER OPTIC COMMUNICATIONS IN CABINET STH 181 & W. VILLARD AVENUE

| LOCATION | SPV.0105.09 |
|---|---|
| CB1(S40-1142) | 1 |
| TOTAL | 1 |

*** PAY ITEM INCLUDES INSTALLATION OF BOTH CONTRACTOR FURNISHED AND STATE FURNISHED MATERIALS

SUMMARY OF STATE FURNISHED MATERIALS

| QUANTITY | UNIT | DESCRIPTION |
|---|---|---|
| 410 | LF | PATCH PANEL WITH FIBER OPTIC CABLE PIGTAIL 8-CT |
| 1 | EACH | IP ETHERNET SWITCH WITH SINGLE MODE FIBER PORTS |

SUMMARY OF CONTRACTOR FURNISHED MATERIALS

| QUANTITY | UNIT | DESCRIPTION |
|---|---|---|
| 2 | LF | ST-ST SINGLE MODE FIBER OPTIC JUMPER 2-CT |
| 3 | EACH | CAT-5E CABLE 1-METER |

INSTALL FIBER OPTIC COMMUNICATIONS IN CABINET STH 181 & FOND DU LAC AVENUE

| LOCATION | SPV.0105.10 |
|---|---|
| CB1(S40-1067) | 1 |
| TOTAL | 1 |

*** PAY ITEM INCLUDES INSTALLATION OF BOTH CONTRACTOR FURNISHED AND STATE FURNISHED MATERIALS

SUMMARY OF STATE FURNISHED MATERIALS

| QUANTITY | UNIT | DESCRIPTION |
|---|---|---|
| 170 | LF | PATCH PANEL WITH FIBER OPTIC CABLE PIGTAIL 8-CT |
| 1 | EACH | IP ETHERNET SWITCH WITH SINGLE MODE FIBER PORTS |

SUMMARY OF CONTRACTOR FURNISHED MATERIALS

| QUANTITY | UNIT | DESCRIPTION |
|---|---|---|
| 2 | LF | ST-ST SINGLE MODE FIBER OPTIC JUMPER 2-CT |
| 3 | EACH | CAT-5E CABLE 1-METER |

3

INSTALL FIBER OPTIC COMMUNICATIONS IN CABINET STH 181 & CTH E (W. SILVER SPRING DRIVE)

| LOCATION | SPV.0105.11 |
|---|---|
| CB1(S40-1126) | 1 |
| TOTAL | 1 |

*** PAY ITEM INCLUDES INSTALLATION OF BOTH CONTRACTOR FURNISHED AND STATE FURNISHED MATERIALS

SUMMARY OF STATE FURNISHED MATERIALS

| QUANTITY | UNIT | DESCRIPTION |
|---|---|---|
| 140 | LF | PATCH PANEL WITH FIBER OPTIC CABLE PIGTAIL 8-CT |
| 1 | EACH | IP ETHERNET SWITCH WITH SINGLE MODE FIBER PORTS |

SUMMARY OF CONTRACTOR FURNISHED MATERIALS

| QUANTITY | UNIT | DESCRIPTION |
|---|---|---|
| 2 | LF | ST-ST SINGLE MODE FIBER OPTIC JUMPER 2-CT |
| 3 | EACH | CAT-5E CABLE 1-METER |

3

CONDUIT RIGID NONMETALLIC SCHEDULE 40 2-INCH
CONDUIT REINFORCED THERMOSETTING RESIN 2-INCH
ELECTRICAL WIRE TRAFFIC SIGNALS 10 AWG
CONDUIT HDPE 1-DUCT 2-INCH
CONDUIT HDPE DIRECTIONAL BORE 1-DUCT 2-INCH

| FROM | TO | 652.0225*** CONDUIT RIGID NONMETALLIC SCHEDULE 40 2-INCH L.F. | 652.0405 CONDUIT REINFORCED THERMOSETTING RESIN 2-INCH L.F. | 655.0515*** ELECTRICAL WIRE TRAFFIC SIGNALS 10 AWG L.F. | 671.0112 CONDUIT HDPE 1-DUCT 2-INCH L.F. | 671.0212 CONDUIT HDPE DIRECTIONAL BORE 1-DUCT 2-INCH L.F. |
|---|---|---|---|---|---|---|
| PB15 | I/C CV100 | 10 | -- | 10 | -- | -- |
| I/C CV100 | I/C CV101 | -- | -- | 145 | 145 | -- |
| I/C CV101 | PB1 | 15 | -- | 15 | -- | -- |
| I/C CV101 | I/C PB100 | -- | -- | 65 | -- | 65 |
| I/C PB100 | STA 96+25 | -- | -- | 60 | 60 | -- |
| STA 96+25 | STA 98+50 | -- | -- | 225 | -- | 225 |
| STA 98+50 | I/C CV102 | -- | -- | 385 | 385 | -- |
| I/C CV102 | I/C CV103 | -- | 350 | -- | -- | -- |
| I/C CV103 | STA 114+75 | -- | -- | 890 | 890 | -- |
| STA 114+75 | STA 115+75 | -- | -- | 100 | -- | 100 |
| STA 115+75 | I/C PB101 | -- | -- | 340 | 340 | -- |
| I/C PB101 | I/C PB102 | -- | -- | 50 | 50 | -- |
| I/C PB102 | I/C CV104 | -- | -- | 125 | 125 | -- |
| I/C CV104 | SC1 (S10-1126) | 31 | -- | 31 | -- | -- |
| I/C CV105 | I/C CV106 | -- | -- | 120 | 120 | -- |
| I/C CV106 | CB1 (S40-1126) | 25 | -- | 25 | -- | -- |
| I/C CV106 | I/C PB103 | -- | -- | 75 | 75 | -- |
| I/C PB103 | STA 126+25 | -- | -- | 340 | 340 | -- |
| STA 126+25 | STA 127+35 | -- | -- | 110 | -- | 110 |
| STA 127+35 | STA 132+75 | -- | -- | 540 | 540 | -- |
| STA 132+75 | I/C CV107 | -- | -- | 125 | -- | 125 |
| I/C CV107 | STA 139+35 | -- | -- | 535 | 535 | -- |
| STA 139+35 | STA 140+25 | -- | -- | 90 | -- | 90 |
| STA 140+25 | STA 143+00 | -- | -- | 275 | 275 | -- |
| STA 143+00 | I/C CV108 | -- | -- | 275 | -- | 275 |
| I/C CV108 | I/C PB104 | -- | -- | 60 | -- | 60 |
| I/C PB104 | I/C CV18 | -- | -- | 170 | -- | 170 |
| | TOTALS | 81 | 350 | 5181 | 3880 | 1220 |

*** ADDITIONAL QUANTITES SHOWN ELSEWHERE

3

PULL BOXES STEEL 24X42-INCH
COMMUNICATION VAULT TYPE 1

| NO. | STATION | LOCATION | 653.0140*** PULL BOXES STEEL 24X42-INCH EACH | 673.0105 COMMUNICATIONS VAULT TYPE 1 EACH |
|---|---|---|---|---|
| I/C CV100 | 94+18 | 61' LT | | 1 |
| I/C CV101 | 95+65 | 61' LT | | 1 |
| I/C PB100 | 95+65 | 1' LT | 1 | |
| I/C CV102 | 102+36 | 9' LT | | 1 |
| I/C CV103 | 105+86 | 7' LT | | 1 |
| I/C PB101 | 119+30 | 9' LT | 1 | |
| I/C PB102 | 119+30 | 51' LT | 1 | |
| I/C CV104 | 120+36 | 59' LT | | 1 |
| I/C CV105 | 122+72 | 59' LT | | 1 |
| I/C CV106 | 122+85 | 82' LT | | 1 |
| I/C PB103 | 122+85 | 9' LT | 1 | |
| I/C CV107 | 134+00 | 4' RT | | 1 |
| I/C CV108 | 145+24 | 9' LT | | 1 |
| I/C PB104 | 145+24 | 51' RT | 1 | |
| | | TOTALS | 5 | 9 |

***ADDITIONAL QUANITIES SHOWN ELSEWHERE
FINAL LOCATIONS TO BE DETERMINED BY ENGINEER

3

FIELD SYSTEM INTEGRATOR
ITS DOCUMENTATION
COMMUNICATIONS SYSTEM TESTING

| LOCATION | 670.0100 FIELD SYSTEM INTEGRATOR L.S. | 670.0200 ITS DOCUMENTATION L.S. | 678.0500 COMMUNICATIONS SYSTEM TESTING L.S. |
|---|---|---|---|
| 2140-13-70 | 1 | 1 | 1 |
| TOTALS | 1 | 1 | 1 |

FIBER SPICE ENCLOSURE
FIBER OPTIC SPLICE
FIBER OPTIC TERMINATION

| LOCATION | 678.0200 FIBER SPLICE ENCLOSURE EACH | 678.0300 FIBER OPTIC SPLICE EACH | 678.0300 FIBER OPTIC TERMINATION EACH | NOTES: |
|---|---|---|---|---|
| I/C CV101 | 1 | 4 | 6 | 2 PIGTAILS - (1)VILLARD & (1) FOND DU LAC |
| I/C CV106 | 1 | 8 | 4 | |
| I/C CV18 | -- | 36 | 2 | EXISTING PIGTAIL AND SPLICE ENCLOSURE |
| UNDISTRIBUTED | 1 | 36 | -- | FOR MAINLINE SPLICES |
| TOTALS | 3 | 84 | 12 | |

MAINLINE SPLICES SHALL BE AS DIRECTED BY THE ENGINEER IN THE FIELD.

3

INSTALL FIBER CABLE OUTDOOR PLANT 36-CT

| FROM | TO | 678.0036 INSTALL FIBER OPTIC CABLE OUTDOOR PLANT 36-CT L.F. |
|---|---|---|
| I/C CV101 | I/C PB100 | 180 |
| I/C PB100 | I/C CV102 | 735 |
| I/C CV102 | I/C CV103 | 450 |
| I/C CV103 | I/C PB101 | 1395 |
| I/C PB101 | I/C PB102 | 80 |
| I/C PB102 | I/C CV104 | 190 |
| I/C CV104 | I/C CV105 | 240 |
| I/C CV105 | I/C CV106 | 220 |
| I/C CV106 | I/C PB103 | 140 |
| I/C PB103 | I/C CV107 | 1180 |
| I/C CV107 | I/C CV108 | 1275 |
| I/C CV108 | I/C PB104 | 125 |
| I/C PB104 | I/C CV18 | 285 |
| | TOTAL | 6495 |

NOTE: ALL FIBER OPTIC CABLE WILL BE STATE FURNISHED

SHEET 3 OF 3

3

CONDUIT RIGID NONMETALLIC SCHEDULE 40 2 1/2-INCH

| STREET | FROM | TO | CAT 60 652.0230 LF |
|---|---|---|---|
| PROJECT ID 2140-13-70 | -- | -- | 7,225 |
| | | PROJECT TOTAL | 7,225 |

** ADDITIONAL QUANTITY SHOWN ELSEWHERE IN PLANS (STRUCTURE)

CONDUIT SPECIAL 2 1/2-INCH

| STREET | FROM | TO | CAT 60 652.0610 LF |
|---|---|---|---|
| STH 181 | 114+55 | 115+40 | 125 |
| STH 181 | 126+50 | 127+20 | 150 |
| | | PROJECT TOTAL | 275 |

SANITARY SEWER

| LOCATION | STATION | OFFSET | CAT 60 SPV.0060.04 ADJUSTING SANITARY SEWER MANHOLES EACH | CAT 60 SPV.0060.05 INTERNAL SANITARY SEWER MANHOLE SEAL EACH | CAT 60 * 611.8120.S COVER PLATES TEMPORARY EACH |
|---|---|---|---|---|---|
| STH 181 | 93+04 | 51 RT | 1 | 1 | 1 |
| STH 181 | 93+05 | 25 LT | 1 | 1 | 1 |
| STH 181 | 93+37 | 25 LT | 1 | 1 | 1 |
| STH 181 | 95+20 | 24 LT | 1 | 1 | 1 |
| STH 181 | 97+38 | 24 LT | 1 | 1 | 1 |
| STH 181 | 98+78 | 50 RT | 1 | 1 | 1 |
| STH 181 | 109+35 | 52 RT | 1 | 1 | -- |
| STH 181 | 109+36 | 51 LT | 1 | 1 | 1 |
| STH 181 | 114+57 | 51 RT | 1 | 1 | -- |
| STH 181 | 115+22 | 51 LT | 1 | 1 | 1 |
| STH 181 | 116+95 | 51 LT | 1 | 1 | -- |
| STH 181 | 123+10 | 54 RT | 1 | 1 | -- |
| STH 181 | 124+15 | 53 LT | 1 | 1 | -- |
| STH 181 | 124+19 | 53 RT | 1 | 1 | -- |
| STH 181 | 126+78 | 53 RT | 1 | 1 | 1 |
| STH 181 | 126+86 | 53 LT | 1 | 1 | 1 |
| STH 181 | 133+30 | 53 RT | 1 | 1 | 1 |
| STH 181 | 133+32 | 53 LT | 1 | 1 | 1 |
| STH 181 | 139+88 | 54 RT | 1 | 1 | 1 |
| STH 181 | 143+28 | 54 RT | 1 | 1 | -- |
| STH 181 | 143+61 | 51 LT | 1 | 1 | 1 |
| STH 181 | 146+50 | 50 LT | 1 | 1 | 1 |
| STH 181 | 146+52 | 54 RT | 1 | 1 | 1 |
| NW RAMP | 105+81 B | 7 LT | 1 | 1 | -- |
| | PROJECT TOTALS | | 24 | 24 | 16 |

* ADDITIONAL QUANTITIES SHOWN ELSEWHERE

3

ADJUSTING WATER BOXES

| LOCATION | STATION | OFFSET | CATEGORY 60 SPV.0060.06 EACH |
|---|---|---|---|
| STH 181 | 89+93 | 40 RT | 1 |
| STH 181 | 92+78 | 39 LT | 1 |
| STH 181 | 92+94 | 36 RT | 1 |
| STH 181 | 92+95 | 37 LT | 1 |
| STH 181 | 93+29 | 27 RT | 1 |
| STH 181 | 93+85 | 37 RT | 1 |
| STH 181 | 97+05 | 40 RT | 1 |
| STH 181 | 97+06 | 45 LT | 1 |
| STH 181 | 97+13 | 77 RT | 1 |
| STH 181 | 97+16 | 76 RT | 1 |
| STH 181 | 97+18 | 73 RT | 1 |
| STH 181 | 101+41 | 43 RT | 1 |
| STH 181 | 101+44 | 43 RT | 1 |
| STH 181 | 101+45 | 43 RT | 1 |
| STH 181 | 105+59 | 43 RT | 1 |
| STH 181 | 107+65 | 38 RT | 1 |
| STH 181 | 107+68 | 43 LT | 1 |
| STH 181 | 109+41 | 60 LT | 1 |
| STH 181 | 109+66 | 46 LT | 1 |
| STH 181 | 111+56 | 47 RT | 1 |
| STH 181 | 114+87 | 45 LT | 1 |
| STH 181 | 114+90 | 43 LT | 1 |
| STH 181 | 114+91 | 43 RT | 1 |
| STH 181 | 115+10 | 61 LT | 1 |
| STH 181 | 115+30 | 40 RT | 1 |
| STH 181 | 118+43 | 46 RT | 1 |
| STH 181 | 118+48 | 43 RT | 1 |
| SW RAMP | 104+08 E | 23 RT | 1 |
| STH 181 | 101+37 D | 25 RT | 1 |
| STH 181 | 123+46 | 39 LT | 1 |
| STH 181 | 123+50 | 43 LT | 1 |
| STH 181 | 123+88 | 37 RT | 1 |
| STH 181 | 123+93 | 44 LT | 1 |
| STH 181 | 126+93 | 59 RT | 1 |
| STH 181 | 126+93 | 64 RT | 1 |
| STH 181 | 126+93 | 59 LT | 1 |
| STH 181 | 126+96 | 62 LT | 1 |
| STH 181 | 132+94 | 43 LT | 1 |
| STH 181 | 132+99 | 43 LT | 1 |
| STH 181 | 133+35 | 61 RT | 1 |
| STH 181 | 133+36 | 30 RT | 1 |
| STH 181 | 133+41 | 60 LT | 1 |
| STH 181 | 133+68 | 33 RT | 1 |
| STH 181 | 133+72 | 36 RT | 1 |
| STH 181 | 139+55 | 37 RT | 1 |
| STH 181 | 139+97 | 60 LT | 1 |
| STH 181 | 140+00 | 63 LT | 1 |
| STH 181 | 143+67 | 60 LT | 1 |
| STH 181 | 143+69 | 63 LT | 1 |
| STH 181 | 146+08 | 35 RT | 1 |
| STH 181 | 146+13 | 29 RT | 1 |
| STH 181 | 146+11 | 43 LT | 1 |
| STH 181 | 146+44 | 60 LT | 1 |
| STH 181 | 146+44 | 27 RT | 1 |
| STH 181 | 147+02 | 43 LT | 1 |
| | PROJECT TOTAL | | 55 |

ALL QUANTITIES ARE CATEGORY 10 UNLESS OTHERWISE NOTED

3

ADJUSTING TES MANHOLE COVERS

| LOCATION | | CAT 60 SPV.0060.08 ADJUSTING TES MANHOLE COVERS EACH | CAT 60 *611.8120.S COVER PLATES TEMPORARY EACH | REMARKS |
|---|---|---|---|---|
| MANHOLE 600 | STA 87+35.7, 17.6'LT | 1 | 1 | REMOVE CHIMNEY TO ROOF DECK, NEW COVER REQUIRED |
| MANHOLE 601 | STA 90+69.9, 18.8'LT | 1 | 1 | REMOVE CHIMNEY TO ROOF DECK, NEW COVER REQUIRED |
| MANHOLE 602 | STA 93+13.2, 17.7'LT | 1 | 1 | REMOVE CHIMNEY TO ROOF DECK, NEW COVER REQUIRED |
| MANHOLE 603 | STA 96+55.1, 18.0'LT | 1 | 1 | REMOVE CHIMNEY TO ROOF DECK, NEW COVER REQUIRED |
| MANHOLE 604 | STA 98+46.6, 22.7'LT | 1 | 1 | REMOVE CHIMNEY TO ROOF DECK, NEW COVER REQUIRED |
| MANHOLE 605 | STA 102+49.7, 23.3'LT | 1 | 1 | REMOVE CHIMNEY TO ROOF DECK, NEW COVER REQUIRED |
| MANHOLE 606 | STA 108+82.2, 22.2'LT | 1 | 1 | REMOVE CHIMNEY TO ROOF DECK, NEW COVER REQUIRED |
| MANHOLE 607 | STA 115+43.9, 23.2'LT | 1 | 1 | REMOVE CHIMNEY TO ROOF DECK, NEW COVER REQUIRED |
| MANHOLE 608 | STA 119+82.9, 26.9'LT | 1 | -- | REMOVE CHIMNEY TO ROOF DECK, NEW COVER REQUIRED |
| MANHOLE 609 | STA 122+55.1, 28.3'LT | 1 | -- | REMOVE CHIMNEY TO ROOF DECK, NEW COVER REQUIRED |
| MANHOLE 610 | STA 127+05.9, 27.5'LT | 1 | 1 | REMOVE CHIMNEY TO ROOF DECK, NEW COVER REQUIRED |
| MANHOLE 611 | STA 133+61.1, 27.5'LT | 1 | 1 | REMOVE CHIMNEY TO ROOF DECK, NEW COVER REQUIRED |
| MANHOLE 612 | STA 140+08.4, 28.0'LT | 1 | 1 | REMOVE CHIMNEY TO ROOF DECK, NEW COVER REQUIRED |
| MANHOLE 613 | STA 146+31.4, 35.9'LT | 1 | 1 | REMOVE CHIMNEY TO ROOF DECK, NEW COVER REQUIRED |
| MANHOLE 614 | STA 146+85.9, 23.8'LT | 1 | 1 | REMOVE CHIMNEY TO ROOF DECK, NEW COVER REQUIRED |
| MANHOLE 615 | STA 103+09.3D, 14.8'LT | 1 | -- | REMOVE CHIMNEY TO ROOF DECK, NEW COVER REQUIRED |
| PROJECT TOTAL | | 16 | 13 | |

* ADDITIONAL QUANTITIES SHOWN ELSEWHERE

4' DIAMETER TES MANHOLE

| LOCATION | STATION | OFFSET | CAT 60 SPV.0060.09 EACH |
|---|---|---|---|
| SW RAMP | 103+41.50 E | 17.5 LT | 1 |
| NW RAMP | 101+80.16 B | 9.0 LT | 1 |
| PROJECT TOTAL | | | 2 |

3

INSTALL CONDUIT INTO EXISTING ITEM

| LOCATION | STATION | OFFSET | CAT 60 652.0700.S EACH |
|---|---|---|---|
| STH 181 | 118+82.88 | 27.3 LT | 1 |
| STH 181 | 122+55.13 | 28.3 LT | 1 |
| PROJECT TOTAL | | | 2 |

4-DUCT CONDUIT, CEMENT ENCASED, 4-INCH RIGID NONMETALLIC CONDUIT DB-60

| STREET | FROM | | TO | CAT 60 SPV.0090.02 LF |
|---|---|---|---|---|
| SW RAMP | 103+42 E | - | 104+60 E | 118 |
| STH 181 | 119+86 | - | 122+12 | 260 |
| NW RAMP | 100+60 B | - | 101+80 B | 140 |
| | | | PROJECT TOTAL | 518 |

ALL QUANTITIES ARE CATEGORY 10 UNLESS OTHERWISE NOTED

| R/W PROJECT NUMBER | SHEET NUMBER | TOTAL SHEETS |
|---|---|---|
| 2140-13-20 | | |
| FEDERAL PROJECT NUMBER | 4.1 | 7 |

PLAT OF RIGHT-OF-WAY REQUIRED FOR

# GRANTOSA DRIVE TO FLORIST AVENUE

STH 181/N. 76TH ST. MILWAUKEE COUNTY

CONSTRUCTION PROJECT NUMBER
2140-13-70

## CONVENTIONAL ABBREVIATIONS

| | | | |
|---|---|---|---|
| ACCESS POINT/ DRIVEWAY CONNECTION | AP | REFERENCE LINE | R/L |
| ACCESS RIGHTS | AR | RELEASE OF RIGHTS | ROR |
| ACRES | AC. | REMAINING | REM. |
| AND OTHERS | ET.AL. | RIGHT-OF-WAY | R/W |
| CENTERLINE | C/L | SECTION | SEC. |
| CERTIFIED SURVEY MAP | CSM | STATION | STA. |
| CORNER | COR. | TEMPORARY LIMITED EASEMENT | TLE |
| DOCUMENT | DOC. | VOLUME | V. |
| EASEMENT | EASE. | | |
| HIGHWAY EASEMENT | H.E. | | |
| LAND CONTRACT | LC | | |
| MONUMENT | MON. | | |
| PAGE | P. | | |
| PERMANENT LIMITED EASEMENT | PLE | | |
| PROPERTY LINE | PL | | |
| RECORDED AS | (100') | | |

## CURVE DATA

| | |
|---|---|
| LONG CHORD | LCH |
| LONG CHORD BEARING | LCB |
| RADIUS | R |
| DEGREE OF CURVE | D |
| CENTRAL ANGLE OR DELTA | DELTA |
| LENGTH OF CURVE | L |
| TANGENT | TAN |

## CONVENTIONAL SYMBOLS

| | | | |
|---|---|---|---|
| FOUND IRON PIPE/PIN | LE (1" UNLESS NOTED) | PROPOSED R/W LINE | |
| R/W MONUMENT | •(SET) | EXISTING H.E. LINE | |
| R/W STANDARD | ▲ •(SET) | PROPERTY LINE | |
| SIGN | SIGN | LOT & TIE LINES | |
| SECTION CORNER MONUMENT | | SLOPE INTERCEPTS | |
| SECTION CORNER SYMBOL | | CORPORATE LIMITS | |
| | | ACCESS RESTRICTED (BY PREVIOUS ACQUISITION/CONTROL) | |
| FEE (HATCH VARIES) | | ACCESS RESTRICTED (BY ACQUISTION) | |
| TEMPORARY LIMITED EASEMENT | | NO ACCESS (BY STATUTORY AUTHORITY) | |
| PERMANENT LIMITED EASEMENT | | SECTION LINE | |
| R/W BOUNDARY POINT | RWB20 | QUARTER LINE | |
| PARCEL NUMBER | 102 | SIXTEENTH LINE | |
| UTILITY PARCEL NUMBER | 92 | EXISTING CENTERLINE | |
| SIGN NUMBER (OFF PREMISE) | 21- | PROPOSED REFERENCE LINE | |
| BUILDING | | PARALLEL OFFSET | |

## CONVENTIONAL UTILITY SYMBOLS

| | | |
|---|---|---|
| WATER | W | |
| GAS | G | |
| TELEPHONE | T | |
| OVERHEAD TRANSMISSION LINES | OH | |
| ELECTRIC | E | |
| CABLE TELEVISION | TV | |
| FIBER OPTIC | FO | |
| SANITARY SEWER | SAN | |
| STORM SEWER | SS | |
| | NON COMPENSABLE | COMPENSABLE |
| POWER POLE | | |
| TELEPHONE POLE | | |
| TELEPHONE PEDESTAL | | |
| ELECTRIC TOWER | | |

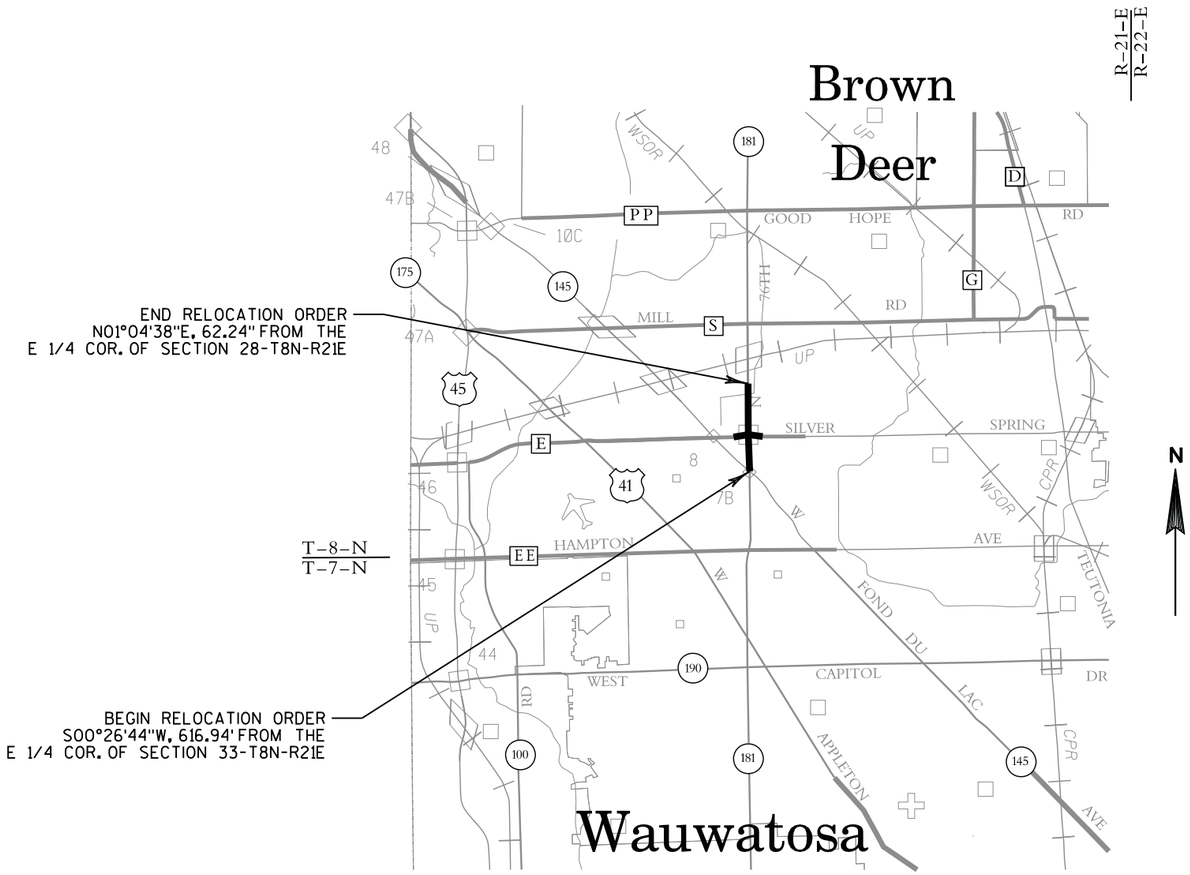


emcs.inc

PREPARED BY EMCS, INC.

WISCONSIN KEVIN C BOYER S-2675 HEWITT WI LAND SURVEYOR

LAYOUT

SCALE 0 1 MI.

TOTAL NET LENGTH OF CENTERLINE = 1.136 MI.

Kevin C. Boyer

KEVIN C. BOYER, RLS - 2675

DATE: 5/12/2014

## NOTES

POSITIONS SHOWN ON THIS PLAT ARE WISCONSIN COUNTY COORDINATES, MILWAUKEE COUNTY, NAD 83 (2007) IN U.S. SURVEY FEET. VALUES SHOWN ARE GRID COORDINATES, GRID BEARINGS, AND GRID DISTANCES. GRID DISTANCES MAY BE USED AS GROUND DISTANCES.

RIGHT-OF-WAY MONUMENTS WILL BE PLACED PRIOR TO THE COMPLETION OF THE PROJECT.

RIGHT-OF-WAY BOUNDARIES ARE DEFINED WITH COURSES OF THE PERIMETER OF THE HIGHWAY LANDS REFERENCED TO THE U.S. PUBLIC LAND SURVEY SYSTEM OR OTHER SURVEYS OF PUBLIC RECORD.

REVISION DATE
10/01/2014 (NC)
5/18/2015 (NC)
10/14/2015 (NC)

STATE OF WISCONSIN
DEPARTMENT OF TRANSPORTATION

APPROVED FOR THE DEPARTMENT

DATE: 6-5-14 (Signature)



E

# SCHEDULE OF LANDS & INTERESTS REQUIRED

OWNER'S NAMES ARE SHOWN FOR REFERENCE PURPOSED ONLY AND ARE SUBJECT TO CHANGE PRIOR TO THE TRANSFER OF LAND INTERESTS TO THE DEPARTMENT.

4

AREAS SHOWN IN THE TOTAL ACRES COLUMN MAY BE APPROXIMATE AND ARE DERIVED FROM TAX ROLLS OR OTHER APPROXIMATE SOURCES AND MAY NOT INCLUDE LANDS OF THE OWNER WHICH ARE NOT CONTIGUOUS TO THE AREA ACQUIRED. OWNER'S NAMES ARE SHOWN FOR REFERANCE PURPOSES ONLY AND ARE SUBJECT TO CHANGE PRIOR TO THE TRANSFER OF LAND INTERSTS TO THE DEPARTMENT.

| PARCEL NUMBER | SHEET NUMBER | OWNERS | INTEREST REQUIRED | R/W ACRES REQUIRED NEW | EXISTING | TOTAL | T.L.E. ACRES |
|---|---|---|---|---|---|---|---|
| 1 | 4.4 | GAVIN PETRO LLC, A WISCONSIN LIMITED LIABILITY COMPANY | TLE | --- | --- | --- | 0.015 |
| 2 | 4.4 | ALDI INC, A WISCONSIN CORPORATION | TLE | --- | --- | --- | 0.006 |
| 3 | 4.5 | SOLOMON HER | TLE | --- | --- | --- | 0.004 |
| 4(3) | 4.6 | CITY OF MILWAUKEE | TLE | --- | --- | --- | 0.122 |
| | | | | | | | |
| 6 | 4.6 | MARINA D. KOLCHINSKY | TLE | --- | --- | --- | 0.036 |
| 7 | 4.6 | SPRING PARK APARTMENTS, LLC, A WISCONSIN LIMITED LIABILITY COMPANY | FEE/TLE | 0.001 | --- | 0.001 | 0.071 |
| 8 | 4.6 | HENRY L. COOKSEY AND SHIRLEY A. COOKSEY | TLE | --- | --- | --- | 0.007 |
| 9 | 4.6 | CITY OF MILWAUKEE (HOUSING AUTHORITY OF THE CITY OF MILWAUKEE-LESSEE) | TLE | --- | --- | --- | 0.021 |
| | | | | | | | |
| 11 | 4.6 | PMG HOLDINGS, INC, A DELAWARE COMPANY | FEE/TLE | 0.004 | --- | 0.004 | 0.022 |
| 12 | 4.6 | EYAD W. KAID | FEE/TLE | 0.001 | --- | 0.001 | 0.067 |
| 13 | 4.6 | SILVER SPRING ROAD PROPERTIES, LLC, A WISCONSIN LIMITED LIABILITY COMPANY (SIDDIQUE, INC-LESSEE) | TLE | --- | --- | --- | 0.053 |
| 14(2) | 4.6 | HAYWOOD INVESTMENTS GROUP, LLC | TLE | --- | --- | --- | 0.016 |
| | | | | | | | |
| 16(2) | 4.6 | STATE OF WISCONSIN | FEE/TLE | 0.032 | --- | 0.032 | 0.179 |
| 17(2) | 4.6 | TEI, LLC (TCF NATIONAL BANK-LESSEE) | TLE | --- | --- | --- | 0.016 |
| 18 | 4.7 | CHANG YANG AND PANG XIONG YANG | TLE | --- | --- | --- | 0.003 |
| | | | | | | | |
| 100(4) | 4.6 | CITY OF MILWAUKEE (WATER) | RELEASE OF RIGHTS | --- | --- | --- | --- |
| 101(4) | 4.6 | CITY OF MILWAUKEE (SEWER) | RELEASE OF RIGHTS | --- | --- | --- | --- |
| 102(4) | 4.4, 4.5, 4.6 | WE ENERGIES (ELECTRIC) | RELEASE OF RIGHTS | --- | --- | --- | --- |
| 103(4) | 4.6 | WE ENERGIES (GAS) | RELEASE OF RIGHTS | --- | --- | --- | --- |
| 104(4) | 4.6 | AT&T WISCONSIN | RELEASE OF RIGHTS | --- | --- | --- | --- |

4

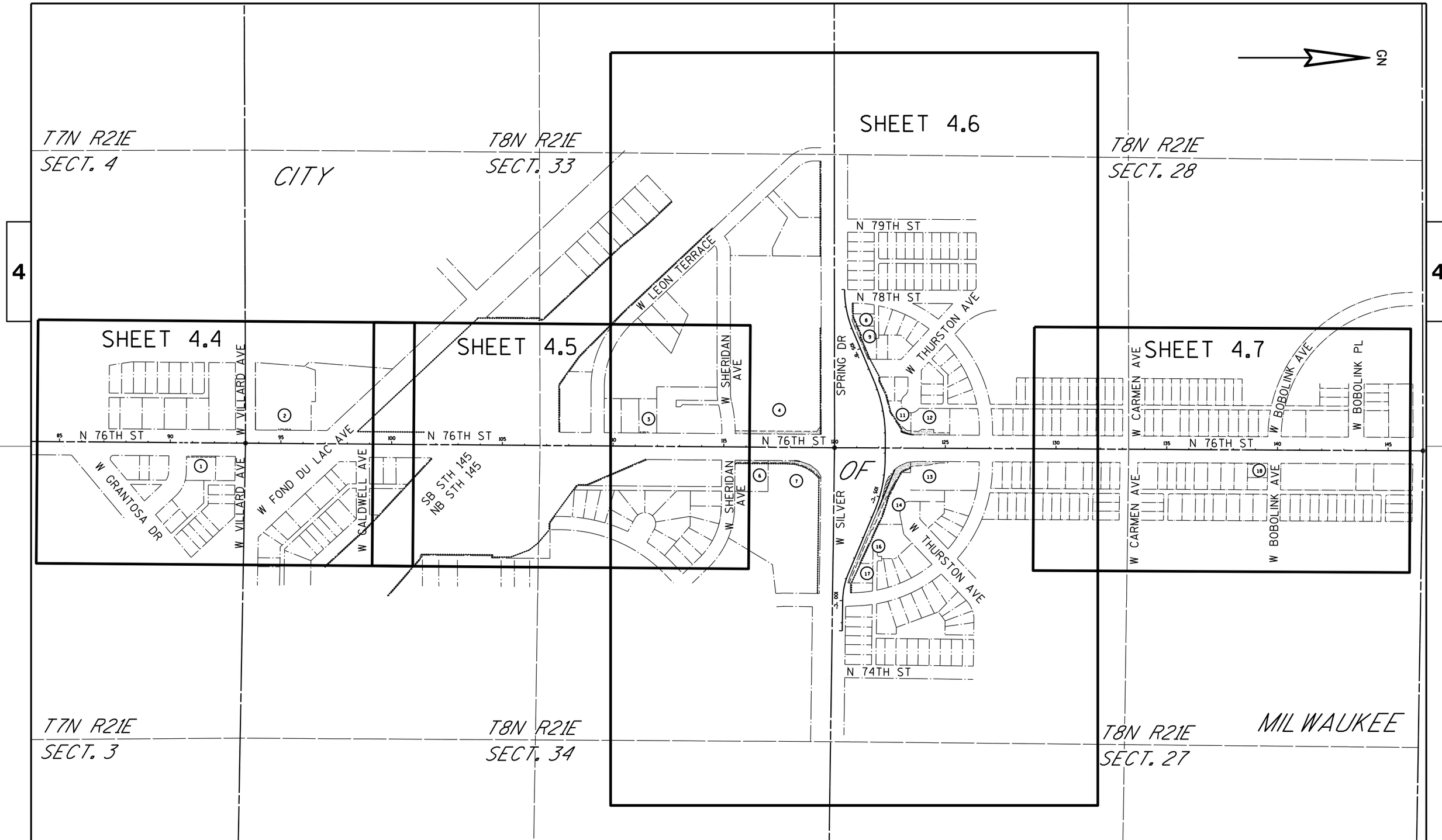


| | | | | | |
|---|---|---|---|---|---|
| REVISION DATE<br>10/01/2014 (NC)<br>5/18/2015 (NC)<br>10/14/2015 (NC) | DATE 05/09/2014 | NO SCALE | HWY: STH 181 | STATE R/W PROJECT NUMBER 2140-13-20 | PLAT SHEET 4.3 |
| | | | COUNTY: MILWAUKEE | CONSTRUCTION PROJECT NUMBER 2140-13-70 | PS&E SHEET |

E



FILE NAME : P:\46xx\4635_DS.N76.MIL\CADDS\Plan\TPP\040103_rp_Traditional.dgn PLOT DATE : 10/14/2015 PLOT BY : kcb PLOT NAME : PLOT SCALE : 1:400

2140-13-70, STH 181, 2140-13-20, 4.3

ALL TLES SHOWN ON THIS SHEET ARE FOR SLOPE GRADING

FOR THE LATEST ACCESS/DRIVEWAY INFORMATION CONTACT THE PLANNING DEPARTMENT OF THE WISCONSIN DEPARTMENT OF TRANSPORTATION OFFICE IN WAUKESHA

POSITIONS SHOWN ON THIS PLAT ARE WISCONSIN COUNTY COORDINATES, MILWAUKEE COUNTY, NAD 83(2007) IN U.S. SURVEY FEET. VALUES SHOWN ARE GRID COORDINATES, GRID BEARINGS, AND GRID DISTANCES. GRID DISTANCES MAY BE USED AS GROUND DISTANCES.

UTILITY INTERESTS REQUIRED

| UTILITY NUMBER | OWNER(S) | INTEREST REQUIRED |
|---|---|---|
| 102 | WE ENERGIES (ELECTRIC) | RELEASE OF RIGHTS |

102 WE ENERGIES (ELECTRIC)
DOC. 1668822 - PAR. 1

TLE STATION AND OFFSET TABLE

| POINT NO. | STATION | OFFSET |
|---|---|---|
| TLE100 | 90+74.53 | 60.00 |
| TLE101 | 92+06.53 | 60.00 |
| TLE102 | 92+06.48 | 65.00 |
| TLE103 | 90+74.47 | 65.00 |
| TLE104 | 94+87.50 | -60.00 |
| TLE105 | 94+87.50 | -65.00 |
| TLE106 | 95+42.50 | -65.00 |
| TLE107 | 95+42.50 | -60.00 |

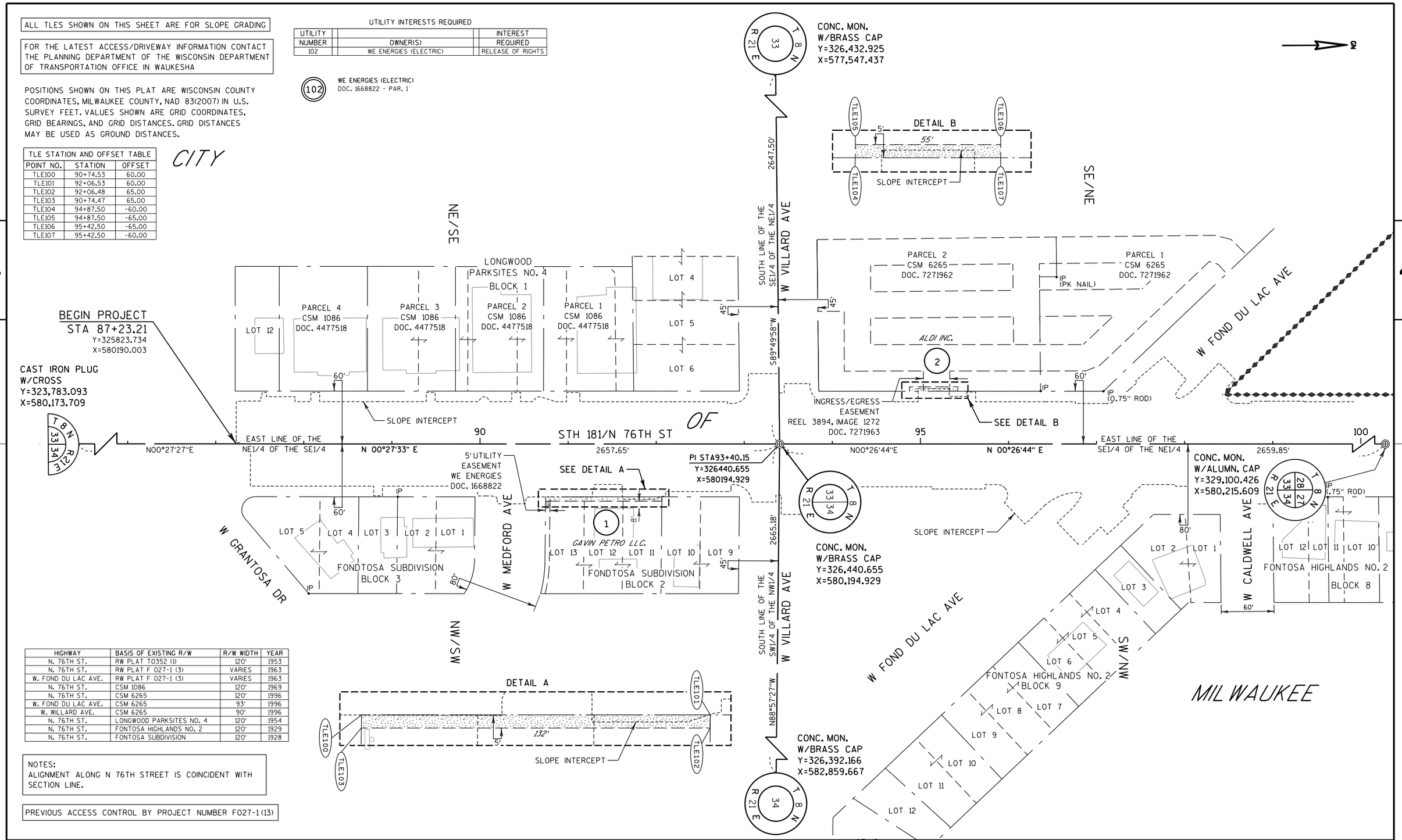


| HIGHWAY | BASIS OF EXISTING R/W | R/W WIDTH | YEAR |
|---|---|---|---|
| N. 76TH ST. | RW PLAT T0352 (1) | 120' | 1953 |
| N. 76TH ST. | RW PLAT F 027-1 (3) | VARIES | 1963 |
| W. FOND DU LAC AVE. | RW PLAT F 027-1 (3) | VARIES | 1963 |
| N. 76TH ST. | CSM 1086 | 120' | 1969 |
| N. 76TH ST. | CSM 6265 | 120' | 1996 |
| W. FOND DU LAC AVE. | CSM 6265 | 93' | 1996 |
| W. WILLARD AVE. | CSM 6265 | 90' | 1996 |
| N. 76TH ST. | LONGWOOD PARKSITES NO. 4 | 120' | 1954 |
| N. 76TH ST. | FONTOSA HIGHLANDS NO. 2 | 120' | 1929 |
| N. 76TH ST. | FONTOSA SUBDIVISION | 120' | 1928 |

NOTES:
ALIGNMENT ALONG N 76TH STREET IS COINCIDENT WITH SECTION LINE.

PREVIOUS ACCESS CONTROL BY PROJECT NUMBER F027-1(13)

| REVISION DATE | DATE 05/09/2014 | SCALE, FEET 0 50 100 | HWY: STH 181 | STATE R/W PROJECT NUMBER 2140-13-20 | PLAT SHEET 4.4 | |
|---|---|---|---|---|---|---|
| 10/01/2014 (NC)<br>5/18/2015 (NC)<br>10/14/2015 (NC) | GRID FACTOR: 1.0000 | | COUNTY: MILWAUKEE | CONSTRUCTION PROJECT NUMBER 2140-13-70 | PS&E SHEET | E |



FILE NAME : P:\46xx\4635_DS.N76.MIL\CADDS\Plan\TPP\040104_rp_Traditional.dgn PLOT DATE : 10/14/2015 PLOT BY : kcb PLOT NAME : PLOT SCALE : 1:100

2140-13-70, STH 181, 2140-13-20, 4.4

ALL TLES SHOWN ON THIS SHEET ARE FOR SLOPE GRADING

FOR THE LATEST ACCESS/DRIVEWAY INFORMATION CONTACT THE PLANNING DEPARTMENT OF THE WISCONSIN DEPARTMENT OF TRANSPORTATION OFFICE IN WAUKESHA

POSITIONS SHOWN ON THIS PLAT ARE WISCONSIN COUNTY COORDINATES, MILWAUKEE COUNTY, NAD 83(2007) IN U.S. SURVEY FEET. VALUES SHOWN ARE GRID COORDINATES, GRID BEARINGS, AND GRID DISTANCES. GRID DISTANCES MAY BE USED AS GROUND DISTANCES.

UTILITY INTERESTS REQUIRED

| UTILITY NUMBER | OWNER(S) | INTEREST REQUIRED |
|---|---|---|
| 102 | WE ENERGIES (ELECTRIC) | RELEASE OF RIGHTS |

102 WE ENERGIES (ELECTRIC)
DOC. 3251844 - PAR. 3

| TLE STATION AND OFFSET TABLE | | |
|---|---|---|
| POINT NO. | STATION | OFFSET |
| TLE150 | 111+21.50 | -60.00 |
| TLE151 | 111+21.50 | -65.00 |
| TLE152 | 111+57.50 | -65.00 |
| TLE153 | 111+57.50 | -60.00 |

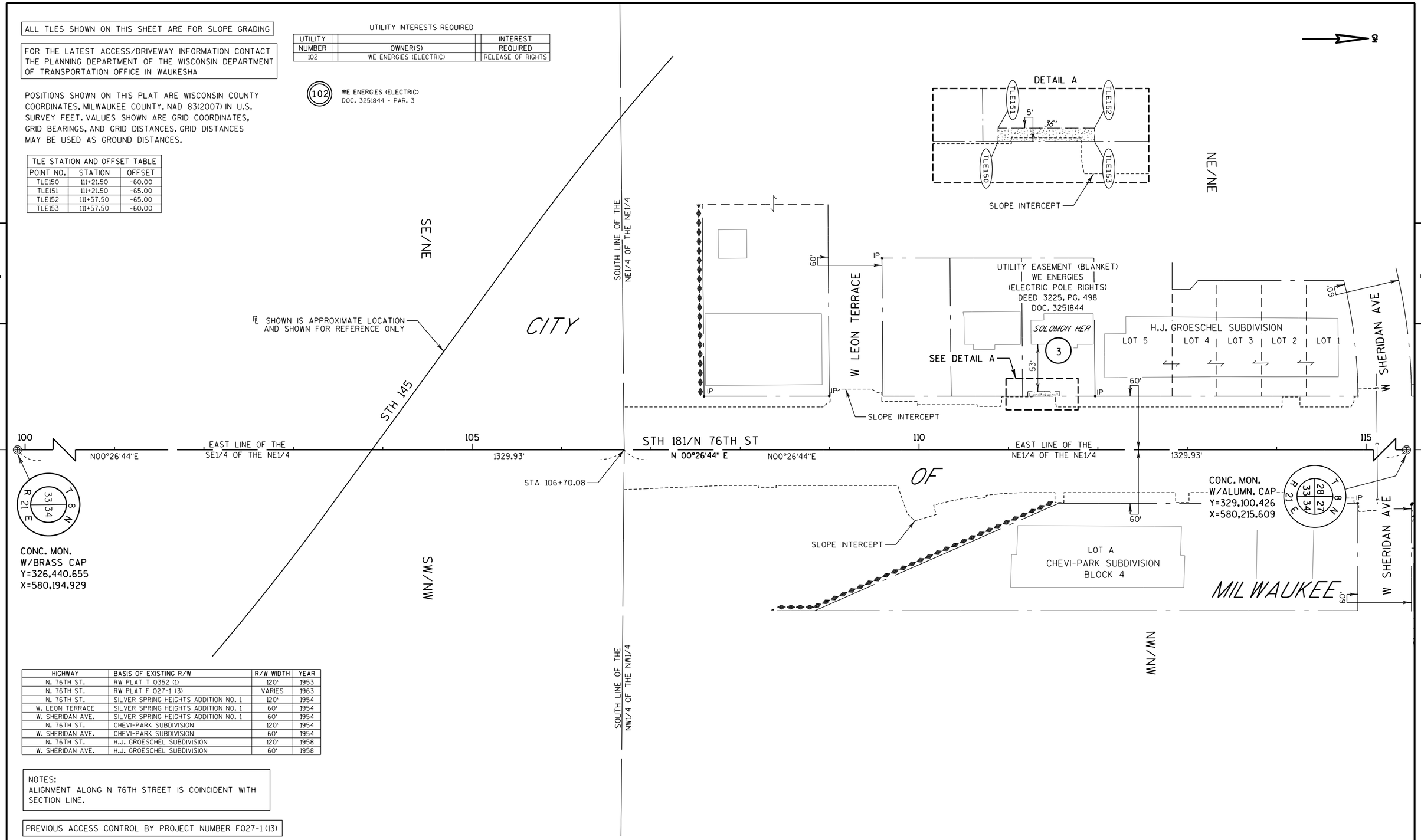


| HIGHWAY | BASIS OF EXISTING R/W | R/W WIDTH | YEAR |
|---|---|---|---|
| N. 76TH ST. | RW PLAT T 0352 (1) | 120' | 1953 |
| N. 76TH ST. | RW PLAT F 027-1 (3) | VARIES | 1963 |
| N. 76TH ST. | SILVER SPRING HEIGHTS ADDITION NO. 1 | 120' | 1954 |
| W. LEON TERRACE | SILVER SPRING HEIGHTS ADDITION NO. 1 | 60' | 1954 |
| W. SHERIDAN AVE. | SILVER SPRING HEIGHTS ADDITION NO. 1 | 60' | 1954 |
| N. 76TH ST. | CHEVI-PARK SUBDIVISION | 120' | 1954 |
| W. SHERIDAN AVE. | CHEVI-PARK SUBDIVISION | 60' | 1954 |
| N. 76TH ST. | H.J. GROESCHEL SUBDIVISION | 120' | 1958 |
| W. SHERIDAN AVE. | H.J. GROESCHEL SUBDIVISION | 60' | 1958 |

NOTES:
ALIGNMENT ALONG N 76TH STREET IS COINCIDENT WITH SECTION LINE.

PREVIOUS ACCESS CONTROL BY PROJECT NUMBER F027-1(13)

| REVISION DATE | DATE 05/09/2014 | SCALE, FEET 0 50 100 | HWY: STH 181 | STATE R/W PROJECT NUMBER 2140-13-20 | PLAT SHEET 4.5 | |
|---|---|---|---|---|---|---|
| 10/01/2014 (NC)<br>5/18/2015 (NC)<br>10/14/2015 (NC) | GRID FACTOR: 1.0000 | | COUNTY: MILWAUKEE | CONSTRUCTION PROJECT NUMBER 2140-13-70 | PS&E SHEET | E |



FILE NAME : P:\46xx\4635_DS.N76.MIL\CADDS\Plan\TPP\040105_rp_Traditional.dgn PLOT DATE : 10/14/2015 PLOT BY : kcb PLOT NAME : PLOT SCALE : 1:100

2140-13-70, STH 181, 2140-13-20, 4.5

ALL TLES SHOWN ON THIS SHEET ARE FOR SLOPE GRADING

FOR THE LATEST ACCESS/DRIVEWAY INFORMATION CONTACT THE PLANNING DEPARTMENT OF THE WISCONSIN DEPARTMENT OF TRANSPORTATION OFFICE IN WAUKESHA

POSITIONS SHOWN ON THIS PLAT ARE WISCONSIN COUNTY COORDINATES, MILWAUKEE COUNTY, NAD 83(2007) IN U.S. SURVEY FEET. VALUES SHOWN ARE GRID COORDINATES, GRID BEARINGS, AND GRID DISTANCES. GRID DISTANCES MAY BE USED AS GROUND DISTANCES.

| HIGHWAY | BASIS OF EXISTING R/W | R/W WIDTH | YEAR |
|---|---|---|---|
| N. 76TH ST. | RW PLAT US T0352 (1) | VARIES | 1953 |
| W. SILVER SPRING DR. | RW PLAT US 0822 (4) | VARIES | 1957 |
| N. 77TH ST. | RW PLAT US 0822 (4) | 80' | 1957 |
| N. 76TH ST. | RW PLAT US 0822 (4) | VARIES | 1957 |
| N. 77TH ST. | CSM 1247 | 80' | 1970 |
| W. SHERIDAN AVE. | CSM 1782 | 60' | 1972 |
| N. 76TH ST. | CSM 1782 | 120' | 1972 |
| N. 74TH ST. | CSM 1782 | 60 | 1972 |
| W. SILVER SPRING DR. | CSM 1782 | 140' | 1972 |
| W. SILVER SPRING DR. | CSM 1160 | 120' | 1969 |
| N. 76TH ST. | GRAN-TOSA HEIGHTS | VARIES | 1927 |
| THURSTON CIR. | GRAN-TOSA HEIGHTS | 60' | 1927 |
| W. THURSTON AVE. | GRAN-TOSA HEIGHTS | 100' | 1927 |
| N. 78TH ST. | GRAN-TOSA HEIGHTS | 60' | 1927 |
| N. 79TH ST. | GRAN-TOSA HEIGHTS | 60' | 1927 |
| N. 76TH ST. | PRINCETON GARDENS | VARIES | 1928 |
| THURSTON CIR. | PRINCETON GARDENS | 60' | 1928 |
| W. THURSTON AVE. | PRINCETON GARDENS | 100' | 1928 |

UTILITY INTERESTS REQUIRED

| UTILITY NUMBER | OWNER(S) | INTEREST REQUIRED |
|---|---|---|
| 100 | CITY OF MILWAUKEE (WATER) | RELEASE OF RIGHTS |
| 101 | CITY OF MILWAUKEE (SEWER) | RELEASE OF RIGHTS |
| 102 | WE ENERGIES (ELECTRIC) | RELEASE OF RIGHTS |
| 103 | WE ENERGIES (GAS) | RELEASE OF RIGHTS |
| 104 | AT&T WISCONSIN (COMMUNICATIONS) | RELEASE OF RIGHTS |

RAMP B
CURVE 1 DATA
PI = 106+82.92
Y = 329,145.890
X = 579,599.089
T = 97.68
L = 192.78
R = 484.98
DELTA = 22°46'32" RT
D = 11°48'51"

RAMP B
CURVE 2 DATA
PI = 102+10.82
Y = 329,330.414
X = 580,037.510
T = 131.23
L = 258.89
R = 641.46
DELTA = 23°07'26" LT
D = 08°55'56"

RAMP C
CURVE 3 DATA
PI = 105+54.48
Y = 329,328.586
X = 580,388.573
T = 123.77
L = 244.34
R = 622.00
DELTA = 22°30'28" LT
D = 09°12'42"

RAMP C
CURVE 4 DATA
PI = 100.64.04
Y = 329,137.872
X = 580,842.125
T = 64.06
L = 126.54
R = 329.19
DELTA = 22°01'25" RT
D = 17°24'18"

| RIGHT OF WAY STATION AND OFFSET TABLE | | |
|---|---|---|
| POINT NO. | STATION | OFFSET |
| PRW300 | 122+99.31 | -76.41' |
| PRW301 | 123+34.44 | -64.88' |
| PRW302 | 123+58.02 | -60.00' |
| PRW303 | 106+30.02 "C" | 45.75' |
| PRW304 | 104+43.64 "C" | 12.00' |
| PRW305 | 118+44.49 | 62.68' |
| PRW306 | 118+17.52 | 60.00' |

| SIGN NO. | SIGN OWNER |
|---|---|
| 11-1 | CLEAR CHANNEL |

| TLE STATION AND OFFSET TABLE | | |
|---|---|---|
| POINT NO. | STATION | OFFSET |
| TLE200 | 115+50.66 | -73.00' |
| TLE201 | 119+20.02 | -73.00' |
| TLE202 | 119+30.02 | -90.00' |
| TLE203 | 119+39.22 | -90.00' |
| TLE204 | 105+50.00 "B" | 23.00' |
| TLE205 | 105+50.00 "B" | 18.00' |
| TLE206 | 104+40.17 "B" | 18.00' |
| TLE207 | 122+73.54 | -123.66' |
| TLE208 | 123+25.00 | -80.00' |
| TLE209 | 123+77.00 | -75.00' |
| TLE210 | 123+94.00 | -85.00' |
| TLE211 | 124+47.73 | -70.00' |
| TLE212 | 124+47.73 | -85.00' |
| TLE213 | 125+19.51 | -70.00' |
| TLE214 | 125+12.06 | 66.00' |
| TLE215 | 124+73.00 | 66.00' |
| TLE216 | 124+25.94 | 76.00' |
| TLE217 | 123+50.00 | 82.00' |
| TLE218 | 106+24.58 "C" | 75.94' |
| TLE219 | 105+25.00 "C" | 45.00' |
| TLE220 | 105+05.51 "C" | 29.21' |
| TLE221 | 103+50.00 "C" | 25.00' |
| TLE222 | 103+50.00 "C" | 20.00' |
| TLE223 | 100+85.68 "C" | 17.61' |
| TLE224 | 119+39.18 | 140.00' |
| TLE225 | 117+80.00 | 70.00' |
| TLE226 | 115+60.00 | 70.00' |
| TLE227 | 115+50.80 | 81.22' |
| TLE228 | 106+52.66 "B" | 18.50' |
| TLE229 | 125+19.48 | -60.00' |
| TLE230 | 125+12.06 | 60.00' |
| TLE231 | 100+84.07 "C" | 11.96' |

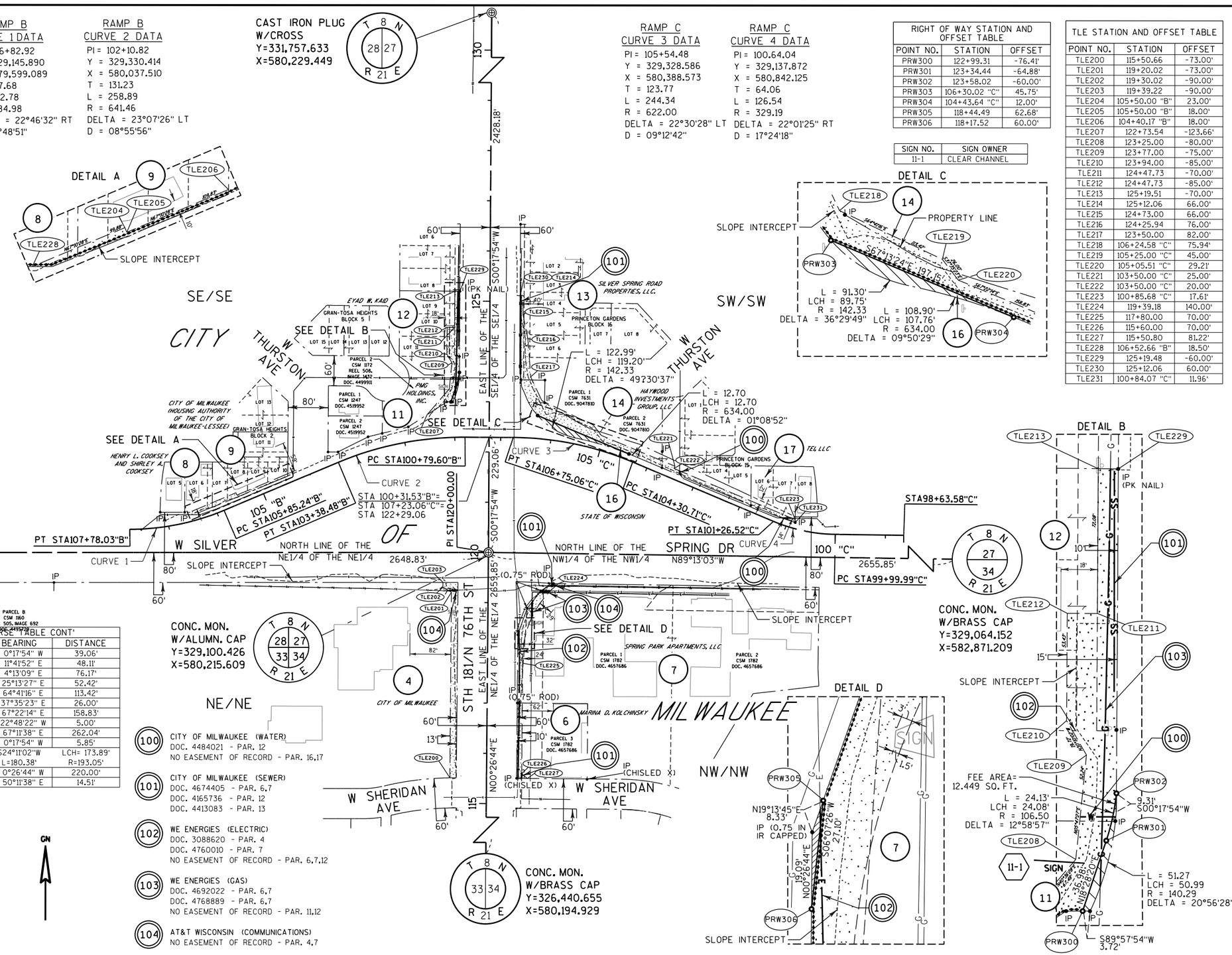


| TLE COURSE TABLE | | |
|---|---|---|
| COURSE | BEARING | DISTANCE |
| TLE200-TLE201 | N 0°26'44" E | 369.36' |
| TLE201-TLE202 | N 59°05'20" W | 19.72' |
| TLE202-TLE203 | N 0°26'44" E | 9.20' |
| TLE228-TLE204 | N 67°10'28" E | 99.88' |
| TLE204-TLE205 | S 22°49'32" E | 5.00' |
| TLE205-TLE206 | N 67°10'28" E | 109.83' |
| TLE207-TLE208 | N 40°36'28" E | 67.48' |
| TLE208-TLE209 | N 5°47'27" E | 52.24' |
| TLE209-TLE210 | N 30°10'02" W | 19.72' |
| TLE210-TLE211 | N 0°17'54" E | 25.00' |
| TLE211-TLE212 | N 54°02'40" E | 18.60' |
| TLE212-TLE213 | N 0°17'54" E | 89.51' |
| TLE213-TLE229 | S 89°29'33" E | 10.00' |
| TLE230-TLE214 | S 89°42'06" E | 6.00' |

| TLE COURSE TABLE CONT' | | |
|---|---|---|
| COURSE | BEARING | DISTANCE |
| TLE214-TLE215 | S 0°17'54" W | 39.06' |
| TLE215-TLE216 | S 11°41'52" E | 48.11' |
| TLE216-TLE217 | S 4°13'09" E | 76.17' |
| TLE217-TLE218 | S 25°13'27" E | 52.42' |
| TLE218-TLE219 | S 64°41'16" E | 113.42' |
| TLE219-TLE220 | S 37°35'23" E | 26.00' |
| TLE220-TLE221 | S 67°22'14" E | 158.83' |
| TLE221-TLE222 | S 22°48'22" W | 5.00' |
| TLE222-TLE223 | S 67°11'38" E | 25.00' |
| TLE223-TLE231 | S 0°17'54" W | 5.85' |
| TLE224-TLE225 | S24°11'02"W L=180.38' | LCH= 173.89' R=193.05' |
| TLE225-TLE226 | S 0°26'44" W | 220.00' |
| TLE226-TLE227 | S 50°11'38" E | 14.51' |

NOTES:
ALIGNMENT ALONG N 76TH STREET IS COINCIDENT WITH SECTION LINE.

FOR STREET AND ALLEY VACATIONS, REFER TO ADOPTED RESOLUTIONS: 4201791, 4183570, 4435041, 5021190, 4412175, 4482903, 4476844 & 4661867.

PREVIOUS ACCESS CONTROL BY PROJECT NUMBER US 0822 (4), CSM 1160 & CSM 1782

100 CITY OF MILWAUKEE (WATER)
DOC. 4484021 - PAR. 12
NO EASEMENT OF RECORD - PAR. 16,17

101 CITY OF MILWAUKEE (SEWER)
DOC. 4674405 - PAR. 6,7
DOC. 4165736 - PAR. 12
DOC. 4413083 - PAR. 13

102 WE ENERGIES (ELECTRIC)
DOC. 3088620 - PAR. 4
DOC. 4760010 - PAR. 7
NO EASEMENT OF RECORD - PAR. 6,7,12

103 WE ENERGIES (GAS)
DOC. 4692022 - PAR. 6,7
DOC. 4768889 - PAR. 6,7
NO EASEMENT OF RECORD - PAR. 11,12

104 AT&T WISCONSIN (COMMUNICATIONS)
NO EASEMENT OF RECORD - PAR. 4,7

| REVISION DATE | DATE 05/09/2014 | SCALE, FEET | HWY: STH 181 | STATE R/W PROJECT NUMBER 2140-13-20 | PLAT SHEET 4.6 | |
|---|---|---|---|---|---|---|
| 10/01/2014 5/18/2015 10/14/2015 | GRID FACTOR: 1.0000 | 0 100 200 | COUNTY: MILWAUKEE | CONSTRUCTION PROJECT NUMBER 2140-13-70 | PS&E SHEET 294 | E |

FILE NAME : P:\46xx\4635_DS.N76.MIL\CADDS\Plan\TPP\040106_rp_Traditional.dgn PLOT DATE : 12/3/2015 PLOT BY : kcb PLOT NAME : PLOT SCALE : 1:200

2140-13-70, STH 181, 2140-13-20, 4.6

ALL TLES SHOWN ON THIS SHEET ARE FOR SLOPE GRADING

FOR THE LATEST ACCESS/DRIVEWAY INFORMATION CONTACT THE PLANNING DEPARTMENT OF THE WISCONSIN DEPARTMENT OF TRANSPORTATION OFFICE IN WAUKESHA

POSITIONS SHOWN ON THIS PLAT ARE WISCONSIN COUNTY COORDINATES, MILWAUKEE COUNTY, NAD 83(2007) IN U.S. SURVEY FEET. VALUES SHOWN ARE GRID COORDINATES, GRID BEARINGS, AND GRID DISTANCES. GRID DISTANCES MAY BE USED AS GROUND DISTANCES.

| HIGHWAY | BASIS OF EXISTING R/W | R/W WIDTH | YEAR |
|---|---|---|---|
| N. 76TH ST. | RW PLAT T0352 (1) | 120' | 1953 |
| N. 76TH ST. | GRAN-TOSA HEIGHTS | VARIES | 1927 |
| CARMEN AVE. | GRAN-TOSA HEIGHTS | 60' | 1927 |
| BOBOLINK AVE. | GRAN-TOSA HEIGHTS | 60' | 1927 |
| W. BOBOLINK PL. | GRAN-TOSA HEIGHTS | 70' | 1927 |
| N. 76TH ST. | PRINCETON GARDENS | VARIES | 1928 |
| CARMEN AVE. | PRINCETON GARDENS | 80' | 1928 |
| BOBOLINK AVE. | PRINCETON GARDENS | 60' | 1928 |

| TLE STATION AND OFFSET TABLE | | |
|---|---|---|
| POINT NO. | STATION | OFFSET |
| TLE350 | 138+65.57 | 60.00 |
| TLE351 | 138+94.50 | 60.00 |
| TLE352 | 138+94.50 | 65.00 |
| TLE353 | 138+65.57 | 65.00 |

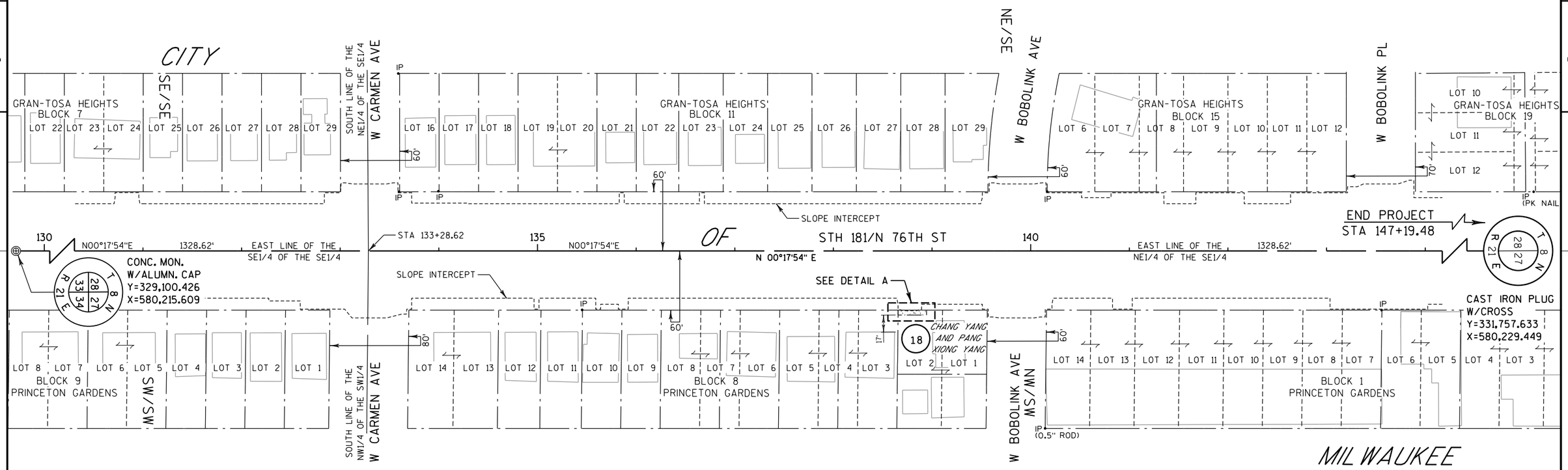


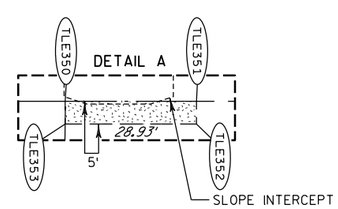


NOTES:
ALIGNMENT ALONG N 76TH STREET IS COINCIDENT WITH SECTION LINE.

| REVISION DATE | DATE 05/09/2014 | SCALE, FEET 0 50 100 | HWY: STH 181 | STATE R/W PROJECT NUMBER 2140-13-20 | PLAT SHEET 4.7 | |
|---|---|---|---|---|---|---|
| 10/01/20414 (NC)<br>5/18/2015 (NC)<br>10/14/2015 (NC) | GRID FACTOR: 1.0000 | | COUNTY: MILWAUKEE | CONSTRUCTION PROJECT NUMBER 2140-13-70 | PS&E SHEET 295 | E |

FILE NAME : P:\46xx\4635_DS.N76.MIL\CADDS\Plan\TPP\040107_rp_Traditional.dgn PLOT DATE : 10/14/2015 PLOT BY : kcb PLOT NAME : PLOT SCALE : 1:100

2140-13-70, STH 181, 2140-13-20, 4.7

BENCH MARKS

| NO. | STATION | DESCRIPTION | ELEV. |
|---|---|---|---|
| 1 | 120+00.00, 0' RT | SECTION CORNER | 747.52 |
| 2 | 118+36.58, 58.74' RT | CHISELED X | 745.44 |
| 3 | 119+97.54, 88.92' RT | 3/4" REBAR WITH CAP | 746.63 |
| 4 | 121+96.59, 78.86' RT | 3/4" REBAR WITH CAP | 744.77 |

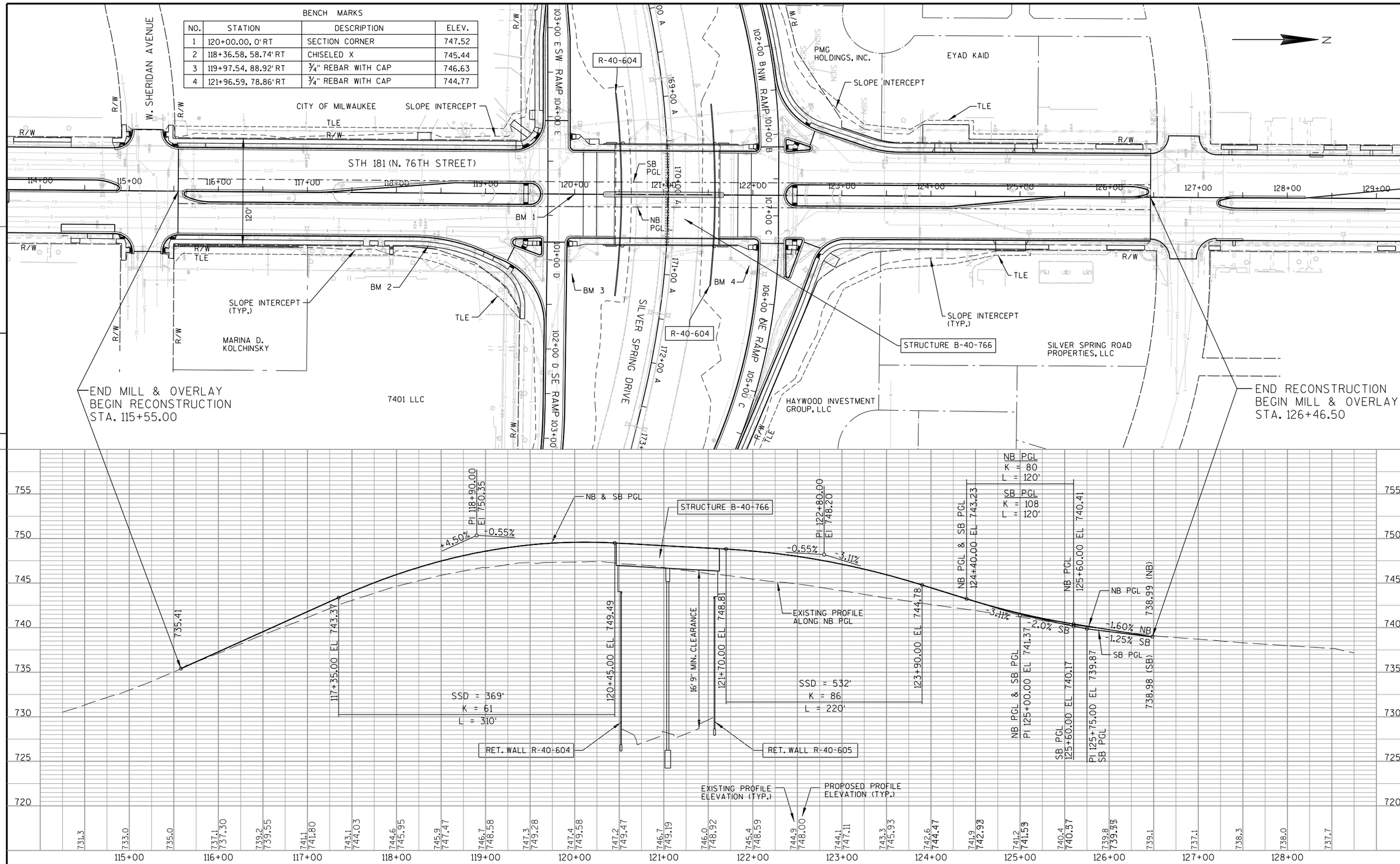


| PROJECT NO: 2140-13-70 | HWY: STH 181 | COUNTY: MILWAUKEE | PLAN AND PROFILE - STH 181 | SHEET 296 | E |
|---|---|---|---|---|---|

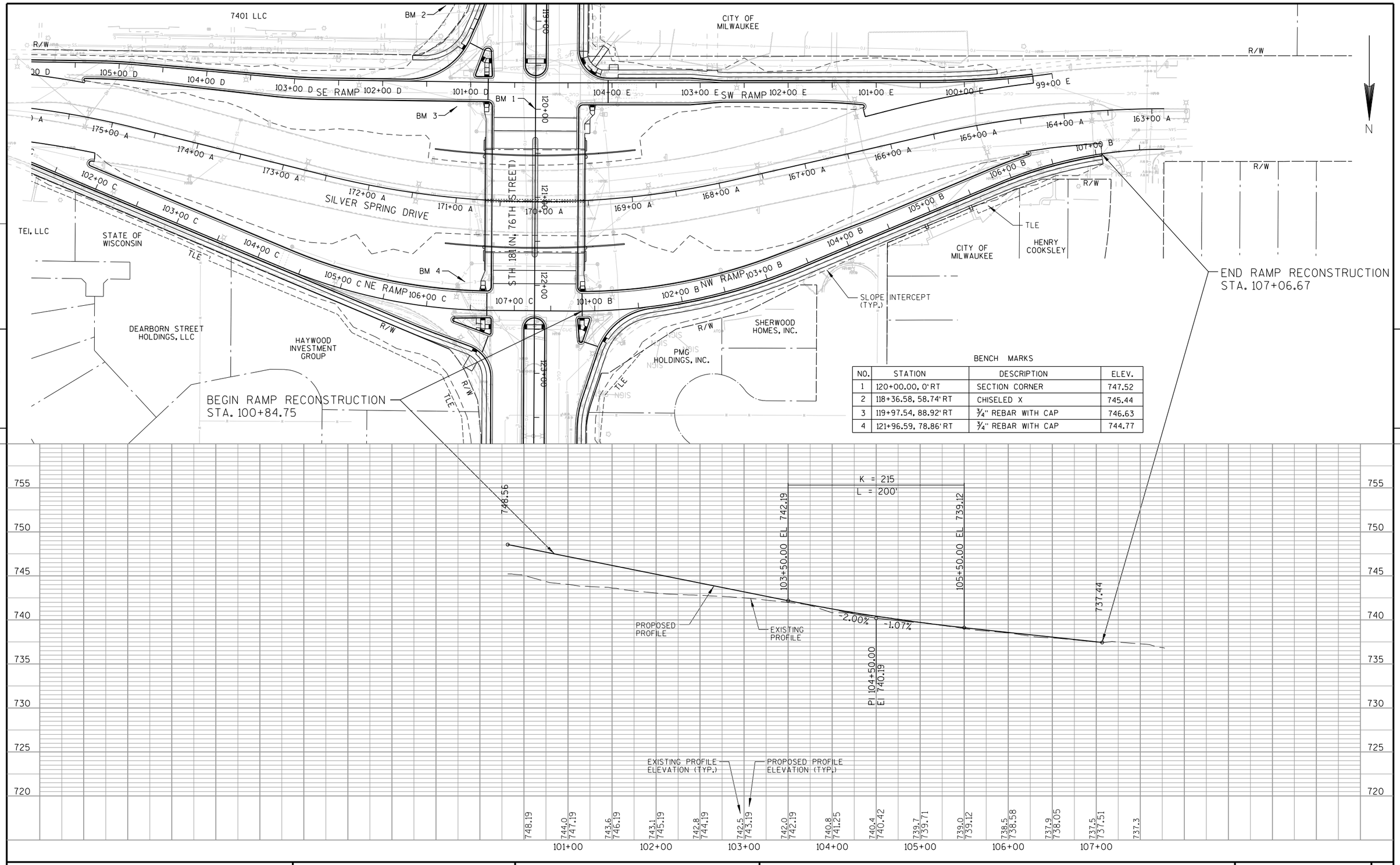


BENCH MARKS

| NO. | STATION | DESCRIPTION | ELEV. |
|---|---|---|---|
| 1 | 120+00.00, 0'RT | SECTION CORNER | 747.52 |
| 2 | 118+36.58, 58.74'RT | CHISELED X | 745.44 |
| 3 | 119+97.54, 88.92'RT | 3/4" REBAR WITH CAP | 746.63 |
| 4 | 121+96.59, 78.86'RT | 3/4" REBAR WITH CAP | 744.77 |

5

5

| PROJECT NO:2140-13-70 | HWY:STH 181 | COUNTY:MILWAUKEE | PLAN AND PROFILE - NW RAMP | SHEET 297 | E |
|---|---|---|---|---|---|

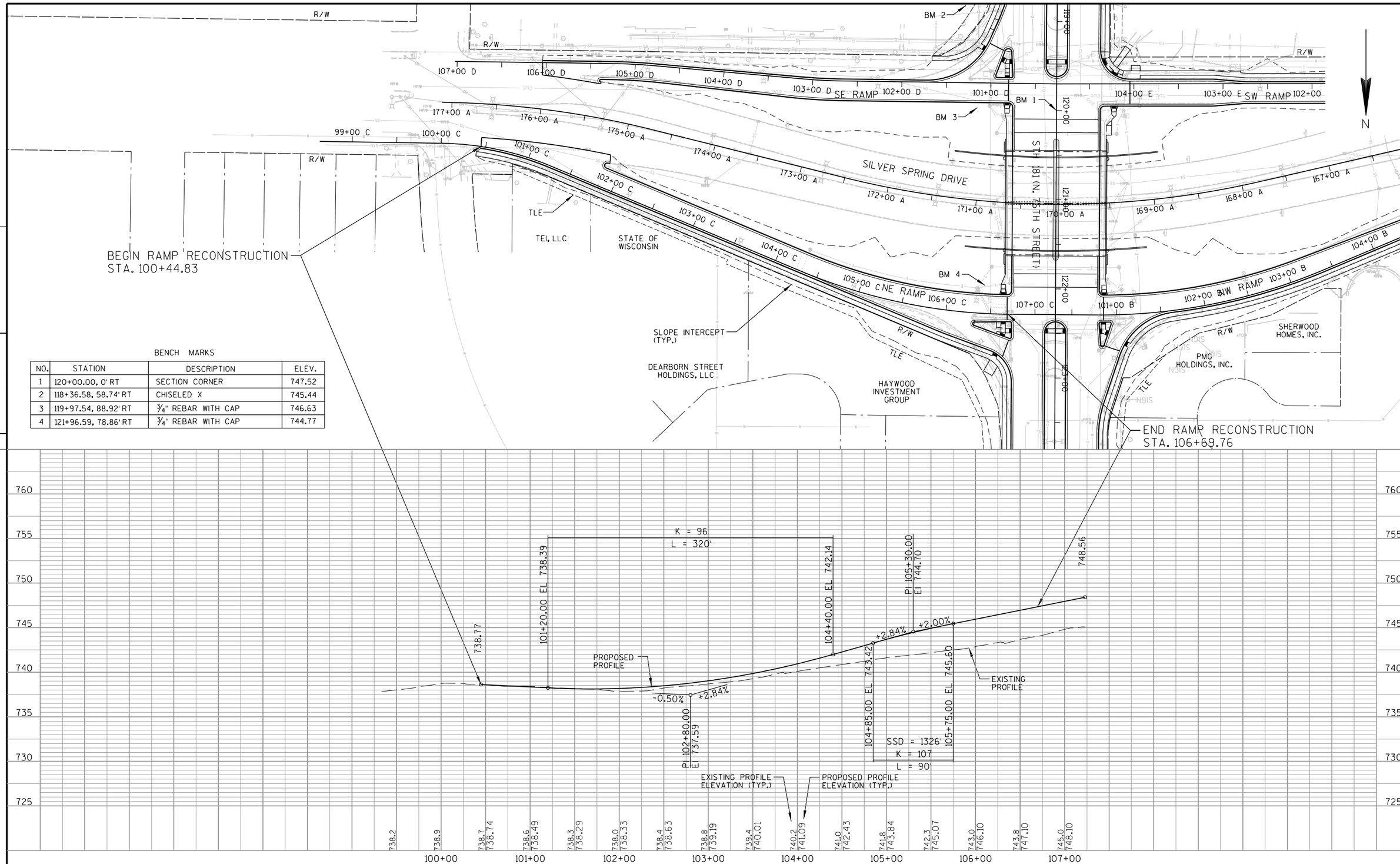


BENCH MARKS

| NO. | STATION | DESCRIPTION | ELEV. |
|---|---|---|---|
| 1 | 120+00.00, 0' RT | SECTION CORNER | 747.52 |
| 2 | 118+36.58, 58.74' RT | CHISELED X | 745.44 |
| 3 | 119+97.54, 88.92' RT | ¾" REBAR WITH CAP | 746.63 |
| 4 | 121+96.59, 78.86' RT | ¾" REBAR WITH CAP | 744.77 |

5

5

| PROJECT NO:2140-13-70 | HWY:STH 181 | COUNTY:MILWAUKEE | PLAN AND PROFILE - NE RAMP | SHEET 298 | E |
|---|---|---|---|---|---|

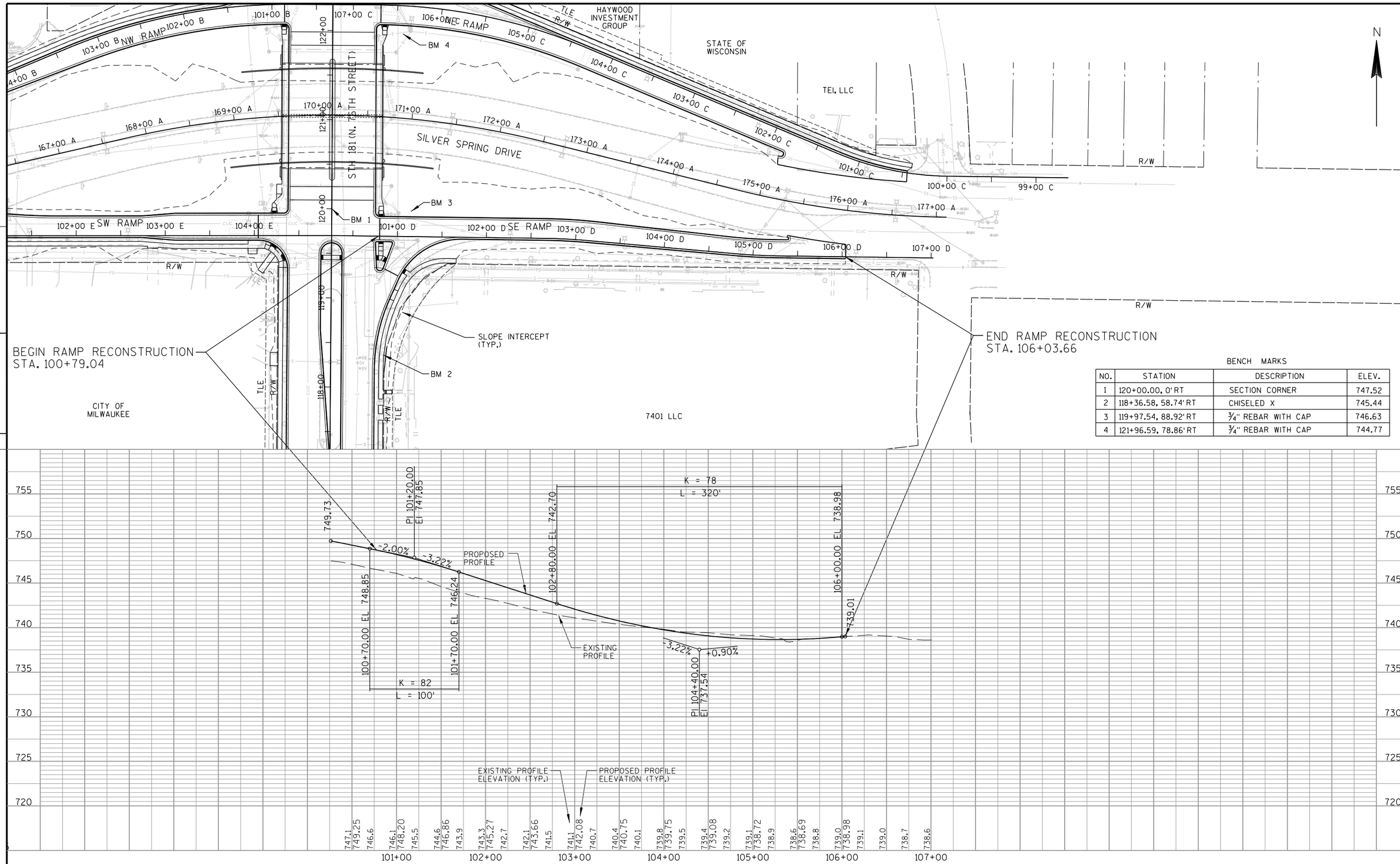


BENCH MARKS

| NO. | STATION | DESCRIPTION | ELEV. |
|---|---|---|---|
| 1 | 120+00.00, 0' RT | SECTION CORNER | 747.52 |
| 2 | 118+36.58, 58.74' RT | CHISELED X | 745.44 |
| 3 | 119+97.54, 88.92' RT | ¾" REBAR WITH CAP | 746.63 |
| 4 | 121+96.59, 78.86' RT | ¾" REBAR WITH CAP | 744.77 |

5

5

| PROJECT NO:2140-13-70 | HWY:STH 181 | COUNTY:MILWAUKEE | PLAN AND PROFILE - SE RAMP | SHEET 299 | E |
|---|---|---|---|---|---|

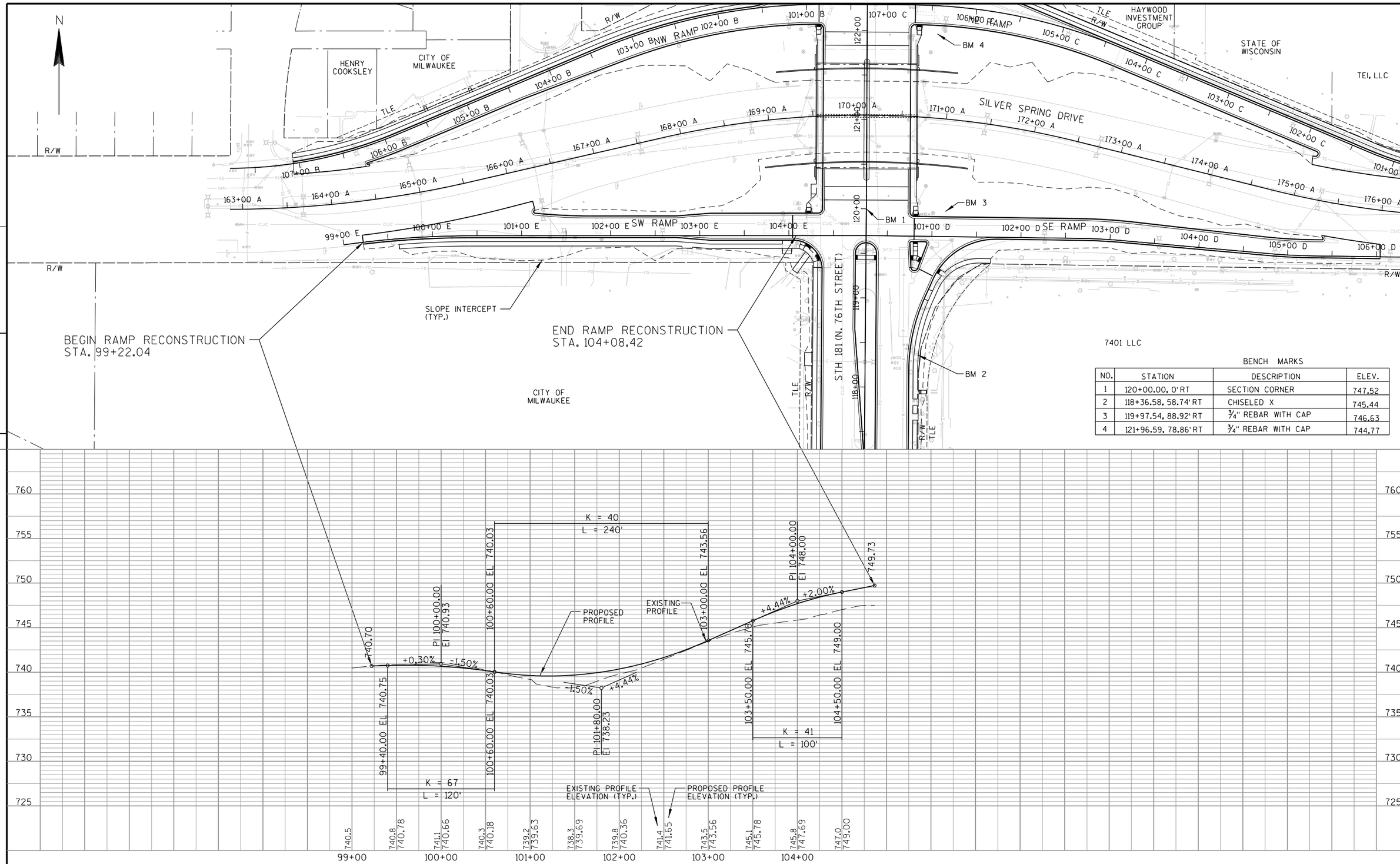


BENCH MARKS

| NO. | STATION | DESCRIPTION | ELEV. |
|---|---|---|---|
| 1 | 120+00.00, 0' RT | SECTION CORNER | 747.52 |
| 2 | 118+36.58, 58.74' RT | CHISELED X | 745.44 |
| 3 | 119+97.54, 88.92' RT | 3/4" REBAR WITH CAP | 746.63 |
| 4 | 121+96.59, 78.86' RT | 3/4" REBAR WITH CAP | 744.77 |

5

5

| PROJECT NO: 2140-13-70 | HWY: STH 181 | COUNTY: MILWAUKEE | PLAN AND PROFILE - SW RAMP | SHEET 300 | E |
|---|---|---|---|---|---|

# Standard Detail Drawing List

| | |
|---|---|
| 08A05-19A | INLET COVERS TYPE A, H, A-S, H-S & Z |
| 08A05-19B | INLET COVERS TYPE B, B-A, C, MS, MS-A, & WM |
| 08A05-19D | INLET COVER TYPE BW, MANHOLE COVERS, TYPE K, J, J-S, L & M |
| 08B09-01 | MANHOLES 3-FT, 4-FT, 5-FT, 6-FT, 7-FT AND 8-FT DIAMETER |
| 08C07-01 | INLETS 2X2-FT, 2X2.5-FT, 2X3-FT AND 2.5X3-FT |
| 08C08-01 | INLETS MEDIAN 1 AND 2 GRATE |
| 08D01-18 | CONCRETE CURB, CONCRETE CURB AND GUTTER AND TIES |
| 08D05-16A | CURB RAMPS TYPES 1 AND 1-A |
| 08D05-16B | CURB RAMPS TYPES 2 AND 3 |
| 08D05-16C | CURB RAMPS TYPES 4A AND 4A1 |
| 08D05-16D | CURB RAMPS TYPE 4B AND 4B1 |
| 08D05-16E | CURB RAMPS TYPES 5, 6, 7A, 7B & 8 |
| 08E09-06 | SILT FENCE |
| 08E10-02 | INLET PROTECTION TYPE A, B, C AND D |
| 08E14-01 | TRACKING PAD |
| 09B02-09 | CONDUIT |
| 09B04-11 | PULL BOX |
| 09C02-07 | CONCRETE BASES, TYPES 1, 2, 5, & 6 |
| 09C03-04 | TRANSFORMER/PEDESTAL BASES |
| 09C06-07 | CONCRETE CONTROL CABINET BASE, TYPE 9, SPECIAL |
| 09C11-08 | CONCRETE BASE TYPE 10 |
| 09C12-07A | CONCRETE BASE TYPE 13 |
| 09C12-07B | CONCRETE BASE TYPE 13 |
| 09C13-02 | CONCRETE BASE TYPE 10 & TYPE 13 EXTENSION |
| 09D01-05 | CABINET SERVICE INSTALLATION (METER BREAKER PEDESTAL) |
| 09D02-03 | SIGNAL CONTROL CABINET |
| 09E06-05 | TRAFFIC SIGNAL STANDARD POLY BRACKET MOUNTINGS (TYPICAL) 13 FT. OR 15 FT. |
| 09E08-07A | TYPE 9 POLE 15'-30' MONOTUBE ARM |
| 09E08-07C | TYPE 12 POLE 35'-55' MONOTUBE ARM |
| 09E08-07E | GENERAL NOTES AND HARDWARE DETAILS FOR TYPE 9, 10, 12 & 13 POLES WITH MONOTUBE ARMS |
| 09F15-04A | LOOP DETECTOR INSTALLED IN BASE COURSE WITH PULL (SPLICE) BOX OFF ROADWAY (OPTION 1) |
| 09F15-04B | LOOP DETECTOR INSTALLED IN BASE COURSE WITH PULL (SPLICE) BOX OFF ROADWAY (OPTION 2) |
| 09G01-04A | SPAN WIRE TEMPORARY TRAFFIC SIGNAL |
| 09G01-04B | SPAN WIRE TEMPORARY TRAFFIC SIGNAL |
| 09G01-04C | SPAN WIRE TEMPORARY TRAFFIC SIGNAL |
| 09G01-04D | SPAN WIRE TEMPORARY TRAFFIC SIGNAL |
| 09G01-04E | SPAN WIRE TEMPORARY TRAFFIC SIGNAL |
| 09G01-04F | SPAN WIRE TEMPORARY TRAFFIC SIGNAL |
| 09G01-04G | SPAN WIRE TEMPORARY TRAFFIC SIGNAL |
| 09H09-01 | COMMUNICATION VAULT |
| 11B02-02 | CONCRETE MEDIAN NOSE |
| 12A03-10 | NAME PLATE (STRUCTURES) |
| 13B02-08A | CONCRETE PAVEMENT APPROACH SLAB |
| 13B02-08B | STRUCTURAL APPROACH SLAB AND CONCRETE PAVEMENT APPROACH SLAB |
| 13C01-18 | CONCRETE PAVEMENT LONGITUDINAL JOINTS AND TIES |
| 13C13-08 | URBAN DOWELED CONCRETE PAVEMENT |
| 13C14-06A | BASE PATCHING CONCRETE |
| 13C14-06B | BASE PATCHING CONCRETE |
| 13C14-06C | BASE PATCHING CONCRETE |
| 13C15-06A | CONCRETE BASE |
| 13C15-06B | CONCRETE BASE |
| 13C18-03A | CONCRETE PAVEMENT JOINTING |
| 13C18-03B | CONCRETE PAVEMENT STEEL REINFORCEMENT |
| 13C18-03C | CONCRETE PAVEMENT JOINT TIES |
| 13C18-03D | CONCRETE PAVEMENT JOINTING AT UTILITY FIXTURES |
| 14B07-14A | CONCRETE BARRIER TEMPORARY PRECAST, 12'-6" |
| 14B07-14B | CONCRETE BARRIER TEMPORARY PRECAST, 12'-6" |
| 14B07-14C | CONCRETE BARRIER TEMPORARY PRECAST, 12'-6" |
| 14B07-14D | CONCRETE BARRIER TEMPORARY PRECAST, 12'-6" |
| 14B07-14E | CONCRETE BARRIER TEMPORARY PRECAST, 12'-6" |
| 14B07-14F | CONCRETE BARRIER TEMPORARY PRECAST, 12'-6" |
| 14B07-14G | CONCRETE BARRIER TEMPORARY PRECAST, 12'-6" |
| 14B07-14H | CONCRETE BARRIER TEMPORARY PRECAST, 12'-6" |
| 14B32-03A | CONCRETE BARRIER SINGLE SLOPE (CBSS) |
| 14B33-01G | CONCRETE BARRIER SINGLE SLOPE 42" THRIE BEAM ANCHOR |
| 14B33-01H | CONCRETE BARRIER SINGLE SLOPE 42" THRIE BEAM ANCHOR |
| 14B39-01E | 42-INCH SSCB TO 56-INCH SSCB HEIGHT TRANSITION |



6

# Standard Detail Drawing List

| | |
|---|---|
| 14B42-03A | MIDWEST GUARDRAIL SYSTEM (MGS) GUARDRAIL |
| 14B42-03B | MIDWEST GUARDRAIL SYSTEM (MGS) GUARDRAIL |
| 14B42-03C | MIDWEST GUARDRAIL SYSTEM (MGS) GUARDRAIL |
| 14B44-02A | MIDWEST GUARDRAIL SYSTEM ENERGY ABSORBING TERMINAL (MGS) |
| 14B44-02B | MIDWEST GUARDRAIL SYSTEM ENERGY ABSORBING TERMINAL (MGS) |
| 14B44-02C | MIDWEST GUARDRAIL SYSTEM ENERGY ABSORBING TERMINAL (MGS) |
| 14B45-04A | MIDWEST GUARDRAIL SYSTEM THRIE BEAM TRANSITION (MGS) |
| 14B45-04B | MIDWEST GUARDRAIL SYSTEM THRIE BEAM TRANSITION (MGS) |
| 14B45-04C | MIDWEST GUARDRAIL SYSTEM THRIE BEAM TRANSITION (MGS) |
| 14B45-04D | MIDWEST GUARDRAIL SYSTEM THRIE BEAM TRANSITION (MGS) |
| 14B45-04I | MIDWEST GUARDRAIL SYSTEM THRIE BEAM TRANSITION (MGS) |
| 14B45-04J | MIDWEST GUARDRAIL SYSTEM THRIE BEAM TRANSITION (MGS) |
| 15C02-06A | BARRICADES AND SIGNS FOR MAINLINE CLOSURES |
| 15C02-06B | BARRICADES AND SIGNS FOR MAINLINE CLOSURES |
| 15C02-06C | DETOUR SIGNING FOR MAINLINE CLOSURES |
| 15C03-03 | BARRICADES AND SIGNS FOR SIDEROAD CLOSURES |
| 15C07-12A | PAVEMENT MARKING SYMBOLS |
| 15C07-12B | PAVEMENT MARKING WORDS |
| 15C07-12C | PAVEMENT MARKING ARROWS |
| 15C08-16A | PAVEMENT MARKING (MAINLINE) |
| 15C08-16E | PAVEMENT MARKING (LEFT TURN LANE) |
| 15C08-16F | PAVEMENT MARKING (ISLANDS) |
| 15C11-06 | FLEXIBLE TUBULAR MARKER POST |
| 15C12-04 | TRAFFIC CONTROL FOR LANE CLOSURE (SUITABLE FOR MOVING OPERATIONS) |
| 15C27-01 | DOUBLE ARROW WARNING SIGN PLACEMENT |
| 15D06-03 | TRAFFIC CONTROL, TWO LANE TWO WAY OPERATION |
| 15D11-06 | TRAFFIC CONTROL, SINGLE LANE CROSSOVER |
| 15D12-05A | TRAFFIC CONTROL, LANE CLOSURE |
| 15D15-02 | TRAFFIC CONTROL, EXIT AND ENTRANCE RAMP WITHIN LANE CLOSURE |
| 15D16-03 | TRAFFIC CONTROL, EXIT RAMP CLOSURE |
| 15D20-03 | TRAFFIC CONTROL, SINGLE LANE CLOSURE, NON-FREEWAY/EXPRESSWAY |
| 15D21-03 | TRAFFIC CONTROL, INTERSECTION WITHIN SINGLE LANE CLOSURE |
| 15D22-02 | TRAFFIC CONTROL, TWO LANE CLOSURE, NON-FREEWAY/EXPRESSWAY |
| 15D23-03 | TRAFFIC CONTROL, INTERSECTION WITHIN TWO LANE CLOSURE |
| 15D27-02 | TRAFFIC CONTROL, SHOULDER CLOSURE ON DIVIDED ROADWAY, SPEEDS GREATER THAN 40 MPH |
| 15D30-02A | TRAFFIC CONTROL, PEDESTRIAN ACCOMMODATION |
| 15D30-02B | TRAFFIC CONTROL, TEMPORARY ADA COMPLIANT PEDESTRIAN ACCOMMODATION |
| 15D30-02C | TRAFFIC CONTROL, PEDESTRIAN ACCOMMODATION |
| 16A01-06 | LANDMARK REFERENCE MONUMENTS AND COVERS |



6

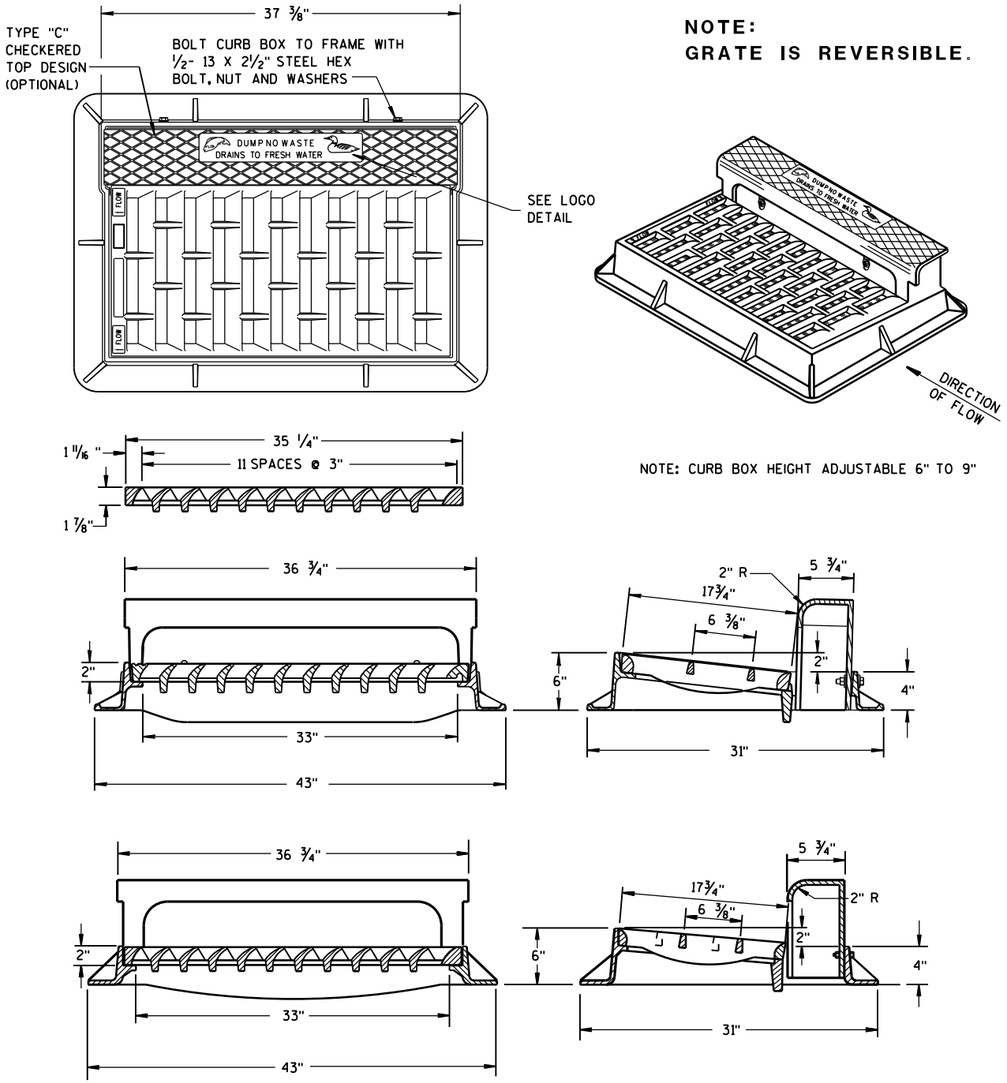


NOTE:
GRATE IS REVERSIBLE.

NOTE: CURB BOX HEIGHT ADJUSTABLE 6" TO 9"

## TYPE "H"

NOTE: EITHER CASTING IS ACCEPTABLE

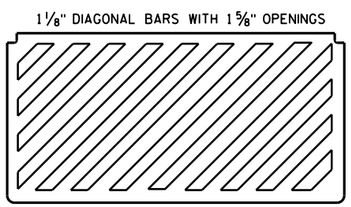


## SPECIAL GRATE FOR TYPE "H" COVER

(MEASURES 35 1/4" X 17 3/4" X 2")

(NOTED AS TYPE H-S ON DRAINAGE TABLE)

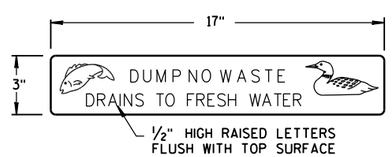


## LOGO DETAIL

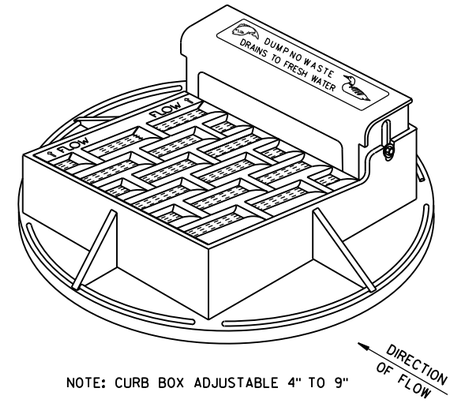


NOTE: CURB BOX ADJUSTABLE 4" TO 9"

NOTE:
GRATE IS REVERSIBLE.

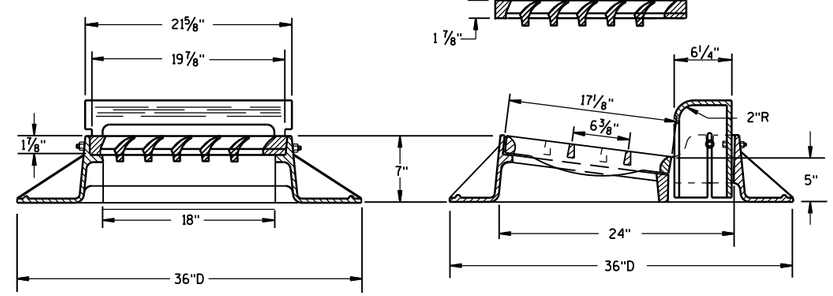


## TYPE "A"

## GENERAL NOTES

DETAILS OF CONSTRUCTION, MATERIALS AND WORKMANSHIP NOT SHOWN ON THIS DRAWING SHALL CONFORM TO THE PERTINENT REQUIREMENTS OF THE STANDARD SPECIFICATIONS AND THE APPLICABLE SPECIAL PROVISIONS.

DETAIL DRAWINGS FOR PROPOSED ALTERNATE DESIGNS FOR CATCH BASIN, MANHOLE AND INLET COVERS SHALL BE SUBMITTED TO THE ENGINEER FOR APPROVAL PROVIDING THAT SUCH ALTERNATE DESIGNS MAKE PROVISION FOR EQUIVALENT CAPACITY AND STRENGTH.

ROUND FRAMES AND COVERS SHALL HAVE CONTINUOUSLY MACHINED BEARING SURFACES TO PREVENT ROCKING AND RATTLING.

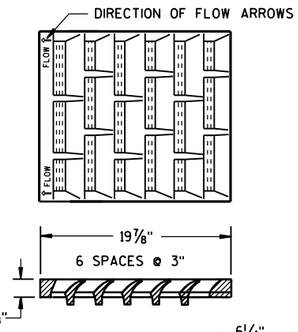


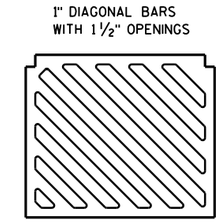


## SPECIAL GRATE FOR TYPE "A" COVER

(MEASURES 19 3/4" X 17" X 1 7/8")

(NOTED AS TYPE A-S ON DRAINAGE TABLE)

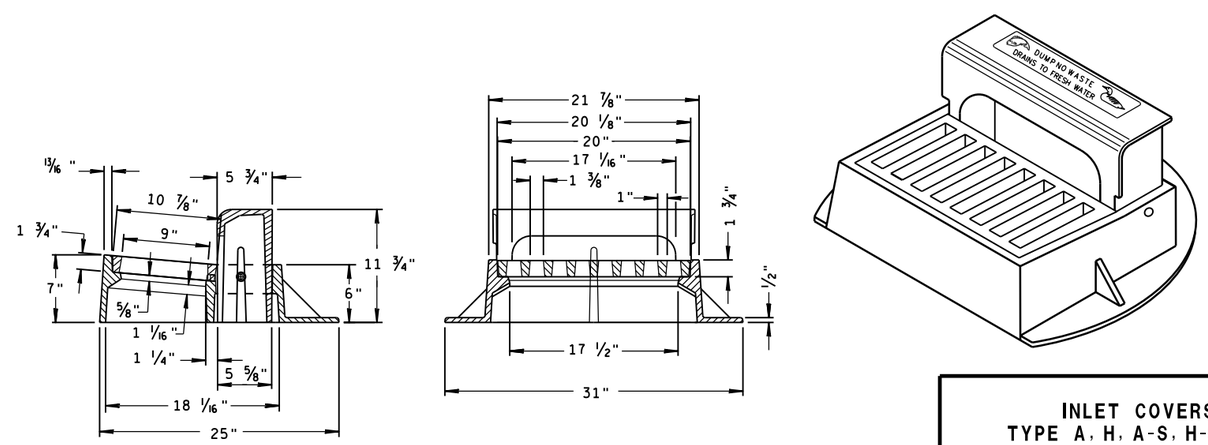


## TYPE "Z"

INLET COVERS
TYPE A, H, A-S, H-S & Z

STATE OF WISCONSIN
DEPARTMENT OF TRANSPORTATION

APPROVED
11-27-13 /S/ Jerry H. Zogg
DATE ROADWAY STANDARDS DEVELOPMENT ENGINEER
FHWA

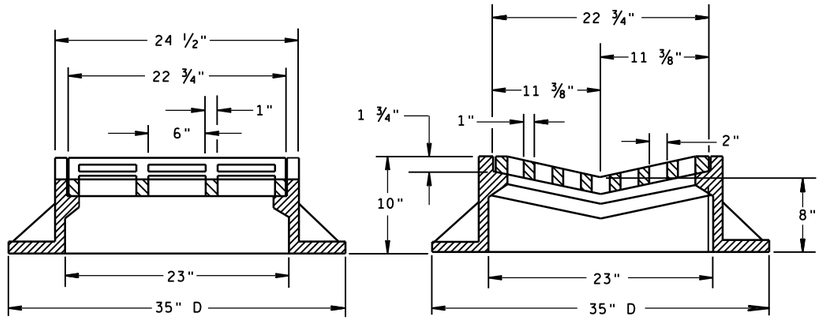


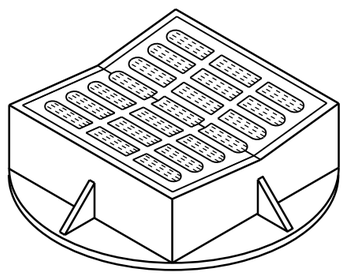

TYPE "B"

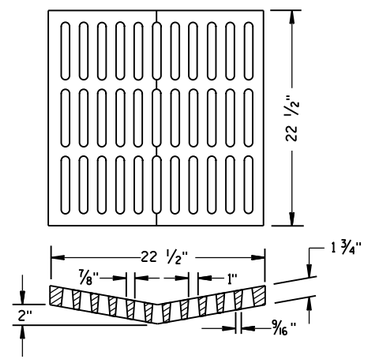


ALTERNATIVE GRATE FOR TYPE "B" COVER

USE WHERE PEDESTRIAN OR BICYCLE TRAFFIC IS POSSIBLE.

**NOTED AS TYPE B-A ON THE DRAINAGE TABLE**

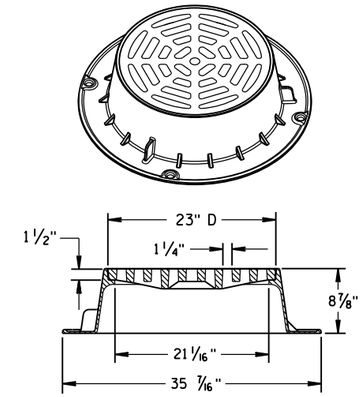


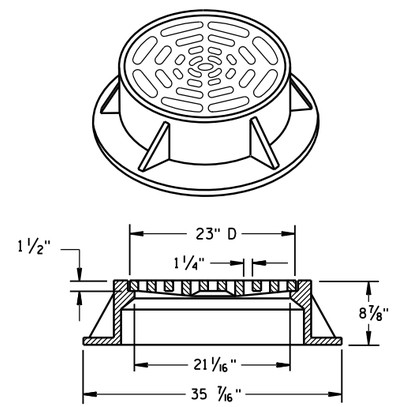


TYPE "C"

NOTE: EITHER CASTING IS ACCEPTABLE

## GENERAL NOTES

DETAILS OF CONSTRUCTION, MATERIALS AND WORKMANSHIP NOT SHOWN ON THIS DRAWING SHALL CONFORM TO THE PERTINENT REQUIREMENTS OF THE STANDARD SPECIFICATIONS AND THE APPLICABLE SPECIAL PROVISIONS.

DETAIL DRAWINGS FOR PROPOSED ALTERNATE DESIGNS FOR CATCH BASIN, MANHOLE AND INLET COVERS SHALL BE SUBMITTED TO THE ENGINEER FOR APPROVAL PROVIDING THAT SUCH ALTERNATE DESIGNS MAKE PROVISION FOR EQUIVALENT CAPACITY AND STRENGTH.

ROUND FRAMES AND COVERS SHALL HAVE CONTINUOUSLY MACHINED BEARING SURFACES TO PREVENT ROCKING AND RATTLING.

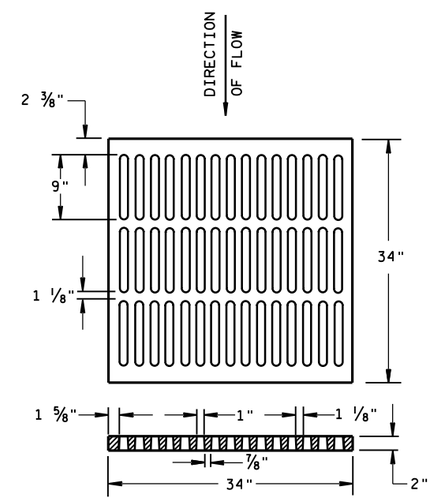


ALTERNATIVE TYPE "MS"

USE WHERE PEDESTRIAN OR BICYCLE TRAFFIC IS PERMITTED

**NOTED AS TYPE MS-A ON THE DRAINAGE TABLE**

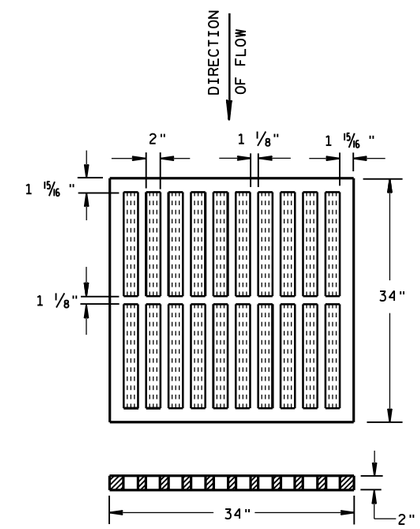


TYPE "MS"

USE ON FREEWAYS AND EXPRESSWAYS

**NOTED AS TYPE MS ON DRAINAGE TABLE**

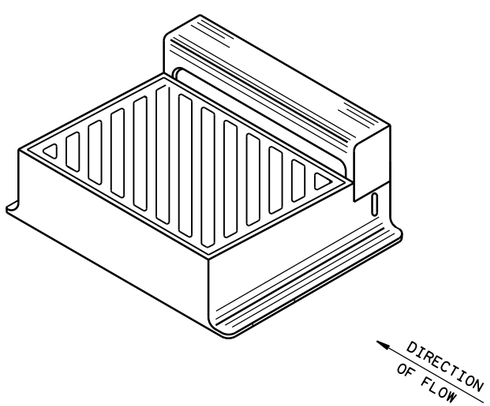


DIAGONAL SLOTS, SHALL BE ORIENTED TO THE DIRECTION OF FLOW AS ILLUSTRATED. GRATES ARE MANUFACTURED TO BE REVERSIBLE.

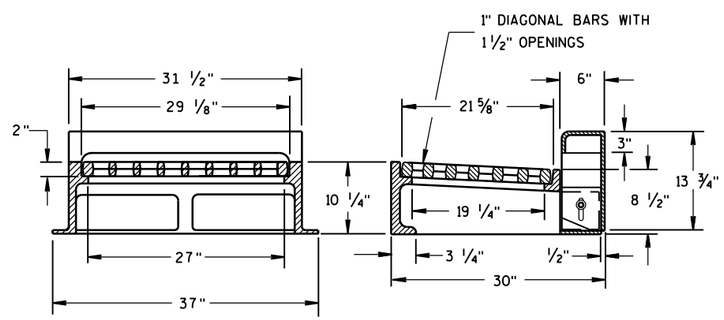


NOTE: CURB BOX HEIGHT ADJUSTABLE 6" TO 9"

TYPE "WM"

6

6

S.D.D. 8 A 5-19b

S.D.D. 8 A 5-19b

INLET COVERS
TYPE B, B-A, C,
MS, MS-A, & WM

STATE OF WISCONSIN
DEPARTMENT OF TRANSPORTATION

APPROVED

11/27/2013 — DATE

/S/ Jerry H. Zogg — ROADWAY STANDARDS DEVELOPMENT ENGINEER

FHWA

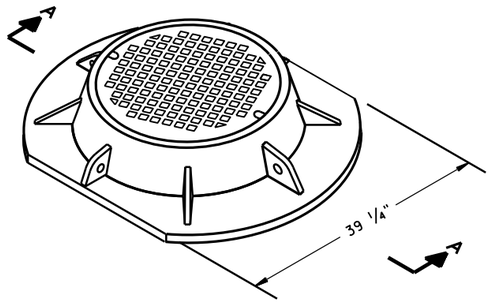


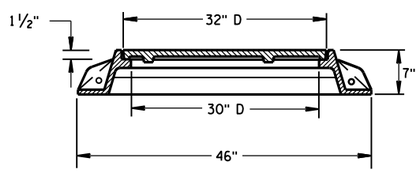


SECTION A-A
TYPE "K"

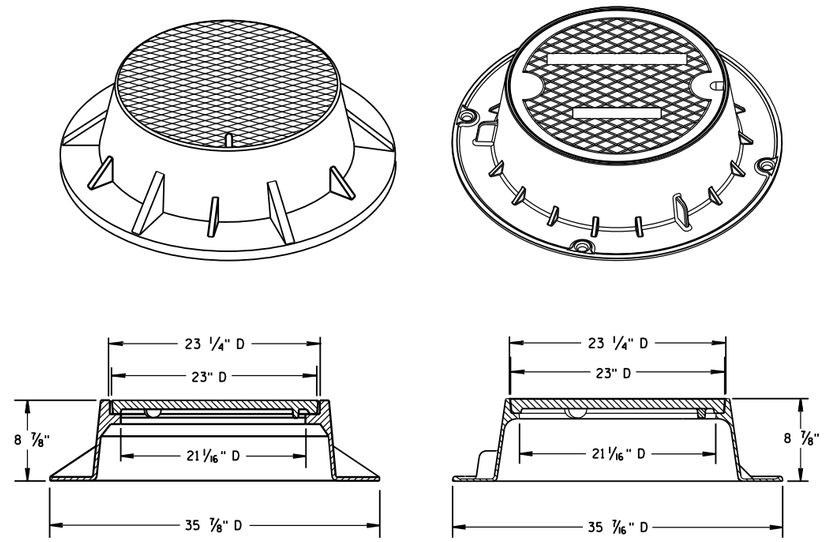


TYPE "J"
NOTE: EITHER CASTING IS ACCEPTABLE

## GENERAL NOTES

DETAILS OF CONSTRUCTION, MATERIALS AND WORKMANSHIP NOT SHOWN ON THIS DRAWING SHALL CONFORM TO THE PERTINENT REQUIREMENTS OF THE STANDARD SPECIFICATIONS AND THE APPLICABLE SPECIAL PROVISIONS.

DETAIL DRAWINGS FOR PROPOSED ALTERNATE DESIGNS FOR MANHOLE COVERS SHALL BE SUBMITTED TO THE ENGINEER FOR APPROVAL PROVIDING THAT SUCH ALTERNATE DESIGNS MAKE PROVISION FOR EQUIVALENT CAPACITY AND STRENGTH.

ROUND FRAMES AND COVERS SHALL HAVE CONTINUOUSLY MACHINED BEARING SURFACES TO PREVENT ROCKING AND RATTLING.

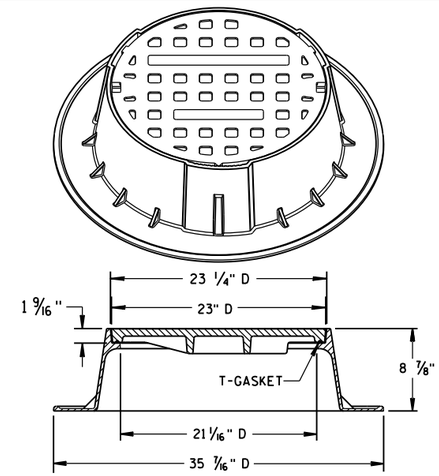


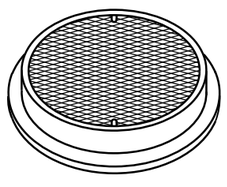

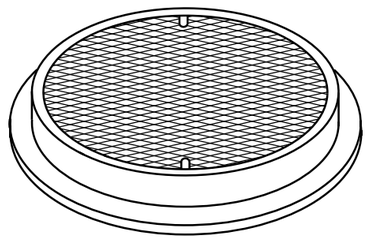

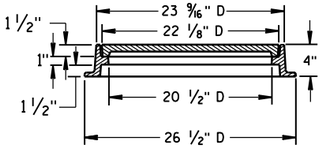


TYPE "L"

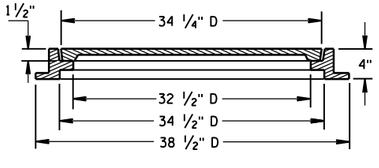


TYPE "M"

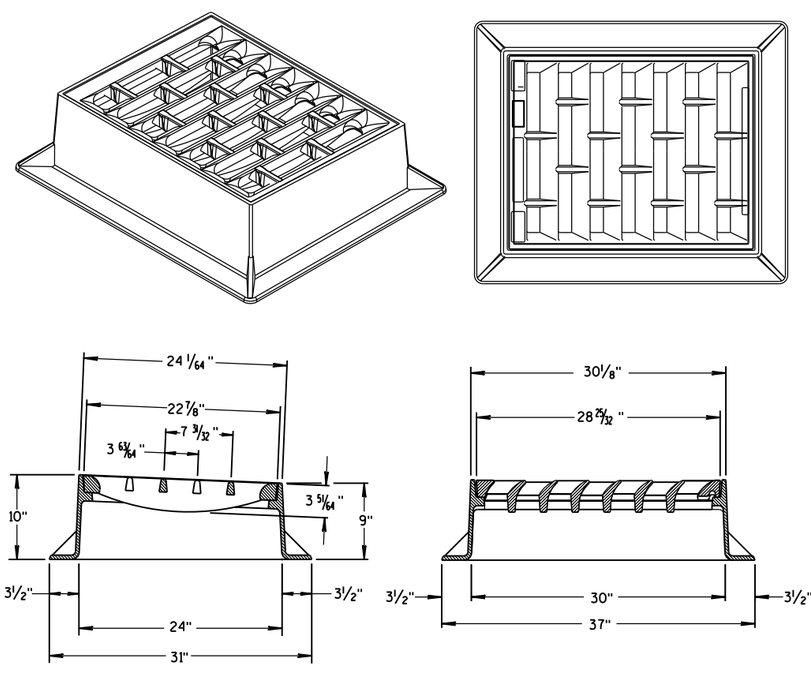


INLET COVER TYPE "BW"

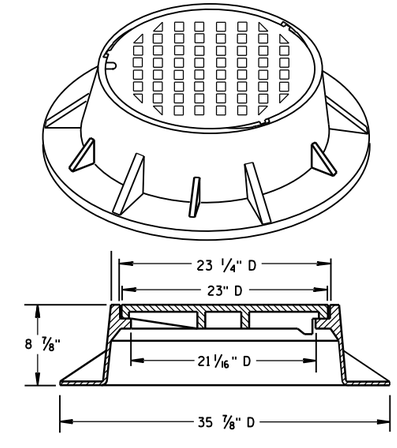


TYPE "J" SPECIAL
TYPE "B" NON-ROCKING SELF-SEAL LID
(NOTED AS TYPE J-S ON THE DRAINAGE TABLE)
NOTE: EITHER CASTING IS ACCEPTABLE

INLET COVER TYPE BW
MANHOLE COVERS, TYPE K, J, J-S, L & M

STATE OF WISCONSIN
DEPARTMENT OF TRANSPORTATION

APPROVED
11/27/2013 — DATE
/S/ Jerry H. Zogg — ROADWAY STANDARDS DEVELOPMENT ENGINEER
FHWA




6


S.D.D. 8 A 5-19d

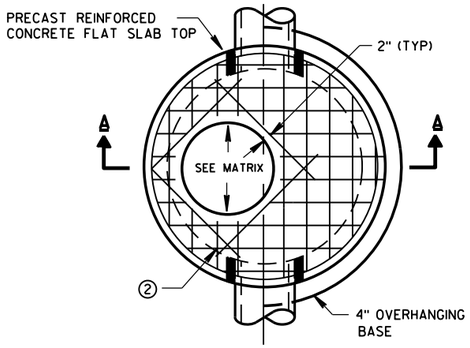


PLAN VIEW CIRCULAR OPENING

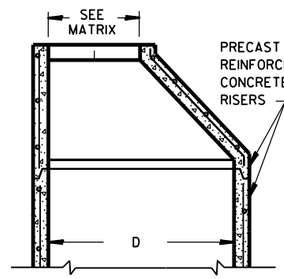


OPTIONAL PRECAST REINFORCED CONCRETE ECCENTRIC TOP

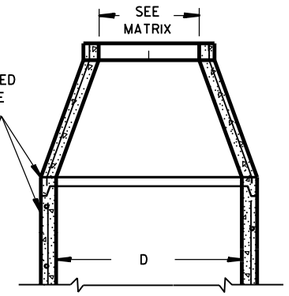


OPTIONAL PRECAST REINFORCED CONCRETE CONCENTRIC TOP

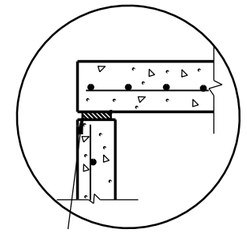

TOP WITH PLAIN END JOINT

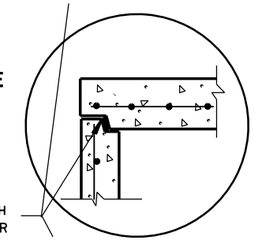

JOINTS TO BE SEALED WITH A BUTYL RUBBER SEAL PER SEALANT MANUFACTURERS RECOMMENDATIONS CONFORMING TO ASTM C990 (TYP)

TOP WITH TONGUE AND GROOVE JOINT

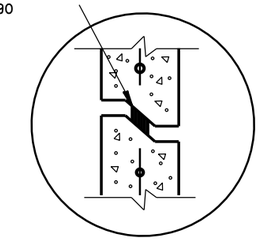

RISER WITH TONGUE AND GROOVE JOINT

DETAIL "B"

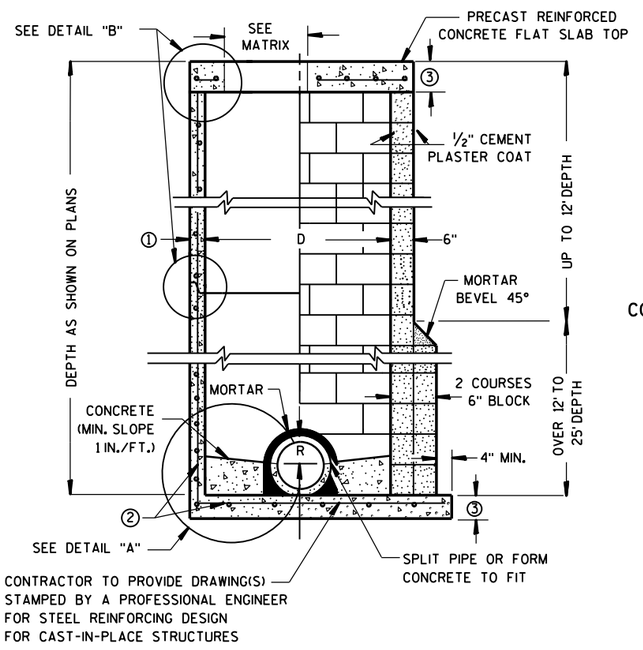


PRECAST REINFORCED CONCRETE WITH MONOLITHIC BASE

CONCRETE BLOCK WITH CAST-IN-PLACE OR PRECAST REINFORCED CONCRETE BASE ②

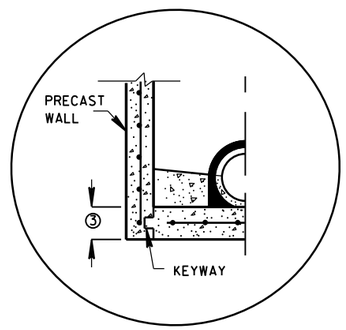


PRECAST REINFORCED CONCRETE WITH INTEGRAL BASE OPTION

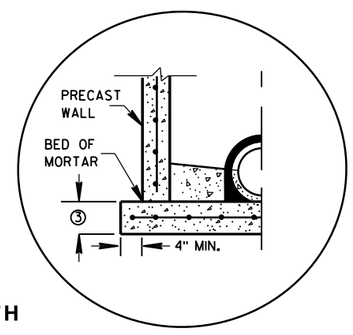


SEPARATE PRECAST REINFORCED CONCRETE BASE OPTION

DETAIL "A"

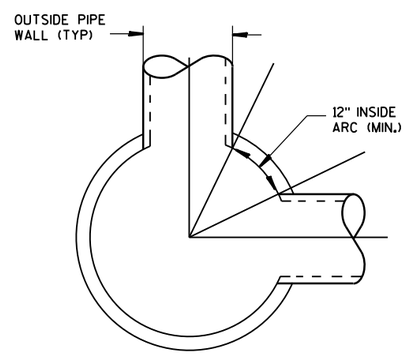


DETAIL "C"

## GENERAL NOTES

DETAILS OF CONSTRUCTION, MATERIALS AND WORKMANSHIP NOT SHOWN ON THIS DRAWING SHALL CONFORM TO THE PERTINENT REQUIREMENTS OF THE STANDARD SPECIFICATIONS AND THE APPLICABLE SPECIAL PROVISIONS.

UNLESS OTHERWISE AUTHORIZED IN WRITING BY THE ENGINEER, THE CONTRACTOR SHALL NOT ORDER AND DELIVER PRECAST MANHOLE UNITS REQUIRED FOR THE PROJECT UNTIL A LIST OF SIZES IS FURNISHED BY THE ENGINEER.

DETAILED DRAWINGS FOR PROPOSED ALTERNATE DESIGNS FOR UNDERGROUND DRAINAGE STRUCTURES SHALL BE SUBMITTED TO THE ENGINEER FOR APPROVAL PROVIDING THAT SUCH ALTERNATE DESIGNS MAKE PROVISION FOR EQUIVALENT CAPACITY AND STRENGTH.

ALL DRAINAGE STRUCTURES ARE DESIGNATED ON THE PLANS AS "MANHOLES 3X3-L", "CATCH BASINS 4-B", "INLETS 2X3-H", ETC. THE FIRST NUMBERS DESIGNATE THE SIZE OF THE STRUCTURE, AND THE FOLLOWING LETTER DESIGNATES THE TYPE OF COVER TO BE USED TO COMPRISE THE COMPLETE UNIT.

BASES SHALL BE PLACED ON A BED OF MATERIAL AT LEAST 6 INCHES IN DEPTH, WHICH MEETS THE REQUIREMENTS OF GRANULAR BACKFILL. THIS BEDDING SHALL BE COMPACTED AND PROVIDE UNIFORM SUPPORT FOR THE ENTIRE AREA OF THE BASE.

PRECAST REINFORCED CONE TOPS (ECCENTRIC OR CONCENTRIC) OR PRECAST REINFORCED FLAT SLAB TOPS MAY BE USED ON CONCRETE BLOCK STRUCTURES. THE CONE TOPS SHALL BE INSTALLED ON A BED OF MORTAR.

ECCENTRIC CONE TOPS MAY BE USED ON ALL STRUCTURES, AND CONCENTRIC CONE TOPS SHALL BE USED ONLY ON STRUCTURES 5 FEET OR LESS IN DEPTH, UNLESS OTHERWISE DIRECTED BY THE ENGINEER.

STEPS MEETING AASHTO M199 AND THE FOLLOWING REQUIREMENTS SHALL BE INSTALLED IN ALL STRUCTURES OVER 5 FEET IN DEPTH: 16 INCH C-C MAXIMUM SPACING; PROJECT A MINIMUM CLEAR DISTANCE OF 4 INCHES FROM THE WALL AT THE POINT OF EMBEDMENT; MINIMUM LENGTH OF 10 INCHES; MINIMUM WALL EMBEDMENT OF 3 INCHES. FERROUS METAL STEPS NOT PAINTED OR TREATED TO RESIST CORROSION SHALL HAVE A MINIMUM CROSS SECTIONAL DIMENSION OF 1 INCH.

STEPS OF APPROVED POLYPROPYLENE PLASTIC COATED REINFORCEMENT BAR ARE ACCEPTABLE. REINFORCING BAR MUST BE A MINIMUM OF ½" AND MEET THE REQUIREMENTS OF ASTM A615.

CERTIFICATION SHALL BE PROVIDED THAT INSTALLED STEPS WHEN TESTED IN ACCORDANCE WITH SECTION 10 OF AASHTO T280 CAN WITHSTAND A VERTICAL LOAD OF 800 LBS. AND A HORIZONTAL LOAD OF 400 LBS.

ALL BAR STEEL REINFORCEMENT SHALL BE EMBEDDED 2 INCHES CLEAR UNLESS OTHERWISE SHOWN OR NOTED.

CONCRETE BLOCK WILL NOT BE PERMITED FOR STRUCTURES GREATER THAN 4 FEET IN DIAMETER.

PRECAST REINFORCED RISERS SHALL HAVE A TONGUE AND GROOVE JOINT WITH TONGUE UP OR DOWN.

ALL PRECAST MANHOLE UNITS SHALL CONFORM TO THE PERTINENT REQUIREMENTS OF AASHTO DESIGNATION M 199.

4" OVERHANGING BASES ARE REQUIRED FOR ALL CONCRETE BLOCK INSTALLATIONS. 4" OVERHANG IS REQUIRED WHEN SEPARATE PRECAST BASE IS PROVIDED. OVERHANG IS NOT REQUIRED ON PRECAST STRUCTURES WITH AN INTEGRAL OR MONOLITHIC BASE.

FOR ADDITIONAL CONFIGURATIONS, MAINTAIN A MINIMUM OF 12 INCHES AS MEASURED FROM THE INSIDE OF THE STRUCTURE WALL BETWEEN THE OUTSIDE PIPE WALLS OF ADJACENT PIPES. SEE DETAIL "C".

① MINIMUM WALL THICKNESS SHALL BE 4 INCHES FOR 3-FT, 5 INCHES FOR 4-FT, 6 INCHES FOR 5-FT, 7 INCHES FOR 6-FT, 8 INCHES FOR 7-FT AND 9 INCHES FOR 8-FT DIAMETER PRECAST MANHOLES.

② FOR PRECAST MANHOLES PROVIDE REINFORCING STEEL IN ACCORDANCE TO AASHTO M199.

③ PRECAST FLAT SLAB TOPS AND BASES WITH A DIAMETER OF 48" AND LESS SHALL HAVE A MINIMUM THICKNESS OF 6". PRECAST FLAT SLAB TOPS AND BASES WITH A DIAMETER LARGER THAN 48" SHALL HAVE A MINIMUM THICKNESS OF 8".

## MANHOLE COVER OPENING MATRIX

| MANHOLE COVER TYPE | C | ALL J'S | K | L | M |
|---|---|---|---|---|---|
| OPENING SIZE (FT) | | | | | |
| 2 DIA. | X | X | | X | |
| 3 DIA. | | | X | | X |

## PIPE MATRIX

| MANHOLE SIZE | MAXIMUM INSIDE PIPE DIAMETER FOR TWO PIPES | |
|---|---|---|
| | 180° SEPARATION (IN) | 90° SEPARATION (IN) |
| 3-FT | 15 | 12 |
| 4-FT | 24 | 18 |
| 5-FT | 36 | 24 |
| 6-FT | 42 | 36 |
| 7-FT | 48 | 36 |
| 8-FT | 60 | 42 |

MANHOLES 3-FT, 4-FT, 5-FT, 6-FT, 7-FT AND 8-FT DIAMETER

STATE OF WISCONSIN
DEPARTMENT OF TRANSPORTATION

APPROVED
6/5/2012 — DATE
/S/ Jerry H. Zogg
ROADWAY STANDARDS DEVELOPMENT ENGINEER
FHWA

MANHOLES 3-FT, 4-FT, 5-FT, 6-FT, 7-FT AND 8-FT DIAMETER

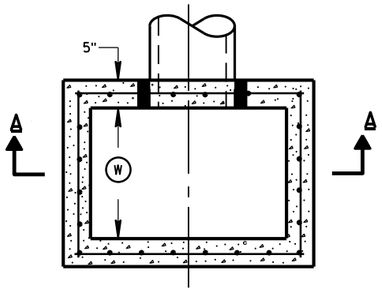


PLAN VIEW

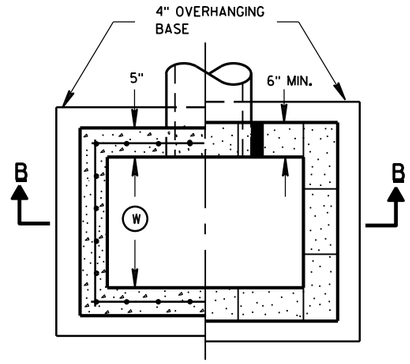


PLAN VIEW

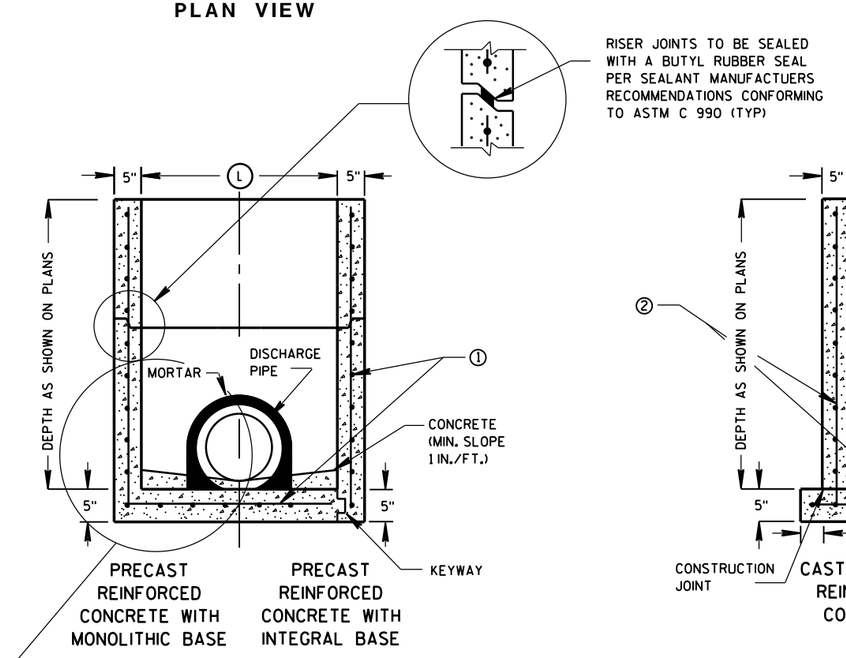


SECTION A-A

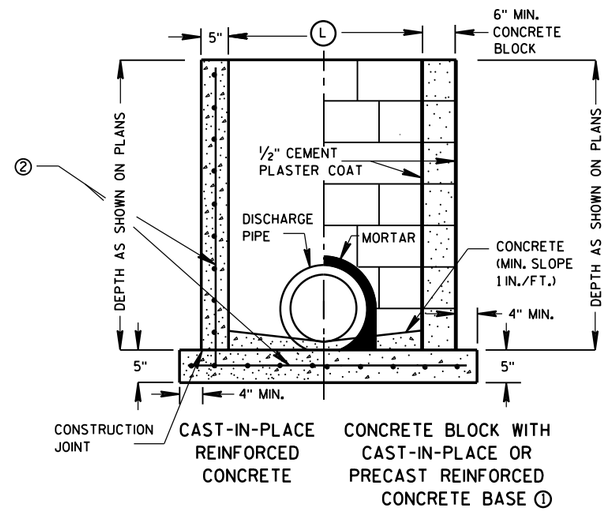


SECTION B-B

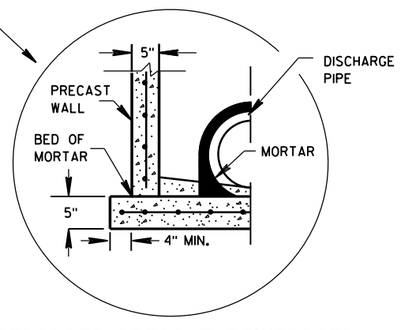


SEPARATE PRECAST REINFORCED CONCRETE BASE OPTION

## GENERAL NOTES

DETAILS OF CONSTRUCTION, MATERIALS AND WORKMANSHIP NOT SHOWN ON THIS DRAWING SHALL CONFORM TO THE PERTINENT REQUIREMENTS OF THE STANDARD SPECIFICATIONS AND THE APPLICABLE SPECIAL PROVISIONS.

UNLESS OTHERWISE AUTHORIZED IN WRITING BY THE ENGINEER, THE CONTRACTOR SHALL NOT ORDER AND DELIVER PRECAST INLET UNITS REQUIRED FOR THE PROJECT UNTIL A LIST OF SIZES IS FURNISHED BY THE ENGINEER.

DETAILED DRAWINGS FOR PROPOSED ALTERNATE DESIGNS FOR UNDERGROUND DRAINAGE STRUCTURES SHALL BE SUBMITTED TO THE ENGINEER FOR APPROVAL PROVIDING THAT SUCH ALTERNATE DESIGNS MAKE PROVISION FOR EQUIVALENT CAPACITY AND STRENGTH.

ALL PRECAST INLET UNITS SHALL CONFORM TO THE PERTINENT REQUIREMENTS OF ASTM C 913.

ALL DRAINAGE STRUCTURES ARE DESIGNATED ON THE PLANS AS "MANHOLES 3X3-L", "CATCH BASINS 4-B", "INLETS 2X3-H", ETC. THE FIRST NUMBERS DESIGNATES THE SIZE OF THE STRUCTURE, AND THE FOLLOWING LETTER DESIGNATES THE TYPE OF COVER TO BE USED TO COMPRISE THE COMPLETE UNIT.

BASES SHALL BE PLACED ON A BED OF MATERIAL AT LEAST 6 INCHES IN DEPTH, WHICH MEETS THE REQUIREMENTS OF GRANULAR BACKFILL. THIS BEDDING SHALL BE COMPACTED AND PROVIDE UNIFORM SUPPORT FOR THE ENTIRE AREA OF THE BASE.

ALL BAR STEEL REINFORCEMENT SHALL BE EMBEDDED 2 INCHES CLEAR UNLESS OTHERWISE SHOWN OR NOTED.

PRECAST REINFORCED RISERS SHALL HAVE A TONGUE AND GROOVE JOINT WITH TONGUE UP OR DOWN.

4" OVERHANGING BASES ARE REQUIRED FOR CAST-IN-PLACE REINFORCED CONCRETE AND CONCRETE BLOCK INSTALLATIONS.
4" OVERHANG IS REQUIRED WHEN SEPARATE PRECAST BASE IS PROVIDED.
OVERHANG IS NOT REQUIRED ON PRECAST STRUCTURES WITH AN INTEGRAL OR MONOLITHIC BASE.

MAXIMUM INSIDE PIPE DIAMETER DETERMINED BY 3 INCH CLEARANCE ON EACH SIDE OF THE OUTSIDE WALL OF THE PIPE. SEE DETAIL "A". ASSUMES PIPE ENTERS PERPENDICULAR TO THE STRUCTURE.

① FOR PRECAST INLETS PROVIDE REINFORCING STEEL IN ACCORDANCE TO ASTM C 913.

② CONTRACTOR TO PROVIDE DRAWING(S) STAMPED BY A PROFESSIONAL ENGINEER FOR STEEL REINFORCING DESIGN FOR CAST-IN-PLACE STRUCTURES.

## INLET COVER MATRIX

| INLET SIZE | | INLET COVER TYPE | ALL A'S | ALL B'S | BW | F | ALL H'S | S | T | V | WM |
|---|---|---|---|---|---|---|---|---|---|---|---|
| | WIDTH (W) (FT) | LENGTH (L) (FT) | | | | | | | | | |
| 2X2-FT | 2 | 2 | X | X | | | | X | | X | |
| 2X2.5-FT | 2 | 2.5 | | | X | | | X | X | X | X |
| 2X3-FT | 2 | 3 | | | | | X | | | | |
| 2.5X3-FT | 2.5 | 3 | | | | X | | | | | |

## PIPE MATRIX

| INLET SIZE | MAXIMUM INSIDE PIPE DIAMETER | |
|---|---|---|
| | WIDTH (IN) | LENGTH (IN) |
| 2X2-FT | 12 | 12 |
| 2X2.5-FT | 12 | 18 |
| 2X3-FT | 12 | 24 |
| 2.5X3-FT | 18 | 24 |

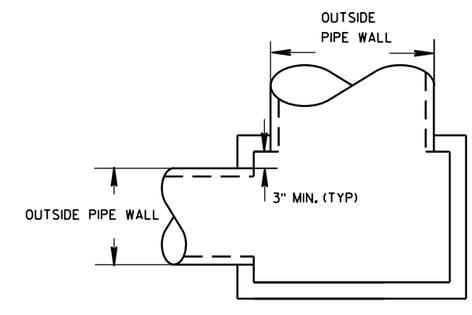


DETAIL "A"

# INLETS 2X2-FT, 2X2.5-FT, 2X3-FT AND 2.5X3-FT

STATE OF WISCONSIN
DEPARTMENT OF TRANSPORTATION

APPROVED
6/5/2012 — DATE
/S/ Jerry H. Zogg — ROADWAY STANDARDS DE ENGINEER
FHWA

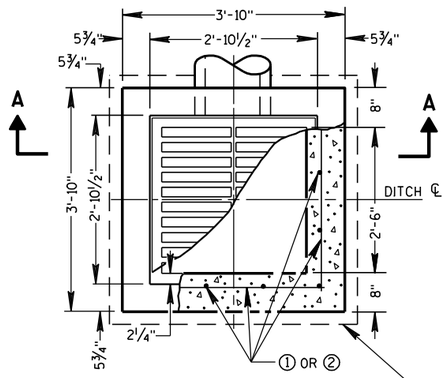


PLAN VIEW

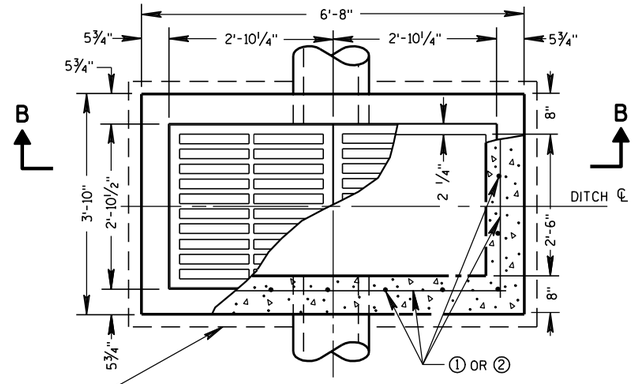


PLAN VIEW

4" OVERHANGING BASE ON REINFORCED CAST-IN-PLACE CONCRETE INLETS

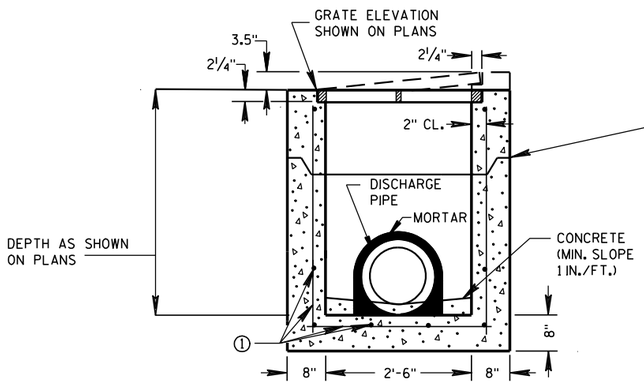


PRECAST REINFORCED CONCRETE SECTION A-A

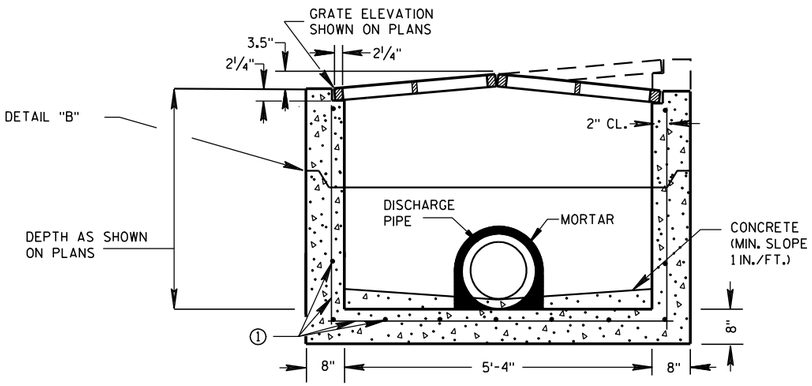


PRECAST REINFORCED CONCRETE SECTION B-B

## GENERAL NOTES

DETAILS OF CONSTRUCTION, MATERIALS AND WORKMANSHIP NOT SHOWN ON THIS DRAWING SHALL CONFORM TO THE PERTINENT REQUIREMENTS OF THE STANDARD SPECIFICATIONS AND THE APPLICABLE SPECIAL PROVISIONS.

UNLESS OTHERWISE AUTHORIZED IN WRITING BY THE ENGINEER, THE CONTRACTOR SHALL NOT ORDER AND DELIVER PRECAST INLET UNITS REQUIRED FOR THE PROJECT UNTIL A LIST OF SIZES IS FURNISHED BY THE ENGINEER.

DETAILED DRAWINGS FOR PROPOSED ALTERNATE DESIGNS FOR INLETS WHICH MAY INCLUDE PRECAST REINFORCED CONCRETE INLETS, SHALL BE SUBMITTED TO THE ENGINEER FOR APPROVAL PROVIDING THAT SUCH ALTERNATE DESIGNS MAKE PROVISION FOR EQUIVALENT CAPACITY AND STRENGTH.

ALL MEDIAN INLETS ARE DESIGNATED ON THE PLANS AS "INLETS, 1G-MS", ETC. THE FIRST NUMBER AND LETTER DESIGNATE THE TYPE OF STRUCTURE, AND THE FOLLOWING LETTERS DESIGNATE THE TYPE OF COVER TO BE USED TO COMPRISE THE COMPLETE UNIT.

ALL BAR STEEL REINFORCEMENT SHALL BE EMBEDDED 2 INCHES CLEAR UNLESS OTHERWISE SHOWN OR NOTED.

PRECAST REINFORCED RISERS SHALL HAVE A TONGUE AND GROOVE JOINT WITH TONGUE UP OR DOWN.

ALL PRECAST INLET UNITS SHALL CONFORM TO THE PERTINENT REQUIREMENTS OF ASTM C 913.

MAXIMUM INSIDE PIPE DIAMETER DETERMINED BY 3" CLEARANCE ON EACH SIDE OF THE OUTSIDE WALL OF THE PIPE. SEE DETAIL "A". ASSUMES PIPE ENTERS PERPENDICULAR TO THE STRUCTURE.

① FOR PRECAST INLETS PROVIDE REINFORCING STEEL IN ACCORDANCE TO ASTM C 913.

② CONTRACTOR TO PROVIDE DRAWING(S) STAMPED BY A PROFESSIONAL ENGINEER FOR STEEL REINFORCING DESIGN FOR CAST-IN-PLACE STRUCTURES.

### PIPE MATRIX

| | MAXIMUM INSIDE PIPE DIAMETER | |
|---|---|---|
| INLET SIZE | WIDTH (IN) | LENGTH (IN) |
| 1 GRATE | 18 | 18 |
| 2 GRATE | 18 | 42 |

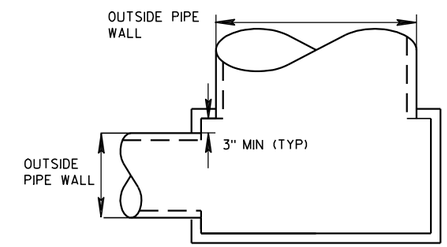


DETAIL "A"

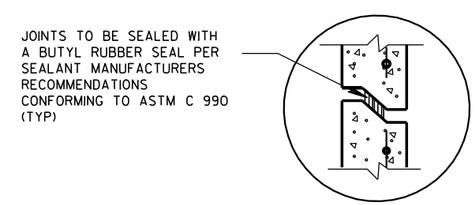


DETAIL "B"

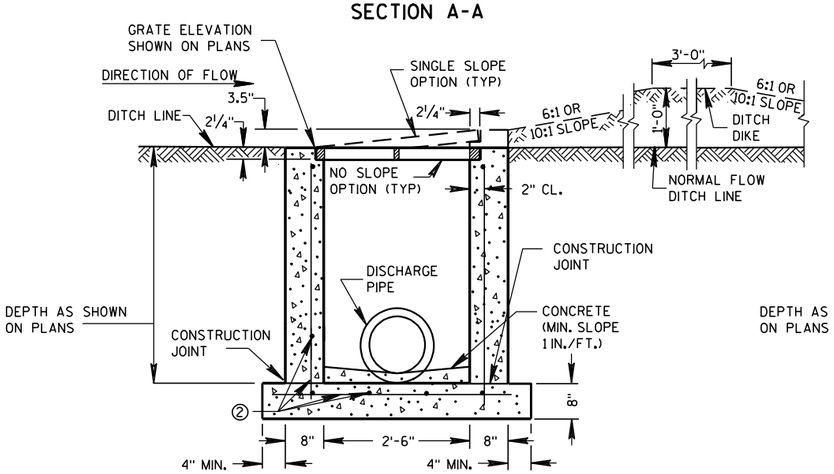


REINFORCED CAST-IN-PLACE CONCRETE SECTION A-A

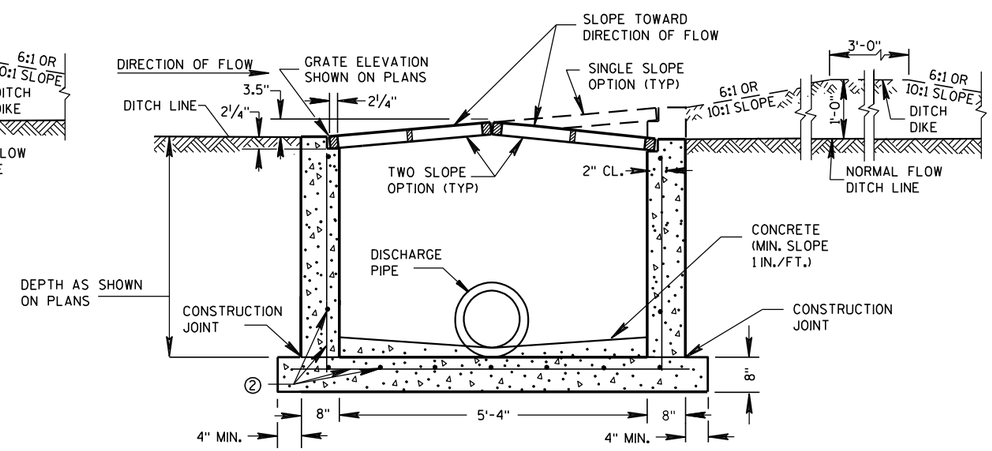


REINFORCED CAST-IN-PLACE CONCRETE SECTION B-B

## INLETS MEDIAN 1 GRATE

## INLETS MEDIAN 2 GRATE

**INLETS MEDIAN 1 AND 2 GRATE**

STATE OF WISCONSIN
DEPARTMENT OF TRANSPORTATION

APPROVED
6/5/2012 — DATE
/S/ Jerry H. Zogg — ROADWAY STANDARDS DEVELOPMENT ENGINEER
FHWA

6

S.D.D. 8 C 8-1

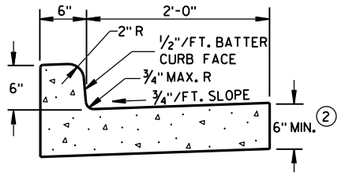


TYPES A & D ①

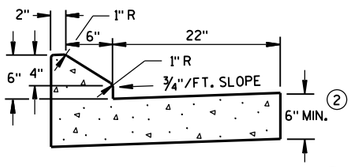


6" SLOPED CURB TYPES G & J ①

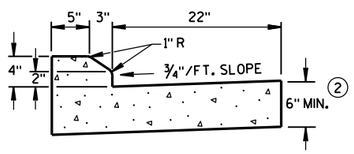


4" SLOPED CURB TYPES G & J ①

CONCRETE CURB & GUTTER 30"

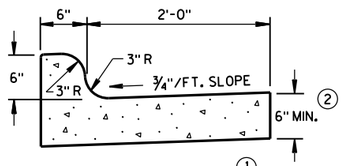


TYPES K & L ①

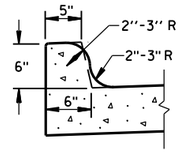


OPTIONAL CURB SHAPE
FOR TYPES K & L ①

CONCRETE CURB & GUTTER 30"

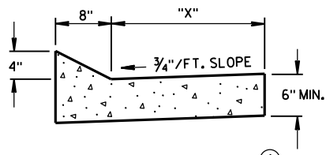


TYPES TBT & TBTT ①

CONCRETE CURB & GUTTER

| TBT & TBTT | "X" |
|---|---|
| 30" | 22" |
| 36" | 28" |

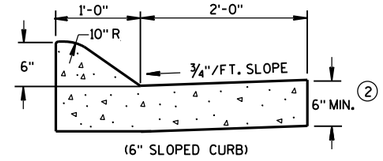


(6" SLOPED CURB)

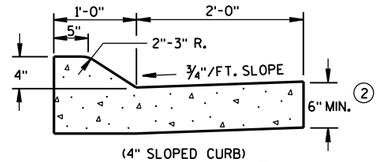


(4" SLOPED CURB)

TYPES A & D ①

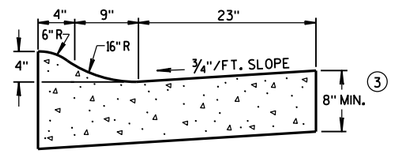


4" SLOPED CURB TYPES R & T ① ④

CONCRETE CURB & GUTTER 36"

## GENERAL NOTES

DETAILS OF CONSTRUCTION, MATERIALS AND WORKMANSHIP NOT SHOWN ON THIS DRAWING SHALL CONFORM TO THE PERTINENT REQUIREMENTS OF THE CONTRACT.

PAVEMENT TIES AND TIE BARS SHALL BE EPOXY COATED IN CONFORMANCE WITH SUBSECTION 505.2.6.2 OF THE STANDARD SPECIFICATIONS.

INTEGRAL CURB & GUTTER SHALL CONFORM TO THE DETAILS SHOWN FOR CONCRETE CURB & GUTTER INCLUDING THE TRANSVERSE GUTTER SLOPE. A LONGITUDINAL CONSTRUCTION JOINT IS NOT REQUIRED WITH INTEGRAL CURB AND GUTTER.

WHERE THE TRANSVERSE JOINTS IN THE PAVEMENT ARE REQUIRED TO BE SEALED, THE JOINTS IN THE INTEGRAL CURB AND GUTTER SHALL BE SEALED TO THE FACE OF CURB WITH THE SAME TYPE OF SEALANT. THE COST OF FURNISHING AND INSTALLING THIS SEALANT SHALL BE INCIDENTAL TO THE ITEM CONCRETE CURB AND GUTTER.

UNLESS OTHERWISE SHOWN ON THE TYPICAL CROSS SECTIONS, THE BASE AGGREGATE AND COMMON EXCAVATION LIMITS ARE 2'-0" BEHIND THE BACK OF CURBS.

① TIE BARS ARE REQUIRED FOR CURB AND GUTTER TYPES A, G, K, R AND TBTT.

② THE BOTTOM OF CURB AND GUTTER MAY BE CONSTRUCTED EITHER LEVEL OR PARALLEL TO THE SLOPE OF THE SUBGRADE OR BASE AGGREGATE PROVIDED A 6" MINIMUM GUTTER THICKNESS IS MAINTAINED.

③ THE BOTTOM OF CURB AND GUTTER MAY BE CONSTRUCTED EITHER LEVEL OR PARALLEL TO THE SLOPE OF THE SUBGRADE OR BASE AGGREGATE PROVIDED A 8" MINIMUM GUTTER THICKNESS IS MAINTAINED.

④ THE FACE OF CURB IS 6" FROM THE BACK OF CURB.

⑤ WHEN REVERSE SLOPE GUTTER IS REQUIRED, THE LOCATION(S) WILL BE SHOWN ELSEWHERE IN THE PLAN.

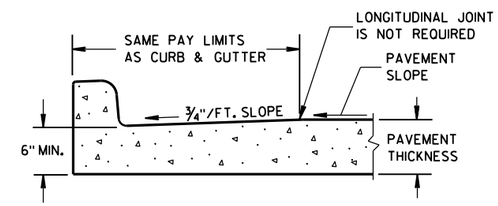


PARTIAL SECTION OF PAVEMENT
WITH INTEGRAL CURB & GUTTER

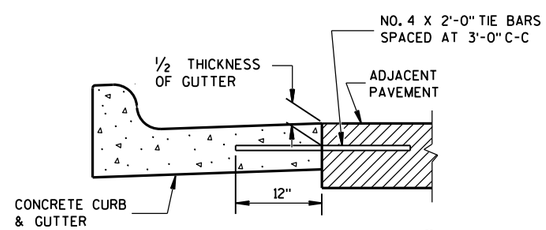


TYPICAL TIE BAR LOCATION ①

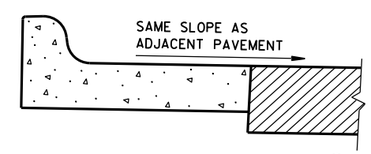


REVERSE SLOPE GUTTER ⑤
(TYPICAL FOR ALL CURB & GUTTER TYPES)

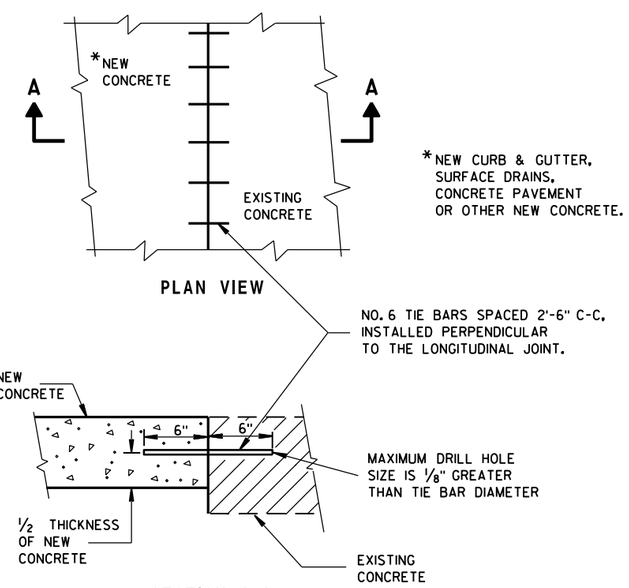


PLAN VIEW

SECTION A-A

TIE BARS DRILLED
INTO EXISTING PAVEMENT

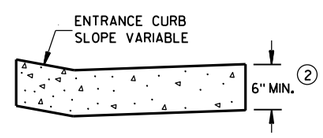


DRIVEWAY ENTRANCE CURB
(WHEN DIRECTED BY THE ENGINEER)

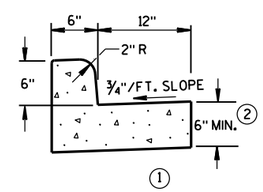


① TYPES A & D

CONCRETE CURB & GUTTER 18"

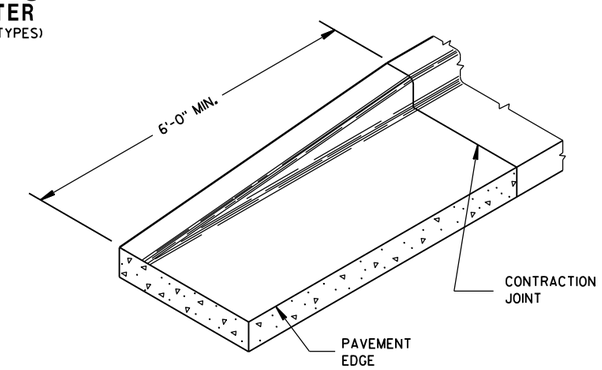


END SECTION CURB & GUTTER

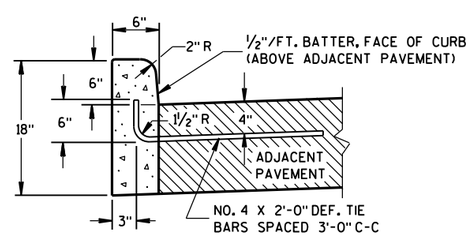


① TYPES A & D

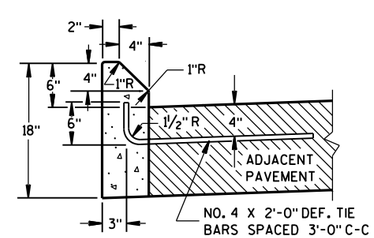


① TYPES G & J

CONCRETE CURB

CONCRETE CURB, CONCRETE CURB & GUTTER AND TIES

STATE OF WISCONSIN
DEPARTMENT OF TRANSPORTATION

APPROVED
June, 2015 — DATE
/S/ Jerry H. Zogg — ROADWAY STANDARDS DEVELOPMENT ENGINEER
FHWA




6


S.D.D. 8 D 1-18

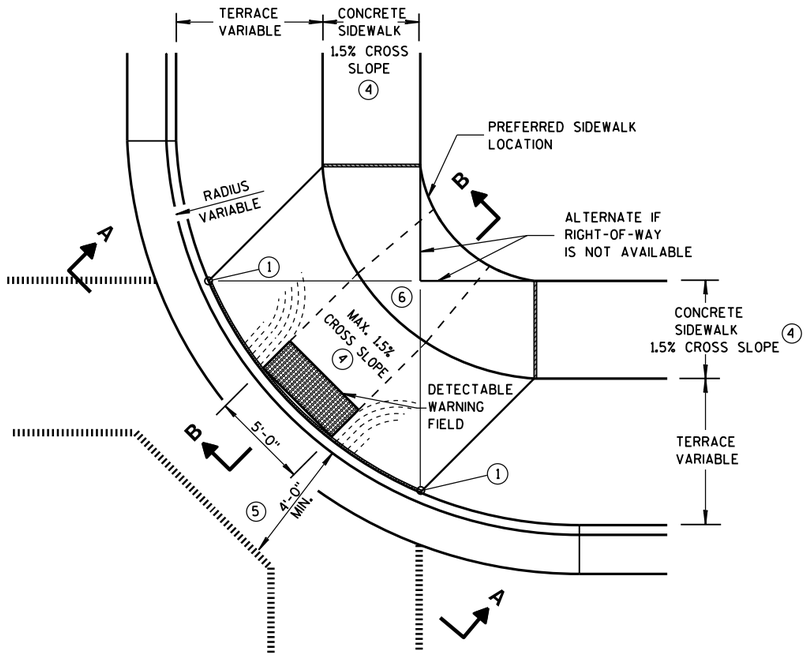


PLAN VIEW

## TYPE 1 RAMP

(CENTER OF CORNER RADIUS)

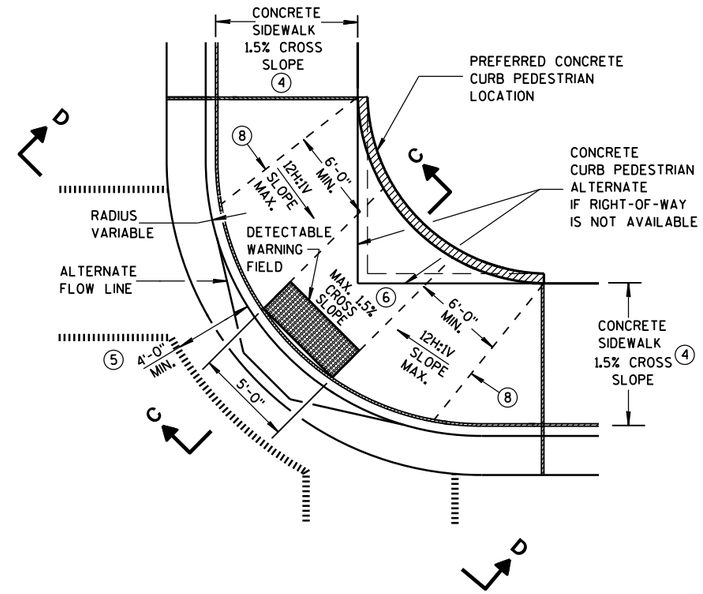


PLAN VIEW

## TYPE 1-A RAMP

(NO TERRACE)

## GENERAL NOTES

DETAILS OF CONSTRUCTION, MATERIALS AND WORKMANSHIP NOT SHOWN ON THIS DRAWING SHALL CONFORM TO THE PERTINENT REQUIREMENTS OF THE STANDARD SPECIFICATIONS AND THE APPLICABLE SPECIAL PROVISIONS.

WHEN NECESSARY, THE SIDEWALK ELEVATION MAY BE LOWERED TO MEET THE HIGH POINT ON THE RAMP.

**TYPE 1 RAMPS SHALL HAVE A NORMAL SIDEWALK APRON AND CURB ON BOTH SIDES OF RAMP.**

DETECTABLE WARNING FIELD SHALL BE MEASURED AND PAID BY THE SQUARE FOOT AS "CURB RAMP DETECTABLE WARNING FIELD". THE CONCRETE PEDESTRIAN CURB, IF NEEDED, SHALL BE MEASURED AND PAID BY THE LINEAL FOOT AS "CONCRETE CURB PEDESTRIAN". CONCRETE SIDEWALK IN THE CURB RAMP AREA SHALL BE MEASURED AND PAID BY THE SQUARE FOOT AS CONCRETE SIDEWALK, INCLUDING THE AREA UNDER THE DETECTABLE WARNING FIELD.

SELECT CURB RAMP DETECTABLE WARNING FIELD MATERIALS AND DEVICES FROM THE DEPARTMENT'S APPROVED MATERIALS LIST. THE COLOR OF THE DETECTABLE WARNING FIELD IS SPECIFIED ELSEWHERE AND IS INCIDENTAL TO THE BID ITEM OF "CURB RAMP DETECTABLE WARNING FIELD".

DETECTABLE WARNING FIELDS THAT ARE INSTALLED AS A GROUP OR SIDE BY SIDE, SHALL BE FROM THE SAME MANUFACTURER.

SURFACE TEXTURE OF THE RAMP SHALL BE OBTAINED BY COARSE BROOMING TRANSVERSE TO THE SLOPE OF THE RAMP.

1. THIS POINT IS AN EXTENSION OF OUTSIDE EDGE OF APPROACHING SIDEWALK WHERE IT MEETS THE BACK OF CONCRETE CURB.
2. GRADE CHANGE BETWEEN GUTTER FLAG SLOPE AND THE CURB RAMP SLOPE SHALL NOT EXCEED 11%. MAXIMUM GUTTER FLAG SLOPE IS 4%. PROVIDE DRAINAGE AWAY FROM CURB RAMP AT GUTTER FLAG INTERFACE. NO VERTICAL LIPS OR DISCONTINUITIES GREATER THAN 1/4-INCH ARE ALLOWED.
3. ABSOLUTE MAXIMUM 12H:1V (8.33%) CURB RAMP SLOPE IS ALLOWABLE WITH FLATTENED GUTTER FLAG SLOPE AND NOT TO EXCEED 11% GRADE CHANGE.
4. ±0.5% CONSTRUCTION TOLERANCE IN SIDEWALK CROSS SLOPE. THE SIDEWALK CROSS SLOPE SHALL NOT EXCEED 2% WITHOUT PRIOR APPROVAL FROM THE ENGINEER.
5. PROVIDE A LEVEL LANDING IN THE STREET AND GUTTER AREA. (2% MAXIMUM SLOPE IN ANY DIRECTION). WHEN THE GUTTER SLOPE EXCEEDS 2%, CONSTRUCT THE LEVEL LANDING IN THE STREET AREA.
6. PROVIDE A LEVEL LANDING (MAXIMUM 2% SLOPE) IN ANY DIRECTION OF PEDESTRIAN TRAVEL. STANDARD LANDING SIZE IS 5 FEET X 5 FEET (MINIMUM 4 FEET X 4 FEET).
8. PROVIDE GRADE BREAK PERPENDICULAR TO DIRECTION OF WHEELCHAIR TRAVEL.

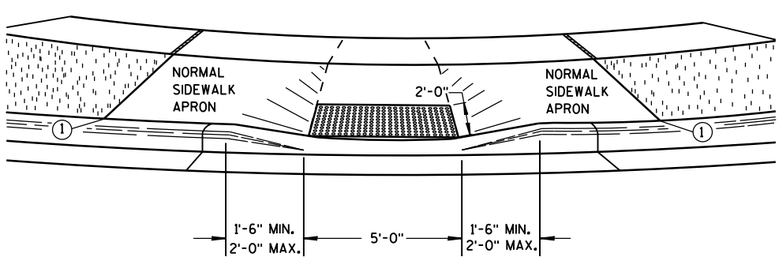


VIEW A-A

** WIDTH SHOWN ELSEWHERE IN THE PLANS

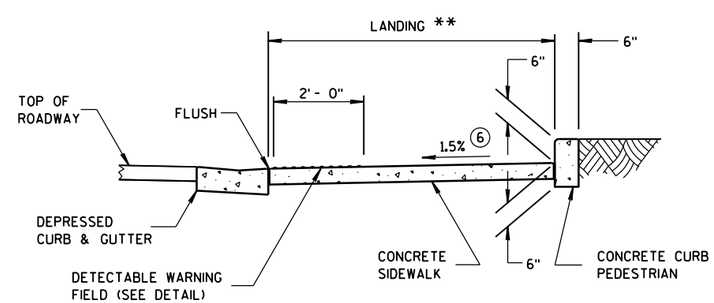


SECTION C-C

### LEGEND

- 1/2" EXPANSION JOINT-SIDEWALK
- CONTRACTION JOINT FIELD LOCATED
- PAVEMENT MARKING CROSSWALK (WHITE)
- ALTERNATIVE LAYOUT

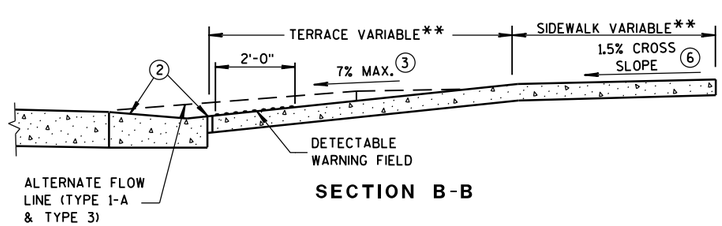


SECTION B-B

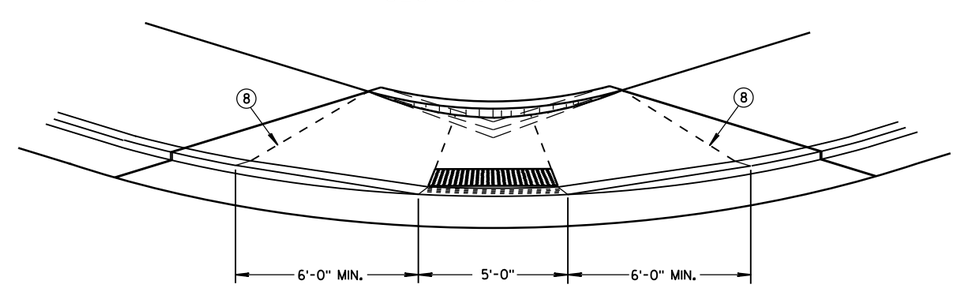


VIEW D-D

CURB RAMPS
TYPES 1 AND 1-A

STATE OF WISCONSIN
DEPARTMENT OF TRANSPORTATION





6



S.D.D. 8 D 5-16a

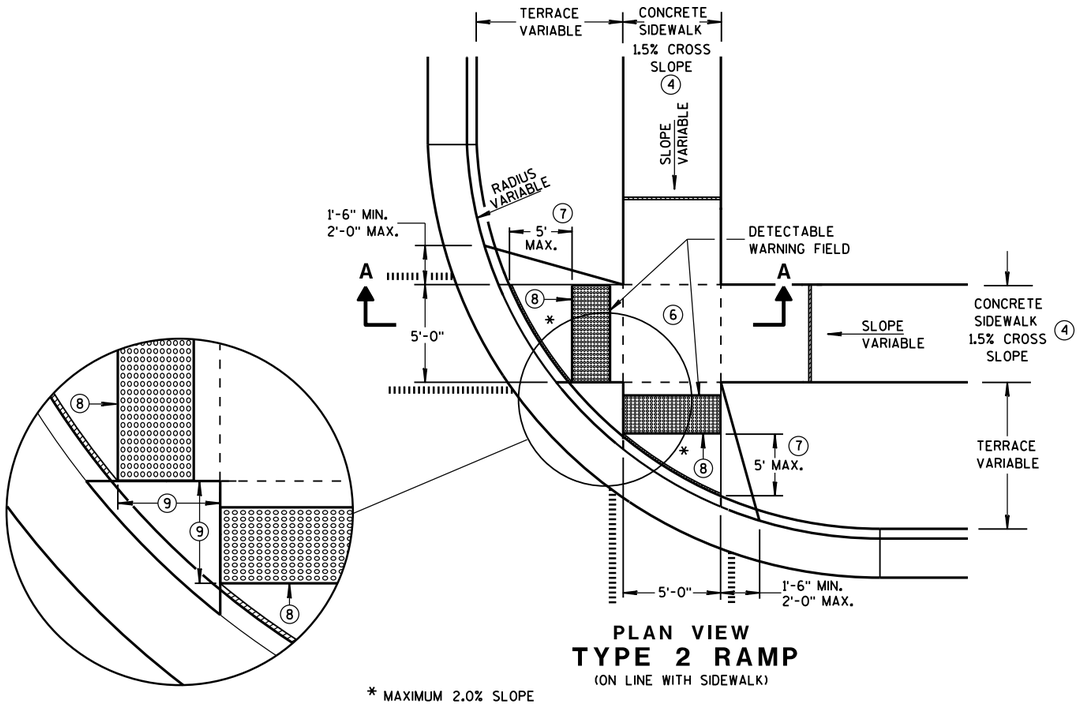


PLAN VIEW
**TYPE 2 RAMP**
(ON LINE WITH SIDEWALK)

* MAXIMUM 2.0% SLOPE IN ALL DIRECTIONS IN FRONT OF GRADE BREAK

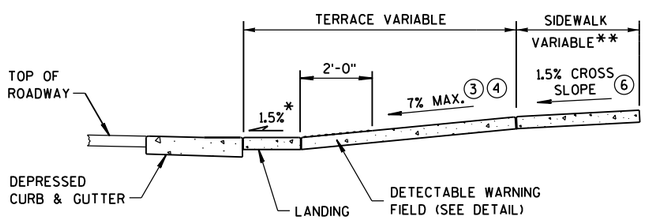


SECTION A-A

** WIDTH SHOWN ELSEWHERE IN THE PLANS

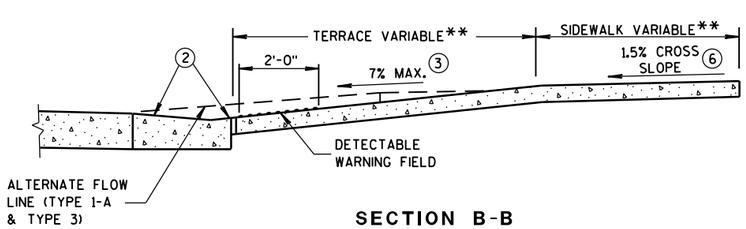


SECTION B-B

## GENERAL NOTES

USE THE TYPE 3 RAMP ONLY WHEN A TYPE 1 OR TYPE 2 CANNOT BE ACHIEVED BECAUSE OF FIELD CONDITIONS.

DETECTABLE WARNING FIELDS THAT ARE INSTALLED AS A GROUP OR SIDE BY SIDE, SHALL BE FROM THE SAME MANUFACTURER.

(2) GRADE CHANGE BETWEEN GUTTER FLAG SLOPE AND THE CURB RAMP SLOPE SHALL NOT EXCEED 11%. MAXIMUM GUTTER FLAG SLOPE IS 4%. PROVIDE DRAINAGE AWAY FROM CURB RAMP AT GUTTER FLAG INTERFACE. NO VERTICAL LIPS OR DISCONTINUITIES GREATER THAN 1/4-INCH ARE ALLOWED.

(3) ABSOLUTE MAXIMUM 12H:1V (8.33%) CURB RAMP SLOPE IS ALLOWABLE WITH FLATTENED GUTTER FLAG SLOPE AND NOT TO EXCEED 11% GRADE CHANGE.

(4) ±0.5% CONSTRUCTION TOLERANCE IN SIDEWALK CROSS SLOPE. THE SIDEWALK CROSS SLOPE SHALL NOT EXCEED 2% WITHOUT PRIOR APPROVAL FROM THE ENGINEER.

(6) PROVIDE A LEVEL LANDING (MAXIMUM 2% SLOPE) IN ANY DIRECTION OF PEDESTRIAN TRAVEL. STANDARD LANDING SIZE IS 5 FEET X 5 FEET (MINIMUM 4 FEET X 4 FEET).

(7) WHEN THIS DISTANCE EXCEEDS 5 FEET, USE MULTIPLE DETECTABLE WARNING PANELS ACROSS THE RAMP AND STAGGER ADDITIONAL DETECTABLE WARNING PANEL(S) FORWARD TO REDUCE THIS DISTANCE.

(8) PROVIDE GRADE BREAK PERPENDICULAR TO DIRECTION OF WHEELCHAIR TRAVEL.

(9) WHEN THIS DISTANCE IS LESS THAN 6'-0", IT MAY BE DIFFICULT TO ACHIEVE A 7% SLOPE OR FLATTER ALONG THE RAMP. REDUCE CURB HEIGHT IN TRIANGLE AREA TO ACHIEVE 7% SLOPE OR FLATTER ON RAMP. 2" MINIMUM CURB HEIGHT.

### LEGEND

- 1/2" EXPANSION JOINT-SIDEWALK
- CONTRACTION JOINT FIELD LOCATED
- PAVEMENT MARKING CROSSWALK (WHITE)
- ALTERNATIVE LAYOUT

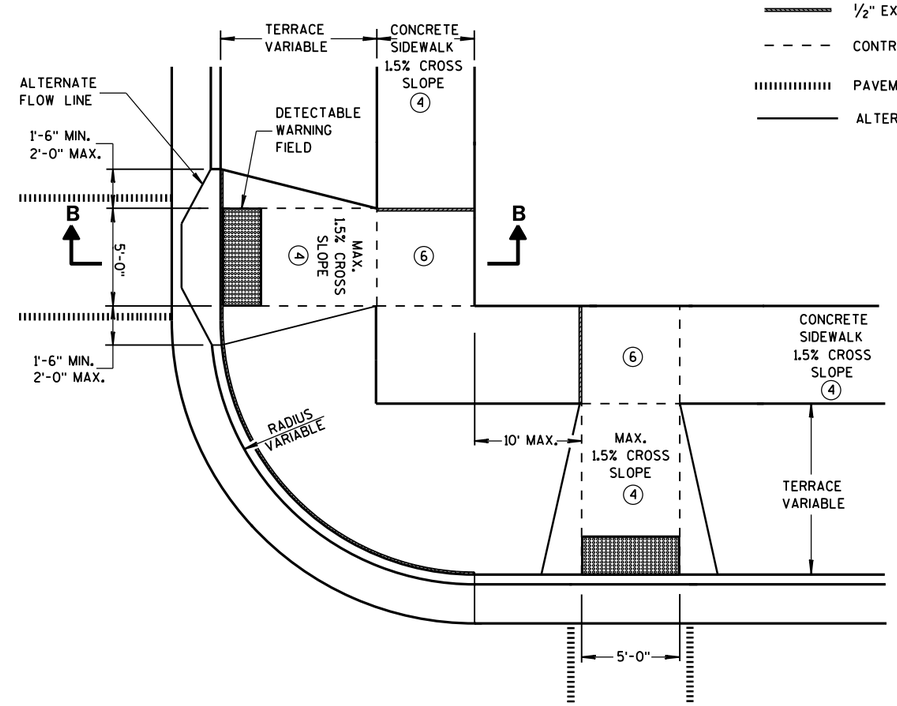


PLAN VIEW
**TYPE 3 RAMP**
(OUTSIDE OF CROSSWALK AREA)

**CURB RAMPS TYPES 2 AND 3**

STATE OF WISCONSIN
DEPARTMENT OF TRANSPORTATION




6

S.D.D. 8 D 5-16b

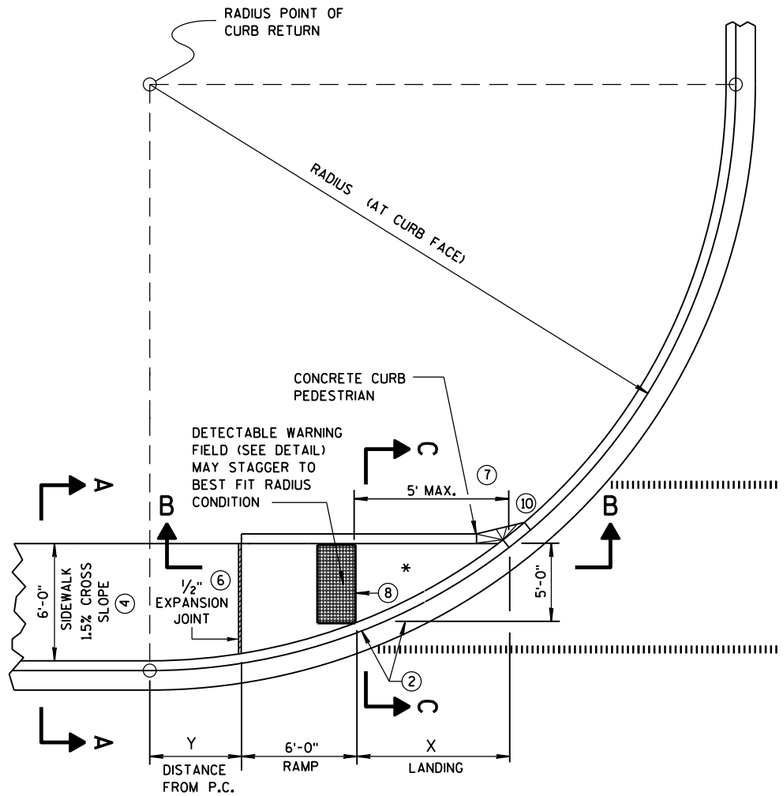


## CURB RAMP TYPE 4A
### PLAN VIEW

| RADIUS (AT CURB FACE) | X | Y |
|---|---|---|
| 20 FEET | 6'-1¾" | 2'-7¼" |
| 30 FEET | 7'-11¾" | 4'-8¼" |
| 40 FEET | 9'-5¼" | 6'-5" |
| 50 FEET | 10'-8¾" | 7'-11¼" |
| 60 FEET | 11'-10¼" | 9'-3½" |

INTERMEDIATE RADII CAN BE INTERPOLATED

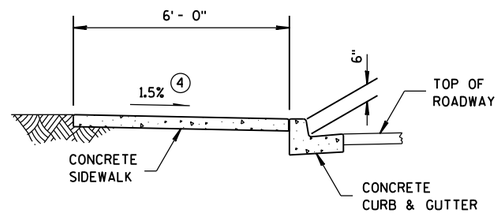


## SECTION A-A FOR TYPE 4A

## GENERAL NOTES

AVOID PLACING DRAINAGE STRUCTURES, JUNCTION BOXES OR OTHER OBSTRUCTIONS IN FRONT OF RAMP ACCESS AREAS.

DETECTABLE WARNING FIELDS THAT ARE INSTALLED AS A GROUP OR SIDE BY SIDE, SHALL BE FROM THE SAME MANUFACTURER.

(2) GRADE CHANGE BETWEEN GUTTER FLAG SLOPE AND THE CURB RAMP SLOPE SHALL NOT EXCEED 11%. MAXIMUM GUTTER FLAG SLOPE IS 4%. PROVIDE DRAINAGE AWAY FROM CURB RAMP AT GUTTER FLAG INTERFACE. NO VERTICAL LIPS OR DISCONTINUITIES GREATER THAN 1/4-INCH ARE ALLOWED.

(3) ABSOLUTE MAXIMUM 12H:1V (8.33%) CURB RAMP SLOPE IS ALLOWABLE WITH FLATTENED GUTTER FLAG SLOPE AND NOT TO EXCEED 11% GRADE CHANGE.

(4) ±0.5% CONSTRUCTION TOLERANCE IN SIDEWALK CROSS SLOPE. THE SIDEWALK CROSS SLOPE SHALL NOT EXCEED 2% WITHOUT PRIOR APPROVAL FROM THE ENGINEER.

(6) PROVIDE A LEVEL LANDING (MAXIMUM 2% SLOPE) IN ANY DIRECTION OF PEDESTRIAN TRAVEL. STANDARD LANDING SIZE IS 5 FEET X 5 FEET (MINIMUM 4 FEET X 4 FEET).

(7) WHEN THIS DISTANCE EXCEEDS 5 FEET, USE MULTIPLE DETECTABLE WARNING PANELS ACROSS THE RAMP AND STAGGER ADDITIONAL DETECTABLE WARNING PANEL(S) FORWARD TO REDUCE THIS DISTANCE.

(8) PROVIDE GRADE BREAK PERPENDICULAR TO DIRECTION OF WHEELCHAIR TRAVEL.

(10) INSTALL TRANSITION NOSE. (INCIDENTAL TO OTHER PAY ITEMS). DO NOT MARK TRANSITION NOSE.

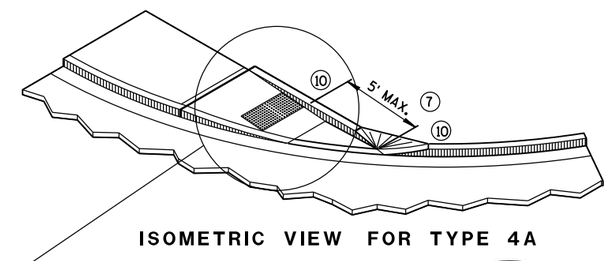


## ISOMETRIC VIEW FOR TYPE 4A

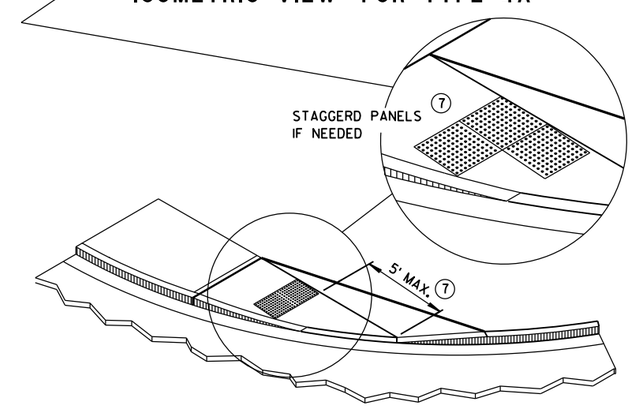


## ISOMETRIC VIEW FOR TYPE 4A1

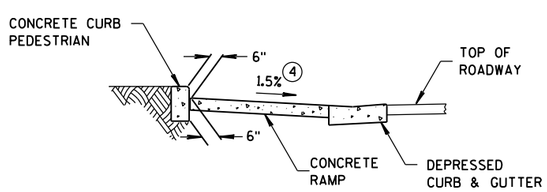


## SECTION C-C FOR TYPE 4A

* MAXIMUM 2.0% SLOPE IN ALL DIRECTIONS IN FRONT OF GRADE BREAK

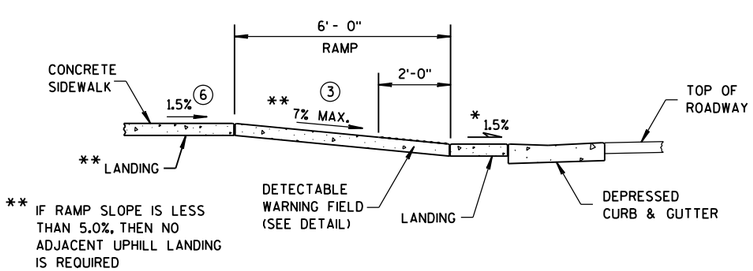


## SECTION B-B FOR TYPE 4A

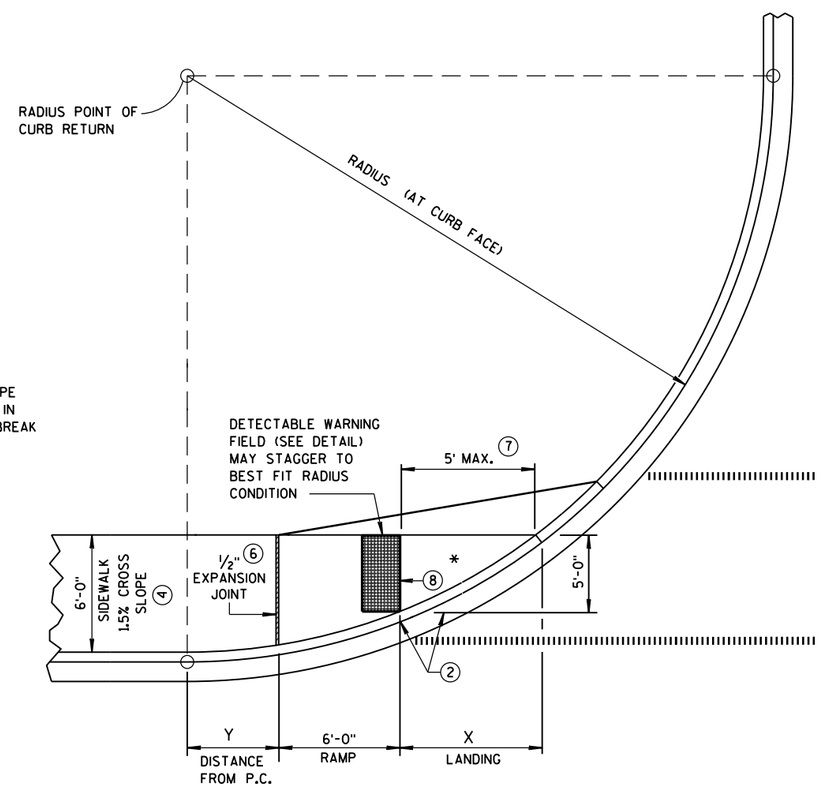


## CURB RAMP TYPE 4A1
### PLAN VIEW

### LEGEND

- ½" EXPANSION JOINT-SIDEWALK
- CONTRACTION JOINT FIELD LOCATED
- PAVEMENT MARKING CROSSWALK (WHITE)

CURB RAMPS
TYPES 4A AND 4A1

STATE OF WISCONSIN
DEPARTMENT OF TRANSPO




6


S.D.D. 8 D 5-16c

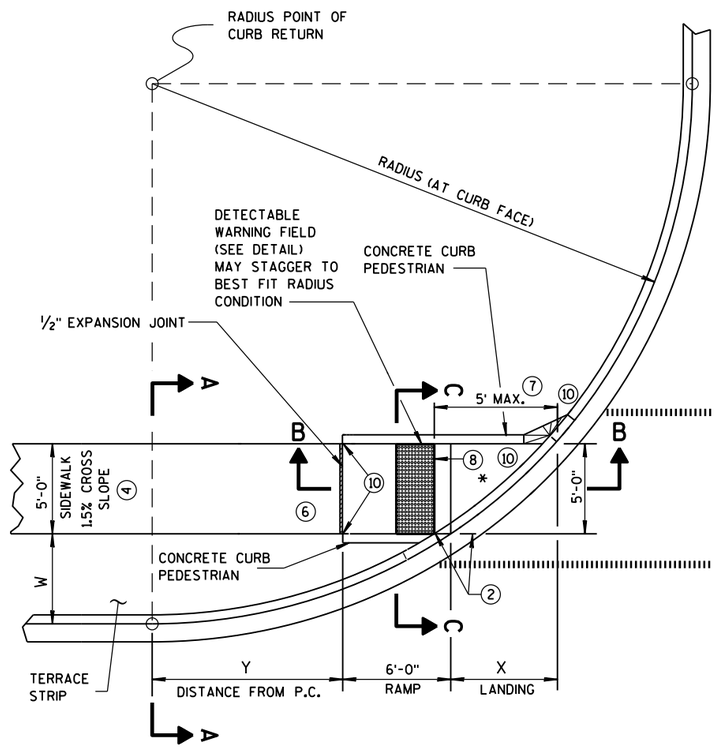


## CURB RAMP TYPE 4B
PLAN VIEW

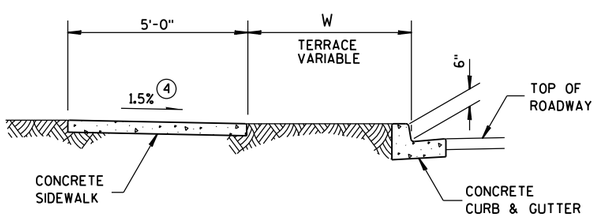


## SECTION A-A FOR TYPE 4B

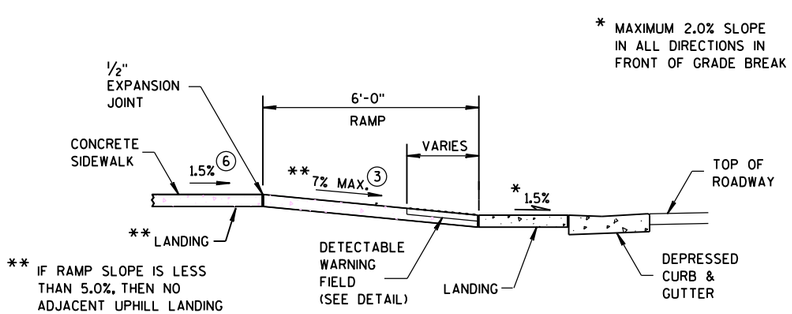


## SECTION B-B FOR TYPE 4B

## LEGEND

- ½" EXPANSION JOINT-SIDEWALK
- CONTRACTION JOINT FIELD LOCATED
- PAVEMENT MARKING CROSSWALK (WHITE)

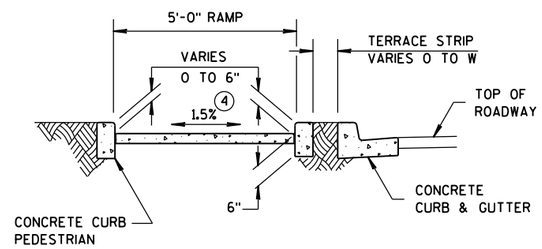


## SECTION C-C FOR TYPE 4B

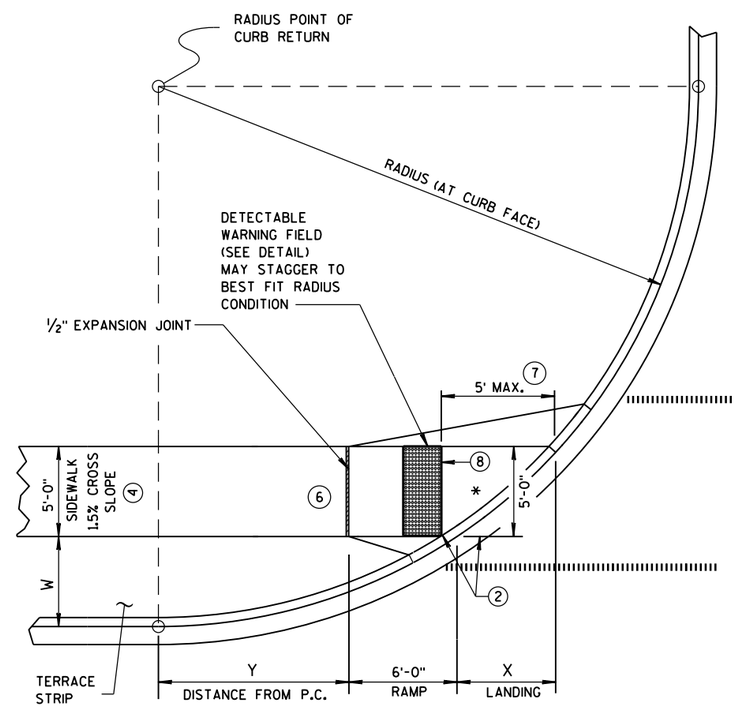


## CURB RAMP TYPE 4B1
PLAN VIEW

| RADIUS (AT CURB FACE) | W = 3' - 0" | | W = 4' - 0" | | W = 5' - 0" | | W = 6' - 0" | | W = 7' - 0" | |
|---|---|---|---|---|---|---|---|---|---|---|
| | X | Y | X | Y | X | Y | X | Y | X | Y |
| 20 FEET | 5'-5½" | 4'-6½" | 4'-8½" | 6'-0" | 4'-1" | 7'-2¾" | 3'-7" | 8'-3½" | 3'-1½" | 9'-2½" |
| 30 FEET | 7'-3¾" | 7'-1" | 6'-5½" | 8'-11½" | 5'-9¼" | 10'-7" | 5'-2½" | 12'-0" | 4'-8¾" | 13'-3¼" |
| 40 FEET | 8'-9½" | 9'-2½" | 7'-10" | 11'-5¼" | 7'-1" | 13'-4½" | 6'-5¾" | 15'-¾" | 5'-11½" | 16'-7¼" |
| 50 FEET | 10'-¾" | 11'-¾" | 9'-¼" | 13'-7¼" | 8'-2½" | 15'-9½" | 7'-6½" | 17'-9" | 6'-11¾" | 19'-6¼" |
| 60 FEET | 11'-2½" | 12'-8¾" | 10'-¾" | 15'-6½" | 9'-2¼" | 17'-11¾" | 8'-5¾" | 20'-1¾" | 7'-10½" | 22'-1½" |

INTERMEDIATE RADII CAN BE INTERPOLATED

## GENERAL NOTES

AVOID PLACING DRAINAGE STRUCTURES, JUNCTION BOXES OR OTHER OBSTRUCTIONS IN FRONT OF RAMP ACCESS AREAS.

DETECTABLE WARNING FIELDS THAT ARE INSTALLED AS A GROUP OR SIDE BY SIDE, SHALL BE FROM THE SAME MANUFACTURER.

(2) GRADE CHANGE BETWEEN GUTTER FLAG SLOPE AND THE CURB RAMP SLOPE SHALL NOT EXCEED 11%. MAXIMUM GUTTER FLAG SLOPE IS 4%. PROVIDE DRAINAGE AWAY FROM CURB RAMP AT GUTTER FLAG INTERFACE. NO VERTICAL LIPS OR DISCONTINUITIES GREATER THAN ¼-INCH ARE ALLOWED.

(3) ABSOLUTE MAXIMUM 12H:1V (8.33%) CURB RAMP SLOPE IS ALLOWABLE WITH FLATTENED GUTTER FLAG SLOPE AND NOT TO EXCEED 11% GRADE CHANGE.

(4) ±0.5% CONSTRUCTION TOLERANCE IN SIDEWALK CROSS SLOPE. THE SIDEWALK CROSS SLOPE SHALL NOT EXCEED 2% WITHOUT PRIOR APPROVAL FROM THE ENGINEER.

(6) PROVIDE A LEVEL LANDING (MAXIMUM 2% SLOPE) IN ANY DIRECTION OF PEDESTRIAN TRAVEL. STANDARD LANDING SIZE IS 5 FEET X 5 FEET (MINIMUM 4 FEET X 4 FEET).

(7) WHEN THIS DISTANCE EXCEEDS 5 FEET, USE MULTIPLE DETECTABLE WARNING PANELS ACROSS THE RAMP AND STAGGER ADDITIONAL DETECTABLE WARNING PANEL(S) FORWARD TO REDUCE THIS DISTANCE.

(8) PROVIDE GRADE BREAK PERPENDICULAR TO DIRECTION OF WHEELCHAIR TRAVEL.

(10) INSTALL TRANSITION NOSE. (INCIDENTAL TO OTHER PAY ITEMS). DO NOT MARK TRANSITION NOSE.

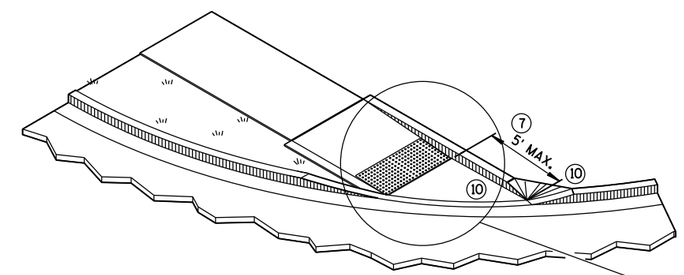


## ISOMETRIC VIEW FOR TYPE 4B

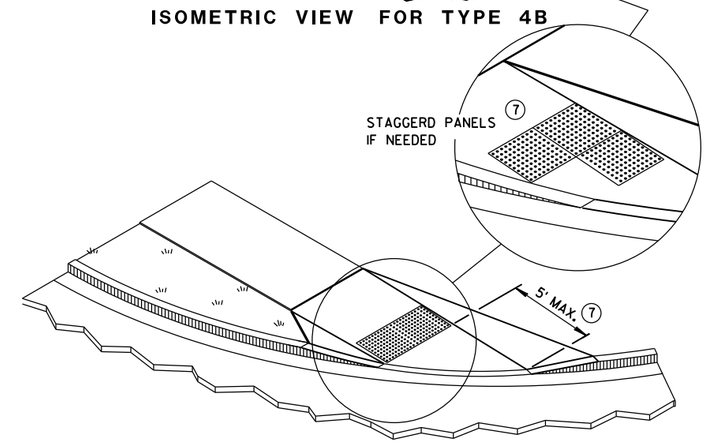


## ISOMETRIC VIEW FOR TYPE 4B1

CURB RAMPS
TYPE 4B AND 4B1

STATE OF WISCONSIN
DEPARTMENT OF TRANSPO

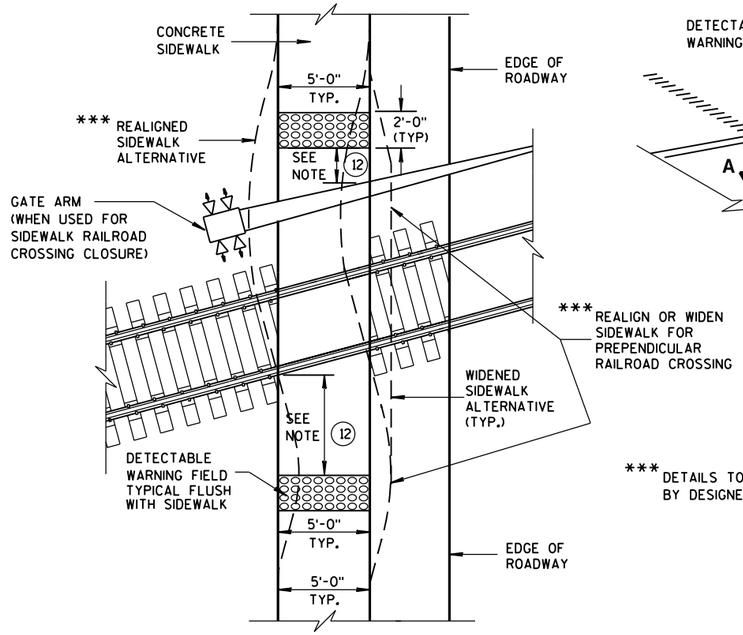


## TYPE 8
### DETECTABLE WARNINGS AT RAILROAD CROSSING

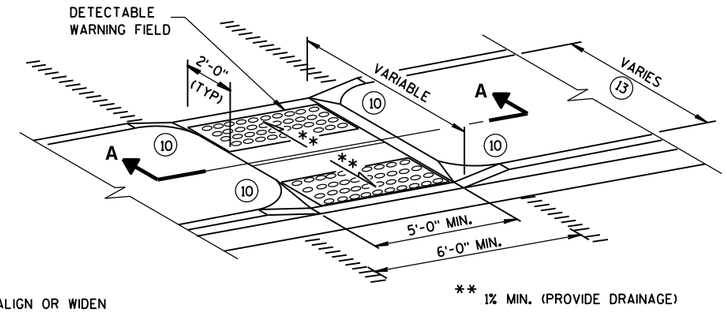


*** DETAILS TO BE DETERMINED BY DESIGNER

## MEDIAN ISLAND NON-ELEVATED CROSSING
## TYPE 5

## GENERAL NOTES

SIDEWALK CROSS SLOPE SHALL NOT EXCEED 2%.

DETECTABLE WARNING FIELDS THAT ARE INSTALLED AS A GROUP OR SIDE BY SIDE, SHALL BE FROM THE SAME MANUFACTURER.

(2) GRADE CHANGE BETWEEN GUTTER FLAG SLOPE AND THE CURB RAMP SLOPE SHALL NOT EXCEED 11%. MAXIMUM GUTTER FLAG SLOPE IS 4%. PROVIDE DRAINAGE AWAY FROM CURB RAMP AT GUTTER FLAG INTERFACE. NO VERTICAL LIPS OR DISCONTINUITIES GREATER THAN 1/4-INCH ARE ALLOWED.

(3) ABSOLUTE MAXIMUM 12H:1V (8.33%) CURB RAMP SLOPE IS ALLOWABLE WITH FLATTENED GUTTER FLAG SLOPE AND NOT TO EXCEED 11% GRADE CHANGE.

(4) ±0.5% CONSTRUCTION TOLERANCE IN SIDEWALK CROSS SLOPE. THE SIDEWALK CROSS SLOPE SHALL NOT EXCEED 2% WITHOUT PRIOR APPROVAL FROM THE ENGINEER.

(6) PROVIDE A LEVEL LANDING (MAXIMUM 2% SLOPE) IN ANY DIRECTION OF PEDESTRIAN TRAVEL. STANDARD LANDING SIZE IS 5 FEET X 5 FEET (MINIMUM 4 FEET X 4 FEET).

(10) INSTALL TRANSITION NOSE. (INCIDENTAL TO OTHER PAY ITEMS). DO NOT MARK TRANSITION NOSE.

(11) SLOPE SIDEWALK TOWARD LANDING AS SHOWN WHERE THERE IS NO TERRACE OR WHERE THE TERRACE WIDTH IS LESS THAN 6 FEET WIDE.

(12) THE EDGE OF THE DETECTABLE WARNING FIELD NEAREST TO A RAILROAD CROSSING SHALL BE 1.5 FEET ± 0.1' FROM THE FACE OF THE GATE ARM IF THE GATE ARM EXTENDS ACROSS THE SIDEWALK. WHERE THERE IS NO PEDESTRIAN GATE, THE EDGE OF THE DETECTABLE WARNING FIELD NEAREST TO THE RAILROAD CROSSING SHALL BE 15 FEET FROM THE NEAREST RAIL.

(13) DO NOT INSTALL DETECTABLE WARNING FIELDS IF MEDIAN WIDTH BETWEEN BACK OF CURBS IS LESS THAN 6 FEET.

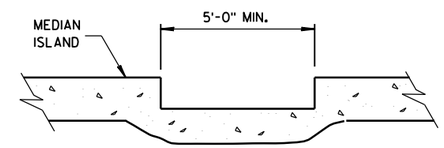


## SECTION A-A

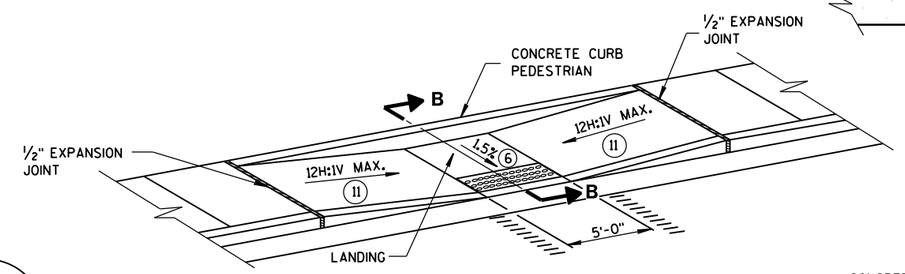


## MID-BLOCK CROSSING
## TYPE 7A

| | MIN. | MAX. |
|---|---|---|
| A | 1.6" | 2.4" |
| B | 0.65" | 1.5" |
| C | * | * |
| D | 0.9" | 1.4" |

* THE C DIMENSION IS 50% TO 65% OF THE D DIMENSION.

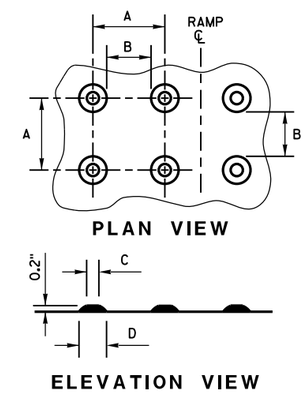


PLAN VIEW

ELEVATION VIEW

## TRUNCATED DOMES
### DETECTABLE WARNING PATTERN DETAIL

REFER TO GENERAL NOTES (2) AND (3) FOR ALL ISLAND CURB RAMPS

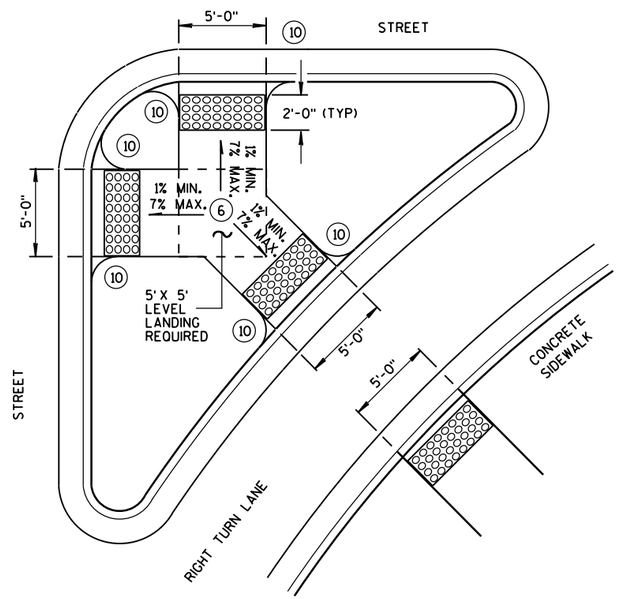


## TYPE 6
### DETECTABLE WARNING AT ISLANDS

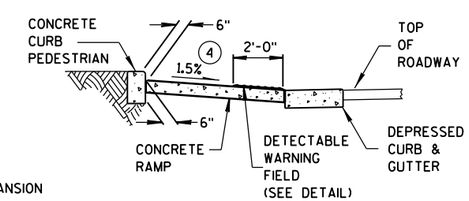


## SECTION B-B

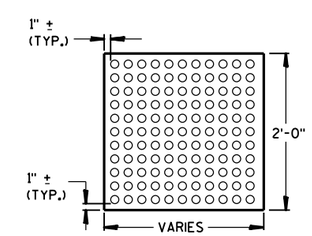


PLAN VIEW

## DETECTABLE WARNING FIELD (TYPICAL)

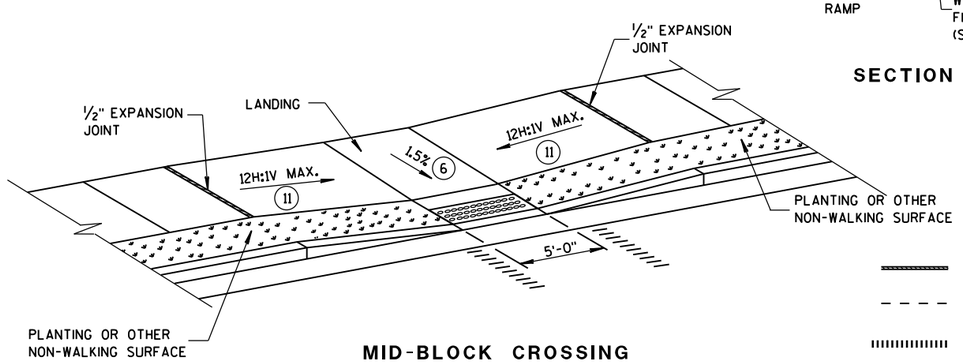


## MID-BLOCK CROSSING
## TYPE 7B

NOTE: THESE PARALLEL AND PARALLEL/PERPENDICULAR CURB RAMPS MAY BE USED AT INTERSECTIONS AND MID BLOCK LOCATIONS.

### LEGEND

- 1/2" EXPANSION JOINT-SIDEWALK
- CONTRACTION JOINT FIELD LOCATED
- PAVEMENT MARKING CROSSWALK (WHITE)

CURB RAMPS
TYPES 5, 6, 7A, 7B & 8

STATE OF WISCONSIN
DEPARTMENT OF TRANSPORTATION

APPROVED
June, 2015 — DATE
/S/ Jerry H. Zogg — ROADWAY STANDARDS DEVELOPMENT ENGINEER
FHWA

6

6

S.D.D. 8 D 5-16e

S.D.D. 8 D 5-16e

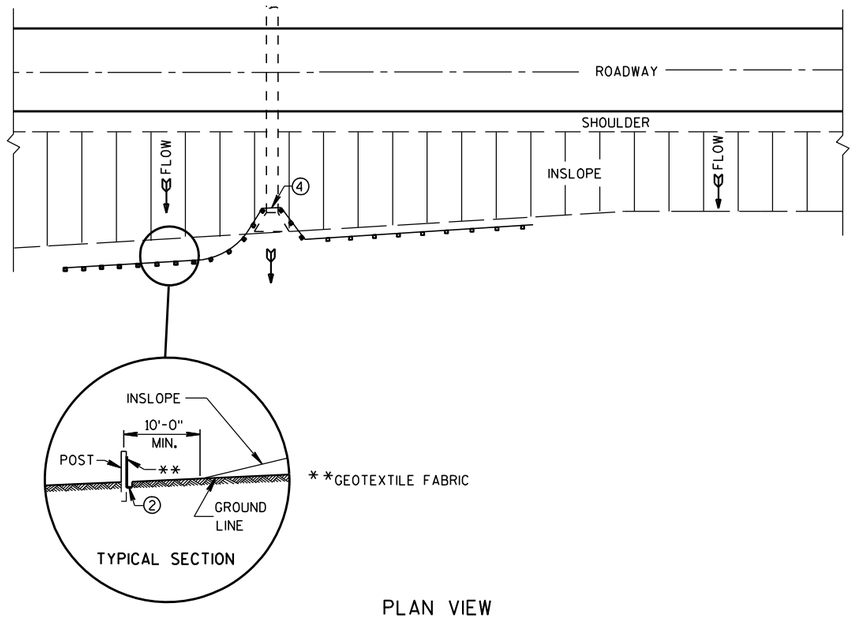


PLAN VIEW

## TYPICAL APPLICATION OF SILT FENCE

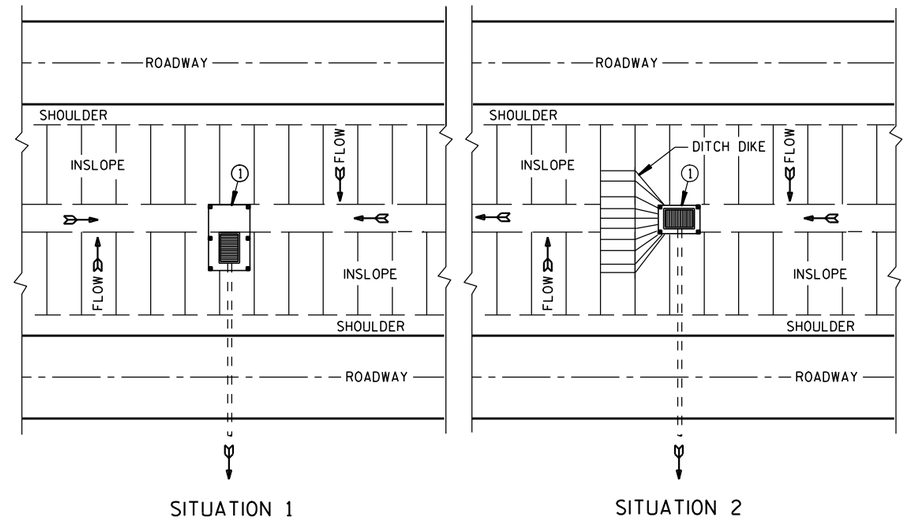


PLAN VIEW

## SILT FENCE AT MEDIAN SURFACE DRAINS

## GENERAL NOTES

DETAILS OF CONSTRUCTION NOT SHOWN ON THIS DRAWING SHALL CONFORM TO THE PERTINENT REQUIREMENTS OF THE STANDARD SPECIFICATIONS AND APPLICABLE SPECIAL PROVISIONS.

① HORIZONTAL BRACE REQUIRED WITH 2" X 4" WOODEN FRAME OR EQUIVALENT AT TOP OF POSTS.

② FOR MANUAL INSTALLATIONS THE TRENCH SHALL BE A MINIMUM OF 4" WIDE & 6" DEEP TO BURY AND ANCHOR THE GEOTEXTILE FABRIC. FOLD MATERIAL TO FIT TRENCH AND BACKFILL & COMPACT TRENCH WITH EXCAVATED SOIL.

③ WOOD POSTS SHALL BE A MINIMUM SIZE OF 1⅛" X 1⅛" OF OAK OR HICKORY.

④ SILT FENCE TO EXTEND ACROSS THE TOP OF THE PIPE.

⑤ CONSTRUCT SILT FENCE FROM A CONTINUOUS ROLL IF POSSIBLE BY CUTTING LENGTHS TO AVOID JOINTS. IF A JOINT IS NECESSARY USE ONE OF THE FOLLOWING TWO METHODS; A) OVERLAP THE END POSTS AND TWIST, OR ROTATE, AT LEAST 180 DEGREES. B) HOOK THE END OF EACH SILT FENCE LENGTH.

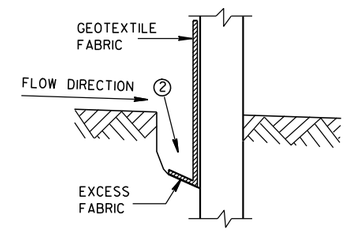


## TRENCH DETAIL

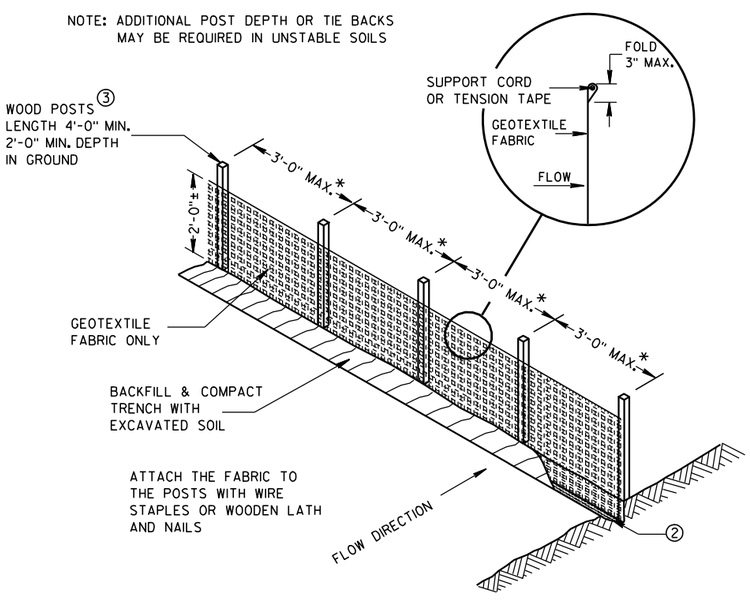


*NOTE: 8'-0" POST SPACING ALLOWED IF A WOVEN GEOTEXTILE FABRIC IS USED.

## SILT FENCE

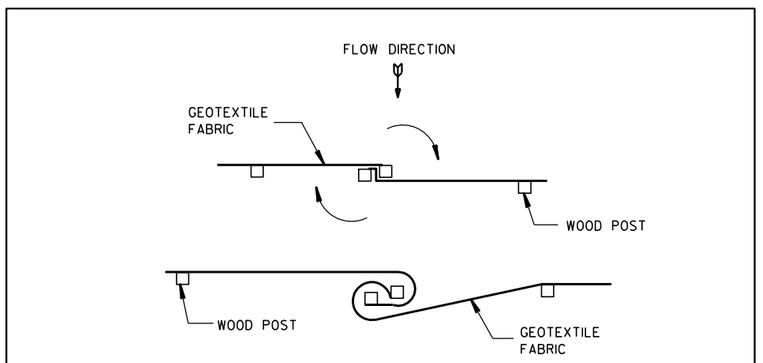


TWIST METHOD

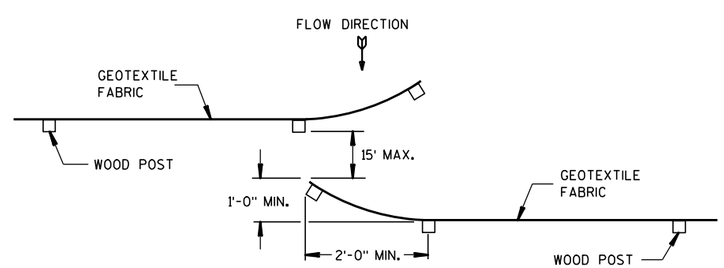


HOOK METHOD

## JOINING TWO LENGTHS OF SILT FENCE ⑤

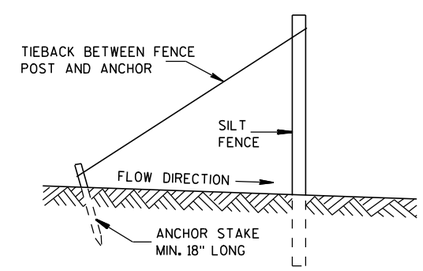


## SILT FENCE TIE BACK

(WHEN REQUIRED BY THE ENGINEER)

| SILT FENCE |
|---|
| STATE OF WISCONSIN<br>DEPARTMENT OF TRANSPORTATION |
| APPROVED<br>4-29-05 /S/ Beth Cann-- ---<br>DATE CHIEF ROADWAY DEVELOP ---INEER<br>FHWA |

6

6

S.D.D. 8 E 9-6

S.D.D. 8 E 9-6

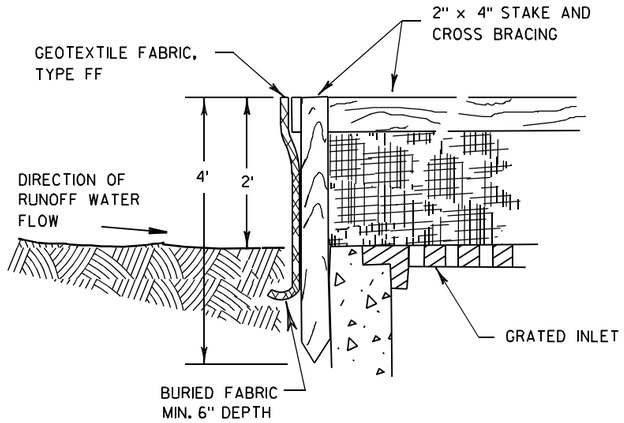


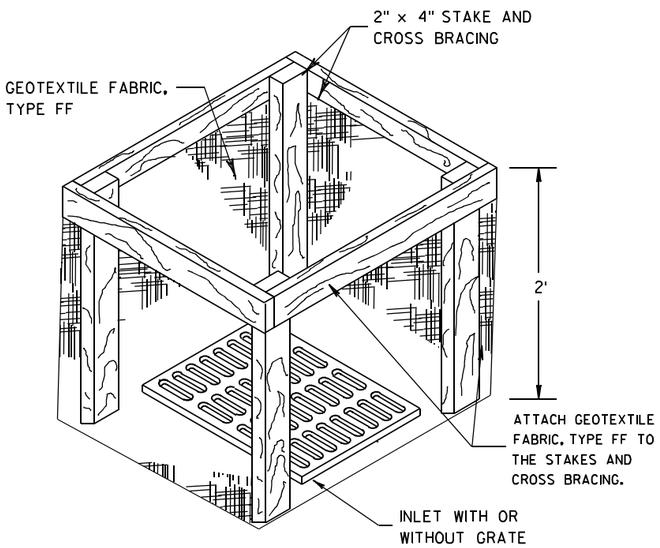


## INLET PROTECTION, TYPE A

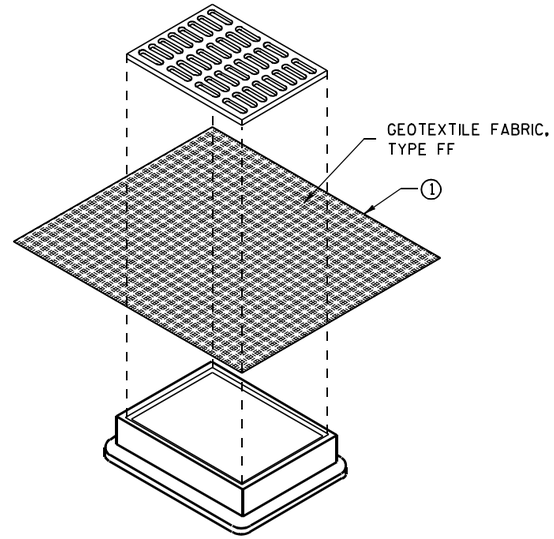


## INLET PROTECTION, TYPE B (WITHOUT CURB BOX)

(CAN BE INSTALLED IN ANY INLET WITHOUT A CURB BOX)

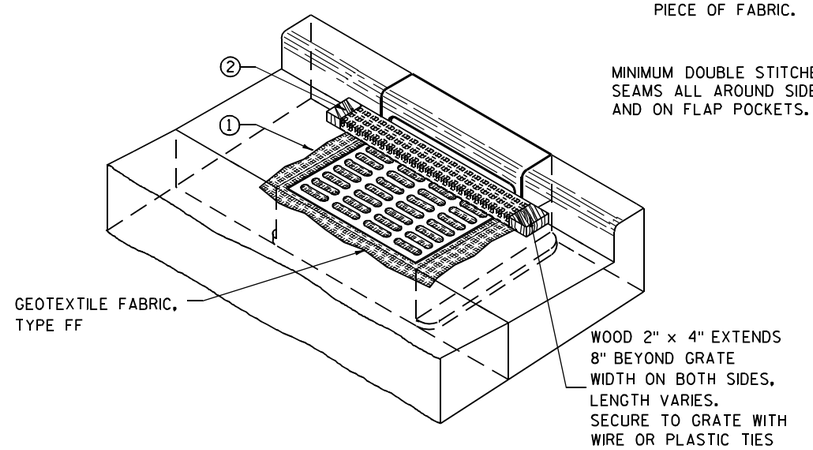


## INLET PROTECTION, TYPE C (WITH CURB BOX)

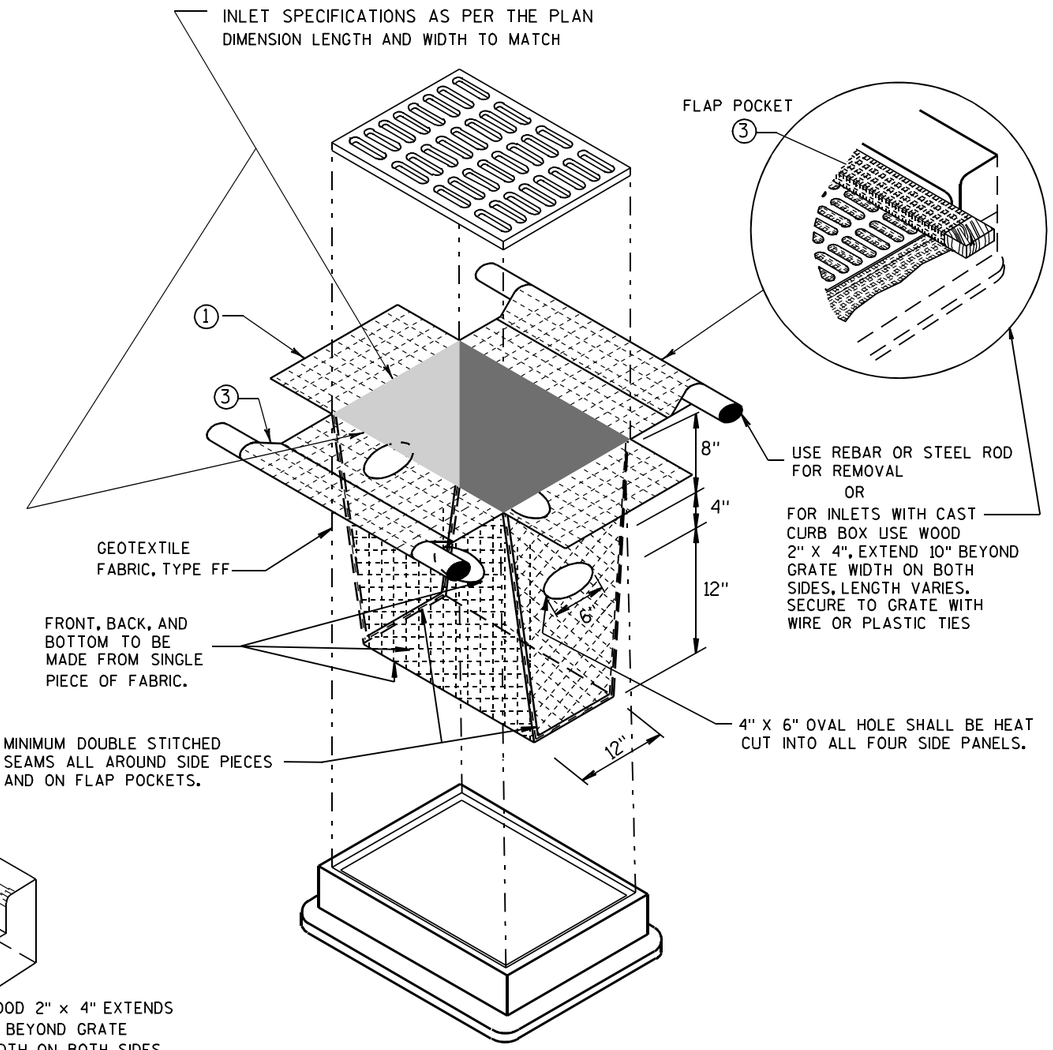


## INLET PROTECTION, TYPE D

(CAN BE INSTALLED IN ANY INLET TYPE WITH OR WITHOUT A CURB BOX AS PER NOTE ② )

## GENERAL NOTES

INLET PROTECTION DEVICES SHALL BE MAINTAINED OR REPLACED AT THE DIRECTION OF THE ENGINEER.

MANUFACTURED ALTERNATIVES APPROVED AND LISTED ON THE DEPARTMENT'S EROSION CONTROL PRODUCT ACCEPTABILITY LIST MAY BE SUBSTITUTED.

WHEN REMOVING OR MAINTAINING INLET PROTECTION, CARE SHALL BE TAKEN SO THAT THE SEDIMENT TRAPPED ON THE GEOTEXTILE FABRIC DOES NOT FALL INTO THE INLET. ANY MATERIAL FALLING INTO THE INLET SHALL BE REMOVED IMMEDIATELY.

① FINISHED SIZE, INCLUDING FLAP POCKETS WHERE REQUIRED, SHALL EXTEND A MINIMUM OF 10" AROUND THE PERIMETER TO FACILITATE MAINTENANCE OR REMOVAL.

② FOR INLET PROTECTION, TYPE C (WITH CURB BOX), AN ADDITIONAL 18" OF FABRIC IS WRAPPED AROUND THE WOOD AND SECURED WITH STAPLES. THE WOOD SHALL NOT BLOCK THE ENTIRE HEIGHT OF THE CURB BOX OPENING.

③ FLAP POCKETS SHALL BE LARGE ENOUGH TO ACCEPT WOOD 2X4.

## INSTALLATION NOTES

### TYPE B & C

TRIM EXCESS FABRIC IN THE FLOW LINE TO WITHIN 3" OF THE GRATE.

THE CONTRACTOR SHALL DEMONSTRATE A METHOD OF MAINTENANCE, USING A SEWN FLAP, HAND HOLDS OR OTHER METHOD TO PREVENT ACCUMULATED SEDIMENT FROM ENTERING THE INLET.

### TYPE D

DO NOT INSTALL INLET PROTECTION TYPE D IN INLETS SHALLOWER THAN 30", MEASURED FROM THE BOTTOM OF THE INLET TO THE TOP OF THE GRATE.

TRIM EXCESS FABRIC IN THE FLOW LINE TO WITHIN 3" OF THE GRATE.

THE INSTALLED BAG SHALL HAVE A MINIMUM SIDE CLEARANCE, BETWEEN THE INLET WALLS AND THE BAG, MEASURED AT THE BOTTOM OF THE OVERFLOW HOLES, OF 3". WHERE NECESSARY THE CONTRACTOR SHALL CINCH THE BAG, USING PLASTIC ZIP TIES, TO ACHIEVE THE 3" CLEARANCE. THE TIES SHALL BE PLACED AT A MAXIMUM OF 4" FROM THE BOTTOM OF THE BAG.

**INLET PROTECTION**
**TYPE A, B, C, AND D**

STATE OF WISCONSIN
DEPARTMENT OF TRANSPORTATION

APPROVED
10/16/02 — DATE
/S/ Beth Cannatine
CHIEF ROADWAY DEVELOPMENT ENGINEER
FHWA

6

S.D.D. 8 E 10-2

## GENERAL NOTES

DETAILS OF CONSTRUCTION, MATERIALS AND WORKMANSHIP NOT SHOWN ON THIS DRAWING SHALL CONFORM TO THE PERTINENT REQUIREMENTS OF THE STANDARD SPECIFICATIONS AND THE APPLICABLE SPECIAL PROVISIONS.

TRACKING PAD SHALL BE INSPECTED DAILY. DEFICIENT AREAS SHALL BE REPAIRED OR REPLACED IMMEDIATELY.

TRACKING PAD TO BE REMOVED AFTER CONSTRUCTION IS COMPLETED.

TRACKING PAD SHALL BE THE FULL WIDTH OF THE EGRESS POINT.

SURFACE WATER MUST BE PREVENTED FROM PASSING THROUGH THE TRACKING PAD. FLOWS SHALL BE DIVERTED AWAY, AROUND OR CONVEYED UNDER THE TRACKING PAD.

CULVERT PIPE OR OTHER BMP USED TO DIVERT WATER AWAY, AROUND OR UNDER THE TRACKING PAD SHALL BE DESIGNED TO CONVEY THE 2 YEAR - 24 HOUR EVENT.

THE COST OF ADDITIONAL BMP TO DIVERT WATER ARE INCIDENTAL TO THE TRACKING PAD BID ITEM.

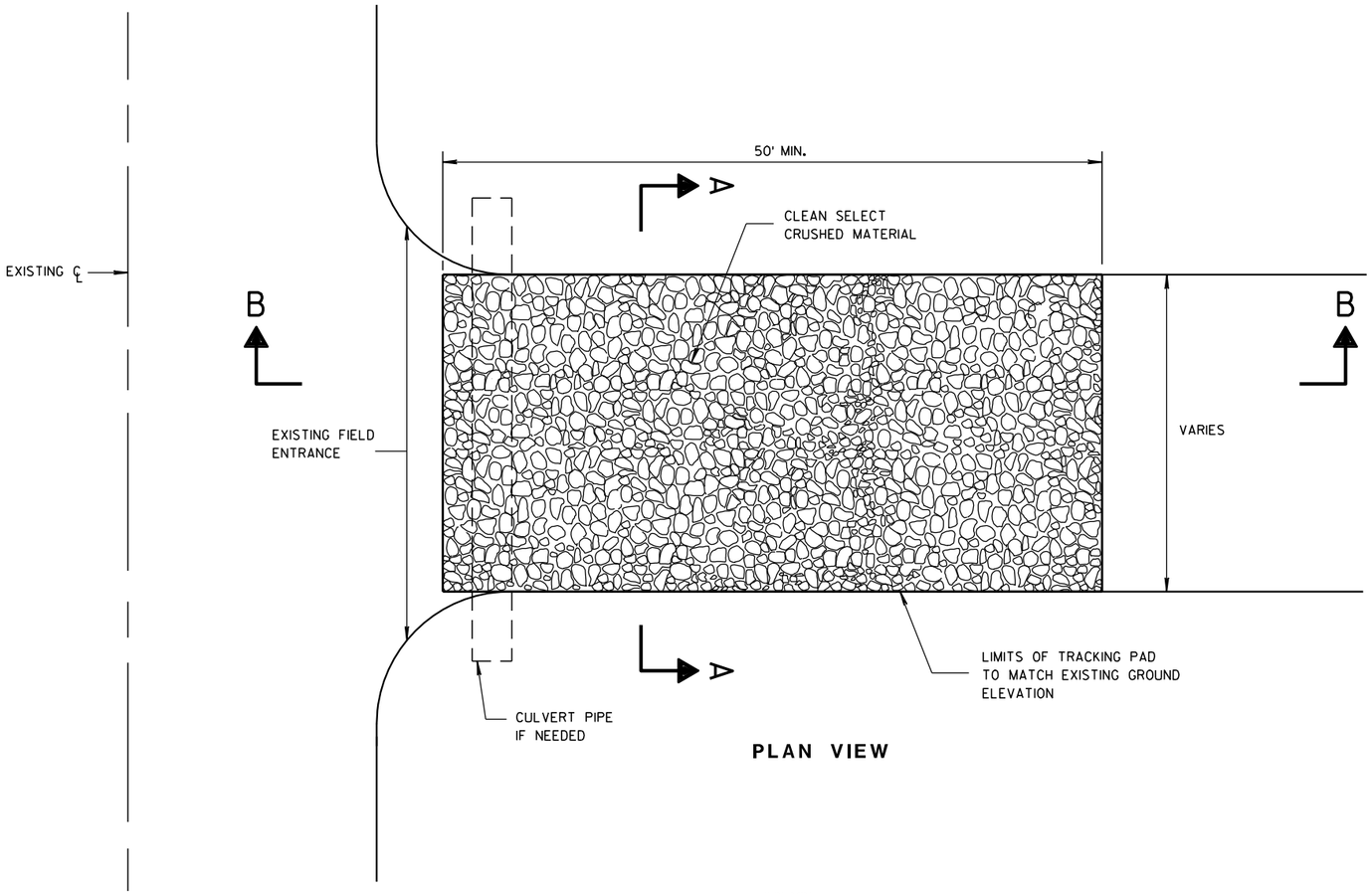


PLAN VIEW

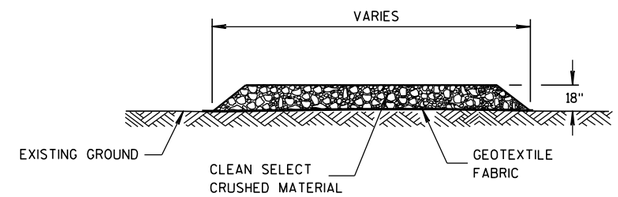


SECTION A-A

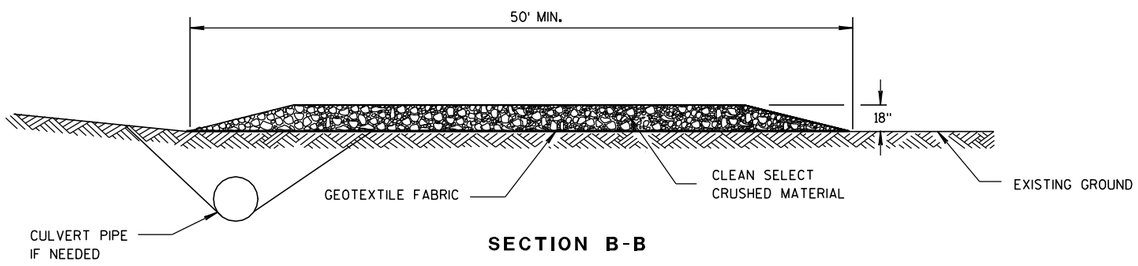


SECTION B-B

# TRACKING PAD

6

6

S.D.D. 8 E 14-1

S.D.D. 8 E 14-1

TRACKING PAD

STATE OF WISCONSIN
DEPARTMENT OF TRANSPORTATION

APPROVED

| | | |
|---|---|---|
| 3/24/2011 | /S/ Jerry H. Zona | |
| DATE | ROADWAY STANDARDS ENGINEER | ENT |

FHWA

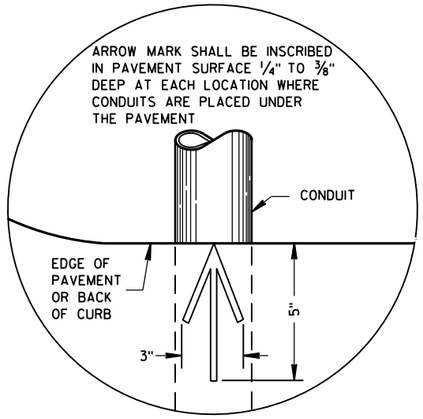


PLAN VIEW

## ARROW MARK

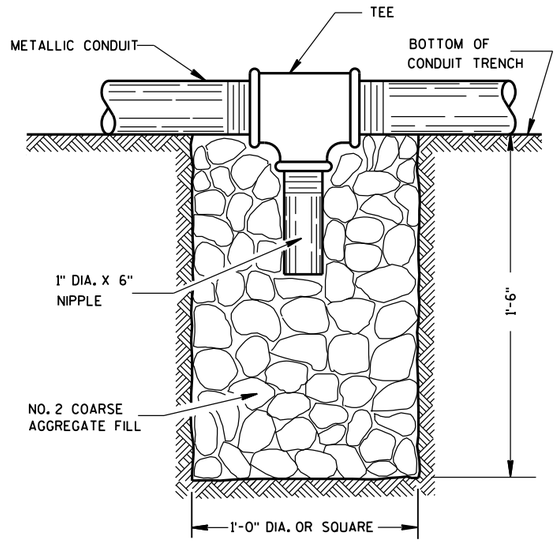


NOTE: INSTALL AT LOCATIONS WHERE METALLIC CONDUITS CANNOT BE PITCHED TO DRAIN INTO A PULL BOX.

## DRAIN SUMP FOR METALLIC CONDUIT

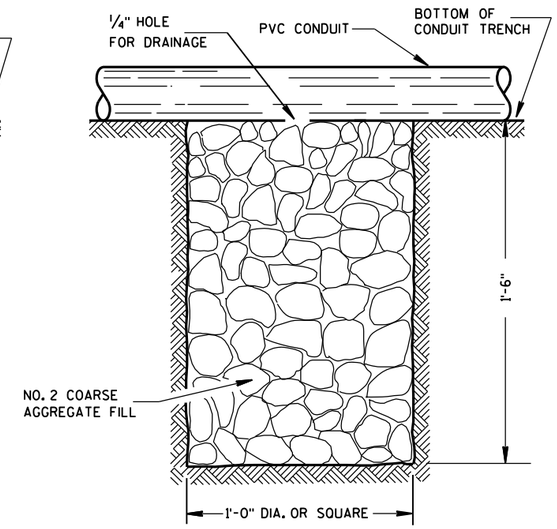


NOTE: INSTALL AT LOCATIONS WHERE PVC CONDUITS CANNOT BE PITCHED TO DRAIN INTO A PULL BOX.

## DRAIN SUMP FOR PVC CONDUIT

## GENERAL NOTES

DETAILS OF CONSTRUCTION, MATERIALS AND WORKMANSHIP NOT SHOWN ON THIS DRAWING SHALL CONFORM TO THE PERTINENT REQUIREMENTS OF THE CONTRACT.

METALLIC (STANDARD SPECIFICATION 652.2.2) OR NONMETALLIC (STANDARD SPECIFICATION 652.2.3) CONDUIT SHALL BE FURNISHED AND PLACED AS SHOWN.

DEPTH OF CONDUIT INSTALLED BELOW THE TRAVELED WAY SHALL BE 24 INCHES MINIMUM AND 36 INCHES MAXIMUM.

DEPTH OF CONDUIT INSTALLED THAT IS NOT BELOW THE TRAVELED WAY SHALL BE 18 INCHES MINIMUM AND 36 INCHES MAXIMUM.

ANY EXCEPTION TO THE MAXIMUM DEPTH SHALL BE ONLY WITH THE WRITTEN APPROVAL OF THE ENGINEER.

THE TRENCH SHALL NOT BE BACKFILLED PRIOR TO INSPECTION OF THE CONDUIT.

ALL METALLIC CONDUIT RACEWAY ENDS SHALL BE REAMED AND THREADED.

ALL METALLIC CONDUIT IN WHICH WIRE OR CABLE IS TO BE INSTALLED SHALL BE BUSHED WITH APPROVED THREADED BUSHINGS BEFORE INSTALLATION OF THE WIRE OR CABLE.

ALL METALLIC CONDUITS IN WHICH WIRE OR CABLE IS NOT TO BE INSTALLED SHALL BE CAPPED WITH THREADED PROTECTIVE CAPS, AS APPROVED BY THE ENGINEER.

ALL NONMETALLIC CONDUIT SHALL BE CAPPED OR PLUGGED IMMEDIATELY AFTER INSTALLATION AND SHALL REMAIN CAPPED OR PLUGGED UNTIL WIRE/CABLES ARE INSTALLED.

NONMETALLIC CONDUITS IN WHICH WIRE OR CABLE IS NOT BEING INSTALLED SHALL REMAIN CAPPED OR PLUGGED.

BENDING OF PVC ELECTRICAL CONDUIT SHALL BE ACCOMPLISHED BY USING A BLANKET OR EMERSION TYPE TANK DESIGNED FOR THE PURPOSE OF BENDING PVC ELECTRICAL CONDUIT.

ALL CUT ENDS SHALL BE TRIMMED INSIDE AND OUTSIDE TO REMOVE ALL ROUGH EDGES ON NONMETALLIC CONDUIT. (SEE NEC 347.5)

WHEN REQUIRED TO CONNECT NONMETALLIC CONDUIT TO METALLIC CONDUIT, ONLY U.L. LISTED ADAPTER FITTINGS SHALL BE USED.

PRIOR TO CONDUIT ACCEPTANCE, CONDUIT CAPS OR PLUGS SHALL BE REMOVED, AND THE CAPS, PLUGS AND CONDUIT ENDS SHALL BE THOROUGHLY CLEANED AND THEN THE CAPS OR PLUGS REINSTALLED TO ENSURE THAT THE CAPS OR PLUGS CAN BE EASILY REMOVED IN THE FUTURE.

ALL CONDUIT BEING FURNISHED AND INSTALLED SHALL HAVE THE U.L. LABEL FIRMLY ATTACHED.

CONDUIT RUNS SHALL BE THE SAME SIZE OF CONDUIT FROM ONE END TO THE OTHER (FROM PULL BOX TO PULL BOX-OR-JUNCTION BOX TO JUNCTION BOX-OR-BASE TO BASE, ETC.).

TRACER WIRE SHALL BE INSTALLED AS STATED IN THE STANDARD SPECIFICATION, ITEM 652.3.1.1.

ALL CONDUIT RUNS SHALL BE STRAIGHT (WITHOUT BENDS) FROM PULL BOX TO PULL BOX, PULL BOX TO BASE AND BASE TO BASE AS SHOWN ON THE PLANS.

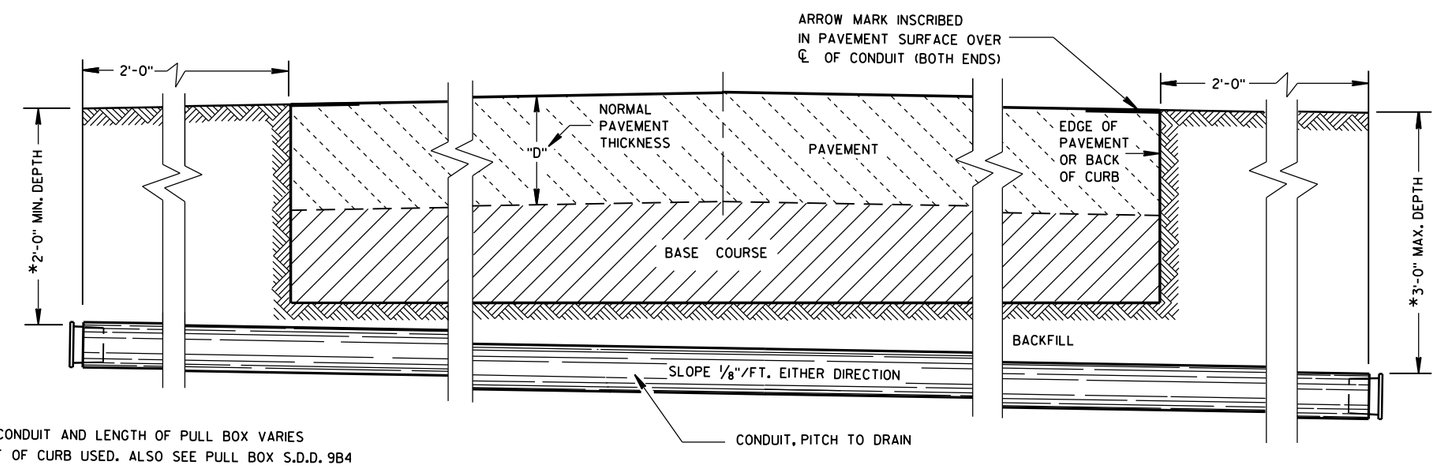


*DEPTH OF CONDUIT AND LENGTH OF PULL BOX VARIES WITH HEIGHT OF CURB USED. ALSO SEE PULL BOX S.D.D. 9B4

SIDE ELEVATION

## DETAIL FOR CONDUIT UNDER PAVED HIGHWAYS

6

6

S.D.D. 9 B 2-9

S.D.D. 9 B 2-9

CONDUIT

STATE OF WISCONSIN
DEPARTMENT OF TRANSPORTATION

APPROVED
June, 2015 — /S/ Ahmet Demirbilek
DATE — STATE ELECTRICAL
FHWA

## TABLE OF NOMINAL DIMENSIONS AND WEIGHTS

| DIMENSION IN INCHES | | CORRUGATED STEEL PIPE | | | | | | | | |
|---|---|---|---|---|---|---|---|---|---|---|
| PIPE DIAMETER (INSIDE) | A | 12 | 12 | 12 | 18 | 18 | 18 | 24 | 24 | 24 |
| PIPE LENGTH ** | B | 24 | 30 | 36 | 24 | 30 | 36 | 36 | 42 | 48 |
| WALL THICKNESS | C | 0.064 | 0.064 | 0.064 | 0.064 | 0.064 | 0.064 | 0.064 | 0.064 | 0.064 |
| COVER | D | 10 1/4 | 10 1/4 | 10 1/4 | 16 1/4 | 16 1/4 | 16 1/4 | 22 1/4 | 22 1/4 | 22 1/4 |
| FRAME | E | 14 1/2 | 14 1/2 | 14 1/2 | 20 1/2 | 20 1/2 | 20 1/2 | 26 1/2 | 26 1/2 | 26 1/2 |
| FRAME | F | 8 1/2 | 8 1/2 | 8 1/2 | 14 1/2 | 14 1/2 | 14 1/2 | 20 1/2 | 20 1/2 | 20 1/2 |
| FRAME | G | 11 1/2 | 11 1/2 | 11 1/2 | 17 1/2 | 17 1/2 | 17 1/2 | 23 1/2 | 23 1/2 | 23 1/2 |
| WEIGHT IN POUNDS * | | | | | | | | | | |
| FRAME AND COVER | | 60 | 60 | 60 | 110 | 110 | 110 | 155 | 155 | 155 |

* THE ACTUAL WEIGHT OF THE MANHOLE FRAME AND COVER MAY VARY WITHIN 5 PERCENT PLUS OR MINUS OF THE WEIGHTS SHOWN.

** NORMALLY USED LENGTHS. THE PROJECT ENGINEER SHALL DETERMINE IF PIPE LENGTHS, OTHER THAN THOSE SPECIFIED, SHALL BE USED, TO A MAXIMUM OF 48" (CONTINUOUS LENGTH, NON-SPLICED). THE ADDITIONAL LENGTH SHALL BE INCIDENTAL TO THE PULL BOX BID PRICE.

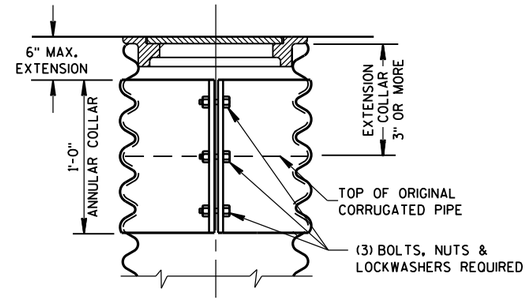


CORRUGATED PIPE EXTENDER

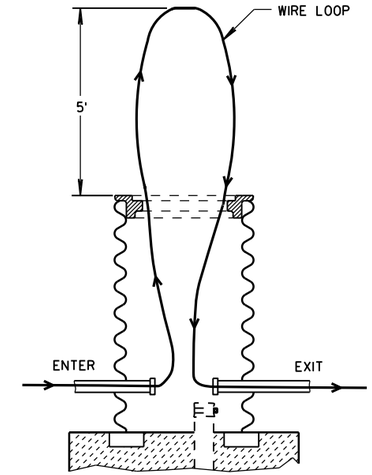


MEASUREMENT DETAIL FOR WIRE/CABLE IN THE PULL BOX

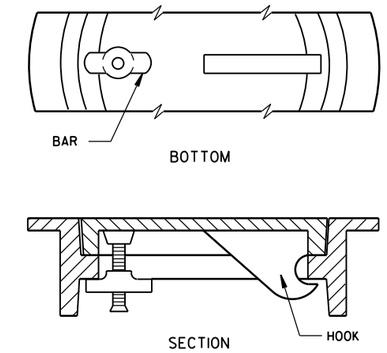


ALTERNATE COVER (LOCKING)

TIGHTENING BAR TYPE

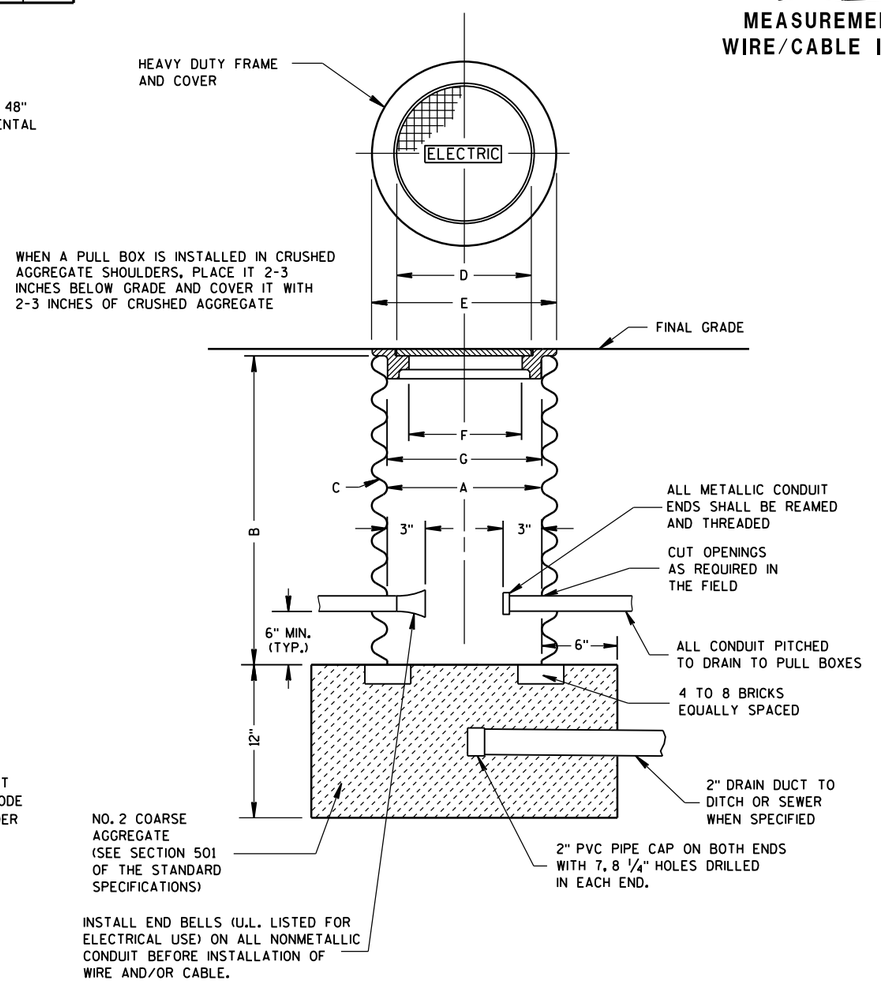


WHEN A PULL BOX IS INSTALLED IN CRUSHED AGGREGATE SHOULDERS, PLACE IT 2-3 INCHES BELOW GRADE AND COVER IT WITH 2-3 INCHES OF CRUSHED AGGREGATE

PULL BOX

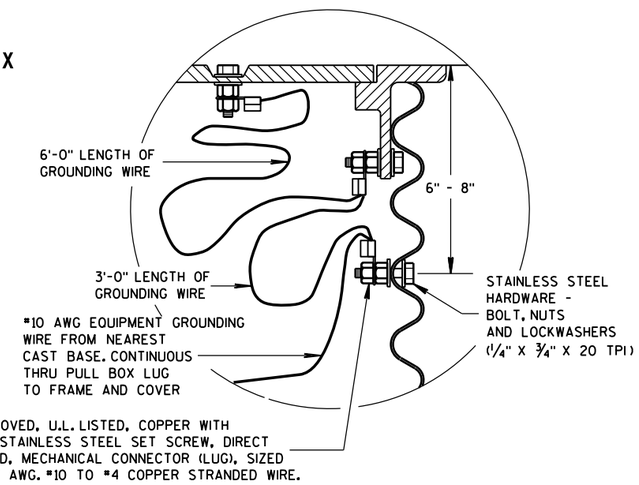


EQUIPMENT GROUNDING LUG AND LOCATION IN STEEL PULL BOXES

## GENERAL NOTES

DETAILS OF CONSTRUCTION, MATERIALS AND WORKMANSHIP NOT SHOWN ON THIS DRAWING SHALL CONFORM TO THE PERTINENT REQUIREMENTS OF THE CONTRACT.

ALL FRAMES AND COVERS SHALL BE HEAVY DUTY TYPE, SUITABLE FOR VEHICULAR TRAFFIC LOADS.

PULL BOXES LOCATED IN THE ROADWAYS SHALL HAVE LOCKING COVERS.

ENTRANCE HOLES INTO PULL BOXES SHALL BE CUT WITH A CIRCULAR HOLE SAW OR HYDRAULIC CONDUIT PUNCH. HOLE SIZE SHALL BE THE OUTSIDE DIAMETER OF THE CONDUIT THAT IS TO FIT IN THE OPENING PLUS NO MORE THAN 1/4".

THE CONTRACTOR SHALL NOT INSTALL WIRE IN ANY PULL BOX UNTIL ITS INSTALLATION HAS BEEN INSPECTED AND ACCEPTED BY THE ENGINEER.

GROUNDING LUGS (MECHANICAL CONNECTORS) SHALL BE U.L. LISTED AND APPROVED FOR USE WITH COPPER WIRE.

ALL METALLIC CONDUIT IN WHICH WIRE AND/OR CABLE IS TO BE INSTALLED, SHALL BE BUSHED BEFORE INSTALLATION OF THE WIRE AND/OR CABLE.

WHEN PULL BOXES ARE INSTALLED FOR FUTURE USE, DO NOT INSTALL THE EQUIPMENT GROUNDING LUG. THE EQUIPMENT GROUNDING LUG, THE EQUIPMENT GROUNDING ELECTRODE AND THE EQUIPMENT GROUNDING CONDUCTOR SHALL BE REQUIRED AND INSTALLED UNDER A FUTURE WIRING CONTRACT.

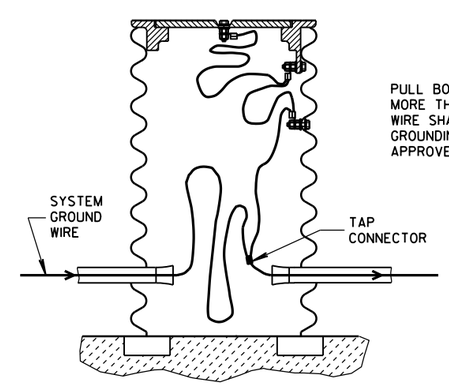


PULL BOX TO NEAREST BASE DISTANCE MORE THAN 20 FEET. PULL BOX GROUND WIRE SHALL CONNECT AT SYSTEM GROUNDING WIRE. USE DEPARTMENT APPROVED TAP CONNECTOR.

EQUIPMENT GROUNDING LUG AND LOCATION IN STEEL PULL BOXES

PULL BOX

STATE OF WISCONSIN
DEPARTMENT OF TRANSPORTATION

APPROVED
Sept. 2014 — DATE
/S/ Ahmet Demirbilek — STATE ELECTRICAL
FHWA




6


S.D.D. 9 B 4-11

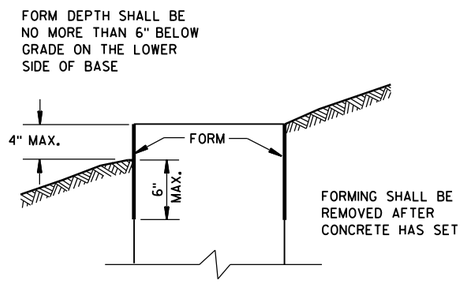


## FORMING DETAIL

| QUANTITY REQUIREMENTS | CONCRETE BASE TYPE | | |
|---|---|---|---|
| | 1 | 2 | 5 & 6 |
| APPROX. CUBIC YARDS OF CONCRETE | 0.40 | 0.57 | 0.40 |
| LBS. OF HOOP BAR STEEL | NONE | 23 | 16 |
| LBS. OF VERTICAL BAR STEEL | NONE | 60 | 18 |

## GENERAL NOTES

DETAILS OF CONSTRUCTION, MATERIALS AND WORKMANSHIP NOT SHOWN ON THIS DRAWING SHALL CONFORM TO THE PERTINENT REQUIREMENTS OF THE CONTRACT.

BASES SHALL BE EXCAVATED BY USE OF A CIRCULAR AUGER.

TOP SURFACES OF CONCRETE BASES SHALL BE TROWEL FINISHED SMOOTH AND LEVEL.

CONDUIT SIZES AND LOCATIONS SHALL BE AS SHOWN ON THE PLANS.

THE FINAL OR TERMINATING CONCRETE BASE IN A CONDUIT RUN SHALL HAVE A 6" EXIT STUB INSTALLED FOR FUTURE CABLING USE. THE EXIT STUB SHALL BE SIZED AS USED THROUGHOUT THE CONDUIT RUN AS SHOWN AT THE ENTRANCE OF THE BASE.

MINIMUM BENDING RADIUS OF CONDUIT IS EQUAL TO 6 X THE DIAMETER.

CONDUIT HEIGHT ABOVE CONCRETE BASES SHALL BE 1 INCH. ALL METALLIC CONDUIT ENDS SHALL BE REAMED AND THREADED.

ALL CONDUIT ENDS AT THE TOP OF CONCRETE BASES SHALL BE CAPPED IF METALLIC OR PLUGGED IF NONMETALLIC IMMEDIATELY AFTER PLACEMENT AND BEFORE CONCRETE IS POURED. CONDUITS IN WHICH WIRE OR CABLE IS NOT INSTALLED SHALL REMAIN CAPPED OR PLUGGED.

## GENERAL NOTES (CONTINUED)

BELL ENDS SHALL BE INSTALLED ON ALL PVC CONDUIT EXPOSED AT THE TOP OF CONCRETE BASES BEFORE INSTALLATION OF CABLE OR WIRE.

ENDS OF CONDUIT INSTALLED BELOW GRADE FOR FUTURE USE SHALL BE CAPPED IF METALLIC OR PLUGGED IF NONMETALLIC.

WHEN REQUIRED TO CONNECT NONMETALLIC CONDUIT TO METALLIC CONDUIT, ONLY ADAPTER FITTINGS, U.L. LISTED FOR ELECTRICAL USE, SHALL BE USED.

IF A BASE REQUIRES A DEEP FORM BECAUSE OF LOOSE DIRT OR FILL, THE FORM SHALL BE REMOVED BEFORE BACKFILLING AROUND THE BASE. BACKFILL SHALL BE TAMPED TIGHT AGAINST THE BARE CONCRETE BASE IN LAYERS OF 1 FOOT OR LESS.

A NO. 4 AWG, STRANDED COPPER EQUIPMENT GROUNDING CONDUCTOR SHALL BE EXOTHERMICALLY WELDED TO THE EQUIPMENT GROUNDING ELECTRODE (GROUND ROD) FOR TYPE 1, TYPE 2, TYPE 5, AND TYPE 6 BASES.

THE EQUIPMENT GROUNDING CONDUCTOR SHALL BE FURNISHED AND INSTALLED TO ENTER THE BASE OF THE TYPE 2 AND TYPE 5 BASES THROUGH A 1 INCH CONDUIT INSTALLED FOR GROUNDING PURPOSES, LEAVING A 4 FOOT COIL OF WIRE ABOVE THE CONCRETE BASE. THE EQUIPMENT GROUNDING CONDUCTOR SHALL BE NEATLY COILED AND THE COILS TIED TOGETHER.

ANCHOR RODS SHALL BE THREADED 12" IN LENGTH ON EACH END OF THE ROD. ANCHOR RODS SHALL BE MANUFACTURED IN ACCORDANCE WITH SECTION 654.2.1 OF THE STANDARD SPECIFICATIONS.

WASHERS AND LOCK WASHERS ARE REQUIRED ON ALL ANCHOR RODS.

WHEN ANCHOR RODS USING THE ALTERNATE "L" BEND ARE FURNISHED, THE 4" "L" BEND SHALL BE IN ADDITION TO THE SPECIFIED ANCHOR ROD BAR LENGTH. THE "L" BEND END SHALL NOT BE THREADED.

ANCHOR RODS SHALL BE INSTALLED WITH MISALIGNMENTS OF LESS THAN 1:40 FROM VERTICAL.

WELDING OF THE ANCHOR RODS TO THE CAGE IS UNACCEPTABLE. TIE WIRES SHALL BE USED.

BAR STEEL REINFORCEMENT SHALL BE COATED WITH POWDERED EPOXY RESIN IN ACCORDANCE WITH SECTION 505 OF THE STANDARD SPECIFICATIONS (LATEST EDITION).

(1) THE MINIMUM DEPTH OF CONDUIT EXITING THE CONCRETE BASE AND INSTALLED BELOW THE TRAVELED WAY SHALL BE 24 INCHES. THE MINIMUM DEPTH OF CONDUIT EXITING THE CONCRETE BASE THAT IS NOT INSTALLED BELOW THE TRAVELED WAY SHALL BE 18 INCHES. THE MAXIMUM DEPTH OF ALL CONDUIT SHALL BE 36 INCHES EXCEPT WITH WRITTEN APPROVAL BY THE ENGINEER.

(2) (4) 1" DIA. X 3'-6" ANCHOR RODS.

(3) (4) 1" DIA. X 5'-0" ANCHOR RODS.

(4) (6) NO. 6 X 6'-8" BAR STEEL REINFORCEMENT.

(5) (7) NO. 4 X 5'-1" BAR STEEL REINFORCEMENT @ 1'-0" C-C.

(6) (4) 1" DIA. X 3'-6" ANCHOR RODS.

(7) (6) NO.4 X 4'-8" BAR STEEL REINFORCEMENT.

(8) (5) NO. 4 X 5'-1" BAR STEEL REINFORCEMENT @ 1'-0" C-C.

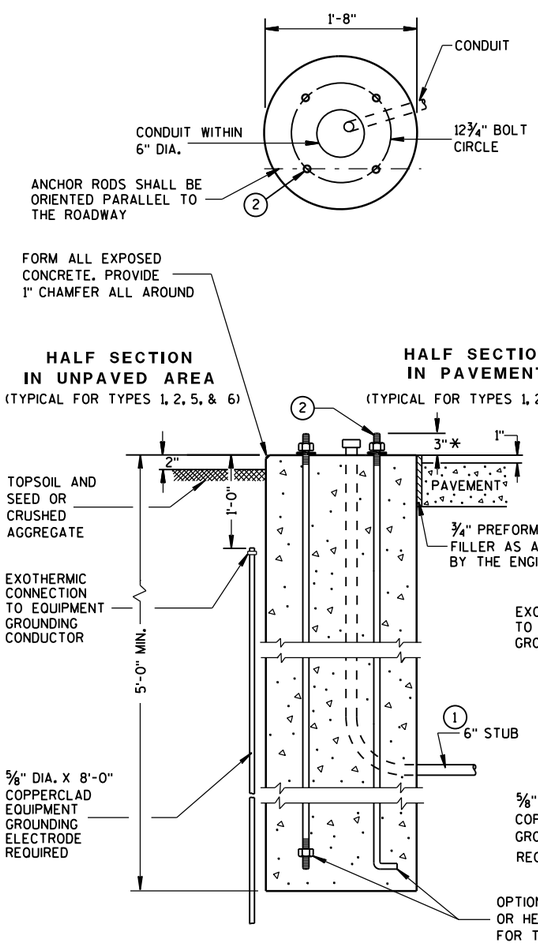


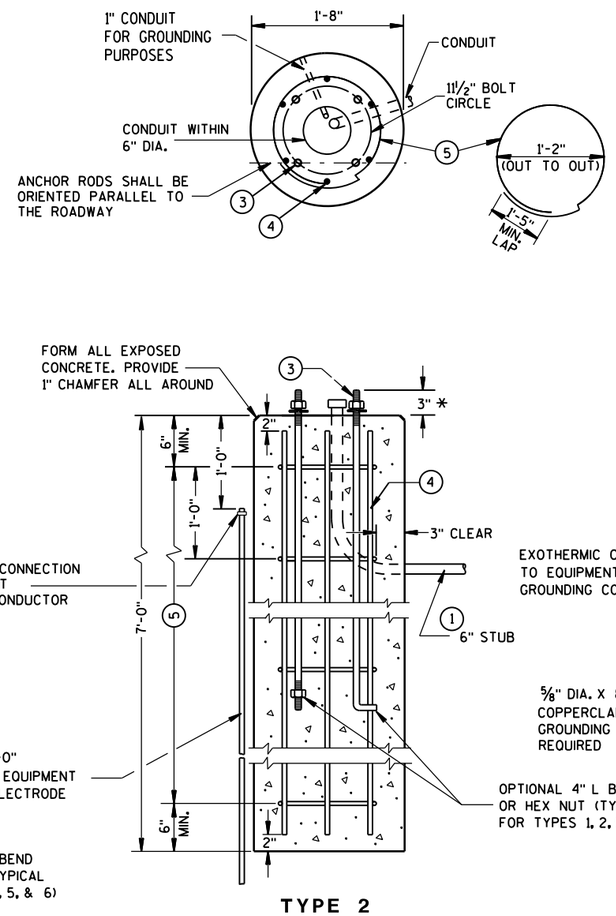


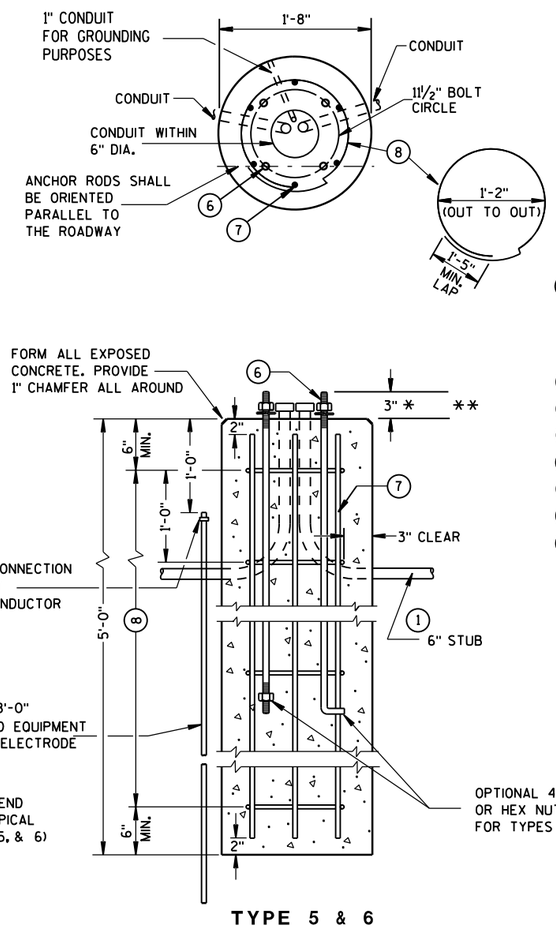


## CONCRETE BASES

* ANY ANCHOR ROD PROJECTION SHORTER THAN 2¾" OR LONGER THAN 3¼" SHALL REQUIRE THE BASE TO BE REMOVED AND REPLACED AT THE CONTRACTORS EXPENSE.

** FOR NONBREAKAWAY INSTALLATIONS, 4½" ± ANCHOR ROD PROJECTION WITH THE USE OF LEVELING NUTS. RODENT SCREEN REQUIRED.

CONCRETE BASES, TYPES 1, 2, 5, & 6

STATE OF WISCONSIN
DEPARTMENT OF TRANSPORTATION

APPROVED
Sept. 2014 — DATE
/S/ Ahmet Demirbilek — STATE ELECTRICAL
FHWA


6
S.D.D. 9 C 2-7

## GENERAL NOTES

DETAILS OF CONSTRUCTION, MATERIALS AND WORKMANSHIP NOT SHOWN ON THIS DRAWING SHALL CONFORM TO THE PERTINENT REQUIREMENTS OF THE CONTRACT.

FOUR (4) BOLTS SHALL BE FURNISHED WITH EACH TRANSFORMER BASE. BOLTS SHALL BE 1" DIAMETER, 4" IN LENGTH, WITH WASHERS, LOCK WASHERS AND NUTS. BOLTS, NUTS AND WASHERS SHALL BE MANUFACTURED IN ACCORDANCE WITH SECTION 641.2.2 OF THE STANDARD SPECIFICATIONS.

LEVELING SHIMS, IF NEEDED, SHALL BE DESIGNED FOR THE PURPOSE AND USED UNDER CAST BASES WHEN PLUMBING POLES OR STANDARDS DURING INSTALLATION. THE USE OF WASHERS IN LIEU OF PROPER LEVELING SHIMS IS NOT ACCEPTABLE.

SHIM LENGTH SHALL BE LONG ENOUGH TO COMPLETELY COVER THE AREA UNDER THE LENGTH AND WIDTH OF THE BASE MOUNTING FLANGE.

DOUBLE NUTTING IS NOT ACCEPTABLE FOR LEVELING OR MOUNTING PURPOSES.

A NEMA APPROVED, U.L. LISTED, COPPER WITH BRASS OR STAINLESS STEEL SET SCREW, DIRECT BURY RATED, MECHANICAL CONNECTOR (LUG), SIZED TO ACCEPT AWG. #10 TO #4 COPPER STRANDED WIRE SHALL BE FURNISHED AND INSTALLED IN THE PEDESTAL AND TRANSFORMER BASES.

THE MECHANICAL CONNECTOR SHALL BE INSTALLED USING A 1/4" - 20 (TPI) STAINLESS STEEL HEX HEAD BOLT OF SUFFICIENT LENGTH TO FIRMLY ATTACH THE LUG TO THE BASE.

SHOULD THE MANNER OF ATTACHMENT OF THE LUG REQUIRE WASHERS, HEX NUTS, LOCK WASHER - THEY SHALL BE STAINLESS STEEL AS IS THE BOLT. THE MANNER OF ATTACHMENT SHALL NOT BLOCK ACCESSIBILITY TO WIRE PLACEMENT IN THE CONNECTOR.

PEDESTAL BASE COLLAR THREADING SHALL BE TAPERED AND IN ACCORDANCE WITH NATIONAL PIPE THREADING DIMENSIONS.

BASE COLLAR THREADING SHALL EXTEND INTO THE BASE COLLAR WITH SUFFICIENT DEPTH TO ACCEPT THE INSTALLATION OF TRAFFIC SIGNAL STANDARDS TO A DEPTH OF 1 1/2", THEN TIGHTENING TO A POINT OF BEING IMMOVABLE.

THE ACCESS DOOR SHALL BE OF THE SAME MATERIAL AS THE BASE.

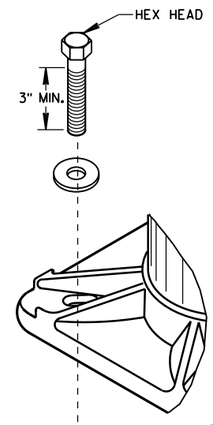


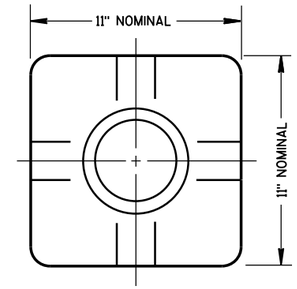


TOP VIEW
(PEDESTAL BASE)

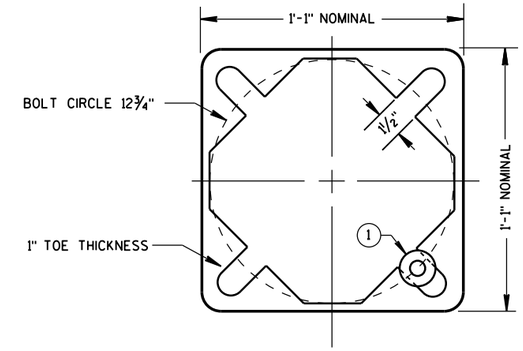


BOTTOM VIEW
(PEDESTAL BASE)

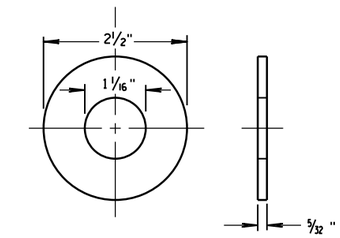


ZINC COATED STEEL WASHER
TO BE PROVIDED BY THE CONTRACTOR

**PEDESTAL BASE WASHER** (1)

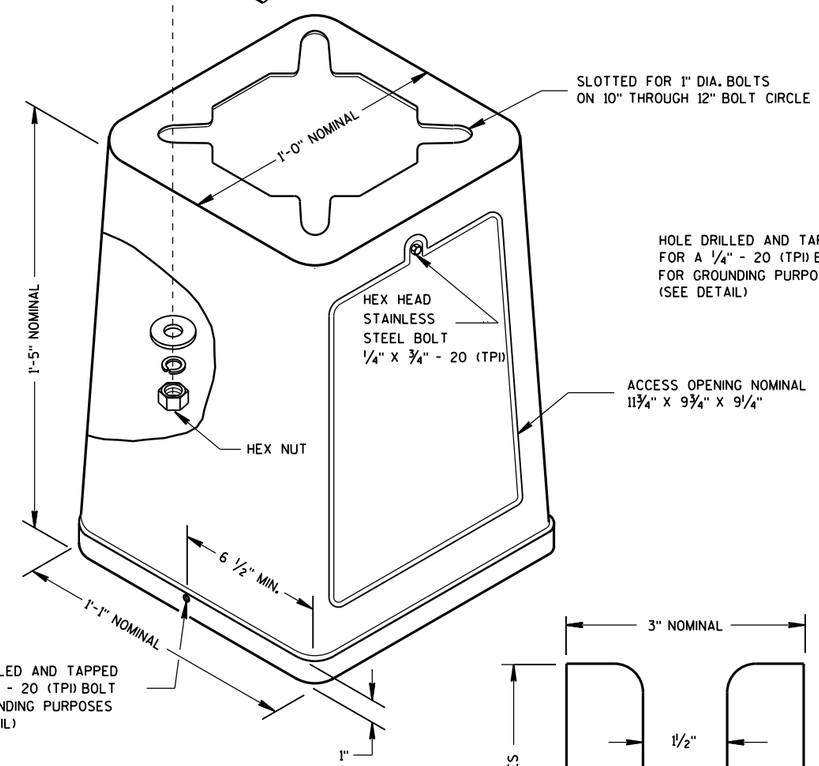


ISOMETRIC VIEW

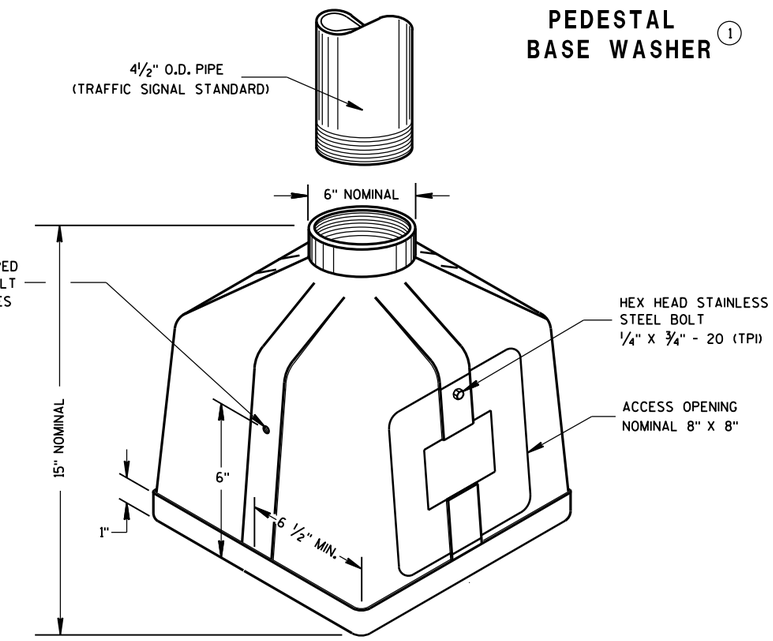


ISOMETRIC VIEW

**PEDESTAL BASE**

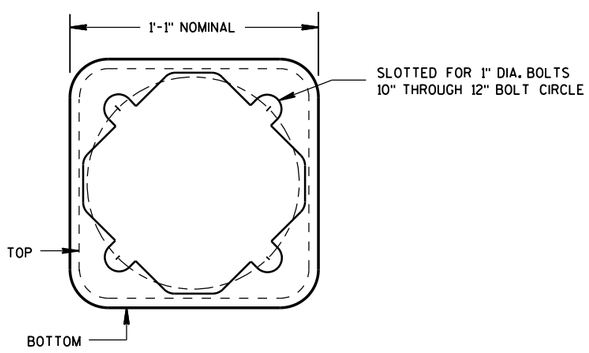


BOTTOM VIEW
(TRANSFORMER BASE)

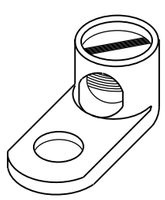

**TYPICAL MECHANICAL CONNECTOR LUG**

TO BE FURNISHED WITH EACH BASE

**TRANSFORMER BASE**

INTENDED FOR USE WITH TYPE 2, 3, 4, 5 & 6 POLES

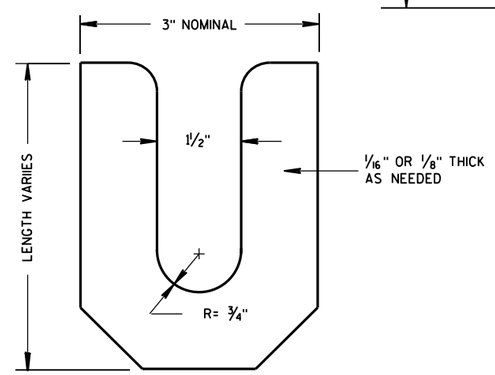


**LEVELING SHIM**

| TRANSFORMER/PEDESTAL BASES | |
|---|---|
| STATE OF WISCONSIN<br>DEPARTMENT OF TRANSPORTATION | |
| APPROVED<br>Sept. 2014<br>DATE<br>FHWA | /S/ Ahmet Demirbilek<br>STATE ELECTRICAL |

6

6

S.D.D. 9 C 3-4

S.D.D. 9 C 3-4

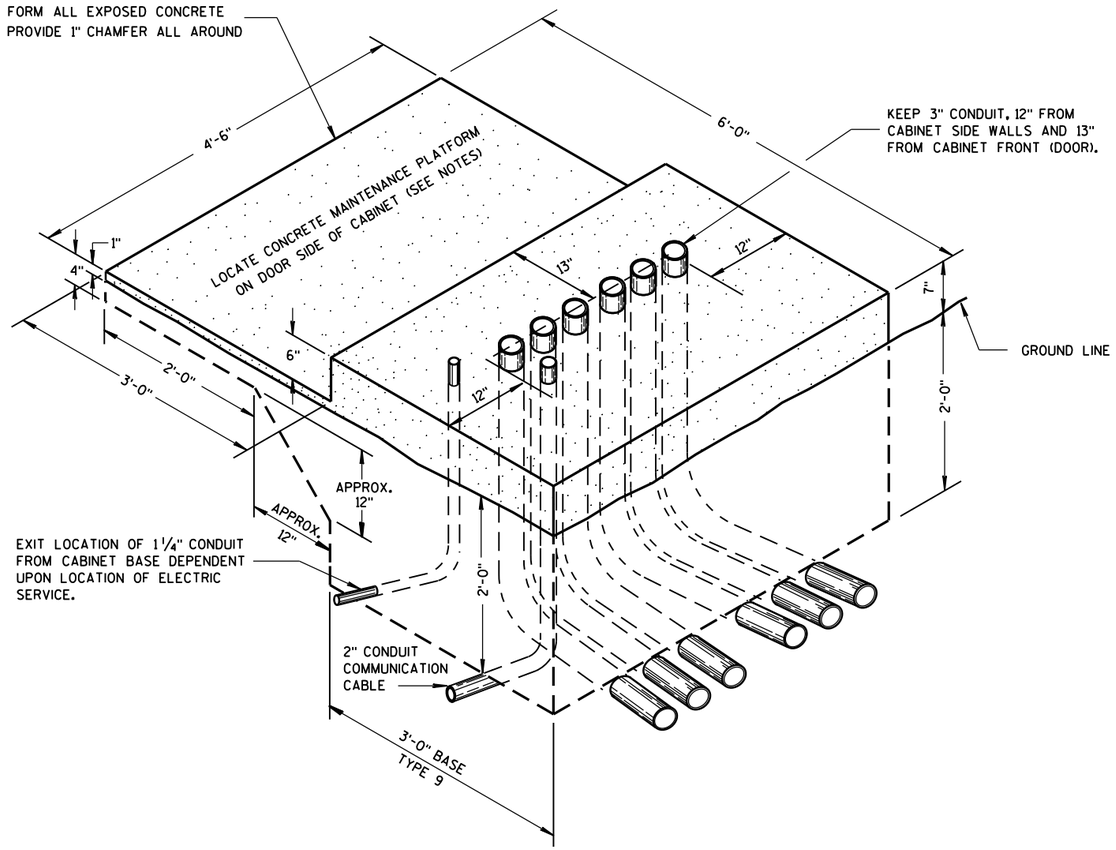


**ISOMETRIC VIEW**

**TYPE 9, SPECIAL**

( C.Y. CONCRETE = APPROX. 1.56)

## GENERAL NOTES

DETAILS OF CONSTRUCTION, MATERIALS AND WORKMANSHIP NOT SHOWN ON THIS DRAWING SHALL CONFORM TO THE PERTINENT REQUIREMENTS OF THE CONTRACT.

INSTALL FOUR 1/2 INCH MINIMUM DIAMETER X 4 INCH MINIMUM LENGTH STAINLESS STEEL APPROVED CONCRETE MASONRY ANCHORS WITH A PULLOUT STRENGTH OF 9,000 LBS. TO ANCHOR THE CABINET TO TYPE 6, 7, 8, AND 9 BASES. THE ANCHOR STUDS SHALL BE LOCATED AS DIRECTED BY THE ENGINEER TO PROPERLY ANCHOR THE CONTROL CABINET TO THE BASE.

WHEN REQUIRED TO CONNECT NONMETALLIC CONDUIT TO METALLIC CONDUIT, ONLY ADAPTER FITTINGS, U.L. LISTED FOR ELECTRICAL USE, SHALL BE USED.

CONDUIT HEIGHT ABOVE THE CONCRETE BASE SHALL BE 1 INCH.

DEPTH OF CONDUIT INSTALLED BELOW THE TRAVELED WAY SHALL BE 24 INCHES MINIMUM AND 36 INCHES MAXIMUM.

DEPTH OF CONDUIT INSTALLED THAT IS NOT BELOW THE TRAVELED WAY SHALL BE 18 INCHES MINIMUM AND 36 INCHES MAXIMUM.

ANY EXCEPTION TO THE MAXIMUM DEPTH SHALL BE ONLY WITH THE WRITTEN APPROVAL OF THE ENGINEER.

CONTROL CABINET BASE TOP SURFACE SHALL BE TROWEL FINISHED SMOOTH AND LEVEL.

MAINTENANCE PLATFORM SHALL BE FLOAT OR BROOM FINISHED AND BE LEVEL.

MAINTENANCE PLATFORMS ARE NOT REQUIRED WHEN THE SURROUNDING AREA IS PAVED.

MINIMUM BENDING RADIUS OF CONDUIT = 6 X THE DIAMETER.

ALL METALLIC CONDUIT ENDS SHALL BE REAMED AND THREADED.

CAP ALL BELOW GRADE METALLIC CONDUIT ENDS IN WHICH WIRE OR CABLE IS NOT BEING INSTALLED.

PLUG ALL BELOW GRADE NONMETALLIC CONDUIT ENDS IN WHICH WIRE OR CABLE IS NOT BEING INSTALLED.

ALL CONDUIT ENDS AT THE TOP OF CONCRETE BASES SHALL BE CAPPED IF METALLIC OR PLUGGED IF NONMETALLIC IMMEDIATELY AFTER PLACEMENT AND BEFORE CONCRETE IS POURED. CONDUITS IN WHICH WIRE OR CABLE IS NOT BEING INSTALLED SHALL REMAIN CAPPED OR PLUGGED.

CONDUIT EXITING THE CONCRETE BASE (SIX THREE INCH) SHALL TERMINATE IN PULL BOXES AS SHOWN ON THE PLANS.

CONCRETE FORM DEPTH BELOW FINISHED GRADE SHALL BE 6" MAXIMUM. CONCRETE FORMS SHALL BE REMOVED AFTER CONCRETE HAS SET.

BELL ENDS SHALL BE INSTALLED ON ALL PVC CONDUIT EXPOSED AT THE TOP OF THE CONCRETE BASE BEFORE INSTALLATION OF CABLE OR WIRE.

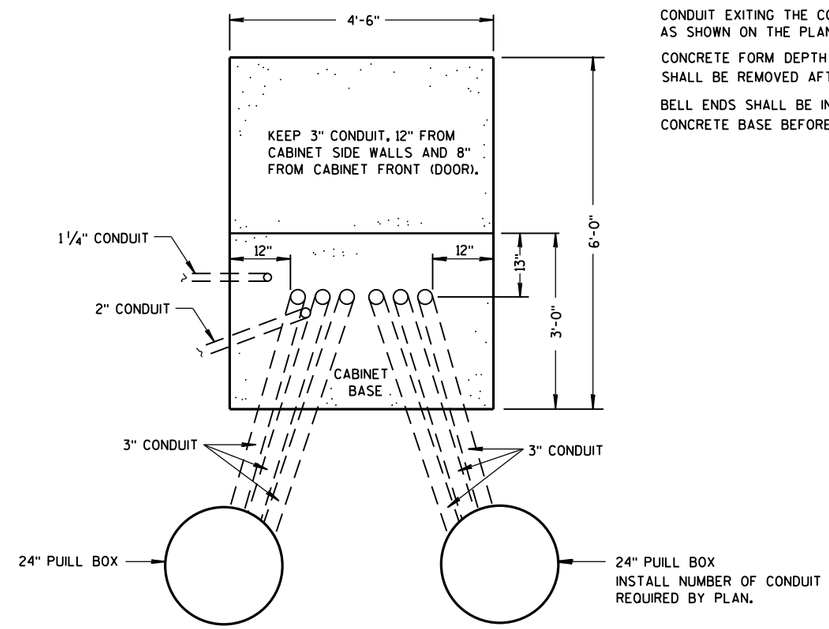


**PLAN VIEW**

**CONCRETE CONTROL CABINET BASE, TYPE 9, SPECIAL**

| |
|---|
| CONCRETE CONTROL CABINET BASE, TYPE 9, SPECIAL |
| STATE OF WISCONSIN DEPARTMENT OF TRANSPORTATION |
| APPROVED Sept. 2014 DATE — /S/ Ahmet Demirbilek STATE ELECTRICAL — FHWA |

## GENERAL NOTES

DETAILS OF CONSTRUCTION, MATERIALS AND WORKMANSHIP NOT SHOWN ON THIS DRAWING SHALL CONFORM TO THE PERTINENT REQUIREMENTS OF THE CONTRACT.

BASES SHALL BE EXCAVATED BY USE OF A CIRCULAR AUGER.

TOP SURFACES OF CONCRETE BASES SHALL BE TROWEL FINISHED AND LEVEL.

CONDUIT SIZES AND LOCATIONS SHALL BE AS SHOWN ON THE PLANS.

THE FINAL OR TERMINATING CONCRETE BASE IN A CONDUIT RUN SHALL HAVE A 6" EXIT STUB INSTALLED FOR FUTURE CABLING USE. THE EXIT STUB SHALL BE SIZED AS USED THROUGHOUT THE CONDUIT RUN AS SHOWN AT THE ENTRANCE OF THE BASE.

MINIMUM BENDING RADIUS OF CONDUIT IS EQUAL TO 6 X THE DIAMETER.

CONDUIT HEIGHT ABOVE CONCRETE BASES SHALL BE 4 INCHES. ALL METALLIC CONDUIT ENDS SHALL BE REAMED AND THREADED. NONMETALLIC CONDUIT SHALL HAVE BELL END INSTALLED. ALL CONDUIT SHALL BE SLOPED TO PULL BOX.

ALL CONDUIT ENDS AT THE TOP OF CONCRETE BASES SHALL BE CAPPED IF METALLIC OR PLUGGED IF NONMETALLIC IMMEDIATELY AFTER PLACEMENT AND BEFORE CONCRETE IS POURED. CONDUIT IN WHICH WIRE OR CABLE IS NOT INSTALLED SHALL REMAIN CAPPED OR PLUGGED.

BELL ENDS SHALL BE INSTALLED ON ALL PVC CONDUIT EXPOSED AT THE TOP OF CONCRETE BASES BEFORE INSTALLATION OF CABLE OR WIRE.

ENDS OF CONDUIT INSTALLED BELOW GRADE FOR FUTURE USE SHALL BE CAPPED IF METALLIC OR PLUGGED IF NONMETALLIC.

WHEN REQUIRED TO CONNECT NONMETALLIC CONDUIT TO METALLIC CONDUIT, ONLY ADAPTER FITTINGS, U.L. LISTED FOR ELECTRICAL USE, SHALL BE USED.

IF A BASE REQUIRES A DEEP FORM BECAUSE OF LOOSE DIRT OR FILL, THE FORM SHALL BE REMOVED BEFORE BACKFILLING AROUND THE BASE. BACKFILL SHALL BE TAMPED TIGHT AGAINST THE BARE CONCRETE BASE IN LAYERS OF 1 FOOT OR LESS.

A NO. 4 AWG, STRANDED COPPER EQUIPMENT GROUNDING CONDUCTOR SHALL BE EXOTHERMICALLY WELDED TO THE EQUIPMENT GROUNDING ELECTRODE (GROUND ROD).

THE EQUIPMENT GROUNDING CONDUCTOR SHALL ENTER THE BASE THROUGH A 1 INCH CONDUIT INSTALLED FOR GROUNDING PURPOSES, LEAVING A 4 FOOT COIL OF WIRE ABOVE THE CONCRETE BASE. THE EQUIPMENT GROUNDING CONDUCTOR SHALL BE NEATLY COILED AND THE COILS TIED TOGETHER.

WELDING OF THE ANCHOR RODS TO THE CAGE IS UNACCEPTABLE. TEMPLATES SHALL BE USED.

BAR STEEL REINFORCEMENT SHALL BE COATED WITH POWDERED EPOXY RESIN IN ACCORDANCE WITH SECTION 505 OF THE STANDARD SPECIFICATIONS (LATEST EDITION).

ANCHOR RODS SHALL BE INSTALLED WITH MISALIGNMENTS OF LESS THAN 1:40 FROM VERTICAL.

(1) THE MINIMUM DEPTH OF CONDUIT EXITING THE CONCRETE BASE AND INSTALLED BELOW THE TRAVELED WAY SHALL BE 24 INCHES. THE MINIMUM DEPTH OF CONDUIT EXITING THE CONCRETE BASE THAT IS NOT INSTALLED BELOW THE TRAVELED WAY SHALL BE 18 INCHES. THE MAXIMUM DEPTH OF ALL CONDUIT SHALL BE 36 INCHES, (GREATER THAN 36 INCHES IF INSTALLED IN BREAKER-RUN), EXCEPT WITH WRITTEN APPROVAL BY THE ENGINEER.

(2) (6) NO. 6 X 13'-7" BAR STEEL REINFORCEMENT.

(3) (15) NO. 4 X 7'-4" BAR STEEL REINFORCEMENT @ 1'-0" MAX. C-C.

| | |
|---|---|
| CONCRETE MASONRY | fc=3,500 p.s.i. |
| HIGH STRENGTH BAR STEEL REINFORCEMENT, GRADE 60 | fy=60,000 p.s.i. |
| ANCHOR RODS, AASHTO M314 GRADE 55 | fy=55,000 p.s.i. |
| TEMPLATES, ASTM, A709 GRADE 36 | fy=36,000 p.s.i. |

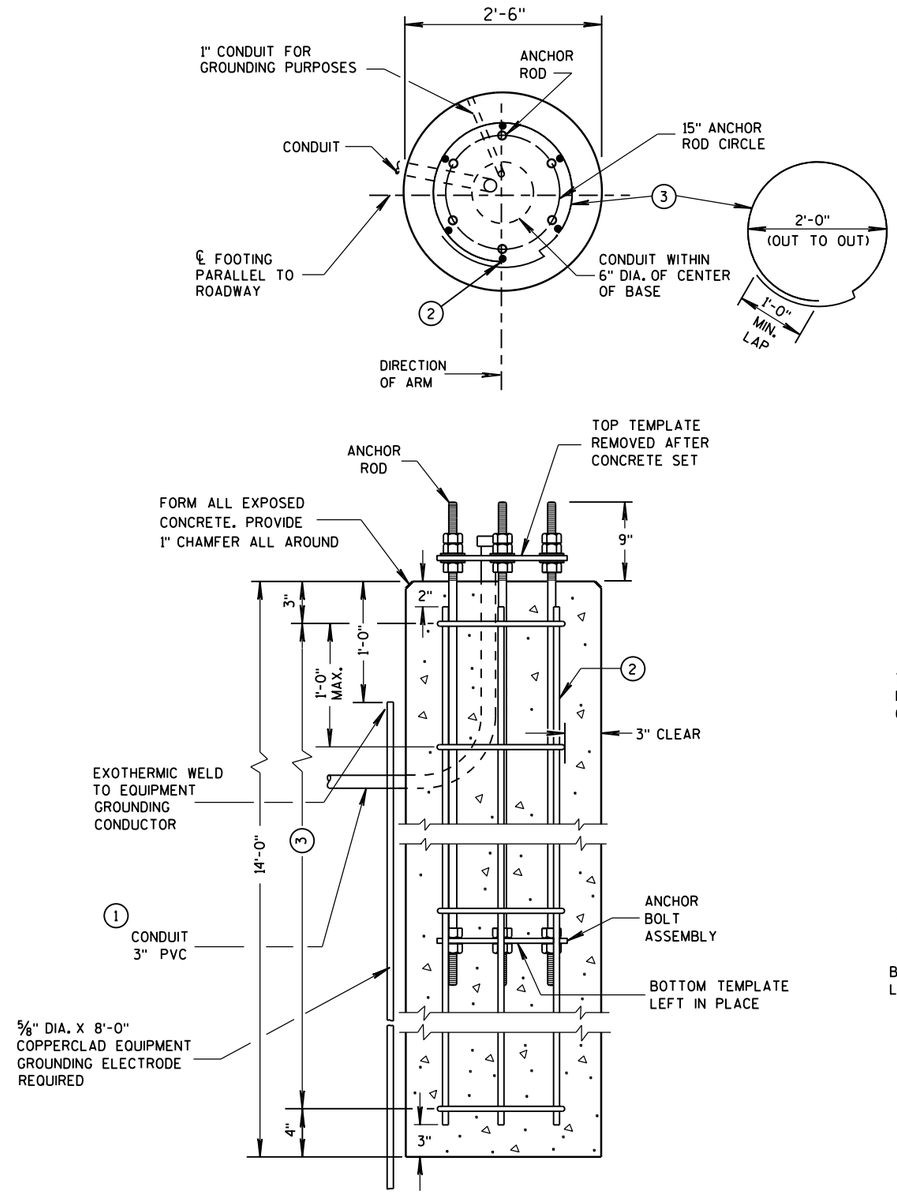


## CONCRETE BASE TYPE 10
### (FOR TYPE 9 & 10 POLES)

TO BE USED WHEN GROUND ELEVATION AT BASE EQUALS OR IS GREATER THAN HIGH POINT OF ROADWAY ELEVATION. SEE S.D.D. 9C13-2 WHEN GROUND ELEVATION AT BASE IS LOWER THAN HIGH POINT OF ROADWAY ELEVATION.

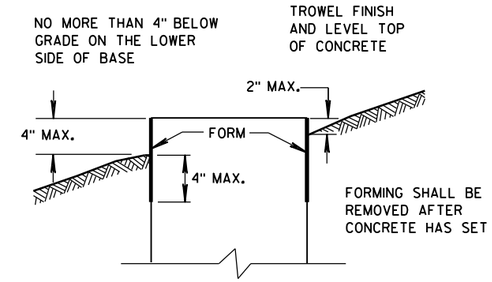


## FORMING DETAIL

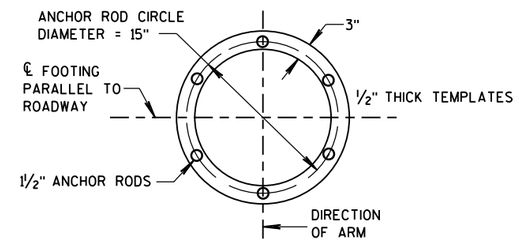


## TOP AND BOTTOM TEMPLATES

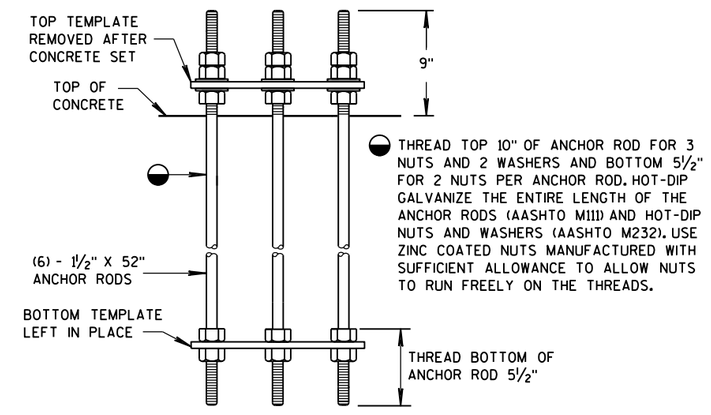


## ANCHOR BOLT ASSEMBLY DETAIL

## CONCRETE BASE TYPE 10
## ANCHOR ASSEMBLY

| QUANTITY REQUIREMENTS | |
|---|---|
| APPROX. CUBIC YARDS OF CONCRETE | 2.5 |
| LBS. OF HOOP BAR STEEL | 69 |
| LBS. OF VERTICAL BAR STEEL | 122 |

CONCRETE BASE TYPE 10

STATE OF WISCONSIN
DEPARTMENT OF TRANSPORTATION

APPROVED
Sept., 2015 — DATE
/S/ Ahmet Demirbilek — STATE ELECTRICAL
FHWA




6

S.D.D. 9 C 11-8

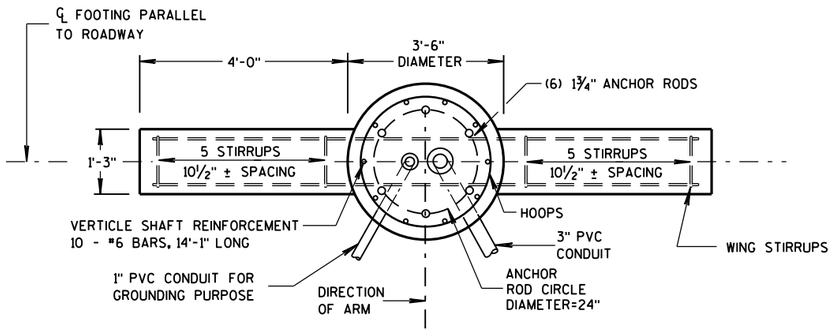


PLAN VIEW

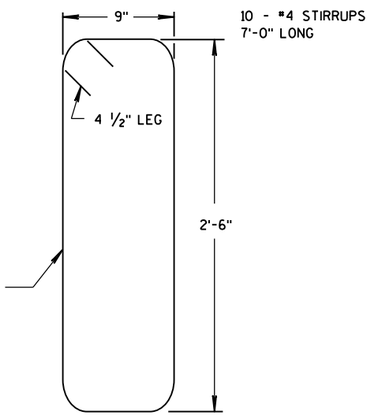


WING STIRRUP

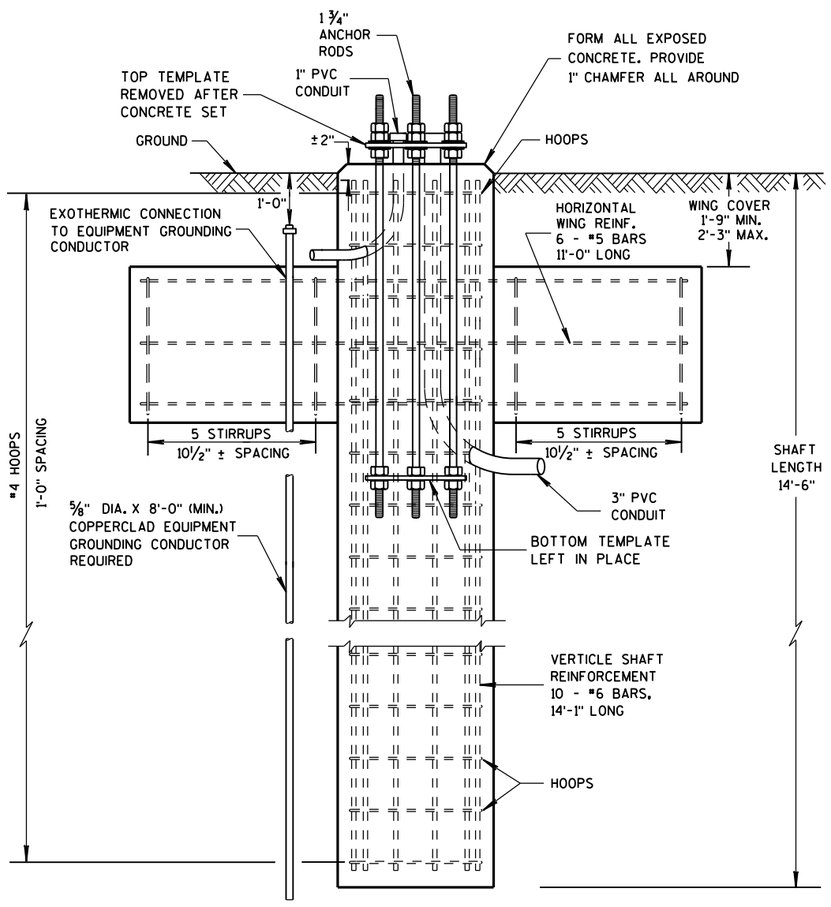


ELEVATION VIEW

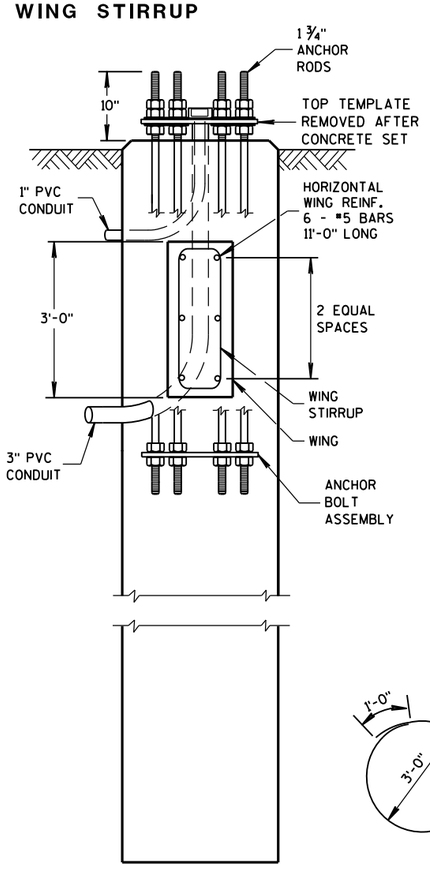


SIDE VIEW

DOES NOT SHOW HOOPS OR VERTICAL SHAFT REINFORCEMENT

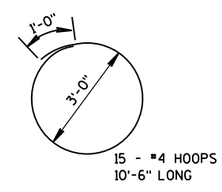


HOOP DETAIL

## GENERAL NOTES

DETAILS OF CONSTRUCTION, MATERIALS AND WORKMANSHIP NOT SHOWN ON THIS DRAWING SHALL CONFORM TO THE PERTINENT REQUIREMENTS OF THE CONTRACT.

ORIENT ANCHOR RODS IN FOOTING AND PROVIDE ANCHOR ROD PROJECTION ABOVE TOP OF CONCRETE FOOTING BASE PER THIS SHEET.

BENDING DIMENSIONS FOR REINFORCING BARS ARE OUT TO OUT.

USE 3" CLEAR FOR ALL REINFORCEMENT UNLESS NOTED OTHERWISE.

THE CONTRACTOR IS RESPONSIBLE FOR MAKING HIS OWN DETERMINATION AS TO THE TYPE AND LOCATION OF THE UNDERGROUND UTILITIES AS MAY BE NECESSARY TO AVOID DAMAGE THERETO.

WELDING OF ANCHOR RODS TO THE CAGE IS UNACCEPTABLE. TEMPLATES SHALL BE USED.

BASES (SHAFT), BELOW THE WING, SHALL BE EXCAVATED BY THE USE OF A CIRCULAR AUGER. IF A BASE REQUIRES A DEEP FORM BECAUSE OF LOOSE SOIL, THE FORM SHALL BE REMOVED BEFORE BACKFILLING AROUNG THE BASE. BACKFILL SHALL BE TAMPED TIGHT AGAINST THE BARE CONCRETE BASE IN LAYERS OF 1 FOOT OR LESS.

TOP SURFACE OF THE CONCRETE BASE SHALL BE TROWEL FINISHED AND LEVEL.

CONDUIT SIZE AND LOCATIONS SHALL BE AS SHOWN ON THE PLANS.

MINIMUM BENDING RADIUS OF CONDUIT IS EQUAL TO 6 X THE DIAMETER.

CONDUIT HEIGHT ABOVE CONCRETE BASE SHALL BE 4½" INCHES. ALL METALLIC CONDUIT ENDS SHALL BE REAMED AND THREADED. NONMETALLIC CONDUIT SHALL HAVE BELL ENDS INSTALLED. ALL CONDUIT SHALL SLOPE TO PULL BOX.

ALL CONDUIT ENDS AT THE TOP OF THE BASES SHALL BE CAPPED IF METALLIC OR PLUGGED IF NONMETALLIC IMMEDIATELY AFTER PLACEMENT AND BEFORE CONCRETE IS POURED. CONDUITS IN WHICH WIRE OR CABLE IS NOT INSTALLED SHALL REMAIN CAPPED OR PLUGGED.

BELL ENDS SHALL BE INSTALLED ON ALL PVC CONDUIT EXPOSED AT THE TOP OF CONCRETE BASES BEFORE INSTALLATION OF CABLE OR WIRE.

WHEN REQUIRED TO CONNECT NONMETALLIC CONDUIT TO METALLIC CONDUIT, ONLY ADAPTOR FITTINGS, UL LISTED FOR ELECTRICAL USE, SHALL BE USED.

A NO. 4 AWG, STRANDED COPPER EQUIPMENT GROUNDING CONDUCTOR SHALL BE EXOTHERMICALLY WELDED TO THE EQUIPMENT GROUNDING ELECTRODE (GROUND ROD).

THE EQUIPMENT GROUNDING CONDUCTOR SHALL BE FURNISHED AND INSTALLED TO ENTER THE BASE THROUGH A 1-INCH CONDUIT INSTALLED FOR GROUNDING PURPOSES, LEAVING A 4-FOOT COIL OF WIRE ABOVE THE CONCRETE BASE, THE EQUIPMENT GROUNDING CONDUCTOR SHALL BE NEATLY COILED AND THE COILS TIED TOGETHER.

BAR STEEL REINFORCEMENT SHALL BE COATED WITH POWDERED EPOXY RESIN IN ACCORDANCE WITH SECTION 505 OF THE STANDARD SPECIFICATIONS.

THE MINIMUM DEPTH OF CONDUIT EXITING THE CONCRETE BASE AND INSTALLED BELOW THE TRAVEL WAY SHALL BE 24-INCHES. THE MINIMUM DEPTH OF CONDUIT EXITING THE CONCRETE BASE THAT IS NOT INSTALLED BELOW THE TRAVELED WAY SHALL BE 18-INCHES. THE MAXIMUM DEPTH OF ALL CONDUIT SHALL BE 36-INCHES, (GREATER THAN 36-INCHES IF INSTALLED IN BREAKER-RUN), EXCEPT WITH THE WRITTEN APPROVAL OF THE ENGINEER.

ANCHOR RODS SHALL BE INSTALLED WITH MISALIGNMENTS OF LESS THAN 1:40 FROM VERTICAL.

| | |
|---|---|
| CONCRETE MASONRY | fc=3,500 p.s.i. |
| HIGH STRENGTH BAR STEEL REINFORCEMENT, GRADE 60 | fy=60,000 p.s.i. |
| ANCHOR RODS, AASHTO M314 GRADE 55 | fy=55,000 p.s.i. |
| TEMPLATES, ASTM A709 GRADE 36 | fy=36,000 p.s.i. |

(FOR TYPE 12 & 13 POLES)

CONCRETE = 6.3 C.Y.
H.S. REINFORCEMENT = 433 LBS.

TO BE USED WHEN GROUND ELEVATION AT BASE EQUALS OR IS GREATER THAN HIGH POINT OF ROADWAY ELEVATION.
SEE S.D.D. 9C13-2 WHEN GROUND ELEVATION AT BASE IS LOWER THAN HIGH POINT OF ROADWAY ELEVATION.

CONCRETE BASE TYPE 13

STATE OF WISCONSIN
DEPARTMENT OF TRANSPO




6


S.D.D. 9 C 12-7a

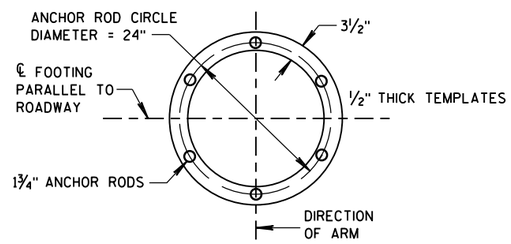


**TOP AND BOTTOM TEMPLATES**

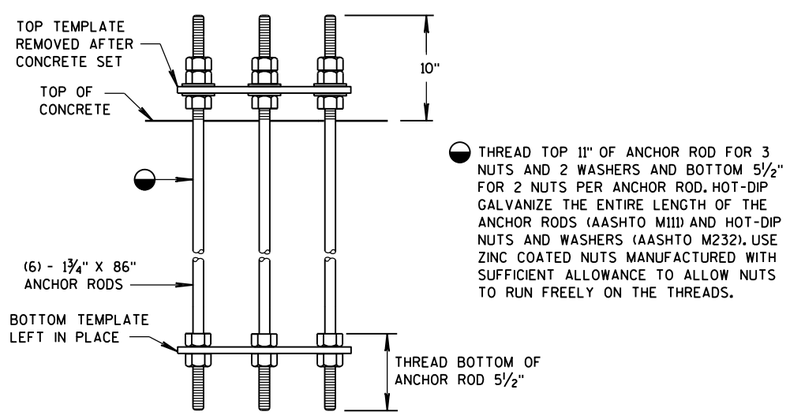


**ANCHOR BOLT ASSEMBLY DETAIL**

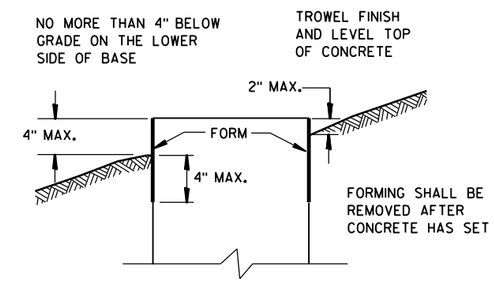


**FORMING DETAIL**

## CONCRETE BASE TYPE 13 ANCHOR ASSEMBLY

6

6

S.D.D. 9 C 12-7b

S.D.D. 9 C 12-7b

CONCRETE BASE TYPE 13

STATE OF WISCONSIN
DEPARTMENT OF TRANSPORTATION

APPROVED

Sept. 2015 — DATE

/S/ Ahmet Demirbilek — STATE ELECTRICAL

FHWA

## REINFORCEMENT AND CONCRETE QUANTITIES ADJUSTED FOR EXTENDED TYPE 10 CONCRETE BASE

| HEIGHT INCREASE REQUIRED | * HEIGHT ABOVE GROUND SURFACE ON LOW SIDE (MAXIMUM) | SHAFT LENGTH | LENGTH OF #6 VERTICAL REINF. | NO. OF #4 HOOPS | C.Y. OF CONCRETE | LBS. OF HOOP BAR STEEL | LBS. OF VERTICAL BAR STEEL |
|---|---|---|---|---|---|---|---|
| >0" TO 6" | 10" | 14'-6" | 14'-1" | 16 | 2.6 | 78 | 127 |
| >6" TO 1'-0" | 1'-4" | 15'-0" | 14'-7" | 16 | 2.7 | 78 | 131 |
| >1'-0" TO 1'-6" | 1'-10" | 15'-6" | 15'-1" | 17 | 2.8 | 83 | 136 |
| >1'-6" TO 2'-0" | 2'-4" | 16'-0" | 15'-7" | 17 | 2.9 | 83 | 141 |

## REINFORCEMENT AND CONCRETE QUANTITIES ADJUSTED FOR EXTENDED TYPE 13 CONCRETE BASE

| HEIGHT INCREASE REQUIRED | * HEIGHT ABOVE GROUND SURFACE ON LOW SIDE (MAXIMUM) | SHAFT LENGTH | LENGTH OF #6 VERTICAL REINF. | NO. OF #4 HOOPS | C.Y. OF CONCRETE | LBS. OF H.S. BAR STEEL |
|---|---|---|---|---|---|---|
| >0" TO 6" | 10" | 15'-0" | 14'-7" | 16 | 6.5 | 447 |
| >6" TO 1'-0" | 1'-4" | 15'-6" | 15'-1" | 16 | 6.6 | 454 |
| >1'-0" TO 1'-6" | 1'-10" | 16'-0" | 15'-7" | 17 | 6.8 | 469 |
| >1'-6" TO 2'-0" | 2'-4" | 16'-6" | 16'-1" | 17 | 7.0 | 476 |

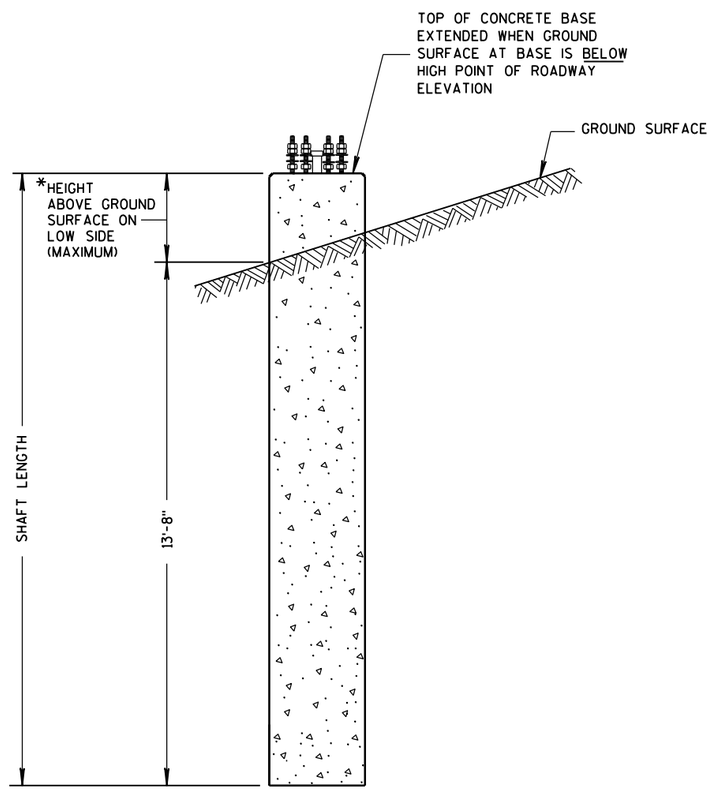


CONCRETE BASE TYPE 10 (EXTENDED)

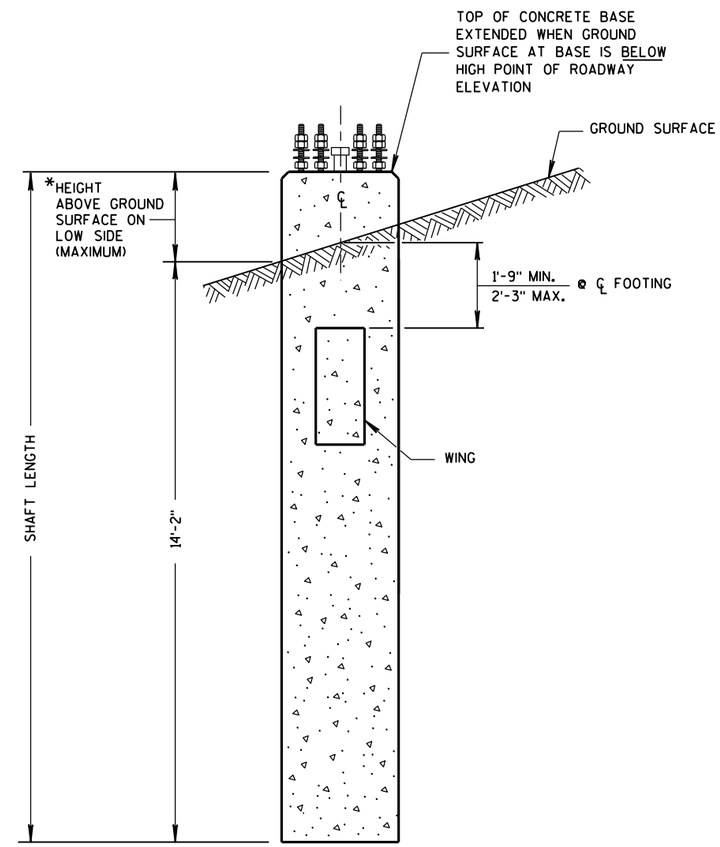


CONCRETE BASE TYPE 13 (EXTENDED)

CONCRETE BASE
TYPE 10 & TYPE 13 EXTENSION

STATE OF WISCONSIN
DEPARTMENT OF TRANSPORTATION

APPROVED
11-26-2013 — DATE
/S/ Ahmet Demirbilek — STATE ELECTRICAL
FHWA

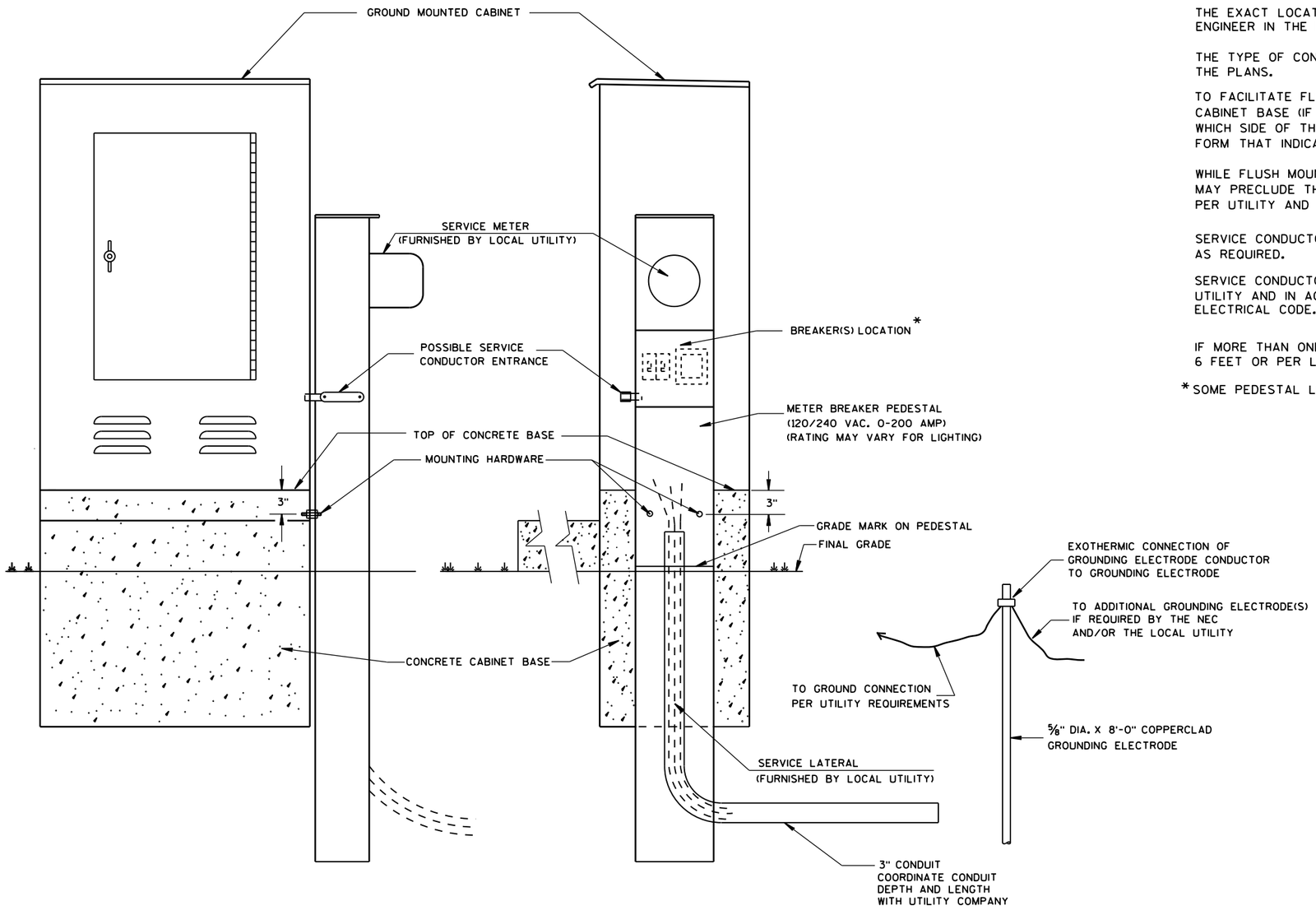


## TYPICAL CABINET SERVICE INSTALLATION

## GENERAL NOTES

DETAILS OF CONSTRUCTION, MATERIALS AND WORKMANSHIP NOT SHOWN ON THIS DRAWING SHALL CONFORM TO THE PERTINENT REQUIREMENTS OF THE CONTRACT.

THE EXACT LOCATION OF THE METER BREAKER PEDESTAL SHALL BE DETERMINED BY THE ENGINEER IN THE FIELD.

THE TYPE OF CONCRETE CABINET BASE TO BE INSTALLED SHALL BE AS CALLED FOR IN THE PLANS.

TO FACILITATE FLUSH MOUNTING OF THE METER BREAKER PEDESTAL AGAINST THE SIDE OF THE CABINET BASE (IF FLUSH MOUNTING POSSIBLE. CONFER WITH THE LOCAL UTILITY TO DETERMINE WHICH SIDE OF THE CONCRETE BASE THE ELECTRICAL SERVICE LATERAL WILL APPROACH. THEN FORM THAT INDICATED SIDE FOR FULL SIDE DEPTH.

WHILE FLUSH MOUNTING IS THE MOST DESIRABLE MOUNTING CONFIGURATION UTILITY REQUIREMENTS MAY PRECLUDE THIS OPTION. CONTRACTOR MUST PROVIDE UTILITY APPROVED PEDESTAL AND INSTALL PER UTILITY AND MANUFACTURERS REQUIREMENTS.

SERVICE CONDUCTOR ENTRANCES SHALL BE RIGID METALLIC CONDUIT, NIPPLES AND/OR CONDULETS AS REQUIRED.

SERVICE CONDUCTOR ENTRANCES SHALL BE SIZED AND LOCATED AS REQUIRED BY THE LOCAL UTILITY AND IN ACCORDANCE WITH APPROPRIATE ARTICLES OF THE LATEST ACCEPTED NATIONAL ELECTRICAL CODE.

IF MORE THAN ONE GROUNDING ELECTRODE IS REQUIRED, THE DISTANCE APART SHALL BE 6 FEET OR PER LOCAL UTILITY REGULATIONS.

*SOME PEDESTAL LIGHTING PLANS SHOW MAIN LUGS ONLY.

6

6

| CABINET SERVICE INSTALLATION (METER BREAKER PEDESTAL) | |
|---|---|
| STATE OF WISCONSIN DEPARTMENT OF TRANSPORTATION | |
| APPROVED Sept. 2014 DATE | /S/ Ahmet Demirbilek STATE ELECTRICAL |
| FHWA | |





S.D.D. 9 D 1-5

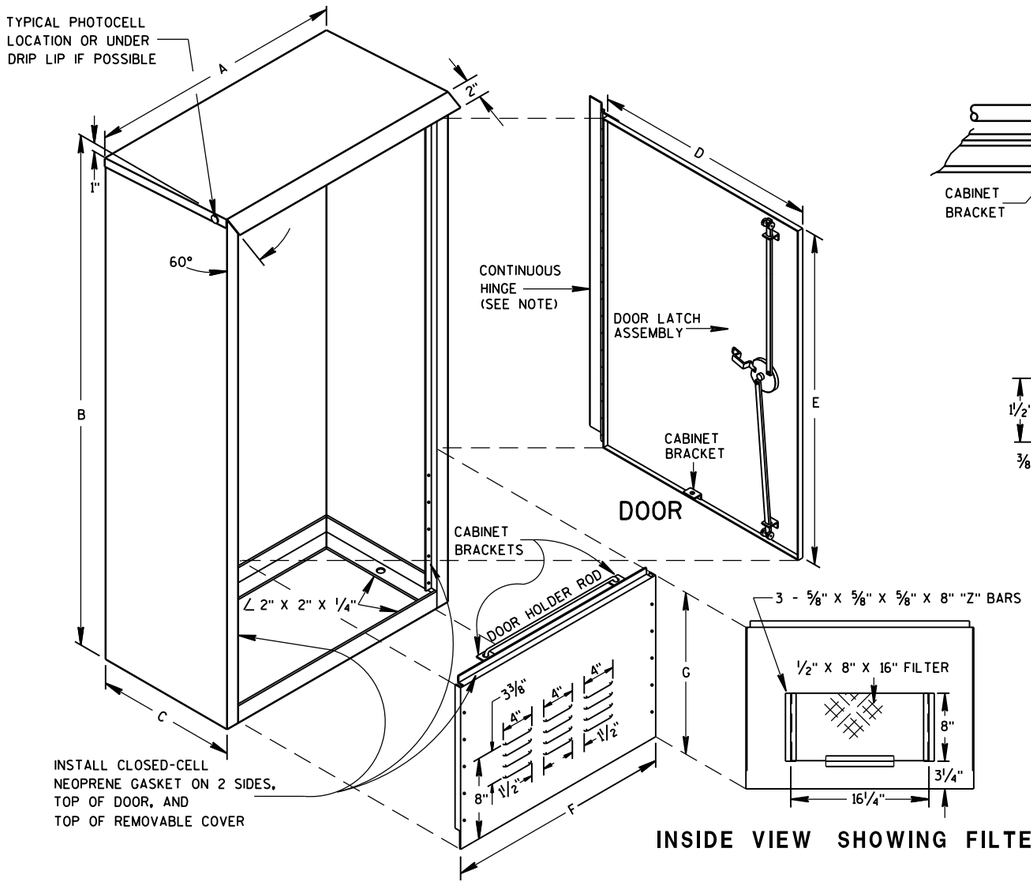


INSIDE VIEW SHOWING FILTER

REMOVABLE COVER

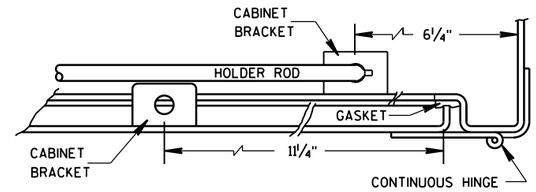


HINGE & DOOR HOLDER

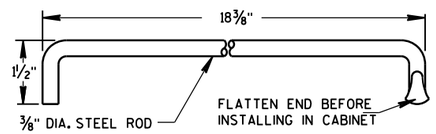


HOLDER ROD

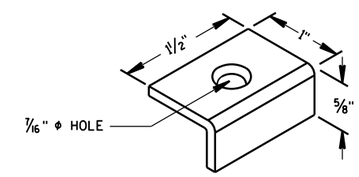


CABINET BRACKET

## GENERAL NOTES

DETAILS OF CONSTRUCTION, MATERIALS AND WORKMANSHIP NOT SHOWN ON THIS DRAWING SHALL CONFORM TO THE PERTINENT REQUIREMENTS OF THE STANDARD SPECIFICATIONS AND APPLICABLE SPECIAL PROVISIONS.

PRIME WITH PHOSPHATE TREATMENT AND PRIMER.

FINISH EXTERIOR SURFACES WITH RUSTOLEUM #906 SILVER GRAY OR APPROVED EQUAL.

FINISH INTERIOR WITH RUSTOLEUM #2766 HIGH GLOSS WHITE ENAMEL OR APPROVED EQUAL.

ALL SHEET METAL PARTS SHALL BE .125 INCH THICK ALUMINUM.

ALL SEAMS SHALL BE CONTINUOUSLY WELDED.

ALUMINUM SHALL BE TYPE 5052-H32.

CONTINUOUS HINGE SHALL BE HEAVY GAUGE ALUMINUM WITH 1/4" DIAMETER STAINLESS STEEL HINGE PIN. HINGE IS SECURED WITH 1/4" X 20 TPI STAINLESS STEEL CARRIAGE BOLTS AND STAINLESS STEEL NYLOCK NUTS.

A SINGLE PHOTOCELL SHALL BE LOCATED ON THE NORTH-NORTHEAST SIDE OF THE CABINET UNLESS OTHERWISE CALLED FOR IN THE SPECIAL PROVISIONS. THE PHOTOCELL SHALL BE PLACED AS SHOWN AND SHALL BE LISTED ON THE DEPARTMENTS APPROVED PRODUCTS LIST.

DOOR LATCH ASSEMBLY TO BE PROVIDED WITH THREE-POINT LOCKING MECHANISM.

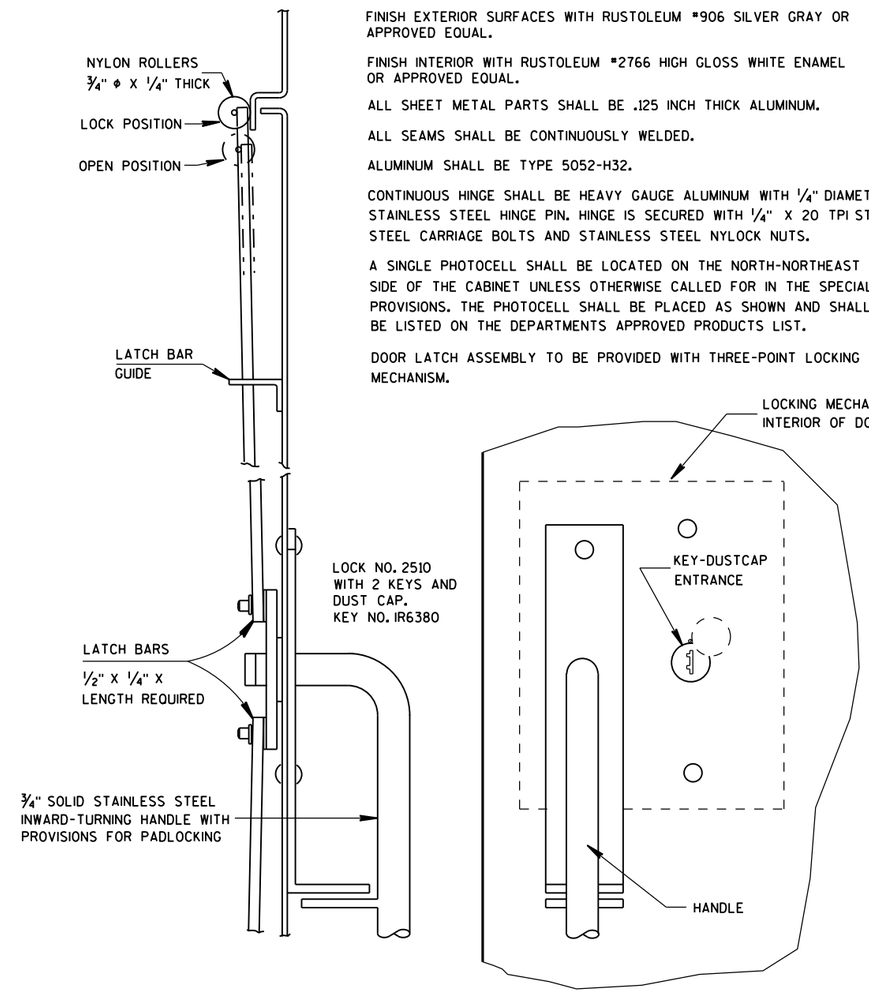


SIDE VIEW

FRONT VIEW

LATCH ASSEMBLY

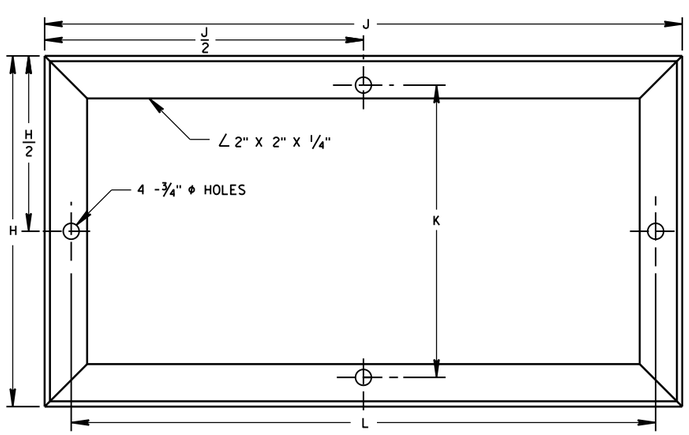


MOUNTING BASE

### TABLE OF DIMENSIONS (INCHES)

| MARK | CABINET TYPE | | |
|---|---|---|---|
| | 3060 | 3860 | 3866 |
| A | 30 | 38 | 38 |
| B | 60 | 60 | 66 |
| C | 16 1/2 | 16 1/2 | 24 |
| D | 26 1/2 | 34 3/4 | 33 3/4 |
| E | 38 3/4 | 38 3/4 | 38 3/4 |
| F | 26 1/2 | 34 3/4 | 33 3/4 |
| G | 19 | 19 | 25 |
| H | 16 1/2 | 16 1/2 | 24 |
| H/2 | 8 1/4 | 8 1/4 | 12 |
| J | 30 | 38 | 38 |
| J/2 | 15 | 19 | 19 |
| K | 13 3/4 | 13 3/4 | 21 1/4 |
| L | 27 1/2 | 35 1/2 | 35 1/2 |

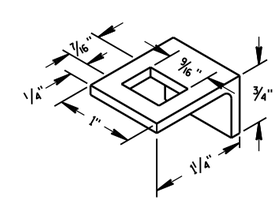


LATCH BAR GUIDE

SIGNAL CONTROL CABINET

STATE OF WISCONSIN
DEPARTMENT OF TRANSPORTATION

APPROVED
Sept. 2014 — DATE
/S/ Ahmet Demirbilek — STATE ELECTRICAL
FHWA




6

S.D.D. 9 D 2-3

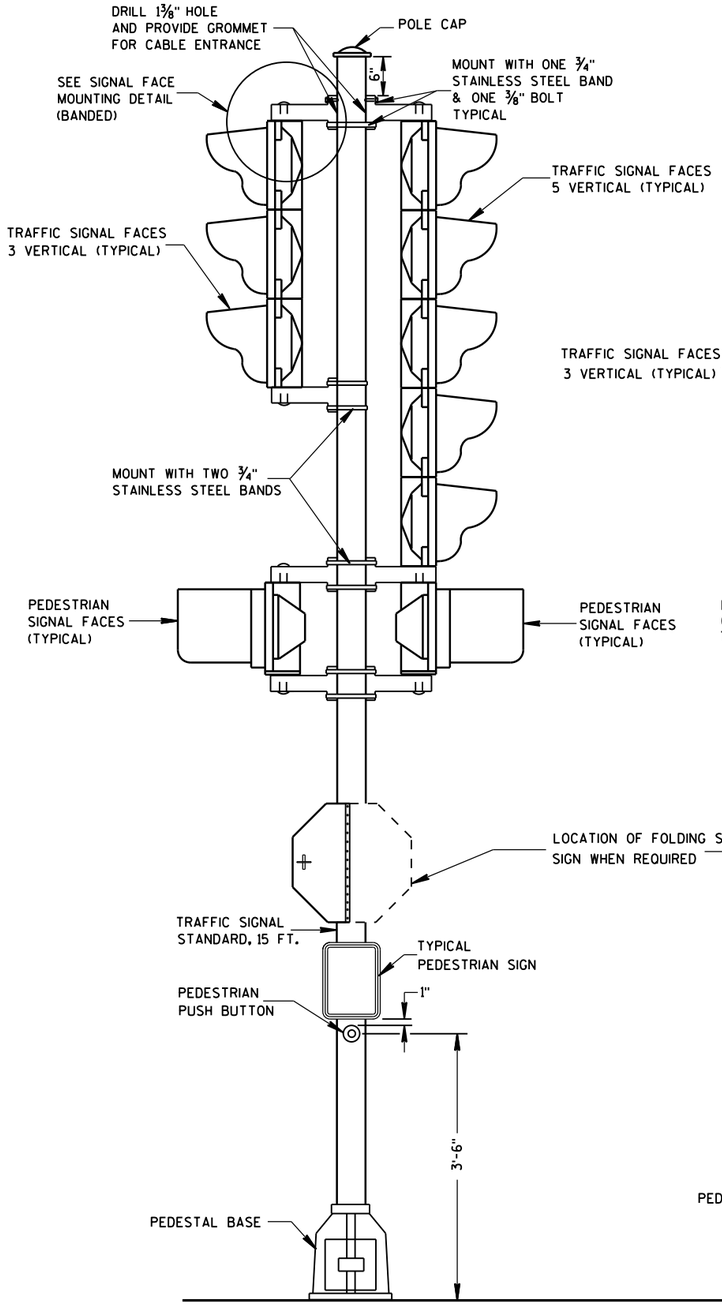


TRAFFIC SIGNAL STANDARD-15 FT.

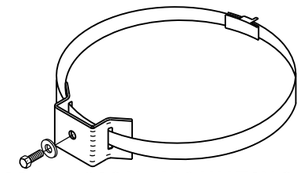

TYPICAL SIGN MOUNTING BAND
(TOP AND BOTTOM OF SIGN)

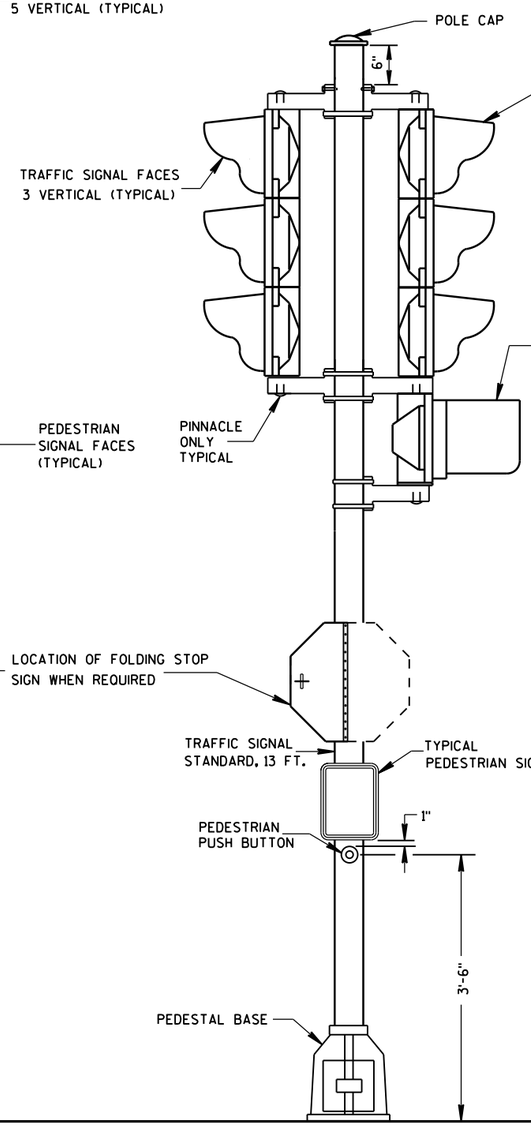


TRAFFIC SIGNAL STANDARD-13 FT.

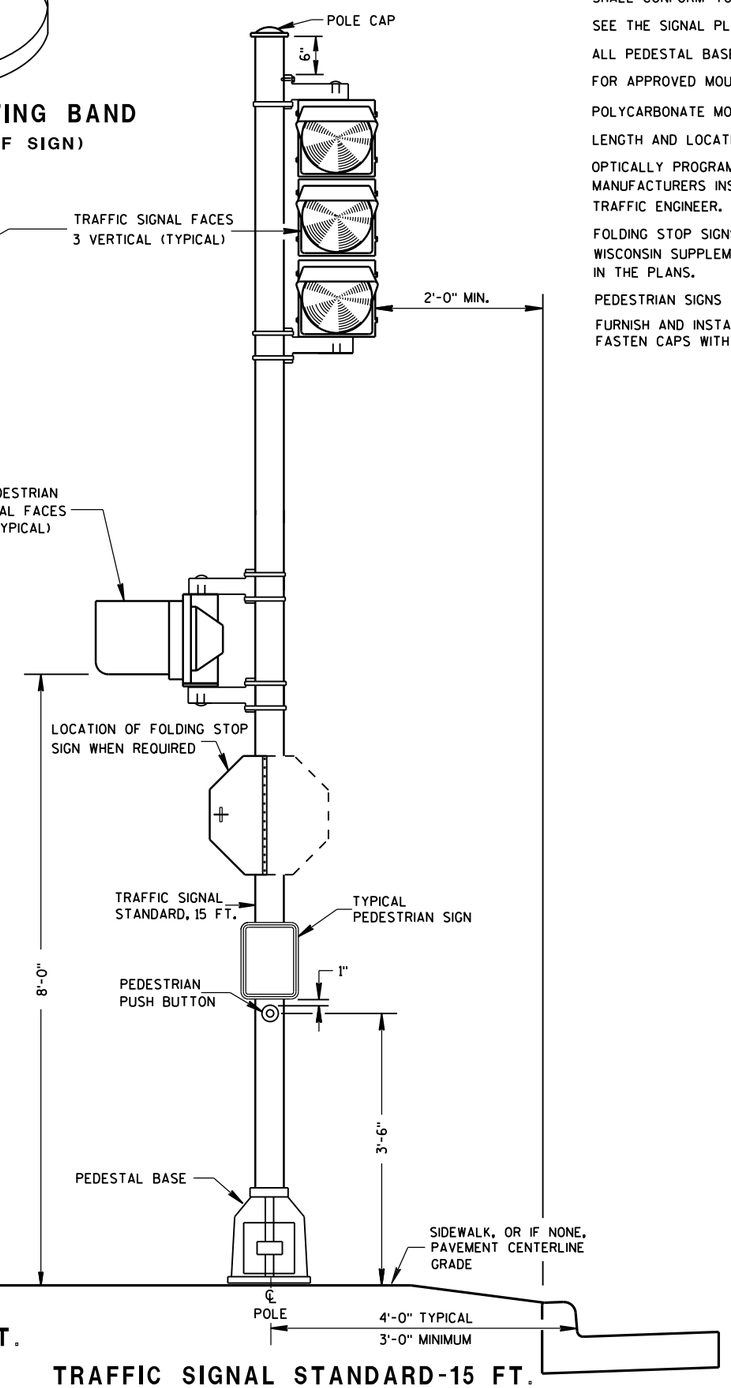


TRAFFIC SIGNAL STANDARD-15 FT.
3M MOUNTING (TYPICAL)

## GENERAL NOTES

DETAILS OF CONSTRUCTION, MATERIALS AND WORKMANSHIP NOT SHOWN ON THIS DRAWING SHALL CONFORM TO THE PERTINENT REQUIREMENTS OF THE CONTRACT.

SEE THE SIGNAL PLAN FOR REQUIRED SIGNAL FACE SIZES.

ALL PEDESTAL BASES SHALL BE MOUNTED ON CONCRETE BASE - TYPE 1.

FOR APPROVED MOUNTING HARDWARE, SEE THE CONTRACT SPECIAL PROVISIONS.

POLYCARBONATE MOUNTING BRACKETS SHALL BE USED.

LENGTH AND LOCATION OF TRAFFIC SIGNAL STANDARDS SHALL BE AS SHOWN ON THE PLANS.

OPTICALLY PROGRAMMED SIGNAL FACES SHALL BE MASKED IN ACCORDANCE WITH MANUFACTURERS INSTRUCTIONS, AND UNDER THE DIRECTIONS OF THE REGION TRAFFIC ENGINEER.

FOLDING STOP SIGNS SHALL BE IN ACCORDANCE WITH THE MUTCD AND/OR THE LATEST WISCONSIN SUPPLEMENT. THE SIGNS SHALL BE SIZED AND LOCATED AS CALLED FOR IN IN THE PLANS.

PEDESTRIAN SIGNS SHALL BE AS DESIGNATED IN THE PLANS.

FURNISH AND INSTALL VENTILATED, CAST, METALLIC (ALUMINUM ALLOY) CAPS. FASTEN CAPS WITH ONE (1) ¼" X ¾" - 20 TPI STAINLESS STEEL, HEX HEAD BOLT.

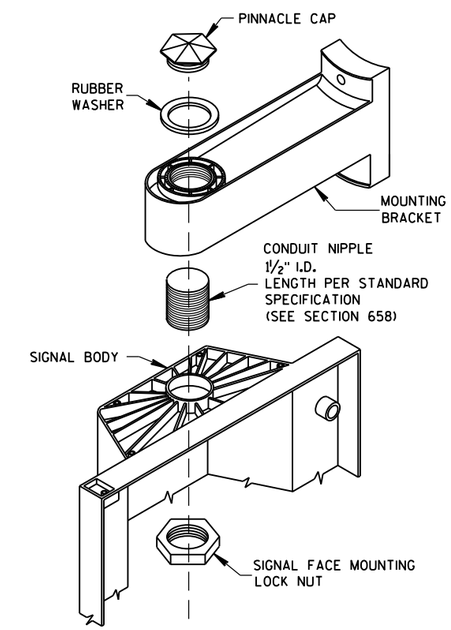


SIGNAL FACE MOUNTING DETAIL
(BANDED)

| TRAFFIC SIGNAL STANDARD POLY BRACKET MOUNTINGS (TYPICAL) 13 FT. OR 15 FT. | |
|---|---|
| STATE OF WISCONSIN DEPARTMENT OF TRANSPORTATION | |
| APPROVED 2/28/2013 DATE | /S/ Ahmet Demirbilek STATE ELECTRICAL |
| FHWA | |

6

6

S.D.D. 9 E 6-5

S.D.D. 9 E 6-5

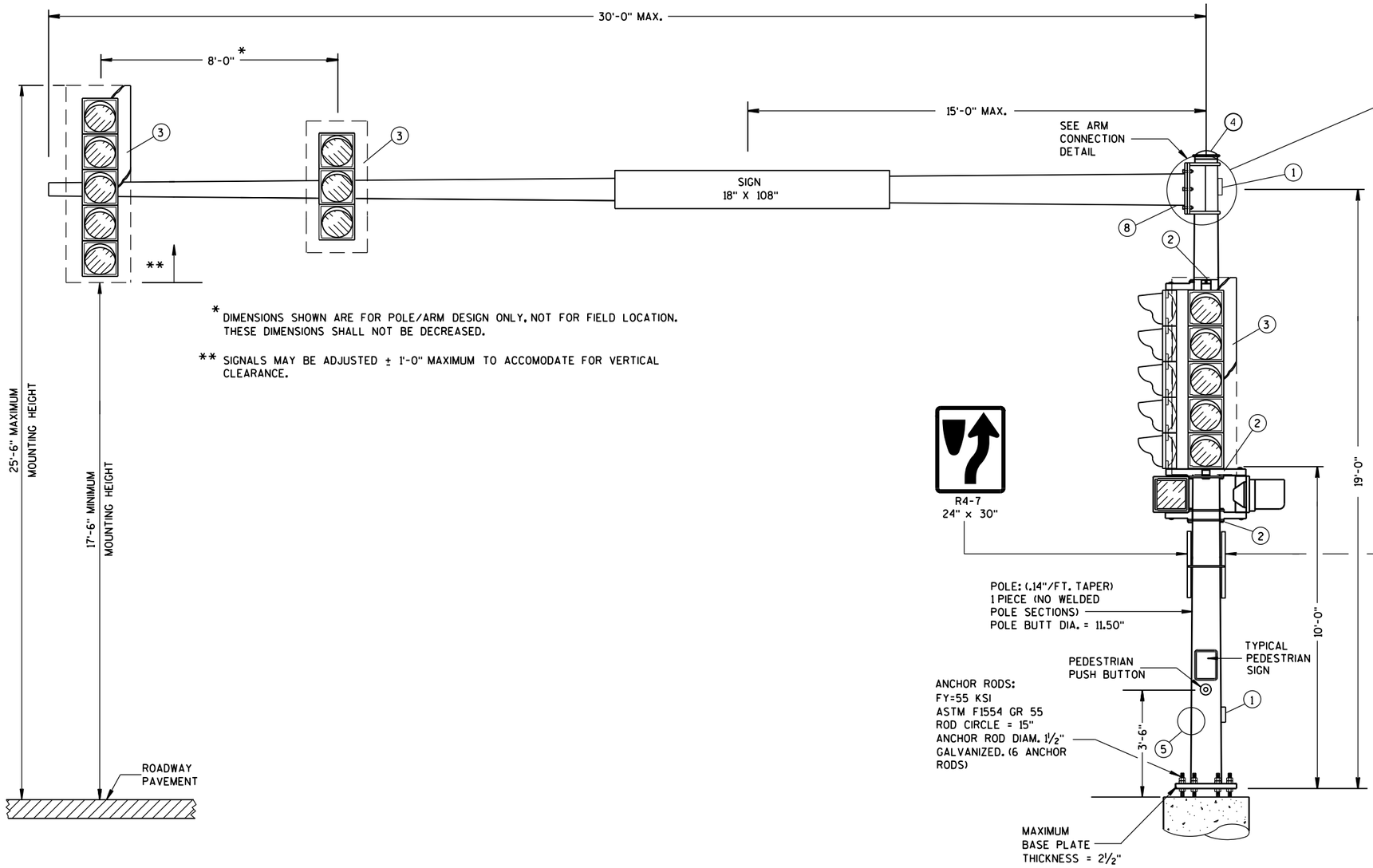


* DIMENSIONS SHOWN ARE FOR POLE/ARM DESIGN ONLY, NOT FOR FIELD LOCATION. THESE DIMENSIONS SHALL NOT BE DECREASED.

** SIGNALS MAY BE ADJUSTED ± 1'-0" MAXIMUM TO ACCOMODATE FOR VERTICAL CLEARANCE.

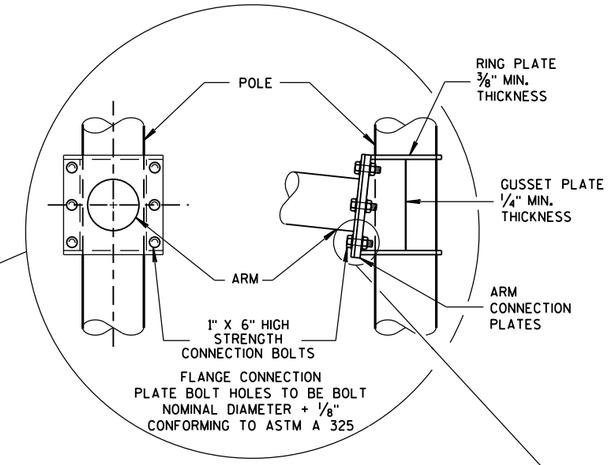


6 BOLT ARM CONNECTION DETAIL

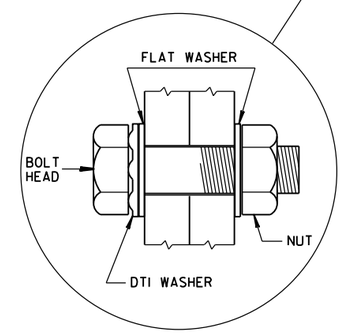


RECOMMENDED BOLT ASSEMBLY DETAIL

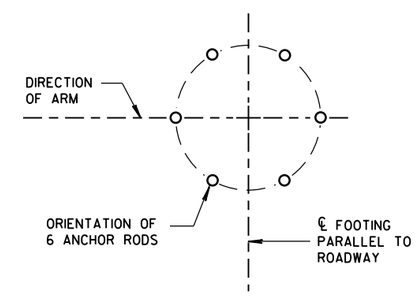


ANCHOR ROD LOCATION

(MAXIMUM LOAD)

## TYPE 9 POLE 15'- 30' MONOTUBE ARM

| TYPE 9 POLE 15' - 30' MONOTUBE ARM | |
|---|---|
| STATE OF WISCONSIN DEPARTMENT OF TRANSPORTATION | |
| APPROVED June, 2015 DATE | /S/ Ahmet Demirbilek STATE ELECTRICAL |
| FHWA | |

6

6

S.D.D. 9 E 8-7a

S.D.D. 9 E 8-7a

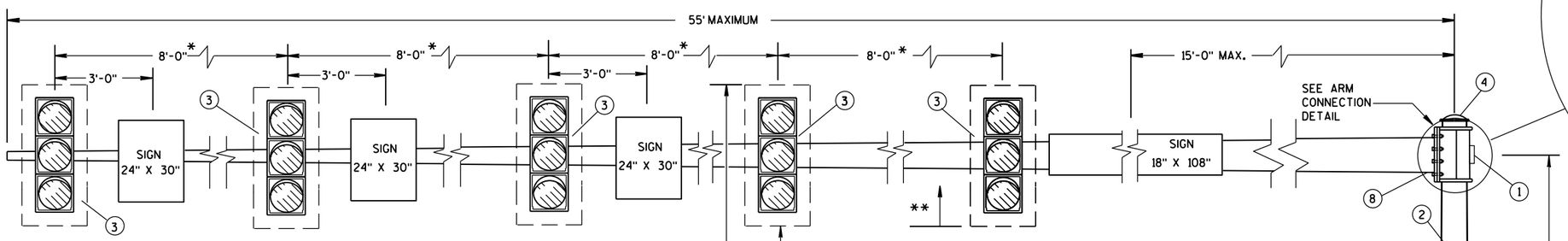


* DIMENSIONS SHOWN ARE FOR POLE/ARM DESIGN ONLY, NOT FOR FIELD LOCATION. THESE DIMENSIONS SHALL NOT BE DECREASED.

** SIGNALS MAY BE ADJUSTED ± 1'-0" MAXIMUM TO ACCOMODATE FOR VERTICAL CLEARANCE.

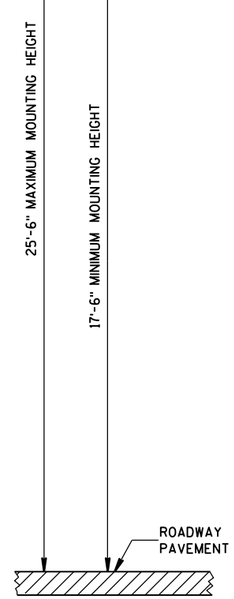


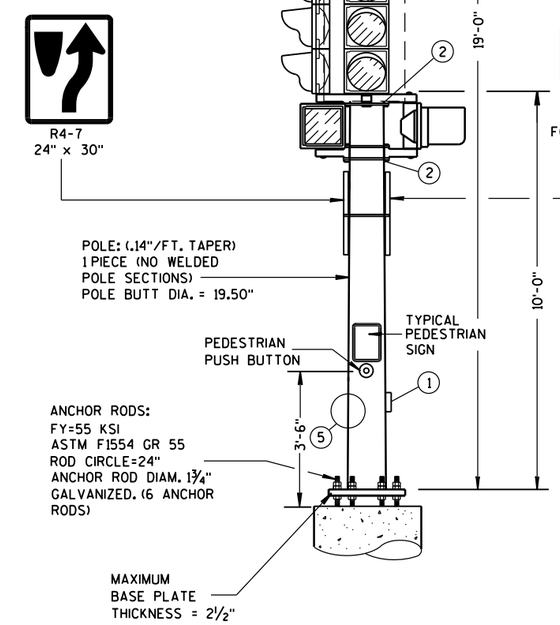


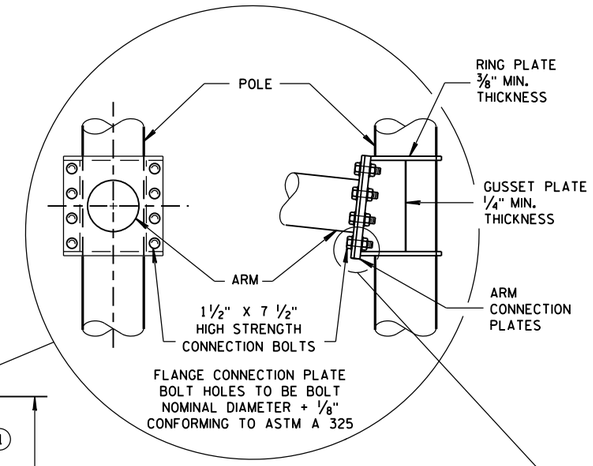


8 BOLT ARM CONNECTION DETAIL

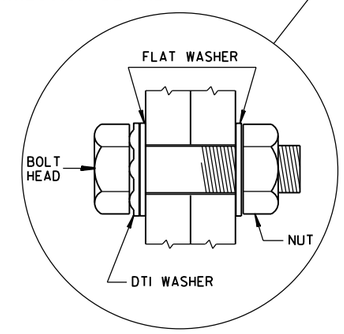


RECOMMENDED
BOLT ASSEMBLY
DETAIL

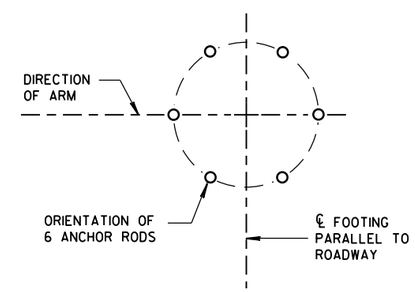


ANCHOR ROD LOCATION

(MAXIMUM LOAD)

## TYPE 12 POLE 35'- 55' MONOTUBE ARM

**TYPE 12 POLE**
**35' - 55' MONOTUBE ARM**

STATE OF WISCONSIN
DEPARTMENT OF TRANSPORTATION

APPROVED
June, 2015 — /S/ Ahmet Demirbilek
DATE — STATE ELECTRICAL
FHWA

6

6

S.D.D. 9 E 8-7c

S.D.D. 9 E 8-7c

## GENERAL NOTES

DETAILS OF CONSTRUCTION, MATERIALS AND WORKMANSHIP NOT SHOWN ON THIS DRAWING SHALL CONFORM TO THE PERTINENT REQUIREMENTS OF THE CONTRACT.

POLE TYPES 9 AND 10 ARE FOR ARM LENGTHS 15-FOOT TO 30-FOOT.

POLE TYPES 12 AND 13 ARE FOR ARM LENGTHS 35-FOOT TO 55-FOOT.

MONOTUBE POLE AND ARM SHALL BE GALVANIZED STEEL.

RING-STIFFENED BUILT-UP BOX TYPE OF ATTACHMENT FOR TRAFFIC SIGNAL ARM.

ONE (1) PIECE POLE CONSTRUCTION (NO WELDED POLE SECTIONS).

STANDARD STRAIGHT ARM DESIGN (3 % ± RISE).

SECTION 657, POLES OF THE STANDARD SPECIFICATIONS SHALL APPLY TO THIS DRAWING.

PROVIDE WIREWAY THRU POLE WALL AND ARM CONNECTION PLATES. PROVIDE ROUND, SMOOTH INSIDE SURFACE.

MANUFACTURER'S SUBMITTED POLE DESIGNS AND DRAWINGS SHALL BE SIGNED AND STAMPED BY A REGISTERED PROFESSIONAL ENGINEER AND CERTIFIED AS BEING IN COMPLIANCE WITH THE AASHTO 2013 6TH EDITION AND ALL PERTINENT WISDOT SPECIFICATIONS AND DRAWINGS FOR TRAFFIC AND LIGHTING STRUCTURES AND AS FOLLOWS:

- CATEGORY III FATIGUE LOADS OF GALLOPING, TRUCK GUSTS (AT 45 MPH VEHICLE VELOCITY) AND NATURAL WIND GUSTS FOR DESIGN OF TYPE 9 AND TYPE 10 STRUCTURES.
- CATEGORY II FATIGUE LOADS OF GALLOPING, TRUCK GUSTS (AT 45 MPH VEHICLE VELOCITY) AND NATURAL WIND GUSTS FOR DESIGN OF TYPE 12 AND TYPE 13 STRUCTURES.
- 90 MPH (3-SECOND GUST) WIND SPEED AND A 50 YEAR DESIGN LIFE.

SECURE THE OPENING BELOW THE BASE PLATE WITH STAINLESS STEEL OR GALVANIZED STEEL MESH AND SECURE THE MESH WITH ¾" S.S. BANDING AROUND THE LEVELING NUTS.

INDENT PRINT (NOMINAL ½" HIGH) THE POLE LENGTH AND FIRST TWO LETTERS OF THE MANUFACTURERS NAME ON TWO SIDES OF THE BASE PLATE 180 DEGREES APART, BEFORE GALVANIZING. THE ARM SHALL BE IDENTIFIED WITH THE SAME INFORMATION BY INDENT PRINT.

SIGNAL FACE SHALL BE MOUNTED 6 INCHES (NOMINAL) FROM THE END OF THE MONOTUBE ARM OR AS SHOWN ON THE PLAN CONSTRUCTION DETAIL OR AS DIRECTED BY THE PROJECT ENGINEER/ELECTRICAL OPERATIONS PERSONNEL. MOUNT ALL LIKE HEADS AT SAME ELEVATION.

SIGN MOUNTING BRACKETS SHALL BE FURNISHED IN ACCORDANCE WITH SECTION 637 OF THE STANDARD SPECIFICATIONS FOR HIGHWAY AND STRUCTURE CONSTRUCTION.

(1) DESIGN FOR MAXIMUM ALLOWABLE HANDHOLE WITH COVER ASSEMBLY WITH TWO ¼" X ¾" - 20 TPI STAINLESS STEEL HEX HEAD BOLTS.

(2) SIGNAL MOUNTING BRACKETS FOR POLE MOUNTING, MOUNT WITH CAP SCREW AND BANDING. (SEE SPECIFICATIONS SEC. 658).

(3) SECURELY MOUNT BACKPLATES, PROJECTING 5" BEYOND ALL SIDES OF THE SIGNAL FACE HOUSING, PER MANUFACTURERS RECOMMENDATIONS.

(4) THE TOP OF THE POLE SHAFT AND THE END OF THE MONOTUBE ARM SHALL BE EQUIPPED WITH A REMOVABLE, VENTILATED CAP HELD SECURELY IN PLACE WITH SET SCREWS.

(5) FACTORY-WELDED BRACKET FOR GROUNDING LUG, OPPOSITE HANDHOLE. (LUG AND HARDWARE PAID UNDER SEPARATE ITEM). PROVIDE HOLE IN BRACKET FOR ¼" X ¾" - 20 TPI STAINLESS STEEL HEX HEAD BOLT.

(6) FACTORY-WELDED "J" HOOK FOR STRAIN RELIEF FOR POLE LUMINAIRE WIRE.

(7) INSTALL STRUCTURAL IDENTIFICATION PLAQUES.

STRUCTURAL IDENTIFICATION PLAQUES SHALL BE PLACED ON THE POLES IN THE SAME DIRECTION AS THE ARM.

MOUNTING HEIGHT SHALL BE 6'-0" ABOVE THE CURB OR SHOULDER. ADJUST IF IT IS KNOWN THAT REQUIRED TRAFFIC SIGNS WILL BE OBSTRUCTED.

(8) FACTORY DRILLED ½" DRAIN HOLE 2" FROM FLANGE CONNECTION PLATE.

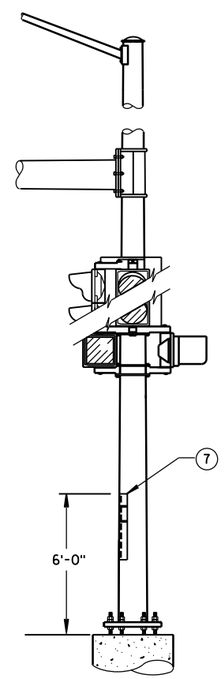


STRUCTURAL IDENTIFICATION PLAQUE PLACEMENT

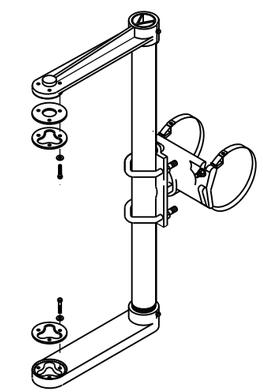

SIGNAL FACE MOUNTING BRACKET DETAIL FOR MONOTUBE ARM

(MOUNT PER MANUFACTURER'S RECOMMENDATION)

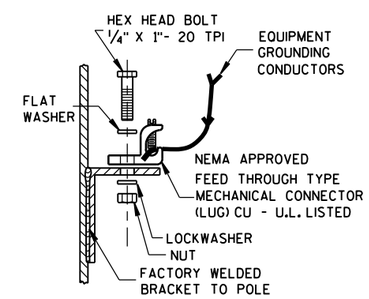


TYPICAL GROUNDING CONNECTIONS (5)

NUT, BOLT AND WASHERS SHALL BE STAINLESS STEEL

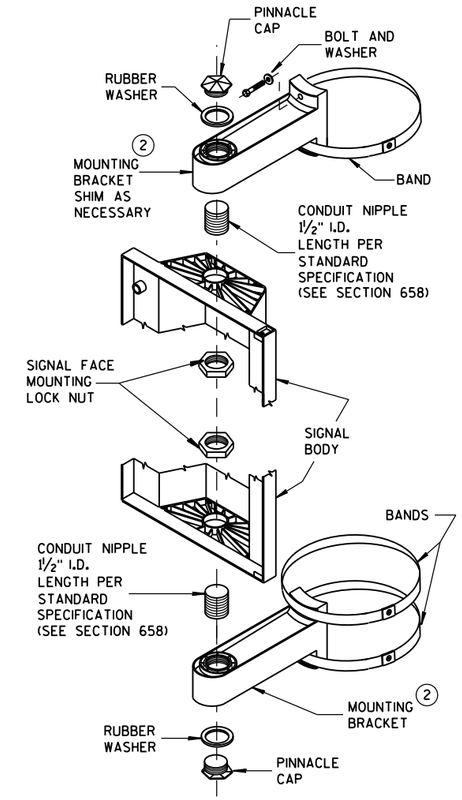


SIGNAL FACE VERTICAL MOUNTING DETAIL

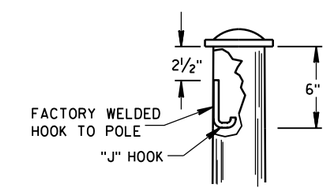


"J" HOOK WIRE SUPPORT (6)

GENERAL NOTES AND HARDWARE DETAILS FOR TYPE 9, 10, 12 & 13 POLES WITH MONOTUBE ARMS

STATE OF WISCONSIN
DEPARTMENT OF TRANSPORTATION

APPROVED
June, 2015 — DATE
/S/ Ahmet Demirbilek — STATE ELECTRICAL
FHWA




S.D.D. 9 E 8-7e

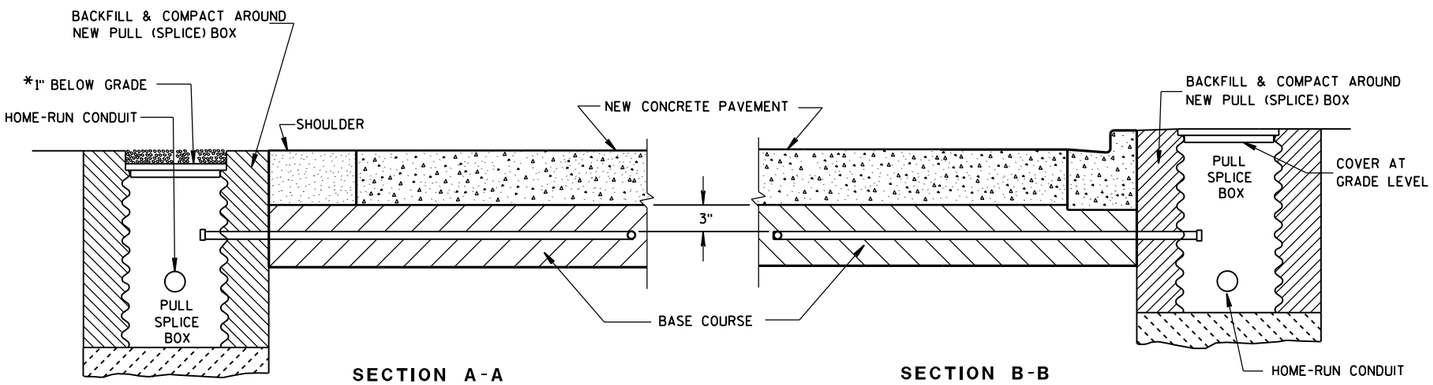


**SECTION A-A**
**NO CURB & GUTTER**

**SECTION B-B**
**CURB & GUTTER**

*RECESS PULL (SPLICE) BOX SO THAT THE COVER IS 3" BELOW GRADE IN SHOULDER AREAS OF CRUSHED AGGREGATE. BACKFILL OVER COVER WITH THE CRUSHED AGGREGATE TO BRING THE AREA TO GRADE LEVEL.

## LOOP DETECTOR INSTALLATION DETAIL

## GENERAL NOTES

DETAILS OF CONSTRUCTION, MATERIALS AND WORKMANSHIP NOT SHOWN ON THIS DRAWING SHALL CONFORM TO THE PERTINENT REQUIREMENTS OF THE CONTRACT.

LOOP SIZE, CONFIGURATION LOCATION, NUMBER OF TURNS OF WIRE AND ASSOCIATED SIGNAL PHASE SHALL BE AS SHOWN ON THE PLANS.

PITCH LEAD OUT CONDUIT TO DRAIN TO ROADSIDE PULL (SPLICE) BOX.

SPLICES SHALL BE INSTALLED BY USING CAST IN PLACE SPLICE KITS LISTED ON THE DEPARTMENTS APPROVED PRODUCTS LIST OR AN ENGINEER APPROVED EQUAL. NON-INSULATED BUTT SPLICES TO FIT #12 AWG STRANDED WIRE SHALL BE USED. SPLICES SHALL BE SOLDERED AND INSULATED FROM EACH OTHER AS PER INSTRUCTIONS INCLUDED IN THE SPLICE KIT.

MEASURE GROUND RESISTANCE USING A MEGGER. REPLACE LOOP WIRE NOT ATTAINING A READING OF INFINITY TO GROUND.

AFTER SPLICING THE LOOP WIRE TO THE LOOP LEAD-IN CABLE, THE CONTRACTOR SHALL MEASURE INDUCTANCE, GROUND RESISTANCE AND WIRE RESISTANCE AT THE CABINET END OF THE LEAD-IN CABLE AND FURNISH A COPY OF THE READINGS TO THE PROJECT ENGINEER FOR EVALUATION.

LOOP DETECTOR LEADS SHALL BE IDENTIFIED WITH THEIR ASSOCIATED LOOP BY USE OF WATERPROOF TAGS AT BOTH ENDS OF THE CABLE. A LISTING OF THE CABLE IDENTIFICATION PER INDIVIDUAL LOOP LEAD-IN SHALL BE PLACED IN THE CABINET.

THE #12 AWG. LOOP WIRE IN THE PULL (SPLICE) BOX SHALL BE HAND TWISTED AT LEAST 3 TWISTS PER FOOT BEFORE BEING SPLICED TO THE LOOP LEAD-IN CABLE.

SPLICES OF LOOP WIRE TO LEAD-IN CABLE SHALL BE MADE ONLY IN PULL (SPLICE) BOXES AT THE SIDE OF THE ROAD.

THE #12 AWG LOOP WIRE SHALL BE INSTALLED FROM THE ROADSIDE PULL (SPLICE) BOX THROUGH THE LOOP CONDUIT, BACK TO THE ROADSIDE PULL (SPLICE) BOX, AND BE INSTALLED IN ONE, NON-SPLICE CONTINUOUS LENGTH.

PROTECTION OF THE CONDUIT IN THE BASE COURSE, SHALL BE REQUIRED AFTER INSTALLATION AND BEFORE NEW PAVEMENT IS INSTALLED.

SHOULD INSTALLATION REPAIR BE REQUIRED, IT SHALL BE DONE UNDER THE DIRECTION OF THE PROJECT ENGINEER.

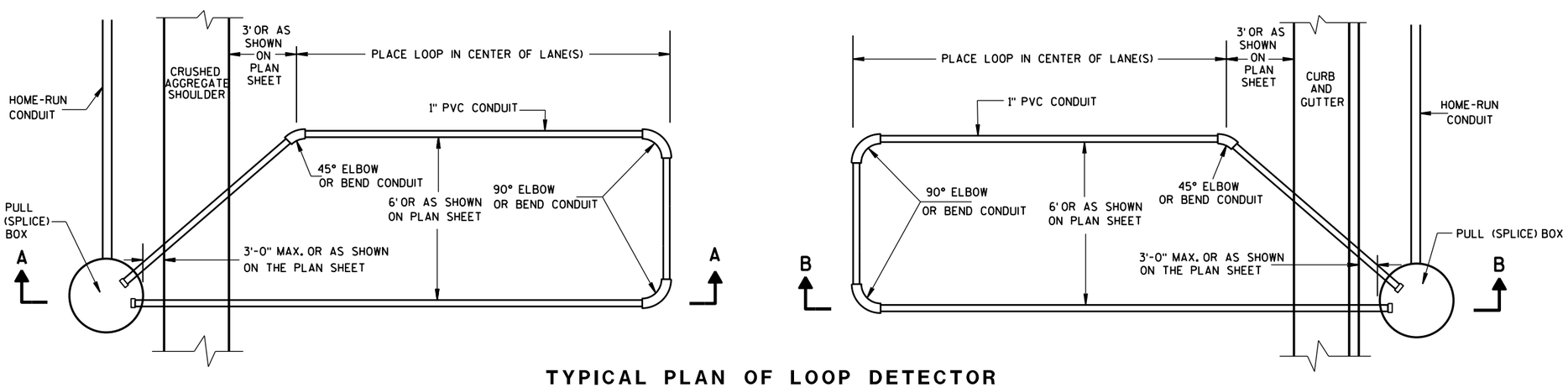


## TYPICAL PLAN OF LOOP DETECTOR WITH 18" OR 24" PULL (SPLICE) BOX

| |
|---|
| LOOP DETECTOR INSTALLED IN BASE COURSE WITH PULL (SPLICE) BOX OFF ROADWAY (OPTION 1) |
| STATE OF WISCONSIN DEPARTMENT OF TRANSPORTATION |
| APPROVED<br>Sept. 2014 — DATE<br>/S/ Ahmet Demirbilek — STATE ELECTRICAL<br>FHWA |


6
S.D.D. 9 F 15-4a

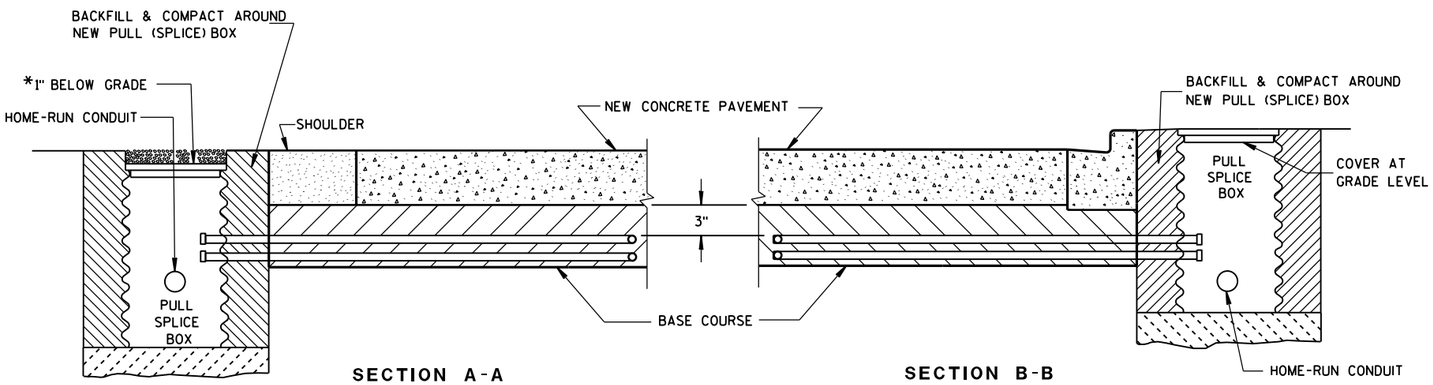


**SECTION A-A**
**NO CURB & GUTTER**

**SECTION B-B**
**CURB & GUTTER**

*RECESS PULL (SPLICE) BOX SO THAT THE COVER IS 3" BELOW GRADE IN SHOULDER AREAS OF CRUSHED AGGREGATE. BACKFILL OVER COVER WITH THE CRUSHED AGGREGATE TO BRING THE AREA TO GRADE LEVEL.

## LOOP DETECTOR INSTALLATION DETAIL

## GENERAL NOTES

DETAILS OF CONSTRUCTION, MATERIALS AND WORKMANSHIP NOT SHOWN ON THIS DRAWING SHALL CONFORM TO THE PERTINENT REQUIREMENTS OF THE CONTRACT.

LOOP SIZE, CONFIGURATION LOCATION, NUMBER OF TURNS OF WIRE AND ASSOCIATED SIGNAL PHASE SHALL BE AS SHOWN ON THE PLANS.

PITCH LEAD OUT CONDUIT TO DRAIN TO ROADSIDE PULL (SPLICE) BOX.

SPLICES SHALL BE INSTALLED BY USING CAST IN PLACE SPLICE KITS LISTED ON THE DEPARTMENTS APPROVED PRODUCTS LIST OR AN ENGINEER APPROVED EQUAL. NON-INSULATED BUTT SPLICES TO FIT #12 AWG STRANDED WIRE SHALL BE USED. SPLICES SHALL BE SOLDERED AND INSULATED FROM EACH OTHER AS PER INSTRUCTIONS INCLUDED IN THE SPLICE KIT.

MEASURE GROUND RESISTANCE USING A MEGGER. REPLACE LOOP WIRE NOT ATTAINING A READING OF INFINITY TO GROUND.

AFTER SPLICING THE LOOP WIRE TO THE LOOP LEAD-IN CABLE, THE CONTRACTOR SHALL MEASURE INDUCTANCE, GROUND RESISTANCE AND WIRE RESISTANCE AT THE CABINET END OF THE LEAD-IN CABLE AND FURNISH A COPY OF THE READINGS TO THE PROJECT ENGINEER FOR EVALUATION.

LOOP DETECTOR LEADS SHALL BE IDENTIFIED WITH THEIR ASSOCIATED LOOP BY USE OF WATERPROOF TAGS AT BOTH ENDS OF THE CABLE. A LISTING OF THE CABLE IDENTIFICATION PER INDIVIDUAL LOOP LEAD-IN SHALL BE PLACED IN THE CABINET.

THE #12 AWG. LOOP WIRE IN THE PULL (SPLICE) BOX SHALL BE HAND TWISTED AT LEAST 3 TWISTS PER FOOT BEFORE BEING SPLICED TO THE LOOP LEAD-IN CABLE.

SPLICES OF LOOP WIRE TO LEAD-IN CABLE SHALL BE MADE ONLY IN PULL (SPLICE) BOXES AT THE SIDE OF THE ROAD.

THE #12 AWG LOOP WIRE SHALL BE INSTALLED FROM THE ROADSIDE PULL (SPLICE) BOX, THROUGH THE LOOP CONDUIT, BACK TO THE ROADSIDE PULL (SPLICE) BOX, AND BE INSTALLED IN ONE, NON-SPLICED CONTINUOUS LENGTH.

PROTECTION OF THE CONDUITS IN THE BASE COURSE SHALL BE REQUIRED AFTER INSTALLATION AND BEFORE NEW PAVEMENT IS INSTALLED.

SHOULD INSTALLATION REPAIR BE REQUIRED, IT SHALL BE DONE UNDER THE DIRECTION OF THE PROJECT ENGINEER.

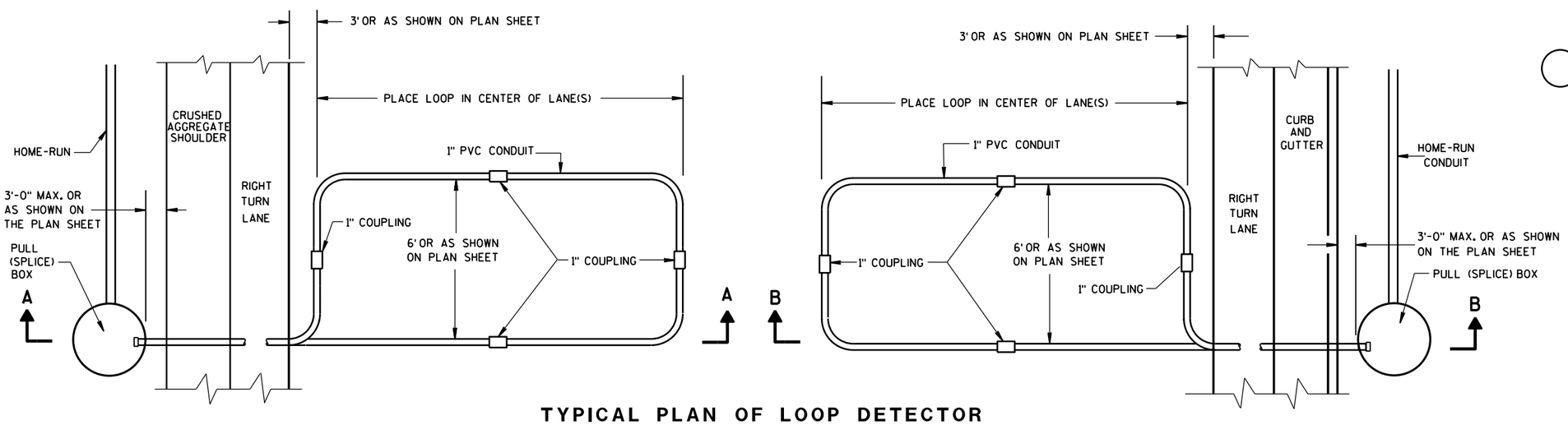


**TYPICAL PLAN OF LOOP DETECTOR WITH 24" PULL (SPLICE) BOX**

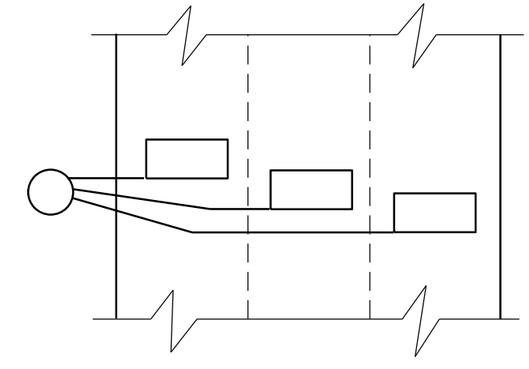

**MULTI-LANE INSTALLATION**

| |
|---|
| LOOP DETECTOR INSTALLED IN BASE COURSE WITH PULL (SPLICE) BOX OFF ROADWAY (OPTION 2) |
| STATE OF WISCONSIN DEPARTMENT OF TRANSPORTATION |
| APPROVED Sept. 2014 DATE — /S/ Ahmet Demirbilek STATE ELECTRICAL — FHWA |

6

6

S.D.D. 9 F 15-4b

S.D.D. 9 F 15-4b

## GENERAL NOTES

DETAILS OF CONSTRUCTION, MATERIALS AND WORKMANSHIP NOT SHOWN ON THIS DRAWING SHALL CONFORM TO THE PERTINENT REQUIREMENTS OF THE CONTRACT.

1. WOOD POLES SHALL BE CLASS 4. LENGTH DETERMINED BY SIGNAL PLAN.

2. SIGNAL FACES:
   A. ALL SECTIONS SHALL BE 12" AND POLYCARBONATE.
   B. EACH SHALL CONTAIN A 5" WIDE DULL BLACK POLYCARBONATE BACKPLATE.
   C. EACH SHALL BE WIRED FROM THE TOP SIGNAL MOUNTING BRACKET.
   D. NEAR RIGHT SIGNAL FACE SUSPENDED ON THE TETHER (NO BACKPLATE) SHALL NOT BE OVER THE TRAVELED WAY. IF THE POLE IS WITHIN 5 FEET OF THE TRAVELED WAY MOUNT THE SIGNAL FACE ON THE WOOD POLE WITH BACKPLATE.

3. SPAN WIRE:
   A. EACH SPAN WIRE SHALL BE INDIVIDUALLY DOWN GUYED.
   B. SIGNAL AND LIGHTING CABLES SHALL ONLY BE ATTACHED TO THE UPPER SPAN WIRE.
   C. THE SIGNAL ASSEMBY SHALL HAVE A 17' MIN. HEIGHT ABOVE THE ROADWAY. THIS SHALL BE MEASURED AFTER THE SPAN WIRE INSTALLATION IS COMPLETED WITH ALL CABLES AND SIGNAL FACES IN PLACE. MAINTAIN MINIMUM AND MAXIMUM HEIGHTS AS ROADWAY WORK PROGRESSES.

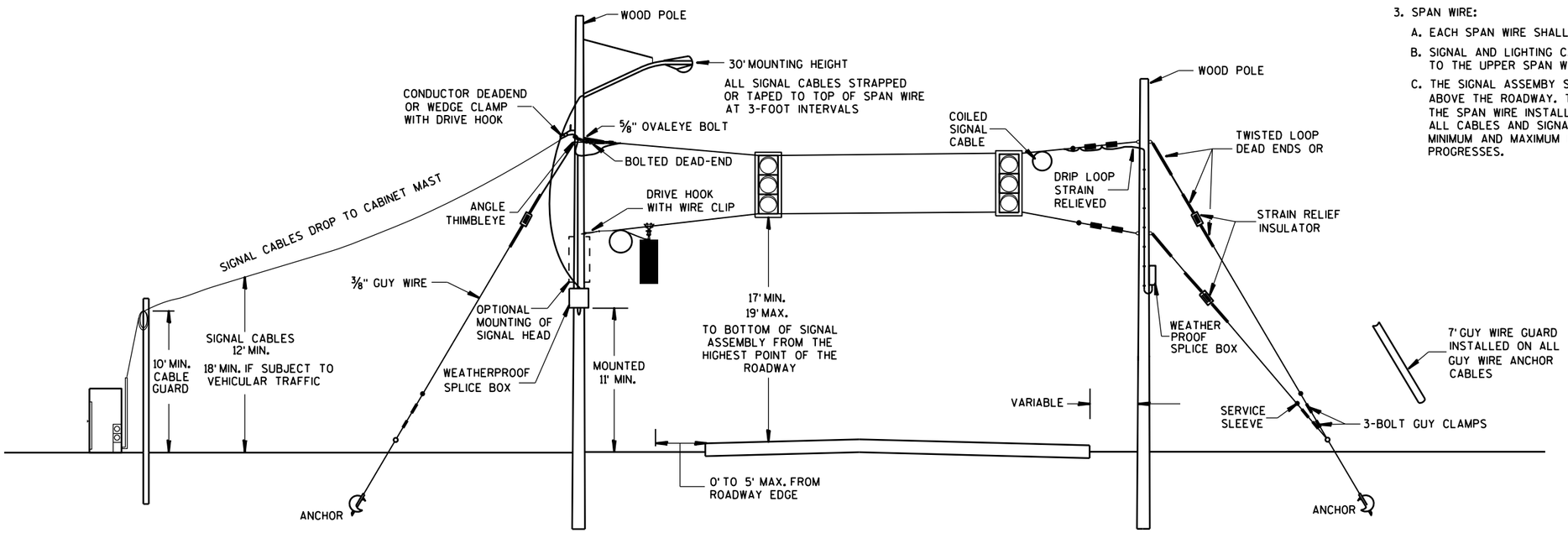


## SPAN WIRE
## TEMPORARY SIGNALS

| MINIMUM POLE LENGTHS | POLE BURIEL DEPTHS |
|---|---|
| 25' | 5' |
| 30' | 6' |
| 35' | 7' |
| 40' | 8' |
| 45' | 9' |

SPAN WIRE
TEMPORARY TRAFFIC SIGNAL

STATE OF WISCONSIN
DEPARTMENT OF TRANSPORTATION

APPROVED
June, 2015 — DATE
/S/ Ahmet Demirbilek — STATE ELECTRICAL
FHWA

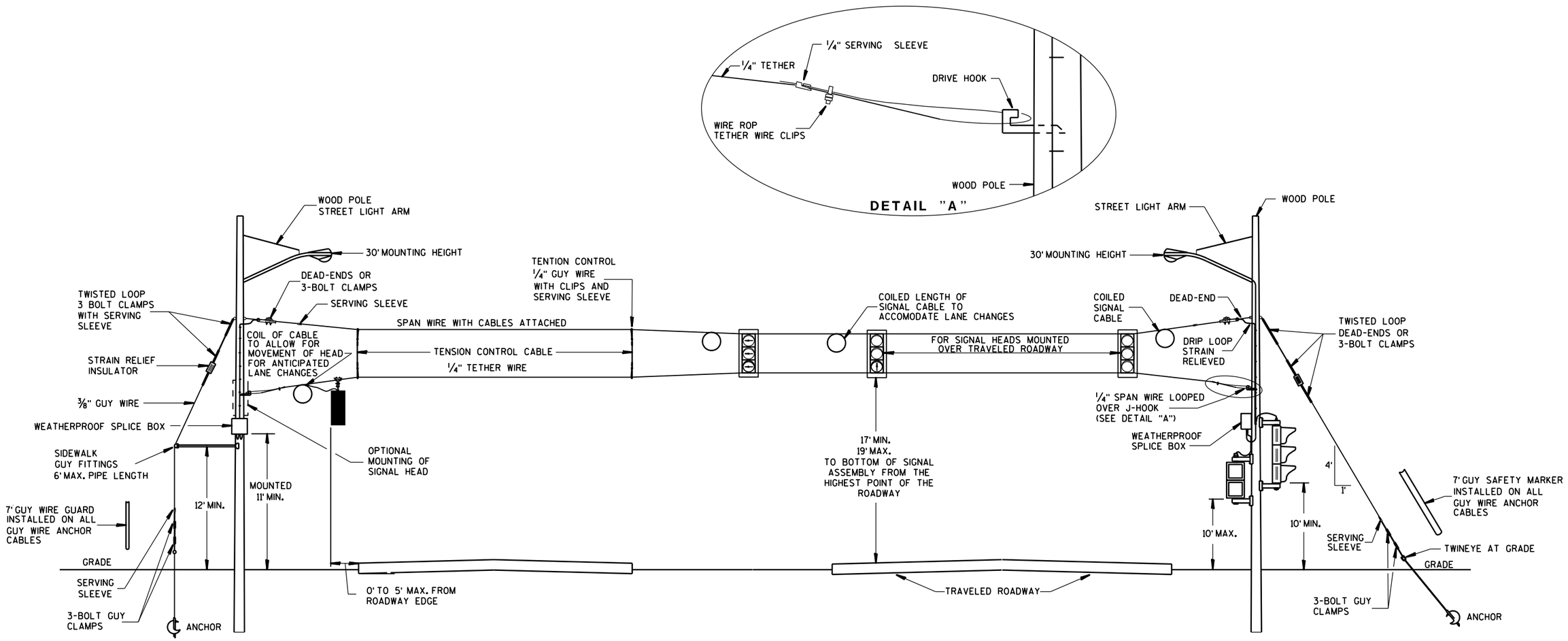


## GENERAL NOTES

DETAILS OF CONSTRUCTION, MATERIALS AND WORKMANSHIP NOT SHOWN ON THIS DRAWING SHALL CONFORM TO THE PERTINENT REQUIREMENTS OF THE CONTRACT.

1. WOOD POLES SHALL BE CLASS 4. LENGTH DETERMINED BY SIGNAL PLAN.
2. SIGNAL FACES:
   - A. ALL SECTIONS SHALL BE 12" AND POLYCARBONATE.
   - B. EACH SHALL CONTAIN A 5" WIDE DULL BLACK POLYCARBONATE BACKPLATE.
   - C. EACH SHALL BE WIRED FROM THE TOP SIGNAL MOUNTING BRACKET.
   - D. NEAR RIGHT SIGNAL FACE SUSPENDED ON THE TETHER (NO BACKPLATE) SHALL NOT BE OVER THE TRAVELED WAY. IF THE POLE IS WITHIN 5 FEET OF THE TRAVELED WAY MOUNT THE SIGNAL FACE ON THE WOOD POLE WITH BACKPLATE.
   - E. FAR INDICATION SHALL BE MAINTAINED OVER CENTER OF TRAFFIC LANE.
3. SPAN WIRE:
   - A. EACH SPAN WIRE SHALL BE INDIVIDUALLY DOWN GUYED.
   - B. SIGNAL AND LIGHTING CABLES SHALL ONLY BE ATTACHED TO THE UPPER SPAN WIRE.
   - C. THE SIGNAL ASSEMBY SHALL HAVE A 17' MIN. HEIGHT ABOVE THE ROADWAY. THIS SHALL BE MEASURED AFTER THE SPAN WIRE INSTALLATION IS COMPLETED WITH ALL CABLES AND SIGNAL FACES IN PLACE. MAINTAIN MINIMUM AND MAXIMUM HEIGHTS AS ROADWAY WORK PROGRESSES.

# SPAN WIRE
# TEMPORARY SIGNALS
## 4 LANE ROADWAYS

| MINIMUM POLE LENGTHS | CLASS | MIN. BURIAL DEPTHS |
|---|---|---|
| 25' | V | 5' |
| 30' | V | 6' |
| 35' | IV | 7' |
| 40' | IV | 8' |
| 45' | IV | 9' |

SPAN WIRE
TEMPORARY TRAFFIC SIGNAL

STATE OF WISCONSIN
DEPARTMENT OF TRANSPORTATION

APPROVED
June, 2015 — DATE
/S/ Ahmet Demirbilek — STATE ELECTRICAL
FHWA




6


S.D.D. 9 G 1-4b

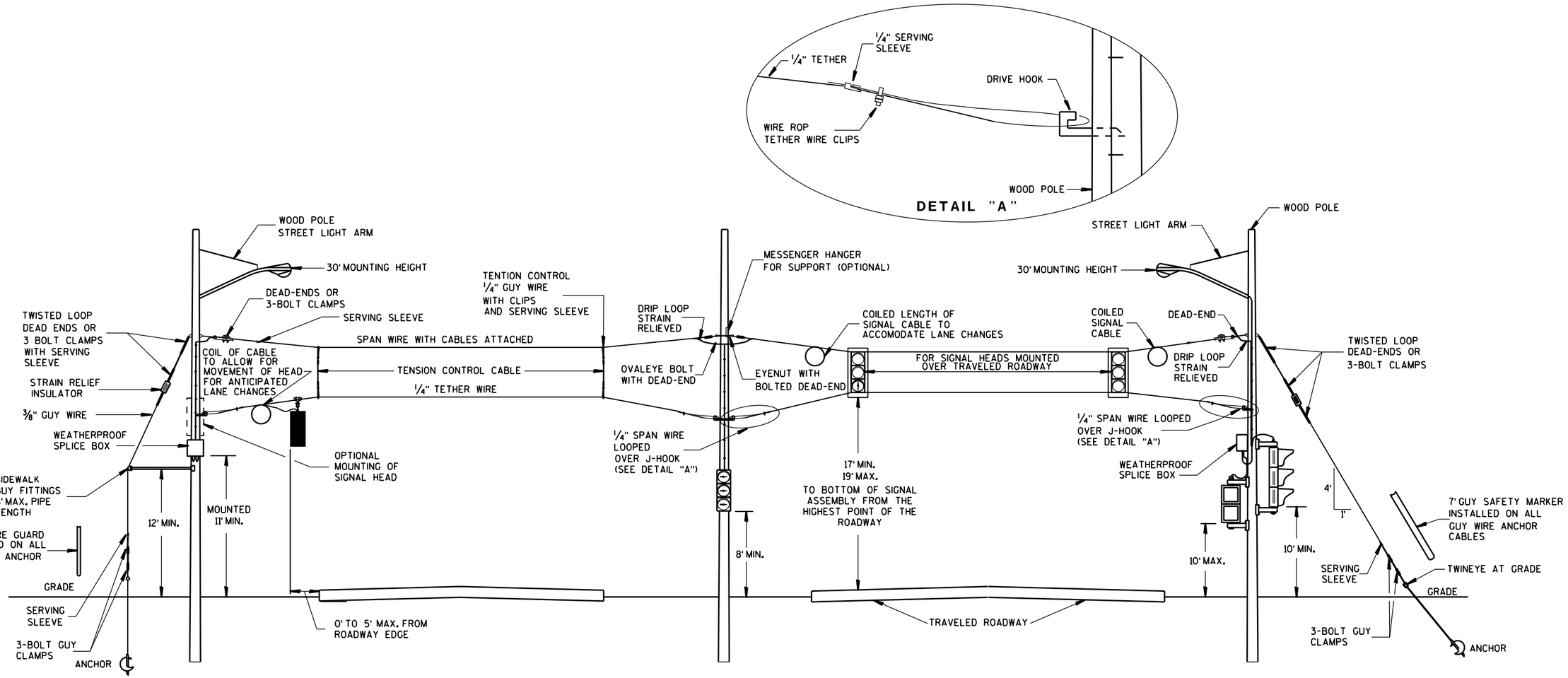


# SPAN WIRE
# TEMPORARY SIGNALS
## 4 LANE ROADWAYS

## GENERAL NOTES

DETAILS OF CONSTRUCTION, MATERIALS AND WORKMANSHIP NOT SHOWN ON THIS DRAWING SHALL CONFORM TO THE PERTINENT REQUIREMENTS OF THE CONTRACT.

1. WOOD POLES SHALL BE CLASS 4. LENGTH DETERMINED BY SIGNAL PLAN.

2. SIGNAL FACES:
   A. ALL SECTIONS SHALL BE 12" AND POLYCARBONATE.
   B. EACH SHALL CONTAIN A 5" WIDE DULL BLACK POLYCARBONATE BACKPLATE.
   C. EACH SHALL BE WIRED FROM THE TOP SIGNAL MOUNTING BRACKET.
   D. NEAR RIGHT SIGNAL FACE SUSPENDED ON THE TETHER (NO BACKPLATE) SHALL NOT BE OVER THE TRAVELED WAY. IF THE POLE IS WITHIN 5 FEET OF THE TRAVELED WAY MOUNT THE SIGNAL FACE ON THE WOOD POLE WITH BACKPLATE.
   E. FAR INDICATION SHALL BE MAINTAINED OVER CENTER OF TRAFFIC LANE.

3. SPAN WIRE:
   A. EACH SPAN WIRE SHALL BE INDIVIDUALLY DOWN GUYED.
   B. SIGNAL AND LIGHTING CABLES SHALL ONLY BE ATTACHED TO THE UPPER SPAN WIRE.
   C. THE SIGNAL ASSEMBY SHALL HAVE A 17' MIN. HEIGHT ABOVE THE ROADWAY. THIS SHALL BE MEASURED AFTER THE SPAN WIRE INSTALLATION IS COMPLETED WITH ALL CABLES AND SIGNAL FACES IN PLACE. MAINTAIN MINIMUM AND MAXIMUM HEIGHTS AS ROADWAY WORK PROGRESSES.

| MINIMUM POLE LENGTHS | CLASS | MIN. BURIAL DEPTHS |
|---|---|---|
| 25' | V | 5' |
| 30' | V | 6' |
| 35' | IV | 7' |
| 40' | IV | 8' |
| 45' | IV | 9' |

SPAN WIRE
TEMPORARY TRAFFIC SIGNAL

STATE OF WISCONSIN
DEPARTMENT OF TRANSPORTATION

APPROVED
June, 2015 — DATE
/S/ Ahmet Demirbilek — STATE ELECTRICAL
FHWA




6


S.D.D. 9 G 1-4c

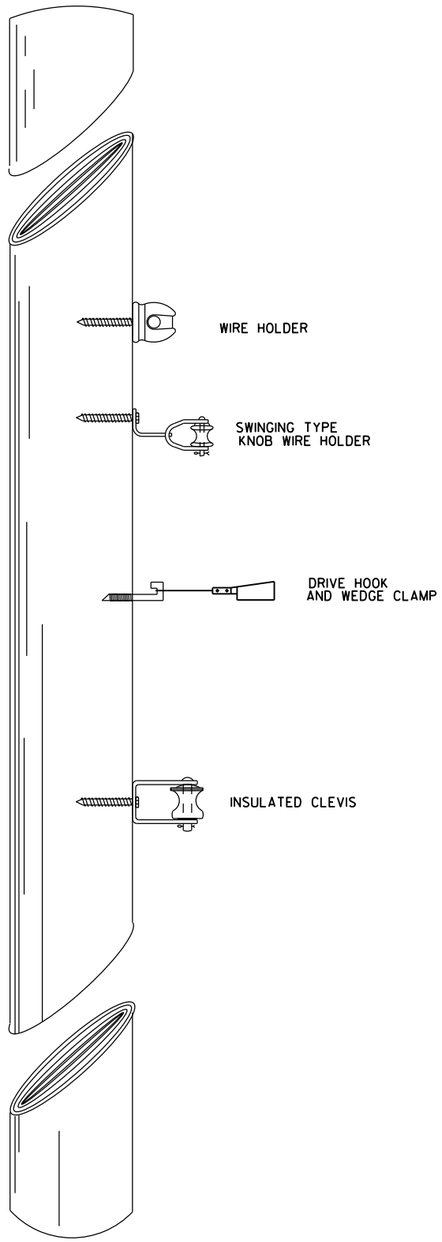


TYPICAL CABLE HANGERS

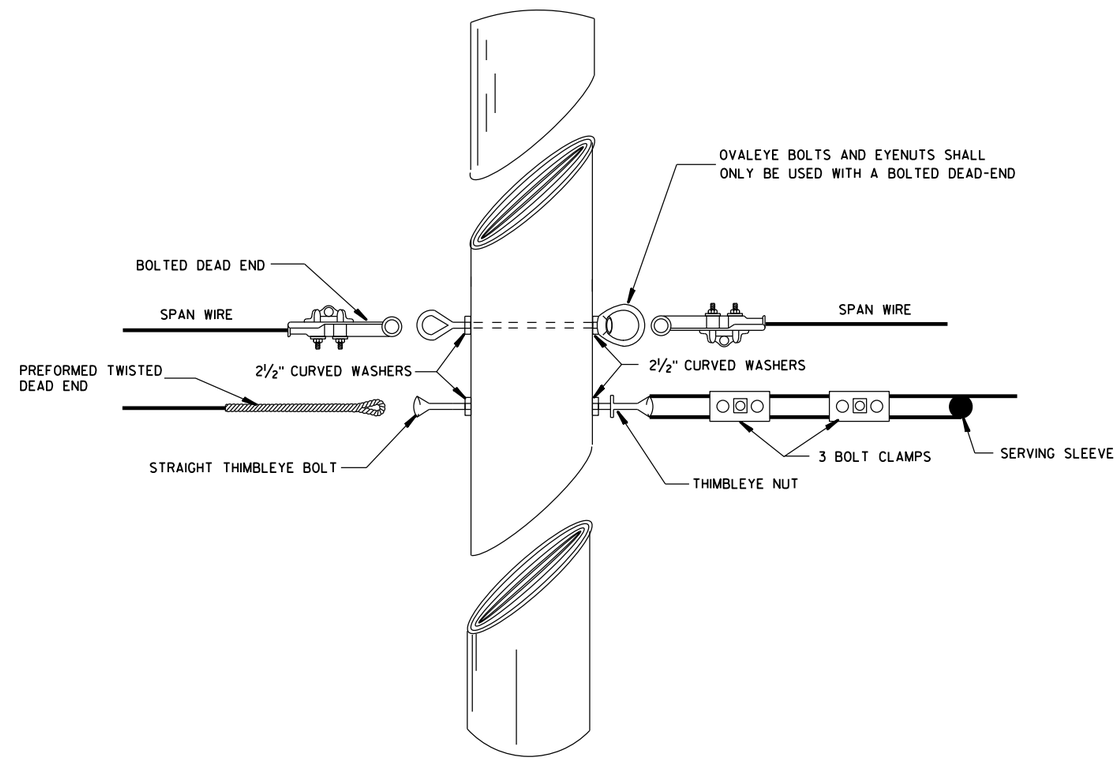


TYPICAL DEAD-ENDING

6

6

SPAN WIRE
TEMPORARY TRAFFIC SIGNAL

STATE OF WISCONSIN
DEPARTMENT OF TRANSPORTATION

APPROVED
June, 2015 — DATE
/S/ Ahmet Demirbilek — STATE ELECTRICAL
FHWA



S.D.D. 9 G 1-4d

S.D.D. 9 G 1-4d

## GENERAL NOTES

1. USE ¾" DRILL IN WOOD POLE TO PROVIDE HOLE FOR ⅝" BOLTS.
2. SAFTY LOOP REQUIRED ON EACH END OF ALL SPAN WIRES.

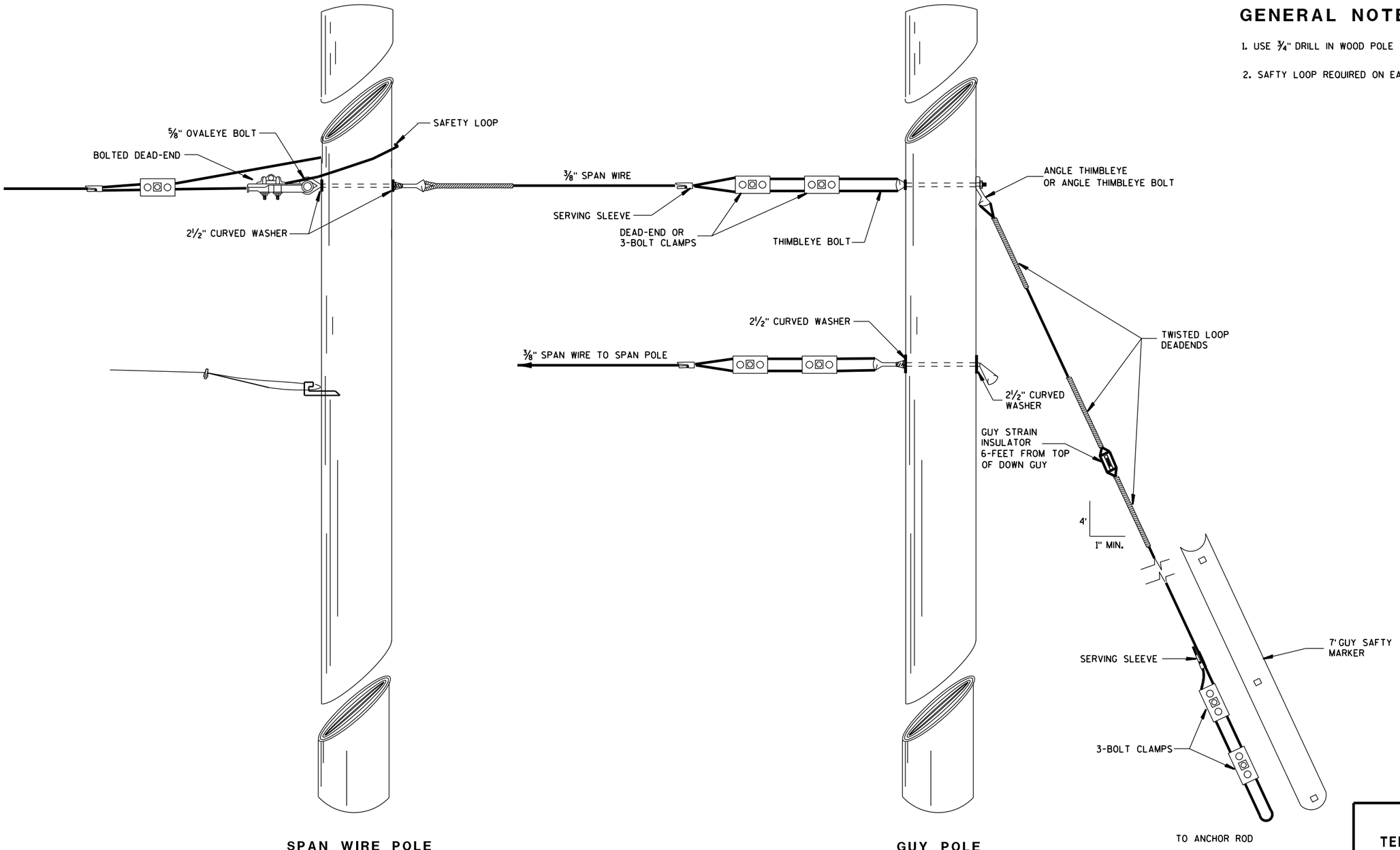


## TYPICAL DEAD-ENDINGS OR GUYING

| SPAN WIRE TEMPORARY TRAFFIC SIGNAL |
|---|
| STATE OF WISCONSIN DEPARTMENT OF TRANSPORTATION |
| APPROVED June, 2015 DATE — /S/ Ahmet Demirbilek STATE ELECTRICAL — FHWA |

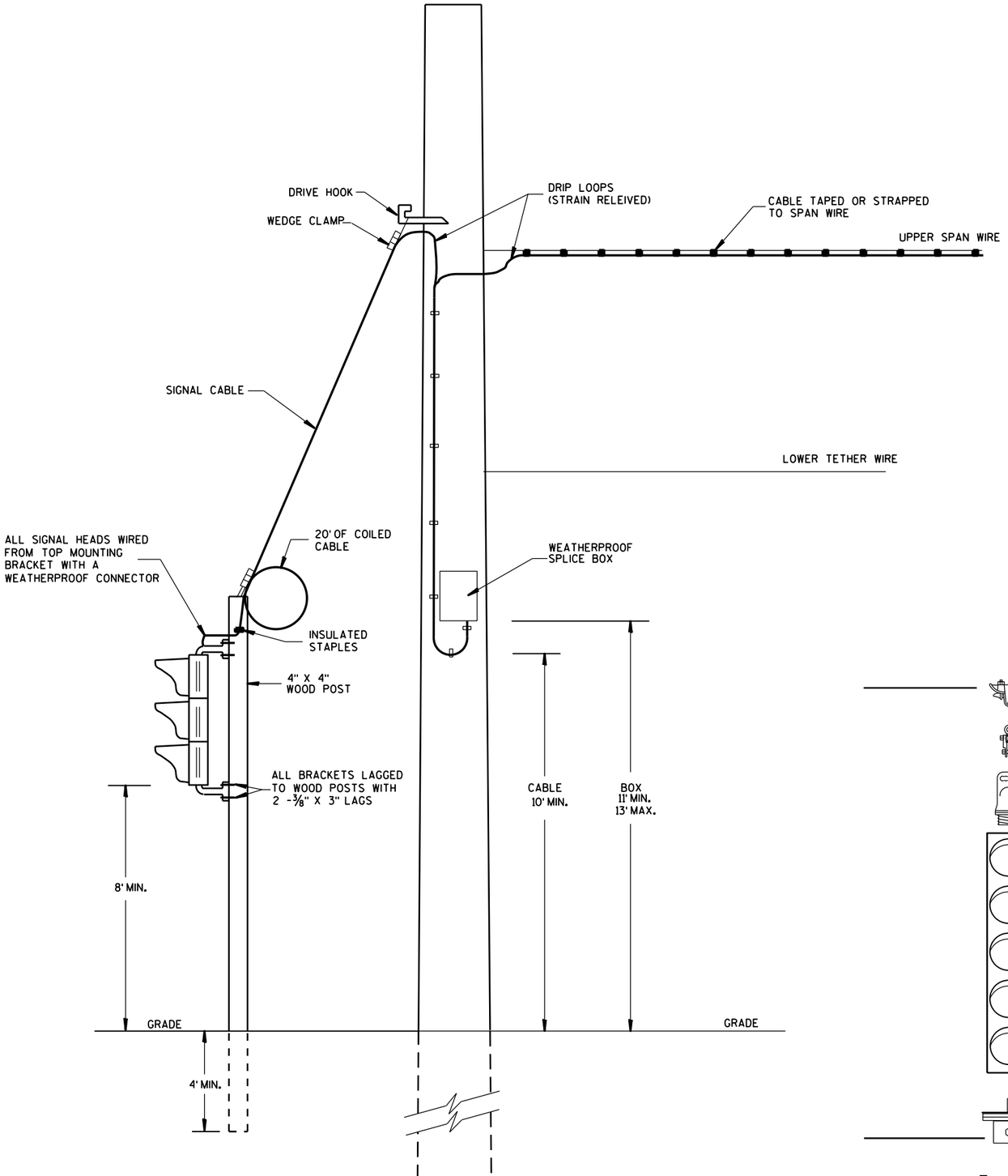


## TYPICAL DROP TO TEMPORARY MOVEABLE SIGNAL

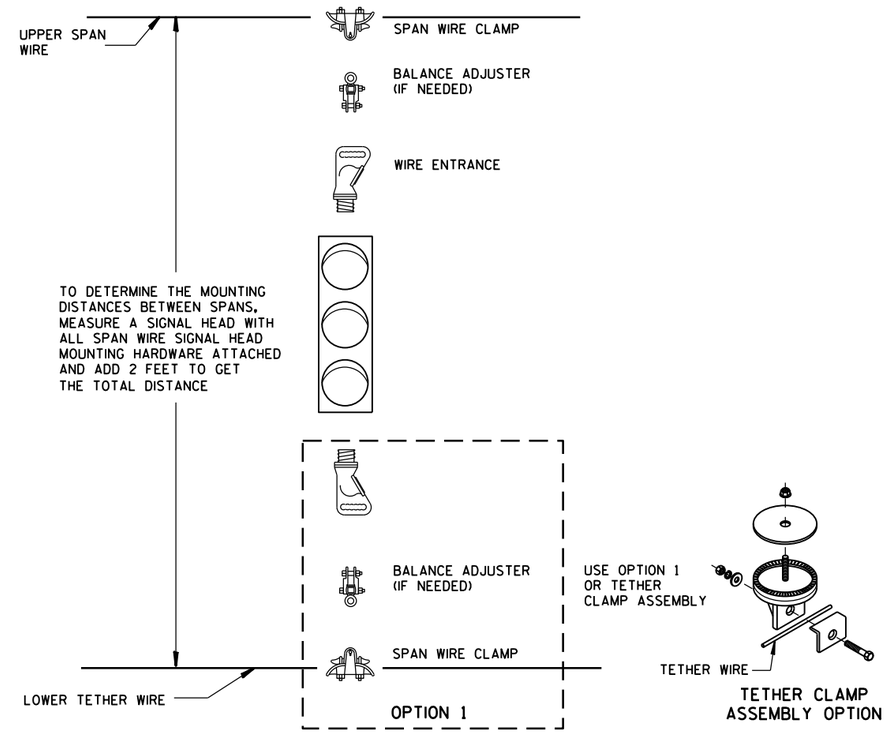


## TYPICAL SPAN WIRE MOUNTING HARDWARE

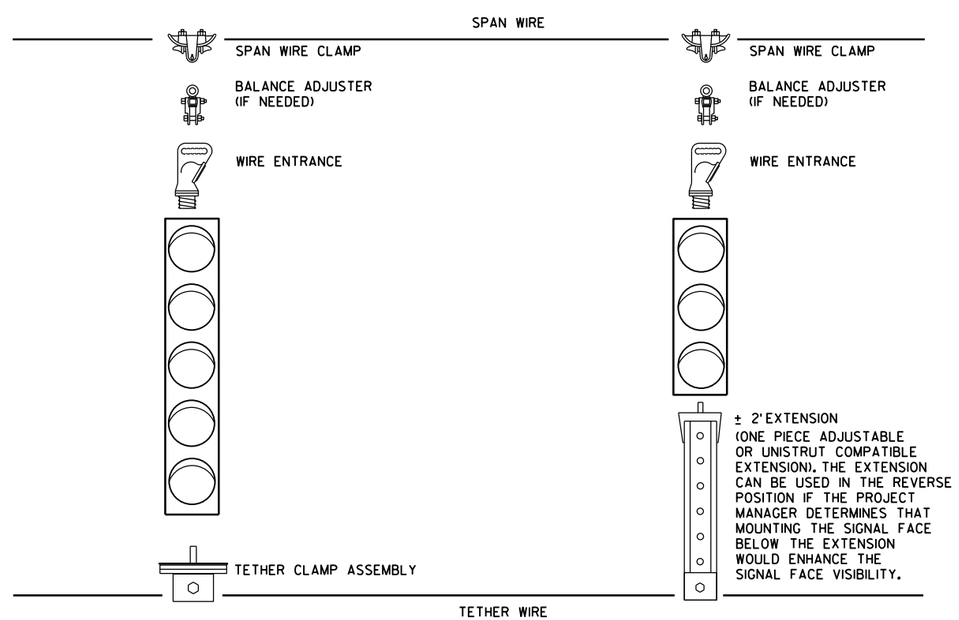


## 5 SECTION VERTICAL WITH 3 SECTION VERTICAL ON ONE SPAN WIRE

SPAN WIRE
TEMPORARY TRAFFIC SIGNAL

STATE OF WISCONSIN
DEPARTMENT OF TRANSPORTATION

APPROVED
June. 2015 — DATE
/S/ Ahmet Demirbilek — STATE ELECTRICAL
FHWA

6

S.D.D. 9 G 1-4f

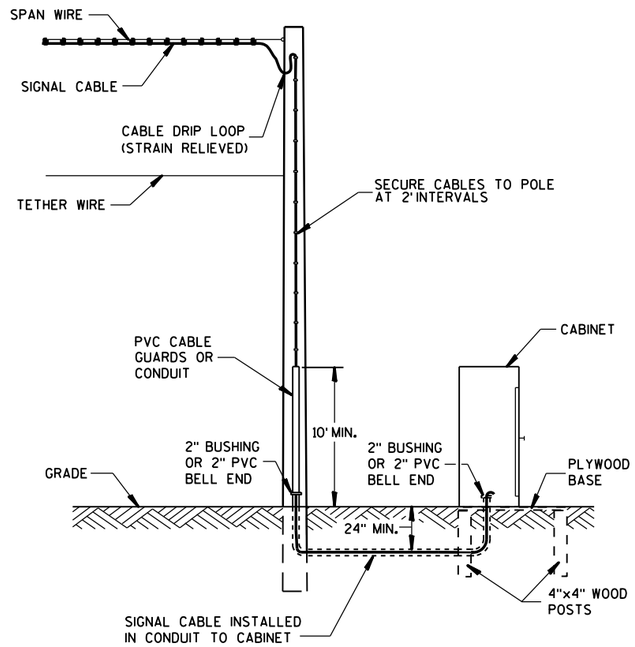


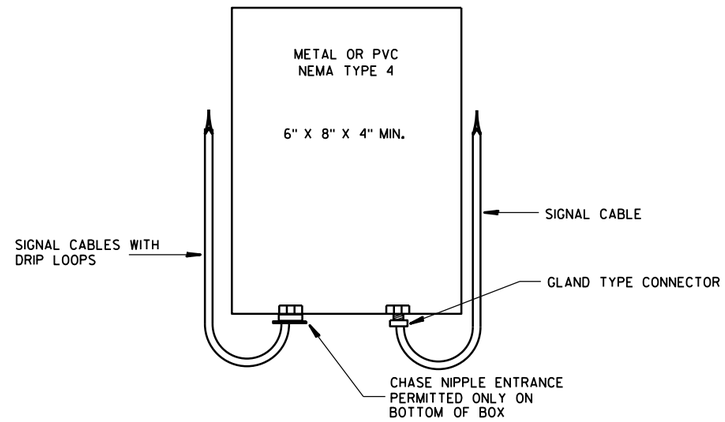


## SPLICE BOX

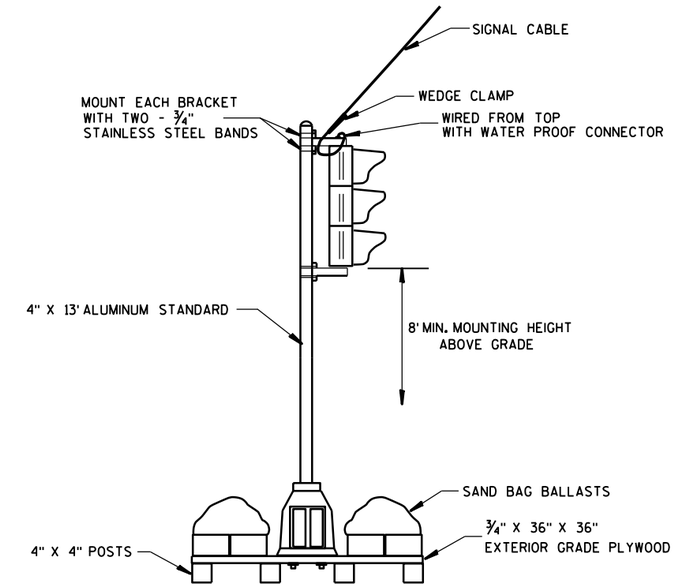


## TYPICAL SKID TYPE TEMPORARY

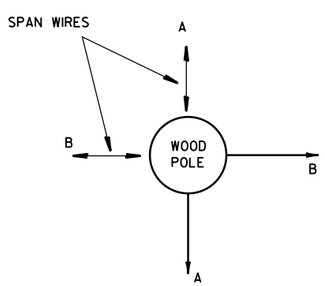


ALL DOWN OR SIDEWALK GUYS SHALL BE INSTALLED IN THE OPPOSITE DIRECTION OF THE STRAIN OF THE SPAN WIRE

## CORNER POLES

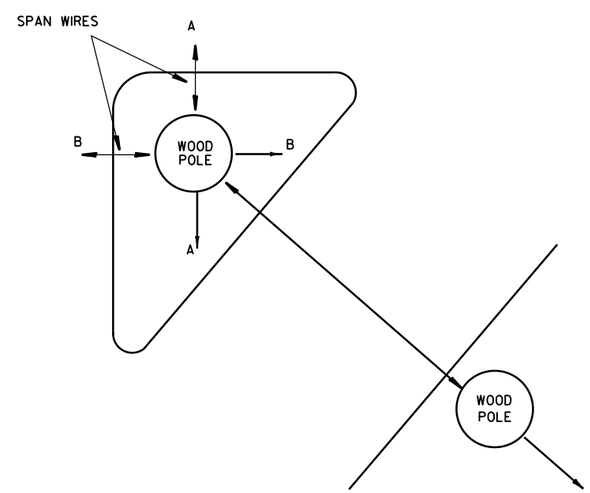


## ISLAND POLES

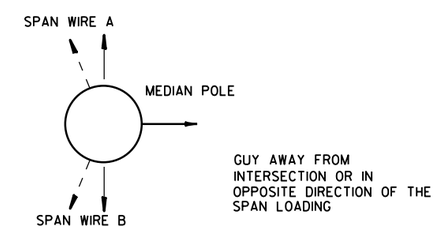


## MEDIAN POLES

SPAN WIRE
TEMPORARY TRAFFIC SIGNAL

STATE OF WISCONSIN
DEPARTMENT OF TRANSPORTATION

APPROVED
June, 2015 — /S/ Ahmet Demirbilek
DATE — STATE ELECTRICAL
FHWA

6

S.D.D. 9 G 1-4g

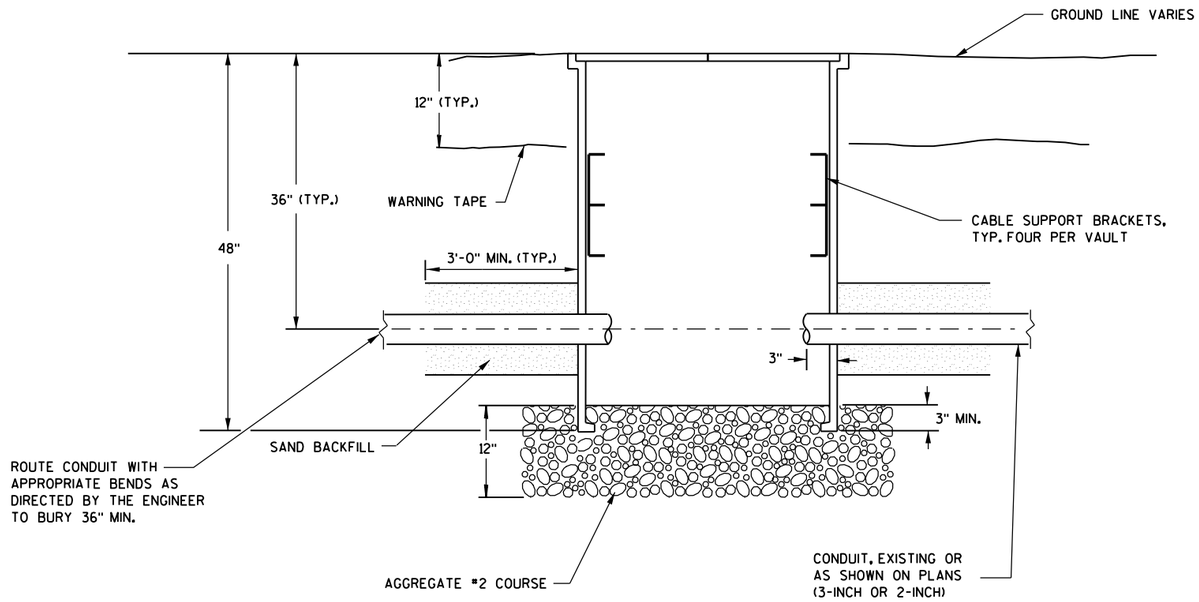


SECTION A-A

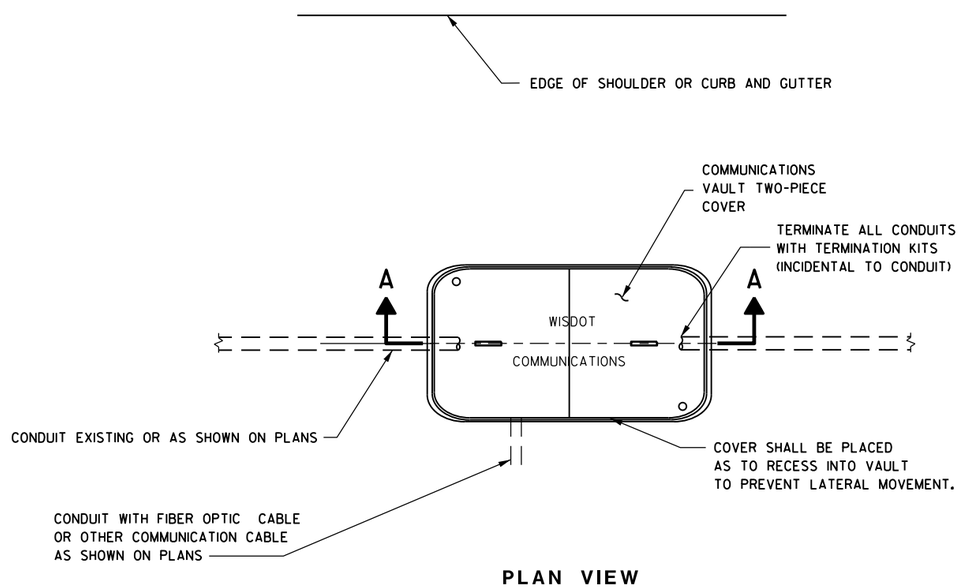


PLAN VIEW

## COMMUNICATIONS VAULT

## GENERAL NOTES

BOX SHALL HAVE AN OPEN BASE.

COVER SHALL BE DETECTABLE, AND HAVE A MINIMUM DESIGN LOAD OF 15,000 LBS AND SHALL LOCK.

ALL OPENINGS IN STRUCTURE MUST BE MACHINED AT TIME OF FABRICATION, OR PUNCH DRIVEN AT TIME OF PLACEMENT.

VAULTS SHALL BE OF ONE-PIECE CONSTRUCTION. TWO-PIECE/STACKABLE VAULTS WILL NOT BE PERMITTED.

FIELD PLACEMENT OF COMMUNICATIONS VAULTS SHALL BE AS DIRECTED BY THE ENGINEER.

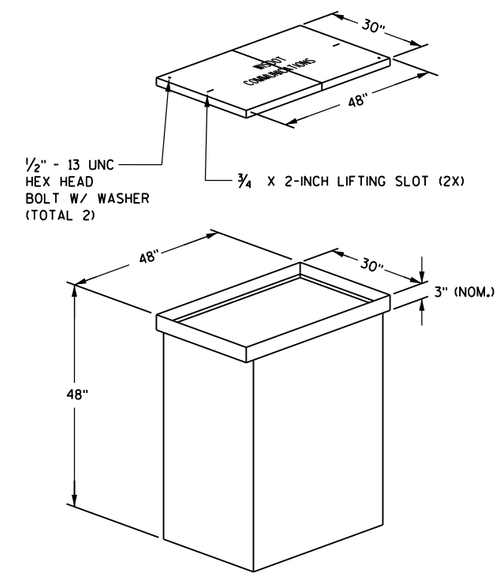


ISOMETRIC VIEW

COMMUNICATION VAULT

STATE OF WISCONSIN
DEPARTMENT OF TRANSPORTATION

APPROVED
Sept. 2014 — /S/ Ahmet Demirbilek
DATE — STATE ELECTRICAL
FHWA




6

S.D.D. 9 H 9-1

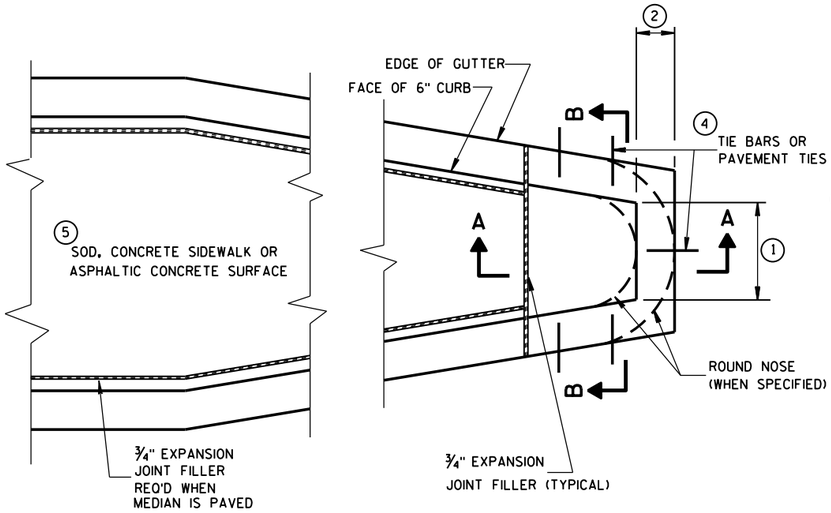


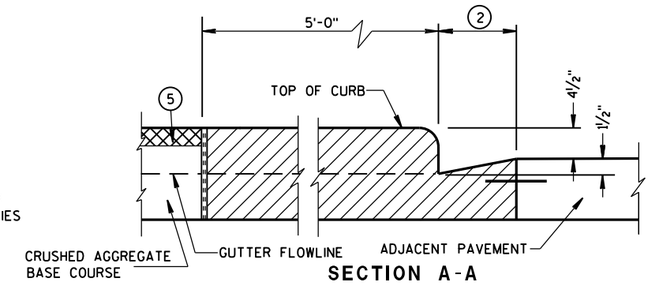


SECTION A-A

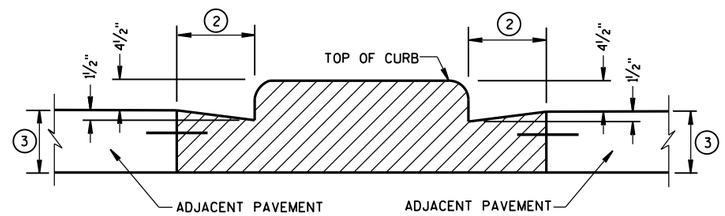


SECTION B-B

## CONCRETE MEDIAN BLUNT NOSE DETAIL

## GENERAL NOTES

DETAILS OF CONSTRUCTION, MATERIALS AND WORKMANSHIP NOT SHOWN ON THIS DRAWING SHALL CONFORM TO THE PERTINENT REQUIREMENTS OF THE STANDARD SPECIFICATIONS AND THE APPLICABLE SPECIAL PROVISIONS.

1. SEE PLAN FOR MEDIAN NOSE WIDTH AND RADIUS (FOR ROUND NOSE ALTERNATE).
2. WIDTH OF GUTTER TO MATCH EXISTING ADJACENT GUTTER OR AS SPECIFIED ELSEWHERE IN THE PLAN.
3. DEPTH EQUAL TO ADJACENT PAVEMENT. ADJACENT PAVEMENT STRUCTURE DETAILS ARE SHOWN ON THE PLAN. TYPICAL OPTIONS ARE:
   (1) NEW OR EXISTING CONCRETE PAVEMENT.
   (2) ASPHALTIC CONCRETE PAVEMENT OVER NEW OR EXISTING CONCRETE BASE COURSE.
   (3) ASPHALTIC CONCRETE PAVEMENT OVER CRUSHED AGGREGATE BASE COURSE.
4. TIE BARS OR PAVEMENT TIES REQUIRED IN NEW CONCRETE PAVEMENT OR CONCRETE BASE COURSE. TIE BARS SHALL BE NO. 4 X 2'-0" SPACED AT 2'-0" C-C.

   PAVEMENT TIES REQUIRED IN EXISTING CONCRETE BASE COURSE. PAVEMENT TIES SHALL BE NO. 6 X 1'-0" SPACED AT 3'-0" C-C INSTALLED ON A HORIZONTAL SKEW OF 6:1. THE DIRECTION OF SKEW SHALL ALTERNATE AFTER EVERY ONE OR TWO BARS.
5. SURFACE TYPE AND DETAILS ARE SHOWN ELSEWHERE IN THE PLAN.

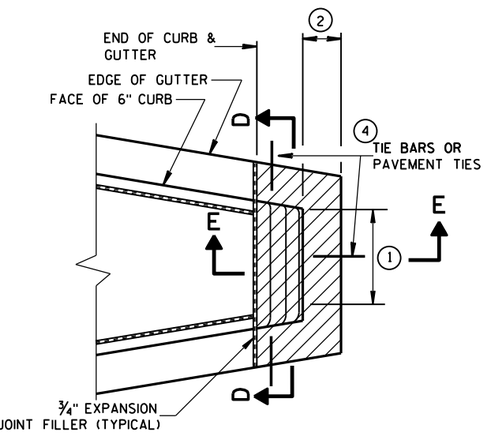


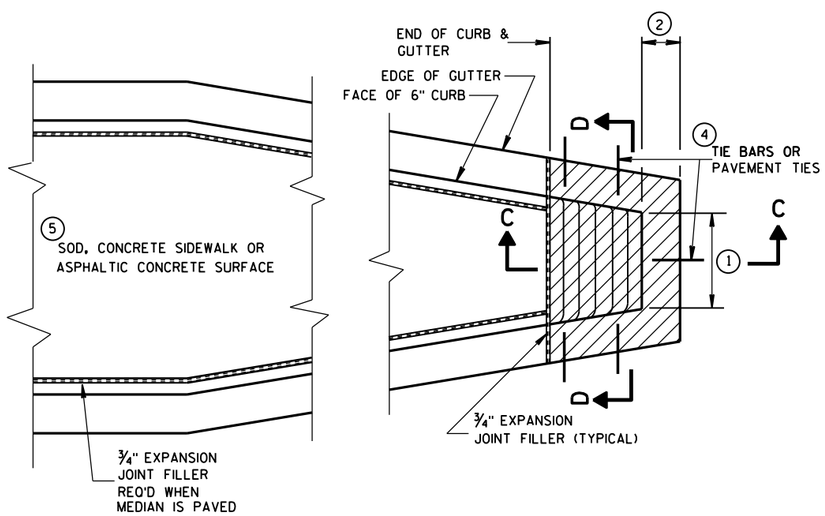


## CONCRETE MEDIAN SLOPED NOSE TYPE 1

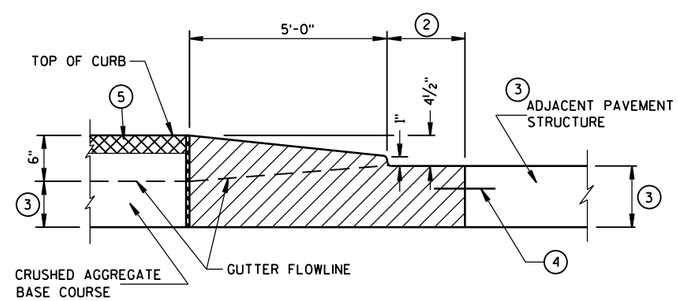


SECTION C-C

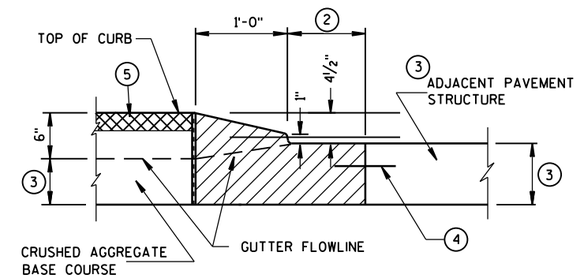


SECTION E-E

## CONCRETE MEDIAN SLOPED NOSE TYPE 2

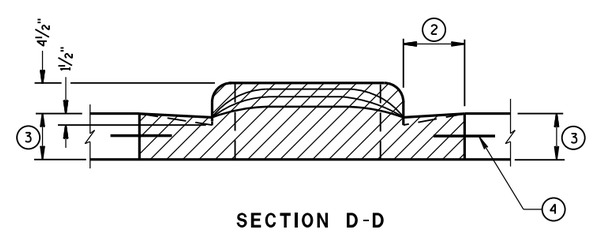

SECTION D-D

| CONCRETE MEDIAN NOSE | |
|---|---|
| STATE OF WISCONSIN DEPARTMENT OF TRANSPORTATION | |
| APPROVED 6/8/2006 DATE | /S/ Jerry H. Zogg ROADWAY STANDARDS DEVELOPMENT ENGINEER |
| FHWA | |

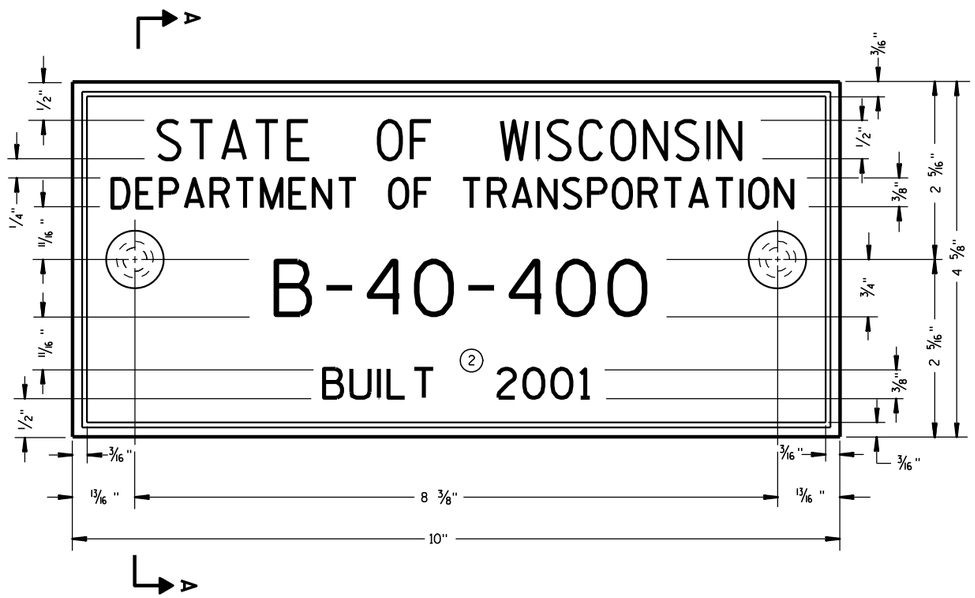


## TYPICAL NAME PLATE

(BRIDGES, CULVERTS, AND RETAINING WALLS)

## GENERAL NOTES

NAME PLATES TO BE INSTALLED ON BRIDGES, CULVERTS, AND RETAINING WALLS SHALL CONFORM TO THE REQUIREMENTS OF SECTION 502.3.11 OF THE STANDARD SPECIFICATIONS.

THE BRIDGE NUMBER AND YEAR BUILT SHOWN ON THIS DRAWING ARE EXAMPLES ONLY. SEE CONSTRUCTION PLANS FOR INDIVIDUAL NUMBERING AND YEAR BUILT.

① EPOXY RESIN SHALL BE FROM AN APPROVED MANUFACTURER AND USED IN ACCORDANCE WITH MANUFACTURER'S RECOMMENDATIONS.

② REHABILITATION OF AN EXISTING STRUCTURE SHOULD USE THE DATE OF ORIGINAL STRUCTURE CONSTRUCTION.

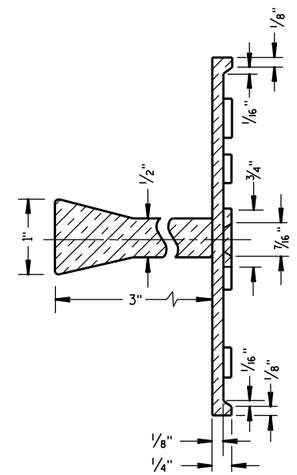


## SECTION A-A

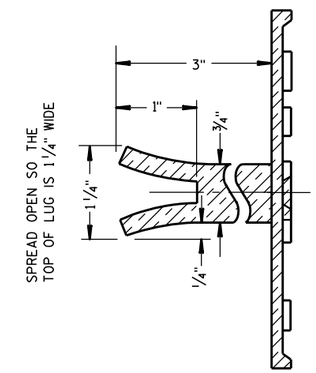


## ALTERNATE LUG

6

FOR MULTI-UNIT STRUCTURES
LINE 3 ABOVE SHALL READ

B = BRIDGE
C = CULVERT
R = RETAINING WALL

COUNTY NO.

BRIDGE NO.

UNIT NO. FOR MULTIPLE
UNIT BRIDGE

B-40-400-1A

## NUMBERING DESIGNATION
## MULTI-UNIT STRUCTURES

① ADHERE ANCHOR LUG TO PRECAST RETAINING WALL WITH EPOXY RESIN.

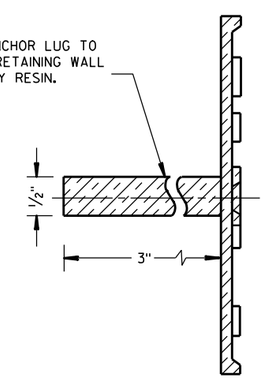


## ALTERNATE LUG

(FOR ATTACHMENT TO PRECAST STRUCTURES)

6

| NAME PLATE (STRUCTURES) | |
|---|---|
| STATE OF WISCONSIN DEPARTMENT OF TRANSPORTATION | |
| APPROVED | |
| 3/26/10 DATE | /S/ Scot Beck -- CHIEF STRUCTURAL DEVELOPER |
| FHWA | |





S.D.D. 12 A 3-10

*(RS) = REINFORCED CONCRETE SLAB
*(PS) = PAVED CONCRETE SHOULDER OR CONCRETE DRAINAGE SLAB (SEE DETAILS ELSEWHERE IN THE PLAN)
*(NRS) = NON-REINFORCED CONCRETE SLAB

***STANDARD DOWEL BAR DIAMETER (SEE SDD 13C11, & SDD 13C13)

Ⓐ STANDARD CONTRACTION JOINT NORMAL TO ℄ OR ℄

Ⓑ STANDARD LONGITUDINAL JOINT WITH TIE BARS.

Ⓒ 1½" EXPANSION JOINT WITH DOWEL BARS NORMAL TO ℄ OR ℄

## GENERAL NOTES

THE CONTRACTOR MAY SPLICE NO. 6 BARS IN THE APPROACH SLAB FOR SKEWED STRUCTURES ONLY. STAGGER SPLICES WITH A MAXIMUM OF ONE SPLICE PER BAR. THE LENGTH OF LAP IS 20 INCHES.

TACK WELD DOWEL BARS TO THE BASKETS ON ALTERNATE ENDS.

① THE CONTRACTOR MAY USE NO. 4 BARS SPACED AT 2'-0" C-C IN BOTH THE LONGITUDINAL AND TRANSVERSE DIRECTIONS FOR TOP REINFORCEMENT AS AN ALTERNATIVE TO THE WELDED WIRE FABRIC.

② THE CONTRACTOR MAY OMIT TIE BARS BETWEEN REINFORCED SLABS WHERE SLAB REINFORCEMENT BARS EXTEND ACROSS THE CENTERLINE OR REFERENCE LINE.

③ DO NOT CONSTRUCT AN EXPANSION JOINT OR INSTALL DOWEL BARS WHEN ABUTTING AN HMA PAVEMENT.

④ USE A JOINT SEALANT MEETING THE REQUIREMENTS OF ASTM D6690.

⑤ PLACE EXPANSION CAP ON THE END OF THE DOWEL THAT IS NOT TACK WELDED TO THE BASKET. DO NOT FORCE DOWEL BAR PAST THE DOWEL STOP.

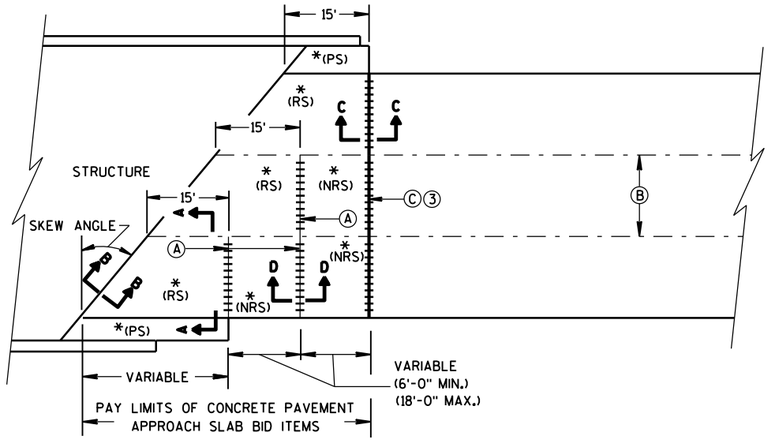


SKEWED APPROACH
(PAVEMENT MORE THAN 2 LANES)

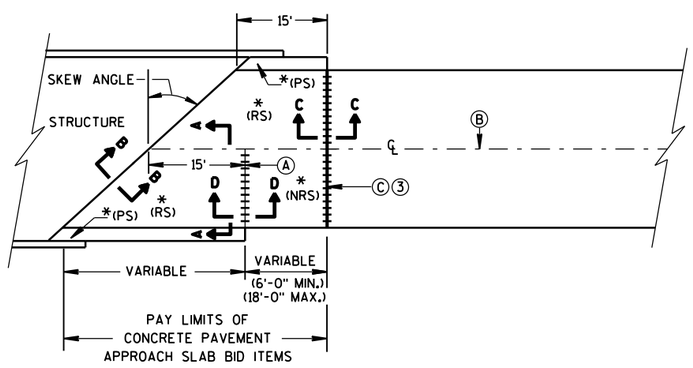


SKEWS >20°
(PAVEMENT WIDTH ≤30')

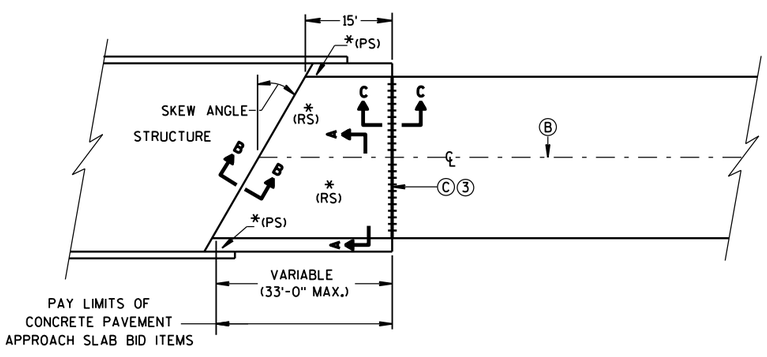


SKEWS ≤20°
(PAVEMENT WIDTH ≤30')

APPROACH SLAB AND ADJACENT PAVEMENT

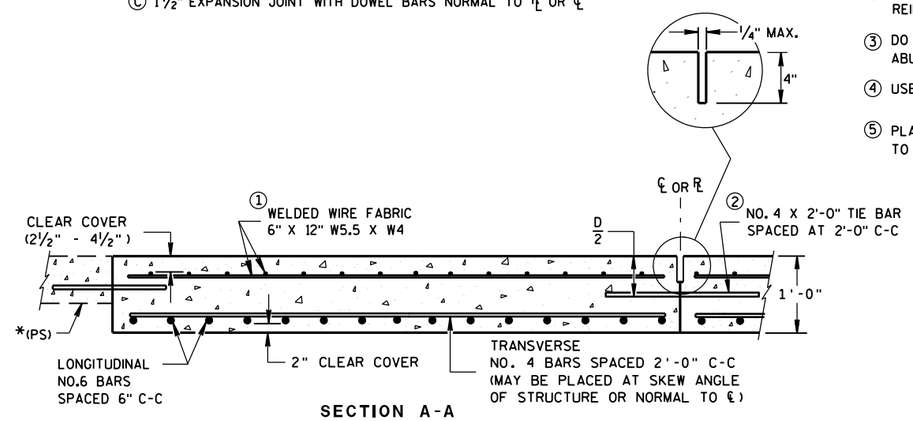


SECTION A-A
REINFORCEMENT POSITIONING DETAIL

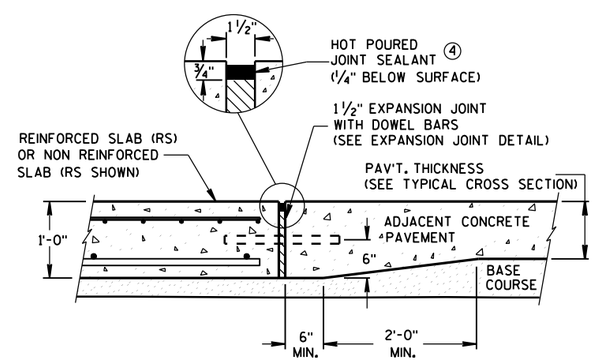


SECTION C-C
TRANSITION DETAIL
APPROACH SLAB TO ADJACENT PAVEMENT

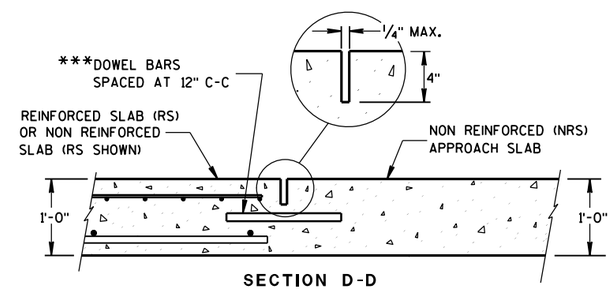


SECTION D-D
CONTRACTION JOINT

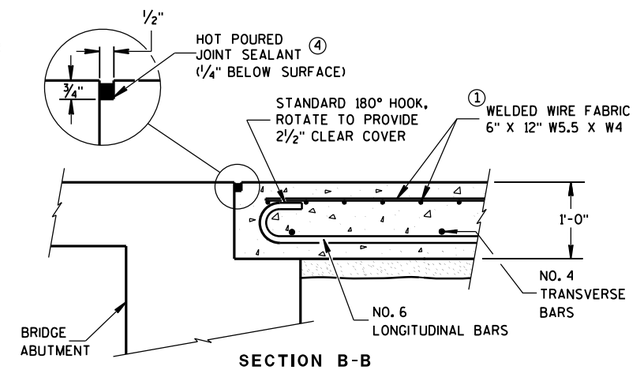


SECTION B-B
BEND DETAIL
BOTTOM REINFORCEMENT

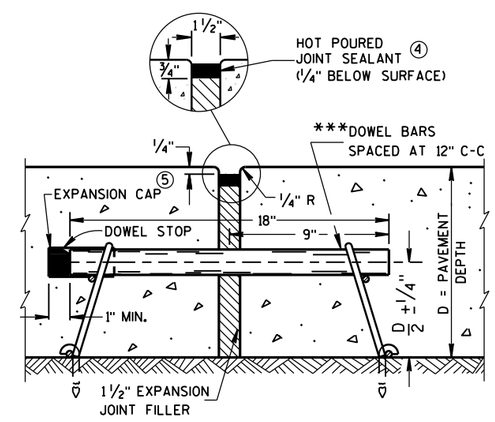


EXPANSION JOINT DETAIL

CONCRETE PAVEMENT
APPROACH SLAB

STATE OF WISCONSIN
DEPARTMENT OF TRANSPORTATION

APPROVED
June, 2015
DATE
FHWA

/S/ Peter Kemp, P.E.
PAVEMENT SUPER




6


S.D.D. 13 B 2-8a

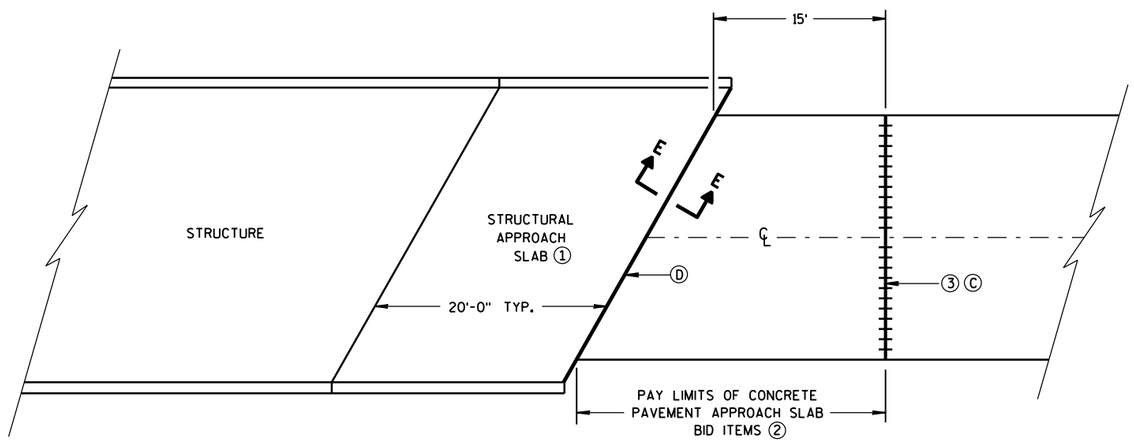


## GENERAL NOTES

ALL PROJECTS THAT INVOLVE A STRUCTURAL APPROACH SLAB WILL ALSO HAVE A CONCRETE PAVEMENT APPROACH SLAB.

① SEE BRIDGE PLAN.

② CONFORM TO SHEET 13 B 2(A) FOR CONCRETE PAVEMENT APPROACH SLAB DETAILS.

③ DO NOT CONSTRUCT AN EXPANSION JOINT OR INSTALL DOWEL BARS WHEN ABUTTING AN HMA PAVEMENT.

Ⓒ 1½" EXPANSION JOINT WITH DOWEL BARS NORMAL TO ℞ OR ℄

Ⓓ 1½" EXPANSION JOINT (NO DOWELS)

## BRIDGE APPROACHES

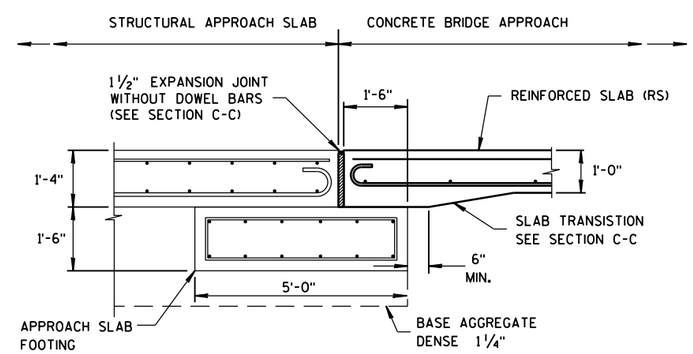


SECTION E-E

### FOOTING DETAIL

STRUCTURAL APPROACH SLAB TO CONCRETE BRIDGE APPROACH

STRUCTURAL APPROACH SLAB AND CONCRETE PAVEMENT APPROACH SLAB

STATE OF WISCONSIN
DEPARTMENT OF TRANSPORTATION

APPROVED
June, 2015 — DATE
/S/ Peter Kemp, P.E. — PAVEMENT SUPER
FHWA




6

S.D.D. 13 B 2-8b

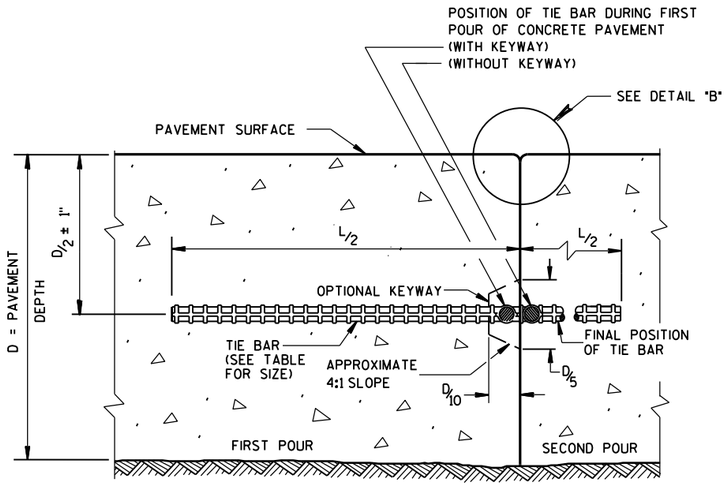


## CONSTRUCTION JOINT

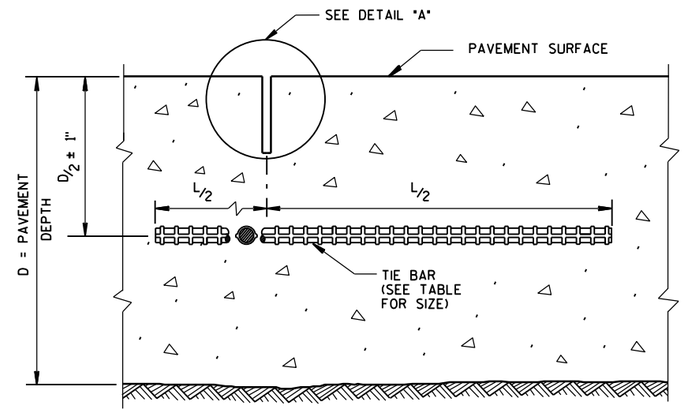


## SAWED JOINT

## GENERAL NOTES

DO NOT SEAL OR FILL LONGITUDINAL JOINTS.

CREATE A LONGITUDINAL JOINT FOR PAVEMENT WIDTHS GREATER THAN 15 FEET.

CORRELATE LONGITUDINAL JOINTS WITH LANE LINES WHEN POSSIBLE.

(1) ANCHOR TIE BARS INTO DRILLED HOLES WITH AN EPOXY.

(2) PAVEMENT THAT WAS IN PLACE PRIOR TO THE CONTRACT.

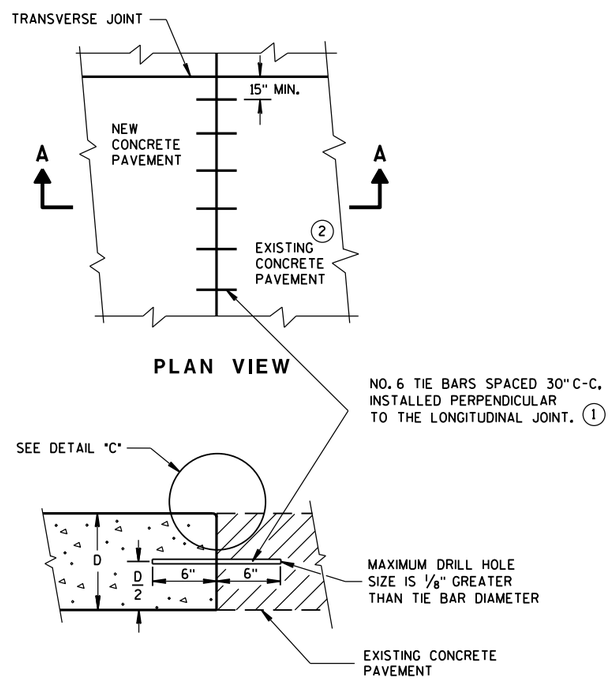


## PLAN VIEW

## SECTION A-A
## LONGITUDINAL CONSTRUCTION JOINT TIE BARS ANCHORED INTO EXISTING PAVEMENT

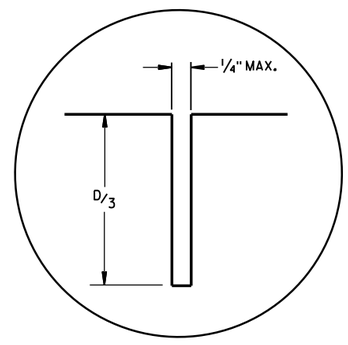


## DETAIL "A"

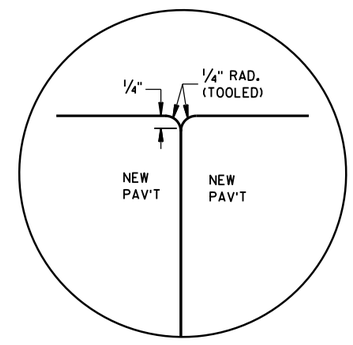


## DETAIL "B"

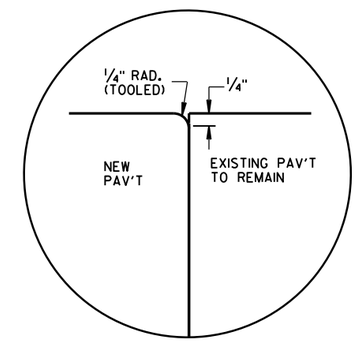


## DETAIL "C"

## TIE BAR TABLE

| PAVEMENT DEPTH (D) | TIE BAR SIZE | TIE BAR LENGTH (L) | MAX. TIE BAR SPACING |
|---|---|---|---|
| < 10 1/2" | NO. 4 | 30" | 36" |
| ≥ 10 1/2" | NO. 5 | 36" | 36" |
| | NO. 4 * | 30" | 24" ** |

* SUBSTITUTE BENT BARS AT LONGITUDINAL JOINTS WHEN EQUIPMENT LIMITATIONS DURING CONSTRUCTION WARRANT (e.g. AUXILIARY LANES OR TURN LANES)

** CONFORM TO 15" MINUMUM SPACING FROM TRANSVERSE JOINTS; SPACING BETWEEN TIE BARS WILL BE 30" AT TRANSVERSE JOINTS.

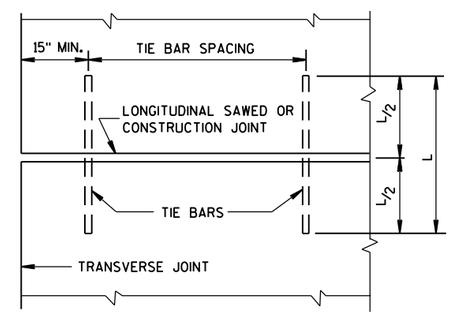


## PLAN VIEW
SHOWING LOCATION OF TIE BARS

CONCRETE PAVEMENT
LONGITUDINAL JOINTS AND TIES

STATE OF WISCONSIN
DEPARTMENT OF TRANSPORTATION

APPROVED
June, 2015 — DATE
/S/ Peter Kemp, P.E. — PAVEMENT SUPER
FHWA

6

S.D.D. 13 C 1-18

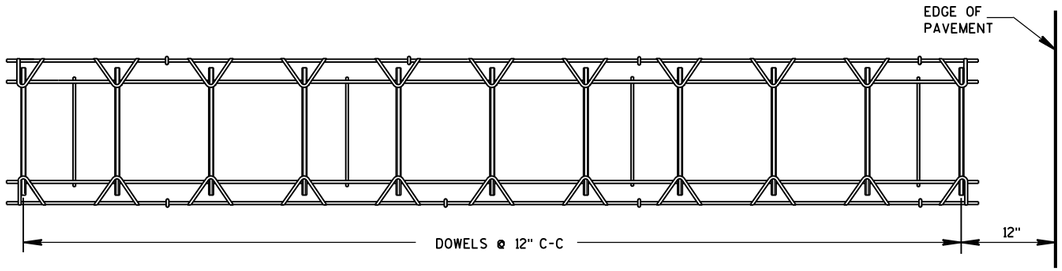


PLAN VIEW

SIDE VIEW

CONTRACTION JOINT DOWEL ASSEMBLY 1

## PAVEMENT DEPTH, DOWEL BAR SIZE AND JOINT SPACING TABLE

| PAVEMENT DEPTH (D) | DOWEL BAR DIAMETER | CONTRACTION JOINT SPACING |
|---|---|---|
| 5 ½", 6", 6 ½" | NONE | 12' |
| 7", 7 ½" | 1" | 14' |
| 8", 8 ½" | 1 ¼" | 15' |
| 9", 9 ½" | 1 ¼" | 15' |
| 10" & ABOVE | 1 ½" | 15' |

## GENERAL NOTES

CONTRACTION JOINTS

CONSTRUCT TRANSVERSE CONTRACTION JOINTS NORMAL TO THE CENTERLINE. SHOW THE LOCATION OF CONTRACTION JOINTS THROUGH INTERSECTIONS ON THE PLANS OR AS DIRECTED BY THE ENGINEER.

DO NOT SEAL OR FILL CONTRACTION JOINTS.

INSTALL DOWEL BARS PARALLEL TO THE PAVEMENT CENTERLINE AND PAVEMENT SURFACE.

FOR PAVEMENT SLABS OF VARYING WIDTHS, LOCATE THE OUTER MOST DOWEL BAR SO THAT THE CENTER OF THE BAR IS A MINIMUM OF 6 INCHES AND A MAXIMUM OF 18 INCHES FROM THE LONGITUDINAL JOINT AND THE FREE EDGE OF PAVEMENT.

CONSTRUCTION JOINTS

LOCATE CONSTRUCTION JOINTS A MINIMUM OF 6 FEET FROM THE NEAREST CONTRACTION JOINT AND ALIGN PARALLEL TO CONTRACTION JOINTS.

1. OBTAIN THE ENGINEER'S APPROVAL FOR THE USE OF ALTERNATIVE DESIGNS OF THE DOWEL ASSEMBLY. USE MECHANICAL DOWEL BAR INSERTERS OR DOWEL ASSEMBLIES WHEN CONSTRUCTING CONTRACTION JOINTS.
2. SECURE BASKETS WITH ANCHORS TO HOLD DOWEL BARS IN THE CORRECT POSITION AND ALIGNMENT. TYPE, LOCATION, NUMBER AND LENGTH OF ANCHORS ARE DEPENDENT UPON FIELD CONDITIONS.
3. FORM OR SAW CONSTRUCTION JOINTS. PROVIDE A ¼-INCH RADIUS AT FORMED JOINTS.
4. PROVIDE A SMOOTH VERTICAL FACE FOR THE ENTIRE DEPTH OF THE PAVEMENT WHEN FORMING CONSTRUCTION JOINTS.
5. INSTALL DOWEL BARS AT CONSTRUCTION JOINTS BY FORMING OR DRILLING. INSTALL FORMED DOWEL BARS 12 INCHES C-C AND 12 INCHES FROM PAVEMENT EDGE. REMOVE EXCESS CONCRETE FROM THE FREE END OF THE DOWEL BAR IF DOWEL BARS ARE FORMED THROUGH A HEADER BOARD. INSTALL DRILLED DOWEL BARS ACCORDING TO *DRILLED DOWEL BAR CONSTRUCTION JOINT* DETAIL.
6. APPLY A THIN UNIFORM COATING OF SURFACE TREATMENT TO THE FREE END OF DOWEL BARS TO PREVENT BONDING.
7. ANCHOR DOWEL BARS INTO DRILLED HOLES WITH AN EPOXY. MAXIMUM DRILLED HOLE SIZE IS ⅛-INCH GREATER THAN DOWEL BAR DIAMETER, 9 INCHES IN LENGTH.

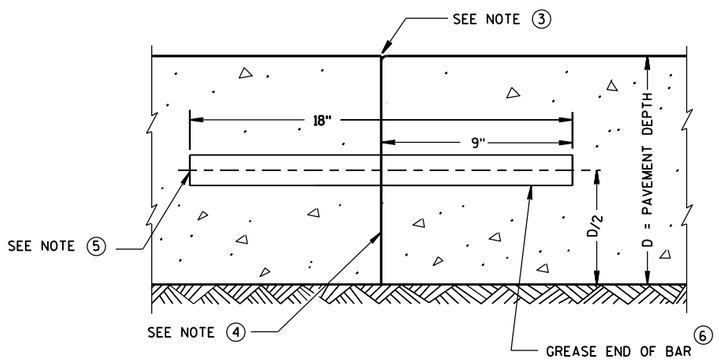


TRANSVERSE CONSTRUCTION JOINT

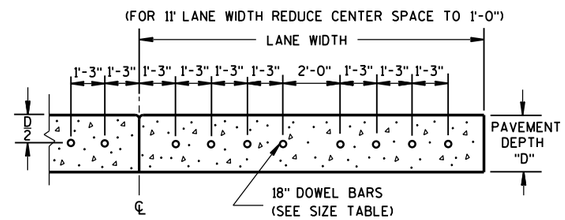


DRILLED DOWEL BAR CONSTRUCTION JOINT 7

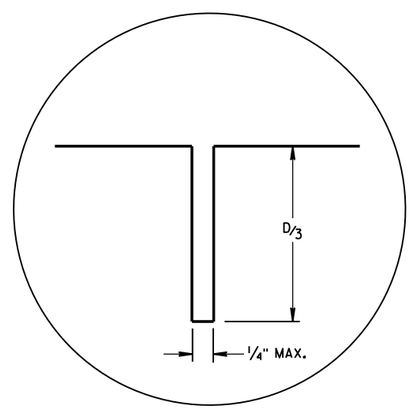


JOINT DETAIL

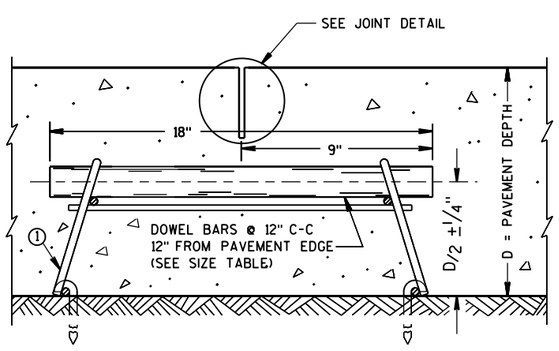


DOWELED CONTRACTION JOINT

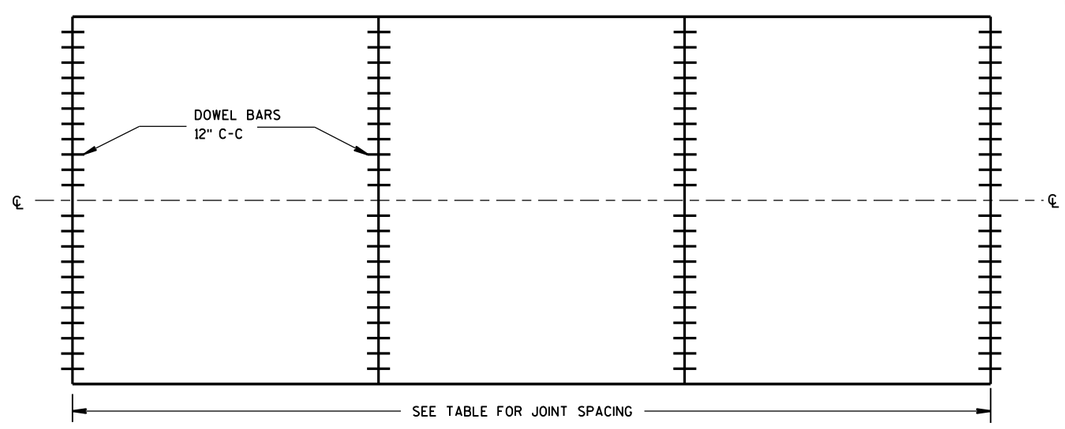


CONTRACTION JOINT LOCATIONS

URBAN DOWELED CONCRETE PAVEMENT

STATE OF WISCONSIN
DEPARTMENT OF TRANSPORTATION

APPROVED
5/3/2013 — DATE
/S/ Deb Bischoff — PAVEMENT POLICY & DE ... NEER
FHWA

## GENERAL NOTES

SAW CUT, DRILL, AND LIFT OUT EXISTING CONCRETE PAVEMENT WITHIN THE BOUNDARIES OF CONCRETE REPAIR AREAS. THE CONTRACTOR MAY MAKE ADDITIONAL SAW CUTS INSIDE THE REPAIR LIMITS TO REDUCE WEIGHT AND SIZE OF CONCRETE PIECES.

PROVIDE 6-FOOT MINIMUM DISTANCE FROM BOUNDARIES OF CONCRETE REPAIR AREAS TO ADJACENT TRANSVERSE JOINT OR CRACK.

THE LENGTH OF THE REPAIRS MAY VARY FROM THE DIMENSIONS SHOWN IF THE EXISTING CONCRETE PAVEMENT IS NONDOWELED AND THE PAVEMENT IS TO BE OVERLAID AFTER REPAIRING.

(1) DOWEL BARS MIGHT NOT EXIST.

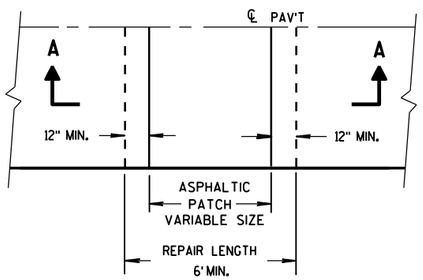


PLAN VIEW

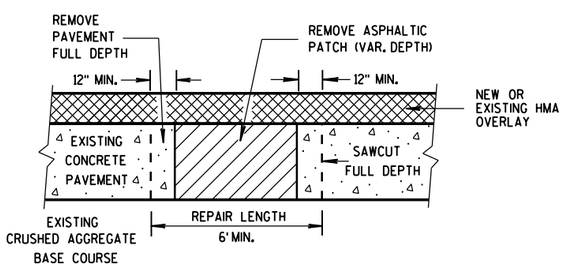


SECTION A-A

HMA PATCH REMOVAL

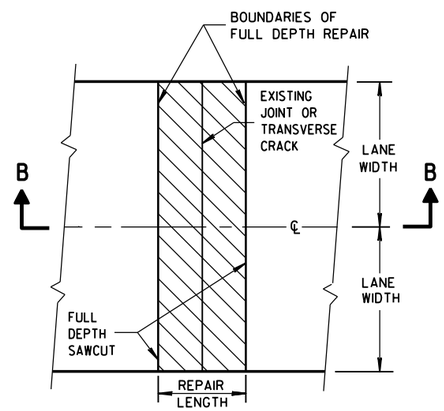


PLAN VIEW
(DOUBLE LANE REPAIR)

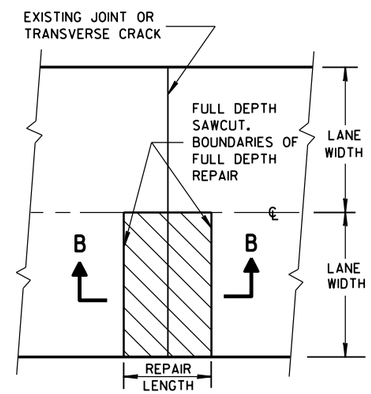


PLAN VIEW
(SINGLE LANE REPAIR)

FULL DEPTH CONCRETE PAVEMENT REMOVAL

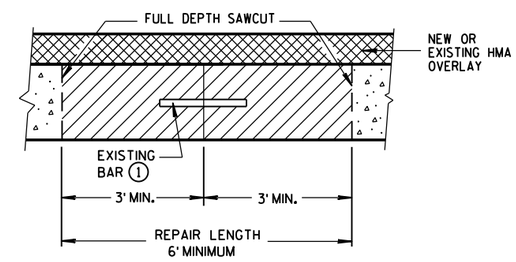


SECTION B-B

CONCRETE REMOVAL

6

6

BASE PATCHING CONCRETE

STATE OF WISCONSIN
DEPARTMENT OF TRANSPO





S.D.D. 13 C 14-6a

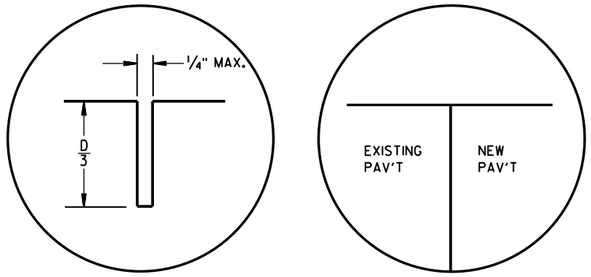


C1 C2

## TRANSVERSE JOINTS

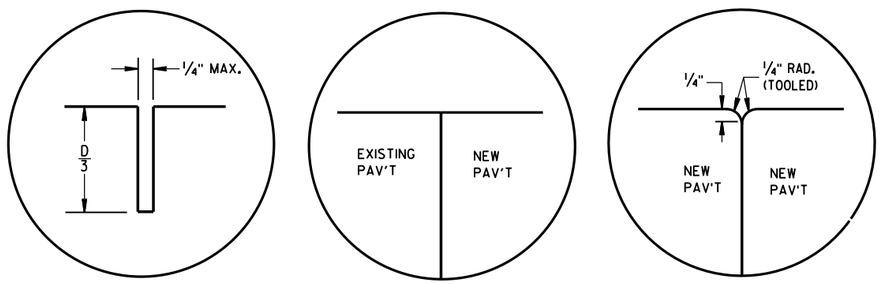


L1 L2 L3

## LONGITUDINAL JOINTS

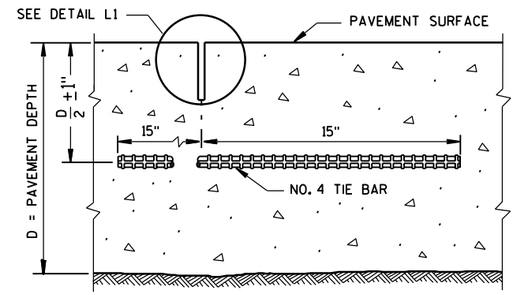


SECTION C-C

## SAWED LONGITUDINAL JOINT

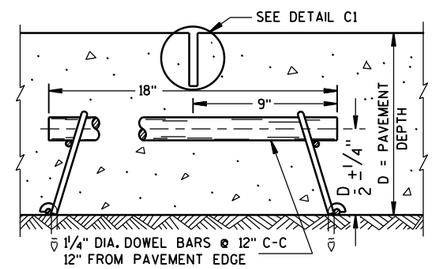


SECTION F-F

## CONTRACTION JOINT

## GENERAL NOTES

INSTALL DOWEL BARS PARALLEL TO THE PAVEMENT CENTERLINE AND PAVEMENT SURFACE.

CONCRETE BASE PATCHES OF EXISTING NONDOWELED CONCRETE PAVEMENTS DO NOT NEED TO BE DOWELED.

DO NOT SEAL OR FILL JOINTS.

ANCHOR DOWEL BARS AND TIE BARS INTO DRILLED HOLES WITH AN EPOXY.

PROVIDE A MINIMUM DISTANCE OF 15 INCHES FROM AN EXISTING TRANSVERSE JOINT OR THE EDGE OF REPLACEMENT TO THE CENTER OF THE TIE BAR NEAREST THAT JOINT OR EDGE.

(1) APPLY A THIN UNIFORM COATING OF SURFACE TREATMENT TO THE FREE END OF DOWEL BARS TO PREVENT BONDING.

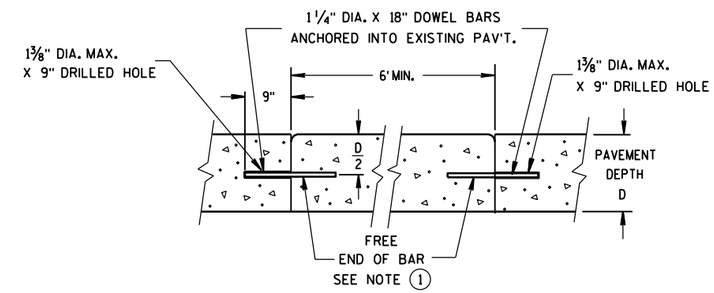


SECTION D-D

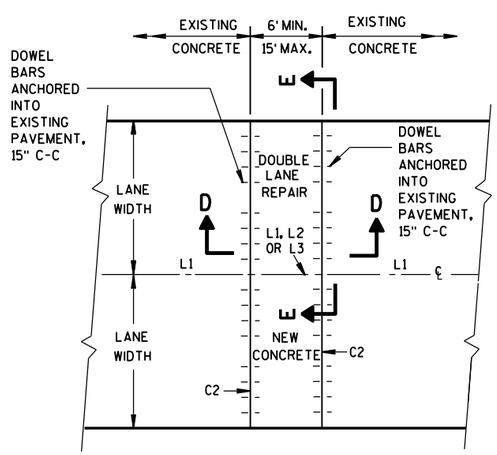


PLAN VIEW

## MULTI-LANE CONCRETE BASE PATCH 15' MAXIMUM LENGTH

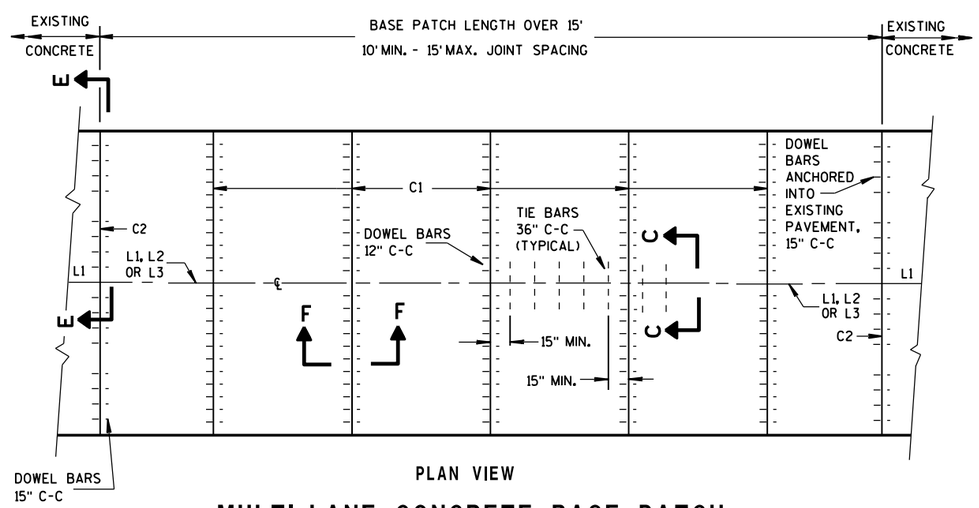


PLAN VIEW

## MULTI-LANE CONCRETE BASE PATCH GREATER THAN 15' IN LENGTH

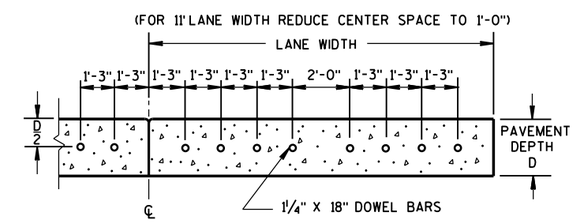


SECTION E-E

## SPACING OF DOWEL BARS ANCHORED INTO EXISTING PAVEMENT

BASE PATCHING CONCRETE

STATE OF WISCONSIN
DEPARTMENT OF TRANSPOI

## GENERAL NOTES

1. USE AN ENGINEER-APPROVED BOND BREAKER (E.G. RELEASE AGENT, CURING COMPOUND) FOR SINGLE LANE BASE PATCHES UP TO 15 FEET IN LENGTH.

2. WITH THE APPROVAL OF THE ENGINEER, FOR SINGLE LANE PAVEMENT REPLACEMENTS LESS THAN 30 FEET IN LENGTH, DRILLED TIE BARS MAY BE INSTALLED ON 6:1 SKEW HORIZONTALLY, DIRECTION OF SKEW ALTERNATING WITH EACH SUCCESSIVE BAR. DRIVE SKEWED TIE BARS TO A DEPTH OF 6 INCHES IN A HOLE OF SUCH A DIAMETER AS TO PROVIDE A TIGHT DRIVEN FIT.

3. ANCHOR TIE BARS INTO DRILLED HOLES WITH AN EPOXY.

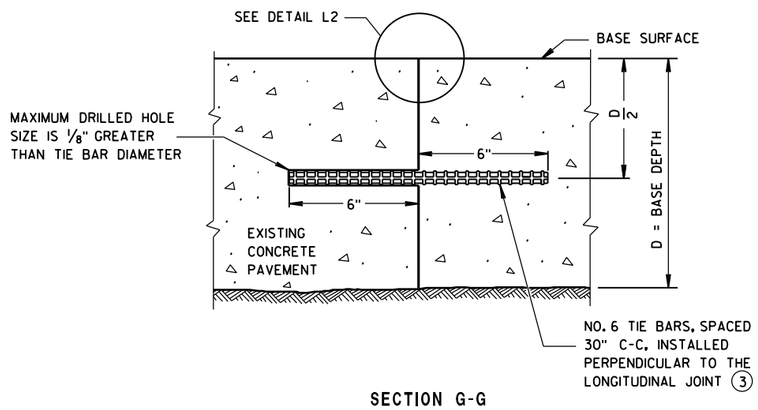


SECTION G-G

### TIE BARS ANCHORED INTO EXISTING PAVEMENT

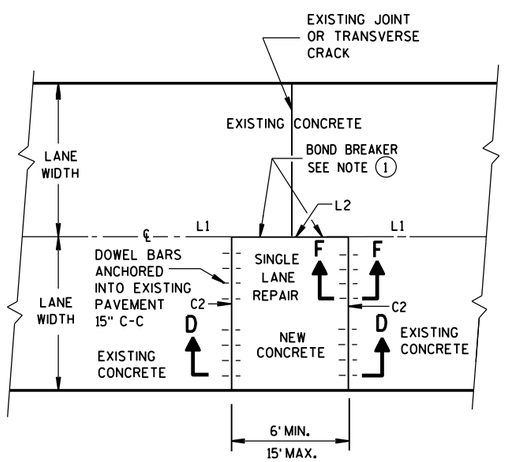


PLAN VIEW

### SINGLE LANE CONCRETE BASE PATCH 15' MAXIMUM LENGTH

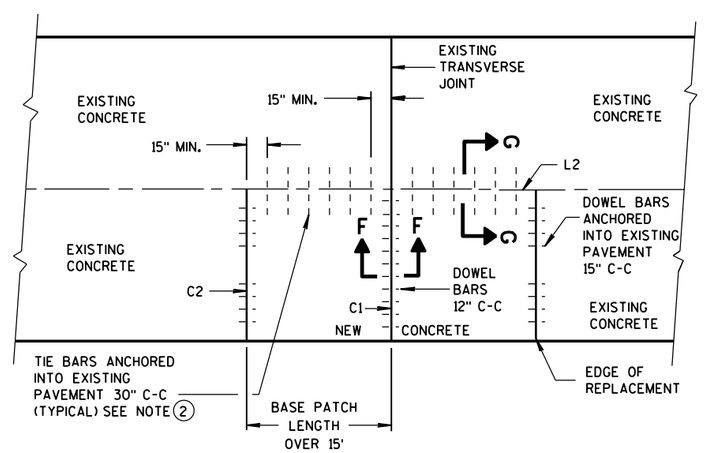


PLAN VIEW

### SINGLE LANE CONCRETE BASE PATCH GREATER THAN 15' IN LENGTH

**BASE PATCHING CONCRETE**

STATE OF WISCONSIN
DEPARTMENT OF TRANSPORTATION

APPROVED
Sept., 2015 — DATE
/S/ Peter Kemp, P.E. — PAVEMENT SUPER
FHWA

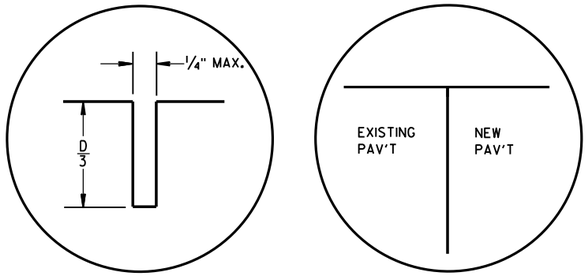


C1 C2

## TRANSVERSE JOINTS

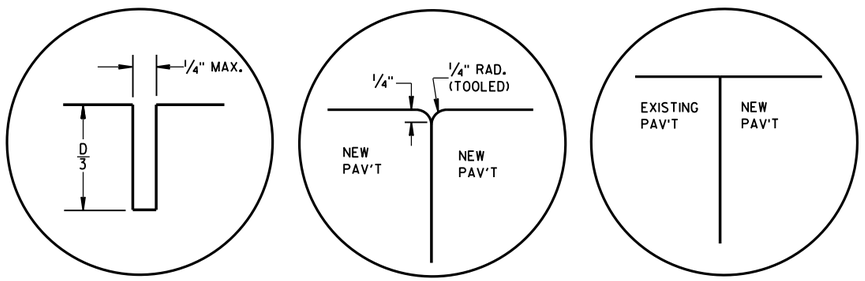


L1 L2 L3

## LONGITUDINAL JOINTS

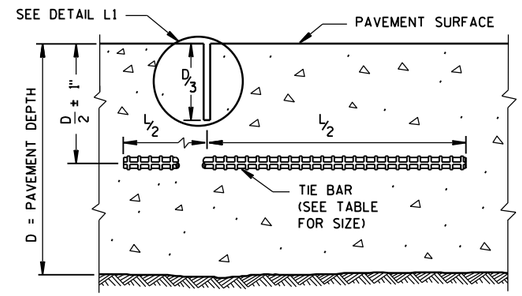


SECTION C-C

## SAWED JOINT

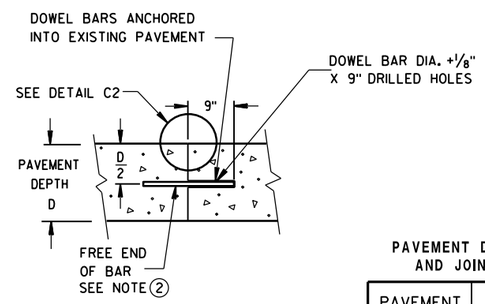


SECTION D-D

## GENERAL NOTES

ANCHOR TIE BARS AND DOWEL BARS INTO DRILLED HOLES WITH AN EPOXY.

PROVIDE A MINIMUM DISTANCE OF 15 INCHES FROM AN EXISTING TRANSVERSE JOINT OR THE EDGE OF REPLACEMENT TO THE CENTER OF THE TIE BAR NEAREST THAT JOINT OR EDGE.

1. INSTALL DOWEL BARS PARALLEL TO THE PAVEMENT CENTERLINE AND PAVEMENT SURFACE.
2. APPLY A THIN UNIFORM COATING OF SURFACE TREATMENT TO THE FREE END OF DOWEL BARS TO PREVENT BONDING.

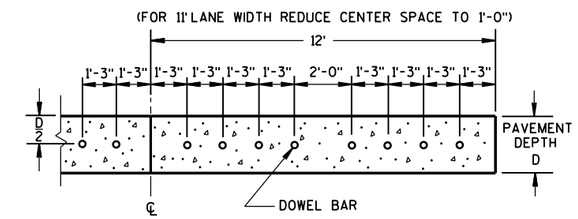


SECTION E-E

## SPACING OF DOWEL BARS ANCHORED INTO EXISTING PAVEMENT

PAVEMENT DEPTH, DOWEL BAR SIZE AND JOINT SPACING TABLE

| PAVEMENT DEPTH (D) | DOWEL BAR DIAMETER | CONTRACTION JOINT SPACING |
|---|---|---|
| 5½", 6, 6 ½" | NONE | 12' |
| 7, 7 ½" | 1" | 14' |
| 8, 8 ½" | 1¼" | 15' |
| 9, 9 ½" | 1¼" | 15' |
| 10" & ABOVE | 1½" | 15' |

## TIE BAR TABLE

| PAVEMENT DEPTH (D) | TIE BAR SIZE | TIE BAR LENGTH (L) | MAX. TIE BAR SPACING |
|---|---|---|---|
| < 10 ½" | NO. 4 | 30" | 36" |
| ≥ 10 ½" | NO. 5 | 36" | 36" |
| | NO. 4 * | 30" | 24" ** |

* SUBSTITUTE BENT BARS AT LONGITUDINAL JOINTS WHEN EQUIPMENT LIMITATIONS DURING CONSTRUCTION WARRANT (e.g. AUXILIARY LANES OR TURN LANES)

** CONFORM TO 15" MINUMUM SPACING FROM TRANSVERSE JOINTS; SPACING BETWEEN TIE BARS WILL BE 30" AT TRANSVERSE JOINTS.

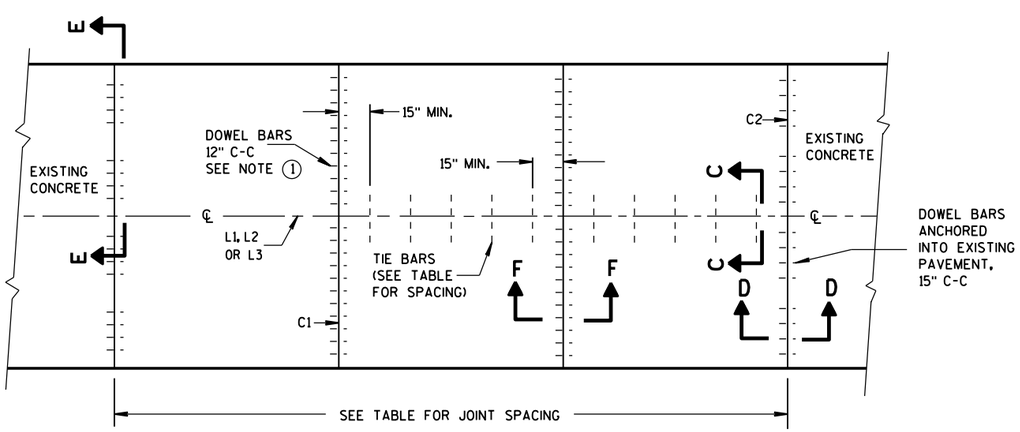


PLAN VIEW

## CONCRETE BASE CONTRACTION JOINT LOCATIONS

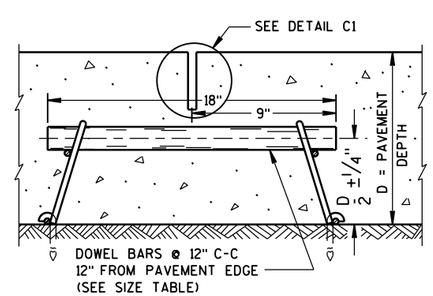


SECTION F-F

## CONTRACTION JOINT

CONCRETE BASE

STATE OF WISCONSIN
DEPARTMENT OF TRANSPO







6

S.D.D. 13 C 15-6a

## GENERAL NOTES

1. USE AN ENGINEER-APPROVED BOND BREAKER (E.G. RELEASE AGENT, CURING COMPOUND) AT THE LONGITUDINAL JOINT IN LIEU OF TIE BARS FOR SINGLE LANE CONCRETE BASE REPAIRS UP TO 15 FEET IN LENGTH.

2. ANCHOR TIE BARS INTO DRILLED HOLES WITH AN EPOXY.

3. PAVEMENT THAT WAS IN PLACE PRIOR TO THE CONTRACT.

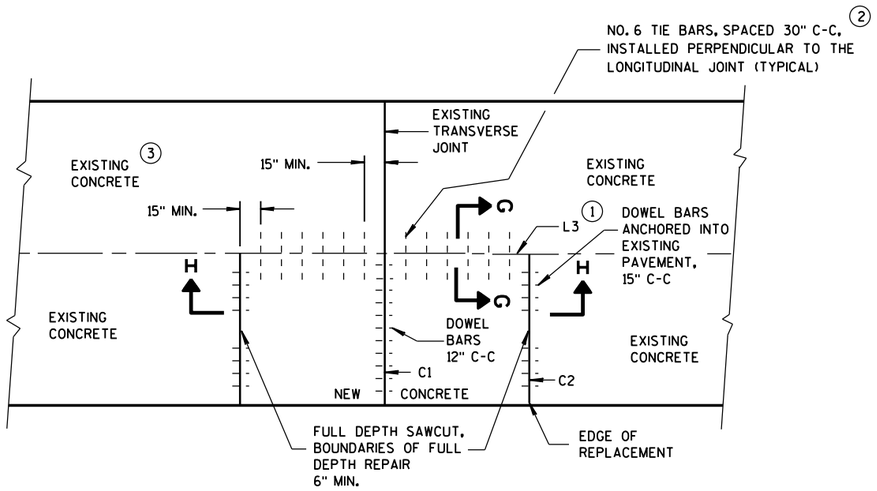


PLAN VIEW

### SINGLE LANE CONCRETE BASE REPAIR

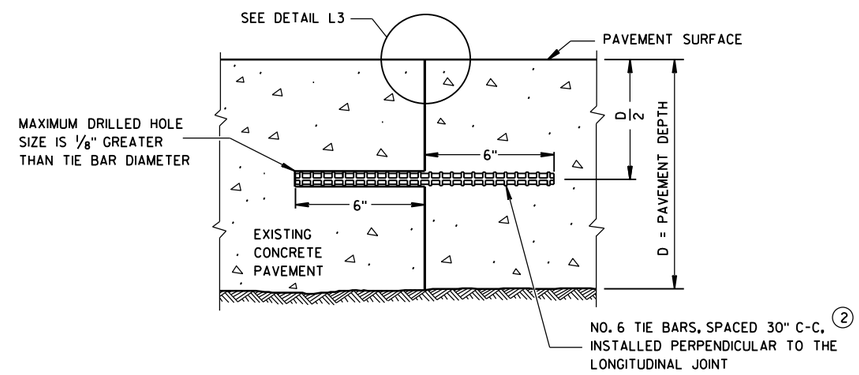


SECTION G-G

### TIE BARS ANCHORED INTO EXISTING PAVEMENT

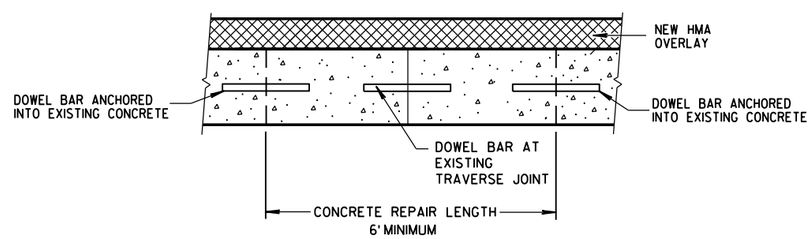


SECTION H-H

CONCRETE BASE

STATE OF WISCONSIN
DEPARTMENT OF TRANSPORTATION

APPROVED
June, 2015 — DATE
/S/ Peter Kemp, P.E. — PAVEMENT SUPEI
FHWA

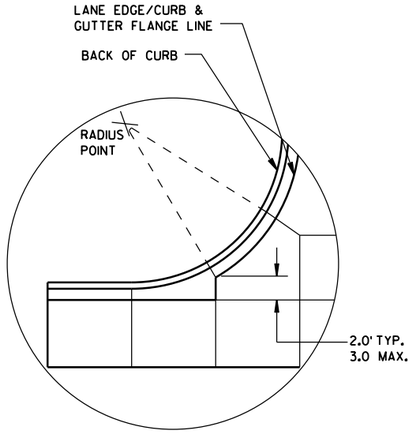


DETAIL "A"

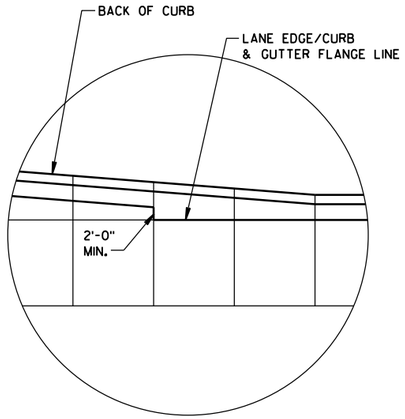


DETAIL "B"

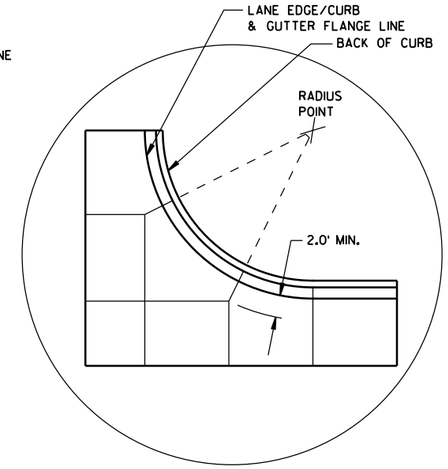


DETAIL "C"

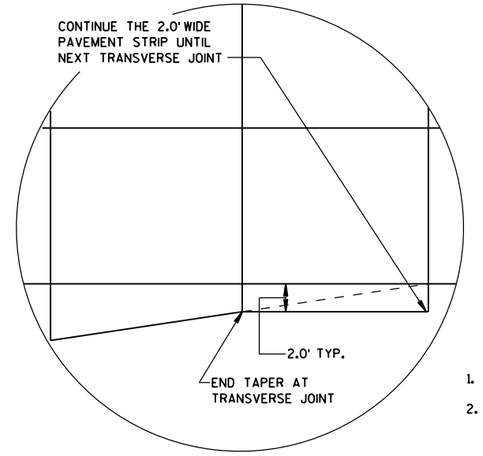


DETAIL "D"

## GENERAL NOTES

THE PRIMARY ROADWAY CONTROLS THE TRANSVERSE JOINT PATTERN.

ALIGN NEW JOINTS WITH EXISTING JOINTS OR CRACKS.

CONSTRUCT TRANSVERSE JOINTS PERPENDICULAR TO THE ROADWAY.

ADJUST TRANSVERSE JOINTS TO ALIGN WITH UTILITY FIXTURES (E.G. MANHOLES AND INLETS) IN THE PAVEMENT STRUCTURE WHEN POSSIBLE. WATER VALVES DO NOT REQUIRE JOINT ADJUSTMENT.

AVOID SLABS LESS THAN 2 FEET WIDE OR GREATER THAN 15 FEET WIDE.

SEE TABLE FOR TRANSVERSE JOINT SPACING. JOINT SPACING SPECIFIED IS MAXIMUM AND ACTUAL SPACING CAN BE ADJUSTED TO ACCOMMODATE INTERSECTIONS.

AVOID ANGLES LESS THAN 60° BY DOGLEGGING JOINTS THROUGH CURVE RADIUS POINTS. USE 90° ANGLES WHEN POSSIBLE.

CORRELATE LONGITUDINAL JOINTS WITH LANE LINES WHEN POSSIBLE.

1. PROVIDE TRANSVERSE JOINTS AT ALL PAVEMENT WIDTH CHANGES.
2. CONSTRUCT DOWELED EXPANSION JOINT ON THE SIDE ROAD OF AN INTERSECTION IF THE SIDE ROAD IS CONCRETE PAVEMENT AND GREATER THAN 300 FEET IN LENGTH. ALIGN EXPANSION JOINT WITH EDGE OF RADIUS.
3. THE ENGINEER MAY APPROVE SLIGHT VARIATIONS FROM THESE JOINTING DETAILS.

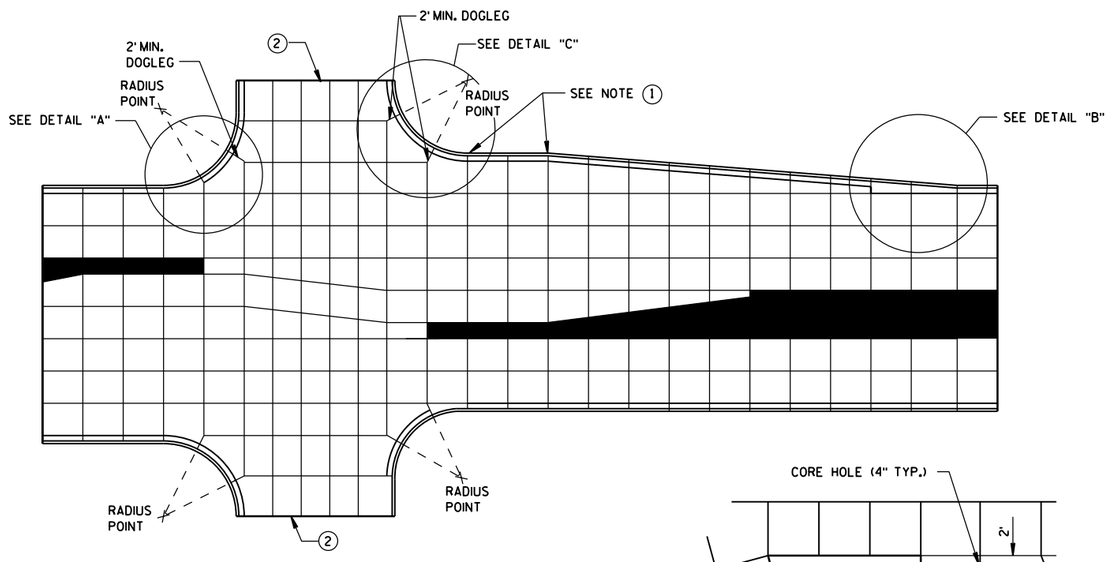


STANDARD INTERSECTION

PAVEMENT DEPTH AND JOINT SPACING TABLE

| PAVEMENT DEPTH (D) | CONTRACTION JOINT SPACING |
|---|---|
| 6", 6½" | 12' |
| 7", 7½" | 14' |
| 8" & ABOVE | 15' |

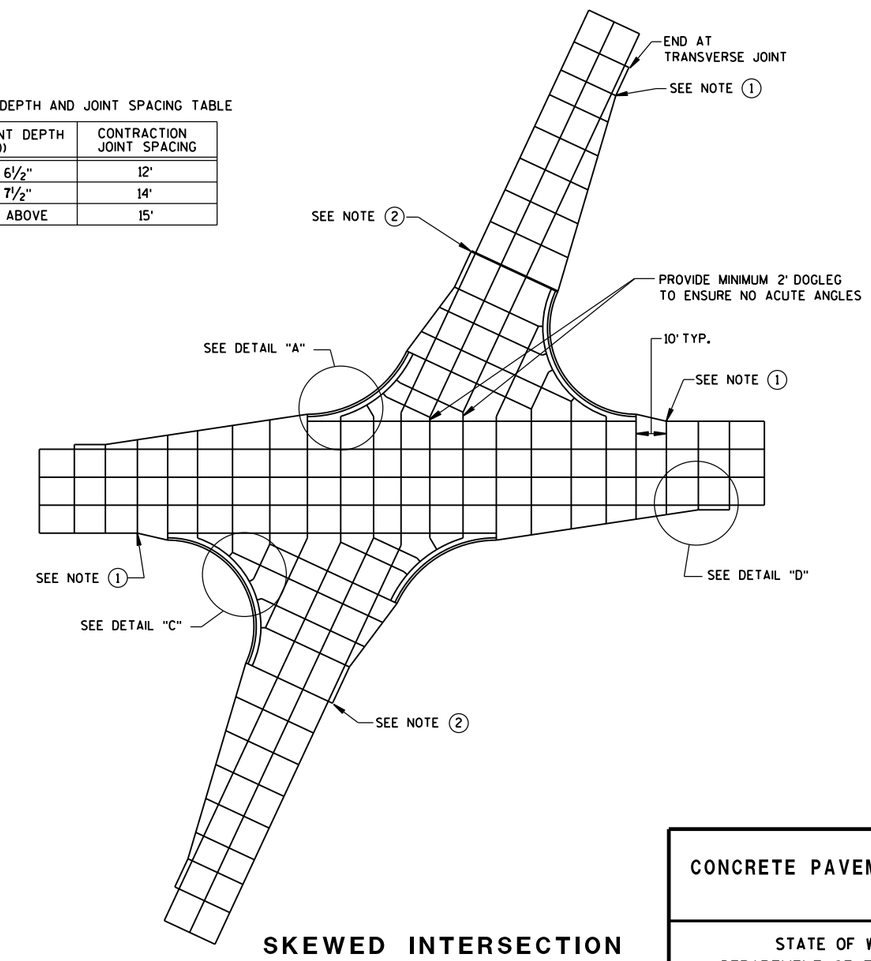


SKEWED INTERSECTION

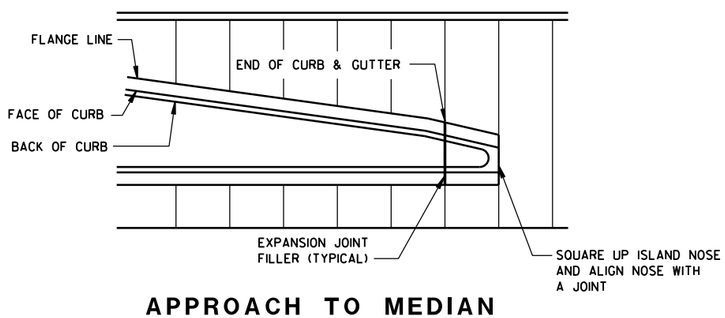


APPROACH TO MEDIAN

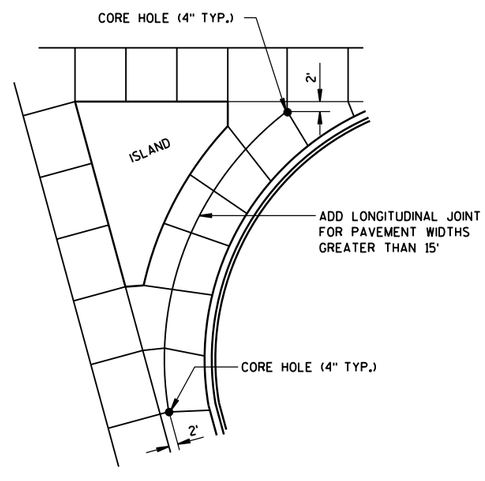


LARGE RIGHT TURN

CONCRETE PAVEMENT JOINTING

STATE OF WISCONSIN
DEPARTMENT OF TRANSPORTATION





6



S.D.D. 13 C 18-3a

## LEGEND

POTENTIAL DOWELED EXPANSION JOINT

DOWELED JOINT

TIED JOINT

## GENERAL NOTES

USE AN EXPANSION JOINT FILLER MEETING THE REQUIREMENTS OF STANDARD SPECIFICATION 415.

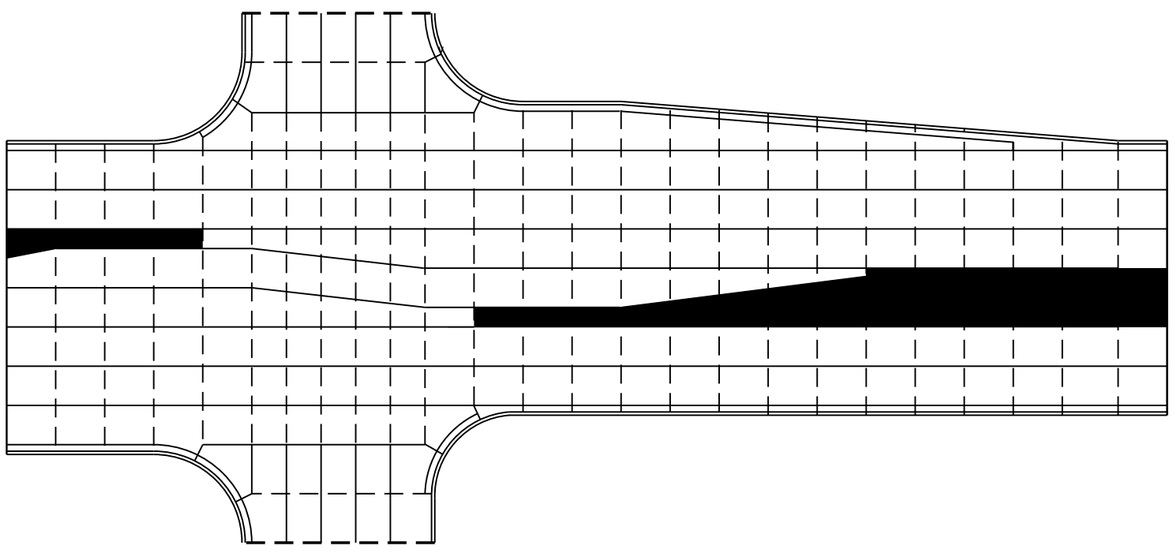

STANDARD INTERSECTION

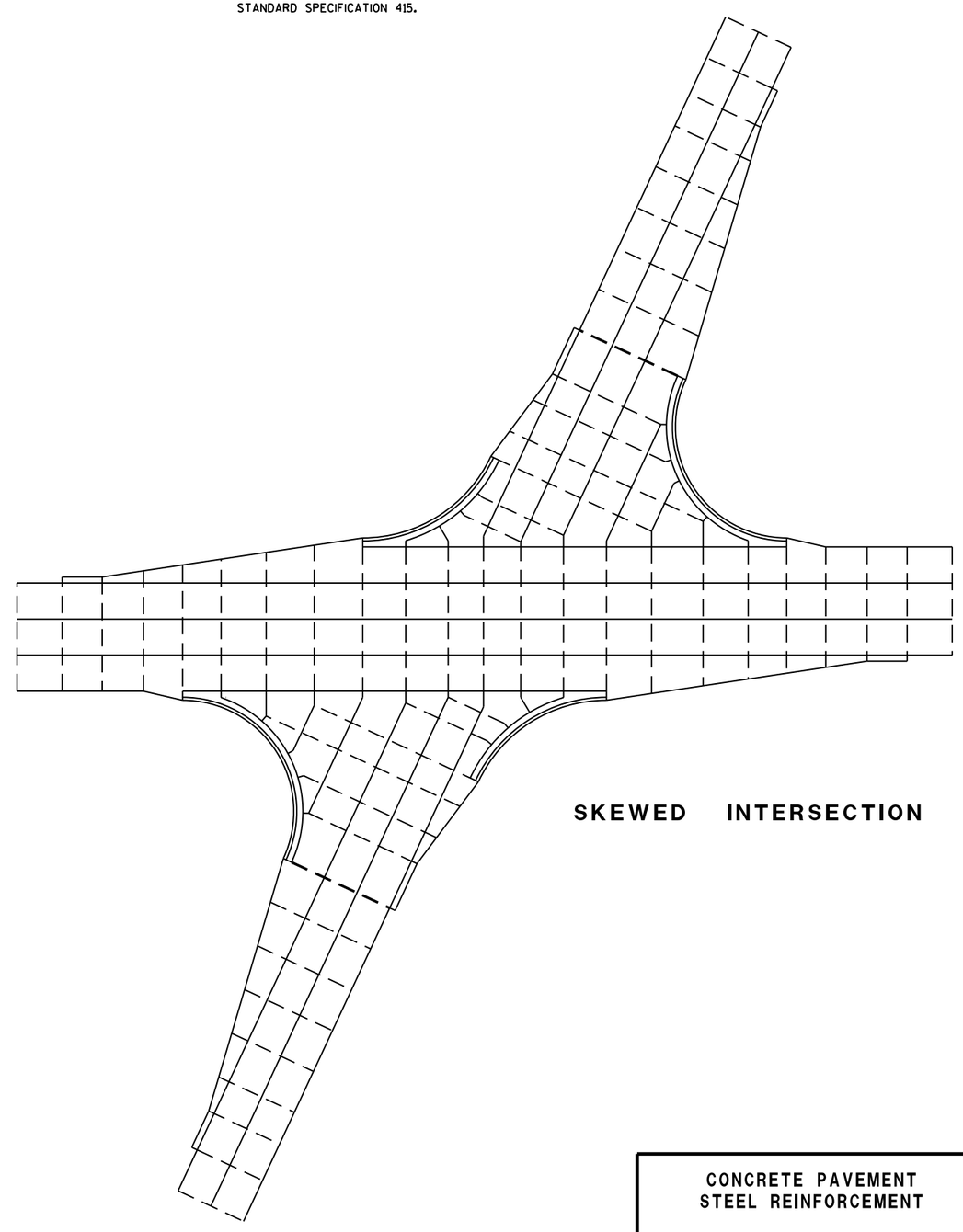

SKEWED INTERSECTION

CONCRETE PAVEMENT
STEEL REINFORCEMENT

STATE OF WISCONSIN
DEPARTMENT OF TRANSPORTATION





6



S.D.D. 13 C 18-3b

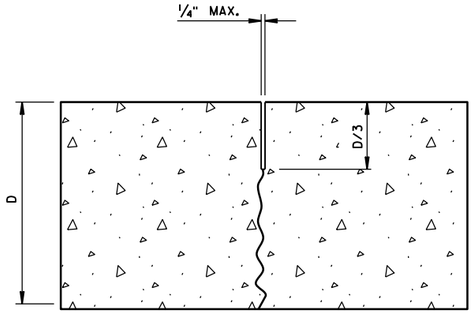


UNDOWELED-TRANSVERSE

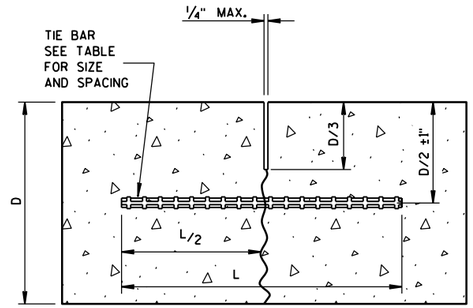


TIED LONGITUDINAL

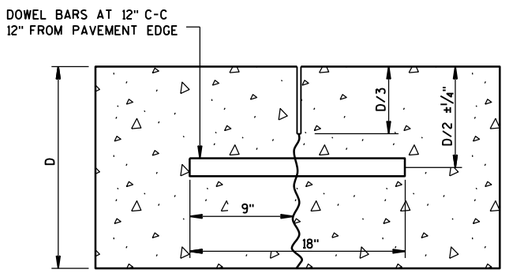


DOWELED-TRANSVERSE

## CONTRACTION JOINTS

SEE NOTE (2)

## TIE BAR TABLE

| PAVEMENT DEPTH (D) | TIE BAR SIZE | TIE BAR LENGTH (L) | MAX. TIE BAR SPACING |
|---|---|---|---|
| < 10 1/2" | NO. 4 | 30" | 36" |
| ≥ 10 1/2" | NO. 5 | 36" | 36" |
| | NO. 4* | 30" | 24"** |

* SUBSTITUTE BENT BARS AT LONGITUDINAL JOINTS WHEN EQUIPMENT LIMITATIONS DURING CONSTRUCTION WARRANT (e.g. AUXILIARY LANES OR TURN LANES)

** CONFORM TO 15" MINUMUM SPACING FROM TRANSVERSE JOINTS; SPACING BETWEEN TIE BARS WILL BE 30" AT TRANSVERSE JOINTS.

## GENERAL NOTES

1. USE DOWELED EXPANSION JOINTS ON SIDE ROADS AT INTERSECTIONS (TO ISOLATE THE SIDE ROAD FROM THE THROUGH STREET) IF THE SIDE ROAD IS CONCRETE PAVEMENT AND GREATER THAN 300 FEET IN LENGTH.
2. SPACE CONTRACTION JOINTS IN ACCORDANCE WITH 13C4, 13C11 OR 13C13.
3. LOCATE CONSTRUCTION JOINTS A MINIMUM OF 6 FEET FROM THE NEAREST CONTRACTION JOINT AND ALIGN PARALLEL TO CONTRACTION JOINTS.
4. CONSTRUCTION JOINTS CAN BE FORMED OR SAWED.
5. IF JOINT IS FORMED, PROVIDE A 1/4-INCH RADIUS.
6. ANCHOR TIE BARS INTO DRILLED HOLES WITH AN EPOXY.

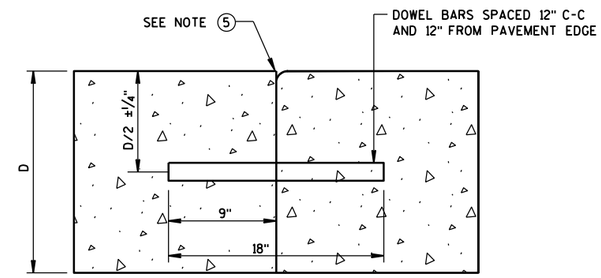


DOWELED TRANSVERSE (3)

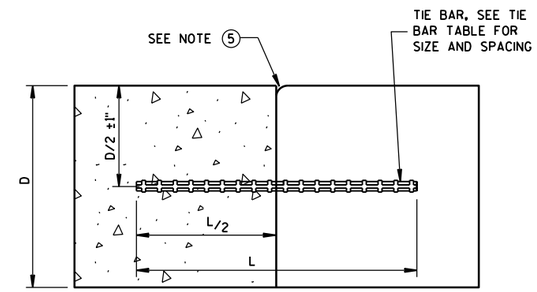


TIED LONGITUDINAL

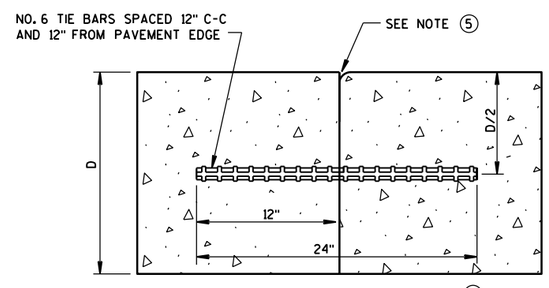


TIED TRANSVERSE (3)

(FOR USE ON NON-DOWELED PAVEMENTS ONLY)

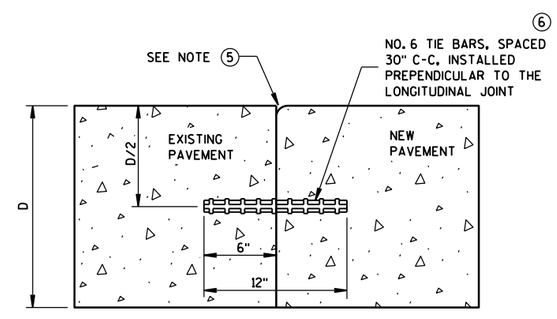


TIED LONGITUDINAL TO EXISTING

## CONSTRUCTION JOINTS

SEE NOTE (4)

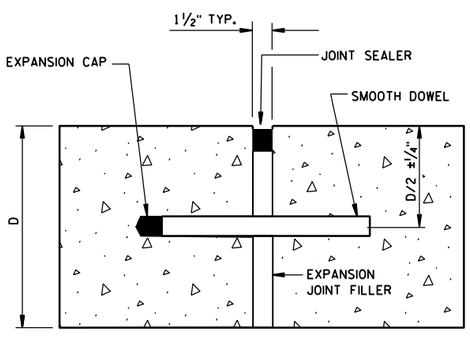


DOWELED-TRANSVERSE

SEE NOTE (1)

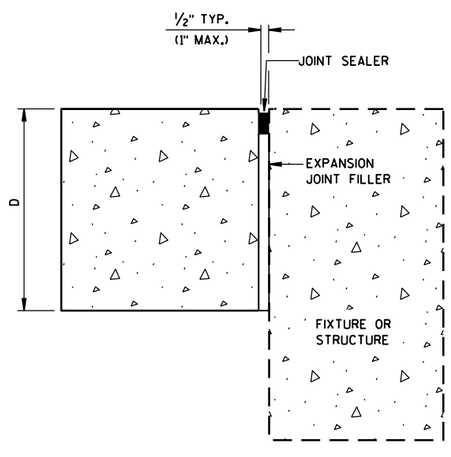


UNTIED-LONGITUDINAL

## EXPANSION JOINTS

CONCRETE PAVEMENT
JOINT TYPES

STATE OF WISCONSIN
DEPARTMENT OF TRANSPOR





6



S.D.D. 13 C 18-3c

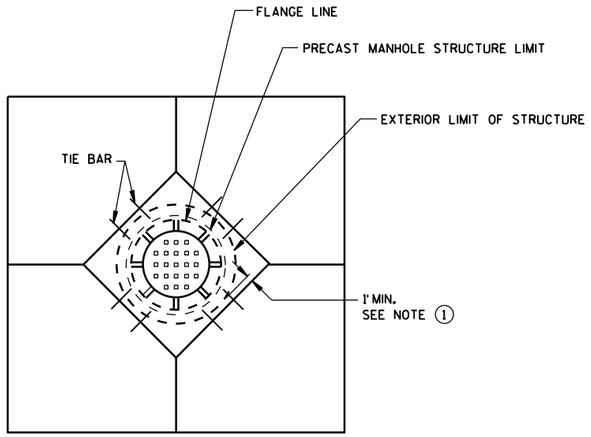


## DIAGONAL MANHOLE BOXOUT FOR CONSTRUCTION JOINTS

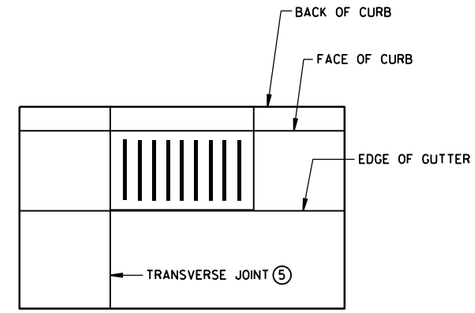


## INLET WITH TRANSVERSE JOINT

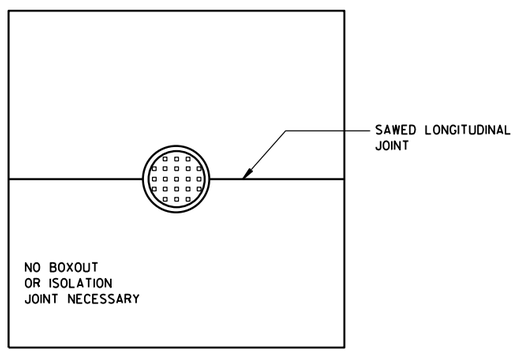


## MANHOLE WITH LONGITUDINAL JOINT

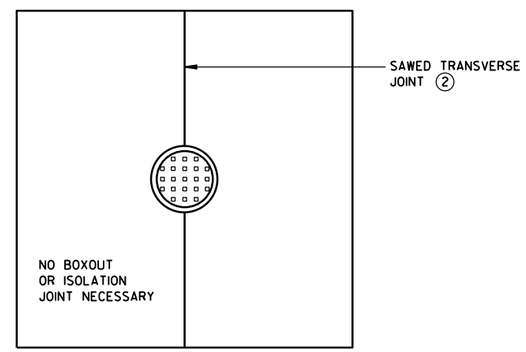


## MANHOLE WITH TRANSVERSE JOINT

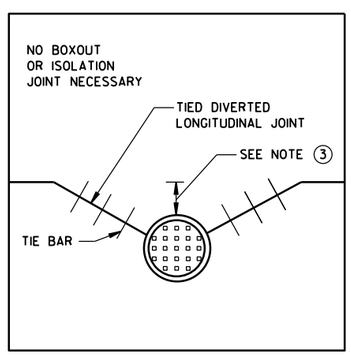


## MANHOLE WITH DIVERTED LONGITUDINAL CONTRACTION JOINT

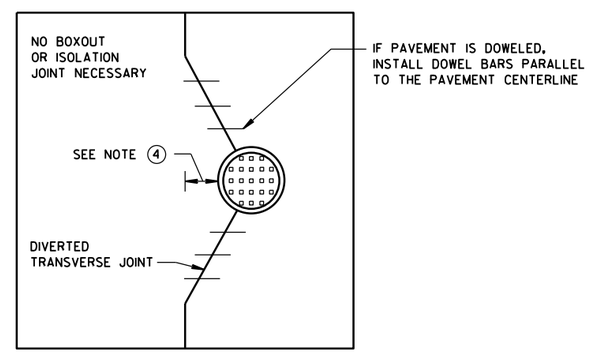


## MANHOLE WITH DIVERTED TRANSVERSE CONTRACTION JOINT

## GENERAL NOTES

1. USE BOXOUTS WHEN UTILITY STRUCTURE IS IN THE PATH OF CONSTRUCTION JOINTS. PROVIDE A 1-FOOT MINIMUM CLEARANCE BETWEEN THE EXTERIOR LIMIT OF THE STRUCTURE TO THE DIAMOND BOXOUT.
2. ADJUST TRANSVERSE JOINT TO INTERSECT MANHOLE IF POSSIBLE.
3. IF DISTANCE BETWEEN THE LONGITUDINAL JOINT AND THE EDGE OF MANHOLE IS 2 FEET OR LESS, DIVERT THE LONGITUDIAL JOINT AT A 2:1 TAPER RATE TO THE CENTER OF THE MANHOLE. IF THE DISTANCE IS GREATER THAN 2 FEET, DO NOT DIVERT THE JOINT AND SAW AS NORMAL. PLACE REBAR REINFORCEMENT AROUND THE MANHOLE.
4. IF DISTANCE FROM THE EDGE OF THE MANHOLE TO THE NEAREST TRANSVERSE JOINT IS 4 FEET OR LESS, REDIRECT JOINT TO INTERSECT THE CENTER OF THE MANHOLE. IF DISTANCE IS GREATER THAN 4 FEET, DO NOT DIVERT THE JOINT AND SAW AS NORMAL. PLACE REBAR REINFORCEMENT AROUND THE MANHOLE.
5. ALIGN TRANSVERSE JOINT WITH ONE EDGE OF INLET WHEN PRACTICAL.

CONCRETE PAVEMENT
JOINTING AT UTILITY FIXTURES

STATE OF WISCONSIN
DEPARTMENT OF TRANSPORTATION

APPROVED
June, 2015 — /S/ Peter Kemp, P.E.
DATE — PAVEMENT SUPER
FHWA

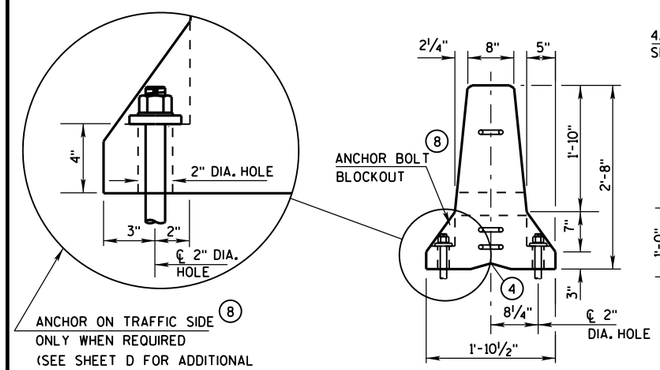


END VIEW

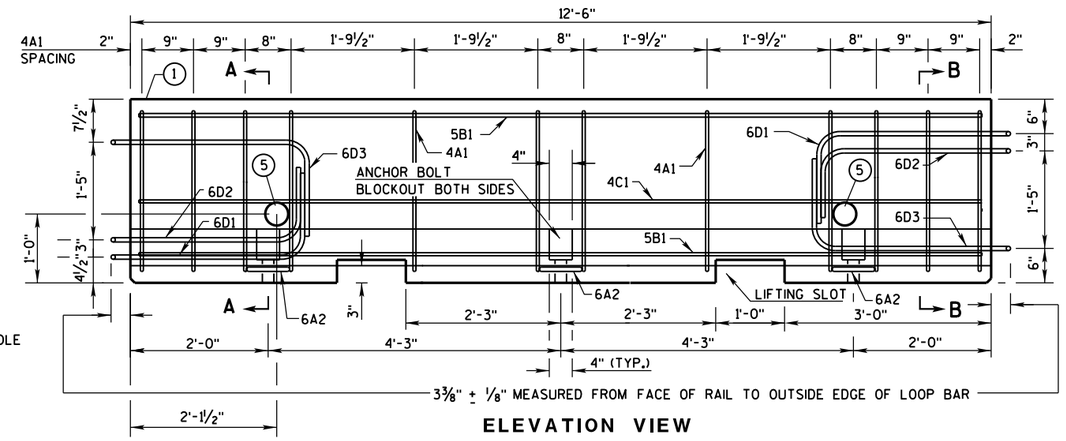


ELEVATION VIEW

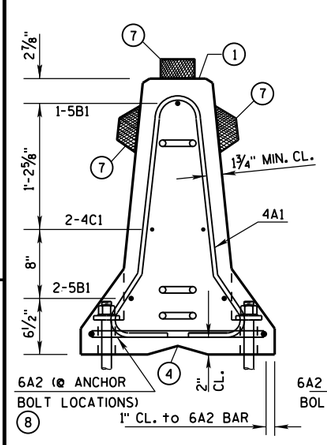


SECTION A-A
(STIRRUP PLACEMENT)

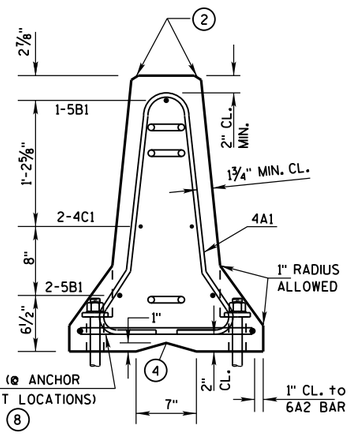


SECTION B-B
(STIRRUP PLACEMENT)

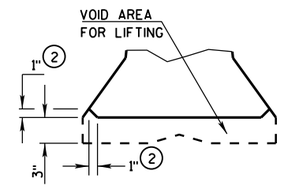


DETAIL "B"
LIFTING SLOT DETAIL

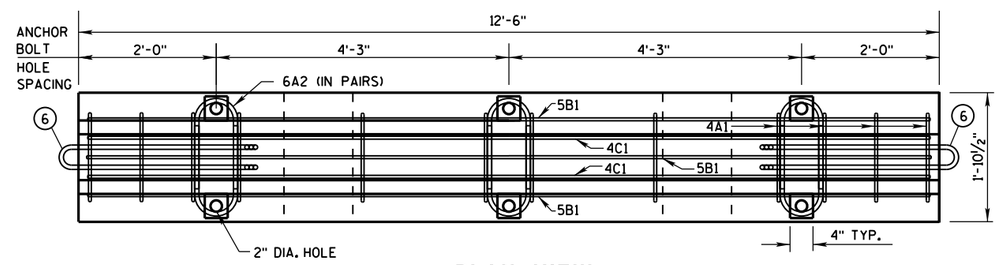


PLAN VIEW

DETAILS OF BARRIER SECTION

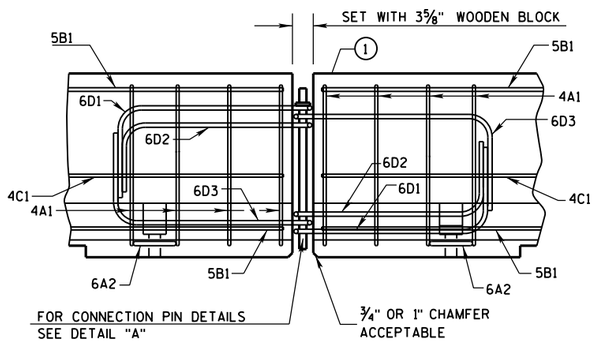


DETAILS OF BARRIER CONNECTION

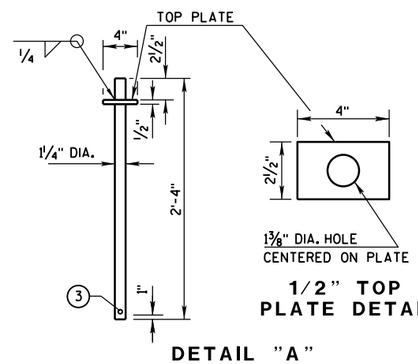


1/2" TOP PLATE DETAIL

DETAIL "A"
CONNECTION PIN
(A36 STEEL ( 10.9 LB EACH))

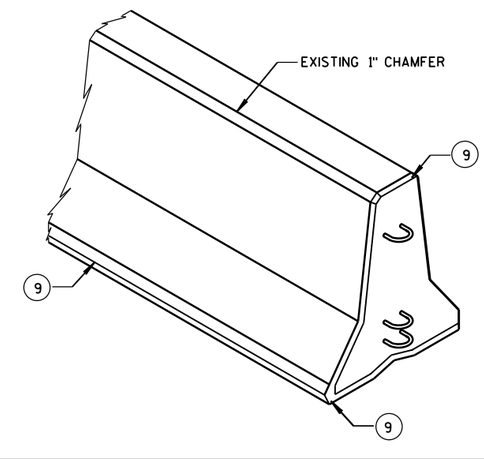


## GENERAL NOTES

THESE GENERAL NOTES APPLY TO SHEETS 14B7-14(a) THRU 14B7-14(h).

DO NOT INTERMIX CONCRETE BARRIER TEMPORARY PRCAST, 12'-6" (CBTP12.5) WITH OTHER TEMPORARY CONCRETE BARRIERS.

USE ASTM A-615, GRADE 60, DEFORMED STEEL BARS FOR BARS 4A1, 6A2, 5B1 AND 4C1 IN THE BARRIER SECTION AND FOR 4V1, 4V2, 4V3, 4V4, 4V5, 4V6, 4F1, 4F2 AND 5F3 IN THE BARRIER TAPER SECTION.

LOOP BARS 6D1, 6D2 AND 6D3 SHALL BE ¾" SMOOTH STEEL BARS WITH A MINIMUM YIELD STRENGTH OF 60 KSI, A TENSILE STRENGTH OF NOT LESS THAN 1.25 TIMES THE YIELD STRENGTH BUT A MINIMUM OF 80 KSI, A MINIMUM 14% ELONGATION IN 8 INCHES AND PASSING A 180 DEGREE BEND TEST USING A 3-½" PIN BEND DIAMETER FOR BEND TESTS. THE LOOPS SHALL BE INSTALLED WITHIN ⅛" OF THE PLAN DIMENSION.

CONSTRUCT LIFTING SLOTS AS SPECIFIED ON THE PLANS TO FACILITATE THE DRAINAGE OF WATER AFTER INSTALLATION.

PLACE BARRIER ON A PAVED SURFACE. REMOVE ALL LOOSE DIRT AND SAND FROM THE ROADWAY SURFACE PRIOR TO PLACEMENT OF THE BARRIER.

INSTALL MECHANICAL OR ADHESIVE ANCHORS PER MANUFACTURER'S RECOMMENDATIONS. PROVIDE MANUFACTURER'S INFORMATION TO PROJECT ENGINEER.

1. MARK ONE END OF EACH BARRIER PERMANENTLY BY FORMING INTO THE BARRIER THE FOLLOWING INFORMATION:
   - a. TYPE: WI CBTP
   - b. MANUFACTURER
   - c. DATE MANUFACTURED (MONTH AND YEAR)
2. 1" CHAMFER TO PREVENT SPALLING.
3. A ⅜" HOLE IN THE CONNECTION PIN, AT THE LOCATION SHOWN, IS ACCEPTABLE, BUT NOT REQUIRED..
4. "V" NOTCH IS OPTIONAL.
5. THE 4" DIAMETER, 11 GAUGE STEEL, ROUND MECHANICAL TUBING SLEEVE FOR LIFTING (OPTIONAL).
6. NEVER USE LOOP BARS (6D1, 6D2 OR 6D3) TO LIFT, MOVE OR REPOSITION THE BARRIER.
7. USE DELINEATORS CONFORMING TO SECTION 633 OF THE STANDARD SPECIFICATIONS. CONTRACTOR MAY USE ALTERNATE SHAPES AND HOUSING. INSTALL DELINEATORS ACCORDING TO MANUFACTURES INSTRUCTION. INSTALL YELLOW REFLECTORS WHEN BARRIER IS LOCATED TO THE LEFT OF TRAFFIC AND WHITE REFLECTORS WHEN BARRIER IS LOCATED TO THE RIGHT OF TRAFFIC. SPACE DELINEATORS A MAXIMUM OF 25 FEET APART. PROVIDE TOP MOUNTED DELINEATORS IN ADDITION TO THE SIDE MOUNTED DELINEATORS ON ALL BARRIER INSTALLATIONS LOCATED ON A CURVED ALIGNMENT LONGER THAN 200 FEET AND ON BARRIERS USED TO SEPARATE OPPOSING TRAFFIC.
8. SEE SHEET D FOR ANCHORING CRITERIA.
9. 1" CHAMFER OPTIONAL.

CONCRETE BARRIER
TEMPORARY PRECAST, 12'-6"

STATE OF WISCONSIN
DEPARTMENT OF TRANSPOI

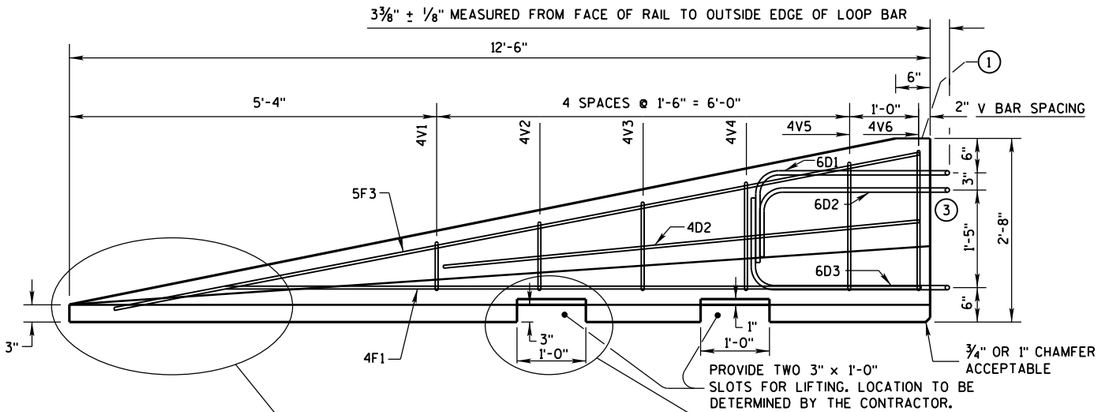


**SIDE ELEVATION**

(FOR CONNECTION TO LEFT END OF BARRIER)

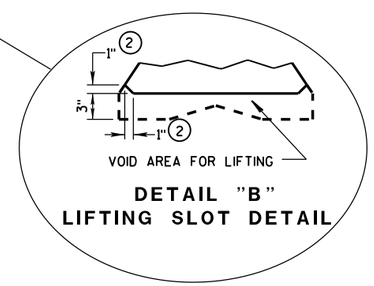


**DETAIL "B"**
**LIFTING SLOT DETAIL**

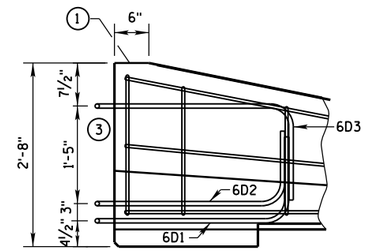


**SIDE ELEVATION**

LOOP BAR ASSEMBLY INVERTED
FOR OPPOSITE END.
(FOR CONNECTION TO RIGHT END OF BARRIER)

## GENERAL NOTES

1. MARK ONE END OF EACH BARRIER PERMANENTLY BY FORMING INTO THE BARRIER THE FOLLOWING INFORMATION:
   a. TYPE WICBTP
   b. MANUFACTURER
   c. DATE MANUFACTURED (MONTH AND YEAR)
2. 1" CHAMFER TO PREVENT SPALLING.
3. NEVER USE LOOP BARS (6D1, 6D2 OR 6D3) TO LIFT, MOVE OR REPOSITION THE BARRIER.

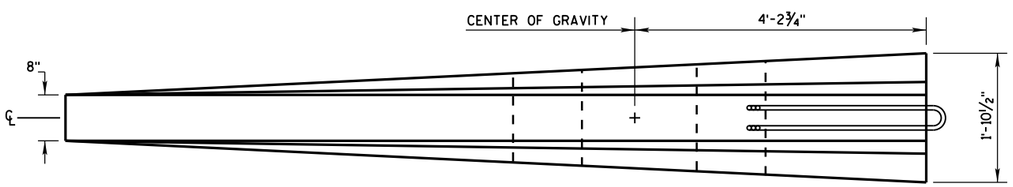


**PLAN VIEW**

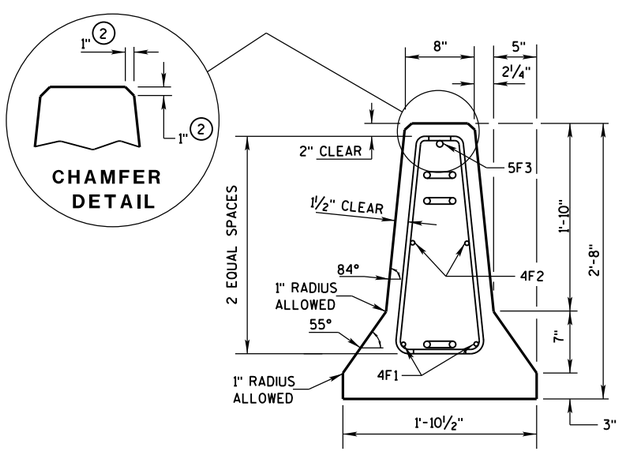


**END SECTION**

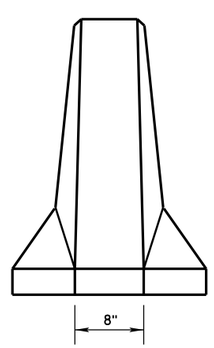


**FRONT ELEVATION**

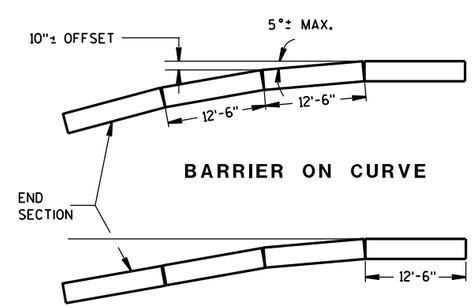


**BARRIER ON CURVE**

**FLARE AT BARRIER END**

| POSTED SPEED, (MPH) | FLARE RATE |
|---|---|
| 40 OR LESS | 6:1 |
| 45 OR GREATER | 8:1 |

## DETAILS OF BARRIER TAPER SECTION

CONCRETE BARRIER
TEMPORARY PRECAST, 12'-6"

STATE OF WISCONSIN
DEPARTMENT OF TRANSPORTATION




6


S.D.D. 14 B 7-14b

## GENERAL NOTES

(1) NEVER USE LOOP BARS (6D1, 6D2 OR 6D3) TO LIFT, MOVE OR REPOSITION THE BARRIER.

### BARRIER TAPER SECTION BILL OF MATERIALS

(PER 12'-6" BARRIER TAPER SECTION)

| BAR | BAR SIZE | NO. OF BARS | LENGTH FT. |
|---|---|---|---|
| 4V1 | 4 | 2 | 1'-11" |
| 4V2 | 4 | 2 | 2'-2" |
| 4V3 | 4 | 2 | 2'-6" |
| 4V4 | 4 | 2 | 2'-9" |
| 4V5 | 4 | 2 | 3'-2" |
| 4V6 | 4 | 2 | 3'-4" |
| 4F1 | 4 | 2 | 12'-0" |
| 4F2 | 4 | 2 | 7'-6" |
| 5F3 | 5 | 1 | 11'-9" |
| **LOOP ASSEMBLY** | | | |
| 6D1 | 6 | 1 | 8'-5" |
| 6D2 | 6 | 1 | 7'-7" |
| 6D3 | 6 | 1 | 8'-6" |

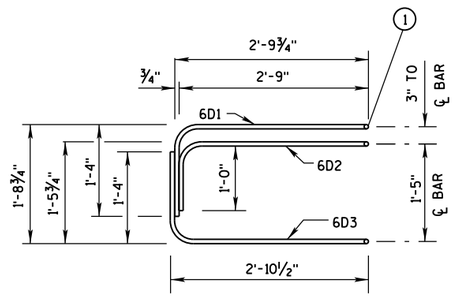


ELEVATION
LOOP BAR ASSEMBLY

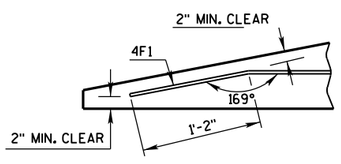


DETAIL "C"
BENT BAR DETAIL

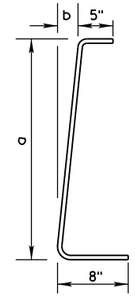


| BAR | a | b |
|---|---|---|
| V1 | 10" | 1" |
| V2 | 1'-1" | 1¼" |
| V3 | 1'-5" | 1⅝" |
| V4 | 1'-8" | 1⅞" |
| V5 | 2'-0½" | 2⅜" |
| V6 | 2'-3" | 2¾" |

4V BARS
2 AT EACH SIZE REQUIRED
FOR STIRRUP ASSEMBLY

TAPER BARRIER SECTION

### BARRIER SECTION BILL OF MATERIALS

(PER 12'-6" BARRIER SECTION)

| BAR | BAR SIZE | NO. OF BARS | LENGTH FT. |
|---|---|---|---|
| 4A1 | 4 | 12 | 6'-0" |
| 6A2 | 6 | 6 | 2'-11" |
| 5B1 | 5 | 3 | 12'-2" |
| 4C1 | 4 | 2 | 12'-2" |
| **LOOP ASSEMBLY** | | | |
| 6D1 | 6 | 2 | 8'-5" |
| 6D2 | 6 | 2 | 7'-7" |
| 6D3 | 6 | 2 | 8'-6" |

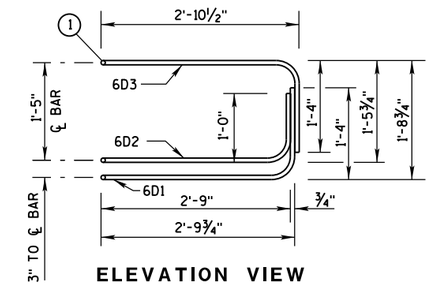


ELEVATION VIEW

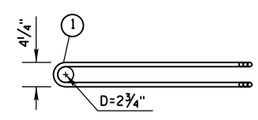


PLAN VIEW
LOOP BAR ASSEMBLY
(MARKED END SHOWN, INVERT FOR OTHER END)

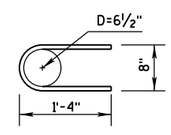


6A2

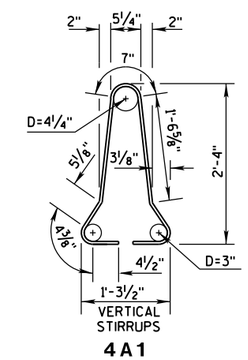


VERTICAL STIRRUPS
4A1

BARRIER SECTION

6

6

CONCRETE BARRIER
TEMPORARY PRECAST, 12'-6"

STATE OF WISCONSIN
DEPARTMENT OF TRANSPOR



S.D.D. 14 B 7-14c

S.D.D. 14 B 7-14c

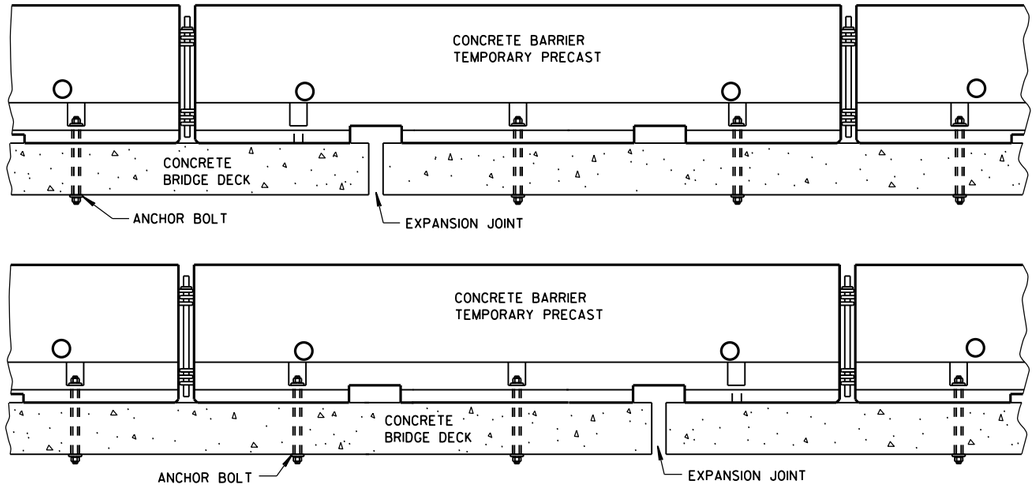


## TREATMENT AT BRIDGE DECK EXPANSION JOINTS

(NO SINGLE CONCRETE BARRIER SECTION SHALL BE ANCHORED TO BOTH THE BRIDGE DECK AND THE APPROACH SLAB. ALL ANCHOR BOLT LOCATIONS SHALL BE ANCHORED TO THE DECK IN ACCORDANCE WITH THE DETAIL. NO MORE THAN ONE ANCHOR BOLT SHALL BE ELIMINATED FROM A BARRIER SECTION WHEN SPANNING AN EXPANSION JOINT.)

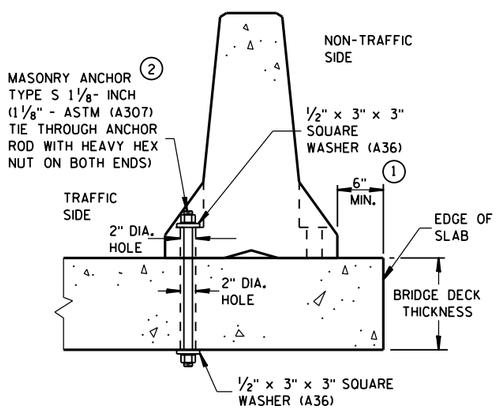


## THROUGH BOLTED ANCHOR INSTALLATION ON BRIDGE DECK

(DO NOTUSE ON CONCRETE BRIDGE DECK WITH ASPHALT OVERLAY)

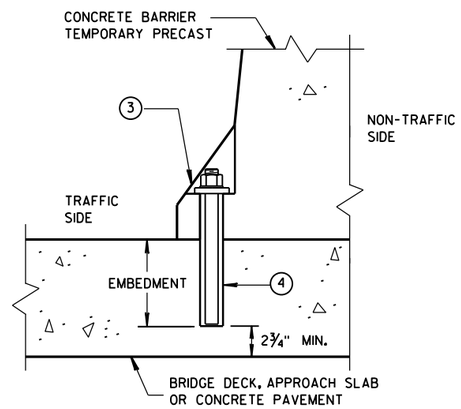


## REMOVABLE ADHESIVE BONDED ANCHOR INSTALLATION ON CONCRETE BRIDGE DECK, CONCRETE APPROACH SLAB, OR CONCRETE PAVEMENT 2

(DO NOT USE ON CONCRETE WITH AN ASPHALTIC OVERLAY)

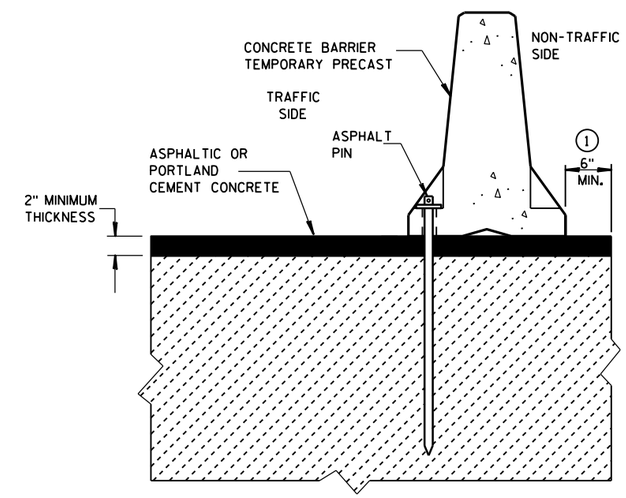


## STAKE DOWN INSTALLATION FOR ASPHALTIC OR PORTLAND CEMENT CONCRETE SURFACE

(STAKING IS INCIDENTAL TO CONCRETE BARRIER TEMPORARY PRECAST)

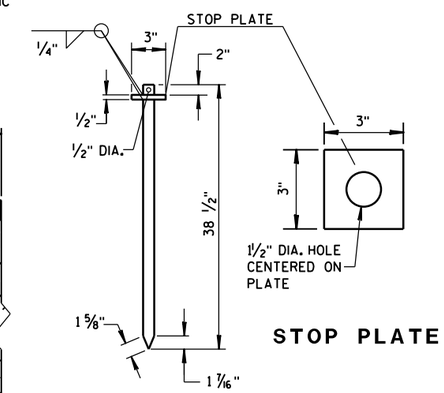


## STOP PLATE

## ASPHALT PIN

(ASTM A36 STEEL)

## GENERAL NOTES

1. CONCRETE BARRIER TEMPORARY PRECAST, 12'-6" SHALL BE ANCHORED IF:
   THE DISTANCE TO A 2 FOOT OR GREATER DROPOFF THAT IS STEEPER THAN 3H : 1V, FOR EXAMPLE THE EDGE OF A BRIDGE DECK OR A DROPOFF AT THE EDGE OF PAVEMENT, IS LESS THAN 4 FEET FROM THE SIDE OF THE BARRIER CLOSEST TO THE DROPOFF AND THE POSTED SPEED IS 45 MPH OR GREATER, OR

   THE DISTANCE TO A 2 FOOT OR GREATER DROPOFF THAT IS STEEPER THAN 3H : 1V, FOR EXAMPLE THE EDGE OF A BRIDGE DECK OR A DROPOFF AT THE EDGE OF PAVEMENT, IS LESS THAN 2 FEET FROM THE SIDE OF THE BARRIER CLOSEST TO THE DROPOFF AND THE POSTED SPEED IS 40 MPH OR LESS.

2. ANCHORING IS INCIDENTAL TO CONCRETE BARRIER TEMPORARY PRECAST.

   WITH THE APPROVAL OF THE ENGINEER, REMOVABLE ADHESIVE BONDED ANCHOR BOLT INSTALLATION MAY BE USED IN LIEU OF THROUGH BOLTED ANCHOR INSTALLATION. THE ADHESIVE BONDED ANCHOR BOLT MUST BE REMOVABLE. USE ASTM (A307) MASONRY ANCHORS TYPE S 1⅛-INCH, EMBEDDED TO A DEPTH SUFFICIENT TO DEVELOP THE ULTIMATE CAPACITY OF THE ANCHOR BOLT AND PROVIDE DOCUMENTATION TO CONFIRM THIS.

   UPON REMOVAL OR RELOCATION OF THE BARRIER UNITS, REMOVE ALL ANCHOR BOLTS AND COMPLETELY FILL IN THE REMAINING HOLES IN CONCRETE BRIDGE DECKS, CONCRETE APPROACH SLABS AND CONCRETE PAVEMENTS THAT ARE TO REMAIN, WITH A NON-SHRINK COMMERICAL GROUT OR MATERIAL IDENTIFIED ON THE CURRENT WISDOT APPROVED PRODUCTS LIST.

3. 1⅛" DIAMENTER A307 THREADED ROD, ½" X 3" X 3" SQUARE PLATE WASHER WITH ASTM A36 STEEL, ASTM A563A HEAVY HEX NUT.

4. ADHESIVE ANCHORS WITH A MINIMUM BOND STRENGTH OF 1,800 PSI AND 5¼" EMBEDMENT. SEE 603.2 AND 603.3.1.2 OF THE WISCONSIN STANDARD SPECIFICATIONS FOR MORE INFORMATION ON ADHESIVE ANCHORS.

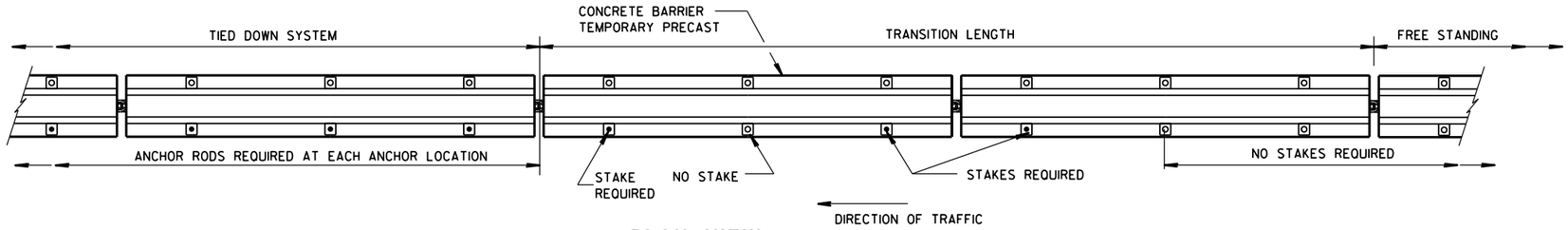


PLAN VIEW

## FREE STANDING TRANSITION TO TIED-DOWN SYSTEM

(PLACE TRANSITION IN A TANGENT SECTION OF BARRIER PARALLEL TO THE ROADWAY. IF TRANSITION OCCURS ON STRUCTURAL SLAB, ANCHOR AS SHOWN.)

CONCRETE BARRIER
TEMPORARY PRECAST, 12'-6"

STATE OF WISCONSIN
DEPARTMENT OF TRANSPOI




6


S.D.D. 14 B 7-14d

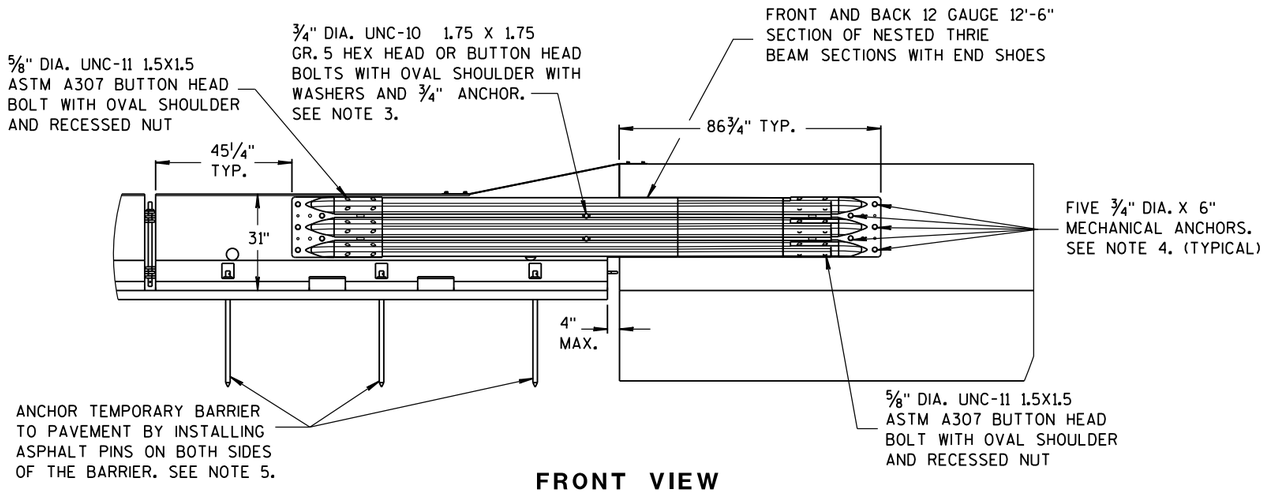


**FRONT VIEW**

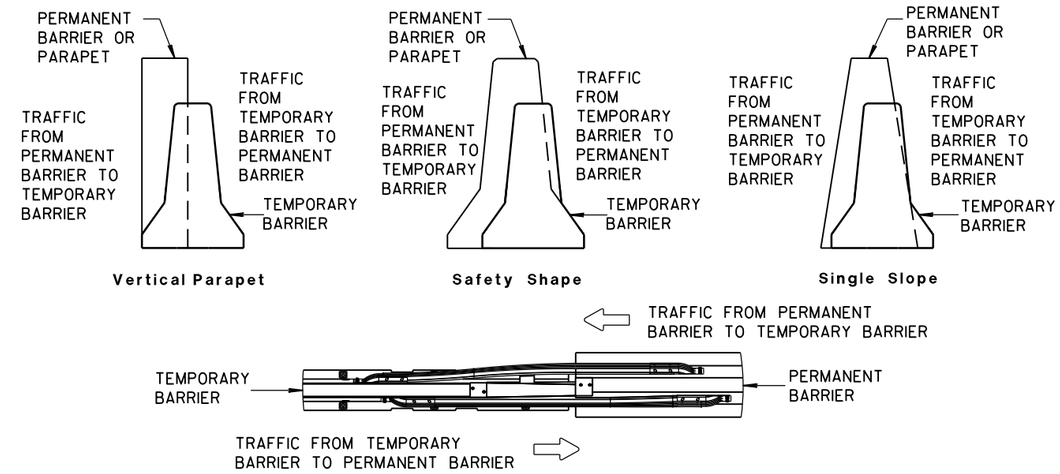


**TEMPORARY BARRIER PLACEMENT FOR BI-DIRECTIONAL TRANSITION TO TIED-DOWN SYSTEM**

## NOTES

NESTED THRIE BEAM IS REQUIRED ON BOTH SIDES OF THE TEMPORARY BARRIER FOR ALL INSTALLATIONS.

1. CAP END PLATE PLACED FLUSH WITH UPSTREAM END OF PERMANENT BARRIER OR PARAPET.
2. THRIE BEAM PIECES ARE OFFSET 15 1/4" TO PREVENT INTERFERENCE FROM THE ANCHORS ON OPPOSING SIDES.
3. MINIMUM MECHANICAL OR ADHESIVE ANCHOR STRENGTH REQUIREMENTS: ULTIMATE TENSILE LOAD 9.48 KIPS AND ULTIMATE SHEAR LOAD 10.48 KIPS.
4. MINIMUM MECHANICAL OR ADHESIVE ANCHOR STRENGTH REQUIREMENTS: ULTIMATE TENSILE LOAD 17.9 KIPS AND ULTIMATE SHEAR LOAD 21.96 KIPS.
5. MAY BE USED ON CONCRETE OR ASPHALT PAVEMENTS. ASPHALT OPTION SHOWN. FOR CONCRETE OPTION SEE OTHER DETAILS.
6. MINIMUM MECHANICAL OR ADHESIVE ANCHOR STRENGTH REQUIREMENTS: ULTIMATE TENSILE LOAD 12.14 KIPS AND ULTIMATE SHEAR LOAD 17.5 KIPS.

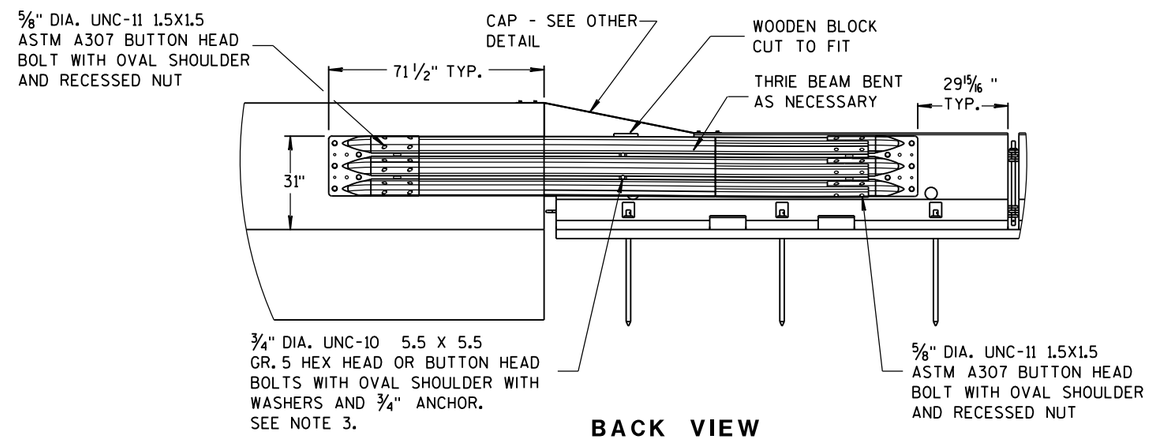


**BACK VIEW**

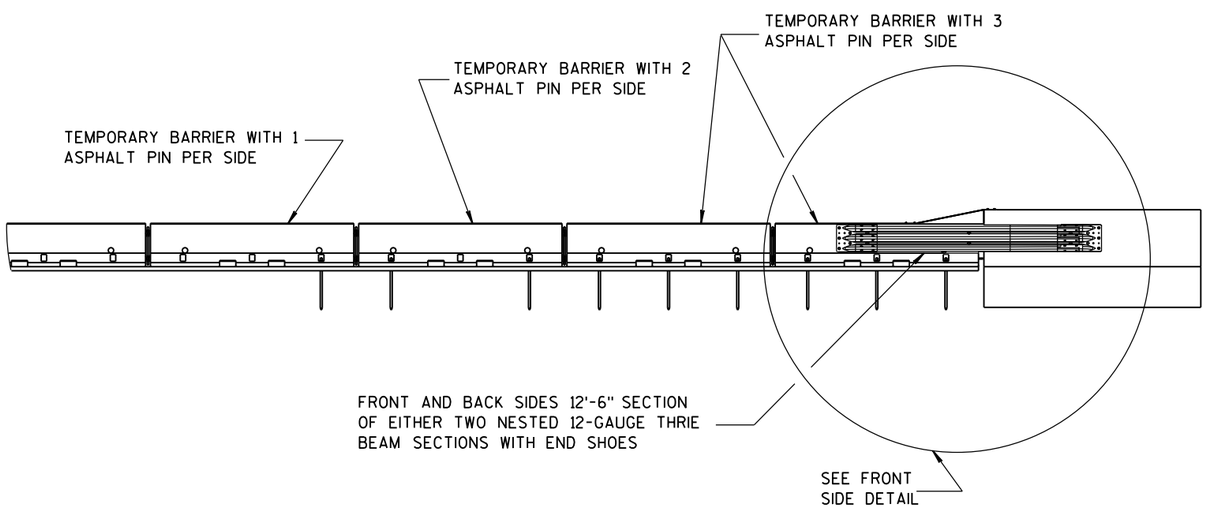


**FRONT VIEW**

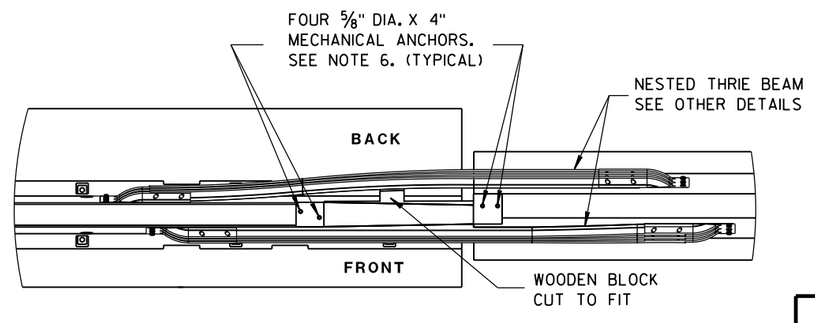


**PLAN VIEW**

**BI-DIRECTIONAL TRANSITION TO TIED-DOWN SYSTEM**

CONCRETE BARRIER
TEMPORARY PRECAST, 12'-6"

STATE OF WISCONSIN
DEPARTMENT OF TRANSPO

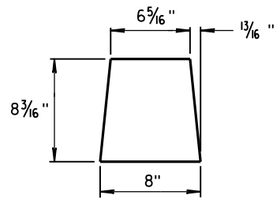


GUSSET 1

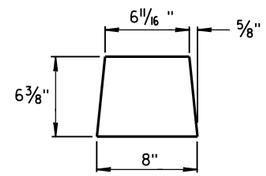


GUSSET 2

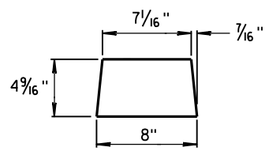


GUSSET 3

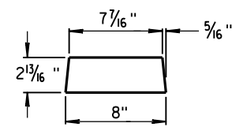


GUSSET 4

GUSSETS

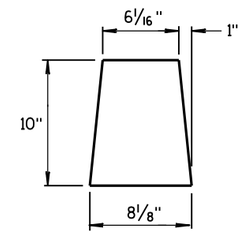


END PLATE

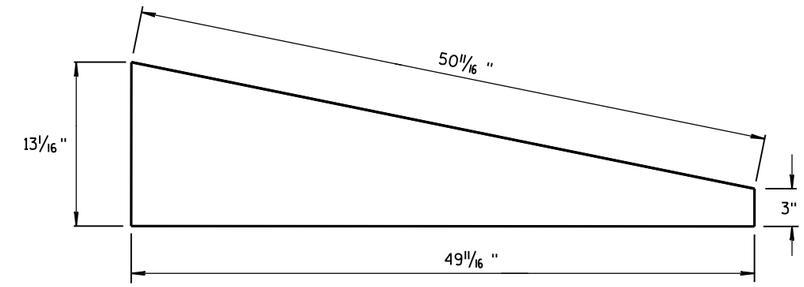


SIDE PLATE

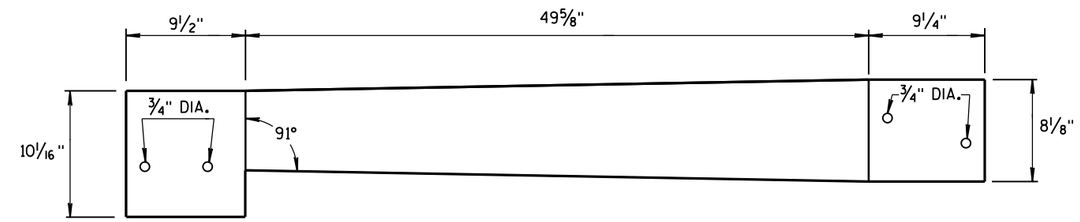


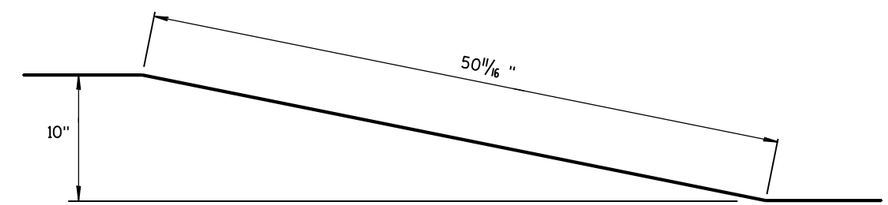


TOP PLATE

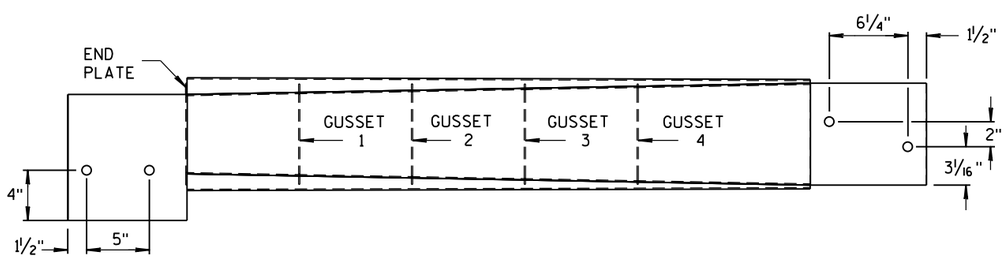


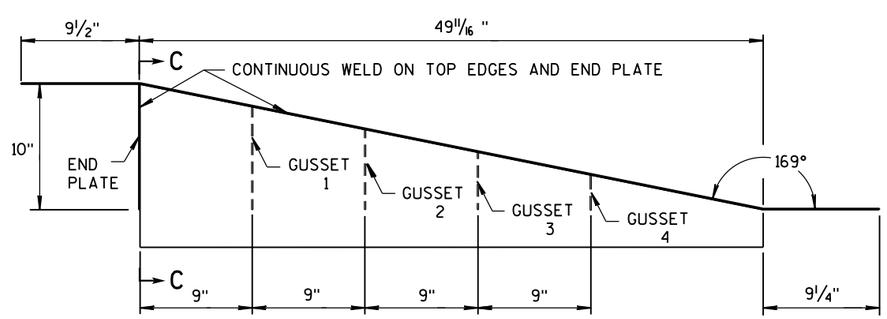


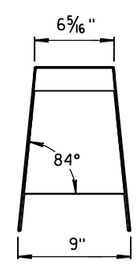


SECTION C-C

## SIDE, TOP AND END PLATES FOR CAP FROM TEMPORARY CONCRETE BARRIER TO 42" PERMANENT CONCRETE BARRIER

SIDE PLATES, TOP PLATE, END PLATE AND GUSSETS ARE 12 GAUGE ASTM A36 GALVANIZED STEEL.

NOTES

1. FOUR GUSSETS AND END PLATE ARE STITCH WELDED ON THREE SIDES.
2. TWO TRIANGULAR SIDE PLATES ARE STITCH WELDED TO TOP PLATE, END PLATE, AND GUSSETS.

## CAP DETAILS FOR TEMPORARY CONCRETE BARRIER TO 42" PERMANENT CONCRETE BARRIER

CONCRETE BARRIER
TEMPORARY PRECAST, 12'-6"

STATE OF WISCONSIN
DEPARTMENT OF TRANSPOR







6

S.D.D. 14 B 7-14f

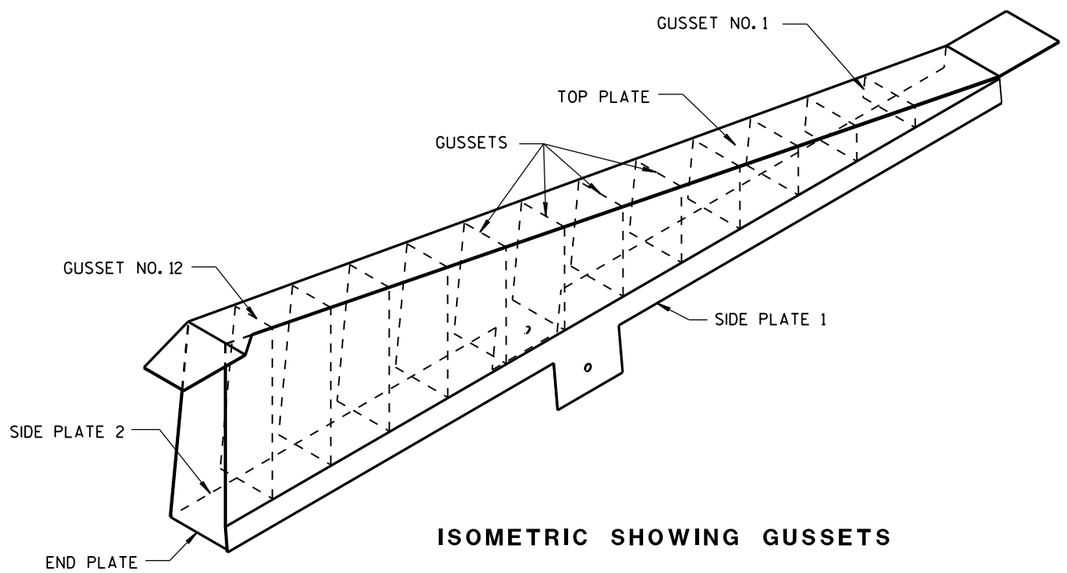


**ISOMETRIC SHOWING GUSSETS**

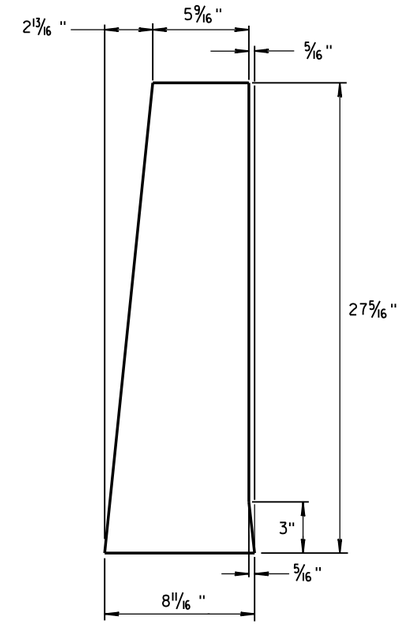


**END PLATE**

1/8" STEEL PLATE

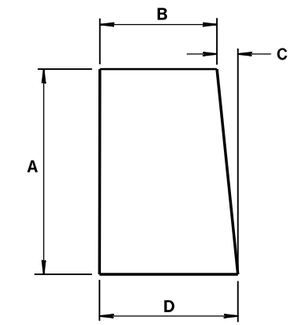


**GUSSETS 1 - 12**

ALL GUSSETS 1/8" STEEL PLATE

| GUSSET DIMENSIONS | | | | |
|---|---|---|---|---|
| GUSSET NO. | A | B | C | D |
| 1 | 2 7/8" | 7 3/4" | 1/4" | 8 |
| 2 | 4 11/16 " | 7 9/16 " | 1/2" | 8 |
| 3 | 6 1/2" | 7 3/8" | 11/16 " | 8 1/16 " |
| 4 | 8 5/16 " | 7 3/16 " | 7/8" | 8 1/16 " |
| 5 | 10 1/8" | 7" | 1 1/16 " | 8 1/16 " |
| 6 | 11 15/16 " | 6 13/16 " | 1 1/4" | 8 1/16 " |
| 7 | 13 3/4" | 6 5/8" | 1 7/16 " | 8 1/16 " |
| 8 | 15 9/16 " | 6 7/16 " | 1 9/16 " | 8 1/16 " |
| 9 | 17 3/8" | 6 1/4" | 1 13/16 " | 8 1/16 " |
| 10 | 19 3/16 " | 6 1/16 " | 1 15/16 " | 8 1/16 " |
| 11 | 21" | 5 7/8" | 2 3/16 " | 8 1/16 " |
| 12 | 22 13/16 " | 5 11/16 " | 2 5/16 " | 8 1/16 " |

SIDE PLATES, TOP PLATE, END PLATE AND GUSSETS ARE 12 GAUGE ASTM A36 STEEL AND GALVANIZED.

GUSSETS AND END PLATE ARE STITCH WELDED ON 3 SIDES. TWO TRIANGULAR SIDE PLATES ARE STITCH WELDED TO TOP PLATE, END PLATE AND GUSSETS.

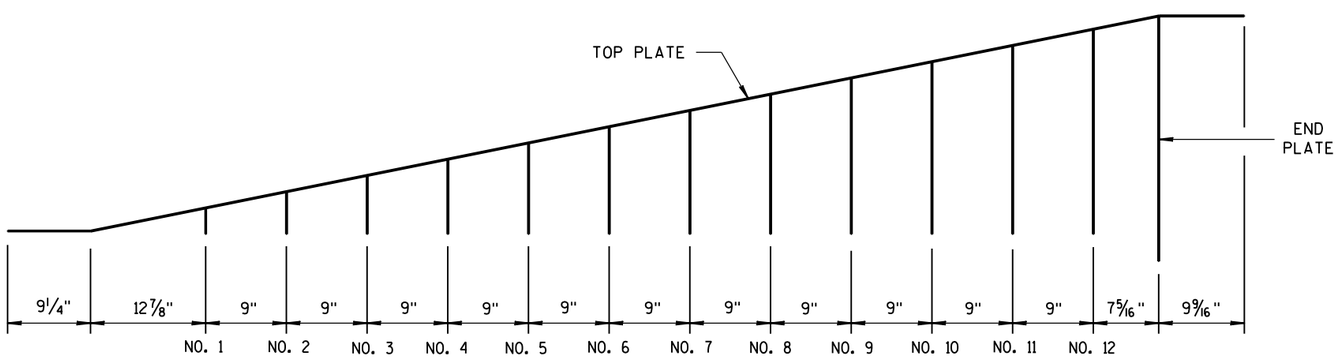


**GUSSET LOCATION**

# CAP DETAILS FOR TEMPORARY CONCRETE BARRIER TO 56" PERMANENT CONCRETE BARRIER

CONCRETE BARRIER
TEMPORARY PRECAST, 12'-6"

STATE OF WISCONSIN
DEPARTMENT OF TRANSPOR







6

S.D.D. 14 B 7-14g

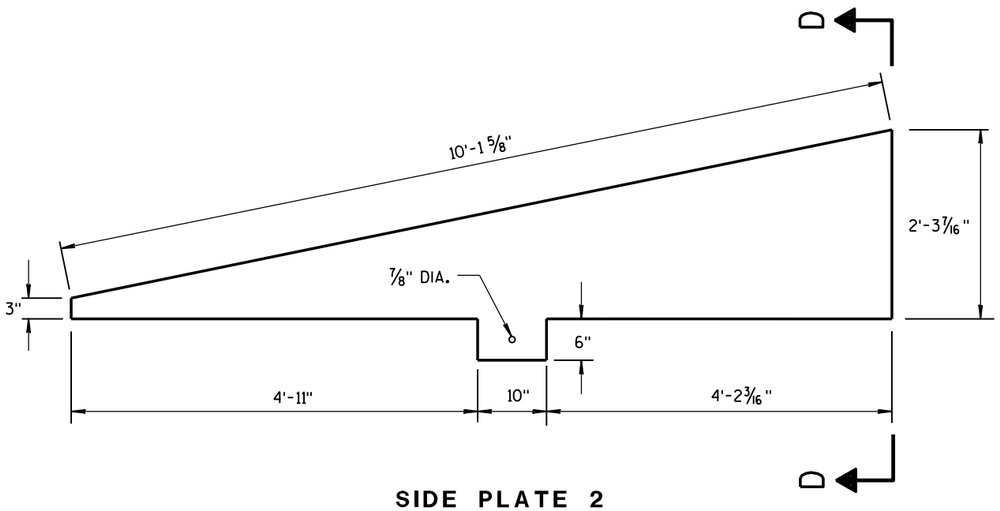


SIDE PLATE 2

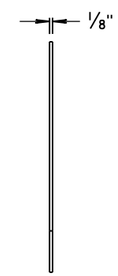


END VIEW

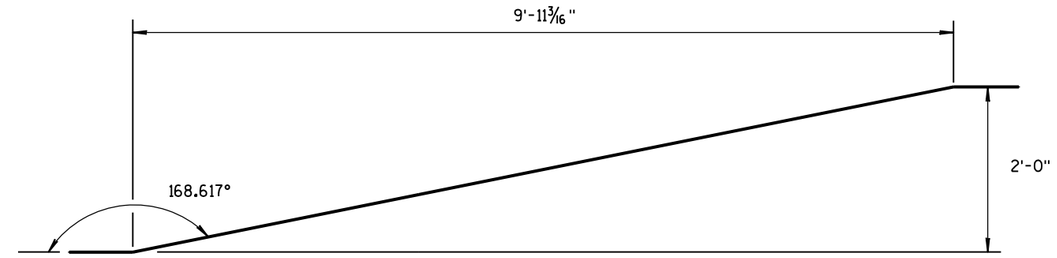


SIDE VIEW

TOP PLATE

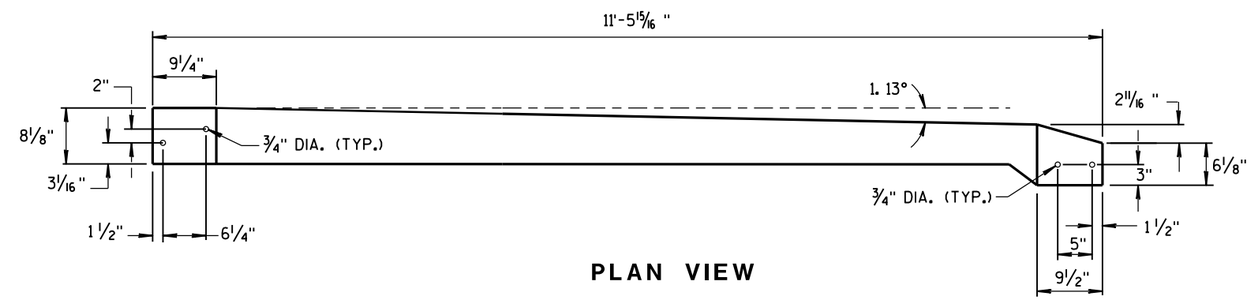


PLAN VIEW

TOP PLATE

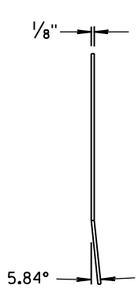


END VIEW

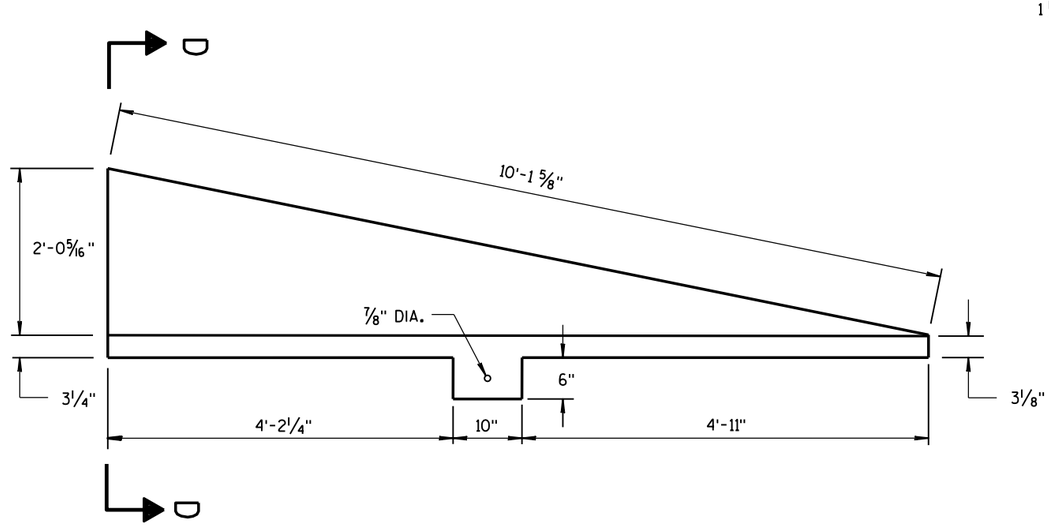


SIDE PLATE 1

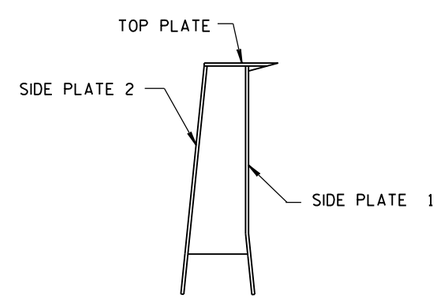


SECTION D-D

## CAP DETAILS FOR TEMPORARY CONCRETE BARRIER TO 56" PERMANENT CONCRETE BARRIER

CONCRETE BARRIER
TEMPORARY PRECAST, 12'-6"

STATE OF WISCONSIN
DEPARTMENT OF TRANSPORTATION

APPROVED

June 2014 — DATE

/S/ Jerry H. Zogg — ROADWAY STANDARD DEVELOPMENT ENGINEER

FHWA

6

S.D.D. 14 B 7-14h

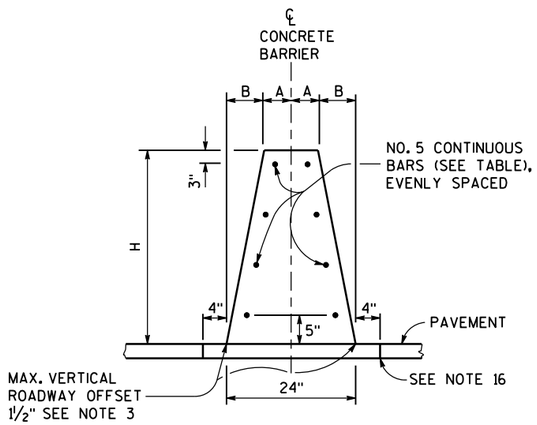


## 32-INCH, 36-INCH OR 42-INCH SINGLE SLOPE CONCRETE BARRIER (TYPE S32, TYPE S36, AND TYPE S42)

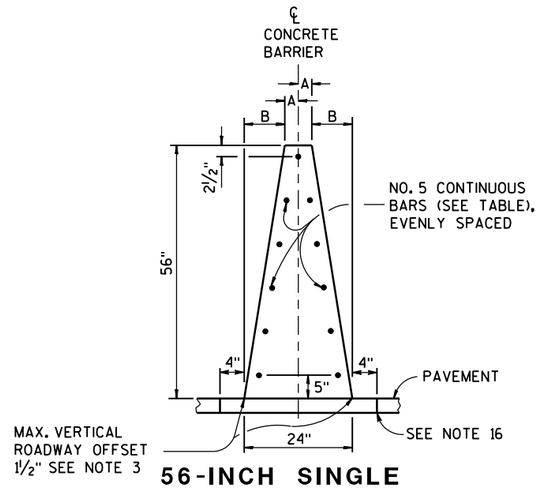


## 56-INCH SINGLE SLOPE CONCRETE BARRIER (TYPE S56)

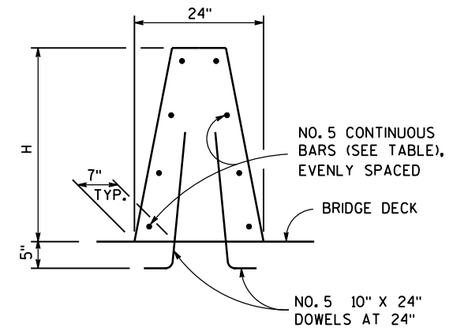


## SINGLE SLOPE CONCRETE BARRIER ON BRIDGE

NON OUTER PARAPET APPLICATION

## GENERAL NOTES

1. WHERE THE CONCRETE BARRIER IS ADDED TO THE FACE OF EXISTING CONCRETE STRUCTURE, MATCH EXISTING WEEP HOLES.
2. EXPANSION JOINTS IN CONCRETE BARRIER SHALL BE LOCATED AT ALL DECK, AND PRINCIPAL WALL JOINTS. EXPANSION JOINT FILLER MATERIAL SHALL BE THE SAME SIZE AS JOINT OR ½" MINIMUM.
3. WHERE VERTICAL ROADWAY OFFSET IS GREATER THAN 1½", USE TYPE A
4. PLACE BARRIER PERPENDICULAR TO SHOULDER GRADE, UNLESS INDICATED IN PLAN.
5. EXCEPT IN ANCHORS, VERTICAL REINFORCING STIRRUP NOT REQUIRED FOR ROADWAY OFFSETS LESS THAN 1'-0".
6. FOR TYPE S32, TYPE S36, TYPE S42, AND S56 MONOLITHIC FOOTING OR DOWELED FOOTING WITH 2-#8 x 8" @ 2'-0".
7. STAGGER LAPPING OF LONGITUDINAL STEEL. MINIMUM OVERLAP OF STEEL 2 FEET. BARS AT LAPS TO BE FIRMLY TIED OR CONNECTED.
8. 4000 PSI CONCRETE AIR ENTRAINMENT PER STANDARD SPECIFICATION 501.
9. WHEN SWITCHING BETWEEN SLIP FORM AND CAST-IN-PLACE OPERATIONS, EXTEND LONGITUDINAL STEEL 3 FEET BEYOND SLIP-FORMING CUT OFF POINT. EXPOSED STEEL INTO NEXT POURS REINFORCEMENT. LAPS TO BE FIRMLY TIED.
10. USE ¾" BEVEL OR 1" RADIUS ON ALL EXPOSED SHARP EDGES UNLESS OTHERWISE NOTED.
11. 2" CLEAR COVER TYPICAL.
12. COLD-JOINTS MAY BE USED BETWEEN ANCHOR INSTALLATIONS. WHEN A COLD JOINT IS NEEDED, 3 FEET OF LAP OF LONGITUDINAL STEEL IS REQUIRED. LAPS TO BE FIRMLY TIED.
13. IN TYPE S32, TYPE S36, TYPE S42 AND TYPE S56 NO ADDITIONAL VERTICAL STEEL NEEDED. IN TYPE S32A, TYPE S36A, TYPE S42A AND TYPE S56A REQUIRES VERTICAL STEEL. SEE OTHER DETAIL.
14. IN TYPE S32, TYPE S36, TYPE S42 AND TYPE S56 DEPTH OF FOOTING 10". IN TYPE S32A, TYPE S36A, TYPE S42A AND TYPE S56A MATCH TOTAL HEIGHT OF SINGLE SLOPE BARRIER RETAINING WALL.
15. FOR ALL BARRIER TYPES SHOWN, ANCHOR IS REQUIRED AT CONCRETE BARRIER ENDS AND AT INTERRUPTIONS IN CONCRETE BARRIER. ANCHOR MAY BE AS SHOWN ON DRAWING OR DETAILS SHOWN ON S.D.D. 14B33. ANCHORS INCIDENTAL TO CBSS.
16. CONCRETE PAD UNDER CBSS MAY BE PLACED INTEGRAL WITH BARRIER, PLACED SEPARATELY OR PLACED WITH CONCRETE SHOULDER AND SAWED FULL DEPTH. CONCRETE PAD MINIMUM DEPTH IS 6 INCHES, OR EQUAL TO THE DEPTH OF THE CONCRETE SHOULDER.

| BARRIER HEIGHT H INCHES | A INCHES | B INCHES | NUMBER OF NO. 5 BARS EACH |
|---|---|---|---|
| 32 | 7 | 5 | 8 |
| 36 | 6¼ | 5¾ | 8 |
| 42 | 5¼ | 6¾ | 10 |
| 56 | 3 | 9 | 11 |

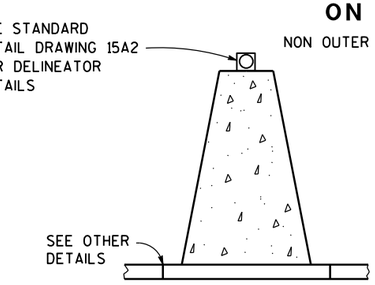


## DELINEATION

## DELINEATOR SPACING ON HORIZONTAL CURVES

| RADIUS OF CURVE | APPROXIMATE SPACING ON CURVE |
|---|---|
| 50 FEET | 20 FEET |
| 115 FEET | 25 FEET |
| 180 FEET | 35 FEET |
| 250 FEET | 40 FEET |
| 300 FEET | 50 FEET |
| 400 FEET | 55 FEET |
| 500 FEET | 65 FEET |
| 600 FEET | 70 FEET |
| 700 FEET | 75 FEET |
| 800 FEET | 80 FEET |
| 900 FEET | 85 FEET |
| 1000 FEET | 90 FEET |

## DELINEATOR SPACING ON RADIUS GREATER THAN 1000 FEET OR TANGENT SECTIONS

| | LENGTH OF BARRIER | REFLECTOR SPACING | NO. SURFACES REFLECTORIZED | MIN. NO. REFLECTORS |
|---|---|---|---|---|
| ONE WAY TRAFFIC | < 200'<br>> 200' | 50' C-C<br>100' C-C | 1<br>1 | 3 |
| TWO WAY TRAFFIC | < 200'<br>> 200' | 25' C-C<br>50' C-C | 1<br>1 | 6 |
| TWO WAY TRAFFIC | < 200'<br>> 200' | 50' C-C<br>100' C-C | 2<br>2 | 3 |

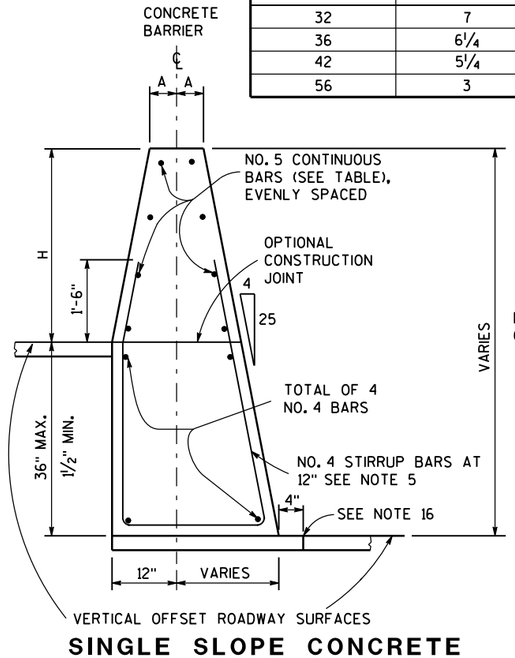


## SINGLE SLOPE CONCRETE BARRIER AND RETAINING WALL (TYPE S32A, TYPE S36A, TYPE S42A, TYPE S56A)

(BETWEEN ADJACENT ROADWAYS)

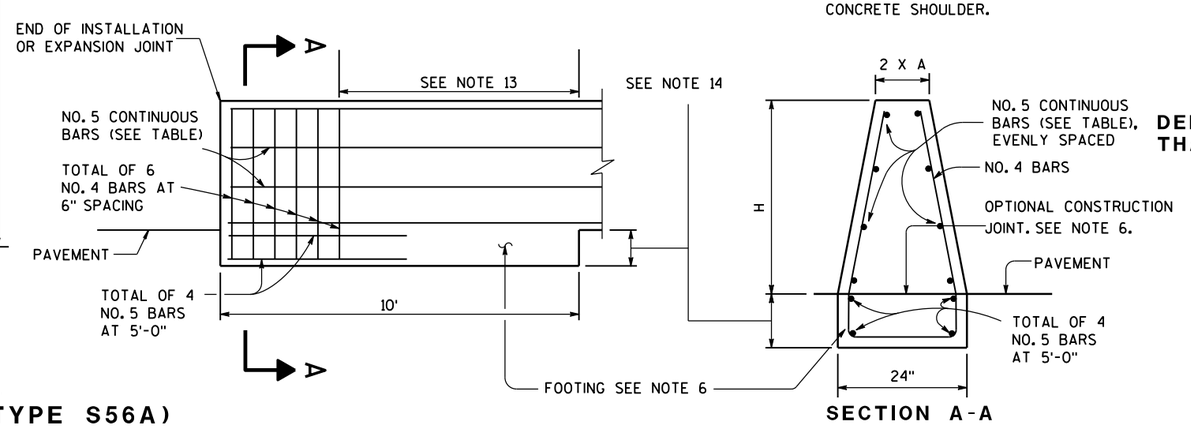


## END ANCHOR SINGLE SLOPE CONCRETE BARRIER

AT CONSTRUCTION JOINT

## SECTION A-A

CONCRETE BARRIER SINGLE SLOPE (CBSS)

STATE OF WISCONSIN
DEPARTMENT OF TRANSPORTATION

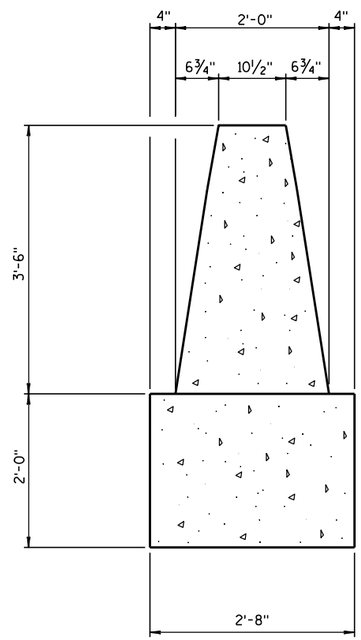


SECTION A-A

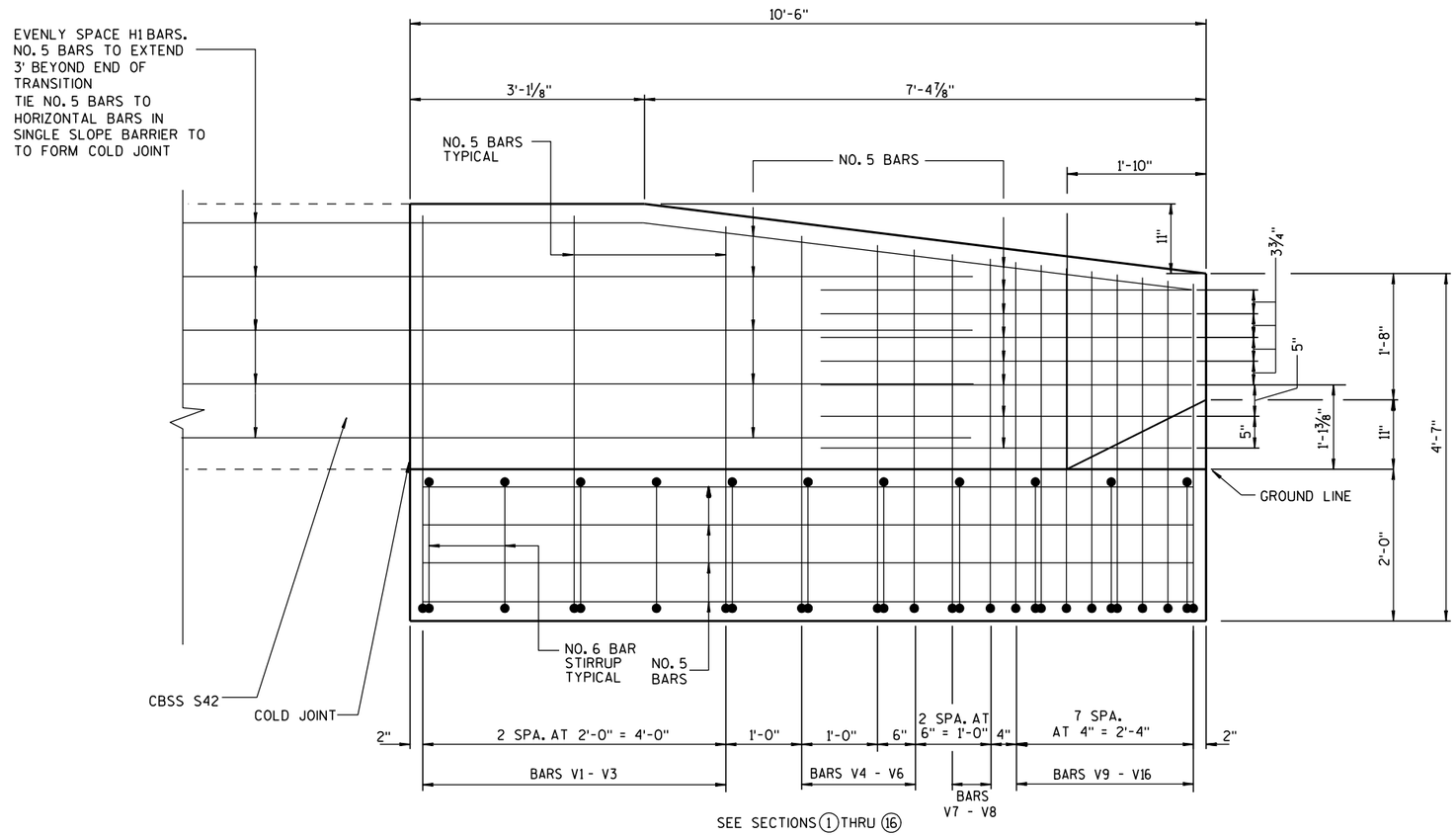


ELEVATION VIEW

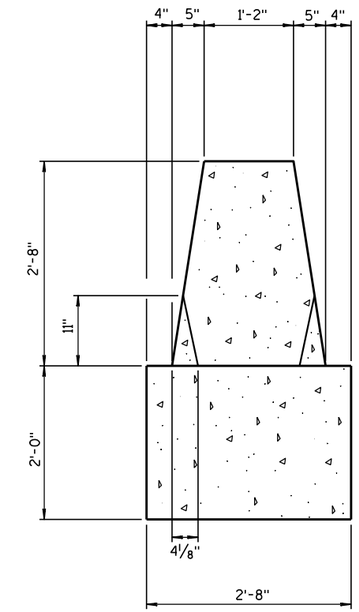


SECTION B-B

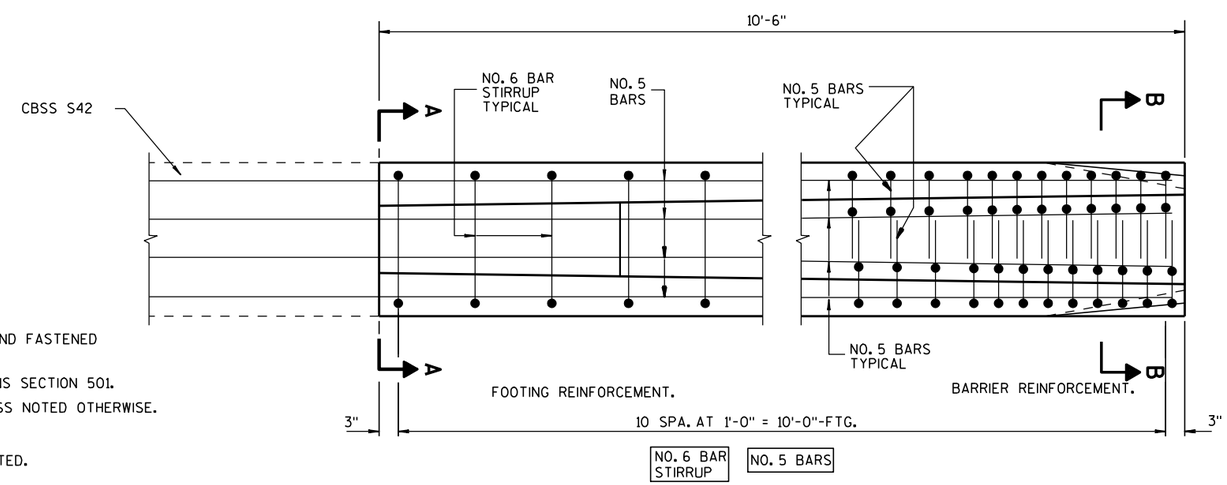


PLAN VIEW

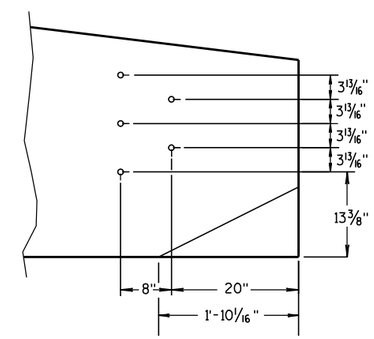


PVC PIPE LOCATIONS

## GENERAL NOTES

CONSTRUCT PER STANDARD SPECIFICATION 603.

SPLICES OF LONGITUDINAL BARS TO BE 2' LONG AND FIRMLY TIED AND FASTENED TOGETHER UNLESS NOTED OTHERWISE.

4000 PSI CONCRETE AIR ENTRAINMENT PER STANDARD SPECIFICATIONS SECTION 501.

USE ¾" BEVEL OR 1" RADIUS ON ALL EXPOSED SHARP EDGES UNLESS NOTED OTHERWISE.

THRIE BEAM ANCHOR INCIDENTAL TO CONCRETE BARRIER ITEM.

INSTALL SCHEDULE 40 PVC PIPE 1" DIAMETER AT LOCATIONS INDICATED.

EXTEND PVC PIPE COMPLETELY THROUGH BARRIER.

CUT ENDS OF PVC PIPE FLUSH WITH FINISHED FACE of BARRIER.

THE NUMBER IN BAR DESIGNATION REPRESENTS THE BARS LOCATION.

2" CLEAR COVER TYPICAL.

**CONCRETE BARRIER**
**SINGLE SLOPE 42"**
**THRIE BEAM ANCHOR**

STATE OF WISCONSIN
DEPARTMENT OF TRANSPORTATION




6


S.D.D. 14 B 33-1g

## BAR CHART
## SECTIONS V1 - V11

| BAR | A | B |
|---|---|---|
| V1 | 170°-50' | 3'-4½" |
| V2 | 171°-20' | 3'-4½" |
| V3 | 171°-30' | 3'-2½" |
| V4 | 171°-25' | 3'-1½" |
| V5 | 171°-15' | 3'-0" |
| V6 | 171°-15' | 2'-11" |
| V7 | 171°-20' | 2'-10½" |
| V8 | 171°-10' | 2'-9½" |
| V9 | 171°-10' | 2'-9" |
| V10 | 171°-05' | 2'-8½" |
| V11 | 171°-10' | 2'-8" |

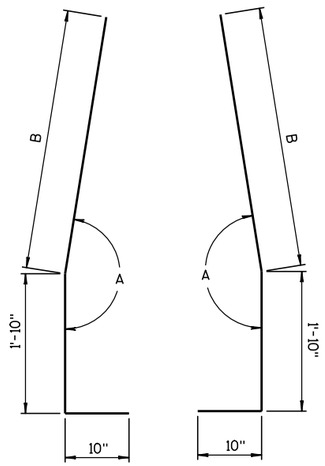


BAR BENDING DETAIL
FOR BARS V1 - V11

## BAR CHART
## SECTIONS V12 - V13

| BAR | A | B | C |
|---|---|---|---|
| V12 | 2'-2" | 171°-15' | 2'-3½" |
| V13 | 2'-7" | 171°-05' | 1'-10" |

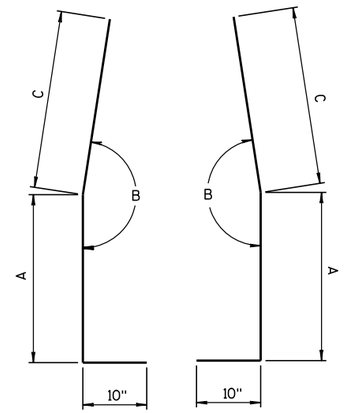


BAR BENDING DETAIL
FOR BARS V12 - V13

## BAR CHART
## SECTIONS V14 - V16

| BAR | A | B | C | D |
|---|---|---|---|---|
| V14 | 168°-15' | 159°-15' | 6" | 2'-0" |
| V15 | 169°-20' | 161°-00' | 8" | 1'-10" |
| V16 | 168°-40' | 160°-10' | 10" | 1'-8" |

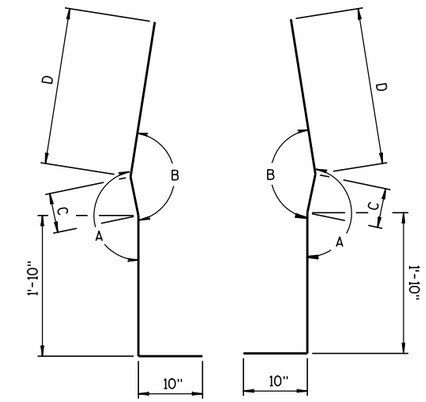


BAR BENDING DETAIL
FOR BARS V14 - V16

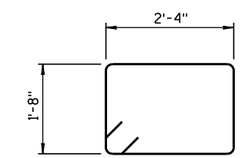


STIRRUP BAR
BENDING DETAIL

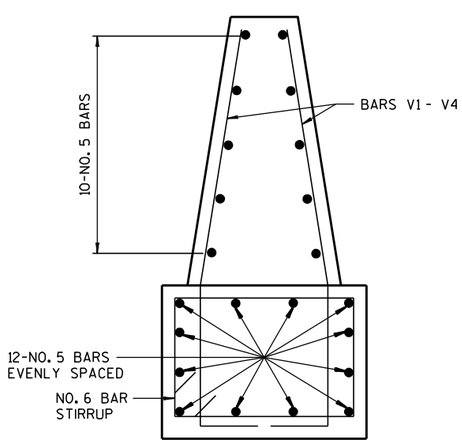


BAR DETAIL
SECTIONS V1 - V4

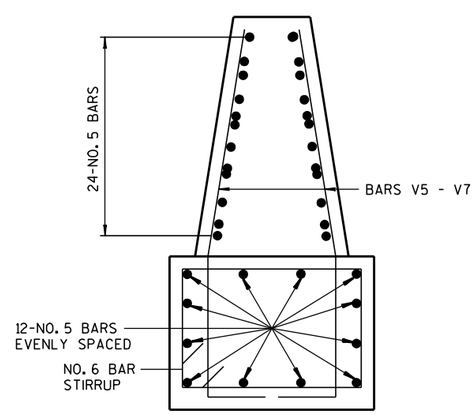


BAR DETAIL
SECTIONS V5 - V7

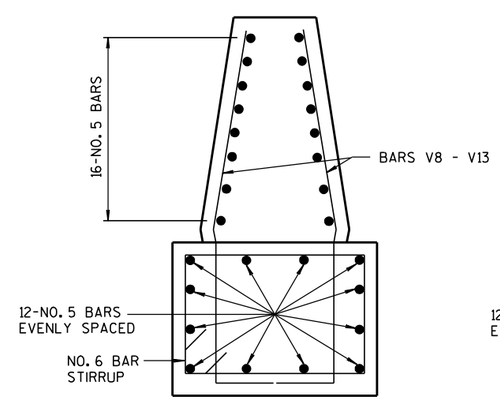


BAR DETAIL
SECTIONS V8 - V13

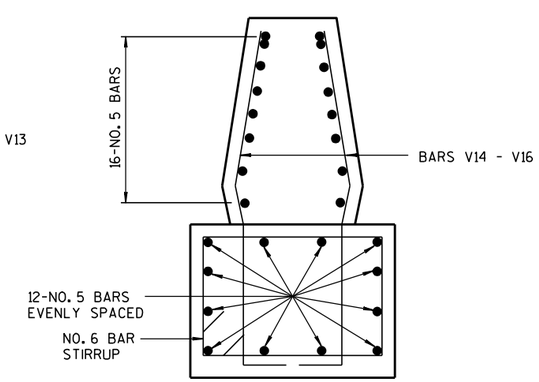


BAR DETAIL
SECTIONS V14 - V16

CONCRETE BARRIER
SINGLE SLOPE 42"
THRIE BEAM ANCHOR

STATE OF WISCONSIN
DEPARTMENT OF TRANSPORTATION

APPROVED
6-3-2010 — DATE
/S/ Jerry H. Z--- — ROADWAY STANDARDS ENGINEER
FHWA




6


S.D.D. 14 B 33-1h

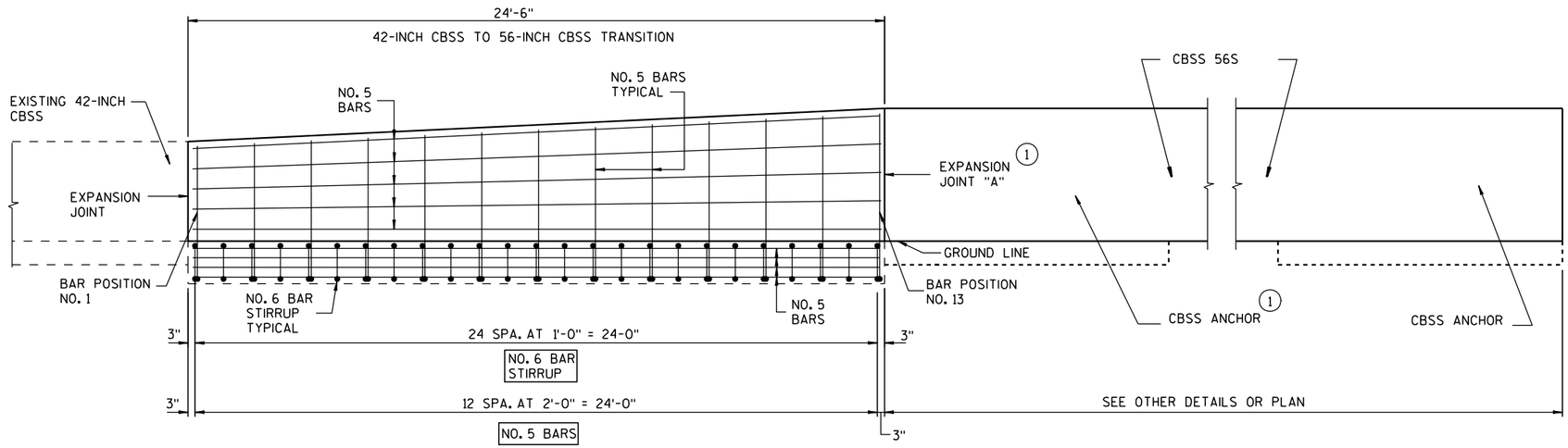


**ELEVATION VIEW**

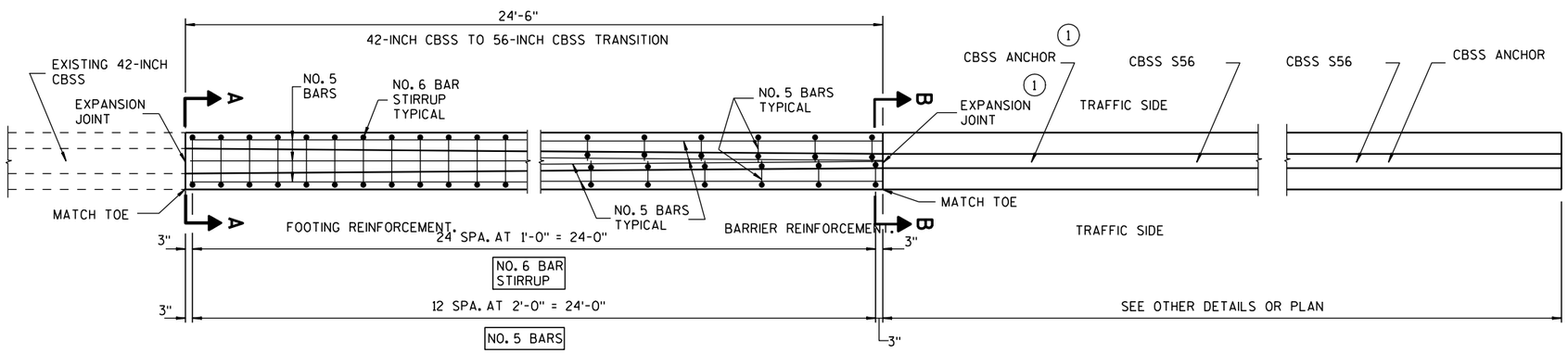


**PLAN VIEW**

## GENERAL NOTES

CONSTRUCT PER STANDARD SPECIFICATION 603.

SPLICES OF LONGITUDINAL BARS TO BE 2' LONG AND FIRMLY TIED AND FASTENED TOGETHER UNLESS NOTED OTHERWISE.

4000 PSI CONCRETE AIR ENTRAINMENT PER STANDARD SPECIFICATIONS 501.

USE ¾" BEVEL OR 1" RADIUS ON ALL EXPOSED SHARP EDGES UNLESS NOTED OTHERWISE.

THE NUMBER IN BAR DESIGNATION REPRESENTS THE BARS LOCATION.

2" CLEAR COVER TYPICAL.

(1) EXPANSION JOINT "A" MAY BE REPLACED WITH A COLD-JOINT PROVIDED THAT 3 FEET OF LAP OF LONGITUDINAL STEEL IS PROVIDED. IF COLD-JOINT IS USED ANCHOR NOT REQUIRED.

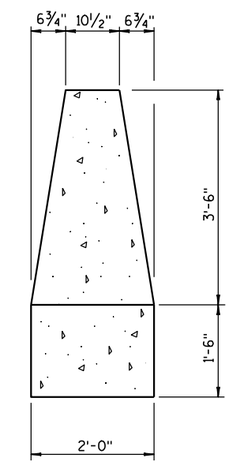


**SECTION A-A**

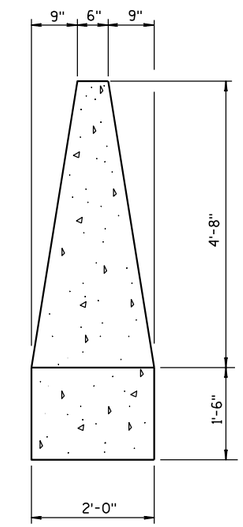


**SECTION B-B**

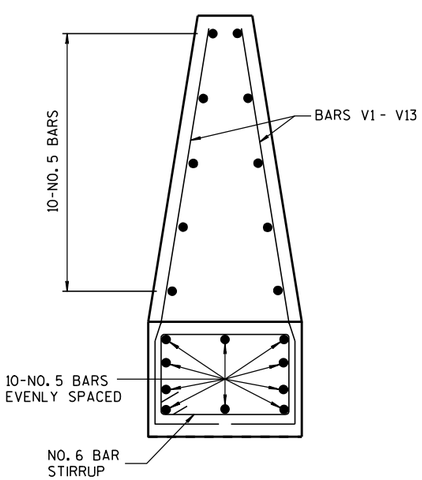


**BAR DETAIL**
**BAR POSITION NO. 1 - NO. 13**

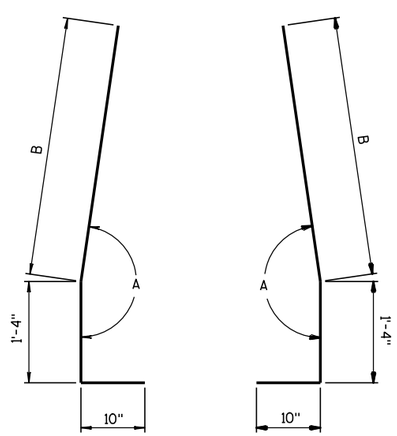


**BAR BENDING DETAIL**
**FOR BARS V1 - V13**

**BAR CHART SECTIONS V1 - V13**

| BAR | A | B |
|---|---|---|
| V1 | 170°-50' | 3'-4½" |
| V2 | 170°-50' | 3'-6" |
| V3 | 170°-55' | 3'-7" |
| V4 | 171° | 3'-8" |
| V5 | 170°-55' | 3'-9½" |
| V6 | 170°-50' | 3'-10½" |
| V7 | 170°-50' | 3'-11½" |

| BAR | A | B |
|---|---|---|
| V8 | 170°-55' | 4'-0½" |
| V9 | 170°-50' | 4'-2" |
| V10 | 170°-50' | 4'-3" |
| V11 | 170°-50' | 4'-4½" |
| V12 | 170°-55' | 4'-5½" |
| V13 | 170°-50' | 4'-6½" |

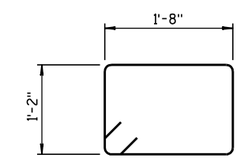


**STIRRUP BAR**
**BENDING DETAIL**

**42-INCH SINGLE SLOPE CONCRETE BARRIER TO 56-INCH SINGLE SLOPE CONCRETE BARRIER HEIGHT TRANSITION**

STATE OF WISCONSIN
DEPARTMENT OF TRANSPORTATION

APPROVED
6-3-2010 DATE
/S/ Jerry H. [illegible]
ROADWAY STANDARDS DEVELOPMENT ENGINEER
FHWA




6


S.D.D. 14 B 39-1e

## GENERAL NOTES

1. WOOD OR STEEL POSTS (w6X9 OR w6X8.5) MAY BE USED. DO NOT INTERMIX WOOD AND STEEL POSTS. INSTALL STEEL POSTS WITH HOLES ON APPROACHING TRAFFIC SIDE.

2. USE WOOD OR APPROVED PLASTIC BLOCKOUTS. WOOD BLOCKOUTS MAY BE CONSTRUCTED OUT OF TWO OR MORE WOOD BLOCKOUTS. SEE ALTERNATE WOOD BLOCKOUT DETAIL. DIMENSIONS OF APPROVED PLASTIC BLOCKOUTS MAY VARY.

3. IF ROCK IS ENCOUNTERED DURING EXCAVATION, PROVIDE A HOLE 12 INCHES IN DIAMETER EXTENDING 20 INCHES DEEP INTO THE ROCK. PLACE APPROXIMATELY 2½ INCHES OF GRANULAR MATERIAL IN THE BOTTOM OF THE HOLE. CUT THE POSTS THE TO LENGTH AMD INSTALL. BACKFILL WITH EXCAVATED MATERIAL AND COMPACT. BACKFILL IS TO BE FREE OF LARGE ROCKS.

4. WHEN THE DISTANCE FROM BACK OF POST TO SHOULDER HINGE POINT IS LESS THAN 2 FEET INSTALL LONGER POST AT HALF POST SPACING (K).

5. FOR NEW MGS INSTALLATION TOP OF W-BEAM RAIL TOLERANCE IS ± 1". FOR EXISTING MGS INSTALLATION TOP OF W-BEAM IS BETWEEN 27¾" TO 32".

6. WHEN USING STEEL POST AND WOOD BLOCKOUTS INSTALL FOUR 16D GALVANIZED NAILS. INSTALL NAILS AT THE BACK CORNERS OF THE BLOCK AND BEND THE NAILS OVER THE FLANGE OF THE STEEL POST.

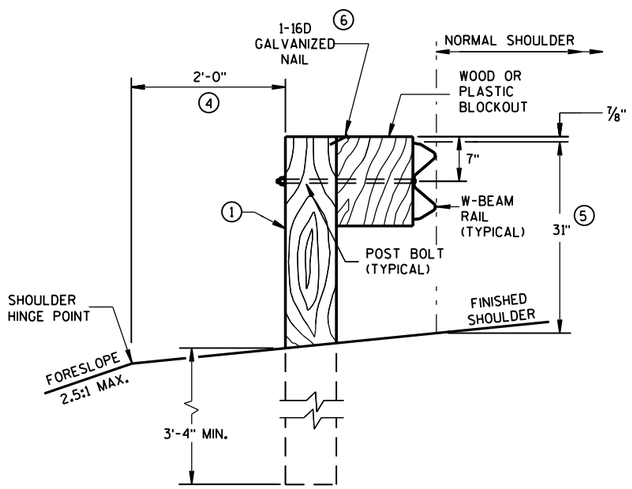


END VIEW

LOCATED ALONG A ROADWAY SHOULDER STANDARD INSTALLATION

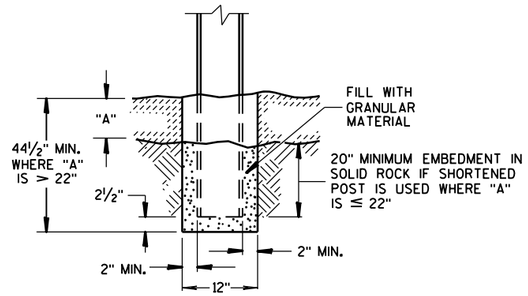


END VIEW

SETTING STEEL OR WOOD POST IN ROCK (3)

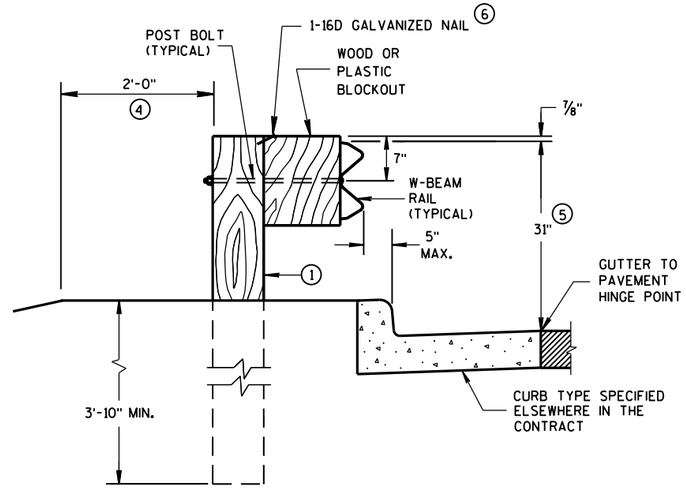


END VIEW

LOCATED ALONG A CURBED ROADWAY

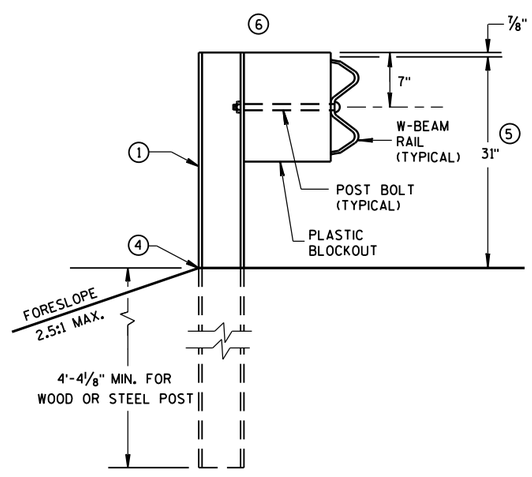


END VIEW

MGS LONGER POST AT HALFPOST SPACING W BEAM (K)

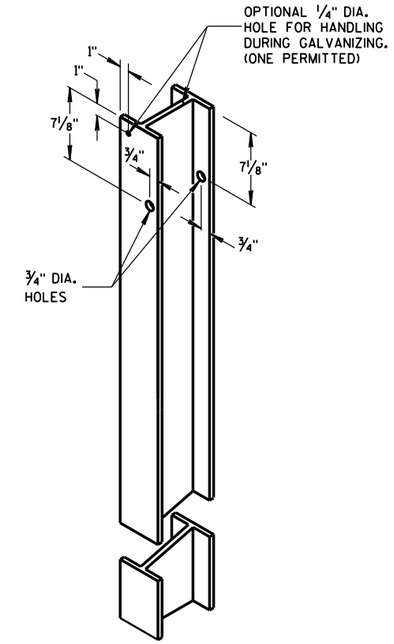


STEEL POST & HOLE PUNCHING DETAIL (w6X9) (1)

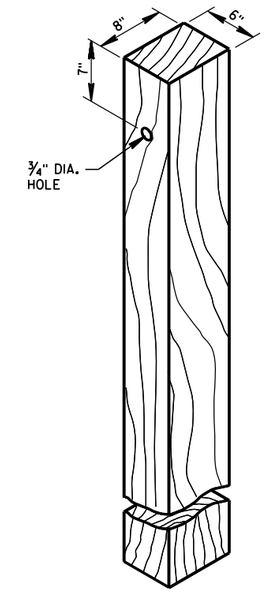


WOOD POST (6" X 8") NOMINAL (1)

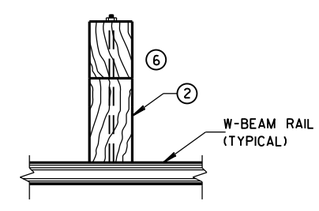


PLAN VIEW

WOOD POST, BLOCKOUT & BEAM

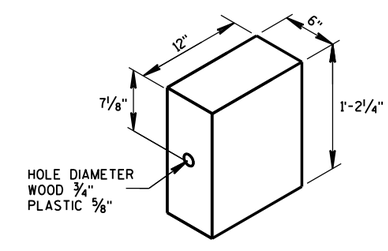


WOOD OR PLASTIC BLOCKOUT (2)

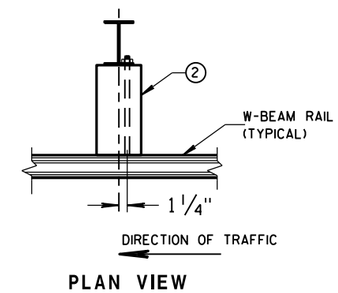


PLAN VIEW

STEEL POST, PLASTIC BLOCKOUT & BEAM

MIDWEST GUARDRAIL SYSTEM (MGS) GUARDRAIL

STATE OF WISCONSIN
DEPARTMENT OF TRANSPO





6



S.D.D. 14 B 42-3a

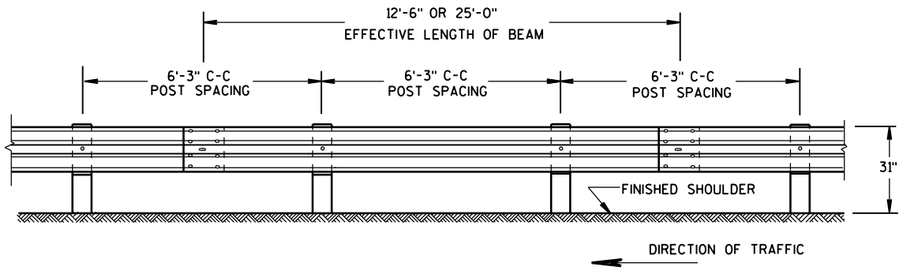


FRONT VIEW

## POST SPACING STANDARD INSTALLATION

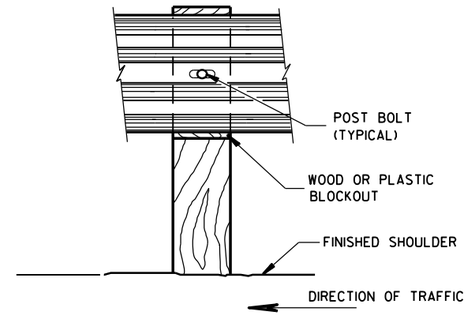


FRONT VIEW AT WOOD POST

## GENERAL NOTES

(7) PROVIDE SILVER REFLECTIVE SHEETING ON ALL REFLECTORS EXCEPT THOSE LOCATED ALONG THE LEFT EDGE OF ONE-WAY ROADWAYS, WHICH SHALL BE PROVIDED WITH YELLOW REFLECTIVE SHEETING. SHEETING IS TYPE H. SEE STANDARD SPECIFICATION 637.

(8) DO NOT INSTALL REFLECTORS ON THE FIRST 50 FEET OF THE APPROACH END OF THE ENERGY ABSORBING TERMINAL. RAIL SPLICE LOCATIONS ARE THE ONLY ACCEPTABLE LOCATIONS FOR REFLECTORS.

(9) REVERSE EVERY OTHER REFLECTOR FOR 2-WAY VISIBILITY. THE CONTRACTOR MAY FURNISH TWO-SIDED REFLECTORS IN LIEU OF ONE-SIDED REFLECTORS.

(10) PROVIDE AN ANGLE OF BEND OF 90° ± 1° FOR TWO-SIDED REFLECTORS.

(11) 25 FEET OF HALF POST SPACING IS REQUIRED ON APPROACH AND DEPARTURE ENDS OF QUARTER POST SPACING.

POST BOLTS ARE A 5/8" DIAMETER ASTM A307 GUARDRAIL BOLT. A POST BOLT REQUIRES 5/8" DIAMETER A563A DOUBLE RECESSED (DR) HEAVY HEX NUT AND 5/8" DIAMETER F844 FLAT WASHER. POST BOLTS MAY BE LONGER IF MULTIPLE BLOCKOUTS ARE BEING USED.

GUARD RAIL SPLICE BOLTS ARE A 5/8" DIAMETER ASTM A307 GUARDRAIL HEAD BOLT. A GUARDRAIL SPLICE BOLT REQUIRES 5/8" DIAMETER A563A DOUBLE RECESSED (DR) HEAVY HEX NUT.

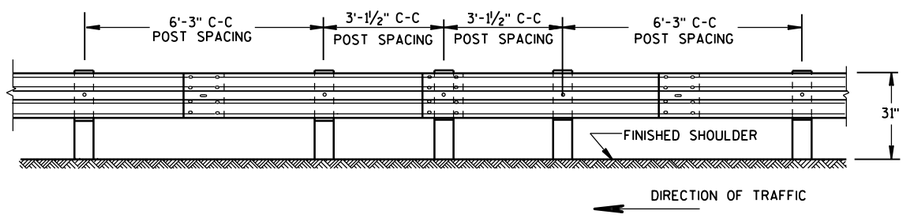


FRONT VIEW

## HALF POST SPACING (HS) AND HALF POST SPACING WITH LONGER POSTS (K)

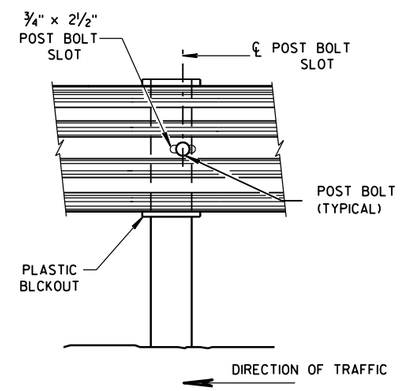


FRONT VIEW AT STEEL POST

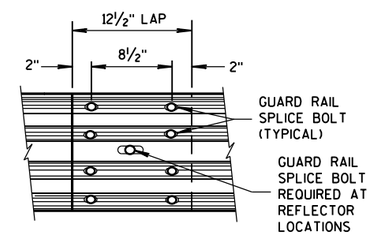


FRONT VIEW

MID-SPAN BEAM SPLICE

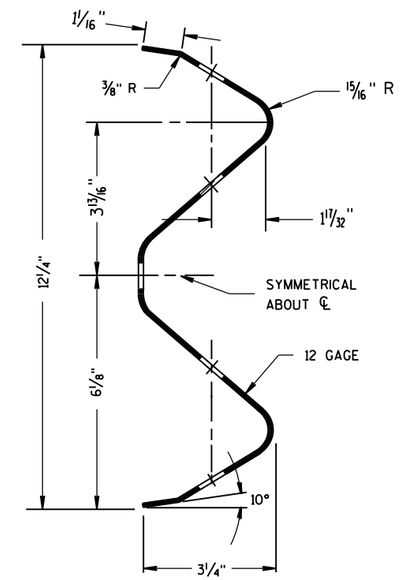


SECTION THRU W-BEAM RAIL

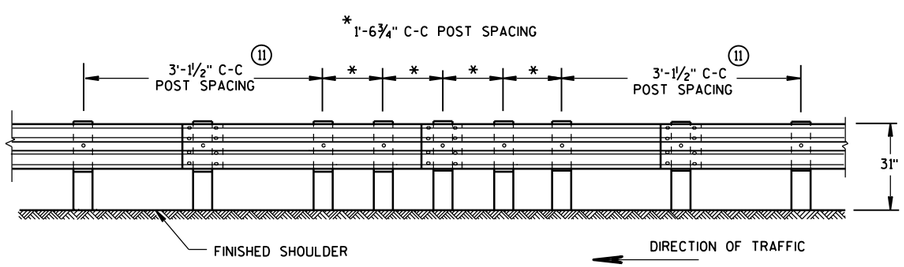


FRONT VIEW

## QUARTER POST SPACING (QS)

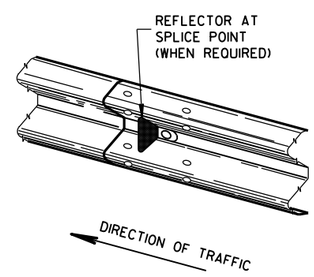


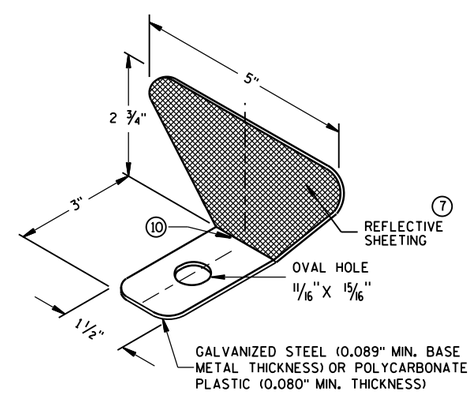


## ONE SIDED REFLECTOR DETAIL AND TYPICAL INSTALLATION (7)

### REFLECTOR SPACING (8)

| | BEAM GUARD LENGTH | REFLECTOR SPACING | NO. SURFACES REFLECTORIZED | MIN. NO. REFLECTORS |
|---|---|---|---|---|
| ONE WAY TRAFFIC | < 200'<br>> 200' | 50' C-C<br>100' C-C | 1<br>1 | 3 |
| TWO WAY TRAFFIC | < 200'<br>> 200' | 25' C-C<br>50' C-C | 1 (9)<br>1 | 6 |
| TWO WAY TRAFFIC | < 200'<br>> 200' | 50' C-C<br>100' C-C | 2<br>2 (10) | 3 |

MIDWEST GUARDRAIL SYSTEM (MGS) GUARDRAIL

STATE OF WISCONSIN
DEPARTMENT OF TRANSPORTATION

6

6

S.D.D. 14 B 42-3b

S.D.D. 14 B 42-3b

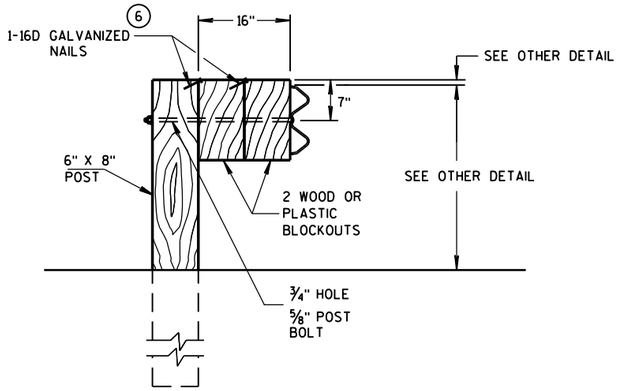


## DETAIL FOR 16" BLOCKOUT DEPTH

IT IS ACCEPTABLE TO USE BLOCKOUTS UP TO 16" DEEP TO INCREASE THE POST OFFSET TO AVOID UNDERGROUND OBSTACLES. THERE IS NO LIMIT TO THE NUMBER OF POSTS THAT CAN HAVE ADDITIONAL BLOCKOUTS UP TO 16" DEEP.

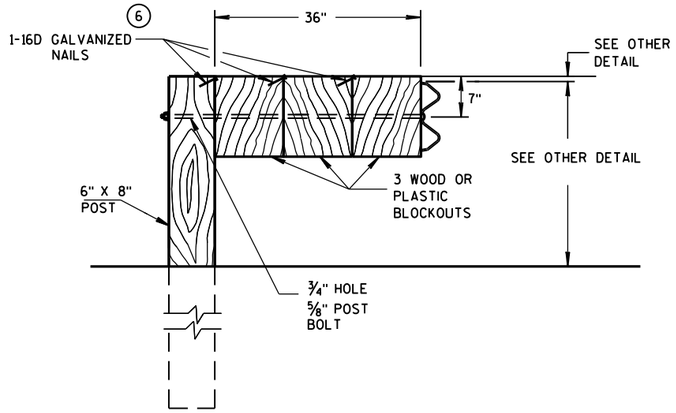


## DETAIL FOR 36" BLOCKOUT DEPTH

NOTES: UNDER SPECIAL CIRCUMSTANCES, SUCH AS AVOIDING OBSTACLES THAT ARE NOT RELOCATED, IT IS ACCEPTABLE TO INSTALL ADDITIONAL BLOCKOUTS TO OBTAIN UP TO 36" DEPTH FOR ONE OR TWO POSTS IN A SECTION OF GUARDRAIL.

DO NOT USE 16" OR 36" BLOCKOUTS IF IT CAUSES THE POST TO BE DRIVEN BEYOND SHOULDER HINGE POINT OR CAUSES A FIXED OBJECT TO BE WITHIN THE DEFLECTION DISTANCE OF THE BARRIER.

NOTE: 1. ALL FILLETS SHALL HAVE A MINIMUM RADIUS OF 1/16".
2. IF THE BOLT EXTENDS MORE THAN 1/4" FROM THE NUT THE BOLT SHOULD BE TRIMMED BACK.

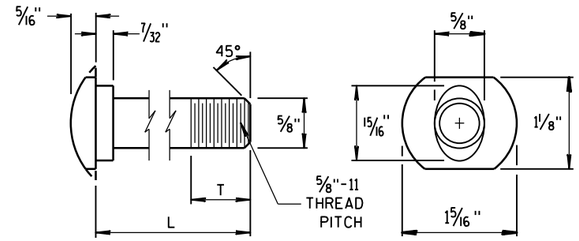


### POST BOLT TABLE

| L | T (MIN.) |
|---|---|
| 1 1/4" | 1 1/8" |
| 2" | 1 3/4" |
| 10" | 4" |
| 14" | 4 1/16" |
| 18" | 4" |
| 21" | 4 1/16" |
| 25" | 4" |

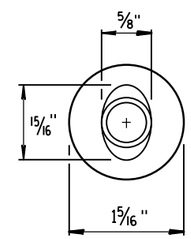


ALTERNATE BOLT HEAD

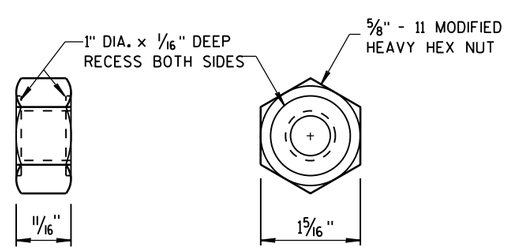


## POST BOLT AND RECESS NUT

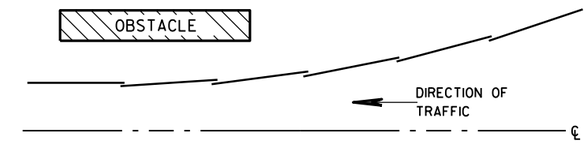


PLAN VIEW

## BEAM LAPPING DETAIL

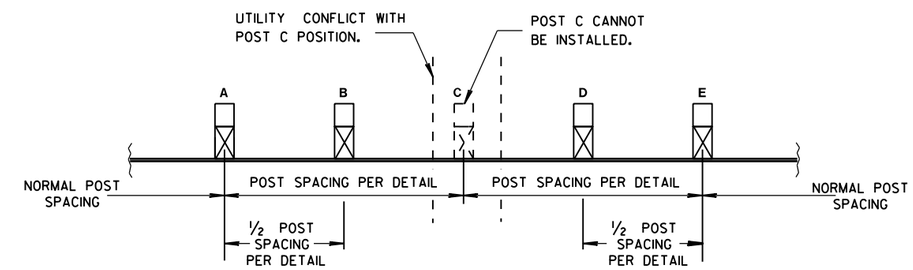


## POST DRIVING FOR CONTINUOUS UNDERGROUND OBSTRUCTION

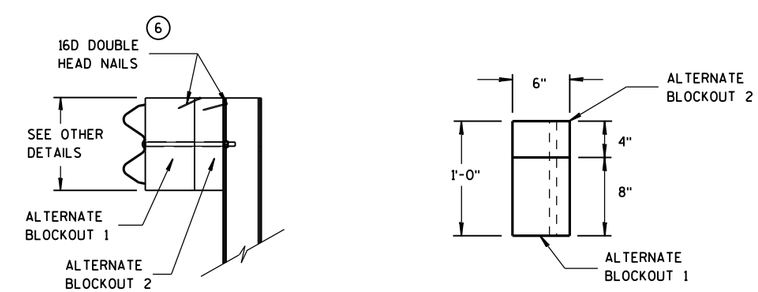


SIDE VIEW TOP VIEW

## ALTERNATE WOOD BLOCKOUT DETAIL

MIDWEST GUARDRAIL SYSTEM (MGS) GUARDRAIL

STATE OF WISCONSIN
DEPARTMENT OF TRANSPORTATION

APPROVED
June 2014 — DATE
/S/ Jerry H. Zogg — ROADWAY STANDARDS DEVELOPMENT ENGINEER
FHWA




6


S.D.D. 14 B 42-3c

## GENERAL NOTES

(A) THE SLOPE IN THE AREA BOUNDED BY THE GRADELINE, THE HINGE POINT LINE (HPL), AND THE CLEAR ZONE LIMITS (CZL) SHALL BE 4:1 OR FLATTER.

(B) AFTER FINAL ASSEMBLY, RECHECK CABLE TO BE SURE IT IS TAUT AND HAS NOT RELAXED.

(C) DIFFERENT MANUFACTURES REQUIRE DIFFERENT PERFORATED W-BEAM RAIL END PANELS. SEE MANUFACTURES INFORMATION.

(D) THE TOP OF THE STEEL TUBE ON POST 1 AND POST 2 SHALL NOT BE MORE THAN 3" ABOVE THE FINISH GROUND ELEVATION.

(F) ATTACH ALUMINUM SHEET TO E.A.T. HEAD USING 4 STAINLESS STEEL SELF-TAPPING SCREWS. ONE SCREW PER CORNER.

(G) 1/2" DIAMETER X 3" LONG LAG BOLT AND WASHER.

(H) HARDWARE VARIES BETWEEN DIFFERENT MANUFACTURES. SEE MANUFACTURE'S DRAWING FOR INFORMATION.

(I) DIMENSIONS MAY VARY. SEE MANUFACTURE'S INFORMATION.

SEE SDD 14B42 FOR MORE INFORMATION.

* DO NOT ATTACH BLOCKOUTS TO POSTS 1 AND 2.

DO NOT INSTALL REFLECTORS ON THE FIRST 50 FEET OF THE APPROACH END OF THE ENERGY ABSORBING TERMINAL.

W-BEAM RAIL SPLICES ARE LOCATED AT POST NUMBER 3, AND BETWEEN POST 5 AND 6, BETWEEN POSTS 7 AND 8, AND MIDDLE OF THE SPAN AFTER POST 9.

THE CENTER OF THE UPPER 3 1/2" DIAMETER HOLE ON POST NUMBER 3 THROUGH POST 9 IS TO BE FLUSH WITH THE GROUND LINE UP TO A MAXIMUM OF 2" ABOVE GROUND LINE.

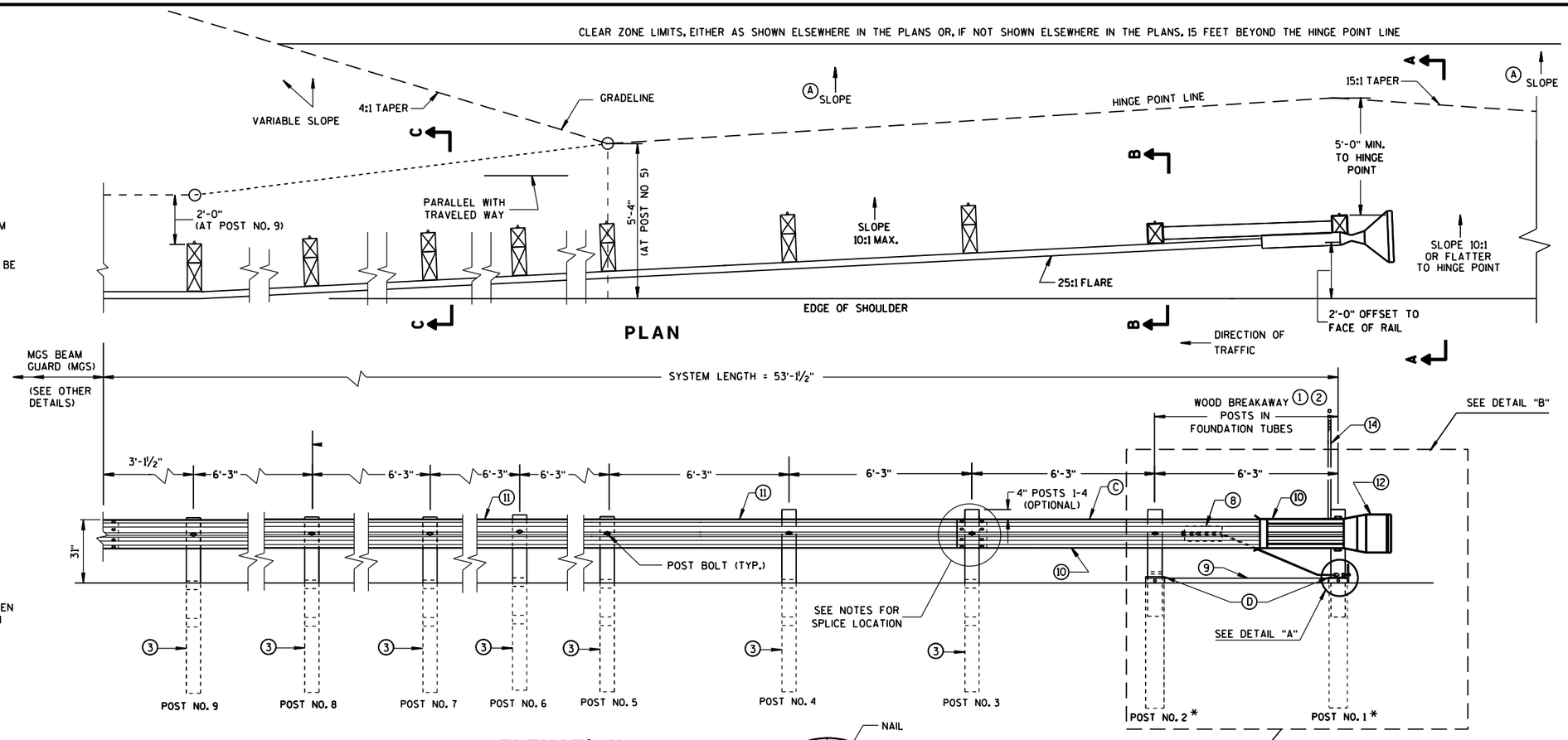


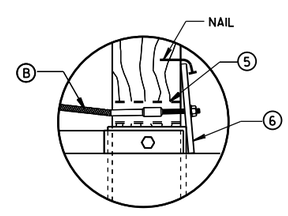


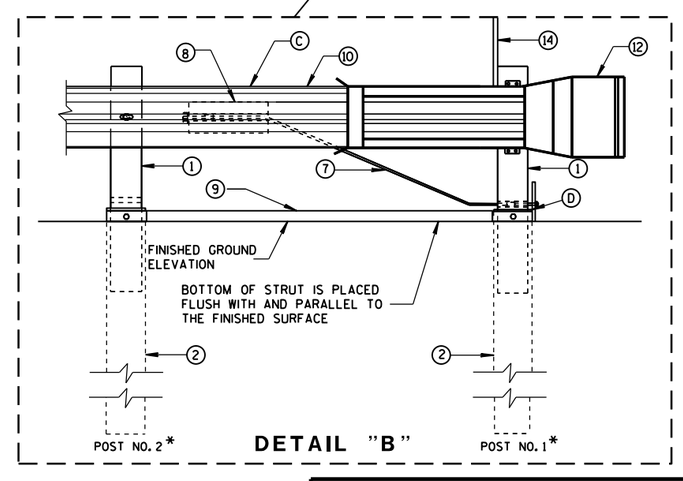


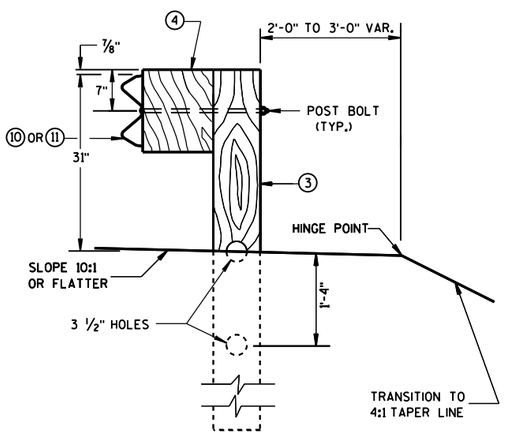


SECTION C-C
TYPICAL AT POST NOS. 3-9

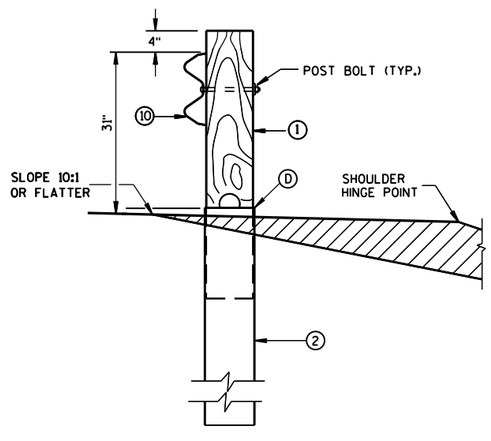


SECTION B-B
TYPICAL AT POST NO. 2*

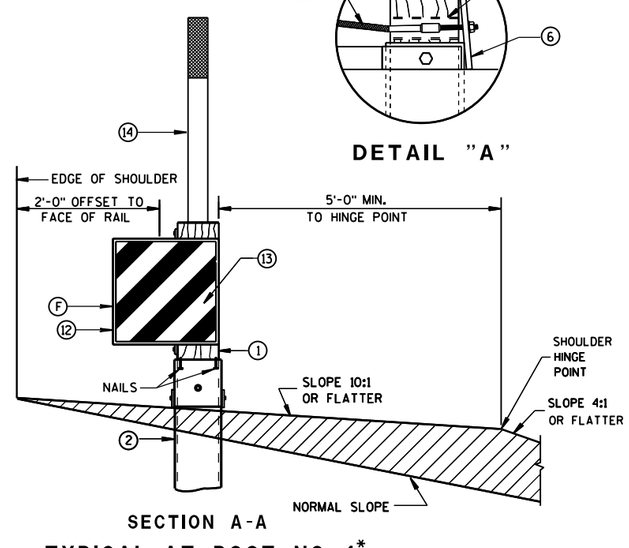


SECTION A-A
TYPICAL AT POST NO. 1*

MIDWEST GUARDRAIL SYSTEM ENERGY ABSORBING TERMINAL (MGS)

STATE OF WISCONSIN
DEPARTMENT OF TRANSPO

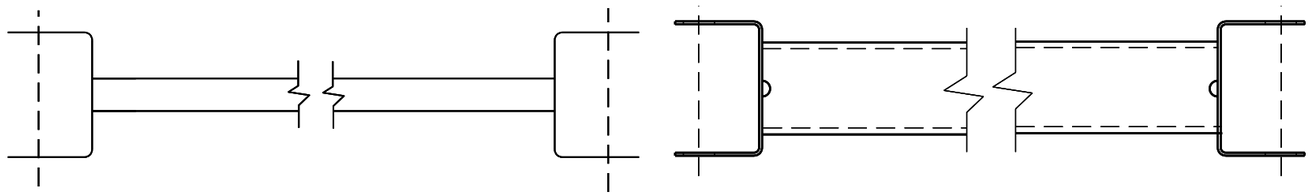

GENERIC GROUND STRUT (9) (H)

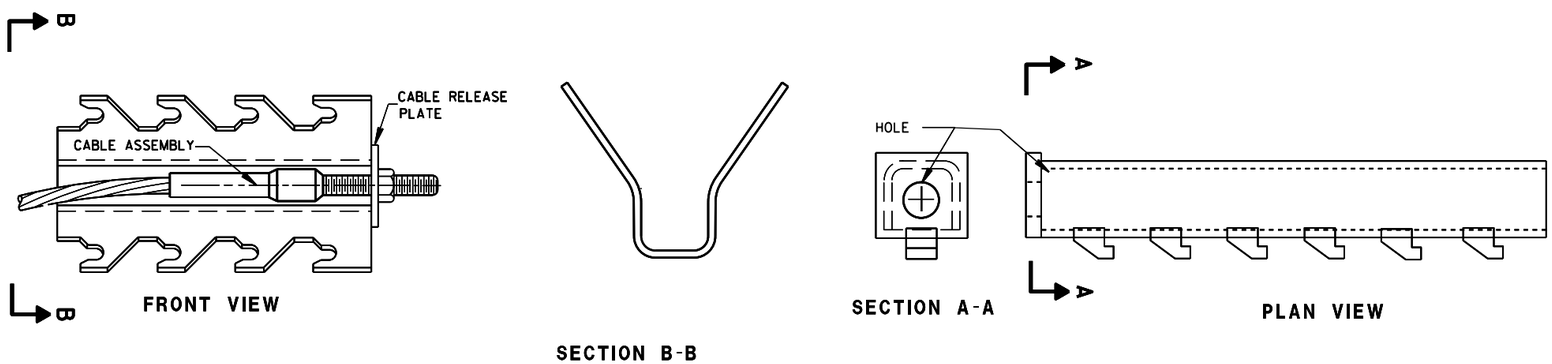


GENERIC ANCHOR CABLE BOX (8) (H)

## BILL OF MATERIALS

| PART NO. | DESCRIPTION<br>MATERIALS PROVIDED BY MGS EAT MANUFACTURER.<br>SEE MANUFACTURER'S DETAILS FOR MORE INFORMATION. |
|---|---|
| 1 | WOOD BREAKAWAY POST |
| 2 | 6" X 8" X 0.188", 6'-0" LONG FOUNDATION TUBE AT POSTS 1 AND 2 |
| 3 | WOOD CRT |
| 4 | WOOD BLOCKOUT |
| 5 | PIPE SLEEVE |
| 6 | BEARING PLATE |
| 7 | BCT CABLE ASSEMBLY |
| 8 | ANCHOR CABLE BOX |
| 9 | GROUND STRUT |
| 10 | PERFORATED W-BEAM RAIL END PANEL, 12'-6" LONG. |
| 11 | STANDARD W-BEAM RAIL. MULTIPLE SECTIONS REQUIRED. SECTIONS VARY IN LENGTH. |
| 12 | END SECTION EAT |
| 13 | 0.040" ALUMINUM SHEET WITH REFLECTIVE SHEETING TYPE F PER SECTION 637 OF THE STANDARD SPECIFICATIONS |
| 14 | EAT MARKER POST - YELLOW (SEE APPROVED PRODUCTS LIST) |

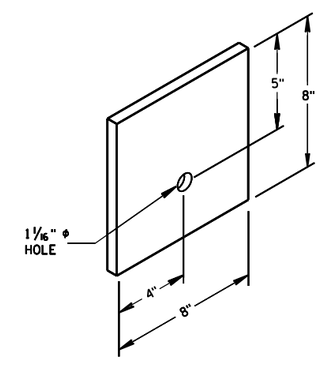


BEARING PLATE (6)

MIDWEST GUARDRAIL SYSTEM
ENERGY ABSORBING TERMINAL
(MGS)

STATE OF WISCONSIN
DEPARTMENT OF TRANSPO







6

S.D.D. 14 B 44-2b

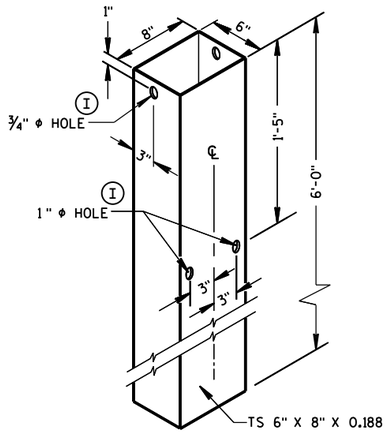


FOUNDATION TUBE (2)

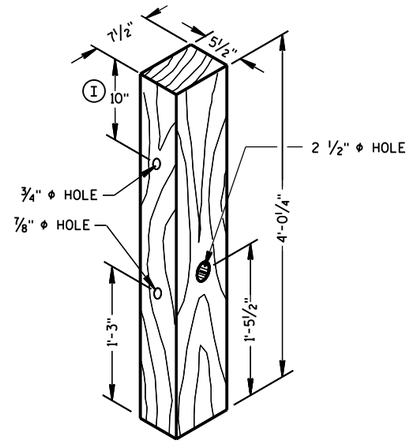


POSTS NUMBER 1 AND 2

WOOD BREAKAWAY POST (1)

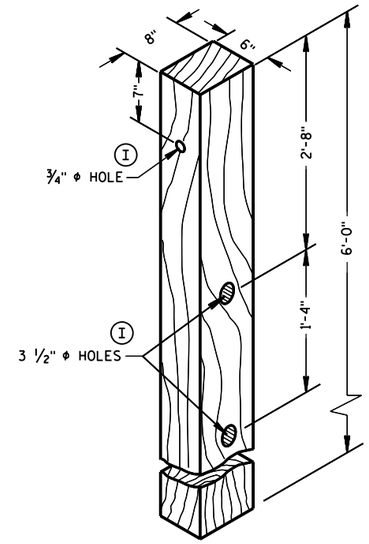


POSTS NUMBER 3-9

WOOD CRT POST (3)

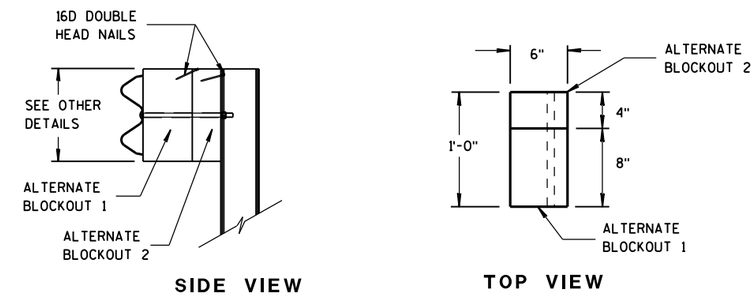


ALTERNATE WOOD BLOCKOUT DETAIL

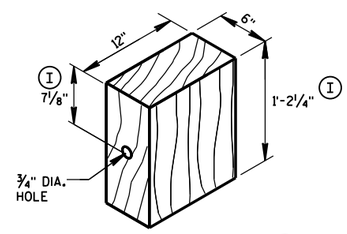


WOOD BLOCKOUT (4)

REQ'D. AT ALL POSTS EXCEPT POST NO'S 1 & 2

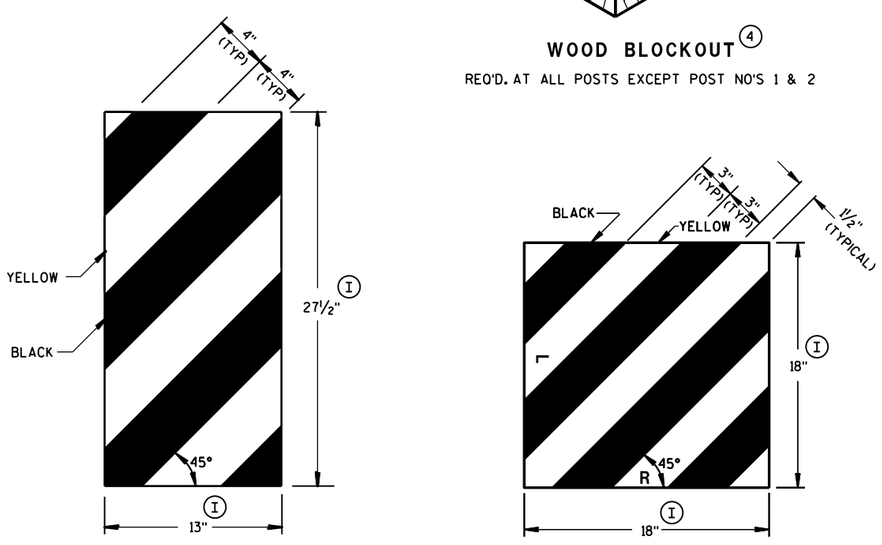


GENERIC REFLECTIVE SHEETING (13) (H)

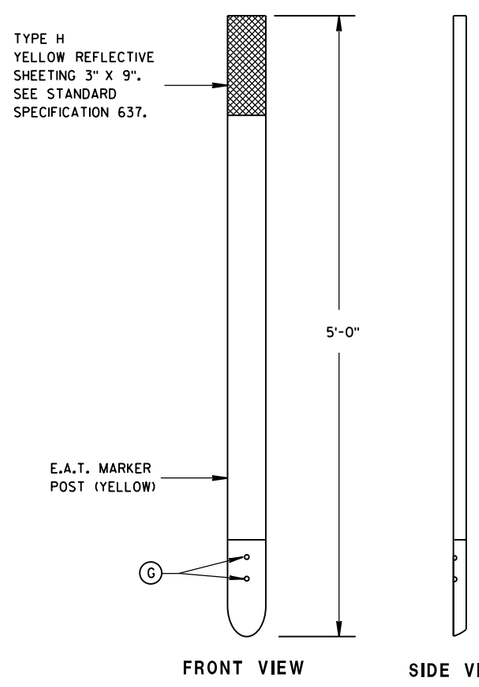


E.A.T. MARKER POST (14)

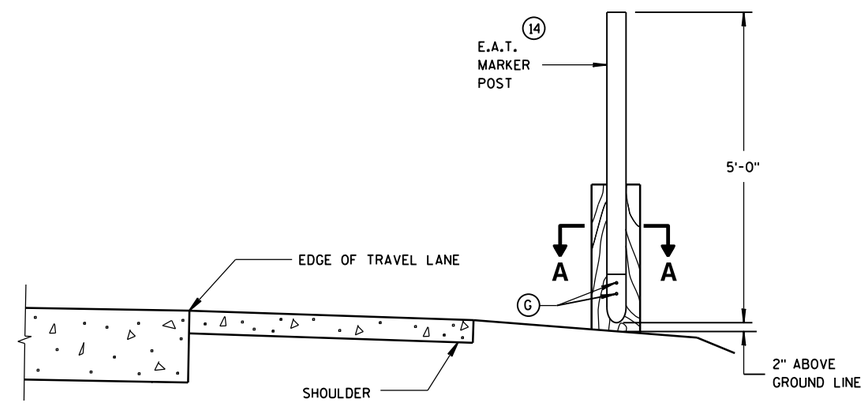


TYPICAL INSTALLATION OF E.A.T. MARKER POST BACKSIDE OF POST NO. 1

(E.A.T. AND RAIL REMOVED FOR CLARITY)

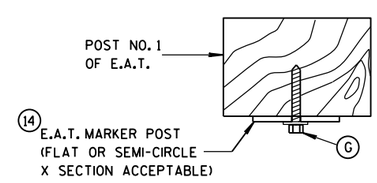


SECTION A-A

MIDWEST GUARDRAIL SYSTEM ENERGY ABSORBING TERMINAL (MGS)

STATE OF WISCONSIN
DEPARTMENT OF TRANSPORTATION

APPROVED
June 2014 — DATE
/S/ Jerry H. Zogg — ROADWAY STANDARDS DEVELOPMENT ENGINEER
FHWA




6


S.D.D. 14 B 44-2c

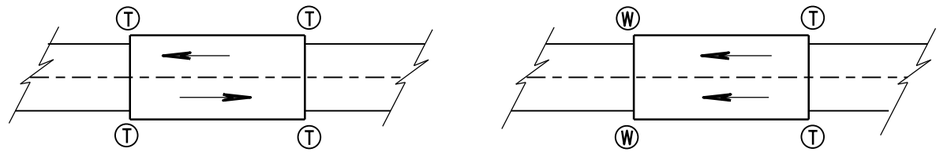


TWO WAY TRAFFIC

ONE WAY TRAFFIC

(T) THRIE BEAM CONNECTION

(W) W-BEAM CONNECTION WHEN REQUIRED

## TYPICAL LOCATIONS OF THRIE BEAM AND W-BEAM CONNECTIONS TO BRIDGE

## GENERAL NOTES

IF ROCK IS ENCOUNTERED, REMOVE ROCK TO FULL DEPTH OF POST PLUS 2½", AND 12" DIAMETER AROUND POST. SEE 14B42 FOR MORE DETAILS.

TRANSITION USES STEEL POSTS ONLY.

SEE STANDARD DETAIL DRAWING 14 B 42 FOR MORE INFORMATION.

(1) BRIDGE RAILING TYPE "W" DOES NOT REQUIRE A TERMINAL CONNECTOR.

(2) OPTIONAL CURB AND GUTTER OR DRAINAGE FEATURE SEE PLAN FOR INFORMATION.

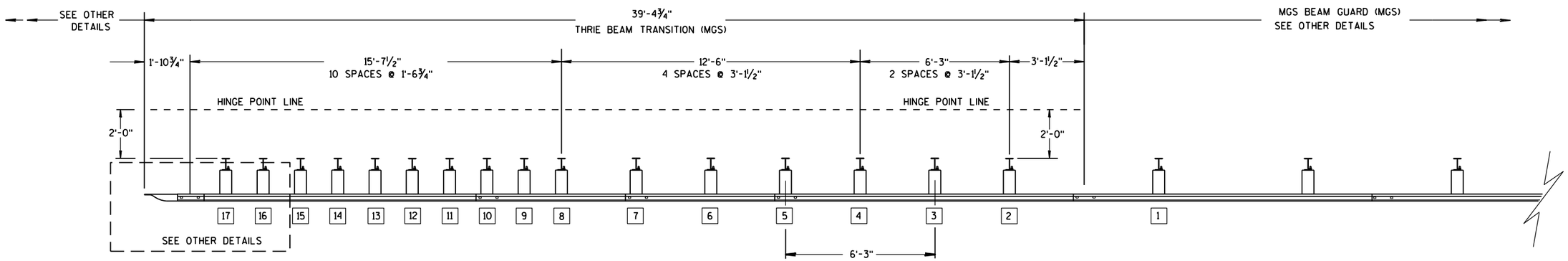


PLAN VIEW

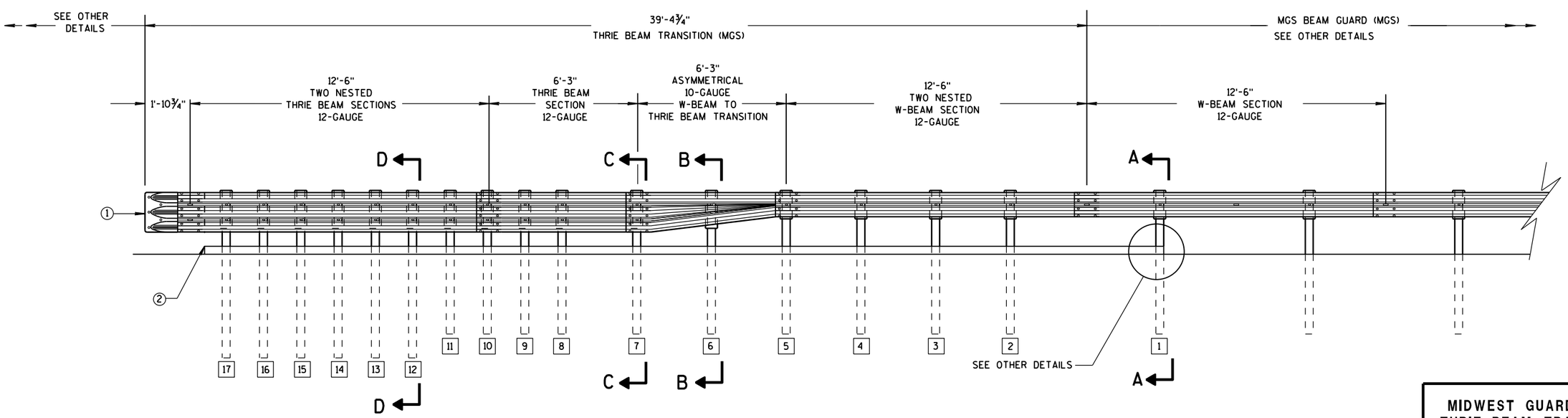


ELEVATION VIEW

## MIDWEST GUARDRAIL SYSTEM THRIE BEAM TRANSITION

MIDWEST GUARDRAIL SYSTEM
THRIE BEAM TRANSITION (MGS)

STATE OF WISCONSIN
DEPARTMENT OF TRANSPORTATION

6

6

S.D.D. 14 B 45-4a

S.D.D. 14 B 45-4a

## GENERAL NOTES

(2) OPTIONAL CURB AND GUTTER OR DRAINAGE_FEATURE SEE PLAN FOR INFORMATION.

(3) WHEN USING STEEL POSTS AND WOOD BLOCKOUTS INSTALL FOUR 10D GALVANIZED NAILS. INSTALL NAILS AT THE BACK CORNERS OF THE BLOCK AND BEND THE NAILS OVER THE FLANGE OF THE STEEL POST.

(4) TOLERANCE FOR TOP OF W-BEAM RAIL IS ± 1".

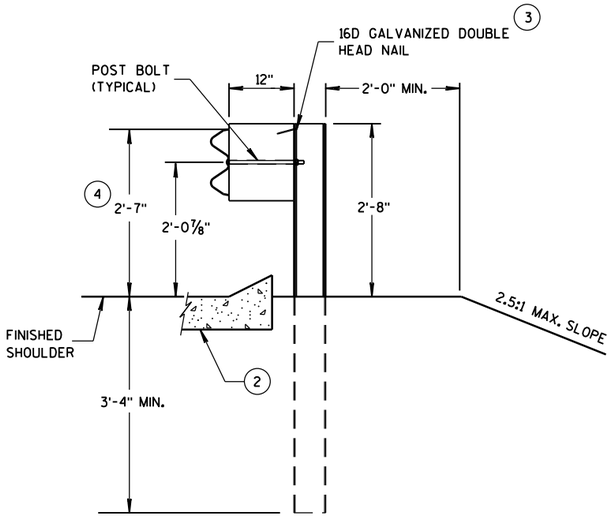


SECTION A-A
POSTS 1-5

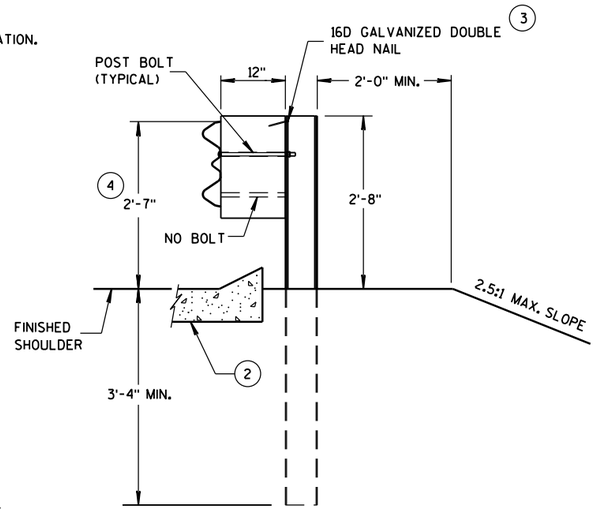


SECTION B-B
POST 6

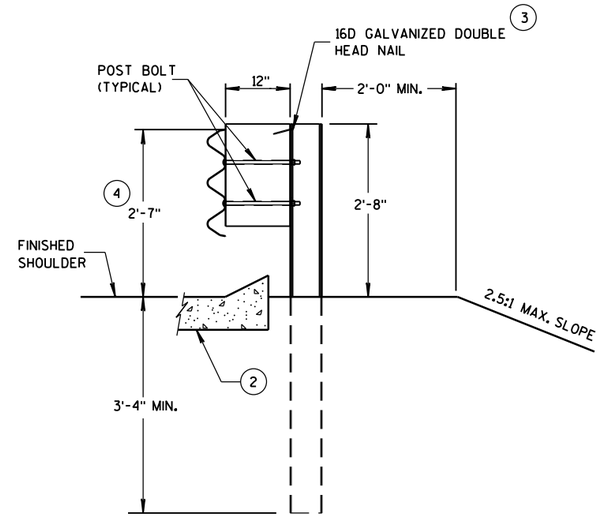


SECTION C-C
POSTS 7-11

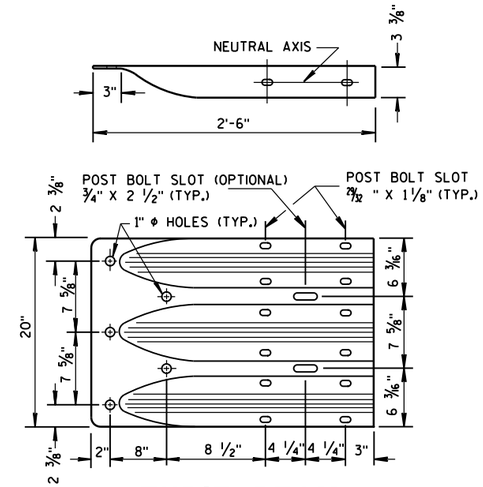


THRIE BEAM
TERMINAL CONNECTOR

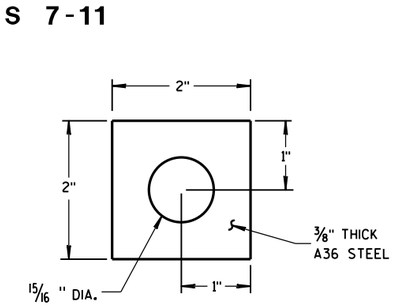


PLATE WASHER DETAIL

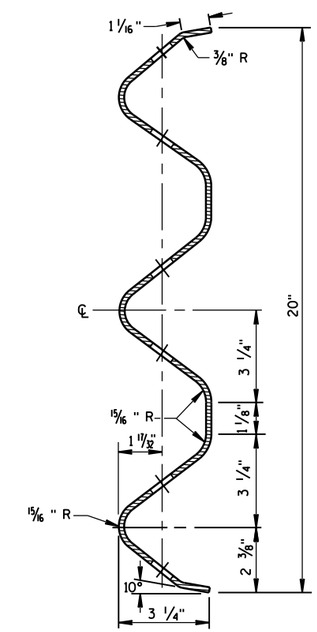


SECTION THRU THRIE
BEAM RAIL ELEMENT

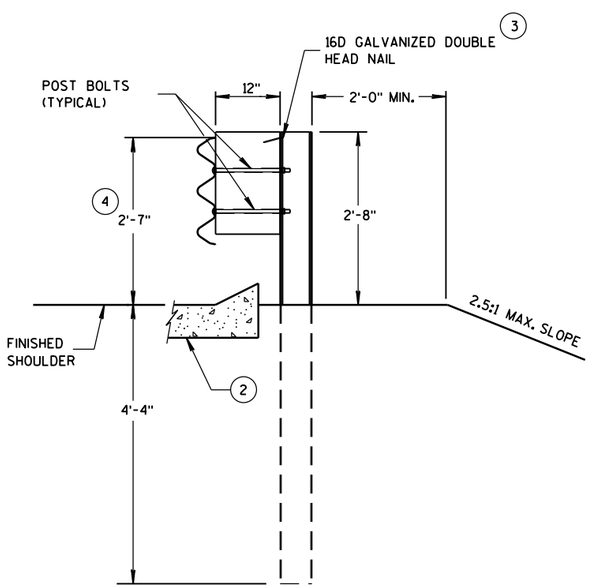


SECTION D-D
POSTS 12-17

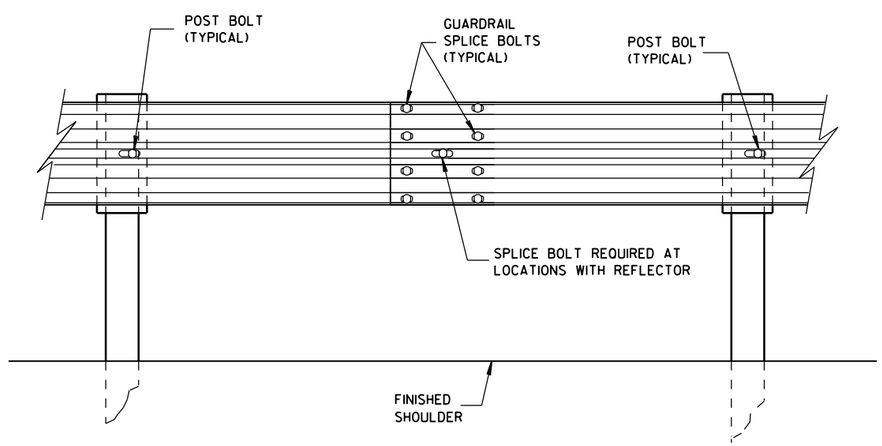


SPLICE DETAIL

MIDWEST GUARDRAIL SYSTEM
THRIE BEAM TRANSITION (MGS)

STATE OF WISCONSIN
DEPARTMENT OF TRANSPO

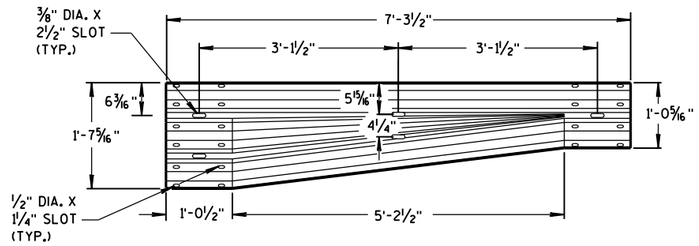


## W-BEAM TO THRIE BEAM TRANSITION SECTION

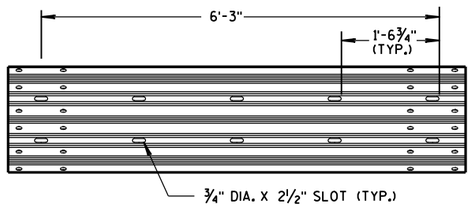


## 6'-3" THRIE BEAM SECTION

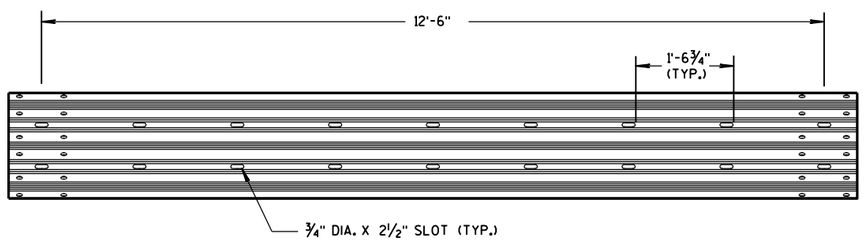


## 12'-6" THRIE BEAM SECTION

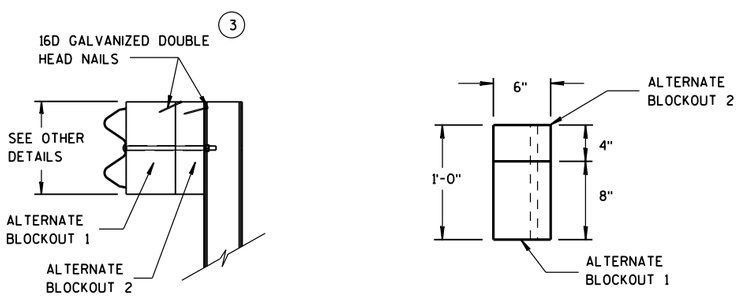


SIDE VIEW TOP VIEW

## ALTERNATE WOOD BLOCKOUT DETAIL

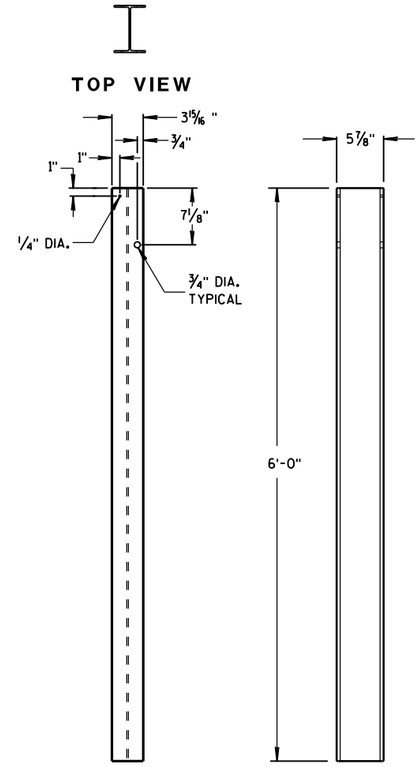


## STEEL POSTS 1-5

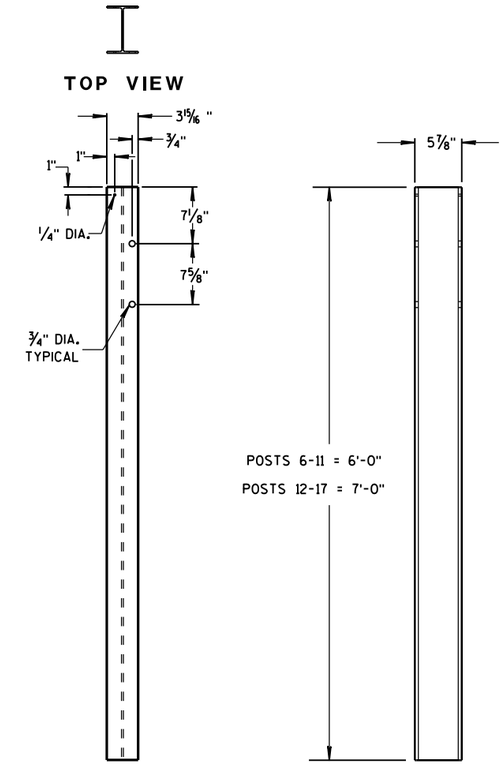


## STEEL POSTS 6-17

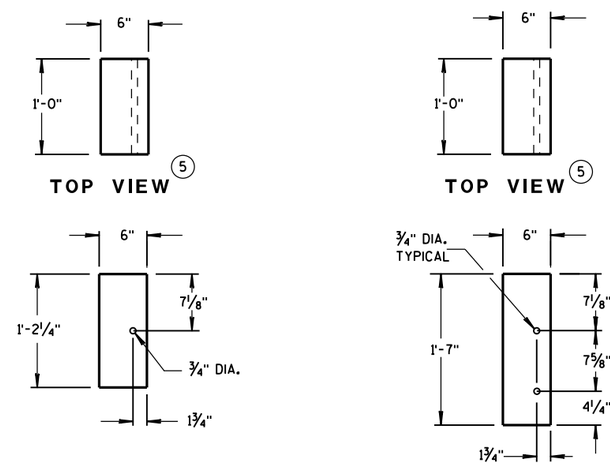


## BLOCKOUT POSTS 1-5

## BLOCKOUT POSTS 6-17

## GENERAL NOTES

STEEL POSTS ARE W6X9 OR W6X8.5.

BOLT HOLES FOR POST ARE ON FRONT AND OF SIDE OF POST.

3 WHEN USING STEEL POSTS AND WOOD BLOCKOUTS INSTALL FOUR 16D GALVANIZED NAILS. INSTALL NAILS AT THE BACK CORNERS OF THE BLOCK AND BEND THE NAILS OVER THE FLANGE OF THE STEEL POST.

5 WOOD BLOCKS MAY BE CONSTRUCTED OUT OF 2 WOOD BLOCKS. SEE ALTERNATE WOOD BLOCK DETAIL.

MIDWEST GUARDRAIL SYSTEM
THRIE BEAM TRANSITION (MGS)

STATE OF WISCONSIN
DEPARTMENT OF TRANSPOR




S.D.D. 14 B 45-4c

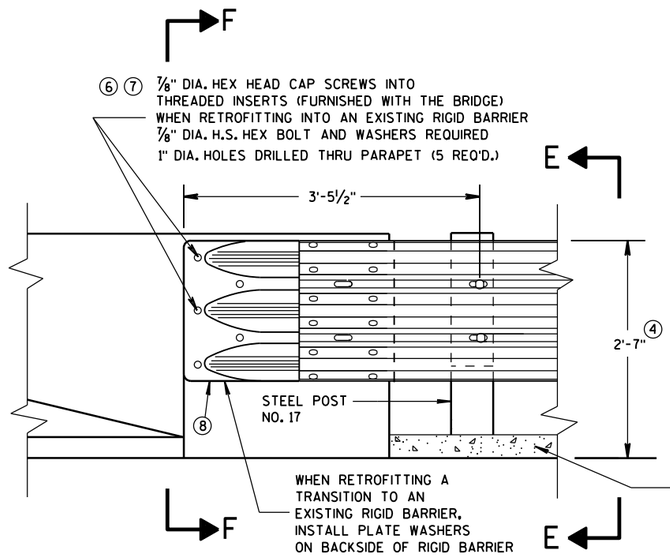


FRONT VIEW

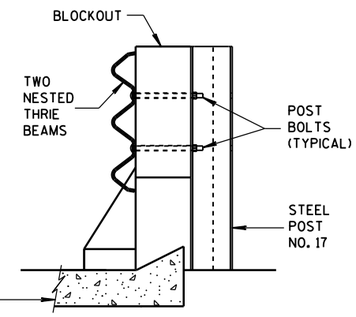


SECTION E-E

## THRIE BEAM CONNECTION TO BRIDGE PARAPET WITH SQUARE ENDS

## GENERAL NOTES

THESE ARE TYPICAL CONNECTION DETAILS. ADJUST THE POSTION OF CONNECTIONS TO EXISTING BRIDGES TO FIT THE ACTUAL BRIDGE AND SITE DIMENSIONS.

② OPTIONAL CURB AND GUTTER OR DRAINAGE FEATURE SEE PLAN FOR INFORMATION.

④ TOLERANCE FOR TOP OF BEAM IS ± 1".

⑥ DRILLING BOLT HOLES THROUGH THE PARAPET, BOLTS, NUTS, WASHERS AND REPAIRING DAMAGED CONCRETE ARE INCIDENTAL TO THE CONTRACT.

⑦ BOLTS MAY BE A325 BOLTS OR A449 BOLTS. BOLT LENGTH AND THREADING LENGTH ARE TO ALLOW FOR A TIGHT CONNECTION BETWEEN RIGID BARRIER AND THRIE BEAM CONNECTION PLATE. CONTRACTOR IS TO FIELD VERIFY BOLT LENGTH AND THREAD LENGTH. ONE ROUND WASHER REQUIRED BETWEEN BOLT HEAD AND THRIE BEAM CONNECTOR PLATE. BOLTS THAT EXTEND THROUGH THE PARAPET AND OUT THE BACK FACE REQUIRE A HARDENED ROUND STEEL WASHER THAT IS 2" O.D. X 5/8" THICK AND ONE PLATE WASHER. REPAIR ANY DAMAGED CONCRETE FROM BOLT INSTALLATION.

⑧ THE RECESS FOR A W-BEAM CONNECTION, WHICH EXISTS ON SOME PARAPETS OF THIS TYPE, SHALL BE FILLED WITH A TREATED TIMBER BLOCKOUT. BLOCKOUT SIZE IS 1'-6" X 2'-0" X 3 1/2".

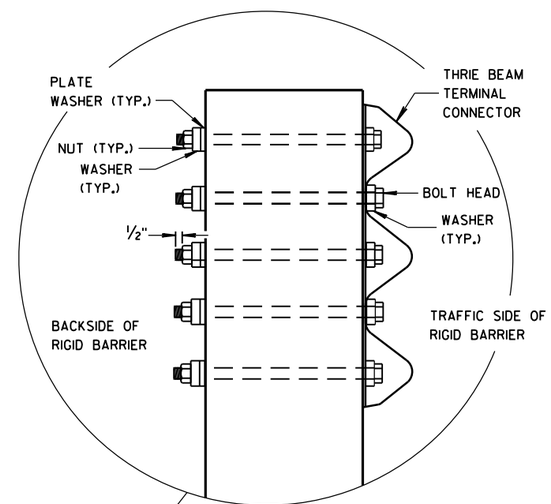


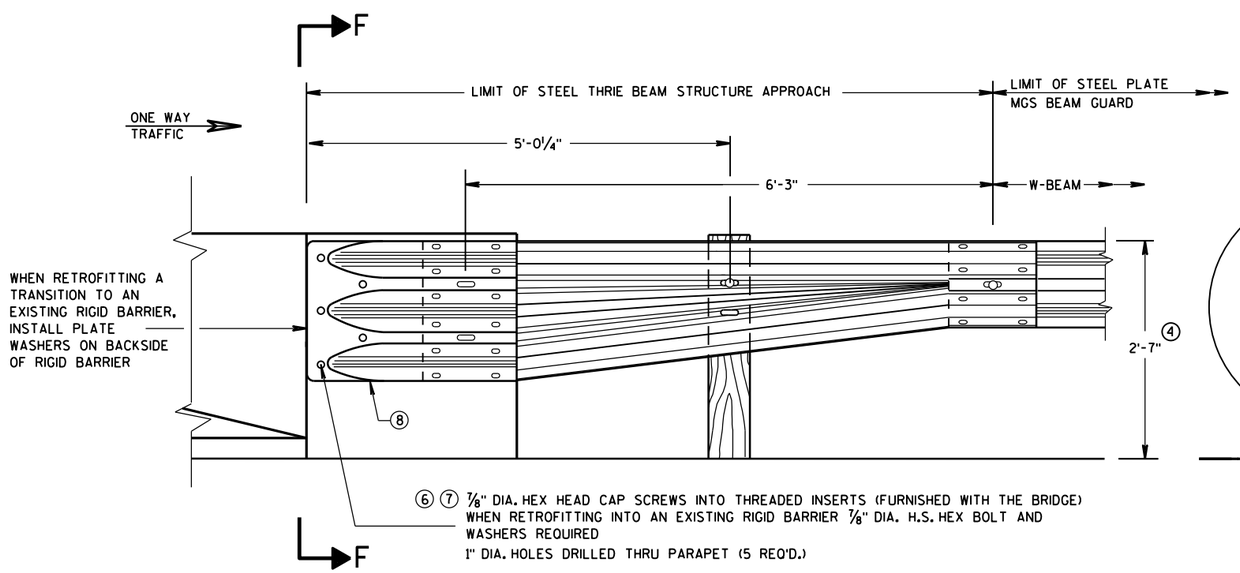


FRONT VIEW

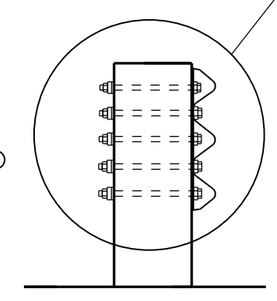

SECTION F-F

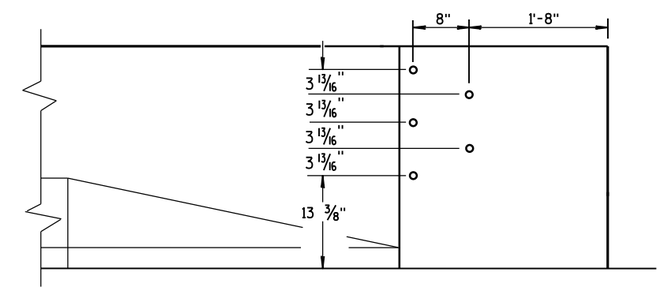


DRILL HOLE LOCATION

## W BEAM TRANSITION AND CONNECTION TO BRIDGE PARAPETS WITH SQUARE ENDS

(USE ONLY ON THE TRAFFIC EXIT END OF ONE WAY BRIDGES)

MIDWEST GUARDRAIL SYSTEM
THRIE BEAM TRANSITION (MGS)

STATE OF WISCONSIN
DEPARTMENT OF TRANSPORTATION

APPROVED
June, 2015 — DATE
/S/ Jerry H. Zogg — ROADWAY STANDARDS DEVELOPMENT ENGINEER
FHWA
NT

6

6

S.D.D. 14 B 45-4d

S.D.D. 14 B 45-4d

## GENERAL NOTES

COVER PLATE PANELS ARE 3/16" THICK.

ALL STIFFENERS ARE 1/4" THICK.

CONNECTOR PLATE SHALL BE FABRICATED FROM ASTM GRADE A36 STEEL AND GALVANIZED.

FOR GALVANIZED REQUIREMENTS, SEE SECTION 614 OF THE STANDARD SPECIFICATIONS.

ALL HOLE DIAMETERS SHALL BE 1".

FOR OPPOSITE SIDE INSTALLATION MIRROR DRAWINGS.

(10) STIFFENERS LOCATED AT THE OUTSIDE EDGES OF THE COVER PLATES SHALL BE WELDED AS FOLLOWS:
SINGLE BEVEL GROOVE WELD ON EXTERNAL SIDES AND 3/16" FILLET WELD BY 1" LONG SPACED AT 2" ON INTERNAL SIDES.

(11) STIFFENERS LOCATED ON THE INSIDE OF THE COVER PLATE SHALL BE WELDED AS FOLLOWS:
3/16" FILLET WELD BY 1" LONG SPACED AT 2".

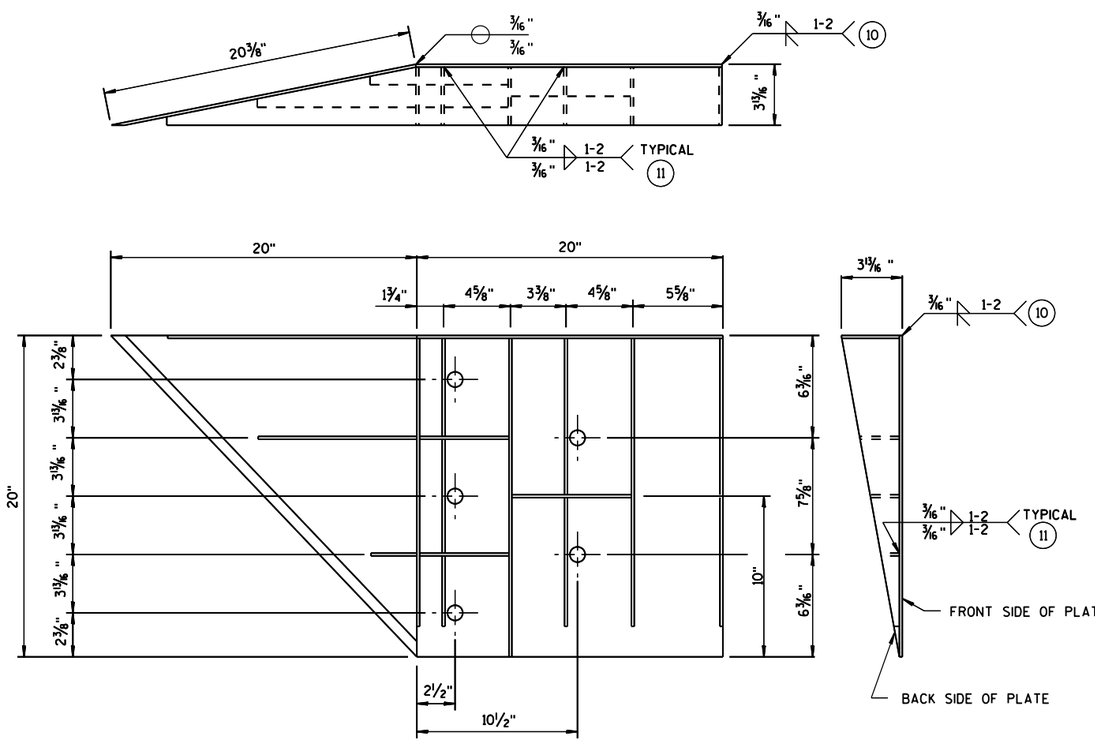


## WELDING INSTRUCTION

(VIEWED FROM BACK SIDE OF PLATE)

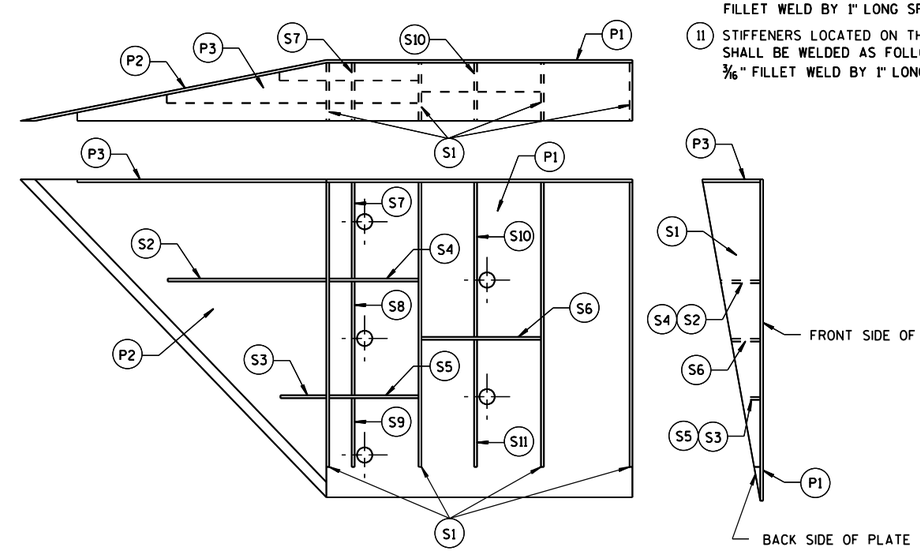


## PLATE AND STIFFENER IDENTIFICATION

(VIEWED FROM BACK SIDE OF PLATE)

| CONNECTOR PLATE DIMENSION (PER ASSEMBLY) | | | | |
|---|---|---|---|---|
| PLATE | QUANTITY | SHAPE | SIZE (A x B x C x D) | THICKNESS |
| P1 | 1 | | 20" x 20" | 3/16" |
| P2 | 1 | | 20" x 20" x 28 9/16" | 3/16" |
| P3 | 1 | | 39" x 3 5/8" x 20" x 19 5/16" | 3/16" |
| S1 | 4 | | 18 7/16" x 3 5/8" x 18 3/4" | 1/4" |
| S2 | 1 | | 10 1/4" x 2 7/16" x 10 3/8" x 1/2" | 1/4" |
| S3 | 1 | | 3" x 1 1/16" x 3 1/8" x 1/2" | 1/4" |
| S4 | 1 | | 6 1/8" x 2 7/16" | 1/4" |
| S5 | 1 | | 6 1/8" x 1 1/16" | 1/4" |
| S6 | 1 | | 7 3/4" x 1 3/4" | 1/4" |
| S7 | 1 | | 2 9/16" x 6" x 3 5/8" x 5 7/8" | 1/4" |
| S8 | 1 | | 1 5/32" x 7 1/2" x 2 1/2" x 7 3/8" | 1/4" |
| S9 | 1 | | 6 1/16" x 6 3/16" x 1 3/32" | 1/4" |
| S10 | 1 | | 1 7/8" x 9 7/8" x 3 5/8" x 9 11/16" | 1/4" |
| S11 | 1 | | 8 1/2" x 8 3/4" x 1 13/16" | 1/4" |

## SINGLE SLOPE CONNECTION PLATE

MIDWEST GUARDRAIL SYSTEM
THRIE BEAM TRANSITION (MGS)

STATE OF WISCONSIN
DEPARTMENT OF TRANSPORTATION

APPROVED
June, 2015 — DATE
/S/ Jerry H. Zogg — ROADWAY STANDARDS ENGINEER
FHWA




6


S.D.D. 14 B 45-4i

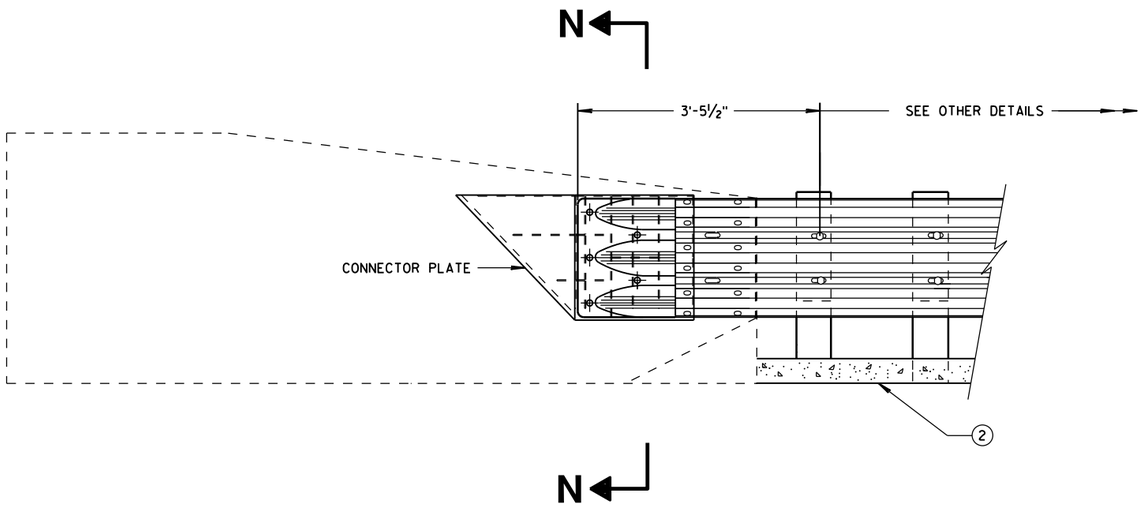


THRIE BEAM CONNECTION TO SINGLE SLOPE BARRIER

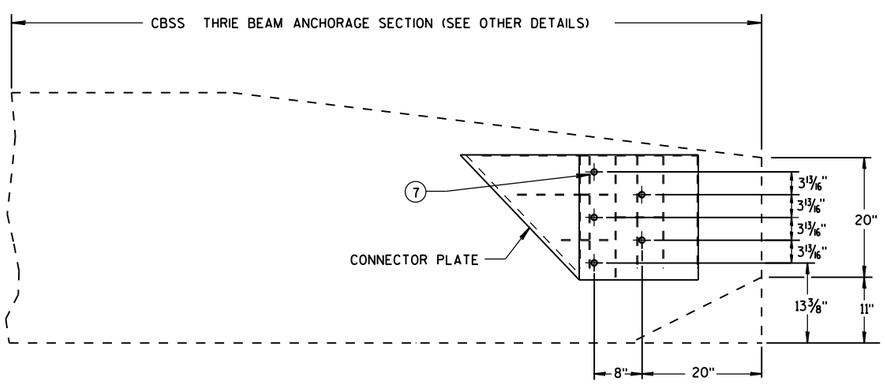


SINGLE SLOPE CONNECTION PLATE PLACEMENT

## GENERAL NOTES

CONNECTOR PLATE, DRILLING BOLT HOLES THROUGH THE PARAPET, BOLTS, NUTS, WASHERS AND REPAIRING DAMAGED CONCRETE ARE INCIDENTAL TO THE CONTRACT.

(2) OPTIONAL CURB AND GUTTER OR DRAINAGE FEATURE SEE PLAN FOR INFORMATION.

(7) BOLTS MAY BE A325 BOLTS OR A449 BOLTS. BOLT LENGTH AND THREADING LENGTH ARE TO ALLOW FOR A TIGHT CONNECTION BETWEEN RIGID BARRIER AND THRIE BEAM CONNECTION PLATE. CONTRACTOR IS TO FIELD VERIFY BOLT LENGTH AND THREAD LENGTH. ONE ROUND WASHER REQUIRED BETWEEN BOLT HEAD AND THRIE BEAM CONNECTOR PLATE. BOLTS THAT EXTEND THROUGH THE PARAPET AND OUT THE BACK FACE REQUIRE A HARDENED ROUND STEEL WASHER THAT IS 2" O.D. X 5/8" THICK AND ONE PLATE WASHER. REPAIR ANY DAMAGED CONCRETE FROM BOLT INSTALLATION.

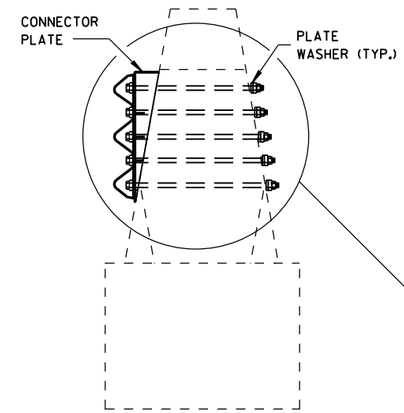


SECTION N-N

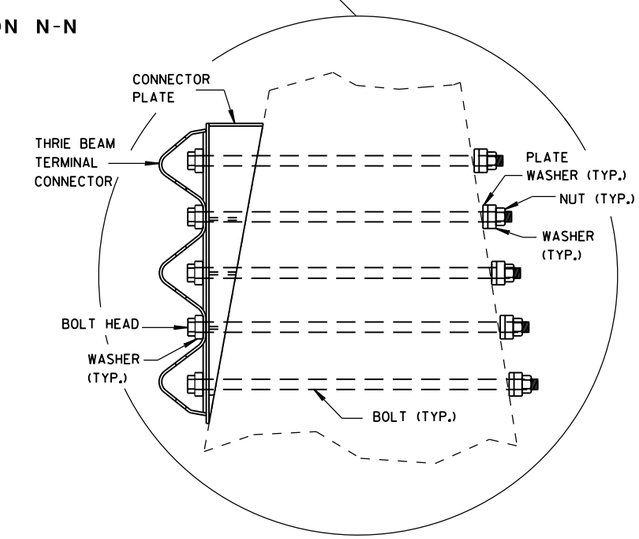


| | |
|---|---|
| MIDWEST GUARDRAIL SYSTEM THRIE BEAM TRANSITION (MGS) | |
| STATE OF WISCONSIN DEPARTMENT OF TRANSPORTATION | |
| APPROVED June, 2015 DATE | /S/ Jerry H. Zogg ROADWAY STANDARDS DEVELOPMENT ENGINEER |
| FHWA | NT |

6

6

S.D.D. 14 B 45-4j

S.D.D. 14 B 45-4j

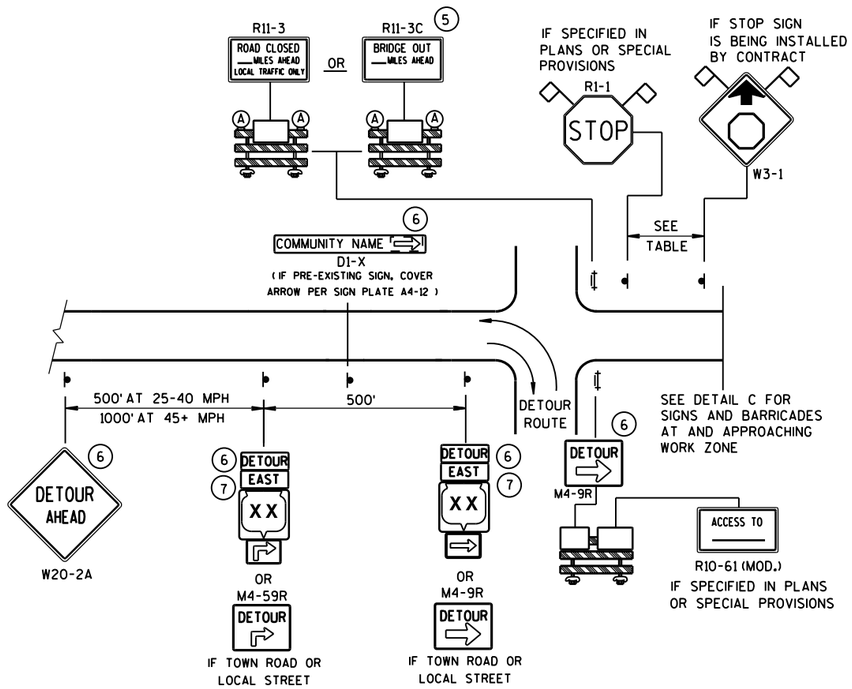


DETAIL A

## MAINLINE CLOSURE WITH POSTED DETOUR

WORK ZONE GREATER THAN ½ MILE FROM DETOUR ROUTE ( 1000 FEET IF URBAN )

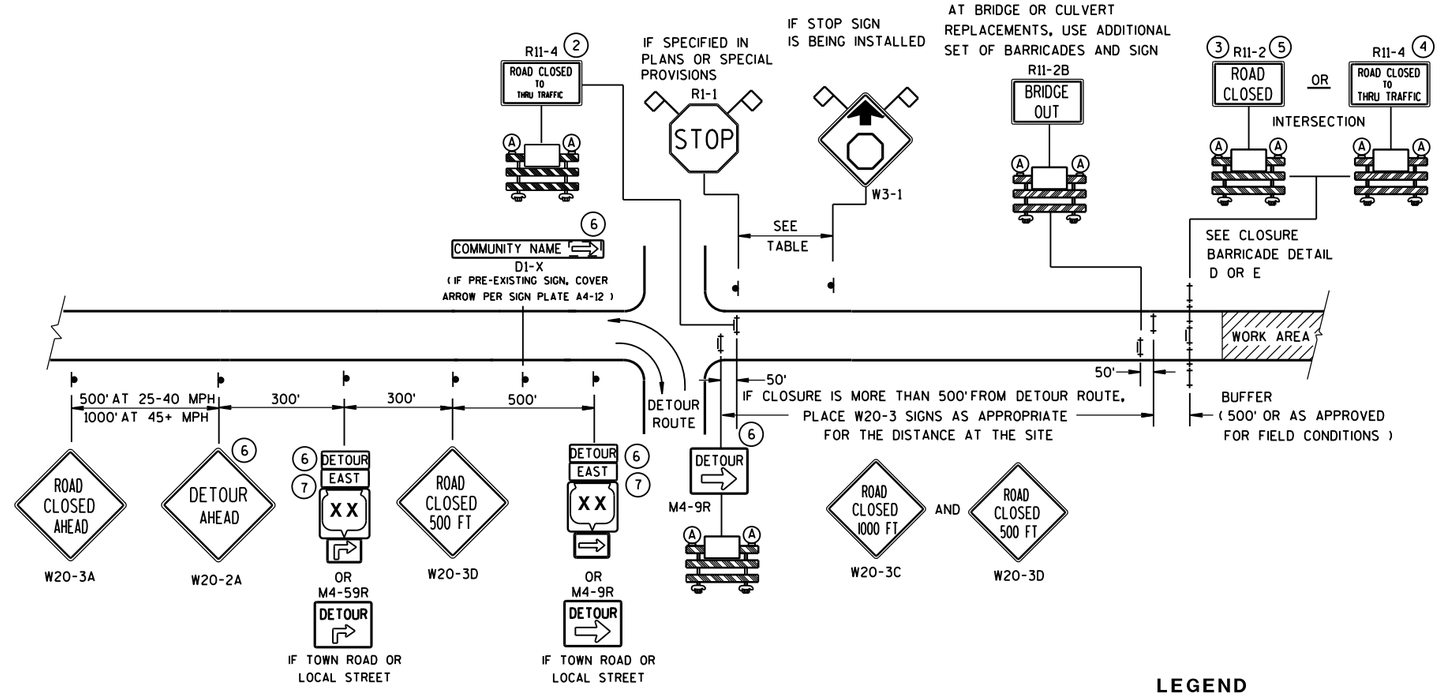


DETAIL B

## MAINLINE CLOSURE WITH POSTED DETOUR

WORK ZONE LESS THAN ½ MILE FROM DETOUR ROUTE ( 1000 FEET IF URBAN )

### LEGEND

- SIGN ON PERMANENT SUPPORT
- TYPE III BARRICADE
- TYPE III BARRICADE WITH ATTACHED SIGN
- (A) TYPE "A" WARNING LIGHT (FLASHING)
- WORK AREA
- DETOUR / EAST — M4-8 / M3-X
- XX — M1-4; XX COUNTY XX — M1-5A; XX — M1-6
- M05-1 OR M06-1
- FLAGS, 16" X 16" MIN., (ORANGE)

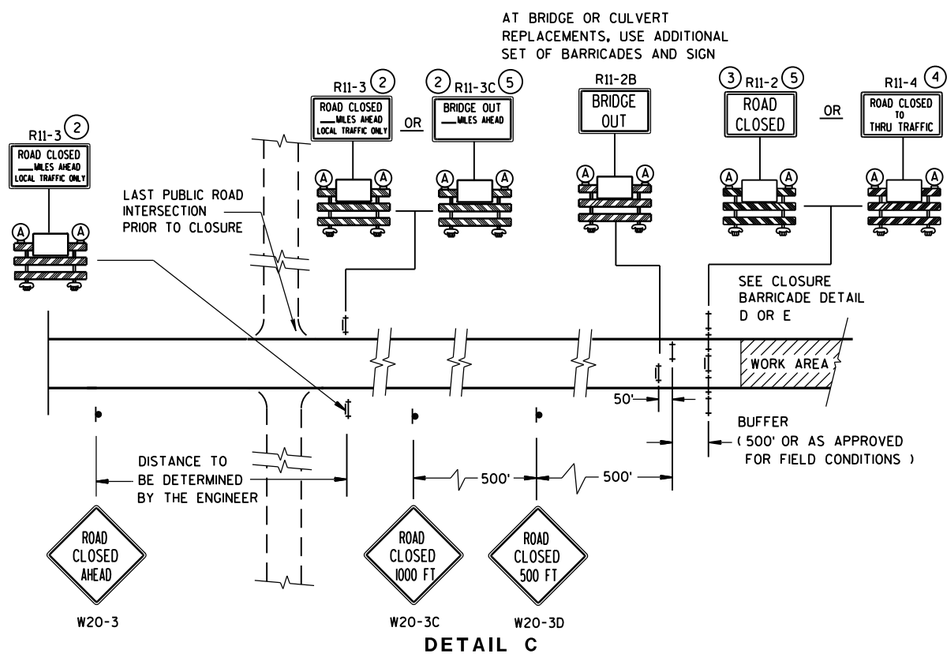


DETAIL C

## MAINLINE CLOSURE, NO POSTED DETOUR

| SPEED LIMIT (MPH) | "STOP AHEAD" ADVANCE WARNING DISTANCE (FT) |
|---|---|
| 25 | 200 |
| 30 | 200 |
| 35 | 350 |
| 40 | 350 |
| 45 | 500 |
| 50 | 550 |
| 55 | 750 |

SEE SDD 15C2-SHEET "**b**"
FOR GENERAL NOTES
AND FOOTNOTES (1) THROUGH (7)

**BARRICADES AND SIGNS FOR MAINLINE CLOSURES**

STATE OF WISCONSIN
DEPARTMENT OF TRANSPORTATION

Sept. 2015 — DATE
/S/ Peter Amakobe Atepe — STATEWIDE WORK ZONE TRAFFIC SAFETY ENGINEER
FHWA

6

6

S.D.D. 15 C 2-6a

S.D.D. 15 C 2-6a

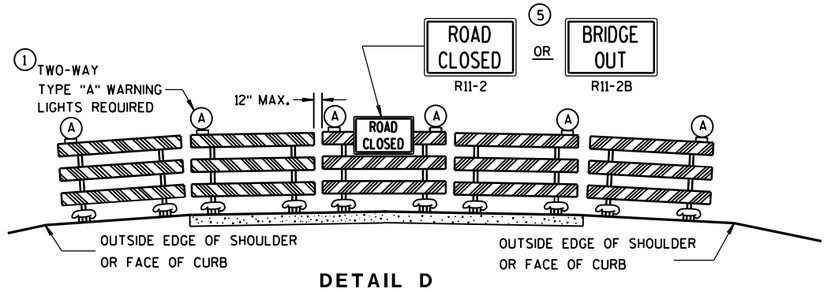


**DETAIL D**

## ROAD CLOSURE BARRICADE DETAIL

APPROACH VIEW

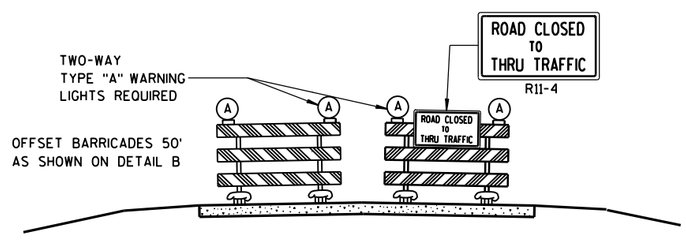


**DETAIL E**

## LANE CLOSURE BARRICADE DETAIL

APPROACH VIEW

SEE SDD 15C2-SHEET "**a**" FOR LEGEND

## GENERAL NOTES

THE EXACT NUMBER, LOCATION, AND SPACING OF ALL SIGNS AND BARRICADES SHALL BE ADJUSTED TO FIT FIELD CONDITIONS AS APPROVED BY THE ENGINEER.

ANY SIGNS TEMPORARY OR EXISTING, WHICH CONFLICT WITH TRAFFIC CONTROL "IN USE" SHALL BE REMOVED OR COVERED AS NEEDED AND AS APPROVED BY THE ENGINEER.

THE SPACING BETWEEN TRAFFIC CONTROL SIGNS SHOULD BE ADJUSTED TO NOT CONFLICT WITH AND SHOULD PROVIDE A DESIRABLE MINIMUM OF 200 FEET CLEARANCE TO EXISTING SIGNS THAT WILL REMAIN IN PLACE.

BARRICADES THAT MUST BE MOVED FOR A WORK OPERATION SHALL BE IMMEDIATELY RE-ESTABLISHED UPON COMPLETION OF THE OPERATION OR, FOR CONTINUING OPERATIONS, AT THE END OF EACH WORKING DAY.

SIGNS THAT WILL BE IN PLACE LESS THAN 7 CONTINUOUS DAYS AND NIGHTS MAY BE MOUNTED ON PORTABLE SUPPORTS.

ALL TYPE III BARRICADES SHALL HAVE RAILS REFLECTORIZED ON BOTH FACES. STRIPES SHALL BE PROPERLY SLOPED DOWN TOWARD THE TRAFFIC SIDE OR AS SHOWN IN THE ROAD CLOSURE BARRICADE DETAIL D FOR FULL ROAD CLOSURES.

TYPE "A" LOW-INTENSITY FLASHING WARNING LIGHTS SHALL BE VISIBLE ON BOTH SIDES OF THE BARRICADE.

THE R11-2, R11-3, M4-9, R11-4 AND R10-61 SIGNS PLACED ON BARRICADES SHALL COVER NO MORE THAN THE TOP RAIL. THE SIGNS SHALL NOT COVER ANY PORTION OF THE MIDDLE OR BOTTOM RAILS.

"WO AND "MO" SIGNS ARE THE SAME AS "W" AND "M" SIGNS EXCEPT THE BACKGROUND IS ORANGE.

ALL SIGNS SHALL BE 48" X 48" UNLESS OTHERWISE NOTED BELOW:

- R11-2 SHALL BE 48" X 30".
- R11-3, R11-4 AND R10-61 SHALL BE 60" X 30".
- M4-9 SHALL BE 30" X 24".
- M3-X SHALL BE 24" X 12". (36" X 18" IF NEEDED TO MATCH EXISTING SIGNS.)
- M4-8 SHALL BE 24" X 12". (30" X 15" IF NEEDED TO MATCH EXISTING SIGNS.)
- M1-4, M1-5A, AND M1-6 SHALL BE 24" X 24". (36" X 36" IF NEEDED TO MATCH EXISTING SIGNS.)
- M05-1 AND M06-1 SHALL BE 21" X 21". (30" X 30" IF NEEDED TO MATCH EXISTING SIGNS.)
- D1-X SHALL BE AS SHOWN ON SPECIFIC PROJECT SIGNING DETAIL SHEETS.
- R1-1 SHALL BE 36" X 36".

1. TWO WARNING LIGHTS SHALL BE PROVIDED ON THE CENTER BARRICADE AND A MINIMUM OF ONE WARNING LIGHT SHALL BE PROVIDED ON EACH OF THE OTHER BARRICADES WITHIN THE ROADWAY LIMITS. SPACING OF THE WARNING LIGHTS SHALL BE UNIFORM TO THE EDGE OF ROADWAY AS SHOWN (APPROX. 8-FOOT LIGHT SPACING).
2. THESE SIGNS AND BARRICADES ARE NOT REQUIRED IF ROAD CLOSURE BEGINS AT INTERSECTION.
3. FOR ROAD CLOSURE WITHOUT LOCAL ACCESS TO PROJECT, SEE ROAD CLOSURE BARRICADE DETAIL D.
4. FOR ROAD CLOSURE WITH LOCAL ACCESS TO PROJECT, SEE LANE CLOSURE BARRICADE DETAIL E.
5. FOR BRIDGE OR CULVERT REPLACEMENTS, SUBSTITUTE "BRIDGE OUT" INSTEAD OF "ROAD CLOSED" ON R11-2 AND R11-3 SIGNS.
6. INSTALL DETOUR AND COMMUNITY GUIDE SIGNS AND ARROWS ONLY IF SPECIFIED IN THE CONTRACT. IF THERE ARE EXISTING ROUTE MARKER ASSEMBLIES THAT WILL REMAIN IN PLACE, ADJUST THE LOCATION OF THE DETOUR ROUTE SIGNS TO CORRESPOND WITH THE EXISTING ASSEMBLIES. MODIFY EXISTING SIGNS WHERE POSSIBLE. SEE SPECIFIC PROJECT DETOUR SIGNING DETAIL SHEETS. IF DETOUR SIGNS ARE BEING INSTALLED BY OTHERS, PLACE THE CONTRACTED TRAFFIC CONTROL SIGNS TO ALLOW FOR PLACEMENT OF ALL WARNING, DETOUR AND GUIDE SIGNS AS SHOWN.
7. "EAST" CARDINAL DIRECTION MARKERS AND RIGHT TURN ARROWS ARE SHOWN. USE OTHER CARDINAL DIRECTIONS AND ARROWS AS APPROPRIATE.

**BARRICADES AND SIGNS FOR MAINLINE CLOSURES**

STATE OF WISCONSIN
DEPARTMENT OF TRANSPORTATION

Sept. 2015 — DATE
/S/ Peter Amakobe Atepe — STATEWIDE WORK ZONE TRAFFIC SAFETY ENGINEER
FHWA

THIS DRAWING PROVIDES GENERAL GUIDANCE ON TYPICAL DETOUR SIGN LAYOUT AND SPACING. SEE PROJECT DETOUR SIGNING SHEETS FOR SPECIFIC DETAILS FOR EACH PROJECT.

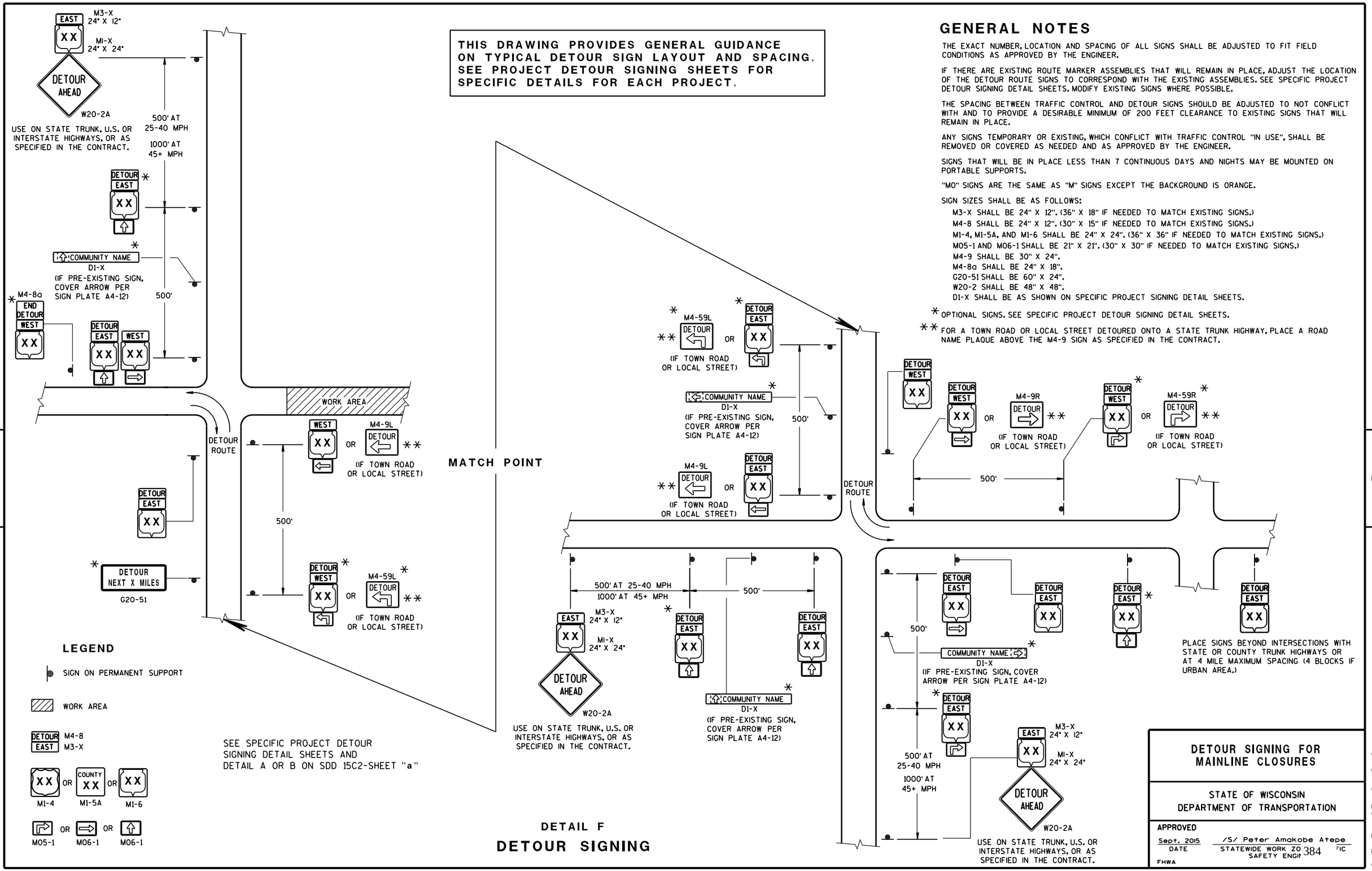


DETAIL F

DETOUR SIGNING

## GENERAL NOTES

THE EXACT NUMBER, LOCATION AND SPACING OF ALL SIGNS SHALL BE ADJUSTED TO FIT FIELD CONDITIONS AS APPROVED BY THE ENGINEER.

IF THERE ARE EXISTING ROUTE MARKER ASSEMBLIES THAT WILL REMAIN IN PLACE, ADJUST THE LOCATION OF THE DETOUR ROUTE SIGNS TO CORRESPOND WITH THE EXISTING ASSEMBLIES. SEE SPECIFIC PROJECT DETOUR SIGNING DETAIL SHEETS. MODIFY EXISTING SIGNS WHERE POSSIBLE.

THE SPACING BETWEEN TRAFFIC CONTROL AND DETOUR SIGNS SHOULD BE ADJUSTED TO NOT CONFLICT WITH AND TO PROVIDE A DESIRABLE MINIMUM OF 200 FEET CLEARANCE TO EXISTING SIGNS THAT WILL REMAIN IN PLACE.

ANY SIGNS TEMPORARY OR EXISTING, WHICH CONFLICT WITH TRAFFIC CONTROL "IN USE", SHALL BE REMOVED OR COVERED AS NEEDED AND AS APPROVED BY THE ENGINEER.

SIGNS THAT WILL BE IN PLACE LESS THAN 7 CONTINUOUS DAYS AND NIGHTS MAY BE MOUNTED ON PORTABLE SUPPORTS.

"MO" SIGNS ARE THE SAME AS "M" SIGNS EXCEPT THE BACKGROUND IS ORANGE.

SIGN SIZES SHALL BE AS FOLLOWS:

- M3-X SHALL BE 24" X 12". (36" X 18" IF NEEDED TO MATCH EXISTING SIGNS.)
- M4-8 SHALL BE 24" X 12". (30" X 15" IF NEEDED TO MATCH EXISTING SIGNS.)
- M1-4, M1-5A, AND M1-6 SHALL BE 24" X 24". (36" X 36" IF NEEDED TO MATCH EXISTING SIGNS.)
- M05-1 AND M06-1 SHALL BE 21" X 21". (30" X 30" IF NEEDED TO MATCH EXISTING SIGNS.)
- M4-9 SHALL BE 30" X 24".
- M4-8a SHALL BE 24" X 18".
- G20-51 SHALL BE 60" X 24".
- W20-2 SHALL BE 48" X 48".
- D1-X SHALL BE AS SHOWN ON SPECIFIC PROJECT SIGNING DETAIL SHEETS.

* OPTIONAL SIGNS. SEE SPECIFIC PROJECT DETOUR SIGNING DETAIL SHEETS.

** FOR A TOWN ROAD OR LOCAL STREET DETOURED ONTO A STATE TRUNK HIGHWAY, PLACE A ROAD NAME PLAQUE ABOVE THE M4-9 SIGN AS SPECIFIED IN THE CONTRACT.

| DETOUR SIGNING FOR MAINLINE CLOSURES | |
|---|---|
| STATE OF WISCONSIN DEPARTMENT OF TRANSPORTATION | |
| APPROVED | |
| Sept. 2015 DATE | /S/ Peter Amakobe Atepe STATEWIDE WORK ZONE TRAFFIC SAFETY ENGINEER |
| FHWA | |

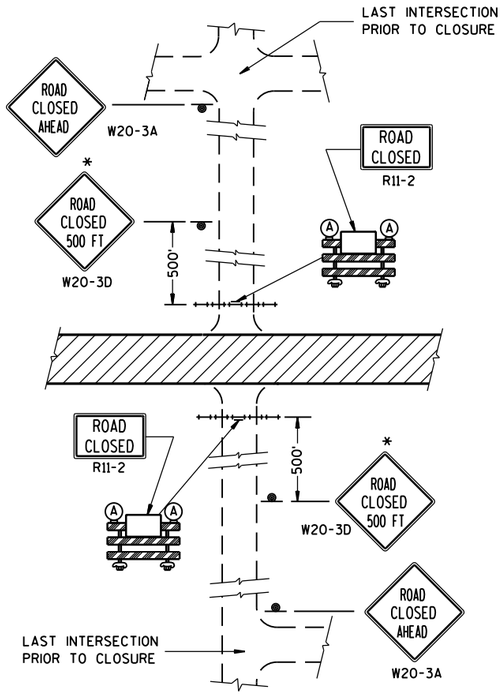


**DETAIL 1**

(NO ACCESS TO PROJECT)

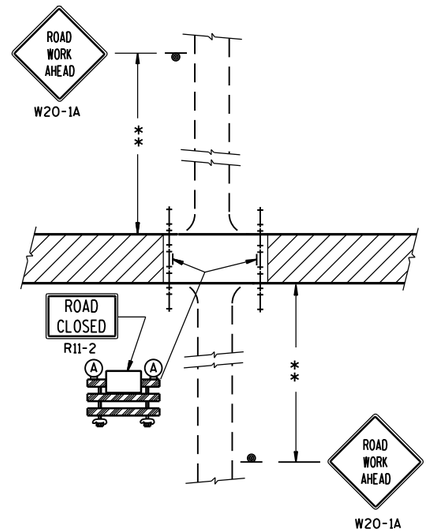


**DETAIL 2**

(PUBLIC CROSS-TRAFFIC MAINTAINED.
NO ACCESS TO PROJECT).

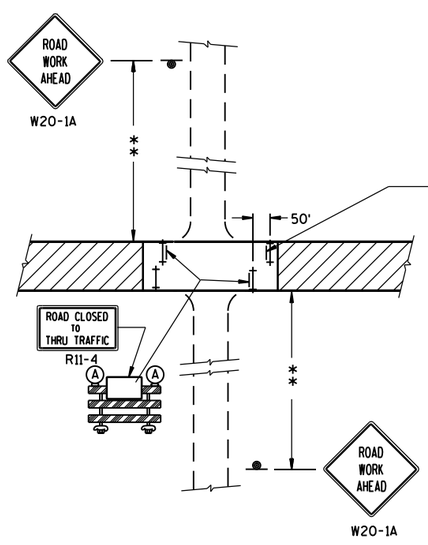


**DETAIL 3**

(PUBLIC CROSS-TRAFFIC MAINTAINED. CONTRACTOR,
LOCAL BUSINESS AND RESIDENT ACCESS).

FOR BRIDGE OR CULVERT
REPLACEMENT, USE ADDITIONAL
SIGN ON BARRICADE

BRIDGE OUT
XX MILES AHEAD
R11-3C

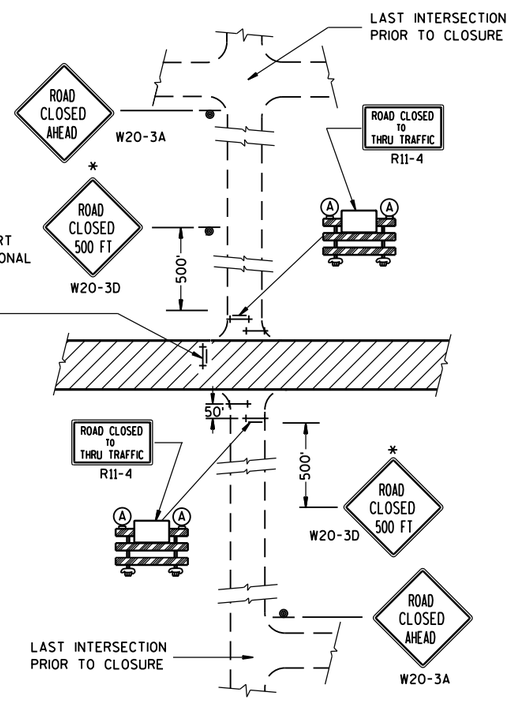


**DETAIL 4**

(CONTRACTOR, LOCAL BUSINESS AND
RESIDENT ACCESS TO PROJECT)

## GENERAL NOTES

THE EXACT NUMBER, LOCATION, AND SPACING OF ALL SIGNS AND BARRICADES SHALL BE ADJUSTED TO FIT FIELD CONDITIONS AS APPROVED BY THE ENGINEER.

ANY SIGNS TEMPORARY OR EXISTING, WHICH CONFLICT WITH TRAFFIC CONTROL "IN USE" SHALL BE REMOVED OR COVERED AS NEEDED AND AS APPROVED BY THE ENGINEER.

THE SPACING BETWEEN TRAFFIC CONTROL SIGNS SHOULD BE ADJUSTED TO NOT CONFLICT WITH AND SHOULD PROVIDE A DESIRABLE MINIMUM OF 200 FEET CLEARANCE TO EXISTING SIGNS THAT WILL REMAIN IN PLACE.

IF A "STOP" SIGN MUST BE REMOVED FOR A WORK OPERATION, A TEMPORARY "STOP" SIGN SHALL BE PLACED PRIOR TO THE SIGN REMOVAL, OR A FLAGGER SHALL BE PROVIDED UNTIL THE SIGN IS RE-ESTABLISHED.

BARRICADES THAT MUST BE MOVED FOR A WORK OPERATION SHALL BE IMMEDIATELY RE-ESTABLISHED UPON COMPLETION OF THE OPERATION OR, FOR CONTINUING OPERATIONS, AT THE END OF EACH WORKING DAY.

SIGNS THAT WILL BE IN PLACE LESS THAN 7 CONTINUOUS DAYS AND NIGHTS MAY BE MOUNTED ON PORTABLE SUPPORTS.

ALL TYPE III BARRICADES SHALL HAVE RAILS REFLECTORIZED ON BOTH FACES. STRIPES SHALL BE PROPERLY SLOPED DOWN TOWARD THE TRAFFIC SIDE OR AS SHOWN IN THE ROAD CLOSURE BARRICADE DETAIL D FOR FULL ROAD CLOSURES.

TYPE "A" LOW-INTENSITY FLASHING WARNING LIGHTS SHALL BE VISIBLE ON BOTH SIDES OF THE BARRICADE.

THE R11-2, R11-3 AND R11-4 SIGNS PLACED ON BARRICADES SHALL COVER NO MORE THAN THE TOP RAIL. THE SIGNS SHALL NOT COVER ANY PORTION OF THE MIDDLE OR BOTTOM RAILS.

ALL SIGNS SHALL BE 48" X 48" UNLESS OTHERWISE NOTED BELOW:
R11-2 SHALL BE 48" X 30".
R11-4 AND R11-3 SHALL BE 60" X 30".

*OMIT THE "ROAD CLOSED 500 FT." SIGN IF THE LAST INTERSECTION IS 500 FT. OR LESS FROM THE WORK ZONE.

**500' MAX. OR AT LAST INTERSECTION WHICHEVER IS CLOSER.

## LEGEND

- SIGN ON PERMANENT SUPPORT
- TYPE III BARRICADE
- TYPE III BARRICADE WITH ATTACHED SIGN
- (A) TYPE "A" WARNING LIGHT (FLASHING)
- WORK AREA

**BARRICADES AND SIGNS FOR SIDEROAD CLOSURES**

STATE OF WISCONSIN
DEPARTMENT OF TRANSPORTATION

APPROVED
Sept. 2015 — DATE
/S/ Peter Amakobe Atepe
STATEWIDE WORK ZONE TRAFFIC SAFETY ENGINEER
FHWA




6


S.D.D. 15 C 3-3

## GENERAL NOTES

DETAILS OF INSTALLATION, MATERIALS AND WORKMANSHIP NOT SHOWN ON THIS DRAWING SHALL CONFORM TO THE PERTINENT REQUIREMENTS OF THE STANDARD SPECIFICATIONS AND APPLICABLE SPECIAL PROVISIONS.

ALL LETTERS, ARROWS AND SYMBOLS SHALL BE IN CONFORMANCE WITH REQUIREMENTS INCLUDED IN "STANDARD ALPHABETS FOR HIGHWAY SIGNS AND PAVEMENT MARKING" BOOK BY THE FEDERAL HIGHWAY ADMINISTRATION. ALL LETTERS, ARROWS AND SYMBOLS SHALL BE WHITE AND REFLECTORIZED. SMALL DIFFERENCES IN DIMENSIONS WITHIN THE TOLERANCES OF THAT BOOK ARE ACCEPTABLE.

A DETAILED DRAWING OF THE HANDICAPPED PARKING SYMBOL IS ILLUSTRATED IN THE "STANDARD HIGHWAY SIGNS MANUAL" BY THE FEDERAL HIGHWAY ADMINISTRATION.

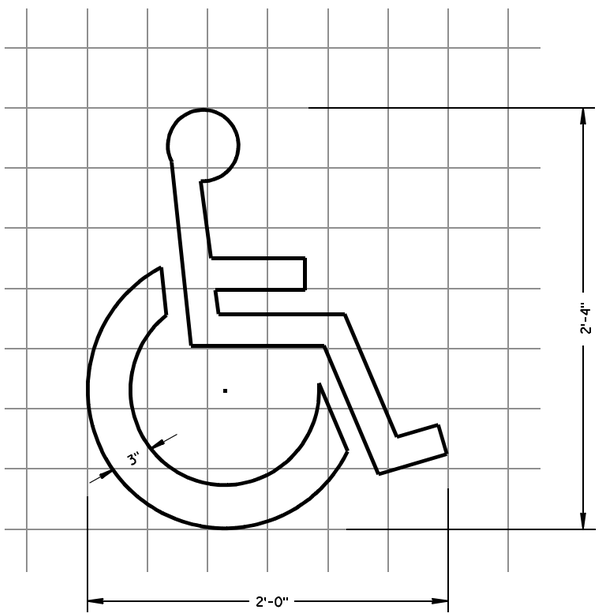


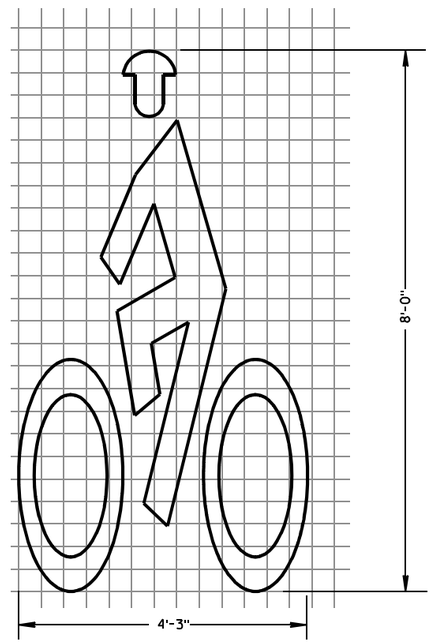


BIKE CROSSING SYMBOL

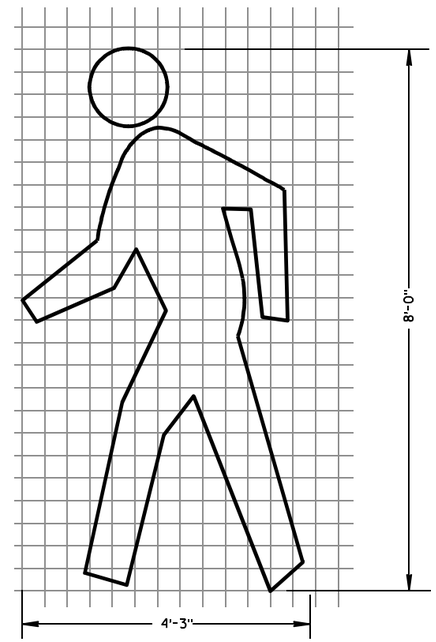


PEDESTRIAN SYMBOL

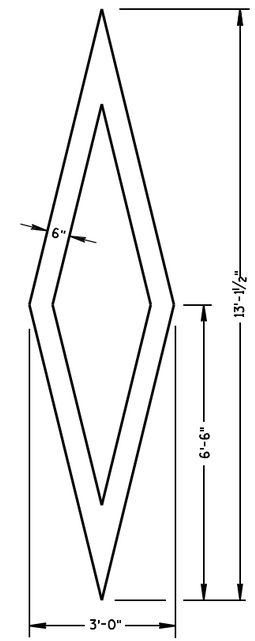


PREFERENTIAL LANE SYMBOL

6

6

S.D.D. 15 C 7-12a

S.D.D. 15 C 7-12a

PAVEMENT MARKING SYMBOLS

STATE OF WISCONSIN
DEPARTMENT OF TRANSPORTATION

APPROVED

7/1/11 — DATE

/S/ Thomas N Nathan — STATE TRAFFIC ENGINEER ... IGN

FHWA

## GENERAL NOTES

DETAILS OF INSTALLATION, MATERIALS AND WORKMANSHIP NOT SHOWN ON THIS DRAWING SHALL CONFORM TO THE PERTINENT REQUIREMENTS OF THE STANDARD SPECIFICATIONS AND APPLICABLE SPECIAL PROVISIONS.

ALL LETTERS, ARROWS AND SYMBOLS SHALL BE IN CONFORMANCE WITH REQUIREMENTS INCLUDED IN "STANDARD ALPHABETS FOR HIGHWAY SIGNS AND PAVEMENT MARKING" BOOK BY THE FEDERAL HIGHWAY ADMINISTRATION. ALL LETTERS, ARROWS AND SYMBOLS SHALL BE WHITE AND REFLECTORIZED. SMALL DIFFERENCES IN DIMENSIONS WITHIN THE TOLERANCES OF THAT BOOK ARE ACCEPTABLE.

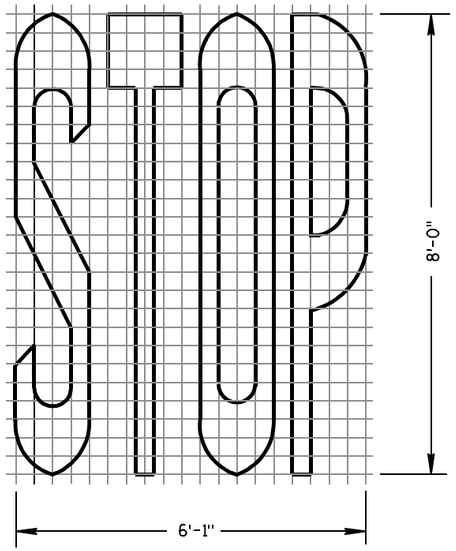


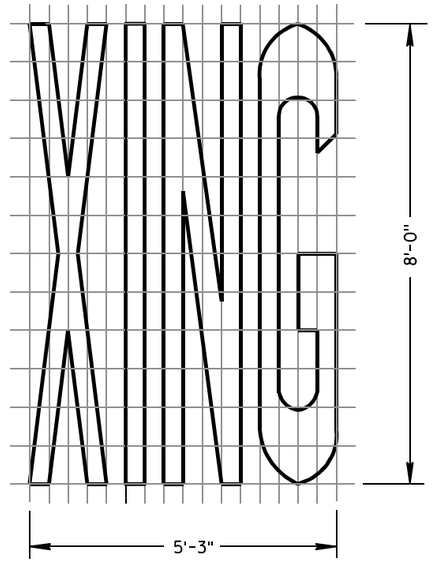


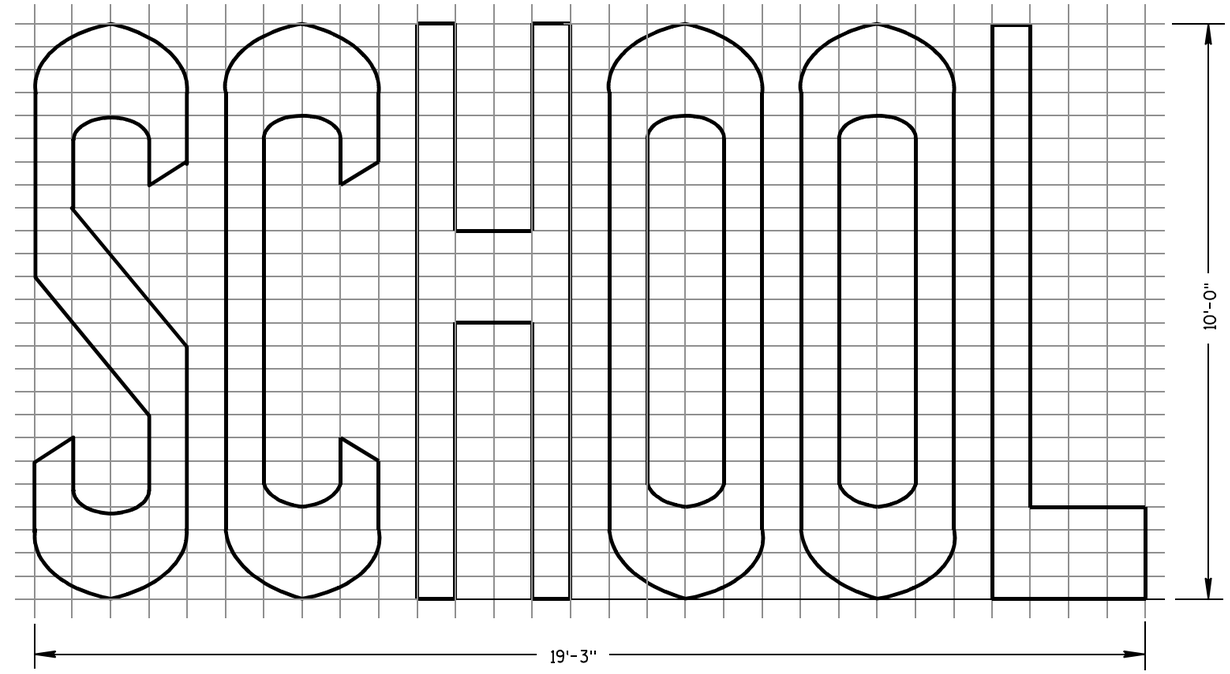


TWO-LANE

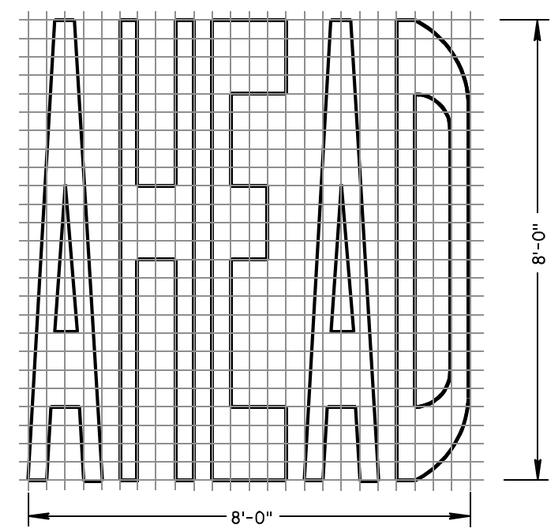


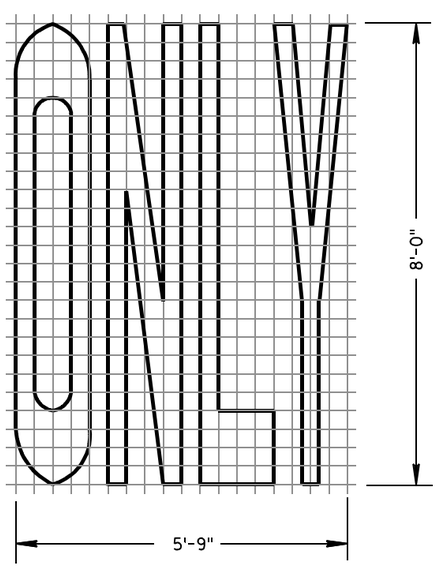


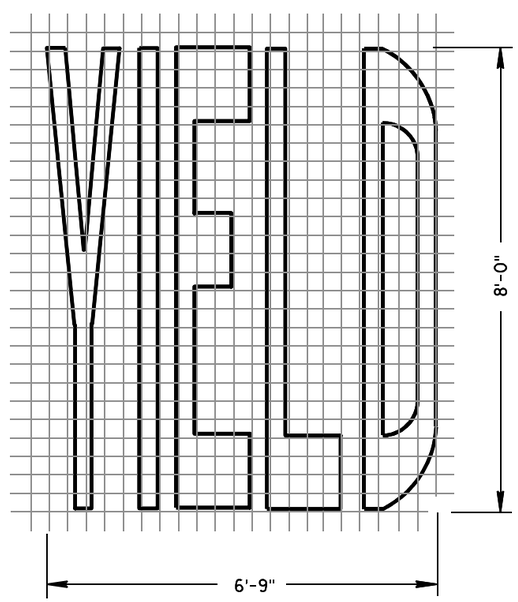


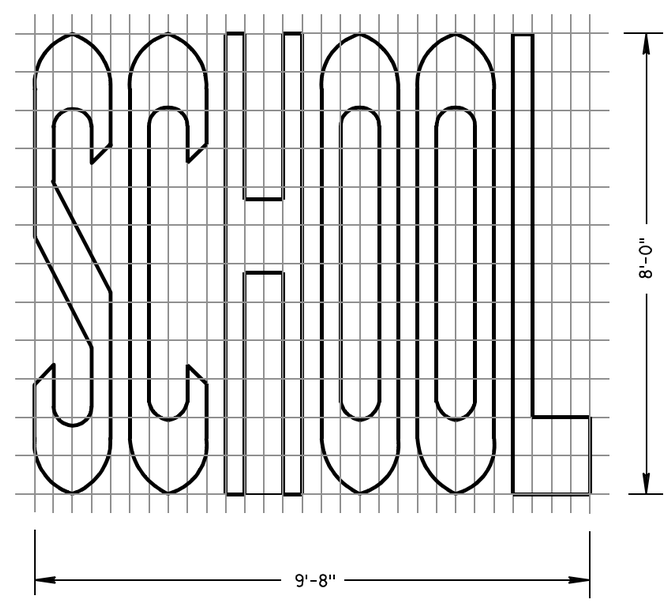


SINGLE-LANE

PAVEMENT MARKING WORDS

STATE OF WISCONSIN
DEPARTMENT OF TRANSPORTATION

APPROVED

7-1-11 — DATE

/S/ Thomas N. Notbohm — STATE TRAFFIC ENGINEER

FHWA



6

6

S.D.D. 15 C 7-12b

S.D.D. 15 C 7-12b

## GENERAL NOTES

DETAILS OF INSTALLATION, MATERIALS AND WORKMANSHIP NOT SHOWN ON THIS DRAWING SHALL CONFORM TO THE PERTINENT REQUIREMENTS OF THE STANDARD SPECIFICATIONS AND APPLICABLE SPECIAL PROVISIONS.

ALL LETTERS, ARROWS AND SYMBOLS SHALL BE IN CONFORMANCE WITH REQUIREMENTS INCLUDED IN "STANDARD ALPHABETS FOR HIGHWAY SIGNS AND PAVEMENT MARKING" BOOK BY THE FEDERAL HIGHWAY ADMINISTRATION. ALL LETTERS, ARROWS AND SYMBOLS SHALL BE WHITE AND REFLECTORIZED. SMALL DIFFERENCES IN DIMENSIONS WITHIN THE TOLERANCES OF THAT BOOK ARE ACCEPTABLE.

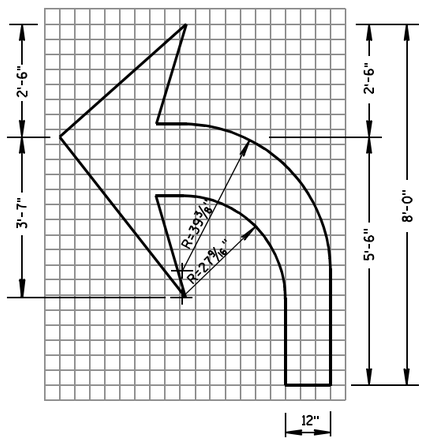


TYPE 2

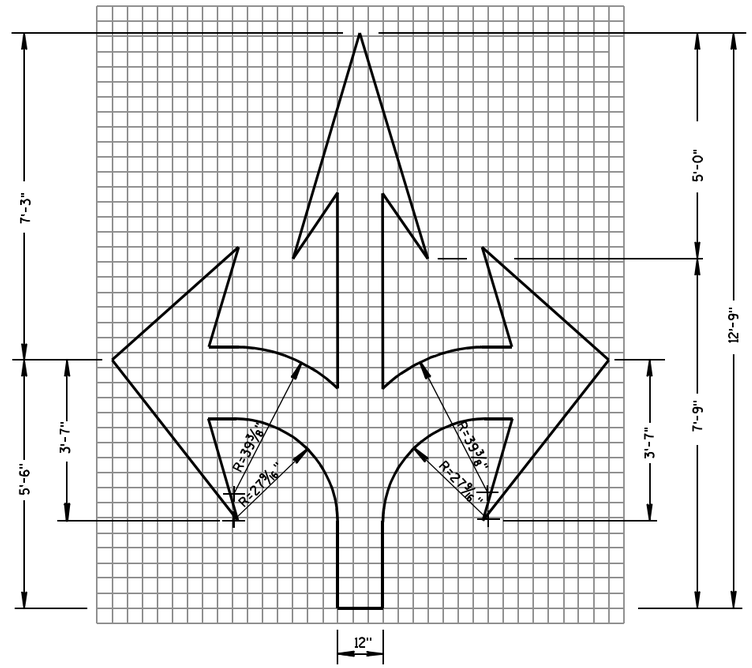


TYPE 6

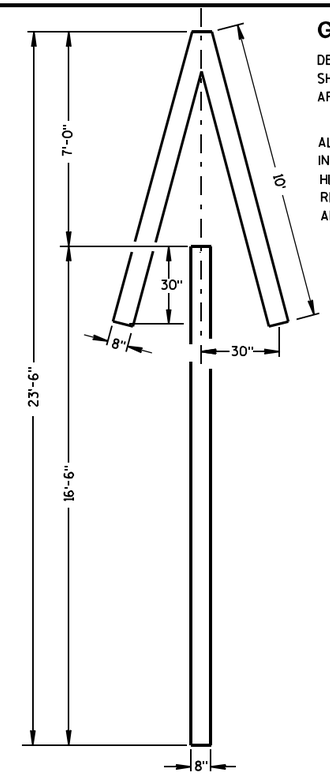


TYPE 4

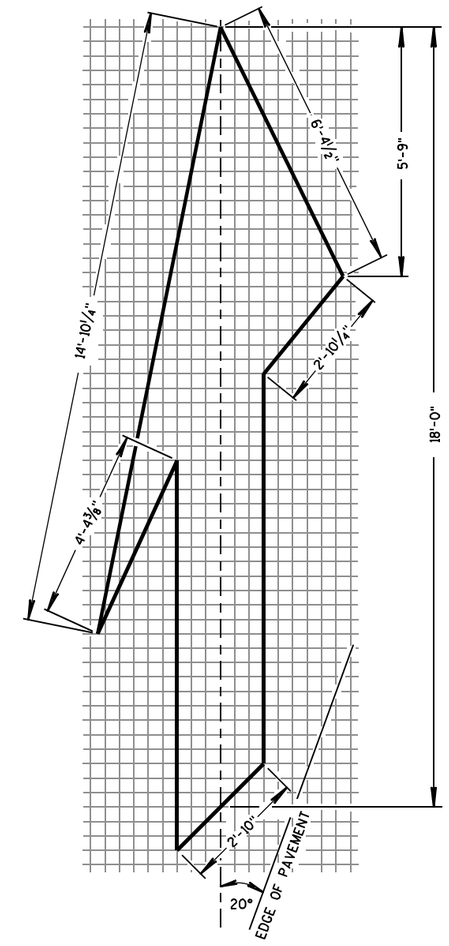


TYPE 5 LANE DROP ARROW

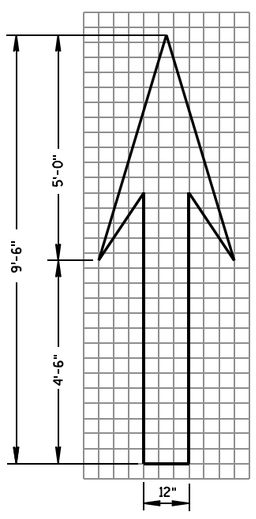


TYPE 1

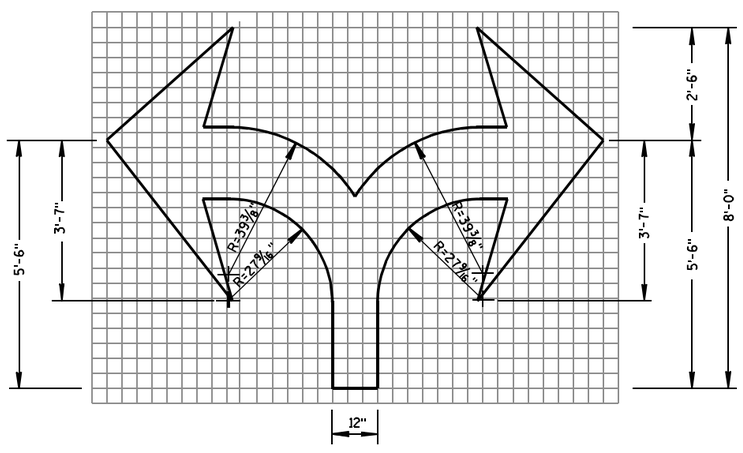


TYPE 7

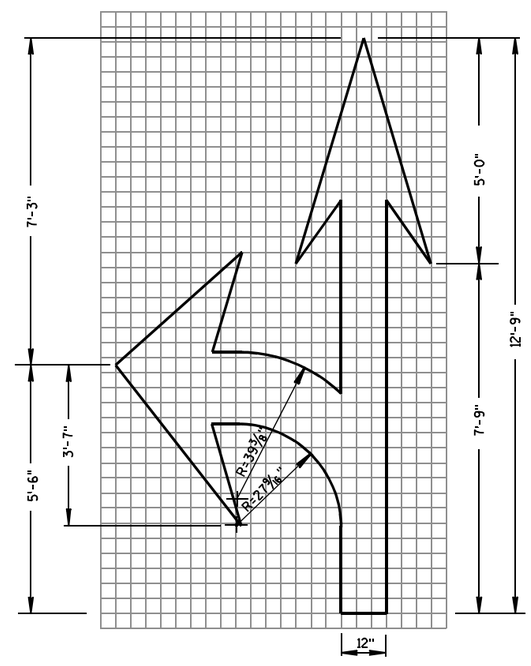


TYPE 3

PAVEMENT MARKING ARROWS

STATE OF WISCONSIN
DEPARTMENT OF TRANSPORTATION

APPROVED

| | |
|---|---|
| 7/1/11 | /S/ Thomas N. Nothohm |
| DATE | STATE TRAFFIC ENGINEER |

FHWA

6

S.D.D. 15 C 7-12c

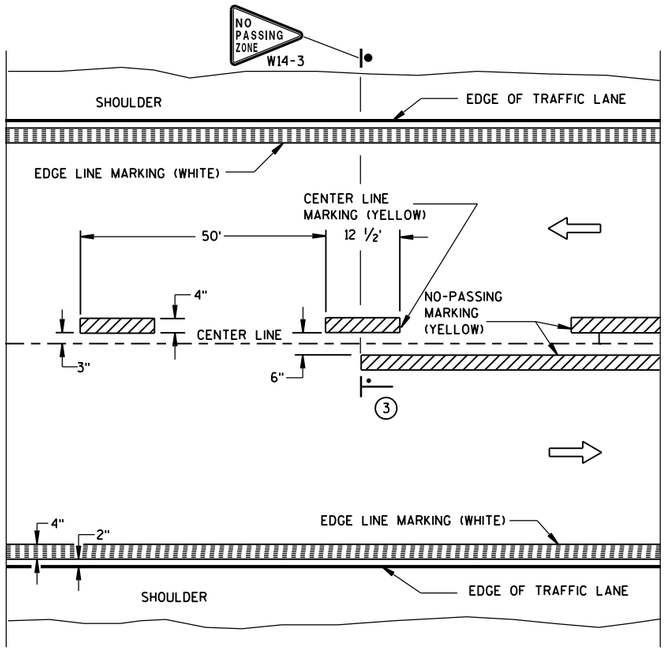


TWO WAY TRAFFIC

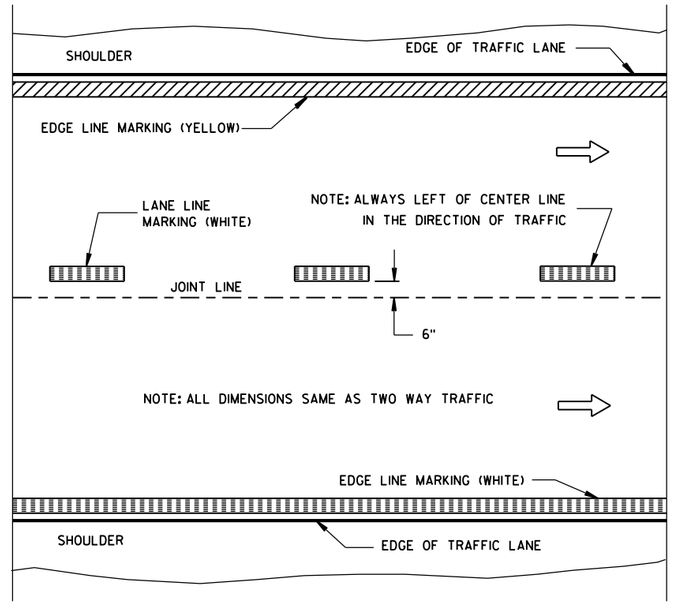


ONE WAY TRAFFIC

## PERMANENT PAVEMENT MARKING

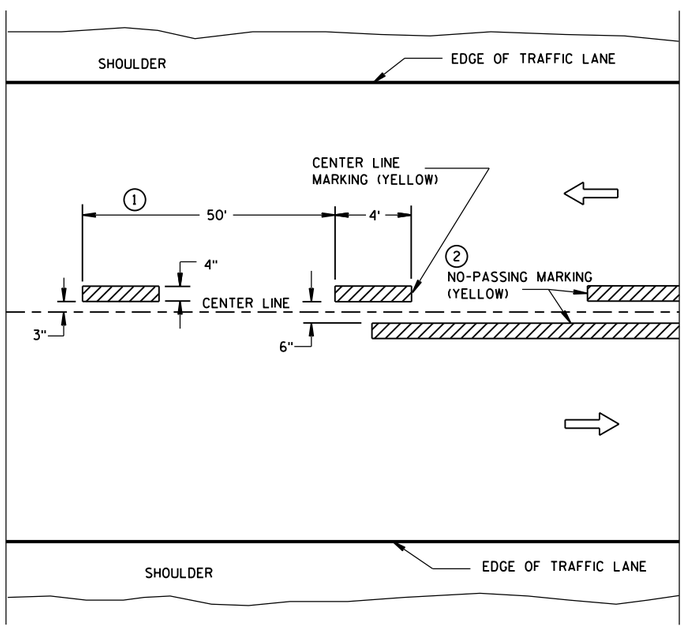


TWO WAY TRAFFIC

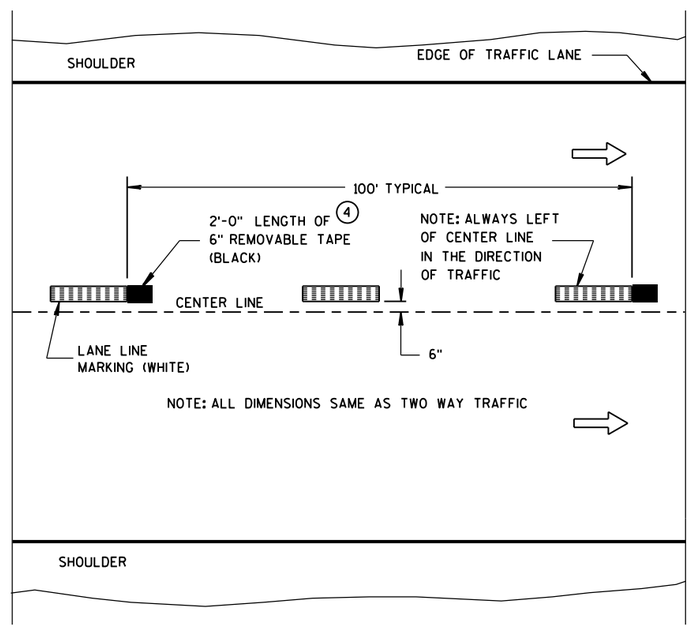


ONE WAY TRAFFIC

## TEMPORARY (INTERMEDIATE) PAVEMENT MARKING

(SHOWS CYCLE FOR TEMPORARY CENTER LINE OR TEMPORARY LANE LINE MARKING)

## GENERAL NOTES

DETAILS OF CONSTRUCTION NOT SHOWN ON THIS DRAWING SHALL CONFORM TO STANDARD SPECIFICATIONS AND SPECIAL PROVISIONS.

1. HALF CYCLE LENGTHS (25'±) WITH 2' MINIMUM STRIPE LENGTHS SHALL BE PROVIDED ON ROADWAYS (INCLUDING TEMPORARY TRAVELED WAYS) WITH REVERSE CURVATURE, CURVATURE OF OVER 5 DEGREES OR WHEN DIRECTED BY THE ENGINEER TO MARK UNUSUAL ALIGNMENT OF THE TRAVELED WAY.
2. NO PASSING ZONE TEMPORARY PAVEMENT MARKING IS REQUIRED TO BE PLACED, WHERE APPROPRIATE, ALONG WITH CENTERLINE TEMPORARY PAVEMENT MARKING WHEN A SAME DAY PERMANENT PAVEMENT MARKING ITEM IS INCLUDED IN THE CONTRACT.
3. NO PASSING ZONE MARKINGS ARE PLACED ACCORDING TO "T" MARKINGS. IF EXISTING NO PASSING ZONE W14-3 SIGNS ARE BEYOND 50 FEET IN EITHER DIRECTION, THE SIGNS SHALL BE MOVED TO THE "T" MARKINGS.
4. CONCRETE ONLY.

## NOTE

ARROW SYMBOL ( ⇨ ) SHOWS DIRECTION OF TRAVEL

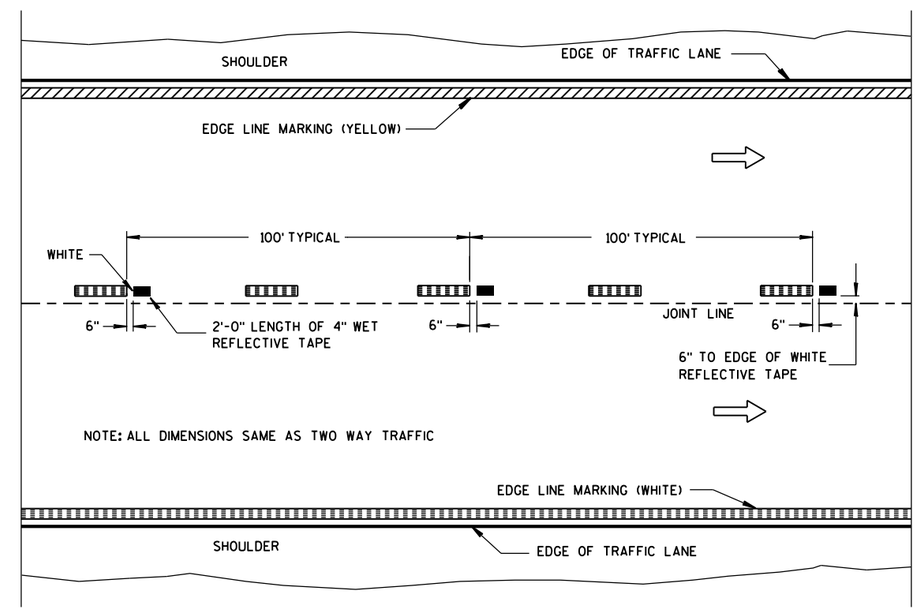


WET REFLECTIVE TAPE SUPPLEMENT TO SPRAYED OR NON WET REFLECTIVE TAPE LANE LINE

### LEGEND

"T" MARKING

POST MOUNTED SIGN

PAVEMENT MARKING (MAINLINE)

STATE OF WISCONSIN
DEPARTMENT OF TRANSPORTATION

APPROVED
5-13-2013 — DATE
/S/ Travis Feltes — STATE TRAFFIC E
FHWA

6

S.D.D. 15 C 8-16a

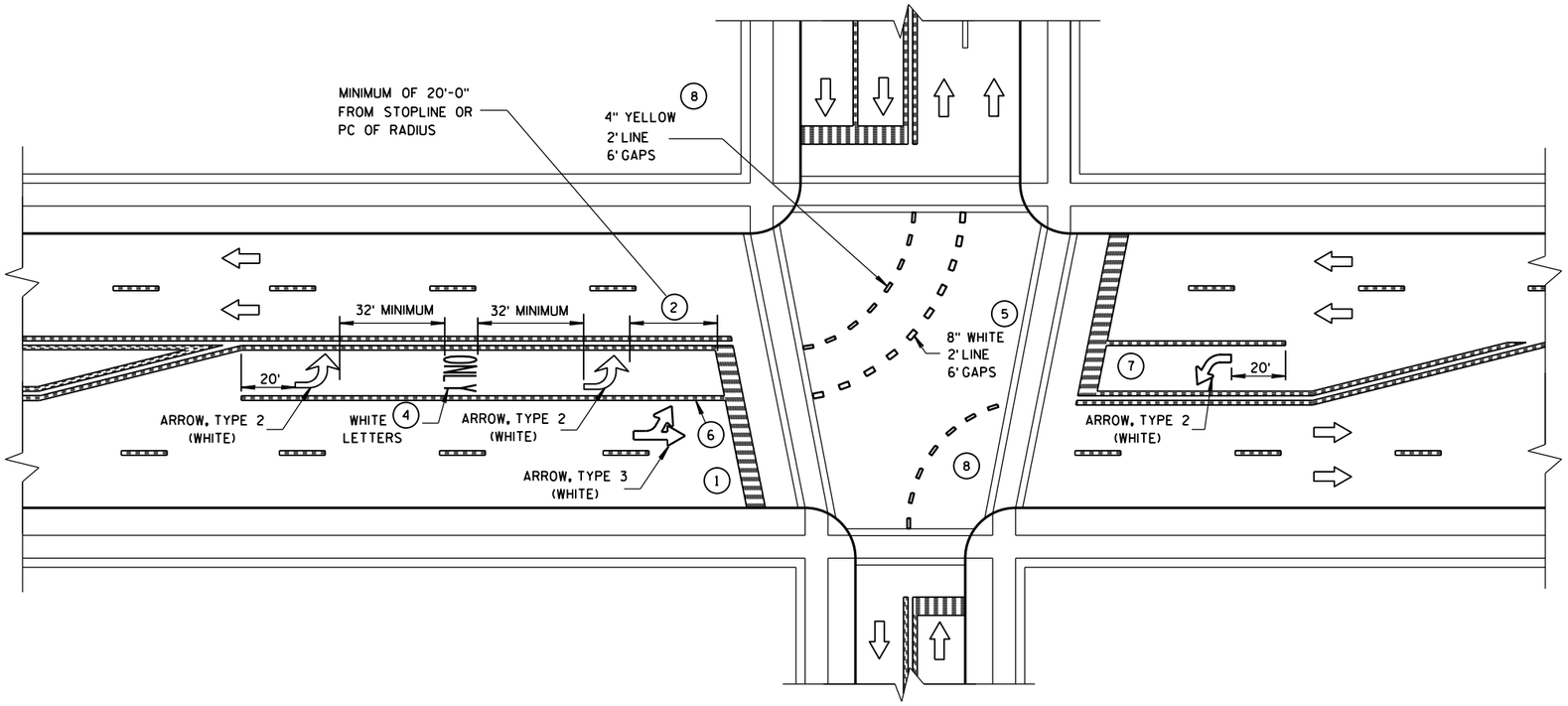


## GENERAL NOTES

1. STOP BAR IS REQUIRED ONLY WHEN SPECIFIED IN THE CONTRACT.
2. DISTANCE MAY BE ADJUSTED TO ACCOMODATE SHORT LEFT TURN LANES. AS APPROVED BY THE ENGINEER.
3. A SET OF ARROWS IS REQUIRED EVERY 400 FEET OR NEAR INTERSECTIONS OR DRIVEWAYS WITH TURNING TRAFFIC.
4. ADD EXTRA SETS OF ONE ARROW AND ONE ONLY PER 160 FEET OR WHEN ON A CURVE.
5. 8" WHITE WITH 2' LINE 6' GAPS FOR DUAL TURN LANE.
6. 8" WHITE
7. ADD SECOND ARROW WHEN TURN BAY IS GREATER THAN OR EQUAL TO 108 FEET.
8. REQUIRED ONLY WHEN SPECIFIED IN THE CONTRACT.

NOTE:
ARROW SYMBOL ( ⇨ )
SHOWS DIRECTION OF TRAVEL

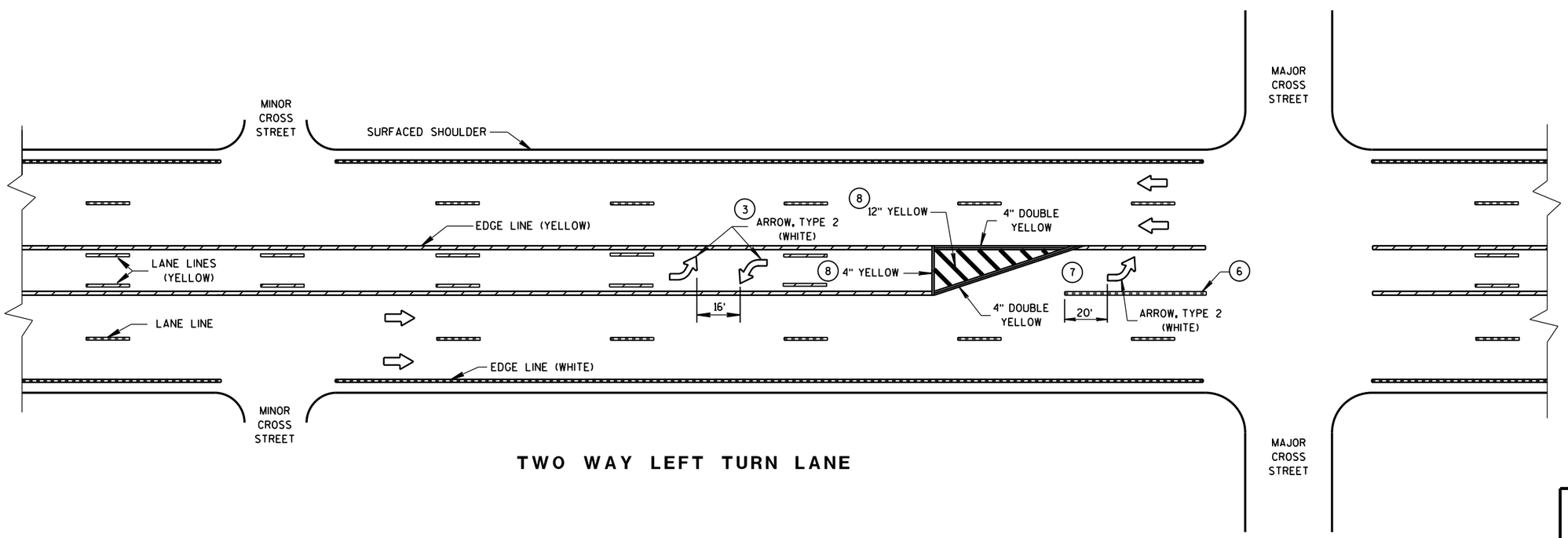


## TWO WAY LEFT TURN LANE

PAVEMENT MARKING
(LEFT TURN LANE)

STATE OF WISCONSIN
DEPARTMENT OF TRANSPORTATION




6


S.D.D. 15 C 8-16e

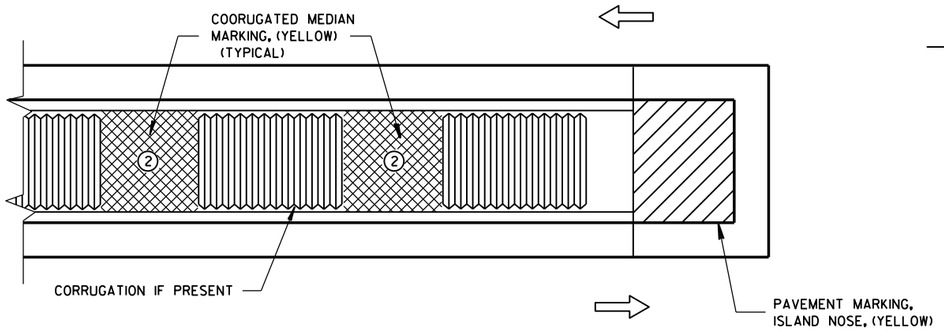


MEDIAN ISLAND WITH SQUARE BLUNT NOSE

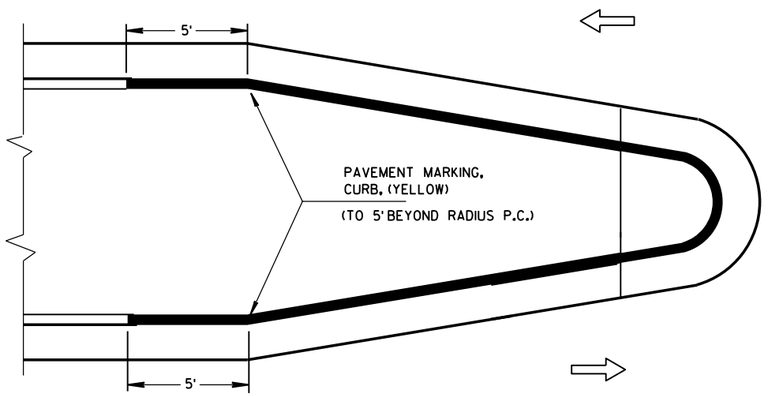


MEDIAN ISLAND WITH ROUND BLUNT NOSE

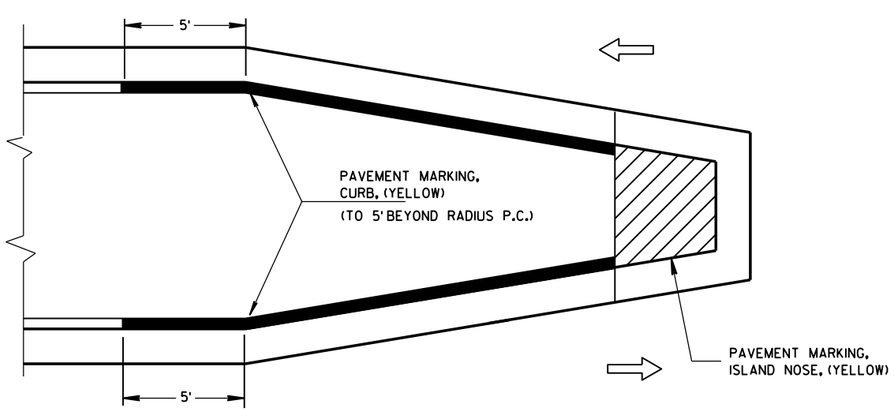


MEDIAN ISLAND WITH SLOPED NOSE

## TYPICAL PLACEMENT OF PAVEMENT MARKING ON MEDIAN ISLANDS

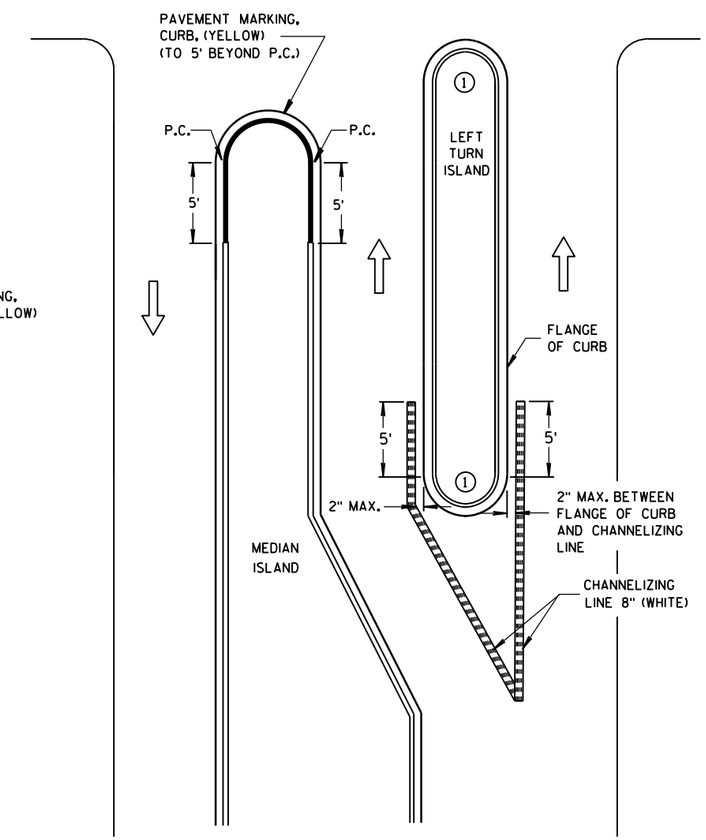


LEFT TURN & MEDIAN ISLAND

## GENERAL NOTES

1. DO NOT MARK CURB NOSES THAT SEPARATE LANES OF TRAFFIC TRAVELING IN THE SAME DIRECTION.

2. WHEN CONCRETE CORRUGATED MEDIAN IS CONSTRUCTED TO SEPARATE TRAFFIC OPERATING IN THE OPPOSING DIRECTION YELLOW PAVEMENT MARKING SHALL BE APPLIED TO THE FLAT PORTION OF THE CONCRETE CORRUGATED MEDIAN. THE ITEM OF PAVEMENT MARKING, CONCRETE CORRUGATED MEDIAN, WILL BE MEASURED IN PLACE AND AND ACCEPTED IN ACCORDANCE WITH THE CONTRACT AND PAID FOR AT THE CONTRACT UNIT PRICE PER SQUARE FOOT.

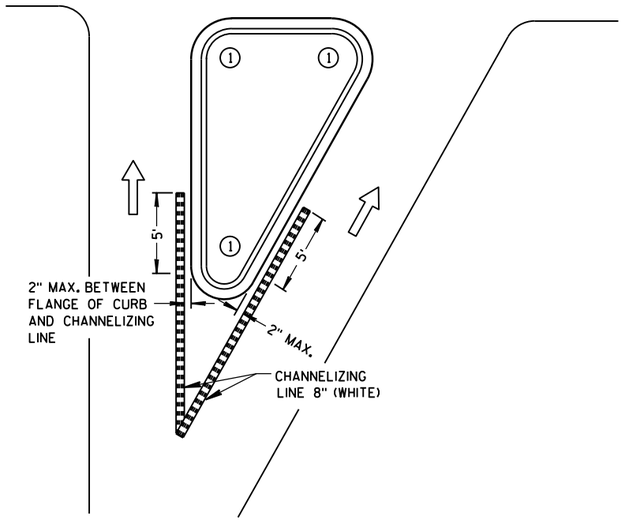


RIGHT TURN ISLAND

### LEGEND

- ISLAND NOSE MARKING
- CURB MARKING
- CORRUGATED MEDIAN MARKING
- DIRECTION OF TRAVEL

PAVEMENT MARKING (ISLANDS)

STATE OF WISCONSIN
DEPARTMENT OF TRANSPOR



6

S.D.D. 15 C 8-16f

6

S.D.D. 15 C 8-16f

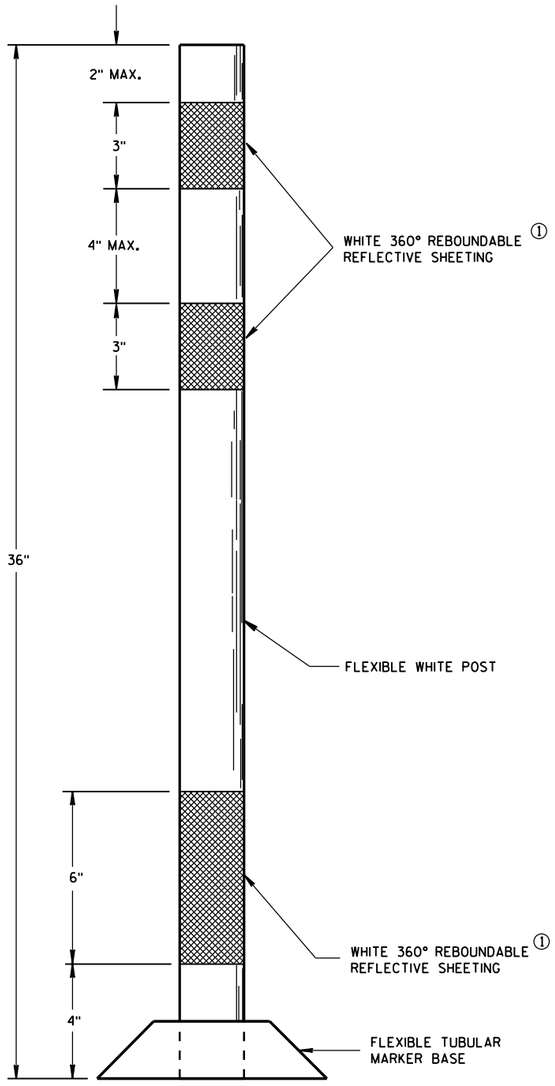


**FLEXIBLE**
**TUBULAR MARKER POST**
**PERMANENT CROSSOVER**

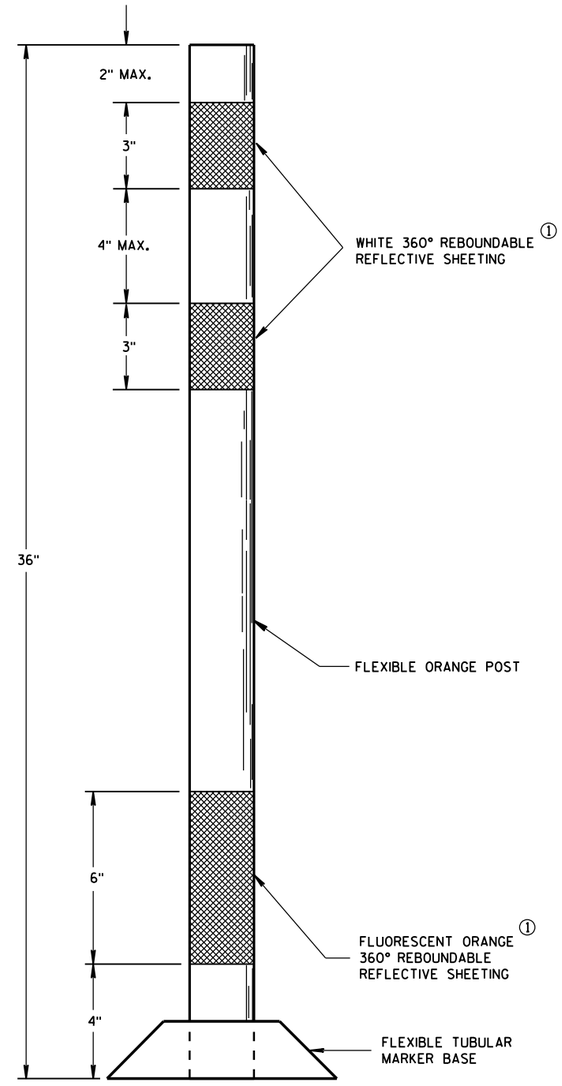


**FLEXIBLE**
**TUBULAR MARKER POST**
**WORK ZONE**

## GENERAL NOTES

DETAILS OF CONSTRUCTION NOT SHOWN ON THIS DRAWING SHALL CONFORM TO THE PERTINENT REQUIREMENTS OF THE STANDARD SPECIFICATIONS AND APPLICABLE SPECIAL PROVISIONS.

SURFACE MOUNTED BASES SHALL BE FURNISHED IN ACCORDANCE WITH MANUFACTURERS RECOMMENDATIONS TO BE COMPATIBLE WITH FLEXIBLE TUBULAR MARKER POSTS TO A SIZE AND SHAPE THAT WILL PROVIDE A STABLE POST FOUNDATION WHEN SECURED TO THE PAVEMENT.

THE ASPHALTIC ADHESIVE OR BUTYL PAD FURNISHED SHALL BE IN ACCORDANCE WITH MANUFACTURERS RECOMMENDATIONS.

① REFLECTIVE SHEETING SHALL FOLLOW THE REQUIREMENTS IN THE APPROVED PRODUCTS LISTING FOR SIGN SHEETING.

6

6

FLEXIBLE TUBULAR MARKER POST

STATE OF WISCONSIN
DEPARTMENT OF TRANSPORTATION

APPROVED
10-16-2015
DATE
/S/ Peter Amakobe Atepe
STATEWIDE WORK ZONE
SAFETY ENGINEER
FHWA





S.D.D. 15 C 11-6

## LEGEND

SIGN ON PORTABLE OR PERMANENT SUPPORT

DIRECTION OF TRAFFIC

WORK AREA

FLAGGER, EQUIPPED WITH STOP/SLOW PADDLE FASTENED ON SUPPORT STAFF

## SIGN SPACING TABLE

| SPEED LIMIT | SIGN SPACING A,B,C |
|---|---|
| 25-35 MPH | 200' |
| 35-40 MPH | 350' |
| 45-55 MPH | 500' |

USE OF THE "BE PREPARED TO STOP" SIGN IS OPTIONAL. WHEN USED, THIS SIGN SHALL BE LOCATED BETWEEN THE W20-7a AND W20-4 SIGNS. A 500' TYPICAL SPACING SHALL BE PROVIDED BETWEEN THE SIGNS.

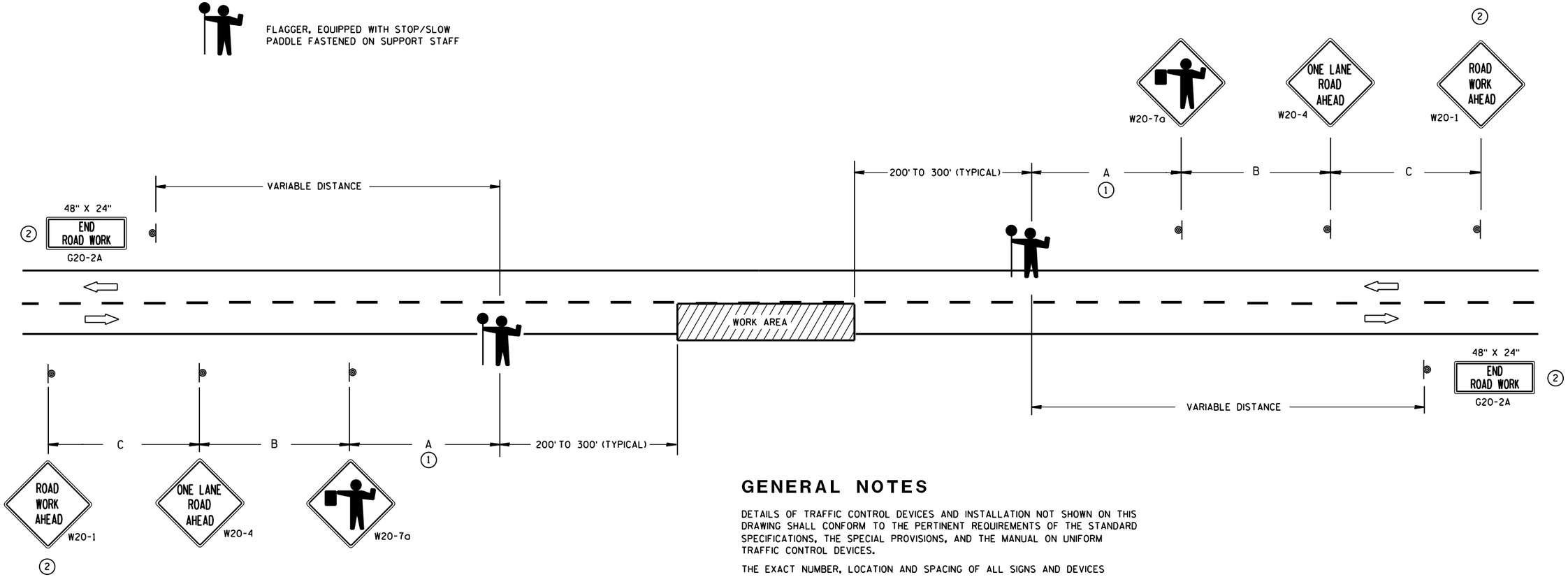


1. FOR A MOVING WORK OPERATION, SIGNING FOR BOTH DIRECTIONS SHALL BE REESTABLISHED (AS SIMULTANEOUSLY AS PRACTICAL) AT APPROXIMATELY 3500 FOOT INTERVALS IN THE MOVING WORK OPERATION OR AS APPROVED BY THE ENGINEER.

2. SIGN NOT REQUIRED IF FLAGGING OPERATION OCCURS WITHIN A SIGNED ROAD WORK ZONE AREA.

## GENERAL NOTES

DETAILS OF TRAFFIC CONTROL DEVICES AND INSTALLATION NOT SHOWN ON THIS DRAWING SHALL CONFORM TO THE PERTINENT REQUIREMENTS OF THE STANDARD SPECIFICATIONS, THE SPECIAL PROVISIONS, AND THE MANUAL ON UNIFORM TRAFFIC CONTROL DEVICES.

THE EXACT NUMBER, LOCATION AND SPACING OF ALL SIGNS AND DEVICES (AND THE LOCATION OF ALL FLAGGERS) SHALL BE ADJUSTED TO FIT FIELD CONDITIONS AS APPROVED BY THE ENGINEER.

THE FIRST ADVANCE WARNING SIGN SHOULD TYPICALLY BE LOCATED IN ADVANCE OF THE ANTICIPATED TRAFFIC BACKUP OR QUEUE.

WHEN A SIDE ROAD OR RAMP INTERSECTS THE FACILITY ON WHICH THE WORK IS BEING PERFORMED, ADDITIONAL TRAFFIC CONTROLS SHALL BE PROVIDED AS SPECIFIED IN THE PLANS AND/OR THE SPECIAL PROVISIONS OR AS APPROVED BY THE ENGINEER.

FLAGGERS SHALL BE IN SIGHT OF EACH OTHER OR IN DIRECT COMMUNICATION AT ALL TIMES. THEY SHALL BE EQUIPPED WITH STOP/SLOW PADDLES FASTENED ON SUPPORT STAFFS. WHEN THE FLAGGING OPERATION IS NOT IN EFFECT, COVER OR REMOVE ALL TEMPORARY TRAFFIC CONTROL SIGNS.

ALL SIGNS ARE 48" X 48" UNLESS OTHERWISE NOTED.

**TRAFFIC CONTROL FOR LANE CLOSURE (SUITABLE FOR MOVING OPERATIONS)**

STATE OF WISCONSIN
DEPARTMENT OF TRANSPORTATION

APPROVED
8/2013 — DATE
/S/ Travis Feltes — STATE TRAFFIC ENGINEER
FHWA

## GENERAL NOTE

APPLIES TO ISLANDS AT LEFT TURNS AT ONE WAY ROADWAYS AS WELL.

SEE MISCELLANEOUS QUANTITIES FOR SIGN SIZE.

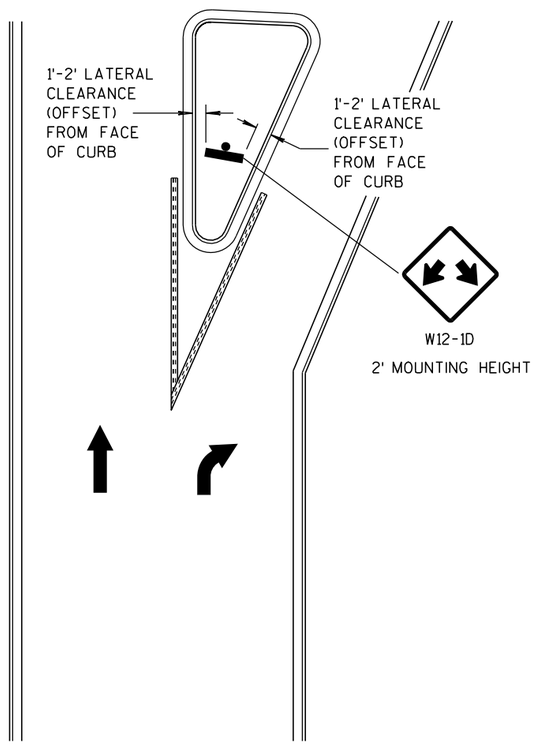


LARGE RIGHT TURN ISLAND

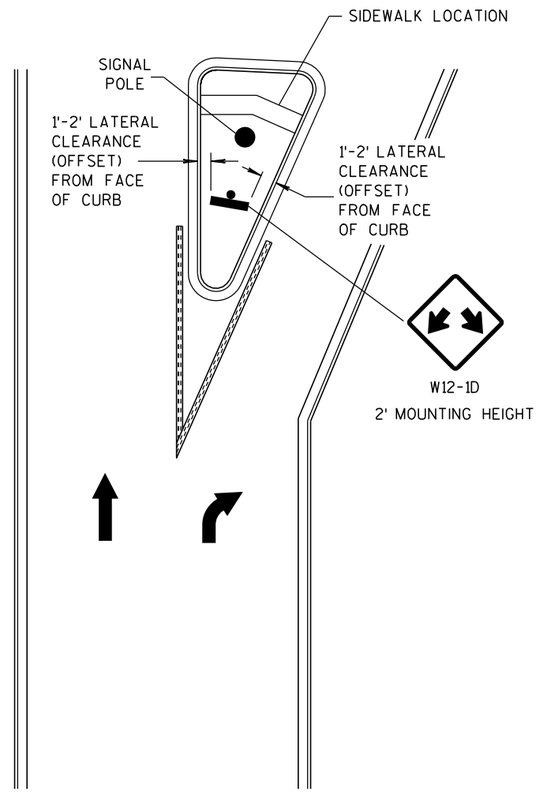


LARGE RIGHT TURN ISLAND
WITH SIGNAL POLE

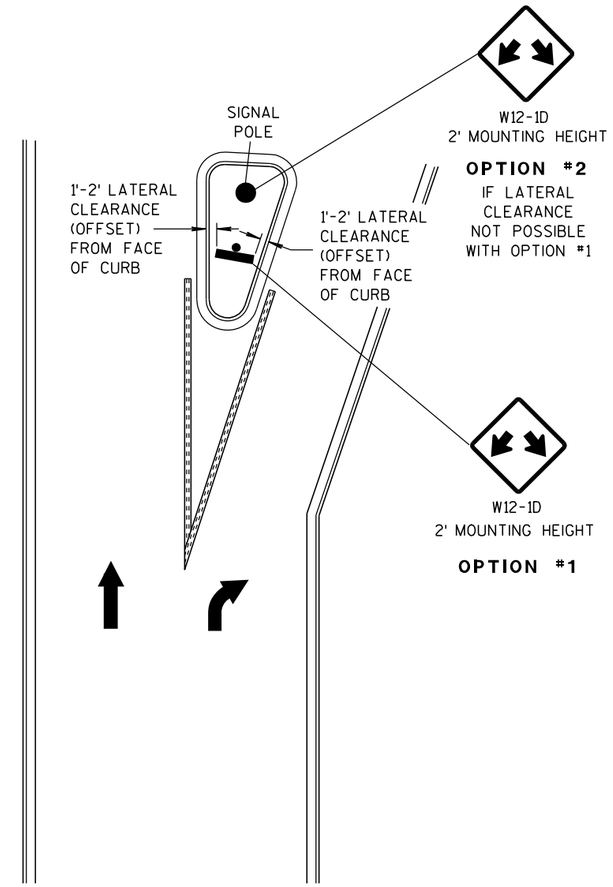


SMALL RIGHT TURN ISLAND

## DOUBLE ARROW WARNING SIGN PLACEMENT

6

6

S.D.D. 15 C 27-1

S.D.D. 15 C 27-1

DOUBLE ARROW
WARNING SIGN PLACEMENT

STATE OF WISCONSIN
DEPARTMENT OF TRANSPORTATION

APPROVED

10-22-08 — DATE

/S/ Thomas N. Notbohm — STATE TRAFFIC ENGINEER

394 — IGN

FHWA

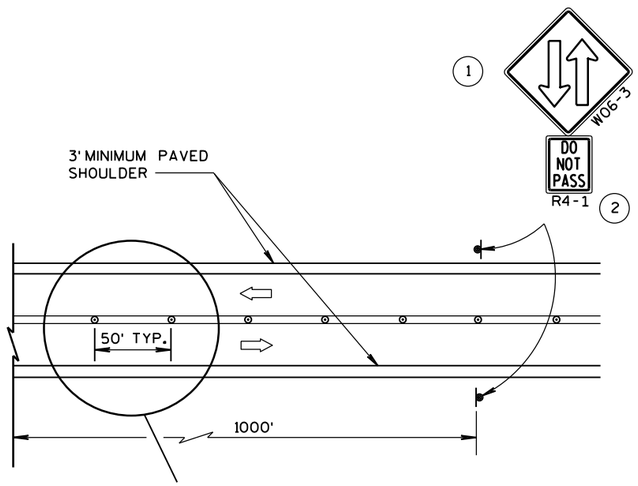


## TWO LANE, TWO WAY OPERATION

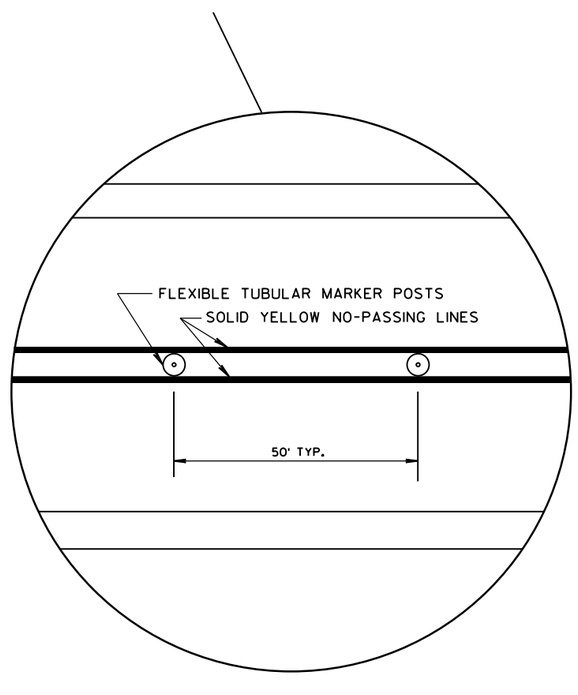


### LEGEND

- SIGN ON PERMANENT SUPPORT
- DELINEATOR FLEXIBLE/TUBULAR MARKER
- DIRECTION OF TRAFFIC

## GENERAL NOTES

ALL SIGNS ARE 48"x48" UNLESS OTHERS NOTED.

"WO" IS THE SAME AS "W" EXCEPT THE BACKGROUND IS ORANGE.

ANY SIGNS TEMPORARY OR EXISTING, WHICH CONFLICT WITH THE TRAFFIC CONTROL "IN USE" SHALL BE REMOVED OR COVERED AS NEEDED AND AS APPROVED BY THE ENGINEER. NO WARNING LIGHTS SHALL BE WORKING ON "COVERED" OR "DOWNED" SIGNS.

THE EXACT NUMBER, LOCATION, AND SPACING OF ALL SIGNS AND DEVICES SHALL BE ADJUSTED TO FIT FIELD CONDITIONS AS APPROVED BY THE ENGINEER.

THE SPACING BETWEEN SIGNS SHOULD BE ADJUSTED TO NOT CONFLICT WITH AND TO PROVIDE A MINIMUM OF 200 FEET, (500 FEET DESIRABLE) DISTANCE TO EXISTING SIGNS.

A SINGLE ROW OF FLEXIBLE TUBULAR MARKERS ON CENTERLINE EXTEND FOR THE ENTIRE LENGTH OF TWO-WAY TRAFFIC AT 50-FOOT SPACING.

COVER EXISTING CENTERLINE STRIPE WITH TEMPORARY PAVEMENT MARKING, 4-INCH DOUBLE YELLOW.

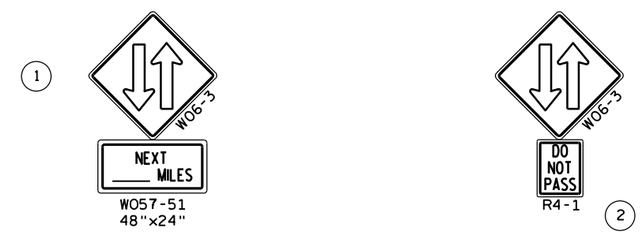


THE W06-3 WITH THE W057-51 SHALL BE LOCATED 200 FEET BEYOND THE END OF THE ACCELERATION LANE OF EACH ENTRANCE RAMP AND/OR 500 FEET BEYOND ANY SIDEROAD. THE W06-3 WITH THE R4-1 SHALL BE LOCATED 1000 FEET BEYOND THE W06-3 AND THE W057-51 AND THE SIGNS SHALL BE ALTERNATED WITH ONE MILE INTERVALS BETWEEN W06-3 SIGNS.

(2) CONVENTIONAL: 24"x30"
FREEWAY AND EXPRESSWAY: 36"x48"

| | |
|---|---|
| TRAFFIC CONTROL, TWO LANE TWO WAY OPERATION | |
| STATE OF WISCONSIN DEPARTMENT OF TRANSPORTATION | |
| APPROVED | |
| 8/2013 DATE | /S/ Travis Feltes STATE TRAFFIC ENGINEER SIGN |
| FHWA | |

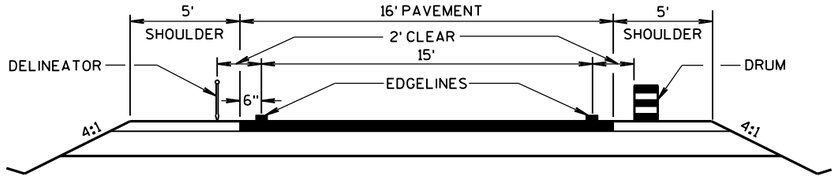


**TYPICAL TEMPORARY CROSSOVER ROADWAY DIMENSIONS**

(SEE PLANS FOR ROADWAY DESIGN ELEMENTS)

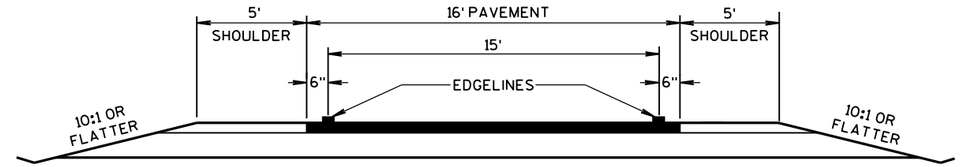


**TYPICAL CROSSOVER TO REMAIN IN PLACE ROADWAY DIMENSIONS**

(SEE PLANS FOR ROADWAY DESIGN ELEMENTS)

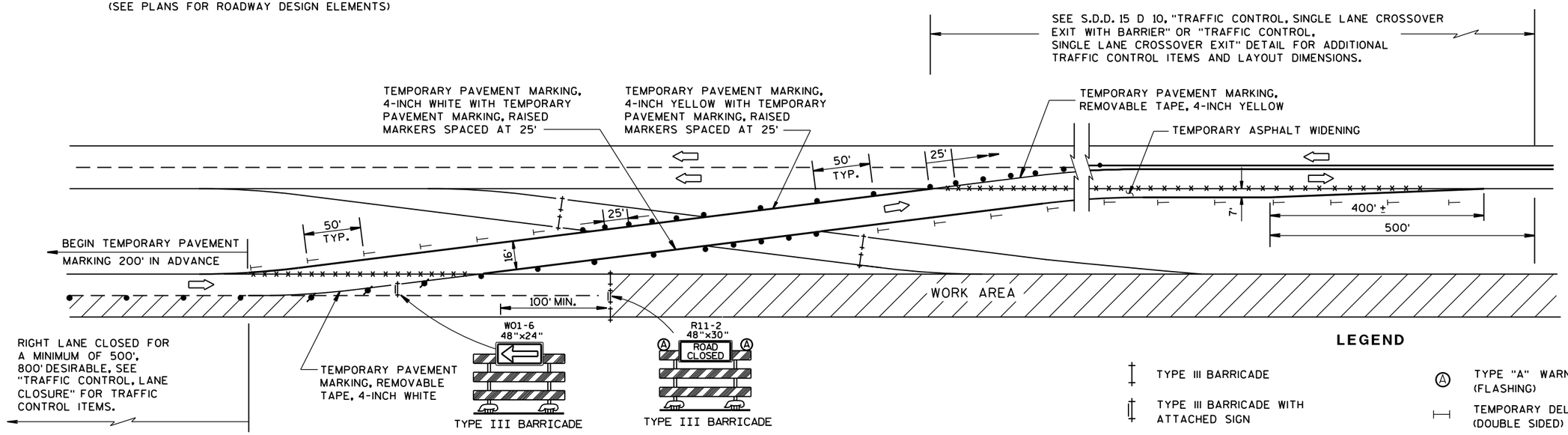


## LEGEND

- TYPE III BARRICADE
- TYPE III BARRICADE WITH ATTACHED SIGN
- TRAFFIC CONTROL DRUM WITH TYPE "C" STEADY BURN LIGHT
- TRAFFIC CONTROL DRUM
- TEMPORARY DELINEATOR (STEEL POST W/SINGLE DELINEATOR) COLOR OF DELINEATOR SHALL MATCH THE COLOR OF THE RESPECTIVE EDGELINE MARKING
- TYPE "A" WARNING LIGHT (FLASHING)
- TEMPORARY DELINEATOR (DOUBLE SIDED)
- REMOVING PAVEMENT MARKINGS
- DELINEATOR FLEXIBLE/ TUBULAR MARKER
- DIRECTION OF TRAFFIC
- WORK AREA

## GENERAL NOTES

THE EXACT NUMBER, LOCATION, AND SPACING OF ALL SIGNS AND DEVICES SHALL BE ADJUSTED TO FIT FIELD CONDITIONS AS APPROVED BY THE ENGINEER.

THE SPACING BETWEEN PROPOSED SIGNS SHOULD BE ADJUSTED TO NOT CONFLICT WITH AND TO PROVIDE A MINIMUM OF 200 FEET (500 FEET DESIRABLE) DISTANCE TO EXISTING SIGNS.

TEMPORARY PAVEMENT MARKING REMOVABLE TAPE SHALL BE USED WHEN CROSSING PERMANENT ROADWAY SURFACES THAT WILL REMAIN AFTER USE OF CROSSOVER AND TEMPORARY PAVEMENT MARKING WHERE USED.

ALL SIGNS ARE 48"x48" UNLESS OTHERWISE NOTED.

"WO" IS THE SAME AS "W" EXCEPT THE BACKGROUND IS ORANGE.

ANY SIGNS TEMPORARY OR EXISTING, WHICH CONFLICT WITH THE TRAFFIC CONTROL "IN USE" SHALL BE REMOVED OR COVERED AS NEEDED AND AS APPROVED BY THE ENGINEER. NO WARNING LIGHTS SHALL BE WORKING ON "COVERED" OR "DOWNED" SIGNS.

REVERSE DEVICES WHEN OTHER LEG OF CROSSOVER IS IN USE.

(1) FOR PERMANENT CROSSOVER, PAVEMENT MARKING SHOULD CONFORM TO SECTION 646 OF THE STANDARD SPECIFICATIONS.

(2) FOR PERMANENT CROSSOVER, INSTALL PERMANENT DELINEATORS ACCORDING TO SECTION 633 OF THE STANDARD SPECIFICATIONS.

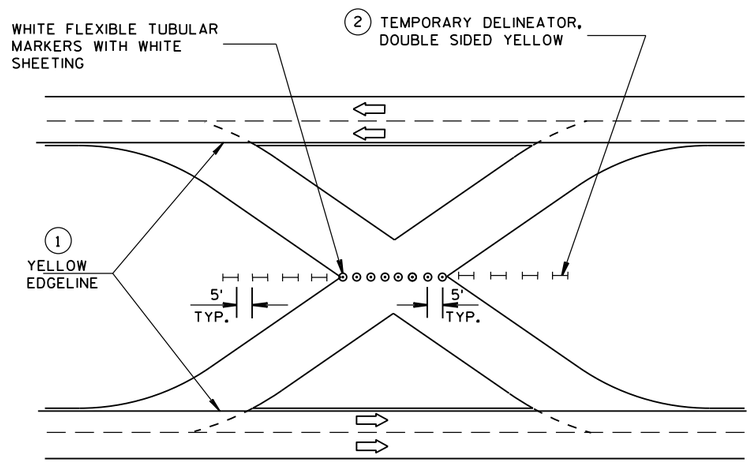


**TRAFFIC CONTROL FOR CROSSOVER THAT IS NOT IN USE**

**TRAFFIC CONTROL, SINGLE LANE CROSSOVER**

STATE OF WISCONSIN
DEPARTMENT OF TRANSPORTATION

APPROVED

10-16-2015 — DATE

/S/ Peter Amakobe Atepe — STATEWIDE WORK ZONE TRAFFIC SAFETY ENGINEER

FHWA



6

6

S.D.D. 15 D 11-6

S.D.D. 15 D 11-6

## LEGEND

- TYPE III BARRICADE WITH ATTACHED SIGN
- SIGN ON PERMENENT SUPPORT
- TRAFFIC CONTROL DRUM WITH TYPE "C" STEADY BURN LIGHT
- TRAFFIC CONTROL DRUM
- FLASHING ARROW BOARD
- TYPE "A" WARNING LIGHT (FLASHING)
- REMOVING PAVEMENT MARKING
- DIRECTION OF TRAFFIC
- WORK AREA

## GENERAL NOTES

THE EXACT NUMBER, LOCATION, AND SPACING OF ALL SIGNS AND DEVICES SHALL BE ADJUSTED TO FIT FIELD CONDITIONS AS APPROVED BY THE ENGINEER.

THE SPACING BETWEEN SIGNS SHOULD BE ADJUSTED TO NOT CONFLICT WITH AND TO PROVIDE A MINIMUM OF 200 FEET, (500 FEET DESIREABLE) DISTANCE TO EXISTING SIGNS.

THIS LANE CLOSURE IS TYPICAL FOR CLOSING RIGHT LANE - REVERSE FOR CLOSING LEFT LANE.

ALL SIGNS ARE 48"×48" UNLESS OTHERWISE NOTED.

"WO" IS THE SAME AS "W" EXCEPT THE BACKGROUND IS ORANGE.

ANY SIGNS TEMPORARY OR EXISTING, WHICH CONFLICT WITH TRAFFIC CONTROL "IN USE" SHALL BE REMOVED OR COVERED AS NEEDED AND AS APPROVED BY THE ENGINEER. NO WARNING LIGHTS SHALL BE WORKING ON "COVERED" OR "DOWNED" SIGNS.

CONSIDER GEOMETRICS WHEN LOCATING SIGNS AND ARROW BOARD SO THE DRIVER HAS A CLEAR VIEW OF THE ARROW BOARD AND LANE CLOSURE DRUMS FOR A MINIMUM 1500 FEET IN FRONT OF DRUMS.

FOR A LANE CLOSURE THAT IS IN PLACE LESS THAN 7 CONTINUOUS DAYS AND NIGHTS, THE ADVANCED WARNING SIGNS MAY BE MOUNTED ON PORTABLE SUPPORTS.

REMOVE PAVEMENT MARKINGS IF LANE CLOSURE IS TO BE IN PLACE FOR LONGER THAN 4 OR MORE DAYS AND NIGHTS.

WARNING LIGHTS ARE NOT REQUIRED IF THE LANE CLOSURE IS A DAYTIME ONLY OPERATION.

IF THE HORIZONTAL ALIGNMENT IS SUCH THAT A CURVE MAY REQUIRE ADDITIONAL DELINEATION, THE DEVICE SPACING MAY BE DECREASED TO 50 FEET.

ADJUSTMENTS IN BUFFER SPACE NEED TO BE INCORPORATED WHEN THE LANE CLOSURE OCCURS NEAR AN INTERCHANGE EXIT OR ENTRANCE RAMP. THE LANE CLOSURE MUST MUST TAKE PLACE FAR ENOUGH IN ADVANCE OF AN EXIT OR ENTRANCE RAMP TO STILL ALLOW FOR ADEQUATE BUFFER SPACE. THE MINIMUM LENGTH OF THE BUFFER SPACE BEFORE AN EXIT RAMP SHOULD BE 1/2 THE LENGTH OF THE TRANSITION AREA. THE ENTRANCE RAMP SHOULD BE FOLLOWED BY THE ORIGINAL BUFFER SPACE LENGTH OF 800 FEET DESIRABLE PRIOR TO ANOTHER TRAFFIC CONTROL CHANGE SUCH AS A CROSSOVER MANEUVER.

* THE LEFT REVERSE CURVE SIGN (WO1-4L) IS ONLY REQUIRED WHEN THIS DETAIL IS USED IN COMBINATION WITH "SINGLE LANE CROSSOVER" DETAIL.

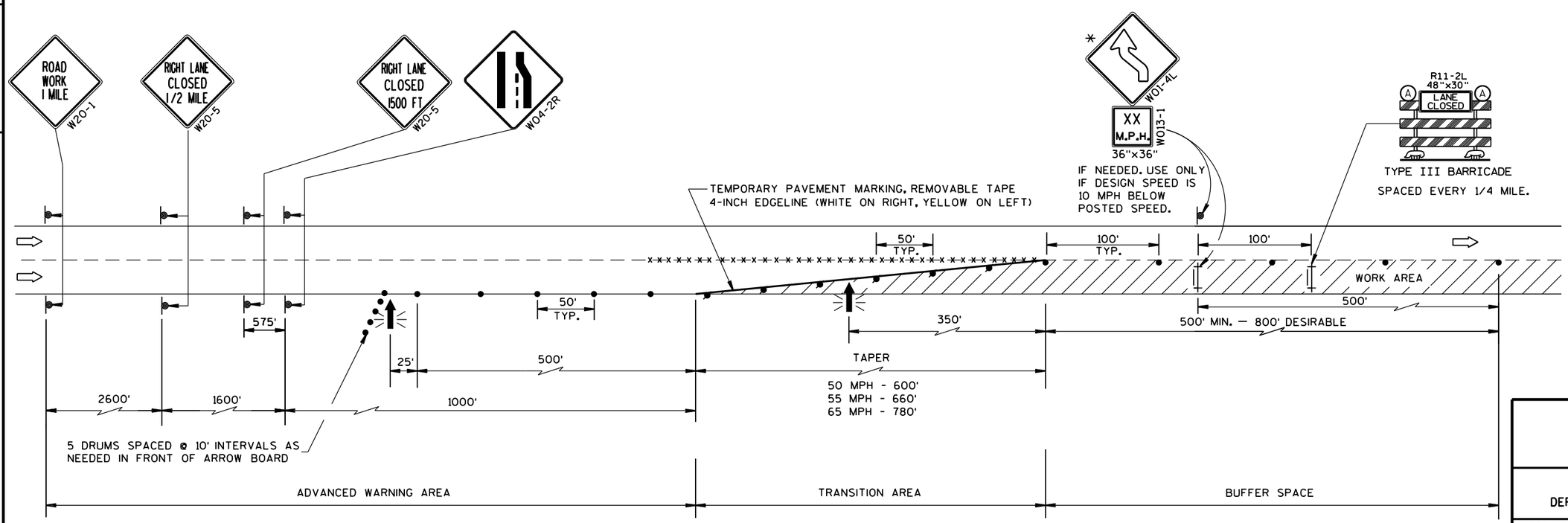


**TRAFFIC CONTROL, LANE CLOSURE**

STATE OF WISCONSIN
DEPARTMENT OF TRANSPORTATION

APPROVED
Feb. 2015 — DATE
/S/ Travis Feltes — STATE TRAFFIC ENGINEER
FHWA




6


S.D.D. 15 D 12-5a

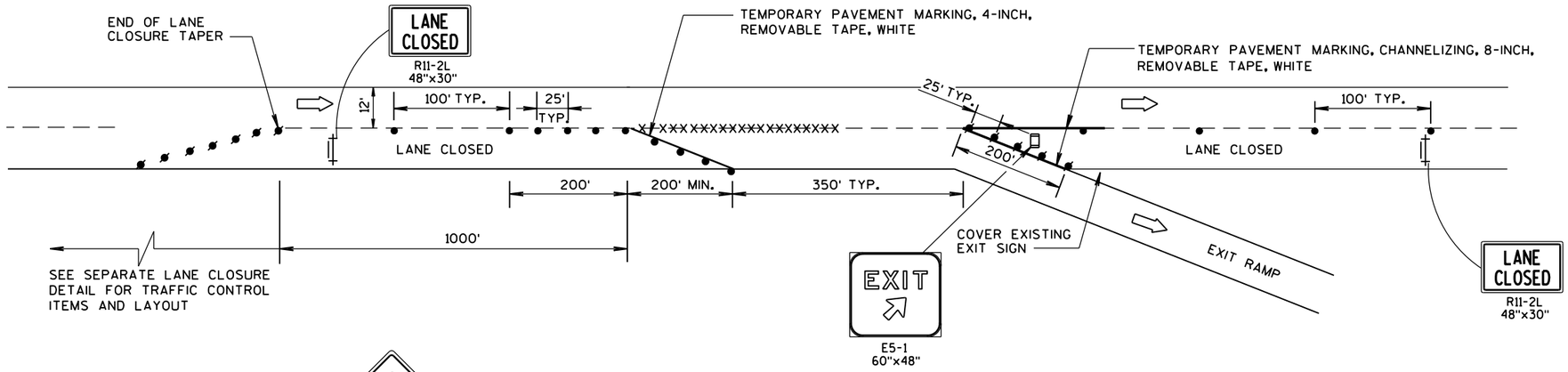


## EXIT RAMP

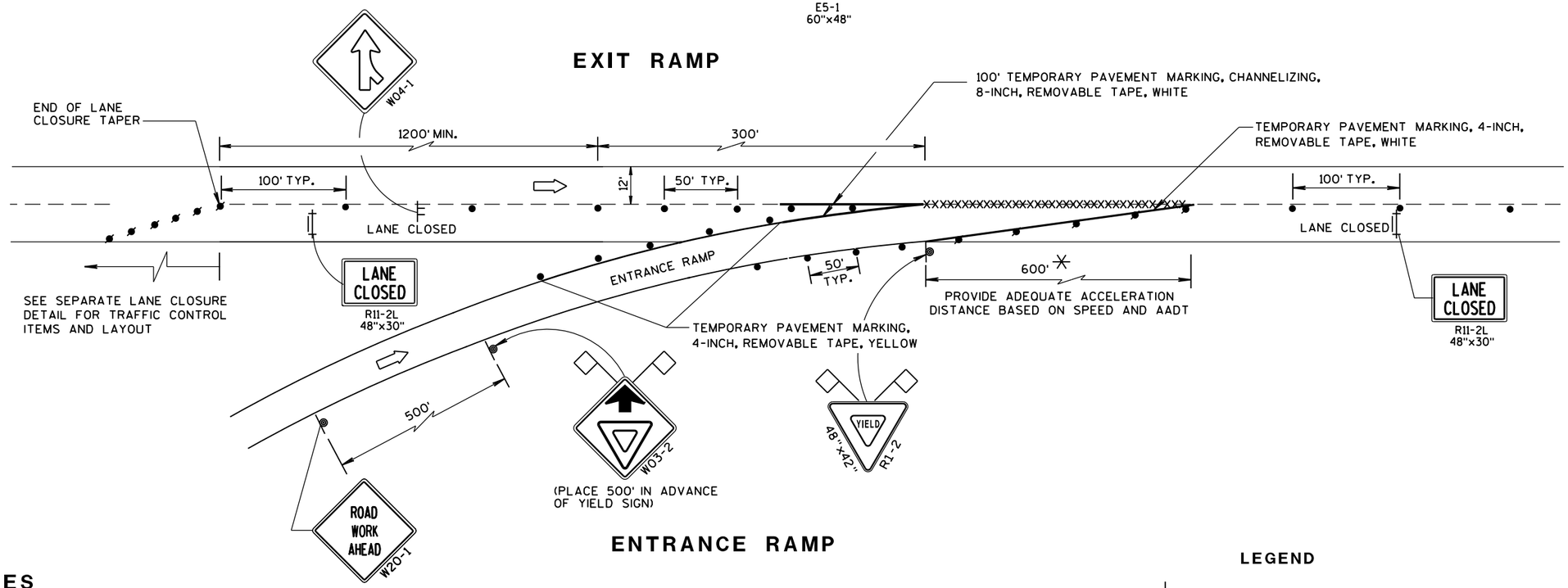


## ENTRANCE RAMP

## GENERAL NOTES

THE INSTALLATIONS SHOWN ON THIS SHEET ARE TYPICAL EXAMPLES AND ARE NOT INTENDED TO REPRESENT ANY PARTICULAR RAMP. AT SPECIFIC FIELD LOCATIONS, SIMILAR INSTALLATIONS SHALL BE USED AND ADJUSTED TO THE GEOMETRICS OF THE RAMP AS COORDINATED WITH THE ENGINEER.

THE EXACT NUMBER, LOCATION, AND SPACING OF ALL SIGNS AND DEVICES SHALL BE ADJUSTED TO FIT FIELD CONDITIONS AS APPROVED BY THE ENGINEER.

THE SPACING BETWEEN TRAFFIC CONTROL SIGNS SHOULD BE ADJUSTED TO NOT CONFLICT WITH AND SHOULD PROVIDE A MINIMUM OF 200 FEET, (500 FEET DESIRABLE) CLEARANCE TO EXISTING SIGNS THAT WILL REMAIN IN PLACE.

ALL SIGNS ARE 48"x48" UNLESS OTHERWISE NOTED.

"WO" IS THE SAME AS "W" EXCEPT THE BACKGROUND IS ORANGE.

SEE SEPARATE LANE CLOSURE DETAIL FOR TYPICAL SPACING OF TYPE III BARRICADES AND R11-2L "LANE CLOSED" SIGNS.

YIELD SIGN AND WARNING SIGNS ON ENTRANCE RAMP ARE ALSO APPROPRIATE FOR CLOSURE OF THE MAINLINE LEFT LANE. OMIT THE YIELD SIGN IF MORE THAN ONE LANE REMAINS OPEN ON THE MAINLINE AND THE RAMP TAPER IS AT LEAST AS LONG AS THE NORMAL ENTRANCE RAMP TAPER AT THE SITE.

SIGNS THAT WILL BE IN PLACE LESS THAN 7 CONTINUOUS DAYS AND NIGHTS, OR THAT WILL BE PLACED IN A CLOSED LANE, MAY BE MOUNTED ON PORTABLE SUPPORTS.

IF INDICATED IN MISCELLANEOUS QUANTITIES, SUBSTITUTE FLEXIBLE TUBULAR MARKERS FOR DRUMS IN THE GORE BETWEEN THE ENTRANCE RAMP AND MAINLINE TRAFFIC.

ANY SIGNS TEMPORARY OR EXISTING, WHICH CONFLICT WITH TRAFFIC CONTROL "IN USE" SHALL BE REMOVED OR COVERED AS NEEDED AND AS APPROVED BY THE ENGINEER.

REMOVE PAVEMENT MARKINGS AND PLACE TEMPORARY PAVEMENT MARKING, REMOVABLE TAPE IF LANE CLOSURE IS TO BE IN PLACE FOR 7 OR MORE CONTINUOUS DAYS AND NIGHTS.

WARNING LIGHTS ARE NOT REQUIRED IF THE LANE CLOSURE IS A DAYTIME ONLY OPERATION.

* LENGTH OF OPENING MAY BE REDUCED TO 150 FEET DURING STAGING OF WORK IN IMMEDIATE AREA OF RAMP TAPER.

## LEGEND

- SIGN ON PERMANENT SUPPORT
- SIGN ON TEMPORARY SUPPORT
- TRAFFIC CONTROL DRUM
- TRAFFIC CONTROL DRUM WITH TYPE "C" STEADY BURN LIGHT
- REMOVING PAVEMENT MARKING (SEE GENERAL NOTES)
- TYPE III BARRICADE WITH ATTACHED SIGN
- FLAGS, 16" x 16" MIN., (ORANGE)
- DIRECTION OF TRAFFIC

**TRAFFIC CONTROL: EXIT AND ENTRANCE RAMP WITHIN LANE CLOSURE**

STATE OF WISCONSIN
DEPARTMENT OF TRANSPORTATION

APPROVED
Sept. 2015 — DATE
/S/ Peter Amakobe Atepe — STATEWIDE WORK ZONE SAFETY ENGINEER
FHWA




6


S.D.D. 15 D 15-2

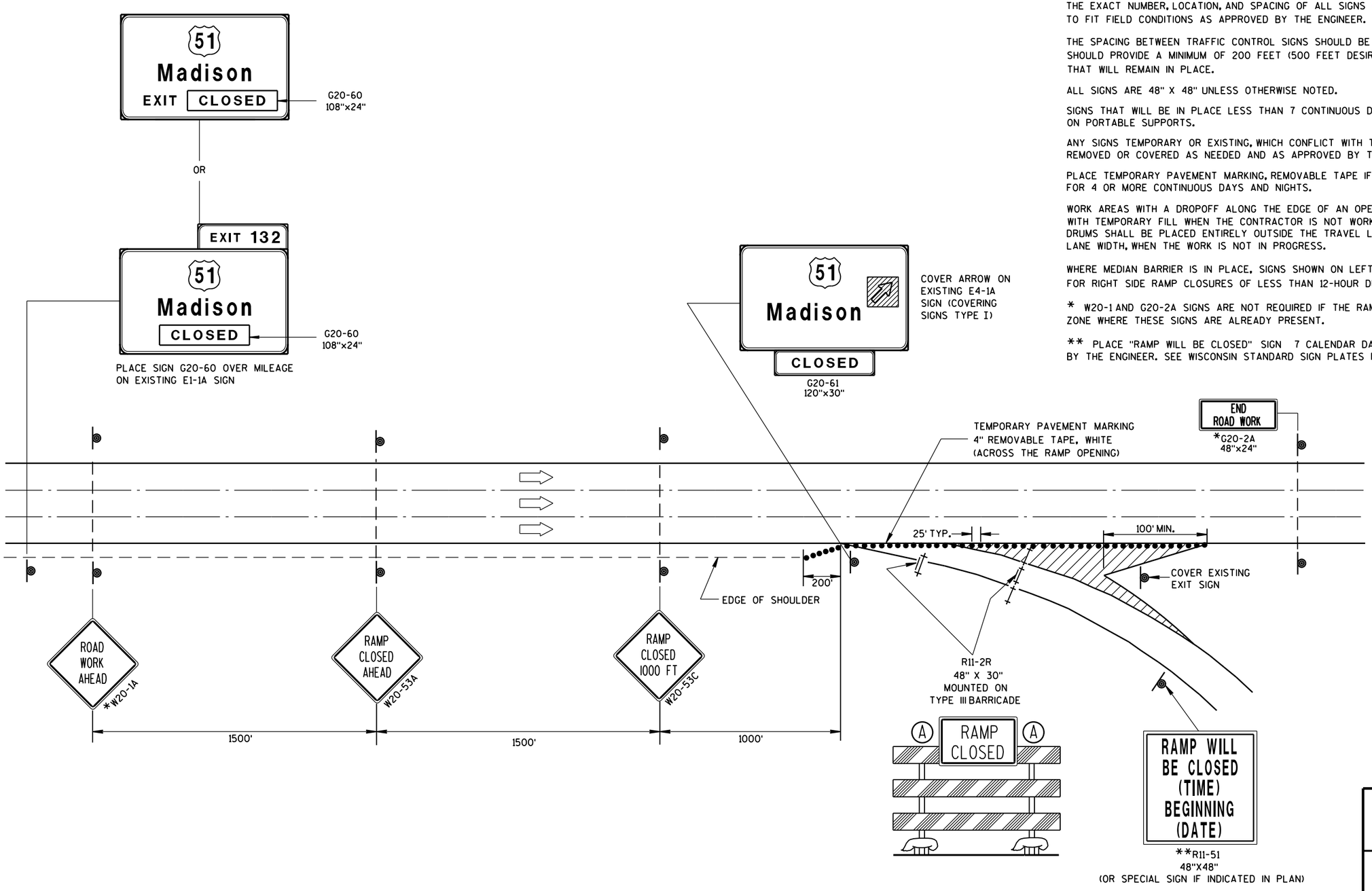


## GENERAL NOTES

THIS RAMP CLOSURE DETAIL IS TYPICAL FOR CLOSING A RIGHT SIDE EXIT RAMP. FOR A LEFT SIDE EXIT RAMP, REVERSE THE TRAFFIC CONTROL.

THE EXACT NUMBER, LOCATION, AND SPACING OF ALL SIGNS AND DEVICES SHALL BE ADJUSTED TO FIT FIELD CONDITIONS AS APPROVED BY THE ENGINEER.

THE SPACING BETWEEN TRAFFIC CONTROL SIGNS SHOULD BE ADJUSTED TO NOT CONFLICT WITH AND SHOULD PROVIDE A MINIMUM OF 200 FEET (500 FEET DESIRABLE) CLEARANCE TO EXISTING SIGNS THAT WILL REMAIN IN PLACE.

ALL SIGNS ARE 48" X 48" UNLESS OTHERWISE NOTED.

SIGNS THAT WILL BE IN PLACE LESS THAN 7 CONTINUOUS DAYS AND NIGHTS MAY BE MOUNTED ON PORTABLE SUPPORTS.

ANY SIGNS TEMPORARY OR EXISTING, WHICH CONFLICT WITH TRAFFIC CONTROL "IN USE" SHALL BE REMOVED OR COVERED AS NEEDED AND AS APPROVED BY THE ENGINEER.

PLACE TEMPORARY PAVEMENT MARKING, REMOVABLE TAPE IF RAMP CLOSURE IS TO BE IN PLACE FOR 4 OR MORE CONTINUOUS DAYS AND NIGHTS.

WORK AREAS WITH A DROPOFF ALONG THE EDGE OF AN OPEN TRAVEL LANE SHALL BE LEVELED WITH TEMPORARY FILL WHEN THE CONTRACTOR IS NOT WORKING ADJACENT TO THE TRAVEL LANE. DRUMS SHALL BE PLACED ENTIRELY OUTSIDE THE TRAVEL LANE, ALLOWING THE FULL UNOBSTRUCTED LANE WIDTH, WHEN THE WORK IS NOT IN PROGRESS.

WHERE MEDIAN BARRIER IS IN PLACE, SIGNS SHOWN ON LEFT SIDE OF ROADWAY MAY BE OMITTED FOR RIGHT SIDE RAMP CLOSURES OF LESS THAN 12-HOUR DURATION.

* W20-1 AND G20-2A SIGNS ARE NOT REQUIRED IF THE RAMP CLOSURE IS WITHIN A LARGER WORK ZONE WHERE THESE SIGNS ARE ALREADY PRESENT.

** PLACE "RAMP WILL BE CLOSED" SIGN 7 CALENDAR DAYS PRIOR TO CLOSURE OR AS DIRECTED BY THE ENGINEER. SEE WISCONSIN STANDARD SIGN PLATES FOR SIGN LAYOUT.

## LEGEND

- TYPE III BARRICADE
- TYPE III BARRICADE WITH ATTACHED SIGN
- TRAFFIC CONTROL DRUM
- SIGN ON PERMANENT SUPPORT
- (A) TYPE "A" WARNING LIGHT (FLASHING)
- DIRECTION OF TRAFFIC

**TRAFFIC CONTROL, EXIT RAMP CLOSURE**

STATE OF WISCONSIN
DEPARTMENT OF TRANSPORTATION

APPROVED
Sept. 2015 — DATE
/S/ Peter Amakobe Atepe — STATEWIDE WORK ZONE SAFETY ENGINEER
FHWA — FIC

6

S.D.D. 15 D 16-3

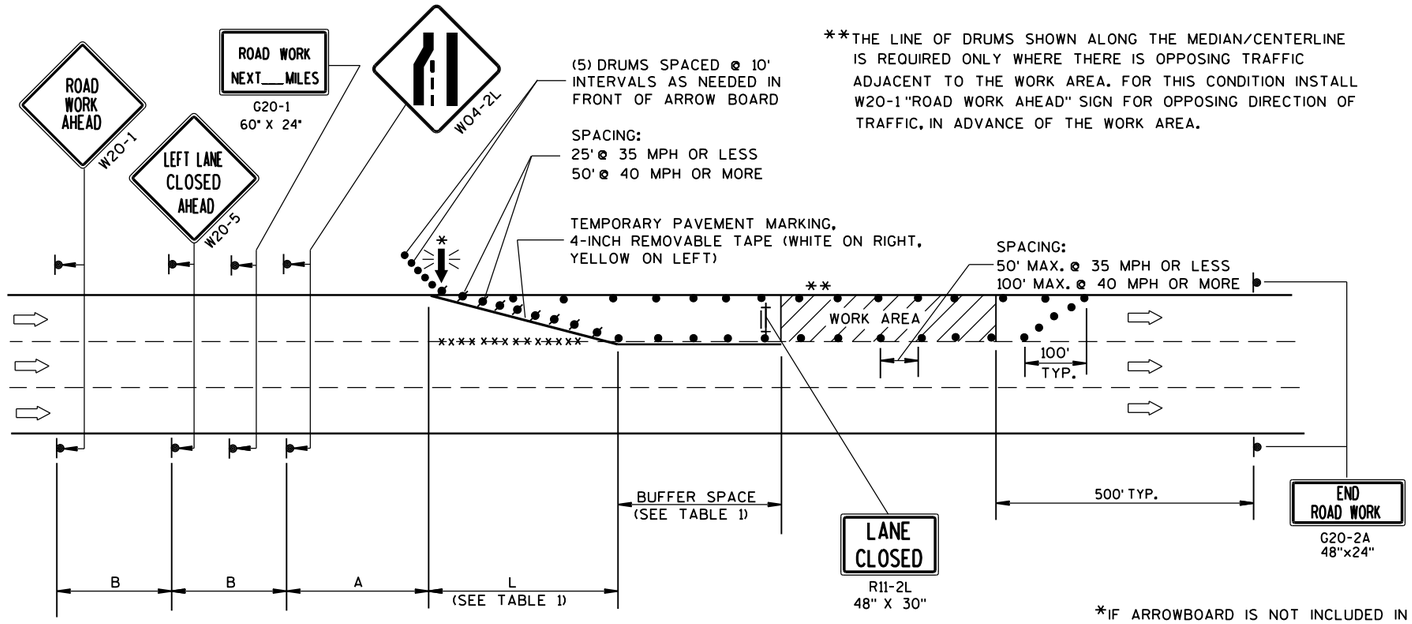


**THE LINE OF DRUMS SHOWN ALONG THE MEDIAN/CENTERLINE IS REQUIRED ONLY WHERE THERE IS OPPOSING TRAFFIC ADJACENT TO THE WORK AREA. FOR THIS CONDITION INSTALL W20-1 "ROAD WORK AHEAD" SIGN FOR OPPOSING DIRECTION OF TRAFFIC, IN ADVANCE OF THE WORK AREA.

B=400' AT 25-30 MPH
700' AT 35-40 MPH
1000' AT 45-55 MPH

A=200' AT 25-30 MPH
350' AT 35-40 MPH
500' AT 45-55 MPH

(PLACE BARRICADE AND SIGN APPROX. EVERY 1000' ACROSS THE CLOSED LANE)

*IF ARROWBOARD IS NOT INCLUDED IN MISCELLANEOUS QUANTITIES, SUBSTITUTE A TYPE III BARRICADE WITH W01-6 SIGN IN THE LANE CLOSURE TAPER.

W01-6
48"x24"

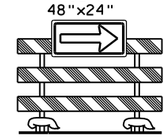

## GENERAL NOTES

THIS LANE CLOSURE DETAIL IS TYPICAL FOR CLOSING THE LEFT LANE. FOR A RIGHT LANE CLOSURE, REVERSE THE TRAFFIC CONTROL.

THIS DETAIL MAY BE USED FOR ROADWAYS WITH EITHER TWO OR THREE LANES IN EACH DIRECTION.

THE EXACT NUMBER, LOCATION, AND SPACING OF ALL SIGNS AND DEVICES SHALL BE ADJUSTED TO FIT FIELD CONDITIONS AS APPROVED BY THE ENGINEER.

THE SPACING BETWEEN TRAFFIC CONTROL SIGNS SHOULD BE ADJUSTED TO NOT CONFLICT WITH AND SHOULD PROVIDE A DESIRABLE MINIMUM OF 200 FEET CLEARANCE TO EXISTING SIGNS THAT WILL REMAIN IN PLACE.

ALL SIGNS ARE 48"x48" UNLESS OTHERWISE NOTED. IF NECESSARY DUE TO SPACE CONSTRAINTS IN URBAN AREAS, 36" X 36" SIGNS MAY BE USED IF APPROVED BY DISTRICT TRAFFIC UNIT.

"WO" SIGNS ARE THE SAME AS "W" SIGNS EXCEPT THE BACKGROUND IS ORANGE.

SIGNS THAT WILL BE IN PLACE LESS THAN 7 CONTINUOUS DAYS AND NIGHTS, OR THAT WILL BE PLACED IN A CLOSED LANE, MAY BE MOUNTED ON PORTABLE SUPPORTS.

ANY SIGNS TEMPORARY OR EXISTING, WHICH CONFLICT WITH TRAFFIC CONTROL "IN USE" SHALL BE REMOVED OR COVERED AS NEEDED AND AS APPROVED BY THE ENGINEER.

REMOVE PAVEMENT MARKINGS AND PLACE TEMPORARY PAVEMENT MARKING, REMOVABLE TAPE IF LANE CLOSURE IS TO BE IN PLACE FOR 4 OR MORE CONTINUOUS DAYS AND NIGHTS.

ON UNDIVIDED ROADWAYS, OMIT THE SIGNS SHOWN ON LEFT SIDE OF ROAD.

W20-1, G20-1 AND G20-2A SIGNS ARE NOT REQUIRED IF THE LANE CLOSURE IS WITHIN A LARGER WORK ZONE WHERE THESE SIGNS ARE ALREADY PRESENT.

OMIT G20-1 SIGNS IF LENGTH OF WORK AREA IS 2 MILES OR LESS.

CONSIDER GEOMETRICS WHEN LOCATING SIGNS AND ARROWBOARDS SO THE APPROACHING DRIVER HAS A CLEAR VIEW OF THE ARROWBOARDS AND LANE CLOSURE DRUMS.

PLACE THE ARROWBOARD AS CLOSE AS POSSIBLE TO THE BEGINNING OF THE LANE CLOSURE TAPER, PREFERABLY ON THE SHOULDER OR TERRACE.

CHANNELIZING DEVICES PLACED ADJACENT TO WORK AREA SHALL BE PULLED BACK FROM THE TRAVEL LANE WHEN WORK IS NOT IN PROGRESS.

BARRICADES IN A CLOSED LANE THAT MUST BE MOVED FOR A WORK OPERATION SHALL BE IMMEDIATELY RE-ESTABLISHED UPON COMPLETION OF THE OPERATION OR, FOR CONTINUING OPERATIONS, AT THE END OF EACH WORKING DAY.

WARNING LIGHTS ARE NOT REQUIRED IF THE LANE CLOSURE IS A DAYTIME ONLY OPERATION.

TABLE 1
TAPER AND BUFFER SPACE
FOR 12' LANE WIDTH

| S | L | BUFFER SPACE |
|---|---|---|
| 25 | 125' | 55' |
| 30 | 180' | 85' |
| 35 | 245' | 120' |
| 40 | 320' | 170' |
| 45 | 540' | 220' |
| 50 | 600' | 280' |
| 55 | 660' | 335' |

FOR LANE WIDTH OTHER THAN 12':

L = WS AT 45 MPH OR GREATER

$L = \frac{WS^2}{60}$ AT 40 MPH OR LESS

L = TAPER LENGTH IN FEET

S = NON-CONSTRUCTION SPEED LIMIT (MPH)

W = WIDTH OF LANE CLOSURE

## LEGEND

- TYPE III BARRICADE WITH ATTACHED SIGN
- SIGN ON PERMANENT SUPPORT
- TRAFFIC CONTROL DRUM WITH TYPE "C" STEADY BURN LIGHT
- TRAFFIC CONTROL DRUM
- FLASHING ARROW BOARD
- DIRECTION OF TRAFFIC
- REMOVING PAVEMENT MARKING (SEE GENERAL NOTES)
- WORK AREA

TRAFFIC CONTROL,
SINGLE LANE CLOSURE,
NON-FREEWAY/EXPRESSWAY

STATE OF WISCONSIN
DEPARTMENT OF TRANSPORTATION

APPROVED
Feb. 2015 — DATE
/S/ Travis Feltes — STATE TRAFFIC ENGINEER
FHWA

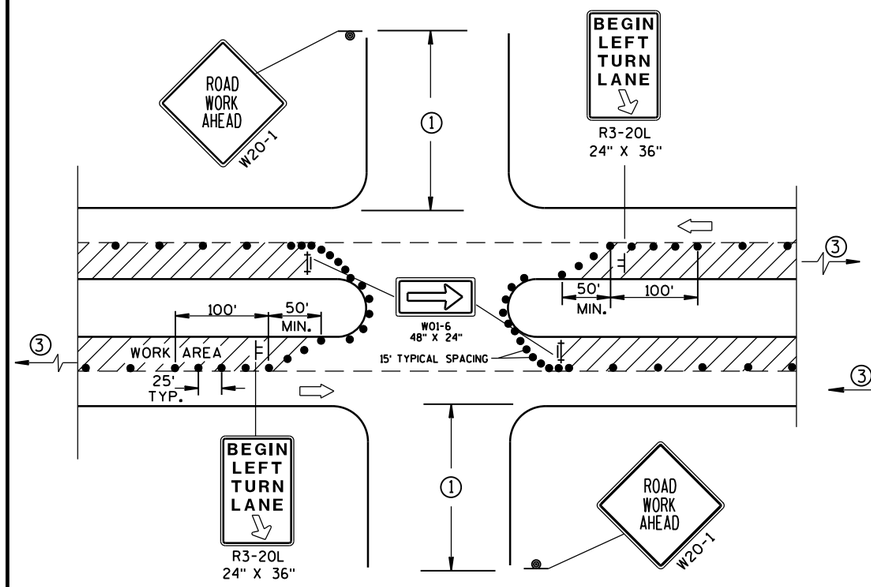


DETAIL A

FOR LEFT LANE CLOSURE AT INTERSECTION OR MEDIAN OPENING

PROVIDE TURN LANES AT INTERSECTIONS WHENEVER STAGING OF WORK ALLOWS. TAPER AND TURN LANE LENGTHS BASED ON FIELD CONDITIONS AS APPROVED BY THE ENGINEER.

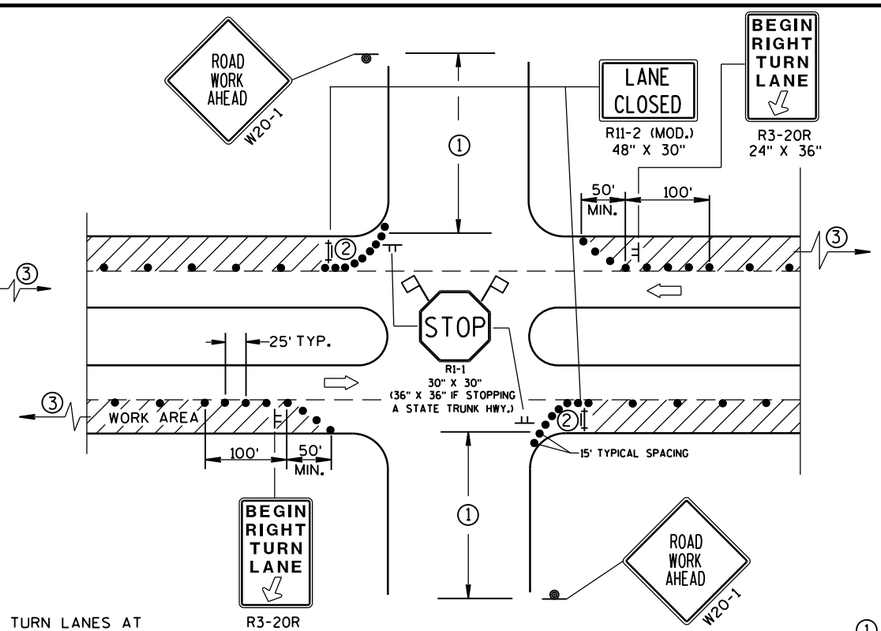


DETAIL B

FOR RIGHT LANE CLOSURE AT INTERSECTION

## GENERAL NOTES

THE EXACT NUMBER, LOCATION, AND SPACING OF ALL SIGNS AND DEVICES SHALL BE ADJUSTED TO FIT FIELD CONDITIONS AS APPROVED BY THE ENGINEER.

THE SPACING BETWEEN SIGNS SHOULD BE ADJUSTED TO NOT CONFLICT WITH AND SHOULD PROVIDE A DESIRABLE MINIMUM OF 200 FEET CLEARANCE TO EXISTING SIGNS THAT WILL REMAIN IN PLACE.

ALL SIGNS ARE 48"x48" UNLESS OTHERWISE NOTED. IF NECESSARY DUE TO SPACE CONSTRAINTS IN URBAN AREAS, 36" X 36" SIGNS MAY BE USED IF APPROVED BY DISTRICT TRAFFIC UNIT.

"WO" SIGNS ARE THE SAME AS "W" SIGNS EXCEPT THE BACKGROUND IS ORANGE.

SIGN LAYOUTS SHALL BE IN ACCORDANCE WITH THE FHWA'S MANUAL OF STANDARD HIGHWAY SIGNS OR THE WISCONSIN STANDARD SIGN PLATES.

SIGNS THAT WILL BE IN PLACE LESS THAN 7 CONTINUOUS DAYS AND NIGHTS, OR THAT WILL BE PLACED IN A CLOSED LANE, MAY BE MOUNTED ON PORTABLE SUPPORTS.

ANY SIGNS TEMPORARY OR EXISTING, WHICH CONFLICT WITH TRAFFIC CONTROL "IN USE" SHALL BE REMOVED OR COVERED AS NEEDED AND AS APPROVED BY THE ENGINEER.

CHANNELIZING DEVICES PLACED ADJACENT TO WORK AREA SHALL BE PULLED BACK FROM THE TRAVEL LANE WHEN WORK IS NOT IN PROGRESS.

BARRICADES IN A CLOSED LANE THAT MUST BE MOVED FOR A WORK OPERATION SHALL BE IMMEDIATELY RE-ESTABLISHED UPON COMPLETION OF THE OPERATION OR, FOR CONTINUING OPERATIONS, AT THE END OF EACH WORKING DAY.

① 500' TYPICAL OR AT LAST INTERSECTION, WHICHEVER IS CLOSER.
350' IF 35-40 MPH.
200' IF 25-30 MPH.

② ALSO USE BARRICADE AND 15-FOOT TYPICAL DRUM SPACING AT COMMERCIAL DRIVEWAYS.

③ SEE SEPARATE LANE CLOSURE DETAIL FOR ADDITIONAL TRAFFIC CONTROL.

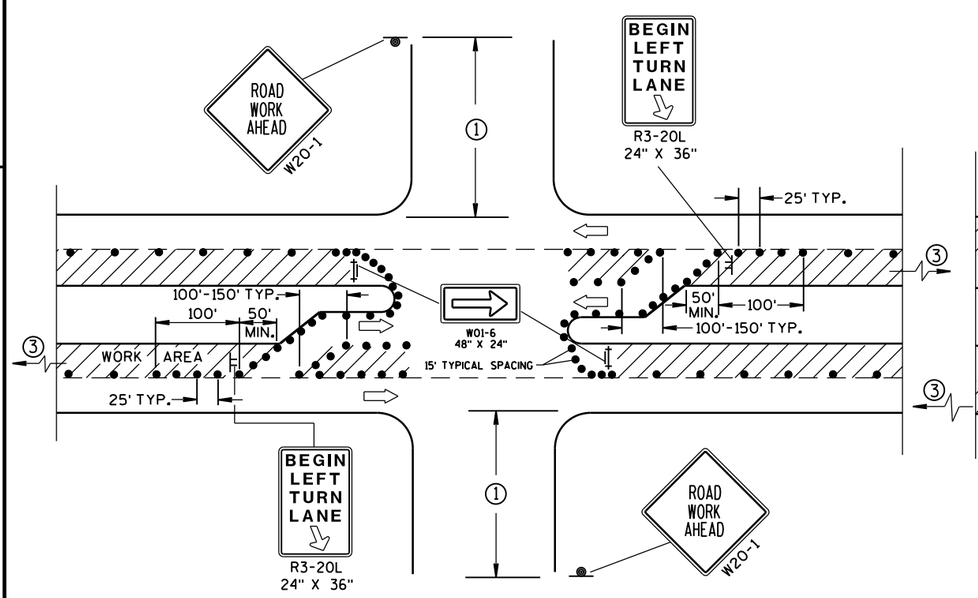


DETAIL C

FOR LEFT LANE CLOSURE AT INTERSECTION OR MEDIAN OPENING (WITH LEFT TURN BAY OPEN)

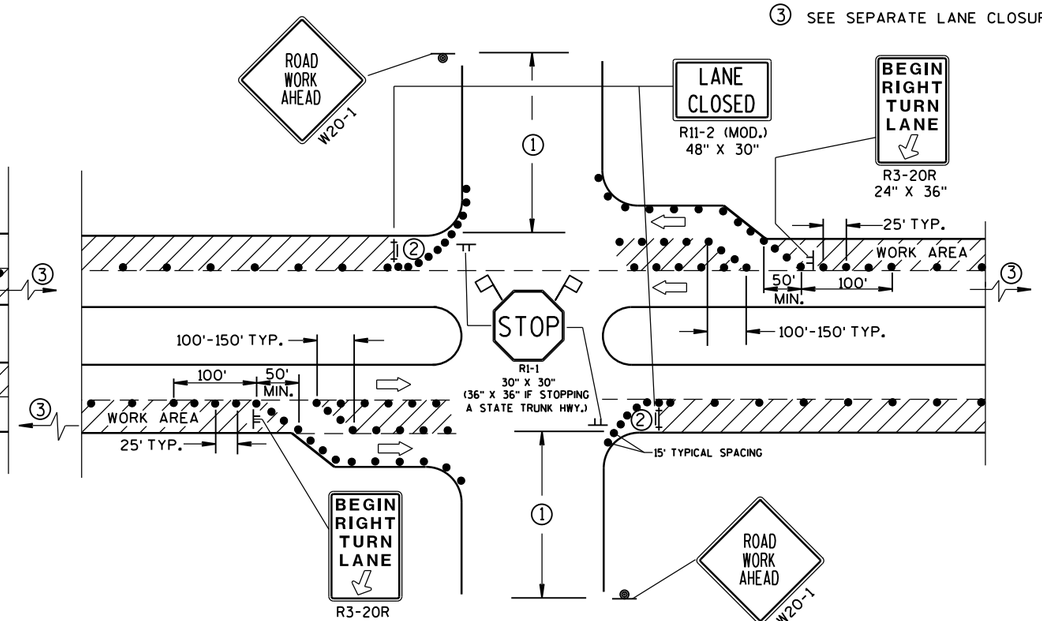


DETAIL D

FOR RIGHT LANE CLOSURE AT INTERSECTION (WITH RIGHT TURN BAY OPEN)

## LEGEND

- TRAFFIC CONTROL DRUM
- SIGN ON PERMANENT SUPPORT
- SIGN ON TEMPORARY SUPPORT (5' MIN. MOUNTING HEIGHT)
- TYPE III BARRICADE WITH ATTACHED SIGN AND TYPE "A" WARNING LIGHT (FLASHING)
- DIRECTION OF TRAFFIC
- FLAGS, 16" X 16" MIN., (ORANGE)
- WORK AREA

**TRAFFIC CONTROL, INTERSECTION WITHIN SINGLE LANE CLOSURE**

STATE OF WISCONSIN
DEPARTMENT OF TRANSPORTATION

APPROVED
Nov. 2014 — /S/ Travis Feltes
DATE — STATE TRAFFIC ENGINEER — DESIGN
FHWA

TABLE 1
TAPER AND BUFFER SPACE
FOR 12' LANE WIDTH

| S | L | BUFFER SPACE |
|---|---|---|
| 25 | 125' | 55' |
| 30 | 180' | 85' |
| 35 | 245' | 120' |
| 40 | 320' | 170' |
| 45 | 540' | 220' |
| 50 | 600' | 280' |
| 55 | 660' | 335' |

FOR LANE WIDTH OTHER THAN 12':

L = WS AT 45 MPH OR GREATER

$L = \frac{WS^2}{60}$ AT 40 MPH OR LESS

L = TAPER LENGTH IN FEET

S = NON-CONSTRUCTION SPEED LIMIT (MPH)

W = WIDTH OF LANE CLOSURE

## LEGEND

- TYPE III BARRICADE
- TYPE III BARRICADE WITH ATTACHED SIGN
- SIGN ON PERMANENT SUPPORT
- SIGN ON TEMPORARY SUPPORT
- TRAFFIC CONTROL DRUM WITH TYPE "C" STEADY BURN LIGHT
- TRAFFIC CONTROL DRUM
- FLASHING ARROW BOARD
- DIRECTION OF TRAFFIC
- REMOVING PAVEMENT MARKING (SEE GENERAL NOTES)
- WORK AREA

## GENERAL NOTES

THIS DETAIL IS TYPICAL FOR CLOSING THE RIGHT TWO LANES. FOR CLOSING THE LEFT TWO LANES, REVERSE THE TRAFFIC CONTROL.

THE EXACT NUMBER, LOCATION, AND SPACING OF ALL SIGNS AND DEVICES SHALL BE ADJUSTED TO FIT FIELD CONDITIONS AS APPROVED BY THE ENGINEER.

THE SPACING BETWEEN SIGNS SHOULD BE ADJUSTED TO NOT CONFLICT WITH AND SHOULD PROVIDE A DESIRABLE MINIMUM OF 200 FEET CLEARANCE TO EXISTING SIGNS THAT WILL REMAIN IN PLACE.

ALL SIGNS ARE 48"x48" UNLESS OTHERWISE NOTED. IF NECESSARY DUE TO SPACE CONSTRAINTS IN URBAN AREAS, 36" X 36" SIGNS MAY BE USED IF APPROVED BY THE DISTRICT TRAFFIC UNIT.

"WO" SIGNS ARE THE SAME AS "W" SIGNS EXCEPT THE BACKGROUND IS ORANGE.

SIGNS THAT WILL BE IN PLACE LESS THAN 7 CONTINUOUS DAYS AND NIGHTS, OR THAT WILL BE PLACED IN A CLOSED LANE, MAY BE MOUNTED ON PORTABLE SUPPORTS.

ANY SIGNS TEMPORARY OR EXISTING, WHICH CONFLICT WITH TRAFFIC CONTROL "IN USE" SHALL BE REMOVED OR COVERED AS NEEDED AND AS APPROVED BY THE ENGINEER.

REMOVE PAVEMENT MARKINGS AND PLACE TEMPORARY PAVEMENT MARKING, REMOVABLE TAPE IF LANE CLOSURE IS TO BE IN PLACE FOR 4 OR MORE CONTINUOUS DAYS AND NIGHTS.

W20-1, G20-1 AND G20-2A SIGNS ARE NOT REQUIRED IF THE LANE CLOSURE IS WITHIN A LARGER WORK ZONE WHERE THESE SIGNS ARE ALREADY PRESENT.

OMIT G20-1 SIGNS IF LENGTH OF WORK AREA IS 2 MILES OR LESS.

CONSIDER GEOMETRICS WHEN LOCATING SIGNS AND ARROWBOARDS SO THE APPROACHING DRIVER HAS A CLEAR VIEW OF THE ARROWBOARDS AND LANE CLOSURE DRUMS.

WHERE THE SHOULDER OR TERRACE HAS INSUFFICIENT SPACE TO LOCATE THE ARROWBOARD AS SHOWN, PLACE THE ARROWBOARD IN THE LANE CLOSURE TAPER AS CLOSE AS POSSIBLE TO THE BEGINNING OF THE TAPER.

CHANNELIZING DEVICES PLACED ADJACENT TO WORK AREA SHALL BE PULLED BACK FROM THE TRAVEL LANE WHEN WORK IS NOT IN PROGRESS.

BARRICADES IN A CLOSED LANE THAT MUST BE MOVED FOR A WORK OPERATION SHALL BE IMMEDIATELY RE-ESTABLISHED UPON COMPLETION OF THE OPERATION OR, FOR CONTINUING OPERATIONS, AT THE END OF EACH WORKING DAY.

WARNING LIGHTS ARE NOT REQUIRED IF THE LANE CLOSURE IS A DAYTIME ONLY OPERATION.

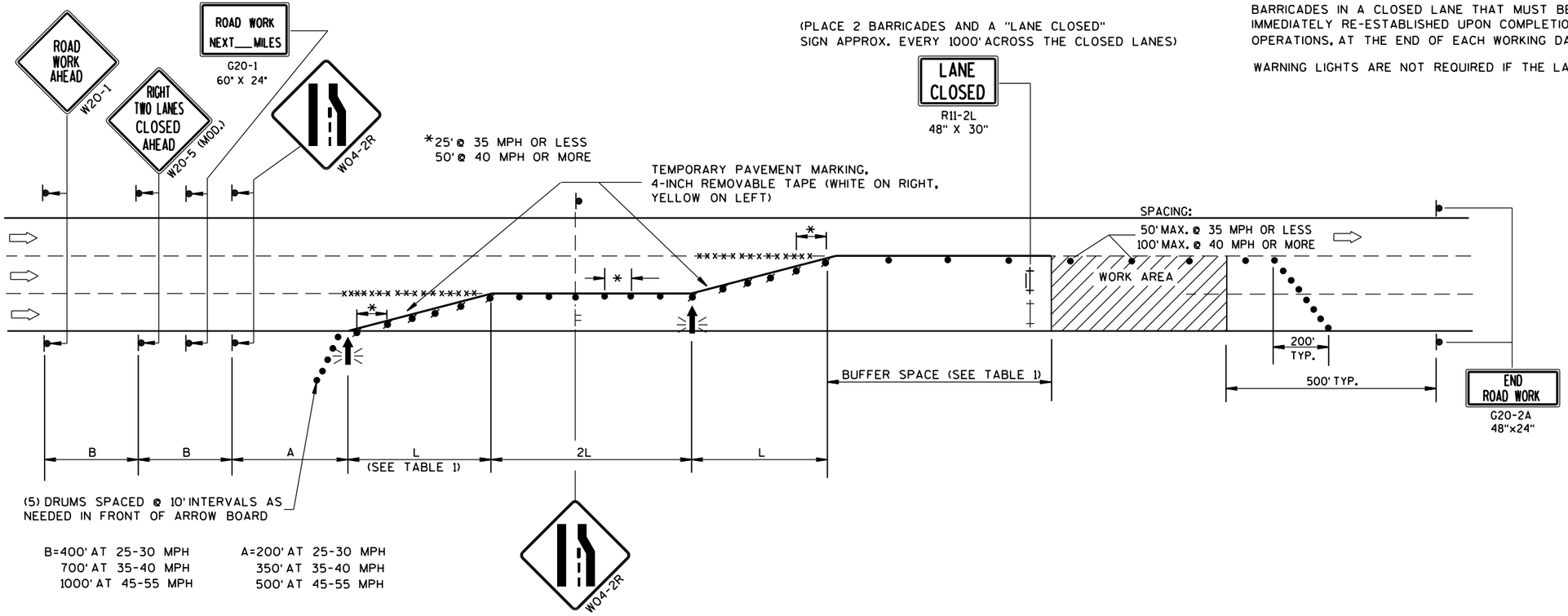


B=400' AT 25-30 MPH
700' AT 35-40 MPH
1000' AT 45-55 MPH

A=200' AT 25-30 MPH
350' AT 35-40 MPH
500' AT 45-55 MPH

TRAFFIC CONTROL,
TWO LANE CLOSURE,
NON-FREEWAY/EXPRESSWAY

STATE OF WISCONSIN
DEPARTMENT OF TRANSPORTATION

APPROVED
8/2013 — DATE
/S/ Travis Feltes — STATE TRAFFIC ENGINEER
FHWA




6

S.D.D. 15 D 22-2

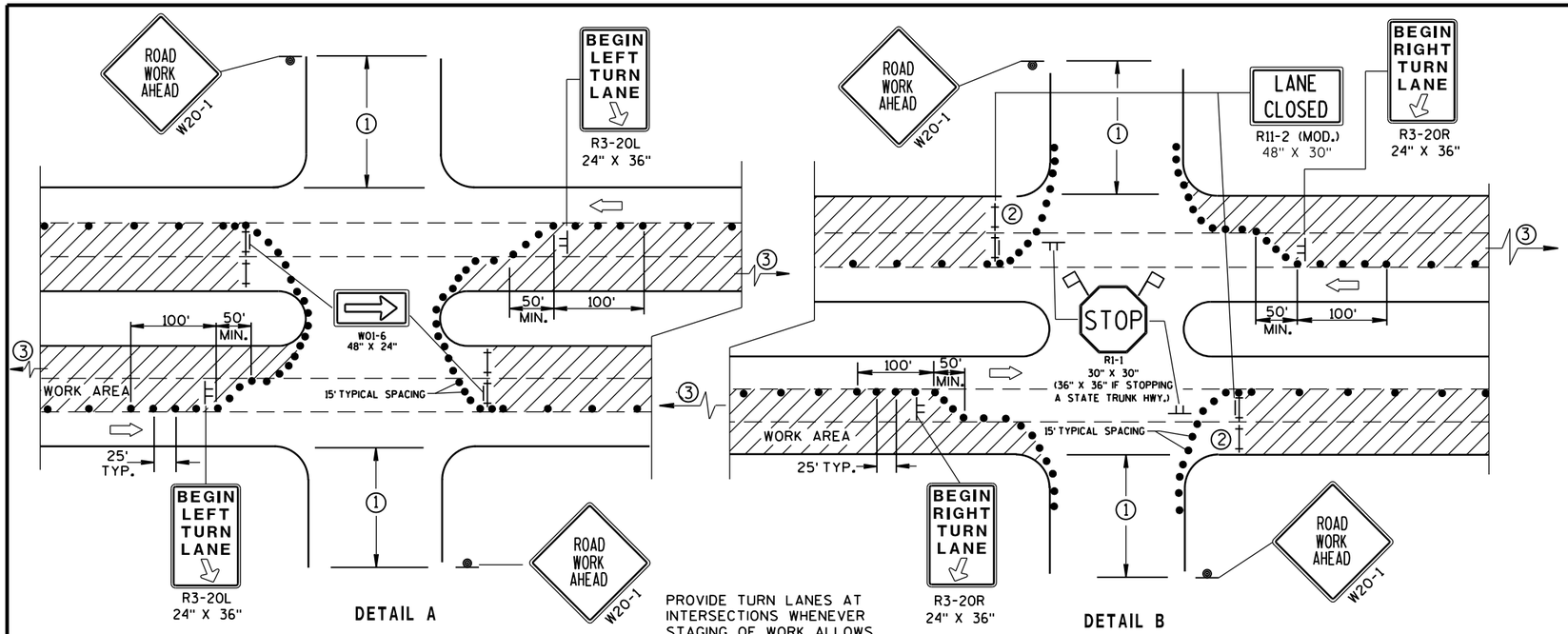


DETAIL A

FOR LEFT TWO LANES CLOSED AT INTERSECTION OR MEDIAN BREAK

PROVIDE TURN LANES AT INTERSECTIONS WHENEVER STAGING OF WORK ALLOWS. TAPER AND TURN LANE LENGTHS BASED ON FIELD CONDITIONS AS APPROVED BY THE ENGINEER.

DETAIL B

FOR RIGHT TWO LANES CLOSED AT INTERSECTION

## GENERAL NOTES

THE EXACT NUMBER, LOCATION, AND SPACING OF ALL SIGNS AND DEVICES SHALL BE ADJUSTED TO FIT FIELD CONDITIONS AS APPROVED BY THE ENGINEER.

THE SPACING BETWEEN SIGNS SHOULD BE ADJUSTED TO NOT CONFLICT WITH AND SHOULD PROVIDE A DESIRABLE MINIMUM OF 200 FEET CLEARANCE TO EXISTING SIGNS THAT WILL REMAIN IN PLACE.

ALL SIGNS ARE 48"×48" UNLESS OTHERWISE NOTED. IF NECESSARY DUE TO SPACE CONSTRAINTS IN URBAN AREAS, 36" X 36" SIGNS MAY BE USED IF APPROVED BY DISTRICT TRAFFIC UNIT.

SIGN LAYOUTS SHALL BE IN ACCORDANCE WITH THE FHWA'S MANUAL OF STANDARD SIGNS OR THE WISCONSIN STANDARD SIGN PLATES.

SIGNS THAT WILL BE IN PLACE LESS THAN 7 CONTINUOUS DAYS AND NIGHTS, OR THAT WILL BE PLACED IN A CLOSED LANE, MAY BE MOUNTED ON PORTABLE SUPPORTS.

ANY SIGNS TEMPORARY OR EXISTING, WHICH CONFLICT WITH TRAFFIC CONTROL "IN USE" SHALL BE REMOVED OR COVERED AS NEEDED AND AS APPROVED BY THE ENGINEER.

CHANNELIZING DEVICES PLACED ADJACENT TO WORK AREA SHALL BE PULLED BACK FROM THE TRAVEL LANE WHEN WORK IS NOT IN PROGRESS.

BARRICADES IN A CLOSED LANE THAT MUST BE MOVED FOR A WORK OPERATION SHALL BE IMMEDIATELY RE-ESTABLISHED UPON COMPLETION OF THE OPERATION OR, FOR CONTINUING OPERATIONS, AT THE END OF EACH WORKING DAY.

① 500 FEET TYPICAL OR AT LAST INTERSECTION, WHICHEVER IS CLOSER.
350 FEET IF 35-40 MPH.
200 FEET IF 25-30 MPH.

② ALSO USE BARRICADES AND 15-FOOT TYPICAL DRUM SPACING AT COMMERCIAL DRIVEWAYS.

③ SEE SEPARATE LANE CLOSURE DETAIL FOR ADDITIONAL TRAFFIC CONTROL.

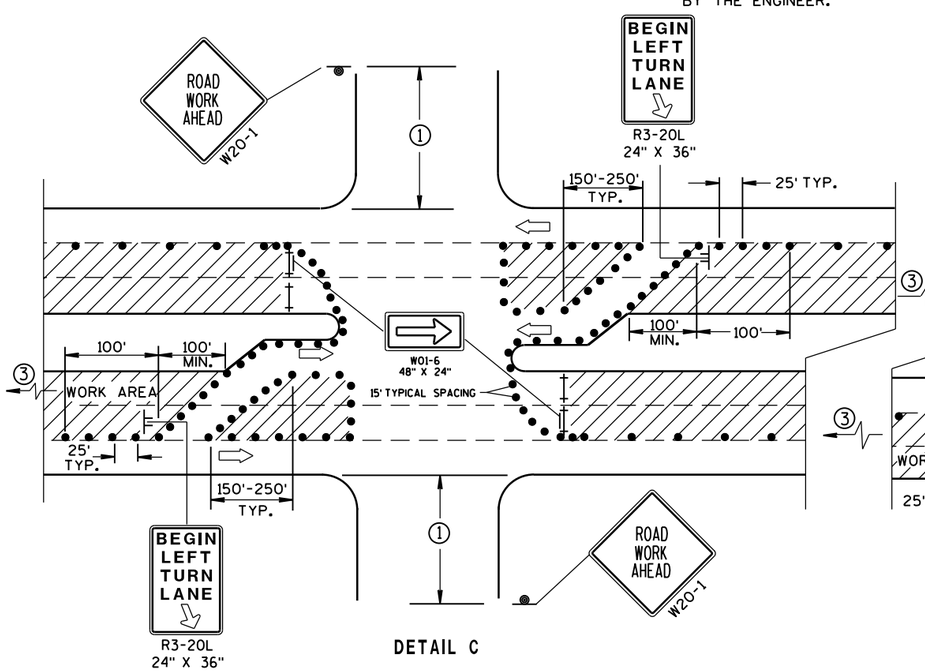


DETAIL C

FOR LEFT TWO LANES CLOSED AT INTERSECTION OR MEDIAN BREAK (WITH LEFT TURN BAY OPEN)

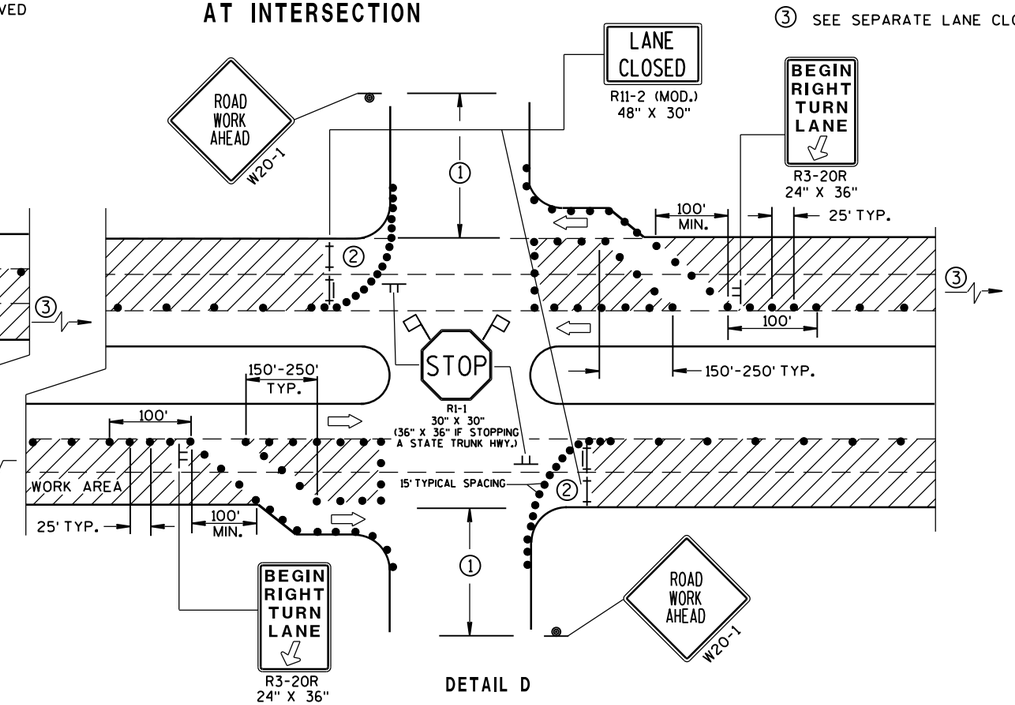


DETAIL D

FOR RIGHT TWO LANES CLOSED AT INTERSECTION (WITH RIGHT TURN BAY OPEN)

## LEGEND

- TRAFFIC CONTROL DRUM
- SIGN ON PERMANENT SUPPORT
- SIGN ON TEMPORARY SUPPORT (5' MIN. MOUNTING HEIGHT)
- TYPE III BARRICADE
- TYPE III BARRICADE WITH ATTACHED SIGN AND TYPE "A" WARNING LIGHT (FLASHING)
- DIRECTION OF TRAFFIC
- FLAGS, 16" X 16" MIN., (ORANGE)
- WORK AREA

TRAFFIC CONTROL, INTERSECTION WITHIN TWO LANE CLOSURE

STATE OF WISCONSIN
DEPARTMENT OF TRANSPORTATION

APPROVED
Nov. 2014 /S/ Travis Feltes
DATE STATE TRAFFIC ENGINE ESIGN
FHWA




6


S.D.D. 15 D 23-3

## LEGEND

- TRAFFIC CONTROL DRUM
- SIGN ON PERMANENT SUPPORT
- DIRECTION OF TRAFFIC
- FLASHING ARROW BOARD
- WORK AREA

## GENERAL NOTES

THIS DETAIL IS TYPICAL FOR CLOSING THE RIGHT SHOULDER. FOR CLOSING THE LEFT SHOULDER, REVERSE THE TRAFFIC CONTROL.

THIS DETAIL MAY BE USED FOR DIVIDED ROADWAYS WITH ANY NUMBER OF TRAVEL LANES.

THE EXACT NUMBER, LOCATION AND SPACING OF ALL SIGNS AND DEVICES SHALL BE ADJUSTED TO FIT FIELD CONDITIONS AS APPROVED BY THE ENGINEER.

ALL SIGNS ARE 48" X 48" UNLESS OTHERWISE NOTED.

SIGN LAYOUTS SHALL BE IN ACCORDANCE WITH THE FHWA'S MANUAL OF STANDARD HIGHWAY SIGNS OR THE WISCONSIN STANDARD SIGN PLATES.

SIGNS THAT WILL BE IN PLACE LESS THAN 7 CONTINUOUS DAYS AND NIGHTS MAY BE MOUNTED ON PORTABLE SUPPORTS.

ANY SIGNS TEMPORARY OR EXISTING, WHICH CONFLICT WITH TRAFFIC CONTROL "IN USE" SHALL BE REMOVED OR COVERED AS NEEDED AND AS APPROVED BY THE ENGINEER.

CHANNELIZING DEVICES PLACED ADJACENT TO THE WORK AREA SHALL BE PULLED BACK FROM THE TRAVEL LANE WHEN WORK IS NOT IN PROGRESS.

WHEN A RAMP INTERSECTS THE FACILITY ON WHICH THE WORK IS BEING PERFORMED, ADDITIONAL TRAFFIC CONTROLS SHALL BE PROVIDED AS SPECIFIED IN THE PLANS AND/OR THE SPECIAL PROVISIONS OR AS APPROVED BY THE ENGINEER.

*FOR SHORT DURATION SHOULDER WORK OF LESS THAN ONE HOUR, THE W21-5a SIGN MAY BE OMITTED.

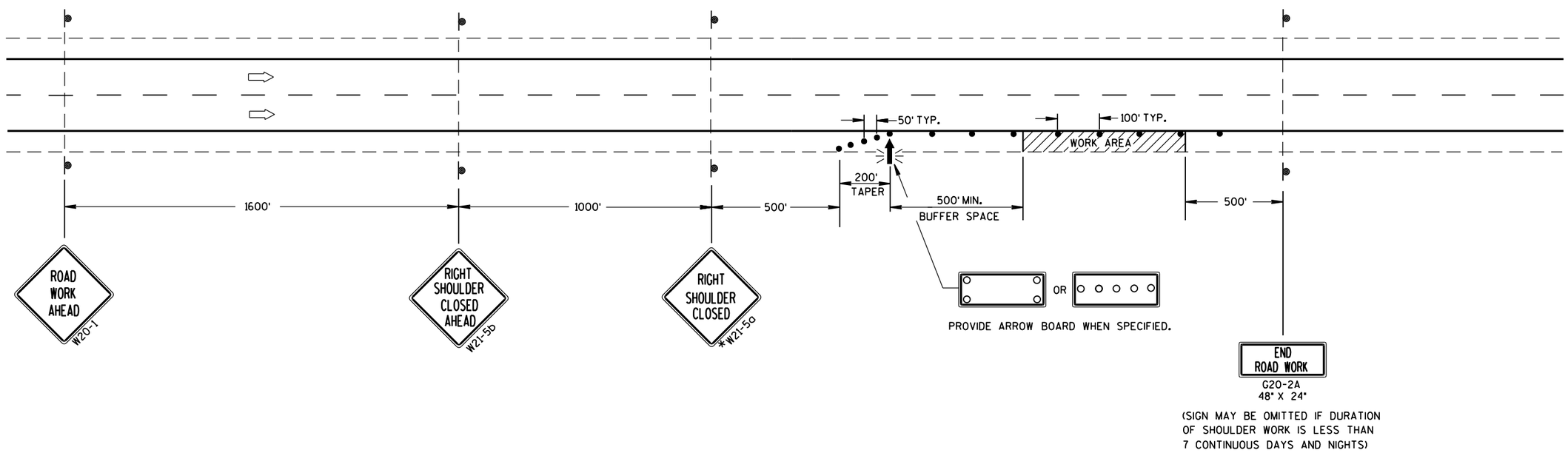


**TRAFFIC CONTROL SHOULDER CLOSURE ON DIVIDED ROADWAY, SPEEDS GREATER THAN 40 MPH**

STATE OF WISCONSIN
DEPARTMENT OF TRANSPORTATION

APPROVED

8/2013 — DATE

/S/ Travis Feltes — STATE TRAFFIC ENGINE ESIGN

FHWA

NOTE: MAY BE USED ON ROADWAY WITH POSTED SPEED OF LESS THAN 40 MPH.

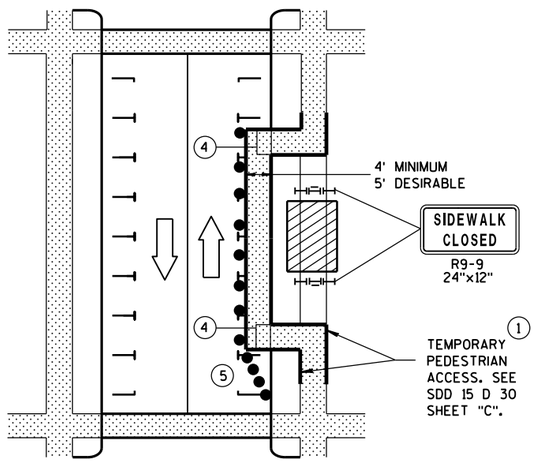


## MID-BLOCK SIDEWALK CLOSURE IN PARKING LANE

NOTE: LAYOUT SAME AS ABOVE.

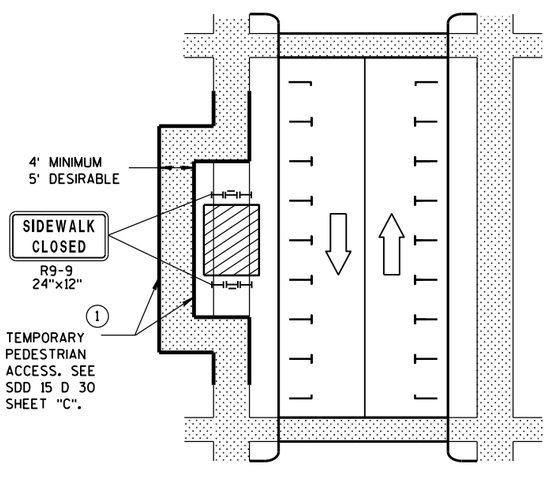


## SIDEWALK DIVERSION

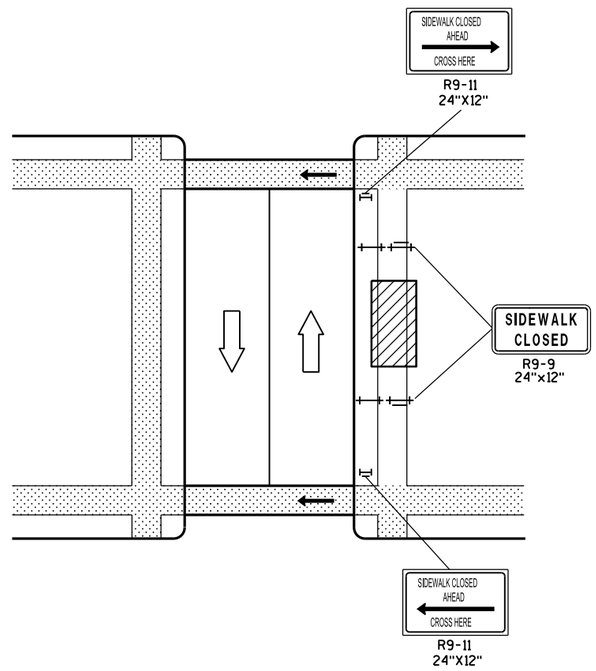


## MID-BLOCK SIDEWALK CLOSURE

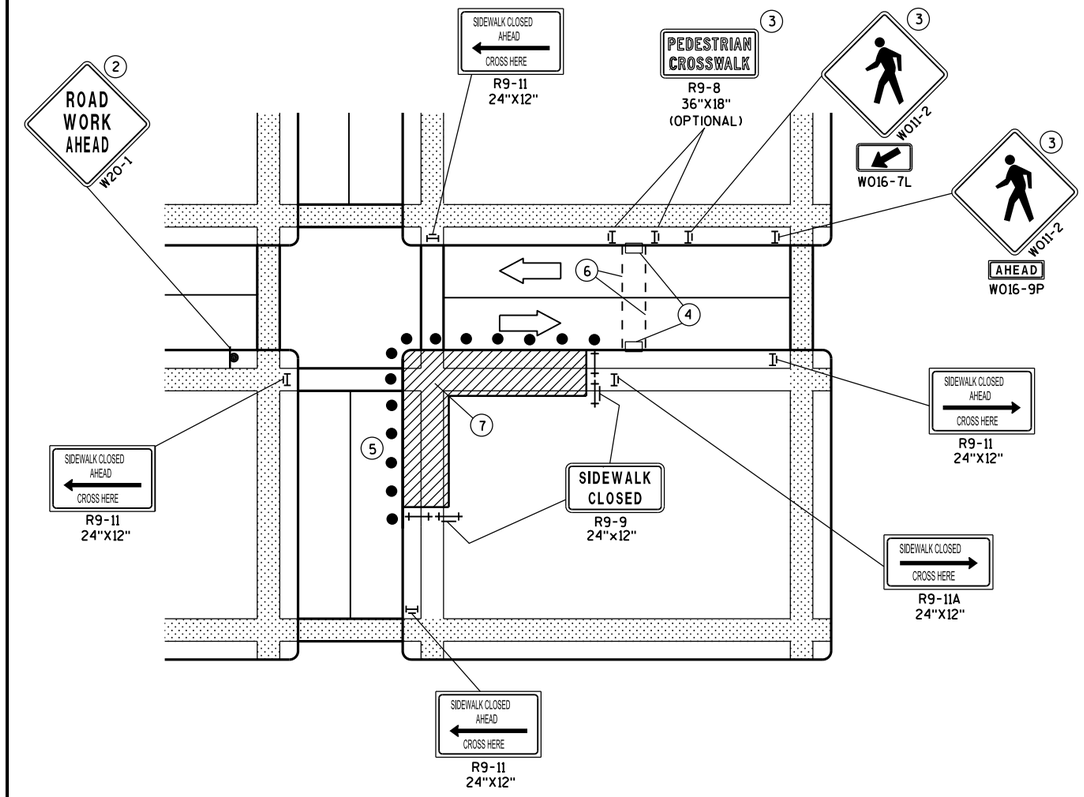


## CORNER SIDEWALK CLOSURE WITH TEMPORARY CROSSWALK

## GENERAL NOTES

WHEN CLOSING OR RELOCATING CROSSWALKS OR SIDEWALKS, PROVIDE DETECABLE TEMPORARY FACILITIES AND INCLUDE ACCESSIBILITY FEATURES CONSISTENT WITH EXISTING PEDESTRIAN FACILITIES.

TEMPORARY TRAFFIC CONTROL DEVICES FOR PEDESTRIANS ARE SHOWN. OTHER DEVICES MAY BE NECESSARY TO CONTROL VEHICULAR TRAFFIC. STAGE WORK, AS NECESSARY, TO PROVIDE A TEMPORARY PEDESTRIAN ACCESS ROUTE AT ALL TIMES. FOR ROADWAYS WITH NO AVAILABLE DETOURS, MAINTAIN ONE OPEN SIDEWALK AT ALL TIMES.

"WO" SIGN IS THE SAME AS "W" SIGN EXCEPT THE BACKGROUND IS ORANGE.

FOR NIGHTTIME CLOSURE USE TYPE "A" FLASHING WARNING LIGHTS ON BARRICADES, SUPPORTING SIGNS AND CLOSING SIDEWALK. USE TYPE "C" STEADY BURN LIGHTS ON CHANNELIZING DEVICES SEPARATING THE WORK AREA FROM VEHICULAR TRAFFIC.

PEDESTRIAN TRAFFIC SIGNAL DISPLAY CONTROLLING CLOSED CROSSWALK SHALL BE COVERED OR DEACTIVATED.

POST MOUNTED SIGNS LOCATED ADJACENT TO A SIDEWALK SHALL HAVE A 7 FOOT MINIMUM CLEARANCE FROM THE BOTTOM OF THE SIGN TO THE SIDEWALK SURFACE.

ALTERNATE SIDEWALK WORK BETWEEN LEFT AND RIGHT SIDE OF ROADWAY TO MAINTAIN PEDESTRIAN ACCESS.

1. IF SIDEWALK CLOSURE AFFECTS AN ACCESSIBLE AND DETECTABLE FACILITY, MAINTAIN ACCESSIBILITY AND DETECTABILITY ALONG THE ALTERNATE PEDESTRIAN ROUTE.
2. "ROAD WORK AHEAD" SIGNS ARE NOT REQUIRED IF THE SIDEWALK CLOSURE OCCURS WITHIN A LARGER WORK ZONE WHERE ADVANCE WARNING SIGNS ARE ALREADY PRESENT, OR IF THE WORK AREA AND EQUIPMENT ARE MORE THAN 2 FEET BEHIND THE CURB.
3. IF TEMPORARY PEDESTRIAN CROSSWALK IS NOT PROVIDED, OMIT R9-8 AND W011-2 SIGN ASSEMBLIES. IF PROVIDED INCLUDE ON BOTH SIDES OF THE CROSSWALK.
4. TEMPORARY CURB RAMPS. SEE SDD 15 D 30 SHEET "B".
5. DRUMS OR BARRICADES AT 25 FOOT SPACING. STREET PARKING SHALL BE PROHIBITED FOR AT LEAST 50 FEET IN ADVANCE OF THE MID-BLOCK CROSSWALK.
6. TEMPORARY PAVEMENT MARKING FOR CROSSWALK LINES.
7. LIMIT WORK TO ONE QUADRANT AT A TIME TO MINIMIZE PEDESTRIAN DISRUPTION.

### LEGEND

- SIGN ON PERMANENT SUPPORT
- UNDER PEDESTRIAN TRAFFIC
- WORK AREA
- PEDESTRIAN CHANNELIZATION DEVICE
- TYPE II BARRICADE WITH/WITHOUT SIGN (ALL WITH ONE WARNING LIGHT, TYPE A, LOW-INTENSITY FLASHING)
- TYPE III BARRICADE WITH/WITHOUT SIGN (ALL WITH ONE WARNING LIGHT, TYPE A, LOW-INTENSITY FLASHING)
- DIRECTION OF TRAFFIC
- TRAFFIC CONTOL DRUM

**TRAFFIC CONTROL, PEDESTRIAN ACCOMMODATION**

STATE OF WISCONSIN
DEPARTMENT OF TRANSPOI





6



S.D.D. 15 D 30-2a

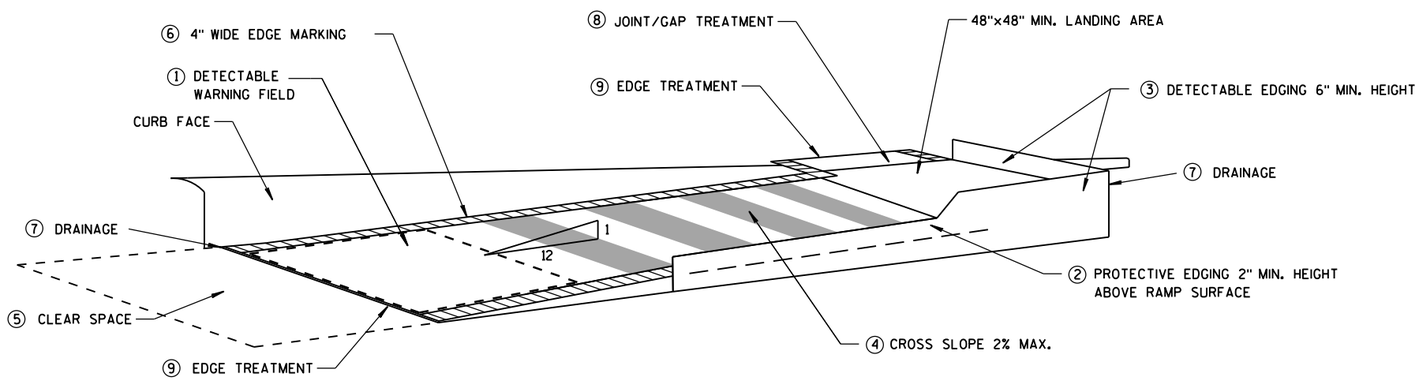


## TEMPORARY CURB RAMP PARALLEL TO CURB

## GENERAL NOTES

NOTIFY THE BUS COMPANY 7 DAYS IN ADVANCE OF THE BUS STOP RELOCATION.

ALTERNATE SIDEWALK WORK BETWEEN LEFT AND RIGHT SIDE OF ROADWAY TO MAINTAIN PEDESTRIAN ACCESS.

① CURB RAMPS SHALL BE 48" MIN. WIDTH WITH A FIRM, STABLE AND SLIP RESISTANT SURFACE. INSTALL CONTRASTING DETECTABLE WARNING FIELD AT PEDESTRIAN STREET CROSSINGS. REFER TO SDD 8D5 SHEET "E".

② PROTECTIVE EDGING WITH A 2" MIN. HEIGHT SHALL BE INSTALLED WHEN A CURB RAMP OR LANDING PLATFORM HAS A VERTICAL DROP OF 6" OR GREATER OR HAS A SIDE APRON SLOPE STEEPER THAN 1:3 (33%). PROTECTIVE EDGING SHOULD BE CONSIDERED WHEN CURB RAMPS OR LANDING PLATFORMS HAVE A VERTICAL DROP OF 3" OR MORE.

③ DETECTABLE EDGING WITH 6" MIN. HEIGHT AND CONTRASTING COLOR SHALL BE INSTALLED ON ALL CURB RAMP LANDINGS WHERE THE WALKWAY CHANGES DIRECTION (TURNS).

④ CURB RAMPS AND LANDINGS SHALL HAVE A 1:50 (2%) MAX. CROSS-SLOPE.

⑤ CLEAR SPACE OF 48"X48" MIN. SHALL BE PROVIDED ABOVE AND BELOW THE CURB RAMP.

⑥ THE CURB RAMP WALKWAY EDGE SHALL BE MARKED WITH A YELLOW COLOR, 4" WIDE MARKING, UNLESS A CONTRASTING DETECTABLE WARNING FIELD IS PROVIDED.

⑦ DO NOT RESTRICT WATER FLOW IN THE GUTTER SYSTEM.

⑧ LATERAL JOINTS OR GAPS BETWEEN SURFACES SHALL BE LESS THAN 1/2" WIDTH.

⑨ CHANGES BETWEEN SURFACE HEIGHTS SHALL NOT EXCEED 1/2". LATERAL EDGES SHALL BE VERTICAL UP TO 1/4" HIGH, AND BEVELED AT 1:2 BETWEEN 1/4" AND 1/2".

⑩ 5' WIDE MIN. WITH PEDSETRIAN SAFETY FENCE, 10' WIDE MIN. WITHOUT PEDESTRIAN SAFETY FENCE.

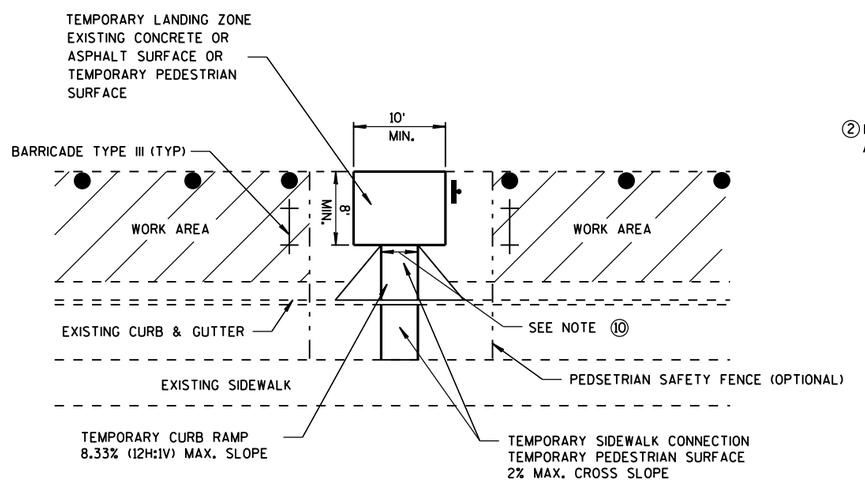


## TEMPORARY BUS STOP PAD

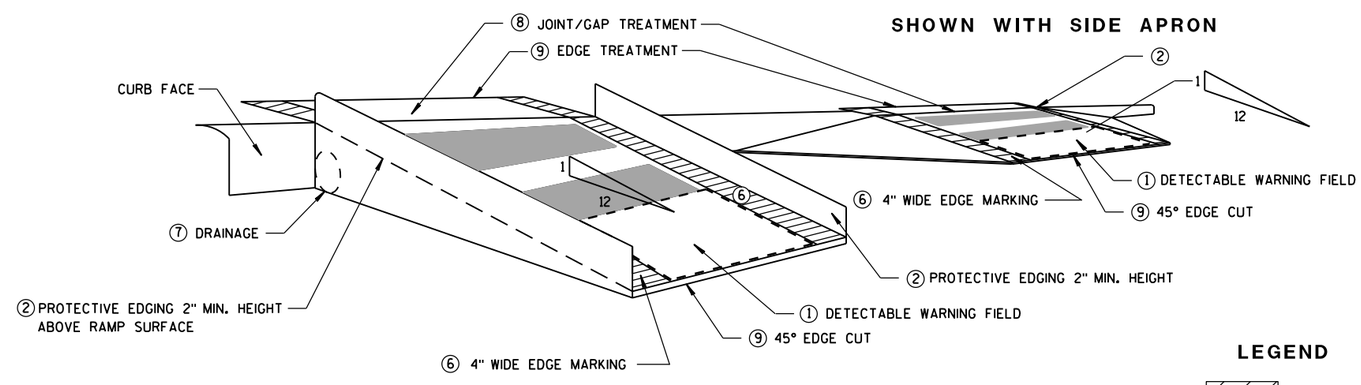


## TEMPORARY CURB RAMP PERPENDICULAR TO CURB

### LEGEND

- WORK AREA
- TYPE III BARRICADE
- TRAFFIC CONTOL DRUM

**TRAFFIC CONTROL, TEMPORARY ADA COMPLIANT PEDESTRIAN ACCOMMODATION**

STATE OF WISCONSIN
DEPARTMENT OF TRANSPORTATION

APPROVED

March 2015 — DATE

/S/ Travis Feltes — STATE TRAFFIC ENGINEER — SIGN

FHWA





6



S.D.D. 15 D 30-2b

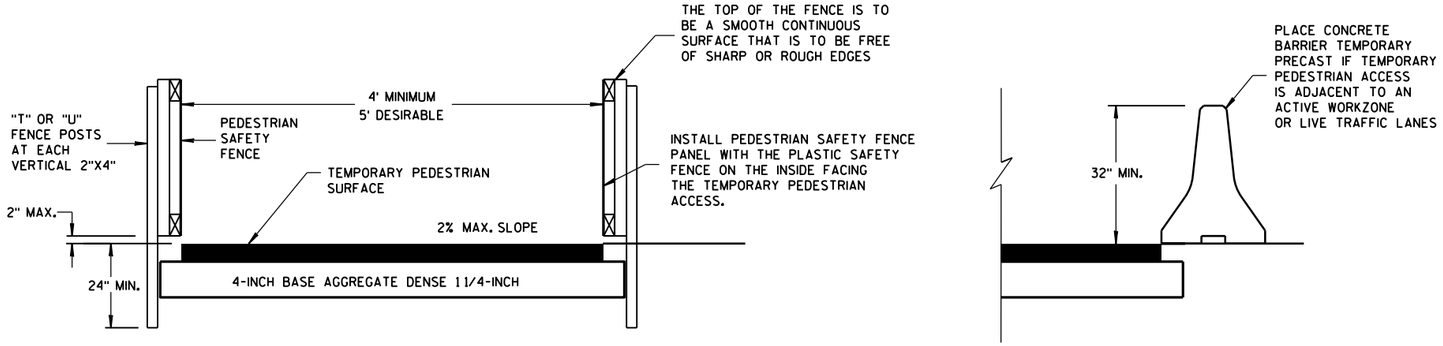


## TEMPORARY PEDESTRIAN ACCESS

## GENERAL NOTES

1. INTERCHANGEABLE WITH THE PEDESTRIAN SAFETY FENCE.

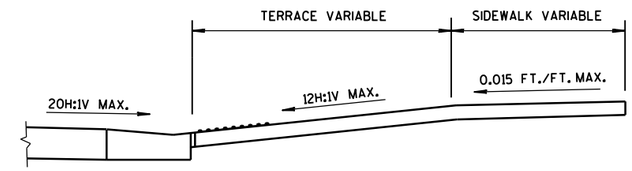


SECTION A-A

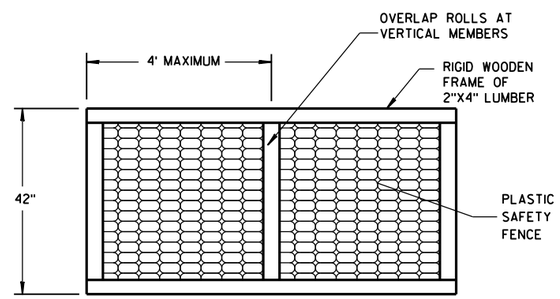


## PEDESTRIAN SAFETY FENCE

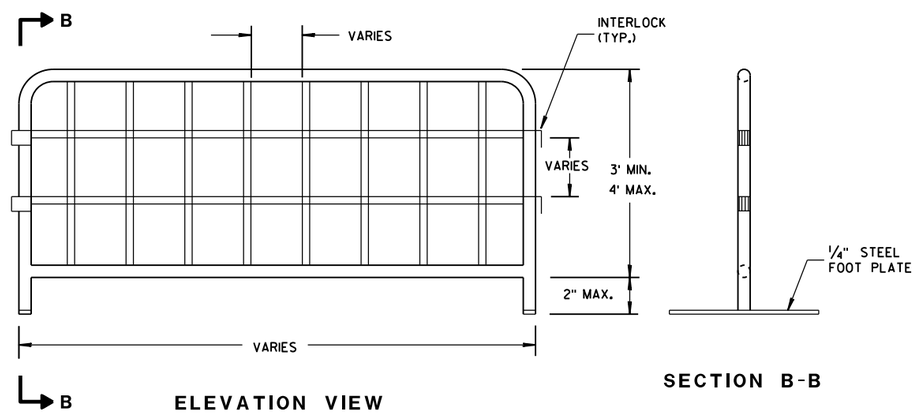


ELEVATION VIEW

SECTION B-B

## TEMPORARY PEDESTRIAN STEEL BARRICADE (1)

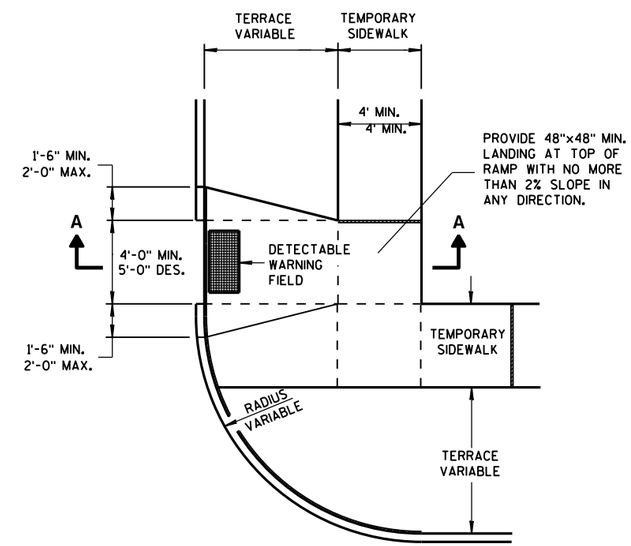


PLAN VIEW

## TEMPORARY TYPE 3 RAMP

(OUTSIDE OF CROSSWALK AREA)

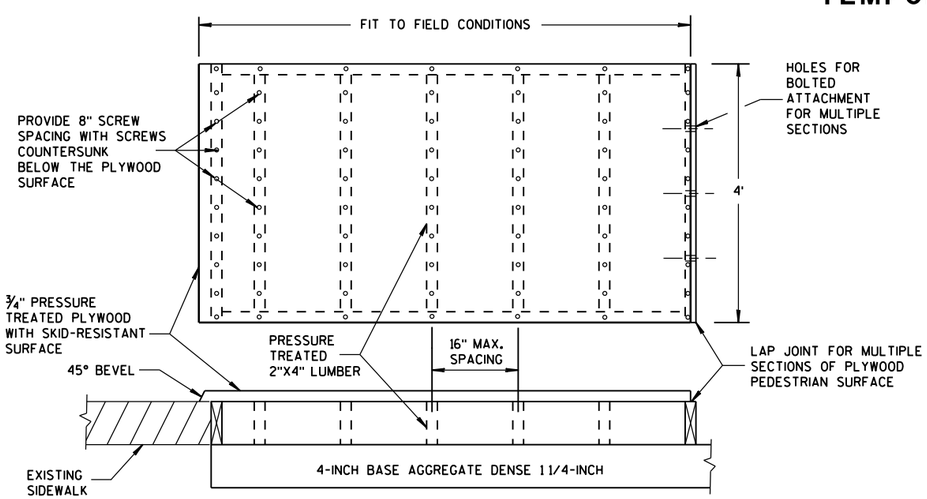


## TEMPORARY PEDESTRIAN SURFACE PLYWOOD

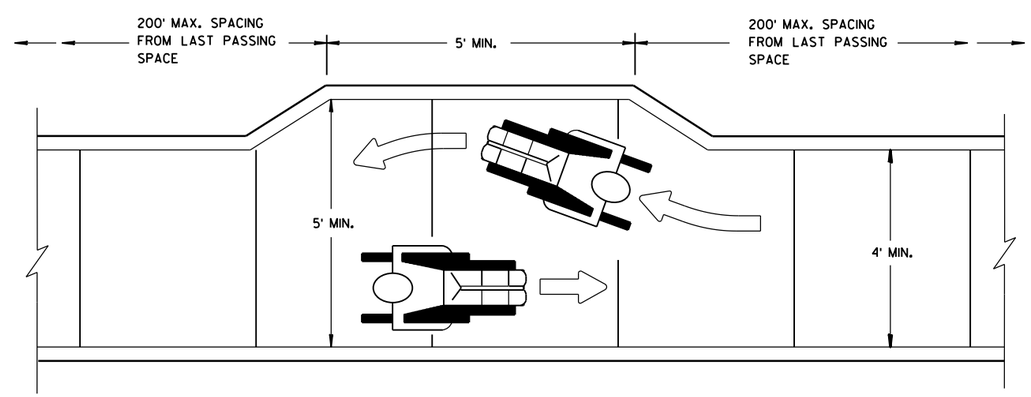


## NARROW SIDEWALK PASSING DETAIL

TRAFFIC CONTROL, PEDESTRIAN ACCOMMODATION

STATE OF WISCONSIN
DEPARTMENT OF TRANSPORTATION

APPROVED
March 2015 — DATE
/S/ Travis Feltes — STATE TRAFFIC ENGINEER — SIGN
FHWA

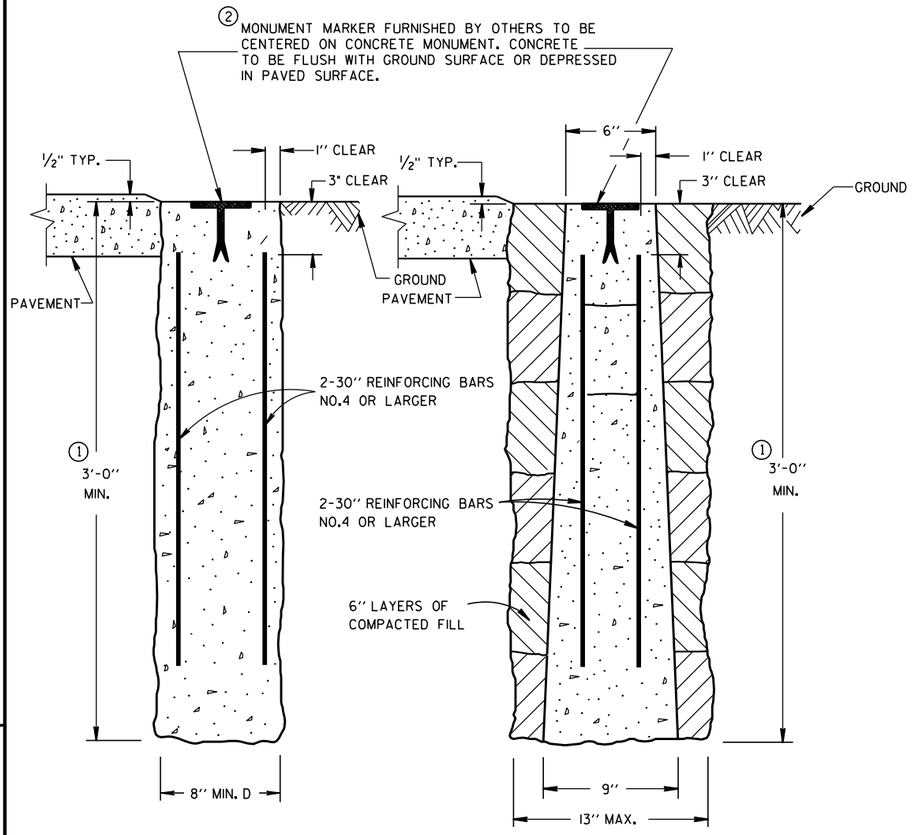


CAST-IN-PLACE PRECAST

CONCRETE MONUMENTS

TYPE A

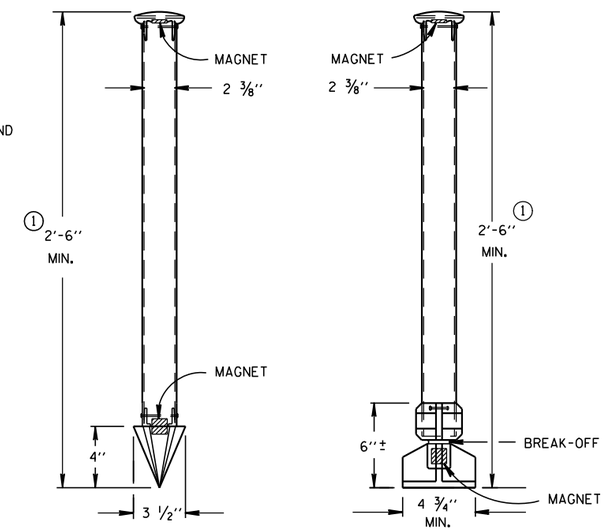


TYPE C TYPE D

DRIVE-IN MONUMENT BREAK-OFF MONUMENT

ALUMINUM MONUMENTS

(INCLUDES MARKER)

## GENERAL NOTES

DETAILS OF CONSTRUCTION, MATERIALS AND WORKMANSHIP NOT SHOWN ON THIS DRAWING SHALL CONFORM TO THE PERTINENT REQUIREMENTS OF THE STANDARD SPECIFICATIONS AND THE APPLICABLE SPECIAL PROVISIONS.

DETAILED DRAWINGS OF PROPOSED ALTERNATE DESIGNS FOR METAL MONUMENTS OR MONUMENT COVERS SHALL BE SUBMITTED TO THE ENGINEER FOR APPROVAL.

INSTALLED METAL MONUMENTS MUST BE EASILY DETECTED WITH A DIP NEEDLE. INSERT PERMANENT MAGNETS SHALL BE ATTACHED NEAR THE TOP AND BOTTOM OF THOSE MONUMENTS CONSTRUCTED OF A METAL ALLOY WHICH IS NOT ATTRACTIVE TO A DIP NEEDLE.

THE CAST IRON MONUMENT COVER SHALL BE A "NON-ROCKING" TYPE. ADJUSTMENT OF THE COVER TO GRADE MAY BE ACCOMPLISHED BY THE USE OF MORTAR AND BRICK, OR BY EITHER PRECAST OR CAST-IN-PLACE REINFORCED CONCRETE GRADE RINGS.

MONUMENTS SHALL BE LOCATED AND PLACED AT THE DIRECTION OF THE ENGINEER.

ALUMINUM MONUMENTS AND MONUMENT COVERS SHALL BE MADE FROM AN ALUMINUM AND MAGNESIUM ALLOY AS DETERMINED BY THE MANUFACTURER.

THE MONUMENT COVERS DETAILED ON THIS DRAWING ARE NOT EQUAL ALTERNATES. MONUMENT COVERS SHALL BE CAST IRON UNLESS ALUMINUM IS SPECIFIED ELSEWHERE IN THE CONTRACT.

MONUMENT SHALL BE CAST-IN-PLACE CONCRETE UNLESS PRECAST CONCRETE OR ALUMINUM MONUMENTS ARE SPECIFIED IN THE CONTRACT OR PERMITTED BY THE ENGINEER.

① MINIMUM LENGTH SHALL BE 4'-0" FOR MONUMENTS INSTALLED IN PAVED AREAS.

② AN OFFICIAL COUNTY MONUMENT MARKER SUPPLIED BY A COUNTY MAY BE REQUIRED FOR SOME SECTION CORNERS AND WITNESS MONUMENTS INSTEAD OF THIS WIS DOT MARKER.

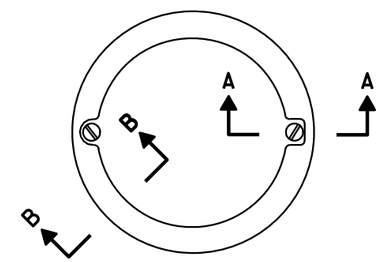


TOP VIEW

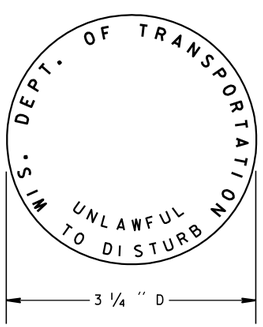


② WIS DOT MONUMENT MARKER LOGO

FOR TYPES "A", "C" & "D"

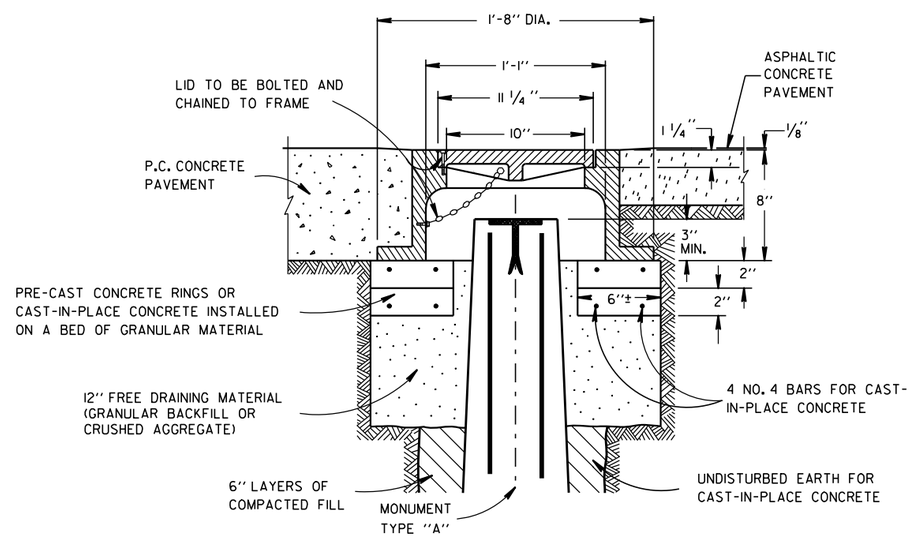


CAST IRON MONUMENT COVER

(APPROXIMATE WEIGHT - 95 LBS.)

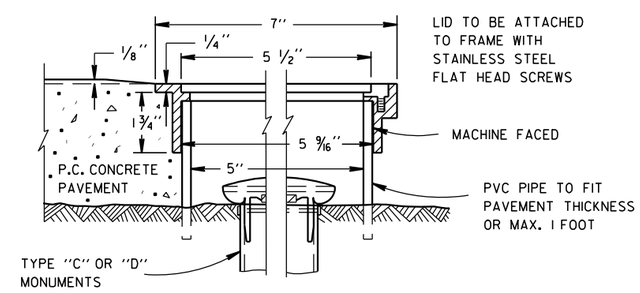


SECTION B-B SECTION A-A

ALUMINUM MONUMENT COVER

(APPROXIMATE WEIGHT 2 LBS)

(FOR CONCRETE PAVEMENT ONLY)

**LANDMARK REFERENCE MOUNMENTS AND COVERS**

STATE OF WISCONSIN
DEPARTMENT OF TRANSPORTATION

APPROVED

9/22/1999 /S/ Rory L. Rhinesmith

DATE CHIEF ROADWAY DEVELOPMENT ENGINEER

FHWA

408

6

6

S.D.D. 16 A 1-6

S.D.D. 16 A 1-6

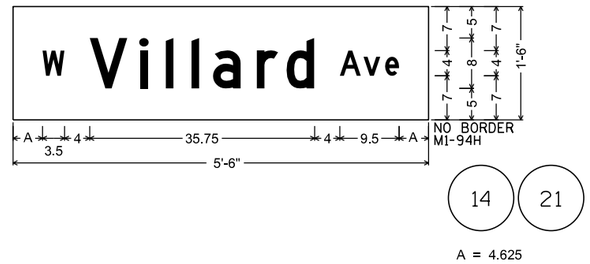


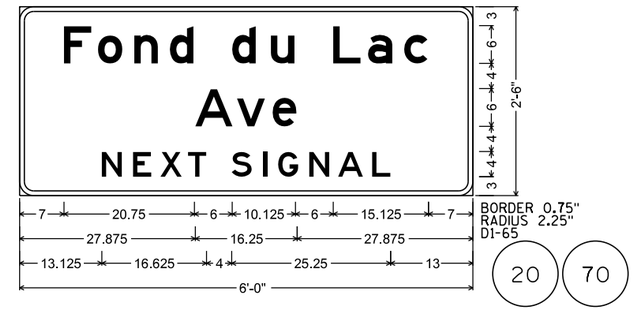


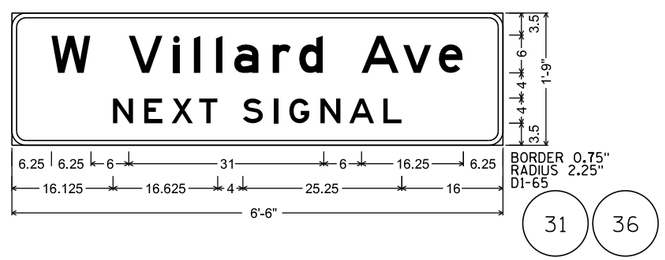


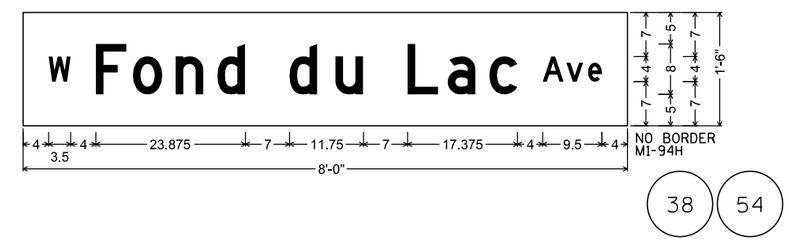


## GENERAL NOTES:

1. DETAILS OF CONSTRUCTION, MATERIALS, AND WORKMANSHIP NOT SHOWN ON THIS DRAWING SHALL CONFORM TO THE PERTINENT REQUIREMENTS OF THE STANDARD SPECIFICATIONS, THE SPECIAL PROVISIONS, AND THE PLANS.
2. UNLESS OTHERWISE NOTED, ALL SIGNS SHOWN ON THIS SHEET ARE "SIGNS, TYPE II".
3. UNLESS OTHERWISE NOTED, TYPE II SIGNS ON THIS SHEET SHALL HAVE "TYPE H REFLECTIVE SHEETING" AND, "TYPE H MESSAGE MATERIAL". TYPE I SIGNS SHALL HAVE TYPE SH REFLECTIVE SHEETING.
4. UNLESS OTHERWISE NOTED, ALL SIGNS SHOWN ON THIS SHEET SHALL HAVE A GREEN BACKGROUND AND WHITE MESSAGE.
5. TYPE II SIGNS ALL UPPER CASE MESSAGE (EXCEPT ON SHIELDS OR WHERE OTHERWISE NOTED) SHALL BE "SERIES E. ALL LOWER CASE MESSAGE WITH AN INITIAL UPPER CASE LETTER SHALL BE "SERIES E.
6. TYPE I SIGNS - ALL UPPER CASE MESSAGE (EXCEPT ON SHIELDS OR WHERE OTHERWISE NOTED) SHALL BE SERIES "E" MODIFIED. ALL LOWER CASE MESSAGE WITH AN INITIAL UPPER CASE LETTER SHALL BE SERIES "E" MODIFIED. ALL CAP WORDS ARE "SERIES E"
7. UNLESS OTHERWISE NOTED, ALL SIGNS SHOWN ON THIS SHEET SHALL HAVE "TYPE A" OR "TYPE C" ARROWS AS SHOWN. SEE THE STANDARD SIGN PLATES FOR FURTHER DETAILS.
8. SEE THE STANDARD SIGN PLATES FOR FURTHER DETAILS ON ROUTE MARKER SHIELDS.
9. THE SIGN NUMBER IS DENOTED IN THE CIRCLE NEAR EACH DETAIL.
10. NUMBER FRACTIONS FOR INTERCHANGE SEQUENCE SIGNS SHALL BE SERIES "E" PER PLATES A11-7 AND A11-10
11. DO NOT SCALE.

7

7

SHEET 1 OF 2

| PROJECT NO:2140-13-70 | HWY:STH 181 | COUNTY:MILWAUKEE | SIGNING DETAIL - TYPE II SIGNS | SCALE: 0 1/2" 1" | SHEET | E |
|---|---|---|---|---|---|---|

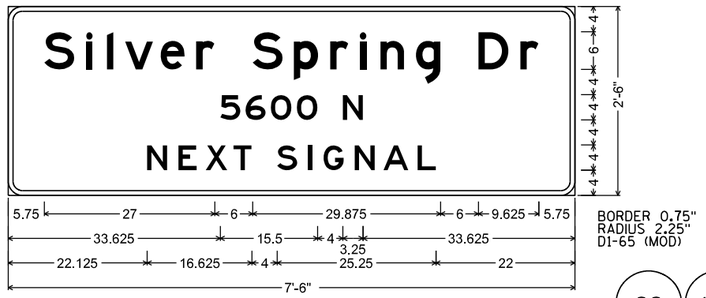


88 182

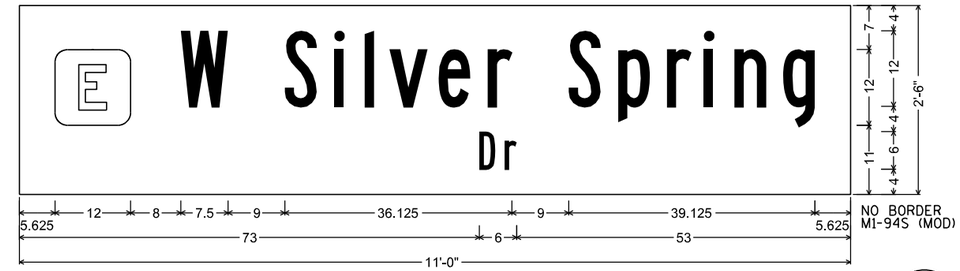


131 132

## GENERAL NOTES:

1. DETAILS OF CONSTRUCTION, MATERIALS, AND WORKMANSHIP NOT SHOWN ON THIS DRAWING SHALL CONFORM TO THE PERTINENT REQUIREMENTS OF THE STANDARD SPECIFICATIONS, THE SPECIAL PROVISIONS, AND THE PLANS.
2. UNLESS OTHERWISE NOTED, ALL SIGNS SHOWN ON THIS SHEET ARE "SIGNS, TYPE II".
3. UNLESS OTHERWISE NOTED, TYPE II SIGNS ON THIS SHEET SHALL HAVE "TYPE H REFLECTIVE SHEETING" AND, "TYPE H MESSAGE MATERIAL". TYPE I SIGNS SHALL HAVE TYPE SH REFLECTIVE SHEETING.
4. UNLESS OTHERWISE NOTED, ALL SIGNS SHOWN ON THIS SHEET SHALL HAVE A GREEN BACKGROUND AND WHITE MESSAGE.
5. TYPE II SIGNS ALL UPPER CASE MESSAGE (EXCEPT ON SHIELDS OR WHERE OTHERWISE NOTED) SHALL BE "SERIES E. ALL LOWER CASE MESSAGE WITH AN INITIAL UPPER CASE LETTER SHALL BE "SERIES E.
6. TYPE I SIGNS - ALL UPPER CASE MESSAGE (EXCEPT ON SHIELDS OR WHERE OTHERWISE NOTED) SHALL BE SERIES "E" MODIFIED. ALL LOWER CASE MESSAGE WITH AN INITIAL UPPER CASE LETTER SHALL BE SERIES "E" MODIFIED. ALL CAP WORDS ARE "SERIES E"
7. UNLESS OTHERWISE NOTED, ALL SIGNS SHOWN ON THIS SHEET SHALL HAVE "TYPE A" OR "TYPE C" ARROWS AS SHOWN. SEE THE STANDARD SIGN PLATES FOR FURTHER DETAILS.
8. SEE THE STANDARD SIGN PLATES FOR FURTHER DETAILS ON ROUTE MARKER SHIELDS.
9. THE SIGN NUMBER IS DENOTED IN THE CIRCLE NEAR EACH DETAIL.
10. NUMBER FRACTIONS FOR INTERCHANGE SEQUENCE SIGNS SHALL BE SERIES "E" PER PLATES A11-7 AND A11-10
11. DO NOT SCALE.

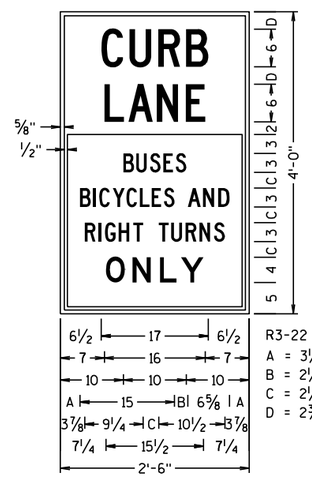


TYPE II

MESSAGE SERIES:
LINES 1,2,3,4 & 5 SERIES C
BOTTOM LINE IS SERIES E

TOP LEGEND IS WHITE
TYPE H SHEETING
WITH BLACK BACKGROUND.
BOTTOM LEGEND IS BLACK
TYPE H SHEETING
WITH WHITE BACKGROUND

160 185 192 203 207 215 260

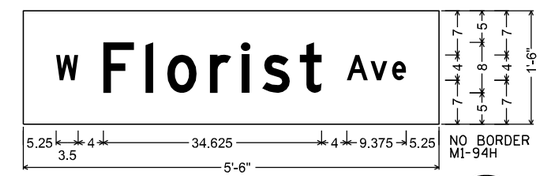


225 227

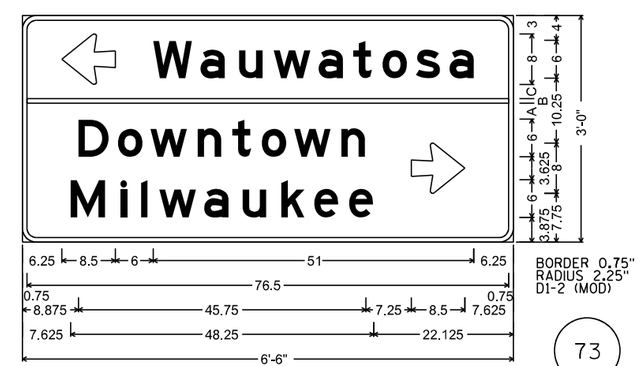


73

SHEET 2 OF 2

| PROJECT NO: 2140-13-70 | HWY: STH 181 | COUNTY: MILWAUKEE | SIGNING DETAIL - TYPE II SIGNS | SCALE: 0 1/2" 1" | SHEET 410 | E |
|---|---|---|---|---|---|---|

FILE NAME : J:\projects\D2_214013181\70\SIGN\070101_ms.dgn PLOT DATE : 22-MAR-2016 13:52 PLOT BY : MSCBXD PLOT NAME : PLOT SCALE : 48.125:1

WISDOT/CADDS SHEET 47

## TYPICAL ASSEMBLIES

J1-1

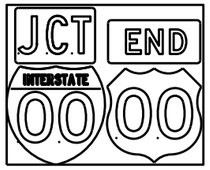

J1-2

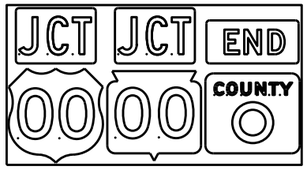

J1-3

J2-1

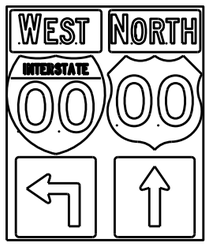

J2-2

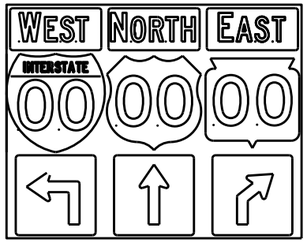

J2-3

JV

( Typical Vertical J-Assembly
See Note 10 and 11 )

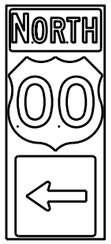

J3-1

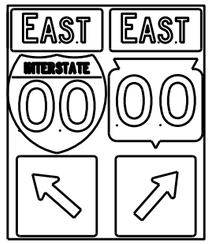

J3-2

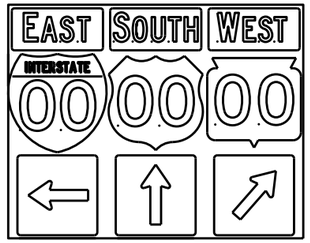

J3-3

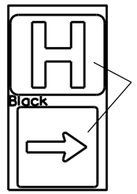

Blue Background

JH-1

J4-1

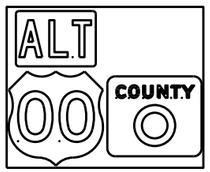

J4-2

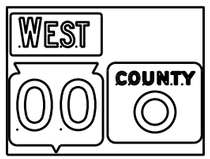

J4-2

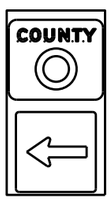

J13-1

J12-1

J32-1

J33-1

J23-1

J22-1

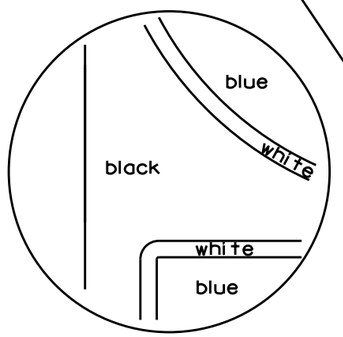


[blue background with interstate]

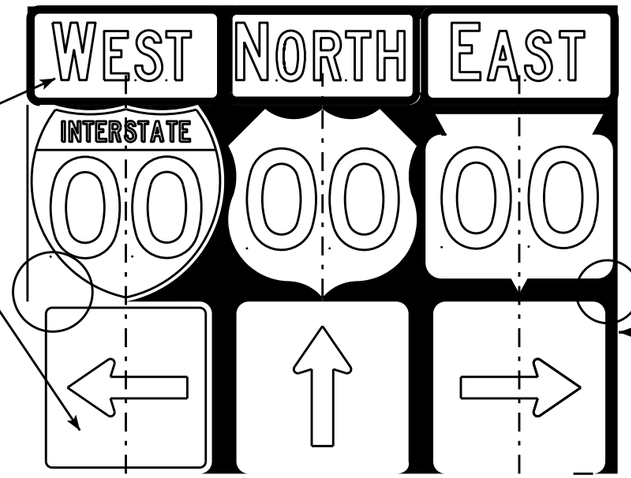


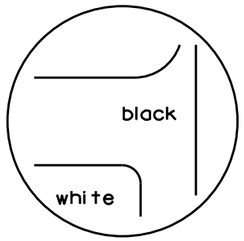


[black background]

NOTES

1. Signs are Type II - Type H Reflective - reference WIS DOT Standard Specification for HIGHWAY and STRUCTURE CONSTRUCTION latest edition.
2. Color:
   Background - Black Non-reflective
   Message - see Note 5
3. Message Series - See Note 5
4. Corners shall be square or rounded if base material is plywood. If base material is metal the corners shall be rounded.
5. The colors and message spacing on each marker shall be according to the applicable route marker panel specifications.
6. Certain marker heads require the component pieces to be the same color. As an example, all the components used with an M1-1 Interstate marker shall be blue.
7. Single panel j-assemblies shall only be used with route marker shields that are same size. If the route marker shields are different size use multiple piece component.
8. Route assemblies that have 24 inch route shields and have dimensions greater than 48 inches (both vertical and horizontal) shall have one horizontal splice between the arrows and route shields. Vertical splices shall not be used on route assemblies with a horizontal dimension of 144 inches or less. The contractor shall not use more than one vertical joint per sign and the joint shall be between route shields.
9. Route assemblies that have 36 inch shields and have dimensions greater than 48 inchs (both vertical and horizontal) shall have two horizontal splices. One horizontal splice shall be between the cardinal direction and route shields and the other horizontal splice shall be between the arrows and route shields. Vertical splices shall not be used on route assemblies with a horizontal dimension of 144 or less. The contractor shall not use more than one vertical joint per sign and the joint shall be between route shields.
10. All Vertical J Assemblies are given a Sign Code of JV
11. For JV Assemblies that have a mixture of Interstate and non Interstate shields, arrows and cardinals shall be white on blue.

ROUTE MARKERS & COMPONENTS IN TYPICAL ASSEMBLIES

WISCONSIN DEPT OF TRANSPORTATION

APPROVED Matthew R Rauch
for State Traffic Engineer

DATE 2/06/14 PLATE A2-1S.8

PROJECT NO: | SHEET NO: E

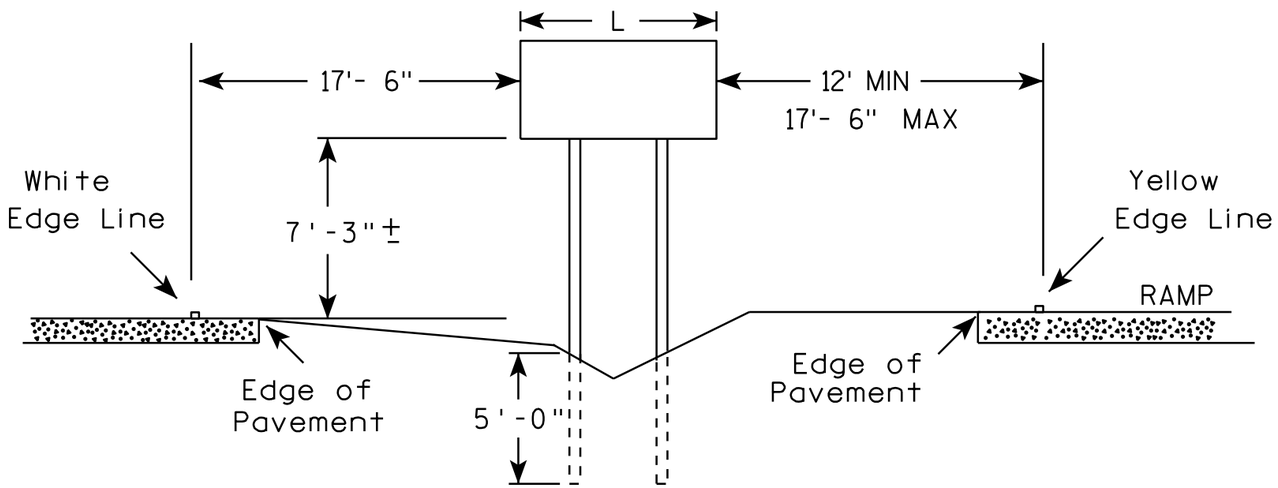


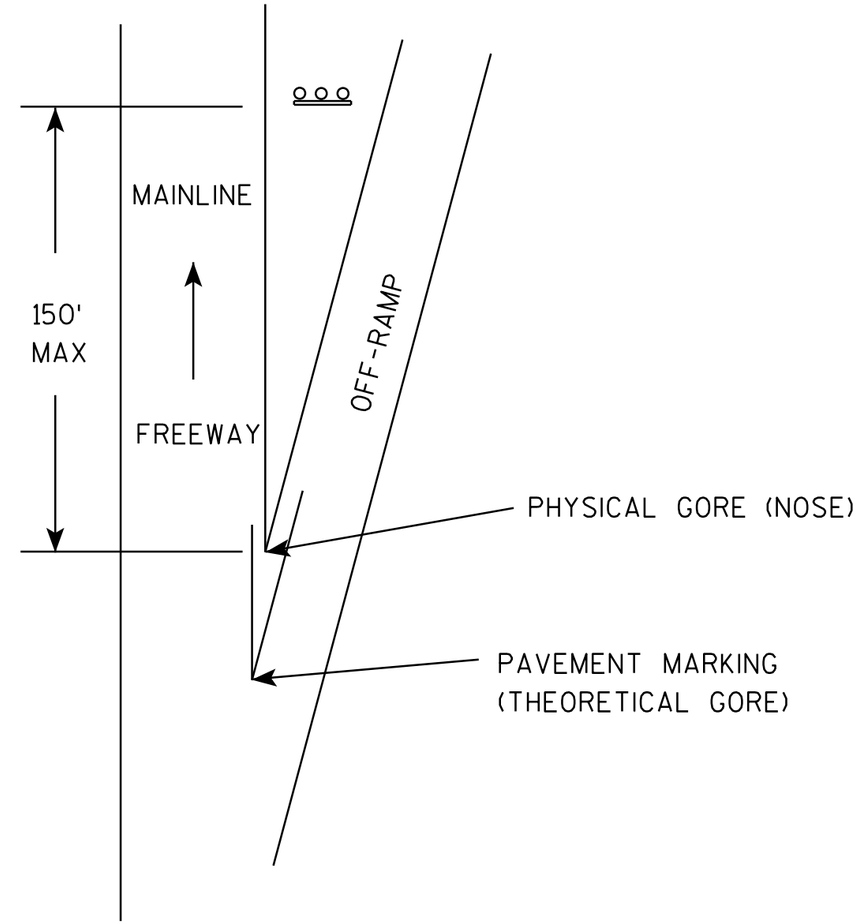


## GENERAL NOTES

1. The 150 foot distance from the physical gore (where pavement ends) will normally provide the offsets as shown.
2. If roadway geometrics permit, the sign may be closer than the 150 foot distance as long as the offsets are maintained.
3. At no time shall the location be greater than 150 feet. If the normal offsets cannot be maintained, they can be reduced to 6 feet from the edge of the paved shoulder (both freeway and ramp).
4. The offset from edge of sign to the yellow edge line on the ramp is shown as a minimum of 12 feet and a maximum of 17 feet, 6 inches. Preference is adhering to the maximum rather than the minimum dimension.
5. When L is equal to or exceeds 10 feet, use 3 posts as per A4-4.
6. The (∓) tolerance for the mounting height is 3 inches.

TYPICAL INSTALLATION OF TYPE II SIGNS ON WOOD POSTS IN GORE

WISCONSIN DEPT OF TRANSPORTATION

APPROVED Matthew R Rauch
for State Traffic Engineer

DATE 2/06/14 PLATE A4-2.3

PROJECT NO: | SHEET NO: E

## URBAN AREA

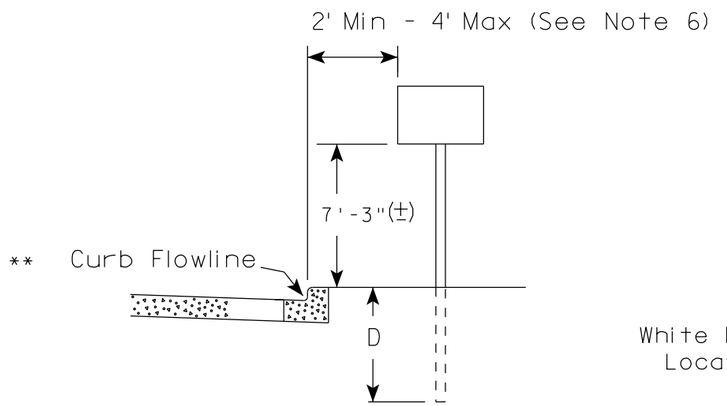


## RURAL AREA (See Note 2)

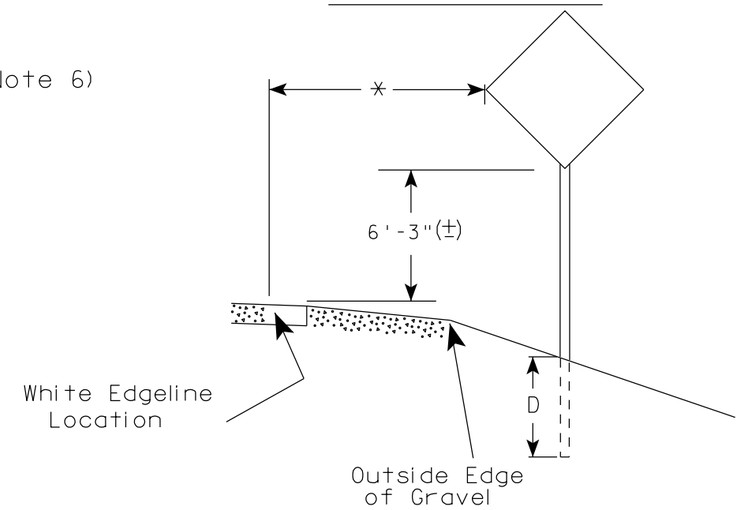


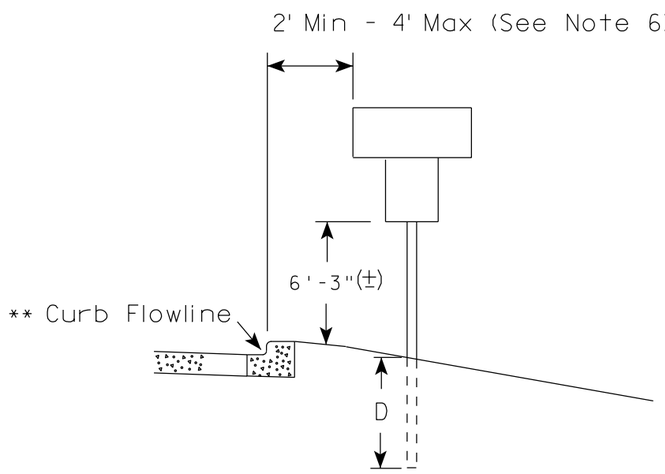


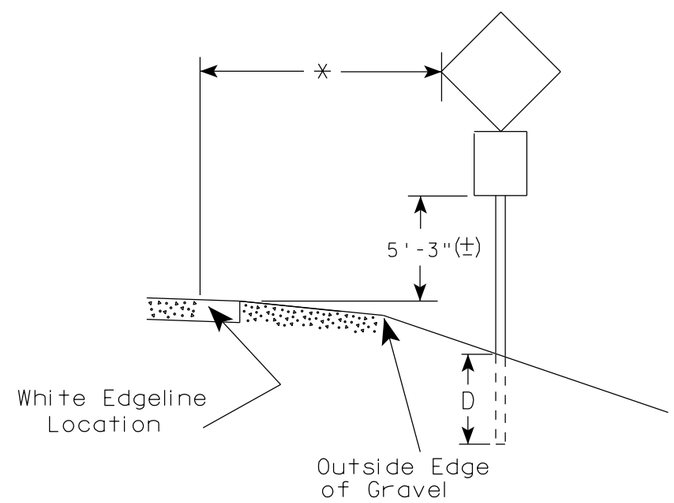


** The existence of curb and gutter does not in itself mandate the vertical clearance illustrated. That height is typically measured where there is sidewalk adjacent to the roadway or parking is permitted. In the absence of sidewalk vertical clearance is measured from the top of the curb. Offset of signs is measured from the flow line.

* 6 feet from edge of a paved shoulder or 12 feet from the edge of pavement (edge line location) or 2 feet from outside edge of gravel, whichever is greater unless directed by project engineer.

### GENERAL NOTES

1. Signs wider than 4 feet or 20 sq.ft or larger, shall be mounted on multiple posts. Refer to plate A4-4.
2. If signs are mounted on barrier wall, see A4-10 sign plate.
3. For expressways and freeways, mounting height is 7'- 3" (±) or 6'-3" (±) depending upon existence of a sub-sign.
4. Minimum mounting height for J assemblies (A2-1S) is 7'-3" (±) or 6'-3" (±) per urban or rural detail respectively.
5. Minimum mounting height for signs mounted on traffic signal poles is 5'- 3" (±).
6. Offset distance shall be consistent with existing signs or consistent throughout length of project.
7. The (±) tolerance for mounting height is 3 inches.
8. Folding signs shall be mounted at a height of 5'-3" (±) or as directd by the Engineer.
9. The Double Arrow sign (W12-1) shall be mounted at a height of 2'-3" (±). The Chevron sign (W1-8), Roundabout Chevron panel (R6-4B), Enhanced Reference Markers, Clearance Markers (W5-52), Mile Markers (D10 series), In Road Object Markers (W5-54) & End of Road Markers (W5-56) shall be mounted at a height of 4'-3" (±).

### POST EMBEDMENT DEPTH

| Area of Sign Installation ( Sq. Ft. ) | D ( Min ) |
|---|---|
| 20 or Less | 4' |
| Greater than 20 | 5' |

TYPICAL INSTALLATION OF PERMANENT TYPE II SIGNS ON SINGLE POSTS

WISCONSIN DEPT OF TRANSPORTATION

APPROVED Matthew R Rauch for State Traffic Engineer

DATE 7/23/15 PLATE NO. A4-3.20



| PROJECT NO: | HWY: | COUNTY: | | SHEET NO: | E |
|---|---|---|---|---|---|

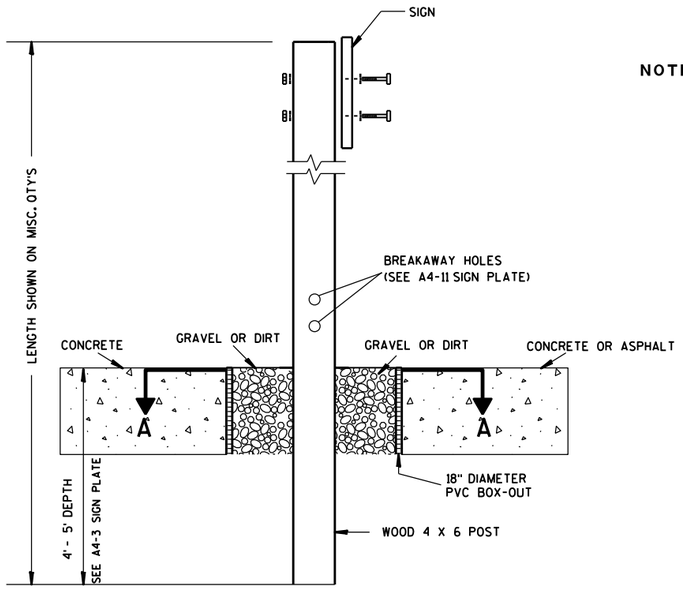


**ELEVATION VIEW**

**DETAIL OF WOOD 4 X 6 SIGN POST IN BOX-OUT**

NOTES:
1. ALL MATERIAL TO BE APPROVED BY ENGINEER PRIOR TO INSTALLATION
2. SEE SIGN PLATE A4-8 FOR SIGN HARDWARE REQUIREMENTS
3. 18 INCH X 18 INCH SQUARE BOX-OUTS MAY BE USED FOR INSTALLATIONS IN EXISTING CONCRETE OR ASPHALT LOCATIONS.

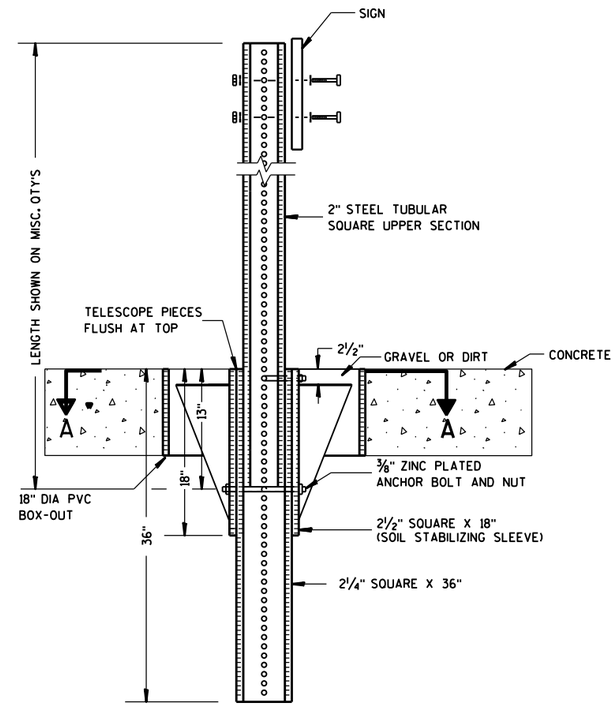


**ELEVATION VIEW**

**DETAIL OF STEEL 2 X 2 SIGN POST IN BOX-OUT**

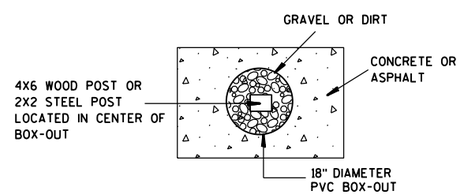


**PLAN VIEW**

**FOR NEW CONCRETE/ASPHALT INSTALLATIONS**

SIGN POST
BOX-OUTS
A4-3B

WISCONSIN DEPT OF TRANSPORTATION

APPROVED Matthew R Rauch
for State Traffic Engineer

DATE 1/27/14 PLATE NO. A4-3B.1

| PROJECT NO: | HWY: | COUNTY: | | SHEET NO: | E |
|---|---|---|---|---|---|

## URBAN AREA

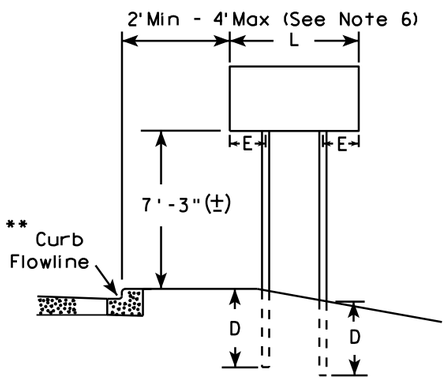


## RURAL AREA (See Note 3)

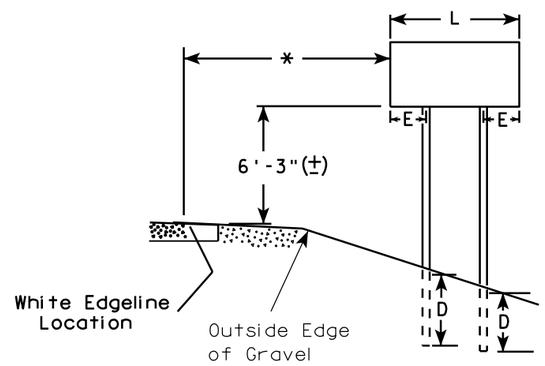


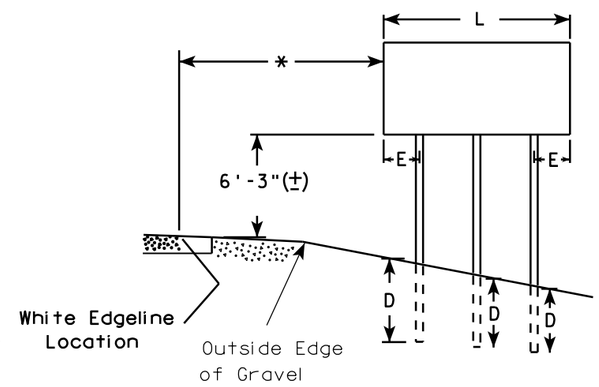


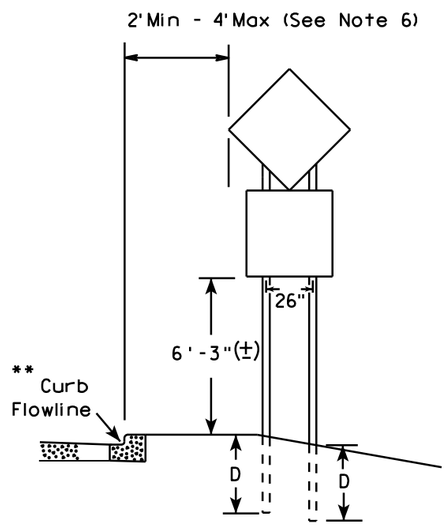


48" DIAMOND WARNING SIGN

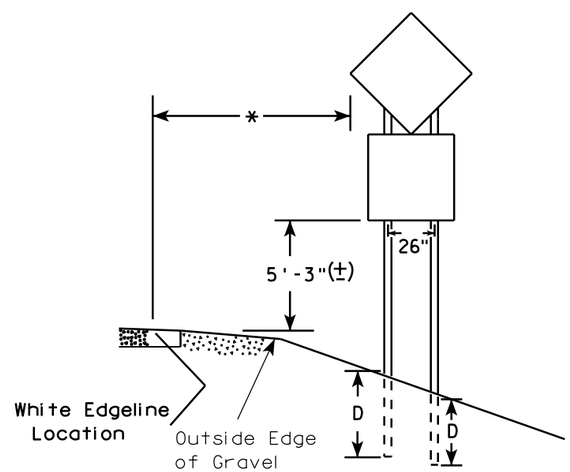


48" DIAMOND WARNING SIGN

### GENERAL NOTES

1. For 3 or 4 post installations, individual post spacing shall be greater than 3'-6".
2. See tables below for required number of posts.
3. For expressways and freeways, mounting height is 7'-3" (±) or 6'-3" (±) depending upon existence of sub-sign.
4. The (±) tolerance for mounting height is 3 inches.
5. Minimum mounting height for J assemblies (A2-1S) is 7'-3" (±) or 6'-3" (±) per urban or rural detail respectively.
6. Offset distance shall be consistent with existing signs or consistent throughout length of project.
7. Folding signs shall be mounted at a height of 5'-3" (±) or as directed by the engineer.
8. The Double Arrow sign (W12-1) shall be mounted at a height of 2'-3" (±). The Chevron sign (W1-8), Roundabout Chevron panel (R6-4B), Clearance Markers (W5-52), Mile Markers (D10 series), In Road Object Markers (W5-54) & End of Road Markers (W5-56) shall be mounted at a height of 4"-3" (±).

* 6 feet from edge of a paved shoulder or 12 feet from the edge of pavement (edge line location) or 2 feet from outside edge of gravel, whichever is greater unless directed by project engineer.

** The existence of curb and gutter does not in itself mandate the vertical clearance illustrated. That height is typically measured where there is sidewalk adjacent to the roadway or parking is permitted. In the absence of sidewalk vertical clearance is measured from the top of the curb. Offset of signs is measured from the flow line.

*** See A4-3 sign plate for signs 4' or less in width and less than 20 S.F. in area.

| SIGN SHAPE OTHER THAN DIAMOND (TWO POSTS REQUIRED) | |
|---|---|
| L | E |
| *** Greater than 48" Less than 60" | 12" |
| 60" to 120" | L/5 |

| SIGN SHAPE OTHER THAN DIAMOND (THREE POSTS REQUIRED) | |
|---|---|
| L | E |
| Greater than 120" less than 168" | 12" |

| SIGN SHAPE OTHER THAN DIAMOND (FOUR POSTS REQUIRED) | |
|---|---|
| L | E |
| 168" and greater | 12" |

### POST EMBEDMENT DEPTH

| Area of Sign Installation ( Sq. Ft. ) | D ( Min ) |
|---|---|
| 20 or Less | 4' |
| Greater than 20 | 5' |

TYPICAL INSTALLATION OF TYPE II SIGNS ON MULTIPLE POSTS

WISCONSIN DEPT OF TRANSPORTATION

APPROVED Matthew R Rauch
for State Traffic Engineer

DATE 7/23/15 PLATE NO. A4-4 14
415

| PROJECT NO: | HWY: | COUNTY: | | SHEET NO: | E |
|---|---|---|---|---|---|

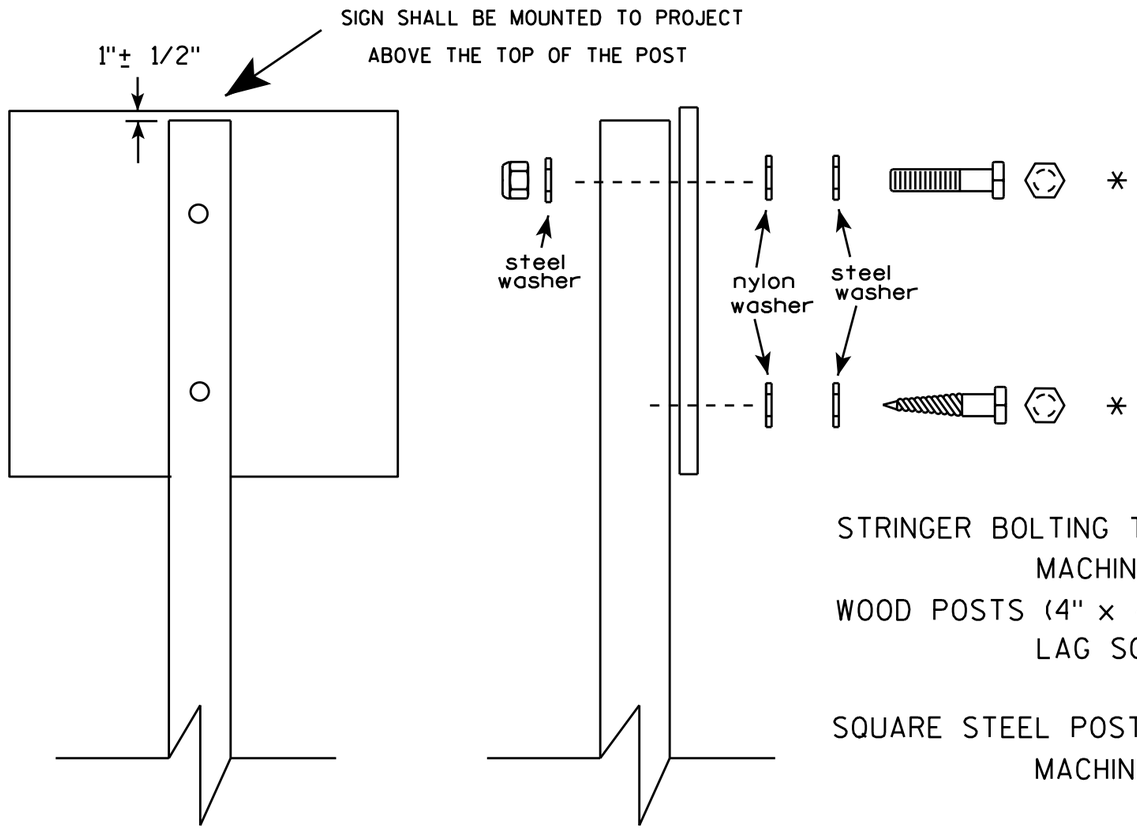


Nuts, bolts and lags used for mounting signs shall have hexagonal heads and shall be either :

a. Hot dip galvanized in accordance with ASTM Designation: A 153, Class D, or SC 3

b. Electro-galvanized in accordance with ASTM Designation : B 633, TYPE III, SC 3.

Threads on bolts and nuts shall be manufactured with sufficient allowance for the cadmium plate or galvanized coating to permit the nuts to run freely on the bolts.

STRINGER BOLTING TO ALUMINUM SIGNS (SEE SIGN PLATE A4-18)

MACHINE BOLTS - 5/16" X 1-3/4" Length w/ nuts

WOOD POSTS (4" x 4" or 4" x 6")

LAG SCREWS - 3/8" X 3" (NO STRINGERS ON BACK OF SIGN)

3/8" X 4" (STRINGERS ON BACK OF SIGN)

SQUARE STEEL POSTS (2" x 2")

MACHINE BOLTS - 3/8" X 3-1/4" Length w/ nuts (NO STRINGER ON BACK OF SIGN)

3/8" X 5" Length w/ nuts (STRINGERS ON BACK OF SIGN)

RIVETS - 9/32 " (6605-9-6) BULB-TITE, TRI-FOLD, ALUMINUM BODY/MANDREL

O.D. FLANGE .720-.765 INCH, GRIP RANGE .042-.375 INCH

WASHERS (ALL POSTS) -

1-1/4" O.D. X 3/8" I.D. X 1/16" STEEL

1-1/4" O.D. X 3/8" I.D. X .080 NYLON

* Two different fastening systems are shown for illustration purposes. On any individual sign, either one or the other system shall be used. Actual number of fasteners per sign varies with the sign area, but normally there are two. For a single post installation, all signs greater than 9 sq. ft. require the use of 3 fasteners.

ATTACHMENT OF SIGNS TO POSTS

WISCONSIN DEPT OF TRANSPORTATION

APPROVED Matthew R Rauch
for State Traffic Engineer

DATE 4/27/16 PLATE NO. A4-8.8



PROJECT NO: SHEET NO: E

## TELESCOPIC TUBING ANCHORS
## TWO PIECE SYSTEM

**2 1/4" SQUARE**
**12 GAUGE**
**PERFORATED**
**GALVANIZED FINISH**

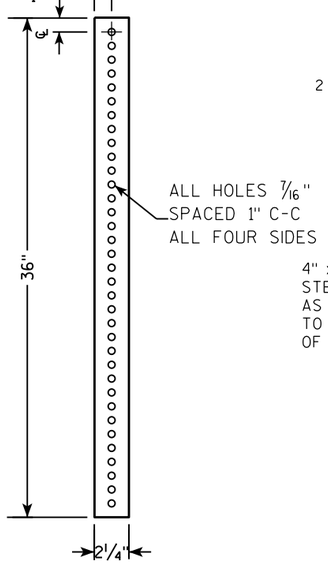


**2 1/2" SQUARE**
**12 GAUGE**
**OMNI-DIRECTIONAL**
**PERFORATED**
**SOIL STABILIZING SLEEVE**
**GALVANIZED FINISH**

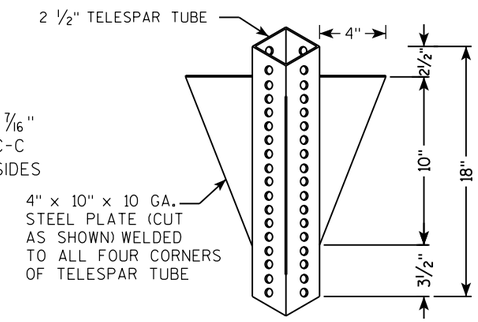


## DETAIL OF TUBULAR STEEL SIGN POST
**(IN POURED CONCRETE OR ASPHALT)**

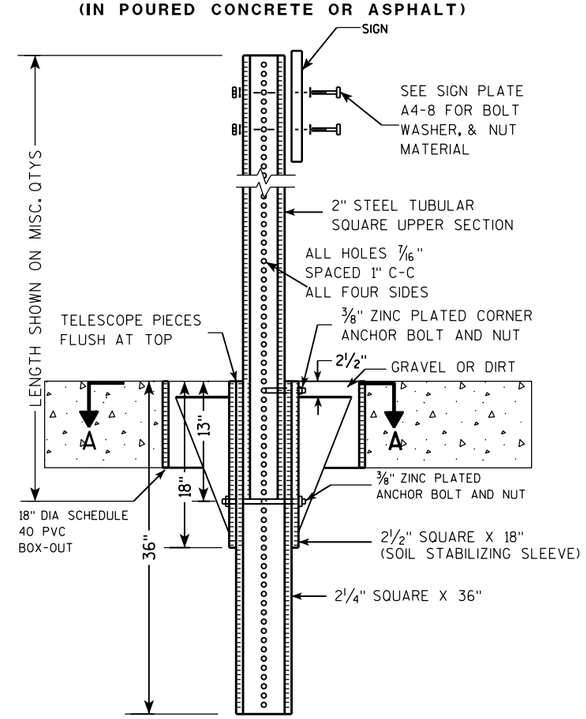


## DETAIL OF TUBULAR STEEL SIGN POST
**(IN LOCATIONS OTHER THAN POURED CONCRETE OR ASPHALT)**

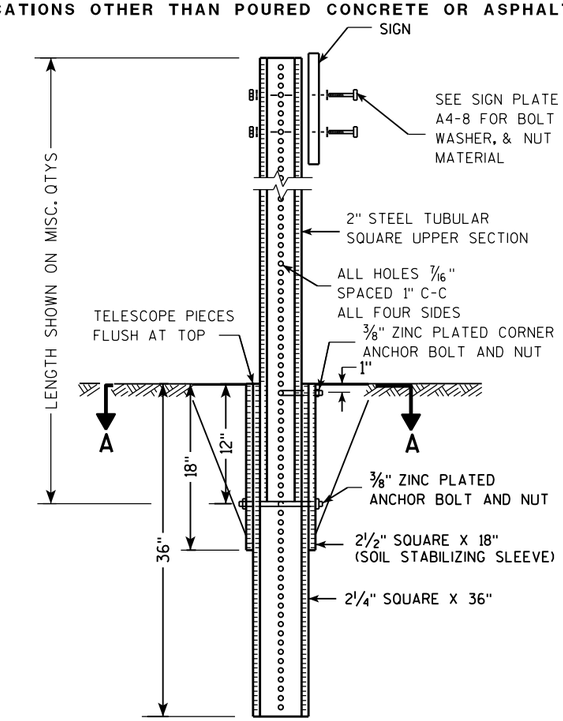


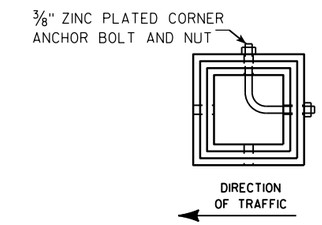


**SECTION A-A**

| Area of Sign Installation (Sq. Ft.) | Number of Required Posts |
|---|---|
| 9 or less | 1 |
| Greater than 9 less than or equal to 18 | 2 |
| Greater than 18 less than or equal to 27 | 3 |

**Signs wider than 3 feet or larger than 9 sq. ft shall be mounted on multiple posts (see above table).**

TUBULAR STEEL
SIGN POST
A4-9

*WISCONSIN DEPT OF TRANSPORTATION*

APPROVED Matthew R Rauch
*for* State Traffic Engineer

DATE 2/05/15 PLATE A4-9.9

7 7

| PROJECT NO: | HWY: | COUNTY: | | SHEET NO: | E |
|---|---|---|---|---|---|

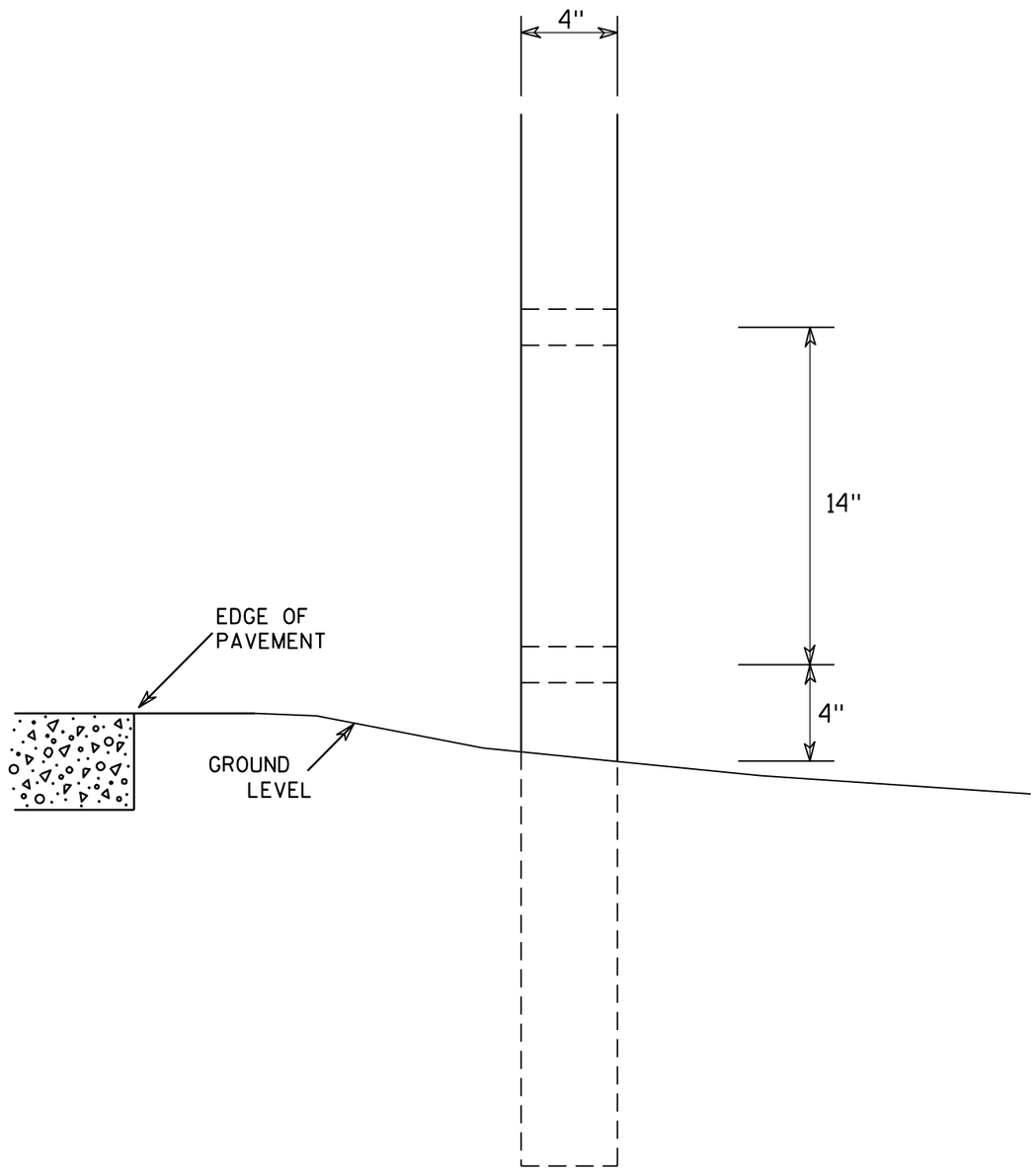


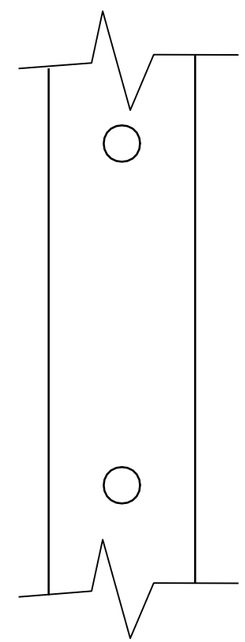

SIDE VIEW

GENERAL NOTES

1. All 4 x 6 Wood Posts shall be modified by having two 1½" diameter holes drilled perpendicular to the roadway centerline.

# 4 X 6 WOOD POST MODIFICATIONS

WISCONSIN DEPT OF TRANSPORTATION

APPROVED Chester J Spang for State Traffic Engineer

DATE 3/27/97 PLATE NO. A4-11.2

| PROJECT NO: | HWY: | COUNTY: | | SHEET NO: 418 | E |
|---|---|---|---|---|---|

# BANDING

SINGLE SIGN

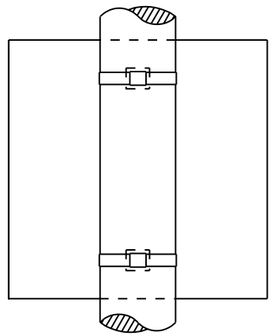

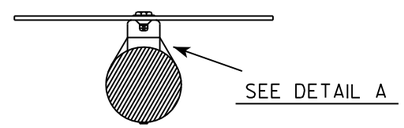


"J" ASSEMBLY

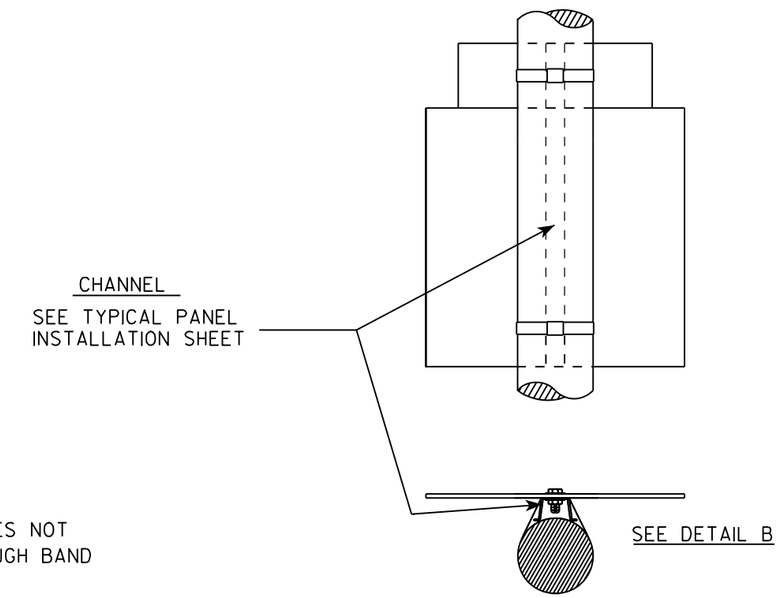


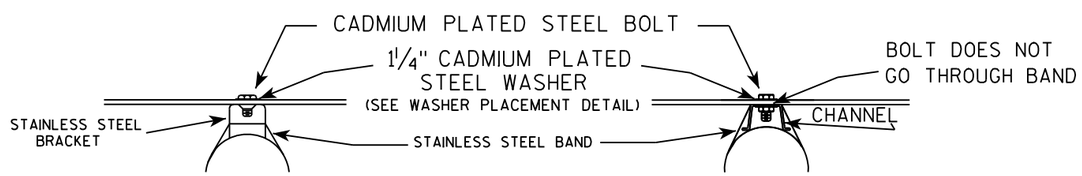


WASHER PLACEMENT

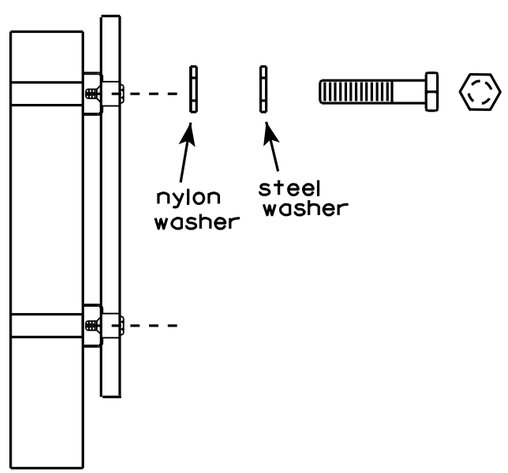


WASHERS (ALL POSTS) -

1-1/4" O.D. X 3/8" I.D. X 1/16" STEEL

1-1/4" O.D. X 3/8" I.D. X .080 NYLON

FOR ALL TYPE H SIGNS

GENERAL NOTES

1. Any sign over 3 feet in width shall use the V-Block banding method. See A5-10 standard plate.
2. Signs 3 feet or greater in height shall have three bracket bands installed. Signs less than 3 feet in height shall have two bracket bands installed.
3. Banding and assembly bracket shall be stainless steel. All bands shall be ¾" in width and 0.025" thickness.

STANDARD SIGN

SIGN BANDING DETAILS

WISCONSIN DEPT OF TRANSPORTATION

APPROVED Matthew R Rauch for State Traffic Engineer

DATE 8/16/13 PLATE NO. A5-9.3

| PROJECT NO: | HWY: | COUNTY: | | SHEET NO: 419 | E |
|---|---|---|---|---|---|

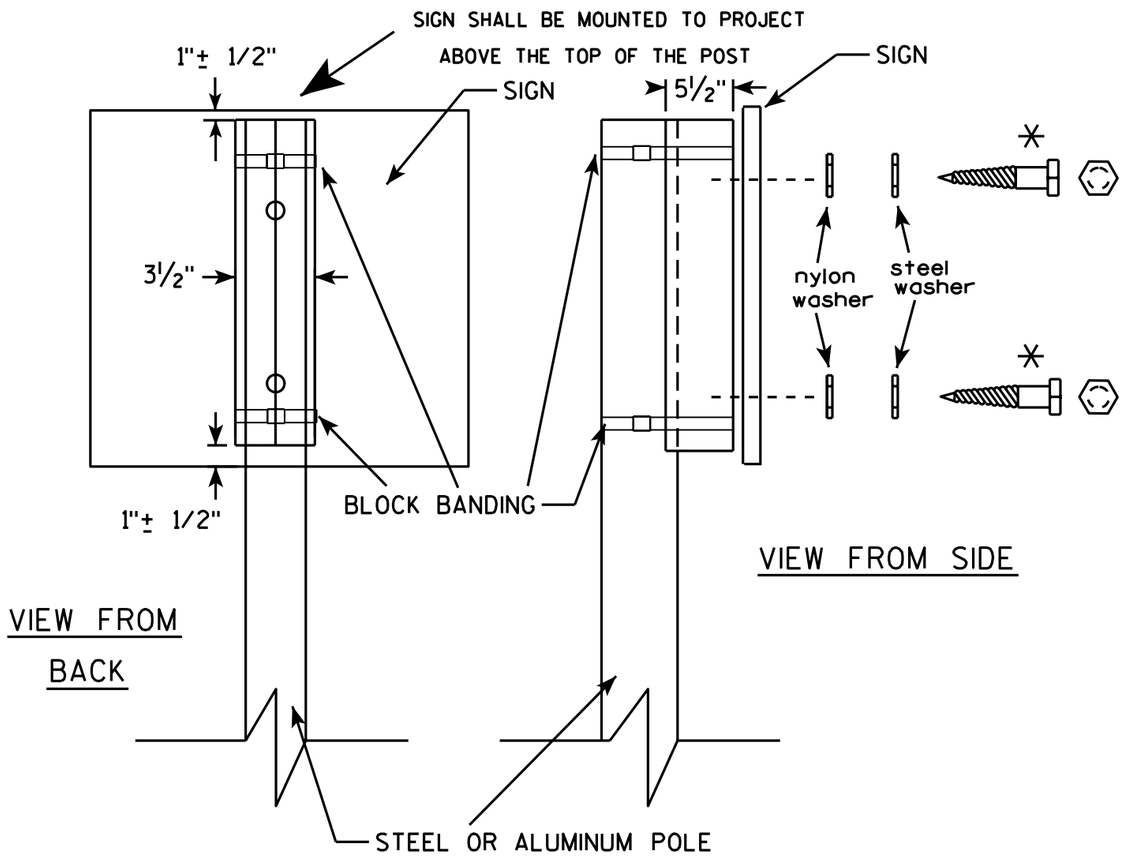


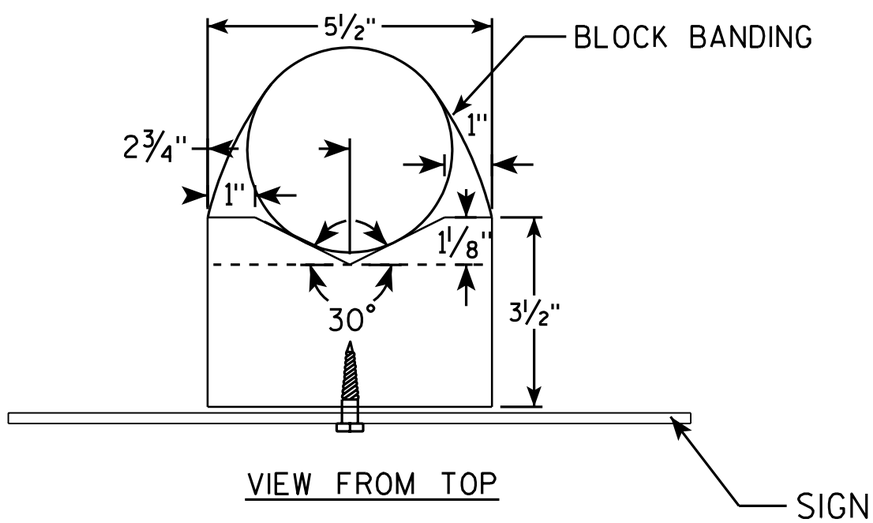


## GENERAL NOTES

1. WOOD 4"X6" POST MATERIAL SHALL CONFORM TO 507.2.2 OF THE WisDOT STANDARD SPECIFICATIONS
2. BLOCK BANDING AND CLIPS SHALL BE STAINLESS STEEL, ¾" WIDTH AND 0.025" THICKNESS
3. SIGNS 3' OR GREATER IN HEIGHT SHALL UTILIZE 3 BLOCK BANDS. SIGNS UNDER 3' IN HEIGHT SHALL UTILIZE 2 BLOCK BANDS
4. ACTUAL NUMBER OF FASTENERS PER SIGN VARIES WITH THE SIGN AREA, BUT NORNALLY THERE ARE TWO. FOR SIGNS GREATER THAN 9 S.F. 3 FASTENERS SHALL BE USED.
5. ALL SIGN MOUNTING BOLTS AND WASHERS SHALL BE EITHER:
   a. Hot dip or mechanically galvanized in accordance with ASTM Designation: A 153, Class D, or
   b. Cadmium plated in accordance with ASTM Designation : B 766 TYPE 3, Class 12, or
   c. Electro-galvanized in accordance with ASTM Designation : B 633, TYPE III, SC 3.
6. ALL BOLTS SHALL HAVE HEXAGONAL HEADS.
7. STEEL WASHERS SHALL BE 1¼" O.D. X ⅜" I.D. X 1/16"
8. NYLON WASHERS SHALL BE 1¼" O.D. X ⅜" I.D. X .080 FOR TYPE H OR TYPE F FACE SIGN

✳ LAG BOLTS SHALL BE ⅜" X 2½"

BLOCK BANDING DETAIL
( V-BLOCK OPTION )

WISCONSIN DEPT OF TRANSPORTATION

APPROVED Matthew R Rauch
for State Traffic Engineer

DATE 7/12/07 PLATE NO. A5-10.1

| PROJECT NO: | | | | SHEET NO: 420 | E |
|---|---|---|---|---|---|

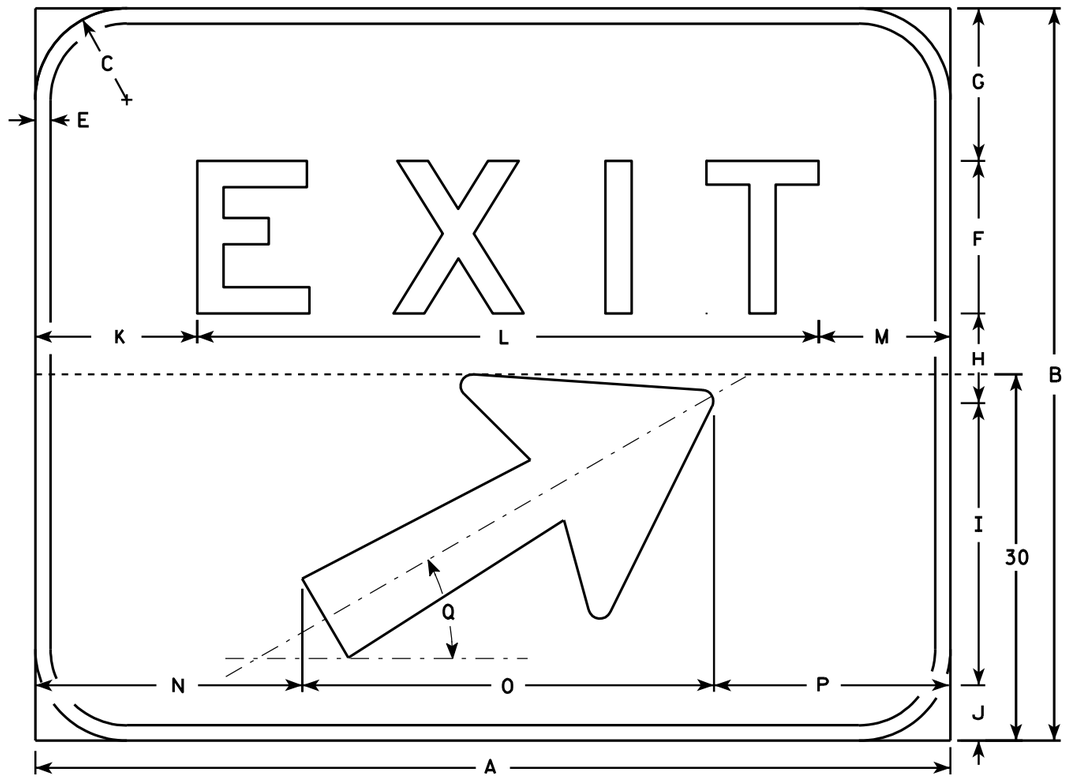


E5-1

## NOTES

1. Sign is Type II - Type H reflective - reference WIS DOT Standard Specification for HIGHWAY and STRUCTURE CONSTRUCTION latest edition.
2. Color:
   Background - Green
   Message - White (Type H reflective)
3. Message Series - E
4. Corners may be square or rounded but borders shall be rounded as shown.
5. Base material for this sign shall be plywood and shall be split into two seperate pieces for the 72 x 60 size as shown on the detail by the dashed line (----------).
6. Arrow is Type "A" from sign plate A1-1.
7. As per the Standard Spec's, this sign shall not have a vertical joint.

Metric equivalent for this sign is:

| SIZE | |
|---|---|
| 1 | |
| 2 | |
| 3 | |
| 4 | 1500 mm X 1200 mm |
| 5 | 1800 mm X 1500 mm |

| SIZE | A | B | C | D | E | F | G | H | I | J | K | L | M | N | O | P | Q | R | S | T | U | V | W | X | Y | Z | Area sq. ft. | Area m2 |
|---|---|---|---|---|---|---|---|---|---|---|---|---|---|---|---|---|---|---|---|---|---|---|---|---|---|---|---|---|
| 1 | | | | | | | | | | | | | | | | | | | | | | | | | | | | |
| 2 | | | | | | | | | | | | | | | | | | | | | | | | | | | | |
| 3 | | | | | | | | | | | | | | | | | | | | | | | | | | | | |
| 4 | 60 | 48 | 6 | | 1 | 10 | 10 | 5 7/8 | 18 1/2 | 3 5/8 | 10 5/8 | 40 3/4 | 8 5/8 | 17 1/2 | 27 | 15 1/2 | 30° | | | | | | | | | | 20.0 | 1.80 |
| 5 | 72 | 60 | 6 | | 1 | 12 | 12 | 10 | 18 1/2 | 7 1/2 | 13 1/4 | 48 1/2 | 10 1/4 | 23 1/2 | 27 | 21 1/2 | 30° | | | | | | | | | | 30.0 | 2.70 |

STANDARD SIGN
E5 - 1

WISCONSIN DEPT OF TRANSPORTATION

APPROVED Chester J Spang
for State Traffic Engineer

DATE 6/22/00 PLATE NO. E5-1.8

| PROJECT NO: | HWY: | COUNTY: | | SHEET NO: 421 | E |
|---|---|---|---|---|---|

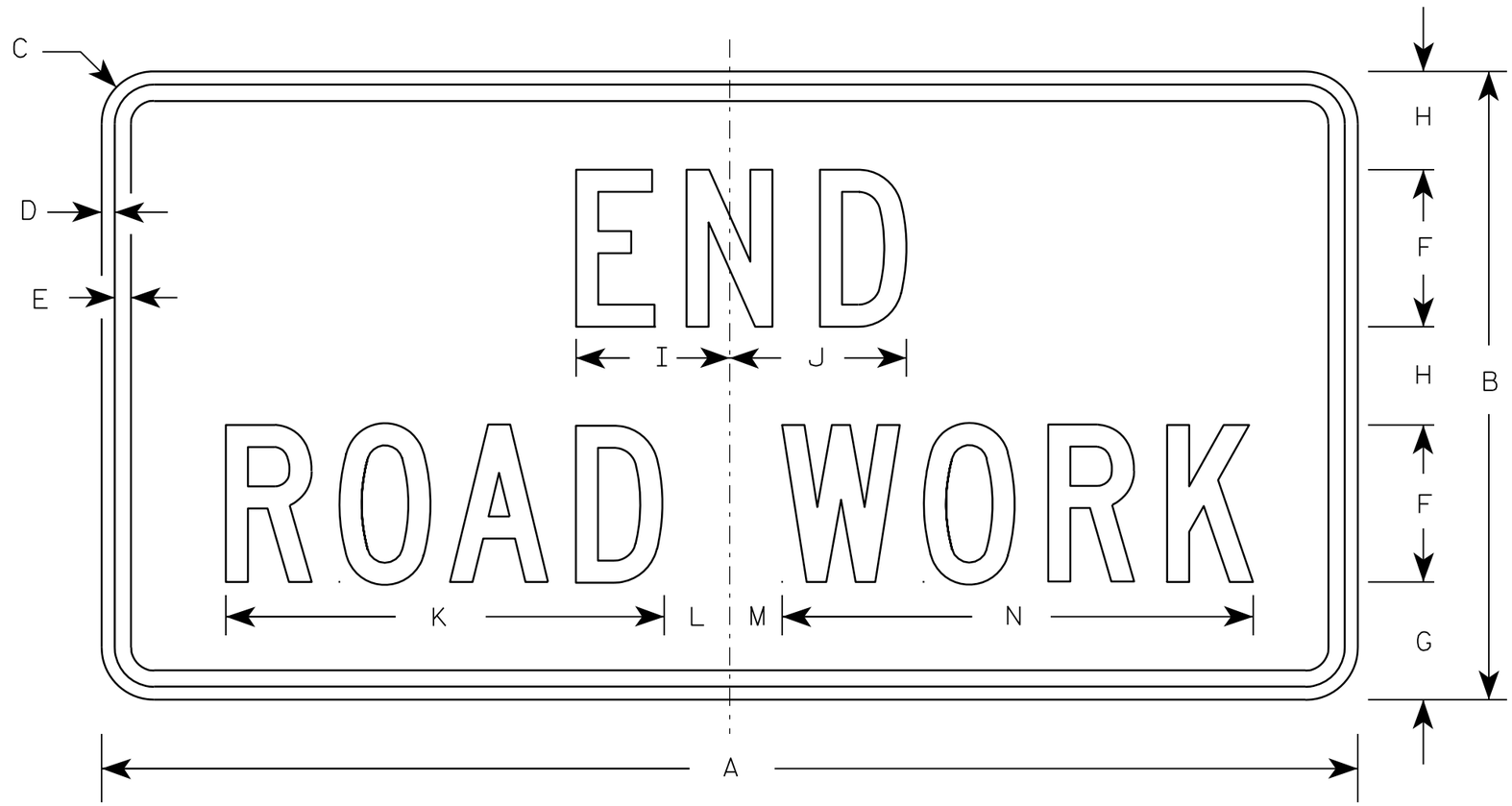


G20-2A

NOTES

1. Sign is Type II - Type F Reflective - reference WIS DOT Standard Specification for HIGHWAY and STRUCTURE CONSTRUCTION latest edition.
2. Color:
   Background - Orange
   Message - Black
3. Message Series - C
4. Corners may be square or rounded when base material is plywood but borders shall be rounded as shown. When base material is metal, the corners and borders shall be rounded.

Metric equivalent for this sign is:

| SIZE | |
|---|---|
| 1 | 900 mm X 450 mm |
| 2 | 1200 mm X 600 mm |
| 3 | 1200 mm X 600 mm |
| 4 | 1200 mm X 600 mm |
| 5 | 1200 mm X 600 mm |

| SIZE | A | B | C | D | E | F | G | H | I | J | K | L | M | N | O | P | Q | R | S | T | U | V | W | X | Y | Z | Area sq. ft. | Area m2 |
|---|---|---|---|---|---|---|---|---|---|---|---|---|---|---|---|---|---|---|---|---|---|---|---|---|---|---|---|---|
| 1 | 36 | 18 | 1 1/8 | 3/8 | 1/2 | 4 | 3 3/4 | 2 1/2 | 4 1/8 | 4 1/8 | 11 1/8 | 2 | 1 | 12 1/8 | | | | | | | | | | | | | 4.5 | 0.41 |
| 2 | 48 | 24 | 1 1/2 | 1/2 | 5/8 | 6 | 4 1/2 | 3 3/4 | 5 7/8 | 6 3/4 | 16 3/4 | 2 1/2 | 1 3/4 | 18 1/2 | | | | | | | | | | | | | 8.0 | 0.72 |
| 3 | 48 | 24 | 1 1/2 | 1/2 | 5/8 | 6 | 4 1/2 | 3 3/4 | 5 7/8 | 6 3/4 | 16 3/4 | 2 1/2 | 1 3/4 | 18 1/2 | | | | | | | | | | | | | 8.0 | 0.72 |
| 4 | 48 | 24 | 1 1/2 | 1/2 | 5/8 | 6 | 4 1/2 | 3 3/4 | 5 7/8 | 6 3/4 | 16 3/4 | 2 1/2 | 1 3/4 | 18 1/2 | | | | | | | | | | | | | 8.0 | 0.72 |
| 5 | 48 | 24 | 1 1/2 | 1/2 | 5/8 | 6 | 4 1/2 | 3 3/4 | 5 7/8 | 6 3/4 | 16 3/4 | 2 1/2 | 1 3/4 | 18 1/2 | | | | | | | | | | | | | 8.0 | 0.72 |

STANDARD SIGN

G20-2A

WISCONSIN DEPT OF TRANSPORTATION

APPROVED Matthew R Rauch
for State Traffic Engineer

DATE 9/30/09 PLATE NO. G20-2A.8

| PROJECT NO: | HWY: | COUNTY: | | SHEET NO: 422 | E |
|---|---|---|---|---|---|

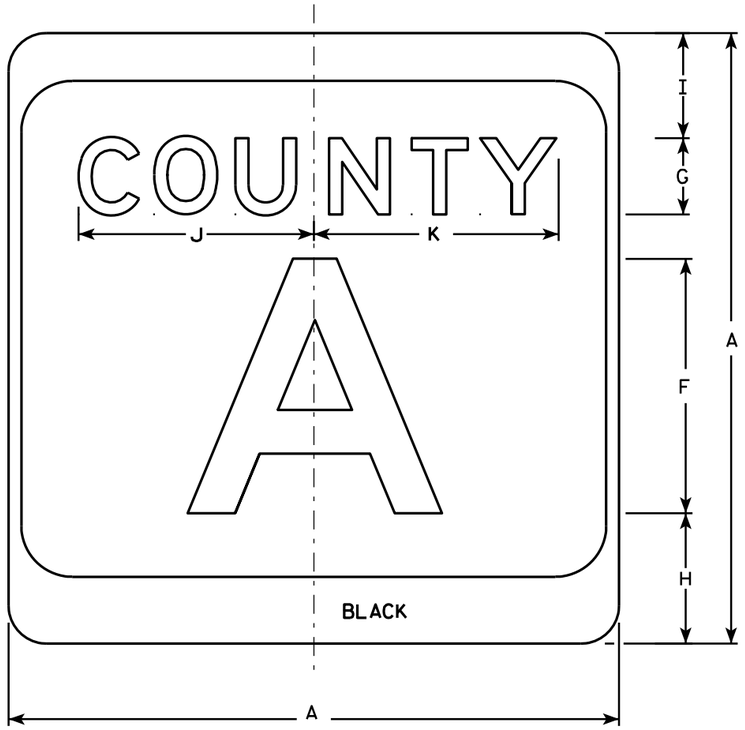


M1-5A

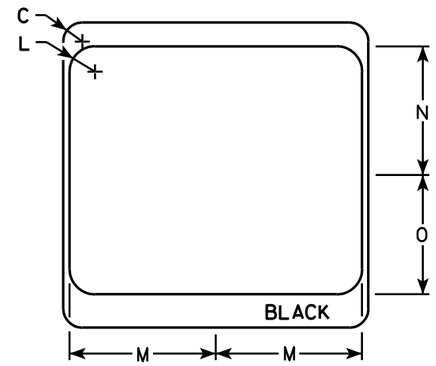


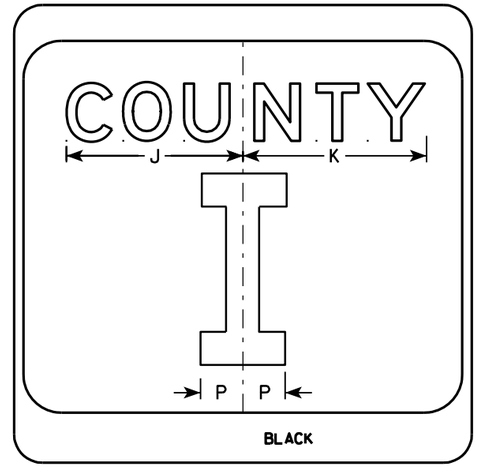


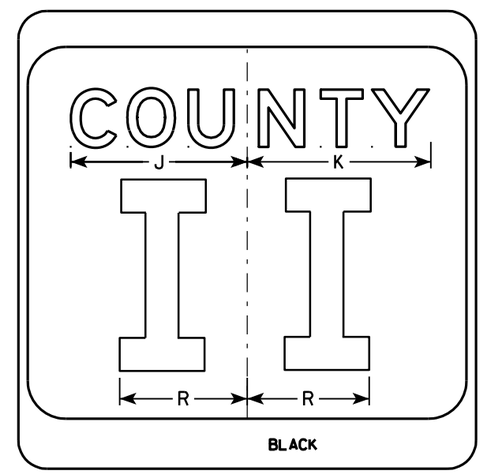


## NOTES

1. Sign is Type II - see Note 7 - reference WIS DOT Standard Specification for HIGHWAY and STRUCTURE CONSTRUCTION latest edition.
2. Color:
   Background - White & Black - See Note 7
   Message - Black
3. Message Series - see Note 5
4. Corners may be square or rounded when base material is plywood but borders shall be rounded as shown. When base material is metal, the corners and borders shall be rounded.
5. Message Series E for 1 letter.
   Message Series D for 2 letters unless message is too big then Series C.
   Message Series C for 3 letters unless message is too big then Series B.
6. Substitute appropriate letters & optically center to achieve proper balance.
7. Permanent Signs
   Background - Type H Reflective
   Detour or temporary Signs
   Background - Reflective

| SIZE | A | B | C | D | E | F | G | H | I | J | K | L | M | N | O | P | Q | R | S | T | U | V | W | X | Y | Z | Area sq. ft. |
|---|---|---|---|---|---|---|---|---|---|---|---|---|---|---|---|---|---|---|---|---|---|---|---|---|---|---|---|
| 1 | | | | | | | | | | | | | | | | | | | | | | | | | | | |
| 2 | 24 | | 1 1/2 | | | 10 | 3 | 5 1/8 | 4 1/8 | 9 1/4 | 9 5/8 | 2 | 11 1/2 | 10 1/8 | 9 3/8 | 2 1/4 | | 6 5/8 | | | | | | | | | 4.0 |
| 3 | 36 | | 2 1/4 | | | 16 | 4 | 7 5/8 | 5 5/8 | 12 1/4 | 12 7/8 | 3 | 17 1/8 | 15 1/4 | 14 | 3 3/8 | | 10 | | | | | | | | | 9.0 |
| 4 | 36 | | 2 1/4 | | | 16 | 4 | 7 5/8 | 5 5/8 | 12 1/4 | 12 7/8 | 3 | 17 1/8 | 15 1/4 | 14 | 3 3/8 | | 10 | | | | | | | | | 9.0 |
| 5 | 36 | | 2 1/4 | | | 16 | 4 | 7 5/8 | 5 5/8 | 12 1/4 | 12 7/8 | 3 | 17 1/8 | 15 1/4 | 14 | 3 3/8 | | 10 | | | | | | | | | 9.0 |

CTH MARKER
M1-5A FOR ASSEMBLIES

WISCONSIN DEPT OF TRANSPORTATION

APPROVED Matthew R Rauch
for State Traffic Engineer

DATE 9/27/11 PLATE NO. M1-5A.8

| PROJECT NO: | HWY: | COUNTY: | | SHEET NO: 423 | E |
|---|---|---|---|---|---|

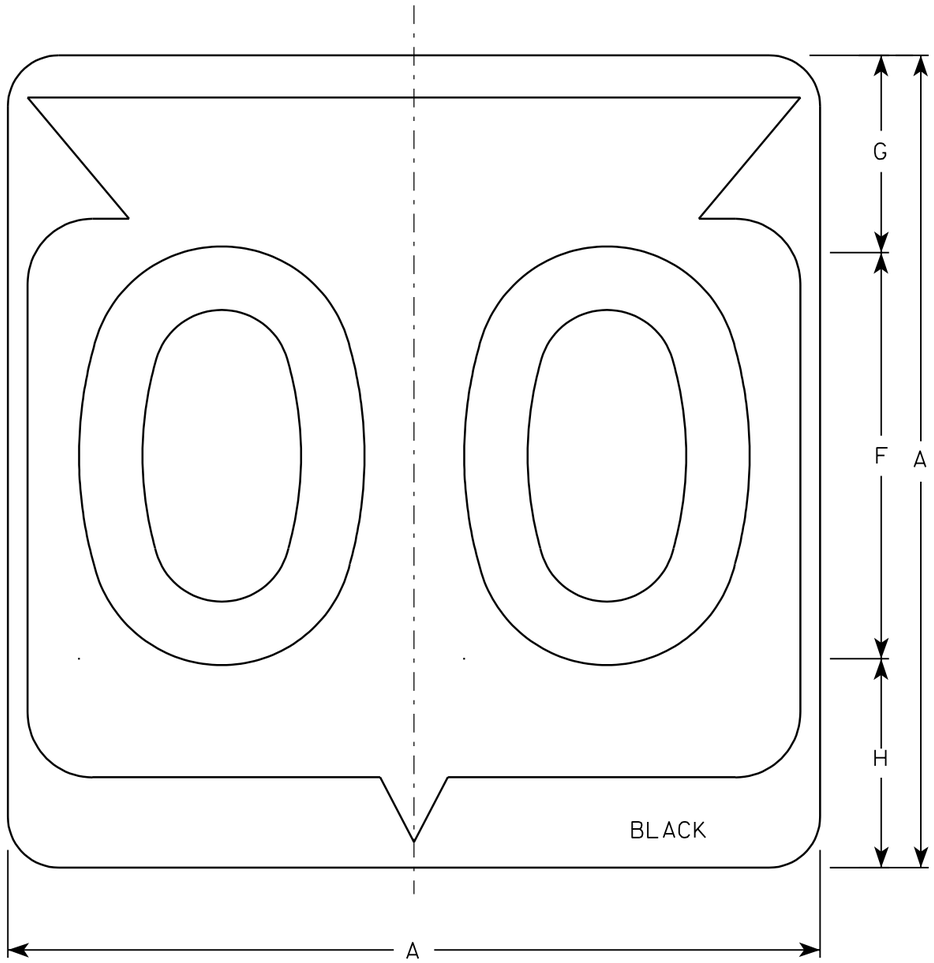


M1-6

## NOTES

1. Sign is Type II - See Note 6 - reference WIS DOT Standard Specification for HIGHWAY and STRUCTURE CONSTRUCTION latest edition.
2. Color:
   Background - White & Black - See Note 6
   Message - Black
3. Message Series - See note 5
4. Corners may be square or rounded when base material is plywood but borders shall be rounded as shown. When base material is metal, the corners and borders shall be rounded.
5. Substitute appropriate Series numerals and adjust spacing as per plate A10-1.
6. Permanent Signs
   Background - Type H Reflective
   Detour or temporary Signs
   Background - Reflective

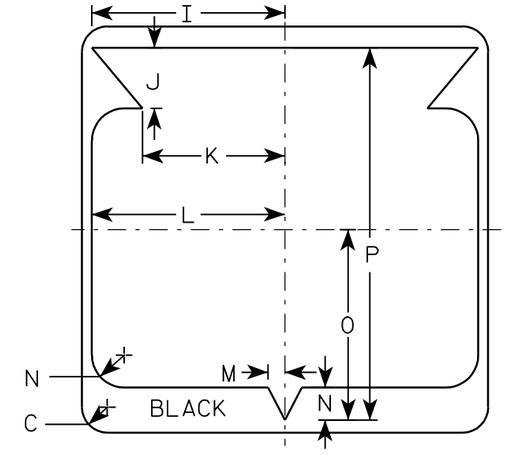


Metric equivalent for this sign is:

| SIZE | |
|---|---|
| 1 | |
| 2 | 600 mm X 600 mm |
| 3 | 900 mm X 900 mm |
| 4 | 900 mm X 900 mm |
| 5 | 900 mm X 900 mm |

| SIZE | A | B | C | D | E | F | G | H | I | J | K | L | M | N | O | P | Q | R | S | T | U | V | W | X | Y | Z | Area sq. ft. | Area m2 |
|---|---|---|---|---|---|---|---|---|---|---|---|---|---|---|---|---|---|---|---|---|---|---|---|---|---|---|---|---|
| 1 | | | | | | | | | | | | | | | | | | | | | | | | | | | | |
| 2 | 24 | | 1 1/2 | | | 12 | 5 1/2 | 6 1/2 | 10 1/4 | 2 1/2 | 8 7/8 | 11 1/2 | 1 | 1 7/8 | 11 1/4 | 21 7/8 | | | | | | | | | | | 4.0 | .36 |
| 3 | 36 | | 2 1/4 | | | 18 | 8 3/4 | 9 1/4 | 15 3/8 | 5 3/8 | 12 5/8 | 17 1/8 | 1 1/2 | 2 7/8 | 16 7/8 | 33 | | | | | | | | | | | 9.0 | .81 |
| 4 | 36 | | 2 1/4 | | | 18 | 8 3/4 | 9 1/4 | 15 3/8 | 5 3/8 | 12 5/8 | 17 1/8 | 1 1/2 | 2 7/8 | 16 7/8 | 33 | | | | | | | | | | | 9.0 | .81 |
| 5 | 36 | | 2 1/4 | | | 18 | 8 3/4 | 9 1/4 | 15 3/8 | 5 3/8 | 12 5/8 | 17 1/8 | 1 1/2 | 2 7/8 | 16 7/8 | 33 | | | | | | | | | | | 9.0 | .81 |

STATE ROUTE MARKER
M1-6 FOR ASSEMBLIES

*WISCONSIN DEPT OF TRANSPORTATION*

APPROVED Chester J Spang
for State Traffic Engineer

DATE 3/20/02 PLATE NO. M1-6.9

PROJECT NO: | HWY: | COUNTY: | SHEET NO: 424 | E

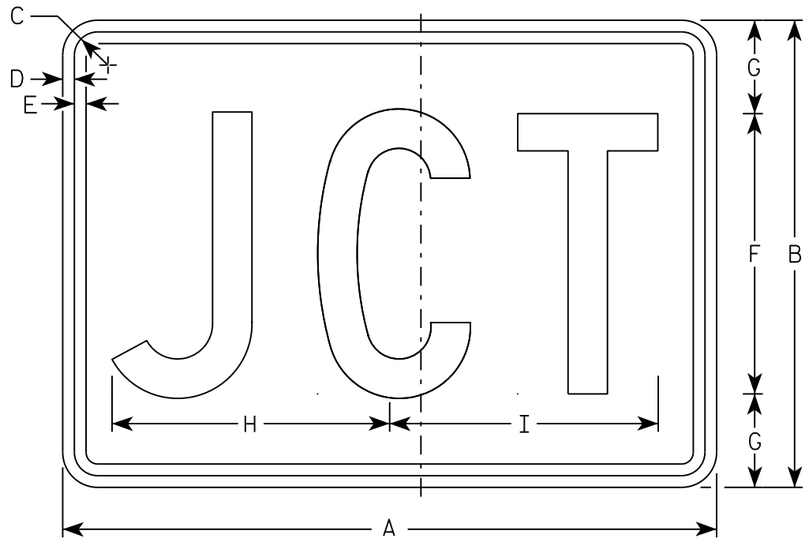


M2-1
MM2-1
MP2-1

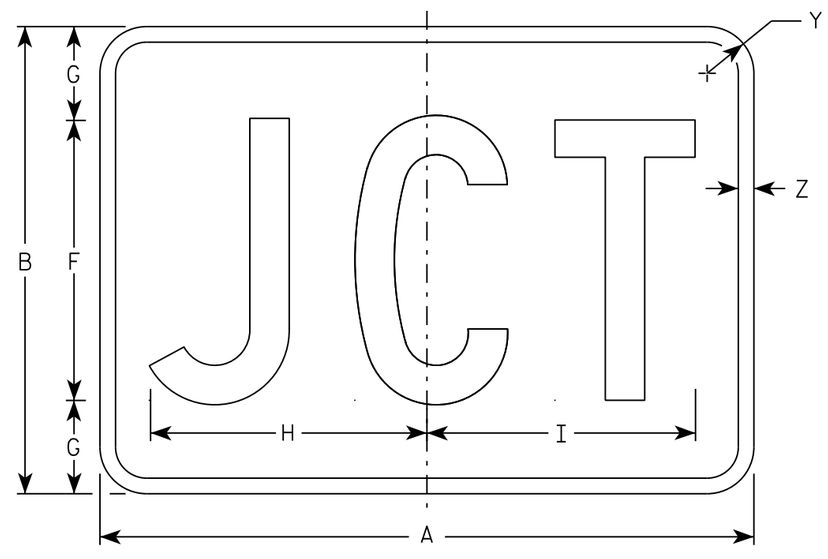


MB2-1
MK2-1
MN2-1
MR2-1

NOTES

1. Sign is Type II - Type H
2. Color:
   Background - See note 5
   Message - See note 5
3. Message Series - C
4. Corners may be square or rounded when base material is plywood but borders shall be rounded as shown. When base material is metal, the corners and borders shall be rounded.
5. M2-1 Background - White
   Message - Black
   MB2-1 Background - Blue
   Message - White
   MK2-1 Background - Green
   Message - White
   MM2-1 Background - White
   Message - Green
   MN2-1 Background - Brown
   Message - White
   MP2-1 Background - White
   Message - Blue
   MR2-1 Background - Brown
   Message - Yellow

| SIZE | A | B | C | D | E | F | G | H | I | J | K | L | M | N | O | P | Q | R | S | T | U | V | W | X | Y | Z | Area sq. ft. |
|---|---|---|---|---|---|---|---|---|---|---|---|---|---|---|---|---|---|---|---|---|---|---|---|---|---|---|---|
| 1 | | | | | | | | | | | | | | | | | | | | | | | | | | | |
| 2 | 21 | 15 | 1 1/8 | 3/8 | 3/8 | 9 | 3 | 8 7/8 | 8 5/8 | | | | | | | | | | | | | | | | 1 1/2 | 1/2 | 2.20 |
| 3 | 30 | 21 | 1 1/8 | 3/8 | 3/8 | 13 | 4 | 12 7/8 | 12 3/8 | | | | | | | | | | | | | | | | 1 1/2 | 1/2 | 4.40 |
| 4 | 30 | 21 | 1 1/8 | 3/8 | 3/8 | 13 | 4 | 12 7/8 | 12 3/8 | | | | | | | | | | | | | | | | 1 1/2 | 1/2 | 4.40 |
| 5 | 30 | 21 | 1 1/8 | 3/8 | 3/8 | 13 | 4 | 12 7/8 | 12 3/8 | | | | | | | | | | | | | | | | 1 1/2 | 1/2 | 4.40 |

STANDARD SIGN
M2-1

WISCONSIN DEPT OF TRANSPORTATION

APPROVED Matthew R Rauch
for State Traffic Engineer

DATE 10/15/15 PLATE 425 M2-1.12

PROJECT NO: | HWY: | COUNTY: | SHEET NO: | E

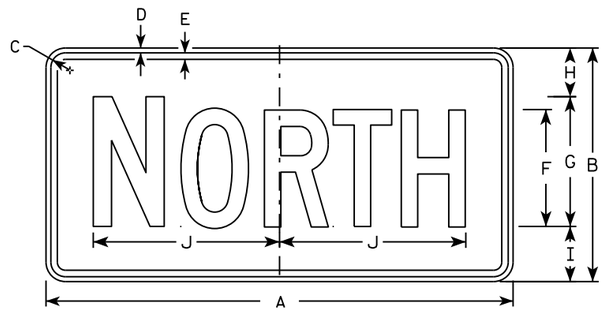


M3-1
MM3-1
MP3-1

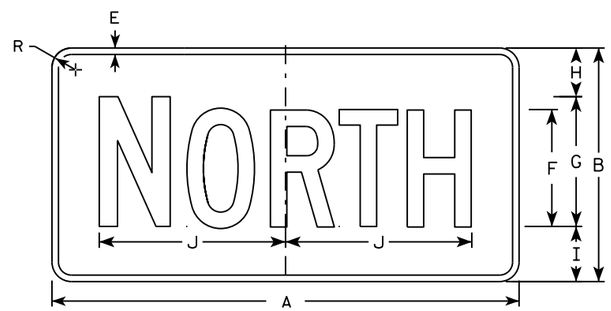


MB3-1
MK3-1
MN3-1

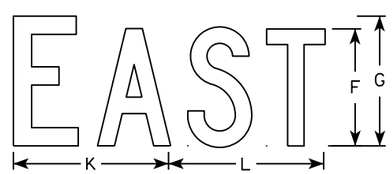


M3-2
MM3-2
MP3-2

MB3-2
MK3-2
MN3-2

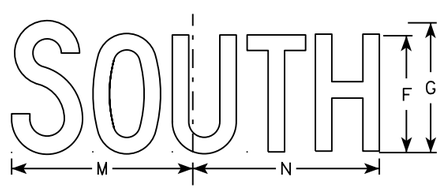


M3-3
MM3-3
MP3-3

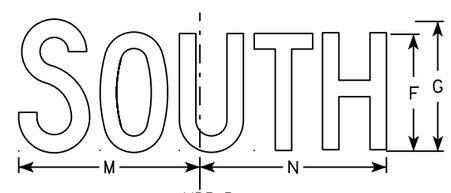


MB3-3
MK3-3
MN3-3

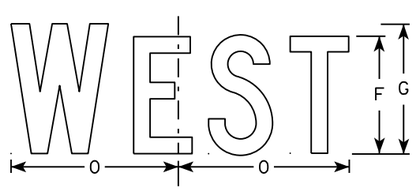


M3-4
MM3-4
MP3-4

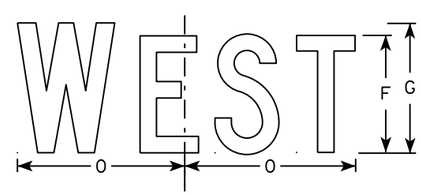


MB3-4
MK3-4
MN3-4

## NOTES

1. All Signs Type II - Type H
2. Color:
   Background - See note 5
   Message - See note 5
3. Message Series - C
4. Corners may be square or rounded when base material is plywood but borders shall be rounded as shown. When base material is metal, the corners and borders shall be rounded.
5. M3-1 thru M3-4 Background - White
   Message - Black
   MB3-1 thru MB3-4 Background - Blue
   Message - White
   MK3-1 thru MK3-4 Background - Green
   Message - White
   MM3-1 thru MM3-4 Background - White
   Message - Green
   MN3-1 thru MN3-4 Background - Brown
   Message - White
   MP3-1 thru MP3-4 Background - White
   Message - Blue
6. Note the first letter of each direction is larger than the remainder of the message.

| SIZE | A | B | C | D | E | F | G | H | I | J | K | L | M | N | O | P | Q | R | S | T | U | V | W | X | Y | Z | Area sq. ft. |
|---|---|---|---|---|---|---|---|---|---|---|---|---|---|---|---|---|---|---|---|---|---|---|---|---|---|---|---|
| 1 | | | | | | | | | | | | | | | | | | | | | | | | | | | |
| 2 | 24 | 12 | 1 1/8 | 3/8 | 3/8 | 6 | 7 | 2 1/4 | 2 3/4 | 10 1/4 | 7 7/8 | 8 3/8 | 10 1/4 | 9 3/4 | 8 3/4 | | | 1 1/2 | | | | | | | | | 2.00 |
| 3 | 36 | 18 | 1 1/8 | 3/8 | 1/2 | 9 | 10 | 3 3/4 | 4 1/4 | 14 3/8 | 12 | 12 1/8 | 14 | 14 1/8 | 13 | | | 1 1/2 | | | | | | | | | 4.5 |
| 4 | 36 | 18 | 1 1/8 | 3/8 | 1/2 | 9 | 10 | 3 3/4 | 4 1/4 | 14 3/8 | 12 | 12 1/8 | 14 | 14 1/8 | 13 | | | 1 1/2 | | | | | | | | | 4.5 |
| 5 | 36 | 18 | 1 1/8 | 3/8 | 1/2 | 9 | 10 | 3 3/4 | 4 1/4 | 14 3/8 | 12 | 12 1/8 | 14 | 14 1/8 | 13 | | | 1 1/2 | | | | | | | | | 4.5 |

STANDARD SIGNS
M3-1 thur M3-4
SERIES

WISCONSIN DEPT OF TRANSPORTATION

APPROVED Matthew R Rauch
for State Traffic Engineer

DATE 10/15/15 PLATE NO M3-1.14

426

PROJECT NO: | HWY: | COUNTY: | SHEET NO: | E

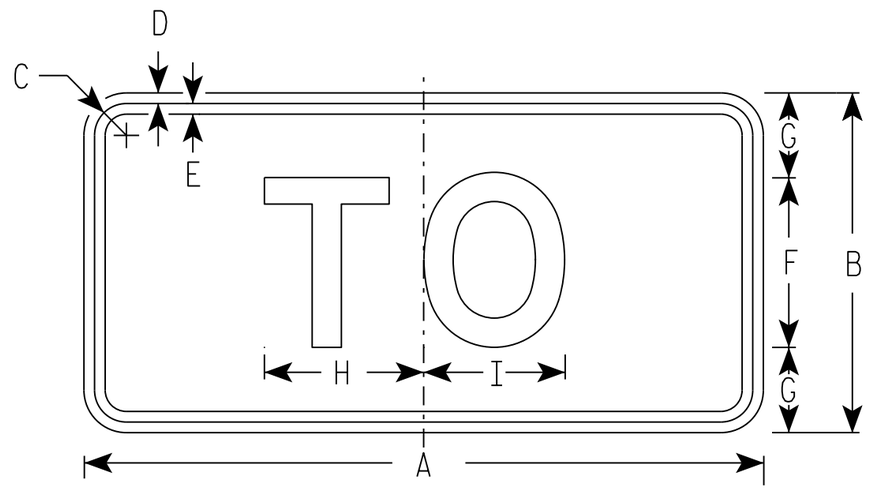


M4-5
MM4-5
MP4-5

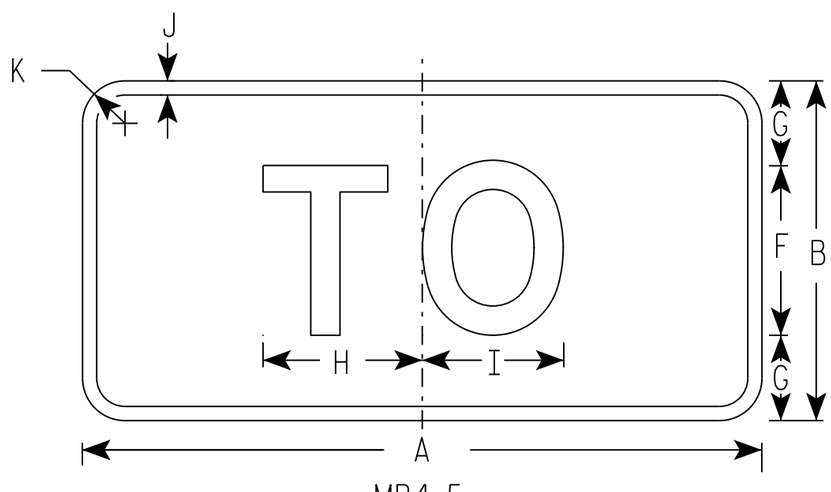


MB4-5
MK4-5
MN4-5

NOTES

1. Sign is Type II - Type H
2. Color:
   Background - See note 5
   Message - See note 5
3. Message Series - E
4. Corners may be square or rounded when base material is plywood but borders shall be rounded as shown. When base material is metal, the corners and borders shall be rounded.
5. M4-5 Background - White
   Message - Black
   MB4-5 Background - Blue
   Message - White
   MK4-5 Background - Green
   Message - White
   MM4-5 Background - White
   Message - Green
   MN4-5 Background - Brown
   Message - White
   MP4-5 Background - White
   Message - Blue

| SIZE | A | B | C | D | E | F | G | H | I | J | K | L | M | N | O | P | Q | R | S | T | U | V | W | X | Y | Z | Area sq. ft. |
|---|---|---|---|---|---|---|---|---|---|---|---|---|---|---|---|---|---|---|---|---|---|---|---|---|---|---|---|
| 1 | | | | | | | | | | | | | | | | | | | | | | | | | | | |
| 2 | 24 | 12 | 1 1/8 | 3/8 | 3/8 | 6 | 3 | 5 3/8 | 5 1/4 | 1/2 | 1 1/2 | | | | | | | | | | | | | | | | 2.00 |
| 3 | 36 | 18 | 1 3/8 | 3/8 | 1/2 | 9 | 4 1/2 | 8 1/4 | 8 3/8 | 1/2 | 1 1/2 | | | | | | | | | | | | | | | | 4.5 |
| 4 | 36 | 18 | 1 3/8 | 3/8 | 1/2 | 9 | 4 1/2 | 8 1/4 | 8 3/8 | 1/2 | 1 1/2 | | | | | | | | | | | | | | | | 4.5 |
| 5 | 36 | 18 | 1 3/8 | 3/8 | 1/2 | 9 | 4 1/2 | 8 1/4 | 8 3/8 | 1/2 | 1 1/2 | | | | | | | | | | | | | | | | 4.5 |

STANDARD SIGN
M4-5

WISCONSIN DEPT OF TRANSPORTATION

APPROVED Matthew R Rauch
for State Traffic Engineer

DATE 10/15/15 PLATE 427 M4-5.8

PROJECT NO: | HWY: | COUNTY: | SHEET NO: E

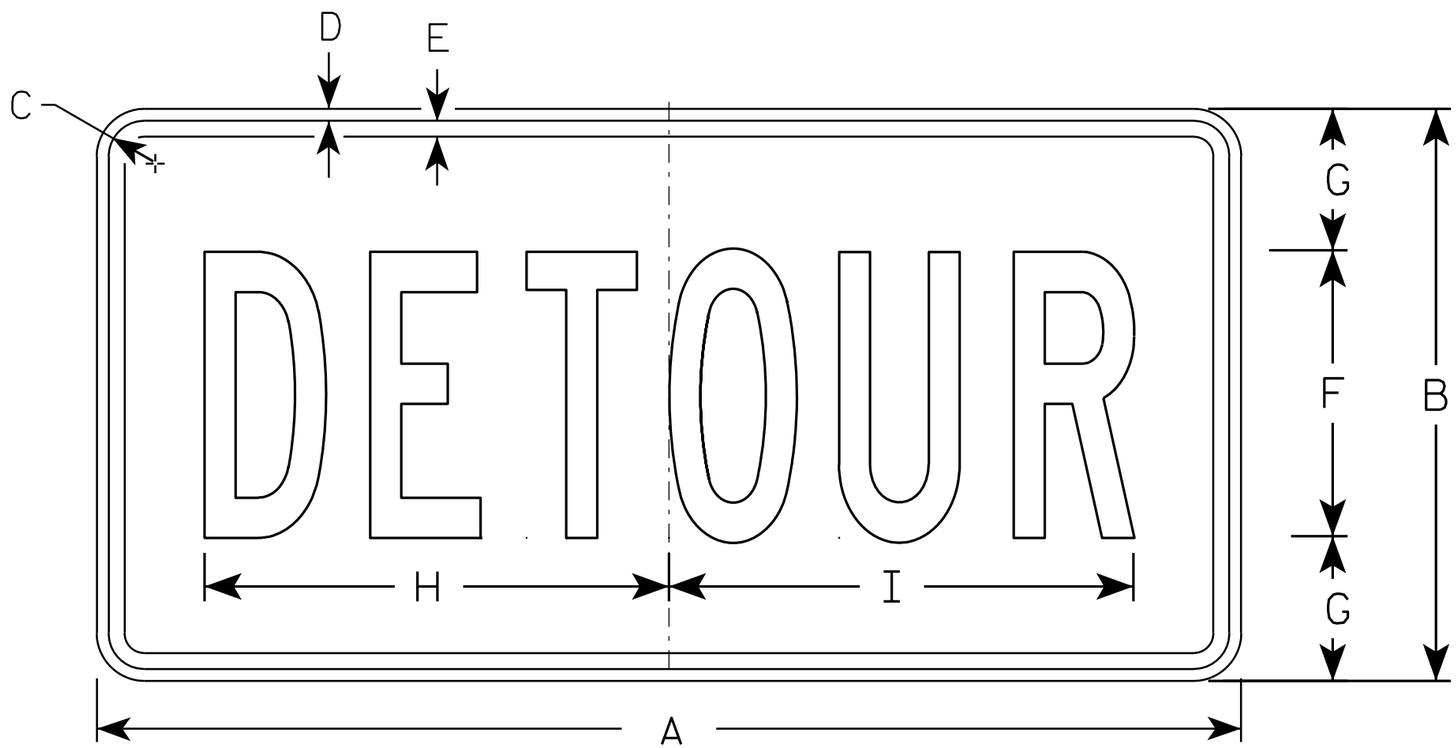


M4-8

NOTES

1. Sign is Type II - Type F Reflective - reference WIS DOT Standard Specification for HIGHWAY and STRUCTURE CONSTRUCTION latest edition.
2. Color:
   Background - Orange
   Message - Black
3. Message Series - B
4. Corners may be square or rounded when base material is plywood but borders shall be rounded as shown. When base material is metal, the corners and borders shall be rounded.

| SIZE | A | B | C | D | E | F | G | H | I | J | K | L | M | N | O | P | Q | R | S | T | U | V | W | X | Y | Z | Area sq. ft. |
|---|---|---|---|---|---|---|---|---|---|---|---|---|---|---|---|---|---|---|---|---|---|---|---|---|---|---|---|
| 1 | | | | | | | | | | | | | | | | | | | | | | | | | | | |
| 2 | 24 | 12 | 1 1/8 | 3/8 | 3/8 | 6 | 3 | 10 | 10 1/4 | | | | | | | | | | | | | | | | | | 2.0 |
| 3 | 36 | 18 | 1 1/8 | 3/8 | 1/2 | 9 | 4 1/2 | 14 5/8 | 14 1/2 | | | | | | | | | | | | | | | | | | 4.5 |
| 4 | | | | | | | | | | | | | | | | | | | | | | | | | | | |
| 5 | | | | | | | | | | | | | | | | | | | | | | | | | | | |

STANDARD SIGN
M4-8

WISCONSIN DEPT OF TRANSPORTATION

APPROVED Matthew R Rauch
for State Traffic Engineer

DATE 11/10/10 PLATE NO. M4-8.2

PROJECT NO: | HWY: | COUNTY: | SHEET NO: 428 | E

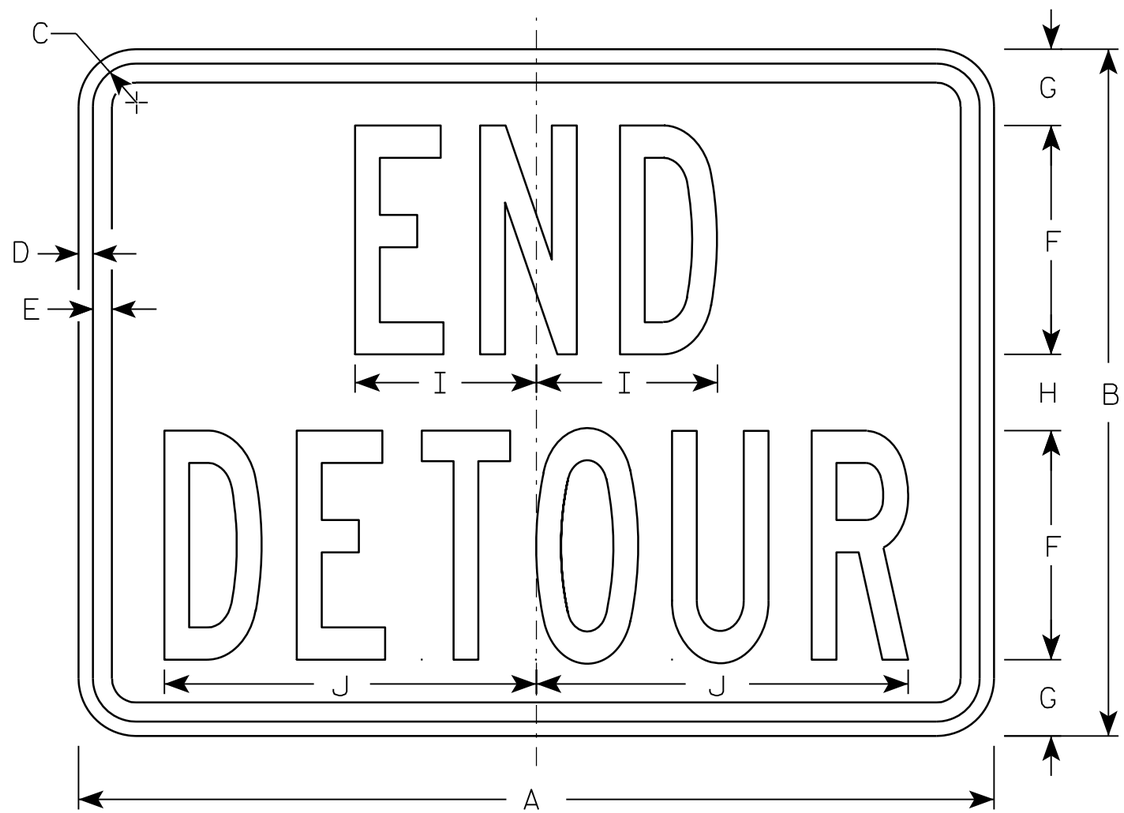


M4-8A

NOTES

1. Sign is Type II - Type F Reflective - reference WIS DOT Standard Specification for HIGHWAY and STRUCTURE CONSTRUCTION latest edition.
2. Color:
   Background - Orange
   Message - Black
3. Message Series - B
4. Corners may be square or rounded when base material is plywood but borders shall be rounded as shown. When base material is metal, the corners and borders shall be rounded.

| SIZE | A | B | C | D | E | F | G | H | I | J | K | L | M | N | O | P | Q | R | S | T | U | V | W | X | Y | Z | Area sq. ft. |
|---|---|---|---|---|---|---|---|---|---|---|---|---|---|---|---|---|---|---|---|---|---|---|---|---|---|---|---|
| 1 | | | | | | | | | | | | | | | | | | | | | | | | | | | |
| 2 | 24 | 18 | 1 1/8 | 3/8 | 1/2 | 6 | 2 | 2 | 4 3/4 | 9 3/4 | | | | | | | | | | | | | | | | | 3.0 |
| 3 | 30 | 24 | 1 1/8 | 3/8 | 1/2 | 8 | 2 1/2 | 3 | 6 3/4 | 13 | | | | | | | | | | | | | | | | | 5.0 |
| 4 | | | | | | | | | | | | | | | | | | | | | | | | | | | |
| 5 | | | | | | | | | | | | | | | | | | | | | | | | | | | |

STANDARD SIGN
M4-8A

WISCONSIN DEPT OF TRANSPORTATION

APPROVED Matthew R Rauch
for State Traffic Engineer

DATE 3/9/11 PLATE NO. M4-8A.2

PROJECT NO: | HWY: | COUNTY: | SHEET NO: 429 | E

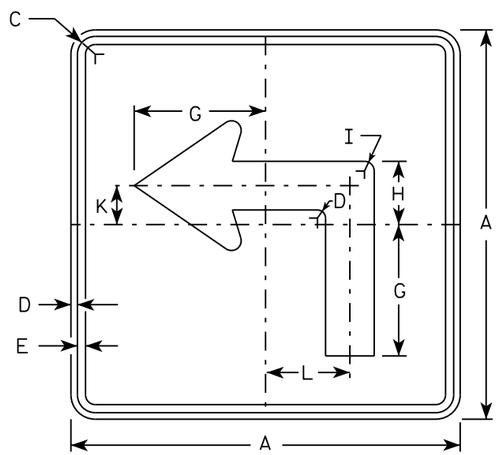


M5-1L
MM5-1L
MO5-1L
MP5-1L

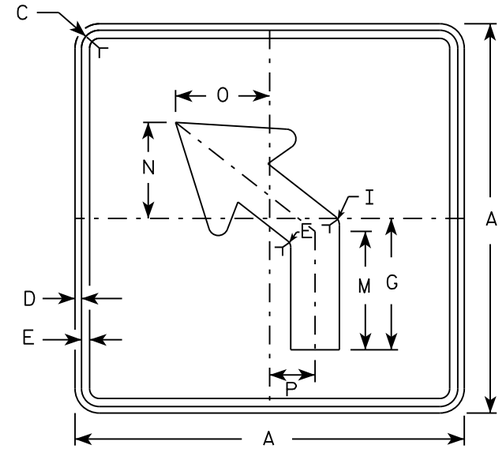


M5-2L
MM5-2L
MO5-2L
MP5-2L

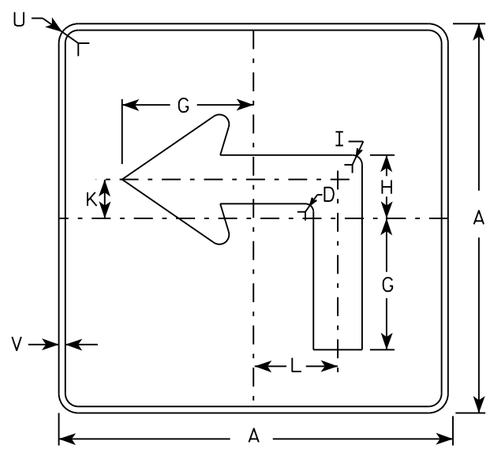


MB5-1L
MK5-1L
MN5-1L
MR5-1L

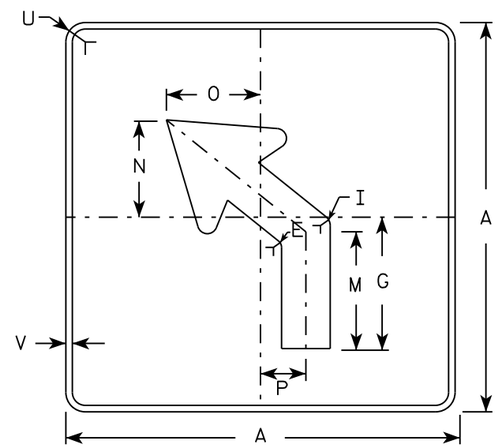


MB5-2L
MK5-2L
MN5-2L
MR5-2L

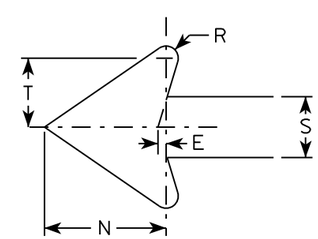


NOTES

1. Signs are Type II - Type H reflective except as shown
2. Color:
   Background - See note 4
   Message - See note 4
3. Corners may be square or rounded when base material is plywood but borders shall be rounded as shown. When base material is metal, the corners and borders shall be rounded.
4. M5-1 and M5-2 Background - White
   Message - Black
   MB5-1 and MB5-2 Background - Blue
   Message - White
   MK5-1 and MK5-2 Background - Green
   Message - White
   MM5-1 and MM5-2 Background - White
   Message - Green
   MN5-1 and MN5-2 Background - Brown
   Message - White
   MO5-1 and MO5-2 Background - Orange - Type F Reflective
   Message - Black
   MP5-1 and MP5-2 Background - White - Type H Reflective
   Message - Blue
   MR5-1 and MR5-2 Background - Brown
   Message - Yellow
5. M5-1R same as M5-1L except arrow points right.
6. M5-2R same as M5-2L except arrow tilts right.

| SIZE | A | B | C | D | E | F | G | H | I | J | K | L | M | N | O | P | Q | R | S | T | U | V | W | X | Y | Z | Area sq. ft. |
|---|---|---|---|---|---|---|---|---|---|---|---|---|---|---|---|---|---|---|---|---|---|---|---|---|---|---|---|
| 1 | | | | | | | | | | | | | | | | | | | | | | | | | | | |
| 2 | 21 | | 1 1/8 | 3/8 | 3/8 | | 7 | 3 3/8 | 5/8 | | 2 1/8 | 4 1/2 | 6 3/8 | 5 1/4 | 5 | 2 1/2 | | 1/2 | 2 5/8 | 3 | 1 1/2 | 1/2 | | | | | 3.06 |
| 3 | 30 | | 1 3/8 | 1/2 | 5/8 | | 10 1/8 | 4 7/8 | 7/8 | | 3 | 6 1/2 | 9 1/8 | 7 1/2 | 7 1/4 | 3 1/2 | | 3/4 | 3 3/4 | 4 1/4 | 1 7/8 | 1/2 | | | | | 6.25 |
| 4 | 30 | | 1 3/8 | 1/2 | 5/8 | | 10 1/8 | 4 7/8 | 7/8 | | 3 | 6 1/2 | 9 1/8 | 7 1/2 | 7 1/4 | 3 1/2 | | 3/4 | 3 3/4 | 4 1/4 | 1 7/8 | 1/2 | | | | | 6.25 |
| 5 | 30 | | 1 3/8 | 1/2 | 5/8 | | 10 1/8 | 4 7/8 | 7/8 | | 3 | 6 1/2 | 9 1/8 | 7 1/2 | 7 1/4 | 3 1/2 | | 3/4 | 3 3/4 | 4 1/4 | 1 7/8 | 1/2 | | | | | 6.25 |

STANDARD SIGN
M5-1 & M5-2

WISCONSIN DEPT OF TRANSPORTATION

APPROVED Matthew R Rauch
for State Traffic Engineer

DATE 10/15/15 PLATE NO. M5-1.13

| PROJECT NO: | HWY: | COUNTY: | | SHEET NO: | E |
|---|---|---|---|---|---|



FILE NAME : C:\CAEfiles\Projects\tr stdplate\M51.DGN PLOT DATE : 01-DEC-2015 18:07 PLOT BY : $$ plotuser $$ PLOT NAME : PLOT SCALE : 11.675051:1.000000

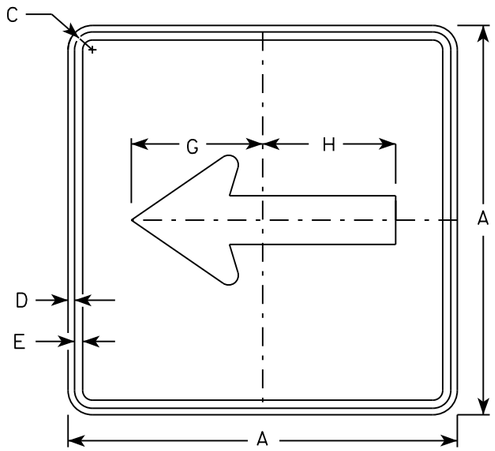


M6-1
MM6-1
MO6-1
MP6-1

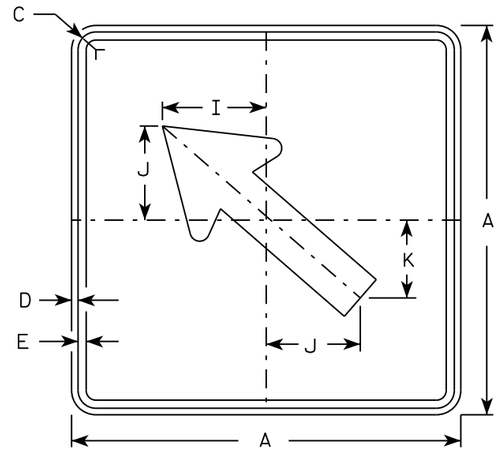


M6-2
MM6-2
MO6-2
MP6-2

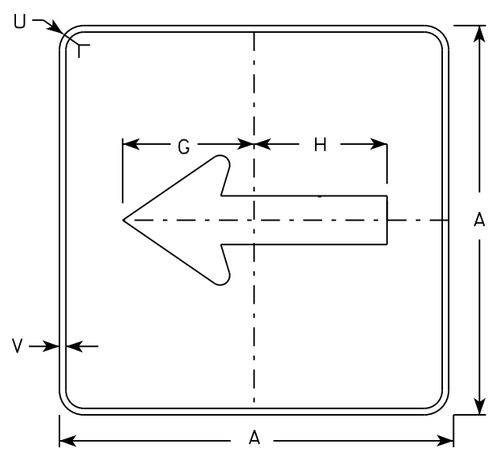


MB6-1
MK6-1
MN6-1
MR6-1

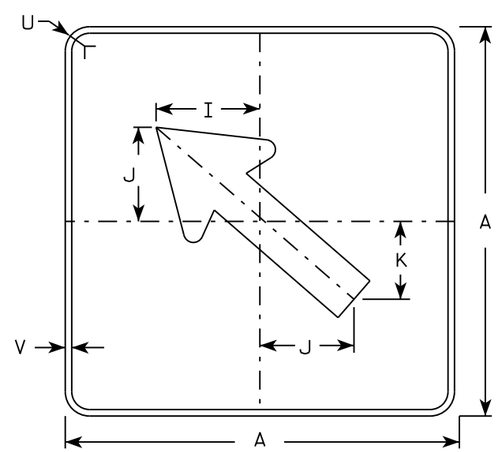


MB6-2
MK6-2
MN6-2
MR6-2

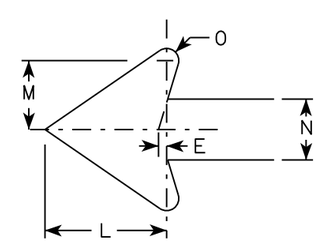


NOTES

1. Signs are Type II - Type H except as Shown
2. Color:
   Background - See note 4
   Message - See note 4
3. Corners may be square or rounded when base material is plywood but borders shall be rounded as shown. When base material is metal, the corners and borders shall be rounded.
4. M6-1 and M6-2 Background - White
   Message - Black

   MB6-1 and MB6-2 Background - Blue
   Message - White

   MK6-1 and MK6-2 Background - Green
   Message - White

   MM6-1 and MM6-2 Background - White
   Message - Green

   MN6-1 and MN6-2 Background - Brown
   Message - White

   MO6-1 and MO6-2 Background - Orange - Type F Reflective
   Message - Black

   MP6-1 and MP6-2 Background - White
   Message - Blue

   MR6-1 and MR6-2 Background - Brown
   Message - Yellow

| SIZE | A | B | C | D | E | F | G | H | I | J | K | L | M | N | O | P | Q | R | S | T | U | V | W | X | Y | Z | Area sq. ft. |
|---|---|---|---|---|---|---|---|---|---|---|---|---|---|---|---|---|---|---|---|---|---|---|---|---|---|---|---|
| 1 | | | | | | | | | | | | | | | | | | | | | | | | | | | |
| 2 | 21 | | 1 1/8 | 3/8 | 3/8 | | 7 1/2 | 7 1/8 | 5 5/8 | 5 | 4 1/4 | 5 1/4 | 3 | 2 5/8 | 1/2 | | | | | | 1 1/2 | 1/2 | | | | | 3.06 |
| 3 | 30 | | 1 3/8 | 1/2 | 5/8 | | 10 3/4 | 10 1/4 | 8 | 7 1/4 | 6 | 7 1/2 | 4 1/4 | 3 3/4 | 3/4 | | | | | | 1 7/8 | 1/2 | | | | | 6.25 |
| 4 | 30 | | 1 3/8 | 1/2 | 5/8 | | 10 3/4 | 10 1/4 | 8 | 7 1/4 | 6 | 7 1/2 | 4 1/4 | 3 3/4 | 3/4 | | | | | | 1 7/8 | 1/2 | | | | | 6.25 |
| 5 | 30 | | 1 3/8 | 1/2 | 5/8 | | 10 3/4 | 10 1/4 | 8 | 7 1/4 | 6 | 7 1/2 | 4 1/4 | 3 3/4 | 3/4 | | | | | | 1 7/8 | 1/2 | | | | | 6.25 |

STANDARD SIGN
M6-1 & M6-2
SERIES

WISCONSIN DEPT OF TRANSPORTATION

APPROVED Matthew R Rauch
for State Traffic Engineer

DATE 10/15/15 PLATE 431 M6-1.15

PROJECT NO: | HWY: | COUNTY: | SHEET NO: | E



FILE NAME : C:\CAEfiles\Projects\tr stdplate\M61.DGN PLOT DATE : 01-DEC-2015 17:57 PLOT BY : $$ plotuser $$ PLOT NAME : PLOT SCALE : 11.675051:1.000000

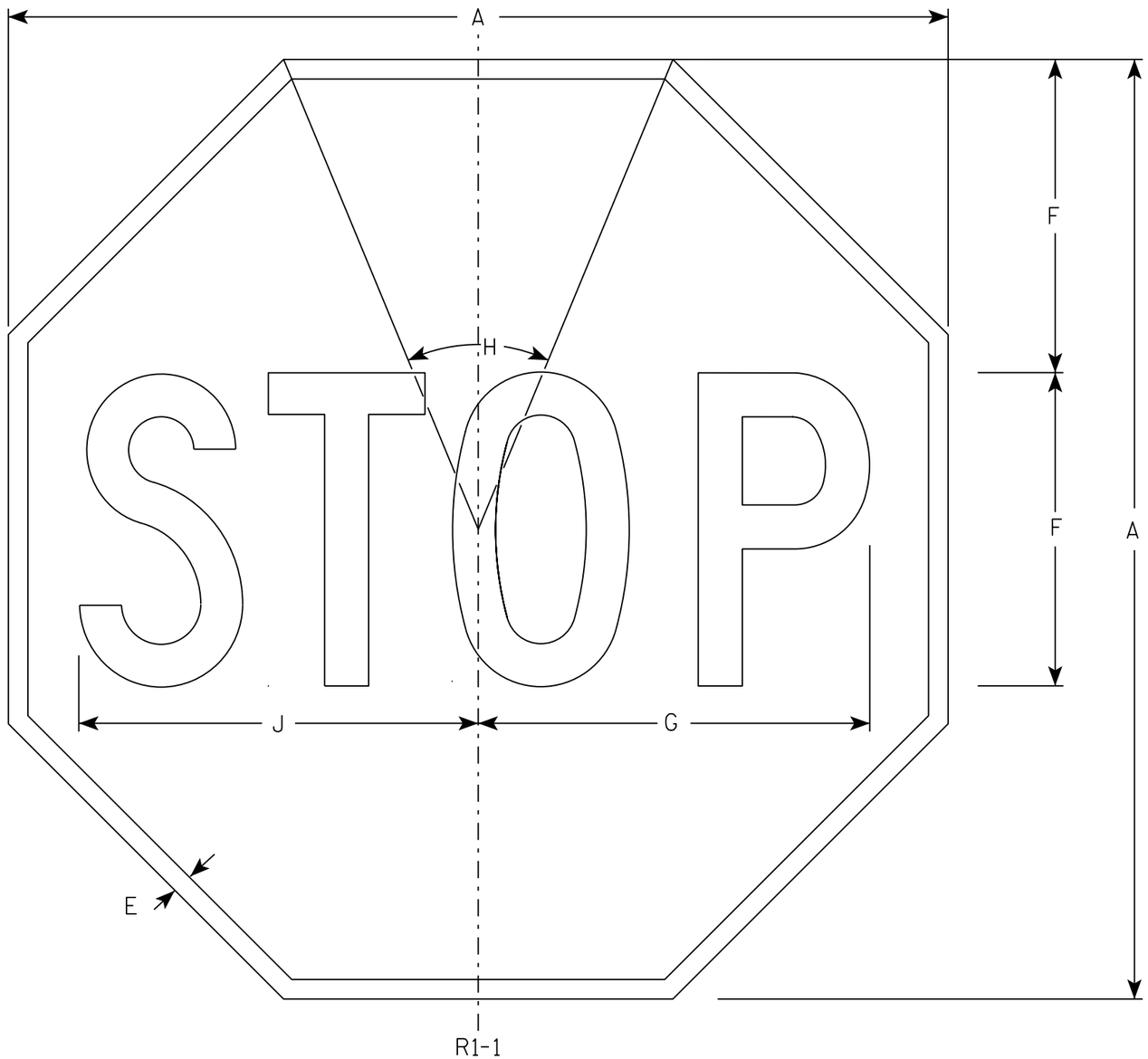


NOTES

1. Sign is Type II - Type H Reflective - reference WIS DOT Standard Specification for HIGHWAY and STRUCTURE CONSTRUCTION latest edition.
2. Color:
   Background - Red
   Message - White
3. Message Series - C

| SIZE | A | B | C | D | E | F | G | H | I | J | K | L | M | N | O | P | Q | R | S | T | U | V | W | X | Y | Z | Area sq. ft. |
|---|---|---|---|---|---|---|---|---|---|---|---|---|---|---|---|---|---|---|---|---|---|---|---|---|---|---|---|
| 1 | 30 | | | | 5/8 | 10 | 12 1/2 | 45° | | 12 3/4 | | | | | | | | | | | | | | | | | 5.18 |
| 2S | 30 | | | | 5/8 | 10 | 12 1/2 | 45° | | 12 3/4 | | | | | | | | | | | | | | | | | 5.18 |
| 2M | 36 | | | | 3/4 | 12 | 15 | 45° | | 15 3/8 | | | | | | | | | | | | | | | | | 7.46 |
| 3 | 36 | | | | 3/4 | 12 | 15 | 45° | | 15 3/8 | | | | | | | | | | | | | | | | | 7.46 |
| 4 | 48 | | | | 1 | 16 | 20 | 45° | | 20 1/2 | | | | | | | | | | | | | | | | | 13.25 |
| 5 | 48 | | | | 1 | 16 | 20 | 45° | | 20 1/2 | | | | | | | | | | | | | | | | | 13.25 |
| 6 | 18 | | | | 3/8 | 6 | 7 3/4 | 45° | | 7 3/4 | | | | | | | | | | | | | | | | | 1.86 |
| 7 | 12 | | | | 1/4 | 4 | 5 | 45° | | 5 1/8 | | | | | | | | | | | | | | | | | 0.78 |

STANDARD SIGN
R1-1

*WISCONSIN DEPT OF TRANSPORTATION*

APPROVED Matthew R Rauch
for State Traffic Engineer

DATE 11/12/15 PLATE NO. 432 R1-1.13

| PROJECT NO: | HWY: | COUNTY: | | SHEET NO: | E |
|---|---|---|---|---|---|

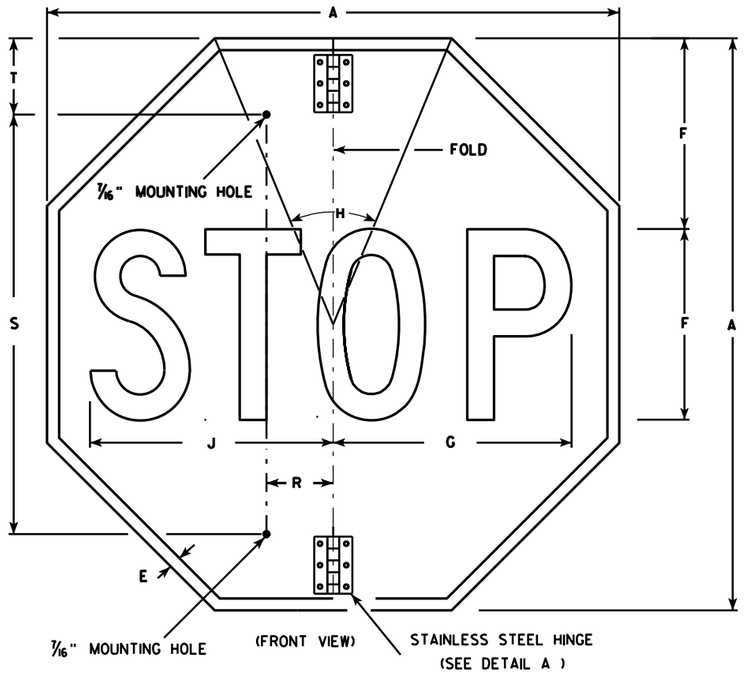


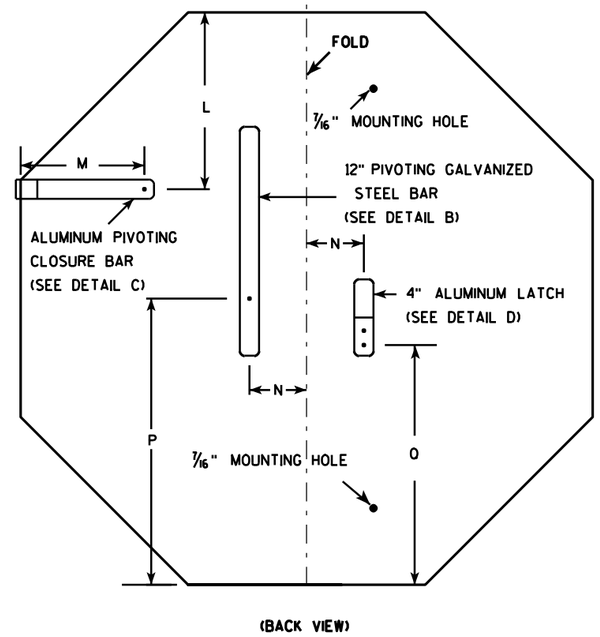


## NOTES

1. Sign is Type II - Type H Reflective - reference WIS DOT Standard Specification for HIGHWAY and STRUCTURE CONSTRUCTION latest edition.
2. Color:
   Background - Red
   Message - White
3. Message Series - C
4. All hardware used on the folding STOP sign installation shall conform to 637.2.4 of the WIS DOT Standard Specification.

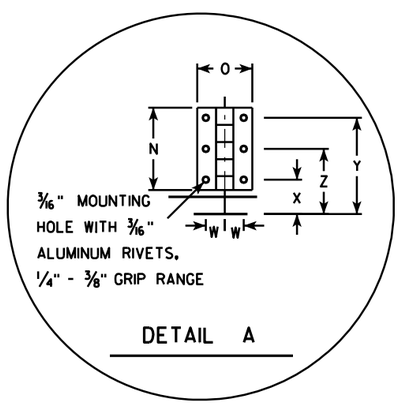


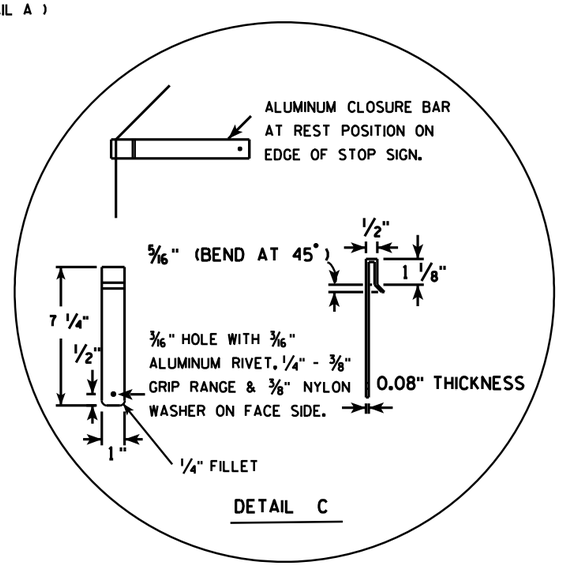


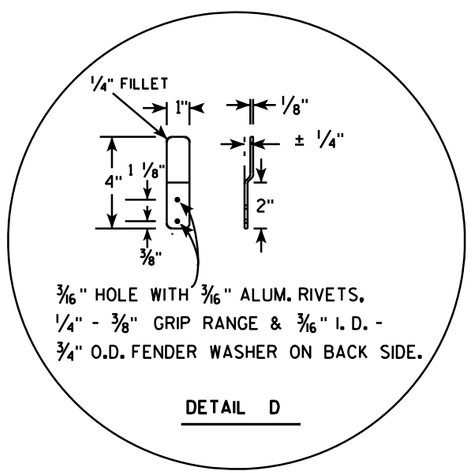


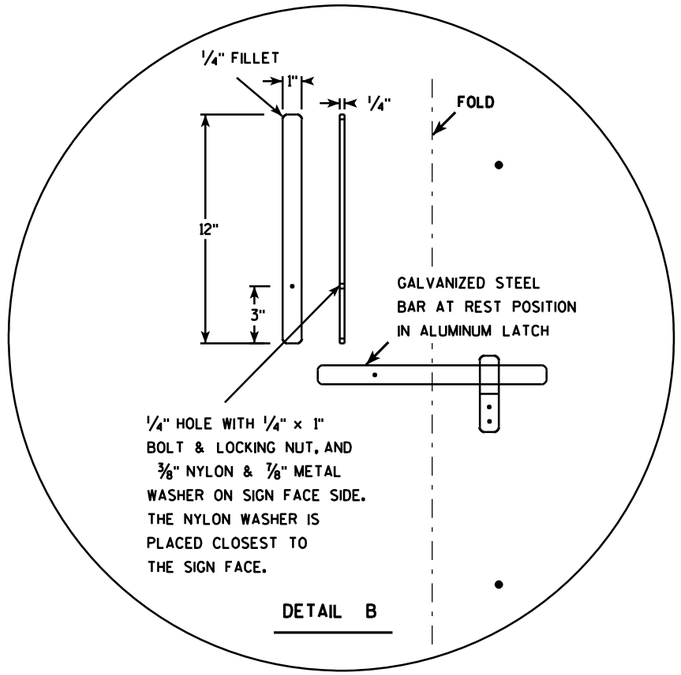


| SIZE | A | B | C | D | E | F | G | H | I | J | K | L | M | N | O | P | Q | R | S | T | U | V | W | X | Y | Z | Area sq. ft. |
|---|---|---|---|---|---|---|---|---|---|---|---|---|---|---|---|---|---|---|---|---|---|---|---|---|---|---|---|
| 1 | | | | | | | | | | | | | | | | | | | | | | | | | | | |
| 2S | 30 | | | | 5/8 | 10 | 12 1/2 | 45 | | 12 3/4 | | 9 1/4 | 6 1/2 | 3 | 2 | 15 | 12 3/8 | 2 1/2 | 22 | 5 | | | 11/16 | 1 1/4 | 3 1/2 | 2 3/8 | 5.18 |
| 2M | 36 | | | | 3/4 | 12 | 15 | 45 | | 15 3/8 | | 11 | 6 1/2 | 3 | 2 | 18 | 15 3/8 | 2 1/2 | 26 | 5 | | | 11/16 | 1 1/4 | 3 1/2 | 2 3/8 | 7.46 |
| 3 | 36 | | | | 3/4 | 12 | 15 | 45 | | 15 3/8 | | 11 | 6 1/2 | 3 | 2 | 18 | 15 3/8 | 2 1/2 | 26 | 5 | | | 11/16 | 1 1/4 | 3 1/2 | 2 3/8 | 7.46 |
| 4 | | | | | | | | | | | | | | | | | | | | | | | | | | | |
| 5 | | | | | | | | | | | | | | | | | | | | | | | | | | | |

STANDARD SIGN
R1-1F

WISCONSIN DEPT OF TRANSPORTATION

APPROVED Matthew R Rauch
for State Traffic Engineer

DATE 12/03/10 PLATE NO. R1-1F.3

PROJECT NO: | HWY: | COUNTY: | SHEET NO: 433 | E

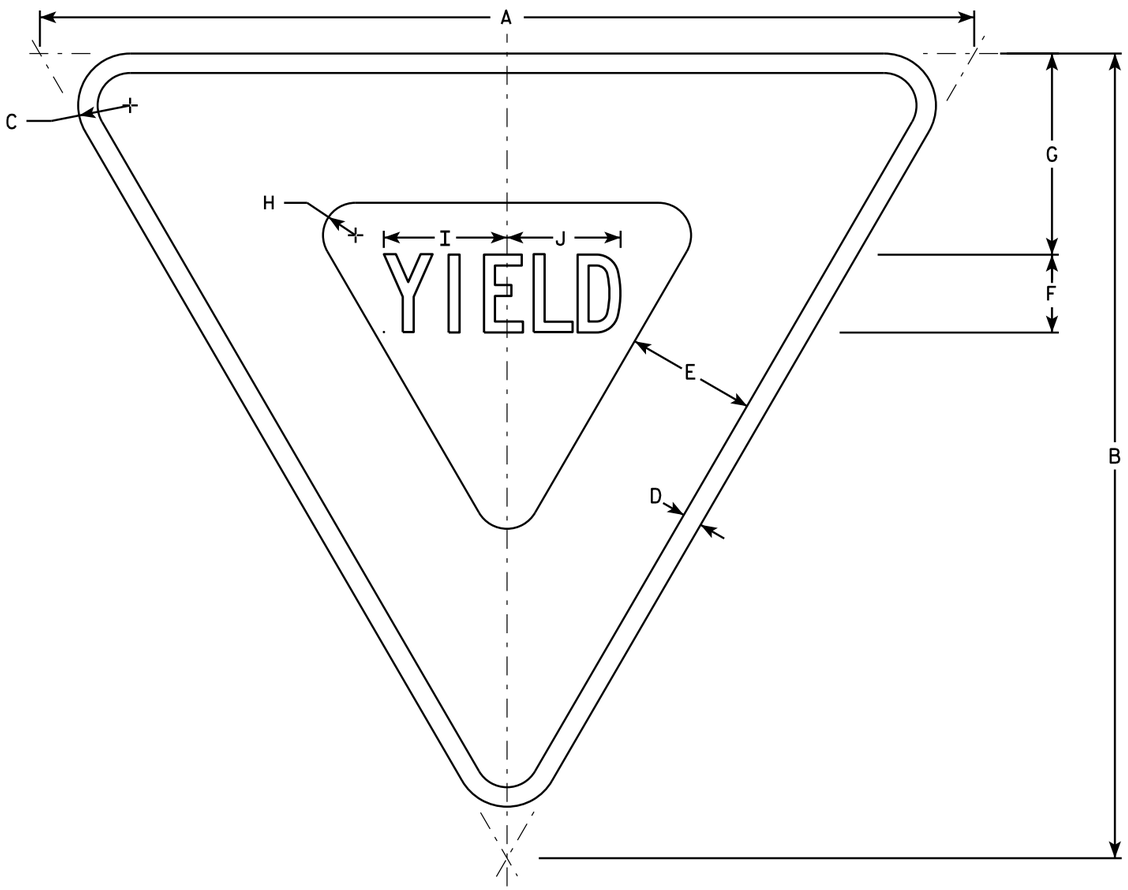


R1-2

NOTES

1. Sign is Type II - Type H Reflective - reference WIS DOT Standard Specification for HIGHWAY and STRUCTURE CONSTRUCTION latest edition.
2. Color:
   Background - White
   Message - See note 5
3. Message Series - C
4. Corners may be square or rounded when base material is plywood but borders shall be rounded as shown. When base material is metal, the corners and borders shall be rounded.
5. The border strip and word message are reflectorized red.

| SIZE | A | B | C | D | E | F | G | H | I | J | K | L | M | N | O | P | Q | R | S | T | U | V | W | X | Y | Z | Area sq. ft. |
|---|---|---|---|---|---|---|---|---|---|---|---|---|---|---|---|---|---|---|---|---|---|---|---|---|---|---|---|
| 1 | 30 | 26 | 1 1/2 | 5/8 | 4 | 2 1/2 | 6 3/8 | 7/8 | 4 | 3 5/8 | | | | | | | | | | | | | | | | | 2.71 |
| 2S | 36 | 31 | 2 | 3/4 | 5 | 3 | 7 3/4 | 1 1/4 | 4 3/4 | 4 3/8 | | | | | | | | | | | | | | | | | 3.88 |
| 2M | 48 | 42 | 3 | 1 | 6 | 4 | 9 3/4 | 2 | 6 1/4 | 5 7/8 | | | | | | | | | | | | | | | | | 7.00 |
| 3 | 48 | 42 | 3 | 1 | 6 | 4 | 9 3/4 | 2 | 6 1/4 | 5 7/8 | | | | | | | | | | | | | | | | | 7.00 |
| 4 | 48 | 42 | 3 | 1 | 6 | 4 | 9 3/4 | 2 | 6 1/4 | 5 7/8 | | | | | | | | | | | | | | | | | 7.00 |
| 5 | 60 | 52 | 3 | 1 1/2 | 8 | 5 | 13 | 2 1/2 | 7 7/8 | 7 1/4 | | | | | | | | | | | | | | | | | 10.83 |
| 6 | | | | | | | | | | | | | | | | | | | | | | | | | | | |
| 7 | 18 | 15 1/2 | 1 | 3/8 | 2 1/2 | 1 1/2 | 3 7/8 | 5/8 | 2 3/8 | 2 1/4 | | | | | | | | | | | | | | | | | 0.97 |

STANDARD SIGN
R1-2

WISCONSIN DEPT OF TRANSPORTATION

APPROVED Matthew R Rauch
for State Traffic Engineer

DATE 10/13/14 PLATE R1-2.12

PROJECT NO: | HWY: | COUNTY: | SHEET NO: | E

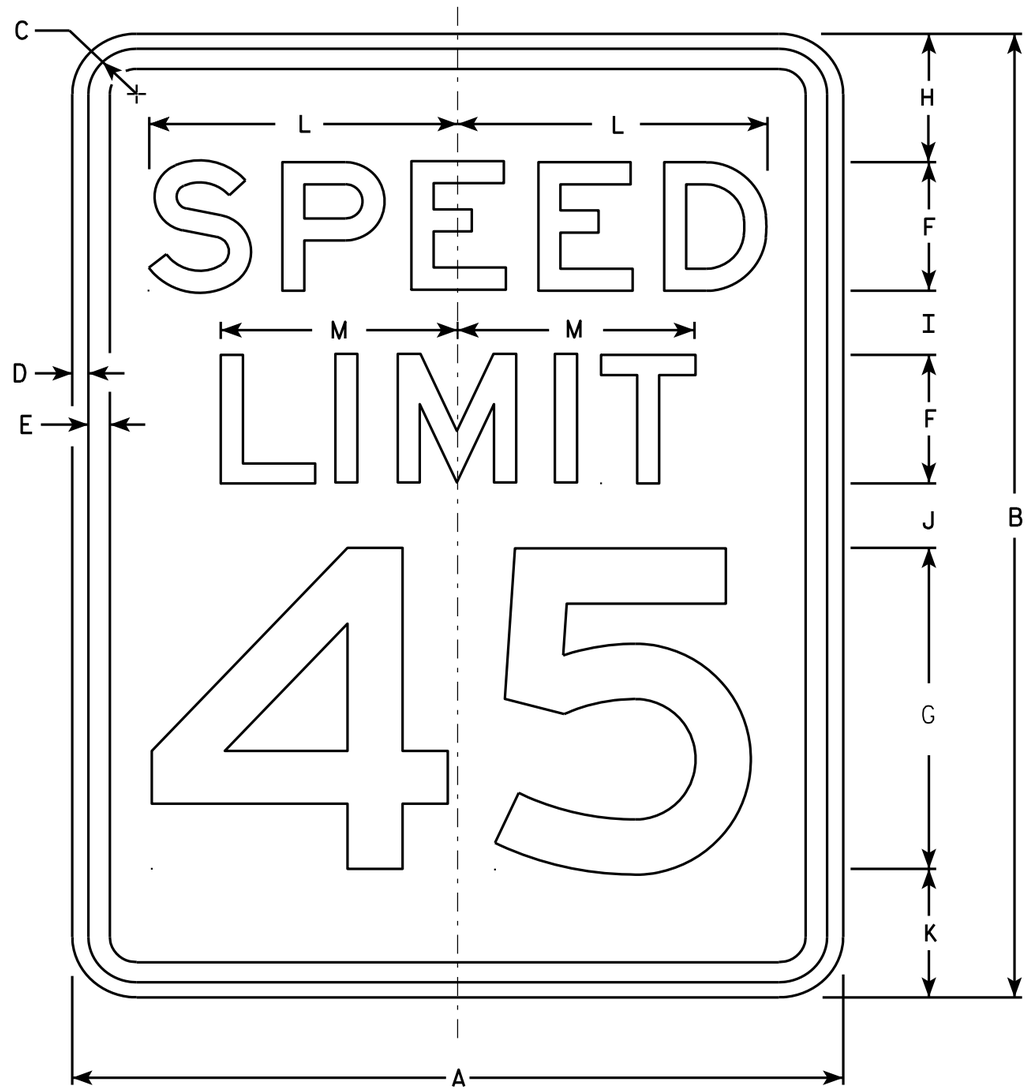


R2-1

## NOTES

1. Sign is Type II - Type H Reflective - reference WIS DOT Standard Specification for HIGHWAY and STRUCTURE CONSTRUCTION latest edition.
2. Color:
   Background - White
   Message - Black
3. Message Series - E
4. Corners may be square or rounded when base material is plywood but borders shall be rounded as shown. When base material is metal, the corners and borders shall be rounded.
5. Substitute appropriate numerals and optically adjust spacing to achieve proper balance.

| SIZE | A | B | C | D | E | F | G | H | I | J | K | L | M | N | O | P | Q | R | S | T | U | V | W | X | Y | Z | Area sq. ft. |
|---|---|---|---|---|---|---|---|---|---|---|---|---|---|---|---|---|---|---|---|---|---|---|---|---|---|---|---|
| 1 | 18 | 24 | 1 1/8 | 3/8 | 1/2 | 3 | 8 | 3 | 2 | 2 | 3 | 7 1/4 | 5 1/2 | | | | | | | | | | | | | | 3.0 |
| 2S | 24 | 30 | 1 1/8 | 3/8 | 1/2 | 4 | 10 | 3 | 2 1/4 | 3 3/8 | 3 3/8 | 9 5/8 | 7 3/8 | | | | | | | | | | | | | | 5.0 |
| 2M | 30 | 36 | 1 3/8 | 1/2 | 5/8 | 5 | 12 | 5 | 2 1/2 | 2 1/2 | 4 | 12 | 9 1/4 | | | | | | | | | | | | | | 7.5 |
| 3 | 36 | 48 | 1 3/8 | 1/2 | 5/8 | 6 | 14 | 6 | 5 | 5 | 6 | 14 3/8 | 11 | | | | | | | | | | | | | | 12.0 |
| 4 | 36 | 48 | 1 3/8 | 1/2 | 5/8 | 6 | 14 | 6 | 5 | 5 | 6 | 14 3/8 | 11 | | | | | | | | | | | | | | 12.0 |
| 5 | 48 | 60 | 2 1/4 | 3/4 | 1 | 8 | 20 | 6 | 4 1/2 | 6 3/4 | 6 3/4 | 19 1/4 | 14 5/8 | | | | | | | | | | | | | | 20.0 |

STANDARD SIGN
R2-1

WISCONSIN DEPT OF TRANSPORTATION

APPROVED Matthew R Rauch
for State Traffic Engineer

DATE 5/26/10 PLATE NO. R2-1.13

PROJECT NO: | HWY: | COUNTY: | SHEET NO: 435 | E

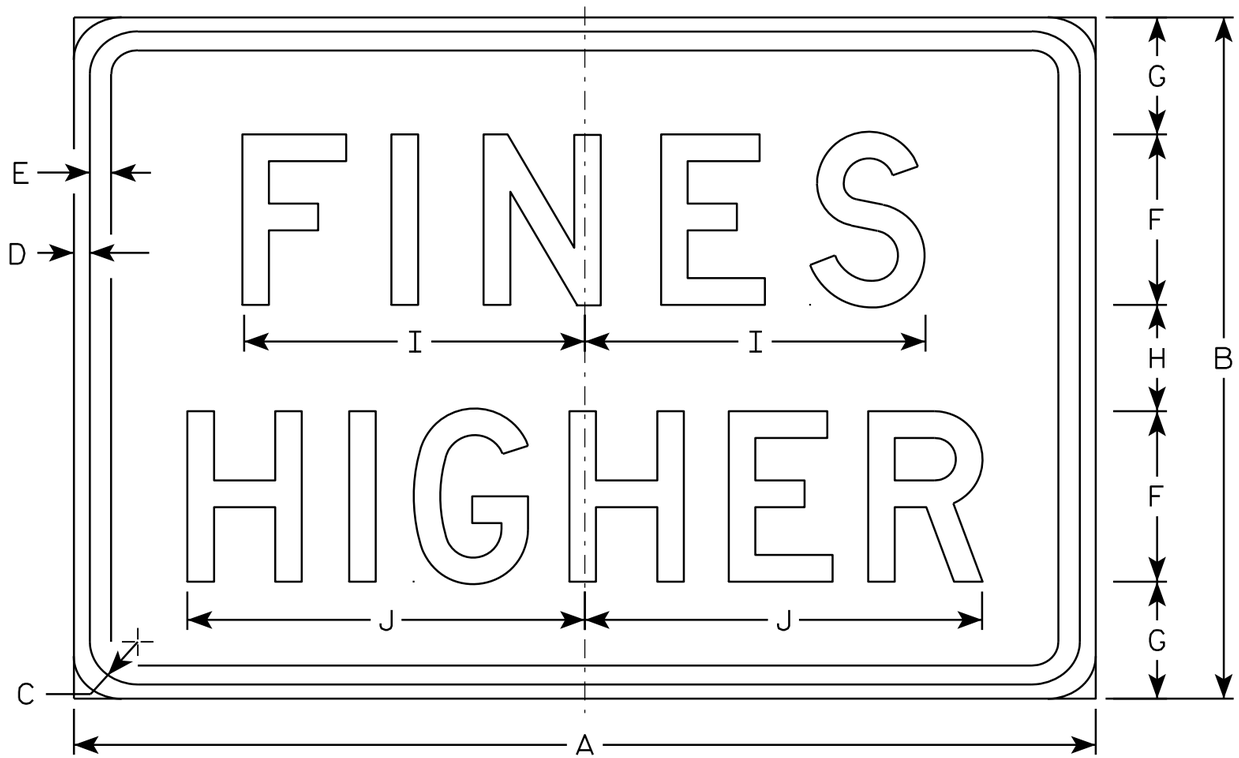


R2-6P

NOTES

1. Sign is Type II - Type H Reflective - reference WIS DOT Standard Specification for HIGHWAY and STRUCTURE CONSTRUCTION latest edition.
2. Color:
   Background - White
   Message - Black
3. Message Series - D
4. Corners may be square or rounded when base material is plywood but borders shall be rounded as shown. When base material is metal, the corners and borders shall be rounded.

| SIZE | A | B | C | D | E | F | G | H | I | J | K | L | M | N | O | P | Q | R | S | T | U | V | W | X | Y | Z | Area sq. ft. |
|---|---|---|---|---|---|---|---|---|---|---|---|---|---|---|---|---|---|---|---|---|---|---|---|---|---|---|---|
| 1 | | | | | | | | | | | | | | | | | | | | | | | | | | | |
| 2S | 24 | 18 | 1 1/8 | 3/8 | 3/8 | 4 | 3 1/2 | 3 | 7 5/8 | 9 1/4 | | | | | | | | | | | | | | | | | 3.0 |
| 2M | 24 | 18 | 1 1/8 | 3/8 | 3/8 | 4 | 3 1/2 | 3 | 7 5/8 | 9 1/4 | | | | | | | | | | | | | | | | | 3.0 |
| 3 | 36 | 24 | 1 1/8 | 3/8 | 1/2 | 6 | 4 1/8 | 3 3/4 | 12 | 14 | | | | | | | | | | | | | | | | | 6.0 |
| 4 | 36 | 24 | 1 1/8 | 3/8 | 1/2 | 6 | 4 1/8 | 3 3/4 | 12 | 14 | | | | | | | | | | | | | | | | | 6.0 |
| 5 | 48 | 36 | 1 3/8 | 1/2 | 5/8 | 8 | 7 | 6 | 15 1/8 | 19 | | | | | | | | | | | | | | | | | 12.0 |

STANDARD SIGN
R2-6P

WISCONSIN DEPT OF TRANSPORTATION

APPROVED Matthew R Rauch
for State Traffic Engineer

DATE 12/20/10 PLATE NO. R2-6P.2

PROJECT NO: | HWY: | COUNTY: | SHEET NO: 436 | E

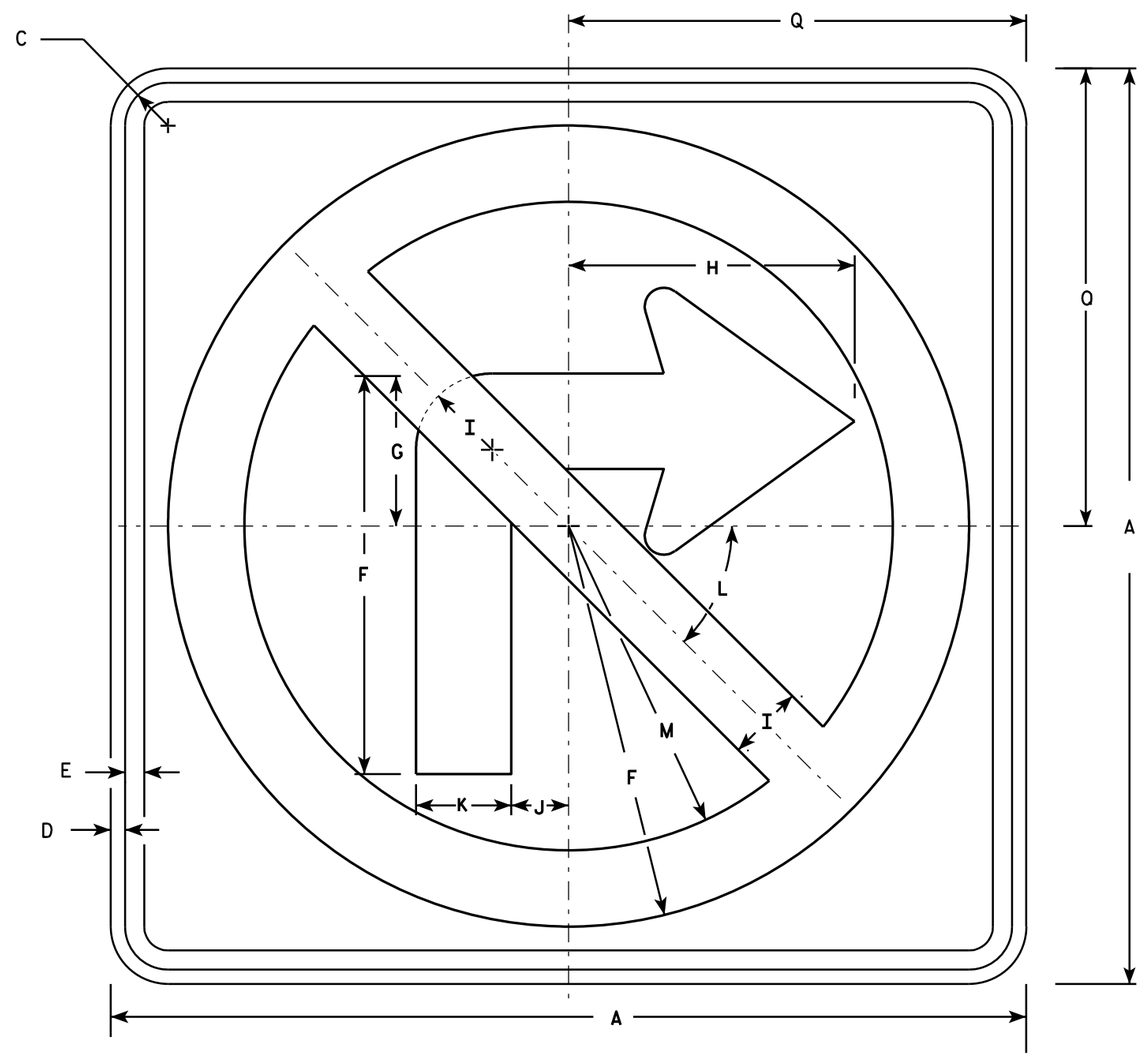


R3-1

## NOTES

1. Sign is Type II - Type H Reflective - reference WIS DOT Standard Specification for HIGHWAY and STRUCTURE CONSTRUCTION latest edition.
2. Color:
   Background - White
   Message - See note 4
3. Corners may be square or rounded when base material is plywood but borders shall be rounded as shown. When base material is metal, the corners and borders shall be rounded.
4. Border & Arrow are non reflective black, the circle with diagonal bar is reflective red.

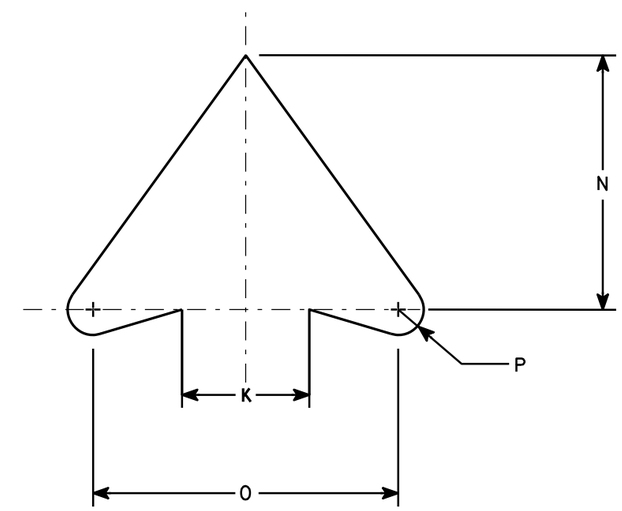


ARROW DETAIL

| SIZE | A | B | C | D | E | F | G | H | I | J | K | L | M | N | O | P | Q | R | S | T | U | V | W | X | Y | Z | Area sq. ft. |
|---|---|---|---|---|---|---|---|---|---|---|---|---|---|---|---|---|---|---|---|---|---|---|---|---|---|---|---|
| 1 | 24 | | 1 1/8 | 3/8 | 1/2 | 10 1/2 | 4 | 7 1/2 | 2 | 1 1/2 | 2 1/2 | 45 | 8 1/2 | 5 | 6 | 1/2 | 12 | | | | | | | | | | 4.0 |
| 2S | 24 | | 1 1/8 | 3/8 | 1/2 | 10 1/2 | 4 | 7 1/2 | 2 | 1 1/2 | 2 1/2 | 45° | 8 1/2 | 5 | 6 | 1/2 | 12 | | | | | | | | | | 4.0 |
| 2M | 36 | | 1 5/8 | 5/8 | 3/4 | 15 3/4 | 6 | 11 1/4 | 3 | 2 1/4 | 3 3/4 | 45 | 12 3/4 | 7 1/2 | 9 | 3/4 | 18 | | | | | | | | | | 9.0 |
| 3 | 36 | | 1 5/8 | 5/8 | 3/4 | 15 3/4 | 6 | 11 1/4 | 3 | 2 1/4 | 3 3/4 | 45 | 12 3/4 | 7 1/2 | 9 | 3/4 | 18 | | | | | | | | | | 9.0 |
| 4 | 36 | | 1 5/8 | 5/8 | 3/4 | 15 3/4 | 6 | 11 1/4 | 3 | 2 1/4 | 3 3/4 | 45° | 12 3/4 | 7 1/2 | 9 | 3/4 | 18 | | | | | | | | | | 9.0 |
| 5 | 48 | | 2 1/4 | 3/4 | 1 | 21 | 8 | 15 | 4 | 3 | 5 | 45° | 17 | 10 | 12 | 1 | 24 | | | | | | | | | | 16.0 |

STANDARD SIGN
R3-1

WISCONSIN DEPT OF TRANSPORTATION

APPROVED Matthew R Rauch
for State Traffic Engineer

DATE 12/08/10 PLATE NO. R3-1.5

| PROJECT NO: | HWY: | COUNTY: | | SHEET NO: 437 | E |
|---|---|---|---|---|---|

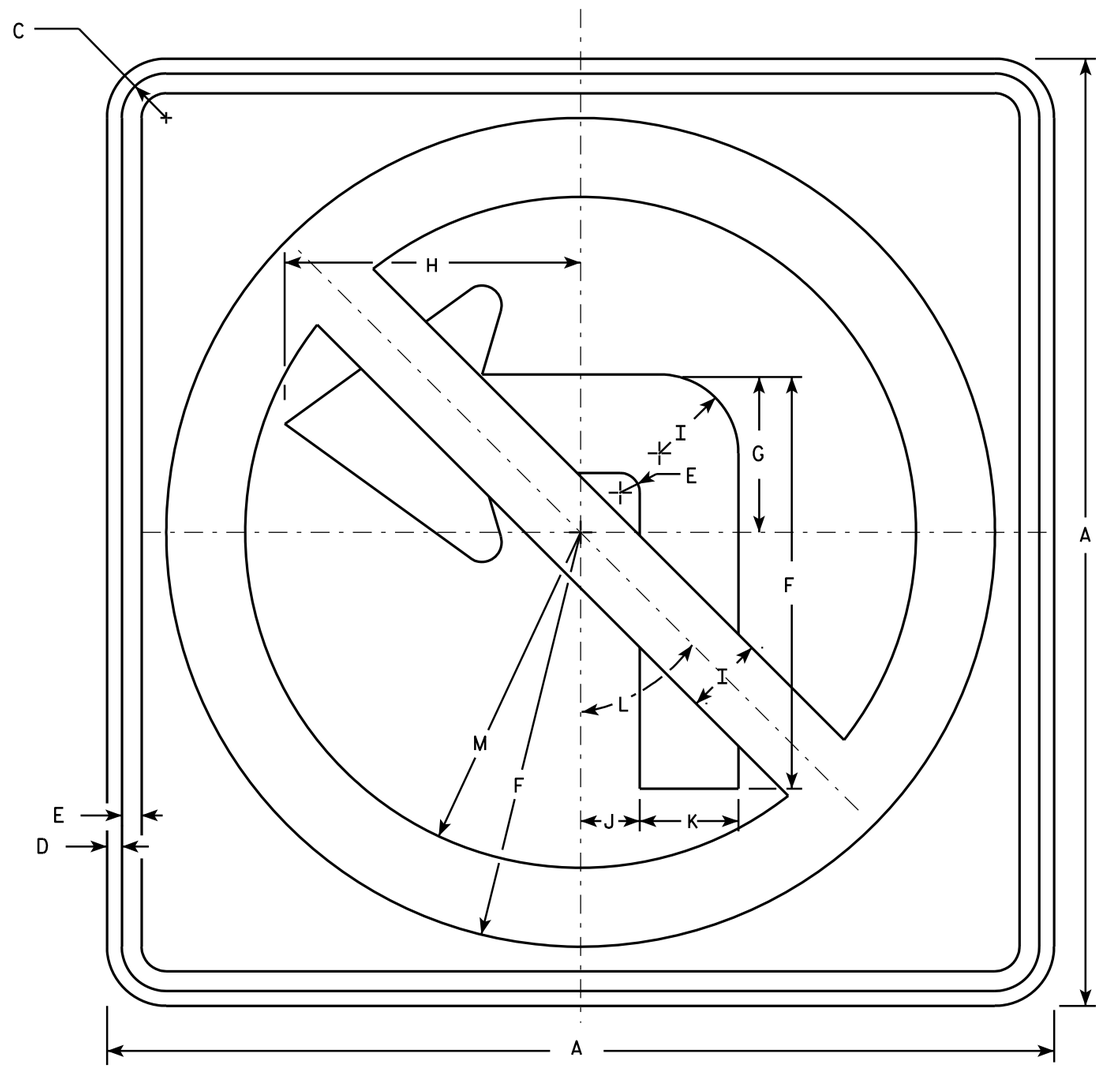


R3-2

NOTES

1. Sign is Type II - Type H Reflective - reference WIS DOT Standard Specification for HIGHWAY and STRUCTURE CONSTRUCTION latest edition.
2. Color:
   Background - White
   Message - See note 4
3. Corners may be square or rounded when base material is plywood but borders shall be rounded as shown. When base material is metal, the corners and borders shall be rounded.
4. Border & Arrow are non reflective black, the circle with diagonal bar is reflective red.

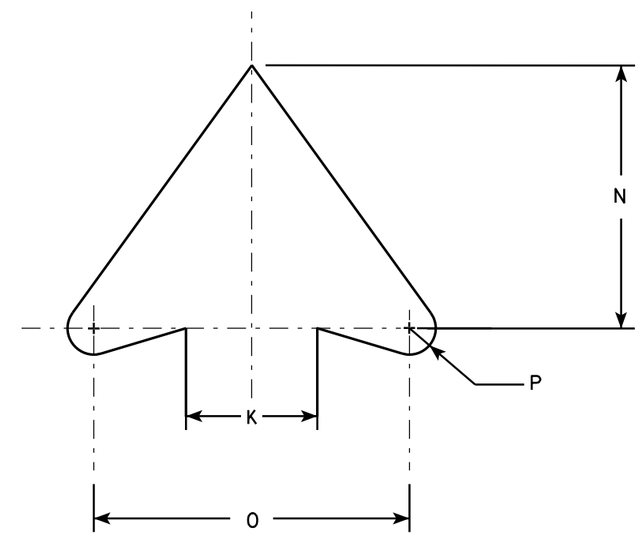


ARROW DETAIL

| SIZE | A | B | C | D | E | F | G | H | I | J | K | L | M | N | O | P | Q | R | S | T | U | V | W | X | Y | Z | Area sq. ft. |
|---|---|---|---|---|---|---|---|---|---|---|---|---|---|---|---|---|---|---|---|---|---|---|---|---|---|---|---|
| 1 | 24 | | 1 1/8 | 3/8 | 1/2 | 10 1/2 | 4 | 7 1/2 | 2 | 1 1/2 | 2 1/2 | 45° | 8 1/2 | 5 | 6 | 1/2 | | | | | | | | | | | 4.0 |
| 2S | 24 | | 1 1/8 | 3/8 | 1/2 | 10 1/2 | 4 | 7 1/2 | 2 | 1 1/2 | 2 1/2 | 45° | 8 1/2 | 5 | 6 | 1/2 | | | | | | | | | | | 4.0 |
| 2M | 36 | | 1 5/8 | 5/8 | 3/4 | 15 3/4 | 6 | 11 1/4 | 3 | 2 1/4 | 3 3/4 | 45° | 12 3/4 | 7 1/2 | 9 | 3/4 | | | | | | | | | | | 9.0 |
| 3 | 36 | | 1 5/8 | 5/8 | 3/4 | 15 3/4 | 6 | 11 1/4 | 3 | 2 1/4 | 3 3/4 | 45° | 12 3/4 | 7 1/2 | 9 | 3/4 | | | | | | | | | | | 9.0 |
| 4 | 36 | | 1 5/8 | 5/8 | 3/4 | 15 3/4 | 6 | 11 1/4 | 3 | 2 1/4 | 3 3/4 | 45° | 12 3/4 | 7 1/2 | 9 | 3/4 | | | | | | | | | | | 9.0 |
| 5 | 48 | | 2 1/4 | 3/4 | 1 | 21 | 8 | 15 | 4 | 3 | 5 | 45° | 17 | 10 | 12 | 1 | | | | | | | | | | | 16.0 |

STANDARD SIGN
R3-2

WISCONSIN DEPT OF TRANSPORTATION

APPROVED Matthew R Rauch
for State Traffic Engineer

DATE 12/08/10 PLATE NO. R3-2.10

| PROJECT NO: | HWY: | COUNTY: | | SHEET NO: 438 | E |
|---|---|---|---|---|---|

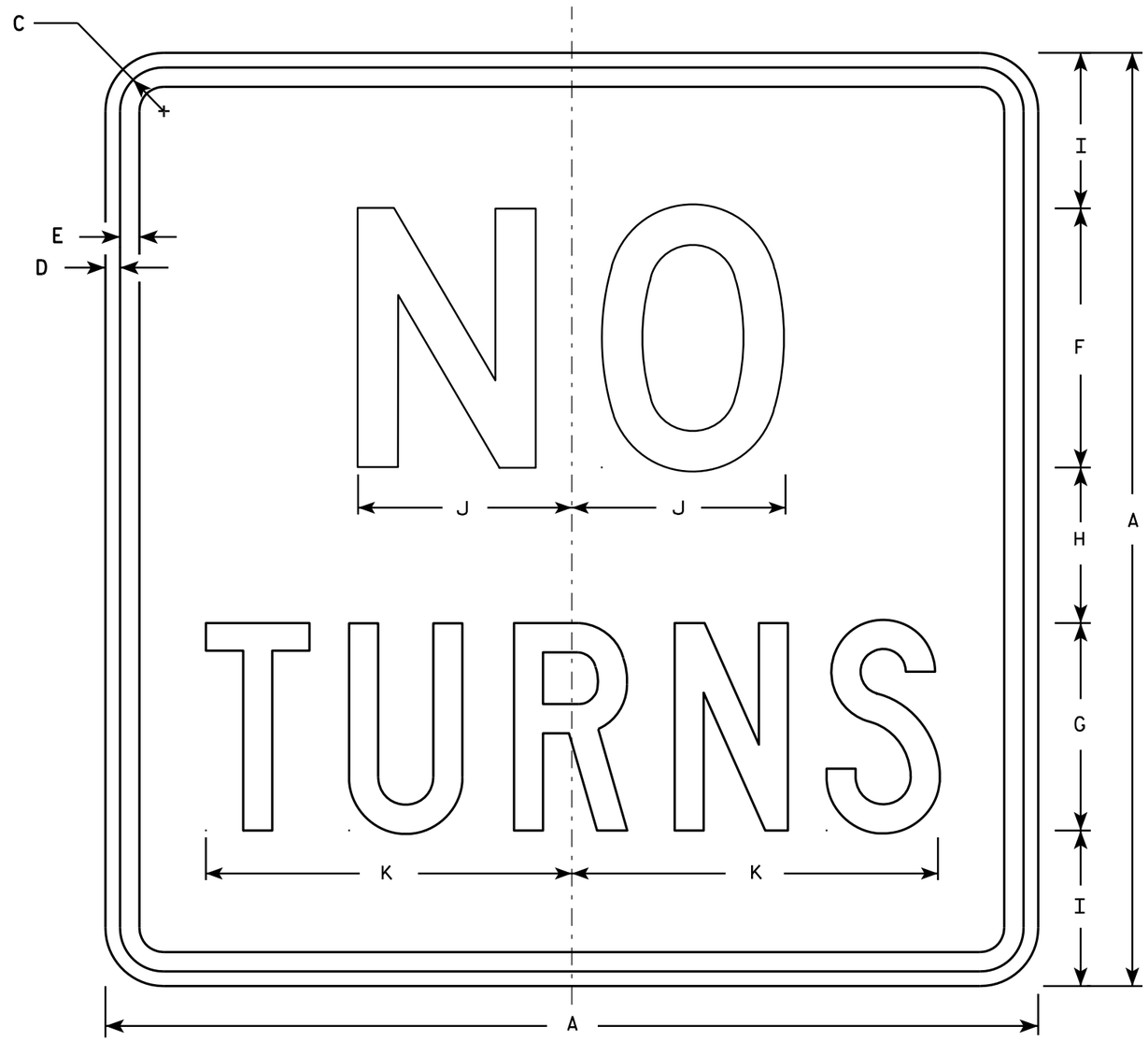


R3-3

NOTES

1. Sign is Type II - Type H Reflective - reference WIS DOT Standard Specification for HIGHWAY and STRUCTURE CONSTRUCTION latest edition.
2. Color:
   Background - White
   Message - Black
3. Message Series - See Note 5
4. Corners may be square or rounded when base material is plywood but borders shall be rounded as shown. When base material is metal, the corners and borders shall be rounded.
5. Line 1 is Series D and Line 2 is Series C.

| SIZE | A | B | C | D | E | F | G | H | I | J | K | L | M | N | O | P | Q | R | S | T | U | V | W | X | Y | Z | Area sq. ft. |
|---|---|---|---|---|---|---|---|---|---|---|---|---|---|---|---|---|---|---|---|---|---|---|---|---|---|---|---|
| 1 | | | | | | | | | | | | | | | | | | | | | | | | | | | |
| 2S | 24 | | 1 1/8 | 3/8 | 1/2 | 6 | 5 | 4 | 4 1/2 | 5 1/8 | 8 3/4 | | | | | | | | | | | | | | | | 4.0 |
| 2M | 36 | | 1 5/8 | 5/8 | 3/4 | 10 | 8 | 6 | 6 | 8 1/4 | 14 1/8 | | | | | | | | | | | | | | | | 9.0 |
| 3 | 36 | | 1 5/8 | 5/8 | 3/4 | 10 | 8 | 6 | 6 | 8 1/4 | 14 1/8 | | | | | | | | | | | | | | | | 9.0 |
| 4 | 36 | | 1 5/8 | 5/8 | 3/4 | 10 | 8 | 6 | 6 | 8 1/4 | 14 1/8 | | | | | | | | | | | | | | | | 9.0 |
| 5 | 48 | | 2 1/4 | 3/4 | 1 | 12 | 10 | 8 | 9 | 10 1/4 | 17 5/8 | | | | | | | | | | | | | | | | 16.0 |

STANDARD SIGN
R3-3

WISCONSIN DEPT OF TRANSPORTATION

APPROVED Matthew R Rauch
for State Traffic Engineer

DATE 12/08/10 PLATE NO. R3-3.10

PROJECT NO: | HWY: | COUNTY: | SHEET NO: 439 | E

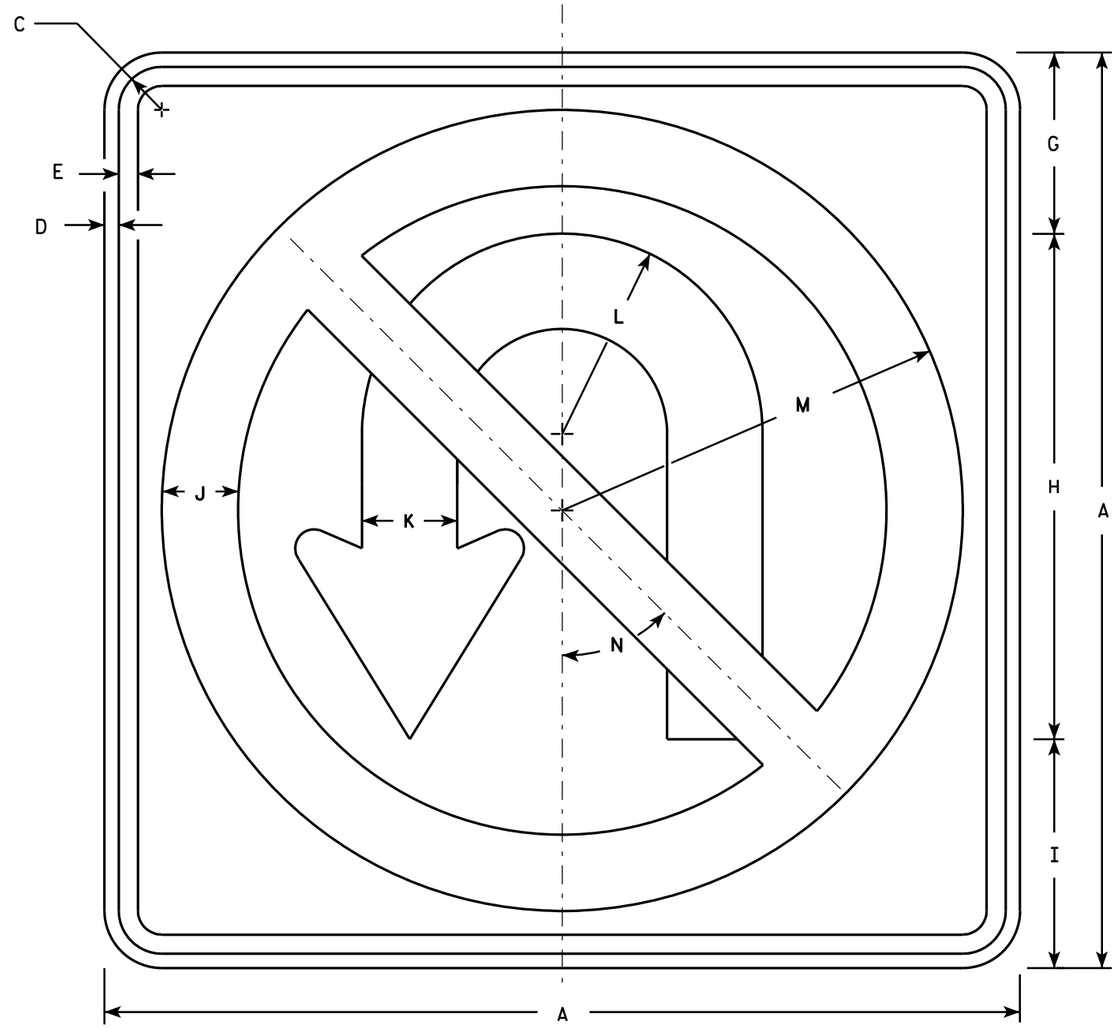


R3-4

NOTES

1. Sign is Type II - Type H Reflective - reference WIS DOT Standard Specification for HIGHWAY and STRUCTURE CONSTRUCTION latest edition.
2. Color:
   Background - White
   Message - See note 4
3. Corners may be square or rounded when base material is plywood but borders shall be rounded as shown. When base material is metal, the corners and borders shall be rounded.
4. Border & Arrow are non reflective black, the circle with diagonal bar is reflective red.

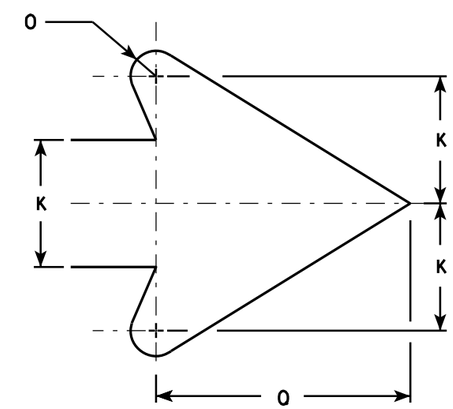


ARROW DETAIL

| SIZE | A | B | C | D | E | F | G | H | I | J | K | L | M | N | O | P | Q | R | S | T | U | V | W | X | Y | Z | Area sq. ft. |
|---|---|---|---|---|---|---|---|---|---|---|---|---|---|---|---|---|---|---|---|---|---|---|---|---|---|---|---|
| 1 | | | | | | | | | | | | | | | | | | | | | | | | | | | |
| 2S | 24 | | 1 1/8 | 3/8 | 1/2 | | 4 3/4 | 13 1/4 | 6 | 2 | 2 1/2 | 5 1/4 | 10 1/2 | 45° | 1/2 | | 5 | | | | | | | | | | 4.0 |
| 2M | 36 | | 1 5/8 | 5/8 | 3/4 | | 7 1/8 | 19 7/8 | 9 | 3 | 3 3/4 | 7 7/8 | 15 3/4 | 45° | 3/4 | | 7 5/8 | | | | | | | | | | 9.0 |
| 3 | 36 | | 1 5/8 | 5/8 | 3/4 | | 7 1/8 | 19 7/8 | 9 | 3 | 3 3/4 | 7 7/8 | 15 3/4 | 45° | 3/4 | | 7 5/8 | | | | | | | | | | 9.0 |
| 4 | 36 | | 1 5/8 | 5/8 | 3/4 | | 7 1/8 | 19 7/8 | 9 | 3 | 3 3/4 | 7 7/8 | 15 3/4 | 45° | 3/4 | | 7 5/8 | | | | | | | | | | 9.0 |
| 5 | 36 | | 1 5/8 | 5/8 | 3/4 | | 7 1/8 | 19 7/8 | 9 | 3 | 3 3/4 | 7 7/8 | 15 3/4 | 45° | 3/4 | | 7 5/8 | | | | | | | | | | 9.0 |

STANDARD SIGN
R3-4

WISCONSIN DEPT OF TRANSPORTATION

APPROVED Matthew R Rauch
for State Traffic Engineer

DATE 12/08/10 PLATE NO. R3-4.11

PROJECT NO: | HWY: | COUNTY: | SHEET NO: 440 | E

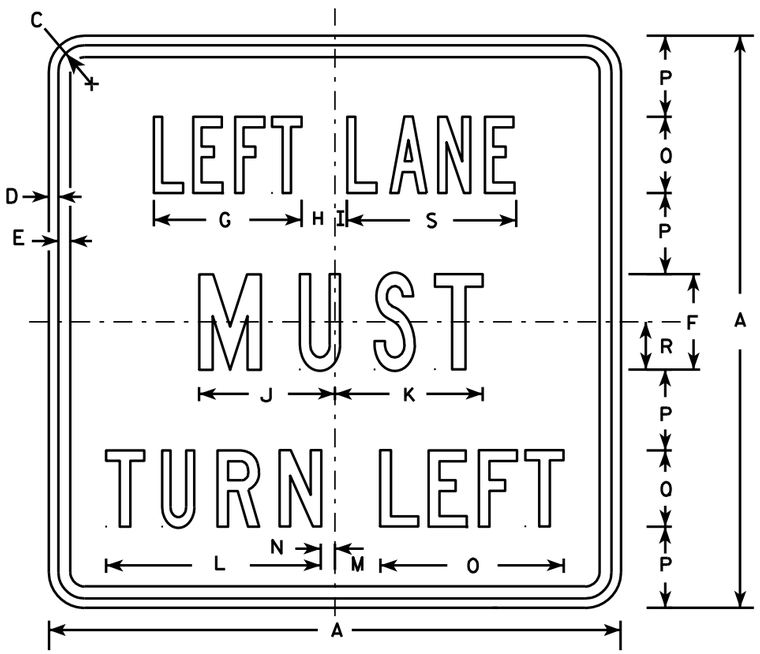


R3-7L

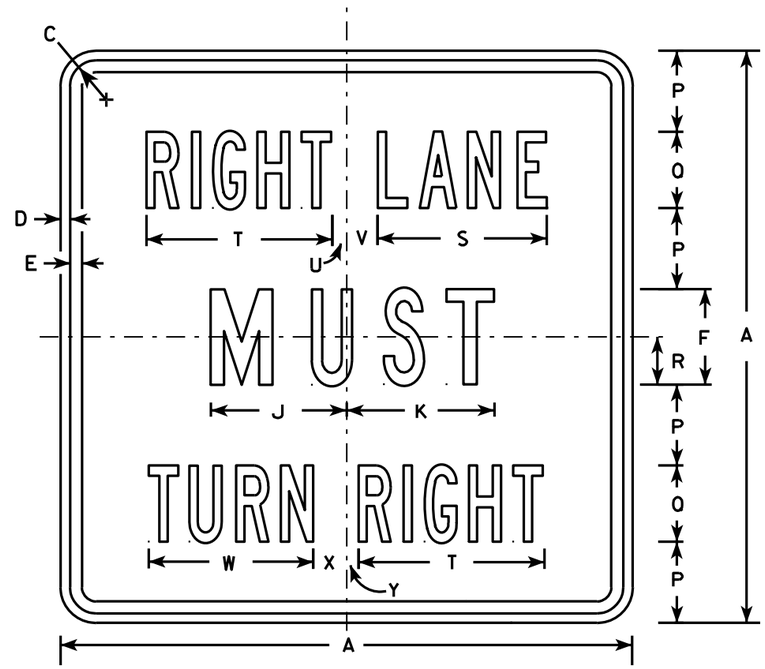


R3-7R

NOTES

1. Sign is Type II - Type H Reflective - reference WIS DOT Standard Specification for HIGHWAY and STRUCTURE CONSTRUCTION latest edition.
2. Color:
   Background - White
   Message - Black
3. Message Series - Line 1 is Series B.
   Line 2 is Series C.
   Line 3 on plate R3-7R is Series B and Series C on plate R3-7L.
4. Corners may be square or rounded when base material is plywood but borders shall be rounded as shown. When base material is metal, the corners and borders shall be rounded.

| SIZE | A | B | C | D | E | F | G | H | I | J | K | L | M | N | O | P | Q | R | S | T | U | V | W | X | Y | Z | Area sq. ft. |
|---|---|---|---|---|---|---|---|---|---|---|---|---|---|---|---|---|---|---|---|---|---|---|---|---|---|---|---|
| 1 | 30 | | 1 3/8 | 1/2 | 5/8 | 5 | 7 3/4 | 1 3/4 | 5/8 | 7 1/8 | 7 3/4 | 11 1/4 | 2 3/8 | 3/4 | 9 5/8 | 4 1/4 | 4 | 2 1/2 | 8 7/8 | 9 3/4 | 3/4 | 1 5/8 | 8 5/8 | 1 5/8 | 5/8 | | 6.25 |
| 2S | 30 | | 1 3/8 | 1/2 | 5/8 | 5 | 7 3/4 | 1 3/4 | 5/8 | 7 1/8 | 7 3/4 | 11 1/4 | 2 3/8 | 3/4 | 9 5/8 | 4 1/4 | 4 | 2 1/2 | 8 7/8 | 9 3/4 | 3/4 | 1 5/8 | 8 5/8 | 1 5/8 | 5/8 | | 6.25 |
| 2M | 30 | | 1 3/8 | 1/2 | 5/8 | 5 | 7 3/4 | 1 3/4 | 5/8 | 7 1/8 | 7 3/4 | 11 1/4 | 2 3/8 | 3/4 | 9 5/8 | 4 1/4 | 4 | 2 1/2 | 8 7/8 | 9 3/4 | 3/4 | 1 5/8 | 8 5/8 | 1 5/8 | 5/8 | | 6.25 |
| 3 | 36 | | 1 5/8 | 5/8 | 3/4 | 6 | 9 5/8 | 2 | 1 1/8 | 8 3/4 | 9 | 13 1/2 | 3 7/8 | 1 1/2 | 12 1/2 | 5 | 5 | 3 | 10 5/8 | 12 | 7/8 | 2 1/4 | 10 5/8 | 2 1/8 | 1 | | 9.00 |
| 4 | 48 | | 2 1/4 | 3/4 | 1 | 8 | 13 1/2 | 2 3/8 | 1 1/2 | 11 1/2 | 11 7/8 | 17 3/4 | 3 5/8 | 2 1/2 | 16 3/8 | 6 1/2 | 7 | 4 | 14 3/8 | 16 7/8 | 5/8 | 3 1/4 | 15 1/8 | 2 3/4 | 1 1/8 | | 16.00 |
| 5 | | | | | | | | | | | | | | | | | | | | | | | | | | | |

STANDARD SIGN
R3-7L & R3-7R

WISCONSIN DEPT OF TRANSPORTATION

APPROVED Matthew R Rauch
for State Traffic Engineer

DATE 3/18/2011 PLATE NO. R3-7.3

| PROJECT NO: | HWY: | COUNTY: | | SHEET NO: 441 | E |
|---|---|---|---|---|---|




7

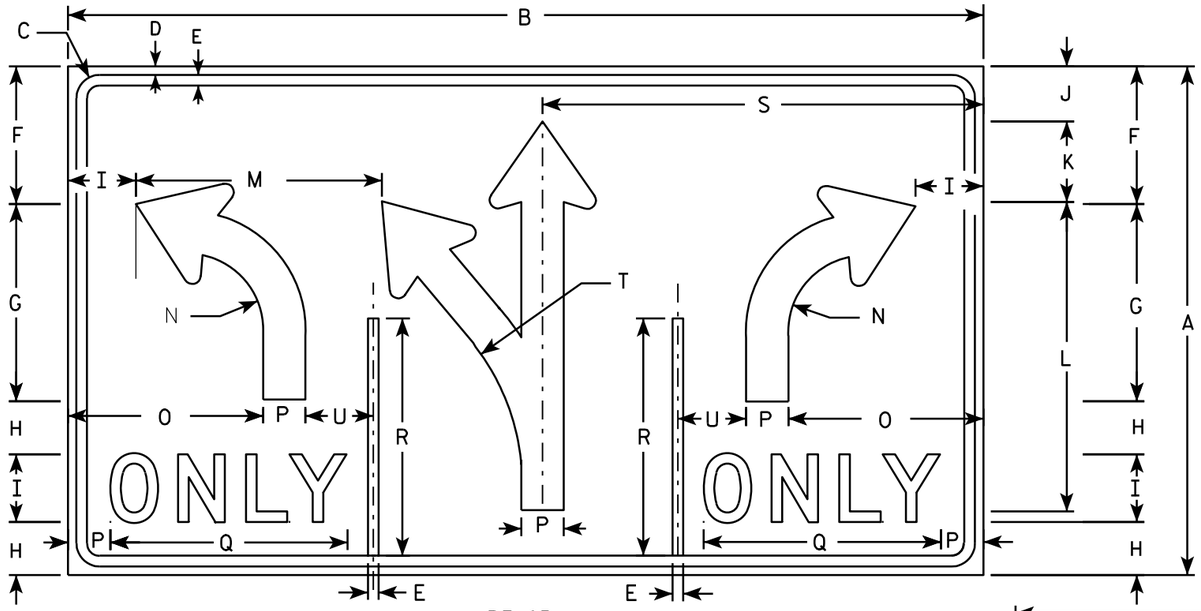


R3-8P

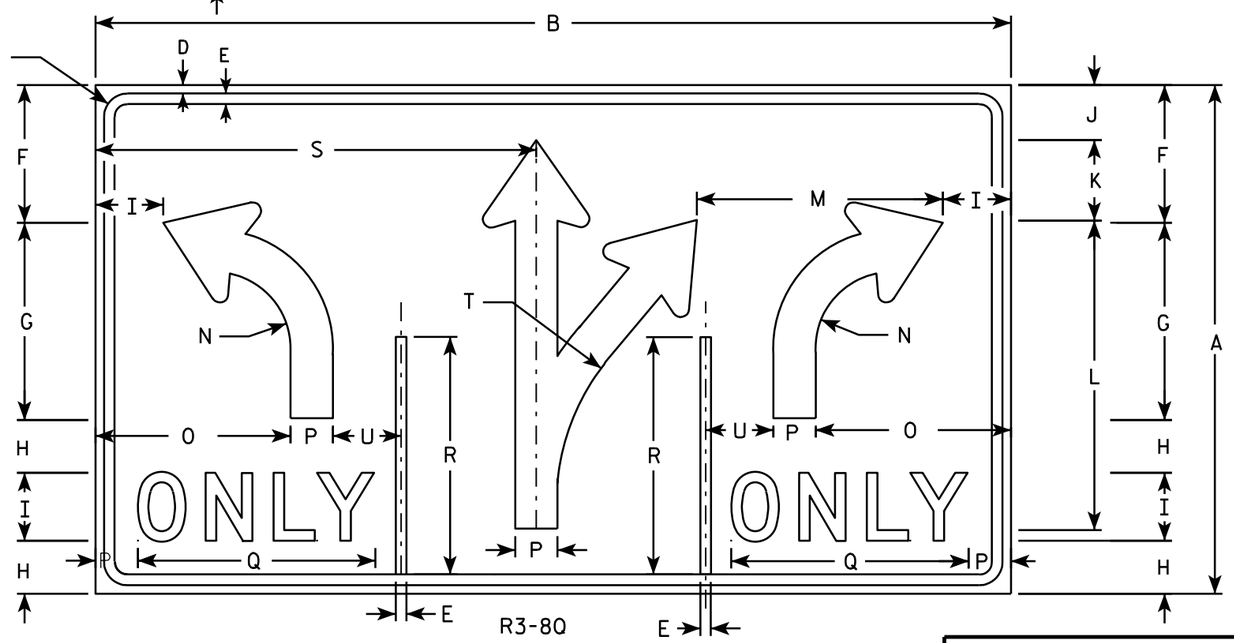


R3-8Q

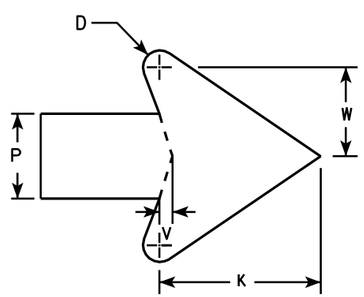


ARROW DETAIL

## NOTES

1. Sign is Type II - Type H Reflective - reference WIS DOT Standard Specification for HIGHWAY and STRUCTURE CONSTRUCTION latest edition.
2. Color:
   Background - WHITE
   Message - BLACK
3. Message Series - D
4. Corners may be square or rounded when base material is plywood but borders shall be rounded as shown. When base material is metal, the corners and borders shall be rounded.

| SIZE | A | B | C | D | E | F | G | H | I | J | K | L | M | N | O | P | Q | R | S | T | U | V | W | X | Y | Z | Area sq. ft. |
|---|---|---|---|---|---|---|---|---|---|---|---|---|---|---|---|---|---|---|---|---|---|---|---|---|---|---|---|
| 1 | | | | | | | | | | | | | | | | | | | | | | | | | | | |
| 2S | 30 | 54 | 1 3/8 | 1/2 | 5/8 | 8 1/8 | 11 5/8 | 3 1/8 | 4 | 3 1/4 | 4 3/4 | 18 1/4 | 14 1/2 | 4 1/2 | 11 1/2 | 2 1/2 | 14 | 14 | 26 | 13 1/4 | 4 | 3/8 | 2 5/8 | | | | 11.25 |
| 2M | 30 | 54 | 1 3/8 | 1/2 | 5/8 | 8 1/8 | 11 5/8 | 3 1/8 | 4 | 3 1/4 | 4 3/4 | 18 1/4 | 14 1/2 | 4 1/2 | 11 1/2 | 2 1/2 | 14 | 14 | 26 | 13 1/4 | 4 | 3/8 | 2 5/8 | | | | 11.25 |
| 3 | | | | | | | | | | | | | | | | | | | | | | | | | | | |
| 4 | 48 | 84 | 2 1/4 | 3/4 | 1 | 13 1/4 | 18 1/2 | 5 1/8 | 6 | 5 1/4 | 7 1/8 | 29 1/8 | 22 5/8 | 7 1/4 | 17 1/4 | 3 3/4 | 20 5/8 | 22 3/8 | 40 3/4 | 21 7/8 | 7 | 5/8 | 4 | | | | 28.0 |
| 5 | 48 | 84 | 2 1/4 | 3/4 | 1 | 13 1/4 | 18 1/2 | 5 1/8 | 6 | 5 1/4 | 7 1/8 | 29 1/8 | 22 5/8 | 7 1/4 | 17 1/4 | 3 3/4 | 20 5/8 | 22 3/8 | 40 3/4 | 21 7/8 | 7 | 5/8 | 4 | | | | 28.0 |

# STANDARD SIGN
# R3-8P & R3-8Q

WISCONSIN DEPT OF TRANSPORTATION

APPROVED Matthew R Rauch
for State Traffic Engineer

DATE 3/24/2011 PLATE NO. R3-8P.2

PROJECT NO:

SHEET NO: 442 E

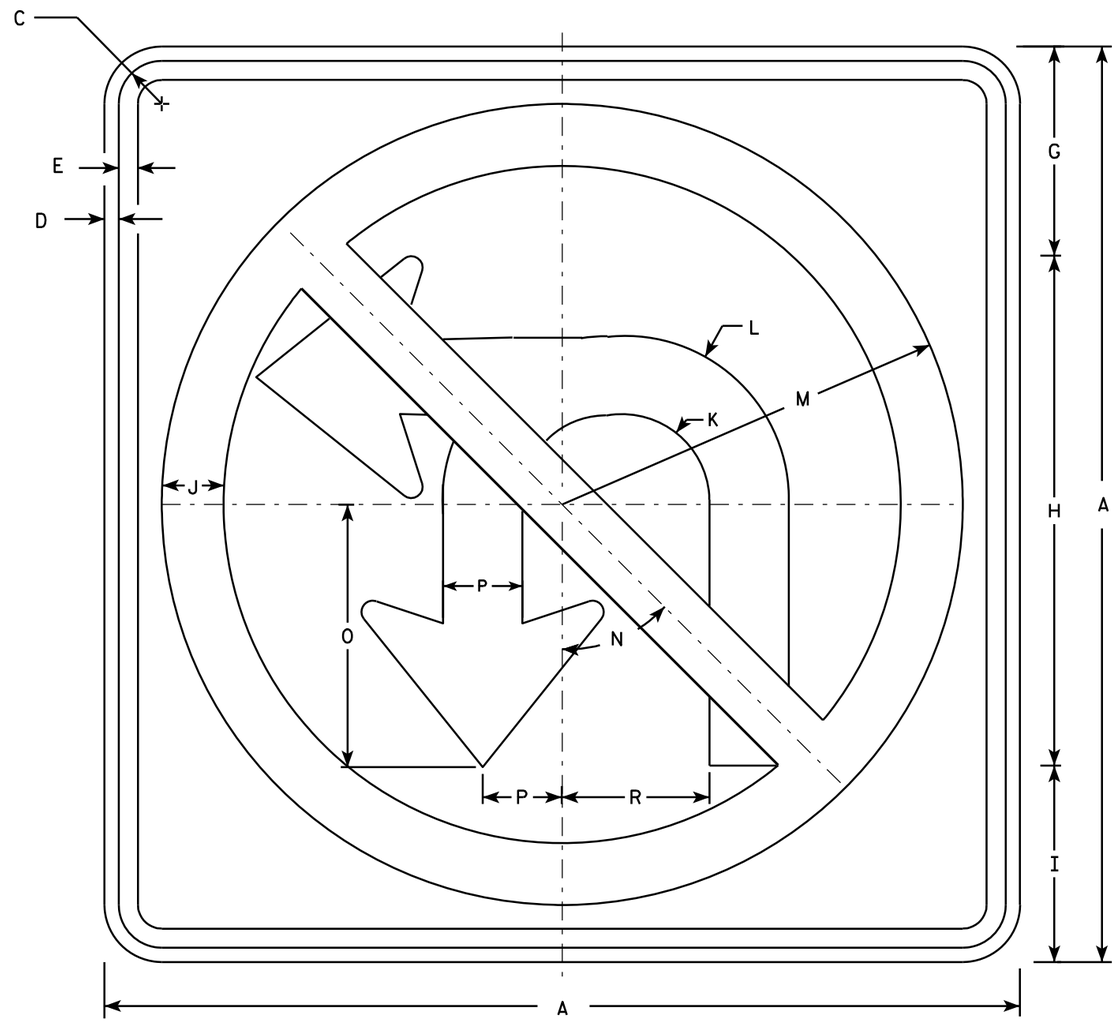


R3-18

## NOTES

1. Sign is Type II - Type H Reflective - reference WIS DOT Standard Specification for HIGHWAY and STRUCTURE CONSTRUCTION latest edition.
2. Color:
   Background - White
   Message - See note 4
3. Corners may be square or rounded when base material is plywood but borders shall be rounded as shown. When base material is metal, the corners and borders shall be rounded.
4. Border & Arrow are non reflective black, the circle with diagonal bar is reflective red.

| SIZE | A | B | C | D | E | F | G | H | I | J | K | L | M | N | O | P | Q | R | S | T | U | V | W | X | Y | Z | Area sq. ft. |
|---|---|---|---|---|---|---|---|---|---|---|---|---|---|---|---|---|---|---|---|---|---|---|---|---|---|---|---|
| 1 | | | | | | | | | | | | | | | | | | | | | | | | | | | |
| 2S | 24 | | 1 1/8 | 3/8 | 1/2 | | 5 1/2 | 13 3/8 | 5 1/8 | 1 5/8 | 2 1/4 | 4 1/4 | 10 1/2 | 45° | 6 7/8 | 2 1/8 | | 3 7/8 | | | | | | | | | 4.0 |
| 2M | 36 | | 1 5/8 | 5/8 | 3/4 | | 8 1/4 | 20 | 7 3/4 | 2 1/2 | 3 3/8 | 6 1/2 | 15 3/4 | 45° | 10 3/8 | 3 1/8 | | 5 3/4 | | | | | | | | | 9.0 |
| 3 | 36 | | 1 5/8 | 5/8 | 3/4 | | 8 1/4 | 20 | 7 3/4 | 2 1/2 | 3 3/8 | 6 1/2 | 15 3/4 | 45 | 10 3/8 | 3 1/8 | | 5 3/4 | | | | | | | | | 9.0 |
| 4 | 36 | | 1 5/8 | 5/8 | 3/4 | | 8 1/4 | 20 | 7 3/4 | 2 1/2 | 3 3/8 | 6 1/2 | 15 3/4 | 45 | 10 3/8 | 3 1/8 | | 5 3/4 | | | | | | | | | 9.0 |
| 5 | 48 | | 2 1/4 | 3/4 | 1 | | 11 | 26 3/4 | 10 1/4 | 3 1/4 | 4 5/8 | 8 5/8 | 21 | 45° | 13 3/4 | 4 1/8 | | 7 3/4 | | | | | | | | | 16.0 |

STANDARD SIGN
R3-18

WISCONSIN DEPT OF TRANSPORTATION

APPROVED Matthew R Rauch
for State Traffic Engineer

DATE 11/21/10 PLATE NO. R3-18.2

| PROJECT NO: | HWY: | COUNTY: | | SHEET NO: 443 | E |
|---|---|---|---|---|---|

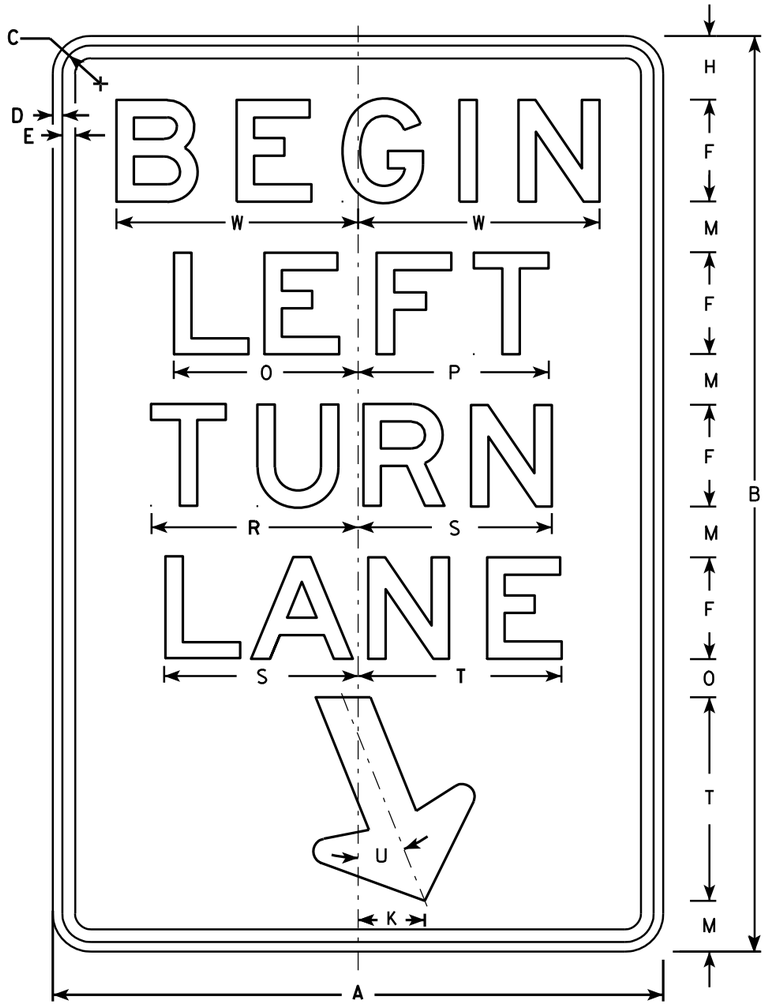


R3-20L

## NOTES

1. Sign is Type II - Type H Reflective - reference WIS DOT Standard Specification for HIGHWAY and STRUCTURE CONSTRUCTION latest edition.
2. Color:
   Background - White
   Message - Black
3. Message Series - E
4. Corners may be square or rounded when base material is plywood but borders shall be rounded as shown. When base material is metal, the corners and borders shall be rounded.

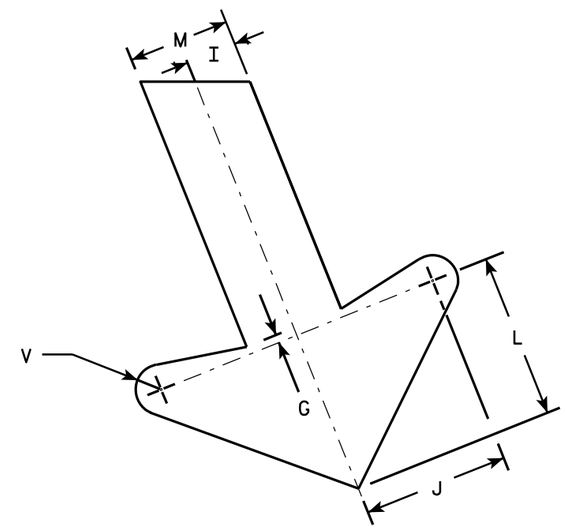


ARROW DETAIL

| SIZE | A | B | C | D | E | F | G | H | I | J | K | L | M | N | O | P | Q | R | S | T | U | V | W | X | Y | Z | Area sq. ft. |
|---|---|---|---|---|---|---|---|---|---|---|---|---|---|---|---|---|---|---|---|---|---|---|---|---|---|---|---|
| 1 | | | | | | | | | | | | | | | | | | | | | | | | | | | |
| 2S | 24 | 36 | 1 1/8 | 3/8 | 1/2 | 4 | 1/4 | 2 1/2 | 1 | 2 7/8 | 2 5/8 | 3 1/4 | 2 | 1 1/2 | 7 1/4 | 7 1/2 | | 8 1/8 | 7 5/8 | 8 | 22° | 1/2 | 9 1/2 | | | | 6.0 |
| 2M | 24 | 36 | 1 1/8 | 3/8 | 1/2 | 4 | 1/4 | 2 1/2 | 1 | 2 7/8 | 2 5/8 | 3 1/4 | 2 | 1 1/2 | 7 1/4 | 7 1/2 | | 8 1/8 | 7 5/8 | 8 | 22° | 1/2 | 9 1/2 | | | | 6.0 |
| 3 | 36 | 54 | 1 3/4 | 1/2 | 5/8 | 6 | 3/8 | 3 3/4 | 1 1/2 | 4 1/4 | 4 | 4 7/8 | 3 | 2 1/4 | 10 7/8 | 11 1/4 | | 12 1/4 | 11 1/2 | 12 | 22° | 3/4 | 13 1/4 | | | | 13.5 |
| 4 | | | | | | | | | | | | | | | | | | | | | | | | | | | |
| 5 | | | | | | | | | | | | | | | | | | | | | | | | | | | |

STANDARD SIGN
R3-20L

WISCONSIN DEPT OF TRANSPORTATION

APPROVED Matthew R Rauch
for State Traffic Engineer

DATE 10/18/10 PLATE NO. R3-20L.7

PROJECT NO: | HWY: | COUNTY: | SHEET NO: 444 | E

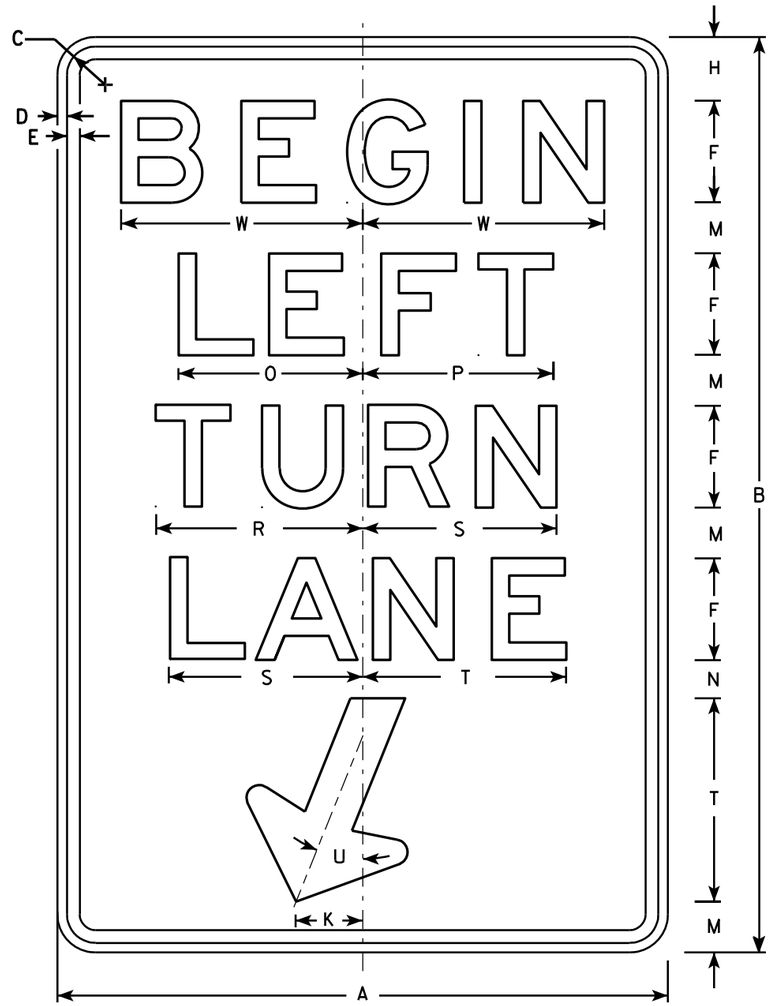


R3-20LL

NOTES

1. Sign is Type II - Type H Reflective - reference WIS DOT Standard Specification for HIGHWAY and STRUCTURE CONSTRUCTION latest edition.
2. Color:
   Background - White
   Message - Black
3. Message Series - E
4. Corners may be square or rounded when base material is plywood but borders shall be rounded as shown. When base material is metal, the corners and borders shall be rounded.

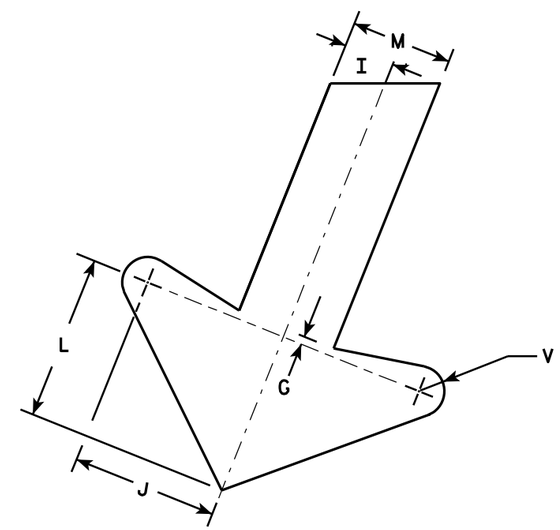


ARROW DETAIL

| SIZE | A | B | C | D | E | F | G | H | I | J | K | L | M | N | O | P | Q | R | S | T | U | V | W | X | Y | Z | Area sq. ft. |
|---|---|---|---|---|---|---|---|---|---|---|---|---|---|---|---|---|---|---|---|---|---|---|---|---|---|---|---|
| 1 | | | | | | | | | | | | | | | | | | | | | | | | | | | |
| 2S | 24 | 36 | 1 1/8 | 3/8 | 1/2 | 4 | 1/4 | 2 1/2 | 1 | 2 7/8 | 2 5/8 | 3 1/4 | 2 | 1 1/2 | 7 1/4 | 7 1/2 | | 8 1/8 | 7 5/8 | 8 | 22° | 1/2 | 9 1/2 | | | | 6.0 |
| 2M | 24 | 36 | 1 1/8 | 3/8 | 1/2 | 4 | 1/4 | 2 1/2 | 1 | 2 7/8 | 2 5/8 | 3 1/4 | 2 | 1 1/2 | 7 1/4 | 7 1/2 | | 8 1/8 | 7 5/8 | 8 | 22° | 1/2 | 9 1/2 | | | | 6.0 |
| 3 | 36 | 54 | 1 3/4 | 1/2 | 5/8 | 6 | 3/8 | 3 3/4 | 1 1/2 | 4 1/4 | 4 | 4 7/8 | 3 | 2 1/4 | 10 7/8 | 11 1/4 | | 12 1/4 | 11 1/2 | 12 | 22° | 3/4 | 13 1/4 | | | | 13.5 |
| 4 | | | | | | | | | | | | | | | | | | | | | | | | | | | |
| 5 | | | | | | | | | | | | | | | | | | | | | | | | | | | |

STANDARD SIGN
R3-20LL

WISCONSIN DEPT OF TRANSPORTATION

APPROVED Matthew R Rauch
for State Traffic Engineer

DATE 10/18/10 PLATE NO. R3-20LL.1

| PROJECT NO: | HWY: | COUNTY: | | SHEET NO: 445 | E |
|---|---|---|---|---|---|

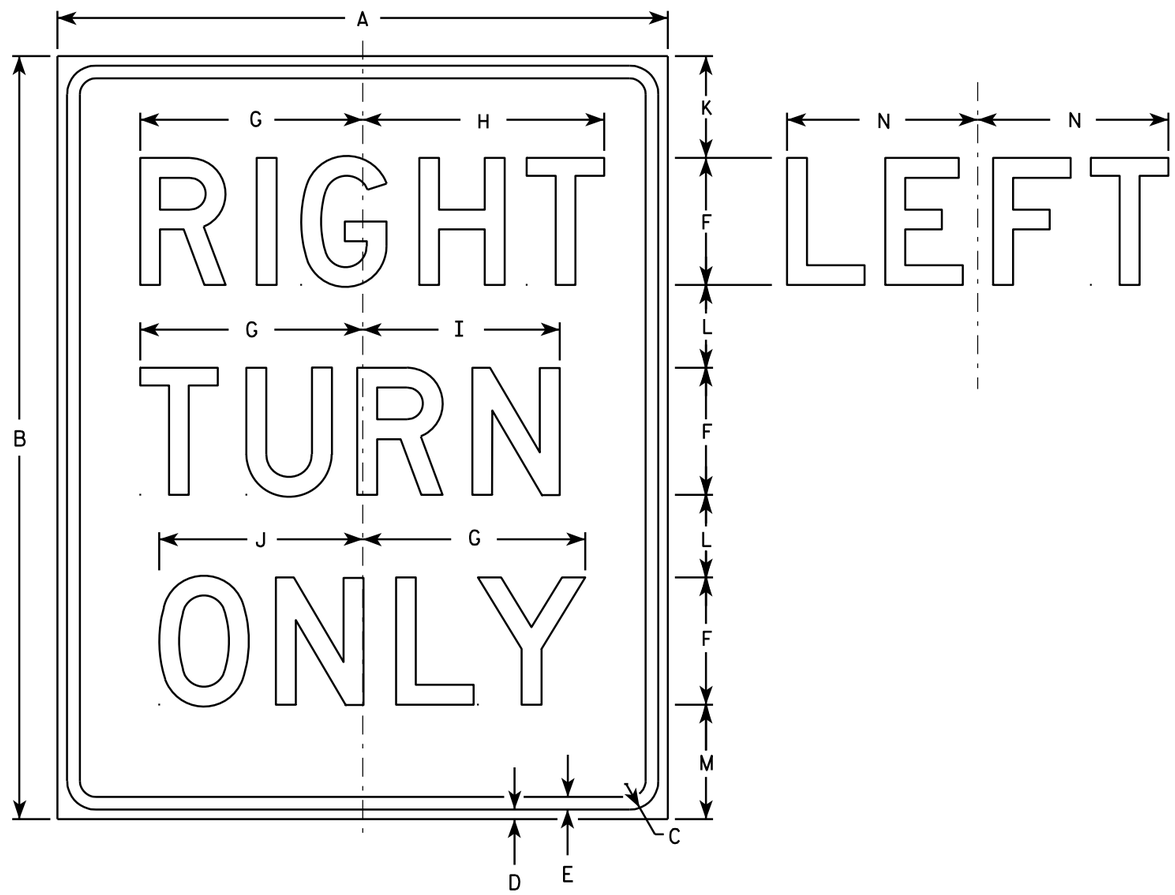


R3-53R

## NOTES

1. Sign is Type II - Type H Reflective - reference WIS DOT Standard Specification for HIGHWAY and STRUCTURE CONSTRUCTION latest edition.
2. Color:
   Background - White
   Message - Black
3. Message Series - D
4. Corners may be square or rounded when base material is plywood but borders shall be rounded as shown. When base material is metal, the corners and borders shall be rounded.
5. R3-53L same as R3-53R except LEFT is substituted for RIGHT.

| SIZE | A | B | C | D | E | F | G | H | I | J | K | L | M | N | O | P | Q | R | S | T | U | V | W | X | Y | Z | Area sq. ft. |
|---|---|---|---|---|---|---|---|---|---|---|---|---|---|---|---|---|---|---|---|---|---|---|---|---|---|---|---|
| 1 | | | | | | | | | | | | | | | | | | | | | | | | | | | |
| 2S | 24 | 30 | 1 1/8 | 3/8 | 1/2 | 5 | 8 3/4 | 9 1/2 | 7 3/4 | 8 | 4 | 3 1/4 | 4 1/2 | 7 1/2 | | | | | | | | | | | | | 5.0 |
| 2M | 24 | 30 | 1 1/8 | 3/8 | 1/2 | 5 | 8 3/4 | 9 1/2 | 7 3/4 | 8 | 4 | 3 1/4 | 4 1/2 | 7 1/2 | | | | | | | | | | | | | 5.0 |
| 3 | 24 | 30 | 1 1/8 | 3/8 | 1/2 | 5 | 8 3/4 | 9 1/2 | 7 3/4 | 8 | 4 | 3 1/4 | 4 1/2 | 7 1/2 | | | | | | | | | | | | | 5.0 |
| 4 | | | | | | | | | | | | | | | | | | | | | | | | | | | |
| 5 | | | | | | | | | | | | | | | | | | | | | | | | | | | |

STANDARD SIGN
R3-53

WISCONSIN DEPT OF TRANSPORTATION

APPROVED Matthew R Rauch
for State Traffic Engineer

DATE 3/24/2011 PLATE NO. R3-53.8

PROJECT NO: | HWY: | COUNTY: | SHEET NO: 446 | E

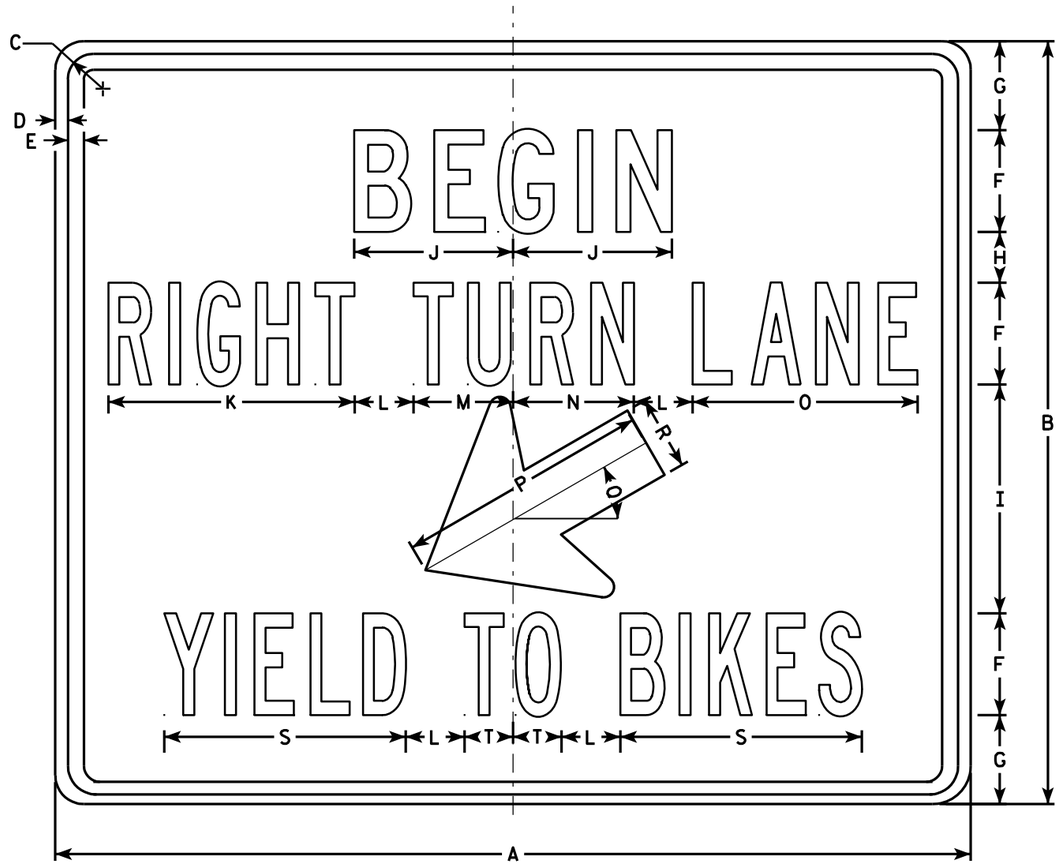


R4-4

## NOTES

1. Sign is Type II - Type H Reflective - reference WIS DOT Standard Specification for HIGHWAY and STRUCTURE CONSTRUCTION latest edition.
2. Color:
   Background - White
   Message - Black
3. Message Series - See Note 5
4. Corners may be square or rounded when base material is plywood but borders shall be rounded as shown. When base material is metal, the corners and borders shall be rounded.
5. Line 1 is Series C
   Lines 2 & 3 are Series B

| SIZE | A | B | C | D | E | F | G | H | I | J | K | L | M | N | O | P | Q | R | S | T | U | V | W | X | Y | Z | Area sq. ft. |
|---|---|---|---|---|---|---|---|---|---|---|---|---|---|---|---|---|---|---|---|---|---|---|---|---|---|---|---|
| 1 | | | | | | | | | | | | | | | | | | | | | | | | | | | |
| 2S | 36 | 30 | 1 3/8 | 1/2 | 5/8 | 4 | 3 1/2 | 2 | 9 | 6 1/4 | 9 3/4 | 2 3/8 | 3 7/8 | 4 3/4 | 8 7/8 | 10 | 30° | 2 7/8 | 9 1/2 | 1 7/8 | | | | | | | 7.5 |
| 2M | 36 | 30 | 1 3/8 | 1/2 | 5/8 | 4 | 3 1/2 | 2 | 9 | 6 1/4 | 9 3/4 | 2 3/8 | 3 7/8 | 4 3/4 | 8 7/8 | 10 | 30° | 2 7/8 | 9 1/2 | 1 7/8 | | | | | | | 7.5 |
| 3 | | | | | | | | | | | | | | | | | | | | | | | | | | | |
| 4 | | | | | | | | | | | | | | | | | | | | | | | | | | | |
| 5 | | | | | | | | | | | | | | | | | | | | | | | | | | | |

STANDARD SIGN
R4-4

WISCONSIN DEPT OF TRANSPORTATION

APPROVED Matthew R Rauch
For State Traffic Engineer

DATE 3/25/2011 PLATE NO. R4-4.2

| PROJECT NO: | HWY: | COUNTY: | | SHEET NO: 447 | E |
|---|---|---|---|---|---|

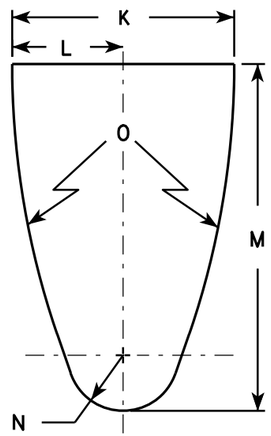


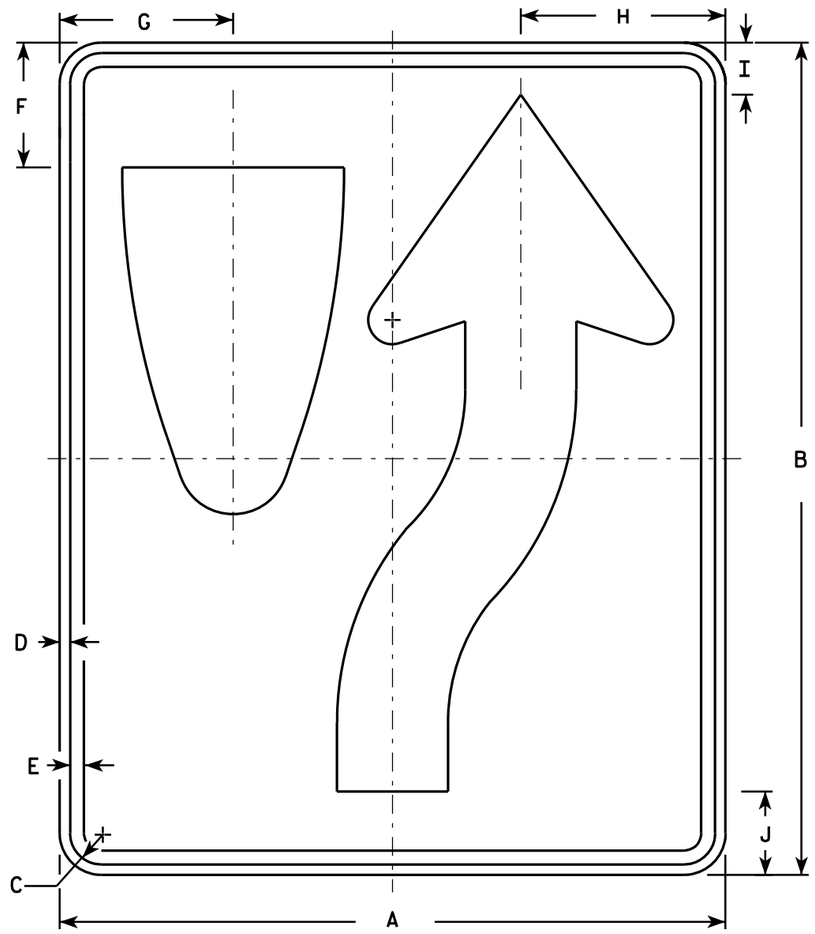


R4-7

## NOTES

1. Sign is Type II - Type H Reflective - reference WIS DOT Standard Specification for HIGHWAY and STRUCTURE CONSTRUCTION latest edition. material is plywood but borders shall be rounded
2. Color:
   Background - White
   Message - Black
3. Corners may be square or rounded when base as shown. When base material is metal, the corners and borders shall be rounded.
4. R4-8 is the same as R4-7 except Legend is reversed.

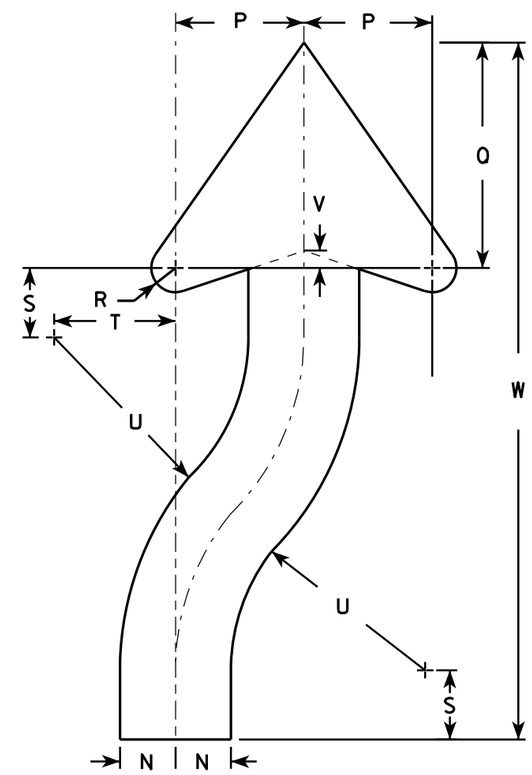


ARROW DETAIL

| SIZE | A | B | C | D | E | F | G | H | I | J | K | L | M | N | O | P | Q | R | S | T | U | V | W | X | Y | Z | Area sq. ft. |
|---|---|---|---|---|---|---|---|---|---|---|---|---|---|---|---|---|---|---|---|---|---|---|---|---|---|---|---|
| 1 | 18 | 24 | 1 1/8 | 3/8 | 1/2 | 3 3/8 | 4 3/4 | 5 1/2 | 1 3/8 | 2 1/4 | 6 | 3 | 9 3/8 | 1 1/2 | 22 1/2 | 3 1/2 | 6 1/8 | 5/8 | 1 7/8 | 3 1/4 | 6 3/4 | 1/2 | 20 3/8 | | | | 3.0 |
| 2S | 24 | 30 | 1 1/8 | 3/8 | 1/2 | 4 1/2 | 6 1/4 | 7 3/8 | 1 7/8 | 3 | 8 | 4 | 12 1/2 | 2 | 30 | 4 5/8 | 8 1/8 | 7/8 | 2 1/2 | 4 3/8 | 9 | 5/8 | 25 1/8 | | | | 5.0 |
| 2M | 24 | 30 | 1 1/8 | 3/8 | 1/2 | 4 1/2 | 6 1/4 | 7 3/8 | 1 7/8 | 3 | 8 | 4 | 12 1/2 | 2 | 30 | 4 5/8 | 8 1/8 | 7/8 | 2 1/2 | 4 3/8 | 9 | 5/8 | 25 1/8 | | | | 5.0 |
| 3 | 36 | 48 | 1 3/4 | 1/2 | 5/8 | 6 3/4 | 9 3/8 | 11 1/8 | 2 7/8 | 4 1/2 | 12 | 6 | 18 3/4 | 3 | 45 | 6 7/8 | 12 1/4 | 1 1/4 | 3 3/4 | 6 5/8 | 13 1/2 | 1 | 40 3/4 | | | | 12.0 |
| 4 | 36 | 48 | 1 3/4 | 1/2 | 5/8 | 6 3/4 | 9 3/8 | 11 1/8 | 2 7/8 | 4 1/2 | 12 | 6 | 18 3/4 | 3 | 45 | 6 7/8 | 12 1/4 | 1 1/4 | 3 3/4 | 6 5/8 | 13 1/2 | 1 | 40 3/4 | | | | 12.0 |
| 5 | 48 | 60 | 2 1/4 | 3/4 | 1 | 9 | 12 1/2 | 14 3/4 | 3 3/4 | 6 | 16 | 8 | 25 | 4 | 60 | 9 1/4 | 16 1/4 | 1 5/8 | 5 | 8 3/4 | 18 | 1 1/4 | 50 1/4 | | | | 20.0 |

STANDARD SIGN
R4-7 & R4-8

WISCONSIN DEPT OF TRANSPORTATION

APPROVED Matthew R Rauch for State Traffic Engineer

DATE 3/25/2011 PLATE NO. R4-7.8

| PROJECT NO: | HWY: | COUNTY: | | SHEET NO: 448 | E |
|---|---|---|---|---|---|

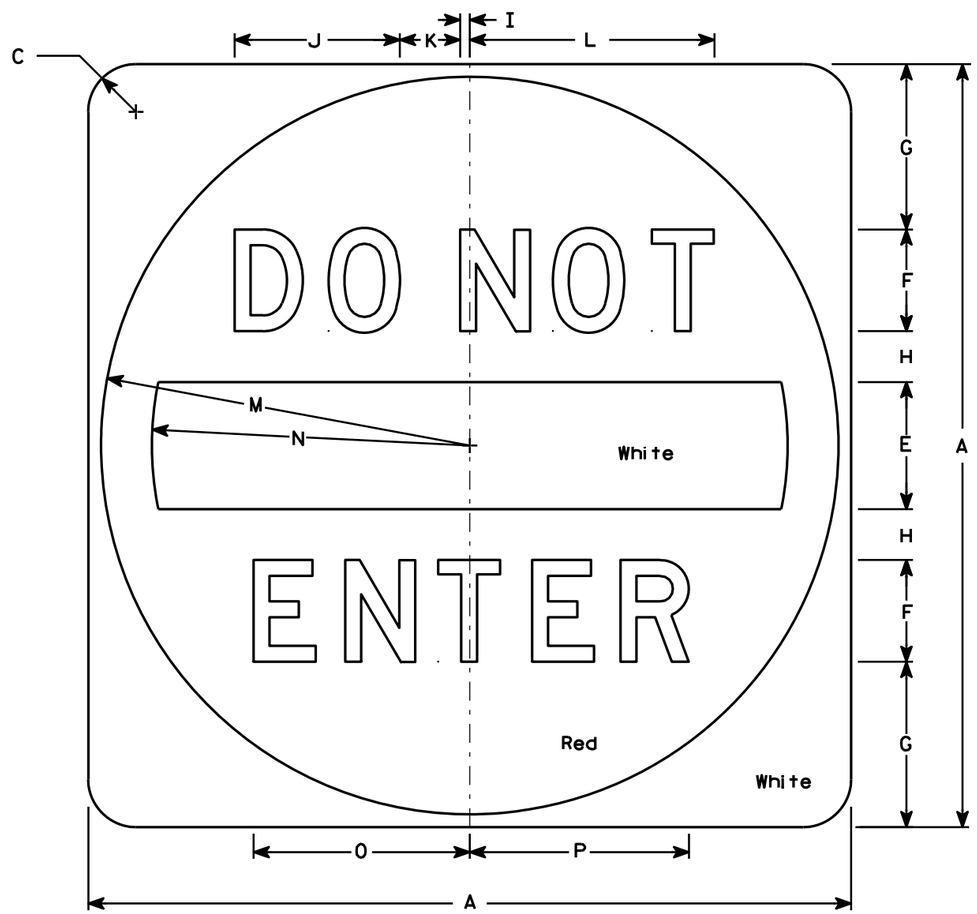


R5-1

## NOTES

1. Sign is Type II - Type H Reflective - reference WIS DOT Standard Specification for HIGHWAY and STRUCTURE CONSTRUCTION latest edition.
2. Color:
   Background - See detail
   Message - White - Type H Reflective
3. Message Series - D
4. Corners may be square or rounded when base material is plywood but when base material is metal, the cornors shall be rounded.

| SIZE | A | B | C | D | E | F | G | H | I | J | K | L | M | N | O | P | Q | R | S | T | U | V | W | X | Y | Z | Area sq. ft. |
|---|---|---|---|---|---|---|---|---|---|---|---|---|---|---|---|---|---|---|---|---|---|---|---|---|---|---|---|
| 1 | | | | | | | | | | | | | | | | | | | | | | | | | | | |
| 2S | 30 | | 1 7/8 | | 5 | 4 | 6 1/2 | 2 | 3/8 | 6 1/2 | 2 3/8 | 9 5/8 | 14 1/2 | 12 1/2 | 8 1/2 | 8 5/8 | | | | | | | | | | | 6.26 |
| 2M | 36 | | 2 1/4 | | 6 | 5 | 7 1/2 | 2 1/2 | 1/2 | 8 1/8 | 3 | 12 1/8 | 17 1/2 | 15 | 10 5/8 | 10 3/4 | | | | | | | | | | | 9.0 |
| 3 | 36 | | 2 1/4 | | 6 | 5 | 7 1/2 | 2 1/2 | 1/2 | 8 1/8 | 3 | 12 1/8 | 17 1/2 | 15 | 10 5/8 | 10 3/4 | | | | | | | | | | | 9.0 |
| 4 | 36 | | 2 1/4 | | 6 | 5 | 7 1/2 | 2 1/2 | 1/2 | 8 1/8 | 3 | 12 1/8 | 17 1/2 | 15 | 10 5/8 | 10 3/4 | | | | | | | | | | | 9.0 |
| 5 | 48 | | 3 | | 8 | 6 | 11 | 3 | 5/8 | 9 3/4 | 3 5/8 | 14 1/2 | 23 1/2 | 20 | 12 3/4 | 12 7/8 | | | | | | | | | | | 16.0 |

STANDARD SIGN
R5-1

WISCONSIN DEPT OF TRANSPORTATION

APPROVED Matthew R Rauch
for State Traffic Engineer

DATE 12/17/10 PLATE NO. R5-1.15

PROJECT NO: | HWY: | COUNTY: | SHEET NO: 449 | E

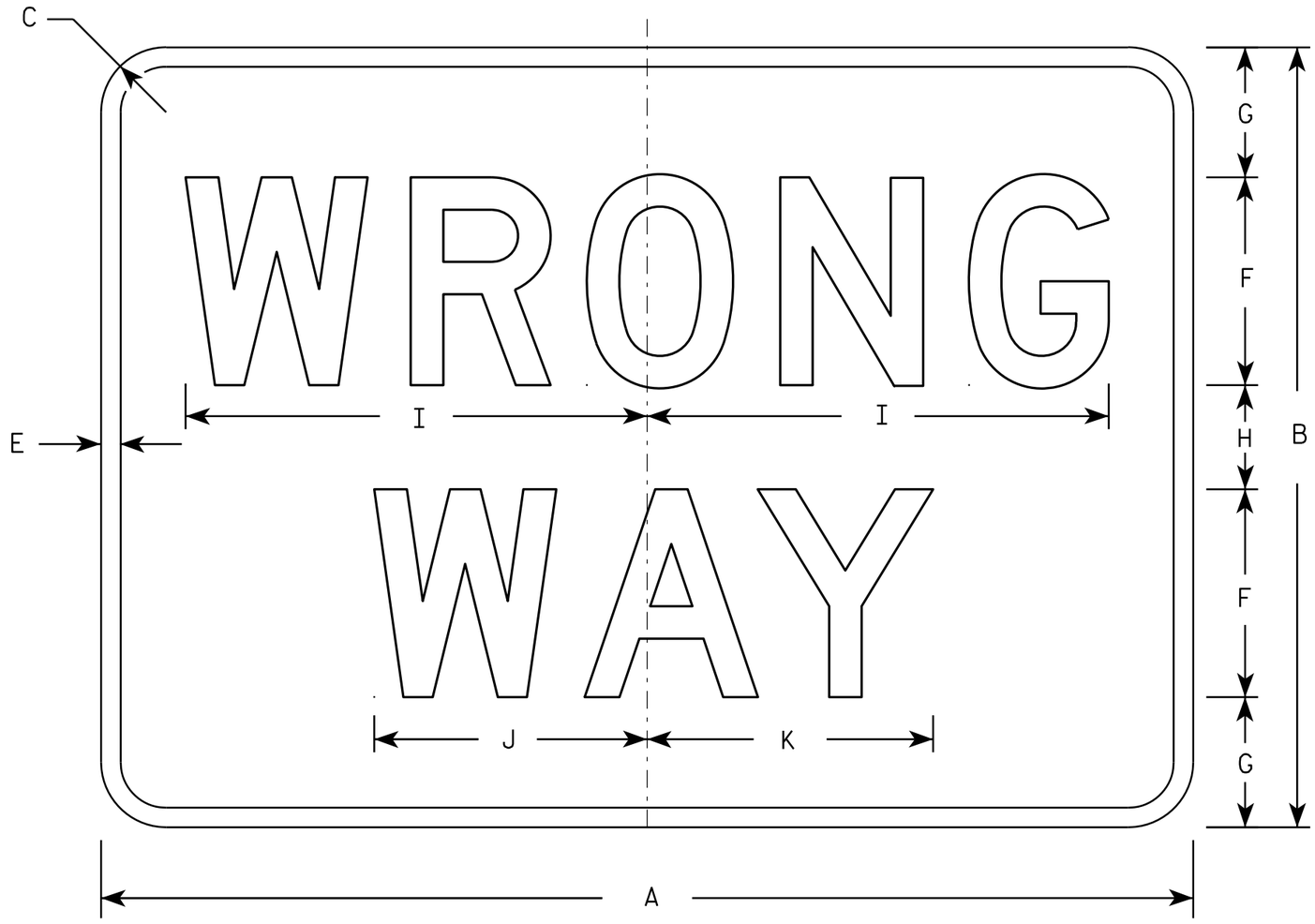


R5-1A

NOTES

1. Sign is Type II - Type H Reflective - reference WIS DOT Standard Specification for HIGHWAY and STRUCTURE CONSTRUCTION latest edition.
2. Color:
   Background - Red
   Message - White
3. Message Series - D
4. Corners may be square or rounded when base material is plywood but borders shall be rounded as shown. When base material is metal, the corners and borders shall be rounded.

| SIZE | A | B | C | D | E | F | G | H | I | J | K | L | M | N | O | P | Q | R | S | T | U | V | W | X | Y | Z | Area sq. ft. |
|---|---|---|---|---|---|---|---|---|---|---|---|---|---|---|---|---|---|---|---|---|---|---|---|---|---|---|---|
| 1 | 30 | 18 | 1 1/2 | | 1/2 | 5 | 3 | 2 | 11 | 6 1/2 | 6 7/8 | | | | | | | | | | | | | | | | 3.75 |
| 2S | 36 | 24 | 2 | | 5/8 | 6 | 4 1/2 | 3 | 13 1/4 | 7 7/8 | 8 1/4 | | | | | | | | | | | | | | | | 6.00 |
| 2M | 42 | 30 | 2 1/2 | | 3/4 | 8 | 5 | 4 | 17 3/4 | 10 1/2 | 11 | | | | | | | | | | | | | | | | 8.75 |
| 3 | 42 | 30 | 2 1/2 | | 3/4 | 8 | 5 | 4 | 17 3/4 | 10 1/2 | 11 | | | | | | | | | | | | | | | | 8.75 |
| 4 | 42 | 30 | 2 1/2 | | 3/4 | 8 | 5 | 4 | 17 3/4 | 10 1/2 | 11 | | | | | | | | | | | | | | | | 8.75 |
| 5 | 42 | 30 | 2 1/2 | | 3/4 | 8 | 5 | 4 | 17 3/4 | 10 1/2 | 11 | | | | | | | | | | | | | | | | 8.75 |

STANDARD SIGN
R5-1A

WISCONSIN DEPT OF TRANSPORTATION

APPROVED Matthew R Rauch
for State Traffic Engineer

DATE 12/17/10 PLATE NO. R5-1A.2

PROJECT NO: | HWY: | COUNTY: | SHEET NO: 450 | E

R5-57

NOTES

1. Sign is Type II - Type H Reflective - reference WIS DOT Standard Specification for HIGHWAY and STRUCTURE CONSTRUCTION latest edition.
2. Color:
   Background - White
   Message - Black
3. Message Series - Lines 1, 2, and 5 are Series C.
   Lines 3 and 4 are Series B.
4. Corners may be square or rounded when base material is plywood but borders shall be rounded as shown. When base material is metal, the corners and borders shall be rounded.

| SIZE | A | B | C | D | E | F | G | H | I | J | K | L | M | N | O | P | Q | R | S | T | U | V | W | X | Y | Z | Area sq. ft. |
|---|---|---|---|---|---|---|---|---|---|---|---|---|---|---|---|---|---|---|---|---|---|---|---|---|---|---|---|
| 1 | | | | | | | | | | | | | | | | | | | | | | | | | | | |
| 2S | | | | | | | | | | | | | | | | | | | | | | | | | | | |
| 2M | | | | | | | | | | | | | | | | | | | | | | | | | | | |
| 3 | | | | | | | | | | | | | | | | | | | | | | | | | | | |
| 4 | 36 | | 1 5/8 | 5/8 | 3/4 | 4 | 3 | 2 | 3 1/2 | 14 1/4 | 14 7/8 | 11 | 11 1/2 | 4 3/4 | 1 3/4 | 9 | | 1 3/8 | 10 | 11 | 2 1/2 | 1 3/4 | 15 1/2 | 13 | 13 5/8 | | 9.0 |
| 5 | 36 | | 1 5/8 | 5/8 | 3/4 | 4 | 3 | 2 | 3 1/2 | 14 1/4 | 14 7/8 | 11 | 11 1/2 | 4 3/4 | 1 3/4 | 9 | | 1 3/8 | 10 | 11 | 2 1/2 | 1 3/4 | 15 1/2 | 13 | 13 5/8 | | 9.0 |

STANDARD SIGN
R5-57

WISCONSIN DEPT OF TRANSPORTATION

APPROVED Matthew R Rauch
for State Traffic Engineer

DATE 3/29/2011 PLATE NO. R5-57.10

PROJECT NO: | HWY: | COUNTY: | SHEET NO: 451 | E

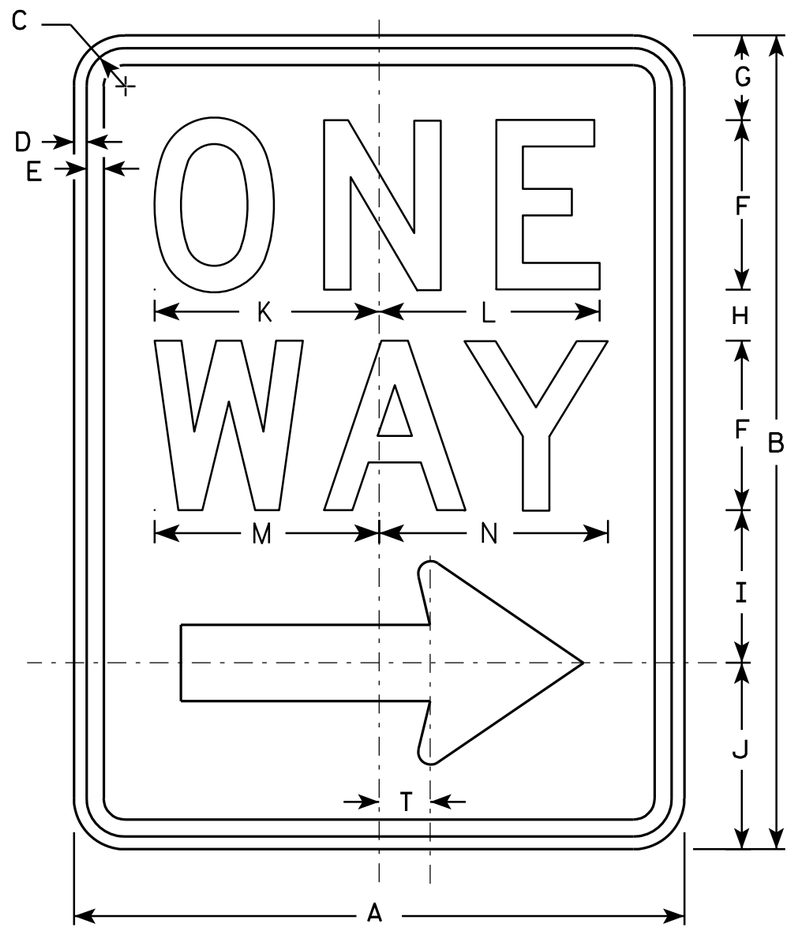


R6-2R

NOTES

1. Sign is Type II - Type H Reflective - reference WIS DOT Standard Specification for HIGHWAY and STRUCTURE CONSTRUCTION latest edition.
2. Color:
   Background - White
   Message - Black
3. Message Series - D
4. Corners may be square or rounded when base material is plywood but borders shall be rounded as shown. When base material is metal, the corners and borders shall be rounded.
5. R6-2L same as R6-2R except arrow points to the left.

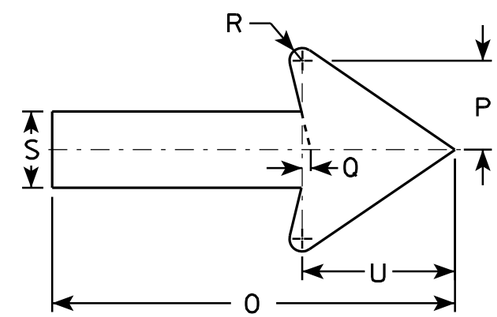


| SIZE | A | B | C | D | E | F | G | H | I | J | K | L | M | N | O | P | Q | R | S | T | U | V | W | X | Y | Z |
|---|---|---|---|---|---|---|---|---|---|---|---|---|---|---|---|---|---|---|---|---|---|---|---|---|---|---|
| 1 | 18 | 24 | 1 1/8 | 3/8 | 1/2 | 5 | 2 1/2 | 1 1/2 | 4 1/2 | 5 1/2 | 6 5/8 | 6 1/2 | 6 5/8 | 6 3/4 | 11 7/8 | 2 5/8 | 1/4 | 3/8 | 2 1/4 | 1 1/2 | 4 1/2 | | | | | |
| 2S | 24 | 30 | 1 1/8 | 3/8 | 1/2 | 6 | 3 | 2 1/2 | 5 1/2 | 7 | 8 1/8 | 8 1/8 | 8 1/2 | 8 5/8 | 16 | 3 1/2 | 3/8 | 1/2 | 3 | 2 | 6 | | | | | |
| 2M | 30 | 36 | 1 3/8 | 1/2 | 5/8 | 8 | 2 1/2 | 2 5/8 | 6 7/8 | 8 | 10 1/2 | 10 1/2 | 11 1/4 | 11 1/4 | 20 | 4 3/8 | 1/2 | 5/8 | 3 3/4 | 2 1/2 | 7 1/2 | | | | | |
| 3 | 36 | 48 | 1 7/8 | 1/2 | 5/8 | 10 | 5 1/4 | 3 1/4 | 9 | 10 1/2 | 12 3/4 | 12 3/4 | 13 1/4 | 13 1/2 | 24 | 5 5/8 | 1/2 | 3/4 | 4 3/4 | 3 | 9 | | | | | |
| 4 | 36 | 48 | 1 7/8 | 1/2 | 5/8 | 10 | 5 1/4 | 3 1/4 | 9 | 10 1/2 | 12 3/4 | 12 3/4 | 13 1/4 | 13 1/2 | 24 | 5 5/8 | 1/2 | 3/4 | 4 3/4 | 3 | 9 | | | | | |
| 5 | | | | | | | | | | | | | | | | | | | | | | | | | | |

STANDARD SIGN
R6-2 R&L

WISCONSIN DEPT OF TRANSPORTATION

APPROVED Matthew R Rauch
for State Traffic Engineer

DATE 11/2/10 PLATE NO. R6-2.8

| PROJECT NO: | HWY: | COUNTY: | | SHEET NO: 452 | E |
|---|---|---|---|---|---|

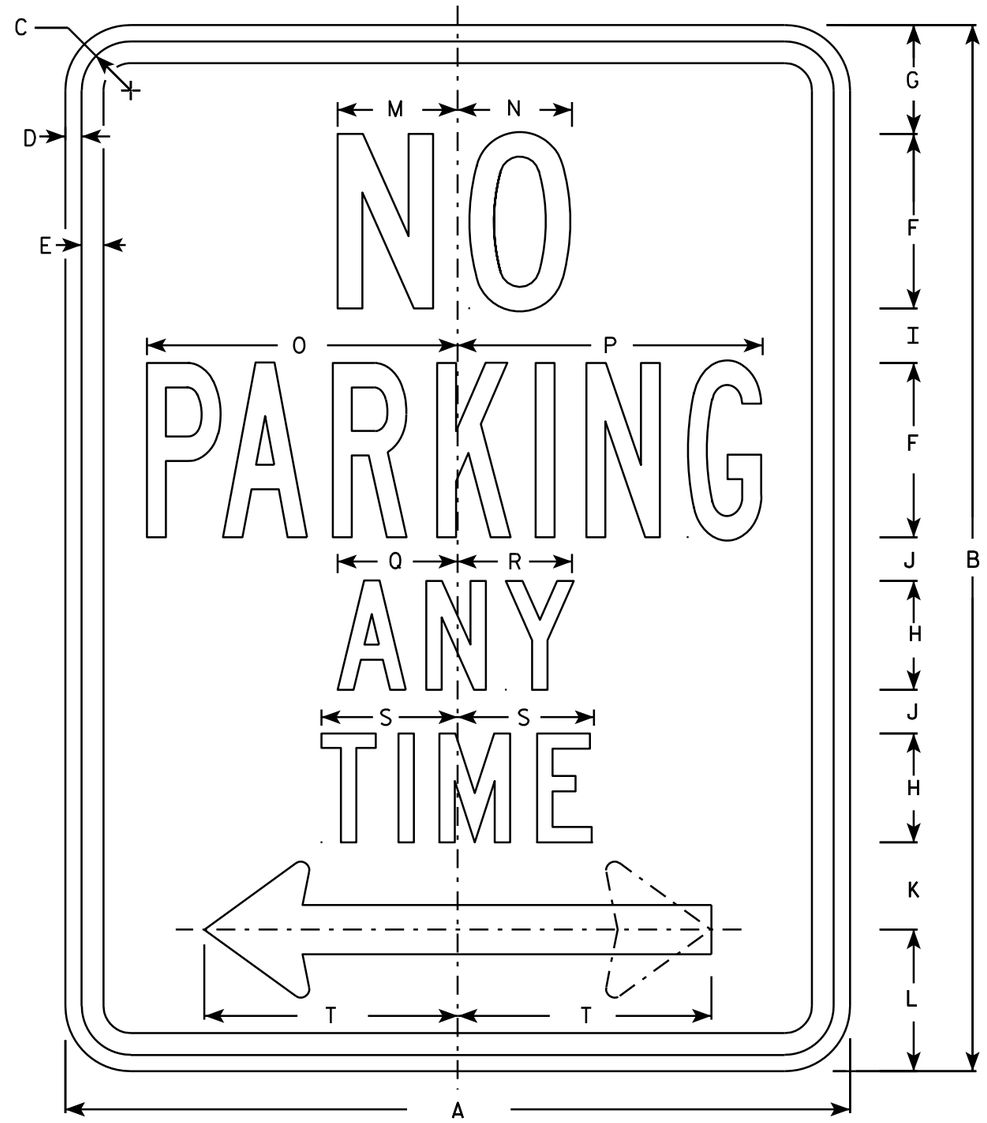


R7-1

## NOTES

1. Sign is Type II - Type H Reflective - reference WIS DOT Standard Specification for HIGHWAY and STRUCTURE CONSTRUCTION latest edition.
2. Color:
   Background - White
   Message - Red
3. Message Series - See Note 5
4. Corners may be square or rounded when base material is plywood but borders shall be rounded as shown. When base material is metal, the corners and borders shall be rounded.
5. Lines 1, 3 and 4 are series C, line 2 is series B.
6. R7-1D (double arrow)
   R7-1L (left arrow)
   R7-1R (right arrow)

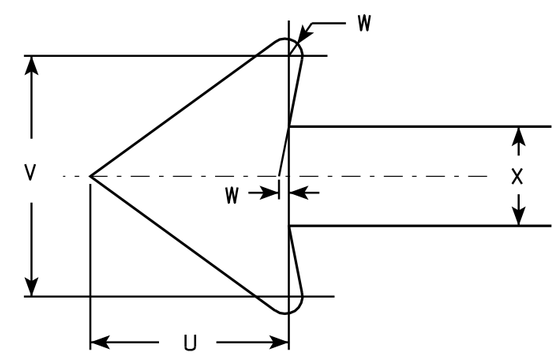


| SIZE | A | B | C | D | E | F | G | H | I | J | K | L | M | N | O | P | Q | R | S | T | U | V | W | X | Y | Z | Area sq. ft. |
|---|---|---|---|---|---|---|---|---|---|---|---|---|---|---|---|---|---|---|---|---|---|---|---|---|---|---|---|
| 1 | 12 | 18 | 1 1/8 | 3/8 | 3/8 | 3 | 1 7/8 | 2 | 7/8 | 5/8 | 1 1/2 | 2 1/2 | 2 | 2 | 4 7/8 | 4 7/8 | 2 1/4 | 2 1/8 | 2 1/2 | 3 7/8 | 1 1/2 | 1 3/4 | 1/8 | 3/4 | | | 1.5 |
| 2S | 18 | 24 | 1 1/8 | 3/8 | 1/2 | 4 | 2 1/2 | 2 1/2 | 1 1/4 | 1 | 2 | 3 1/4 | 2 3/4 | 2 5/8 | 7 1/8 | 7 | 2 3/4 | 2 5/8 | 3 1/8 | 5 7/8 | 2 1/4 | 2 5/8 | 1/4 | 1 1/8 | | | 3.0 |
| 2M | 24 | 30 | 1 1/8 | 3/8 | 1/2 | 5 | 3 | 3 | 2 | 1 1/4 | 2 1/2 | 4 | 3 1/4 | 3 3/8 | 9 1/4 | 9 1/4 | 3 1/4 | 3 1/4 | 3 3/4 | 7 3/4 | 3 | 3 1/2 | 1/4 | 1 1/2 | | | 5.0 |
| 3 | 24 | 30 | 1 1/8 | 3/8 | 1/2 | 5 | 3 | 3 | 2 | 1 1/4 | 2 1/2 | 4 | 3 1/4 | 3 3/8 | 9 1/4 | 9 1/4 | 3 1/4 | 3 1/4 | 3 3/4 | 7 3/4 | 3 | 3 1/2 | 1/4 | 1 1/2 | | | 5.0 |
| 4 | | | | | | | | | | | | | | | | | | | | | | | | | | | |
| 5 | | | | | | | | | | | | | | | | | | | | | | | | | | | |

# STANDARD SIGN
# R7-1

WISCONSIN DEPT OF TRANSPORTATION

APPROVED Matthew R Rauch
for State Traffic Engineer

DATE 3/31/2011 PLATE NO. R7-1.9

| PROJECT NO: | HWY: | COUNTY: | | SHEET NO: 453 | E |
|---|---|---|---|---|---|

R7-7

## NOTES

1. Sign is Type II - Type H Reflective - reference WIS DOT Standard Specification for HIGHWAY and STRUCTURE CONSTRUCTION latest edition.
2. Color:
   Background - White
   Message - Red
3. Message Series - See Note 6
4. Corners may be square or rounded when base material is plywood but borders shall be rounded as shown. When base material is metal, the corners and borders shall be rounded.
5. R7-7D (double arrow)
   R7-7R (right arrow)
   R7-7L (left arrow)
6. Lines 1, 3 and 4 are Series C.
   Line 2 is Series B.

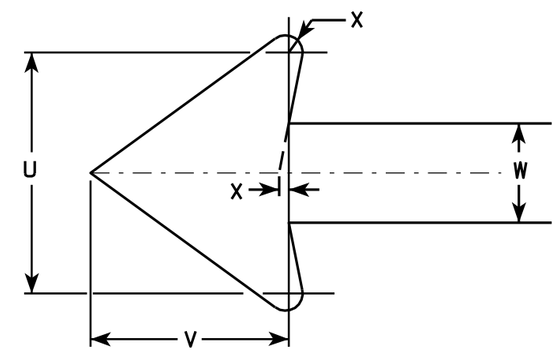


ARROW DETAIL

| SIZE | A | B | C | D | E | F | G | H | I | J | K | L | M | N | O | P | Q | R | S | T | U | V | W | X | Y | Z | Area sq. ft. |
|---|---|---|---|---|---|---|---|---|---|---|---|---|---|---|---|---|---|---|---|---|---|---|---|---|---|---|---|
| 1 | 12 | 18 | 1 1/8 | 3/8 | 3/8 | 3 | 2 | 1 7/8 | 7/8 | 5/8 | 1 1/2 | 2 1/2 | 2 | 2 | 4 7/8 | 4 7/8 | 2 | 2 3/4 | 2 5/8 | 3 7/8 | 1 3/4 | 1 1/2 | 3/4 | 1/8 | | | 1.50 |
| 2S | 18 | 24 | 1 1/8 | 3/8 | 1/2 | 4 | 2 1/2 | 2 1/2 | 1 1/4 | 1 | 2 | 3 1/4 | 2 3/4 | 2 5/8 | 7 1/8 | 7 | 2 1/2 | 3 3/8 | 3 3/8 | 5 7/8 | 2 5/8 | 2 1/4 | 1 1/8 | 1/4 | | | 3.00 |
| 2M | 24 | 30 | 1 1/8 | 3/8 | 1/2 | 5 | 3 | 3 | 2 | 1 1/4 | 2 1/2 | 4 | 3 1/4 | 3 3/8 | 9 1/4 | 9 1/4 | 3 | 4 1/8 | 4 | 7 3/4 | 3 1/2 | 3 | 1 1/2 | 1/4 | | | 5.00 |
| 3 | 24 | 30 | 1 1/8 | 3/8 | 1/2 | 5 | 3 | 3 | 2 | 1 1/4 | 2 1/2 | 4 | 3 1/4 | 3 3/8 | 9 1/4 | 9 1/4 | 3 | 4 1/8 | 4 | 7 3/4 | 3 1/2 | 3 | 1 1/2 | 1/4 | | | 5.00 |
| 4 | | | | | | | | | | | | | | | | | | | | | | | | | | | |
| 5 | | | | | | | | | | | | | | | | | | | | | | | | | | | |

STANDARD SIGN
R7-7

WISCONSIN DEPT OF TRANSPORTATION

APPROVED Matthew R Rauch
for State Traffic Engineer

DATE 3/31/2011 PLATE NO. R7-7.8

| PROJECT NO: | HWY: | COUNTY: | | SHEET NO: 454 | E |
|---|---|---|---|---|---|

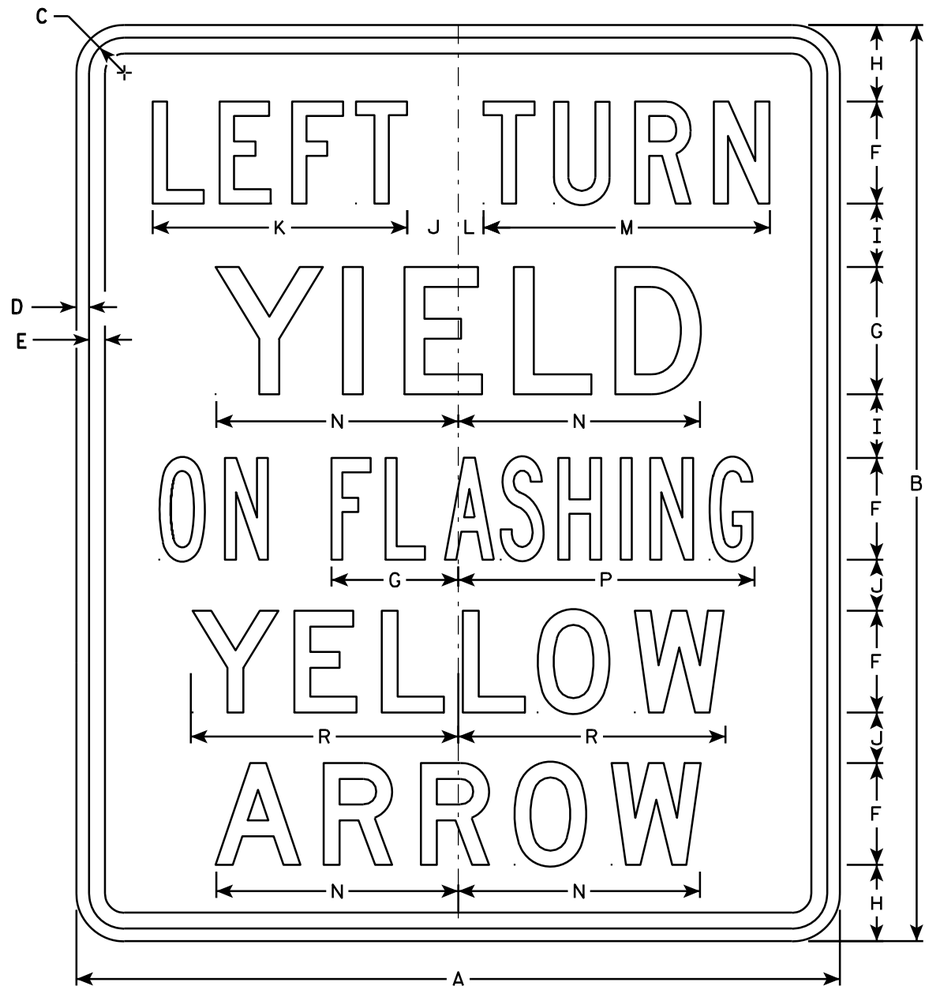


R10-50L

## NOTES

1. Sign is Type II - Type H Reflective - reference WIS DOT Standard Specification for HIGHWAY and STRUCTURE CONSTRUCTION latest edition.
2. Color:
   Background - White
   Message - Black
3. Message Series - see note 5
4. Corners may be square or rounded when base material is plywood but borders shall be rounded as shown. When base material is metal, the corners and borders shall be rounded.
5. Line 1 is Series C.
   Lines 2, 4 and 5 are Series D.
   Line 3 is Series B.

"RIGHT" Is Series B

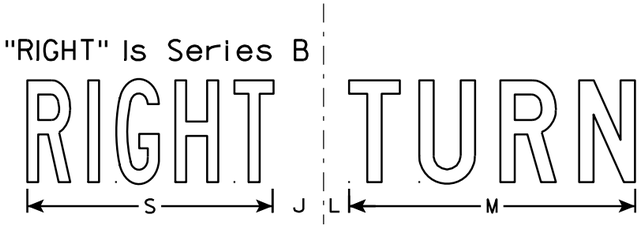


R10-50R

| SIZE | A | B | C | D | E | F | G | H | I | J | K | L | M | N | O | P | Q | R | S | T | U | V | W | X | Y | Z | Area sq. ft. |
|---|---|---|---|---|---|---|---|---|---|---|---|---|---|---|---|---|---|---|---|---|---|---|---|---|---|---|---|
| 1 | | | | | | | | | | | | | | | | | | | | | | | | | | | |
| 2S | 30 | 36 | 1 3/8 | 1/2 | 5/8 | 4 | 5 | 3 | 2 1/2 | 2 | 10 | 1 | 11 1/4 | 9 1/2 | 4 1/4 | 11 5/8 | | 10 1/2 | 9 5/8 | | | | | | | | 7.5 |
| 2M | 30 | 36 | 1 3/8 | 1/2 | 5/8 | 4 | 5 | 3 | 2 1/2 | 2 | 10 | 1 | 11 1/4 | 9 1/2 | 4 1/4 | 11 5/8 | | 10 1/2 | 9 5/8 | | | | | | | | 7.5 |
| 3 | | | | | | | | | | | | | | | | | | | | | | | | | | | |
| 4 | | | | | | | | | | | | | | | | | | | | | | | | | | | |
| 5 | | | | | | | | | | | | | | | | | | | | | | | | | | | |

STANDARD SIGN
R10-50

WISCONSIN DEPT OF TRANSPORTATION

APPROVED Matthew R Rauch
for State Traffic Engineer

DATE 4/11/13 PLATE NO. R10-50.2

| PROJECT NO: | HWY: | COUNTY: | | SHEET NO: 455 | E |
|---|---|---|---|---|---|

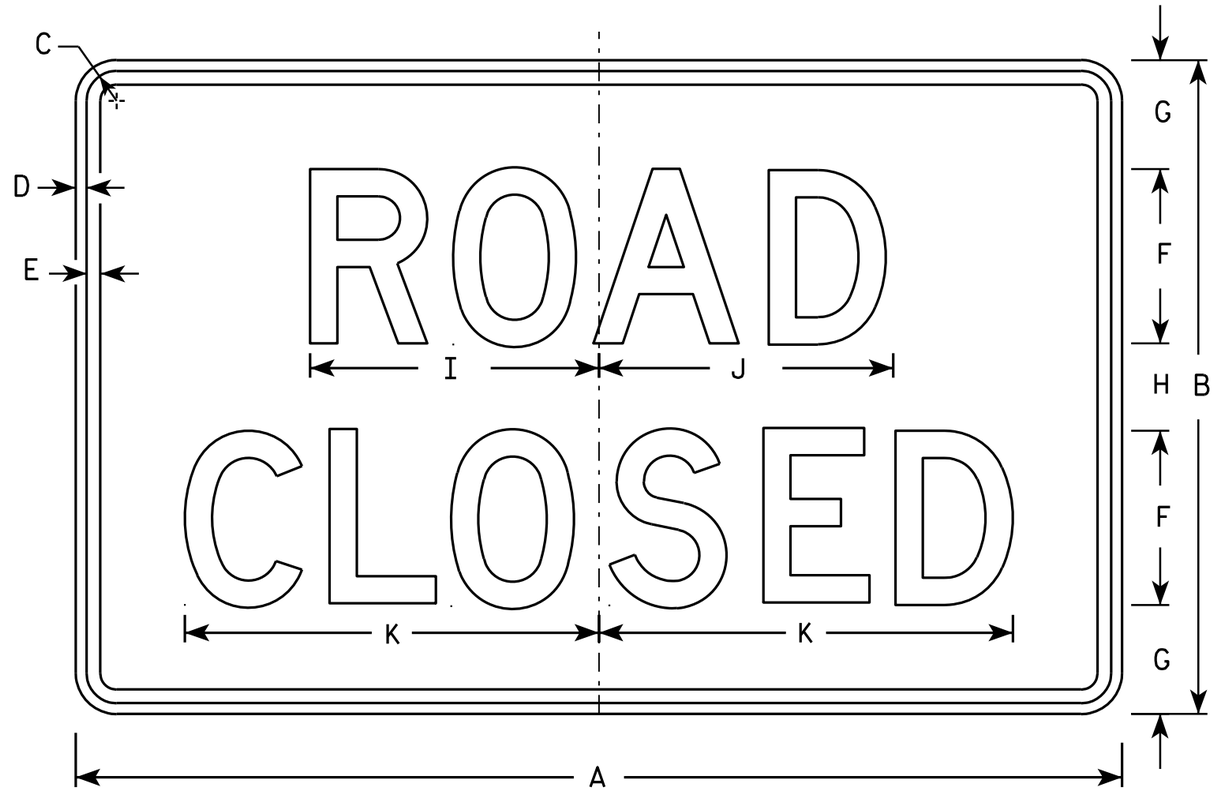


R11-2

NOTES

1. Sign is Type II - Type H Reflective - reference WIS DOT Standard Specification for HIGHWAY and STRUCTURE CONSTRUCTION latest edition.
2. Color:
   Background - White
   Message - Black
3. Message Series - D
4. Corners may be square or rounded when base material is plywood but borders shall be rounded as shown. When base material is metal, the corners and borders shall be rounded.
5. Modify the message as required.

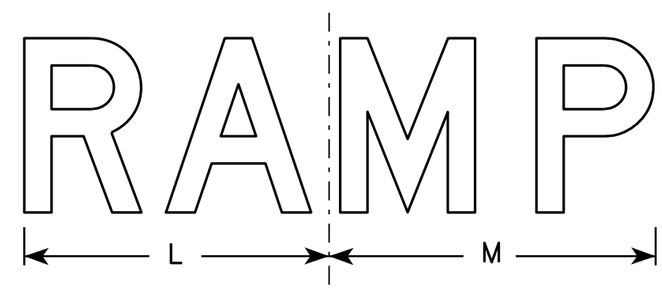


R11-2R

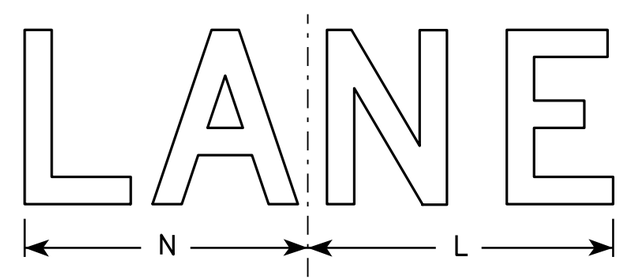


R11-2L

| SIZE | A | B | C | D | E | F | G | H | I | J | K | L | M | N | O | P | Q | R | S | T | U | V | W | X | Y | Z | Area sq. ft. |
|---|---|---|---|---|---|---|---|---|---|---|---|---|---|---|---|---|---|---|---|---|---|---|---|---|---|---|---|
| 1 | | | | | | | | | | | | | | | | | | | | | | | | | | | |
| 2S | 48 | 30 | 1 3/8 | 1/2 | 5/8 | 8 | 5 | 4 | 13 1/4 | 13 1/2 | 19 | 14 | 15 | 13 | | | | | | | | | | | | | 10.0 |
| 2M | 48 | 30 | 1 3/8 | 1/2 | 5/8 | 8 | 5 | 4 | 13 1/4 | 13 1/2 | 19 | 14 | 15 | 13 | | | | | | | | | | | | | 10.0 |
| 3 | 48 | 30 | 1 3/8 | 1/2 | 5/8 | 8 | 5 | 4 | 13 1/4 | 13 1/2 | 19 | 14 | 15 | 13 | | | | | | | | | | | | | 10.0 |
| 4 | 48 | 30 | 1 3/8 | 1/2 | 5/8 | 8 | 5 | 4 | 13 1/4 | 13 1/2 | 19 | 14 | 15 | 13 | | | | | | | | | | | | | 10.0 |
| 5 | 48 | 30 | 1 3/8 | 1/2 | 5/8 | 8 | 5 | 4 | 13 1/4 | 13 1/2 | 19 | 14 | 15 | 13 | | | | | | | | | | | | | 10.0 |

STANDARD SIGN
R11-2

WISCONSIN DEPT OF TRANSPORTATION

APPROVED Matthew R Rauch
for State Traffic Engineer

DATE 4/1/11 PLATE NO. R11-2.10

PROJECT NO: | HWY: | COUNTY: | SHEET NO: 456 | E

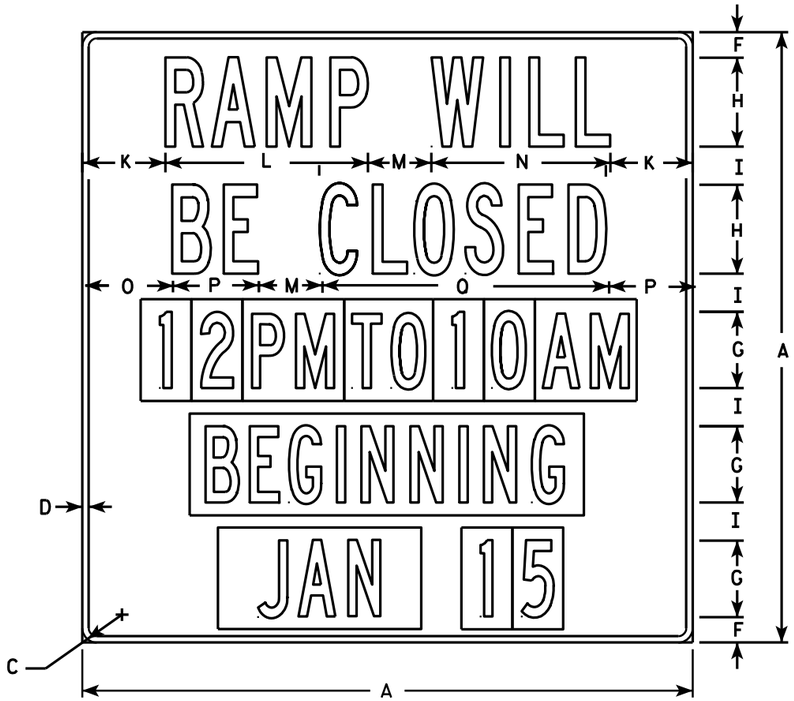


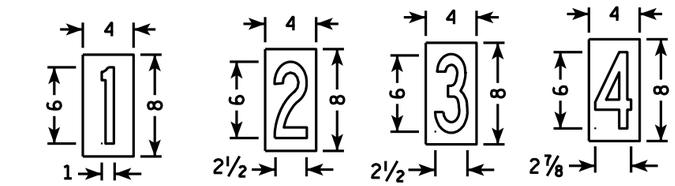


NOTES

1. Sign is Type II - Type H Reflective - reference WIS DOT Standard Specification for HIGHWAY and STRUCTURE CONSTRUCTION latest edition.
2. Color:
   Background - White
   Message - Black
3. Message Series - B
4. Message plaques consist of Type H Reflective sheeting with the appropriate non-reflective black message applied to .040 aluminum and screwed to the base sign.

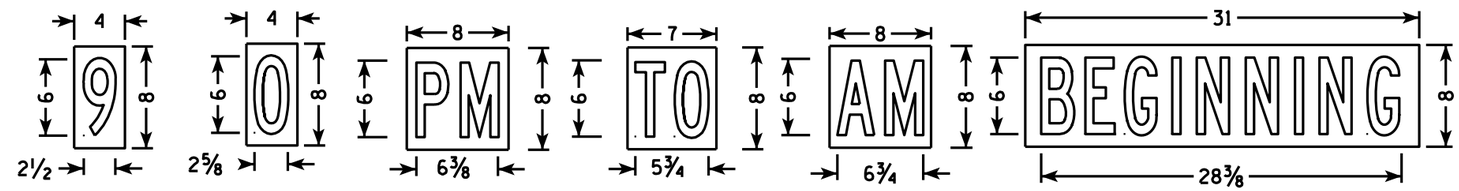


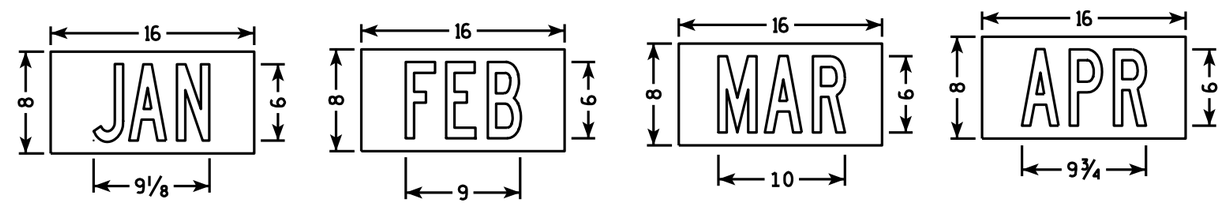


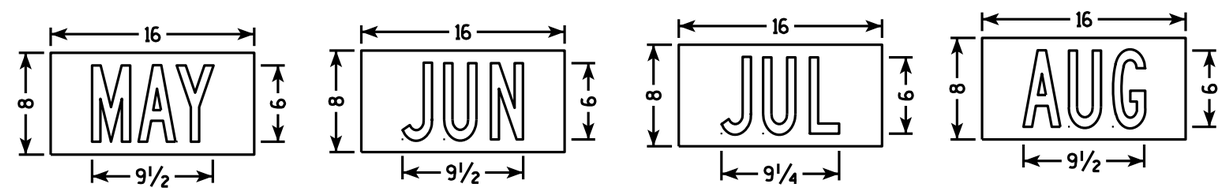


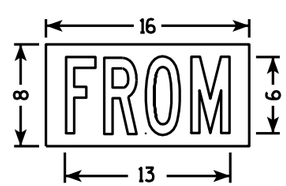


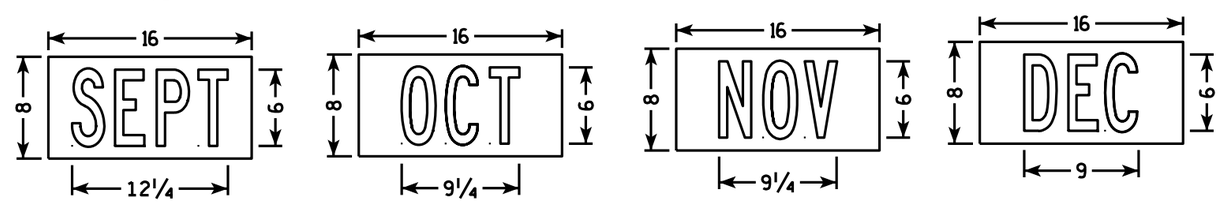


| SIZE | A | B | C | D | E | F | G | H | I | J | K | L | M | N | O | P | Q | R | S | T | U | V | W | X | Y | Z | Area sq. ft. |
|---|---|---|---|---|---|---|---|---|---|---|---|---|---|---|---|---|---|---|---|---|---|---|---|---|---|---|---|
| 1 | | | | | | | | | | | | | | | | | | | | | | | | | | | |
| 2S | 48 | | 2 ¼ | ½ | | 2 | 6 | 7 | 3 | | 6 ½ | 15 ⅞ | 5 | 14 ⅛ | 6 ⅞ | 6 ¾ | 22 ½ | | | | | | | | | | 16.0 |
| 2M | 48 | | 2 ¼ | ½ | | 2 | 6 | 7 | 3 | | 6 ½ | 15 ⅞ | 5 | 14 ⅛ | 6 ⅞ | 6 ¾ | 22 ½ | | | | | | | | | | 16.0 |
| 3 | | | | | | | | | | | | | | | | | | | | | | | | | | | |
| 4 | | | | | | | | | | | | | | | | | | | | | | | | | | | |
| 5 | | | | | | | | | | | | | | | | | | | | | | | | | | | |

STANDARD SIGN
R11-51

WISCONSIN DEPT OF TRANSPORTATION

APPROVED Matthew R Rauch
for State Traffic Engineer

DATE 4/1/11 PLATE NO. R11-51.4

| PROJECT NO: | HWY: | COUNTY: | | SHEET NO: 457 | E |
|---|---|---|---|---|---|

NOTES

1. Sign is Type II - Type H Reflective - reference WIS DOT Standard Specification for HIGHWAY and STRUCTURE CONSTRUCTION latest edition.
2. Color:
   Background - White
   Message - Black
3. Message Series - E except as noted
4. Corners may be square or rounded when base material is plywood but borders shall be rounded as shown. When base material is metal, the corners and borders shall be rounded.

** Substitute appropriate message, optically center message

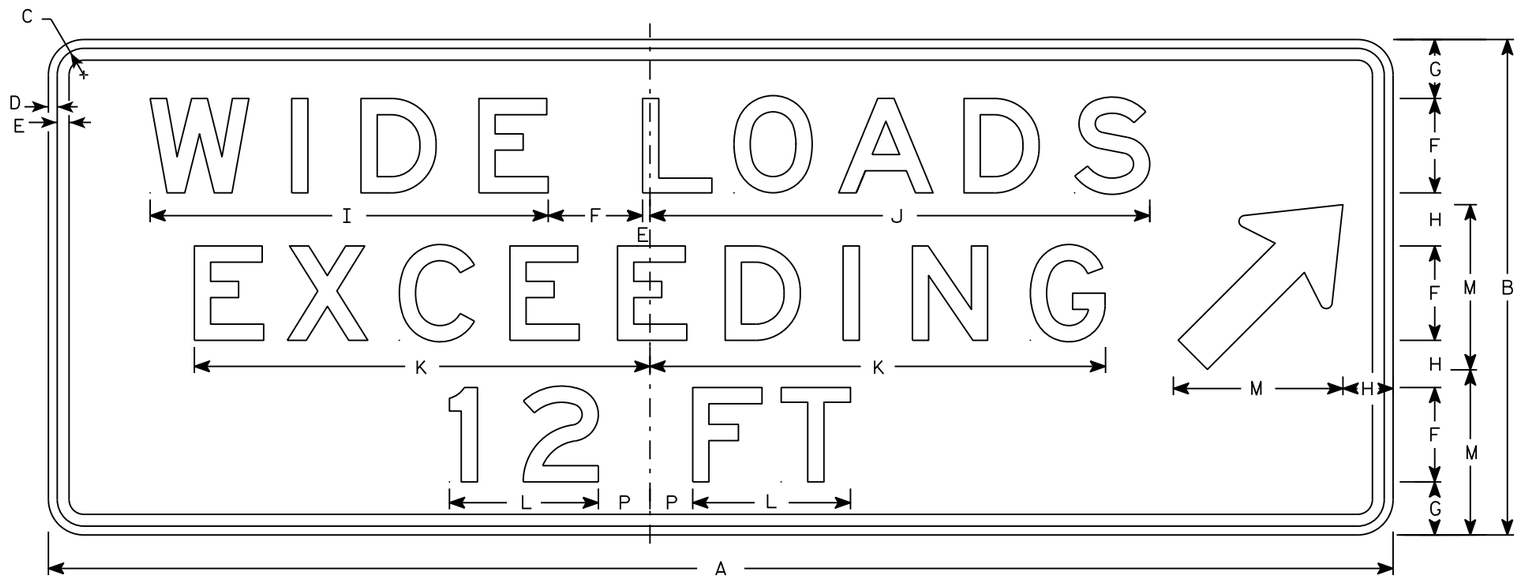


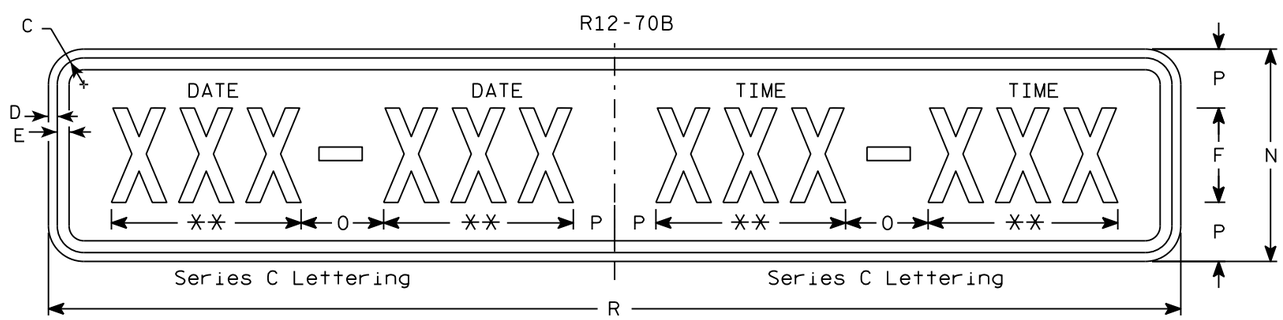


R12-70C

| SIZE | A | B | C | D | E | F | G | H | I | J | K | L | M | N | O | P | Q | R | S | T | U | V | W | X | Y | Z | R12-70 Area sq. ft. | R12-70C Area sq. ft. |
|---|---|---|---|---|---|---|---|---|---|---|---|---|---|---|---|---|---|---|---|---|---|---|---|---|---|---|---|---|
| 1 | | | | | | | | | | | | | | | | | | | | | | | | | | | | |
| 2S | 90 | 36 | 2 1/4 | 1/2 | 5/8 | 6 | 4 | 5 | 20 7/8 | 28 3/8 | 24 5/8 | 8 1/8 | 12 | 12 | 6 | 3 | | 66 | | | | | | | | | 22.5 | 5.5 |
| 2M | 90 | 36 | 2 1/4 | 1/2 | 5/8 | 6 | 4 | 5 | 20 7/8 | 28 3/8 | 24 5/8 | 8 1/8 | 12 | 12 | 6 | 3 | | 66 | | | | | | | | | 22.5 | 5.5 |
| 3 | | | | | | | | | | | | | | | | | | | | | | | | | | | | |
| 4 | 114 | 42 | 2 1/4 | 3/4 | 1 | 8 | 5 | 4 | 34 | 42 | 39 | 13 | 14 | 18 | 7 | 3 1/2 | | 96 | | | | | | | | | 36.75 | 12.0 |
| 5 | 114 | 42 | 2 1/4 | 3/4 | 1 | 8 | 5 | 4 | 34 | 42 | 39 | 13 | 14 | 18 | 7 | 3 1/2 | | 96 | | | | | | | | | 36.75 | 12.0 |

TYPICAL SIGN
R12-70B

WISCONSIN DEPT OF TRANSPORTATION

APPROVED Matthew R Rauch
for State Traffic Engineer

DATE 11/10/15 PLATE NO R12-70B.3

458

| PROJECT NO: | HWY: | COUNTY: | | SHEET NO: | E |
|---|---|---|---|---|---|

FILE NAME : C:\CAEfiles\Projects\tr stdplate\R12T0B.DGN PLOT DATE : 01-DEC-2015 18:10 PLOT BY : $$ plotuser $$ PLOT NAME : PLOT SCALE : 12.842555:1 000000

## NOTES

1. Sign is Type II - Type F Reflective - reference WIS DOT Standard Specification for HIGHWAY and STRUCTURE CONSTRUCTION latest edition.
2. Color:
   Background - Yellow
   Message - Black
3. Corners may be square or rounded when base material is plywood but borders shall be rounded as shown. When base material is metal, the corners and borders shall be rounded.

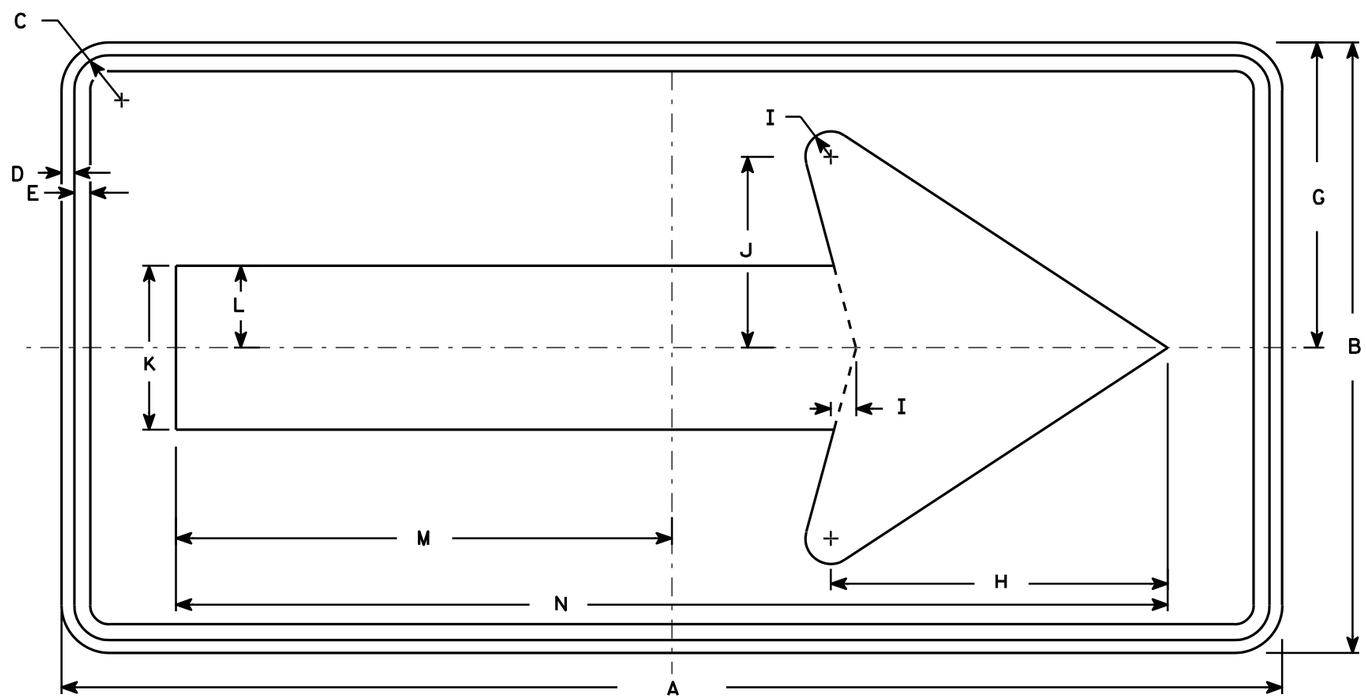


W1-6

| SIZE | A | B | C | D | E | F | G | H | I | J | K | L | M | N | O | P | Q | R | S | T | U | V | W | X | Y | Z | Area sq. ft. |
|---|---|---|---|---|---|---|---|---|---|---|---|---|---|---|---|---|---|---|---|---|---|---|---|---|---|---|---|
| 1 | 36 | 18 | 1 1/8 | 3/8 | 3/8 | | 9 | 10 | 3/4 | 5 5/8 | 4 3/4 | 2 3/8 | 14 5/8 | 29 1/4 | | | | | | | | | | | | | 4.5 |
| 2S | 48 | 24 | 1 3/8 | 1/2 | 5/8 | | 12 | 13 1/4 | 1 | 7 1/2 | 6 1/2 | 3 1/4 | 19 1/2 | 39 | | | | | | | | | | | | | 8.0 |
| 2M | 48 | 24 | 1 3/8 | 1/2 | 5/8 | | 12 | 13 1/4 | 1 | 7 1/2 | 6 1/2 | 3 1/4 | 19 1/2 | 39 | | | | | | | | | | | | | 8.0 |
| 3 | 60 | 30 | 1 3/8 | 1/2 | 5/8 | | 15 | 16 1/4 | 1 1/4 | 9 1/4 | 8 | 4 | 24 3/8 | 48 3/4 | | | | | | | | | | | | | 12.5 |
| 4 | 60 | 30 | 1 3/8 | 1/2 | 5/8 | | 15 | 16 1/4 | 1 1/4 | 9 1/4 | 8 | 4 | 24 3/8 | 48 3/4 | | | | | | | | | | | | | 12.5 |
| 5 | 96 | 48 | 2 1/4 | 3/4 | 1 | | 24 | 26 1/2 | 2 | 15 | 13 | 6 1/2 | 39 | 78 | | | | | | | | | | | | | 32.0 |

STANDARD SIGN

W1-6

WISCONSIN DEPT OF TRANSPORTATION

APPROVED Matthew R Rauch
for State Traffic Engineer

DATE 6/7/10 PLATE NO. W1-6.8

| PROJECT NO: | HWY: | COUNTY: | | SHEET NO: 459 | E |
|---|---|---|---|---|---|

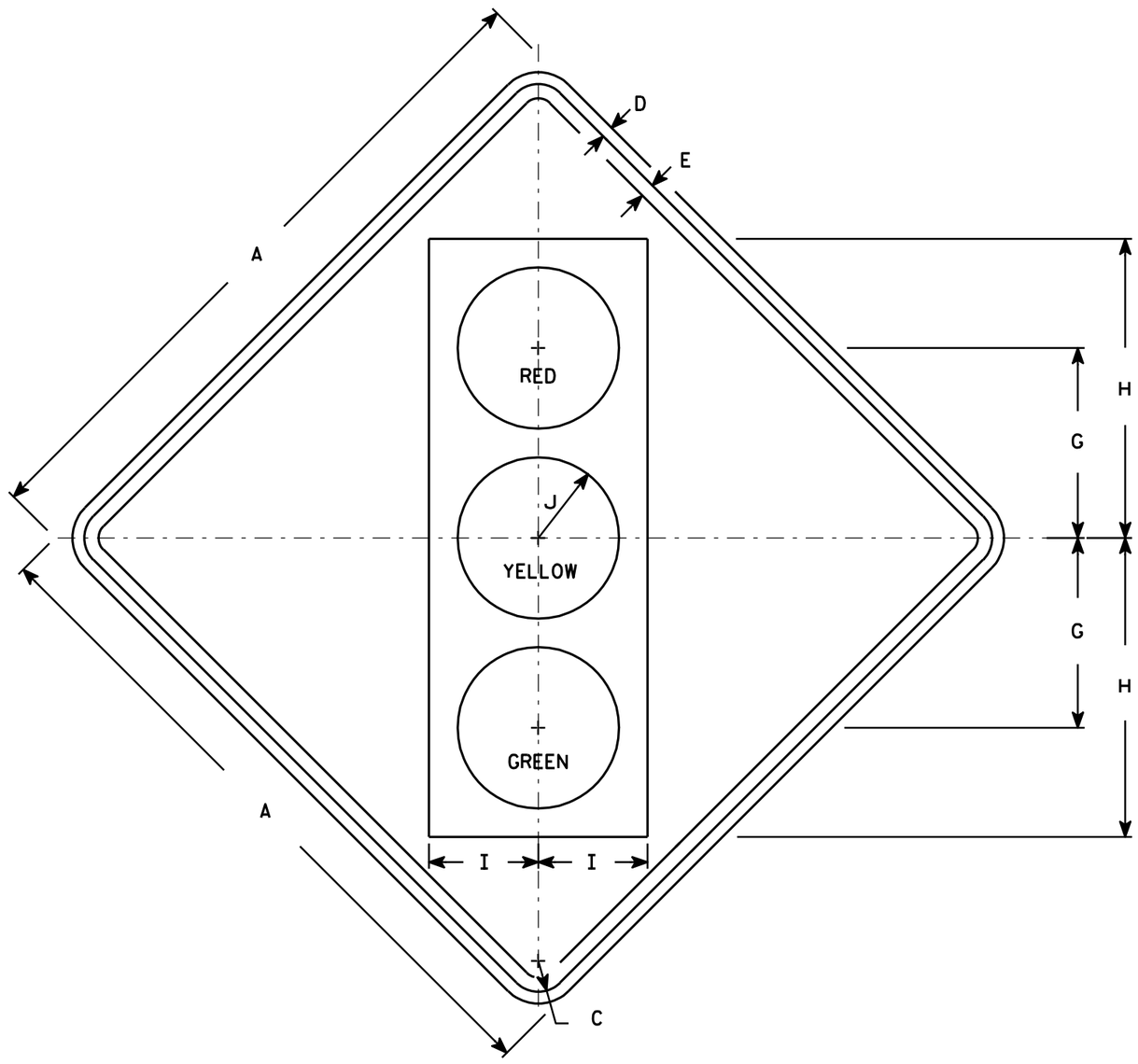


W3-3

NOTES

1. Sign is Type II - Type F Reflective - reference WIS DOT Standard Specification for HIGHWAY and STRUCTURE CONSTRUCTION latest edition.
2. Color:
   Background - Yellow
   Message - See Note 4
3. Corners may be square or rounded when base material is plywood but borders shall be rounded as shown. When base material is metal, the corners and borders shall be rounded.
4. Symbol and border are non-reflective black.
   Top circle - Type H Reflectorized Red
   Center circle - Same as background
   Bottom circle - Type H Reflectorized Green

| SIZE | A | B | C | D | E | F | G | H | I | J | K | L | M | N | O | P | Q | R | S | T | U | V | W | X | Y | Z | Area sq. ft. |
|---|---|---|---|---|---|---|---|---|---|---|---|---|---|---|---|---|---|---|---|---|---|---|---|---|---|---|---|
| 1 | 30 | | 1 3/8 | 1/2 | 5/8 | | 8 3/4 | 13 3/4 | 5 | 3 3/4 | | | | | | | | | | | | | | | | | 6.25 |
| 2S | 36 | | 1 5/8 | 5/8 | 3/4 | | 10 | 15 3/4 | 5 3/4 | 4 1/4 | | | | | | | | | | | | | | | | | 9.0 |
| 2M | 36 | | 1 5/8 | 5/8 | 3/4 | | 10 | 15 3/4 | 5 3/4 | 4 1/4 | | | | | | | | | | | | | | | | | 9.0 |
| 3 | 36 | | 1 5/8 | 5/8 | 3/4 | | 10 | 15 3/4 | 5 3/4 | 4 1/4 | | | | | | | | | | | | | | | | | 9.0 |
| 4 | 48 | | 2 1/4 | 3/4 | 1 | | 12 1/2 | 20 | 7 1/2 | 5 | | | | | | | | | | | | | | | | | 16.0 |
| 5 | 48 | | 2 1/4 | 3/4 | 1 | | 12 1/2 | 20 | 7 1/2 | 5 | | | | | | | | | | | | | | | | | 16.0 |

STANDARD SIGN
W3-3

WISCONSIN DEPT OF TRANSPORTATION

APPROVED Matthew R Rauch
for State Traffic Engineer

DATE 6/7/10 PLATE NO. W3-3.11

PROJECT NO: | HWY: | COUNTY: | SHEET NO: 460 | E

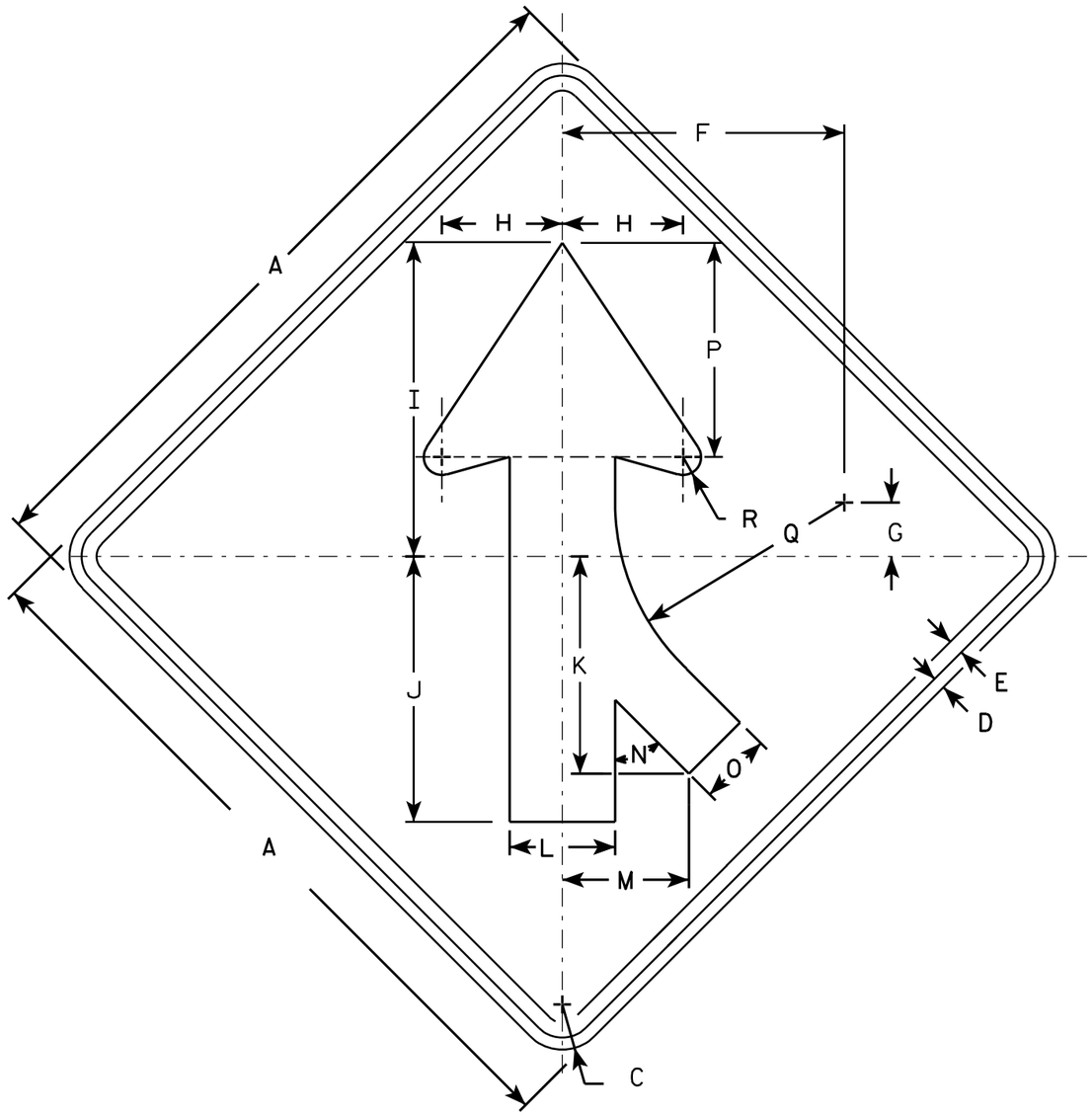


W4-1 R

NOTES

1. Sign is Type II - Type F Reflective - reference WIS DOT Standard Specification for HIGHWAY and STRUCTURE CONSTRUCTION latest edition.
2. Color:
   Background - Yellow
   Message - Black
3. Corners may be square or rounded when base material is plywood but borders shall be rounded as shown. When base material is metal, the corners and borders shall be rounded.
4. W4-1L is the same as W4-1R except the arrow is reversed along the vertical centerline.

| SIZE | A | B | C | D | E | F | G | H | I | J | K | L | M | N | O | P | Q | R | S | T | U | V | W | X | Y | Z | Area sq. ft. |
|---|---|---|---|---|---|---|---|---|---|---|---|---|---|---|---|---|---|---|---|---|---|---|---|---|---|---|---|
| 1 | 30 | | 1 3/8 | 1/2 | 5/8 | 11 5/8 | 2 1/2 | 5 | 13 | 11 | 9 | 4 3/8 | 5 1/4 | 45° | 3 | 8 7/8 | 9 1/2 | 3/4 | | | | | | | | | 6.25 |
| 2S | 36 | | 1 5/8 | 5/8 | 3/4 | 14 | 2 3/4 | 6 | 15 3/4 | 13 1/4 | 10 1/4 | 5 1/4 | 6 3/8 | 45° | 3 5/8 | 10 5/8 | 11 3/8 | 7/8 | | | | | | | | | 9.0 |
| 2M | 36 | | 1 5/8 | 5/8 | 3/4 | 14 | 2 3/4 | 6 | 15 3/4 | 13 1/4 | 10 1/4 | 5 1/4 | 6 3/8 | 45° | 3 5/8 | 10 5/8 | 11 3/8 | 7/8 | | | | | | | | | 9.0 |
| 3 | 36 | | 1 5/8 | 5/8 | 3/4 | 14 | 2 3/4 | 6 | 15 3/4 | 13 1/4 | 10 1/4 | 5 1/4 | 6 3/8 | 45° | 3 5/8 | 10 5/8 | 11 3/8 | 7/8 | | | | | | | | | 9.0 |
| 4 | 48 | | 2 1/4 | 3/4 | 1 | 18 3/4 | 3 5/8 | 8 | 20 1/2 | 17 1/2 | 14 3/8 | 7 | 8 3/8 | 45° | 4 3/4 | 14 1/4 | 15 1/4 | 1 1/4 | | | | | | | | | 16.0 |
| 5 | 48 | | 2 1/4 | 3/4 | 1 | 18 3/4 | 3 5/8 | 8 | 20 1/2 | 17 1/2 | 14 3/8 | 7 | 8 3/8 | 45° | 4 3/4 | 14 1/4 | 15 1/4 | 1 1/4 | | | | | | | | | 16.0 |

STANDARD SIGN
W4-1

WISCONSIN DEPT OF TRANSPORTATION

APPROVED Matthew R Rauch for State Traffic Engineer

DATE 03/12/13 PLATE NO. W4-1.14

PROJECT NO: | HWY: | COUNTY: | SHEET NO: 461 | E

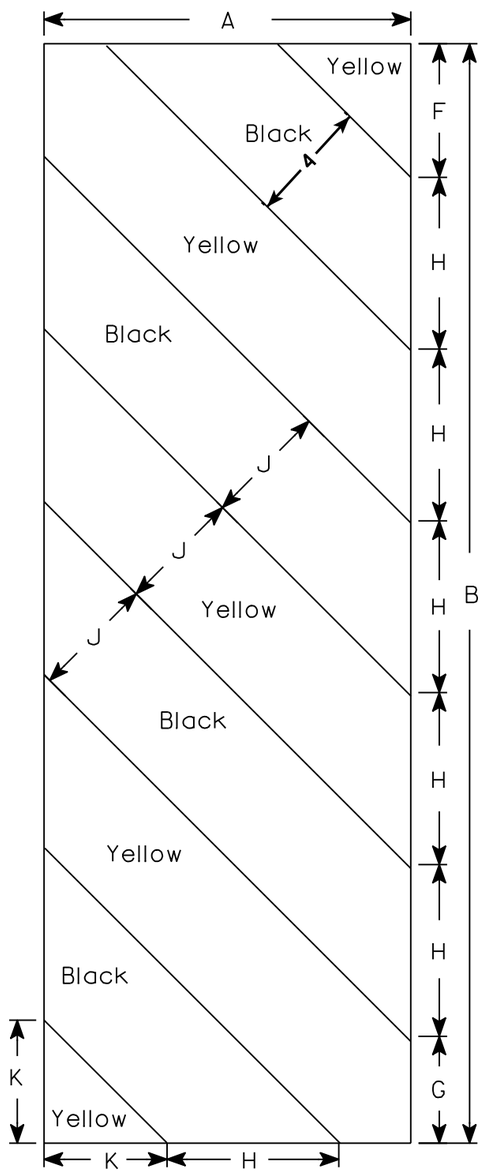


W5-52L

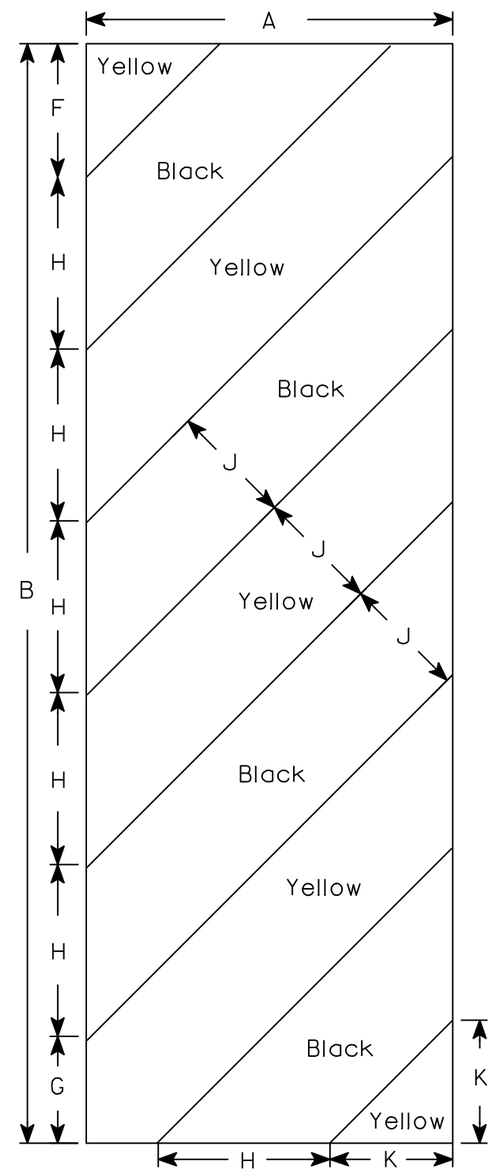


W5-52R

NOTES

1. Sign is Type II - Type F Reflective - reference WIS DOT Standard Specification for HIGHWAY and STRUCTURE CONSTRUCTION latest edition.
2. Color:
   Background - Yellow
   Message - Black
3. Corners may be square or rounded when base material is plywood but borders shall be rounded as shown. When base material is metal, the corners and borders shall be rounded.
4. Alternate colors of stripes as shown.

| SIZE | A | B | C | D | E | F | G | H | I | J | K | L | M | N | O | P | Q | R | S | T | U | V | W | X | Y | Z | Area sq. ft. |
|---|---|---|---|---|---|---|---|---|---|---|---|---|---|---|---|---|---|---|---|---|---|---|---|---|---|---|---|
| 1 | | | | | | | | | | | | | | | | | | | | | | | | | | | |
| 2S | 12 | 36 | | | | 4 3/8 | 3 1/2 | 5 5/8 | 45° | 4 | 4 | | | | | | | | | | | | | | | | 3.0 |
| 2M | 12 | 36 | | | | 4 3/8 | 3 1/2 | 5 5/8 | 45° | 4 | 4 | | | | | | | | | | | | | | | | 3.0 |
| 3 | 18 | 54 | | | | 6 | 5 1/2 | 8 1/2 | 45° | 6 | 6 9/16 | | | | | | | | | | | | | | | | 6.75 |
| 4 | | | | | | | | | | | | | | | | | | | | | | | | | | | |
| 5 | | | | | | | | | | | | | | | | | | | | | | | | | | | |

STANDARD SIGN
W5-52L & W5-52R

WISCONSIN DEPT OF TRANSPORTATION

APPROVED Matthew R Rauch
for State Traffic Engineer

DATE 5/29/12 PLATE NO. W5-52.9

PROJECT NO: | HWY: | COUNTY: | SHEET NO: 462 | E

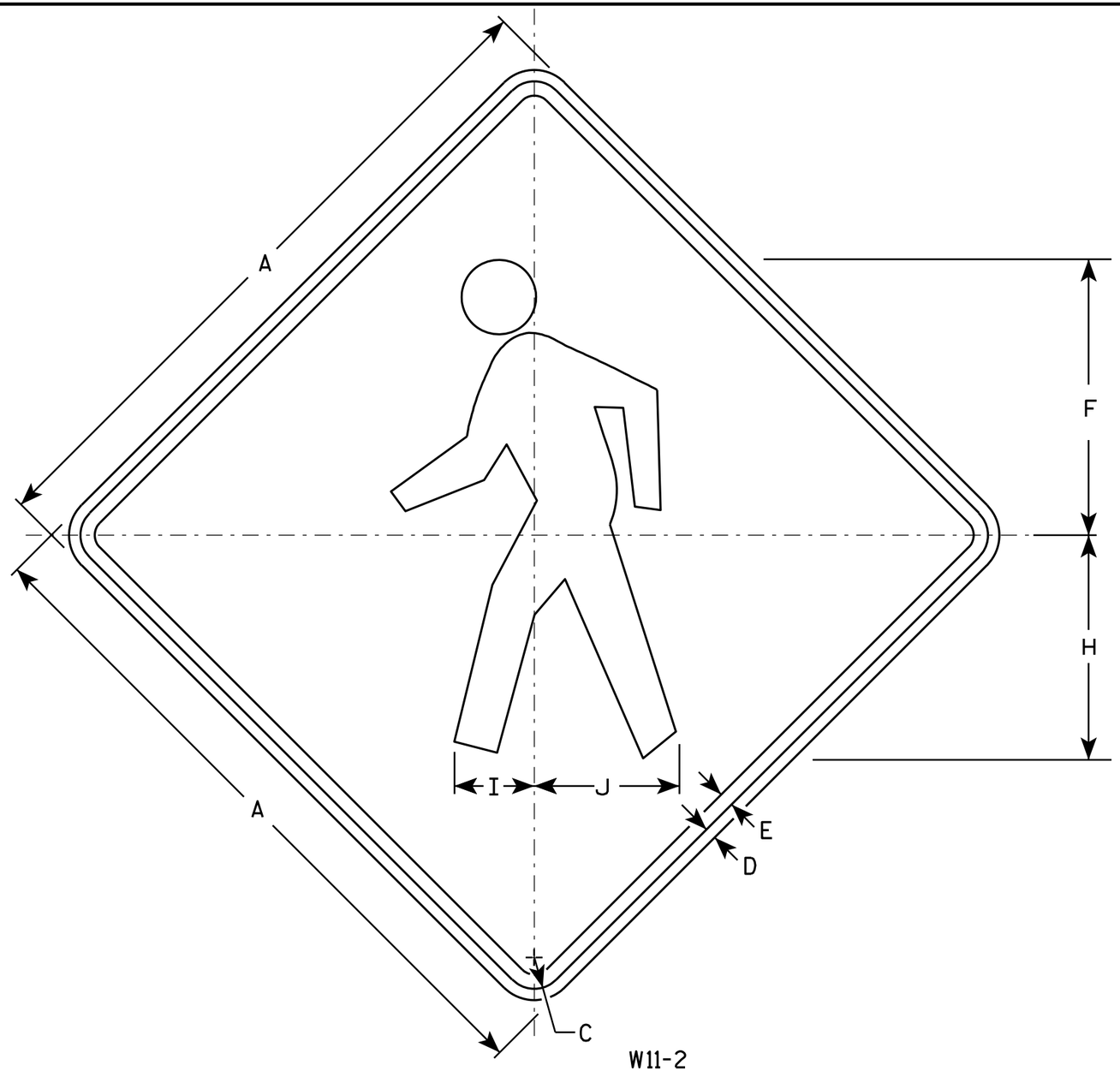


W11-2

## NOTES

1. Sign is Type II - Type F Reflective - reference WIS DOT Standard Specification for HIGHWAY and STRUCTURE CONSTRUCTION latest edition.
2. Color:
   Background - Yellow
   Message - Black
3. Corners may be square or rounded when base material is plywood but borders shall be rounded as shown. When base material is metal, the corners and borders shall be rounded.

| SIZE | A | B | C | D | E | F | G | H | I | J | K | L | M | N | O | P | Q | R | S | T | U | V | W | X | Y | Z | Area sq. ft. |
|---|---|---|---|---|---|---|---|---|---|---|---|---|---|---|---|---|---|---|---|---|---|---|---|---|---|---|---|
| 1 | 24 | | 1 1/8 | 3/8 | 1/2 | 9 3/4 | | 7 7/8 | 2 7/8 | 5 1/8 | | | | | | | | | | | | | | | | | 4.0 |
| 2S | 30 | | 1 3/8 | 1/2 | 5/8 | 12 1/8 | | 9 7/8 | 3 1/2 | 6 3/8 | | | | | | | | | | | | | | | | | 6.25 |
| 2M | 36 | | 1 5/8 | 5/8 | 3/4 | 14 1/2 | | 11 7/8 | 4 1/4 | 7 5/8 | | | | | | | | | | | | | | | | | 9.0 |
| 3 | 36 | | 1 5/8 | 5/8 | 3/4 | 14 1/2 | | 11 7/8 | 4 1/4 | 7 5/8 | | | | | | | | | | | | | | | | | 9.0 |
| 4 | 48 | | 2 1/4 | 3/4 | 1 | 19 3/8 | | 15 3/4 | 5 5/8 | 10 1/4 | | | | | | | | | | | | | | | | | 16.0 |
| 5 | | | | | | | | | | | | | | | | | | | | | | | | | | | |

STANDARD SIGN
W11-2

WISCONSIN DEPT OF TRANSPORTATION

APPROVED Matthew R Rauch
for State Traffic Engineer

DATE 6/7/10 PLATE NO. W11-2.7

| PROJECT NO: | HWY: | COUNTY: | | SHEET NO: 463 | E |
|---|---|---|---|---|---|

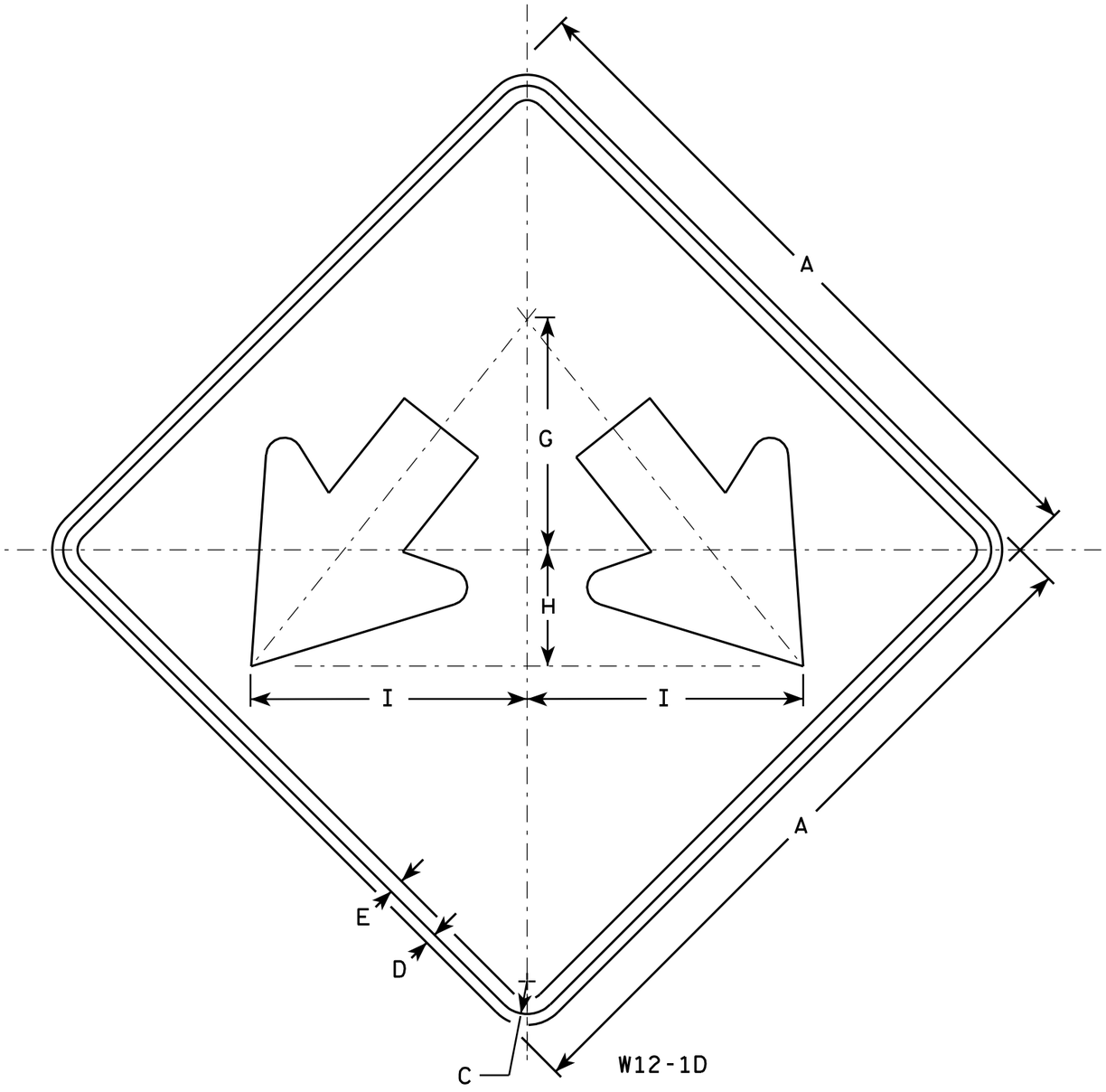


NOTES

1. Sign is Type II - Type F Reflective - reference WIS DOT Standard Specification for HIGHWAY and STRUCTURE CONSTRUCTION latest edition.
2. Color:
   Background - Yellow
   Message - Black
3. Corners may be square or rounded when base material is plywood but borders shall be rounded as shown. When base material is metal, the corners and borders shall be rounded.

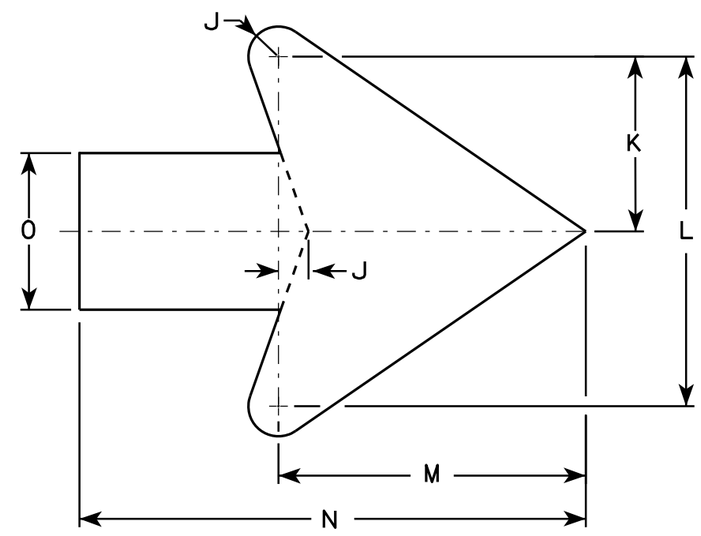


Arrow Detail

| SIZE | A | B | C | D | E | F | G | H | I | J | K | L | M | N | O | P | Q | R | S | T | U | V | W | X | Y | Z | Area sq. ft. |
|---|---|---|---|---|---|---|---|---|---|---|---|---|---|---|---|---|---|---|---|---|---|---|---|---|---|---|---|
| 1 | | | | | | | | | | | | | | | | | | | | | | | | | | | |
| 2S | 24 | | 1 1/8 | 1/2 | 3/8 | | 8 | 4 | 9 1/2 | 3/8 | 3 3/8 | 7 1/4 | 6 3/8 | 10 3/8 | 3 1/4 | | | | | | | | | | | | 4.0 |
| 2M | 24 | | 1 1/8 | 1/2 | 3/8 | | 8 | 4 | 9 1/2 | 3/8 | 3 3/8 | 7 1/4 | 6 3/8 | 10 3/8 | 3 1/4 | | | | | | | | | | | | 4.0 |
| 3 | 30 | | 1 3/8 | 1/2 | 5/8 | | 10 | 5 | 11 7/8 | 3/4 | 4 1/2 | 9 | 7 7/8 | 13 | 4 | | | | | | | | | | | | 6.25 |
| 4 | 36 | | 1 3/8 | 1/2 | 5/8 | | 12 | 6 | 14 1/4 | 1 | 5 1/2 | 10 7/8 | 9 5/8 | 15 3/4 | 4 3/4 | | | | | | | | | | | | 9.0 |
| 5 | 48 | | 2 1/4 | 3/4 | 1 | | 16 | 8 | 19 | 1 1/4 | 7 1/4 | 14 1/2 | 12 3/4 | 21 | 6 1/4 | | | | | | | | | | | | 16.0 |

STANDARD SIGN
W12-1D

WISCONSIN DEPT OF TRANSPORTATION

APPROVED Matthew R Rauch
for State Traffic Engineer

DATE 3/13/13 PLATE NO. W12-1D.15

PROJECT NO: | HWY: | COUNTY: | SHEET NO: 464 | E

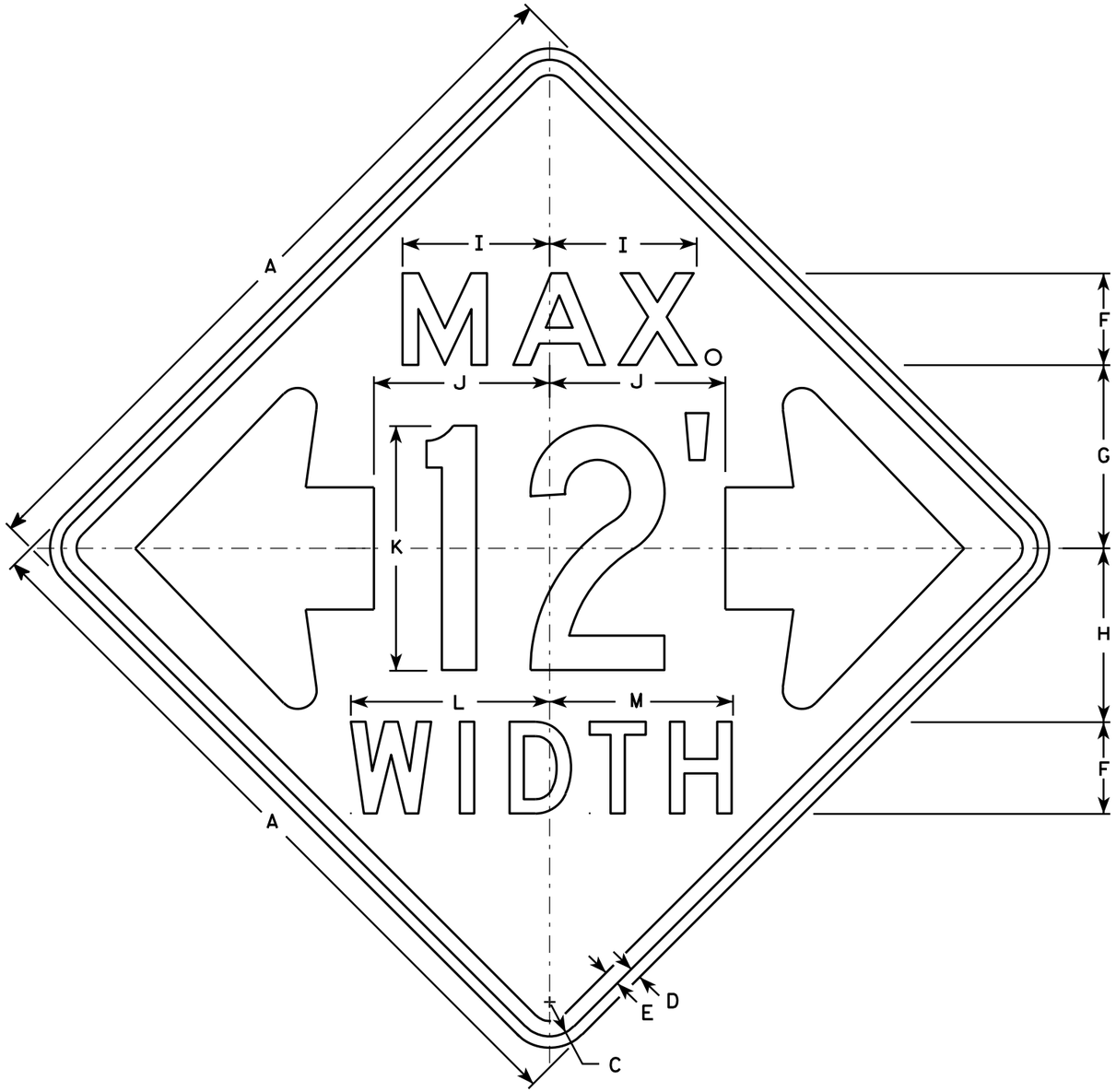


W12-52

NOTES

1. Sign is Type II - Type F Reflective - reference WIS DOT Standard Specification for HIGHWAY and STRUCTURE CONSTRUCTION latest edition.
2. Color:
   Background - Orange
   Message - Black
3. Message Series - See note 5
4. Corners may be square or rounded when base material is plywood but borders shall be rounded as shown. When base material is metal, the corners and borders shall be rounded.
5. The top line is series E, the numerals are series C, and the bottom line is series D.
6. Substitute appropriate numerals and adjust spacing as required.

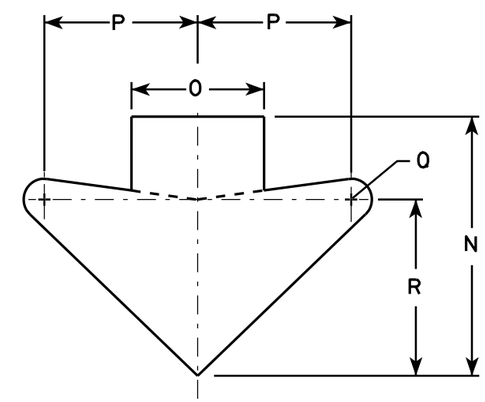


ARROW DETAIL

| SIZE | A | B | C | D | E | F | G | H | I | J | K | L | M | N | O | P | Q | R | S | T | U | V | W | X | Y | Z | Area sq. ft. |
|---|---|---|---|---|---|---|---|---|---|---|---|---|---|---|---|---|---|---|---|---|---|---|---|---|---|---|---|
| 1 | | | | | | | | | | | | | | | | | | | | | | | | | | | |
| 2S | 48 | | 2 1/4 | 3/4 | 1 | 6 | 12 | 11 3/8 | 9 5/8 | 11 1/2 | 16 | 13 | 12 | 15 5/8 | 8 | 9 1/4 | 1 1/4 | 10 5/8 | | | | | | | | | 16.0 |
| 2M | 48 | | 2 1/4 | 3/4 | 1 | 6 | 12 | 11 3/8 | 9 5/8 | 11 1/2 | 16 | 13 | 12 | 15 5/8 | 8 | 9 1/4 | 1 1/4 | 10 5/8 | | | | | | | | | 16.0 |
| 3 | | | | | | | | | | | | | | | | | | | | | | | | | | | |
| 4 | | | | | | | | | | | | | | | | | | | | | | | | | | | |
| 5 | | | | | | | | | | | | | | | | | | | | | | | | | | | |

STANDARD SIGN
W12-52

WISCONSIN DEPT OF TRANSPORTATION

APPROVED Matthew R Rauch
for State Traffic Engineer

DATE 3/16/11 PLATE NO. W12-52.7

| PROJECT NO: | HWY: | COUNTY: | | SHEET NO: 465 | E |
|---|---|---|---|---|---|

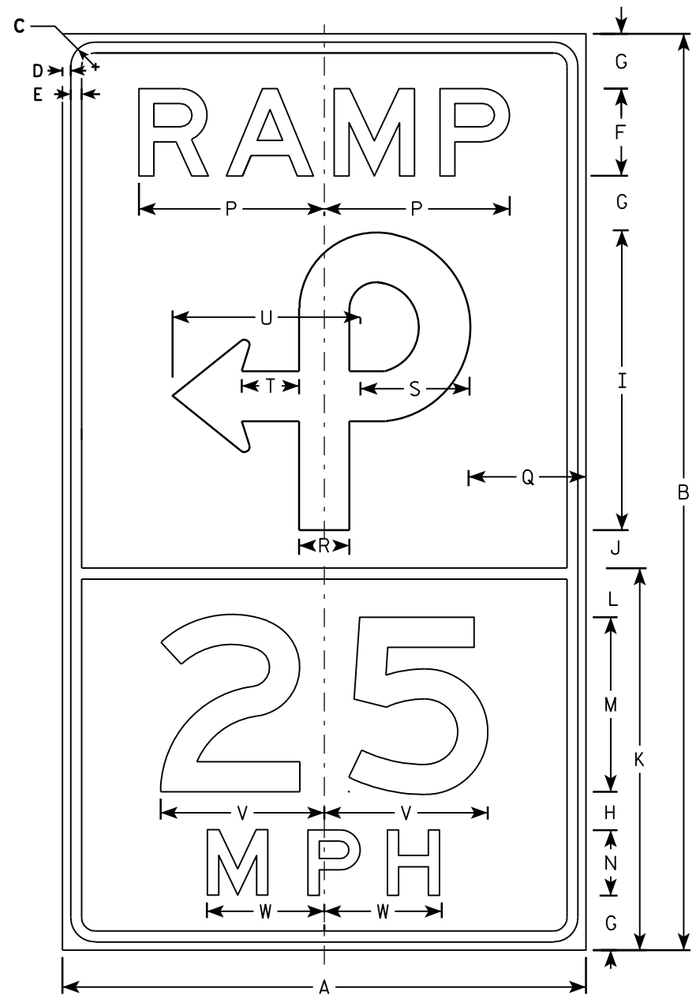


W13-2B

## NOTES

1. Sign is Type II - Type F Reflective - reference WIS DOT Standard Specification for HIGHWAY and STRUCTURE CONSTRUCTION latest edition.
2. Color:
   Background - Yellow
   Message - Black
3. Message Series - E
4. Corners may be square or rounded when base material is plywood but borders shall be rounded as shown. When base material is metal, the corners and borders shall be rounded.

| SIZE | A | B | C | D | E | F | G | H | I | J | K | L | M | N | O | P | Q | R | S | T | U | V | W | X | Y | Z | Area sq. ft. |
|---|---|---|---|---|---|---|---|---|---|---|---|---|---|---|---|---|---|---|---|---|---|---|---|---|---|---|---|
| 1 | | | | | | | | | | | | | | | | | | | | | | | | | | | |
| 2S | 36 | 60 | 1 5/8 | 3/4 | 5/8 | 6 | 3 1/2 | 3 | 19 3/4 | 2 1/4 | 25 | 3 1/2 | 10 | 5 | | 12 3/4 | 8 | 3 1/2 | 7 1/2 | 4 | 13 | 10 | 8 1/2 | | | | 15.0 |
| 2M | 36 | 60 | 1 5/8 | 3/4 | 5/8 | 6 | 3 1/2 | 3 | 19 3/4 | 2 1/4 | 25 | 3 1/2 | 10 | 5 | | 12 3/4 | 8 | 3 1/2 | 7 1/2 | 4 | 13 | 10 | 8 1/2 | | | | 15.0 |
| 3 | | | | | | | | | | | | | | | | | | | | | | | | | | | |
| 4 | 48 | 84 | 2 1/4 | 3/4 | 1 | 8 | 5 | 3 1/2 | 27 1/2 | 3 1/2 | 35 | 4 1/2 | 16 | 6 | | 17 | 10 3/4 | 4 5/8 | 10 | 5 1/4 | 17 1/4 | 15 | 10 3/4 | | | | 28.0 |
| 5 | 48 | 84 | 2 1/4 | 3/4 | 1 | 8 | 5 | 3 1/2 | 27 1/2 | 3 1/2 | 35 | 4 1/2 | 16 | 6 | | 17 | 10 3/4 | 4 5/8 | 10 | 5 1/4 | 17 1/4 | 15 | 10 3/4 | | | | 28.0 |

STANDARD SIGN
W13-3B

WISCONSIN DEPT OF TRANSPORTATION

APPROVED Matthew R Rauch
for State Traffic Engineer

DATE 2/14/13 PLATE NO. W13-3B.1

| PROJECT NO: | HWY: | COUNTY: | | SHEET NO: 466 | E |
|---|---|---|---|---|---|

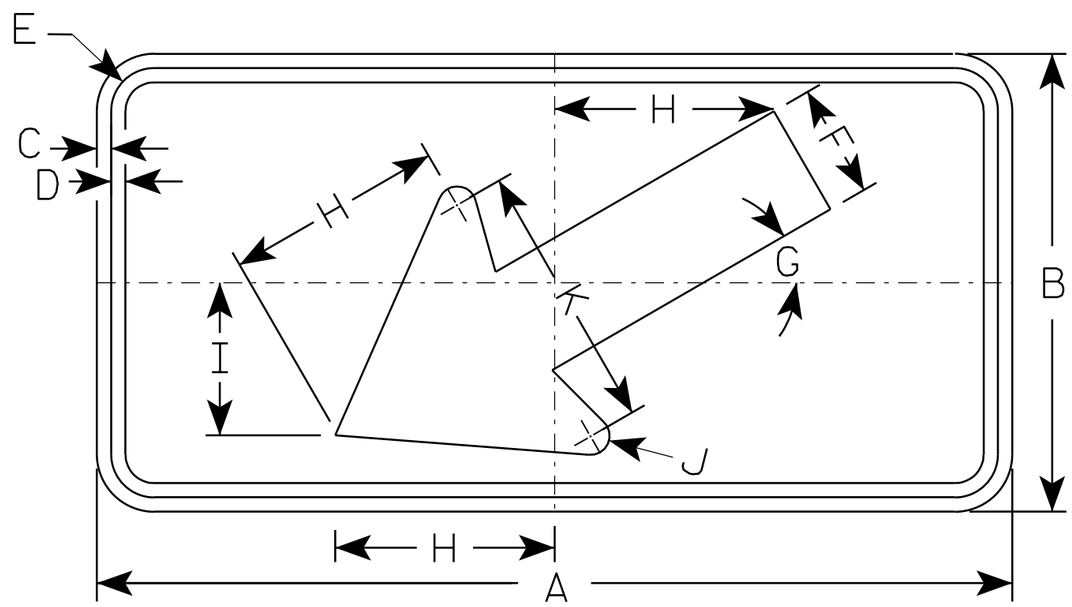


W16-7L

## NOTES

1. Sign is Type II - Type F Reflective - reference WIS DOT Standard Specification for HIGHWAY and STRUCTURE CONSTRUCTION latest edition.
2. Color:
   Background - Yellow
   Message - Black
3. Corners may be square or rounded when base material is plywood but borders shall be rounded as shown. When base material is metal, the corners and borders shall be rounded.
4. W16-7R is the same as W16-L except the arrow is reversed along the vertical centerline.

| SIZE | A | B | C | D | E | F | G | H | I | J | K | L | M | N | O | P | Q | R | S | T | U | V | W | X | Y | Z | Area sq. ft. |
|---|---|---|---|---|---|---|---|---|---|---|---|---|---|---|---|---|---|---|---|---|---|---|---|---|---|---|---|
| 1 | | | | | | | | | | | | | | | | | | | | | | | | | | | |
| 2S | 24 | 12 | 3/8 | 3/8 | 1 1/8 | 3 | 30° | 5 3/4 | 4 | 1/2 | 7 | | | | | | | | | | | | | | | | 2.0 |
| 2M | 30 | 18 | 3/8 | 1/2 | 1 1/8 | 4 1/2 | 30° | 8 1/2 | 6 | 5/8 | 10 1/4 | | | | | | | | | | | | | | | | 3.75 |
| 3 | 30 | 18 | 3/8 | 1/2 | 1 1/8 | 4 1/2 | 30° | 8 1/2 | 6 | 5/8 | 10 1/4 | | | | | | | | | | | | | | | | 3.75 |
| 4 | | | | | | | | | | | | | | | | | | | | | | | | | | | 8 |
| 5 | | | | | | | | | | | | | | | | | | | | | | | | | | | 8 |

STANDARD SIGN
W16-7

WISCONSIN DEPT OF TRANSPORTATION

APPROVED Matthew R Rauch
for State Traffic Engineer

DATE 11/02/10 PLATE NO. W16-7.5

PROJECT NO: | HWY: | COUNTY: | SHEET NO: 467 | E

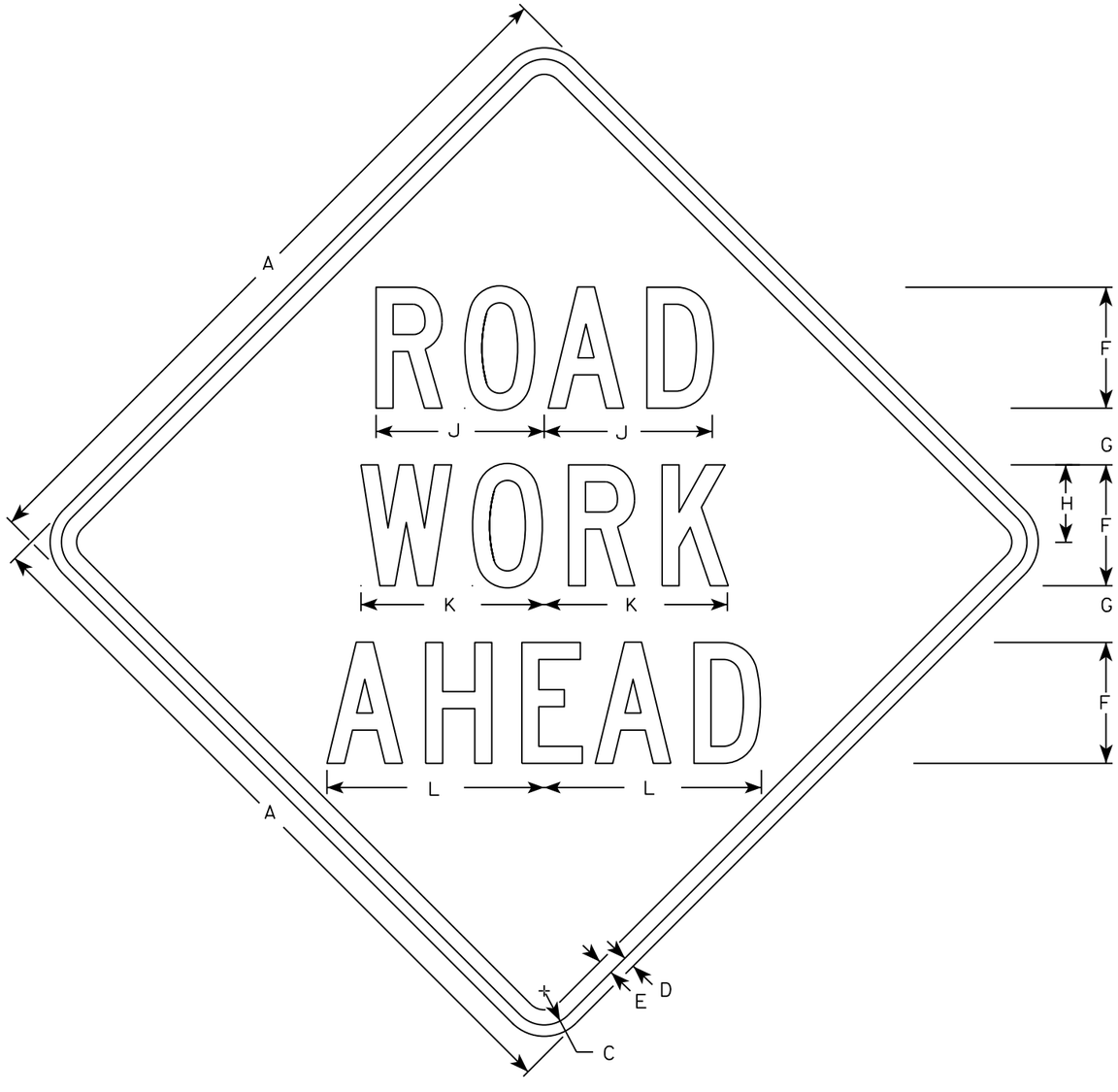


W20-1A

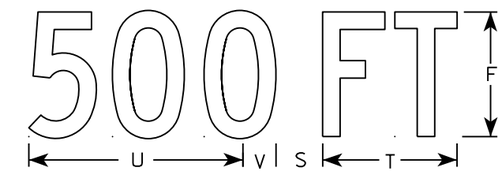


W20-1D

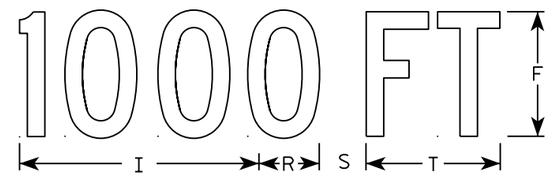


W20-1C

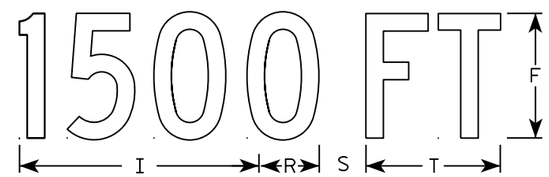


W20-1B

W20-1G

W20-1F

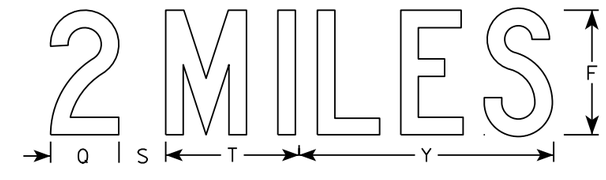


W20-1E

NOTES

1. Sign is Type II - Type F Reflective
2. Color:
   Background - Orange
   Message - Black
3. Message Series - C
4. Corners may be square or rounded when base material is plywood but borders shall be rounded as shown. When base material is metal, the corners and borders shall be rounded.

| SIZE | A | B | C | D | E | F | G | H | I | J | K | L | M | N | O | P | Q | R | S | T | U | V | W | X | Y | Z | Area sq. ft. |
|---|---|---|---|---|---|---|---|---|---|---|---|---|---|---|---|---|---|---|---|---|---|---|---|---|---|---|---|
| 1 | 36 | | 1 3/8 | 1/2 | 5/8 | 5 | 2 5/8 | 3 1/4 | 10 1/8 | 7 | 7 5/8 | 8 7/8 | 1 1/8 | 4 1/2 | 3 1/2 | 9 | | 2 1/2 | 2 1/4 | 5 5/8 | 9 | 1 3/8 | 8 | 1 3/4 | 10 3/4 | 6 | 9.0 |
| 2S | 48 | | 2 1/4 | 3/4 | 1 | 8 | 3 3/4 | 5 1/8 | 15 3/8 | 11 1/8 | 12 1/8 | 14 3/8 | 1 5/8 | 6 7/8 | 5 3/8 | 13 7/8 | 4 3/8 | 3 7/8 | 3 | 8 5/8 | 13 3/4 | 2 1/8 | 11 7/8 | 2 3/4 | 16 3/8 | 9 | 16.0 |
| 2M | 48 | | 2 1/4 | 3/4 | 1 | 8 | 3 3/4 | 5 1/8 | 15 3/8 | 11 1/8 | 12 1/8 | 14 3/8 | 1 5/8 | 6 7/8 | 5 3/8 | 13 7/8 | 4 3/8 | 3 7/8 | 3 | 8 5/8 | 13 3/4 | 2 1/8 | 11 7/8 | 2 3/4 | 16 3/8 | 9 | 16.0 |
| 3 | 48 | | 2 1/4 | 3/4 | 1 | 8 | 3 3/4 | 5 1/8 | 15 3/8 | 11 1/8 | 12 1/8 | 14 3/8 | 1 5/8 | 6 7/8 | 5 3/8 | 13 7/8 | 4 3/8 | 3 7/8 | 3 | 8 5/8 | 13 3/4 | 2 1/8 | 11 7/8 | 2 3/4 | 16 3/8 | 9 | 16.0 |
| 4 | 48 | | 2 1/4 | 3/4 | 1 | 8 | 3 3/4 | 5 1/8 | 15 3/8 | 11 1/8 | 12 1/8 | 14 3/8 | 1 5/8 | 6 7/8 | 5 3/8 | 13 7/8 | 4 3/8 | 3 7/8 | 3 | 8 5/8 | 13 3/4 | 2 1/8 | 11 7/8 | 2 3/4 | 16 3/8 | 9 | 16.0 |
| 5 | 48 | | 2 1/4 | 3/4 | 1 | 8 | 3 3/4 | 5 1/8 | 15 3/8 | 11 1/8 | 12 1/8 | 14 3/8 | 1 5/8 | 6 7/8 | 5 3/8 | 13 7/8 | 4 3/8 | 3 7/8 | 3 | 8 5/8 | 13 3/4 | 2 1/8 | 11 7/8 | 2 3/4 | 16 3/8 | 9 | 16.0 |

STANDARD SIGN
W20-1A, B, C, D, F & G

WISCONSIN DEPT OF TRANSPORTATION

APPROVED Matthew R Rauch
for State Traffic Engineer

DATE 5/07/15 PLATE NO. W20-1.10



PROJECT NO:

SHEET NO: E

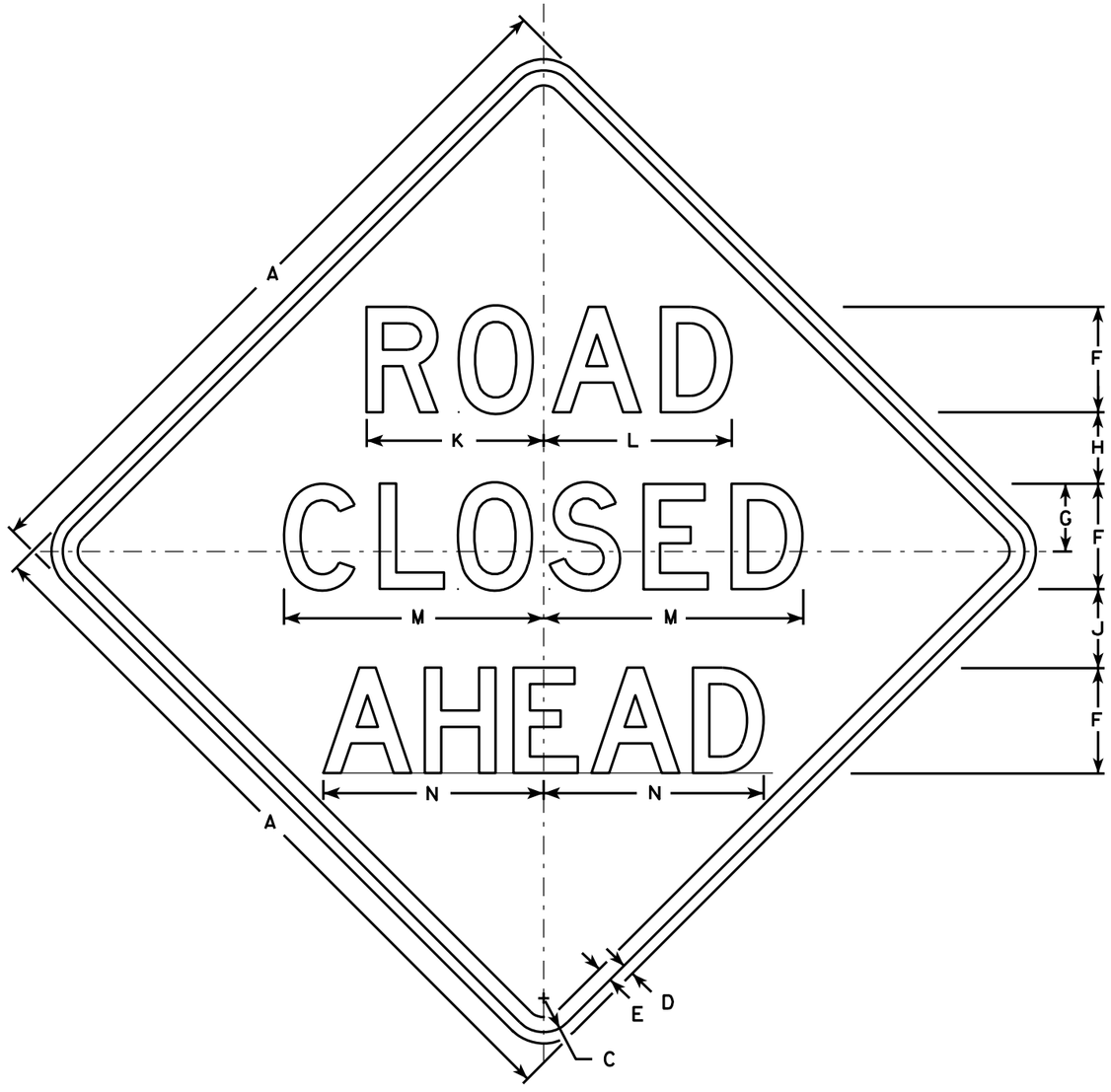


W20-3A

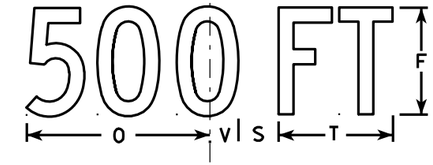


W20-3D

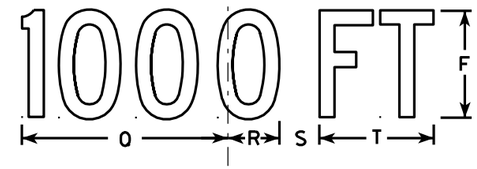


W20-3C

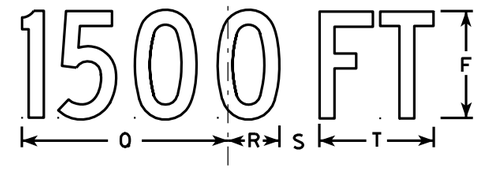


W20-3B

W20-3G

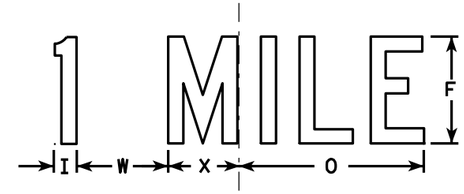


W20-3F

## NOTES

1. Sign is Type II - Type F Reflective - reference WIS DOT Standard Specification for HIGHWAY and STRUCTURE CONSTRUCTION latest edition.
2. Color:
   Background - Orange
   Message - Black
3. Message Series - see note 5
4. Corners may be square or rounded when base material is plywood but borders shall be rounded as shown. When base material is metal, the corners and borders shall be rounded.
5. Lines 1 and 2 are Series D.
   Line 3 is Series D for AHEAD and Series C for all other distances.

| SIZE | A | B | C | D | E | F | G | H | I | J | K | L | M | N | O | P | Q | R | S | T | U | V | W | X | Y | Z | Area sq. ft. |
|---|---|---|---|---|---|---|---|---|---|---|---|---|---|---|---|---|---|---|---|---|---|---|---|---|---|---|---|
| 1 | 36 | | 1 5/8 | 5/8 | 3/4 | 5 | 3 3/8 | 3 1/2 | 1 1/8 | 4 | 8 3/8 | 8 7/8 | 12 1/2 | 11 | 9 | 6 | 10 1/8 | 2 1/2 | 1 7/8 | 5 5/8 | 8 | 1 3/8 | 4 1/2 | 3 1/2 | 10 3/4 | 1 3/4 | 9.0 |
| 2S | 48 | | 2 1/4 | 3/4 | 1 | 7 | 4 1/2 | 4 3/4 | 1 1/2 | 5 1/4 | 11 3/4 | 12 1/2 | 17 1/4 | 14 5/8 | 12 | 8 | 13 1/2 | 3 3/8 | 2 5/8 | 7 1/2 | 10 5/8 | 1 7/8 | 6 | 4 5/8 | 14 3/8 | 2 3/8 | 16.0 |
| 2M | 48 | | 2 1/4 | 3/4 | 1 | 7 | 4 1/2 | 4 3/4 | 1 1/2 | 5 1/4 | 11 3/4 | 12 1/2 | 17 1/4 | 14 5/8 | 12 | 8 | 13 1/2 | 3 3/8 | 2 5/8 | 7 1/2 | 10 5/8 | 1 7/8 | 6 | 4 5/8 | 14 3/8 | 2 3/8 | 16.0 |
| 3 | 48 | | 2 1/4 | 3/4 | 1 | 7 | 4 1/2 | 4 3/4 | 1 1/2 | 5 1/4 | 11 3/4 | 12 1/2 | 17 1/4 | 14 5/8 | 12 | 8 | 13 1/2 | 3 3/8 | 2 5/8 | 7 1/2 | 10 5/8 | 1 7/8 | 6 | 4 5/8 | 14 3/8 | 2 3/8 | 16.0 |
| 4 | 48 | | 2 1/4 | 3/4 | 1 | 7 | 4 1/2 | 4 3/4 | 1 1/2 | 5 1/4 | 11 3/4 | 12 1/2 | 17 1/4 | 14 5/8 | 12 | 8 | 13 1/2 | 3 3/8 | 2 5/8 | 7 1/2 | 10 5/8 | 1 7/8 | 6 | 4 5/8 | 14 3/8 | 2 3/8 | 16.0 |
| 5 | 48 | | 2 1/4 | 3/4 | 1 | 7 | 4 1/2 | 4 3/4 | 1 1/2 | 5 1/4 | 11 3/4 | 12 1/2 | 17 1/4 | 14 5/8 | 12 | 8 | 13 1/2 | 3 3/8 | 2 5/8 | 7 1/2 | 10 5/8 | 1 7/8 | 6 | 4 5/8 | 14 3/8 | 2 3/8 | 16.0 |

STANDARD SIGN
W20-3A, B, C, D, F & G

WISCONSIN DEPT OF TRANSPORTATION

APPROVED Matthew R Rauch
for State Traffic Engineer
DATE 3/18/11 PLATE NO. W20-3.7

PROJECT NO: | HWY: | COUNTY: | SHEET NO: 469 | E

W20-56A

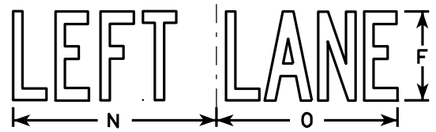


W20-55A

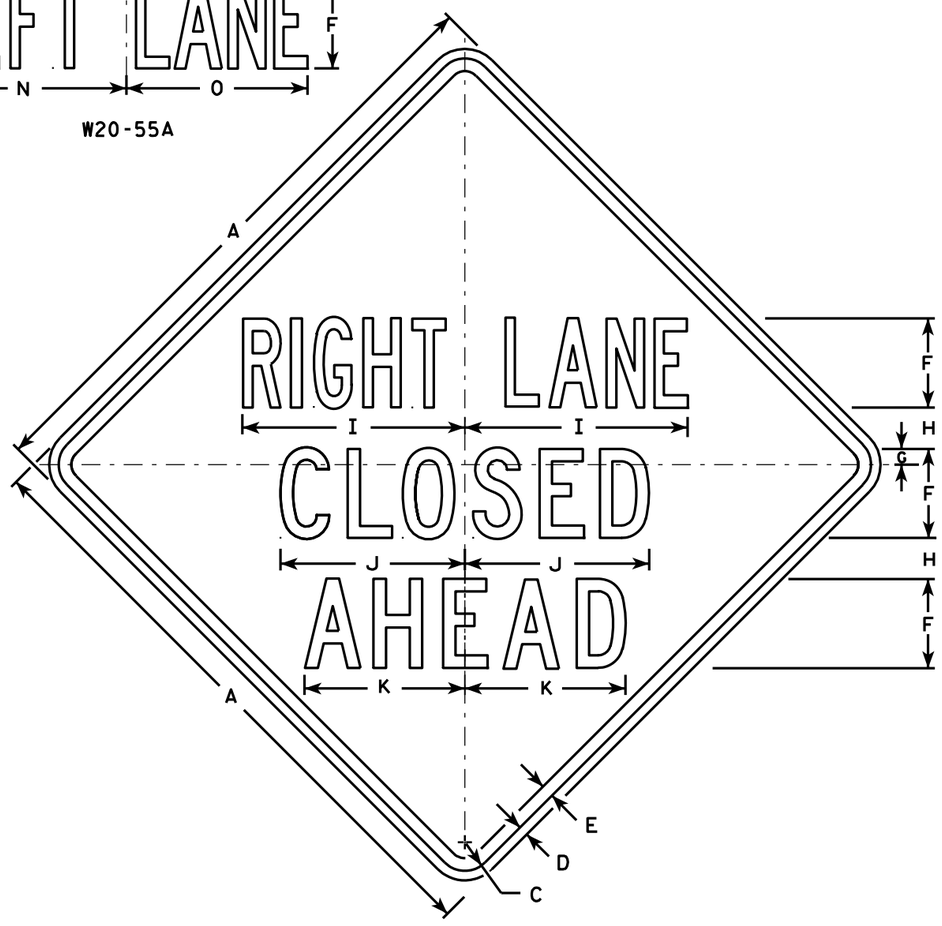


W20-5A

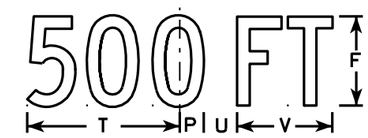


W20-5D

W20-5C

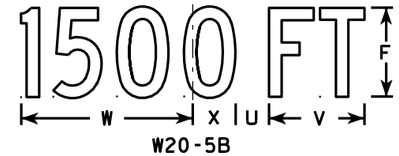


W20-5B

W20-5G

W20-5F

NOTES

1. Sign is Type II - Type F Reflective - reference WIS DOT Standard Specification for HIGHWAY and STRUCTURE CONSTRUCTION latest edition.
2. Color:
   Background - Orange
   Message - Black
3. Message Series - See Note 5
4. Corners may be square or rounded when base material is plywood but borders shall be rounded as shown. When base material is metal, the corners and borders shall be rounded.
5. " ------- LANE" is Series B.
   All other copy is Series C.

| SIZE | A | B | C | D | E | F | G | H | I | J | K | L | M | N | O | P | Q | R | S | T | U | V | W | X | Y | Z | Area sq. ft. |
|---|---|---|---|---|---|---|---|---|---|---|---|---|---|---|---|---|---|---|---|---|---|---|---|---|---|---|---|
| 1 | 36 | 6 | 1 5/8 | 5/8 | 3/4 | 5 | 7/8 | 2 1/2 | 13 1/8 | 10 3/4 | 9 1/2 | 14 1/4 | 13 5/8 | 12 | 12 | 1 3/8 | 1 1/8 | 4 1/2 | 3 1/2 | 9 | 1 7/8 | 5 5/8 | 10 1/8 | 2 1/2 | 1 3/4 | 8 | 9.0 |
| 2S | 48 | 8 | 2 1/4 | 3/4 | 1 | 7 | 1 1/4 | 3 1/4 | 17 1/2 | 14 3/8 | 12 5/8 | 19 | 18 3/8 | 16 | 14 1/4 | 1 7/8 | 1 1/2 | 6 | 4 5/8 | 12 | 2 5/8 | 7 1/2 | 13 1/2 | 3 3/8 | 2 3/8 | 10 5/8 | 16.0 |
| 2M | 48 | 8 | 2 1/4 | 3/4 | 1 | 7 | 1 1/4 | 3 1/4 | 17 1/2 | 14 3/8 | 12 5/8 | 19 | 18 3/8 | 16 | 14 1/4 | 1 7/8 | 1 1/2 | 6 | 4 5/8 | 12 | 2 5/8 | 7 1/2 | 13 1/2 | 3 3/8 | 2 3/8 | 10 5/8 | 16.0 |
| 3 | 48 | 8 | 2 1/4 | 3/4 | 1 | 7 | 1 1/4 | 3 1/4 | 17 1/2 | 14 3/8 | 12 5/8 | 19 | 18 3/8 | 16 | 14 1/4 | 1 7/8 | 1 1/2 | 6 | 4 5/8 | 12 | 2 5/8 | 7 1/2 | 13 1/2 | 3 3/8 | 2 3/8 | 10 5/8 | 16.0 |
| 4 | 48 | 8 | 2 1/4 | 3/4 | 1 | 7 | 1 1/4 | 3 1/4 | 17 1/2 | 14 3/8 | 12 5/8 | 19 | 18 3/8 | 16 | 14 1/4 | 1 7/8 | 1 1/2 | 6 | 4 5/8 | 12 | 2 5/8 | 7 1/2 | 13 1/2 | 3 3/8 | 2 3/8 | 10 5/8 | 16.0 |
| 5 | 48 | 8 | 2 1/4 | 3/4 | 1 | 7 | 1 1/4 | 3 1/4 | 17 1/2 | 14 3/8 | 12 5/8 | 19 | 18 3/8 | 16 | 14 1/4 | 1 7/8 | 1 1/2 | 6 | 4 5/8 | 12 | 2 5/8 | 7 1/2 | 13 1/2 | 3 3/8 | 2 3/8 | 10 5/8 | 16.0 |

STANDARD SIGN
W20-5A, B, C, D, F & G

WISCONSIN DEPT OF TRANSPORTATION

APPROVED Matthew R Rauch
for State Traffic Engineer

DATE 3/18/11 PLATE NO. W20-5.11

| PROJECT NO: | HWY: | COUNTY: | | SHEET NO: 470 | E |
|---|---|---|---|---|---|

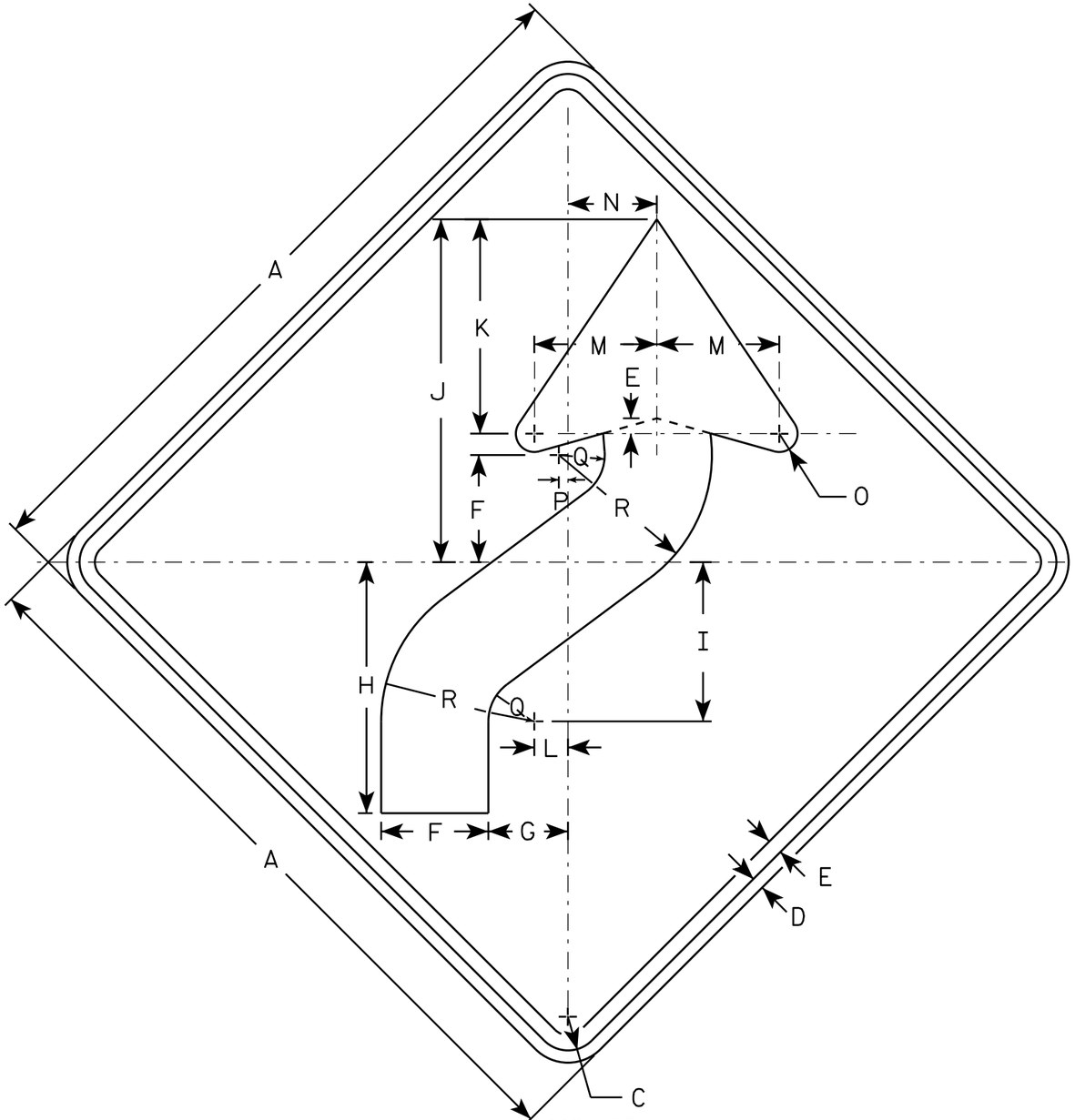


W01-4R

## NOTES

1. Sign is Type II - Type F Reflective - reference WIS DOT Standard Specification for HIGHWAY and STRUCTURE CONSTRUCTION latest edition.
2. Color:
   Background - Orange
   Message - Black
3. Corners may be square or rounded when base material is plywood but borders shall be rounded as shown. When base material is metal, the corners and borders shall be rounded.
4. W01-4L is the same as W01-4R except the arrow is reversed along the vertical centerline.

| SIZE | A | B | C | D | E | F | G | H | I | J | K | L | M | N | O | P | Q | R | S | T | U | V | W | X | Y | Z | Area sq. ft. |
|---|---|---|---|---|---|---|---|---|---|---|---|---|---|---|---|---|---|---|---|---|---|---|---|---|---|---|---|
| 1 | 36 | | 1 5/8 | 5/8 | 3/4 | 5 1/4 | 4 | 12 3/8 | 7 7/8 | 16 7/8 | 10 1/2 | 1 5/8 | 6 | 4 1/2 | 1 | 1/2 | 2 1/4 | 7 1/2 | | | | | | | | | 9.0 |
| 2S | 48 | | 2 1/4 | 3/4 | 1 | 7 | 5 1/4 | 16 1/2 | 10 1/2 | 22 1/2 | 14 | 2 1/4 | 8 | 6 | 1 1/4 | 5/8 | 3 | 10 | | | | | | | | | 16.0 |
| 2M | 48 | | 2 1/4 | 3/4 | 1 | 7 | 5 1/4 | 16 1/2 | 10 1/2 | 22 1/2 | 14 | 2 1/4 | 8 | 6 | 1 1/4 | 5/8 | 3 | 10 | | | | | | | | | 16.0 |
| 3 | 48 | | 2 1/4 | 3/4 | 1 | 7 | 5 1/4 | 16 1/2 | 10 1/2 | 22 1/2 | 14 | 2 1/4 | 8 | 6 | 1 1/4 | 5/8 | 3 | 10 | | | | | | | | | 16.0 |
| 4 | 48 | | 2 1/4 | 3/4 | 1 | 7 | 5 1/4 | 16 1/2 | 10 1/2 | 22 1/2 | 14 | 2 1/4 | 8 | 6 | 1 1/4 | 5/8 | 3 | 10 | | | | | | | | | 16.0 |
| 5 | 48 | | 2 1/4 | 3/4 | 1 | 7 | 5 1/4 | 16 1/2 | 10 1/2 | 22 1/2 | 14 | 2 1/4 | 8 | 6 | 1 1/4 | 5/8 | 3 | 10 | | | | | | | | | 16.0 |

# STANDARD SIGN
# W01-4

*WISCONSIN DEPT OF TRANSPORTATION*

APPROVED Matthew R Rauch
for State Traffic Engineer

DATE 11/18/13 PLATE NO W01-4.1

| PROJECT NO: | HWY: | COUNTY: | | SHEET NO: | E |
|---|---|---|---|---|---|

## NOTES

1. Sign is Type II - Type F Reflective - reference WIS DOT Standard Specification for HIGHWAY and STRUCTURE CONSTRUCTION latest edition.
2. Color:
   Background - Orange
   Message - Black
3. Corners may be square or rounded when base material is plywood but borders shall be rounded as shown. When base material is metal, the corners and borders shall be rounded.

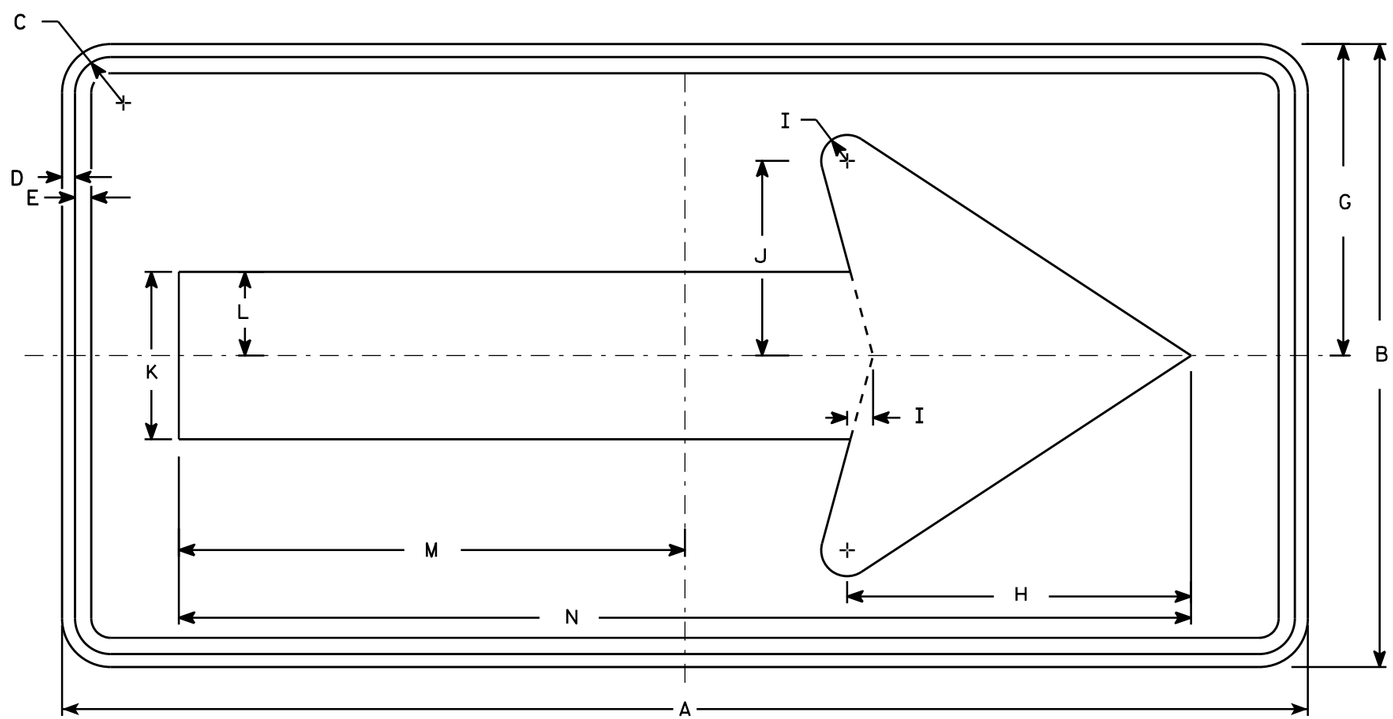


W01-6

| SIZE | A | B | C | D | E | F | G | H | I | J | K | L | M | N | O | P | Q | R | S | T | U | V | W | X | Y | Z | Area sq. ft. |
|---|---|---|---|---|---|---|---|---|---|---|---|---|---|---|---|---|---|---|---|---|---|---|---|---|---|---|---|
| 1 | | | | | | | | | | | | | | | | | | | | | | | | | | | |
| 2S | 48 | 24 | 1 3/8 | 1/2 | 5/8 | | 12 | 13 1/4 | 1 | 7 1/2 | 6 1/2 | 3 1/4 | 19 1/2 | 39 | | | | | | | | | | | | | 8.0 |
| 2M | 48 | 24 | 1 3/8 | 1/2 | 5/8 | | 12 | 13 1/4 | 1 | 7 1/2 | 6 1/2 | 3 1/4 | 19 1/2 | 39 | | | | | | | | | | | | | 8.0 |
| 3 | 60 | 30 | 1 3/8 | 1/2 | 5/8 | | 15 | 16 1/4 | 1 1/4 | 9 1/4 | 8 | 4 | 24 3/8 | 48 3/4 | | | | | | | | | | | | | 12.5 |
| 4 | 60 | 30 | 1 3/8 | 1/2 | 5/8 | | 15 | 16 1/4 | 1 1/4 | 9 1/4 | 8 | 4 | 24 3/8 | 48 3/4 | | | | | | | | | | | | | 12.5 |
| 5 | 60 | 30 | 1 3/8 | 1/2 | 5/8 | | 15 | 16 1/4 | 1 1/4 | 9 1/4 | 8 | 4 | 24 3/8 | 48 3/4 | | | | | | | | | | | | | 12.5 |

STANDARD SIGN
W01-6

WISCONSIN DEPT OF TRANSPORTATION

APPROVED Matthew R Rauch
for State Traffic Engineer

DATE 11/18/13 PLATE NO. W01-6.1

PROJECT NO: | HWY: | COUNTY: | SHEET NO: | E

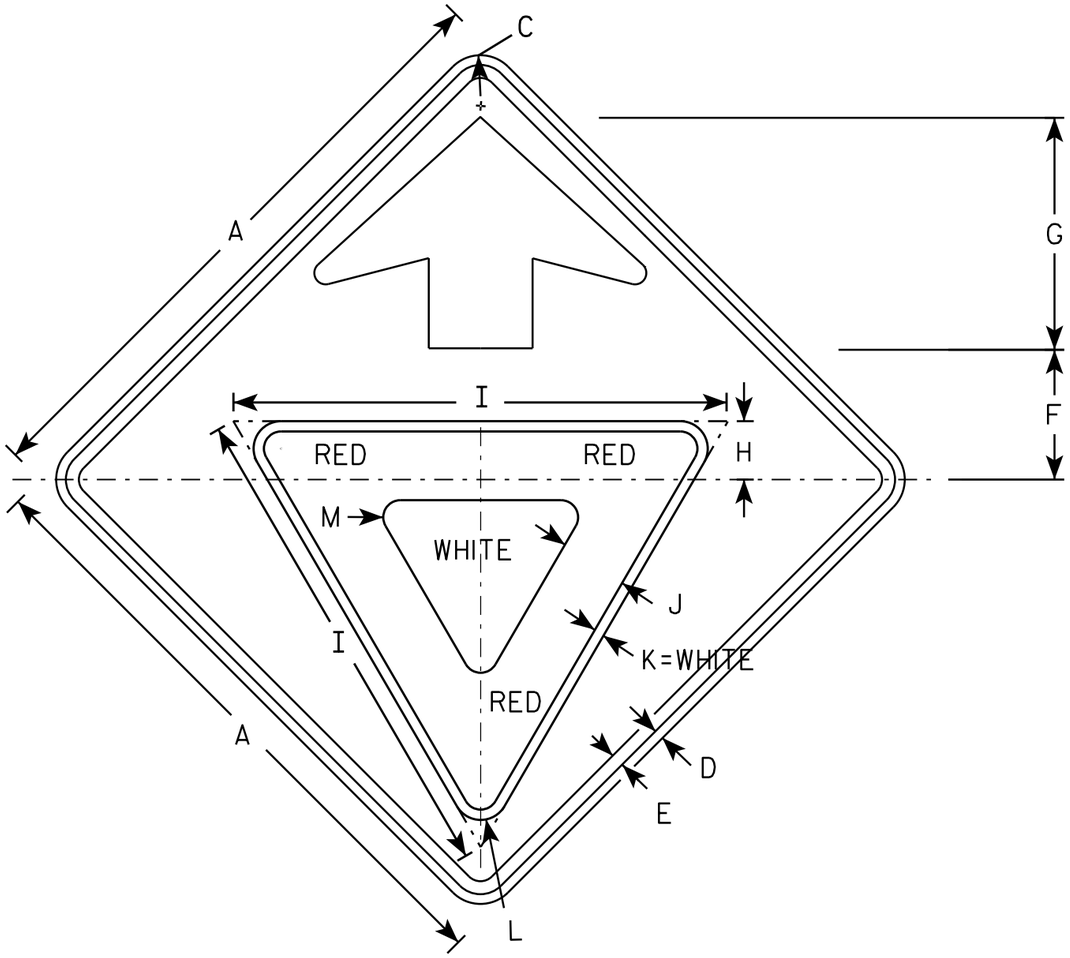


W03-2

NOTES

1. All Signs Type II - Type F Reflective - reference WIS DOT Standard Specification for HIGHWAY and STRUCTURE CONSTRUCTION latest edition.
2. Color:
   Background - ORANGE
   Arrow & Border - BLACK
   Yield Symbol - WHITE BORDER ON RED BACKGROUND

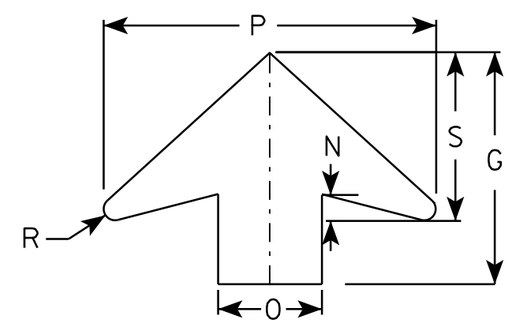


ARROW DETAIL

| SIZE | A | B | C | D | E | F | G | H | I | J | K | L | M | N | O | P | Q | R | S | T | U | V | W | X | Y | Z | Area sq. ft. |
|---|---|---|---|---|---|---|---|---|---|---|---|---|---|---|---|---|---|---|---|---|---|---|---|---|---|---|---|
| 1 | 36 | | 1 5/8 | 5/8 | 3/4 | 7 1/2 | 13 1/2 | 3 3/8 | 28 | 3 3/4 | 5/8 | 1 1/2 | 1 | 1 5/8 | 6 | 19 1/4 | | 5/8 | 9 3/4 | | | | | | | | 9.0 |
| 2S | 48 | | 2 1/4 | 3/4 | 1 | 10 | 17 7/8 | 4 1/2 | 38 | 5 | 3/4 | 2 1/8 | 1 3/8 | 2 | 8 | 25 5/8 | | 7/8 | 13 | | | | | | | | 16.0 |
| 2M | 48 | | 2 1/4 | 3/4 | 1 | 10 | 17 7/8 | 4 1/2 | 38 | 5 | 3/4 | 2 1/8 | 1 3/8 | 2 | 8 | 25 5/8 | | 7/8 | 13 | | | | | | | | 16.0 |
| 3 | 48 | | 2 1/4 | 3/4 | 1 | 10 | 17 7/8 | 4 1/2 | 38 | 5 | 3/4 | 2 1/8 | 1 3/8 | 2 | 8 | 25 5/8 | | 7/8 | 13 | | | | | | | | 16.0 |
| 4 | 48 | | 2 1/4 | 3/4 | 1 | 10 | 17 7/8 | 4 1/2 | 38 | 5 | 3/4 | 2 1/8 | 1 3/8 | 2 | 8 | 25 5/8 | | 7/8 | 13 | | | | | | | | 16.0 |
| 5 | 48 | | 2 1/4 | 3/4 | 1 | 10 | 17 7/8 | 4 1/2 | 38 | 5 | 3/4 | 2 1/8 | 1 3/8 | 2 | 8 | 25 5/8 | | 7/8 | 13 | | | | | | | | 16.0 |

STANDARD SIGN
W03-2

WISCONSIN DEPT OF TRANSPORTATION

APPROVED Matthew R Rauch
for State Traffic Engineer

DATE 11/20/13 PLATE NO. W03-2.1

PROJECT NO:

SHEET NO: E

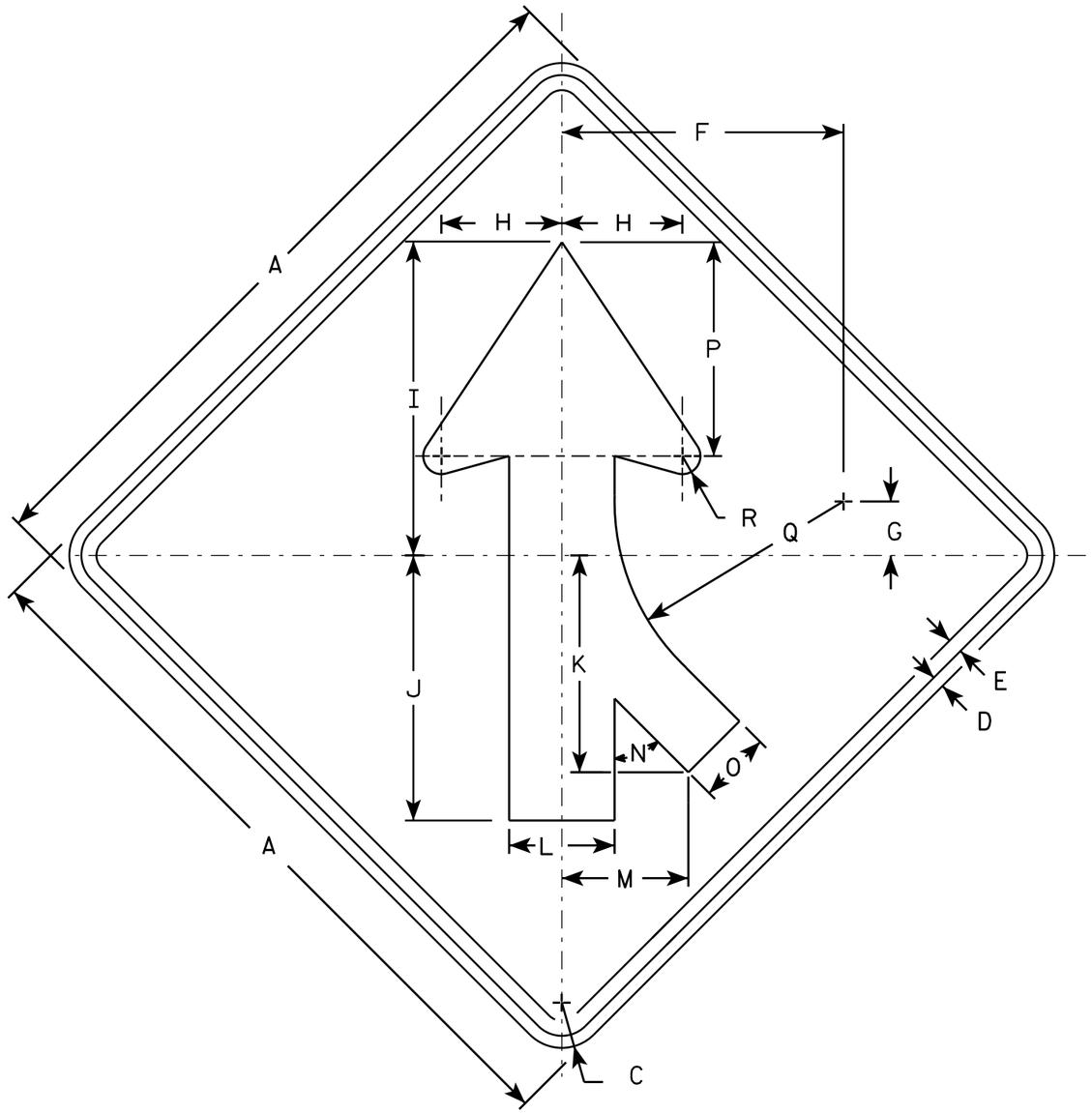


W04-1R

## NOTES

1. Sign is Type II - Type F Reflective - reference WIS DOT Standard Specification for HIGHWAY and STRUCTURE CONSTRUCTION latest edition.
2. Color:
   Background - Orange
   Message - Black
3. Corners may be square or rounded when base material is plywood but borders shall be rounded as shown. When base material is metal, the corners and borders shall be rounded.
4. W4-1L is the same as W4-1R except the arrow is reversed along the vertical centerline.

| SIZE | A | B | C | D | E | F | G | H | I | J | K | L | M | N | O | P | Q | R | S | T | U | V | W | X | Y | Z | Area sq. ft. |
|---|---|---|---|---|---|---|---|---|---|---|---|---|---|---|---|---|---|---|---|---|---|---|---|---|---|---|---|
| 1 | 36 | | 1 5/8 | 5/8 | 3/4 | 14 | 2 3/4 | 6 | 15 3/4 | 13 1/4 | 10 1/4 | 5 1/4 | 6 3/8 | 45° | 3 5/8 | 10 5/8 | 11 3/8 | 7/8 | | | | | | | | | 9.0 |
| 2S | 48 | | 2 1/4 | 3/4 | 1 | 18 3/4 | 3 5/8 | 8 | 20 1/2 | 17 1/2 | 14 3/8 | 7 | 8 3/8 | 45° | 4 3/4 | 14 1/4 | 15 1/4 | 1 1/4 | | | | | | | | | 16.0 |
| 2M | 48 | | 2 1/4 | 3/4 | 1 | 18 3/4 | 3 5/8 | 8 | 20 1/2 | 17 1/2 | 14 3/8 | 7 | 8 3/8 | 45° | 4 3/4 | 14 1/4 | 15 1/4 | 1 1/4 | | | | | | | | | 16.0 |
| 3 | 48 | | 2 1/4 | 3/4 | 1 | 18 3/4 | 3 5/8 | 8 | 20 1/2 | 17 1/2 | 14 3/8 | 7 | 8 3/8 | 45° | 4 3/4 | 14 1/4 | 15 1/4 | 1 1/4 | | | | | | | | | 16.0 |
| 4 | 48 | | 2 1/4 | 3/4 | 1 | 18 3/4 | 3 5/8 | 8 | 20 1/2 | 17 1/2 | 14 3/8 | 7 | 8 3/8 | 45° | 4 3/4 | 14 1/4 | 15 1/4 | 1 1/4 | | | | | | | | | 16.0 |
| 5 | 48 | | 2 1/4 | 3/4 | 1 | 18 3/4 | 3 5/8 | 8 | 20 1/2 | 17 1/2 | 14 3/8 | 7 | 8 3/8 | 45° | 4 3/4 | 14 1/4 | 15 1/4 | 1 1/4 | | | | | | | | | 16.0 |

STANDARD SIGN
W04-1

WISCONSIN DEPT OF TRANSPORTATION

APPROVED Matthew R Rauch
for State Traffic Engineer

DATE 11/20/13 PLATE NO. W04-1.1



PROJECT NO: | HWY: | COUNTY: | SHEET NO: | E

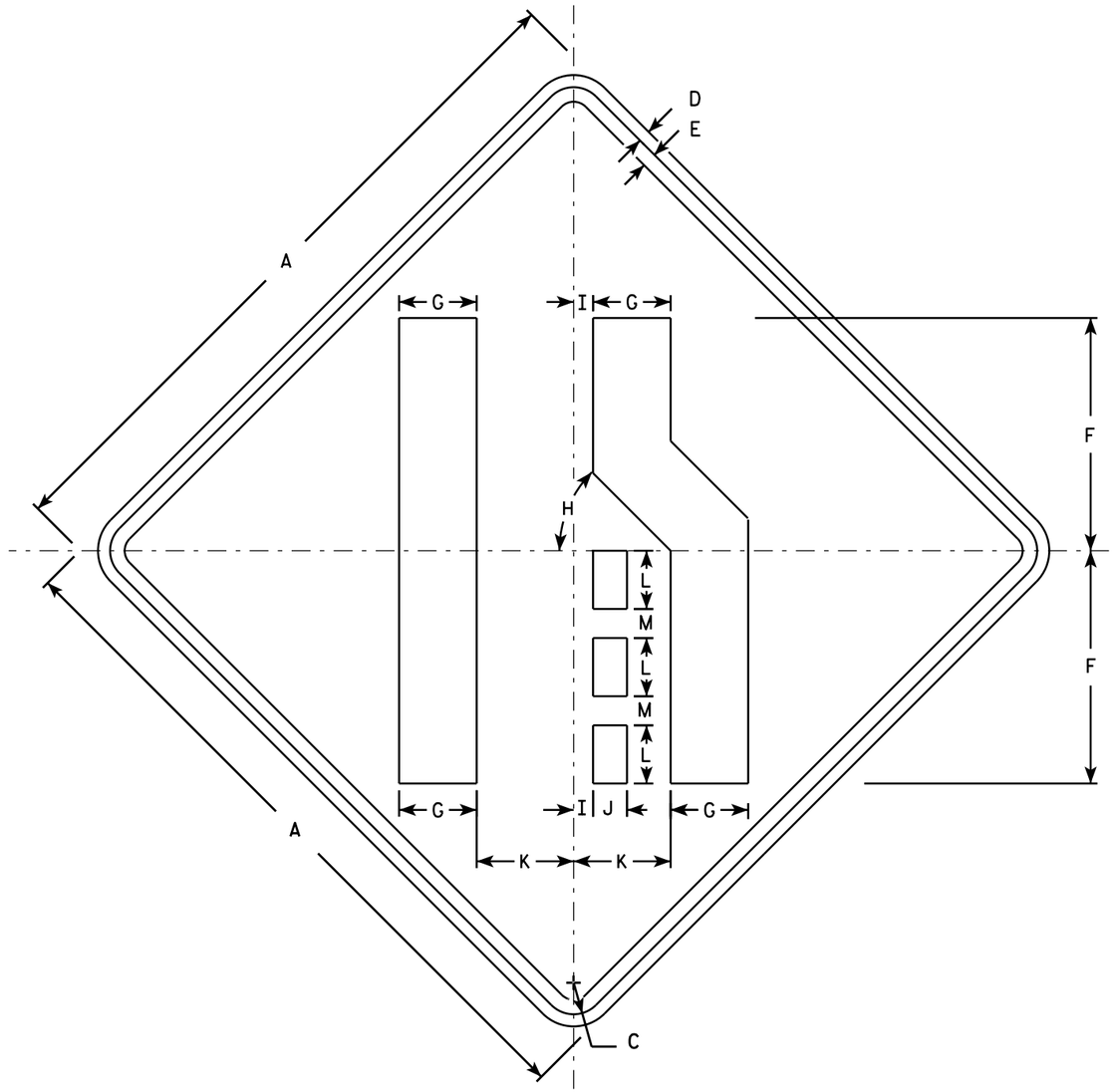


W04-2R

NOTES

1. Sign is Type II - Type F Reflective - reference WIS DOT Standard Specification for HIGHWAY and STRUCTURE CONSTRUCTION latest edition.
2. Color:
   Background - Orange
   Message - Black
3. Corners may be square or rounded when base material is plywood but borders shall be rounded as shown. When base material is metal, the corners and borders shall be rounded.
4. W04-2L is the same as W04-2R except the symbol is reversed along the vertical centerline.

| SIZE | A | B | C | D | E | F | G | H | I | J | K | L | M | N | O | P | Q | R | S | T | U | V | W | X | Y | Z | Area sq. ft. |
|---|---|---|---|---|---|---|---|---|---|---|---|---|---|---|---|---|---|---|---|---|---|---|---|---|---|---|---|
| 1 | 36 | | 1 5/8 | 5/8 | 3/4 | 12 | 4 | 45° | 1 | 1 3/4 | 5 | 3 | 1 1/2 | | | | | | | | | | | | | | 9.0 |
| 2S | 48 | | 2 1/4 | 3/4 | 1 | 16 | 5 3/8 | 45° | 1 1/4 | 2 3/8 | 6 3/4 | 4 | 2 | | | | | | | | | | | | | | 16.0 |
| 2M | 48 | | 2 1/4 | 3/4 | 1 | 16 | 5 3/8 | 45° | 1 1/4 | 2 3/8 | 6 3/4 | 4 | 2 | | | | | | | | | | | | | | 16.0 |
| 3 | 48 | | 2 1/4 | 3/4 | 1 | 16 | 5 3/8 | 45° | 1 1/4 | 2 3/8 | 6 3/4 | 4 | 2 | | | | | | | | | | | | | | 16.0 |
| 4 | 48 | | 2 1/4 | 3/4 | 1 | 16 | 5 3/8 | 45° | 1 1/4 | 2 3/8 | 6 3/4 | 4 | 2 | | | | | | | | | | | | | | 16.0 |
| 5 | 48 | | 2 1/4 | 3/4 | 1 | 16 | 5 3/8 | 45° | 1 1/4 | 2 3/8 | 6 3/4 | 4 | 2 | | | | | | | | | | | | | | 16.0 |

STANDARD SIGN
W04-2

WISCONSIN DEPT OF TRANSPORTATION

APPROVED Matthew R Rauch
for State Traffic Engineer

DATE 11/20/13 PLATE 475 W04-2.1

PROJECT NO:

SHEET NO: E

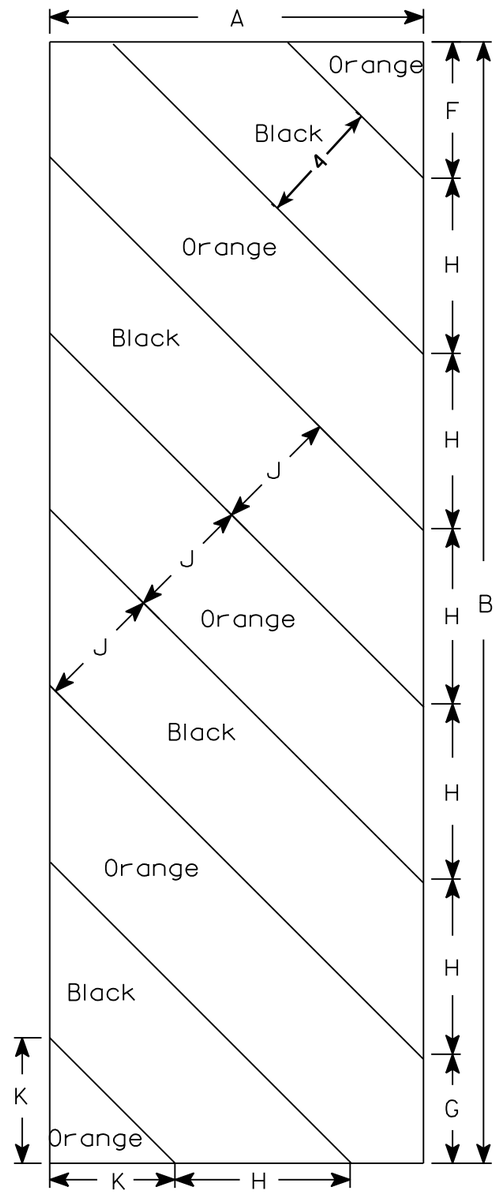


W05-52L

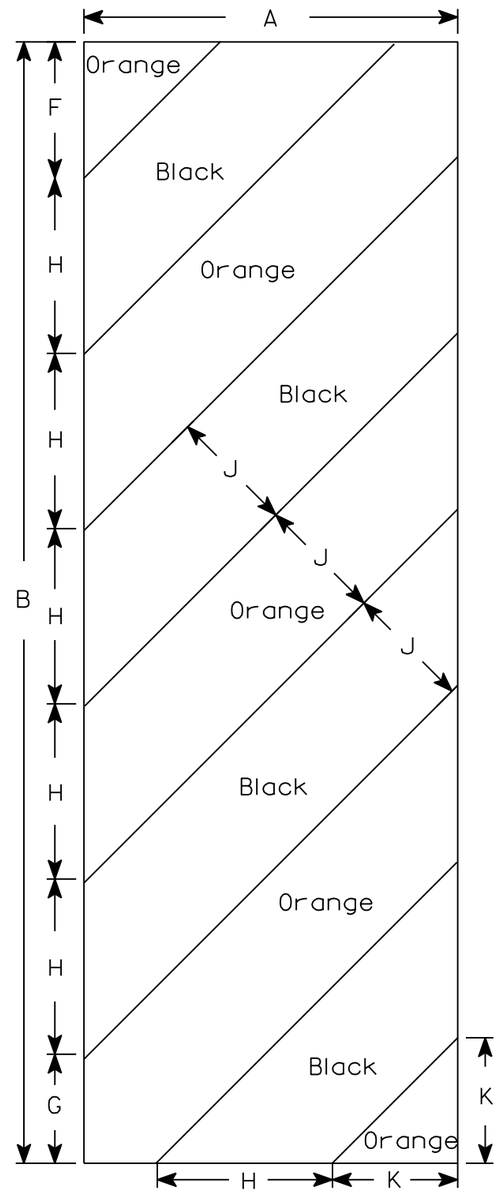


W05-52R

## NOTES

1. Sign is Type II - Type F Reflective - reference WIS DOT Standard Specification for HIGHWAY and STRUCTURE CONSTRUCTION latest edition.
2. Color:
   Background - Orange
   Message - Black
3. Corners may be square or rounded when base material is plywood but borders shall be rounded as shown. When base material is metal, the corners and borders shall be rounded.
4. Alternate colors of stripes as shown.

| SIZE | A | B | C | D | E | F | G | H | I | J | K | L | M | N | O | P | Q | R | S | T | U | V | W | X | Y | Z | Area sq. ft. |
|---|---|---|---|---|---|---|---|---|---|---|---|---|---|---|---|---|---|---|---|---|---|---|---|---|---|---|---|
| 1 | | | | | | | | | | | | | | | | | | | | | | | | | | | |
| 2S | 12 | 36 | | | | 4 3/8 | 3 1/2 | 5 5/8 | 45° | 4 | 4 | | | | | | | | | | | | | | | | 3.0 |
| 2M | 12 | 36 | | | | 4 3/8 | 3 1/2 | 5 5/8 | 45° | 4 | 4 | | | | | | | | | | | | | | | | 3.0 |
| 3 | 18 | 54 | | | | 6 | 5 1/2 | 8 1/2 | 45° | 6 | 6 9/16 | | | | | | | | | | | | | | | | 6.75 |
| 4 | | | | | | | | | | | | | | | | | | | | | | | | | | | |
| 5 | | | | | | | | | | | | | | | | | | | | | | | | | | | |

STANDARD SIGN

W05-52L & W05-52R

*WISCONSIN DEPT OF TRANSPORTATION*

APPROVED *Matthew R Rauch*
*for* State Traffic Engineer

DATE 11/20/13 PLATE No. W05-52.1

476

| PROJECT NO: | HWY: | COUNTY: | | SHEET NO: | E |
|---|---|---|---|---|---|

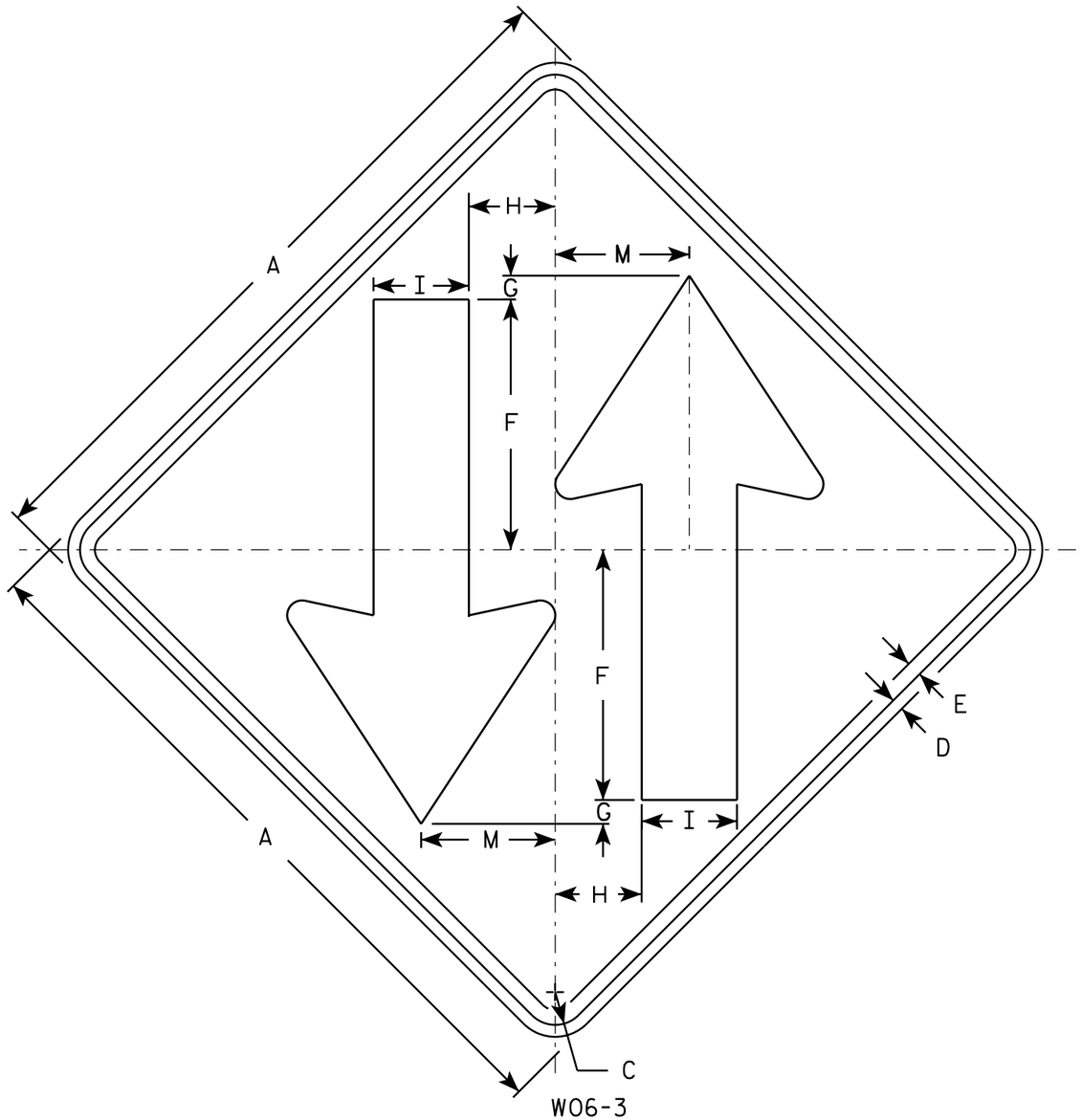


W06-3

NOTES

1. Sign is Type II - Type F Reflective - reference WIS DOT Standard Specification for HIGHWAY and STRUCTURE CONSTRUCTION latest edition.
2. Color:
   Background - Orange
   Message - Black
3. Corners may be square or rounded when base material is plywood but borders shall be rounded as shown. When base material is metal, the corners and borders shall be rounded.

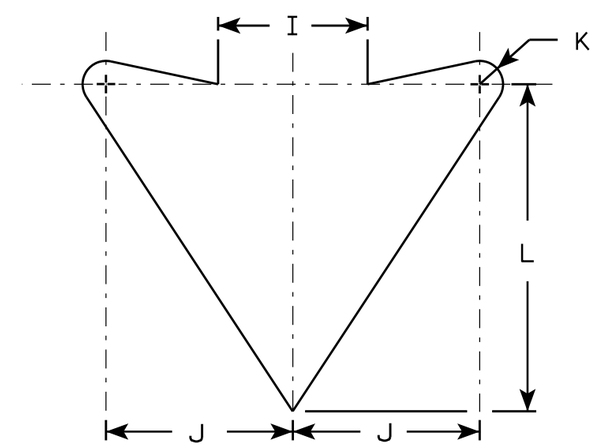


ARROW DETAIL

| SIZE | A | B | C | D | E | F | G | H | I | J | K | L | M | N | O | P | Q | R | S | T | U | V | W | X | Y | Z | Area sq. ft. |
|---|---|---|---|---|---|---|---|---|---|---|---|---|---|---|---|---|---|---|---|---|---|---|---|---|---|---|---|
| 1 | 36 | | 1 5/8 | 5/8 | 3/4 | 12 | 1 | 4 1/4 | 5 | 6 | 3/4 | 10 1/2 | 6 3/4 | | | | | | | | | | | | | | 9.0 |
| 2S | 48 | | 2 1/4 | 3/4 | 1 | 15 1/2 | 1 | 6 | 6 | 8 | 1 | 14 | 9 | | | | | | | | | | | | | | 16.0 |
| 2M | 48 | | 2 1/4 | 3/4 | 1 | 15 1/2 | 1 | 6 | 6 | 8 | 1 | 14 | 9 | | | | | | | | | | | | | | 16.0 |
| 3 | 48 | | 2 1/4 | 3/4 | 1 | 15 1/2 | 1 | 6 | 6 | 8 | 1 | 14 | 9 | | | | | | | | | | | | | | 16.0 |
| 4 | 48 | | 2 1/4 | 3/4 | 1 | 15 1/2 | 1 | 6 | 6 | 8 | 1 | 14 | 9 | | | | | | | | | | | | | | 16.0 |
| 5 | 48 | | 2 1/4 | 3/4 | 1 | 15 1/2 | 1 | 6 | 6 | 8 | 1 | 14 | 9 | | | | | | | | | | | | | | 16.0 |

STANDARD SIGN
W06-3

WISCONSIN DEPT OF TRANSPORTATION

APPROVED Matthew R Rauch
for State Traffic Engineer

DATE 11/20/13 PLATE 477 W06-3.1

| PROJECT NO: | HWY: | COUNTY: | | SHEET NO: | E |
|---|---|---|---|---|---|

STATE PROJECT NUMBER

2140-13-70

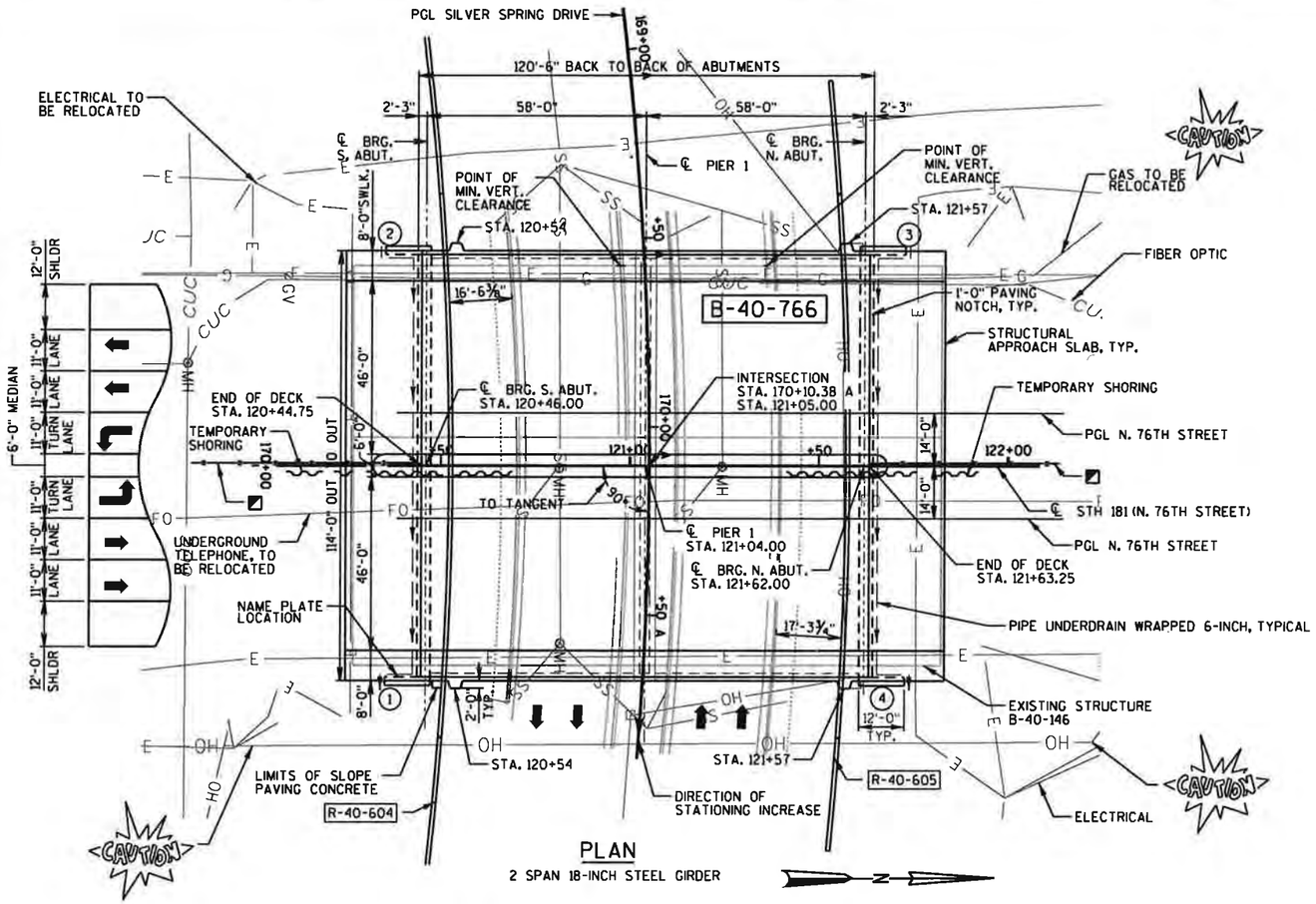


## PLAN

2 SPAN 18-INCH STEEL GIRDER

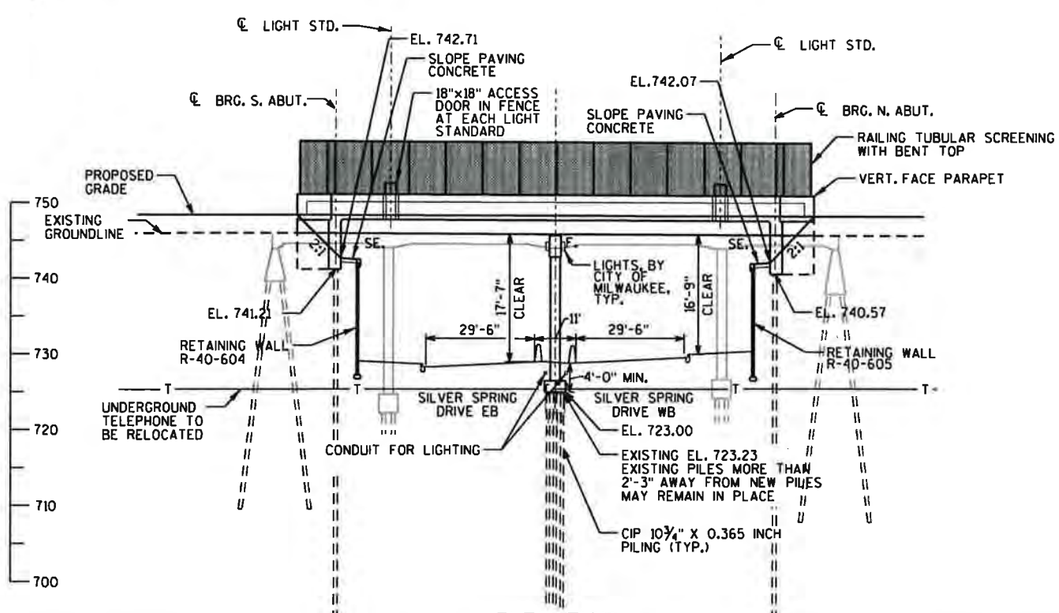


## ELEVATION

LOOKING WEST

## LIST OF DRAWINGS


1. GENERAL PLAN
2. TYPICAL SECTION
3. QUANTITIES & GENERAL NOTES
4. SUBSURFACE EXPLORATION
5. SOUTH ABUTMENT
6. SOUTH ABUTMENT WINGWALLS
7. ABUTMENT DETAILS
8. NORTH ABUTMENT
9. NORTH ABUTMENT WINGWALLS
10. PIER
11. PIER DETAILS
12. BEARING DETAILS
13. FRAMING PLAN
14. GIRDER DETAILS
15. GIRDER DEFLECTIONS AND DECK ELEVATIONS
16. SUPERSTRUCTURE PLAN
17. SUPERSTRUCTURE CROSS SECTION & LIGHT STANDARD
18. SUPERSTRUCTURE SIDEWALK AND MEDIAN DETAILS
19. STRUCTURAL APPROACH SLAB
20. STRUCTURAL APPROACH SLAB DETAILS
21. CONDUIT DETAILS
22. VERTICAL FACE PARAPET 'A'
23. TUBULAR STEEL RAILING SCREENING


## HORIZONTAL CURVE DATA

℄ CTH E (W. SILVER SPRING DRIVE)

P.I. STA. = 170+18.70
DELTA = 26° 55' 11" (RT)
DEGREE = 05° 43' 46"
TANGENT = 239.34'
LENGTH = 469.84'
RADIUS = 1,000.00'
PC STA. = 167+79.36
PT STA. = 172+49.20

## DESIGN DATA

LIVE LOAD:
DESIGN LOADING: HL-93
INVENTORY RATING FACTOR: RF=1.13
OPERATING RATING FACTOR: RF=1.47
WISCONSIN STANDARD PERMIT VEHICLE (WIS-SPV) = 250 KIPS

MATERIAL PROPERTIES:
CONCRETE MASONRY
SUPERSTRUCTURE AND STRUCTURAL APPROACH SLAB.....f'c = 4,000 psi
ALL OTHER.....f'c = 3,500 psi

BAR STEEL REINFORCEMENT
HIGH STRENGTH, GRADE 60 .....fy = 60,000 psi

STRUCTURAL STEEL
ASTM A709 GRADE 50 .....fy = 50,000 psi

STRUCTURE IS DESIGNED FOR A FUTURE WEARING SURFACE OF 20 PSF.

ALLOWABLE SOIL BEARING PRESSURE FOR STRUCTURAL APPROACH SLAB: .....2,000 PSF

## FOUNDATION DATA

SOUTH ABUTMENT TO BE SUPPORTED ON 10¾ X 0.365-INCH CAST-IN-PLACE CONCRETE PILING DRIVEN TO A REQUIRED DRIVING RESISTANCE OF 150 TONS **PER PILE AS DETERMINED BY THE MODIFIED GATES DYNAMIC FORMULA. ESTIMATED 55' LONG AT THE SOUTH ABUTMENT.

NORTH ABUTMENT TO BE SUPPORTED ON 10¾ X 0.365-INCH CAST-IN-PLACE CONCRETE PILING DRIVEN TO A REQUIRED DRIVING RESISTANCE OF 150 TONS **PER PILE AS DETERMINED BY THE MODIFIED GATES DYNAMIC FORMULA. ESTIMATED 55' LONG AT THE NORTH ABUTMENT.

PIER TO BE SUPPORTED ON 10¾ X 0.365-INCH CAST-IN-PLACE CONCRETE PILING DRIVEN TO A REQUIRED DRIVING RESISTANCE OF 150 TONS **PER PILE AS DETERMINED BY THE MODIFIED GATES DYNAMIC FORMULA. ESTIMATED 50' LONG AT PIER.

** THE FACTORED AXIAL RESISTANCE OF PILES IN COMPRESSION USED FOR DESIGN IS THE REQUIRED DRIVING RESISTANCE MULTIPLIED BY A RESISTANCE FACTOR OF 0.5 USING MODIFIED GATES TO DETERMINE DRIVEN PILE CAPACITY.

## TRAFFIC DATA

| STH 181 | CTH E (SILVER SPRING DRIVE) |
|---|---|
| ADT = 39,100 (2038) | ADT = 25,000 (2038) |
| RDS = 40 M.P.H. | RDS = 45 M.P.H. |

## LEGEND

- INDICATES WING WALL NUMBER
- INDICATES LANE LOCATION AND DIRECTION OF TRAVEL
- TEMPORARY WALL WIRE FACED MECHANICALLY STABILIZED EARTH, INCLUDED IN STRUCTURES R-40-604 AND R-40-605

WISCONSIN PROFESSIONAL ENGINEER
ALBERT M. LINDNER
E-18992
BROOKFIELD, WIS.

April 11, 2016

STRUCTURE DESIGN CONTACTS

BUREAU OF STRUCTURES:
WILLIAM DREHER P.E. (608) 266-8489
CONSULTANT:
AL LINDNER P.E. (414) 259-1500

| NO. | DATE | REVISION | BY |
|---|---|---|---|


GRAEF
One Honey Creek Corporate Center
125 South 84th Street
Suite 401
Milwaukee, WI 53214-1470
414 / 259 1500
414 / 259 0037 fax
www.graef-usa.com


STATE OF WISCONSIN
DEPARTMENT OF TRANSPORTATION

ACCEPTED William C. Dreher SDR 05/03/16
CHIEF STRUCTURES DESIGN ENGINEER DATE

# STRUCTURE B-40-766

(STH 181) N. 76TH STREET OVER CTH E (W. SILVER SPRING DRIVE)

COUNTY MILWAUKEE | ~~TOWN/CITY/VILLAGE~~ MILWAUKEE

DESIGN SPEC. AASHTO LRFD BRIDGE DESIGN SPECIFICATIONS

DESIGNED BY RPB | DESIGN CK'D. KGW | DRAWN BY RBH | PLANS CK'D. AML

GENERAL PLAN

SHEET 1 OF 23
478

8

8

STATE PROJECT NUMBER

2140-13-70

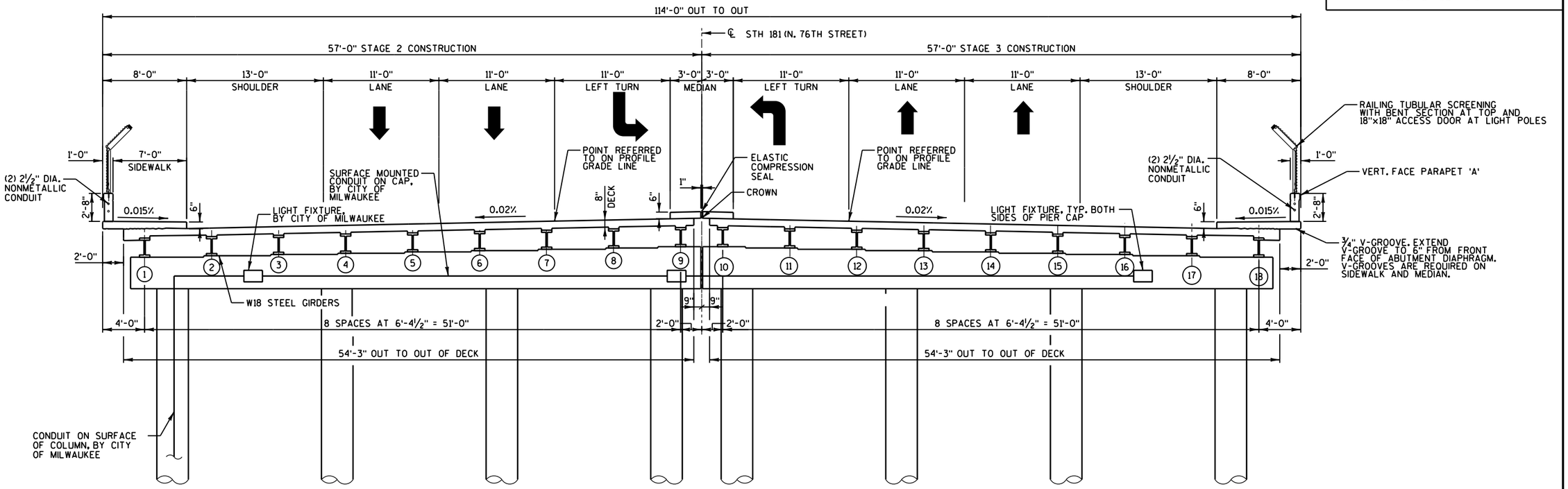


## TYPICAL SECTION THRU B-40-766

LOOKING NORTH

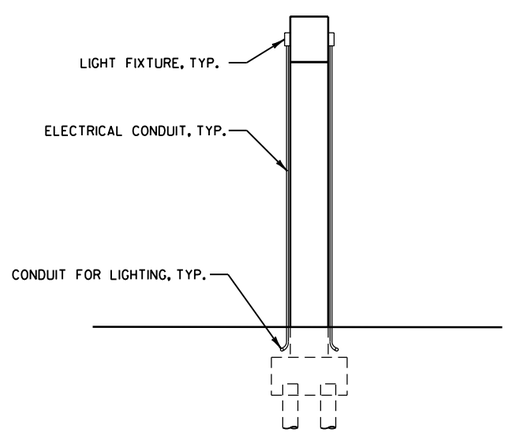


## ELEVATION OF PIER

LOOKING EAST

LIGHT FIXUTES, ELECTRICAL CONDUIT BY OTHERS

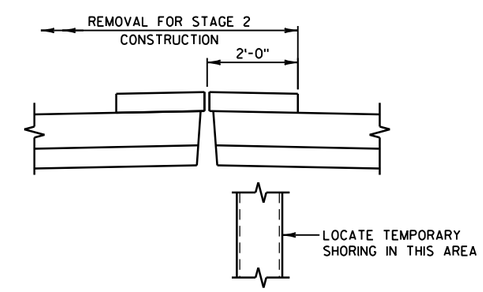


## CROSS SECTION THRU ROADWAY

LOOKING NORTH

## BENCH MARKS

| NO. | NORTHING | EASTING | DESCRIPTION | ELEV. |
|---|---|---|---|---|
| SEC 137 | 329100.426 | 580215.609 | SECTION CORNER, STH 181 AT W. SILVER SPRING DR. | 747.52 |

| NO. | DATE | REVISION | BY |
|---|---|---|---|
| | | | |

STATE OF WISCONSIN
DEPARTMENT OF TRANSPORTATION

STRUCTURE B-40-766

DRAWN BY RBH | PLANS CK'D. RPB

TYPICAL SECTION

SHEET 2 OF 23

479

8

8

FILE=
SCALE =

L:±JOBS2010±20100384±CAD±WISDOT_TRANS±DGN±00±B-40-766_SHT02.DGN 4/11/2016 1:28:07 PM

STATE PROJECT NUMBER

2140-13-70

## TOTAL ESTIMATED QUANTITIES

| ITEM NO. | BID ITEMS | UNIT | S. STR. APPR. SLAB | S. ABUT | N. STR. APPR. SLAB | N. ABUT | PIER | SUPER | TOTAL |
|---|---|---|---|---|---|---|---|---|---|
| 203.0200 | REMOVING OLD STRUCTURE STATION 121+05.00 | LS | - | - | - | - | - | - | 1 |
| 203.0225.S | DEBRIS CONTAINMENT STRUCTURE B-40-766 | LS | - | - | - | - | - | - | 1 |
| 206.1000 | EXCAVATION FOR STRUCTURES BRIDGES B-40-766 | LS | - | - | - | - | - | - | 1 |
| 210.0100 | BACKFILL STRUCTURE | CY | - | 220 | - | 220 | - | - | 440 |
| 305.0120 | BASE AGGREGATE DENSE 1 1/4-INCH | TON | - | 368 | - | 368 | - | - | 736 |
| 502.0100 | CONCRETE MASONRY BRIDGES | CY | 156 | 100 | 156 | 100 | 121 | 472 | 1,105 |
| 502.2000 | COMPRESSION JOINT SEALER PREFORMED ELASTOMERIC 2 1/4 INCH | LF | 21 | - | 21 | - | - | 119 | 161 |
| 502.3200 | PROTECTIVE SURFACE TREATMENT | SY | 253 | - | 253 | - | - | 1,560 | 2,066 |
| 502.3210 | PIGMENTED SURFACE SEALER | SY | 16 | - | 16 | - | - | 94 | 126 |
| 505.0400 | BAR STEEL REINFORCEMENT HS STRUCTURES | LB | - | 7,220 | - | 7,220 | 3,150 | - | 17,590 |
| 505.0600 | BAR STEEL REINFORCEMENT HS COATED STRUCTURES | LB | 25,570 | 1,550 | 25,390 | 1,550 | 16,070 | 102,160 | 172,290 |
| 505.0800.S | BAR STEEL REINFORCEMENT HS STAINLESS STRUCTURES | LB | 1,970 | - | 1,970 | - | - | - | 3,940 |
| 506.0605 | STRUCTURAL STEEL HS | LB | - | - | - | - | - | 332,140 | 332,140 |
| 506.2605 | BEARING PADS ELASTOMERIC NON-LAMINATED | EACH | - | 18 | - | 18 | - | - | 36 |
| 506.3015 | WELDED STUD SHEAR CONNECTORS 7/8X6-INCH | EACH | - | - | - | - | - | 8,448 | 8,448 |
| 506.4000 | STEEL DIAPHRAGMS B-40-766 | EACH | - | - | - | - | - | 80 | 80 |
| 506.5000 | BEARING ASSEMBLIES FIXED B-40-766 | EACH | - | - | - | - | - | 18 | 18 |
| 511.1200 | TEMPORARY SHORING B-40-766 | SF | - | 526 | - | 472 | - | - | 998 |
| 513.4091 | RAILING TUBULAR SCREENING B-40-766 | LF | 40 | - | 40 | - | - | 237 | 317 |
| 516.0500 | RUBBERIZED MEMBRANE WATERPROOFING | SY | - | 24 | - | 24 | - | - | 48 |
| 517.0600 | PAINTING EPOXY SYSTEM B-40-766 | LS | - | - | - | - | - | - | 1 |
| 550.2106 | PILING CIP CONCRETE 10 3/4 X 0.365-INCH | LF | - | 1,100 | - | 1,100 | 3,200 | - | 5,400 |
| 604.0400 | SLOPE PAVING CONCRETE | SY | - | 337 | - | 337 | - | - | 674 |
| 612.0406 | PIPE UNDERDRAIN WRAPPED 6-INCH | LF | - | 146 | - | 146 | - | - | 292 |
| 652.0230 | CONDUIT RIGID NONMETALLIC SCHEDULE 40 2 1/2-INCH | LF | - | 12 | - | 12 | - | 613 | 637 |
| 653.0222 | JUNCTION BOXES 18X12X6-INCH | EACH | - | - | - | - | - | 4 | 4 |
| 657.6005.S | ANCHOR ASSEMBLIES LIGHT POLES ON STRUCTURES | EACH | - | - | - | - | - | 4 | 4 |
| SPV.0090.03 | REMOVING EXISTING TIMBER PILING | LF | - | - | - | - | 840 | - | 840 |
| SPV.0105.13 | METALIZING B-40-766 | LS | - | - | - | - | - | - | 1 |
| | | | | | | | | | |
| | | | | | | | | | |
| | NON-BID ITEMS | | | | | | | | |
| | PREFORMED JOINT FILLER | SIZE | | - | | - | - | - | 3/4" |
| | | | | | | | | | |
| | | | | | | | | | |

## GENERAL NOTES

DRAWINGS SHALL NOT BE SCALED.

ALL STATIONS AND ELEVATIONS ARE IN FEET.

BAR STEEL REINFORCEMENT SHALL BE EMBEDDED 2" CLEAR UNLESS SHOWN OR NOTED OTHERWISE.

THE FIRST DIGIT OR THE FIRST TWO DIGITS OF THE BAR MARK SIGNIFIES THE BAR SIZE.

BEVEL ALL EXPOSED EDGES OF CONCRETE ¾" UNLESS OTHERWISE NOTED.

THE EXISTING GROUND LINE SHALL BE USED AS THE UPPER LIMITS OF EXCAVATION FOR STRUCTURES.

THE EXISTING BRIDGE B-40-146 IS A 4 SPAN 156' LONG BY 110' WIDE, HAUNCHED CONCRETE SLAB BRIDGE SUPPORTED ON TIMBER PILE FOUNDATION. THE STRUCTURE IS TO BE REMOVED TO A DEPTH OF 2 FEET BELOW THE BOTTOM OF THE NEW PILE CAPS AND 2 FEET BELOW ABUTMENTS. PILES WITHIN 2'-3" OF THE NEW PILES ARE TO BE REMOVED.

IT IS ANTICIPATED 28 PILES WILL NEED TO BE REMOVED TO CONSTRUCT THE NEW PIER: 4 PILES AT COLUMN 1, 3 PILES AT COLUMN 2, 3 PILES AT COLUMN 3, 4 PILES AT COLUMN 4, 4 PILES AT COLUMN 5, 3 PILES AT COLUMN 6, 3 PILES AT COLUMN 7, AND 4 PILES AT COLUMN 8.

AT THE BACKFACE OF THE ABUTMENT ALL VOLUME WHICH CANNOT BE PLACED BEFORE ABUTMENT CONSTRUCTION AND IS NOT OCCUPIED BY THE NEW STRUCTURE SHALL BE BACKFILLED WITH STRUCTURE BACKFILL.

TRAFFIC WILL BE MAINTAINED ON THE BRIDGE DURING CONSTRUCTION.

PILE SPLICES SHALL BE MADE BY CERTIFIED WELDER.

INFORMATION ON THESE DRAWINGS RELATED TO THE EXISTING BRIDGE IS BASED UPON AVAILABLE DRAWINGS FROM THE WISCONSIN DEPARTMENT OF TRANSPORTATION.

AN AVERAGE HAUNCH DEPTH OF 2½" WAS USED IN THE QUANTITY "CONCRETE MASONRY BRIDGES".

ALL FIELD CONNECTIONS SHALL BE MADE WITH ¾" DIAMETER FRICTION TYPE HIGH TENSILE STRENGTH BOLTS UNLESS SHOWN OR NOTED OTHERWISE.

METALIZE 4 FEET AT EACH GIRDER END PRIOR TO PAINTING.

STEEL GIRDERS SHALL BE PAINTED BLUE (FEDERAL COLOR NUMBER 25240).

THE SLOPE OF FILL IN FRONT OF THE ABUTMENTS SHALL BE COVERED WITH SLOPE PAVING CONCRETE TO THE EXTENT SHOWN ON SHEET 1 AND IN THE ABUTMENT DETAILS.

THE QUANTITY FOR BACKFILL STRUCTURE, BID ITEM 210.0100, IS CALCULATED BASED ON THE APPLICABLE FIGURES 12.6.1 AND 12.6.2 IN THE WISCONSIN DEPARTMENT OF TRANSPORTATION BRIDGE MANUAL.

THE GIRDERS ARE ANALYZED ASSUMING A SINGLE DECK POUR SEQUENCE WITH NO COMPOSITE ACTION OCCURRING DURING POUR. A NET UNFACTORED UPLIFT FORCE OF 0.40 KIPS/GIRDER IS EXPECTED TO OCCUR AT THE UNLOADED ABUTMENT WHEN THE GREEN DECK CONCRETE IS PLACED ON ONE SPAN ONLY.

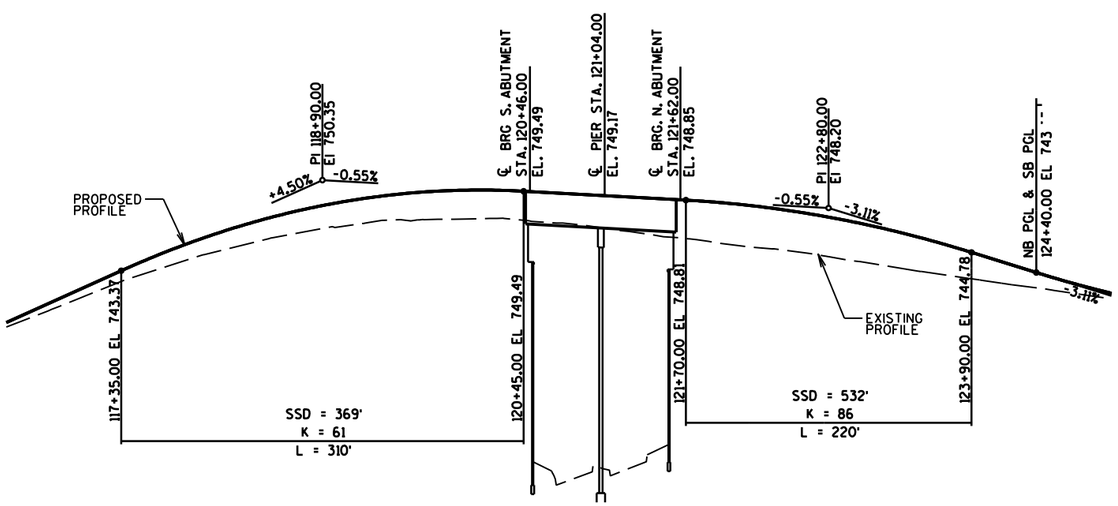


PROFILE GRADE LINE STH 181 NB AND SB

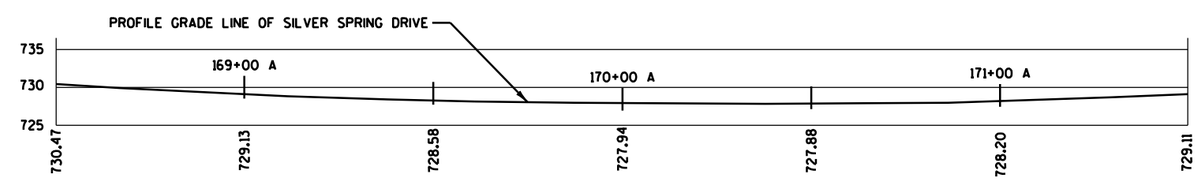


PROFILE GRADE LINE SILVER SPRING DR.

LOOKING NORTH

| NO. | DATE | REVISION | BY |
|---|---|---|---|
| | | | |

STATE OF WISCONSIN
DEPARTMENT OF TRANSPORTATION

STRUCTURE B-40-766

DRAWN BY RBH | PLANS CK'D. RPB

QUANTITIES & GENERAL NOTES

SHEET 3 OF 23

480

8

8

FILE=
SCALE =

STATE PROJECT NUMBER

2140-13-70

ABBREVIATIONS

F — FINE  M — MEDIUM  C — COARSE
WS — WEATHERED  SO — SOUND

MATERIAL SYMBOLS

TOPSOIL, SILT, SANDSTONE, SAND, PEAT, LIMESTONE, GRAVEL, CLAY, IGNEOUS ROCK

LEGEND OF PROBING

PROBING NO.
STA.
ELEVATION
7 AVERAGE BLOWS PER FOOT
REFUSAL 95/6

95/6=95 BLOWS FOR 6" PENETRATION PROBING TAKEN WITH A 350# WT. FALLING 18" ON A 2" O.D. POINT.

LEGEND OF BORING

BORING NO.
STA.
ELEV.
UNCONFINED STRENGTH → 7.7
BLOWS PER FT. USING 140# WT. FALLING 30"
WASH SAMPLE
SHELBY TUBE — S.T.
GROUND WATER ELEVATION
NO GROUND WATER OBSERVED ABOVE THIS ELEVATION
SANDY GRAVEL
F. BOULDERS OR COBBLES
SAND
SILTY CLAY
SO LIMESTONE

UNLESS OTHERWISE SPECIFIED, THE BLOWS PER FOOT AT THE LOCATIONS INDICATED ARE BASED ON DRIVING A 2" O.D. X 1.4" I.D. SPLIT SPOON SAMPLER WITH A 140# HAMMER HAVING A FREE FALL OF 30". THE BLOW COUNT IS TAKEN IN UNDISTURBED SOIL IMMEDIATELY BELOW A CASED OR OPEN HOLE ELIMINATING SIDE FRICTION ON THE DRIVE PIPE.

SUBSURFACE EXPLORATION FOR FOUNDATION DESIGN AND BIDDERS INFORMATION

TO OBTAIN RELATIVE DATA CONCERNING THE CHARACTER OF MATERIAL IN AND UPON WHICH THE FOUNDATION MIGHT BE BUILT, BORINGS AND/OR SOUNDINGS WERE MADE AT POINTS APPROXIMATELY AS INDICATED ON THIS DRAWING. THE DATA PRESENTED HEREIN REPRESENTS THE FINDINGS OF THE SUBSURFACE EXPLORATIONS MADE. HOWEVER, BECAUSE THE DEPTHS INVESTIGATED ARE LIMITED AND THE AREA OF THE BORINGS AND/OR SOUNDINGS IS VERY SMALL IN RELATION TO THE ENTIRE AREA, THE WISCONSIN DEPARTMENT OF TRANSPORTATION DOES NOT WARRANT CONDITIONS BELOW THE DEPTHS INVESTIGATED OR THAT THE CLASSIFICATION OF MATERIAL ENCOUNTERED IN THESE INVESTIGATIONS IS NECESSARILY TYPICAL OF THE ENTIRE SITE.

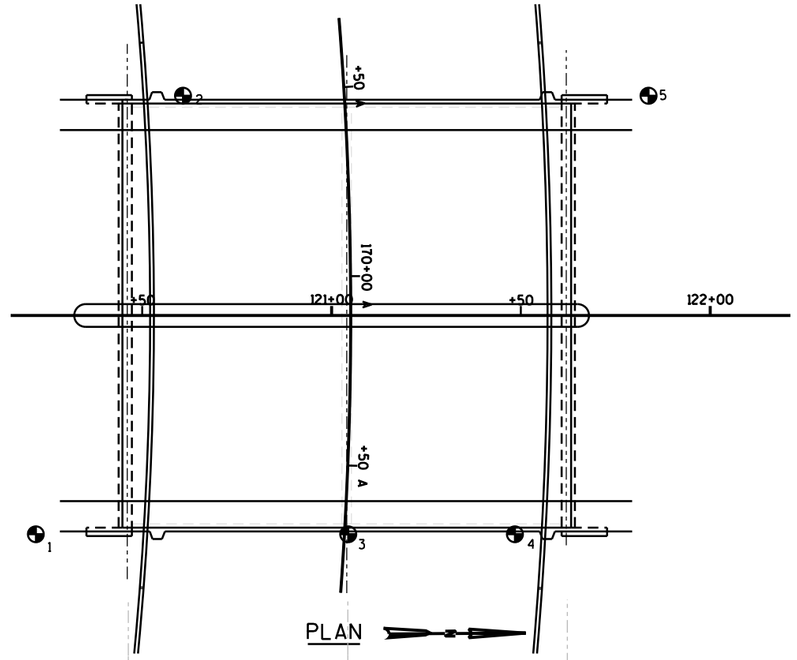


BORINGS PERFORMED BY:

GILES ENGINEERING ASSOCIATES INC.
N8 W22350 JOHNSON DRIVE, SUITE A1
WAUKESHA, WI 53186

BORING 1 TAKEN ON 11/17/2010
BORING 2 TAKEN ON 11/18/2010
BORING 3 TAKEN ON 11/19/2010
BORING 4 TAKEN ON 11/18/2010
BORING 5 TAKEN ON 11/19/2010

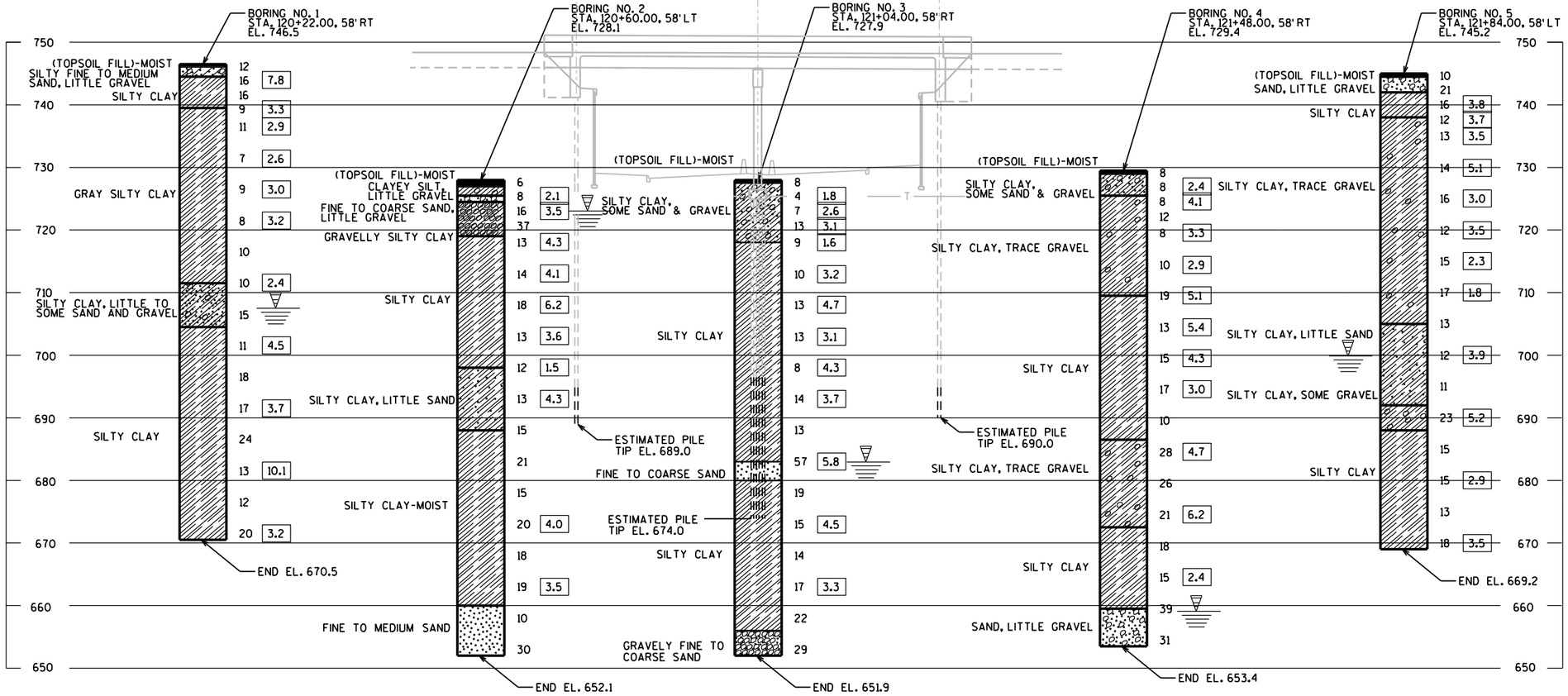


| NO. | DATE | REVISION | BY |
|---|---|---|---|
| | | | |

STATE OF WISCONSIN
DEPARTMENT OF TRANSPORTATION

STRUCTURE B-40-766

DRAWN BY RBH  PLANS CK'D. AML

SUBSURFACE EXPLORATION

SHEET 4 OF 23
481

8

8

L:±JOBS2010±20100384±CAD±WISDOT_TRANS±DGN±00±B-40-766_SHT04.DGN  4/11/2016  1:28:10 PM

I.D.  DATE:

| STATE PROJECT NUMBER |
|---|
| 2140-13-70 |

## LEGEND

- A01 ABUTMENT TO BE SUPPORTED ON 10¾×0.365-INCH CAST-IN-PLACE CONCRETE PILING DRIVEN TO A REQUIRED DRIVING RESISTANCE OF 150 TONS ** PER PILE AS DETERMINED BY THE MODIFIED GATES DYNAMIC FORMULA. ESTIMATED PILE LENGTH = 55 FEET.
- ** THE FACTORED AXIAL RESISTANCE OF PILES IN COMPRESSION USED FOR DESIGN IS THE REQUIRED DRIVING RESISTANCE MULTIPLIED BY A RESISTANCE FACTOR OF 0.5 USING MODIFIED GATES TO DETERMINE DRIVEN PILE CAPACITY.
- A02 PIPE UNDERDRAIN WRAPPED 6-INCH. LOCATE TO SUITABLE DRAINAGE. ATTACH RODENT SHIELDS AT ENDS OF PIPE UNDERDRAIN, SEE SHEET 7.
- A03 VERTICAL CONSTR. JOINT WITH 1" COMPRESSIBLE FILLER.
- A04 ½" FILLER TO EXTEND FROM BRIDGE SEAT TO TOP OF WING (INCLUDED IN WING LENGTH).
- A05 ¾" CORK FILLER ON VERT. BEAM SEAT FACES, TYP.
- A06 18" RUBBERIZED MEMBRANE WATERPROOFING. SEAL ALL HORIZONTAL AND VERTICAL JOINTS ON BACKFACE.
- A08 8"×1'-4"×½" NON-LAMINATED ELASTOMERIC BEARING PAD.
- X PILE NUMBER, SEE SHEET 7 FOR PILE SPLICE DETAILS.

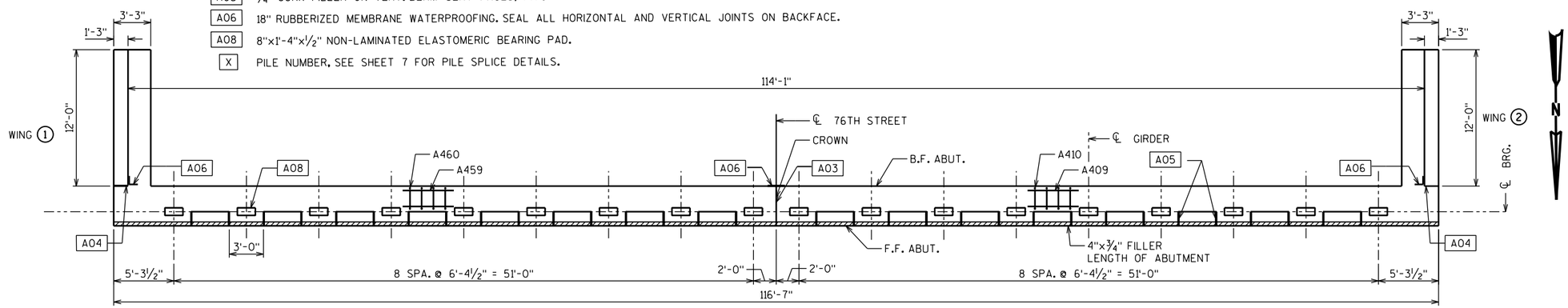


## PLAN

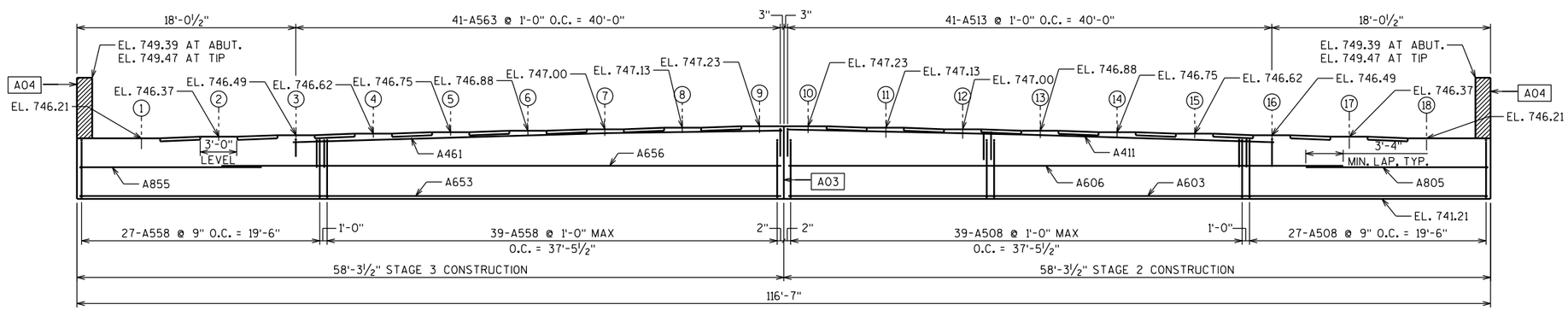


## ELEVATION

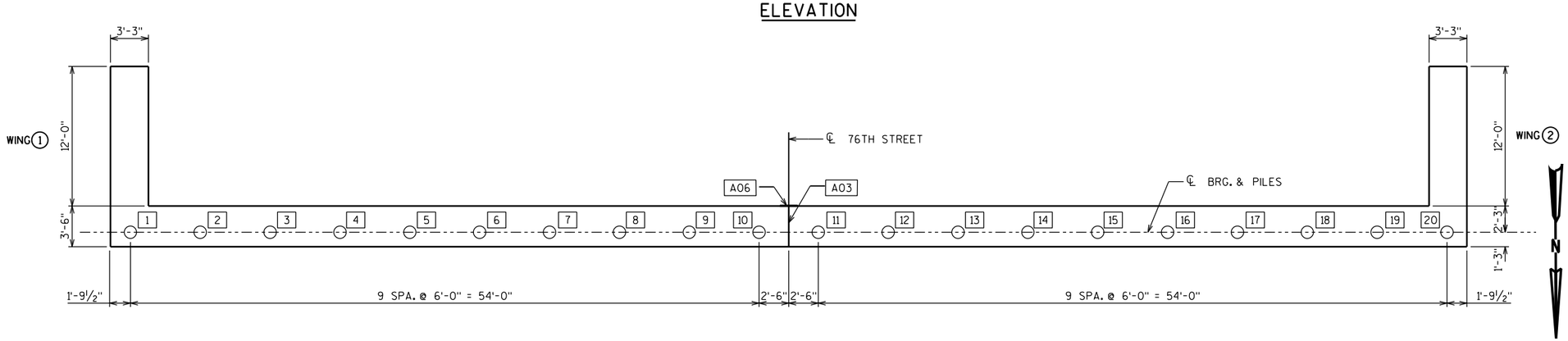


## PILE LAYOUT PLAN

| NO. | DATE | REVISION | BY |
|---|---|---|---|
| | | | |

STATE OF WISCONSIN
DEPARTMENT OF TRANSPORTATION

STRUCTURE B-40-766

DRAWN BY RBH | PLANS CK'D. RPB

SOUTH ABUTMENT

SHEET 5 OF 23
482

FILE=
SCALE =

8

8

| STATE PROJECT NUMBER |
|---|
| 2140-13-70 |

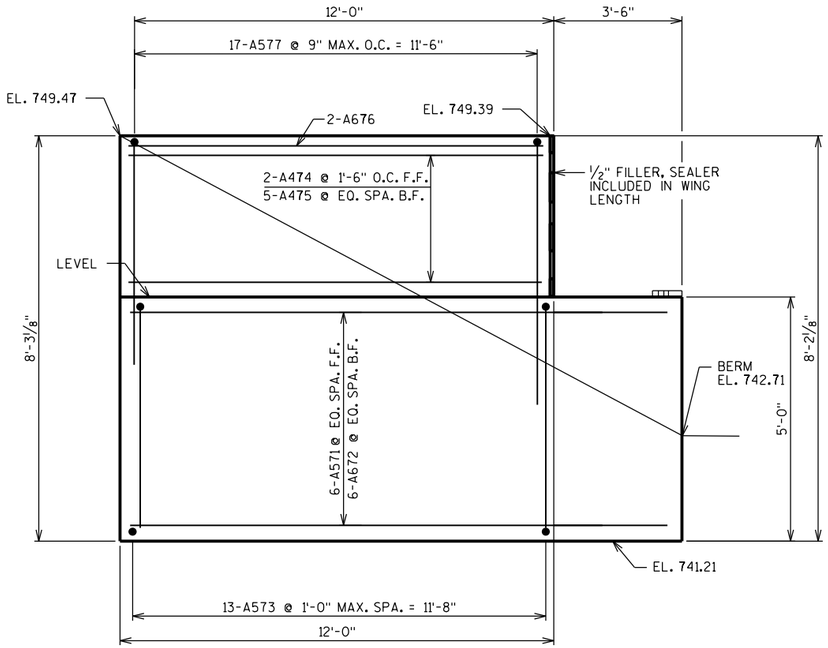


ELEVATION WING 1

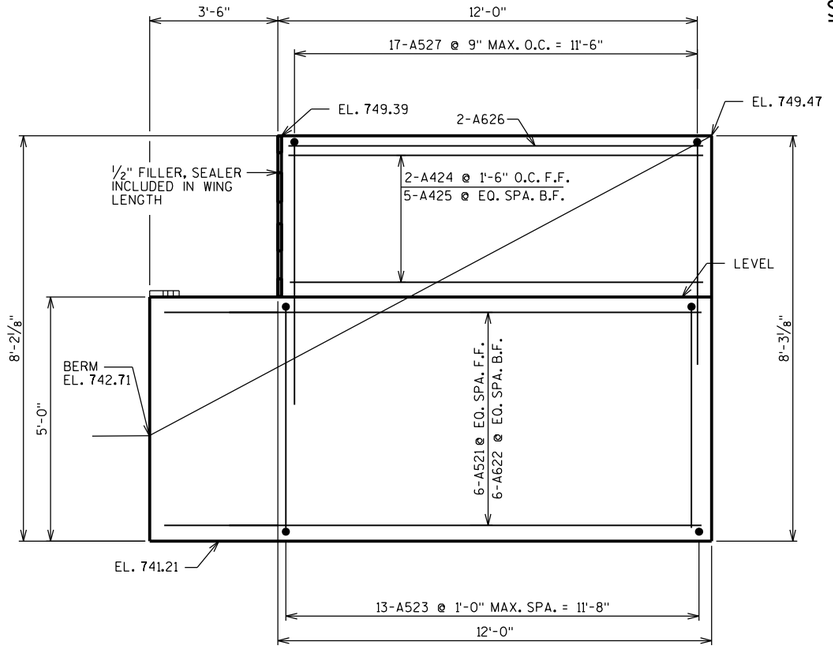


ELEVATION WING 2

## SOUTH ABUTMENT - BILL OF BARS

| MARK | COATED | NO. REQ'D | LENGTH | BAR SERIES | BENT | LOCATION |
|---|---|---|---|---|---|---|
| A401 | | 20 | 2'-3" | | | STAGE 2 - ABUT. PILES |
| A402 | | 10 | 28'-0" | | X | STAGE 2 - ABUT. PILES |
| A603 | | 11 | 57'-11" | | | STAGE 2 - ABUT. BODY HORIZ. F.F, TOP, BOTTO |
| | | | | | | |
| A805 | | 7 | 16'-6" | | X | STAGE 2 - ABUT. BODY HORIZ. B.F. |
| A606 | | 7 | 46'-7" | | | STAGE 2 - ABUT. BODY HORIZ. B.F. |
| | | | | | | |
| A508 | | 66 | 15'-6" | | X | STAGE 2 - ABUT. BODY STIRRUPS |
| A409 | | 16 | 5'-6" | | | STAGE 2 - ABUT. BODY HORIZ. |
| A410 | | 32 | 4'-5" | | X | STAGE 2 - ABUT. BODY STIRRUPS |
| A411 | | 4 | 40'-1" | | | STAGE 2 - ABUT. BODY HORIZ. |
| | | | | | | |
| A513 | | 41 | 7'-3" | | X | STAGE 2 - ABUT. BODY STIRRUPS |
| | | | | | | |
| A521 | X | 6 | 15'-2" | | | STAGE 2 - WING 2 HORIZ. F.F. |
| A622 | X | 8 | 15'-2" | | | STAGE 2 - WING 2 HORIZ. B.F., TOP |
| A523 | X | 13 | 15'-8" | | X | STAGE 2 - WING 2 STIRRUPS |
| A424 | X | 2 | 11'-7" | | | STAGE 2 - WING 2 HORIZ. F.F. |
| A425 | X | 5 | 11'-7" | | | STAGE 2 - WING 2 HORIZ. B.F. |
| A626 | X | 2 | 11'-7" | | | STAGE 2 - WING 2 HORIZ. TOP |
| A527 | X | 17 | 11'-1" | | X | STAGE 2 - WING 2 STIRRUPS |
| | | | | | | |
| A451 | | 20 | 2'-3" | | | STAGE 3 - ABUT. PILES |
| A452 | | 10 | 28'-0" | | X | STAGE 3 - ABUT. PILES |
| A653 | | 11 | 57'-11" | | | STAGE 3 - ABUT. BODY HORIZ. F.F, TOP, BOTTO |
| | | | | | | |
| A855 | | 7 | 16'-6" | | X | STAGE 3 - ABUT. BODY HORIZ. B.F. |
| A656 | | 7 | 46'-7" | | | STAGE 3 - ABUT. BODY HORIZ. B.F. |
| | | | | | | |
| A558 | | 66 | 15'-6" | | X | STAGE 3 - ABUT. BODY STIRRUPS |
| A459 | | 16 | 5'-6" | | | STAGE 3 - ABUT. BODY HORIZ. |
| A460 | | 32 | 4'-5" | | X | STAGE 3 - ABUT. BODY STIRRUPS |
| A461 | | 4 | 40'-1" | | | STAGE 3 - ABUT. BODY HORIZ. |
| | | | | | | |
| A563 | | 41 | 7'-3" | | X | STAGE 3 - ABUT. BODY STIRRUPS |
| | | | | | | |
| A571 | X | 6 | 15'-2" | | | STAGE 3 - WING 1 HORIZ. F.F. |
| A672 | X | 8 | 15'-2" | | | STAGE 3 - WING 1 HORIZ. B.F., TOP |
| A573 | X | 13 | 15'-8" | | X | STAGE 3 - WING 1 STIRRUPS |
| A474 | X | 2 | 11'-7" | | | STAGE 3 - WING 1 HORIZ. F.F. |
| A475 | X | 5 | 11'-7" | | | STAGE 3 - WING 1 HORIZ. B.F. |
| A676 | X | 2 | 11'-7" | | | STAGE 3 - WING 1 HORIZ. TOP |
| A577 | X | 17 | 11'-1" | | X | STAGE 3 - WING 1 STIRRUPS |

THE FIRST DIGIT OR FIRST TWO DIGITS OF A BAR MARK INDICATES THE BAR SIZE.
ALL DIMENSIONS IN THE BAR BENDS ARE OUT TO OUT.

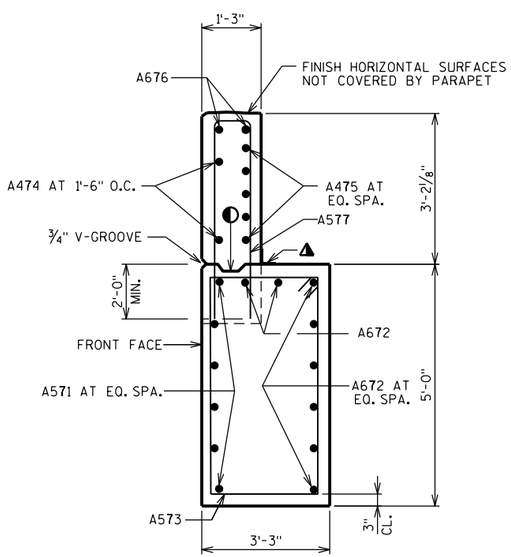


SECTION WING 1

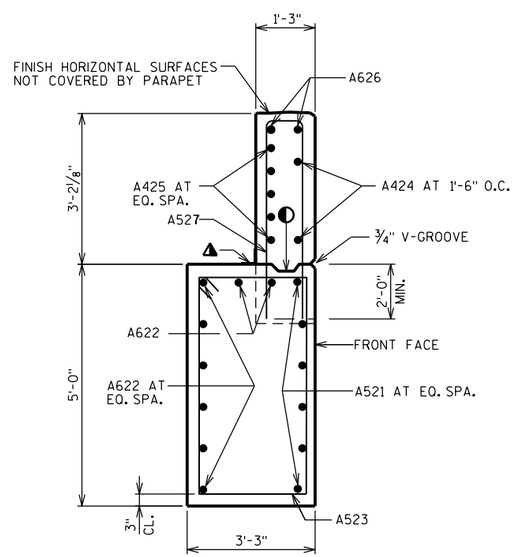


SECTION WING 2

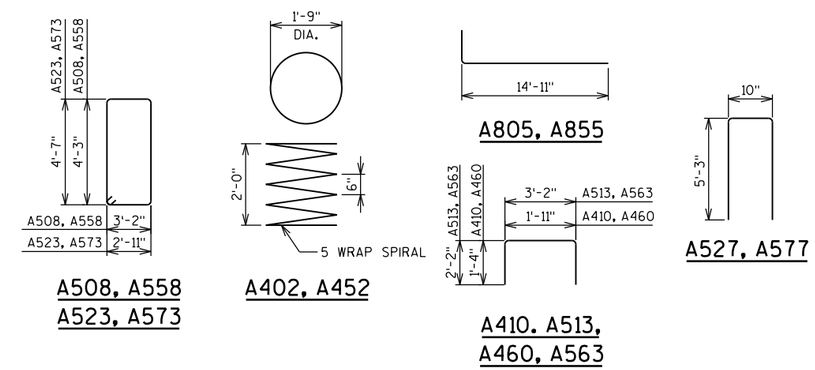


## LEGEND

◐ OPTIONAL CONSTR. JOINT FORMED BY BEVELED 2" X 6" KEYWAY WITH MEMBRANE ON BACKFACE.

▲ 18" RUBBERIZED MEMBRANE WATERPROOFING. SEAL ALL HORIZONTAL AND VERTICAL JOINTS ON BACKFACE

| NO. | DATE | REVISION | BY |
|---|---|---|---|
| | | | |

STATE OF WISCONSIN
DEPARTMENT OF TRANSPORTATION

STRUCTURE B-40-766

DRAWN BY RBH | PLANS CK'D. RPB

SOUTH ABUTMENT WINGWALLS

SHEET 6 OF 23
483

8

8

FILE=
SCALE =

STATE PROJECT NUMBER

2140-13-70

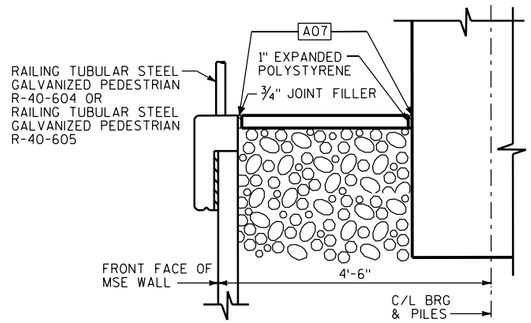


## WALL DETAIL

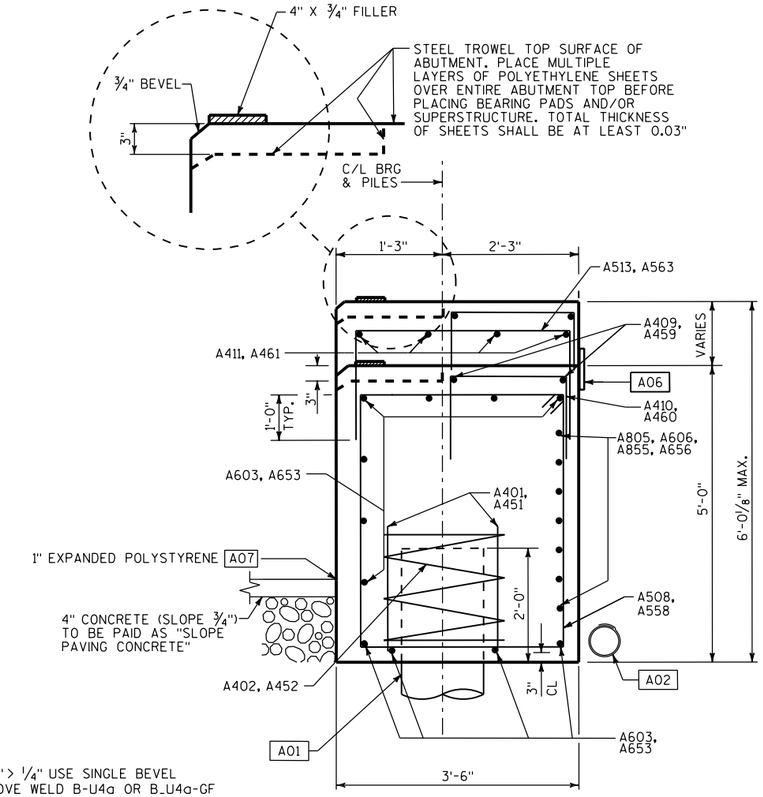


## SECTION THRU SOUTH ABUTMENT BODY

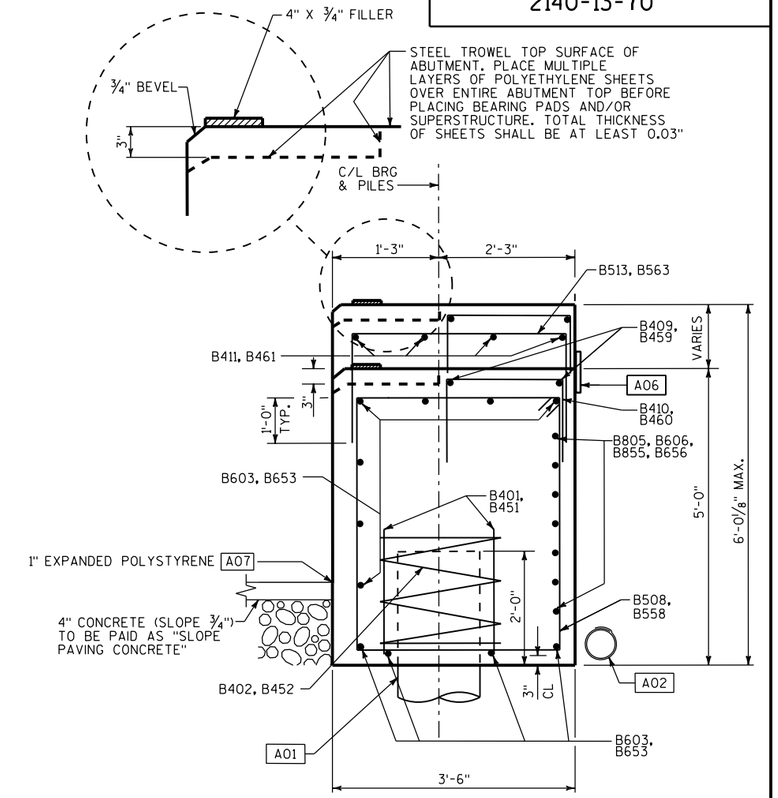


## SECTION THRU NORTH ABUTMENT BODY

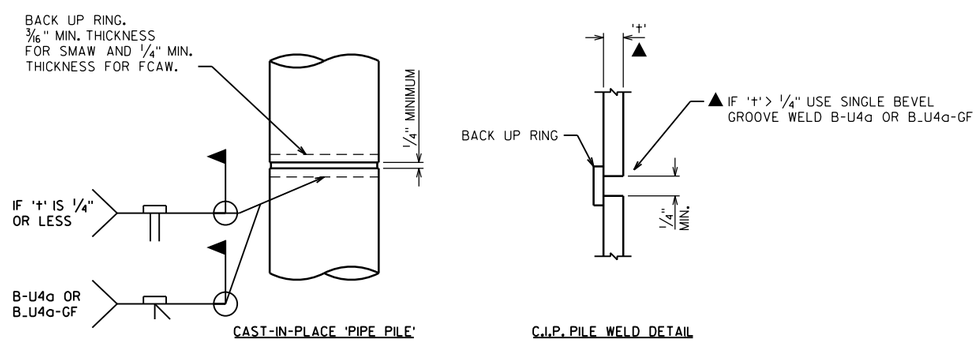


## PILE DETAILS

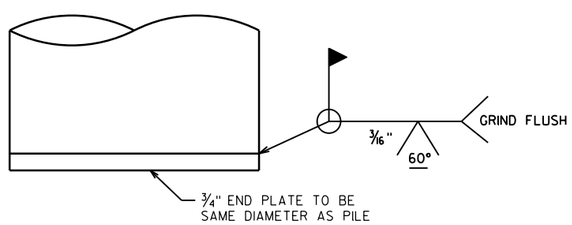


## END PLATE DETAIL

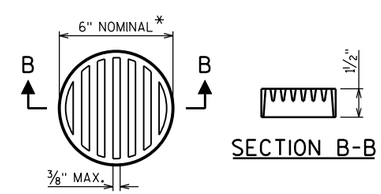


## SECTION B-B

## RODENT SHIELD DETAIL

*DIMENSIONS ARE APPROXIMATE. THE GRATE IS SIZED TO FIT INTO A PIPE COUPLING. ORIENT SO SLOTS ARE VERTICAL.

THE RODENT SHIELD, PIPE COUPLING AND SCREWS SHALL BE CONSIDERED INCIDENTAL TO THE BID ITEM "PIPE UNDERDRAIN WRAPPED 6-INCH".

THE RODENT SHIELD SHALL BE A PVC GRATE SIMILAR TO THIS DETAIL. THE GRATE IS COMMERCIALLY AVAILABLE AS A FLOOR STRAINER. A PIPE COUPLING IS REQUIRED FOR THE ATTACHMENT OF THIS SHIELD TO THE EXPOSED END OF THE PIPE UNDERDRAIN. THE SHIELD SHALL BE FASTENED TO THE PIPE COUPLING WITH TWO OR MORE NO. 10 X 1-INCH STAINLESS STEEL SHEET METAL SCREWS.

## NOTES

CAST-IN-PLACE PILE SHELL MATERIAL SHALL BE IN ACCORDANCE WITH THE STANDARD SPECIFICATIONS.

## LEGEND

| | |
|---|---|
| A01 | ABUTMENT TO BE SUPPORTED ON 10 3/4 × 0.365-INCH CAST-IN-PLACE CONCRETE PILING DRIVEN TO A REQUIRED DRIVING RESISTANCE OF 150 TONS ** PER PILE AS DETERMINED BY THE MODIFIED GATES DYNAMIC FORMULA. ESTIMATED PILE LENGTH = 55 FEET. |
| ** | THE FACTORED AXIAL RESITANCE OF PILES IN COMPRESSION USED FOR DESIGN IS THE REQUIRED DRIVING RESISTANCE MULTIPLIED BY A RESISTANCE FACTOR OF 0.5 USING MODIFED GATES TO DETERMINE DRIVEN PILE CAPACITY. |
| A02 | PIPE UNDERDRAIN WRAPPED 6-INCH. LOCATE TO SUITABLE DRAINAGE. ATTACH RODENT SHIELDS AT ENDS OF PIPE UNDERDRAIN. |
| A06 | 18" RUBBERIZED MEMBRANE WATERPROOFING. SEAL ALL HORIZONTAL AND VERTICAL JOINTS ON BACKFACE. |
| A07 | SEAL ALL HORIZONTAL AND VERTICAL SURFACES OF FILLER AND 1" EXPANDED POLYSTYRENE WITH NON-STAINING, GRAY NON-BITUMINOUS JOINT SEALER. (1" DEEP AND HOLD 1/8" BELOW SURFACE OF CONCRETE). |

| NO. | DATE | REVISION | BY |
|---|---|---|---|
| | | | |

STATE OF WISCONSIN
DEPARTMENT OF TRANSPORTATION

STRUCTURE B-40-766

DRAWN BY RBH | PLANS CK'D. RPB

ABUTMENT DETAILS

SHEET 7 OF 23
484

8

8

FILE=
SCALE =

| STATE PROJECT NUMBER |
|---|
| 2140-13-70 |

## LEGEND

- A01 ABUTMENT TO BE SUPPORTED ON 10¾×0.365-INCH CAST-IN-PLACE CONCRETE PILING DRIVEN TO A REQUIRED DRIVING RESISTANCE OF 150 TONS ** PER PILE AS DETERMINED BY THE MODIFIED GATES DYNAMIC FORMULA. ESTIMATED PILE LENGTH = 55 FEET.
- ** THE FACTORED AXIAL RESISTANCE OF PILES IN COMPRESSION USED FOR DESIGN IS THE REQUIRED DRIVING RESISTANCE MULTIPLIED BY A RESISTANCE FACTOR OF 0.5 USING MODIFIED GATES TO DETERMINE DRIVEN PILE CAPACITY.
- A02 PIPE UNDERDRAIN WRAPPED 6-INCH. LOCATE TO SUITABLE DRAINAGE. ATTACH RODENT SHIELDS AT ENDS OF PIPE UNDERDRAIN, SEE SHEET 7.
- A03 VERTICAL CONSTR. JOINT WITH 1" COMPRESSIBLE FILLER.
- A04 ½" FILLER TO EXTEND FROM BRIDGE SEAT TO TOP OF WING (INCLUDED IN WING LENGTH).
- A05 ¾" CORK FILLER ON VERT. BEAM SEAT FACES, TYP.
- A06 18" RUBBERIZED MEMBRANE WATERPROOFING. SEAL ALL HORIZONTAL AND VERTICAL JOINTS ON BACKFACE.
- A08 8"×1'-4"×½" NON-LAMINATED ELASTOMERIC BEARING PAD.
- X PILE NUMBER, SEE SHEET 7 FOR PILE SPLICE DETAILS.

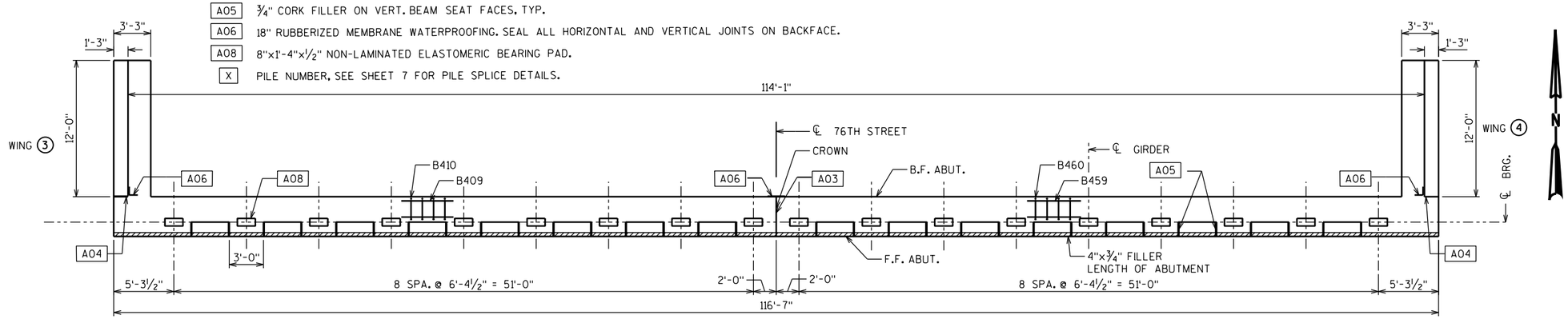


## PLAN

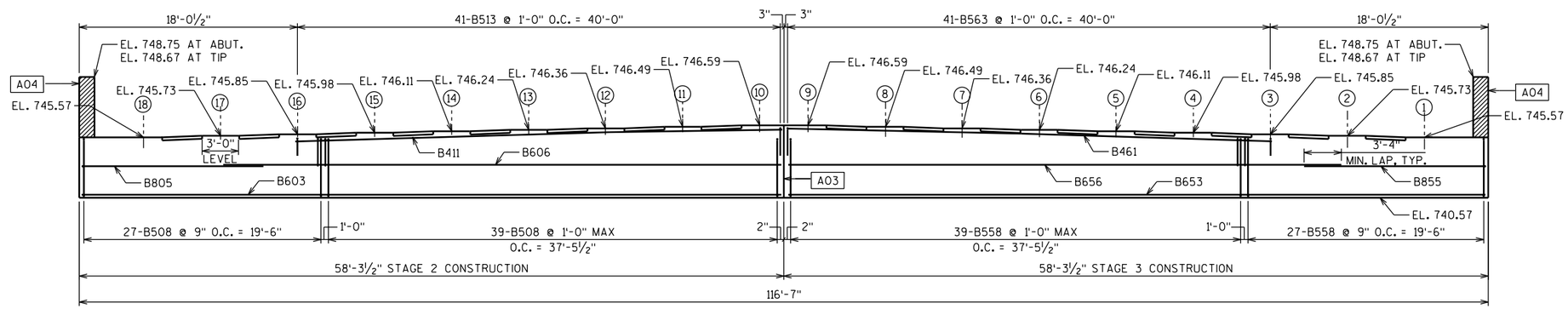


## ELEVATION

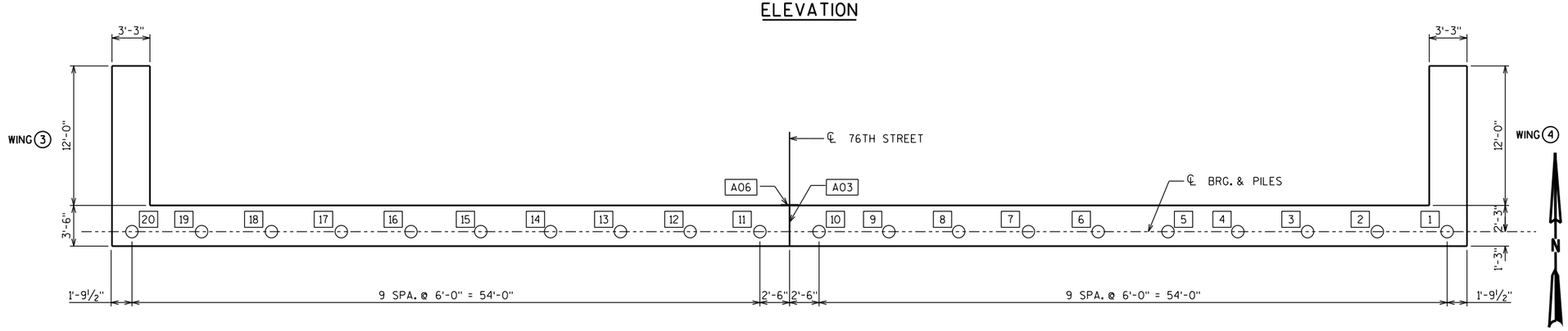


## PILE LAYOUT PLAN

| NO. | DATE | REVISION | BY |
|---|---|---|---|
| | | | |

STATE OF WISCONSIN
DEPARTMENT OF TRANSPORTATION

STRUCTURE B-40-766

DRAWN BY RBH | PLANS CK'D. RPB

NORTH ABUTMENT

SHEET 8 OF 23
485

FILE=
SCALE =

8

| STATE PROJECT NUMBER |
|---|
| 2140-13-70 |

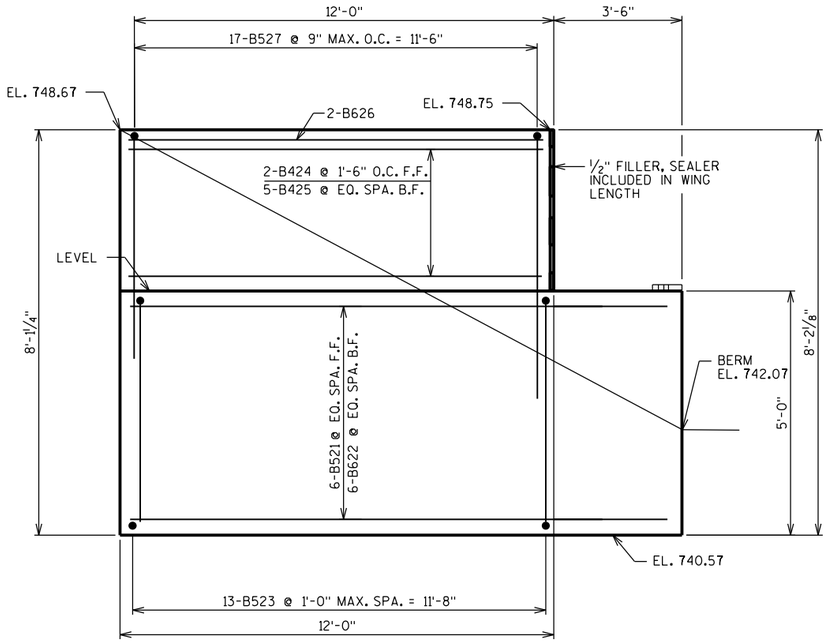


ELEVATION WING 3

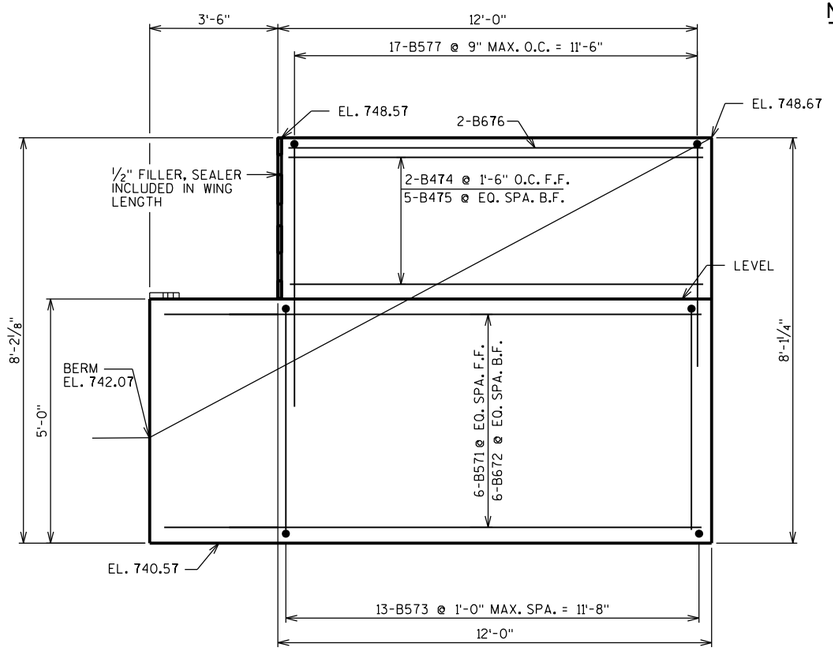


ELEVATION WING 4

## NORTH ABUTMENT - BILL OF BARS

| MARK | COATED | NO. REQ'D | LENGTH | BAR SERIES | BENT | LOCATION |
|---|---|---|---|---|---|---|
| B401 | | 20 | 2'-3" | | | STAGE 2 - ABUT. PILES |
| B402 | | 10 | 28'-0" | | X | STAGE 2 - ABUT. PILES |
| B603 | | 11 | 57'-11" | | | STAGE 2 - ABUT. BODY HORIZ. F.F, TOP, BOTTO |
| | | | | | | |
| B805 | | 7 | 16'-6" | | X | STAGE 2 - ABUT. BODY HORIZ. B.F. |
| B606 | | 7 | 46'-7" | | | STAGE 2 - ABUT. BODY HORIZ. B.F. |
| | | | | | | |
| B508 | | 66 | 15'-6" | | X | STAGE 2 - ABUT. BODY STIRRUPS |
| B409 | | 16 | 5'-6" | | | STAGE 2 - ABUT. BODY HORIZ. |
| B410 | | 32 | 4'-5" | | X | STAGE 2 - ABUT. BODY STIRRUPS |
| B411 | | 4 | 40'-1" | | | STAGE 2 - ABUT. BODY HORIZ. |
| | | | | | | |
| B513 | | 41 | 7'-3" | | X | STAGE 2 - ABUT. BODY STIRRUPS |
| | | | | | | |
| B521 | X | 6 | 15'-2" | | | STAGE 2 - WING 3 HORIZ. F.F. |
| B622 | X | 8 | 15'-2" | | | STAGE 2 - WING 3 HORIZ. B.F., TOP |
| B523 | X | 13 | 15'-8" | | X | STAGE 2 - WING 3 STIRRUPS |
| B424 | X | 2 | 11'-7" | | | STAGE 2 - WING 3 HORIZ. F.F. |
| B425 | X | 5 | 11'-7" | | | STAGE 2 - WING 3 HORIZ. B.F. |
| B626 | X | 2 | 11'-7" | | | STAGE 2 - WING 3 HORIZ. TOP |
| B527 | X | 17 | 11'-1" | | X | STAGE 2 - WING 3 STIRRUPS |
| | | | | | | |
| B451 | | 20 | 2'-3" | | | STAGE 3 - ABUT. PILES |
| B452 | | 10 | 28'-0" | | X | STAGE 3 - ABUT. PILES |
| B653 | | 11 | 57'-11" | | | STAGE 3 - ABUT. BODY HORIZ. F.F, TOP, BOTTO |
| | | | | | | |
| B855 | | 7 | 16'-6" | | X | STAGE 3 - ABUT. BODY HORIZ. B.F. |
| B656 | | 7 | 46'-7" | | | STAGE 3 - ABUT. BODY HORIZ. B.F. |
| | | | | | | |
| B558 | | 66 | 15'-6" | | X | STAGE 3 - ABUT. BODY STIRRUPS |
| B459 | | 16 | 5'-6" | | | STAGE 3 - ABUT. BODY HORIZ. |
| B460 | | 32 | 4'-5" | | X | STAGE 3 - ABUT. BODY STIRRUPS |
| B461 | | 4 | 40'-1" | | | STAGE 3 - ABUT. BODY HORIZ. |
| | | | | | | |
| B563 | | 41 | 7'-3" | | X | STAGE 3 - ABUT. BODY STIRRUPS |
| | | | | | | |
| B571 | X | 6 | 15'-2" | | | STAGE 3 - WING 4 HORIZ. F.F. |
| B672 | X | 8 | 15'-2" | | | STAGE 3 - WING 4 HORIZ. B.F., TOP |
| B573 | X | 13 | 15'-8" | | X | STAGE 3 - WING 4 STIRRUPS |
| B474 | X | 2 | 11'-7" | | | STAGE 3 - WING 4 HORIZ. F.F. |
| B475 | X | 5 | 11'-7" | | | STAGE 3 - WING 4 HORIZ. B.F. |
| B676 | X | 2 | 11'-7" | | | STAGE 3 - WING 4 HORIZ. TOP |
| B577 | X | 17 | 11'-1" | | X | STAGE 3 - WING 4 STIRRUPS |

THE FIRST DIGIT OR FIRST TWO DIGITS OF A BAR MARK INDICATES THE BAR SIZE.
ALL DIMENSIONS IN THE BAR BENDS ARE OUT TO OUT.

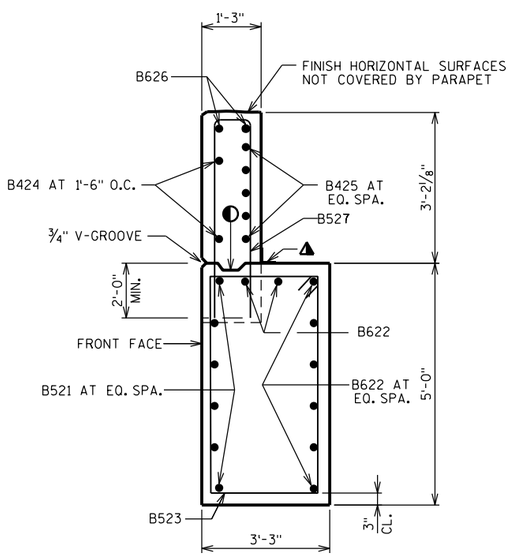


SECTION WING 3

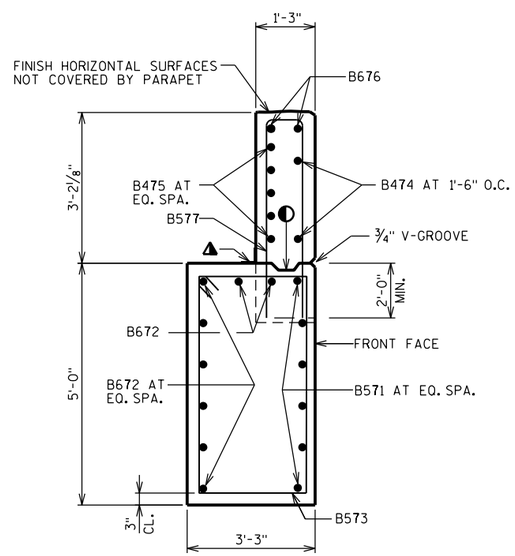


SECTION WING 4

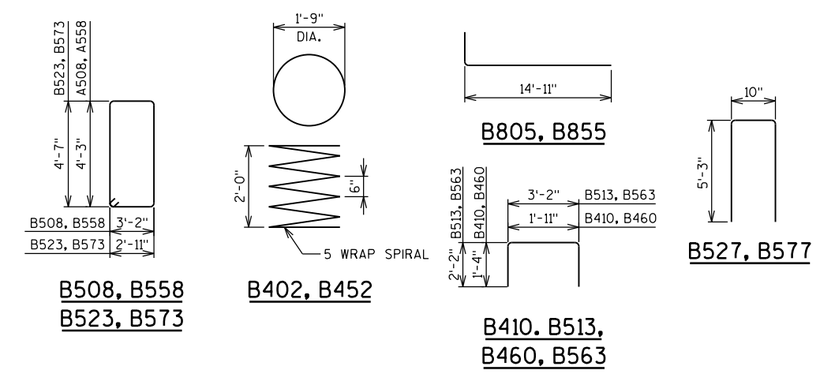


## LEGEND

◐ OPTIONAL CONSTR. JOINT FORMED BY BEVELED 2" X 6" KEYWAY WITH MEMBRANE ON BACKFACE.

▲ 18" RUBBERIZED MEMBRANE WATERPROOFING. SEAL ALL HORIZONTAL AND VERTICAL JOINTS ON BACKFACE

| NO. | DATE | REVISION | BY |
|---|---|---|---|
| | | | |

STATE OF WISCONSIN
DEPARTMENT OF TRANSPORTATION

STRUCTURE B-40-766

DRAWN BY RBH | PLANS CK'D. RPB

NORTH ABUTMENT WINGWALLS

SHEET 9 OF 23
486

8

8

FILE=
SCALE =

STATE PROJECT NUMBER

2140-13-70

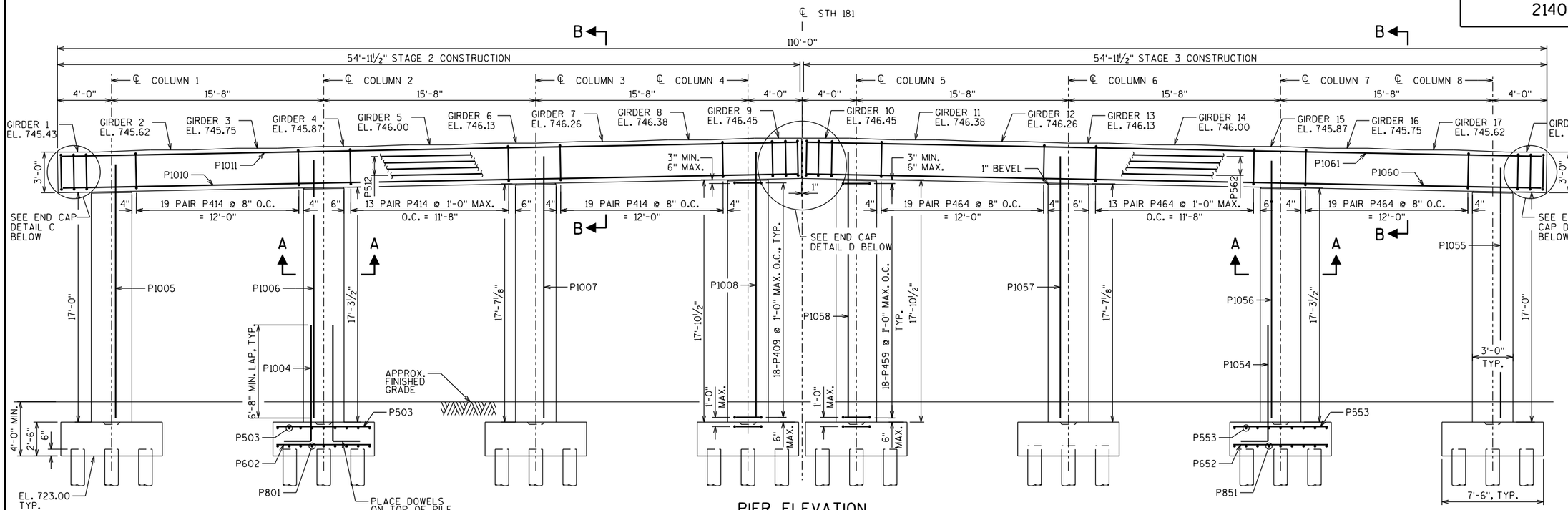


PIER ELEVATION

LOOKING NORTH

END VIEW

- 1'-3"x1'-3"x2" CONST. JOINT FORMED BY A BEVELED KEYWAY

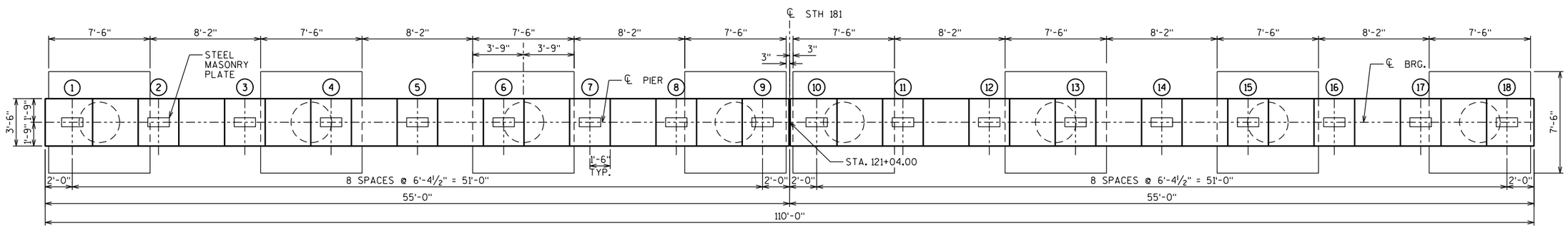


PIER PLAN

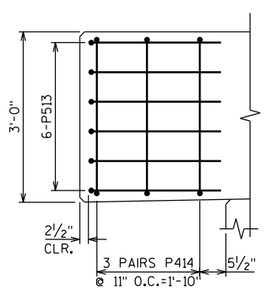


END CAP DETAIL C

P1010, P1011, AND P512 NOT SHOWN FOR CLARITY

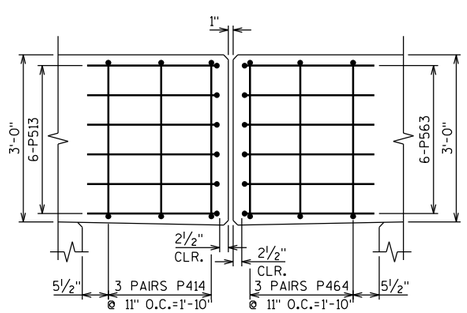


END CAP DETAIL D

P1010, P1011, P512, P1060, P1061, AND P562 NOT SHOWN FOR CLARITY

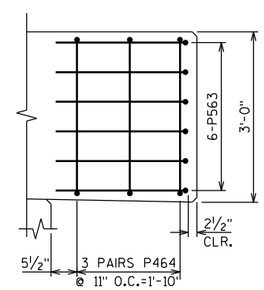


END CAP DETAIL E

P1060, P1061, AND P562 NOT SHOWN FOR CLARITY

## NOTES

SEE SHEET 11 FOR SECTIONS A-A AND B-B.

PIER TO BE SUPPORTED ON 10¾x0.365-INCH CAST-IN-PLACE CONCRETE PILING DRIVEN TO A REQUIRED DRIVING RESISTANCE OF 150 TONS ** PER PILE AS DETERMINED BY THE MODIFIED GATES DYNAMIC FORMULA. ESTIMATED PILE LENGTH = 50'.

** THE FACTORED AXIAL RESISTANCE OF PILES IN COMPRESSION USED FOR DESIGN IS THE REQUIRED DRIVING RESISTANCE MULTIPLIED BY A RESISTANCE FACTOR OF 0.5 USING MODIFIED GATES TO DETERMINE DRIVEN PILE CAPACITY.

| NO. | DATE | REVISION | BY |
|---|---|---|---|

STATE OF WISCONSIN
DEPARTMENT OF TRANSPORTATION

STRUCTURE B-40-766

DRAWN BY RBH | PLANS CK'D. RPB

PIER

SHEET 10 OF 23

487

FILE=

SCALE =

8

8

STATE PROJECT NUMBER

2140-13-70

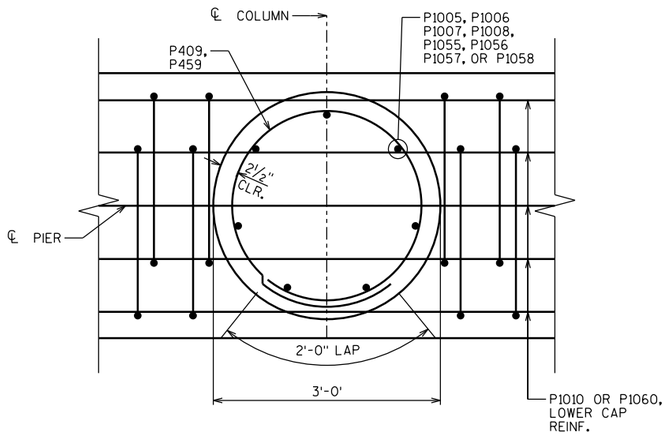


SECTION A-A

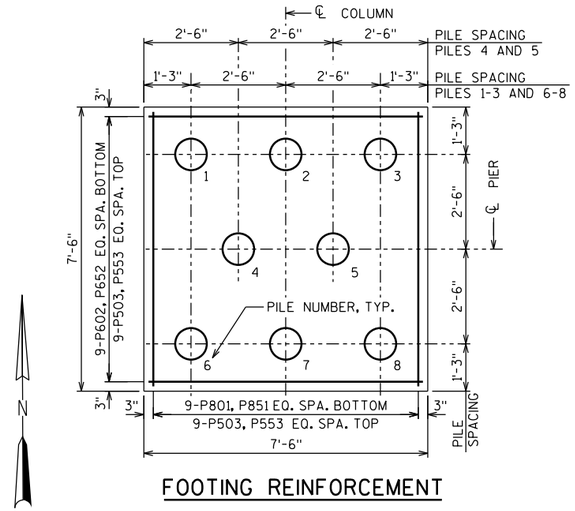


FOOTING REINFORCEMENT

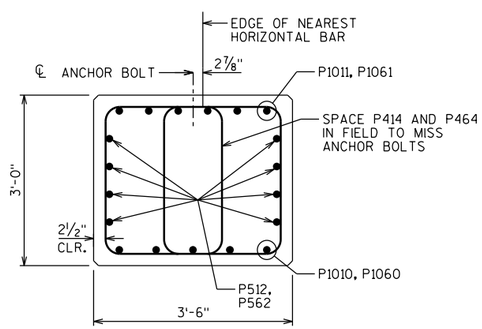


SECTION B-B

| PIER - BILL OF BARS | | | | | | |
|---|---|---|---|---|---|---|
| MARK | COATED | NO. REQ'D | LENGTH | BAR SERIES | BENT | LOCATION |
| P801 | | 36 | 7'-0" | | | STAGE 2 - PILE CAP BOTTOM |
| P602 | | 36 | 7'-0" | | | STAGE 2 - PILE CAP BOTTOM |
| P503 | | 72 | 7'-0" | | | STAGE 2 - PILE CAP TOP |
| P1004 | X | 28 | 10'-4" | | X | STAGE 2 - PILE CAP DOWELS |
| P1005 | X | 7 | 19'-0" | | | STAGE 2 - COLUMN 1 VERTICAL |
| P1006 | X | 7 | 19'-3" | | | STAGE 2 - COLUMN 2 VERTICAL |
| P1007 | X | 7 | 19'-7" | | | STAGE 2 - COLUMN 3 VERTICAL |
| P1008 | X | 7 | 19'-10" | | | STAGE 2 - COLUMN 4 VERTICAL |
| P409 | X | 76 | 10'-2" | | X | STAGE 2 - COLUMN TIES |
| P1010 | X | 5 | 54'-7" | | | STAGE 2 - CAP BOTTOM LONGITUDINAL |
| P1011 | X | 6 | 54'-7" | | | STAGE 2 - CAP TOP LONGITUDINAL |
| P512 | X | 8 | 54'-7" | | | STAGE 2 - CAP SIDE LONGITUDINAL |
| P513 | X | 12 | 6'-9" | | X | STAGE 2 - CAP END |
| P414 | X | 114 | 10'-8" | | X | STAGE 2 - CAP STIRRUPS |
| | | | | | | |
| P851 | | 36 | 7'-0" | | | STAGE 3 - PILE CAP BOTTOM |
| P652 | | 36 | 7'-0" | | | STAGE 3 - PILE CAP BOTTOM |
| P553 | | 72 | 7'-0" | | | STAGE 3 - PILE CAP TOP |
| P1054 | X | 28 | 10'-4" | | X | STAGE 3 - PILE CAP DOWELS |
| P1055 | X | 7 | 19'-0" | | | STAGE 3 - COLUMN 8 VERTICAL |
| P1056 | X | 7 | 19'-3" | | | STAGE 3 - COLUMN 7 VERTICAL |
| P1057 | X | 7 | 19'-7" | | | STAGE 3 - COLUMN 6 VERTICAL |
| P1058 | X | 7 | 19'-10" | | | STAGE 3 - COLUMN 5 VERTICAL |
| P459 | X | 76 | 10'-2" | | X | STAGE 3 - COLUMN TIES |
| P1060 | X | 5 | 54'-7" | | | STAGE 3 - CAP BOTTOM LONGITUDINAL |
| P1061 | X | 6 | 54'-7" | | | STAGE 3 - CAP TOP LONGITUDINAL |
| P562 | X | 8 | 54'-7" | | | STAGE 3 - CAP SIDE LONGITUDINAL |
| P563 | X | 12 | 6'-9" | | X | STAGE 3 - CAP END |
| P464 | X | 114 | 10'-8" | | X | STAGE 3 - CAP STIRRUPS |

ALL DIMENSIONS IN THE BAR BENDS ARE OUT TO OUT.

THE FIRST DIGIT OR THE FIRST TWO DIGITS OF A BAR MARK SIGNIFIES THE BAR SIZE.

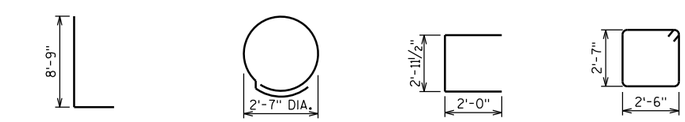


P1004, P1054 P409, P459 P513, P563 P414, P464

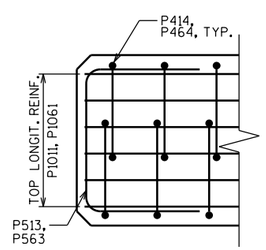


PLAN VIEW SHOWING END OF CAP REINFORCMENT

## NOTES

SEE SHEET 7 FOR PILE SPLICE DETAILS.

PIER TO BE SUPPORTED ON 10¾×0.365-INCH CAST-IN-PLACE CONCRETE PILING DRIVEN TO A REQUIRED DRIVING RESISTANCE OF 150 TONS ** PER PILE AS DETERMINED BY THE MODIFIED GATES DYNAMIC FORMULA. ESTIMATED PILE LENGTH = 50'.

** THE FACTORED AXIAL RESISTANCE OF PILES IN COMPRESSION USED FOR DESIGN IS THE REQUIRED DRIVING RESISTANCE MULTIPLIED BY A RESISTANCE FACTOR OF 0.5 USING MODIFIED GATES TO DETERMINE DRIVEN PILE CAPACITY.

| NO. | DATE | REVISION | BY |
|---|---|---|---|

STATE OF WISCONSIN
DEPARTMENT OF TRANSPORTATION

STRUCTURE B-40-766

DRAWN BY RBH PLANS CK'D. RPB

PIER DETAILS

SHEET 11 OF 23

488

8

8

FILE=
SCALE =

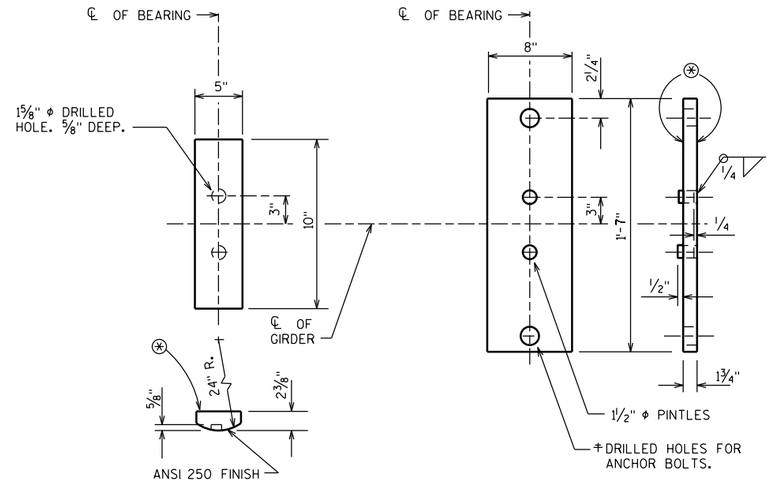


ROCKER PLATE "C"

MASONRY PLATE "D"

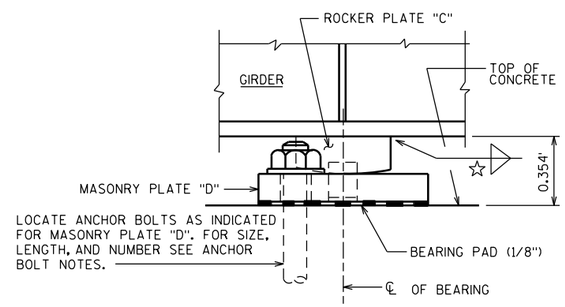


FIXED BEARING ASSEMBLY TYPE 'A'

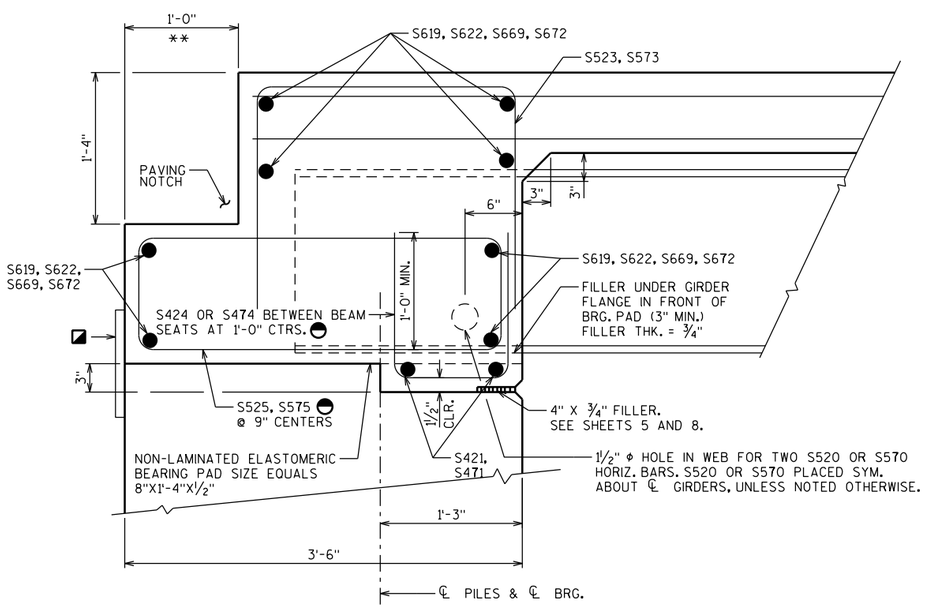


STEEL GIRDER WITH SEMI-EXPANSION SEAT

## BEARING NOTES

ALL BEARINGS ARE SYMMETRICAL ABOUT ℄ OF GIRDER AND ℄ OF BEARING.

IN LIEU OF USING SHIM PLATES, FABRICATOR MAY INCREASE THICKNESS OF PLATE "D" BY THE SHIM PLATE THICKNESS.

ALL STRUCTURAL STEEL BEARING PLATES SHALL BE FLAT ROLLED STEEL PLATES WITH ALL SURFACES SMOOTH AND FREE FROM WARP AND ALL EDGES SMOOTH, STRAIGHT AND VERTICAL.

ALL PLATE CUTS SHALL BE MACHINE OR MACHINE FLAME CUTS.

ALL FINISHED SURFACES SHALL BE MACHINE FINISHED BY AN AUTOMATIC PROCESS.

ANCHOR BOLTS SHALL BE THREADED 3". PROVIDE ONE STANDARD WROUGHT WASHER AND ONE HEX NUT PER BOLT. PROJECT ANCHOR BOLTS 4" ABOVE TOP OF CONCRETE.

ALL MATERIAL IN BEARINGS, INCLUDING SHIM PLATES, BUT EXCLUDING PINTLES, ANCHOR BOLTS, NUTS AND WASHERS SHALL CONFORM TO ASTM A709 GRADE 50W.

STEEL PINTLES SHALL CONFORM TO ASTM A449 OR MATERIAL OF EQUIVALENT YIELD STRENGTH AND ELONGATION.

ALL MATERIALS IN TYPE "A" BEARINGS, INCLUDING SHIM PLATES AND BEARING PADS, SHALL BE PAID FOR AT THE UNIT PRICE BID FOR "BEARING ASSEMBLIES FIXED B-40-766".

ANCHOR BOLTS, NUTS AND WASHERS SHALL CONFORM TO ASTM A709 GRADE 36, OR MATERIAL OF EQUIVALENT YIELD STRENGTH AND ELONGATION.

CHAMFER TOP OF PINTLES ⅛". DRILL HOLES FOR ALL PINTLES IN MASONRY PLATE "D" FOR A DRIVING FIT.

PROVIDE ⅛" THICK BEARING PAD THE SAME SIZE AS MASONRY PLATE "D" FOR EACH BEARING.

CHAMFER ANCHOR BOLTS PRIOR TO THREADING.

ANCHOR BOLTS, NUTS AND WASHERS SHALL BE GALVANIZED IN ACCORDANCE WITH ASTM A153, CLASS C.

ROCKER PLATE "C" SHALL BE SHOP PAINTED WITH A WELDABLE PRIMER.

MASONRY PLATE "D" SHALL BE GALVANIZED.

PLACE SHIM PLATES BETWEEN BEARING PAD AND MASONRY PLATE "D", PLATES SHALL HAVE DIMENSIONS THAT MATCH MASONRY PLATE "D".

‡ DRILLED HOLES FOR ANCHOR BOLTS IN MASONRY PLATE "D" SHALL HAVE A DIAMETER ⅜" LARGER THAN ANCHOR BOLT.

⊛ FINISH THESE SURFACES TO ANSI 250 IF "Y" DIMENSION IS GREATER THAN 2".

## ANCHOR BOLT NOTES

USE A TYPE I MASONRY PLATE "D"
WITH (2) - 1¼" ϕ x 1'-5" LONG ANCHOR BOLTS.

## LEGEND

** DIMENSION IS TAKEN NORMAL TO ℄ SUBSTRUCTURE UNITS.

◪ 1'-6" RUBBERIZED MEMBRANE WATERPROOFING

◓ BARS PLACED PARALLEL TO GIRDERS. SPACING PERPENDICULAR TO ℄ GIRDER.

☆ FOR WELD SIZE, SEE SHEET 14.

| NO. | DATE | REVISION | BY |
|---|---|---|---|

STATE OF WISCONSIN
DEPARTMENT OF TRANSPORTATION

STRUCTURE B-40-766

DRAWN BY RBH | PLANS CK'D. RPB

BEARING DETAILS



8

8

FILE=
SCALE =

STATE PROJECT NUMBER

2140-13-70

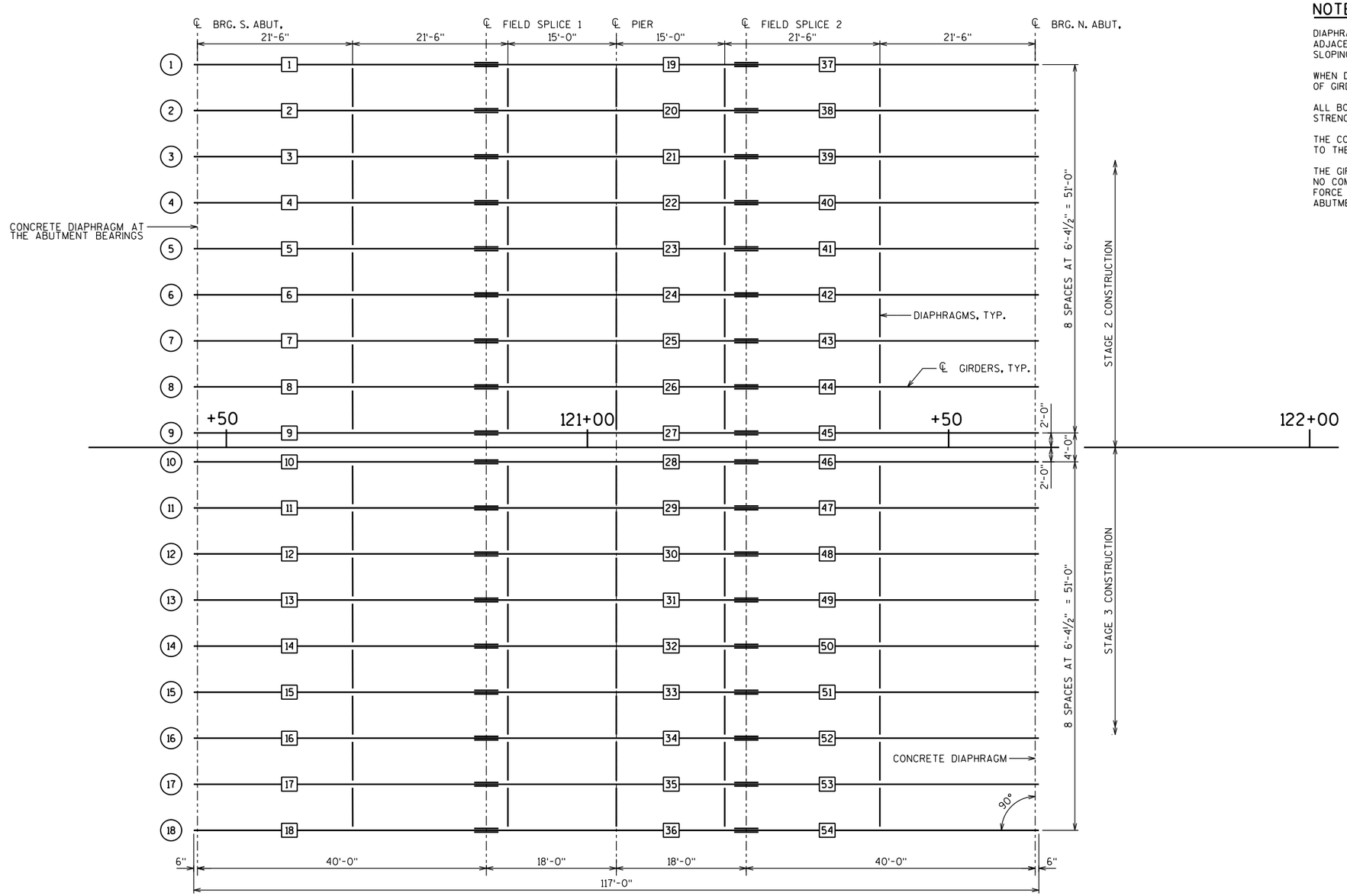


FRAMING PLAN

## NOTES

DIAPHRAGMS SHALL BE HORIZONTAL EXCEPT WHEN THE DIFFERENCE IN ADJACENT GIRDER ELEVATIONS IS OF A MAGNITUDE THAT NECESSITATES SLOPING THE DIAPHRAGMS.

WHEN DIAPHRAGMS ARE SLOPED, PLACE CENTER OF DIAPHRAGM AT MID-DEPTH OF GIRDER.

ALL BOLTED CONNECTIONS SHALL BE FRICTION TYPE USING ¾" Φ HIGH STRENGTH ASTM A325 BOLTS WITH DOUBLE WASHERS.

THE CONTRACTOR MAY SUBMIT AN ALTERNATE POURING SEQUENCE SUBJECT TO THE APPROVAL OF THE STRUCTURE DESIGN SECTION.

THE GIRDERS ARE ANALYZED ASSUMING A SINGLE DECK POUR SEQUENCE WITH NO COMPOSITE ACTION OCCURING DURING POUR. A NET UNFACTORED UPLIFT FORCE OF 0.40 KIPS/GIRDER IS EXPECTED TO OCCUR AT THE UNLOADED ABUTMENT WHEN THE GREEN DECK CONCRETE IS PLACED ON ONE SPAN ONLY.

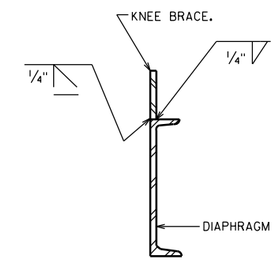


SECTION A

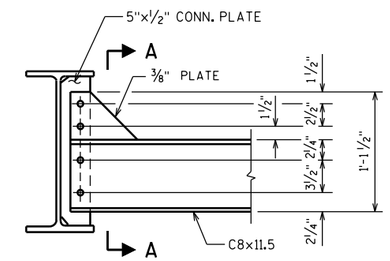


DIAPHRAGM

## LEGEND

(X) GIRDER LINE

[X] GIRDER PIECE NUMBER

| NO. | DATE | REVISION | BY |
|---|---|---|---|
| | | | |

STATE OF WISCONSIN
DEPARTMENT OF TRANSPORTATION

STRUCTURE B-40-766

DRAWN BY RBH | PLANS CK'D. RPB

FRAMING PLAN

SHEET 13 OF 23
490

FILE=
SCALE =

8

8

STATE PROJECT NUMBER

2140-13-70

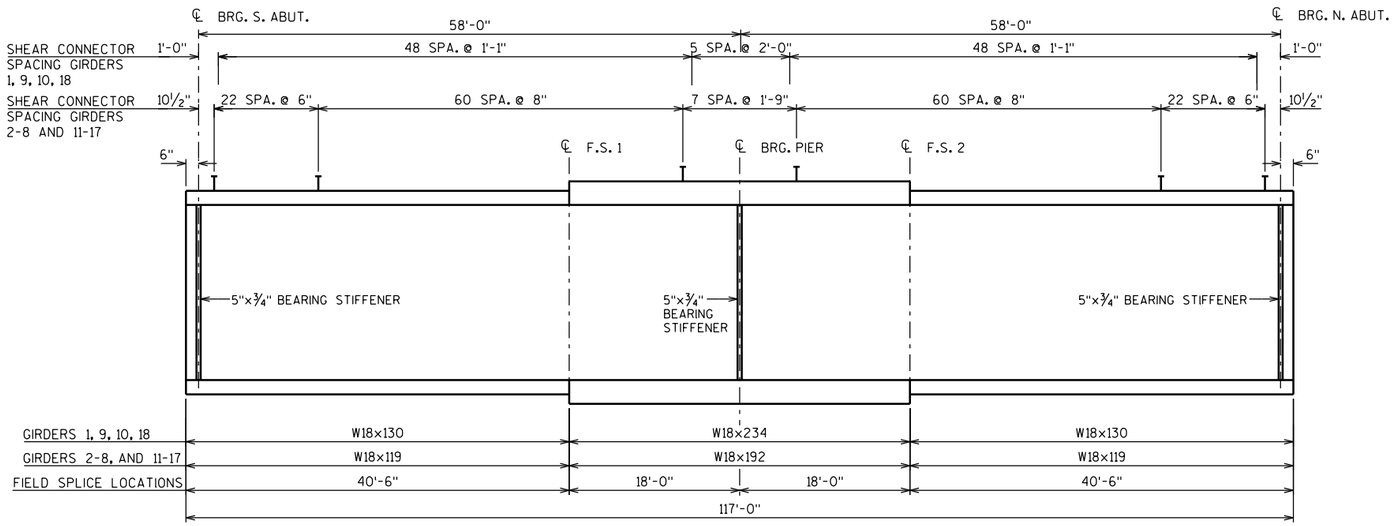


## GIRDER ELEVATION

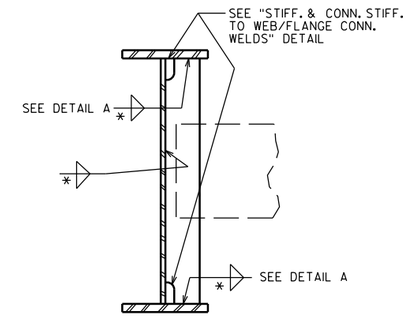


## CONNECTION STIFF. DETAILS

## NOTES

PRIOR TO STEEL BLAST, ALL FLAME CUT EDGES OF PLATES THAT ARE TO BE PAINTED SHALL BE GROUND OR PLANED TO REMOVE THE HARDENED SURFACE CAUSED BY THE FLAME.

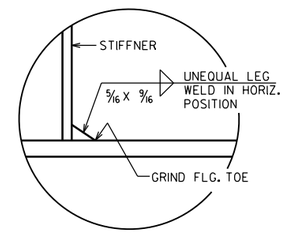


## DETAIL A

CONNECTION STIFFENER DETAIL @ TENSION FLANGE

NOTE: USE THREE FIELD WELDED ⅞" DIA. X 6" LONG ⊖ STUDS EQUALLY SPACED WITH A MIN. OF 1½" CL. FROM THE FLANGE EDGE. STUDS SHALL NOT BE PLACED OVER FIELD SPLICE PLATES.

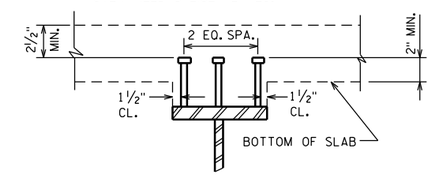


⊖ USE DIFFERENT LENGTH STUDS IF 2½" MIN. CLEARANCE OR 2" EXTENSION CRITERIA IS VIOLATED.

## SHEAR CONN. DETAILS

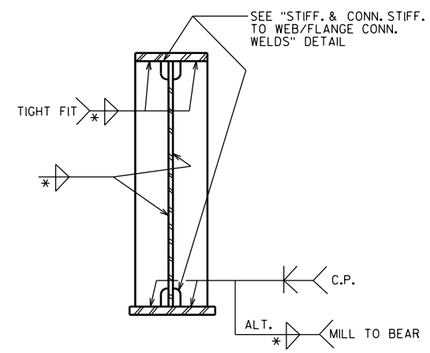


## BRG. STIFF. DETAILS TYP. AT ABUT. & PIER

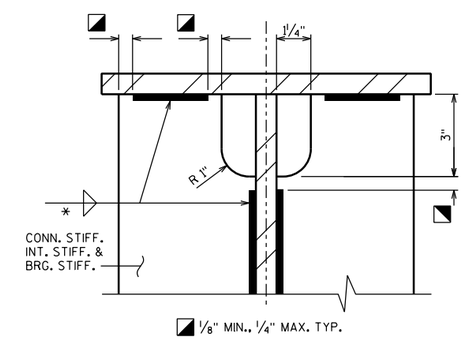


## STIFF. & CONN. STIFF. TO WEB/FLANGE CONN. WELDS

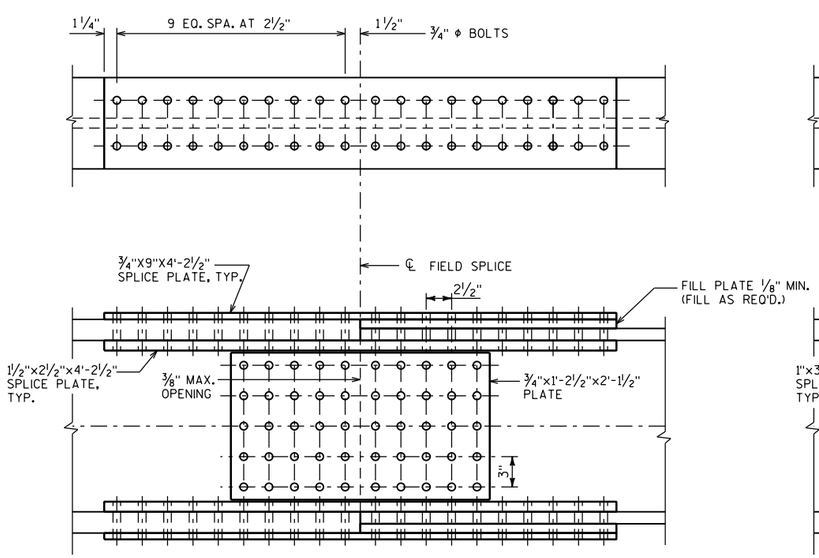


## FIELD SPLICE DETAILS

GIRDERS 1, 9, 10 AND 18

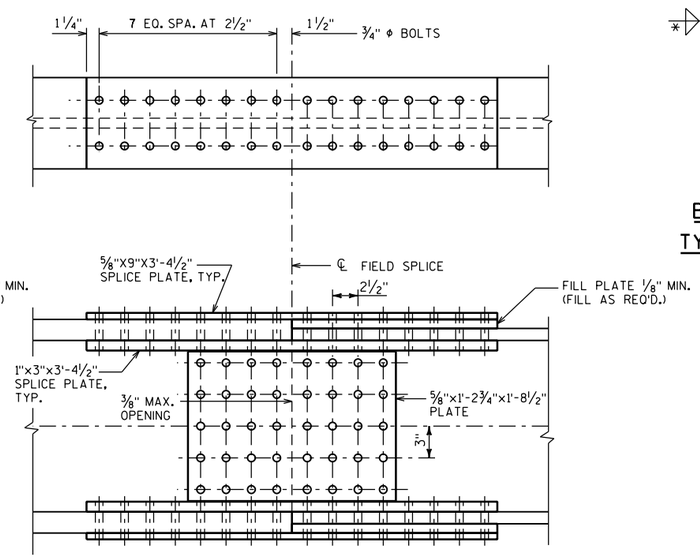


## FIELD SPLICE DETAILS

GIRDERS 2-8 AND 11-17

## * TABLE OF FILLET WELD SIZES

| MATERIAL THICKNESS OF THICKER PART JOINED. | ‡ MIN. SIZE OF FILLET WELD |
|---|---|
| TO ½" INCLUSIVE | 3/16" |
| OVER ½" TO ¾" | ¼" |
| OVER ¾" TO 1½" | △ 5/16" |
| OVER 1½" | △ ⅜" |

‡ EXCEPT THAT THE WELD SIZE SHALL NOT EXCEED THE THICKNESS OF THE THINNER PART JOINED.

△ MIN. PASS SIZE IS 5/16"

| NO. | DATE | REVISION | BY |
|---|---|---|---|

STATE OF WISCONSIN
DEPARTMENT OF TRANSPORTATION

STRUCTURE B-40-766

DRAWN BY RBH | PLANS CK'D. RPB

GIRDER DETAILS

SHEET 14 OF 23

491

8

8

FILE=
SCALE =

L:±JOBS2010±20100384±CAD±WISDOT_TRANS±DGN±00±B-40-766_SHT14.DGN 4/11/2016 1:28:21 PM

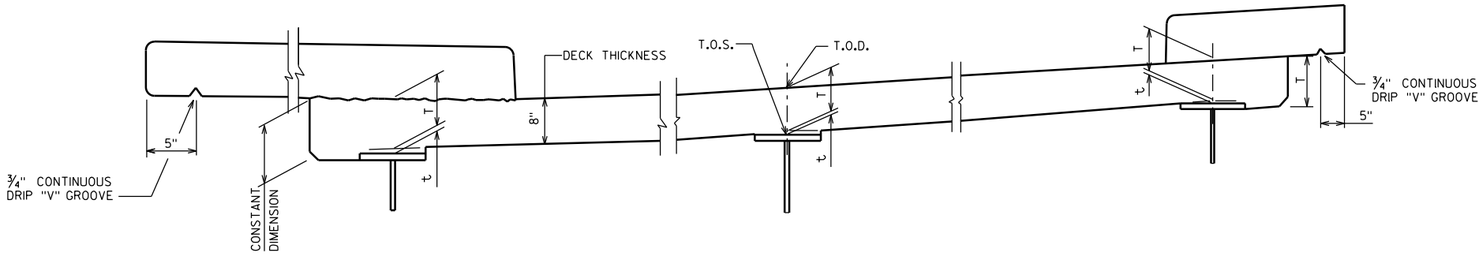


TREATMENT OF EXTERIOR GIRDER AT SIDEWALK OVERHANG

SECTION THRU SLAB

## NOTES

t = HAUNCH HEIGHT AT CENTERLINE OF GIRDER.

(TO DETERMINE "t": AFTER ALL STRUCTURAL STEEL HAS BEEN ERECTED, ELEVATIONS OF THE TOP FLANGES OR TOP OF SPLICE PLATES, WHICHEVER APPLIES, SHALL BE TAKEN AT CENTERLINE OF BEARINGS, CENTERLINE OF FIELD SPLICES, AND AT 0.1 POINTS.

TOP OF DECK ELEV. AT FINAL GRADE.

\- TOP OF STEEL ELEV. AFTER STEEL ERECTION.

\+ CONC. ONLY DEFLECTION; DOWNWARD DEFLECTION IS ADDED. UPWARD DEFLECTION IS SUBTRACTED.

\- SLAB THICKNESS ('T')

= "t" VALUE FOR SETTING HAUNCH.

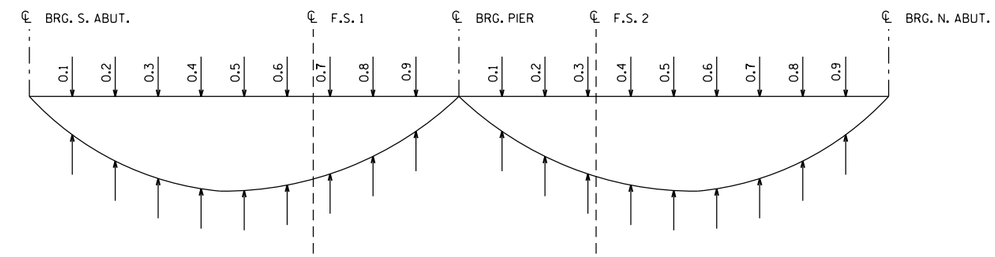


DEAD LOAD DEFLECTION DIAGRAM

## ELEVATIONS AT TOP OF DECK (T.O.D.) & TOP OF STEEL (T.O.S.)

| | | C/L BRG. | SPAN 1 | | | | | | | | | | C/L BRG. | SPAN 2 | | | | | | | | | | C/L BRG. |
|---|---|---|---|---|---|---|---|---|---|---|---|---|---|---|---|---|---|---|---|---|---|---|---|---|
| GIRDER LINE | | S. ABUT. | 0.1 | 0.2 | 0.3 | 0.4 | 0.5 | 0.6 | C/L SPLICE | 0.7 | 0.8 | 0.9 | PIER | 0.1 | 0.2 | 0.3 | C/L SPLICE | 0.4 | 0.5 | 0.6 | 0.7 | 0.8 | 0.9 | N. ABUT. |
| W. DECK EDGE | T.O.D. | 748.67 | 748.64 | 748.61 | 748.57 | 748.54 | 748.51 | 748.48 | - | 748.45 | 748.41 | 748.38 | 748.35 | 748.32 | 748.29 | 748.25 | - | 748.22 | 748.19 | 748.16 | 748.13 | 748.09 | 748.06 | 748.03 |
| 1 | T.O.D. | 748.71 | 748.68 | 748.65 | 748.61 | 748.58 | 748.55 | 748.52 | 748.49 | 748.49 | 748.45 | 748.42 | 748.39 | 748.36 | 748.33 | 748.29 | 748.29 | 748.26 | 748.23 | 748.20 | 748.17 | 748.13 | 748.10 | 748.07 |
| | T.O.S. | 747.86 | 747.87 | 747.87 | 747.84 | 747.79 | 747.70 | 747.60 | 747.63 | 747.63 | 747.57 | 747.56 | 747.54 | 747.50 | 747.44 | 747.44 | 747.44 | 747.34 | 747.38 | 747.40 | 747.40 | 747.35 | 747.29 | 747.22 |
| 2 | T.O.D. | 748.84 | 748.81 | 748.77 | 748.74 | 748.71 | 748.68 | 748.65 | 748.62 | 748.61 | 748.58 | 748.55 | 748.52 | 748.49 | 748.45 | 748.42 | 748.42 | 748.39 | 748.36 | 748.33 | 748.29 | 748.26 | 748.23 | 748.20 |
| | T.O.S. | 747.99 | 747.99 | 747.99 | 747.97 | 747.91 | 747.84 | 747.74 | 747.76 | 747.76 | 747.70 | 747.70 | 747.67 | 747.63 | 747.58 | 747.57 | 747.56 | 747.48 | 747.51 | 747.53 | 747.52 | 747.47 | 747.42 | 747.35 |
| 3 | T.O.D. | 748.97 | 748.93 | 748.90 | 748.87 | 748.84 | 748.81 | 748.77 | 748.74 | 748.74 | 748.71 | 748.68 | 748.65 | 748.61 | 748.58 | 748.55 | 748.55 | 748.52 | 748.49 | 748.45 | 748.42 | 748.39 | 748.36 | 748.33 |
| | T.O.S. | 748.12 | 748.12 | 748.12 | 748.09 | 748.04 | 747.97 | 747.87 | 747.89 | 747.89 | 747.83 | 747.82 | 747.80 | 747.76 | 747.70 | 747.70 | 747.69 | 747.61 | 747.64 | 747.66 | 747.64 | 747.60 | 747.54 | 747.48 |
| 4 | T.O.D. | 749.09 | 749.06 | 749.03 | 749.00 | 748.96 | 748.93 | 748.90 | 748.87 | 748.87 | 748.84 | 748.80 | 748.77 | 748.74 | 748.71 | 748.68 | 748.67 | 748.64 | 748.61 | 748.58 | 748.55 | 748.52 | 748.48 | 748.45 |
| | T.O.S. | 748.25 | 748.25 | 748.24 | 748.22 | 748.17 | 748.09 | 748.00 | 748.02 | 748.02 | 747.96 | 747.95 | 747.93 | 747.89 | 747.83 | 747.82 | 747.82 | 747.74 | 747.77 | 747.78 | 747.77 | 747.73 | 747.67 | 747.61 |
| 5 | T.O.D. | 749.22 | 749.19 | 749.16 | 749.12 | 749.09 | 749.06 | 749.03 | 749.00 | 749.00 | 748.96 | 748.93 | 748.90 | 748.87 | 748.84 | 748.80 | 748.80 | 748.77 | 748.74 | 748.71 | 748.68 | 748.64 | 748.61 | 748.58 |
| | T.O.S. | 748.37 | 748.38 | 748.37 | 748.35 | 748.30 | 748.22 | 748.12 | 748.14 | 748.14 | 748.09 | 748.08 | 748.05 | 748.01 | 747.96 | 747.95 | 747.95 | 747.87 | 747.90 | 747.91 | 747.90 | 747.86 | 747.80 | 747.73 |
| 6 | T.O.D. | 749.35 | 749.32 | 749.28 | 749.25 | 749.22 | 749.19 | 749.16 | 749.13 | 749.12 | 749.09 | 749.06 | 749.03 | 749.00 | 748.96 | 748.93 | 748.93 | 748.90 | 748.87 | 748.84 | 748.80 | 748.77 | 748.74 | 748.71 |
| | T.O.S. | 748.50 | 748.50 | 748.50 | 748.48 | 748.42 | 748.35 | 748.25 | 748.27 | 748.27 | 748.21 | 748.21 | 748.18 | 748.14 | 748.09 | 748.08 | 748.07 | 747.99 | 748.02 | 748.04 | 748.03 | 747.98 | 747.93 | 747.86 |
| 7 | T.O.D. | 749.48 | 749.44 | 749.41 | 749.38 | 749.35 | 749.32 | 749.28 | 749.25 | 749.25 | 749.22 | 749.19 | 749.16 | 749.12 | 749.09 | 749.06 | 749.06 | 749.03 | 749.00 | 748.96 | 748.93 | 748.90 | 748.87 | 748.84 |
| | T.O.S. | 748.63 | 748.63 | 748.63 | 748.60 | 748.55 | 748.48 | 748.38 | 748.40 | 748.40 | 748.34 | 748.33 | 748.31 | 748.27 | 748.21 | 748.21 | 748.20 | 748.12 | 748.15 | 748.17 | 748.15 | 748.11 | 748.05 | 747.99 |
| 8 | T.O.D. | 749.60 | 749.57 | 749.54 | 749.51 | 749.47 | 749.44 | 749.41 | 749.38 | 749.38 | 749.35 | 749.31 | 749.28 | 749.25 | 749.22 | 749.19 | 749.18 | 749.15 | 749.12 | 749.09 | 749.06 | 749.03 | 748.99 | 748.96 |
| | T.O.S. | 748.76 | 748.76 | 748.75 | 748.73 | 748.68 | 748.60 | 748.51 | 748.53 | 748.53 | 748.47 | 748.46 | 748.44 | 748.40 | 748.34 | 748.33 | 748.33 | 748.25 | 748.28 | 748.29 | 748.28 | 748.24 | 748.18 | 748.12 |
| 9 | T.O.D. | 749.73 | 749.70 | 749.67 | 749.63 | 749.60 | 749.57 | 749.54 | 749.51 | 749.51 | 749.47 | 749.44 | 749.41 | 749.38 | 749.35 | 749.31 | 749.31 | 749.28 | 749.25 | 749.22 | 749.19 | 749.15 | 749.12 | 749.09 |
| | T.O.S. | 748.88 | 748.89 | 748.89 | 748.87 | 748.81 | 748.73 | 748.62 | 748.65 | 748.65 | 748.59 | 748.58 | 748.56 | 748.52 | 748.46 | 748.46 | 748.46 | 748.36 | 748.40 | 748.43 | 748.42 | 748.38 | 748.32 | 748.24 |
| MEDIAN DECK EDGE | T.O.D. | 749.76 | 749.72 | 749.69 | 749.66 | 749.63 | 749.60 | 749.56 | - | 749.53 | 749.50 | 749.47 | 749.44 | 749.40 | 749.37 | 749.34 | - | 749.31 | 749.28 | 749.24 | 749.21 | 749.18 | 749.15 | 749.12 |
| MEDIAN DECK EDGE | T.O.D. | 749.76 | 749.72 | 749.69 | 749.66 | 749.63 | 749.60 | 749.56 | - | 749.53 | 749.50 | 749.47 | 749.44 | 749.40 | 749.37 | 749.34 | - | 749.31 | 749.28 | 749.24 | 749.21 | 749.18 | 749.15 | 749.12 |
| 10 | T.O.D. | 749.73 | 749.70 | 749.67 | 749.63 | 749.60 | 749.57 | 749.54 | 749.51 | 749.51 | 749.47 | 749.44 | 749.41 | 749.38 | 749.35 | 749.31 | 749.31 | 749.28 | 749.25 | 749.22 | 749.19 | 749.15 | 749.12 | 749.09 |
| | T.O.S. | 748.88 | 748.89 | 748.89 | 748.87 | 748.81 | 748.73 | 748.62 | 748.65 | 748.65 | 748.59 | 748.58 | 748.56 | 748.52 | 748.46 | 748.46 | 748.46 | 748.36 | 748.40 | 748.43 | 748.42 | 748.38 | 748.32 | 748.24 |
| 11 | T.O.D. | 749.60 | 749.57 | 749.54 | 749.51 | 749.47 | 749.44 | 749.41 | 749.38 | 749.38 | 749.35 | 749.31 | 749.28 | 749.25 | 749.22 | 749.19 | 749.18 | 749.15 | 749.12 | 749.09 | 749.06 | 749.03 | 748.99 | 748.96 |
| | T.O.S. | 748.76 | 748.76 | 748.75 | 748.73 | 748.68 | 748.60 | 748.51 | 748.53 | 748.53 | 748.47 | 748.46 | 748.44 | 748.40 | 748.34 | 748.33 | 748.33 | 748.25 | 748.28 | 748.29 | 748.28 | 748.24 | 748.18 | 748.12 |
| 12 | T.O.D. | 749.48 | 749.44 | 749.41 | 749.38 | 749.35 | 749.32 | 749.28 | 749.25 | 749.25 | 749.22 | 749.19 | 749.16 | 749.12 | 749.09 | 749.06 | 749.06 | 749.03 | 749.00 | 748.96 | 748.93 | 748.90 | 748.87 | 748.84 |
| | T.O.S. | 748.63 | 748.63 | 748.63 | 748.60 | 748.55 | 748.48 | 748.38 | 748.40 | 748.40 | 748.34 | 748.33 | 748.31 | 748.27 | 748.21 | 748.21 | 748.20 | 748.12 | 748.15 | 748.17 | 748.15 | 748.11 | 748.05 | 747.99 |
| 13 | T.O.D. | 749.35 | 749.32 | 749.28 | 749.25 | 749.22 | 749.19 | 749.16 | 749.13 | 749.12 | 749.09 | 749.06 | 749.03 | 749.00 | 748.96 | 748.93 | 748.93 | 748.90 | 748.87 | 748.84 | 748.80 | 748.77 | 748.74 | 748.71 |
| | T.O.S. | 748.50 | 748.50 | 748.50 | 748.48 | 748.42 | 748.35 | 748.25 | 748.27 | 748.27 | 748.21 | 748.21 | 748.18 | 748.14 | 748.09 | 748.08 | 748.07 | 747.99 | 748.02 | 748.04 | 748.03 | 747.98 | 747.93 | 747.86 |
| 14 | T.O.D. | 749.22 | 749.19 | 749.16 | 749.12 | 749.09 | 749.06 | 749.03 | 749.00 | 749.00 | 748.96 | 748.93 | 748.90 | 748.87 | 748.84 | 748.80 | 748.80 | 748.77 | 748.74 | 748.71 | 748.68 | 748.64 | 748.61 | 748.58 |
| | T.O.S. | 748.37 | 748.38 | 748.37 | 748.35 | 748.30 | 748.22 | 748.12 | 748.14 | 748.14 | 748.09 | 748.08 | 748.05 | 748.01 | 747.96 | 747.95 | 747.95 | 747.87 | 747.90 | 747.91 | 747.90 | 747.86 | 747.80 | 747.73 |
| 15 | T.O.D. | 749.09 | 749.06 | 749.03 | 749.00 | 748.96 | 748.93 | 748.90 | 748.87 | 748.87 | 748.84 | 748.80 | 748.77 | 748.74 | 748.71 | 748.68 | 748.67 | 748.64 | 748.61 | 748.58 | 748.55 | 748.52 | 748.48 | 748.45 |
| | T.O.S. | 748.25 | 748.25 | 748.24 | 748.22 | 748.17 | 748.09 | 748.00 | 748.02 | 748.02 | 747.96 | 747.95 | 747.93 | 747.89 | 747.83 | 747.82 | 747.82 | 747.74 | 747.77 | 747.78 | 747.77 | 747.73 | 747.67 | 747.61 |
| 16 | T.O.D. | 748.97 | 748.93 | 748.90 | 748.87 | 748.84 | 748.81 | 748.77 | 748.74 | 748.74 | 748.71 | 748.68 | 748.65 | 748.61 | 748.58 | 748.55 | 748.55 | 748.52 | 748.49 | 748.45 | 748.42 | 748.39 | 748.36 | 748.33 |
| | T.O.S. | 748.12 | 748.12 | 748.12 | 748.09 | 748.04 | 747.97 | 747.87 | 747.89 | 747.89 | 747.83 | 747.82 | 747.80 | 747.76 | 747.70 | 747.70 | 747.69 | 747.61 | 747.64 | 747.66 | 747.64 | 747.60 | 747.54 | 747.48 |
| 17 | T.O.D. | 748.84 | 748.81 | 748.77 | 748.74 | 748.71 | 748.68 | 748.65 | 748.62 | 748.61 | 748.58 | 748.55 | 748.52 | 748.49 | 748.45 | 748.42 | 748.42 | 748.39 | 748.36 | 748.33 | 748.29 | 748.26 | 748.23 | 748.20 |
| | T.O.S. | 747.99 | 747.99 | 747.99 | 747.97 | 747.91 | 747.84 | 747.74 | 747.76 | 747.76 | 747.70 | 747.70 | 747.67 | 747.63 | 747.58 | 747.57 | 747.56 | 747.48 | 747.51 | 747.53 | 747.52 | 747.47 | 747.42 | 747.35 |
| 18 | T.O.D. | 748.71 | 748.68 | 748.65 | 748.61 | 748.58 | 748.55 | 748.52 | 748.49 | 748.49 | 748.45 | 748.42 | 748.39 | 748.36 | 748.33 | 748.29 | 748.29 | 748.26 | 748.23 | 748.20 | 748.17 | 748.13 | 748.10 | 748.07 |
| | T.O.S. | 747.86 | 747.87 | 747.87 | 747.84 | 747.79 | 747.70 | 747.60 | 747.63 | 747.63 | 747.57 | 747.56 | 747.54 | 747.50 | 747.44 | 747.44 | 747.44 | 747.34 | 747.38 | 747.40 | 747.40 | 747.35 | 747.29 | 747.22 |
| E. DECK EDGE | T.O.D. | 748.67 | 748.64 | 748.61 | 748.57 | 748.54 | 748.51 | 748.48 | - | 748.45 | 748.41 | 748.38 | 748.35 | 748.32 | 748.29 | 748.25 | - | 748.22 | 748.19 | 748.16 | 748.13 | 748.09 | 748.06 | 748.03 |

THESE ELEVATIONS ARE TO TOP OF STEEL (SPLICE AND COVER PLATE THICKNESS, IF APPLICABLE, ARE ACCOUNTED FOR) AND THEY ARE FOR THE MATERIAL AS ERECTED. THE ELEVATION OF THE TOP STEEL AT THE FIELD SPLICE POINTS SHALL BE CHECKED, AND CORRECTED, IF POSSIBLE, AFTER ERECTION AND BEFORE PERMANENTLY BOLTING THE DIAPHRAGMS IN PLACE.

**DEAD LOAD DEFLECTION (INCHES)**

| | C/L BRG. | SPAN 1 | | | | | | | | | | C/L BRG. | SPAN 2 | | | | | | | | | | C/L BRG. |
|---|---|---|---|---|---|---|---|---|---|---|---|---|---|---|---|---|---|---|---|---|---|---|---|
| SPAN POINT | S. ABUT. | 0.1 | 0.2 | 0.3 | 0.4 | 0.5 | 0.6 | C/L SPLICE | 0.7 | 0.8 | 0.9 | PIER | 0.1 | 0.2 | 0.3 | C/L SPLICE | 0.4 | 0.5 | 0.6 | 0.7 | 0.8 | 0.9 | N. ABUT. |
| CONC. DEFL. | 0.0 | 0.4 | 0.7 | 0.9 | 1.0 | 0.9 | 0.8 | 0.5 | 0.5 | 0.3 | 0.1 | 0.0 | 0.1 | 0.3 | 0.5 | 0.5 | 0.8 | 0.9 | 1.0 | 0.9 | 0.7 | 0.4 | 0.0 |
| TOTAL DEFL. | 0.0 | 0.5 | 0.9 | 1.1 | 1.2 | 1.1 | 0.9 | 0.7 | 0.6 | 0.3 | 0.1 | 0.0 | 0.1 | 0.3 | 0.6 | 0.7 | 0.9 | 1.1 | 1.2 | 1.1 | 0.9 | 0.5 | 0.0 |

DEFLECTIONS ARE GIVEN IN DECIMALS OF AN INCH.
NEGATIVE VALUE INDICATES UPWARD DEFLECTION.
CONCRETE DEFELCTION INCLUDES CONCRETE DECK, HAUNCHES, AND PARAPETS.
TOTAL DEFLECTION INCLUDES ALL OF THE ABOVE PLUS DEFLECTIONS DUE TO SELF WEIGHT OF STEEL.

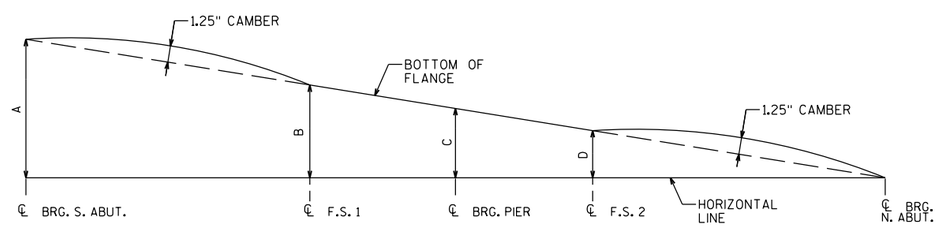


CAMBER AND BLOCKING DIAGRAM

**BLOCKING DIMENSIONS**

| GIRDER | A | B | C | D |
|---|---|---|---|---|
| 1 | 7 11/16 | 4 1/8 | 2 15/16 | 1 3/4 |
| 2-8 | 7 11/16 | 4 5/16 | 3 1/8 | 1 15/16 |
| 9 | 7 11/16 | 4 1/8 | 2 15/16 | 1 3/4 |
| 10 | 7 11/16 | 4 1/8 | 2 15/16 | 1 3/4 |
| 11-17 | 7 11/16 | 4 5/16 | 3 1/8 | 1 15/16 |
| 18 | 7 11/16 | 4 1/8 | 2 15/16 | 1 3/4 |

BLOCKING DIMENSIONS ARE FROM A HORIZONTAL BASE LINE PASSING THROUGH THE LOWER END OF THE GIRDER AT THE CENTERLINE OF BEARING.

| NO. | DATE | REVISION | BY |
|---|---|---|---|

STATE OF WISCONSIN
DEPARTMENT OF TRANSPORTATION

STRUCTURE B-40-766

DRAWN BY RBH | PLANS CK'D. RPB

GIRDER DEFLECTIONS AND DECK ELEVATIONS

SHEET 15 OF 23
492

8

8

FILE=
SCALE =

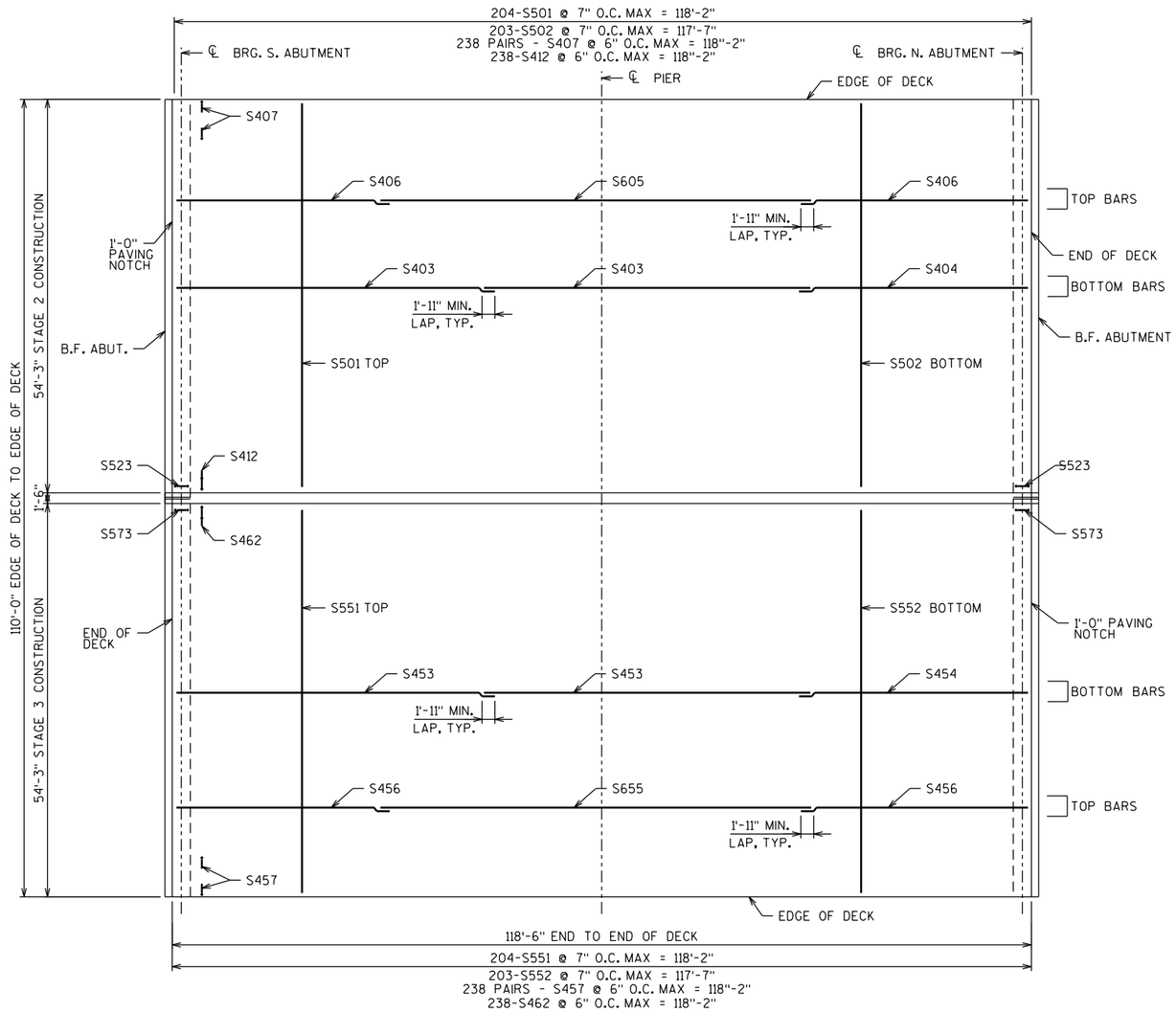


DECK PLAN

## SUPERSTRUCTURE BILL OF BARS

| MARK | COATED | NO. REQ'D | LENGTH | BAR SERIES | BENT | LOCATION |
|---|---|---|---|---|---|---|
| S501 | X | 204 | 53'-11" | | | STAGE 2 - DECK TRANSVERSE TOP |
| S502 | X | 203 | 53'-11" | | | STAGE 2 -DECK TRANSVERSE BOTTOM |
| S403 | X | 156 | 45'-0" | | | STAGE 2 - DECK LONGITUDINAL BOTTOM |
| S404 | X | 78 | 32'-4" | | | STAGE 2 - DECK LONGITUDINAL BOTTOM |
| S605 | X | 77 | 40'-0" | | | STAGE 2 - DECK LONGITUDINAL TOP AT PIER |
| S406 | X | 154 | 41'-2" | | | STAGE 2 - DECK LONGITUDINAL TOP |
| S407 | X | 476 | 2'-6" | | X | STAGE 2 - SIDEWALK DOWEL |
| S508 | X | 238 | 8'-2" | | X | STAGE 2 - SIDEWALK TRANSVERSE TOP |
| S409 | X | 80 | 3'-0" | | | STAGE 2 - SIDEWALK TRANSVERSE BOTTOM |
| S410 | X | 30 | 40'-0" | | | STAGE 2 - SIDEWALK LONGITUDINAL |
| S411 | X | 30 | 21'-0" | | | STAGE 2 - SIDEWALK LONGITUDINAL |
| S412 | X | 238 | 4'-5" | | X | STAGE 2 - MEDIAN DOWEL |
| S513 | X | 238 | 4'-9" | | X | STAGE 2 - MEDIAN TRANSVERSE |
| S414 | X | 14 | 40'-0" | | | STAGE 2 - MEDIAN LONGITUDINAL |
| S415 | X | 14 | 21'-0" | | | STAGE 2 - MEDIAN LONGITUDINAL |
| | | | | | | |
| S617 | X | 8 | 5'-8" | | X | STAGE 2 - DIAPH. B.F. HORIZ. AT EXTERIOR |
| S618 | X | 4 | 2'-5" | | X | STAGE 2 - DIAPH. B.F. HORIZ. AT MEDIAN |
| S619 | X | 4 | 5'-0" | | X | STAGE 2 - DIAPH. HORIZ. AT MEDIAN |
| S520 | X | 36 | 6'-0" | | | STAGE 2 - DIAPH. HORIZ. AT GIRDER |
| S421 | X | 32 | 3'-0" | | | STAGE 2 - DIAPH. HORIZ. |
| S622 | X | 128 | 5'-11" | | | STAGE 2 - DIAPH. HORIZ. |
| S523 | X | 140 | 5'-7" | | X | STAGE 2 - DIAPH. VERT. |
| S424 | X | 64 | 4'-1" | | X | STAGE 2 - DIAPH. VERT. |
| S525 | X | 168 | 8'-4" | | X | STAGE 2 - DIAPH. VERT. |
| S626 | X | 8 | 11'-6" | | X | STAGE 2 - DIAPH. HORIZ. AT EXTERIOR |
| S627 | X | 2 | 7'-10" | | X | STAGE 2 - DIAPH. HORIZ. AT EXTERIOR |
| S528 | X | 4 | 8'-5" | | X | STAGE 2 - DIAPH. VERT. AT EXTERIOR |
| S529 | X | 6 | 7'-1" | | X | STAGE 2 - DIAPH. VERT. AT EXTERIOR |
| S430 | X | 12 | 40'-0" | | | STAGE 2 - PARAPET HORIZ |
| S431 | X | 12 | 21'-0" | | | STAGE 2 - PARAPET HORIZ |
| S532 | X | 120 | 6'-8" | | X | STAGE 2 - PARAPET VERT. DOWEL |
| | | | | | | |
| S534 | X | 24 | 8'-3" | | X | STAGE 2 - SIDEWALK TRANSV. @ LIGHT STD. |
| S535 | X | 8 | 6'-0" | | X | STAGE 2 - PARAPET VERT. @ LIGHT STD. |
| S536 | X | 8 | 7'-3" | | X | STAGE 2 - PARAPET VERT. @ LIGHT STD. |
| S637 | X | 14 | 10'-0" | | X | STAGE 2 - PARAPET HORIZ. @ LIGHT STD. |
| S538 | X | 24 | 7'-8" | | | STAGE 2 - SIDEWALK TRANSV. @ LIGHT STD. |
| S539 | X | 4 | 3'-2" | | X | STAGE 2 - PARAPET VERT. @ LIGHT STD. |
| S540 | X | 4 | 3'-4" | | X | STAGE 2 - PARAPET VERT. @ LIGHT STD. |
| | | | | | | |
| S551 | X | 204 | 53'-11" | | | STAGE 3 - DECK TRANSVERSE TOP |
| S552 | X | 203 | 53'-11" | | | STAGE 3 - DECK TRANSVERSE BOTTOM |
| S453 | X | 156 | 45'-0" | | | STAGE 3 - DECK LONGITUDINAL BOTTOM |
| S454 | X | 78 | 32'-4" | | | STAGE 3 - DECK LONGITUDINAL BOTTOM |
| S655 | X | 77 | 40'-0" | | | STAGE 3 - DECK LONGITUDINAL TOP AT PIER |
| S456 | X | 154 | 41'-2" | | | STAGE 3 - DECK LONGITUDINAL TOP |
| S457 | X | 476 | 2'-6" | | X | STAGE 3 - SIDEWALK DOWEL |
| S558 | X | 238 | 8'-2" | | X | STAGE 3 - SIDEWALK TRANSVERSE TOP |
| S459 | X | 80 | 3'-0" | | | STAGE 3 - SIDEWALK TRANSVERSE BOTTOM |
| S460 | X | 30 | 40'-0" | | | STAGE 3 - SIDEWALK LONGITUDINAL |
| S461 | X | 30 | 21'-0" | | | STAGE 3 - SIDEWALK LONGITUDINAL |
| S462 | X | 238 | 4'-5" | | X | STAGE 3 - MEDIAN DOWEL |
| S563 | X | 238 | 4'-9" | | X | STAGE 3 - MEDIAN TRANSVERSE |
| S464 | X | 14 | 40'-0" | | | STAGE 3 - MEDIAN LONGITUDINAL |
| S465 | X | 14 | 21'-0" | | | STAGE 3 - MEDIAN LONGITUDINAL |
| | | | | | | |
| S667 | X | 8 | 5'-8" | | X | STAGE 3 - DIAPH. B.F. HORIZ. AT EXTERIOR |
| S668 | X | 4 | 2'-5" | | X | STAGE 3 - DIAPH. B.F. HORIZ. AT MEDIAN |
| S669 | X | 4 | 5'-0" | | X | STAGE 3 - DIAPH. HORIZ. AT MEDIAN |
| S570 | X | 36 | 6'-0" | | | STAGE 3 - DIAPH. HORIZ. AT GIRDER |
| S471 | X | 32 | 3'-0" | | | STAGE 3 - DIAPH. HORIZ. |
| S672 | X | 128 | 5'-11" | | | STAGE 3 - DIAPH. HORIZ. |
| S573 | X | 140 | 5'-7" | | X | STAGE 3 - DIAPH. VERT. |
| S474 | X | 64 | 4'-1" | | X | STAGE 3 - DIAPH. VERT. |
| S575 | X | 168 | 8'-4" | | X | STAGE 3 - DIAPH. VERT. |
| S676 | X | 8 | 11'-6" | | X | STAGE 3 - DIAPH. HORIZ. AT EXTERIOR |
| S677 | X | 2 | 7'-10" | | X | STAGE 3 - DIAPH. HORIZ. AT EXTERIOR |
| S578 | X | 4 | 8'-5" | | X | STAGE 3 - DIAPH. VERT. AT EXTERIOR |
| S579 | X | 6 | 7'-1" | | X | STAGE 3 - DIAPH. VERT. AT EXTERIOR |
| S480 | X | 12 | 40'-0" | | | STAGE 3 - PARAPET HORIZ |
| S481 | X | 12 | 21'-0" | | | STAGE 3 - PARAPET HORIZ |
| S582 | X | 120 | 6'-8" | | X | STAGE 3 - PARAPET VERT. DOWEL |
| | | | | | | |
| S584 | X | 24 | 8'-3" | | X | STAGE 3 - SIDEWALK TRANSV. @ LIGHT STD. |
| S585 | X | 8 | 6'-0" | | X | STAGE 3 - PARAPET VERT. @ LIGHT STD. |
| S586 | X | 8 | 7'-3" | | X | STAGE 3 - PARAPET VERT. @ LIGHT STD. |
| S687 | X | 14 | 10'-0" | | X | STAGE 3 - PARAPET HORIZ. @ LIGHT STD. |
| S588 | X | 24 | 7'-8" | | | STAGE 3 - SIDEWALK TRANSV. @ LIGHT STD. |
| S589 | X | 4 | 3'-2" | | X | STAGE 3 - PARAPET VERT. @ LIGHT STD. |
| S590 | X | 4 | 3'-4" | | X | STAGE 3 - PARAPET VERT. @ LIGHT STD. |

THE FIRST DIGIT OR THE FIRST TWO DIGITS OF A BAR MARK SIGNIFIES THE BAR SIZE.
ALL DIMENSIONS IN THE BAR BENDS ARE OUT TO OUT.

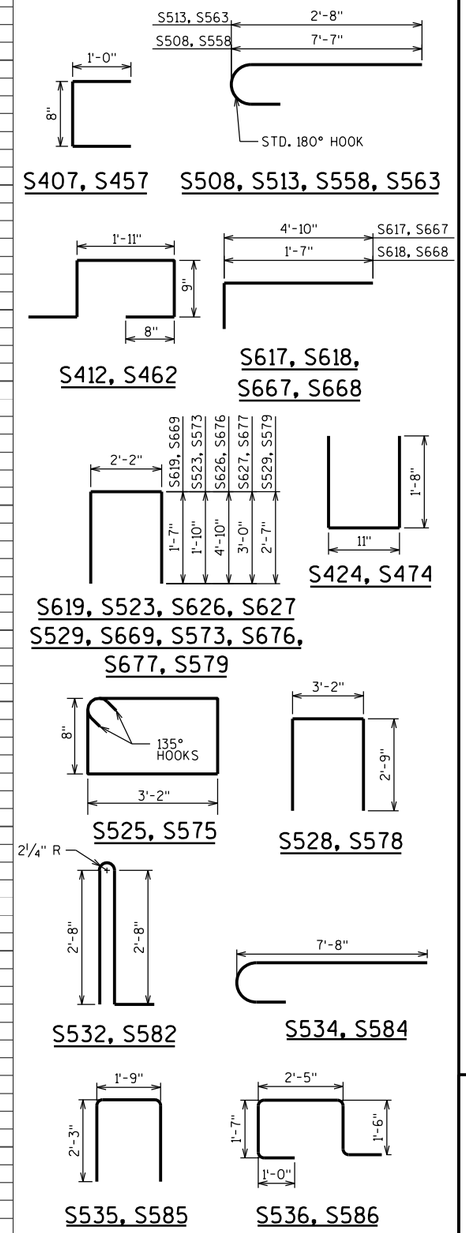


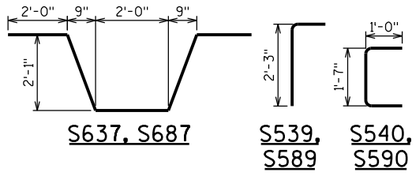


STATE PROJECT NUMBER

2140-13-70

| NO. | DATE | REVISION | BY |
|---|---|---|---|

STATE OF WISCONSIN
DEPARTMENT OF TRANSPORTATION

STRUCTURE B-40-766

DRAWN BY RBH | PLANS CK'D. RPB

SUPERSTRUCTURE PLAN

SHEET 16 OF 23
493

8

8

FILE=
SCALE =

| STATE PROJECT NUMBER |
|---|
| 2140-13-70 |

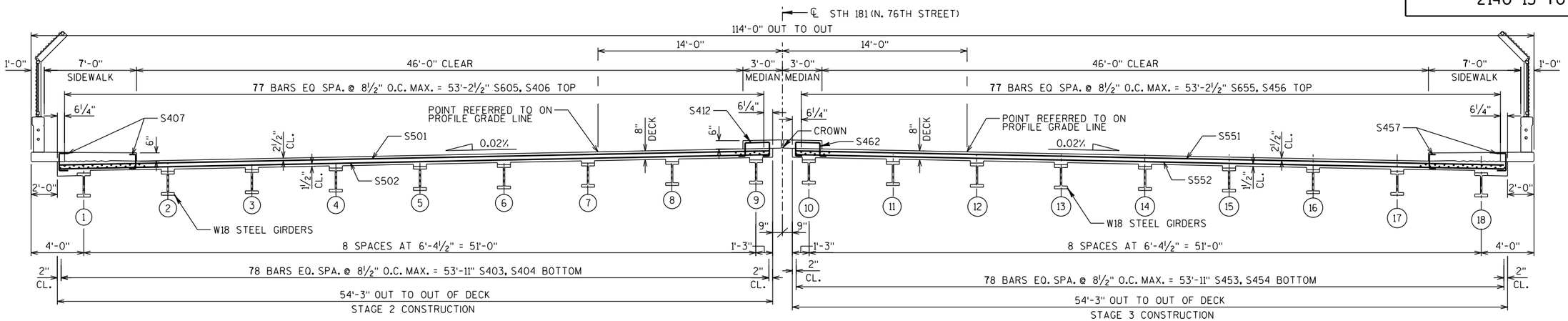


## TYPICAL SECTION

LOOKING NORTH

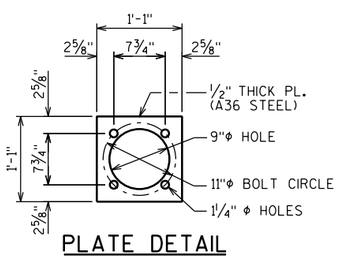


## PLATE DETAIL

(4 REQ'D.)

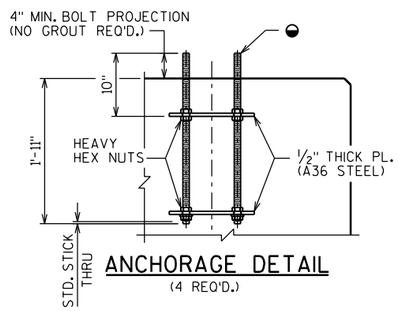


## ANCHORAGE DETAIL

(4 REQ'D.)

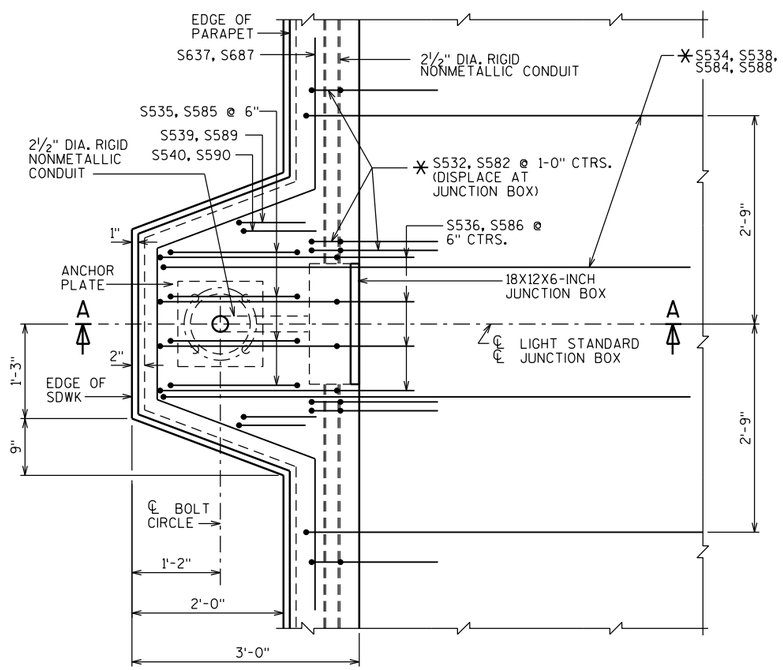


## PLAN AT LIGHT STANDARD

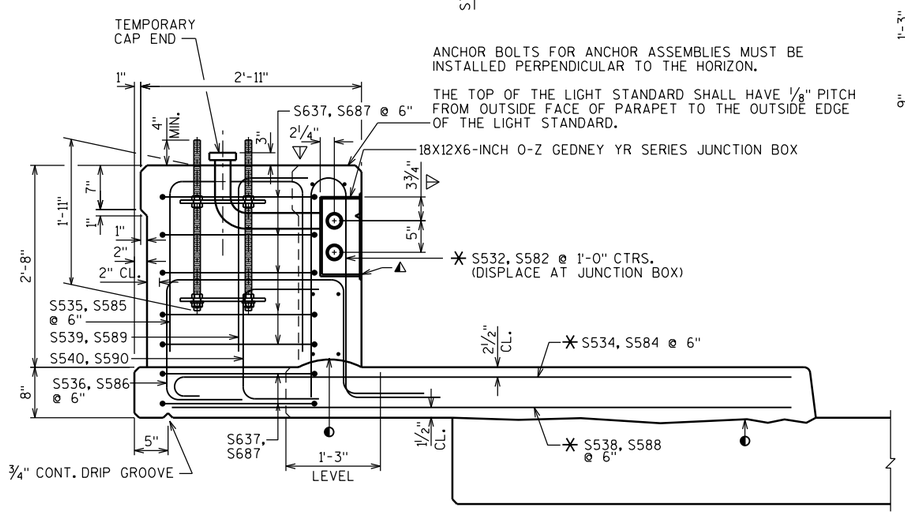


ANCHOR BOLTS FOR ANCHOR ASSEMBLIES MUST BE INSTALLED PERPENDICULAR TO THE HORIZON.

THE TOP OF THE LIGHT STANDARD SHALL HAVE ⅛" PITCH FROM OUTSIDE FACE OF PARAPET TO THE OUTSIDE EDGE OF THE LIGHT STANDARD.

## SECTION A-A

## NOTES

BID ITEMS SHALL BE:
"JUNCTION BOXES 18X12X6-INCH", EACH.
"ANCHOR ASSEMBLIES LIGHT POLES ON STRUCTURE"
"CONDUIT RIGID NONMETALLIC SCHEDULE 40 2½-INCH"

EXPANSION FITTINGS, ANGLES AND ADAPTER FITTINGS TO BE INCIDENTAL TO "CONDUIT RIGID NONMETALLIC SCHEDULE 40 2½-INCH".

JUNCTION BOXES TO BE O-Z GEDNEY YR SERIES.

APPROVED MANUFACTURER OR EQUIVALENT - EXPANSION FITTING:
CARLON E945K

⅜" NYLON PULL WIRE/ROPE IS REQUIRED FOR ALL RIGID NONMETALLIC CONDUIT AND SHALL BE INCIDENTAL TO CONDUIT INSTALLATION.

## LEGEND

◒ 1"Φ THREADED ANCHOR BOLTS ASTM A449 OR AASHTO M 314-90 GR 55. HOT DIP ASTM A153, CLASS C, UPPER 8" OF BOLT INCLUDING NUTS & WASHERS. PROVIDE ENLARGED THREAD ON NUTS FOR PROPER FIT AFTER GALVANIZING. PROVIDE DOUBLE FLAT WASHERS & NUTS.

◐ CONSTR. JT. STRIKE OFF AS SHOWN

◭ CUT OUT ± 1" OF GASKET AT BOTTOM OF JUNCTION BOX COVER TO ALLOW FOR DRAINAGE.

✳ THESE BARS ARE IN ADDITION TO STANDARD TRANSVERSE BARS IN SIDEWALK.

▽ LOCATION OF CONDUIT IS MEASURED FROM OUTSIDE EDGE OF JUNCTION BOX.

| NO. | DATE | REVISION | BY |
|---|---|---|---|
| | | | |

STATE OF WISCONSIN
DEPARTMENT OF TRANSPORTATION

STRUCTURE B-40-766

DRAWN BY RBH | PLANS CK'D. RPB

SUPERSTRUCTURE CROSS SECTION & LIGHT STANDARD

SHEET 17 OF 23
494

8

8

FILE=
SCALE =

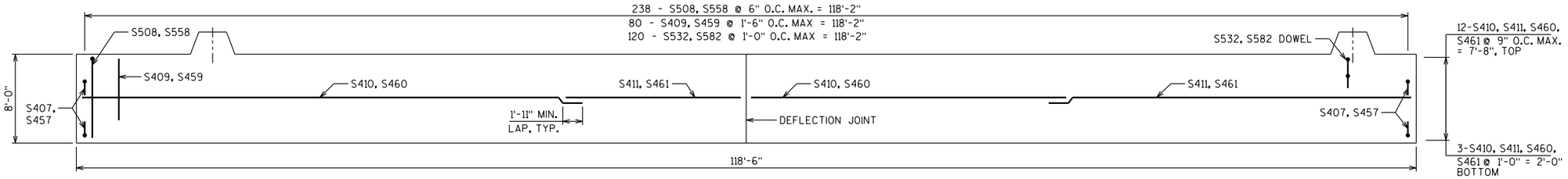


## SIDEWALK PLAN

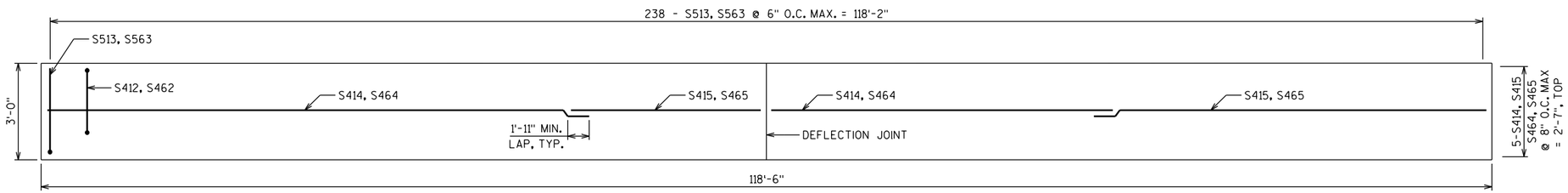


## MEDIAN PLAN

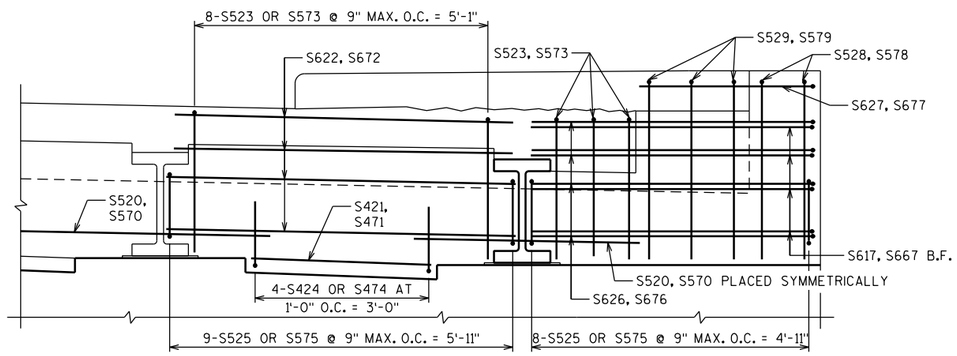


## SECTION AT DIAPHRAGM AT END OF ABUTMENT

(DECK REINFORCEMENT NOT SHOWN FOR CLARITY.)

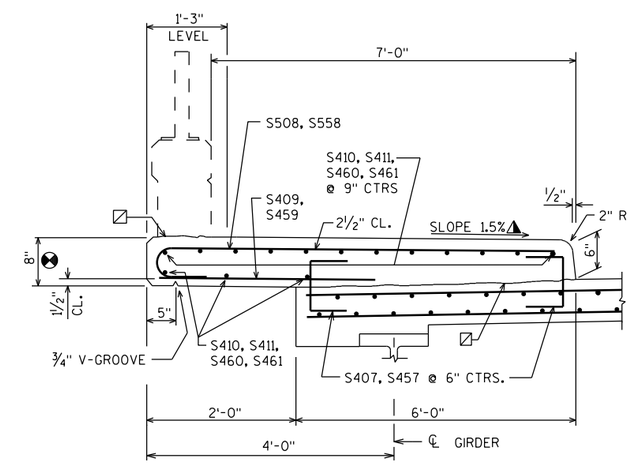


## SECTION THRU SIDEWALK

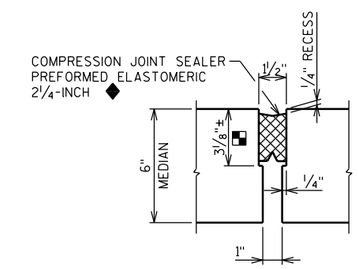


## ELASTOMERIC COMPRESSION SEAL DETAIL

VARIES BASED ON JOINT MANUFACTURER

MANUFACTURER SHALL LABEL TOP OF SEAL

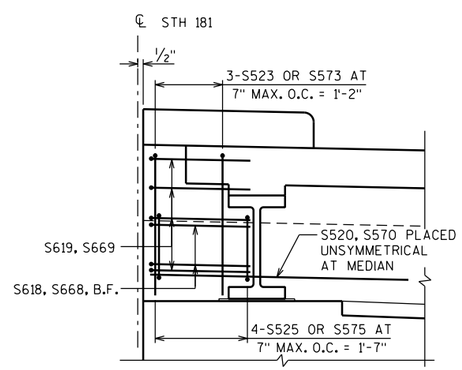


## SECTION AT DIAPHRAGM AT MEDIAN

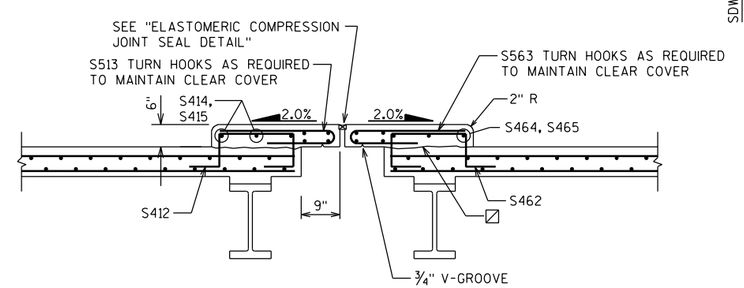


## CROSS SECTION THRU ANCHORED MEDIAN

LOOKING NORTH

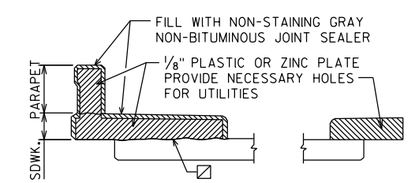


## DEFLECTION JOINT DETAIL

STATE PROJECT NUMBER

2140-13-70

## NOTES

WHEN PARAPETS ARE POURED CONTINUOUSLY FROM END TO END, THEY SHALL BE SEPARATED AT THE DEFLECTION JOINTS BY A PIECE OF ⅛" ZINC OR PLASTIC PLATE CUT AS SHOWN IN THE "DEFLECTION JOINT DETAIL". IF CONSTRUCTION JOINTS IN PARAPETS ARE USED AT THE DEFLECTION JOINTS, ONE SIDE OF THE JOINT SHALL BE COATED WITH AN APPROVED LIQUID BOND BREAKER AND PLATE SEPARATORS MAY BE OMITTED.

CONSTRUCTION JOINT - STRIKE OFF AS SHOWN AND LEAVE ROUGH, FOR DECK POUR. MATCH BRIDGE X-SLOPE.

8" MIN. SIDEWALK THICKNESS ALSO REQ'D AT EDGE OF DECK.

± 0.5% CONSTRUCTION TOLERANCE IN SIDEWALK CROSS SLOPE. THE SIDEWALK CROSS SLOPE SHALL NOT EXCEED 2% WITHOUT PRIOR APPROVAL FROM THE ENGINEER.

CLEAN ALL LOOSE MATERIAL ON THE DECK AT THE MEDIAN LOCATION PRIOR TO MEDIAN PLACEMENT USING HIGH PRESSURE WATER OR AIR, ENSURING ALL FREE-STANDING WATER IS REMOVED PRIOR TO MEDIAN PLACEMENT. NEAT CEMENT IS REQUIRED AS PER 509.3.9.2 OF THE STANDARD SPECIFICATIONS UNLESS THE MEDIAN IS POURED WITHIN 45 DAYS OF COMPLETING THE DECK POUR.

| NO. | DATE | REVISION | BY |
|---|---|---|---|

STATE OF WISCONSIN
DEPARTMENT OF TRANSPORTATION

STRUCTURE B-40-766

DRAWN BY RBH | PLANS CK'D. RPB

SUPERSTRUCTURE SIDEWALK AND MEDIAN DETAILS

SHEET 18 OF 23
495

8

8

FILE=
SCALE =

STATE PROJECT NUMBER

2140-13-70

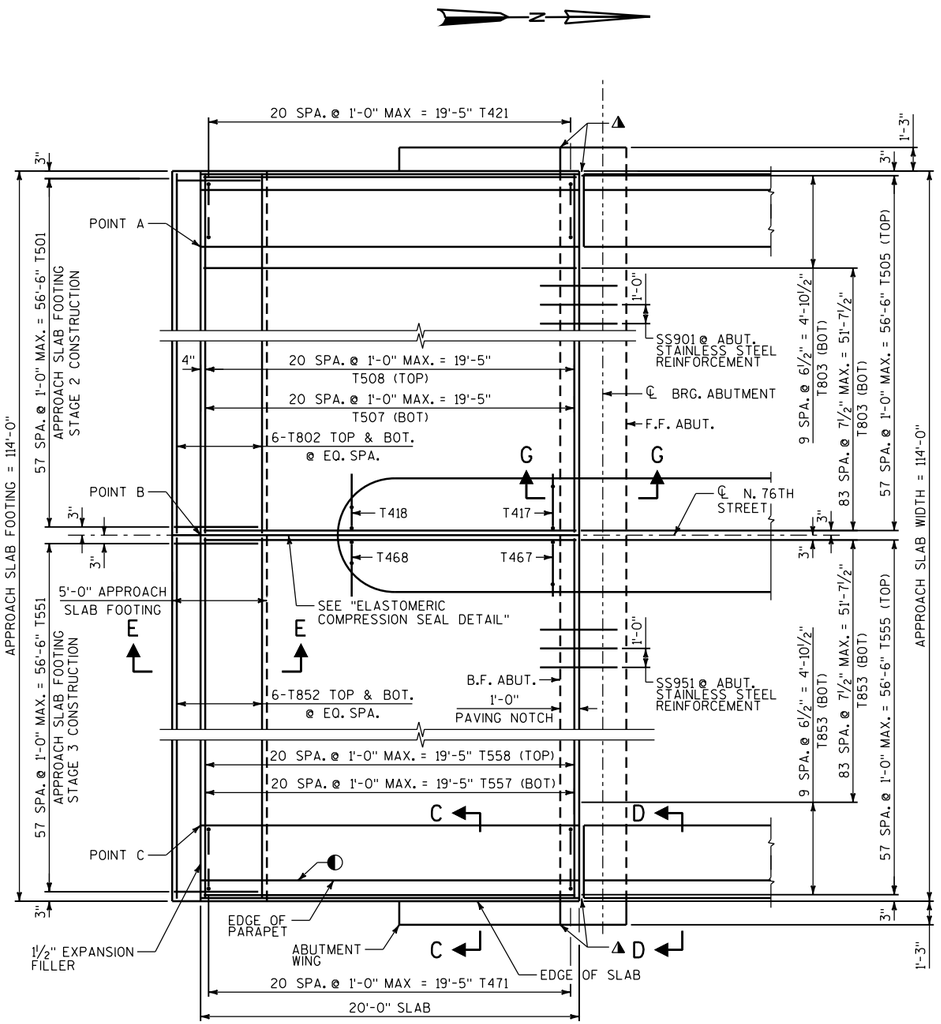


## APPROACH SLAB PLAN

SOUTH ABUTMENT SLAB SHOWN
NORTH ABUTMENT SLAB SIMILAR

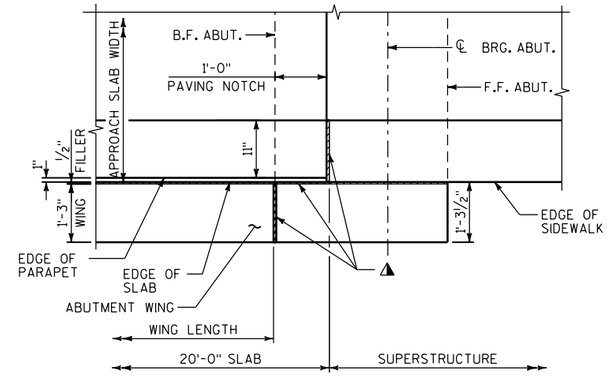


## APPROACH SLAB PARTIAL PLAN

## NOTES

POLYETHYLENE SHEETS SHALL BE INCIDENTAL TO CONCRETE MASONRY BRIDGES.

INSTALL AN ELASTOMERIC COMPRESSION SEAL IN THE APPROACH SLAB AND MEDIAN. THE COMPRESSION SEAL SHALL EXTEND UP THE VERTICAL FACE OF THE MEDIAN.

## LEGEND

- (T02) STEEL TROWEL TOP SURFACE OF FOOTING AND PLACE MULTIPLE LAYERS (0.03" MIN. TOTAL THK.) OF POLYETHYLENE SHEETS OVER THE ENTIRE TOP OF FOOTING.
- (T03) PLACE MULTIPLE LAYERS (0.03" MIN. TOTAL THK.) OF POLYETHYLENE SHEETS OVER THE ENTIRE TOP OF THE SUBGRADE BENEATH THE SLAB.
- ▲ SEAL ALL EXPOSED HORIZONTAL AND VERTICAL SURFACES OF ½" FILLER WITH NON-STAINING GRAY NON-BITUMINOUS JOINT SEALER. (1" DEEP AND HOLD ⅛" BELOW SURFACE OF CONCRETE).
- ◐ SEE PARAPET STANDARD DETAILS FOR REINFORCEMENT. LOCATION OF NAME PLATE AND BENCH MARK WITH RESPECT TO THE END OF PARAPET, ETC.
- ◪ CONST. JOINT - STRIKE OFF AS SHOWN AND LEAVE ROUGH. FOR DECK POUR MATCH BRIDGE X-SLOPE.
- ◩ SLOPE TO DRAIN.
- ◪ MEASURED NORMAL TO ABUTMENT.
- ❂ FOLLOW FDM 14-10-15 REQUIREMENTS FOR ROADWAY APPROACH PAVEMENT.
- ☆ THE BID ITEM FOR SS901 AND SS951 SHALL BE STANDARD SPECIAL PROVISION "BAR STEEL REINFORCEMENT HS STAINLESS STRUCTURES".
- ◆ VARIES BASED ON JOINT MANUFACTURER
- ◆ MANUFACTURER SHALL LABEL TOP OF SEAL
- ◇ 1" FILLER AT APPROACH SLAB

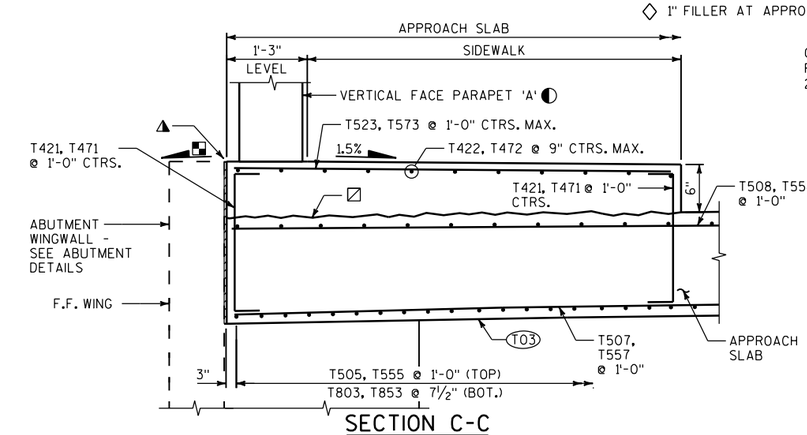


## SECTION C-C

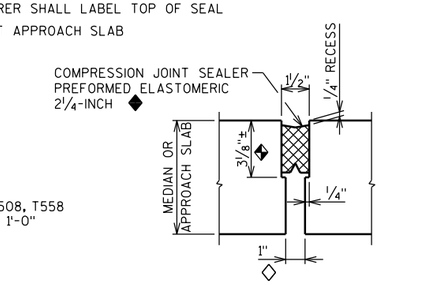


## ELASTOMERIC COMPRESSION SEAL DETAIL

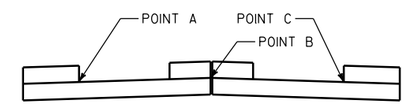


LOOKING NORTH

| POINT | | S. APPROACH | N. APPROACH |
|---|---|---|---|
| A | STA. | 120+24.75 | 121+83.25 |
| | ELEV. | 748.59 | 747.74 |
| B | STA. | 120+24.75 | 121+83.25 |
| | ELEV. | 749.57 | 748.72 |
| C | STA. | 120+24.75 | 121+83.25 |
| | ELEV. | 748.59 | 747.74 |

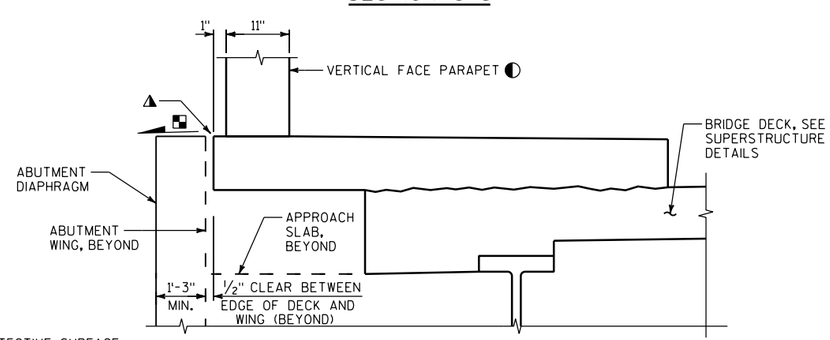


## SECTION D-D

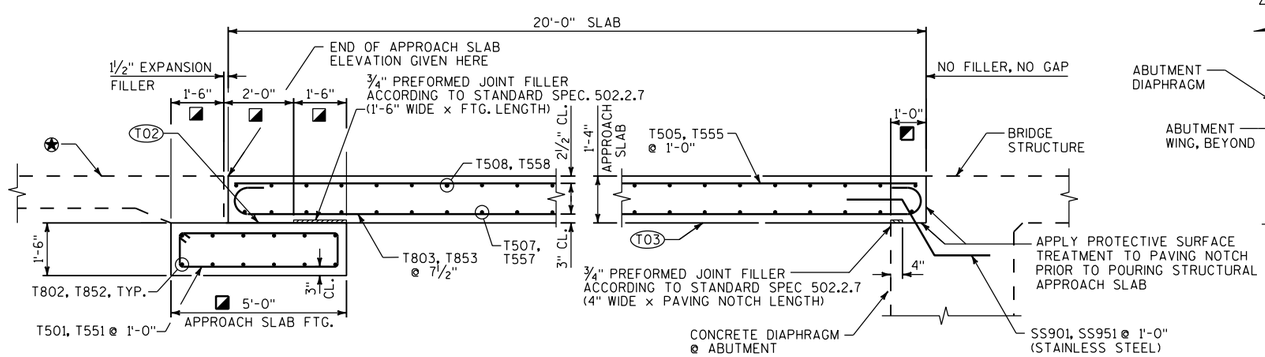


## SECTION E-E

## SECTION THRU APPROACH SLAB

## SECTION G-G

8

8

| NO. | DATE | REVISION | BY |
|---|---|---|---|
| | | | |

STATE OF WISCONSIN
DEPARTMENT OF TRANSPORTATION

STRUCTURE B-40-766

DRAWN BY RBH | PLANS CK'D. RPB

STRUCTURAL APPROACH SLAB

SHEET 19 OF 23
496

FILE=
SCALE =

STATE PROJECT NUMBER

2140-13-70

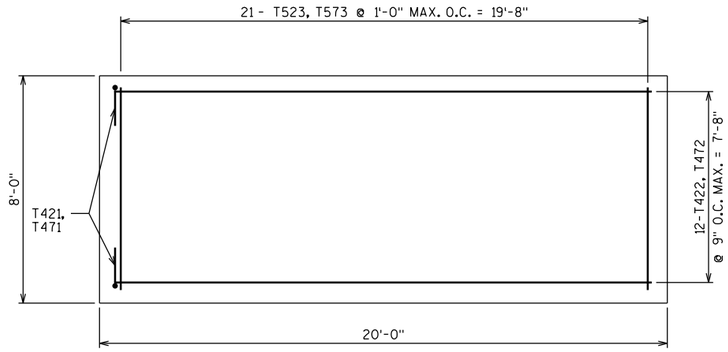


SIDEWALK PLAN ON THE STRUCTURAL APPROACH SLAB

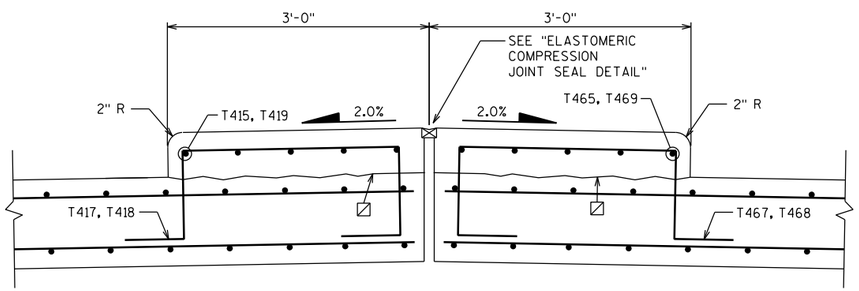


CROSS SECTION THRU ANCHORED MEDIAN ON THE STRUCTURAL APPROACH SLAB

LOOKING NORTH

## STRUCTURAL APPROACH SLAB BILL OF BARS

| MARK | COATED | S. STR. APPROACH SLAB | N. STR. APPROACH SLAB | LENGTH | BAR SERIES | BENT | LOCATION |
|---|---|---|---|---|---|---|---|
| T501 | X | 58 | 58 | 12'-2" | | X | STAGE 2 - APPROACH SLAB FTG. - STIRRUP |
| T802 | X | 12 | 12 | 56'-8" | | | STAGE 2 - APPROACH SLAB FTG. - TRANS. |
| T803 | X | 93 | 93 | 21'-6" | | X | STAGE 2 - APPROACH SLAB - LONG. - BOT. |
| T505 | X | 58 | 58 | 19'-8" | | | STAGE 2 - APPROACH SLAB - LONG. - TOP |
| T507 | X | 21 | 21 | 56'-8" | | | STAGE 2 - APPROACH SLAB - TRANS. - BOT. |
| T508 | X | 21 | 21 | 56'-8" | | | STAGE 2 - APPROACH SLAB - TRANS. - TOP |
| T415 | X | 5 | - | 10'-10" | X | | STAGE 2 - SOUTH MEDIAN LONG. |
| T417 | X | 20 | 4 | 6'-0" | | X | STAGE 2 - MEDIAN TRANS. |
| T418 | X | 6 | 6 | 5'-3" | X | X | STAGE 2 - MEDIAN TRANS. |
| T419 | X | - | 5 | 2'-11" | X | | STAGE 2 - NORTH MEDIAN LONG. |
| T421 | X | 42 | 42 | 3'-1" | | X | STAGE 2 - SIDEWALK DOWEL |
| T422 | X | 12 | 12 | 19'-8" | | | STAGE 2 - SIDEWALK LONG. |
| T523 | X | 21 | 21 | 7'-7" | | | STAGE 2 - SIDEWALK TRANS. |
| T551 | X | 58 | 58 | 12'-2" | | X | STAGE 3 - APPROACH SLAB FTG. - STIRRUP |
| T852 | X | 12 | 12 | 56'-8" | | | STAGE 3 - APPROACH SLAB FTG. - TRANS. |
| T853 | X | 93 | 93 | 21'-6" | | X | STAGE 3 - APPROACH SLAB - LONG. - BOT. |
| T555 | X | 58 | 58 | 19'-8" | | | STAGE 3 - APPROACH SLAB - LONG. - TOP |
| T557 | X | 21 | 21 | 56'-8" | | | STAGE 3 - APPROACH SLAB - TRANS. - BOT. |
| T558 | X | 21 | 21 | 56'-8" | | | STAGE 3 - APPROACH SLAB - TRANS. - TOP |
| T465 | X | 5 | - | 10'-10" | X | | STAGE 3 - SOUTH MEDIAN LONG. |
| T467 | X | 20 | 4 | 6'-0" | | X | STAGE 3 - MEDIAN TRANS. |
| T468 | X | 6 | 6 | 5'-3" | X | X | STAGE 3 - MEDIAN TRANS. |
| T469 | X | - | 5 | 2'-11" | X | | STAGE 3 - NORTH MEDIAN LONG. |
| T471 | X | 42 | 42 | 3'-1" | | X | STAGE 3 - SIDEWALK DOWEL |
| T472 | X | 12 | 12 | 19'-8" | | | STAGE 3 - SIDEWALK LONG. |
| T573 | X | 21 | 21 | 7'-7" | | | STAGE 3 - SIDEWALK TRANS. |

STRUCTURAL APPROACH SLAB - STAINLESS STEEL - BILL OF BARS

| MARK | COATED | S. STR. APPROACH SLAB | N. STR. APPROACH SLAB | LENGTH | BAR SERIES | BENT | LOCATION |
|---|---|---|---|---|---|---|---|
| SS901 | | 58 | 58 | 5'-0" | | X | STAGE 2 - CONC. ABUT. DIAPH. TO APPROACH SLAB |
| SS951 | | 58 | 58 | 5'-0" | | X | STAGE 3 - CONC. ABUT. DIAPH. TO APPROACH SLAB |

THE FIRST DIGIT OR FIRST TWO DIGITS OF A BAR MARK INDICATES THE BAR SIZE.
ALL DIMENSIONS IN THE BAR BENDS ARE OUT TO OUT.

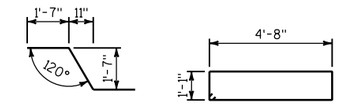


SS901, SS951 T501, T551

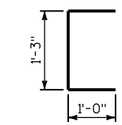


T421, T471

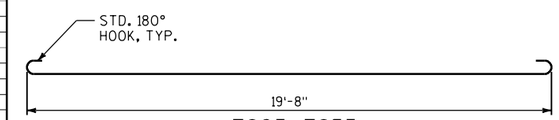


T803, T853

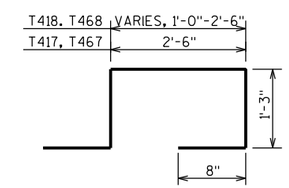


T417, T418
T467, T468

BAR SERIES TABLE

| MARK | NO REQ'D | LENGTH |
|---|---|---|
| T415 | 1 SERIES OF 5 | 9'-4" TO 12'-4" |
| T418 | 2 SERIES OF 6 | 3'-8" TO 5'-2" |
| T419 | 1 SERIES OF 5 | 1'-5" TO 4'-5" |
| T465 | 1 SERIES OF 5 | 9'-4" TO 12'-4" |
| T468 | 2 SERIES OF 6 | 3'-8" TO 5'-2" |
| T469 | 1 SERIES OF 5 | 1'-5" TO 4'-5" |

LENGTH SHOWN FOR BAR IS AN AVERAGE LENGTH AND SHOULD ONLY BE USED FOR BAR LENGTH CALCULATIONS. SEE BAR SERIES FOR ACTUAL LENGTHS. BUNDLE AND TAG EACH SERIES SEPARATELY.

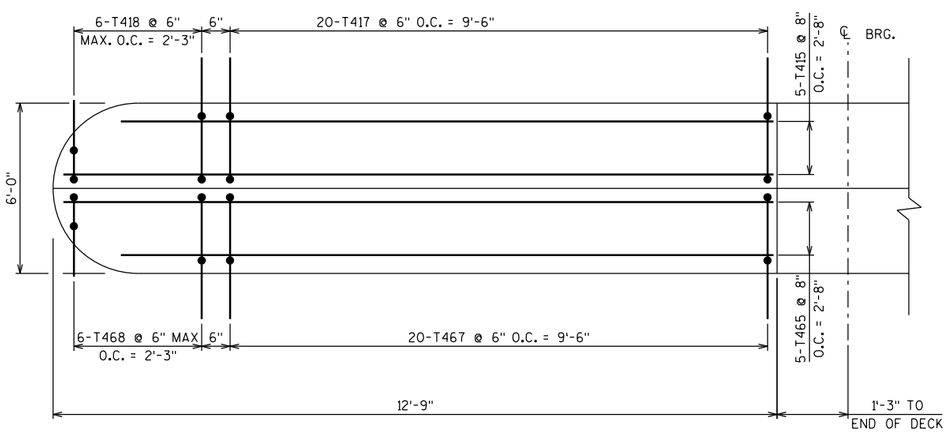


MEDIAN PLAN

SOUTH APPROACH

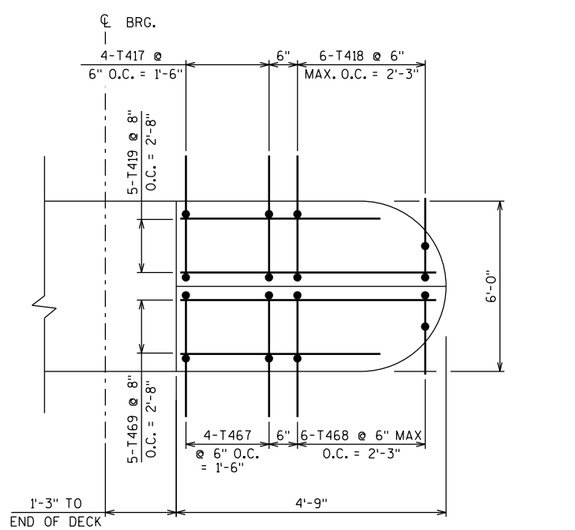


MEDIAN PLAN

NORTH APPROACH

## NOTES

☒ CONSTRUCTION JOINT - STRIKE OFF AS SHOWN AND LEAVE ROUGH, FOR APPROACH SLAB POUR. MATCH BRIDGE X-SLOPE.

CLEAN ALL LOOSE MATERIAL ON THE APPROACH SLAB AT THE MEDIAN LOCATION PRIOR TO MEDIAN PLACEMENT USING HIGH PRESSURE WATER OR AIR, ENSURING ALL FREE-STANDING WATER IS REMOVED PRIOR TO MEDIAN PLACEMENT. NEAT CEMENT IS REQUIRED AS PER 509.3.9.2 OF THE STANDARD SPECIFICATIONS UNLESS THE MEDIAN IS POURED WITHIN 45 DAYS OF COMPLETING THE APPROACH SLAB POUR.

| NO. | DATE | REVISION | BY |
|---|---|---|---|

STATE OF WISCONSIN
DEPARTMENT OF TRANSPORTATION

STRUCTURE B-40-766

DRAWN BY RBH PLANS CK'D. RPB

STRUCTURAL APPROACH SLAB DETAILS

SHEET 20 OF 23
497

8

8

FILE=
SCALE =

STATE PROJECT NUMBER

2140-13-70

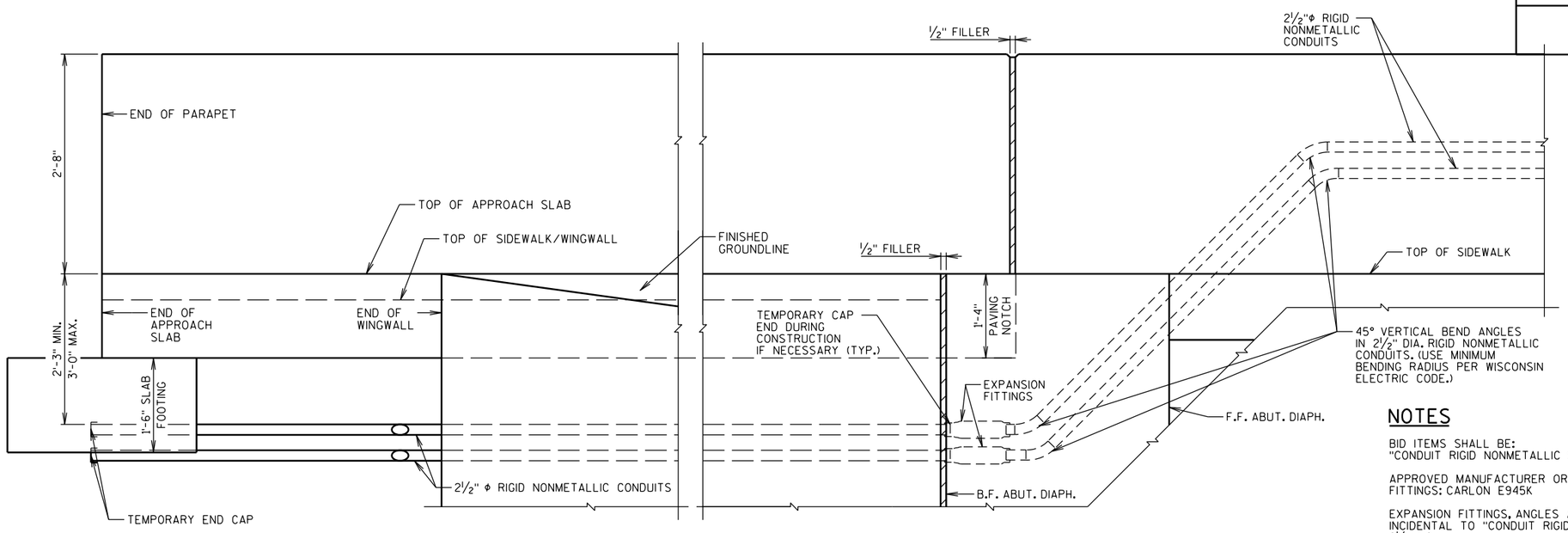


## OUTSIDE ELEVATION OF WINGWALL/STRUCTURAL APPROACH SLAB/PARAPET SHOWING CONDUITS

## NOTES

BID ITEMS SHALL BE:
"CONDUIT RIGID NONMETALLIC SCHEDULE 40 2 1/2-INCH"

APPROVED MANUFACTURER OR EQUIVALENT - EXPANSION FITTINGS: CARLON E945K

EXPANSION FITTINGS, ANGLES AND ADAPTER FITTINGS TO BE INCIDENTAL TO "CONDUIT RIGID NONMETALLIC SCHEDULE 40 2 1/2-INCH".

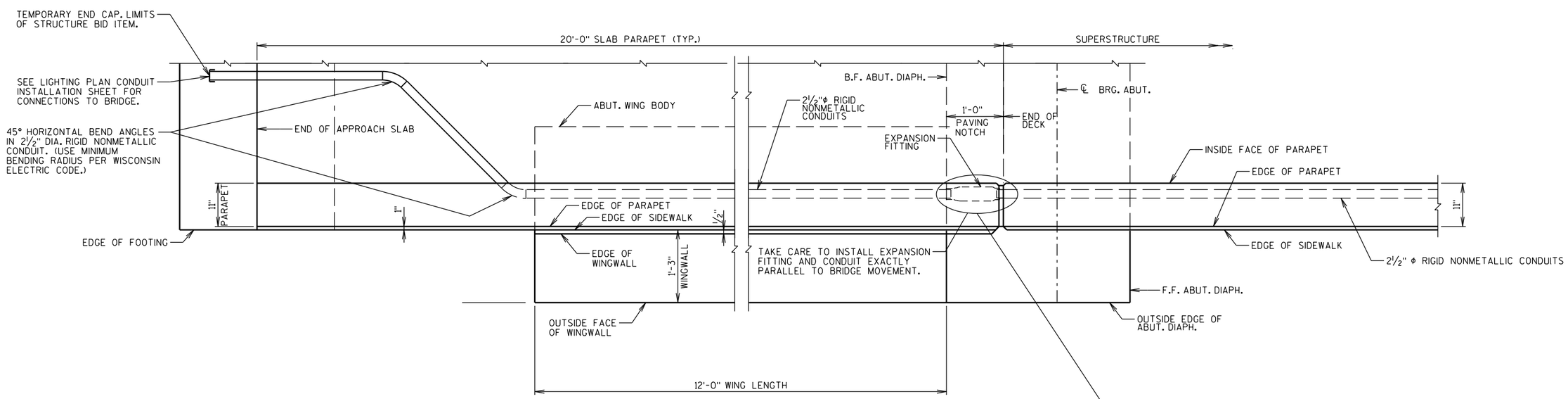


## PLAN VIEW OF WINGWALL/STRUCTURAL APPROACH SLAB/PARAPET SHOWING CONDUITS

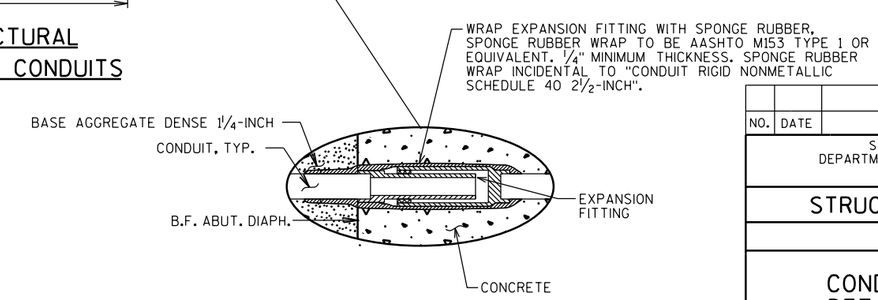


| NO. | DATE | REVISION | BY |
|---|---|---|---|
| | | | |

STATE OF WISCONSIN
DEPARTMENT OF TRANSPORTATION

STRUCTURE B-40-766

DRAWN BY RBH | PLANS CK'D. RPB

CONDUIT DETAILS

SHEET 21 OF 23
498

8

8

FILE=
SCALE =

L:±JOBS2010±20100384±CAD±WISDOT_TRANS±DGN±00±B-40-766_SHT21.DGN 4/11/2016 1:28:33 PM

| STATE PROJECT NUMBER |
|---|
| 2140-13-70 |

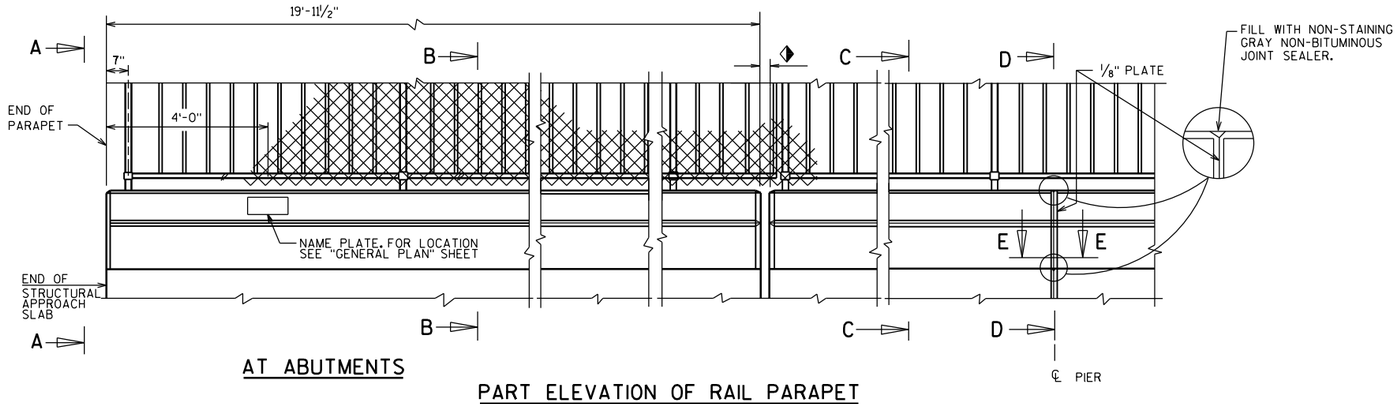


AT ABUTMENTS

## PART ELEVATION OF RAIL PARAPET

POST SPACING NOT SHOWN FOR CLARITY. SEE SHEET 23.

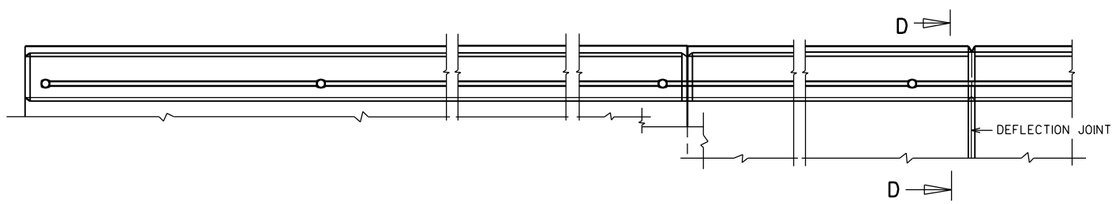


AT ABUTMENTS

AT PIERS

## PART PLAN OF RAIL PARAPET

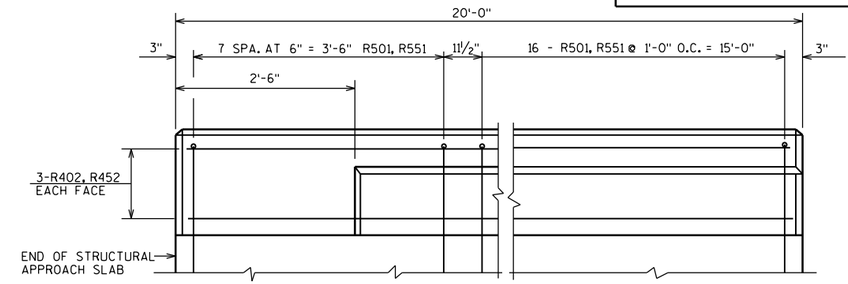


## VIEW SHOWING OUTSIDE FACE OF PARAPET & REINF. ON APPROACH SLAB

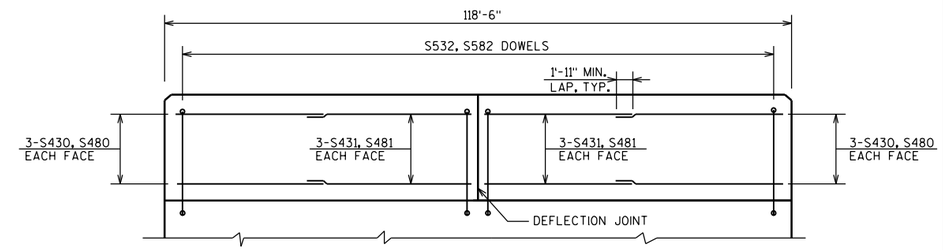


## BRIDGE PARAPET ELEVATION

## PARAPET BILL OF BARS

| BAR MARK | COAT | S. ABUT. | N. ABUT. | LENGTH | BENT | BAR SERIES | LOCATION |
|---|---|---|---|---|---|---|---|
| R501 | X | 24 | 24 | 10'-4" | X | | STAGE 2 PARAPET VERT. |
| R402 | X | 6 | 6 | 19'-6" | | | STAGE 2 PARAPET HORIZ. |
| R551 | X | 24 | 24 | 10'-4" | X | | STAGE 3 PARAPET VERT. |
| R452 | X | 6 | 6 | 19'-6" | | | STAGE 3 PARAPET HORIZ. |

THE FIRST DIGIT OR FIRST TWO DIGITS OF A BAR MARK SIGNIFIES THE BAR SIZE.
ALL DIMENSIONS IN THE BAR BENDS ARE OUT TO OUT.

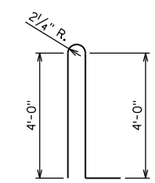


R501, R551

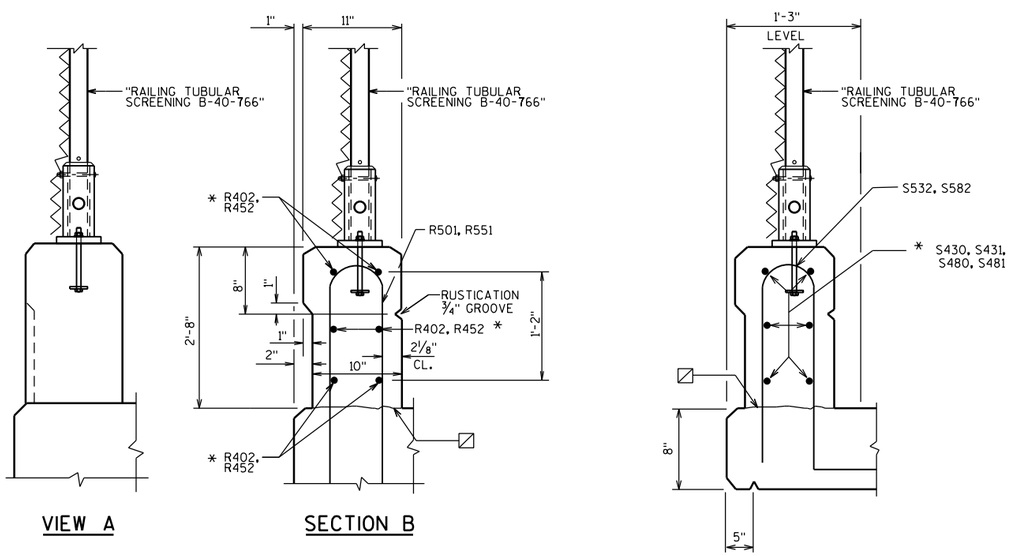


VIEW A

SECTION B

AT SIDEWALK

SECTION C

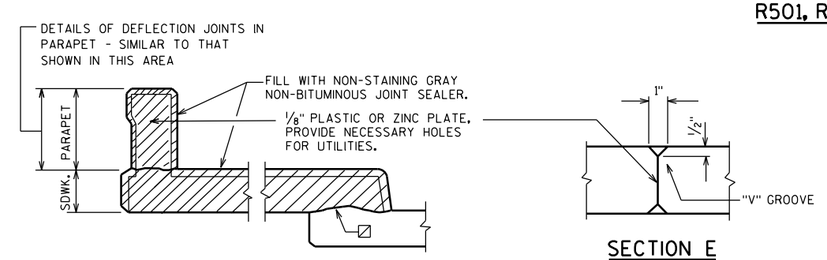


SECTION D

SHOWING DEFLECTION JOINT IN PARAPET AND SIDEWALK AT PIER

SECTION E

## NOTES

WHEN PARAPETS ARE POURED CONTINUOUSLY FROM END TO END, THEY SHALL BE SEPARATED AT THE DEFLECTION JOINTS BY A PIECE OF ⅛" ZINC OR PLASTIC PLATE CUT AS SHOWN IN SECTION "D" BY SHADED AREA. IF CONSTRUCTION JOINTS IN PARAPETS ARE USED AT THE DEFLECTION JOINTS, ONE SIDE OF JOINT SHALL BE COATED WITH AN APPROVED LIQUID BOND BREAKER AND PLATE SEPARATORS MAY BE OMITTED.

## LEGEND

▨ HORIZ. CONST. JOINT-STRIKE OFF AS SHOWN AND LEAVE ROUGH.

◆ ½" OPENING WITH FILLER

* OPTIONAL CONSTRUCTION JOINTS IN THE PARAPETS MAY BE USED. RUN BAR REINF. THRU THE JOINT. LAP LONGIT. BARS A MIN. OF 1'-11". MIN. JOINT SPACING OF 80'-0". DEFINE CONST. JOINT WITH A ¾" "V" GROOVE

| NO. | DATE | REVISION | BY |
|---|---|---|---|
| | | | |

STATE OF WISCONSIN
DEPARTMENT OF TRANSPORTATION

STRUCTURE B-40-766

DRAWN BY RBH | PLANS CK'D. RPB

VERTICAL FACE PARAPET 'A'

SHEET 22 OF 23
499

8

8

FILE=
SCALE =

STATE PROJECT NUMBER

2140-13-70

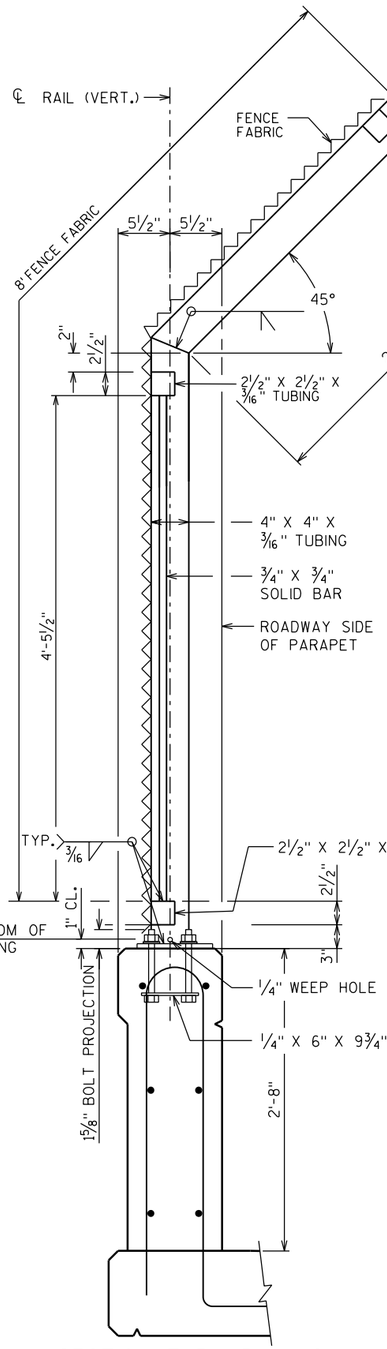


SECTION THRU RAILING

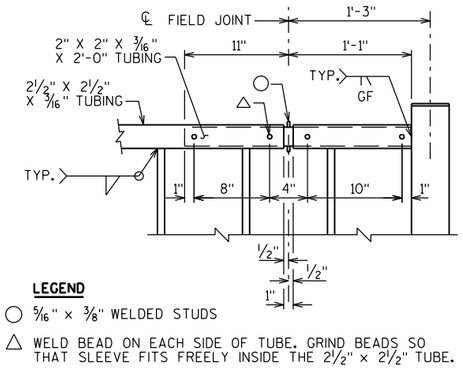


**LEGEND**

○ 5/16" × 3/8" WELDED STUDS

△ WELD BEAD ON EACH SIDE OF TUBE. GRIND BEADS SO THAT SLEEVE FITS FREELY INSIDE THE 2 1/2" × 2 1/2" TUBE.

RAILING EXPANSION JOINT DETAIL

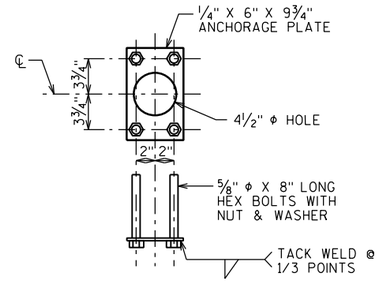


ANCHORAGE DETAIL

5/8" CAST-IN-PLACE ANCHOR BOLTS. MASONRY ANCHORS MAY BE SUBSTITUTED FOR C.I.P. ANCHOR BOLTS. ANCHORAGE PLATE NOT REQUIRED WHEN TYPE S ANCHORS ARE USED.

MASONRY ANCHOR TYPE S 5/8-INCH, EMBED 7" IN CONCRETE.

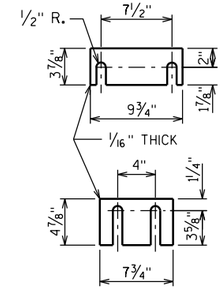


SHIM PLATE DETAILS

TWO SHIMS OF EACH SIZE REQUIRED PER POST

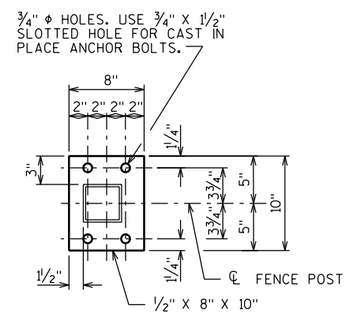


BASE PLATE

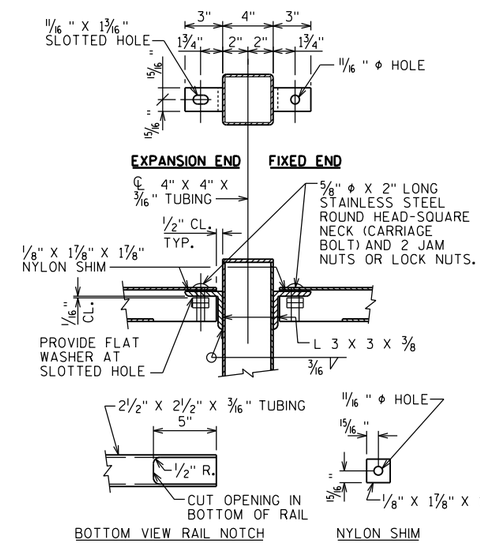


TOP RAIL CONNECTION

## NOTES

POST BASE PLATES SHALL BE FLAT WITH ALL SURFACES SMOOTH AND FREE FROM WARP AND ALL EDGES SMOOTH, STRAIGHT AND VERTICAL. ALL PLATE CUTS SHALL BE MACHINE OR MACHINE FLAME CUT.

STRUCTURAL TUBING SHALL CONFORM TO ASTM A500, GRADE B. PLATES, ANGLES, BARS AND SHIMS SHALL CONFORM TO ASTM A709, GRADE 36. FENCE FABRIC SHALL CONFORM TO ASTM F668, CLASS 2B.

ANCHORAGES SHALL BE ACCURATELY PLACED TO PROVIDE CORRECT ALIGNMENT OF RAILING. SET POSTS NORMAL TO GRADE.

ALL POST SPACING ARE TAKEN HORIZONTAL ALONG CENTER LINE OF RAILING AT BASE OF POST.

STEEL SHIMS SHALL BE PROVIDED AND USED UNDER BASE PLATES WHERE REQUIRED FOR ALIGNMENT, AND SHALL BE GALVANIZED.

CAULK AROUND PERIMETER OF BASE PLATES AND FILL PORTION OF SLOTTED HOLES AROUND ANCHOR BOLTS WITH NON-STAINING GRAY NON-BITUMINOUS JOINT SEALER.

CUT BOTTOM OF POST TO MAKE VERTICAL IN TRANSVERSE DIRECTION.

ANCHOR BOLTS, NUTS AND WASHERS SHALL BE EITHER STAINLESS STEEL OR ASTM 307. IF 307 IS USED, ANCHOR BOLTS, NUTS, AND WASHERS SHALL BE GALVANIZED.

THE BID ITEM SHALL BE "RAILING TUBULAR SCREENING B-40-766" WHICH SHALL INCLUDE ALL ITEMS SHOWN.

RAILING SHALL BE FABRICATED IN LENGTHS THAT INCLUDE NOT MORE THAN 3 POSTS.

VENT HOLES SHALL BE DRILLED IN MEMBERS AS REQUIRED TO FACILITATE GALVANIZING AND DRAINAGE.

ALL RAILING MATERIAL SHALL BE GALVANIZED AFTER FABRICATION. PRIOR TO GALVANIZING THE STEEL RAILING SHALL BE GIVEN A #6 BLAST CLEANING PER SSPC SPECIFICATIONS.

THE END OF THE FABRIC SHALL BE ATTACHED TO THE POST BY MEANS OF A TENSION BAR THREADED THROUGH THE END LOOPS OF THE FABRIC AND SECURED TO THE POST WITH CLAMPS & BOLT. THE FABRIC SHALL BE STRETCHED TO REMOVE ALL SLACK.

THERE SHALL BE AN ACCESS DOOR AT EACH LIGHT STANDARD. SEE SHEET 1.

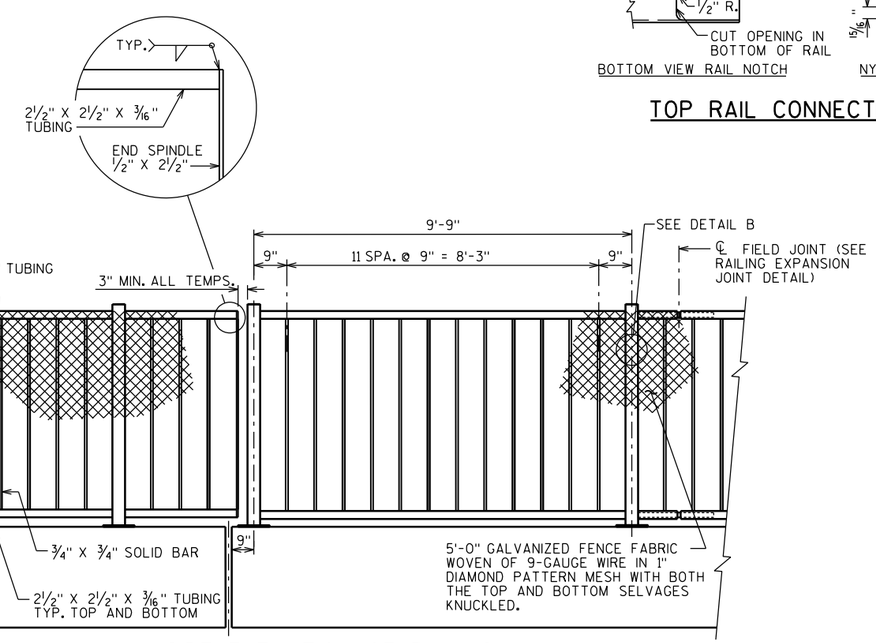


INSIDE ELEVATION OF RAILING

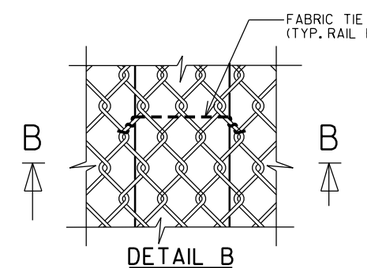


DETAIL B

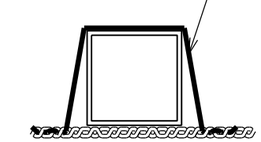

SECTION B-B

8

8

| NO. | DATE | REVISION | BY |
|---|---|---|---|

STATE OF WISCONSIN
DEPARTMENT OF TRANSPORTATION

STRUCTURE B-40-766

DRAWN BY RBH | PLANS CK'D. RPB

TUBULAR STEEL RAILING SCREENING

SHEET 23 OF 23

500

FILE=

SCALE =

| STATE PROJECT NUMBER |
|---|
| 2140-13-70 |

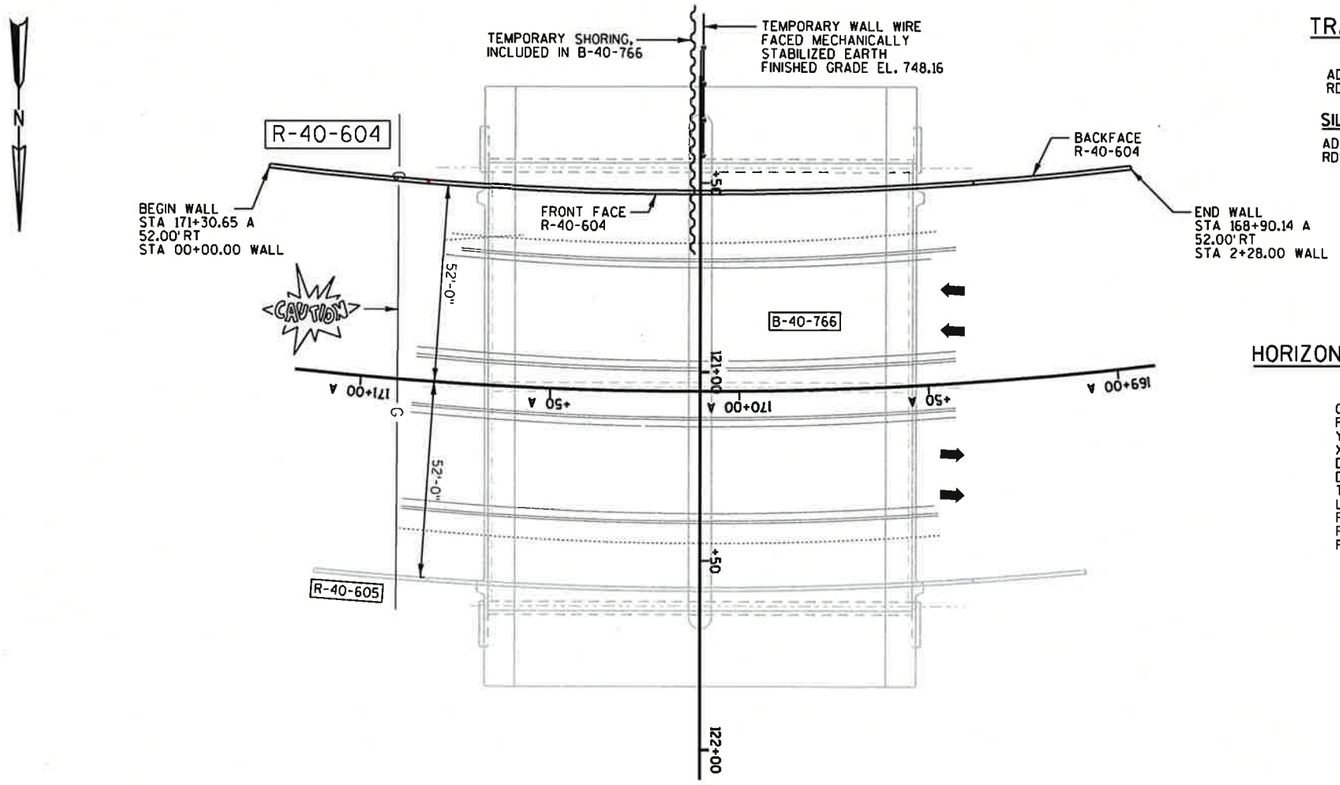


## PLAN

MECHANICALLY STABALIZED EARTH (MSE) RETAINING WALL

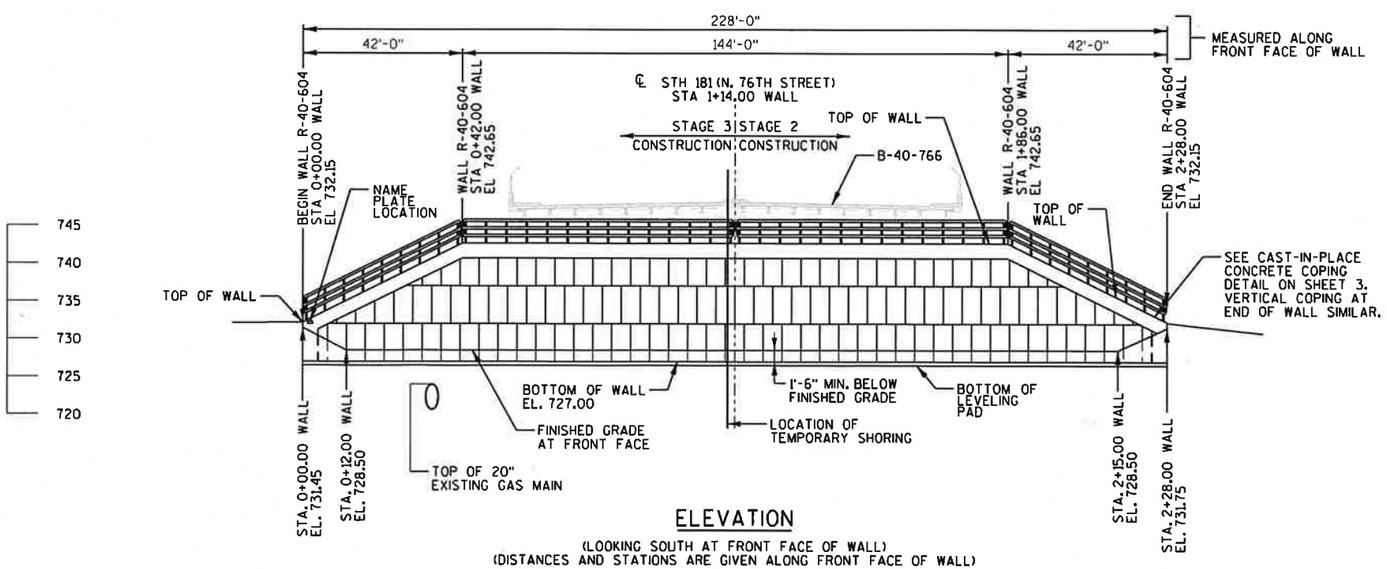


## ELEVATION

(LOOKING SOUTH AT FRONT FACE OF WALL)
(DISTANCES AND STATIONS ARE GIVEN ALONG FRONT FACE OF WALL)

## BENCH MARKS

| NO. | NORTHING | EASTING | DESCRIPTION | ELEV. |
|---|---|---|---|---|
| SEC 137 | 329100.426 | 580215.609 | SECTION CORNER. STH 181 AT W. SILVER SPRING DR. | 747.52 |

## TRAFFIC DATA

**STH 181**

ADT = 39,100 (2038)
RDS = 40 M.P.H.

**SILVER SPRING DR.**

ADT = 25,000 (2038)
RDS = 45 M.P.H.

## HORIZONTAL CURVE DATA

**R/L**

CURVE = WALL_604-1
P.I. = 1+14.55
Y = 329,160.37
X = 580,215.92
DELTA = 13° 46' 48" (LT)
D = 6° 02' 38"
T = 114.55'
L = 228.00'
R = 948.00'
P.C. = 0+00.00
P.T. = 2+28.00

## DESIGN DATA

LIVE LOAD:
LIVE LOAD SURCHARGE = 240 PSF

MATERIALS PROPERTIES:

| | |
|---|---|
| CONCRETE MASONRY RETAINING WALLS | F'c = 3,500 PSI |
| PRECAST CONCRETE WALL PANEL | F'c = 4,000 PSI |
| BAR STEEL REINFORCEMENT | F'y = 60,000 PSI |

## ALLOWABLE WALL SYSTEMS

WALL CONCRETE PANEL MECHANICALLY STABILIZED EARTH LRFD/OMP

## GENERAL NOTES

DRAWINGS SHALL NOT BE SCALED.

BEVEL EXPOSED EDGES OF CONCRETE ¾", UNLESS NOTED OTHERWISE.

ALL DIMENSIONS ARE ALONG THE FRONT FACE OF WALL, UNLESS OTHERWISE SHOWN.

BAR STEEL REINFORCEMENT SHALL HAVE 2" CLEAR COVER, UNLESS SHOWN OTHERWISE.

THE CONTRACTOR MUST COORDINATE THE CONSTRUCTION OF THE WALL R-40-604 WITH THE CONSTRUCTION OF BRIDGE B-40-766, SPECIFICALLY THE SOUTH ABUTMENT.

THE CONTRACTOR SHALL PROVIDE COMPLETE DESIGN, PLANS, DETAILS, SPECIFICATIONS, AND SHOP DRAWINGS FOR THE RETAINING WALL IN ACCORDANCE WITH THE SPECIAL PROVISIONS. THE RETAINING WALL MANUFACTURER SHALL PROVIDE TECHNICAL ASSISTANCE TO THE CONTRACTOR DURING CONSTRUCTION. THE COST OF FURNISHING THESE ITEMS IS INCLUDED IN THE BID ITEM "WALL CONCRETE PANEL MECHANICALLY STABILIZED EARTH LRFD/OMP".

PLANS, ELEVATIONS, AND DETAILS SHOWN ON THESE DRAWINGS ARE INTENDED TO INDICATE WALL LOCATIONS, LENGTHS, HEIGHTS, AND DETAILS COMMON TO THE WALL SYSTEM SELECTED. THE CONTRACTOR SHALL VERIFY THAT THE WALL SYSTEM SELECTED WILL CONFORM TO THE REQUIRED ALIGNMENTS AND DETAILS.

THE RETAINING WALL IS TO BE DESIGNED USING THE ELEVATIONS GIVEN ON THIS SHEET AND THE GEOMETRY TABLE ON SHEET 3.

THE MAXIMUM VALUE OF THE ANGLE OF INTERNAL FRICTION OF THE WALL BACKFILL MATERIAL IN THE REINFORCED ZONE SHALL BE ASSUMED TO BE 30° WITHOUT CERTIFIED TEST VALUES.

THE COST OF FURNISHING AND PLACING THE CAST-IN-PLACE COPING AND UNREINFORCED CONCRETE LEVELING PAD UNDER THE MSE PRECAST WALL PANELS IS INCLUDED IN THE BID ITEM "WALL CONCRETE PANEL MECHANICALLY STABILIZED EARTH LRFD/OMP".

THE DESIGN OF THE WALL IN FRONT OF THE ABUTMENT SHALL INCLUDE THE HORIZONTAL EARTH LOADS AND 240 PSF LIVE LOAD SURCHARGE ACTING ON THE BACK OF THE ABUTMENT BELOW THE BEAM SEATS.

CONTRACTOR SHALL SUPPLY AND INSTALL A NAME PLATE IN ACCORDANCE WITH SECTION 502.3.11 OF THE STANDARD SPECIFICATIONS AND THE STANDARD DETAIL DRAWINGS.

THE PLAN QUANTITY FOR THE BID ITEM "WALL CONCRETE PANEL MECHANICALLY STABILIZED EARTH LRFD/OMP" IS BASED ON A WALL HEIGHT MEASURED FROM THE TOP OF WALL TO A CONSTANT DEPTH OF 1'-6" BELOW FINISHED GRADE.

THE BOTTOM OF THE WALL SHALL NOT BE STEPPED.

THE WALL REINFORCEMENT LENGTH SHALL BE THE GREATER OF 8 FEET AND 0.86 OF THE WALL HEIGHT.

## LIST OF DRAWINGS


1. GENERAL PLAN
2. CROSS SECTION
3. QUANTITIES & DETAILS
4. SUBSURFACE EXPLORATION
5. RAILING TUBULAR STEEL


WISCONSIN ALBERT M. LINDNER E-18992 BROOKFIELD, WIS. PROFESSIONAL ENGINEER

1-28-2016

STRUCTURE DESIGN CONTACTS


BUREAU OF STRUCTURES:
WILLIAM DREHER, P.E. (608) 266-8489
CONSULTANT:
ALBERT M. LINDNER, P.E. (414) 259-1500


| NO. | DATE | REVISION | BY |
|---|---|---|---|


GRAEF
One Honey Creek Corporate Center
125 South 84th Street, Suite 401
Milwaukee, WI 53214-1470
414 / 259 1500
414 / 259 0037 fax
www.graef-usa.com


STATE OF WISCONSIN
DEPARTMENT OF TRANSPORTATION

ACCEPTED William C. Dreher SDR 06/23/16
CHIEF STRUCTURES DESIGN ENGINEER — DATE

# STRUCTURE R-40-604

SOUTH ABUTMENT WALL FOR STRUCTURE B-40-766

| | |
|---|---|
| COUNTY MILWAUKEE | ~~TOWN~~/CITY/~~VILLAGE~~ MILWAUKEE |

DESIGN SPEC.
AASHTO LRFD BRIDGE DESIGN SPECIFICATIONS

| | | | | | | | |
|---|---|---|---|---|---|---|---|
| DESIGNED BY | RPB | DESIGN CK'D. | KGW | DRAWN BY | RBH | PLANS CK'D. | AML |

GENERAL PLAN

SHEET 1 OF 5
501

8

8

STATE PROJECT NUMBER

2140-13-70

## NOTES

1. SEAL ALL EXPOSED HORIZONTAL AND VERTICAL SURFACES OF FILLER AND EXPANDED POLYSTYRENE WITH NON-STAINING, GRAY NON-BITUMINOUS JOINT SEALER. (1" DEEP AND HOLD 1/8" BELOW SURFACE OF CONCRETE).

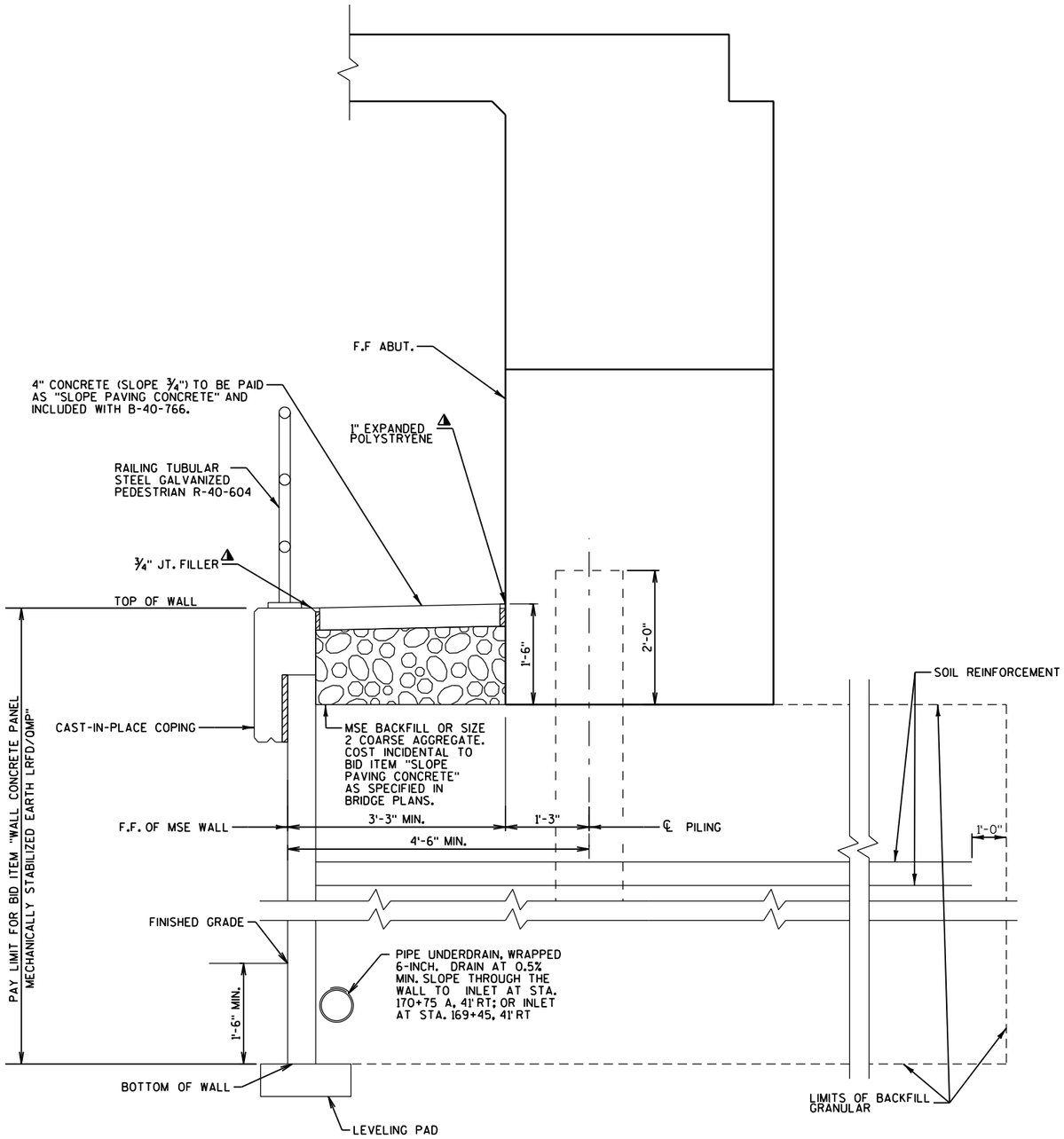


## CROSS SECTION THROUGH SOUTH ABUTMENT AT MSE WALL

8

8

| NO. | DATE | REVISION | BY |
|---|---|---|---|
| | | | |

STATE OF WISCONSIN
DEPARTMENT OF TRANSPORTATION

STRUCTURE R-40-604

DRAWN BY RBH | PLANS CK'D. RPB

CROSS SECTION

SHEET 2 OF 5

502

FILE=
SCALE =

| STATE PROJECT NUMBER |
|---|
| 2140-13-70 |

## TOTAL ESTIMATED QUANTITIES

| ITEM NO. | BID ITEMS | UNIT | TOTAL |
|---|---|---|---|
| 209.0100 | BACKFILL GRANULAR | CY | 1,563 |
| 516.0500 | RUBBERIZED MEMBRANE WATERPROOFING | SY | 2 |
| 532.0750.S | TEMPORARY WALL WIRE FACED MECHANICALLY STABILIZED EARTH | SF | 931 |
| 612.0406 | PIPE UNDERDRAIN WRAPPED 6-INCH | LF | 238 |
| SPV.0090.04 | RAILNG TUBULAR STEEL GALVANIZED PEDESTRIAN R-40-604 | LF | 231 |
| SPV.0165.01 | WALL CONCRETE PANEL MECHANICALLY STABILIZED EARTH LRFD/QMP | SF | 3,089 |
| | NON-BID ITEMS | | |
| | PREFORMED JOINT FILLER | SIZE | 3/4" |
| | | | |
| | | | |

## GEOMETRY TABLE

| WALL STATION | ROADWAY STATION | OFFSET TO F.F. WALL | TOP OF WALL ELEV. | FINISHED GRADE F.F. ELEV. ◪ |
|---|---|---|---|---|
| 0+00.00 | 171+30.65A | 52.00' RT | 732.15 | 731.45 |
| 0+12.00 | 171+17.99A | 52.00' RT | 735.15 | 728.50 |
| 0+25.00 | 171+04.28A | 52.00' RT | 738.40 | 728.50 |
| 0+42.00 | 170+86.35A | 52.00' RT | 742.65 | 728.50 |
| 0+50.00 | 170+77.91A | 52.00' RT | 742.65 | 728.50 |
| 0+75.00 | 170+51.53A | 52.00' RT | 742.65 | 728.50 |
| 1+00.00 | 170+25.16A | 52.00' RT | 742.65 | 728.50 |
| 1+25.00 | 169+98.79A | 52.00' RT | 742.65 | 728.50 |
| 1+50.00 | 169+72.42A | 52.00' RT | 742.65 | 728.50 |
| 1+75.00 | 169+46.05A | 52.00' RT | 742.65 | 728.50 |
| 1+86.00 | 169+34.44A | 52.00' RT | 742.65 | 728.50 |
| 2+00.00 | 169+19.68A | 52.00' RT | 739.15 | 728.50 |
| 2+15.00 | 169+03.85A | 52.00' RT | 735.40 | 728.50 |
| 2+25.00 | 168+93.30A | 52.00' RT | 732.90 | 731.00 |
| 2+28.00 | 168+90.14A | 52.00' RT | 732.15 | 731.75 |

◪ = LINEARLY INTERPOLATE WALL ELEVATIONS BETWEEN STATIONS.

## SOIL PARAMETERS

| STRATUM LOCATIONS AND SOIL DESCRIPTIONS | TOTAL UNIT WEIGHT (PCF) | FRICTION ANGLE (DEGREES) | COHESION (PSF) |
|---|---|---|---|
| GRANULAR BACKFILL (REINFORCING ZONE OR BACKFILL) | 120 | 30 | 0 |
| SILTY CLAY NATIVE SOIL RETAINED SOIL* | 135 | 26 | 0 |
| SILTY CLAY NATIVE SOIL (EL. 746-660) | 135 | 26 | 0 |
| NEW FILL SILTY CLAY ENGINEERED FILL (ABOVE EXISTING GRADES AND PLACED IN EXCAVATION BACKFILL) | 130 | 26 | 0 |

* DESIGN WALL FOR THESE VALUES

## WALL EXTERNAL & OVERALL STABILITY EVALUATION **

| DIMENSIONS | EVALUATED LOCATIONS |
|---|---|
| WALL HEIGHT (FEET) | 15.65 |
| EXPOSED WALL HEIGHT (FEET) | 14.15 |
| MINIMUM LENGTH OF REINFORCEMENT (FEET) | 13.50 |
| WALL STATION | SE RAMP STA. 101+00 |
| BORING USED | 1 |
| CAPACITY TO DEMAND RATIO (CDR) | |
| SLIDING (CDR>1.0) | 1.01 |
| ECCENTRICITY (CDR>1.0) | 2.42 |
| OVERALL STABILITY (CDR>1.0) | 1.11 |
| BEARING RESISTANCE (CDR>1.0) | 1.37 |
| FACTORED BEARING RESISTANCE (PSF) | 5480 |

** BASED ON GEOTECHNICAL ENGINEERING REPORT

FINAL DESIGN FOR INTERNAL STABILITY AND EXTERNAL SLIDING AND OVERTURNING IS THE RESPONSIBILTY OF THE CONTRACTOR'S WALL DESIGNER.

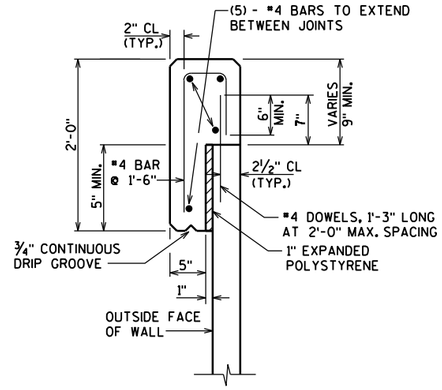


### CAST-IN-PLACE CONCRETE COPING DETAIL

COPING ON TOP OF WALL SHOWN.
VERTICAL COPING AT END OF WALL SIM.

NOTE: CONCRETE COPING REINFORCING STEEL SHALL BE DESIGNED AT LOCATIONS WHERE RAILING, FENCING OR ANY OTHER ATTACHMENTS ARE MADE.

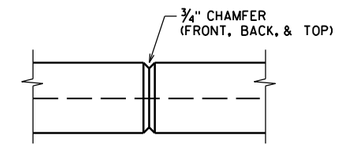


### COPING CONTRACTION JOINT

DO NOT RUN BAR STEEL THRU JOINT.
MAX. SPACING OF JOINT = 12'

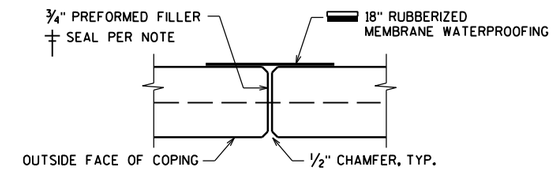


### COPING EXPANSION JOINT

DO NOT RUN BAR STEEL THRU JOINT.
MAX. SPACING OF JOINT = 50'

SEAL ALL EXPOSED HORIZ. & VERT. SURFACES OF FILLER WITH NON-STAINING GRAY NON-BITUMINOUS JOINT SEALER. (1" DEEP AND HOLD ⅛" BELOW SURFACE OF CONC.)

MEMBRANE WATERPROOFING TO EXTEND FROM TOP OF COPING TO 6" BELOW TOP OF PANELS.

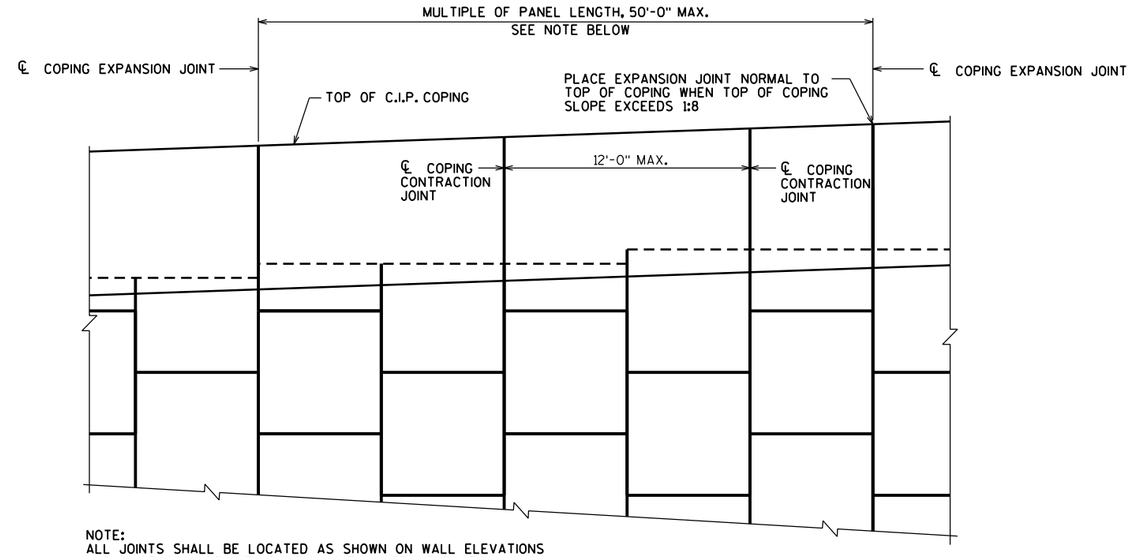


NOTE:
ALL JOINTS SHALL BE LOCATED AS SHOWN ON WALL ELEVATIONS AND MUST COINCIDE WITH PANEL JOINT ON FRONT FACE.

### C.I.P. COPING PARTIAL ELEVATION

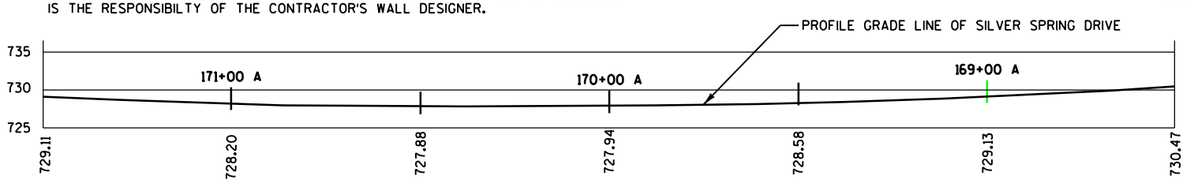


### EXISTING PROFILE GRADE LINE SILVER SPRING DR.

| NO. | DATE | REVISION | BY |
|---|---|---|---|
| | | | |

STATE OF WISCONSIN
DEPARTMENT OF TRANSPORTATION

STRUCTURE R-40-604

DRAWN BY RBH | PLANS CK'D. RPB

QUANTITIES & DETAILS

SHEET 3 OF 5
503

8

8

FILE=
SCALE =

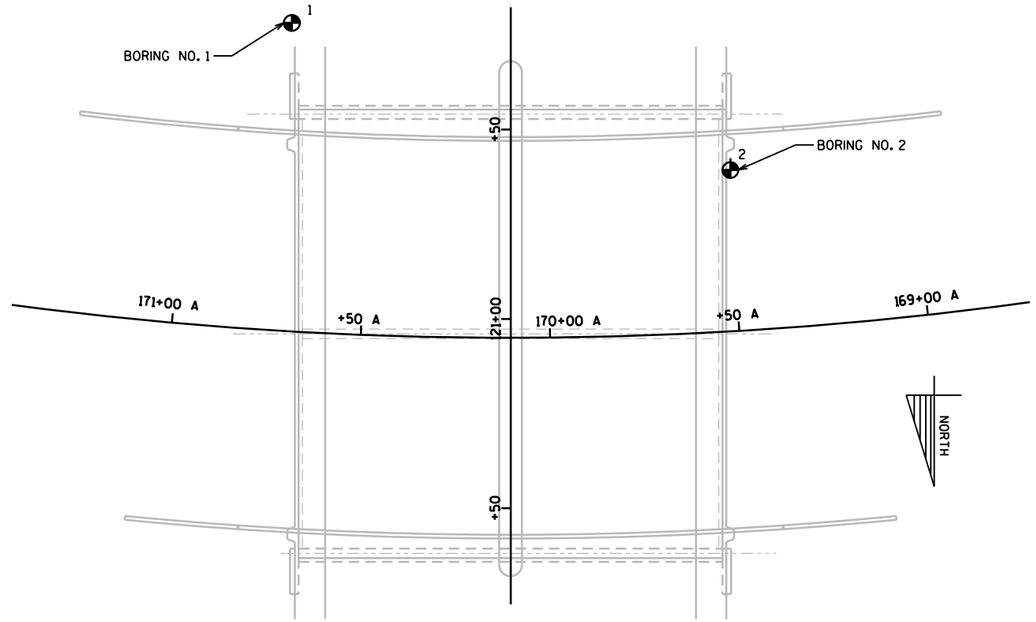


PLAN

BORINGS PERFORMED BY:

GILES ENGINEERING ASSOCIATES INC.
N8 W22350 JOHNSON DRIVE, SUITE A1
WAUKESHA, WI 53186

BORING 1 TAKEN ON 11/17/2010
BORING 2 TAKEN ON 11/18/2010

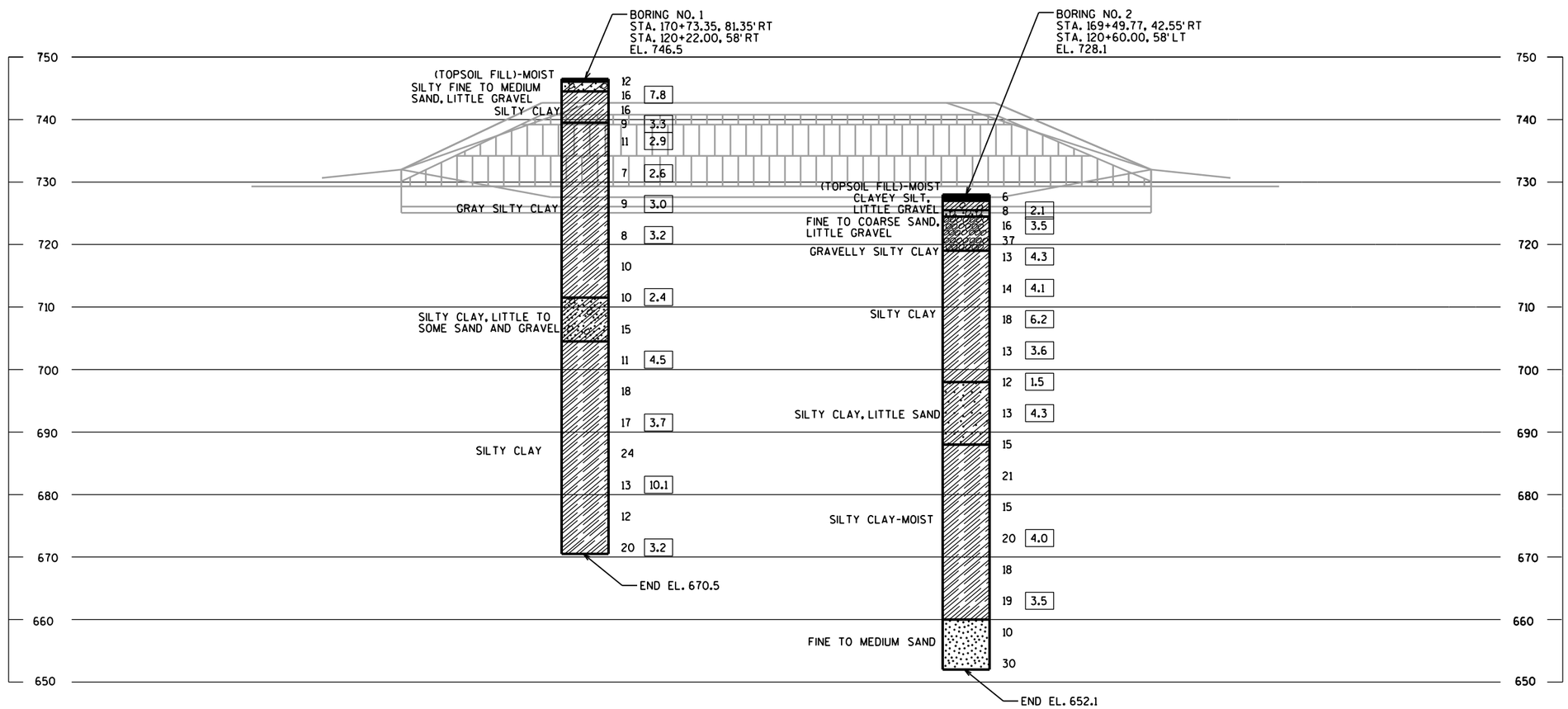


STATE PROJECT NUMBER

2140-13-70

ABBREVIATIONS

F — FINE  M — MEDIUM  C — COARSE
WS — WEATHERED  SO — SOUND

MATERIAL SYMBOLS

TOPSOIL, SILT, SANDSTONE, SAND, PEAT, LIMESTONE, GRAVEL, CLAY, IGNEOUS ROCK

LEGEND OF PROBING

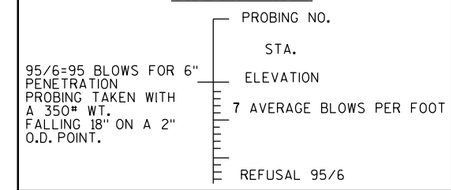


LEGEND OF BORING

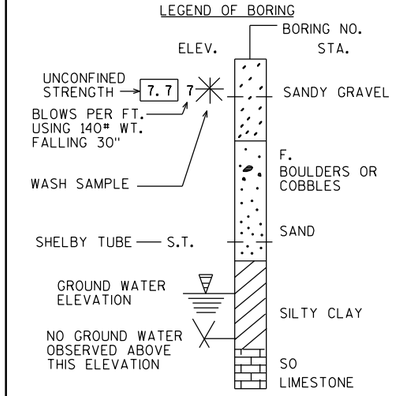


UNLESS OTHERWISE SPECIFIED, THE BLOWS PER FOOT AT THE LOCATIONS INDICATED ARE BASED ON DRIVING A 2" O.D. X 1.4" I.D. SPLIT SPOON SAMPLER WITH A 140# HAMMER HAVING A FREE FALL OF 30". THE BLOW COUNT IS TAKEN IN UNDISTURBED SOIL IMMEDIATELY BELOW A CASED OR OPEN HOLE ELIMINATING SIDE FRICTION ON THE DRIVE PIPE.

SUBSURFACE EXPLORATION FOR FOUNDATION DESIGN AND BIDDERS INFORMATION

TO OBTAIN RELATIVE DATA CONCERNING THE CHARACTER OF MATERIAL IN AND UPON WHICH THE FOUNDATION MIGHT BE BUILT, BORINGS AND/OR SOUNDINGS WERE MADE AT POINTS APPROXIMATELY AS INDICATED ON THIS DRAWING. THE DATA PRESENTED HEREIN REPRESENTS THE FINDINGS OF THE SUBSURFACE EXPLORATIONS MADE. HOWEVER, BECAUSE THE DEPTHS INVESTIGATED ARE LIMITED AND THE AREA OF THE BORINGS AND/OR SOUNDINGS IS VERY SMALL IN RELATION TO THE ENTIRE AREA, THE WISCONSIN DEPARTMENT OF TRANSPORTATION DOES NOT WARRANT CONDITIONS BELOW THE DEPTHS INVESTIGATED OR THAT THE CLASSIFICATION OF MATERIAL ENCOUNTERED IN THESE INVESTIGATIONS IS NECESSARILY TYPICAL OF THE ENTIRE SITE.

| NO. | DATE | REVISION | BY |
|---|---|---|---|

STATE OF WISCONSIN
DEPARTMENT OF TRANSPORTATION

STRUCTURE R-40-604

DRAWN BY RBH  PLANS CK'D. RPB

SUBSURFACE EXPLORATION

SHEET 4 OF 5
504

8

8

| STATE PROJECT NUMBER |
|---|
| 2140-13-70 |

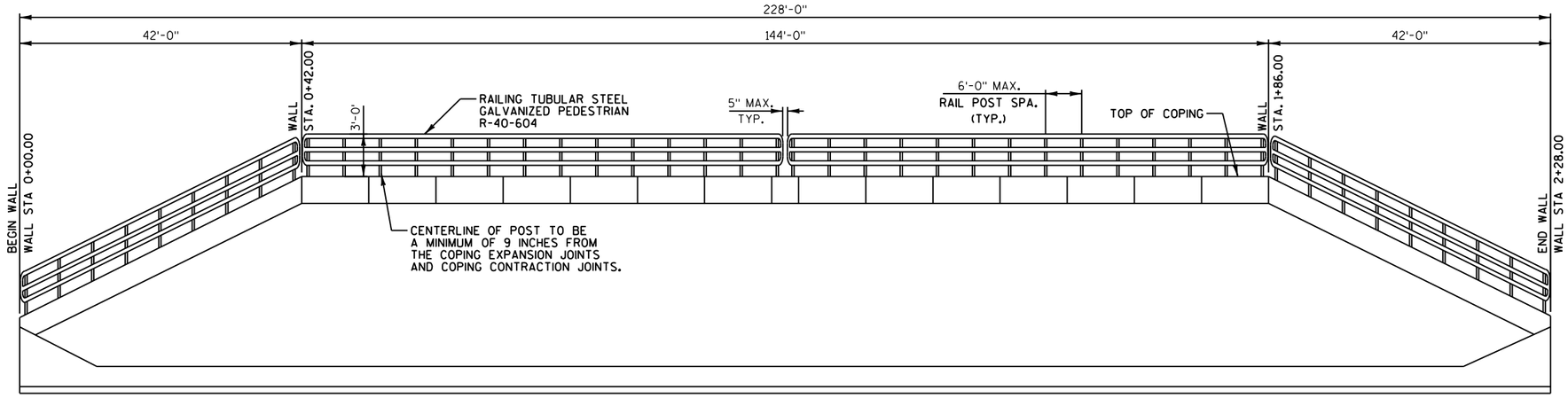


## ELEVATION

(LOOKING SOUTH AT FRONT FACE OF WALL)

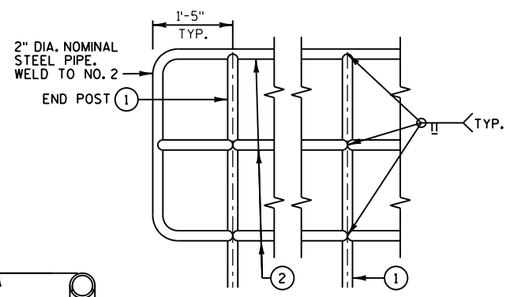


## PART ELEVATION OF RAILING

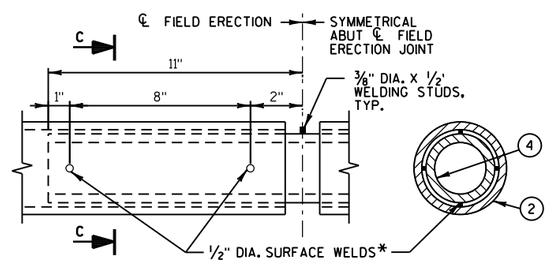


## FIELD ERECTION JOINT DETAIL

* MIN. 5/8" FLAT SURFACE DIA. PUNCHING OR STUDS MAY BE USED AS AN ALTERNATE.

## SECTION C-C

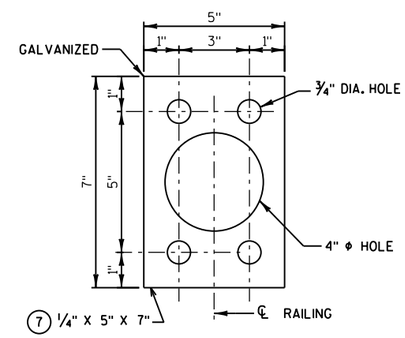


## ANCHOR PLATE

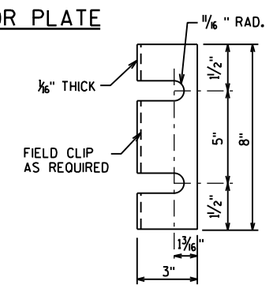


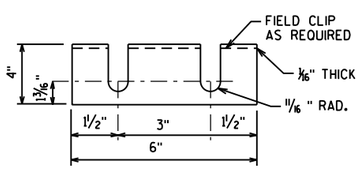


## POST SHIM DETAILS

SHIMS REQUIRED ONLY WHEN END POSTS AND LINE POSTS ARE WELDED TO BASE PLATES. PROVIDE 2 SETS PER POST. USE WHERE REQUIRED FOR ALIGNMENT.

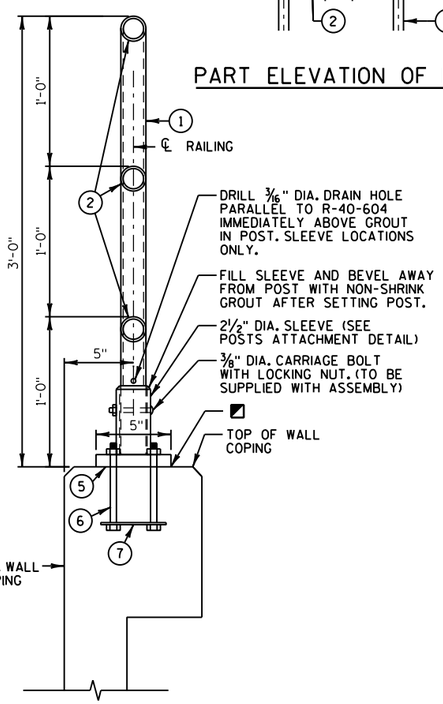


## SECTION THRU RAILING

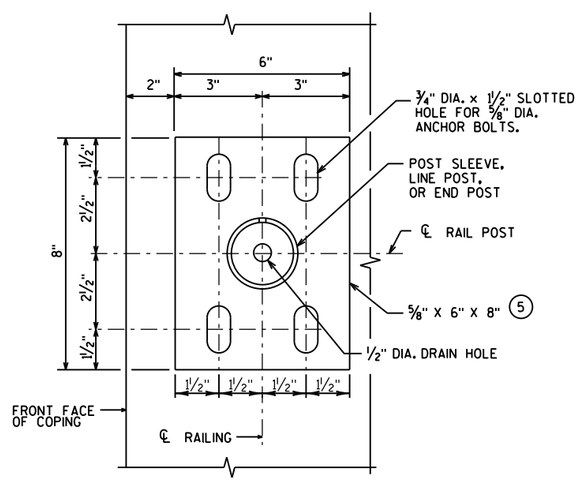


## BASE PLATE

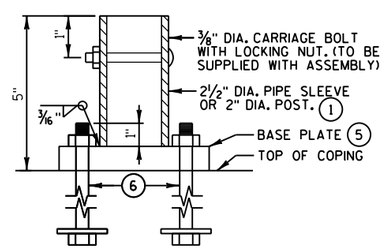


## POST ATTACHMENT

UNIT SHALL BE GALVANIZED AFTER FABRICATION

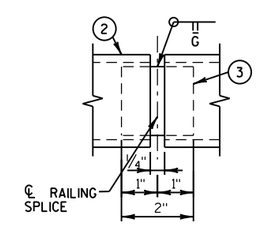


## SHOP RAILING SPLICE DETAIL

(LOCATION MUST BE SHOWN ON SHOP DRAWINGS)

## GENERAL NOTES

COMPLETE ANY REQUIRED WELDING OF COMPONENT BEFORE GALVANIZING.

BID ITEM SHALL BE "RAILING TUBULAR STEEL GALVANIZED PEDESTRIAN R-40-604", WHICH INCLUDES ALL ITEMS SHOWN.

RAILING SHALL BE FABRICATED IN LENGTHS THAT INCLUDE 3 OR 4 POSTS.

FIELD ERECTION JOINTS MUST BE PLACED IN BETWEEN RAIL POSTS WHERE THERE IS ALSO A CONCRETE COPING EXPANSION JOINT IN BETWEEN RAIL POSTS.

POST BASE PLATES SHALL BE FLAT WITH ALL SURFACES SMOOTH AND FREE FROM WARP AND ALL EDGES SMOOTH, STRAIGHT AND VERTICAL. ALL PLATE CUTS SHALL BE MACHINE OR MACHINE FLAME CUT.

ALL MATERIAL EXCEPT ANCHORAGE DETAIL (NO. 7) SHALL BE GALVANIZED AFTER FABRICATION. PRIOR TO GALVANIZING, ALL STEEL RAILING POSTS AND STEEL TUBING SHALL BE GIVEN A NO. 6 BLAST CLEANING BY S.S.P.C. SPECIFICATIONS.

DRILL DRAIN HOLES PRIOR TO GALVANIZING.

ALL MATERIALS USED IN FABRICATION SHALL BE MADE FROM MATERIALS CONFORMING TO A.S.T.M. DESIGNATION A709 GRADE 36 UNLESS NOTED OTHERWISE.

GALVANIZED STEEL SHIMS MAY BE USED UNDER POSTS WHERE REQ'D FOR ALIGNMENT.

ALL RAILS, POSTS AND SLEEVES ARE STANDARD WEIGHT PIPE, SCHEDULE 40.

PLACE ALL NUTS ON ABUTMENT SIDE OF POSTS.

ANCHORAGES SHALL BE ACCURATELY PLACED TO PROVIDE CORRECT ALIGNMENT OF RAILING.

◪ CAULK AROUND PERIMETER OF BASE PLATE AND FILL PORTION OF SLOTTED HOLE AROUND ANCHOR BOLT IN SHIM WITH NON-STAINING GRAY NON-BITUMINOUS JOINT SEALER.

RAILS AND POSTS TO BE ASTM A500 GRADE B. BASE PLATES AND SHIMS TO BE ASTM A709, GRADE 36. ALL GALVANIZED AFTER FABRICATION.

THE NUT SECURING THE POST BASE PLATE TO THE CONCRETE SHALL BE TIGHTENED TO A SNUG FIT AND GIVEN AN ADDITIONAL 1/8 TURN.

## LEGEND

1. 2" DIA. NOMINAL STEEL PIPE FOR POSTS: CUT BOTTOM OF POST TO MATCH TOP OF CONCRETE. POSTS ARE TO BE SET VERTICAL.
2. 2" DIA. NOMIMAL STEEL PIPE FOR RAILS: WELD TO NO. 1.
3. 1 1/2" DIA. PIPE SLEEVE FOR NO. 2 PROVIDE "SLIDING FIT" WITH A MINIMUM OUT TO OUT DIMENSION OF 2 1/16".
4. 1 1/2" DIA. PIPE SLEEVE X 1'-10" LONG FOR NO. 2. PROVIDE 1/2" DIA. SURFACE WELDS ON ALL SIDES AS SHOWN. GRIND WELDS TO FIT FREE INTO I.D. OF NO. 2. PROVIDE 3/8" DIA. X 1/2" WELDING STUDS ON TOP AND BOTTOM SURFACES AT CENTERLINE.
5. PLATE 5/8" X 6" X 8", WITH 3/4" DIA. x 1 1/2" SLOTTED HOLE FOR ANCHOR BOLTS NO. 6. WELD TO NO. 1 OR PIPE SLEEVE AS SHOWN.
6. 5/8" DIA. x 9" LONG, TYPE 316 STAINLESS STEEL THREADED ROD (MIN. TENSILE STRENGTH = 70 KSI) WITH NUT AND WASHERS OF SAME ALLOY GROUP. (ALTERNATE RAIL POST ANCHORAGE: 4 EQUIVALENT STAINLESS STEEL CONCRETE MASONRY ANCHORS TYPE S 5/8"-INCH. EMBED 7" IN CONCRETE FOR RAIL POSTS. EMBED 5" IN CONCRETE FOR END RAILS.)
7. 1/4" X 5" X 7" FLAT BAR, WITH 3/4" DIA. HOLES FOR ANCHOR BOLTS NO. 6.

| NO. | DATE | REVISION | BY |
|---|---|---|---|

STATE OF WISCONSIN
DEPARTMENT OF TRANSPORTATION

STRUCTURE R-40-604

DRAWN BY RBH | PLANS CK'D. RPB

RAILING TUBULAR STEEL

SHEET 5 OF 5
505

8

8

FILE=
SCALE =

| STATE PROJECT NUMBER |
|---|
| 2140-13-70 |

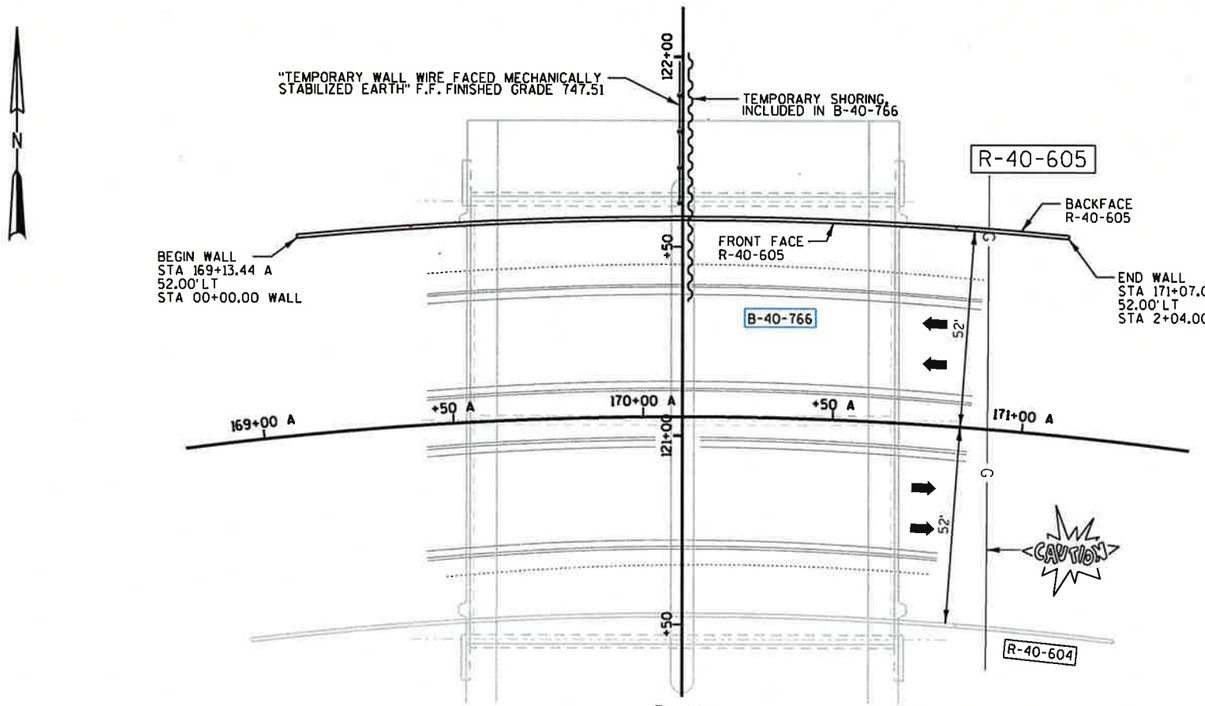


## PLAN

MECHANICALLY STABILIZED EARTH (MSE) RETAINING WALL

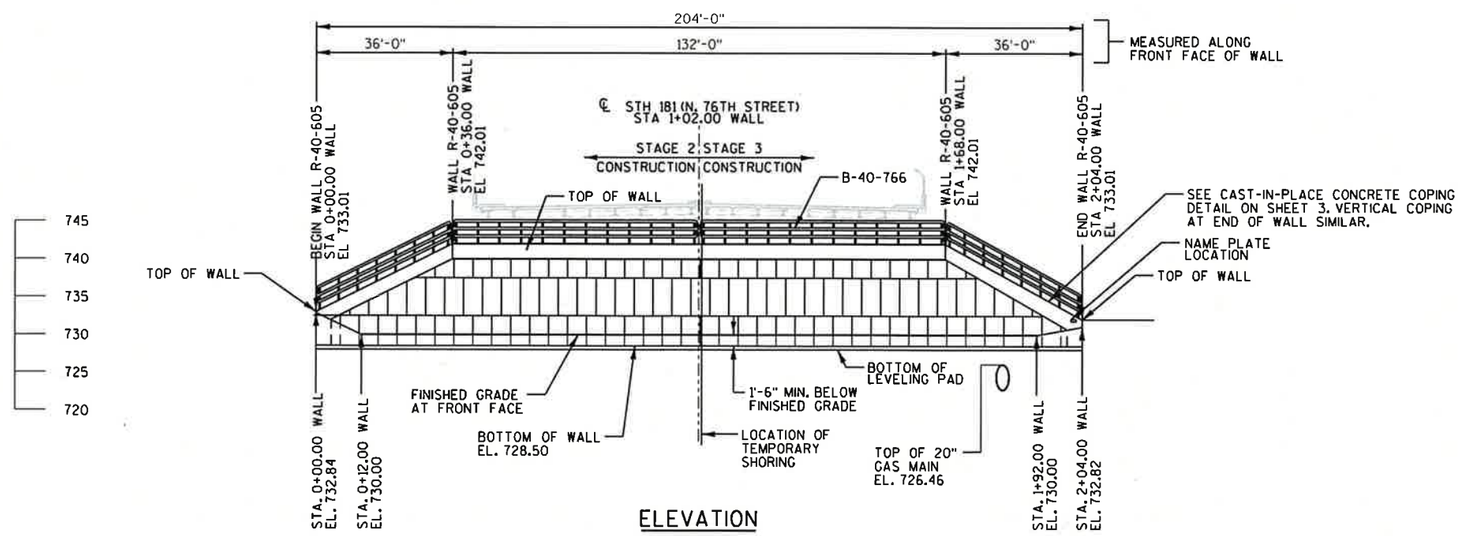


## ELEVATION

(LOOKING NORTH AT FRONT FACE OF WALL)
(DISTANCES AND STATIONS ARE GIVEN ALONG FRONT FACE OF WALL)

## TRAFFIC DATA

**STH 181**

ADT = 39,100 (2038)
RDS = 40 M.P.H.

**SILVER SPRING DR.**

ADT = 25,000 (2038)
RDS = 45 M.P.H.

## HORIZONTAL CURVE DATA

**R/L**

CURVE = WALL_605-1
P.I. = 1+02.32
Y = 329,262.44
X = 580,216.45
DELTA = 11° 06' 38" (RT)
D = 5° 26' 47"
T = 102.32'
L = 204.00'
R = 1,052.00'
P.C. = 0+00.00
P.T. = 2+04.00

## DESIGN DATA

LIVE LOAD:
LIVE LOAD SURCHARGE = 240 PSF

MATERIALS PROPERTIES:

| | |
|---|---|
| CONCRETE MASONRY RETAINING WALLS | F'c = 3,500 PSI |
| PRECAST CONCRETE WALL PANEL | F'c = 4,000 PSI |
| BAR STEEL REINFORCEMENT | F'y = 60,000 PSI |

## ALLOWABLE WALL SYSTEMS

WALL CONCRETE PANEL MECHANICALLY STABILIZED EARTH LRFD/OMP

## GENERAL NOTES

DRAWINGS SHALL NOT BE SCALED.

BEVEL EXPOSED EDGES OF CONCRETE ¾", UNLESS NOTED OTHERWISE.

ALL DIMENSIONS ARE ALONG THE FRONT FACE OF WALL, UNLESS OTHERWISE SHOWN.

BAR STEEL REINFORCEMENT SHALL HAVE 2" CLEAR COVER, UNLESS SHOWN OTHERWISE.

THE CONTRACTOR MUST COORDINATE THE CONSTRUCTION OF THE WALL R-40-605 WITH THE CONSTRUCTION OF BRIDGE B-40-766, SPECIFICALLY THE NORTH ABUTMENT.

THE CONTRACTOR SHALL PROVIDE COMPLETE DESIGN, PLANS, DETAILS, SPECIFICATIONS, AND SHOP DRAWINGS FOR THE RETAINING WALL IN ACCORDANCE WITH THE SPECIAL PROVISIONS. THE RETAINING WALL MANUFACTURER SHALL PROVIDE TECHNICAL ASSISTANCE TO THE CONTRACTOR DURING CONSTRUCTION. THE COST OF FURNISHING THESE ITEMS IS INCLUDED IN THE BID ITEM "WALL CONCRETE PANEL MECHANICALLY STABILIZED EARTH LRFD/OMP".

PLANS, ELEVATIONS, AND DETAILS SHOWN ON THESE DRAWINGS ARE INTENDED TO INDICATE WALL LOCATIONS, LENGTHS, HEIGHTS, AND DETAILS COMMON TO THE WALL SYSTEM SELECTED. THE CONTRACTOR SHALL VERIFY THAT THE WALL SYSTEM SELECTED WILL CONFORM TO THE REQUIRED ALIGNMENTS AND DETAILS.

THE RETAINING WALL IS TO BE DESIGNED USING THE ELEVATIONS GIVEN ON THIS SHEET AND THE GEOMETRY TABLE ON SHEET 3.

THE MAXIMUM VALUE OF THE ANGLE OF INTERNAL FRICTION OF THE WALL BACKFILL MATERIAL IN THE REINFORCED ZONE SHALL BE ASSUMED TO BE 30° WITHOUT CERTIFIED TEST VALUES.

THE COST OF FURNISHING AND PLACING THE CAST-IN-PLACE COPING AND UNREINFORCED CONCRETE LEVELING PAD UNDER THE MSE PRECAST WALL PANELS IS INCLUDED IN THE BID ITEM "WALL CONCRETE PANEL MECHANICALLY STABILIZED EARTH LRFD/OMP".

THE PLAN QUANTITY FOR THE BID ITEM "WALL CONCRETE PANEL MECHANICALLY STABILIZED EARTH LRFD/OMP" IS BASED ON A WALL HEIGHT MEASURED FROM THE TOP OF THE WALL TO A CONSTANT DEPTH OF 1'-6" BELOW FINISHED GRADE.

THE DESIGN OF THE WALL IN FRONT OF THE ABUTMENT SHALL INCLUDE THE HORIZONTAL EARTH LOADS AND 240 PSF LIVE LOAD SURCHARGE ACTING ON THE BACK OF THE ABUTMENT BELOW THE BEAM SEATS.

CONTRACTOR SHALL SUPPLY AND INSTALL A NAME PLATE IN ACCORDANCE WITH SECTION 502.3.11 OF THE STANDARD SPECIFICATIONS AND THE STANDARD DETAIL DRAWINGS.

THE BOTTOM OF THE WALL SHALL NOT BE STEPPED.

THE WALL REINFORCEMENT LENGTH SHALL BE THE GREATER OF 8 FEET AND 0.9 OF THE WALL HEIGHT.

## LIST OF DRAWINGS

1. GENERAL PLAN
2. CROSS SECTION
3. QUANTITIES & DETAILS
4. SUBSURFACE EXPLORATION
5. RAILING TUBULAR STEEL

## BENCH MARKS

| NO. | NORTHING | EASTING | DESCRIPTION | ELEV. |
|---|---|---|---|---|
| SEC 137 | 329100.426 | 580215.609 | SECTION CORNER, STH 181 AT W. SILVER SPRING DR. | 747.52 |

WISCONSIN
ALBERT M. LINDNER
E-18992
BROOKFIELD, WIS.
PROFESSIONAL ENGINEER

1-28-2016

STRUCTURE DESIGN CONTACTS

BUREAU OF STRUCTURES:
WILLIAM DREHER P.E. (608) 266-8489
CONSULTANT:
ALBERT M. LINDNER P.E. (414) 259-1500

| NO. | DATE | REVISION | BY |
|---|---|---|---|
| | | | |


GRAEF
One Honey Creek Corporate Center
125 South 84th Street, Suite 401
Milwaukee, WI 53214-1470
414 / 259 1500
414 / 259 0037 fax
www.graef-usa.com


STATE OF WISCONSIN
DEPARTMENT OF TRANSPORTATION

ACCEPTED William C. Dreher SDR 06/23/16
CHIEF STRUCTURES DESIGN ENGINEER DATE

STRUCTURE R-40-605

NORTH ABUTMENT WALL FOR STRUCTURE B-40-766

COUNTY MILWAUKEE | ~~TOWN/CITY/VILLAGE~~ MILWAUKEE

DESIGN SPEC. AASHTO LRFD BRIDGE DESIGN SPECIFICATIONS

| DESIGNED BY RPB | DESIGN CK'D. KGW | DRAWN BY RBH | PLANS CK'D. AML |
|---|---|---|---|

GENERAL PLAN

SHEET 1 OF 5
506

8

8

STATE PROJECT NUMBER

2140-13-70

## NOTES

1. SEAL ALL EXPOSED HORIZONTAL AND VERTICAL SURFACES OF FILLER AND EXPANDED POLYSTYRENE WITH NON-STAINING, GRAY NON-BITUMINOUS JOINT SEALER. (1" DEEP AND HOLD 1/8" BELOW SURFACE OF CONCRETE).

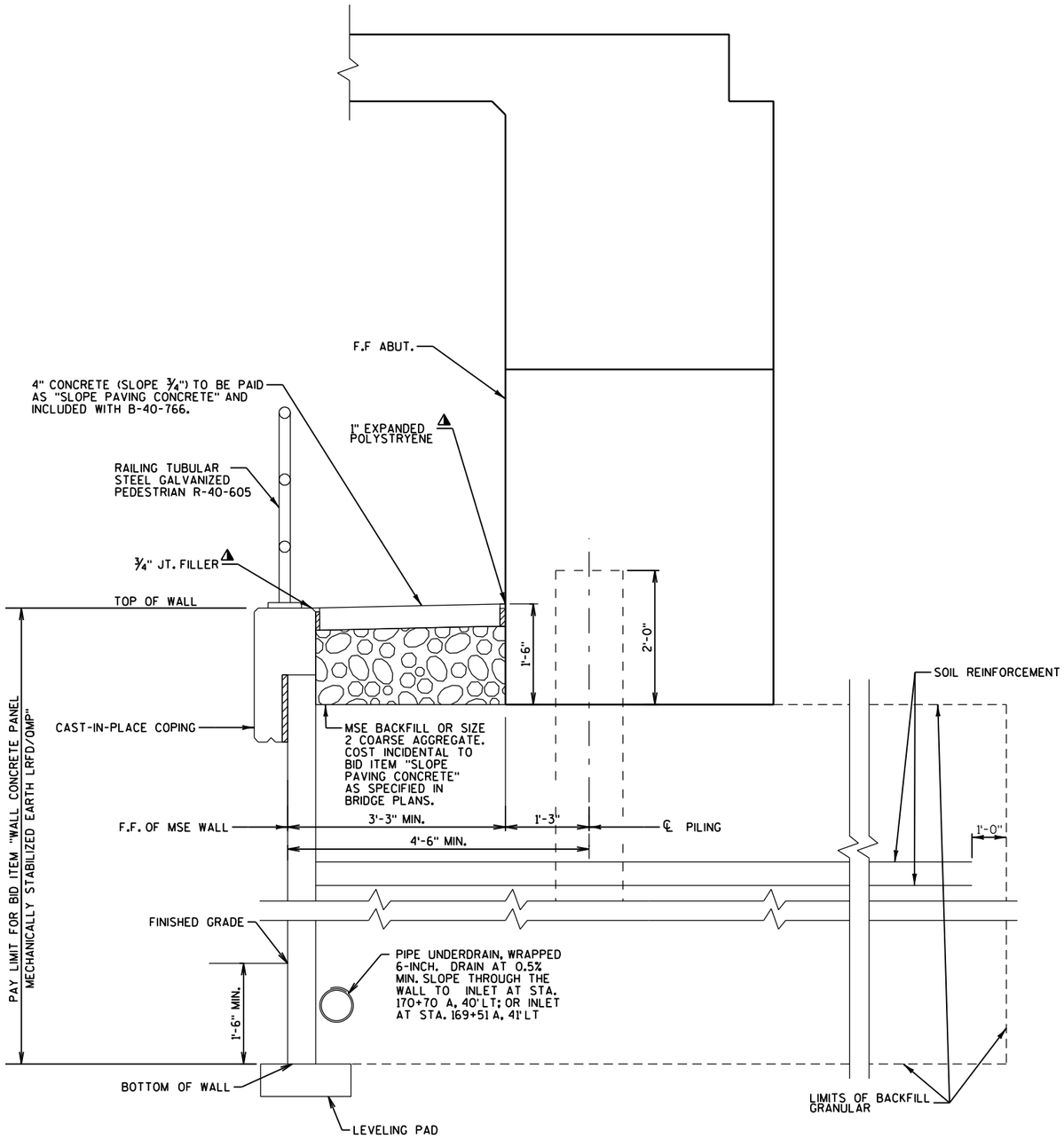


## CROSS SECTION THROUGH NORTH ABUTMENT AT MSE WALL

8

8

| NO. | DATE | REVISION | BY |
|---|---|---|---|
| | | | |

STATE OF WISCONSIN
DEPARTMENT OF TRANSPORTATION

STRUCTURE R-40-605

DRAWN BY RBH | PLANS CK'D. RPB

CROSS SECTION

SHEET 2 OF 5

507

FILE=
SCALE =

| STATE PROJECT NUMBER |
|---|
| 2140-13-70 |

## TOTAL ESTIMATED QUANTITIES

| ITEM NO. | BID ITEMS | UNIT | TOTAL |
|---|---|---|---|
| 209.0100 | BACKFILL GRANULAR | CY | 1,117 |
| 516.0500 | RUBBERIZED MEMBRANE WATERPROOFING | SY | 2 |
| 532.0750.S | TEMPORARY WALL WIRE FACED MECHANICALLY STABILIZED EARTH | SF | 700 |
| 612.0406 | PIPE UNDERDRAIN WRAPPED 6-INCH | LF | 214 |
| SPV.0090.05 | RAILNG TUBULAR STEEL GALVANIZED PEDESTRIAN R-40-605 | LF | 206 |
| SPV.0165.01 | WALL CONCRETE PANEL MECHANICALLY STABILIZED EARTH LRFD/QMP | SF | 2,398 |
| | NON-BID ITEMS | | |
| | PREFORMED JOINT FILLER | SIZE | 3/4" |
| | | | |
| | | | |

## GEOMETRY TABLE

| WALL STATION | ROADWAY STATION | OFFSET TO F.F. WALL | TOP OF WALL ELEV. | FINISHED GRADE F.F. ELEV. ◥ |
|---|---|---|---|---|
| 0+00.00 | 169+13.44A | 52.00' LT | 733.01 | 732.84 |
| 0+12.00 | 169+24.83A | 52.00' LT | 736.01 | 730.00 |
| 0+25.00 | 169+37.16A | 52.00' LT | 739.26 | 730.00 |
| 0+36.00 | 169+47.60A | 52.00' LT | 742.01 | 730.00 |
| 0+50.00 | 169+60.88A | 52.00' LT | 742.01 | 730.00 |
| 0+75.00 | 169+84.60A | 52.00' LT | 742.01 | 730.00 |
| 1+00.00 | 170+08.32A | 52.00' LT | 742.01 | 730.00 |
| 1+25.00 | 170+32.04A | 52.00' LT | 742.01 | 730.00 |
| 1+50.00 | 170+55.76A | 52.00' LT | 742.01 | 730.00 |
| 1+68.00 | 170+72.84A | 52.00' LT | 742.01 | 730.00 |
| 1+75.00 | 170+79.48A | 52.00' LT | 740.26 | 730.00 |
| 1+92.00 | 170+95.61A | 52.00' LT | 736.01 | 730.00 |
| 2+00.00 | 171+03.20A | 52.00' LT | 734.01 | 731.88 |
| 2+04.00 | 171+07.00A | 52.00' LT | 733.01 | 732.82 |

◥ = LINEARLY INTERPOLATE WALL ELEVATIONS BETWEEN STATIONS.

## SOIL PARAMETERS

| STRATUM LOCATIONS AND SOIL DESCRIPTIONS | TOTAL UNIT WEIGHT (PCF) | FRICTION ANGLE (DEGREES) | COHESION (PSF) |
|---|---|---|---|
| GRANULAR BACKFILL (REINFORCING ZONE OR BACKFILL) | 120 | 30 | 0 |
| SILTY CLAY NATIVE SOIL (RETAINED SOIL)* | 135 | 26 | 0 |
| SILTY CLAY NATIVE SOIL (EL. 746-669) | 135 | 26 | 0 |
| NEW FILL SILTY CLAY ENGINEERED FILL (ABOVE EXISTING GRADES AND PLACED IN EXCAVATION BACKFILL) | 130 | 26 | 0 |

* DESIGN WALL FOR THESE VALUES

## WALL EXTERNAL & OVERALL STABILITY EVALUATION **

| DIMENSIONS | EVALUATED LOCATIONS |
|---|---|
| WALL HEIGHT (FEET) | 13.5 |
| EXPOSED WALL HEIGHT (FEET) | 12.0 |
| MINIMUM LENGTH OF REINFORCEMENT (FEET) | 12.15 |
| WALL STATION | NE RAMP STA. 106+50 |
| BORING USED | 5 |
| CAPACITY TO DEMAND RATIO (CDR) | |
| SLIDING (CDR>1.0) | 1.02 |
| ECCENTRICITY (CDR>1.0) | 2.52 |
| OVERALL STABILITY (CDR>1.0) | 1.02 |
| BEARING RESISTANCE (CDR>1.0) | 1.46 |
| FACTORED BEARING RESISTANCE (PSF) | 5038 |

** BASED ON GEOTECHNICAL ENGINEERING REPORT

FINAL DESIGN FOR INTERNAL STABILITY AND EXTERNAL SLIDING AND OVERTURNING IS THE RESPONSIBILTY OF THE CONTRACTOR'S WALL DESIGNER.

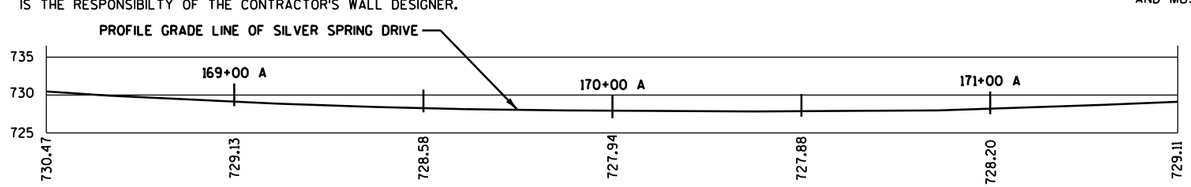


EXISTING PROFILE GRADE LINE
SILVER SPRING DR.

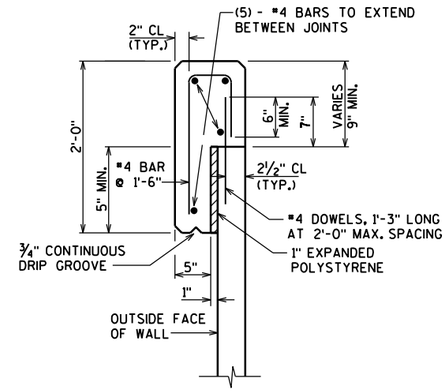


CAST-IN-PLACE
CONCRETE COPING DETAIL

COPING ON TOP OF WALL SHOWN.
VERTICAL COPING AT END OF WALL SIM.

NOTE: CONCRETE COPING REINFORCING STEEL SHALL BE DESIGNED AT LOCATIONS WHERE RAILING, FENCING OR ANY OTHER ATTACHMENTS ARE MADE.

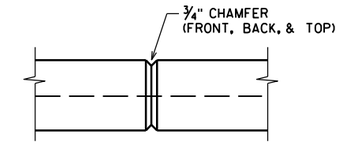


COPING CONTRACTION JOINT

DO NOT RUN BAR STEEL THRU JOINT.
MAX. SPACING OF JOINT = 12'

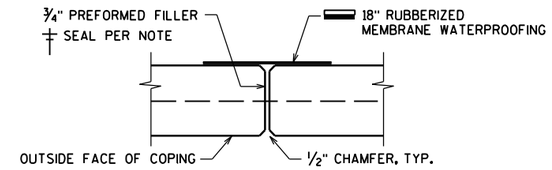


COPING EXPANSION JOINT

DO NOT RUN BAR STEEL THRU JOINT.
MAX. SPACING OF JOINT = 50'

SEAL ALL EXPOSED HORIZ. & VERT. SURFACES OF FILLER WITH NON-STAINING GRAY NON-BITUMINOUS JOINT SEALER. (1" DEEP AND HOLD ⅛" BELOW SURFACE OF CONC.)

MEMBRANE WATERPROOFING TO EXTEND FROM TOP OF COPING TO 6" BELOW TOP OF PANELS.

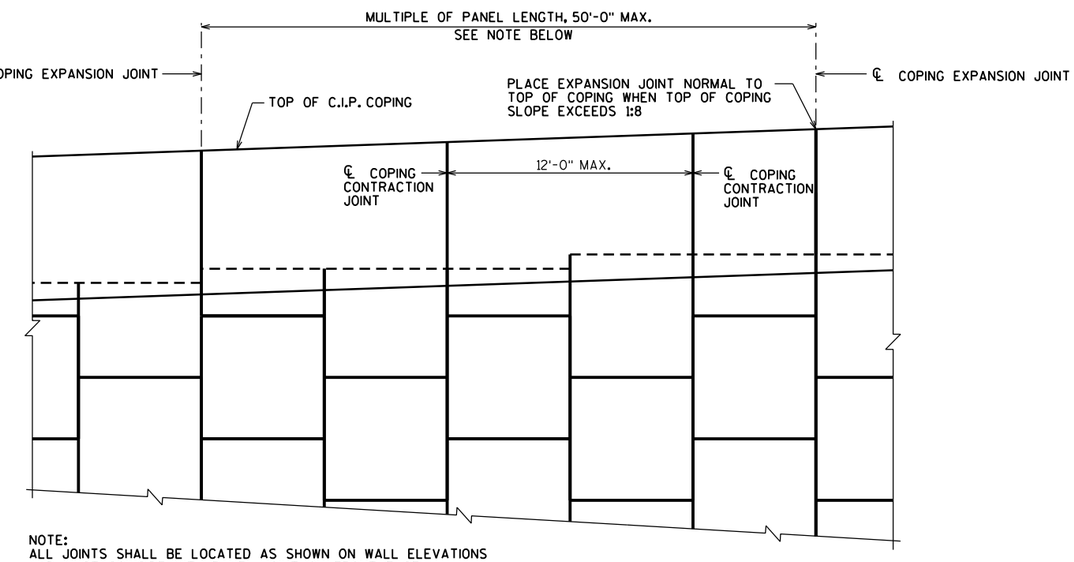


NOTE:
ALL JOINTS SHALL BE LOCATED AS SHOWN ON WALL ELEVATIONS AND MUST COINCIDE WITH PANEL JOINT ON FRONT FACE.

C.I.P. COPING PARTIAL ELEVATION

| NO. | DATE | REVISION | BY |
|---|---|---|---|
| | | | |

STATE OF WISCONSIN
DEPARTMENT OF TRANSPORTATION

STRUCTURE R-40-605

DRAWN BY RBH | PLANS CK'D. RPB

QUANTITIES & DETAILS

SHEET 3 OF 5
508

8

8

FILE=
SCALE =

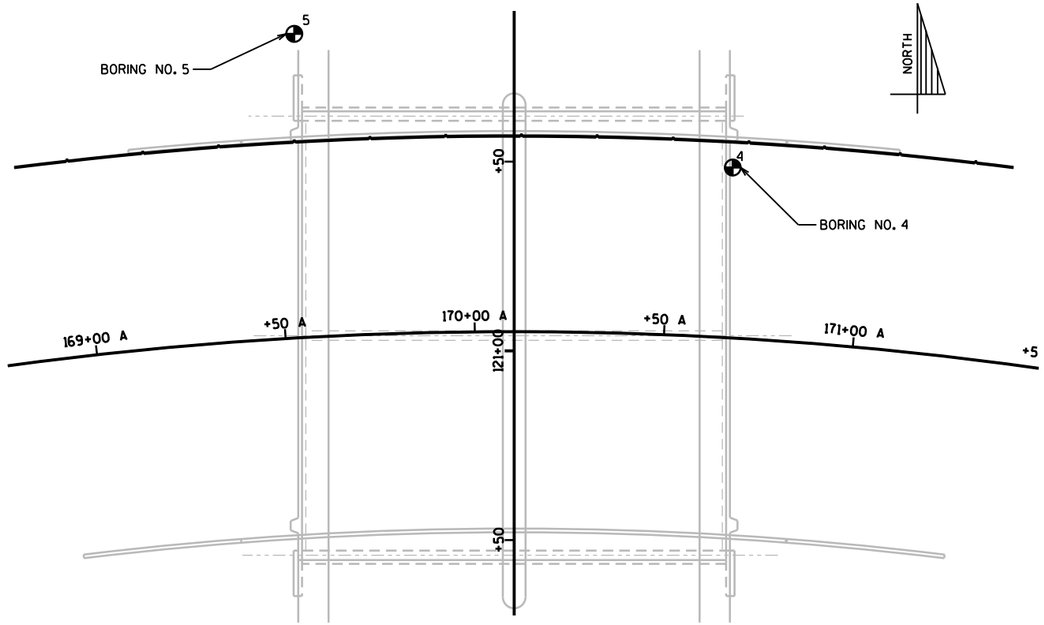


PLAN

**BORINGS PERFORMED BY:**

GILES ENGINEERING ASSOCIATES INC.
N8 W22350 JOHNSON DRIVE, SUITE A1
WAUKESHA, WI 53186

BORING 4 TAKEN ON 11/18/2010
BORING 5 TAKEN ON 11/19/2010

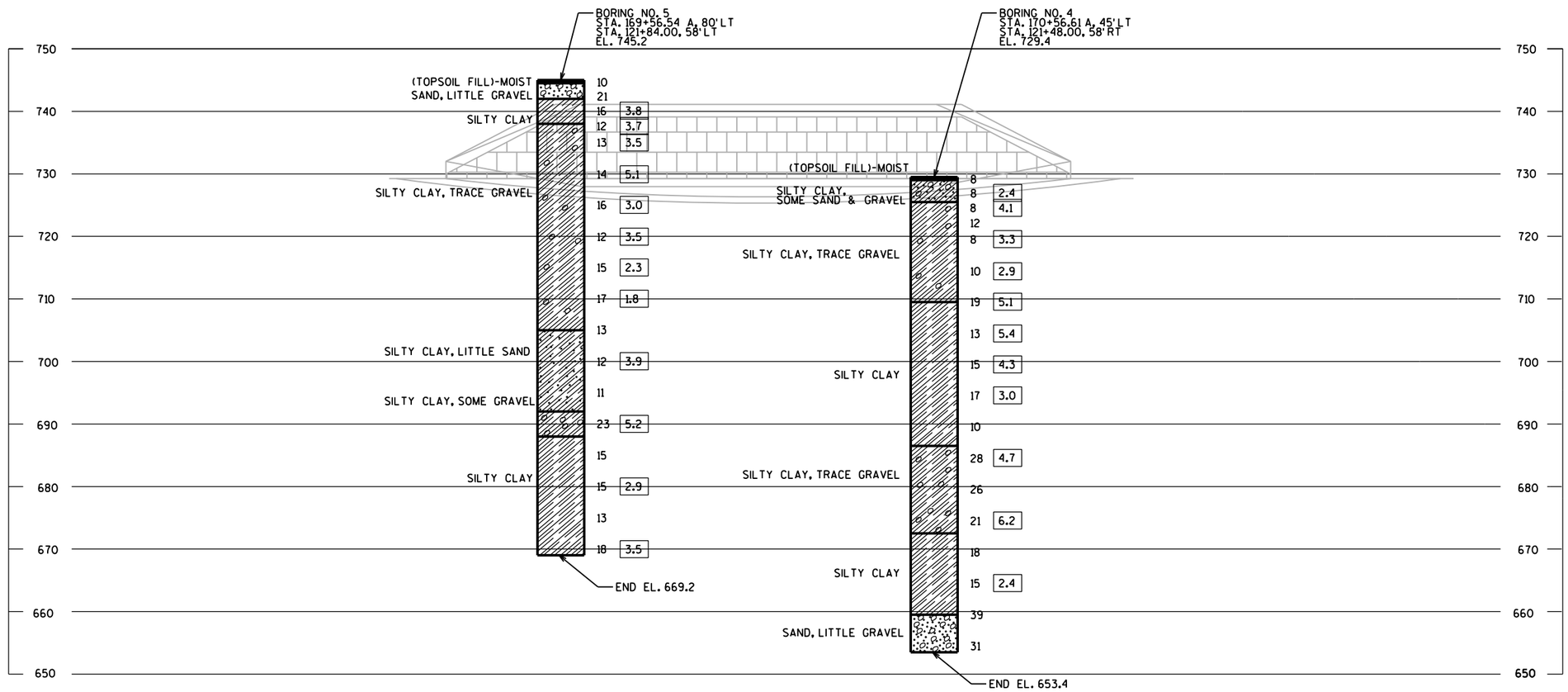


STATE PROJECT NUMBER

2140-13-70

ABBREVIATIONS

F — FINE M — MEDIUM C — COARSE
WS — WEATHERED SO — SOUND

MATERIAL SYMBOLS

TOPSOIL, SILT, SANDSTONE, SAND, PEAT, LIMESTONE, GRAVEL, CLAY, IGNEOUS ROCK

LEGEND OF PROBING

PROBING NO.
STA.
ELEVATION
7 AVERAGE BLOWS PER FOOT
REFUSAL 95/6

95/6=95 BLOWS FOR 6" PENETRATION
PROBING TAKEN WITH A 350# WT. FALLING 18" ON A 2" O.D. POINT.

LEGEND OF BORING

BORING NO.
ELEV. STA.
UNCONFINED STRENGTH → 7.7 7
BLOWS PER FT. USING 140# WT. FALLING 30"
SANDY GRAVEL
F. BOULDERS OR COBBLES
WASH SAMPLE
SAND
SHELBY TUBE — S.T.
GROUND WATER ELEVATION
SILTY CLAY
NO GROUND WATER OBSERVED ABOVE THIS ELEVATION
SO LIMESTONE

UNLESS OTHERWISE SPECIFIED, THE BLOWS PER FOOT AT THE LOCATIONS INDICATED ARE BASED ON DRIVING A 2" O.D. X 1.4" I.D. SPLIT SPOON SAMPLER WITH A 140# HAMMER HAVING A FREE FALL OF 30". THE BLOW COUNT IS TAKEN IN UNDISTURBED SOIL IMMEDIATELY BELOW A CASED OR OPEN HOLE ELIMINATING SIDE FRICTION ON THE DRIVE PIPE.

SUBSURFACE EXPLORATION FOR FOUNDATION DESIGN AND BIDDERS INFORMATION

TO OBTAIN RELATIVE DATA CONCERNING THE CHARACTER OF MATERIAL IN AND UPON WHICH THE FOUNDATION MIGHT BE BUILT, BORINGS AND/OR SOUNDINGS WERE MADE AT POINTS APPROXIMATELY AS INDICATED ON THIS DRAWING. THE DATA PRESENTED HEREIN REPRESENTS THE FINDINGS OF THE SUBSURFACE EXPLORATIONS MADE. HOWEVER, BECAUSE THE DEPTHS INVESTIGATED ARE LIMITED AND THE AREA OF THE BORINGS AND/OR SOUNDINGS IS VERY SMALL IN RELATION TO THE ENTIRE AREA, THE WISCONSIN DEPARTMENT OF TRANSPORTATION DOES NOT WARRANT CONDITIONS BELOW THE DEPTHS INVESTIGATED OR THAT THE CLASSIFICATION OF MATERIAL ENCOUNTERED IN THESE INVESTIGATIONS IS NECESSARILY TYPICAL OF THE ENTIRE SITE.

| NO. | DATE | REVISION | BY |
|---|---|---|---|

STATE OF WISCONSIN
DEPARTMENT OF TRANSPORTATION

**STRUCTURE R-40-605**

DRAWN BY RBH PLANS CK'D. AML

SUBSURFACE EXPLORATION

SHEET 4 OF 5
509

8

8

| STATE PROJECT NUMBER |
|---|
| 2140-13-70 |

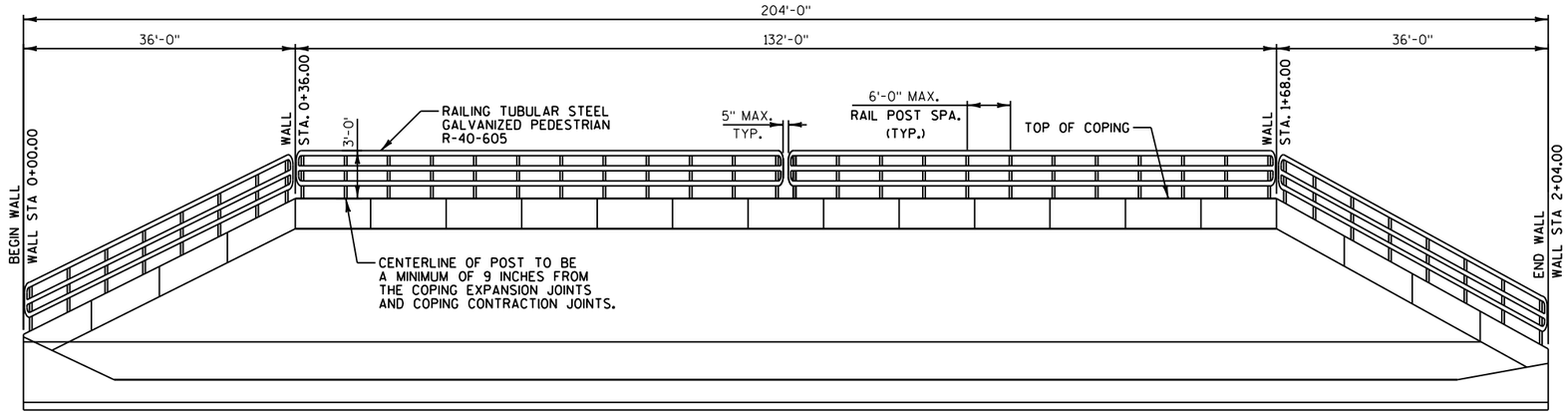


## ELEVATION

(LOOKING NORTH AT FRONT FACE OF WALL)

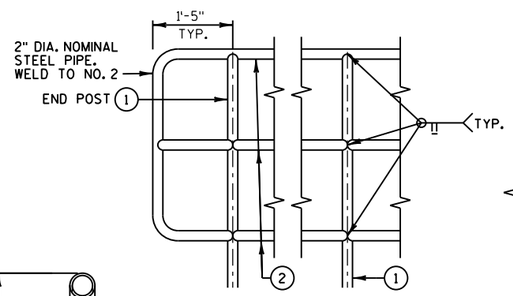


## PART ELEVATION OF RAILING

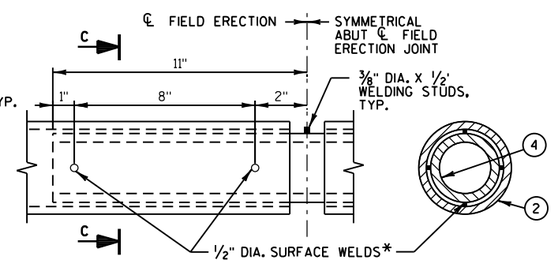


## FIELD ERECTION JOINT DETAIL

* MIN. 5/8" FLAT SURFACE DIA. PUNCHING OR STUDS MAY BE USED AS AN ALTERNATE.

## SECTION C-C

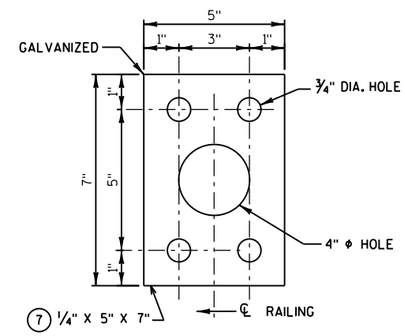


## ANCHOR PLATE

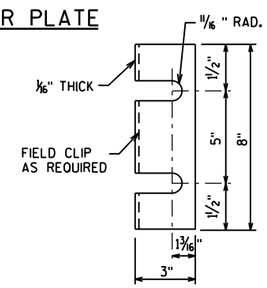


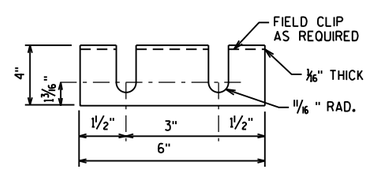


## POST SHIM DETAILS

SHIMS REQUIRED ONLY WHEN END POSTS AND LINE POSTS ARE WELDED TO BASE PLATES. PROVIDE 2 SETS PER POST. USE WHERE REQUIRED FOR ALIGNMENT.

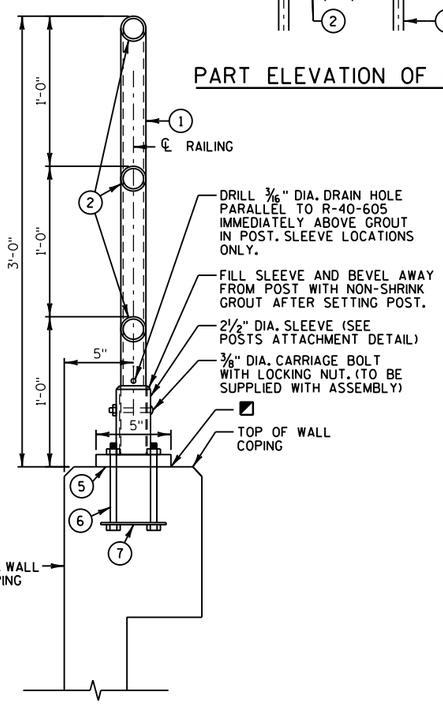


## SECTION THRU RAILING

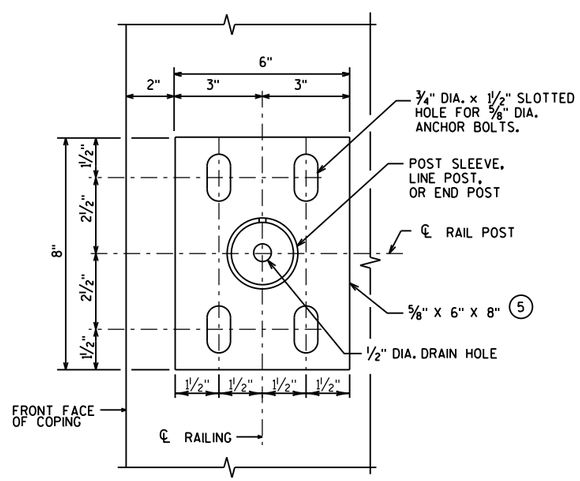


## BASE PLATE

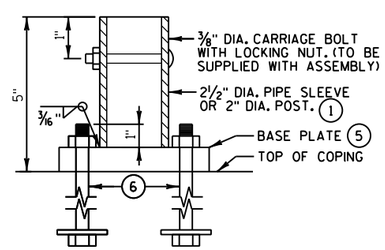


## POST ATTACHMENT

UNIT SHALL BE GALVANIZED AFTER FABRICATION

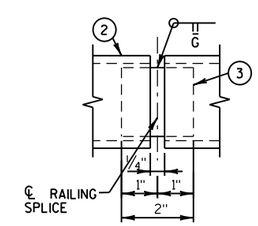


## SHOP RAILING SPLICE DETAIL

(LOCATION MUST BE SHOWN ON SHOP DRAWINGS)

## GENERAL NOTES

COMPLETE ANY REQUIRED WELDING OF COMPONENT BEFORE GALVANIZING.

BID ITEM SHALL BE "RAILING TUBULAR STEEL GALVANIZED PEDESTRIAN R-40-605", WHICH INCLUDES ALL ITEMS SHOWN.

RAILING SHALL BE FABRICATED IN LENGTHS THAT INCLUDE 3 OR 4 POSTS.

FIELD ERECTION JOINTS MUST BE PLACED IN BETWEEN RAIL POSTS WHERE THERE IS ALSO A CONCRETE COPING EXPANSION JOINT IN BETWEEN RAIL POSTS.

POST BASE PLATES SHALL BE FLAT WITH ALL SURFACES SMOOTH AND FREE FROM WARP AND ALL EDGES SMOOTH, STRAIGHT AND VERTICAL. ALL PLATE CUTS SHALL BE MACHINE OR MACHINE FLAME CUT.

ALL MATERIAL EXCEPT ANCHORAGE DETAIL (NO. 7) SHALL BE GALVANIZED AFTER FABRICATION. PRIOR TO GALVANIZING, ALL STEEL RAILING POSTS AND STEEL TUBING SHALL BE GIVEN A NO. 6 BLAST CLEANING BY S.S.P.C. SPECIFICATIONS.

DRILL DRAIN HOLES PRIOR TO GALVANIZING.

ALL MATERIALS USED IN FABRICATION SHALL BE MADE FROM MATERIALS CONFORMING TO A.S.T.M. DESIGNATION A709 GRADE 36 UNLESS NOTED OTHERWISE.

GALVANIZED STEEL SHIMS MAY BE USED UNDER POSTS WHERE REQ'D FOR ALIGNMENT.

ALL RAILS, POSTS AND SLEEVES ARE STANDARD WEIGHT PIPE, SCHEDULE 40.

PLACE ALL NUTS ON ABUTMENT SIDE OF POSTS.

ANCHORAGES SHALL BE ACCURATELY PLACED TO PROVIDE CORRECT ALIGNMENT OF RAILING.

◪ CAULK AROUND PERIMETER OF BASE PLATE AND FILL PORTION OF SLOTTED HOLE AROUND ANCHOR BOLT IN SHIM WITH NON-STAINING GRAY NON-BITUMINOUS JOINT SEALER.

RAILS AND POSTS TO BE ASTM A500 GRADE B. BASE PLATES AND SHIMS TO BE ASTM A709, GRADE 36. ALL GALVANIZED AFTER FABRICATION.

THE NUT SECURING THE POST BASE PLATE TO THE CONCRETE SHALL BE TIGHTENED TO A SNUG FIT AND GIVEN AN ADDITIONAL 1/8 TURN.

## LEGEND

1. 2" DIA. NOMINAL STEEL PIPE FOR POSTS: CUT BOTTOM OF POST TO MATCH TOP OF CONCRETE. POSTS ARE TO BE SET VERTICAL.
2. 2" DIA. NOMIMAL STEEL PIPE FOR RAILS: WELD TO NO. 1.
3. 1 1/2" DIA. PIPE SLEEVE FOR NO. 2 PROVIDE "SLIDING FIT" WITH A MINIMUM OUT TO OUT DIMENSION OF 2 1/16".
4. 1 1/2" DIA. PIPE SLEEVE X 1'-10" LONG FOR NO. 2. PROVIDE 1/2" DIA. SURFACE WELDS ON ALL SIDES AS SHOWN. GRIND WELDS TO FIT FREE INTO I.D. OF NO. 2. PROVIDE 3/8" DIA. X 1/2" WELDING STUDS ON TOP AND BOTTOM SURFACES AT CENTERLINE.
5. PLATE 3/4" X 5" X 8", WITH 3/4" DIA. x 1 1/2" SLOTTED HOLE FOR ANCHOR BOLTS NO. 6. WELD TO NO. 1 OR PIPE SLEEVE AS SHOWN.
6. 5/8" DIA. x 9" LONG, TYPE 316 STAINLESS STEEL THREADED ROD (MIN. TENSILE STRENGTH = 70 KSI) WITH NUT AND WASHERS OF SAME ALLOY GROUP. (ALTERNATE RAIL POST ANCHORAGE: 4 EQUIVALENT STAINLESS STEEL CONCRETE MASONRY ANCHORS TYPE S 5/8"-INCH. EMBED 7" IN CONCRETE FOR RAIL POSTS. EMBED 5" IN CONCRETE FOR END RAILS.)
7. 1/4" X 5" X 7" FLAT BAR, WITH 3/4" DIA. HOLES FOR ANCHOR BOLTS NO. 6.

| NO. | DATE | REVISION | BY |
|---|---|---|---|

STATE OF WISCONSIN
DEPARTMENT OF TRANSPORTATION

STRUCTURE R-40-605

DRAWN BY RBH | PLANS CK'D. RPB

RAILING TUBULAR STEEL

SHEET 5 OF 5
510

FILE=
SCALE =

8

8

STAGE 2 - STH 181 (N. 76TH ST.)

| STATION | Real Station | Distance | AREA (SF) Cut | AREA (SF) Salvaged/Unusable Pavement Material | AREA (SF) Fill | Incremental Vol (CY) (Unadjusted) Cut Note 1 | Incremental Vol (CY) (Unadjusted) Salvaged/Unusable Pavement Material Note 2 | Incremental Vol (CY) (Unadjusted) Fill Note 3 | Cumulative Vol (CY) Cut 1.00 Note 1 | Cumulative Vol (CY) Expanded Fill 1.25 | Mass Ordinate Note 8 |
|---|---|---|---|---|---|---|---|---|---|---|---|
| 115+56.00 | 11556 | | 51 | 34 | 0 | 0 | 0 | 0 | 0 | 0 | 0 |
| 116+00.00 | 11600 | 44 | 46 | 33 | 0 | 79 | 54 | 0 | 79 | 0 | 24 |
| 116+50.00 | 11650 | 50 | 44 | 33 | 2 | 83 | 62 | 2 | 162 | 2 | 44 |
| 117+00.00 | 11700 | 50 | 39 | 33 | 9 | 76 | 62 | 10 | 238 | 14 | 46 |
| 117+50.00 | 11750 | 50 | 43 | 38 | 30 | 75 | 66 | 36 | 314 | 60 | 10 |
| 118+00.00 | 11800 | 50 | 41 | 38 | 54 | 77 | 69 | 78 | 391 | 157 | -79 |
| 118+50.00 | 11850 | 50 | 39 | 37 | 75 | 73 | 69 | 119 | 464 | 305 | -223 |
| 119+00.00 | 11900 | 50 | 38 | 38 | 86 | 71 | 69 | 148 | 535 | 491 | -407 |
| 119+50.00 | 11950 | 50 | 41 | 41 | 111 | 73 | 72 | 182 | 608 | 718 | -634 |
| 120+00.00 | 12000 | 50 | 50 | 50 | 104 | 84 | 84 | 199 | 692 | 966 | -882 |
| STRUCTURE | | | | | | | | | | | |
| 122+00.00 | 12200 | 0 | 50 | 50 | 174 | 0 | 0 | 0 | 692 | 966 | -882 |
| 122+50.00 | 12250 | 50 | 40 | 40 | 174 | 83 | 83 | 322 | 775 | 1369 | -1285 |
| 123+00.00 | 12300 | 50 | 51 | 51 | 210 | 84 | 84 | 356 | 859 | 1814 | -1730 |
| 123+50.00 | 12350 | 50 | 38 | 38 | 142 | 82 | 82 | 326 | 941 | 2221 | -2137 |
| 124+00.00 | 12400 | 50 | 25 | 25 | 67 | 58 | 58 | 193 | 999 | 2463 | -2379 |
| 124+13.00 | 12413 | 13 | 31 | 25 | 34 | 14 | 12 | 24 | 1013 | 2493 | -2407 |
| 124+50.00 | 12450 | 37 | 27 | 25 | 27 | 40 | 34 | 41 | 1053 | 2545 | -2453 |
| 124+75.00 | 12475 | 25 | 28 | 25 | 17 | 26 | 23 | 20 | 1079 | 2570 | -2476 |
| 125+00.00 | 12500 | 25 | 39 | 26 | 8 | 31 | 24 | 12 | 1110 | 2585 | -2483 |
| 125+50.00 | 12550 | 50 | 33 | 25 | 0 | 67 | 47 | 7 | 1176 | 2594 | -2473 |
| 126+00.00 | 12600 | 50 | 51 | 38 | 0 | 78 | 58 | 0 | 1255 | 2594 | -2453 |
| 126+46.00 | 12646 | 46 | 0 | 0 | 0 | 44 | 32 | 0 | 1299 | 2594 | -2441 |
| | | | | | Column totals | 1299 | 1146 | 2075 | | | |

STAGE 2 - RAMP NW

| STATION | Real Station | Distance | AREA (SF) Cut | AREA (SF) Salvaged/Unusable Pavement Material | AREA (SF) Fill | Incremental Vol (CY) (Unadjusted) Cut Note 1 | Incremental Vol (CY) (Unadjusted) Salvaged/Unusable Pavement Material Note 2 | Incremental Vol (CY) (Unadjusted) Fill Note 3 | Cumulative Vol (CY) Cut 1.00 Note 1 | Cumulative Vol (CY) Expanded Fill 1.25 | Mass Ordinate Note 8 |
|---|---|---|---|---|---|---|---|---|---|---|---|
| 101+00.00 | 10100 | | 72 | 57 | 494 | 0 | 0 | 0 | 0 | 0 | 0 |
| 101+25.00 | 10125 | 25 | 62 | 48 | 360 | 62 | 49 | 396 | 62 | 495 | -481 |
| 101+50.00 | 10150 | 25 | 33 | 33 | 213 | 44 | 37 | 266 | 106 | 827 | -807 |
| 101+75.00 | 10175 | 25 | 26 | 26 | 140 | 27 | 27 | 164 | 133 | 1031 | -1012 |
| 102+00.00 | 10200 | 25 | 24 | 24 | 102 | 23 | 23 | 112 | 156 | 1172 | -1152 |
| 102+25.00 | 10225 | 25 | 24 | 24 | 97 | 22 | 22 | 92 | 178 | 1287 | -1268 |
| 102+50.00 | 10250 | 25 | 24 | 24 | 59 | 22 | 22 | 72 | 201 | 1378 | -1358 |
| 102+75.00 | 10275 | 25 | 26 | 24 | 38 | 23 | 22 | 45 | 224 | 1434 | -1413 |
| 103+00.00 | 10300 | 25 | 27 | 24 | 23 | 25 | 22 | 28 | 249 | 1469 | -1446 |
| 103+25.00 | 10325 | 25 | 29 | 24 | 13 | 26 | 22 | 16 | 275 | 1489 | -1463 |
| 103+50.00 | 10350 | 25 | 31 | 24 | 5 | 28 | 22 | 8 | 302 | 1499 | -1468 |
| 103+75.00 | 10375 | 25 | 32 | 24 | 1 | 29 | 22 | 3 | 331 | 1503 | -1464 |
| 104+00.00 | 10400 | 25 | 32 | 24 | 4 | 30 | 22 | 2 | 361 | 1506 | -1460 |
| 104+25.00 | 10425 | 25 | 35 | 24 | 2 | 31 | 22 | 3 | 392 | 1509 | -1455 |
| 104+50.00 | 10450 | 25 | 36 | 24 | 2 | 33 | 22 | 2 | 424 | 1511 | -1446 |
| 104+75.00 | 10475 | 25 | 37 | 24 | 2 | 34 | 22 | 2 | 458 | 1513 | -1437 |
| 105+00.00 | 10500 | 25 | 36 | 24 | 2 | 34 | 22 | 2 | 492 | 1516 | -1427 |
| 105+25.00 | 10525 | 25 | 36 | 24 | 2 | 33 | 22 | 2 | 526 | 1518 | -1419 |
| 105+50.00 | 10550 | 25 | 32 | 24 | 2 | 31 | 22 | 2 | 557 | 1520 | -1412 |
| 105+75.00 | 10575 | 25 | 32 | 22 | 1 | 30 | 21 | 1 | 587 | 1522 | -1405 |
| 106+00.00 | 10600 | 25 | 32 | 20 | 0 | 30 | 20 | 1 | 617 | 1522 | -1395 |
| 106+25.00 | 10625 | 25 | 33 | 18 | 1 | 30 | 17 | 0 | 647 | 1523 | -1383 |
| 106+50.00 | 10650 | 25 | 29 | 21 | 1 | 28 | 18 | 1 | 675 | 1524 | -1373 |
| 106+75.00 | 10675 | 25 | 25 | 18 | 1 | 25 | 18 | 1 | 700 | 1525 | -1367 |
| 107+07.00 | 10707 | 32 | 22 | 15 | 1 | 28 | 19 | 1 | 728 | 1526 | -1360 |
| | | | | | Column totals | 728 | 562 | 1221 | | | |

**STAGE 2 - RAMP SW**

| STATION | Real Station | Distance | AREA (SF) Cut | AREA (SF) Salvaged/Unusable Pavement Material | AREA (SF) Fill | Incremental Vol (CY) (Unadjusted) Cut Note 1 | Incremental Vol (CY) (Unadjusted) Salvaged/Unusable Pavement Material Note 2 | Incremental Vol (CY) (Unadjusted) Fill Note 3 | Cumulative Vol (CY) Cut 1.00 Note 1 | Cumulative Vol (CY) Expanded Fill 1.25 | Mass Ordinate Note 8 |
|---|---|---|---|---|---|---|---|---|---|---|---|
| 99+22.00 | 9922 | | 14 | 10 | 0 | 0 | 0 | 0 | 0 | 0 | 0 |
| 99+50.00 | 9950 | 28 | 16 | 10 | 0 | 16 | 10 | 0 | 16 | 0 | 5 |
| 99+75.00 | 9975 | 25 | 25 | 10 | 0 | 19 | 9 | 0 | 35 | 0 | 15 |
| 100+00.00 | 10000 | 25 | 28 | 11 | 0 | 25 | 10 | 0 | 59 | 0 | 30 |
| 100+25.00 | 10025 | 25 | 29 | 12 | 1 | 26 | 10 | 0 | 86 | 0 | 46 |
| 100+50.00 | 10050 | 25 | 32 | 17 | 4 | 28 | 13 | 2 | 114 | 3 | 58 |
| 100+75.00 | 10075 | 25 | 34 | 25 | 11 | 30 | 19 | 7 | 144 | 11 | 61 |
| 101+00.00 | 10100 | 25 | 38 | 35 | 17 | 34 | 27 | 13 | 178 | 28 | 50 |
| 101+25.00 | 10125 | 25 | 30 | 26 | 29 | 32 | 28 | 22 | 209 | 54 | 27 |
| 101+50.00 | 10150 | 25 | 28 | 25 | 30 | 27 | 24 | 27 | 236 | 89 | -4 |
| 101+75.00 | 10175 | 25 | 28 | 24 | 20 | 26 | 23 | 23 | 262 | 118 | -30 |
| 102+00.00 | 10200 | 25 | 29 | 24 | 12 | 26 | 22 | 15 | 288 | 136 | -44 |
| 102+25.00 | 10225 | 25 | 30 | 24 | 10 | 27 | 22 | 10 | 315 | 148 | -52 |
| 102+50.00 | 10250 | 25 | 37 | 24 | 3 | 31 | 22 | 6 | 346 | 155 | -50 |
| 102+75.00 | 10275 | 25 | 34 | 24 | 0 | 33 | 22 | 1 | 379 | 157 | -41 |
| 102+85.00 | 10285 | 10 | 38 | 24 | 0 | 13 | 9 | 0 | 393 | 157 | -36 |
| 103+00.00 | 10300 | 15 | 38 | 24 | 2 | 21 | 13 | 1 | 414 | 158 | -29 |
| 103+25.00 | 10325 | 25 | 37 | 24 | 9 | 35 | 22 | 5 | 448 | 164 | -23 |
| 103+50.00 | 10350 | 25 | 30 | 24 | 26 | 31 | 22 | 16 | 480 | 184 | -34 |
| 103+75.00 | 10375 | 25 | 36 | 24 | 57 | 31 | 22 | 38 | 510 | 232 | -74 |
| 104+00.00 | 10400 | 25 | 46 | 24 | 287 | 38 | 22 | 159 | 548 | 431 | -257 |
| 104+25.00 | 10425 | 25 | 47 | 29 | 407 | 43 | 25 | 322 | 591 | 833 | -641 |
| | | | | | **Column totals** | 591 | 399 | 666 | | | |

**STAGE 2 - SILVER SPRING DRIVE**

| STATION | Real Station | Distance | AREA (SF) Cut | AREA (SF) Salvaged/Unusable Pavement Material | AREA (SF) Fill | Incremental Vol (CY) (Unadjusted) Cut Note 1 | Incremental Vol (CY) (Unadjusted) Salvaged/Unusable Pavement Material Note 2 | Incremental Vol (CY) (Unadjusted) Fill Note 3 | Cumulative Vol (CY) Cut 1.00 Note 1 | Cumulative Vol (CY) Expanded Fill 1.25 | Mass Ordinate Note 8 |
|---|---|---|---|---|---|---|---|---|---|---|---|
| 168+60.00 | 16860 | | 16 | 6 | 0 | 0 | 0 | 0 | 0 | 0 | 0 |
| 169+00.00 | 16900 | 40 | 18 | 6 | 0 | 25 | 9 | 0 | 25 | 0 | 16 |
| 169+50.00 | 16950 | 50 | 56 | 25 | 0 | 68 | 29 | 0 | 93 | 0 | 56 |
| 170+00.00 | 17000 | 50 | 63 | 25 | 0 | 109 | 46 | 0 | 202 | 0 | 118 |
| | | | | | **Column totals** | 202 | 84 | 0 | | | |

** Note: Quantity for Salvaged/Unusable shown in Earthwork Summary Table in Miscellaneous Quantities.

**STAGE 3 - STH 181 (N. 76TH ST.)**

| STATION | Real Station | Distance | AREA (SF) Cut | AREA (SF) Salvaged/Unusable Pavement Material | AREA (SF) Fill | Incremental Vol (CY) (Unadjusted) Cut Note 1 | Incremental Vol (CY) (Unadjusted) Salvaged/Unusable Pavement Material Note 2 | Incremental Vol (CY) (Unadjusted) Fill Note 3 | Cumulative Vol (CY) Cut 1.00 Note 1 | Cumulative Vol (CY) Expanded Fill 1.25 | Mass Ordinate Note 8 |
|---|---|---|---|---|---|---|---|---|---|---|---|
| 115+56.00 | 11556 | | 31 | 19 | 2 | 0 | 0 | 0 | 0 | 0 | 0 |
| 116+00.00 | 11600 | 44 | 31 | 19 | 1 | 51 | 31 | 2 | 51 | 3 | 17 |
| 116+50.00 | 11650 | 50 | 27 | 19 | 2 | 54 | 35 | 2 | 104 | 5 | 33 |
| 117+00.00 | 11700 | 50 | 24 | 19 | 5 | 47 | 35 | 7 | 152 | 14 | 37 |
| 117+50.00 | 11750 | 50 | 22 | 19 | 19 | 43 | 35 | 22 | 194 | 41 | 17 |
| 118+00.00 | 11800 | 50 | 40 | 38 | 61 | 57 | 52 | 74 | 251 | 134 | -70 |
| 118+50.00 | 11850 | 50 | 40 | 38 | 78 | 74 | 70 | 129 | 325 | 296 | -229 |
| 119+00.00 | 11900 | 50 | 55 | 55 | 120 | 88 | 86 | 183 | 413 | 525 | -456 |
| 119+50.00 | 11950 | 50 | 40 | 40 | 123 | 88 | 88 | 225 | 501 | 806 | -737 |
| 120+00.00 | 12000 | 50 | 50 | 50 | 115 | 83 | 83 | 221 | 584 | 1082 | -1013 |
| **STRUCTURE** | | | | | | | | | | | |
| 122+00.00 | 12200 | 0 | 50 | 50 | 183 | 0 | 0 | 0 | 584 | 1082 | -1013 |
| 122+50.00 | 12250 | 50 | 39 | 39 | 195 | 83 | 83 | 350 | 667 | 1519 | -1450 |
| 123+00.00 | 12300 | 50 | 55 | 55 | 300 | 88 | 88 | 458 | 755 | 2091 | -2022 |
| 123+50.00 | 12350 | 50 | 39 | 39 | 157 | 87 | 87 | 423 | 842 | 2619 | -2551 |
| 124+00.00 | 12400 | 50 | 23 | 22 | 49 | 57 | 57 | 190 | 899 | 2857 | -2788 |
| 124+13.00 | 12413 | 13 | 23 | 22 | 42 | 11 | 11 | 22 | 910 | 2884 | -2815 |
| 124+50.00 | 12450 | 37 | 25 | 22 | 20 | 33 | 31 | 42 | 943 | 2937 | -2865 |
| 124+75.00 | 12475 | 25 | 30 | 23 | 9 | 26 | 21 | 14 | 969 | 2954 | -2878 |
| 125+00.00 | 12500 | 25 | 35 | 22 | 1 | 30 | 21 | 5 | 999 | 2960 | -2875 |
| 125+50.00 | 12550 | 50 | 32 | 22 | 0 | 62 | 41 | 1 | 1061 | 2961 | -2855 |
| 126+00.00 | 12600 | 50 | 35 | 22 | 0 | 62 | 41 | 0 | 1123 | 2962 | -2835 |
| 126+46.00 | 12646 | 46 | 40 | 22 | 0 | 64 | 38 | 0 | 1187 | 2962 | -2809 |
| | | | | | **Column totals** | 1187 | 1034 | 2370 | | | |

**STAGE 3 - RAMP NE**

| STATION | Real Station | Distance | AREA (SF) Cut | AREA (SF) Salvaged/Unusable Pavement Material | AREA (SF) Fill | Incremental Vol (CY) (Unadjusted) Cut Note 1 | Incremental Vol (CY) (Unadjusted) Salvaged/Unusable Pavement Material Note 2 | Incremental Vol (CY) (Unadjusted) Fill Note 3 | Cumulative Vol (CY) Cut 1.00 Note 1 | Cumulative Vol (CY) Expanded Fill 1.25 | Mass Ordinate Note 8 |
|---|---|---|---|---|---|---|---|---|---|---|---|
| 100+45.00 | 10045 | | 21 | 13 | 0 | 0 | 0 | 0 | 0 | 0 | 0 |
| 100+75.00 | 10075 | 30 | 24 | 16 | 0 | 25 | 16 | 0 | 25 | 0 | 9 |
| 101+00.00 | 10100 | 25 | 31 | 21 | 0 | 25 | 17 | 0 | 50 | 1 | 17 |
| 101+25.00 | 10125 | 25 | 37 | 27 | 0 | 31 | 22 | 0 | 82 | 1 | 27 |
| 101+50.00 | 10150 | 25 | 45 | 32 | 0 | 38 | 27 | 0 | 120 | 1 | 37 |
| 101+75.00 | 10175 | 25 | 46 | 38 | 3 | 42 | 33 | 1 | 162 | 2 | 45 |
| 102+00.00 | 10200 | 25 | 34 | 25 | 8 | 37 | 29 | 5 | 199 | 8 | 47 |
| 102+25.00 | 10225 | 25 | 32 | 24 | 8 | 31 | 23 | 7 | 229 | 17 | 45 |
| 102+50.00 | 10250 | 25 | 32 | 25 | 6 | 30 | 23 | 7 | 259 | 25 | 44 |
| 102+75.00 | 10275 | 25 | 31 | 24 | 8 | 29 | 22 | 6 | 288 | 33 | 43 |
| 103+00.00 | 10300 | 25 | 30 | 24 | 10 | 28 | 22 | 8 | 316 | 44 | 39 |
| 103+25.00 | 10325 | 25 | 29 | 24 | 14 | 28 | 22 | 11 | 344 | 58 | 30 |
| 103+50.00 | 10350 | 25 | 29 | 24 | 17 | 27 | 22 | 15 | 371 | 76 | 16 |
| 103+75.00 | 10375 | 25 | 27 | 24 | 21 | 26 | 22 | 18 | 397 | 98 | -2 |
| 104+00.00 | 10400 | 25 | 26 | 24 | 30 | 25 | 22 | 24 | 422 | 128 | -30 |
| 104+25.00 | 10425 | 25 | 25 | 24 | 41 | 24 | 22 | 33 | 445 | 170 | -70 |
| 104+50.00 | 10450 | 25 | 24 | 24 | 54 | 23 | 22 | 44 | 468 | 225 | -125 |
| 104+75.00 | 10475 | 25 | 24 | 24 | 70 | 22 | 22 | 57 | 491 | 297 | -197 |
| 105+00.00 | 10500 | 25 | 24 | 24 | 92 | 22 | 22 | 75 | 513 | 390 | -290 |
| 105+25.00 | 10525 | 25 | 52 | 24 | 94 | 35 | 22 | 86 | 548 | 498 | -385 |
| 105+50.00 | 10550 | 25 | 69 | 25 | 116 | 56 | 22 | 97 | 605 | 620 | -473 |
| 105+75.00 | 10575 | 25 | 71 | 27 | 129 | 65 | 24 | 113 | 669 | 761 | -573 |
| 106+00.00 | 10600 | 25 | 38 | 35 | 172 | 50 | 28 | 139 | 719 | 935 | -726 |
| 106+25.00 | 10625 | 25 | 66 | 50 | 293 | 48 | 39 | 215 | 767 | 1204 | -986 |
| 106+50.00 | 10650 | 25 | 74 | 56 | 549 | 65 | 49 | 390 | 832 | 1691 | -1457 |
| | | | | | **Column totals** | 832 | 598 | 1353 | | | |

9

9

STAGE 3 - RAMP SE

| STATION | Real Station | Distance | AREA (SF) Cut | AREA (SF) Salvaged/Unusable Pavement Material | AREA (SF) Fill | Incremental Vol (CY) (Unadjusted) Cut Note 1 | Incremental Vol (CY) (Unadjusted) Salvaged/Unusable Pavement Material Note 2 | Incremental Vol (CY) (Unadjusted) Fill Note 3 | Cumulative Vol (CY) Cut 1.00 Note 1 | Cumulative Vol (CY) Expanded Fill 1.25 | Mass Ordinate Note 8 |
|---|---|---|---|---|---|---|---|---|---|---|---|
| 101+00.00 | 10100 | | 77 | 57 | 485 | 0 | 0 | 0 | 0 | 0 | 0 |
| 101+25.00 | 10125 | 25 | 69 | 50 | 286 | 68 | 50 | 357 | 68 | 446 | -428 |
| 101+50.00 | 10150 | 25 | 37 | 36 | 109 | 49 | 40 | 183 | 117 | 674 | -647 |
| 101+75.00 | 10175 | 25 | 28 | 28 | 93 | 30 | 30 | 93 | 147 | 791 | -764 |
| 102+00.00 | 10200 | 25 | 24 | 24 | 88 | 24 | 24 | 84 | 171 | 896 | -869 |
| 102+25.00 | 10225 | 25 | 24 | 24 | 75 | 22 | 22 | 75 | 193 | 990 | -963 |
| 102+50.00 | 10250 | 25 | 24 | 24 | 63 | 22 | 22 | 64 | 215 | 1070 | -1042 |
| 102+75.00 | 10275 | 25 | 24 | 24 | 55 | 22 | 22 | 55 | 238 | 1138 | -1111 |
| 103+00.00 | 10300 | 25 | 26 | 24 | 45 | 23 | 22 | 47 | 261 | 1197 | -1168 |
| 103+25.00 | 10325 | 25 | 27 | 24 | 30 | 25 | 22 | 35 | 286 | 1240 | -1209 |
| 103+50.00 | 10350 | 25 | 28 | 23 | 14 | 25 | 22 | 21 | 311 | 1266 | -1231 |
| 103+75.00 | 10375 | 25 | 29 | 22 | 5 | 26 | 21 | 9 | 337 | 1277 | -1236 |
| 104+00.00 | 10400 | 25 | 32 | 20 | 3 | 28 | 19 | 3 | 365 | 1281 | -1232 |
| 104+25.00 | 10425 | 25 | 36 | 19 | 1 | 32 | 18 | 2 | 397 | 1283 | -1220 |
| 104+50.00 | 10450 | 25 | 42 | 18 | 1 | 36 | 17 | 1 | 433 | 1284 | -1202 |
| 104+75.00 | 10475 | 25 | 41 | 16 | 0 | 38 | 16 | 1 | 472 | 1285 | -1180 |
| 105+00.00 | 10500 | 25 | 41 | 16 | 0 | 38 | 15 | 0 | 510 | 1285 | -1157 |
| 105+25.00 | 10525 | 25 | 37 | 16 | 0 | 36 | 15 | 0 | 546 | 1285 | -1135 |
| 105+50.00 | 10550 | 25 | 31 | 18 | 0 | 31 | 16 | 0 | 577 | 1285 | -1120 |
| 105+75.00 | 10575 | 25 | 25 | 20 | 0 | 26 | 17 | 0 | 603 | 1285 | -1111 |
| 106+04.00 | 10604 | 29 | 22 | 16 | 0 | 25 | 19 | 0 | 628 | 1285 | -1106 |
| | | | | | **Column totals** | 628 | 449 | 1028 | | | |

STAGE 3 - SILVER SPRING DRIVE

| STATION | Real Station | Distance | AREA (SF) Cut | AREA (SF) Salvaged/Unusable Pavement Material | AREA (SF) Fill | Incremental Vol (CY) (Unadjusted) Cut Note 1 | Incremental Vol (CY) (Unadjusted) Salvaged/Unusable Pavement Material Note 2 | Incremental Vol (CY) (Unadjusted) Fill Note 3 | Cumulative Vol (CY) Cut 1.00 Note 1 | Cumulative Vol (CY) Expanded Fill 1.25 | Mass Ordinate Note 8 |
|---|---|---|---|---|---|---|---|---|---|---|---|
| 170+00.00 | 17000 | 0 | 60 | 25 | 0 | 0 | 0 | 0 | 0 | 0 | 0 |
| 170+50.00 | 17050 | 50 | 59 | 25 | 0 | 110 | 46 | 0 | 110 | 0 | 63 |
| 170+82.00 | 17082 | 32 | 45 | 22 | 0 | 62 | 28 | 0 | 171 | 0 | 97 |
| 171+00.00 | 17100 | 18 | 22 | 6 | 0 | 23 | 9 | 0 | 194 | 0 | 110 |
| 171+48.00 | 17148 | 48 | 18 | 6 | 0 | 36 | 11 | 0 | 230 | 0 | 135 |
| | | | | | **Column totals** | 230 | 95 | 0 | | | |

** Note: Quantity for Salvaged/Unusable shown in Earthwork Summary Table in Miscellaneous Quantities.

STAGE 4 - STH 181 (N. 76TH ST.)

| STATION | Real Station | Distance | AREA (SF) Cut | AREA (SF) Salvaged/Unusable Pavement Material | AREA (SF) Fill | Incremental Vol (CY) (Unadjusted) Cut Note 1 | Incremental Vol (CY) (Unadjusted) Salvaged/Unusable Pavement Material Note 2 | Incremental Vol (CY) (Unadjusted) Fill Note 3 | Cumulative Vol (CY) Cut 1.00 Note 1 | Cumulative Vol (CY) Expanded Fill 1.25 | Mass Ordinate Note 8 |
|---|---|---|---|---|---|---|---|---|---|---|---|
| 115+56.00 | 11556 | | 58 | 41 | 0 | 0 | 0 | 0 | 0 | 0 | 0 |
| 116+00.00 | 11600 | 44 | 43 | 35 | 4 | 83 | 62 | 3 | 83 | 4 | 16 |
| 116+50.00 | 11650 | 50 | 41 | 35 | 9 | 78 | 65 | 12 | 160 | 19 | 14 |
| 117+00.00 | 11700 | 50 | 48 | 48 | 32 | 82 | 77 | 38 | 242 | 67 | -29 |
| 117+50.00 | 11750 | 50 | 36 | 32 | 38 | 77 | 74 | 66 | 320 | 149 | -108 |
| 118+00.00 | 11800 | 50 | 28 | 27 | 50 | 59 | 55 | 82 | 379 | 252 | -206 |
| 118+50.00 | 11850 | 50 | 27 | 27 | 73 | 51 | 50 | 114 | 430 | 395 | -348 |
| 119+00.00 | 11900 | 50 | 27 | 27 | 84 | 50 | 50 | 146 | 480 | 576 | -530 |
| 119+50.00 | 11950 | 50 | 0 | 0 | 0 | 25 | 25 | 78 | 506 | 674 | -627 |
| 120+00.00 | 12000 | 50 | 0 | 0 | 0 | 0 | 0 | 0 | 506 | 674 | -627 |
| 122+00.00 | 12200 | 200 | 0 | 0 | 0 | 0 | 0 | 0 | 506 | 674 | -627 |
| 122+50.00 | 12250 | 50 | 0 | 0 | 0 | 0 | 0 | 0 | 506 | 674 | -627 |
| 123+00.00 | 12300 | 50 | 0 | 0 | 0 | 0 | 0 | 0 | 506 | 674 | -627 |
| 123+50.00 | 12350 | 50 | 0 | 0 | 0 | 0 | 0 | 0 | 506 | 674 | -627 |
| 124+00.00 | 12400 | 50 | 28 | 28 | 88 | 26 | 26 | 81 | 532 | 775 | -728 |
| 124+13.00 | 12413 | 13 | 28 | 28 | 75 | 13 | 13 | 39 | 545 | 824 | -777 |
| 124+50.00 | 12450 | 37 | 33 | 31 | 48 | 41 | 40 | 84 | 586 | 929 | -881 |
| 124+75.00 | 12475 | 25 | 37 | 33 | 31 | 32 | 30 | 37 | 619 | 975 | -925 |
| 125+00.00 | 12500 | 25 | 41 | 36 | 15 | 36 | 32 | 21 | 655 | 1001 | -947 |
| 125+50.00 | 12550 | 50 | 49 | 40 | 4 | 83 | 71 | 17 | 737 | 1023 | -956 |
| 126+00.00 | 12600 | 50 | 92 | 66 | 2 | 130 | 98 | 5 | 867 | 1029 | -931 |
| 126+46.00 | 12646 | 46 | 107 | 78 | 0 | 169 | 122 | 1 | 1036 | 1031 | -886 |
| | | | | | **Column totals** | 1036 | 891 | 825 | | | |

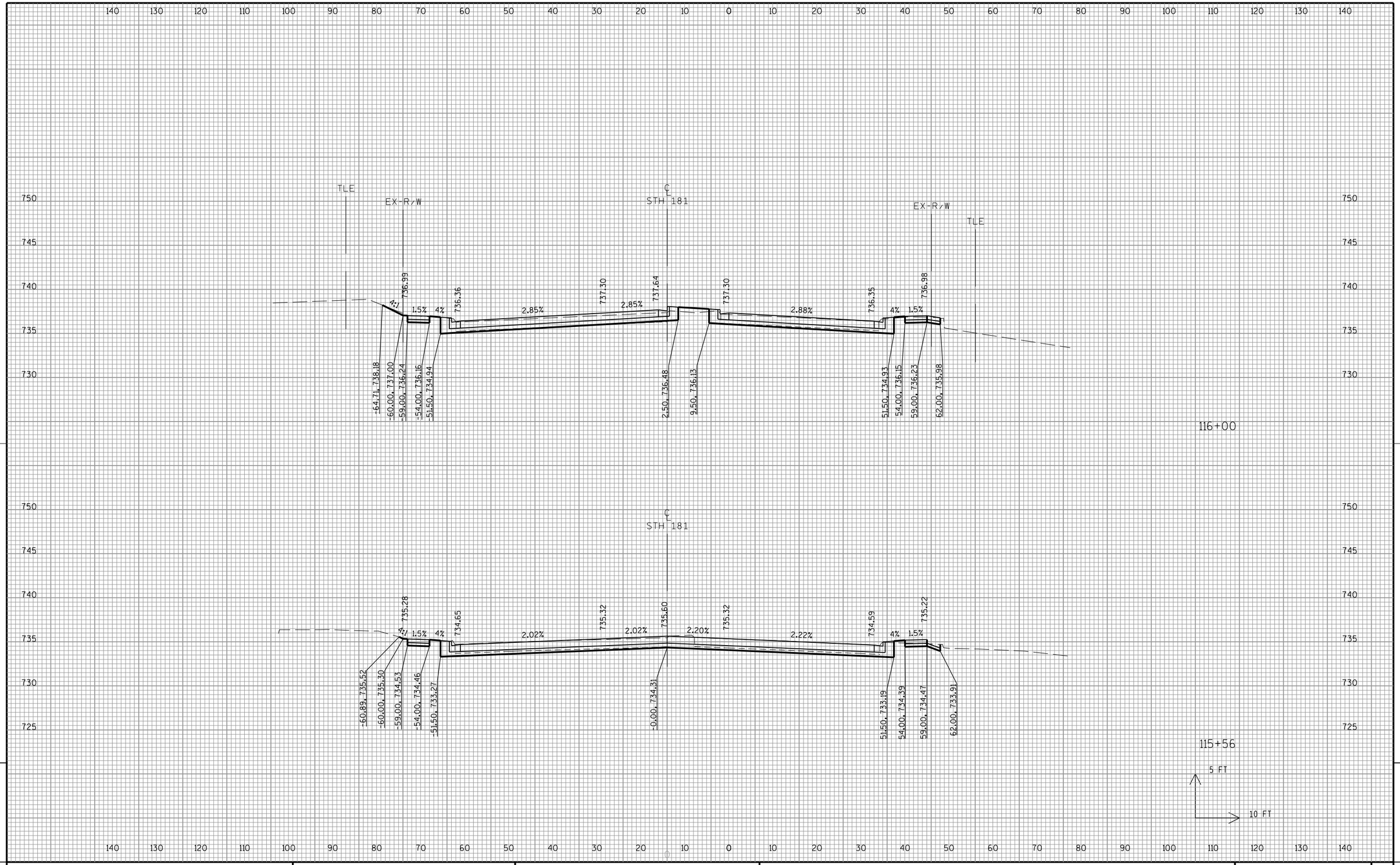


9

9

| PROJECT NO:2140-13-70 | HWY:STH 181 | COUNTY:MILWAUKEE | CROSS SECTIONS:STH 181 | SHEET 516 | E |
|---|---|---|---|---|---|

FILE NAME : L:\Jobs2010\20100384\CAD\WisDOT_Trans\dgn\00\090201_xs_NBPGL_18S.dgn PLOT DATE : 7/22/2016 PLOT BY : GRAEF PLOT NAME : PLOT SCALE : 20.0000 sf / in. WISDOT/CADDS SHEET 21

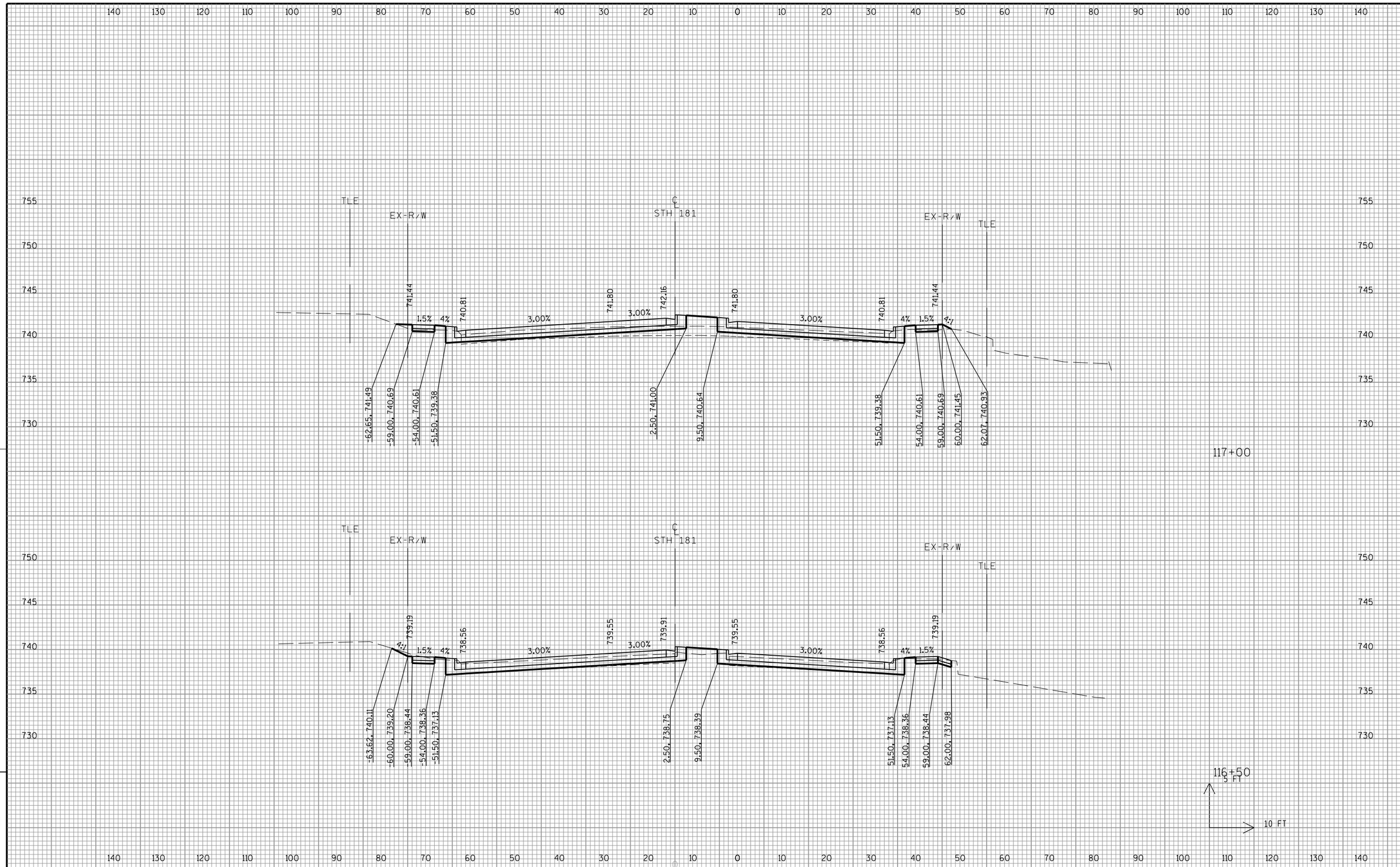


9

9

| PROJECT NO:2140-13-70 | HWY:STH 181 | COUNTY:MILWAUKEE | CROSS SECTIONS:STH 181 | SHEET 517 | E |
|---|---|---|---|---|---|

FILE NAME : L:\Jobs2010\20100384\CAD\WisDOT_Trans\dgn\00\090201_xs_NBPGL_18S.dgn PLOT DATE : 7/22/2016 PLOT BY : GRAEF PLOT NAME : PLOT SCALE : 20.0000 sf / in. WISDOT/CADDS SHEET 21

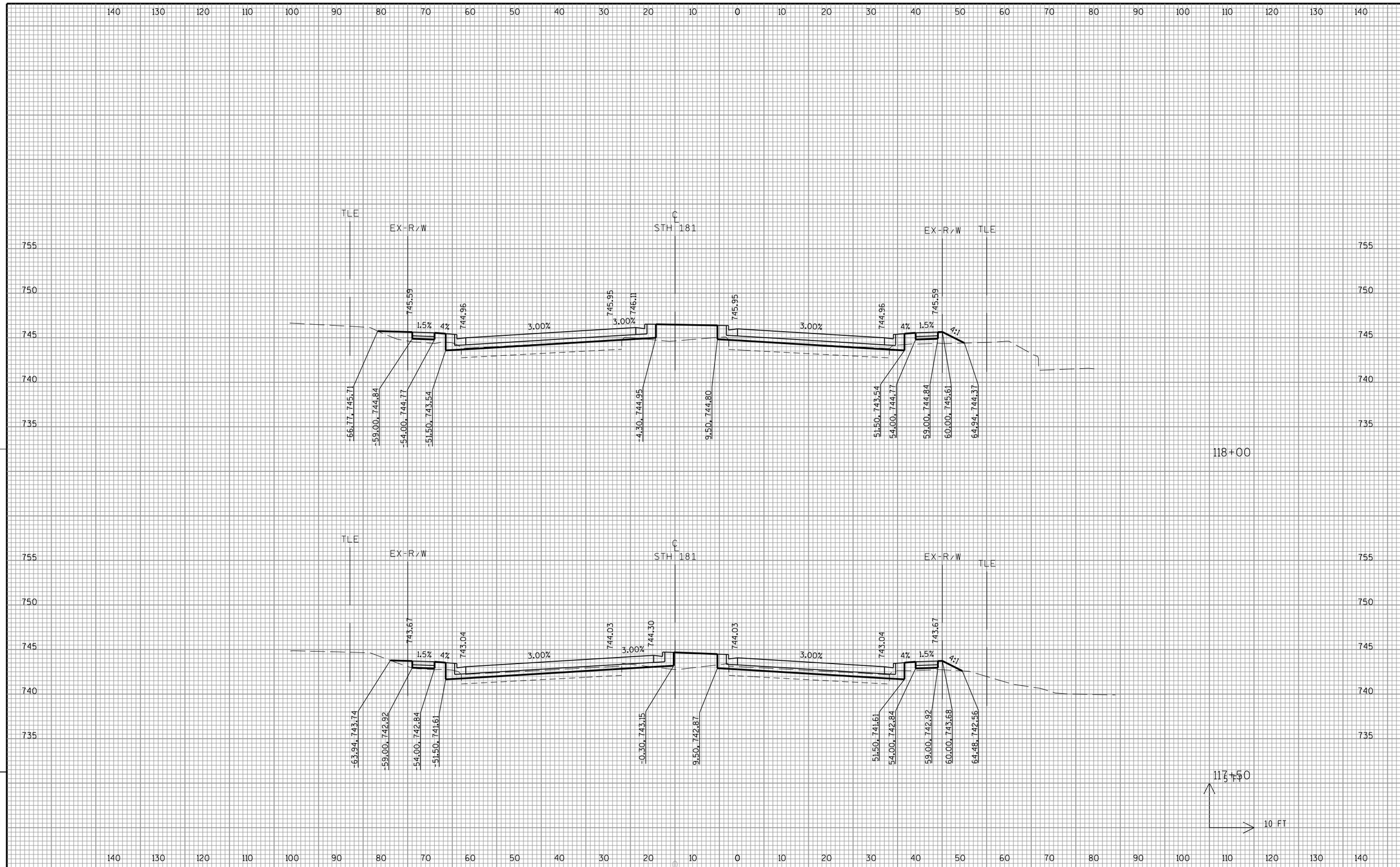


9

9

| PROJECT NO:2140-13-70 | HWY:STH 181 | COUNTY:MILWAUKEE | CROSS SECTIONS:STH 181 | SHEET 518 | E |
|---|---|---|---|---|---|

FILE NAME : L:\Jobs2010\20100384\CAD\WisDOT_Trans\dgn\00\090201_xs_NBPGL_18S.dgn PLOT DATE : 7/22/2016 PLOT BY : GRAEF PLOT NAME : PLOT SCALE : 20.0000 sf / in. WISDOT/CADDS SHEET 21

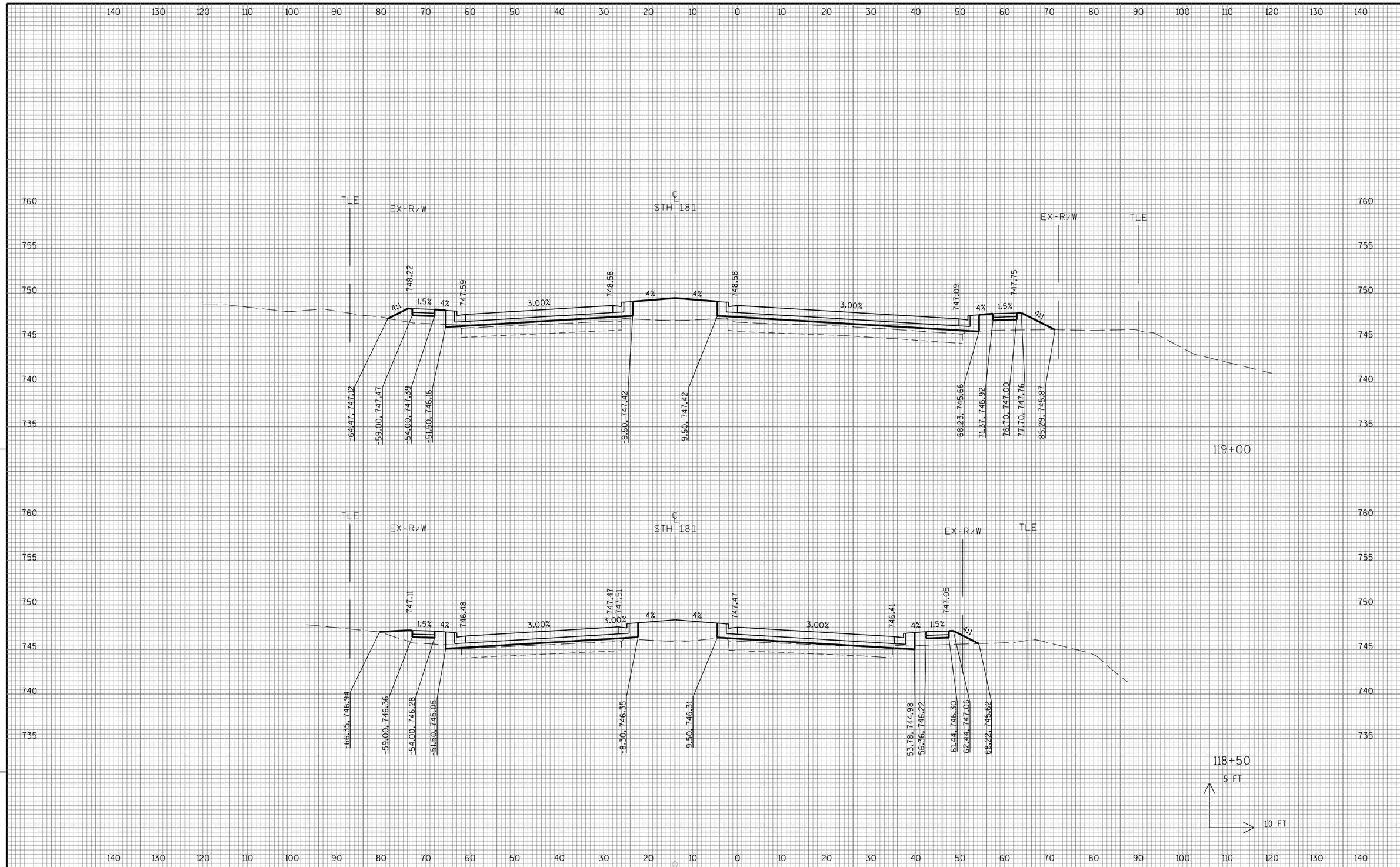


9

9

| PROJECT NO:2140-13-70 | HWY:STH 181 | COUNTY:MILWAUKEE | CROSS SECTIONS:STH 181 | SHEET 519 | E |
|---|---|---|---|---|---|

FILE NAME : L:\Jobs2010\20100384\CAD\WisDOT_Trans\dgn\00\090201_xs_NBPGL_18S.dgn PLOT DATE : 7/22/2016 PLOT BY : GRAEF PLOT NAME : PLOT SCALE : 20.0000 sf / in.

WISDOT/CADDS SHEET 21

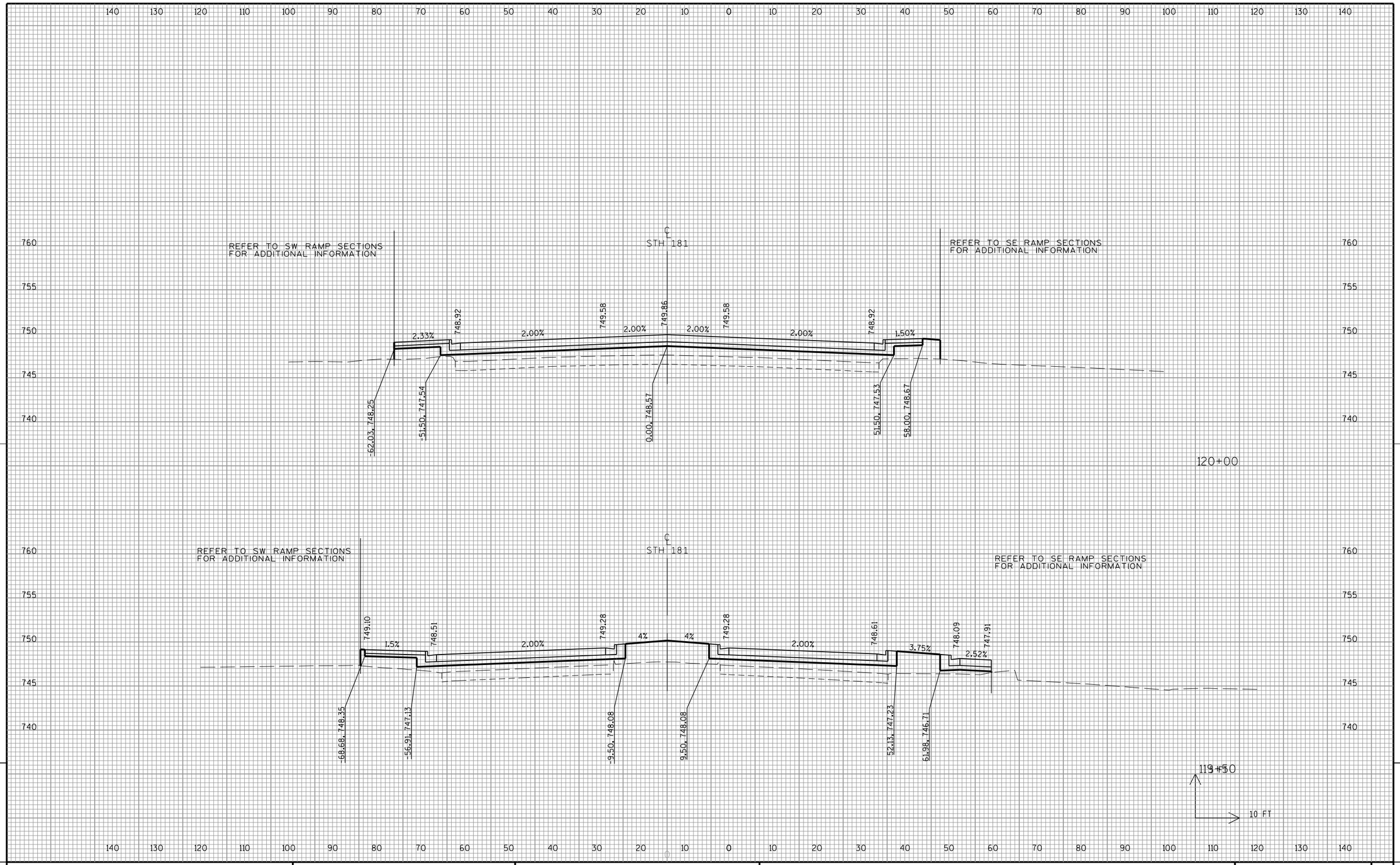


| PROJECT NO: 2140-13-70 | HWY: STH 181 | COUNTY: MILWAUKEE | CROSS SECTIONS: STH 181 | SHEET 520 | E |
|---|---|---|---|---|---|

FILE NAME : L:\Jobs2010\20100384\CAD\WisDOT_Trans\dgn\00\090201_xs_NBPGL_18S.dgn PLOT DATE : 7/22/2016 PLOT BY : GRAEF PLOT NAME : PLOT SCALE : 20.0000 sf / in.

WISDOT/CADDS SHEET 21

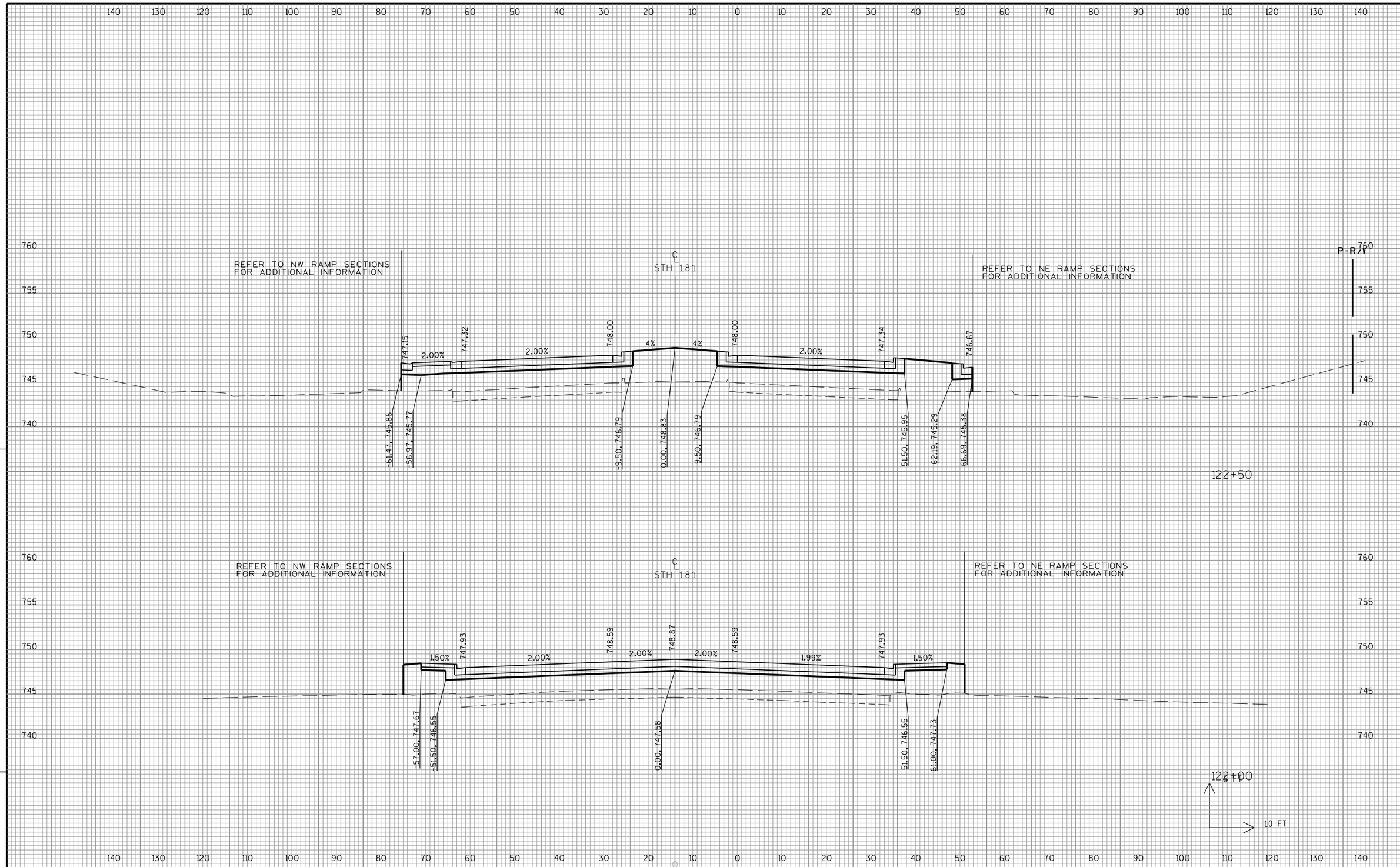


| PROJECT NO:2140-13-70 | HWY:STH 181 | COUNTY:MILWAUKEE | CROSS SECTIONS:STH 181 | SHEET 521 | E |
|---|---|---|---|---|---|

FILE NAME : L:\Jobs2010\20100384\CAD\WisDOT_Trans\dgn\00\090201_xs_NBPGL_18S.dgn PLOT DATE : 7/22/2016 PLOT BY : GRAEF PLOT NAME : PLOT SCALE : 20.0000 sf / in. WISDOT/CADDS SHEET 21

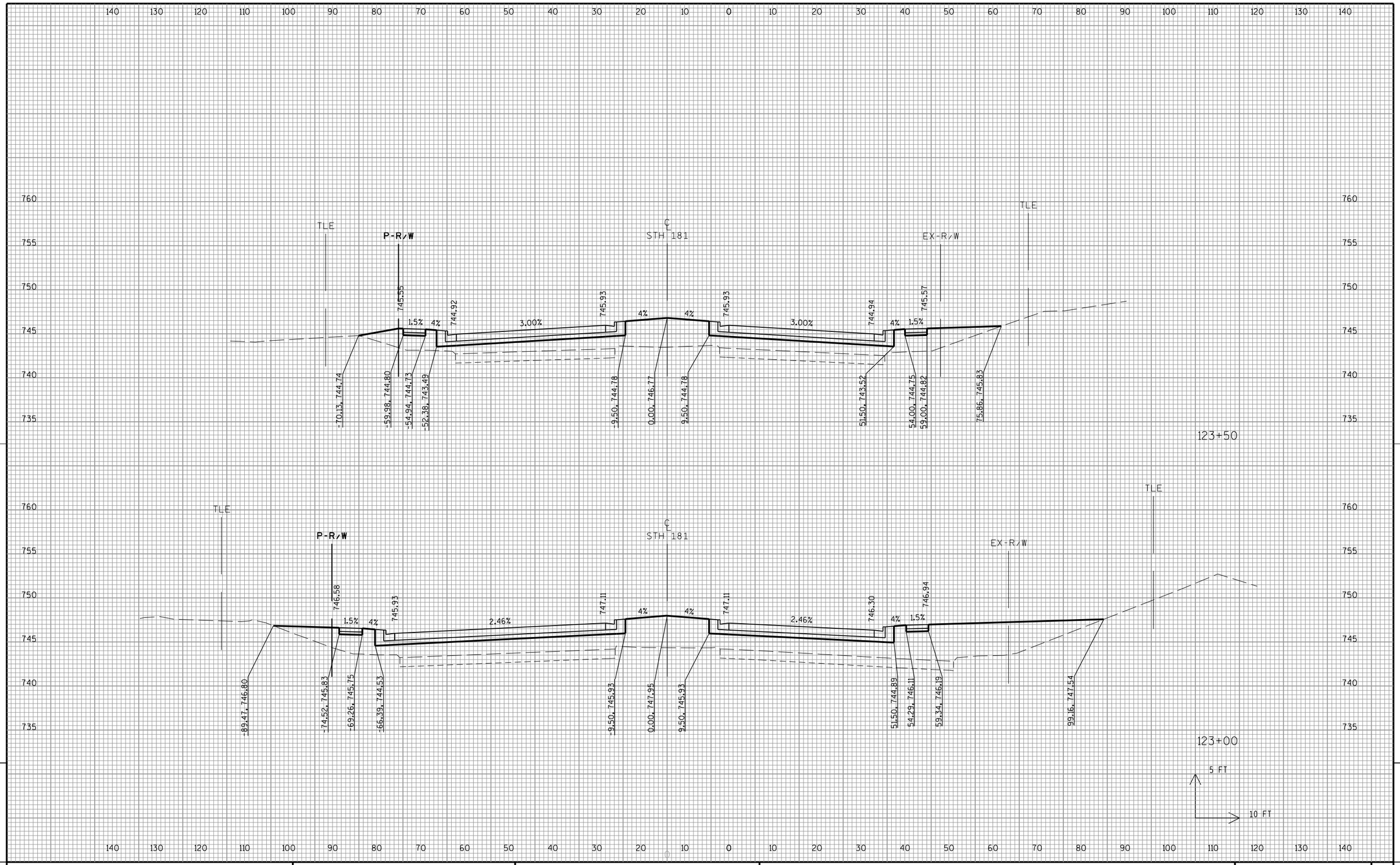


9

9

| PROJECT NO:2140-13-70 | HWY:STH 181 | COUNTY:MILWAUKEE | CROSS SECTIONS:STH 181 | SHEET 522 | E |
|---|---|---|---|---|---|

FILE NAME : L:\Jobs2010\20100384\CAD\WisDOT_Trans\dgn\00\090201_xs_NBPGL_18S.dgn PLOT DATE : 7/22/2016 PLOT BY : GRAEF PLOT NAME : PLOT SCALE : 20.0000 sf / in.

WISDOT/CADDS SHEET 21

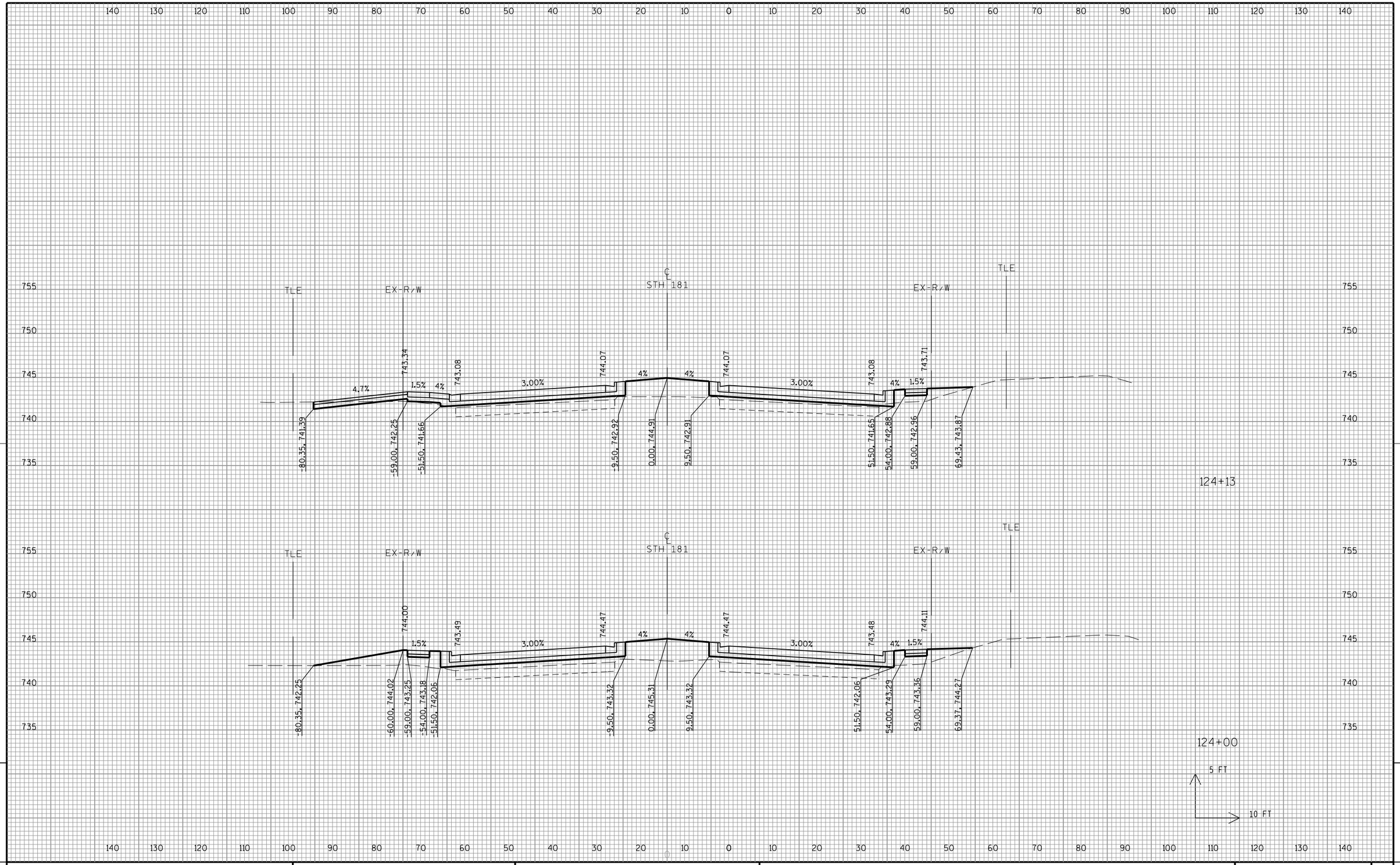


9

9

| PROJECT NO:2140-13-70 | HWY:STH 181 | COUNTY:MILWAUKEE | CROSS SECTIONS:STH 181 | SHEET 523 | E |
|---|---|---|---|---|---|

FILE NAME : L:\Jobs2010\20100384\CAD\WisDOT_Trans\dgn\00\090201_xs_NBPGL_18S.dgn PLOT DATE : 7/22/2016 PLOT BY : GRAEF PLOT NAME : PLOT SCALE : 20.0000 sf / in. WISDOT/CADDS SHEET 21

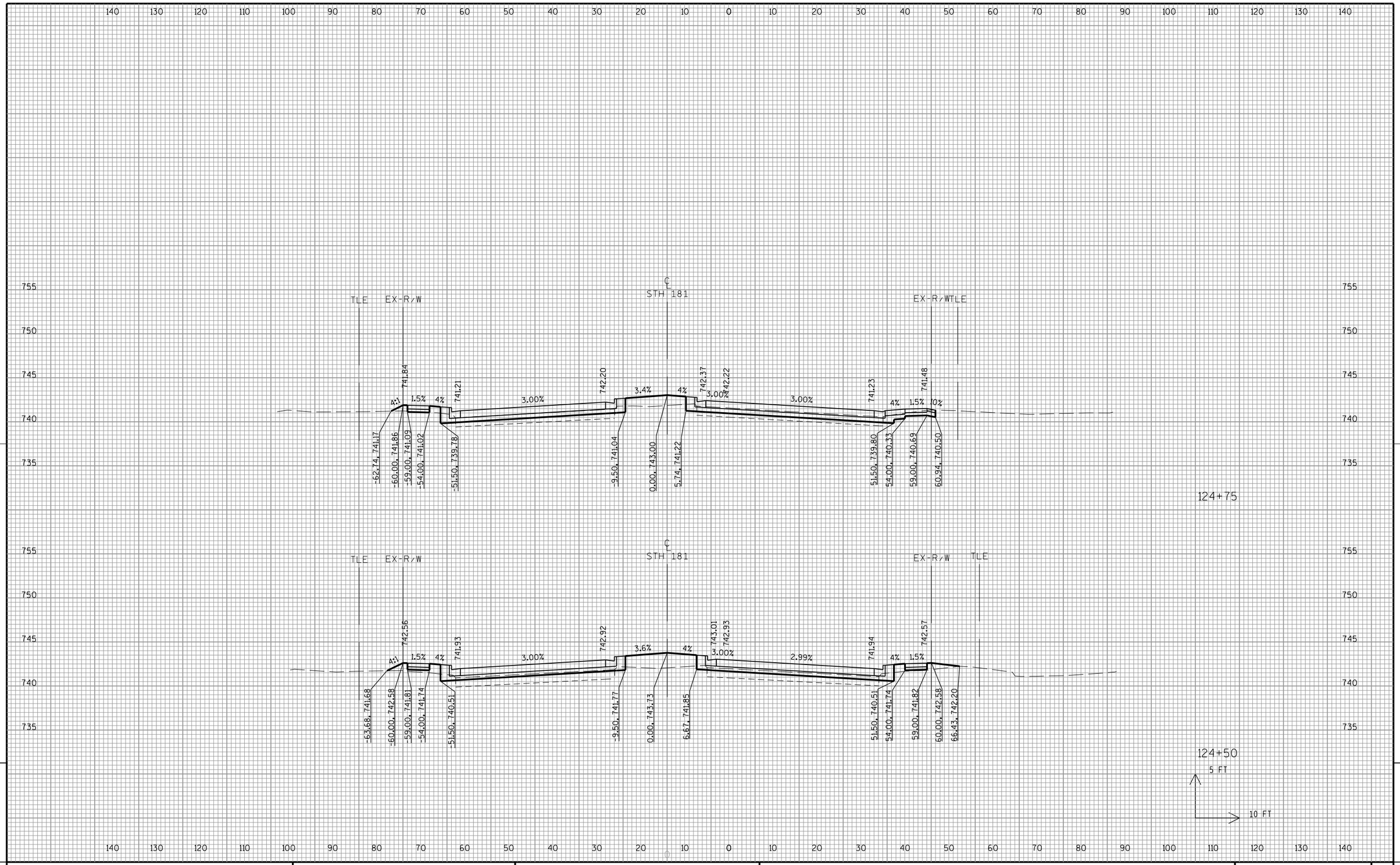


9

9

| PROJECT NO:2140-13-70 | HWY:STH 181 | COUNTY:MILWAUKEE | CROSS SECTIONS:STH 181 | SHEET 524 | E |
|---|---|---|---|---|---|

FILE NAME : L:\Jobs2010\20100384\CAD\WisDOT_Trans\dgn\00\090201_xs_NBPGL_18S.dgn PLOT DATE : 7/22/2016 PLOT BY : GRAEF PLOT NAME : PLOT SCALE : 20.0000 sf / in.

WISDOT/CADDS SHEET 21

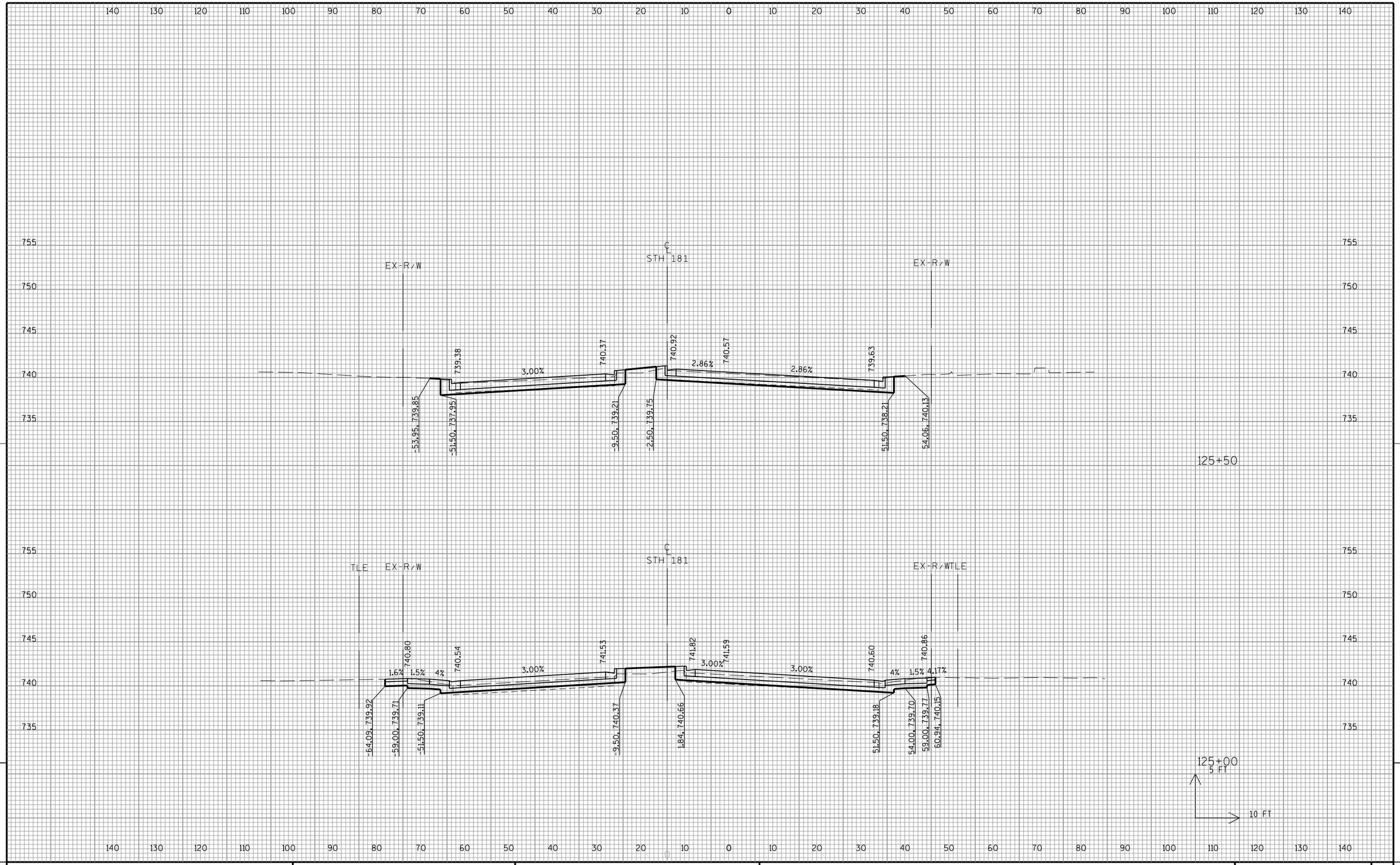


| PROJECT NO:2140-13-70 | HWY:STH 181 | COUNTY:MILWAUKEE | CROSS SECTIONS:STH 181 | SHEET 525 | E |
|---|---|---|---|---|---|

FILE NAME : L:\Jobs2010\20100384\CAD\WisDOT_Trans\dgn\00\090201_xs_NBPGL_18S.dgn PLOT DATE : 7/22/2016 PLOT BY : GRAEF PLOT NAME : PLOT SCALE : 20.0000 sf / in. WISDOT/CADDS SHEET 21

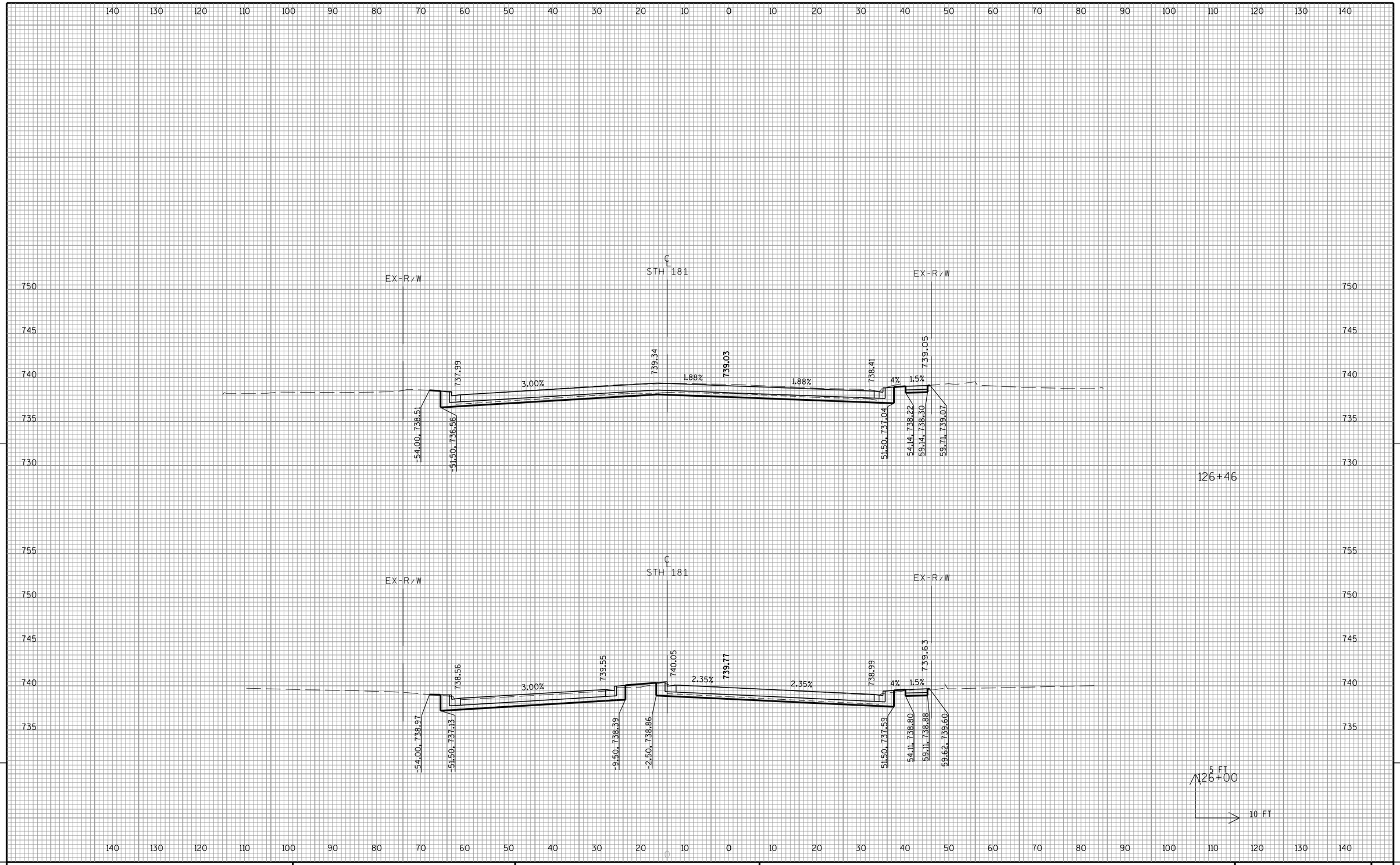


| PROJECT NO:2140-13-70 | HWY:STH 181 | COUNTY:MILWAUKEE | CROSS SECTIONS:STH 181 | SHEET 526 | E |
|---|---|---|---|---|---|

FILE NAME : L:\Jobs2010\20100384\CAD\WisDOT_Trans\dgn\00\090201_xs_NBPGL_18S.dgn PLOT DATE : 7/22/2016 PLOT BY : GRAEF PLOT NAME : PLOT SCALE : 20.0000 sf / in. WISDOT/CADDS SHEET 21

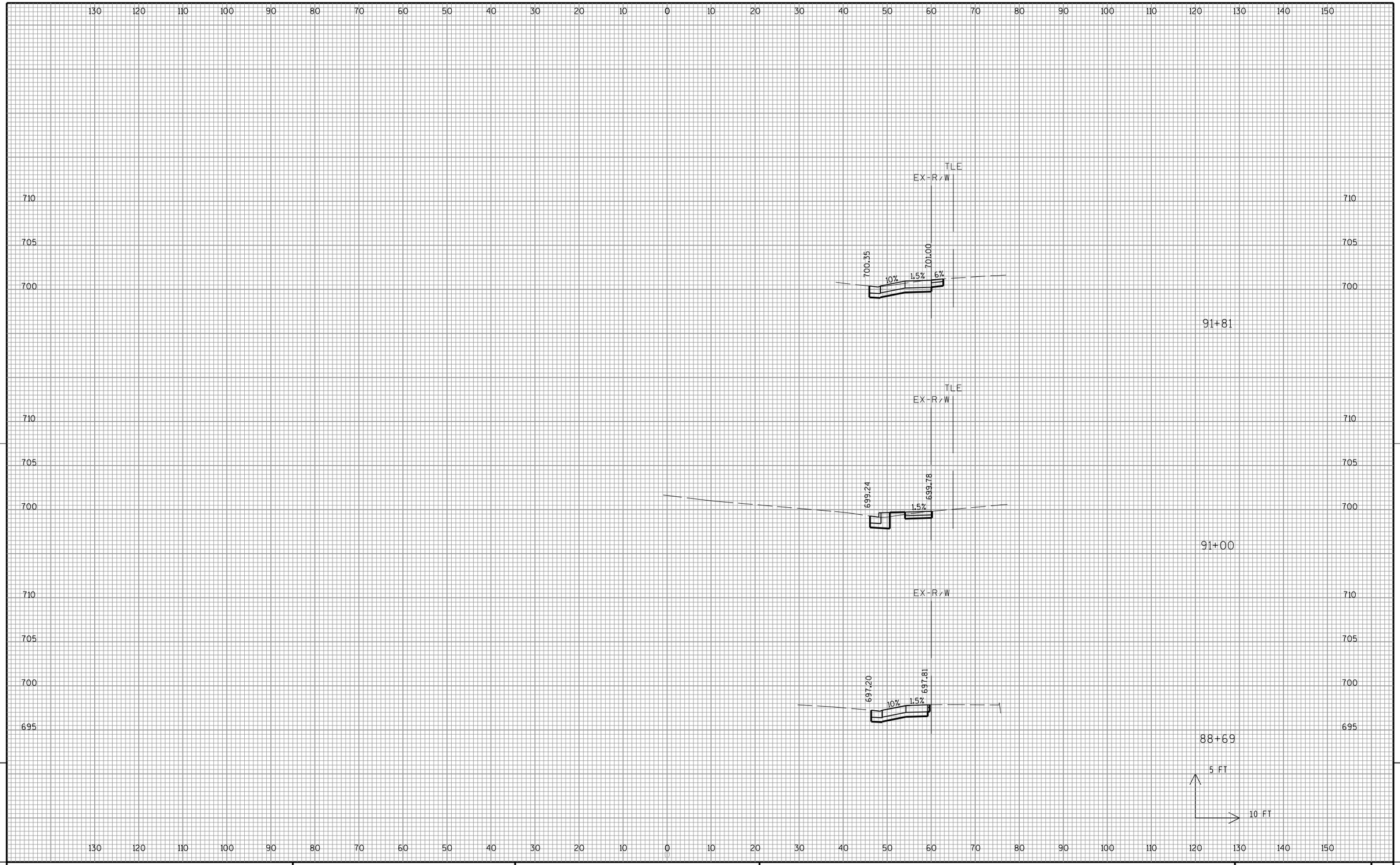


9

9

| PROJECT NO:2140-13-70 | HWY:STH 181 | COUNTY:MILWAUKEE | CROSS SECTIONS: STH 181 (DRIVEWAYS) | SHEET 527 | E |
|---|---|---|---|---|---|

FILE NAME : L:\Jobs2010\20100384\CAD\WisDOT_Trans\dgn\00\090201a_xs_driveways_18S.dgn PLOT DATE : 7/22/2016 PLOT BY : GRAEF PLOT NAME : PLOT SCALE : 20.0000 sf / in.

WISDOT/CADDS SHEET 21

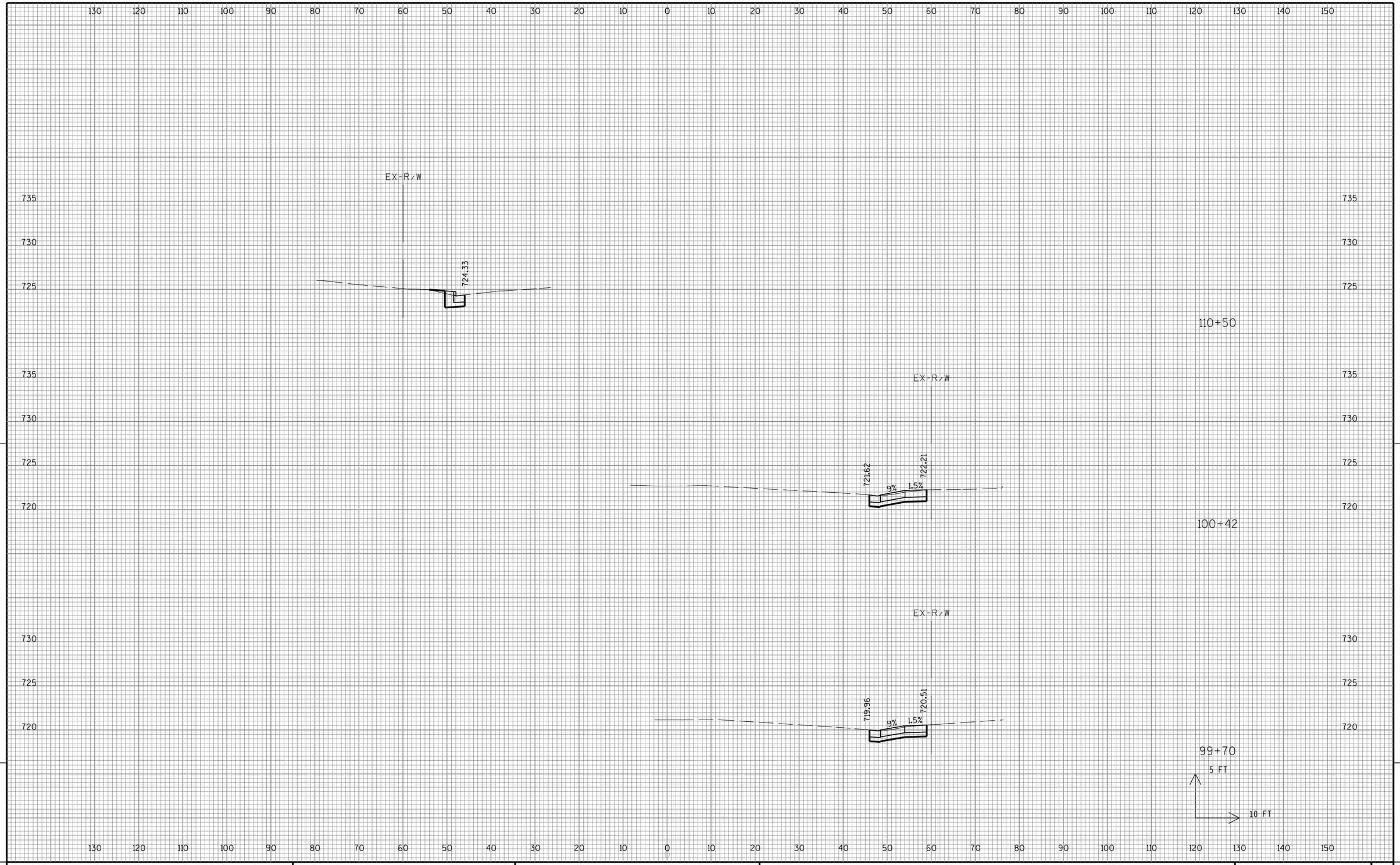


| PROJECT NO:2140-13-70 | HWY:STH 181 | COUNTY:MILWAUKEE | CROSS SECTIONS: STH 181(DRIVEWAYS) | SHEET 528 | E |
|---|---|---|---|---|---|

FILE NAME : L:\Jobs2010\20100384\CAD\WisDOT_Trans\dgn\00\090201a_xs_driveways_18S.dgn PLOT DATE : 7/22/2016 PLOT BY : GRAEF PLOT NAME : PLOT SCALE : 20.0000 sf / in.

WISDOT/CADDS SHEET 21

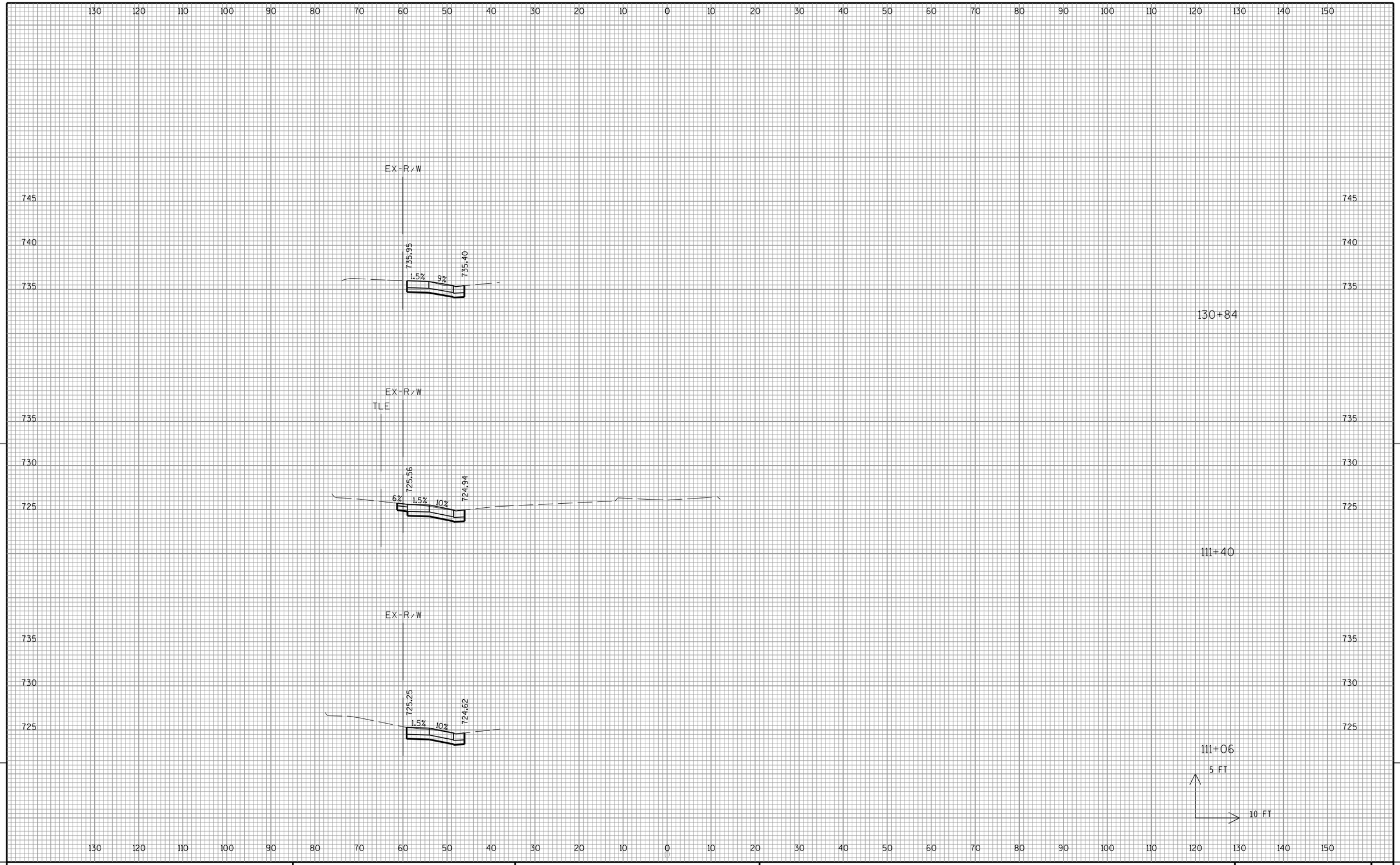


9

9

| PROJECT NO:2140-13-70 | HWY:STH 181 | COUNTY:MILWAUKEE | CROSS SECTIONS: STH 181 (DRIVEWAYS) | SHEET 529 | E |
|---|---|---|---|---|---|

FILE NAME : L:\Jobs2010\20100384\CAD\WisDOT_Trans\dgn\00\090201a_xs_driveways_18S.dgn PLOT DATE : 7/22/2016 PLOT BY : GRAEF PLOT NAME : PLOT SCALE : 20.0000 sf / in. WISDOT/CADDS SHEET 21

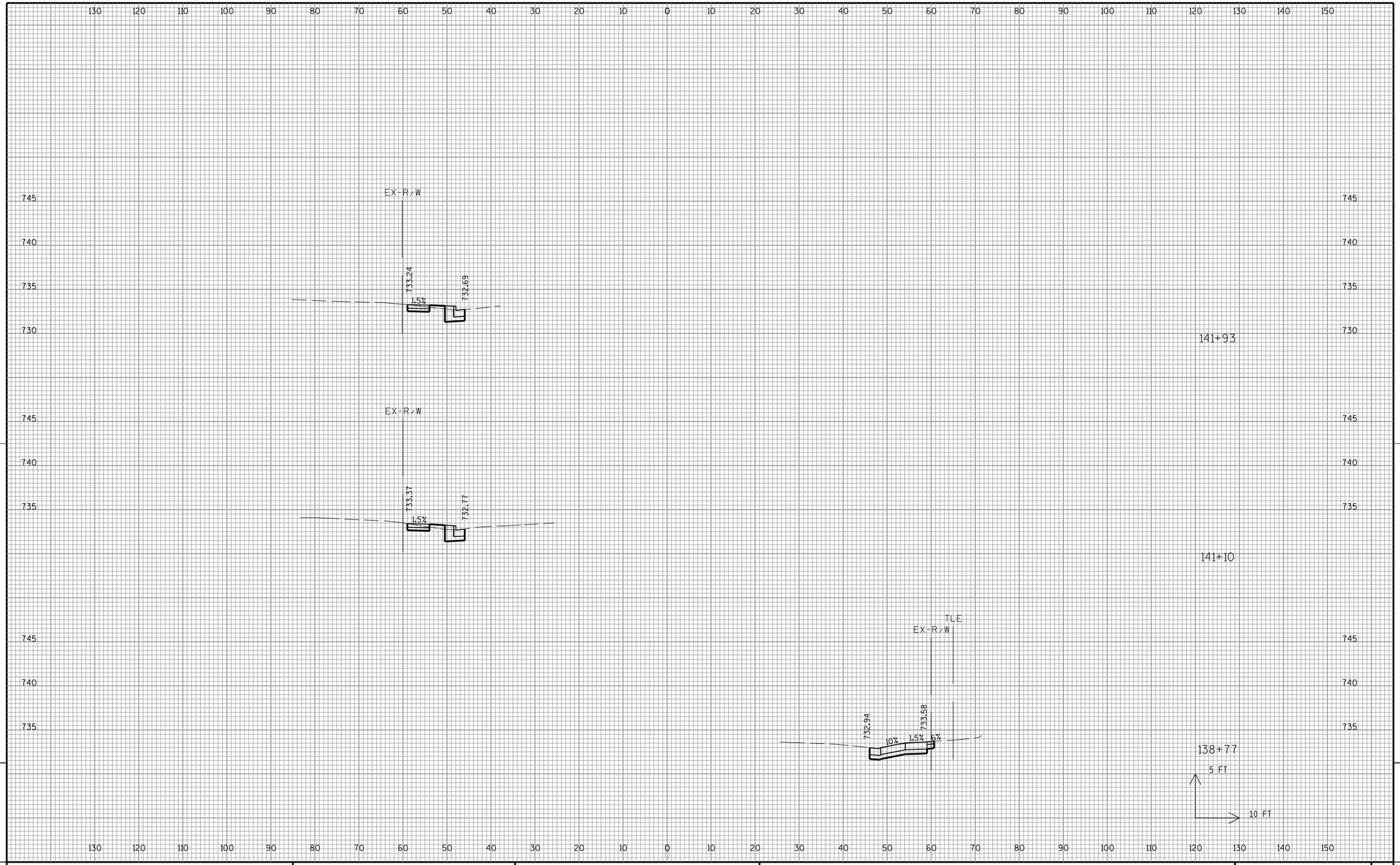


| PROJECT NO:2140-13-70 | HWY:STH 181 | COUNTY:MILWAUKEE | CROSS SECTIONS: STH 181 (DRIVEWAYS) | SHEET 530 | E |
|---|---|---|---|---|---|

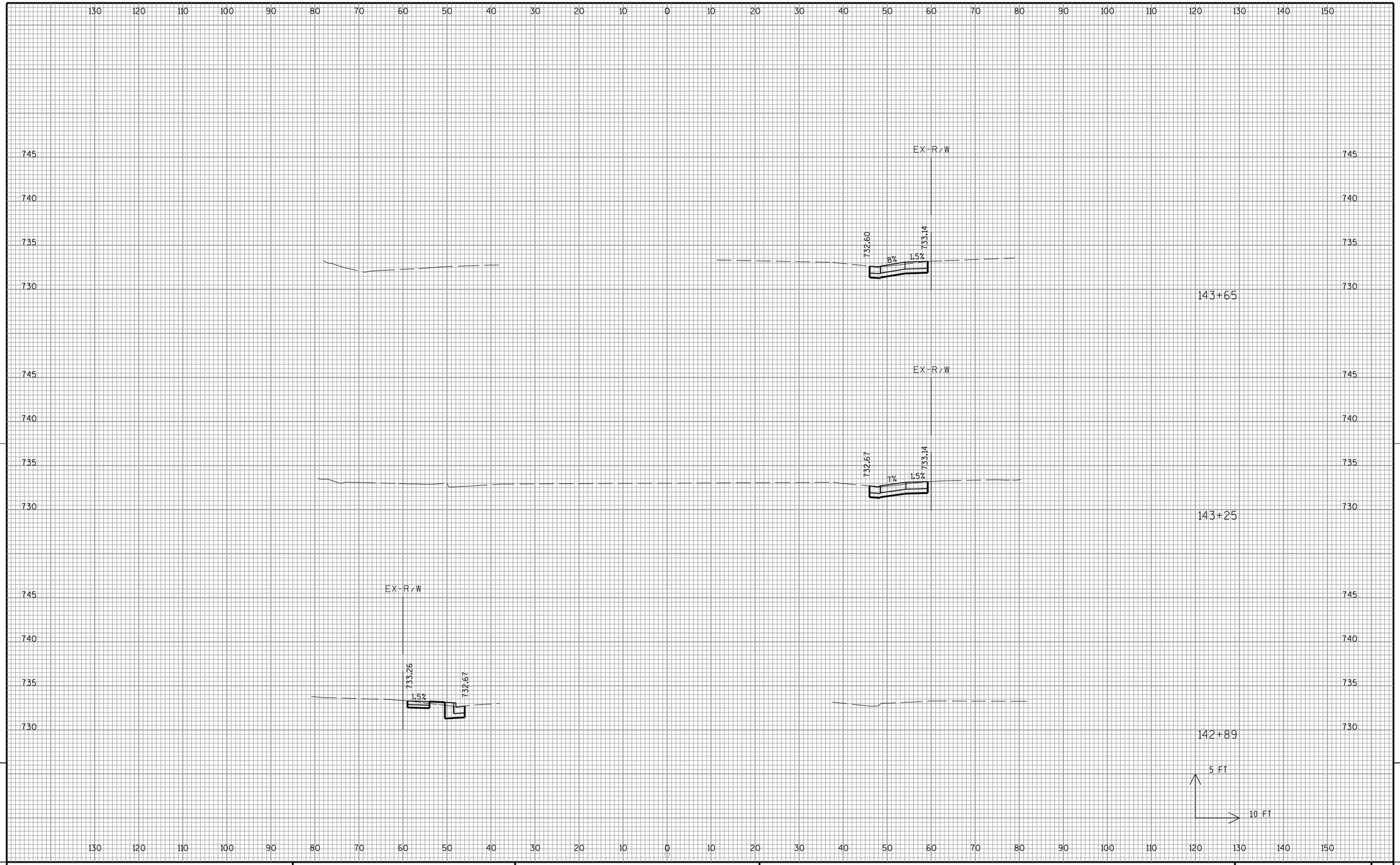


| PROJECT NO:2140-13-70 | HWY:STH 181 | COUNTY:MILWAUKEE | CROSS SECTIONS: STH 181 (DRIVEWAYS) | SHEET 531 | E |
|---|---|---|---|---|---|

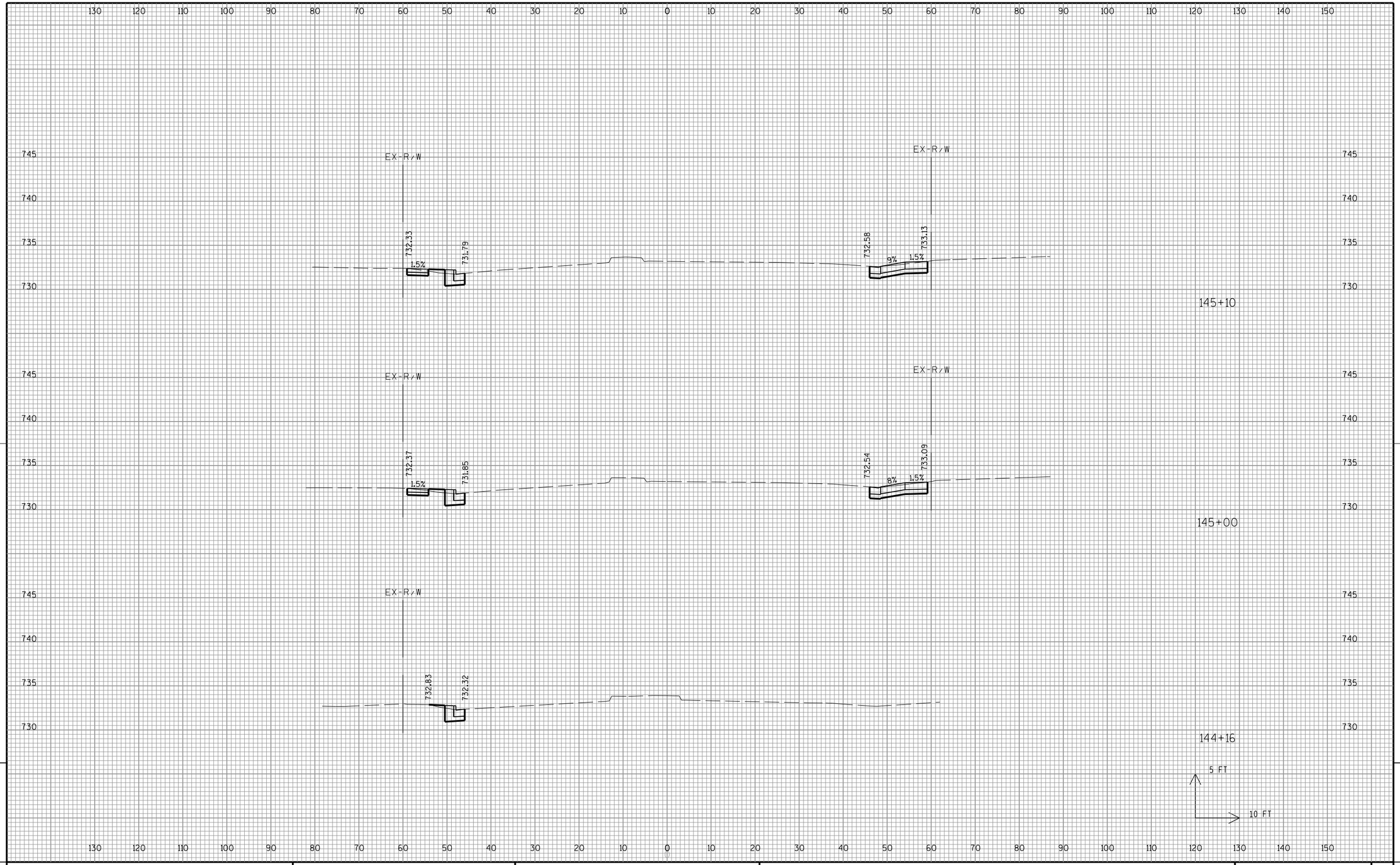


| PROJECT NO:2140-13-70 | HWY:STH 181 | COUNTY:MILWAUKEE | CROSS SECTIONS: STH 181 (DRIVEWAYS) | SHEET 532 | E |
|---|---|---|---|---|---|

FILE NAME : L:\Jobs2010\20100384\CAD\WisDOT_Trans\dgn\00\090201a_xs_driveways_18S.dgn PLOT DATE : 7/22/2016 PLOT BY : GRAEF PLOT NAME : PLOT SCALE : 20.0000 sf / in. WISDOT/CADDS SHEET 21

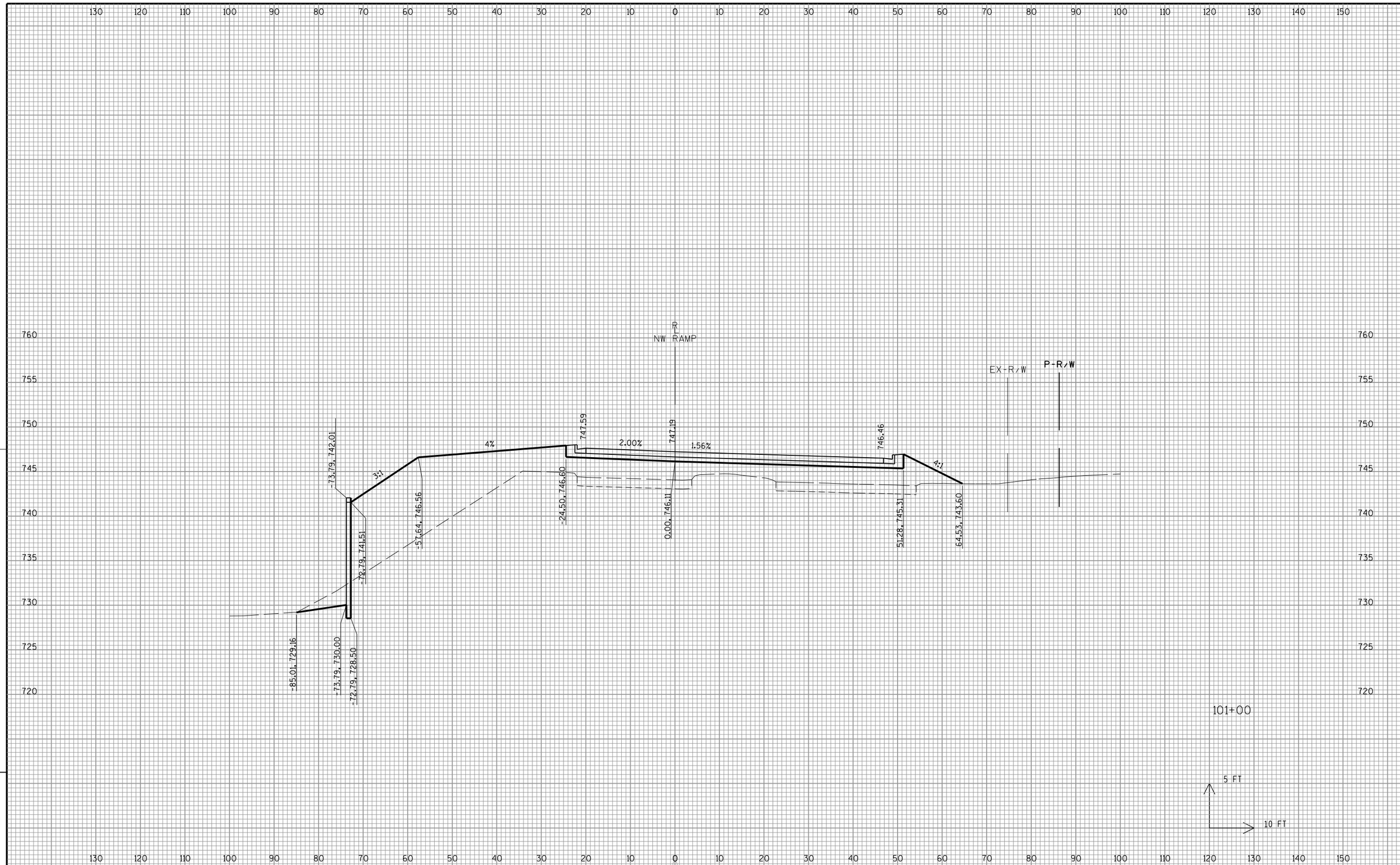


9

9

| PROJECT NO:2140-13-70 | HWY:STH 181 | COUNTY:MILWAUKEE | CROSS SECTIONS:NW RAMP | SHEET 533 | E |
|---|---|---|---|---|---|

FILE NAME : L:\Jobs2010\20100384\CAD\WisDOT_Trans\dgn\00\090202_xs_NWRamp_18S.dgn PLOT DATE : 7/22/2016 PLOT BY : GRAEF PLOT NAME : PLOT SCALE : 20.0000 sf / in. WISDOT/CADDS SHEET 21

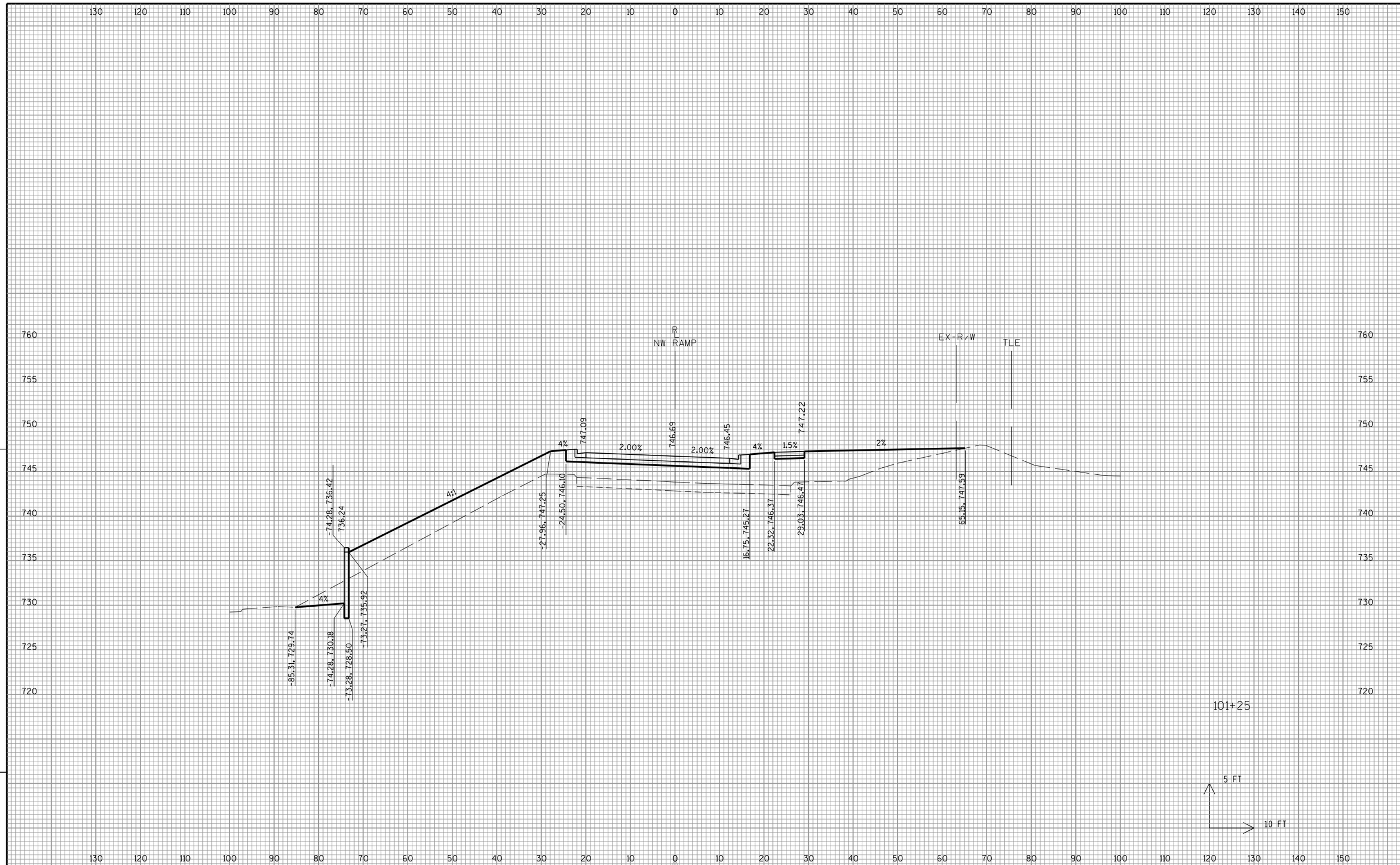


9

9

| PROJECT NO:2140-13-70 | HWY:STH 181 | COUNTY:MILWAUKEE | CROSS SECTIONS:NW RAMP | SHEET 534 | E |
|---|---|---|---|---|---|

FILE NAME : L:\Jobs2010\20100384\CAD\WisDOT_Trans\dgn\00\090202_xs_NWRamp_18S.dgn PLOT DATE : 7/22/2016 PLOT BY : GRAEF PLOT NAME : PLOT SCALE : 20.0000 sf / in.

WISDOT/CADDS SHEET 21

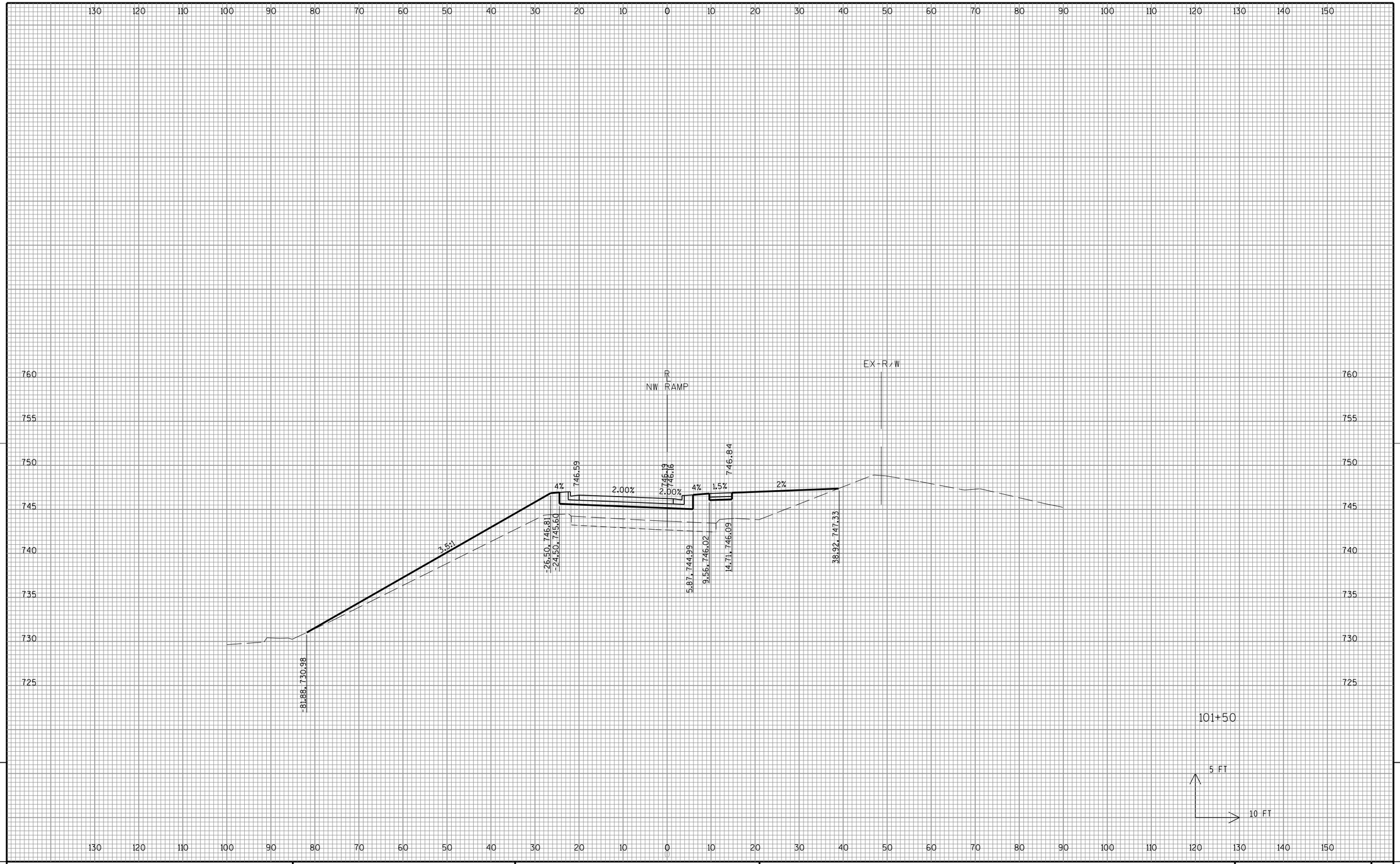


9

9

| PROJECT NO:2140-13-70 | HWY:STH 181 | COUNTY:MILWAUKEE | CROSS SECTIONS:NW RAMP | SHEET 535 | E |
|---|---|---|---|---|---|

FILE NAME : L:\Jobs2010\20100384\CAD\WisDOT_Trans\dgn\00\090202_xs_NWRamp_18S.dgn PLOT DATE : 7/22/2016 PLOT BY : GRAEF PLOT NAME : PLOT SCALE : 20.0000 sf / in. WISDOT/CADDS SHEET 21

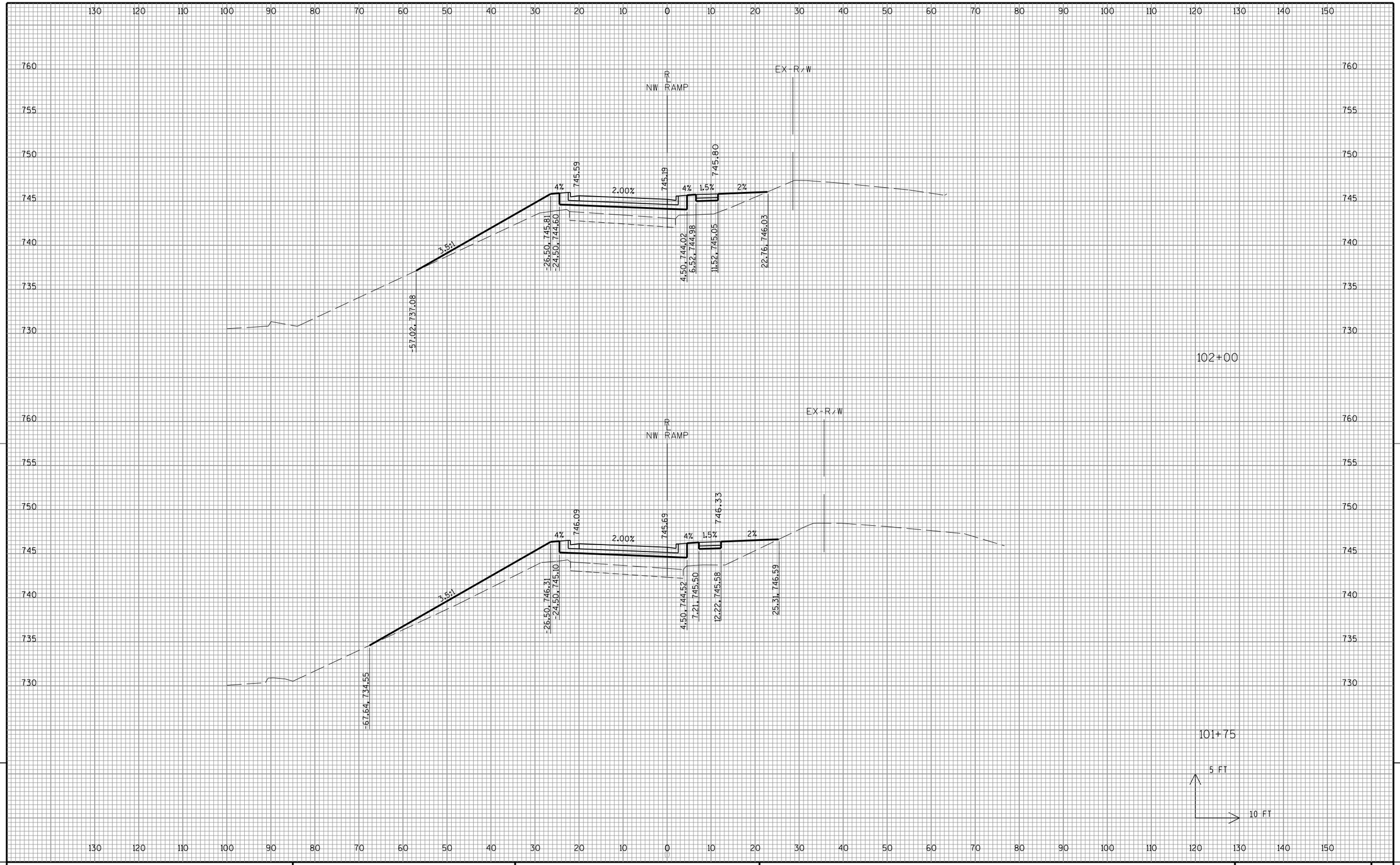


9

9

| PROJECT NO:2140-13-70 | HWY:STH 181 | COUNTY:MILWAUKEE | CROSS SECTIONS:NW RAMP | SHEET 536 | E |
|---|---|---|---|---|---|

FILE NAME : L:\Jobs2010\20100384\CAD\WisDOT_Trans\dgn\00\090202_xs_NWRamp_18S.dgn PLOT DATE : 7/22/2016 PLOT BY : GRAEF PLOT NAME : PLOT SCALE : 20.0000 sf / in.

WISDOT/CADDS SHEET 21

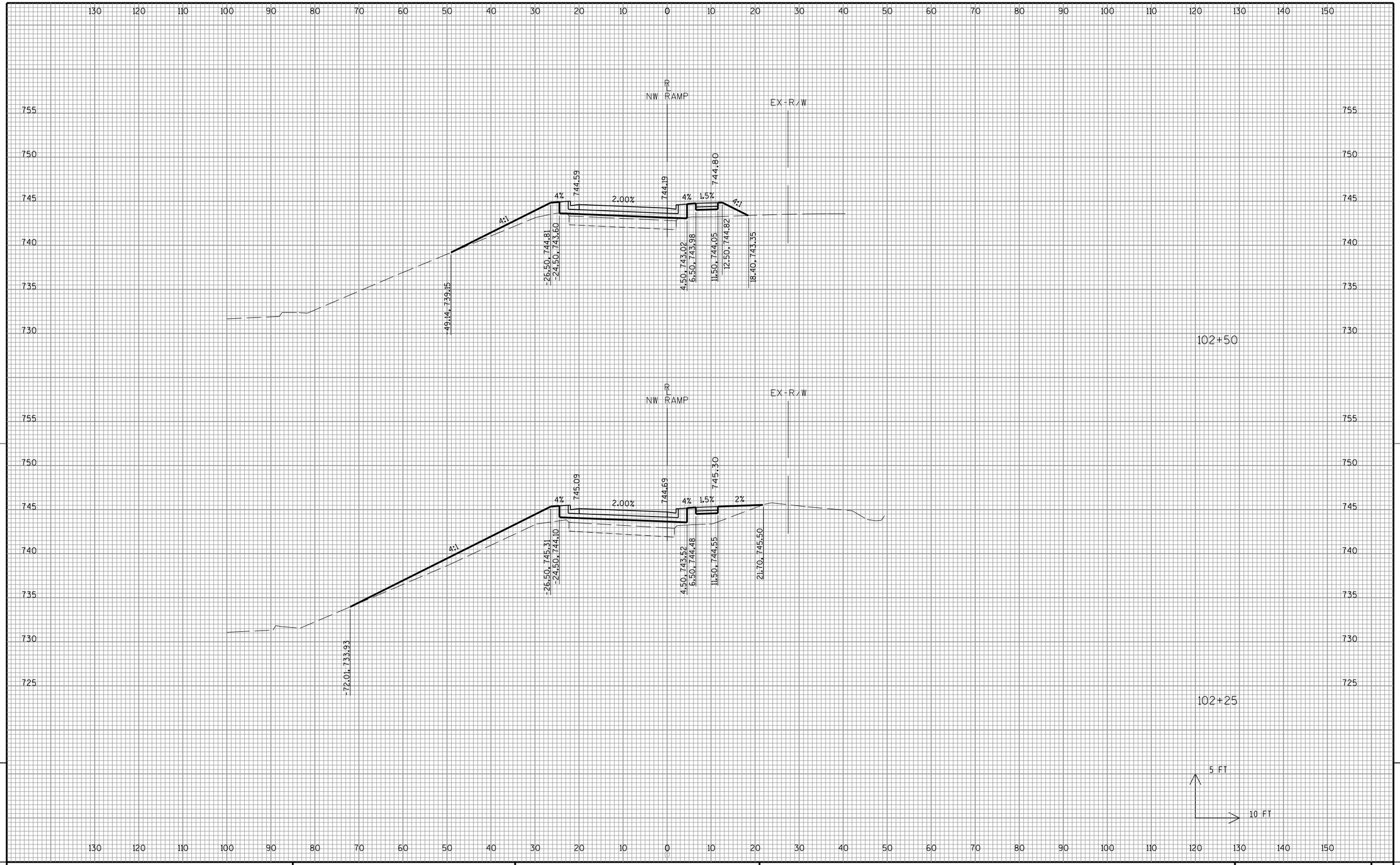


9

9

| PROJECT NO:2140-13-70 | HWY:STH 181 | COUNTY:MILWAUKEE | CROSS SECTIONS:NW RAMP | SHEET 537 | E |
|---|---|---|---|---|---|

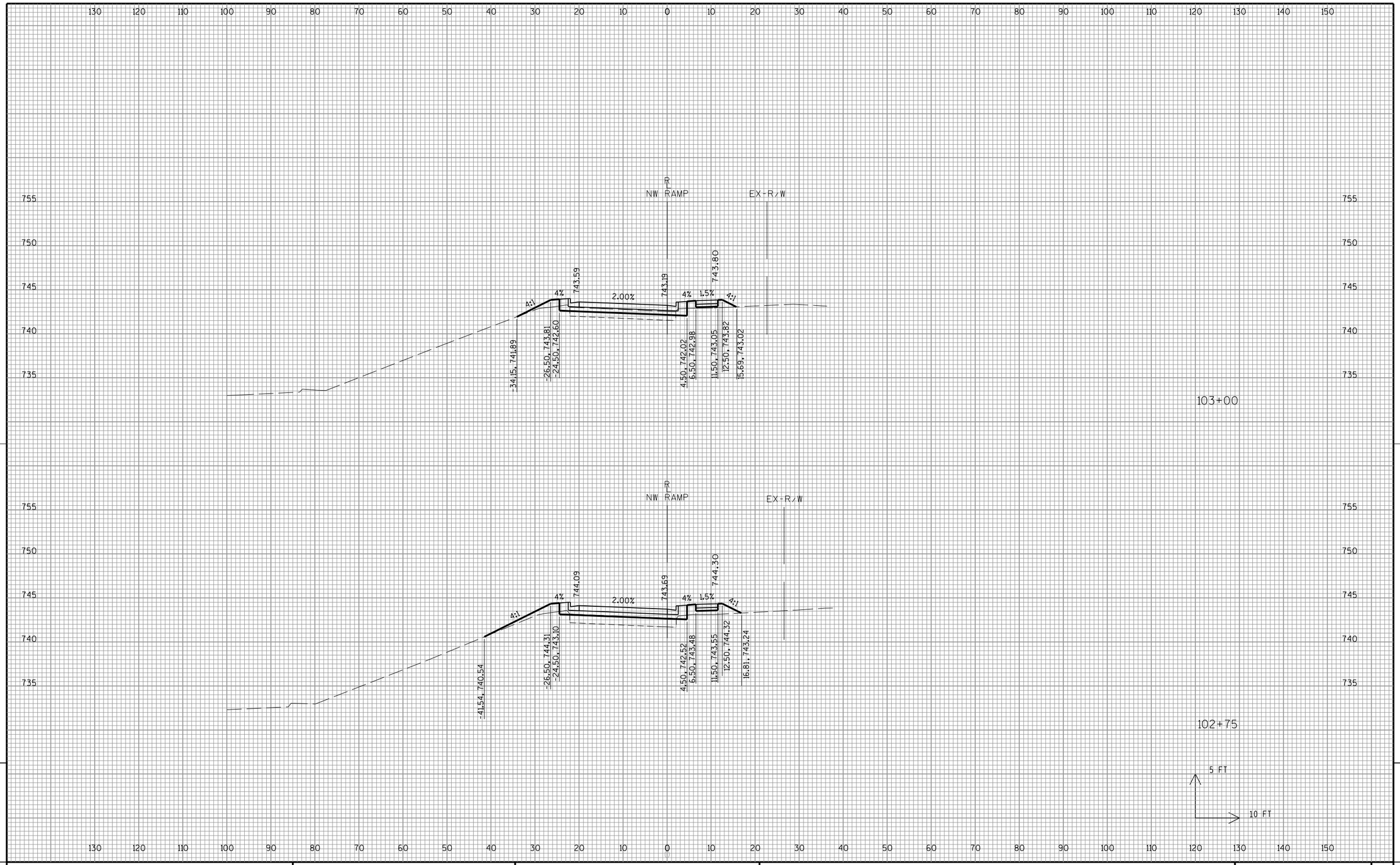


9

9

| PROJECT NO:2140-13-70 | HWY:STH 181 | COUNTY:MILWAUKEE | CROSS SECTIONS:NW RAMP | SHEET 538 | E |
|---|---|---|---|---|---|

FILE NAME : L:\Jobs2010\20100384\CAD\WisDOT_Trans\dgn\00\090202_xs_NWRamp_18S.dgn PLOT DATE : 7/22/2016 PLOT BY : GRAEF PLOT NAME : PLOT SCALE : 20.0000 sf / in.

WISDOT/CADDS SHEET 21

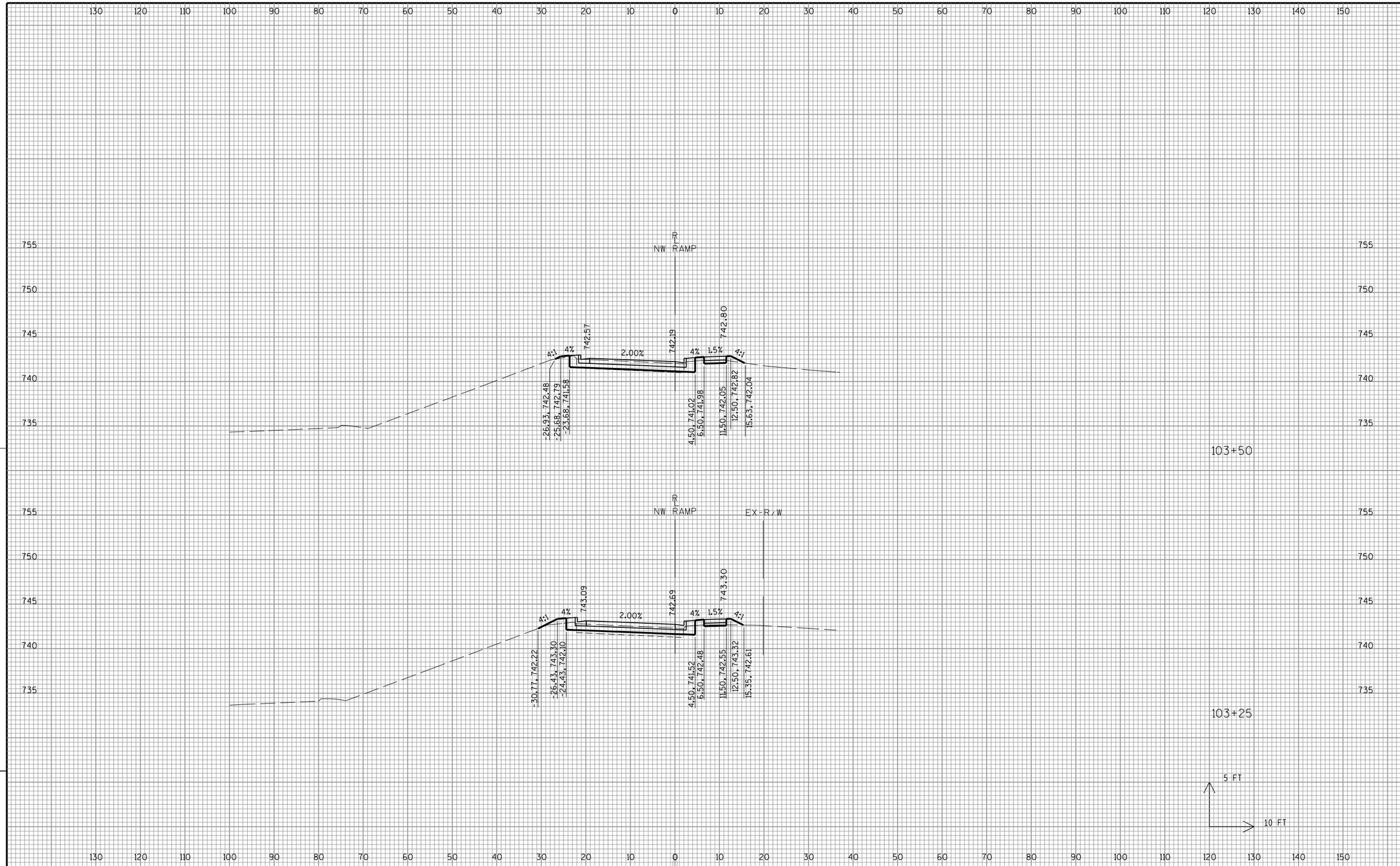


9

9

| PROJECT NO:2140-13-70 | HWY:STH 181 | COUNTY:MILWAUKEE | CROSS SECTIONS:NW RAMP | SHEET 539 | E |
|---|---|---|---|---|---|

FILE NAME : L:\Jobs2010\20100384\CAD\WisDOT_Trans\dgn\00\090202_xs_NWRamp_18S.dgn PLOT DATE : 7/22/2016 PLOT BY : GRAEF PLOT NAME : PLOT SCALE : 20.0000 sf / in. WISDOT/CADDS SHEET 21

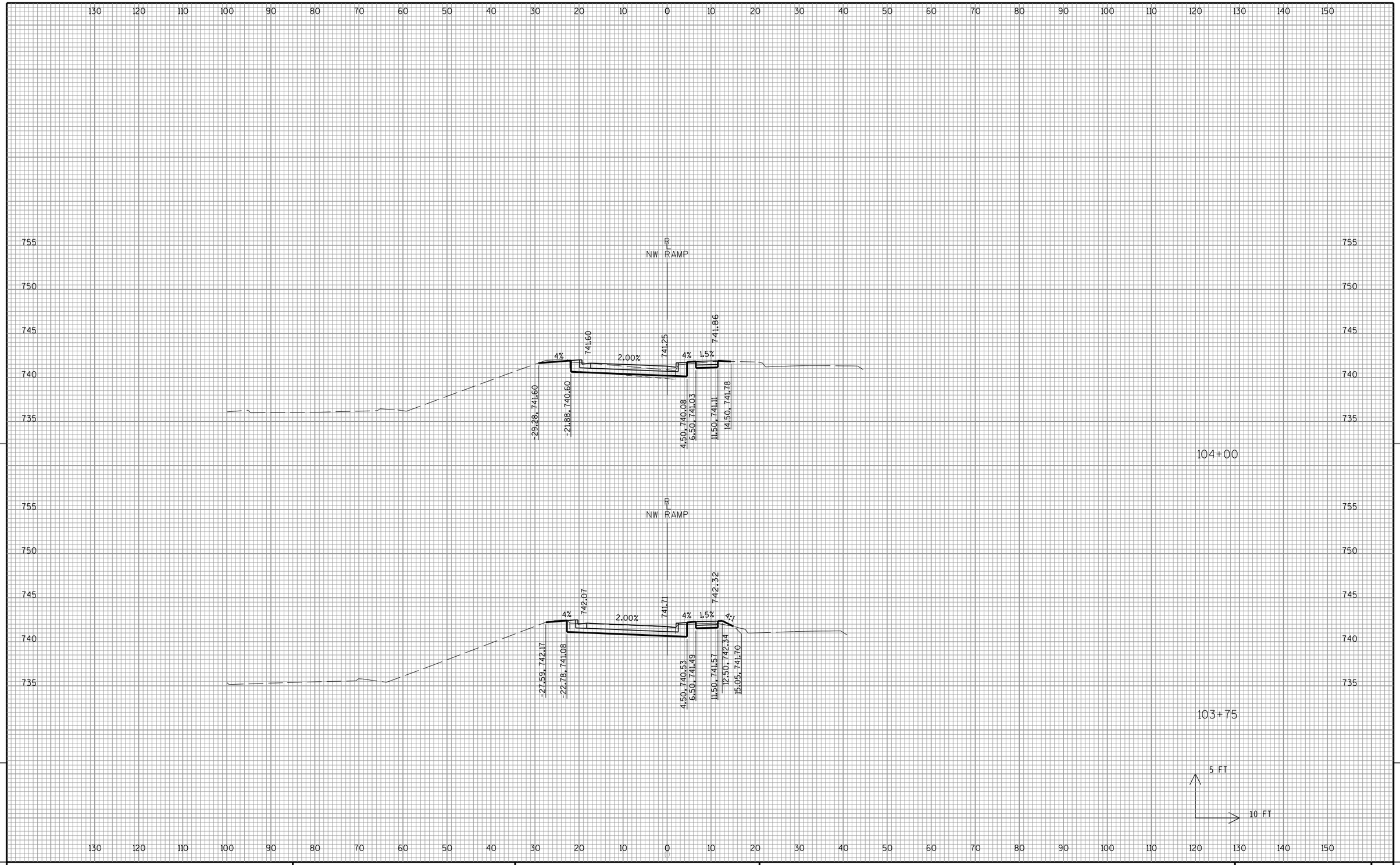


9

9

| PROJECT NO:2140-13-70 | HWY:STH 181 | COUNTY:MILWAUKEE | CROSS SECTIONS:NW RAMP | SHEET 540 | E |
|---|---|---|---|---|---|

FILE NAME : L:\Jobs2010\20100384\CAD\WisDOT_Trans\dgn\00\090202_xs_NWRamp_18S.dgn PLOT DATE : 7/22/2016 PLOT BY : GRAEF PLOT NAME : PLOT SCALE : 20.0000 sf / in. WISDOT/CADDS SHEET 21

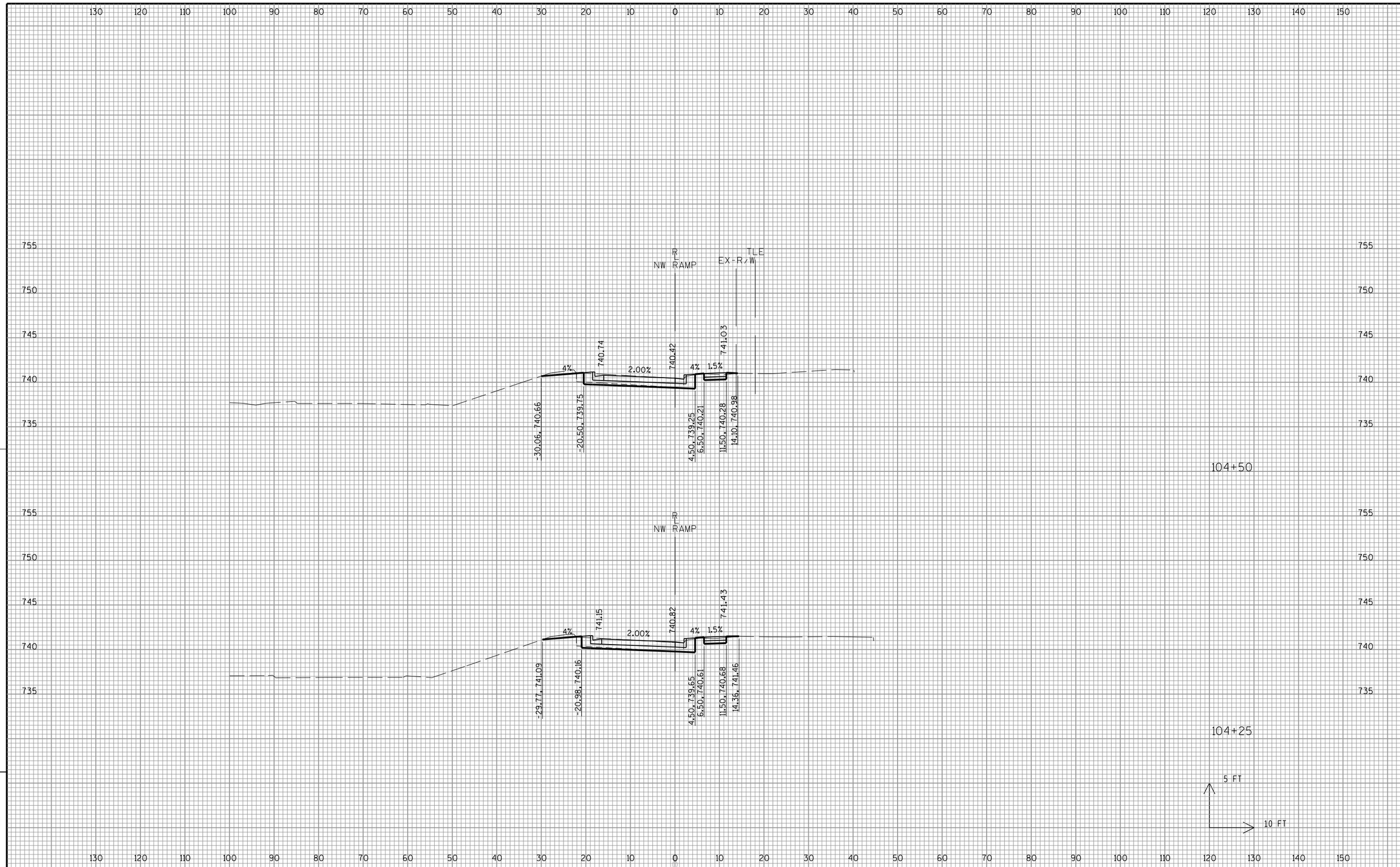


9

9

| PROJECT NO:2140-13-70 | HWY:STH 181 | COUNTY:MILWAUKEE | CROSS SECTIONS:NW RAMP | SHEET 541 | E |
|---|---|---|---|---|---|

FILE NAME : L:\Jobs2010\20100384\CAD\WisDOT_Trans\dgn\00\090202_xs_NWRamp_18S.dgn PLOT DATE : 7/22/2016 PLOT BY : GRAEF PLOT NAME : PLOT SCALE : 20.0000 sf / in. WISDOT/CADDS SHEET 21

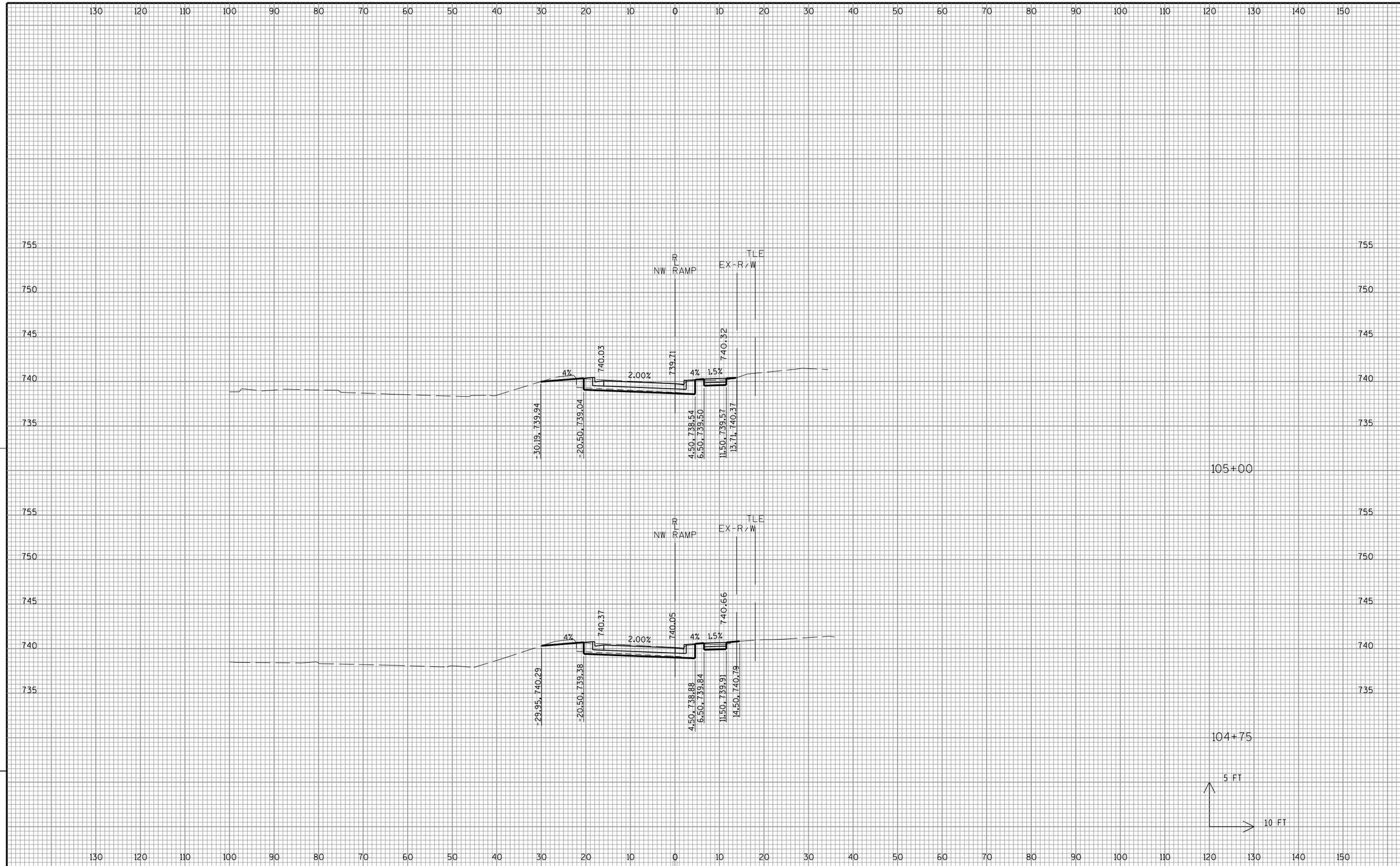


9

9

| PROJECT NO:2140-13-70 | HWY:STH 181 | COUNTY:MILWAUKEE | CROSS SECTIONS:NW RAMP | SHEET 542 | E |
|---|---|---|---|---|---|

FILE NAME : L:\Jobs2010\20100384\CAD\WisDOT_Trans\dgn\00\090202_xs_NWRamp_18S.dgn PLOT DATE : 7/22/2016 PLOT BY : GRAEF PLOT NAME : PLOT SCALE : 20.0000 sf / in. WISDOT/CADDS SHEET 21

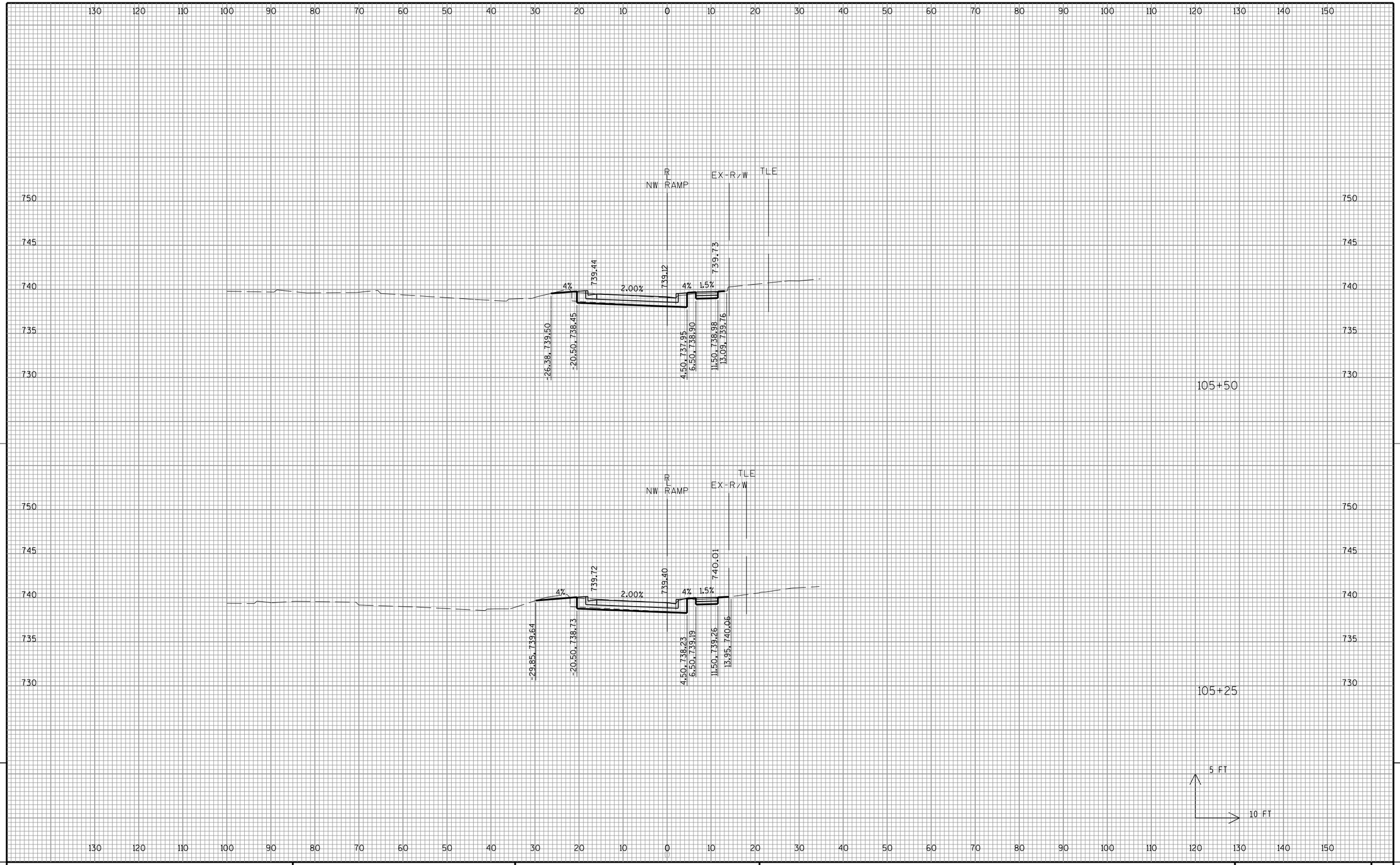


9

9

| PROJECT NO:2140-13-70 | HWY:STH 181 | COUNTY:MILWAUKEE | CROSS SECTIONS:NW RAMP | SHEET 543 | E |
|---|---|---|---|---|---|

FILE NAME : L:\Jobs2010\20100384\CAD\WisDOT_Trans\dgn\00\090202_xs_NWRamp_18S.dgn PLOT DATE : 7/22/2016 PLOT BY : GRAEF PLOT NAME : PLOT SCALE : 20.0000 sf / in. WISDOT/CADDS SHEET 21

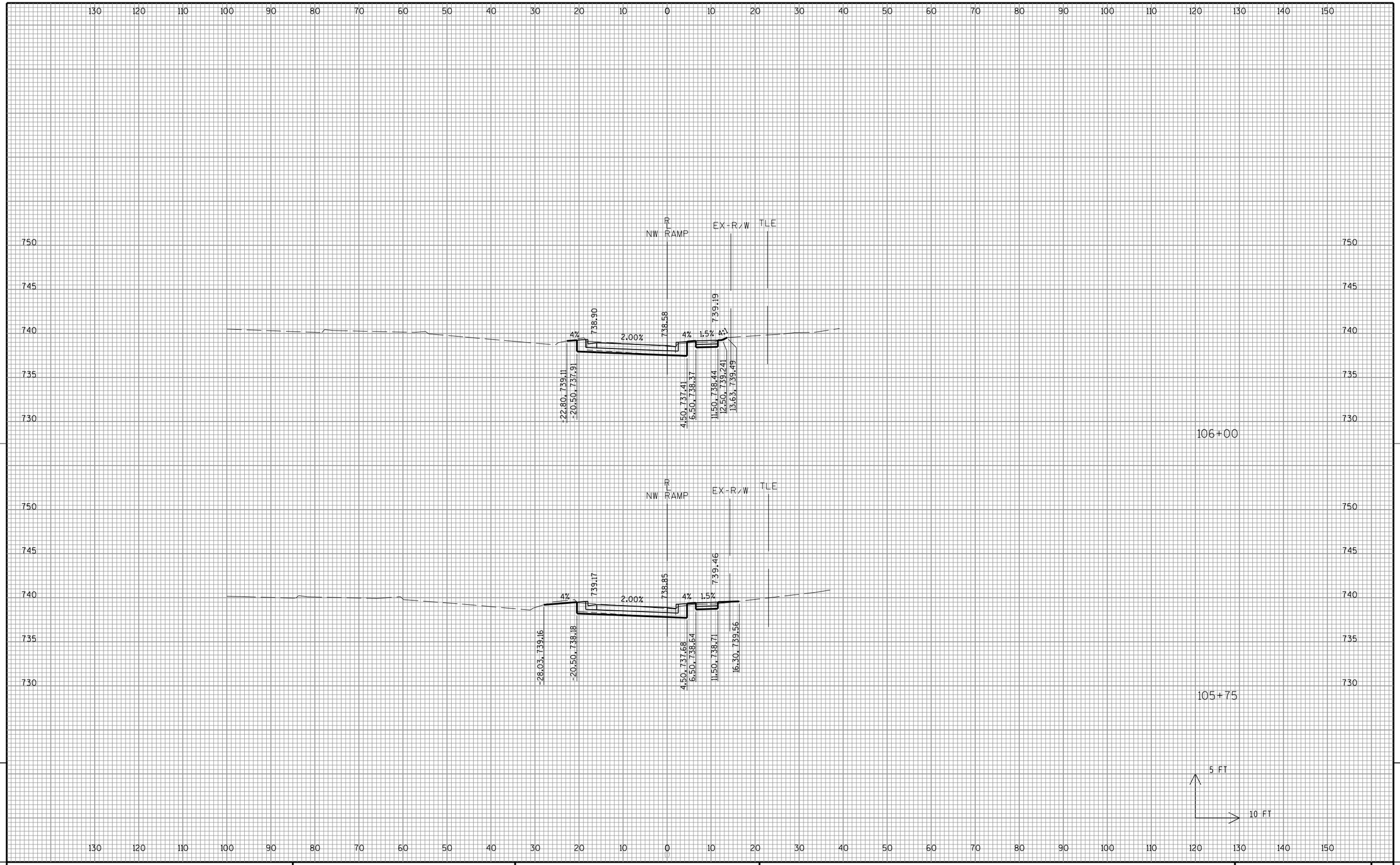


9

9

| PROJECT NO:2140-13-70 | HWY:STH 181 | COUNTY:MILWAUKEE | CROSS SECTIONS:NW RAMP | SHEET 544 | E |
|---|---|---|---|---|---|

FILE NAME : L:\Jobs2010\20100384\CAD\WisDOT_Trans\dgn\00\090202_xs_NWRamp_18S.dgn PLOT DATE : 7/22/2016 PLOT BY : GRAEF PLOT NAME : PLOT SCALE : 20.0000 sf / in.

WISDOT/CADDS SHEET 21

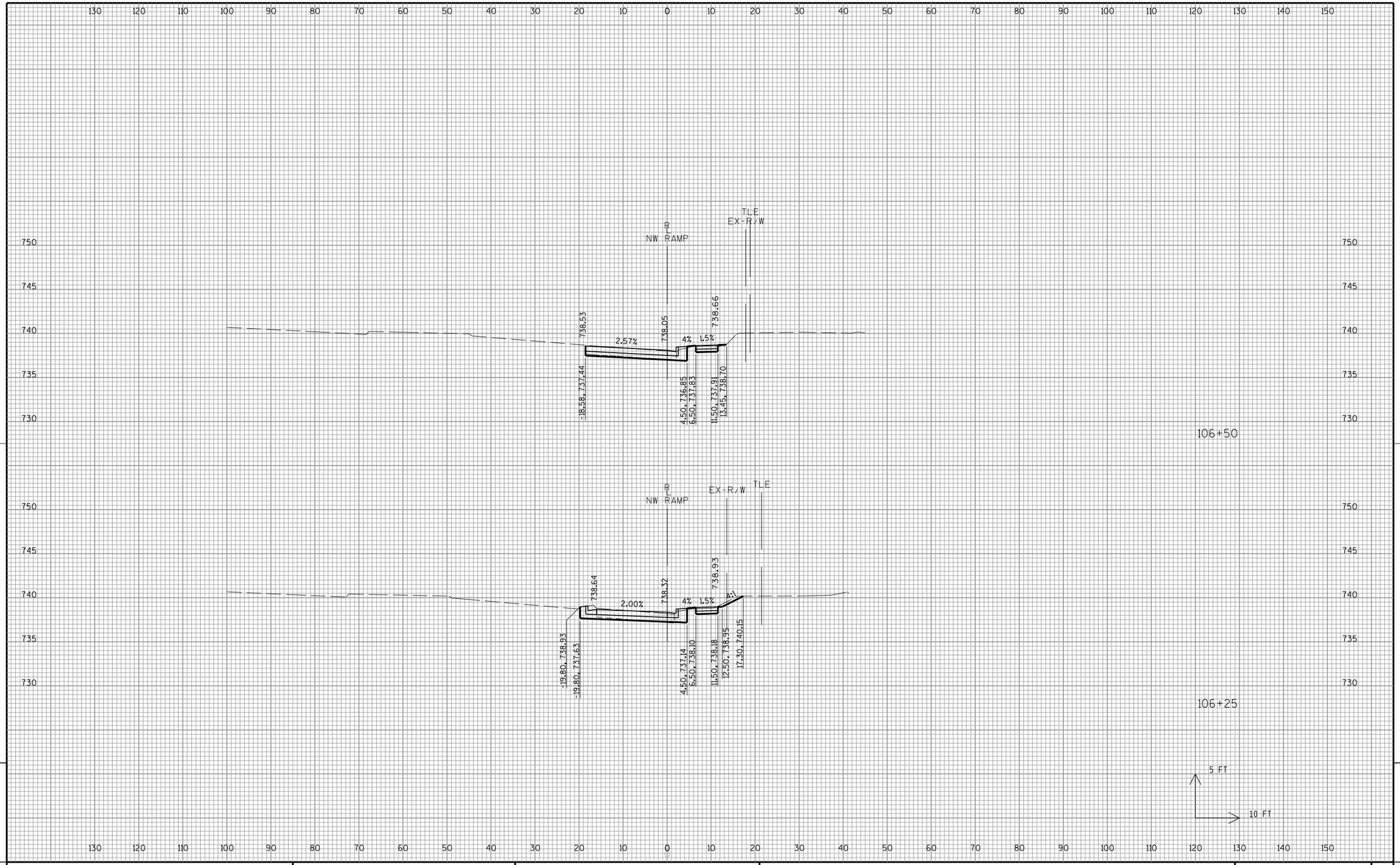


9

9

| PROJECT NO:2140-13-70 | HWY:STH 181 | COUNTY:MILWAUKEE | CROSS SECTIONS:NW RAMP | SHEET 545 | E |
|---|---|---|---|---|---|

FILE NAME : L:\Jobs2010\20100384\CAD\WisDOT_Trans\dgn\00\090202_xs_NWRamp_18S.dgn PLOT DATE : 7/22/2016 PLOT BY : GRAEF PLOT NAME : PLOT SCALE : 20.0000 sf / in. WISDOT/CADDS SHEET 21

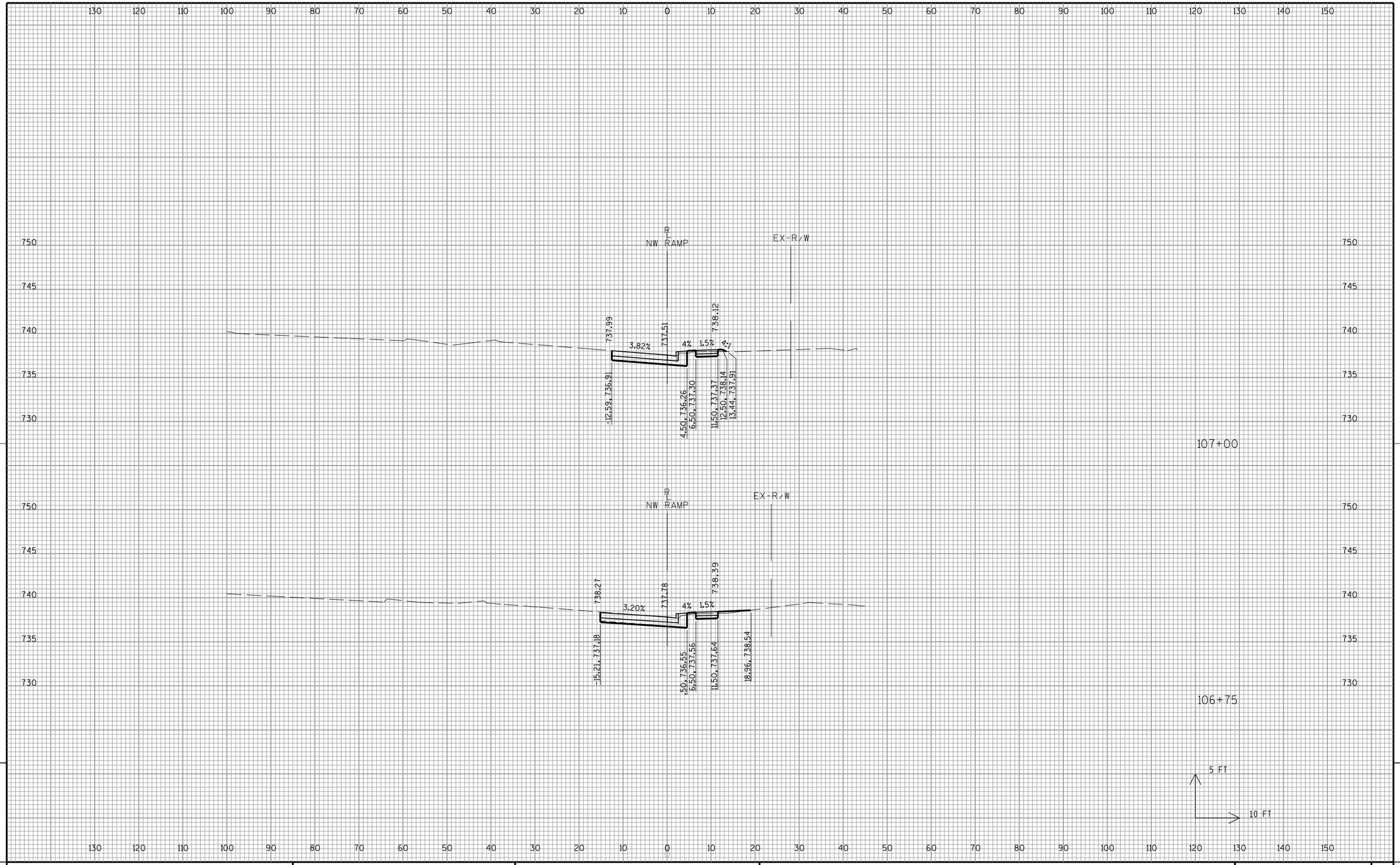


9

9

| PROJECT NO:2140-13-70 | HWY:STH 181 | COUNTY:MILWAUKEE | CROSS SECTIONS:NW RAMP | SHEET 546 | E |
|---|---|---|---|---|---|

FILE NAME : L:\Jobs2010\20100384\CAD\WisDOT_Trans\dgn\00\090202_xs_NWRamp_18S.dgn PLOT DATE : 7/22/2016 PLOT BY : GRAEF PLOT NAME : PLOT SCALE : 20.0000 sf / in.

WISDOT/CADDS SHEET 21

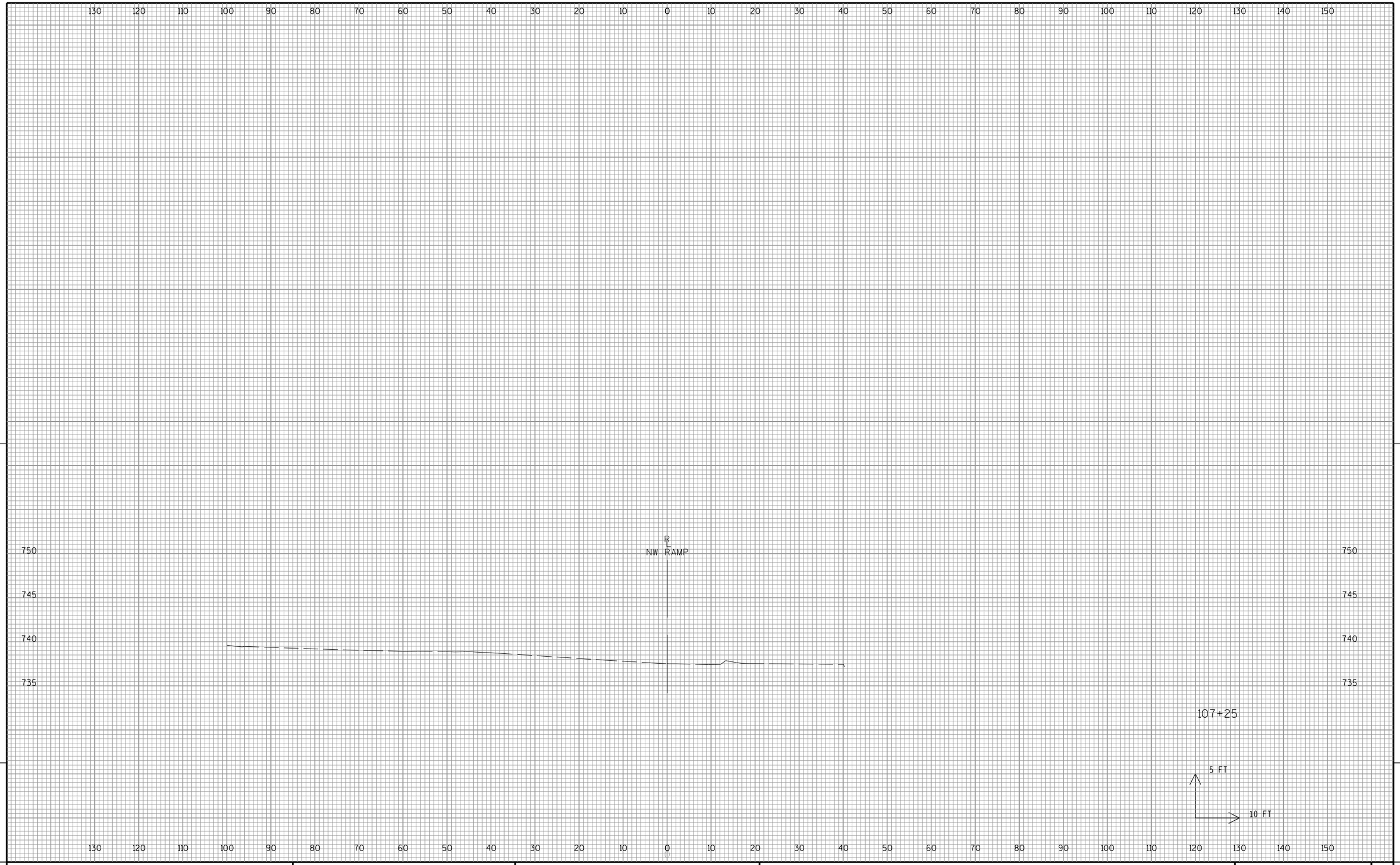


9

9

| PROJECT NO:2140-13-70 | HWY:STH 181 | COUNTY:MILWAUKEE | CROSS SECTIONS:NW RAMP | SHEET 547 | E |
|---|---|---|---|---|---|

FILE NAME : L:\Jobs2010\20100384\CAD\WisDOT_Trans\dgn\00\090202_xs_NWRamp_18S.dgn PLOT DATE : 7/22/2016 PLOT BY : GRAEF PLOT NAME : PLOT SCALE : 20.0000 sf / in.

WISDOT/CADDS SHEET 21

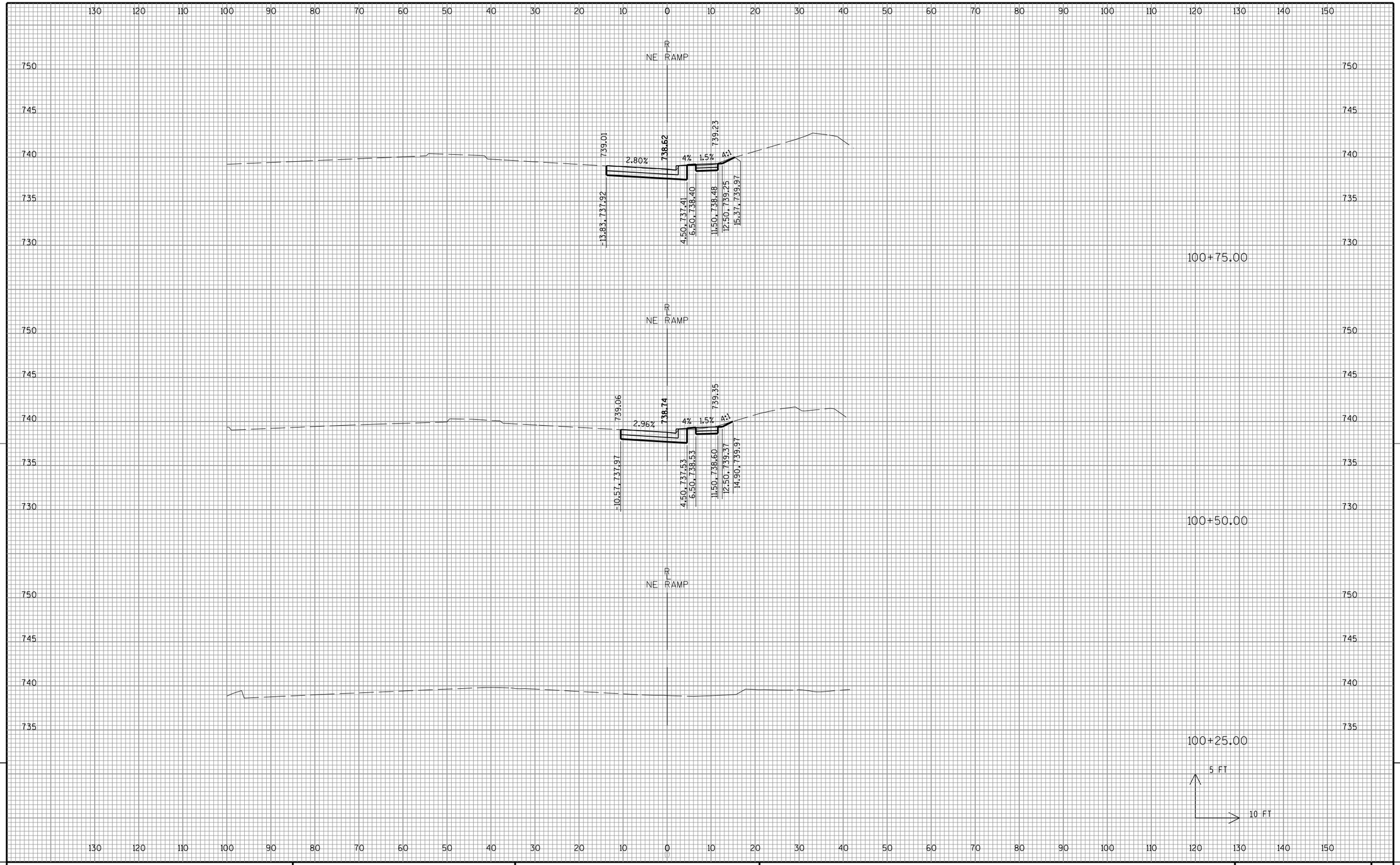


| PROJECT NO:2140-13-70 | HWY:STH 181 | COUNTY:MILWAUKEE | CROSS SECTIONS:NE RAMP | SHEET 548 | E |
|---|---|---|---|---|---|

FILE NAME : L:\Jobs2010\20100384\CAD\WisDOT_Trans\dgn\00\090203_xs_NERamp_18S.dgn PLOT DATE : 7/22/2016 PLOT BY : GRAEF PLOT NAME : PLOT SCALE : 20.0000 sf / in. WISDOT/CADDS SHEET 21

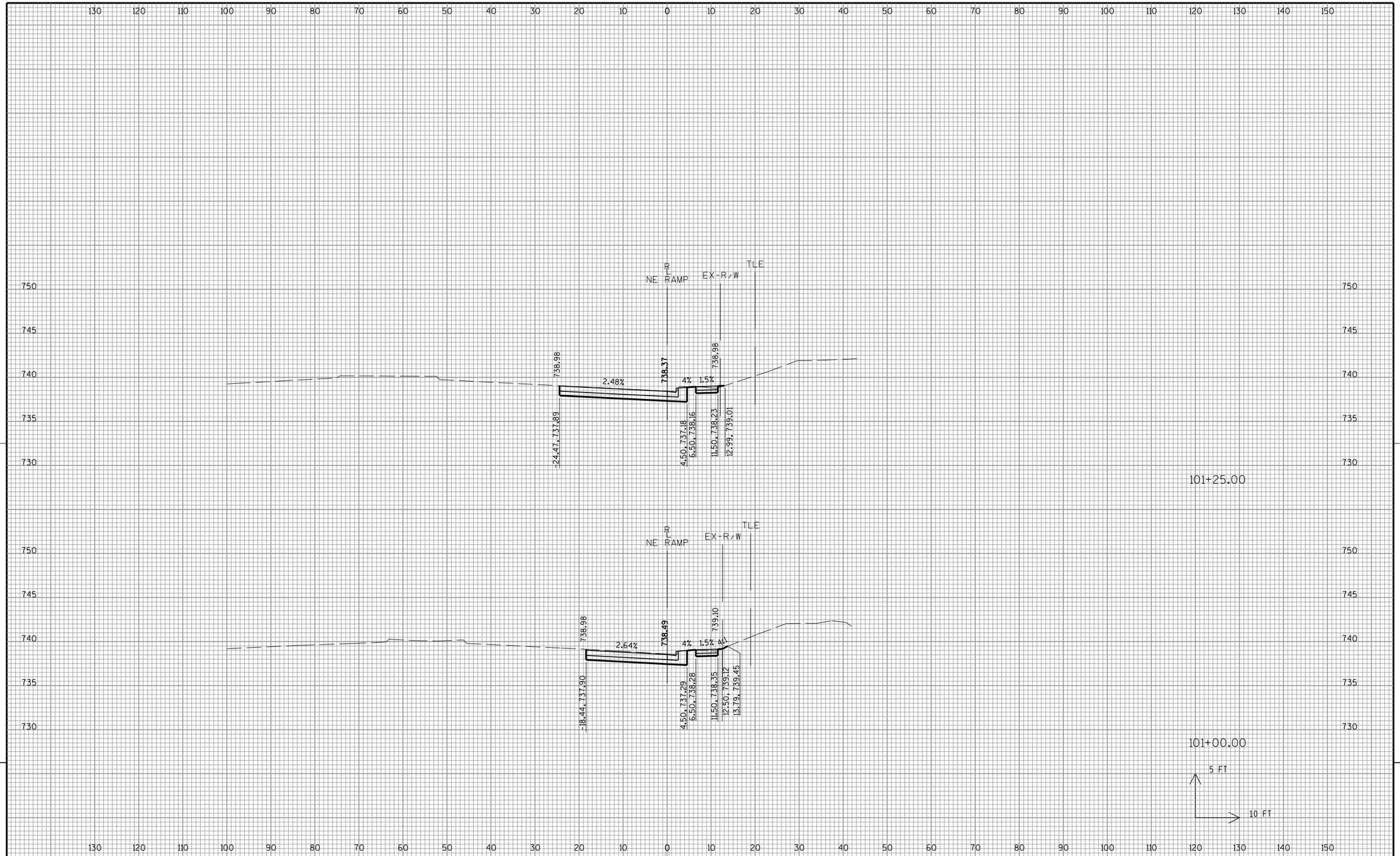


9

9

| PROJECT NO:2140-13-70 | HWY:STH 181 | COUNTY:MILWAUKEE | CROSS SECTIONS:NE RAMP | SHEET 549 | E |
|---|---|---|---|---|---|

FILE NAME : L:\Jobs2010\20100384\CAD\WisDOT_Trans\dgn\00\090203_xs_NERamp_18S.dgn PLOT DATE : 7/22/2016 PLOT BY : GRAEF PLOT NAME : PLOT SCALE : 20.0000 sf / in.

WISDOT/CADDS SHEET 21

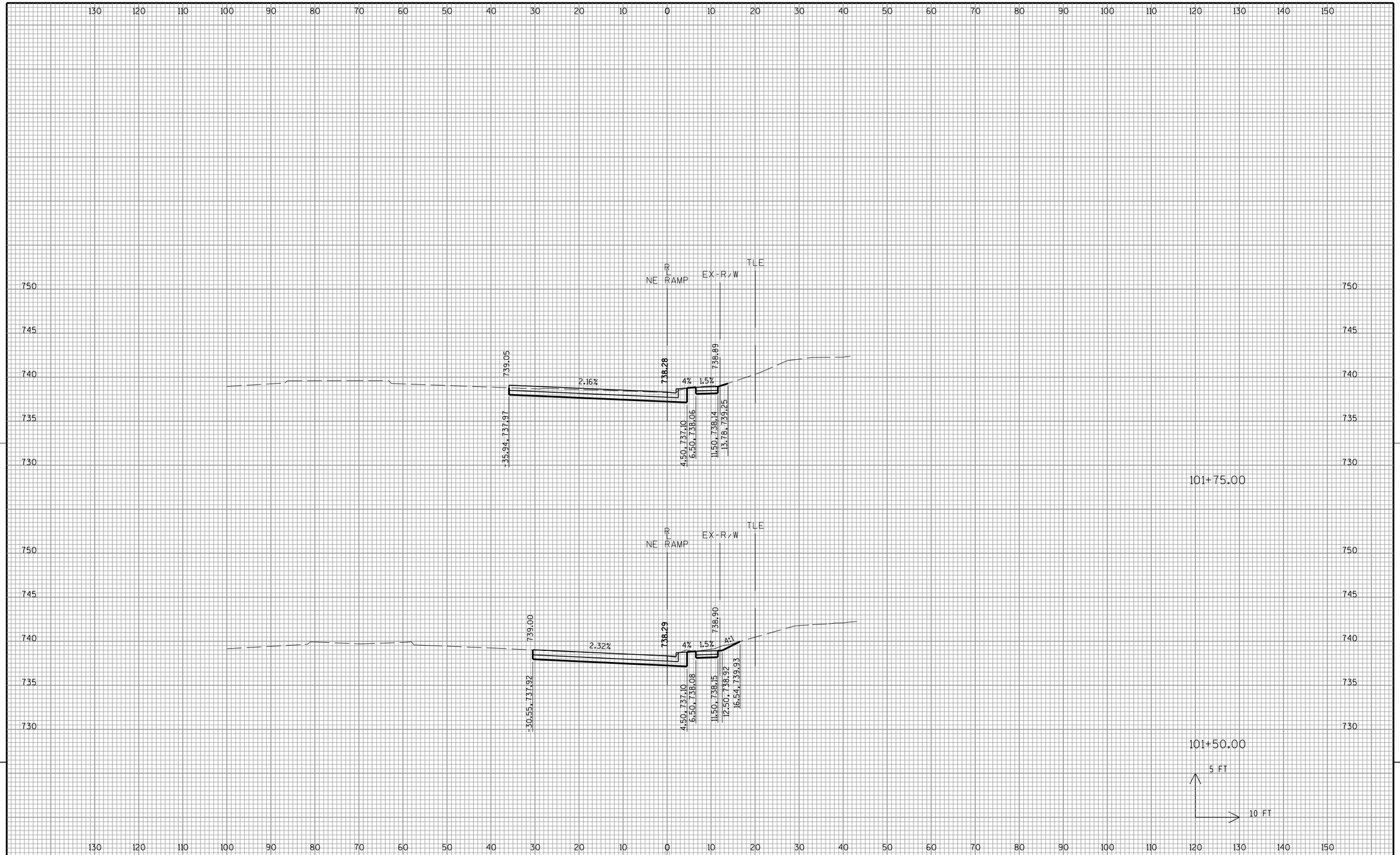


| PROJECT NO:2140-13-70 | HWY:STH 181 | COUNTY:MILWAUKEE | CROSS SECTIONS:NE RAMP | SHEET 550 | E |
|---|---|---|---|---|---|

FILE NAME : L:\Jobs2010\20100384\CAD\WisDOT_Trans\dgn\00\090203_xs_NERamp_18S.dgn PLOT DATE : 7/22/2016 PLOT BY : GRAEF PLOT NAME : PLOT SCALE : 20.0000 sf / in. WISDOT/CADDS SHEET 21

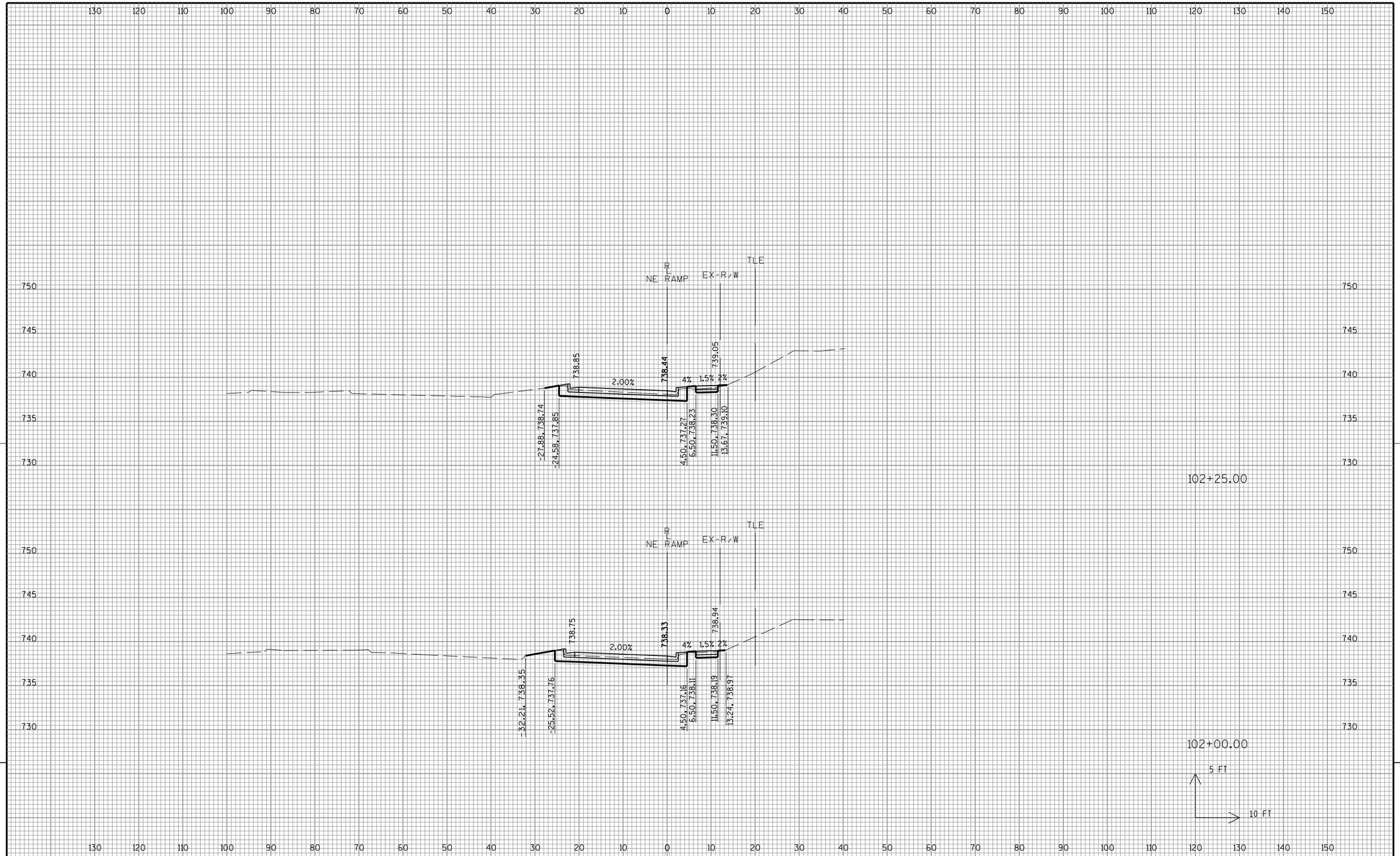


9

9

| PROJECT NO:2140-13-70 | HWY:STH 181 | COUNTY:MILWAUKEE | CROSS SECTIONS:NE RAMP | SHEET 551 | E |
|---|---|---|---|---|---|

FILE NAME : L:\Jobs2010\20100384\CAD\WisDOT_Trans\dgn\00\090203_xs_NERamp_18S.dgn PLOT DATE : 7/22/2016 PLOT BY : GRAEF PLOT NAME : PLOT SCALE : 20.0000 sf / in.

WISDOT/CADDS SHEET 21

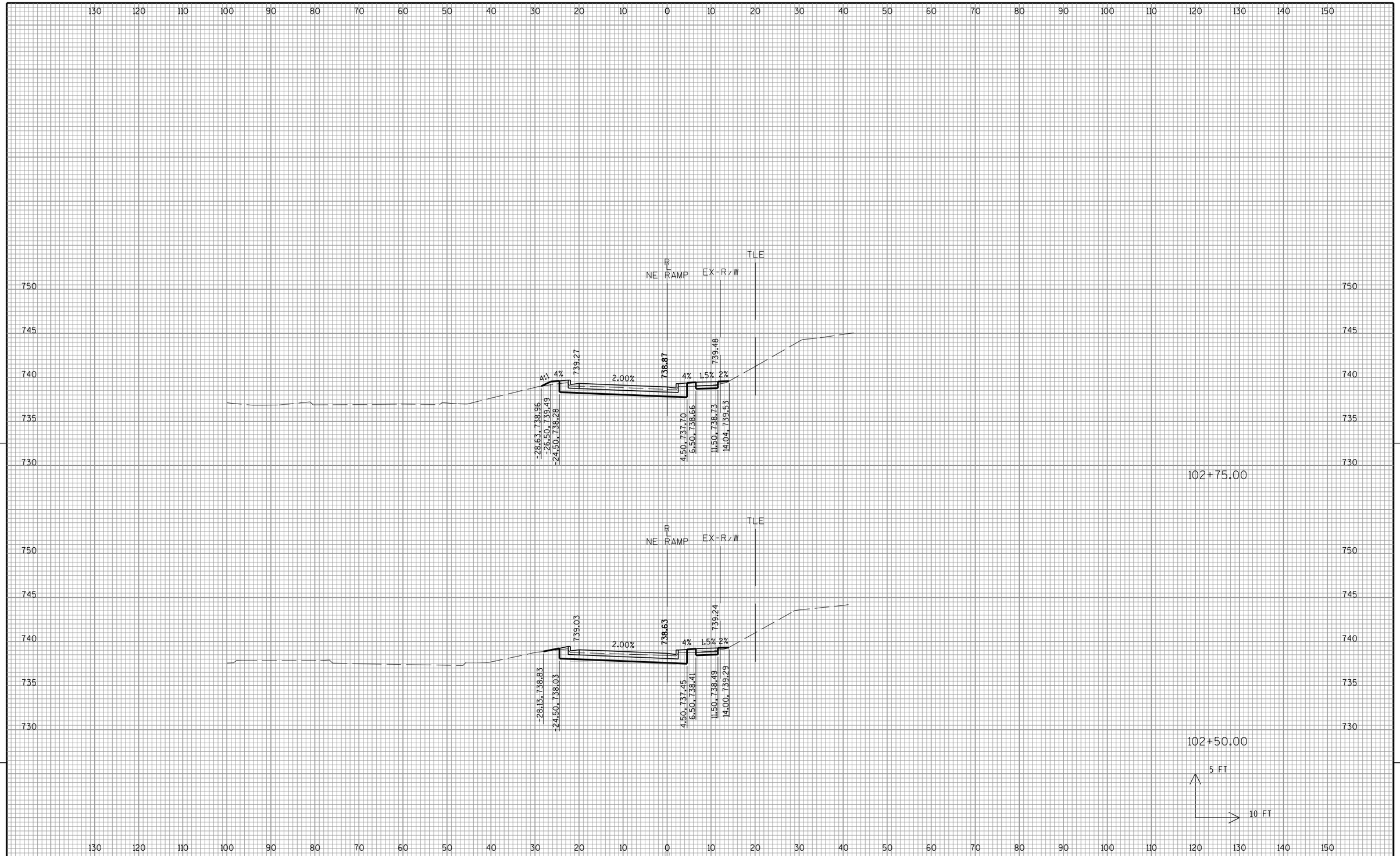


9

9

| PROJECT NO:2140-13-70 | HWY:STH 181 | COUNTY:MILWAUKEE | CROSS SECTIONS:NE RAMP | SHEET 552 | E |
|---|---|---|---|---|---|

FILE NAME : L:\Jobs2010\20100384\CAD\WisDOT_Trans\dgn\00\090203_xs_NERamp_18S.dgn PLOT DATE : 7/22/2016 PLOT BY : GRAEF PLOT NAME : PLOT SCALE : 20.0000 sf / in. WISDOT/CADDS SHEET 21

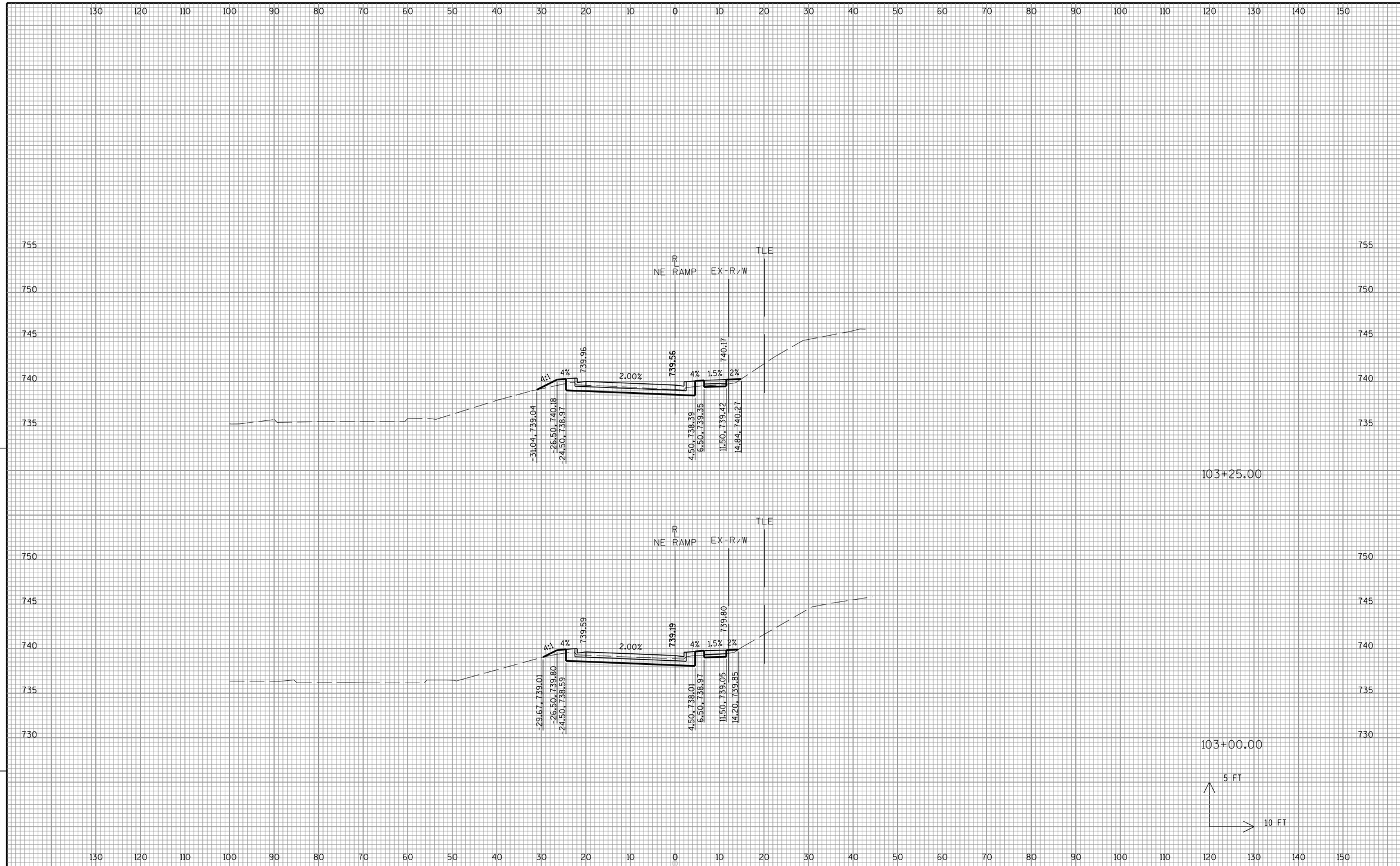


9

9

| PROJECT NO:2140-13-70 | HWY:STH 181 | COUNTY:MILWAUKEE | CROSS SECTIONS:NE RAMP | SHEET 553 | E |
|---|---|---|---|---|---|

FILE NAME : L:\Jobs2010\20100384\CAD\WisDOT_Trans\dgn\00\090203_xs_NERamp_18S.dgn PLOT DATE : 7/22/2016 PLOT BY : GRAEF PLOT NAME : PLOT SCALE : 20.0000 sf / in. WISDOT/CADDS SHEET 21

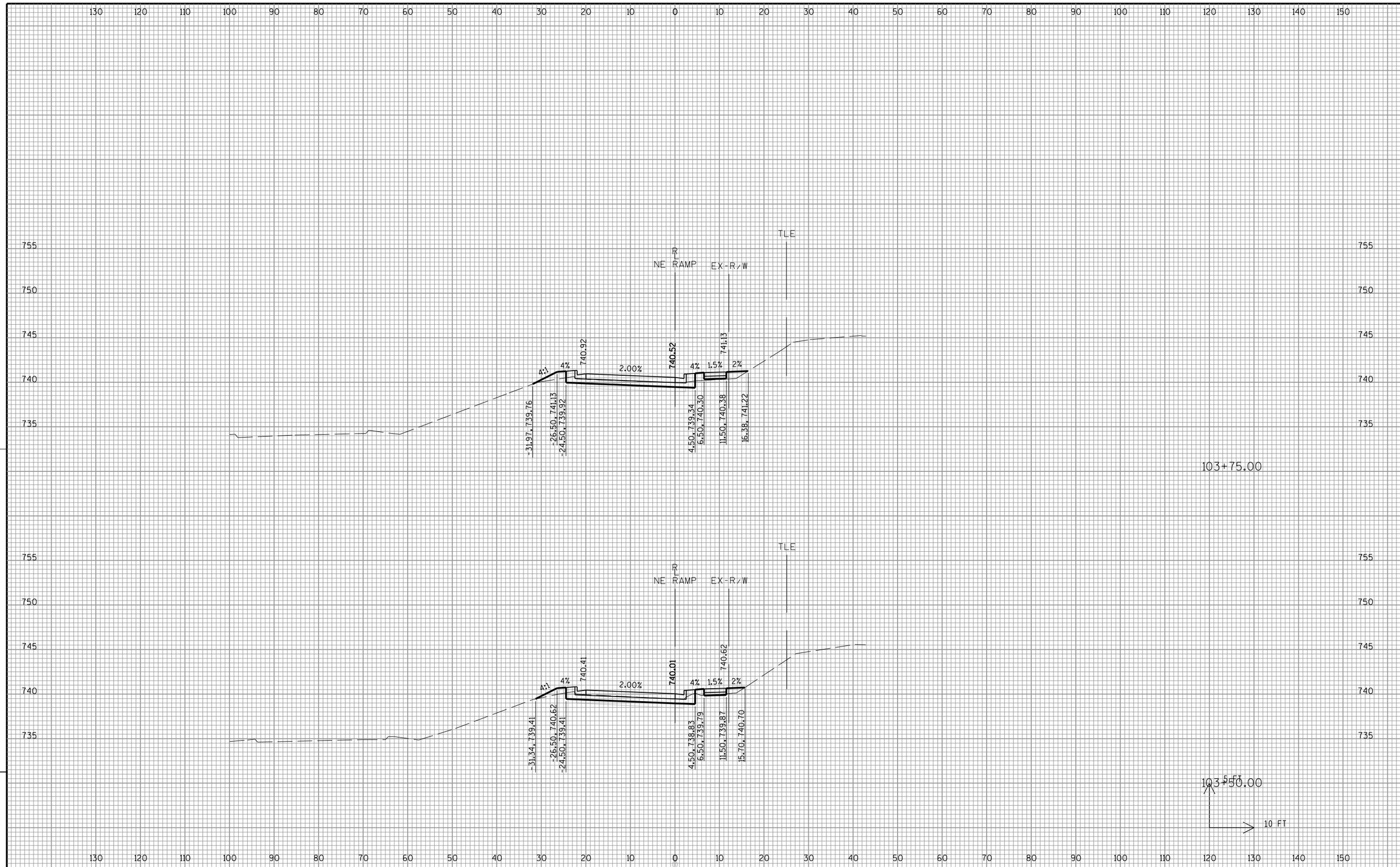


9

9

| PROJECT NO:2140-13-70 | HWY:STH 181 | COUNTY:MILWAUKEE | CROSS SECTIONS:NE RAMP | SHEET 554 | E |
|---|---|---|---|---|---|

FILE NAME : L:\Jobs2010\20100384\CAD\WisDOT_Trans\dgn\00\090203_xs_NERamp_18S.dgn PLOT DATE : 7/22/2016 PLOT BY : GRAEF PLOT NAME : PLOT SCALE : 20.0000 sf / in. WISDOT/CADDS SHEET 21

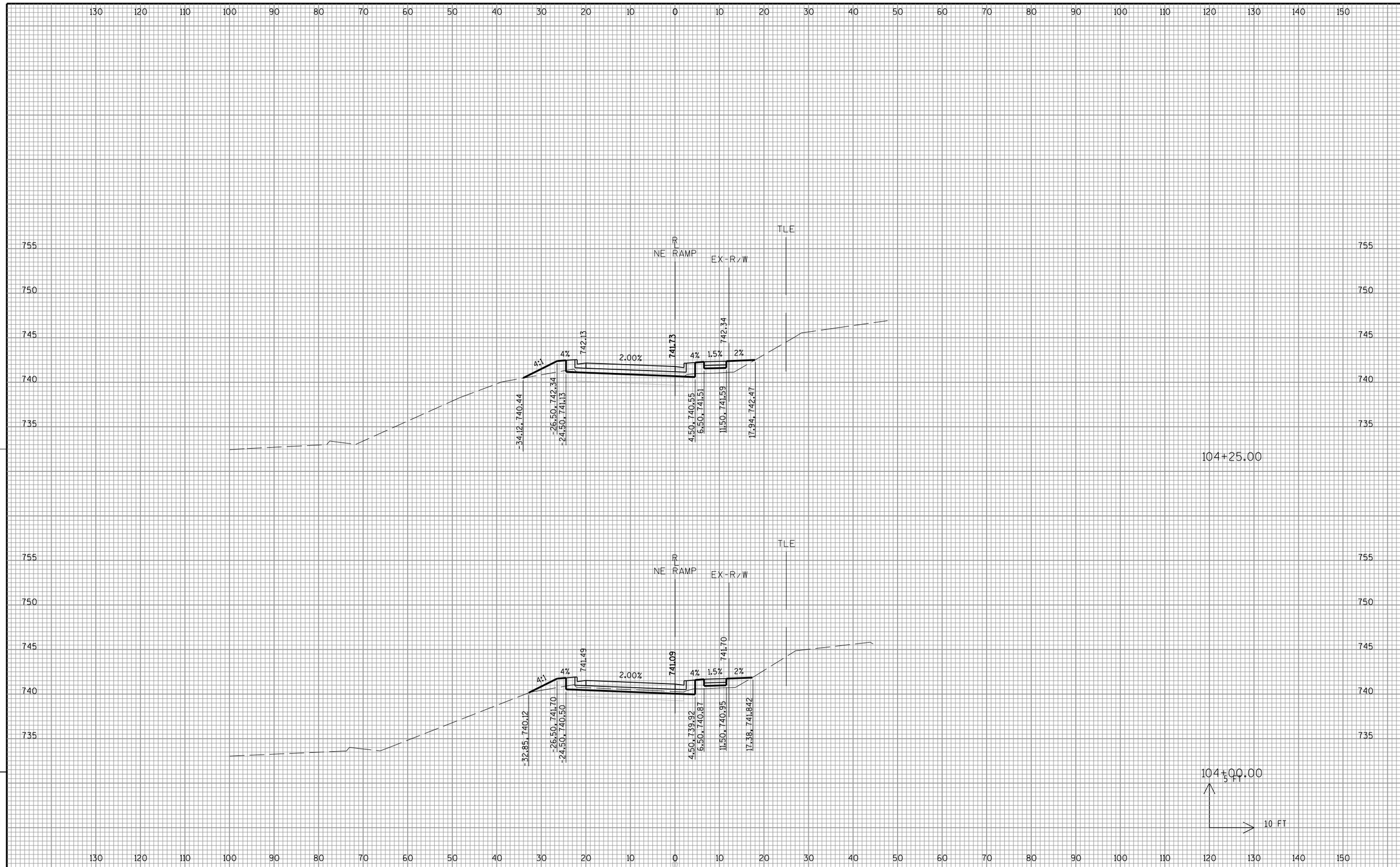


9

9

| PROJECT NO:2140-13-70 | HWY:STH 181 | COUNTY:MILWAUKEE | CROSS SECTIONS:NE RAMP | SHEET 555 | E |
|---|---|---|---|---|---|

FILE NAME : L:\Jobs2010\20100384\CAD\WisDOT_Trans\dgn\00\090203_xs_NERamp_18S.dgn PLOT DATE : 7/22/2016 PLOT BY : GRAEF PLOT NAME : PLOT SCALE : 20.0000 sf / in. WISDOT/CADDS SHEET 21

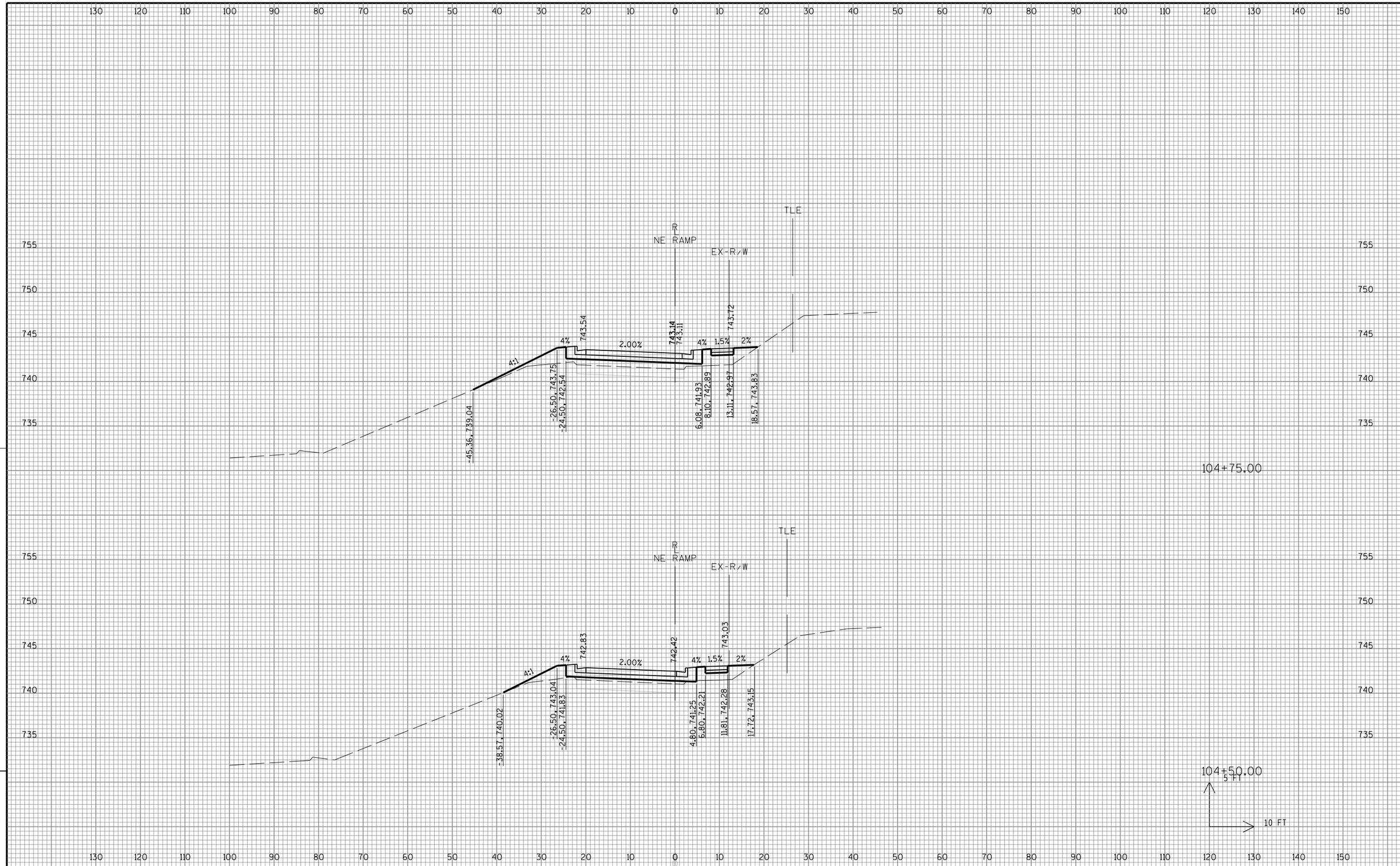


9

9

| PROJECT NO:2140-13-70 | HWY:STH 181 | COUNTY:MILWAUKEE | CROSS SECTIONS:NE RAMP | SHEET 556 | E |
|---|---|---|---|---|---|

FILE NAME : L:\Jobs2010\20100384\CAD\WisDOT_Trans\dgn\00\090203_xs_NERamp_18S.dgn PLOT DATE : 7/22/2016 PLOT BY : GRAEF PLOT NAME : PLOT SCALE : 20.0000 sf / in. WISDOT/CADDS SHEET 21

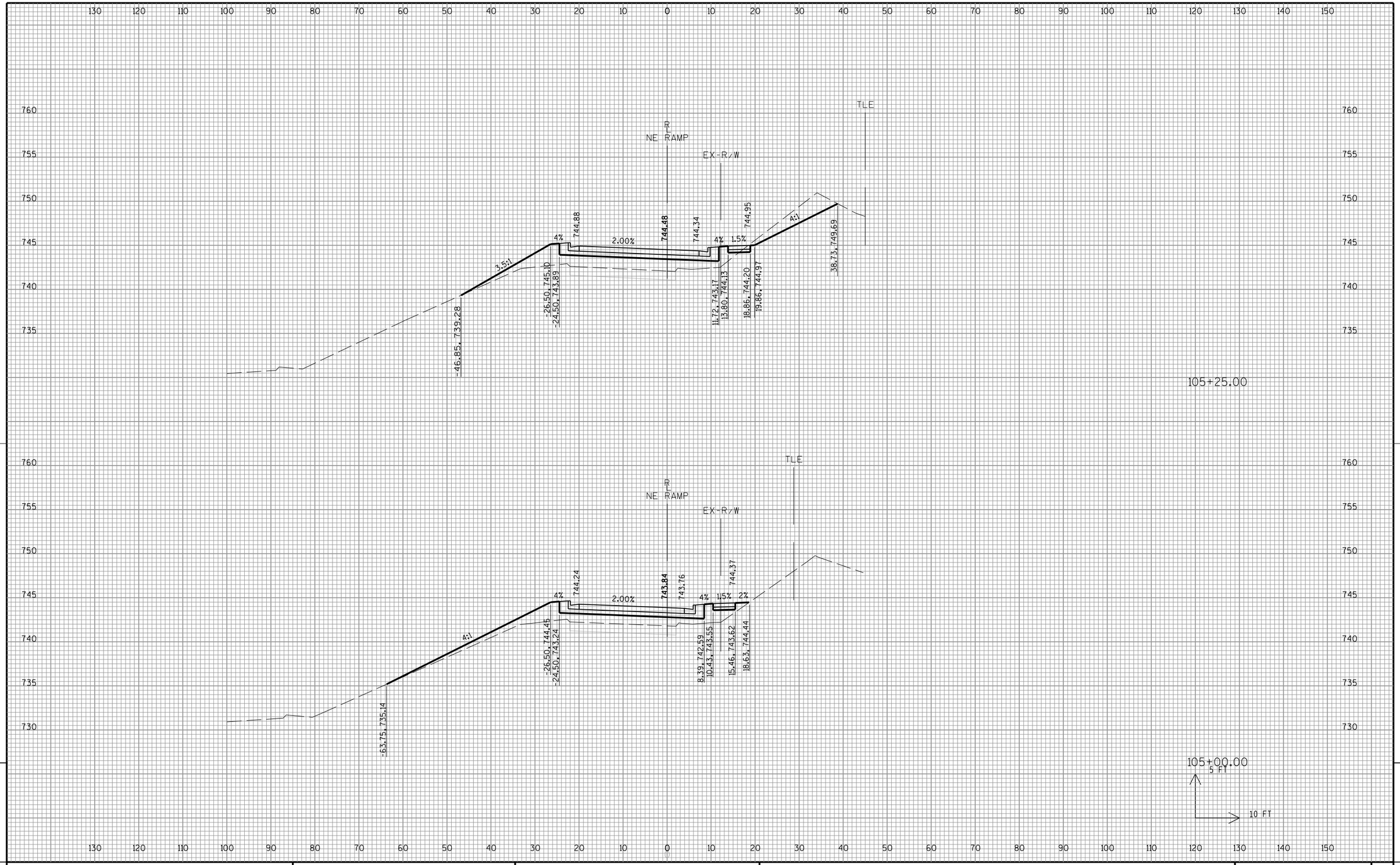


9

9

| PROJECT NO:2140-13-70 | HWY:STH 181 | COUNTY:MILWAUKEE | CROSS SECTIONS:NE RAMP | SHEET 557 | E |
|---|---|---|---|---|---|

FILE NAME : L:\Jobs2010\20100384\CAD\WisDOT_Trans\dgn\00\090203_xs_NERamp_18S.dgn PLOT DATE : 7/22/2016 PLOT BY : GRAEF PLOT NAME : PLOT SCALE : 20.0000 sf / in.

WISDOT/CADDS SHEET 21

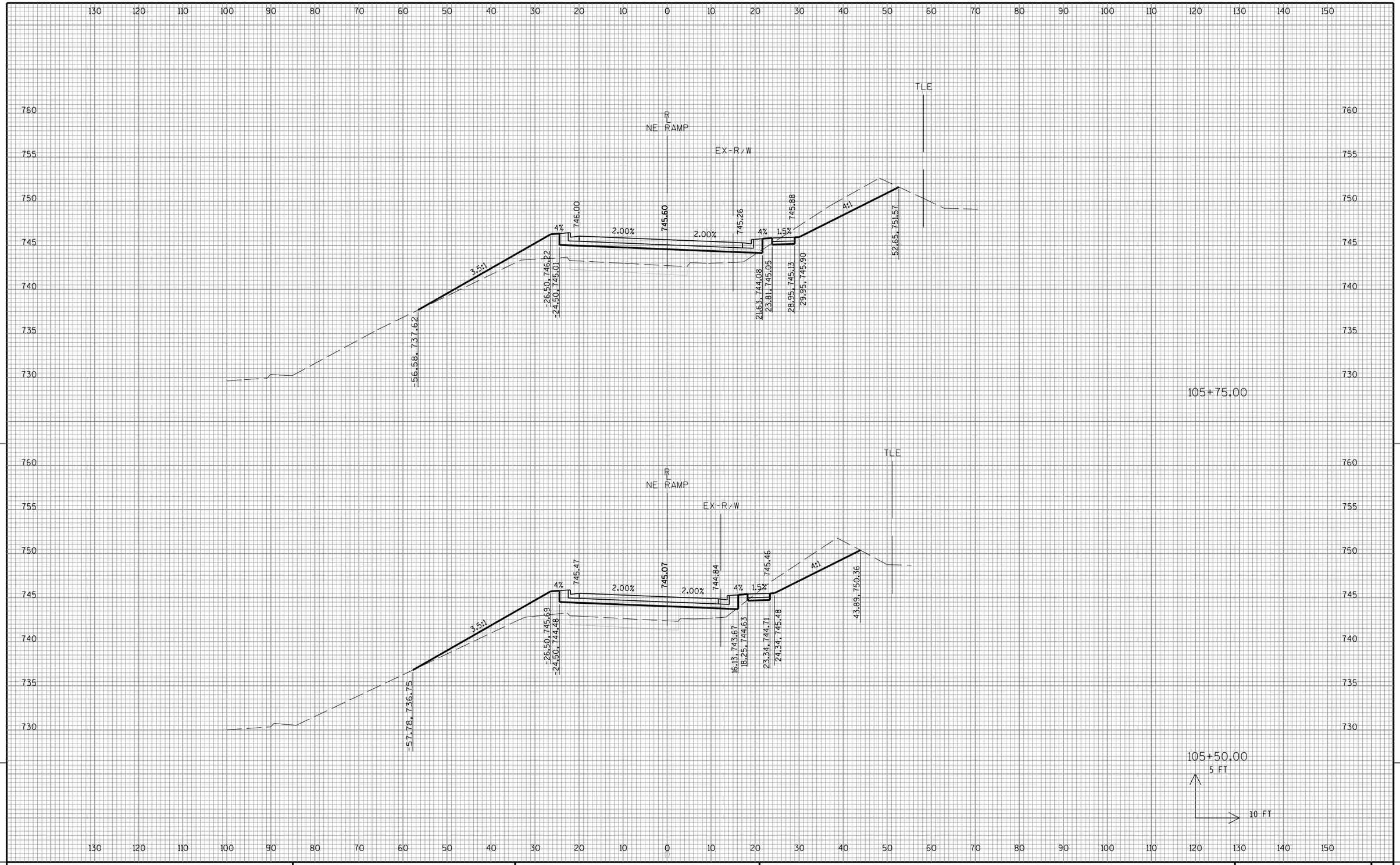


9

9

| PROJECT NO:2140-13-70 | HWY:STH 181 | COUNTY:MILWAUKEE | CROSS SECTIONS:NE RAMP | SHEET 558 | E |
|---|---|---|---|---|---|

FILE NAME : L:\Jobs2010\20100384\CAD\WisDOT_Trans\dgn\00\090203_xs_NERamp_18S.dgn PLOT DATE : 7/22/2016 PLOT BY : GRAEF PLOT NAME : PLOT SCALE : 20.0000 sf / in. WISDOT/CADDS SHEET 21

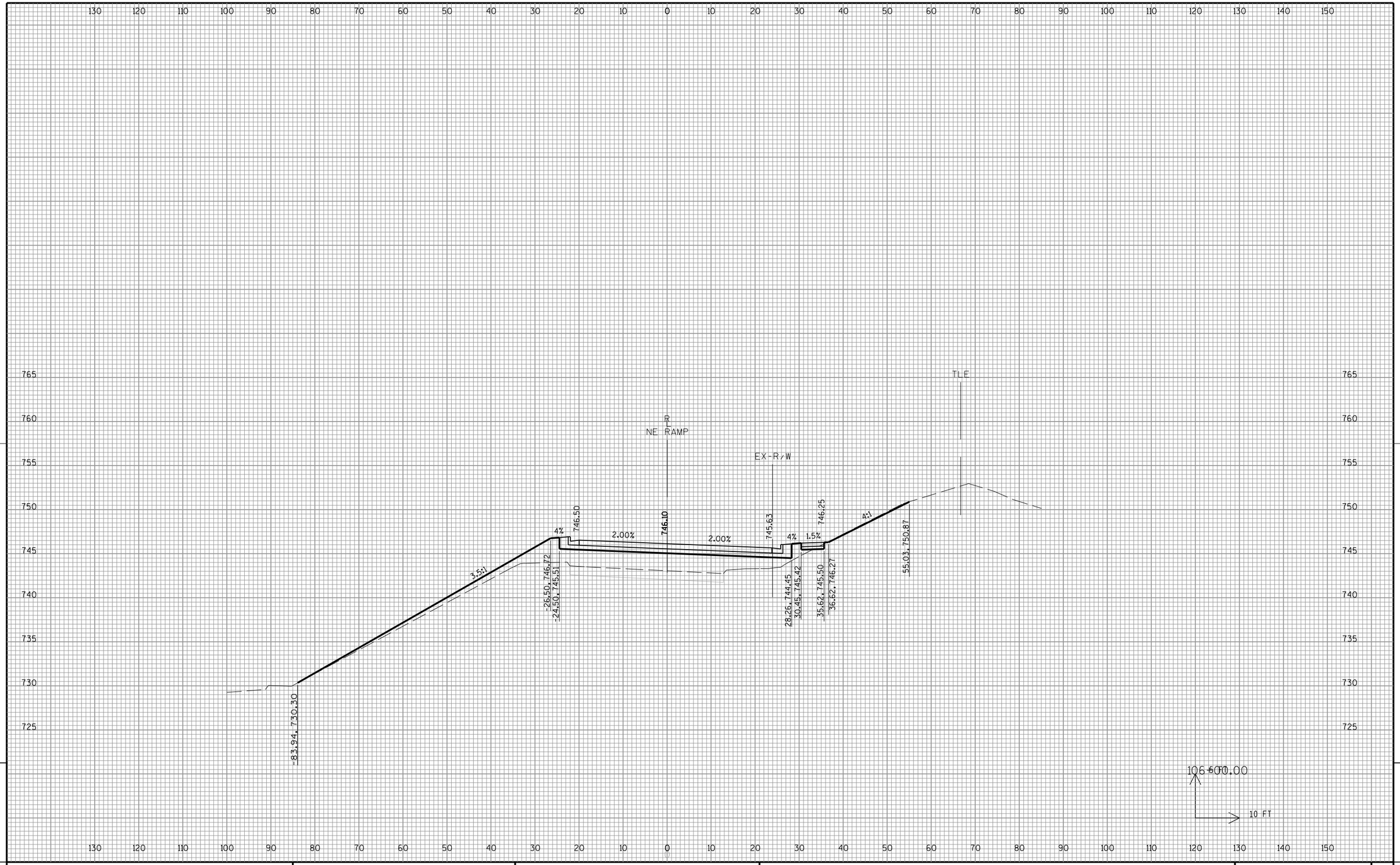


9

9

| PROJECT NO:2140-13-70 | HWY:STH 181 | COUNTY:MILWAUKEE | CROSS SECTIONS:NE RAMP | SHEET 559 | E |
|---|---|---|---|---|---|

FILE NAME : L:\Jobs2010\20100384\CAD\WisDOT_Trans\dgn\00\090203_xs_NERamp_18S.dgn PLOT DATE : 7/22/2016 PLOT BY : GRAEF PLOT NAME : PLOT SCALE : 20.0000 sf / in.

WISDOT/CADDS SHEET 21

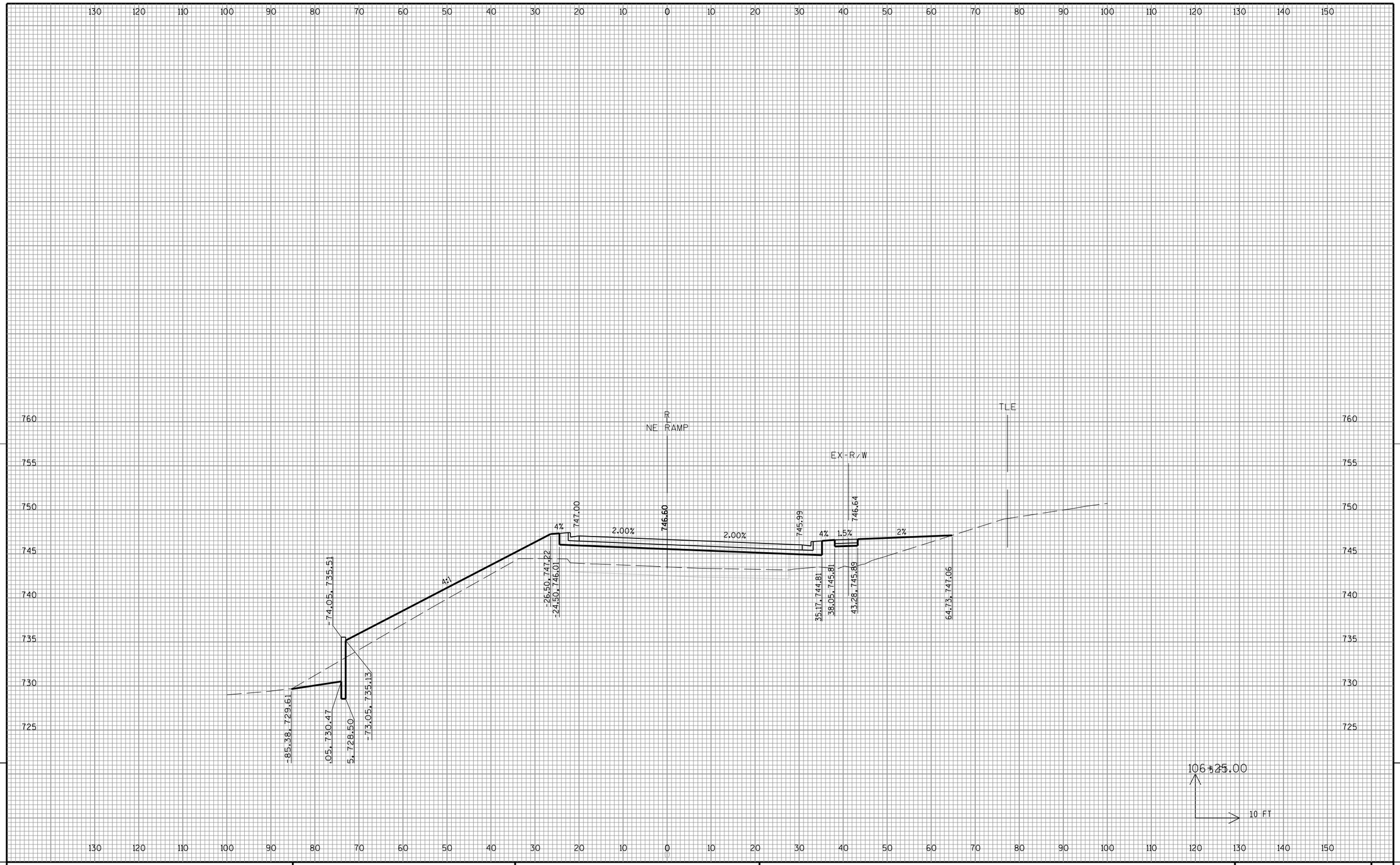


9

9

| PROJECT NO:2140-13-70 | HWY:STH 181 | COUNTY:MILWAUKEE | CROSS SECTIONS:NE RAMP | SHEET 560 | E |
|---|---|---|---|---|---|

FILE NAME : L:\Jobs2010\20100384\CAD\WisDOT_Trans\dgn\00\090203_xs_NERamp_18S.dgn PLOT DATE : 7/22/2016 PLOT BY : GRAEF PLOT NAME : PLOT SCALE : 20.0000 sf / in.

WISDOT/CADDS SHEET 21

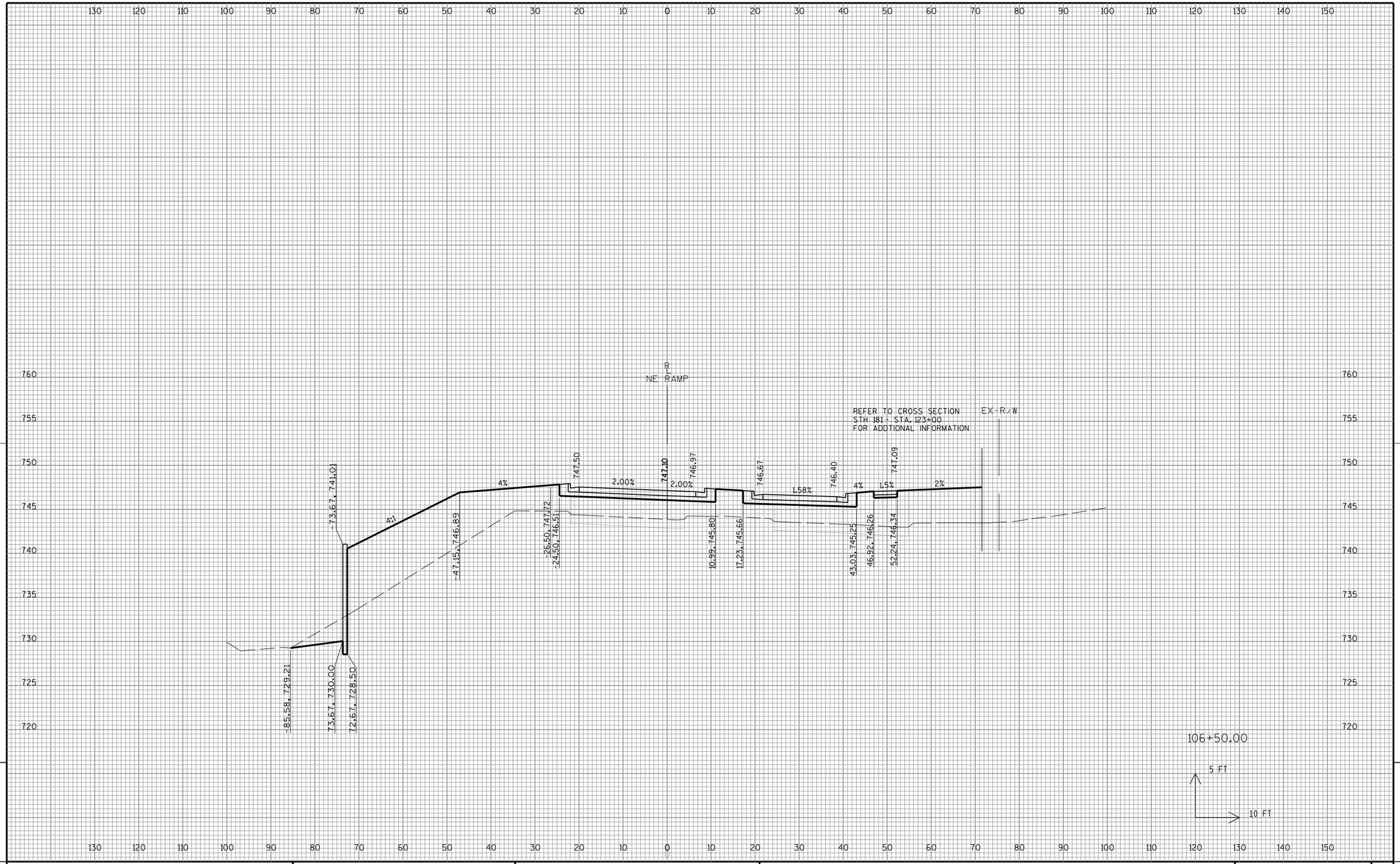


9

9

| PROJECT NO:2140-13-70 | HWY:STH 181 | COUNTY:MILWAUKEE | CROSS SECTIONS:NE RAMP | SHEET 561 | E |
|---|---|---|---|---|---|

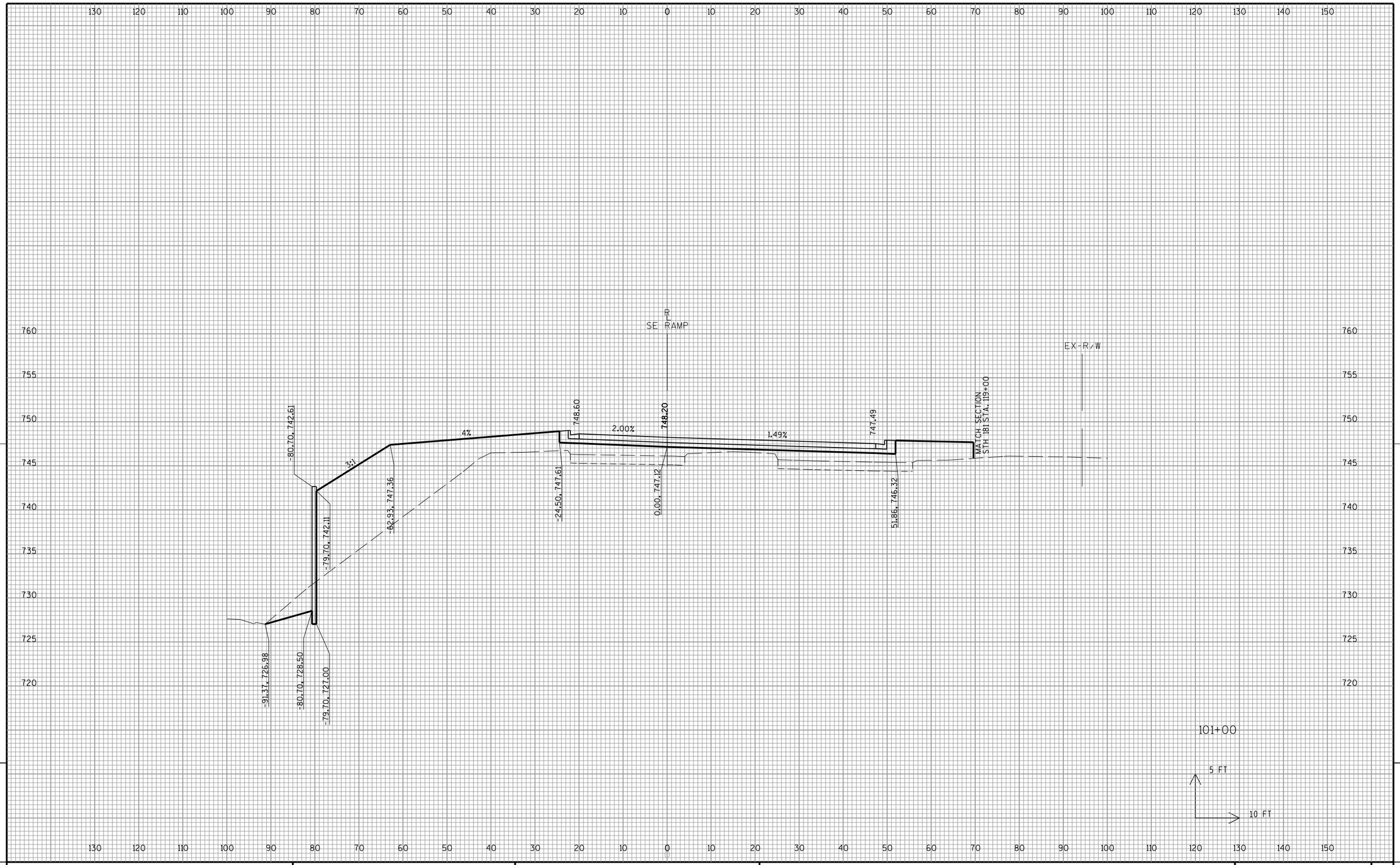


| PROJECT NO:2140-13-70 | HWY:STH 181 | COUNTY:MILWAUKEE | CROSS SECTIONS:SE RAMP | SHEET 562 | E |
|---|---|---|---|---|---|

FILE NAME : L:\Jobs2010\20100384\CAD\WisDOT_Trans\dgn\00\090204_xs_SERamp_18S.dgn PLOT DATE : 7/22/2016 PLOT BY : GRAEF PLOT NAME : PLOT SCALE : 20.0000 sf / in.

WISDOT/CADDS SHEET 21

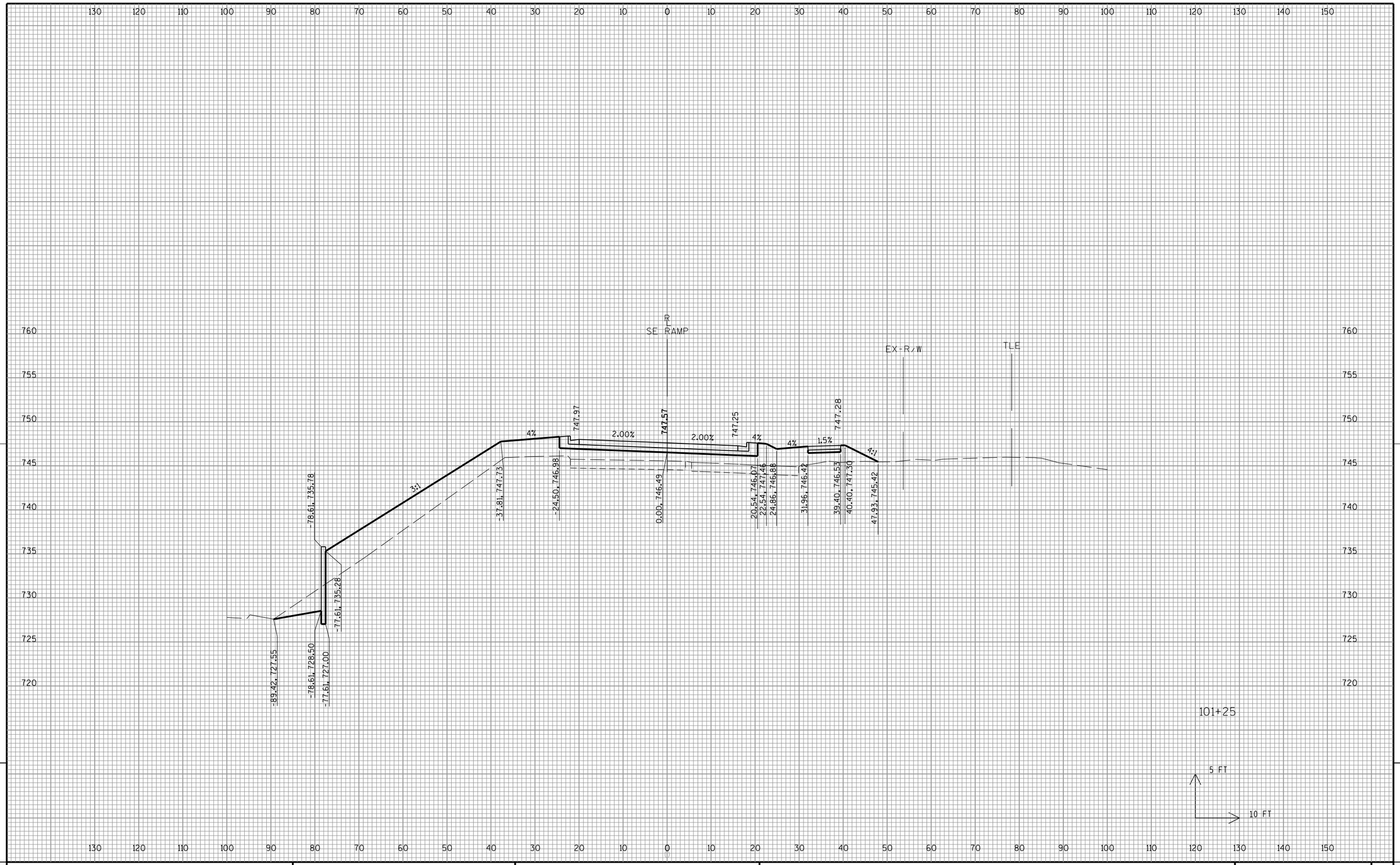


9

9

| PROJECT NO:2140-13-70 | HWY:STH 181 | COUNTY:MILWAUKEE | CROSS SECTIONS:SE RAMP | SHEET 563 | E |
|---|---|---|---|---|---|

FILE NAME : L:\Jobs2010\20100384\CAD\WisDOT_Trans\dgn\00\090204_xs_SERamp_18S.dgn PLOT DATE : 7/22/2016 PLOT BY : GRAEF PLOT NAME : PLOT SCALE : 20.0000 sf / in.

WISDOT/CADDS SHEET 21

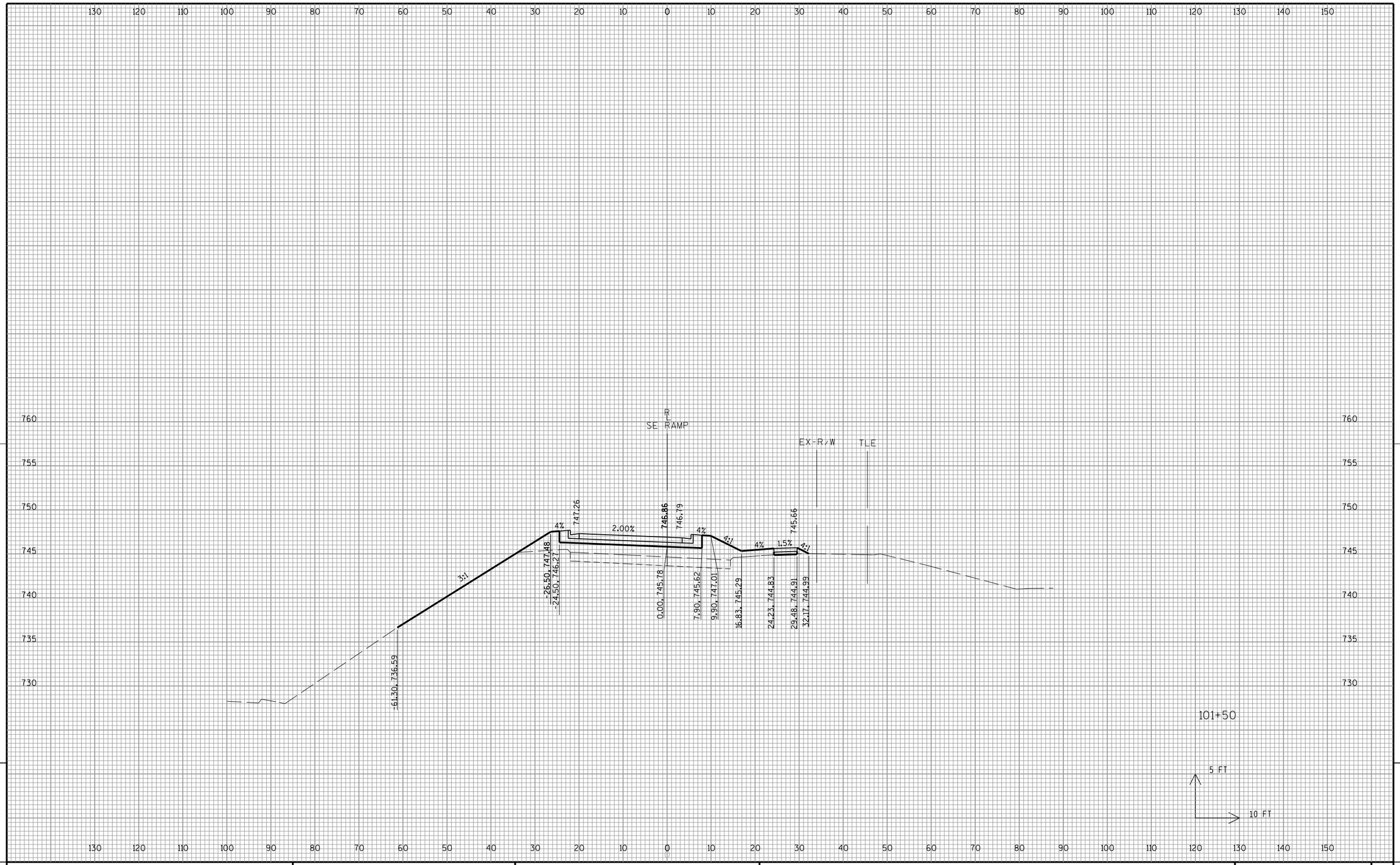


9

9

| PROJECT NO:2140-13-70 | HWY:STH 181 | COUNTY:MILWAUKEE | CROSS SECTIONS:SE RAMP | SHEET 564 | E |
|---|---|---|---|---|---|

FILE NAME : L:\Jobs2010\20100384\CAD\WisDOT_Trans\dgn\00\090204_xs_SERamp_18S.dgn PLOT DATE : 7/22/2016 PLOT BY : GRAEF PLOT NAME : PLOT SCALE : 20.0000 sf / in.

WISDOT/CADDS SHEET 21

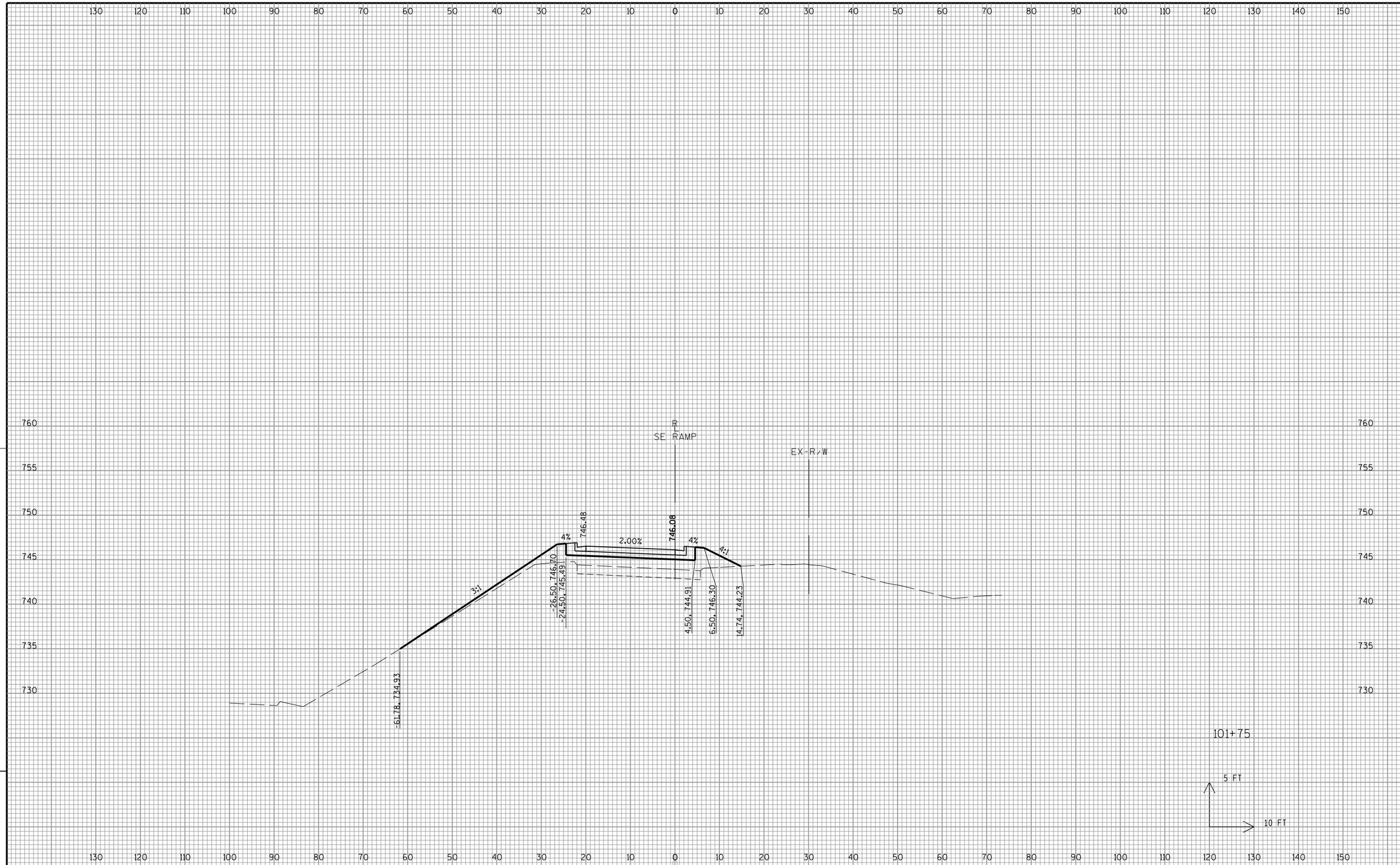


9

9

| PROJECT NO:2140-13-70 | HWY:STH 181 | COUNTY:MILWAUKEE | CROSS SECTIONS:SE RAMP | SHEET 565 | E |
|---|---|---|---|---|---|

FILE NAME : L:\Jobs2010\20100384\CAD\WisDOT_Trans\dgn\00\090204_xs_SERamp_18S.dgn PLOT DATE : 7/22/2016 PLOT BY : GRAEF PLOT NAME : PLOT SCALE : 20.0000 sf / in. WISDOT/CADDS SHEET 21

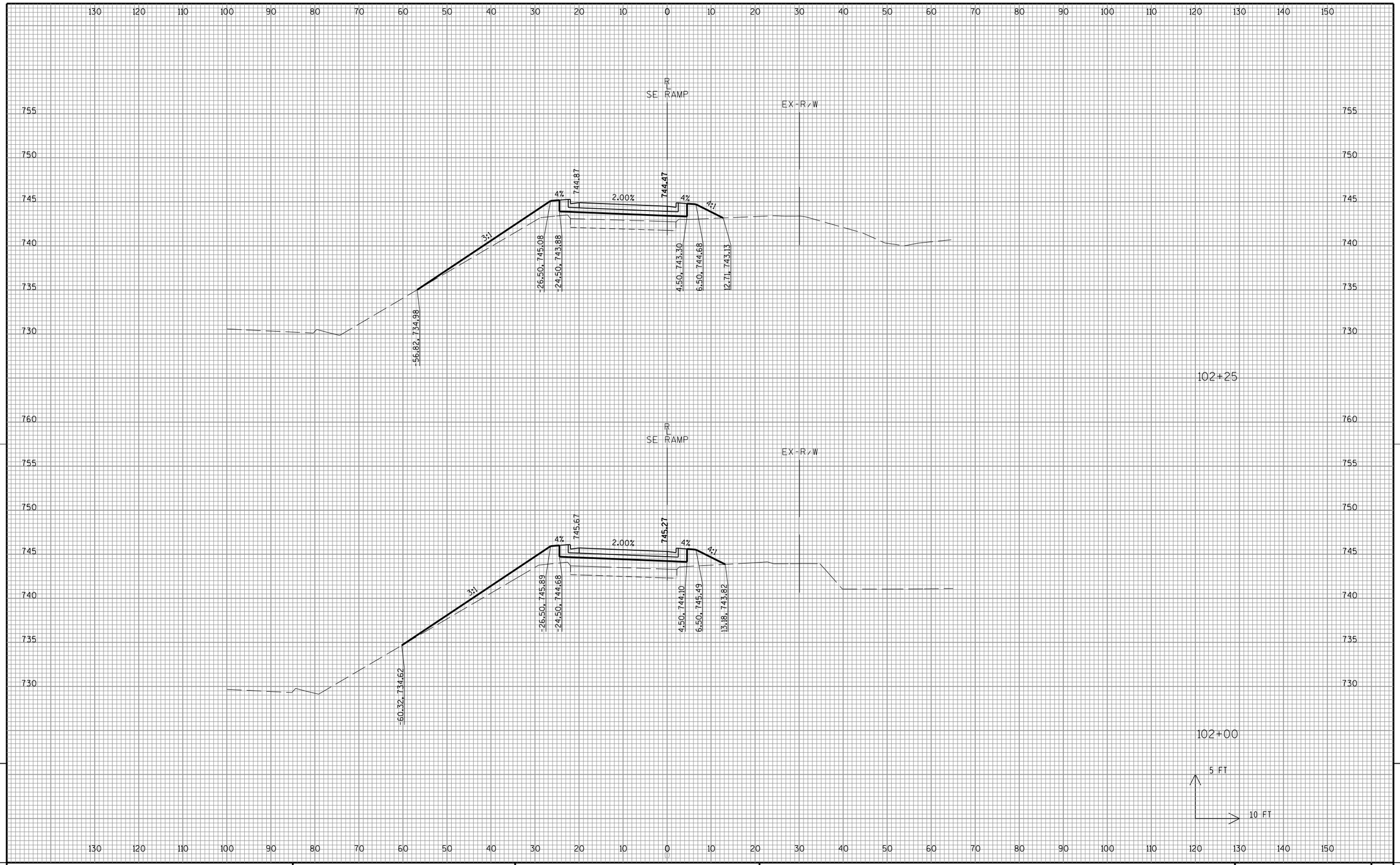


9

9

| PROJECT NO:2140-13-70 | HWY:STH 181 | COUNTY:MILWAUKEE | CROSS SECTIONS:SE RAMP | SHEET 566 | E |
|---|---|---|---|---|---|

FILE NAME : L:\Jobs2010\20100384\CAD\WisDOT_Trans\dgn\00\090204_xs_SERamp_18S.dgn PLOT DATE : 7/22/2016 PLOT BY : GRAEF PLOT NAME : PLOT SCALE : 20.0000 sf / in. WISDOT/CADDS SHEET 21

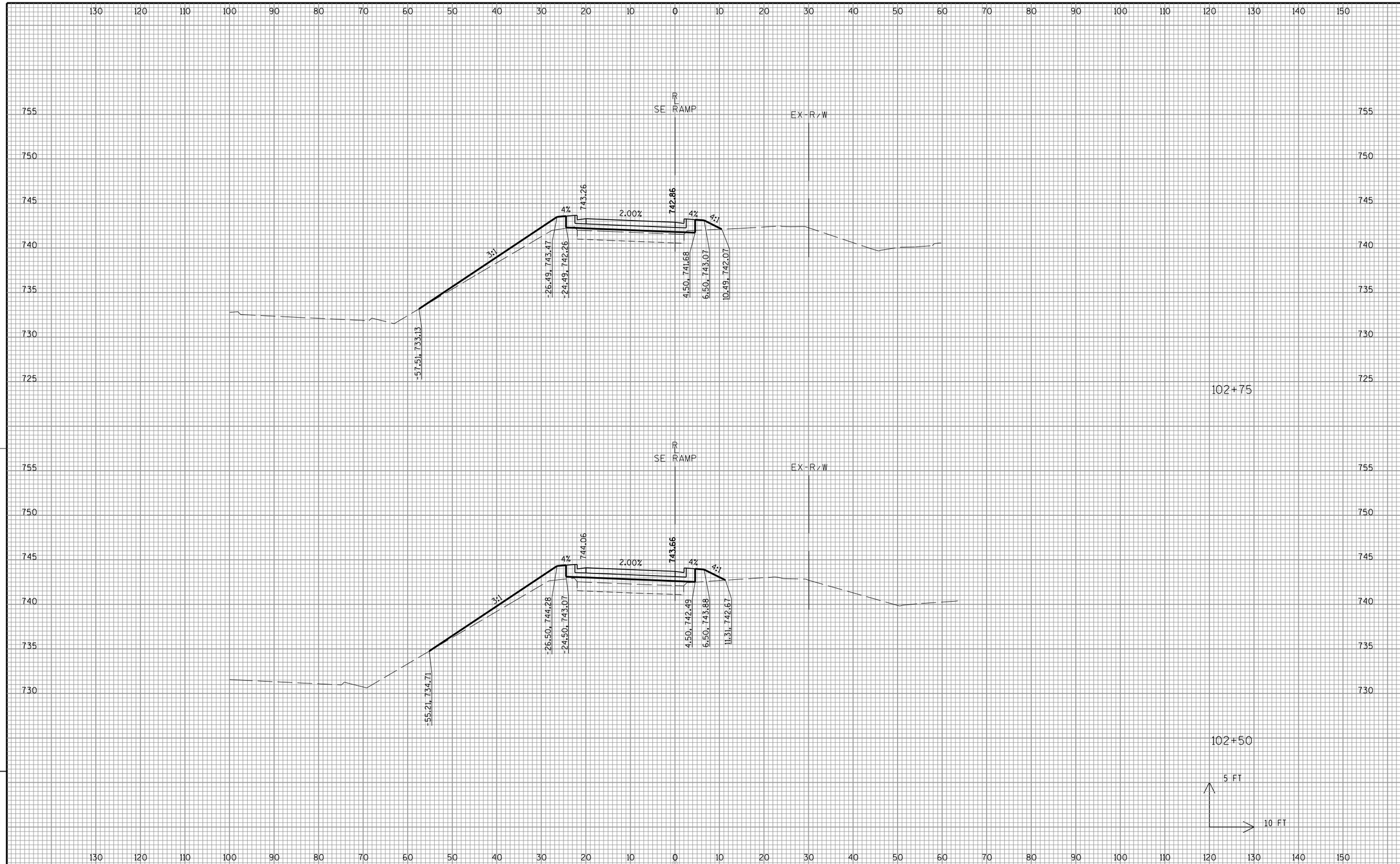


9

9

| PROJECT NO:2140-13-70 | HWY:STH 181 | COUNTY:MILWAUKEE | CROSS SECTIONS:SE RAMP | SHEET 567 | E |
|---|---|---|---|---|---|

FILE NAME : L:\Jobs2010\20100384\CAD\WisDOT_Trans\dgn\00\090204_xs_SERamp_18S.dgn PLOT DATE : 7/22/2016 PLOT BY : GRAEF PLOT NAME : PLOT SCALE : 20.0000 sf / in. WISDOT/CADDS SHEET 21

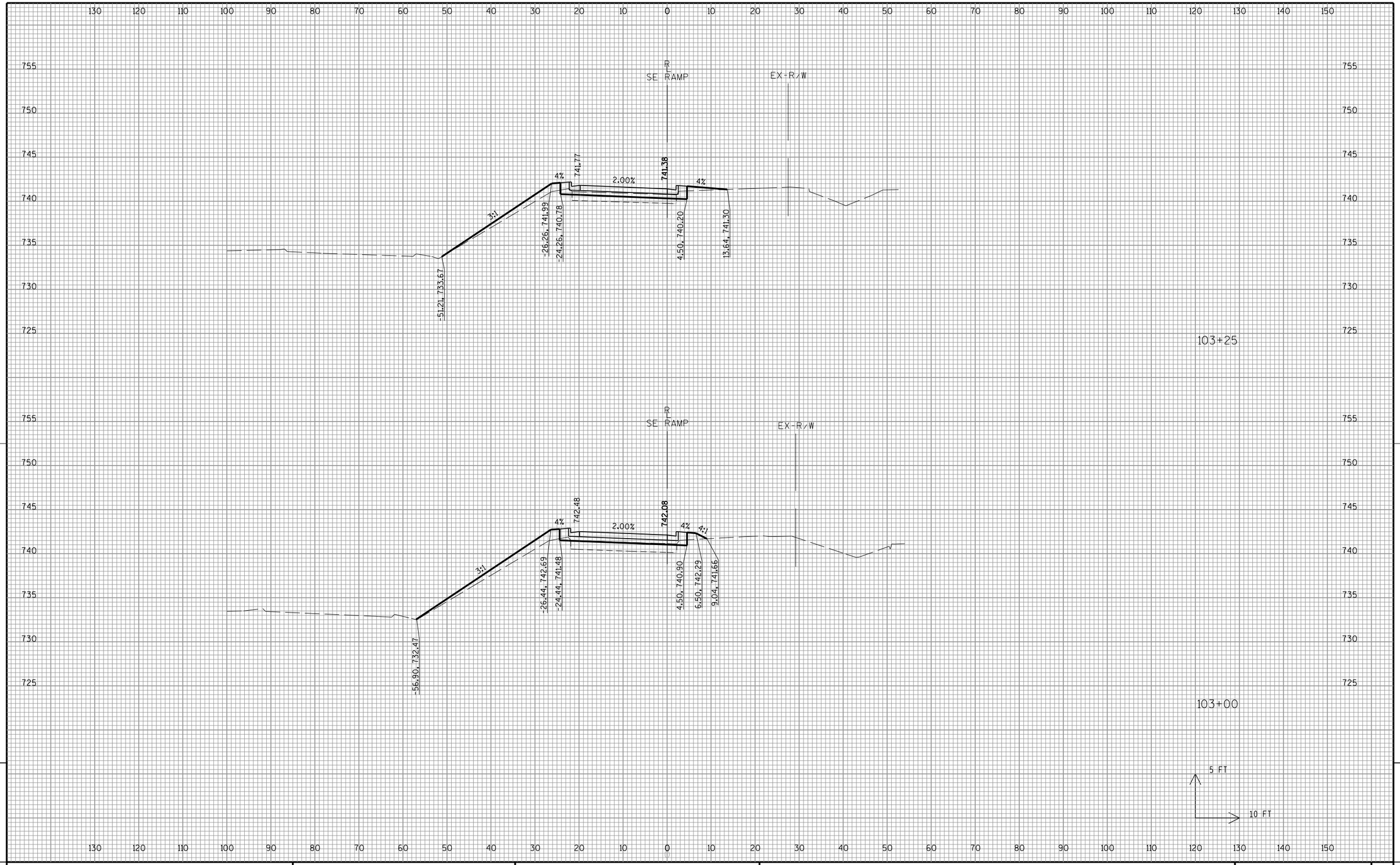


9

9

| PROJECT NO:2140-13-70 | HWY:STH 181 | COUNTY:MILWAUKEE | CROSS SECTIONS:SE RAMP | SHEET 568 | E |
|---|---|---|---|---|---|

FILE NAME : L:\Jobs2010\20100384\CAD\WisDOT_Trans\dgn\00\090204_xs_SERamp_18S.dgn PLOT DATE : 7/22/2016 PLOT BY : GRAEF PLOT NAME : PLOT SCALE : 20.0000 sf / in. WISDOT/CADDS SHEET 21

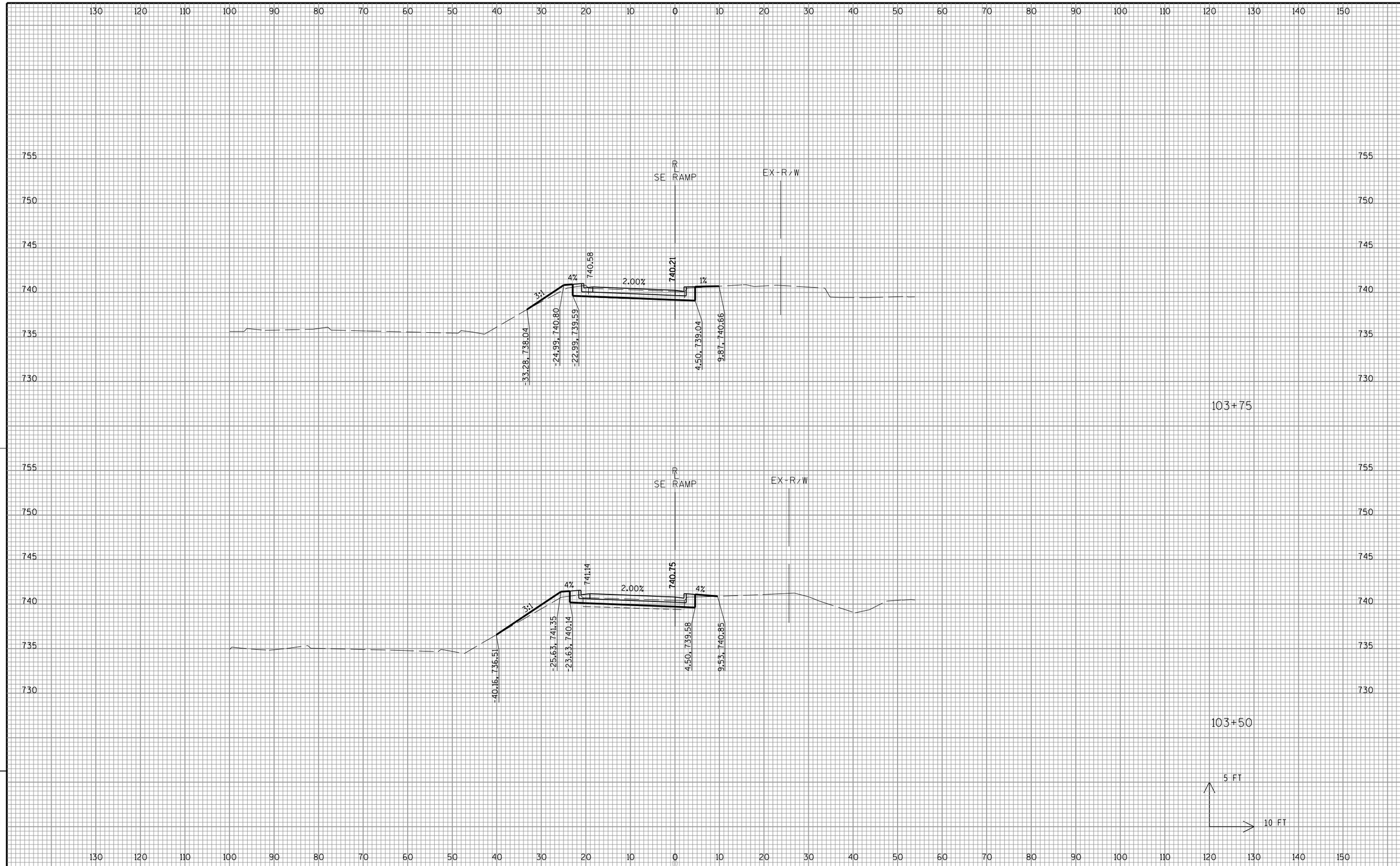


9

9

| PROJECT NO:2140-13-70 | HWY:STH 181 | COUNTY:MILWAUKEE | CROSS SECTIONS:SE RAMP | SHEET 569 | E |
|---|---|---|---|---|---|

FILE NAME : L:\Jobs2010\20100384\CAD\WisDOT_Trans\dgn\00\090204_xs_SERamp_18S.dgn PLOT DATE : 7/22/2016 PLOT BY : GRAEF PLOT NAME : PLOT SCALE : 20.0000 sf / in. WISDOT/CADDS SHEET 21

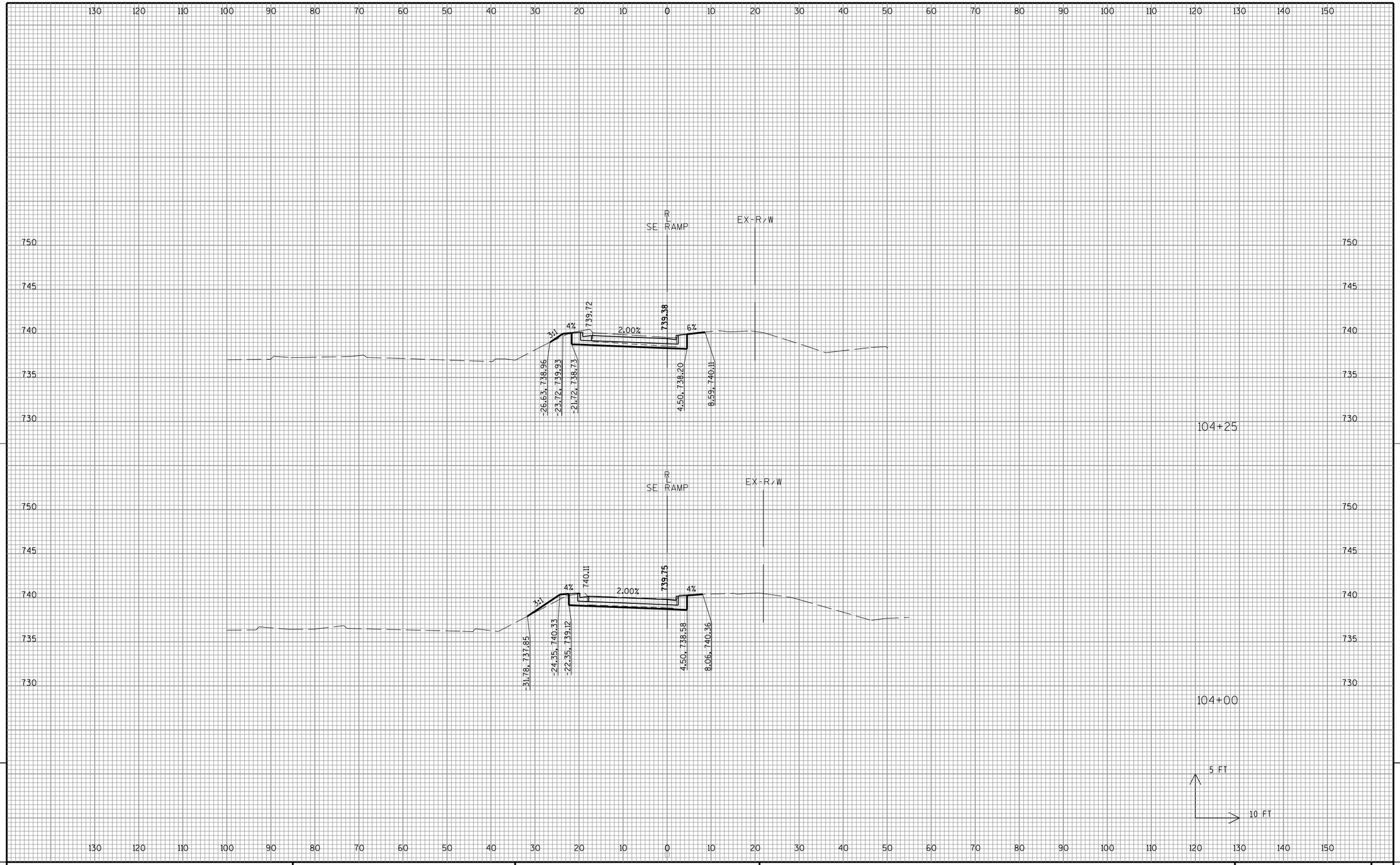


9

9

| PROJECT NO:2140-13-70 | HWY:STH 181 | COUNTY:MILWAUKEE | CROSS SECTIONS:SE RAMP | SHEET 570 | E |
|---|---|---|---|---|---|

FILE NAME : L:\Jobs2010\20100384\CAD\WisDOT_Trans\dgn\00\090204_xs_SERamp_18S.dgn PLOT DATE : 7/22/2016 PLOT BY : GRAEF PLOT NAME : PLOT SCALE : 20.0000 sf / in. WISDOT/CADDS SHEET 21

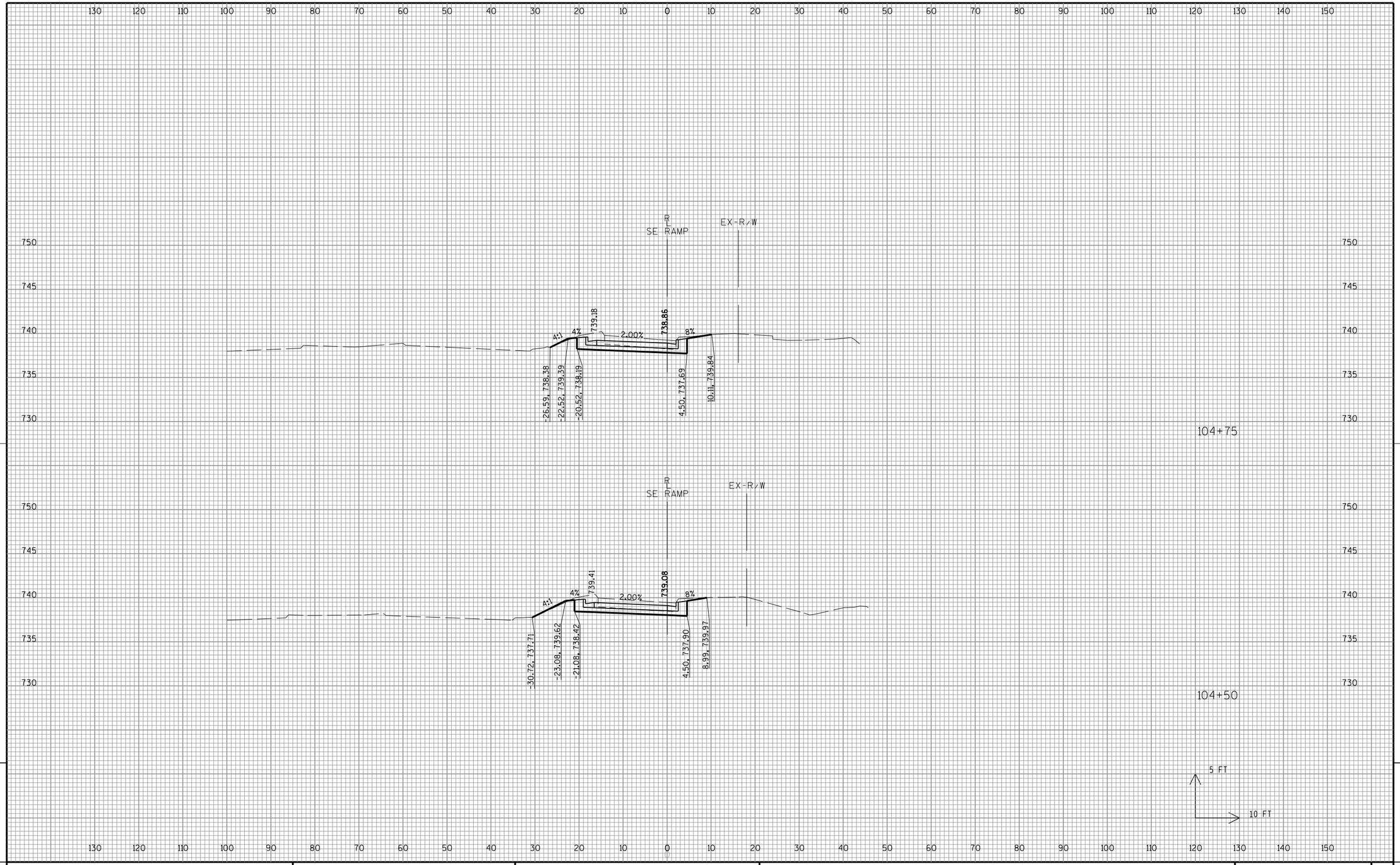


9

9

| PROJECT NO:2140-13-70 | HWY:STH 181 | COUNTY:MILWAUKEE | CROSS SECTIONS:SE RAMP | SHEET 571 | E |
|---|---|---|---|---|---|

FILE NAME : L:\Jobs2010\20100384\CAD\WisDOT_Trans\dgn\00\090204_xs_SERamp_18S.dgn PLOT DATE : 7/22/2016 PLOT BY : GRAEF PLOT NAME : PLOT SCALE : 20.0000 sf / in. WISDOT/CADDS SHEET 21

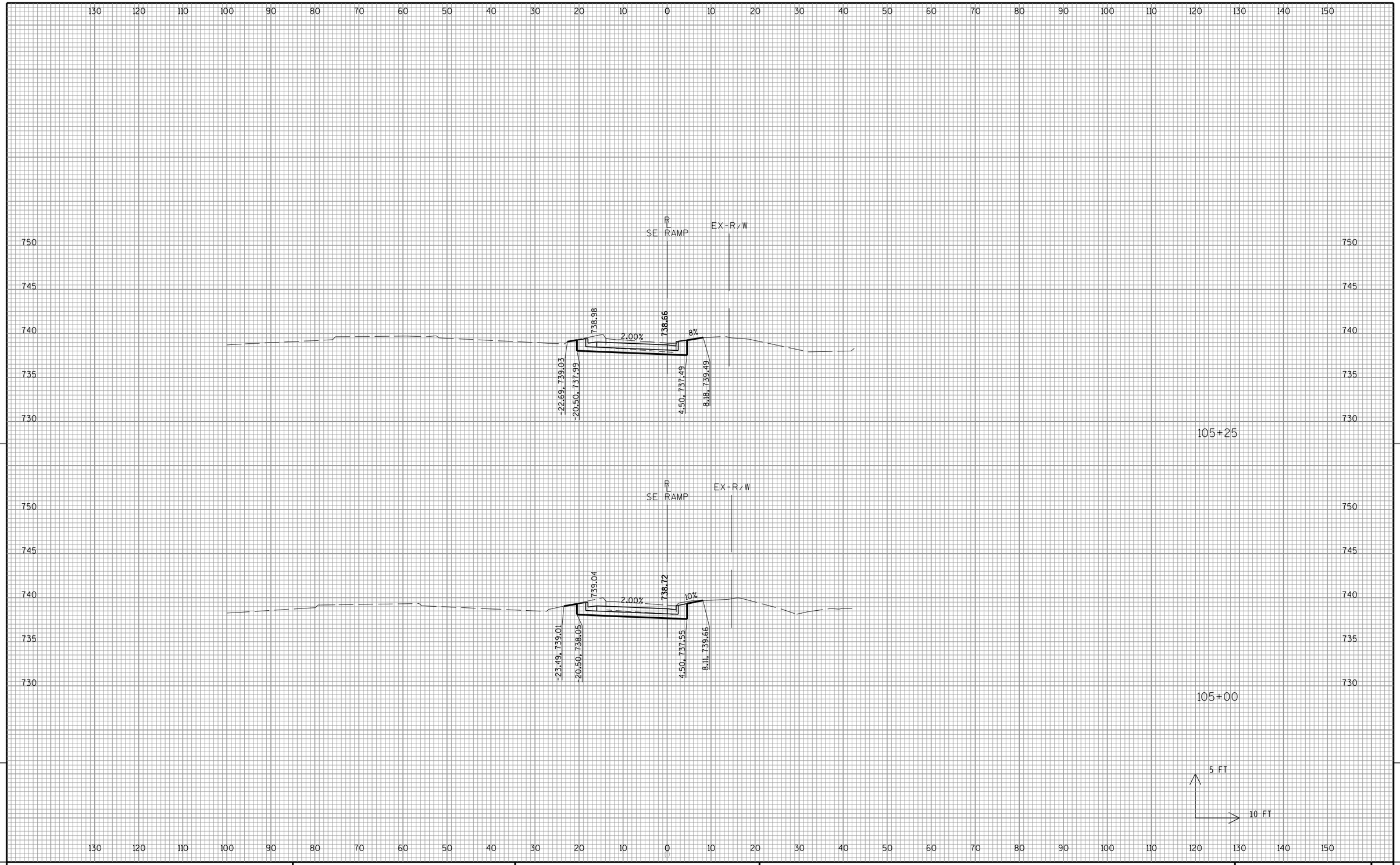


9

9

| PROJECT NO:2140-13-70 | HWY:STH 181 | COUNTY:MILWAUKEE | CROSS SECTIONS:SE RAMP | SHEET 572 | E |
|---|---|---|---|---|---|

FILE NAME : L:\Jobs2010\20100384\CAD\WisDOT_Trans\dgn\00\090204_xs_SERamp_18S.dgn PLOT DATE : 7/22/2016 PLOT BY : GRAEF PLOT NAME : PLOT SCALE : 20.0000 sf / in. WISDOT/CADDS SHEET 21

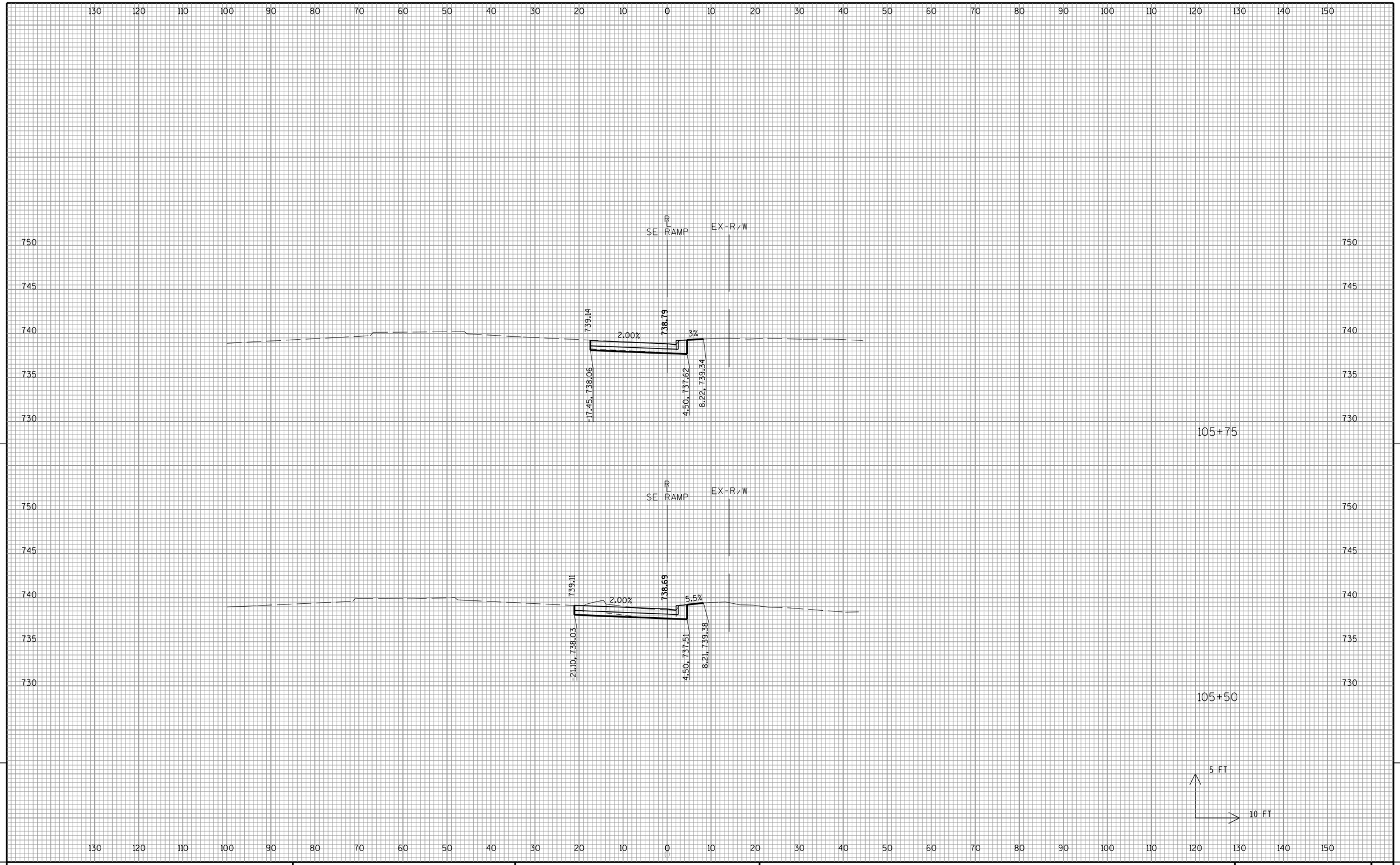


9

9

| PROJECT NO:2140-13-70 | HWY:STH 181 | COUNTY:MILWAUKEE | CROSS SECTIONS:SE RAMP | SHEET 573 | E |
|---|---|---|---|---|---|

FILE NAME : L:\Jobs2010\20100384\CAD\WisDOT_Trans\dgn\00\090204_xs_SERamp_18S.dgn PLOT DATE : 7/22/2016 PLOT BY : GRAEF PLOT NAME : PLOT SCALE : 20.0000 sf / in. WISDOT/CADDS SHEET 21

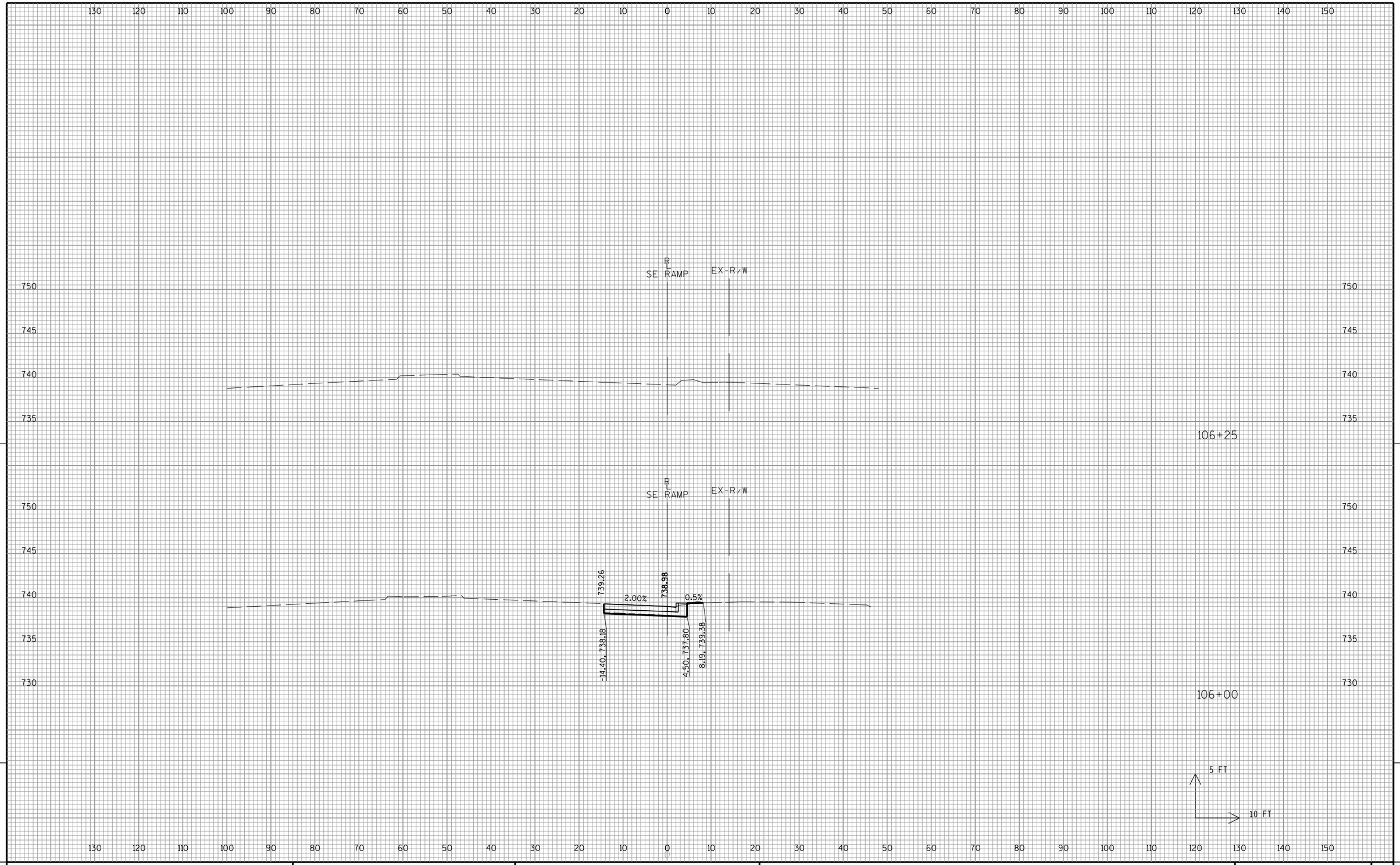


9

9

| PROJECT NO:2140-13-70 | HWY:STH 181 | COUNTY:MILWAUKEE | CROSS SECTIONS:SE RAMP | SHEET 574 | E |
|---|---|---|---|---|---|

FILE NAME : L:\Jobs2010\20100384\CAD\WisDOT_Trans\dgn\00\090204_xs_SERamp_18S.dgn PLOT DATE : 7/22/2016 PLOT BY : GRAEF PLOT NAME : PLOT SCALE : 20.0000 sf / in.

WISDOT/CADDS SHEET 21

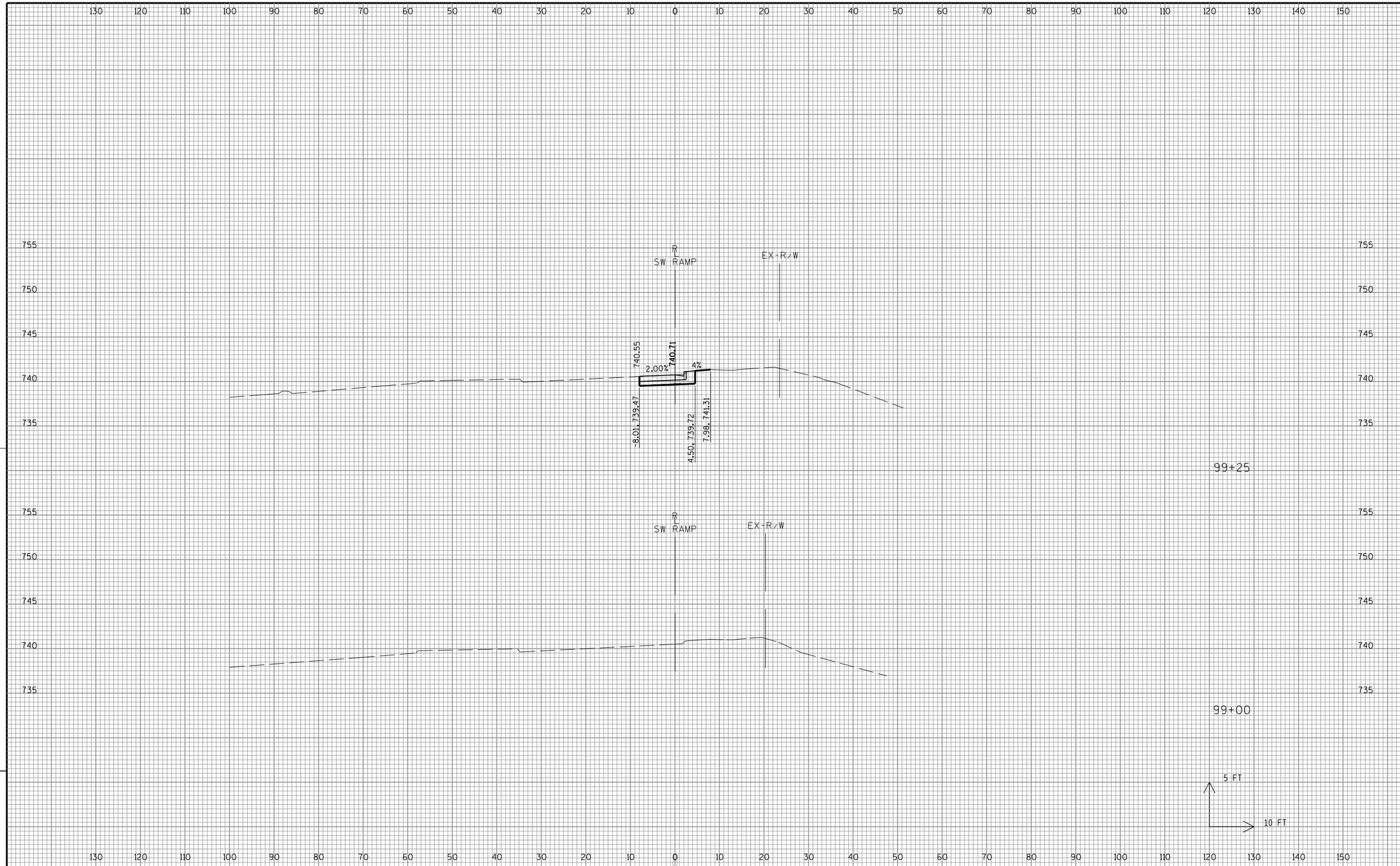


| PROJECT NO:2140-13-70 | HWY:STH 181 | COUNTY:MILWAUKEE | CROSS SECTIONS:SW RAMP | SHEET 575 | E |
|---|---|---|---|---|---|

FILE NAME : L:\Jobs2010\20100384\CAD\WisDOT_Trans\dgn\00\090205_xs_SWRamp_18S.dgn PLOT DATE : 7/22/2016 PLOT BY : GRAEF PLOT NAME : PLOT SCALE : 20.0000 sf / in. WISDOT/CADDS SHEET 21

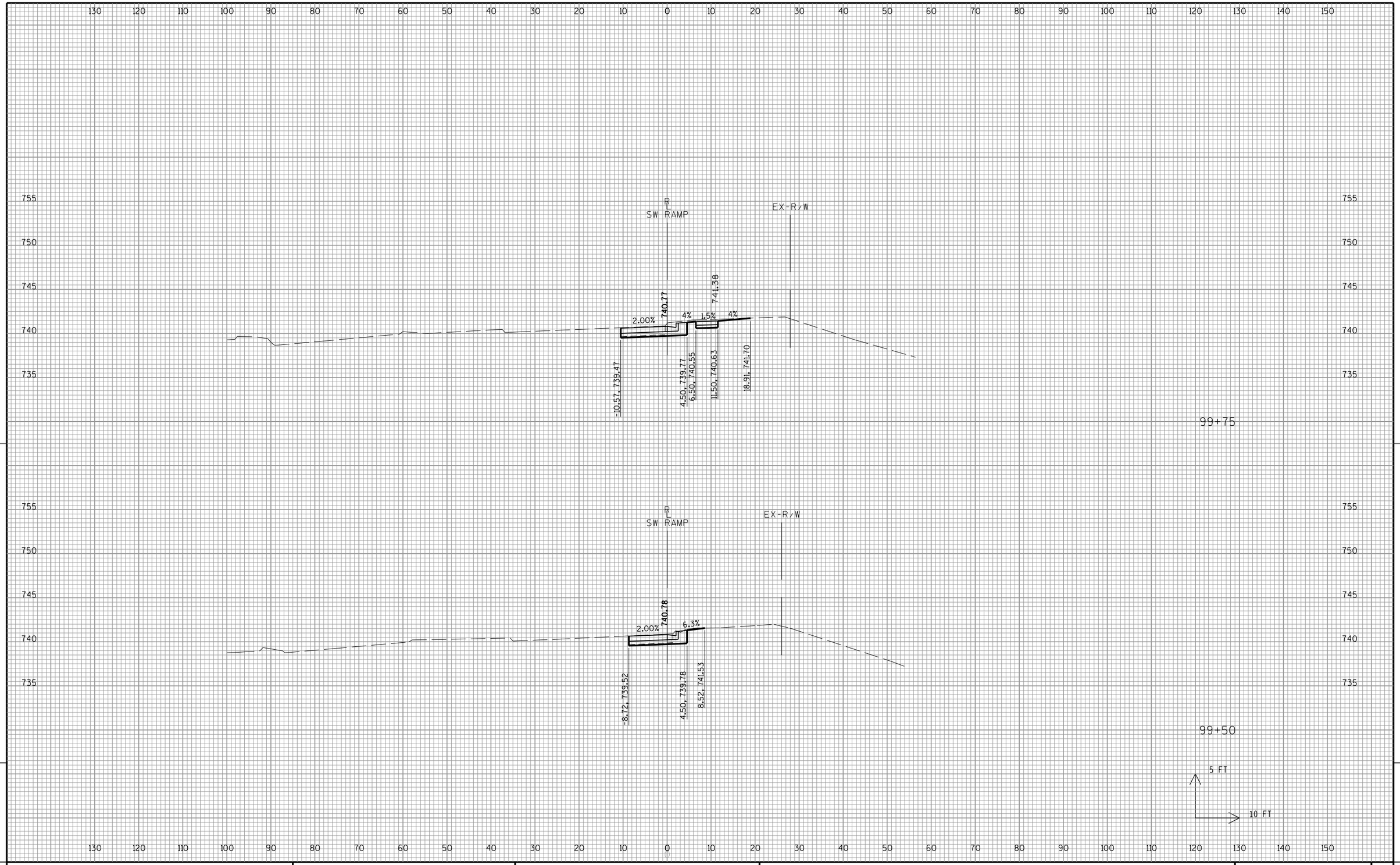


9

9

| PROJECT NO:2140-13-70 | HWY:STH 181 | COUNTY:MILWAUKEE | CROSS SECTIONS:SW RAMP | SHEET 576 | E |
|---|---|---|---|---|---|

FILE NAME : L:\Jobs2010\20100384\CAD\WisDOT_Trans\dgn\00\090205_xs_SWRamp_18S.dgn PLOT DATE : 7/22/2016 PLOT BY : GRAEF PLOT NAME : PLOT SCALE : 20.0000 sf / in.

WISDOT/CADDS SHEET 21

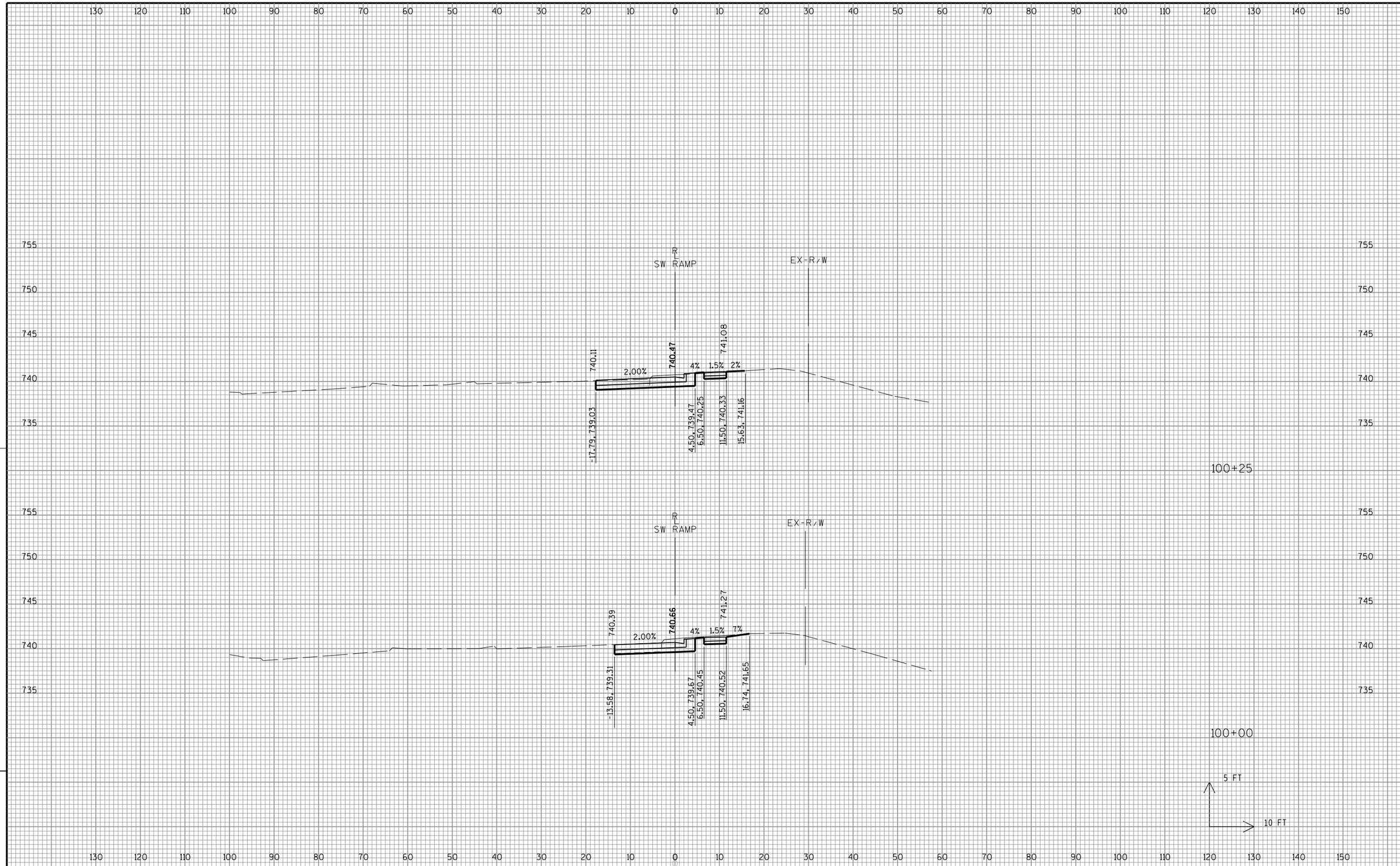


9

9

| PROJECT NO:2140-13-70 | HWY:STH 181 | COUNTY:MILWAUKEE | CROSS SECTIONS:SW RAMP | SHEET 577 | E |
|---|---|---|---|---|---|

FILE NAME : L:\Jobs2010\20100384\CAD\WisDOT_Trans\dgn\00\090205_xs_SWRamp_18S.dgn PLOT DATE : 7/22/2016 PLOT BY : GRAEF PLOT NAME : PLOT SCALE : 20.0000 sf / in. WISDOT/CADDS SHEET 21

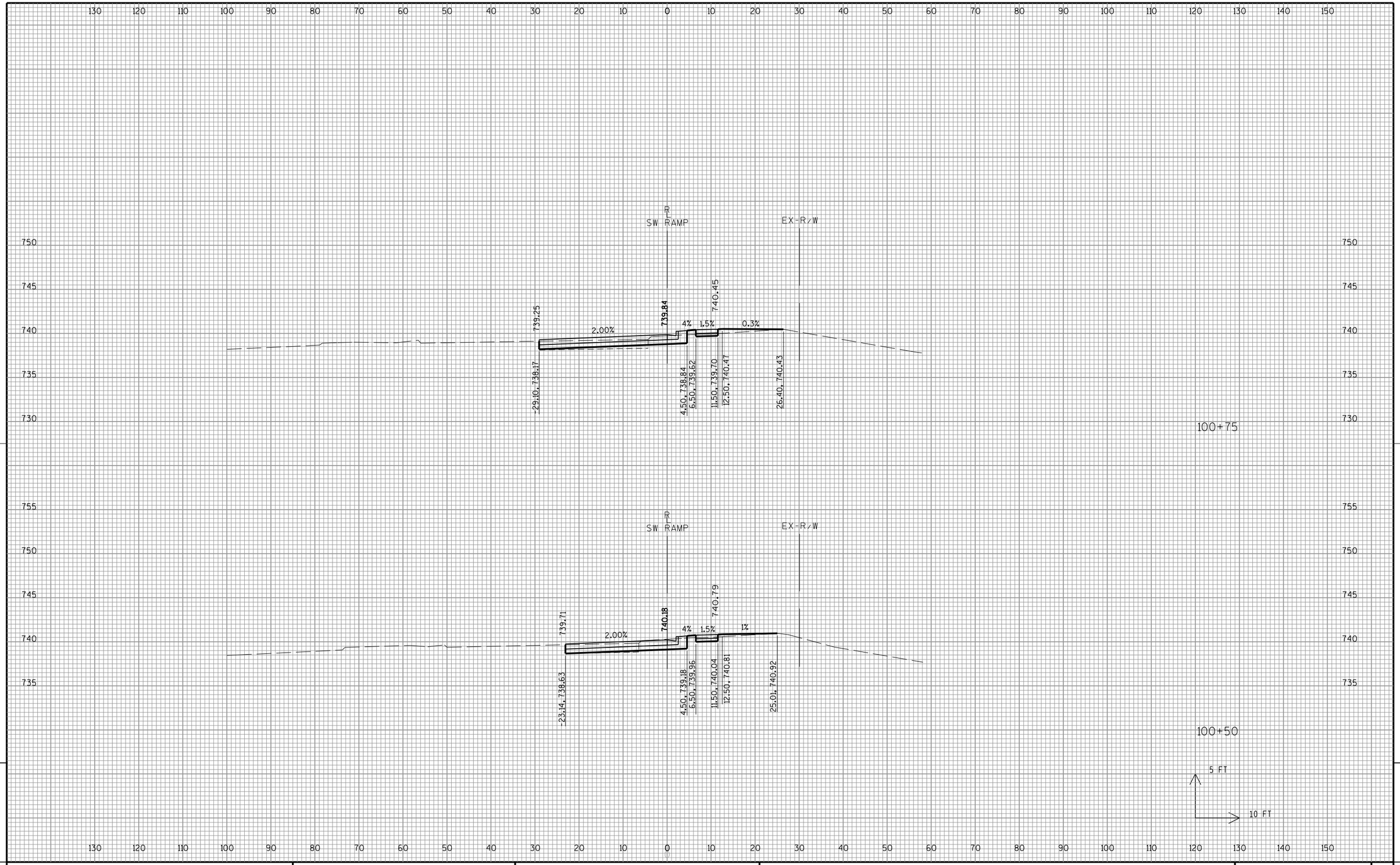


9

9

| PROJECT NO:2140-13-70 | HWY:STH 181 | COUNTY:MILWAUKEE | CROSS SECTIONS:SW RAMP | SHEET 578 | E |
|---|---|---|---|---|---|

FILE NAME : L:\Jobs2010\20100384\CAD\WisDOT_Trans\dgn\00\090205_xs_SWRamp_18S.dgn PLOT DATE : 7/22/2016 PLOT BY : GRAEF PLOT NAME : PLOT SCALE : 20.0000 sf / in.

WISDOT/CADDS SHEET 21

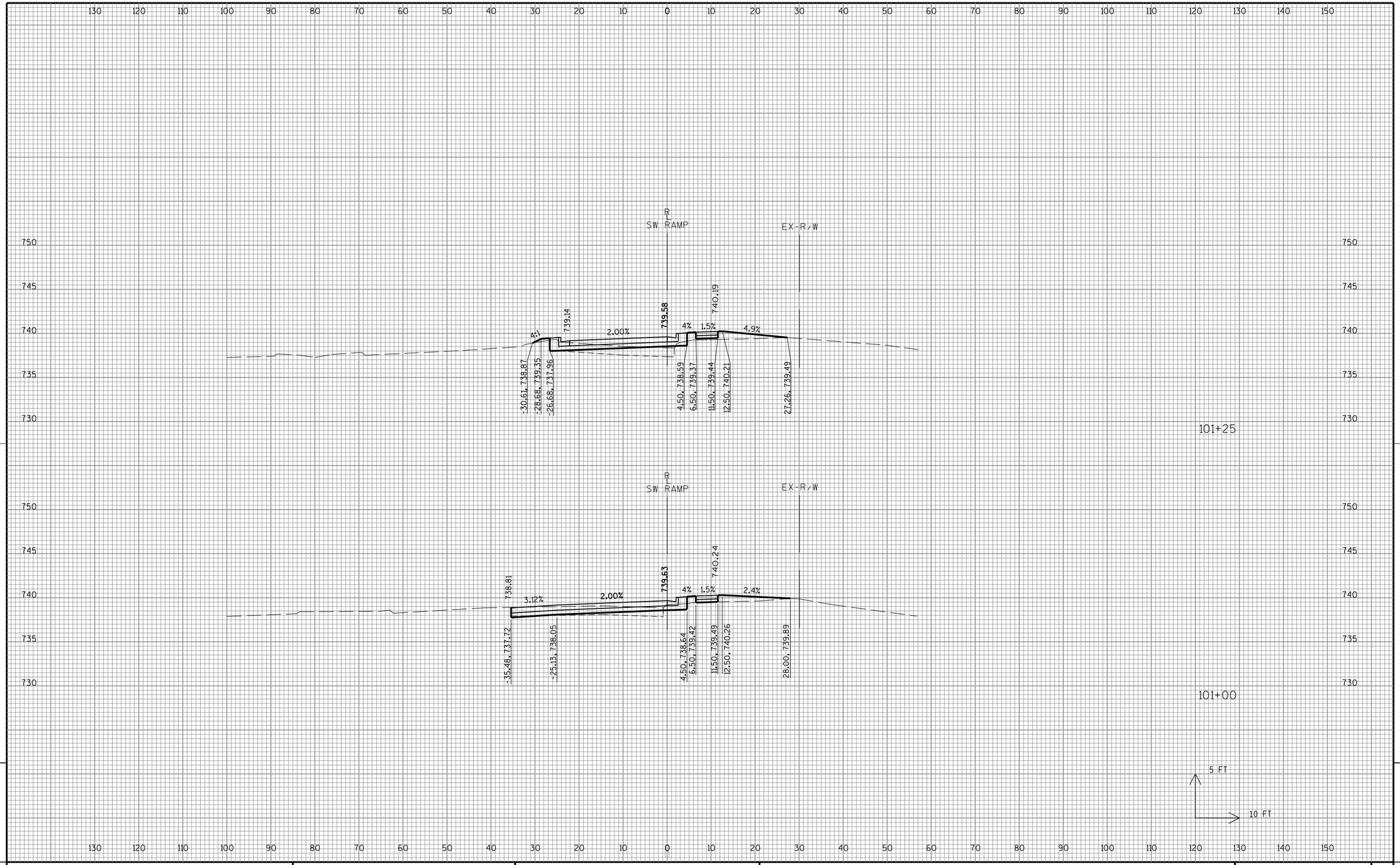


9

9

| PROJECT NO:2140-13-70 | HWY:STH 181 | COUNTY:MILWAUKEE | CROSS SECTIONS:SW RAMP | SHEET 579 | E |
|---|---|---|---|---|---|

FILE NAME : L:\Jobs2010\20100384\CAD\WisDOT_Trans\dgn\00\090205_xs_SWRamp_18S.dgn PLOT DATE : 7/22/2016 PLOT BY : GRAEF PLOT NAME : PLOT SCALE : 20.0000 sf / in.

WISDOT/CADDS SHEET 21

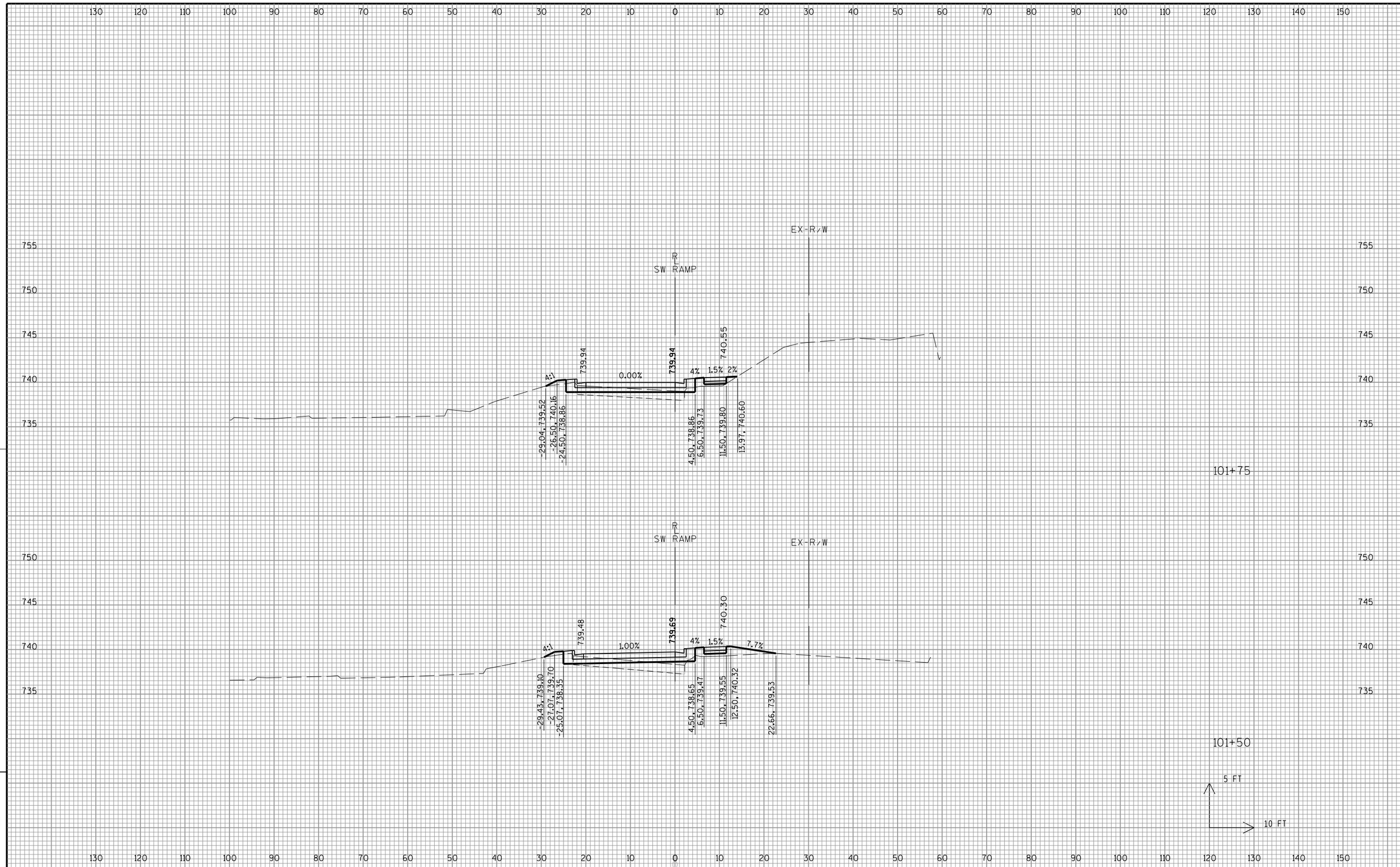


9

9

| PROJECT NO:2140-13-70 | HWY:STH 181 | COUNTY:MILWAUKEE | CROSS SECTIONS:SW RAMP | SHEET 580 | E |
|---|---|---|---|---|---|

FILE NAME : L:\Jobs2010\20100384\CAD\WisDOT_Trans\dgn\00\090205_xs_SWRamp_18S.dgn PLOT DATE : 7/22/2016 PLOT BY : GRAEF PLOT NAME : PLOT SCALE : 20.0000 sf / in.

WISDOT/CADDS SHEET 21

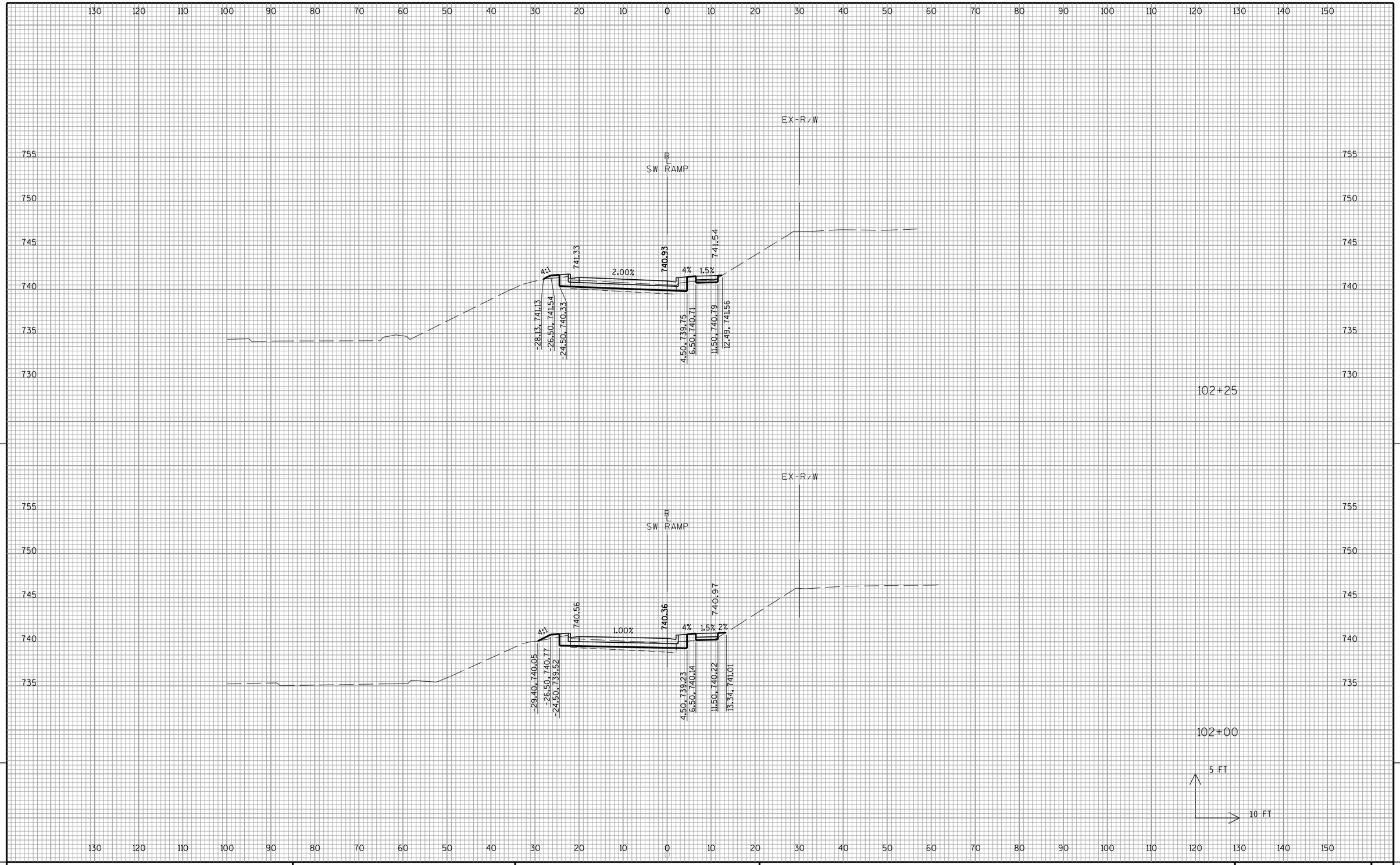


9

9

| PROJECT NO:2140-13-70 | HWY:STH 181 | COUNTY:MILWAUKEE | CROSS SECTIONS:SW RAMP | SHEET 581 | E |
|---|---|---|---|---|---|

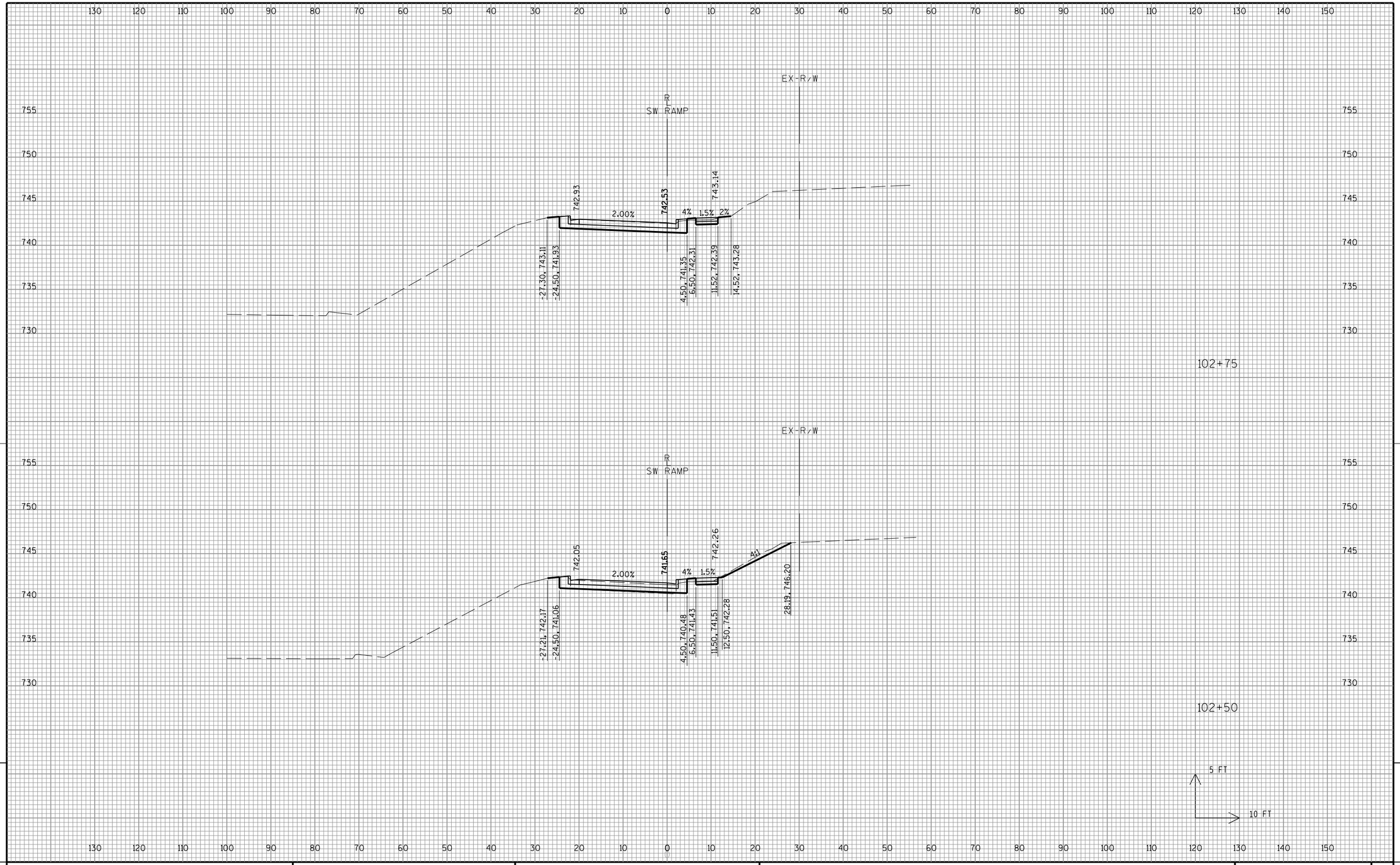


9

9

| PROJECT NO:2140-13-70 | HWY:STH 181 | COUNTY:MILWAUKEE | CROSS SECTIONS:SW RAMP | SHEET 582 | E |
|---|---|---|---|---|---|

FILE NAME : L:\Jobs2010\20100384\CAD\WisDOT_Trans\dgn\00\090205_xs_SWRamp_18S.dgn PLOT DATE : 7/22/2016 PLOT BY : GRAEF PLOT NAME : PLOT SCALE : 20.0000 sf / in.

WISDOT/CADDS SHEET 21

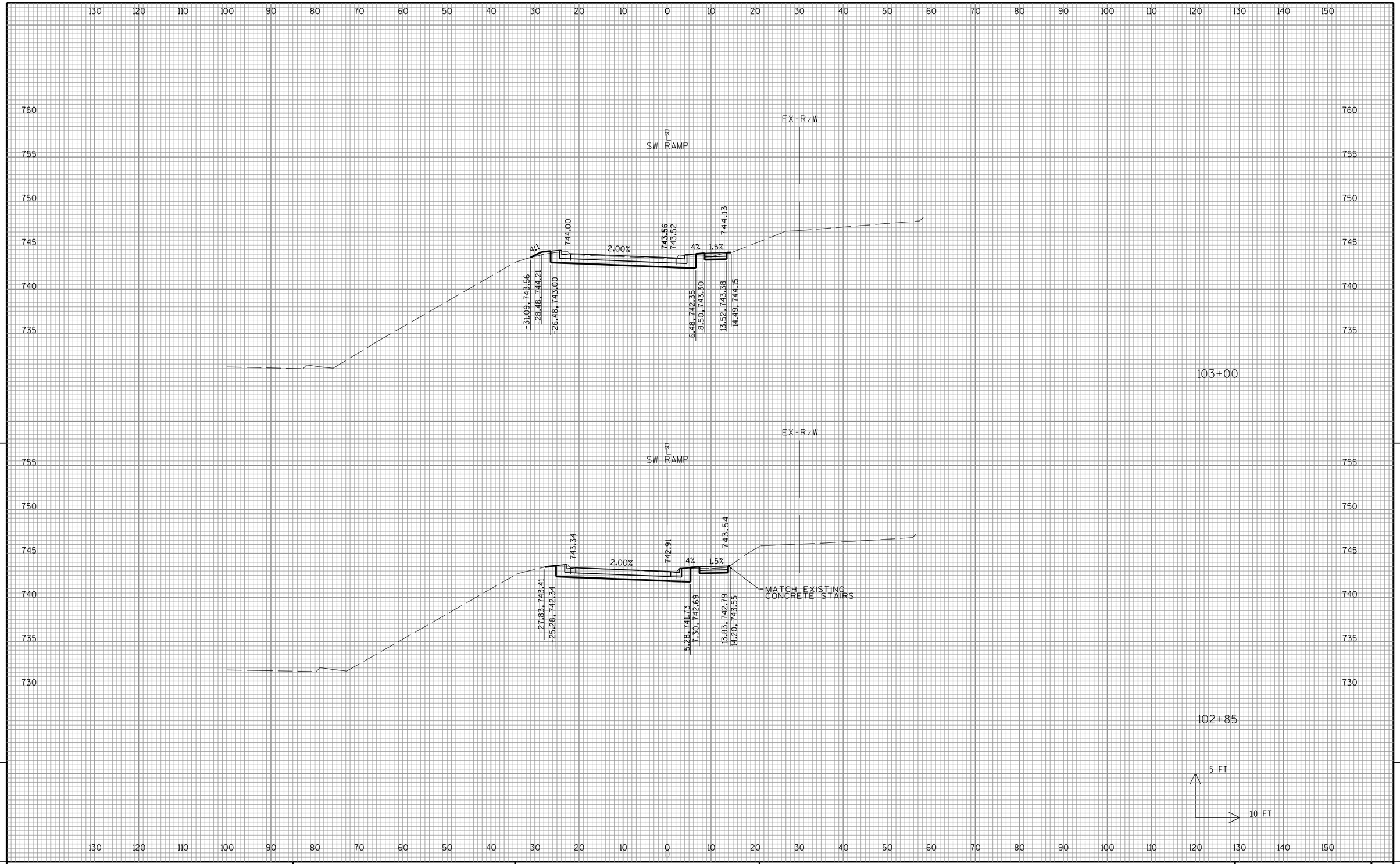


9

9

| PROJECT NO:2140-13-70 | HWY:STH 181 | COUNTY:MILWAUKEE | CROSS SECTIONS:SW RAMP | SHEET 583 | E |
|---|---|---|---|---|---|

FILE NAME : L:\Jobs2010\20100384\CAD\WisDOT_Trans\dgn\00\090205_xs_SWRamp_18S.dgn PLOT DATE : 7/22/2016 PLOT BY : GRAEF PLOT NAME : PLOT SCALE : 20.0000 sf / in. WISDOT/CADDS SHEET 21

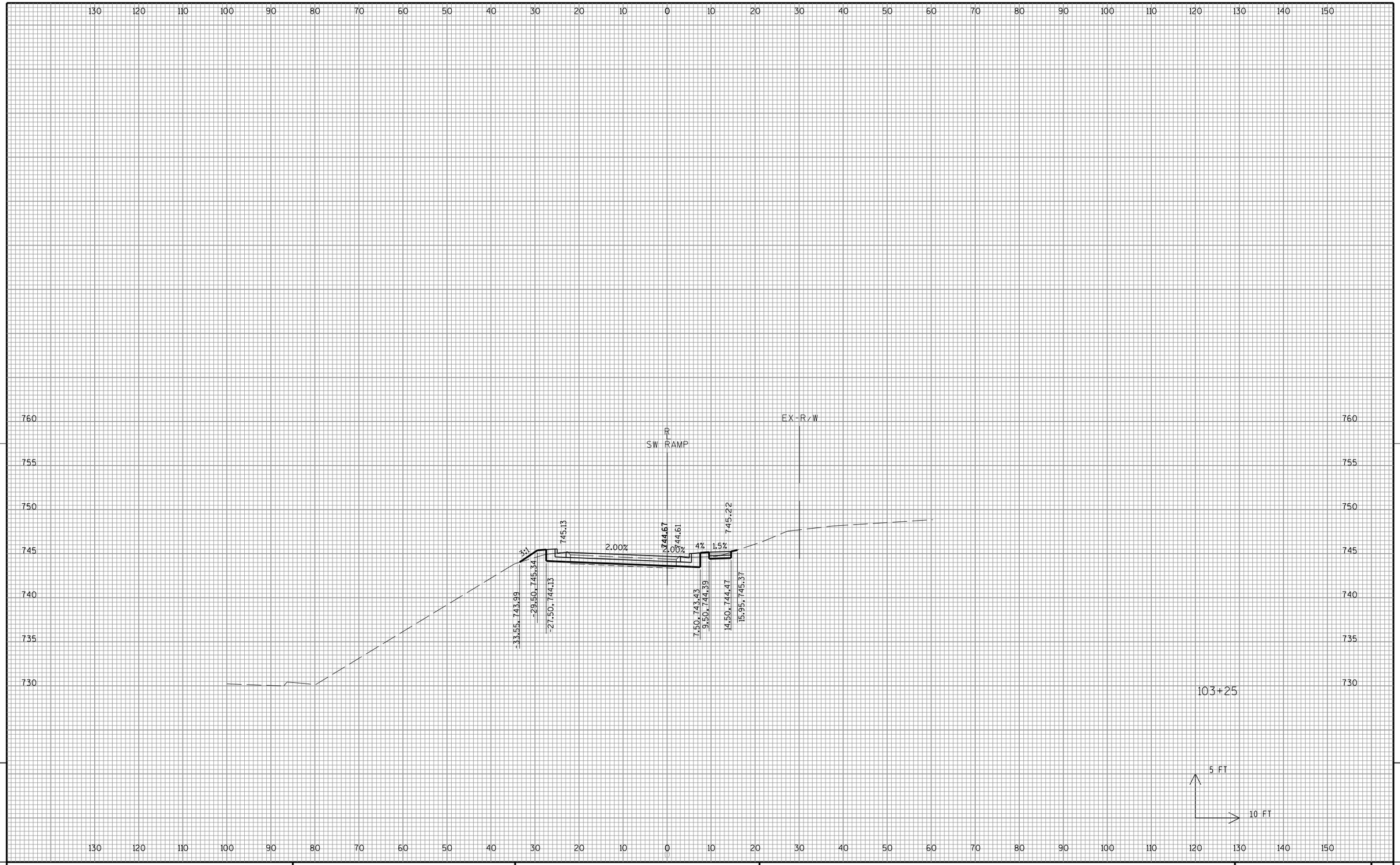


9

9

| PROJECT NO:2140-13-70 | HWY:STH 181 | COUNTY:MILWAUKEE | CROSS SECTIONS:SW RAMP | SHEET 584 | E |
|---|---|---|---|---|---|

FILE NAME : L:\Jobs2010\20100384\CAD\WisDOT_Trans\dgn\00\090205_xs_SWRamp_18S.dgn PLOT DATE : 7/22/2016 PLOT BY : GRAEF PLOT NAME : PLOT SCALE : 20.0000 sf / in.

WISDOT/CADDS SHEET 21

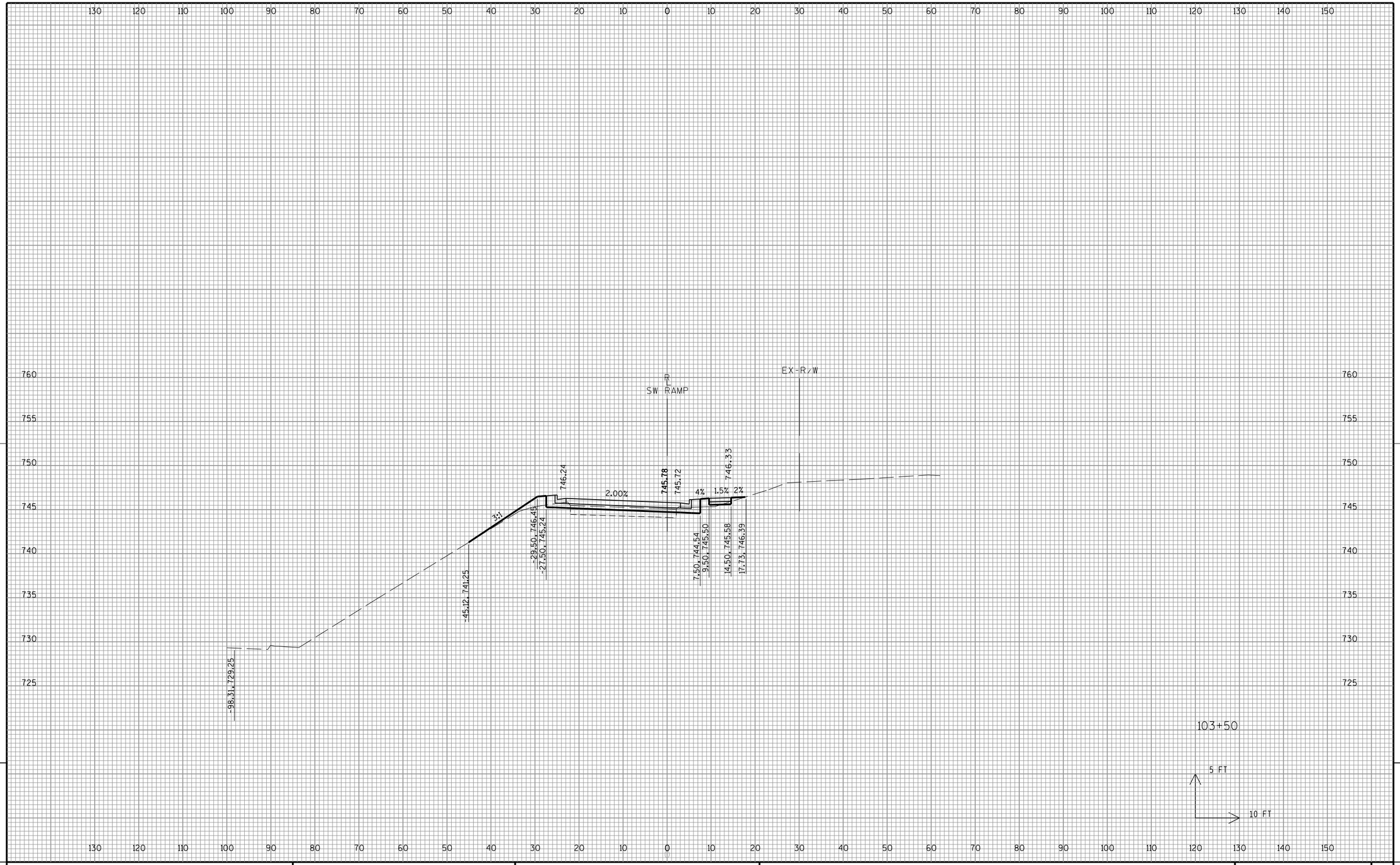


9

9

| PROJECT NO:2140-13-70 | HWY:STH 181 | COUNTY:MILWAUKEE | CROSS SECTIONS:SW RAMP | SHEET 585 | E |
|---|---|---|---|---|---|

FILE NAME : L:\Jobs2010\20100384\CAD\WisDOT_Trans\dgn\00\090205_xs_SWRamp_18S.dgn PLOT DATE : 7/22/2016 PLOT BY : GRAEF PLOT NAME : PLOT SCALE : 20.0000 sf / in.

WISDOT/CADDS SHEET 21

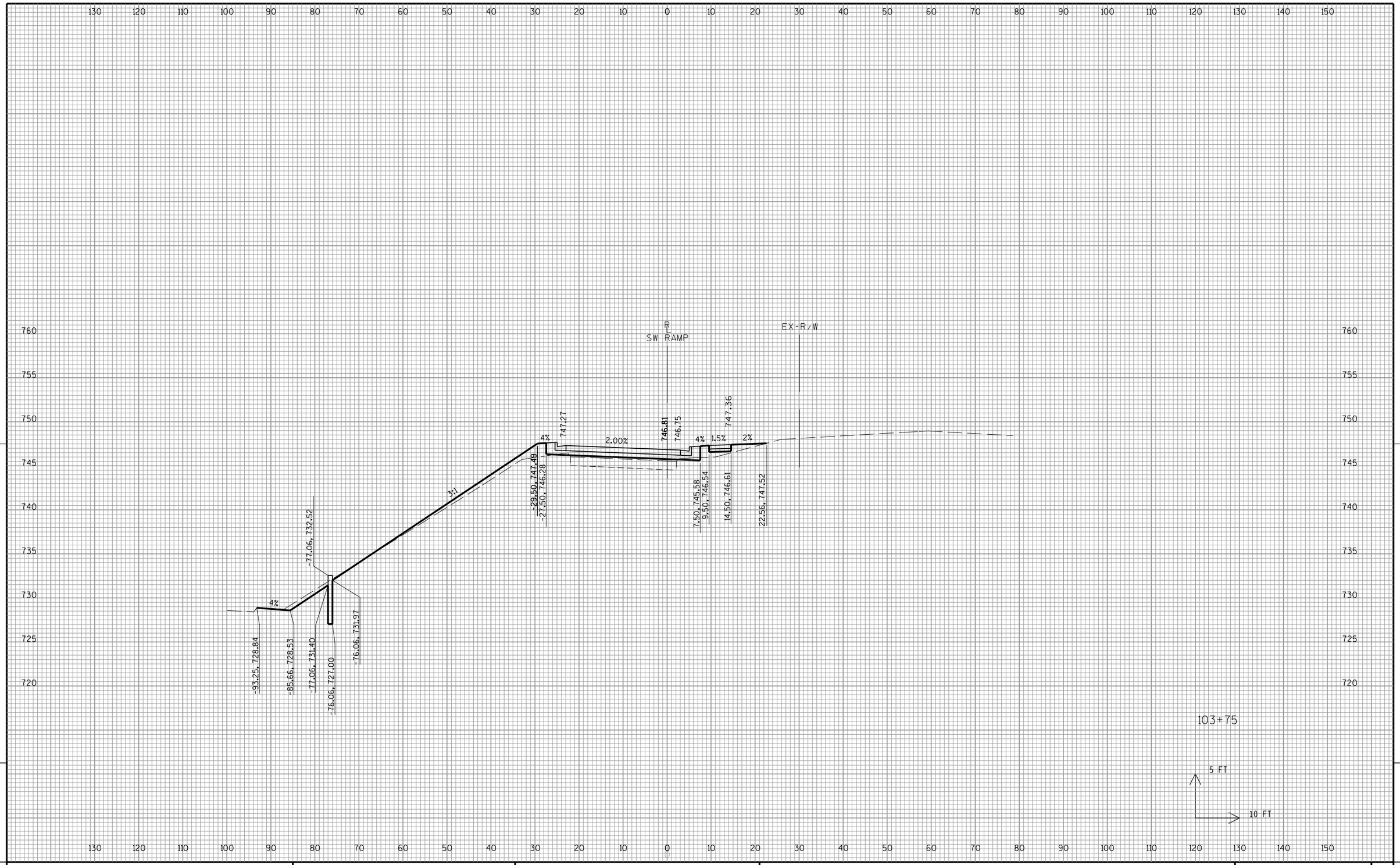


9

9

| PROJECT NO:2140-13-70 | HWY:STH 181 | COUNTY:MILWAUKEE | CROSS SECTIONS:SW RAMP | SHEET 586 | E |
|---|---|---|---|---|---|

FILE NAME : L:\Jobs2010\20100384\CAD\WisDOT_Trans\dgn\00\090205_xs_SWRamp_18S.dgn PLOT DATE : 7/22/2016 PLOT BY : GRAEF PLOT NAME : PLOT SCALE : 20.0000 sf / in. WISDOT/CADDS SHEET 21

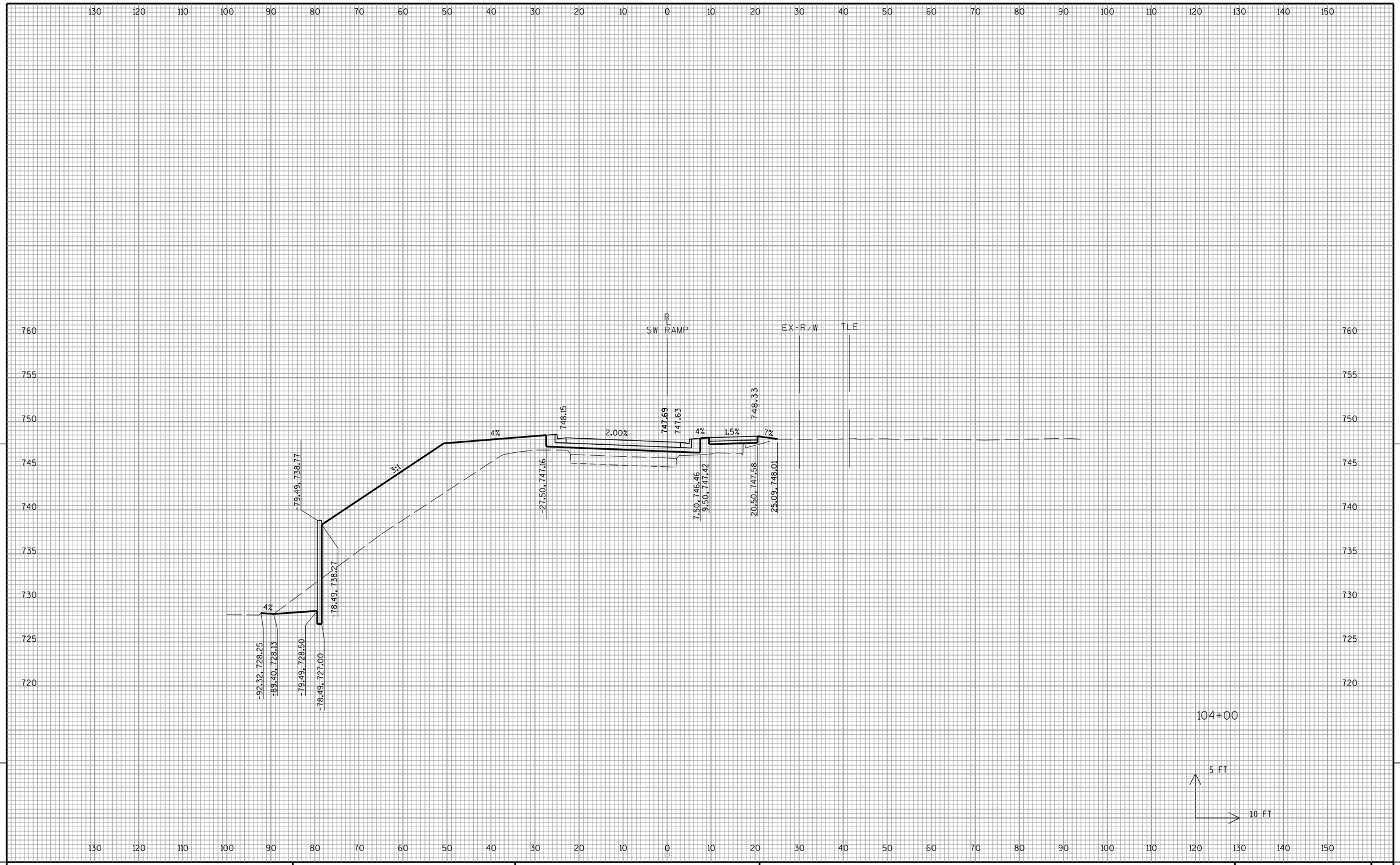


9

9

| PROJECT NO:2140-13-70 | HWY:STH 181 | COUNTY:MILWAUKEE | CROSS SECTIONS:SW RAMP | SHEET 587 | E |
|---|---|---|---|---|---|

FILE NAME : L:\Jobs2010\20100384\CAD\WisDOT_Trans\dgn\00\090205_xs_SWRamp_18S.dgn PLOT DATE : 7/22/2016 PLOT BY : GRAEF PLOT NAME : PLOT SCALE : 20.0000 sf / in. WISDOT/CADDS SHEET 21

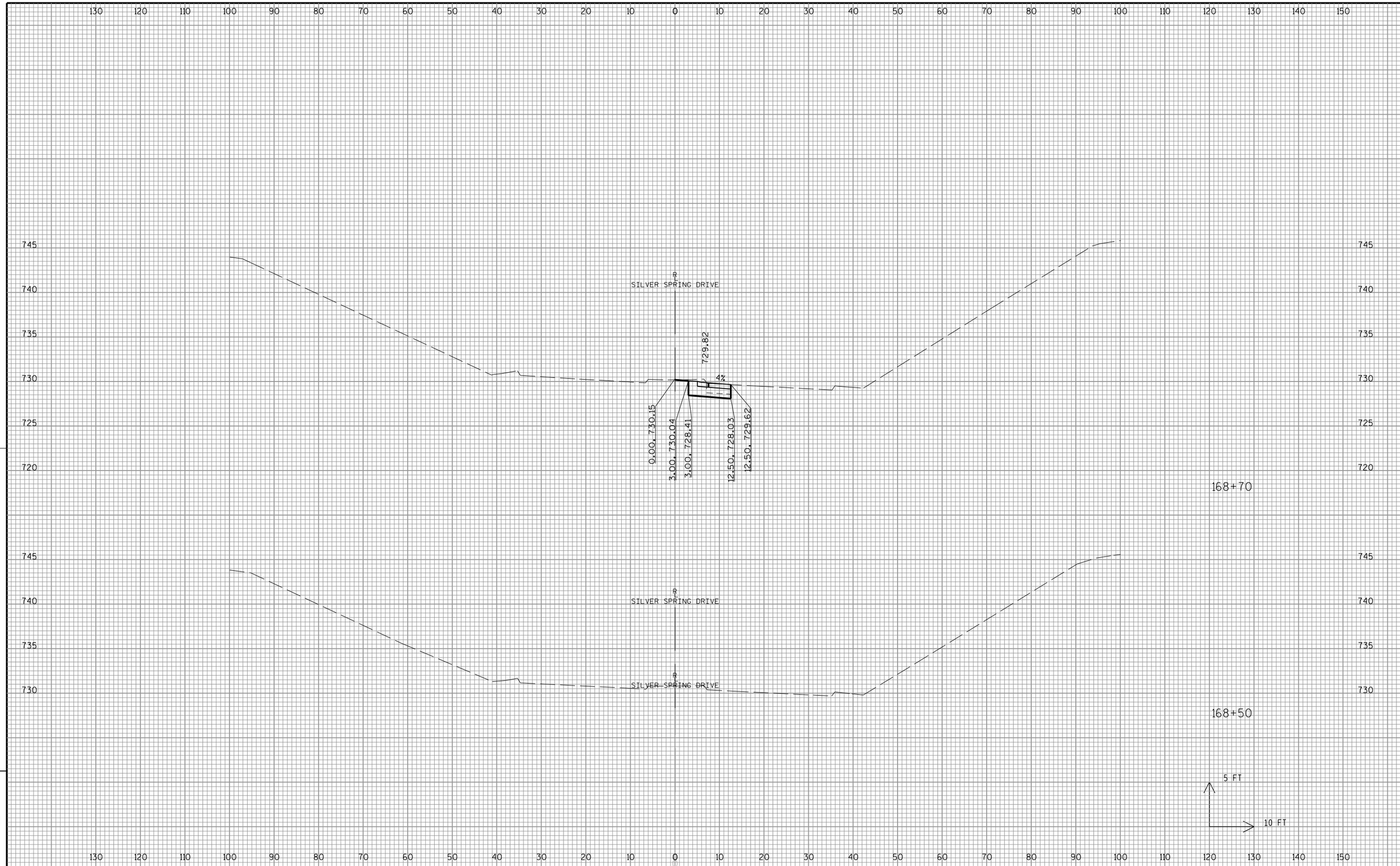


9

9

| PROJECT NO:2140-13-70 | HWY:STH 181 | COUNTY:MILWAUKEE | CROSS SECTIONS:SILVER SPRING DRIVE | SHEET 588 | E |
|---|---|---|---|---|---|

FILE NAME : L:\Jobs2010\20100384\CAD\WisDOT_Trans\dgn\00\090206_xs_SilverSpring.dgn PLOT DATE : 7/22/2016 PLOT BY : GRAEF PLOT NAME : PLOT SCALE : 20.0000 sf / in. WISDOT/CADDS SHEET 21

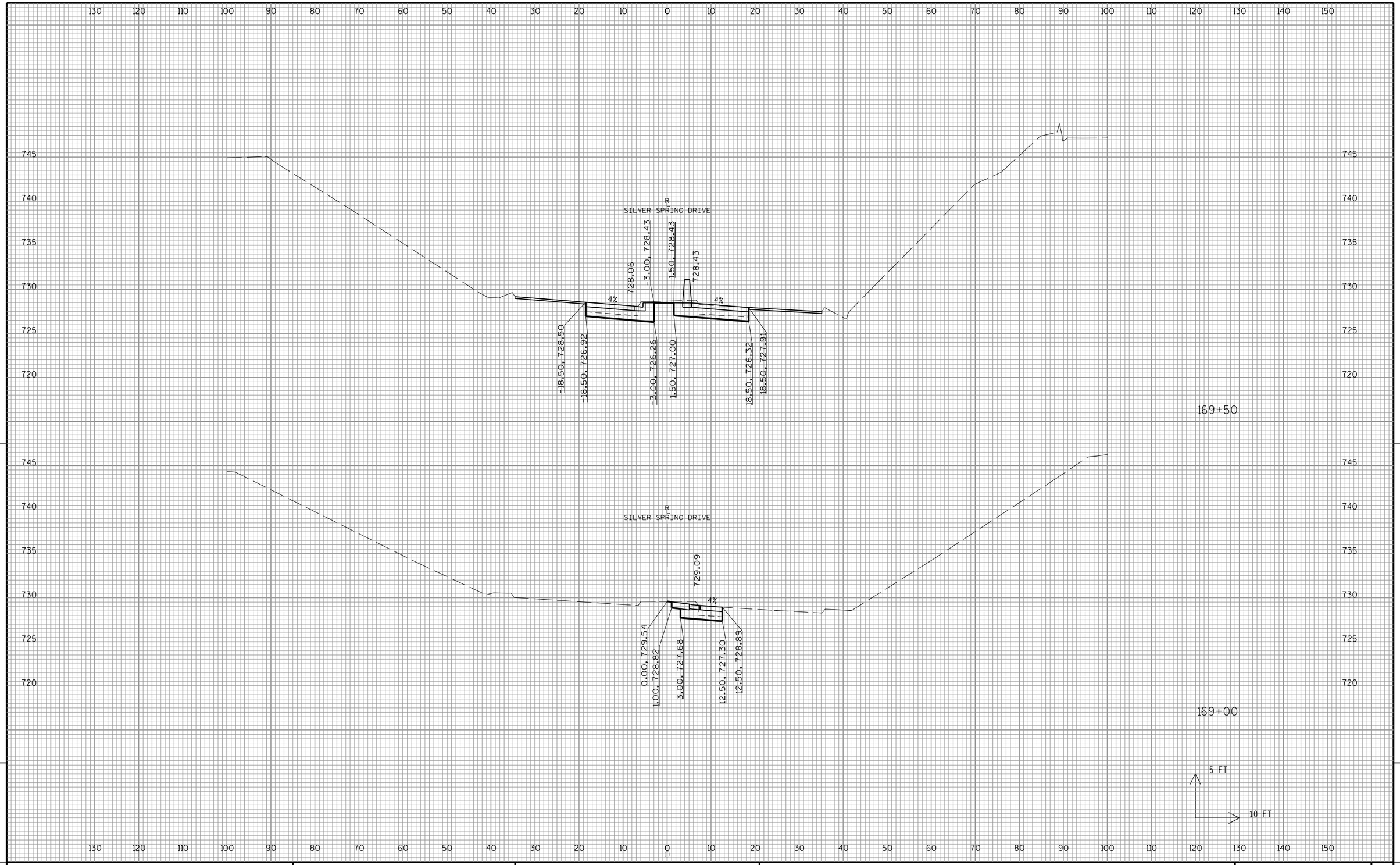


9

9

| PROJECT NO:2140-13-70 | HWY:STH 181 | COUNTY:MILWAUKEE | CROSS SECTIONS:SILVER SPRING DRIVE | SHEET 589 | E |
|---|---|---|---|---|---|

FILE NAME : L:\Jobs2010\20100384\CAD\WisDOT_Trans\dgn\00\090206_xs_SilverSpring.dgn PLOT DATE : 7/22/2016 PLOT BY : GRAEF PLOT NAME : PLOT SCALE : 20.0000 sf / in. WISDOT/CADDS SHEET 21

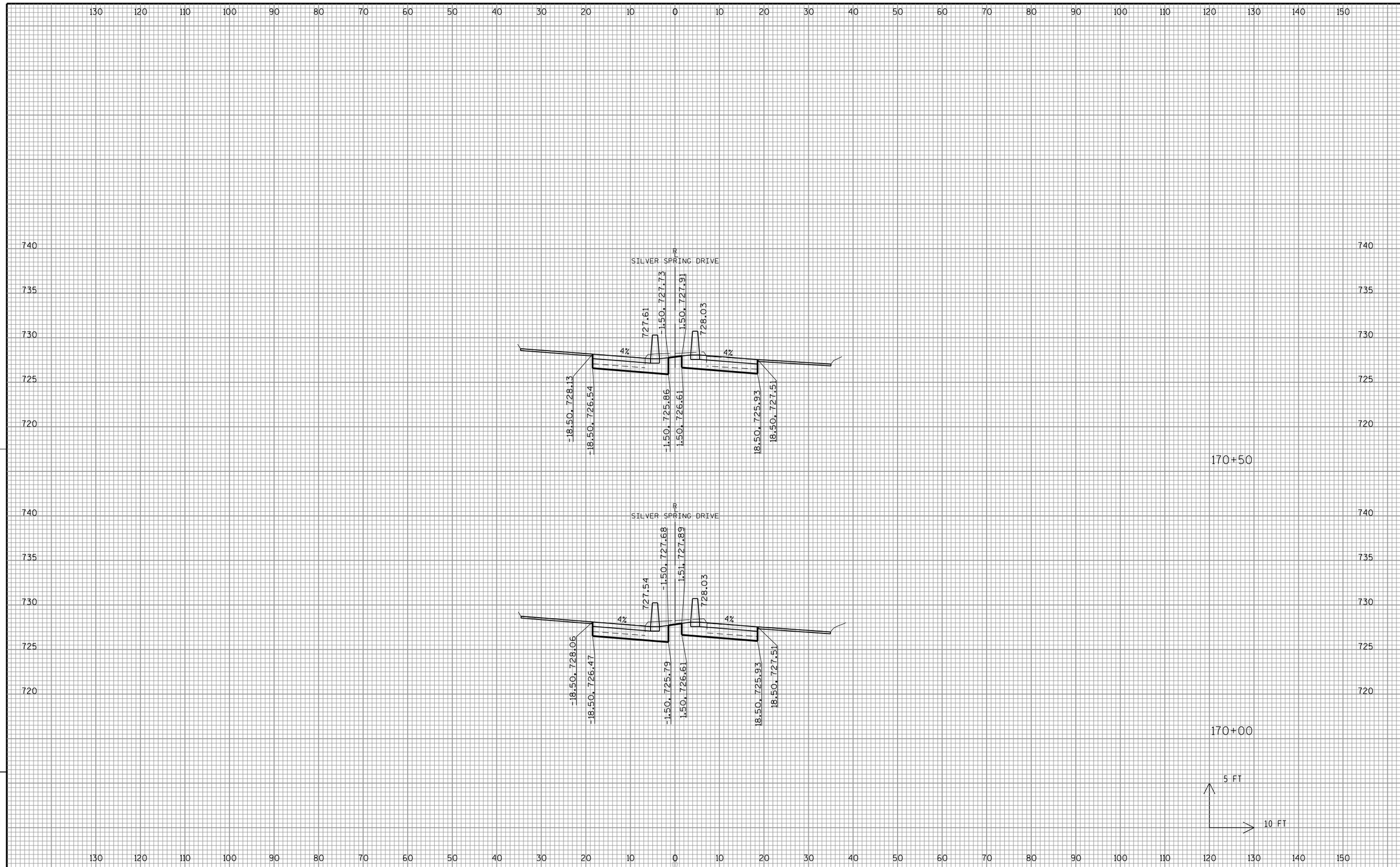


9

9

| PROJECT NO:2140-13-70 | HWY:STH 181 | COUNTY:MILWAUKEE | CROSS SECTIONS:SILVER SPRING DRIVE | SHEET 590 | E |
|---|---|---|---|---|---|

FILE NAME : L:\Jobs2010\20100384\CAD\WisDOT_Trans\dgn\00\090206_xs_SilverSpring.dgn PLOT DATE : 7/22/2016 PLOT BY : GRAEF PLOT NAME : PLOT SCALE : 20.0000 sf / in. WISDOT/CADDS SHEET 21

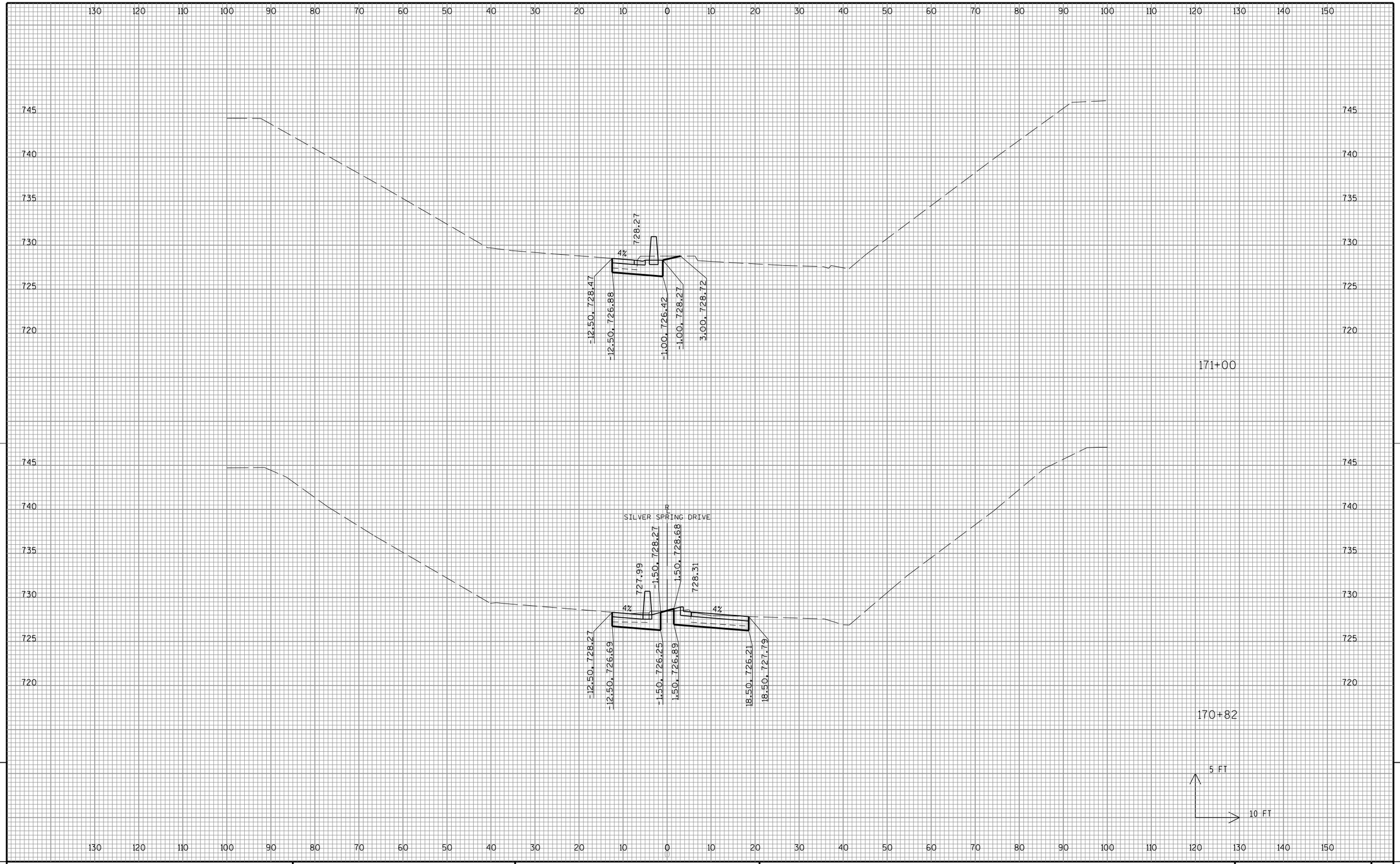


9

9

| PROJECT NO:2140-13-70 | HWY:STH 181 | COUNTY:MILWAUKEE | CROSS SECTIONS:SILVER SPRING DRIVE | SHEET 591 | E |
|---|---|---|---|---|---|

FILE NAME : L:\Jobs2010\20100384\CAD\WisDOT_Trans\dgn\00\090206_xs_SilverSpring.dgn PLOT DATE : 7/22/2016 PLOT BY : GRAEF PLOT NAME : PLOT SCALE : 20.0000 sf / in. WISDOT/CADDS SHEET 21

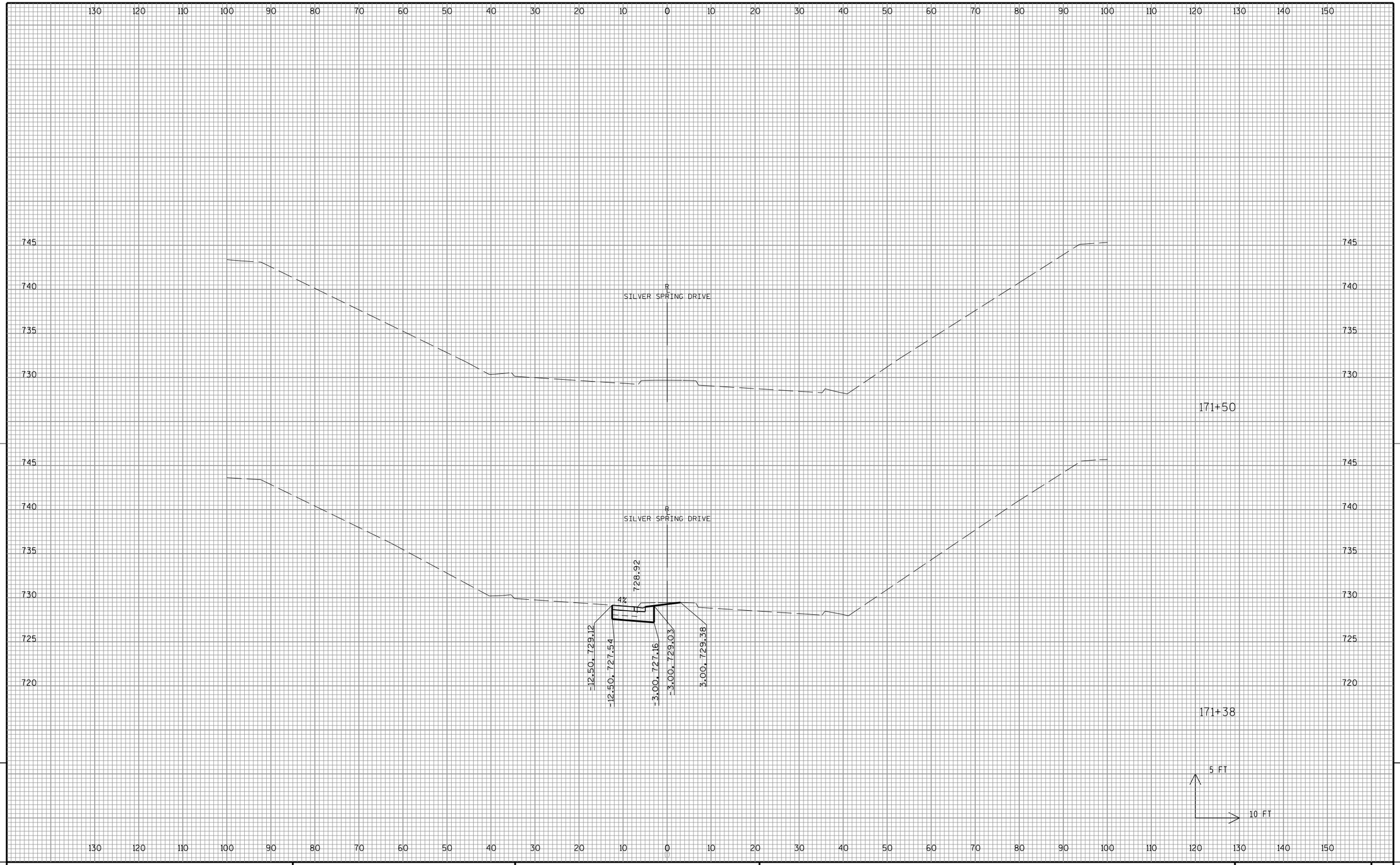


9

9

| PROJECT NO:2140-13-70 | HWY:STH 181 | COUNTY:MILWAUKEE | CROSS SECTIONS:SILVER SPRING DRIVE | SHEET 592 | E |
|---|---|---|---|---|---|

FILE NAME : L:\Jobs2010\20100384\CAD\WisDOT_Trans\dgn\00\090206_xs_SilverSpring.dgn PLOT DATE : 7/22/2016 PLOT BY : GRAEF PLOT NAME : PLOT SCALE : 20.0000 sf / in.

WISDOT/CADDS SHEET 21

Notes

**Wisconsin Department of Transportation**

Dedicated people creating transportation solutions through innovation and exceptional service.

http://www.dot.wisconsin.gov