MAD JULY 2016

PROJECT ID: 3320-00-75/1706-00-73

WITH: N/A

COUNTY: ROCK

07

ORDER OF SHEETS

TOTAL SHEETS = 204

STATE OF WISCONSIN
DEPARTMENT OF TRANSPORTATION

PLAN OF PROPOSED IMPROVEMENT

STATE PROJECT	FEDERAL PROJECT	
	PROJECT	CONTRACT
3320-00-75	—	—
1706-00-73	—	—

JANESVILLE - DARIEN

STH 140 INTERSECTION

USH 14/STH 11

ROCK COUNTY

STATE PROJECT NUMBER
1706-00-73

BERGEN - EMERALD GROVE

BRADFORD/CLINTON RD TO AVALON RD

STH 140

ROCK COUNTY

STATE PROJECT NUMBER
3320-00-75

N

DESIGN DESIGNATION

		3320-00-75 (IH 43-CREEK)	(CREEK-AVALON)	(AVALON-USH 14)	1706-00-73 (USH 14/STH 11)
A.A.D.T.	(2016)	= 4500	= 4000	= 2500	= 10700
A.A.D.T.	(2036)	= 4800	= 5500	= 2700	= 10800
D.H.V.		= 22.7%	= 22.7%	= 22.7%	= 22.7%
D.D.		= 60/40	= 60/40	= 60/40	= 60/40
T.		= 27.0%	= 27.0%	= 27.0%	= 27.0%
DESIGN SPEED		= 60 MPH	= 60 MPH	= 60 MPH	= 60 MPH
ESALS		= NA	= NA	= NA	= 6,538,462

CONVENTIONAL SYMBOLS

PLAN
- CORPORATE LIMITS
- PROPERTY LINE
- LOT LINE
- LIMITED HIGHWAY EASEMENT
- EXISTING RIGHT OF WAY
- PROPOSED OR NEW R/W LINE
- SLOPE INTERCEPT
- REFERENCE LINE
- EXISTING CULVERT
- PROPOSED CULVERT (Box or Pipe)
- COMBUSTIBLE FLUIDS — CAUTION
- MARSH AREA
- WOODED OR SHRUB AREA

PROFILE
- GRADE LINE
- ORIGINAL GROUND
- MARSH OR ROCK PROFILE (To be noted as such) — ROCK
- SPECIAL DITCH — LABEL
- GRADE ELEVATION — 95.36
- CULVERT (Profile View)

UTILITIES
- ELECTRIC — E
- FIBER OPTIC — FO
- GAS — G
- SANITARY SEWER — SAN
- STORM SEWER — SS
- TELEPHONE — T
- WATER — W
- UTILITY PEDESTAL
- POWER POLE
- TELEPHONE POLE

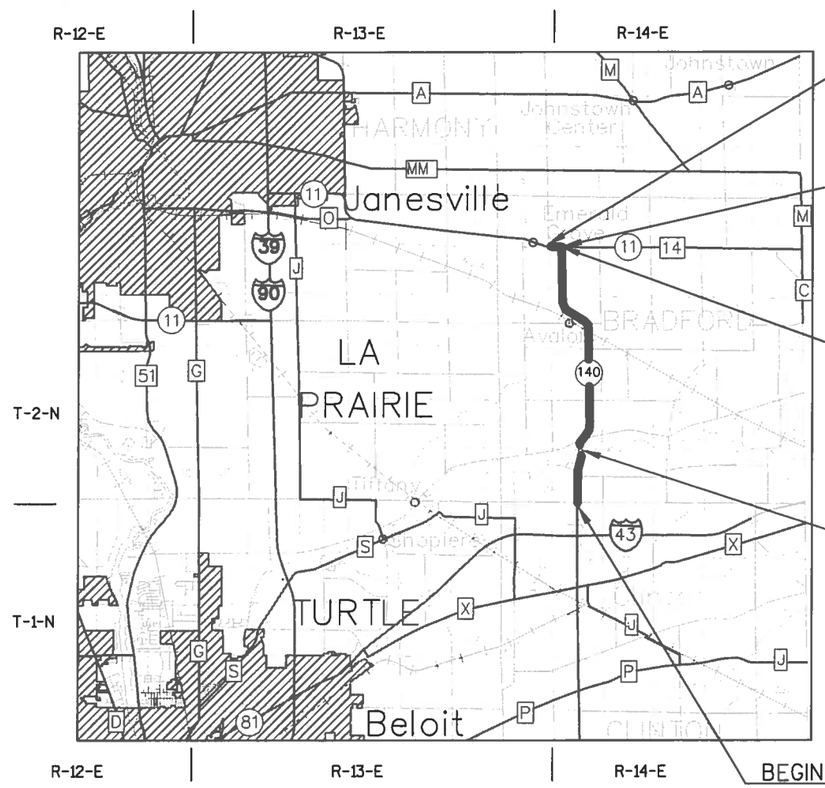

BEGIN PROJECT 1706-00-73
STA. 400'EG'+50.00
N= 258870.85
E= 533716.35

END PROJECT 1706-00-73
STA. 407'EG'+77.50

END PROJECT 3320-00-75
STA. 321'CL'+93.98

B-53-223 (NO WORK)
EXCEPTION TO NET CENTERLINE
STA 93'CL'+45.84 TO
STA 94'CL'+87.00

BEGIN PROJECT 3320-00-75
STA. 39'CL'+96.45
N= 232343.33
E= 535880.79

LAYOUT
SCALE 0 — 3 MILE

TOTAL NET LENGTH OF CENTERLINE 1706-00-73 = 0.138 MILES
TOTAL NET LENGTH OF CENTERLINE 3320-00-75 = 5.314 MILES

HORIZONTAL POSITIONS SHOWN ON THIS PLAN ARE WISCONSIN COUNTY COORDINATES, ROCK COUNTY, NAD83 (2011), IN U.S. SURVEY FEET. VALUES ARE GRID COORDINATES, GRID BEARINGS, AND GRID DISTANCES. GRID DISTANCES MAY BE USED AS GROUND DISTANCES.

ELEVATIONS ON THIS PLAN ARE REFERENCED TO NADV 83 (2007)

ORIGINAL PLANS PREPARED BY

WISCONSIN TAMMY L. KUEHLMANN E-30676 SHEBOYGAN WI PROFESSIONAL ENGINEER

01.22.16 Tammy Kuehlmann
(Date) (Signature)

STATE OF WISCONSIN
DEPARTMENT OF TRANSPORTATION

PREPARED BY

Surveyor	R.H. BATTERMAN & CO.
Designer	DONOHUE & ASSOCIATES, INC
Project Manager	STEVE MARSHALL
Regional Examiner	JIM BUSCHKOPF
Regional Supervisor	KIM SCHAUDER

APPROVED FOR THE DEPARTMENT

DATE: 1/25/2016 (Signature)

E

2

GENERAL NOTES:

CROSS DRAIN PIPE ELEVATIONS, LENGTHS AND LOCATIONS AS SHOWN ON THE PLANS MAY BE ADJUSTED TO FIT EXISTING FIELD CONDITIONS AS DIRECTED BY THE ENGINEER.

ALL DISTURBED AREAS WITHIN THE SLOPE INTERCEPTS SHALL BE RESTORED WITH TOPSOIL, SEED, FERTILIZER AND MULCH AS SHOWN ON THE PLANS AND AS DIRECTED BY THE ENGINEER. ANY OTHER DISTURBED AREAS ARE TO BE SEEDED, FERTILIZED AND MULCHED AT THE CONTRACTORS EXPENSE.

STATION, OFFSET, AND ELEVATIONS FOR CULVERT ENDWALLS ARE SHOWN AT THE PIPE END. THE LENGTH OF THE PIPE ENDWALL IS ADDITIONAL.

THE EXACT LOCATION AND WIDTHS OF PRIVATE AND COMMERCIAL DRIVEWAYS ARE TO BE DETERMINED BY THE ENGINEER IN THE FIELD AND SHALL BE REPLACED IN KIND.

ALL DISTANCES ARE GROUND DISTANCES. TIES ARE HORIZONTAL UNLESS SHOWN OTHERWISE.

THE LOCATIONS OF EXISTING UTILITY FACILITIES AS SHOWN ON THE PLANS ARE APPROXIMATE. THERE MAY BE OTHER UTILITY FACILITIES WITHIN THE PROJECT AREA THAT ARE NOT SHOWN. NOT ALL UTILITIES ARE MEMBERS OF DIGGERS HOTLINE.

TREES DESIGNATED FOR REMOVAL ARE SHOWN ON THE PLANS. NO TREES OR SHRUBS ARE TO BE REMOVED WITHOUT APPROVAL OF THE ENGINEER.

EXCAVATION BELOW SUBGRADE (EBS) LOCATIONS ARE NOT SHOWN ON THE CROSS SECTIONS. IF EBS IS DETERMINED NECESSARY BY THE ENGINEER IN THE FIELD IT SHALL BE MEASURED AND PAID FOR AS EXCAVATION COMMON. BACKFILL EBS AREAS WITH SELECT CRUSHED MATERIAL. LATERAL TRANSITIONS OUT OF EBS AREAS SHALL BE AT A 5:1 SLOPE.

EROSION CONTROL ITEMS SHOWN IN THE MISCELLANEOUS QUANTITIES ARE AT SUGGESTED LOCATIONS. THE ENGINEER MAY MODIFY LOCATIONS TO FIT FIELD CONDITIONS.

KEEP ALL EQUIPMENT AND MATERIALS OUT OF ADJACENT WETLANDS AND WATERWAYS. STORAGE OF ANY MATERIAL IN WETLANDS WILL NOT BE PERMITTED.

RADII, ELEVATIONS, AND DIMENSIONS ARE GIVEN AT THE PAVEMENT EDGES, UNLESS OTHERWISE NOTED IN THE PLANS.

HMA WEIGHT CALCULATIONS ARE BASED ON 110 LBS/SY/IN OF DEPTH.

THE CONTRACTOR'S PAVING OPERATIONS SHALL BE CONSISTENT WITH THE PLAN TYPICAL SECTIONS AND CONSTRUCTED TO PREVENT HMA LONGITUDINAL JOINTS FROM BELING LOCATED WITHIN A DRIVING, TURNING, PASSING OR PARKING LANE.

TRAFFIC CONTROL DEVICES SHALL BE ADJUSTED TO FIT FIELD CONDITIONS AS DIRECTED BY THE ENGINEER.

CONSTRUCT HMA PAVEMENT WITH MATERIALS AND THICKNESS AS FOLLOWS:

ROADWAY	LAYER	THICKNESS	HMA MIX DESIGNATION
USH 14/STH 11 EB RT TURN LANE	UPPER	2"	4 MT 58-28 H
	LOWER	4"	3 LT 58-28 S
STH 140 CENTERLINE PAVEMENT	UPPER	2"	ASPHALTIC SURFACE

ABBREVIATIONS

ACCESS POINT/ DRIVEWAY CONNECTION	AP
ACCESS RIGHTS	AR
ACRES	AC.
AND OTHERS	ET.AL.
CENTERLINE	C/L
CERTIFIED SURVEY MAP	CSM
DOCUMENT	DOC.
HIGHWAY EASEMENT	H.E.
LAND CONTRACT	LC
MONUMENT	MON.
PAGE	P.
PERMANENT LIMITED EASEMENT	PLE
PROPERTY LINE	PL
RECORDED AS	(100')
REFERENCE LINE	R/L
REMAINING	REM.
RIGHT-OF-WAY	R/W
SECTION	SEC.
SQUARE FEET	SQ.FT.
STATION	STA.
TEMPORARY LIMITED EASEMENT	TLE
VOLUME	V.

UTILITIES

JASON HOGAN
ALLIANT ENERGY - ELECTRICITY AND GAS/PETROLEUM
4902 NORTH BILTMORE LANE
PO BOX 77007
MADISON, WI 53707-1007
(608) 458-4871
JASONHOGAN@ALLIANTENERGY.COM

LAWRENCE HUBER
ANR PIPELINE COMPANY - GAS/PETROLEUM
W3925 PIPELINE LANE
EDEN, WI 53019-1225
(920) 477-2235
LAWRENCE_HUBER@TRANSCANADA.COM

MIKE OLSEN
ATC MANAGEMENT - ELECTRICITY
PO BOX 6113
801 O'KEEFE ROAD
DE PERE, WI 54115-6113
(920) 338-6582
MOLSEN@ATCLLC.COM

CAROL ANASON
AT&T WISCONSIN
316 W. WASHINGTON AVE.
MADISON, WI 53703
(608) 252-2385
CA2624@ATT.COM

BRANDON STORM
CHARTER COMMUNICATIONS
2701 DANIELS STREET
MADISON, WI 53718
(608) 274-3822
(608) 444-9493 (CELL)
BRANDON.STORM@CHARTER.COM

ROBERT CHURCH
FRONTIER COMMUNICATIONS OF WI LL - COMMUNICATION
2222 WEST WISCONSIN STREET
PORTAGE, WI 53901
(608) 742-1817
ROBERT.CHURCH@FTR.COM

UTILITIES (CONT.)

LYNN MAIER
ROCK ENERGY COOPERATIVE - ELECTRICITY
2815 KENNEDY ROAD
JANESVILLE, WI 53545
(608) 752-4550
LYNNM@ROCK.COOP

LATROY BRUMFIELD
WE ENERGIES - GAS / PETROLEUM
ROOM A299
333 WEST EVERETT STREET
MILWAUKEE, WI 53203
(414) 221-5617
WE-UTILITY-RELOCATIONS@WE-ENERGIES.COM

WISDOT

WISDOT I-39/90 DESIGN
MAMATA SHRESTHA
111 INTERSTATE BLVD.
EDGERTON, WI 53534
PHONE: (608) 884-7124
MAMATA.SHRESTHA@DOT.WI.GOV

WISDOT I-39/90 CONSTRUCTION
JAMIE GRAINGER
111 INTERSTATE BLVD.
EDGERTON, WI 53534
PHONE: (608) 884-1173
JAMIE.GRAINGER@DOT.WI.GOV

CONSULTANT CONTACT

TAMMY KUEHLMANN, PE
3311 WEEDEN CREEK ROAD
SHEBOYGAN, WI 53081
PHONE: (920) 803-7364
TKUEHLMANN@DONOHUE-ASSOCIATES.COM

TYPICAL SECTION AND SHEET INDEX

WISDNR

WISCONSIN DEPARTMENT OF NATURAL RESOURCES
(SOUTH CENTRAL REGION)
ROCK COUNTY:
LAURA BUB
3911 FISH HATCHERY RD
FITCHBURG, WI 53711-5397
PHONE: (608)275-3485
LAURA.BUB@WISCONSIN.GOV

DIGGERS HOTLINE
Dial 811 or (800)242-8511
www.DiggersHotline.com

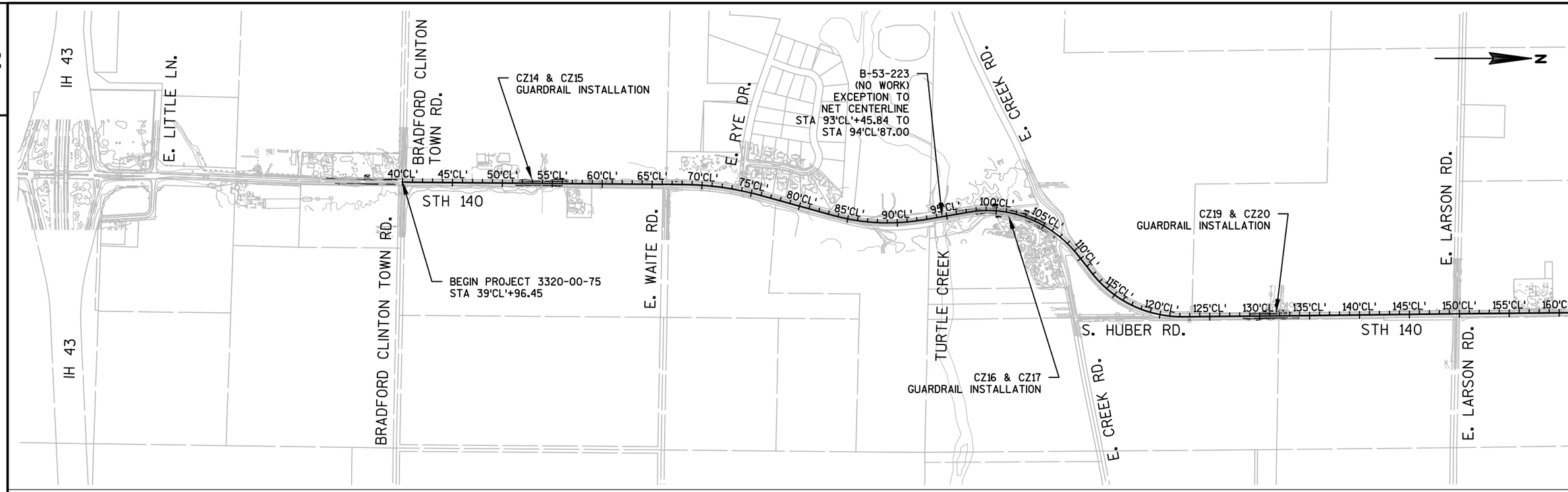

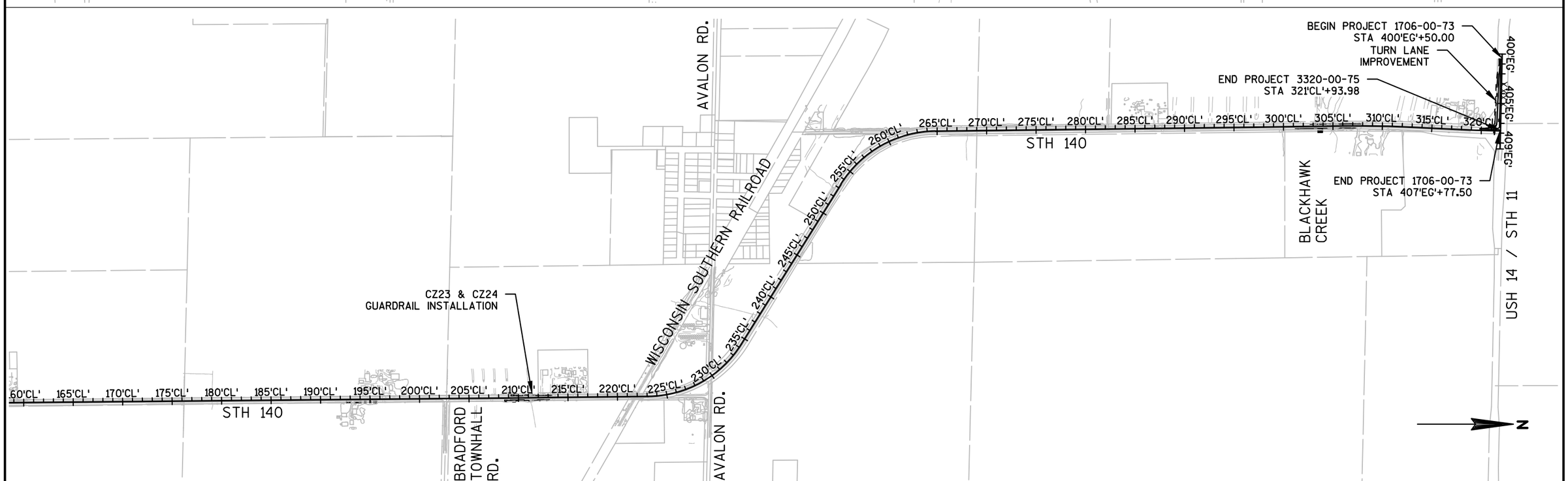

PROJECT NO:1706-00-73/3320-00-75	HWY:STH 140	COUNTY:ROCK	PROJECT OVERVIEW	SHEET 3	E

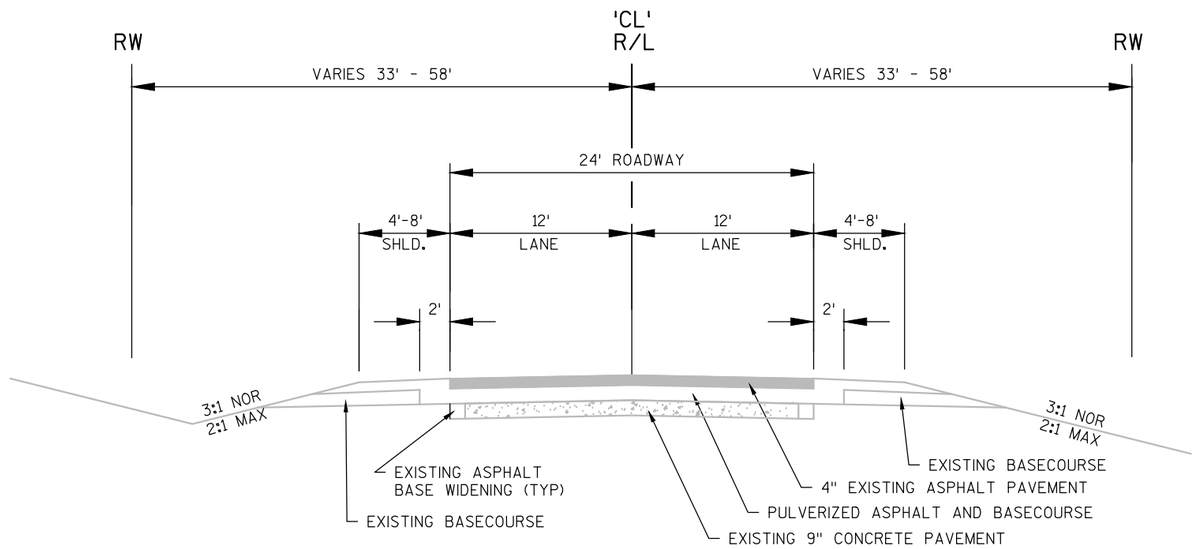

EXISTING TYPICAL SECTION STH 140

STA 39+96.45 TO STA 80+96.83
STA 301+60 TO STA 321+93

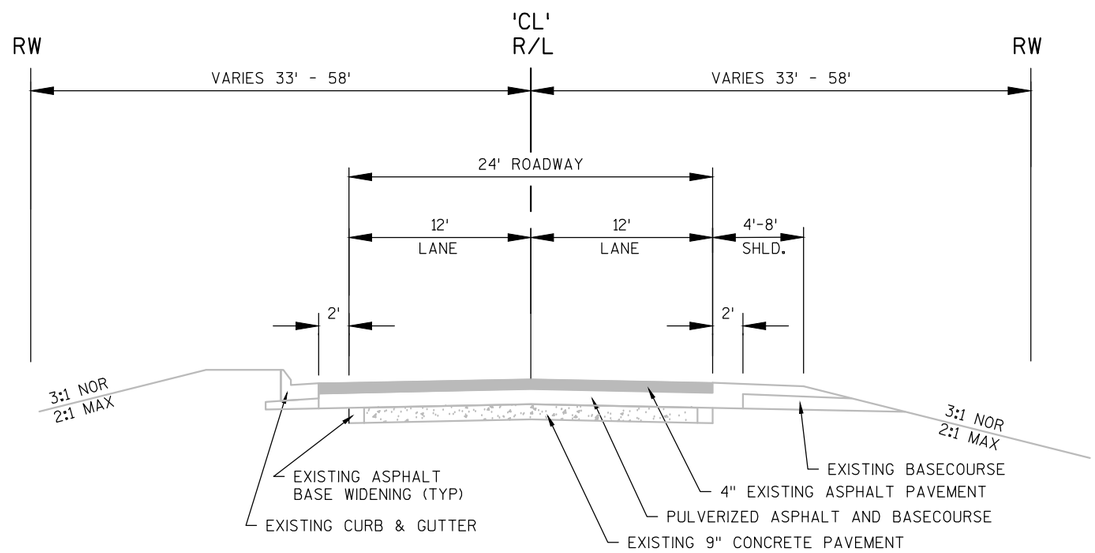

EXISTING TYPICAL SECTION STH 140

STA 80+96.83 TO STA 88+00

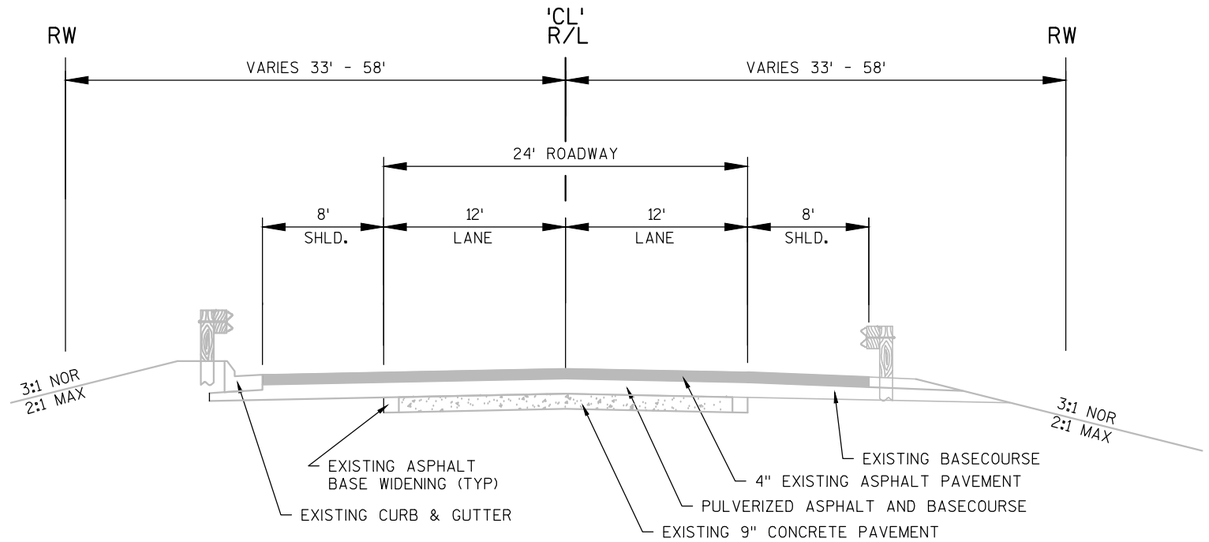

EXISTING TYPICAL SECTION STH 140

STA 88+00 TO STA 93+36.10

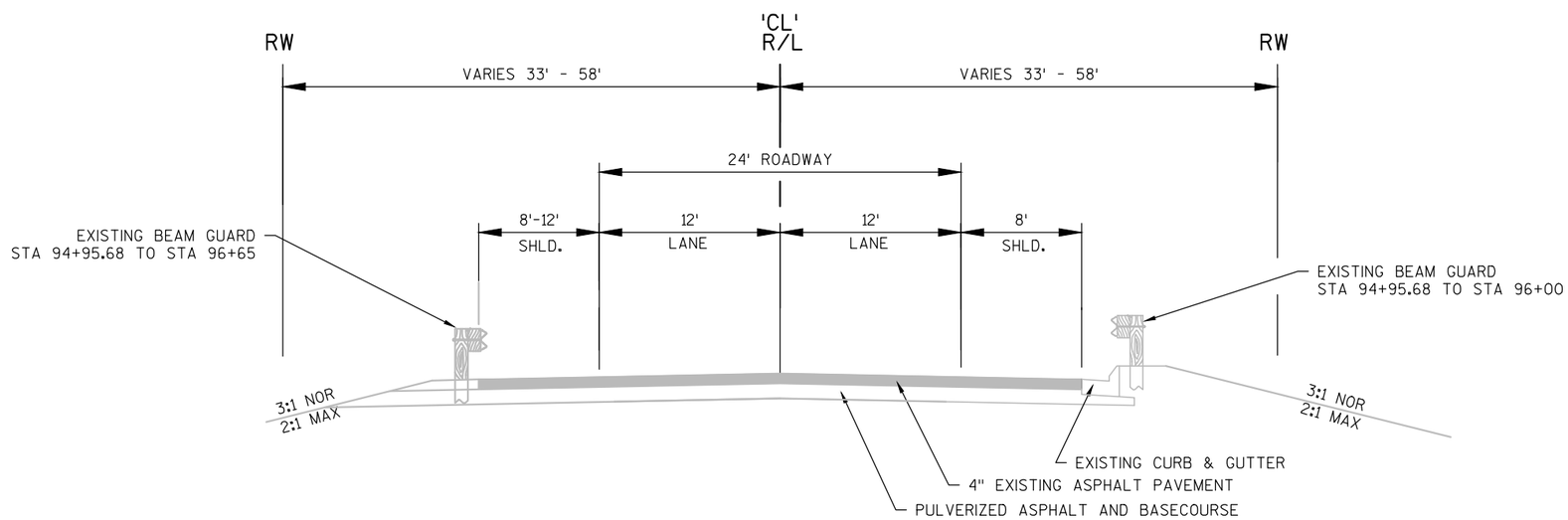

EXISTING TYPICAL SECTION STH 140

STA 94+95.68 TO STA 97+50

PROJECT NO: 3320-00-75	HWY: STH 140	COUNTY: ROCK	PLAN: TYPICAL SECTIONS	SHEET 5	E

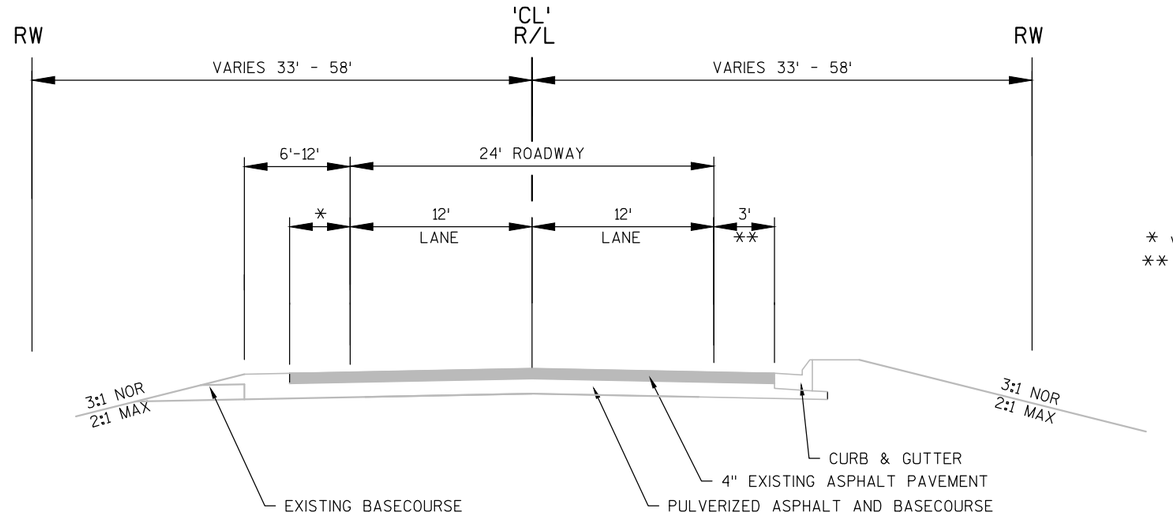

* VARIES 0' - 12' STA 97+50 TO STA 98+30
** VARIES 3' - 8' STA 97+50 TO STA 98+30

EXISTING TYPICAL SECTION STH 140

STA 97+50 TO STA 103+70

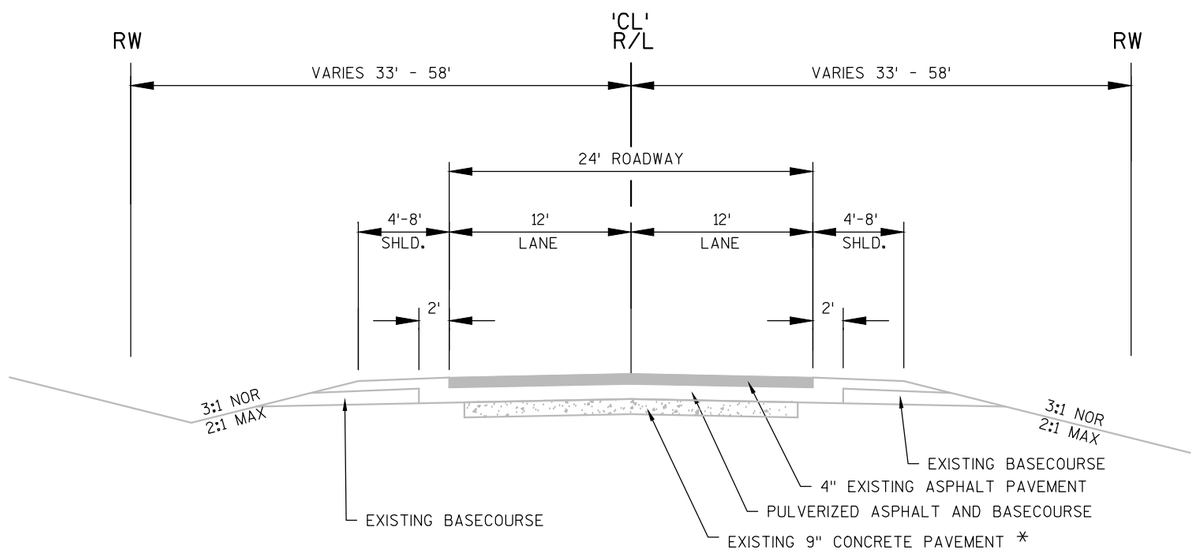

* NO CONCRETE BASE STA 103+70 - STA 113+12

EXISTING TYPICAL SECTION STH 140

STA 103+70 TO STA 301+61

PROJECT NO: 3320-00-75	HWY: STH 140	COUNTY: ROCK	PLAN: TYPICAL SECTIONS	SHEET 6	E

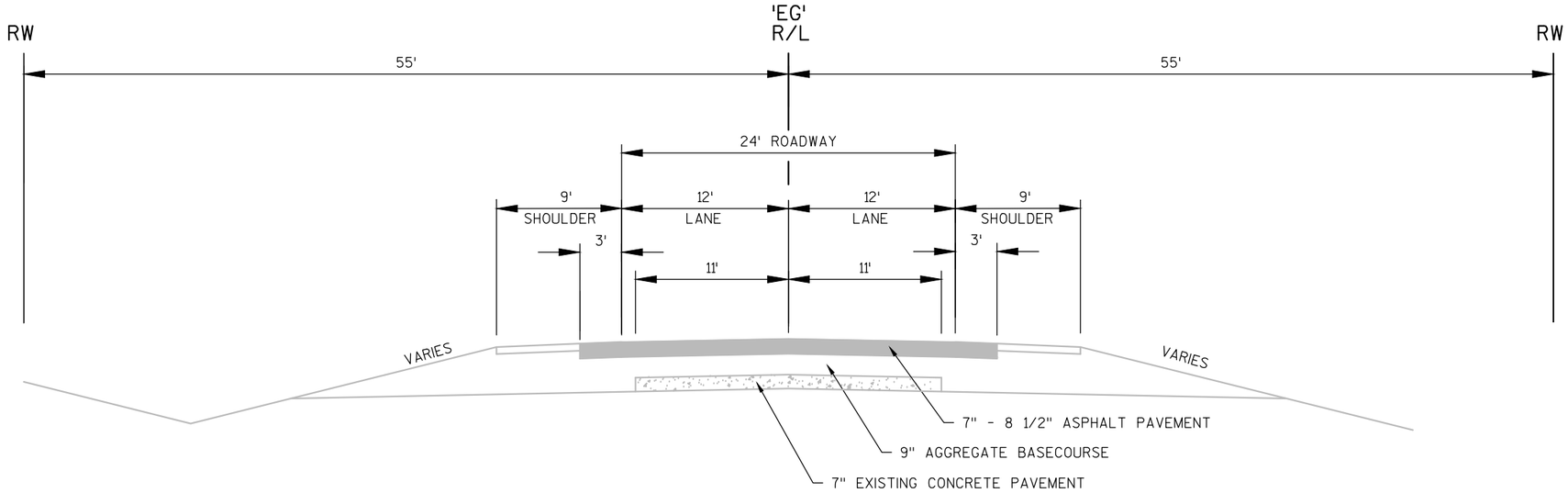

EXISTING TYPICAL SECTION USH 14/STH 11

STA 400+50.00 TO STA 404+94.86

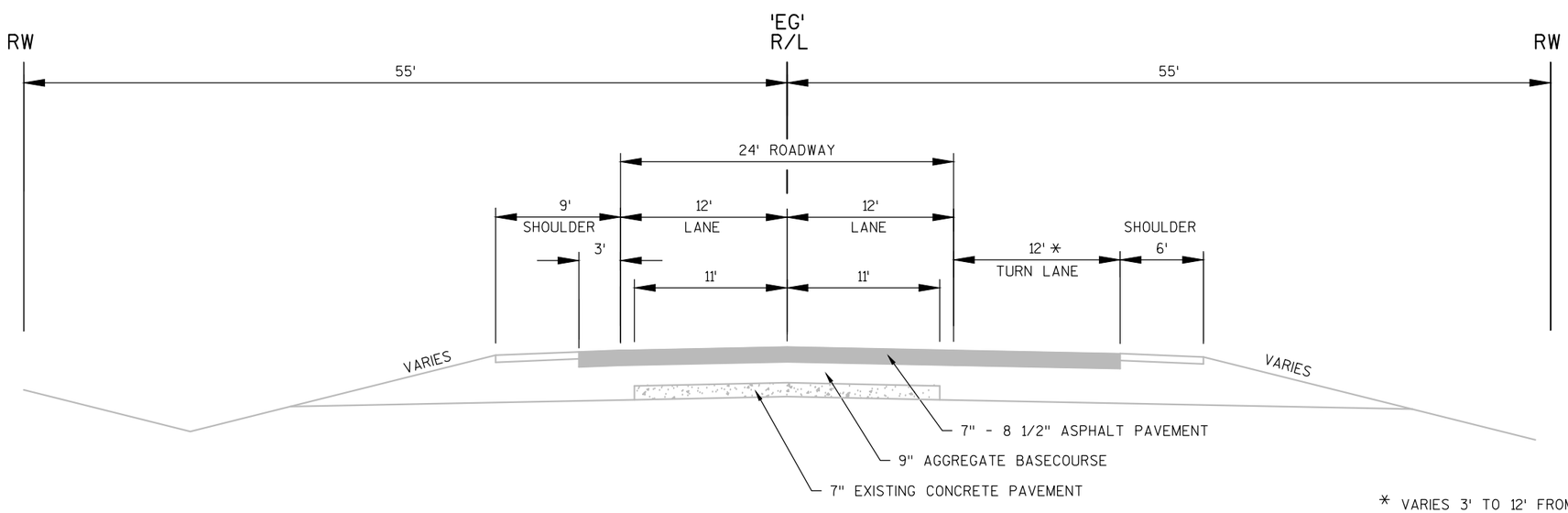

* VARIES 3' TO 12' FROM STA 403+85.73 TO 404+94.86

EXISTING TYPICAL SECTION USH 14/STH 11

STA 404+94.86 TO STA 407+77.50

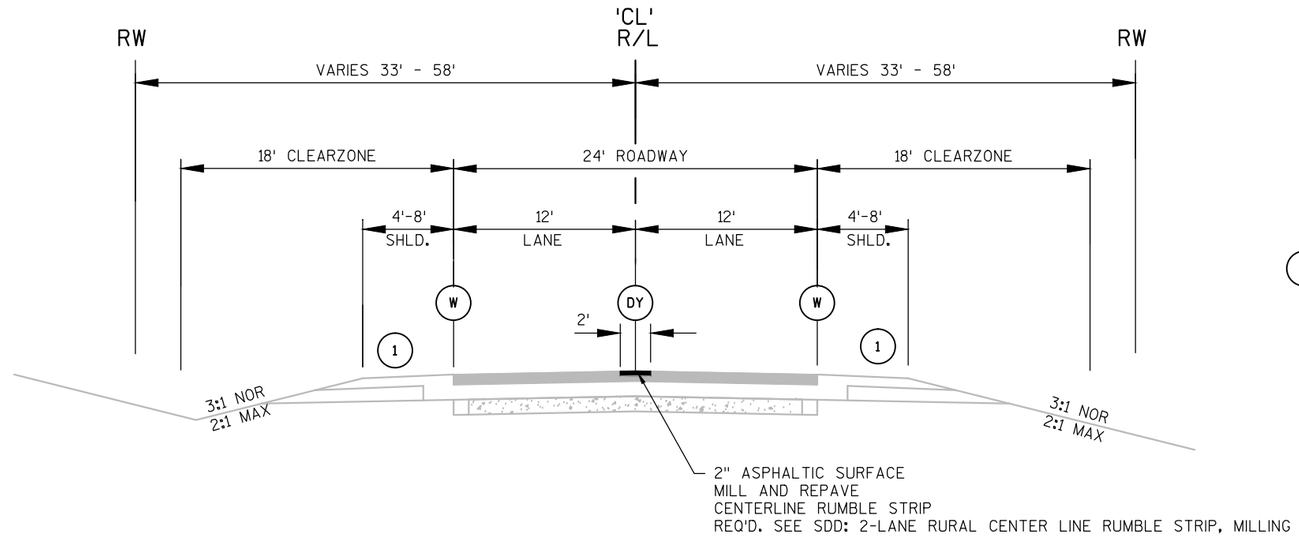

PROPOSED TYPICAL SECTION STH 140

STA 39+96.45 TO STA 80+96.83

(1) SEE "PROPOSED TYPICAL BEAM GUARD HALF SECTION STH 140" FOR THE FOLLOWING LOCATIONS:

STA 51+94.80 TO STA 55+38.55, RIGHT
STA 52+26.06 TO STA 55+94.80, LEFT

(W) PAVEMENT MARKING EPOXY 4-INCH WHITE

(DY) PAVEMENT MARKING EPOXY 4-INCH DOUBLE YELLOW (FINAL LOCATIONS OF THE NO PASSING ZONES WILL BE DETERMINED IN THE FIELD)

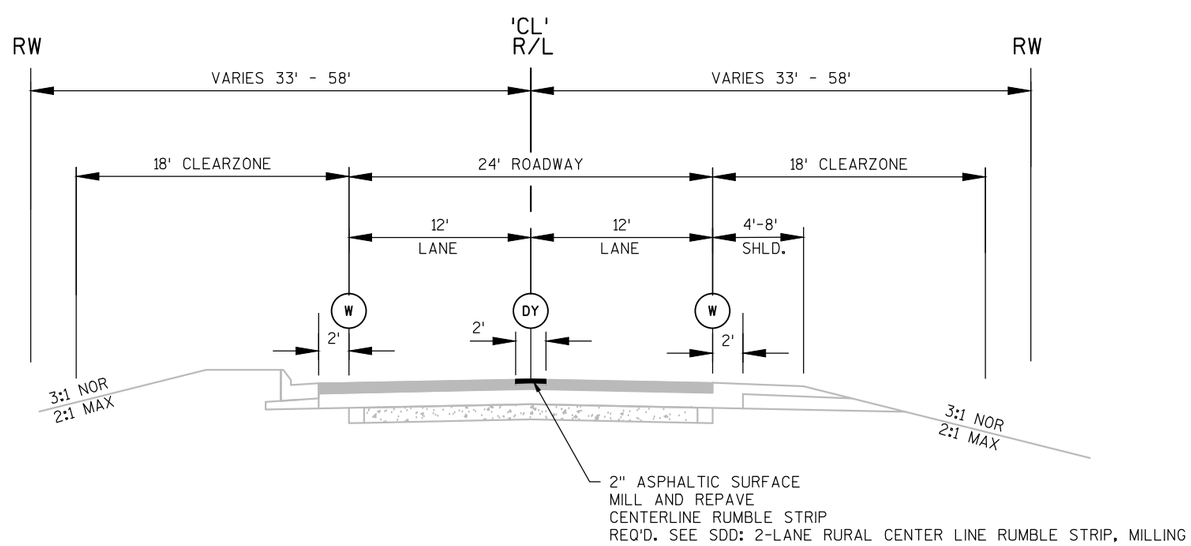

PROPOSED TYPICAL SECTION STH 140

STA 80+96.83 TO STA 88+00

PROJECT NO: 3320-00-75	HWY: STH 140	COUNTY: ROCK	PLAN: TYPICAL SECTIONS	SHEET 8	E

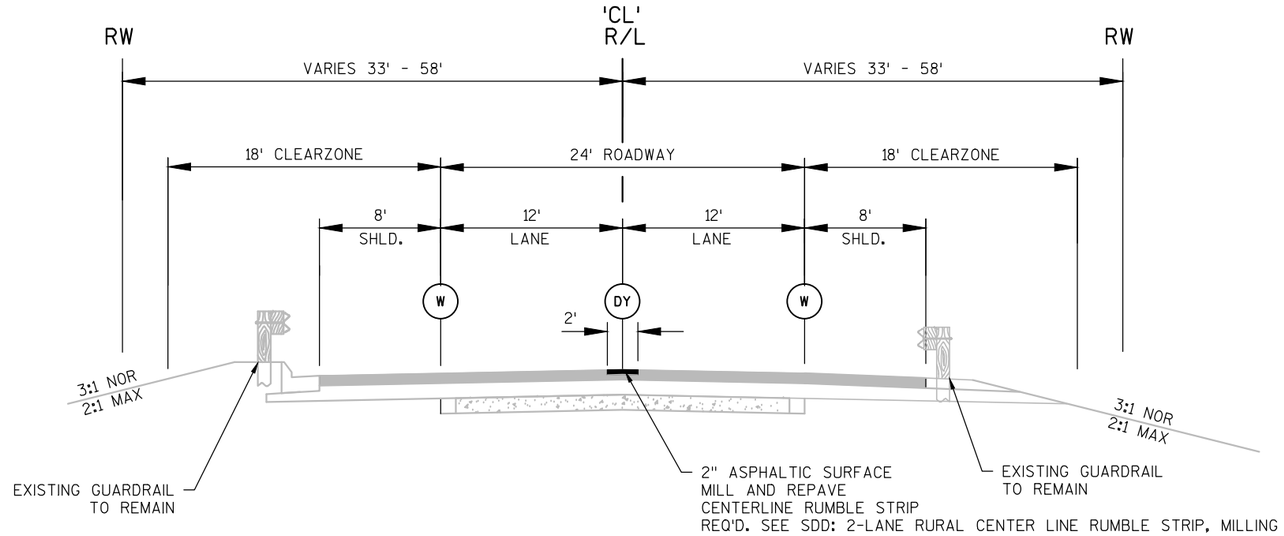

PROPOSED TYPICAL SECTION STH 140

STA 88+00 TO STA 93+36.10 (APPROACH SLAB)

W PAVEMENT MARKING EPOXY 4-INCH WHITE

DY PAVEMENT MARKING EPOXY 4-INCH DOUBLE YELLOW (FINAL LOCATIONS OF THE NO PASSING ZONES WILL BE DETERMINED IN THE FIELD)

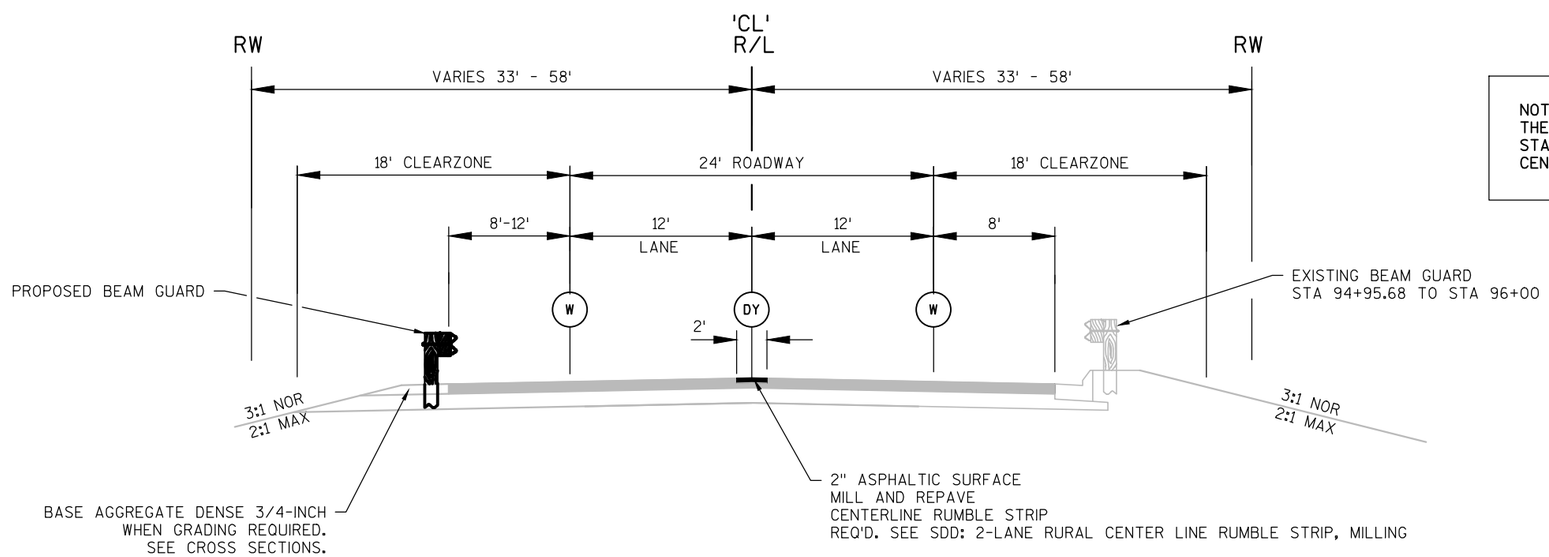

NOTE:
THERE IS NO CENTERLINE RUMBLE STRIP FROM STA 93+36.10 TO STA 94+95.68. THERE IS CENTERLINE AND EDGELINE PAVEMENT MARKING.

PROPOSED TYPICAL SECTION STH 140

STA 94+95.68 (APPROACH SLAB) TO STA 97+50

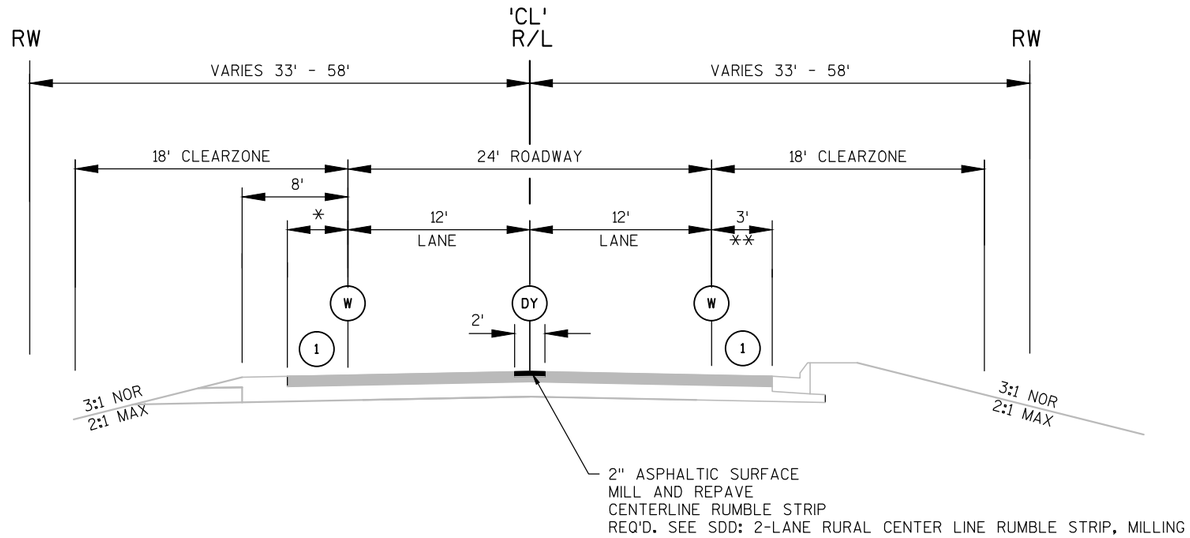

PROPOSED TYPICAL SECTION STH 140

STA 97+50 TO STA 103+70

* VARIES 0' - 6' STA 97+50 TO STA 98+30
** VARIES 3' - 8' STA 97+50 TO STA 98+30

(W) PAVEMENT MARKING EPOXY 4-INCH WHITE

(DY) PAVEMENT MARKING EPOXY 4-INCH DOUBLE YELLOW (FINAL LOCATIONS OF THE NO PASSING ZONES WILL BE DETERMINED IN THE FIELD)

(1) SEE "PROPOSED TYPICAL BEAM GUARD HALF SECTION STH 140" FOR THE FOLLOWING LOCATIONS:

STA 94+95.46 TO STA 104+56.25, LEFT
STA 98+42.50 TO STA 103+25.00, RIGHT
STA 129+54.48 TO STA 132+73.23, RIGHT
STA 130+12.25 TO STA 132+08.21, LEFT
STA 209+20.82 TO STA 212+52.12, RIGHT
STA 209+83.29 TO STA 213+20.78, LEFT

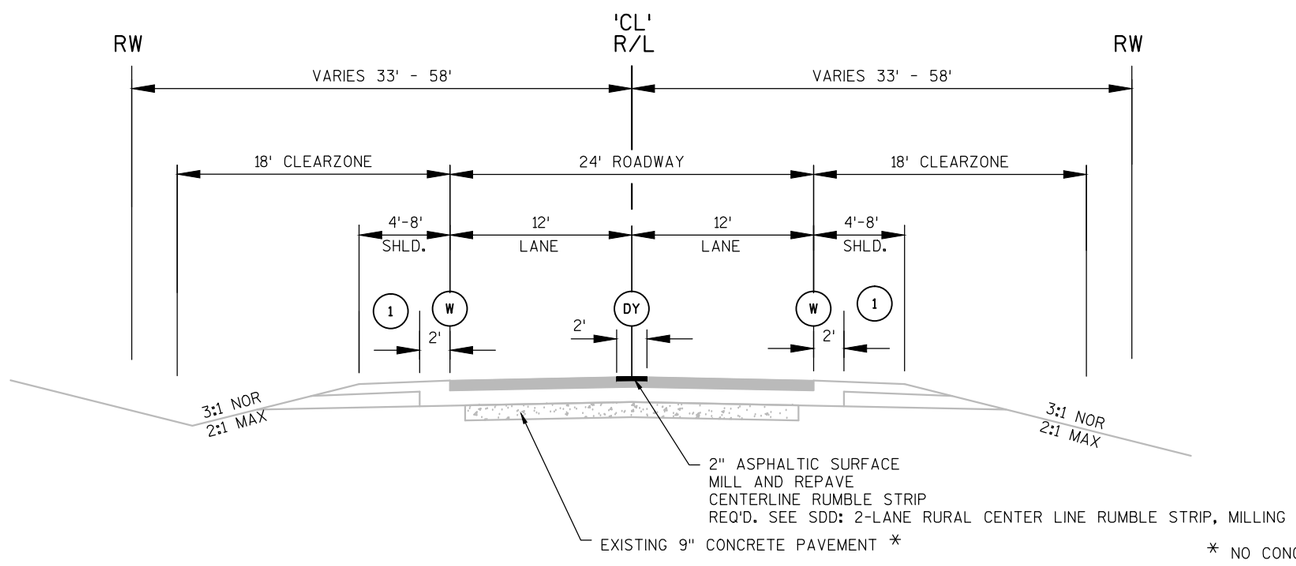

PROPOSED TYPICAL SECTION STH 140

STA 103+70 TO STA 149+71.10
STA 202+72.81 TO STA 270+00

* NO CONCRETE BASE STA 103+70 - STA 113+12

PROJECT NO: 3320-00-75	HWY: STH 140	COUNTY: ROCK	PLAN: TYPICAL SECTIONS	SHEET 10	E

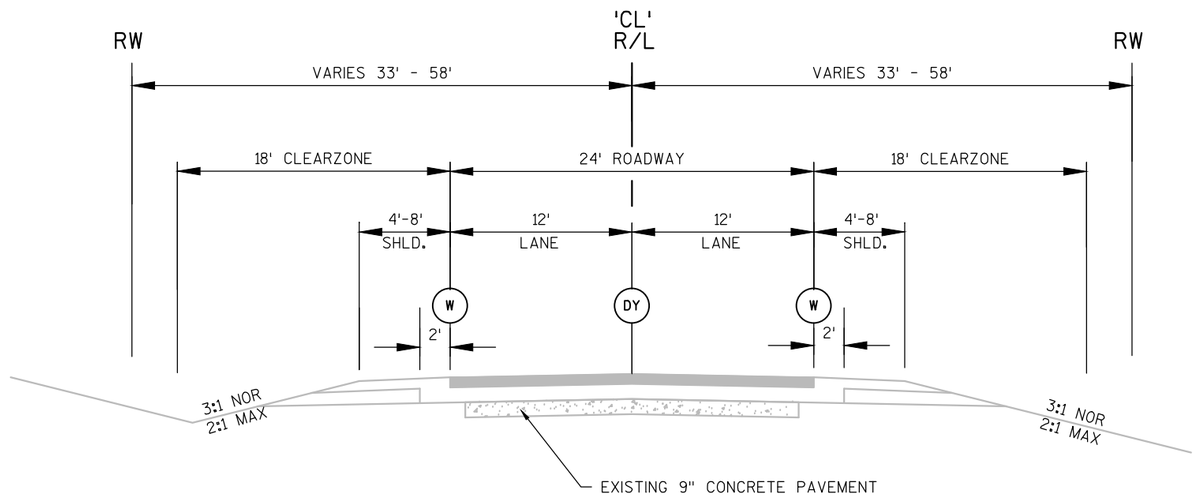

PROPOSED TYPICAL SECTION STH 140

STA 149+71.10 TO STA 202+72.81
STA 270+00 TO STA 301+61

W PAVEMENT MARKING EPOXY 4-INCH WHITE

DY PAVEMENT MARKING EPOXY 4-INCH DOUBLE YELLOW (FINAL LOCATIONS OF THE NO PASSING ZONES WILL BE DETERMINED IN THE FIELD)

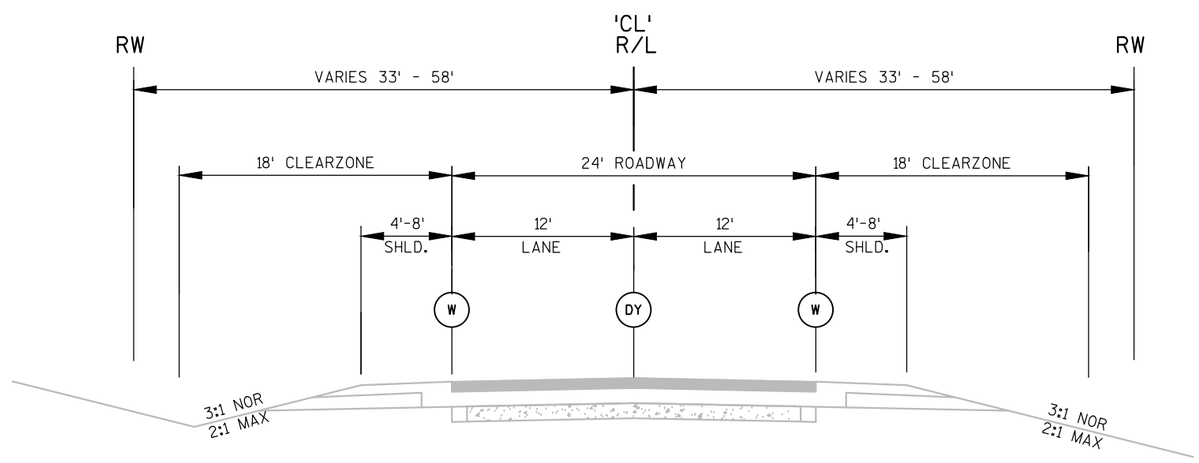

PROPOSED TYPICAL SECTION STH 140

STA 301+61 TO STA 321+93

PROJECT NO: 3320-00-75	HWY: STH 140	COUNTY: ROCK	PLAN: TYPICAL SECTIONS	SHEET 11	E

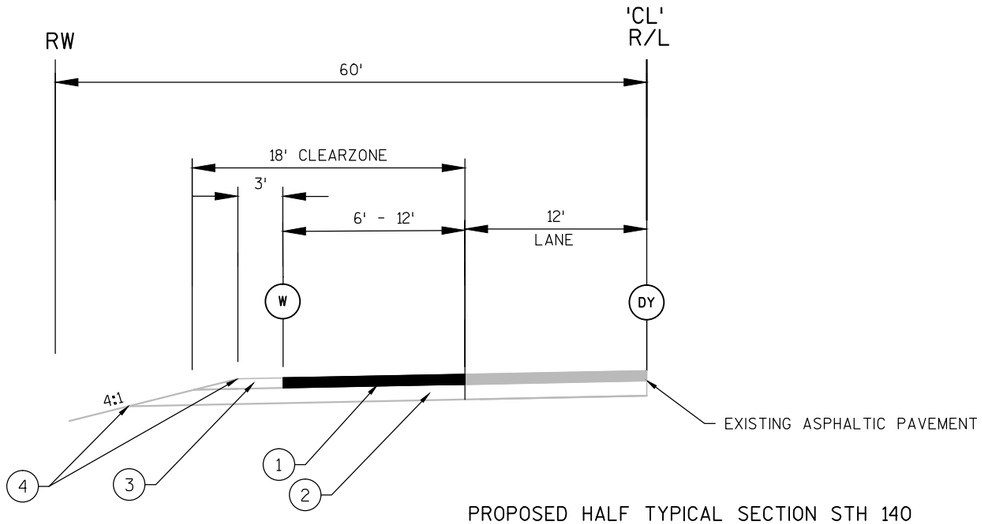

PROPOSED HALF TYPICAL SECTION STH 140

STA 319'CL'+85.74 TO STA 321'CL'+06.72

(W) PAVEMENT MARKING EPOXY 4-INCH WHITE

(DY) PAVEMENT MARKING EPOXY 4-INCH DOUBLE YELLOW (FINAL LOCATIONS OF THE NO PASSING ZONES WILL BE DETERMINED IN THE FIELD)

(1) HMA PAVEMENT
UPPER LAYER 2" DEPTH 4 MT 58-28 H
LOWER LAYER 4" DEPTH 3 LT 58-28 S

(2) 14" BASE AGGREGATE DENSE 1 1/4-INCH

(3) 6" BASE AGGREGATE DENSE 3/4-INCH

(4) FERTILIZE AND SEED

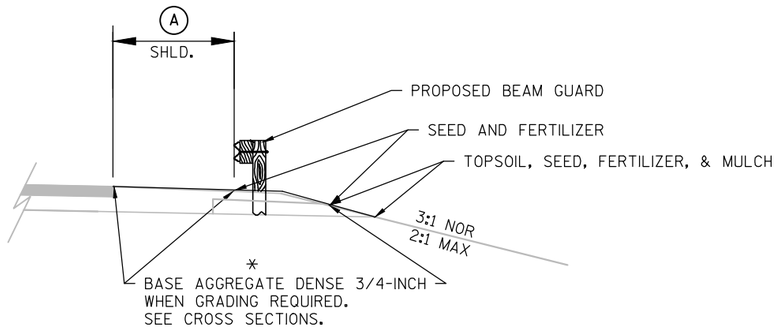

PROPOSED TYPICAL BEAM GUARD HALF SECTION STH 140

INSTALLATION ON EXISTING SHOULDER

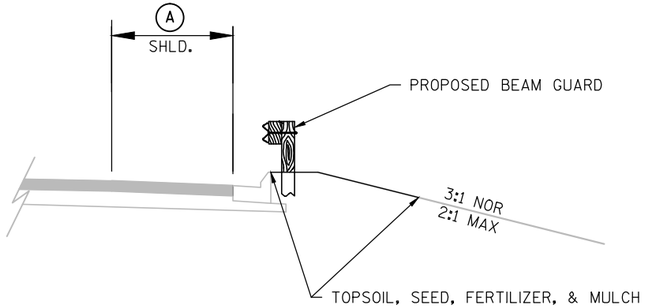

PROPOSED TYPICAL BEAM GUARD HALF SECTION STH 140

INSTALLATION BEHIND EXISTING CURB

	STA.	STA.	SIDE	BEAM GUARD TYPE	A
	51+94.80	55+38.55	RIGHT	MGS	4'
	52+26.06	55+94.80	LEFT	MGS	4'
*	94+95.46	104+56.25	LEFT	MGS	8'-12'
	129+54.48	132+73.23	RIGHT	MGS	8'
	130+12.23	132+09.21	LEFT	CLASS A	8'
	209+20.82	212+52.12	RIGHT	MGS	4'
	209+83.29	213+20.78	LEFT	MGS	4'

SEE PLAN DETAILS FOR END TREATMENT OFFSET DISTANCE

* PAVED SHOULDER WIDTH VARIES BETWEEEN STA 94+95.46 TO STA 98+20
BASE AGGREGATE DENSE NOT REQUIRED IN PAVED SHOULDER LOCATIONS

STA.	STA.	SIDE	BEAM GUARD TYPE	A
98+42.50	103+25.00	RIGHT	MGS	3'

SEE PLAN DETAILS FOR END TREATMENT OFFSET DISTANCE

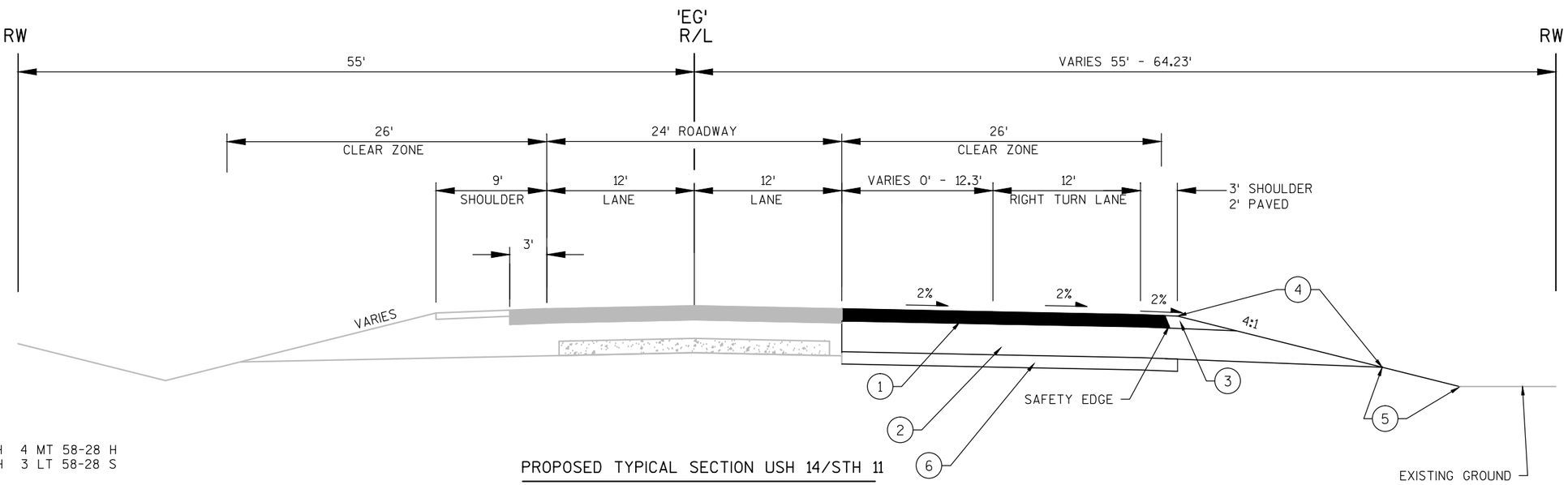

PROPOSED TYPICAL SECTION USH 14/STH 11

STA 400+50.00 TO STA 407+77.50

1. HMA PAVEMENT
   UPPER LAYER 2" DEPTH 4 MT 58-28 H
   LOWER LAYER 4" DEPTH 3 LT 58-28 S
2. 14" BASE AGGREGATE DENSE 1 1/4-INCH
3. 6" BASE AGGREGATE DENSE 3/4-INCH
4. FERTILIZE AND SEED
5. TOPSOIL, SEED, FERTILIZER, AND MULCH
6. 6" BASE AGGREGATE DENSE 3-INCH

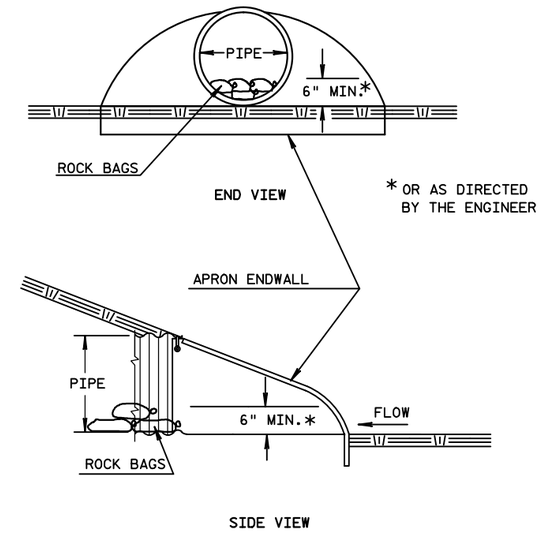

CULVERT PIPE CHECKS DETAIL

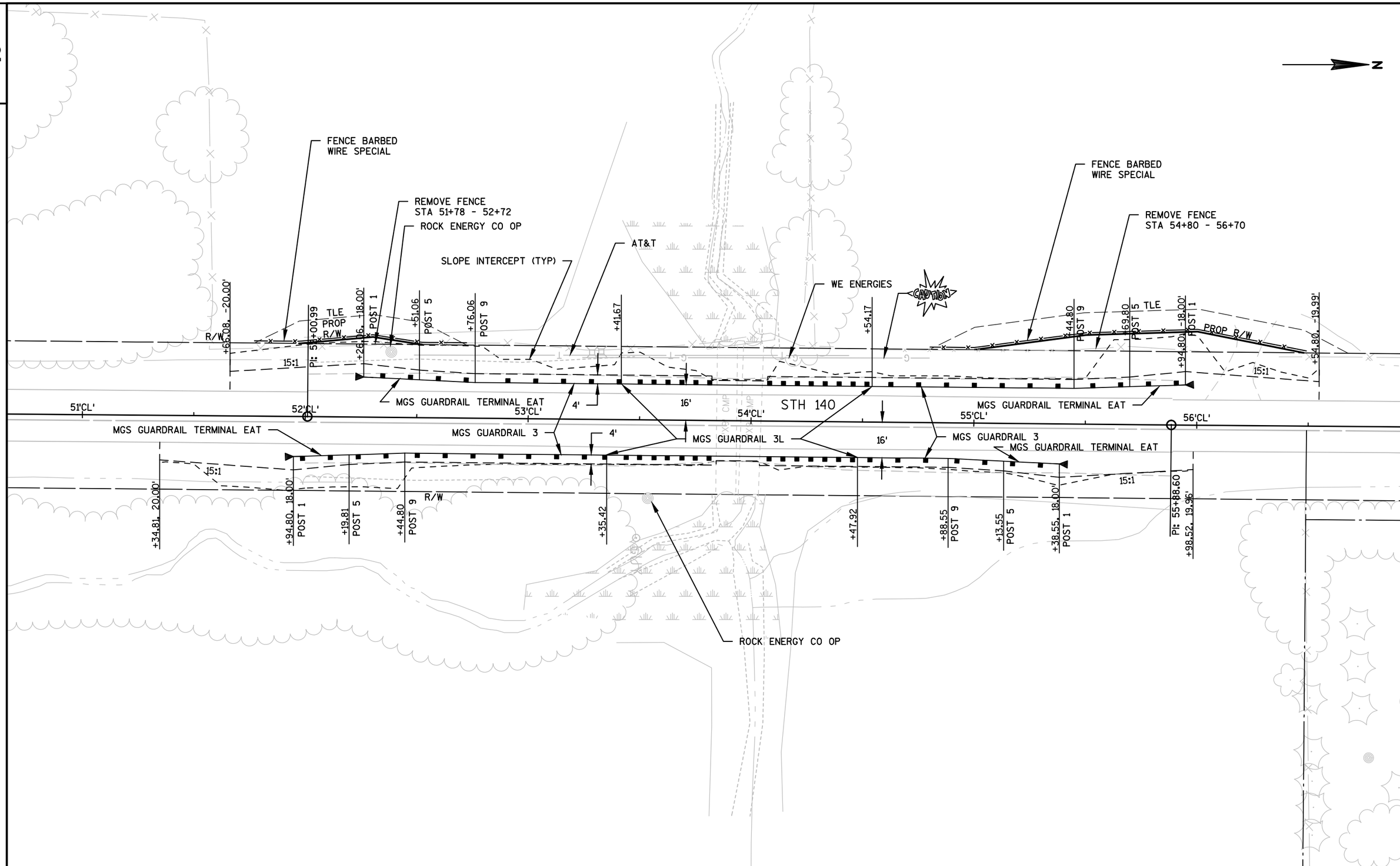

PROJECT NO:3320-00-75	HWY:STH 140	COUNTY:ROCK	PLAN DETAILS: CZ14 & CZ15 GUARDRAIL LOCATION	SHEET 16	E

FILE NAME : L:\PROJECTS\12729\DWG\3320-00-05\SHEETSPLAN\021204_PD.DWG
LAYOUT NAME - 021204_PD - 021204_PD
PLOT DATE : 5/5/2016 1:51 PM PLOT BY : BREMER, SAM PLOT NAME : PLOT SCALE : 1:40_XREF

DESIGNER NOTES:

3. REMOVE CURB HEAD 100' BACK FROM POST 3 ON NB RIGHT.

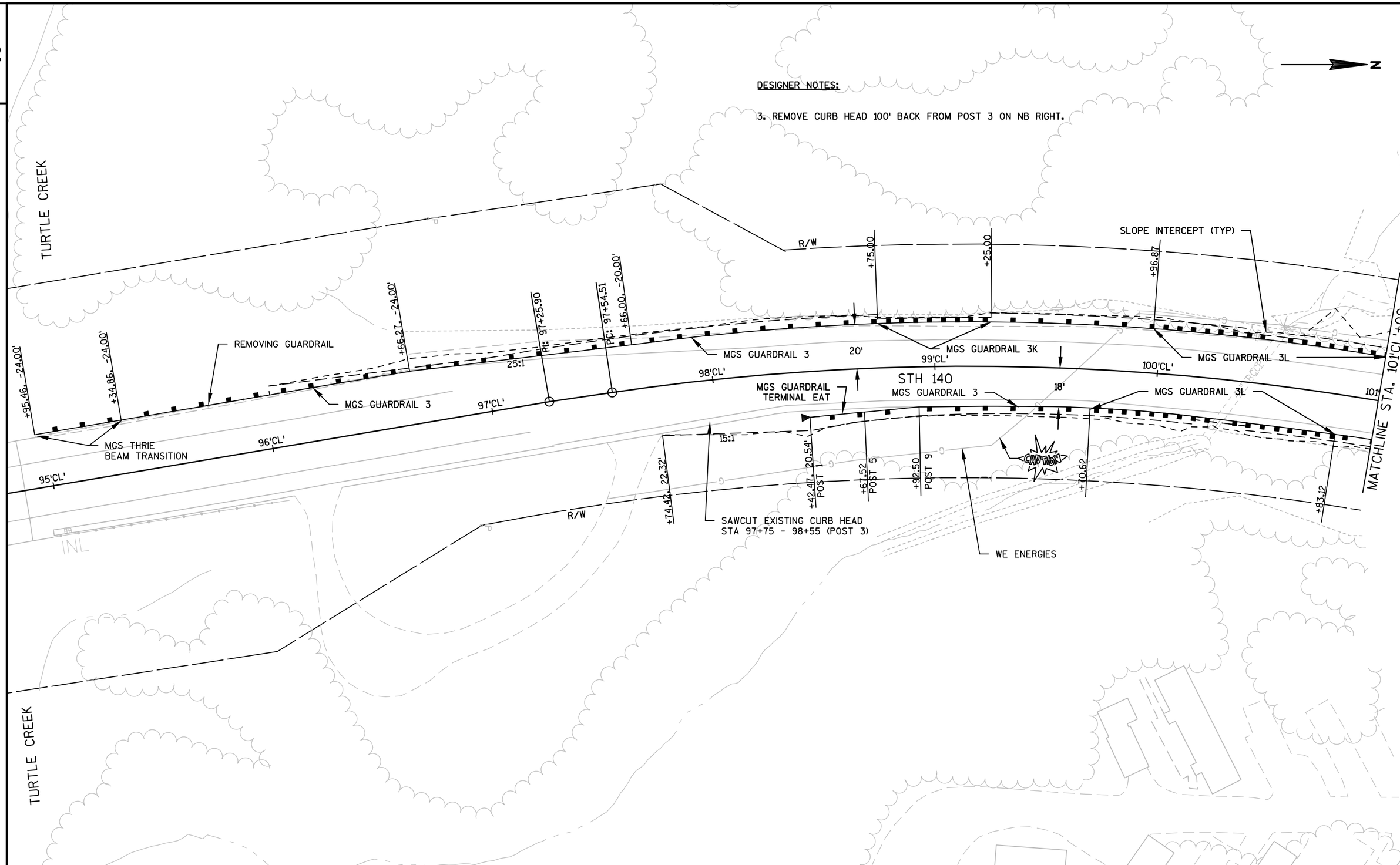

PROJECT NO:3320-00-75	HWY:STH 140	COUNTY:ROCK	PLAN DETAILS: CZ16 & CZ17 GUARDRAIL LOCATION	SHEET 17	E

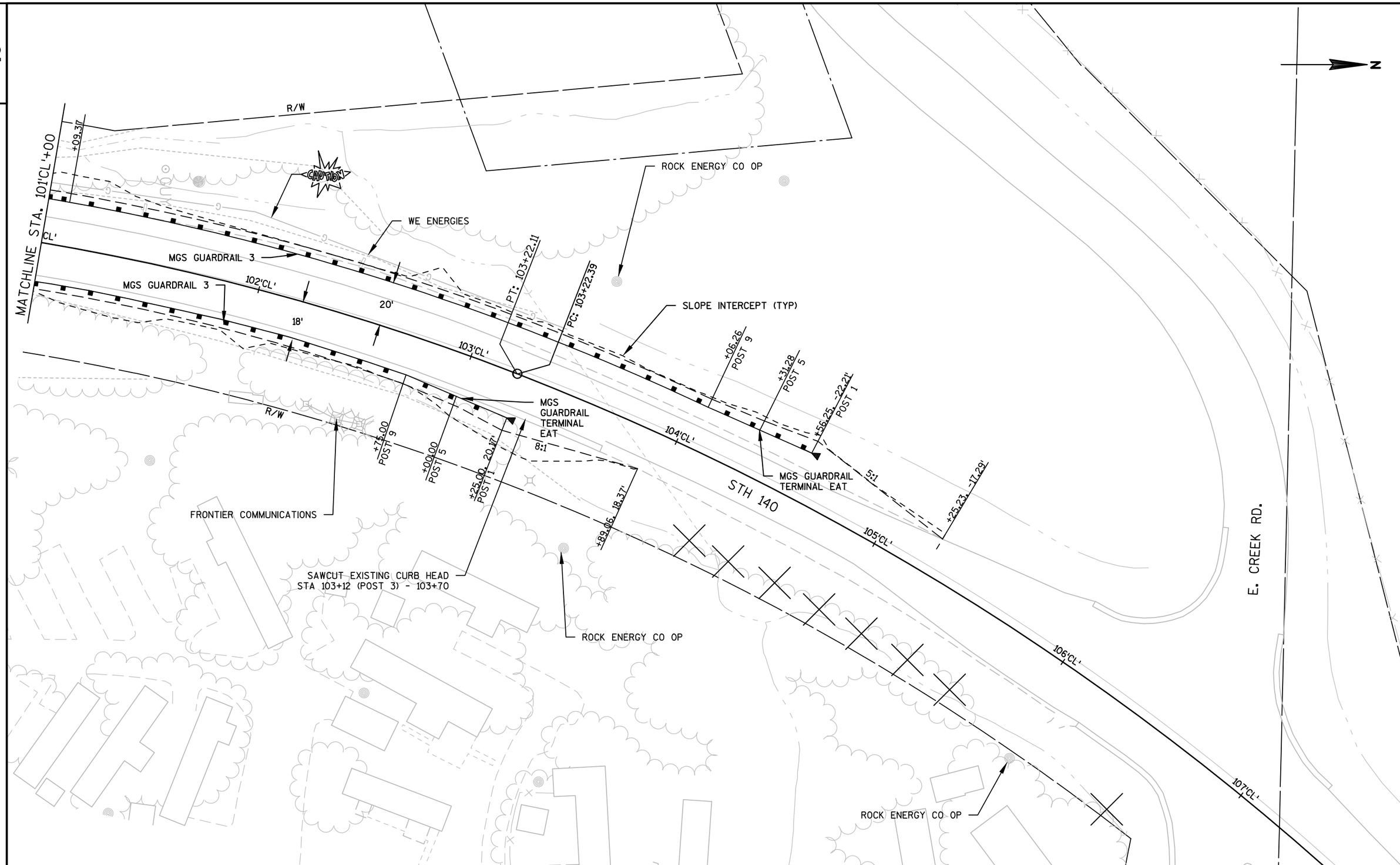

2

PROJECT NO:3320-00-75	HWY:STH 140	COUNTY:ROCK	PLAN DETAILS: CZ16 & CZ17 GUARDRAIL LOCATION	SHEET 18	E

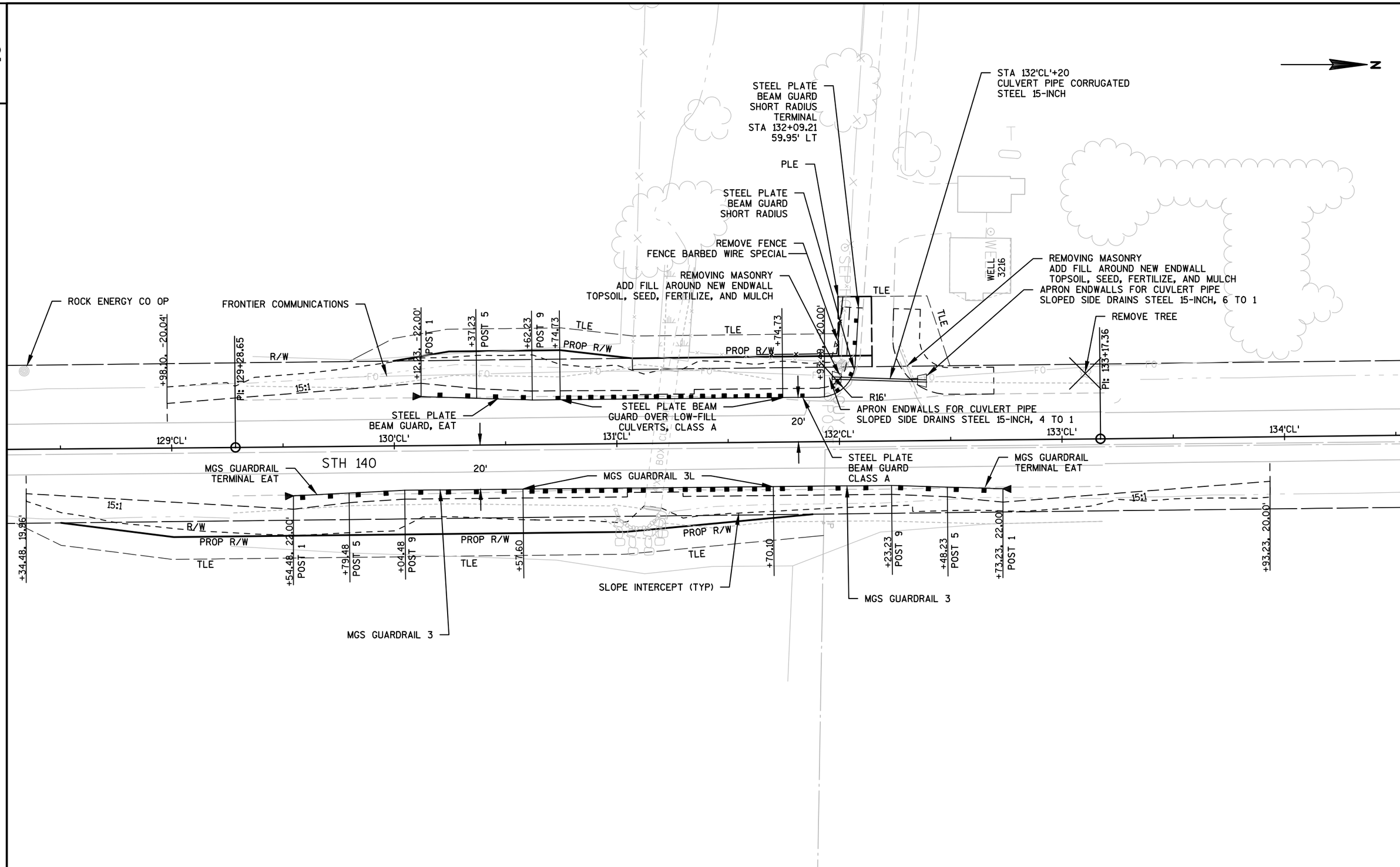

PROJECT NO:3320-00-75	HWY:STH 140	COUNTY:ROCK	PLAN DETAILS: CZ19 & CZ20 GUARDRAIL LOCATION	SHEET 19	E

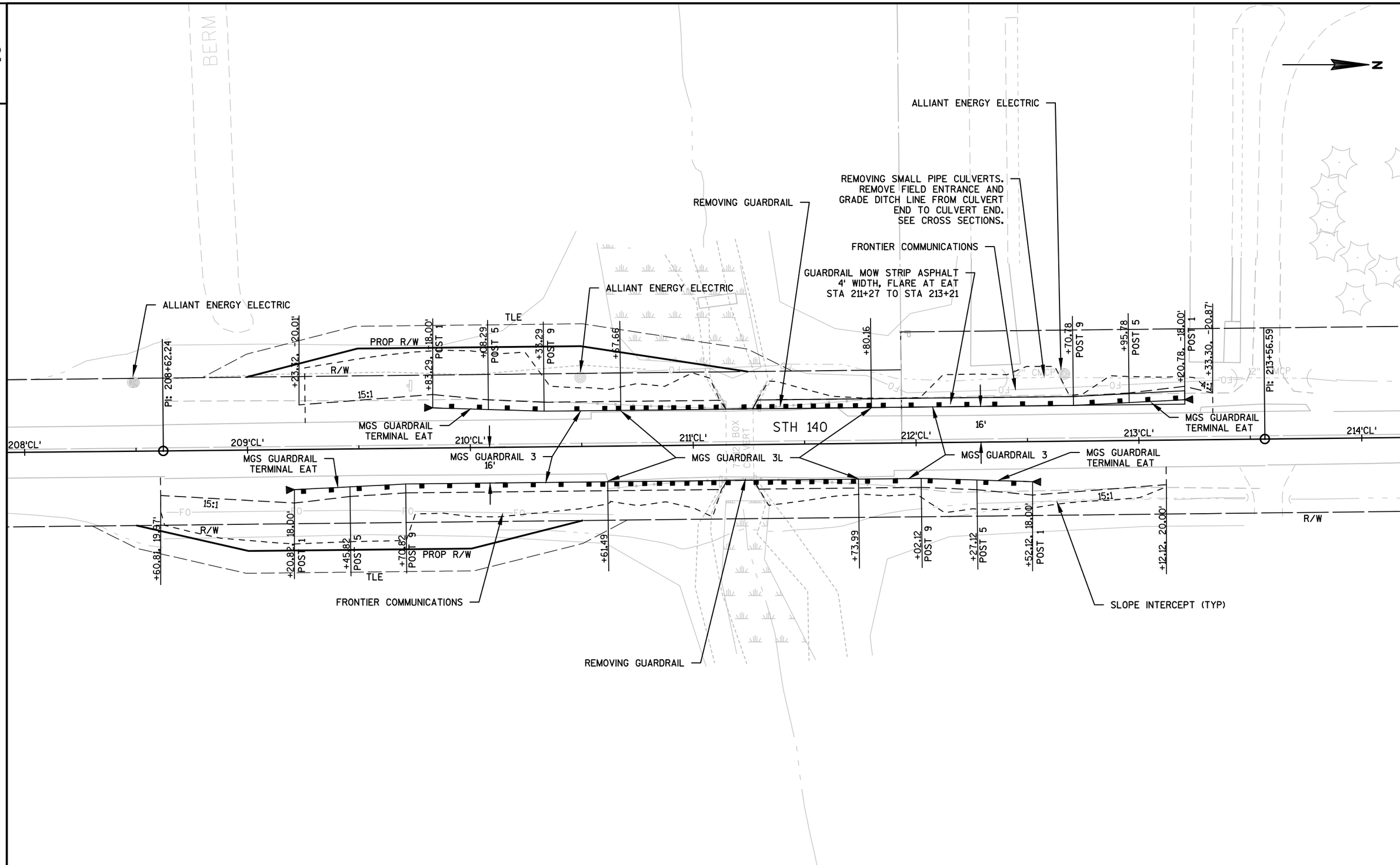

PROJECT NO:3320-00-75	HWY:STH 140	COUNTY:ROCK	PLAN DETAILS: CZ23 & CZ24 GUARDRAIL LOCATION	SHEET 20	E

FILE NAME : L:\PROJECTS\12729\DWG\3320-00-05\SHEETSPLAN\021208_PD.DWG
LAYOUT NAME - 021208_PD - 021208_PD
PLOT DATE : 5/5/2016 2:02 PM PLOT BY : BREMER, SAM PLOT NAME : PLOT SCALE : 1:40_XREF

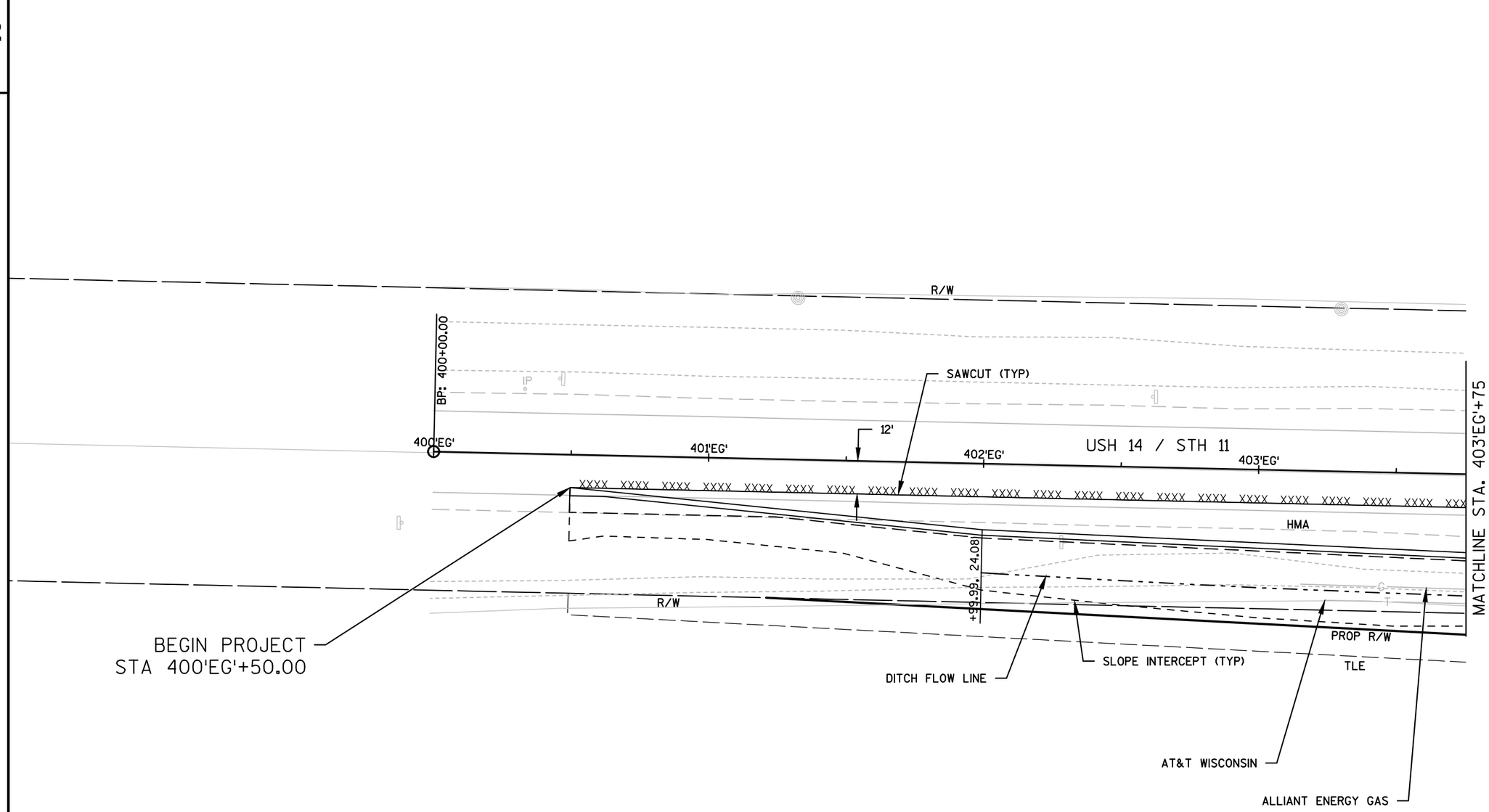
N
R/W
BP: 400+00.00
SAWCUT (TYP)
12'
400'EG'
401'EG'
402'EG'
403'EG'
USH 14 / STH 11
MATCHLINE STA. 403'EG'+75
HMA
+99.99, 24.08
R/W
PROP R/W
TLE
BEGIN PROJECT
STA 400'EG'+50.00
DITCH FLOW LINE
SLOPE INTERCEPT (TYP)
AT&T WISCONSIN
ALLIANT ENERGY GAS

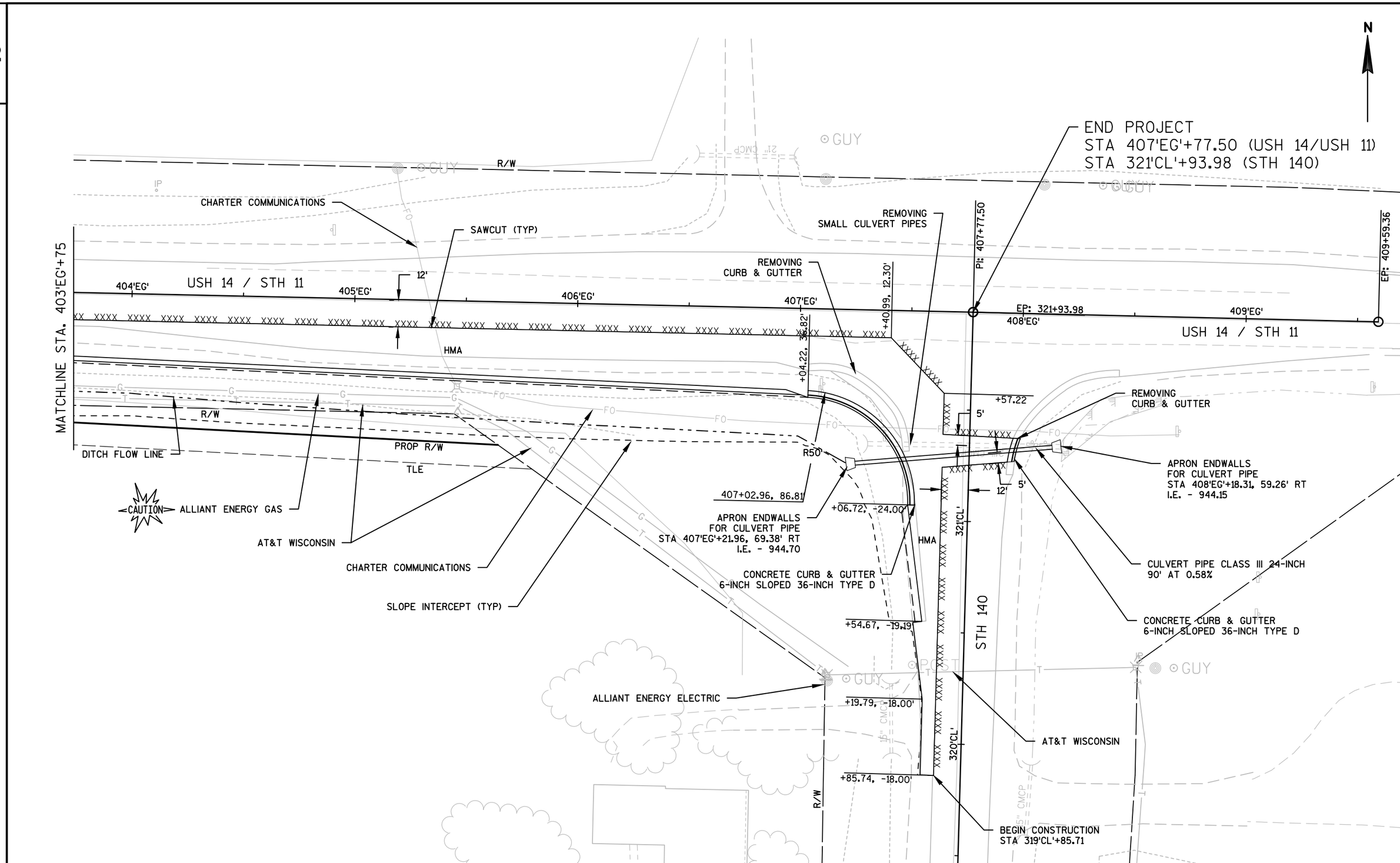

PROJECT NO:1706-00-73	HWY:STH 140	COUNTY:ROCK	PLAN DETAILS: USH 14 / STH 11 EB RIGHT TURN LANE	SHEET 22	E

2

2

CLEARING WITH IN CLEAR ZONE
STA 57+00 - STA 62+00

CLEAR ZONE

R/W

15:1

56'CL' 57'CL' 58'CL' 59'CL' STH 140 60'CL' 61'CL' 62'CL' 63'CL'

CLEAR ZONE

R/W

CLEARING WITH IN CLEAR ZONE
STA 63+00 - STA 65+00

CLEARING WITH IN CLEAR ZONE
STA 67+00 - STA 68+00

R/W

CLEAR ZONE

64'CL' 65'CL' STH 140 66'CL' 67'CL' 68'CL' 69'CL' 70'CL' 71'CL'

CLEAR ZONE

R/W

WAITE RD.

PROJECT NO:3320-00-75	HWY:STH 140	COUNTY:ROCK	PLAN DETAILS: CLEARING AND GRUBBING	SHEET 23	E

FILE NAME : L:\PROJECTS\12729\DWG\3320-00-05\SHEETSPLAN\021210_PD.DWG
LAYOUT NAME - 021210_PD - 021210_PD

PLOT DATE : 5/5/2016 2:06 PM PLOT BY : BREMER, SAM PLOT NAME : PLOT SCALE : 1:50_XREF

WISDOT/CADDS SHEET 42

2

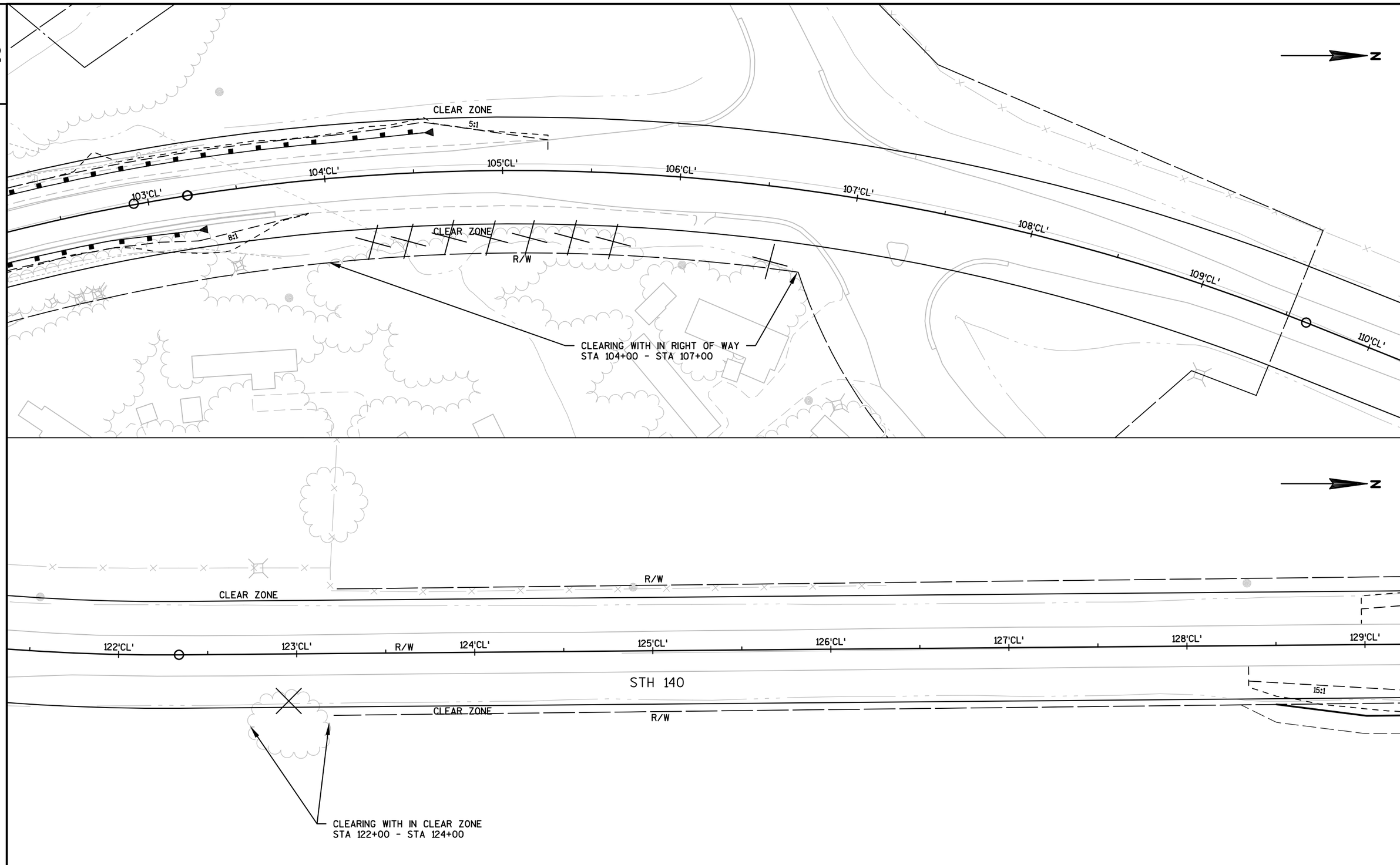

2

PROJECT NO:3320-00-75	HWY:STH 140	COUNTY:ROCK	PLAN DETAILS: CLEARING AND GRUBBING	SHEET 24	E

FILE NAME : L:\PROJECTS\12729\DWG\3320-00-05\SHEETSPLAN\021210_PD.DWG
LAYOUT NAME - 021210_PD - 021211_PD
PLOT DATE : 5/5/2016 2:06 PM PLOT BY : BREMER, SAM PLOT NAME : PLOT SCALE : 1:50_XREF

2

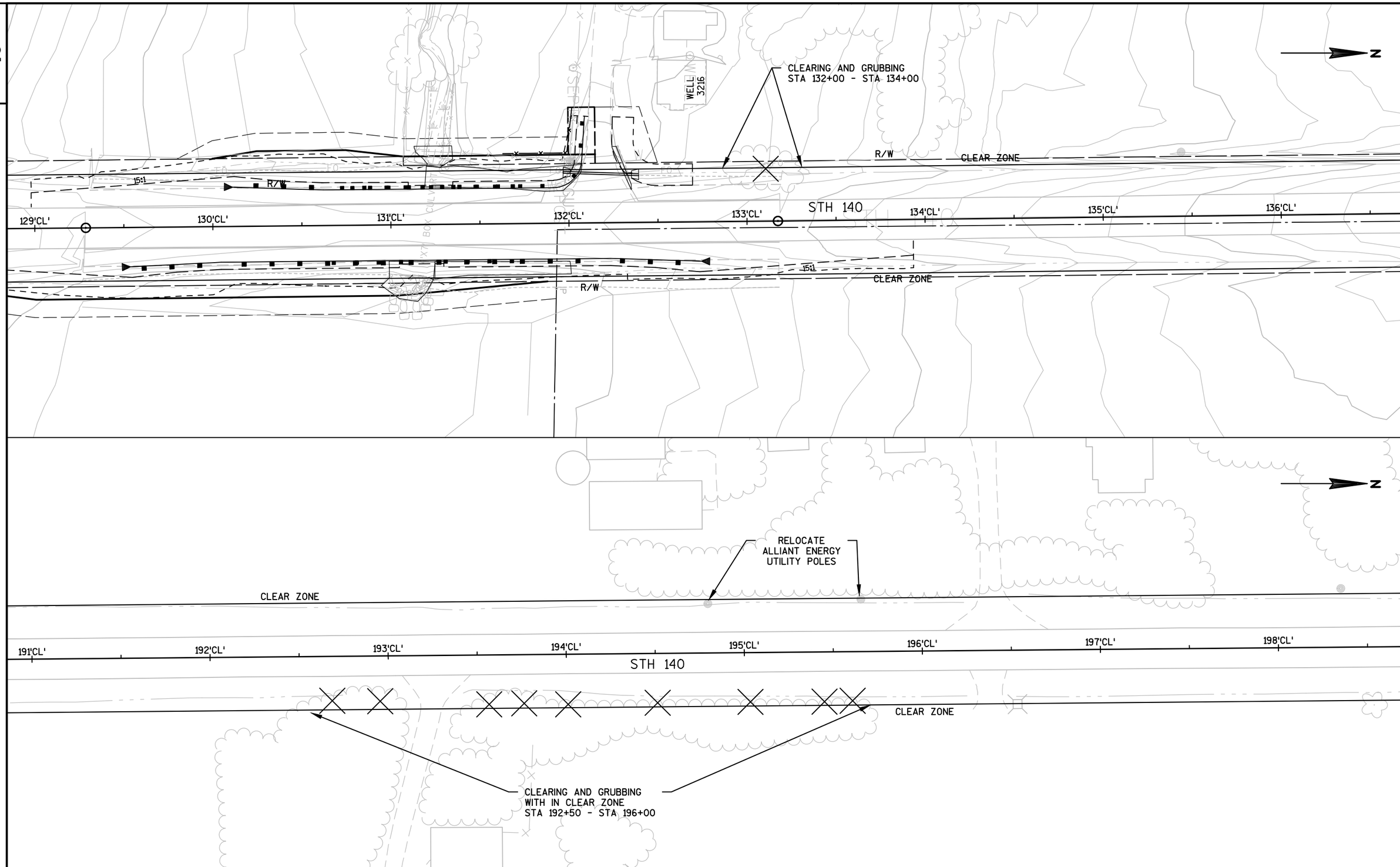

2

PROJECT NO:3320-00-75	HWY:STH 140	COUNTY:ROCK	PLAN DETAILS: CLEARING AND GRUBBING	SHEET 25	E

FILE NAME : L:\PROJECTS\12729\DWG\3320-00-05\SHEETSPLAN\021210_PD.DWG
LAYOUT NAME - 021210_PD - 021212_PD
PLOT DATE : 5/5/2016 2:06 PM PLOT BY : BREMER, SAM PLOT NAME : PLOT SCALE : 1:50_XREF

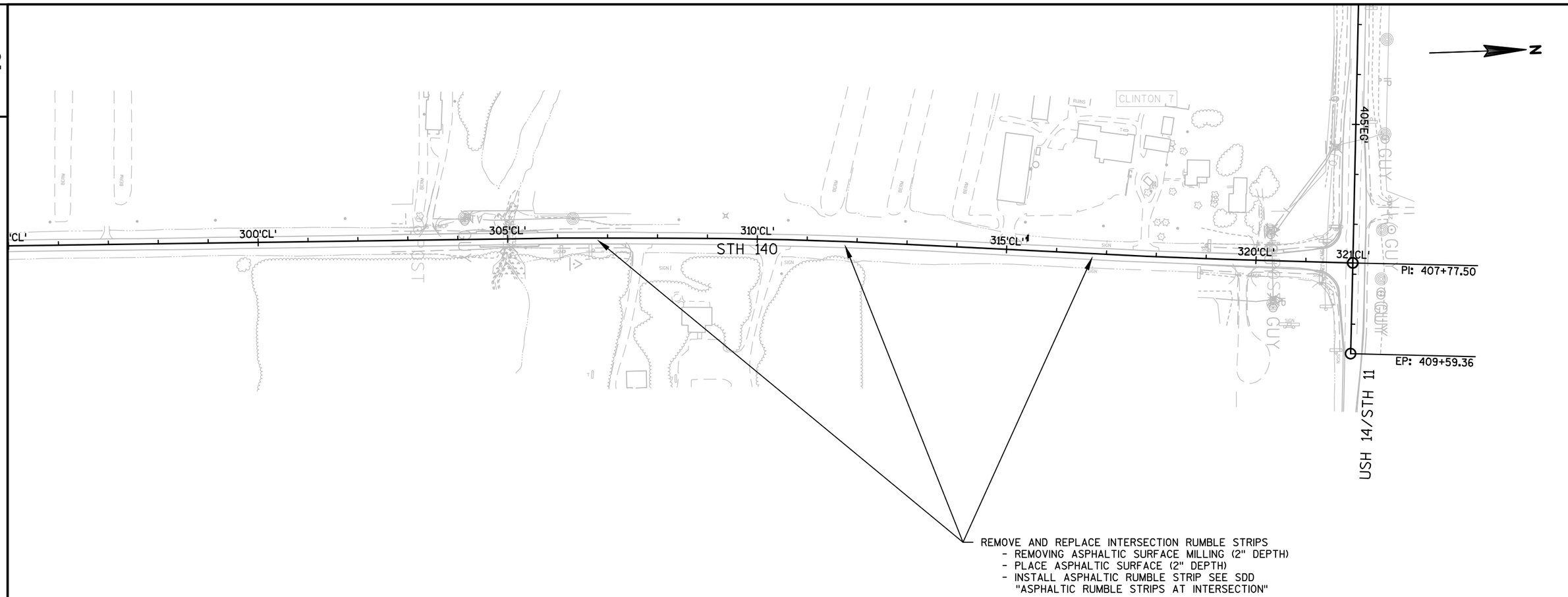

2

PROJECT NO:3320-00-05	HWY:STH 140	COUNTY:ROCK	PLAN DETAILS: STH 140 INTERSECTION RUMBLE STRIPS	SHEET 26	E

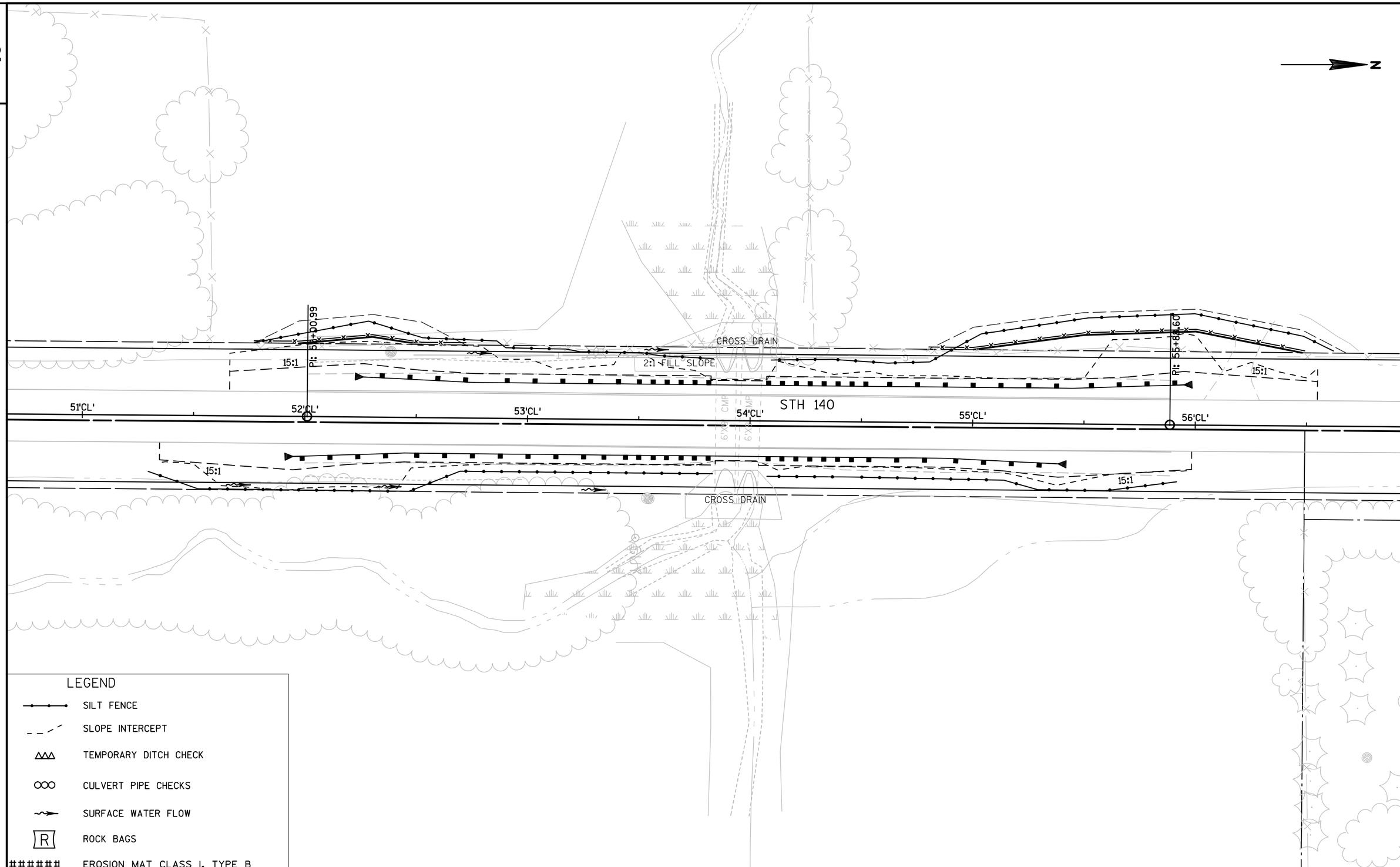

PROJECT NO:3320-00-75	HWY:STH 140	COUNTY:ROCK	EROSION CONTROL: CZ14 & CZ15 GUARDRAIL LOCATION	SHEET 27	E

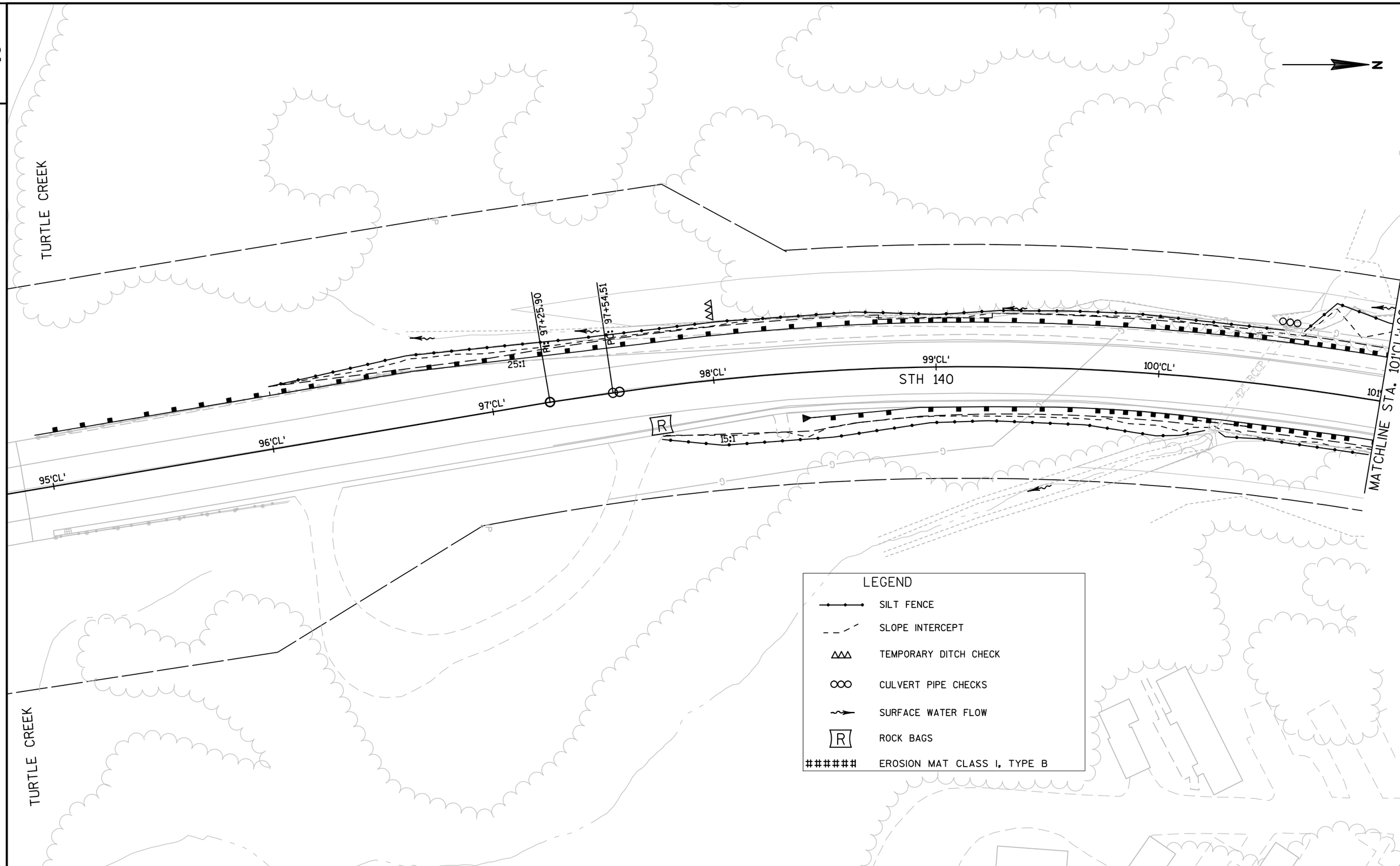

2

PROJECT NO:3320-00-75	HWY:STH 140	COUNTY:ROCK	EROSION CONTROL: CZ16 & CZ17 GUARDRAIL LOCATION	SHEET 28	E

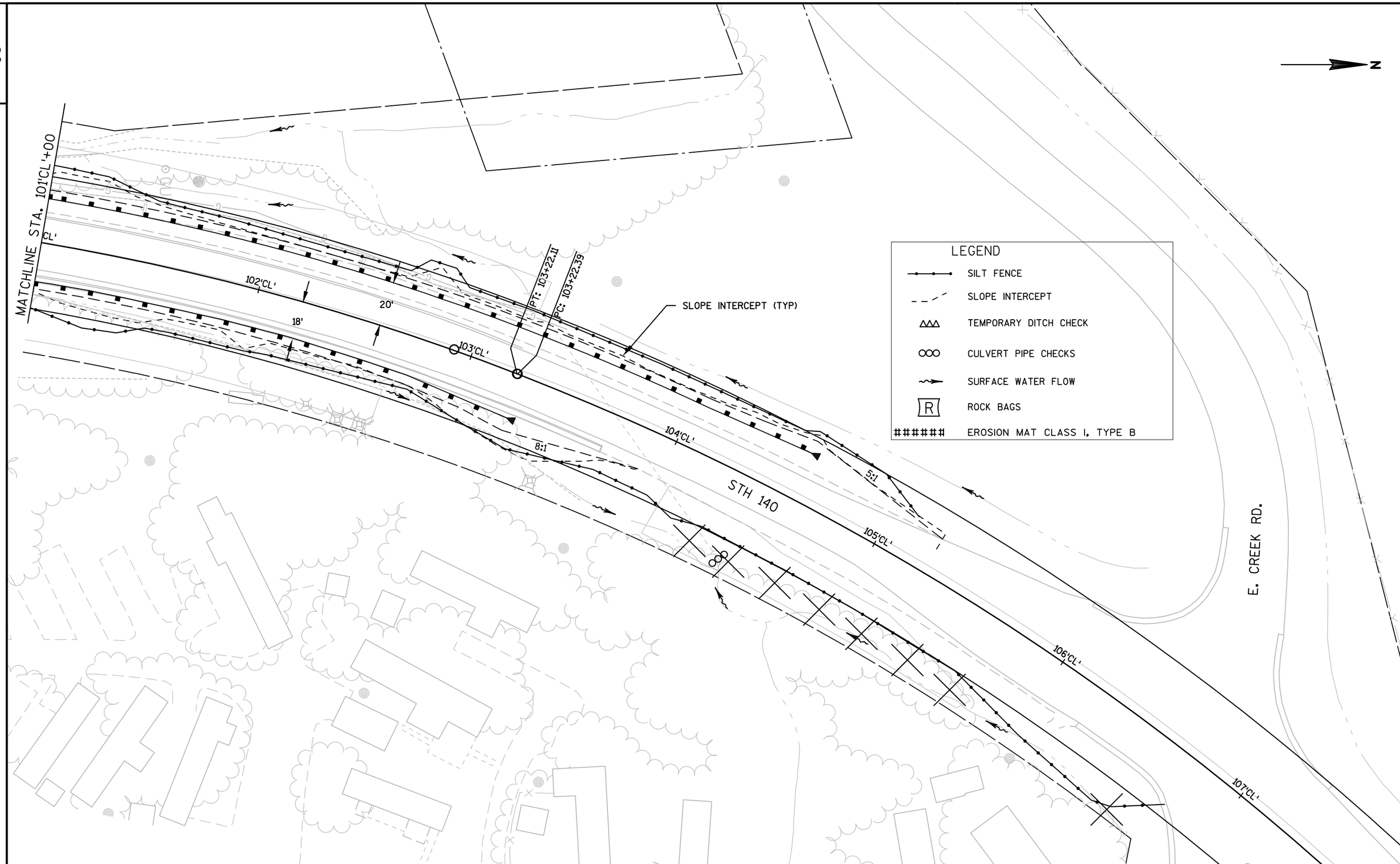

PROJECT NO:3320-00-75	HWY:STH 140	COUNTY:ROCK	EROSION CONTROL: CZ16 & CZ17 GUARDRAIL LOCATION	SHEET 29	E

FILE NAME : L:\PROJECTS\12729\DWG\3320-00-05\SHEETSPLAN\022001_EC.DWG
LAYOUT NAME - 021205_PD - 021206_PD
PLOT DATE : 5/5/2016 2:08 PM PLOT BY : BREMER, SAM PLOT NAME : PLOT SCALE : 1:40_XREF

2

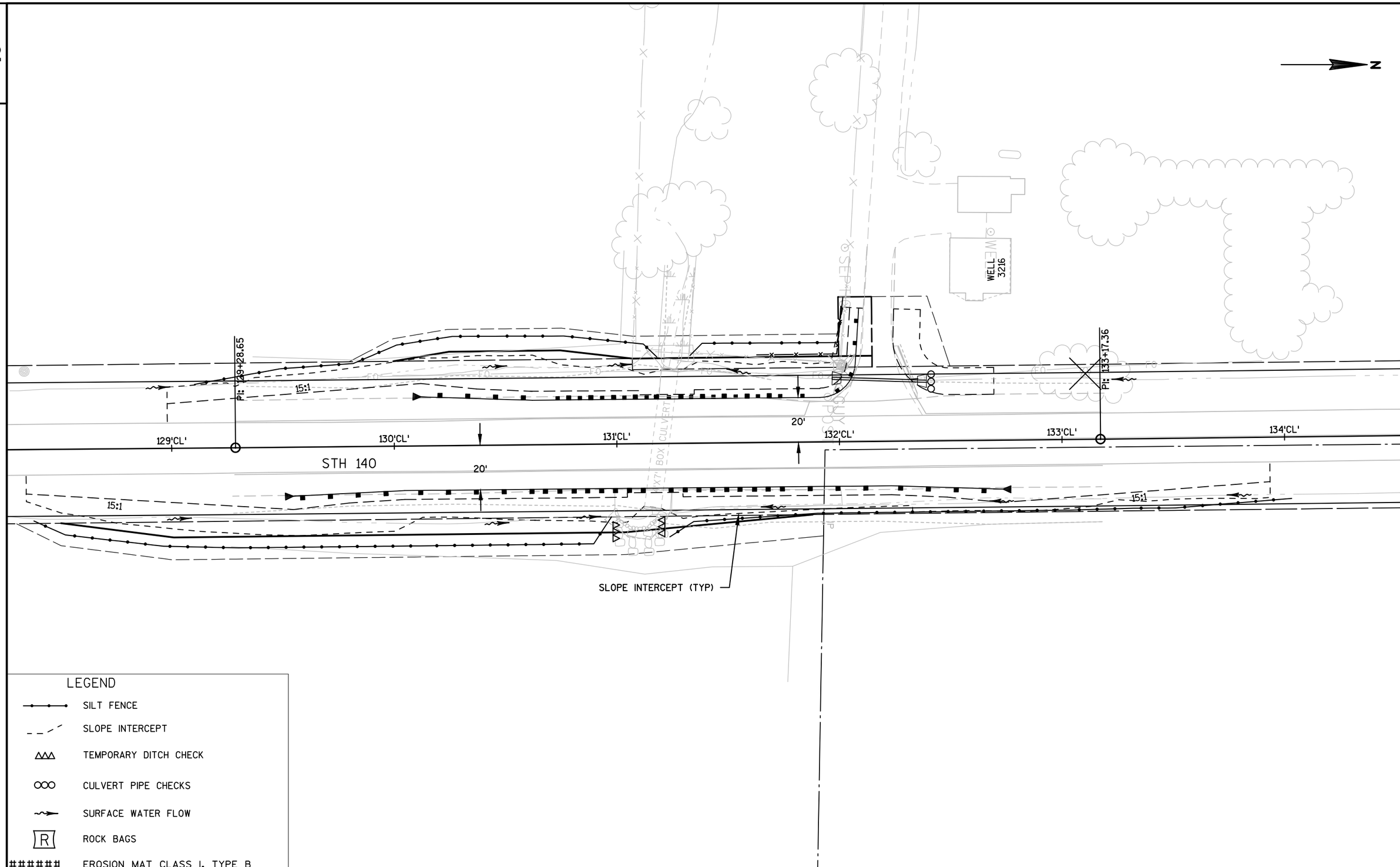

2

PROJECT NO:3320-00-75	HWY:STH 140	COUNTY:ROCK	EROSION CONTROL: CZ19 & CZ20 GUARDRAIL LOCATION	SHEET 30	E

FILE NAME : L:\PROJECTS\12729\DWG\3320-00-05\SHEETSPLAN\022001_EC.DWG
LAYOUT NAME - 021207_PD - 021207_PD
PLOT DATE : 5/5/2016 2:09 PM PLOT BY : BREMER, SAM PLOT NAME : PLOT SCALE : 1:40_XREF

WISDOT/CADDS SHEET 42

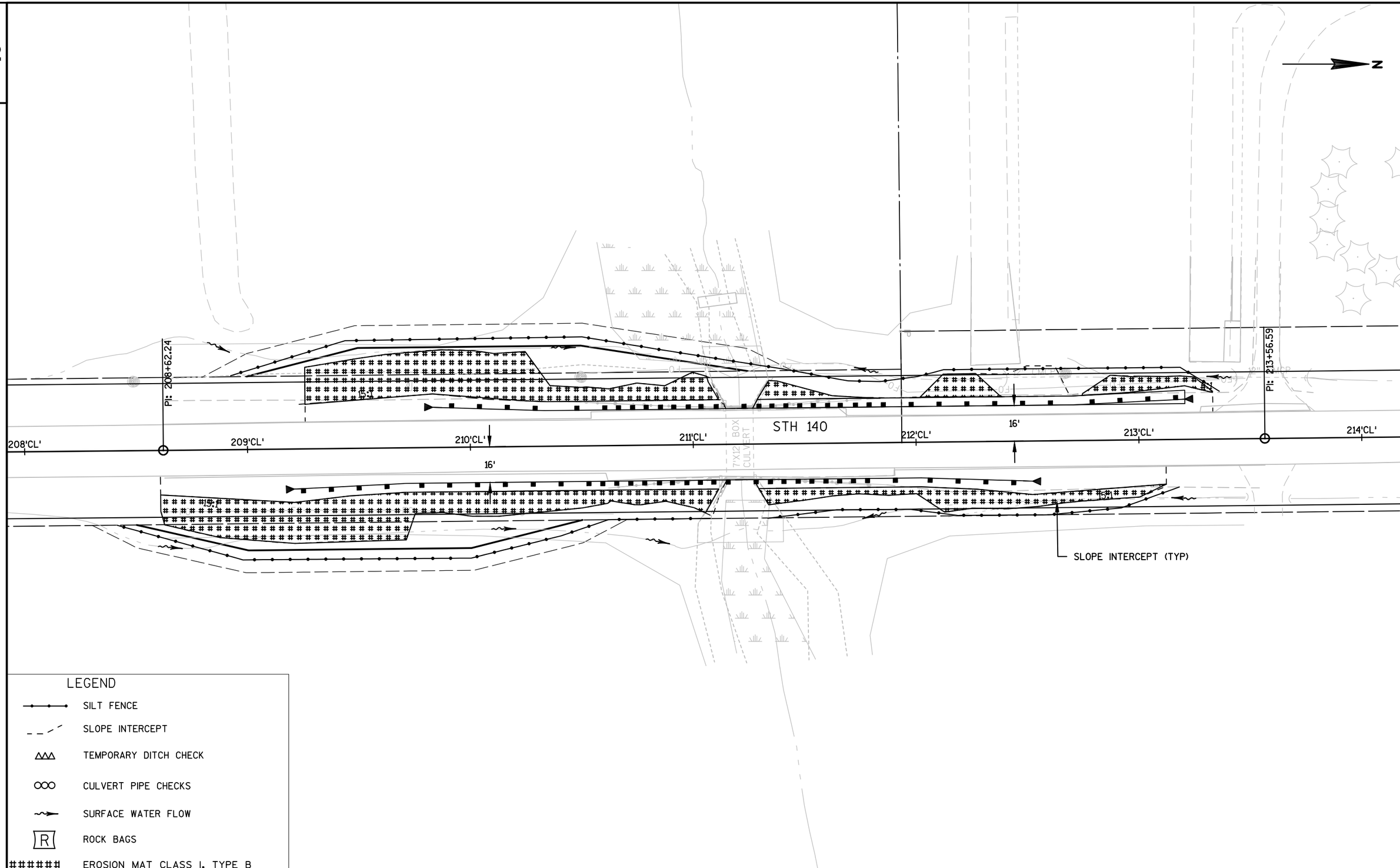

PROJECT NO:3320-00-75	HWY:STH 140	COUNTY:ROCK	EROSION CONTROL: CZ23 & CZ24 GUARDRAIL LOCATION	SHEET 31	E

FILE NAME : L:\PROJECTS\12729\DWG\3320-00-05\SHEETSPLAN\022001_EC.DWG
LAYOUT NAME - 021208_PD - 021208_PD
PLOT DATE : 5/5/2016 2:09 PM PLOT BY : BREMER, SAM PLOT NAME : PLOT SCALE : 1:40_XREF

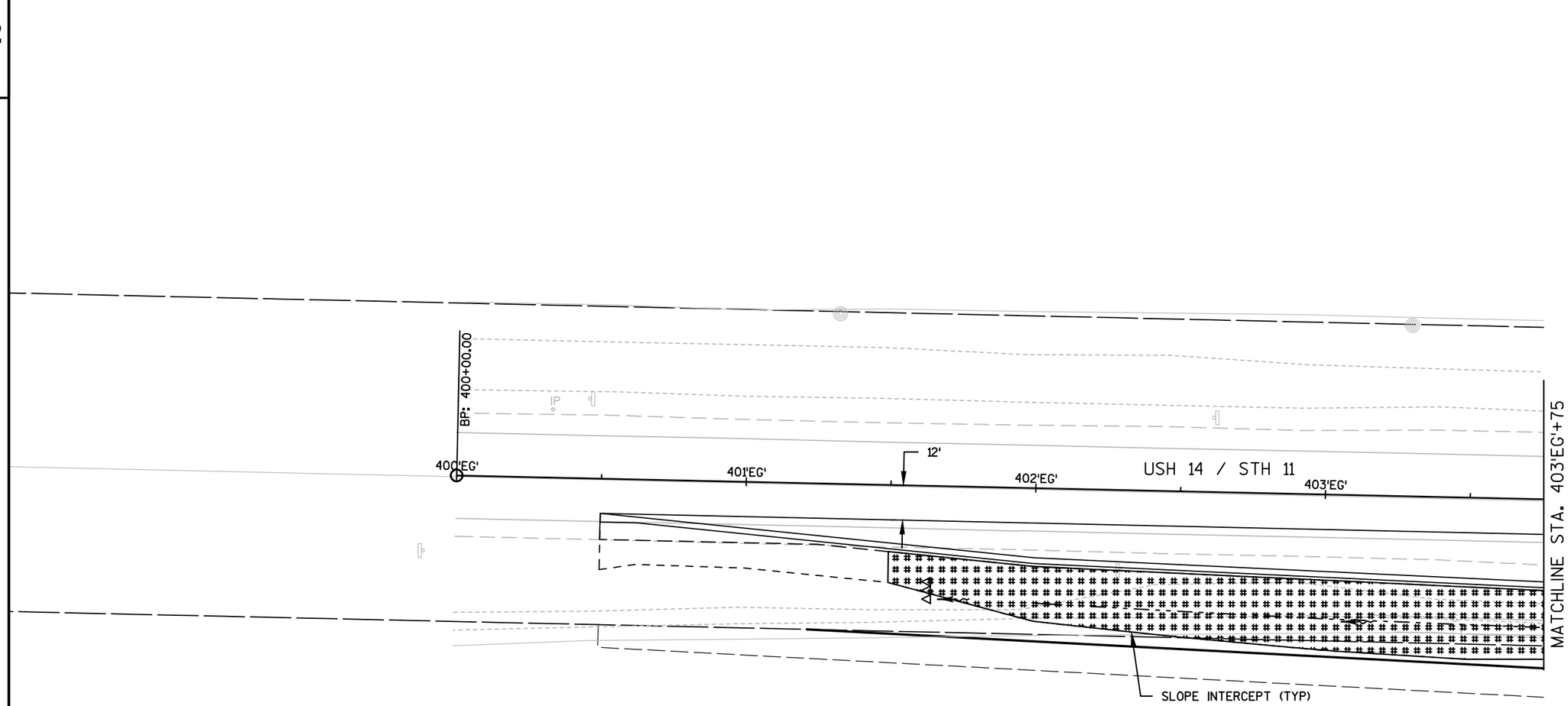

LEGEND

- SILT FENCE
- SLOPE INTERCEPT
- TEMPORARY DITCH CHECK
- CULVERT PIPE CHECKS
- SURFACE WATER FLOW
- R ROCK BAGS
- ###### EROSION MAT CLASS I, TYPE B

PROJECT NO:1706-00-73	HWY:STH 140	COUNTY:ROCK	EROSION CONTROL: USH 14 / STH 11 EB RIGHT TURN LANE	SHEET 32	E

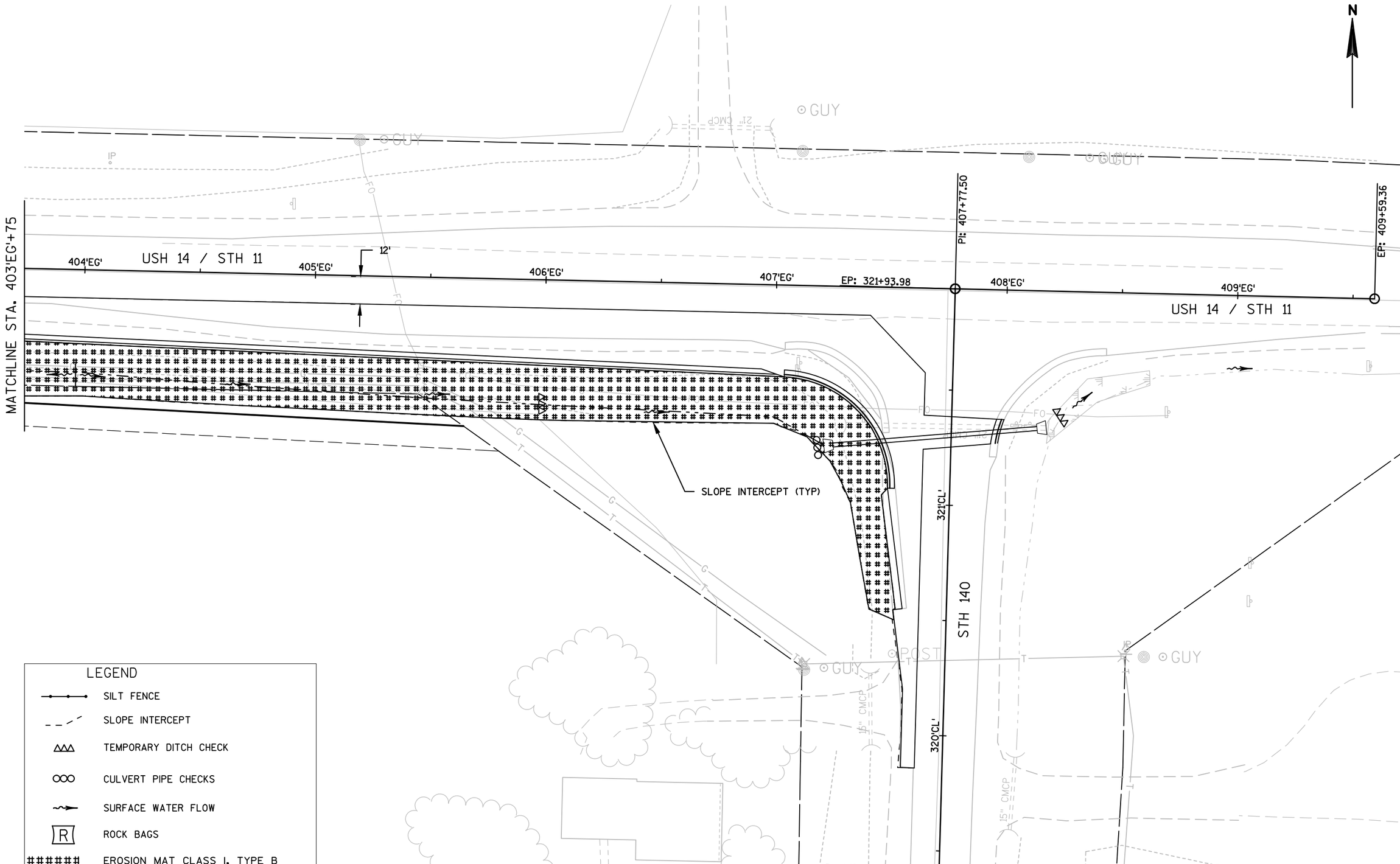

PROJECT NO:1706-00-73	HWY:STH 140	COUNTY:ROCK	EROSION CONTROL: USH 14 / STH 11 EB RIGHT TURN LANE	SHEET 33	E

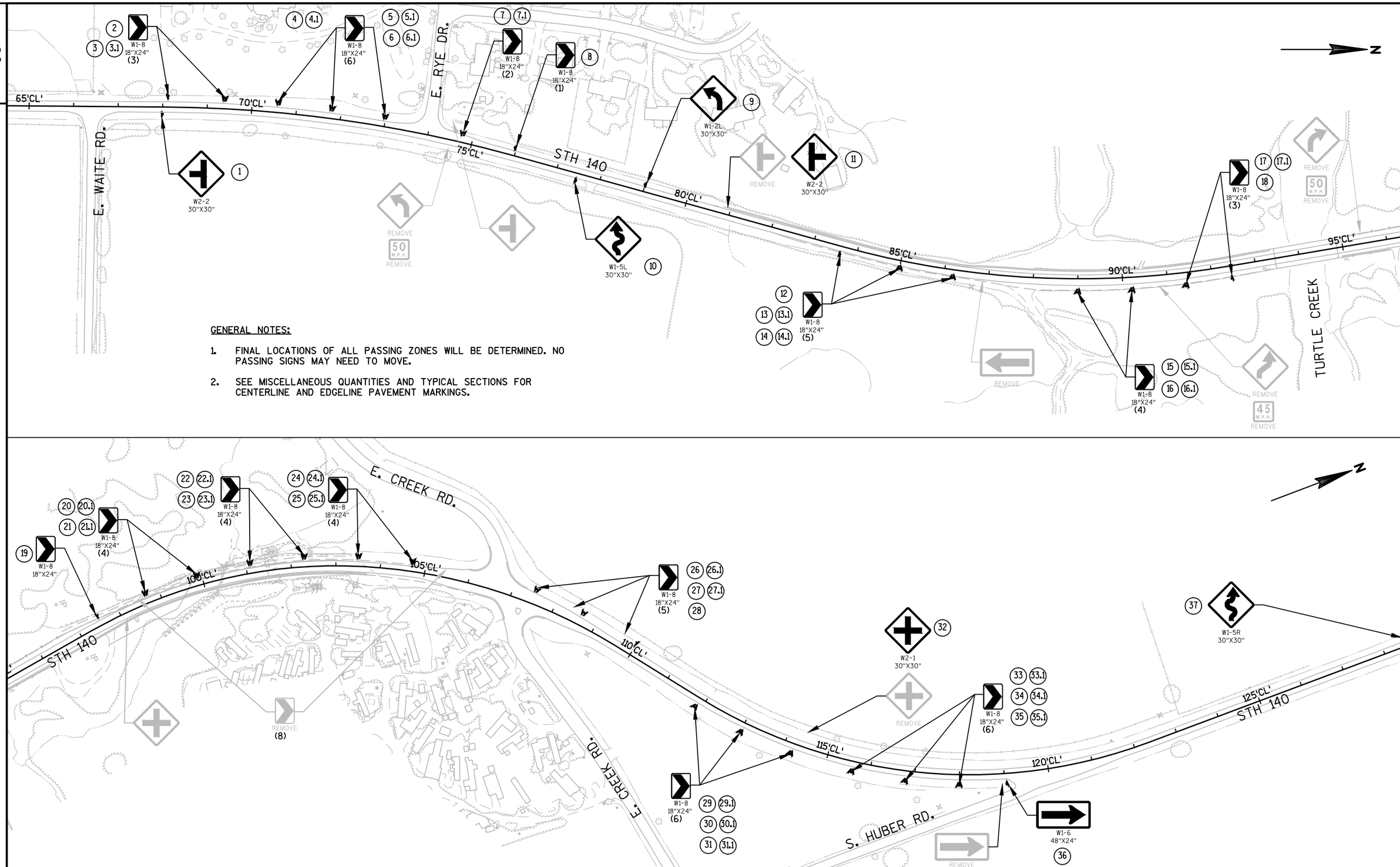

GENERAL NOTES:

1. FINAL LOCATIONS OF ALL PASSING ZONES WILL BE DETERMINED. NO PASSING SIGNS MAY NEED TO MOVE.

2. SEE MISCELLANEOUS QUANTITIES AND TYPICAL SECTIONS FOR CENTERLINE AND EDGELINE PAVEMENT MARKINGS.

PROJECT NO:3320-00-75	HWY:STH 140	COUNTY:ROCK	PERMANENT SIGNING AND MARKING	SHEET 34	E

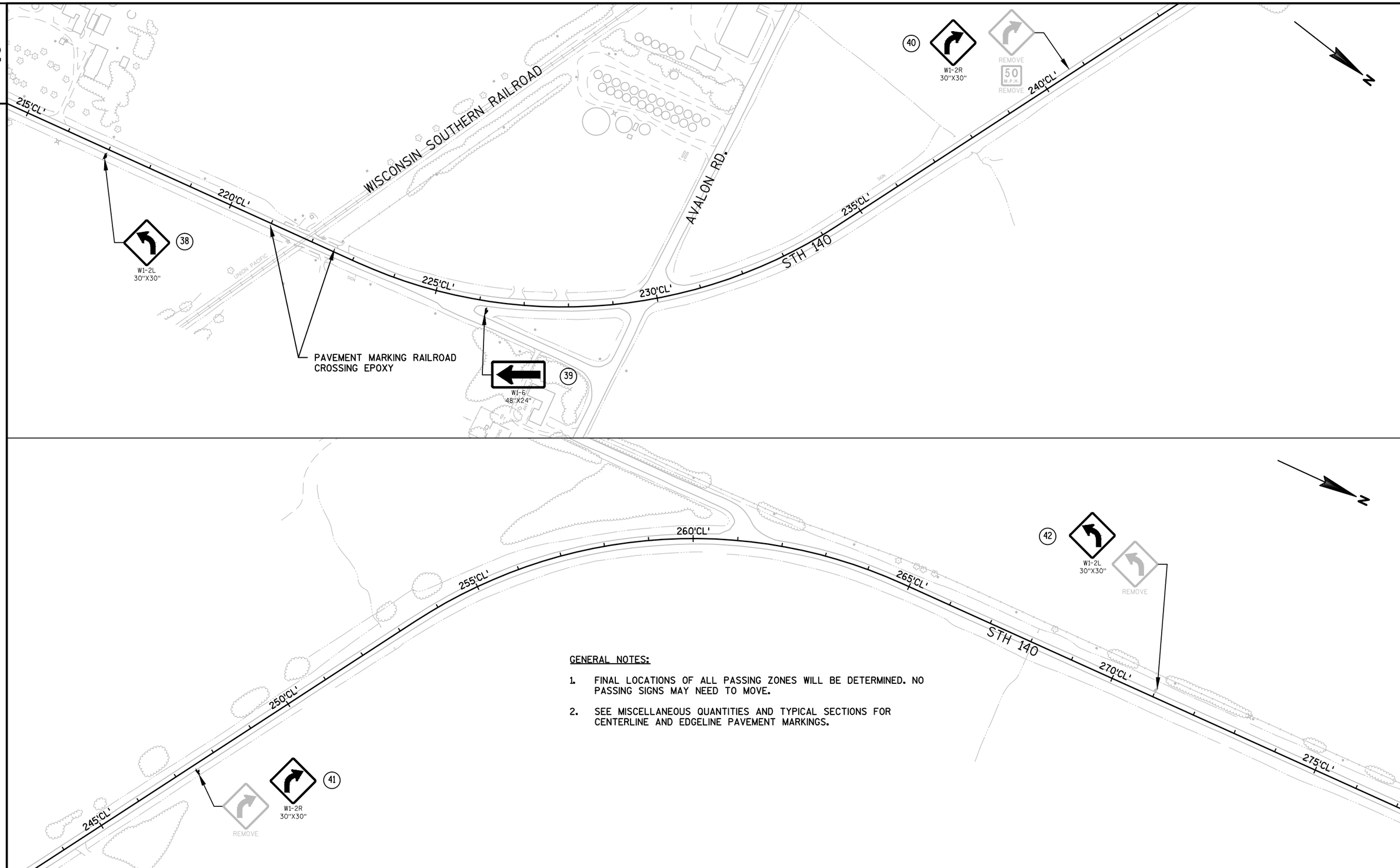

GENERAL NOTES:

1. FINAL LOCATIONS OF ALL PASSING ZONES WILL BE DETERMINED. NO PASSING SIGNS MAY NEED TO MOVE.

2. SEE MISCELLANEOUS QUANTITIES AND TYPICAL SECTIONS FOR CENTERLINE AND EDGELINE PAVEMENT MARKINGS.

PROJECT NO:3320-00-75	HWY:STH 140	COUNTY:ROCK	PERMANENT SIGNING AND MARKING	SHEET 35	E

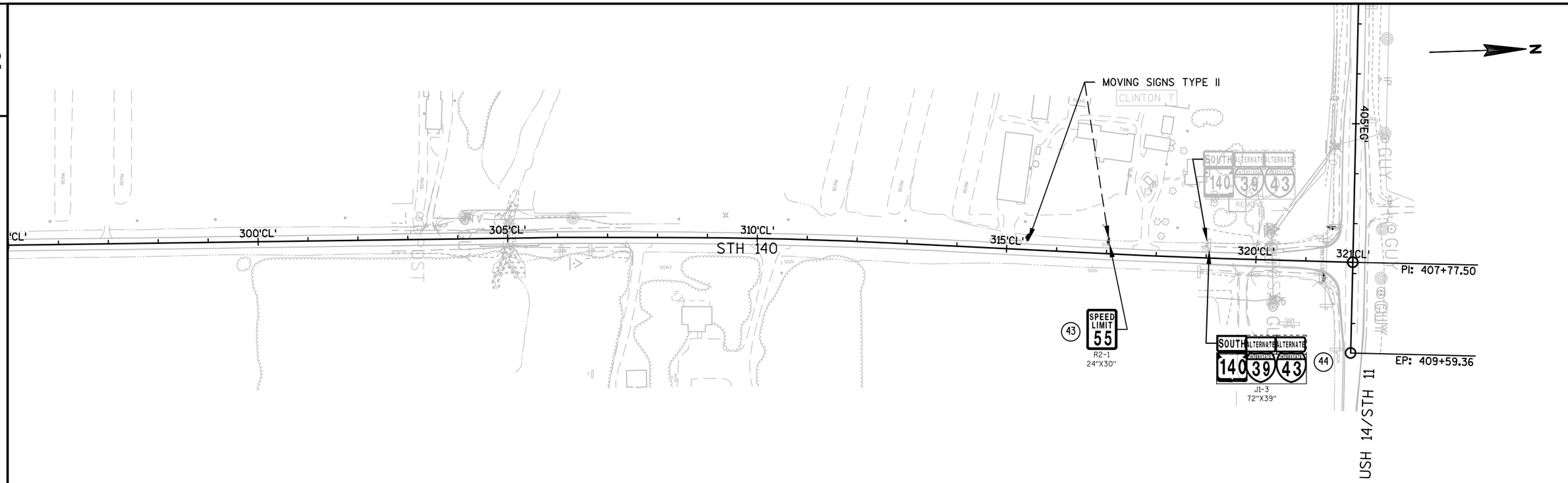

GENERAL NOTES:

1. SEE MISCELLANEOUS QUANTITIES AND TYPICAL SECTIONS FOR CENTERLINE AND EDGELINE PAVEMENT MARKINGS.

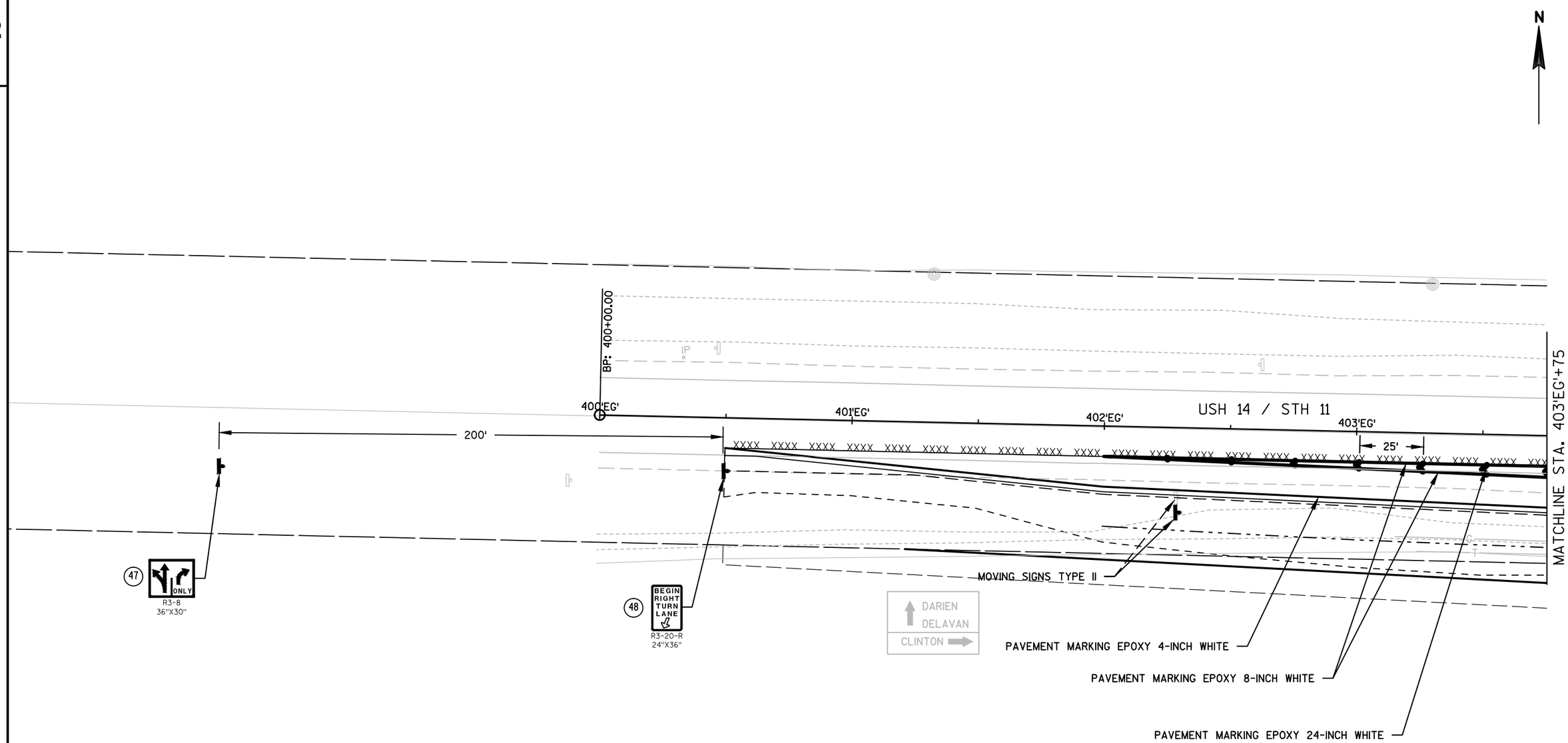

GENERAL NOTES:

1. FOLLOW SDD 15C28: SIGNING AND MARKING FOR COMBINED RIGHT TURN AND BYPASS LANE FOR PAVEMENT MARKING GUIDELINES.

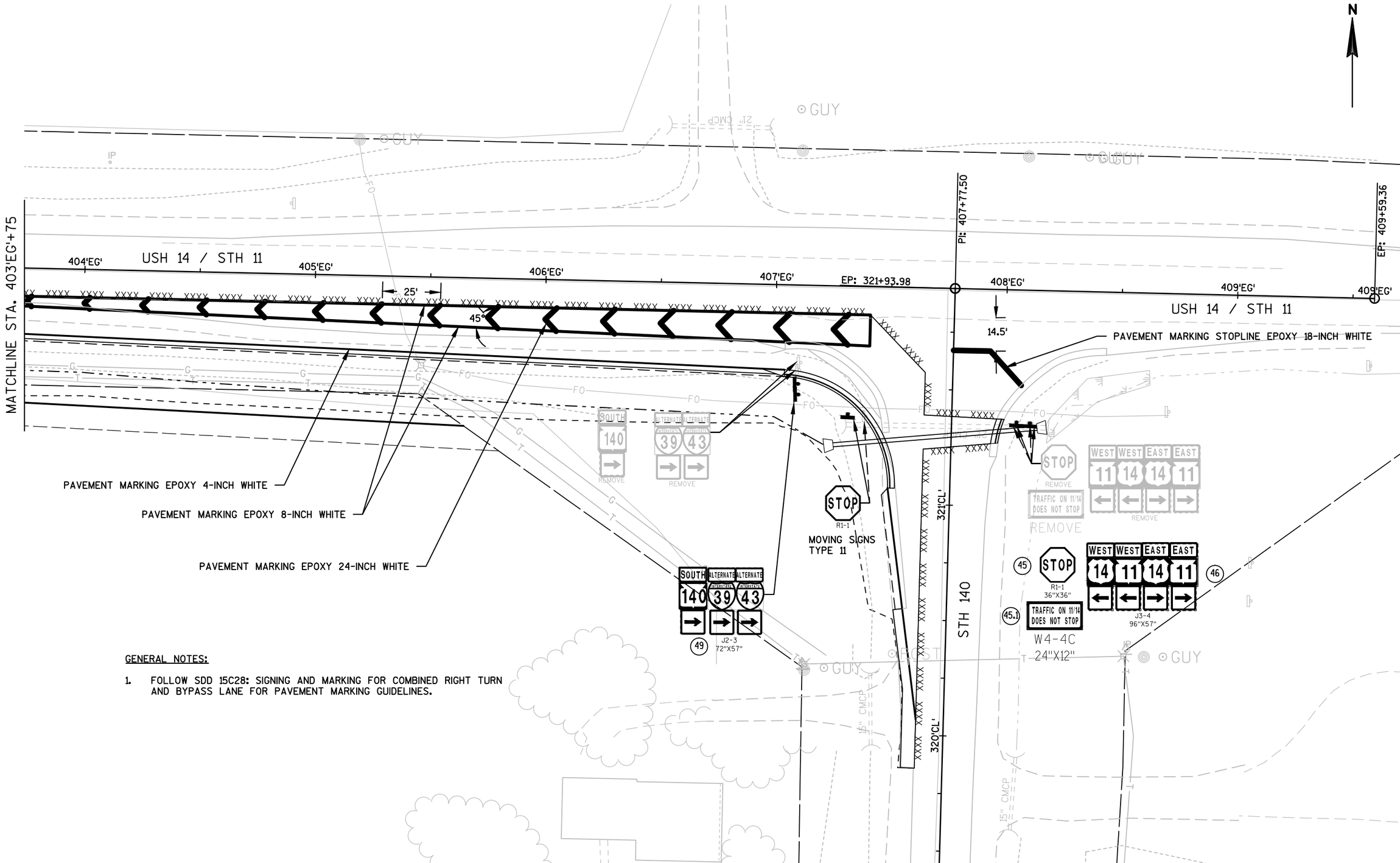

GENERAL NOTES:

1. FOLLOW SDD 15C28: SIGNING AND MARKING FOR COMBINED RIGHT TURN AND BYPASS LANE FOR PAVEMENT MARKING GUIDELINES.

PROJECT NO:1706-00-73	HWY: STH 140	COUNTY: ROCK	PERMANENT SIGNING AND MARKING	SHEET 38	E

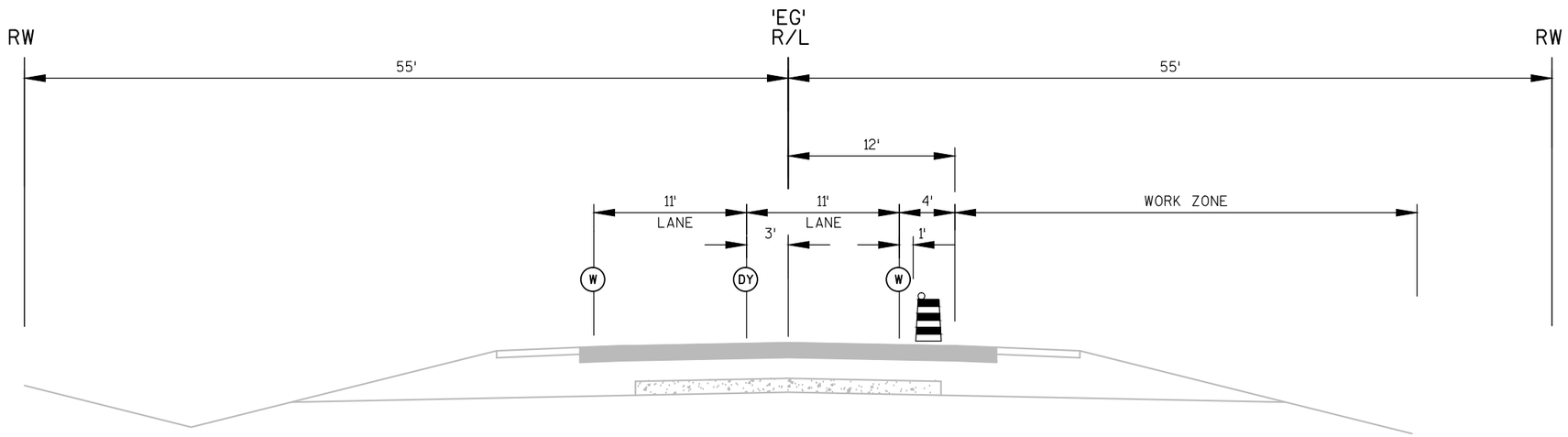

STAGING TYPICAL SECTION USH 14/STH 11

W REMOVABLE TAPE 4-INCH WHITE

DY REMOVABLE TAPE 4-INCH DOUBLE YELLOW

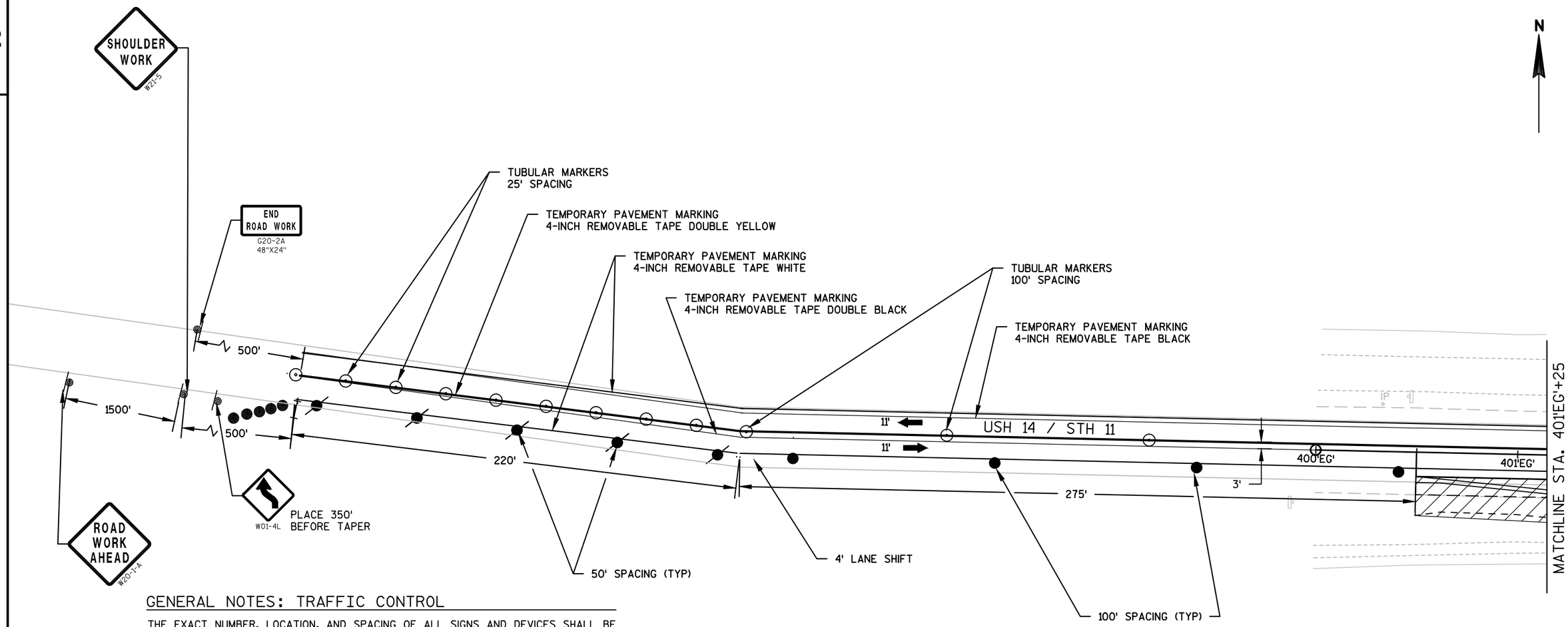

GENERAL NOTES: TRAFFIC CONTROL

THE EXACT NUMBER, LOCATION, AND SPACING OF ALL SIGNS AND DEVICES SHALL BE ADJUSTED TO FIT FIELD CONDITIONS AS APPROVED BY THE ENGINEER.

THE SPACING BETWEEN SIGNS SHOULD BE ADJUSTED TO NOT CONFLICT WITH AND TO PROVIDE A MINIMUM OF 200 FEET (500 FEET DESIRABLE) DISTANCE TO EXISTING SIGNS.

ANY SIGNS TEMPORARY OR EXISTING, WHICH CONFLICT WITH TRAFFIC CONTROL "IN USE" SHALL BE REMOVED OR COVERED AS NEEDED AND AS APPROVED BY THE ENGINEER.

IF LANE CLOSURES ARE IN PLACE LESS THAN 7 CONTINUOUS DAYS AND NIGHTS THE ADVANCED WARNING SIGNS MAY BE MOUNTED ON PORTABLE SUPPORTS.

THE LANE CLOSURE SERIES SHALL BE INSTALLED AS A COMPLETE UNIT WHICH INCLUDES ALL ADVANCE WARNING SIGNING, DRUMS, AND ARROW BOARDS.

PAVEMENT MARKING NOT APPROPRIATE TO THE TRAVEL PATH SHALL BE REMOVED.

ALL TRAFFIC CONTROL SIGNING SHALL CONFORM TO: PART VI ON THE MANUAL ON UNIFORM TRAFFIC CONTROL DEVICES, THE WISCONSIN SUPPLEMENT TO THE MUTCD, AND OTHER CONTRACT DOCUMENTS.

THE TURNING OF TRAFFIC CONTROL DEVICES WHEN NOT IN USE TO OBSCURE THE MESSAGE WILL NOT BE ALLOWED.

ALL SIGNS ARE 48"X48" UNLESS INDICATED OTHERWISE.

SIGNS WITH 'WO' IN THE PREFIX OF THE SIGN LABEL ARE ORANGE.

LEGEND

- TYPE III BARRICADE
- TYPE III BARRICADE WTH ATTACHED SIGN
- TRAFFIC CONTROL DRUM
- TRAFFIC CONTROL DRUM WITH TYPE C STEADY BURN LIGHT
- SIGN ON PERMANENT SUPPORT
- DIRECTION OF TRAFFIC
- WORK AREA
- DELINEATOR FLEXIBLE/TUBULAR MARKER

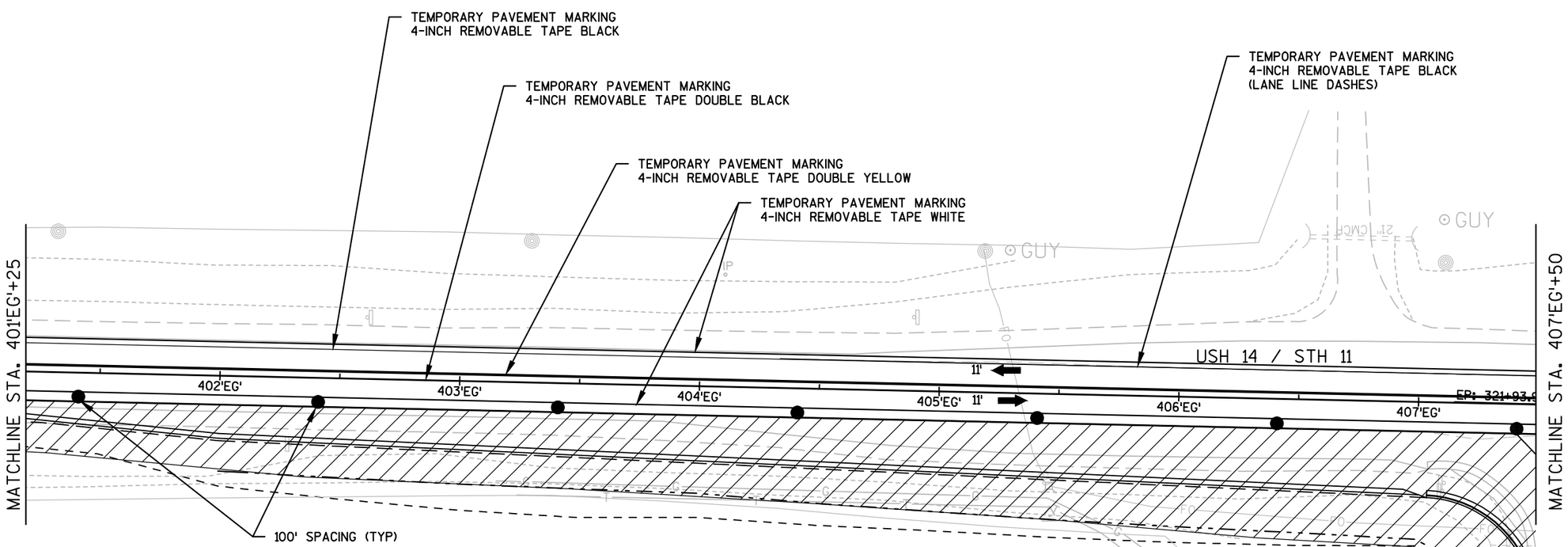

GENERAL NOTES: TRAFFIC CONTROL

THE EXACT NUMBER, LOCATION, AND SPACING OF ALL SIGNS AND DEVICES SHALL BE ADJUSTED TO FIT FIELD CONDITIONS AS APPROVED BY THE ENGINEER.

THE SPACING BETWEEN SIGNS SHOULD BE ADJUSTED TO NOT CONFLICT WITH AND TO PROVIDE A MINIMUM OF 200 FEET (500 FEET DESIRABLE) DISTANCE TO EXISTING SIGNS.

ANY SIGNS TEMPORARY OR EXISTING, WHICH CONFLICT WITH TRAFFIC CONTROL "IN USE" SHALL BE REMOVED OR COVERED AS NEEDED AND AS APPROVED BY THE ENGINEER.

IF LANE CLOSURES ARE IN PLACE LESS THAN 7 CONTINUOUS DAYS AND NIGHTS THE ADVANCED WARNING SIGNS MAY BE MOUNTED ON PORTABLE SUPPORTS.

THE LANE CLOSURE SERIES SHALL BE INSTALLED AS A COMPLETE UNIT WHICH INCLUDES ALL ADVANCE WARNING SIGNING, DRUMS, AND ARROW BOARDS.

PAVEMENT MARKING NOT APPROPRIATE TO THE TRAVEL PATH SHALL BE REMOVED.

ALL TRAFFIC CONTROL SIGNING SHALL CONFORM TO: PART VI ON THE MANUAL ON UNIFORM TRAFFIC CONTROL DEVICES, THE WISCONSIN SUPPLEMENT TO THE MUTCD, AND OTHER CONTRACT DOCUMENTS.

THE TURNING OF TRAFFIC CONTROL DEVICES WHEN NOT IN USE TO OBSCURE THE MESSAGE WILL NOT BE ALLOWED.

ALL SIGNS ARE 48"X48" UNLESS INDICATED OTHERWISE.

SIGNS WITH 'WO' IN THE PREFIX OF THE SIGN LABEL ARE ORANGE.

LEGEND

- TYPE III BARRICADE
- TYPE III BARRICADE WTH ATTACHED SIGN
- TRAFFIC CONTROL DRUM
- TRAFFIC CONTROL DRUM WITH TYPE C STEADY BURN LIGHT
- SIGN ON PERMANENT SUPPORT
- DIRECTION OF TRAFFIC
- WORK AREA
- DELINEATOR FLEXIBLE/TUBULAR MARKER

PI: 319+38.47

PROJECT NO:1706-00-73	HWY:STH 140	COUNTY:ROCK	TRAFFIC CONTROL	SHEET 41	E

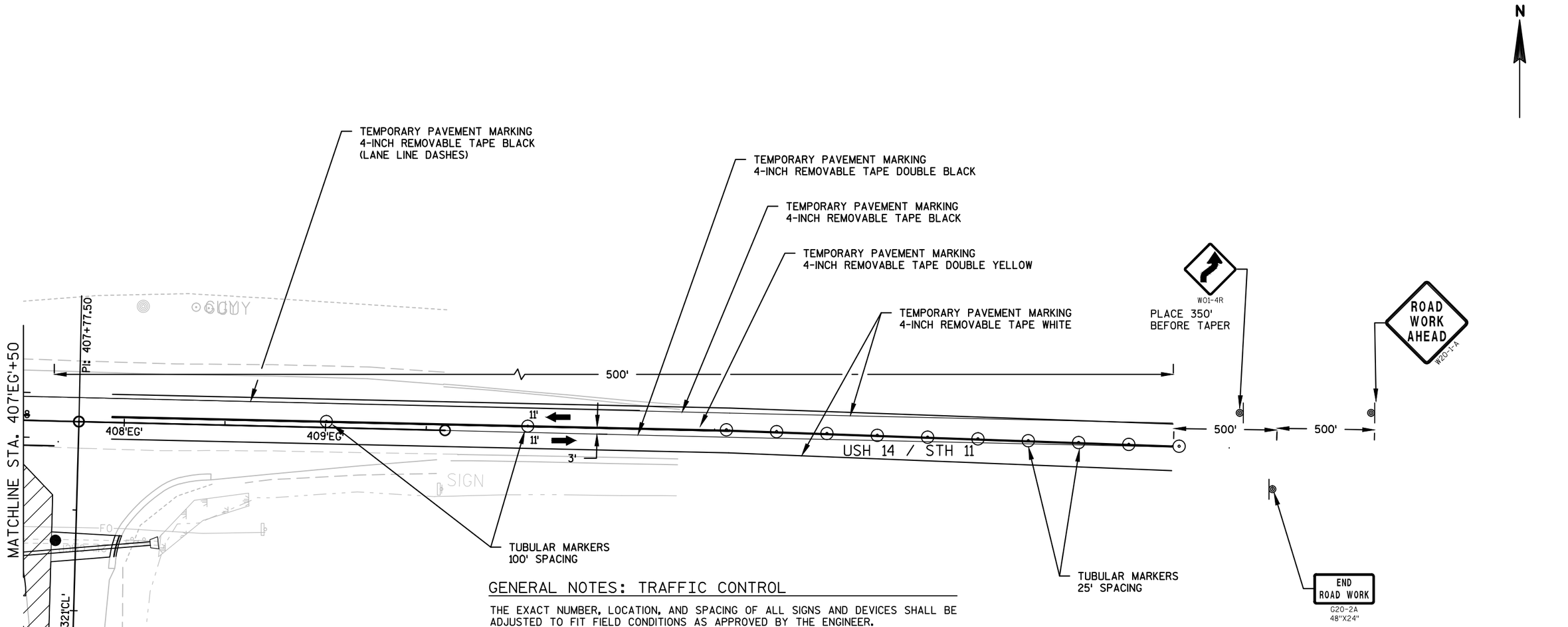

GENERAL NOTES: TRAFFIC CONTROL

THE EXACT NUMBER, LOCATION, AND SPACING OF ALL SIGNS AND DEVICES SHALL BE ADJUSTED TO FIT FIELD CONDITIONS AS APPROVED BY THE ENGINEER.

THE SPACING BETWEEN SIGNS SHOULD BE ADJUSTED TO NOT CONFLICT WITH AND TO PROVIDE A MINIMUM OF 200 FEET (500 FEET DESIRABLE) DISTANCE TO EXISTING SIGNS.

ANY SIGNS TEMPORARY OR EXISTING, WHICH CONFLICT WITH TRAFFIC CONTROL "IN USE" SHALL BE REMOVED OR COVERED AS NEEDED AND AS APPROVED BY THE ENGINEER.

IF LANE CLOSURES ARE IN PLACE LESS THAN 7 CONTINUOUS DAYS AND NIGHTS THE ADVANCED WARNING SIGNS MAY BE MOUNTED ON PORTABLE SUPPORTS.

THE LANE CLOSURE SERIES SHALL BE INSTALLED AS A COMPLETE UNIT WHICH INCLUDES ALL ADVANCE WARNING SIGNING, DRUMS, AND ARROW BOARDS.

PAVEMENT MARKING NOT APPROPRIATE TO THE TRAVEL PATH SHALL BE REMOVED.

ALL TRAFFIC CONTROL SIGNING SHALL CONFORM TO: PART VI ON THE MANUAL ON UNIFORM TRAFFIC CONTROL DEVICES, THE WISCONSIN SUPPLEMENT TO THE MUTCD, AND OTHER CONTRACT DOCUMENTS.

THE TURNING OF TRAFFIC CONTROL DEVICES WHEN NOT IN USE TO OBSCURE THE MESSAGE WILL NOT BE ALLOWED.

ALL SIGNS ARE 48"X48" UNLESS INDICATED OTHERWISE.

SIGNS WITH 'WO' IN THE PREFIX OF THE SIGN LABEL ARE ORANGE.

LEGEND

- TYPE III BARRICADE
- TYPE III BARRICADE WTH ATTACHED SIGN
- TRAFFIC CONTROL DRUM
- TRAFFIC CONTROL DRUM WITH TYPE C STEADY BURN LIGHT
- SIGN ON PERMANENT SUPPORT
- DIRECTION OF TRAFFIC
- WORK AREA
- DELINEATOR FLEXIBLE/TUBULAR MARKER

PROJECT NO:1706-00-73	HWY:STH 140	COUNTY:ROCK	TRAFFIC CONTROL	SHEET 42	E

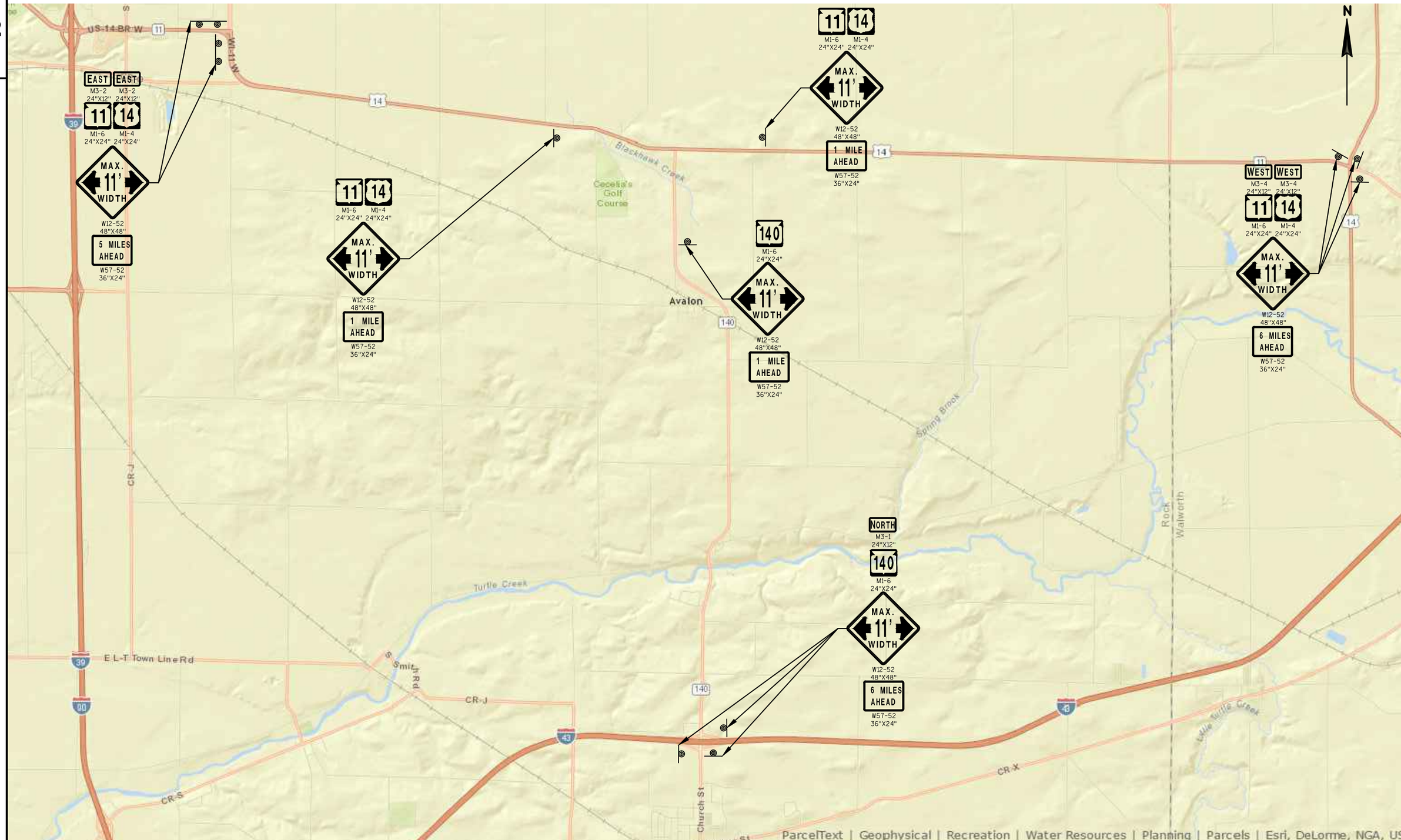

PROJECT NO:1706-00-73/3320-00-75	HWY:STH 140	COUNTY:ROCK	TRAFFIC CONTROL	SHEET 43	E

FILE NAME : L:\PROJECTS\12729\DWG\3320-00-05\SHEETSPLAN\025005_TC.DWG PLOT DATE : 5/5/2016 2:13 PM PLOT BY : BREMER, SAM PLOT NAME : PLOT SCALE : 0.000093

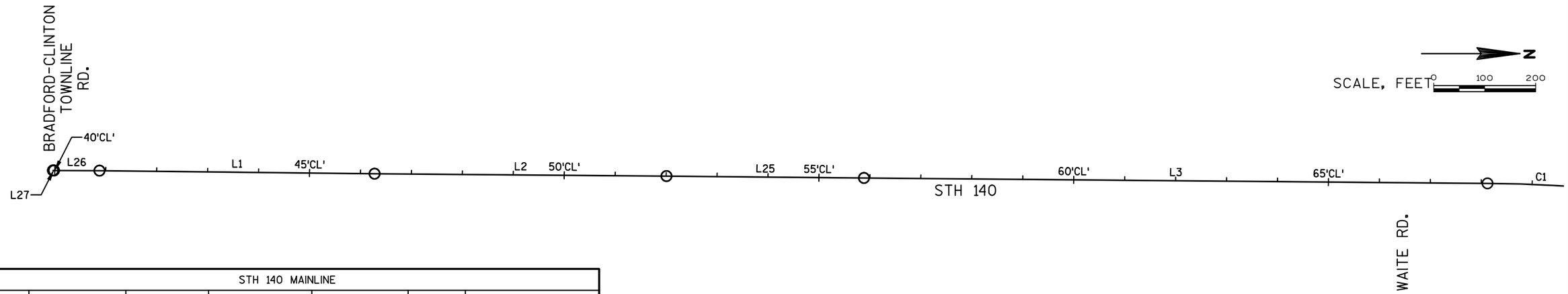

STH 140 MAINLINE						
NUMBER	STATION START	STATION END	NORTHING START	EASTING START	LENGTH	LINE/CHORD DIRECTION
L27	39+96.45	39+98.46	232343.33	535880.79	2.01'	N00° 35' 08"E
L26	39+98.46	40+87.80	232345.34	535880.81	89.34'	N00° 21' 14"E
L1	40+87.80	46+27.91	232434.68	535881.36	540.11'	N00° 36' 19"E
L2	46+27.91	52+00.99	232974.75	535887.06	573.08'	N00° 29' 00"E
L25	52+00.99	55+88.60	233547.82	535891.90	387.61'	N00° 33' 20"E
L3	55+88.60	68+12.37	233935.41	535895.66	1223.77'	N00° 29' 20"E

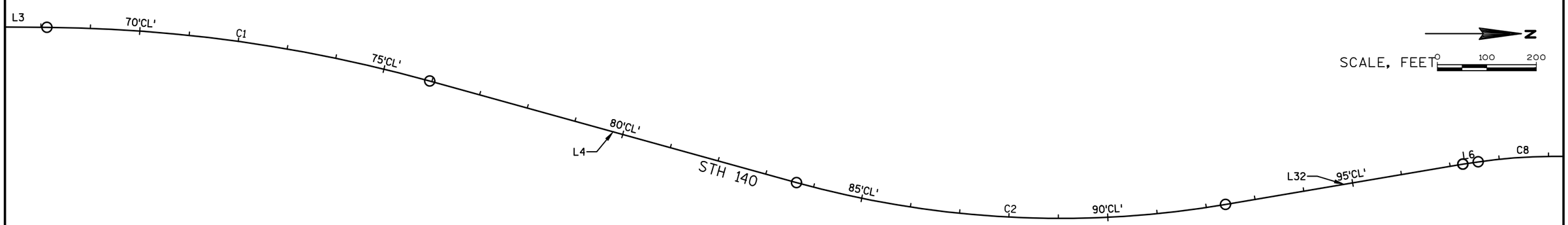

STH 140 MAINLINE														
NUMBER	STATION START	STATION END	NORTHING START	EASTING START	NORTHING END	EASTING END	LENGTH	P.I. STATION	P.I. NORTHING	P.I. EASTING	RADIUS	LINE/CHORD DIRECTION	DELTA	T
C1	68+12.37	75+95.57	235159.13	535906.10	235932.57	536014.35	783.20'	72+06.21	235552.96	535909.46	3000.00'	N07° 58' 04"E	014°57'29"	393.84
L4	75+95.57	83+64.75	235932.57	536014.35	236673.96	536219.22	769.17'					N15° 26' 49"E		
C2	83+64.75	92+39.61	236673.96	536219.22	237540.74	536263.36	874.86'	88+09.29	237102.44	536337.62	2000.00'	N02° 54' 56"E	025°03'46"	444.54
L32	92+39.61	97+25.90	237540.74	536263.36	238020.20	536182.13	486.30'					N09° 36' 58"W		
L6	97+25.90	97+54.51	238020.20	536182.13	238048.50	536177.95	28.61'					N08° 23' 43"W		

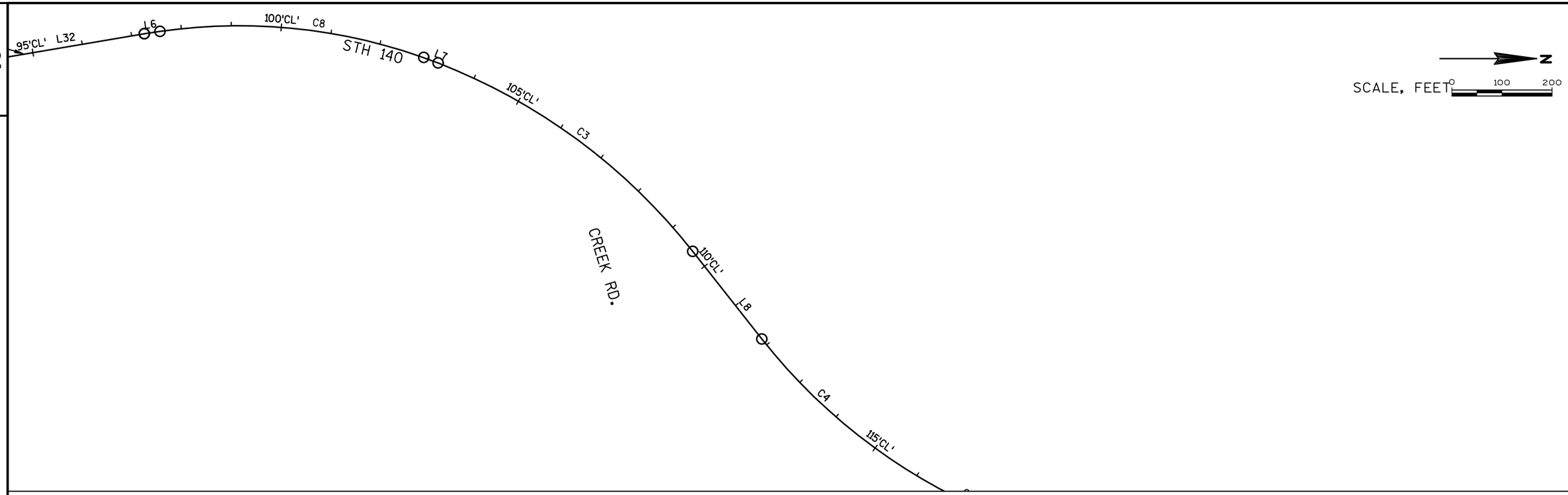

STH 140 MAINLINE														
NUMBER	STATION START	STATION END	NORTHING START	EASTING START	NORTHING END	EASTING END	LENGTH	P.I. STATION	P.I. NORTHING	P.I. EASTING	RADIUS	LINE/CHORD DIRECTION	DELTA	T
L6	97+25.90	97+54.51	238020.20	536182.13	238048.50	536177.95	28.61'					N08° 23' 43"W		
C8	97+54.51	103+22.11	238048.50	536177.95	238606.31	536240.58	567.60'	100+44.80	238335.68	536135.57	1098.60'	N06° 24' 21"E	029°36'09"	290.29
L7	103+22.11	103+22.39	238606.31	536240.58	238606.57	536240.68	0.28'					N21° 12' 26"E		
C3	103+22.39	109+62.24	238606.57	536240.68	239114.96	536616.63	639.85'	106+50.12	238912.10	536359.23	1200.00'	N36° 28' 56"E	030°33'01"	327.72
L8	109+62.24	111+85.15	239114.96	536616.63	239252.94	536791.70	222.91'					N51° 45' 27"E		

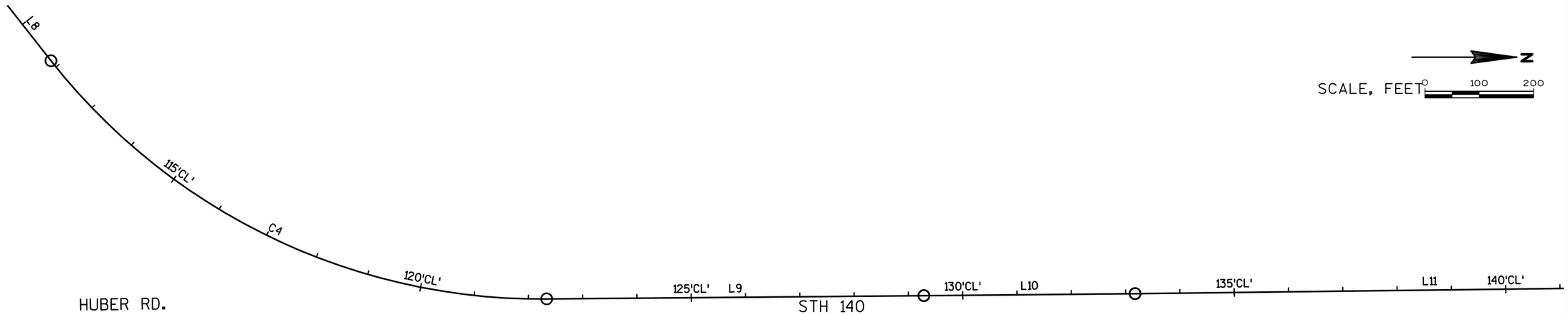

STH 140 MAINLINE														
NUMBER	STATION START	STATION END	NORTHING START	EASTING START	NORTHING END	EASTING END	LENGTH	P.I. STATION	P.I. NORTHING	P.I. EASTING	RADIUS	LINE/CHORD DIRECTION	DELTA	T
C4	111+85.15	122+33.98	239252.94	536791.70	240166.14	537229.82	1048.83'	117+49.22	239602.09	537234.72	1150.00'	N25° 37' 48"E	052°15'18"	564.07
L9	122+33.98	129+28.65	240166.14	537229.82	240860.79	537223.79	694.68'					N00° 29' 51"W		
L10	129+28.65	133+17.36	240860.79	537223.79	241249.48	537219.93	388.71'					N00° 34' 06"W		

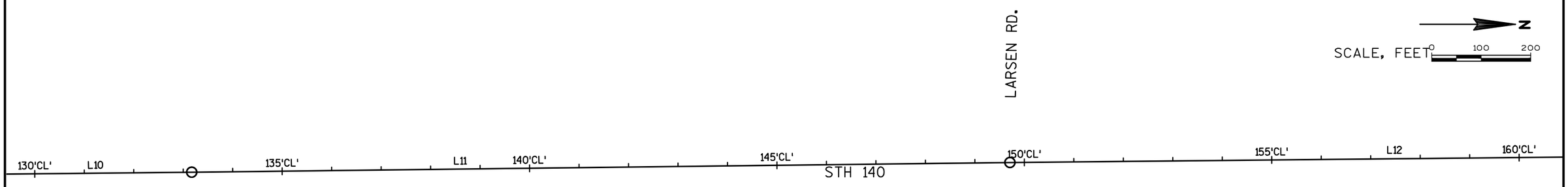

STH 140 MAINLINE														
NUMBER	STATION START	STATION END	NORTHING START	EASTING START	NORTHING END	EASTING END	LENGTH	P.I. STATION	P.I. NORTHING	P.I. EASTING	RADIUS	LINE/CHORD DIRECTION	DELTA	T
L11	133+17.36	149+71.10	241249.48	537219.93	242903.09	537200.06	1653.74'					N00° 41' 18"W		
L12	149+71.10	176+20.67	242903.09	537200.06	245552.54	537174.46	2649.57'					N00° 33' 13"W		

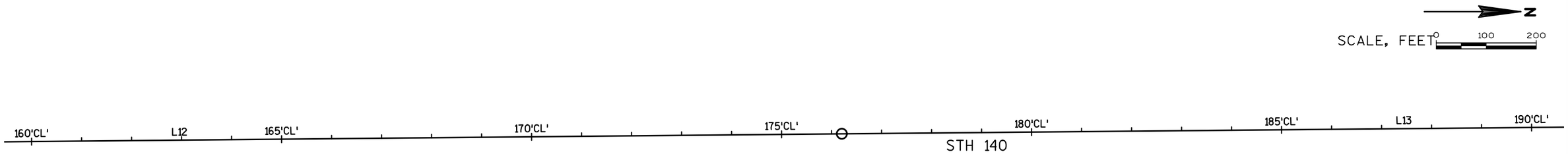

STH 140 MAINLINE														
NUMBER	STATION START	STATION END	NORTHING START	EASTING START	NORTHING END	EASTING END	LENGTH	P.I. STATION	P.I. NORTHING	P.I. EASTING	RADIUS	LINE/CHORD DIRECTION	DELTA	T
L12	149+71.10	176+20.67	242903.09	537200.06	245552.54	537174.46	2649.57'					N00° 33' 13"W		

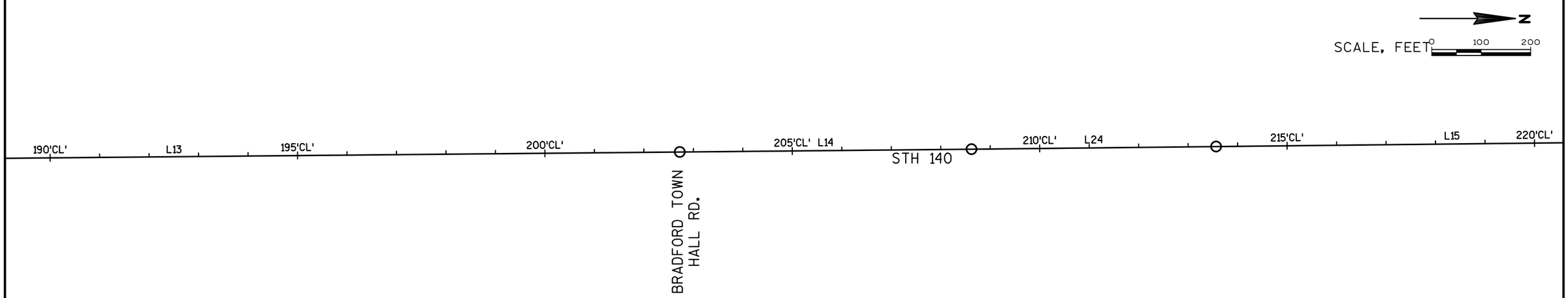

STH 140 MAINLINE														
NUMBER	STATION START	STATION END	NORTHING START	EASTING START	NORTHING END	EASTING END	LENGTH	P.I. STATION	P.I. NORTHING	P.I. EASTING	RADIUS	LINE/CHORD DIRECTION	DELTA	T
L13	176+20.67	202+72.81	245552.54	537174.46	248204.57	537150.24	2652.14'					N00° 31' 24"W		
L14	202+72.81	208+62.24	248204.57	537150.24	248793.97	537144.46	589.43'					N00° 33' 41"W		
L24	208+62.24	213+56.59	248793.97	537144.46	249288.29	537139.10	494.35'					N00° 37' 16"W		
L15	213+56.59	223+10.41	249288.29	537139.10	250242.06	537128.86	953.83'					N00° 36' 56"W		

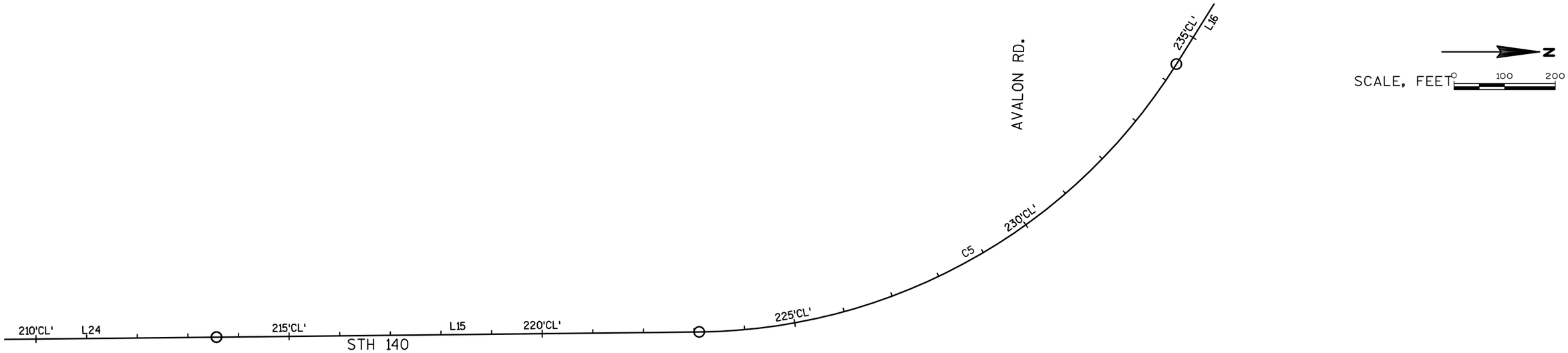

STH 140 MAINLINE														
NUMBER	STATION START	STATION END	NORTHING START	EASTING START	NORTHING END	EASTING END	LENGTH	P.I. STATION	P.I. NORTHING	P.I. EASTING	RADIUS	LINE/CHORD DIRECTION	DELTA	T
L15	213+56.59	223+10.41	249288.29	537139.10	250242.06	537128.86	953.83'					N00° 36' 56"W		
C5	223+10.41	234+38.04	250242.06	537128.86	251184.49	536599.33	1127.63'	229+26.71	250858.32	537122.23	1125.00'	N29° 19' 49"W	057°25'46"	616.30

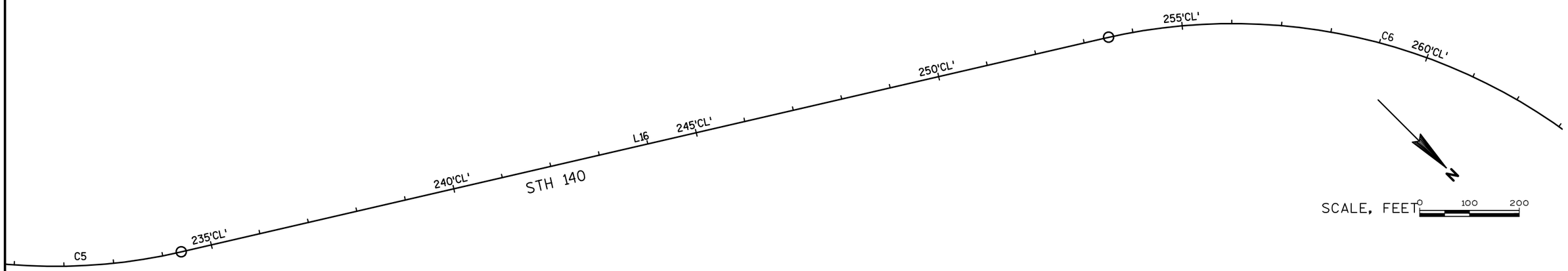

STH 140 MAINLINE														
NUMBER	STATION START	STATION END	NORTHING START	EASTING START	NORTHING END	EASTING END	LENGTH	P.I. STATION	P.I. NORTHING	P.I. EASTING	RADIUS	LINE/CHORD DIRECTION	DELTA	T
L16	234+38.04	253+42.41	251184.49	536599.33	252192.39	534983.53	1904.38'					N58° 02' 42"W		

PROJECT NO:1706-00-73/3320-00-75	HWY:STH 140	COUNTY:ROCK	STH 140 ALIGNMENT DIAGRAM	SHEET 48	E

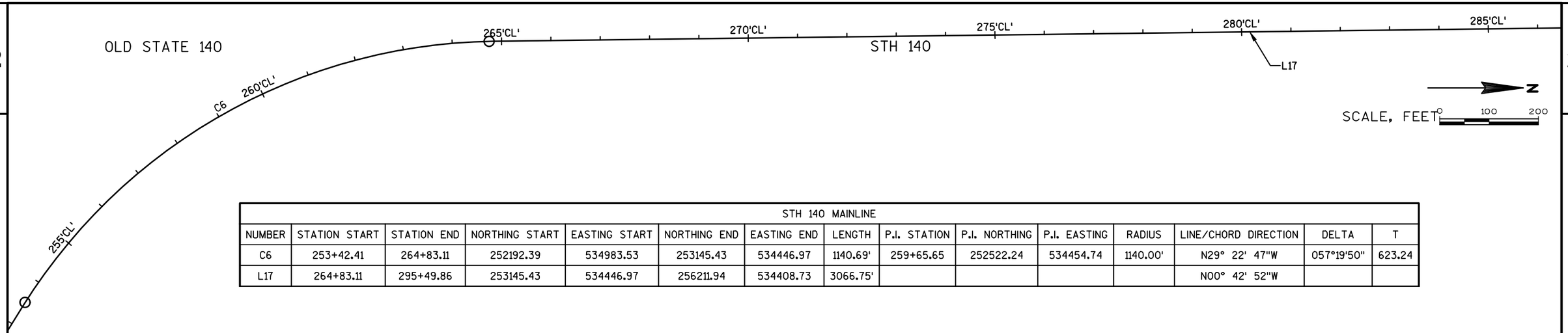

STH 140 MAINLINE														
NUMBER	STATION START	STATION END	NORTHING START	EASTING START	NORTHING END	EASTING END	LENGTH	P.I. STATION	P.I. NORTHING	P.I. EASTING	RADIUS	LINE/CHORD DIRECTION	DELTA	T
C6	253+42.41	264+83.11	252192.39	534983.53	253145.43	534446.97	1140.69'	259+65.65	252522.24	534454.74	1140.00'	N29° 22' 47"W	057°19'50"	623.24
L17	264+83.11	295+49.86	253145.43	534446.97	256211.94	534408.73	3066.75'					N00° 42' 52"W		

STH 140 MAINLINE						
NUMBER	STATION START	STATION END	NORTHING START	EASTING START	LENGTH	LINE/CHORD DIRECTION
L23	295+49.86	305+10.27	256211.94	534408.73	960.41'	N00° 47' 39"W
L22	305+10.27	306+09.01	257172.26	534395.42	98.75'	N00° 52' 13"W
L21	306+09.01	308+10.51	257270.99	534393.92	201.50'	N00° 02' 11"E
C7	308+10.51	313+05.73	257472.49	534394.05	495.22'	N01° 27' 18"E
L18	313+05.73	317+81.81	257967.50	534406.62	476.08'	N02° 52' 25"E
L19	317+81.81	319+38.47	258442.98	534430.49	156.65'	N02° 12' 12"E
L20	319+38.47	321+93.98	258599.52	534436.51	255.51'	N01° 36' 24"E

USH 14 / STH 11						
NUMBER	STATION START	STATION END	NORTHING START	EASTING START	LENGTH	LINE/CHORD DIRECTION
L55	400+00.00	407+77.50	258871.94	533666.36	777.50'	S88° 44' 46"E
L56	407+77.50	409+59.36	258854.93	534443.67	181.86'	S88° 37' 28"E

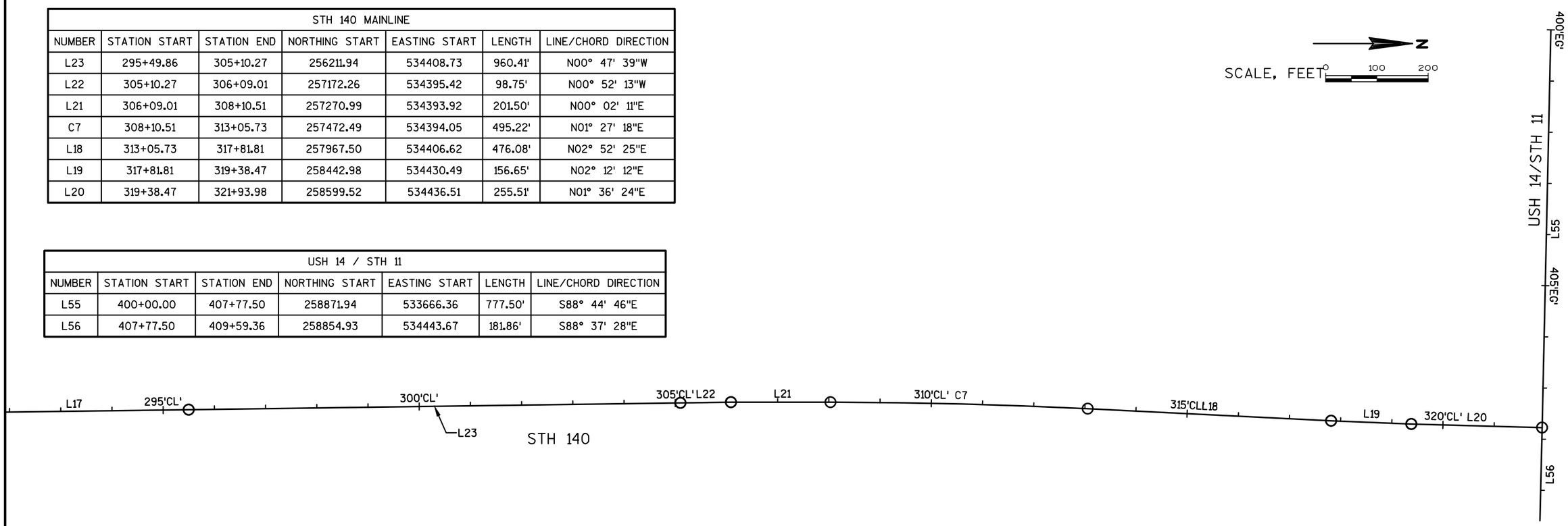

PROJECT NO:1706-00-73/3320-00-75	HWY:STH 140	COUNTY:ROCK	STH 140 ALIGNMENT DIAGRAM	SHEET 49	E

3

DATE 12MAY16 E S T I M A T E O F Q U A N T I T I E S

LINE NUMBER	ITEM	ITEM DESCRIPTION	UNIT	TOTAL	1706-00-73 QUANTITY	3320-00-75 QUANTITY
0010	201.0105	Clearing	STA	20.000		20.000
0020	201.0205	Grubbing	STA	6.000		6.000
0030	203.0100	Removing Small Pipe Culverts	EACH	2.000	1.000	1.000
0040	204.0120	Removing Asphaltic Surface Milling	SY	3,155.000		3,155.000
0050	204.0150	Removing Curb & Gutter	LF	68.000	68.000	
0060	204.0165	Removing Guardrail	LF	410.000		410.000
0070	204.0170	Removing Fence	LF	382.000		382.000
0080	204.0185	Removing Masonry	CY	6.000		6.000
0090	205.0100	Excavation Common	CY	1,055.000	1,055.000	
0100	213.0100	Finishing Roadway (project) 001. 1706-00-73	EACH	1.000	1.000	
0110	213.0100	Finishing Roadway (project) 002. 3320-00-75	EACH	1.000		1.000
0120	305.0110	Base Aggregate Dense 3/4-Inch	TON	459.000	59.000	400.000
0130	305.0120	Base Aggregate Dense 1 1/4-Inch	TON	1,758.000	1,758.000	
0140	305.0130	Base Aggregate Dense 3-Inch	TON	590.000	590.000	
0150	455.0605	Tack Coat	GAL	22.000	22.000	
0160	460.5223	HMA Pavement 3 LT 58-28 S	TON	364.000	364.000	
0170	460.6424	HMA Pavement 4 MT 58-28 H	TON	181.000	181.000	
0180	465.0105	Asphaltic Surface	TON	347.000		347.000
0190	465.0450	Asphaltic Intersection Rumble Strips	SY	100.000		100.000
0200	465.0475	Asphalt Center Line Rumble Strips 2-Lane Rural	LF	23,793.000		23,793.000
0210	520.1024	Apron Endwalls for Culvert Pipe 24-Inch	EACH	2.000	2.000	
0220	521.0115	Culvert Pipe Corrugated Steel 15-Inch	LF	43.000		43.000
0230	521.1502	Apron Endwalls for Culvert Pipe Sloped Side Drains Steel 15-Inch 4 to 1	EACH	1.000		1.000
0240	521.1515	Apron Endwalls for Culvert Pipe Sloped Side Drains Steel 15-Inch 6 to 1	EACH	1.000		1.000
0250	522.0124	Culvert Pipe Reinforced Concrete Class III 24-Inch	LF	89.000	89.000	
0260	601.0557	Concrete Curb & Gutter 6-Inch Sloped 36-Inch Type D	LF	90.000	90.000	
0270	614.0010	Barrier System Grading Shaping Finishing	EACH	8.000		8.000
0280	614.0305	Steel Plate Beam Guard Class A	LF	31.000		31.000
0290	614.0340	Steel Plate Beam Guard Over Low-Fill Culverts Class A	LF	100.000		100.000
0300	614.0345	Steel Plate Beam Guard Short Radius	LF	37.000		37.000
0310	614.0370	Steel Plate Beam Guard Energy Absorbing Terminal	EACH	1.000		1.000
0320	614.0390	Steel Plate Beam Guard Short Radius Terminal	EACH	1.000		1.000
0330	614.0396	Guardrail Mow Strip Asphalt	SY	91.000		91.000
0340	614.2300	MGS Guardrail 3	LF	1,576.000		1,576.000
0350	614.2330	MGS Guardrail 3 K	LF	50.000		50.000
0360	614.2340	MGS Guardrail 3 L	LF	789.000		789.000
0370	614.2500	MGS Thrie Beam Transition	LF	40.000		40.000
0380	614.2610	MGS Guardrail Terminal EAT	EACH	13.000		13.000
0390	618.0100	Maintenance And Repair of Haul Roads (project) 001. 1706-00-73	EACH	1.000	1.000	
0400	618.0100	Maintenance And Repair of Haul Roads (project) 002. 3320-00-75	EACH	1.000		1.000
0410	619.1000	Mobilization	EACH	1.000	0.500	0.500
0420	625.0500	Salvaged Topsoil	SY	1,800.000	1,800.000	
0430	627.0200	Mulching	SY	100.000	100.000	
0440	628.1504	Silt Fence	LF	4,744.000		4,744.000

3

3

DATE 12MAY16 E S T I M A T E O F Q U A N T I T I E S

LINE NUMBER	ITEM	ITEM DESCRIPTION	UNIT	TOTAL	1706-00-73 QUANTITY	3320-00-75 QUANTITY
0450	628.1520	Silt Fence Maintenance	LF	4,744.000		4,744.000
0460	628.1905	Mobilizations Erosion Control	EACH	5.000	1.000	4.000
0470	628.1910	Mobilizations Emergency Erosion Control	EACH	3.000	1.000	2.000
0480	628.2004	Erosion Mat Class I Type B	SY	1,750.000	1,750.000	
0490	628.6510	Soil Stabilizer Type B	ACRE	2.000	1.000	1.000
0500	628.7504	Temporary Ditch Checks	LF	160.000	80.000	80.000
0510	628.7555	Culvert Pipe Checks	EACH	27.000	6.000	21.000
0520	628.7570	Rock Bags	EACH	10.000		10.000
0530	629.0210	Fertilizer Type B	CWT	15.000	15.000	
0540	630.0120	Seeding Mixture No. 20	LB	5.000	5.000	
0550	633.5200	Markers Culvert End	EACH	4.000	2.000	2.000
0560	634.0612	Posts Wood 4x6-Inch X 12-FT	EACH	30.000		30.000
0570	634.0614	Posts Wood 4x6-Inch X 14-FT	EACH	4.000	1.000	3.000
0580	634.0616	Posts Wood 4x6-Inch X 16-FT	EACH	13.000	1.000	12.000
0590	634.0618	Posts Wood 4x6-Inch X 18-FT	EACH	6.000	2.000	4.000
0600	637.2210	Signs Type II Reflective H	SF	325.440	41.000	284.440
0610	637.2230	Signs Type II Reflective F	SF	324.890		324.890
0620	638.2102	Moving Signs Type II	EACH	2.000	1.000	1.000
0630	638.2602	Removing Signs Type II	EACH	93.000	2.000	91.000
0640	638.3000	Removing Small Sign Supports	EACH	24.000	2.000	22.000
0650	638.4000	Moving Small Sign Supports	EACH	2.000	1.000	1.000
0660	642.5001	Field Office Type B	EACH	1.000	0.500	0.500
0670	643.0100	Traffic Control (project) 001. 1706-00-73	EACH	1.000	1.000	
0680	643.0100	Traffic Control (project) 002. 3320-000-75	EACH	1.000		1.000
0690	643.0300	Traffic Control Drums	DAY	490.000	250.000	240.000
0700	643.0420	Traffic Control Barricades Type III	DAY	10.000	10.000	
0710	643.0500	Traffic Control Flexible Tubular Marker Posts	EACH	24.000	24.000	
0720	643.0600	Traffic Control Flexible Tubular Marker Bases	EACH	24.000	24.000	
0730	643.0715	Traffic Control Warning Lights Type C	DAY	310.000	70.000	240.000
0740	643.0900	Traffic Control Signs	DAY	224.000	80.000	144.000
0750	643.1050	Traffic Control Signs PCMS	DAY	82.000	30.000	52.000
0760	646.0106	Pavement Marking Epoxy 4-Inch	LF	92,882.000	655.000	92,227.000
0770	646.0126	Pavement Marking Epoxy 8-Inch	LF	1,096.000	1,096.000	
0780	647.0110	Pavement Marking Railroad Crossings Epoxy	EACH	2.000		2.000
0790	647.0566	Pavement Marking Stop Line Epoxy 18-Inch	LF	35.000	35.000	
0800	647.0746	Pavement Marking Diagonal Epoxy 24-Inch	LF	205.000	205.000	
0810	648.0100	Locating No-Passing Zones	MI	5.314		5.314
0820	649.0400	Temporary Pavement Marking Removable Tape 4-Inch	LF	12,208.000	12,208.000	
0830	690.0150	Sawing Asphalt	LF	898.000	691.000	207.000
0840	690.0250	Sawing Concrete	LF	6.000	6.000	
0850	SPV.0060	Special 001. Baseline CPM Progress Schedule	EACH	1.000	1.000	
0860	SPV.0060	Special 002. CPM Progress Schedule Updates and Accepted Revisions	EACH	2.000	2.000	
0870	SPV.0060	Special 250. Sign Blinder	EACH	1.000		1.000
0880	SPV.0090	Special 001. Fence Barbed Wire Special	LF	346.000		346.000
0890	SPV.0090	Special 002. Sawing Curb Openings	LF	138.000		138.000
0900	SPV.0090	Special 003. Temporary Fence	LF	346.000		346.000

3

DATE 12MAY16 E S T I M A T E O F Q U A N T I T I E S

LINE NUMBER	ITEM	ITEM DESCRIPTION	UNIT	TOTAL	1706-00-73 QUANTITY	3320-00-75 QUANTITY
0910	SPV.0105	Special 001. Survey Project (1706-00-73)	LS	1.000	1.000	
0920	SPV.0105	Special 002. Survey Project (3320-00-75)	LS	1.000		1.000

3

3

3

CLEARING AND GRUBBING

STATION	-	STATION	LOCATION	ITEM NO. 201.0105 CLEARING STA.	ITEM NO. 201.0205 GRUBBING STA.
57+00	-	62+00	LEFT	5	---
63+00	-	65+00	LEFT	2	---
67+00	-	68+00	LEFT	1	---
103+00	-	107+00	RIGHT	4	---
122+00	-	124+00	RIGHT	2	---
132+00	-	134+00	LEFT	2	2
192+00	-	196+00	RIGHT	4	4
PROJECT 3320-00-75 SUBTOTAL				**20**	**6**
		TOTAL		**20**	**6**

REMOVING CULVERT ITEMS

LOCATION	DESCRIPTION	ITEM NO. 203.0100 REMOVING SMALL PIPE CULVERTS EACH
STA 212+60, LEFT	DRIVEWAY	1
PROJECT 3320-00-25 SUBTOTAL		**1**
USH 14/STH 11 & STH 140	INTERSECTION	1
PROJECT 1706-00-73 SUBTOTAL		**1**
	TOTAL	**2**

3

REMOVING CURB AND GUTTER

LOCATION	DESCRIPTION	ITEM NO. 204.0150 REMOVING CURB AND GUTTER LF
USH 14/STH 11 & STH 140	INTERSECTION	68
PROJECT 1706-00-73 SUBTOTAL		**68**
	TOTAL	**68**

REMOVING ASPHALT ITEMS

STATION	-	STATION	LOCATION	ITEM NO. 204.0120 REMOVING ASPHALTIC SURFACE MILLING S.Y.
41'CL'+96	-	64'CL'+43		499
68'CL'+43	-	72'CL'+05		80
76'CL'+05	-	93'CL'+20		381
95'CL'+12	-	104'CL'+63		211
109'CL'+22	-	118'CL'+00		195
122'CL'+00	-	147'CL'+71		571
204'CL'+66	-	220'CL'+81		359
231'CL'+90	-	259'CL'+12		605
263'CL'+12	-	270'CL'+00		153
306'CL'+80	-	316'CL'+60	INTERSECTION RUMBLE STRIPS	100
PROJECT 3320-00-75 SUBTOTAL				**3155**
		TOTAL		**3155**

REMOVING MASONRY

STATION	OFFSET	LOCATION	ITEM NO. 204.0185 REMOVING MASONRY CY
132+40	LT	RETAINING WALL	3
132+00	LT	RETAINING WALL	3
PROJECT 3320-00-75 SUBTOTAL			**6**

REMOVING GUARDRAIL ITEMS

STA	STA	DESCRIPTION	ITEM NO. 204.0165 REMOVING GUARDRAIL LF
94+96	96+66	LEFT	170
210+50	211+72	LEFT	122
210+62	211+80	RIGHT	118
PROJECT 3320-00-75 SUBTOTAL			**410**
		TOTAL	**410**

3

3

EARTHWORK SUMMARY TABLE

Division	From/To Station	Location	#205.0100 Excavation Common (1)		Salvaged/ Unusable Pavement Material (4)	Available Material (5)	Unexpanded Fill	Expanded Fill (6)	Mass Ordinate +/- (7)	Waste	#208.0100 Borrow	Comment:
			Cut (2)	EBS Excavation (3)				Factor 1.25				
1	400+50 - 407+77.50	Turn Lane	1055	0	130	925	187	234	691	821	0	
Grand Total			1055	0	130	925	187	234	691	821	0	
			Total Common E	1055								

1) Common Excavation is the sum of the Cut and EBS Excavation columns. Item number 205.0100
2) Salvaged/Unsuable Pavement Material is included in Cut in reconstruction area.
3) EBS Excavation to be backfilled with Select Borrow material. Note: this is designers choice, can be backfilled with Borrow, or Cut as well.
4) Salvaged/Unusable Pavement Material
5) Available Material = Cut - Salvaged/Unusuable Pavement Material
6) Expanded Fill. Factor = 1.25

Expanded Fill = (Unexpanded Fill) * Fill Factor

7) The Mass Ordinate + or - Qty calculated for the Division. Plus quantity indicates an excess of material within the Division. Minus indicates a shortage of material within the Division.

3

ASPHALT PAVEMENT ITEMS

STATION	-	STATION	LOCATION	ITEM NO. 455.0605 TACK COAT GAL	ITEM NO. 460.5223 HMA PAVEMENT 3 LT 58-28 S TONS	ITEM NO. 460.6424 HMA PAVEMENT 4 MT 58-28 H TONS	ITEM NO. 465.0105 ASPHALTIC SURFACE TONS	ITEM NO. 465.0450 ASPHALTIC INTERSECTION RUMBLE STRIP SY	ITEM NO. 465.0475 ASPHALTIC CENTERLINE RUMBLE STRIPS 2-LANE RURAL LF
41'CL'+96	-	64'CL'+43	CENTERLINE	---	---	---	55	---	2247
68'CL'+43	-	72'CL'+05	CENTERLINE	---	---	---	9	---	362
76'CL'+05	-	93'CL'+20	CENTERLINE	---	---	---	42	---	1715
95'CL'+12	-	104'CL'+63	CENTERLINE	---	---	---	23	---	951
109'CL'+22	-	118'CL'+00	CENTERLINE	---	---	---	21	---	878
122'CL'+00	-	147'CL'+71	CENTERLINE	---	---	---	63	---	2571
204'CL'+66	-	220'CL'+81	CENTERLINE	---	---	---	39	---	1615
231'CL'+90	-	259'CL'+12	CENTERLINE	---	---	---	67	---	6727
263'CL'+12	-	270'CL'+00	CENTERLINE	---	---	---	17	---	6727
306'CL'+80	-	316'CL'+60	INTERSECTION RUMBLE STRIP	---	---	---	11	100	---
PROJECT 3320-00-75 SUBTOTAL				**0**	**0**	**0**	**347**	**100**	**23793**
			USH 14/STH 11 EB RIGHT TURN LANE	22	364	181	---	---	---
PROJECT 1706-00-73 SUBTOTAL				**22**	**364**	**181**	**0**	**0**	**0**
TOTAL				**22**	**364**	**181**	**347**	**100**	**23793**

CONCRETE CURB AND GUTTER

LOCATION	DESCRIPTION	ITEM NO. 601.0557 CONCRETE CURB AND GUTTER 6-INCH SLOPED 36-INCH TYPE D L.F.
USH 14/STH 11	EB RIGHT TURN LANE	78
STH 140	CULVERT REPLACEMENT	12
PROJECT 1706-00-73 SUBTOTAL		**90**
TOTAL		**90**

BASE AGGREGATE ITEMS

LOCATION	DESCRIPTION	ITEM NO. 305.0110 BASE AGGREGATE DENSE 3/4-INCH TONS	ITEM NO. 305.0120 BASE AGGREGATE DENSE 1 1/4-INCH TONS	ITEM NO. 305.0130 BASE AGGREGATE DENSE 3-INCH TONS
STH 140	SHOULDERS	400	-	
PROJECT 3320-00-75 SUBTOTAL		**400**	**0**	**0**
USH 14/STH 11	EB RIGHT TURN LANE	59	1758	590
PROJECT 1706-00-73 SUBTOTAL		**59**	**1758**	**590**
	TOTAL	**459**	**1758**	**590**

3

3

REPLACEMENT SIGNS AND POSTS

STATION	CODE	SIZE IN. X IN.	ITEM NO. 638.2602 * REMOVING SIGNS TYPE II EA	ITEM NO. 637.221 * SIGNS TYPE II REFLECTIVE H S.F.	ITEM NO. 637.223 * SIGNS TYPE II REFLECTIVE F S.F.	ITEM NO. SPV.0060.250 SIGN BLINDER EACH	REMARKS
39+97R	R1-1	30X30	1	5.18	---	---	AT BRADFORD/CLINTON TOWN ROAD
57+92R	W2-2	30X30	1	---	6.25	---	
66+37R	R1-1	30X30	1	5.18	---	---	AT E WAITE ROAD
98+58R	W2-1	30X30	1	---	6.25	---	
107+02R	R1-1	30X30	1	5.18	---	---	AT E CREEK ROAD
107+55R	R1-1	30X30	1	5.18	---	---	AT E CREEK ROAD
119+70R	R1-1	36X36	1	7.46	---	1.00	AT S HUBER ROAD, INCLUDES SIGN BLINDER
150+85R	R1-1	30X30	1	5.18	---	---	AT E LARSON ROAD
153+00R	J 4-2	48x39	4	13.00	---	---	**ALTERNATE/I39, ALTERNATE/I43**
196+26R	W2-2	30X30	1	---	6.25	---	
203+65R	R1-1	30X30	1	5.18	---	---	AT BRADFORD TOWNHALL ROAD
212+10L	W5-52 L	12X36	1	---	3.00	---	
212+10R	W5-52 R	12X36	1	---	3.00	---	
213+70R	W10-1	36X36	1	---	7.07	---	
223+18R	D1-1	48X18	1	6.00	---	---	**(LEFT ARROW) AVALON**
226+35R	R1-1	30X30	1	5.18	---	---	AT AVALON ROAD (SOUTH)
230+05R	R1-1	30X30	1	5.18	---	---	AT AVALON ROAD (NORTH)
306+61	J1-3	72X39	6	19.50	---	---	**JCT/STH 11, JCT/USH 14, END/STH 140**
311+89	J2-4	96X57	12	38.00	---	---	**WEST/STH 11/M5-1L, WEST/USH 14/M5-1L, EAST/USH 14/M5-1R, EAST/STH 11/M5-1R**
316+64	D1-3	48X42	3	14.00	---	---	**(LEFT ARROW) JANESVILLE, DARIEN, DELAVAN (RIGHT ARROV**
320+00	J3 -2	48x57	5	19.00	---	---	**ALTERNATE/I39/M6-1L, ALTERNATE/I43/M6-1L**
320+36	D2-1	48X18	1	6.00	---	---	**CLINTON 7**
262+28	R1-1	30X30	1	5.18	---	---	AT UNNAMED ROAD
238+52	W2-1	30X30	1	---	6.25	---	
236+93	D1-1	48X18	1	6.00	---	---	**AVALON (RIGHT ARROW)**
231+12	R1-1	30X30	1	5.18	---	---	AT AVALON ROAD
230+06	W10-1	36X36	1	---	7.07	---	
212+11L	W5-52 L	12X36	1	---	3.00	---	
212+11R	W5-52 R	12X36	1	---	3.00	---	
209+48	W14-3	48X36	1	---	6.00	---	
165+65	W14-3	48X36	1	---	6.00	---	
150+34	R1-1	30X30	1	5.18	---	---	AT E LARSON ROAD
148+50	J4 -2	48x39	4	13.00	---	---	**ALTERNATE/I39, ALTERNATE/I43**
130+28	W1-4 R	36X36	1	---	9.00	---	
130+28	W13-1	24X24	1	---	4.00	---	**45**
PROJECT 3320-00-75 SUBTOTAL			**63**	**198.94**	**76.14**	**1.00**	

CONTINUED ON NEXT SHEET

3

REPLACEMENT SIGNS AND POSTS

STATION	CODE	SIZE IN. X IN.	ITEM NO. 638.2602 * REMOVING SIGNS TYPE II EA	ITEM NO. 637.221 * SIGNS TYPE II REFLECTIVE H S.F.	ITEM NO. 637.223 * SIGNS TYPE II REFLECTIVE F S.F.	ITEM NO. SPV.0060.250 SIGN BLINDER EACH	REMARKS
107+57	R1-1	30X30	1	5.18	---	---	AT E CREEK ROAD
76+42	W2-2	30X30	1	---	6.25	---	
74+84	R1-1	30X30	1	5.18	---	---	AT E RYE ROAD
40+52	R1-1	30X30	1	5.18	---	---	AT BRADFORD/CLINTON TOWN ROAD
PROJECT 3320-00-75 SUBTOTAL			**4**	**15.54**	**6.25**	**0**	
	TOTAL		**67**	**214.48**	**82.39**	**1.00**	

* ADDITIONAL QUANTITES SHOWN ELSEWHERE

REMOVING SIGN ITEMS

STATION	ITEM NO. 638.2602 * REMOVING SIGNS TYPE II EA	ITEM NO. 638.3000 REMOVING SMALL SIGN SUPPORTS EA	REMARKS
74+50	2	1	
81+00	1	1	W2-2
87+00	1	1	
90+80	2	1	
95+40	2	1	
100+00	8	8	CHEVRONS
114+40	1	1	W2-1
119+00	1	1	W1-6
240+80	1	1	W1-2R, W13-1
247+50	1	1	W1-2R
271+00	1	1	W1-2L
319+00	1	2	J1-3
321+34	1	1	R1-1
321+34	1	1	J3-4
PROJECT 3320-00-75 SUBTOTAL	**24**	**22**	
407+08	1	1	J2-1
407+08	1	1	J2-2
PROJECT 1706-00-73 SUBTOTAL	**2**	**2**	
TOTAL	**26**	**24**	

* ADDITIONAL QUANTITIES SHOWN ELSEWHERE

3

CULVERT ITEMS

STATION	-	STATION	LOCATION	INLET ELEVATION	OUTLET ELEVATION	ITEM NO. 521.0115 CULVERT PIPE CORRUGUATED STEEL 15-INCH LF	ITEM NO. 522.0124 CULVERT PIPE REINFORCED CONCRETE CLASS III 24-INCH LF	ITEM NO. 520.1024 APRON ENDWALLS FOR CULVERT PIP3 24-INCH EACH	ITEM NO. 521.1502 APRON ENDWALLS FOR CULVERT PIPE SLOPED SIDE DRAINS STEEL 15-INCH 4 TO 1 EACH	ITEM NO. 521.1515 APRON ENDWALLS FOR CULVERT PIPE SLOPED SIDE DRAINS STEEL 15-INCH 6TO 1 EACH	ITEM NO. 633.5200 MARKERS CULVERT END EACH
132+20	-	132+20		944.7	944.15	43	---	---	1	1	2
PROJECT 3320-00-75 SUBTOTAL						**43**	**0**	**0**	**1**	**1**	**2**
407+77	-	407+77	USH 14/STH 11 EB RIGHT TURN LANE	909.00	908.40	---	89	2	---	---	2
PROJECT 1706-00-73 SUBTOTAL						**0**	**89**	**2**	**0**	**0**	**2**
		TOTAL				**43**	**89**	**2**	**1**	**1**	**4**

MINIMUM WALL THICKNESS FOR STEEL CULVERT PIPE
15 INCH THROUGH 24 INCH: 0.064 INCHES

3

BARRIER SYSTEM GRADING SHAPING FINISHING

LOCATION	DESCRIPTION	STATION	-	STATION	ITEM NO. 614.0010 BARRIER SYSTEM GRADING SHAPING FINISHING EACH	QUANTITIES FOR ESTIMATING INFORMATIONAL PURPOSES ONLY. PAID FOR AS PART OF ITEM NO. 614.0100 BARRIER SYSTEM GRADING SHAPING FINISHING: BORROW CY	SALVAGED TOPSOIL SY	MULCH SY	EROSION MAT CLASS 1 TYPE B SY	SEED MIXTURE NO. 20 LB	FERTILIZER TYPE B CWT
CZ 14	RIGHT	52+26.06	-	55+94.80	1	44	150	150	-	0	1
CZ 15	LEFT	51+94.80	-	55+38.55	1	44	350	350	-	1	2
CZ 16	RIGHT	98+42.47	-	103+25.00	1	175	320	320	-	1	2
CZ 17	LEFT	94+95.46	-	104+56.25	1	175	200	200	-	0	1
CZ 19	RIGHT	129+54.48	-	132+73.23	1	263	520	520	-	1	4
CZ 20	LEFT	130+12.23	-	132+09.21	1	263	400	400	-	1	3
CZ 23	RIGHT	209+20.82	-	212+52.12	1	130	500	35	465	0	0
CZ 24	LEFT	209+83.29	-	213+20.78	1	130	450	73	377	0	1
PROJECT 3320-00-75 SUBTOTAL					**8**	**1224**	**2890**	**2048**	**842**	**4**	**14**
		TOTAL			**8**	**1224**	**2890**	**2048**	**842**	**4**	**14**

GUARDRAIL ITEMS

LOCATION	DESCRIPTION	STATION	-	STATION	ITEM NO. 614.0305 STEEL PLATE BEAM GUARD CLASS A LF	ITEM NO. 614.0340 STEEL PLATE BEAM GUARD OVER LOW FILL CULVERTS CLASS A LF	ITEM NO. 614.0345 STEEL PLATE BEAM GUARD SHORT RADIUS LF	ITEM NO. 614.0370 STEEL PLATE BEAM GUARD EAT EACH	ITEM NO. 614.0390 STEEL PLATE BEAM GUARD SHORT RADIUS TERMINAL EACH	ITEM NO. 614.0396 GUARDRAIL MOW STRIP ASPHALT SY	ITEM NO. 614.2300 MGS GUARDRAIL 3 LF	ITEM NO. 614.2330 MGS GUARDRAIL 3K LF	ITEM NO. 614.2340 MGS GUARDRAIL 3L LF	ITEM NO. 614.2500 MGS THRIE BEAM TRANSITION LF	ITEM NO. 614.2610 MGS GUARDRAIL TERMINAL EAT EACH
CZ 14	RIGHT	52+26.06	-	55+94.80	-	-	-	-	-	-	125	-	113	-	2
CZ 15	LEFT	51+94.80	-	55+38.55	-	-	-	-	-	-	150	-	113	-	2
CZ 16	RIGHT	98+42.47	-	103+25.00	-	-	-	-	-	-	264	-	113	-	2
CZ 17	LEFT	94+95.46	-	104+56.25	-	-	-	-	-	-	706	50	113	40	1
CZ 19	RIGHT	129+54.48	-	132+73.23	-	-	-	-	-	-	100	-	113	-	2
CZ 20	LEFT	130+12.23	-	132+09.21	31	100	37	1	1	-	-	-	-	-	-
CZ 23	RIGHT	209+20.82	-	212+52.12	-	-	-	-	-	-	113	-	113	-	2
CZ 24	LEFT	209+83.29	-	213+20.78	-	-	-	-	-	91	119	-	113	-	2
PROJECT 3320-00-75 SUBTOTAL					**31**	**100**	**37**	**1**	**1**	**91**	**1576**	**50**	**789**	**40**	**13**
		TOTAL			**31**	**100**	**37**	**1**	**1**	**91**	**1576**	**50**	**789**	**40**	**13**

3

SILT FENCE

STATION	-	STATION	LOCATION	ITEM NO. 628.1504 SILT FENCE L.F.	ITEM NO. 628.1520 SILT FENCE MAINTENANCE L.F.
51+30	-	53+83	RT	257	257
51+77	-	53+83	LT	210	210
54+08	-	55+92	RT	185	185
54+09	-	56+62	LT	260	260
96+03	-	100+54	LT	459	459
97+74	-	100+01	RT	223	223
100+66	-	105+11	LT	460	460
101+01	-	106+86	RT	577	577
128+38	-	130+98	RT	261	261
129+11	-	131+20	LT	211	211
131+22	-	134+03	RT	282	282
131+29	-	132+00	LT	90	90
208+58	-	211+07	RT	253	253
209+17	-	211+08	LT	193	193
211+33	-	213+18	RT	187	187
211+34	-	213+36	LT	205	205
UNDISTRIBUTED				431	431
PROJECT 3320-00-75 SUBTOTAL				4744	4744
TOTAL				4744	4744

MOBILIZATIONS EROSION CONTROL

	ITEM NO. 628.1905 MOBILIZATIONS EROSION CONTROL EACH	ITEM NO. 628.1910 MOBILIZATIONS EMERGENCY EROSION CONTROL EACH
PROJECT 3320-00-75 SUBTOTAL	4	2
PROJECT 1706-00-73 SUBTOTAL	1	1
TOTAL	**5**	**3**

TEMPORARY DITCH CHECKS

STATION	OFFSET	EROSION CONTROL TYPE	ITEM NO. 628.7504 TEMPORARY DITCH CHECKS LF
98+00	LT	TEMPORARY	20
131+00	RT	TEMPORARY	20
131+20	RT	TEMPORARY	20
UNDISTRIBUTED		TEMPORARY	20
PROJECT 3320-00-75 SUBTOTAL			**80**
401+63	RT	TEMPORARY	20
405+98	RT	TEMPORARY	20
408+24	RT	TEMPORARY	20
UNDISTRIBUTED			20
PROJECT 1706-00-73 SUBTOTAL			**80**
		TOTAL	**160**

CULVERT PIPE CHECKS

STATION	OFFSET	ITEM NO. 628.7555 CULVERT PIPE CHECKS EACH
100+56	LT	10
104+00	RT	6
132+42	LT	5
PROJECT 3320-00-75 SUBTOTAL		**21**
407+20	RT	6
PROJECT 1706-00-73 SUBTOTAL		**6**
	TOTAL	**27**

ROCK BAGS

STATION	OFFSET	ITEM NO. 628.7570 ROCK BAGS EACH
97+74	RT	5
UNDISTRIBUTED		5
PROJECT 3320-00-75 SUBTOTAL		**10**
	TOTAL	**10**

3

3

SIGNS AND POSTS

STATION	SIGN NO.	CODE	SIZE IN. X IN.	ITEM NO. 634.0612 POSTS WOOD 4X6-INCH X 12 FEET EACH	ITEM NO. 634.0614 POSTS WOOD 4X6-INCH X 14 FEET EACH	ITEM NO. 634.0616 POSTS WOOD 4X6-INCH X 16 FEET EACH	ITEM NO. 634.0618 POSTS WOOD 4X6-INCH X 18 FEET EACH	ITEM NO. 637.2210 * SIGNS TYPE II REFLECTIVE H S.F.	ITEM NO. 637.223 * SIGNS TYPE II REFLECTIVE F S.F.
68+00	1	W2-2	30X30	---	---	1	---	---	6.25
68+10	2	W1-8	18X24	1	---	---	---	---	3.00
69+30	3	W1-8	18X24	1	---	---	---	---	3.00
	3.1	W1-8	18X24	---	---	---	---	---	3.00
70+50	4	W1-8	18X24	1	---	---	---	---	3.00
	4.1	W1-8	18X24	---	---	---	---	---	3.00
71+70	5	W1-8	18X24	1	---	---	---	---	3.00
	5.1	W1-8	18X24	---	---	---	---	---	3.00
73+00	6	W1-8	18X24	1	---	---	---	---	3.00
	6.1	W1-8	18X24	---	---	---	---	---	3.00
74+75	7	W1-8	18X24	1	---	---	---	---	3.00
	7.1	W1-8	18X24	---	---	---	---	---	3.00
76+00	8	W1-8	18X24	1	---	---	---	---	3.00
79+00	9	W1-2L	30X30	---	---	1	---	---	6.25
77+50	10	W1-5L	30X30	---	---	1	---	---	6.25
81+00	11	W2-2	30X30	---	---	1	---	---	6.25
83+60	12	W1-8	18X24	1	---	---	---	---	3.00
85+00	13	W1-8	18X24	1	---	---	---	---	3.00
	13.1	W1-8	18X24	---	---	---	---	---	3.00
86+20	14	W1-8	18X24	1	---	---	---	---	3.00
	14.1	W1-8	18X24	---	---	---	---	---	3.00
89+00	15	W1-8	18X24	1	---	---	---	---	3.00
	15.1	W1-8	18X24	---	---	---	---	---	3.00
90+20	16	W1-8	18X24	1	---	---	---	---	3.00
	16.1	W1-8	18X24	---	---	---	---	---	3.00
91+40	17	W1-8	18X24	1	---	---	---	---	3.00
	17.1	W1-8	18X24	---	---	---	---	---	3.00
92+50	18	W1-8	18X24	1	---	---	---	---	3.00
97+50	19	W1-8	18X24	1	---	---	---	---	3.00
98+70	20	W1-8	18X24	1	---	---	---	---	3.00
	20.1	W1-8	18X24	---	---	---	---	---	3.00
99+90	21	W1-8	18X24	1	---	---	---	---	3.00
	21.1	W1-8	18X24	---	---	---	---	---	3.00
101+10	22	W1-8	18X24	1	---	---	---	---	3.00
PROJECT 3320-00-75 SUBTOTAL				18	0	4	0	0	115

CONTINUED ON NEXT SHEET

3

SIGNS AND POSTS

STATION	SIGN NO.	CODE	SIZE IN. X IN.	ITEM NO. 634.0612 POSTS WOOD 4X6-INCH X 12 FEET EACH	ITEM NO. 634.0614 POSTS WOOD 4X6-INCH X 14 FEET EACH	ITEM NO. 634.0616 POSTS WOOD 4X6-INCH X 16 FEET EACH	ITEM NO. 634.0618 POSTS WOOD 4X6-INCH X 18 FEET EACH	ITEM NO. 637.2210 * SIGNS TYPE II REFLECTIVE H S.F.	ITEM NO. 637.223 * SIGNS TYPE II REFLECTIVE F S.F.
	22.1	W1-8	18X24	---	---	---	---	---	3.00
102+30	23	W1-8	18X24	1	---	---	---	---	3.00
	23.1	W1-8	18X24	---	---	---	---	---	3.00
103+50	24	W1-8	18X24	1	---	---	---	---	3.00
	24.1	W1-8	18X24	---	---	---	---	---	3.00
104+70	25	W1-8	18X24	1	---	---	---	---	3.00
	25.1	W1-8	18X24	---	---	---	---	---	3.00
107+25	26	W1-8	18X24	1	---	---	---	---	3.00
	26.1	W1-8	18X24	---	---	---	---	---	3.00
108+60	27	W1-8	18X24	1	---	---	---	---	3.00
	27.1	W1-8	18X24	---	---	---	---	---	3.00
110+00	28	W1-8	18X24	1	---	---	---	---	3.00
111+90	29	W1-8	18X24	1	---	---	---	---	3.00
	29.1	W1-8	18X24	---	---	---	---	---	3.00
113+00	30	W1-8	18X24	1	---	---	---	---	3.00
	30.1	W1-8	18X24	---	---	---	---	---	3.00
114+20	31	W1-8	18X24	1	---	---	---	---	3.00
	31.1	W1-8	18X24	---	---	---	---	---	3.00
114+40	32	W2-1	30X30	---	---	1	---	---	6.25
115+40	33	W1-8	18X24	1	---	---	---	---	3.00
	33.1	W1-8	18X24	---	---	---	---	---	3.00
116+90	34	W1-8	18X24	1	---	---	---	---	3.00
	34.1	W1-8	18X24	---	---	---	---	---	3.00
118+00	35	W1-8	18X24	1	---	---	---	---	3.00
	35.1	W1-8	18X24	---	---	---	---	---	3.00
119+00	36	W1-6	48X24	---	1	---	---	---	8.00
128+50	37	W1-5R	30X30	---	---	1	---	---	6.25
217+00	38	W1-2L	30X30	---	---	1	---	---	6.25
226+15	39	W1-6	48X24	---	1	---	---	---	8.00
240+80	40	W1-2R	30X30	---	---	1	---	---	6.25
247+50	41	W1-2R	30X30	---	---	1	---	---	6.25
PROJECT 3320-00-75 SUBTOTAL				12	2	5	0	0	119.25

3

CONTINUED ON NEXT SHEET

3

SIGNS AND POSTS

STATION	SIGN NO.	CODE	SIZE IN. X IN.	ITEM NO. 634.0612 POSTS WOOD 4X6-INCH X 12 FEET EACH	ITEM NO. 634.0614 POSTS WOOD 4X6-INCH X 14 FEET EACH	ITEM NO. 634.0616 POSTS WOOD 4X6-INCH X 16 FEET EACH	ITEM NO. 634.0618 POSTS WOOD 4X6-INCH X 18 FEET EACH	ITEM NO. 637.2210 * SIGNS TYPE II REFLECTIVE H S.F.	ITEM NO. 637.223 * SIGNS TYPE II REFLECTIVE F S.F.
271+00	42	W1-2L	30X30	---	---	1	---	---	6.25
315+50	43	R2-1	24X30	---	1	---	---	5.00	---
319+00	44	J1-3	72X39	---	---	---	2	19.50	---
321+34	45	R1-1	36X36	---	---	1	---	7.46	---
	45.1	W4-4C	24X12	---	---	1	---	---	2.00
321+34	46	J3-4	96X57	---	---	---	2	38.00	---
PROJECT 3320-00-75 SUBTOTAL				**0**	**1**	**3**	**4**	**69.96**	**8.25**
200' W OF LIMIT	47	R3-8	36X30	---	1	---	---	7.50	---
400+50	48	R3-20-R	24X36	---	---	1	---	5.00	---
407+08	49	J2-3	72X57	---	---	---	2	28.50	---
PROJECT 1706-00-73 SUBTOTAL				**0**	**1**	**1**	**2**	**41.00**	**0.00**
		TOTAL		**30**	**4**	**13**	**6**	**110.96**	**242.50**

* ADDITIONAL QUANTITES SHOWN ELSEWHERE

3

PAVEMENT MARKING

STATION	-	STATION	ITEM NO. 646.0106 PAVEMENT MARKING EPOXY 4-INCH WHITE LF	ITEM NO. 646.0106 PAVEMENT MARKING EPOXY 4-INCH YELLOW* LF	ITEM NO. 646.0126 PAVEMENT MARKING EPOXY 8-INCH LF	ITEM NO. 647.011 PAVEMENT MARKING RAILROAD CROSSING EPOXY EACH	ITEM NO. 647.0566 PAVEMENT MARKING STOP LINE EPOXY 18-INCH LF	ITEM NO. 647.0746 PAVEMENT MARKING DIAGONAL EPOXY 24-INCH LF	REMARKS
PROJECT LENGTH LEFT			28200	---	---	---	---	---	---
PROJECT LENGTH RIGHT			28150	---	---	---	---	---	---
39+96	-	40+71	---	94	---	---	---	---	LT SOLID, RT SKIP
40+71	-	55+59	---	372	---	---	---	---	LT SKIP
55+59	-	63+89	---	1038	---	---	---	---	LT SKIP, RT SOLID
63+89	-	119+78	---	11178	---	---	---	---	LT & RT SOLID
119+78	-	128+18	---	1052	---	---	---	---	LT SOLID, RT SKIP
128+18	-	149+52	---	534	---	---	---	---	RT SKIP
149+52	-	156+42	---	863	---	---	---	---	LT SKIP, RT SOLID
156+42	-	158+22	---	45	---	---	---	---	LT SKIP
158+22	-	164+74	---	815	---	---	---	---	LT SOLID, RT SKIP
164+74	-	186+59	---	547	---	---	---	---	LT SKIP
186+59	-	195+22	---	1080	---	---	---	---	LT SKIP, RT SOLID
195+22	-	200+10	---	976	---	---	---	---	LT & RT SOLID
200+10	-	208+47	---	1047	---	---	---	---	LT SOLID, RT SKIP
208+47	-	209+66	---	30	---	---	---	---	LT SKIP
209+66	-	218+02	---	1045	---	---	---	---	LT SKIP, RT SOLID
218+02	-	231+26	---	2647	---	2	---	---	LT & RT SOLID
231+26	-	239+71	---	1057	---	---	---	---	LT SOLID, RT SKIP
239+71	-	247+26	---	189	---	---	---	---	LT SKIP
247+26	-	255+62	---	1047	---	---	---	---	LT SKIP, RT SOLID
255+62	-	271+29	---	3134	---	---	---	---	LT & RT SOLID
271+29	-	288+07	---	2098	---	---	---	---	LT SKIP, RT SOLID
288+07	-	298+75	---	2136	---	---	---	---	LT & RT SOLID
298+75	-	305+00	---	782	---	---	---	---	LT SOLID, RT SKIP
305+00	-	307+25	---	57	---	---	---	---	RT SKIP
307+25	-	315+36	---	782	---	---	---	---	LT SOLID, RT SKIP
315+36	-	321+65	---	1232	---	---	---	---	LT & RT SOLID
PROJECT 3320-00-75 SUBTOTAL			**56350**	**35877**	**0**	**2**	**0**	**0**	
USH 14 / STH 11		INTERSECTION	655	---	1096	---	35	205	
PROJECT 1706-00-73 SUBTOTAL			**655**	**0**	**1096**	**0**	**35**	**205**	
TOTAL			**92882**		**1096**	**2**	**35**	**205**	

* QUANTITY ESTIMATED BASE ON EXISTING MARKINGS. ACTUAL QUANTITY MAY VARY BASE ON RESULTS FROM LOCATING NO PASSING ZONES

3

TOPSOIL, SEED, FERTILZER, E-MAT AND MULCH

LOCATION	DESCRIPTION	ITEM NO. 625.0500 SALVAGED TOPSOIL S.Y.	ITEM NO. 627.0200 MULCHING S.Y.	ITEM NO. 628.2004 EROSION MAT CLASS I TYPE B S.Y.	ITEM NO. 628.6510 SOIL STABILIZER TYPE B ACRE	ITEM NO. 629.0210 FERTILIZER TYPE B CWT	ITEM NO. 630.0120 SEEDING MIXTURE NO. 20 LB
UNDISTRIBUTED		-	-	-	1	-	-
PROJECT 3320-00-75 SUBTOTAL		**0**	**0**	**0**	**1**	**0**	**0**
USH 14/STH 11	EB RIGHT TURN LANE	1675	90	1585	-	12	3
UNDISTRIBUTED		125	10	165	1	3	2
PROJECT 1706-00-73 SUBTOTAL		**1800**	**100**	**1750**	**1**	**15**	**5**
	TOTAL	**1800**	**100**	**1750**	**2**	**15**	**5**

3

MOVING SIGN ITEMS

EXISTING STATION	PROPOSED STATION	ITEM NO. 638.2102 MOVING SIGNS TYPE II EACH	ITEM NO. 638.4000 MOVING SMALL SIGN SUPPORTS EACH	REMARKS
317+05	315+40	1	1	
PROJECT 3320-00-75 SUBTOTAL		**1**	**1**	
321+34	321+34	1	1	MOVE 5' LT
PROJECT 1706-00-73 SUBTOTAL		**1**	**1**	
TOTAL		**2**	**2**	

3

LOCATING NO PASSING ZONES

	ITEM NO. 648.0100 LOCATING NO PASSING ZONES MI
PROJECT 3320-00-75 SUBTOTAL	5.314
PROJECT 1706-00-73 SUBTOTAL	---
TOTAL	5.314

3

TEMPORARY PAVEMENT MARKING

		ITEM NO. 649.0400 TEMPORARY PAVEMENT MARKING REMOVABLE TAPE 4-INCH		
		WHITE	YELLOW	BLACK
LOCATION	STATION	LF	LF	LF
USH 14 / STH 11	INTERSECTION	3455	3455	5298
PROJECT 1706-00-73 SUBTOTAL		3455	3455	5298
TOTAL			12208	

SAWING

			ITEM NO. 690.0150 SAWING ASPHALT *	ITEM NO. 690.0250 SAWING CONCRETE *	ITEM NO. SPV.0090.02 SAWING CURB OPENINGS *
LOCATION	ROADWAY	DESCRIPTION	LF	LF	LF
CURB 97+75 - 98+55, RT	STH 140	100' BACK FROM POST 3	---	---	80
CURB 103+12 - 103+70, RT	STH 140	100' BACK FROM POST 3	---	---	58
PROJECT 3320-00-75 SUBTOTAL			0	0	138
PAVEMENT 400+50 - 407+57.22	USH 14/STH 11		898	---	---
CURB 321+28 - 321+38	USH 14/STH 11	CURB AND CULVERT REMOVAL	---	6	---
PROJECT 1706-00-73 SUBTOTAL			898	6	0
TOTAL			898	6	138

* - ADDITIONAL QUANTITIES SHOWN ELSEWHERE.

3

TRAFFIC CONTROL

LOCATION	DAYS	ITEM NO. 643.0300 TRAFFIC CONTROL DRUMS EACH	DAYS	ITEM NO. 643.0420 TRAFFIC CONTROL BARRICADES TYPE III EACH	DAYS	ITEM NO. 643.0500 TRAFFIC CONTROL FLEXIBLE TUBULAR MARKER POSTS EACH	ITEM NO. 643.0600 TRAFFIC CONTROL FLEXIBLE TUBULAR MARKER BASES EACH	ITEM NO. 643.0715 TRAFFIC CONTROL WARNING LIGHTS TYPE C EACH	DAYS	ITEM NO. 643.0900 TRAFFIC CONTROL SIGNS EACH	DAYS	ITEM NO. 643.1050 TRAFFIC CONTROL SIGNS PCMS EACH	DAYS
CZ14 & CZ15	3	20	60	---	---	---	---	20	60	6	18	2	6
CZ16 & CZ17	3	20	60	---	---	---	---	20	60	6	18	2	6
CZ19 & CZ20	3	20	60	---	---	---	---	20	60	6	18	2	6
CZ23 & CZ24	3	20	60	---	---	---	---	20	60	6	18	2	6
CENTERLINE RUMBLE STRIPS	9	---	---	---	---	---	---	---	---	8	72	2	18
UNDISTRIBUTED		---	---	---	---	---	---	---	---	---	---	---	10
PROJECT 3320-00-75 SUBTOTAL			**240**		**0**				**240**		**144**		**52**
USH 14 / STH 11	10	19	190	1	10	24	24	5	50	8	80	2	20
UNDISTRIBUTED		6	60	---	---	---	---	2	20	---	---	---	10
PROJECT 1706-00-73 SUBTOTAL			**250**		**10**	**24**	**24**		**70**		**80**		**30**
	TOTAL		**490**		**10**	**24**	**24**		**310**		**224**		**82**

TRAFFIC CONTROL

	ITEM NO. 643.0100 TRAFFIC CONTROL (PROJECT) EACH
PROJECT 3320-00-75 SUBTOTAL	1
PROJECT 1706-00-73 SUBTOTAL	1
TOTAL	**2**

SURVEY PROJECT

	ITEM NO. SPV.0105.001 LS	ITEM NO. SPV.0105.002 LS
PROJECT 3320-00-75 SUBTOTAL	---	1
PROJECT 1706-00-73 SUBTOTAL	1	---
TOTAL	**1**	**1**

FENCE ITEMS

STATION	-	STATION	LENGTH	ITEM NO. 204.0170 REMOVING FENCE LF	ITEM NO. SPV.0090.001 FENCE BARBED WIRE SPECIAL LF	ITEM NO. SPV.0090.003 TEMPORARY FENCE LF	REMARKS
51+78	-	52+72	94	94	94	94	
54+80	-	56+70	190	190	190	190	
131+63	-	132+04	41	98	62	62	PART OF FENCE RUNS PERPENDICULAR TO ALIGNMENT
PROJECT 3320-00-75 SUBTOTAL				**382**	**346**	**346**	
		TOTAL		**382**	**346**	**346**	

STATE OF WISCONSIN
DEPARTMENT OF TRANSPORTATION
TRANSPORTATION PROJECT PLAT TITLE SHEET
PROJECT NO. 1706-00-21
JANESVILLE - DARIEN
STH 140 INTERSECTION
USH 14
ROCK COUNTY

4

CONVENTIONAL SYMBOLS

SECTION LINE
QUARTER LINE
SIXTEENTH LINE
NEW REFERENCE LINE
NEW R/W LINE
EXISTING R/W LINE
PROPERTY LINE — P.L.
LOT, TIE & OTHER MINOR LINES
CORPORATE LIMITS
UNDERGROUND FACILITY (COMMUNICATIONS, ELECTRIC, ETC) — W (TYPE)
FEE ACQUISITION AREA (HATCHING VARIES BY OWNER)
TEMPORARY LIMITED EASEMENT AREA
EASEMENT AREA (HIGHWAY, PERMANENT LIMITED, OR RESTRICTED DEVELOPMENT)
TRANSMISSION STRUCTURES
BUILDING — B
NATIONAL GEODETIC SURVEY MONUMENT
SIXTEENTH CORNER MONUMENT

SECTION CORNER — 23 24 26 25
NOTATION FOR COMBUSTABLE FLUIDS — CAUTION
NOTATION FOR HIGH VOLTAGE TRANSMISSION LINES — CAUTION
ELECTRIC POLE
TELEPHONE POLE
PEDESTAL (LABEL TYPE) (TV, TEL, ELEC, ETC.)
COMPENSABLE | NON-COMPENSABLE
ACCESS CONTROLLED BY ACQUISITION
NO ACCESS (BY STATUTORY AUTHORITY)
ACCESS RESTRICTED (BY PREVIOUS PROJECT OR CONTROL)
BRIDGE
R/W MONUMENT
NON-MONUMENTED R/W POINT
FOUND IRON PIN — IP
VALVE (GAS, WATER, ETC.) — (TYPE)
SIGN — SIGN
OFF-PREMISE SIGN — 1-25 — SIGN
PARCEL NUMBER — 25
UTILITY NUMBER — 40

CONVENTIONAL ABBREVIATIONS

ACCESS RIGHTS	AR	POINT OF CURVATURE	PC
ACRES	AC	POINT OF COMPOUND CURVE	PCC
AHEAD	AH	POINT OF INTERSECTION	PI
ALUMINUM	ALUM	PROPERTY LINE	PL
AND OTHERS	ET AL	RECORDED AS	(100')
BACK	BK	REFERENCE LINE	R/L
BLOCK	BLK	REMAINING	REM
BEGINNING POINT	BP	RIGHT	RT
CENTERLINE	C/L	RIGHT OF WAY	R/W
CERTIFIED SURVEY MAP	CSM	SECTION	SEC
CONCRETE	CONC	SEPTIC VENT	SEPV
COUNTY	CO	SQUARE FEET	SF
COUNTY TRUNK HIGHWAY	CTH	STATE TRUNK HIGHWAY	STH
DISTANCE	DIST	STATION	STA
CORNER	COR	SUBDIVISION	SUBD
DOCUMENT NUMBER	DOC	TANGENT	TAN
EASEMENT	EASE	TELEPHONE PEDESTAL	TP
EXISTING	EX	TEMPORARY LIMITED EASEMENT	TLE
GAS VALVE	GV		
GRID NORTH	GN	TRANSPORTATION PROJECT PLAT	TPP
HIGHWAY EASEMENT	HE		
IDENTIFICATION	ID	UNITED STATES HIGHWAY	USH
LAND CONTRACT	LC	VOLUME	V
LEFT	LT		
MONUMENT	MON		
NATIONAL GEODETIC SURVEY	NGS		
NUMBER	NO		
OUTLOT	OL		
PAGE	P		
POINT OF TANGENCY	PT		
PERMANENT LIMITED EASEMENT	PLE		
POINT OF BEGINNING	POB		

CURVE DATA

LONG CHORD	LC
LONG CHORD BEARING	LCB
RADIUS	R
DEGREE OF CURVE	D
CENTRAL ANGLE OR DELTA	Δ
LENGTH OF CURVE	L
TANGENT	T
DIRECTION AHEAD	DA
DIRECTION BACK	DB

CONVENTIONAL UTILITY SYMBOLS

WATER	W
GAS	G
TELEPHONE	T
OVERHEAD TRANSMISSION LINES	OH
ELECTRIC	E
CABLE TELEVISION	TV
FIBER OPTIC	FO
SANITARY SEWER	SAN
STORM SEWER	SS

PROJECT LOCATION

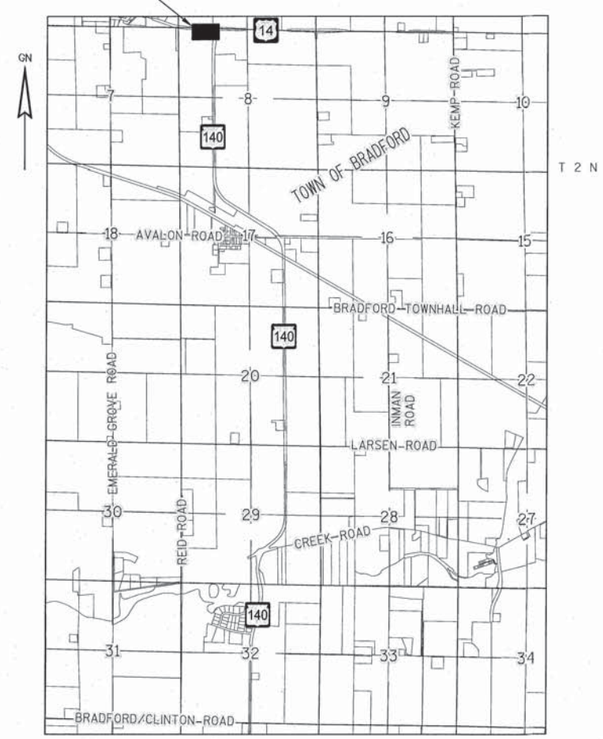

LAYOUT
SCALE 0 — 0.5 MI.

THE NOTES, CONVENTIONAL SIGNS, AND ABBREVIATIONS ARE ASSOCIATED WITH EACH TRANSPORTATION PROJECT PLAT FOR PROJECT 1706-00-21

NOTES:

POSITIONS SHOWN ON THIS PLAT ARE WISCONSIN COUNTY COORDINATES, ROCK COUNTY, NAD83(2007) IN U.S. SURVEY FEET. VALUES ARE GRID COORDINATES, GRID BEARINGS, AND GRID DISTANCES. GRID DISTANCES MAY BE USED AS GROUND DISTANCES.

ALL NEW RIGHT-OF-WAY MONUMENTS WILL BE TYPE 2 (TYPICALLY ¾" x 24" REBARS), UNLESS OTHERWISE NOTED, AND WILL BE PLACED PRIOR TO THE COMPLETION OF THE PROJECT.

ALL RIGHT-OF-WAY LINES DEPICTED IN THE NON-ACQUISITION AREAS ARE INTENDED TO RE-ESTABLISH EXISTING RIGHT-OF-WAY LINES AS DETERMINED FROM PREVIOUS PROJECTS, OTHER RECORDED DOCUMENTS, OR FROM CENTERLINE OF EXISTING PAVEMENTS.

RIGHT-OF-WAY BOUNDARIES ARE DEFINED WITH COURSES OF THE PERIMETER OF THE HIGHWAY LANDS REFERENCED TO THE U.S. PUBLIC LAND SURVEY SYSTEM OR OTHER "SURVEYS" OF PUBLIC RECORD.

DIMENSIONING FOR THE NEW RIGHT-OF-WAY IS MEASURED ALONG AND PERPENDICULAR TO THE NEW REFERENCE LINES.

A TEMPORARY LIMITED EASEMENT (TLE) IS A RIGHT FOR CONSTRUCTION PURPOSES, AS DEFINED HEREIN, INCLUDING THE RIGHT TO OPERATE NECESSARY EQUIPMENT THEREON, THE RIGHT OF INGRESS AND EGRESS, AS LONG AS REQUIRED FOR SUCH PUBLIC PURPOSE, INCLUDING THE RIGHT TO PRESERVE, PROTECT, REMOVE, OR PLANT THEREON ANY VEGETATION THAT THE HIGHWAY AUTHORITIES MAY DEEM DESIRABLE. ALL (TLEs) ON THIS PLAT EXPIRE AT THE COMPLETION OF THE CONSTRUCTION PROJECT FOR WHICH THIS INSTRUMENT IS GIVEN.

A PERMANENT LIMITED EASEMENT (PLE) IS A RIGHT FOR CONSTRUCTION AND MAINTENANCE PURPOSES, AS DEFINED HEREIN, INCLUDING THE RIGHT TO OPERATE NECESSARY EQUIPMENT THEREON AND THE RIGHT OF INGRESS AND EGRESS, AS LONG AS REQUIRED FOR SUCH PUBLIC PURPOSE, INCLUDING THE RIGHT TO PRESERVE, PROTECT, REMOVE, OR PLANT THEREON ANY VEGETATION THAT THE HIGHWAY AUTHORITIES MAY DEEM DESIRABLE, BUT WITHOUT PREJUDICE TO THE OWNER'S RIGHTS TO MAKE OR CONSTRUCT IMPROVEMENTS ON SAID LANDS OR TO FLATTEN THE SLOPES, PROVIDING SAID ACTIVITIES WILL NOT IMPAIR OR OTHERWISE ADVERSELY AFFECT THE HIGHWAY FACILITIES.

AN EASEMENT FOR HIGHWAY PURPOSES (HE), AS LONG AS SO USED, INCLUDING THE RIGHT TO PRESERVE, PROTECT, REMOVE, OR PLANT THEREON ANY VEGETATION THAT THE HIGHWAY AUTHORITIES MAY DEEM DESIRABLE.

PROPERTY LINES SHOWN ON THIS PLAT ARE DRAWN FROM DATA DERIVED FROM MAPS AND DOCUMENTS OF PUBLIC RECORD AND/OR EXISTING OCCUPATIONAL LINES. THIS PLAT MAY NOT BE A TRUE REPRESENTATION OF EXISTING PROPERTY LINES, EXCLUDING RIGHT-OF-WAY, AND SHOULD NOT BE USED AS A SUBSTITUTE FOR AN ACCURATE FIELD SURVEY.

FOR THE LATEST ACCESS/DRIVEWAY INFORMATION, CONTACT THE PLANNING UNIT OF THE WISCONSIN DEPARTMENT OF TRANSPORTATION OFFICE IN SOUTHWEST REGION OFFICE IN MADISON.

PARCEL IDENTIFICATION NUMBERS MAY NOT POINT TO ALL AREAS OF ACQUISITION, AS NOTED ON THE SCHEDULE OF LANDS & INTERESTS REQUIRED.

EXISTING HIGHWAY RIGHT-OF-WAY SHOWN HEREIN IS BASED ON THE FOLLOWING POINTS OF REFERENCE:

EXISTING HIGHWAY RIGHT-OF-WAY FOR STH 140 ESTABLISHED FROM PREVIOUS STATE AID PROJECT NO. 1448, 1704-00-22, CSM DOC 1229089 AND PLAT OF SURVEY COMPLETED BY COMBS & ASSOCIATES, INC ON DECEMBER 23, 1985.

EXISTING HIGHWAY RIGHT-OF-WAY FOR USH 14 ESTABLISHED FROM PREVIOUS R/W PROJECT NUMBER 1704-00-22, CSM DOC 1229089 AND PLAT OF SURVEY COMPLETED BY COMBS & ASSOCIATES INC ON DECEMBER 23, 1985.

4

PROJECT NUMBER 1706-00-21 4.01
SHEET 2 OF 2

2027591
RANDAL LEYES
REGISTER OF DEEDS
ROCK COUNTY, WI
RECORDED ON
05/28/2015 09:35:42AM
REC FEE: 25.00
PAGES: 2
** The above recording information verifies that this document has been electronically recorded and returned to the submitter.**

TRANSPORTATION PROJECT PLAT NO: 1706-00-21 - 4.01

THAT PART OF THE NW 1/4 OF THE NW 1/4, OF SECTION 8, T. 2 N., R. 14 E., TOWN OF BRADFORD, ROCK COUNTY, WISCONSIN.

RELOCATION ORDER USH 14, JANESVILLE-DARIEN, STH 140 INTERSECTION.

TO PROPERLY ESTABLISH, LAY OUT, WIDEN, ENLARGE, EXTEND, CONSTRUCT, RECONSTRUCT, IMPROVE, OR MAINTAIN A PORTION OF THE HIGHWAY DESIGNATED ABOVE, THE STATE OF WISCONSIN DEPARTMENT OF TRANSPORTATION DEEMS IT NECESSARY TO RELOCATE OR CHANGE SAID HIGHWAY AND ACQUIRE CERTAIN LANDS AND INTERESTS OR RIGHTS IN LANDS FOR THE ABOVE PROJECT.

TO EFFECT THIS CHANGE, PURSUANT TO AUTHORITY GRANTED UNDER SECTION 84.02 (3), 84.09 AND 84.30, WISCONSIN STATUTES, THE DEPARTMENT OF TRANSPORTATION HEREBY ORDERS THAT:
1. THAT PORTION OF SAID HIGHWAY AS SHOWN ON THIS PLAT IS LAID OUT AND ESTABLISHED TO THE LINES AND WIDTHS AS SO SHOWN FOR THE ABOVE PROJECT.
2. THE LANDS OR INTERESTS OR RIGHTS IN LANDS AS SHOWN ON THIS PLAT ARE REQUIRED BY THE DEPARTMENT FOR THE ABOVE PROJECT AND SHALL BE ACQUIRED IN THE NAME OF THE STATE OF WISCONSIN, PURSUANT TO THE PROVISIONS OF SECTION 84.09 (1) OR (2), WISCONSIN STATUTES.

SCALE, FEET
0 50 100

GN

RESERVED FOR REGISTER OF DEEDS
PROJECT NUMBER 1706-00-21 - 4.01
SHEET 1 OF 2
AMENDMENT NO:

FOR ADDITIONAL INFORMATION REFER TO THE TITLE SHEET, RECORDED AS SHEET 2 OF 2.

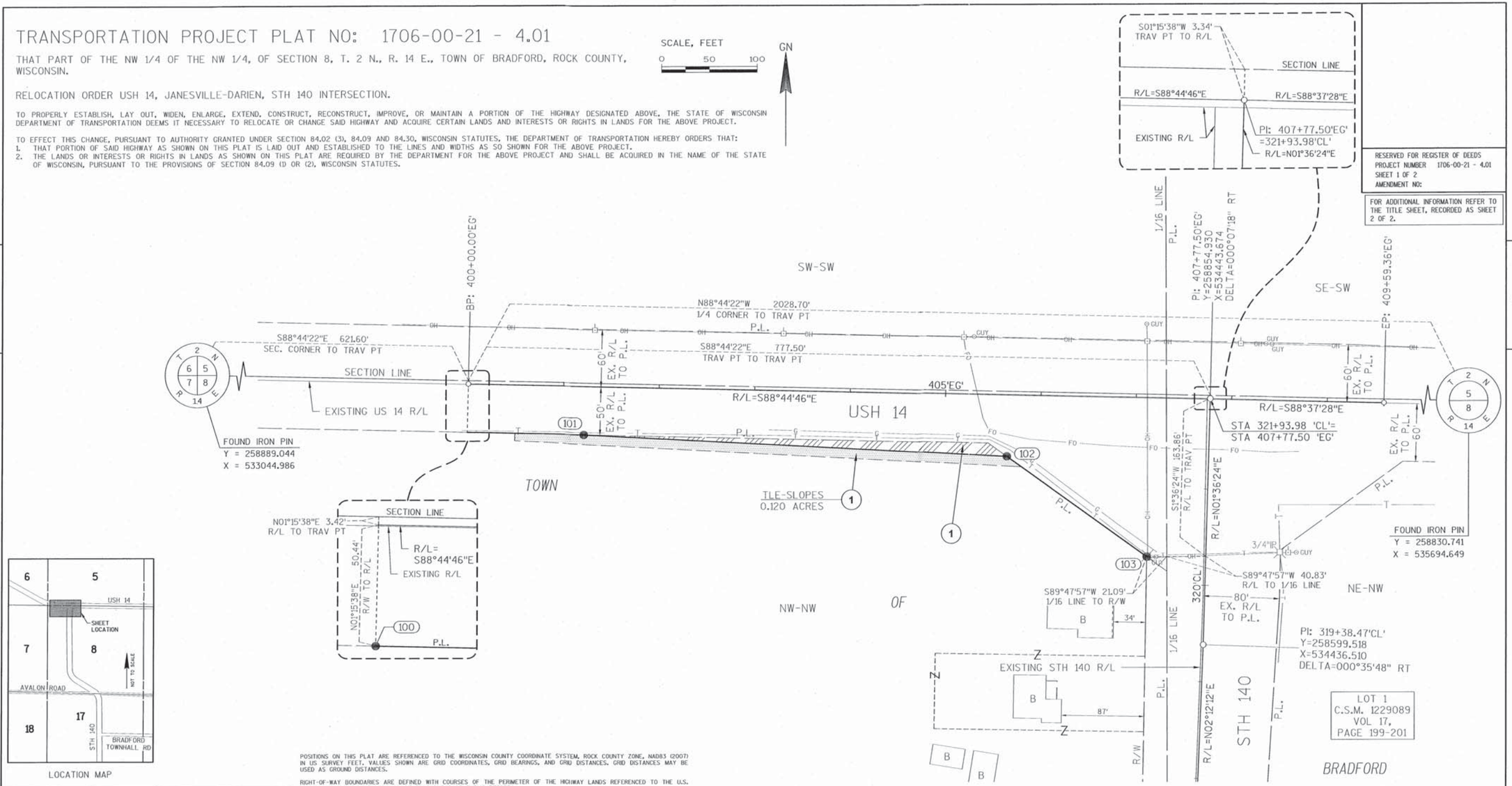

LOCATION MAP

Batterman

I, JEFFREY R. GARDE, PROFESSIONAL LAND SURVEYOR, HEREBY CERTIFY THAT IN FULL COMPLIANCE WITH THE PROVISIONS OF SECTION 84.095 OF THE WISCONSIN STATUTES AND UNDER THE DIRECTION OF THE DEPARTMENT OF TRANSPORTATION, I HAVE SURVEYED AND MAPPED THIS TRANSPORTATION PROJECT PLAT 1706-00-21 - 4.01 AND SUCH PLAT CORRECTLY REPRESENTS ALL EXTERIOR BOUNDARIES OF THE SURVEYED LAND.

WISCONSIN JEFFREY R. GARDE S-2766 BRODHEAD WIS. LAND SURVEYOR

SIGNATURE: Jeffrey R. Garde DATE: 5/22/15
PRINT NAME: JEFFREY R. GARDE
REGISTRATION NUMBER: S-2766

THIS PLAT AND RELOCATION ORDER ARE APPROVED FOR THE WISCONSIN DEPARTMENT OF TRANSPORTATION SOUTHWEST REGION OFFICE.

SIGNATURE: David R. Miller DATE: 5/27/15
PRINT NAME: DAVID R. MILLER

POSITIONS ON THIS PLAT ARE REFERENCED TO THE WISCONSIN COUNTY COORDINATE SYSTEM, ROCK COUNTY ZONE, NAD83 (2007) IN US SURVEY FEET. VALUES SHOWN ARE GRID COORDINATES, GRID BEARINGS, AND GRID DISTANCES. GRID DISTANCES MAY BE USED AS GROUND DISTANCES.

RIGHT-OF-WAY BOUNDARIES ARE DEFINED WITH COURSES OF THE PERIMETER OF THE HIGHWAY LANDS REFERENCED TO THE U.S. PUBLIC LAND SURVEY SYSTEM OR OTHER SURVEYS OF PUBLIC RECORD.

EXISTING HIGHWAY RIGHT-OF-WAY SHOWN HEREON IS BASED ON THE FOLLOWING POINTS OF REFERENCE:
EXISTING HIGHWAY RIGHT-OF-WAY FOR STH 140 ESTABLISHED FROM PREVIOUS STATE AID PROJECT NO. 1448, 1704-00-22, CSM DOC. 1229089 AND PLAT OF SURVEY COMPLETED BY COMBS & ASSOCIATES, INC ON DECEMBER 23, 1985.

EXISTING HIGHWAY RIGHT-OF-WAY FOR USH 14 ESTABLISHED FROM PREVIOUS R/W PROJECT NUMBER 1704-00-22, CSM DOC. 1229089 AND PLAT OF SURVEY COMPLETED BY COMBS & ASSOCIATES, INC ON DECEMBER 23, 1985.

FOR THE LATEST ACCESS/DRIVEWAY INFORMATION, CONTACT THE PLANNING UNIT OF THE WISCONSIN DEPARTMENT OF TRANSPORTATION SOUTHWEST REGION OFFICE IN MADISON.

SCHEDULE OF LANDS & INTERESTS REQUIRED

OWNERS NAMES ARE SHOWN FOR REFERENCE PURPOSES ONLY, AND ARE SUBJECT TO CHANGE PRIOR TO TRANSFER OF LAND INTEREST TO THE DEPARTMENT.

PARCEL NUMBER	OWNER(S)	INTEREST REQUIRED	ACRES REQUIRED			TLE ACRES
			R/W NEW	R/W EXISTING	R/W TOTAL	
1	EMERALD HEIGHTS INC	FEE, TLE	0.070	--	0.070	0.120

R/W STATION & OFFSET

Point #	STATION	OFFSET
100	400+00.00'EG'	50.43'
101	401+22.01'EG'	50.50'
102	405+65.60'EG'	64.23'
103	407+14.58'EG'	165.42'

R/W COURSE TABLE

COURSE	BEARING	DISTANCE
101-100	N88°42'59"W	122.01'
102-101	N86°58'20"W	443.80'
103-102	N54°33'40"W	180.10'

FILE NAME : J:\31900-31950\31902 WI DOT - STH 140\DESIGN\TPP\31902-TPP USH 14.DWG
APPRAISAL PLAT DATE : _____

PLOT DATE : 5/27/2015 10:49 AM PLOT BY : CARYN MELLOM PLOT NAME : PLOT SCALE : **********

1706-00-21 4.01

STATE OF WISCONSIN
DEPARTMENT OF TRANSPORTATION
TRANSPORTATION PROJECT PLAT TITLE SHEET
PROJECT NO. 3320-00-23
BERGEN - EMERALD GROVE
BRADFORD/CLINTON ROAD TO AVALON ROAD

STH 140
ROCK COUNTY

CONVENTIONAL SYMBOLS

SECTION LINE
QUARTER LINE
SIXTEENTH LINE
NEW REFERENCE LINE
NEW R/W LINE
EXISTING R/W LINE
PROPERTY LINE (P.L.)
LOT, TIE & OTHER MINOR LINES
CORPORATE LIMITS
UNDERGROUND FACILITY (COMMUNICATIONS, ELECTRIC, ETC) (TYPE)
FEE ACQUISITION AREA (HATCHING VARIES BY OWNER)
TEMPORARY LIMITED EASEMENT AREA
EASEMENT AREA (HIGHWAY, PERMANENT LIMITED, OR RESTRICTED DEVELOPMENT)
TRANSMISSION STRUCTURES
BUILDING
NATIONAL GEODETIC SURVEY MONUMENT
SIXTEENTH CORNER MONUMENT
TLE BOUNDARY POINT (135)

SECTION CORNER
NOTATION FOR COMBUSTABLE FLUIDS (CAUTION)
NOTATION FOR HIGH VOLTAGE TRANSMISSION LINES (CAUTION)

R/W MONUMENT
NON-MONUMENTED R/W POINT
FOUND IRON PIN
VALVE (GAS, WATER, ETC.) (TYPE)
SIGN
OFF-PREMISE SIGN (I-25)

	COMPENSABLE	NON-COMPENSABLE
ELECTRIC POLE		
TELEPHONE POLE		
PEDESTAL (LABEL TYPE) (TV, TEL, ELEC, ETC.)		

ACCESS CONTROLLED BY ACQUISITION
NO ACCESS (BY STATUTORY AUTHORITY)
ACCESS RESTRICTED (BY PREVIOUS PROJECT OR CONTROL)

BRIDGE
PARCEL NUMBER (25)
UTILITY NUMBER (40)

CONVENTIONAL ABBREVIATIONS

ACCESS RIGHTS	AR	POINT OF COMPOUND CURVE	PCC
ACRES	AC	POINT OF INTERSECTION	PI
AHEAD	AH	PROPERTY LINE	PL
ALUMINUM	ALUM	RECORDED AS	(100')
AND OTHERS	ET AL	REFERENCE LINE	R/L
BACK	BK	REMAINING	REM
BLOCK	BLK	RIGHT	RT
CENTERLINE	C/L	RIGHT OF WAY	R/W
CERTIFIED SURVEY MAP	CSM	SECTION	SEC
CONCRETE	CONC	SEPTIC VENT	SEPV
COUNTY	CO	SQUARE FEET	SF
COUNTY TRUNK HIGHWAY	CTH	STATE TRUNK HIGHWAY	STH
DISTANCE	DIST	STATION	STA
CORNER	COR	SUBDIVISION	SUBD
DOCUMENT NUMBER	DOC	TANGENT	TAN
EASEMENT	EASE	TELEPHONE PEDESTAL	TP
EXISTING	EX	TEMPORARY LIMITED EASEMENT	TLE
GAS VALVE	GV	TRANSPORTATION PROJECT PLAT	TPP
GRID NORTH	GN	UNITED STATES HIGHWAY	USH
HIGHWAY EASEMENT	HE	VOLUME	V
IDENTIFICATION	ID		
LAND CONTRACT	LC		
LEFT	LT		
MONUMENT	MON		
NATIONAL GEODETIC SURVEY NUMBER	NGS NO		
OUTLOT	OL		
PAGE	P		
POINT OF TANGENCY	PT		
PERMANENT LIMITED EASEMENT	PLE		
POINT OF BEGINNING	POB		
POINT OF CURVATURE	PC		

CURVE DATA

LONG CHORD	LC
LONG CHORD BEARING	LCB
RADIUS	R
DEGREE OF CURVE	D
CENTRAL ANGLE OR DELTA	Δ
LENGTH OF CURVE	L
TANGENT	T
DIRECTION AHEAD	DA
DIRECTION BACK	DB

CONVENTIONAL UTILITY SYMBOLS

WATER	W
GAS	G
TELEPHONE	T
OVERHEAD TRANSMISSION LINES	OH
ELECTRIC	E
CABLE TELEVISION	TV
FIBER OPTIC	FO
SANITARY SEWER	SAN
STORM SEWER	SS

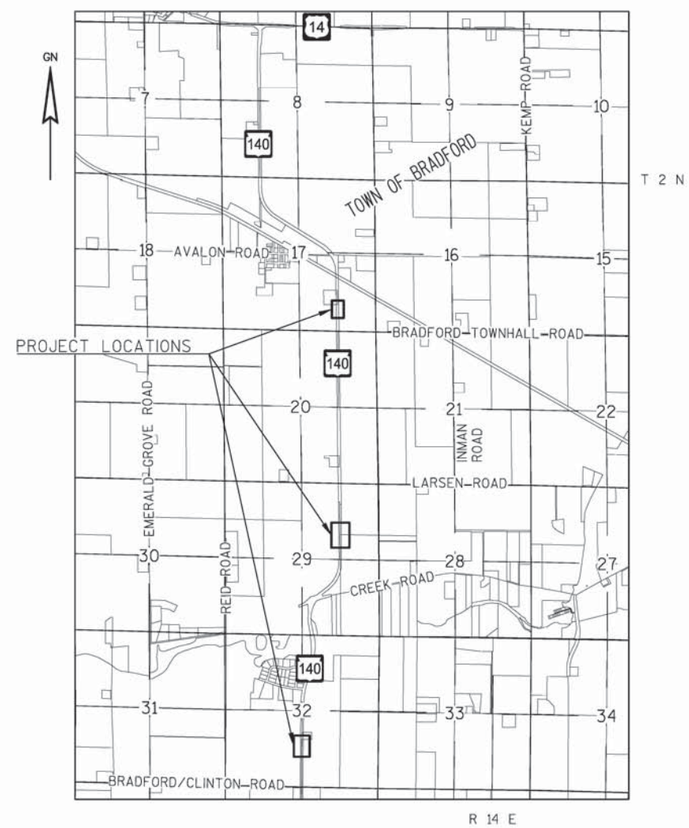

LAYOUT
SCALE 0 0.5 MI.

THE NOTES, CONVENTIONAL SIGNS, AND ABBREVIATIONS ARE ASSOCIATED WITH EACH TRANSPORTATION PROJECT PLAT FOR PROJECT 3320-00-23

NOTES:

POSITIONS SHOWN ON THIS PLAT ARE WISCONSIN COUNTY COORDINATES, ROCK COUNTY, NAD83(2007) IN U.S. SURVEY FEET. VALUES ARE GRID COORDINATES, GRID BEARINGS, AND GRID DISTANCES. GRID DISTANCES MAY BE USED AS GROUND DISTANCES.

ALL NEW RIGHT-OF-WAY MONUMENTS WILL BE TYPE 2 (TYPICALLY ¾" x 24" REBARS), UNLESS OTHERWISE NOTED, AND WILL BE PLACED PRIOR TO THE COMPLETION OF THE PROJECT.

ALL RIGHT-OF-WAY LINES DEPICTED IN THE NON-ACQUISITION AREAS ARE INTENDED TO RE-ESTABLISH EXISTING RIGHT-OF-WAY LINES AS DETERMINED FROM PREVIOUS PROJECTS, OTHER RECORDED DOCUMENTS, OR FROM CENTERLINE OF EXISTING PAVEMENTS.

RIGHT-OF-WAY BOUNDARIES ARE DEFINED WITH COURSES OF THE PERIMETER OF THE HIGHWAY LANDS REFERENCED TO THE U.S. PUBLIC LAND SURVEY SYSTEM OR OTHER "SURVEYS" OF PUBLIC RECORD.

DIMENSIONING FOR THE NEW RIGHT-OF-WAY IS MEASURED ALONG AND PERPENDICULAR TO THE NEW REFERENCE LINES.

A TEMPORARY LIMITED EASEMENT (TLE) IS A RIGHT FOR CONSTRUCTION PURPOSES, AS DEFINED HEREIN, INCLUDING THE RIGHT TO OPERATE NECESSARY EQUIPMENT THEREON, THE RIGHT OF INGRESS AND EGRESS, AS LONG AS REQUIRED FOR SUCH PUBLIC PURPOSE, INCLUDING THE RIGHT TO PRESERVE, PROTECT, REMOVE, OR PLANT THEREON ANY VEGETATION THAT THE HIGHWAY AUTHORITIES MAY DEEM DESIRABLE. ALL (TLEs) ON THIS PLAT EXPIRE AT THE COMPLETION OF THE CONSTRUCTION PROJECT FOR WHICH THIS INSTRUMENT IS GIVEN.

A PERMANENT LIMITED EASEMENT (PLE) IS A RIGHT FOR CONSTRUCTION AND MAINTENANCE PURPOSES, AS DEFINED HEREIN, INCLUDING THE RIGHT TO OPERATE NECESSARY EQUIPMENT THEREON AND THE RIGHT OF INGRESS AND EGRESS, AS LONG AS REQUIRED FOR SUCH PUBLIC PURPOSE, INCLUDING THE RIGHT TO PRESERVE, PROTECT, REMOVE, OR PLANT THEREON ANY VEGETATION THAT THE HIGHWAY AUTHORITIES MAY DEEM DESIRABLE, BUT WITHOUT PREJUDICE TO THE OWNER'S RIGHTS TO MAKE OR CONSTRUCT IMPROVEMENTS ON SAID LANDS OR TO FLATTEN THE SLOPES, PROVIDING SAID ACTIVITIES WILL NOT IMPAIR OR OTHERWISE ADVERSELY AFFECT THE HIGHWAY FACILITIES.

AN EASEMENT FOR HIGHWAY PURPOSES (HE), AS LONG AS SO USED, INCLUDING THE RIGHT TO PRESERVE, PROTECT, REMOVE, OR PLANT THEREON ANY VEGETATION THAT THE HIGHWAY AUTHORITIES MAY DEEM DESIRABLE.

PROPERTY LINES SHOWN ON THIS PLAT ARE DRAWN FROM DATA DERIVED FROM MAPS AND DOCUMENTS OF PUBLIC RECORD AND/OR EXISTING OCCUPATIONAL LINES. THIS PLAT MAY NOT BE A TRUE REPRESENTATION OF EXISTING PROPERTY LINES, EXCLUDING RIGHT-OF-WAY, AND SHOULD NOT BE USED AS A SUBSTITUTE FOR AN ACCURATE FIELD SURVEY.

FOR THE LATEST ACCESS/DRIVEWAY INFORMATION, CONTACT THE PLANNING UNIT OF THE WISCONSIN DEPARTMENT OF TRANSPORTATION OFFICE IN SOUTHWEST REGION OFFICE IN MADISON.

PARCEL IDENTIFICATION NUMBERS MAY NOT POINT TO ALL AREAS OF ACQUISITION, AS NOTED ON THE SCHEDULE OF LANDS & INTERESTS REQUIRED.

EXISTING HIGHWAY RIGHT-OF-WAY SHOWN HEREIN IS BASED ON THE FOLLOWING POINTS OF REFERENCE:

EXISTING RIGHT-OF-WAY FOR STH 140 ESTABLISHED FROM PREVIOUS STATE AID PROJECT NO. 1448, CSM DOC. 900797, CSM DOC. 1717789, CSM DOC. 2005544 AND PLAT OF SURVEY BY COMBS & ASSOCIATES, INC ON FEBRUARY 25, 2014.

PROJECT NUMBER 3320-00-23 - 4.01
SHEET 2 OF 2

FILE NAME : J:\31900-31950\31902 WI DOT - STH 140\DESIGN\TPP\31902-TITLE SHEET STH 140.DWG
APPRAISAL PLAT DATE : 8/04/2015
PLOT DATE : 2/23/2015 2:36 PM
PLOT BY : CARYN MELLOM
PLOT NAME : ----------
3320-00-23 4.01

2033405
RANDAL LEYES
REGISTER OF DEEDS
ROCK COUNTY, WI
RECORDED ON
08/12/2015 02:16:24PM
REC FEE: 25.00
PAGES: 2
** The above recording information verifies that this document has been electronically recorded and returned to the submitter.**

TRANSPORTATION PROJECT PLAT NO: 3320-00-23 - 4.01

THAT PART OF THE NE 1/4 OF THE SW 1/4, AND THE SE 1/4 OF THE SW 1/4 OF SECTION 32, ALL IN T. 2 N., R. 14 E., TOWN OF BRADFORD, ROCK COUNTY, WISCONSIN.

RELOCATION ORDER STH 140, BERGEN - EMERALD GROVE, BRADFORD/CLINTON ROAD TO AVALON ROAD.

TO PROPERLY ESTABLISH, LAY OUT, WIDEN, ENLARGE, EXTEND, CONSTRUCT, RECONSTRUCT, IMPROVE, OR MAINTAIN A PORTION OF THE HIGHWAY DESIGNATED ABOVE, THE STATE OF WISCONSIN DEPARTMENT OF TRANSPORTATION DEEMS IT NECESSARY TO RELOCATE OR CHANGE SAID HIGHWAY AND ACQUIRE CERTAIN LANDS AND INTERESTS OR RIGHTS IN LANDS FOR THE ABOVE PROJECT.

TO EFFECT THIS CHANGE, PURSUANT TO AUTHORITY GRANTED UNDER SECTION 84.02 (3), 84.09 AND 84.30, WISCONSIN STATUTES, THE DEPARTMENT OF TRANSPORTATION HEREBY ORDERS THAT:
1. THAT PORTION OF SAID HIGHWAY AS SHOWN ON THIS PLAT IS LAID OUT AND ESTABLISHED TO THE LINES AND WIDTHS AS SO SHOWN FOR THE ABOVE PROJECT.
2. THE LANDS OR INTERESTS OR RIGHTS IN LANDS AS SHOWN ON THIS PLAT ARE REQUIRED BY THE DEPARTMENT FOR THE ABOVE PROJECT AND SHALL BE ACQUIRED IN THE NAME OF THE STATE OF WISCONSIN, PURSUANT TO THE PROVISIONS OF SECTION 84.09 (1) OR (2), WISCONSIN STATUTES.

POSITIONS ON THIS PLAT ARE REFERENCED TO THE WISCONSIN COUNTY COORDINATE SYSTEM, ROCK COUNTY ZONE, NAD83 (2007) IN US SURVEY FEET. VALUES SHOWN ARE GRID COORDINATES, GRID BEARINGS, AND GRID DISTANCES. GRID DISTANCES MAY BE USED AS GROUND DISTANCES.

RIGHT-OF-WAY BOUNDARIES ARE DEFINED WITH COURSES OF THE PERIMETER OF THE HIGHWAY LANDS REFERENCED TO THE U.S. PUBLIC LAND SURVEY SYSTEM OR OTHER SURVEYS OF PUBLIC RECORD.

EXISTING HIGHWAY RIGHT-OF-WAY SHOWN HEREON IS BASED ON THE FOLLOWING POINTS OF REFERENCE: EXISTING HIGHWAY RIGHT-OF-WAY FOR STH 140 ESTABLISHED FROM PREVIOUS STATE AID PROJECT NO. 1448 AND CSM DOC. 900797.

FOR THE LATEST ACCESS/DRIVEWAY INFORMATION, CONTACT THE PLANNING UNIT OF THE WISCONSIN DEPARTMENT OF TRANSPORTATION SOUTHWEST REGION OFFICE IN MADISON.

SCALE, FEET
0 50 100
GN

RESERVED FOR REGISTER OF DEEDS
PROJECT NUMBER 3320-00-23 - 4.01
SHEET 1 OF 2
AMENDMENT NO:

FOR ADDITIONAL INFORMATION REFER TO THE TITLE SHEET, RECORDED AS SHEET 2 OF 2.

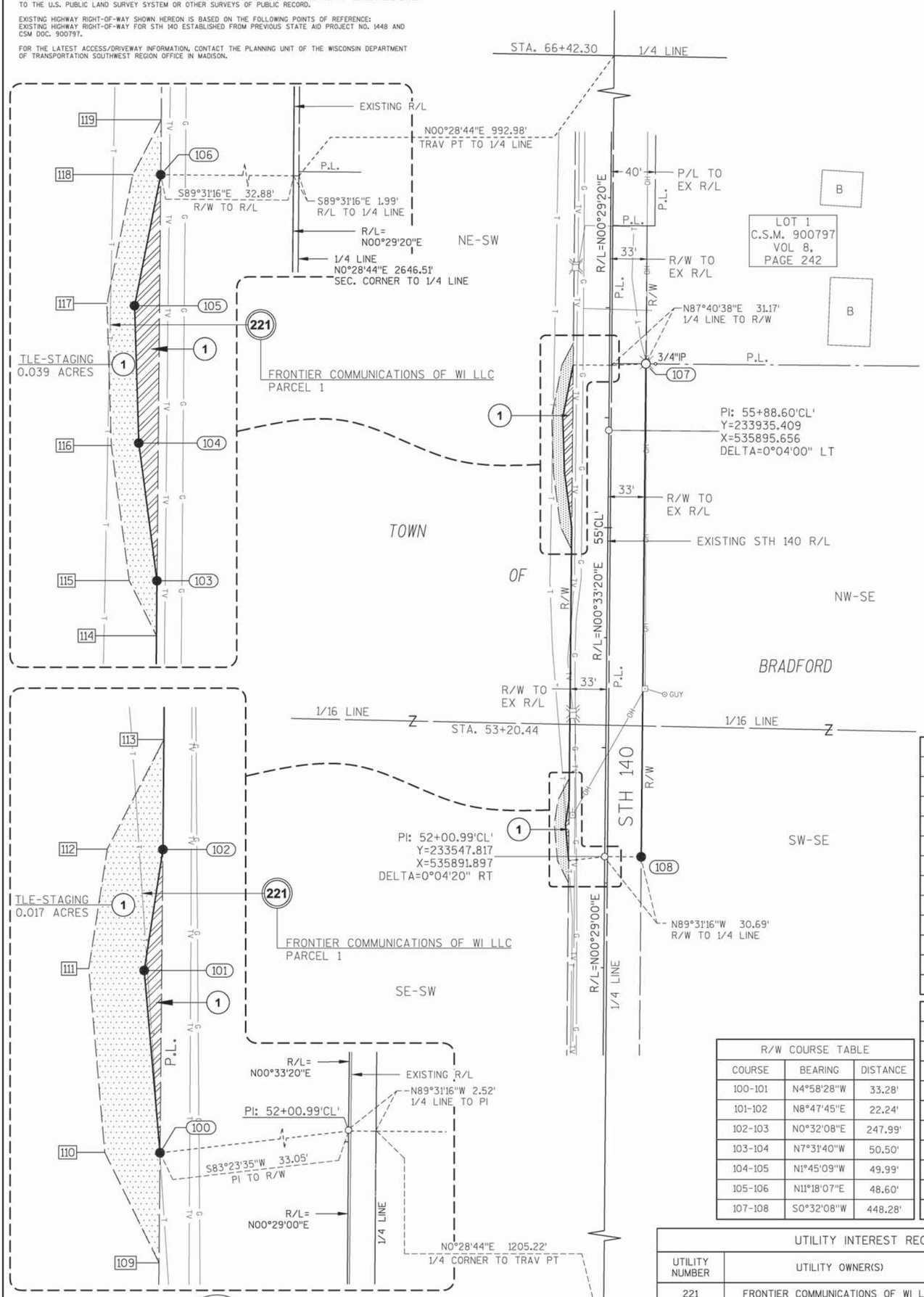

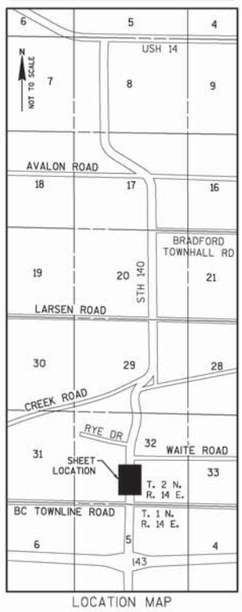

LOCATION MAP

TLE STATION & OFFSET		
Point #	STATION	OFFSET
109	51+76.91'CL'	32.82'
110	51+96.91'CL'	42.84'
111	52+30.24'CL'	46.07'
112	52+52.01'CL'	42.92'
113	52+72.01'CL'	32.82'
114	54+80.00'CL'	32.89'
115	55+00.00'CL'	43.00'
116	55+49.09'CL'	49.97'
117	56+00.75'CL'	52.04'
118	56+47.74'CL'	43.06'
119	56+67.74'CL'	32.87'

R/W STATION & OFFSET		
Point #	STATION	OFFSET
100	51+96.91'CL'	32.80'
101	52+30.00'CL'	36.00'
102	52+52.01'CL'	32.81'
103	55+00.00'CL'	32.90'
104	55+50.00'CL'	40.00'
105	56+00.00'CL'	42.00'
106	56+47.74'CL'	32.88'
107	56+49.28'CL'	33.12'
108	52+01.04'CL'	33.21'

R/W COURSE TABLE		
COURSE	BEARING	DISTANCE
100-101	N4°58'28"W	33.28'
101-102	N8°47'45"E	22.24'
102-103	N0°32'08"E	247.99'
103-104	N7°31'40"W	50.50'
104-105	N1°45'09"W	49.99'
105-106	N11°18'07"E	48.60'
107-108	S0°32'08"W	448.28'

UTILITY INTEREST REQUIRED		
UTILITY NUMBER	UTILITY OWNER(S)	INTEREST REQUIRED
221	FRONTIER COMMUNICATIONS OF WI LLC	RELEASE OF RIGHTS

SCHEDULE OF LANDS & INTERESTS REQUIRED						
			OWNERS NAMES ARE SHOWN FOR REFERENCE PURPOSES ONLY, AND ARE SUBJECT TO CHANGE PRIOR TO TRANSFER OF LAND INTEREST TO THE DEPARTMENT.			
PARCEL NUMBER	OWNER(S)	INTEREST REQUIRED	ACRES REQUIRED			TLE ACRES
			R/W NEW	R/W EXISTING	R/W TOTAL	
1	GORDON H WAITE	FEE, TLE	0.020	0.362	0.382	0.056

221 FRONTIER COMMUNICATIONS OF WI LLC
DOCUMENT NO. 750944
VOL. 344, PAGE 540 - PARCEL 1

Batterman

I, JEFFREY R. GARDE, PROFESSIONAL LAND SURVEYOR, HEREBY CERTIFY THAT IN FULL COMPLIANCE WITH THE PROVISIONS OF SECTION 84.095 OF THE WISCONSIN STATUTES AND UNDER THE DIRECTION OF THE DEPARTMENT OF TRANSPORTATION, I HAVE SURVEYED AND MAPPED THIS TRANSPORTATION PROJECT PLAT 3320-00-23 - 4.01 AND SUCH PLAT CORRECTLY REPRESENTS ALL EXTERIOR BOUNDARIES OF THE SURVEYED LAND.

WISCONSIN JEFFREY R. GARDE S-2766 BRODHEAD WIS. LAND SURVEYOR

SIGNATURE: Jeffrey R. Garde DATE: 8/04/15
PRINT NAME: JEFFREY R. GARDE
REGISTRATION NUMBER: S-2766

THIS PLAT AND RELOCATION ORDER ARE APPROVED FOR THE WISCONSIN DEPARTMENT OF TRANSPORTATION SOUTHWEST REGION OFFICE.

SIGNATURE: David R. Miller DATE: 8/12/15
PRINT NAME: DAVID R. MILLER

FILE NAME : J:\31900-31950\31902 WI DOT - STH 140\DESIGN\TPP\31902-TPP STH 140.DWG
APPRAISAL PLAT DATE : 8/04/2015
PLOT DATE : 8/12/2015 11:01 AM
PLOT BY : Caryn Mellom
PLOT NAME : PLOT SCALE : ==========
3320-00-23
4.01
70

2042350
RANDAL LEYES
REGISTER OF DEEDS
ROCK COUNTY, WI
RECORDED ON
12/22/2015 12:36:15PM
REC FEE: 25.00
FILED: TPP-E78
PAGES: 1
** The above recording information is hereby acknowledged as accurately and returned to the submitter.**

4

TRANSPORTATION PROJECT PLAT NO: 3320-00-23 - 4.02, AMENDMENT NO: 1

AMENDMENT REMOVES UTILITY NUMBER 202 AND ADDS UTILITY NUMBER 241 TO TRANSPORTATION PROJECT PLAT NO: 3320-00-23 - 4.02 RECORDED AS DOCUMENT NO. 2033749

THAT PART OF LOT 1 CSM 2005544 IN THE SE 1/4 OF THE NE 1/4 AND THAT PART OF THE SW 1/4 OF THE NE 1/4, ALL IN SECTION 29, T. 2 N., R. 14 E., TOWN OF BRADFORD, ROCK COUNTY, WISCONSIN.

RELOCATION ORDER STH 140, BERGEN-EMERALD GROVE, BRADFORD/CLINTON ROAD TO AVALON ROAD.

TO PROPERLY ESTABLISH, LAY OUT, WIDEN, ENLARGE, EXTEND, CONSTRUCT, RECONSTRUCT, IMPROVE, OR MAINTAIN A PORTION OF THE HIGHWAY DESIGNATED ABOVE, THE STATE OF WISCONSIN DEPARTMENT OF TRANSPORTATION DEEMS IT NECESSARY TO RELOCATE OR CHANGE SAID HIGHWAY AND ACQUIRE CERTAIN LANDS AND INTERESTS OR RIGHTS IN LANDS FOR THE ABOVE PROJECT.

TO EFFECT THIS CHANGE, PURSUANT TO AUTHORITY GRANTED UNDER SECTION 84.02 (3), 84.09 AND 84.30, WISCONSIN STATUTES, THE DEPARTMENT OF TRANSPORTATION HEREBY ORDERS THAT:
1. THAT PORTION OF SAID HIGHWAY AS SHOWN ON THIS PLAT IS LAID OUT AND ESTABLISHED TO THE LINES AND WIDTHS AS SO SHOWN FOR THE ABOVE PROJECT.
2. THE LANDS OR INTERESTS OR RIGHTS IN LANDS AS SHOWN ON THIS PLAT ARE REQUIRED BY THE DEPARTMENT FOR THE ABOVE PROJECT AND SHALL BE ACQUIRED IN THE NAME OF THE STATE OF WISCONSIN, PURSUANT TO THE PROVISIONS OF SECTION 84.09 (1) OR (2), WISCONSIN STATUTES.

POSITIONS ON THIS PLAT ARE REFERENCED TO THE WISCONSIN COUNTY COORDINATE SYSTEM, ROCK COUNTY ZONE, NAD83 (2007) IN US SURVEY FEET. VALUES SHOWN ARE GRID COORDINATES, GRID BEARINGS, AND GRID DISTANCES. GRID DISTANCES MAY BE USED AS GROUND DISTANCES.

RIGHT-OF-WAY BOUNDARIES ARE DEFINED WITH COURSES OF THE PERIMETER OF THE HIGHWAY LANDS REFERENCED TO THE U.S. PUBLIC LAND SURVEY SYSTEM OR OTHER SURVEYS OF PUBLIC RECORD.

EXISTING HIGHWAY RIGHT-OF-WAY SHOWN HEREON IS BASED ON THE FOLLOWING POINTS OF REFERENCE: EXISTING HIGHWAY RIGHT-OF-WAY FOR STH 140 ESTABLISHED FROM PREVIOUS STATE AID PROJECT NO. 1448, CSM DOC. 2005544 AND PLAT OF SURVEY COMPLETED BY COMBS & ASSOCIATES, INC ON FEBRUARY 25, 2014.

FOR THE LATEST ACCESS/DRIVEWAY INFORMATION, CONTACT THE PLANNING UNIT OF THE WISCONSIN DEPARTMENT OF TRANSPORTATION SOUTHWEST REGION OFFICE IN MADISON.

SCALE, FEET
0 50 100

RESERVED FOR REGISTER OF DEEDS
PROJECT NUMBER 3320-00-23 - 4.02
AMENDMENT NO: 1

UTILITY INTEREST REQUIRED		
UTILITY NUMBER	UTILITY OWNER(S)	INTEREST REQUIRED
241	ROCK ENERGY COOPERATIVE - ELECTRIC	RELEASE OF RIGHTS
221	FRONTIER COMMUNICATIONS OF WI LLC	RELEASE OF RIGHTS

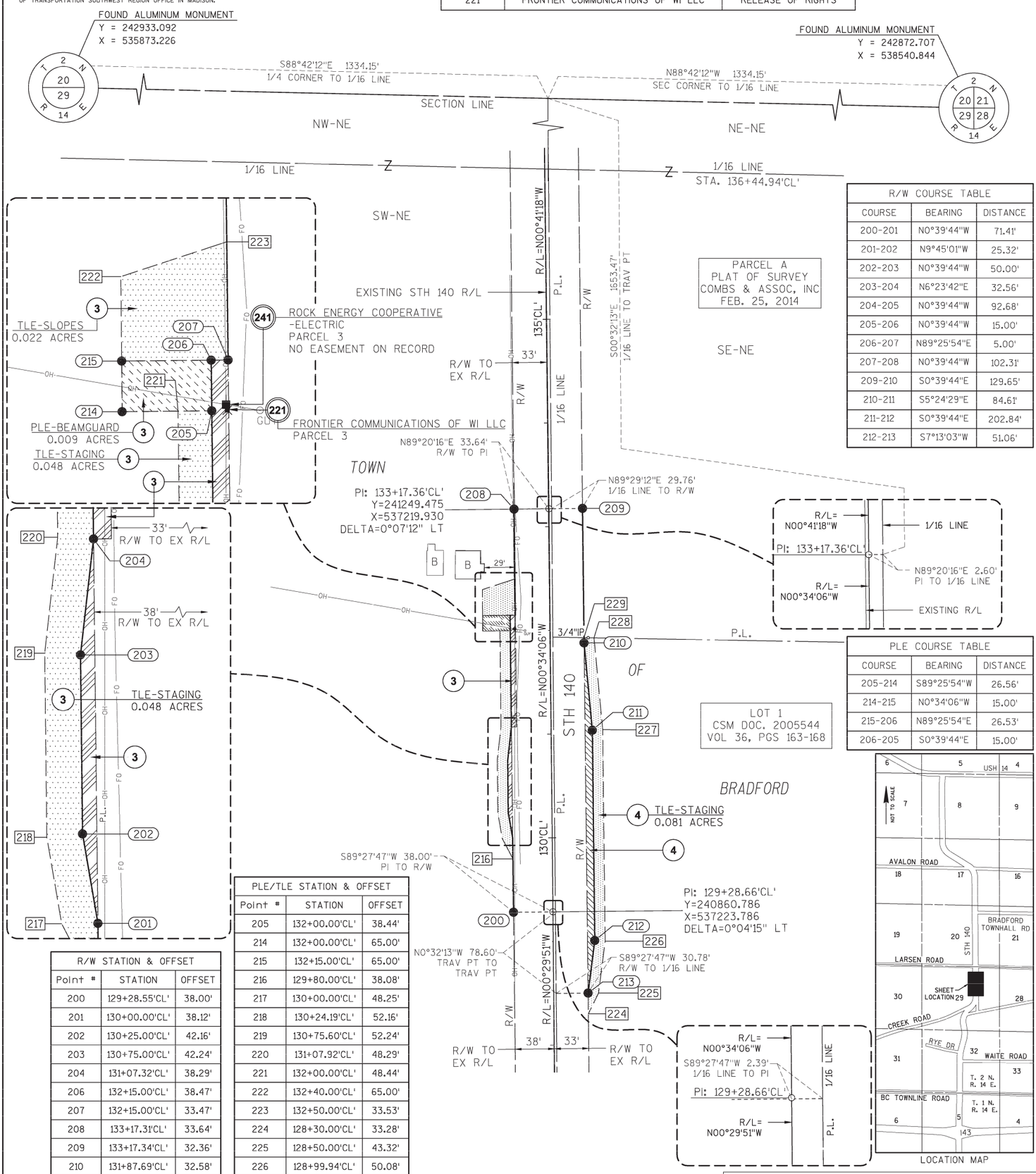

R/W COURSE TABLE		
COURSE	BEARING	DISTANCE
200-201	N0°39'44"W	71.41'
201-202	N9°45'01"W	25.32'
202-203	N0°39'44"W	50.00'
203-204	N6°23'42"E	32.56'
204-205	N0°39'44"W	92.68'
205-206	N0°39'44"W	15.00'
206-207	N89°25'54"E	5.00'
207-208	N0°39'44"W	102.31'
209-210	S0°39'44"E	129.65'
210-211	S5°24'29"E	84.61'
211-212	S0°39'44"E	202.84'
212-213	S7°13'03"W	51.06'

PLE COURSE TABLE		
COURSE	BEARING	DISTANCE
205-214	S89°25'54"W	26.56'
214-215	N0°34'06"W	15.00'
215-206	N89°25'54"E	26.53'
206-205	S0°39'44"E	15.00'

R/W STATION & OFFSET		
Point #	STATION	OFFSET
200	129+28.55'CL'	38.00'
201	130+00.00'CL'	38.12'
202	130+25.00'CL'	42.16'
203	130+75.00'CL'	42.24'
204	131+07.32'CL'	38.29'
206	132+15.00'CL'	38.47'
207	132+15.00'CL'	33.47'
208	133+17.31'CL'	33.64'
209	133+17.34'CL'	32.36'
210	131+87.69'CL'	32.58'
211	131+03.38'CL'	39.71'
212	129+00.60'CL'	40.08'
213	128+50.00'CL'	33.23'

PLE/TLE STATION & OFFSET		
Point #	STATION	OFFSET
205	132+00.00'CL'	38.44'
214	132+00.00'CL'	65.00'
215	132+15.00'CL'	65.00'
216	129+80.00'CL'	38.08'
217	130+00.00'CL'	48.25'
218	130+24.19'CL'	52.16'
219	130+75.60'CL'	52.24'
220	131+07.92'CL'	48.29'
221	132+00.00'CL'	48.44'
222	132+40.00'CL'	65.00'
223	132+50.00'CL'	33.53'
224	128+30.00'CL'	33.28'
225	128+50.00'CL'	43.32'
226	128+99.94'CL'	50.08'
227	131+03.81'CL'	49.71'
228	131+92.43'CL'	42.21'
229	131+92.69'CL'	32.57'

SCHEDULE OF LANDS & INTERESTS REQUIRED

OWNERS NAMES ARE SHOWN FOR REFERENCE PURPOSES ONLY, AND ARE SUBJECT TO CHANGE PRIOR TO TRANSFER OF LAND INTEREST TO THE DEPARTMENT.

PARCEL NUMBER	OWNER(S)	INTEREST REQUIRED	ACRES REQUIRED R/W NEW	R/W EXISTING	R/W TOTAL	PLE ACRES	TLE ACRES
3	LAWRENCE G & SHARON K HARGARTEN	FEE, PLE, TLE	0.020	0.340	0.360	0.009	0.070
4	MORTIMER G HUBER JR TRUST	FEE, TLE	0.043	0.325	0.368	--	0.081

FOR ADDITIONAL INFORMATION, REFER TO THE TITLE SHEET, RECORDED IN THE OFFICE OF THE REGISTER OF DEEDS IN ROCK COUNTY AS SHEET 2 OF 2, OF DOCUMENT NO. 2033405.

221 FRONTIER COMMUNICATIONS OF WI LLC
DOCUMENT NO. 1135608
CARD 483, IMAGE 948 - PARCEL 3

Batterman

I, JEFFREY R. GARDE, PROFESSIONAL LAND SURVEYOR, HEREBY CERTIFY THAT IN FULL COMPLIANCE WITH THE PROVISIONS OF SECTION 84.095 OF THE WISCONSIN STATUTES AND UNDER THE DIRECTION OF THE DEPARTMENT OF TRANSPORTATION, I HAVE SURVEYED AND MAPPED THIS TRANSPORTATION PROJECT PLAT 3320-00-23 - 4.02, AMENDMENT NO: 1 AND SUCH PLAT CORRECTLY REPRESENTS ALL EXTERIOR BOUNDARIES OF THE SURVEYED LAND.

WISCONSIN JEFFREY R. GARDE S-2766 BRODHEAD WIS. LAND SURVEYOR

SIGNATURE: Jeffrey R. Garde DATE:12/17/15
PRINT NAME: JEFFREY R. GARDE
REGISTRATION NUMBER: S-2766

THIS PLAT AND RELOCATION ORDER ARE APPROVED FOR THE WISCONSIN DEPARTMENT OF TRANSPORTATION SOUTHWEST REGION OFFICE.

SIGNATURE: David R. Miller DATE:12/21/15
PRINT NAME: DAVID R. MILLER

4

FILE NAME : J:\31900-31950\31902 WI DOT - STH 140\DESIGN\TPP\31902-TPP STH 140.DWG
APPRAISAL PLAT DATE : 8/04/2015
PLOT DATE : 12/21/2015 9:42 AM
PLOT BY : Caryn Mellom
PLOT NAME : ========== PLOT SCALE : ========== 3320-00-23 4.02
71

2033750
RANDAL LEYES
REGISTER OF DEEDS
ROCK COUNTY, WI
RECORDED ON
08/17/2015 02:31:12PM
REC FEE: 25.00
PAGES: 1
** The above recording information verifies that this document has been electronically recorded and returned to the submitter.**

RESERVED FOR REGISTER OF DEEDS
PROJECT NUMBER 3320-00-23 - 4.03
AMENDMENT NO:

TRANSPORTATION PROJECT PLAT NO: 3320-00-23 - 4.03

SCALE, FEET 0 50 100

GN

THAT PART OF THE SW 1/4 OF THE SE 1/4, AND THE SE 1/4 OF THE SE 1/4, ALL IN SECTION 17, T. 2 N., R. 14 E., TOWN OF BRADFORD, ROCK COUNTY, WISCONSIN.

RELOCATION ORDER STH 140, BERGEN-EMERALD GROVE, BRADFORD/CLINTON ROAD TO AVALON ROAD.

TO PROPERLY ESTABLISH, LAY OUT, WIDEN, ENLARGE, EXTEND, CONSTRUCT, RECONSTRUCT, IMPROVE, OR MAINTAIN A PORTION OF THE HIGHWAY DESIGNATED ABOVE, THE STATE OF WISCONSIN DEPARTMENT OF TRANSPORTATION DEEMS IT NECESSARY TO RELOCATE OR CHANGE SAID HIGHWAY AND ACQUIRE CERTAIN LANDS AND INTERESTS OR RIGHTS IN LANDS FOR THE ABOVE PROJECT.

TO EFFECT THIS CHANGE, PURSUANT TO AUTHORITY GRANTED UNDER SECTION 84.02 (3), 84.09 AND 84.30, WISCONSIN STATUTES, THE DEPARTMENT OF TRANSPORTATION HEREBY ORDERS THAT:
1. THAT PORTION OF SAID HIGHWAY AS SHOWN ON THIS PLAT IS LAID OUT AND ESTABLISHED TO THE LINES AND WIDTHS AS SO SHOWN FOR THE ABOVE PROJECT.
2. THE LANDS OR INTERESTS OR RIGHTS IN LANDS AS SHOWN ON THIS PLAT ARE REQUIRED BY THE DEPARTMENT FOR THE ABOVE PROJECT AND SHALL BE ACQUIRED IN THE NAME OF THE STATE OF WISCONSIN, PURSUANT TO THE PROVISIONS OF SECTION 84.09 (1) OR (2), WISCONSIN STATUTES.

POSITIONS ON THIS PLAT ARE REFERENCED TO THE WISCONSIN COUNTY COORDINATE SYSTEM, ROCK COUNTY ZONE, NAD83 (2007) IN US SURVEY FEET. VALUES SHOWN ARE GRID COORDINATES, GRID BEARINGS, AND GRID DISTANCES. GRID DISTANCES MAY BE USED AS GROUND DISTANCES.

RIGHT-OF-WAY BOUNDARIES ARE DEFINED WITH COURSES OF THE PERIMETER OF THE HIGHWAY LANDS REFERENCED TO THE U.S. PUBLIC LAND SURVEY SYSTEM OR OTHER SURVEYS OF PUBLIC RECORD.

EXISTING HIGHWAY RIGHT-OF-WAY SHOWN HEREON IS BASED ON THE FOLLOWING POINTS OF REFERENCE: EXISTING HIGHWAY RIGHT-OF-WAY FOR STH 140 ESTABLISHED FROM PREVIOUS STATE AID PROJECT NO. 1448 AND CSM DOC. 1717789.

FOR THE LATEST ACCESS/DRIVEWAY INFORMATION, CONTACT THE PLANNING UNIT OF THE WISCONSIN DEPARTMENT OF TRANSPORTATION SOUTHWEST REGION OFFICE IN MADISON.

SCHEDULE OF SIGN STRUCTURES		
SIGN NUMBER	SIGN OWNER	OASIS NUMBER
6-1	THE LAMAR COMPANY, LLC RUTH R INMAN REVOCABLE TRUST	13597

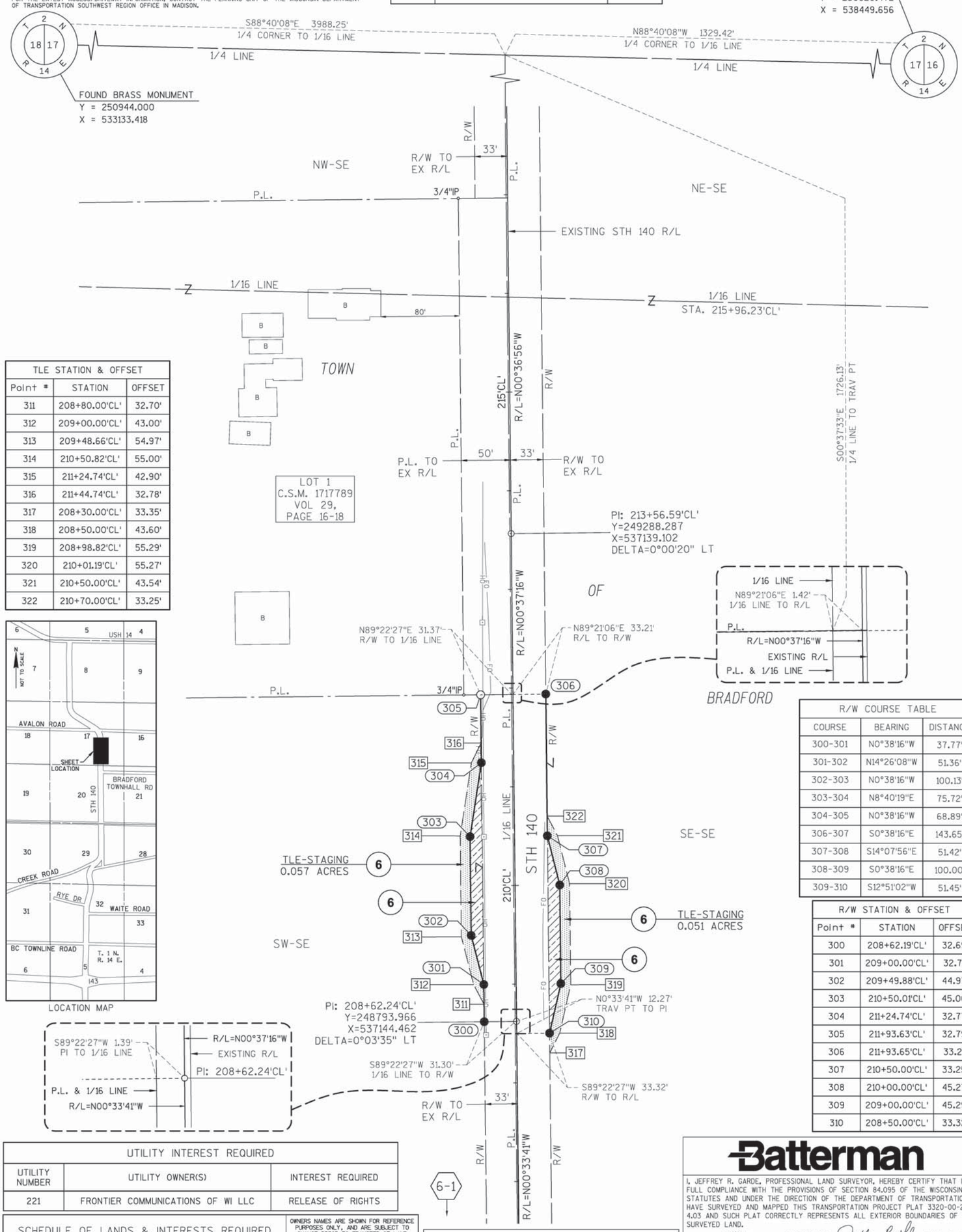

TLE STATION & OFFSET		
Point #	STATION	OFFSET
311	208+80.00'CL'	32.70'
312	209+00.00'CL'	43.00'
313	209+48.66'CL'	54.97'
314	210+50.82'CL'	55.00'
315	211+24.74'CL'	42.90'
316	211+44.74'CL'	32.78'
317	208+30.00'CL'	33.35'
318	208+50.00'CL'	43.60'
319	208+98.82'CL'	55.29'
320	210+01.19'CL'	55.27'
321	210+50.00'CL'	43.54'
322	210+70.00'CL'	33.25'

LOCATION MAP

R/W COURSE TABLE		
COURSE	BEARING	DISTANCE
300-301	N0°38'16"W	37.77'
301-302	N14°26'08"W	51.36'
302-303	N0°38'16"W	100.13'
303-304	N8°40'19"E	75.72'
304-305	N0°38'16"W	68.89'
306-307	S0°38'16"E	143.65'
307-308	S14°07'56"E	51.42'
308-309	S0°38'16"E	100.00'
309-310	S12°51'02"W	51.45'

R/W STATION & OFFSET		
Point #	STATION	OFFSET
300	208+62.19'CL'	32.69'
301	209+00.00'CL'	32.71'
302	209+49.88'CL'	44.97'
303	210+50.01'CL'	45.00'
304	211+24.74'CL'	32.77'
305	211+93.63'CL'	32.79'
306	211+93.65'CL'	33.21'
307	210+50.00'CL'	33.25'
308	210+00.00'CL'	45.27'
309	209+00.00'CL'	45.29'
310	208+50.00'CL'	33.32'

UTILITY INTEREST REQUIRED		
UTILITY NUMBER	UTILITY OWNER(S)	INTEREST REQUIRED
221	FRONTIER COMMUNICATIONS OF WI LLC	RELEASE OF RIGHTS

SCHEDULE OF LANDS & INTERESTS REQUIRED						
PARCEL NUMBER	OWNER(S)	INTEREST REQUIRED	ACRES REQUIRED			TLE ACRES
			R/W NEW	R/W EXISTING	R/W TOTAL	
6	RUTH R INMAN REVOCABLE TRUST THE LAMAR COMPANY, LLC	FEE, TLE	0.087	0.512	0.599	0.108

OWNERS NAMES ARE SHOWN FOR REFERENCE PURPOSES ONLY, AND ARE SUBJECT TO CHANGE PRIOR TO TRANSFER OF LAND INTEREST TO THE DEPARTMENT.

(221) FRONTIER COMMUNICATIONS OF WI LLC
DOCUMENT NO. 750946
VOL. 344, PAGE 542 - PARCEL 6

FOR ADDITIONAL INFORMATION, REFER TO THE TITLE SHEET, RECORDED IN THE OFFICE OF THE REGISTER OF DEEDS IN ROCK COUNTY AS SHEET 2 OF 2, OF DOCUMENT NO. 2033405.

Batterman

I, JEFFREY R. GARDE, PROFESSIONAL LAND SURVEYOR, HEREBY CERTIFY THAT IN FULL COMPLIANCE WITH THE PROVISIONS OF SECTION 84.095 OF THE WISCONSIN STATUTES AND UNDER THE DIRECTION OF THE DEPARTMENT OF TRANSPORTATION, I HAVE SURVEYED AND MAPPED THIS TRANSPORTATION PROJECT PLAT 3320-00-23 - 4.03 AND SUCH PLAT CORRECTLY REPRESENTS ALL EXTERIOR BOUNDARIES OF THE SURVEYED LAND.

WISCONSIN JEFFREY R. GARDE S-2766 BRODHEAD WIS. LAND SURVEYOR

SIGNATURE: Jeffrey R. Garde DATE: 8/14/15
PRINT NAME: JEFFREY R. GARDE
REGISTRATION NUMBER: S-2766

THIS PLAT AND RELOCATION ORDER ARE APPROVED FOR THE WISCONSIN DEPARTMENT OF TRANSPORTATION SOUTHWEST REGION OFFICE.

SIGNATURE: David R. Miller DATE: 8/14/15
PRINT NAME: DAVID R. MILLER

FILE NAME : J:\31900-31950\31902 WI DOT - STH 140\DESIGN\TPP\31902-TPP STH 140.DWG
APPRAISAL PLAT DATE : 8/04/2015
PLOT DATE : 8/14/2015 12:02 PM PLOT BY : Caryn Mellom PLOT NAME : PLOT SCALE : ========== 3320-00-23 4.03

Standard Detail Drawing List

08D01-18	CONCRETE CURB, CONCRETE CURB AND GUTTER AND TIES
08E08-03	TYPICAL INSTALLATIONS OF EROSION BALES / TEMPORARY DITCH CHECKS
08E09-06	SILT FENCE
08F01-11	APRON ENDWALLS FOR CULVERT PIPE
08F07-05	STEEL APRON ENDWALLS FOR CULVERT PIPE AND PIPE ARCH SLOPED SIDE FRAINS
08F08-02	STEEL APRON ENDWALLS FOR CULVERT PIPE AND PIPE ARCH SLOPED CROSS DRAINS
13A08-01	ASPHALTIC RUMBLE STRIPS AT INTERSECTION
13A11-02A	2-LANE RURAL CENTER LINE RUMBLE STRIP, MILLING
13A11-02B	2-LANE RURAL CENTER LINE RUMBLE STRIP, MILLING
14B15-08A	STEEL PLATE BEAM GUARD, CLASS "A" INSTALLATION & ELEMENTS
14B15-08B	STEEL PLATE BEAM GUARD, CLASS "A" INSTALLATION & ELEMENTS
14B15-08C	STEEL PLATE BEAM GUARD, CLASS "A", INSTALLATION & ELEMENTS
14B24-08A	STEEL PLATE BEAM GUARD ENERGY ABSORBING TERMINAL
14B24-08B	STEEL PLATE BEAM GUARD ENERGY ABSORBING TERMINAL
14B24-08C	STEEL PLATE BEAM GUARD ENERGY ABSORBING TERMINAL
14B25-01	STEEL PLATE BEAM GUARD, CLASS "A", OVER LOW FILL CULVERTS
14B27-01A	STEEL PLATE BEAM GUARD SHORT RADIUS TERMINAL
14B27-01B	STEEL PLATE BEAM GUARD SHORT RADIUS TERMINAL
14B27-01C	STEEL PLATE BEAM GUARD SHORT RADIUS TERMINAL
14B28-03	GUARDRAIL MOW STRIP
14B42-03A	MIDWEST GUARDRAIL SYSTEM (MGS) GUARDRAIL
14B42-03B	MIDWEST GUARDRAIL SYSTEM (MGS) GUARDRAIL
14B42-03C	MIDWEST GUARDRAIL SYSTEM (MGS) GUARDRAIL
14B43-03A	MIDWEST GUARDRAIL SYSTEM LONG SPAN MGS (L)
14B43-03B	MIDWEST GUARDRAIL SYSTEM LONG SPAN MGS (L)
14B43-03C	MIDWEST GUARDRAIL SYSTEM LONG SPAN MGS (L)
14B44-02A	MIDWEST GUARDRAIL SYSTEM ENERGY ABSORBING TERMINAL (MGS)
14B44-02B	MIDWEST GUARDRAIL SYSTEM ENERGY ABSORBING TERMINAL (MGS)
14B44-02C	MIDWEST GUARDRAIL SYSTEM ENERGY ABSORBING TERMINAL (MGS)
14B45-04A	MIDWEST GUARDRAIL SYSTEM THRIE BEAM TRANSITION (MGS)
14B45-04B	MIDWEST GUARDRAIL SYSTEM THRIE BEAM TRANSITION (MGS)
14B45-04C	MIDWEST GUARDRAIL SYSTEM THRIE BEAM TRANSITION (MGS)
14B45-04D	MIDWEST GUARDRAIL SYSTEM THRIE BEAM TRANSITION (MGS)
14B45-04E	MIDWEST GUARDRAIL SYSTEM THRIE BEAM TRANSITION (MGS)
14B45-04F	MIDWEST GUARDRAIL SYSTEM THRIE BEAM TRANSITION (MGS)
14B45-04G	MIDWEST GUARDRAIL SYSTEM THRIE BEAM TRANSITION (MGS)
14B45-04H	MIDWEST GUARDRAIL SYSTEM THRIE BEAM TRANSITION (MGS)
14B45-04I	MIDWEST GUARDRAIL SYSTEM THRIE BEAM TRANSITION (MGS)
14B45-04J	MIDWEST GUARDRAIL SYSTEM THRIE BEAM TRANSITION (MGS)
15A03-02A	FLEXIBLE MARKER POST FOR CULVERT END
15A03-02B	FLEXIBLE MARKER POST FOR CULVERT END
15B01-08A	FENCE WOVEN WIRE
15B01-08B	FENCE WOVEN WIRE
15C08-16A	PAVEMENT MARKING (MAINLINE)
15C08-16B	PAVEMENT MARKING (INTERSECTIONS)
15C09-09A	SIGNING AND PAVEMENT MARKING DETAILS FOR RAILROAD-HIGHWAY GRADE CROSSINGS
15C11-06	FLEXIBLE TUBULAR MARKER POST
15C12-04	TRAFFIC CONTROL FOR LANE CLOSURE (SUITABLE FOR MOVING OPERATIONS)
15C18-03	MEDIAN ISLAND MARKING
15C28-02	SIGNING AND MARKING FOR COMBINATION RIGHT TURN AND BYPASS LANE
15C33-01	STOP LINE AND CROSSWALK PAVEMENT MARKING
15D28-03	TRAFFIC CONTROL, WORK ON SHOULDER OR PARKING LANE, UNDIVIDED ROADWAY

6

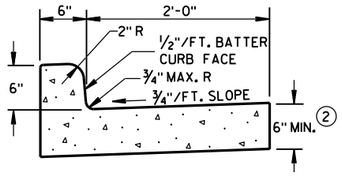

TYPES A & D ①

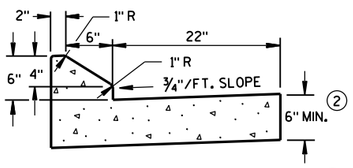

6" SLOPED CURB TYPES G & J ①

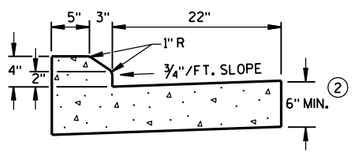

4" SLOPED CURB TYPES G & J ①

CONCRETE CURB & GUTTER 30"

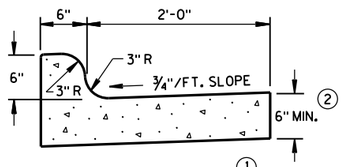

TYPES K & L ①

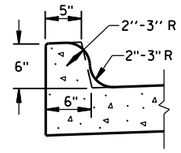

OPTIONAL CURB SHAPE FOR TYPES K & L ①

CONCRETE CURB & GUTTER 30"

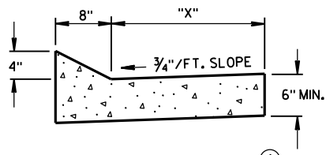

TYPES TBT & TBTT ①

CONCRETE CURB & GUTTER

TBT & TBTT	"X"
30"	22"
36"	28"

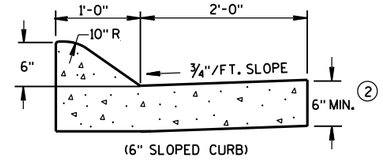

(6" SLOPED CURB)

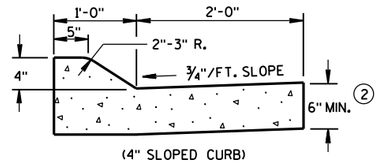

(4" SLOPED CURB)

TYPES A & D ①

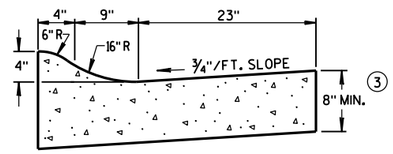

4" SLOPED CURB TYPES R & T ① ④

CONCRETE CURB & GUTTER 36"

GENERAL NOTES

DETAILS OF CONSTRUCTION, MATERIALS AND WORKMANSHIP NOT SHOWN ON THIS DRAWING SHALL CONFORM TO THE PERTINENT REQUIREMENTS OF THE CONTRACT.

PAVEMENT TIES AND TIE BARS SHALL BE EPOXY COATED IN CONFORMANCE WITH SUBSECTION 505.2.6.2 OF THE STANDARD SPECIFICATIONS.

INTEGRAL CURB & GUTTER SHALL CONFORM TO THE DETAILS SHOWN FOR CONCRETE CURB & GUTTER INCLUDING THE TRANSVERSE GUTTER SLOPE. A LONGITUDINAL CONSTRUCTION JOINT IS NOT REQUIRED WITH INTEGRAL CURB AND GUTTER.

WHERE THE TRANSVERSE JOINTS IN THE PAVEMENT ARE REQUIRED TO BE SEALED, THE JOINTS IN THE INTEGRAL CURB AND GUTTER SHALL BE SEALED TO THE FACE OF CURB WITH THE SAME TYPE OF SEALANT. THE COST OF FURNISHING AND INSTALLING THIS SEALANT SHALL BE INCIDENTAL TO THE ITEM CONCRETE CURB AND GUTTER.

UNLESS OTHERWISE SHOWN ON THE TYPICAL CROSS SECTIONS, THE BASE AGGREGATE AND COMMON EXCAVATION LIMITS ARE 2'-0" BEHIND THE BACK OF CURBS.

① TIE BARS ARE REQUIRED FOR CURB AND GUTTER TYPES A, G, K, R AND TBTT.

② THE BOTTOM OF CURB AND GUTTER MAY BE CONSTRUCTED EITHER LEVEL OR PARALLEL TO THE SLOPE OF THE SUBGRADE OR BASE AGGREGATE PROVIDED A 6" MINIMUM GUTTER THICKNESS IS MAINTAINED.

③ THE BOTTOM OF CURB AND GUTTER MAY BE CONSTRUCTED EITHER LEVEL OR PARALLEL TO THE SLOPE OF THE SUBGRADE OR BASE AGGREGATE PROVIDED A 8" MINIMUM GUTTER THICKNESS IS MAINTAINED.

④ THE FACE OF CURB IS 6" FROM THE BACK OF CURB.

⑤ WHEN REVERSE SLOPE GUTTER IS REQUIRED, THE LOCATION(S) WILL BE SHOWN ELSEWHERE IN THE PLAN.

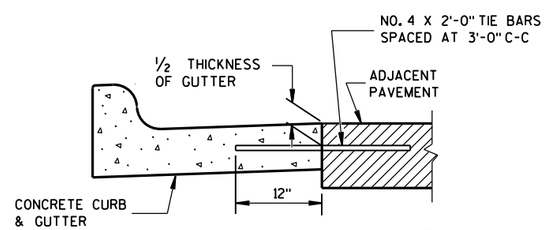

TYPICAL TIE BAR LOCATION ①

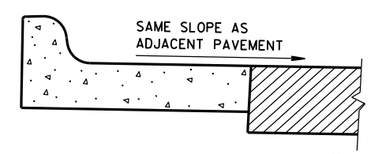

REVERSE SLOPE GUTTER ⑤
(TYPICAL FOR ALL CURB & GUTTER TYPES)

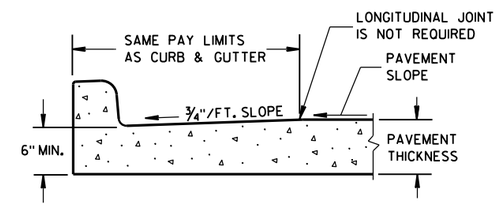

PARTIAL SECTION OF PAVEMENT WITH INTEGRAL CURB & GUTTER

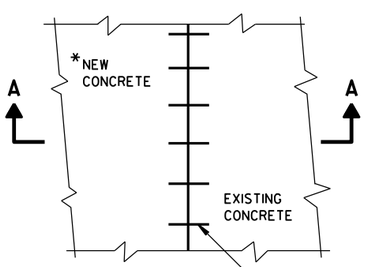

*NEW CURB & GUTTER, SURFACE DRAINS, CONCRETE PAVEMENT OR OTHER NEW CONCRETE.

PLAN VIEW

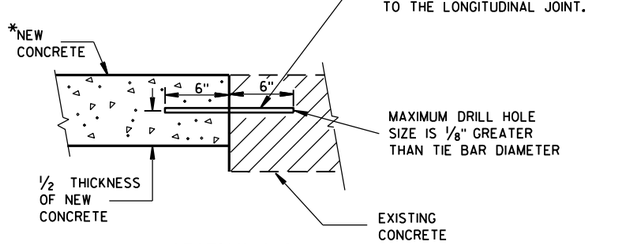

SECTION A-A

TIE BARS DRILLED INTO EXISTING PAVEMENT

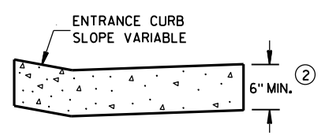

DRIVEWAY ENTRANCE CURB
(WHEN DIRECTED BY THE ENGINEER)

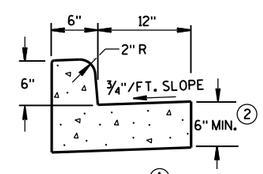

① TYPES A & D

CONCRETE CURB & GUTTER 18"

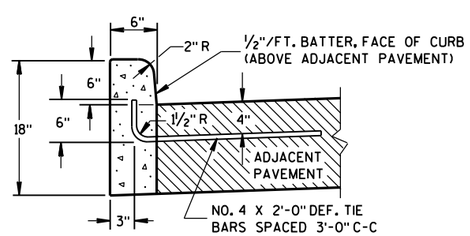

① TYPES A & D

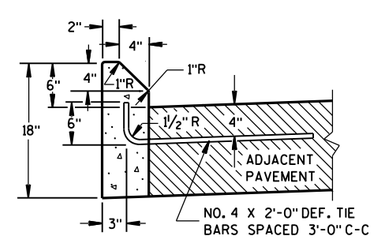

① TYPES G & J

CONCRETE CURB

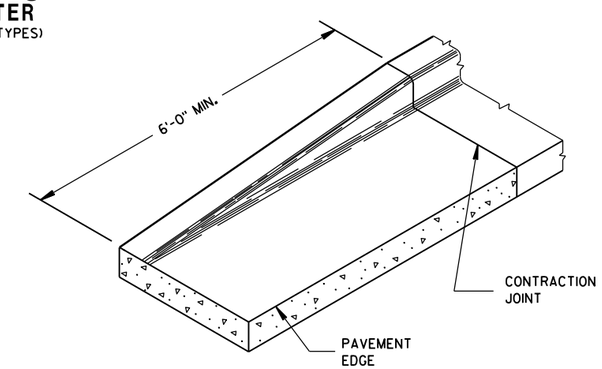

END SECTION CURB & GUTTER

CONCRETE CURB, CONCRETE CURB & GUTTER AND TIES

STATE OF WISCONSIN
DEPARTMENT OF TRANSPORTATION

APPROVED
June, 2015 — DATE
/S/ Jerry H. Zogg — ROADWAY STANDARDS DEVELOPMENT ENGINEER
FHWA

6

S.D.D. 8 D 1-18

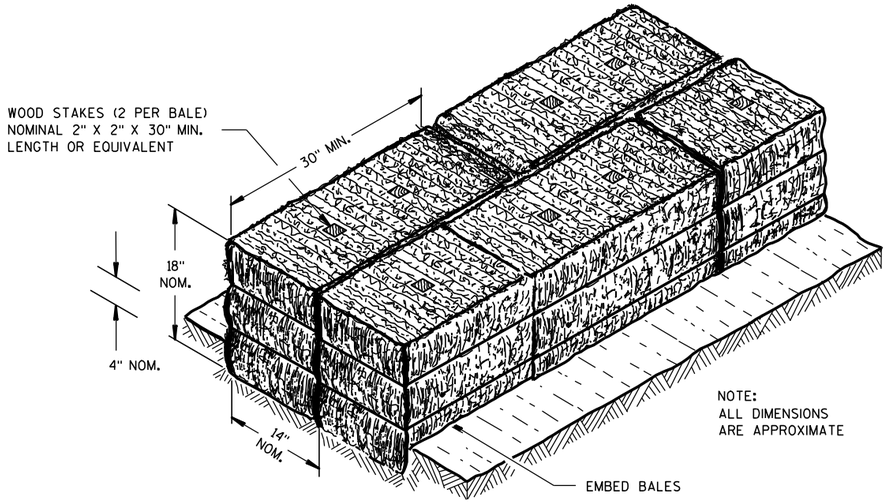

SECTION A-A

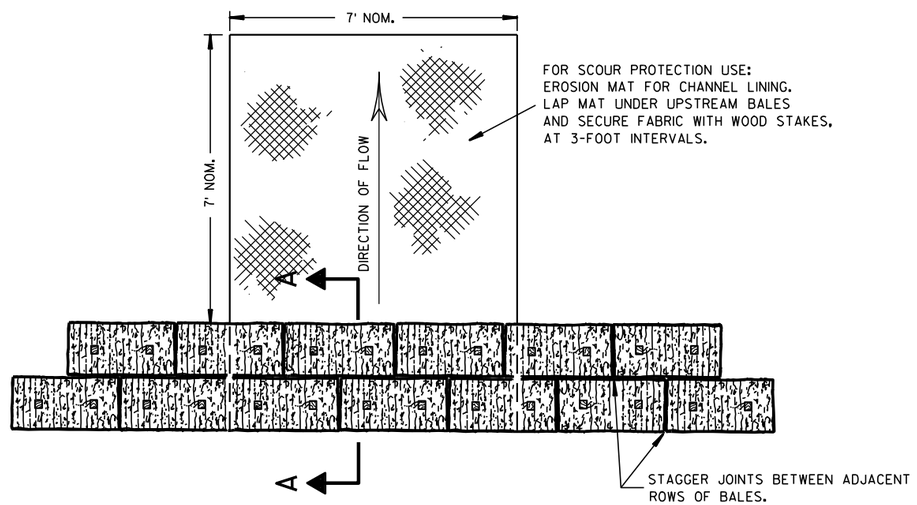

PLAN VIEW

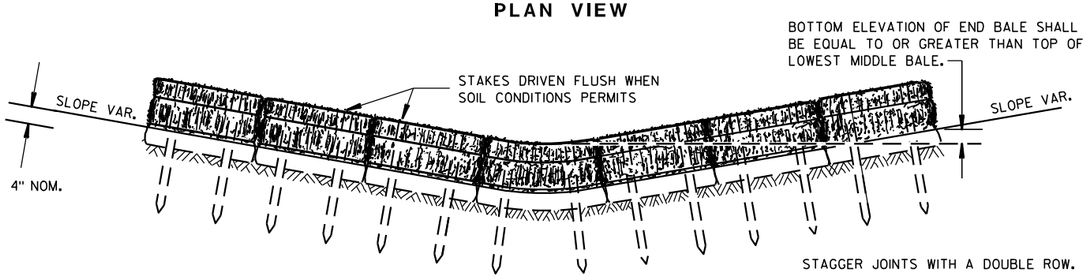

FRONT ELEVATION

TEMPORARY DITCH CHECK USING EROSION BALES ①

GENERAL NOTES

DETAILS OF CONSTRUCTION, MATERIALS AND WORKMANSHIP NOT SHOWN ON THIS DRAWING SHALL CONFORM TO THE PERTINENT REQUIREMENTS OF THE STANDARD SPECIFICATIONS AND THE APPLICABLE SPECIAL PROVISIONS.

① TEMPORARY DITCH CHECKS EITHER EROSION BALES OR MANUFACTURED SHALL BE PAID FOR UNDER THE BID ITEM OF TEMPORARY DITCH CHECK. THE DEPARTMENT WILL NOT PAY FOR TEMPORARY DITCH CHECKS CONSTRUCTED OF A SINGLE ROW OF EROSION BALES.

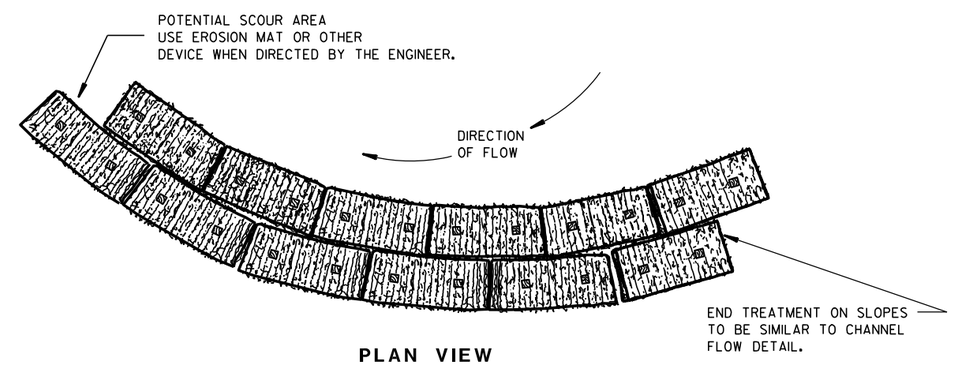

PLAN VIEW

WHEN ALTERING THE DIRECTION OF FLOW

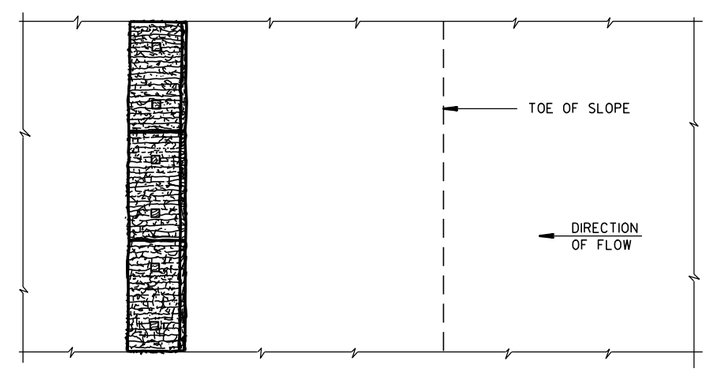

PLAN VIEW

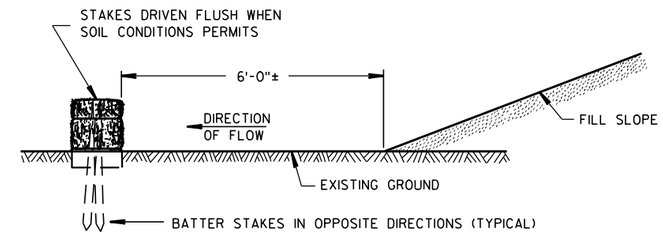

FRONT ELEVATION

WHEN EXISTING GROUND SLOPES AWAY FROM FILL SLOPE

EROSION BALES FOR SHEET FLOW

TYPICAL INSTALLATIONS OF EROSION BALES / TEMPORARY DITCH CHECKS

STATE OF WISCONSIN
DEPARTMENT OF TRANSPORTATION

APPROVED
6/04/02 — DATE
/S/ Beth Cann... — CHIEF ROADWAY DEVELOPMENT ENGINEER
FHWA

6
S.D.D. 8 E 8-3

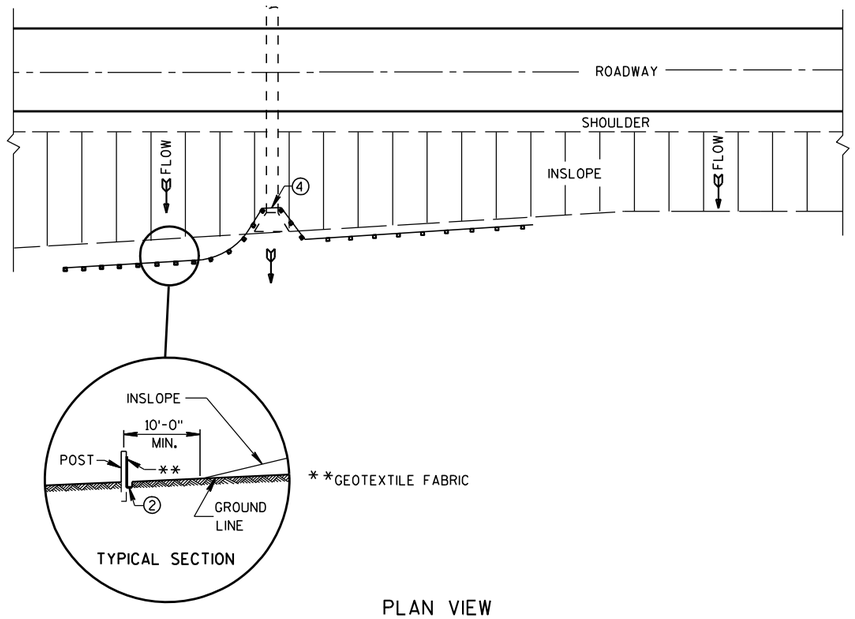

PLAN VIEW

TYPICAL APPLICATION OF SILT FENCE

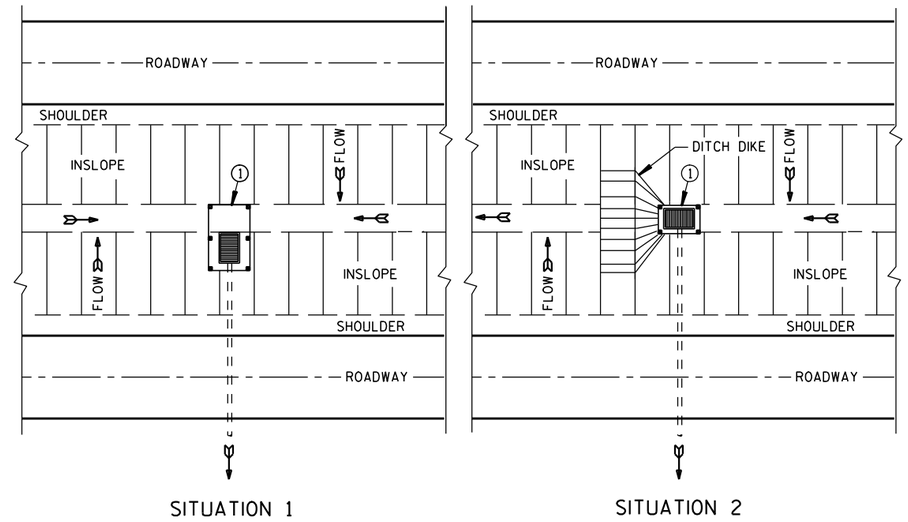

PLAN VIEW

SILT FENCE AT MEDIAN SURFACE DRAINS

GENERAL NOTES

DETAILS OF CONSTRUCTION NOT SHOWN ON THIS DRAWING SHALL CONFORM TO THE PERTINENT REQUIREMENTS OF THE STANDARD SPECIFICATIONS AND APPLICABLE SPECIAL PROVISIONS.

① HORIZONTAL BRACE REQUIRED WITH 2" X 4" WOODEN FRAME OR EQUIVALENT AT TOP OF POSTS.

② FOR MANUAL INSTALLATIONS THE TRENCH SHALL BE A MINIMUM OF 4" WIDE & 6" DEEP TO BURY AND ANCHOR THE GEOTEXTILE FABRIC. FOLD MATERIAL TO FIT TRENCH AND BACKFILL & COMPACT TRENCH WITH EXCAVATED SOIL.

③ WOOD POSTS SHALL BE A MINIMUM SIZE OF 1⅛" X 1⅛" OF OAK OR HICKORY.

④ SILT FENCE TO EXTEND ACROSS THE TOP OF THE PIPE.

⑤ CONSTRUCT SILT FENCE FROM A CONTINUOUS ROLL IF POSSIBLE BY CUTTING LENGTHS TO AVOID JOINTS. IF A JOINT IS NECESSARY USE ONE OF THE FOLLOWING TWO METHODS; A) OVERLAP THE END POSTS AND TWIST, OR ROTATE, AT LEAST 180 DEGREES. B) HOOK THE END OF EACH SILT FENCE LENGTH.

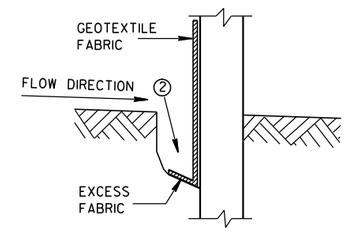

TRENCH DETAIL

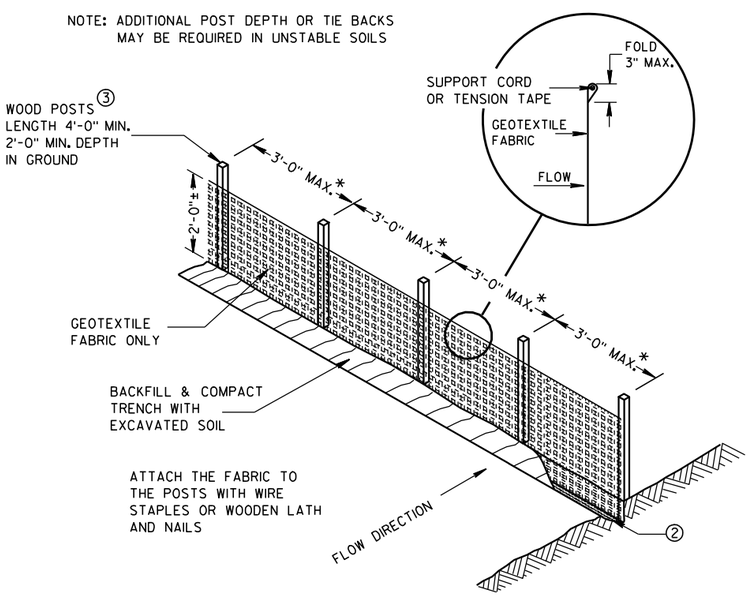

*NOTE: 8'-0" POST SPACING ALLOWED IF A WOVEN GEOTEXTILE FABRIC IS USED.

SILT FENCE

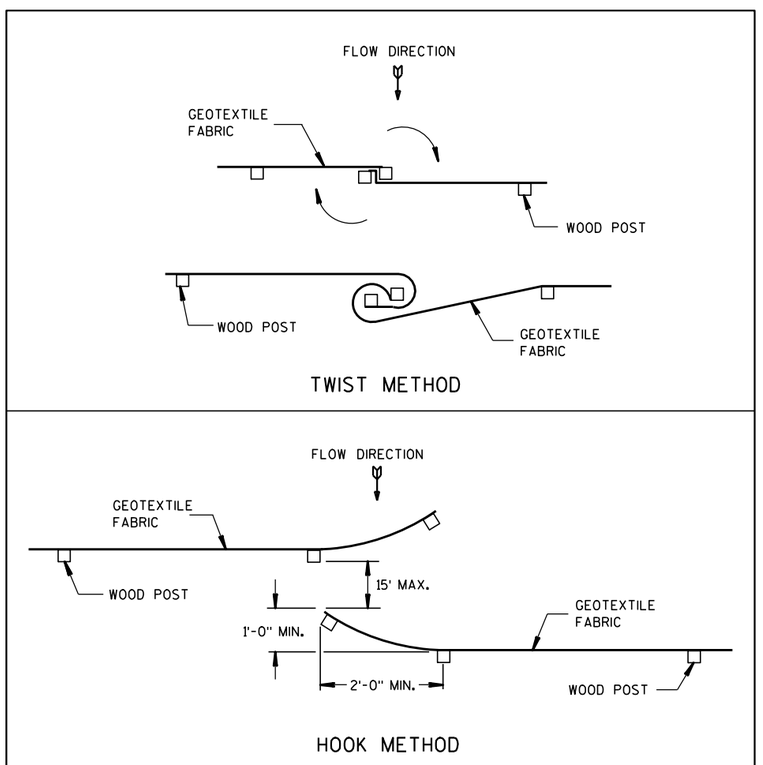

JOINING TWO LENGTHS OF SILT FENCE ⑤

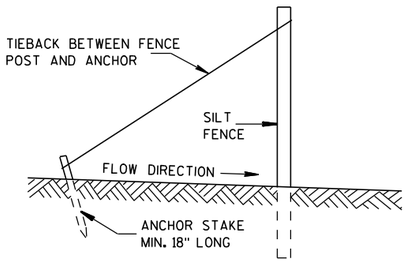

SILT FENCE TIE BACK

(WHEN REQUIRED BY THE ENGINEER)

SILT FENCE
STATE OF WISCONSIN DEPARTMENT OF TRANSPORTATION
APPROVED 4-29-05 /S/ Beth Cann----- DATE CHIEF ROADWAY DEVELOP ENGINEER FHWA

6

6

S.D.D. 8 E 9-6

S.D.D. 8 E 9-6

METAL APRON ENDWALLS

PIPE DIA. (IN.)	MIN. THICK. (Inches) STEEL	MIN. THICK. (Inches) ALUM.	DIMENSIONS (Inches) A (±1")	B (MAX.)	H (±1")	L (±1 1/2")	L1 ①	L2 ①	W (±2")	APPROX. SLOPE	BODY
12	.064	.060	6	6	6	21	12	17 1/2	24	2 1/2 to 1	1 Pc.
15	.064	.060	7	8	6	26	14	21 3/4	30	2 1/2 to 1	1 Pc.
18	.064	.060	8	10	6	31	15	28 1/4	36	2 1/2 to 1	1 Pc.
21	.064	.060	9	12	6	36	18	29 5/8	42	2 1/2 to 1	1 Pc.
24	.064	.075	10	13	6	41	18	37 1/4	48	2 1/2 to 1	1 Pc.
30	.079	.075	12	16	8	51	18	52 1/4	60	2 1/2 to 1	1 Pc.
36	.079	.105	14	19	9	60	24	59 3/4	72	2 1/2 to 1	2 Pc.
42	.109	.105	16	22	11	69	24	75 5/8	84	2 1/2 to 1	2 Pc.
48	.109	.105	18	27	12	78	24	81	90	2 1/4 to 1	3 Pc.
54	.109	.105	18	30	12	84	30	85 1/2	102	2 1/4 to 1	3 Pc.
60	.109×	.105×	18	33	12	87	—	—	114	2 to 1	3 Pc.
66	.109×	.105×	18	36	12	87	—	—	120	2 to 1	3 Pc.
72	.109×	.105×	18	39	12	87	—	—	126	2 to 1	3 Pc.
78	.109×	.105×	18	42	12	87	—	—	132	1 1/2 to 1	3 Pc.
84	.109×	.105×	18	45	12	87	—	—	138	1 1/2 to 1	3 Pc.
90	.109×	.105×	18	37	12	87	—	—	144	1 1/2 to 1	3 Pc.
96	.109×	.105×	18	35	12	87	—	—	150	1 1/2 to 1	3 Pc.

× EXCEPT CENTER PANEL
SEE GENERAL NOTES

REINFORCED CONCRETE APRON ENDWALLS

PIPE DIA. (IN.)	DIMENSIONS (Inches) T	A	B	C	D	E	G	APPROX. SLOPE
12	2	4	24	48 7/8	72 7/8	24	2	3 to 1
15	2 1/4	6	27	46	73	30	2 1/4	3 to 1
18	2 1/2	9	27	46	73	36	2 1/2	3 to 1
21	2 3/4	9	36	37 1/2	73 1/2	42	2 3/4	3 to 1
24	3	9 1/2	43 1/2	30	73 1/2	48	3	3 to 1
27	3 1/4	10 1/2	49 1/2	24	73 1/2	54	3 1/4	3 to 1
30	3 1/2	12	54	19 3/4	73 1/2	60	3 1/2	3 to 1
36	4	15	63	34 3/4	97 3/4	72	4	3 to 1
42	4 1/2	21	63	35	98	78	4 1/2	3 to 1
48	5	24	72	26	98	84	5	3 to 1
54	5 1/2	27	65	*33 1/4-**35	*98 1/4-**100	90	5 1/2	2 2/5 to 1
60	6	*30-**35	60	39	99	96	5	2 to 1
66	6 1/2	*24-**30	*72-**78	*21-**27	99	102	5 1/2	2 to 1
72	7	*24-**36	78	21	99	108	6	2 to 1
78	7 1/2	*24-**36	78	21	99	114	6 1/2	2 to 1
84	8	36	90 1/2	21	111 1/2	120	6 1/2	1 1/2 to 1
90	8 1/2	41	87 1/2	24	111 1/2	132	6 1/2	1 1/2 to 1

*MINIMUM
**MAXIMUM

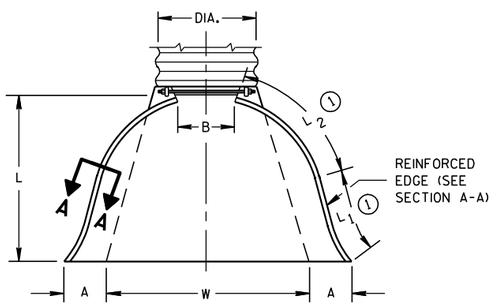

PLAN VIEW

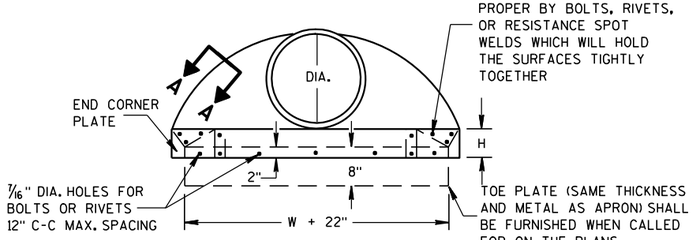

END VIEW

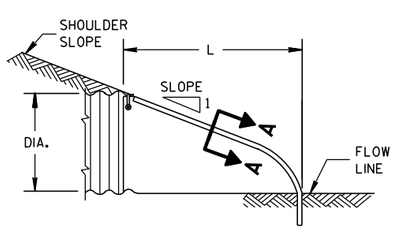

SIDE ELEVATION

METAL ENDWALLS

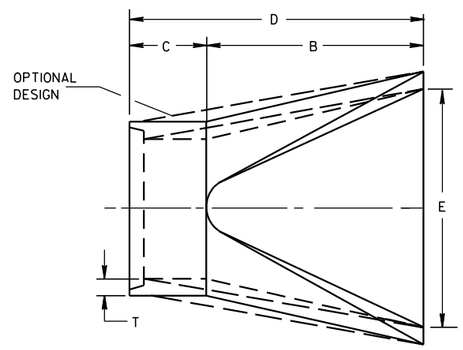

PLAN

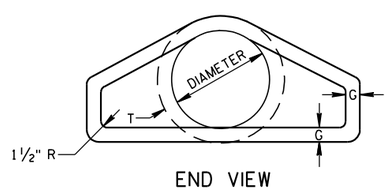

END VIEW

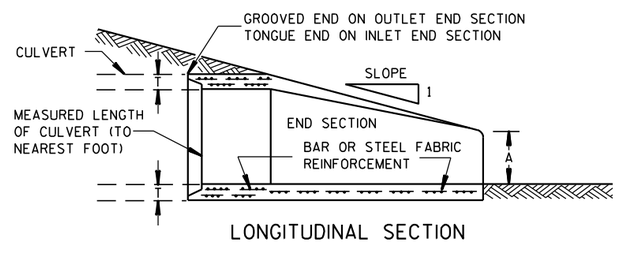

LONGITUDINAL SECTION

CONCRETE ENDWALLS

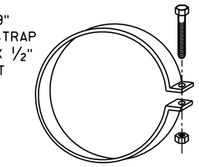

ALTERNATE FOR TYPE 1 CONNECTION

END SECTION CONNECTOR STRAP

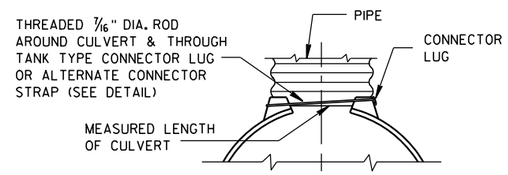

TYPE 1
FOR 12" THRU 24" CORR. PIPE

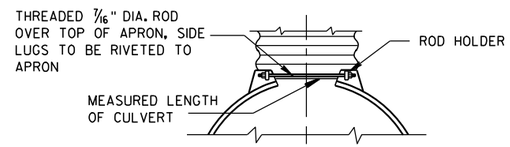

TYPE 2
FOR 30" THRU 96" CORR. PIPE

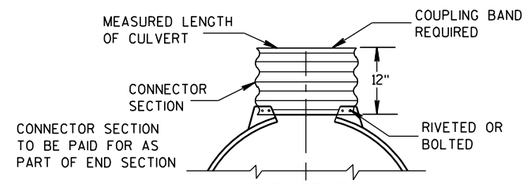

TYPE 3
FOR 42" THRU 96" CORR. PIPE

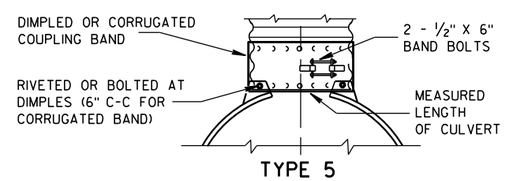

TYPE 5
ALTERNATE FOR:
ALL SIZES CORRUGATED CIRCULAR PIPE

NOTE: DIMPLED BAND FITS OVER OUTSIDE OF ENDWALL, AND CORRUGATED BAND FITS INSIDE ENDWALL. DIMPLED BAND MAY BE USED WITH HELICALLY CORRUGATED PIPE.

FOR CIRCUMFERENTIALLY CORRUGATED PIPE USE ENDWALL CONNECTION DETAILS 1, 2, 3 OR 5 AS APPLICABLE.

FOR HELICALLY CORRUGATED PIPE USE ENDWALL CONNECTION DETAILS 1, 2 OR 5.

FOR HELICALLY CORRUGATED PIPES WITH TWO CIRCUMFERENTIAL CORRUGATIONS AT EACH END USE ENDWALL CONNECTION DETAILS 1, 2 OR 3.

CONNECTION DETAILS

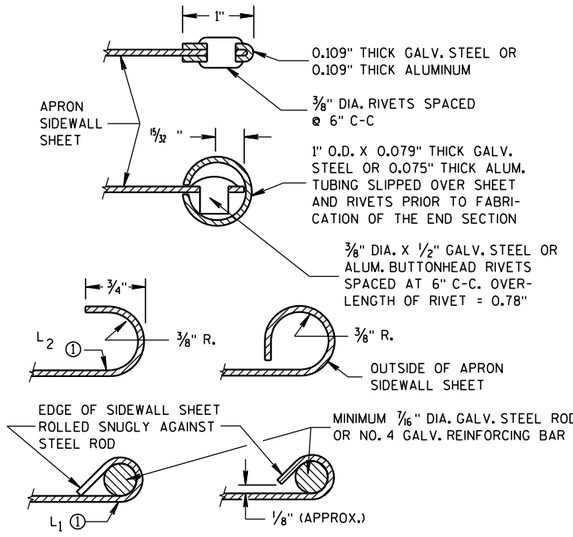

SECTION A-A

GENERAL NOTES

DETAILS OF CONSTRUCTION, MATERIALS AND WORKMANSHIP NOT SHOWN ON THIS DRAWING SHALL CONFORM TO THE PERTINENT REQUIREMENTS OF THE STANDARD SPECIFICATIONS AND THE APPLICABLE SPECIAL PROVISIONS.

CONCRETE CULVERT ENDWALLS MAY NOT BE USED WITH GALVANIZED STEEL OR ALUMINUM CULVERT PIPE OR VISE VERSA. GALVANIZED STEEL OR ALUMINUM ENDWALLS SHALL NORMALLY BE INSTALLED ON CULVERT PIPE OF THE SAME METAL.

ALL THREE PIECE STEEL APRON ENDWALLS FOR 60" DIAMETER PIPE AND LARGER SHALL HAVE 0.109" SIDES AND 0.138" CENTER PANELS. ALL THREE PIECE ALUMINUM APRON ENDWALLS FOR 60" DIAMETER PIPE AND LARGER SHALL HAVE 0.105" SIDES AND 0.134" CENTER PANELS. THE WIDTH OF CENTER PANELS SHALL BE GREATER THAN 20 PERCENT OF THE PIPE PERIMETER.

LAP SEAMS SHALL BE TIGHTLY JOINED BY GALVANIZED RIVETS OR BOLTS FOR STEEL UNITS AND ALUMINUM RIVETS AND BOLTS FOR ALUMINUM UNITS. FOR THE 60" THROUGH 96" DIAMETER APRON ENDWALL SIZES, THE REINFORCED EDGES AND CENTER PANEL SEAMS SHALL BE FURTHER REINFORCED WITH GALVANIZED STEEL OR ALUMINUM STIFFENER ANGLES. THE ANGLES SHALL BE ATTACHED BY GALVANIZED NUTS AND BOLTS FOR STEEL UNITS AND ALUMINUM NUTS AND BOLTS FOR ALUMINUM UNITS.

WHERE TWO OR MORE PIPES WITH APRON ENDWALLS ARE LAID ADJACENT TO EACH OTHER, THEY SHALL BE SEPARATED BY A DISTANCE SUFFICIENT TO PROVIDE A MINIMUM CLEARANCE OF 6 INCHES BETWEEN APRON ENDWALLS.

① FOR PIPE SIZES UP TO 60" DIAMETER, A 180° ROLLED EDGE MAY BE USED INSTEAD OF STEEL ROD REINFORCEMENT. SEE SECTION A-A.

APRON ENDWALLS FOR CULVERT PIPE

STATE OF WISCONSIN
DEPARTMENT OF TRANSPORTATION

APPROVED
11/30/94 — DATE
/S/ Rory L. Rhinesmith — CHIEF ROADWAY DEVELOPMENT ENGINEER
FHWA

6
S.D.D. 8 F 1-11

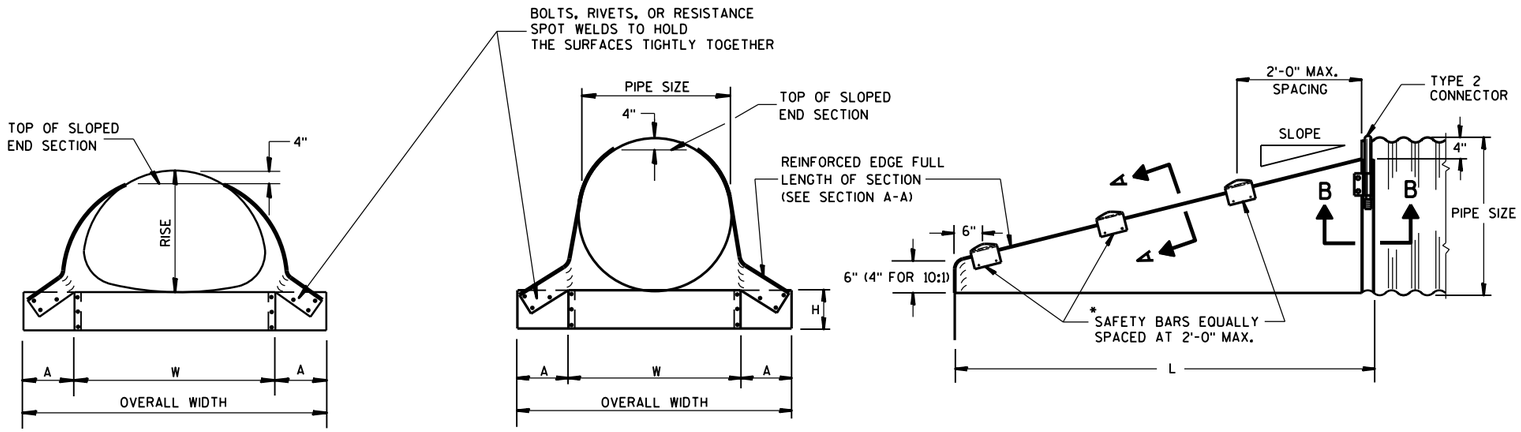

FRONT VIEW

FRONT VIEW

SIDE VIEW

GENERAL NOTES

DETAILS OF CONSTRUCTION, MATERIALS AND WORKMANSHIP NOT SHOWN ON THIS DRAWING SHALL CONFORM TO THE PERTINENT REQUIREMENTS OF THE STANDARD SPECIFICATIONS AND THE APPLICABLE SPECIAL PROVISIONS.

SLOPED END SECTIONS SHALL CONFORM TO THE REQUIREMENTS OF THE STANDARD SPECIFICATIONS, SECTION 521 FOR STEEL APRON ENDWALLS.

SAFETY BARS SHALL BE FABRICATED FROM GALVANIZED STEEL PIPE MEETING THE REQUIREMENTS OF ASTM A-53, GRADE B, SCHEDULE 40 OR APPROVED EQUAL.

STEEL APRON ENDWALLS FOR CULVERT PIPE SLOPED SIDE DRAINS

PIPE DIA. (IN.)	MIN. THICK. (Inches)	DIMENSIONS (Inches)				L DIMENSIONS					
		A	H	W	OVERALL WIDTH	SLOPE	LENGTH INCHES	SLOPE	LENGTH INCHES	SLOPE	LENGTH INCHES
15	.064	8	6	21	37	4:1	20	6:1	30	10:1	70
18	.064	8	6	24	40	4:1	32	6:1	48	10:1	100
21	.064	8	6	27	43	4:1	44	6:1	66	10:1	130
24	.064	8	6	30	46	4:1	56	6:1	84	10:1	160
30	.109	12	9	36	60	4:1	80	6:1	120	10:1	220
36	.109	12	9	42	66	4:1	104	6:1	156	10:1	280
42	.109	16	12	48	80	4:1	128	6:1	192	——	——
48	.109	16	12	54	86	4:1	152	6:1	228	——	——
54	.109	16	12	60	92	4:1	176	6:1	264	——	——
60	.109	16	12	66	98	4:1	200	6:1	300	——	——

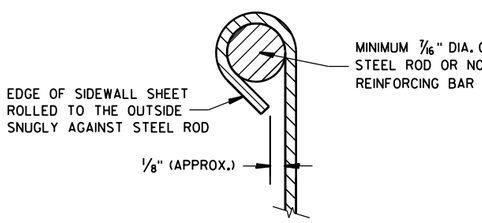

SECTION A-A

*NOTE:
THREE SAFETY BARS ARE SHOWN. ACTUAL NUMBER OF BARS REQUIRED AT A 2'-0" C-C MAX. SPACING WILL VARY DEPENDING ON THE LENGTH OF THE END SECTION.

3" GALVANIZED PIPE. FLATTEN ENDS, THEN BEND OUTSIDE 4" TO MATCH END SECTION SIDES.

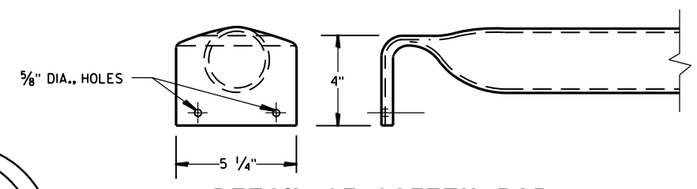

DETAIL OF SAFETY BAR

STEEL APRON ENDWALLS FOR PIPE ARCH SLOPED SIDE DRAINS

EQUIV. DIA. (Inches)	(Inches)		MIN. THICK. (Inches) ①	DIMENSIONS (Inches)				L DIMENSIONS					
	SPAN	RISE		A	H	W	OVERALL WIDTH	SLOPE	LENGTH INCHES	SLOPE	LENGTH INCHES	SLOPE	LENGTH INCHES
15	17	13	.064 *	7	6	30	44	4:1	19	6:1	30	10:1 ②	70
18	21	15	.064 *	8	6	27	43	4:1	20	6:1	30	10:1	70
21	24	18	.064 *	8	6	30	46	4:1	32	6:1	48	10:1	100
24	28	20	.064 *	8	6	34	50	4:1	40	6:1	60	10:1	120
30	35	24	.079 *	12	9	41	65	4:1	56	6:1	84	10:1	160
36	42	29	.109 *	12	9	48	72	4:1	76	6:1	114	10:1	210
42	49	33	.109	16	12	55	87	4:1	92	6:1	138	——	——
48	57	38	.109	16	12	63	95	4:1	112	6:1	168	——	——
54	64	43	.109	16	12	70	102	4:1	132	6:1	198	——	——

① * MINIMUM THICKNESS OF ALL 10:1 SLOPED SIDE DRAINS IS 0.109".
② ACTUAL SLOPE GREATER THAN 10:1.

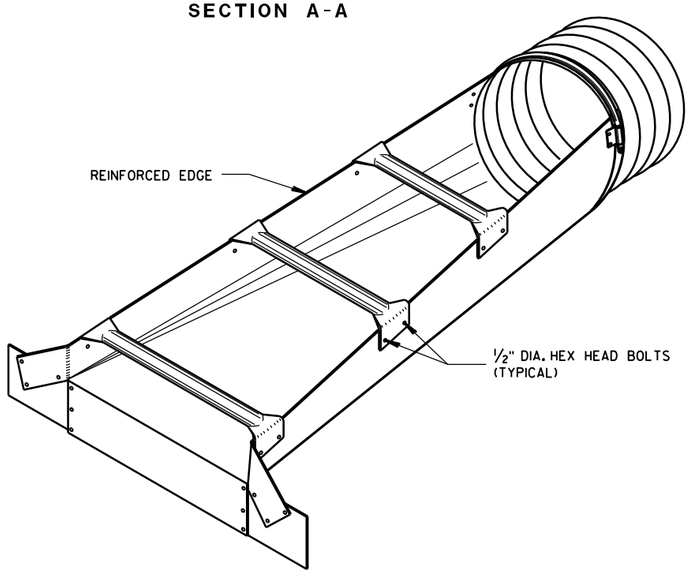

ISOMETRIC VIEW

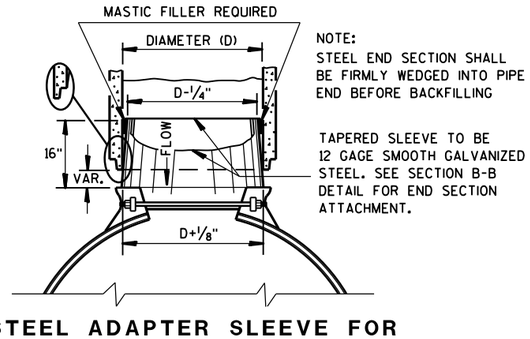

NOTE:
STEEL END SECTION SHALL BE FIRMLY WEDGED INTO PIPE END BEFORE BACKFILLING

TAPERED SLEEVE TO BE 12 GAGE SMOOTH GALVANIZED STEEL. SEE SECTION B-B DETAIL FOR END SECTION ATTACHMENT.

STEEL ADAPTER SLEEVE FOR CONCRETE PIPE

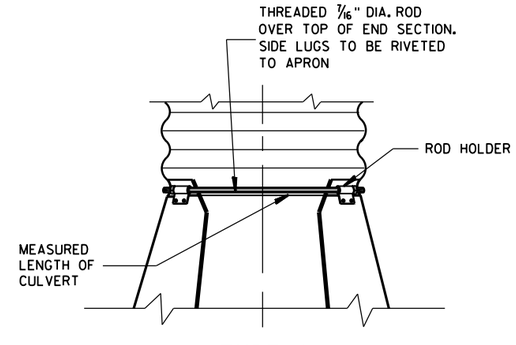

TYPE 2 CONNECTION DETAIL

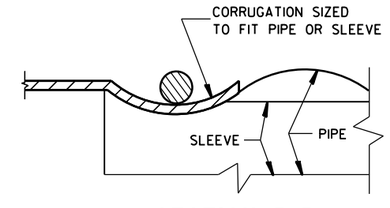

SECTION B-B

STEEL APRON ENDWALLS FOR CULVERT PIPE AND PIPE ARCH SLOPED SIDE DRAINS

STATE OF WISCONSIN
DEPARTMENT OF TRANSPORTATION

APPROVED
9/14/2012 — DATE
/S/ Jerry H. Zogg — ROADWAY STANDARDS DEVELOPMENT ENGINEER
FHWA

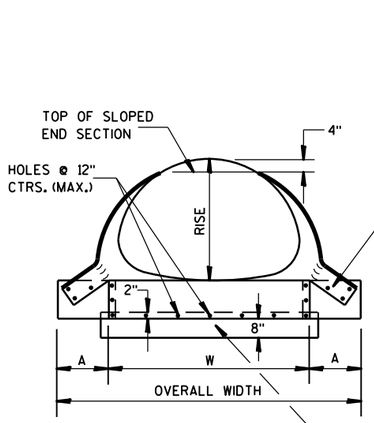

FRONT VIEW

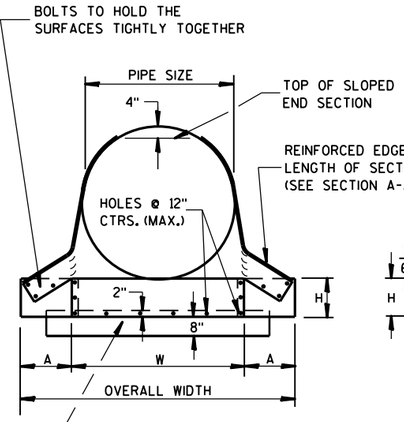

FRONT VIEW

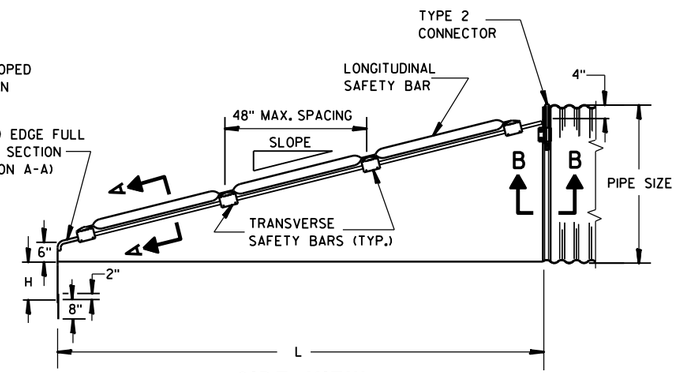

SIDE VIEW
(48" SIZE ILLUSTRATED)

GENERAL NOTES

DETAILS OF CONSTRUCTION, MATERIALS AND WORKMANSHIP NOT SHOWN ON THIS DRAWING SHALL CONFORM TO THE PERTINENT REQUIREMENTS OF THE STANDARD SPECIFICATIONS AND APPLICABLE SPECIAL PROVISIONS.

SAFETY GRATES SHALL BE FABRICATED FROM 3-INCH DIAMETER GALVANIZED PIPE MEETING THE REQUIREMENTS OF ASTM A-53, GRADE B, SCHEDULE 40 OR APPROVED EQUAL. THE LONGITUDINAL BAR SHALL BE WELDED TO THE TRANSVERSE BARS WHERE THE BARS CROSS. THE NUMBER OF TRANSVERSE BARS REQUIRED WILL VARY DEPENDING ON THE LENGTH OF THE END SECTION.

SLOPED STEEL ENDWALLS LOCATED AT THE ENDS OF CONCRETE CULVERT PIPE SHALL BE FURNISHED WITH STEEL ADAPTER SLEEVES.

STEEL APRON ENDWALLS FOR CULVERT PIPE CROSS DRAINS

PIPE DIA. (IN.)	MIN. THICK.		DIMENSIONS (Inches)				L DIMENSIONS			
	IN.	GAGE	A	H	W	OVERALL WIDTH	SLOPE	LENGTH INCHES	SLOPE	LENGTH INCHES
36	.109	12	12	9	42	66	4:1	104	6:1	156
42	.109	12	16	12	48	80	4:1	128	6:1	192
48	.109	12	16	12	54	86	4:1	152	6:1	228
54	.109	12	16	12	60	92	4:1	176	6:1	264
60	.109	12	16	12	66	98	4:1	200	6:1	300

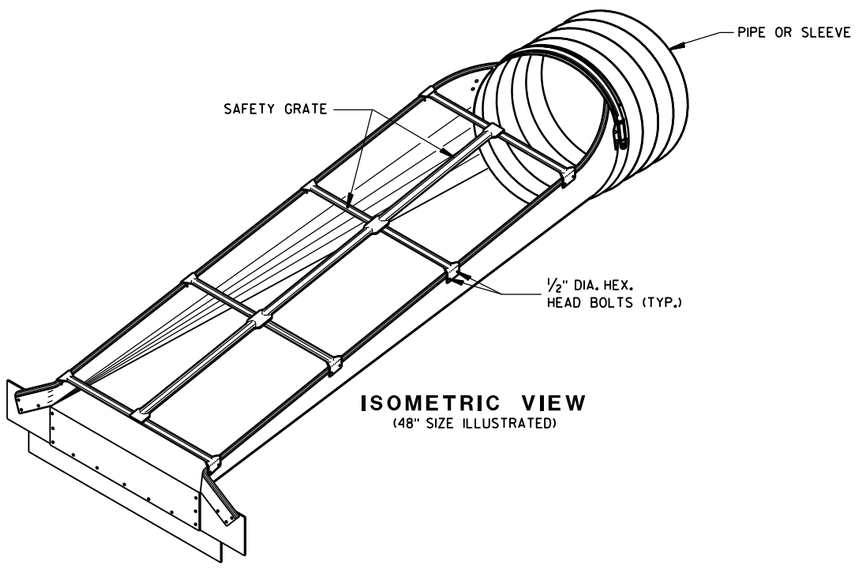

ISOMETRIC VIEW
(48" SIZE ILLUSTRATED)

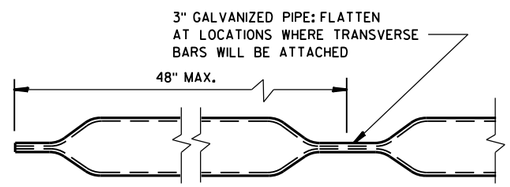

LONGITUDINAL SAFETY BAR

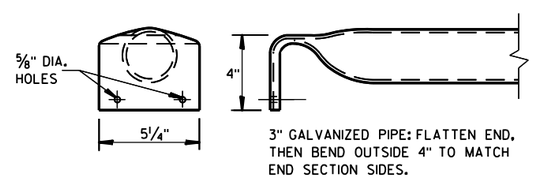

TRANSVERSE SAFETY BAR

STEEL APRON ENDWALLS FOR PIPE ARCH SLOPED CROSS DRAINS

EQUIV. DIA. (IN.)	INCHES		MIN. THICK.		DIMENSIONS (Inches)				L DIMENSIONS			
	SPAN	RISE	IN.	GAGE	A	H	W	OVERALL WIDTH	SLOPE	LENGTH INCHES	SLOPE	LENGTH INCHES
30	35	24	.079	14	12	9	41	65	4:1	56	6:1	84
36	42	29	.109	12	12	9	48	72	4:1	76	6:1	114
42	49	33	.109	12	16	12	55	87	4:1	92	6:1	138
48	57	38	.109	12	16	12	63	95	4:1	112	6:1	168
54	64	43	.109	12	16	12	70	102	4:1	132	6:1	198
60	71	47	.109	12	16	12	77	109	4:1	148	6:1	222

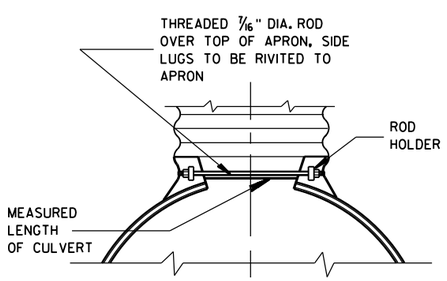

TYPE 2 CONNECTOR DETAIL

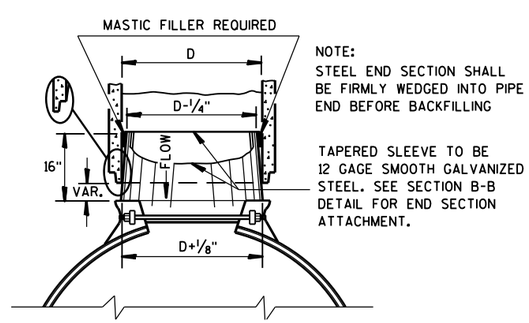

NOTE:
STEEL END SECTION SHALL BE FIRMLY WEDGED INTO PIPE END BEFORE BACKFILLING

TAPERED SLEEVE TO BE 12 GAGE SMOOTH GALVANIZED STEEL. SEE SECTION B-B DETAIL FOR END SECTION ATTACHMENT.

STEEL ADAPTER SLEEVE FOR CONCRETE PIPE

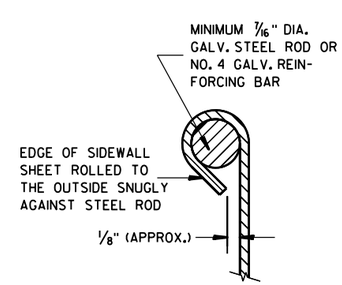

SECTION A-A

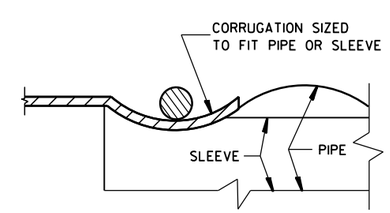

SECTION B-B

STEEL APRON ENDWALLS FOR CULVERT PIPE AND PIPE ARCH SLOPED CROSS DRAINS

STATE OF WISCONSIN
DEPARTMENT OF TRANSPORTATION

APPROVED
6/5/2012 — DATE
/S/ Jerry H. Zogg — ROADWAY STANDARDS ENGINEER
FHWA

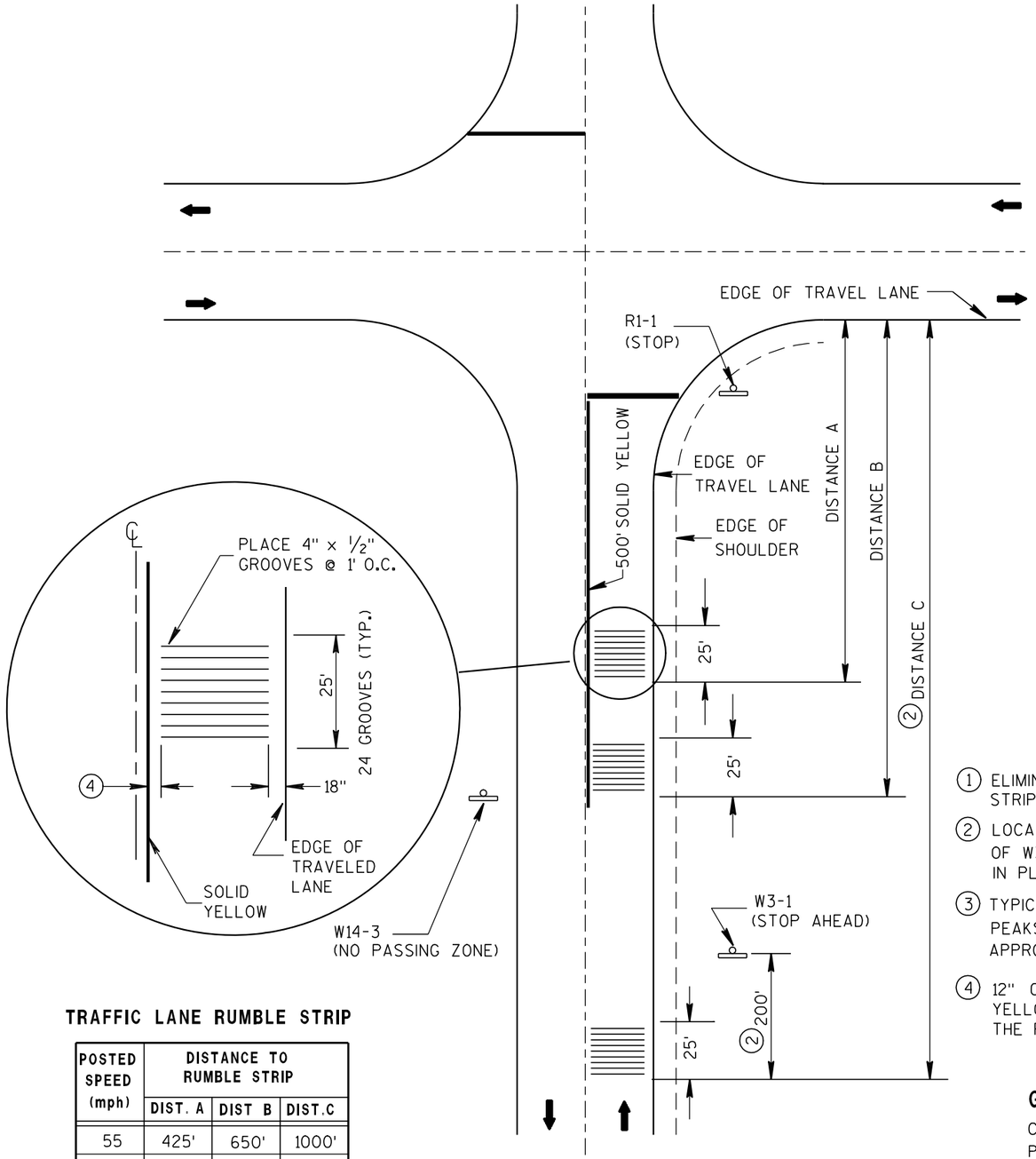

ARROW SYMBOL (➡) SHOWS DIRECTION OF TRAVEL

PLAN VIEW

RUMBLE STRIP LOCATION

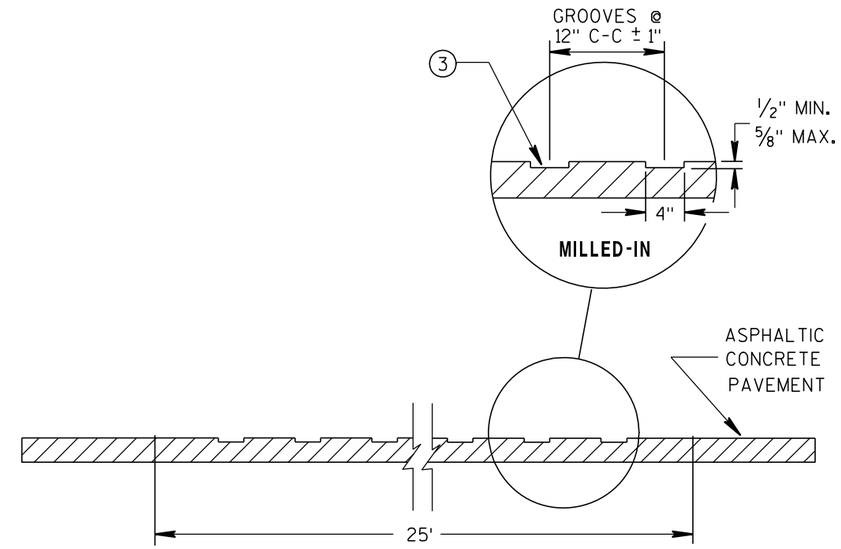

ELEVATION VIEW

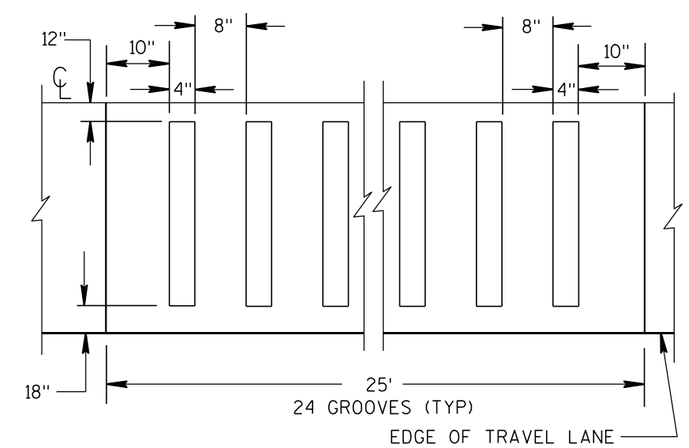

PLAN VIEW

ASPHALTIC PAVEMENT MILLED-IN

1. ELIMINATE THE MIDDLE SET OF RUMBLE STRIPS.
2. LOCATE RUMBLE STRIP 200' IN ADVANCE OF W3-1 SIGN AS SHOWN. IF W3-1 IS NOT IN PLACE, USE DISTANCE C.
3. TYPICAL VERTICAL VARIATION BETWEEN PEAKS AND VALLEYS WITHIN THE CUT APPROXIMATELY 1/16"
4. 12" CLEAR BETWEEN THE SOLID YELLOW LINE AND THE EDGE OF THE RUMBLE.

TRAFFIC LANE RUMBLE STRIP

POSTED SPEED (mph)	DISTANCE TO RUMBLE STRIP		
	DIST. A	DIST B	DIST.C
55	425'	650'	1000'
50	325'	450'	800'
45	275'	400'	650'
40	225'	1	550'
35	175'	1	475'
≤ 30	125'	1	425'

GENERAL NOTES

CONTRACTOR SHALL CONFIRM RUMBLE STRIP LOCATION WITH THE ENGINEER PRIOR TO INSTALLATION. THE ENGINEER MAY MODIFY THE RUMBLE STRIP LOCATION AS FIELD CONDITIONS DICTATE.

WHEN ASPHALTIC PAVEMENT IS NEW IN THE RUMBLE AREA THE CONTRACTOR SHALL ALLOW THE PAVEMENT TO CURE A MINIMUM OF 7 DAYS PRIOR TO RUMBLE INSTALLATION.

PAVEMENT MARKING AND SIGNING DETAILS AND SPECIFICATIONS ARE PROVIDED ELSEWHERE IN THE CONTRACT.

ASPHALTIC RUMBLE STRIPS AT INTERSECTION

STATE OF WISCONSIN
DEPARTMENT OF TRANSPORTATION

APPROVED

8/17/2011 — DATE

/S/ Jerry H. Zogg — ROADWAY STANDARDS DEVELOPMENT ENGINEER

FHWA

6
S.D.D. 13 A 8-1

GENERAL NOTES

DETAILS OF CONSTRUCTION SHOWN ON THIS DRAWING SHALL CONFORM TO THE PERTINENT REQUIREMENTS OF THE STANDARD SPECIFICATIONS AND APPLICABLE SPECIAL PROVISIONS.

DO NOT MILL CENTER LINE GROOVES THROUGH ANY INTERSECTION, MARKED CROSSWALK, NON-MOTORIZED PATH CROSSING, OR SNOWMOBILE CROSSING.

INSTALL PAVEMENT MARKING AFTER THE GROOVES ARE INSTALLED.

SEE SIGNING PLAN FOR SIGN REQUIREMENTS THAT MAY BE NEEDED.

(1) CENTERLINE GROOVES MAY BE OMITTED IN AREAS WITH HIGH CONCENTRATIONS OF DRIVEWAYS, WHEN DIRECTED BY THE ENGINEER.

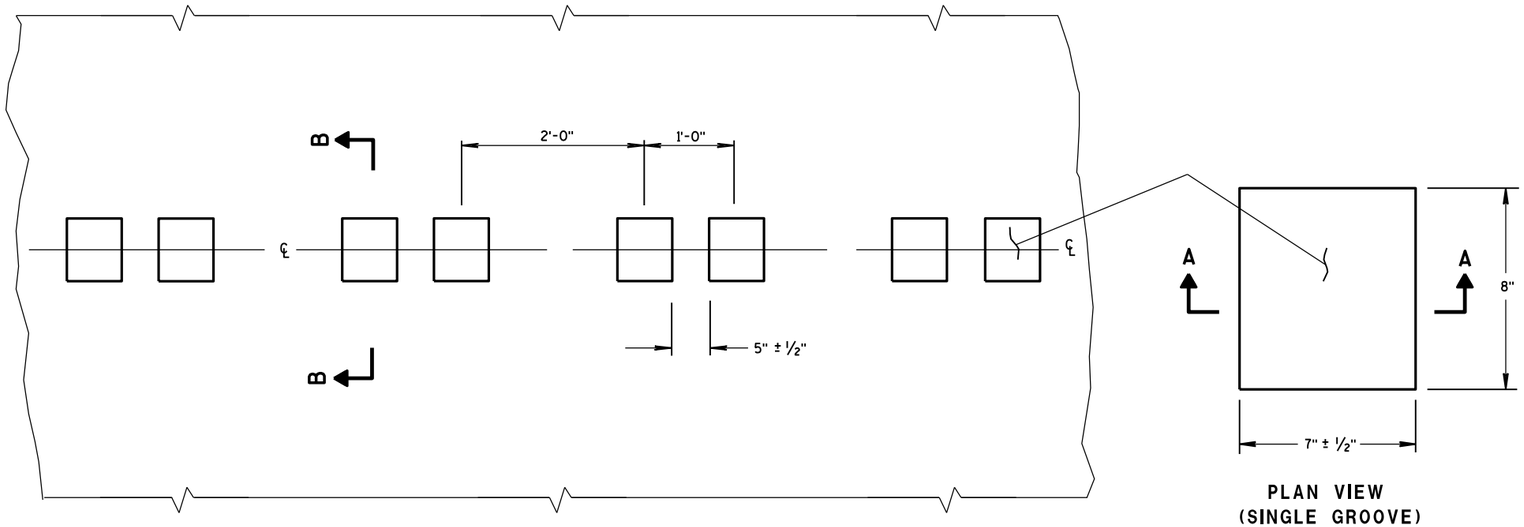

PLAN VIEW
CENTER LINE WITH GROOVES

PLAN VIEW
(SINGLE GROOVE)

PLACEMENT DETAIL FOR MILLED RUMBLE STRIP

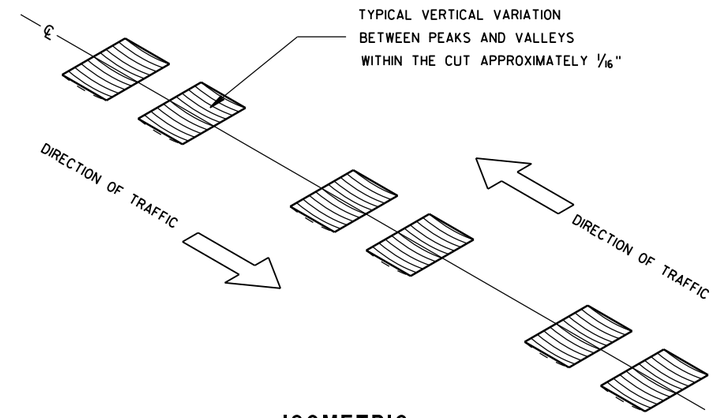

ISOMETRIC

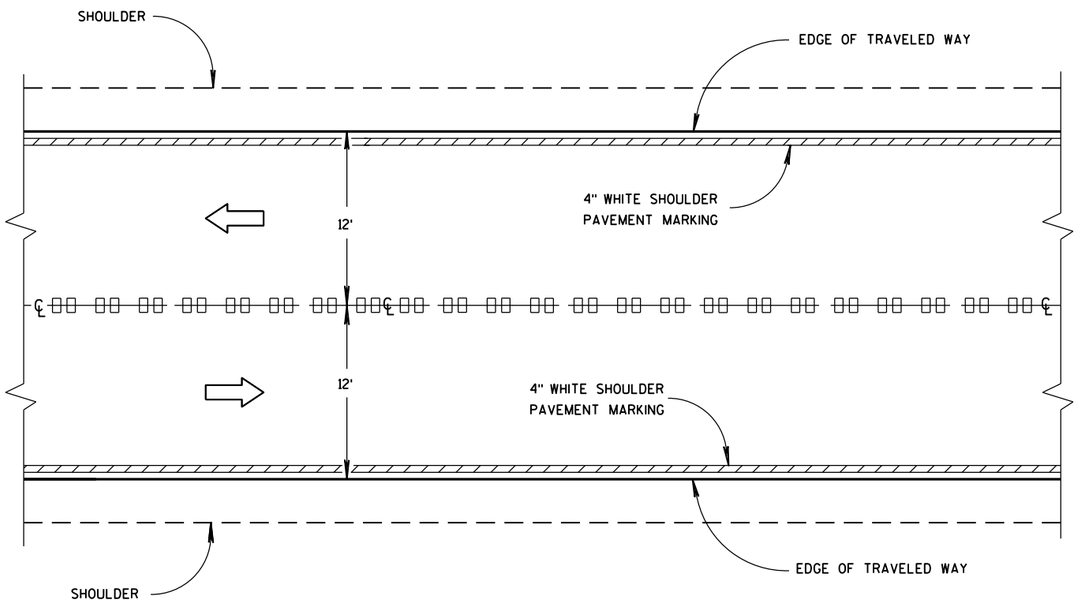

CENTER LINE GROOVES ON TWO-WAY ROADWAYS

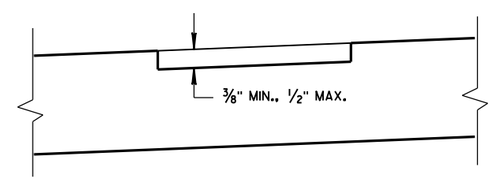

SECTION B-B
SUPERELEVATED ROADWAY

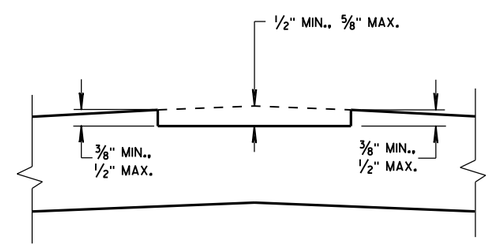

SECTION B-B
CROWNED ROADWAY

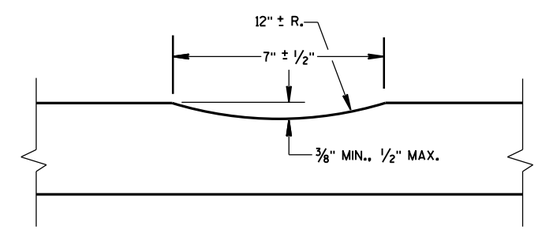

SECTION A-A

2-LANE RURAL CENTER LINE RUMBLE STRIP, MILLING
STATE OF WISCONSIN DEPARTMENT OF TRANSPO

6

S.D.D. 13 A 11-2a

6

S.D.D. 13 A 11-2a

(1) CENTERLINE GROOVES MAY BE OMITTED IN AREAS WITH HIGH CONCENTRATIONS OF DRIVEWAYS, WHEN DIRECTED BY THE ENGINEER.

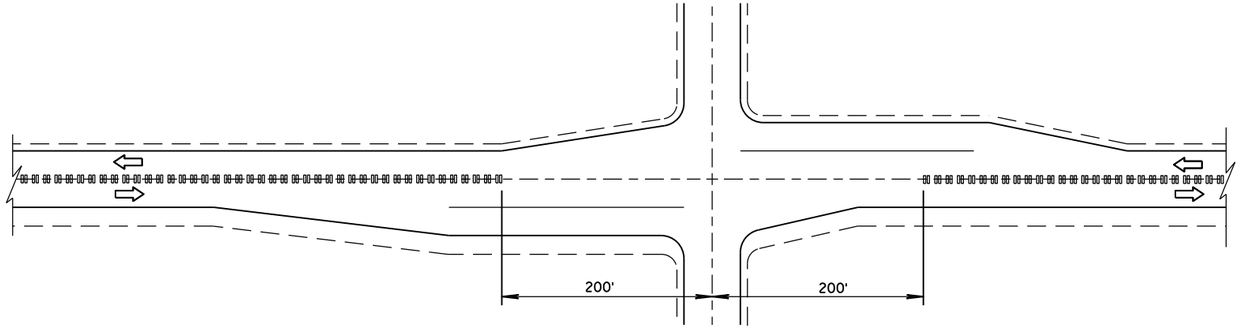

CENTER LINE GROOVES AT INTERSECTIONS

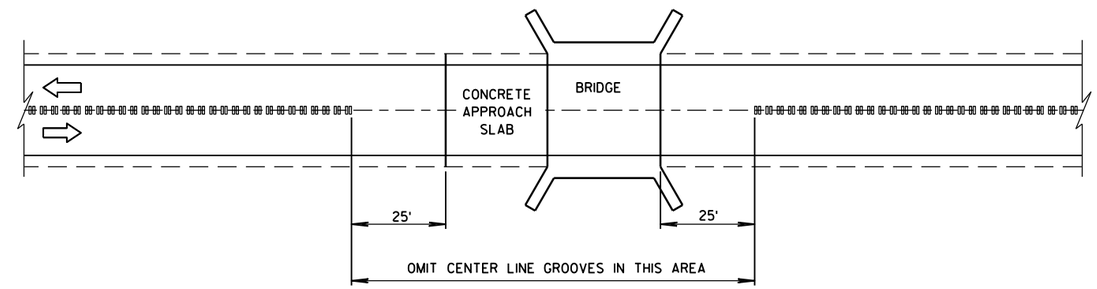

CENTER LINE GROOVES AT BRIDGES

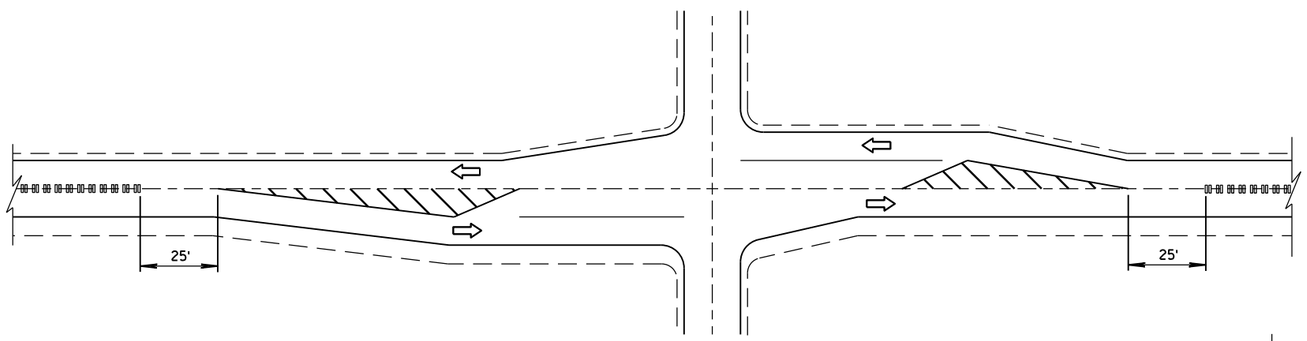

CENTER LINE GROOVES AT INTERSECTIONS
(WITH LEFT TURN LANES)

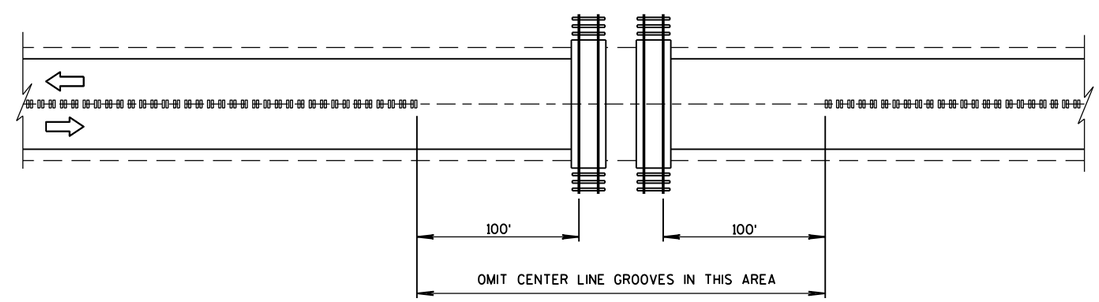

CENTER LINE GROOVES AT RAILROADS

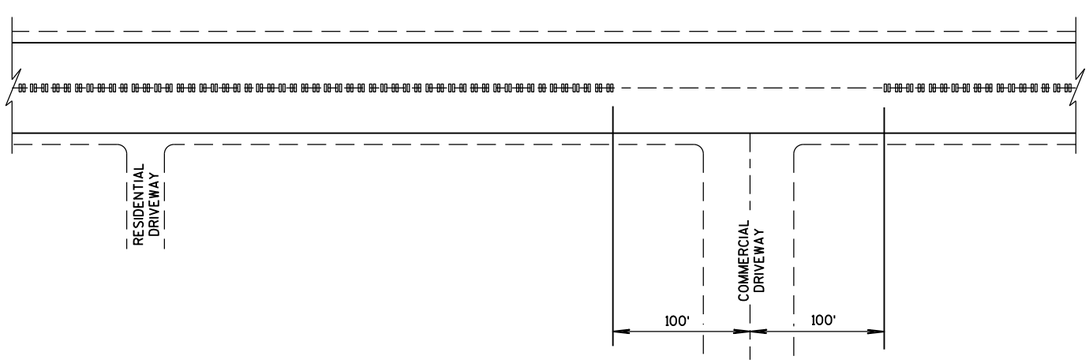

CENTER LINE GROOVES AT DRIVEWAYS (1)

2-LANE RURAL CENTER LINE RUMBLE STRIP, MILLING	
STATE OF WISCONSIN DEPARTMENT OF TRANSPORTATION	
APPROVED 5/15/2013 DATE FHWA	/S/ Jerry H. Zoda ROADWAY STANDARDS DEVELOPMENT ENGINEER NT

6

6

S.D.D. 13 A 11-2b

S.D.D. 13 A 11-2b

GENERAL NOTES

DETAILS OF CONSTRUCTION, MATERIALS AND WORKMANSHIP NOT SHOWN ON THIS DRAWING SHALL CONFORM TO THE PERTINENT REQUIREMENTS OF THE STANDARD SPECIFICATIONS, AND THE APPLICABLE SPECIAL PROVISIONS.

1. W6 X 9 OR W6 X 8.5 STEEL POSTS AND NOTCHED PLASTIC BLOCKOUTS ARE ACCEPTABLE ALTERNATIVES FOR 6" X 8" WOOD POSTS WITH WOOD OR PLASTIC BLOCKOUTS. USE APPROVED NOTCHED PLASTIC BLOCKOUTS WITH STEEL POSTS. APPROVED PLASTIC BLOCKOUT DESIGNS MAY VARY FROM THIS TYPICAL DETAIL WHEN USED IN CONJUNCTION WITH STEEL POSTS.

   DO NOT MIX STEEL POSTS AND WOOD POSTS IN A SINGLE INSTALLATION.
2. USE STRUCTURAL STEEL POSTS CONFORMING TO ASTM A 36. GALVANIZED POSTS ACCORDING TO AASHTO M 111. EITHER SET THE POSTS IN DRILLED HOLES OR DRIVE TO GRADE. REMOVE MUSHROOMING CAUSED BY DRIVING AND REPAIR DAMAGED SPELTER COATING ON GALVANIZED POSTS.
3. INSTALL STEEL POSTS WITH HOLES ON APPROACHING TRAFFIC SIDE.
4. USE EITHER WOOD OR APPROVED PLASTIC BLOCKOUTS ON WOOD POSTS.
5. IF THE DISTANCE FROM BACK OF POST TO SHOULDER HINGE POINT IS LESS THAN 2 FEET INSTALL LONGER POST AT HALF POST SPACING, W BEAM (LHW).
6. IF ROCK IS ENCOUNTERED DURING EXCAVATION, THE ENGINEER MAY APPROVE USING A 12 INCH DIAMETER POST HOLE EXTENDING 20 INCHES DEEP INTO THE ROCK. PLACE GRANULAR MATERIAL IN THE BOTTOM OF THE HOLE APPROXIMATELY 2½ INCHES DEEP. CUT THE POSTS TO LENGTH AND PLACE IN YHE HOLE. BACKFILL WITH MATERIAL EXCAVATED FROM THE HOLE AND COMPACT ADEQUATEY.
7. WHEN USING STEEL POSTS AND WOOD BLOCKOUTS INSTALL FOUR 16D GALVANIZED NAILS. INSTALL NAILS AT THE BACK CORNERS OF THE BLOCK AND BEND THE NAILS OVER THE FLANGE OF THE STEEL POST.

INSTALL BEAM GUARD SECTIONS AND ALL NECESSARY HARDWARE ACCORDING TO THE APPLICABLE PLAN AND CURRENT STANDARD AND SUPPLEMENTAL SPECIFICATIONS.

ALL DIMENSIONS ARE SUBJECT TO MANUFACTURER'S TOLERANCES EXCEPT WHERE ALLOWABLE TOLERANCES ARE SHOWN.

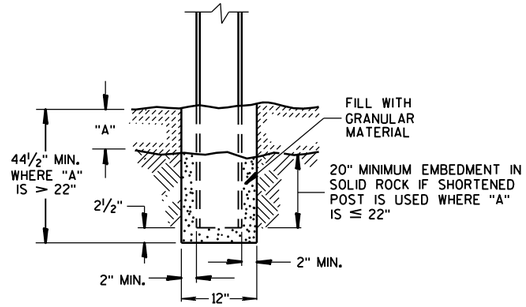

END VIEW
SETTING STEEL OR WOOD POST IN ROCK (6)

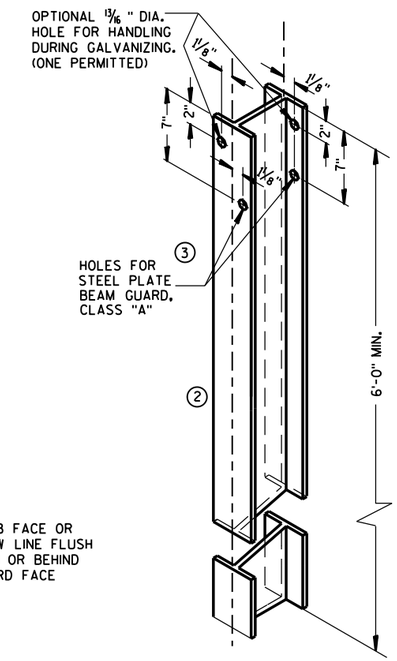

STEEL POST & HOLE PUNCHING DETAIL (W6 X 9) (1)

ALL HOLES 13/16" DIAMETER EXCEPT AS NOTED

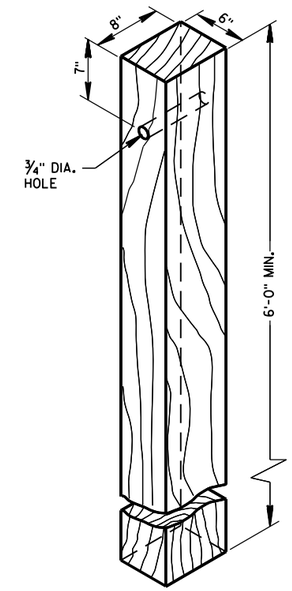

WOOD POST (6"X8") NOMINAL

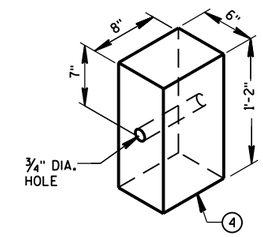

WOOD OR PLASTIC BLOCKOUT FOR WOOD POSTS

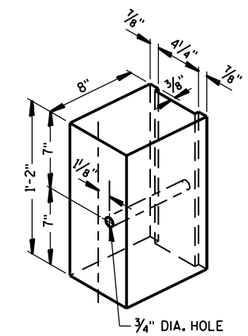

TYPICAL NOTCHED PLASTIC BLOCKOUT FOR STEEL POSTS (1)

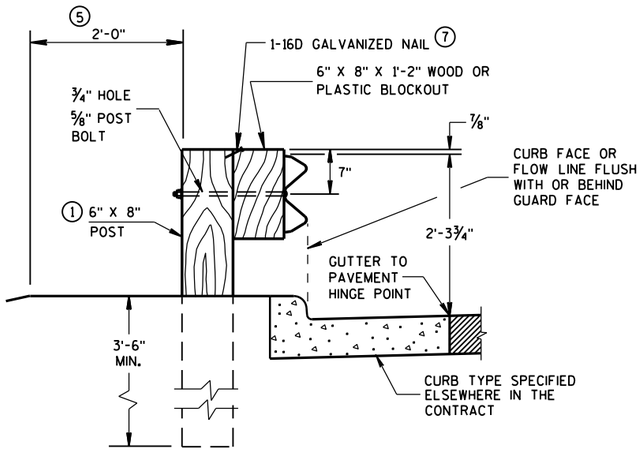

END VIEW
LOCATED ALONG A CURBED ROADWAY

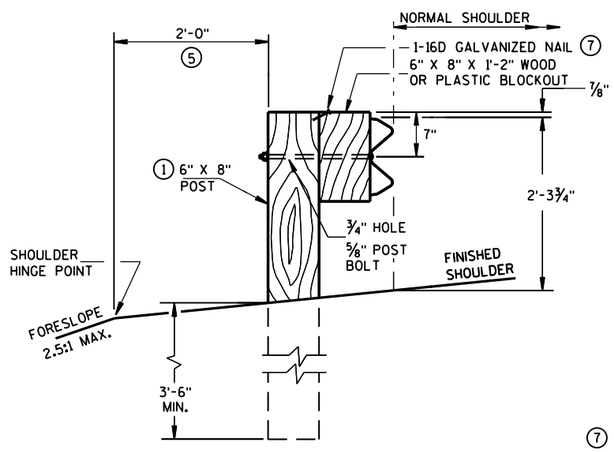

END VIEW
LOCATED ALONG A ROADWAY SHOULDER
STANDARD INSTALLATION

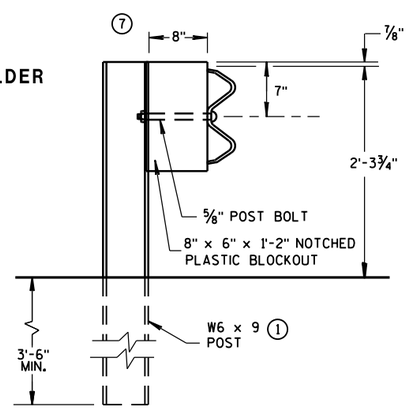

END VIEW
STEEL POST & NOTCHED
PLASTIC BLOCKOUT ALTERNATIVE
STANDARD INSTALLATION

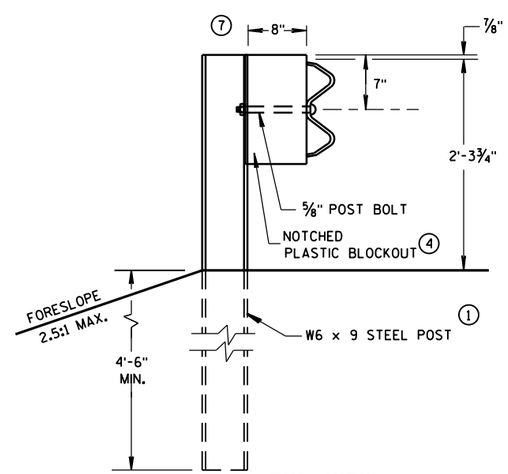

END VIEW
LONGER POST AT HALF
POST SPACING W BEAM
(LHW)

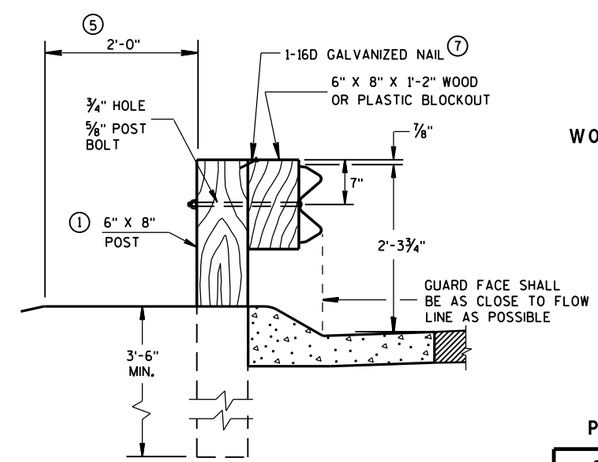

END VIEW
LOCATED ALONG A
MOUNTABLE CURBED ROADWAY

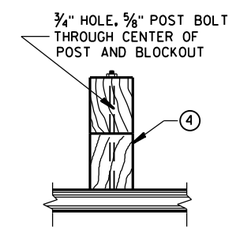

PLAN VIEW
WOOD POST, BLOCKOUT & BEAM

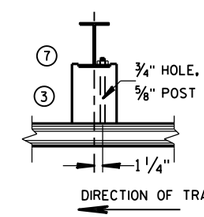

PLAN VIEW
STEEL POST, NOTCHED
PLASTIC BLOCKOUT & BEAM

TYPICAL INSTALLATION OF STEEL PLATE BEAM GUARD

STEEL PLATE BEAM GUARD, CLASS "A"
INSTALLATION & ELEMENTS

STATE OF WISCONSIN
DEPARTMENT OF TRANSPO

6

S.D.D. 14 B 15-8a

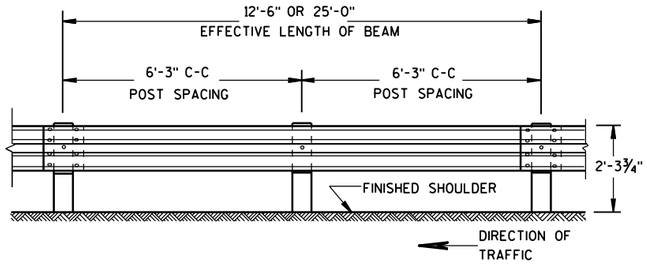

FRONT VIEW

POST SPACING STANDARD INSTALLATION

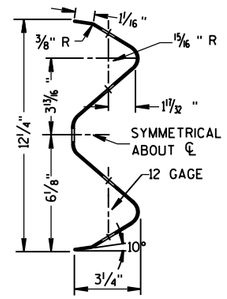

SECTION THRU W BEAM

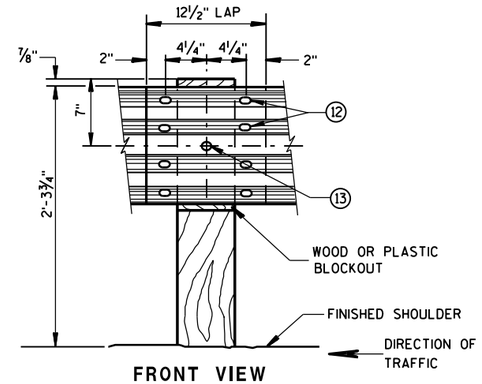

FRONT VIEW

BEAM SPLICE AT WOOD POST AND POST MOUNTING DETAIL

GENERAL NOTES

⑧ PROVIDE SILVER REFLECTIVE SHEETING ON ALL REFLECTORS EXCEPT THOSE LOCATED ALONG THE LEFT EDGE OF ONE-WAY ROADWAYS, WHICH SHALL BE PROVIDED WITH YELLOW REFLECTIVE SHEETING. SHEETING IS TYPE H. SEE STANDARD SPECIFICATION 637.

⑨ DO NOT INSTALL REFLECTORS ON THE FIRST 50 FEET OF THE APPROACH END OF THE ENERGY ABSORBING TERMINAL.

⑩ REVERSE EVERY OTHER REFLECTOR FOR 2-WAY VISIBILITY. THE CONTRACTOR MAY FURNISH TWO-SIDED REFLECTORS IN LIEU OF ONE-SIDED REFLECTORS.

⑪ PROVIDE AN ANGLE OF BEND OF 90° ± 1° FOR TWO-SIDED REFLECTORS.

⑫ 8 -⅝" ϕ X 2" BUTTON HEAD BOLTS WITH OVAL SHOULDERS & RECESS NUTS.

⑬ ⅝" DIA. BUTTON HEAD BOLT AND RECESS NUT WITH ⅝" DIA. F844 FLAT WASHER UNDER NUT.

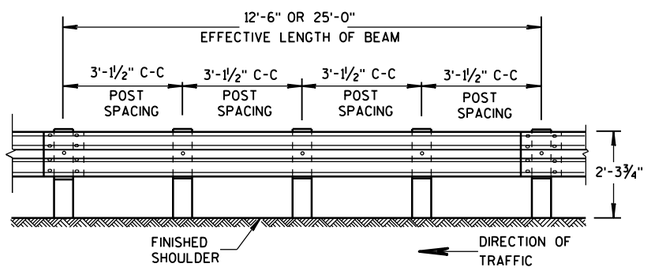

FRONT VIEW

POST SPACING FOR LONGER POST AT HALF POST SPACING W BEAM (LHW)

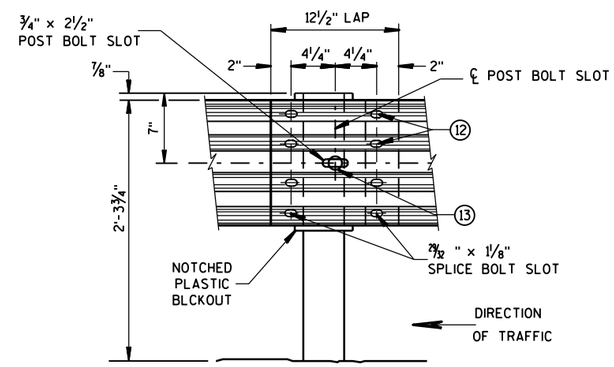

FRONT VIEW

BEAM SPLICE AT STEEL POST

TYPICAL SPLICING DETAILS OF STEEL PLATE BEAM GUARD

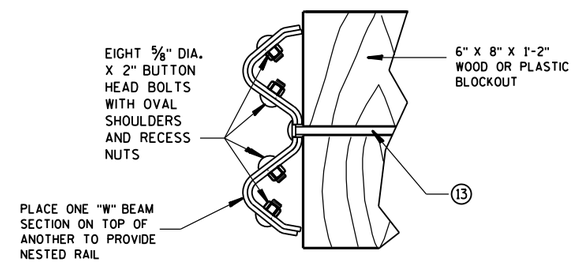

NESTED W BEAM (NW)

USE ALL OTHER STANDARD BEAM GUARD DETAILS FOR CONSTRUCTING NESTED W BEAM (NW)

REFLECTOR SPACING ⑨

	BEAM GUARD LENGTH	REFLECTOR SPACING	NO. SURFACES REFLECTORIZED	MIN. NO. REFLECTORS
ONE WAY TRAFFIC	< 200' > 200'	50' C-C 100' C-C	1 1	3
TWO WAY TRAFFIC	< 200' > 200'	25' C-C 50' C-C	1 ⑩ 1	6
TWO WAY TRAFFIC	< 200' > 200'	50' C-C 100' C-C	2 ⑪ 2	3

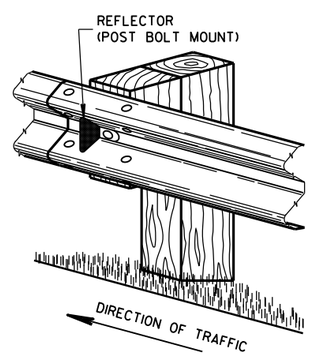

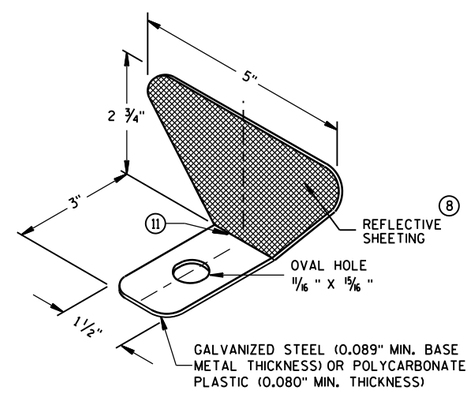

ONE SIDED REFLECTOR DETAIL AND TYPICAL INSTALLATION ⑧

STEEL PLATE BEAM GUARD, CLASS "A", INSTALLATION & ELEMENTS

STATE OF WISCONSIN
DEPARTMENT OF TRANSPOR

6

S.D.D. 14 B 15-8b

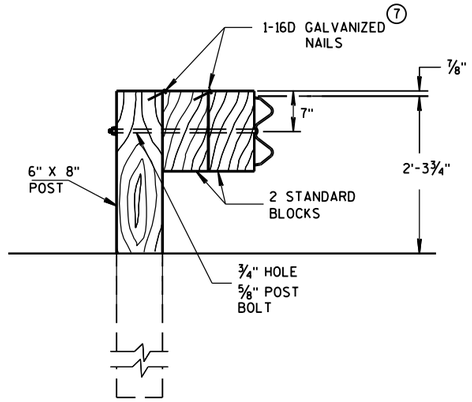

DETAIL FOR DOUBLE BLOCKS

THE NUMBER OF DOUBLE BLOCK POSTS WITHIN A BARRIER RUN IS UNLIMITED

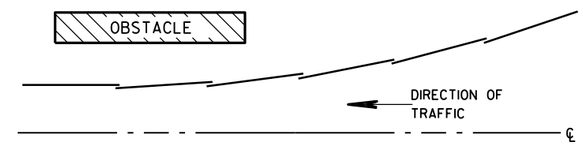

PLAN VIEW
BEAM LAPPING DETAIL

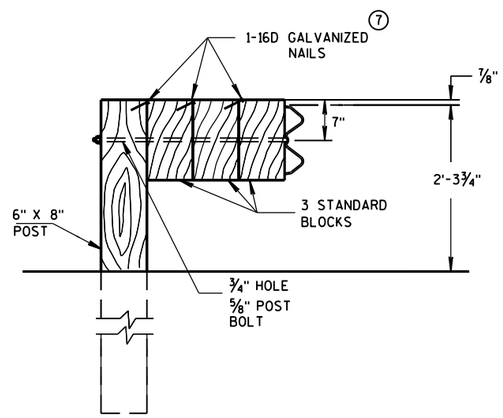

DETAIL FOR TRIPLE BLOCKS

TRIPLE BLOCK DETAIL IS LIMITED TO ONE LOCATION WITHIN A BEAM GUARD RUN.

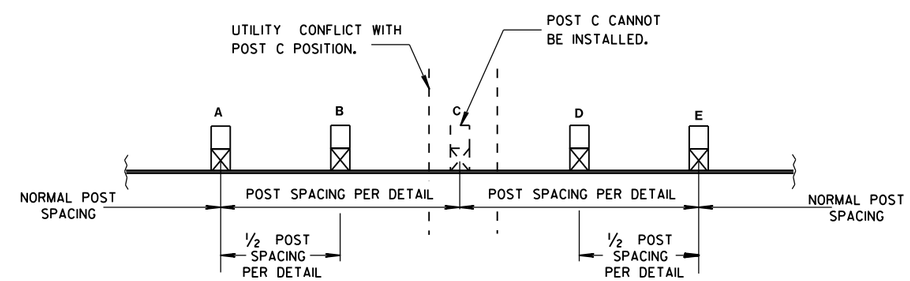

POST DRIVING FOR CONTINUOUS UNDERGROUND OBSTRUCTION

NOTES: USE DOUBLE OR TRIPLE BLOCKS WHEN UNDERGROUND OBSTACLES PREVENT THE POST FROM BEING INSTALLED.

DO NOT USE EXTRA BLOCKOUTS IF IT CAUSES THE POST TO BE DRIVEN BEYOND SHOULDER HINGE POINT OR CAUSES A FIXED OBJECT TO BE WITHIN THE DEFLECTION DISTANCE OF THE BARRIER.

STEEL PLATE BEAM GUARD, CLASS "A", INSTALLATION & ELEMENTS

STATE OF WISCONSIN
DEPARTMENT OF TRANSPORTATION

APPROVED
June 2014 — DATE
/S/ Jerry H. Zogg — ROADWAY STANDARDS DEVELOPMENT ENGINEER
FHWA

6

S.D.D. 14 B 15-8c

BILL OF MATERIALS

NOTE NO.	QTY.	DESCRIPTION
1	4	WOOD BREAKAWAY TERMINAL POST: 5½" X 7½" X 3'-9"
2	**	STEEL TUBE: OPTION 1 - QUANITY OF 4 TS 8" X 6" X 0.188", 4'-6" LONG OR OPTION 2 - QUANITY OF 2 TS 8" X 6" X 0.188", 6'-0" AND 2 TS 8" X 6" X 0.188", 4'-6" LONG
3	2	SOIL PLATE: 2'-0" X 1'-6" X ¼" **
4	4	WOOD BREAKAWAY CRT POST: 6" X 8" X 6'-0"
5	6	WOOD OFFSET BLOCKS: 6" X 8" X 1'-2"
6	1	PIPE SLEEVE: 2" X 5 ½" STANDARD PIPE
7	1	BEARING PLATE
8	1	BCT CABLE ASSEMBLY
9	1	CABLE ANCHOR BOX
10	1	STRUT & YOKE
11	1	STEEL PLATE BEAM, END PANEL 12 GA. 13'-6½" LONG FOR SKT-350, ET-2000 AND ET-2000 PLUS
12	3	STEEL PLATE BEAM: 12 GA. 13'-6½"
13	1	ET-2000/ET-2000 PLUS GUARDRAIL EXTRUDER OR SKT-350 IMPACT HEAD: AS FURNISHED BY MANUFACTURER
14	1	0.040" ALUMINUM SHEET WITH REFLECTIVE SHEETING TYPE F PER SECTION 637 OF THE STANDARD SPECIFICATIONS
15	1	E.A.T. MARKER POST

GENERAL NOTES

FOLLOW MANUFACTURE'S BOLTING RECOMMENDATIONS. IF NONE ARE AVAILABLE, INSTALL ⅝" ø X 1'-6" BUTTON HEAD BOLTS AT ALL POSTS EXCEPT FOR POST 1.

(A) THE SLOPE IN THE AREA BOUNDED BY THE GRADELINE, THE HINGE POINT LINE (HPL), AND THE CLEAR ZONE LIMITS (CZL) SHALL BE 4:1 OR FLATTER.

(B) AFTER FINAL ASSEMBLY, RECHECK CABLE TO BE SURE IT IS TAUT AND HAS NOT RELAXED.

(C) THE 13 SLOT FIRST RAIL PANEL MAY BE USED IN LIEU OF THE 3 SLOT RAIL PANEL ON SKT-350 ONLY.

(D) THE TOP OF THE STEEL TUBE ON POSTS 1 THROUGH 4 SHALL NOT BE MORE THAN 3" ABOVE THE FINISH GROUND ELEVATION.

(E) THE CENTER OF THE UPPER 3½" DIAMETER HOLE ON POST 5 THROUGH 8 SHALL BE ¾" ABOVE THE FINISHED GROUND LINE.

(F) ATTACH ALUMINUM SHEET TO E.A.T. HEAD USING 4 STAINLESS STEEL SELF-TAPPING SCREWS. ONE SCREW PER CORNER.

STEEL POSTS SHALL NOT BE ALLOWED FOR USE WITH ENERGY ABSORBING TERMINALS.

DO NOT INSTALL REFLECTORS ON THE FIRST 50 FEET OF THE APPROACH END OF THE ENERGY ABSORBING TERMINAL.

* DO NOT ATTACH BLOCKOUTS TO POSTS 1 AND 2.

** SDD SHOWS 4 - 54 INCH STEEL TUBES WITH SOIL PLATES INSTALLED ON POST 1 AND POST 2. POST 3 AND 4 DO NOT NEED SOIL PLATES. AN ALTERNATIVE INSTALLATION WOULD CONSIST OF 2 - 72 INCH STEEL TUBES ON POST 1 AND POST 2 AND 54 INCH SOIL TUBES ON POSTS 3 AND 4. THE ALTERNATIVE INSTALLATION DOES NOT REQUIRE SOIL PLATES.

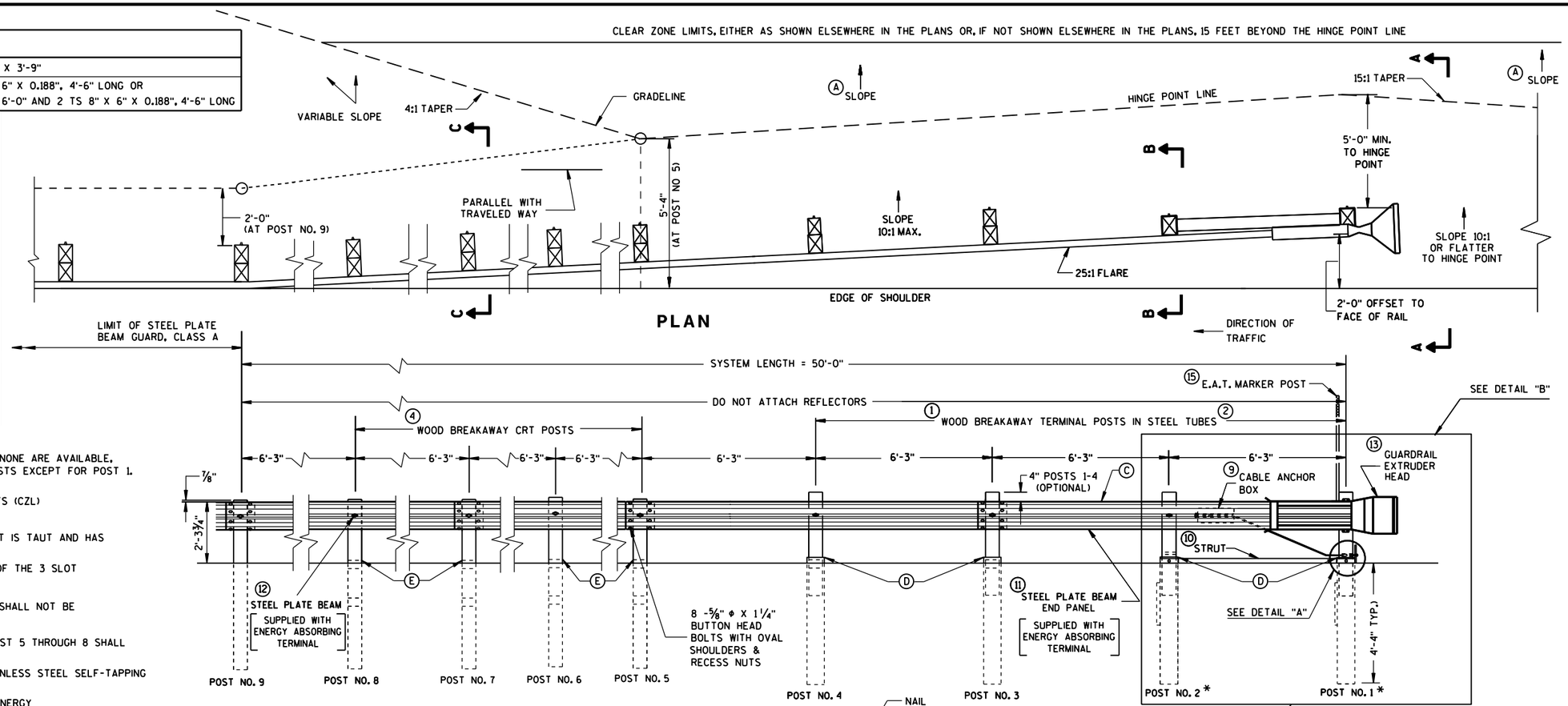

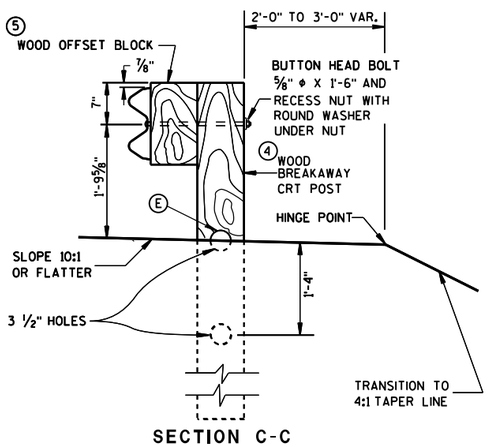

SECTION C-C
TYPICAL AT POST NOS. 6, 8

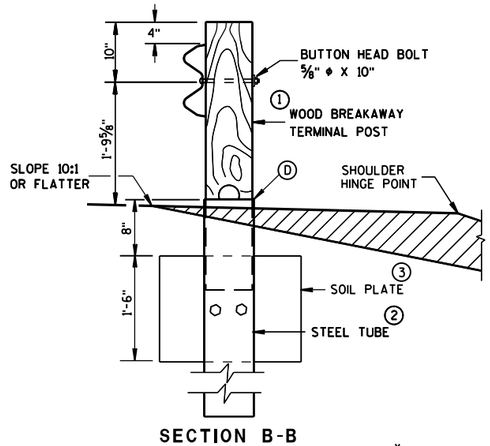

SECTION B-B
TYPICAL AT POST NO. 2*

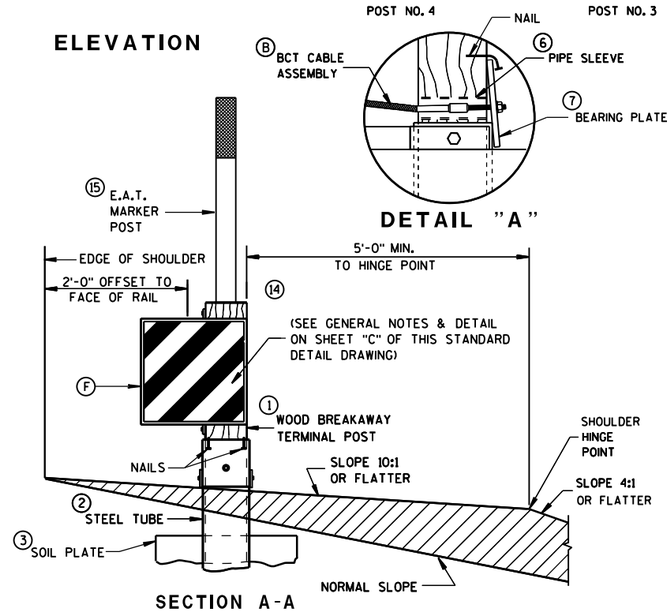

SECTION A-A
TYPICAL AT POST NO. 1*

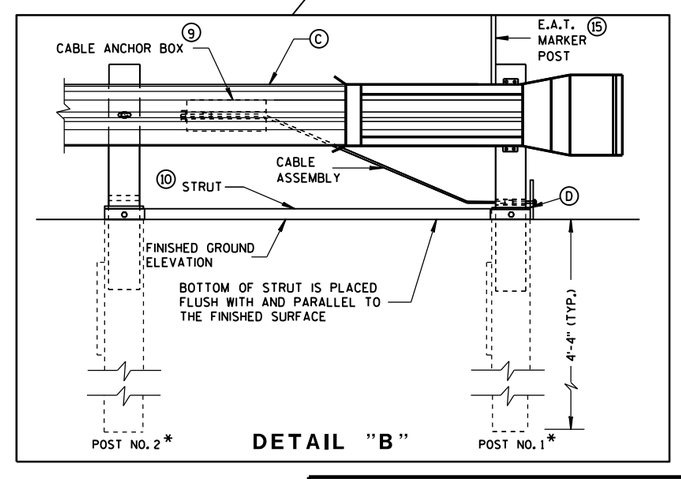

STEEL PLATE BEAM GUARD
ENERGY ABSORBING TERMINAL

STATE OF WISCONSIN
DEPARTMENT OF TRANSPORTATION

6

S.D.D. 14 B 24-8a

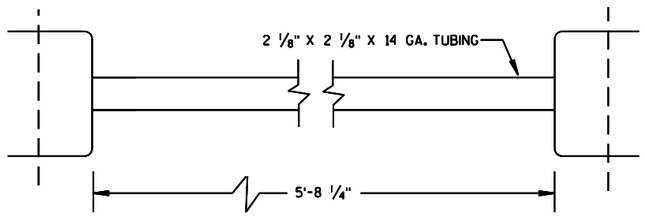

⑩ STRUT DETAIL (SKT-350)

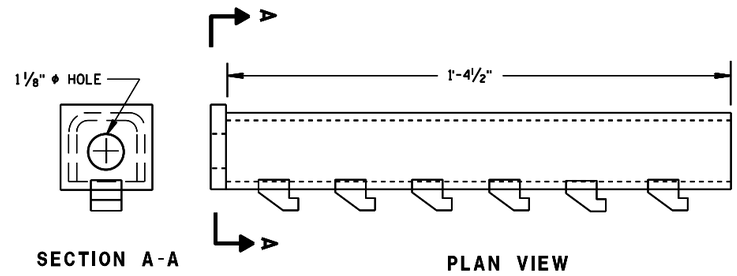

⑨ CABLE ANCHOR BOX (ET-2000/ET-2000 PLUS)

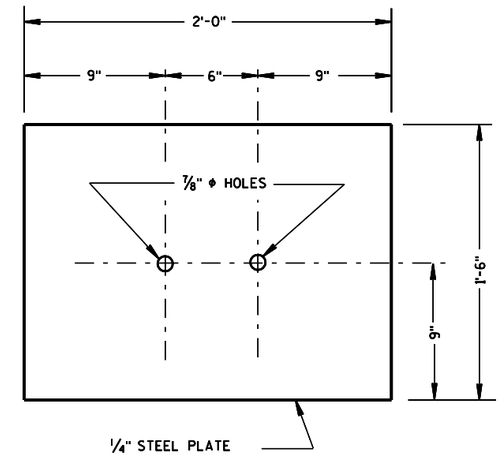

③ SOIL PLATE

(SKT-350, ET-2000/ET-2000 PLUS)

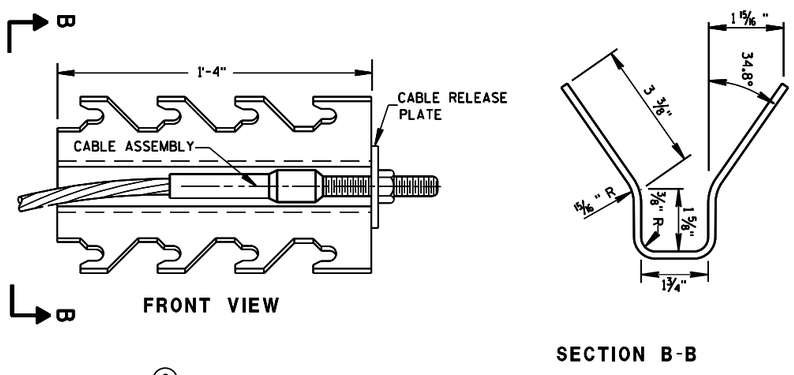

⑨ CABLE ANCHOR BOX (SKT-350)

(SKT-350)

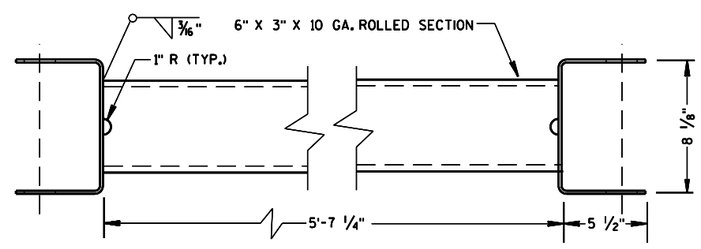

⑩ STRUT DETAIL (ET-2000/ET-2000 PLUS)

(ET-2000/ET-2000 PLUS)

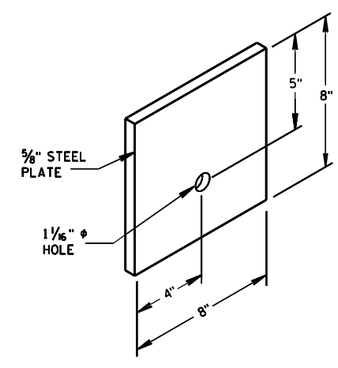

⑦ STEEL BEARING PLATE

(SKT-350, ET-2000/ET-2000 PLUS)

STEEL PLATE BEAM GUARD
ENERGY ABSORBING TERMINAL

STATE OF WISCONSIN
DEPARTMENT OF TRANSPO

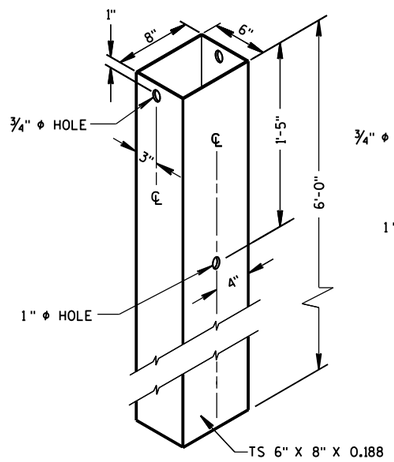

② 72" STEEL TUBE
(POSTS NO. 1-4

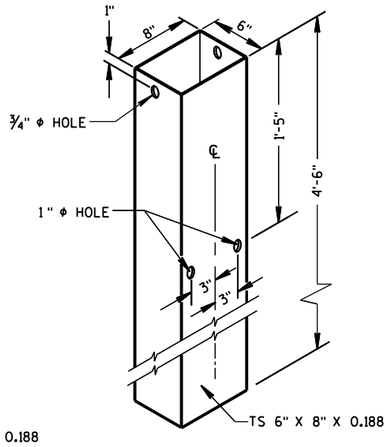

② 54" STEEL TUBE
(POSTS NO. 1-4

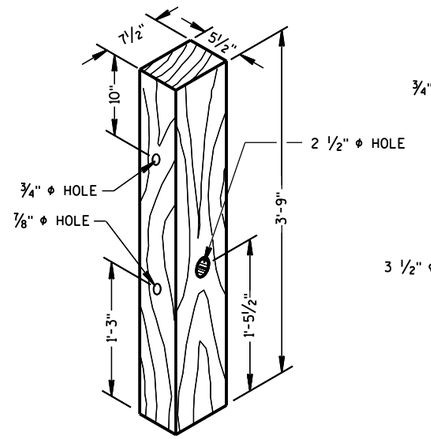

① TERMINAL POST
(POSTS NO. 1-4

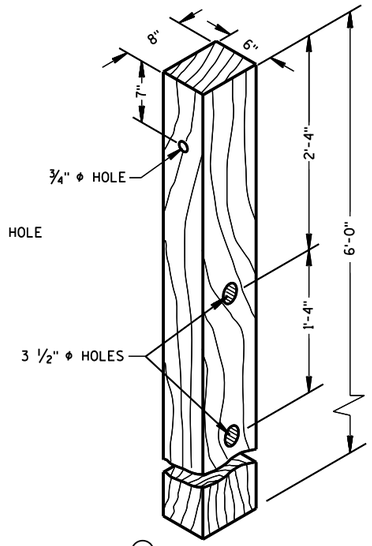

④ CRT POST
(POSTS NO'S 5-8

WOOD BREAKAWAY POSTS

GENERAL NOTES

WHEN ROCK IS ENCOUNTERED DURING EXCAVATION, A 12 INCH DIA. POST HOLE EXTENDING 20 INCHES DEEP INTO THE ROCK MAY BE USED IF APPROVED BY THE ENGINEER. GRANULAR MATERIAL SHALL BE PLACED IN THE BOTTOM OF THE HOLE APPROXIMATELY 2 ½" INCHES DEEP TO PROVIDE DRAINAGE. THE SOIL TUBES SHALL BE FIELD CUT TO LENGTH, PLACED IN THE HOLE AND BACKFILLED WITH ADEQUATELY COMPACTED MATERIAL EXCAVATED FROM THE HOLE.

SEE APPROVED PRODUCTS LIST FOR ACCEPTABLE E. A. T. MARKER POST.

(G) ½" DIA. X 3" LAG BOLT WITH WASHER.

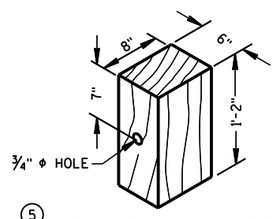

⑤ WOOD OFFSET BLOCK
REQ'D. AT ALL POSTS EXCEPT POST NO'S 1 & 2

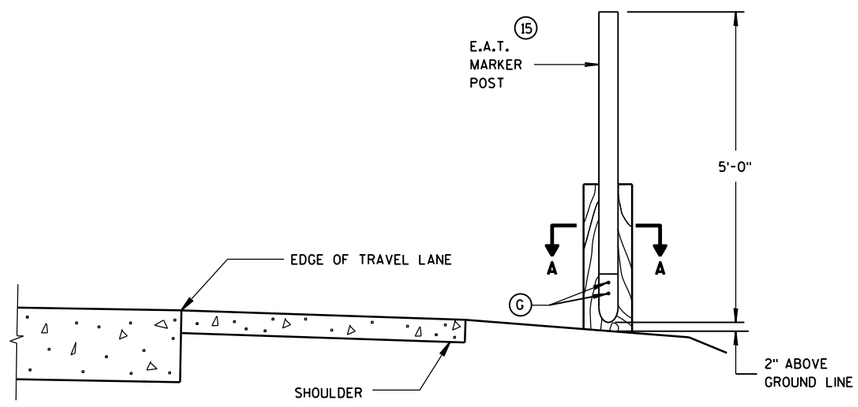

TYPICAL INSTALLATION OF E.A.T. MARKER POST BACKSIDE OF POST NO. 1

(E.A.T. AND RAIL REMOVED FOR CLARITY)

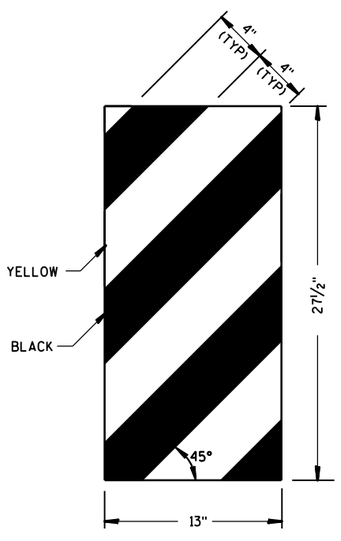

ET-2000 PLUS ONLY

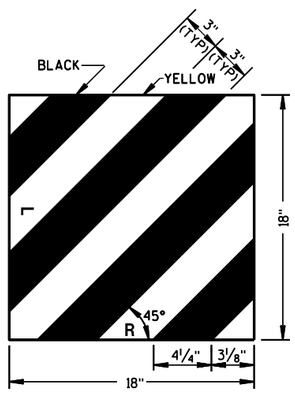

ET-2000 AND SKT-350

⑭ REFLECTIVE SHEETING DETAILS

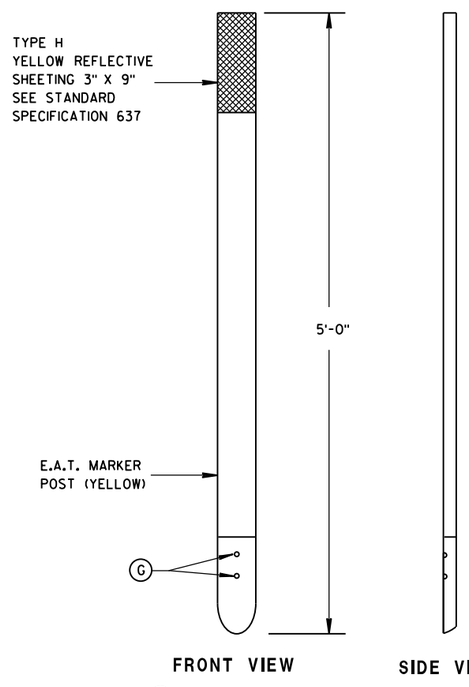

⑮ E.A.T. MARKER POST

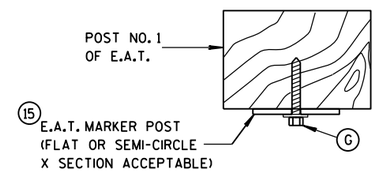

SECTION A-A

STEEL PLATE BEAM GUARD
ENERGY ABSORBING TERMINAL

STATE OF WISCONSIN
DEPARTMENT OF TRANSPORTATION

APPROVED
June 2014 — DATE
/S/ Jerry H. Zogg — ROADWAY STANDARDS DEVELOPMENT ENGINEER
FHWA

6

6

S.D.D. 14 B 24-8c

S.D.D. 14 B 24-8c

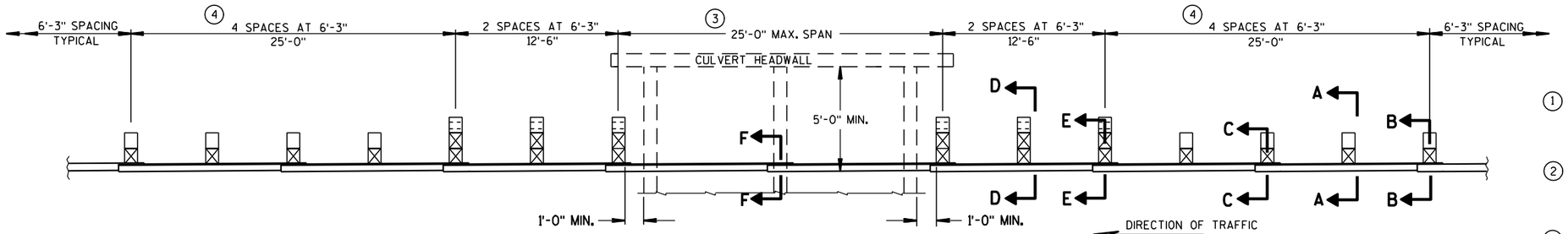

PLAN VIEW

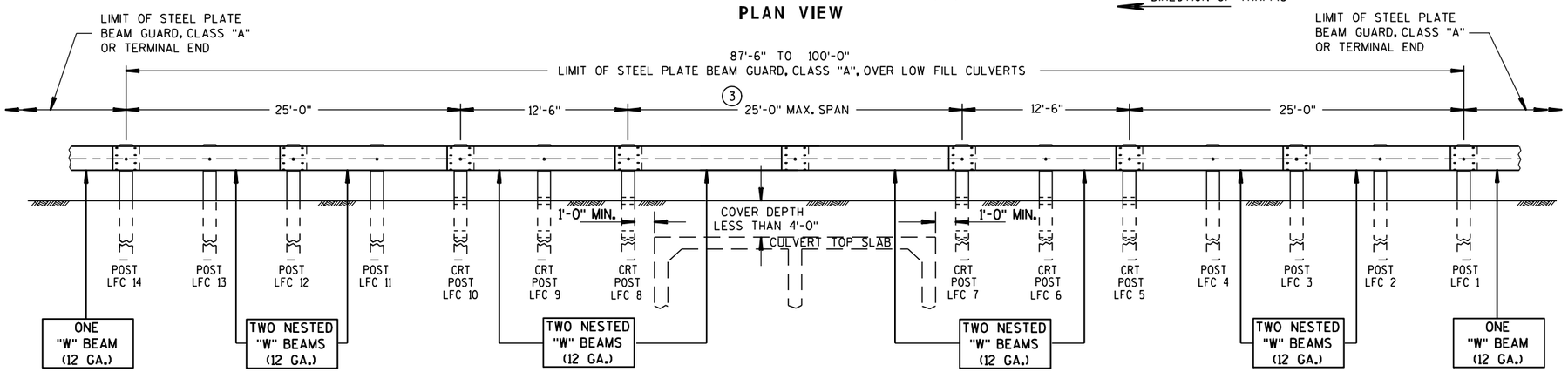

FRONT VIEW

TYPICAL INSTALLATION OF STEEL PLATE BEAM GUARD OVER LOW FILL CULVERTS

GENERAL NOTES

DETAILS OF CONSTRUCTION, MATERIALS AND WORKMANSHIP NOT SHOWN ON THIS DRAWING SHALL CONFORM TO THE PERTINENT REQUIREMENTS OF THE STANDARD SPECIFICATIONS AND THE APPLICABLE SPECIAL PROVISIONS.

1. MAINTAIN THE NESTING OF EACH NESTED PAIR OF "W" BEAM SECTIONS THROUGH SPLICES. ORIENTATE NESTED "W" BEAM SPLICES IN THE DIRECTION OF TRAFFIC AS THE PLAN VIEW SHOWS. SEE S.D.D. 14 B 15 FOR SPLICE INSTALLATION.
2. THE CONTRACTOR MAY USE APPROVED PLASTIC BLOCKOUTS IN LIEU OF WOOD BLOCKOUTS. SEE S.D.D. 14 B 15 FOR TYPICAL BLOCKOUT, SPLICE AND REFLECTOR INSTALLATIONS. USE BOLT SIZES AND LENGTHS AS SHOWN ON THIS DETAIL.
3. PROVIDE 12'-6", 18'-9" AND 25'-0" SPANS ONLY. USE A MAXIMUM OF ONE SPLICE LOCATED ANYWHERE WITHIN THE SPAN SECTION. LOCATE ALL OTHER SPLICES AT BEAM GUARD POSTS.
4. IN THE FIRST AND LAST 25 FOOT SECTIONS (POSTS LFC 1-4 & LFC 11-14), THE CONTRACTOR MAY USE W6 X 9 OR W6 X 8.5 STEEL POSTS WITH NOTCHED PLASTIC BLOCKOUTS OR 6" X 8" WOOD POSTS WITH EITHER WOOD OR PLASTIC BLOCKOUTS. DO NOT MIX STEEL POSTS WITH NOTCHED PLASTIC BLOCKOUTS AND WOOD POSTS WITH EITHER WOOD OR PLASTIC BLOCKOUTS IN THE SAME INSTALLATION.
5. WHERE EXISTING CONDITIONS DO NOT PERMIT THE APPROPRIATE EARTHWORK, THE PLAN TYPICAL SECTIONS OR DETAILS MAY SHOW, OR THE ENGINEER MAY ALLOW, THE REDUCTION OR ELIMINATION OF THE 2 FOOT DISTANCE TO THE HINGE POINT. BUILD AS THE PLAN SHOWS OR ENGINEER DIRECTS. IF THE 2 FOOT DISTANCE TO THE HINGE POINT IS REDUCED OR ELIMINATED, INCREASE THE POST SOIL DEPTH TO 4'-6" OR MORE.

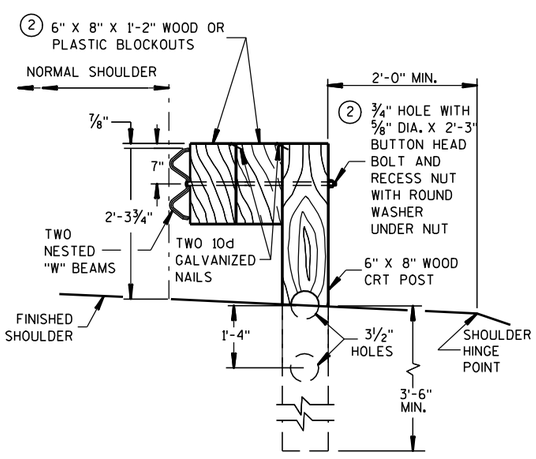

SECTION D-D
TYPICAL CRT POST LFC 6 AND 9

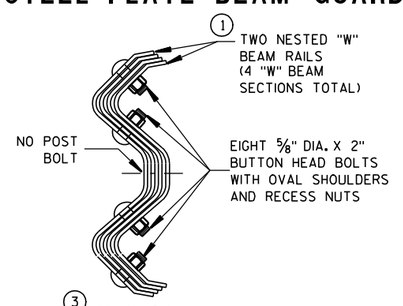

SECTION F-F
BEAM SPLICE IN SPAN OVER CULVERT

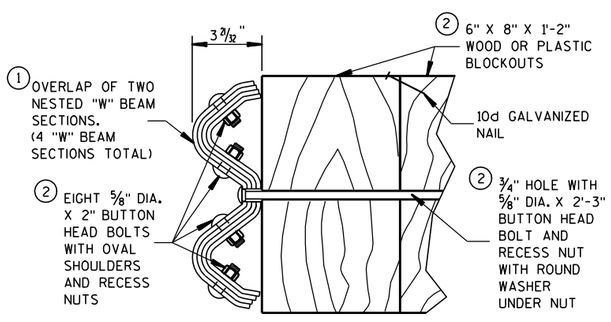

SECTION E-E
TYPICAL CRT POST LFC 5, 7, 8 AND 10

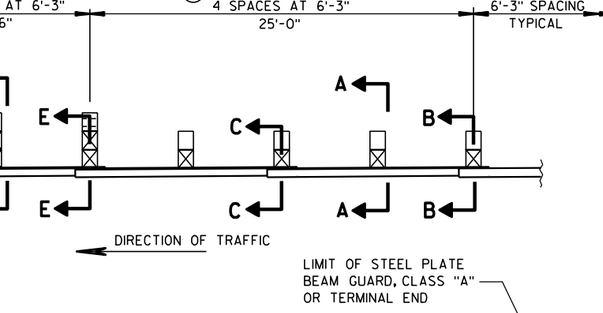

SECTION C-C
TYPICAL AT POSTS LFC 3 AND 12

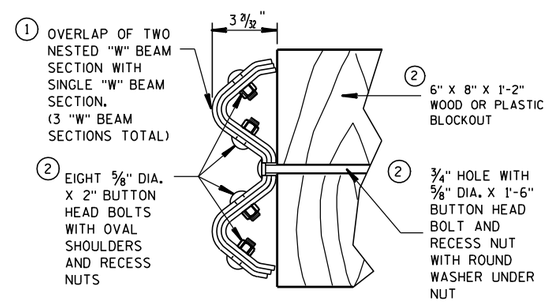

SECTION B-B
TYPICAL AT POSTS LFC 1 AND 14

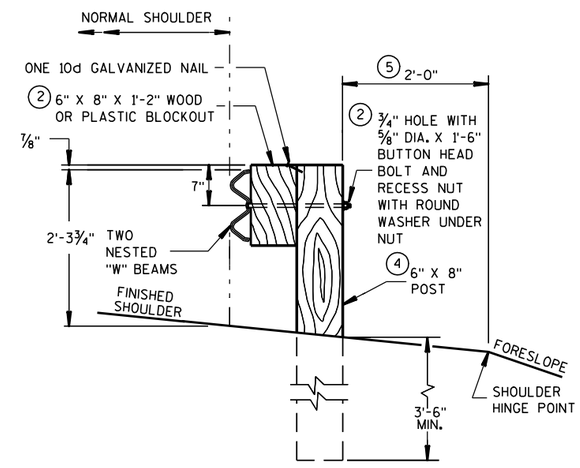

SECTION A-A
TYPICAL AT POST LFC 2,4,11,13

STEEL PLATE BEAM GUARD, CLASS "A", OVER LOW FILL CULVERTS

STATE OF WISCONSIN
DEPARTMENT OF TRANSPORTATION

APPROVED
12/8/00 DATE
/S/ John Have CHIEF ROADWAY DEVELOPMENT ENGINEER
FHWA

6

S.D.D. 14 B 25-1

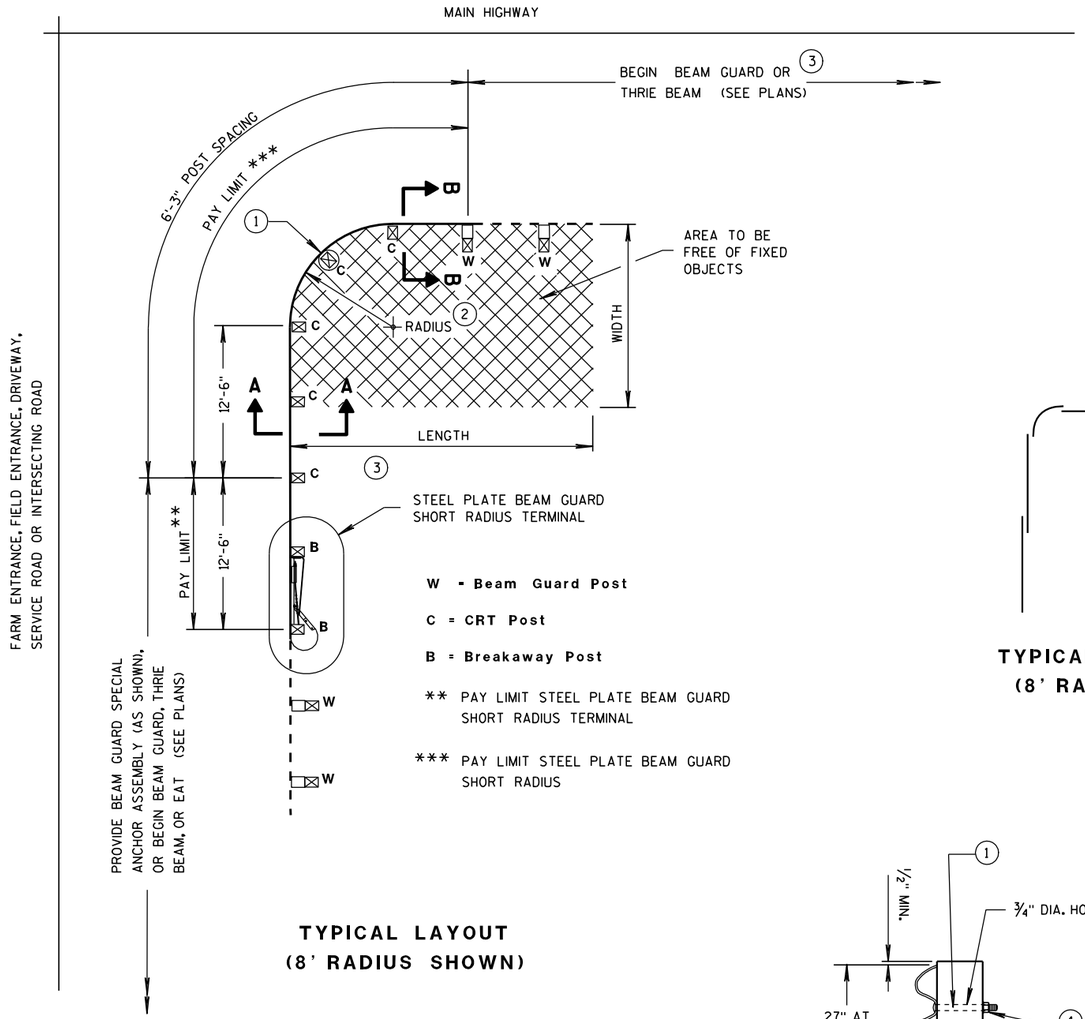

W = Beam Guard Post

C = CRT Post

B = Breakaway Post

** PAY LIMIT STEEL PLATE BEAM GUARD SHORT RADIUS TERMINAL

*** PAY LIMIT STEEL PLATE BEAM GUARD SHORT RADIUS

TYPICAL LAYOUT
(8' RADIUS SHOWN)

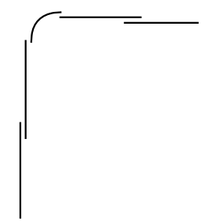

TYPICAL LAP SPLICES
(8' RADIUS SHOWN)

GENERAL NOTES

ALL ANGLES, CHANNELS, AND PLATES SHALL CONFORM TO THE REQUIREMENTS OF ASTM A36 AND THE STRUCTURAL TUBING SHALL CONFORM TO ASTM A 500. WELDING SHALL MEET THE CURRENT REQUIREMENTS OF THE AMERICAN WELDING SOCIETY STRUCTURAL WELDING CODE ANSI/AWS D1.1. ALL STRUCTURAL STEEL SHALL BE GALVANIZED IN ACCORDANCE WITH ASTM A 123. PUNCHING, DRILLING, CUTTING, OR WELDING WILL NOT BE PERMITTED AFTER GALVANIZING. FURNISH AND INSTALL HARDWARE PER STANDARD SPECIFICATION 614.2. UNLESS NOTED OTHERWISE.

SHOP BEND CURVED RAIL SECTIONS.

SEE STANDARD DETAIL DRAWING 14 B 15 FOR OTHER DETAIL.

1. ON THE 8 FOOT RADIUS INSTALLATION, DO NOT INSTALL BUTTON HEAD BOLT AT CENTER CRT POST.
2. RADIUS FROM 8' - 36'. SEE PLAN.
3. HEIGHT TRANSITION MAY BE REQUIRED. SEE PLAN OR PROJECT ENGINEER.
4. 5/8" ø X 1'-6" BUTTON HEAD BOLT AND RECESS NUT WITH ROUND WASHER UNDER NUT.

RADIUS	NUMBER OF CRT POSTS	* NUMBER AND LENGTH OF CURVED RAILS	REQUIRED AREA FREE OF FIXED OBJECTS (LENGTH x WIDTH)
8'	5	1 at 12.5'	25' x 15'
16'	7	1 at 25'	30' x 15'
24'	9	1 at 25' and 1 at 12.5'	40' x 20'
32'	11	2 at 25'	50' x 20'

* THE NUMBER OF RAILS IS BASED ON A 90° INTERSECTION. SEE PLAN FOR NON 90° INSTALLATIONS.

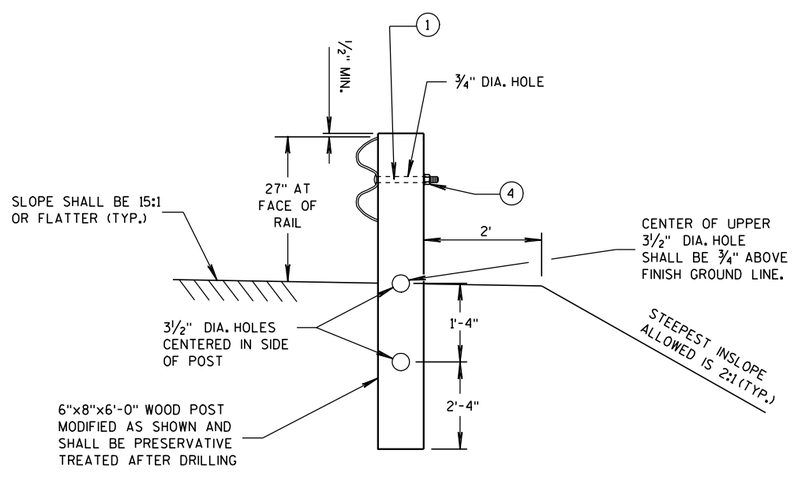

SECTION A-A
(CRT POST)

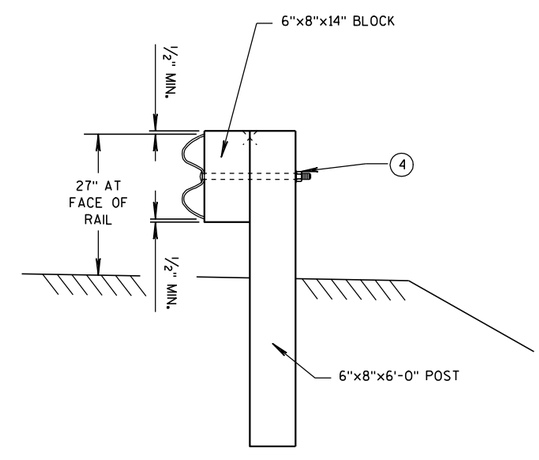

SECTION B-B
(BEAM GUARD POST)

STEEL PLATE BEAM GUARD SHORT RADIUS TERMINAL

STEEL PLATE BEAM GUARD SHORT RADIUS TERMINAL

STATE OF WISCONSIN
DEPARTMENT OF TRANSPORTATION

6

6

S.D.D. 14 B 27-1a

S.D.D. 14 B 27-1a

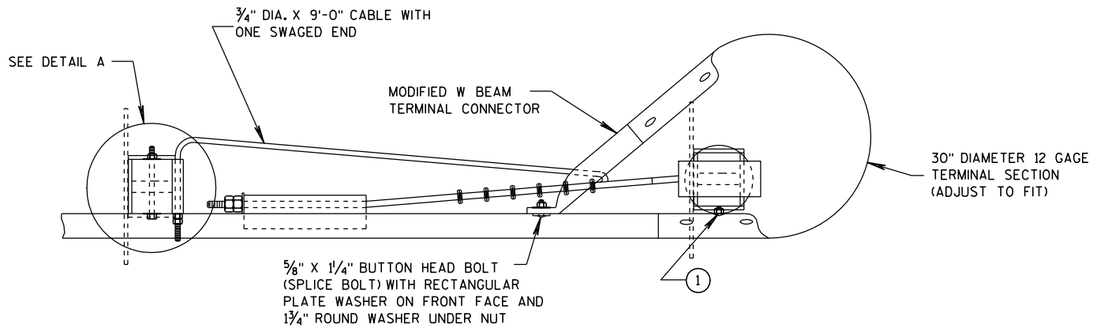

PLAN VIEW

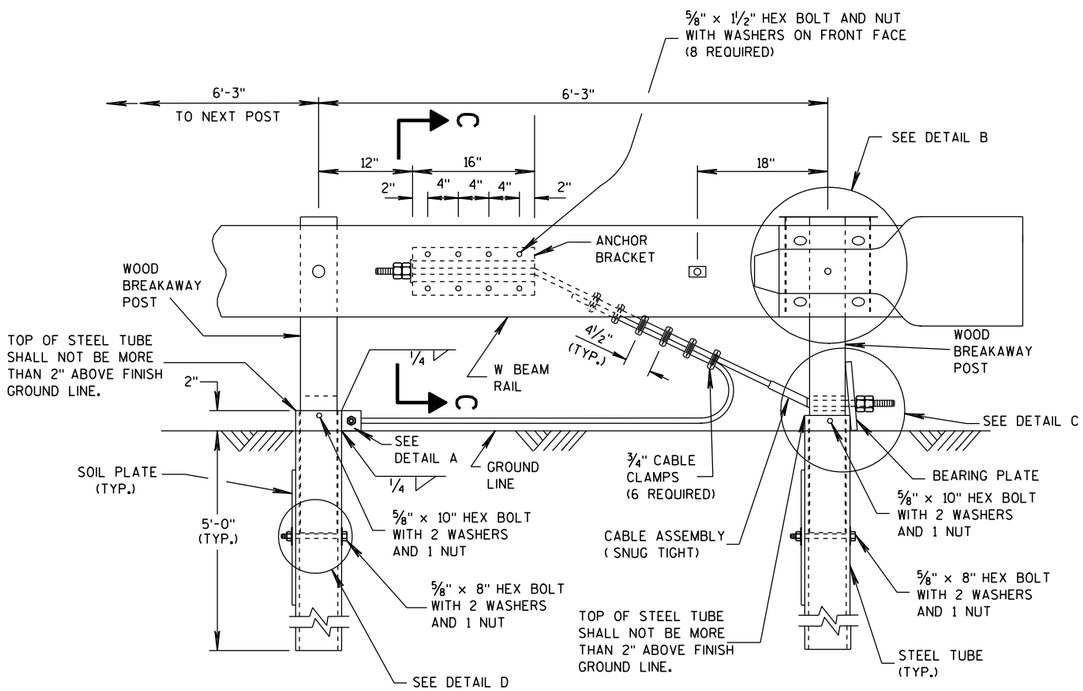

ELEVATION VIEW

STEEL PLATE BEAM GUARD SHORT RADIUS TERMINAL

GENERAL NOTES

(1) ATTACH W BEAM RAIL TO THE STEEL PIPE WITH A 5/8" X 2" BUTTON HEAD BOLT WITH NO WASHER. CONNECTION TO THE POST IS NOT REQUIRED.

INSTALL GALVANIZED 3/4" (6X19) PREFORMED WIRE OR INDEPENDENT WIRE ROPE CORE CONFORMING TO AASHTO M 30. MANUFACTURE WIRE ROPE OUT OF IMPROVED PLOW STEEL WITH A MINIMUM BREAKING STRENGTH OF 42,800 PSI.

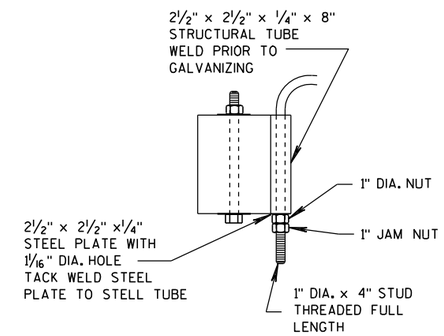

DETAIL A

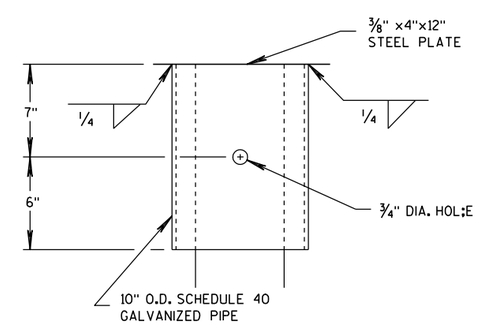

DETAIL B

(BEAM GUARD AND TERMINAL SECTION NOT SHOWN)

STEEL PLATE BEAM GUARD SHORT RADIUS TERMINAL

STATE OF WISCONSIN
DEPARTMENT OF TRANSPORTATION

6

S.D.D. 14 B 27-1b

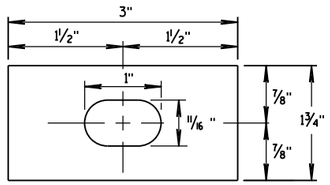

RECTANGULAR PLATE WASHER

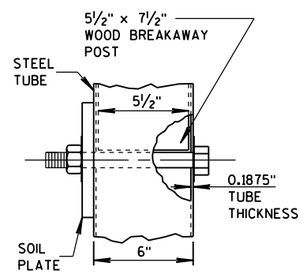

DETAIL D

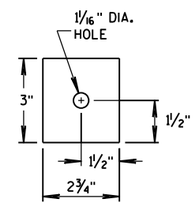

END PLATE

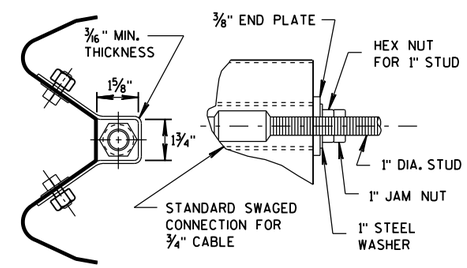

SECTION C-C
(END PLATE REMOVED)

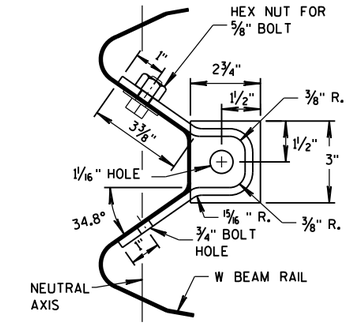

ANCHOR BRACKET

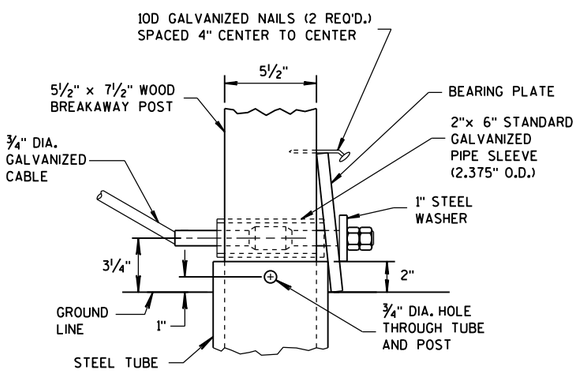

DETAIL C

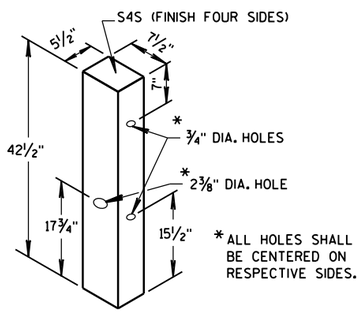

WOOD BREAKAWAY POST

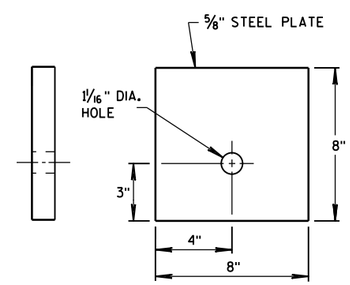

BEARING PLATE

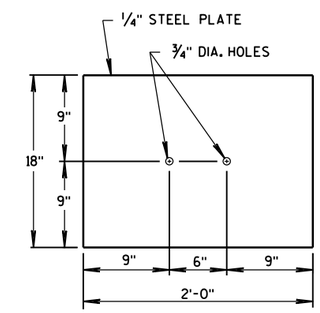

SOIL PLATE

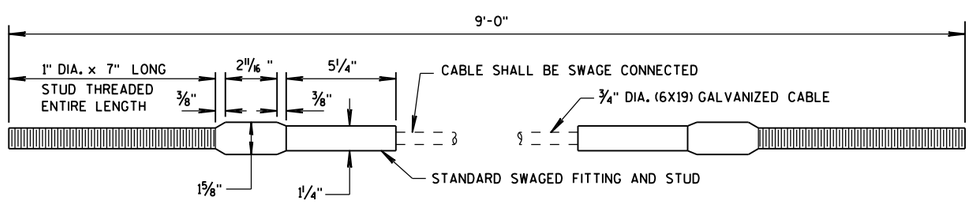

CABLE ASSEMBLY

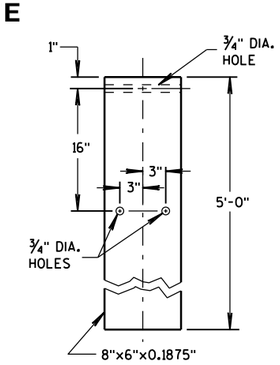

STEEL TUBE

STEEL PLATE BEAM GUARD
SHORT RADIUS TERMINAL

STATE OF WISCONSIN
DEPARTMENT OF TRANSPORTATION

APPROVED
12/18/08 — DATE
/S/ Jerry H. Zogg — ROADWAY STANDARDS DEVELOPMENT ENGINEER
FHWA

6

S.D.D. 14 B 27-1c

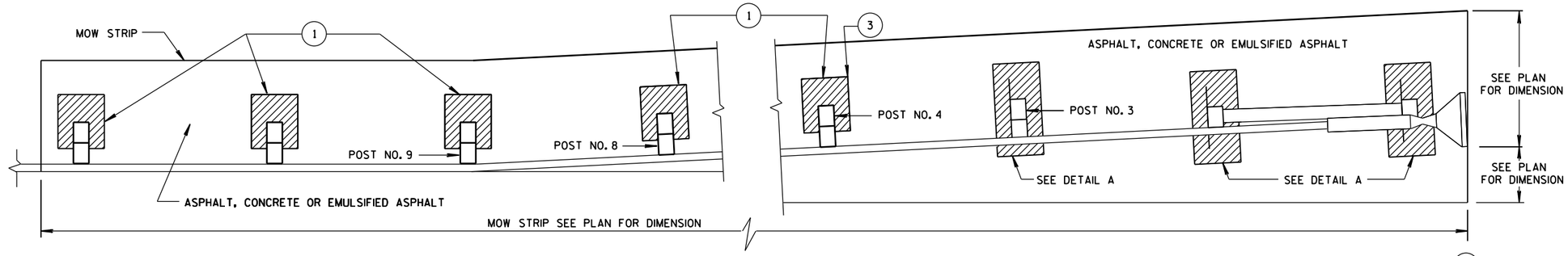

PLAN VIEW

MOW STRIP LAYOUT FOR ENERGY ABORBING TERMINAL

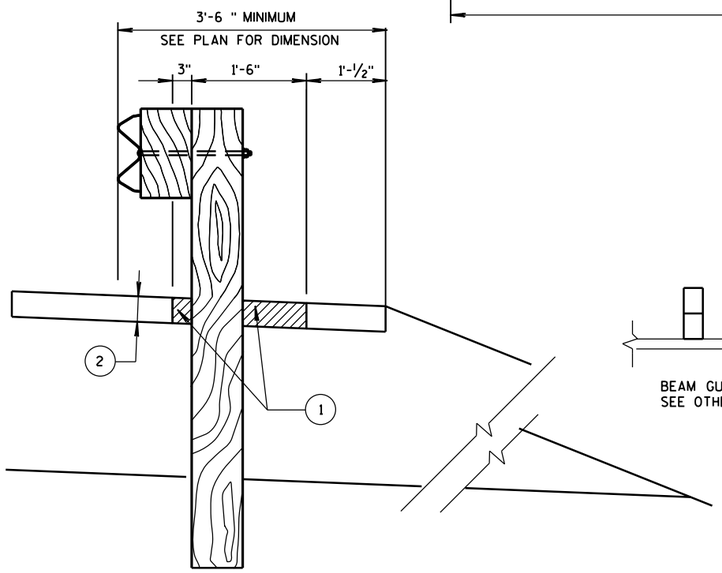

SECTION A-A

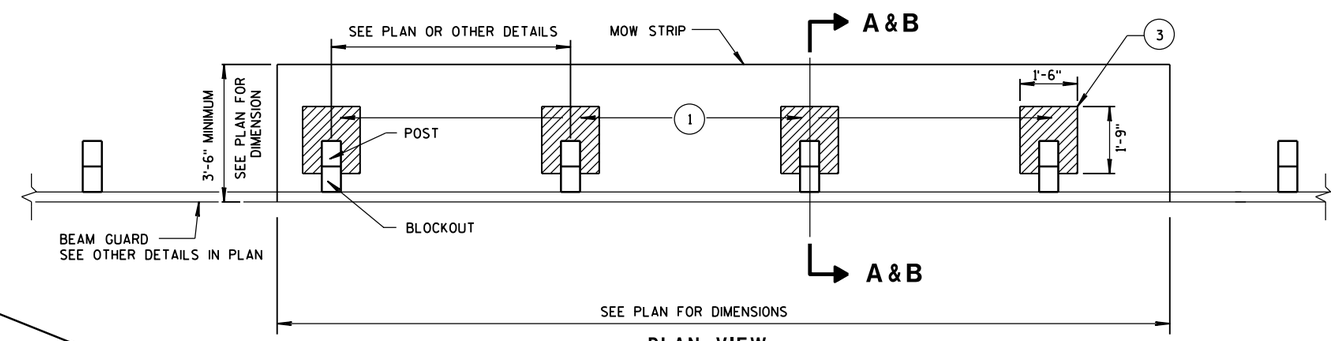

PLAN VIEW

MOW STRIP FOR TYPICAL BLOCKOUT LAYOUT

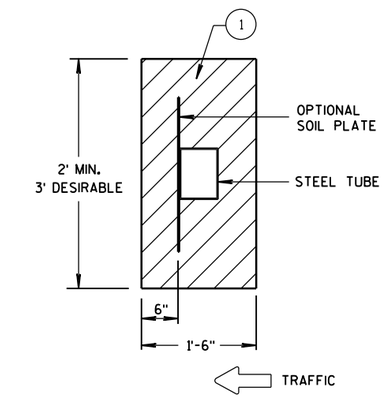

DETAIL A

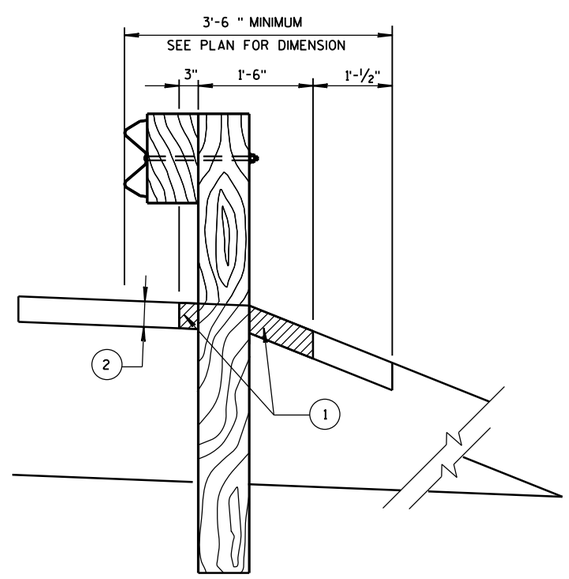

SECTION B-B

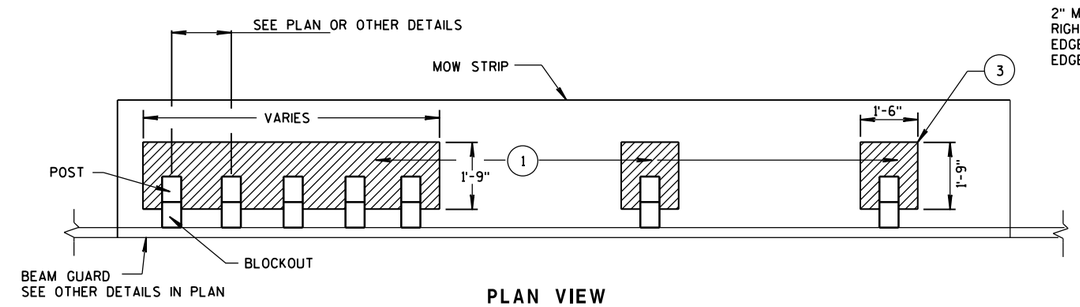

PLAN VIEW

MOW STRIP FOR TIGHT SPACING LAYOUT

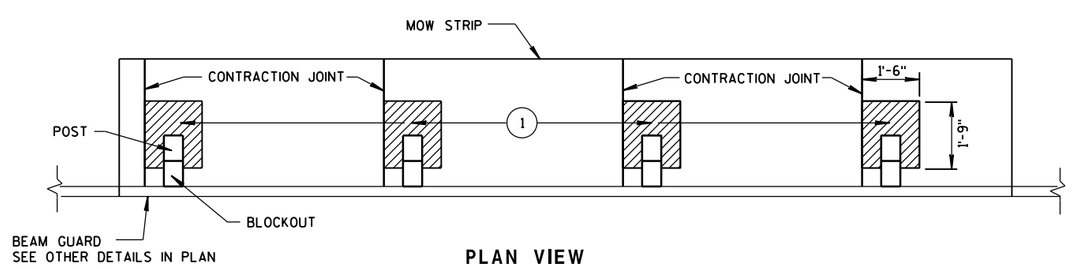

PLAN VIEW

JOINT PLACEMENT FOR CONCRETE MOW STRIP

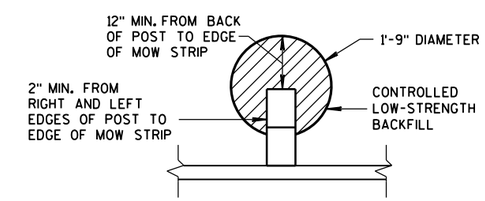

ALTERNATIVE HMA
MOW STRIP DESIGN

1. CONTROLLED LOW-STRENGTH BACKFILL OR EMULSIFIED ASPHALT.
2. DEPTH OF MOW STRIP:
   ASPHALT - 4"
   CONCRETE - 4"
   EMULSIFIED ASPHALT - 1" OR LESS
3. FOR EMULSIFIED ASPHALT MOW STRIP LEAVE OUTS NOT REQUIRED. (TYPICAL FOR ALL POSTS.)

GUARDRAIL MOW STRIP

STATE OF WISCONSIN
DEPARTMENT OF TRANSPORTATION

APPROVED
June 2014 — DATE
/S/ Jerry H. Zogg — ROADWAY STANDARDS DEVELOPMENT ENGINEER
FHWA
NT

6

S.D.D. 14 B 28-3

6

S.D.D. 14 B 28-3

GENERAL NOTES

1. WOOD OR STEEL POSTS (w6X9 OR w6X8.5) MAY BE USED. DO NOT INTERMIX WOOD AND STEEL POSTS. INSTALL STEEL POSTS WITH HOLES ON APPROACHING TRAFFIC SIDE.

2. USE WOOD OR APPROVED PLASTIC BLOCKOUTS. WOOD BLOCKOUTS MAY BE CONSTRUCTED OUT OF TWO OR MORE WOOD BLOCKOUTS. SEE ALTERNATE WOOD BLOCKOUT DETAIL. DIMENSIONS OF APPROVED PLASTIC BLOCKOUTS MAY VARY.

3. IF ROCK IS ENCOUNTERED DURING EXCAVATION, PROVIDE A HOLE 12 INCHES IN DIAMETER EXTENDING 20 INCHES DEEP INTO THE ROCK. PLACE APPROXIMATELY 2½ INCHES OF GRANULAR MATERIAL IN THE BOTTOM OF THE HOLE. CUT THE POSTS THE TO LENGTH AMD INSTALL. BACKFILL WITH EXCAVATED MATERIAL AND COMPACT. BACKFILL IS TO BE FREE OF LARGE ROCKS.

4. WHEN THE DISTANCE FROM BACK OF POST TO SHOULDER HINGE POINT IS LESS THAN 2 FEET INSTALL LONGER POST AT HALF POST SPACING (K).

5. FOR NEW MGS INSTALLATION TOP OF W-BEAM RAIL TOLERANCE IS ± 1". FOR EXISTING MGS INSTALLATION TOP OF W-BEAM IS BETWEEN 27¾" TO 32".

6. WHEN USING STEEL POST AND WOOD BLOCKOUTS INSTALL FOUR 16D GALVANIZED NAILS. INSTALL NAILS AT THE BACK CORNERS OF THE BLOCK AND BEND THE NAILS OVER THE FLANGE OF THE STEEL POST.

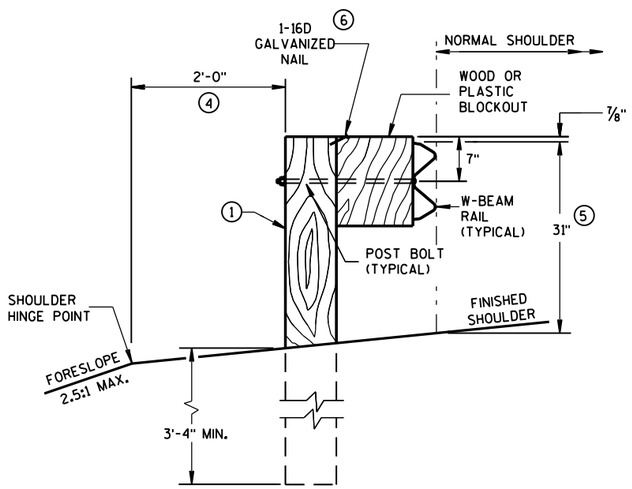

END VIEW

LOCATED ALONG A ROADWAY SHOULDER STANDARD INSTALLATION

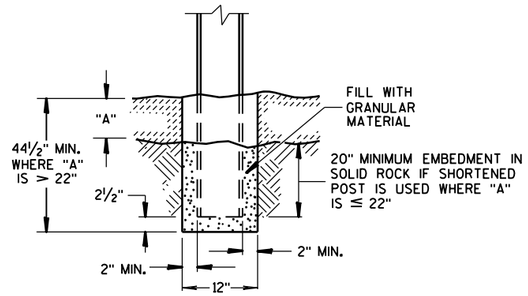

END VIEW

SETTING STEEL OR WOOD POST IN ROCK (3)

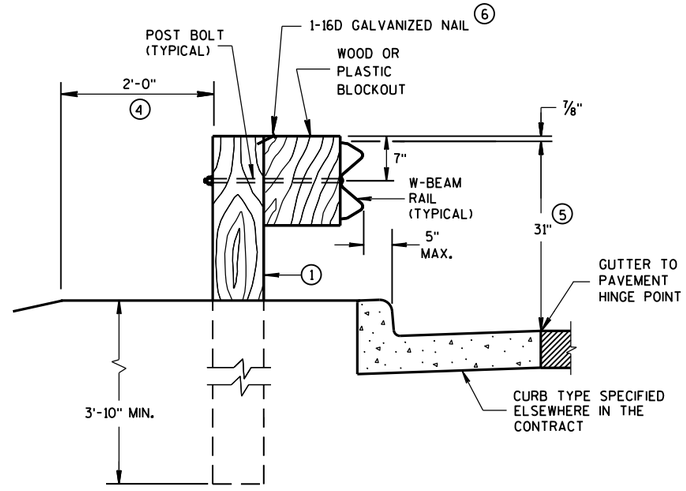

END VIEW

LOCATED ALONG A CURBED ROADWAY

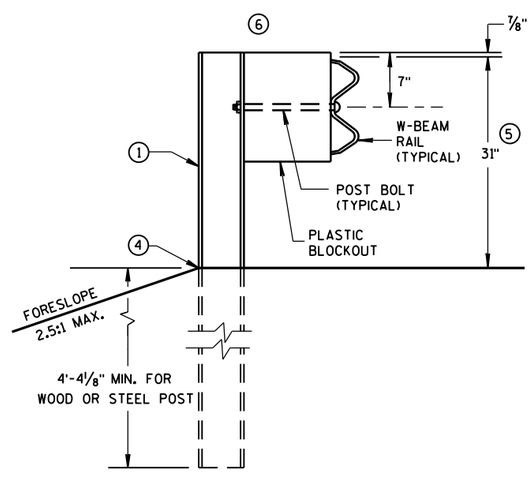

END VIEW

MGS LONGER POST AT HALFPOST SPACING W BEAM (K)

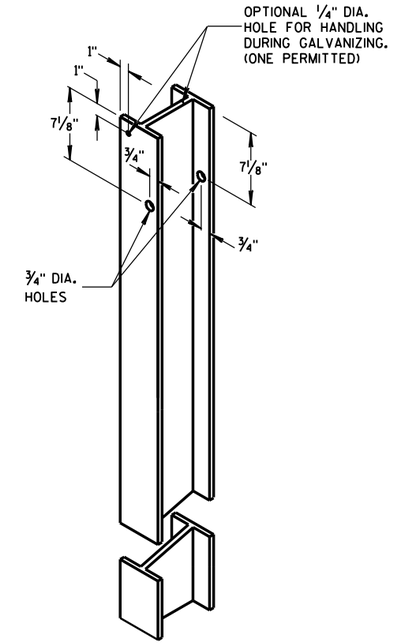

STEEL POST & HOLE PUNCHING DETAIL (w6X9) (1)

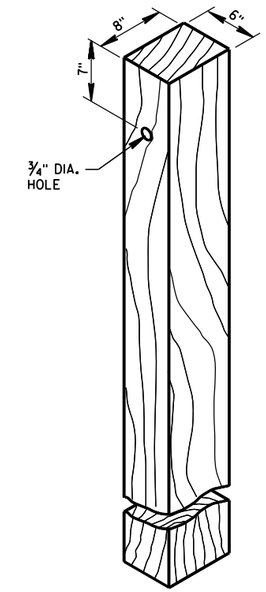

WOOD POST (6" X 8") NOMINAL (1)

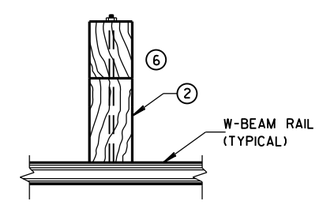

PLAN VIEW

WOOD POST, BLOCKOUT & BEAM

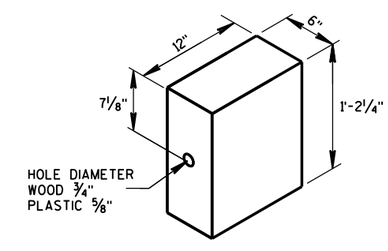

WOOD OR PLASTIC BLOCKOUT (2)

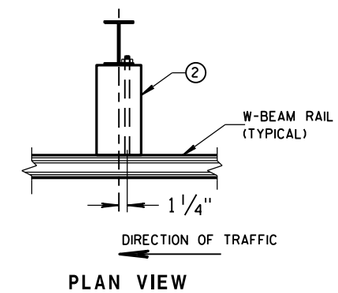

PLAN VIEW

STEEL POST, PLASTIC BLOCKOUT & BEAM

MIDWEST GUARDRAIL SYSTEM (MGS) GUARDRAIL

STATE OF WISCONSIN
DEPARTMENT OF TRANSPOI

6

S.D.D. 14 B 42-3a

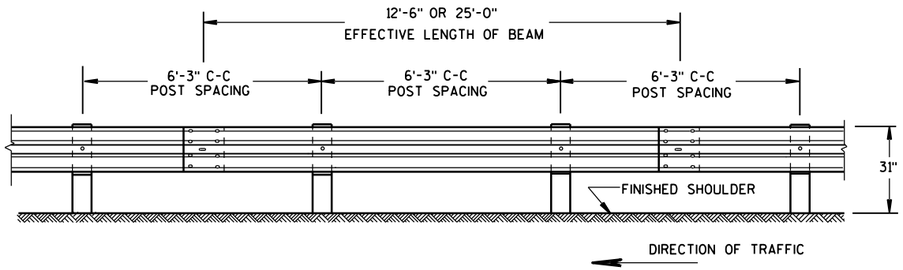

FRONT VIEW

POST SPACING STANDARD INSTALLATION

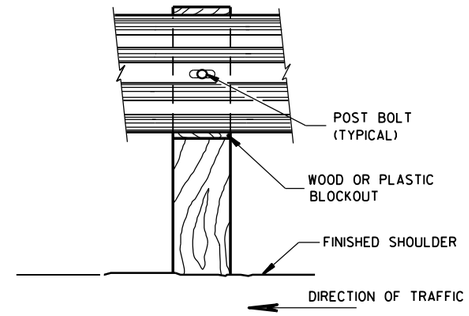

FRONT VIEW AT WOOD POST

GENERAL NOTES

(7) PROVIDE SILVER REFLECTIVE SHEETING ON ALL REFLECTORS EXCEPT THOSE LOCATED ALONG THE LEFT EDGE OF ONE-WAY ROADWAYS, WHICH SHALL BE PROVIDED WITH YELLOW REFLECTIVE SHEETING. SHEETING IS TYPE H. SEE STANDARD SPECIFICATION 637.

(8) DO NOT INSTALL REFLECTORS ON THE FIRST 50 FEET OF THE APPROACH END OF THE ENERGY ABSORBING TERMINAL. RAIL SPLICE LOCATIONS ARE THE ONLY ACCEPTABLE LOCATIONS FOR REFLECTORS.

(9) REVERSE EVERY OTHER REFLECTOR FOR 2-WAY VISIBILITY. THE CONTRACTOR MAY FURNISH TWO-SIDED REFLECTORS IN LIEU OF ONE-SIDED REFLECTORS.

(10) PROVIDE AN ANGLE OF BEND OF 90° ± 1° FOR TWO-SIDED REFLECTORS.

(11) 25 FEET OF HALF POST SPACING IS REQUIRED ON APPROACH AND DEPARTURE ENDS OF QUARTER POST SPACING.

POST BOLTS ARE A 5/8" DIAMETER ASTM A307 GUARDRAIL BOLT. A POST BOLT REQUIRES 5/8" DIAMETER A563A DOUBLE RECESSED (DR) HEAVY HEX NUT AND 5/8" DIAMETER F844 FLAT WASHER. POST BOLTS MAY BE LONGER IF MULTIPLE BLOCKOUTS ARE BEING USED.

GUARD RAIL SPLICE BOLTS ARE A 5/8" DIAMETER ASTM A307 GUARDRAIL HEAD BOLT. A GUARDRAIL SPLICE BOLT REQUIRES 5/8" DIAMETER A563A DOUBLE RECESSED (DR) HEAVY HEX NUT.

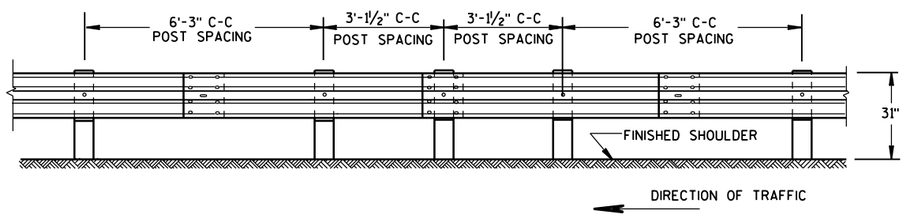

FRONT VIEW

HALF POST SPACING (HS) AND HALF POST SPACING WITH LONGER POSTS (K)

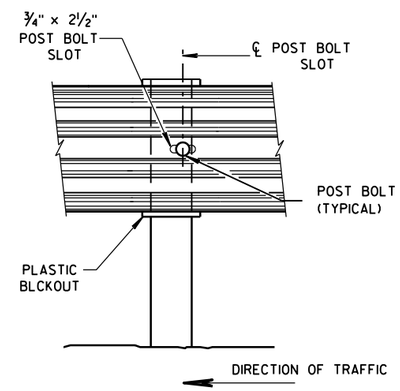

FRONT VIEW AT STEEL POST

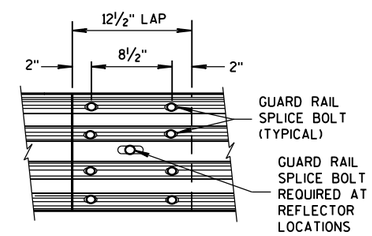

FRONT VIEW

MID-SPAN BEAM SPLICE

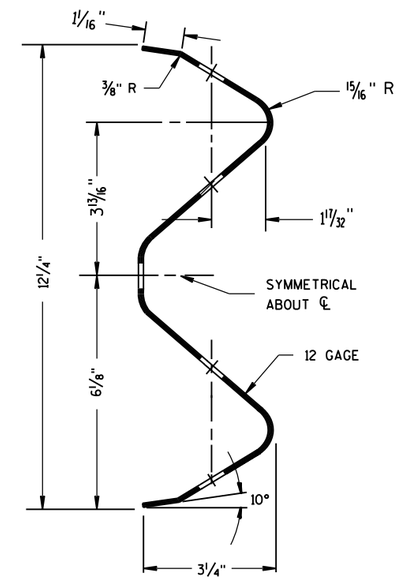

SECTION THRU W-BEAM RAIL

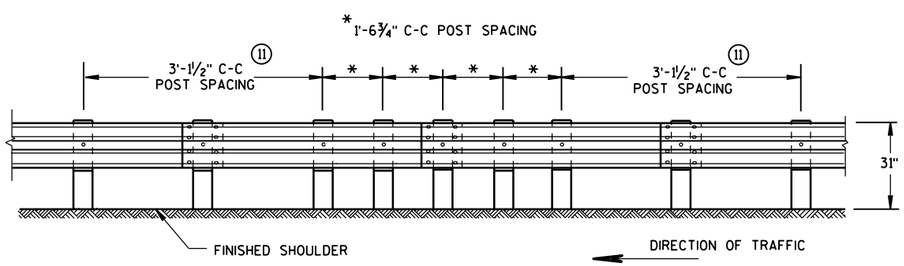

FRONT VIEW

QUARTER POST SPACING (QS)

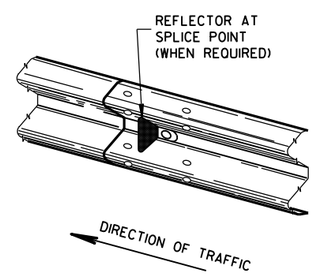

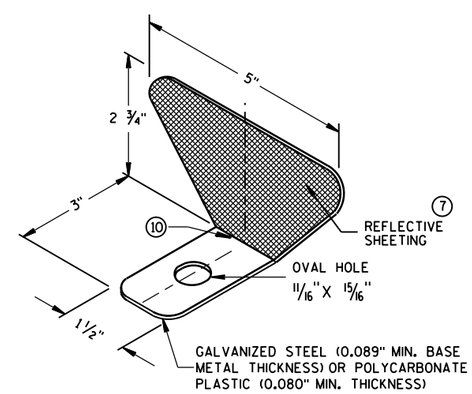

ONE SIDED REFLECTOR DETAIL AND TYPICAL INSTALLATION (7)

REFLECTOR SPACING (8)

	BEAM GUARD LENGTH	REFLECTOR SPACING	NO. SURFACES REFLECTORIZED	MIN. NO. REFLECTORS
ONE WAY TRAFFIC	< 200' > 200'	50' C-C 100' C-C	1 1	3
TWO WAY TRAFFIC	< 200' > 200'	25' C-C 50' C-C	1 (9) 1	6
TWO WAY TRAFFIC	< 200' > 200'	50' C-C 100' C-C	2 2 (10)	3

MIDWEST GUARDRAIL SYSTEM (MGS) GUARDRAIL

STATE OF WISCONSIN
DEPARTMENT OF TRANSPORTATION

6

6

S.D.D. 14 B 42-3b

S.D.D. 14 B 42-3b

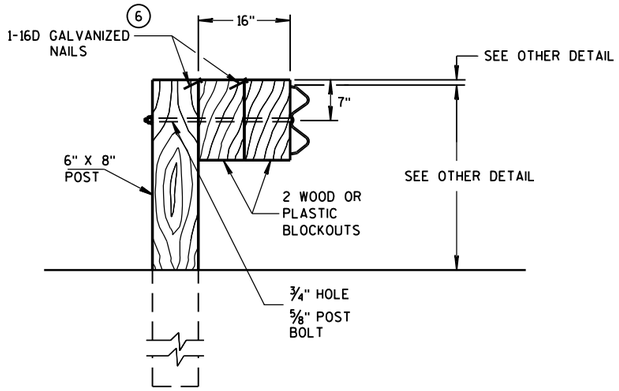

DETAIL FOR 16" BLOCKOUT DEPTH

IT IS ACCEPTABLE TO USE BLOCKOUTS UP TO 16" DEEP TO INCREASE THE POST OFFSET TO AVOID UNDERGROUND OBSTACLES. THERE IS NO LIMIT TO THE NUMBER OF POSTS THAT CAN HAVE ADDITIONAL BLOCKOUTS UP TO 16" DEEP.

NOTE: 1. ALL FILLETS SHALL HAVE A MINIMUM RADIUS OF 1/16".
2. IF THE BOLT EXTENDS MORE THAN 1/4" FROM THE NUT THE BOLT SHOULD BE TRIMMED BACK.

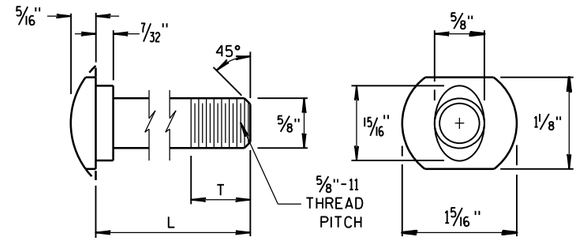

POST BOLT TABLE

L	T (MIN.)
1 1/4"	1 1/8"
2"	1 3/4"
10"	4"
14"	4 1/16"
18"	4"
21"	4 1/16"
25"	4"

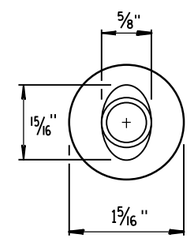

ALTERNATE BOLT HEAD

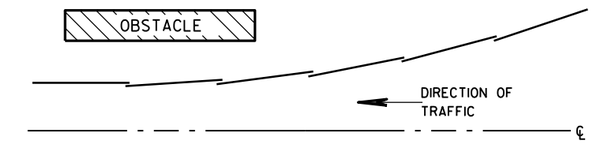

PLAN VIEW

BEAM LAPPING DETAIL

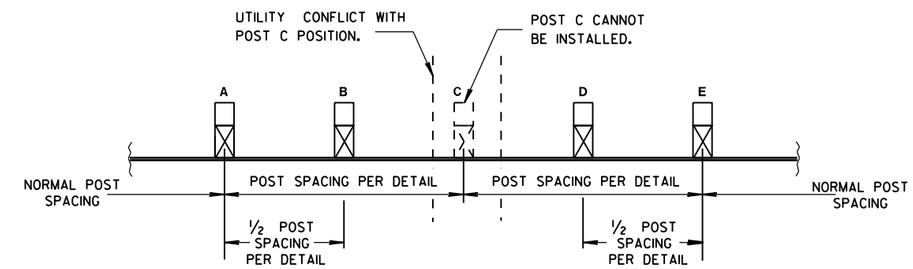

POST DRIVING FOR CONTINUOUS UNDERGROUND OBSTRUCTION

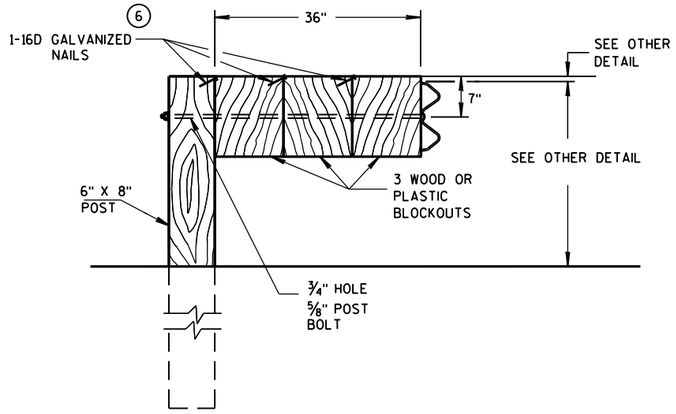

DETAIL FOR 36" BLOCKOUT DEPTH

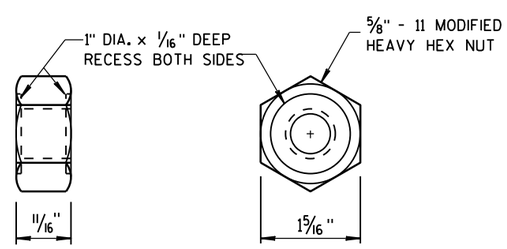

POST BOLT AND RECESS NUT

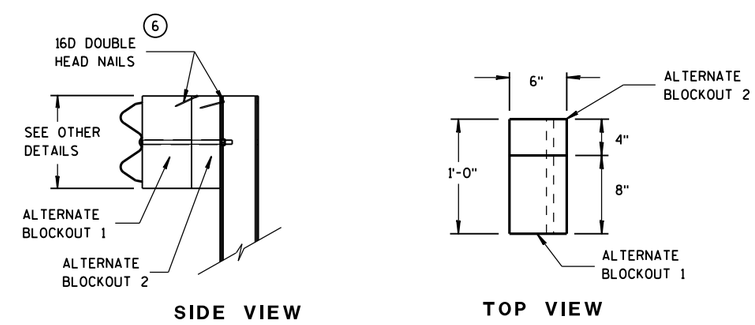

SIDE VIEW TOP VIEW

ALTERNATE WOOD BLOCKOUT DETAIL

NOTES: UNDER SPECIAL CIRCUMSTANCES, SUCH AS AVOIDING OBSTACLES THAT ARE NOT RELOCATED, IT IS ACCEPTABLE TO INSTALL ADDITIONAL BLOCKOUTS TO OBTAIN UP TO 36" DEPTH FOR ONE OR TWO POSTS IN A SECTION OF GUARDRAIL.

DO NOT USE 16" OR 36" BLOCKOUTS IF IT CAUSES THE POST TO BE DRIVEN BEYOND SHOULDER HINGE POINT OR CAUSES A FIXED OBJECT TO BE WITHIN THE DEFLECTION DISTANCE OF THE BARRIER.

MIDWEST GUARDRAIL SYSTEM (MGS) GUARDRAIL

STATE OF WISCONSIN
DEPARTMENT OF TRANSPORTATION

APPROVED
June 2014 — DATE
/S/ Jerry H. Zogg — ROADWAY STANDARDS DEVELOPMENT ENGINEER
FHWA

6

S.D.D. 14 B 42-3c

GENERAL NOTES

POSTS 1 THROUGH 3 ARE CRT POSTS.
ALL OTHER POSTS SHALL BE WOOD OR STEEL.

SEE SDD 14 B 42 FOR MORE DETAILS.

(A) FLARE FOR MGS EAT SHOWN. IF INSTALLING MGS NO FLARE NEEDED.

(B) VALUES SHOWN ON DRAWING REPRESENT THE MAXIMUM LENGTH. SHORTER DIMENSIONS ARE POSSIBLE. SEE OTHER SECTION OF PLAN FOR MORE INFORMATION.

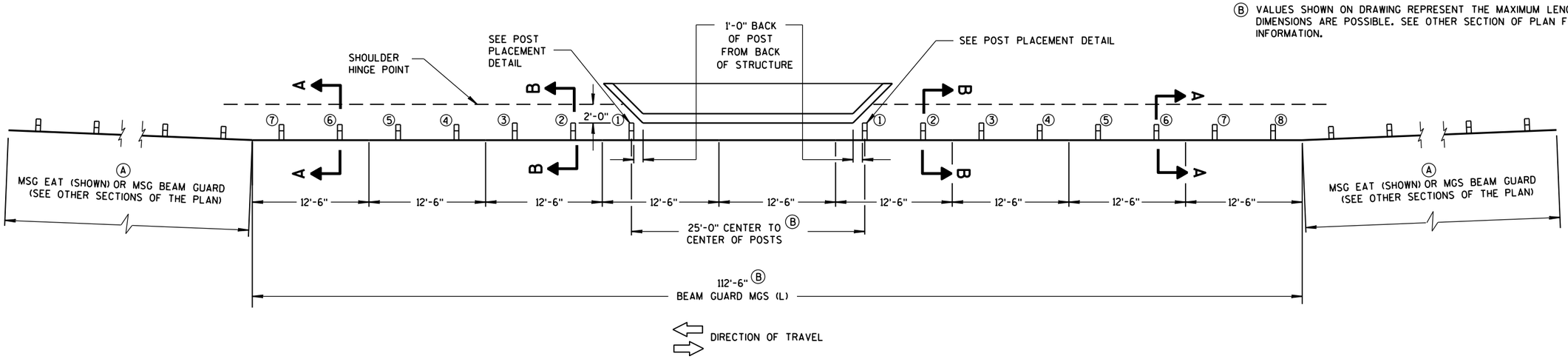

PLAN VIEW

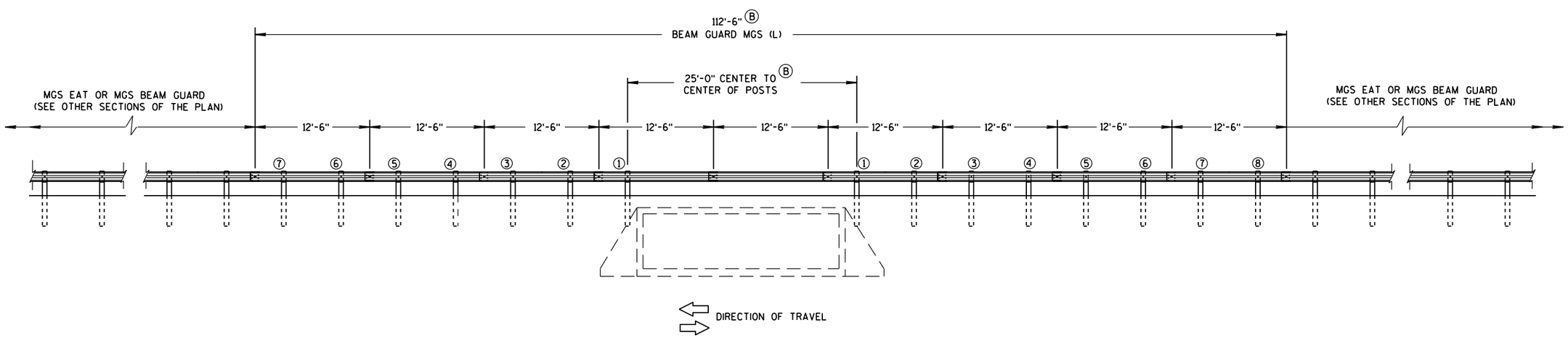

ELEVATION VIEW

MIDWEST GUARDRAIL SYSTEM LONG SPAN MGS (L) TWO-WAY TRAFFIC

MIDWEST GUARDRAIL SYSTEM
LONG SPAN MGS (L)

STATE OF WISCONSIN
DEPARTMENT OF TRANSPOR

6
S.D.D. 14 B 43-3a

GENERAL NOTES

POSTS 1 THROUGH 3 ARE CRT POSTS.
ALL OTHER POSTS SHALL BE WOOD OR STEEL.

SEE SDD 14 B 42 FOR MORE DETAILS.

(A) FLARE FOR MGS EAT SHOWN. IF INSTALLING MGS NO FLARE NEEDED.

(B) VALUES SHOWN ON DRAWING REPRESENT THE MAXIMUM LENGTH. SHORTER DIMENSIONS ARE POSSIBLE. SEE OTHER SECTION OF PLAN FOR MORE INFORMATION.

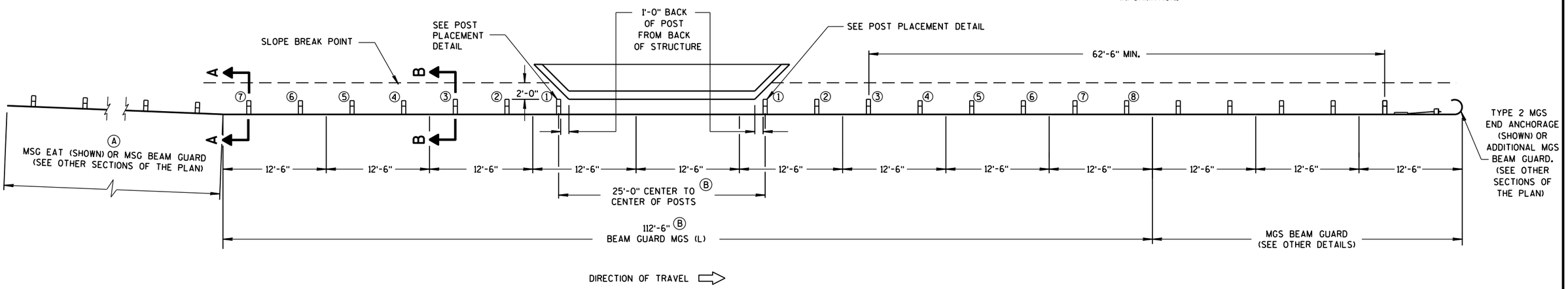

PLAN VIEW

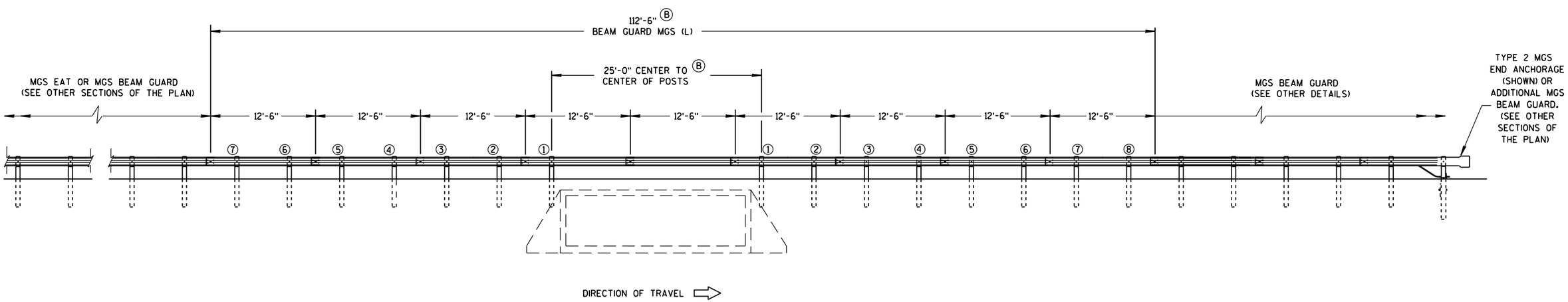

ELEVATION VIEW

MIDWEST GUARDRAIL SYSTEM LONG SPAN MGS (L) ONE-WAY TRAFFIC

MIDWEST GUARDRAIL SYSTEM
LONG SPAN MGS (L)

STATE OF WISCONSIN
DEPARTMENT OF TRANSPOR

6

S.D.D. 14 B 43-3b

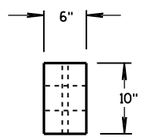

PLAN VIEW

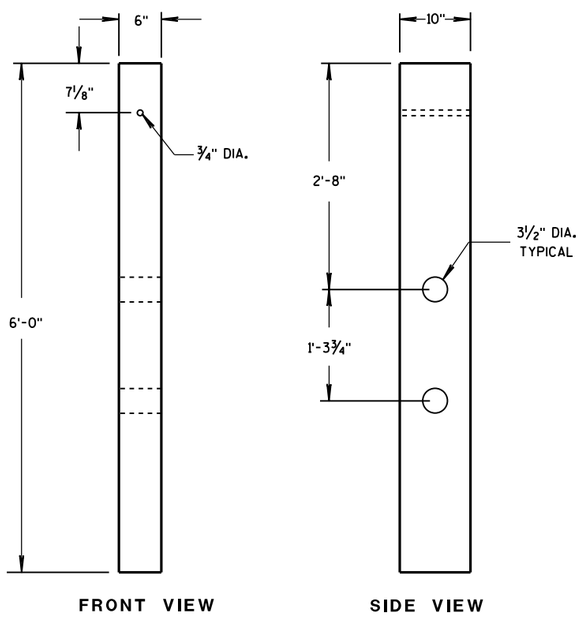

CRT WOOD POST

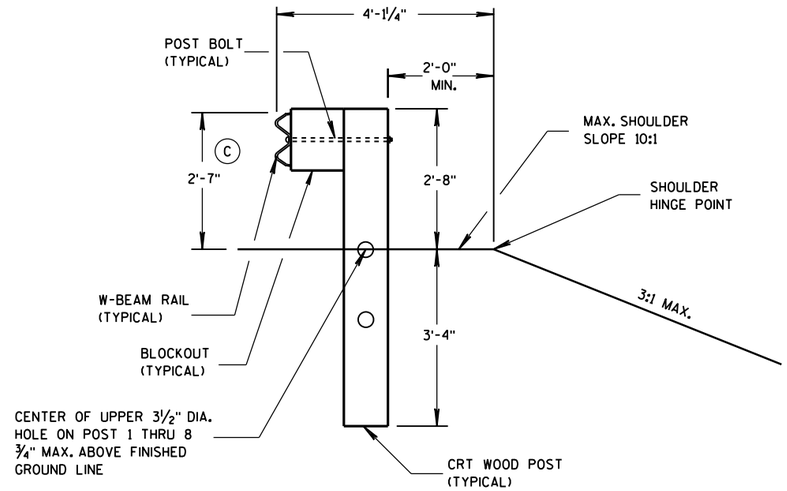

SECTION B-B

POSTS NO. 1-3

SEE OTHER DETAILS

GENERAL NOTES

(C) TOLERANCE FOR TOP OF W-BEAM RAIL IS ± 1".

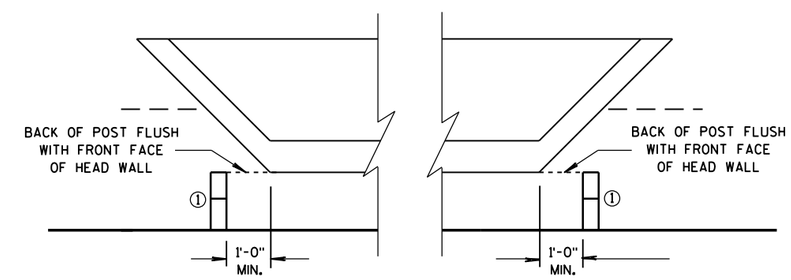

POST PLACEMENT DETAIL

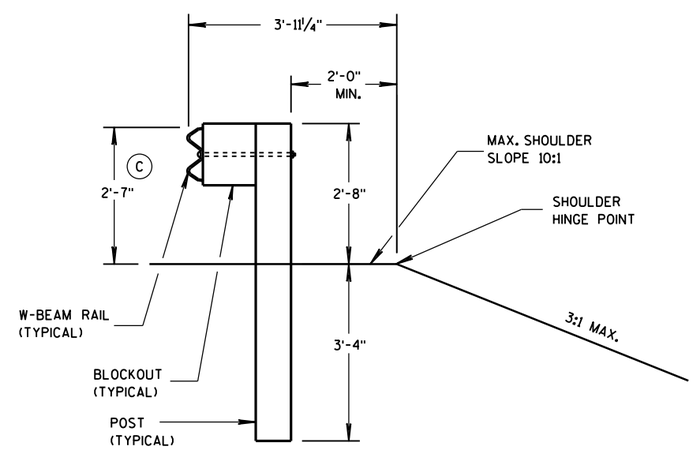

SECTION A-A

POSTS NO. 4-8

SEE OTHER DETAILS

6

6

S.D.D. 14 B 43-3c

S.D.D. 14 B 43-3c

MIDWEST GUARDRAIL SYSTEM
LONG SPAN MGS (L)

STATE OF WISCONSIN
DEPARTMENT OF TRANSPORTATION

APPROVED

5/10/2013 — DATE

/S/ Jerry H. Zogg — ROADWAY STANDARDS DEVELOPMENT ENGINEER

FHWA

GENERAL NOTES

(A) THE SLOPE IN THE AREA BOUNDED BY THE GRADELINE, THE HINGE POINT LINE (HPL), AND THE CLEAR ZONE LIMITS (CZL) SHALL BE 4:1 OR FLATTER.

(B) AFTER FINAL ASSEMBLY, RECHECK CABLE TO BE SURE IT IS TAUT AND HAS NOT RELAXED.

(C) DIFFERENT MANUFACTURES REQUIRE DIFFERENT PERFORATED W-BEAM RAIL END PANELS. SEE MANUFACTURES INFORMATION.

(D) THE TOP OF THE STEEL TUBE ON POST 1 AND POST 2 SHALL NOT BE MORE THAN 3" ABOVE THE FINISH GROUND ELEVATION.

(F) ATTACH ALUMINUM SHEET TO E.A.T. HEAD USING 4 STAINLESS STEEL SELF-TAPPING SCREWS. ONE SCREW PER CORNER.

(G) 1/2" DIAMETER X 3" LONG LAG BOLT AND WASHER.

(H) HARDWARE VARIES BETWEEN DIFFERENT MANUFACTURES. SEE MANUFACTURE'S DRAWING FOR INFORMATION.

(I) DIMENSIONS MAY VARY. SEE MANUFACTURE'S INFORMATION.

SEE SDD 14B42 FOR MORE INFORMATION.

* DO NOT ATTACH BLOCKOUTS TO POSTS 1 AND 2.

DO NOT INSTALL REFLECTORS ON THE FIRST 50 FEET OF THE APPROACH END OF THE ENERGY ABSORBING TERMINAL.

W-BEAM RAIL SPLICES ARE LOCATED AT POST NUMBER 3, AND BETWEEN POST 5 AND 6, BETWEEN POSTS 7 AND 8, AND MIDDLE OF THE SPAN AFTER POST 9.

THE CENTER OF THE UPPER 3 1/2" DIAMETER HOLE ON POST NUMBER 3 THROUGH POST 9 IS TO BE FLUSH WITH THE GROUND LINE UP TO A MAXIMUM OF 2" ABOVE GROUND LINE.

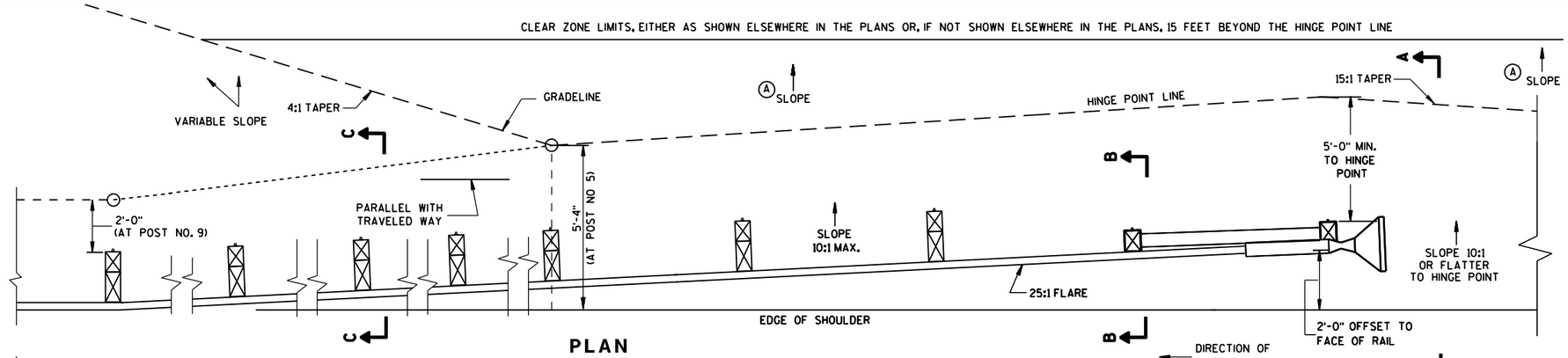

PLAN

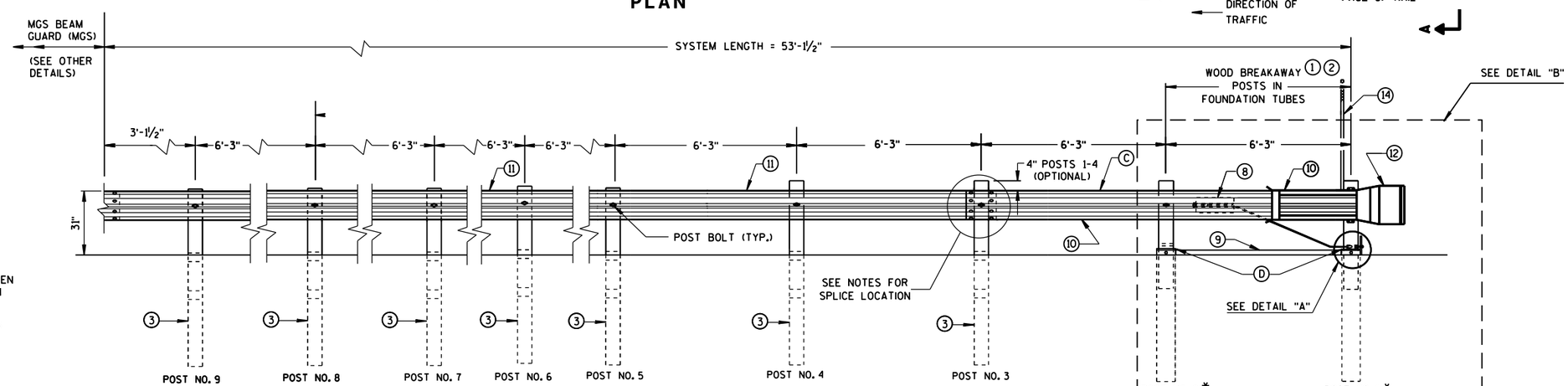

ELEVATION

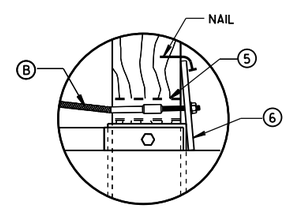

DETAIL "A"

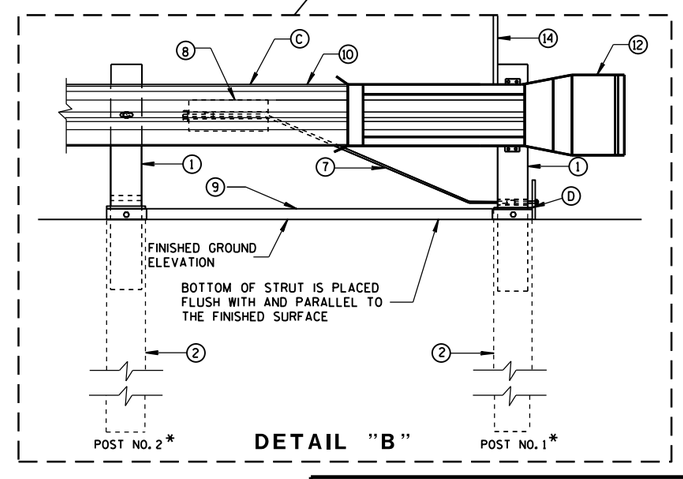

DETAIL "B"

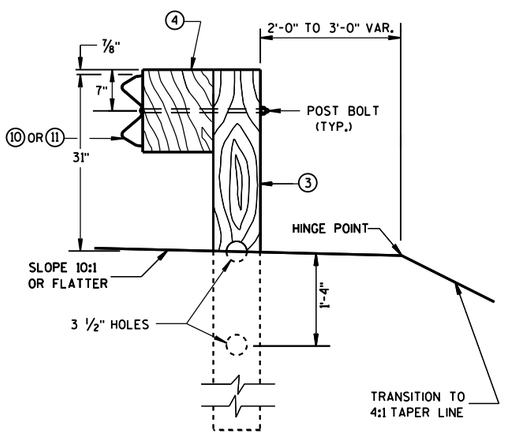

SECTION C-C
TYPICAL AT POST NOS. 3-9

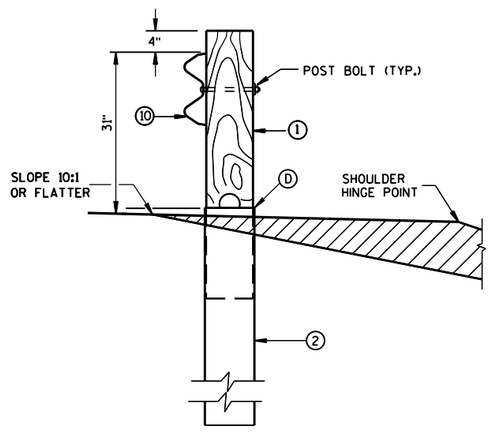

SECTION B-B
TYPICAL AT POST NO. 2*

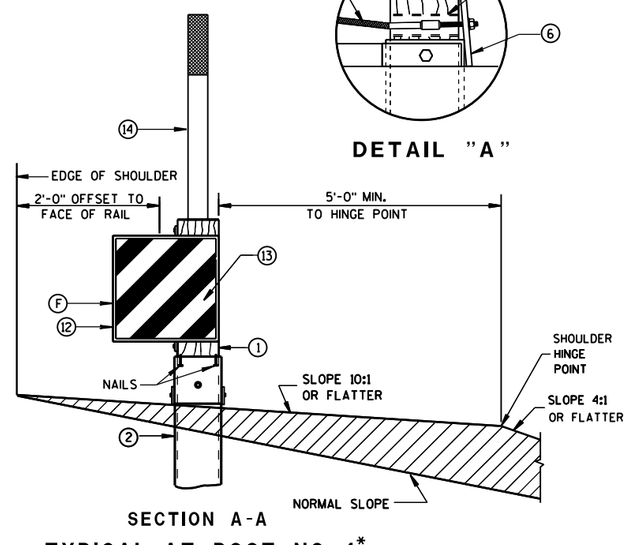

SECTION A-A
TYPICAL AT POST NO. 1*

MIDWEST GUARDRAIL SYSTEM ENERGY ABSORBING TERMINAL (MGS)

STATE OF WISCONSIN
DEPARTMENT OF TRANSPO

S.D.D. 14 B 44-2a

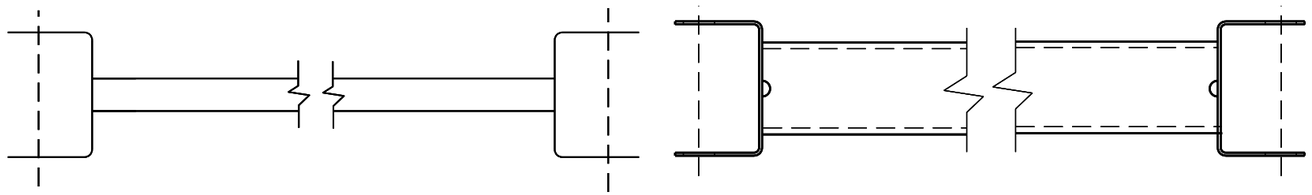

GENERIC GROUND STRUT (9) (H)

BILL OF MATERIALS

PART NO.	DESCRIPTION MATERIALS PROVIDED BY MGS EAT MANUFACTURER. SEE MANUFACTURER'S DETAILS FOR MORE INFORMATION.
1	WOOD BREAKAWAY POST
2	6" X 8" X 0.188", 6'-0" LONG FOUNDATION TUBE AT POSTS 1 AND 2
3	WOOD CRT
4	WOOD BLOCKOUT
5	PIPE SLEEVE
6	BEARING PLATE
7	BCT CABLE ASSEMBLY
8	ANCHOR CABLE BOX
9	GROUND STRUT
10	PERFORATED W-BEAM RAIL END PANEL, 12'-6" LONG.
11	STANDARD W-BEAM RAIL. MULTIPLE SECTIONS REQUIRED. SECTIONS VARY IN LENGTH.
12	END SECTION EAT
13	0.040" ALUMINUM SHEET WITH REFLECTIVE SHEETING TYPE F PER SECTION 637 OF THE STANDARD SPECIFICATIONS
14	EAT MARKER POST - YELLOW (SEE APPROVED PRODUCTS LIST)

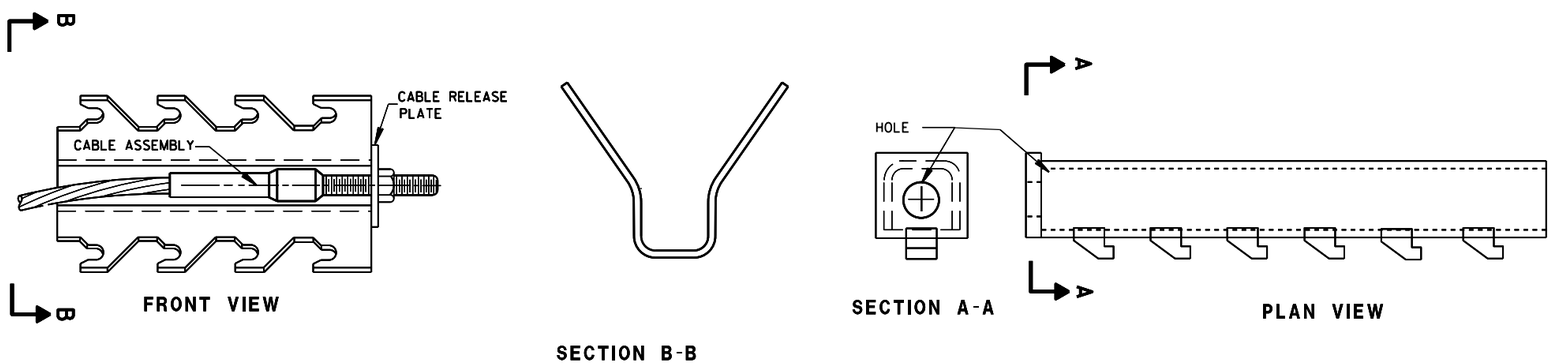

GENERIC ANCHOR CABLE BOX (8) (H)

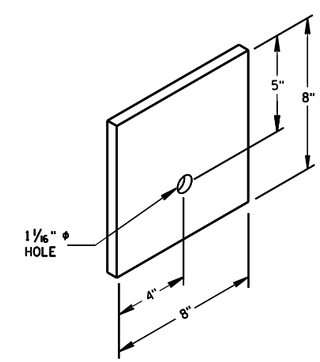

BEARING PLATE (6)

6

6

S.D.D. 14 B 44-2b

S.D.D. 14 B 44-2b

MIDWEST GUARDRAIL SYSTEM
ENERGY ABSORBING TERMINAL
(MGS)

STATE OF WISCONSIN
DEPARTMENT OF TRANSPOI

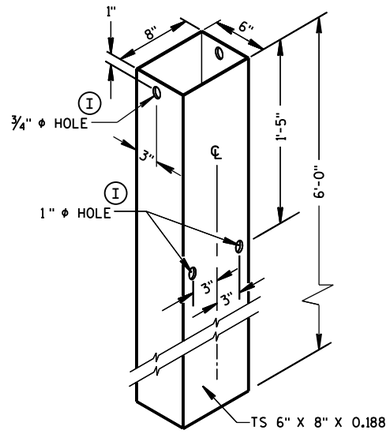

FOUNDATION TUBE (2)

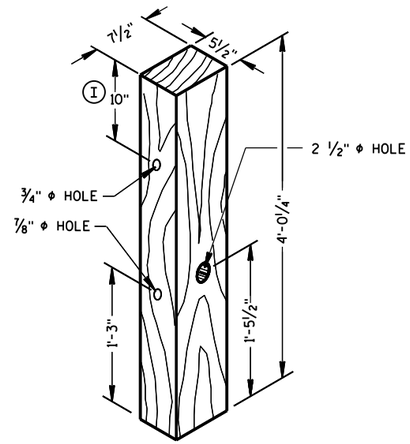

POSTS NUMBER 1 AND 2

WOOD BREAKAWAY POST (1)

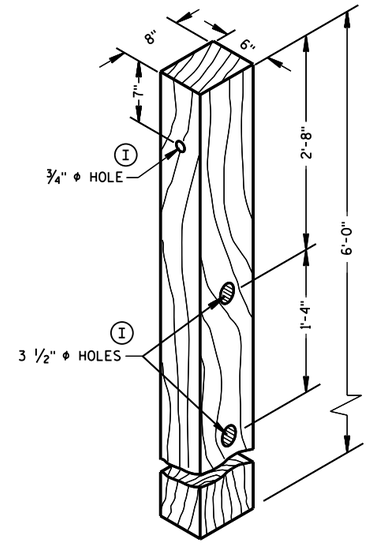

POSTS NUMBER 3-9

WOOD CRT POST (3)

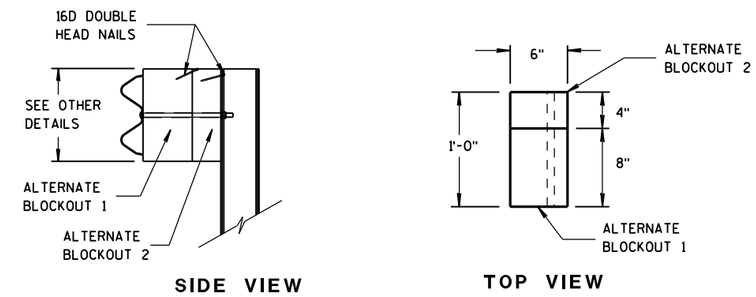

ALTERNATE WOOD BLOCKOUT DETAIL

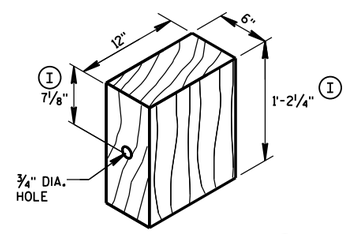

WOOD BLOCKOUT (4)

REQ'D. AT ALL POSTS EXCEPT POST NO'S 1 & 2

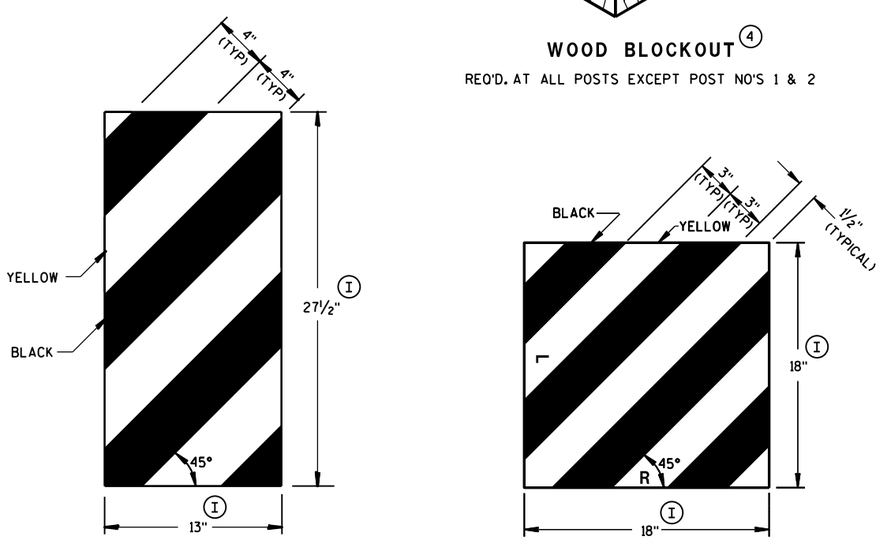

GENERIC REFLECTIVE SHEETING (13) (H)

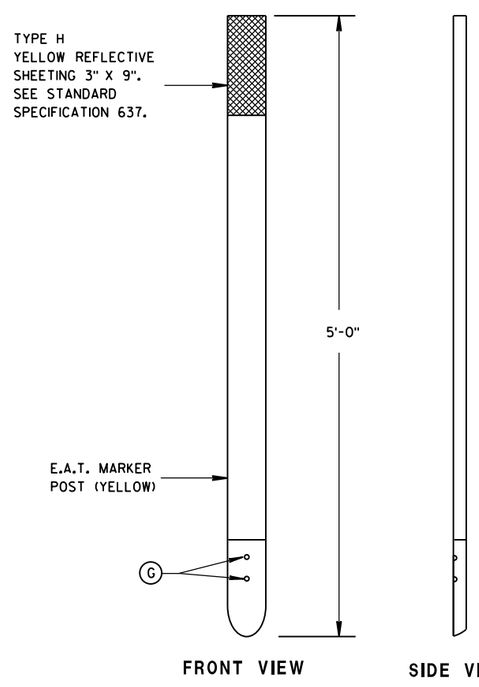

E.A.T. MARKER POST (14)

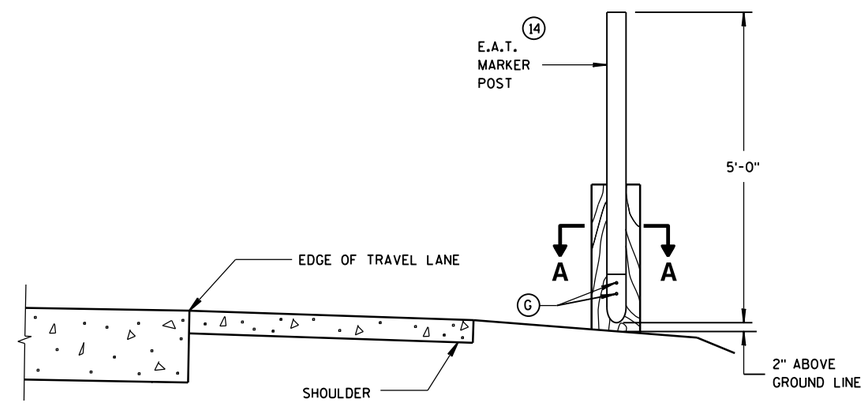

TYPICAL INSTALLATION OF E.A.T. MARKER POST BACKSIDE OF POST NO. 1

(E.A.T. AND RAIL REMOVED FOR CLARITY)

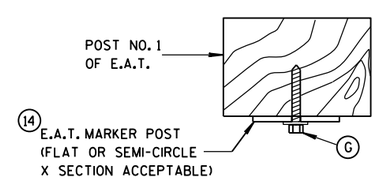

SECTION A-A

MIDWEST GUARDRAIL SYSTEM ENERGY ABSORBING TERMINAL (MGS)

STATE OF WISCONSIN
DEPARTMENT OF TRANSPORTATION

APPROVED
June 2014 — DATE
/S/ Jerry H. Zogg — ROADWAY STANDARDS DEVELOPMENT ENGINEER
FHWA

6

6

S.D.D. 14 B 44-2c

S.D.D. 14 B 44-2c

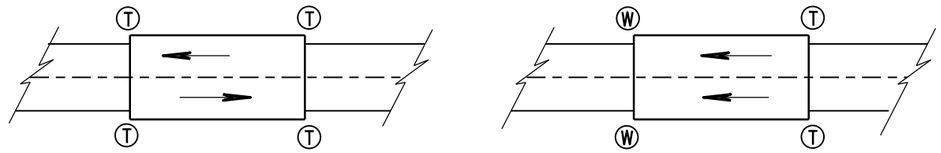

TWO WAY TRAFFIC

ONE WAY TRAFFIC

(T) THRIE BEAM CONNECTION

(W) W-BEAM CONNECTION WHEN REQUIRED

TYPICAL LOCATIONS OF THRIE BEAM AND W-BEAM CONNECTIONS TO BRIDGE

GENERAL NOTES

IF ROCK IS ENCOUNTERED, REMOVE ROCK TO FULL DEPTH OF POST PLUS 2½", AND 12" DIAMETER AROUND POST. SEE 14B42 FOR MORE DETAILS.

TRANSITION USES STEEL POSTS ONLY.

SEE STANDARD DETAIL DRAWING 14 B 42 FOR MORE INFORMATION.

(1) BRIDGE RAILING TYPE "W" DOES NOT REQUIRE A TERMINAL CONNECTOR.

(2) OPTIONAL CURB AND GUTTER OR DRAINAGE FEATURE SEE PLAN FOR INFORMATION.

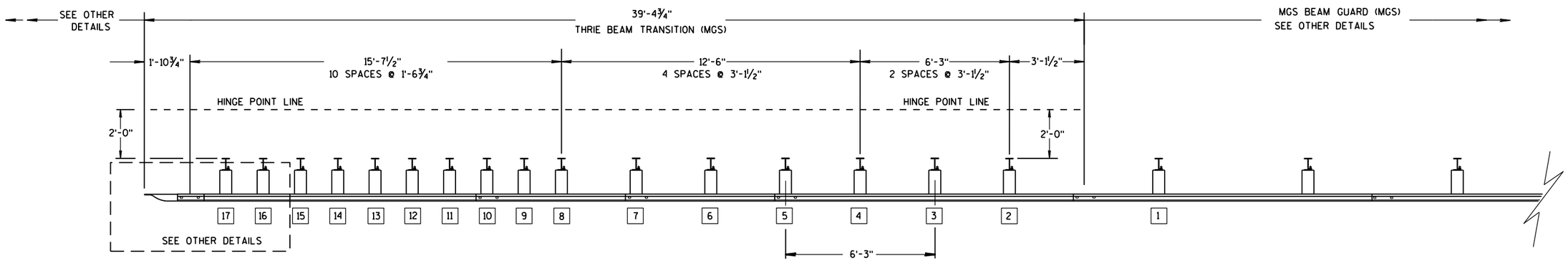

PLAN VIEW

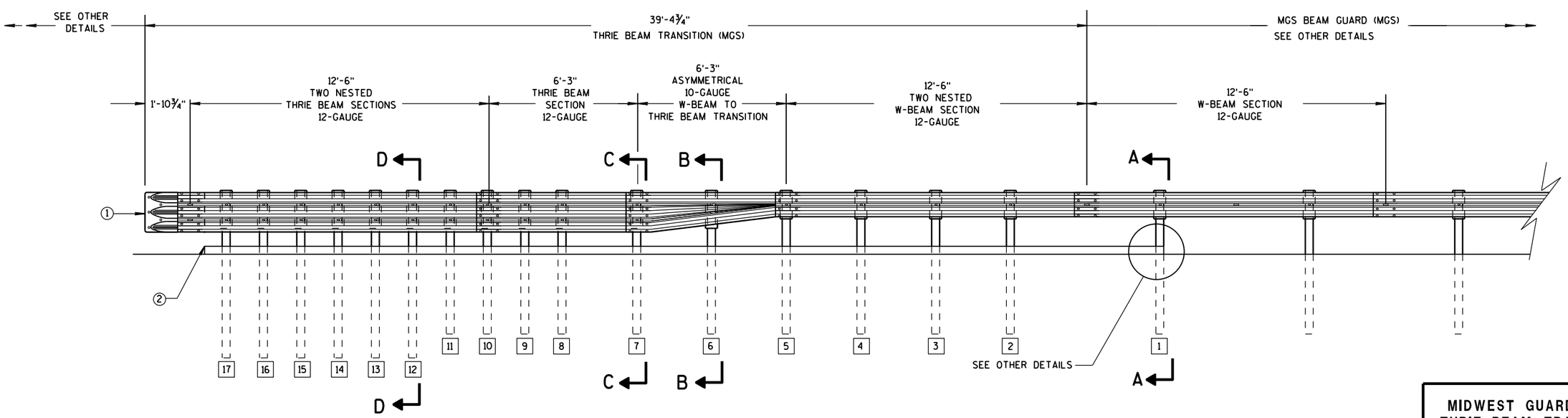

ELEVATION VIEW

MIDWEST GUARDRAIL SYSTEM THRIE BEAM TRANSITION

MIDWEST GUARDRAIL SYSTEM
THRIE BEAM TRANSITION (MGS)

STATE OF WISCONSIN
DEPARTMENT OF TRANSPORTATION

6

6

S.D.D. 14 B 45-4a

S.D.D. 14 B 45-4a

GENERAL NOTES

(2) OPTIONAL CURB AND GUTTER OR DRAINAGE_FEATURE SEE PLAN FOR INFORMATION.

(3) WHEN USING STEEL POSTS AND WOOD BLOCKOUTS INSTALL FOUR 10D GALVANIZED NAILS. INSTALL NAILS AT THE BACK CORNERS OF THE BLOCK AND BEND THE NAILS OVER THE FLANGE OF THE STEEL POST.

(4) TOLERANCE FOR TOP OF W-BEAM RAIL IS ± 1".

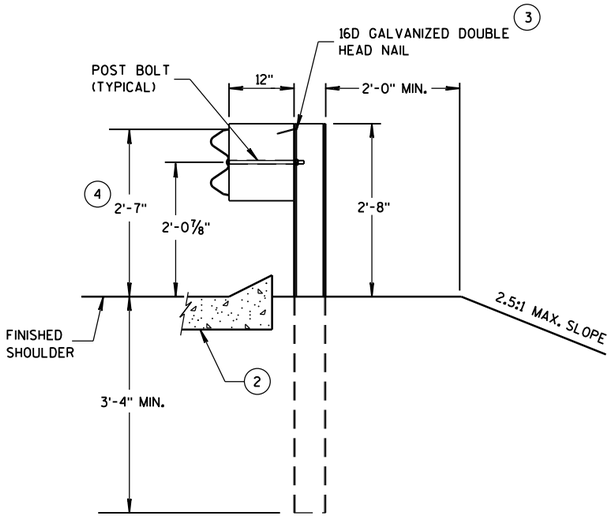

SECTION A-A
POSTS 1-5

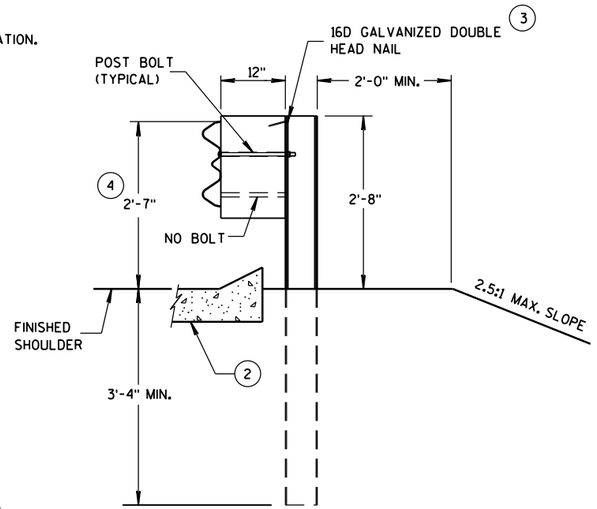

SECTION B-B
POST 6

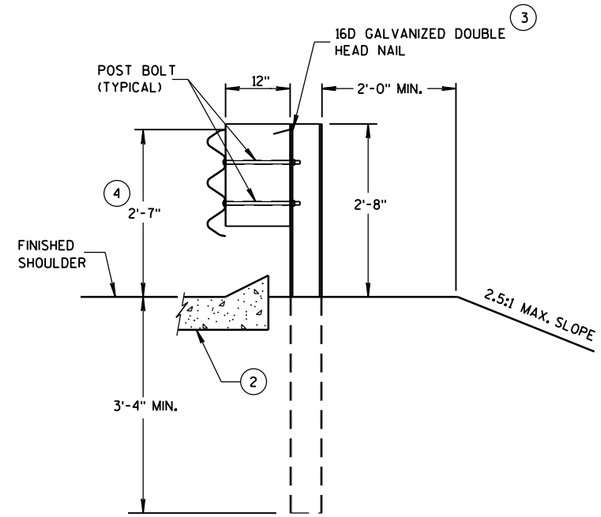

SECTION C-C
POSTS 7-11

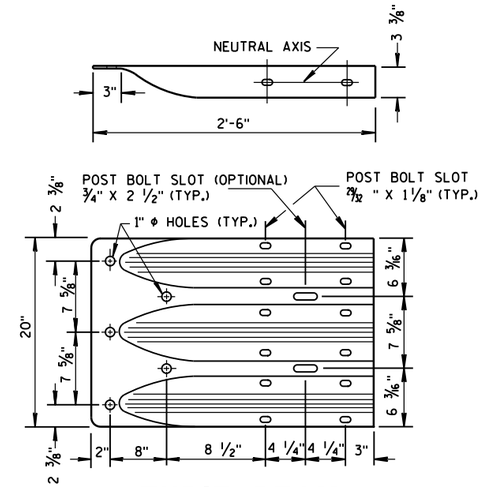

THRIE BEAM
TERMINAL CONNECTOR

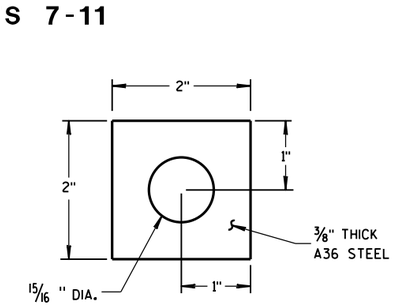

PLATE WASHER DETAIL

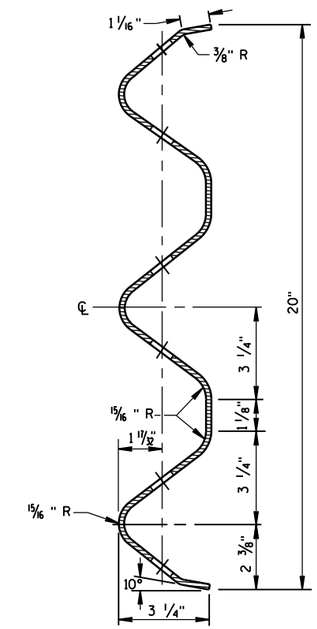

SECTION THRU THRIE
BEAM RAIL ELEMENT

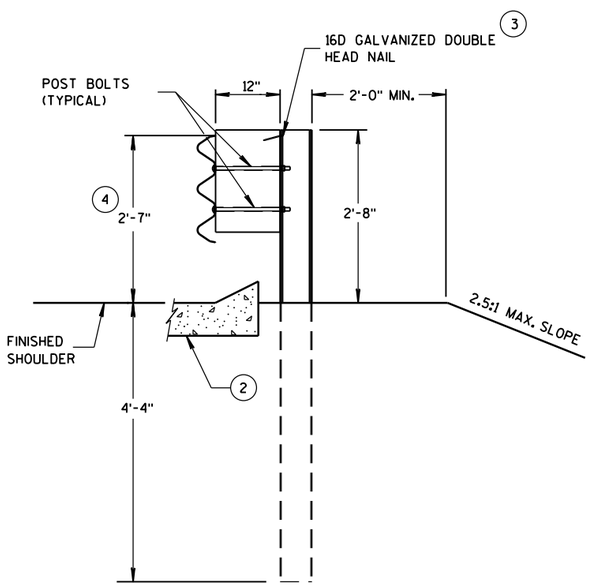

SECTION D-D
POSTS 12-17

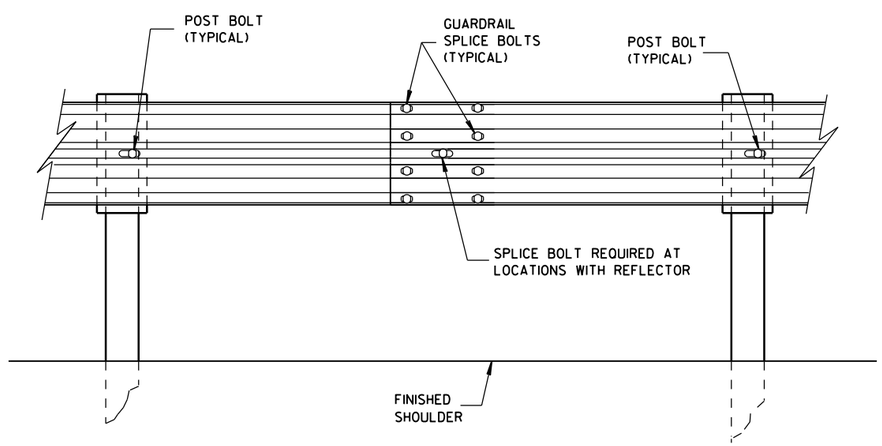

SPLICE DETAIL

MIDWEST GUARDRAIL SYSTEM
THRIE BEAM TRANSITION (MGS)

STATE OF WISCONSIN
DEPARTMENT OF TRANSPO

6

6

S.D.D. 14 B 45-4b

S.D.D. 14 B 45-4b

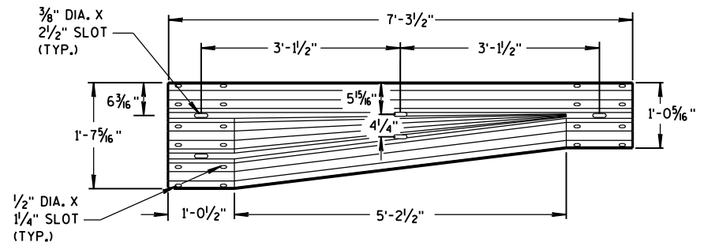

W-BEAM TO THRIE BEAM TRANSITION SECTION

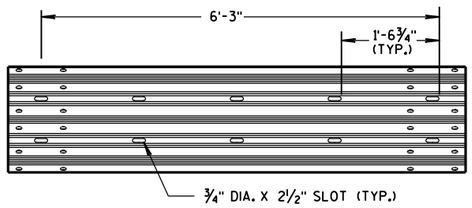

6'-3" THRIE BEAM SECTION

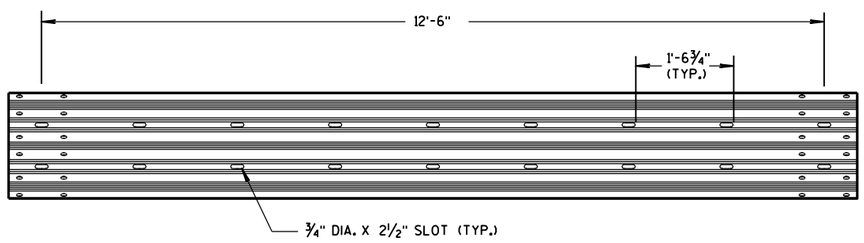

12'-6" THRIE BEAM SECTION

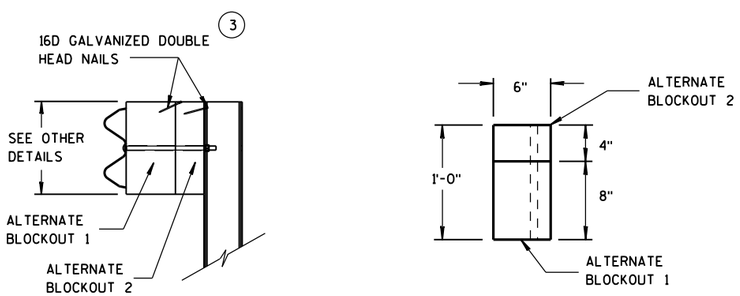

SIDE VIEW TOP VIEW

ALTERNATE WOOD BLOCKOUT DETAIL

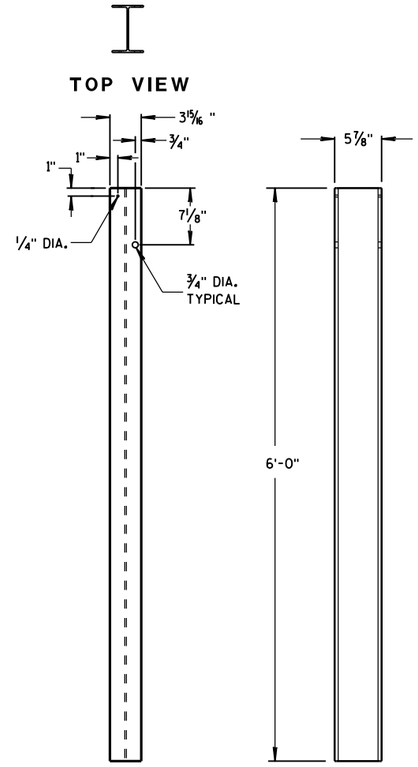

STEEL POSTS 1-5

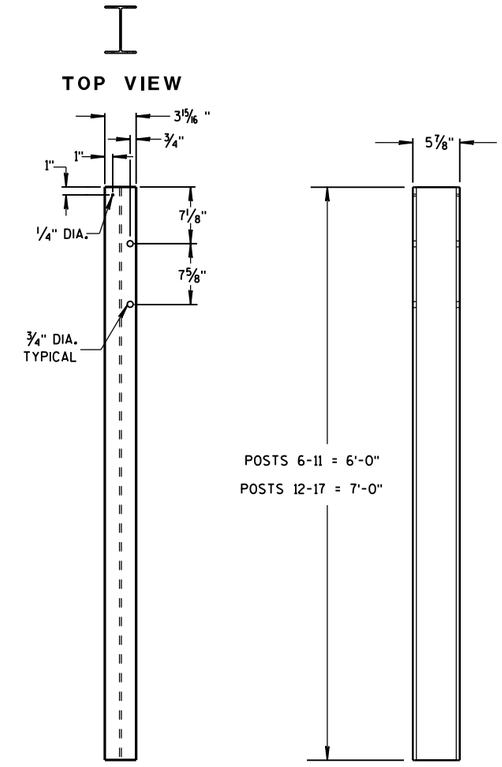

STEEL POSTS 6-17

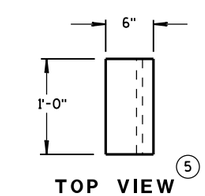

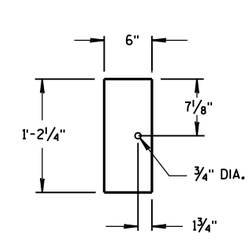

FRONT VIEW

BLOCKOUT POSTS 1-5

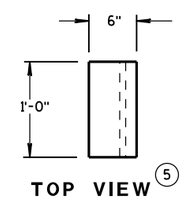

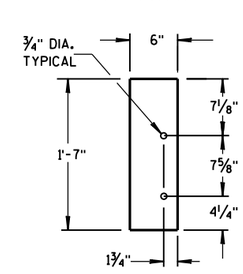

FRONT VIEW

BLOCKOUT POSTS 6-17

GENERAL NOTES

STEEL POSTS ARE W6X9 OR W6X8.5.

BOLT HOLES FOR POST ARE ON FRONT AND OF SIDE OF POST.

3 WHEN USING STEEL POSTS AND WOOD BLOCKOUTS INSTALL FOUR 16D GALVANIZED NAILS. INSTALL NAILS AT THE BACK CORNERS OF THE BLOCK AND BEND THE NAILS OVER THE FLANGE OF THE STEEL POST.

5 WOOD BLOCKS MAY BE CONSTRUCTED OUT OF 2 WOOD BLOCKS. SEE ALTERNATE WOOD BLOCK DETAIL.

MIDWEST GUARDRAIL SYSTEM
THRIE BEAM TRANSITION (MGS)

STATE OF WISCONSIN
DEPARTMENT OF TRANSPOR

6

6

S.D.D. 14 B 45-4c

S.D.D. 14 B 45-4c

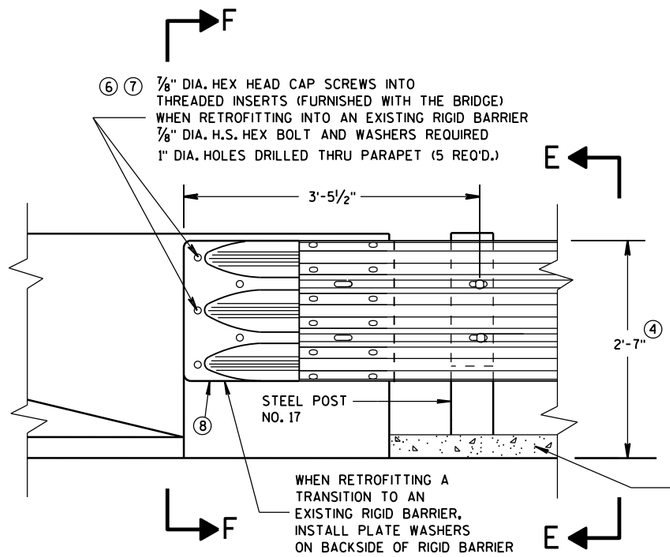

FRONT VIEW

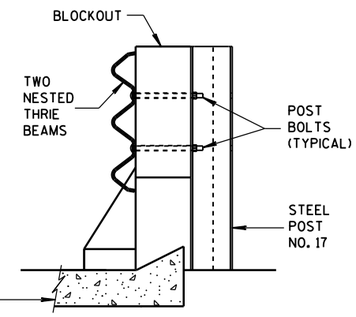

SECTION E-E

THRIE BEAM CONNECTION TO BRIDGE PARAPET WITH SQUARE ENDS

GENERAL NOTES

THESE ARE TYPICAL CONNECTION DETAILS. ADJUST THE POSTION OF CONNECTIONS TO EXISTING BRIDGES TO FIT THE ACTUAL BRIDGE AND SITE DIMENSIONS.

② OPTIONAL CURB AND GUTTER OR DRAINAGE FEATURE SEE PLAN FOR INFORMATION.

④ TOLERANCE FOR TOP OF BEAM IS ± 1".

⑥ DRILLING BOLT HOLES THROUGH THE PARAPET, BOLTS, NUTS, WASHERS AND REPAIRING DAMAGED CONCRETE ARE INCIDENTAL TO THE CONTRACT.

⑦ BOLTS MAY BE A325 BOLTS OR A449 BOLTS. BOLT LENGTH AND THREADING LENGTH ARE TO ALLOW FOR A TIGHT CONNECTION BETWEEN RIGID BARRIER AND THRIE BEAM CONNECTION PLATE. CONTRACTOR IS TO FIELD VERIFY BOLT LENGTH AND THREAD LENGTH. ONE ROUND WASHER REQUIRED BETWEEN BOLT HEAD AND THRIE BEAM CONNECTOR PLATE. BOLTS THAT EXTEND THROUGH THE PARAPET AND OUT THE BACK FACE REQUIRE A HARDENED ROUND STEEL WASHER THAT IS 2" O.D. X 5/8" THICK AND ONE PLATE WASHER. REPAIR ANY DAMAGED CONCRETE FROM BOLT INSTALLATION.

⑧ THE RECESS FOR A W-BEAM CONNECTION, WHICH EXISTS ON SOME PARAPETS OF THIS TYPE, SHALL BE FILLED WITH A TREATED TIMBER BLOCKOUT. BLOCKOUT SIZE IS 1'-6" X 2'-0" X 3 1/2".

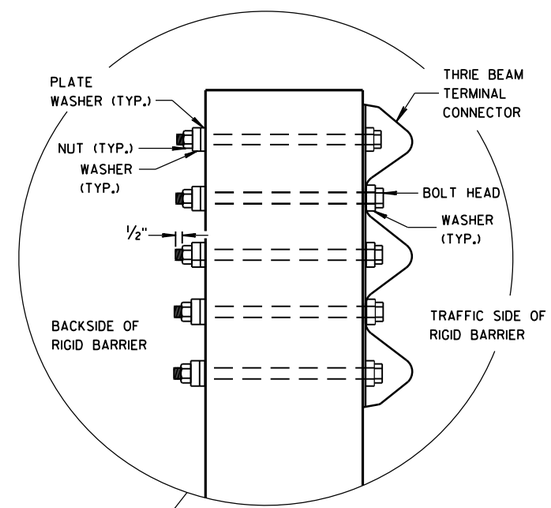

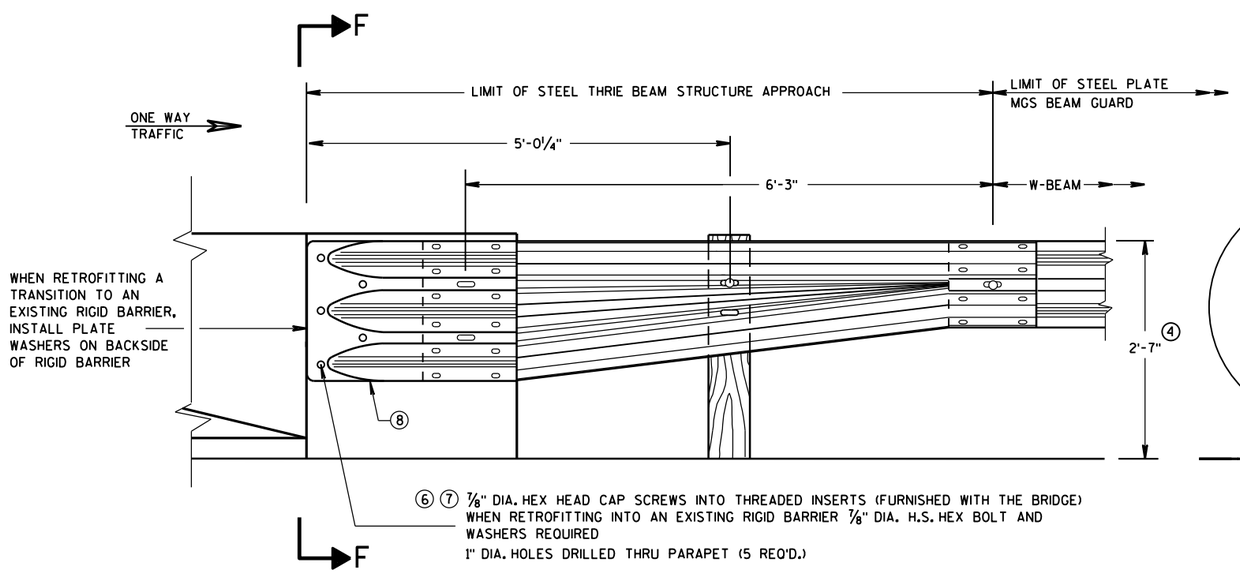

FRONT VIEW

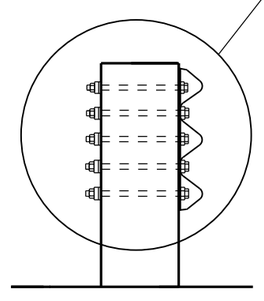

SECTION F-F

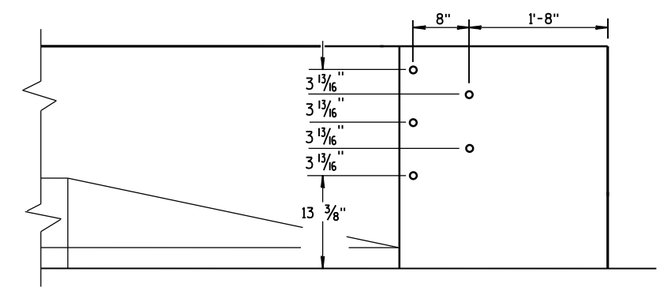

DRILL HOLE LOCATION

W BEAM TRANSITION AND CONNECTION TO BRIDGE PARAPETS WITH SQUARE ENDS

(USE ONLY ON THE TRAFFIC EXIT END OF ONE WAY BRIDGES)

MIDWEST GUARDRAIL SYSTEM
THRIE BEAM TRANSITION (MGS)

STATE OF WISCONSIN
DEPARTMENT OF TRANSPORTATION

APPROVED
June, 2015 — DATE
/S/ Jerry H. Zogg — ROADWAY STANDARDS DEVELOPMENT ENGINEER
FHWA
NT

6

S.D.D. 14 B 45-4d

GENERAL NOTES

THESE ARE TYPICAL CONNECTION DETAILS. ADJUST THE POSTION OF CONNECTIONS TO EXISTING BRIDGES TO FIT THE ACTUAL BRIDGE AND SITE DIMENSIONS.

(2) OPTIONAL CURB AND GUTTER OR DRAINAGE FEATURE SEE PLAN FOR INFORMATION.

(4) TOLERANCE FOR TOP OF BEAM IS ± 1".

(6) DRILLING BOLT HOLES THROUGH THE PARAPET, BOLTS, NUTS, WASHERS AND REPAIRING DAMAGED CONCRETE ARE INCIDENTAL TO THE CONTRACT.

(7) BOLTS MAY BE A325 BOLTS OR A449 BOLTS. BOLT LENGTH AND THREADING LENGTH ARE TO ALLOW FOR A TIGHT CONNECTION BETWEEN RIGID BARRIER AND THRIE BEAM CONNECTION PLATE. CONTRACTOR IS TO FIELD VERIFY BOLT LENGTH AND THREAD LENGTH. ONE ROUND WASHER REQUIRED BETWEEN BOLT HEAD AND THRIE BEAM CONNECTOR PLATE. BOLTS THAT EXTEND THROUGH THE PARAPET AND OUT THE BACK FACE REQUIRE A HARDENED ROUND STEEL WASHER THAT IS 2" O.D. X 5/8" THICK AND ONE PLATE WASHER. REPAIR ANY DAMAGED CONCRETE FROM BOLT INSTALLATION.

(8) THE RECESS FOR A W-BEAM CONNECTION, WHICH EXISTS ON SOME PARAPETS OF THIS TYPE, SHALL BE FILLED WITH A TREATED TIMBER BLOCKOUT. BLOCKOUT SIZE IS 1'-6" X 2'-0" X 3 1/2".

(9) BOLT, NUT AND WASHERS NOT REQUIRED FOR THIS LOCATION WHEN RETROFITTING AN EXISTING PAPAPET AND THE HOLE IS EITHER ABOVE PARAPET OR WITHIN 4 INCHES OF THE EDGE OF PARAPET.

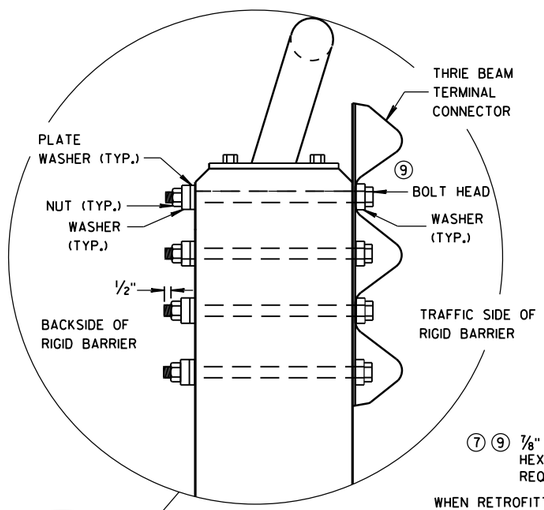

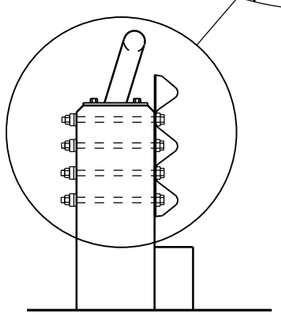

SECTION G-G

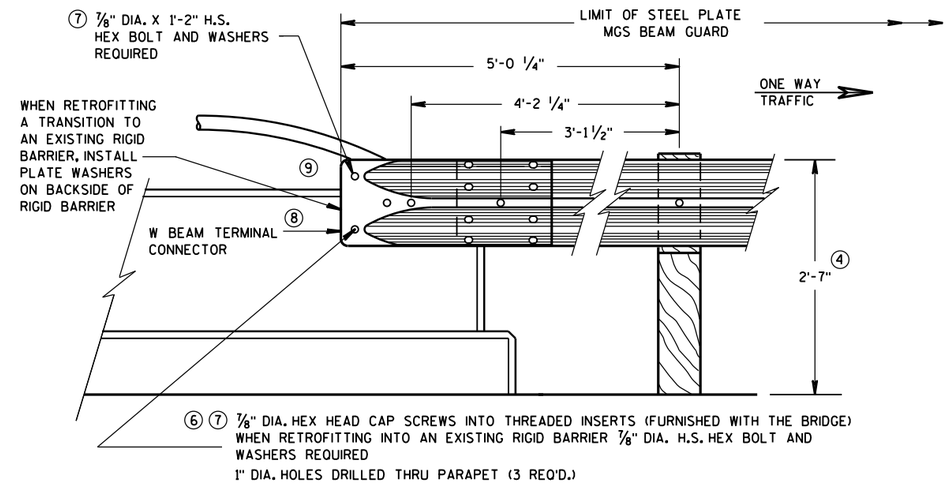

FRONT VIEW

W BEAM CONNECTION TO VERTICAL FACE PARAPET

(USE ONLY ON THE TRAFFIC EXIT END OF ONE WAY BRIDGES)

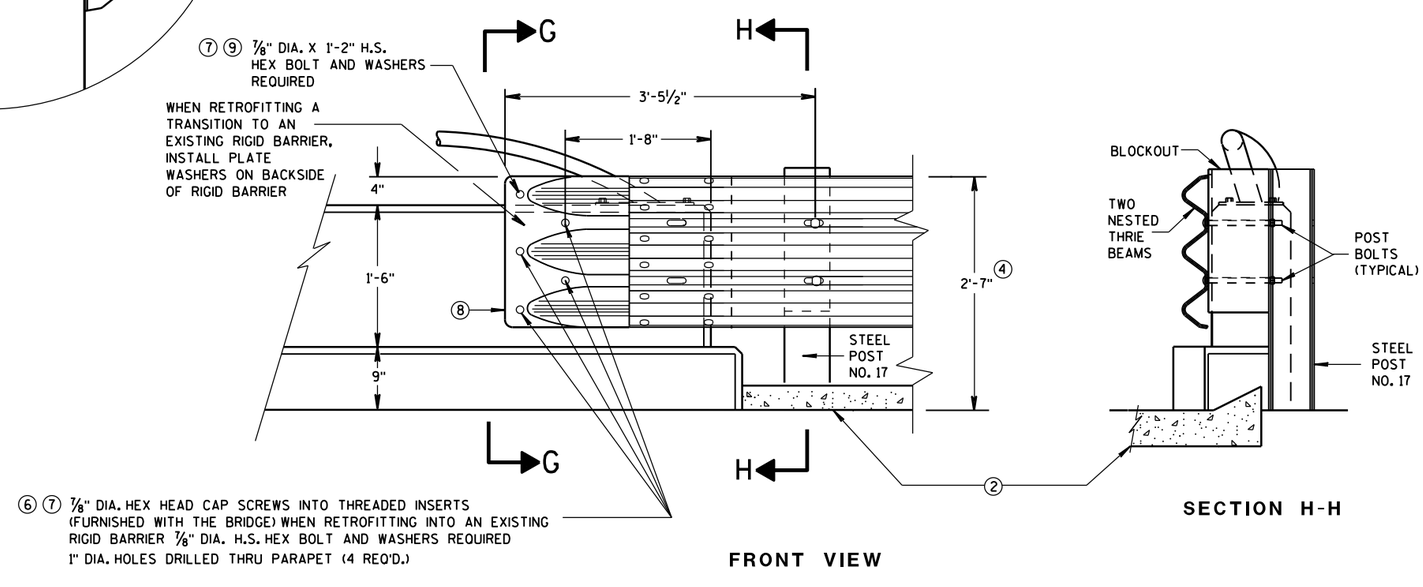

FRONT VIEW

SECTION H-H

THRIE BEAM CONNECTION TO VERTICAL FACED PARAPETS

MIDWEST GUARDRAIL SYSTEM
THRIE BEAM TRANSITION (MGS)

STATE OF WISCONSIN
DEPARTMENT OF TRANSPORTATION

APPROVED
June, 2015 — DATE
/S/ Jerry H. Zogg — ROADWAY STANDARDS DEVELOPMENT ENGINEER
FHWA
NT

6

6

S.D.D. 14 B 45-4e

S.D.D. 14 B 45-4e

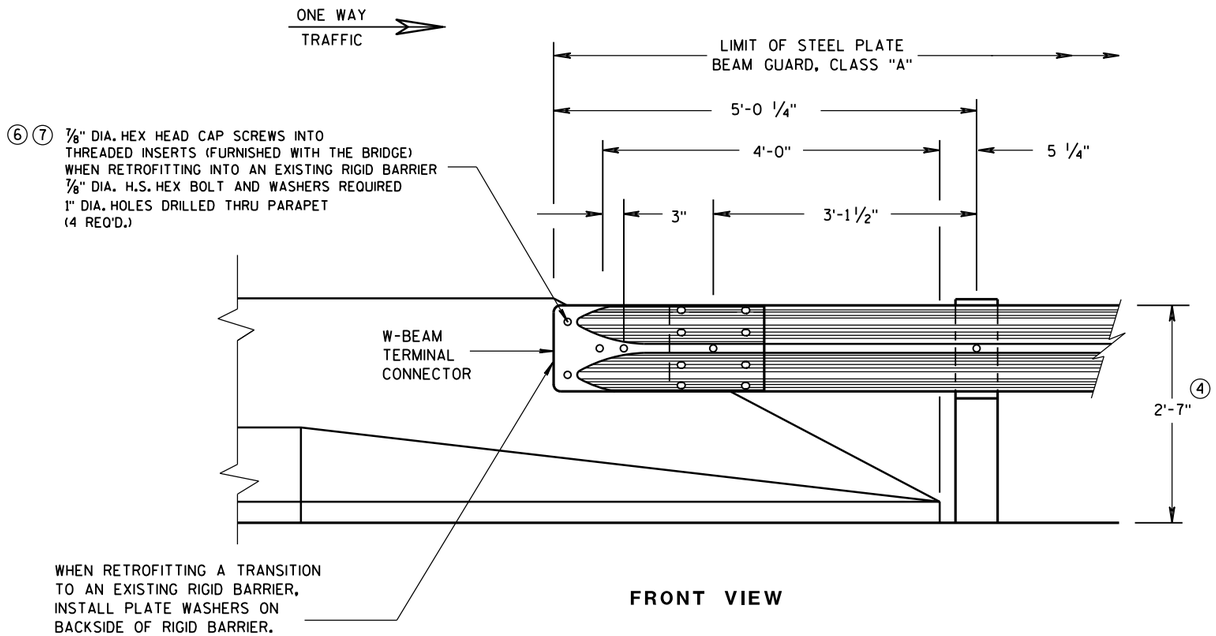

FRONT VIEW

W BEAM CONNECTION TO PARAPETS WITH SLOPED ENDS

(USE ONLY AT TRAFFIC EXIT END OF ONE WAY BRIDGE)

GENERAL NOTES

② OPTIONAL CURB AND GUTTER OR DRAINAGE FEATURE SEE PLAN FOR INFORMATION.

④ TOLERANCE FOR TOP OF BEAM IS ± 1".

⑥ DRILLING BOLT HOLES THROUGH THE PARAPET, BOLTS, NUTS, WASHERS AND REPAIRING DAMAGED CONCRETE ARE INCIDENTAL TO THE CONTRACT.

⑦ BOLTS MAY BE A325 BOLTS OR A449 BOLTS. BOLT LENGTH AND THREADING LENGTH ARE TO ALLOW FOR A TIGHT CONNECTION BETWEEN RIGID BARRIER AND THRIE BEAM CONNECTION PLATE. CONTRACTOR IS TO FIELD VERIFY BOLT LENGTH AND THREAD LENGTH. ONE ROUND WASHER REQUIRED BETWEEN BOLT HEAD AND THRIE BEAM CONNECTOR PLATE. BOLTS THAT EXTEND THROUGH THE PARAPET AND OUT THE BACK FACE REQUIRE A HARDENED ROUND STEEL WASHER THAT IS 2" O.D. X 5/8" THICK AND ONE PLATE WASHER. REPAIR ANY DAMAGED CONCRETE FROM BOLT INSTALLATION.

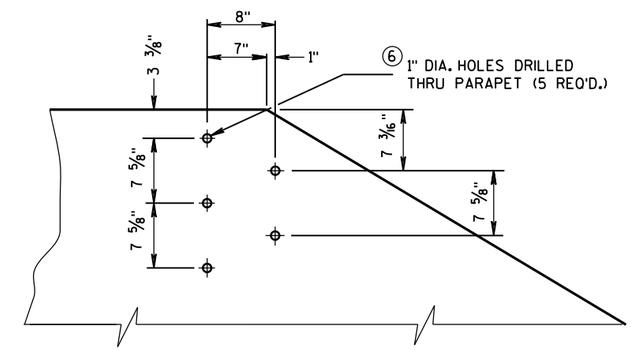

DRILL HOLE LOCATION AND PATTERN FOR THRIE BEAM CONNECTION

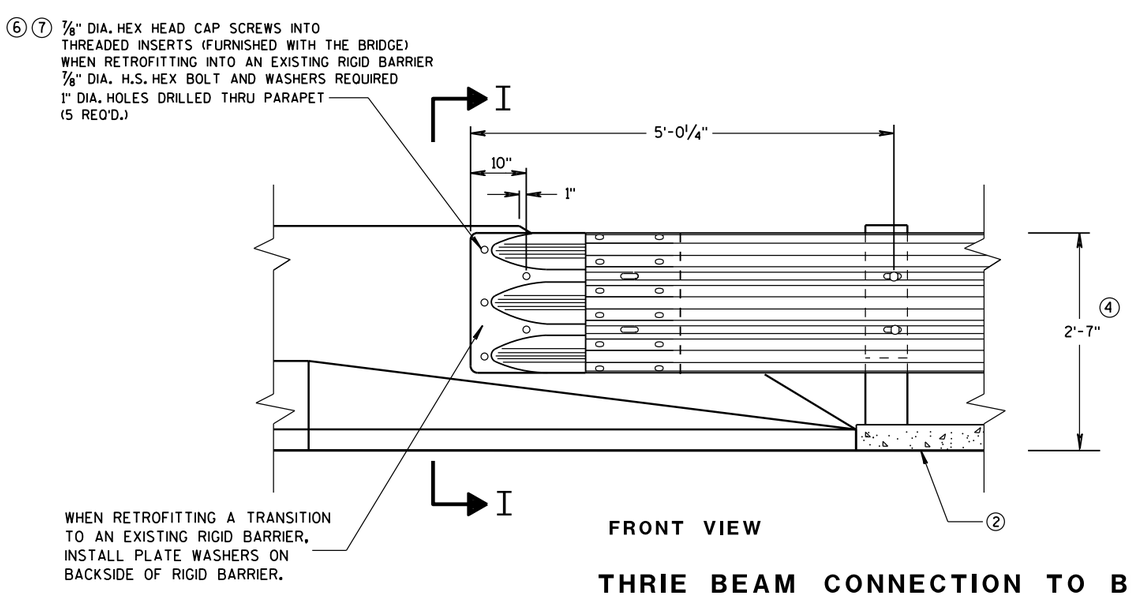

FRONT VIEW

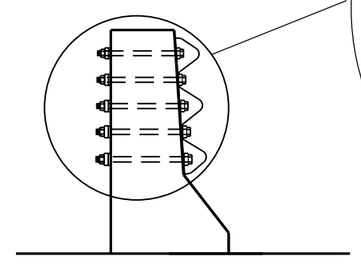

SECTION I-I

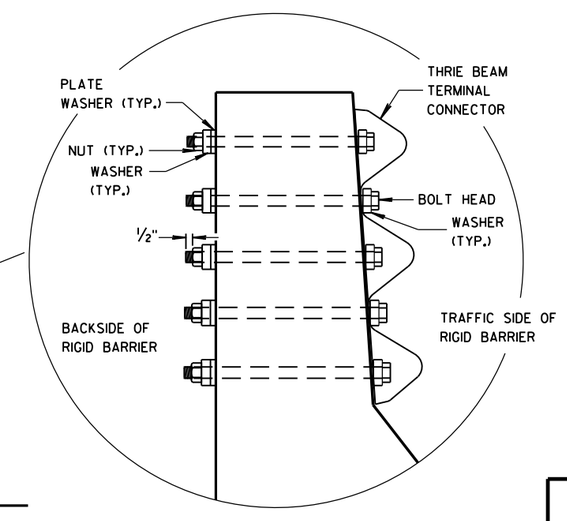

THRIE BEAM CONNECTION TO BRIDGE PARAPETS WITH SLOPED ENDS

MIDWEST GUARDRAIL SYSTEM
THRIE BEAM TRANSITION (MGS)

STATE OF WISCONSIN
DEPARTMENT OF TRANSPORTATION

APPROVED
June, 2015 — DATE
/S/ Jerry H. Zogg — ROADWAY STANDARDS DEVELOPMENT ENGINEER
FHWA

6

S.D.D. 14 B 45-4f

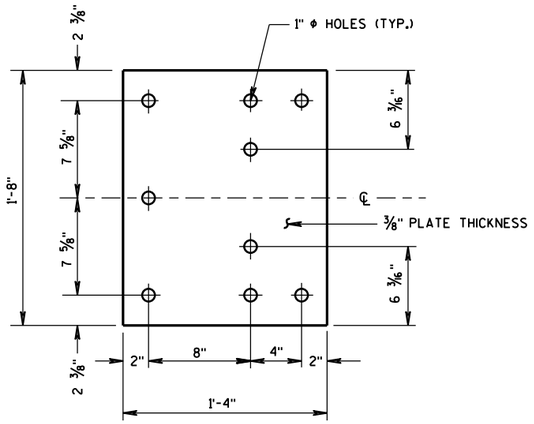

BACK-UP PLATE DETAIL

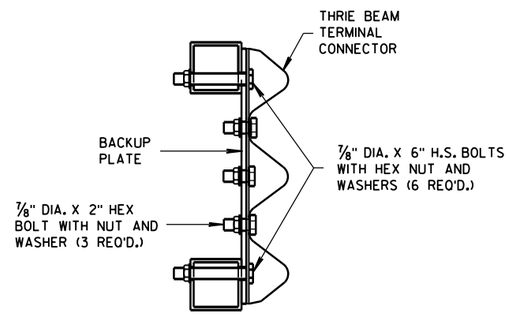

SECTION J-J

GENERAL NOTES

(4) TOLERANCE FOR TOP OF BEAM IS ± 1".

(6) DRILLING HOLES THROUGH THE PAPRPET, BOLTS, NUTS, WASHERS AND REPAIRING DAMAGED CONCRETE ARE INCIDENTAL TO THE CONTRACT.

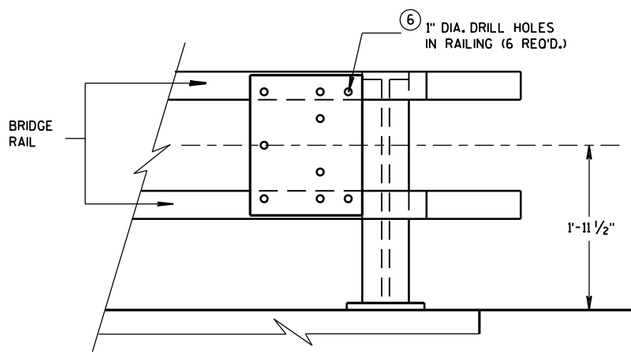

BACK-UP PLATE MOUNTING ONTO BRIDGE RAILING

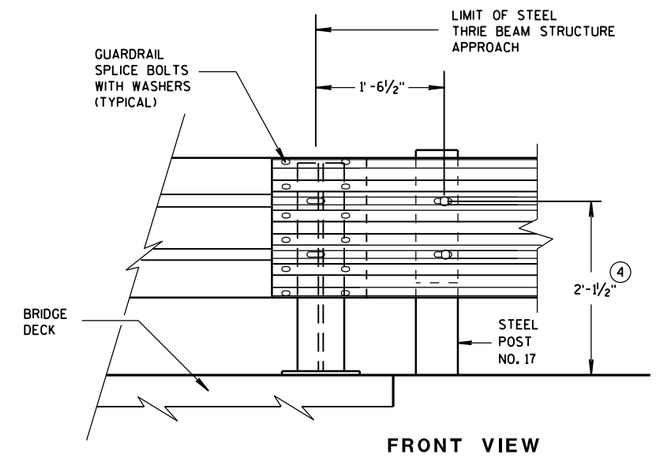

FRONT VIEW

THRIE BEAM CONNECTION TO STEEL RAILING TYPE "W"

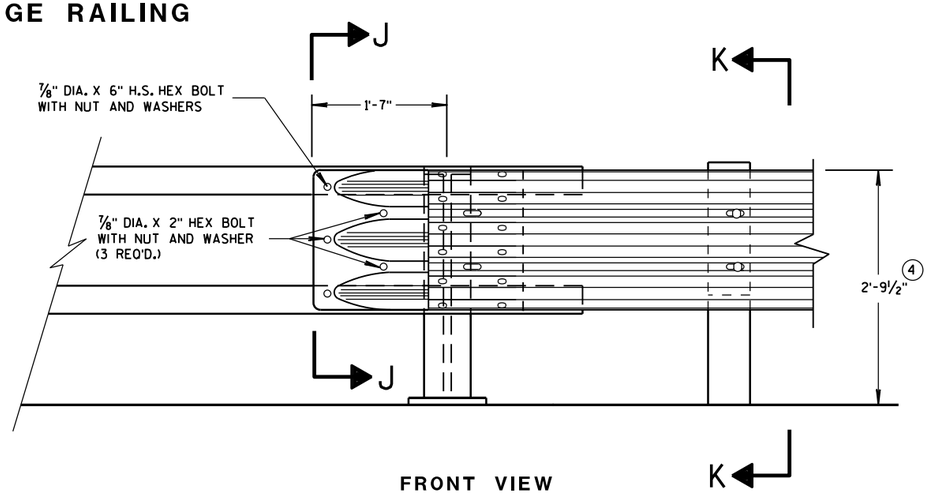

FRONT VIEW

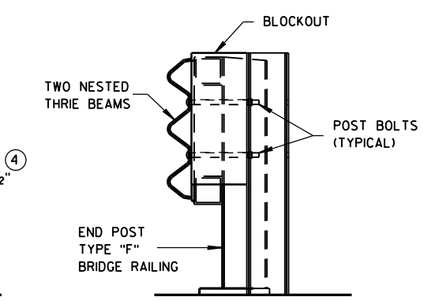

SECTION K-K

THRIE BEAM CONNECTION TO TUBULAR RAILING TYPE "F"

MIDWEST GUARDRAIL SYSTEM
THRIE BEAM TRANSITION (MGS)

STATE OF WISCONSIN
DEPARTMENT OF TRANSPORTATION

APPROVED
June, 2015 — DATE
/S/ Jerry H. Zogg — ROADWAY STANDARDS DEVELOPMENT ENGINEER
FHWA — NT

6

6

S.D.D. 14 B 45-4g

S.D.D. 14 B 45-4g

GENERAL NOTES

(4) TOLERANCE FOR TOP OF W-BEAM RAIL IS ± 1".

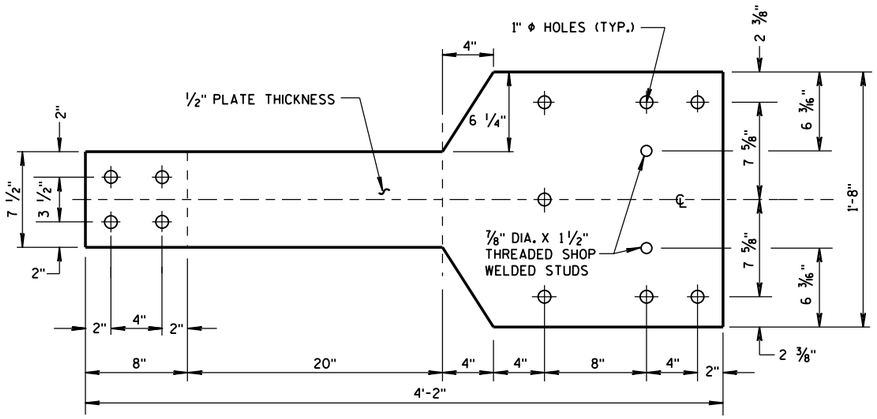

FRONT VIEW

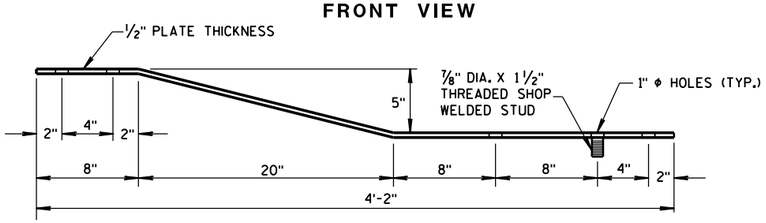

PLAN VIEW

BACK-UP PLATE DETAIL, TYPE "M"

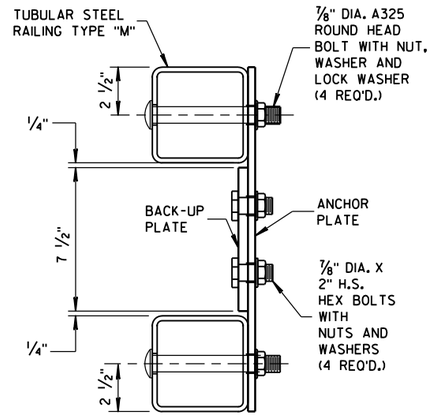

SECTION L-L

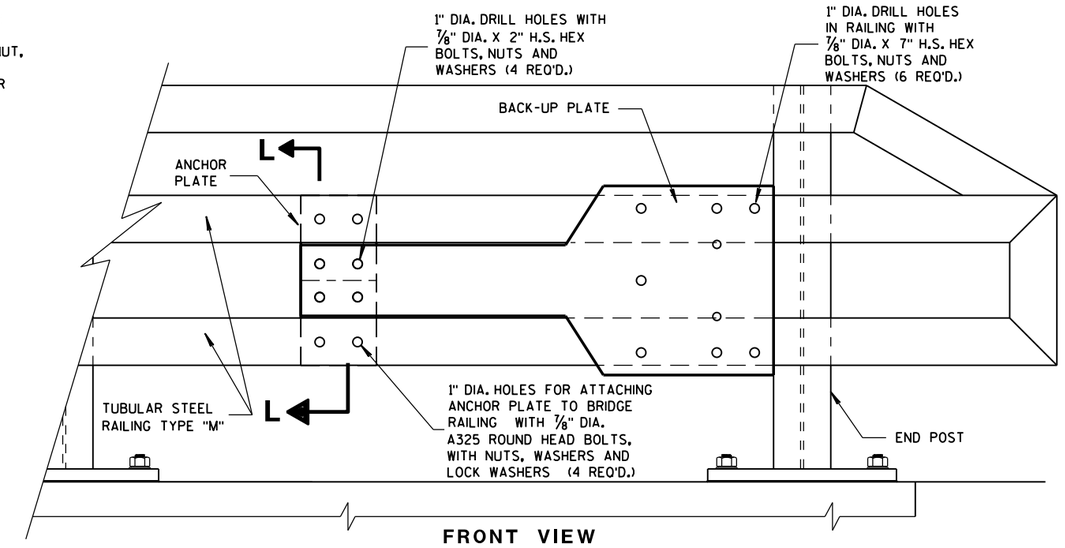

FRONT VIEW

ANCHOR AND BACK-UP PLATE MOUNTING TO BRIDGE RAILING, TYPE "M"

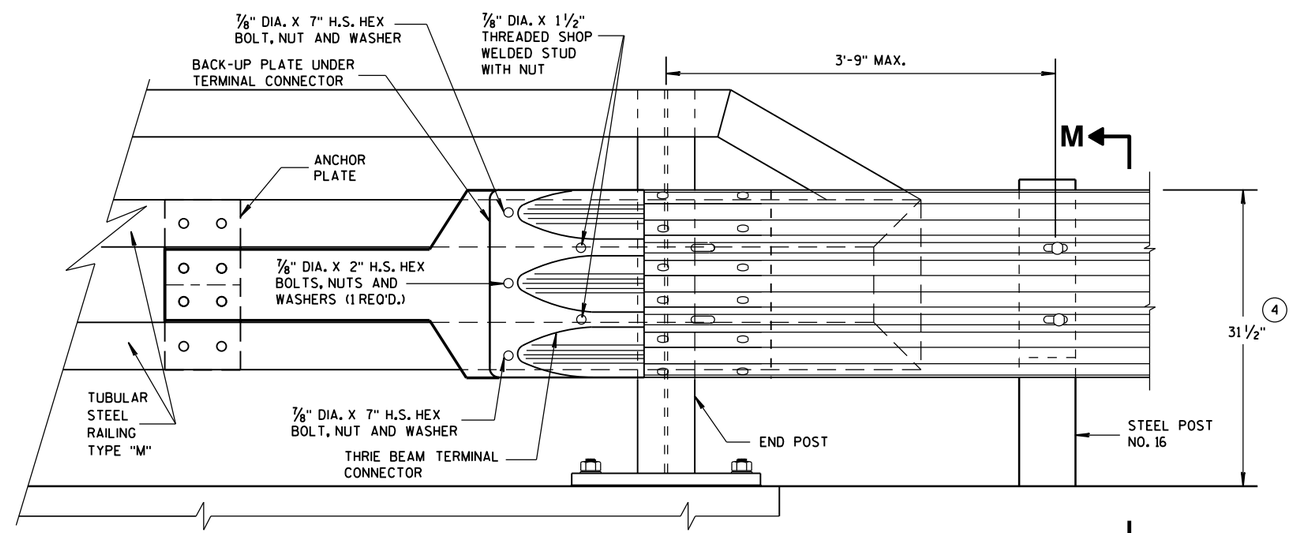

FRONT VIEW

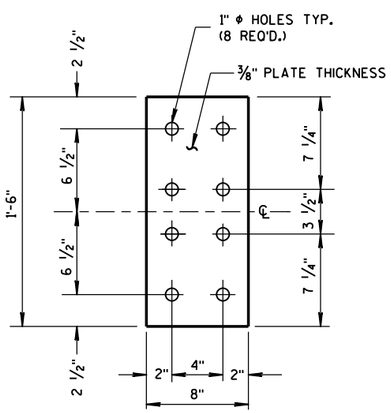

FRONT VIEW

ANCHOR PLATE DETAIL, TYPE "M"

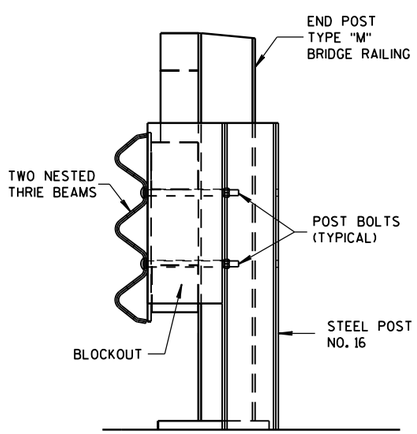

SECTION M-M

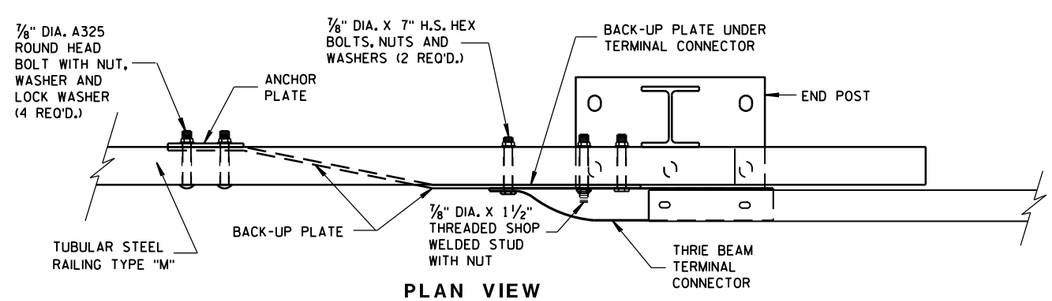

PLAN VIEW

THRIE BEAM CONNECTION TO TUBULAR RAILING, TYPE "M"

MIDWEST GUARDRAIL SYSTEM
THRIE BEAM TRANSITION (MGS)

STATE OF WISCONSIN
DEPARTMENT OF TRANSPORTATION

APPROVED
June, 2015 — DATE
/S/ Jerry H. Zogg — ROADWAY STANDARDS DEVELOPMENT ENGINEER
FHWA

6

6

S.D.D. 14 B 45-4h

S.D.D. 14 B 45-4h

GENERAL NOTES

COVER PLATE PANELS ARE 3/16" THICK.

ALL STIFFENERS ARE 1/4" THICK.

CONNECTOR PLATE SHALL BE FABRICATED FROM ASTM GRADE A36 STEEL AND GALVANIZED.

FOR GALVANIZED REQUIREMENTS, SEE SECTION 614 OF THE STANDARD SPECIFICATIONS.

ALL HOLE DIAMETERS SHALL BE 1".

FOR OPPOSITE SIDE INSTALLATION MIRROR DRAWINGS.

(10) STIFFENERS LOCATED AT THE OUTSIDE EDGES OF THE COVER PLATES SHALL BE WELDED AS FOLLOWS:
SINGLE BEVEL GROOVE WELD ON EXTERNAL SIDES AND 3/16" FILLET WELD BY 1" LONG SPACED AT 2" ON INTERNAL SIDES.

(11) STIFFENERS LOCATED ON THE INSIDE OF THE COVER PLATE SHALL BE WELDED AS FOLLOWS:
3/16" FILLET WELD BY 1" LONG SPACED AT 2".

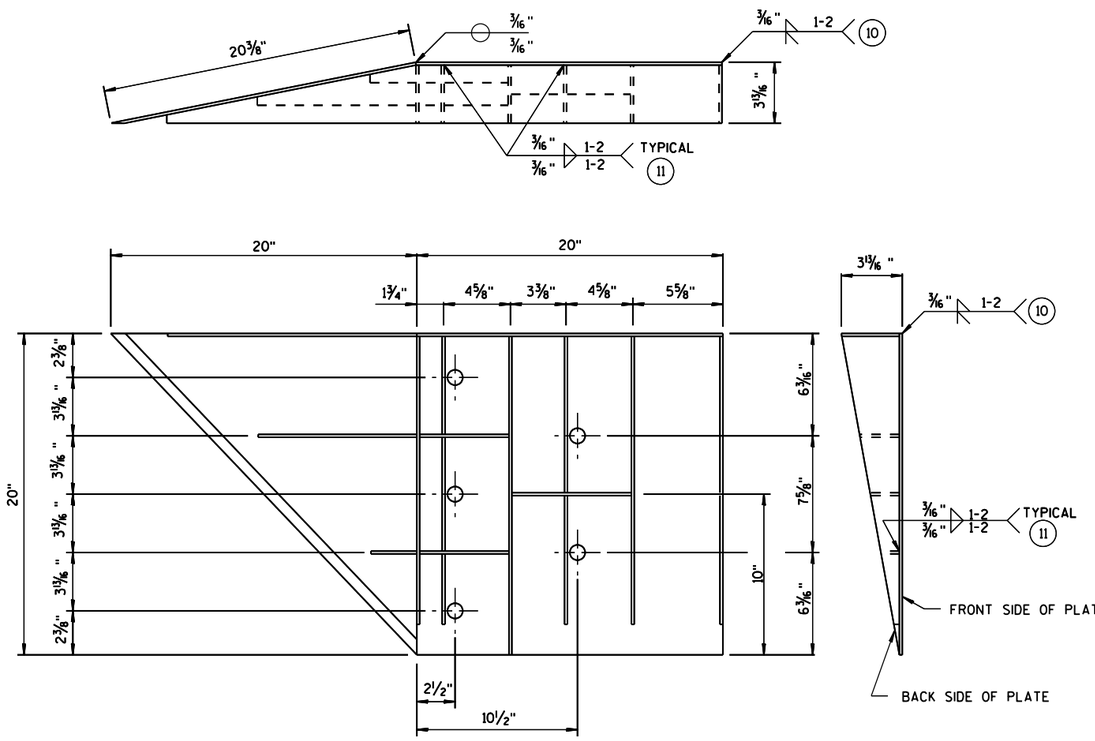

WELDING INSTRUCTION

(VIEWED FROM BACK SIDE OF PLATE)

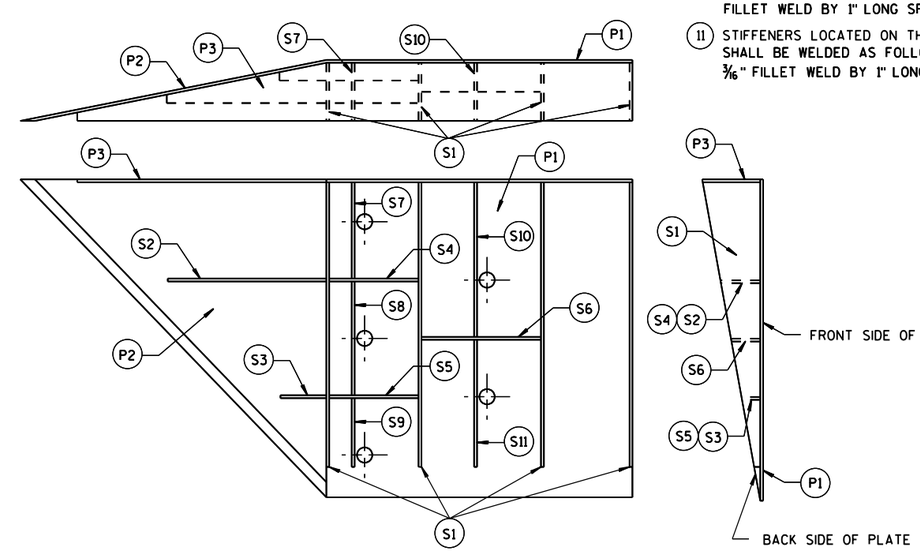

PLATE AND STIFFENER IDENTIFICATION

(VIEWED FROM BACK SIDE OF PLATE)

CONNECTOR PLATE DIMENSION (PER ASSEMBLY)

PLATE	QUANTITY	SHAPE	SIZE (A x B x C x D)	THICKNESS
P1	1		20" x 20"	3/16"
P2	1		20" x 20" x 28 9/16"	3/16"
P3	1		39" x 3 5/8" x 20" x 19 5/16"	3/16"
S1	4		18 7/16" x 3 5/8" x 18 3/4"	1/4"
S2	1		10 1/4" x 2 7/16" x 10 3/8" x 1/2"	1/4"
S3	1		3" x 1 1/16" x 3 1/8" x 1/2"	1/4"
S4	1		6 1/8" x 2 7/16"	1/4"
S5	1		6 1/8" x 1 1/16"	1/4"
S6	1		7 3/4" x 1 3/4"	1/4"
S7	1		2 9/16" x 6" x 3 5/8" x 5 7/8"	1/4"
S8	1		1 5/32" x 7 1/2" x 2 1/2" x 7 3/8"	1/4"
S9	1		6 1/16" x 6 3/16" x 1 3/32"	1/4"
S10	1		1 7/8" x 9 7/8" x 3 5/8" x 9 11/16"	1/4"
S11	1		8 1/2" x 8 3/4" x 1 13/16"	1/4"

SINGLE SLOPE CONNECTION PLATE

MIDWEST GUARDRAIL SYSTEM
THRIE BEAM TRANSITION (MGS)

STATE OF WISCONSIN
DEPARTMENT OF TRANSPORTATION

APPROVED
June, 2015 — DATE
/S/ Jerry H. Zogg — ROADWAY STANDARDS ENGINEER
FHWA

6

S.D.D. 14 B 45-4i

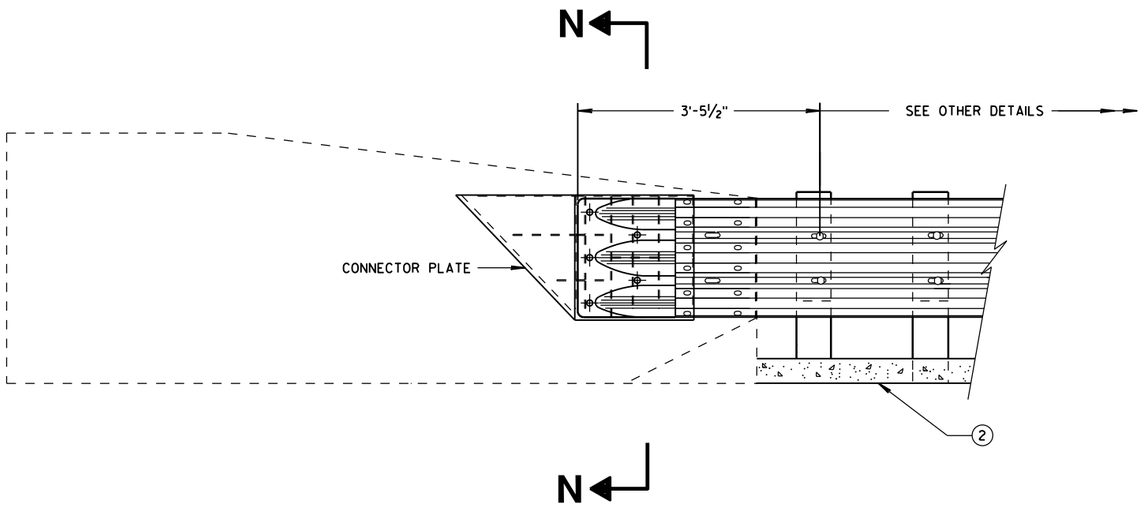

THRIE BEAM CONNECTION TO SINGLE SLOPE BARRIER

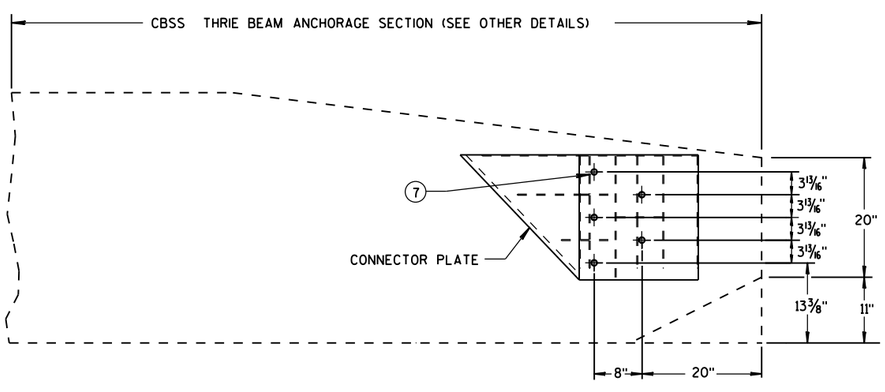

SINGLE SLOPE CONNECTION PLATE PLACEMENT

GENERAL NOTES

CONNECTOR PLATE, DRILLING BOLT HOLES THROUGH THE PARAPET, BOLTS, NUTS, WASHERS AND REPAIRING DAMAGED CONCRETE ARE INCIDENTAL TO THE CONTRACT.

(2) OPTIONAL CURB AND GUTTER OR DRAINAGE FEATURE SEE PLAN FOR INFORMATION.

(7) BOLTS MAY BE A325 BOLTS OR A449 BOLTS. BOLT LENGTH AND THREADING LENGTH ARE TO ALLOW FOR A TIGHT CONNECTION BETWEEN RIGID BARRIER AND THRIE BEAM CONNECTION PLATE. CONTRACTOR IS TO FIELD VERIFY BOLT LENGTH AND THREAD LENGTH. ONE ROUND WASHER REQUIRED BETWEEN BOLT HEAD AND THRIE BEAM CONNECTOR PLATE. BOLTS THAT EXTEND THROUGH THE PARAPET AND OUT THE BACK FACE REQUIRE A HARDENED ROUND STEEL WASHER THAT IS 2" O.D. X 5/8" THICK AND ONE PLATE WASHER. REPAIR ANY DAMAGED CONCRETE FROM BOLT INSTALLATION.

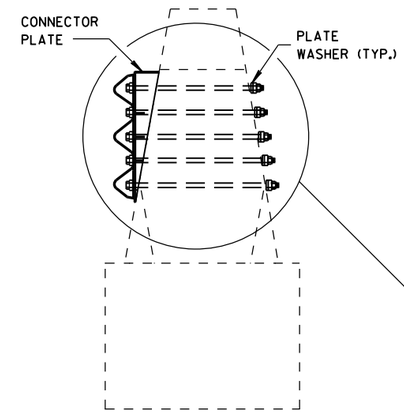

SECTION N-N

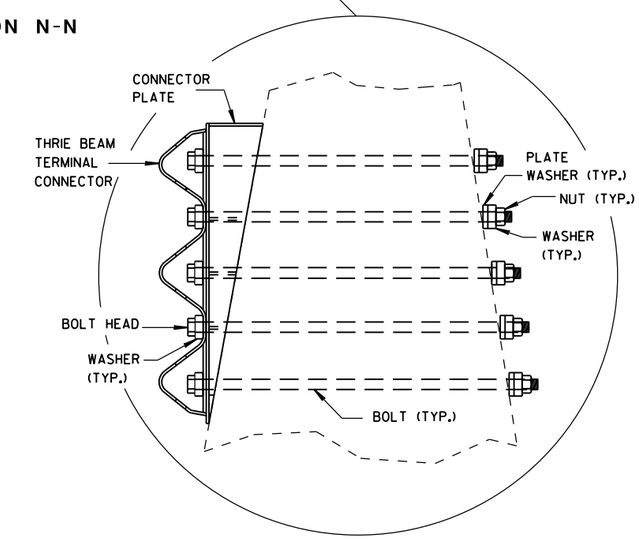

6

6

S.D.D. 14 B 45-4j

S.D.D. 14 B 45-4j

MIDWEST GUARDRAIL SYSTEM
THRIE BEAM TRANSITION (MGS)

STATE OF WISCONSIN
DEPARTMENT OF TRANSPORTATION

APPROVED
June, 2015
DATE
/S/ Jerry H. Zogg
ROADWAY STANDARDS DEVELOPMENT ENGINEER
NT
FHWA

GENERAL NOTES

DETAILS OF CONSTRUCTION, MATERIALS AND WORKMANSHIP NOT SHOWN ON THIS DRAWING SHALL CONFORM TO THE PERTINENT REQUIREMENTS OF THE STANDARD SPECIFICATIONS AND THE APPLICABLE SPECIAL PROVISIONS.

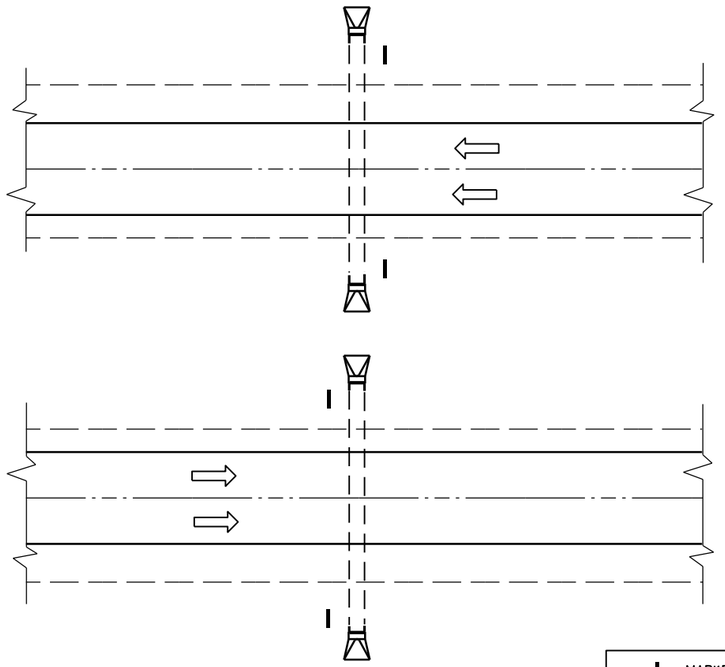

PLAN VIEW

DIVIDED HIGHWAY

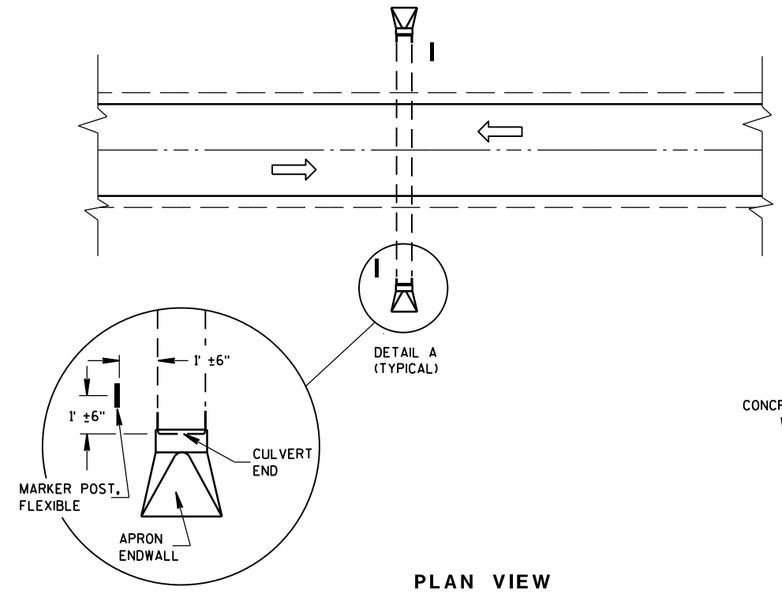

DETAIL A
(TYPICAL)

PLAN VIEW

UNDIVIDED HIGHWAY

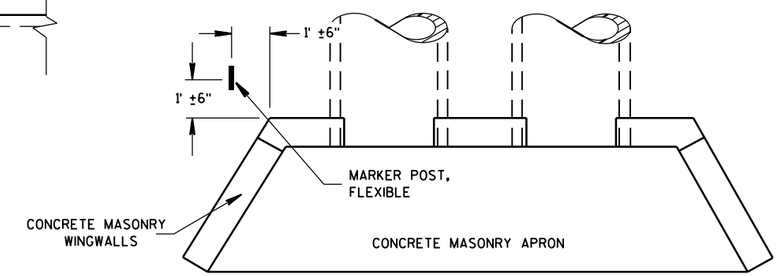

PLAN VIEW

CONCRETE MASONRY ENDWALLS FOR CULVERT PIPE AND PIPE ARCH

MARKER POST, FLEXIBLE

DIRECTION OF TRAFFIC FLOW

FLEXIBLE MARKER POST LOCATION

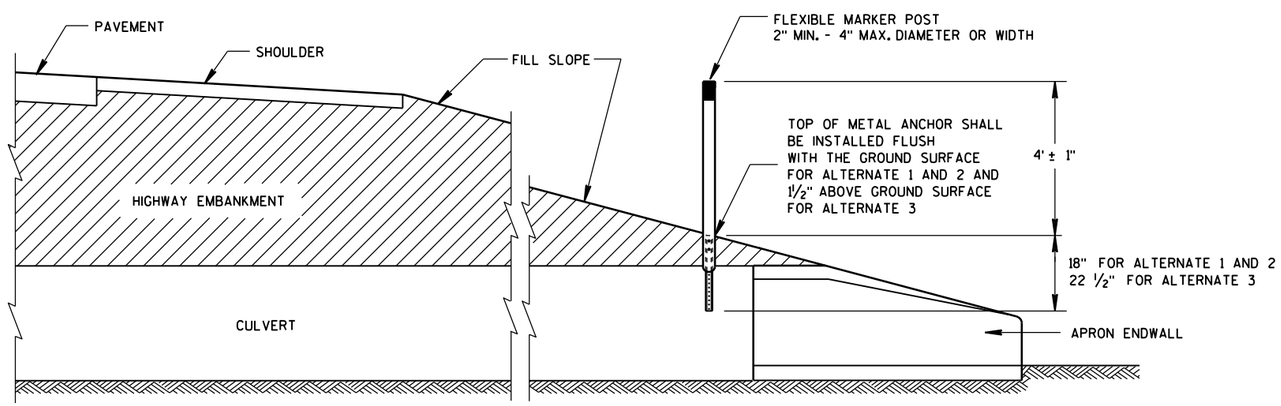

CROSS SECTION

FLEXIBLE MARKER POST

FLEXIBLE MARKER POST FOR CULVERT END

STATE OF WISCONSIN
DEPARTMENT OF TRANSPOR

6

6

S.D.D. 15 A 3-2a

S.D.D. 15 A 3-2a

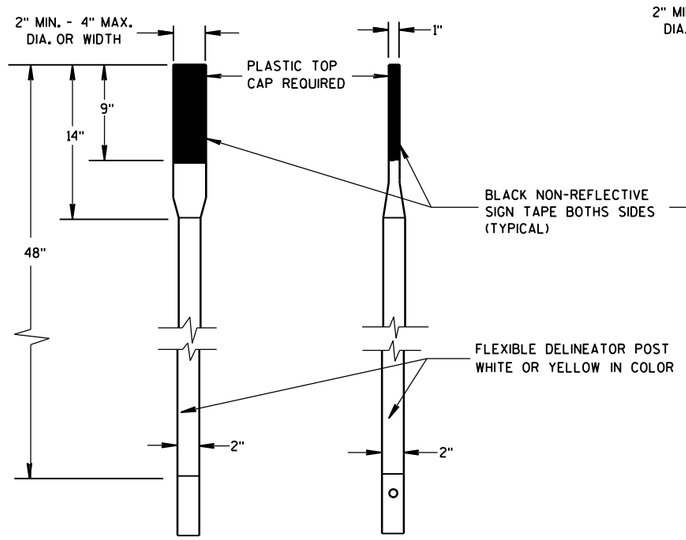

FRONT VIEW SIDE VIEW

ALTERNATE 1

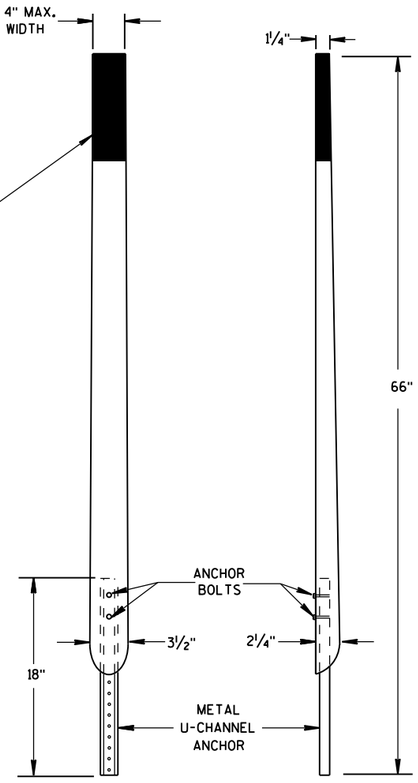

FRONT VIEW SIDE VIEW

ALTERNATE 2

FLEXIBLE MARKER POSTS

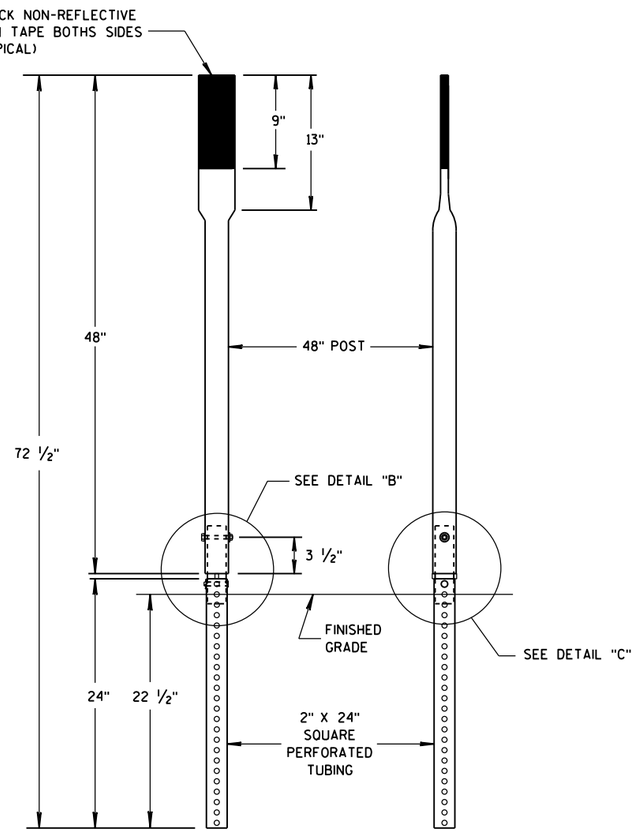

FRONT VIEW SIDE VIEW

ALTERNATE 3

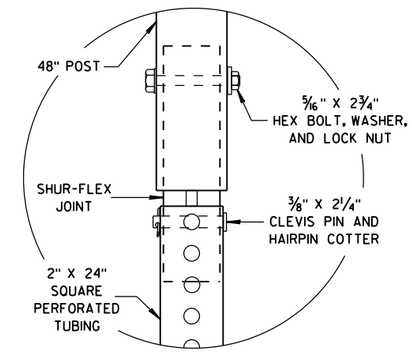

DETAIL B

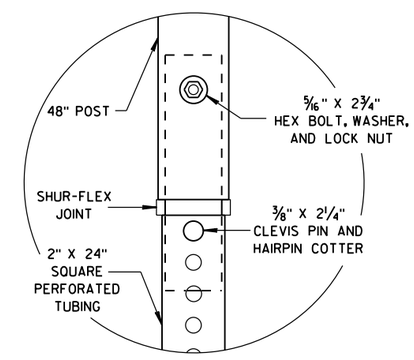

DETAIL C

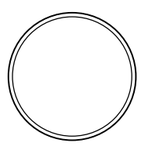

SECTION A-A

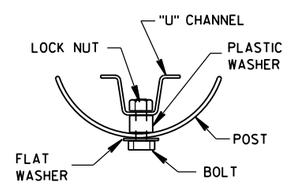

SECTION B-B

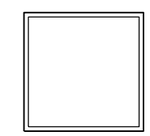

SECTION C-C

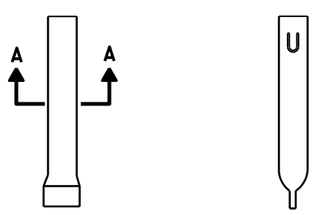

FRONT VIEW SIDE VIEW

ALTERNATE 1

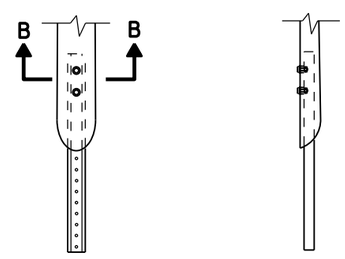

FRONT VIEW SIDE VIEW

ALTERNATE 2

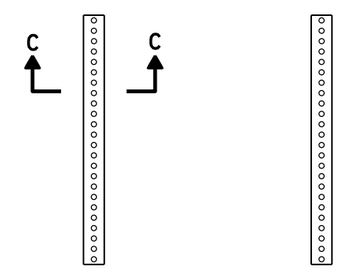

FRONT VIEW SIDE VIEW

ALTERNATE 3

FLEXIBLE MARKER POST ANCHORS

FLEXIBLE MARKER POST
FOR CULVERT END

STATE OF WISCONSIN
DEPARTMENT OF TRANSPORTATION

APPROVED
10/1/2012 /S/ Travis Feltes
DATE STATE TRAFFIC ENGINEER
FHWA

6

6

S.D.D. 15 A 3-2b

S.D.D. 15 A 3-2b

NOTE: PULL OR STRETCHER POST ASSEMBLIES SHALL BE PLACED MIDWAY BETWEEN END POSTS AND CORNER POSTS WHERE A RUN OF FENCE EXCEEDS 660' BUT IS LESS THAN 1,320'. FOR RUNS OF FENCE IN EXCESS OF 1,320' MAXIMUM SPACING OF PULL OR STRETCHER POST ASSEMBLIES SHALL BE 660'± C-C.

ILLUSTRATION SHOWS POSITION OF STANDARD STEEL BRACE, DOUBLE STRAND GALVANIZED WIRE, AND THE POST TO BE EMBEDDED IN CONCRETE WHEN WIRE FENCE IS INSTALLED FROM LEFT TO RIGHT. THE BRACES SHALL BE POSITIONED ON THE OPPOSITE DIAGONALS AND THE OPPOSITE POST SHALL BE EMBEDDED IN CONCRETE WHEN WIRE FENCE IS INSTALLED FROM RIGHT TO LEFT.

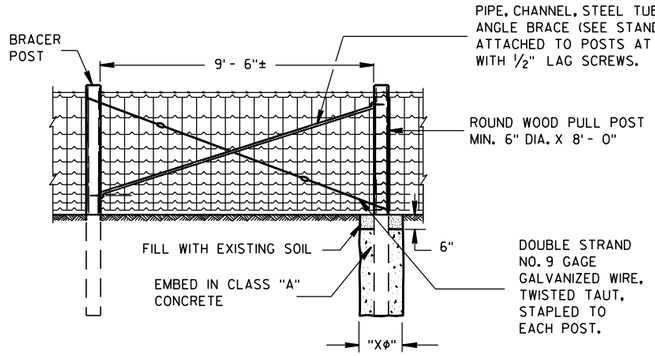

PULL OR STRETCHER POSTS ASSEMBLY

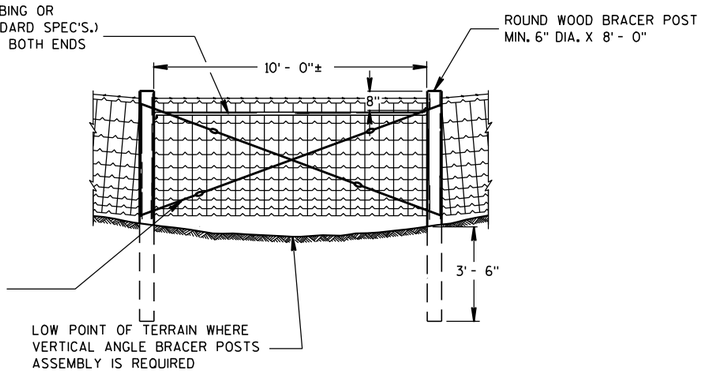

VERTICAL ANGLE BRACER POSTS ASSEMBLY

GENERAL NOTES

"XΦ" = DIAMETER OF THE POST PLUS 12".

FENCE STAPLES SHOULD NEVER BE DRIVEN VERTICALLY INTO WOOD POSTS (WITH BOTH LEGS PARALLEL WITH THE WOOD GRAIN). DOING SO CAN SEPARATE THE GRAIN AND SIGNIFICANTLY REDUCE THE HOLDING POWER. ROTATING THE STAPLES SLIGHTLY OFF VERTICAL STRADDLES THE GRAIN AND PROVIDES MORE RESISTANCE TO PULL-OUT.

DO NOT STAPLE WIRE TIGHT TO THE LINE POSTS. ALLOW MOVEMENT OF WIRE FOR EXPANSION AND CONTRACTION. STAPLE ARRANGEMENT SHALL BE THE SAME FOR ALL OTHER POSTS EXCEPT THAT THEY SHALL BE DRIVEN TIGHT TO POSTS. ALL STAPLES SHALL BE 2" X 9 GAGE AND SHALL BE MANUFACTURED FROM GALVANIZED WIRE OR HOT DIP GALVANIZED AFTER FORMING. STAPLES SHALL HAVE SLASH-CUT POINTS.

FENCE SHALL BE LOCATED 3'-0" INSIDE THE RIGHT OF WAY LINE UNLESS OTHERWISE INDICATED ON THE PLANS.

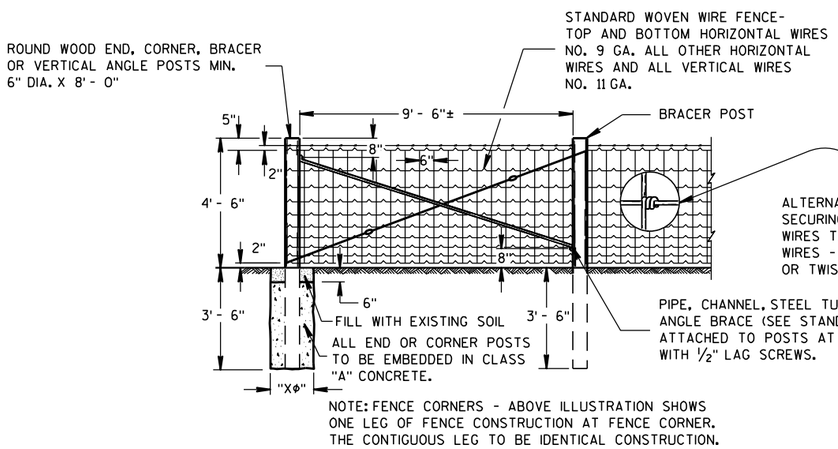

END OR CORNER POSTS ASSEMBLY

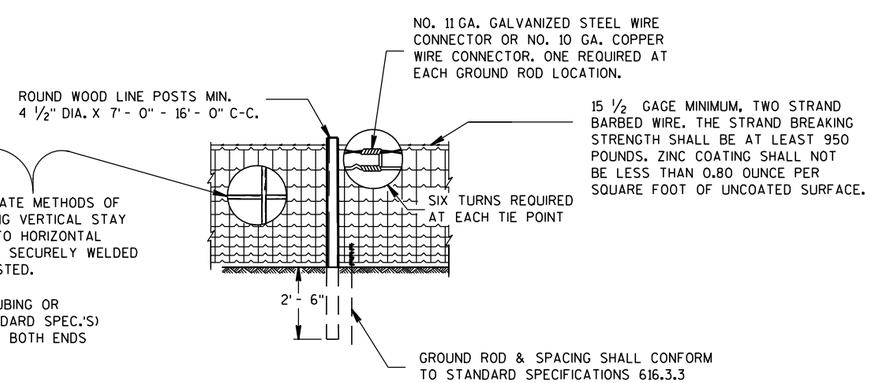

LINE FENCE CONSTRUCTION

GENERAL ROADSIDE VIEW OF WOVEN WIRE FENCE

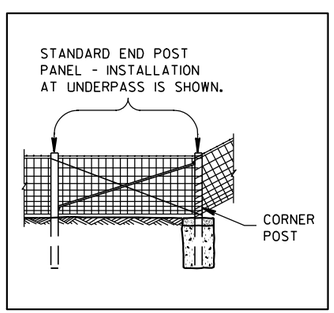

ALTERNATE FENCE DESIGN AT STRUCTURE

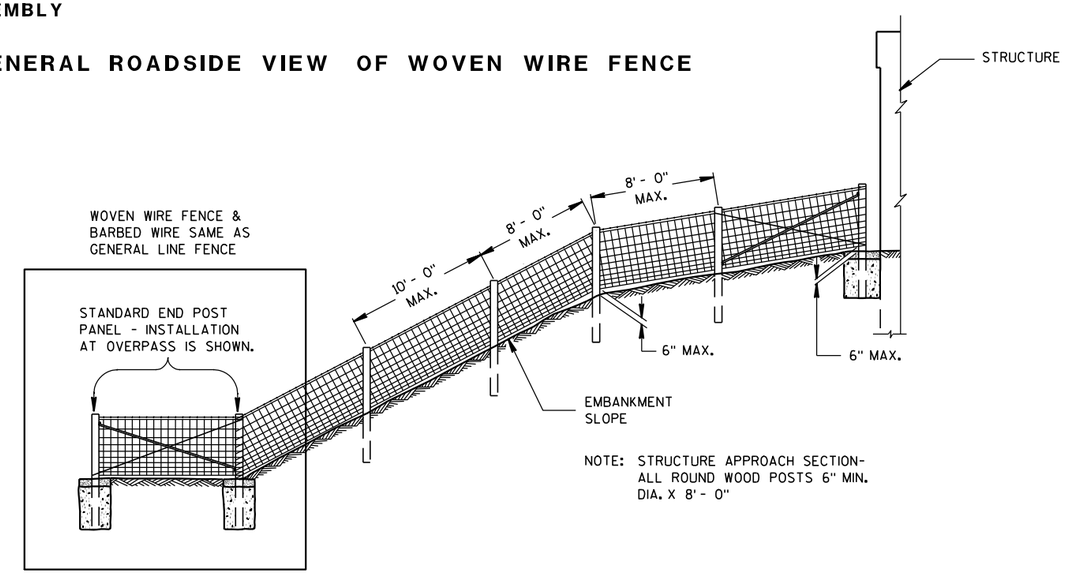

FENCE DESIGN AT STRUCTURE APPROACH

FENCE WOVEN WIRE

STATE OF WISCONSIN
DEPARTMENT OF TRANSPORTATION

6

6

S.D.D. 15 B 1-8a

S.D.D. 15 B 1-8a

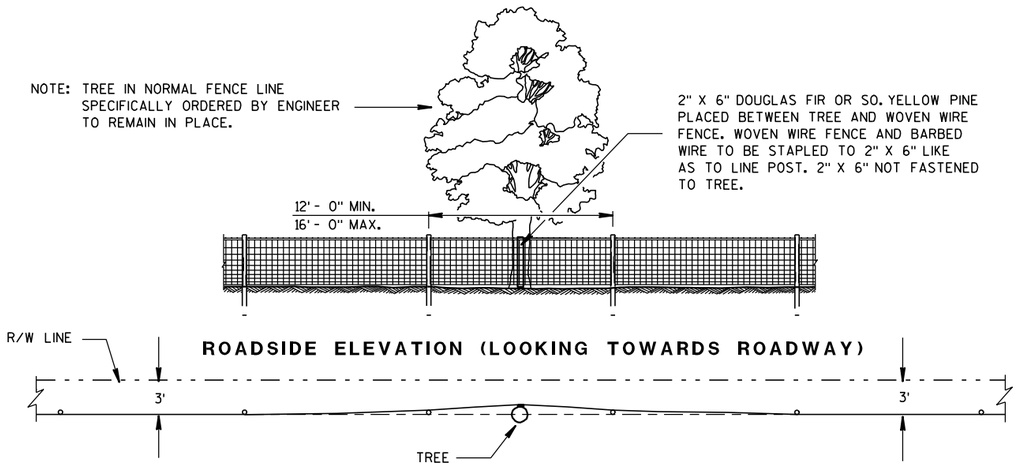

PLAN VIEW

FENCE DESIGN AT TREES REMAINING IN NORMAL FENCE LINE

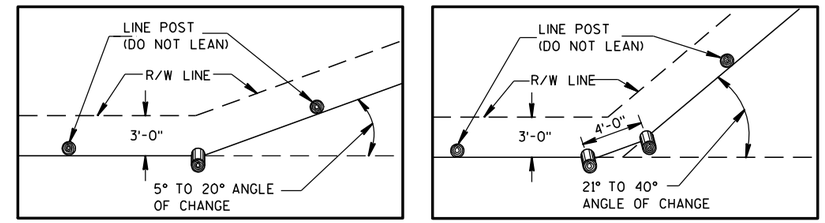

PLAN VIEW
SINGLE POST CORNER

PLAN VIEW
DOUBLE POST CORNER

RIGHT OF WAY LINE CHANGE 40° AND LESS

NOTE: SINGLE AND DOUBLE POSTS SHALL BE A MIN. 6" DIA. X 8'-0" WITH A LEAN OF 4" TOWARD THE OUTSIDE OF THE CURVE.

WHEN THE RIGHT OF WAY LINE CHANGE IS MORE THAN 40° USE THE CORNER OR STRETCHER POSTS ASSEMBLY.

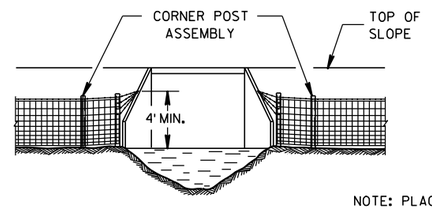

NOTE: PLACE A MINIMUM OF 4 STRANDS OF BARBED WIRE, 6" MAXIMUM CENTERS IN FAN SHAPE CONNECTED TO AN EYE BOLT ON WINGWALL OR SET A LONE POST WHEN NECESSARY TO CONNECT BARBED WIRE.

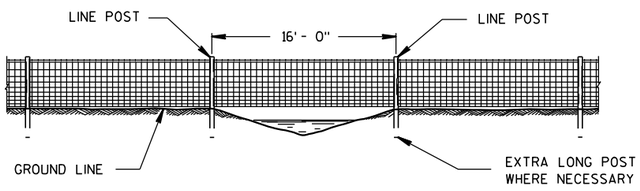

FENCE CONSTRUCTION OVER STREAM COURSES OF 15 FT. OR LESS IN WIDTH

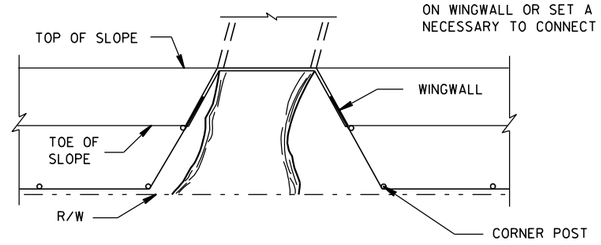

FENCE INSTALLATION TO WINGWALLS

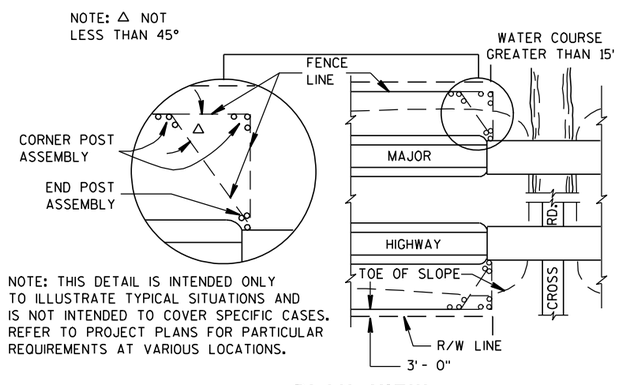

NOTE: THIS DETAIL IS INTENDED ONLY TO ILLUSTRATE TYPICAL SITUATIONS AND IS NOT INTENDED TO COVER SPECIFIC CASES. REFER TO PROJECT PLANS FOR PARTICULAR REQUIREMENTS AT VARIOUS LOCATIONS.

PLAN VIEW

MAJOR HIGHWAY OVERPASS OR STREAM COURSE CROSSING OF GREATER THAN 15 FT. IN WIDTH

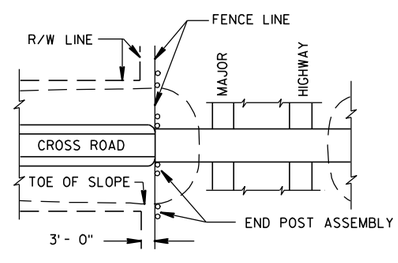

PLAN VIEW

MAJOR HIGHWAY UNDERPASS

FENCE LOCATION AT STRUCTURES

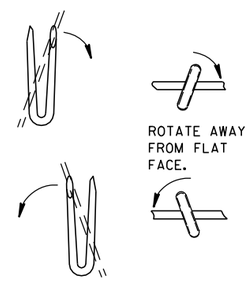

LINE POST

NOTE: WHEN POSTS ARE DRIVEN THE SMALL END SHALL BE DOWN.

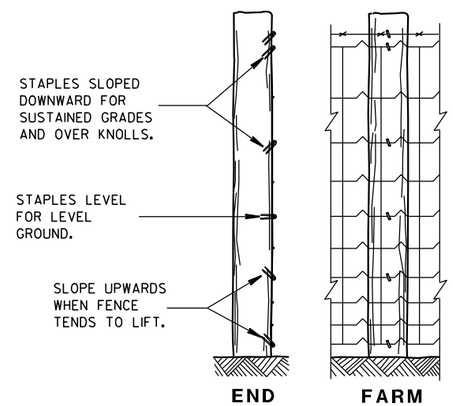

END ELEVATION

FARM SIDE ELEVATION

FENCE MOUNTING DETAIL

FENCE WOVEN WIRE

STATE OF WISCONSIN
DEPARTMENT OF TRANSPORTATION

APPROVED
4/4/2008 /S/ Jerry H. ---
DATE ROADWAY STANDARDS DEVELOPMENT ENGINEER
FHWA

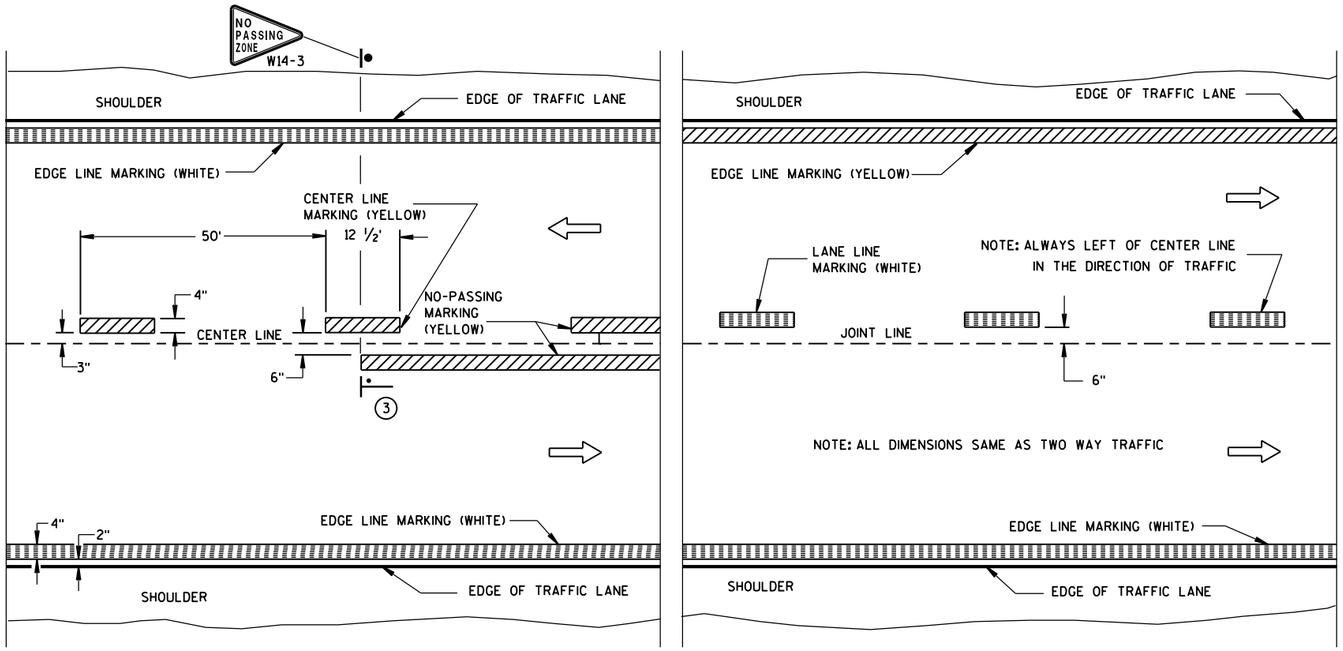

TWO WAY TRAFFIC

ONE WAY TRAFFIC

PERMANENT PAVEMENT MARKING

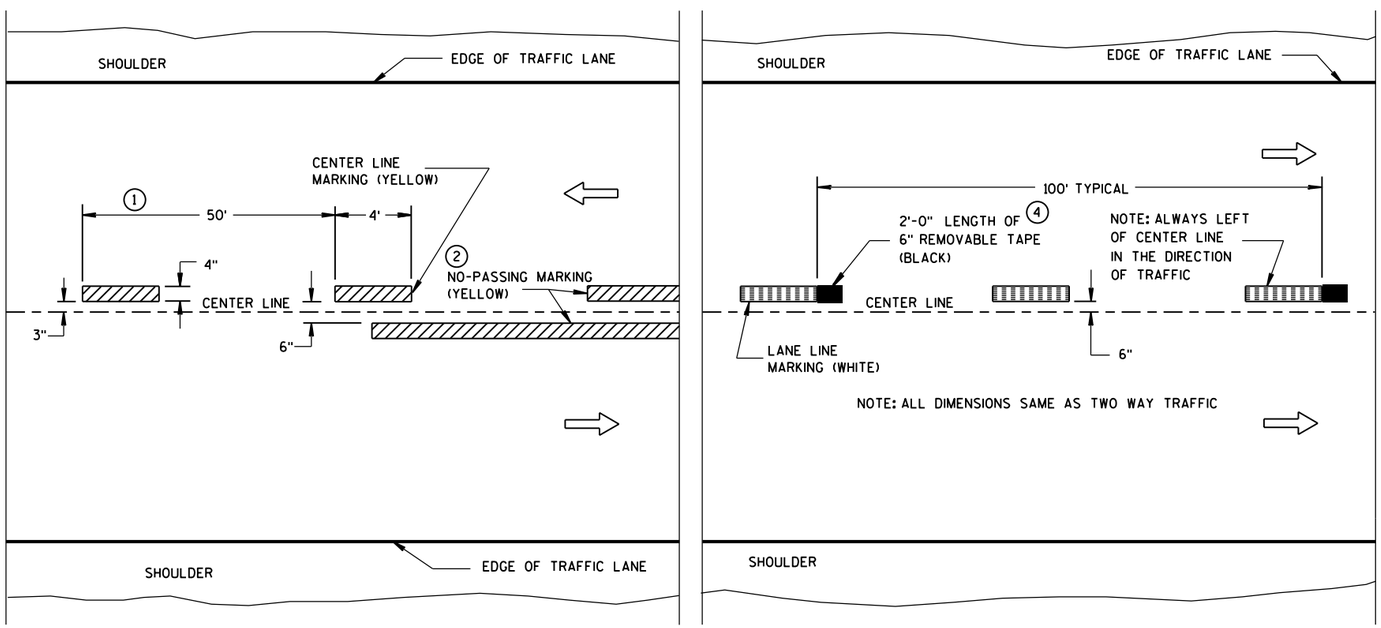

TWO WAY TRAFFIC

ONE WAY TRAFFIC

TEMPORARY (INTERMEDIATE) PAVEMENT MARKING

(SHOWS CYCLE FOR TEMPORARY CENTER LINE OR TEMPORARY LANE LINE MARKING)

GENERAL NOTES

DETAILS OF CONSTRUCTION NOT SHOWN ON THIS DRAWING SHALL CONFORM TO STANDARD SPECIFICATIONS AND SPECIAL PROVISIONS.

1. HALF CYCLE LENGTHS (25'±) WITH 2' MINIMUM STRIPE LENGTHS SHALL BE PROVIDED ON ROADWAYS (INCLUDING TEMPORARY TRAVELED WAYS) WITH REVERSE CURVATURE, CURVATURE OF OVER 5 DEGREES OR WHEN DIRECTED BY THE ENGINEER TO MARK UNUSUAL ALIGNMENT OF THE TRAVELED WAY.
2. NO PASSING ZONE TEMPORARY PAVEMENT MARKING IS REQUIRED TO BE PLACED, WHERE APPROPRIATE, ALONG WITH CENTERLINE TEMPORARY PAVEMENT MARKING WHEN A SAME DAY PERMANENT PAVEMENT MARKING ITEM IS INCLUDED IN THE CONTRACT.
3. NO PASSING ZONE MARKINGS ARE PLACED ACCORDING TO "T" MARKINGS. IF EXISTING NO PASSING ZONE W14-3 SIGNS ARE BEYOND 50 FEET IN EITHER DIRECTION, THE SIGNS SHALL BE MOVED TO THE "T" MARKINGS.
4. CONCRETE ONLY.

NOTE

ARROW SYMBOL (⇨) SHOWS DIRECTION OF TRAVEL

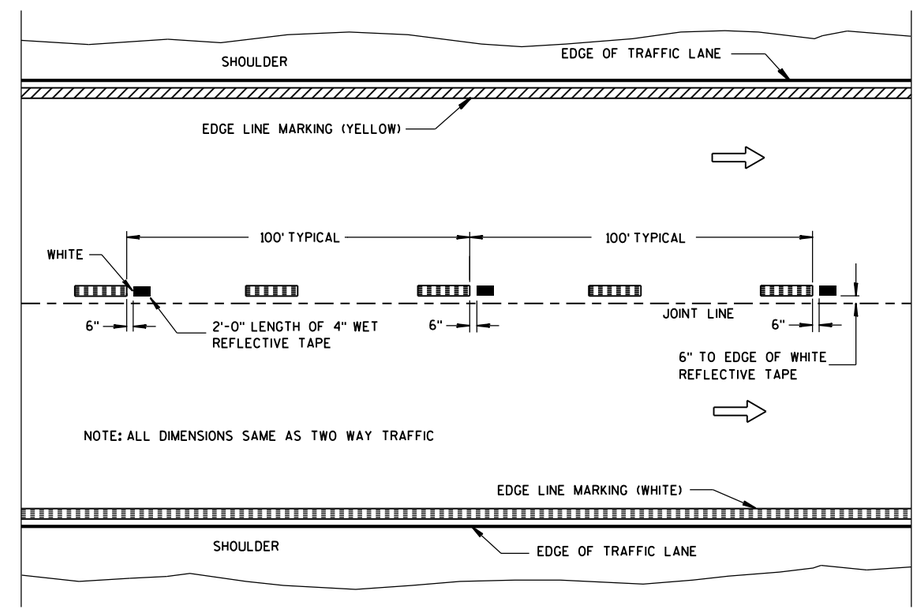

WET REFLECTIVE TAPE SUPPLEMENT TO SPRAYED OR NON WET REFLECTIVE TAPE LANE LINE

LEGEND

"T" MARKING

POST MOUNTED SIGN

PAVEMENT MARKING (MAINLINE)

STATE OF WISCONSIN
DEPARTMENT OF TRANSPORTATION

APPROVED
5-13-2013 — DATE
/S/ Travis Feltes — STATE TRAFFIC E
FHWA

6

S.D.D. 15 C 8-16a

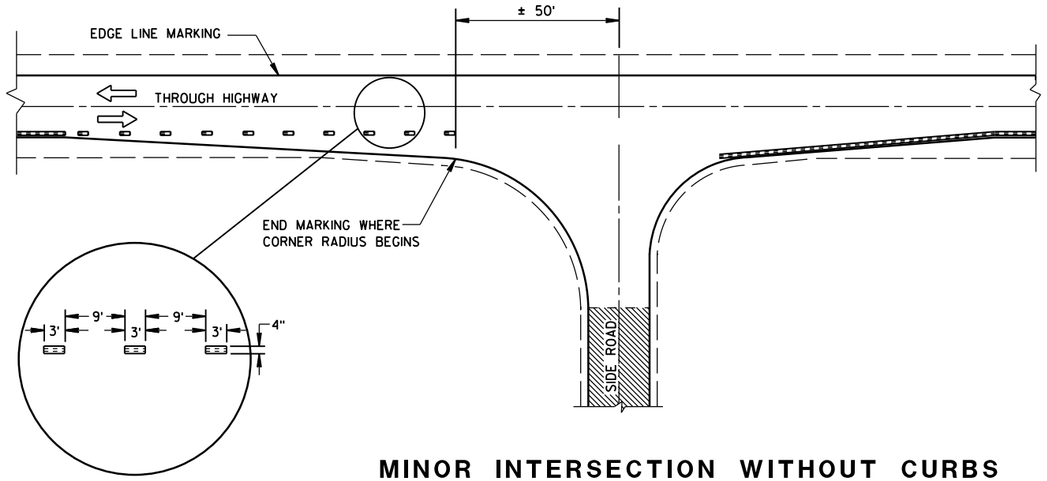

MINOR INTERSECTION WITHOUT CURBS

GENERAL NOTES

EDGE LINES SHALL BE OMITTED THROUGH INTERSECTIONS. EDGE LINES SHALL BE CONTINUED THROUGH DRIVEWAYS.

1. WHEN DISTANCE "A" IS LESS THAN 250 FEET, OMIT LANE LINE.
2. WHEN DISTANCE "B" IS LESS THAN 100 FEET, OMIT CHANNELIZING LANE LINE.
3. ALTERNATIVE MARKING SHALL BE PROVIDED WHEN SPECIFIED IN THE CONTRACT. TYPICAL SITUATIONS WHERE THIS MARKING MAY BE REQUIRED ARE WHERE THE INTERSECTION IS ON A SHARP HORIZONTAL CURVE OR CREST VERTICAL CURVE IN AN UNLIGHTED AREA SUCH THAT THE EDGE LINE MAY BE MISLEADING TO THE MOTORIST OR DISAPPEAR FROM SIGHT.
4. THE EDGE LINE IN THE TAPER AREAS OF THE BYPASS LANE AND THE BYPASS LANE SHALL BE LOCATED 1-FOOT FROM EDGE OF PAVEMENT TO THE OUTSIDE EDGE OF EDGE LINE.
5. BARRIER LINE ENDS AT SIDE ROAD PAVEMENT/SURFACE EDGE EXTENSION.
6. BARRIER LINE STARTS 500 FEET PRIOR TO THE BYPASS TAPER.
7. IF THE DISTANCE BETWEEN 2 SUCCESSIVE NO-PASSING ZONES IS LESS THAN THE MINIMUM DISTANCE BETWEEN ZONES, CONNECT THE 2 ZONES.
8. 3' LINE 9' GAP, EXCEPT RETRACE THE EXISTING LINE - GAP PATTERN WHERE EXISTING MARKINGS ARE IN PLACE.

ARROW SYMBOL (⇨) SHOWS DIRECTION OF TRAVEL

(7)

POSTED SPEED (MPH)	MINIMUM DISTANCE BETWEEN ZONES (FEET)
25 - 30	528
35 - 40	528
45 - 50	686
55	792

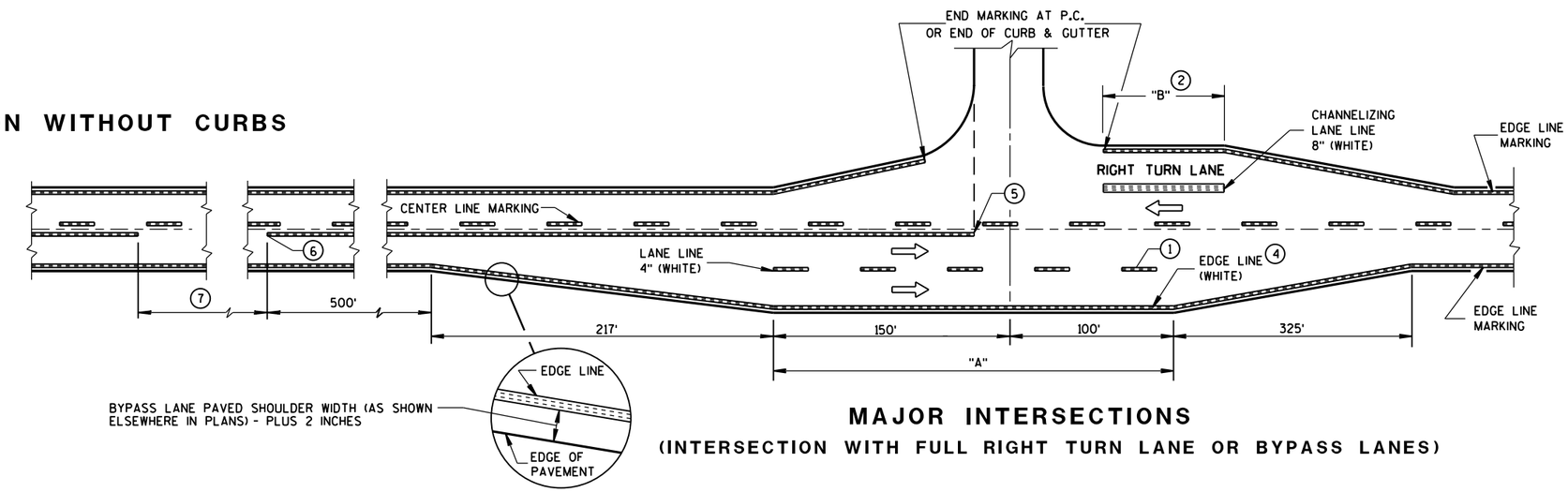

MAJOR INTERSECTIONS

(INTERSECTION WITH FULL RIGHT TURN LANE OR BYPASS LANES)

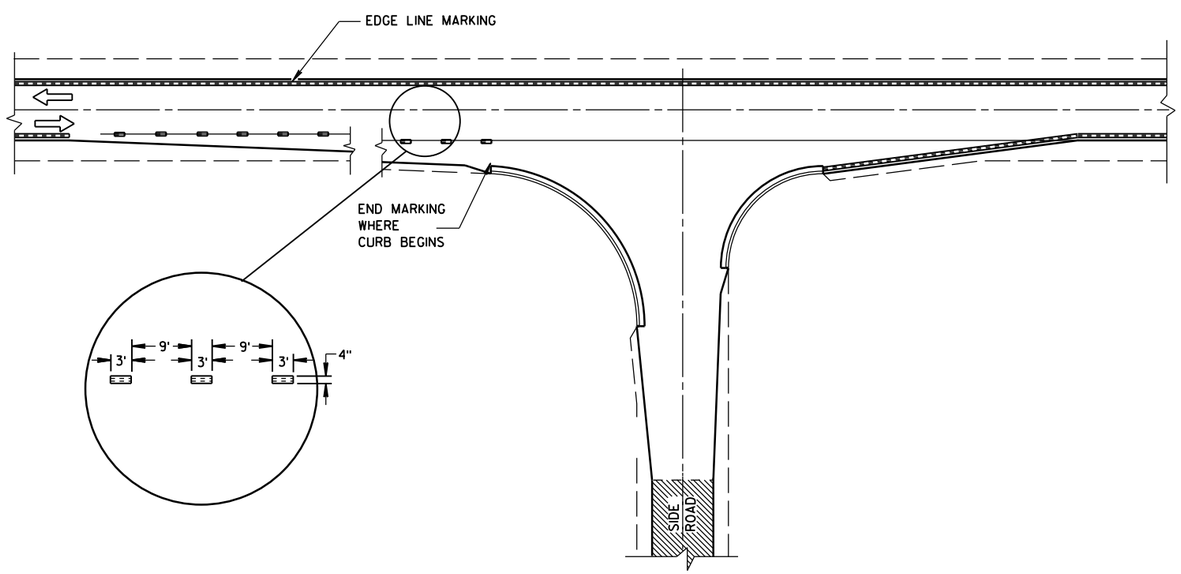

MINOR INTERSECTION WITH CURBS

(TYPICAL MARKING)

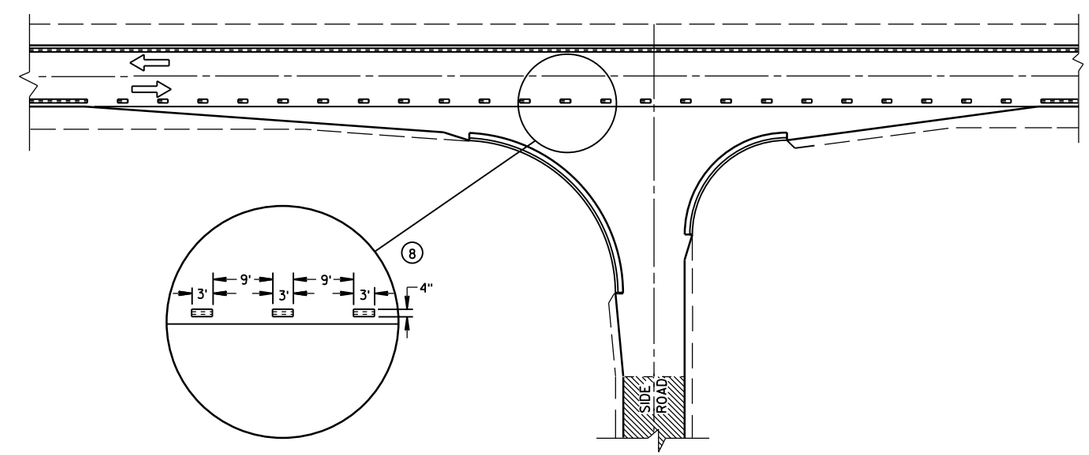

MINOR INTERSECTION WITH CURBS

(3) (FOR SPECIAL CONDITIONS AS SPECIFIED)

PAVEMENT MARKING
(INTERSECTIONS)

STATE OF WISCONSIN
DEPARTMENT OF TRANSPO

6

S.D.D. 15 C 8-16b

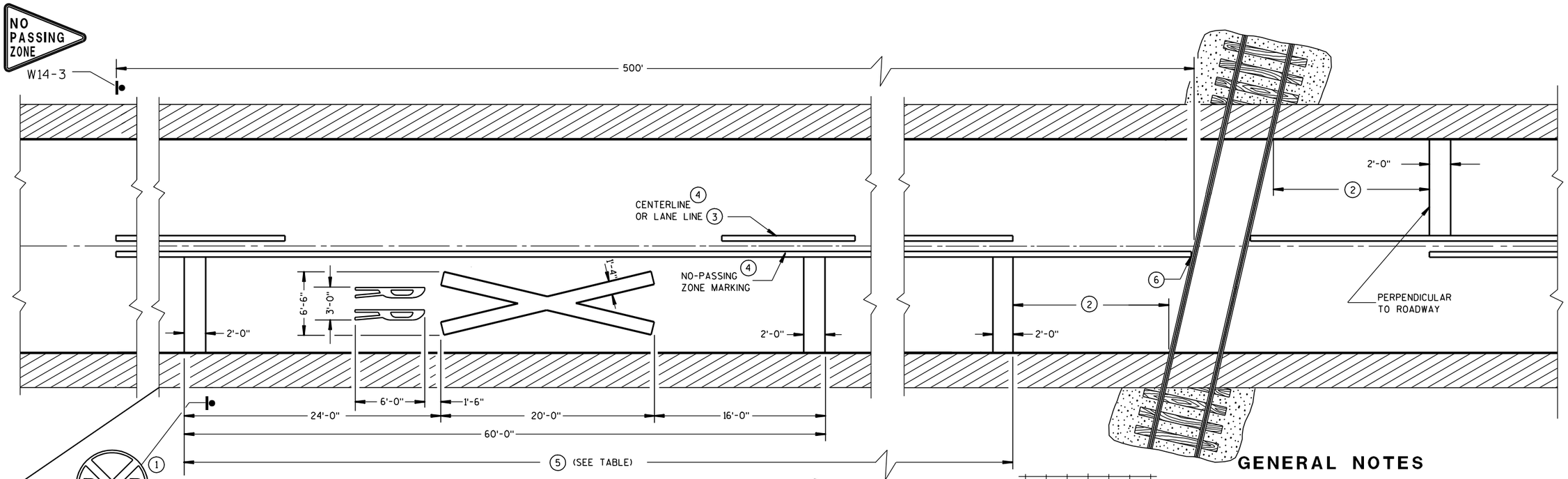

PREFERRED PAVEMENT MARKING 3

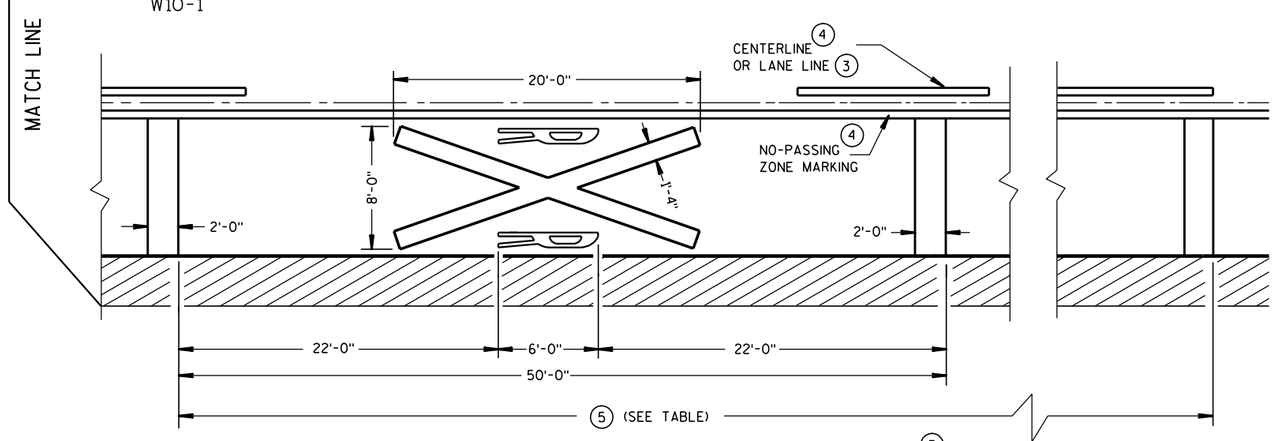

ALTERNATE PAVEMENT MARKING 3

5

Posted Speed (M.P.H.)	Dimension Range (Feet)
25	150*- 250
30	200*- 300
35	250*- 450
40	300*- 500
45	400*- 650
50	550*- 800
55	750*- 1000
60	1000*- 1250
65	1000*- 1250

* THE MINIMUM DISTANCES IN THE TABLE ARE DESIRABLE AND SHOULD BE USED. THE DISTANCES MAY BE INCREASED UP TO THE MAXIMUM TO ALLOW FOR FIELD CONDITIONS SUCH AS THE CLOSE PROXIMITY OF DRIVEWAYS, BRIDGES, SIDEROADS OR OTHER FEATURES THAT WOULD PROHIBIT THE MINIMUM DISTANCES FROM BEING USED.

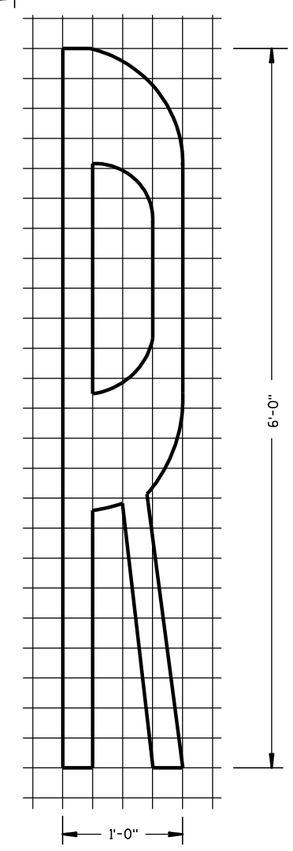

GENERAL NOTES

DETAILS OF CONSTRUCTION, MATERIALS, AND WORKMANSHIP NOT SHOWN ON THIS DRAWING SHALL CONFORM TO THE PERTINENT REQUIREMENTS OF THE STANDARD SPECIFICATIONS AND THE APPLICABLE SPECIAL PROVISIONS.

A THREE-LANE ROADWAY SHOULD BE MARKED WITH A CENTERLINE FOR TWO-LANE APPROACH OPERATION ON THE APPROACH TO A CROSSING.

ON MULTI-LANE ROADS THE TRANSVERSE BANDS SHOULD EXTEND ACROSS ALL APPROACH LANES, AND INDIVIDUAL R X R SYMBOLS SHOULD BE USED IN EACH APPROACH LANE. ALL LETTERS AND SYMBOLS SHALL BE IN CONFORMANCE WITH THE "STANDARD ALPHABETS FOR HIGHWAY SIGNS AND PAVEMENT MARKINGS" (ADOPTED BY THE FEDERAL HIGHWAY ADMINISTRATION).

CENTER OR LANE LINES AND NO-PASSING ZONE MARKINGS SHOWN ON THIS DRAWING ARE REQUIRED AND PAID FOR UNDER OTHER ITEMS IN THE CONTRACT.

1. A PORTION OF THE PAVEMENT MARKING SYMBOL SHOULD BE DIRECTLY OPPOSITE THE ADVANCE WARNING SIGN (W10-1).
2. MINIMUM 8' FROM ANY RAILROAD WARNING DEVICES (SIGNALS, GATES, ETC.) OR 25' FROM THE NEAREST RAIL, WHICHEVER DISTANCE IS GREATER.
3. REFLECTIVE WHITE.
4. REFLECTIVE YELLOW 500' MINIMUM. MARKING LIMITS MAY BE EXTENDED AS DIRECTED BY THE ENGINEER TO MEET ADJACENT NO-PASSING ZONE MARKINGS.
5. TABLE BASED UPON 2C-4 WISCONSIN SUPPLEMENT OF MANUAL ON UNIFORM TRAFFIC CONTROL DEVICES.
6. FOR MULTIPLE TRACK CROSSINGS, THE BARRIER LINE SHALL EXTEND TO THE NEAR RAIL OF THE FURTHEST TRACK IN THE DIRECTION OF HIGHWAY TRAVEL.

SIGNING AND PAVEMENT MARKING DETAILS FOR RAILROAD-HIGHWAY GRADE CROSSINGS

STATE OF WISCONSIN
DEPARTMENT OF TRANSPORTATION

APPROVED

1-9-2012 — DATE

/S/ Thomas N. [illegible] — STATE TRAFFIC ENGINEER

FHWA

6

S.D.D. 15 C 9-9a

S.D.D. 15 C 9-9a

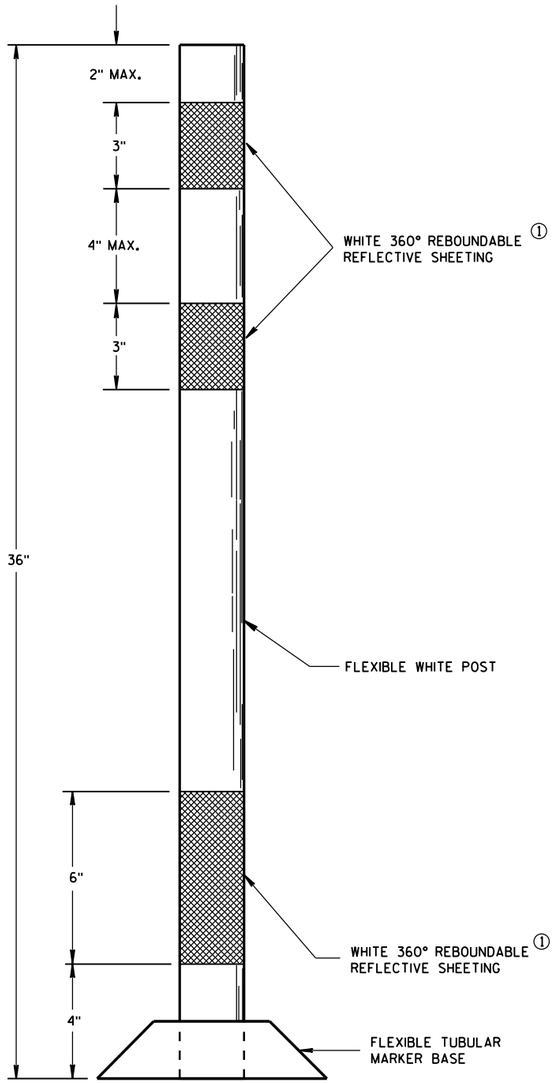

FLEXIBLE
TUBULAR MARKER POST
PERMANENT CROSSOVER

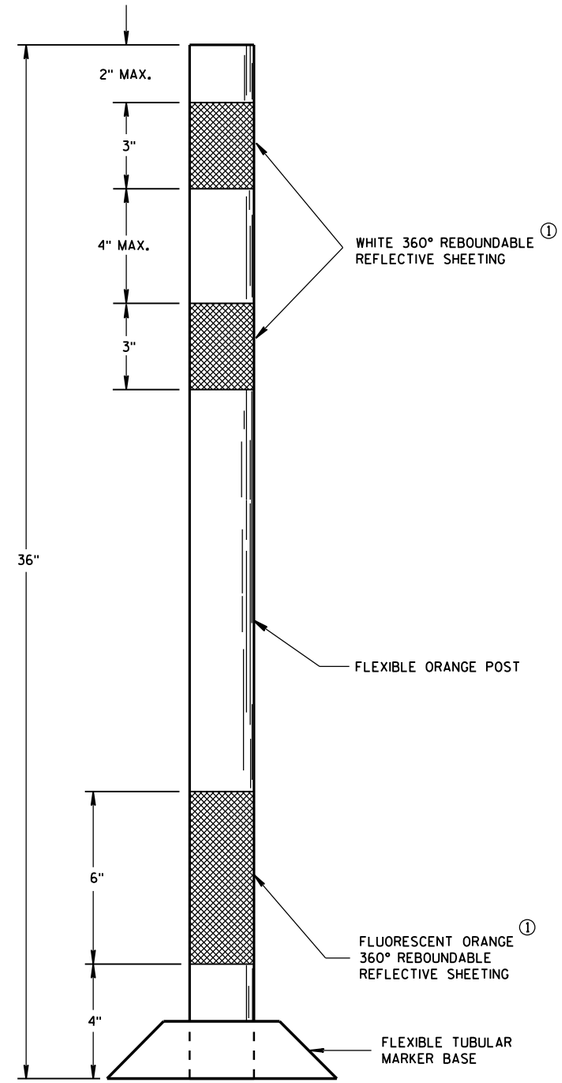

FLEXIBLE
TUBULAR MARKER POST
WORK ZONE

GENERAL NOTES

DETAILS OF CONSTRUCTION NOT SHOWN ON THIS DRAWING SHALL CONFORM TO THE PERTINENT REQUIREMENTS OF THE STANDARD SPECIFICATIONS AND APPLICABLE SPECIAL PROVISIONS.

SURFACE MOUNTED BASES SHALL BE FURNISHED IN ACCORDANCE WITH MANUFACTURERS RECOMMENDATIONS TO BE COMPATIBLE WITH FLEXIBLE TUBULAR MARKER POSTS TO A SIZE AND SHAPE THAT WILL PROVIDE A STABLE POST FOUNDATION WHEN SECURED TO THE PAVEMENT.

THE ASPHALTIC ADHESIVE OR BUTYL PAD FURNISHED SHALL BE IN ACCORDANCE WITH MANUFACTURERS RECOMMENDATIONS.

① REFLECTIVE SHEETING SHALL FOLLOW THE REQUIREMENTS IN THE APPROVED PRODUCTS LISTING FOR SIGN SHEETING.

6

6

S.D.D. 15 C 11-6

S.D.D. 15 C 11-6

FLEXIBLE TUBULAR MARKER POST

STATE OF WISCONSIN
DEPARTMENT OF TRANSPORTATION

APPROVED
10-16-2015
DATE
FHWA

/S/ Peter Amakobe Atepe
STATEWIDE WORK ZONE
SAFETY ENGINEER

LEGEND

SIGN ON PORTABLE OR PERMANENT SUPPORT

DIRECTION OF TRAFFIC

WORK AREA

FLAGGER, EQUIPPED WITH STOP/SLOW PADDLE FASTENED ON SUPPORT STAFF

SIGN SPACING TABLE

SPEED LIMIT	SIGN SPACING A,B,C
25-35 MPH	200'
35-40 MPH	350'
45-55 MPH	500'

USE OF THE "BE PREPARED TO STOP" SIGN IS OPTIONAL. WHEN USED, THIS SIGN SHALL BE LOCATED BETWEEN THE W20-7a AND W20-4 SIGNS. A 500' TYPICAL SPACING SHALL BE PROVIDED BETWEEN THE SIGNS.

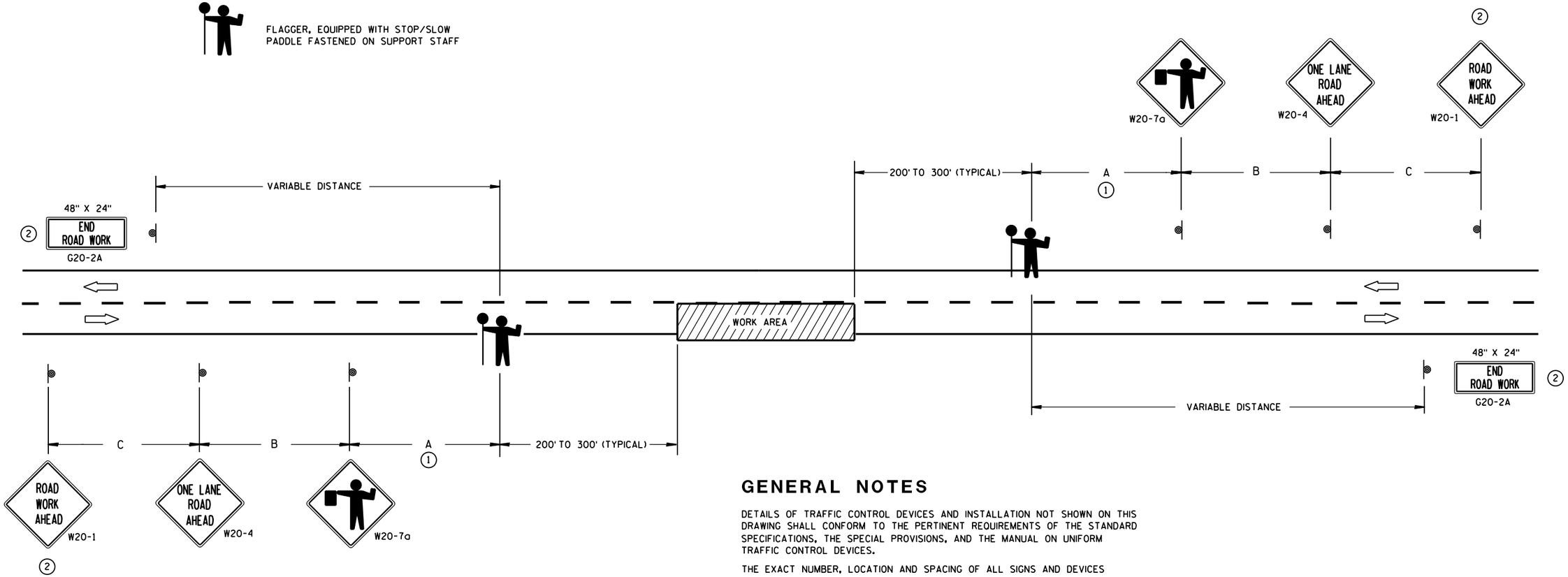

1. FOR A MOVING WORK OPERATION, SIGNING FOR BOTH DIRECTIONS SHALL BE REESTABLISHED (AS SIMULTANEOUSLY AS PRACTICAL) AT APPROXIMATELY 3500 FOOT INTERVALS IN THE MOVING WORK OPERATION OR AS APPROVED BY THE ENGINEER.

2. SIGN NOT REQUIRED IF FLAGGING OPERATION OCCURS WITHIN A SIGNED ROAD WORK ZONE AREA.

GENERAL NOTES

DETAILS OF TRAFFIC CONTROL DEVICES AND INSTALLATION NOT SHOWN ON THIS DRAWING SHALL CONFORM TO THE PERTINENT REQUIREMENTS OF THE STANDARD SPECIFICATIONS, THE SPECIAL PROVISIONS, AND THE MANUAL ON UNIFORM TRAFFIC CONTROL DEVICES.

THE EXACT NUMBER, LOCATION AND SPACING OF ALL SIGNS AND DEVICES (AND THE LOCATION OF ALL FLAGGERS) SHALL BE ADJUSTED TO FIT FIELD CONDITIONS AS APPROVED BY THE ENGINEER.

THE FIRST ADVANCE WARNING SIGN SHOULD TYPICALLY BE LOCATED IN ADVANCE OF THE ANTICIPATED TRAFFIC BACKUP OR QUEUE.

WHEN A SIDE ROAD OR RAMP INTERSECTS THE FACILITY ON WHICH THE WORK IS BEING PERFORMED, ADDITIONAL TRAFFIC CONTROLS SHALL BE PROVIDED AS SPECIFIED IN THE PLANS AND/OR THE SPECIAL PROVISIONS OR AS APPROVED BY THE ENGINEER.

FLAGGERS SHALL BE IN SIGHT OF EACH OTHER OR IN DIRECT COMMUNICATION AT ALL TIMES. THEY SHALL BE EQUIPPED WITH STOP/SLOW PADDLES FASTENED ON SUPPORT STAFFS. WHEN THE FLAGGING OPERATION IS NOT IN EFFECT, COVER OR REMOVE ALL TEMPORARY TRAFFIC CONTROL SIGNS.

ALL SIGNS ARE 48" X 48" UNLESS OTHERWISE NOTED.

TRAFFIC CONTROL FOR LANE CLOSURE (SUITABLE FOR MOVING OPERATIONS)

STATE OF WISCONSIN
DEPARTMENT OF TRANSPORTATION

APPROVED
8/2013 — DATE
/S/ Travis Feltes — STATE TRAFFIC ENGINEER
FHWA

6

S.D.D. 15 C 12-4

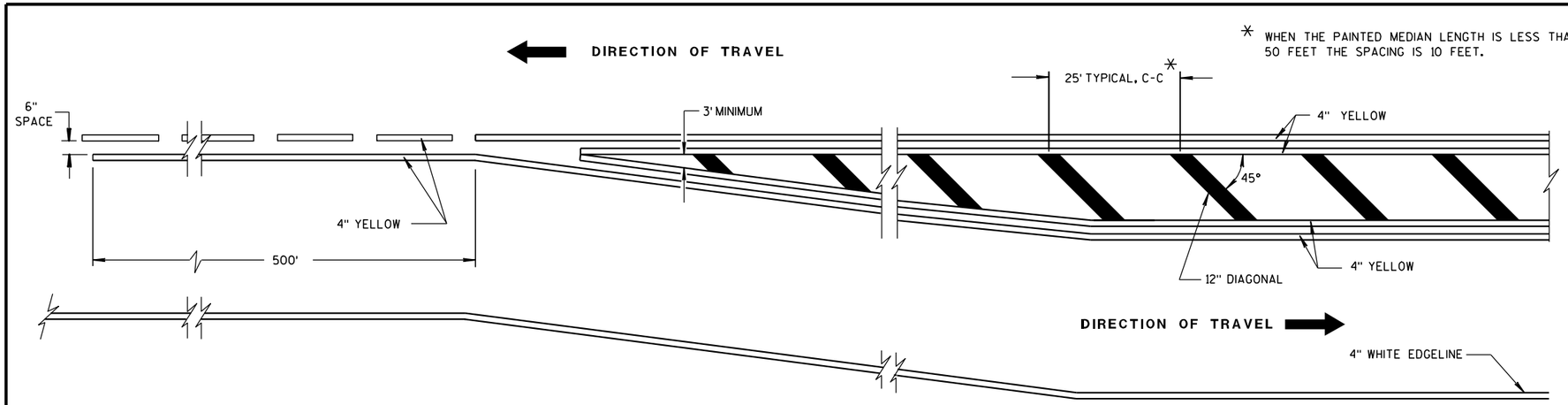

MEDIAN ISLAND DETAIL

GENERAL NOTE

DIAGONALS ARE OPTIONAL WHEN PAINTED ISLAND IS LESS THAN 6 FEET AT WIDEST POINT.

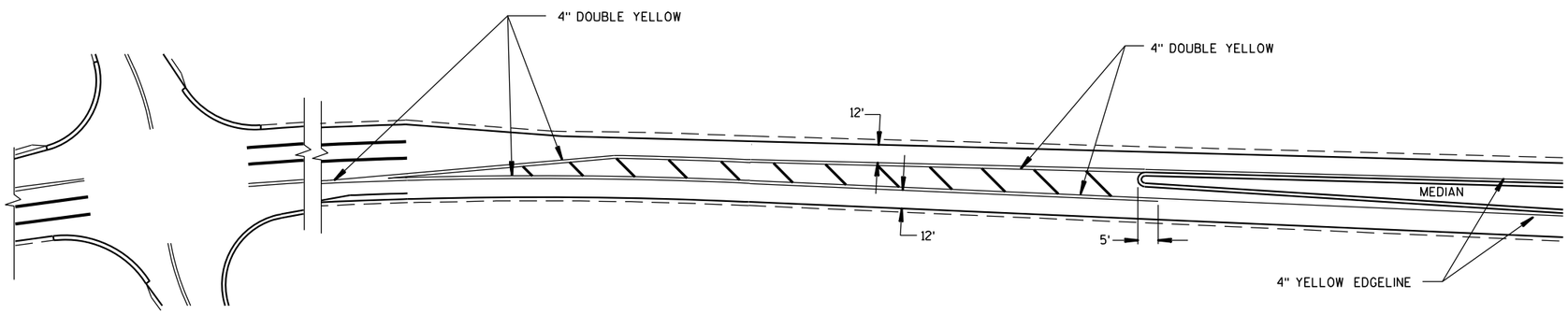

APPROACH MARKINGS FOR OTHER MEDIAN TYPES

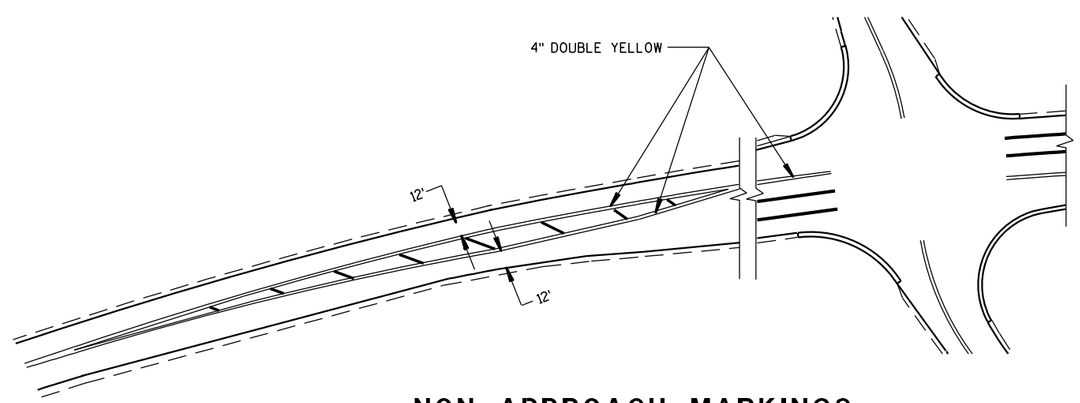

NON APPROACH MARKINGS

6

6

S.D.D. 15 C 18-3

S.D.D. 15 C 18-3

MEDIAN ISLAND MARKING

STATE OF WISCONSIN
DEPARTMENT OF TRANSPORTATION

APPROVED

2-5-09	/S/ Thomas N. Nothohm
DATE	STATE TRAFFIC ENGINEER

FHWA

IGN

GENERAL NOTES

1. BARRIER LINE STARTS AT 500 FEET PRIOR TO THE BYPASS TAPER.
2. PLACE R3-7R SIGNS AT BEGINNING OF WHITE DROP LANE LINE DASHED AND WHITE CHANNEL LINE.
3. IF THE DISTANCE BETWEEN TWO SUCCESSIVE NO PASSING ZONES IS LESS THAN THE MINIMUM DISTANCE BETWEEN ZONES, CONNECT THE TWO ZONES.
4. REQUIRED ONLY WHEN SPECIFIED IN THE PLANS.
5. 3' LINE 9' GAP, EXCEPT RETRACE THE EXISTING LINE - GAP PATTERN WHERE EXISTING MARKINGS ARE IN PLACE.

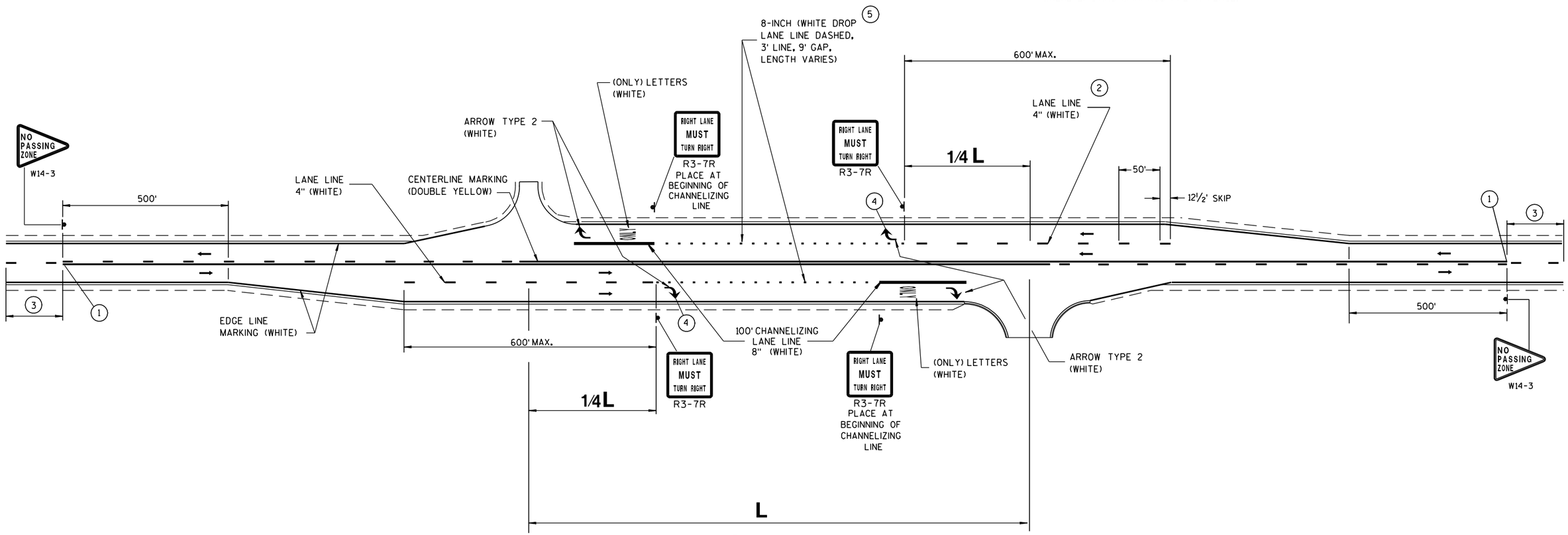

LEGEND

DIRECTION OF TRAFFIC

SIGNING AND MARKING FOR COMBINATION RIGHT TURN AND BYPASS LANE

STATE OF WISCONSIN
DEPARTMENT OF TRANSPORTATION

APPROVED

5-13-10 — DATE

/S/ Thomas N. Nothaft — STATE TRAFFIC ENGINEER

FHWA

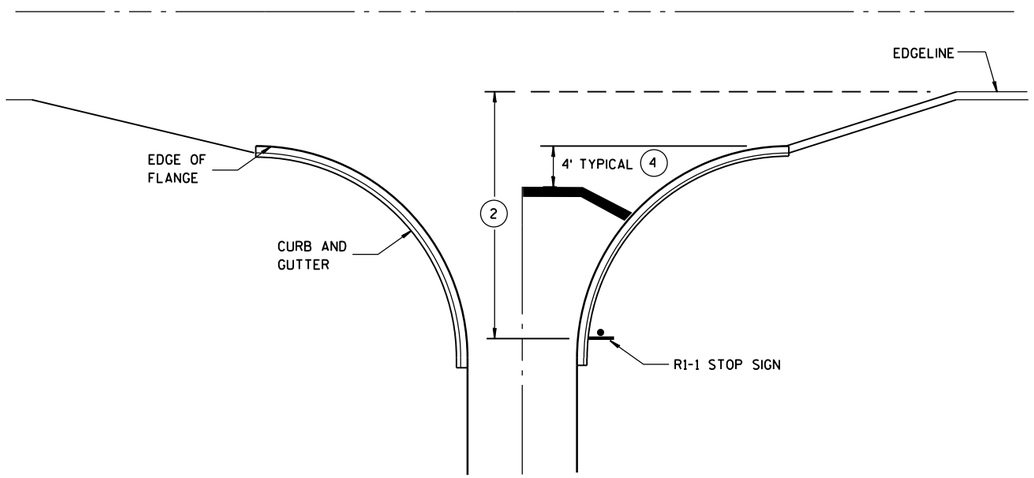

TYPICAL STOP LINE PAVEMENT MARKING WITH CURB AND GUTTER

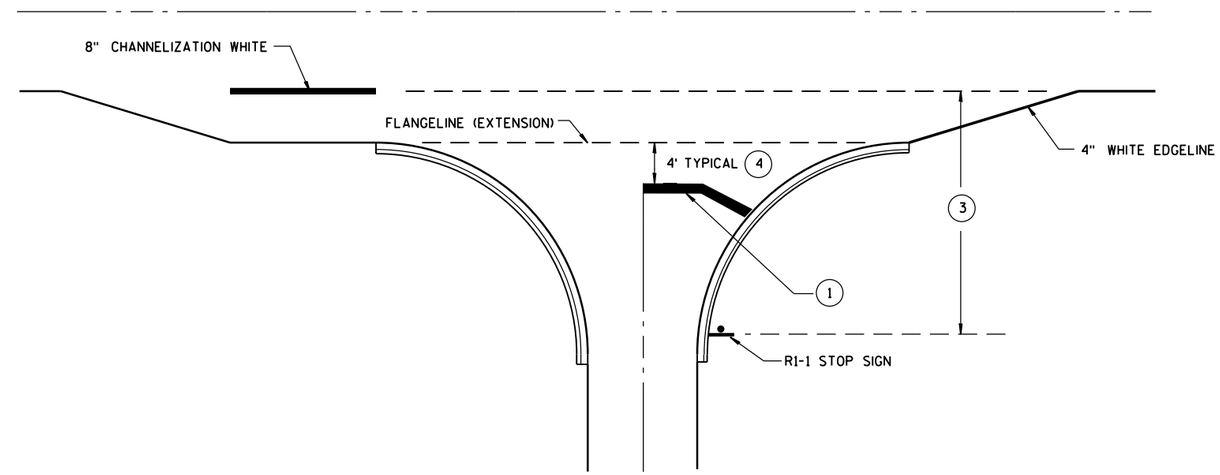

TYPICAL STOP LINE PAVEMENT MARKING FOR SIDEROADS WITH RIGHT TURN LANE

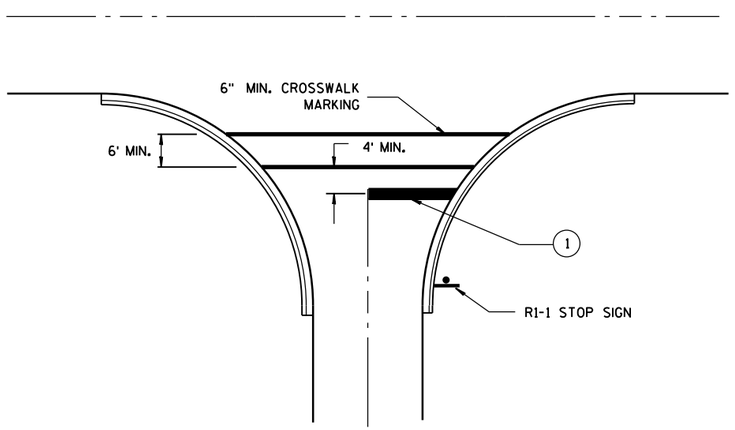

TYPICAL STOP LINE PAVEMENT MARKING FOR SIDEROADS WITH CROSSWALK MARKING

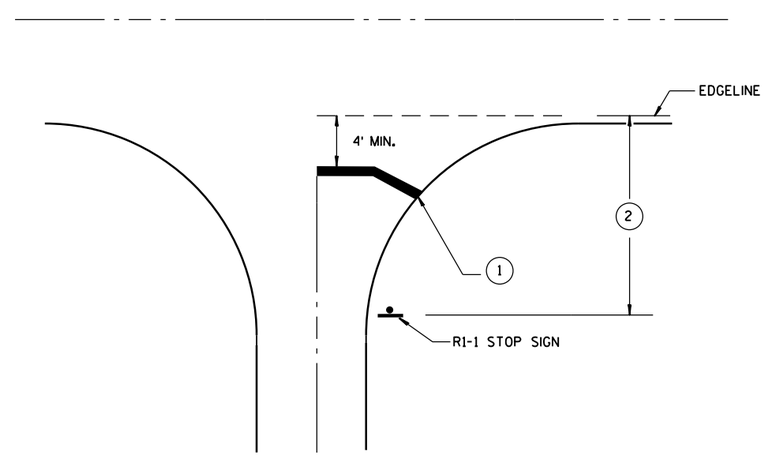

TYPICAL STOP LINE PAVEMENT MARKING WITHOUT CURB AND GUTTER

GENERAL NOTES

1. 18-INCH STOP LINES MAY BE DELETED OR ADDED BY THE PROJECT ENGINEER BASED ON VISIBILITY AND SIGHT LINES.
2. IF STOP SIGN IS LESS THAN OR EQUAL TO 40 FEET FROM THE EDGELINE THAN NO STOP LINE IS REQUIRED.
3. IF STOP SIGN IS LESS THAN OR EQUAL TO 30 FEET FROM THE FLANGELINE EXTENSION THAN NO STOP LINE IS REQUIRED.
4. MOVE CLOSER TO EDGE OF TRAVEL LANE AS NEEDED FOR VISIBILITY AND SIGHT LINES.

STOP LINE AND CROSSWALK PAVEMENT MARKING

STATE OF WISCONSIN
DEPARTMENT OF TRANSPORTATION

APPROVED
4/30/2013 — DATE
/S/ Travis Feltes — STATE TRAFFIC E
FHWA

GENERAL NOTES

THE EXACT NUMBER, LOCATION AND SPACING OF ALL SIGNS AND DEVICES SHALL BE ADJUSTED TO FIT FIELD CONDITIONS AS APPROVED BY THE ENGINEER.

ALL SIGNS ARE 48" X 48" UNLESS OTHERWISE NOTED. IF NECESSARY DUE TO SPACE CONSTRAINTS IN URBAN AREAS, 36" X 36" SIGNS MAY BE USED IF APPROVED BY DISTRICT TRAFFIC UNIT.

"WO" SIGNS ARE THE SAME AS "W" SIGNS EXCEPT THE BACKGROUND IS ORANGE.

SIGNS THAT WILL BE IN PLACE LESS THAN 7 CONTINUOUS DAYS AND NIGHTS MAY BE MOUNTED ON PORTABLE SUPPORTS.

ANY SIGNS TEMPORARY OR EXISTING, WHICH CONFLICT WITH TRAFFIC CONTROL "IN USE" SHALL BE REMOVED OR COVERED AS NEEDED AND AS APPROVED BY THE ENGINEER.

W20-1A AND G20-2A SIGNS ARE NOT REQUIRED IF THE WORK AREA IS WITHIN A LARGER WORK ZONE WHERE THESE SIGNS ARE ALREADY PRESENT. G20-2A SIGNS MAY ALSO BE OMITTED IF DURATION OF WORK IS LESS THAN 7 CONTINUOUS DAYS AND NIGHTS.

CHANNELIZING DEVICES PLACED ADJACENT TO THE WORK AREA SHALL BE PULLED BACK FROM THE TRAVEL LANE WHEN WORK IS NOT IN PROGRESS.

TABLE A

S \ W	SHOULDER TAPER LENGTH (FEET) 4	6	8	10	BUFFER SPACE (FEET)
30	20	30	40	50	200
35	30	45	55	70	250
40	40	55	75	90	305
45	60	90	120	150	360
50	70	100	135	170	425
55	75	110	150	185	495

SHOULDER TAPER LENGTH = $\frac{1}{3}L$

W = SHOULDER WIDTH (FEET)
S = NON-CONSTRUCTION SPEED LIMIT (MPH)

TAPER LENGTH

$L = WS$ AT 45 MPH OR GREATER

$L = \frac{WS^2}{60}$ AT 40 MPH OR LESS

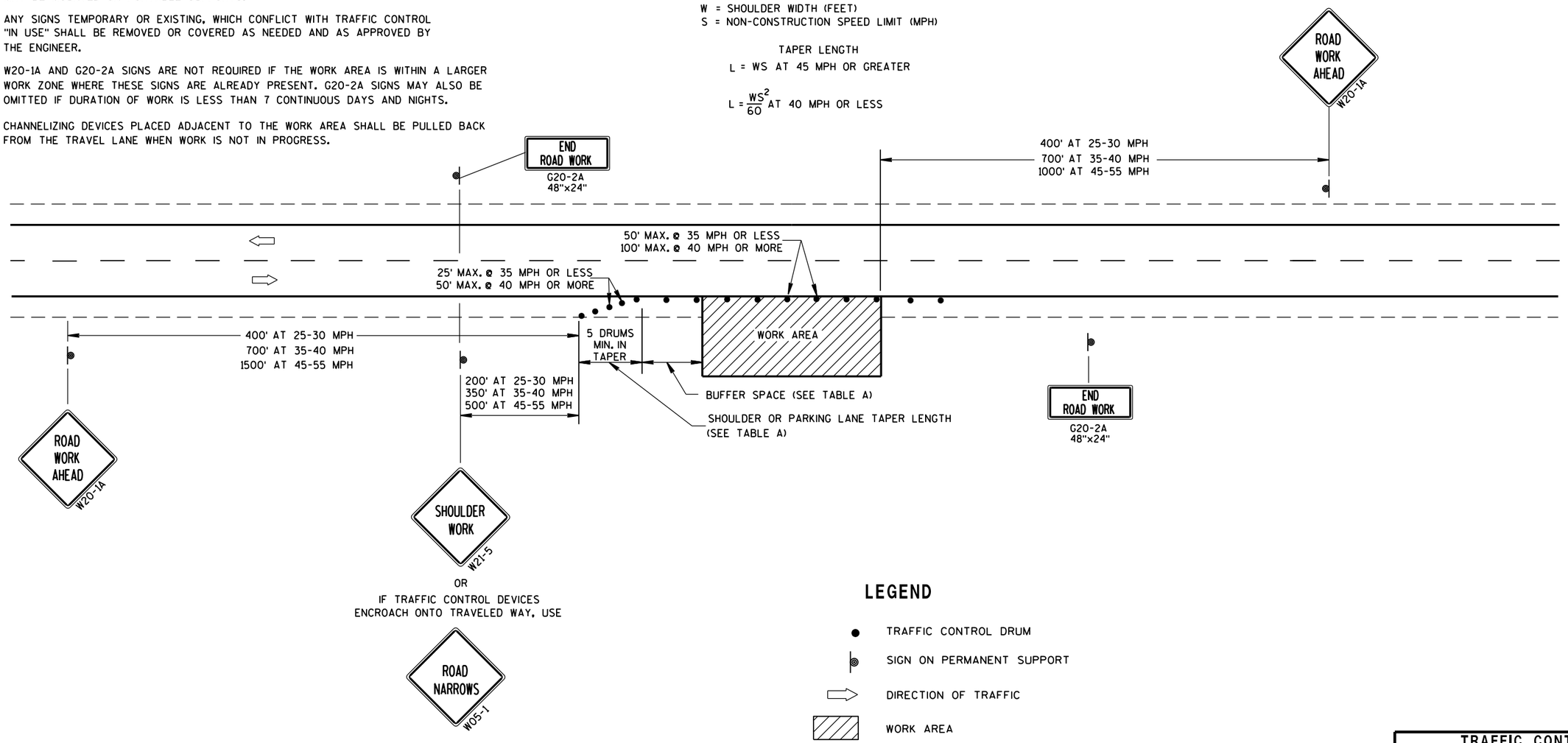

LEGEND

- TRAFFIC CONTROL DRUM
- SIGN ON PERMANENT SUPPORT
- DIRECTION OF TRAFFIC
- WORK AREA

TRAFFIC CONTROL, WORK ON SHOULDER OR PARKING LANE, UNDIVIDED ROADWAY

STATE OF WISCONSIN
DEPARTMENT OF TRANSPORTATION

APPROVED

July 14, 2015 — DATE

/S/ Peter Amakobe Atepe — STATEWIDE WORK ZONE TRAFFIC SAFETY ENGIN

FHWA

6

S.D.D. 15 D 28-3

NOTES

1. All Signs Type II - Type H Reflective
2. Color:
   Background - GREEN
   Message - WHITE
3. Message Series - E

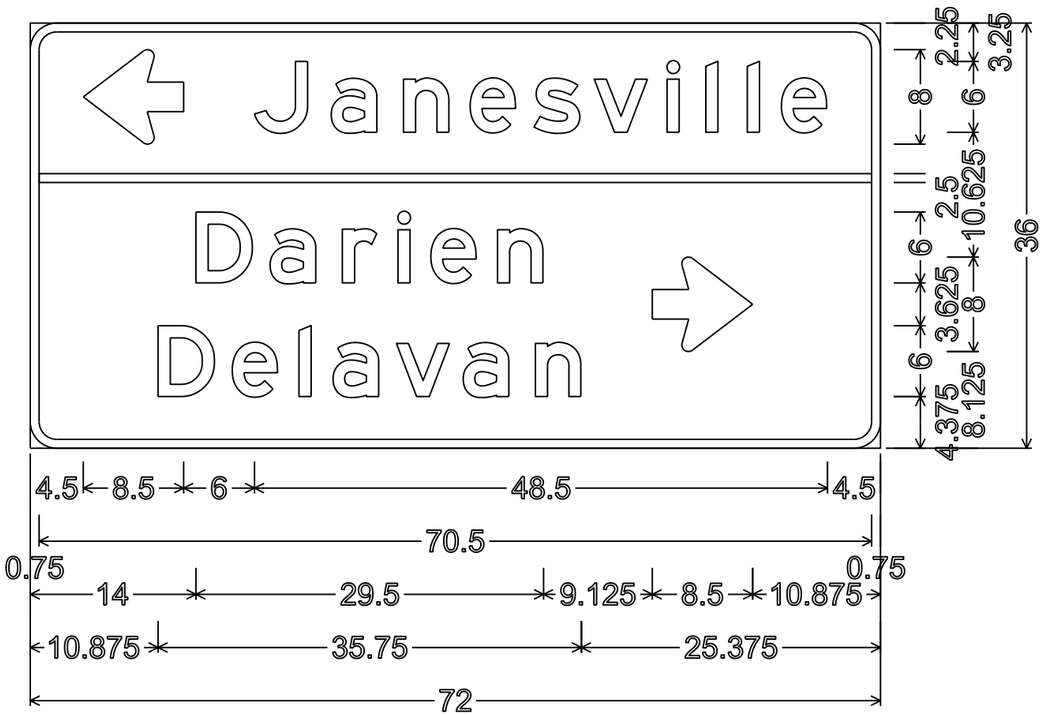

D1-3; 2.250" Radius, 0.750" Border,

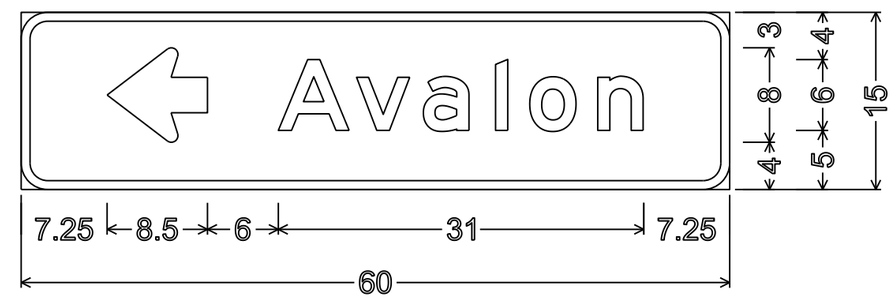

D1-1;
2.250" Radius, 0.750" Border

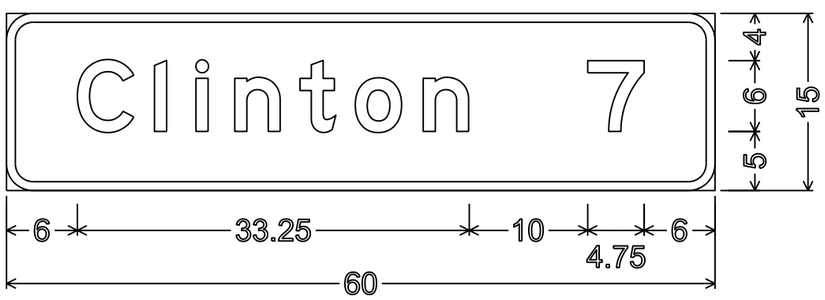

D2-1;
2.250" Radius, 0.750" Border

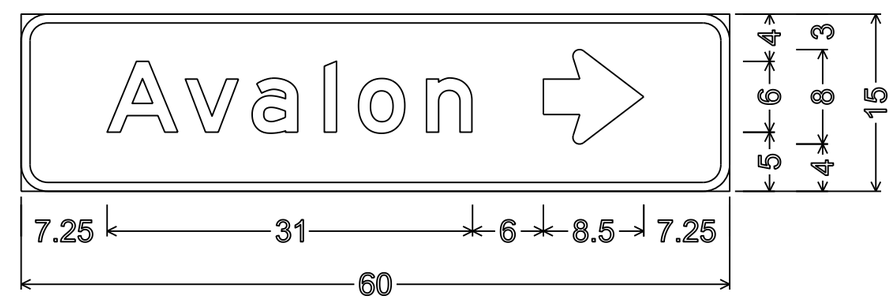

D1-1;
2.250" Radius , 0.750" Border

PROJECT NO: 3320-00-75	HWY: STH 140	COUNTY: ROCK	PERMANENT SIGNING	SHEET NO:	E

TYPICAL ASSEMBLIES

J1-1

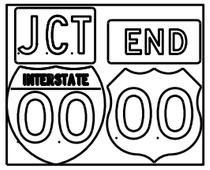

J1-2

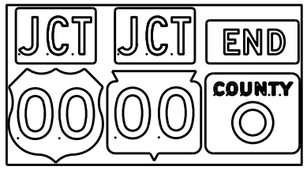

J1-3

J2-1

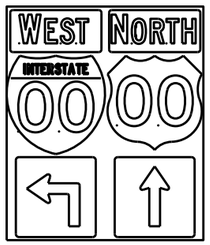

J2-2

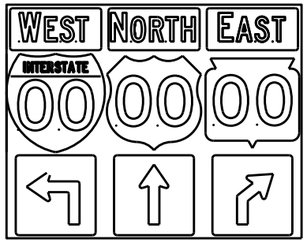

J2-3

JV

(Typical Vertical J-Assembly
See Note 10 and 11)

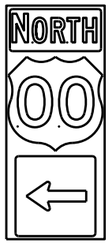

J3-1

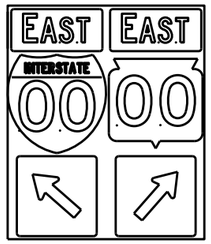

J3-2

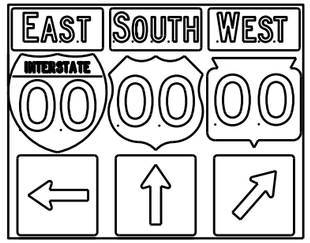

J3-3

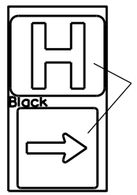

Blue Background

JH-1

J4-1

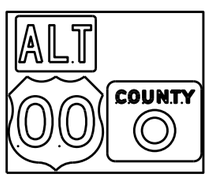

J4-2

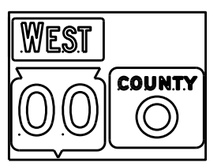

J4-2

J13-1

J12-1

J32-1

J33-1

J23-1

J22-1

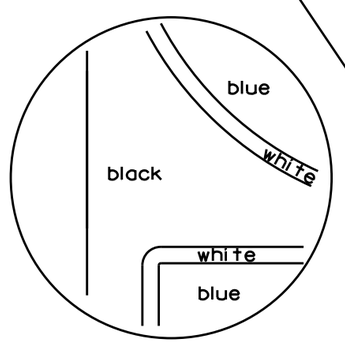

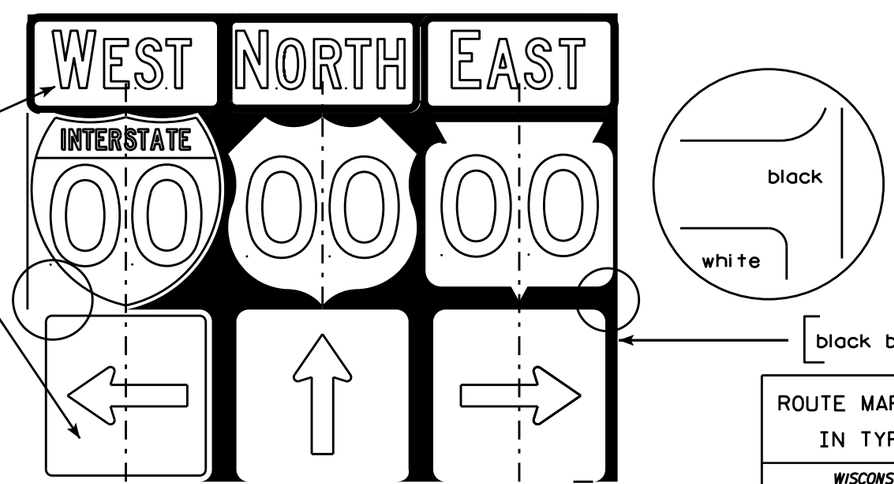

NOTES

1. Signs are Type II - Type H Reflective - reference WIS DOT Standard Specification for HIGHWAY and STRUCTURE CONSTRUCTION latest edition.
2. Color:
   Background - Black Non-reflective
   Message - see Note 5
3. Message Series - See Note 5
4. Corners shall be square or rounded if base material is plywood. If base material is metal the corners shall be rounded.
5. The colors and message spacing on each marker shall be according to the applicable route marker panel specifications.
6. Certain marker heads require the component pieces to be the same color. As an example, all the components used with an M1-1 Interstate marker shall be blue.
7. Single panel j-assemblies shall only be used with route marker shields that are same size. If the route marker shields are different size use multiple piece component.
8. Route assemblies that have 24 inch route shields and have dimensions greater than 48 inches (both vertical and horizontal) shall have one horizontal splice between the arrows and route shields. Vertical splices shall not be used on route assemblies with a horizontal dimension of 144 inches or less. The contractor shall not use more than one vertical joint per sign and the joint shall be between route shields.
9. Route assemblies that have 36 inch shields and have dimensions greater than 48 inchs (both vertical and horizontal) shall have two horizontal splices. One horizontal splice shall be between the cardinal direction and route shields and the other horizontal splice shall be between the arrows and route shields. Vertical splices shall not be used on route assemblies with a horizontal dimension of 144 or less. The contractor shall not use more than one vertical joint per sign and the joint shall be between route shields.
10. All Vertical J Assemblies are given a Sign Code of JV
11. For JV Assemblies that have a mixture of Interstate and non Interstate shields, arrows and cardinals shall be white on blue.

ROUTE MARKERS & COMPONENTS
IN TYPICAL ASSEMBLIES

WISCONSIN DEPT OF TRANSPORTATION

APPROVED Matthew R Rauch
for State Traffic Engineer

DATE 2/06/14 PLATE A2-1S.8

PROJECT NO: | SHEET NO: E

URBAN AREA

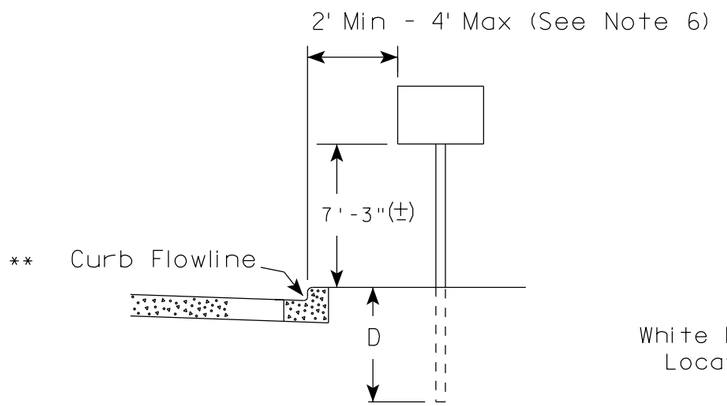

RURAL AREA (See Note 2)

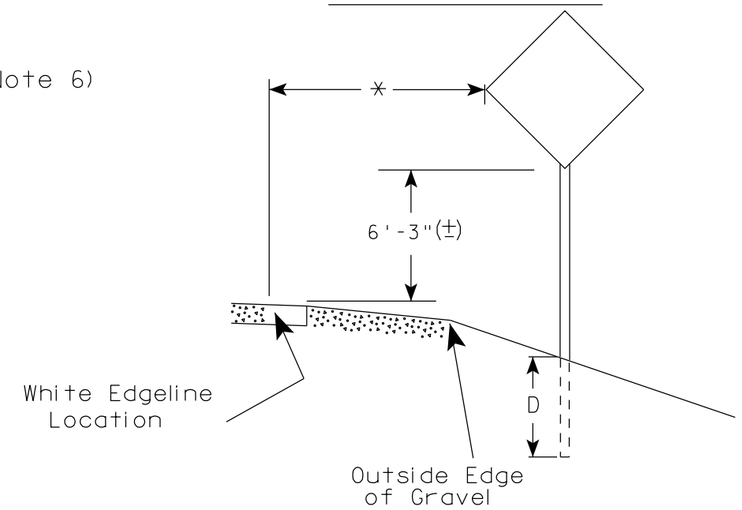

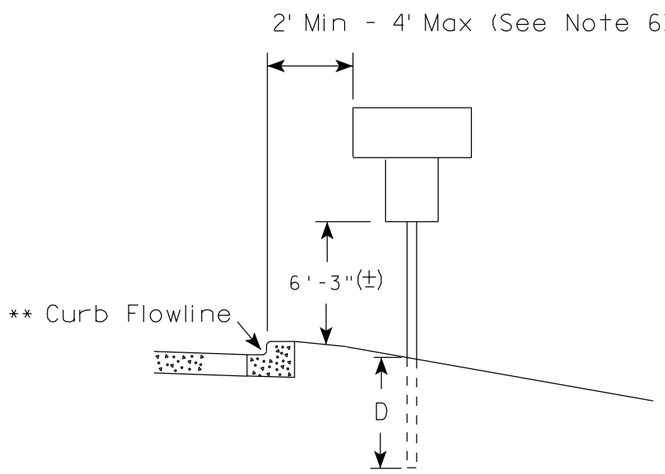

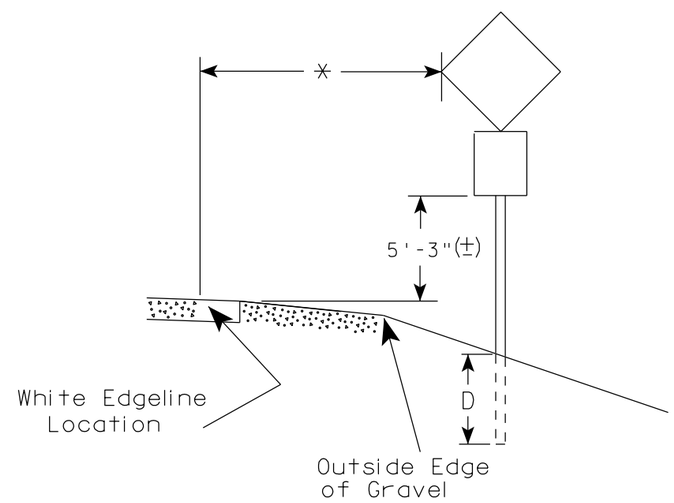

** The existence of curb and gutter does not in itself mandate the vertical clearance illustrated. That height is typically measured where there is sidewalk adjacent to the roadway or parking is permitted. In the absence of sidewalk vertical clearance is measured from the top of the curb. Offset of signs is measured from the flow line.

* 6 feet from edge of a paved shoulder or 12 feet from the edge of pavement (edge line location) or 2 feet from outside edge of gravel, whichever is greater unless directed by project engineer.

GENERAL NOTES

1. Signs wider than 4 feet or 20 sq.ft or larger, shall be mounted on multiple posts. Refer to plate A4-4.
2. If signs are mounted on barrier wall, see A4-10 sign plate.
3. For expressways and freeways, mounting height is 7'- 3" (±) or 6'-3" (±) depending upon existence of a sub-sign.
4. Minimum mounting height for J assemblies (A2-1S) is 7'-3" (±) or 6'-3" (±) per urban or rural detail respectively.
5. Minimum mounting height for signs mounted on traffic signal poles is 5'- 3" (±).
6. Offset distance shall be consistent with existing signs or consistent throughout length of project.
7. The (±) tolerance for mounting height is 3 inches.
8. Folding signs shall be mounted at a height of 5'-3" (±) or as directd by the Engineer.
9. The Double Arrow sign (W12-1) shall be mounted at a height of 2'-3" (±). The Chevron sign (W1-8), Roundabout Chevron panel (R6-4B), Enhanced Reference Markers, Clearance Markers (W5-52), Mile Markers (D10 series), In Road Object Markers (W5-54) & End of Road Markers (W5-56) shall be mounted at a height of 4'-3" (±).

POST EMBEDMENT DEPTH

Area of Sign Installation (Sq. Ft.)	D (Min)
20 or Less	4'
Greater than 20	5'

TYPICAL INSTALLATION OF PERMANENT TYPE II SIGNS ON SINGLE POSTS

WISCONSIN DEPT OF TRANSPORTATION

APPROVED Matthew R Rauch for State Traffic Engineer

DATE 7/23/15 PLATE NO. A4-3.20

PROJECT NO:	HWY:	COUNTY:		SHEET NO:	E

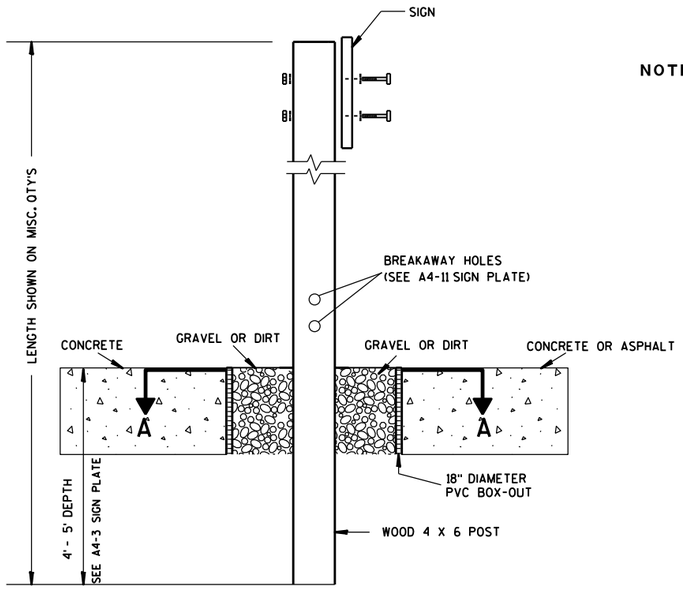

ELEVATION VIEW

DETAIL OF WOOD 4 X 6 SIGN POST IN BOX-OUT

NOTES:
1. ALL MATERIAL TO BE APPROVED BY ENGINEER PRIOR TO INSTALLATION
2. SEE SIGN PLATE A4-8 FOR SIGN HARDWARE REQUIREMENTS
3. 18 INCH X 18 INCH SQUARE BOX-OUTS MAY BE USED FOR INSTALLATIONS IN EXISTING CONCRETE OR ASPHALT LOCATIONS.

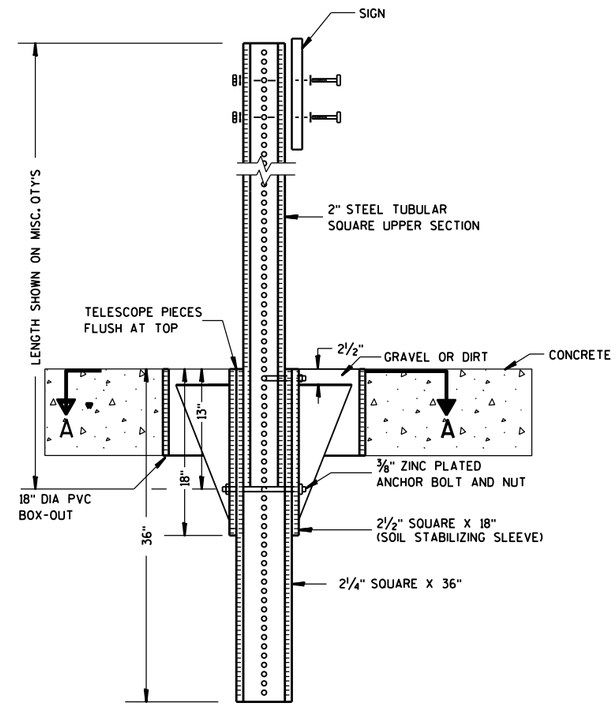

ELEVATION VIEW

DETAIL OF STEEL 2 X 2 SIGN POST IN BOX-OUT

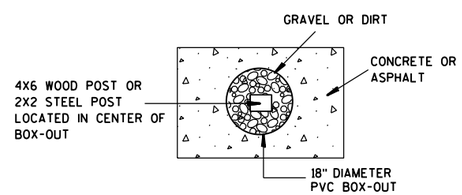

PLAN VIEW

FOR NEW CONCRETE/ASPHALT INSTALLATIONS

SIGN POST
BOX-OUTS
A4-3B

WISCONSIN DEPT OF TRANSPORTATION

APPROVED Matthew R Rauch
for State Traffic Engineer

DATE 1/27/14 PLATE NO. A4-3B.1

PROJECT NO:	HWY:	COUNTY:		SHEET NO:	E

URBAN AREA

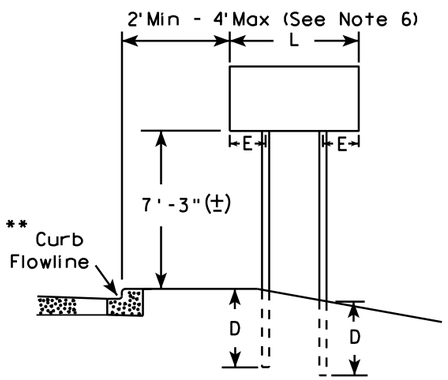

RURAL AREA (See Note 3)

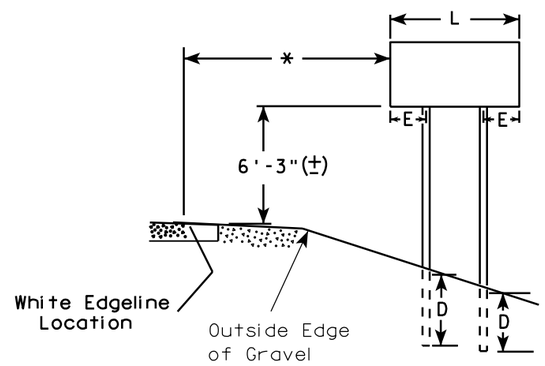

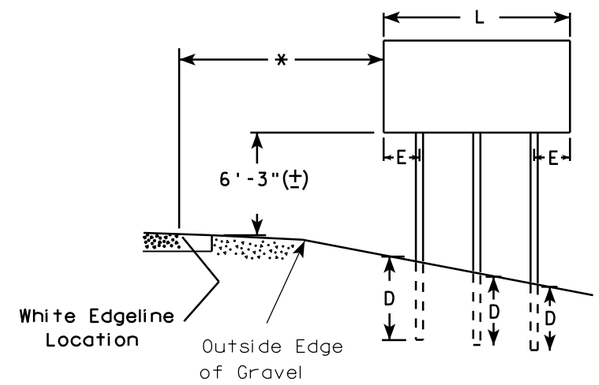

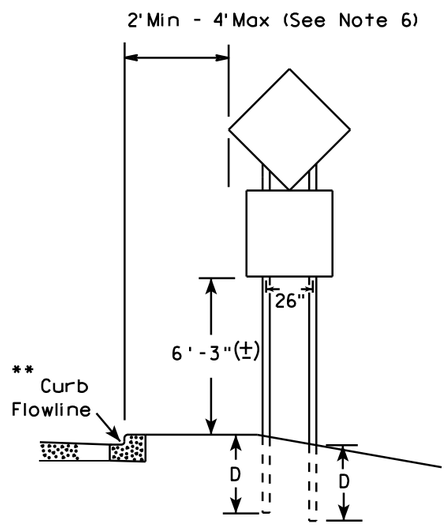

48" DIAMOND WARNING SIGN

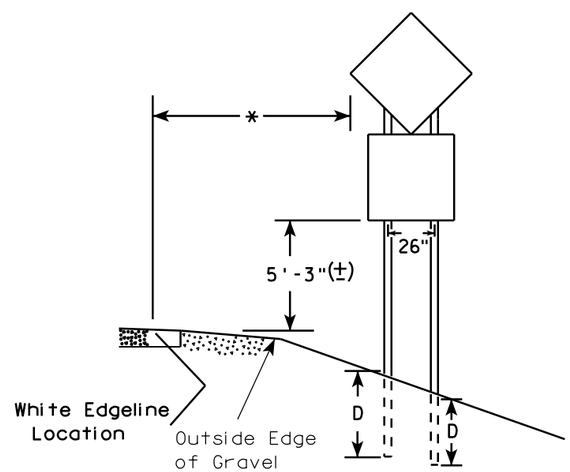

48" DIAMOND WARNING SIGN

GENERAL NOTES

1. For 3 or 4 post installations, individual post spacing shall be greater than 3'-6".
2. See tables below for required number of posts.
3. For expressways and freeways, mounting height is 7'-3" (±) or 6'-3" (±) depending upon existence of sub-sign.
4. The (±) tolerance for mounting height is 3 inches.
5. Minimum mounting height for J assemblies (A2-1S) is 7'-3" (±) or 6'-3" (±) per urban or rural detail respectively.
6. Offset distance shall be consistent with existing signs or consistent throughout length of project.
7. Folding signs shall be mounted at a height of 5'-3" (±) or as directed by the engineer.
8. The Double Arrow sign (W12-1) shall be mounted at a height of 2'-3" (±). The Chevron sign (W1-8), Roundabout Chevron panel (R6-4B), Clearance Markers (W5-52), Mile Markers (D10 series), In Road Object Markers (W5-54) & End of Road Markers (W5-56) shall be mounted at a height of 4"-3" (±).

* 6 feet from edge of a paved shoulder or 12 feet from the edge of pavement (edge line location) or 2 feet from outside edge of gravel, whichever is greater unless directed by project engineer.

** The existence of curb and gutter does not in itself mandate the vertical clearance illustrated. That height is typically measured where there is sidewalk adjacent to the roadway or parking is permitted. In the absence of sidewalk vertical clearance is measured from the top of the curb. Offset of signs is measured from the flow line.

*** See A4-3 sign plate for signs 4' or less in width and less than 20 S.F. in area.

SIGN SHAPE OTHER THAN DIAMOND (TWO POSTS REQUIRED)	
L	E
*** Greater than 48" Less than 60"	12"
60" to 120"	L/5

SIGN SHAPE OTHER THAN DIAMOND (THREE POSTS REQUIRED)	
L	E
Greater than 120" less than 168"	12"

SIGN SHAPE OTHER THAN DIAMOND (FOUR POSTS REQUIRED)	
L	E
168" and greater	12"

POST EMBEDMENT DEPTH

Area of Sign Installation (Sq. Ft.)	D (Min)
20 or Less	4'
Greater than 20	5'

TYPICAL INSTALLATION OF TYPE II SIGNS ON MULTIPLE POSTS

WISCONSIN DEPT OF TRANSPORTATION

APPROVED Matthew R Rauch
for State Traffic Engineer

DATE 7/23/15 PLATE NO. A4-4 14

PROJECT NO:	HWY:	COUNTY:		SHEET NO:	E

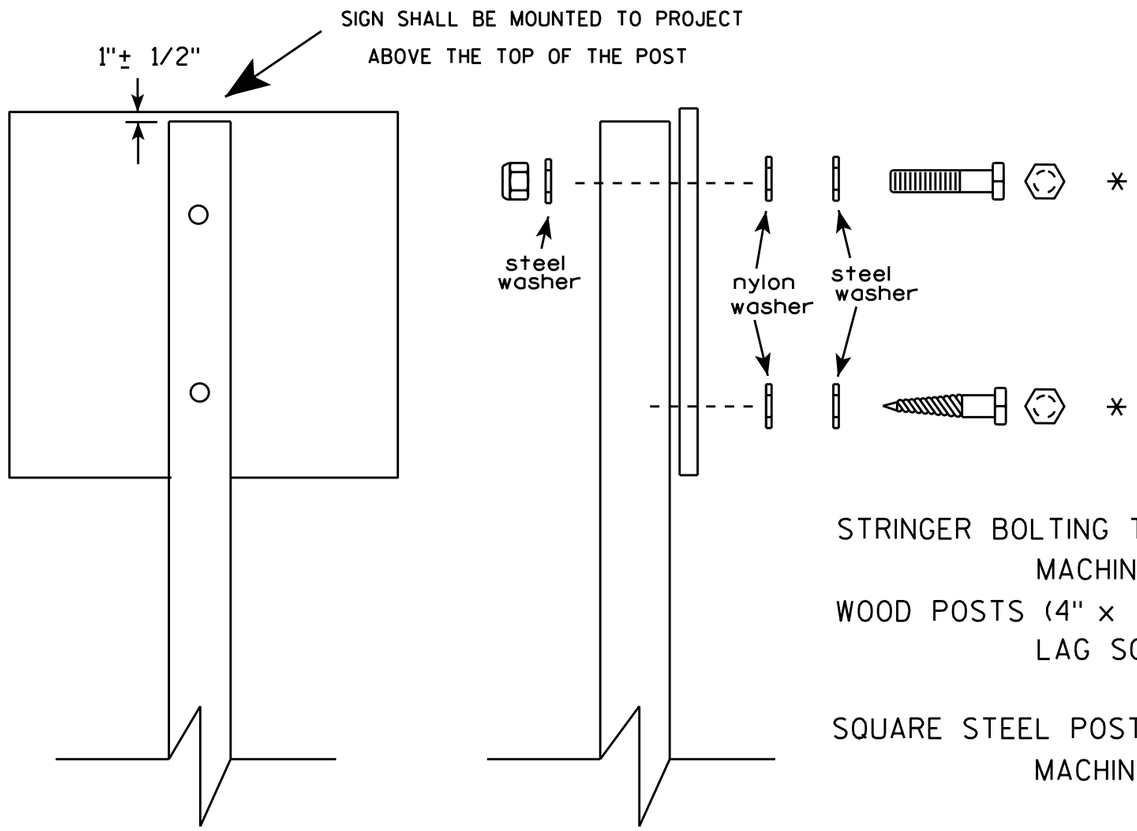

Nuts, bolts and lags used for mounting signs shall have hexagonal heads and shall be either :

a. Hot dip galvanized in accordance with ASTM Designation: A 153, Class D, or SC 3

b. Electro-galvanized in accordance with ASTM Designation : B 633, TYPE III, SC 3.

Threads on bolts and nuts shall be manufactured with sufficient allowance for the cadmium plate or galvanized coating to permit the nuts to run freely on the bolts.

STRINGER BOLTING TO ALUMINUM SIGNS (SEE SIGN PLATE A4-18)

MACHINE BOLTS - 5/8" X 1-3/4" Length w/ nuts

WOOD POSTS (4" x 4" or 4" x 6")

LAG SCREWS - 3/8" X 3" (NO STRINGERS ON BACK OF SIGN)

3/8" X 4" (STRINGERS ON BACK OF SIGN)

SQUARE STEEL POSTS (2" x 2")

MACHINE BOLTS - 3/8" X 3-1/4" Length w/ nuts (NO STRINGER ON BACK OF SIGN)

3/8" X 5" Length w/ nuts (STRINGERS ON BACK OF SIGN)

RIVETS - 9/32 " (6605-9-6) BULB-TITE, TRI-FOLD, ALUMINUM BODY/MANDREL

O.D. FLANGE .720-.765 INCH, GRIP RANGE .042-.375 INCH

WASHERS (ALL POSTS) -

1-1/4" O.D. X 3/8" I.D. X 1/16" STEEL

1-1/4" O.D. X 3/8" I.D. X .080 NYLON for all Type H signs.

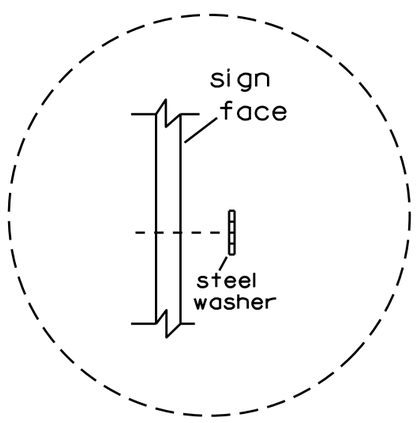

Washer Placement when Sign Has Other Than Type H or Type F Face

* Two different fastening systems are shown for illustration purposes. On any individual sign, either one or the other system shall be used. Actual number of fasteners per sign varies with the sign area, but normally there are two. For a single post installation, all signs greater than 9 sq. ft. require the use of 3 fasteners.

ATTACHMENT OF SIGNS TO POSTS

WISCONSIN DEPT OF TRANSPORTATION

APPROVED Matthew R Rauch for State Traffic Engineer

DATE 4/5/16 PLATE NO. A4-8.8

PROJECT NO: SHEET NO: E

TELESCOPIC TUBING ANCHORS
TWO PIECE SYSTEM

2 1/4" SQUARE
12 GAUGE
PERFORATED
GALVANIZED FINISH

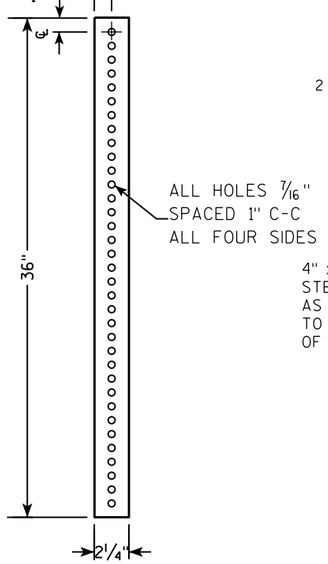

2 1/2" SQUARE
12 GAUGE
OMNI-DIRECTIONAL
PERFORATED
SOIL STABILIZING SLEEVE
GALVANIZED FINISH

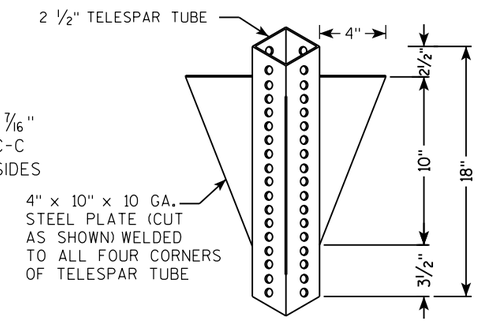

DETAIL OF TUBULAR STEEL SIGN POST
(IN POURED CONCRETE OR ASPHALT)

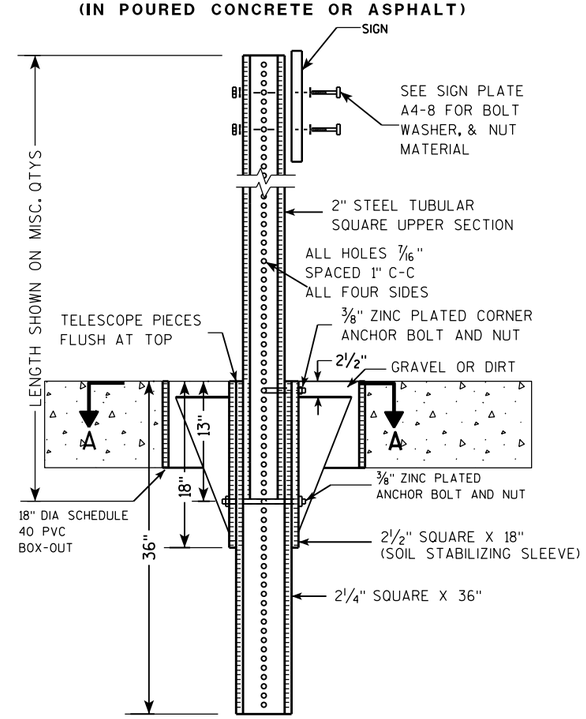

DETAIL OF TUBULAR STEEL SIGN POST
(IN LOCATIONS OTHER THAN POURED CONCRETE OR ASPHALT)

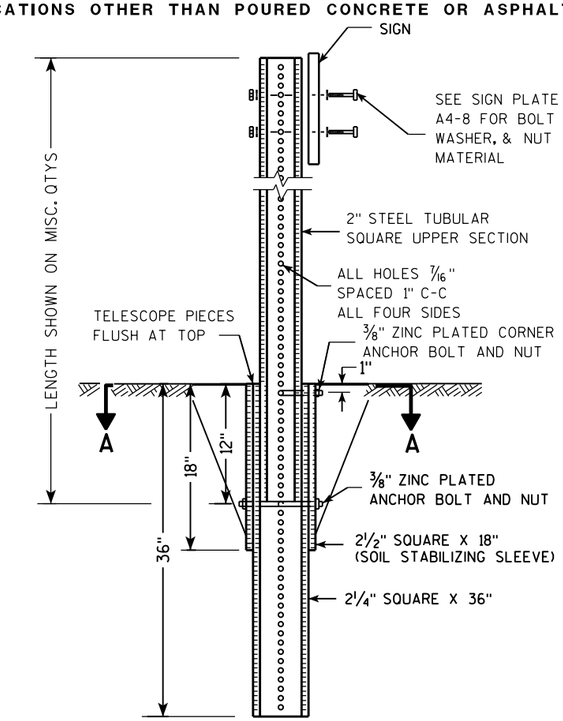

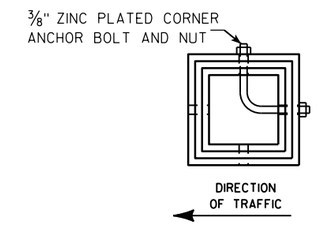

SECTION A-A

Area of Sign Installation (Sq. Ft.)	Number of Required Posts
9 or less	1
Greater than 9 less than or equal to 18	2
Greater than 18 less than or equal to 27	3

Signs wider than 3 feet or larger than 9 sq. ft shall be mounted on multiple posts (see above table).

TUBULAR STEEL
SIGN POST
A4-9

WISCONSIN DEPT OF TRANSPORTATION

APPROVED Matthew R Rauch
for State Traffic Engineer

DATE 2/05/15 PLATE A4-9.9

PROJECT NO:	HWY:	COUNTY:		SHEET NO:	E

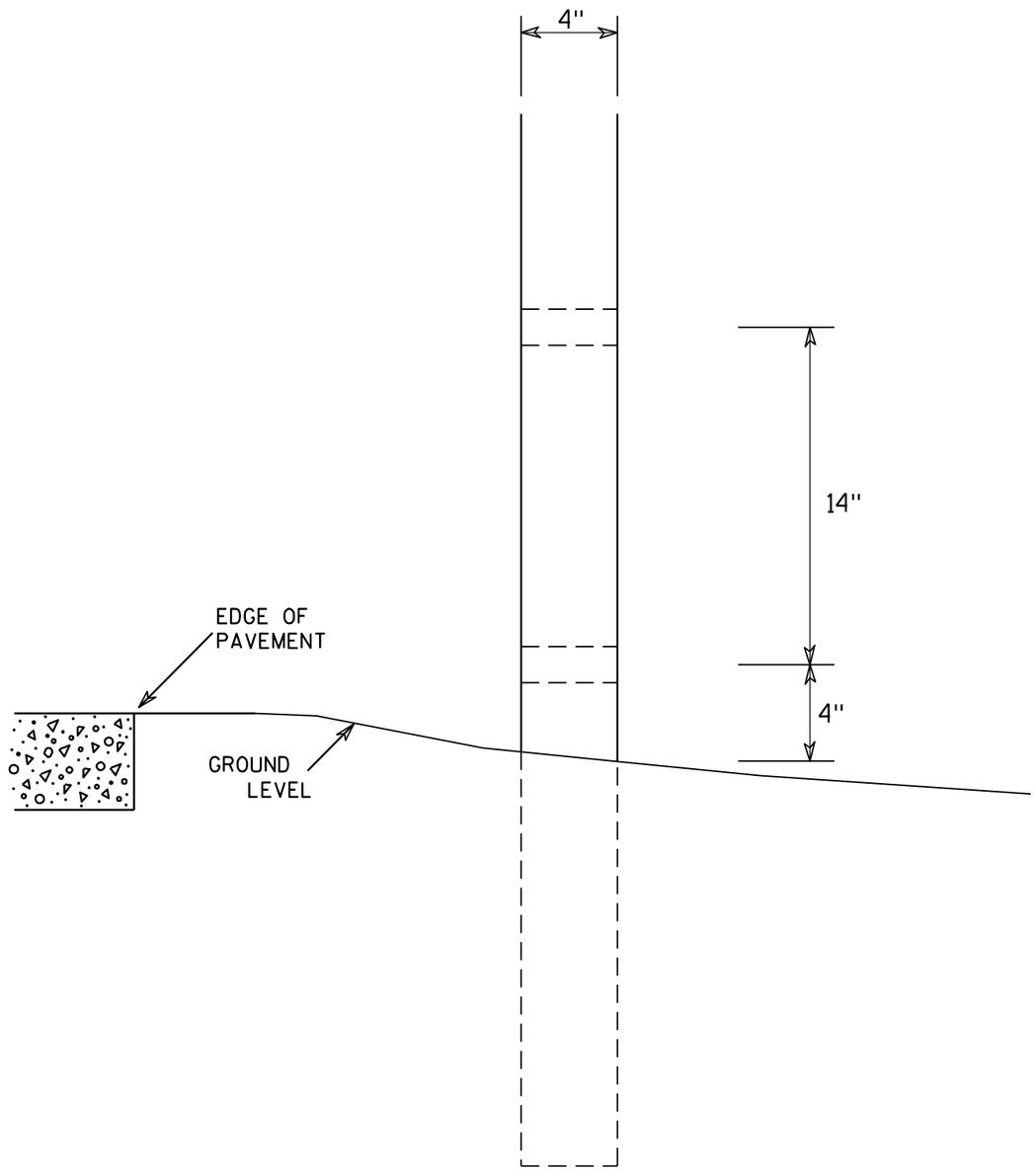

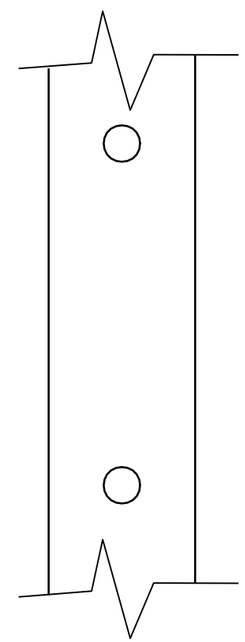

SIDE VIEW

GENERAL NOTES

1. All 4 x 6 Wood Posts shall be modified by having two 1½" diameter holes drilled perpendicular to the roadway centerline.

7

7

4 X 6 WOOD POST MODIFICATIONS

WISCONSIN DEPT OF TRANSPORTATION

APPROVED Chester J Spang for State Traffic Engineer

DATE 3/27/97 PLATE NO. A4-11.2

PROJECT NO:	HWY:	COUNTY:		SHEET NO: 133	E

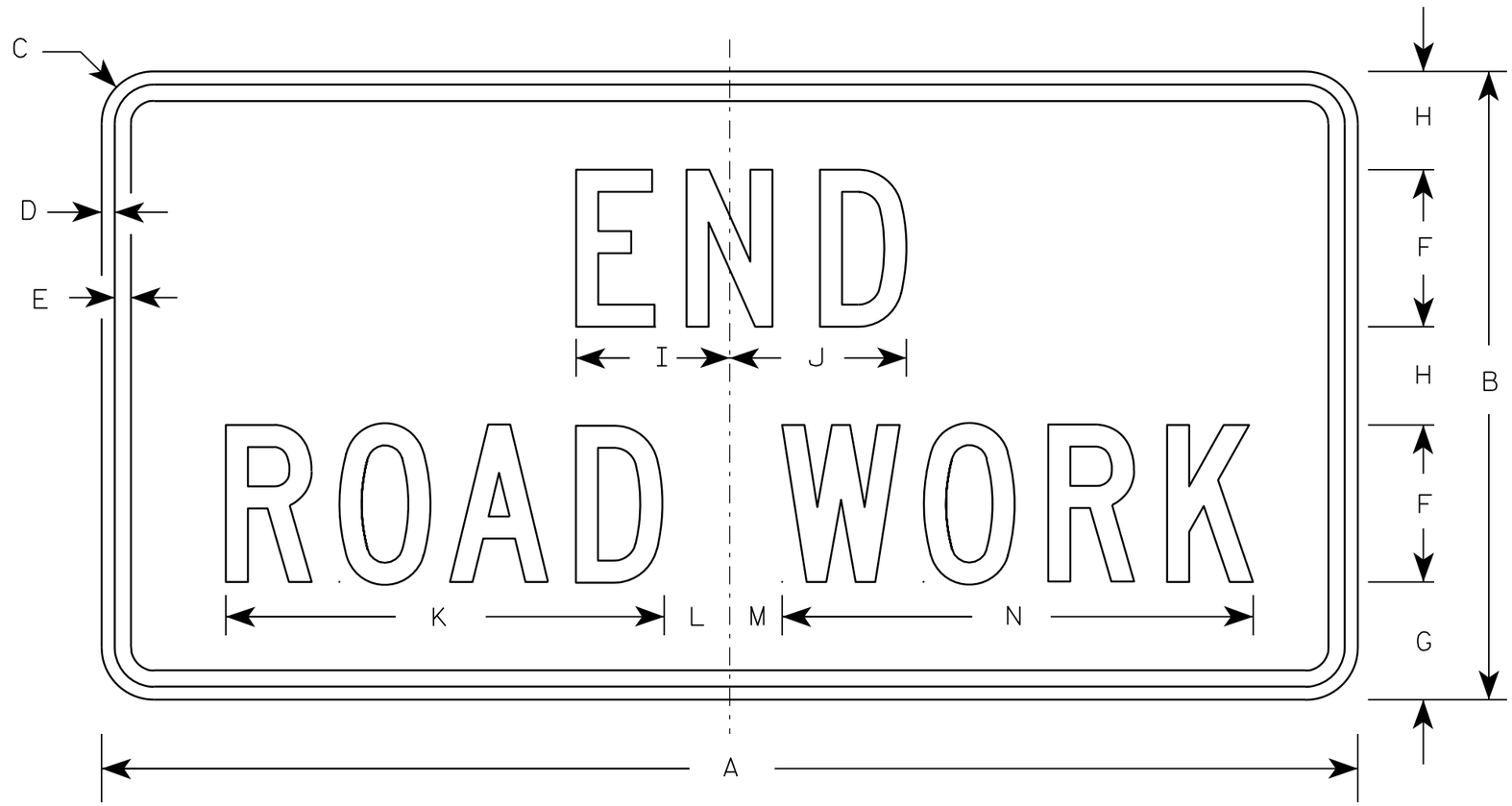

G20-2A

NOTES

1. Sign is Type II - Type F Reflective - reference WIS DOT Standard Specification for HIGHWAY and STRUCTURE CONSTRUCTION latest edition.
2. Color:
   Background - Orange
   Message - Black
3. Message Series - C
4. Corners may be square or rounded when base material is plywood but borders shall be rounded as shown. When base material is metal, the corners and borders shall be rounded.

Metric equivalent for this sign is:

SIZE	
1	900 mm X 450 mm
2	1200 mm X 600 mm
3	1200 mm X 600 mm
4	1200 mm X 600 mm
5	1200 mm X 600 mm

SIZE	A	B	C	D	E	F	G	H	I	J	K	L	M	N	O	P	Q	R	S	T	U	V	W	X	Y	Z	Area sq. ft.	Area m2
1	36	18	1 1/8	3/8	1/2	4	3 3/4	2 1/2	4 1/8	4 1/8	11 1/8	2	1	12 1/8													4.5	0.41
2	48	24	1 1/2	1/2	5/8	6	4 1/2	3 3/4	5 7/8	6 3/4	16 3/4	2 1/2	1 3/4	18 1/2													8.0	0.72
3	48	24	1 1/2	1/2	5/8	6	4 1/2	3 3/4	5 7/8	6 3/4	16 3/4	2 1/2	1 3/4	18 1/2													8.0	0.72
4	48	24	1 1/2	1/2	5/8	6	4 1/2	3 3/4	5 7/8	6 3/4	16 3/4	2 1/2	1 3/4	18 1/2													8.0	0.72
5	48	24	1 1/2	1/2	5/8	6	4 1/2	3 3/4	5 7/8	6 3/4	16 3/4	2 1/2	1 3/4	18 1/2													8.0	0.72

STANDARD SIGN

G20-2A

WISCONSIN DEPT OF TRANSPORTATION

APPROVED Matthew R Rauch
for State Traffic Engineer

DATE 9/30/09 PLATE NO. G20-2A.8

PROJECT NO:	HWY:	COUNTY:		SHEET NO: 134	E

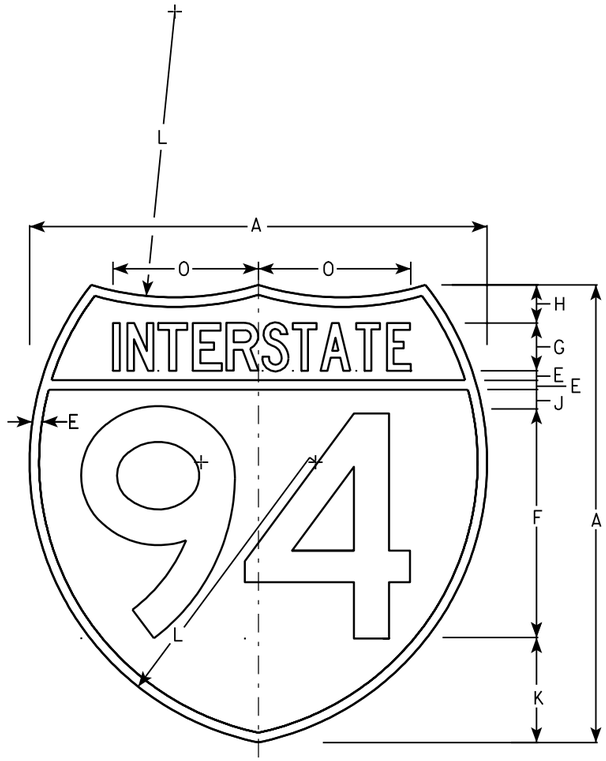

M1-1

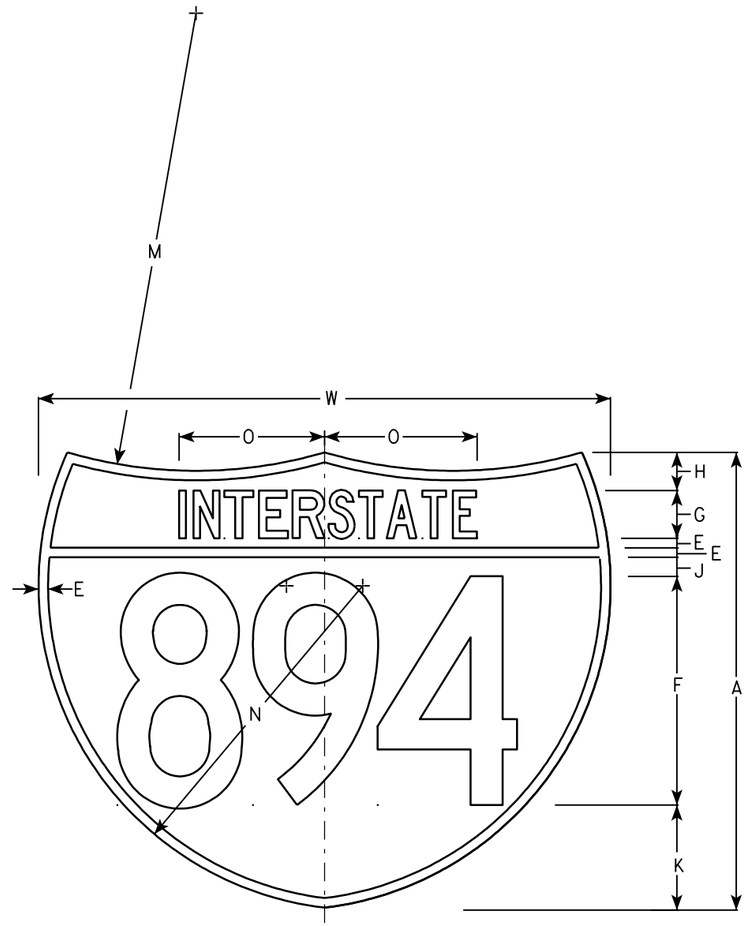

M1-1A

NOTES

1. Sign is Type II - See Note 6 - reference WIS DOT Standard Specification for HIGHWAY and STRUCTURE CONSTRUCTION latest edition.
2. Color:
   Background - Top Red - Bottom Blue (See Note 6)
   Message - White - See Note 6
3. Message Series - See note 5
4. Substitute appropriate numerals & ajust spacing as per plate A10-1.
5. M1-1 - Numerals - D
   Interstate - C
   M1-1A - All copy - C
6. Permanent Signs
   Message - Type H Reflective
   Detour or other temporary signs
   Background - Reflective
   Message - Reflective

Metric equivalent for these signs are:

SIZE	M1-1	SIZE	M1-1A
1			
2	600 mm X 600 mm	2	600 mm X 750 mm
3	900 mm X 900 mm	3	900 mm X 1125 mm
4	900 mm X 900 mm	4	900 mm X 1125 mm
5	900 mm X 900 mm	5	900 mm X 1125 mm

SIZE	A	B	C	D	E	F	G	H	I	J	K	L	M	N	O	P	Q	R	S	T	U	V	W	X	Y	M1-1 Area sq. ft.	M1-1A Area sq. ft.	M1-1 Area m2	M1-1A Area m2
1																													
2	24				1/2	12	2 1/2	2		1	5 1/2	15	24	17	7 7/8								30			3.13	3.91	.36	.46
3	36				3/4	18	3 3/4	3		1 1/2	8 1/4	22 1/2	36	25 1/2	11 3/4								45			7.03	8.79	.81	1.05
4	36				3/4	18	3 3/4	3		1 1/2	8 1/4	22 1/2	36	25 1/2	11 3/4								45			7.03	8.79	.81	1.05
5	36				3/4	18	3 3/4	3		1 1/2	8 1/4	22 1/2	36	25 1/2	11 3/4								45			7.03	8.79	.81	1.05

INTERSTATE ROUTE MARKER
M1-1 FOR ASSEMBLIES

WISCONSIN DEPT OF TRANSPORTATION

APPROVED Matthew R Rauch
for State Traffic Engineer

DATE 08/23/05 PLATE NO. M1-1.8

PROJECT NO:	HWY:	COUNTY:		SHEET NO: 135	E

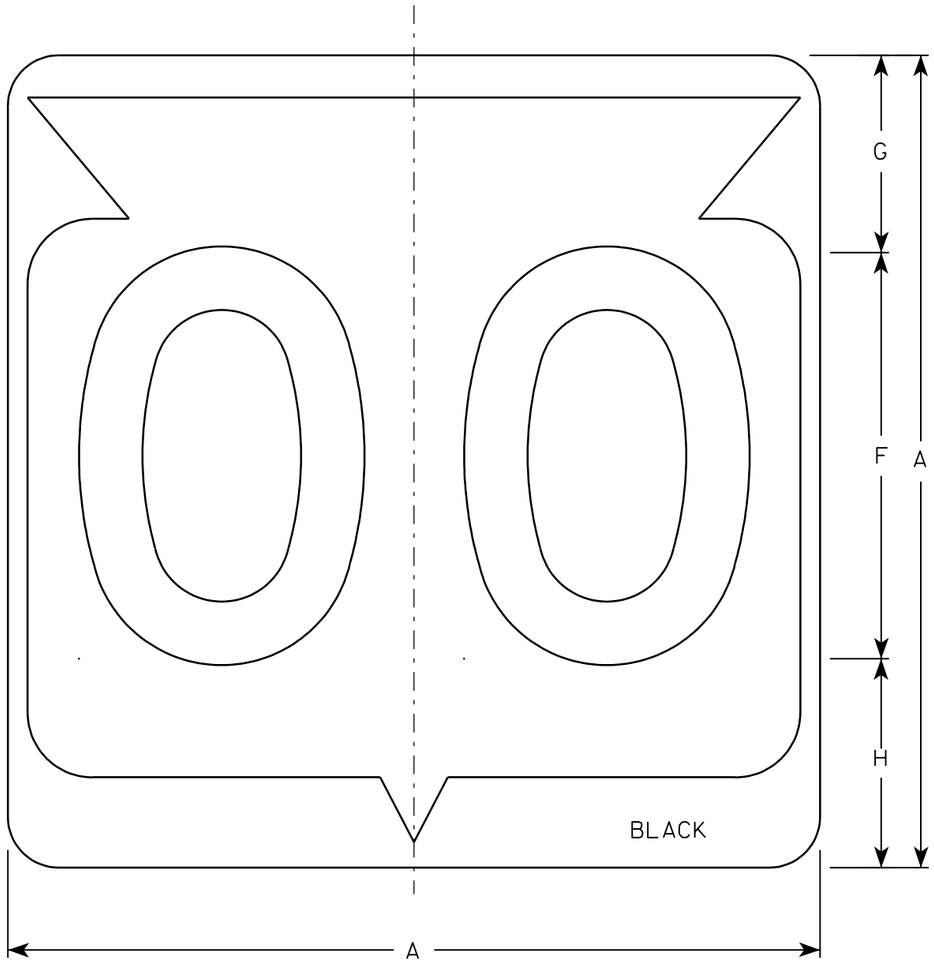

M1-6

NOTES

1. Sign is Type II - See Note 6 - reference WIS DOT Standard Specification for HIGHWAY and STRUCTURE CONSTRUCTION latest edition.
2. Color:
   Background - White & Black - See Note 6
   Message - Black
3. Message Series - See note 5
4. Corners may be square or rounded when base material is plywood but borders shall be rounded as shown. When base material is metal, the corners and borders shall be rounded.
5. Substitute appropriate Series numerals and adjust spacing as per plate A10-1.
6. Permanent Signs
   Background - Type H Reflective
   Detour or temporary Signs
   Background - Reflective

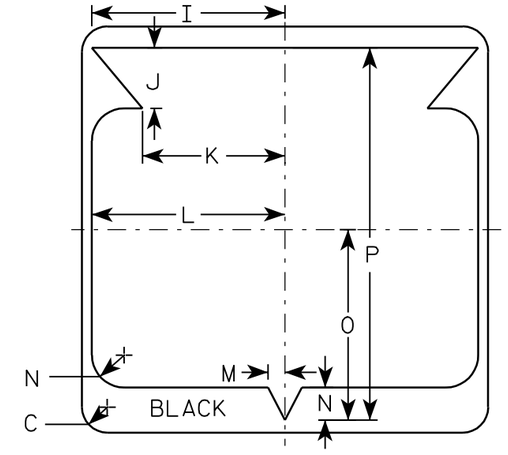

Metric equivalent for this sign is:

SIZE	
1	
2	600 mm X 600 mm
3	900 mm X 900 mm
4	900 mm X 900 mm
5	900 mm X 900 mm

SIZE	A	B	C	D	E	F	G	H	I	J	K	L	M	N	O	P	Q	R	S	T	U	V	W	X	Y	Z	Area sq. ft.	Area m2
1																												
2	24		1 1/2			12	5 1/2	6 1/2	10 1/4	2 1/2	8 7/8	11 1/2	1	1 7/8	11 1/4	21 7/8											4.0	.36
3	36		2 1/4			18	8 3/4	9 1/4	15 3/8	5 3/8	12 5/8	17 1/8	1 1/2	2 7/8	16 7/8	33											9.0	.81
4	36		2 1/4			18	8 3/4	9 1/4	15 3/8	5 3/8	12 5/8	17 1/8	1 1/2	2 7/8	16 7/8	33											9.0	.81
5	36		2 1/4			18	8 3/4	9 1/4	15 3/8	5 3/8	12 5/8	17 1/8	1 1/2	2 7/8	16 7/8	33											9.0	.81

STATE ROUTE MARKER
M1-6 FOR ASSEMBLIES

WISCONSIN DEPT OF TRANSPORTATION

APPROVED Chester J Spang
for State Traffic Engineer

DATE 3/20/02 PLATE NO. M1-6.9

PROJECT NO: | HWY: | COUNTY: | SHEET NO: 136 | E

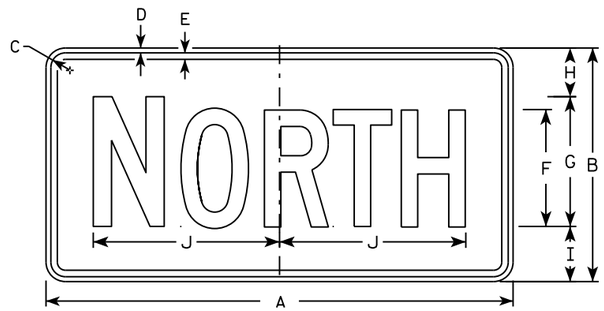

M3-1
MM3-1
MP3-1

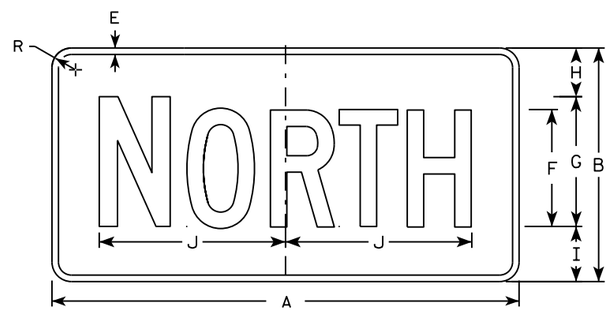

MB3-1
MK3-1
MN3-1

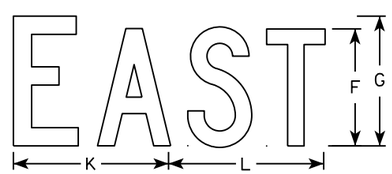

M3-2
MM3-2
MP3-2

MB3-2
MK3-2
MN3-2

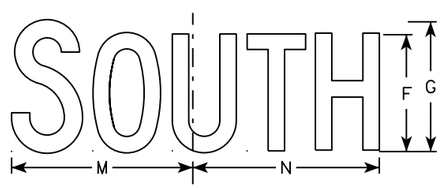

M3-3
MM3-3
MP3-3

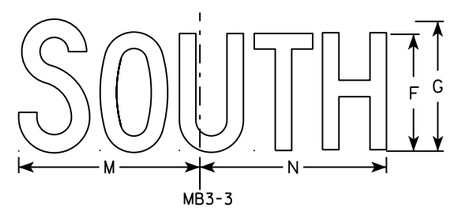

MB3-3
MK3-3
MN3-3

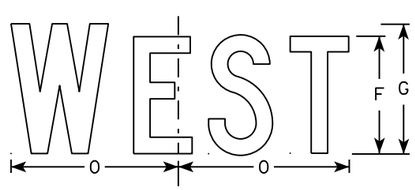

M3-4
MM3-4
MP3-4

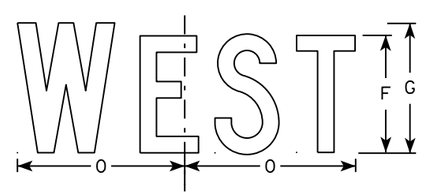

MB3-4
MK3-4
MN3-4

NOTES

1. All Signs Type II - Type H
2. Color:
   Background - See note 5
   Message - See note 5
3. Message Series - C
4. Corners may be square or rounded when base material is plywood but borders shall be rounded as shown. When base material is metal, the corners and borders shall be rounded.
5. M3-1 thru M3-4 Background - White
   Message - Black
   MB3-1 thru MB3-4 Background - Blue
   Message - White
   MK3-1 thru MK3-4 Background - Green
   Message - White
   MM3-1 thru MM3-4 Background - White
   Message - Green
   MN3-1 thru MN3-4 Background - Brown
   Message - White
   MP3-1 thru MP3-4 Background - White
   Message - Blue
6. Note the first letter of each direction is larger than the remainder of the message.

SIZE	A	B	C	D	E	F	G	H	I	J	K	L	M	N	O	P	Q	R	S	T	U	V	W	X	Y	Z	Area sq. ft.
1																											
2	24	12	1 1/8	3/8	3/8	6	7	2 1/4	2 3/4	10 1/4	7 7/8	8 3/8	10 1/4	9 3/4	8 3/4			1 1/2									2.00
3	36	18	1 1/8	3/8	1/2	9	10	3 3/4	4 1/4	14 3/8	12	12 1/8	14	14 1/8	13			1 1/2									4.5
4	36	18	1 1/8	3/8	1/2	9	10	3 3/4	4 1/4	14 3/8	12	12 1/8	14	14 1/8	13			1 1/2									4.5
5	36	18	1 1/8	3/8	1/2	9	10	3 3/4	4 1/4	14 3/8	12	12 1/8	14	14 1/8	13			1 1/2									4.5

STANDARD SIGNS
M3-1 thur M3-4
SERIES

WISCONSIN DEPT OF TRANSPORTATION

APPROVED Matthew R Rauch
for State Traffic Engineer

DATE 10/15/15 PLATE NO M3-1.14

PROJECT NO: | HWY: | COUNTY: | SHEET NO: | E

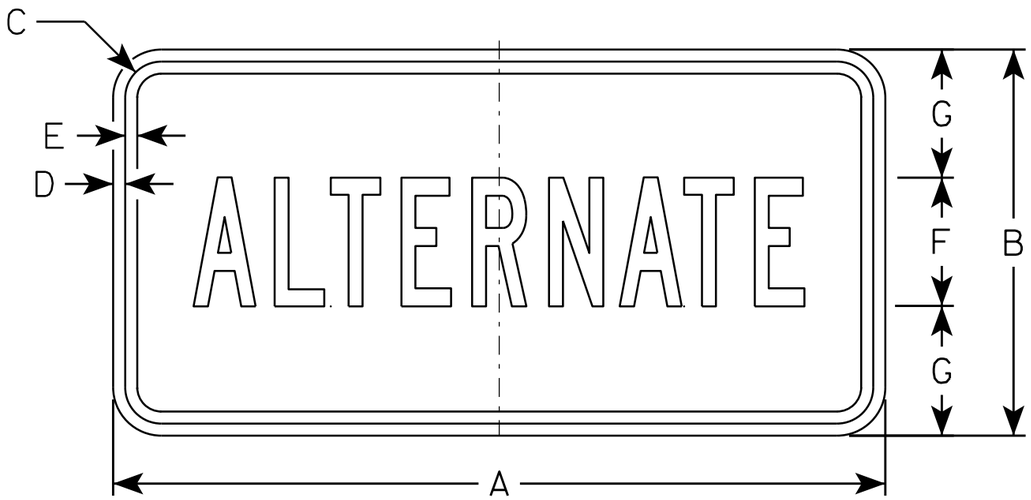

M4 - 1
M04 - 1

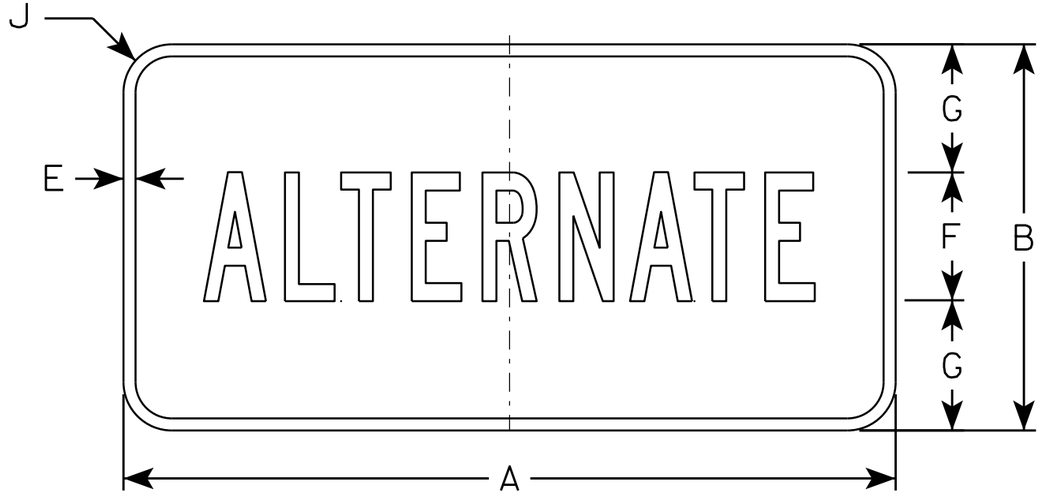

MB4 - 1

NOTES

1. Sign is Type II - Type H except as Shown
2. Color:
   Background - See Note 5
   Message - See note 5
3. Message Series - B
4. Corners may be square or rounded when base material is plywood but borders shall be rounded as shown. When base material is metal, the corners and borders shall be rounded.
5. M4-1 Background - White
   Message - Black

   MB4-1 Background - Blue
   Message - White

   M04-1 Background - Orange - Type F
   Message - Black

SIZE	A	B	C	D	E	F	G	H	I	J	K	L	M	N	O	P	Q	R	S	T	U	V	W	X	Y	Z	Area sq. ft.
1																											
2	24	12	1 1/8	3/8	3/8	4	4	9 3/4	9 1/2	1 1/2																	2.00
3	36	18	1 1/8	3/8	1/2	7	5 1/2	16 3/8	16 1/2	1 1/2																	4.5
4	36	18	1 1/8	3/8	1/2	7	5 1/2	16 3/8	16 1/2	1 1/2																	4.5
5	36	18	1 1/8	3/8	1/2	7	5 1/2	16 3/8	16 1/2	1 1/2																	4.5

STANDARD SIGN
M4 - 1

WISCONSIN DEPT OF TRANSPORTATION

APPROVED Matthew R Rauch
for State Traffic Engineer

DATE 6/30/14 PLATE '14-1.8

PROJECT NO: | HWY: | COUNTY: | SHEET NO: | E

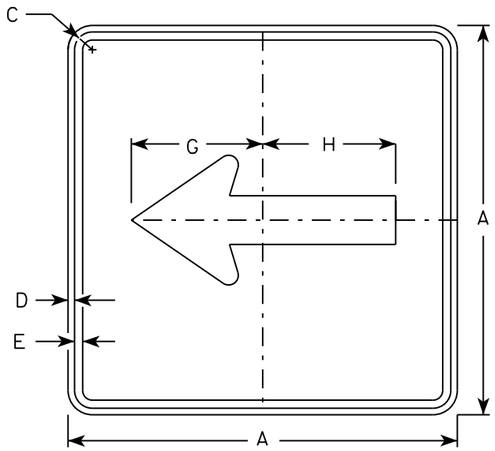

M6-1
MM6-1
MO6-1
MP6-1

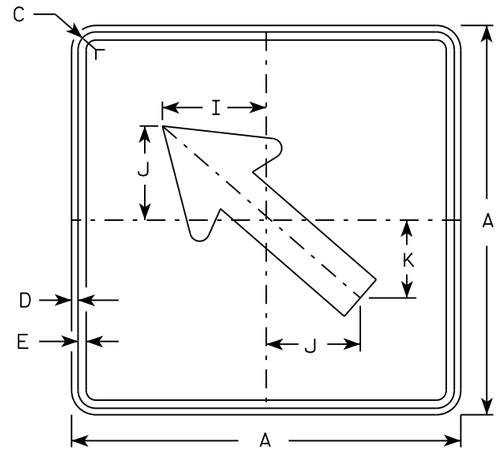

M6-2
MM6-2
MO6-2
MP6-2

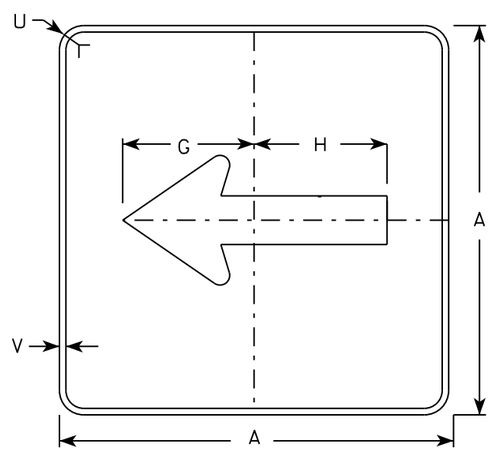

MB6-1
MK6-1
MN6-1
MR6-1

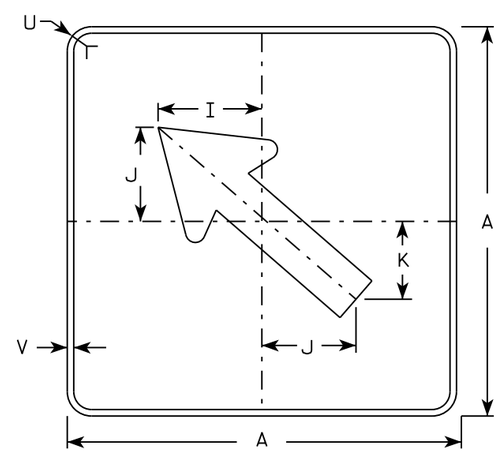

MB6-2
MK6-2
MN6-2
MR6-2

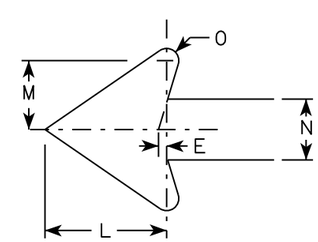

NOTES

1. Signs are Type II - Type H except as Shown
2. Color:
   Background - See note 4
   Message - See note 4
3. Corners may be square or rounded when base material is plywood but borders shall be rounded as shown. When base material is metal, the corners and borders shall be rounded.
4. M6-1 and M6-2 Background - White
   Message - Black
   MB6-1 and MB6-2 Background - Blue
   Message - White
   MK6-1 and MK6-2 Background - Green
   Message - White
   MM6-1 and MM6-2 Background - White
   Message - Green
   MN6-1 and MN6-2 Background - Brown
   Message - White
   MO6-1 and MO6-2 Background - Orange - Type F Reflective
   Message - Black
   MP6-1 and MP6-2 Background - White
   Message - Blue
   MR6-1 and MR6-2 Background - Brown
   Message - Yellow

SIZE	A	B	C	D	E	F	G	H	I	J	K	L	M	N	O	P	Q	R	S	T	U	V	W	X	Y	Z	Area sq. ft.
1																											
2	21		1 1/8	3/8	3/8		7 1/2	7 1/8	5 5/8	5	4 1/4	5 1/4	3	2 5/8	1/2						1 1/2	1/2					3.06
3	30		1 3/8	1/2	5/8		10 3/4	10 1/4	8	7 1/4	6	7 1/2	4 1/4	3 3/4	3/4						1 7/8	1/2					6.25
4	30		1 3/8	1/2	5/8		10 3/4	10 1/4	8	7 1/4	6	7 1/2	4 1/4	3 3/4	3/4						1 7/8	1/2					6.25
5	30		1 3/8	1/2	5/8		10 3/4	10 1/4	8	7 1/4	6	7 1/2	4 1/4	3 3/4	3/4						1 7/8	1/2					6.25

STANDARD SIGN
M6-1 & M6-2
SERIES

WISCONSIN DEPT OF TRANSPORTATION

APPROVED Matthew R Rauch
for State Traffic Engineer

DATE 10/15/15 PLATE 139 M6-1.15

PROJECT NO: | HWY: | COUNTY: | SHEET NO: | E

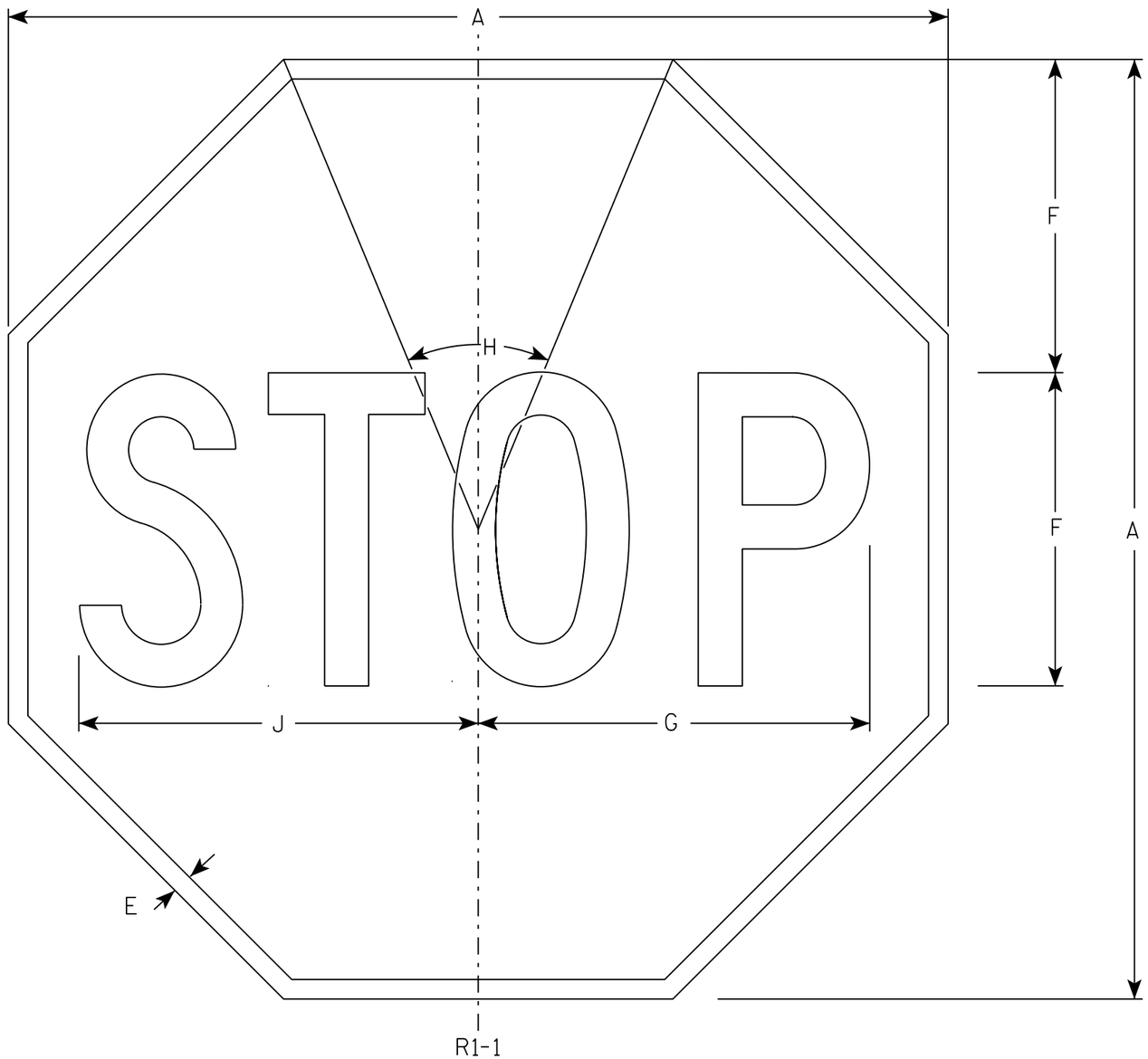

NOTES

1. Sign is Type II - Type H Reflective - reference WIS DOT Standard Specification for HIGHWAY and STRUCTURE CONSTRUCTION latest edition.
2. Color:
   Background - Red
   Message - White
3. Message Series - C

SIZE	A	B	C	D	E	F	G	H	I	J	K	L	M	N	O	P	Q	R	S	T	U	V	W	X	Y	Z	Area sq. ft.
1	30				5/8	10	12 1/2	45°		12 3/4																	5.18
2S	30				5/8	10	12 1/2	45°		12 3/4																	5.18
2M	36				3/4	12	15	45°		15 3/8																	7.46
3	36				3/4	12	15	45°		15 3/8																	7.46
4	48				1	16	20	45°		20 1/2																	13.25
5	48				1	16	20	45°		20 1/2																	13.25
6	18				3/8	6	7 3/4	45°		7 3/4																	1.86
7	12				1/4	4	5	45°		5 1/8																	0.78

STANDARD SIGN
R1-1

WISCONSIN DEPT OF TRANSPORTATION

APPROVED Matthew R Rauch
for State Traffic Engineer

DATE 11/12/15 PLATE NO. R1-1.13

PROJECT NO:	HWY:	COUNTY:		SHEET NO:	E

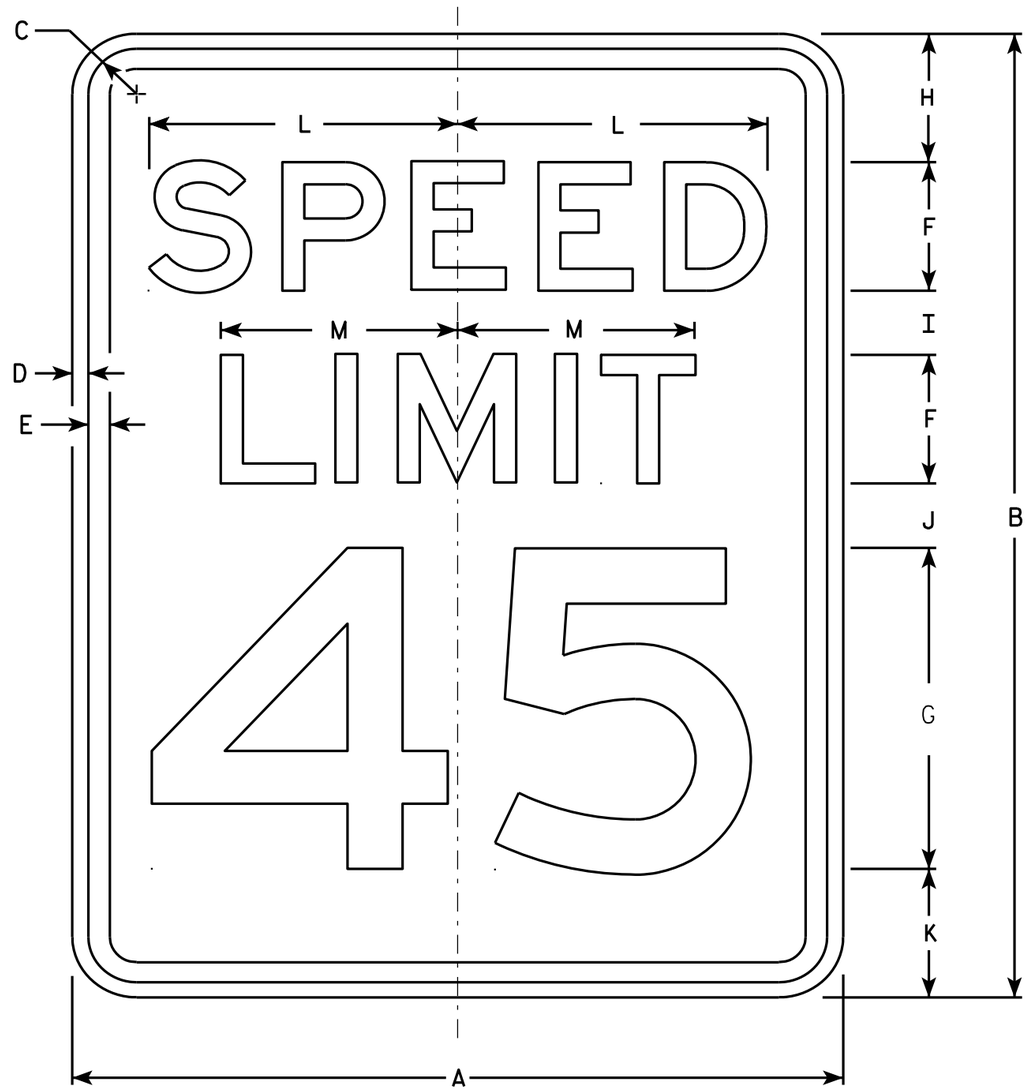

R2-1

NOTES

1. Sign is Type II - Type H Reflective - reference WIS DOT Standard Specification for HIGHWAY and STRUCTURE CONSTRUCTION latest edition.
2. Color:
   Background - White
   Message - Black
3. Message Series - E
4. Corners may be square or rounded when base material is plywood but borders shall be rounded as shown. When base material is metal, the corners and borders shall be rounded.
5. Substitute appropriate numerals and optically adjust spacing to achieve proper balance.

SIZE	A	B	C	D	E	F	G	H	I	J	K	L	M	N	O	P	Q	R	S	T	U	V	W	X	Y	Z	Area sq. ft.
1	18	24	1 1/8	3/8	1/2	3	8	3	2	2	3	7 1/4	5 1/2														3.0
2S	24	30	1 1/8	3/8	1/2	4	10	3	2 1/4	3 3/8	3 3/8	9 5/8	7 3/8														5.0
2M	30	36	1 3/8	1/2	5/8	5	12	5	2 1/2	2 1/2	4	12	9 1/4														7.5
3	36	48	1 3/8	1/2	5/8	6	14	6	5	5	6	14 3/8	11														12.0
4	36	48	1 3/8	1/2	5/8	6	14	6	5	5	6	14 3/8	11														12.0
5	48	60	2 1/4	3/4	1	8	20	6	4 1/2	6 3/4	6 3/4	19 1/4	14 5/8														20.0

STANDARD SIGN
R2-1

WISCONSIN DEPT OF TRANSPORTATION

APPROVED Matthew R Rauch
for State Traffic Engineer

DATE 5/26/10 PLATE NO. R2-1.13

PROJECT NO: | HWY: | COUNTY: | SHEET NO: 141 | E

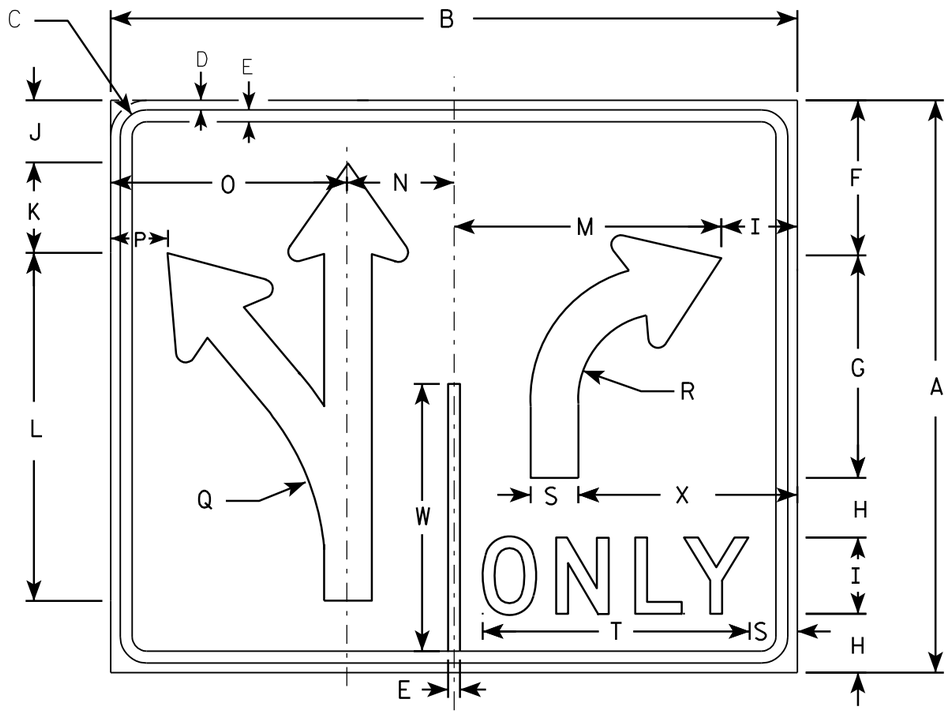

R3-8

NOTES

1. Sign is Type II - Type H Reflective - reference WIS DOT Standard Specification for HIGHWAY and STRUCTURE CONSTRUCTION latest edition.
2. Color:
   Background - WHITE
   Message - BLACK
3. Message Series - D
4. Corners may be square or rounded when base material is plywood but borders shall be rounded as shown. When base material is metal, the corners and borders shall be rounded.

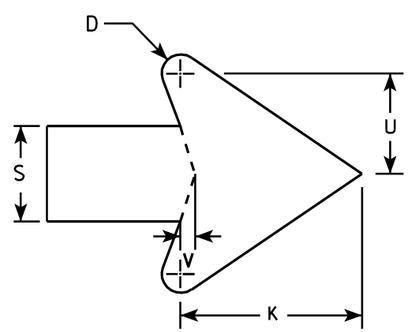

ARROW DETAIL

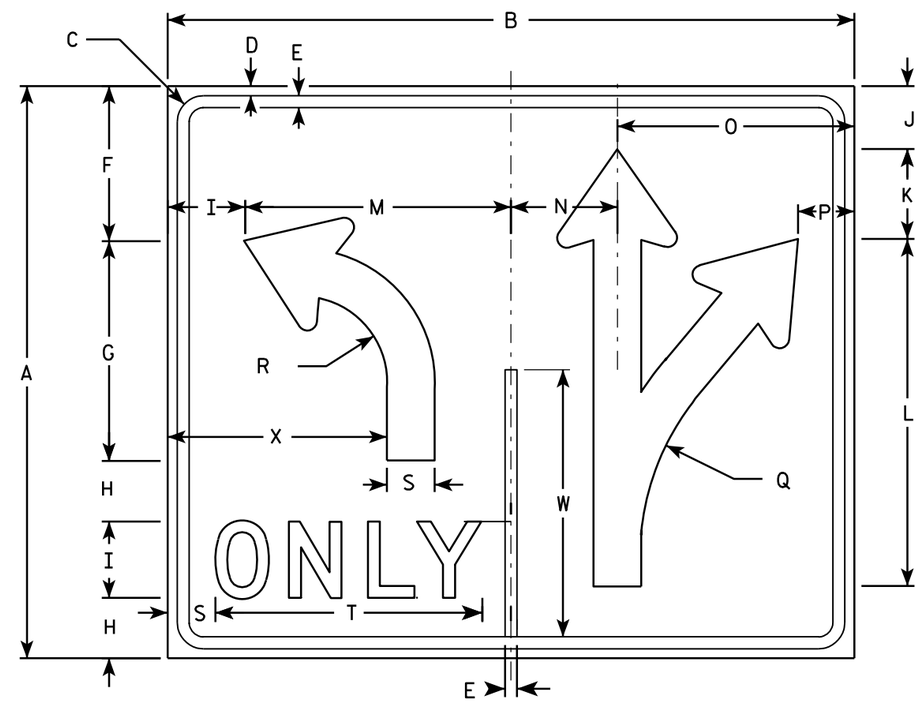

R3-8A

SIZE	A	B	C	D	E	F	G	H	I	J	K	L	M	N	O	P	Q	R	S	T	U	V	W	X	Y	Z	Area sq. ft.
1																											
2S	30	36	1 3/8	1/2	5/8	8 1/8	11 5/8	3 1/8	4	3 1/4	4 3/4	18 1/4	14	5 5/8	12 3/8	3	13 1/4	4 1/2	2 1/2	14	2 5/8	3/8	14	11 1/2			7.5
2M	30	36	1 3/8	1/2	5/8	8 1/8	11 5/8	3 1/8	4	3 1/4	4 3/4	18 1/4	14	5 5/8	12 3/8	3	13 1/4	4 1/2	2 1/2	14	2 5/8	3/8	14	11 1/2			7.5
3																											
4	48	54	2 1/4	3/4	1	13 1/4	18 1/2	5 1/8	6	5 1/4	7 1/8	29 1/8	21	8 3/8	18 5/8	4 3/8	21 7/8	7 1/4	3 3/4	20 5/8	4	5/8	22 3/8	17 1/4			18.0
5	48	54	2 1/4	3/4	1	13 1/4	18 1/2	5 1/8	6	5 1/4	7 1/8	29 1/8	21	8 3/8	18 5/8	4 3/8	21 7/8	7 1/4	3 3/4	20 5/8	4	5/8	22 3/8	17 1/4			18.0

STANDARD SIGN
R3-8 & R3-8A

WISCONSIN DEPT OF TRANSPORTATION

APPROVED Matthew R Rauch
for State Traffic Engineer

DATE 3/18/2011 PLATE NO. R3-8.5

PROJECT NO: | HWY: | COUNTY: | SHEET NO: 142 | E

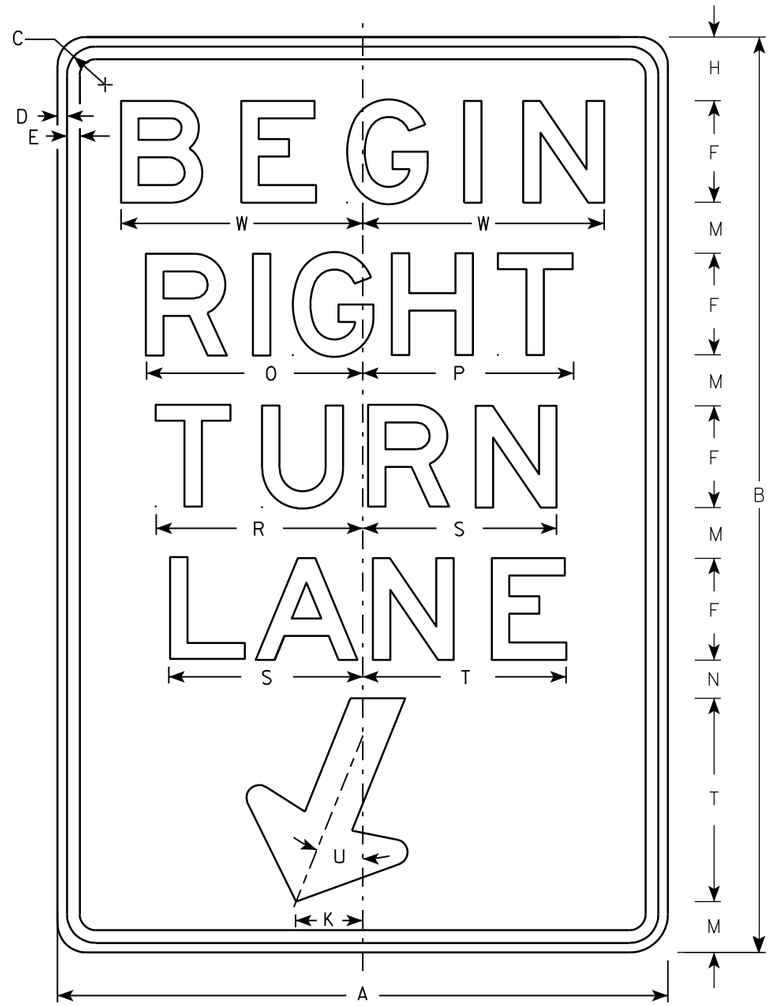

R3-20R

NOTES

1. Sign is Type II - Type H Reflective - reference WIS DOT Standard Specification for HIGHWAY and STRUCTURE CONSTRUCTION latest edition.
2. Color:
   Background - White
   Message - Black
3. Message Series - E
4. Corners may be square or rounded when base material is plywood but borders shall be rounded as shown. When base material is metal, the corners and borders shall be rounded.

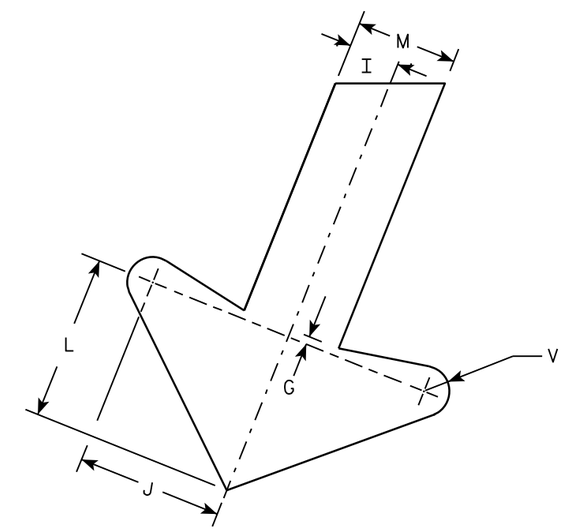

ARROW DETAIL

SIZE	A	B	C	D	E	F	G	H	I	J	K	L	M	N	O	P	Q	R	S	T	U	V	W	X	Y	Z	Area sq. ft.
1																											
2S	24	36	1 1/8	3/8	1/2	4	1/4	2 1/2	1	2 7/8	2 5/8	3 1/4	2	1 1/2	8 1/2	8 1/4		8 1/8	7 5/8	8	22°	1/2	9 1/2				6.0
2M	24	36	1 1/8	3/8	1/2	4	1/4	2 1/2	1	2 7/8	2 5/8	3 1/4	2	1 1/2	8 1/2	8 1/4		8 1/8	7 5/8	8	22°	1/2	9 1/2				6.0
3	36	54	1 3/4	1/2	5/8	6	3/8	3 3/4	1 1/2	4 1/4	4	4 7/8	3	2 1/4	12 3/4	12 1/2		12 1/4	11 1/2	12	22°	3/4	13 1/4				13.5
4																											
5																											

STANDARD SIGN
R3-20R

WISCONSIN DEPT OF TRANSPORTATION

APPROVED Matthew R Rauch
for State Traffic Engineer

DATE 10/18/10 PLATE NO. R3-20R.6

PROJECT NO: | HWY: | COUNTY: | SHEET NO: 143 | E

NOTES

1. Sign is Type II - Type F Reflective - reference WIS DOT Standard Specification for HIGHWAY and STRUCTURE CONSTRUCTION latest edition.
2. Color:
   Background - Yellow
   Message - Black
3. Corners may be square or rounded when base material is plywood but borders shall be rounded as shown. When base material is metal, the corners and borders shall be rounded.
4. W1-2L is the same as W1-2R except the arrow is reversed along the vertical centerline.

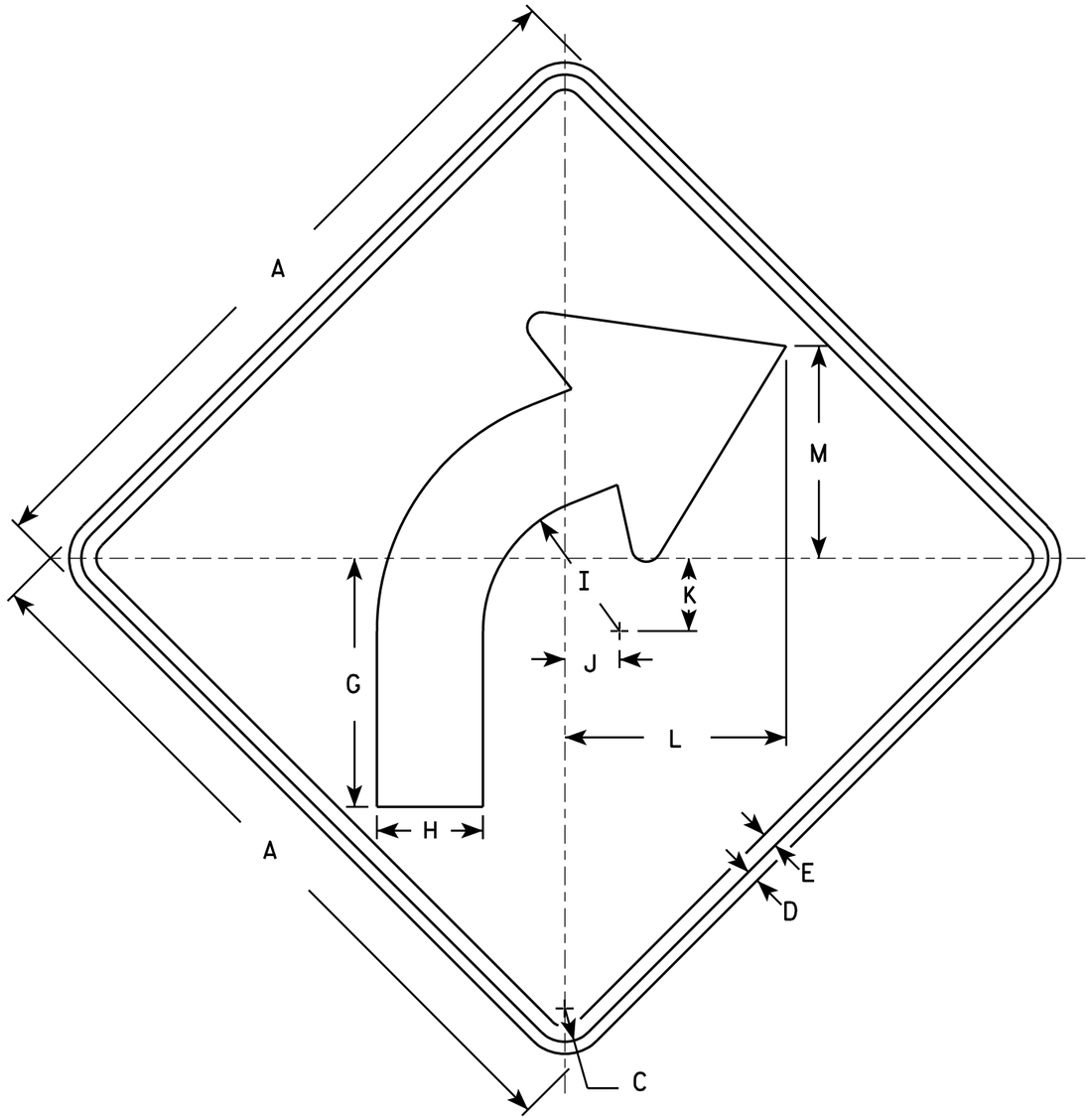

W1-2R

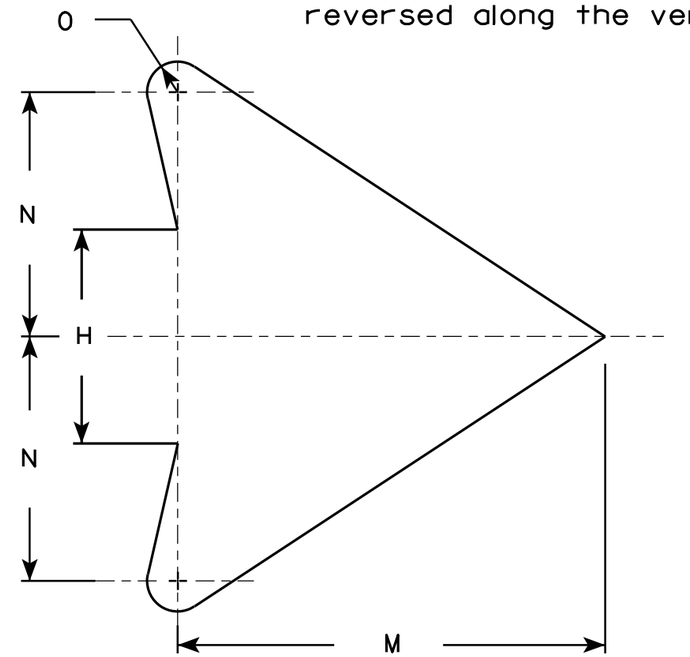

ARROW DETAIL

SIZE	A	B	C	D	E	F	G	H	I	J	K	L	M	N	O	P	Q	R	S	T	U	V	W	X	Y	Z	Area sq. ft.
1	24		1 1/8	3/8	1/2		8 1/4	3 1/2	4 1/2	1 3/4	2 3/8	7 1/4	7	4	1/2												4.0
2S	30		1 3/8	1/2	5/8		10 1/4	4 3/8	5 5/8	2 1/4	3	9 1/8	8 3/4	5	5/8												6.25
2M	36		1 5/8	5/8	3/4		12 3/8	5 1/4	6 3/4	2 5/8	3 1/2	10 7/8	10 1/2	6	3/4												9.0
3	36		1 5/8	5/8	3/4		12 3/8	5 1/4	6 3/4	2 5/8	3 1/2	10 7/8	10 1/2	6	3/4												9.0
4	36		1 5/8	5/8	3/4		12 3/8	5 1/4	6 3/4	2 5/8	3 1/2	10 7/8	10 1/2	6	3/4												9.0
5	48		2 1/4	3/4	1		16 1/2	7	9	3 1/2	4 5/8	14 1/2	14	8	1												16.0

STANDARD SIGN
W1-2

WISCONSIN DEPT OF TRANSPORTATION

APPROVED Matthew R Rauch
for State Traffic Engineer

DATE 5/15/12 PLATE NO. W1-2.10

PROJECT NO:	HWY:	COUNTY:		SHEET NO: 144	E

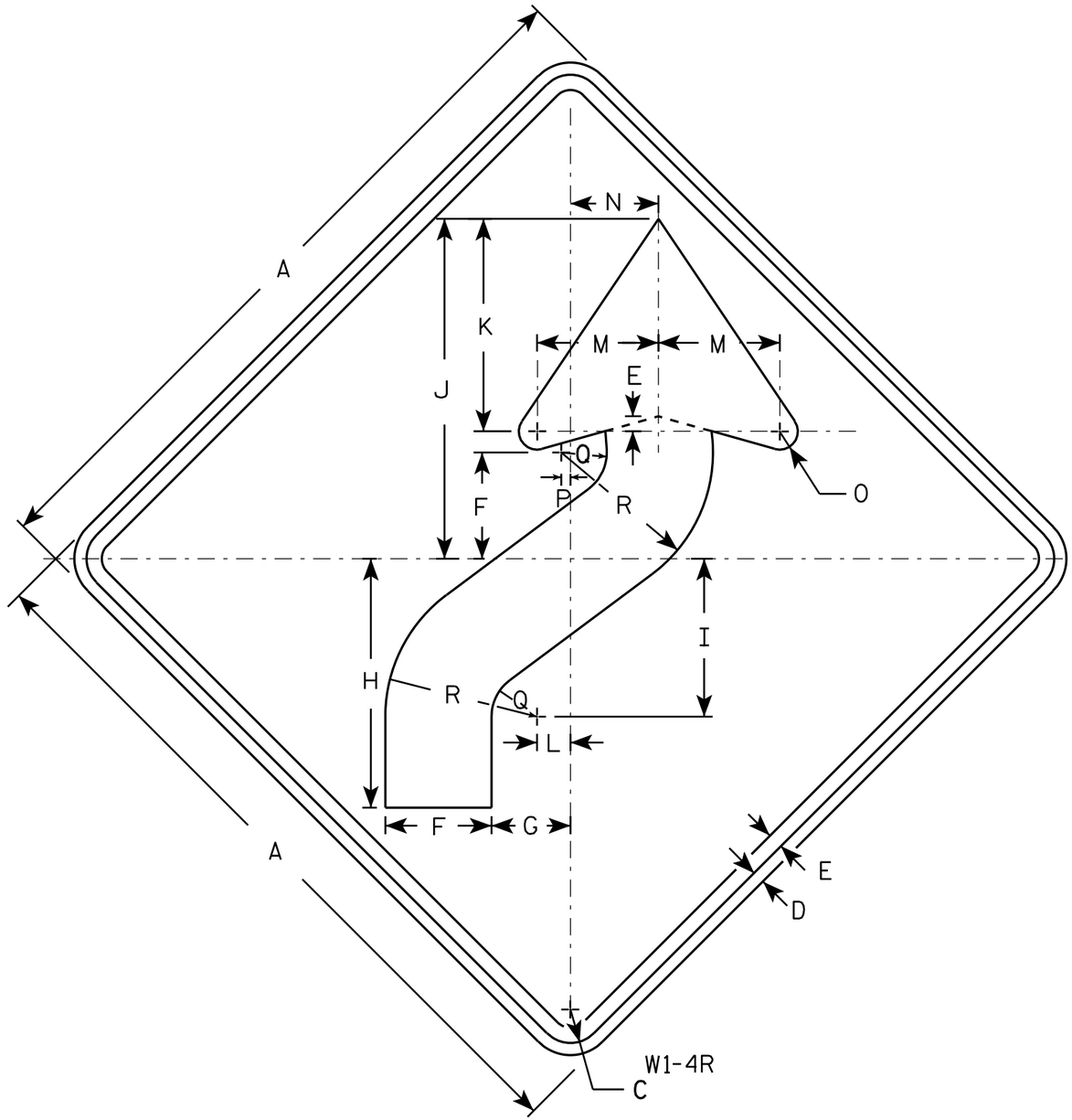

NOTES

1. Sign is Type II - Type F Reflective - reference WIS DOT Standard Specification for HIGHWAY and STRUCTURE CONSTRUCTION latest edition.
2. Color:
   Background - Yellow
   Message - Black
3. Corners may be square or rounded when base material is plywood but borders shall be rounded as shown. When base material is metal, the corners and borders shall be rounded.
4. W1-4L is the same as W1-4R except the arrow is reversed along the vertical centerline.

SIZE	A	B	C	D	E	F	G	H	I	J	K	L	M	N	O	P	Q	R	S	T	U	V	W	X	Y	Z	Area sq. ft.
1	24		1 1/8	3/8	1/2	3 1/2	2 5/8	8 1/4	5 1/4	11 1/4	7	1 1/8	4	3	5/8	1/4	1 1/2	5									4.0
2S	30		1 3/8	1/2	5/8	4 3/8	3 1/4	10 1/4	6 1/2	14	8 3/4	1 3/8	5	3 5/8	3/4	3/8	1 7/8	6 1/4									6.25
2M	36		1 5/8	5/8	3/4	5 1/4	4	12 3/8	7 7/8	16 7/8	10 1/2	1 5/8	6	4 1/2	1	1/2	2 1/4	7 1/2									9.0
3	36		1 5/8	5/8	3/4	5 1/4	4	12 3/8	7 7/8	16 7/8	10 1/2	1 5/8	6	4 1/2	1	1/2	2 1/4	7 1/2									9.0
4	36		1 5/8	5/8	3/4	5 1/4	4	12 3/8	7 7/8	16 7/8	10 1/2	1 5/8	6	4 1/2	1	1/2	2 1/4	7 1/2									9.0
5	48		2 1/4	3/4	1	7	5 1/4	16 1/2	10 1/2	22 1/2	14	2 1/4	8	6	1 1/4	5/8	3	10									16.0

STANDARD SIGN
W1-4

WISCONSIN DEPT OF TRANSPORTATION

APPROVED Matthew R Rauch
for State Traffic Engineer

DATE 5/17/12 PLATE NO. W1-4.11

PROJECT NO: | HWY: | COUNTY: | SHEET NO: 145 | E

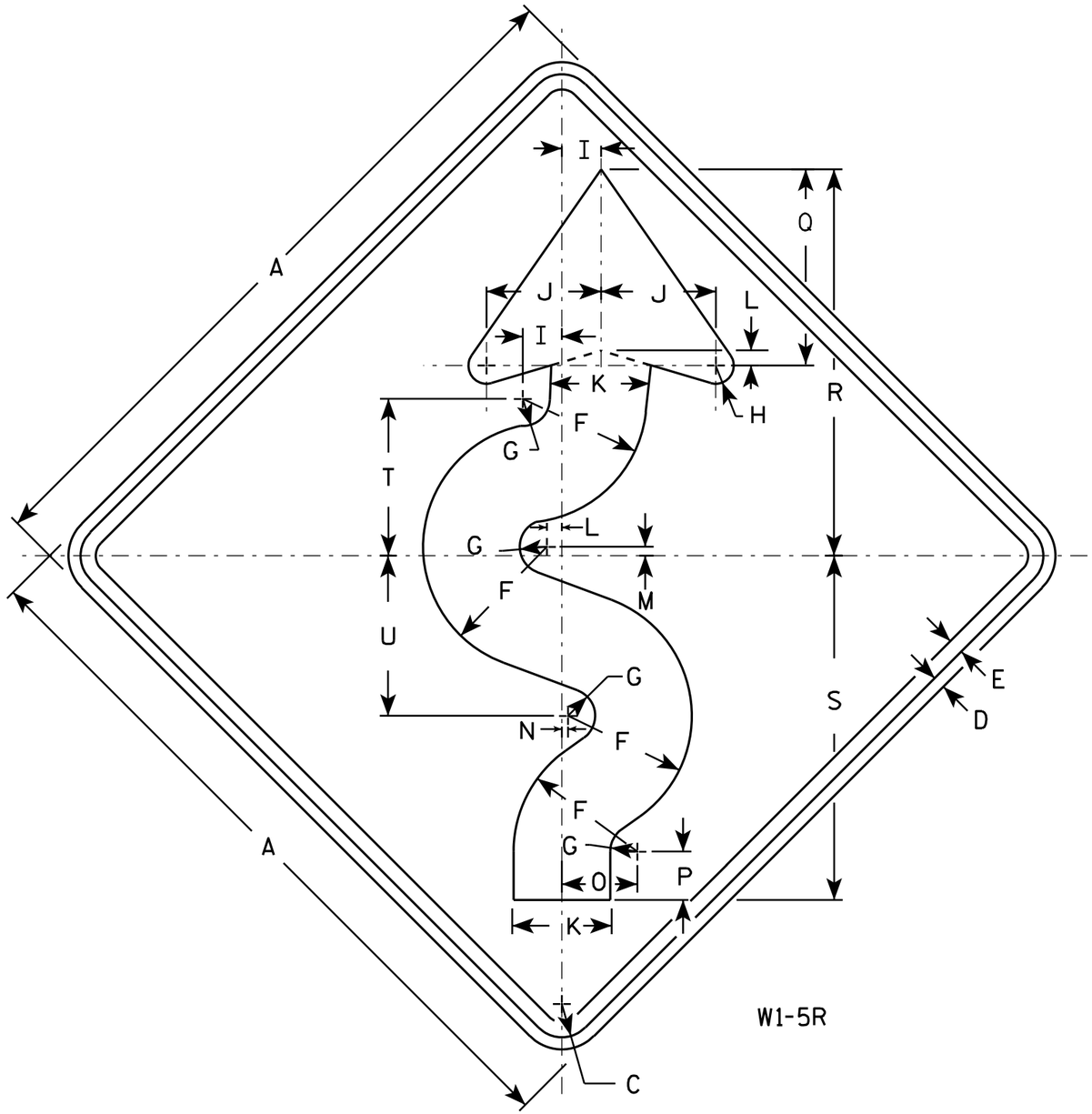

W1-5R

NOTES

1. Sign is Type II - Type F Reflective - reference WIS DOT Standard Specification for HIGHWAY and STRUCTURE CONSTRUCTION latest edition.
2. Color:
   Background - Yellow
   Message - Black
3. Corners may be square or rounded when base material is plywood but borders shall be rounded as shown. When base material is metal, the corners and borders shall be rounded.
4. W1-5L is the same as W1-5R except the arrow is reversed along the vertical centerline.

SIZE	A	B	C	D	E	F	G	H	I	J	K	L	M	N	O	P	Q	R	S	T	U	V	W	X	Y	Z	Area sq. ft.
1	24		1 1/8	3/8	1/2	4 1/8	7/8	5/8	1 1/4	3 3/4	3 1/4	1/2	1/4	1/8	2 1/2	1 5/8	6 1/2	12 3/4	11 3/8	5 1/4	5 1/4						4.0
2S	30		1 3/8	1/2	5/8	5 1/8	1 1/8	3/4	1 5/8	4 3/4	4 1/8	5/8	3/8	1/4	3 1/8	2	8 1/8	16	14 1/4	6 1/2	6 5/8						6.25
2M	36		1 5/8	5/8	3/4	6 1/4	1 3/8	1	1 7/8	5 5/8	4 7/8	3/4	3/8	1/4	3 3/4	2 7/8	9 3/4	19 1/8	17 1/8	7 3/4	7 7/8						9.0
3	36		1 5/8	5/8	3/4	6 1/4	1 3/8	1	1 7/8	5 5/8	4 7/8	3/4	3/8	1/4	3 3/4	2 7/8	9 3/4	19 1/8	17 1/8	7 3/4	7 7/8						9.0
4	36		1 5/8	5/8	3/4	6 1/4	1 3/8	1	1 7/8	5 5/8	4 7/8	3/4	3/8	1/4	3 3/4	2 7/8	9 3/4	19 1/8	17 1/8	7 3/4	7 7/8						9.0
5	48		2 1/4	3/4	1	8 1/4	1 3/4	1 1/4	2 1/2	7 1/2	6 1/2	1	1/2	3/8	5	3 1/4	13	25 1/2	22 3/4	10 3/8	10 1/2						16.0

STANDARD SIGN
W1-5

WISCONSIN DEPT OF TRANSPORTATION

APPROVED Matthew R Rauch
for State Traffic Engineer

DATE 5/18/12 PLATE NO. W1-5.8

PROJECT NO: | HWY: | COUNTY: | SHEET NO: 146 | E

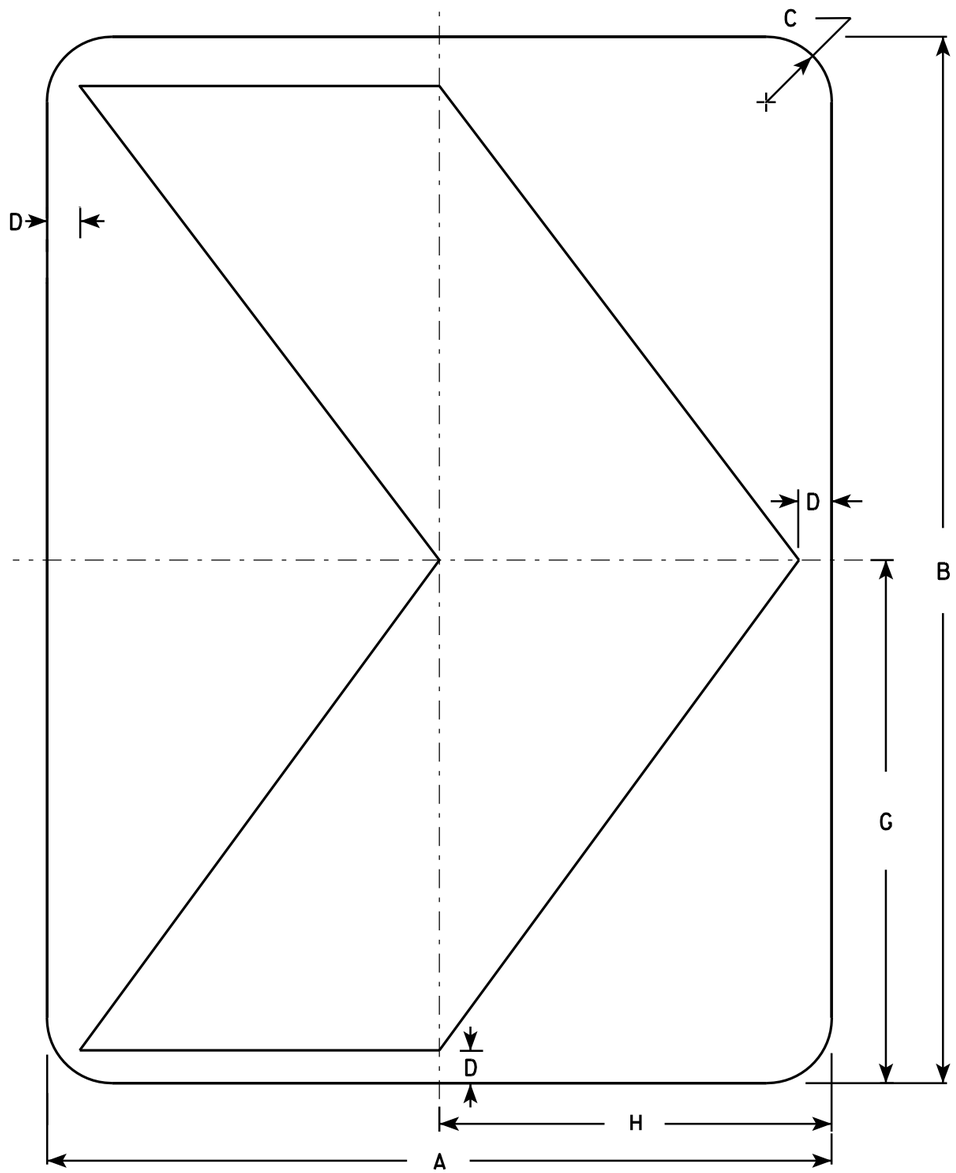

W1-8

NOTES

1. Sign is Type II - Type F Reflective - reference WIS DOT Standard Specification for HIGHWAY and STRUCTURE CONSTRUCTION latest edition.
2. Color:
   Background - Yellow
   Message - Black
3. Corners may be square or rounded when base material is plywood but borders shall be rounded as shown. When base material is metal, the corners and borders shall be rounded.

SIZE	A	B	C	D	E	F	G	H	I	J	K	L	M	N	O	P	Q	R	S	T	U	V	W	X	Y	Z	Area sq. ft.
1	12	18	1 1/2	1/2			9	6																			1.5
2S	18	24	1 1/2	3/4			12	9																			3.0
2M	18	24	1 1/2	3/4			12	9																			3.0
3	24	30	1 1/2	1			15	12																			5.0
4	30	36	1 7/8	1 1/4			18	15																			7.5
5	36	48	2 1/4	1 1/2			24	18																			12.0

STANDARD SIGN
W1-8

WISCONSIN DEPT OF TRANSPORTATION

APPROVED Matthew R Rauch for State Traffic Engineer

DATE 6/7/10 PLATE NO. W1-8.6

PROJECT NO:

SHEET NO: 147 E

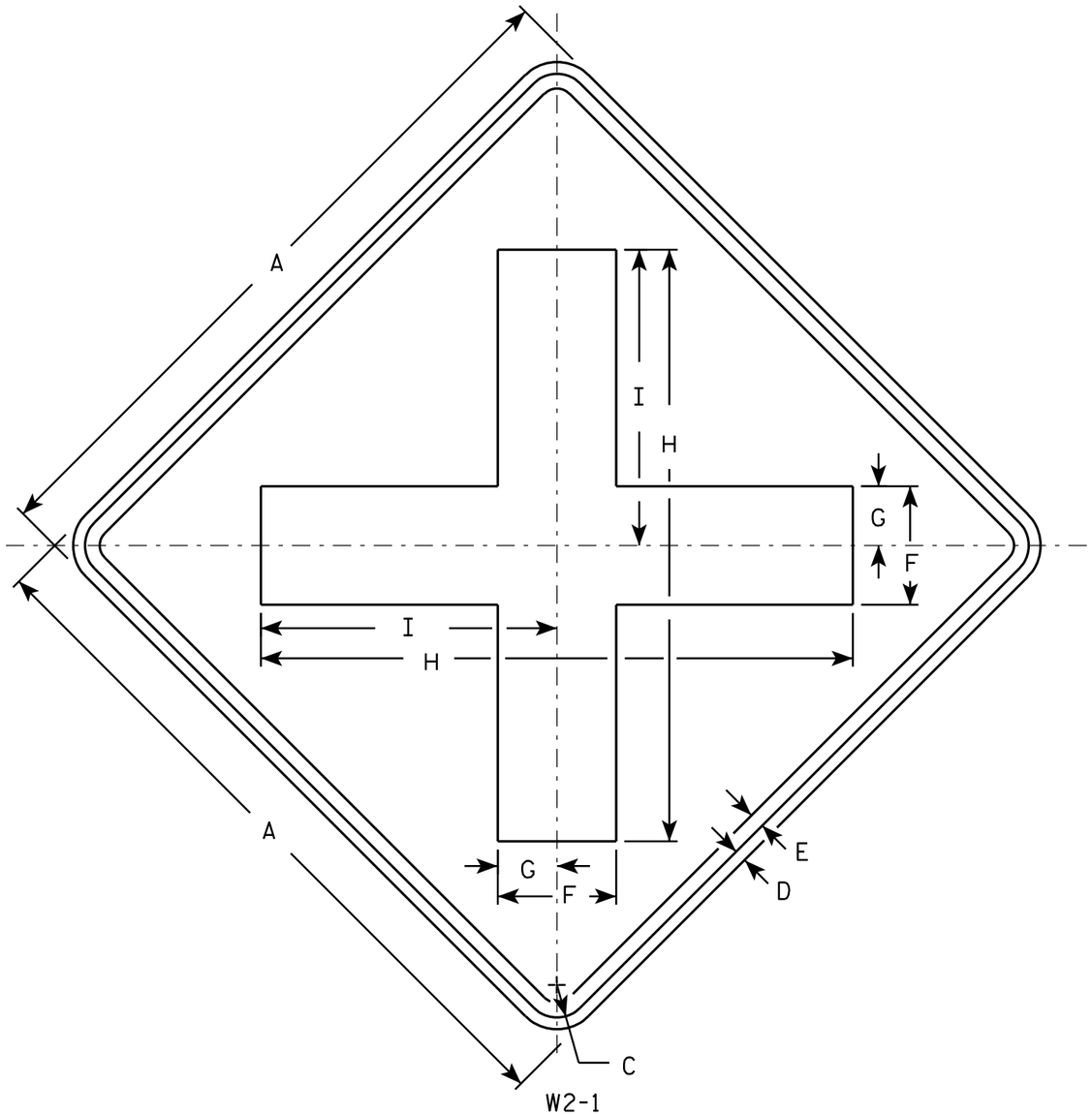

NOTES

1. Sign is Type II - Type F Reflective - reference WIS DOT Standard Specification for HIGHWAY and STRUCTURE CONSTRUCTION latest edition.
2. Color:
   Background - Yellow
   Message - Black
3. Corners may be square or rounded when base material is plywood but borders shall be rounded as shown. When base material is metal, the corners and borders shall be rounded.

SIZE	A	B	C	D	E	F	G	H	I	J	K	L	M	N	O	P	Q	R	S	T	U	V	W	X	Y	Z	Area sq. ft.
1	24		1 1/8	3/8	1/2	4	2	20	10																		4.0
2S	30		1 3/8	1/2	5/8	5	2 1/2	25	12 1/2																		6.25
2M	30		1 3/8	1/2	5/8	5	2 1/2	25	12 1/2																		6.25
3	36		1 5/8	5/8	3/4	6	3	30	15																		9.0
4	48		2 1/4	3/4	1	8	4	40	20																		16.0
5																											

STANDARD SIGN
W2-1

WISCONSIN DEPT OF TRANSPORTATION

APPROVED Matthew R Rauch
for State Traffic Engineer

DATE 5/29/12 PLATE NO. W2-1.9

PROJECT NO:	HWY:	COUNTY:		SHEET NO: 148	E

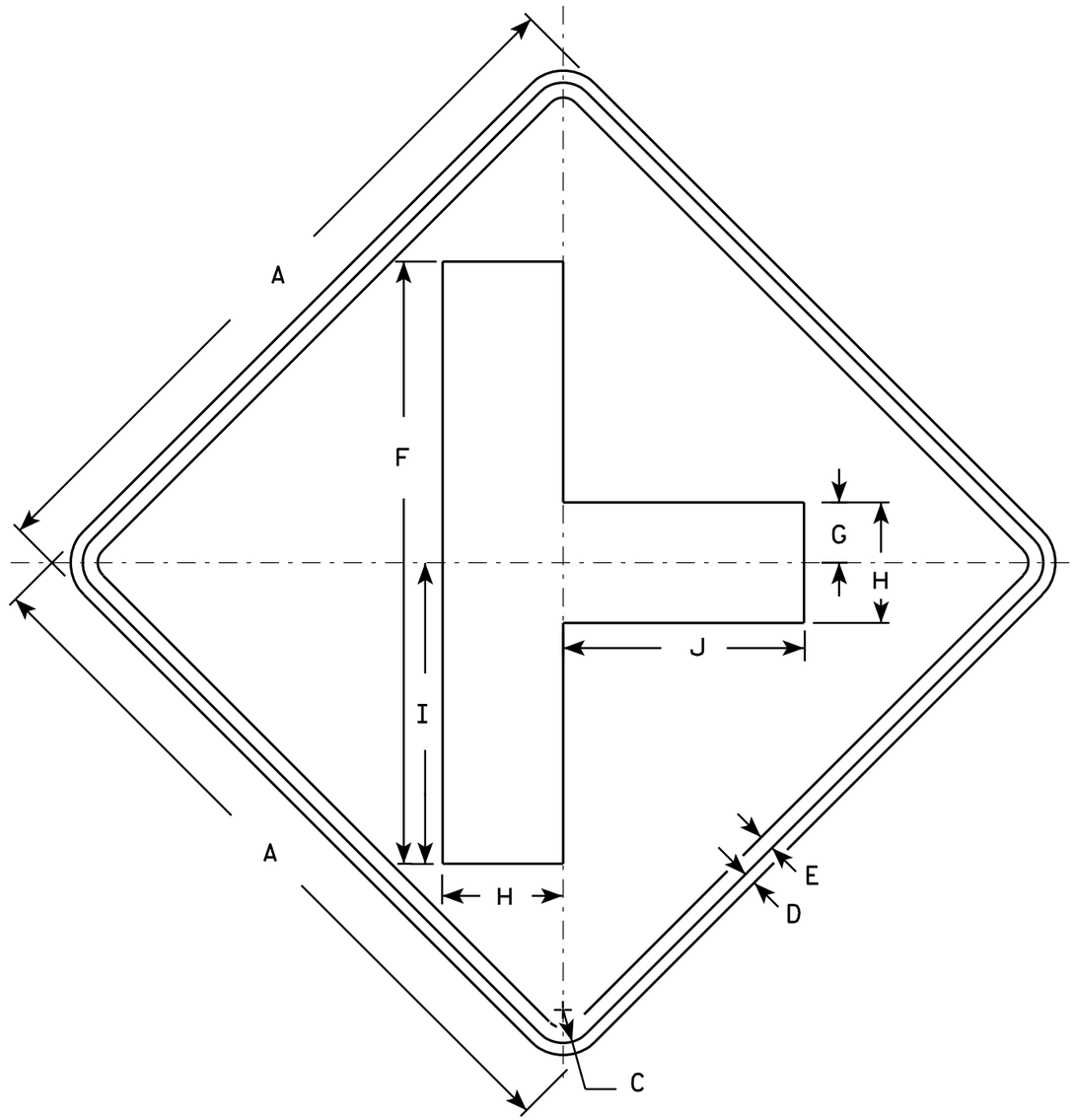

W2-2

NOTES

1. Sign is Type II - Type F Reflective - reference WIS DOT Standard Specification for HIGHWAY and STRUCTURE CONSTRUCTION latest edition.
2. Color:
   Background - Yellow
   Message - Black
3. Corners may be square or rounded when base material is plywood but borders shall be rounded as shown. When base material is metal, the corners and borders shall be rounded.

SIZE	A	B	C	D	E	F	G	H	I	J	K	L	M	N	O	P	Q	R	S	T	U	V	W	X	Y	Z	Area sq. ft.
1	24		1 1/8	3/8	1/2	20	2	4	10	8																	4.0
2S	30		1 3/8	1/2	5/8	25	2 1/2	5	12 1/2	10																	6.25
2M	30		1 3/8	1/2	5/8	25	2 1/2	5	12 1/2	10																	6.25
3	36		1 5/8	5/8	3/4	30	3	6	15	12																	9.0
4	48		2 1/4	3/4	1	40	4	8	20	16																	16.0
5																											

STANDARD SIGN
W2-2

WISCONSIN DEPT OF TRANSPORTATION

APPROVED Matthew R Rauch
for State Traffic Engineer

DATE 5/29/12 PLATE NO. W2-2.6

PROJECT NO: | HWY: | COUNTY: | SHEET NO: 149 | E

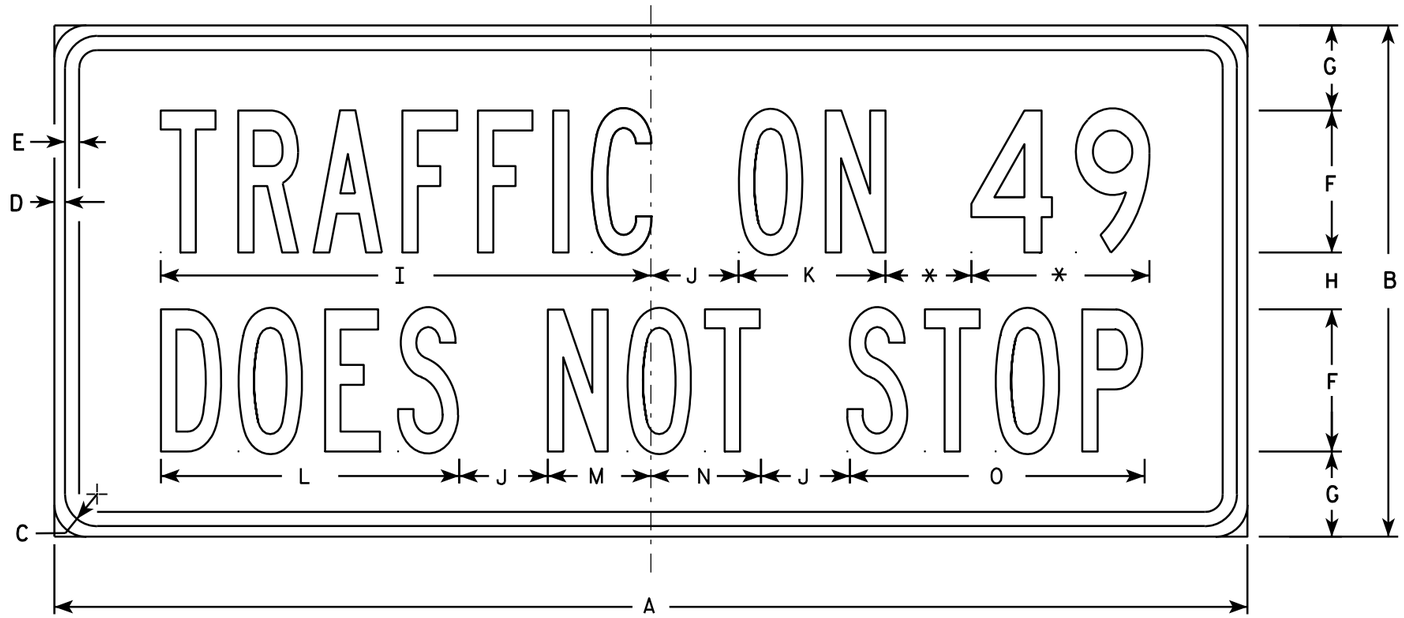

W4-4C

* VARIES

NOTES

1. Sign is Type II - Type F Reflective - reference WIS DOT Standard Specification for HIGHWAY and STRUCTURE CONSTRUCTION latest edition.
2. Color:
   Background - Yellow
   Message - Black
3. Message Series - B (See note 5)
4. Corners may be square or rounded when base material is plywood but borders shall be rounded as shown. When base material is metal, the corners and borders shall be rounded.
5. Highway Number usually Series D. Substitute appropriate numerals and optically adjust spacing to achieve proper balance.

SIZE	A	B	C	D	E	F	G	H	I	J	K	L	M	N	O	P	Q	R	S	T	U	V	W	X	Y	Z	Area sq. ft.
1																											
2S	24	12	1 1/8	3/8	3/8	3	2 1/4	1 1/2	10 3/8	1 1/2	3 1/8	6 1/4	2 1/4	2 1/4	6 1/4												2.0
2M	24	12	1 1/8	3/8	3/8	3	2 1/4	1 1/2	10 3/8	1 1/2	3 1/8	6 1/4	2 1/4	2 1/4	6 1/4												2.0
3	36	15	1 1/8	3/8	1/2	4	2 5/8	1 3/4	13 7/8	2 3/8	4 1/4	8 3/8	3 1/8	3 1/8	8 3/8												3.75
4	42	18	1 1/8	3/8	1/2	5	3	2	17 1/4	3 1/8	5 1/8	10 1/2	3 7/8	3 7/8	10 3/8												5.25
5																											

STANDARD SIGN
W4-4C

WISCONSIN DEPT OF TRANSPORTATION

APPROVED Matthew R Rauch
for State Traffic Engineer

DATE 03/12/13 PLATE NO. W4-4.2

PROJECT NO: | HWY: | COUNTY: | SHEET NO: 150 | E

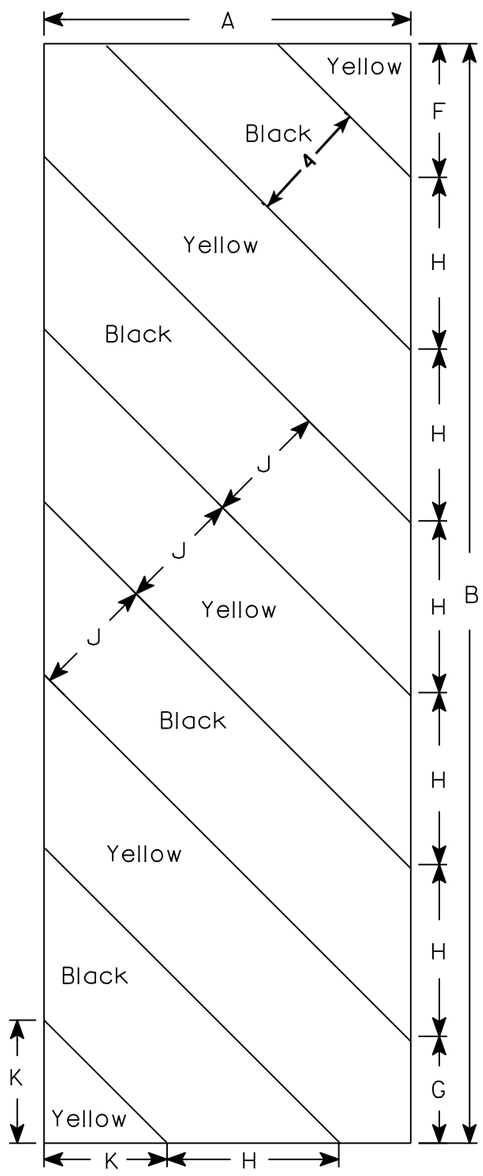

W5-52L

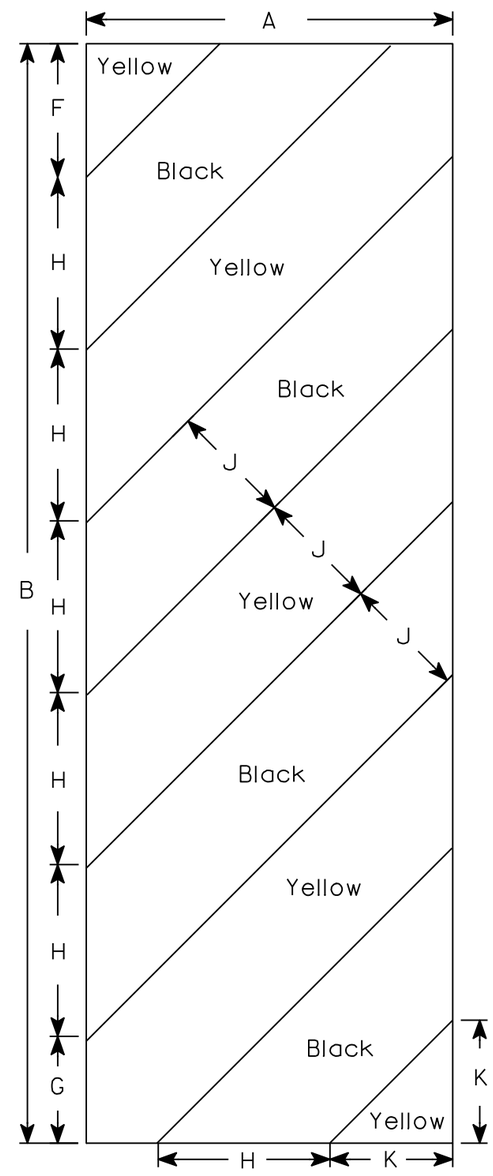

W5-52R

NOTES

1. Sign is Type II - Type F Reflective - reference WIS DOT Standard Specification for HIGHWAY and STRUCTURE CONSTRUCTION latest edition.
2. Color:
   Background - Yellow
   Message - Black
3. Corners may be square or rounded when base material is plywood but borders shall be rounded as shown. When base material is metal, the corners and borders shall be rounded.
4. Alternate colors of stripes as shown.

SIZE	A	B	C	D	E	F	G	H	I	J	K	L	M	N	O	P	Q	R	S	T	U	V	W	X	Y	Z	Area sq. ft.
1																											
2S	12	36				4 3/8	3 1/2	5 5/8	45°	4	4																3.0
2M	12	36				4 3/8	3 1/2	5 5/8	45°	4	4																3.0
3	18	54				6	5 1/2	8 1/2	45°	6	6 9/16																6.75
4																											
5																											

STANDARD SIGN
W5-52L & W5-52R

WISCONSIN DEPT OF TRANSPORTATION

APPROVED Matthew R Rauch
for State Traffic Engineer

DATE 5/29/12 PLATE NO. W5-52.9

PROJECT NO: | HWY: | COUNTY: | SHEET NO: 151 | E

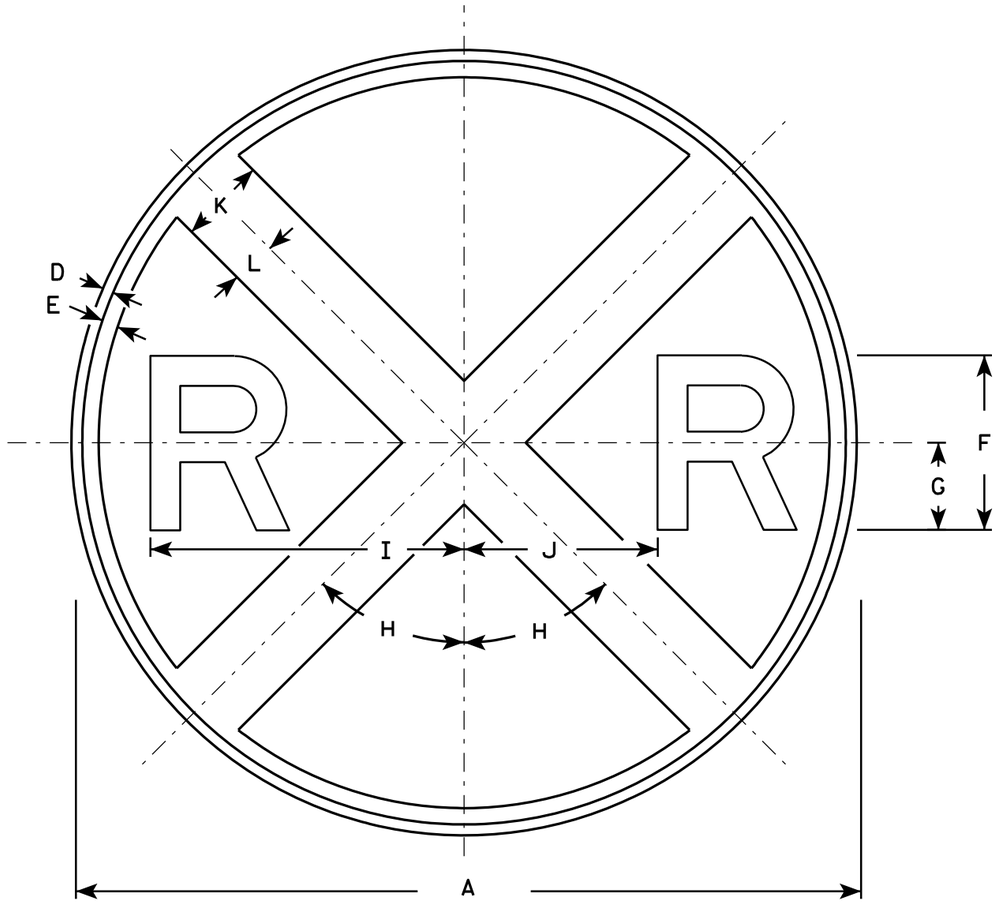

W10-1

NOTES

1. Sign is Type II - Type F Reflective - reference WIS DOT Standard Specification for HIGHWAY and STRUCTURE CONSTRUCTION latest edition.
2. Color:
   Background - Yellow
   Message - Black
3. Message Series - E

SIZE	A	B	C	D	E	F	G	H	I	J	K	L	M	N	O	P	Q	R	S	T	U	V	W	X	Y	Z	Area sq. ft.
1	30			3/8	5/8	7	3 1/2	45°	12 3/8	7 1/8	3	1 1/2															4.91
2S	36			5/8	3/4	8	4	45°	14 3/8	8 5/8	4	2															7.07
2M	36			5/8	3/4	8	4	45°	14 3/8	8 5/8	4	2															7.07
3																											
4	48			3/4	1 1/4	10	5	45°	18 3/8	11 5/8	5	2 1/2															12.57
5																											

STANDARD SIGN
W10-1

WISCONSIN DEPT OF TRANSPORTATION

APPROVED Matthew R Rauch for State Traffic Engineer
DATE 3/13/13 PLATE NO. W10-1.8

PROJECT NO: | HWY: | COUNTY: | SHEET NO: 152 | E

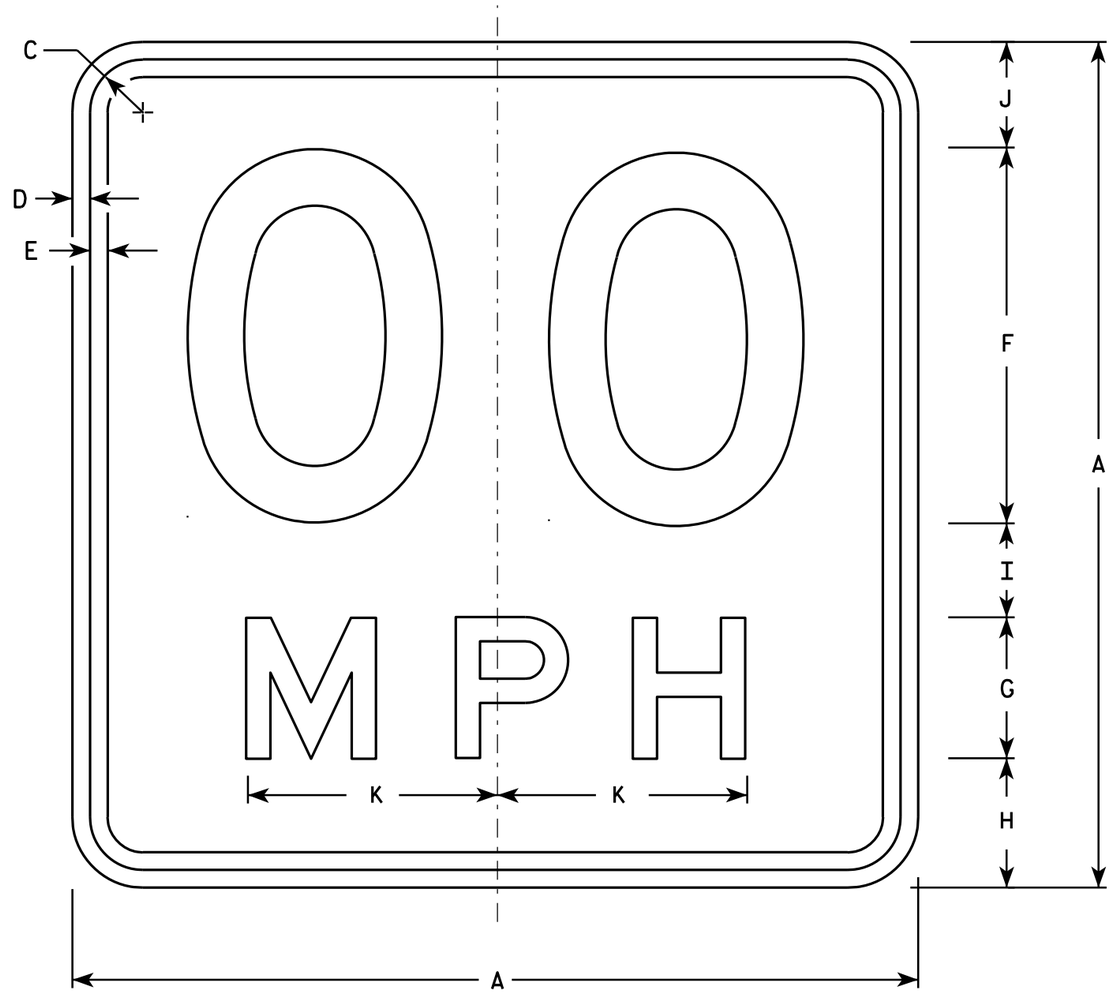

W13-1

* For 30" x 30" Warning Signs, use 18" x 18" W13-1 signs.
For 36" x 36" Warning Signs, use 24" x 24" W13-1 signs.

NOTES

1. Sign is Type II - Type F Reflective - reference WIS DOT Standard Specification for HIGHWAY and STRUCTURE CONSTRUCTION latest edition.
2. Color:
   Background - Yellow
   Message - Black
3. Message Series - See Note 6
4. Corners may be square or rounded when base material is plywood but borders shall be rounded as shown. When base material is metal, the corners and borders shall be rounded.
5. Substitute appropriate numerals and optically space about centerline to achieve proper balance.
6. Line 1 is Series D
   Line 2 is Series E

SIZE	A	B	C	D	E	F	G	H	I	J	K	L	M	N	O	P	Q	R	S	T	U	V	W	X	Y	Z	Area sq. ft.
1	18		1 1/8	3/8	3/8	8	3	2 3/4	2	2 1/4	5 3/8																2.25
* 2S	18		1 1/8	3/8	3/8	8	3	2 3/4	2	2 1/4	5 3/8																2.25
* 2M	18		1 1/8	3/8	3/8	8	3	2 3/4	2	2 1/4	5 3/8																2.25
3	24		1 1/8	3/8	1/2	10	4	4	2 3/4	3 1/4	6 5/8																4.00
4	36		1 5/8	5/8	3/4	16	6	5 1/2	4	4 1/2	10 5/8																9.00
5	36		1 5/8	5/8	3/4	16	6	5 1/2	4	4 1/2	10 5/8																9.00

STANDARD SIGN
W13-1

WISCONSIN DEPT OF TRANSPORTATION

APPROVED Matthew R Rauch
For State Traffic Engineer

DATE 5/31/12 PLATE NO. W13-1.16

PROJECT NO:	HWY:	COUNTY:		SHEET NO: 153	E

NOTES

1. Sign is Type II - Type F Reflective - reference WIS DOT Standard Specification for HIGHWAY and STRUCTURE CONSTRUCTION latest edition.
2. Color:
   Background - Yellow
   Message - Black
3. Message Series - See note 5
4. Corners and borders shall be rounded on all base materials for this sign.
5. Lines 1 and 2 are Series D.
   Line 3 is series C.

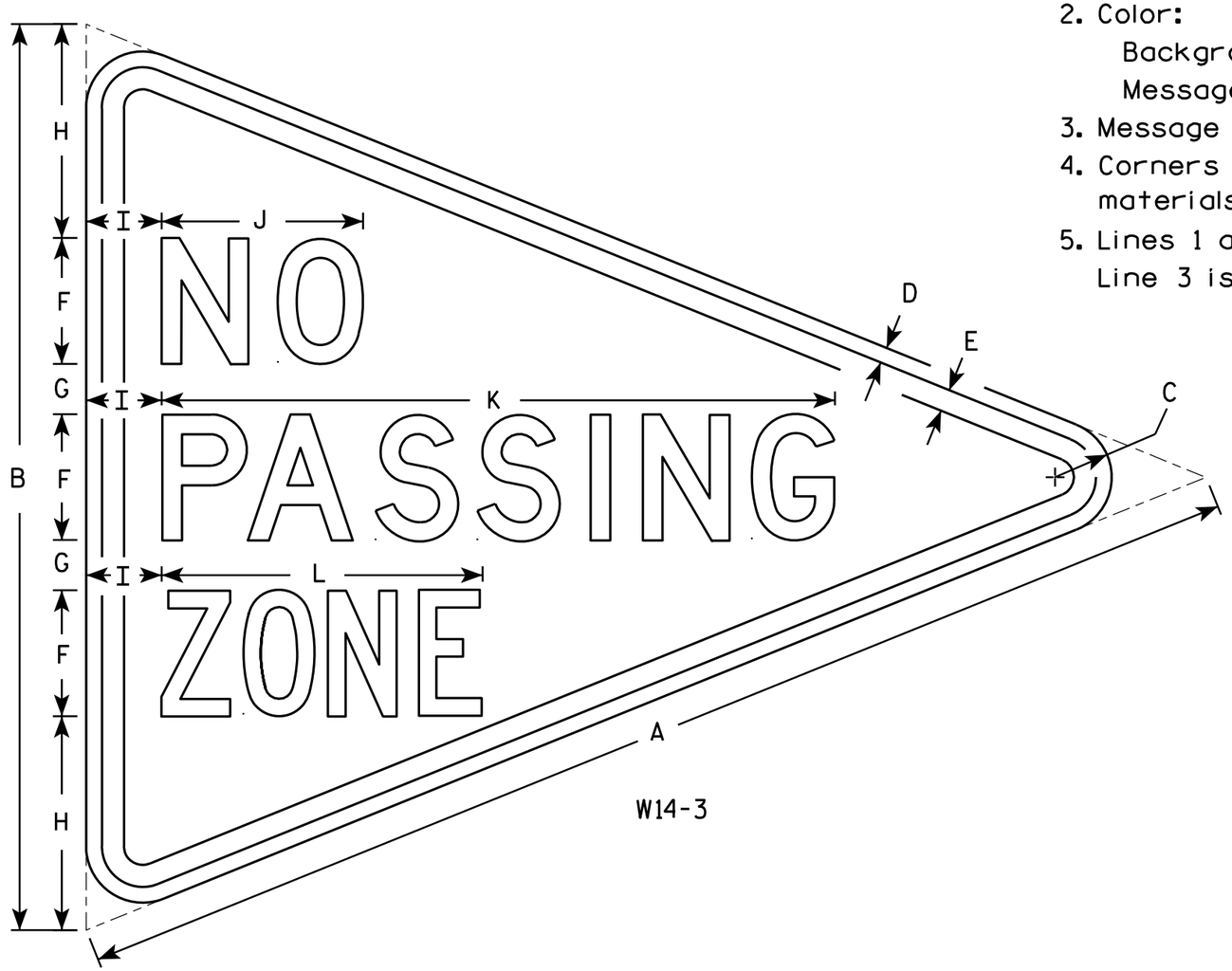

W14-3

SIZE	A	B	C	D	E	F	G	H	I	J	K	L	M	N	O	P	Q	R	S	T	U	V	W	X	Y	Z	Area sq. ft.
1																											
2S	48	36	2 1/4	5/8	7/8	5	2	8 1/2	3	8	26 3/4	12 3/4															6.0
2M	48	36	2 1/4	5/8	7/8	5	2	8 1/2	3	8	26 3/4	12 3/4															6.0
3	64	48	3	3/4	1 1/4	6	3	12	4	10 3/4	33 5/8	16 1/2															10.7
4																											
5																											

STANDARD SIGN
W14-3

WISCONSIN DEPT OF TRANSPORTATION

APPROVED Matthew R Rauch
for State Traffic Engineer
DATE 6/7/10 PLATE NO. W14-3.9

PROJECT NO: | HWY: | COUNTY: | SHEET NO: 154 | E

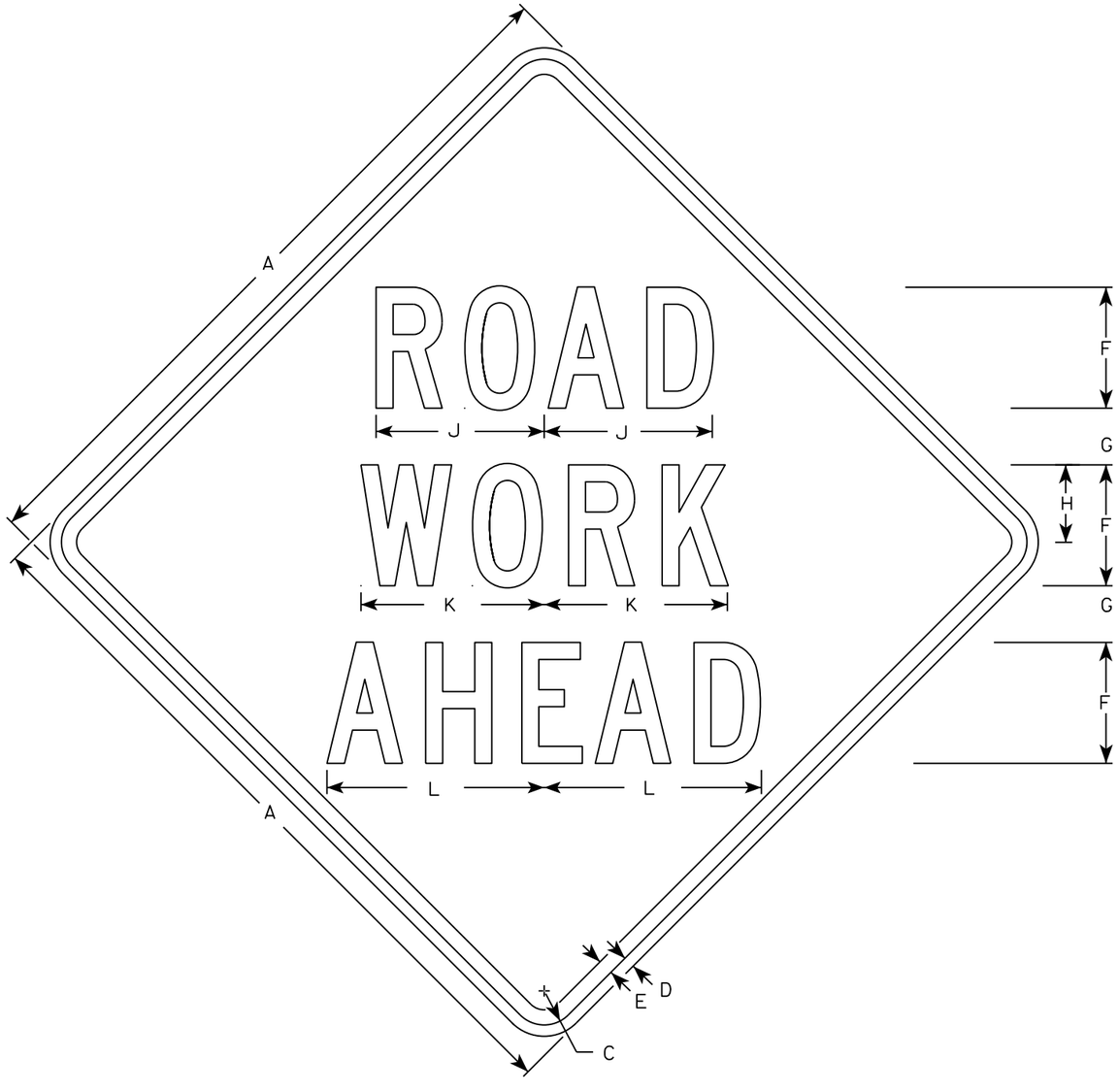

W20-1A

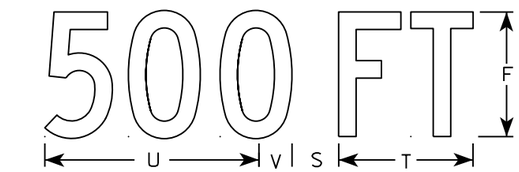

W20-1D

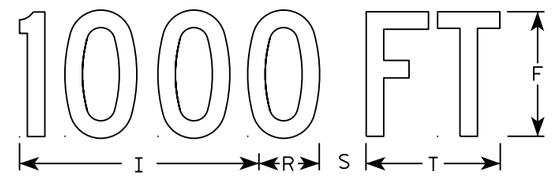

W20-1C

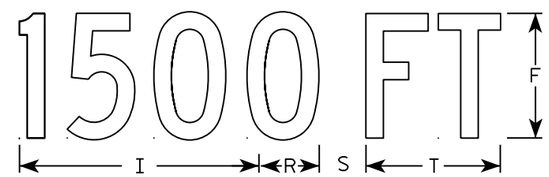

W20-1B

W20-1G

W20-1F

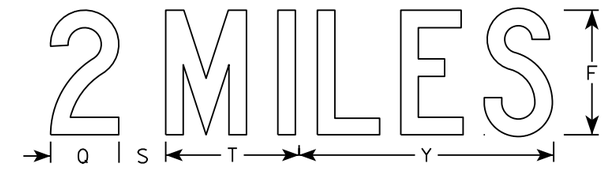

W20-1E

NOTES

1. Sign is Type II - Type F Reflective
2. Color:
   Background - Orange
   Message - Black
3. Message Series - C
4. Corners may be square or rounded when base material is plywood but borders shall be rounded as shown. When base material is metal, the corners and borders shall be rounded.

SIZE	A	B	C	D	E	F	G	H	I	J	K	L	M	N	O	P	Q	R	S	T	U	V	W	X	Y	Z	Area sq. ft.
1	36		1 3/8	1/2	5/8	5	2 5/8	3 1/4	10 1/8	7	7 5/8	8 7/8	1 1/8	4 1/2	3 1/2	9		2 1/2	2 1/4	5 5/8	9	1 3/8	8	1 3/4	10 3/4	6	9.0
2S	48		2 1/4	3/4	1	8	3 3/4	5 1/8	15 3/8	11 1/8	12 1/8	14 3/8	1 5/8	6 7/8	5 3/8	13 7/8	4 3/8	3 7/8	3	8 5/8	13 3/4	2 1/8	11 7/8	2 3/4	16 3/8	9	16.0
2M	48		2 1/4	3/4	1	8	3 3/4	5 1/8	15 3/8	11 1/8	12 1/8	14 3/8	1 5/8	6 7/8	5 3/8	13 7/8	4 3/8	3 7/8	3	8 5/8	13 3/4	2 1/8	11 7/8	2 3/4	16 3/8	9	16.0
3	48		2 1/4	3/4	1	8	3 3/4	5 1/8	15 3/8	11 1/8	12 1/8	14 3/8	1 5/8	6 7/8	5 3/8	13 7/8	4 3/8	3 7/8	3	8 5/8	13 3/4	2 1/8	11 7/8	2 3/4	16 3/8	9	16.0
4	48		2 1/4	3/4	1	8	3 3/4	5 1/8	15 3/8	11 1/8	12 1/8	14 3/8	1 5/8	6 7/8	5 3/8	13 7/8	4 3/8	3 7/8	3	8 5/8	13 3/4	2 1/8	11 7/8	2 3/4	16 3/8	9	16.0
5	48		2 1/4	3/4	1	8	3 3/4	5 1/8	15 3/8	11 1/8	12 1/8	14 3/8	1 5/8	6 7/8	5 3/8	13 7/8	4 3/8	3 7/8	3	8 5/8	13 3/4	2 1/8	11 7/8	2 3/4	16 3/8	9	16.0

STANDARD SIGN
W20-1A, B, C, D, F & G

WISCONSIN DEPT OF TRANSPORTATION

APPROVED Matthew R Rauch
for State Traffic Engineer

DATE 5/07/15 PLATE NO. W20-1.10

PROJECT NO:

SHEET NO: E

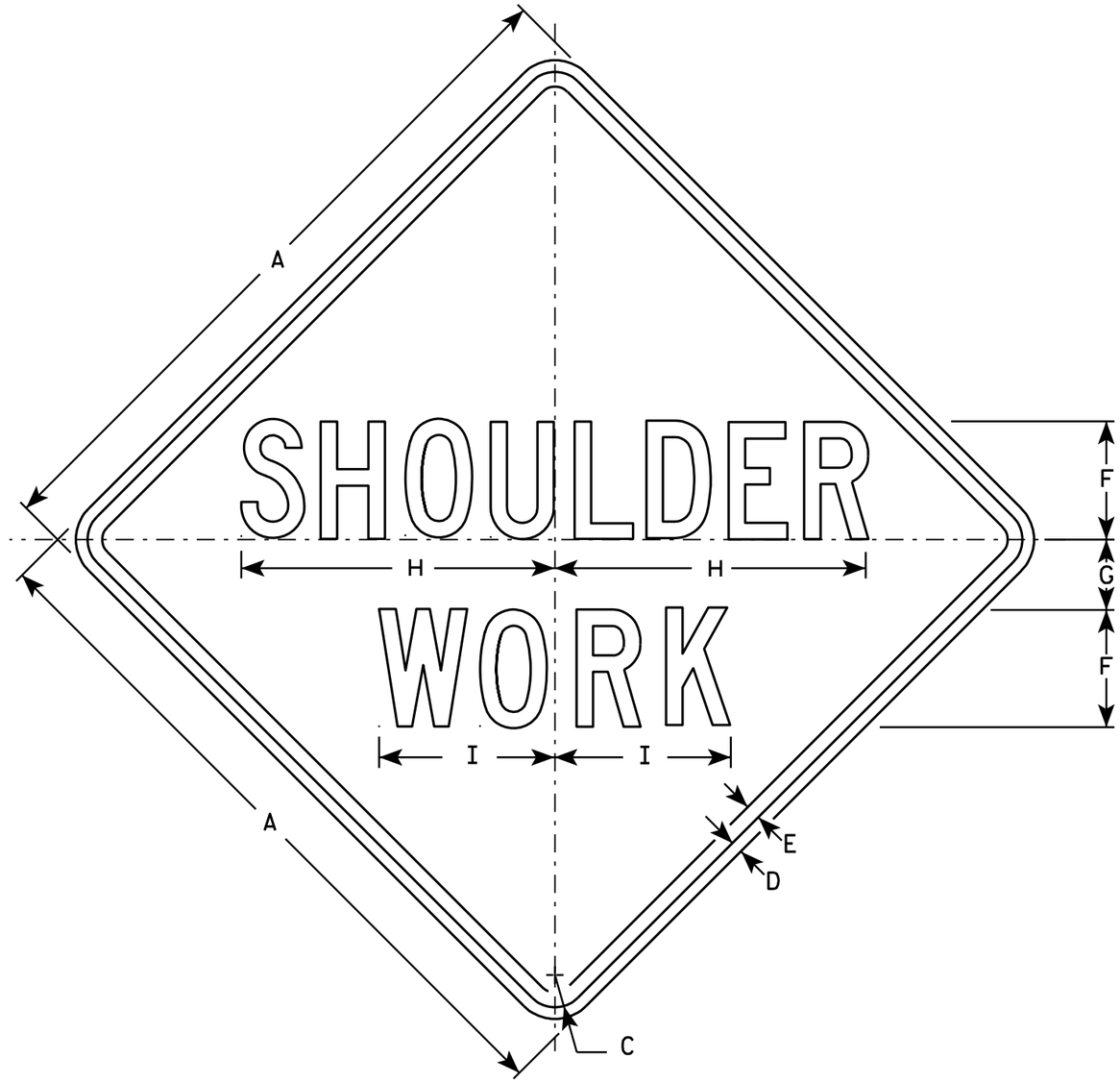

W21-5

NOTES

1. Sign is Type II - Type F Reflective - reference WIS DOT Standard Specification for HIGHWAY and STRUCTURE CONSTRUCTION latest edition.
2. Color:
   Background - Orange
   Message - Black
3. Message Series - C
4. Corners may be square or rounded when base material is plywood but borders shall be rounded as shown. When base material is metal, the corners and borders shall be rounded.

SIZE	A	B	C	D	E	F	G	H	I	J	K	L	M	N	O	P	Q	R	S	T	U	V	W	X	Y	Z	Area sq. ft.
1	24		1 1/8	3/8	1/2	4	2 1/2	10 3/4	6																		4.0
2S	30		1 3/8	1/2	5/8	5	3	13 3/8	7 1/2																		6.25
2M	30		1 3/8	1/2	5/8	5	3	13 3/8	7 1/2																		6.25
3	36		1 5/8	5/8	3/4	6	3 1/2	16	9																		9.0
4	48		2 1/4	3/4	1	8	5	21 3/8	11 1/4																		16.0
5	48		2 1/4	3/4	1	8	5	21 3/8	11 1/4																		16.0

STANDARD SIGN
W21-5

WISCONSIN DEPT OF TRANSPORTATION

APPROVED Matthew R Rauch
for State Traffic Engineer

DATE 3/21/11 PLATE NO. W21-5.5

PROJECT NO:	HWY:	COUNTY:		SHEET NO: 156	E

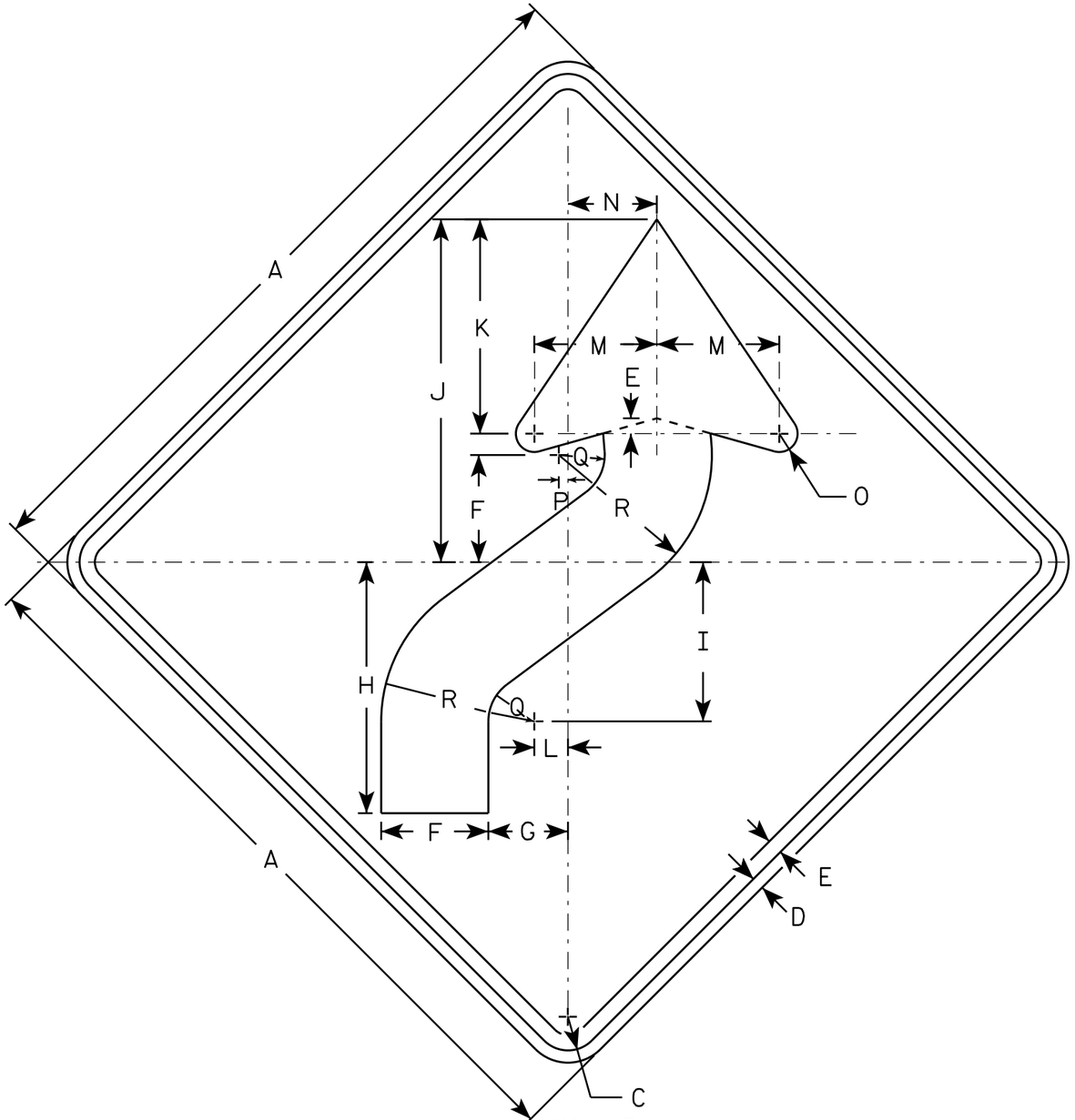

W01-4R

NOTES

1. Sign is Type II - Type F Reflective - reference WIS DOT Standard Specification for HIGHWAY and STRUCTURE CONSTRUCTION latest edition.
2. Color:
   Background - Orange
   Message - Black
3. Corners may be square or rounded when base material is plywood but borders shall be rounded as shown. When base material is metal, the corners and borders shall be rounded.
4. W01-4L is the same as W01-4R except the arrow is reversed along the vertical centerline.

SIZE	A	B	C	D	E	F	G	H	I	J	K	L	M	N	O	P	Q	R	S	T	U	V	W	X	Y	Z	Area sq. ft.
1	36		1 5/8	5/8	3/4	5 1/4	4	12 3/8	7 7/8	16 7/8	10 1/2	1 5/8	6	4 1/2	1	1/2	2 1/4	7 1/2									9.0
2S	48		2 1/4	3/4	1	7	5 1/4	16 1/2	10 1/2	22 1/2	14	2 1/4	8	6	1 1/4	5/8	3	10									16.0
2M	48		2 1/4	3/4	1	7	5 1/4	16 1/2	10 1/2	22 1/2	14	2 1/4	8	6	1 1/4	5/8	3	10									16.0
3	48		2 1/4	3/4	1	7	5 1/4	16 1/2	10 1/2	22 1/2	14	2 1/4	8	6	1 1/4	5/8	3	10									16.0
4	48		2 1/4	3/4	1	7	5 1/4	16 1/2	10 1/2	22 1/2	14	2 1/4	8	6	1 1/4	5/8	3	10									16.0
5	48		2 1/4	3/4	1	7	5 1/4	16 1/2	10 1/2	22 1/2	14	2 1/4	8	6	1 1/4	5/8	3	10									16.0

STANDARD SIGN
W01-4

WISCONSIN DEPT OF TRANSPORTATION

APPROVED Matthew R Rauch
for State Traffic Engineer

DATE 11/18/13 PLATE NO W01-4.1

PROJECT NO:	HWY:	COUNTY:		SHEET NO:	E

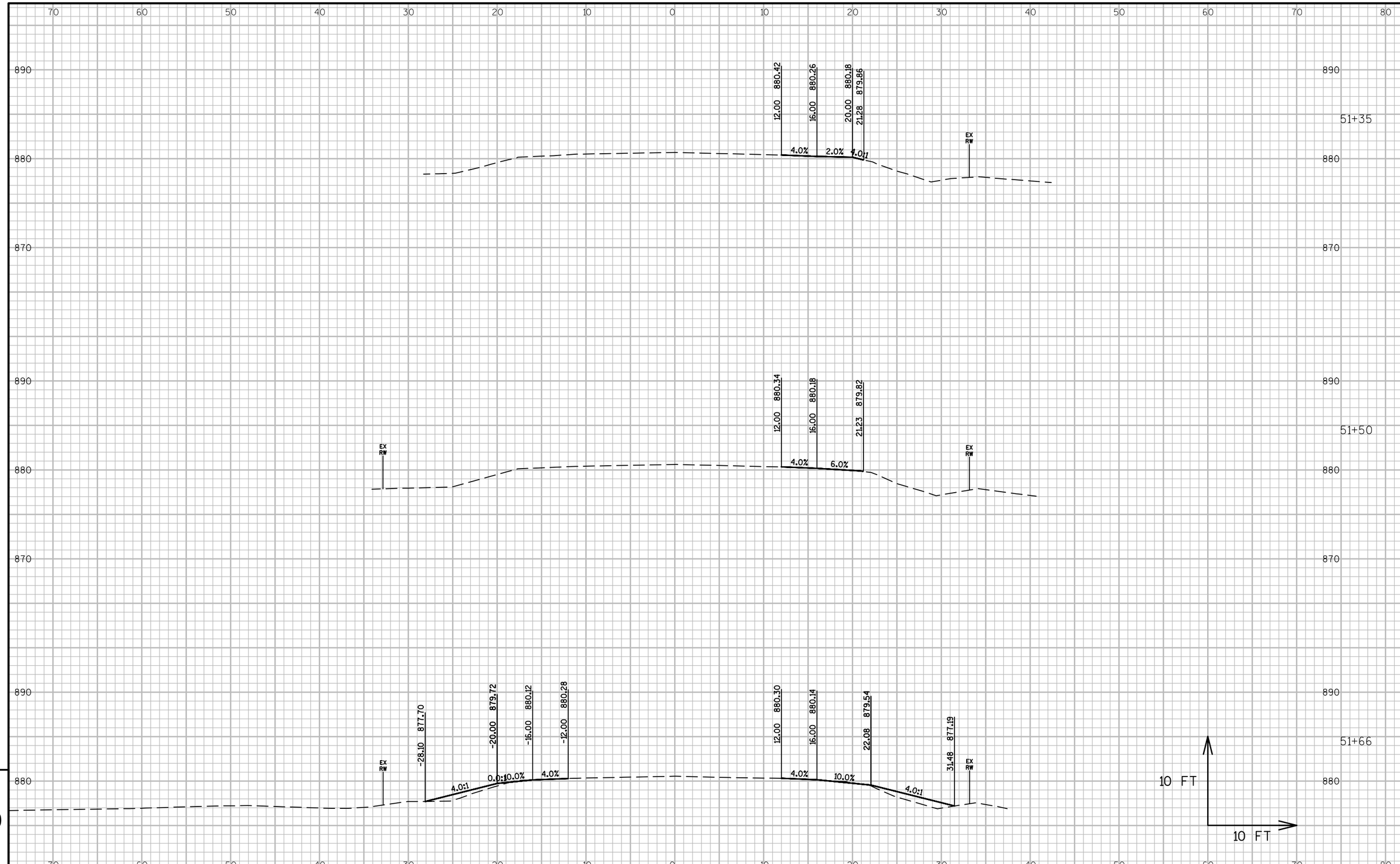

9

9

PROJECT NO: 3320-00-75	HWY: STH 140	COUNTY: ROCK	CROSS SECTIONS: STH 140	SHEET 158	E

FILE NAME : L:\PROJECTS\12729\DWG\3320-00-05\SHEETSPLAN\090201_XS BEAM GUARD.DWG
LAYOUT NAME - 090201_XS BEAM GUARD - SECTION SHEET - (7)

PLOT DATE : 1/26/2016 12:50 PM PLOT BY : HOLZWART, JOE PLOT NAME : PLOT SCALE : 1:10_XREF

WISDOT/CADDS SHEET 49

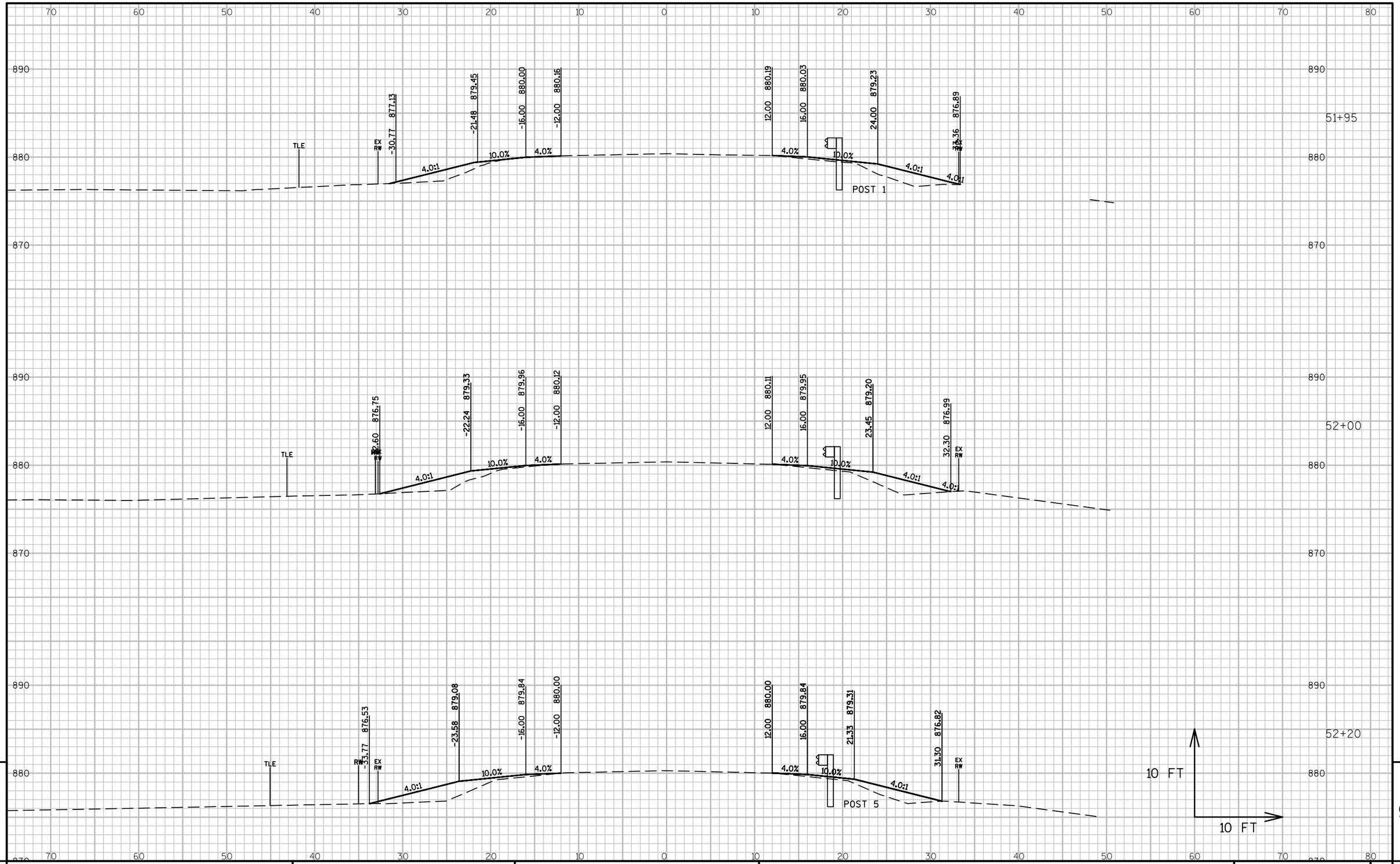

PROJECT NO: 3320-00-75	HWY: STH 140	COUNTY: ROCK	CROSS SECTIONS: STH 140	SHEET 159	E

FILE NAME : L:\PROJECTS\12729\DWG\3320-00-05\SHEETSPLAN\090201_XS BEAM GUARD.DWG
LAYOUT NAME - 090201_XS BEAM GUARD - SECTION SHEET - (8)
PLOT DATE : 1/26/2016 12:50 PM PLOT BY : HOLZWART, JOE PLOT NAME : PLOT SCALE : 1:10_XREF

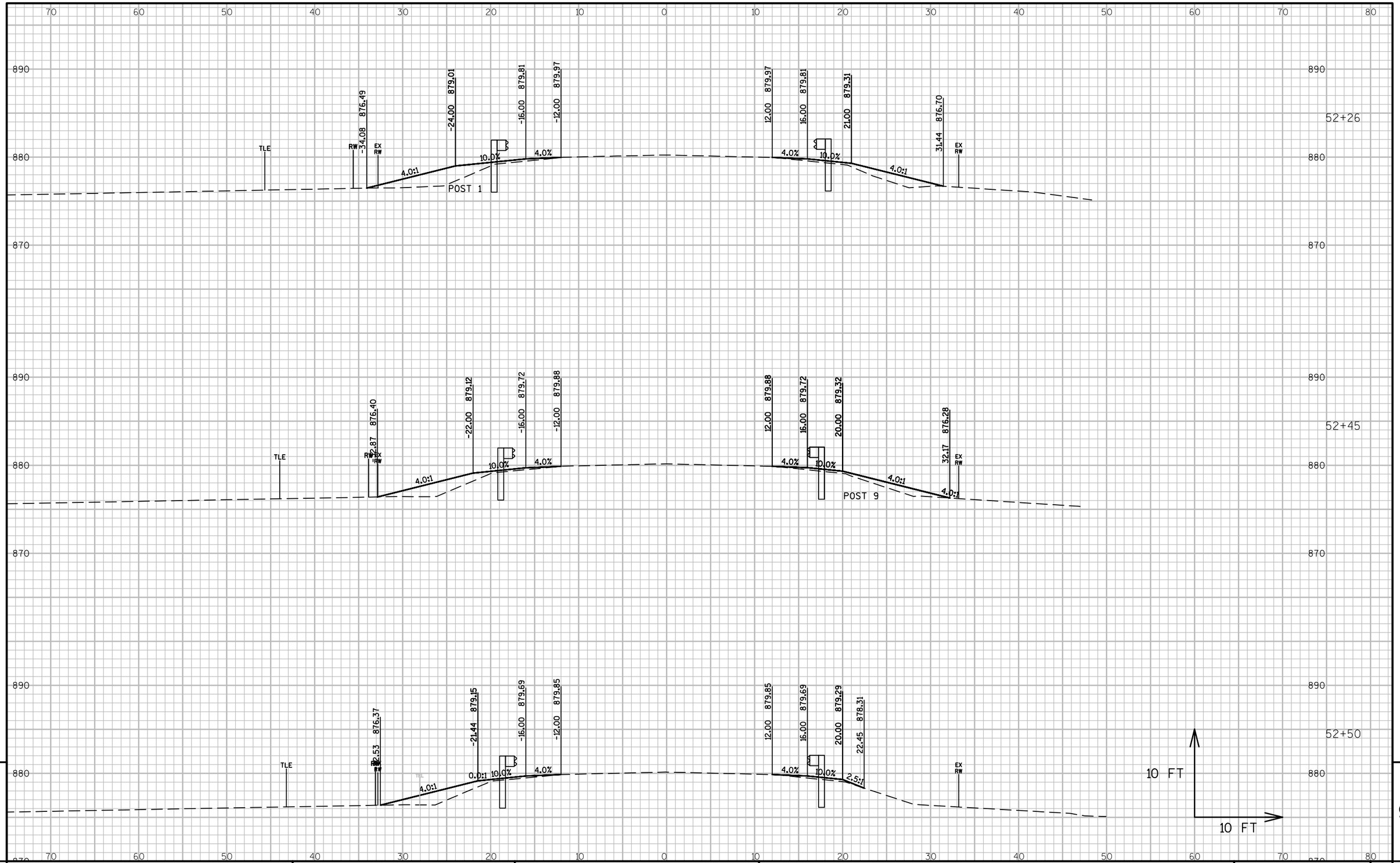

9

9

PROJECT NO: 3320-00-75	HWY: STH 140	COUNTY: ROCK	CROSS SECTIONS: STH 140	SHEET 160	E

FILE NAME : L:\PROJECTS\12729\DWG\3320-00-05\SHEETSPLAN\090201_XS BEAM GUARD.DWG
LAYOUT NAME - 090201_XS BEAM GUARD - SECTION SHEET - (9)

PLOT DATE : 1/26/2016 12:50 PM PLOT BY : HOLZWART, JOE PLOT NAME : PLOT SCALE : 1:10_XREF

WISDOT/CADDS SHEET 49

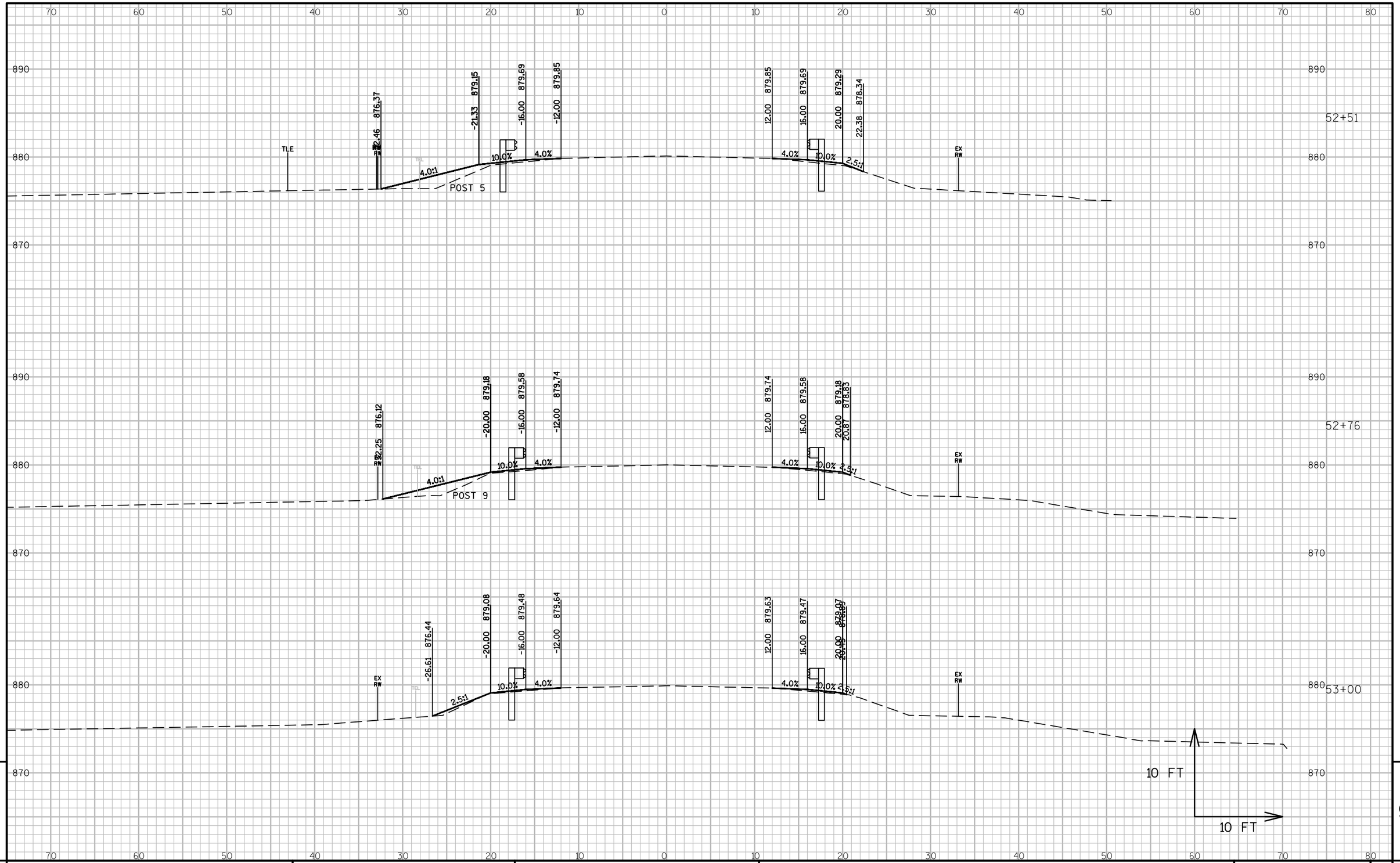

9

9

PROJECT NO: 3320-00-75	HWY: STH 140	COUNTY: ROCK	CROSS SECTIONS: STH 140	SHEET 161	E

FILE NAME : L:\PROJECTS\12729\DWG\3320-00-05\SHEETSPLAN\090201_XS BEAM GUARD.DWG
LAYOUT NAME - 090201_XS BEAM GUARD - SECTION SHEET - (10)

PLOT DATE : 1/26/2016 12:50 PM PLOT BY : HOLZWART, JOE PLOT NAME : PLOT SCALE : 1:10_XREF

WISDOT/CADDS SHEET 49

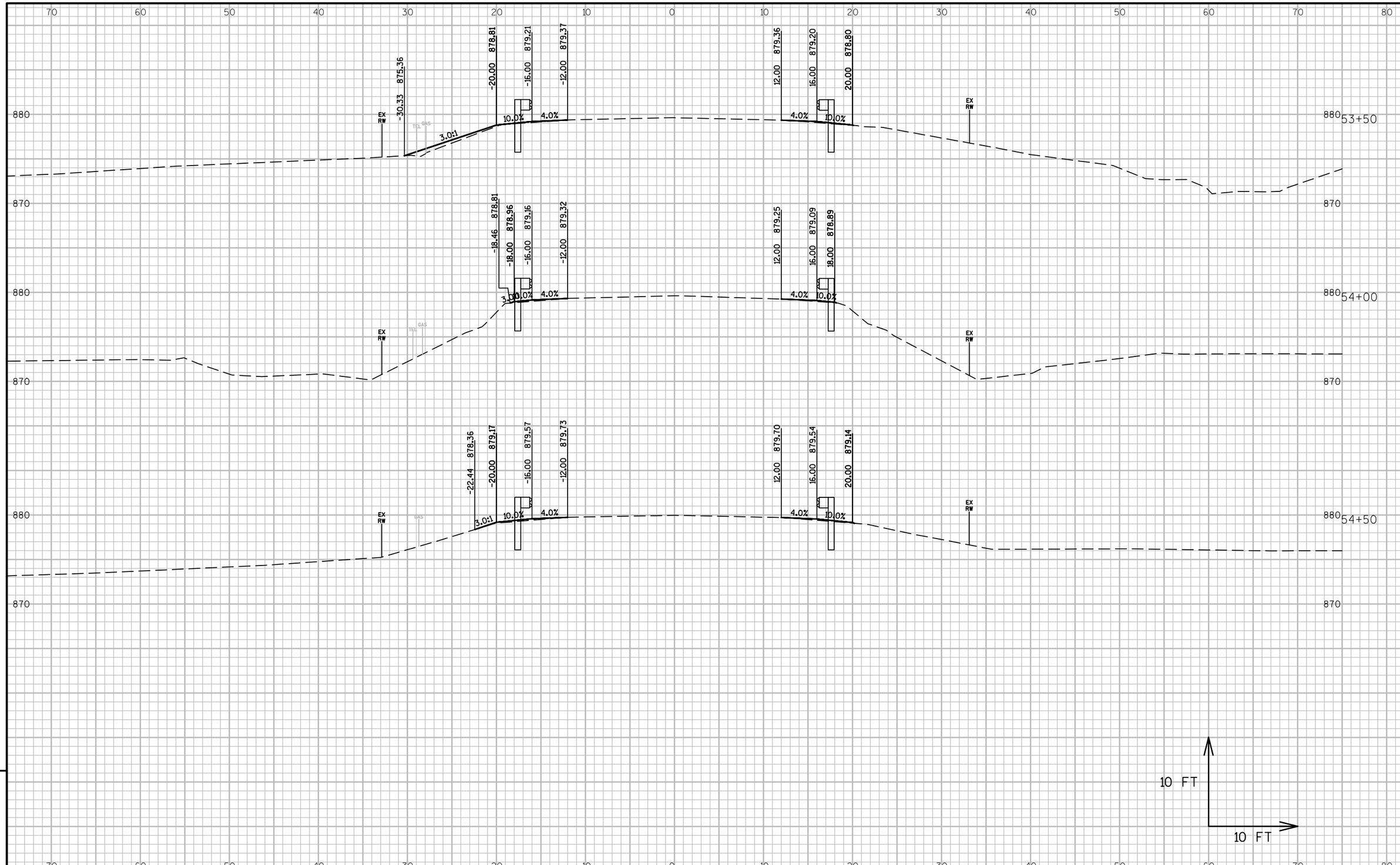

9

9

PROJECT NO: 3320-00-75	HWY: STH 140	COUNTY: ROCK	CROSS SECTIONS: STH 140	SHEET 162	E

FILE NAME : L:\PROJECTS\12729\DWG\3320-00-05\SHEETSPLAN\090201_XS BEAM GUARD.DWG
LAYOUT NAME - 090201_XS BEAM GUARD - SECTION SHEET - (11)

PLOT DATE : 1/26/2016 12:50 PM PLOT BY : HOLZWART, JOE PLOT NAME : PLOT SCALE : 1:10_XREF

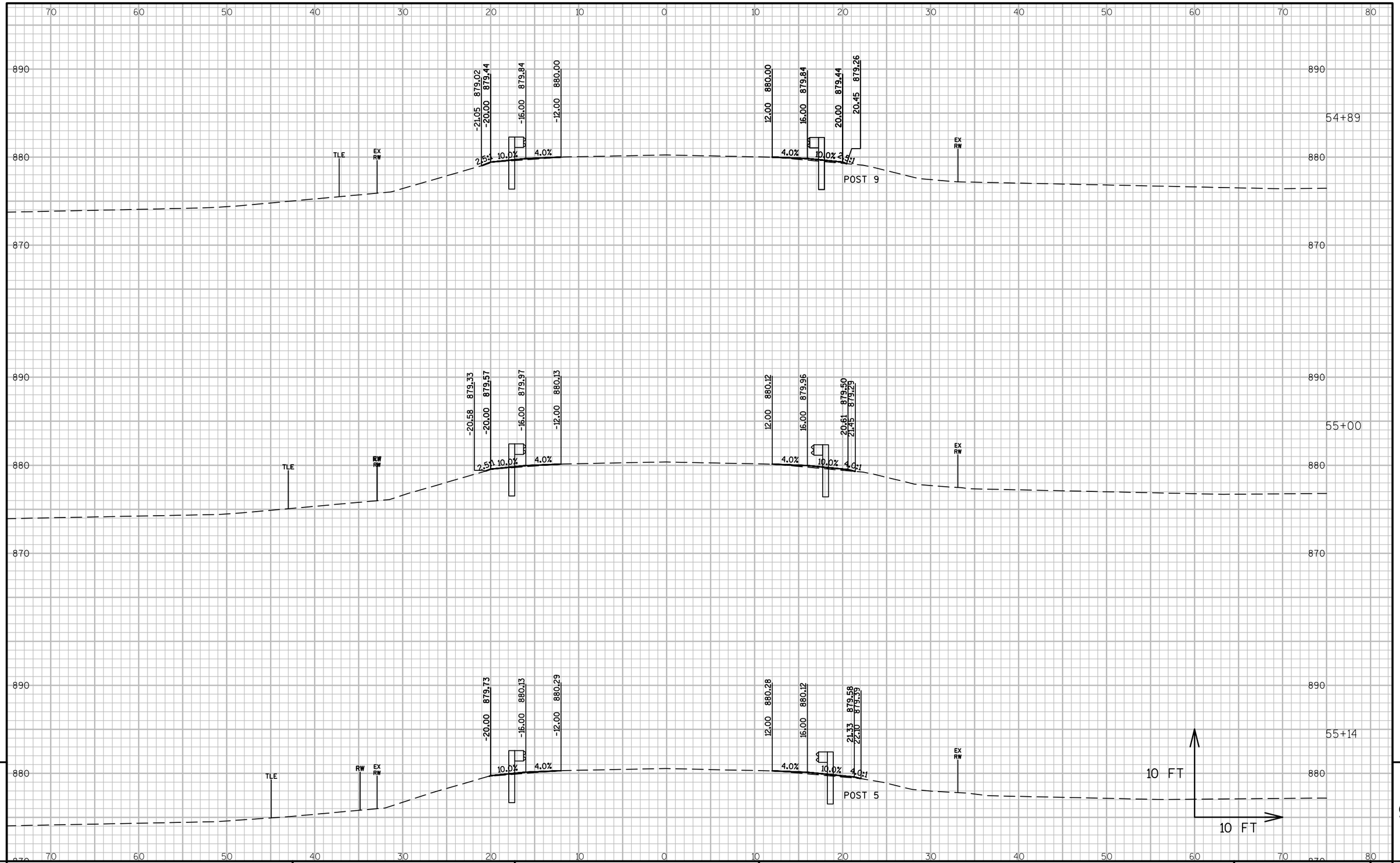

9

9

PROJECT NO: 3320-00-75	HWY: STH 140	COUNTY: ROCK	CROSS SECTIONS: STH 140	SHEET 163	E

FILE NAME : L:\PROJECTS\12729\DWG\3320-00-05\SHEETSPLAN\090201_XS BEAM GUARD.DWG
LAYOUT NAME - 090201_XS BEAM GUARD - SECTION SHEET - (12)

PLOT DATE : 1/26/2016 12:50 PM PLOT BY : HOLZWART, JOE PLOT NAME : PLOT SCALE : 1:10_XREF

WISDOT/CADDS SHEET 49

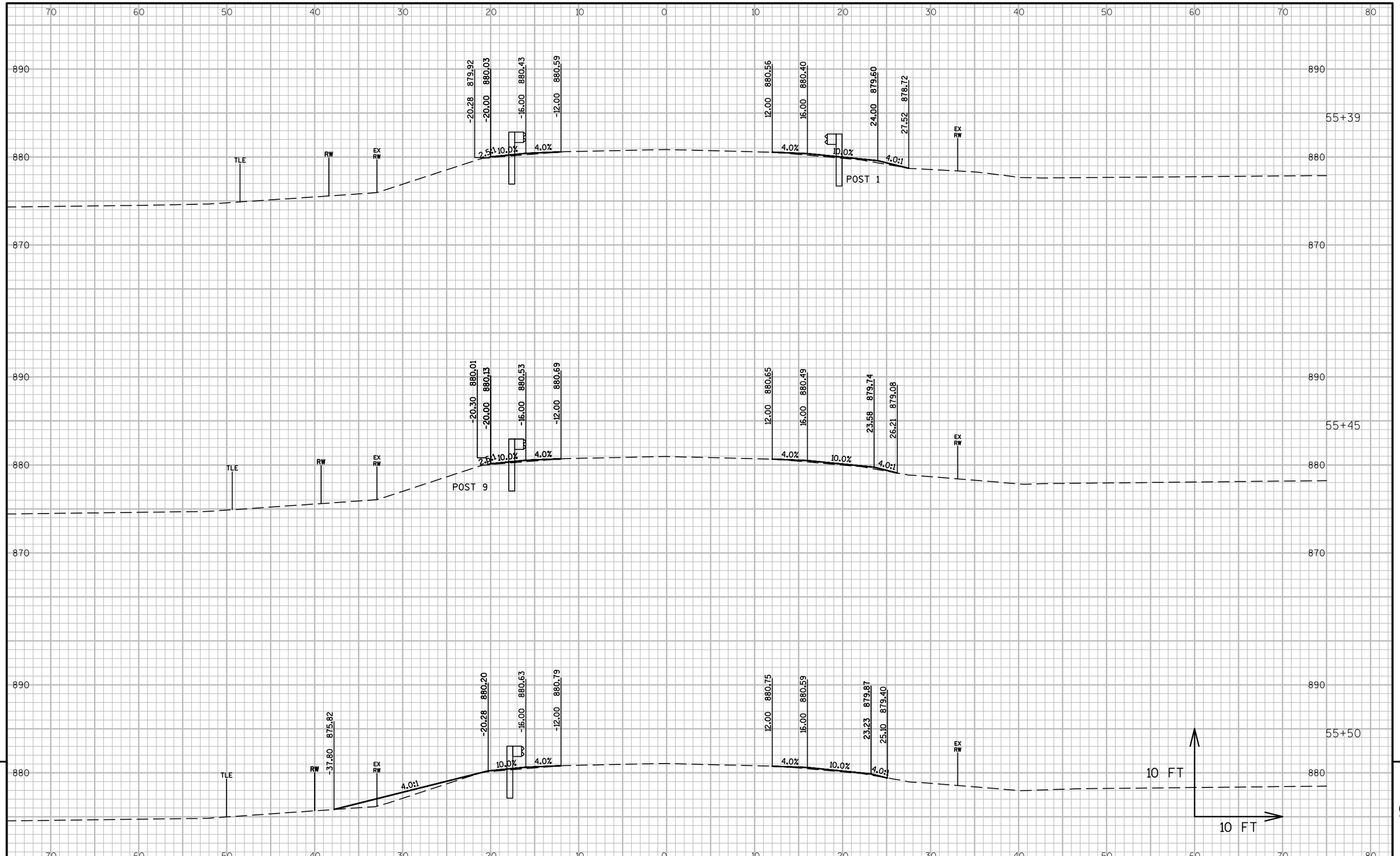

PROJECT NO: 3320-00-75	HWY: STH 140	COUNTY: ROCK	CROSS SECTIONS: STH 140	SHEET 164	E

FILE NAME : L:\PROJECTS\12729\DWG\3320-00-05\SHEETSPLAN\090201_XS BEAM GUARD.DWG
LAYOUT NAME - 090201_XS BEAM GUARD - SECTION SHEET - (13)
PLOT DATE : 1/26/2016 12:50 PM PLOT BY : HOLZWART, JOE PLOT NAME : PLOT SCALE : 1:10_XREF

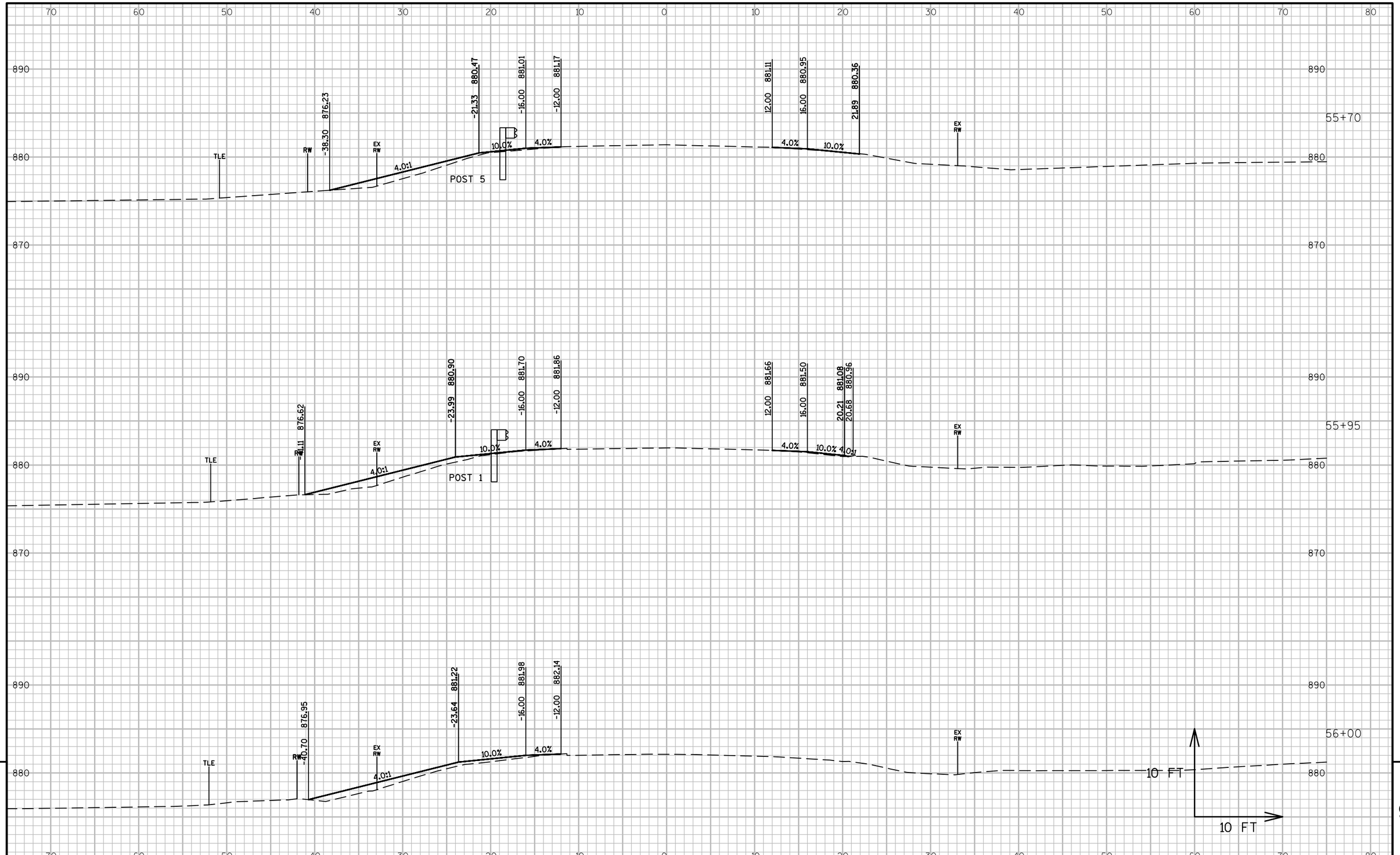

PROJECT NO: 3320-00-75	HWY: STH 140	COUNTY: ROCK	CROSS SECTIONS: STH 140	SHEET 165	E

FILE NAME : L:\PROJECTS\12729\DWG\3320-00-05\SHEETSPLAN\090201_XS BEAM GUARD.DWG
LAYOUT NAME - 090201_XS BEAM GUARD - SECTION SHEET - (14)
PLOT DATE : 1/26/2016 12:50 PM PLOT BY : HOLZWART, JOE PLOT NAME : PLOT SCALE : 1:10_XREF

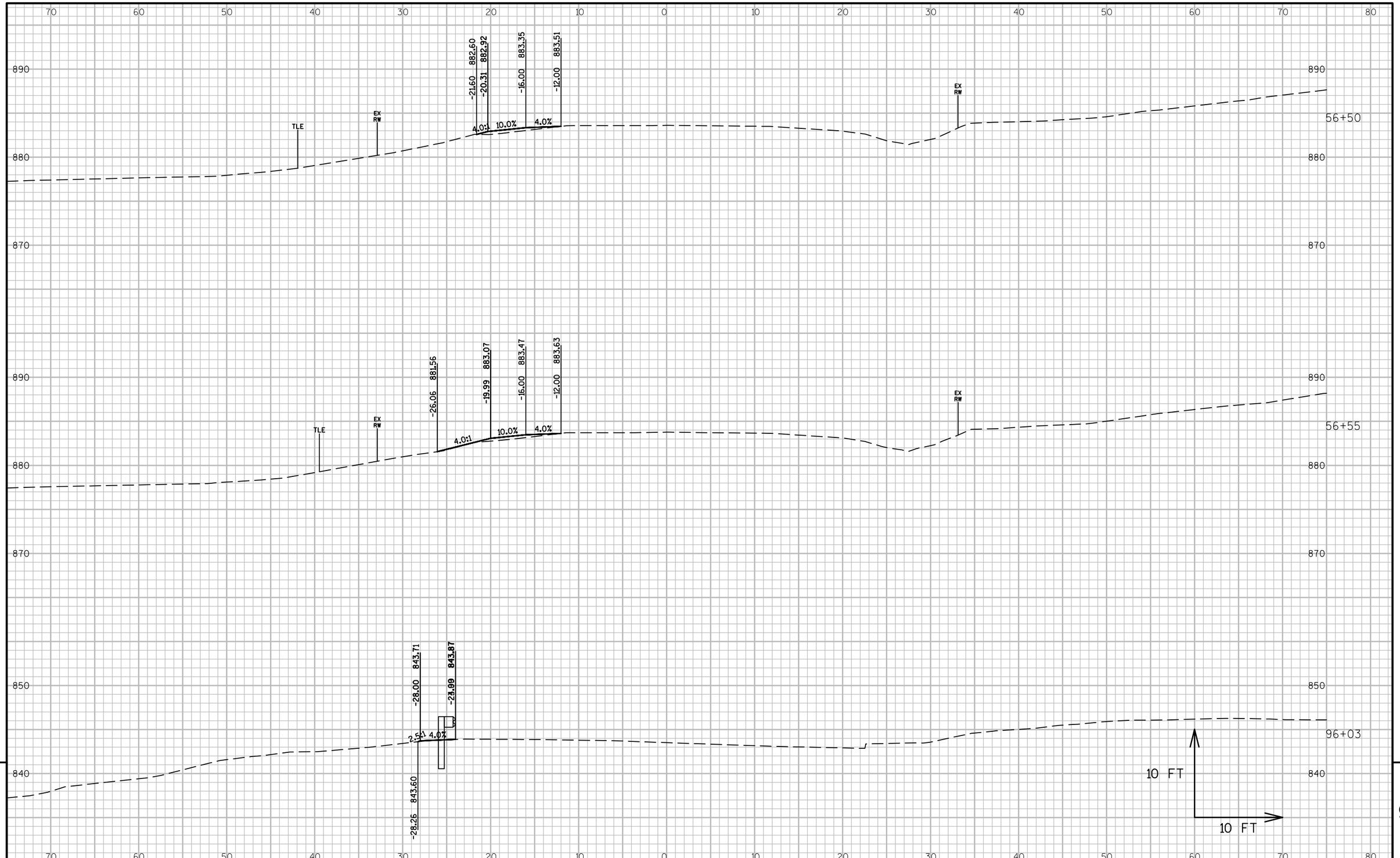

9

9

PROJECT NO: 3320-00-75	HWY: STH 140	COUNTY: ROCK	CROSS SECTIONS: STH 140	SHEET 166	E

FILE NAME : L:\PROJECTS\12729\DWG\3320-00-05\SHEETSPLAN\090201_XS BEAM GUARD.DWG
LAYOUT NAME - 090201_XS BEAM GUARD - SECTION SHEET - (15)

PLOT DATE : 5/5/2016 1:10 PM PLOT BY : HOLZWART, JOE PLOT NAME : PLOT SCALE : 1:10_XREF

WISDOT/CADDS SHEET 49

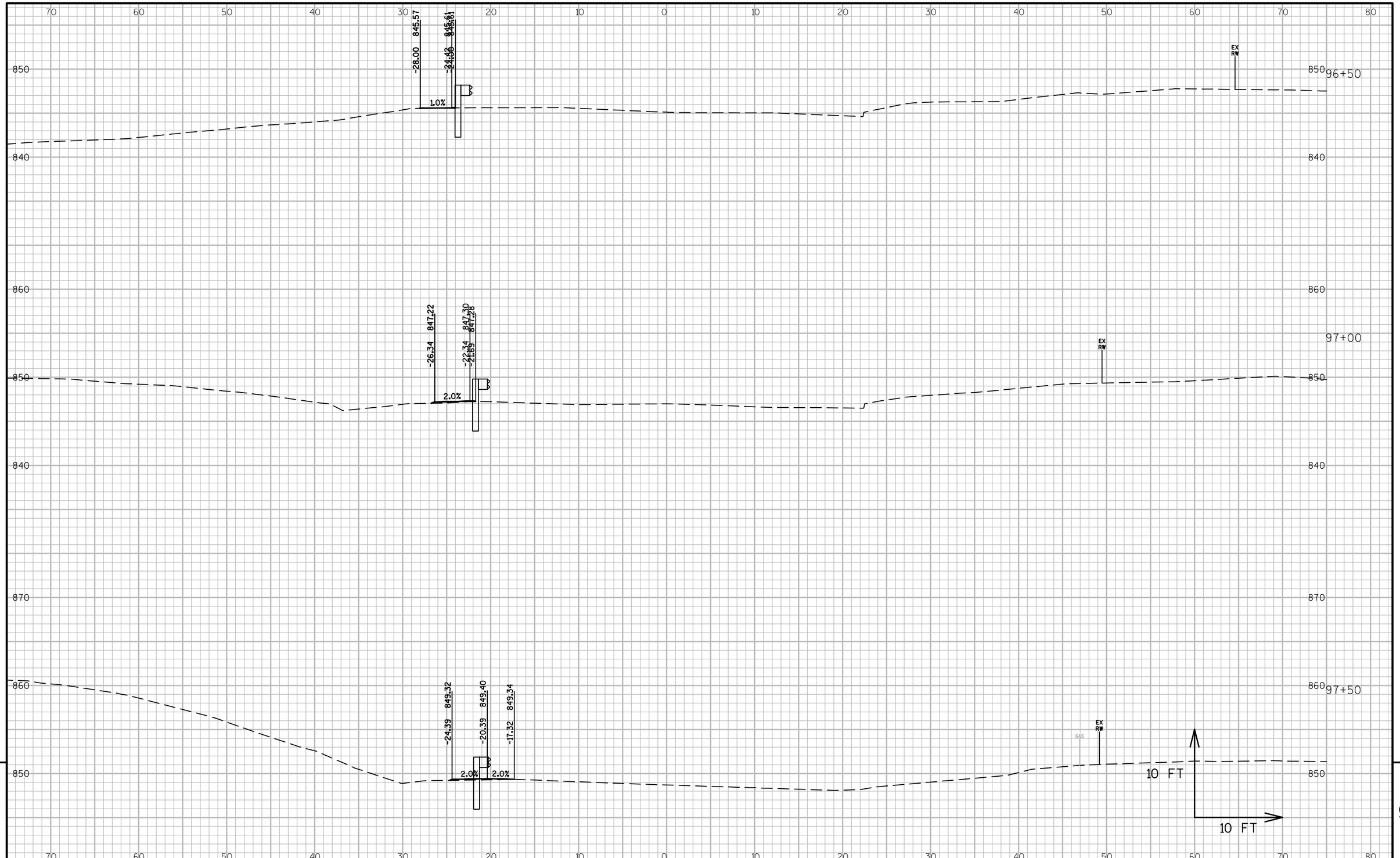

9

9

PROJECT NO: 3320-00-75	HWY: STH 140	COUNTY: ROCK	CROSS SECTIONS: STH 140	SHEET 167	E

FILE NAME : L:\PROJECTS\12729\DWG\3320-00-05\SHEETSPLAN\090201_XS BEAM GUARD.DWG
LAYOUT NAME - 090201_XS BEAM GUARD - SECTION SHEET - (16)

PLOT DATE : 5/5/2016 1:11 PM PLOT BY : HOLZWART, JOE PLOT NAME : PLOT SCALE : 1:10_XREF

WISDOT/CADDS SHEET 49

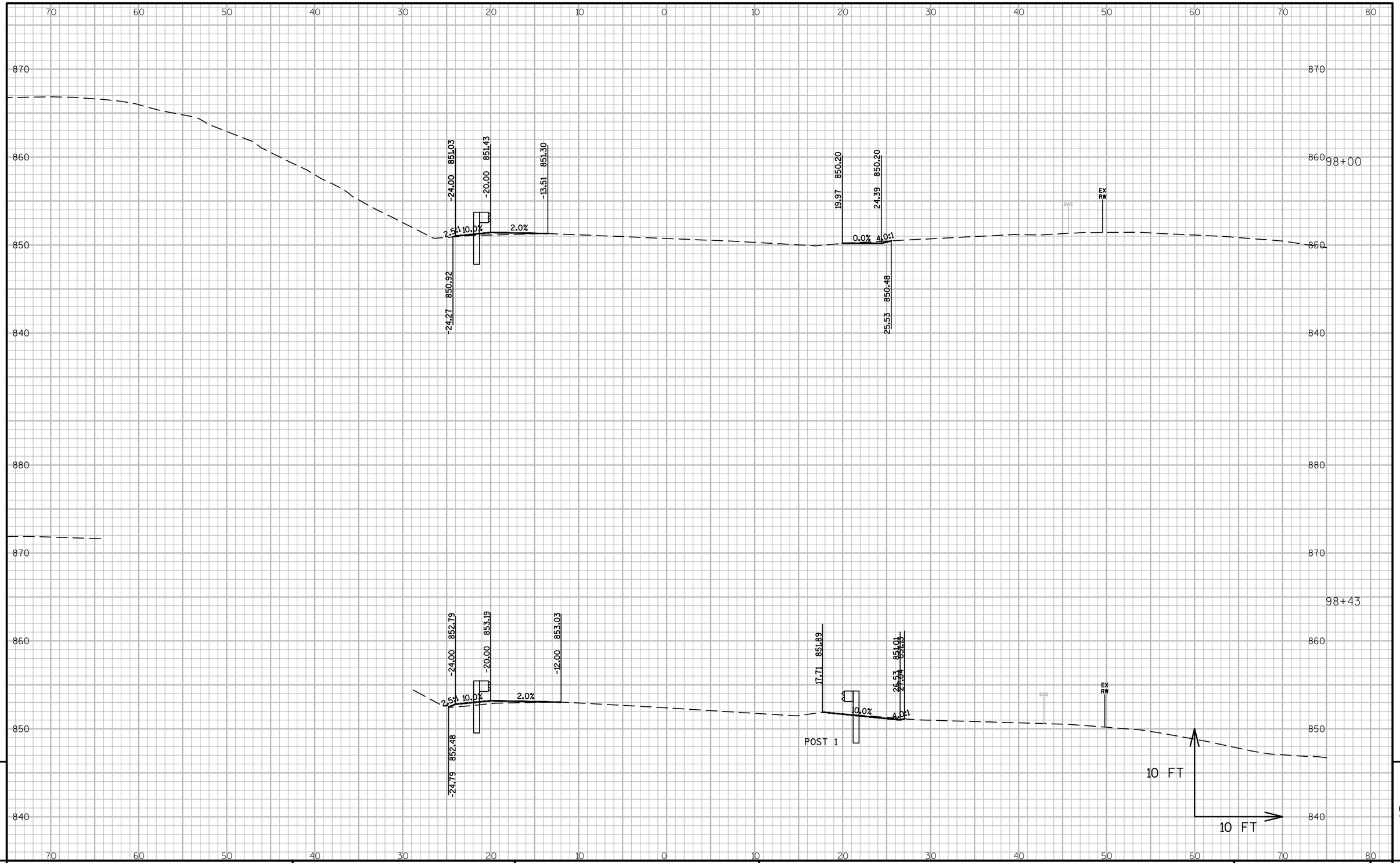

9

9

PROJECT NO: 3320-00-75	HWY: STH 140	COUNTY: ROCK	CROSS SECTIONS: STH 140	SHEET 168	E

FILE NAME : L:\PROJECTS\12729\DWG\3320-00-05\SHEETSPLAN\090201_XS BEAM GUARD.DWG
LAYOUT NAME - 090201_XS BEAM GUARD - SECTION SHEET - (17)

PLOT DATE : 5/5/2016 1:11 PM PLOT BY : HOLZWART, JOE PLOT NAME : PLOT SCALE : 1:10_XREF

WISDOT/CADDS SHEET 49

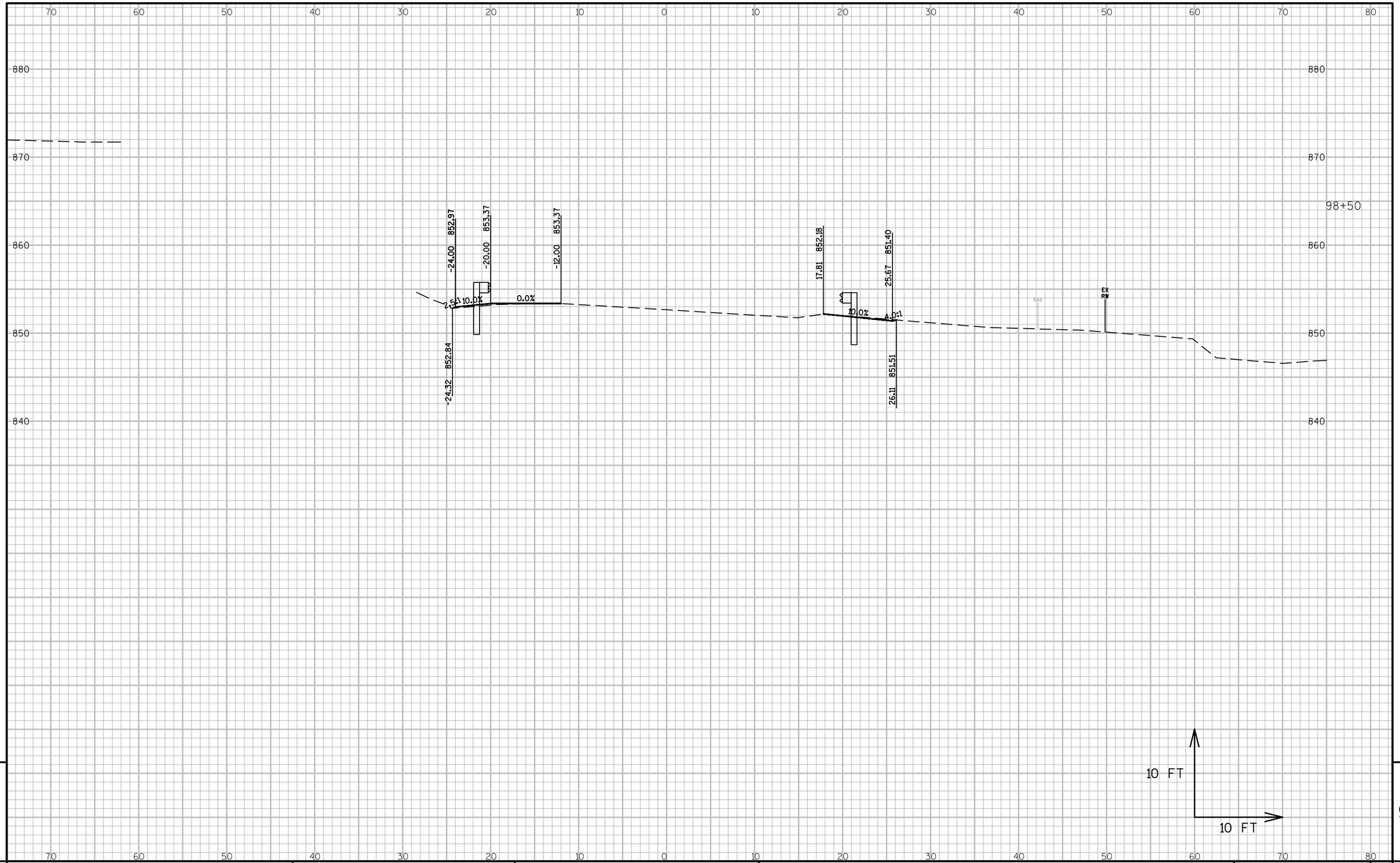

PROJECT NO: 3320-00-75	HWY: STH 140	COUNTY: ROCK	CROSS SECTIONS: STH 140	SHEET 169	E

FILE NAME : L:\PROJECTS\12729\DWG\3320-00-05\SHEETSPLAN\090201_XS BEAM GUARD.DWG
LAYOUT NAME - 090201_XS BEAM GUARD - SECTION SHEET - (18)
PLOT DATE : 1/26/2016 12:50 PM PLOT BY : HOLZWART, JOE PLOT NAME : PLOT SCALE : 1:10_XREF

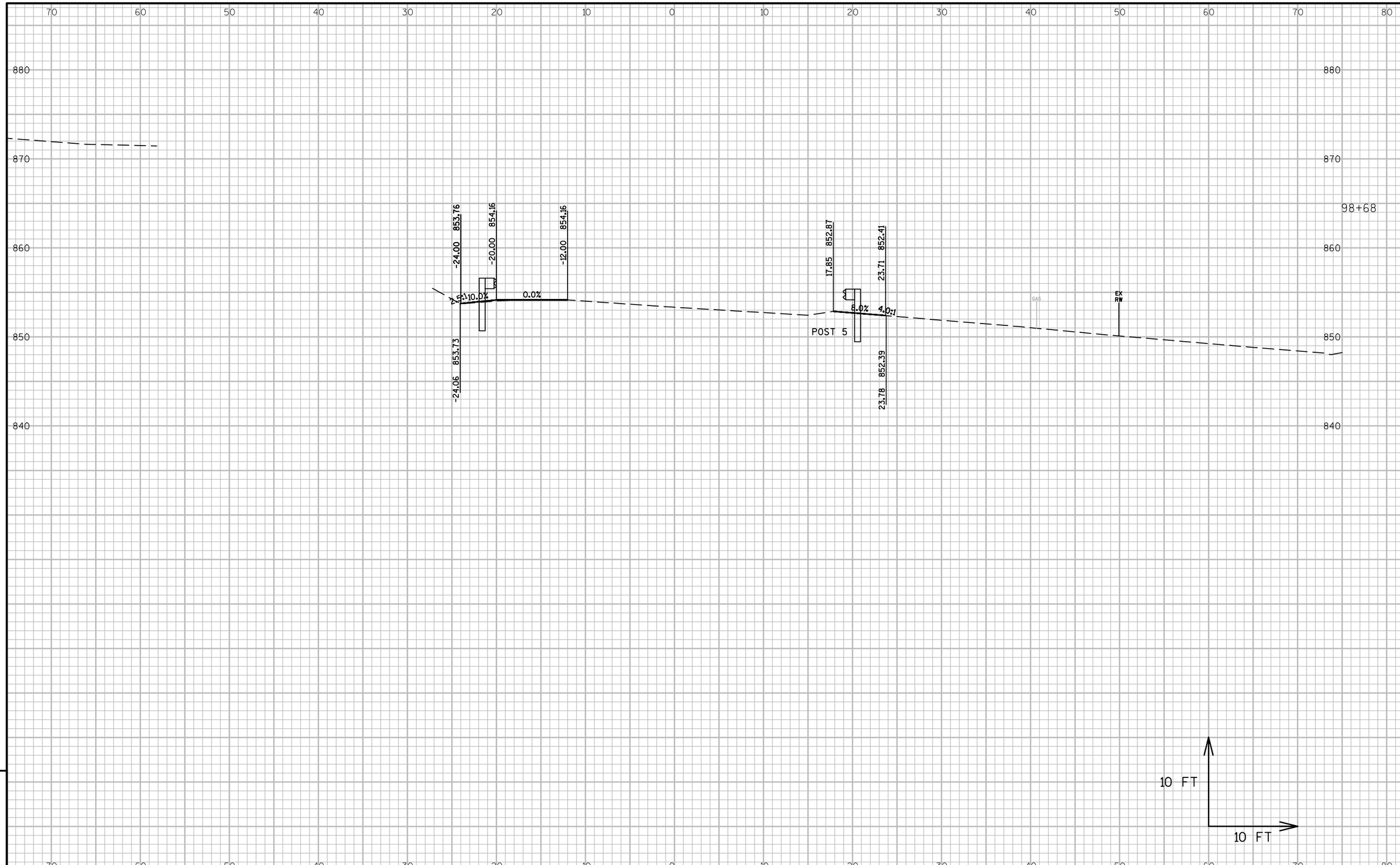

PROJECT NO: 3320-00-75	HWY: STH 140	COUNTY: ROCK	CROSS SECTIONS: STH 140	SHEET 170	E

FILE NAME : L:\PROJECTS\12729\DWG\3320-00-05\SHEETSPLAN\090201_XS BEAM GUARD.DWG
LAYOUT NAME - 090201_XS BEAM GUARD - SECTION SHEET - (19)
PLOT DATE : 1/26/2016 12:50 PM PLOT BY : HOLZWART, JOE PLOT NAME : PLOT SCALE : 1:10_XREF

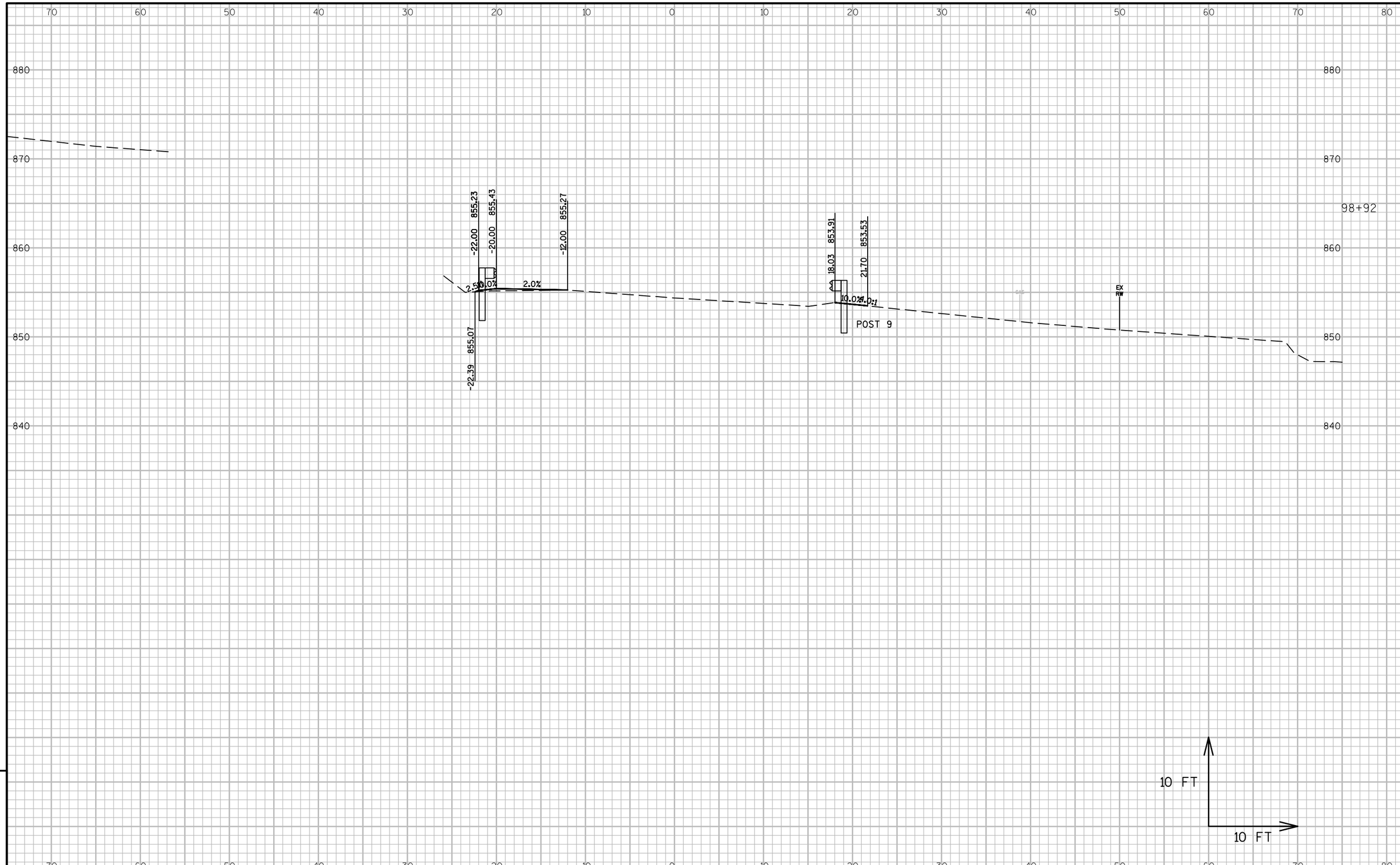

9

9

PROJECT NO: 3320-00-75	HWY: STH 140	COUNTY: ROCK	CROSS SECTIONS: STH 140	SHEET 171	E

FILE NAME : L:\PROJECTS\12729\DWG\3320-00-05\SHEETSPLAN\090201_XS BEAM GUARD.DWG
LAYOUT NAME - 090201_XS BEAM GUARD - SECTION SHEET - (20)
PLOT DATE : 1/26/2016 12:50 PM PLOT BY : HOLZWART, JOE PLOT NAME : PLOT SCALE : 1:10_XREF

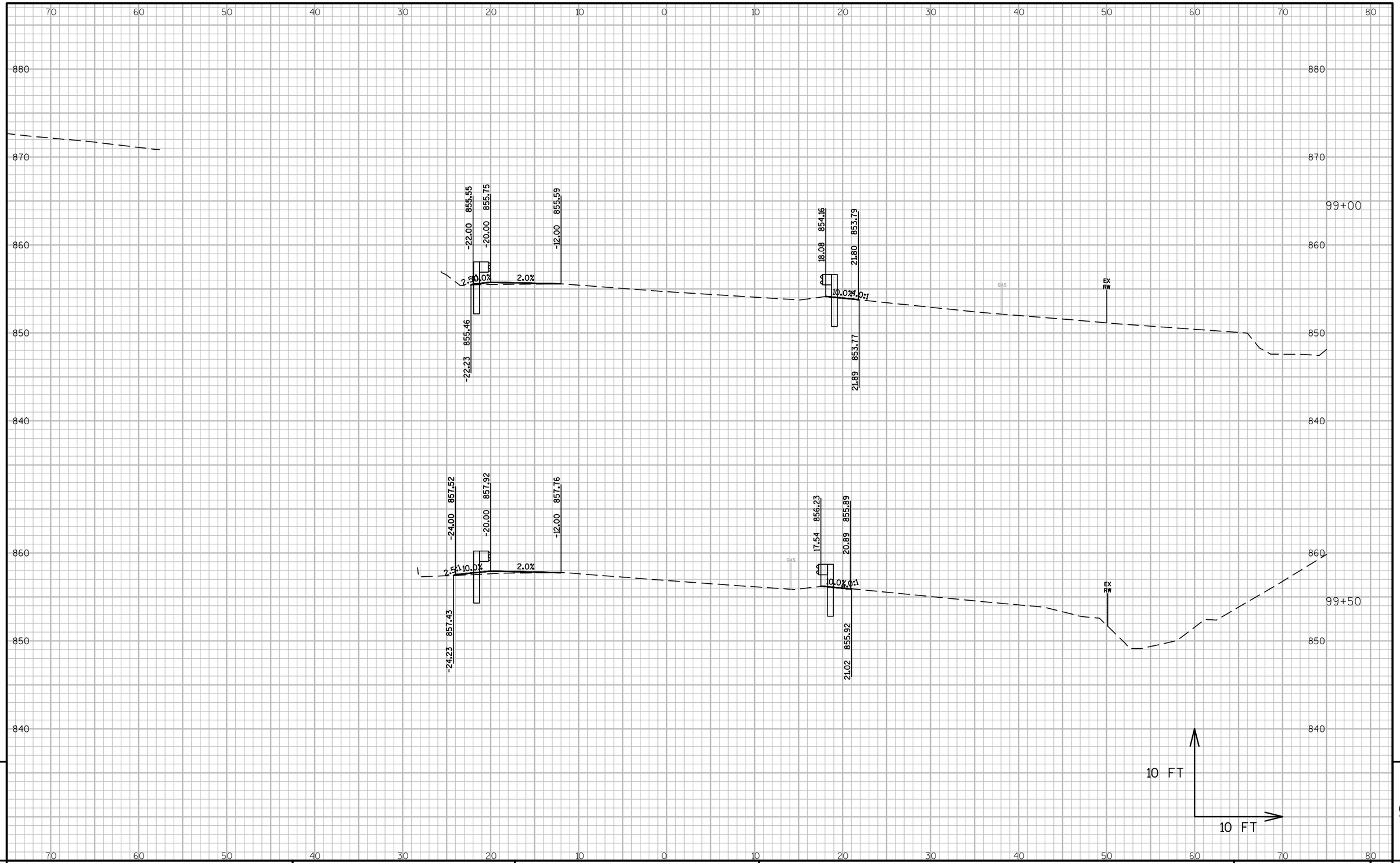

PROJECT NO: 3320-00-75	HWY: STH 140	COUNTY: ROCK	CROSS SECTIONS: STH 140	SHEET 172	E

FILE NAME : L:\PROJECTS\12729\DWG\3320-00-05\SHEETSPLAN\090201_XS BEAM GUARD.DWG
LAYOUT NAME - 090201_XS BEAM GUARD - SECTION SHEET - (21)
PLOT DATE : 1/26/2016 12:50 PM PLOT BY : HOLZWART, JOE PLOT NAME : PLOT SCALE : 1:10_XREF

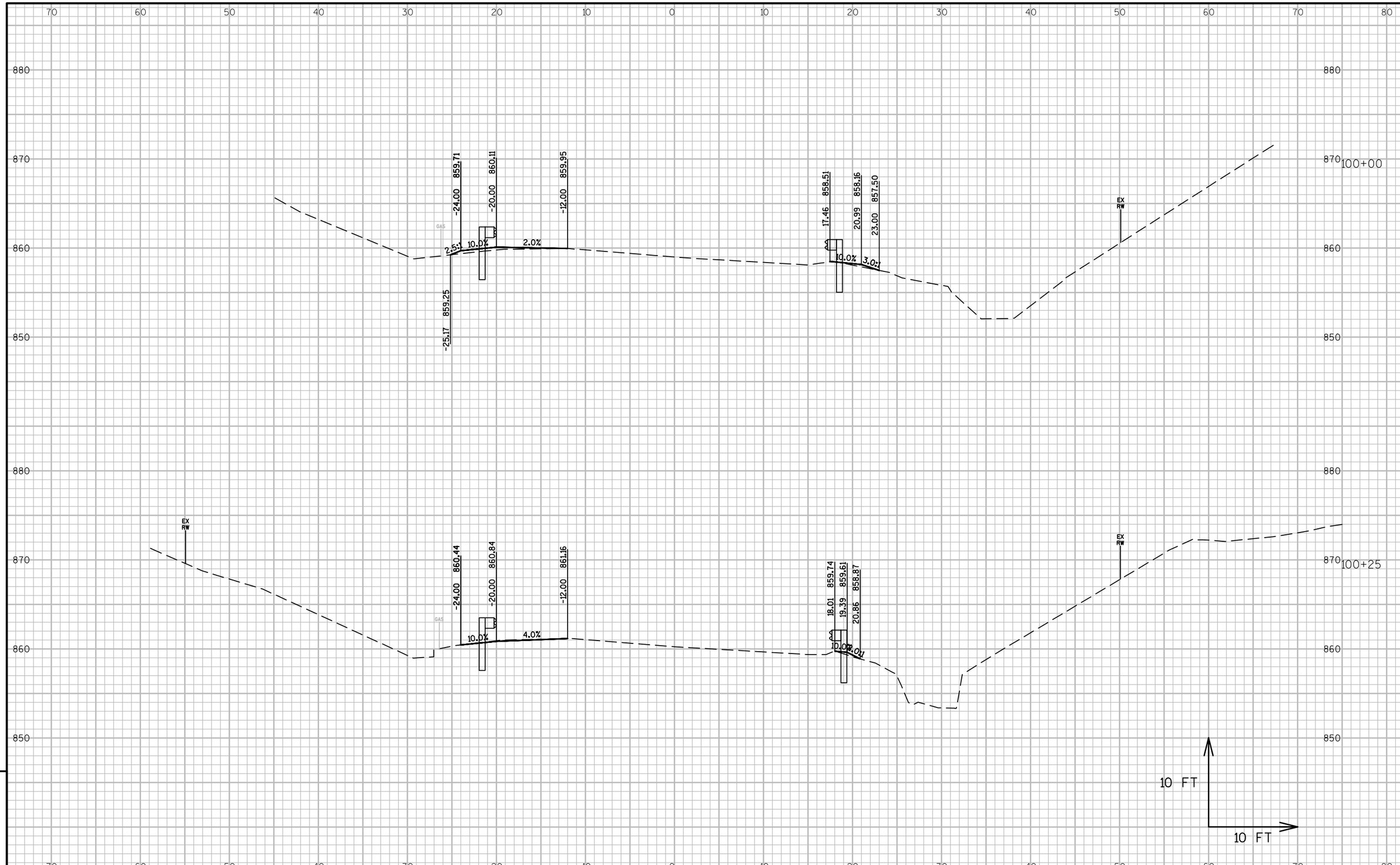

PROJECT NO: 3320-00-75	HWY: STH 140	COUNTY: ROCK	CROSS SECTIONS: STH 140	SHEET 173	E

FILE NAME : L:\PROJECTS\12729\DWG\3320-00-05\SHEETSPLAN\090201_XS BEAM GUARD.DWG
LAYOUT NAME - 090201_XS BEAM GUARD - SECTION SHEET - (22)
PLOT DATE : 1/26/2016 12:50 PM PLOT BY : HOLZWART, JOE PLOT NAME : PLOT SCALE : 1:10_XREF

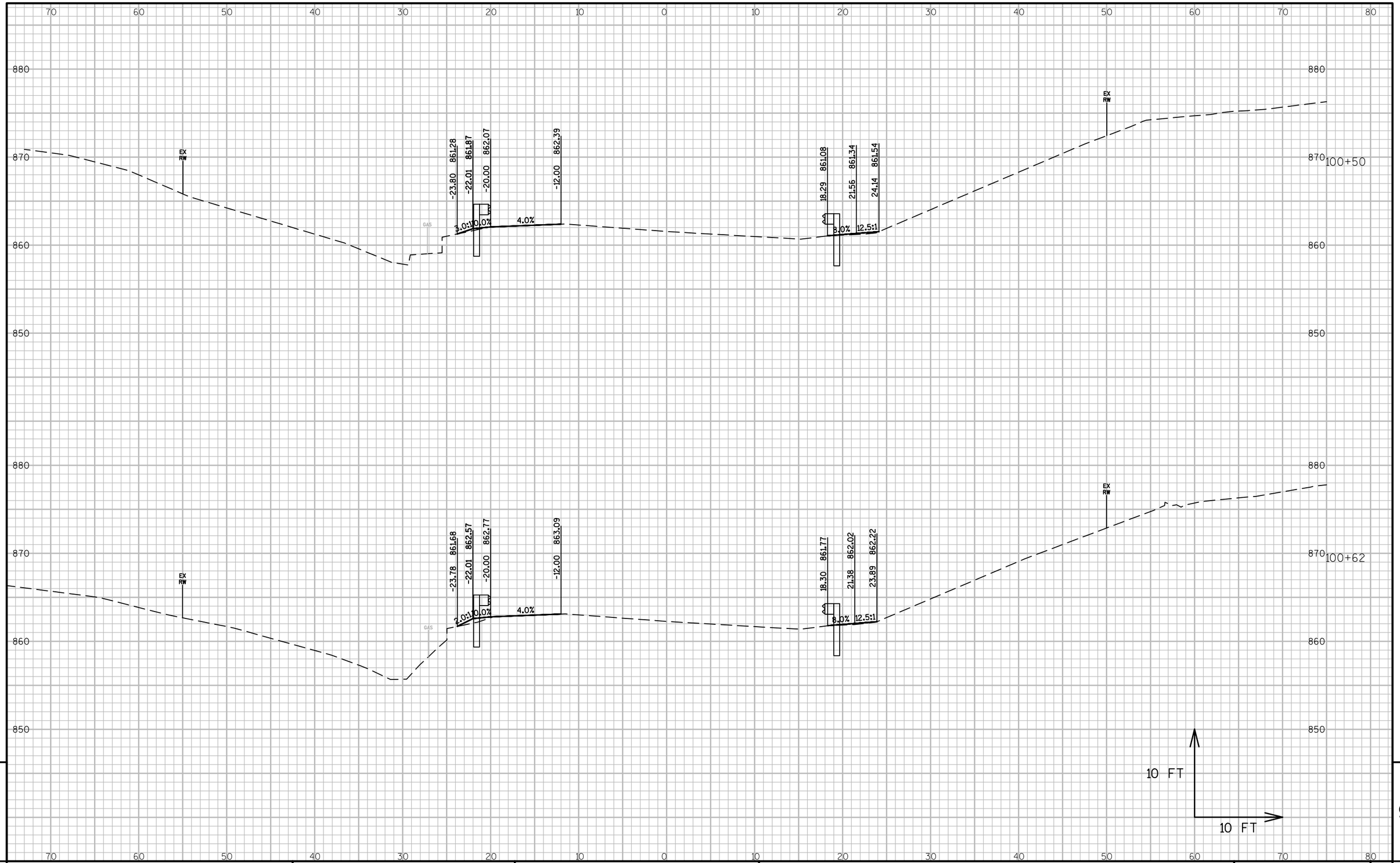

9

9

PROJECT NO: 3320-00-75	HWY: STH 140	COUNTY: ROCK	CROSS SECTIONS: STH 140	SHEET 174	E

FILE NAME : L:\PROJECTS\12729\DWG\3320-00-05\SHEETSPLAN\090201_XS BEAM GUARD.DWG
LAYOUT NAME - 090201_XS BEAM GUARD - SECTION SHEET - (23)
PLOT DATE : 1/26/2016 12:50 PM PLOT BY : HOLZWART, JOE PLOT NAME : PLOT SCALE : 1:10_XREF

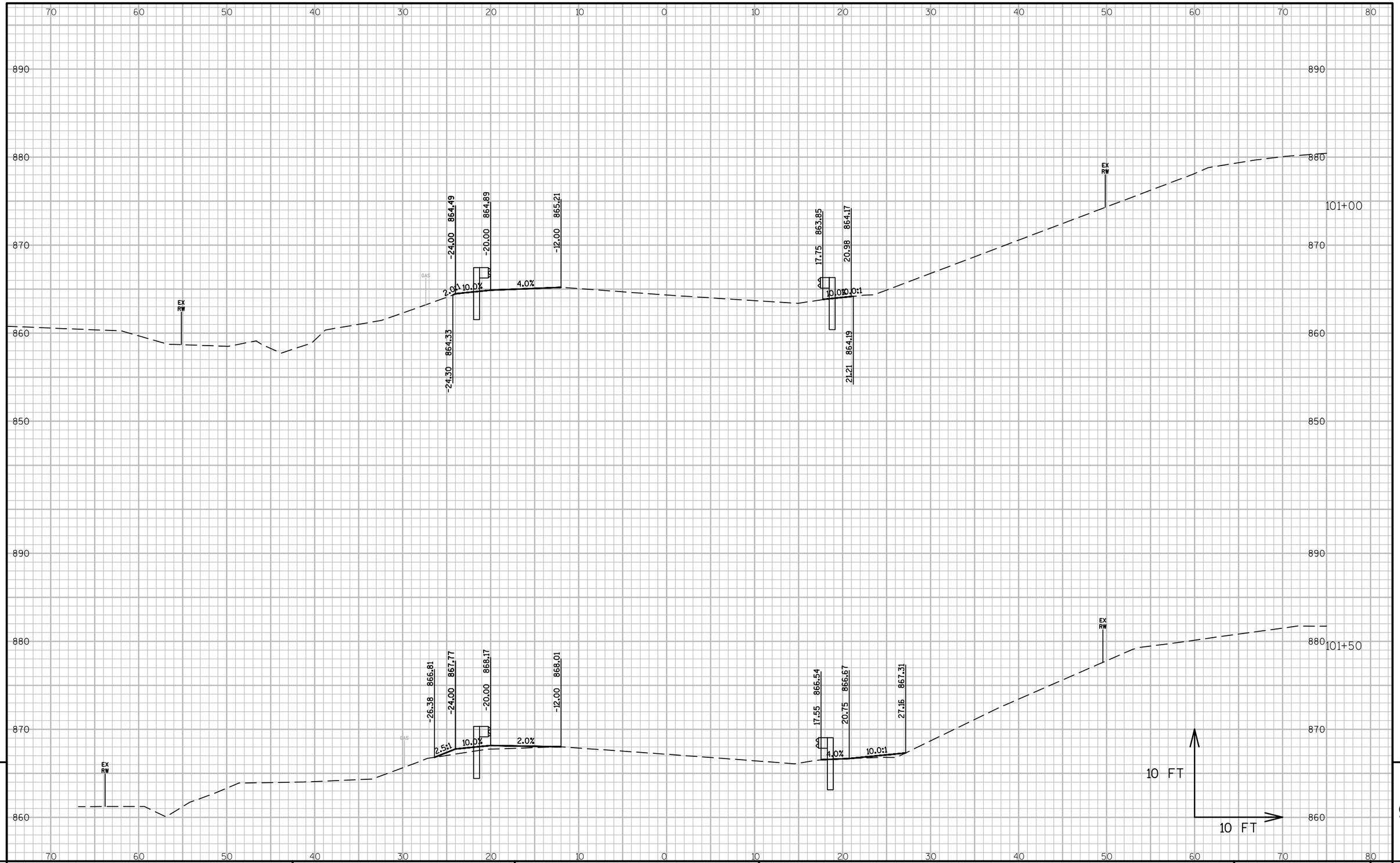

PROJECT NO: 3320-00-75	HWY: STH 140	COUNTY: ROCK	CROSS SECTIONS: STH 140	SHEET 175	E

FILE NAME : L:\PROJECTS\12729\DWG\3320-00-05\SHEETSPLAN\090201_XS BEAM GUARD.DWG
LAYOUT NAME - 090201_XS BEAM GUARD - SECTION SHEET - (24)
PLOT DATE : 1/26/2016 12:50 PM PLOT BY : HOLZWART, JOE PLOT NAME : PLOT SCALE : 1:10_XREF

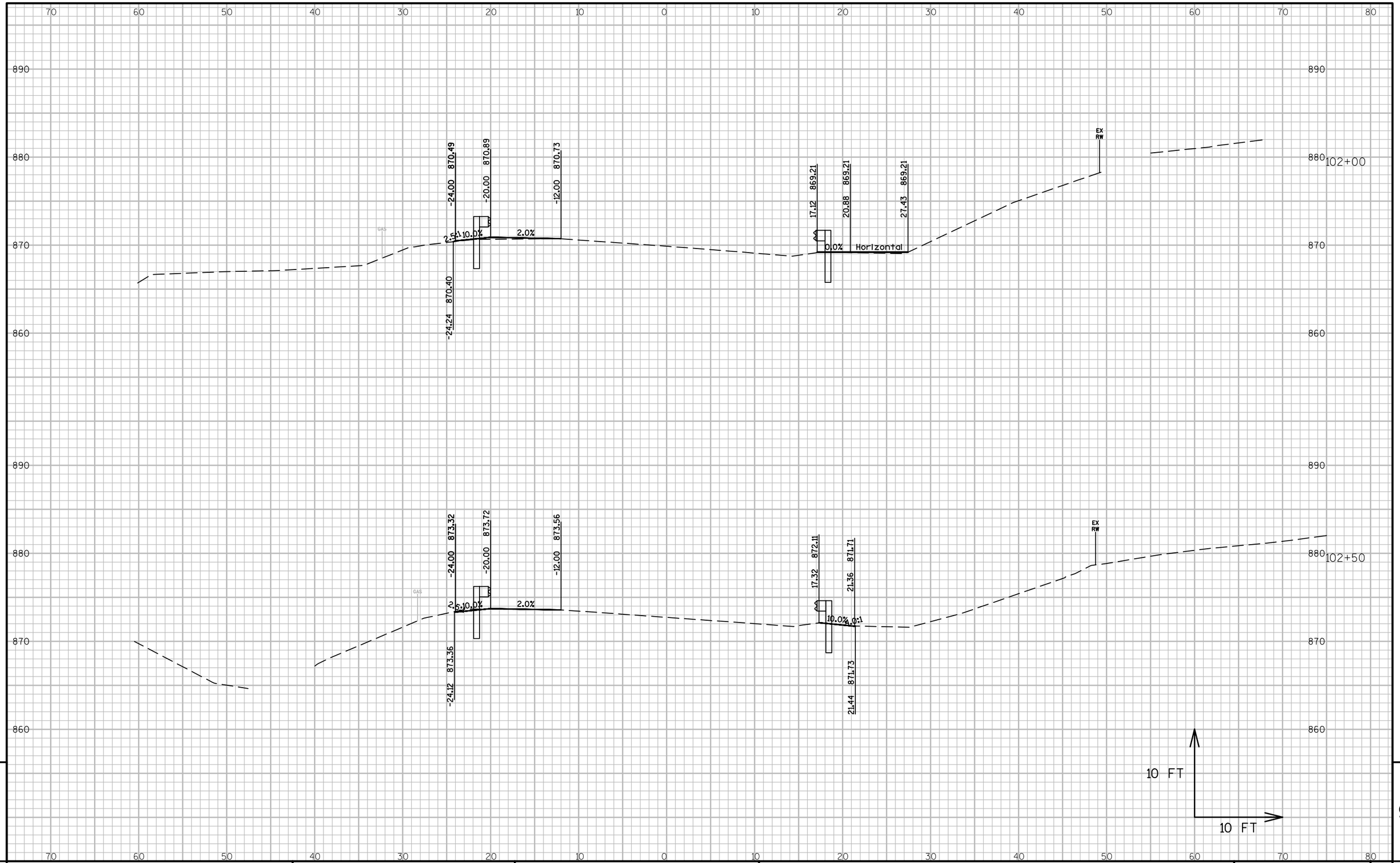

PROJECT NO: 3320-00-75	HWY: STH 140	COUNTY: ROCK	CROSS SECTIONS: STH 140	SHEET 176	E

FILE NAME : L:\PROJECTS\12729\DWG\3320-00-05\SHEETSPLAN\090201_XS BEAM GUARD.DWG
LAYOUT NAME - 090201_XS BEAM GUARD - SECTION SHEET - (25)
PLOT DATE : 1/26/2016 12:50 PM PLOT BY : HOLZWART, JOE PLOT NAME : PLOT SCALE : 1:10_XREF

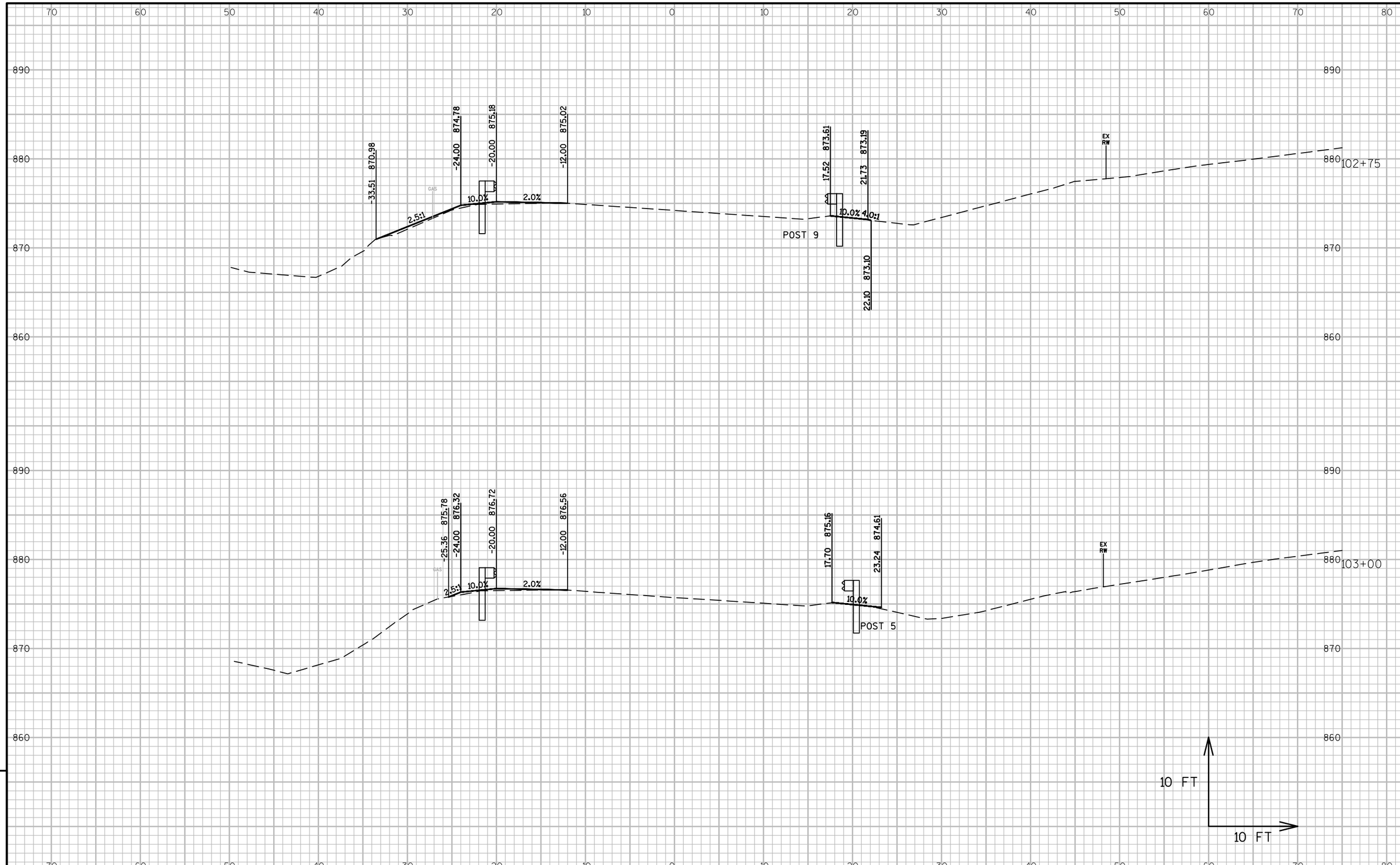

9

9

PROJECT NO: 3320-00-75	HWY: STH 140	COUNTY: ROCK	CROSS SECTIONS: STH 140	SHEET 177	E

FILE NAME : L:\PROJECTS\12729\DWG\3320-00-05\SHEETSPLAN\090201_XS BEAM GUARD.DWG
LAYOUT NAME - 090201_XS BEAM GUARD - SECTION SHEET - (26)

PLOT DATE : 1/26/2016 12:51 PM PLOT BY : HOLZWART, JOE PLOT NAME : PLOT SCALE : 1:10_XREF

WISDOT/CADDS SHEET 49

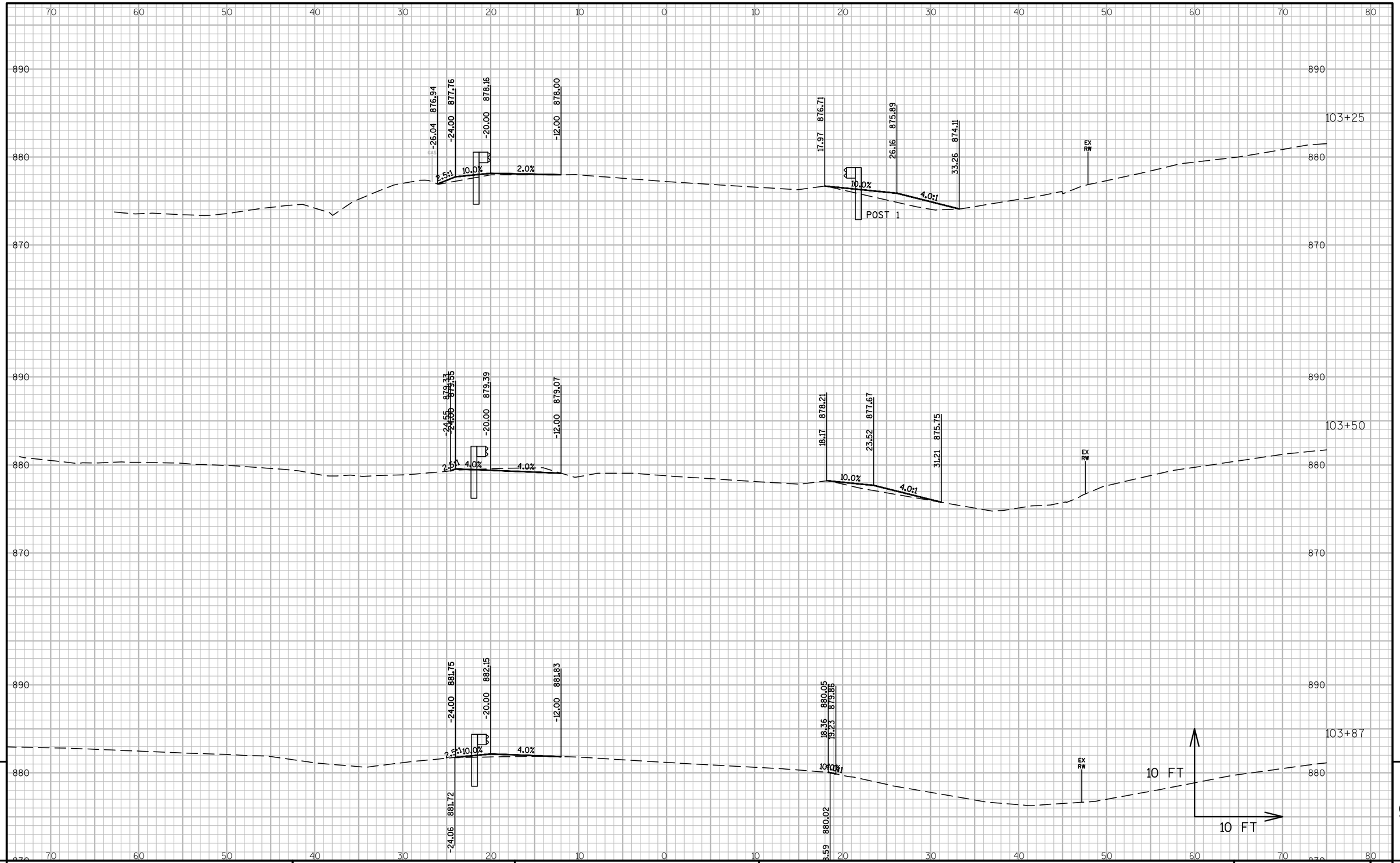

9

9

PROJECT NO: 3320-00-75	HWY: STH 140	COUNTY: ROCK	CROSS SECTIONS: STH 140	SHEET 178	E

FILE NAME : L:\PROJECTS\12729\DWG\3320-00-05\SHEETSPLAN\090201_XS BEAM GUARD.DWG
LAYOUT NAME - 090201_XS BEAM GUARD - SECTION SHEET - (27)

PLOT DATE : 1/26/2016 12:51 PM PLOT BY : HOLZWART, JOE PLOT NAME : PLOT SCALE : 1:10_XREF

WISDOT/CADDS SHEET 49

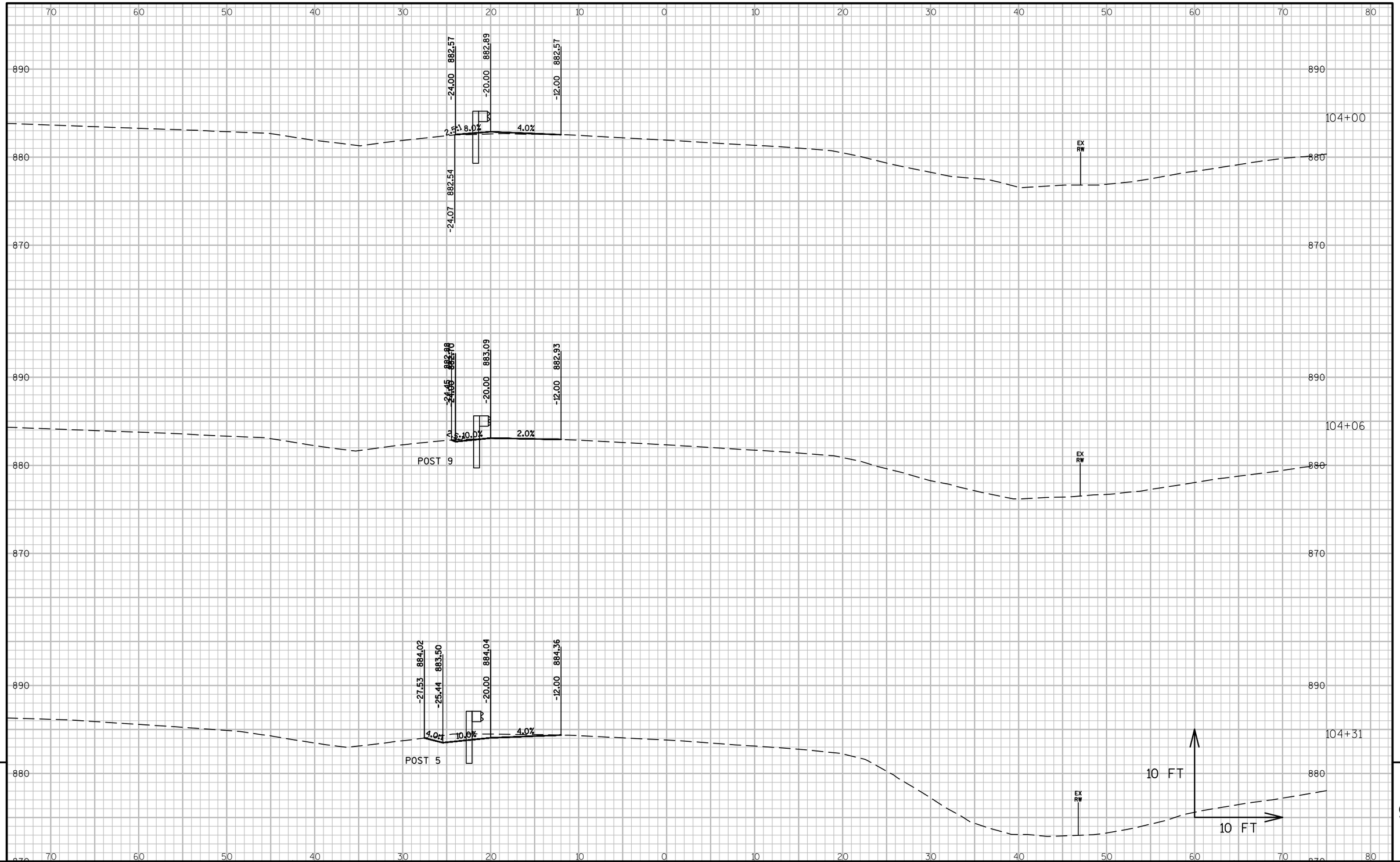

9

9

PROJECT NO: 3320-00-75	HWY: STH 140	COUNTY: ROCK	CROSS SECTIONS: STH 140	SHEET 179	E

FILE NAME : L:\PROJECTS\12729\DWG\3320-00-05\SHEETSPLAN\090201_XS BEAM GUARD.DWG
LAYOUT NAME - 090201_XS BEAM GUARD - SECTION SHEET - (28)

PLOT DATE : 1/26/2016 12:51 PM PLOT BY : HOLZWART, JOE PLOT NAME : PLOT SCALE : 1:10_XREF

WISDOT/CADDS SHEET 49

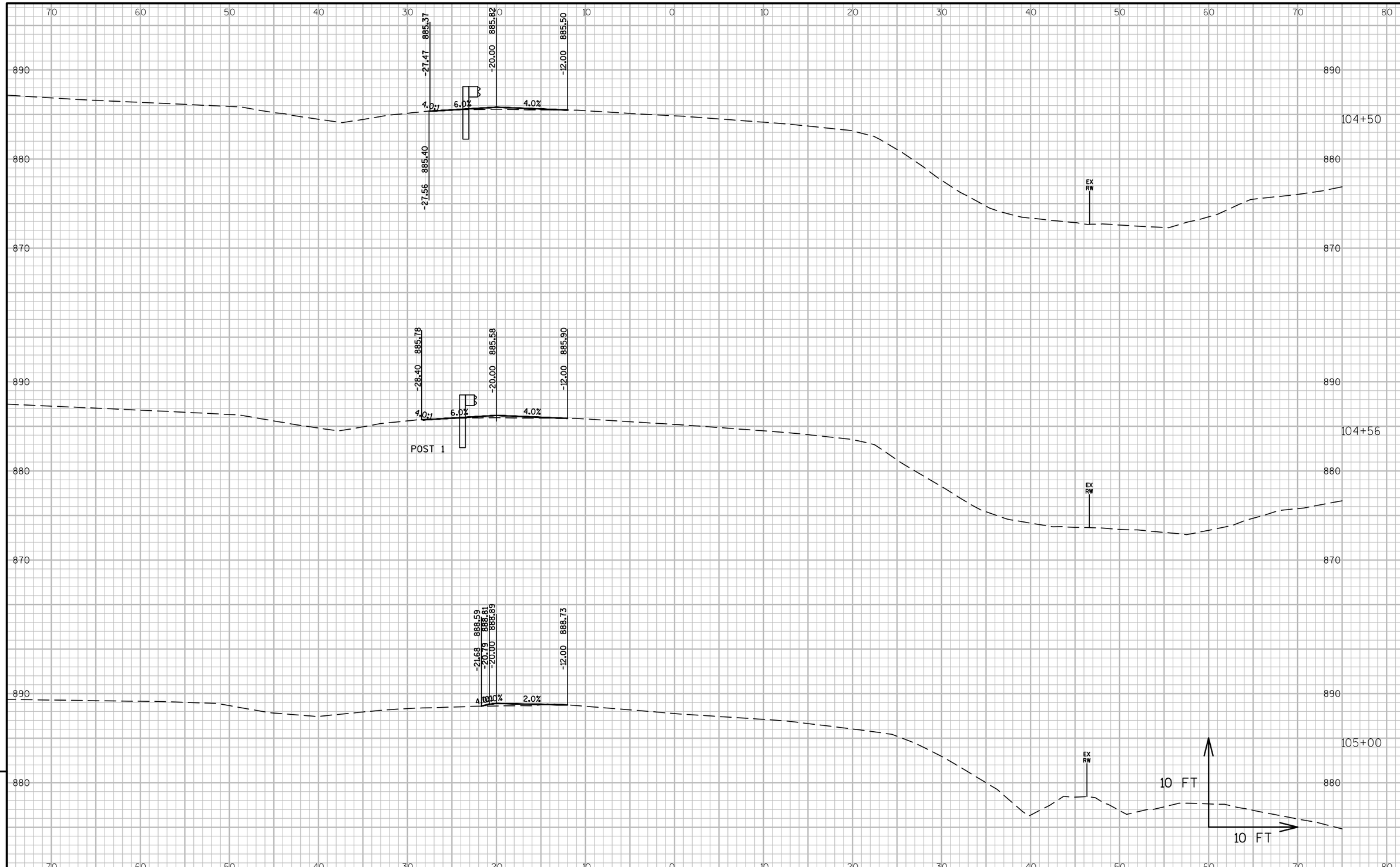

PROJECT NO: 3320-00-75	HWY: STH 140	COUNTY: ROCK	CROSS SECTIONS: STH 140	SHEET 180	E

FILE NAME : L:\PROJECTS\12729\DWG\3320-00-05\SHEETSPLAN\090201_XS BEAM GUARD.DWG
LAYOUT NAME - 090201_XS BEAM GUARD - SECTION SHEET - (29)
PLOT DATE : 1/26/2016 12:51 PM PLOT BY : HOLZWART, JOE PLOT NAME : PLOT SCALE : 1:10_XREF

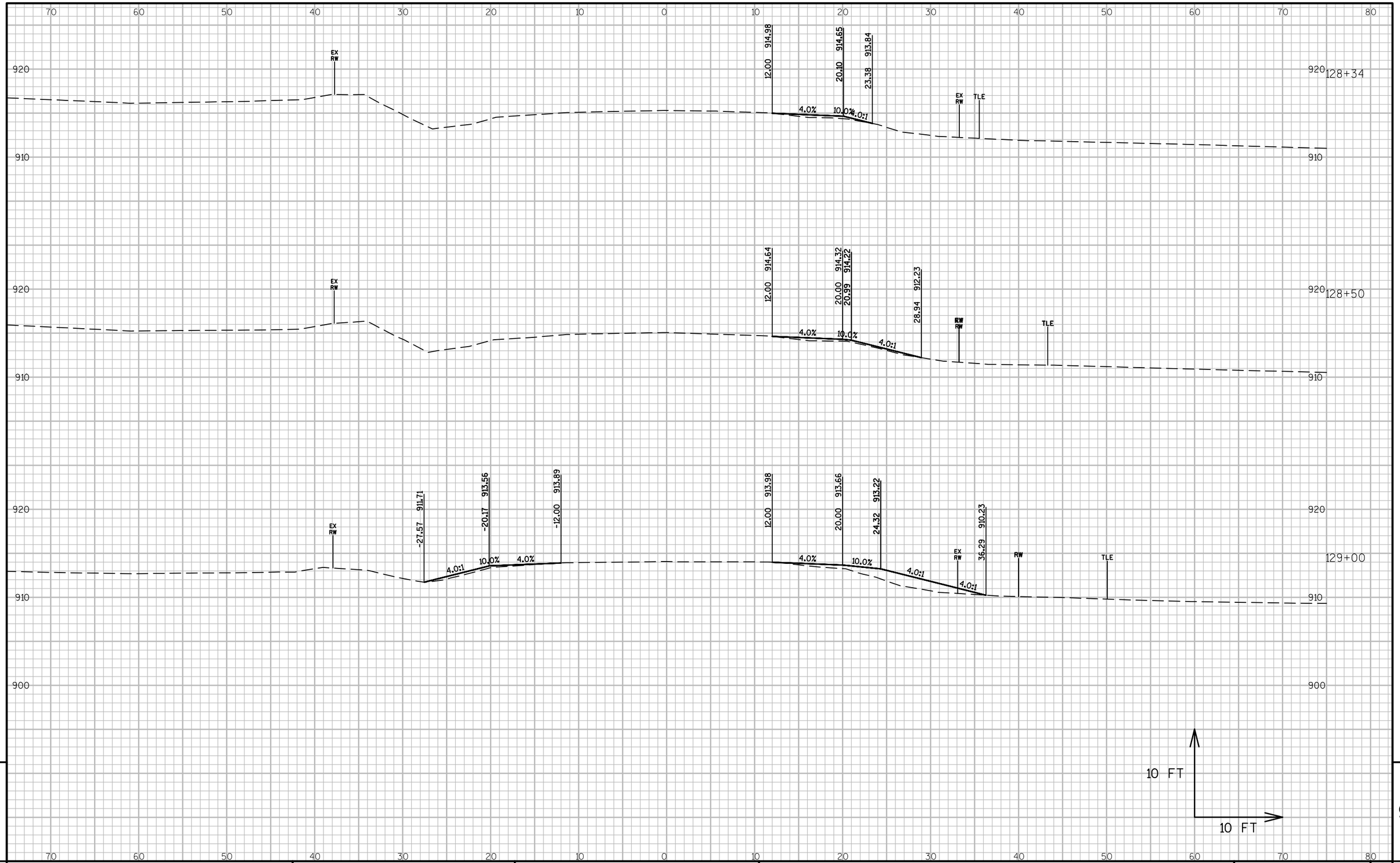

9

9

PROJECT NO: 3320-00-75	HWY: STH 140	COUNTY: ROCK	CROSS SECTIONS: STH 140	SHEET 181	E

FILE NAME : L:\PROJECTS\12729\DWG\3320-00-05\SHEETSPLAN\090201_XS BEAM GUARD.DWG
LAYOUT NAME - 090201_XS BEAM GUARD - SECTION SHEET - (30)

PLOT DATE : 1/26/2016 12:51 PM PLOT BY : HOLZWART, JOE PLOT NAME : PLOT SCALE : 1:10_XREF

WISDOT/CADDS SHEET 49

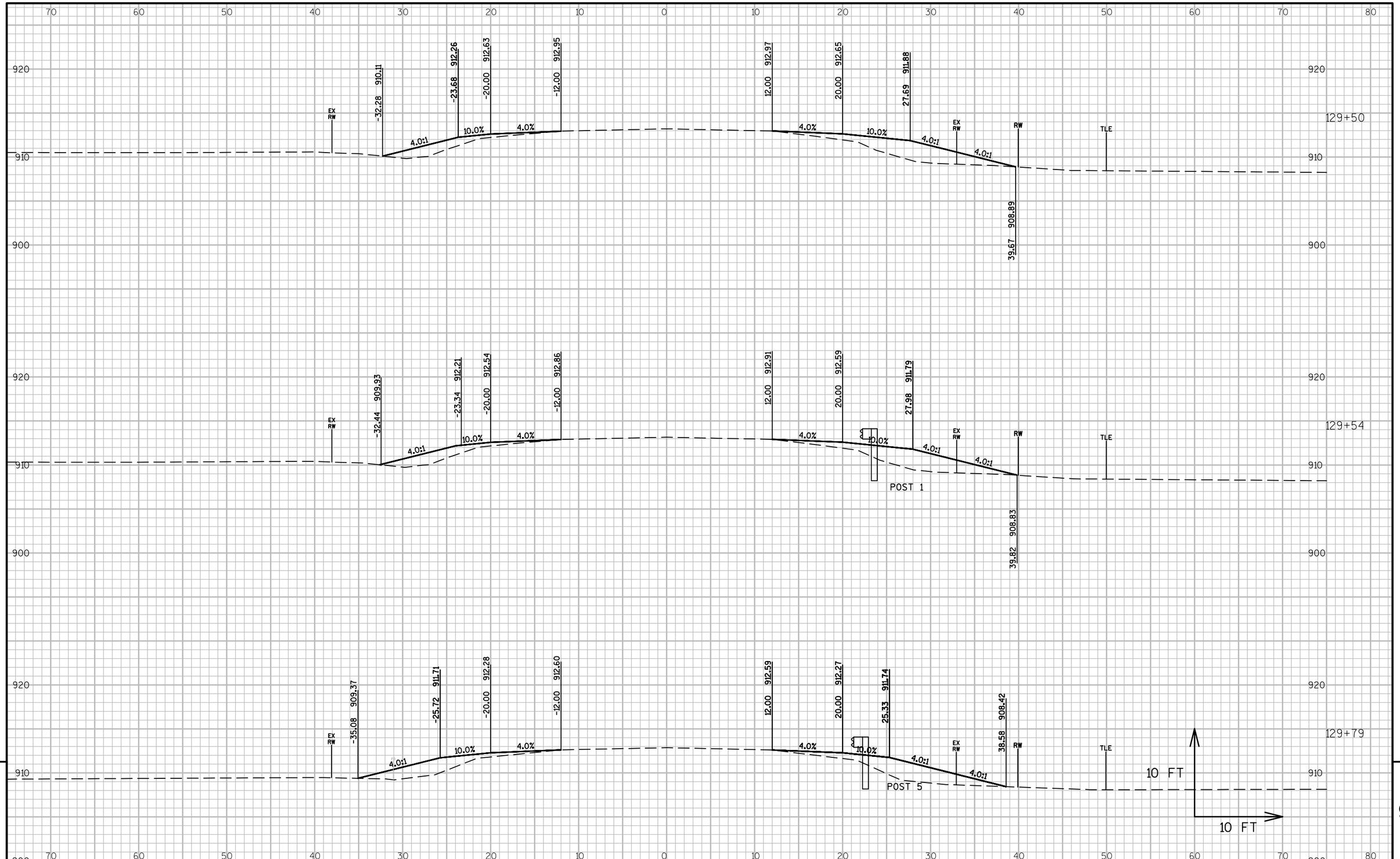

9

9

PROJECT NO: 3320-00-75	HWY: STH 140	COUNTY: ROCK	CROSS SECTIONS: STH 140	SHEET 182	E

FILE NAME : L:\PROJECTS\12729\DWG\3320-00-05\SHEETSPLAN\090201_XS BEAM GUARD.DWG
LAYOUT NAME - 090201_XS BEAM GUARD - SECTION SHEET - (31)
PLOT DATE : 1/26/2016 12:51 PM PLOT BY : HOLZWART, JOE PLOT NAME : PLOT SCALE : 1:10_XREF

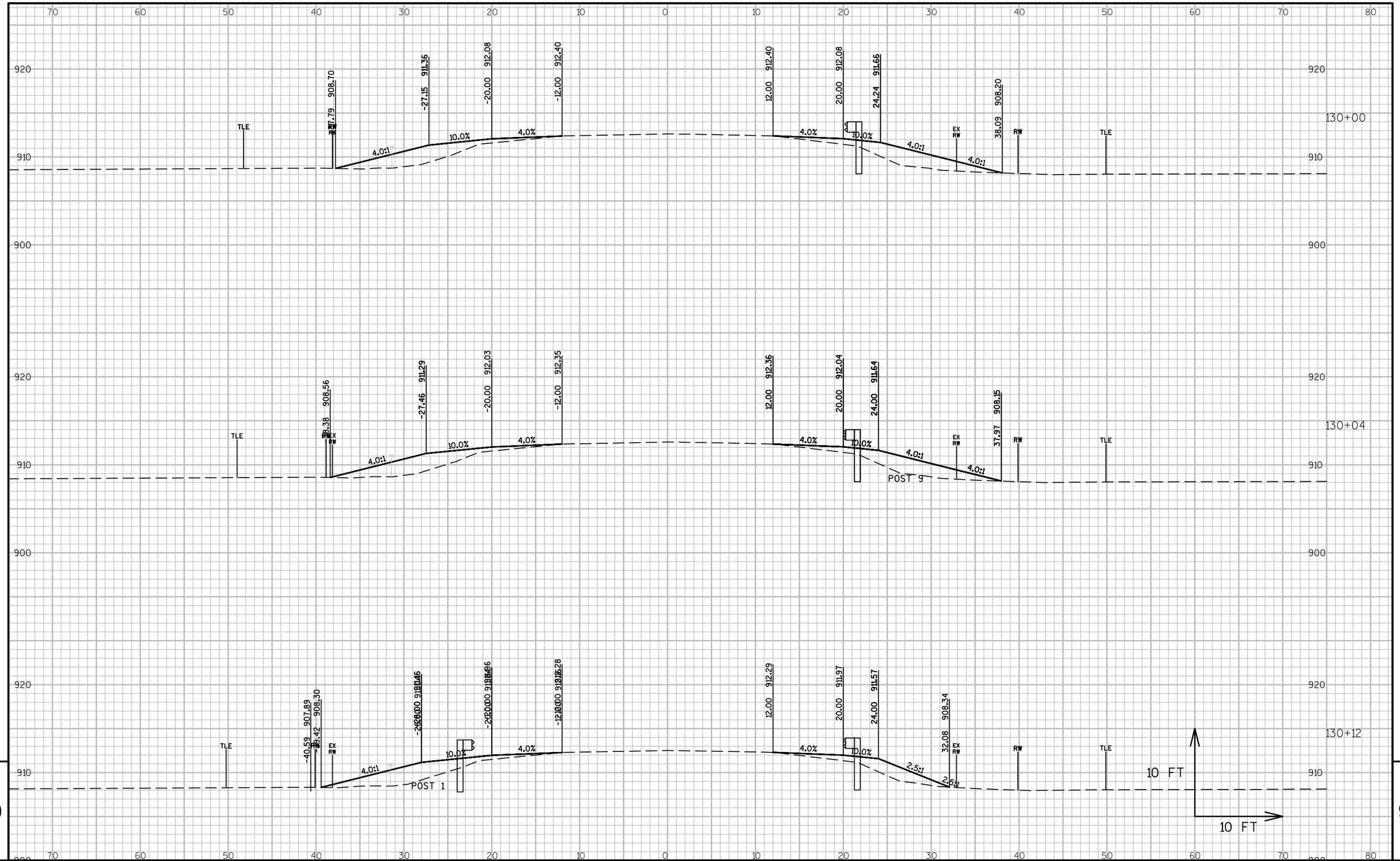

PROJECT NO: 3320-00-75	HWY: STH 140	COUNTY: ROCK	CROSS SECTIONS: STH 140	SHEET 183	E

FILE NAME : L:\PROJECTS\12729\DWG\3320-00-05\SHEETSPLAN\090201_XS BEAM GUARD.DWG
LAYOUT NAME - 090201_XS BEAM GUARD - SECTION SHEET - (32)
PLOT DATE : 1/26/2016 12:51 PM PLOT BY : HOLZWART, JOE PLOT NAME : PLOT SCALE : 1:10_XREF

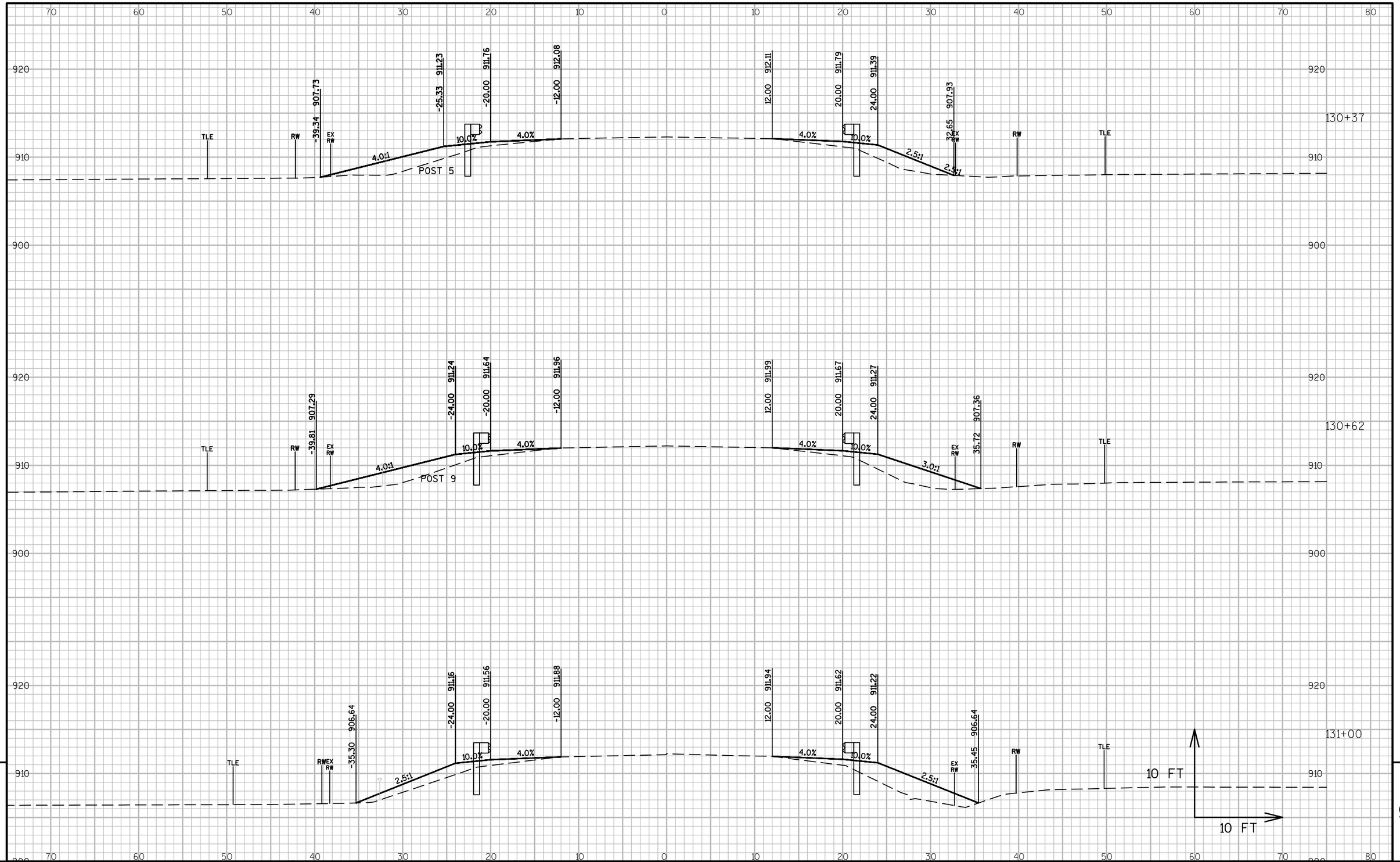

PROJECT NO: 3320-00-75	HWY: STH 140	COUNTY: ROCK	CROSS SECTIONS: STH 140	SHEET 184	E

FILE NAME : L:\PROJECTS\12729\DWG\3320-00-05\SHEETSPLAN\090201_XS BEAM GUARD.DWG
LAYOUT NAME - 090201_XS BEAM GUARD - SECTION SHEET - (33)
PLOT DATE : 1/26/2016 12:51 PM PLOT BY : HOLZWART, JOE PLOT NAME : PLOT SCALE : 1:10_XREF

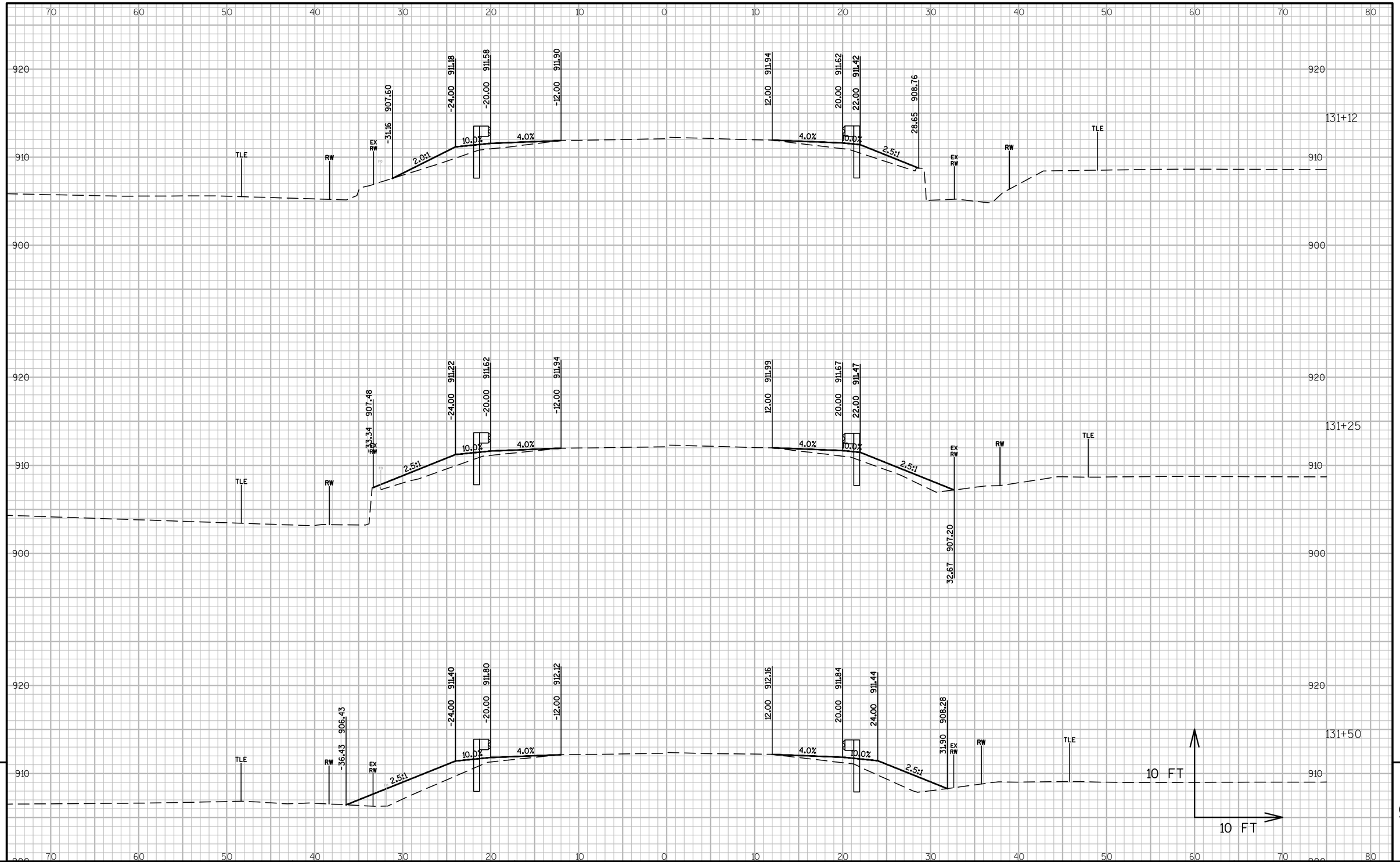

PROJECT NO: 3320-00-75	HWY: STH 140	COUNTY: ROCK	CROSS SECTIONS: STH 140	SHEET 185	E

FILE NAME : L:\PROJECTS\12729\DWG\3320-00-05\SHEETSPLAN\090201_XS BEAM GUARD.DWG
LAYOUT NAME - 090201_XS BEAM GUARD - SECTION SHEET - (34)
PLOT DATE : 1/26/2016 12:51 PM PLOT BY : HOLZWART, JOE PLOT NAME : PLOT SCALE : 1:10_XREF

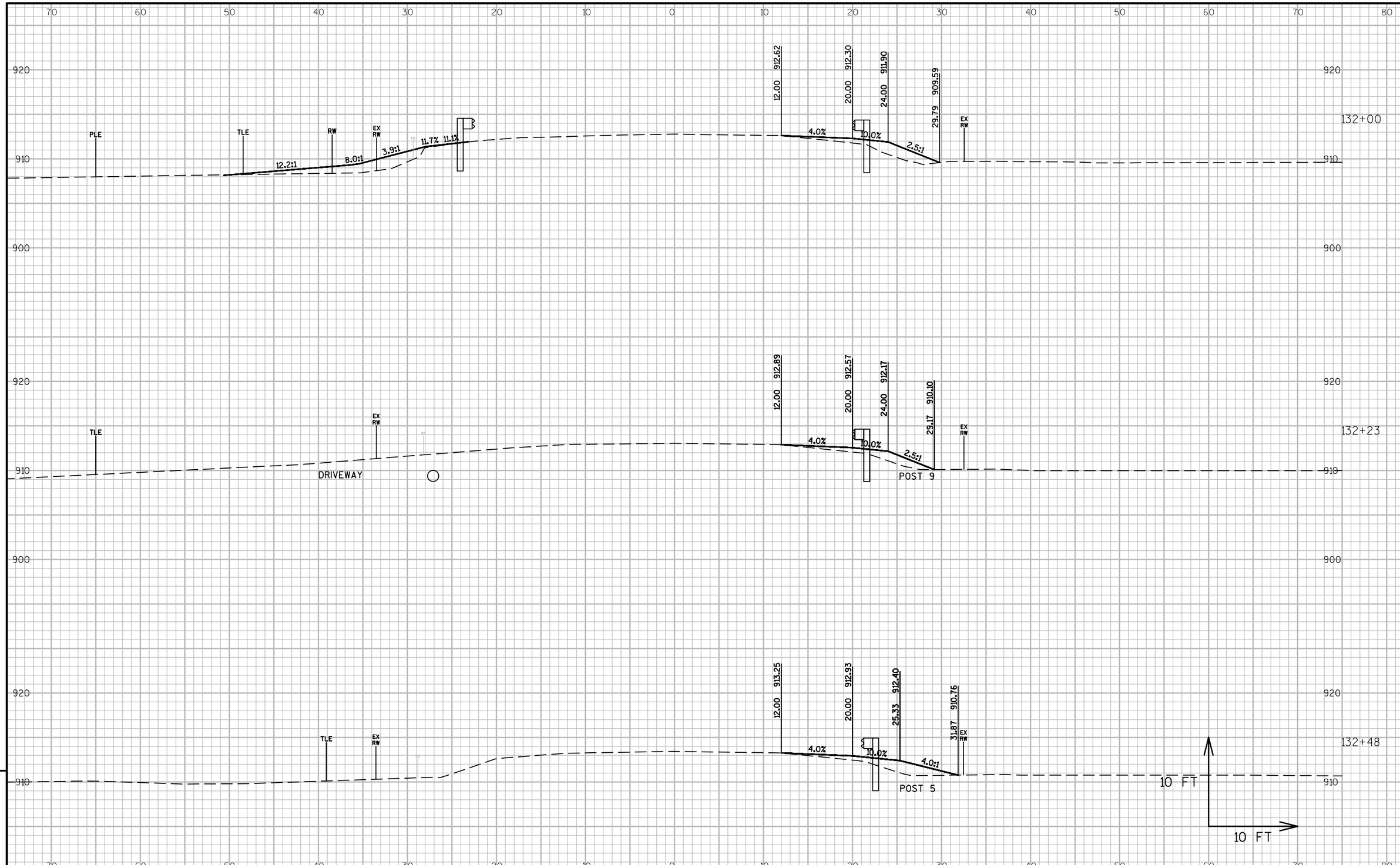

9

9

PROJECT NO: 3320-00-75	HWY: STH 140	COUNTY: ROCK	CROSS SECTIONS: STH 140	SHEET 186	E

FILE NAME : L:\PROJECTS\12729\DWG\3320-00-05\SHEETSPLAN\090201_XS BEAM GUARD.DWG
LAYOUT NAME - 090201_XS BEAM GUARD - SECTION SHEET - (35)
PLOT DATE : 1/26/2016 12:51 PM PLOT BY : HOLZWART, JOE PLOT NAME : PLOT SCALE : 1:10_XREF

WISDOT/CADDS SHEET 49

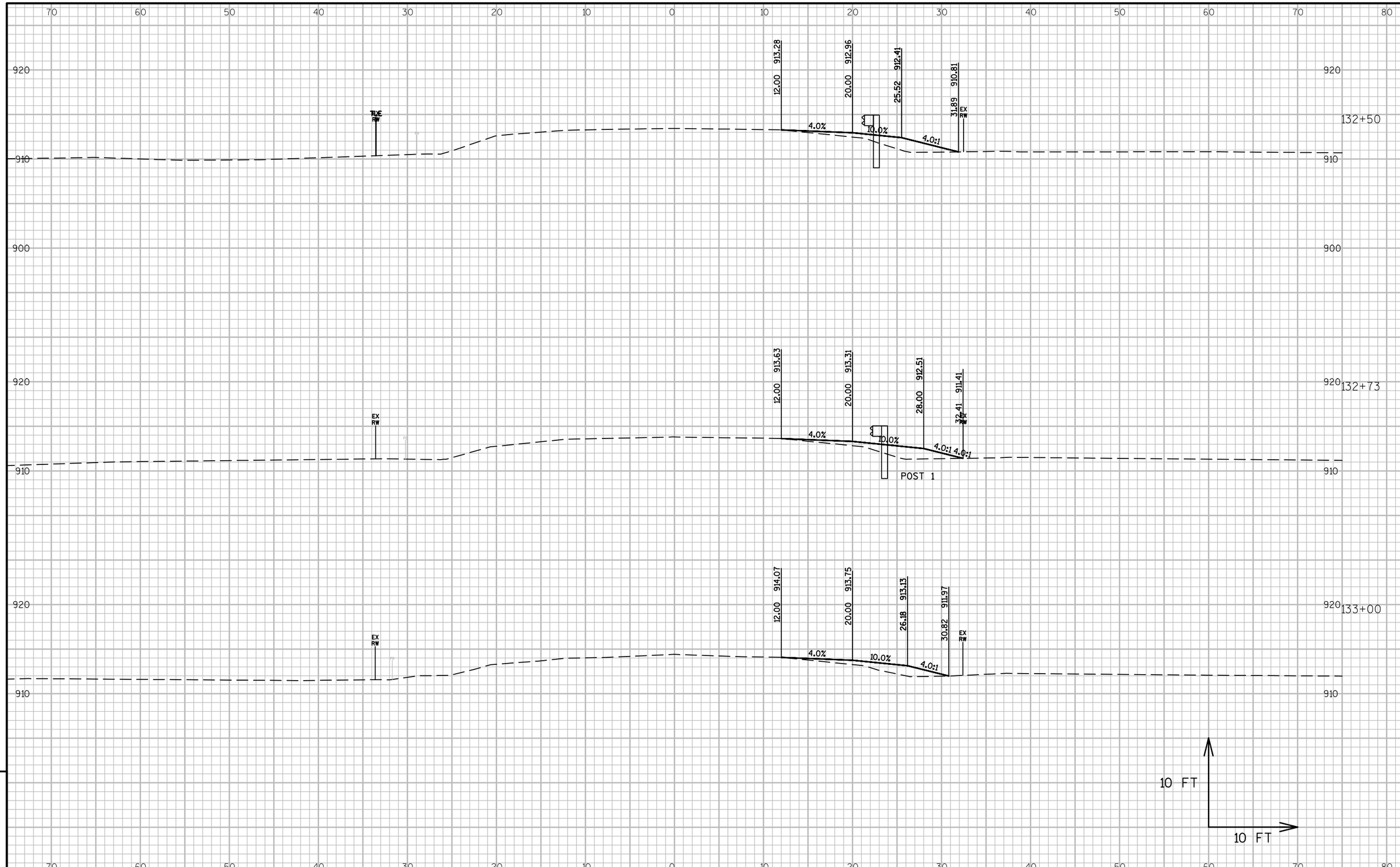

PROJECT NO: 3320-00-75	HWY: STH 140	COUNTY: ROCK	CROSS SECTIONS: STH 140	SHEET 187	E

FILE NAME : L:\PROJECTS\12729\DWG\3320-00-05\SHEETSPLAN\090201_XS BEAM GUARD.DWG
LAYOUT NAME - 090201_XS BEAM GUARD - SECTION SHEET - (36)
PLOT DATE : 1/26/2016 12:51 PM PLOT BY : HOLZWART, JOE PLOT NAME : PLOT SCALE : 1:10_XREF

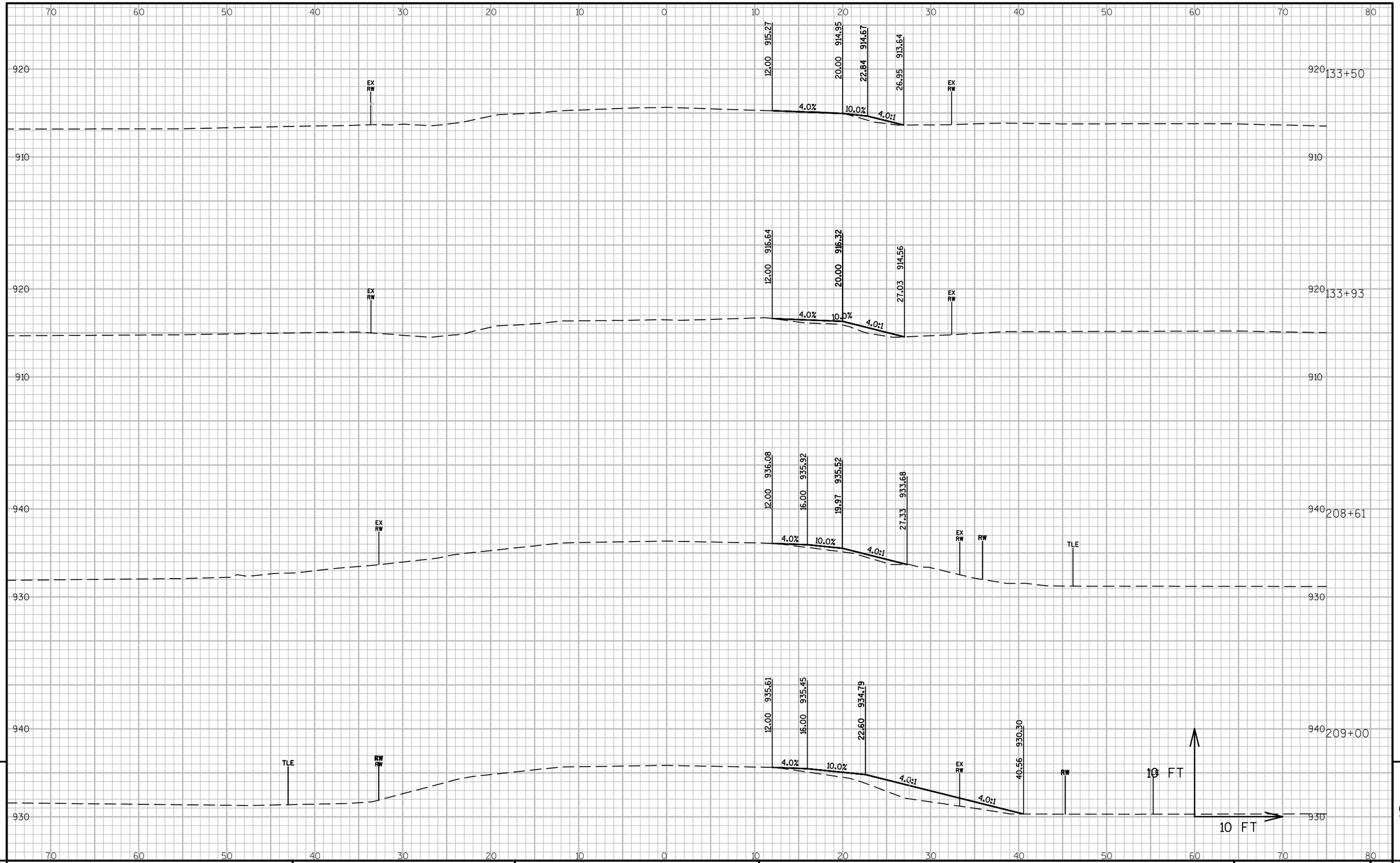

PROJECT NO: 3320-00-75	HWY: STH 140	COUNTY: ROCK	CROSS SECTIONS: STH 140	SHEET 188	E

FILE NAME : L:\PROJECTS\12729\DWG\3320-00-05\SHEETSPLAN\090201_XS BEAM GUARD.DWG
LAYOUT NAME - 090201_XS BEAM GUARD - SECTION SHEET - (37)
PLOT DATE : 1/26/2016 12:51 PM PLOT BY : HOLZWART, JOE PLOT NAME : PLOT SCALE : 1:10_XREF

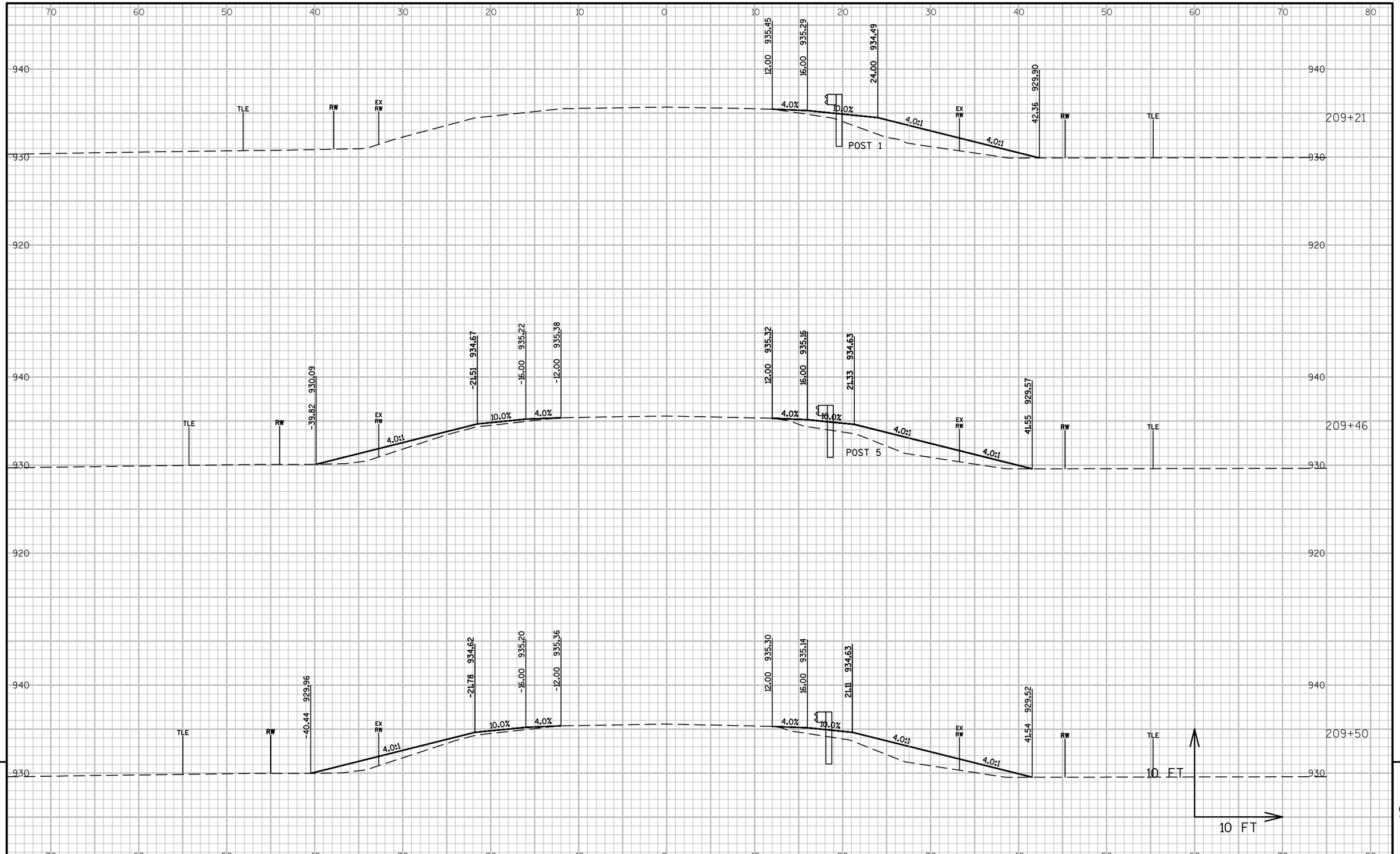

9

9

PROJECT NO: 3320-00-75	HWY: STH 140	COUNTY: ROCK	CROSS SECTIONS: STH 140	SHEET 189	E

FILE NAME : L:\PROJECTS\12729\DWG\3320-00-05\SHEETSPLAN\090201_XS BEAM GUARD.DWG
LAYOUT NAME - 090201_XS BEAM GUARD - SECTION SHEET - (38)
PLOT DATE : 1/26/2016 12:51 PM PLOT BY : HOLZWART, JOE PLOT NAME : PLOT SCALE : 1:10_XREF

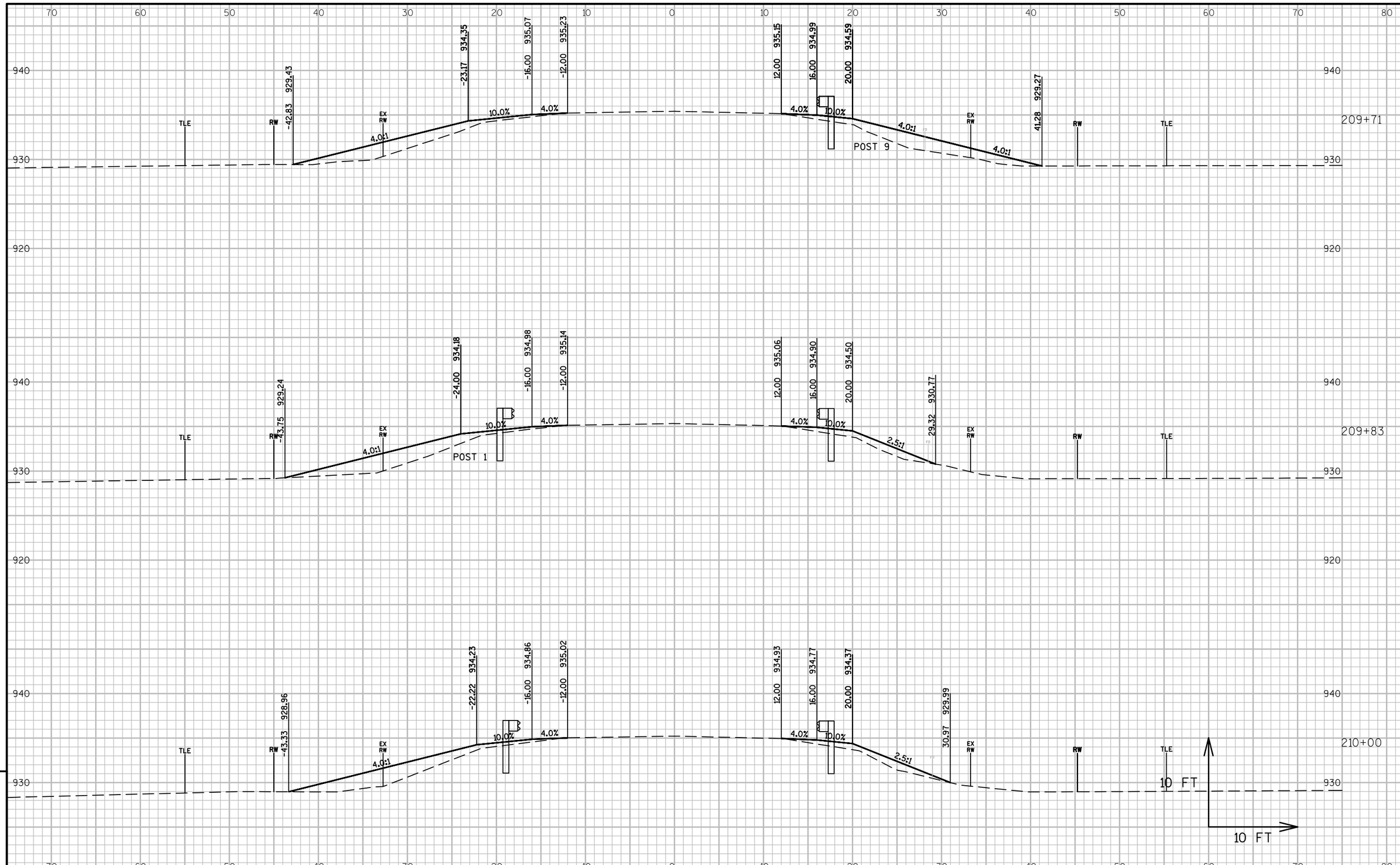

9

9

PROJECT NO: 3320-00-75	HWY: STH 140	COUNTY: ROCK	CROSS SECTIONS: STH 140	SHEET 190	E

FILE NAME : L:\PROJECTS\12729\DWG\3320-00-05\SHEETSPLAN\090201_XS BEAM GUARD.DWG
LAYOUT NAME - 090201_XS BEAM GUARD - SECTION SHEET - (39)
PLOT DATE : 1/26/2016 12:51 PM PLOT BY : HOLZWART, JOE PLOT NAME : PLOT SCALE : 1:10_XREF

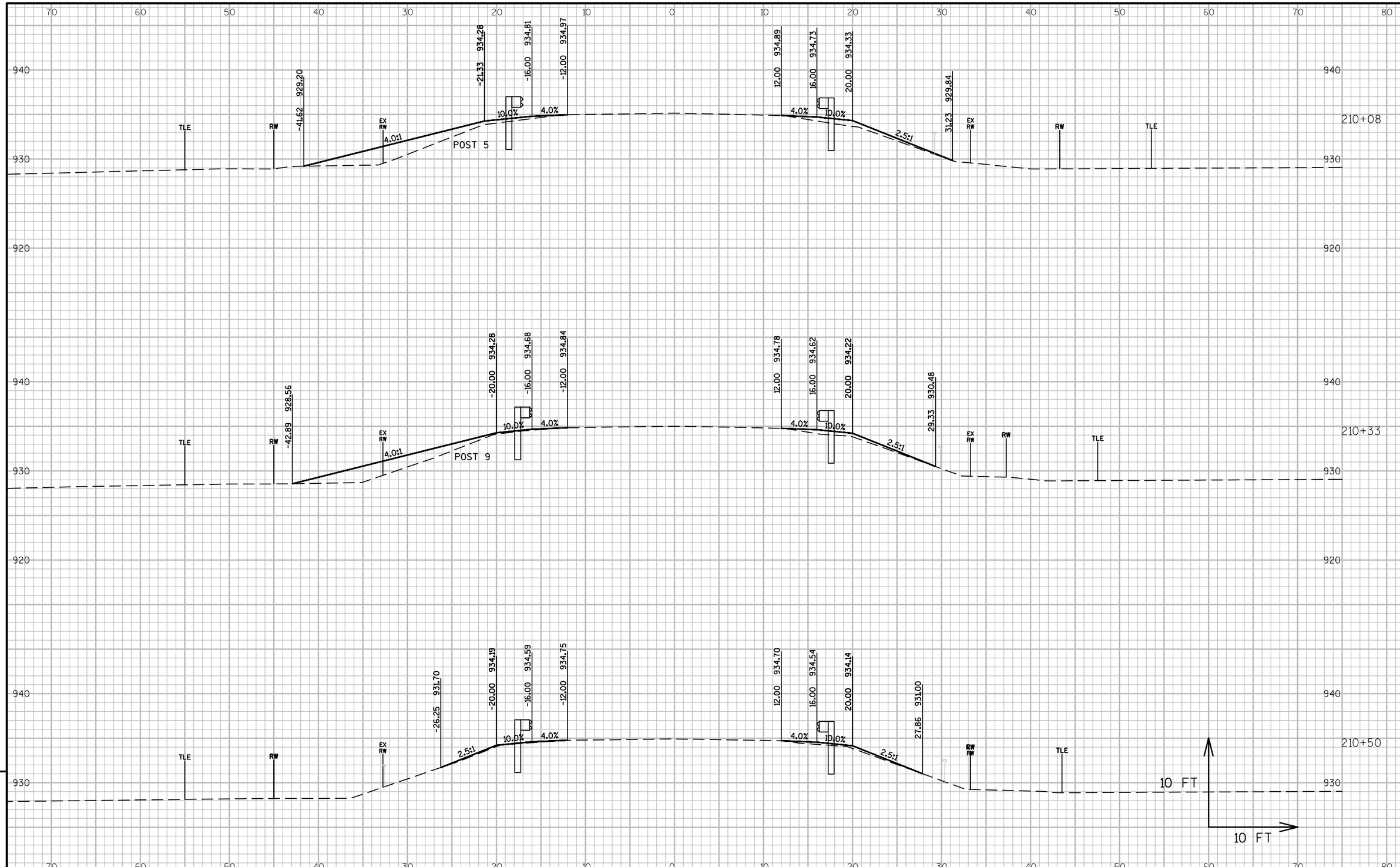

9

9

PROJECT NO: 3320-00-75	HWY: STH 140	COUNTY: ROCK	CROSS SECTIONS: STH 140	SHEET 191	E

FILE NAME : L:\PROJECTS\12729\DWG\3320-00-05\SHEETSPLAN\090201_XS BEAM GUARD.DWG
LAYOUT NAME - 090201_XS BEAM GUARD - SECTION SHEET - (40)

PLOT DATE : 1/26/2016 12:51 PM PLOT BY : HOLZWART, JOE PLOT NAME : PLOT SCALE : 1:10_XREF

WISDOT/CADDS SHEET 49

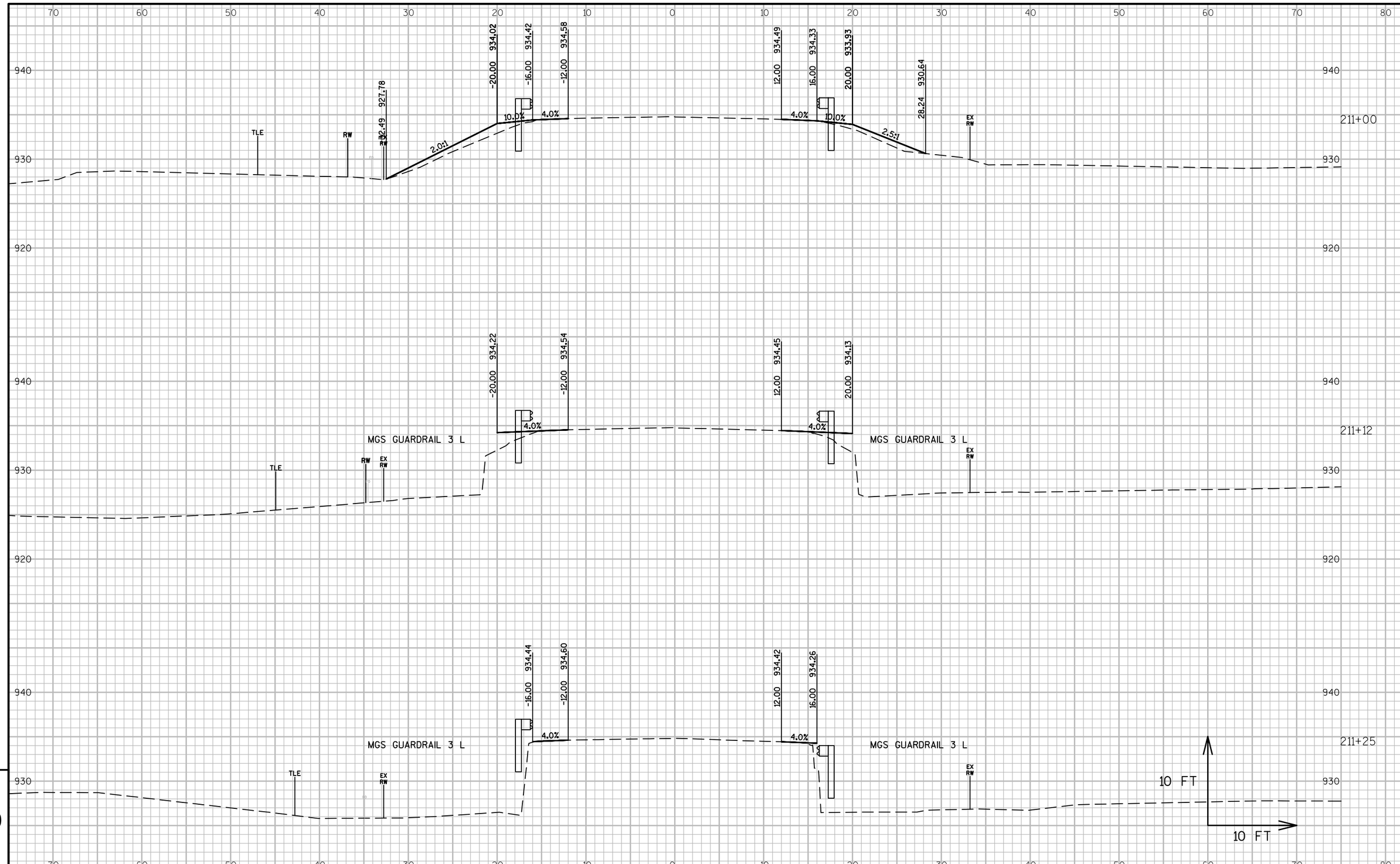

PROJECT NO: 3320-00-75	HWY: STH 140	COUNTY: ROCK	CROSS SECTIONS: STH 140	SHEET 192	E

FILE NAME : L:\PROJECTS\12729\DWG\3320-00-05\SHEETSPLAN\090201_XS BEAM GUARD.DWG
LAYOUT NAME - 090201_XS BEAM GUARD - SECTION SHEET - (41)
PLOT DATE : 1/26/2016 12:51 PM PLOT BY : HOLZWART, JOE PLOT NAME : PLOT SCALE : 1:10_XREF

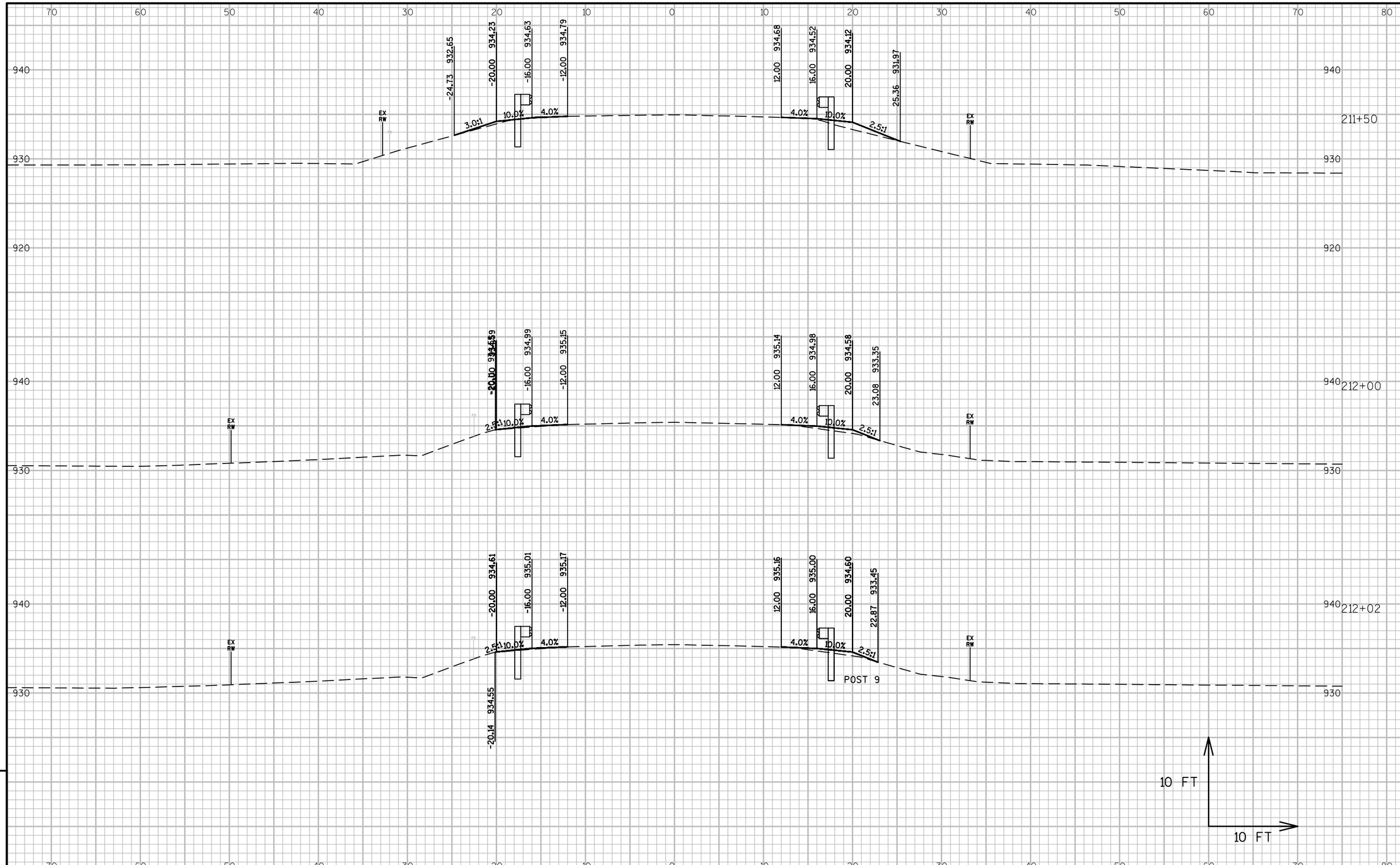

9

9

PROJECT NO: 3320-00-75	HWY: STH 140	COUNTY: ROCK	CROSS SECTIONS: STH 140	SHEET 193	E

FILE NAME : L:\PROJECTS\12729\DWG\3320-00-05\SHEETSPLAN\090201_XS BEAM GUARD.DWG
LAYOUT NAME - 090201_XS BEAM GUARD - SECTION SHEET - (42)
PLOT DATE : 1/26/2016 12:51 PM PLOT BY : HOLZWART, JOE PLOT NAME : PLOT SCALE : 1:10_XREF

WISDOT/CADDS SHEET 49

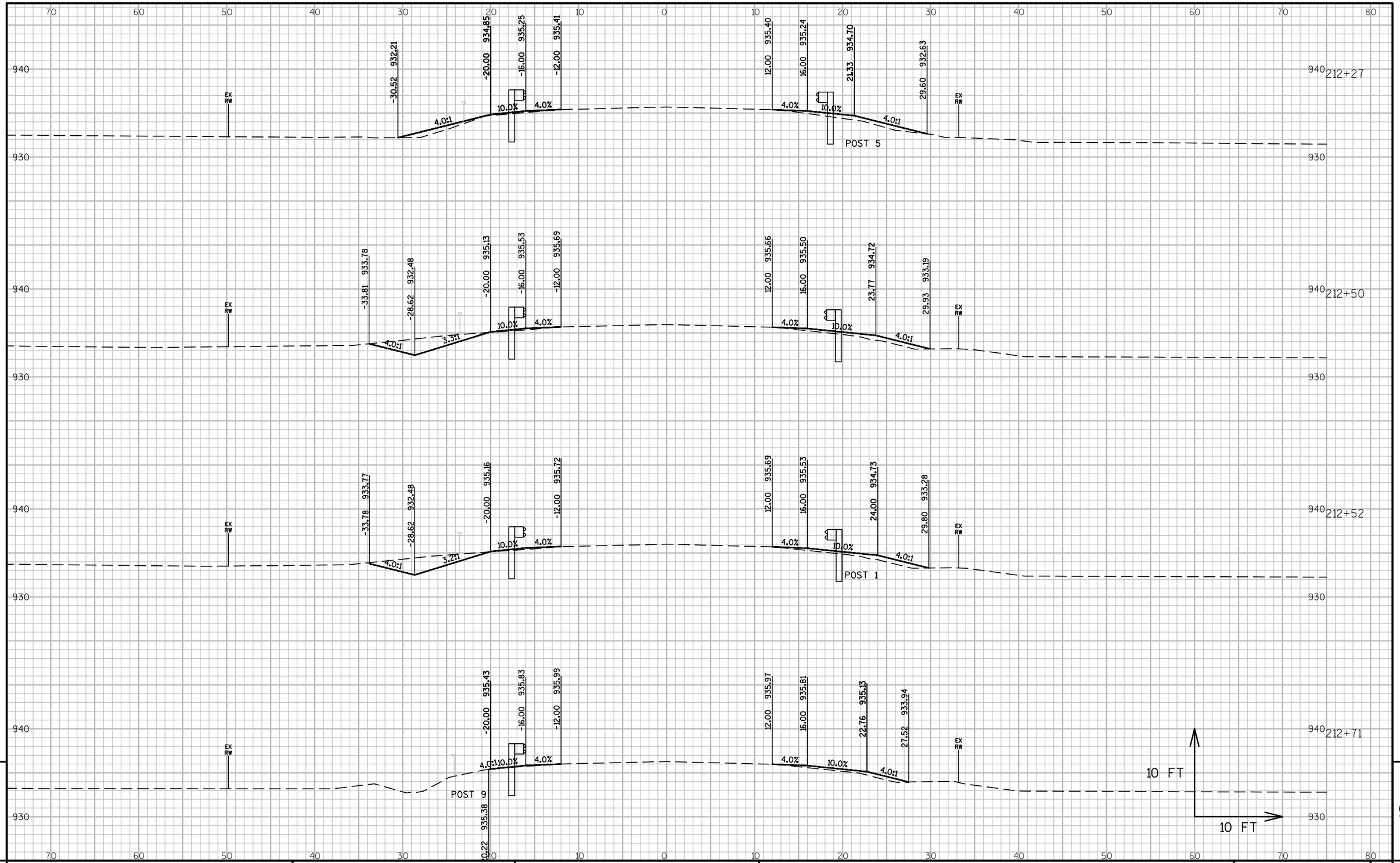

PROJECT NO: 3320-00-75	HWY: STH 140	COUNTY: ROCK	CROSS SECTIONS: STH 140	SHEET 194	E

FILE NAME : L:\PROJECTS\12729\DWG\3320-00-05\SHEETSPLAN\090201_XS BEAM GUARD.DWG
LAYOUT NAME - 090201_XS BEAM GUARD - SECTION SHEET - (43)
PLOT DATE : 1/26/2016 12:51 PM PLOT BY : HOLZWART, JOE PLOT NAME : PLOT SCALE : 1:10_XREF

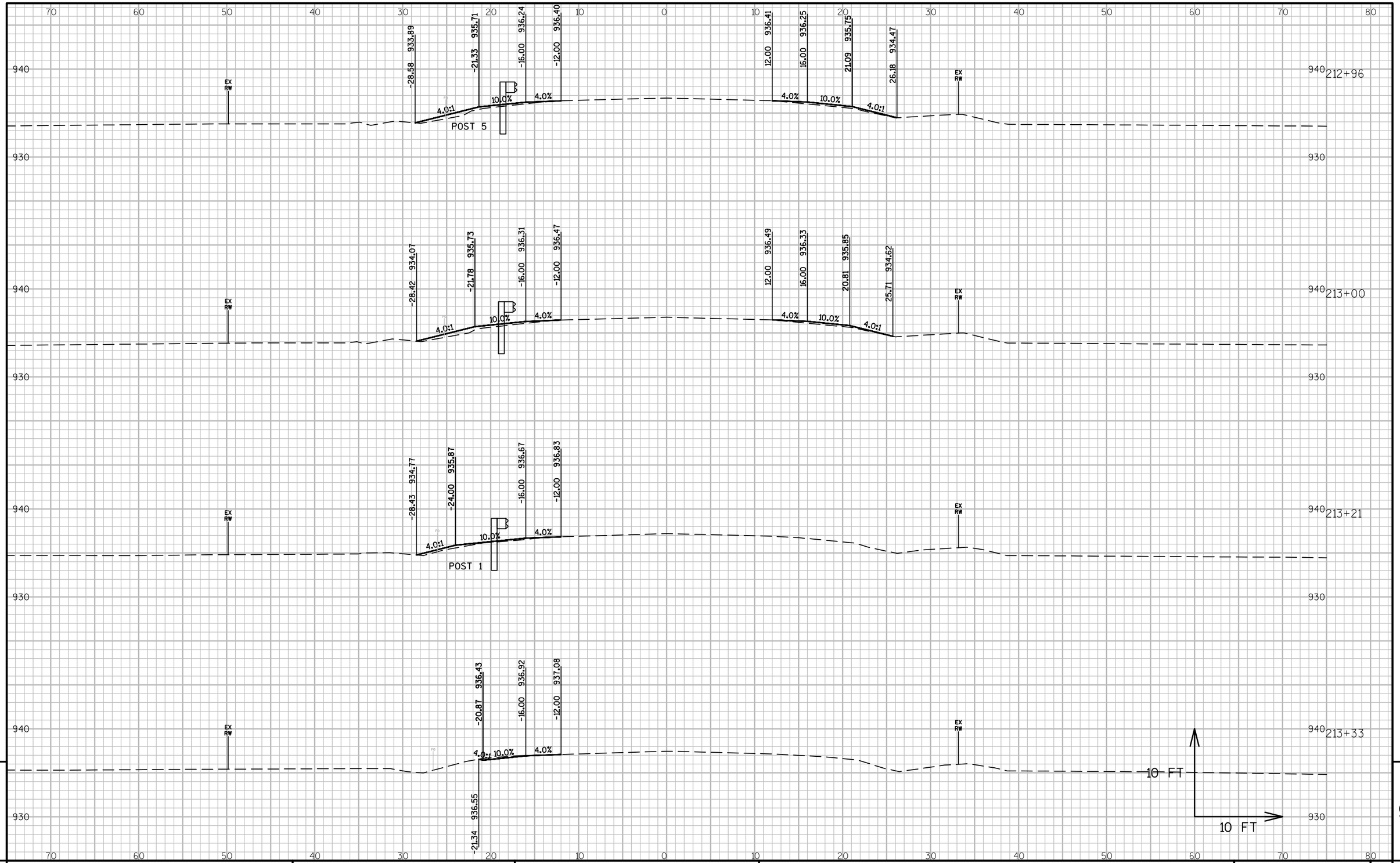

PROJECT NO: 3320-00-75	HWY: STH 140	COUNTY: ROCK	CROSS SECTIONS: STH 140	SHEET 195	E

FILE NAME : L:\PROJECTS\12729\DWG\3320-00-05\SHEETSPLAN\090201_XS BEAM GUARD.DWG
LAYOUT NAME - 090201_XS BEAM GUARD - SECTION SHEET - (44)
PLOT DATE : 1/26/2016 12:52 PM PLOT BY : HOLZWART, JOE PLOT NAME : PLOT SCALE : 1:10_XREF

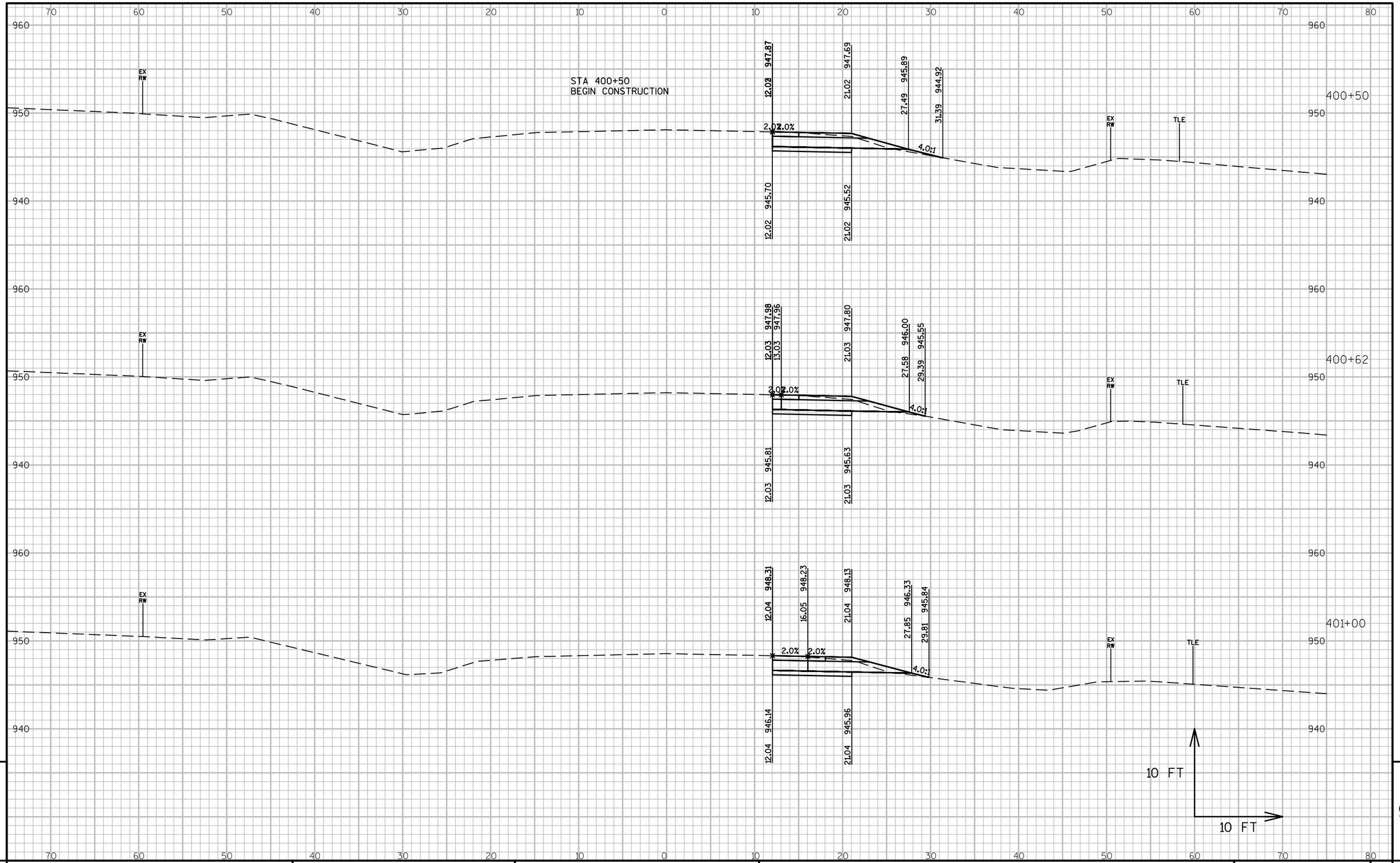

PROJECT NO: 1706-00-73	HWY: STH 140	COUNTY: ROCK	CROSS SECTIONS: USH 14 / STH 11	SHEET 196	E

FILE NAME : L:\PROJECTS\12729\DWG\3320-00-05\SHEETSPLAN\090202_XS.DWG
LAYOUT NAME - 090202_XS - SECTION SHEET - (1)
PLOT DATE : 1/26/2016 12:58 PM PLOT BY : HOLZWART, JOE PLOT NAME : PLOT SCALE : 1:10_XREF

9

9

PROJECT NO: 1706-00-73	HWY: STH 140	COUNTY: ROCK	CROSS SECTIONS: USH 14 / STH 11	SHEET 197	E

FILE NAME : L:\PROJECTS\12729\DWG\3320-00-05\SHEETSPLAN\090202_XS.DWG
LAYOUT NAME - 090202_XS - SECTION SHEET - (2)
PLOT DATE : 1/26/2016 12:58 PM PLOT BY : HOLZWART, JOE PLOT NAME : PLOT SCALE : 1:10_XREF

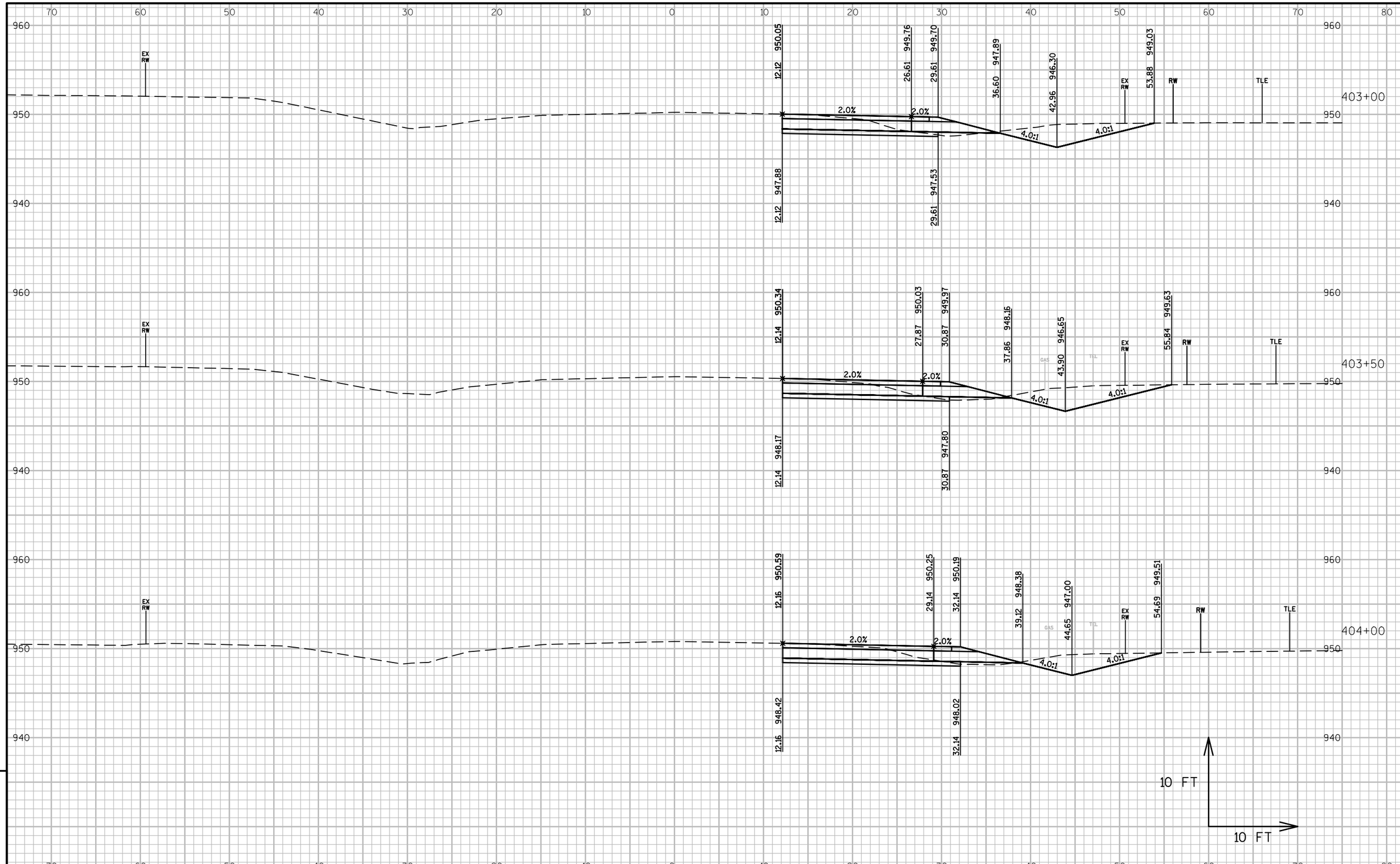

PROJECT NO: 1706-00-73	HWY: STH 140	COUNTY: ROCK	CROSS SECTIONS: USH 14 / STH 11	SHEET 198	E

FILE NAME : L:\PROJECTS\12729\DWG\3320-00-05\SHEETSPLAN\090202_XS.DWG
LAYOUT NAME - 090202_XS - SECTION SHEET - (3)
PLOT DATE : 1/26/2016 12:58 PM PLOT BY : HOLZWART, JOE PLOT NAME : PLOT SCALE : 1:10_XREF

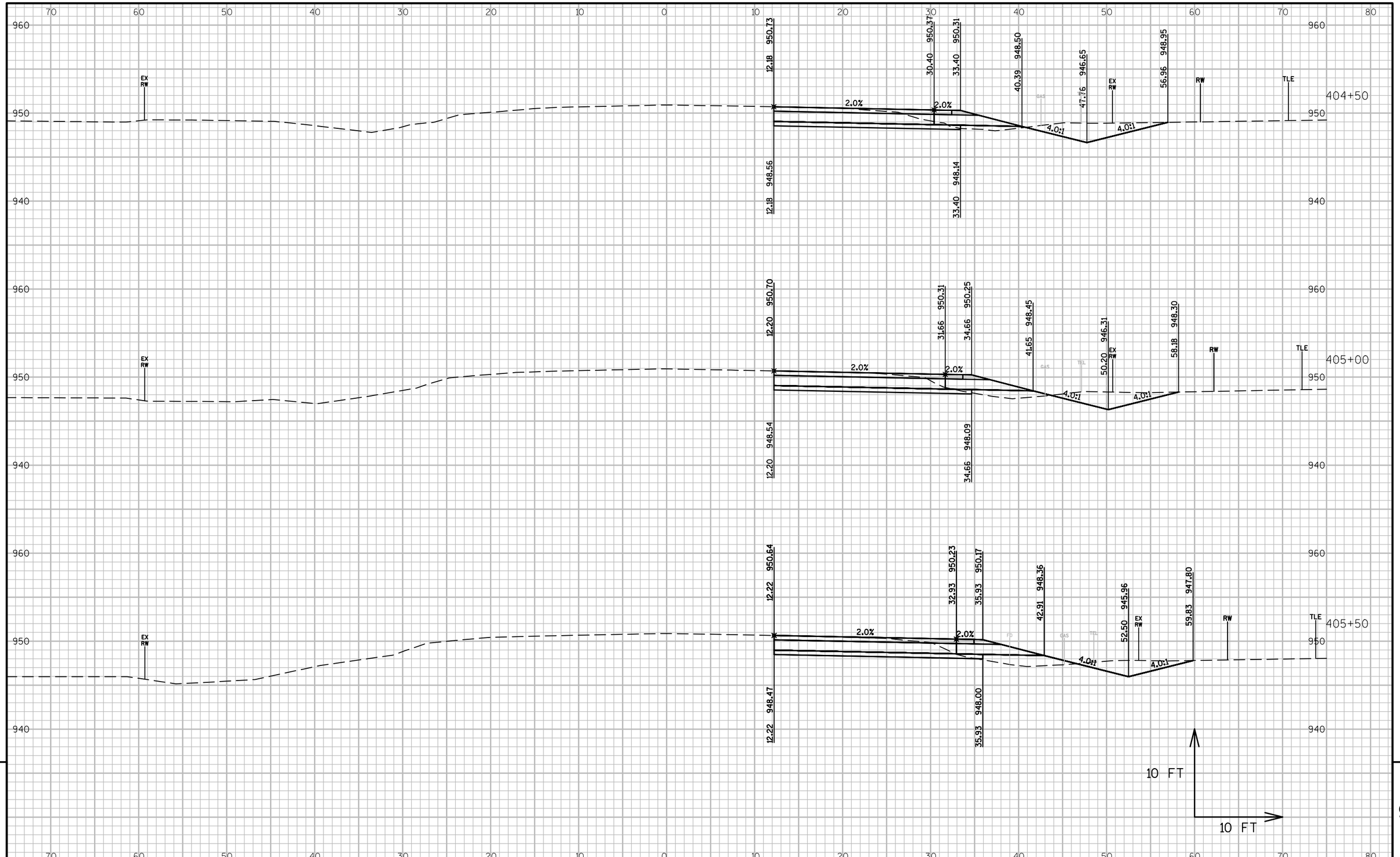

PROJECT NO: 1706-00-73	HWY: STH 140	COUNTY: ROCK	CROSS SECTIONS: USH 14 / STH 11	SHEET 199	E

FILE NAME : L:\PROJECTS\12729\DWG\3320-00-05\SHEETSPLAN\090202_XS.DWG
LAYOUT NAME - 090202_XS - SECTION SHEET - (4)
PLOT DATE : 1/26/2016 12:58 PM PLOT BY : HOLZWART, JOE PLOT NAME : PLOT SCALE : 1:10_XREF

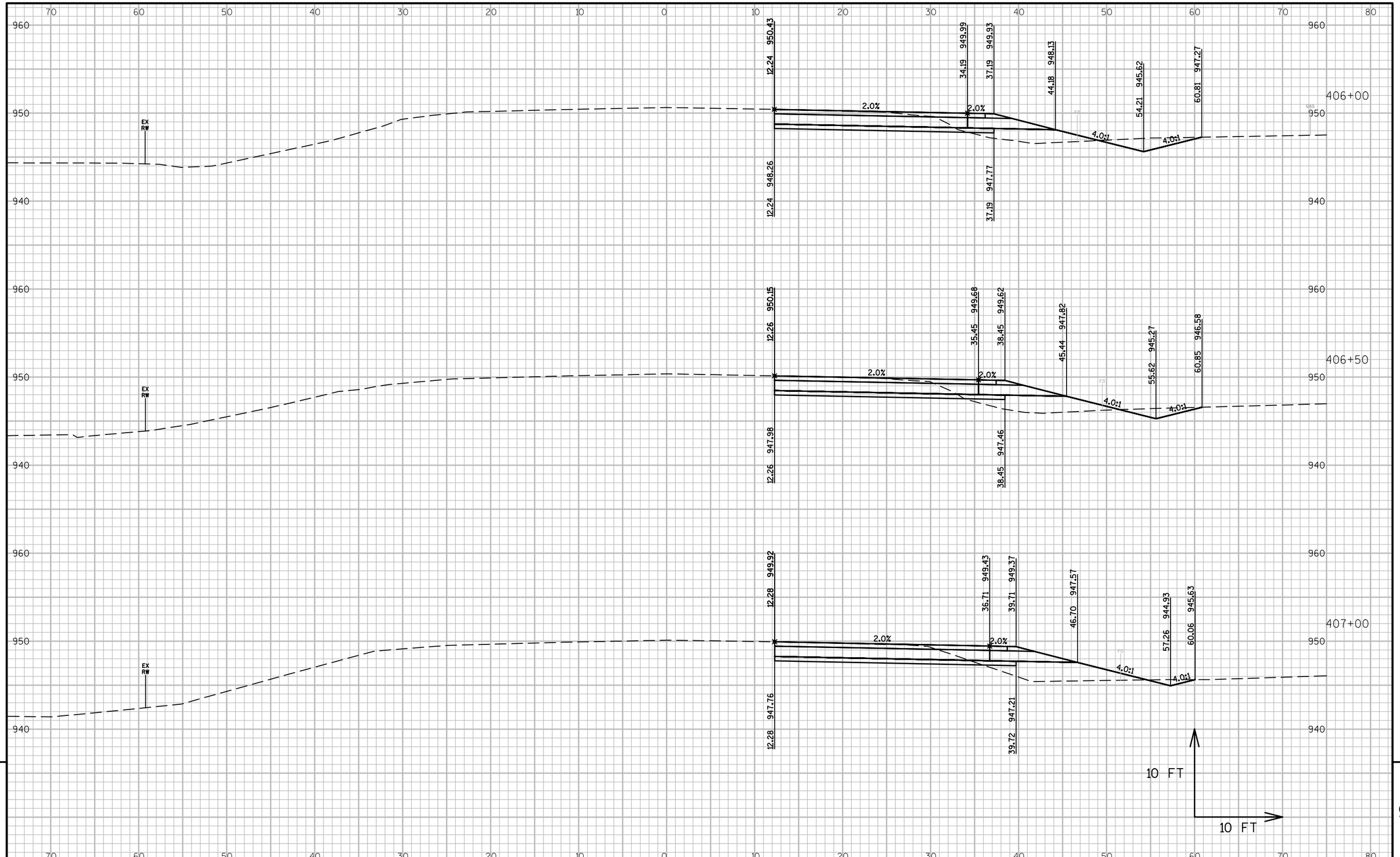

PROJECT NO: 1706-00-73	HWY: STH 140	COUNTY: ROCK	CROSS SECTIONS: USH 14 / STH 11	SHEET 200	E

FILE NAME : L:\PROJECTS\12729\DWG\3320-00-05\SHEETSPLAN\090202_XS.DWG
LAYOUT NAME - 090202_XS - SECTION SHEET - (5)
PLOT DATE : 1/26/2016 12:58 PM PLOT BY : HOLZWART, JOE PLOT NAME : PLOT SCALE : 1:10_XREF

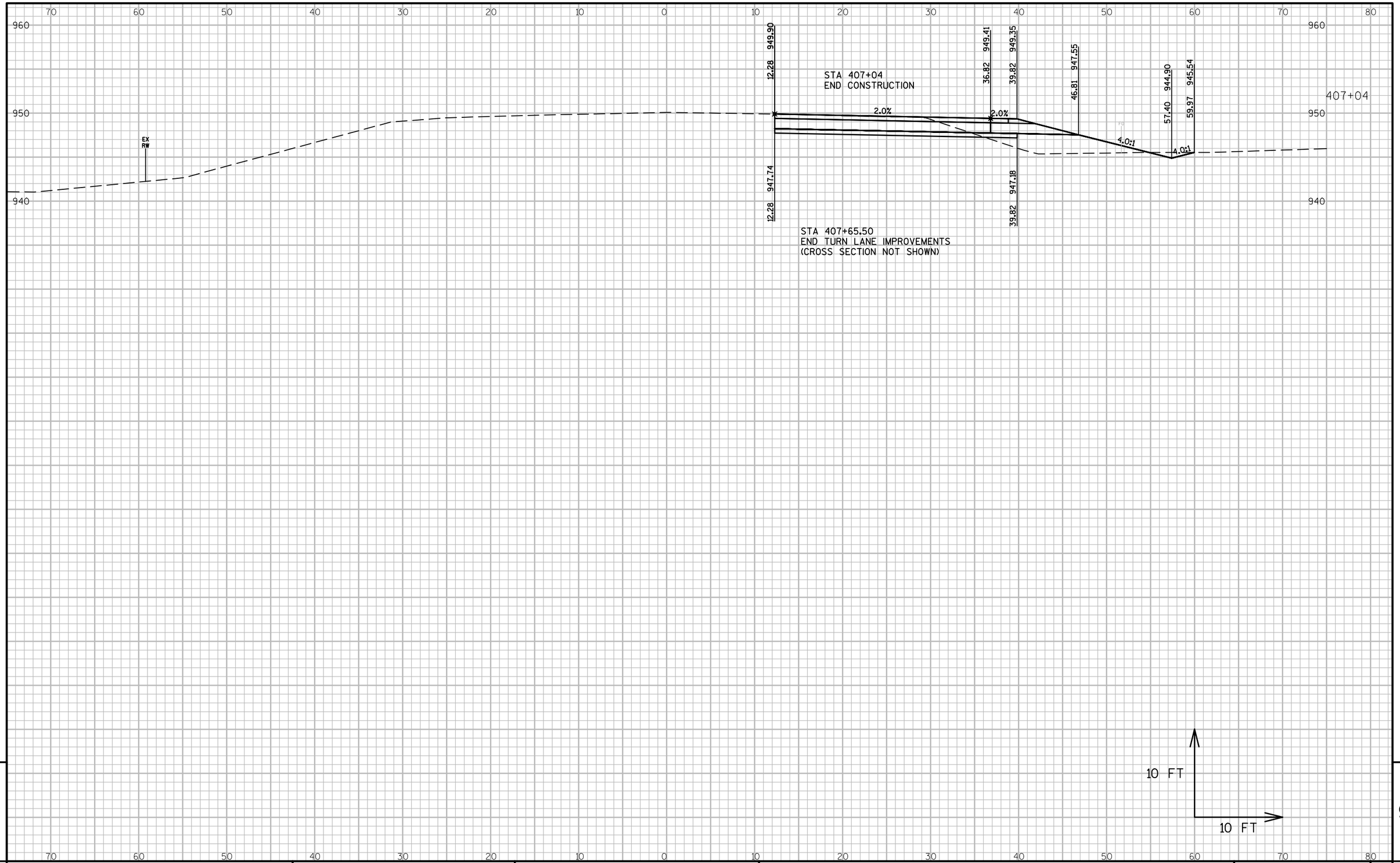

9

9

PROJECT NO: 1706-00-73	HWY: STH 140	COUNTY: ROCK	CROSS SECTIONS: USH 14 / STH 11	SHEET 201	E

FILE NAME : L:\PROJECTS\12729\DWG\3320-00-05\SHEETSPLAN\090202_XS.DWG
LAYOUT NAME - 090202_XS - SECTION SHEET - (6)

PLOT DATE : 1/26/2016 12:58 PM PLOT BY : HOLZWART, JOE PLOT NAME : PLOT SCALE : 1:10_XREF

WISDOT/CADDS SHEET 49

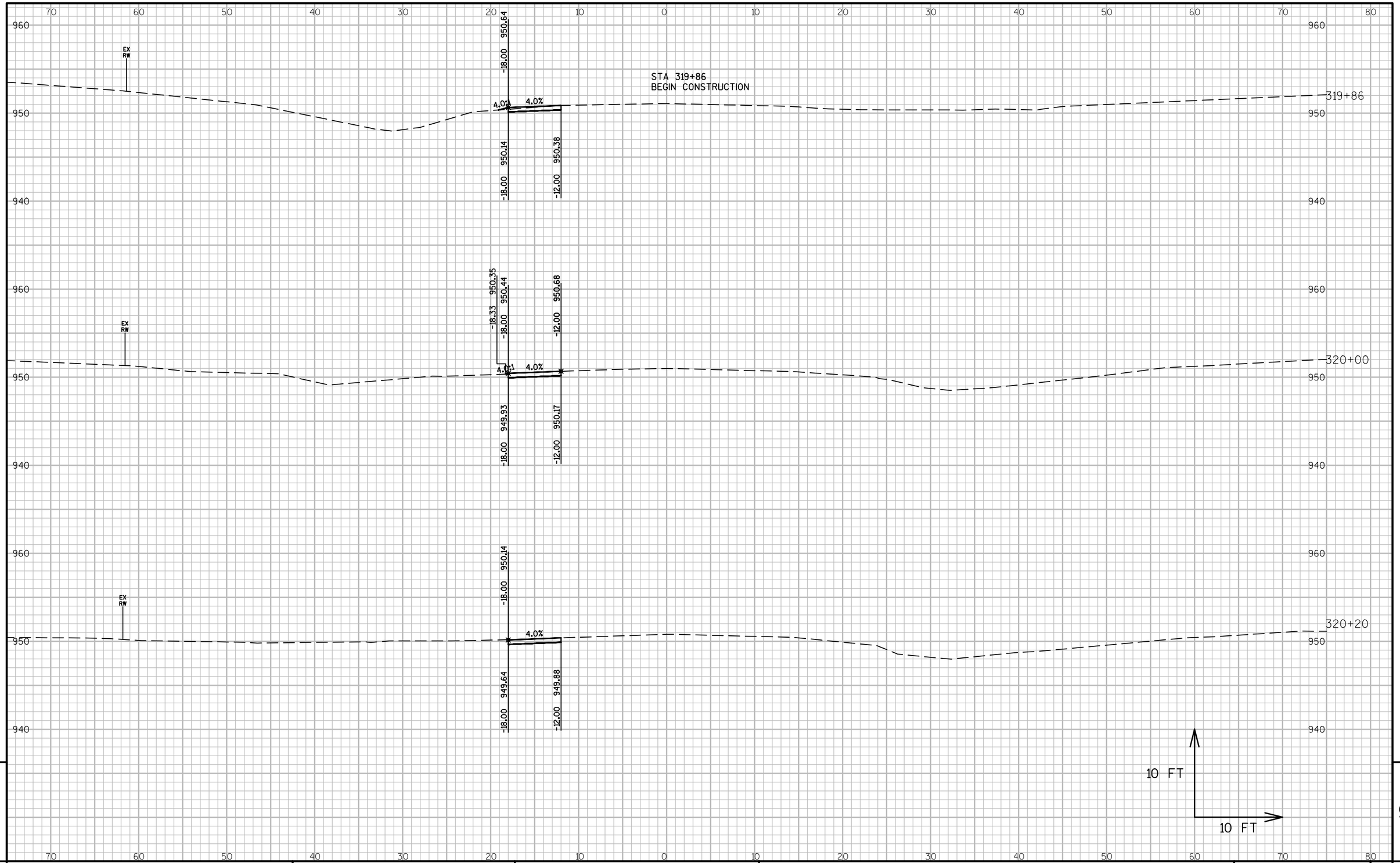

9

9

PROJECT NO: 1706-00-73	HWY: STH 140	COUNTY: ROCK	CROSS SECTIONS: STH 140	SHEET 202	E

FILE NAME : L:\PROJECTS\12729\DWG\3320-00-05\SHEETSPLAN\090203_XS.DWG
LAYOUT NAME - 090203_XS - SECTION SHEET - (1)

PLOT DATE : 1/26/2016 1:08 PM PLOT BY : HOLZWART, JOE PLOT NAME : PLOT SCALE : 1:10_XREF

WISDOT/CADDS SHEET 49

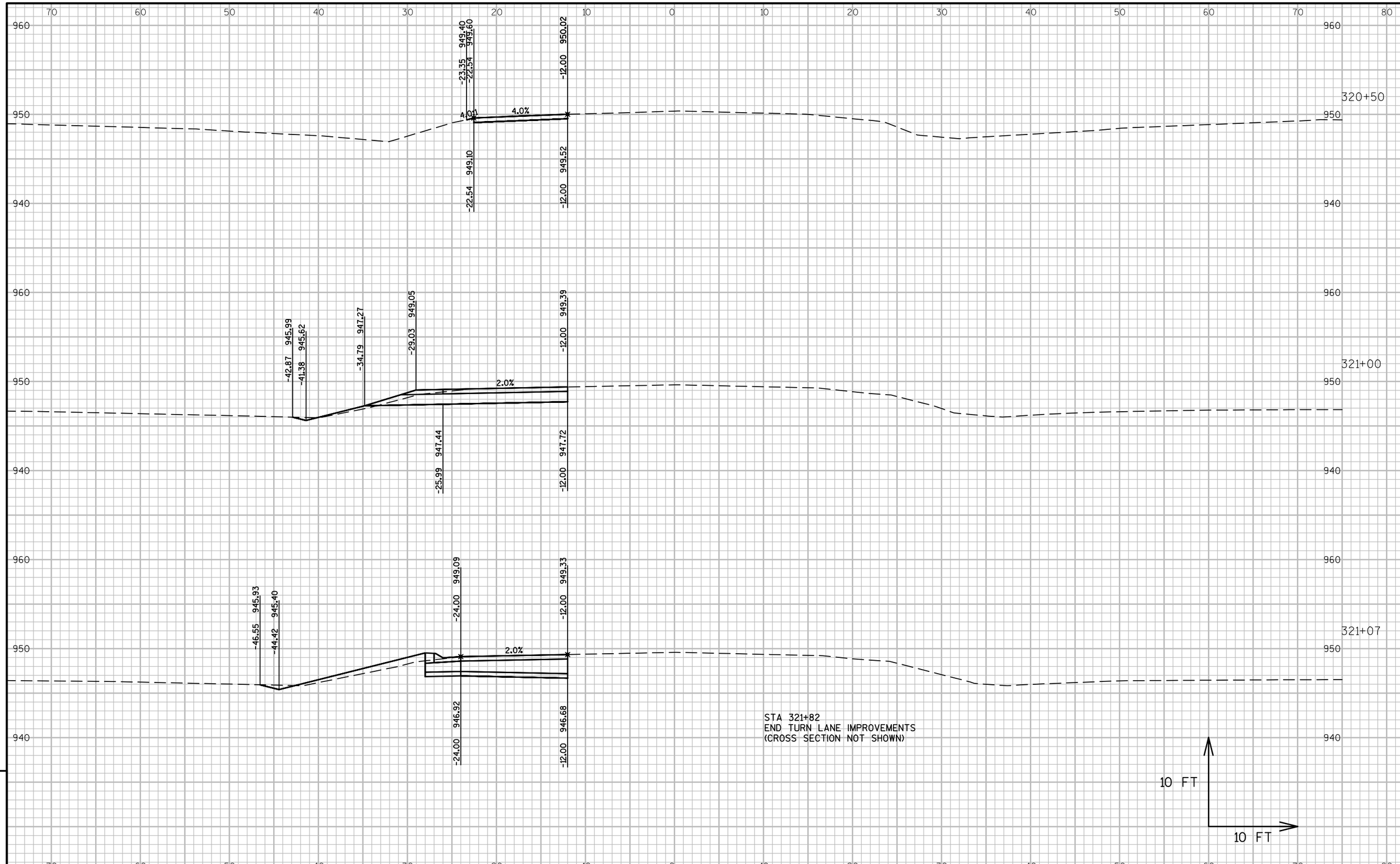

9

9

PROJECT NO: 1706-00-73	HWY: STH 140	COUNTY: ROCK	CROSS SECTIONS: STH 140	SHEET 203	E

FILE NAME : L:\PROJECTS\12729\DWG\3320-00-05\SHEETSPLAN\090203_XS.DWG
LAYOUT NAME - 090203_XS - SECTION SHEET - (2)

PLOT DATE : 1/26/2016 1:08 PM PLOT BY : HOLZWART, JOE PLOT NAME : PLOT SCALE : 1:10_XREF

WISDOT/CADDS SHEET 49

Wisconsin Department of Transportation

Dedicated people creating transportation solutions through innovation and exceptional service.

http://www.dot.wisconsin.gov