SEL

JUNE 2016

PROJECT ID: 2265-00-74
WITH: N/A

COUNTY: MILWAUKEE

09

ORDER OF SHEETS


SECTION NO. 1 TITLE
SECTION NO. 2 TYPICAL SECTIONS AND DETAILS
SECTION NO. 3 ESTIMATE OF QUANTITIES
SECTION NO. 3 MISCELLANEOUS QUANTITIES
~~SECTION NO. 4 RIGHT OF WAY PLAT~~
~~SECTION NO. 5 PLAN AND PROFILE~~
SECTION NO. 6 STANDARD DETAIL DRAWINGS
~~SECTION NO. 7 SIGN PLATES~~
~~SECTION NO. 8 STRUCTURE PLANS~~
SECTION NO. 9 COMPUTER EARTHWORK DATA
~~SECTION NO. 9 CROSS SECTIONS~~


TOTAL SHEETS - 172

| STATE PROJECT | FEDERAL PROJECT | |
|---|---|---|
| | PROJECT | CONTRACT |
| 2265-00-74 | WISC 2016222 | 1 |
| | | |
| | | |
| | | |

# STATE OF WISCONSIN
# DEPARTMENT OF TRANSPORTATION

PLAN OF PROPOSED IMPROVEMENT

# NORTH 27TH STREET

**WEST HIGHLAND BOULEVARD TO WEST LISBON AVENUE**

## LOCAL STREET
## MILWAUKEE COUNTY

STATE PROJECT NUMBER
2265-00-74

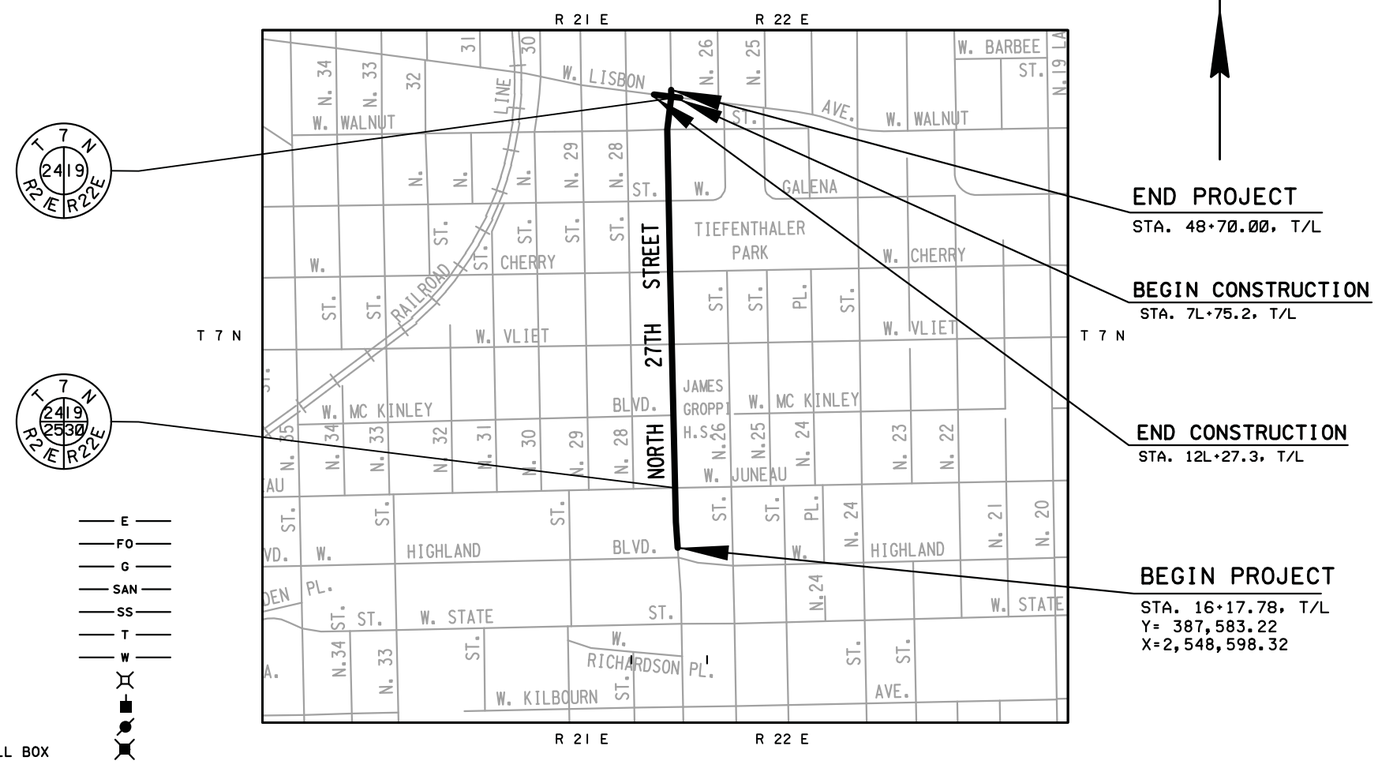


| DESIGN DESIGNATION | W. LISBON AVE | N. 27 TH ST |
|---|---|---|
| A.D.T. (CURRENT) | 15,300 | 17,300 |
| A.D.T. 2035 | 17,600 | 19,900 |
| D.H.V. | 1,600 | 1,800 |
| D.D. | 48/52 | 48/52 |
| T. | 6.6% | 6.6% |
| DESIGN SPEED | 35 MPH | 35 MPH |
| ESALS | 1,356,000 | 1,533,100 |

CONVENTIONAL SYMBOLS

PLAN
- COUNTY LINE
- SECTION LINE
- CORPORATE OR CITY LIMITS
- PROPERTY LINE — P.L.
- STANDARD BENCH MARK
- EXISTING RIGHT OF WAY — R/W
- BASIS OF SURVEY LINE
- EXISTING CATCH BASIN OR INLET — EXISTING / PROPOSED
- CONCRETE WALK/DRWY REMOVAL
- SAWING CONCRETE — XXXXXXXX

PROFILE
- GRADE LINE
- ORIGINAL GROUND
- GRADE ELEVATION — 95.36
- CULVERT (PROFILE VIEW)

UTILITIES
- ELECTRIC — E
- FIBER OPTIC — FO
- GAS — G
- SANITARY SEWER — SAN
- STORM SEWER — SS
- TELEPHONE — T
- WATER — W
- UTILITY PEDESTAL
- POWER POLE
- TELEPHONE POLE
- FIRE & POLICE CALL BOX
- LIGHT POLE
- TRAFFIC SIGNAL
- TRAFFIC SIGNAL CONTROL BOX
- HYDRANT
- GAS OR WATER GATE VALVE
- MANHOLE SEWER
- MANHOLE UTILITY
- COMBUSTIBLE FLUIDS UNDER PRESSURE — CAUTION

LAYOUT
SCALE 0 800 FT

TOTAL NET CENTERLINE NORTH 27TH ST - 0.616 MI. (URBAN)

ALL COORDINATES ON THIS PLAN ARE GROUND COORDINATES BASED ON THE WISCONSIN STATE PLANE COORDINATE SYSTEM (WSPCS), NAD 27, SOUTH ZONE.

ELEVATIONS SHOWN ON THIS PLAN ARE REFERENCED TO THE CITY OF MILWAUKEE DATUM.

TO CONVERT ELEVATION SHOWN ON THIS PLAN TO THE NATIONAL GEOGRAPHICAL DATUM OF 1929(NGVD 29), ADD 580.603 TO THE ELEVATION SHOWN ON THE PLAN.

ACCEPTED FOR
CITY OF MILWAUKEE

4/7/16 — DATE
COMMISSIONER OF PUBLIC WORKS

ORIGINAL PLANS PREPARED BY
BLOOM COMPANIES, LLC
Infrastructure Innovation and Ingenuity

WISCONSIN PROFESSIONAL ENGINEER
SUSAN M. COOK
E-23367
MENOMONEE FALLS, WI

4/7/16 — DATE
SIGNATURE

STATE OF WISCONSIN
DEPARTMENT OF TRANSPORTATION

PREPARED BY
SURVEYOR — CITY OF MILWAUKEE
DESIGNER — BLOOM COMPANIES, LLC
MANAGEMENT CONSULTANT — DAAR ENGINEERING
C.O. EXAMINER

APPROVED FOR THE DEPARTMENT
DATE: 4/13/16
MANAGEMENT CONSULTANT

E

## GENERAL NOTES

ALL OPENINGS BELOW SUBGRADE, RESULTING FROM REMOVALS OR ABANDONMENTS, SHALL BE BACKFILLED WITH BASE AGGREGATE DENSE 1 1/4-INCH.

ALL DISTURBED AREAS, NOT SURFACED, ARE TO BE COVERED WITH 4 INCHES OF TOPSOIL, SODDED AND FERTILIZED UNLESS OTHERWISE DIRECTED BY THE ENGINEER.

NO TREES OR SHRUBS SHALL BE REMOVED UNLESS DESIGNATED FOR REMOVAL BY THE ENGINEER.

ALL ELEVATIONS ARE REFERENCED TO CITY OF MILWAUKEE DATUM.

THE LOCATION OF EXISTING AND PROPOSED UTILITY INSTALLATIONS AS SHOWN ON THE PLAN IS APPROXIMATE. THERE MAY BE OTHER UTILITY INSTALLATIONS WITHIN THE PROJECT AREA WHICH ARE NOT SHOWN.

REPLACE ALL CONCRETE CURB AND GUTTER INDICATED FOR REMOVAL AND REPLACEMENT IN THE EXISTING LOCATION EXCEPT AS SHOWN ON THE PLAN DETAILS.

CONCRETE CURB AND GUTTER 31-INCH, WILL HAVE A SLOPE OF 1/2 PER FOOT. CONCRETE CURB AND GUTTER 31-INCH SPECIAL, WILL HAVE A SLOPE OF 1/4 PER FOOT AND NOT HAVE THE CONCRETE CURB AND GUTTER FLANGES OVERLAID WITH HMA PAVEMENT. CONCRETE CURB AND GUTTER 31-INCH IS SHOWN ON TYPICAL SECTIONS, SEE PAVING DETAILS FOR LOCATIONS OF EACH CURB AND GUTTER TYPE.

ALL CURB AND GUTTER IS LOW SIDE UNLESS OTHERWISE INDICATED ON THE PLAN.

"PAVEMENT TIES" AS SHOWN ON STANDARD DETAIL DRAWING "CONCRETE GUTTER, CURB AND GUTTER AND PAVEMENT TIES" ARE NOT REQUIRED TO TIE EXISTING CONCRETE TO NEW CONCRETE CURB AND GUTTER.

"DOWEL BARS" AS SHOWN ON STANDARD DETAIL DRAWING "CONCRETE BASE" ARE NOT REQUIRED.

ALL LONGITUDINAL AND TRANSVERSE CONCRETE PAVEMENT JOINTS REQUIRING SEALING SHALL BE SEALED IN ACCORDANCE WITH THE PLAN DETAIL AND SPECIFICATIONS.

TRANSVERSE JOINTS IN THE CONCRETE SIDEWALK SHALL BE CONSTRUCTED AT 5-FOOT INTERVALS UNLESS OTHERWISE DIRECTED BY THE ENGINEER.

PITCH ALL YARD WALKS 1.5% (+/-)0.5% TOWARDS STREET UNLESS OTHERWISE NOTED ON PLAN.

CURB AND GUTTER GRADES ARE GIVEN TO THE FLANGE, CURB AND GUTTER RADII ARE MEASURED TO THE FACE OF CURB.

HMA PAVEMENT TO BE NORMALLY CONSTRUCTED IN TWO LAYERS AS SHOWN ON TYPICAL SECTIONS. HOWEVER, ADDITIONAL LAYERS MAY BE NECESSARY WHERE CURB RETURNS HAVE BEEN RAISED.

CONSTRUCTION PERMITS FOR CONCRETE WALK &/ OR CONCRETE DRIVEWAY WORK HAVE BEEN OBTAINED, WHICH RIGHTS SHALL BE EXTENDED TO THE CONTRACTORS. SEE LIST.

INLET SCREENS TYPE M ARE REQUIRED AT ALL CATCH BASINS OR AS DIRECTED BY THE ENGINEER. THESE INLET SCREENS TYPE M INCLUDE FILTER FABRIC PLACED BETWEEN THE FRAME AND GRATE OF CATCH BASINS AND METAL BASKETS / INLETS TO PREVENT SOIL FROM ENTERING THE SEWERS.

## UTILITIES WITHIN PROJECT LIMITS

AT&T WISCONSIN
425 S. 95TH STREET
MILWAUKEE, WI 53214
DEAN HERRO
TEL. (414) 678-2644
MOBILE (262) 352-0131

CITY OF MILWAUKEE,
STREET LIGHTING
1540 WEST CANAL STREET
MILWAUKEE, WI 53233
DENNIS MILLER
TEL. (414) 286-5942
MOBILE (414) 708-4251
dennis.miller@milwaukee.gov

CITY OF MILWAUKEE,
DPW/COMMUNICATIONS
1440 WEST CANAL STREET
MILWAUKEE, WI 53233
BRYAN PAWLAK
DISPATCH: (414) 286-3686

CITY OF MILWAUKEE,
UTILITY COORDINATOR
841 N. BROADWAY, ROOM 710
MILWAUKEE, WI 53202
MUSA ABU-KHADER
(414) 286-2432
mkhader@milwaukee.gov

TIME WARNER CABLE
1320 N. DOCTOR MARTIN
LUTHER KING JR. DRIVE
MILWAUKEE WI 53212
STEVE CRAMER
TEL. (414) 277-4045
MOBILE (414) 688-2385

### WE ENERGIES FIELD CONTACTS

WE ENERGIES - ELEC. & GAS
333 W. EVERWTT STREET - A299
MILWAUKEE, WI 53203
LaTROY BRUMFIELD
TEL. (414) 221-5617
latroy.brumfield@we-energies.com

WE ENERGIES - GAS
500 S. 116TH STREET
WEST ALLIS, WI 53214
JOSH MOUNT
TEL. (414) 218-2053
josh.mount@we-energies.com

WE ENERGIES - ELECTRIC
500 S. 116TH STREET
WEST ALLIS, WI 53214
KEN FRANECKI
TEL. (414) 944-5531
kenneth.franecki@we-energies.com

DIGGERS HOTLINE

Dial 811 or (800) 242-8511

www.DiggersHotline.com

TO OBTAIN LOCATION OF PARTICIPANTS' UNDERGROUND FACILITIES BEFORE YOU DIG IN WISCONSIN

WIS. STATUTE 182.0175 (1974) REQUIRES MIN. OF 3 WORK DAYS NOTICE BEFORE YOU EXCAVATE.

2

## CONSTRUCTION PERMITS

| PROPERTY | ADRESSES OF PROPERTY | STATION |
|---|---|---|
| 1 | NOT USED | |
| 2 | • 1212 N. 27TH ST. | 20+00.0 TO 21+46.5 RT |
| 3 | • 1222 - 1224 N. 27TH ST. | 21+70.2 TO 21+93.0 RT |
| 4 | NOT USED | |
| 5 | • 1230 - 1232 N. 27TH ST. | 22+20.0 TO 22+51.0 RT |
| 6 | • 1234 - 1236 N. 27TH ST. | 22+51.0 TO 22+80.0 RT |
| 7 | • 1238 - 1240 N. 27TH ST. | 22+80.0 TO 23+08.2 RT |
| 8 | • 1246 N. 27TH ST. | 23+23.2 TO 24+78.2 RT |
| 9 | • 1312 N. 27TH ST. | 24+78.2 TO 28+08.4 RT |
| 10 | • 2639 W. VLIET ST. | 28+23.4 TO 29+43.4 RT |
| 11 | • 1410 N. 27TH ST. | 30+08.4 TO 31+28.4 RT |
| 12 | • 1418 N. 27TH ST. | 31+43.4 TO 31+68.4 RT |
| 13 | NOT USED | |
| 14 | • 1428 N. 27TH ST. | 32+18.4 TO 32+68.4 RT |
| 15 | • 1454 N. 27TH ST. | 32+68.4 TO 34+56.8 RT |
| 16 | • 1530 N. 27TH ST. | 35+16.9 TO 39+56.8 RT |
| 17 | • 2630 W. WALNUT ST. | 45+71.0 TO 45+86.8 RT |
| 18 | • 2624 W. LISBON AVE. | 10L+68.6 TO 11L+20.2 LT |
| 19 | • 2700-2702 W. LISBON AVE. | 9L+86.4 TO 9L+99.9 LT |

## ASPHALT SAWCUTS TO REMOVE AND REPLACE CONCRETE SIDEWALK AND DRIVEWAYS

| PROPERTY | ADRESSES OF PROPERTY | STATION |
|---|---|---|
| 1 | • 2635 W. JUNEAU AVE. | 17+90, - RT |
| 2 | • 1312 N. 27TH ST. | 25+03, - RT |
| 3 | • 2713-2717 W. VLIET ST. | 28+95, - LT |
| 4A | • 1454 N. 27TH ST. | 33+20, - RT |
| 4B | • 1454 N. 27TH ST. | 34+34, - RT |
| 5 | • 2624 W. LISBON AVE. | 10L+99, - LT |

## OTHER AGENCIES

DNR SOUTHEAST REGION HQ
2300 N. DR. MARTIN LUTHER KING JR. DR.
MILWAUKEE WI 53212
KRISTINA BETZOLD
TEL. (414) 263-8517
kristina.betzoldwisconsin.gov

MILWAUKEE COUNTY PARKS
9480 W. WATERTOWN PLANK ROAD
WAUWATOSA, WI 53226
JAMES KEEGAN
TEL. (414) 257-4775
james.keegan@milwcnty.com

MILWAUKEE COUNTY TRANSIT SYSTEM
1942 N. 17TH ST, MILWAUKEE, WI 53205
MELANIE MACARTHUR
TEL. (414) 343-1764
mmacarthur@mcts.com

MILWAUKEE PUBLIC SCHOOLS
1141 NORTH 10TH STREET
MILWAUKEE, WI 53205
CHICO TORRES
TEL. (414) 283-4641
torresdr@milwaukee.k12.wi.us

SOUTHEASTERN WISCONSIN REGIONAL PLANNING COMMISSION (SEWRPC)
W239 N1812 ROCKWOOD DRIVE
WAUKESHA, WI 53187-1607
JOHN WASHBURN
TEL. (262) 547-6721
jwashburn@sewrpc.org

## STANDARD ABBREVIATIONS

| | | | |
|---|---|---|---|
| AMER | - AT&T | HYD | - HYDRANT |
| CTR. | - CENTER | MMSD | - MILWAUKEE METROPOLITAN SEWERAGE DISTRICT |
| C.W. | - CONCRETE WALK | P/L | - PROPERTY LINE |
| COR. | - CORNER | ST | - STREET |
| F | - FLANGE | TES | - TRAFFIC ENGINEERING AND ELECTRICAL SERVICES |
| G | - GUTTER OR GAS | WEP | - WISCONSIN ELECTRIC POWER |

## DESIGNER CONTACTS

**CITY OF MILWAUKEE**
**SAMUEL MEDHIN, (414) 286-0474**

TRAFFIC SIGNAL PLANS
UNDERGROUND CONDUIT PLANS

**BLOOM COMPANIES LLC**
**SUSAN COOK, (414) 292-4530**

ALL OTHER PLANS NOT LISTED ABOVE

## HMA PAVEMENT LAYERS

| TOTAL LAYER PAVEMENT THICKNESS | LAYERS | NOMINAL MAXIMUM AGGREGATE GRADATIONS | TRAFFIC | ASPHALT BINDER | BINDER DESIGNATION LEVEL |
|---|---|---|---|---|---|
| 3 1/2" | 1 3/4" UPPER | 4 | MT | 58-28 | S |
| | 1 3/4" TO 3" LOWER | 4 | MT | 58-28 | S |

## ORDER OF SECTION 2 DETAIL SHEETS


GENERAL NOTES
PROJECT OVERVIEW
TYPICAL SECTIONS
CONSTRUCTION DETAILS
INTERSECTION DETAILS
PLAN DETAILS
PAVING GRADES
STORM SEWER PLANS
REMOVALS AND UTILITY PLANS
CITY UNDERGROUND CONDUIT (TES)
TRAFFIC SIGNAL PLANS
PAVEMENT MARKING PLANS
TRAFFIC CONTROL PLANS
ALIGNMENT PLAN AND TIE SHEETS

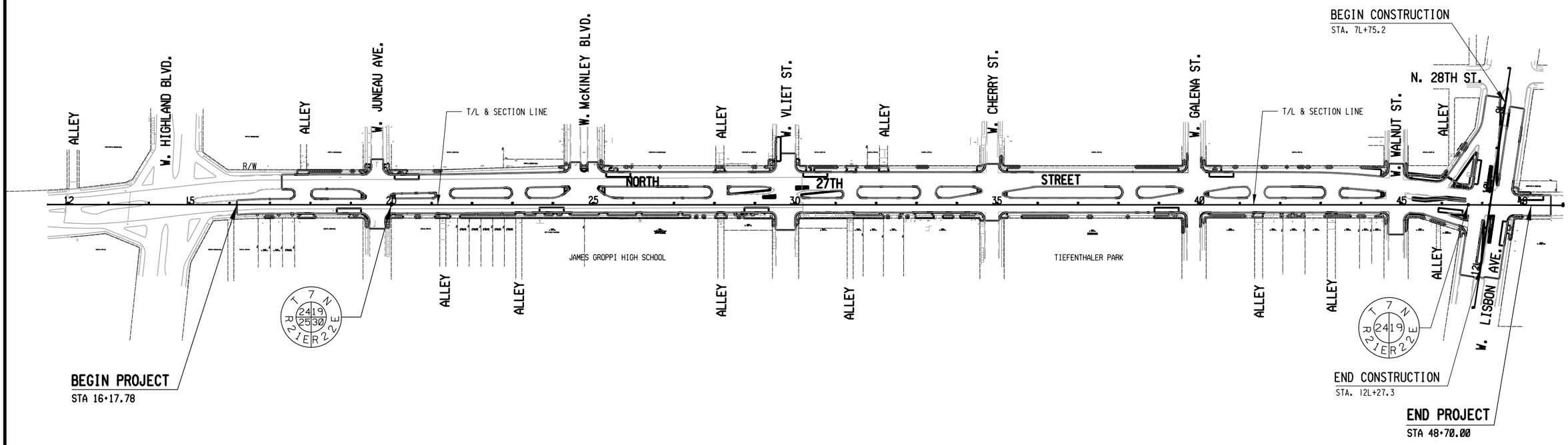


| STATE PROJECT NUMBER 2265-00-74 | HWY: LOCAL | COUNTY: MILWAUKEE | PROJECT OVERVIEW | SCALE FEET | SHEET NO: 3 | E |
|---|---|---|---|---|---|---|

FILE NAME: F:\BM1-3393 N 27th St Milwaukee\5_Design\03_Roads\cds\h1020201_po.dgn PLOT DATE : 21-DEC-2015 13:00 PLOT BY : scook PLOT NAME : h1020201_po PLOT SCALE : 250.000000:1.000000

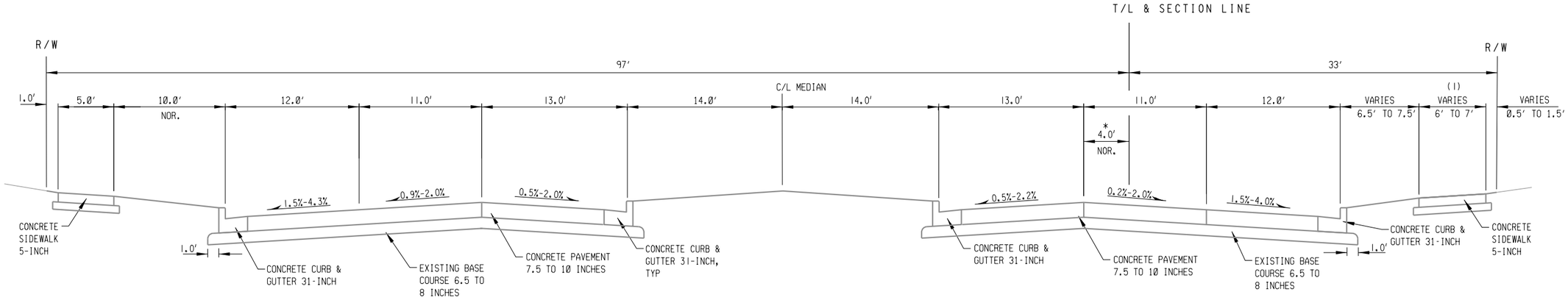


* T/L & SECTION LINE

LT OF CENTER LANE 0' - 2'
STA 44+55 TO STA 44+99

## NOTES

1) SIDEWALK WIDTHS ON THE SOUTH SIDE OF ROADWAY 6' EXCEPT BETWEEN W. VLIET ST. AND W. CHERRY ST. WHERE IT IS 7' WIDE.

2) NORTH SIDE TERRACE WIDTH VARIES 6' TO 20' BETWEEN STA 43+00 TO STA 44+47.

## TYPICAL EXISTING SECTION

### NORTH 27TH ST

STA 30+18 TO STA 44+99

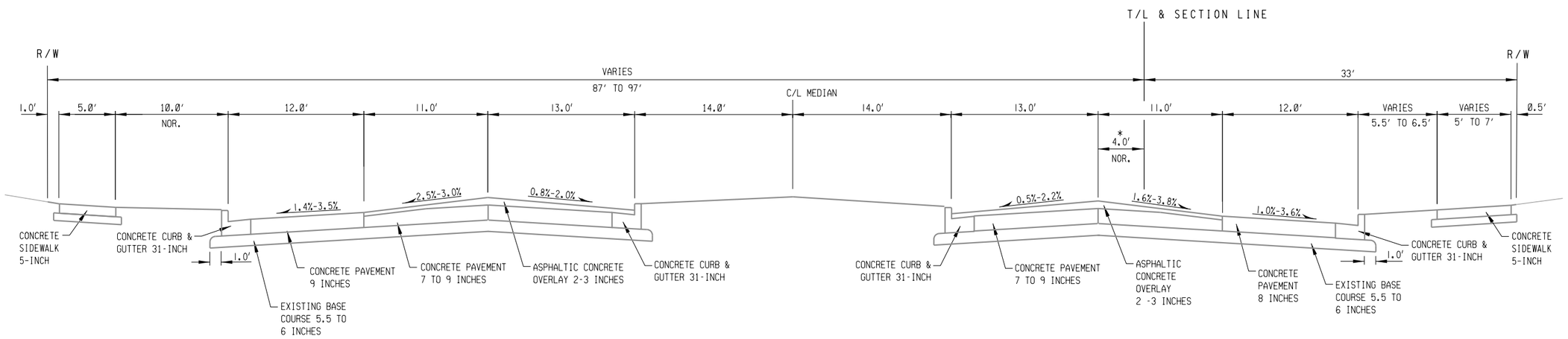


* T/L & SECTION LINE

LT OF CENTER LANE 0.0' - 2.2'
STA 16+18 TO STA 16+58

VARIES RT OF CTR LANE 0' - 4'
STA 16+58 TO STA 21+58

## NOTES

1) ORIGINAL 9-INCH CONCRETE PAVEMENT AT THROUGH LANES AND MEDIAN CURB & GUTTER WAS MILLED AND OVERLAID.

2) SOUTH SIDE SIDEWALK WIDTHS 6' TO 7' EXCEPT BETWEEN W. HIGHLAND BLVD. AND W. JUNEAU AVE.AND BETWEEN W. WALNUT ST. AND W. LISBON AVE WHERE IT IS 5'.

3) NORTH SIDE TERRACE WIDTH VARIES 5' TO 10' BETWEEN W. HIGHLAND BLVD. AND W. JUNEAU AVE AND BOTH SIDES OF W. WALNUT ST.

## TYPICAL EXISTING SECTION

### NORTH 27TH ST

STA 16+18 TO STA 30+18

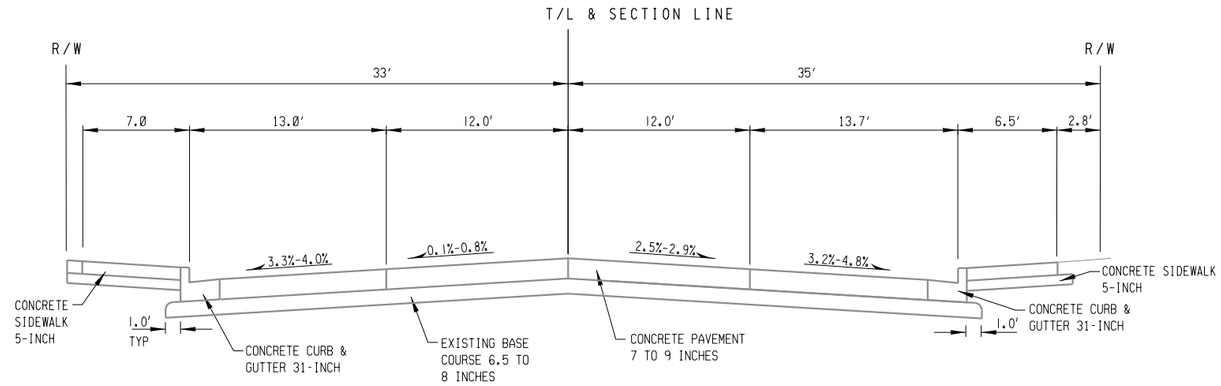


## TYPICAL EXISTING SECTION

NORTH 27TH ST

STA 47+89 TO STA 48+70

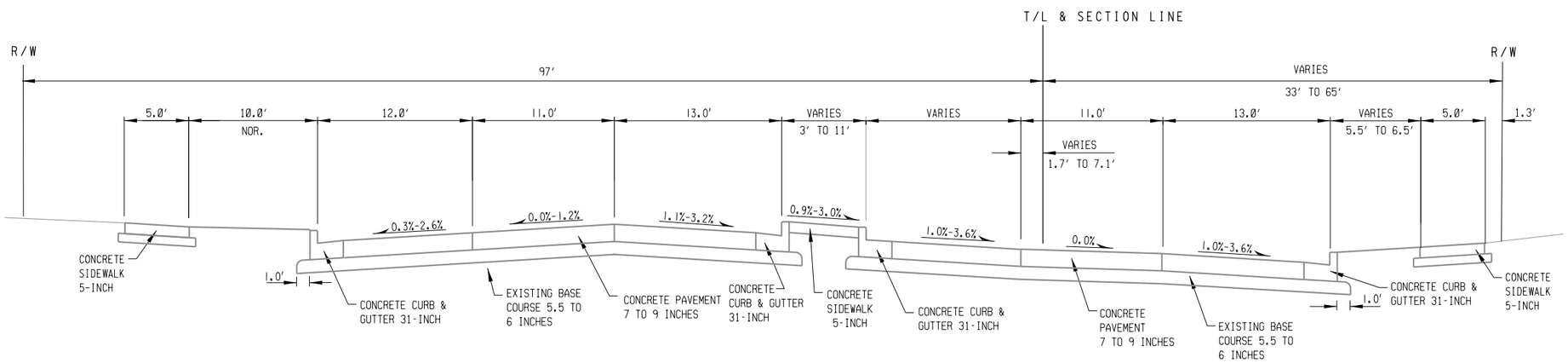


## TYPICAL EXISTING SECTION

NORTH 27TH ST

STA 44+99 TO STA 47+89

### NOTES

1) ORIGINAL 9-INCH CONCRETE PAVEMENT AT MIDDLE OF INTERSECTION WAS MILLED AND OVERLAID.

2) RIGHT TURN ISLANDS BEGIN AT 46+18 LT/RT.

3) INTERSECTION WITH W. LISBON AVE. IS BETWEEN STA 46+70 TO 47+68.

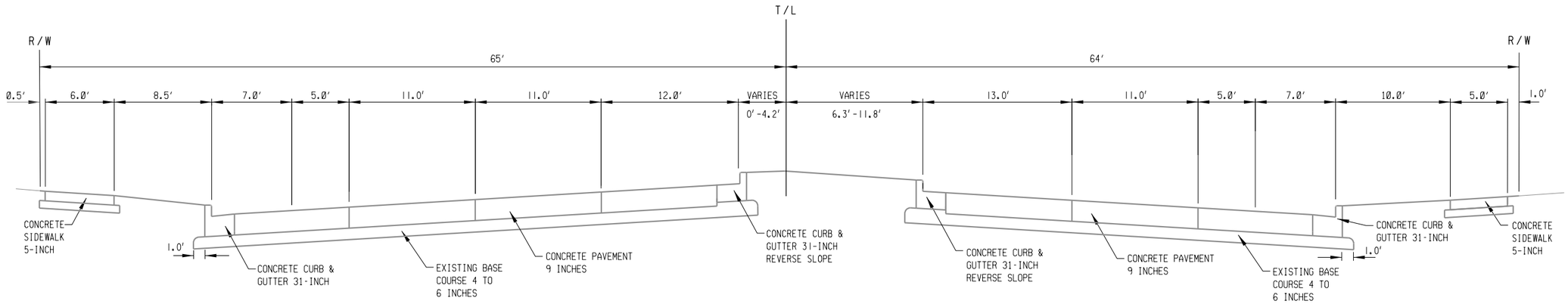


NOTES

1) ORIGINAL 9-INCH CONCRETE PAVEMENT AT MIDDLE OF INTERSECTION WAS MILLED AND OVERLAID.

2) LEFT TURN ISLAND BETWEEN STA 10L+70 AND 11L+92.

**TYPICAL EXISTING SECTION**

**WEST LISBON AVENUE**

STA 10L+43 TO STA 12L+27

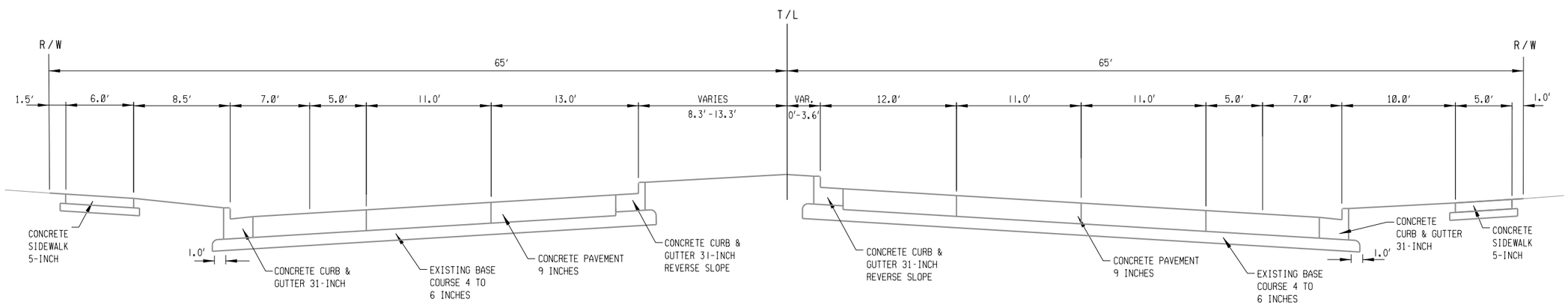


NOTES

1) ORIGINAL 9-INCH CONCRETE PAVEMENT AT MIDDLE OF INTERSECTION WAS MILLED AND OVERLAID.

2) LEFT TURN ISLAND BETWEEN STA 8L+45 AND 10L+04.

**TYPICAL EXISTING SECTION**

**WEST LISBON AVENUE**

STA 7L+75 TO STA 10L+43

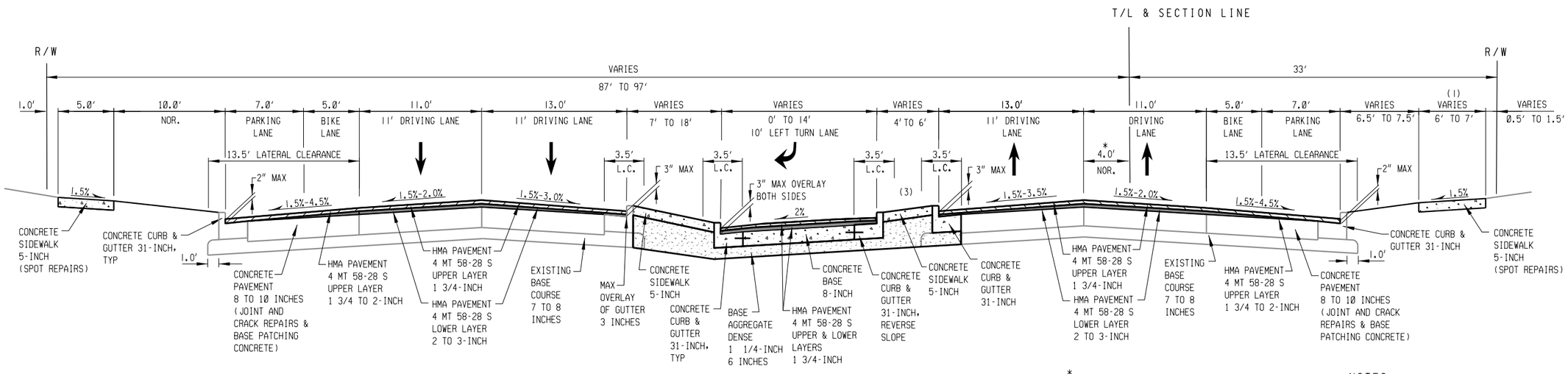


L.C. = LATERAL CLEARANCE

* T/L & SECTION LINE

LT OF CENTER LANE 0' - 2'
STA 44+55 TO STA 44+99

NOTES

1) SMALL LEFT TURN ISLAND BEGINS AT 29+21.

## PROPOSED TYPICAL SECTION
### NORTH 27TH ST
STA 28+42 TO STA 30+03

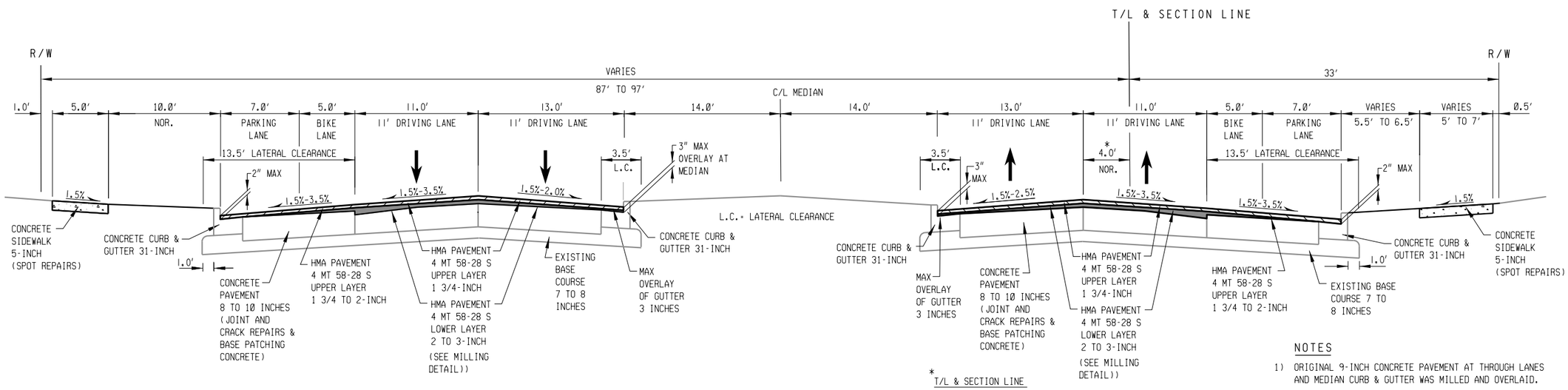


L.C. = LATERAL CLEARANCE

* T/L & SECTION LINE

LT OF CENTER LANE 0.0' - 2.2'
STA 16+18 TO STA 16+58

VARIES RT OF CTR LANE 0' - 4'
STA 16+58 TO STA 21+58

NOTES

1) ORIGINAL 9-INCH CONCRETE PAVEMENT AT THROUGH LANES AND MEDIAN CURB & GUTTER WAS MILLED AND OVERLAID.

2) EAST SIDE SIDEWALK WIDTHS 7' EXCEPT BETWEEN W. HIGHLAND BLVD. AND W. JUNEAU AVE.WHERE IT IS 6'.

3) WEST SIDE TERRACE WIDTH VARIES 5' TO 10' BETWEEN W. HIGHLAND BLVD. AND W. JUNEAU AVE.

4) CONCRETE CURB & GUTTER REPLACEMENT LOCATIONS SHOWN ON PLAN DETAILS.

## PROPOSED TYPICAL SECTION
### NORTH 27TH ST
STA 16+18 TO STA 28+42

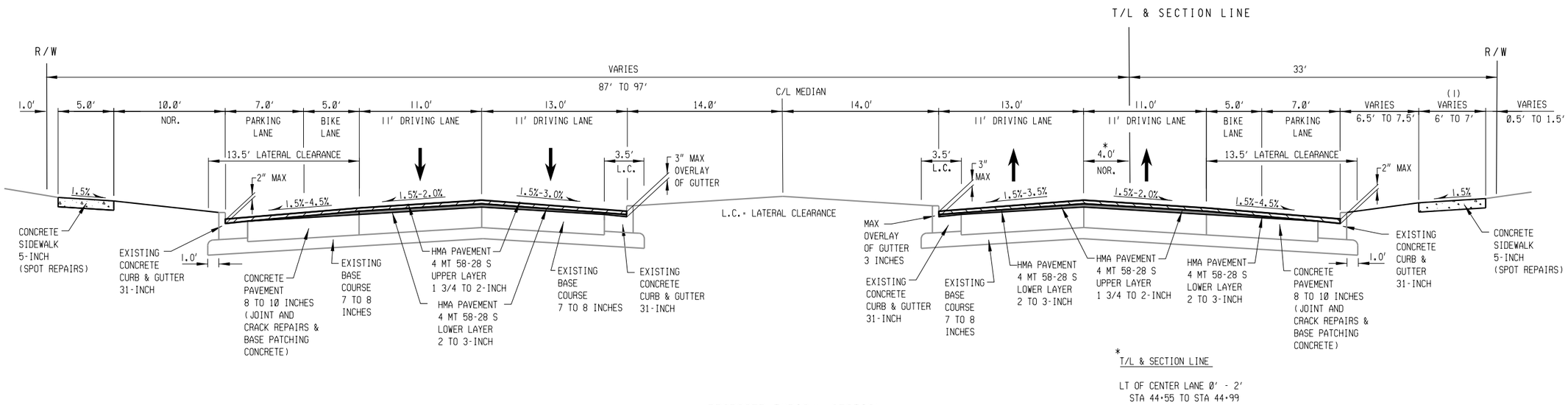


## PROPOSED TYPICAL SECTION

NORTH 27TH ST

STA 30+34 TO STA 44+99

### NOTES

1) SIDEWALK WIDTHS ON THE EAST SIDE OF ROADWAY 6' EXCEPT BETWEEN W. VLIET ST. AND W. CHERRY ST. WHERE IT IS 7' WIDE.

2) WEST SIDE TERRACE WIDTH VARIES 6' TO 13' BETWEEN STA 43+00 TO STA 46+00.

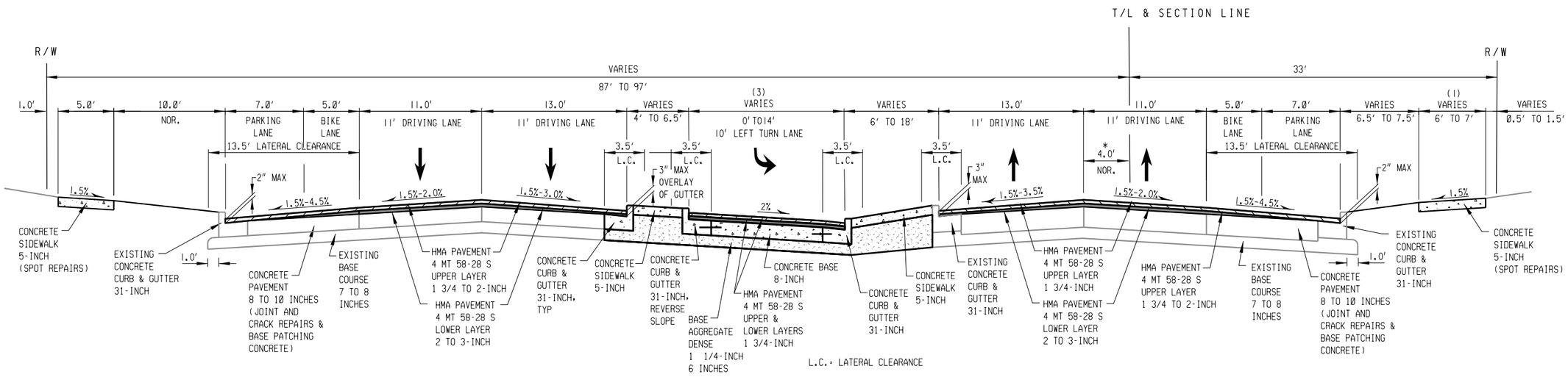


## PROPOSED TYPICAL SECTION

NORTH 27TH ST

STA 30+03 TO STA 30+34

### NOTES

1) CONCRETE CURB & GUTTER REPLACEMENT LOCATIONS SHOWN ON PAVING DETAILS.

2) EXISTING ASPHALTIC OVERLAY ENDS AT STA. 30+18.

3) LEFT TURN TAPER CONTINUES FROM STA 30+34 TO STA 31+10 PAVEMENT REPLACEMENT WIDTH VARIES 0' TO 10'.

| STATE PROJECT NUMBER 2265-00-74 | HWY: LOCAL | COUNTY: MILWAUKEE | PROPOSED TYPICAL SECTIONS | SCALE FEET | SHEET NO: 8 | E |
|---|---|---|---|---|---|---|

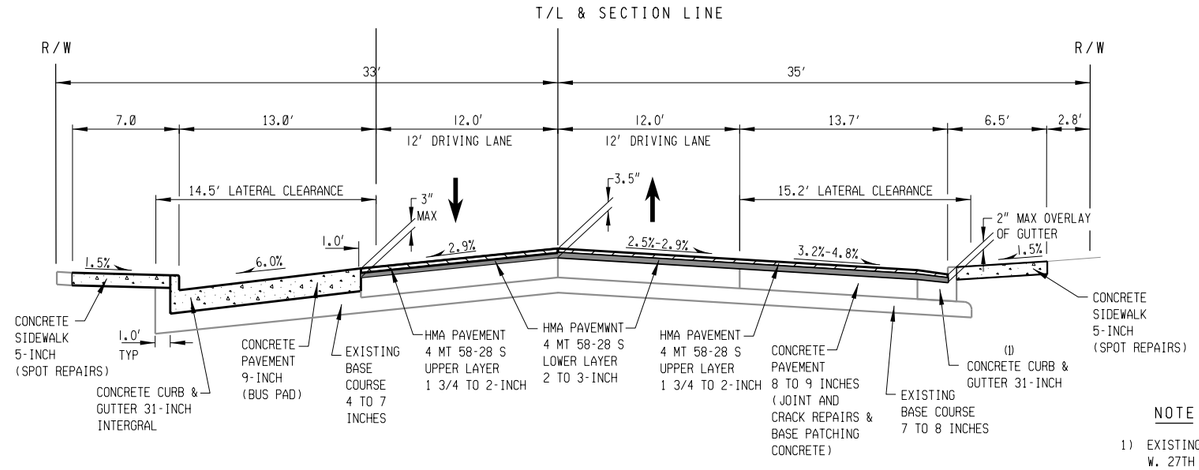


NOTE

1) EXISTING CONCRETE CURB & GUTTER ON EAST SIDE OF W. 27TH ST. IS 22' WIDE STA 48+00 TO 48+70 RT.

## PROPOSED TYPICAL SECTION

NORTH 27TH ST

STA 47+89 TO STA 48+70

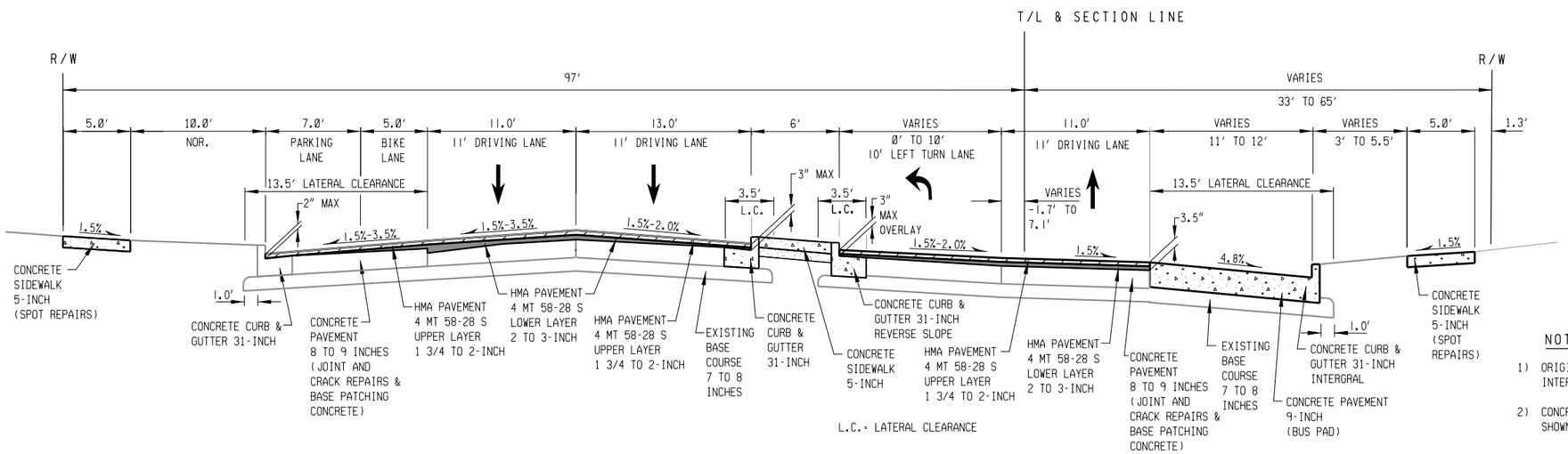


NOTES

1) ORIGINAL 9-INCH CONCRETE PAVEMENT AT CENTER OF INTERSECTION WAS MILLED AND OVERLAID.

2) CONCRETE CURB & GUTTER REPLACEMENT LOCATIONS SHOWN ON PAVING DETAILS.

## PROPOSED TYPICAL SECTION

NORTH 27TH ST

STA 44+99 TO STA 47+89

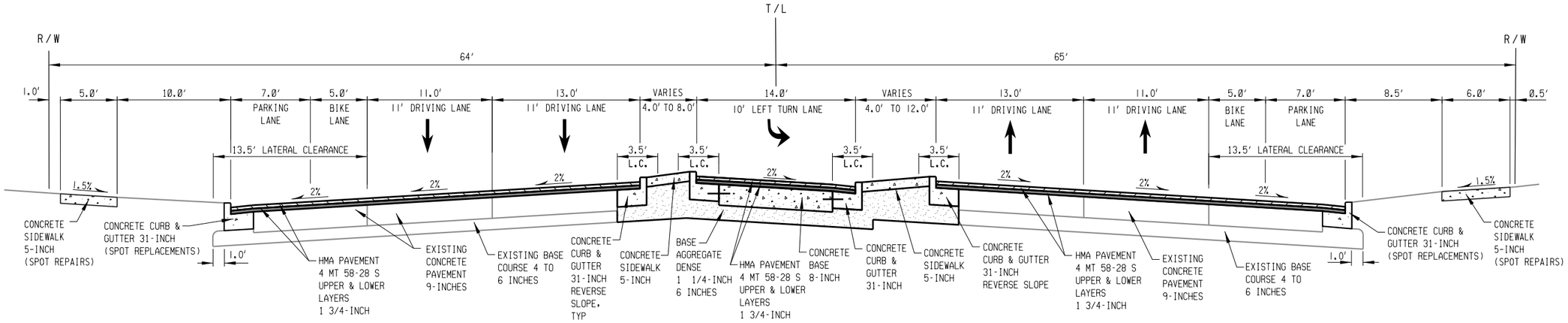


**PROPOSED TYPICAL SECTION**

**WEST LISBON AVENUE**

STA 10L+43 TO STA 12L+27

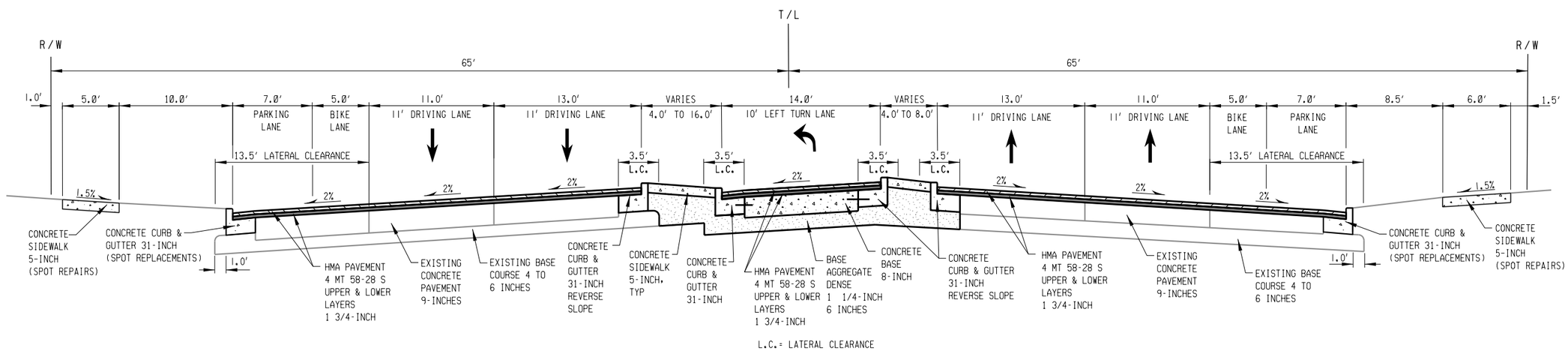


**PROPOSED TYPICAL SECTION**

**WEST LISBON AVENUE**

STA 7L+75 TO STA 10L+43

| STATE PROJECT NUMBER 2265-00-74 | HWY: LOCAL | COUNTY: MILWAUKEE | PROPOSED TYPICAL SECTIONS | SCALE FEET | SHEET NO: 10 | E |
|---|---|---|---|---|---|---|

2

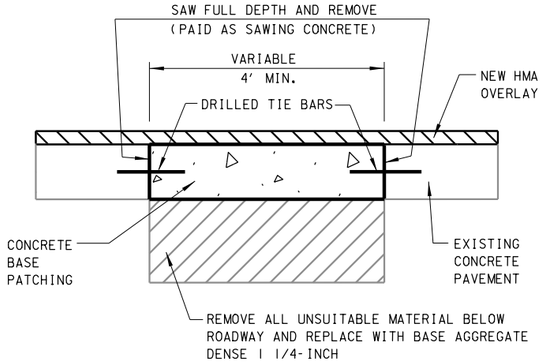


## BASE PATCHING CONCRETE DETAIL

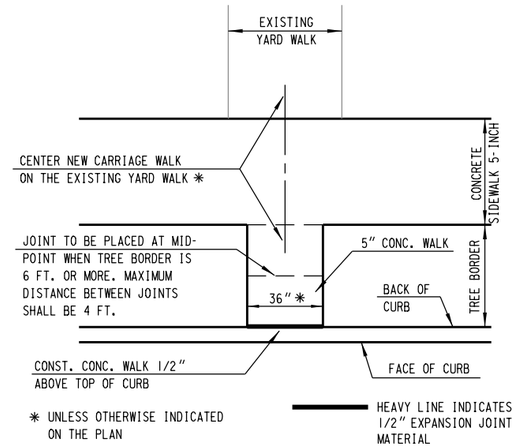


## CARRIAGE WALK DETAIL

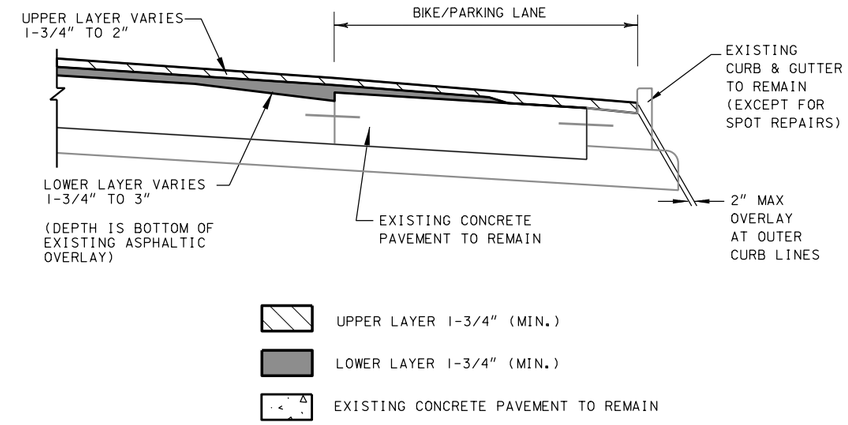


## HMA LAYERS DETAIL

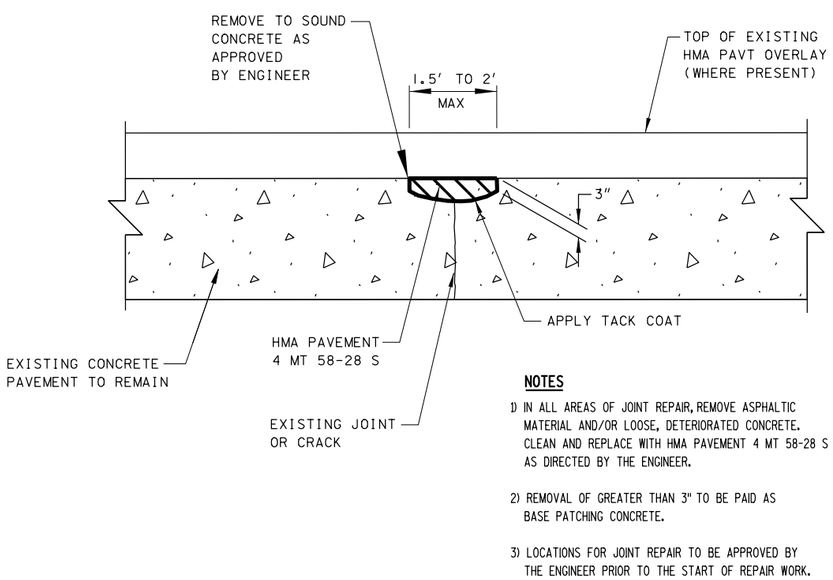


**NOTES**

1) IN ALL AREAS OF JOINT REPAIR, REMOVE ASPHALTIC MATERIAL AND/OR LOOSE, DETERIORATED CONCRETE. CLEAN AND REPLACE WITH HMA PAVEMENT 4 MT 58-28 S AS DIRECTED BY THE ENGINEER.

2) REMOVAL OF GREATER THAN 3" TO BE PAID AS BASE PATCHING CONCRETE.

3) LOCATIONS FOR JOINT REPAIR TO BE APPROVED BY THE ENGINEER PRIOR TO THE START OF REPAIR WORK.

## JOINT AND CRACK REPAIR DETAIL

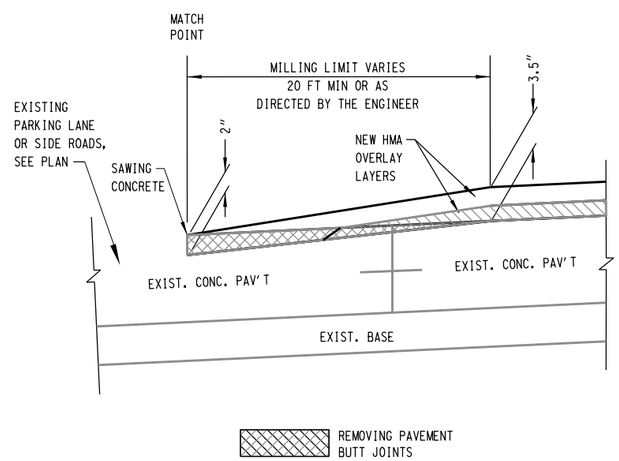


## MILLING CONCRETE PAVEMENT DETAIL

W. MCKINLEY BLVD
W CHERRY ST.

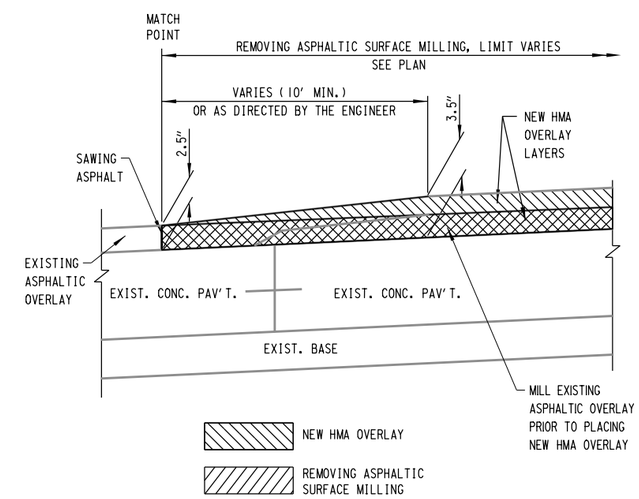


## MILLING ASPHALTIC PAVEMENT DETAIL

AT SIDE ROADS
ALONG DRIVING LANES S. OF VLIET

2

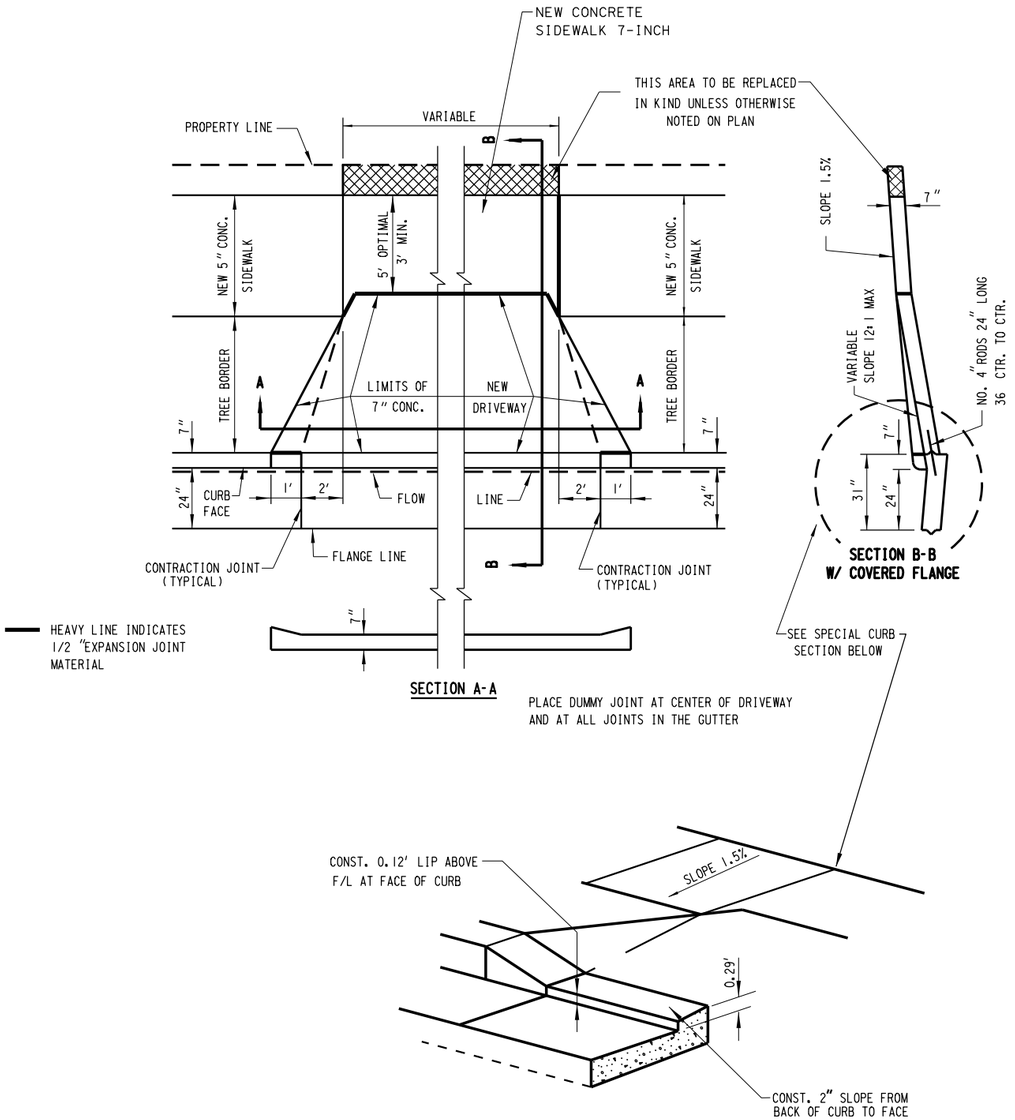


**CURB SECTION DETAIL**

## FLARED CONCRETE DRIVEWAY (MODIFIED) DETAIL

W/ CURB - SPECIAL SECTION

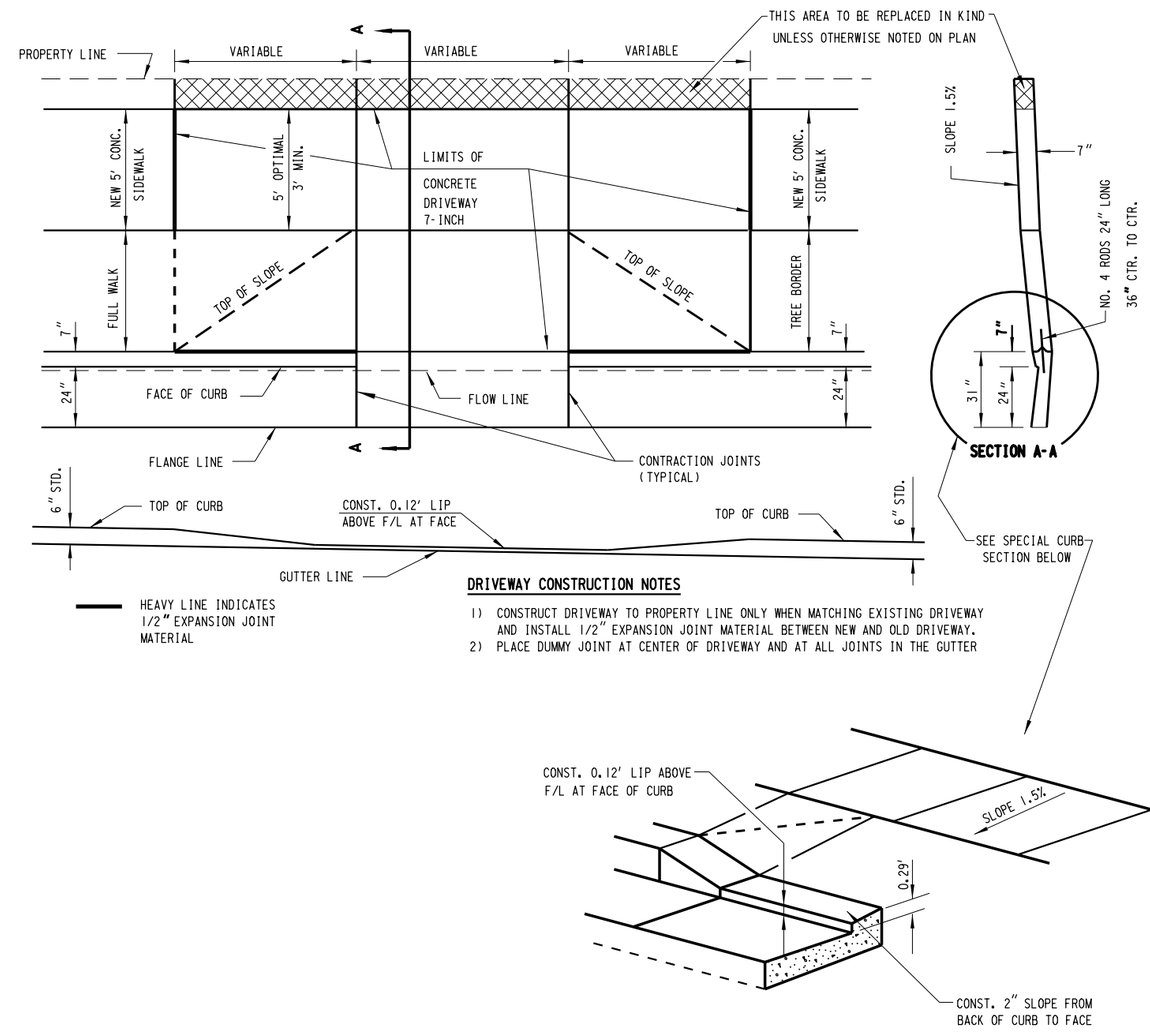


**DRIVEWAY CONSTRUCTION NOTES**

1) CONSTRUCT DRIVEWAY TO PROPERTY LINE ONLY WHEN MATCHING EXISTING DRIVEWAY AND INSTALL 1/2" EXPANSION JOINT MATERIAL BETWEEN NEW AND OLD DRIVEWAY.
2) PLACE DUMMY JOINT AT CENTER OF DRIVEWAY AND AT ALL JOINTS IN THE GUTTER

**CURB SECTION DETAIL**

## DEPRESSED CONCRETE DRIVEWAY (MODIFIED) SPECIAL DETAIL

W/ CURB - SPECIAL SECTION

2

| STATE PROJECT NUMBER 2265-00-74 | HWY: LOCAL | COUNTY: MILWAUKEE | CONSTRUCTION DETAILS | SCALE FEET | SHEET NO: | E |
|---|---|---|---|---|---|---|



FILE NAME: F:\BM1-3393 N 27th St Milwaukee\5_Design\03_Roads\cds\h1021001_cd.dgn PLOT DATE : 21-APR-2016 10:26 PLOT BY : scook PLOT NAME : h1021001_cd3 PLOT SCALE : 40.000000:1.000000

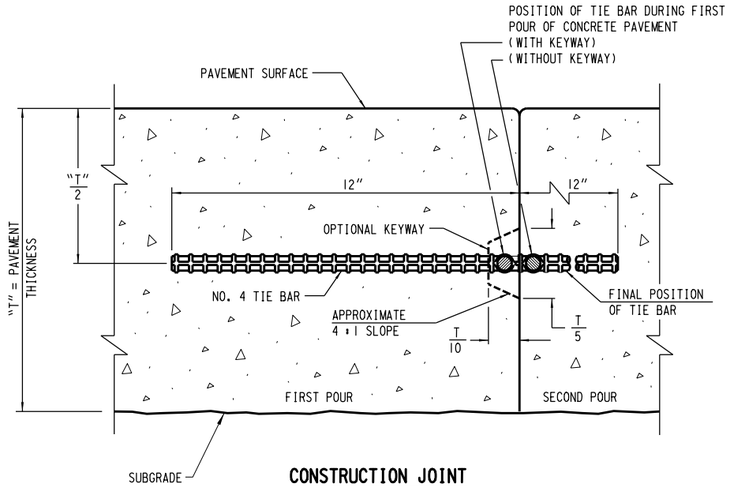


**CONSTRUCTION JOINT**

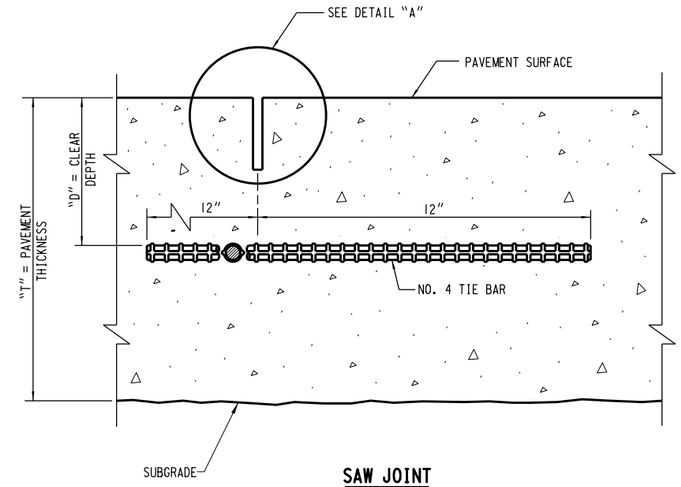


**SAW JOINT**

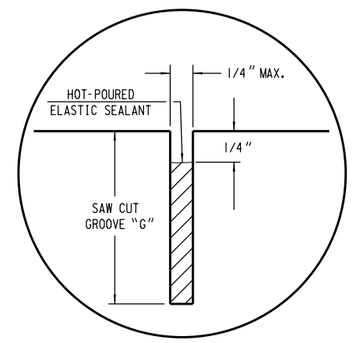


**DETAIL "A"**

## NOTES

1) DETAILS OF CONSTRUCTION NOT SHOWN ON THIS DRAWING SHALL CONFORM TO THE PERTINENT REQUIREMENTS OF THE STANDARD SPECIFICATIONS AND THE APPLICABLE SPECIAL PROVISIONS.

2) TIE BARS AND PAVEMENT TIES SHALL BE EPOXY COATED IN CONFORMANCE WITH SUBSECTION 505.2.4 OF THE STANDARD SPECIFICATIONS.

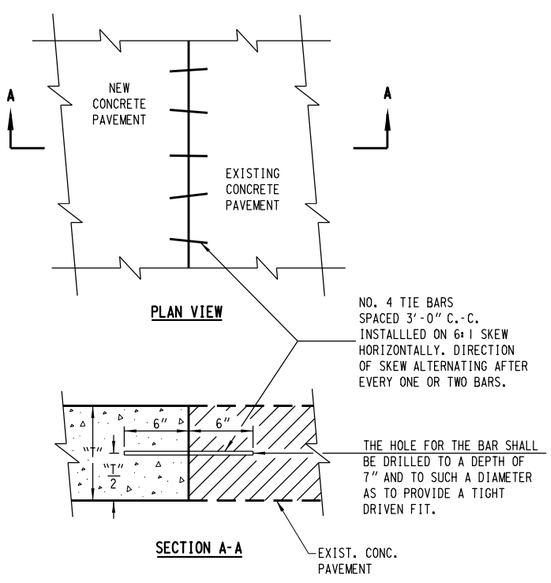


**PLAN VIEW**

**SECTION A-A**

**PAVEMENT TIES**

| PAVEMENT THICKNESS "T" | CLEAR DEPTH "D" | SAW CUT GROOVE "G" | MAXIMUM TIE BAR SPACING "S" PAVEMENT WIDTH LESS THAN 30' | MAXIMUM TIE BAR SPACING "S" PAVEMENT WIDTH 30' OR MORE |
|---|---|---|---|---|
| 6" | 3" ± 1/2" | 1-1/2" | 48" | 42" |
| 7" | 3-1/4" ± 1" | 1-3/4" | 45" | 36" |
| 7 1/2" | 3-1/2" + 1" | 1 7/8" | 42" | 33?" |
| 8" | 3-3/4" ± 1" | 2" | 39" | 30" |
| 9" | 4-1/4" ± 1" | 2-1/4" | 33" | 27" |
| 10" | 4-3/4" ± 1" | 2-1/2" | 30" | 24" |
| 11" | 5-1/4" ± 1" | 2-3/4" | 27" | 21" |
| 12" | 5-3/4" ± 1" | 3" | 24" | 21" |

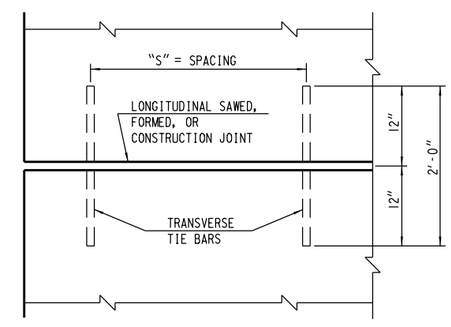


**PLAN VIEW**

SHOWING LOCATION OF TIE BARS

**CONCRETE PAVEMENT JOINT DETAILS**

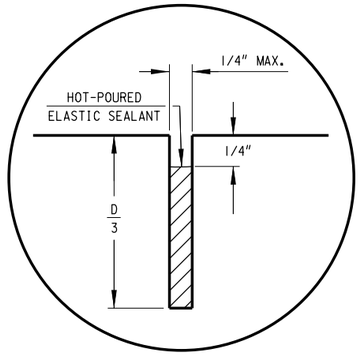


DETAIL "A"

| PAVEMENT DEPTH AND JOINT SPACING TABLE | |
|---|---|
| PAVEMENT DEPTH (D) | CONTRACTION JOINT SPACING |
| 6" | 12' |
| 7" | 14' |
| 7 1/2" | 14' |
| 8" | 15' |
| 9" | 15' |
| 10" & ABOVE | 18' |

## GENERAL NOTES

DETAILS OF CONSTRUCTION NOT SHOWN ON THIS DRAWING SHALL CONFORM TO THE STANDARD SPECIFICATIONS AND SPECIAL PROVISIONS.

### CONTRACTION JOINTS

CONTRACTION JOINTS SHALL BE LOCATED AT A UNIFORM SPACING SHOWN IN TABLE.

EXCEPTIONS SHALL BE AS DIRECTED BY THE ENGINEER.

THE SAWCUT SHALL BE TO THE DEPTH OF D/3 AND THE WIDTH OF 1/8 INCH MIN. & 1/4 INCH MAX.

### CONSTRUCTION JOINTS

CONSTRUCTION JOINTS MAY BE LOCATED IN ANY PANEL AND BE A MINIMUM OF 4 FEET FROM THE NEAREST CONTRACTION JOINT. CONSTRUCTION JOINTS MAY BE CONSTRUCTED EITHER PARALLEL TO CONTRACTION JOINTS OR AT 90° TO THE CENTERLINE.

TIE BARS MAY BE INSERTED THROUGH THE HEADER BOARD AFTER THE CONCRETE HAS BEEN POURED.

TIE BARS SHALL BE EPOXY COATED IN CONFORMANCE WITH SUBSECTION 505.2.4 OF THE STANDARD SPECIFICATIONS.

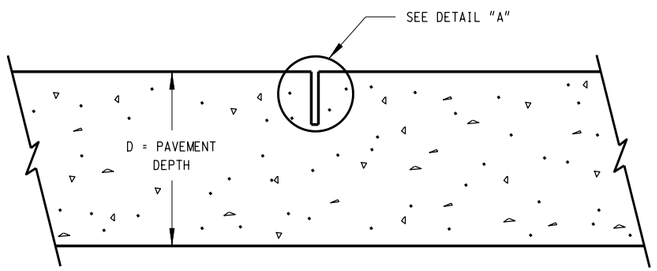


CONTRACTION JOINT

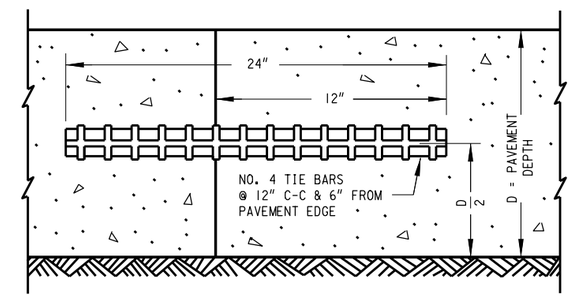


CONSTRUCTION JOINT

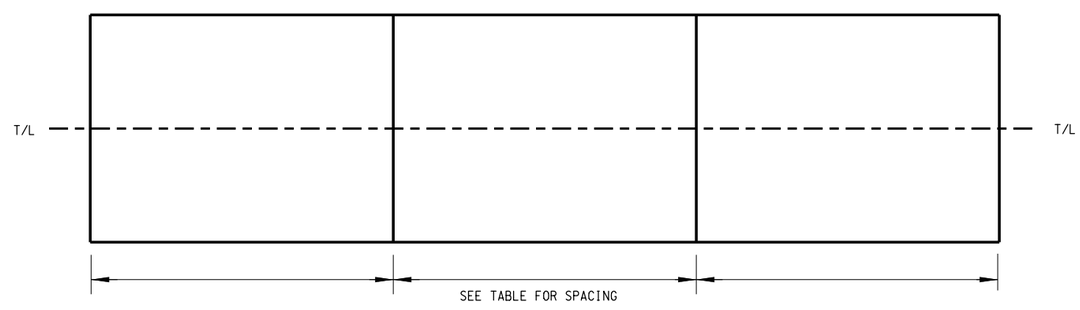


CONTRACTION JOINT LOCATIONS

TRANSVERSE NON-DOWELED, NON-REINFORCED CONCRETE PAVEMENT JOINTS DETAIL

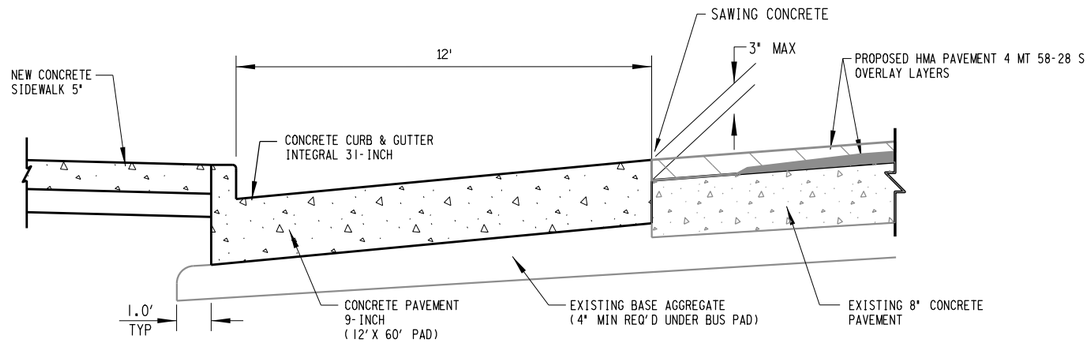


## BUS PAD DETAIL

**(SOUTHBOUND 27TH ST SHOWN)**

| | |
|---|---|
| 18+95 RT | 20+30 LT |
| 23+97 RT | 25+62 LT |
| 29+06 RT | 30+48 LT |
| 29+58 LT VLIET ST. | 40+55 LT |
| 39+19 RT | 48+21 LT |
| 46+22 RT | 9L+67 RT |
| | 11L+08 LT |

**NOTE**

1) CURB & GUTTER FLANGE TO BE EXPOSED THROUGH THE ENTIRE CURB RETURN AND/OR TO INLET BEYOND END OF CURB RETURN (NO HMA OVERLAY)

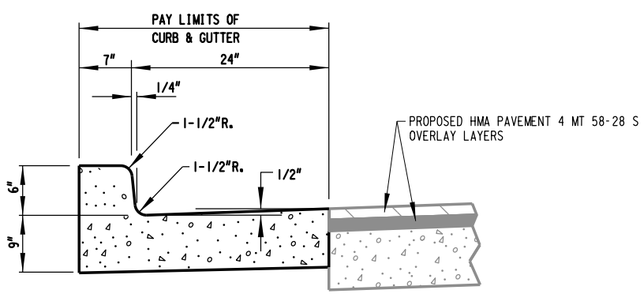


## CONCRETE CURB & GUTTER 31-INCH SPECIAL

(FLATTENED GUTTER PANS AT CURB RAMPS)

**NOTE**

1) CURB & GUTTER FLANGE TO BE EXPOSED THROUGH THE ENTIRE LENGTH (NO HMA OVERLAY)

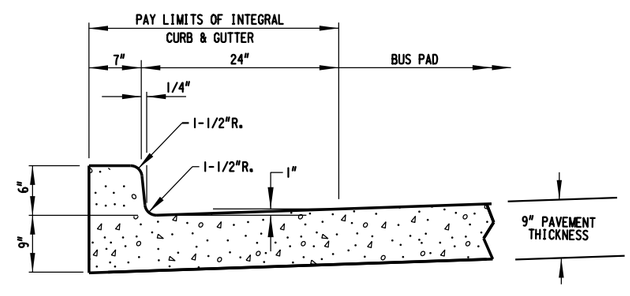


## CONCRETE CURB & GUTTER INTEGRAL 31-INCH

(AT BUS PADS)

**NOTE**

1) CURB & GUTTER FLANGE TO BE EXPOSED THROUGH THE ENTIRE LENGTH (NO HMA OVERLAY)

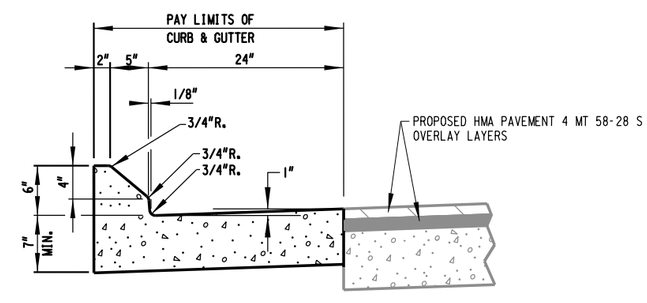


## CONCRETE CURB & GUTTER 6-INCH 31-INCH SLOPED

9L+24, 58' RT TO 10L+11, 99' RT

2

## CURVE 1

PI = 43+32.70
N = 390296.61
E = 2548497.97
Δ = 5°25'57"
D = 3°10'59" RT
R = 1800.00
T = 85.40
L = 170.67
E = 2.02
PCI = 42+47.30
N = 390211.22
E = 2548499.66
PT = 44+17.97
N = 390381.77
E = 2548504.37

## CURVE 2

PI = 46+80.64
N = 390643.69
E = 2548523.69
Δ = 6°31'59" RT
D = 13°58'28"
R = 410.00
T = 23.40
L = 46.75
E = 0.67
PCI = 46+57.24
N = 390620.38
E = 2548521.72
PT = 47+03.99
N = 390666.64
E = 2548528.30

## CURVE 3

PI = 47+49.56
N = 390711.31
E = 2548537.27
Δ = 12°08'03" LT
D = 13°58'28"
R = 410.00
T = 43.58
L = 86.83
E = 2.31
PCI = 47+05.98
N = 390668.58
E = 2548528.69
PT = 47+92.81
N = 390754.88
E = 2548536.68

## CURVE 4

PI = 44+80.91
N = 390445.42
E = 2548527.03
Δ = 5°57'27.33" RT
D = 11°27'32.96"
R = 500.00
T = 26.02
L = 51.99
E = 0.68
PCI = 44+54.89
N = 390419.41
E = 2548527.54
PT = 45+06.88
N = 390471.35
E = 2548529.22

## CURVE 5

PI = 46+80.79
N = 390644.64
E = 2548132.57
Δ = 9°00'03.49" LT
D = 13°58'28.49"
R = 410.00
T = 32.27
L = 64.41
E = 1.27
PCI = 46+48.52
N = 390612.48
E = 2548541.13
PT = 47+12.93
N = 390676.82
E = 2548541.49

## CURVE 6

PI = 47+76.18
N = 390757.64
E = 2548536.88
Δ = 3°23'59.26" RT
D = 13°58'28.49"
R = 410.00
T = 12.17
L = 24.33
E = 0.18
PCI = 47+64.01
N = 390727.77
E = 2548537.77
PT = 47+88.34
N = 390752.08
E = 2548536.71

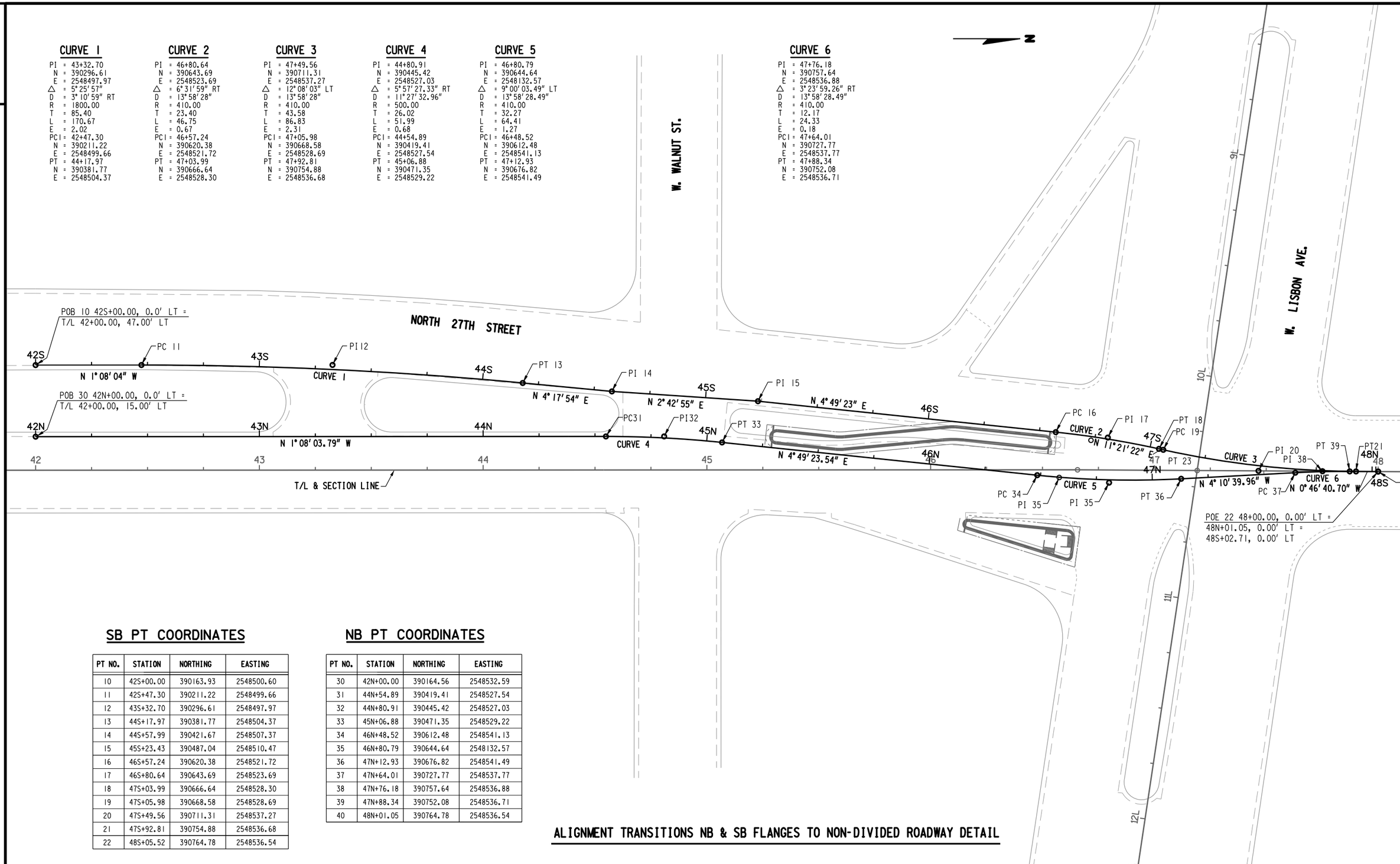


## SB PT COORDINATES

| PT NO. | STATION | NORTHING | EASTING |
|---|---|---|---|
| 10 | 42S+00.00 | 390163.93 | 2548500.60 |
| 11 | 42S+47.30 | 390211.22 | 2548499.66 |
| 12 | 43S+32.70 | 390296.61 | 2548497.97 |
| 13 | 44S+17.97 | 390381.77 | 2548504.37 |
| 14 | 44S+57.99 | 390421.67 | 2548507.37 |
| 15 | 45S+23.43 | 390487.04 | 2548510.47 |
| 16 | 46S+57.24 | 390620.38 | 2548521.72 |
| 17 | 46S+80.64 | 390643.69 | 2548523.69 |
| 18 | 47S+03.99 | 390666.64 | 2548528.30 |
| 19 | 47S+05.98 | 390668.58 | 2548528.69 |
| 20 | 47S+49.56 | 390711.31 | 2548537.27 |
| 21 | 47S+92.81 | 390754.88 | 2548536.68 |
| 22 | 48S+05.52 | 390764.78 | 2548536.54 |

## NB PT COORDINATES

| PT NO. | STATION | NORTHING | EASTING |
|---|---|---|---|
| 30 | 42N+00.00 | 390164.56 | 2548532.59 |
| 31 | 44N+54.89 | 390419.41 | 2548527.54 |
| 32 | 44N+80.91 | 390445.42 | 2548527.03 |
| 33 | 45N+06.88 | 390471.35 | 2548529.22 |
| 34 | 46N+48.52 | 390612.48 | 2548541.13 |
| 35 | 46N+80.79 | 390644.64 | 2548132.57 |
| 36 | 47N+12.93 | 390676.82 | 2548541.49 |
| 37 | 47N+64.01 | 390727.77 | 2548537.77 |
| 38 | 47N+76.18 | 390757.64 | 2548536.88 |
| 39 | 47N+88.34 | 390752.08 | 2548536.71 |
| 40 | 48N+01.05 | 390764.78 | 2548536.54 |

## ALIGNMENT TRANSITIONS NB & SB FLANGES TO NON-DIVIDED ROADWAY DETAIL

2

| STATE PROJECT NUMBER 2265-00-74 | HWY: LOCAL | COUNTY: MILWAUKEE | CONSTRUCTION DETAILS | SCALE FEET | SHEET NO: 16 | E |
|---|---|---|---|---|---|---|

2

* REMOVE 3'-0" CURB & GUTTER MIN. OR TO THE NEAREST JOINT, 6'-0" MAX. UNLESS OTHERWISE DIRECTED ON THE PLAN.

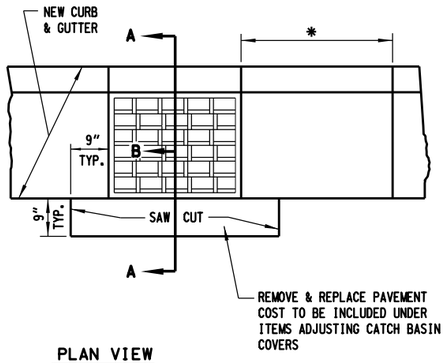


PLAN VIEW

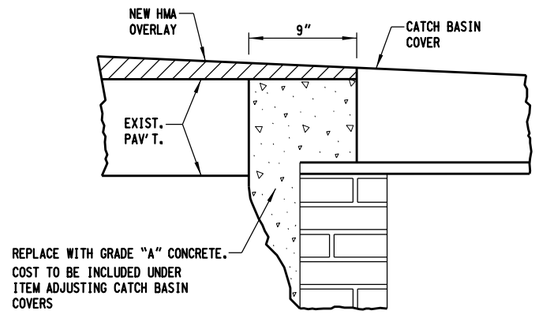


SECTION A-B

## ADJUSTING CATCH BASIN COVERS DETAIL

REPAIR BY REMOVING & REPLACING DAMAGED OR LOOSE BRICK OR BLOCK TO DEPTH AS DIRECTED BY ENGINEER.

WORK UNDER ADJUSTING CATCH BASIN COVERS SHALL BE CONFINED TO THE BRICK SHIMMING ABOVE THE STRUCTURE CORBEL.

SHIMMING SHALL NOT EXCEED 1 FOOT BETWEEN THE TOP OF THE CORBEL AND THE FRAME BOTTOM. ANY WORK MORE EXTENSIVE SHALL BE CONSTRUED AS WORK UNDER RECONSTRUCTING CATCH BASINS.

DEPTHS OF BRICKWORK TO BE REPAIRED, AS INDICATED ON THE PLAN, ARE ESTIMATES ONLY AND MAY VARY IN THE FIELD.

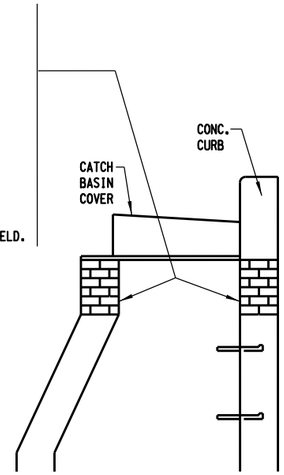


SECTION A-A

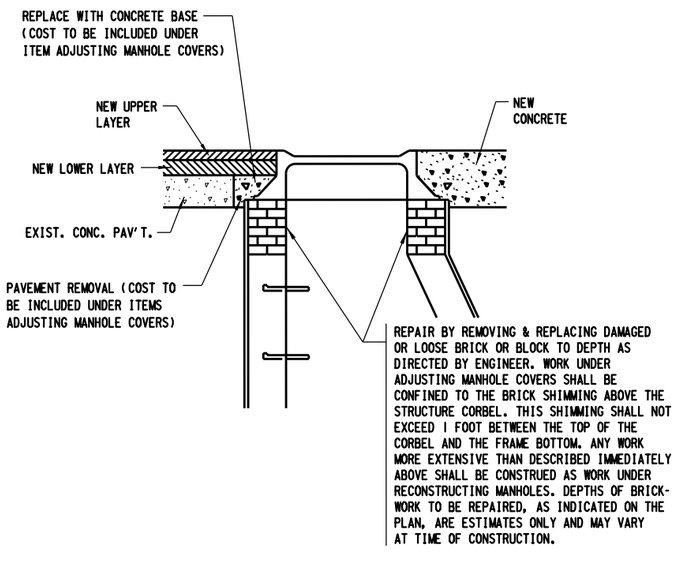


## ADJUSTING MANHOLE COVERS DETAIL

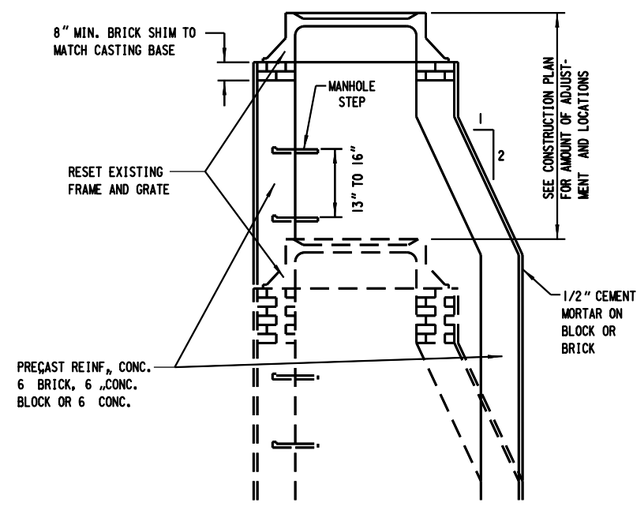


CORBEL MAY BE REVERSED STRAIGHT SIDE LEANED SLIGHTLY TO CLEAR CURB HEAD.

REPAIR BY REMOVING AND REPLACING DAMAGED OR LOOSE BRICK OR BLOCK TO THE DEPTH AS SHOWN ON THE PLAN OR AS DIRECTED BY THE ENGINEER. DEPTHS AS INDICATED ON PLAN ARE ESTIMATES ONLY AND MAY VARY AT TIME OF CONSTRUCTION.

## RECONSTRUCTING MANHOLES AND CATCH BASIN DETAILS

## CONSTRUCTION NOTES

1. LOCATIONS OF STRUCTURES IN CURB & GUTTER SECTIONS REFER TO FACE OF CURB.
2. LOCATIONS OF STRUCTURES NOT IN CURB AND GUTTER SECTIONS REFER TO CENTERLINE OF STRUCTURE.
3. PIPE LENGTHS GIVEN ARE APPROXIMATE OUT TO OUT OF STRUCTURE.
4. GRATE & RIM ELEVATIONS ARE GIVEN AT FLOW LINE OF CATCH BASIN COVER OR AT CENTER-LINE OF MANHOLE COVER.
5. WHEN NEW COVERS ARE PLACED, THE FIRST 12" OF ADJUSTMENT OR REPAIRING SHALL BE INCLUDED IN THE COST OF THE NEW COVER. ANY ADJUSTMENT OR REPAIR OF BRICKWORK 12" OR LESS WILL BE PAID AS ADJUSTING COVERS WHEN RESETTING EXISTING COVERS, ANY ADJUSTMENT OR REPAIR OF BRICKWORK MORE THAN 12" WILL BE PAID AS A RECONSTRUCT.
6. MANHOLE ADJUSTMENTS IN ASPHALTIC PAVEMENT WILL BE MADE AFTER THE LOWER LAYER IS PLACED.
7. WHEN CONSTRUCTING CONCRETE CURB ADJACENT TO INLET COVER TYPE 57, TWO (2) DEFORMED TIE BARS SHALL BE PLACED LONGITUDINALLY THROUGH THE CURB SECTION AND EXTENDED ONE (1) FOOT BEYOND EACH SIDE OF THE FRAME. A DUMMY JOINT SHALL BE CUT IN THE CURB AT EACH SIDE OF THE FRAME.

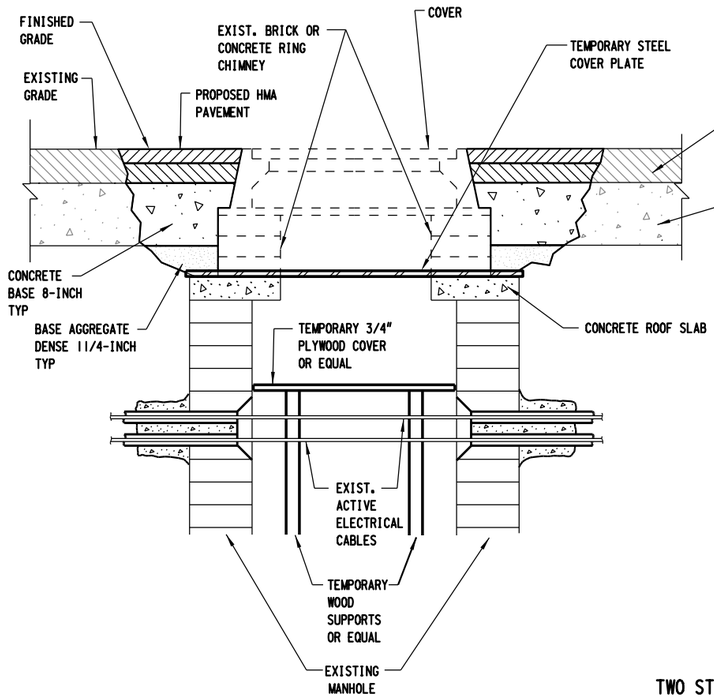


BLOCK OR PRECAST MANHOLE

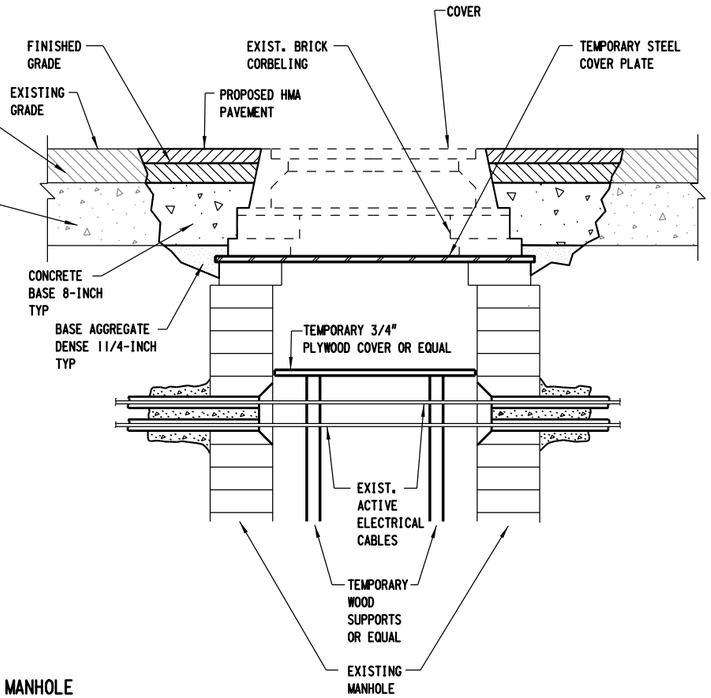


BRICK ROUND MANHOLE

## TWO STEP METHOD OF ADJUSTING TES MANHOLE COVERS PAVEMENT ROADWAY DETAIL

### STEP 1

PRIOR TO REMOVING ASPHALTIC SURFACE & CONCRETE PAVEMENT

A. REMOVE AND STORE MANHOLE COVER.

B. FURNISH AND INSTALL TEMPORARY WOOD SUPPORTS OR EQUAL.

C. FURNISH AND INSTALL TEMPORARY 3/4" PLYWOOD COVER OR EQUAL.

D. FURNISH AND INSTALL TEMPORARY 1/4" STEEL PLATE.

E. BACKFILL FROM PLATE TO SURFACE USING GRAVEL

### STEP 2

PRIOR TO CONCRETE PAVING

A. EXCAVATE AND REMOVE TEMPORARY COVER PLATE.

B. REMOVE DEBRIS FROM TEMPORARY PLYWOOD COVER.

C. REMOVE TEMPORARY PLYWOOD COVER AND WOOD SUPPORTS.

D. ADJUST MANHOLE CHIMNEY WITH PROPER SIZE CONCRETE ADJUSTING RINGS (SIZE OF OPENING OF CONCRETE ADJUSTING RING TO BE DETERMINED BY SIZE OF OPENING IN FRAME) AND REINSTALL EXIST. OR NEW MANHOLE COVER TO FINISH GRADE.

(BACKFILL AND OTHER WORK TO BE DONE IN ACCORDANCE WITH ITEM - ADJUSTING TES MANHOLE COVERS)

## ADJUSTING TES MANHOLE COVERS AND TEMPORARY COVER PLATE IN CONCRETE PAVEMENT ROADWAY DETAIL

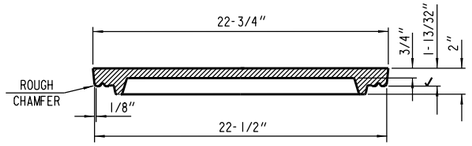


SECTION A-A

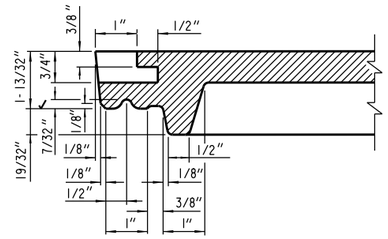


SECTION B-B

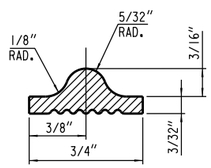


"T" GASKET DETAIL

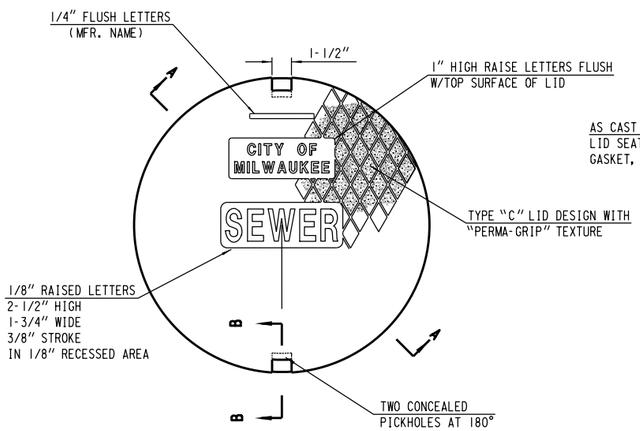


TOP VIEW

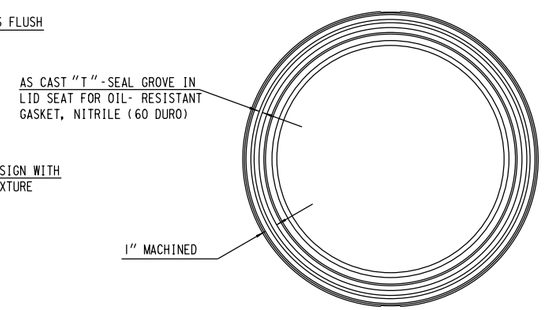


BOTTOM VIEW

**NOTES**

1) ALL CASTINGS SHALL BEAR THE FOLLOWING IDENTIFICATION MARKS IN THE FORM OF LEGIBLE LETTERS OR NUMERALS RAISED 1/8" HAVING A DIGIT OR LETTER HEIGHT OF ONE INCH ON LOWER FACE OF LID:
   1. THE INITIALS OR MONOGRAM OF THE FOUNDRY.
   2. THE CONTRACT NUMBER AND YEAR MADE.
   3. THE CASTING IDENTIFICATION NUMBER.
   4. THE SERIAL NUMBER OF THE INDIVIDUAL CASTING.

2) ALL EXTERIOR EDGES SHALL BE GROUND.

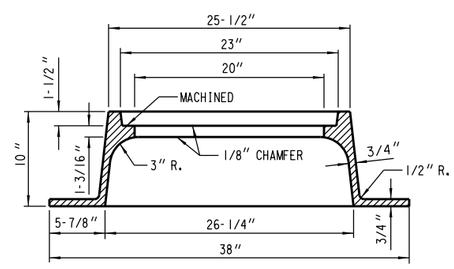


## MANHOLE COVER - TYPE 58-A DETAIL

LID - 107 LBS., FRAME - 381 LBS.

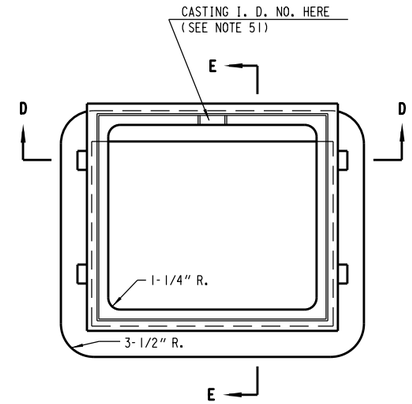


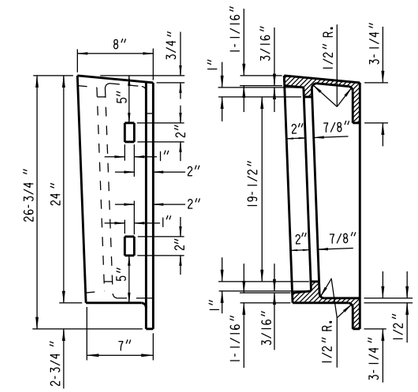


SECTION E-E

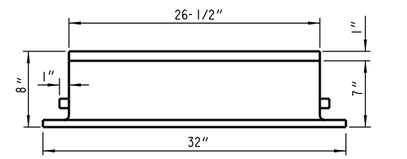


FRAME

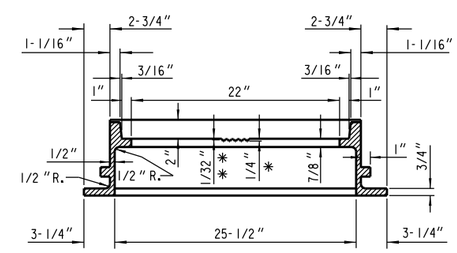


SECTION D-D

* DEPRESSION FOR LETTERS

** CLEARANCE FROM TOP OF LETTERS TO FACE OF SEAT

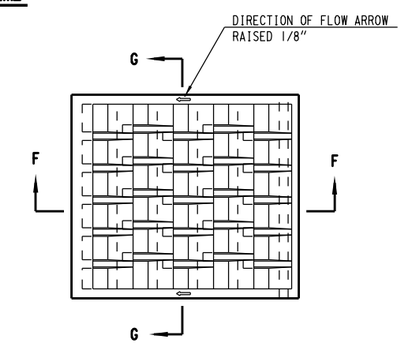


GRATE

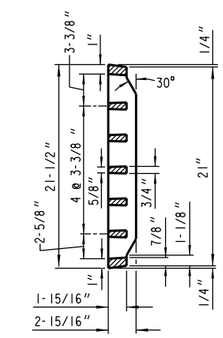


SECTION G-G

**GENERAL NOTES**

ALL EDGES ARE TO BE GROUND

ALL CASTINGS SHALL BEAR THE FOLLOWING IDENTIFICATION MARKS IN THE FORM OF LEGIBLE LETTERS OR NUMERALS RAISED 1/8"

**ON THE FRAME**

1. ON THE UPPER FACE OF THE FLANGE IN 1 INCH HIGH LETTERS THE INITIALS OR MONOGRAM OF THE FOUNDRY, THE YEAR MADE AND THE SERIAL NUMBER OF THE INDIVIDUAL CASTING.
2. ON THE SEAT OF THE FRAME IN 1 INCH HIGH LETTERS, THE CASTING IDENTIFICATION NUMBER (51).

**ON THE GRATE**

1. ON THE UPPER SIDE OF THE GRATE IN 1 INCH HIGH LETTERS, THE INITIALS OR MONOGRAM OF THE FOUNDRY, THE YEAR MADE, THE CASTING IDENTIFICATION NUMBER (57) AND THE SERIAL NUMBER OF THE INDIVIDUAL CASTING.

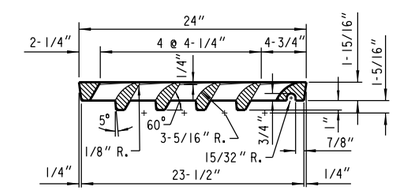


SECTION F-F

## INLET COVER TYPE 57 DETAIL

LID- 145 LBS., FRAME-204 LBS.

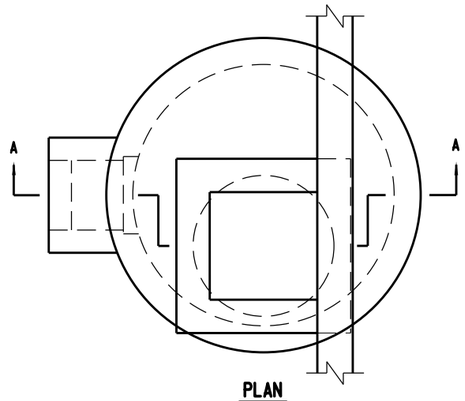


PLAN

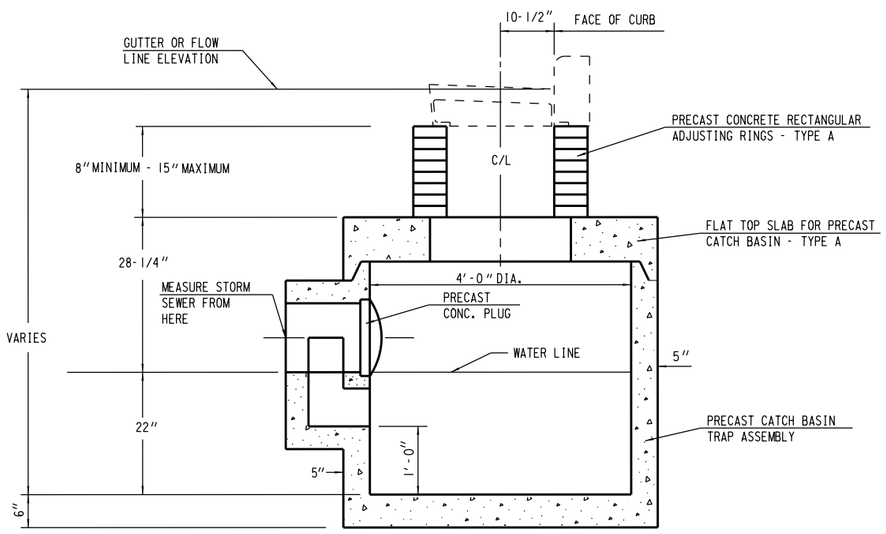


SECTION A-A

## CATCH BASIN - TYPE 44B DETAIL

**GENERAL NOTES**

1. REINFORCEMENT FOR 5" PRECAST REINFORCED CONCRETE SHALL BE 6" X 6" W16 X W16 WELDED STEEL WIRE FABRIC AND SHALL BE EMBEDDED 2" CLEAR.
2. PRECAST INLET UNITS AND BASES SHALL CONFORM TO THE PERTINENT REQUIREMENTS OF AASHTO DESIGNATION M199.
3. PRECAST REINFORCED BASES SHALL BE PLACED ON A BED OF MATERIAL AT LEAST 4" IN DEPTH WHICH MEETS REQUIREMENTS FOR GRANULAR BACKFILL. THIS BEDDING SHALL BE COMPACTED AND PROVIDE UNIFORM SUPPORT FOR THE ENTIRE AREA OF THE BASE.
4. SET FRAME ELEVATION 0.03 FT. LOWER THAN ELEVATION INDICATED ON PLAN.

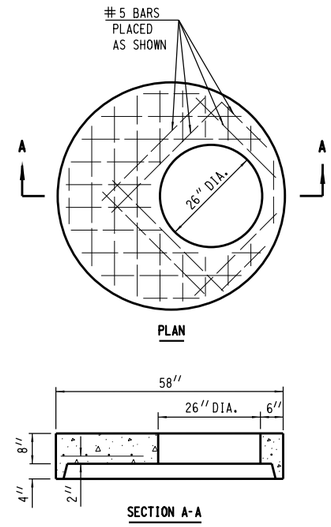


PLAN

SECTION A-A

## TOP SLAB - TYPE A DETAIL

FLAT TOP SLAB SHALL BE 8" THICK REINFORCED WITH ONE LAYER OF STEEL WITH A MINIMUM AREA OF 0.12 SQ. IN. PER LINEAL FOOT IN BOTH DIRECTIONS, PLACED IN THE CENTER THIRD OF THE SECTION AS SHOWN.

REINFORCEMENT SHALL BE TIED OR WELDED TOGETHER.

THE MINIMUM COMPRESSIVE STRENGTH OF THE CONCRETE SHALL BE 3300 P.S.I.

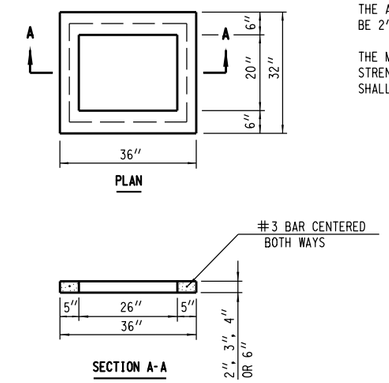


PLAN

SECTION A-A

## RECTANGULAR ADJUSTING RING - TYPE A DETAIL

THE ADJUSTING RINGS SHALL BE 2", 3", 4" OR 6" IN HEIGHT.

THE MINIMUM COMPRESSIVE STRENGTH OF THE CONCRETE SHALL BE 3300 P.S.I.

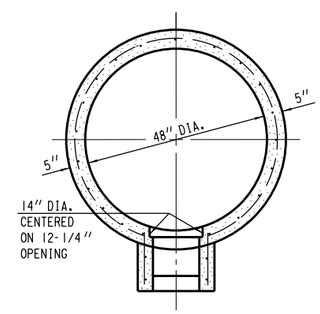


SECTION A-A

CIRCUMFERENTIAL REINFORCEMENT SHALL CONSIST OF ONE LINE OF STEEL NOT LESS THAN 0.12 SQ. IN. PER LINEAL FOOT, AND SHALL BE PLACED IN THE CENTER THIRD OF THE WALL.

TRAP ASSEMBLY SHALL BE REINFORCED WITH ONE LAYER OF STEEL WITH A MINIMUM AREA OF 0.12 SQ. IN. PER LINEAL FOOT IN BOTH DIRECTIONS, PLACED IN THE CENTER THIRD OF THE SECTION AS SHOWN.

CIRCUMFERENTIAL AND TRAP ASSEMBLY REINFORCEMENT SHALL BE TIED OR WELDED TOGETHER.

THE MINIMUM COMPRESSIVE STRENGTH OF THE CONCRETE SHALL BE 3300 P.S.I.

TWO HANDLING HOLES 2 1/4 INCHES IN DIAMETER SHALL BE CAST OR DRILLED IN THE WALL.

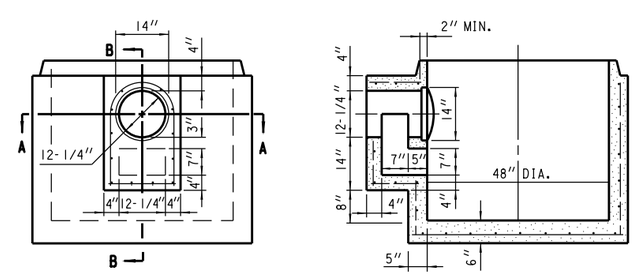


PLAN

SECTION B-B

## TRAP ASSEMBLY

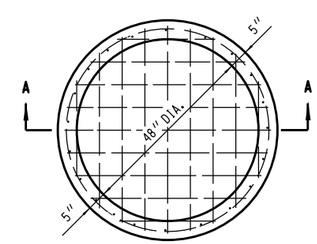


PLAN

CIRCUMFERENTIAL REINFORCEMENT SHALL CONSIST OF ONE LINE OF STEEL NOT LESS THAN 0.12 SQ. IN. PER LINEAL FOOT, AND SHALL BE PLACED IN THE CENTER THIRD OF THE WALL.

BOTTOM SLAB SHALL BE REINFORCED WITH ONE LAYER OF STEEL WITH A MINIMUM AREA OF 0.12 SQ. IN. PER LINEAL FOOT IN BOTH DIRECTIONS, PLACED IN THE CENTER THIRD OF THE SLAB.

CIRCUMFERENTIAL AND BOTTOM SLAB REINFORCEMENT SHALL BE TIED OR WELDED TOGETHER.

THE MINIMUM COMPRESSIVE STRENGTH OF THE CONCRETE SHALL BE 3300 P.S.I.

TWO HANDLING HOLES 2 1/4 INCHES IN DIAMETER SHALL BE CAST OR DRILLED IN THE WALL.

## BASE -TYPE A DETAIL

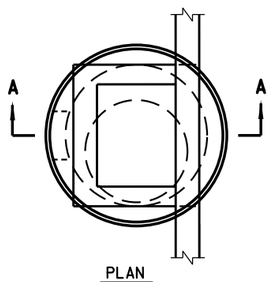


PLAN

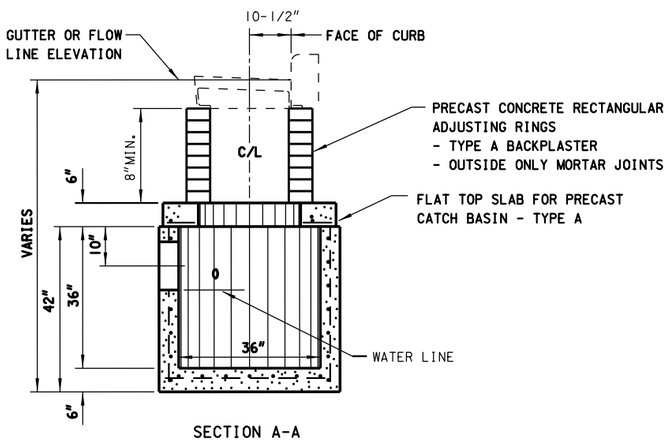


SECTION A-A

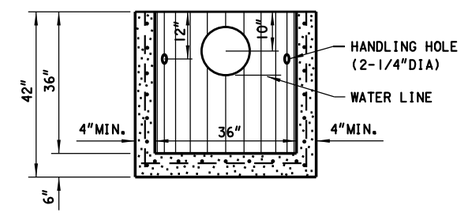


SECTION B-B

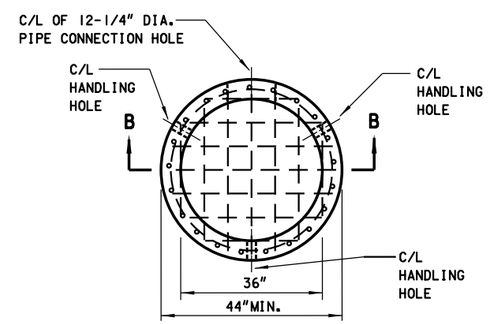


RISER SECTION WITH INTEGRAL BASE PLAN DETAIL

## GENERAL NOTES

CIRCUMFERENTIAL AND LONGITUDINAL REINFORCEMENT IN THE RISER SECTON SHALL EACH CONSIST OF ONE LAYER OF STEEL NOT LESS THAN 0.12 SQ. IN. PER FOOT AND SHALL BE PLACED IN THE CENTER THIRD OF THE WALL.

THE BASE SLAB SHALL BE REINFORCED WITH ONE LAYER OF STEEL WITH A MINIMUM AREA OF 0.32 SQ. IN. PER FOOT IN BOTH DIRECTIONS, PLACED ABOVE THE MIDPOINT OF THE SLAB.

RISER SECTION AND BASE SLAB REINFORCEMENT SHALL BE TIED OR WELDED TOGETHER.

TWO TO THREE HANDLING HOLES 2-1/4" IN DIAMETER AND A PIPE CONNECTION HOLE 12-1/4" IN DIAMETER SHALL BE CAST OR CORED IN THE RISER SECTION AT THE LOCATIONS SHOWN. LIFTING DEVICES MAY BE SUBSTITUTED FOR HANDLING HOLES.

NO JOINTS OR HOLES SHALL BE BELOW THE WATERLINE.

THE MINIMUM COMPRESSIVE STRENGTH OF THE CONCRETE SHALL BE 4000 P.S.I.

RISER SECTION MAY TAPER TO A 33" INTERNAL DIAMETER AT IT'S BOTTOM PROVIDED A 44" MINIMUM OUTSIDE DIAMETER IS MAINTAINED.

## NOTES

1) PRECAST INLET UNITS AND BASES SHALL CONFORM TO THE PERTINENT REQUIREMENTS OF AASHTO DESIGNATION M199 AND ASTM DESIGNATION C-478 AND THESE DETAILED REQUIREMENTS WHICH SHALL GOVERN WHERE THEY ALTER THE AASHTO AND ASTM STANDARDS.

2) ALL REINFORCEMENT STEEL SHALL BE GRADE 60 OR GREATER AND EMBEDDED AT LEAST 1" CLEAR.

3) PRECAST REINFORCED BASES SHALL BE PLACED ON A BED OF MATERIAL AT LEAST 4 IN DEPTH WHICH MEETS REQUIREMENTS FOR GRANULAR BACKFILL. THIS BEDDING SHALL BE COMPACTED AND PROVIDE UNIFORM SUPPORT FOR THE ENTIRE AREA OF THE BASE.

4) SET FRAME ELEVATION 0.03 FT. LOWER THAN ELEVATION INDICATED ON PLAN.

# CATCH BASIN - TYPE 45A DETAIL

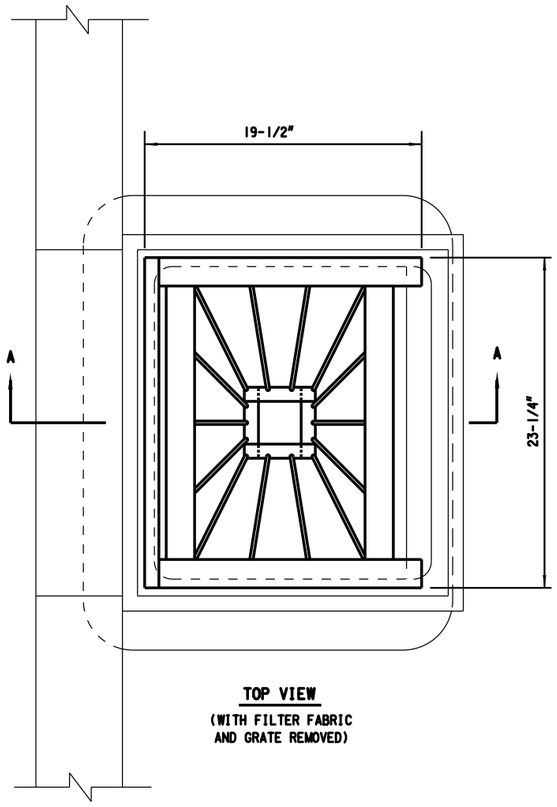


TOP VIEW
(WITH FILTER FABRIC AND GRATE REMOVED)

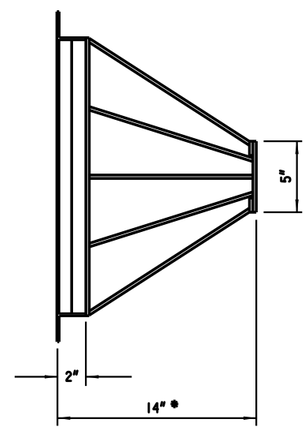


FRONT VIEW
(BASKET ONLY)

* MAY BE DECREASED IF INLET IS OF INSUFFICIENT DEPTH

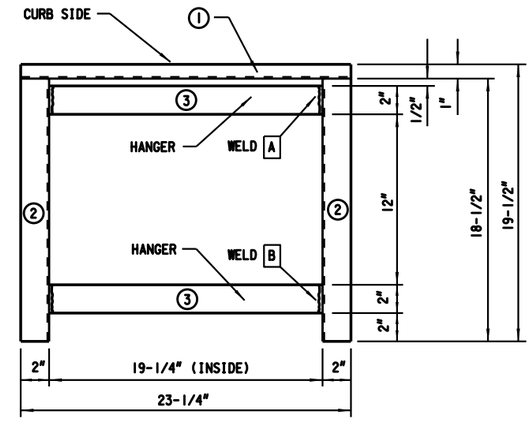


TOP VIEW

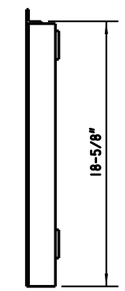


SIDE VIEW

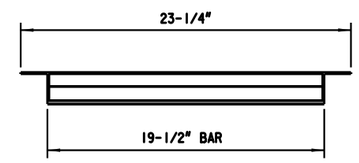


FRONT VIEW

BAR SCHEDULE

| NO. | SHAPE | SIZE | THICKNESS | LENGTH | QUANTITY |
|---|---|---|---|---|---|
| 1 | ANGLE | 1" X 1" | 1/8" | 23-1/4" | 1 |
| 2 | ANGLE | 2" X 2" | 1/8" | 18-1/2" | 2 |
| 3 | BAR | 2" | 1/4" | 19-1/2" | 2 |

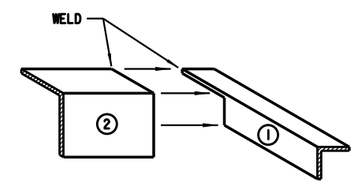


WELD CONNECTION - A
TOP FRAME

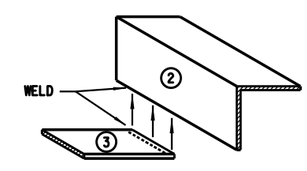


WELD CONNECTION - B
BASKET HANGER TO TOP FRAME

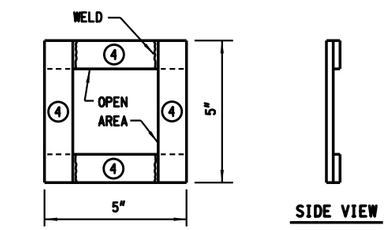


TOP VIEW



SIDE VIEW

BAR SCHEDULE

| NO. | SHAPE | SIZE | THICKNESS | LENGTH | QUANTITY |
|---|---|---|---|---|---|
| 4 | BAR | 1" | 1/4" | 5" | 4 |

BASKET BOTTOM

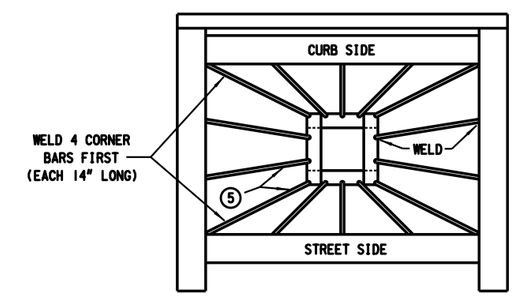


ROD PLACEMENT

ROD SCHEDULE

| NO. | SHAPE | SIZE | THICKNESS | LENGTH | QUANTITY |
|---|---|---|---|---|---|
| 5 | ROD | 1/4" MIN. | 1/8" | 12" TO 14" (CUT TO FIT) | 14 |

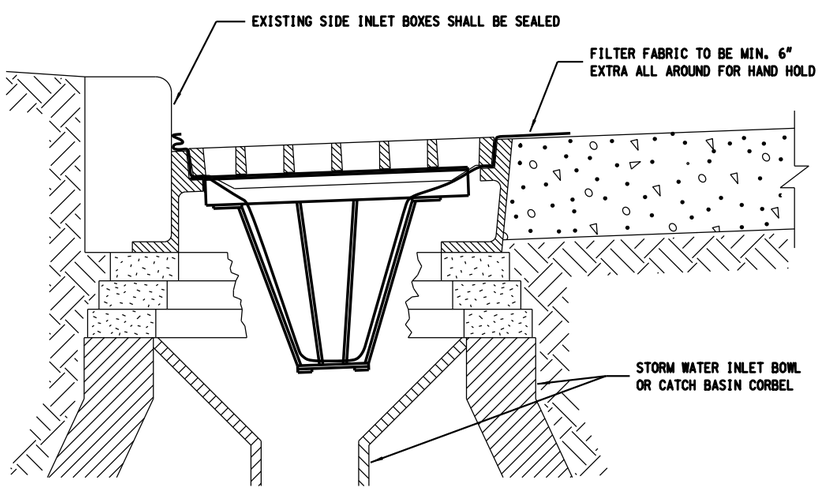


SECTION A-A

INLET SCREENS TYPE M DETAIL

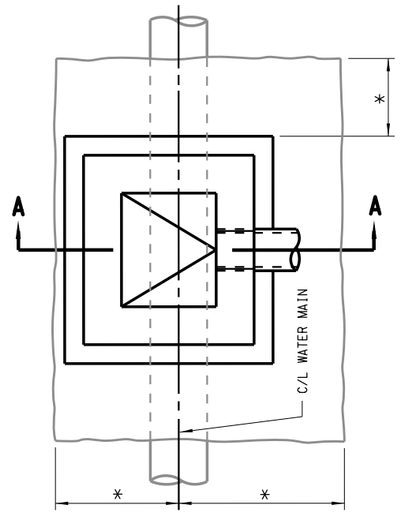


PLAN VIEW

* LIMITS OF EXCAVATION FOR DRAINAGE STRUCTURE OR 2' MAXIMUM

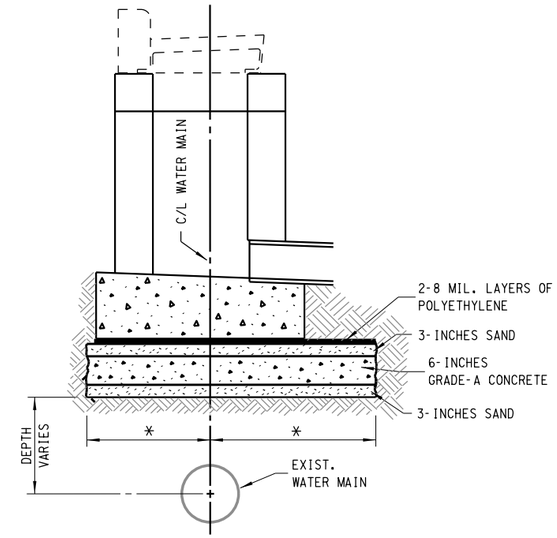


SECTION A-A

## WATER MAIN PROTECTION DETAIL

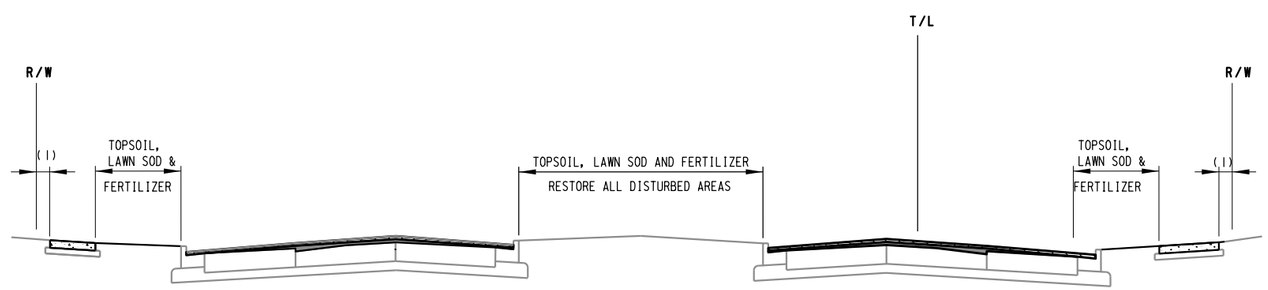


**FOOTNOTE**

(1) RESTORE DISTURBED UNPAVED AREAS BETWEEN BACK OF SIDEWALK AND RIGHT-OF-WAY WITH TOPSOIL, SOD LAWN AND FERTILIZER.

## FINISHING ITEMS DETAIL

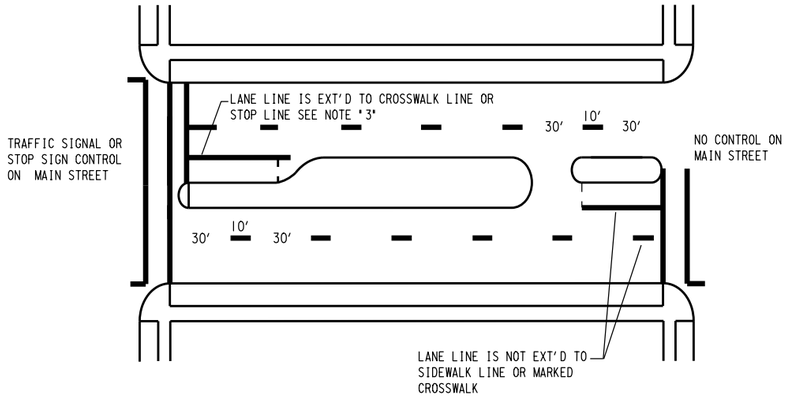


## LANE LINE INSTALLATION DETAIL

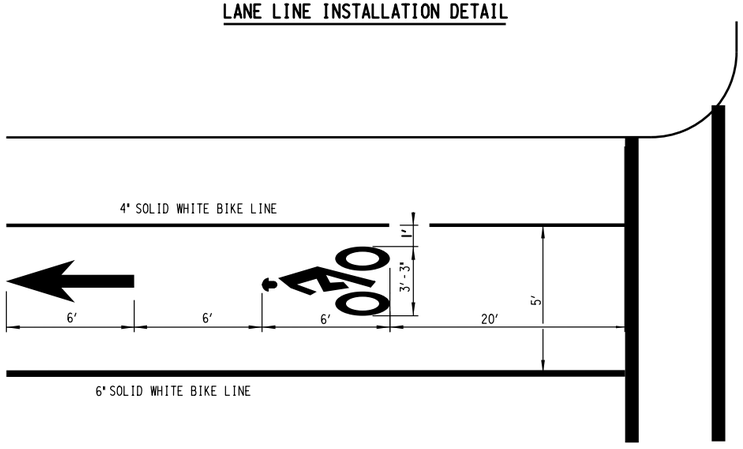


## BIKE LANE DETAIL

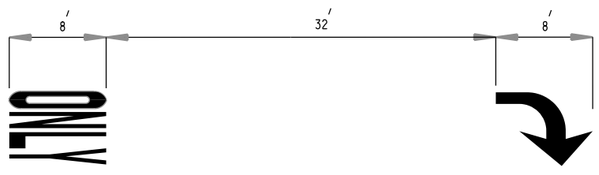


## ARROW AND ONLY DETAIL

## PAVEMENT MARKING NOTES

1. DASHED YELLOW CENTER LINES AND WHITE LANE LINES ARE 10 FEET LONG WITH A 30 FOOT GAP.
2. ALL DASHED CENTER LINES AND LANE LINES ARE 4 INCHES WIDE. ALL DOUBLE YELLOW CENTER LINES HAVE A 4 INCH SPACE BETWEEN TWO 4 INCH LINES.
3. DASHED WHITE BUS PAD LINES ARE 6 INCHES WIDE AND 2 FEET LONG WITH 6 FOOT GAPS.TOTAL LENGTH OF BUS PAD DASHED MARKING IS 80 FEET LONG.
4. AT CONTROLLED INTERSECTION IF LANE LINE IS LESS THAN 10 FEET, THE PRECEEDING LINE IS EXTENDED TO THE STOP LINE OR CROSSWALK LINE. THIS BALANCE LINE SHOULD NOT EXCEED 49 FEET. THIS POLICY APPLIES TO LANE LINES ONLY AT TRAFFIC SIGNALIZED OR STOP SIGN CONTROLLED INTERSECTIONS AND CENTER LINES AT ALL LOCATIONS.
5. ALL WHITE CROSSWALK LINES ARE 12 INCHES WIDE.
6. ALL WHITE STOP LINES ARE 24 INCHES WIDE
7. CROSSWALK WIDTH DIMENSIONS ARE TO THE OUTSIDE EDGE OF THE MARKING.
8. ALL PAVEMENT MARKINGS ARE TO BE EPOXY.
9. ALL DIMENSIONS ARE FROM THE FACE OF THE CURB TO THE CENTER OF THE MARKING UNLESS OTHERWISE NOTED.
9. TEMPORARY PAVEMENT MARKINGS MUST BE PLACED ON THE PAVEMENT IF PERMANENT MARKINGS ARE NOT INSTALLED AFTER THE COMPLETION OF PAVING.

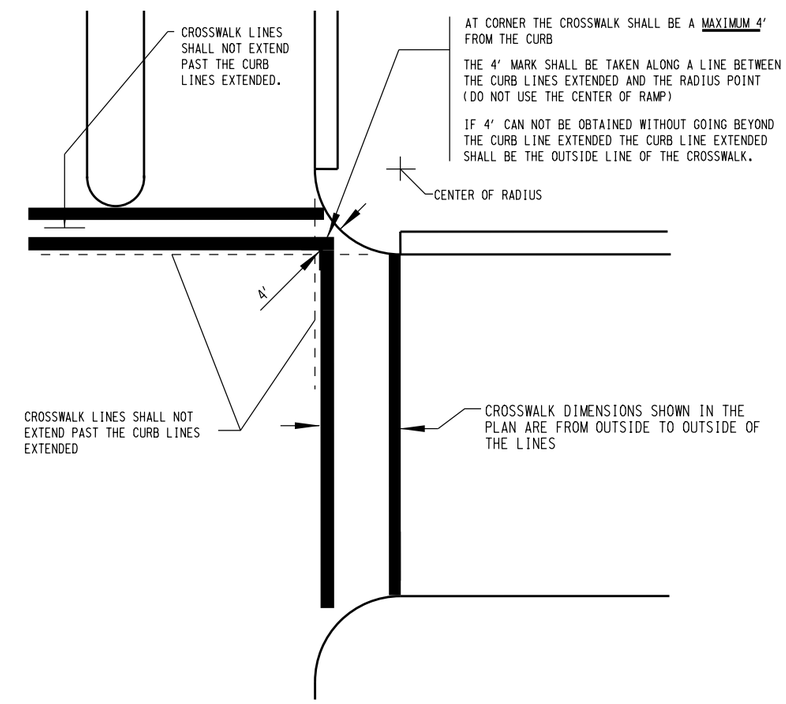


## CROSSWALK INSTALLATION DETAIL

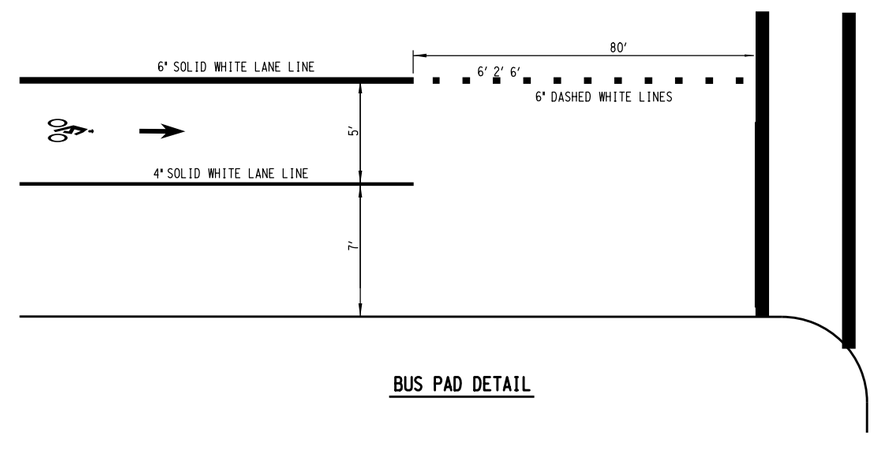


## BUS PAD DETAIL

## PAVEMENT MARKING DETAILS

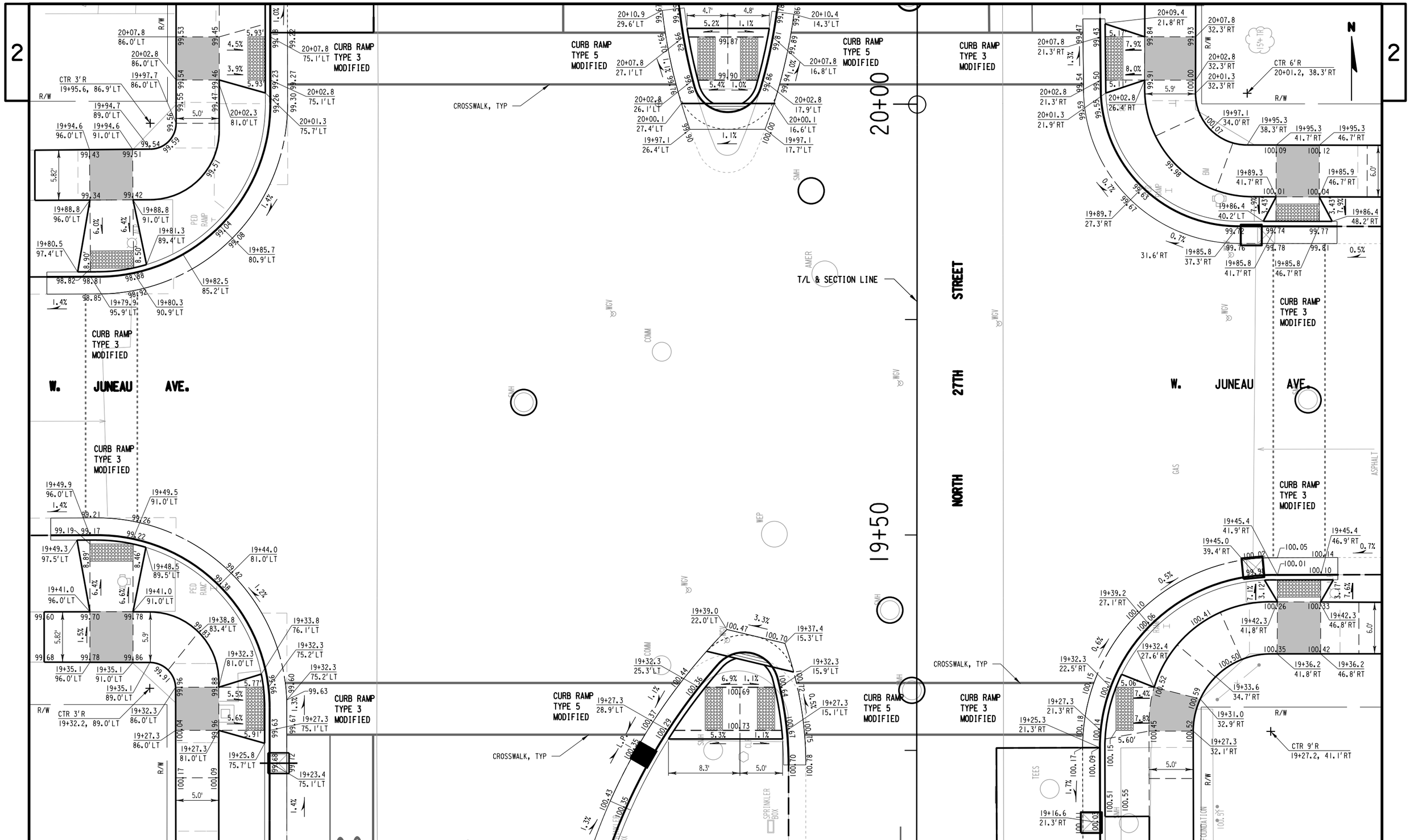


| STATE PROJECT NUMBER | HWY: | COUNTY: | INTERSECTION DETAIL | SCALE | SHEET NO: | |
|---|---|---|---|---|---|---|
| 2265-00-74 | LOCAL | MILWAUKEE | | FEET | 25 | E |

FILE NAME: F:\BM1-3393 N 27th St Milwaukee\5_Design\03_Roads\cds\h1021101_id.dgn PLOT DATE : 19-APR-2016 13:46 PLOT BY : scook PLOT NAME : h1021101_id PLOT SCALE : 10.000000:1.000000

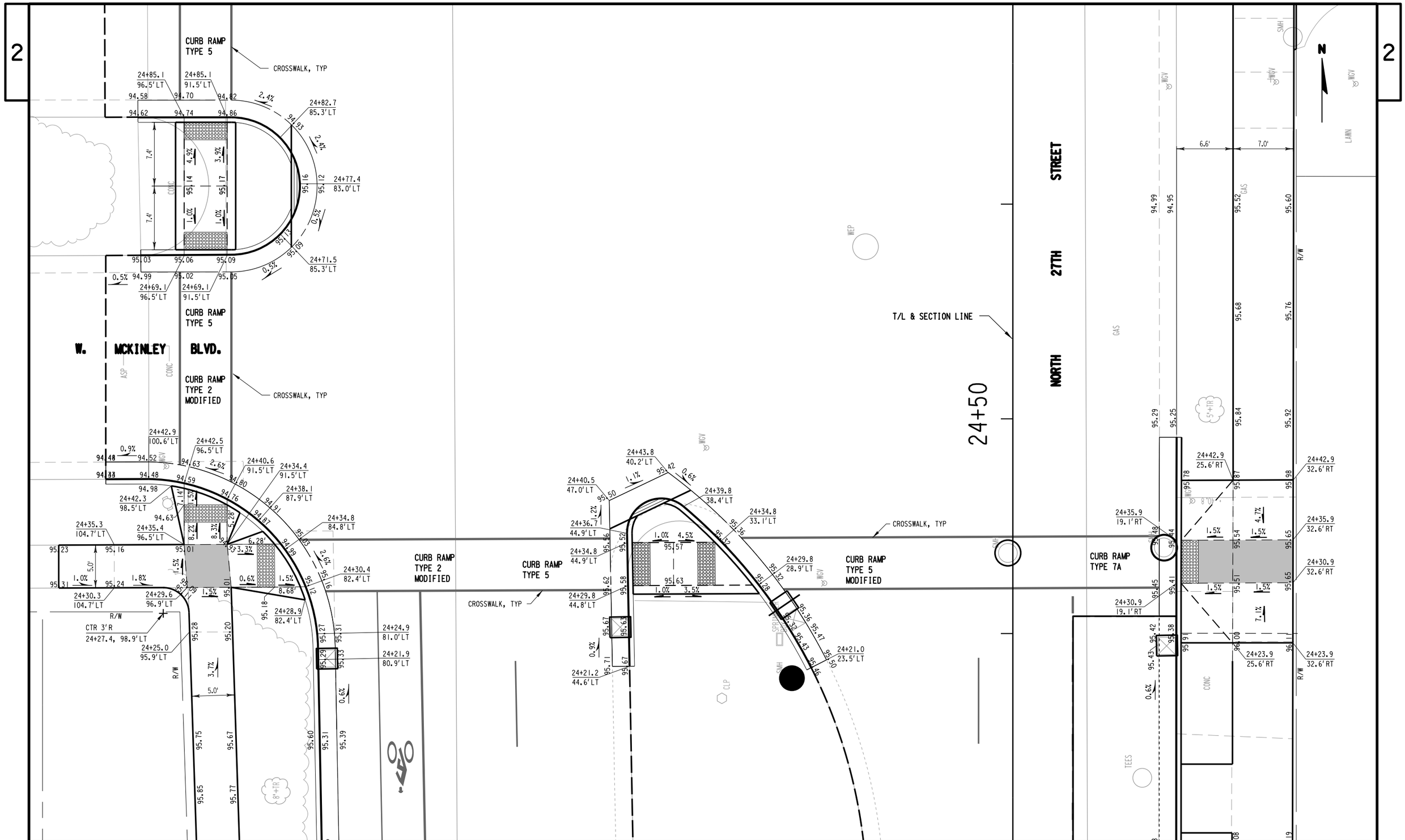


| STATE PROJECT NUMBER 2265-00-74 | HWY: LOCAL | COUNTY: MILWAUKEE | INTERSECTION DETAIL | SCALE FEET | SHEET NO: | E |
|---|---|---|---|---|---|---|

FILE NAME: F:\BM1-3393 N 27th St Milwaukee\5_Design\03_Roads\cds\h1021102_id.dgn PLOT DATE : 19-APR-2016 13:46 PLOT BY : scook PLOT NAME : h1021102_id PLOT SCALE : 10.000000:1.000000

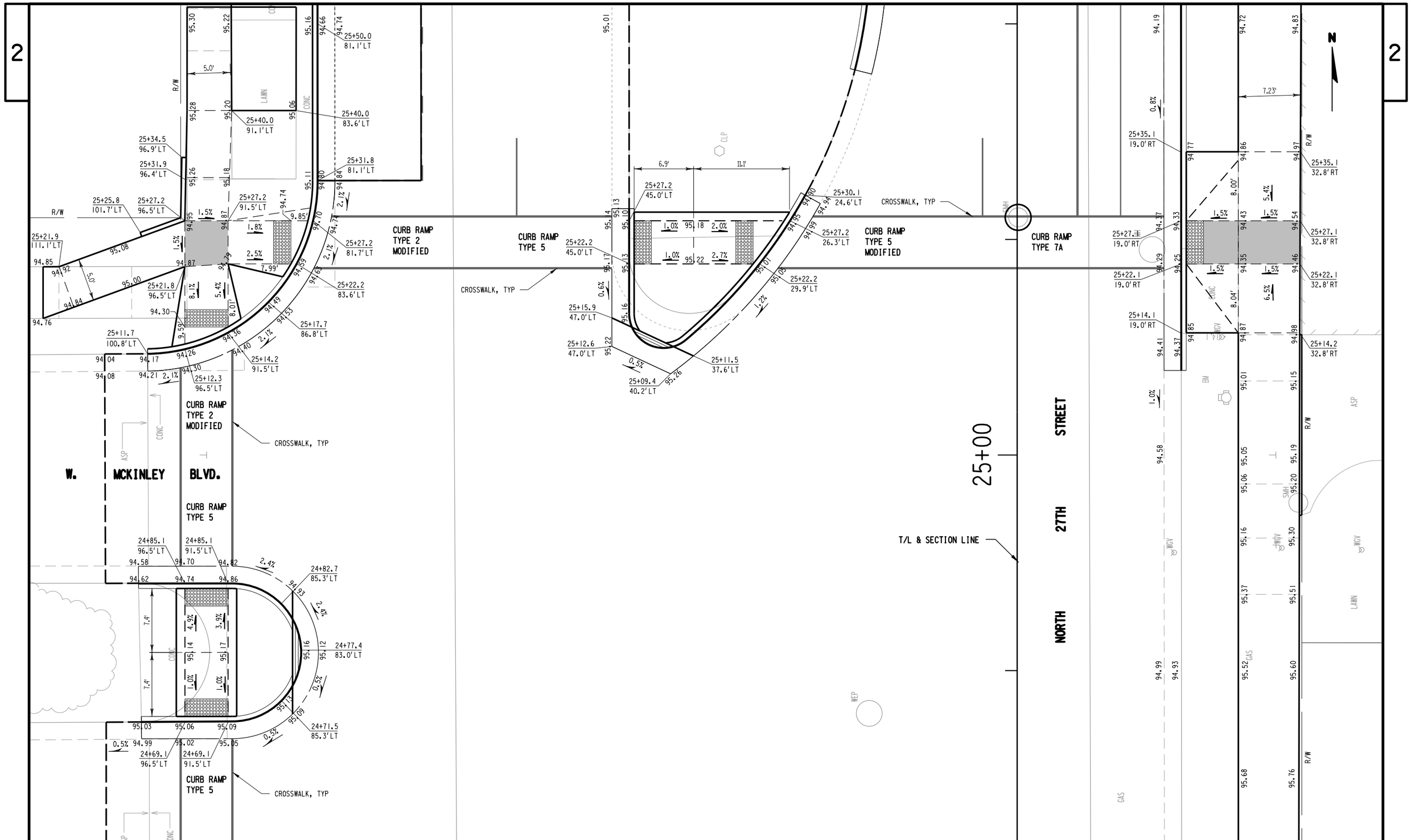


| STATE PROJECT NUMBER 2265-00-74 | HWY: LOCAL | COUNTY: MILWAUKEE | INTERSECTION DETAIL | SCALE FEET | SHEET NO: 27 | E |
|---|---|---|---|---|---|---|

FILE NAME: F:\BM1-3393 N 27th St Milwaukee\5_Design\03_Roads\cds\hi021103_id.dgn PLOT DATE : 19-APR-2016 13:46 PLOT BY : scook PLOT NAME : hi021103_id PLOT SCALE : 10.000000:1.000000

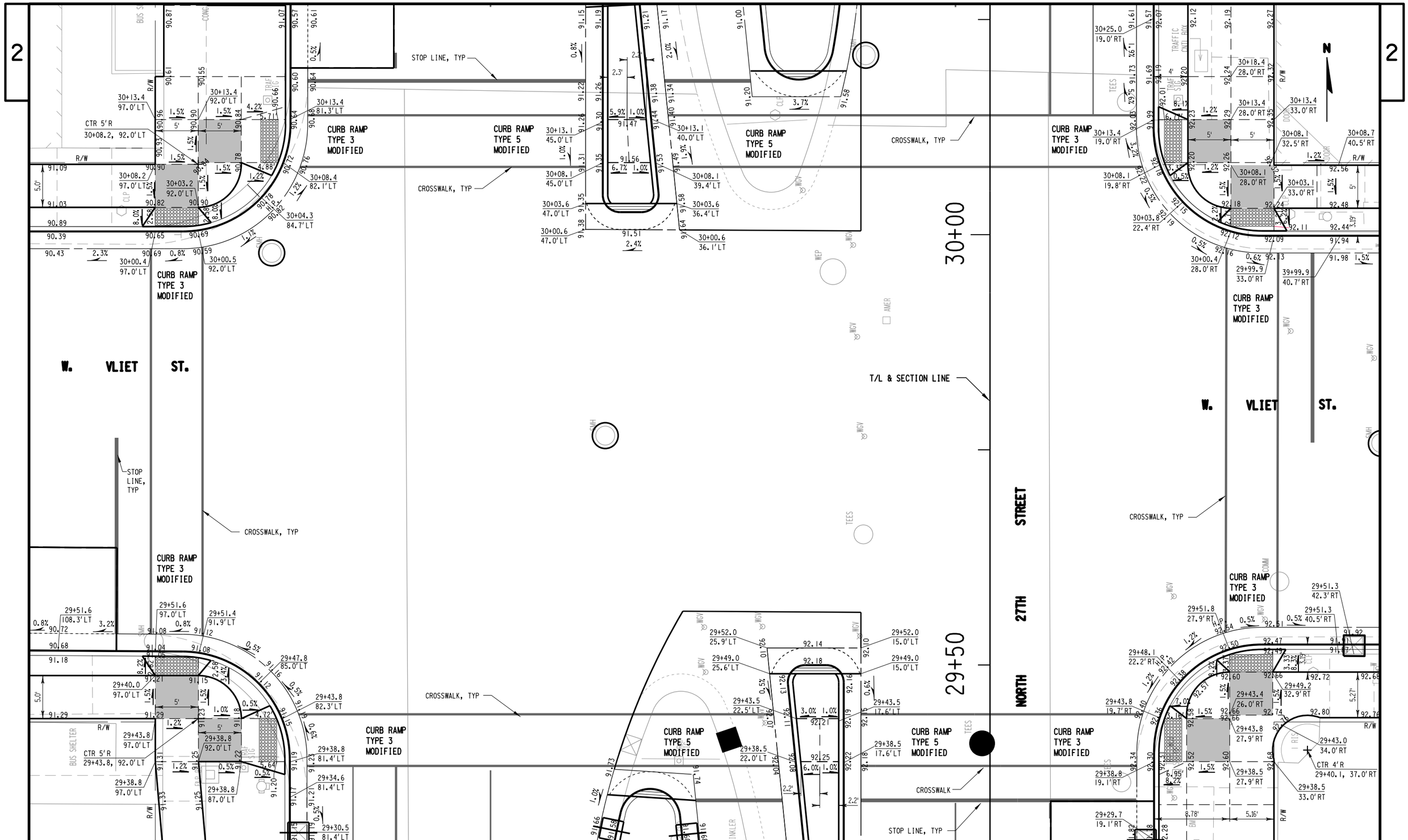


| STATE PROJECT NUMBER 2265-00-74 | HWY: LOCAL | COUNTY: MILWAUKEE | INTERSECTION DETAIL | SCALE FEET | SHEET NO: 28 | E |
|---|---|---|---|---|---|---|

FILE NAME: F:\BM1-3393 N 27th St Milwaukee\5_Design\03_Roads\cds\h1021104_id.dgn PLOT DATE : 19-APR-2016 13:46 PLOT BY : scook PLOT NAME : h1021104_id PLOT SCALE : 10.000000:1.000000

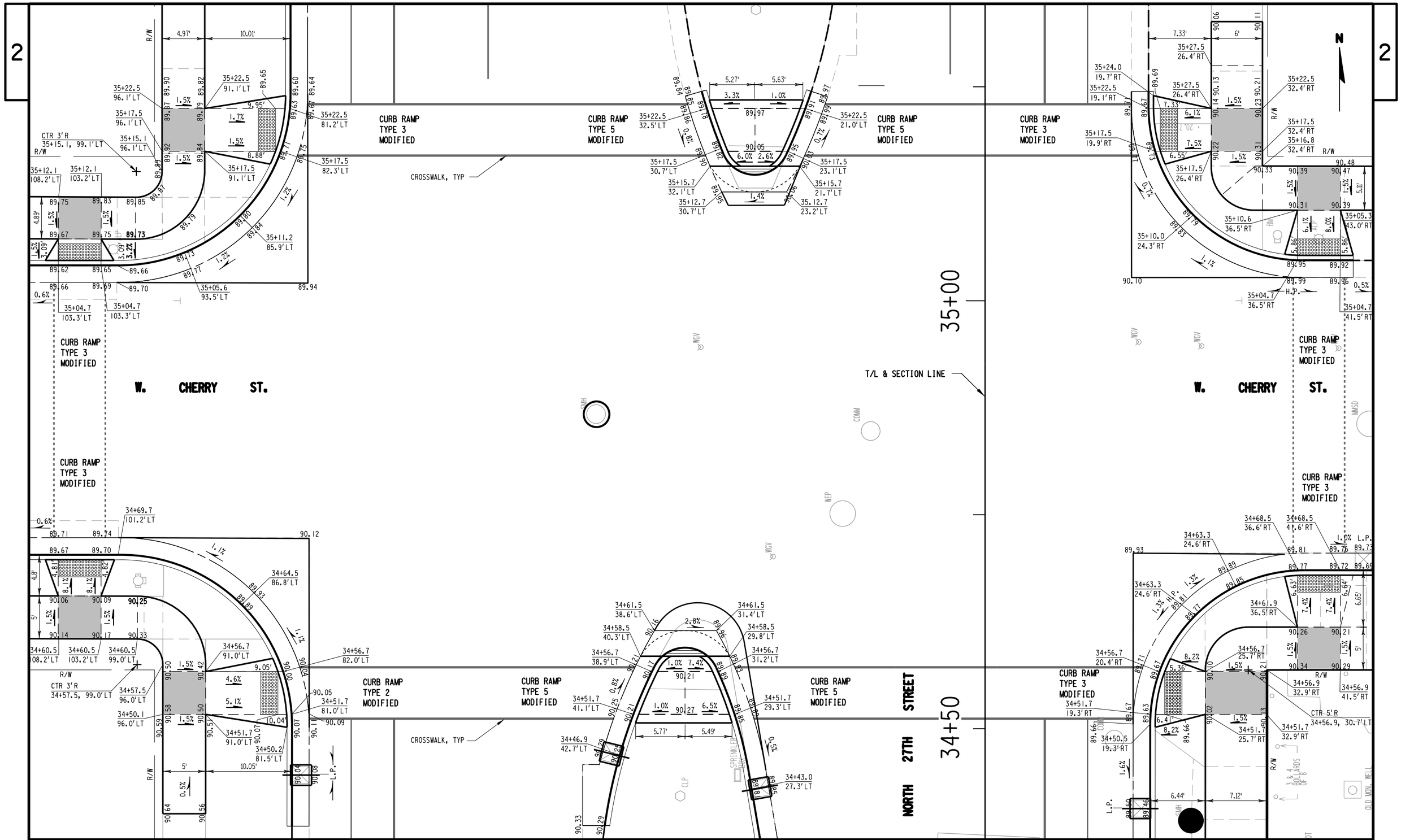


| STATE PROJECT NUMBER 2265-00-74 | HWY: LOCAL | COUNTY: MILWAUKEE | INTERSECTION DETAIL | SCALE FEET | SHEET NO: 29 | E |
|---|---|---|---|---|---|---|

FILE NAME: F:\BM1-3393 N 27th St Milwaukee\5_Design\03_Roads\cds\h1021105_id.dgn PLOT DATE : 19-APR-2016 13:46 PLOT BY : scook PLOT NAME : h1021105_id PLOT SCALE : 10.000000:1.000000

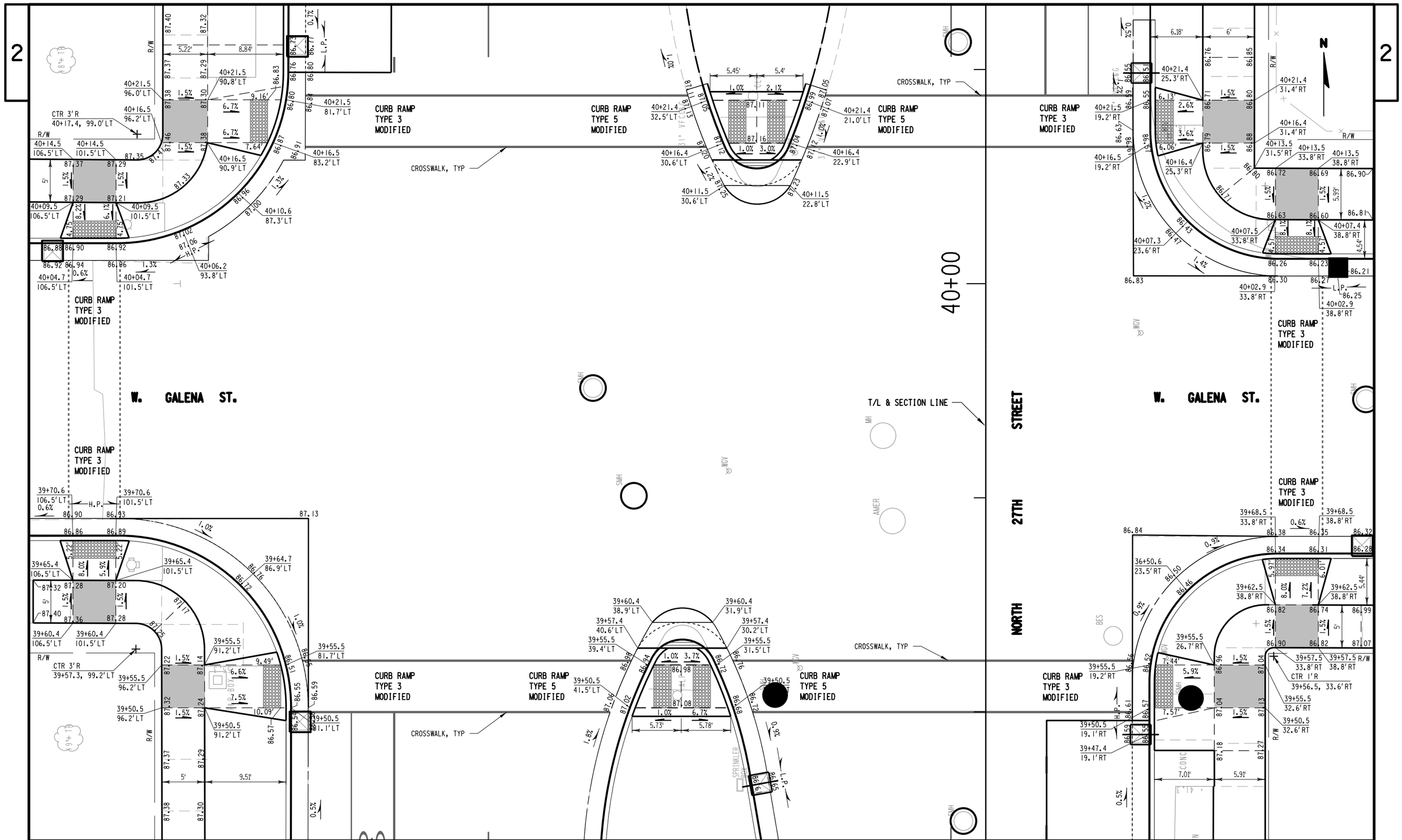


| STATE PROJECT NUMBER 2265-00-74 | HWY: LOCAL | COUNTY: MILWAUKEE | INTERSECTION DETAIL | SCALE FEET | SHEET NO: | E |
|---|---|---|---|---|---|---|

FILE NAME: F:\BM1-3393 N 27th St Milwaukee\5_Design\03_Roads\cds\h1021106_id.dgn PLOT DATE : 19-APR-2016 13:46 PLOT BY : scook PLOT NAME : h1021106_id PLOT SCALE : 10.000000:1.000000

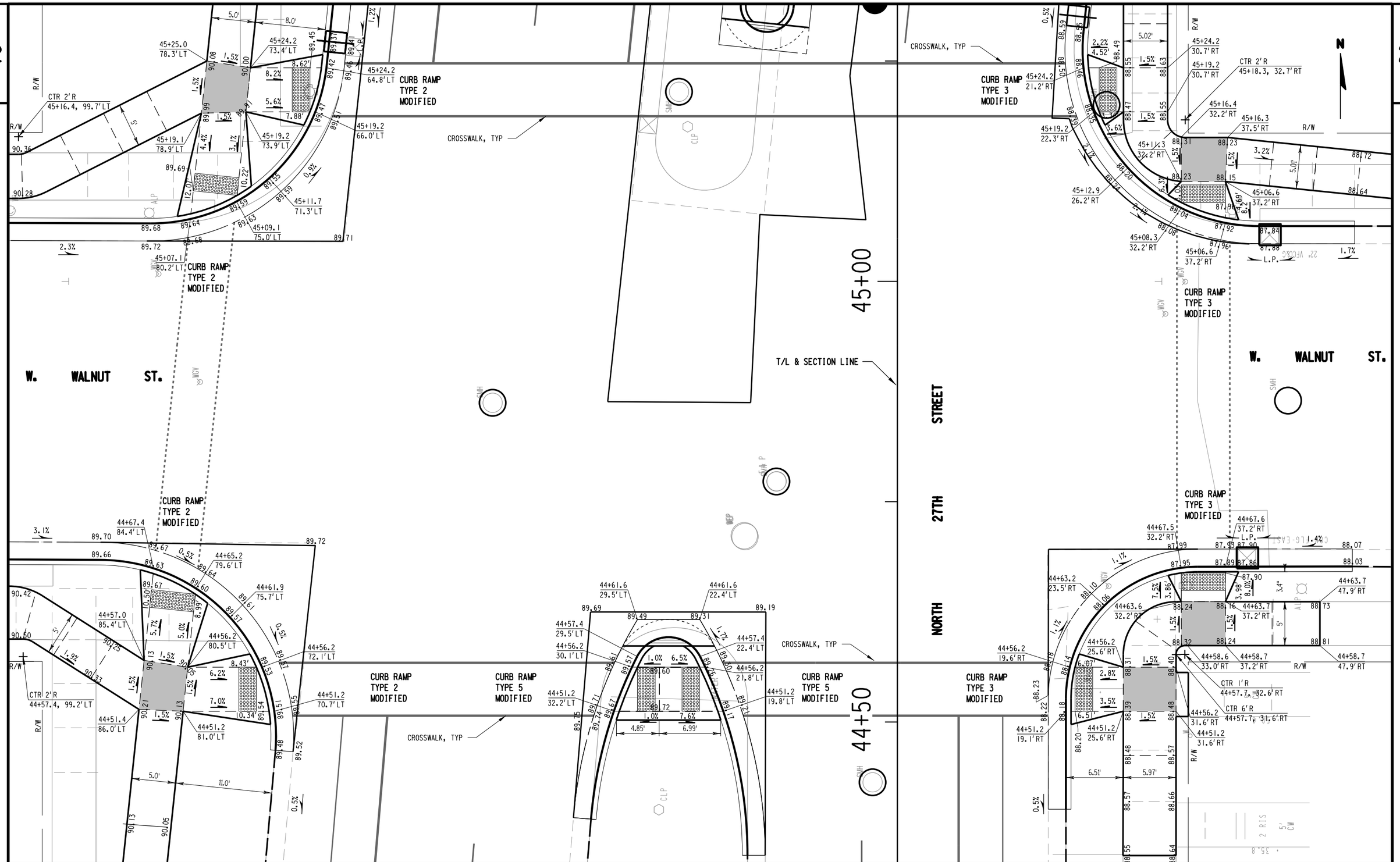


| STATE PROJECT NUMBER | HWY: | COUNTY: | INTERSECTION DETAIL | SCALE | SHEET NO: | |
|---|---|---|---|---|---|---|
| 2265-00-74 | LOCAL | MILWAUKEE | | FEET | 31 | E |

FILE NAME: F:\BM1-3393 N 27th St Milwaukee\5_Design\03_Roads\cds\hl021107_id.dgn PLOT DATE : 19-APR-2016 13:46 PLOT BY : scook PLOT NAME : hl021107_id PLOT SCALE : 10.000000:1.000000

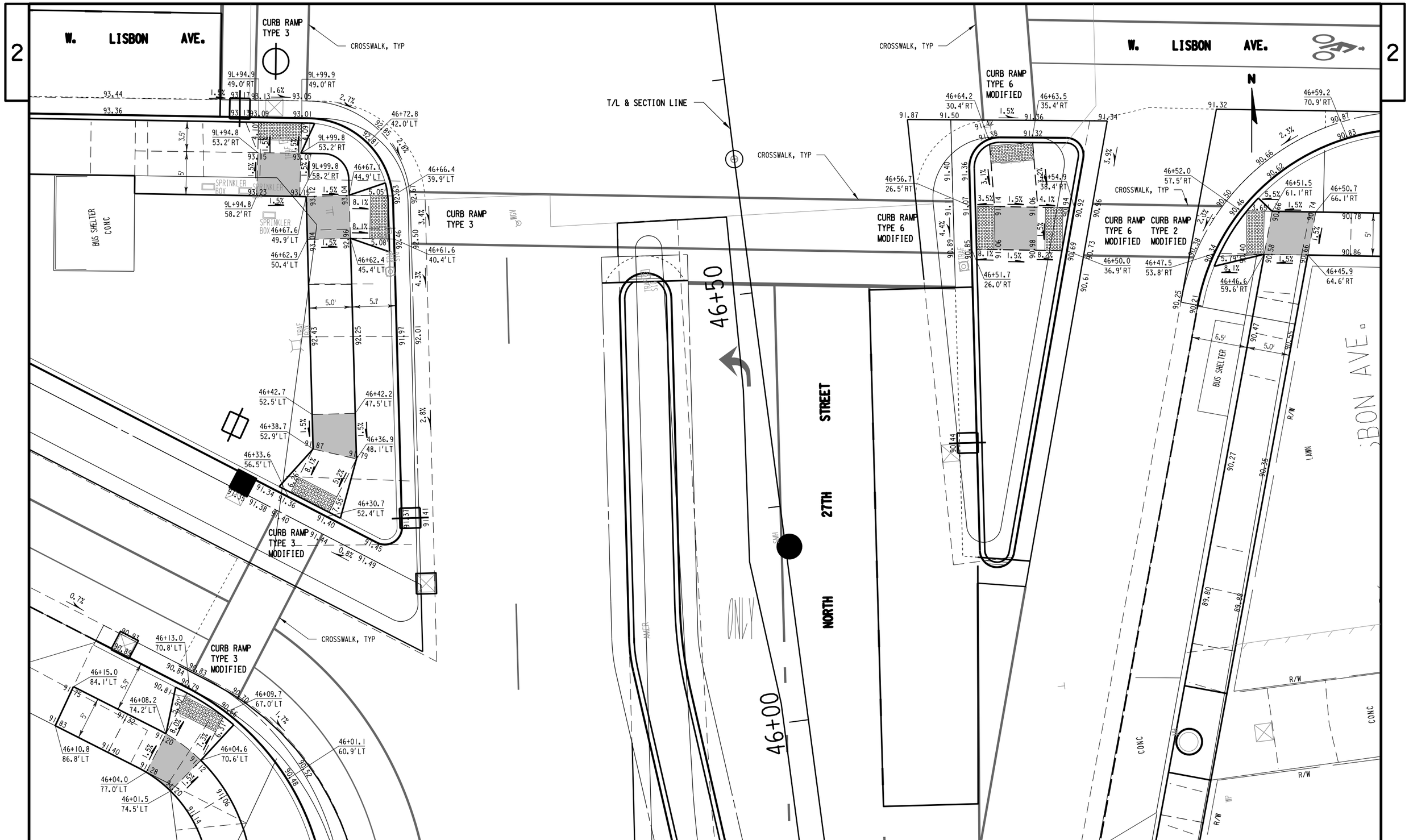


| STATE PROJECT NUMBER 2265-00-74 | HWY: LOCAL | COUNTY: MILWAUKEE | INTERSECTION DETAIL | SCALE FEET | SHEET NO: 32 | E |
|---|---|---|---|---|---|---|

FILE NAME: F:\BM1-3393 N 27th St Milwaukee\5_Design\03_Roads\cds\h1021108_id.dgn PLOT DATE : 19-APR-2016 13:46 PLOT BY : scook PLOT NAME : h1021108_id PLOT SCALE : 10.000000:1.000000

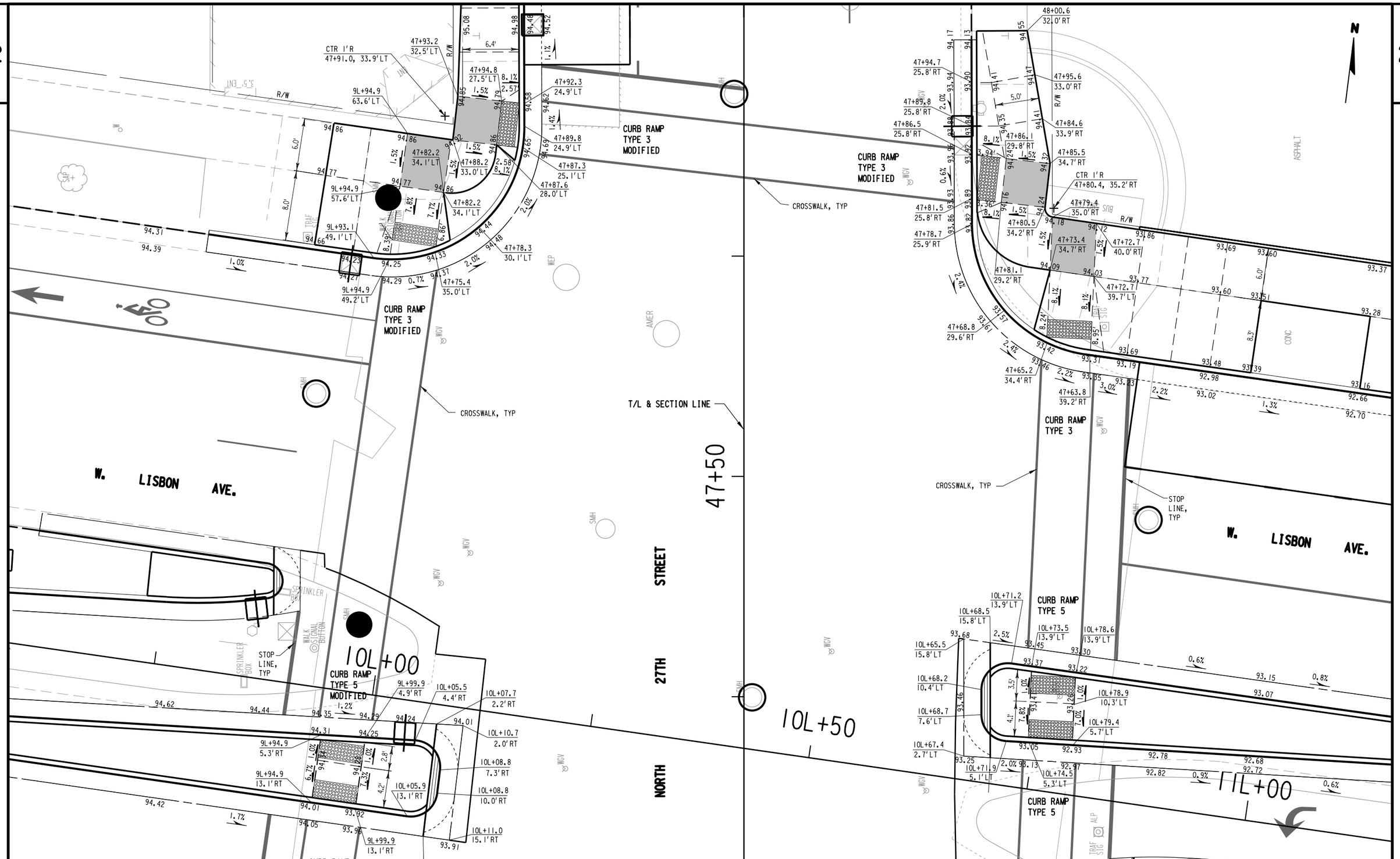


| STATE PROJECT NUMBER 2265-00-74 | HWY: LOCAL | COUNTY: MILWAUKEE | INTERSECTION DETAIL | SCALE FEET | SHEET NO: 33 | E |
|---|---|---|---|---|---|---|

FILE NAME: F:\BM1-3393 N 27th St Milwaukee\5_Design\03_Roads\cds\h1021109_id.dgn PLOT DATE : 19-APR-2016 13:46 PLOT BY : scook PLOT NAME : h1021109_id PLOT SCALE : 10.000000:1.000000

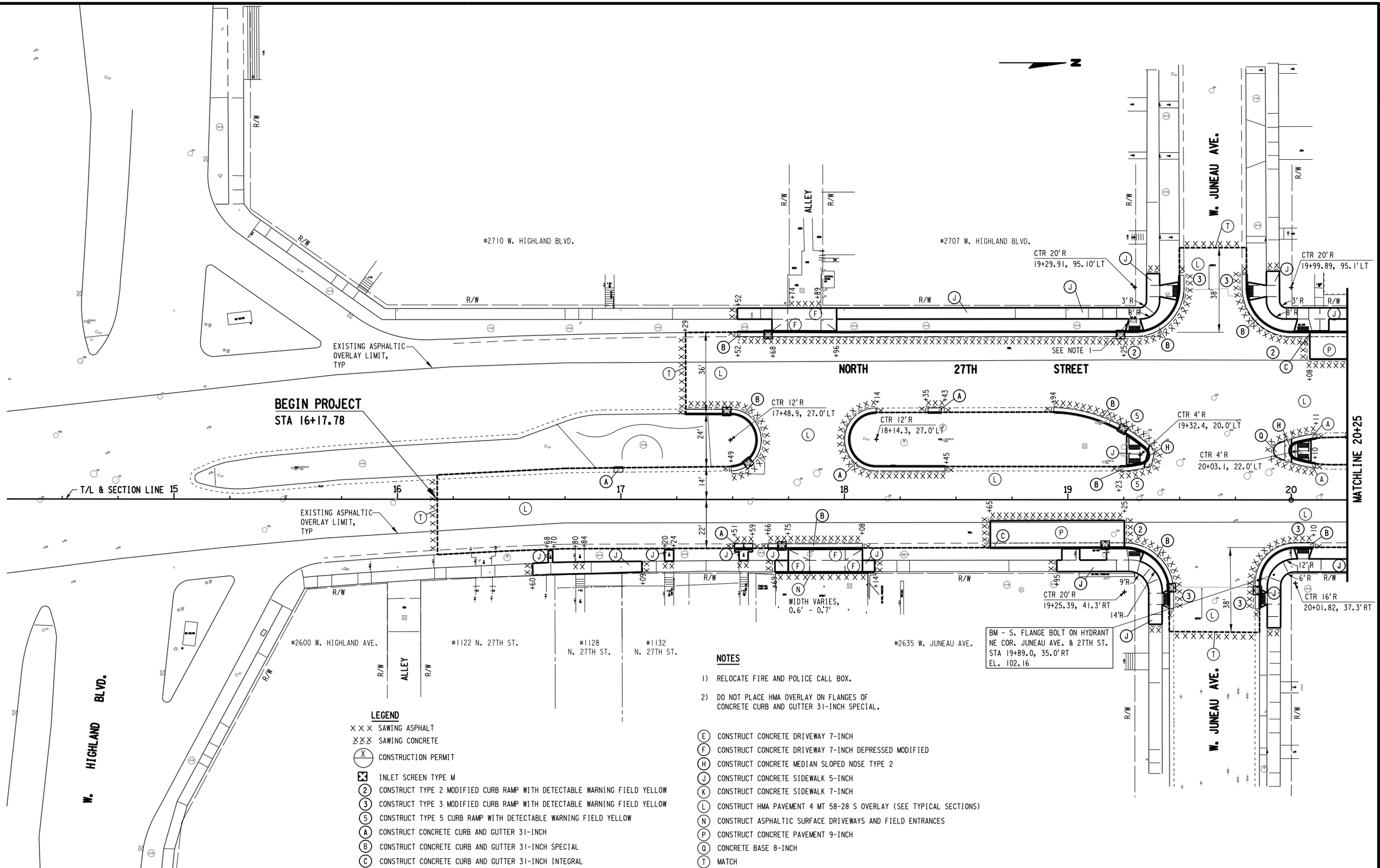


**NOTES**

1) RELOCATE FIRE AND POLICE CALL BOX.

2) DO NOT PLACE HMA OVERLAY ON FLANGES OF CONCRETE CURB AND GUTTER 31-INCH SPECIAL.

**LEGEND**

- XXX SAWING ASPHALT
- XXX SAWING CONCRETE
- (X) CONSTRUCTION PERMIT
- INLET SCREEN TYPE M
- (2) CONSTRUCT TYPE 2 MODIFIED CURB RAMP WITH DETECTABLE WARNING FIELD YELLOW
- (3) CONSTRUCT TYPE 3 MODIFIED CURB RAMP WITH DETECTABLE WARNING FIELD YELLOW
- (5) CONSTRUCT TYPE 5 CURB RAMP WITH DETECTABLE WARNING FIELD YELLOW
- (A) CONSTRUCT CONCRETE CURB AND GUTTER 31-INCH
- (B) CONSTRUCT CONCRETE CURB AND GUTTER 31-INCH SPECIAL
- (C) CONSTRUCT CONCRETE CURB AND GUTTER 31-INCH INTEGRAL
- (E) CONSTRUCT CONCRETE DRIVEWAY 7-INCH
- (F) CONSTRUCT CONCRETE DRIVEWAY 7-INCH DEPRESSED MODIFIED
- (H) CONSTRUCT CONCRETE MEDIAN SLOPED NOSE TYPE 2
- (J) CONSTRUCT CONCRETE SIDEWALK 5-INCH
- (K) CONSTRUCT CONCRETE SIDEWALK 7-INCH
- (L) CONSTRUCT HMA PAVEMENT 4 MT 58-28 S OVERLAY (SEE TYPICAL SECTIONS)
- (N) CONSTRUCT ASPHALTIC SURFACE DRIVEWAYS AND FIELD ENTRANCES
- (P) CONSTRUCT CONCRETE PAVEMENT 9-INCH
- (Q) CONCRETE BASE 8-INCH
- (T) MATCH

| STATE PROJECT NUMBER 2265-00-74 | HWY: LOCAL | COUNTY: MILWAUKEE | PLAN DETAILS | SCALE FEET 0' 40' | SHEET NO: 34 | E |
|---|---|---|---|---|---|---|

FILE NAME: F:\BM1-3393 N 27th St Milwaukee\5_Design\03_Roads\cds\h1021201_pd.dgn PLOT DATE : 19-APR-2016 16:05 PLOT BY : scook PLOT NAME : h1021201_pd PLOT SCALE : 40.000000:1.000000

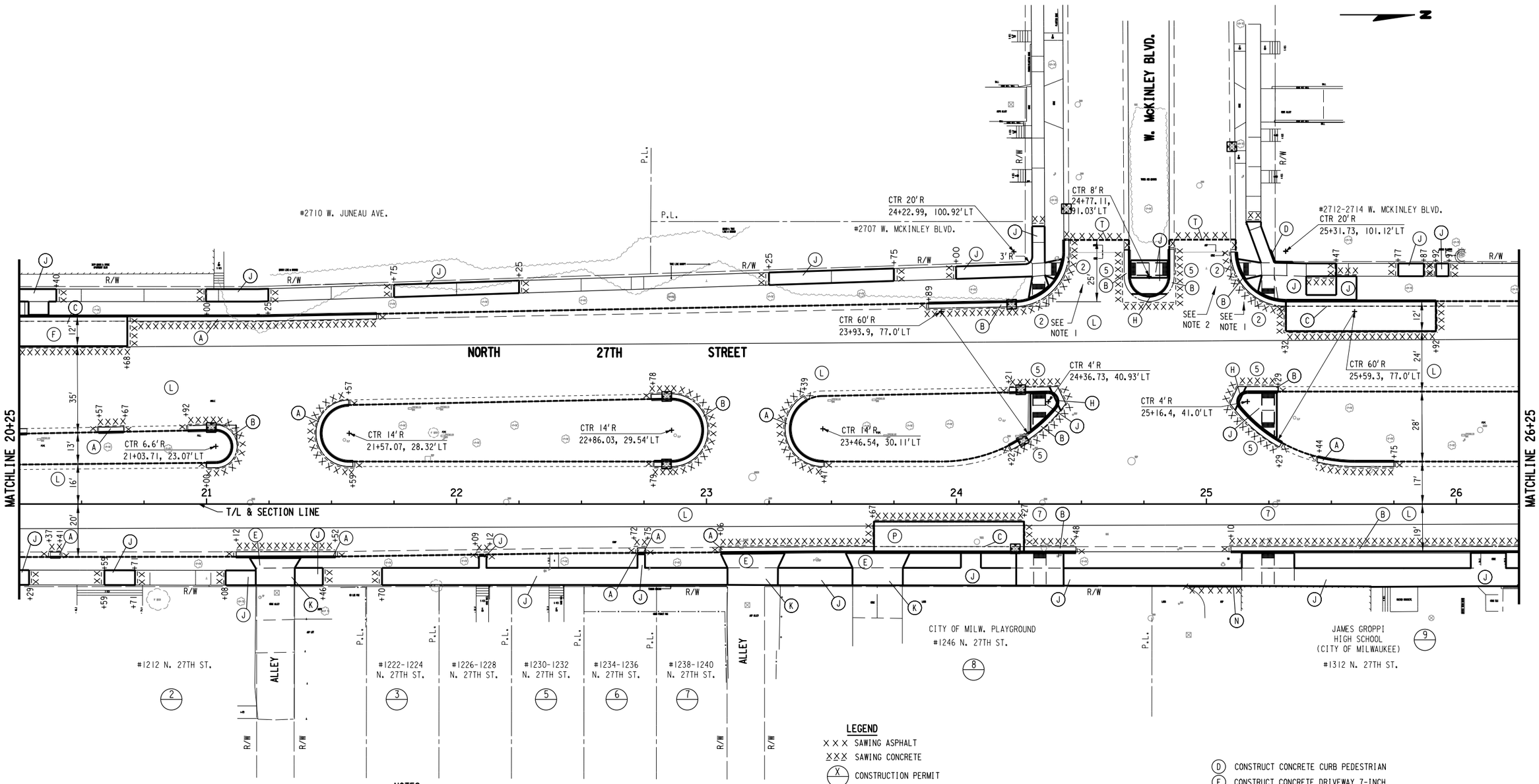


## NOTES

1) SIDE STREET AREA AT W. MCKINLEY BLVD. REQUIRES REMOVING PAVEMENT BUTT JOINTS TO ALLOW CONSTRUCTION OF THE HMA OVERLAY.

2) RECONSTRUCT THE BASE PATCHING CONCRETE AT W. MCKINLEY BLVD. 2" LOWER TO ALLOW CONSTRUCTION OF THE HMA OVERLAY.

3) DO NOT PLACE HMA OVERLAY ON FLANGES OF CONCRETE CURB AND GUTTER 31-INCH SPECIAL.

## LEGEND

- XXX SAWING ASPHALT
- XXX SAWING CONCRETE
- (X) CONSTRUCTION PERMIT
- INLET SCREEN TYPE M
- (2) CONSTRUCT TYPE 2 MODIFIED CURB RAMP WITH DETECTABLE WARNING FIELD YELLOW
- (5) CONSTRUCT TYPE 5 CURB RAMP WITH DETECTABLE WARNING FIELD YELLOW
- (7) CONSTRUCT TYPE 7 MODIFIED CURB RAMP WITH DETECTABLE WARNING FIELD YELLOW
- (A) CONSTRUCT CONCRETE CURB AND GUTTER 31-INCH
- (B) CONSTRUCT CONCRETE CURB AND GUTTER 31-INCH SPECIAL
- (C) CONSTRUCT CONCRETE CURB AND GUTTER 31-INCH INTEGRAL
- (D) CONSTRUCT CONCRETE CURB PEDESTRIAN
- (E) CONSTRUCT CONCRETE DRIVEWAY 7-INCH
- (H) CONSTRUCT CONCRETE MEDIAN SLOPED NOSE TYPE 2
- (J) CONSTRUCT CONCRETE SIDEWALK 5-INCH
- (K) CONSTRUCT CONCRETE SIDEWALK 7-INCH
- (L) CONSTRUCT HMA PAVEMENT 4 MT 58-28 S OVERLAY (SEE TYPICAL SECTIONS)
- (N) CONSTRUCT ASPHALTIC SURFACE DRIVEWAYS AND FIELD ENTRANCES
- (P) CONSTRUCT CONCRETE PAVEMENT 9-INCH
- (T) MATCH

| STATE PROJECT NUMBER 2265-00-74 | HWY: LOCAL | COUNTY: MILWAUKEE | PLAN DETAILS | SCALE FEET 0 40 | SHEET NO: 35 | E |
|---|---|---|---|---|---|---|

| RADIUS TABLE (CENTER OF RADIUS) | | | |
|---|---|---|---|
| CODE | STATION | OFFSET | RADIUS |
| 1 | 29+23.06 | 19.0' LT | 2.0' |
| 3 | 29+47.98 | 19.0' LT | 2.0' |
| 4 | 29+47.98 | 21.5' LT | 2.0' |
| 6 | 30+04.62 | 43.0' LT | 2.0' |
| 7 | 30+04.62 | 40.5' LT | 2.0' |
| 8 | 30+29.54 | 43.0' LT | 2.0' |

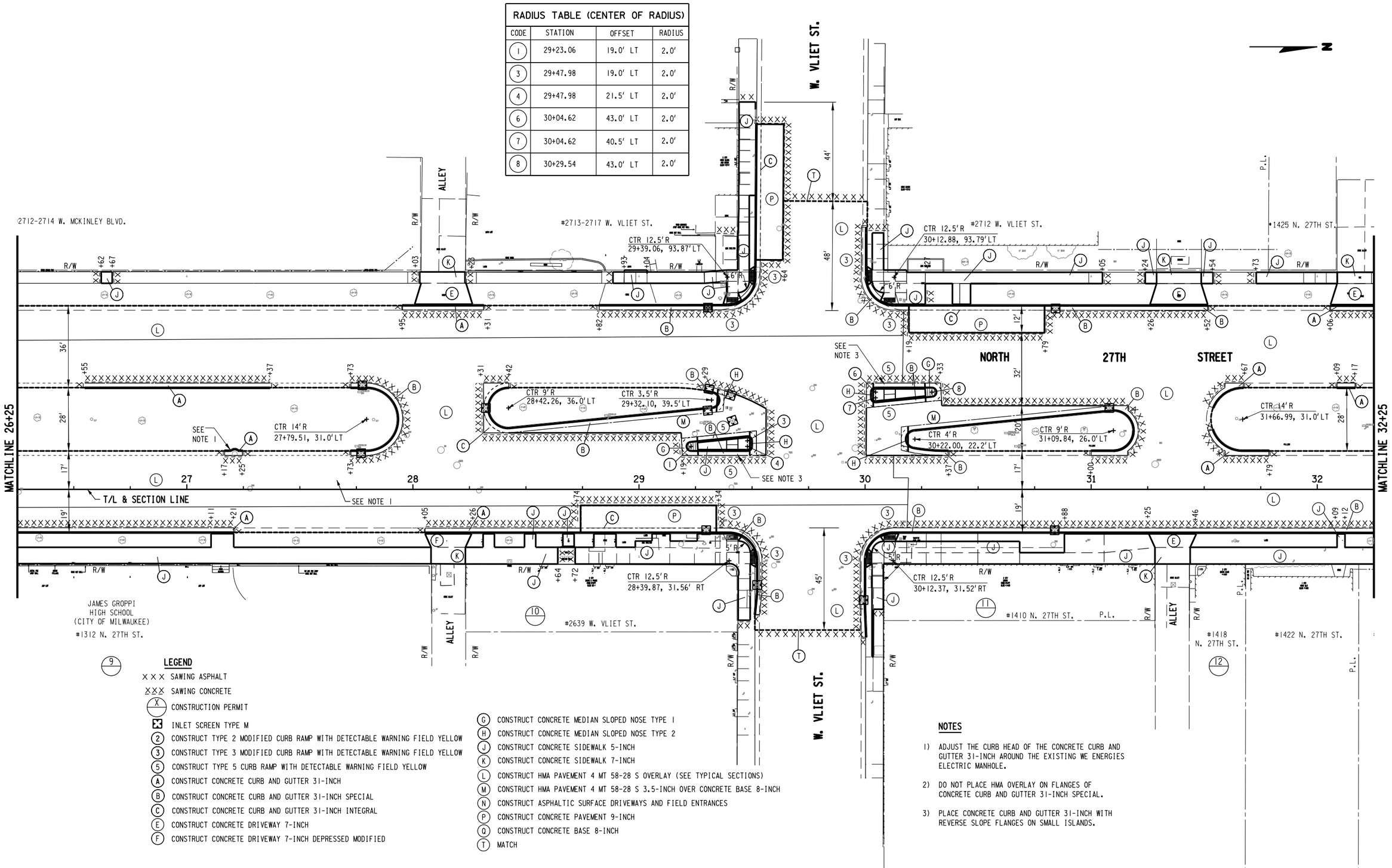


**LEGEND**

- XXX SAWING ASPHALT
- XXX SAWING CONCRETE
- (X) CONSTRUCTION PERMIT
- INLET SCREEN TYPE M
- (2) CONSTRUCT TYPE 2 MODIFIED CURB RAMP WITH DETECTABLE WARNING FIELD YELLOW
- (3) CONSTRUCT TYPE 3 MODIFIED CURB RAMP WITH DETECTABLE WARNING FIELD YELLOW
- (5) CONSTRUCT TYPE 5 CURB RAMP WITH DETECTABLE WARNING FIELD YELLOW
- (A) CONSTRUCT CONCRETE CURB AND GUTTER 31-INCH
- (B) CONSTRUCT CONCRETE CURB AND GUTTER 31-INCH SPECIAL
- (C) CONSTRUCT CONCRETE CURB AND GUTTER 31-INCH INTEGRAL
- (E) CONSTRUCT CONCRETE DRIVEWAY 7-INCH
- (F) CONSTRUCT CONCRETE DRIVEWAY 7-INCH DEPRESSED MODIFIED
- (G) CONSTRUCT CONCRETE MEDIAN SLOPED NOSE TYPE 1
- (H) CONSTRUCT CONCRETE MEDIAN SLOPED NOSE TYPE 2
- (J) CONSTRUCT CONCRETE SIDEWALK 5-INCH
- (K) CONSTRUCT CONCRETE SIDEWALK 7-INCH
- (L) CONSTRUCT HMA PAVEMENT 4 MT 58-28 S OVERLAY (SEE TYPICAL SECTIONS)
- (M) CONSTRUCT HMA PAVEMENT 4 MT 58-28 S 3.5-INCH OVER CONCRETE BASE 8-INCH
- (N) CONSTRUCT ASPHALTIC SURFACE DRIVEWAYS AND FIELD ENTRANCES
- (P) CONSTRUCT CONCRETE PAVEMENT 9-INCH
- (Q) CONSTRUCT CONCRETE BASE 8-INCH
- (T) MATCH

**NOTES**

1) ADJUST THE CURB HEAD OF THE CONCRETE CURB AND GUTTER 31-INCH AROUND THE EXISTING WE ENERGIES ELECTRIC MANHOLE.

2) DO NOT PLACE HMA OVERLAY ON FLANGES OF CONCRETE CURB AND GUTTER 31-INCH SPECIAL.

3) PLACE CONCRETE CURB AND GUTTER 31-INCH WITH REVERSE SLOPE FLANGES ON SMALL ISLANDS.

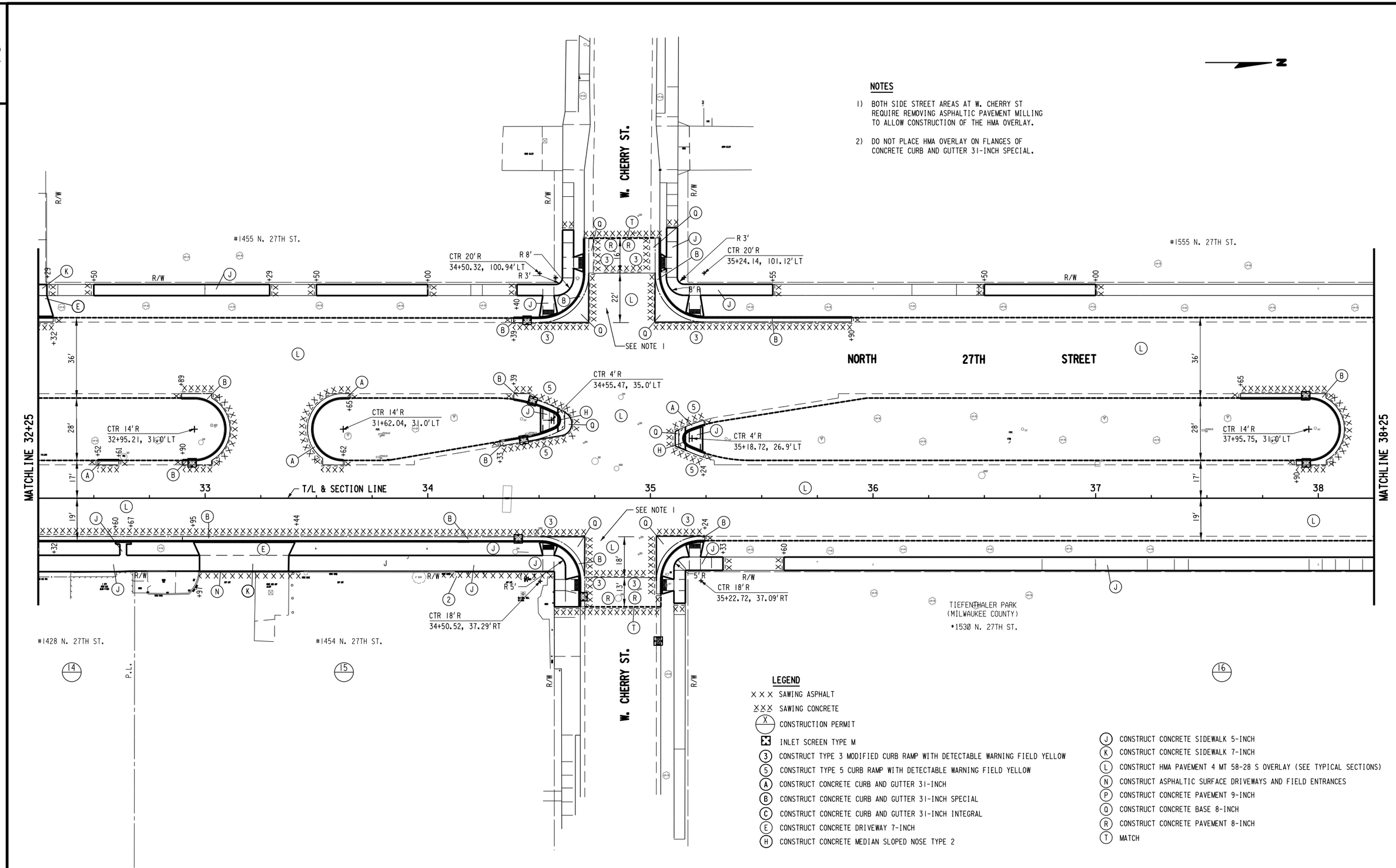


## NOTES

1) BOTH SIDE STREET AREAS AT W. CHERRY ST REQUIRE REMOVING ASPHALTIC PAVEMENT MILLING TO ALLOW CONSTRUCTION OF THE HMA OVERLAY.

2) DO NOT PLACE HMA OVERLAY ON FLANGES OF CONCRETE CURB AND GUTTER 31-INCH SPECIAL.

## LEGEND

- X X X SAWING ASPHALT
- X X X SAWING CONCRETE
- (X) CONSTRUCTION PERMIT
- INLET SCREEN TYPE M
- (3) CONSTRUCT TYPE 3 MODIFIED CURB RAMP WITH DETECTABLE WARNING FIELD YELLOW
- (5) CONSTRUCT TYPE 5 CURB RAMP WITH DETECTABLE WARNING FIELD YELLOW
- (A) CONSTRUCT CONCRETE CURB AND GUTTER 31-INCH
- (B) CONSTRUCT CONCRETE CURB AND GUTTER 31-INCH SPECIAL
- (C) CONSTRUCT CONCRETE CURB AND GUTTER 31-INCH INTEGRAL
- (E) CONSTRUCT CONCRETE DRIVEWAY 7-INCH
- (H) CONSTRUCT CONCRETE MEDIAN SLOPED NOSE TYPE 2
- (J) CONSTRUCT CONCRETE SIDEWALK 5-INCH
- (K) CONSTRUCT CONCRETE SIDEWALK 7-INCH
- (L) CONSTRUCT HMA PAVEMENT 4 MT 58-28 S OVERLAY (SEE TYPICAL SECTIONS)
- (N) CONSTRUCT ASPHALTIC SURFACE DRIVEWAYS AND FIELD ENTRANCES
- (P) CONSTRUCT CONCRETE PAVEMENT 9-INCH
- (Q) CONSTRUCT CONCRETE BASE 8-INCH
- (R) CONSTRUCT CONCRETE PAVEMENT 8-INCH
- (T) MATCH

| STATE PROJECT NUMBER 2265-00-74 | HWY: LOCAL | COUNTY: MILWAUKEE | SCALE FEET 0' 40' | SHEET NO: 37 | E |
|---|---|---|---|---|---|

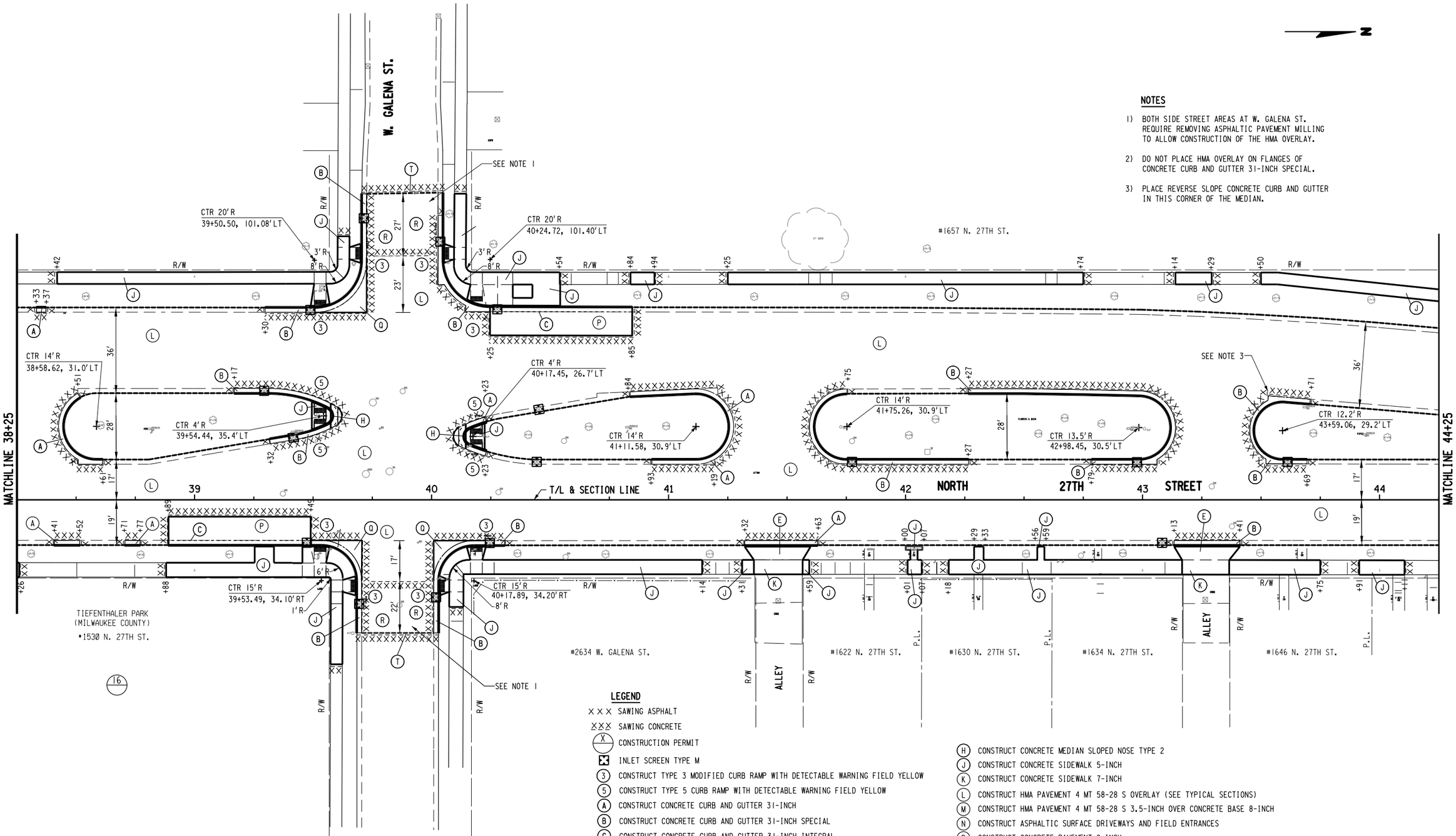


**NOTES**

1) BOTH SIDE STREET AREAS AT W. GALENA ST. REQUIRE REMOVING ASPHALTIC PAVEMENT MILLING TO ALLOW CONSTRUCTION OF THE HMA OVERLAY.

2) DO NOT PLACE HMA OVERLAY ON FLANGES OF CONCRETE CURB AND GUTTER 31-INCH SPECIAL.

3) PLACE REVERSE SLOPE CONCRETE CURB AND GUTTER IN THIS CORNER OF THE MEDIAN.

**LEGEND**

- XXX SAWING ASPHALT
- XXX SAWING CONCRETE
- (X) CONSTRUCTION PERMIT
- INLET SCREEN TYPE M
- (3) CONSTRUCT TYPE 3 MODIFIED CURB RAMP WITH DETECTABLE WARNING FIELD YELLOW
- (5) CONSTRUCT TYPE 5 CURB RAMP WITH DETECTABLE WARNING FIELD YELLOW
- (A) CONSTRUCT CONCRETE CURB AND GUTTER 31-INCH
- (B) CONSTRUCT CONCRETE CURB AND GUTTER 31-INCH SPECIAL
- (C) CONSTRUCT CONCRETE CURB AND GUTTER 31-INCH INTEGRAL
- (E) CONSTRUCT CONCRETE DRIVEWAY 7-INCH
- (F) CONSTRUCT CONCRETE DRIVEWAY 7-INCH DEPRESSED MODIFIED
- (G) CONSTRUCT CONCRETE MEDIAN SLOPED NOSE TYPE 1
- (H) CONSTRUCT CONCRETE MEDIAN SLOPED NOSE TYPE 2
- (J) CONSTRUCT CONCRETE SIDEWALK 5-INCH
- (K) CONSTRUCT CONCRETE SIDEWALK 7-INCH
- (L) CONSTRUCT HMA PAVEMENT 4 MT 58-28 S OVERLAY (SEE TYPICAL SECTIONS)
- (M) CONSTRUCT HMA PAVEMENT 4 MT 58-28 S 3.5-INCH OVER CONCRETE BASE 8-INCH
- (N) CONSTRUCT ASPHALTIC SURFACE DRIVEWAYS AND FIELD ENTRANCES
- (P) CONSTRUCT CONCRETE PAVEMENT 9-INCH
- (Q) CONSTRUCT CONCRETE BASE 8-INCH
- (R) CONSTRUCT CONCRETE PAVEMENT 8-INCH
- (T) MATCH

| STATE PROJECT NUMBER 2265-00-74 | HWY: LOCAL | COUNTY: MILWAUKEE | SCALE FEET 0 40 | SHEET NO: 38 | E |
|---|---|---|---|---|---|

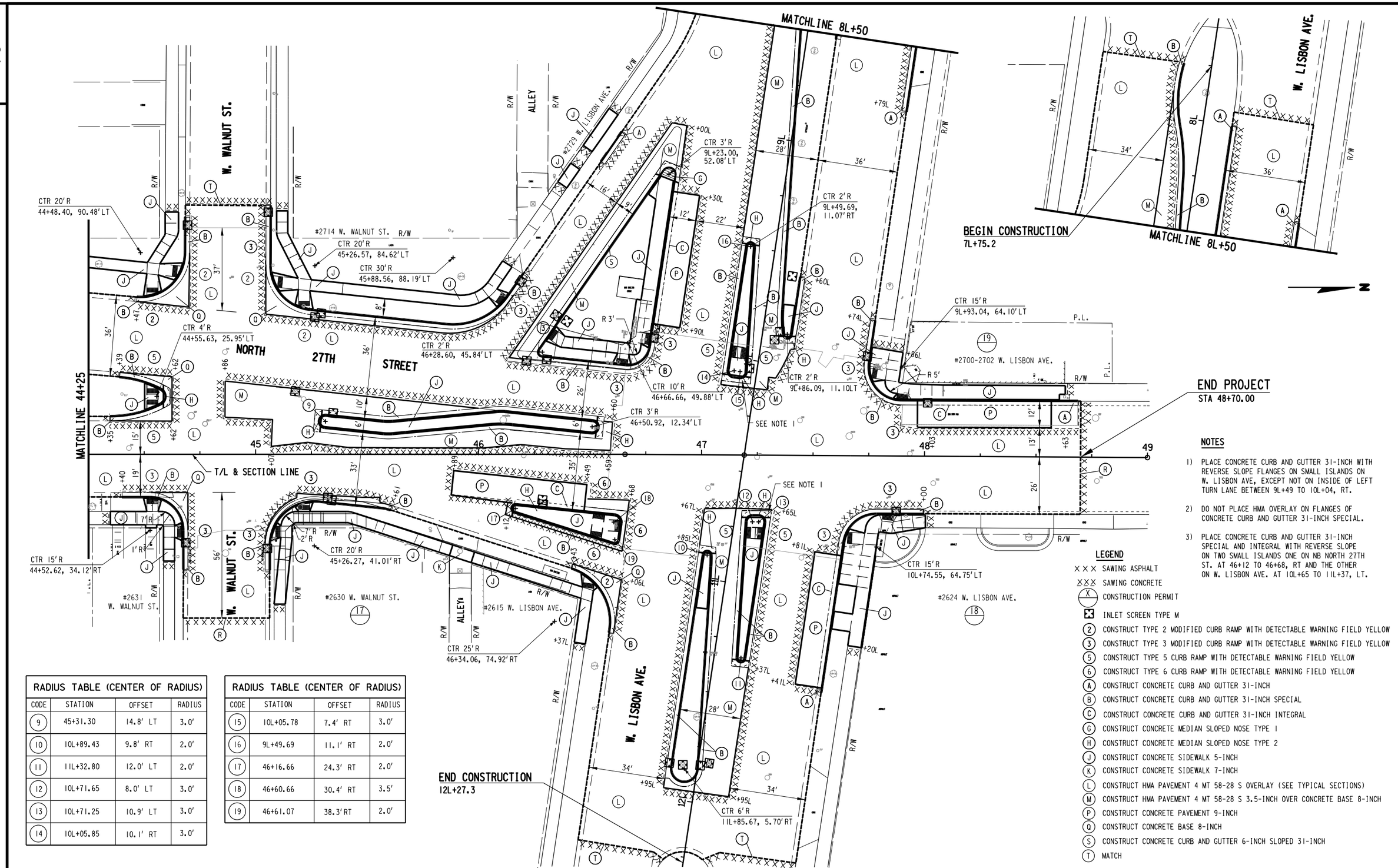


| RADIUS TABLE (CENTER OF RADIUS) | | | |
|---|---|---|---|
| CODE | STATION | OFFSET | RADIUS |
| 9 | 45+31.30 | 14.8' LT | 3.0' |
| 10 | 10L+89.43 | 9.8' RT | 2.0' |
| 11 | 11L+32.80 | 12.0' LT | 2.0' |
| 12 | 10L+71.65 | 8.0' LT | 3.0' |
| 13 | 10L+71.25 | 10.9' LT | 3.0' |
| 14 | 10L+05.85 | 10.1' RT | 3.0' |

| RADIUS TABLE (CENTER OF RADIUS) | | | |
|---|---|---|---|
| CODE | STATION | OFFSET | RADIUS |
| 15 | 10L+05.78 | 7.4' RT | 3.0' |
| 16 | 9L+49.69 | 11.1' RT | 2.0' |
| 17 | 46+16.66 | 24.3' RT | 2.0' |
| 18 | 46+60.66 | 30.4' RT | 3.5' |
| 19 | 46+61.07 | 38.3' RT | 2.0' |

## NOTES

1) PLACE CONCRETE CURB AND GUTTER 31-INCH WITH REVERSE SLOPE FLANGES ON SMALL ISLANDS ON W. LISBON AVE, EXCEPT NOT ON INSIDE OF LEFT TURN LANE BETWEEN 9L+49 TO 10L+04, RT.

2) DO NOT PLACE HMA OVERLAY ON FLANGES OF CONCRETE CURB AND GUTTER 31-INCH SPECIAL.

3) PLACE CONCRETE CURB AND GUTTER 31-INCH SPECIAL AND INTEGRAL WITH REVERSE SLOPE ON TWO SMALL ISLANDS ONE ON NB NORTH 27TH ST. AT 46+12 TO 46+68, RT AND THE OTHER ON W. LISBON AVE. AT 10L+65 TO 11L+37, LT.

## LEGEND

- XXX SAWING ASPHALT
- XXX SAWING CONCRETE
- (X) CONSTRUCTION PERMIT
- INLET SCREEN TYPE M
- (2) CONSTRUCT TYPE 2 MODIFIED CURB RAMP WITH DETECTABLE WARNING FIELD YELLOW
- (3) CONSTRUCT TYPE 3 MODIFIED CURB RAMP WITH DETECTABLE WARNING FIELD YELLOW
- (5) CONSTRUCT TYPE 5 CURB RAMP WITH DETECTABLE WARNING FIELD YELLOW
- (6) CONSTRUCT TYPE 6 CURB RAMP WITH DETECTABLE WARNING FIELD YELLOW
- (A) CONSTRUCT CONCRETE CURB AND GUTTER 31-INCH
- (B) CONSTRUCT CONCRETE CURB AND GUTTER 31-INCH SPECIAL
- (C) CONSTRUCT CONCRETE CURB AND GUTTER 31-INCH INTEGRAL
- (G) CONSTRUCT CONCRETE MEDIAN SLOPED NOSE TYPE 1
- (H) CONSTRUCT CONCRETE MEDIAN SLOPED NOSE TYPE 2
- (J) CONSTRUCT CONCRETE SIDEWALK 5-INCH
- (K) CONSTRUCT CONCRETE SIDEWALK 7-INCH
- (L) CONSTRUCT HMA PAVEMENT 4 MT 58-28 S OVERLAY (SEE TYPICAL SECTIONS)
- (M) CONSTRUCT HMA PAVEMENT 4 MT 58-28 S 3.5-INCH OVER CONCRETE BASE 8-INCH
- (P) CONSTRUCT CONCRETE PAVEMENT 9-INCH
- (Q) CONSTRUCT CONCRETE BASE 8-INCH
- (S) CONSTRUCT CONCRETE CURB AND GUTTER 6-INCH SLOPED 31-INCH
- (T) MATCH

| STATE PROJECT NUMBER 2265-00-74 | HWY: LOCAL | COUNTY: MILWAUKEE | SCALE FEET 0 40 | SHEET NO: 39 | E |
|---|---|---|---|---|---|

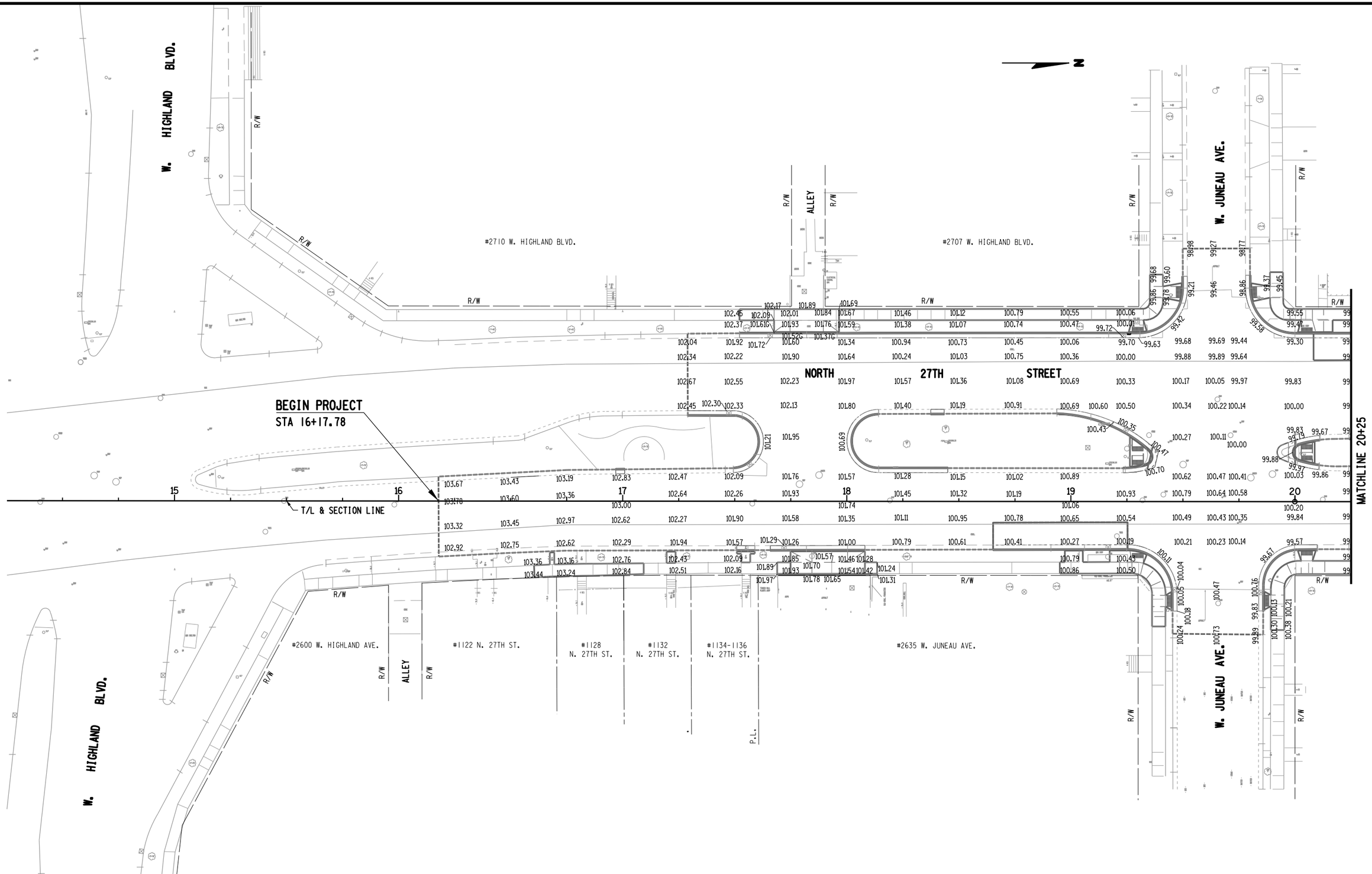
W. HIGHLAND BLVD.
W. JUNEAU AVE.
NORTH 27TH STREET
ALLEY
#2710 W. HIGHLAND BLVD.
#2707 W. HIGHLAND BLVD.
#2600 W. HIGHLAND AVE.
#1122 N. 27TH ST.
#1128 N. 27TH ST.
#1132 N. 27TH ST.
#1134-1136 N. 27TH ST.
#2635 W. JUNEAU AVE.
BEGIN PROJECT
STA 16+17.78
T/L & SECTION LINE
MATCHLINE 20+25
R/W
P.L.
N

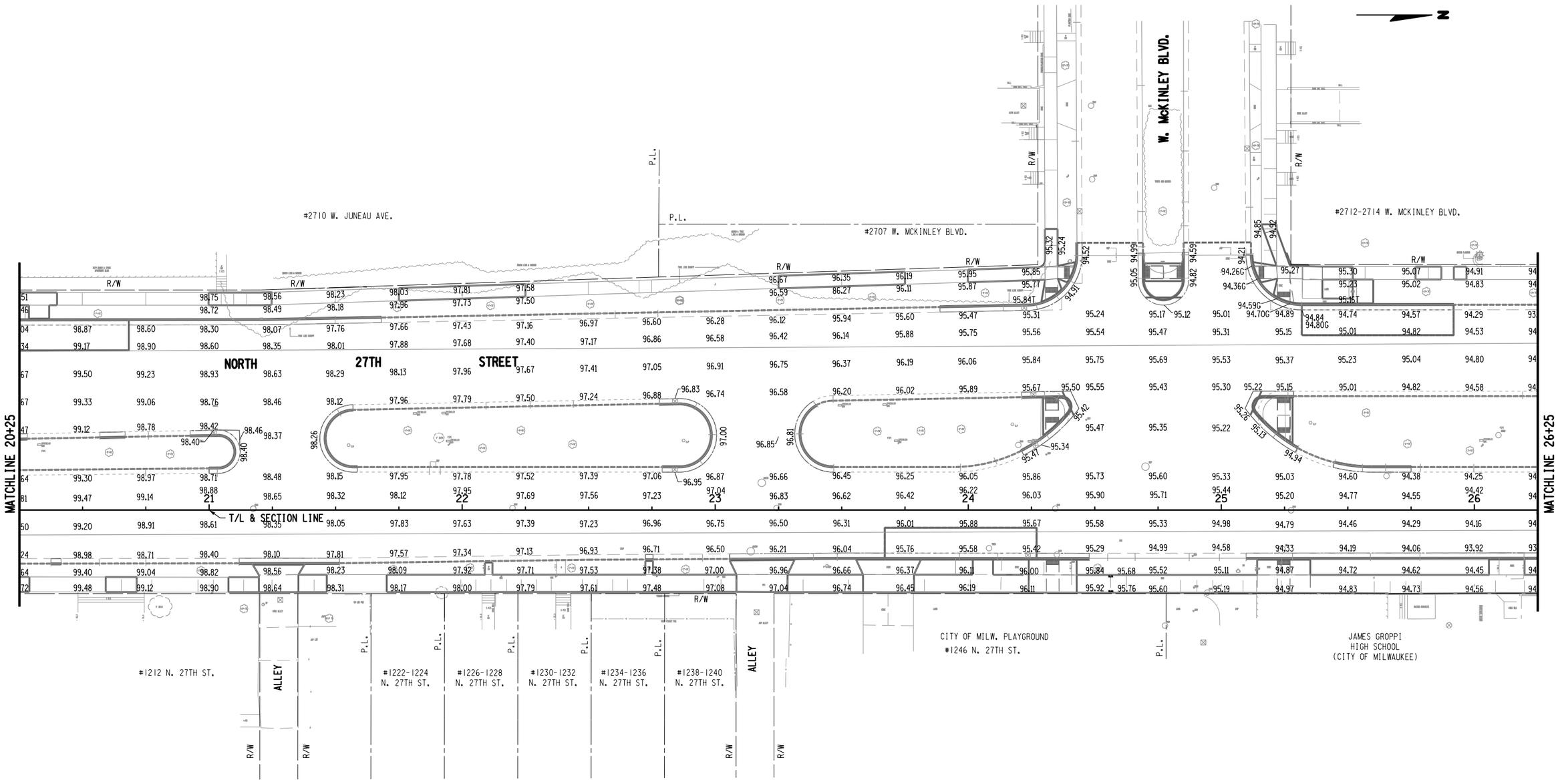
#2710 W. JUNEAU AVE.
#2707 W. MCKINLEY BLVD.
#2712-2714 W. MCKINLEY BLVD.
W. MCKINLEY BLVD.
NORTH 27TH STREET
MATCHLINE 20+25
MATCHLINE 26+25
T/L & SECTION LINE
21
22
23
24
25
26
P.L.
R/W
ALLEY
#1212 N. 27TH ST.
#1222-1224 N. 27TH ST.
#1226-1228 N. 27TH ST.
#1230-1232 N. 27TH ST.
#1234-1236 N. 27TH ST.
#1238-1240 N. 27TH ST.
CITY OF MILW. PLAYGROUND
#1246 N. 27TH ST.
JAMES GROPPI HIGH SCHOOL (CITY OF MILWAUKEE)

2

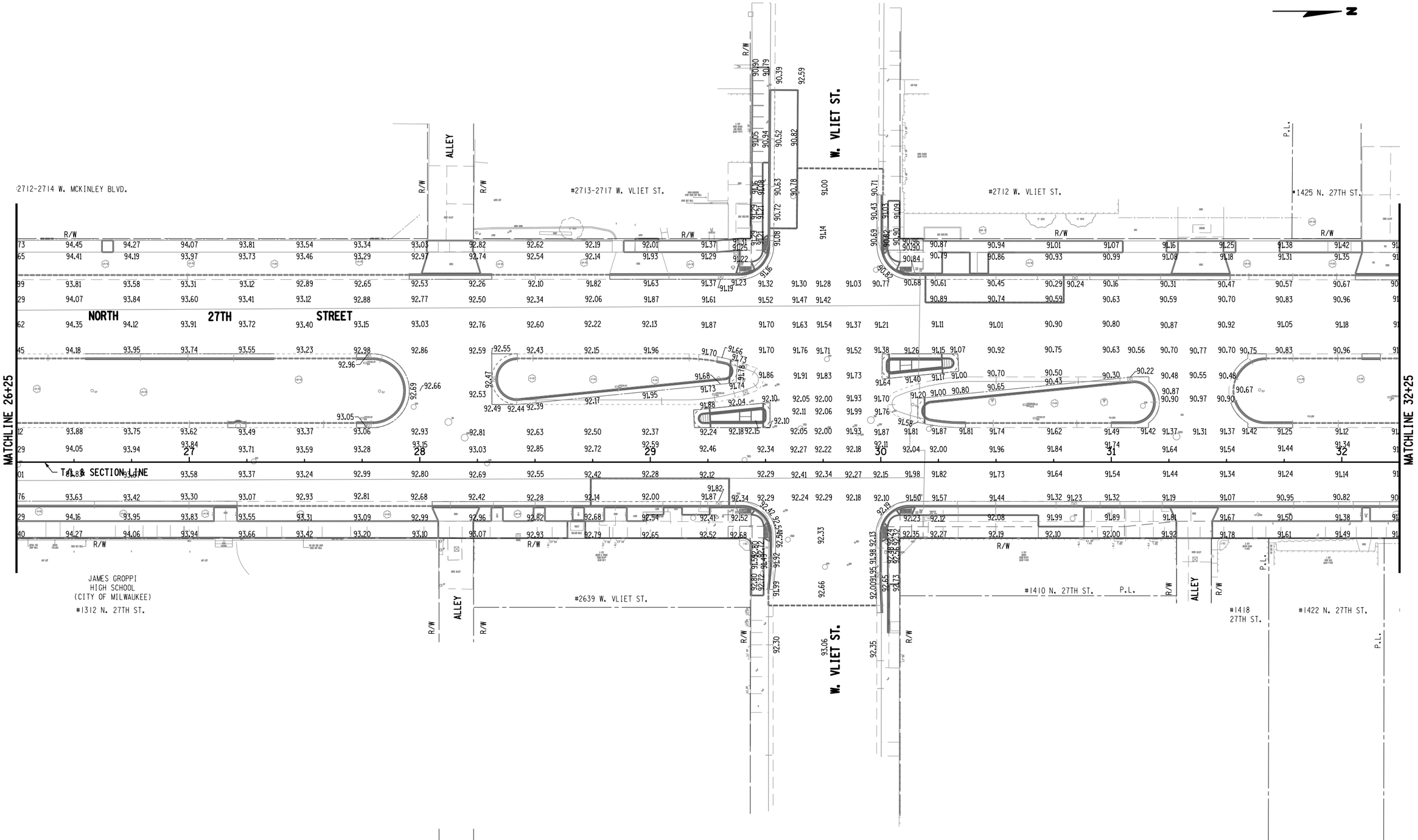


| STATE PROJECT NUMBER 2265-00-74 | HWY: LOCAL | COUNTY: MILWAUKEE | PAVING GRADES | SCALE FEET 0' 40' | SHEET NO: 42 | E |
|---|---|---|---|---|---|---|

FILE NAME: F:\BM1-3393 N 27th St Milwaukee\5_Design\03_Roads\cds\h1021303_pg.dgn PLOT DATE : 19-APR-2016 13:42 PLOT BY : scook PLOT NAME : h1021303_pg PLOT SCALE : 40.000000:1.000000

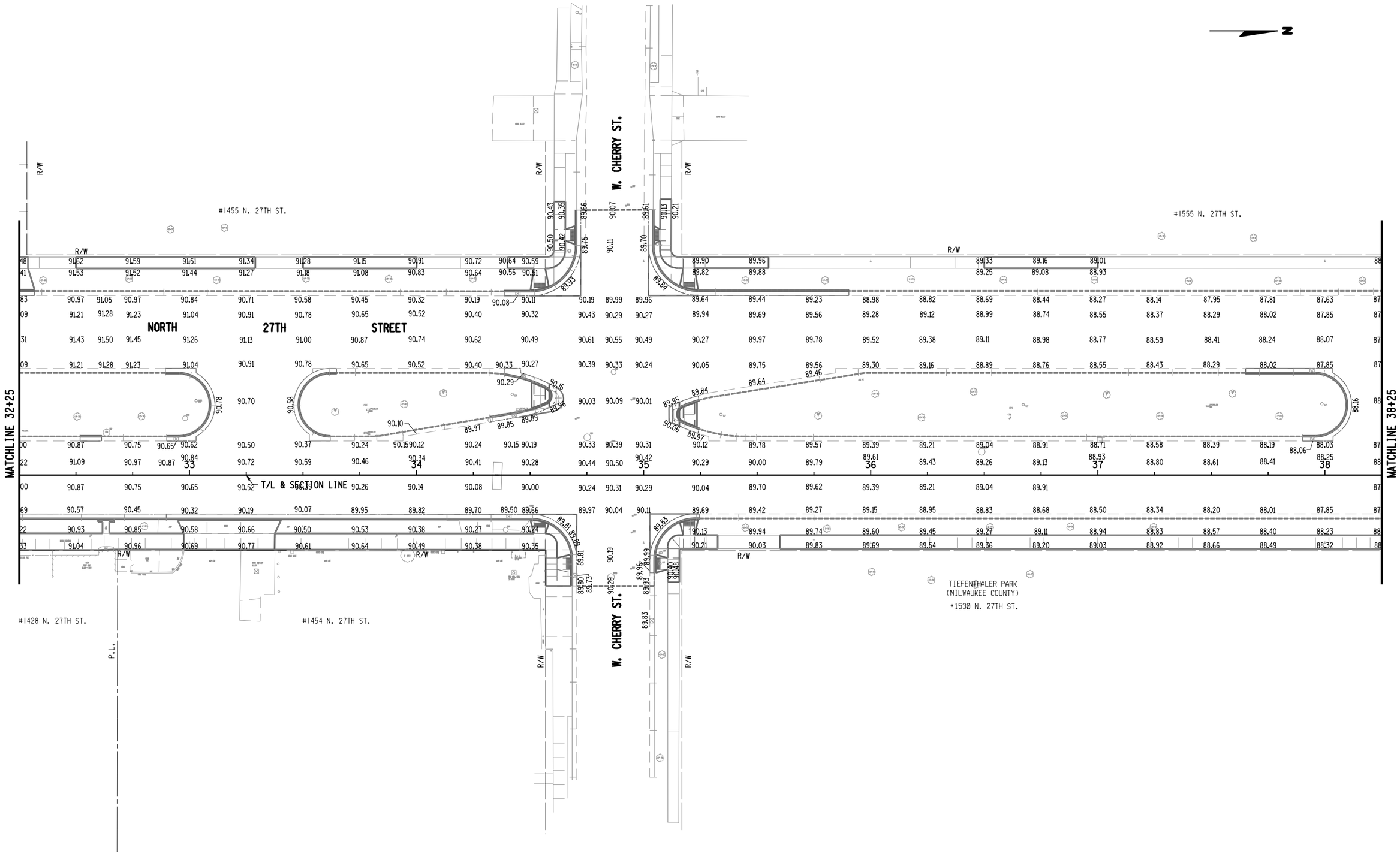
N
W. CHERRY ST.
#1455 N. 27TH ST.
#1555 N. 27TH ST.
R/W
NORTH 27TH STREET
MATCHLINE 32+25
MATCHLINE 38+25
33
34
35
36
37
38
T/L & SECTION LINE
TIEFENTHALER PARK
(MILWAUKEE COUNTY)
#1530 N. 27TH ST.
#1428 N. 27TH ST.
#1454 N. 27TH ST.
P.L.

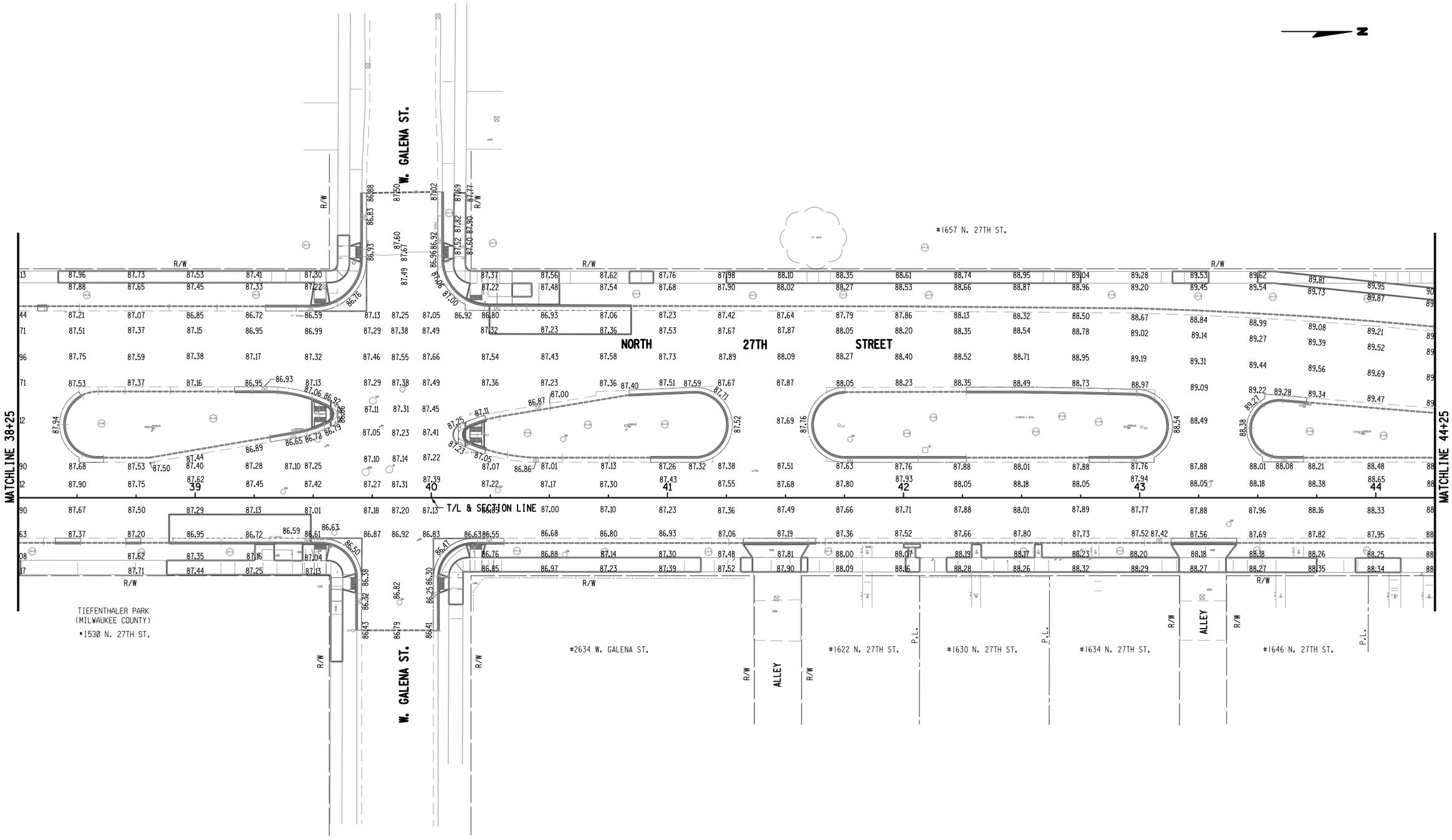


| STATE PROJECT NUMBER 2265-00-74 | HWY: LOCAL | COUNTY: MILWAUKEE | PAVING GRADES | SCALE FEET 0' 40' | SHEET NO: 44 | E |
|---|---|---|---|---|---|---|

FILE NAME: F:\BM1-3393 N 27th St Milwaukee\5_Design\03_Roads\cds\h1021305_pg.dgn PLOT DATE : 19-APR-2016 13:42 PLOT BY : scook PLOT NAME : h1021305_pg PLOT SCALE : 40.000000:1.000000

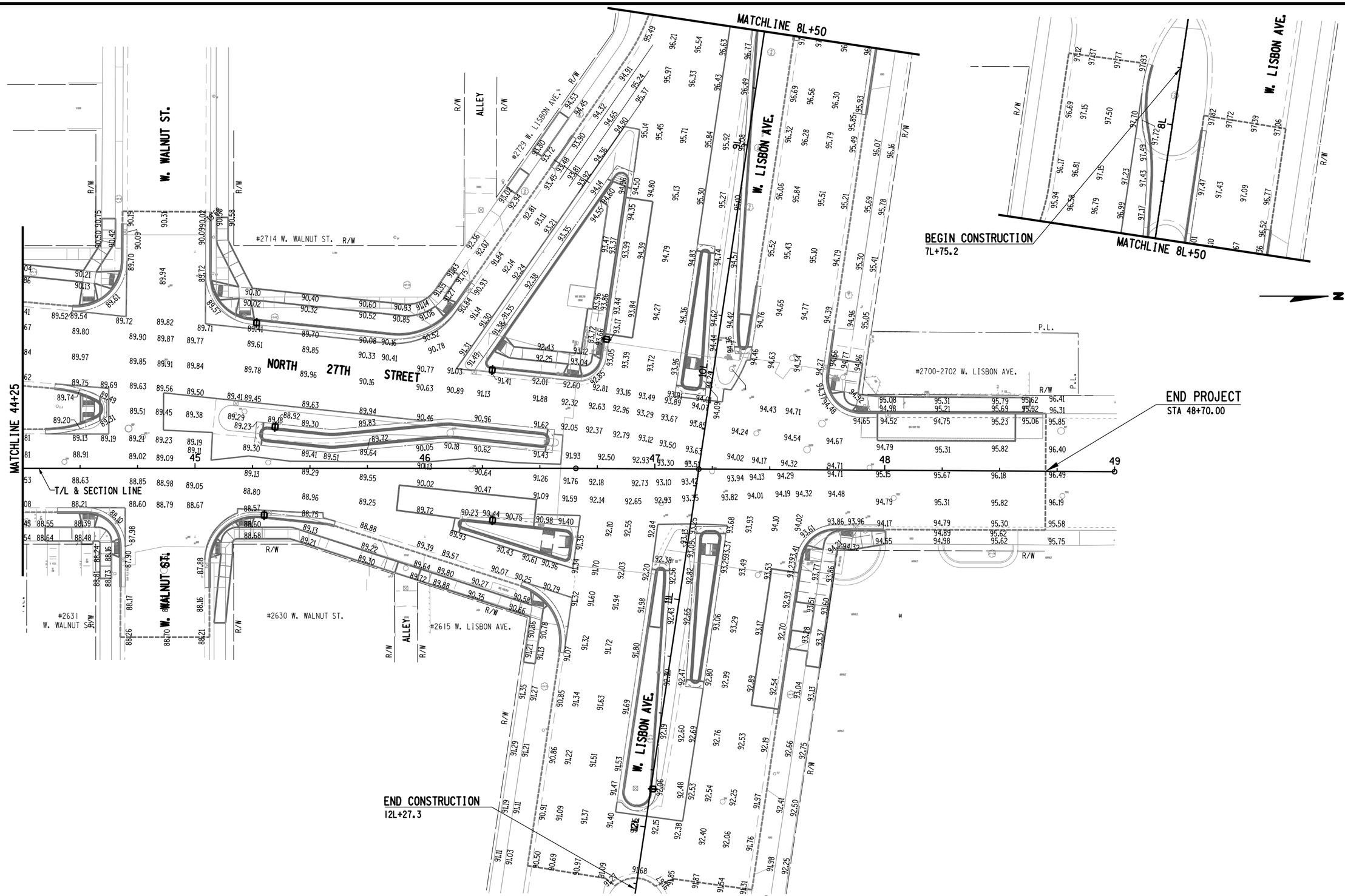
MATCHLINE 8L+50
W. WALNUT ST.
ALLEY
W. LISBON AVE.
#2729 W. LISBON AVE.
#2714 W. WALNUT ST.
NORTH 27TH STREET
MATCHLINE 44+25
T/L & SECTION LINE
#2631 W. WALNUT ST.
#2630 W. WALNUT ST.
#2615 W. LISBON AVE.
#2700-2702 W. LISBON AVE.
P.L.
R/W
BEGIN CONSTRUCTION
7L+75.2
END PROJECT
STA 48+70.00
END CONSTRUCTION
12L+27.3
N

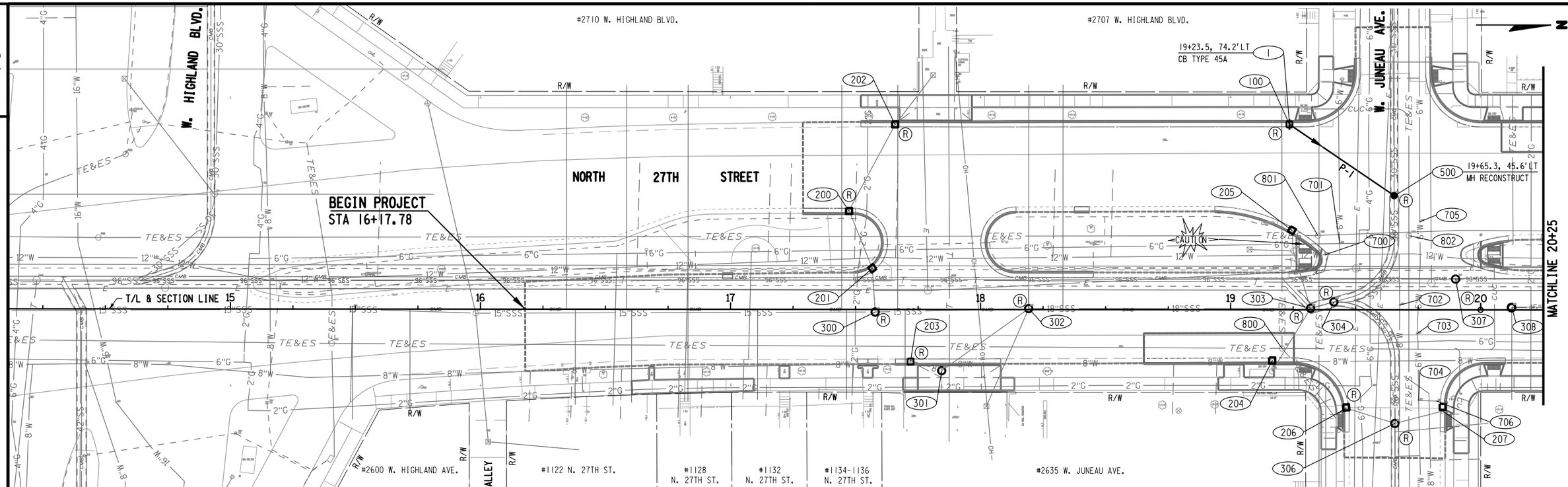


## DRAINAGE LEGEND

- PROPOSED STORM SEWER
- (R) REMOVING EXISTING CB / MH COVERS
- XX — CATCH BASIN
- 1XX — ABANDON / REMOVE CATCH BASIN / BOWL
- 2XX — ADJUSTING INLET COVERS
- 3XX — ADJUSTING MANHOLE COVERS
- 4XX — RECONSTRUCTING CATCH BASIN
- 5XX — RECONSTRUCTING MANHOLES
- 6XX — ADJUSTING WATER SERVICE BOXES
- 7XX — ADJUSTING WATER GATE VALVES
- 8XX — ADJUSTING TES MANHOLE COVERS

## NOTES

1) OFFSETS ARE MEASURED TO THE CENTER OF STRUCTURES
2) RIM ELEVATIONS AT CURB & GUTTER ARE THE FLANGE ELEVATIONS
3) STRUCTURE DEPTH EQUALS RIM ELEVATION MINUS COVER, MINUS 6", MINUS LOWEST INVERT ELEVATION
4) MAINTAIN A MINIUM 18 INCHES OF VERTICAL CLEARANCE FROM CITY WATER MAINS

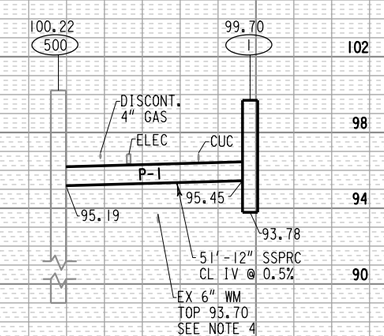


| STATE PROJECT NUMBER 2265-00-74 | HWY: LOCAL | COUNTY: MILWAUKEE | STORM SEWER PLAN | SCALE FEET 0 40 | SHEET NO: 46 | E |
|---|---|---|---|---|---|---|

FILE NAME: F:\BM1-3393 N 27th St Milwaukee\5_Design\03_Roads\cds\h1022501_ss.dgn PLOT DATE : 25-APR-2016 11:17 PLOT BY : scook PLOT NAME : h1022501_ss PLOT SCALE : 40.000000:1.000000

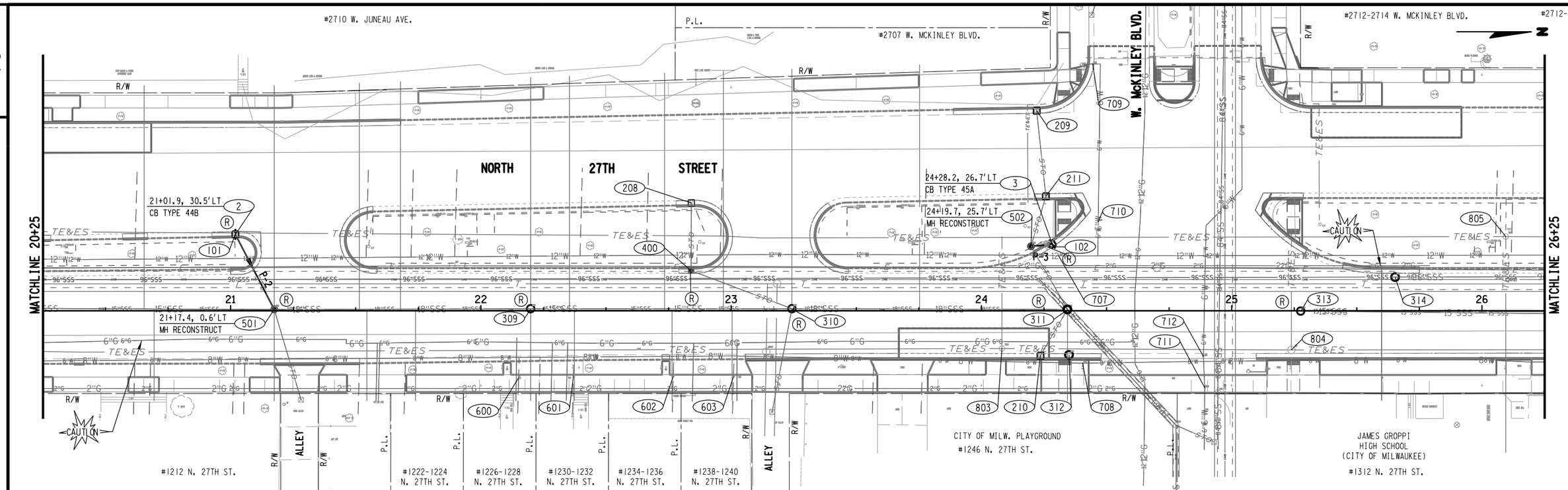


## DRAINAGE LEGEND

- PROPOSED STORM SEWER
- (R) REMOVING EXISTING CB / MH COVERS
- (XX) CATCH BASIN
- (1XX) ABANDON / REMOVE CATCH BASIN / BOWL
- (2XX) ADJUSTING INLET COVERS
- (3XX) ADJUSTING MANHOLE COVERS
- (4XX) RECONSTRUCTING CATCH BASIN
- (5XX) RECONSTRUCTING MANHOLES
- (6XX) ADJUSTING WATER SERVICE BOXES
- (7XX) ADJUSTING WATER GATE VALVES
- (8XX) ADJUSTING TES MANHOLE COVERS

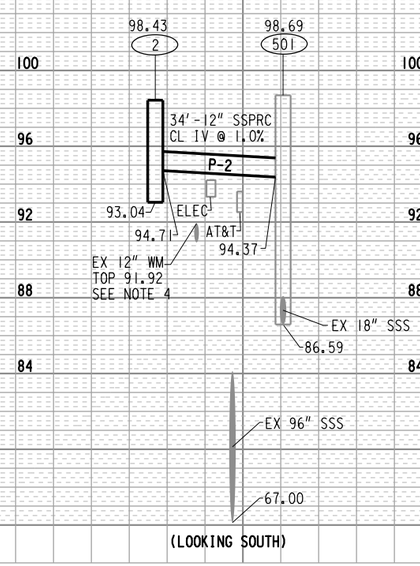


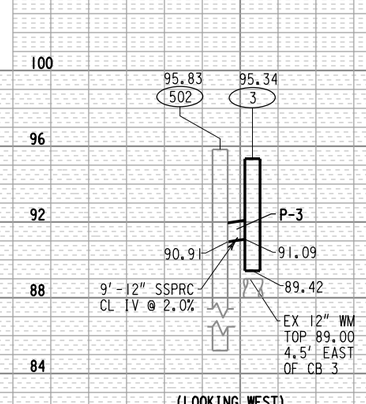


## NOTES

1) OFFSETS ARE MEASURED TO THE CENTER OF STRUCTURES
2) RIM ELEVATIONS AT CURB & GUTTER ARE THE FLANGE ELEVATIONS
3) STRUCTURE DEPTH EQUALS RIM ELEVATION MINUS COVER, MINUS 6", MINUS STRUCTURE BOTTOM ELEVATION
4) MAINTAIN A MINIMUM 18 INCHES OF VERTICAL CLEARANCE FROM CITY WATER MAINS

| STATE PROJECT NUMBER 2265-00-74 | HWY: LOCAL | COUNTY: MILWAUKEE | STORM SEWER PLAN | SCALE FEET 0 40 | SHEET NO: 47 | E |
|---|---|---|---|---|---|---|

2

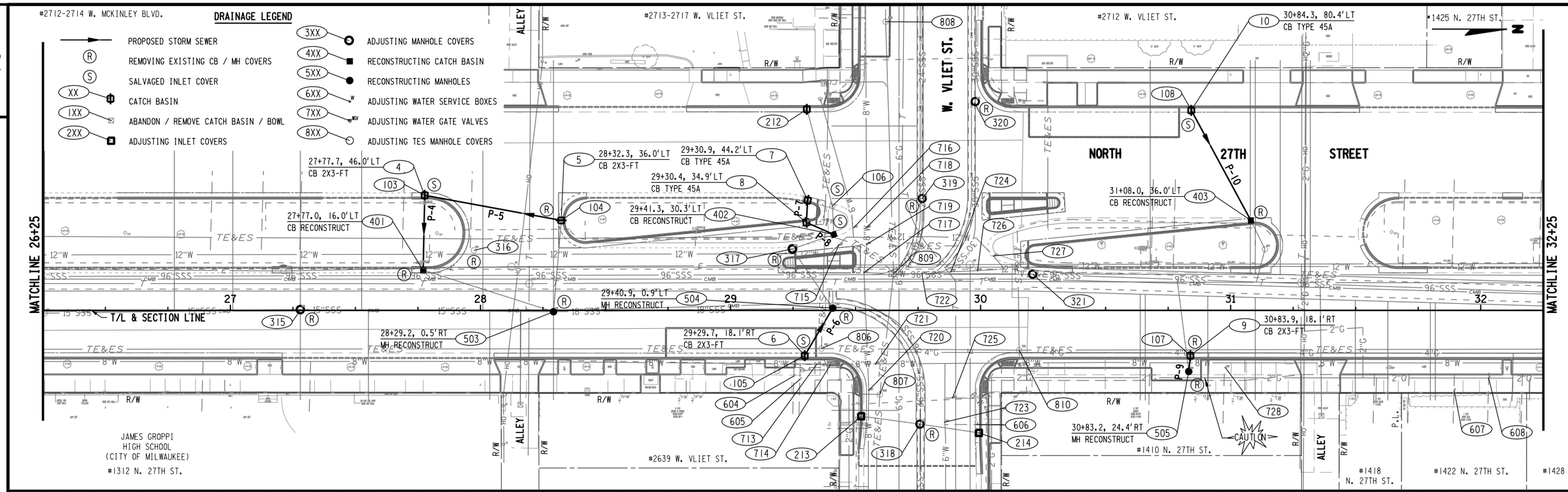


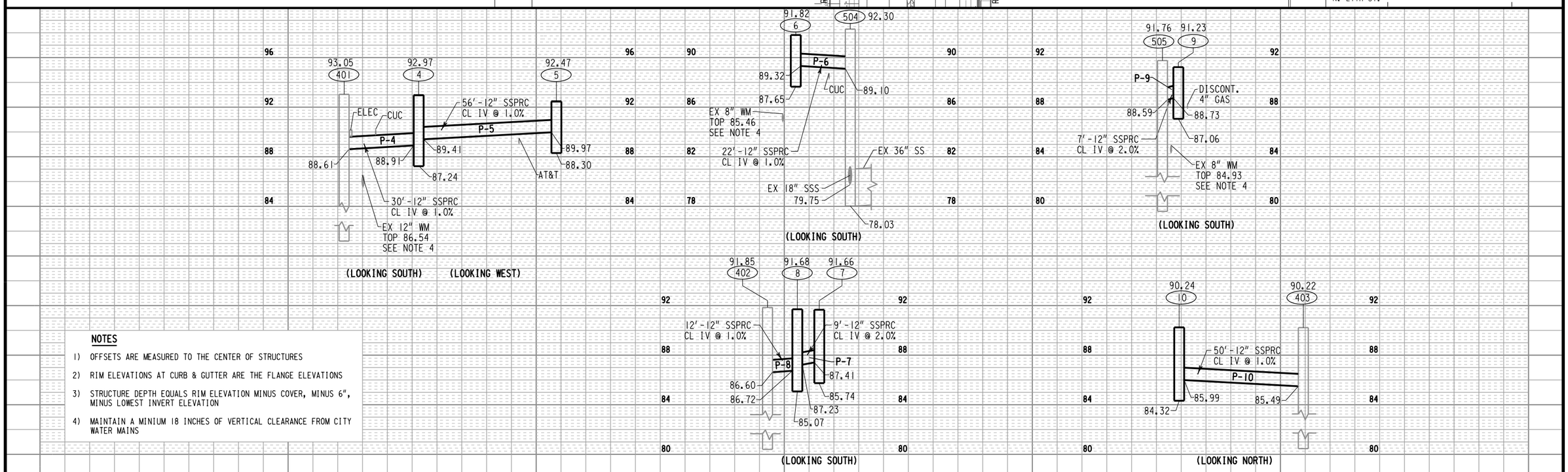


**NOTES**

1) OFFSETS ARE MEASURED TO THE CENTER OF STRUCTURES
2) RIM ELEVATIONS AT CURB & GUTTER ARE THE FLANGE ELEVATIONS
3) STRUCTURE DEPTH EQUALS RIM ELEVATION MINUS COVER, MINUS 6", MINUS LOWEST INVERT ELEVATION
4) MAINTAIN A MINIUM 18 INCHES OF VERTICAL CLEARANCE FROM CITY WATER MAINS

| STATE PROJECT NUMBER 2265-00-74 | HWY: LOCAL | COUNTY: MILWAUKEE | STORM SEWER PLAN | SCALE FEET 0' 40' | SHEET NO: 48 | E |
|---|---|---|---|---|---|---|

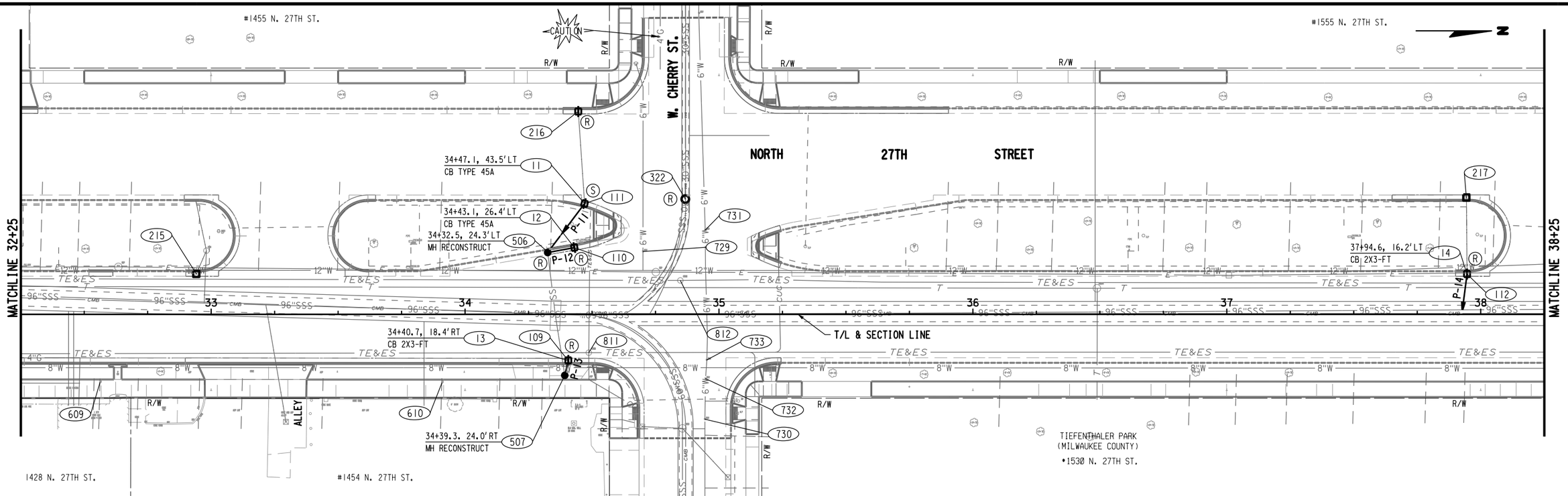


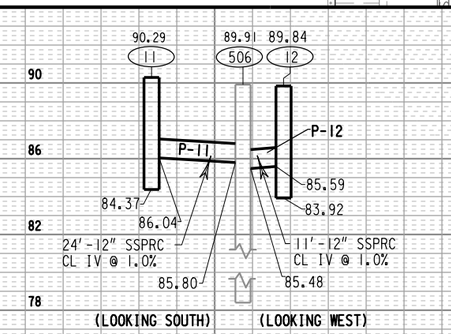


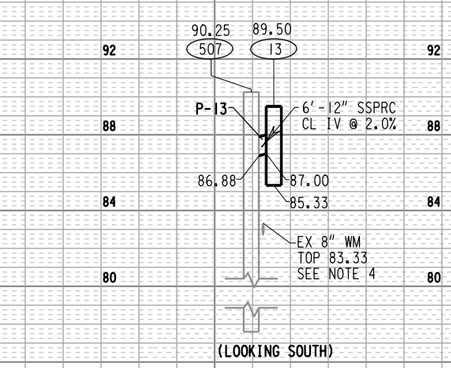


## DRAINAGE LEGEND

- PROPOSED STORM SEWER
- (S) SALVAGED INLET COVERS
- XX CATCH BASIN
- 1XX ABANDON / REMOVE CATCH BASIN / BOWL
- 2XX ADJUSTING INLET COVERS
- 3XX ADJUSTING MANHOLE COVERS
- 4XX RECONSTRUCTING CATCH BASIN
- 5XX RECONSTRUCTING MANHOLES
- 6XX ADJUSTING WATER SERVICE BOXES
- 7XX ADJUSTING WATER GATE VALVES
- 8XX ADJUSTING TES MANHOLE COVERS

## NOTES

1) OFFSETS ARE MEASURED TO THE CENTER OF STRUCTURES
2) RIM ELEVATIONS AT CURB & GUTTER ARE THE FLANGE ELEVATIONS
3) STRUCTURE DEPTH EQUALS RIM ELEVATION MINUS COVER, MINUS 6", MINUS LOWEST INVERT ELEVATION
4) MAINTAIN A MINIUM 18 INCHES OF VERTICAL CLEARANCE FROM CITY WATER MAINS
5) EXISTING BLIND CONNECTION TO 96" COMBINED SEWER. WORK AROUND EXISTING UTILITIES TO REMAIN IN PLACE.

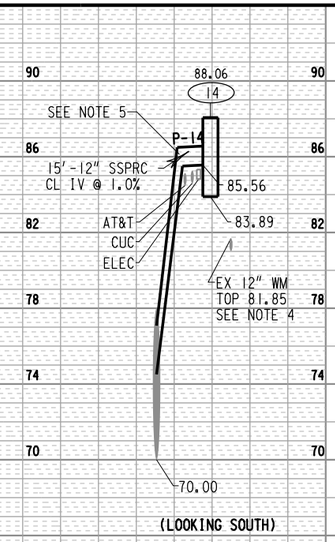

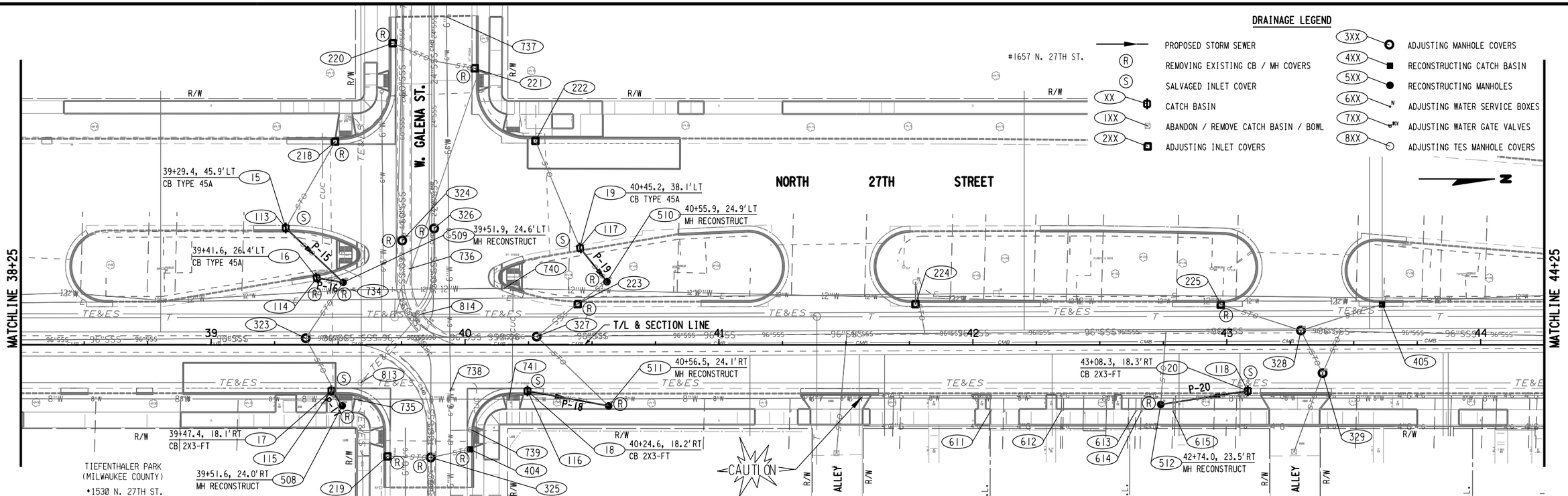


## NOTES

1) OFFSETS ARE MEASURED TO THE CENTER OF STRUCTURES
2) RIM ELEVATIONS AT CURB & GUTTER ARE THE FLANGE ELEVATIONS
3) STRUCTURE DEPTH EQUALS RIM ELEVATION MINUS COVER, MINUS 6", MINUS LOWEST INVERT ELEVATION
4) MAINTAIN A MINIUM 18 INCHES OF VERTICAL CLEARANCE FROM CITY WATER MAINS

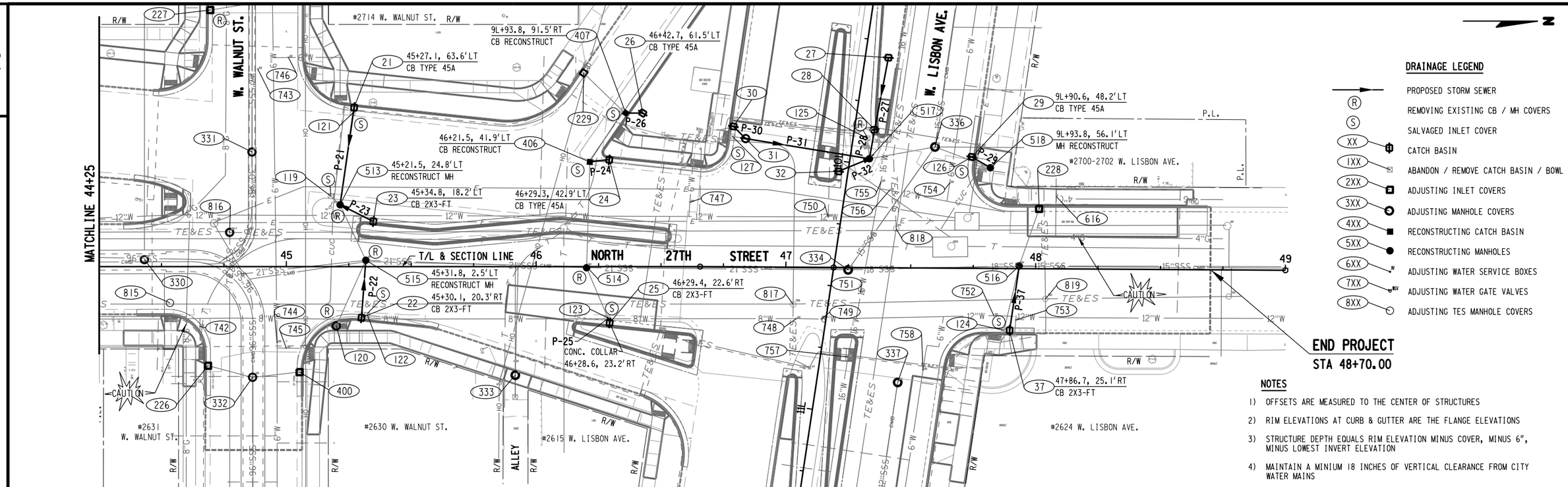


SEE NEXT PAGE FOR STRUCTURES 27, 28, 30, 31, 32, 33, 34, 35 AND 36

| STATE PROJECT NUMBER 2265-00-74 | HWY: LOCAL | COUNTY: MILWAUKEE | STORM SEWER PLAN | SCALE FEET 0 40 | SHEET NO: | E |
|---|---|---|---|---|---|---|



FILE NAME: F:\BM1-3393 N 27th St Milwaukee\5_Design\03_Roads\cds\h1022506_ss.dgn PLOT DATE : 21-APR-2016 00:30 PLOT BY : scook PLOT NAME : h1022506_ss PLOT SCALE : 40.000000:1.000000

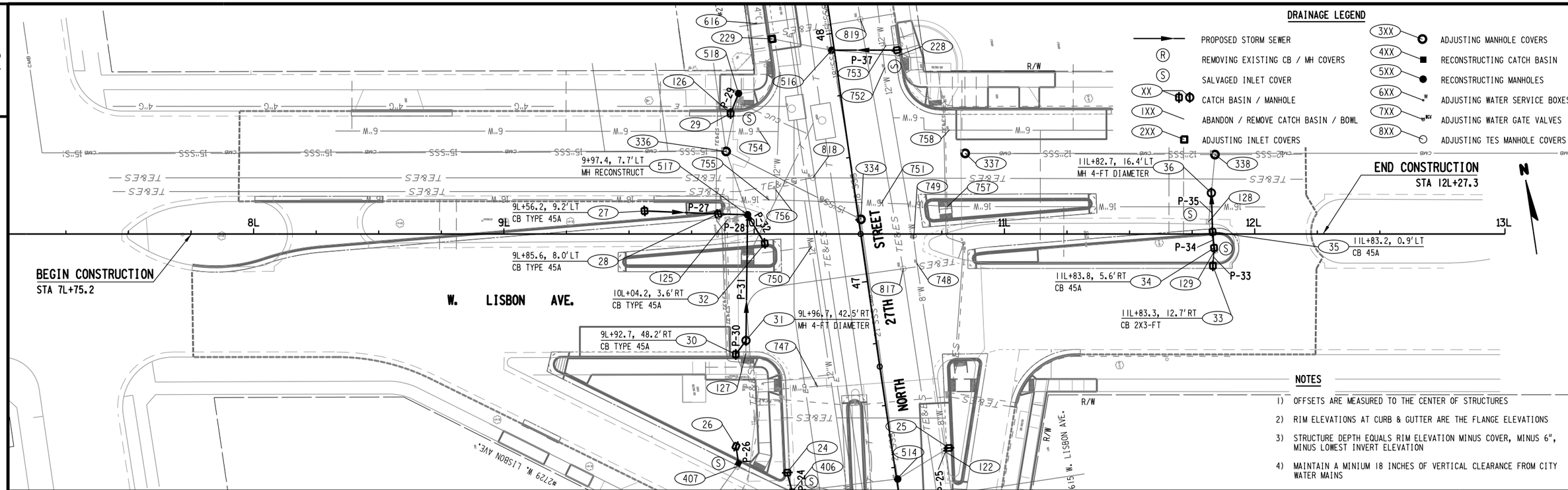


## NOTES

1) OFFSETS ARE MEASURED TO THE CENTER OF STRUCTURES
2) RIM ELEVATIONS AT CURB & GUTTER ARE THE FLANGE ELEVATIONS
3) STRUCTURE DEPTH EQUALS RIM ELEVATION MINUS COVER, MINUS 6", MINUS LOWEST INVERT ELEVATION
4) MAINTAIN A MINIUM 18 INCHES OF VERTICAL CLEARANCE FROM CITY WATER MAINS

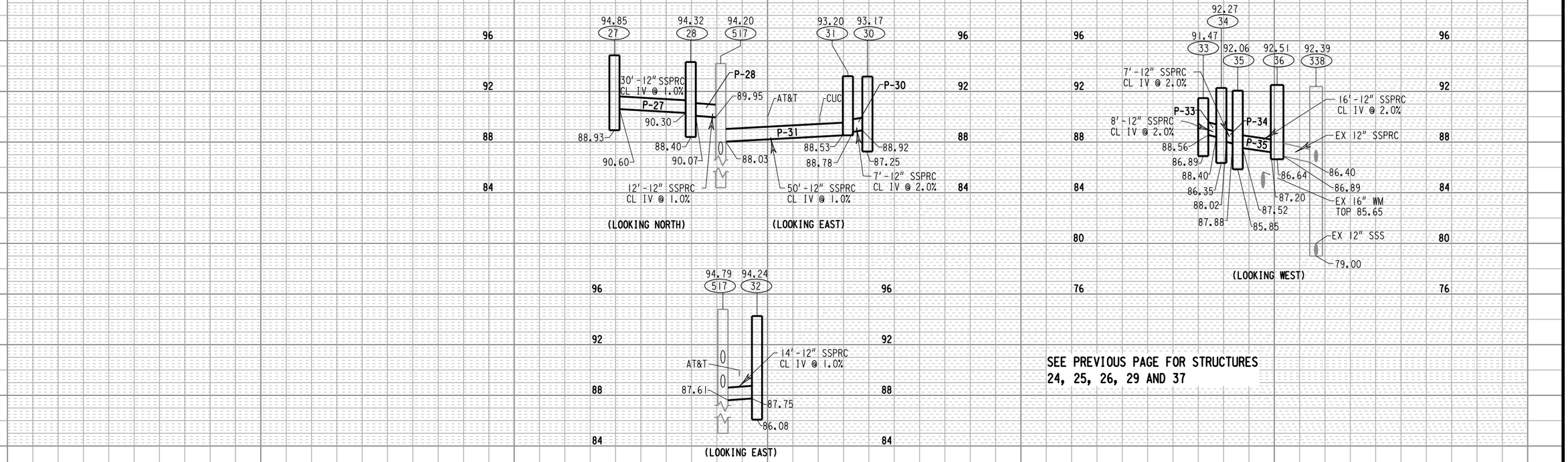


SEE PREVIOUS PAGE FOR STRUCTURES
24, 25, 26, 29 AND 37

| STATE PROJECT NUMBER 2265-00-74 | HWY: LOCAL | COUNTY: MILWAUKEE | SCALE FEET 0 40 | SHEET NO: 52 | E |
|---|---|---|---|---|---|

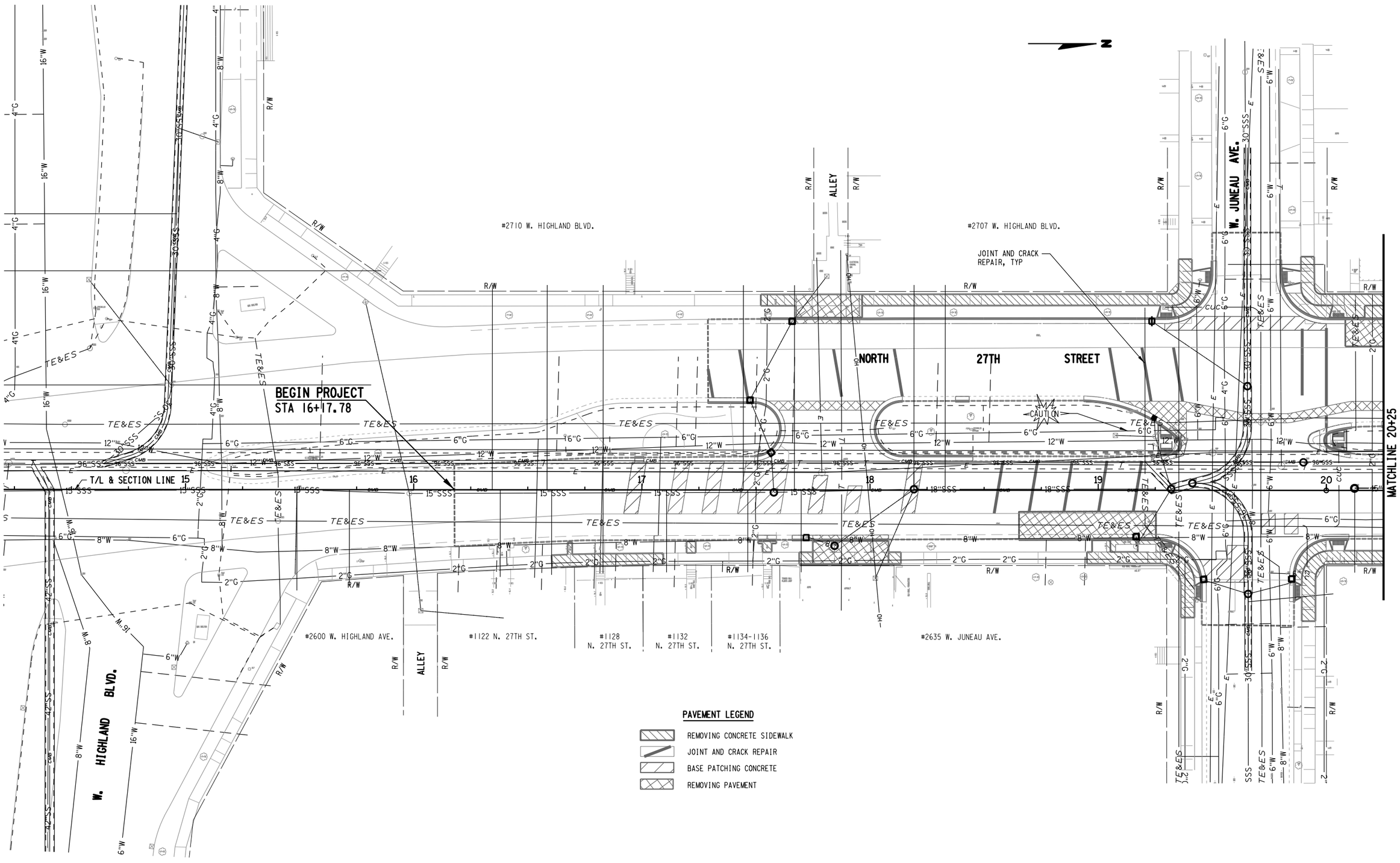




| STATE PROJECT NUMBER 2265-00-74 | HWY: LOCAL | COUNTY: MILWAUKEE | REMOVALS AND UTILITY PLAN | SCALE FEET 0' 40' | SHEET NO: 53 | E |
|---|---|---|---|---|---|---|

FILE NAME: F:\BM1-3393 N 27th St Milwaukee\5_Design\03_Roads\cds\h1023001_up.dgn PLOT DATE : 19-APR-2016 14:09 PLOT BY : scook PLOT NAME : h1023001_up PLOT SCALE : 40.000000:1.000000

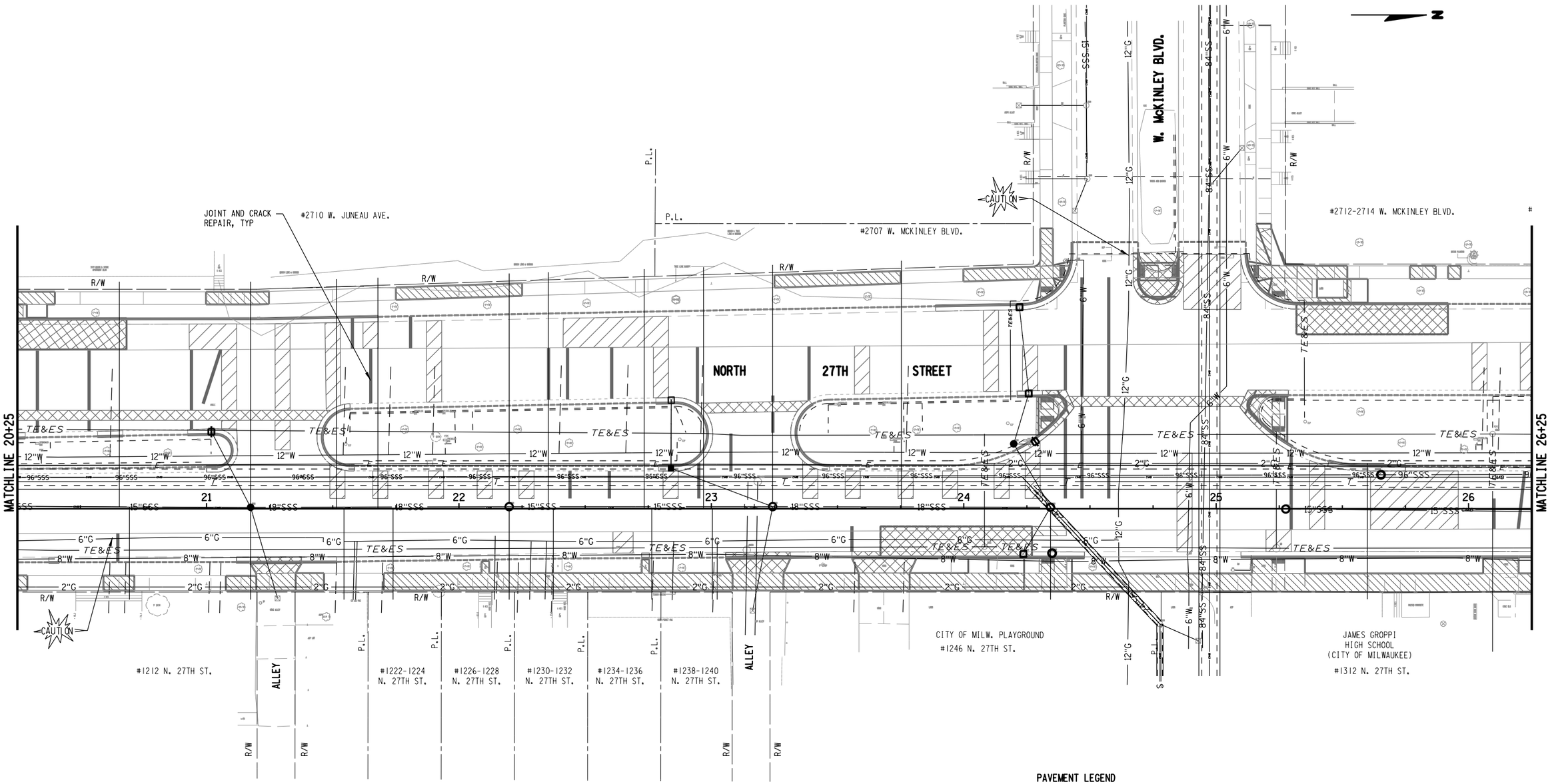


| STATE PROJECT NUMBER 2265-00-74 | HWY: LOCAL | COUNTY: MILWAUKEE | REMOVALS AND UTILITY PLAN | SCALE FEET 0 40 | SHEET NO: 54 | E |
|---|---|---|---|---|---|---|

FILE NAME: F:\BM1-3393 N 27th St Milwaukee\5_Design\03_Roads\cds\h1023002_up.dgn PLOT DATE : 19-APR-2016 14:09 PLOT BY : scook PLOT NAME : h1023002_up PLOT SCALE : 40.000000:1.000000

2

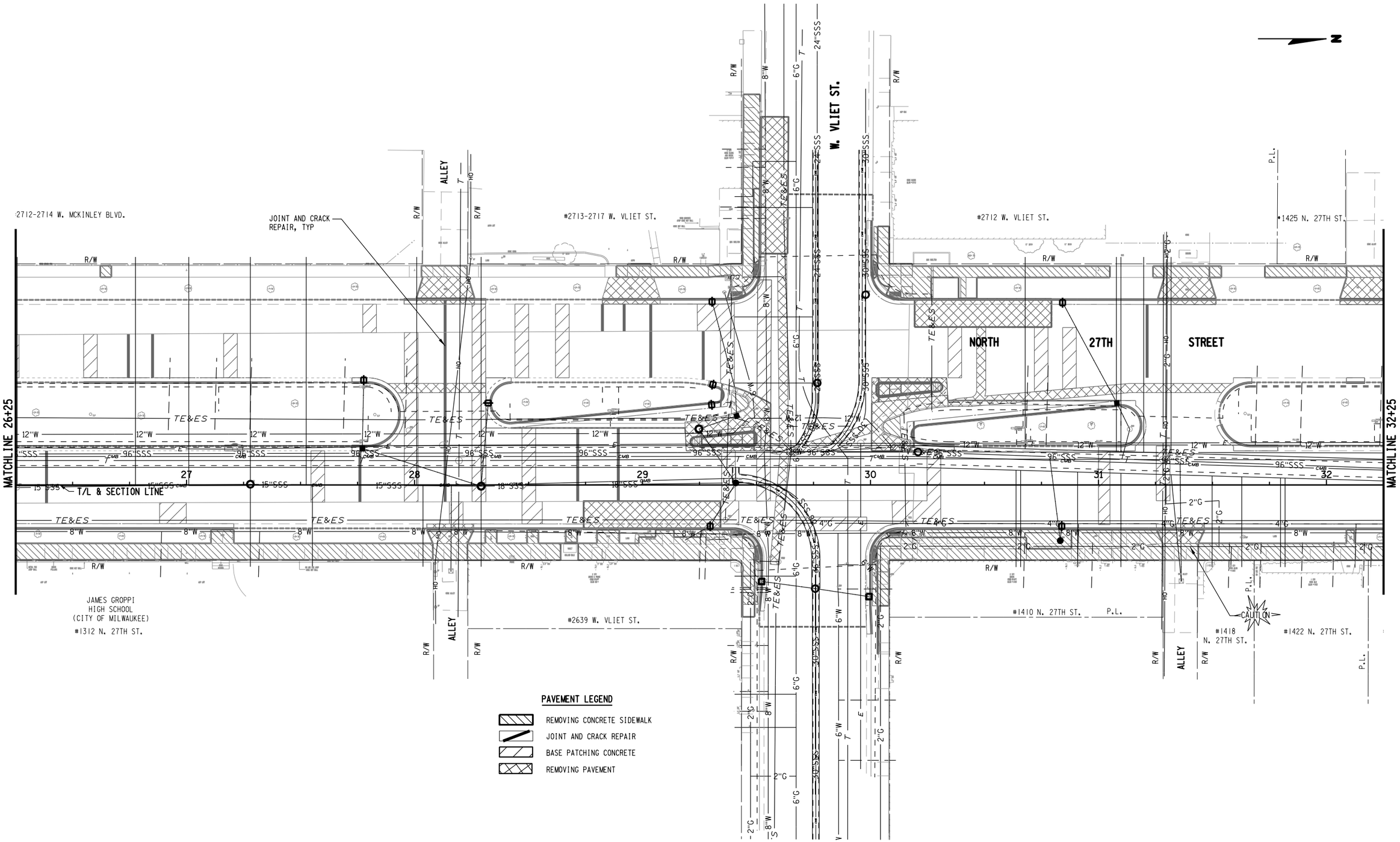


2

| STATE PROJECT NUMBER 2265-00-74 | HWY: LOCAL | COUNTY: MILWAUKEE | REMOVALS AND UTILITY PLAN | SCALE FEET 0 40 | SHEET NO: 55 | E |
|---|---|---|---|---|---|---|

FILE NAME: F:\BM1-3393 N 27th St Milwaukee\5_Design\03_Roads\cds\h1023003_up.dgn PLOT DATE : 19-APR-2016 14:09 PLOT BY : scook PLOT NAME : h1023003_up PLOT SCALE : 40.000000:1.000000

2

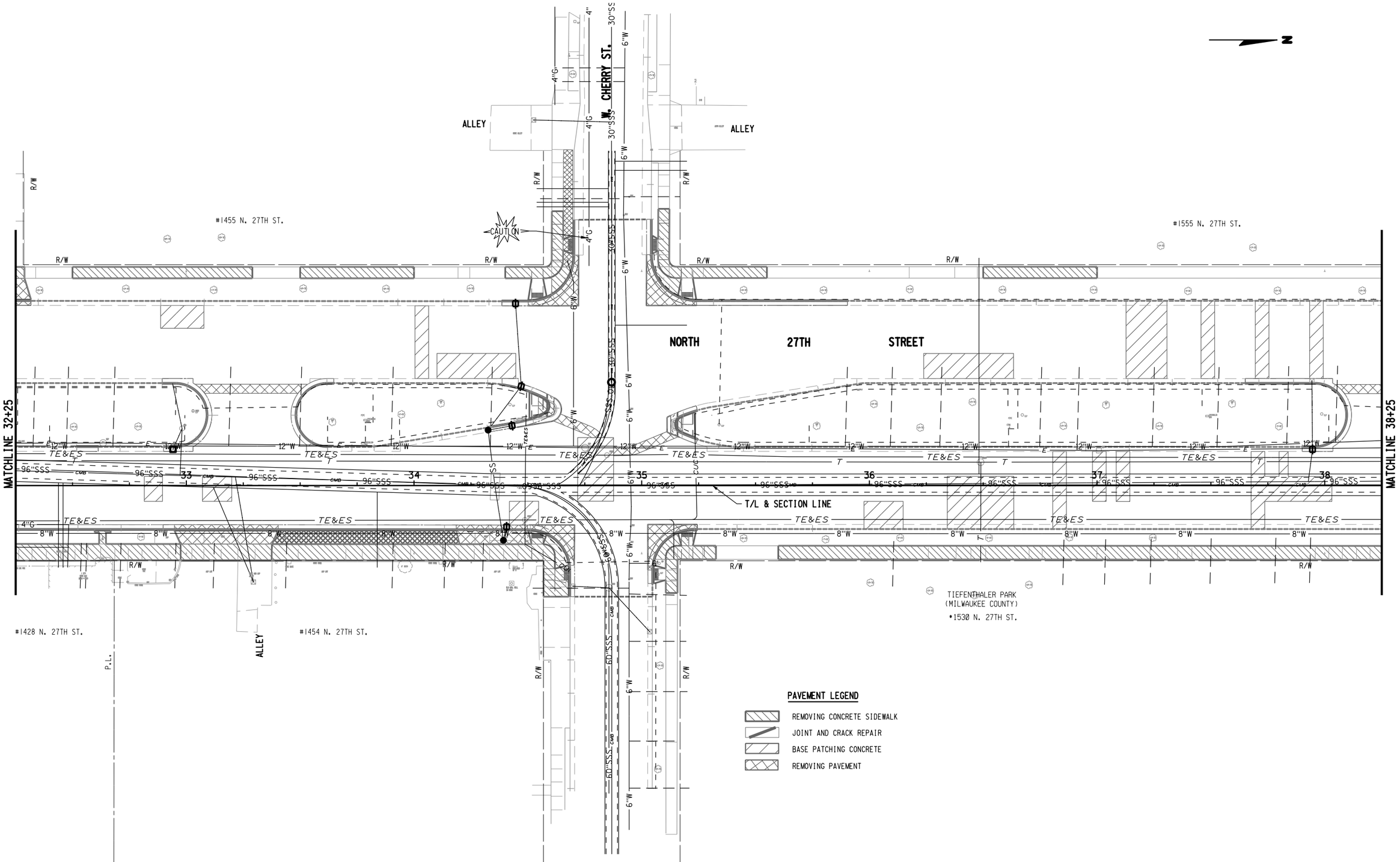


2

| STATE PROJECT NUMBER 2265-00-74 | HWY: LOCAL | COUNTY: MILWAUKEE | REMOVALS AND UTILITY PLAN | SCALE FEET 0' 40' | SHEET NO: 56 | E |
|---|---|---|---|---|---|---|

FILE NAME: F:\BM1-3393 N 27th St Milwaukee\5_Design\03_Roads\cds\h1023004_up.dgn PLOT DATE : 19-APR-2016 14:09 PLOT BY : scook PLOT NAME : h1023004_up PLOT SCALE : 40.000000:1.000000

2

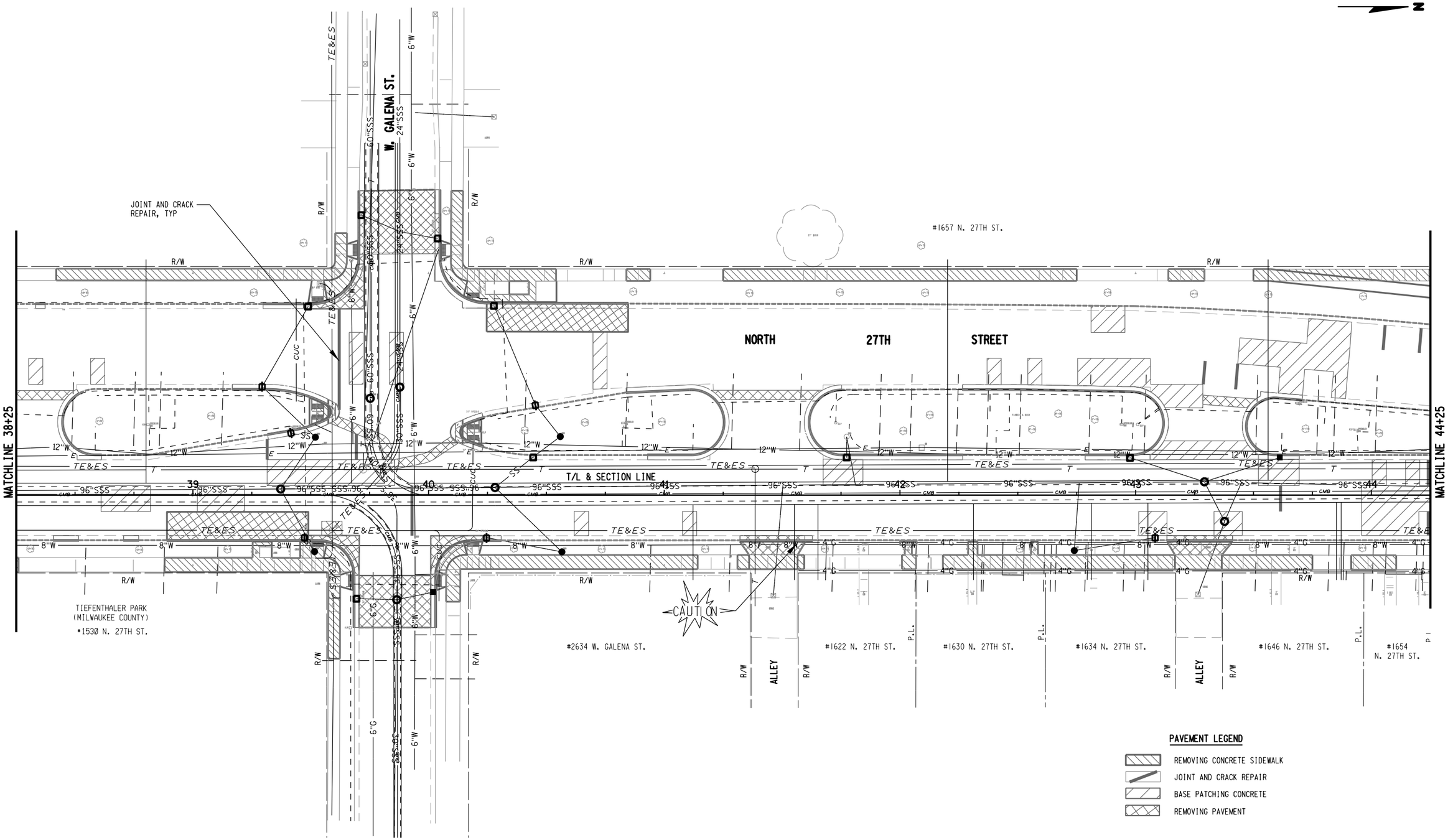


| STATE PROJECT NUMBER 2265-00-74 | HWY: LOCAL | COUNTY: MILWAUKEE | REMOVALS AND UTILITY PLAN | SCALE FEET 0' 40' | SHEET NO: 57 | E |
|---|---|---|---|---|---|---|

FILE NAME: F:\BM1-3393 N 27th St Milwaukee\5_Design\03_Roads\cds\h1023005_up.dgn PLOT DATE : 19-APR-2016 14:09 PLOT BY : scook PLOT NAME : h1023005_up PLOT SCALE : 40.000000:1.000000

2

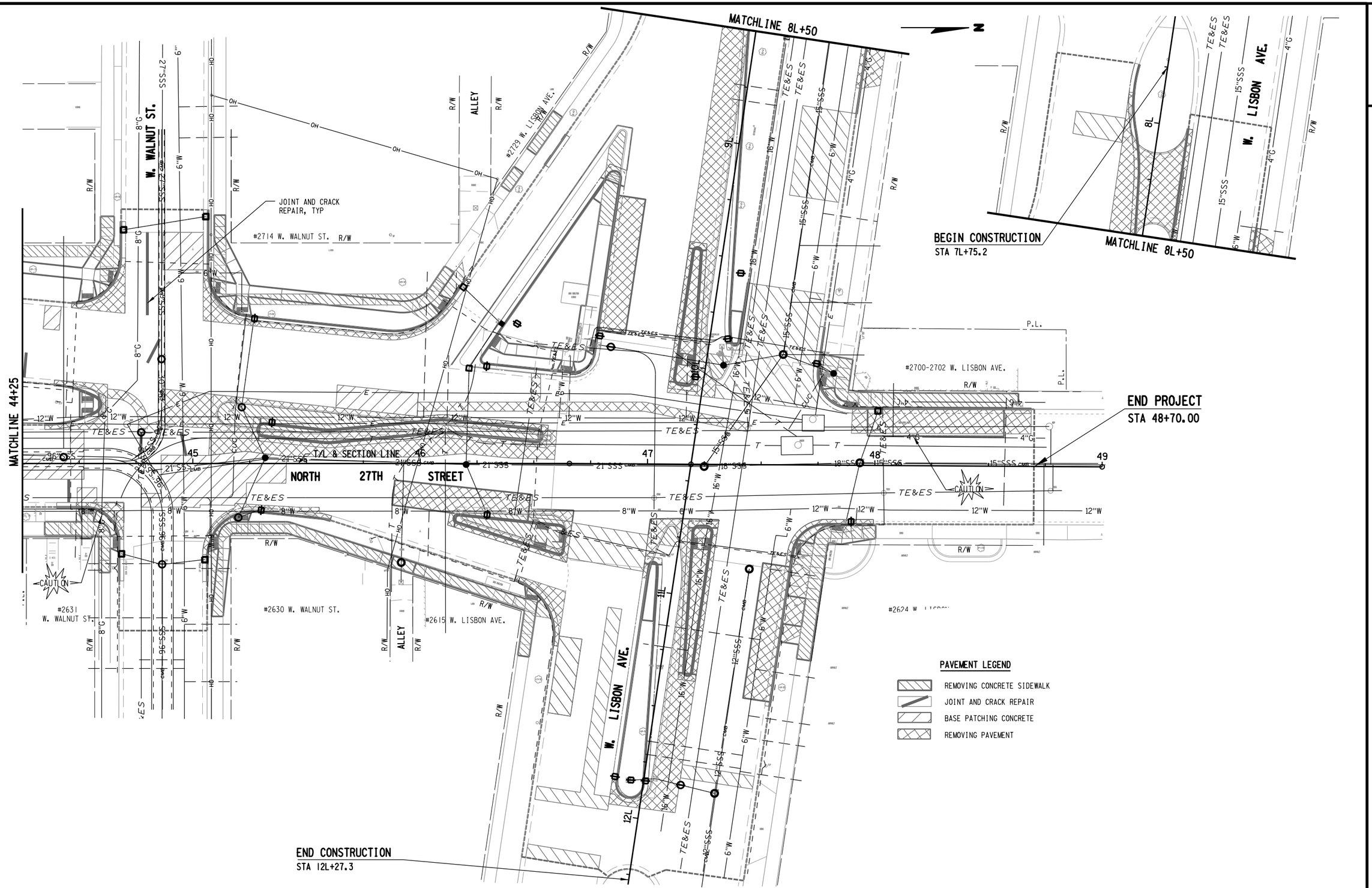


2

| STATE PROJECT NUMBER 2265-00-74 | HWY: LOCAL | COUNTY: MILWAUKEE | REMOVALS AND UTILITY PLAN | SCALE FEET 0 40 | SHEET NO: | E |
|---|---|---|---|---|---|---|

FILE NAME: F:\BM1-3393 N 27th St Milwaukee\5_Design\03_Roads\cds\h1023006_up.dgn PLOT DATE : 19-APR-2016 14:09 PLOT BY : scook PLOT NAME : h1023006_up PLOT SCALE : 40.000000:1.000000

2

## STREET LIGHTING & TRAFFIC GENERAL NOTES:

PRIOR TO CONSTRUCTION, THE LOCATION OF UNDERGROUND UTILITIES SHALL BE DETERMINED IN THE FIELD BY CONTACTING "DIGGERS HOTLINE."

STREET LIGHTING & TRAFFIC SIGNALS SHALL BE INSTALLED IN COMPLIANCE WITH WISCONSIN DEPARTMENT OF TRANSPORTATION STANDARD SPECIFICATIONS SECTION 652 EXCEPT:

THE CONTRACTOR IS RESPONSIBLE FOR ALL COSTS INCLUDING REPAIRS, REPLACEMENT OR RELOCATION ETC. OF STREET LIGHTING OR TRAFFIC SIGNAL FACILITIES IF THE CONTRACTOR DOES ANY DEVIATION FROM THE STREET LIGHTING OR TRAFFIC SIGNAL DESIGN WITHOUT THE STREET LIGHTING ENGINEERS SIGNED PERMISSION.

1 DETAILS OF CONSTRUCTION MATERIALS AND WORKMANSHIP NOT SHOWN ON THIS DRAWING SHALL CONFORM TO THE PERTINENT REQUIREMENTS OF THE CONTRACT.

2 LOCATIONS OF THE PVC CONDUITS WHERE THEY ARE REQUIRED ARE IDENTIFIED IN THE PRINTS. HOWEVER, INSTALLATION MAY REQUIRE INTEGRATION WITH EXISTING FIELD CONDITIONS. APPROPRIATE ADJUSTMENT ON CONDUIT LOCATIONS MAY BE MADE IF THE FIELD CONDITIONS ARE SUCH THAT THE CONDUIT CANNOT BE INSTALLED AT THE SPECIFIED LOCATIONS. ANY RELOCATIONS MUST BE APPROVED BY THE ENGINEER. FIELD MARK EACH CONDUIT LOCATION BY STAMPING AND PAINTING WITH RED PAINT ON TOP AND BACKSIDE OF CURB.

3 TYPICAL CONDUIT INSTALLED UP TO DIRECT BURIED STREET LIGHT POLES IS AS FOLLOWS 3-INCH OR 2.5-INCH (AS NOTED) SCHEDULE 40 RIGID PVC TO STREET LIGHTING METAL HOUSING (PEDESTAL), THE 1.5-INCH SCHEDULE 40 RIGID PVC TO STREET LIGHT POLE CABLE SLOT, AND THE 2-INCH SCHEDULE 40 RIGID PVC TO SIGNAL STANDARD BASE AND RISER FOR TRAFFIC SIGNAL ON STREET LIGHT POLE.

4 DEPTH OF CONDUIT INSTALLED BELOW THE STREETS, HIGHWAYS, ROADS, AND ALLEYS SHALL BE 24-INCHES MINIMUM AND 36-INCHES MAXIMUM. (MEASURED FROM FINISHED FLANGE LINE)

5 CONDUIT INSTALLED BEHIND CURB, AND UNDER DRIVEWAYS SHALL BE INSTALLED AT A DISTANCE OF 6 INCHES AWAY FROM THE BACK OF CURB TO THE CENTER LINE OF CONDUIT, AND 18 INCHES DOWN MEASURED FROM THE TOP OF CURB OR FINISHED GRADE TO THE TOP OF CONDUIT.

6 WHEN THERE IS MORE THAN ONE CONDUIT TO BE INSTALLED, PLACE ALL CONDUITS IN THE SAME TRENCH.

7 ANY EXCEPTION TO THE MINIMUM OR MAXIMUM DEPTH SHALL BE ONLY WITH THE WRITTEN APPROVAL OF THE ENGINEER.

8 THE CONTRACTOR OR HIS SUBCONTRACTOR MUST MAKE SURE THE AREA BEHIND CURB AND/OR TRENCH SHALL BE FREE OF DEBRIS AND OVERPOUR AND SHALL NOT BE BACKFILLED PRIOR TO INSPECTION OF THE CONDUIT.

9 BENDING OF PVC ELECTRICAL CONDUIT SHALL BE ACCOMPLISHED BY USING A BLANKET OR EMERSION TYPE TANK DESIGNED FOR THE PURPOSE OF BENDING PVC ELECTRICAL CONDUIT.

10 ALL CUT ENDS SHALL BE TRIMMED INSIDE AND OUTSIDE TO REMOVE ALL ROUGH EDGES ON ALL CONDUITS. (SEE NEC 352.28 2008 CODE)

11 PRIOR TO CONDUIT ACCEPTANCE, ALL CONDUIT ENDS SHALL BE THOROUGHLY CLEANED AND BE CAPPED IMMEDIATELY AFTER INSTALLATION WITH THE APPROPRIATE CAST PLASTIC CAP WHICH FITS SNUGGLY ON THE CONDUIT, BUT EASILY REMOVED IN THE FUTURE. DUCT TAPE OR ANY OTHER CAPPING METHOD IS NOT ACCEPTABLE.

12 ALL CONDUIT BEING FURNISHED AND INSTALLED SHALL HAVE THE U.L. LABEL FIRMLY ATTACHED.

13 CONDUIT RUNS SHALL BE THE SAME SIZE PIPE FROM ONE END TO THE OTHER (FROM PULL BOX TO PULL BOX OR JUNCTION BOX OR BASE TO BASE, ETC.).

14 PULL ROPE (3/8-INCH NYLON) SHALL BE INSTALLED IN ALL NEW CONDUIT.

15 ALL CONDUIT RUNS SHALL BE STRAIGHT (WITHOUT BENDS) FROM PULL BOX TO PULL BOX, PULL BOX TO BASE AND BASE TO BASE AS SHOWN ON THE PLANS UNLESS OTHERWISE APPROVED BY THE STREET LIGHTING ENGINEER.

16 WHEN ENDS OF CONDUIT DO NOT CONNECT TO A VAULT AND WILL END UP UNDER CONCRETE WALK. THE CONTRACTOR IS REQUIRED TO LEAVE A 24" X 24" BOX FORM CENTERED OVER THE END OF CONDUIT AND FILL THE BOXFORM WITH CRUSHED GRAVEL. (PER WISDOT SPEC 209.2.1(1) GRANULAR BACKFILL)

17 ALL PIPE CROSSINGS AND VAULTS SHALL BE AT LEAST SIX (6) FEET AWAY FROM FIRE HYDRANTS, UNLESS NOTED OTHERWISE, OR APPROVED BY THE STREET LIGHTING ENGINEER.

18 ALL POLES AND TRAFFIC STANDARDS IN CONCRETE ARE REQUIRED TO HAVE A 30"X30" BOX SHAPED JOINT PLACED AROUND THEM USING AN EXPANSION JOINT FILLER. UNLESS NOTED OTHERWISE (SEE DETAIL 122)

19 TYPICAL RECTANGULAR VAULTS SHOULD BE INSTALLED AS SHOWN ON PLANS, BUT WHEN IT IS NOT POSSIBLE, A 5 FT. TO 6 FT. OFFSET FROM STREET LIGHT POLES, SIGNAL STANDARDS AND FIRE HYDRANTS SHOULD BE USED, OTHERWISE APPROVED BY THE STREET LIGHTING ENGINEER.

## TRAFFIC & STREET LIGHTING GENERAL NOTES:

20 COORDINATE NEW CONDUIT CONNECTIONS WITH EXISTING CONDUIT, DUCT PACKAGES, AND VAULTS/ MANHOLES WITH CITY OF MILWAUKEE STREET LIGHTING. THE CITY REQUIRES THREE WORKING DAYS ADVANCED NOTICE. CONTACT ELECTRICAL SUPERVISOR
STREET LIGHTING - DENNIS MILLER (OFFICE) 414-286-5942 (CELL) 414-708-4251 OR DISPATCHER @ 414-286-5944
TRAFFIC SIGNALS - AL NICHOLS (OFFICE) 414-286-3687 (CELL) 414-708-5148 OR DISPATCHER @ 414-286-3687

21 IMMEDIATELY AFTER THE CONTRACTOR HAS COMPLETED ALL THE ELECTRICAL VAULT, CONDUIT AND CONDUIT CONNECTIONS, AND JUST BEFORE ELECTRICAL WORK IS COVERED UP WITH CONRETE, SOIL, OR ETC. THE CONTRACTOR IS REQUIRED TO CONTACT THE CITY OF MILWAUKEE ELECTRICAL SHOP SUPERVISORS FOR FINAL INSPECTION AND APPROVAL OF ALL WORK.
STREET LIGHTING - DENNIS MILLER (OFFICE) 414-286-5942 (CELL) 414-708-4251
STREET LIGHTING - GEORGE BERDINE (OFFICE) 414-286-5943 (CELL) 414-708-4245
STREET LIGHTING - THOMAS HUGHES (OFFICE) 414-286-3457 (CELL) 414-708-3175
STREET LIGHTING - DISPATCHER @ 414-286-5944
TRAFFIC SIGNALS - AL NICHOLS (OFFICE) 414-286-5941 (CELL) 414-708-5148
TRAFFIC SIGNALS - DISPATCHER @ 414-286-3687

22 CONDUIT WILL ONLY BE INSTALLED AFTER THE CURB IS POURED, UNLESS APPROVED BY BOTH THE ENGINEER & STREET LIGHTING SHOP SUPERVISOR.

2

### LEGEND

- STREET LIGHT POLE
- TRAFFIC SIGNAL MOUNTED ON LIGHT POLE
- EXISTING SIGNAL STANDARD BASE
- VAULT TO BE INSTALLED
- TRAFFIC CONTROL CABINET
- STREET LIGHTING ENCLOSURE
- PVC CONDUIT
- TRAFFIC SIGNAL BASE TO BE INSTALLED
- MONOTUBE MAST ARM BASE TO BE INSTALLED
- XX' ARM — MAST ARM
- XX' ARM — SIGNAL HEAD LOCATION ON MAST ARM
- EVP DETECTOR LOCATION ON MAST ARM
- CONCRETE BOX JOINT AROUND FACILITIES
- 000 — SEE DETAIL NUMBER FOR ADDITIONAL INFORMATION

### UTILITY LINE CODE

| | |
|---|---|
| SAN | SANITARY SEWER |
| STO | STORM SEWER |
| W | WATER |
| G | GAS |
| G | PROPOSED GAS |
| E | ELECTRIC |
| TE&ES | TRAFFIC & STREET LIGHTING |
| | OLD CITY UNDERGROUND CONDUIT |
| CUC | PROPOSED CITY UNDERGROUND CONDUIT |
| T | TELEPHONE |
| TV | CABLE |

SHEET 1 OF 12

| PROJECT NO: 2265-00-74 | HWY: LOCAL STREET | COUNTY: MILWAUKEE | TRAFFIC SIGNAL CONDUIT DETAILS | SHEET 59 | E |
|---|---|---|---|---|---|

2

NOTE: 1.) KEEP AREA BEHIND CURB FREE OF DEBRIS AND CONCRETE OVERPOUR.
2.) CONDUIT TO BE PLACED 6 INCHES ON CENTER DIRECTLY BEHIND CURB, UNLESS NOTED OR APPROVED BY ENGINEER.

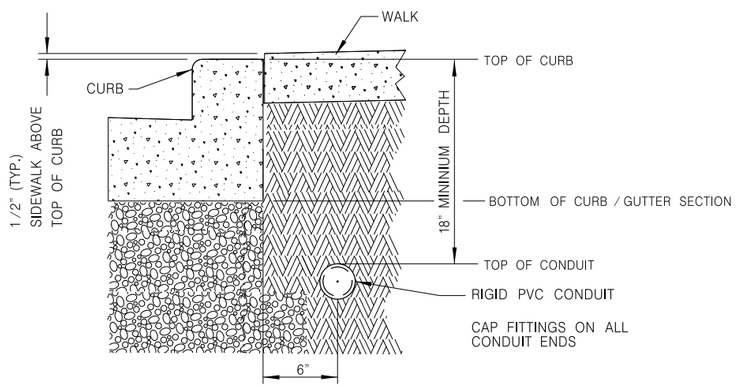


100 DETAIL "A"

TYPICAL CONDUIT INSTALLATION
BEHIND CURB

NOT TO SCALE

ANY DEVIATIONS FROM DETAIL WILL REQUIRE PERMISSION FROM STREET LIGHTING FORCES.
CONTACT DISPATCHER AT (414) 286-5944 FOR THE APPROPRIATE SHOP SUPERVISOR.

NOTE: 1.) KEEP AREA BEHIND CURB FREE OF DEBRIS AND CONCRETE OVERPOUR.

DETAIL "B"

CONDUIT TO BE PLACED 6" ON CENTER DIRECTLY BEHIND CURB,
UNLESS NOTED OR APPROVED BY ENGINEER.

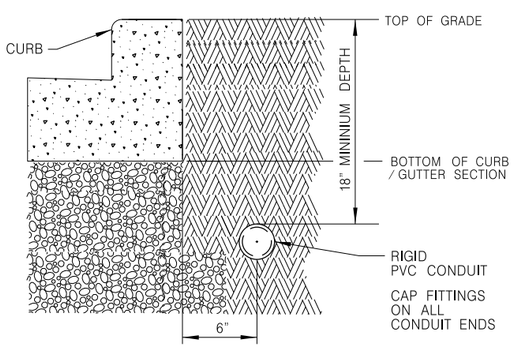


DETAIL "C"

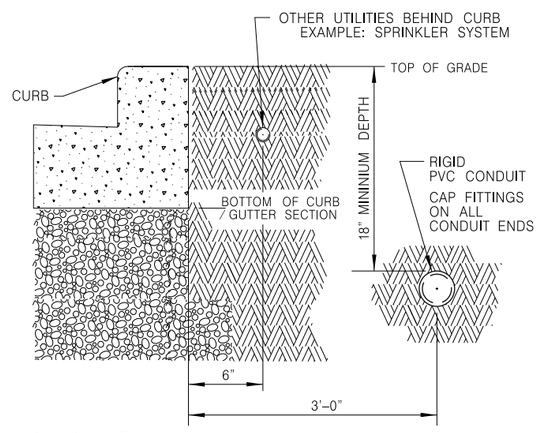


100 DETAIL "B" & "C"

TYPICAL CONDUIT INSTALLATION
BEHIND CURB

NOT TO SCALE

ANY DEVIATIONS FROM DETAIL WILL REQUIRE PERMISSION FROM STREET LIGHTING FORCES.
CONTACT DISPATCHER AT (414) 286-5944 FOR THE APPROPRIATE SHOP SUPERVISOR.

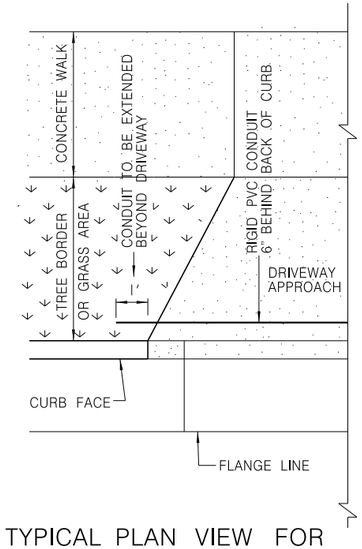


TYPICAL PLAN VIEW FOR
FLARED DRIVEWAY

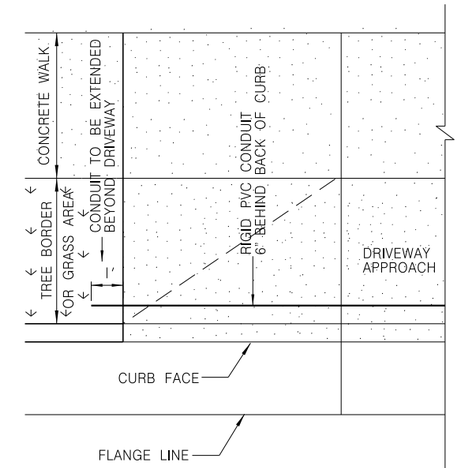


TYPICAL PLAN VIEW FOR
DEPRESSED DRIVEWAY

2

NOTE: 1.) KEEP AREA BEHIND CURB FREE OF DEBRIS AND CONCRETE OVERPOUR.
2.) CONDUIT TO BE PLACED 6 INCHES ON CENTER DIRECTLY BEHIND CURB, UNLESS NOTED OR APPROVED BY ENGINEER.

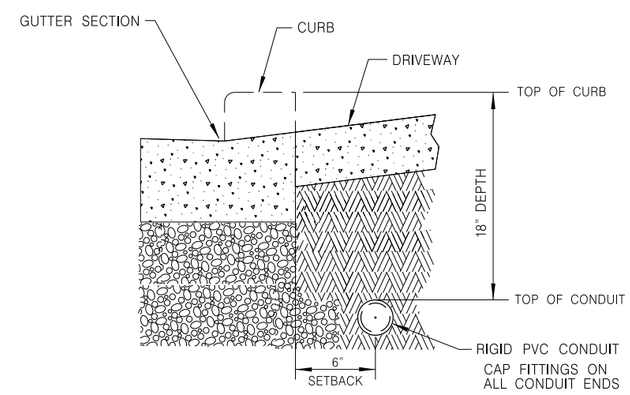


101 DETAIL

TYPICAL CONDUIT INSTALLATION
UNDER DRIVEWAYS OR PEDESTRIAN RAMPS

NOT TO SCALE

ANY DEVIATIONS FROM DETAIL WILL REQUIRE PERMISSION FROM STREET LIGHTING FORCES.
CONTACT DISPATCHER AT (414) 286-5944 FOR THE APPROPRIATE SHOP SUPERVISOR.

SHEET 2 OF 12

2

NOTE:

ARROW MARK SHALL BE INSCRIBED IN PAVEMENT SURFACE 1/4-INCH TO 3/8-INCH DEEP AT EACH LOCATION WHERE CONDUITS ARE PLACED UNDER THE PAVEMENT.

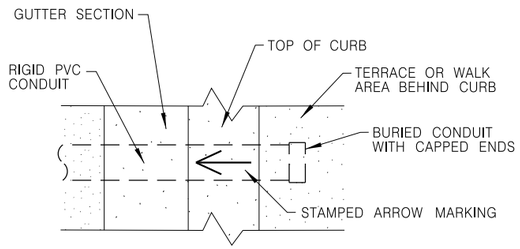


TOP VIEW OF CURB STAMPING

NOT TO SCALE

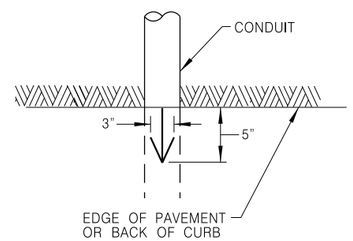


ARROW MARK

NOT TO SCALE

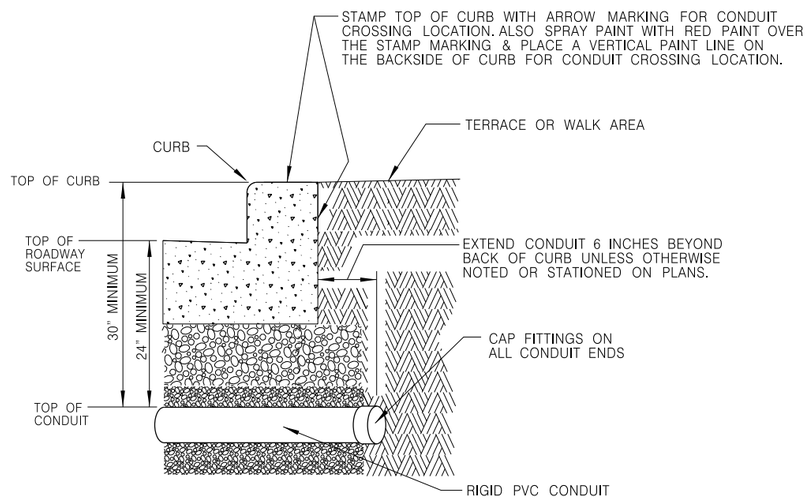


102 DETAIL VERSION #1

TYPICAL CONDUIT INSTALLATION FOR CROSSING ROADWAYS

NOT TO SCALE

ANY DEVIATIONS FROM DETAIL WILL REQUIRE PERMISSION FROM STREET LIGHTING FORCES. CONTACT DISPATCHER AT (414) 286-5944 FOR THE APPROPRIATE SHOP SUPERVISOR.

NOTE:

ARROW MARK SHALL BE INSCRIBED IN PAVEMENT SURFACE 1/4-INCH TO 3/8-INCH DEEP AT EACH LOCATION WHERE CONDUITS ARE PLACED UNDER THE PAVEMENT.

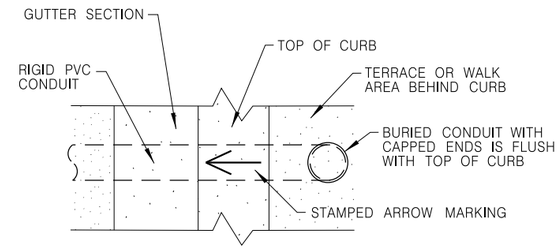


TOP VIEW OF CURB STAMPING

NOT TO SCALE

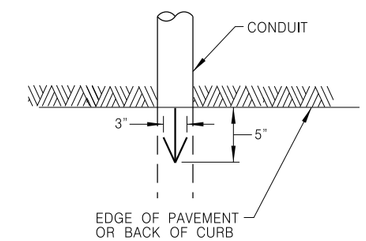


ARROW MARK

NOT TO SCALE

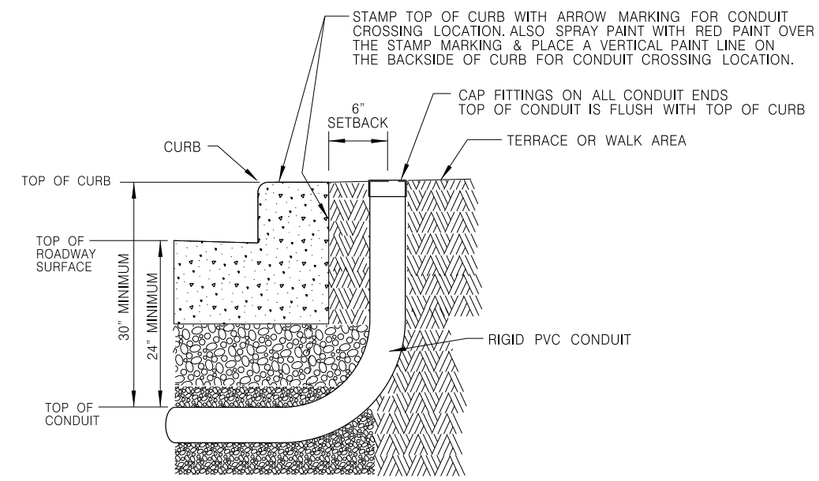


102 DETAIL VERSION #2

TYPICAL CONDUIT INSTALLATION FOR CROSSING ROADWAYS

NOT TO SCALE

ANY DEVIATIONS FROM DETAIL WILL REQUIRE PERMISSION FROM STREET LIGHTING FORCES. CONTACT DISPATCHER AT (414) 286-5944 FOR THE APPROPRIATE SHOP SUPERVISOR.

2

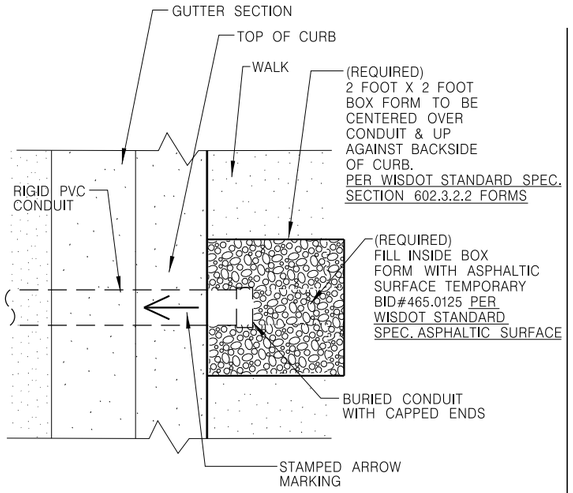


TOP VIEW OF CURB STAMPING

NOTE:
ARROW MARK SHALL BE INSCRIBED IN PAVEMENT SURFACE 1/4-INCH TO 3/8-INCH DEEP AT EACH LOCATION WHERE CONDUITS ARE PLACED UNDER THE PAVEMENT.

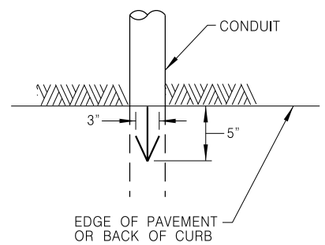


ARROW MARK

NOT TO SCALE

NOT TO SCALE

THE CONTRACTOR IS REQUIRED TO FORM OUT A OPENING IN THE CONCRETE WALK BEFORE POURING THE CONCRETE WALK AROUND TRAFFIC AND STREET LIGHTING FACILITIES.
(AS SHOWN IN DETAIL)

THE CONTRACTOR IS REQUIRED TO FILL IN THE FORMED OUT AREA OPENING IN THE CONCRETE WALK WITH AN ASPHALTIC SURFACE (TEMPORARY), AFTER POURING THE CONCRETE WALK AROUND TRAFFIC AND STREET LIGHTING FACILITIES.
(AS SHOWN IN DETAIL)

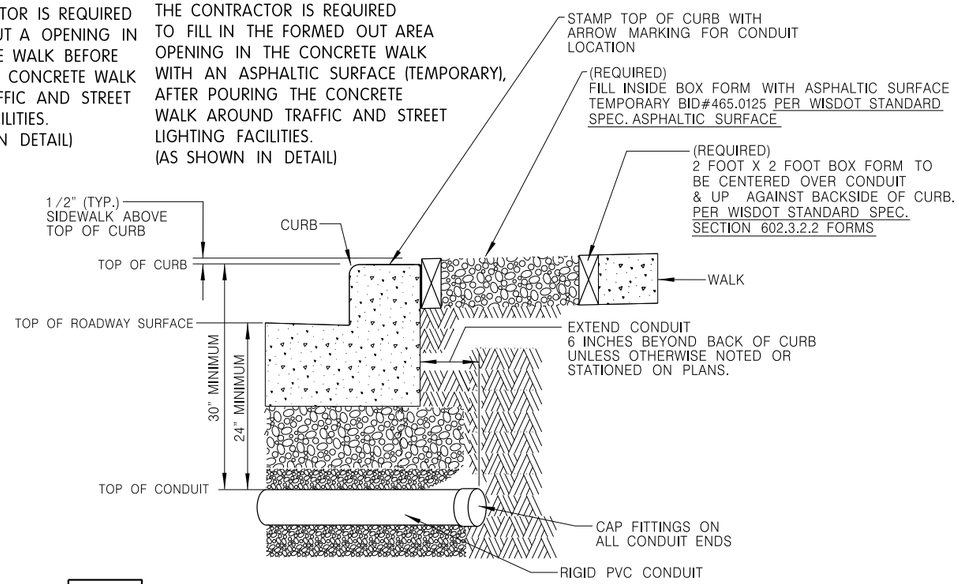


103

DETAIL VERSION #1

NOT TO SCALE

TYPICAL CONDUIT INSTALLATION
FOR CROSSING ROADWAYS
FROM FULL WALK AREAS

ANY DEVIATIONS FROM DETAIL WILL REQUIRE PERMISSION FROM STREET LIGHTING FORCES.
CONTACT DISPATCHER AT (414) 286-5944 FOR THE APPROPRIATE SHOP SUPERVISOR.

2

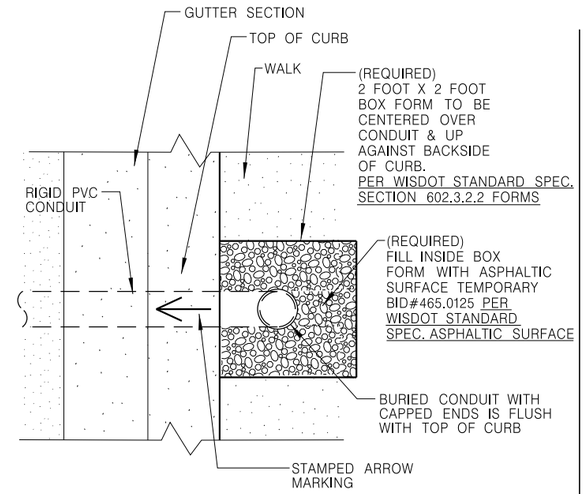


TOP VIEW OF CURB STAMPING

NOTE:
ARROW MARK SHALL BE INSCRIBED IN PAVEMENT SURFACE 1/4-INCH TO 3/8-INCH DEEP AT EACH LOCATION WHERE CONDUITS ARE PLACED UNDER THE PAVEMENT.

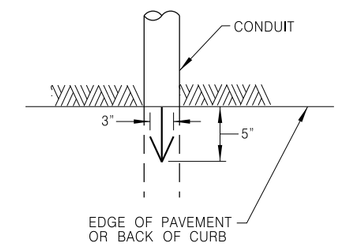


ARROW MARK

NOT TO SCALE

NOT TO SCALE

THE CONTRACTOR IS REQUIRED TO FORM OUT A OPENING IN THE CONCRETE WALK BEFORE POURING THE CONCRETE WALK AROUND TRAFFIC AND STREET LIGHTING FACILITIES.
(AS SHOWN IN DETAIL)

THE CONTRACTOR IS REQUIRED TO FILL IN THE FORMED OUT AREA OPENING IN THE CONCRETE WALK WITH CRUSHED GRAVEL, AFTER POURING THE CONCRETE WALK AROUND TRAFFIC AND STREET LIGHTING FACILITIES.
(AS SHOWN IN DETAIL)

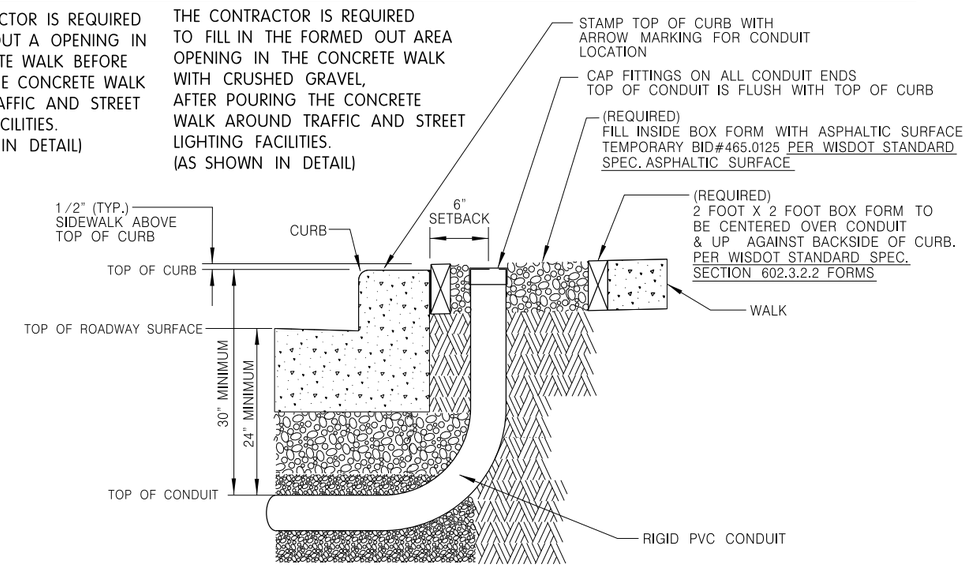


103

DETAIL VERSION #2

NOT TO SCALE

TYPICAL CONDUIT INSTALLATION
FOR CROSSING ROADWAYS
FROM FULL WALK AREAS

ANY DEVIATIONS FROM DETAIL WILL REQUIRE PERMISSION FROM STREET LIGHTING FORCES.
CONTACT DISPATCHER AT (414) 286-5944 FOR THE APPROPRIATE SHOP SUPERVISOR.

SHEET 4 OF 12

NOTE: CAP FITTINGS ON CONDUIT ENDS

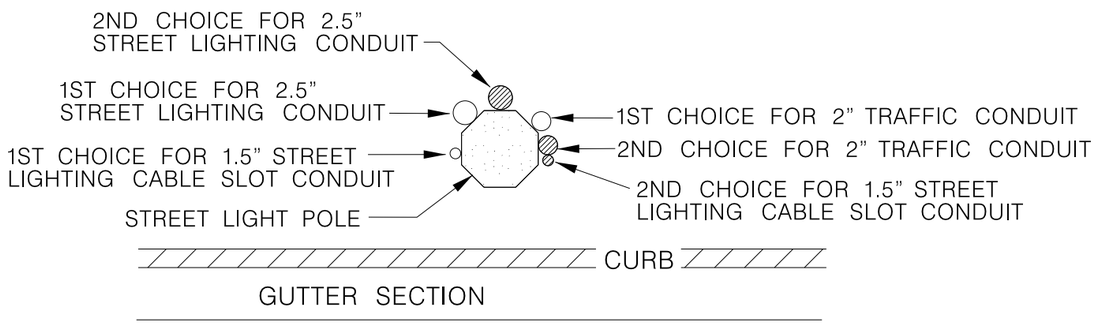


DIRECTION OF TRAFFIC AT CURB

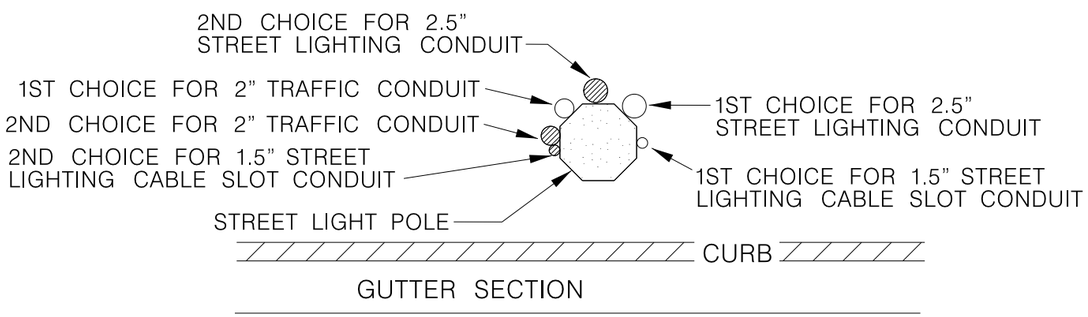


DIRECTION OF TRAFFIC AT CURB

104 DETAIL

TYPICAL TRAFFIC SIGNAL RISER AND STREET LIGHTING CONDUIT LOCATIONS ON LIGHT POLES DEPENDING ON DIRECTION OF TRAFFIC AT CURB

NOT TO SCALE

ANY DEVIATIONS FROM DETAIL WILL REQUIRE PERMISSION FROM TRAFFIC / STREET LIGHTING FORCES. CONTACT DISPATCHER AT (414) 286-5944 FOR THE APPROPRIATE SHOP SUPERVISOR.

THE CONTRACTOR IS REQUIRED TO FORM OUT A OPENING IN THE CONCRETE WALK BEFORE POURING THE CONCRETE WALK AROUND TRAFFIC AND STREET LIGHTING FACILITIES. (AS SHOWN IN ADJACENT DETAIL)

THE CONTRACTOR IS REQUIRED TO FILL IN THE FORMED OUT AREA OPENING IN THE CONCRETE WALK WITH AN ASPHALTIC SURFACE (TEMPORARY), AFTER POURING THE CONCRETE WALK AROUND TRAFFIC AND STREET LIGHTING FACILITIES. (AS SHOWN IN ADJACENT DETAIL)

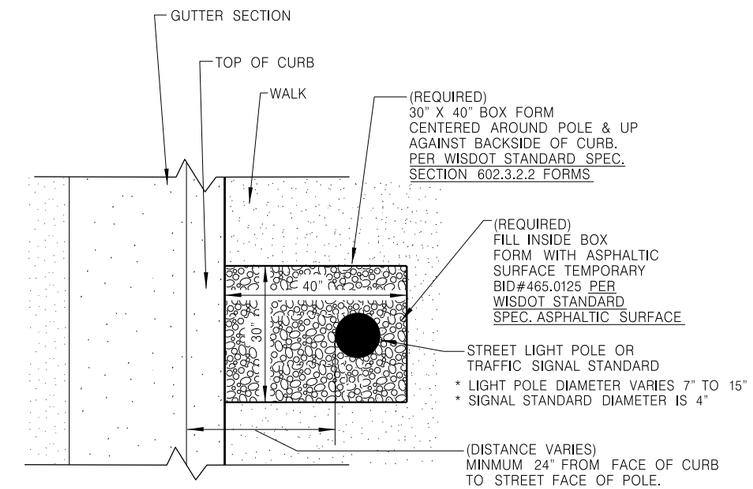


105 DETAIL

TYPICAL 30" X 40" BOX FORM AROUND STREET LIGHTING POLE OR TRAFFIC SIGNAL STANDARD

ANY DEVIATIONS FROM DETAIL WILL REQUIRE PERMISSION FROM STREET LIGHTING FORCES. CONTACT DISPATCHER AT (414) 286-5944 FOR THE APPROPRIATE SHOP SUPERVISOR.

NOT TO SCALE

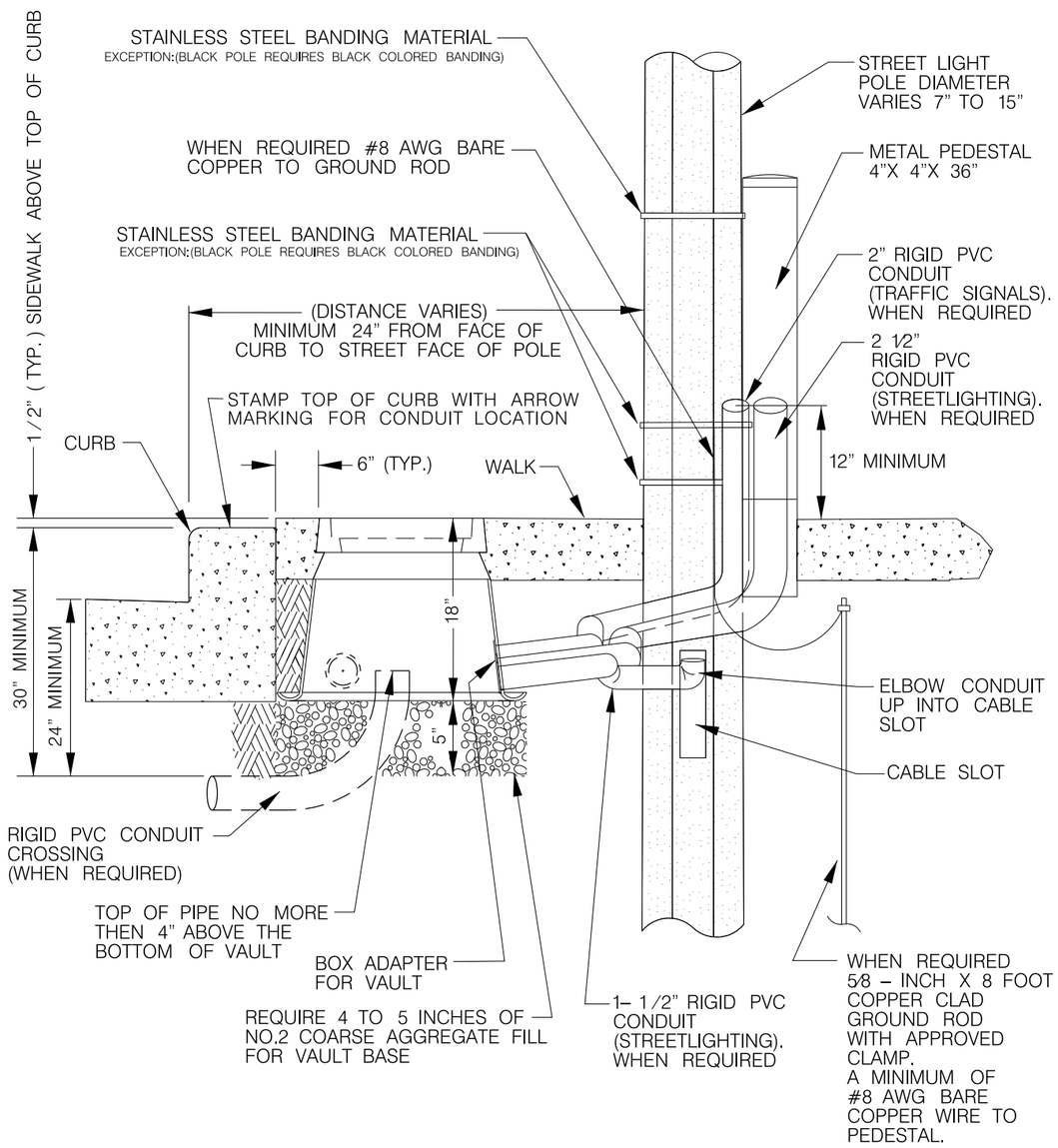


108 DETAIL VERSION #1

TYPICAL CONDUIT INSTALLATION FROM VAULT TO POLE

NOT TO SCALE

ANY DEVIATIONS FROM DETAIL WILL REQUIRE PERMISSION FROM STREET LIGHTING FORCES.
CONTACT DISPATCHER AT (414) (414) 286-5944 FOR THE APPROPRIATE SHOP SUPERVISOR.

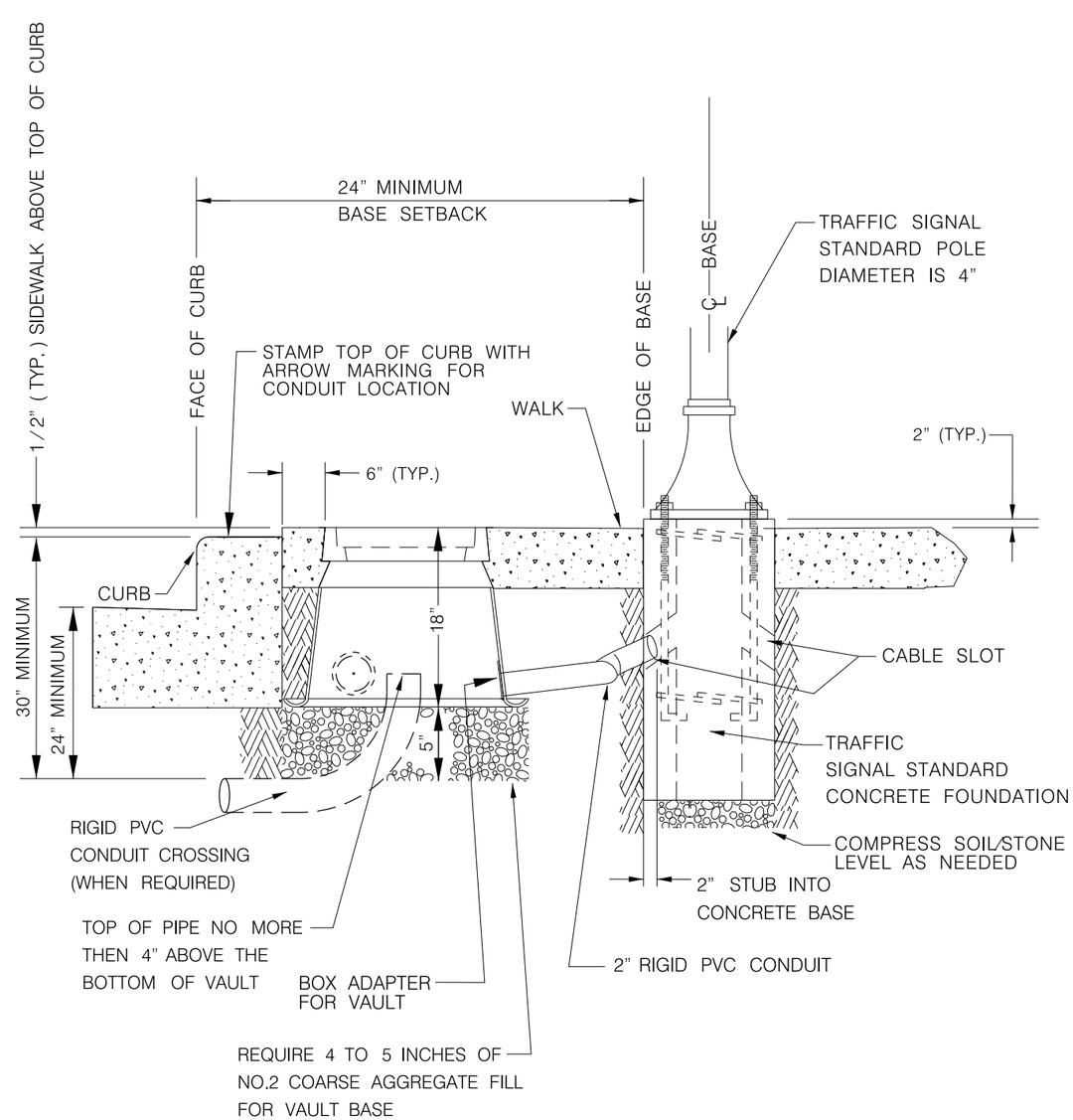


109 DETAIL

TYPICAL CONDUIT INSTALLATION FROM VAULT TO SIGNAL STANDARD AND TYPICAL BASE INSTALLATION

NOT TO SCALE

ANY DEVIATIONS FROM DETAIL WILL REQUIRE PERMISSION FROM TRAFFIC & LIGHTING FORCES.
CONTACT DISPATCHER AT (414) 286-5944 FOR THE APPROPRIATE SHOP SUPERVISOR.

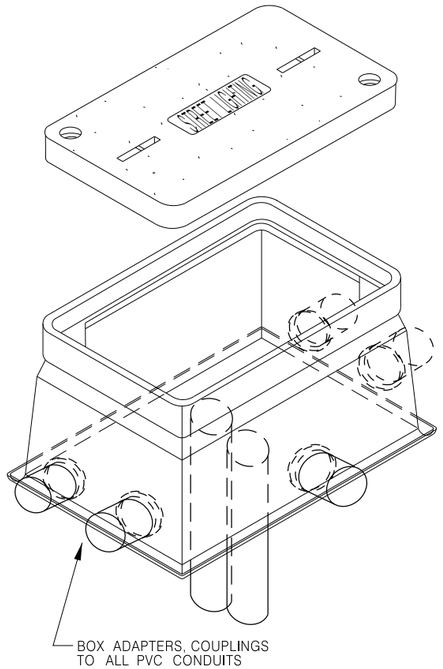


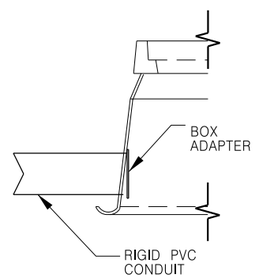


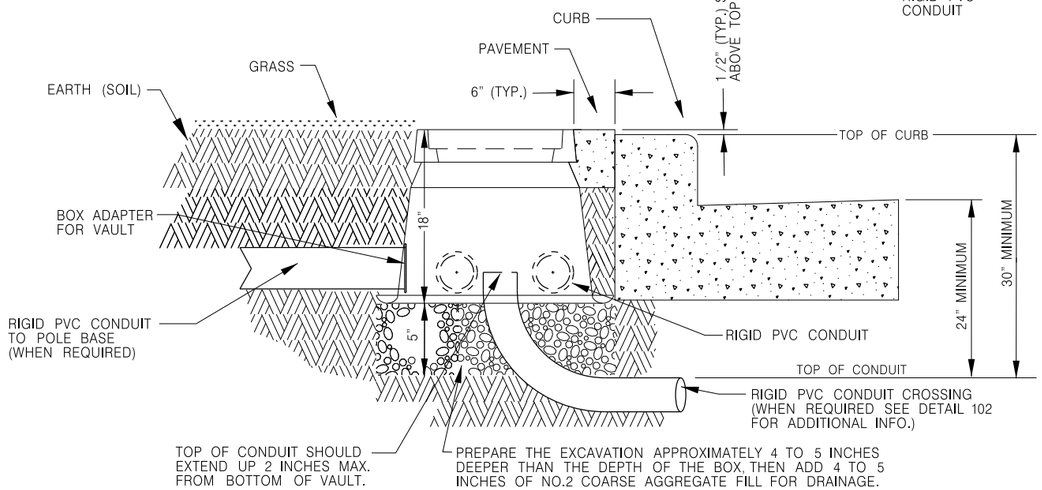


112 DETAIL

TYPICAL VAULT INSTALLATION IN EITHER PAVEMENT OR GRASS AREAS

NOT TO SCALE

ANY DEVIATIONS FROM DETAIL WILL REQUIRE PERMISSION FROM STREET LIGHTING FORCES.
CONTACT DISPATCHER AT (414) 286–5944 FOR THE APPROPRIATE SHOP SUPERVISOR.

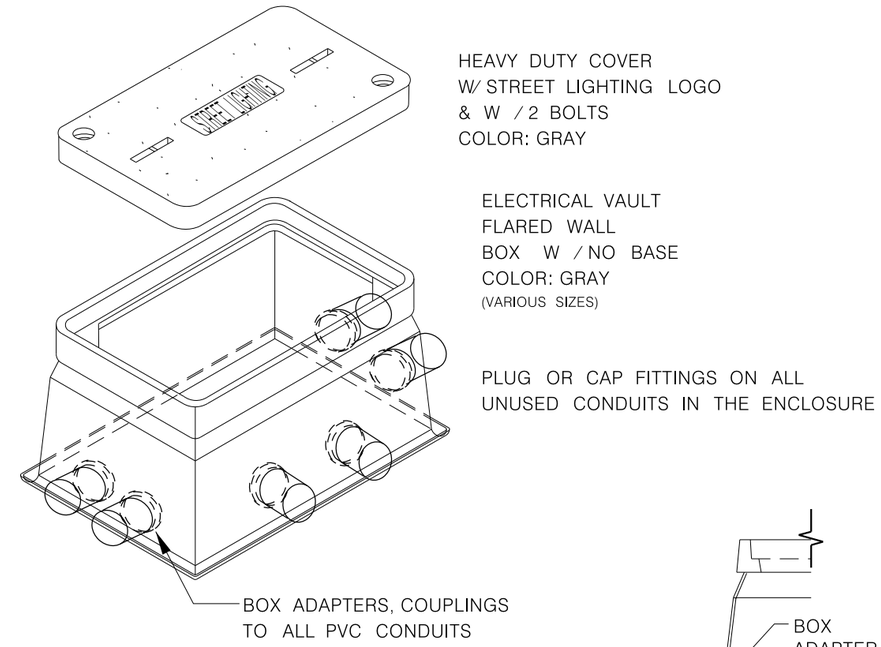


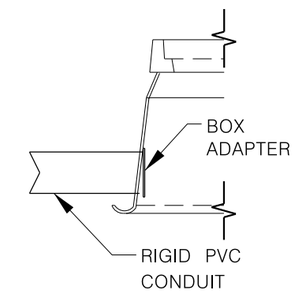


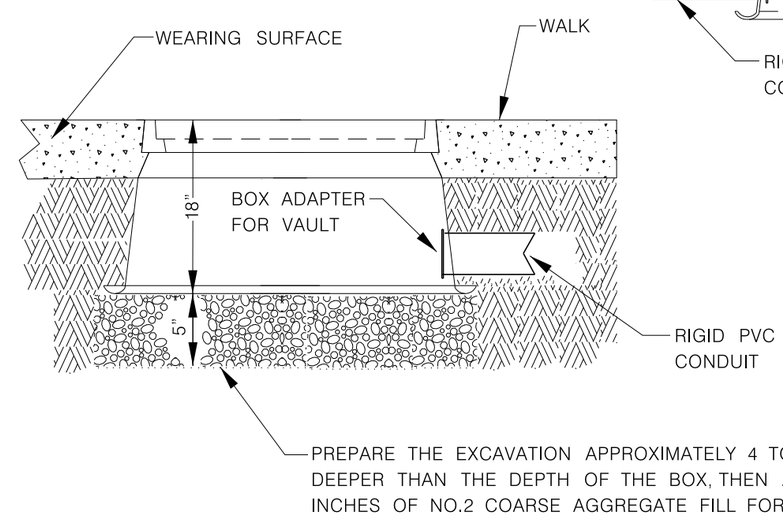


113 DETAIL

TYPICAL VAULT INSTALLATION IN SIDEWALK

ANY DEVIATIONS FROM DETAIL WILL REQUIRE PERMISSION FROM STREET LIGHTING FORCES.
CONTACT DISPATCHER AT (414) 286–5944 FOR THE APPROPRIATE SHOP SUPERVISOR.

NOT TO SCALE

THE CONTRACTOR IS REQUIRED TO INSTALL EXPANSION JOINT FILLER INTO THE CONCRETE WALK, WHICH SHALL BE 1/2" WIDE MINIMUM TO BE USED TO CREATE A SEPARATION BETWEEN A SMALL CONCRETE AREA AROUND THE TRAFFIC & STREET LIGHTING FACILITIES AND THE REST OF THE CONCRETE WALK.

THE BOX SIZE OF THE AREA CREATED USING THE EXPANSION JOINT FILLER IS STANDARD AROUND LIGHT POLES AND TRAFFIC SIGNALS, BUT WILL VARY WHEN PLACED AROUND TRAFFIC & LIGHTING CONTROL CABINETS.

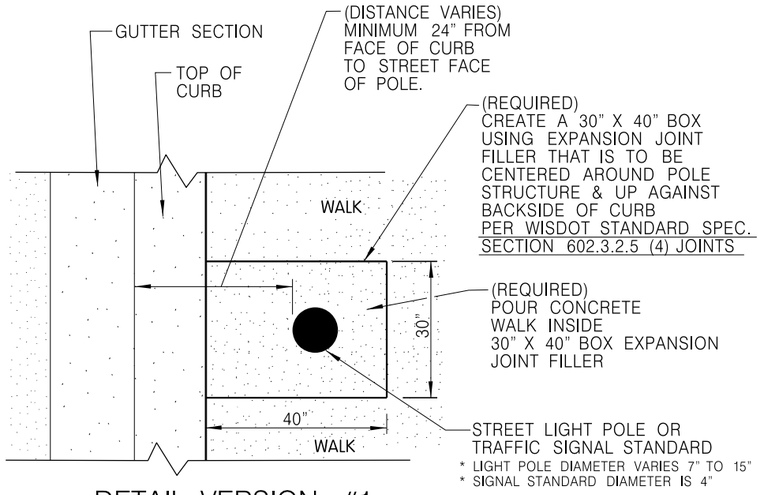


122 DETAIL VERSION #1

NOT TO SCALE

## TYPICAL 30" X 40" BOX EXPANSION JOINT FILLER AROUND STREET LIGHTING AND TRAFFIC SIGNAL FACILITIES

ANY DEVIATIONS FROM DETAIL WILL REQUIRE PERMISSION FROM STREET LIGHTING FORCES.
CONTACT DISPATCHER AT (414) 286-5944 FOR THE APPROPRIATE SHOP SUPERVISOR.

THE CONTRACTOR IS REQUIRED TO INSTALL EXPANSION JOINT FILLER INTO THE CONCRETE WALK, WHICH SHALL BE 1/2" WIDE MINIMUM TO BE USED TO CREATE A SEPARATION BETWEEN A SMALL CONCRETE AREA AROUND THE TRAFFIC & STREET LIGHTING FACILITIES AND THE REST OF THE CONCRETE WALK.

THE BOX SIZE OF THE AREA CREATED USING THE EXPANSION JOINT FILLER IS STANDARD AROUND LIGHT POLES AND TRAFFIC SIGNALS, BUT WILL VARY WHEN PLACED AROUND TRAFFIC & LIGHTING CONTROL CABINETS.

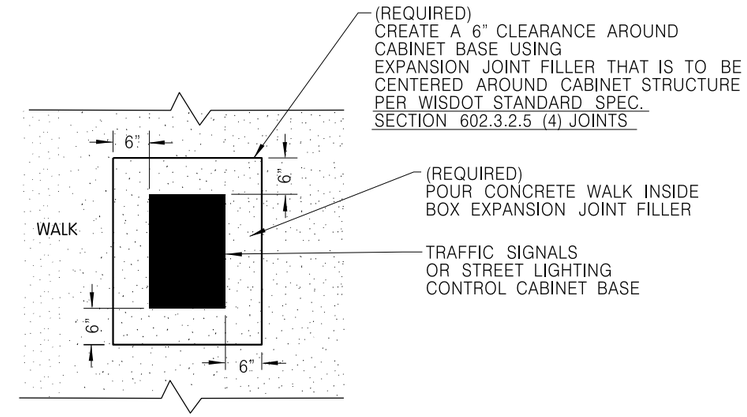


122 DETAIL VERSION #2

NOT TO SCALE

## TYPICAL BOX EXPANSION JOINT FILLER AROUND TRAFFIC SIGNAL OR STREET LIGHTING CONTROL CABINET

ANY DEVIATIONS FROM DETAIL WILL REQUIRE PERMISSION FROM STREET LIGHTING FORCES.
CONTACT DISPATCHER AT (414) 286-5944 FOR THE APPROPRIATE SHOP SUPERVISOR.

2

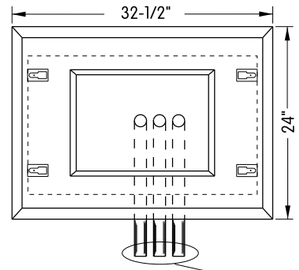


NOTE:
REFER TO STREET LIGHTING AND TRAFFIC SIGNAL CONDUIT PLAN FOR THE QUANTITY & SIZE OF CONDUIT REQUIRED IN THE CONCRETE CONTROL CABINET BASE

PLAN VIEW

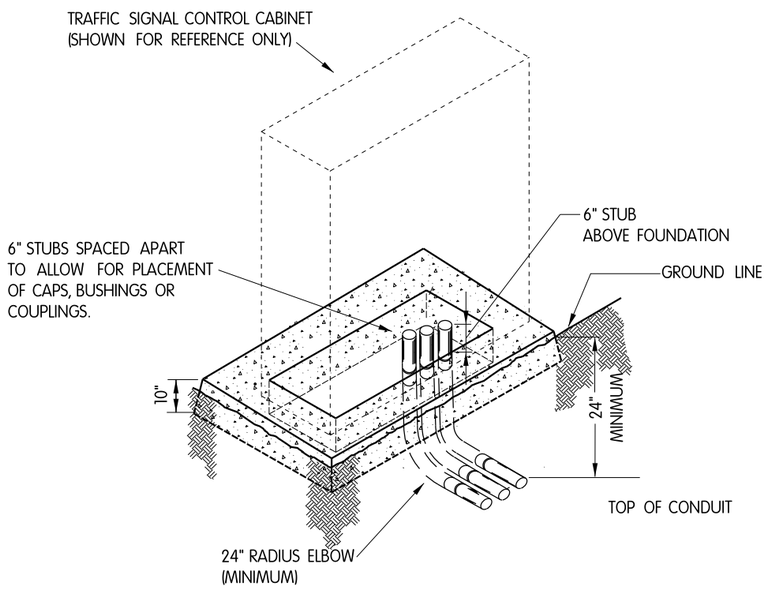


ISOMETRIC VIEW

125A

TYPICAL DETAIL

CONDUIT INSTALLATION TO TRAFFIC CONTROL CABINET CONCRETE FOUNDATION

NOT TO SCALE

ANY DEVIATIONS FROM DETAIL WILL REQUIRE PERMISSION FROM STREET LIGHTING FORCES.
CONTACT DISPATCHER AT (414) 286-5944 FOR THE APPROPRIATE SHOP SUPERVISOR.

2

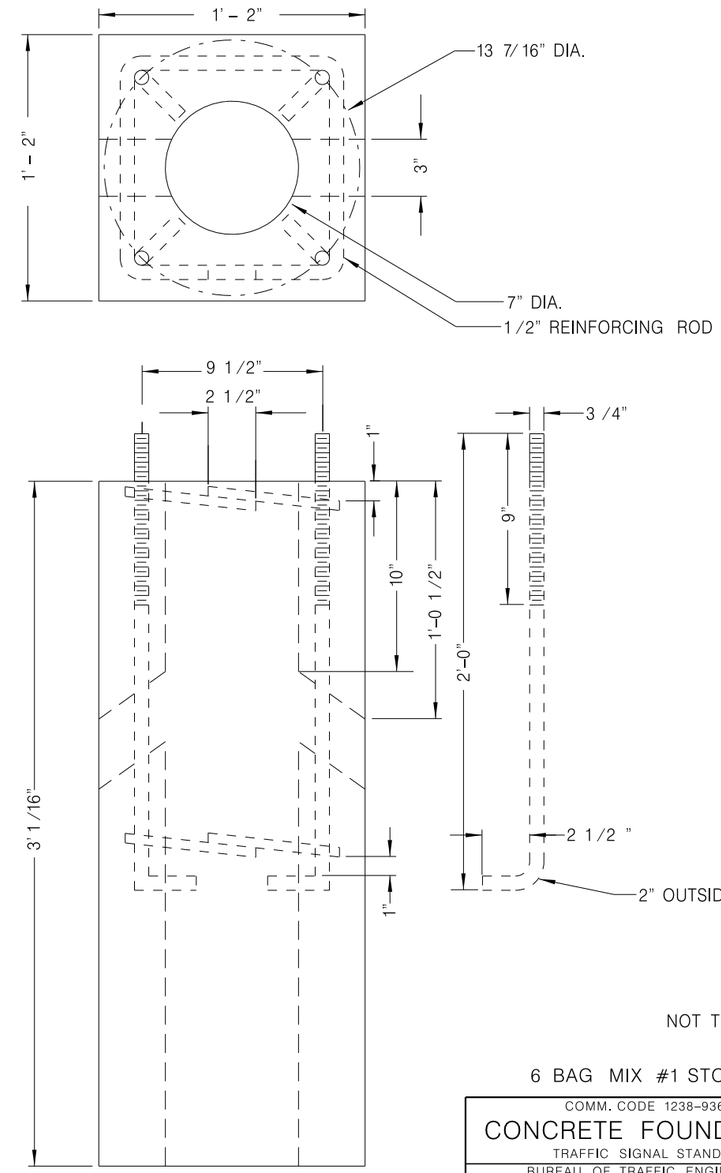


NOT TO SCALE

6 BAG MIX #1 STONE

126

DETAIL

TYPICAL TRAFFIC SIGNAL STANDARD CONCRETE FOUNDATION

| COMM. CODE 1238-936 | | | | |
|---|---|---|---|---|
| CONCRETE FOUNDATION<br>TRAFFIC SIGNAL STANDARD | | | | |
| BUREAU OF TRAFFIC ENGINEERING AND ELECTRICAL SERVICES<br>D.P.W. CITY OF MILWAUKEE | | | | |
| TRAFFIC CONTROL MATERIAL | | | | |
| DATE 4-18-75 | SCALE Not To Scale | DRAWN J.H.S. | CHECKED B.J.T. | APPROVED R.J.B. |
| SUPERSEDES | REVISED DATE 07-29-03 | DRG. C-75-563-T | | |
| SUPERSEDED BY | NEW DRG. F-82-535-T | | | |

ANY DEVIATIONS FROM DETAIL WILL REQUIRE PERMISSION FROM TRAFFIC SIGNAL FORCES.
CONTACT DISPATCHER AT (414) 286-3687 FOR SHOP SUPERVISOR.

SHEET 9 OF 12

## GENERAL NOTES

DETAILS OF CONSTRUCTION, MATERIALS AND WORKMANSHIP NOT SHOWN ON THIS DRAWING SHALL CONFORM TO THE PERTINENT REQUIREMENTS OF THE CONTRACT.

BASES SHALL BE EXCAVATED BY USE OF A CIRCULAR AUGER.

TOP SURFACES OF CONCRETE BASES SHALL BE TROWEL FINISHED AND LEVEL.

CONDUIT SIZES AND LOCATIONS SHALL BE AS SHOWN ON THE PLANS.

THE FINAL OR TERMINATING CONCRETE BASE IN A CONDUIT RUN SHALL HAVE A 6" EXIT STUB INSTALLED FOR FUTURE CABLING USE. THE EXIT STUB SHALL BE SIZED AS USED THROUGHOUT THE CONDUIT RUN AS SHOWN AT THE ENTRANCE OF THE BASE.

MINIMUM BENDING RADIUS OF CONDUIT IS EQUAL TO 6 X THE DIAMETER. CONDUIT HEIGHT ABOVE CONCRETE BASES SHALL BE 4 INCHES. ALL METALLIC CONDUIT ENDS SHALL BE REAMED AND THREADED. NONMETALLIC CONDUIT SHALL HAVE BELL END INSTALLED. ALL CONDUIT SHALL BE SLOPED TO PULL BOX.

ALL CONDUIT ENDS AT THE TOP OF CONCRETE BASES SHALL BE CAPPED IF METALLIC OR PLUGGED IF NONMETALLIC IMMEDIATELY AFTER PLACEMENT AND BEFORE CONCRETE IS POURED. CONDUIT IN WHICH WIRE OR CABLE IS NOT INSTALLED SHALL REMAIN CAPPED OR PLUGGED.

BELL ENDS SHALL BE INSTALLED ON ALL PVC CONDUIT EXPOSED AT THE TOP OF CONCRETE BASES BEFORE INSTALLATION OF CABLE OR WIRE.

ENDS OF CONDUIT INSTALLED BELOW GRADE FOR FUTURE USE SHALL BE CAPPED IF METALLIC OR PLUGGED IF NONMETALLIC.

WHEN REQUIRED TO CONNECT NONMETALLIC CONDUIT TO METALLIC CONDUIT, ONLY ADAPTER FITTINGS, U.L. LISTED FOR ELECTRICAL USE, SHALL BE USED.

IF A BASE REQUIRES A DEEP FORM BECAUSE OF LOOSE DIRT OR FILL, THE FORM SHALL BE REMOVED BEFORE BACKFILLING AROUND THE BASE. BACKFILL SHALL BE TAMPED TIGHT AGAINST THE BARE CONCRETE BASE IN LAYERS OF 1 FOOT OR LESS.

A NO. 4 AWG, STRANDED COPPER EQUIPMENT GROUNDING CONDUCTOR SHALL BE EXOTHERMICALLY WELDED TO THE EQUIPMENT GROUNDING ELECTRODE (GROUND ROD).

THE EQUIPMENT GROUNDING CONDUCTOR SHALL ENTER THE BASE THROUGH A 1 INCH CONDUIT INSTALLED FOR GROUNDING PURPOSES, LEAVING A 4 FOOT COIL OF WIRE ABOVE THE CONCRETE BASE. THE EQUIPMENT GROUNDING CONDUCTOR SHALL BE NEATLY COILED AND THE COILS TIED TOGETHER.

WELDING OF THE ANCHOR RODS TO THE CAGE IS UNACCEPTABLE. TEMPLATES SHALL BE USED.

BAR STEEL REINFORCEMENT SHALL BE COATED WITH POWDERED EPOXY RESIN IN ACCORDANCE WITH SECTION 505 OF THE STANDARD SPECIFICATIONS (LATEST EDITION).

ANCHOR RODS SHALL BE INSTALLED WITH MISALIGNMENTS OF LESS THAN 1:40 FROM VERTICAL.

(1) THE MINIMUM DEPTH OF CONDUIT EXITING THE CONCRETE BASE AND INSTALLED BELOW THE TRAVELED WAY SHALL BE 24 INCHES. THE MINIMUM DEPTH OF CONDUIT EXITING THE CONCRETE BASE THAT IS NOT INSTALLED BELOW THE TRAVELED WAY SHALL BE 18 INCHES. THE MAXIMUM DEPTH OF ALL CONDUIT SHALL BE 36 INCHES, (GREATER THAN 36 INCHES IF INSTALLED IN BREAKER-RUN), EXCEPT WITH WRITTEN APPROVAL BY THE ENGINEER.

(2) (10) NO. 8 X 15'-7" BAR STEEL REINFORCEMENT.

(3) (17) NO. 4 X 9'-0" BAR STEEL REINFORCEMENT @ 1'-0" C-C.

| | |
|---|---|
| CONCRETE MASONRY | fc=3,500 p.s.i. |
| HIGH STRENGTH BAR STEEL REINFORCEMENT, GRADE 60 | fy=60,000 p.s.i. |
| ANCHOR RODS, AASHTO M314 GRADE 55 | fy=55,000 p.s.i. |
| TEMPLATES, ASTM, A709 GRADE 36 | fy=36,000 p.s.i. |

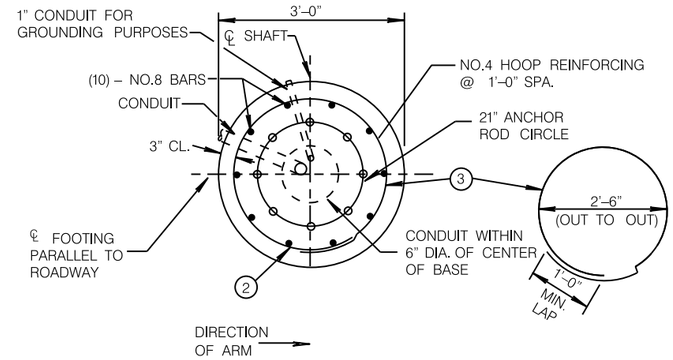


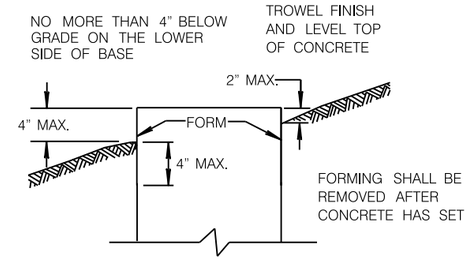


FORMING DETAIL

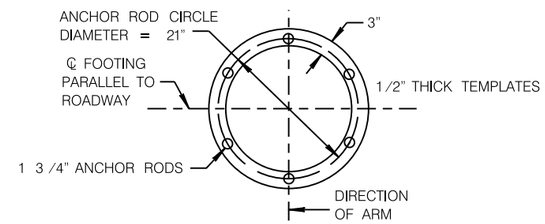


TOP AND BOTTOM TEMPLATES

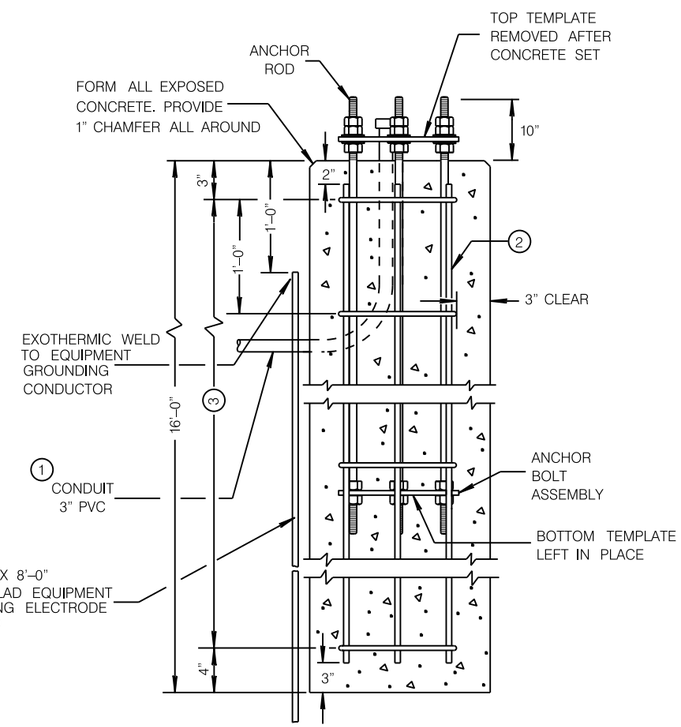


CONCRETE BASE TYPE 10 SPECIAL

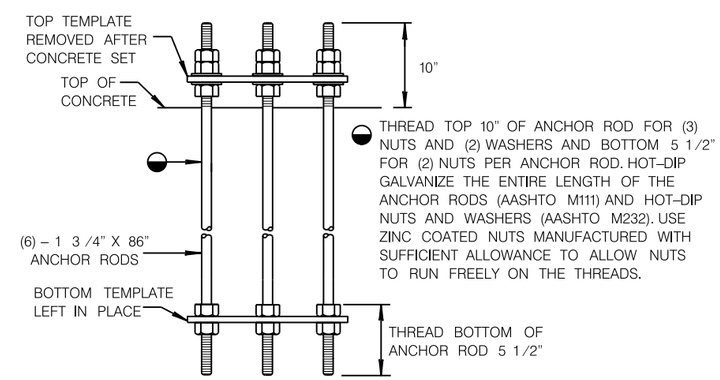


ANCHOR BOLT ASSEMBLY DETAIL

CONCRETE BASE TYPE 10 SPECIAL

ANCHOR ASSEMBLY

| QUANTITY REQUIREMENTS | |
|---|---|
| APPROX. CUBIC YARDS OF CONCRETE | 4.19 |
| LBS. OF HOOP BAR STEEL | 103 |
| LBS. OF VERTICAL BAR STEEL | 417 |

SHEET 10 OF 12

CONCRETE BASE TYPE 10 SPECIAL

CITY OF MILWAUKEE
DEPARTMENT OF PUBLIC WORKS

| | | |
|---|---|---|
| REVISED: | DECEMBER 2014 (DATE) | 2013 AASHTO (REVISION) |
| REVISED: | JULY 2015 (DATE) | 2015 DESIGN UPDATE (REVISION) |
| REVISED: | NOVEMBER 2015 (DATE) | ANCHOR ROD PROJECTION UPDATE (REVISION) |

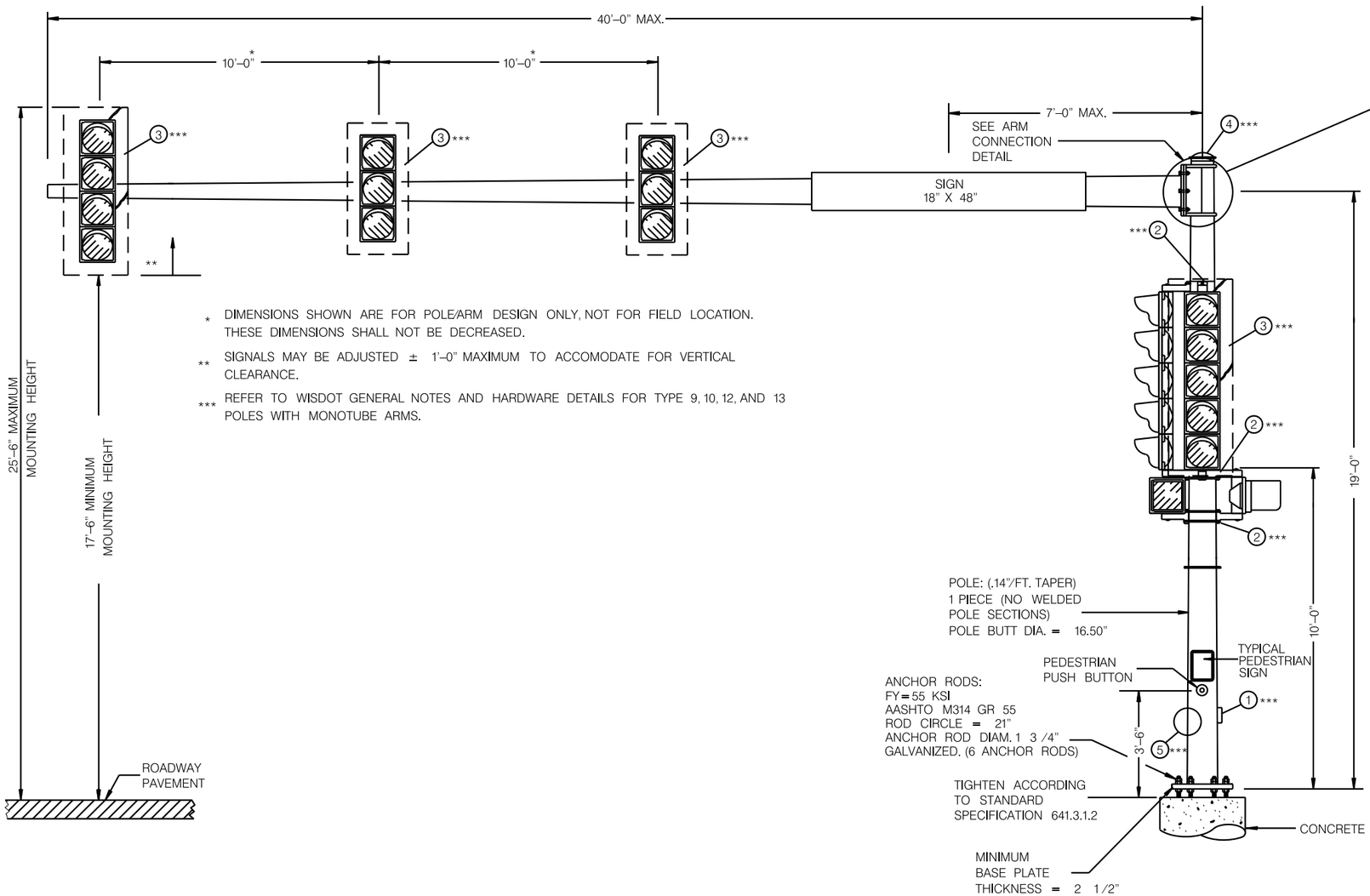


* DIMENSIONS SHOWN ARE FOR POLE/ARM DESIGN ONLY, NOT FOR FIELD LOCATION. THESE DIMENSIONS SHALL NOT BE DECREASED.

** SIGNALS MAY BE ADJUSTED ± 1'–0" MAXIMUM TO ACCOMODATE FOR VERTICAL CLEARANCE.

*** REFER TO WISDOT GENERAL NOTES AND HARDWARE DETAILS FOR TYPE 9, 10, 12, AND 13 POLES WITH MONOTUBE ARMS.

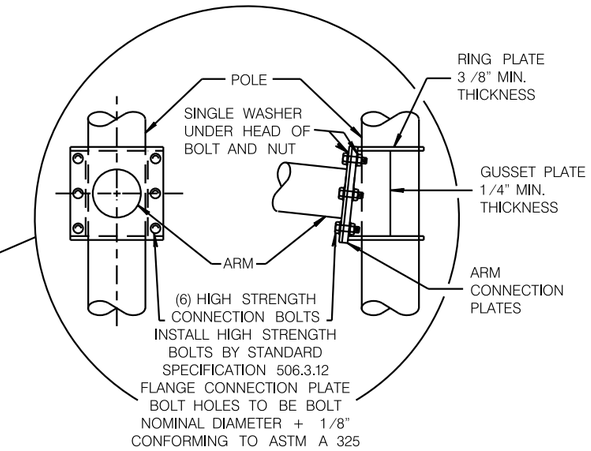


6 BOLT ARM CONNECTION DETAIL

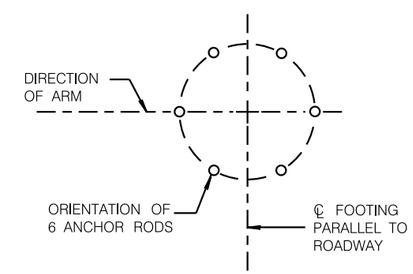


ANCHOR ROD LOCATION

(MAXIMUM LOAD)

TYPE 12 POLE SPECIAL
35'– 40' MONOTUBE ARM

SHEET 11 OF 12

TYPE 12 POLE SPECIAL
35'– 40' MONOTUBE ARM

CITY OF MILWAUKEE
DEPARTMENT OF PUBLIC WORKS

| | | |
|---|---|---|
| REVISED: | DECEMBER 2014 (DATE) | 2013 AASHTO (REVISION) |
| REVISED: | JULY 2015 (DATE) | 2015 DESIGN UPDATE (REVISION) |

| PROJECT NO: 2265–00–74 | HWY: LOCAL STREET | COUNTY: MILWAUKEE | TRAFFIC SIGNAL CONDUIT DETAILS | SHEET 69 | E |
|---|---|---|---|---|---|

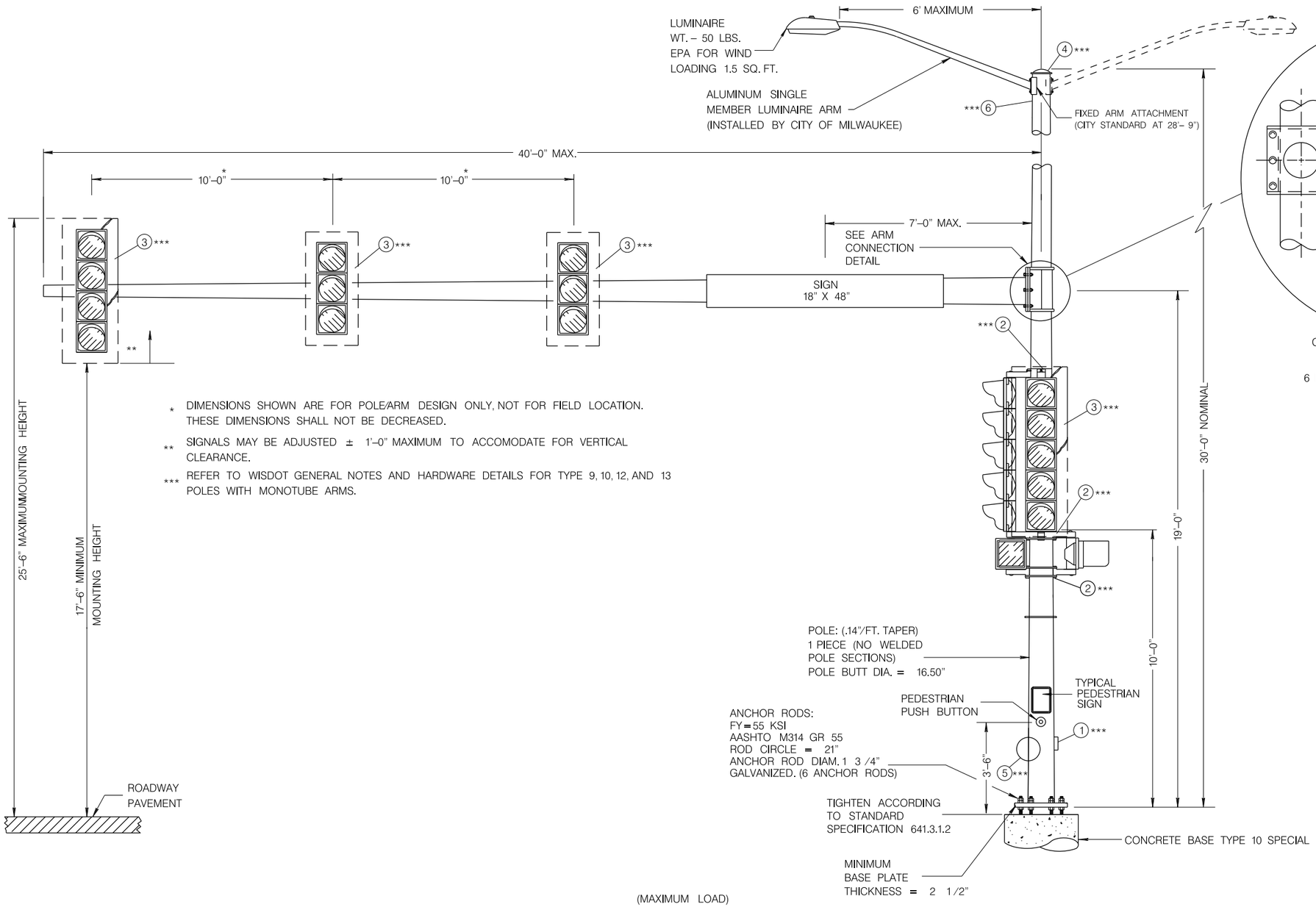


* DIMENSIONS SHOWN ARE FOR POLE/ARM DESIGN ONLY, NOT FOR FIELD LOCATION. THESE DIMENSIONS SHALL NOT BE DECREASED.

** SIGNALS MAY BE ADJUSTED ± 1'–0" MAXIMUM TO ACCOMODATE FOR VERTICAL CLEARANCE.

*** REFER TO WISDOT GENERAL NOTES AND HARDWARE DETAILS FOR TYPE 9, 10, 12, AND 13 POLES WITH MONOTUBE ARMS.

(MAXIMUM LOAD)

TYPE 13 POLE SPECIAL
35'– 40' MONOTUBE ARM

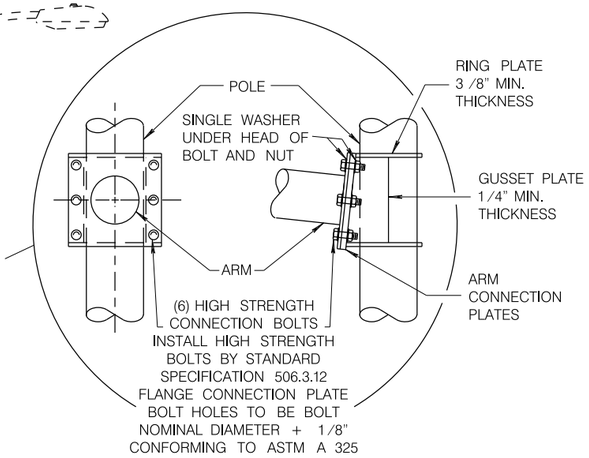


6 BOLT ARM CONNECTION DETAIL

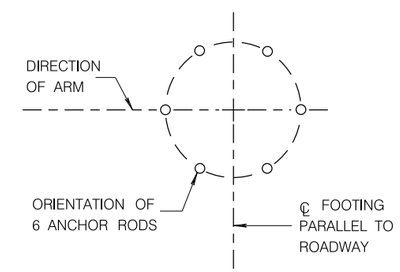


ANCHOR ROD LOCATION

TYPE 13 POLE SPECIAL
35'– 40' MONOTUBE ARM

CITY OF MILWAUKEE
DEPARTMENT OF PUBLIC WORKS

| | | |
|---|---|---|
| REVISED: | DECEMBER 2014 (DATE) | 2013 AASHTO (REVISION) |
| REVISED: | JULY 2015 (DATE) | 2015 DESIGN UPDATE (REVISION) |

SHEET 12 OF 12

| PROJECT NO: 2265–00–74 | HWY: LOCAL STREET | COUNTY: MILWAUKEE | TRAFFIC SIGNAL CONDUIT DETAILS | SHEET 70 | E |
|---|---|---|---|---|---|

2

1.5"; 2"; 2.5"
13"X24"X18" VAULT
29+49; 105.40' LT

RELOCATED POLE
(BY CITY)

TYPE 10 BASE
TYPE 10 POLE
30+03.06, 106.50' LT.

SIGNAL BASE
29+36; .85.5' LT

20' ARM

13"X24"X18" VAULT
30+08.5; 95.00' LT

2-3"
SPECIAL

TYPE 10 SPECIAL BASE
TYPE 12 SPECIAL POLE
29+31.06, 86.00' LT.

RELOCATED CONTROL
CABINET (BY CITY)

13"X24"X18" VAULT
29+33; 83.00' LT

STREET

SIGNAL BASE
30+16; 85.50' LT

17"X30"X18" VAULT
30+21; 83.00' LT

2-3"
SPECIAL

35' ARM

RELOCATED POLE
(BY CITY)

17"X30"X18" VAULT
29+33; 38.10' LT

SIGNAL BASE
30+15.5; 42.10' LT

17"X30"X18" VAULT
30+18; 42.10' LT

NORTH 27TH

2-3"
SPECIAL

SIGNAL BASE
29+36; 19.10' LT

1.5"; 2"; 2.5"

17"X30"X18" VAULT
29+32; 19.10' LT

RELOCATED POLE
(BY CITY)

17"X30"X18" VAULT
30+29; 23.00' LT

2-3"
SPECIAL

35' ARM

SIGNAL BASE
29+36; 22.00' RT

13"X24"X18" VAULT
30+20; 20.80' RT

13"X24"X18" VAULT
29+49; 37.40' RT

TYPE 10 SPECIAL BASE
TYPE 12 SPECIAL POLE
30+16.00, 22.00' RT.

CONNECT TO EXISTING 2"PVC
AT SIGNAL SERVICE RISER

13"X24"X18" VAULT
29+17; 20.90' RT

TYPE 10 BASE
TYPE 10 POLE
29+49.56, 50.20' RT.

RELOCATED POLE
(BY CITY)

13"X24"X18" VAULT
30+03; 36.70' RT

20' ARM

WEST VLIET

## LEGEND

- STREET LIGHT POLE
- TRAFFIC SIGNAL MOUNTED ON LIGHT POLE
- EXISTING SIGNAL STANDARD BASE
- VAULT TO BE INSTALLED
- TRAFFIC CONTROL CABINET
- STREET LIGHTING ENCLOSURE
- PVC CONDUIT
- TRAFFIC SIGNAL BASE TO BE INSTALLED
- MONOTUBE MAST ARM BASE TO BE INSTALLED
- "XX" ARM — MAST ARM
- SIGNAL HEAD LOCATION ON MAST ARM
- "XX" ARM — EVP DETECTOR LOCATION ON MAST ARM
- CONCRETE BOX JOINT AROUND FACILITIES
- 000 — SEE DETAIL NUMBER FOR ADDITIONAL INFORMATION
- 0 MONOTUBE STRUCTURE NUMBER

## NOTE:

GENERAL NOTES MUST BE FOLLOWED WHEN INSTALLING MATERIALS FOR STREET LIGHTING AND TRAFFIC SIGNALS.

ALL CONDUIT SHALL BE SCHEDULE 40 RIGID PVC.

CONDUIT END CAPS REQUIRED ON ALL EMPTY CONDUIT.

PULL ROPE (3/8" NYLON) REQUIRED IN ALL CONDUIT.

SEE STREET LIGHTING & TRAFFIC SIGNAL CONDUIT DETAILS FOR ADDITIONAL INFORMATION AND REQUIREMENTS.

SEE UTILITY SPECIALS FOR ADDITIONAL INFORMATION AND ALL CONTACT NUMBERS.

CONTRACTOR IS REQUIRED TO CONTACT THE CITY OF MILWAUKEE ELECTRICAL SERVICES FOR FINAL INSPECTION AND APPROVAL OF ALL ELECTRICAL WORK BEFORE ANY MATERIALS ARE COVERED UP OR BACKFILLED.

ALL CONDUIT LABELED FOR SERIES CIRCUITRY SHALL NOT BE CONNECTED TO ANY VAULTS UNLESS NOTED OTHERWISE.

SCALE, FEET 0 — 20

SW364 – 1

SHEET 1 OF 2

| PROJECT NO: 2265–00–74 | HWY: LOCAL STREET | COUNTY: MILWAUKEE | TRAFFIC SIGNAL BASE AND CONDUIT PLAN | SHEET 71 | E |
|---|---|---|---|---|---|

FILE NAME : W:\bte\signals\PAVING AND DESIGN\State Projects–LFA\Preliminary Engineering\2265–00–04 N.27th Highland to Lisbon\2265–00–74 Signals4–12–16.dgn PLOT DATE : 12–APR–2016 13:15 PLOT BY : jbondo PLOT NAME : PLOT SCALE : 20.000000:1.000000

WISDOT/CADDS SHEET 42

13"X24"X18" VAULT
46+69; 68.00' LT

2-3"
SPECIAL

AVENUE

1.5"; 2"; 2.5"

17"X30"X18" VAULT
47+38.1; 63.50' LT

RELOCATED POLE
(BY CITY)

CONTROL
CABINET

2-3"

2"

17"X30"X18" VAULT
47+18; 58.40' LT

2-3"
SPECIAL

TYPE 10 SPECIAL BASE
TYPE 12 SPECIAL POLE
47+82.56, 49.00' LT.

A

3"

2"

40' ARM

2-3"

3"

H

SIGNAL BASE
46+67.5; 58.20' LT

SIGNAL BASE
47+16.8; 50.50' LT

2-3"
SPECIAL

13"X24"X18" VAULT
47+79; 46.10' LT

13"X24"X18" VAULT
48+05; 26.60' LT

13"X24"X18" VAULT
46+47; 43.50' LT

TYPE 10 BASE
TYPE 10 POLE
46+57.32, 43.40' LT.

25' ARM

SIGNAL BASE
47+80; 42.6' LT

2-3"

2"

SIGNAL BASE
47+97; 31.0' LT

NORTH 27TH

46

47

48

STREET

2-3"
SPECIAL

2-3"
SPECIAL

13"X24"X18" VAULT
47+89; 33.20' RT

CAP END AT
45+46; 25.00' RT

1.5"; 2"; 2.5"

40' ARM

2"

RELOCATED POLE
(BY CITY)

2-3"
SPECIAL

SIGNAL BASE
47+23.0; 38.10' RT

3"

C

3"
SPECIAL

17"X30"X18" VAULT
47+01.5; 56.30' RT

17"X30"X18" VAULT
47+21; 52.90' RT

2-3"

TYPE 10 SPECIAL BASE
TYPE 13 SPECIAL POLE
47+96.50, 33.30' RT.

17"X30"X18" VAULT
46+36; 26.00' RT

2-3"
SPECIAL

2"

SIGNAL BASE
47+67; 42.10' RT

2-3"
SPECIAL

2"

25' ARM

3"

F

TYPE 10 BASE
TPPE 10 POLE
47+01.06, 63.00' RT.

WEST LISBON

13"X24"X18" VAULT
47+63.5; 55.00' RT

13"X24"X18" VAULT
46+26; 51.00' RT

## LEGEND

- STREET LIGHT POLE
- TRAFFIC SIGNAL MOUNTED ON LIGHT POLE
- EXISTING SIGNAL STANDARD BASE
- VAULT TO BE INSTALLED
- TRAFFIC CONTROL CABINET
- STREET LIGHTING ENCLOSURE
- PVC CONDUIT
- TRAFFIC SIGNAL BASE TO BE INSTALLED
- MONOTUBE MAST ARM BASE TO BE INSTALLED
- XX' ARM — MAST ARM
- XX' ARM — SIGNAL HEAD LOCATION ON MAST ARM
- XX' ARM — EVP DETECTOR LOCATION ON MAST ARM
- CONCRETE BOX JOINT AROUND FACILITIES
- 000 — SEE DETAIL NUMBER FOR ADDITIONAL INFORMATION
- 0 — MONOTUBE STRUCTURE NUMBER

**SW350-2**

## NOTE:

GENERAL NOTES MUST BE FOLLOWED WHEN INSTALLING MATERIALS FOR STREET LIGHTING AND TRAFFIC SIGNALS.

ALL CONDUIT SHALL BE SCHEDULE 40 RIGID PVC.

CONDUIT END CAPS REQUIRED ON ALL EMPTY CONDUIT.

PULL ROPE (3/8" NYLON) REQUIRED IN ALL CONDUIT.

SEE STREET LIGHTING & TRAFFIC SIGNAL CONDUIT DETAILS FOR ADDITIONAL INFORMATION AND REQUIREMENTS.

SEE UTILITY SPECIALS FOR ADDITIONAL INFORMATION AND ALL CONTACT NUMBERS.

CONTRACTOR IS REQUIRED TO CONTACT THE CITY OF MILWAUKEE ELECTRICAL SERVICES FOR FINAL INSPECTION AND APPROVAL OF ALL ELECTRICAL WORK BEFORE ANY MATERIALS ARE COVERED UP OR BACKFILLED.

ALL CONDUIT LABELED FOR SERIES CIRCUITRY SHALL NOT BE CONNECTED TO ANY VAULTS UNLESS NOTED OTHERWISE.

SCALE, FEET 0 20

SHEET 2 OF 2

| PROJECT NO: 2265-00-74 | HWY: LOCAL STREET | COUNTY: MILWAUKEE | TRAFFIC SIGNAL BASE AND CONDUIT PLAN | SHEET 72 | E |
|---|---|---|---|---|---|

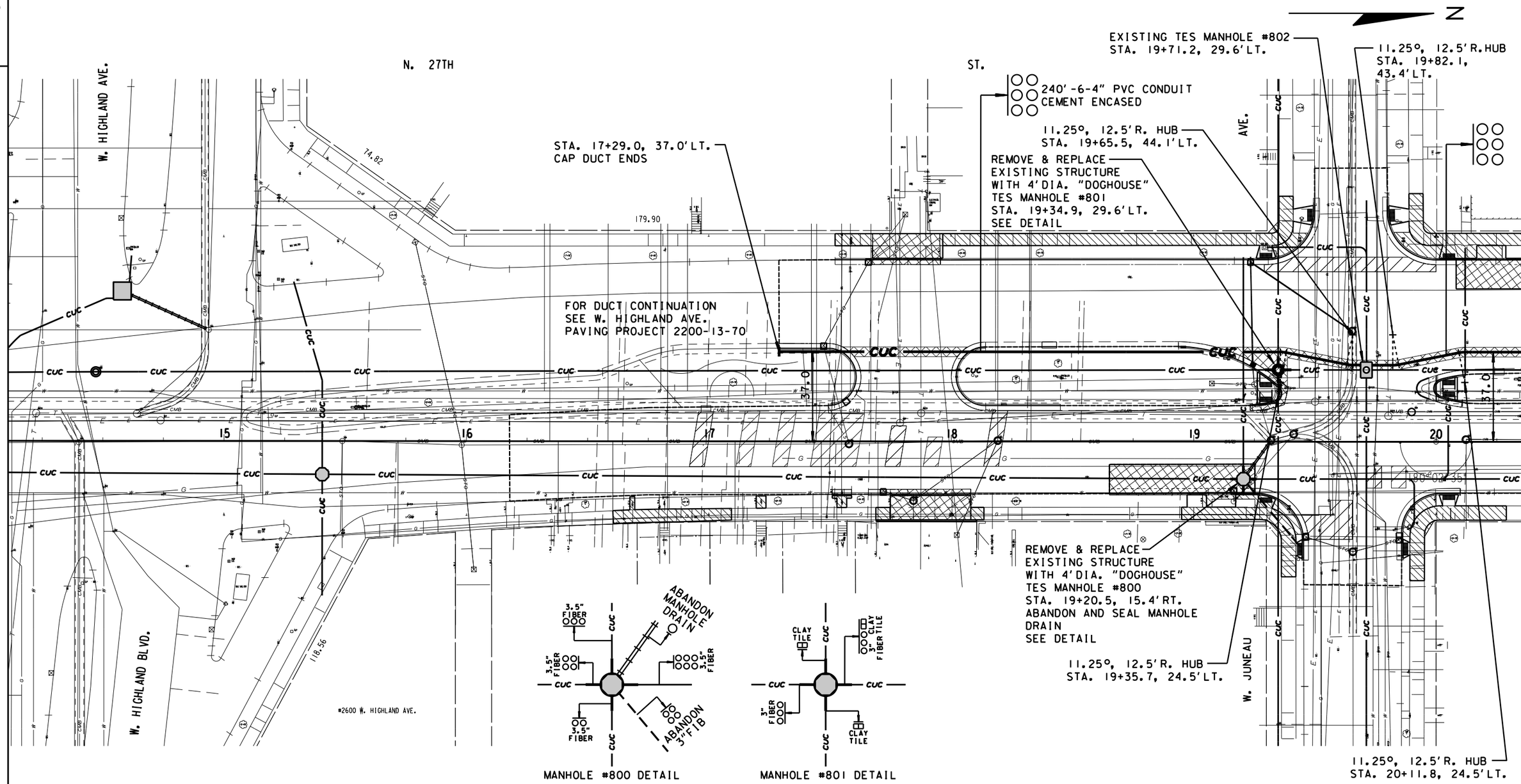


MANHOLE #800 DETAIL

MANHOLE #801 DETAIL

NOTES:

1) THE LOCATION OF EXISTING AND PROPOSED UTILITY INSTALLATIONS AS SHOWN ON THE PLANS IS APPROXIMATE. THERE MAY BE OTHER UTILITY INSTALLATIONS WITHIN THE PROJECT AREA WHICH ARE NOT SHOWN.
2) THE LOCATION OF THE EXISTING AND PROPOSED UTILITY INSTALLATIONS SHALL BE FIELD VERIFIED BY THE CONTRACTOR.
3) DIMENSIONS SHOWN ARE TO CENTER OF MANHOLE, DUCT PACKAGE OR UTILITY.
4) MAINTAIN A STANDARD DEPTH OF 39-INCHES BETWEEN FINISHED GRADE AND TOP OF CONDUIT.

LEGEND

| | |
|---|---|
| — CUC — | PROPOSED 4-INCH CEMENT ENCASED NONMETALLIC CONDUIT, NUMBER OF RUNS AS NOTED. |
| ○ | PROPOSED TES MANHOLE |
| — CUC — | EXISTING CONDUIT |
| — — — — | ABANDONED CONDUIT |

SHEET 1 OF 8

| STATE PROJECT NUMBER 2265-00-74 - - | HWY: LOCAL STREET | COUNTY: MILWAUKEE | CITY UG CONDUIT (TES) | SCALE FEET 0' 40' | SHEET NO: 73 | E |
|---|---|---|---|---|---|---|

FILENAME: W:\UGD\CONDUIT WORK FILES\UCONDUIT\2015\27TH HIGHLAND-LISBON\14+25-20+25.DGN

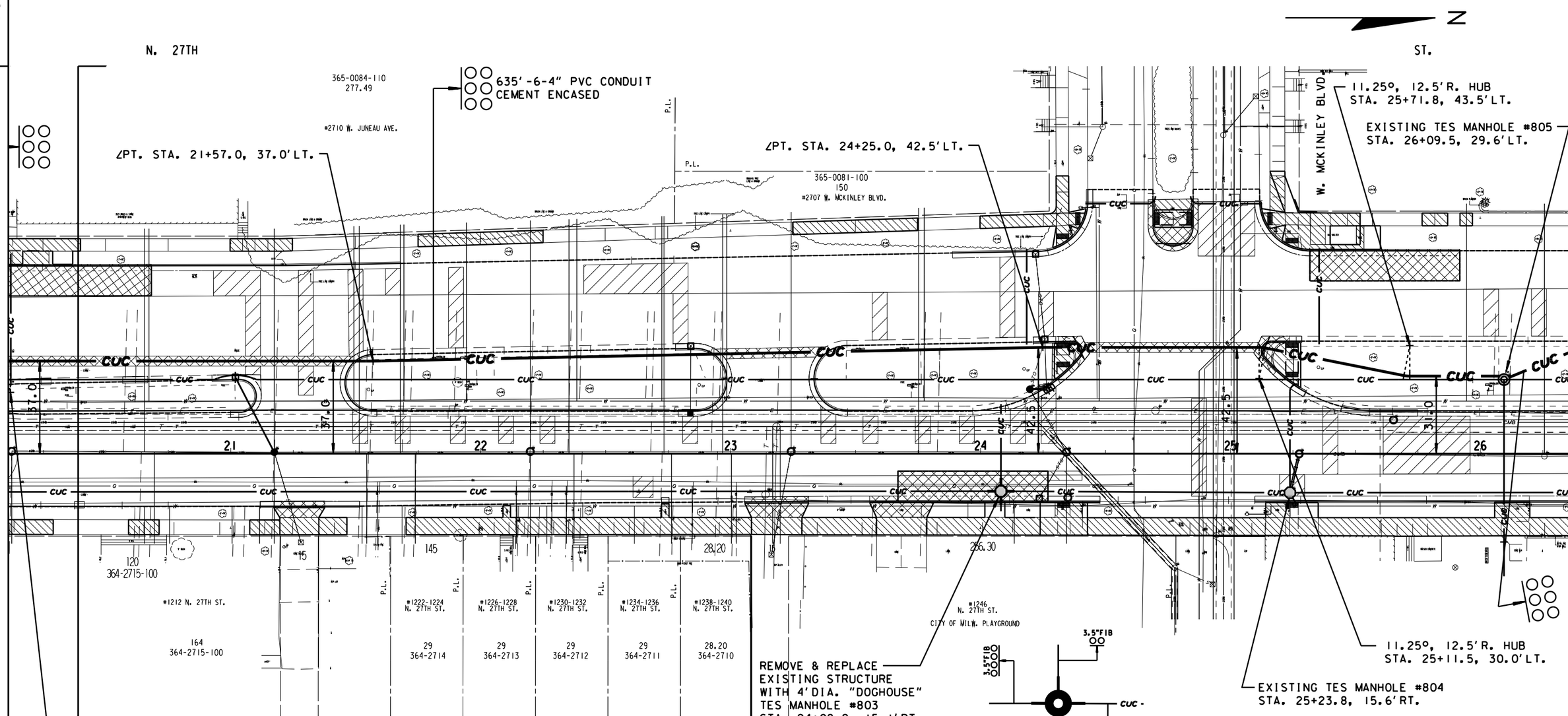


MANHOLE #803 DETAIL

NOTES:

1) THE LOCATION OF EXISTING AND PROPOSED UTILITY INSTALLATIONS AS SHOWN ON THE PLANS IS APPROXIMATE. THERE MAY BE OTHER UTILITY INSTALLATIONS WITHIN THE PROJECT AREA WHICH ARE NOT SHOWN.
2) THE LOCATION OF THE EXISTING AND PROPOSED UTILITY INSTALLATIONS SHALL BE FIELD VERIFIED BY THE CONTRACTOR.
3) DIMENSIONS SHOWN ARE TO CENTER OF MANHOLE, DUCT PACKAGE OR UTILITY.
4) MAINTAIN A STANDARD DEPTH OF 39-INCHES BETWEEN FINISHED GRADE AND TOP OF CONDUIT.

LEGEND

| | |
|---|---|
| — CUC — | PROPOSED 4-INCH CEMENT ENCASED NONMETALLIC CONDUIT, NUMBER OF RUNS AS NOTED. |
| ● | PROPOSED TES MANHOLE |
| — CUC — | EXISTING CONDUIT |
| — — — — | ABANDONED CONDUIT |

SHEET 2 OF 8

| STATE PROJECT NUMBER 2265-00-74 - - | HWY: LOCAL STREET | COUNTY: MILWAUKEE | CITY UG CONDUIT (TES) | SCALE FEET 0' 40' | SHEET NO: 74 | E |
|---|---|---|---|---|---|---|

FILENAME: W:\UGD\CONDUIT WORK FILES\UCONDUIT\2015\27TH HIGHLAND-LISBON\20+25-26+25.DGN

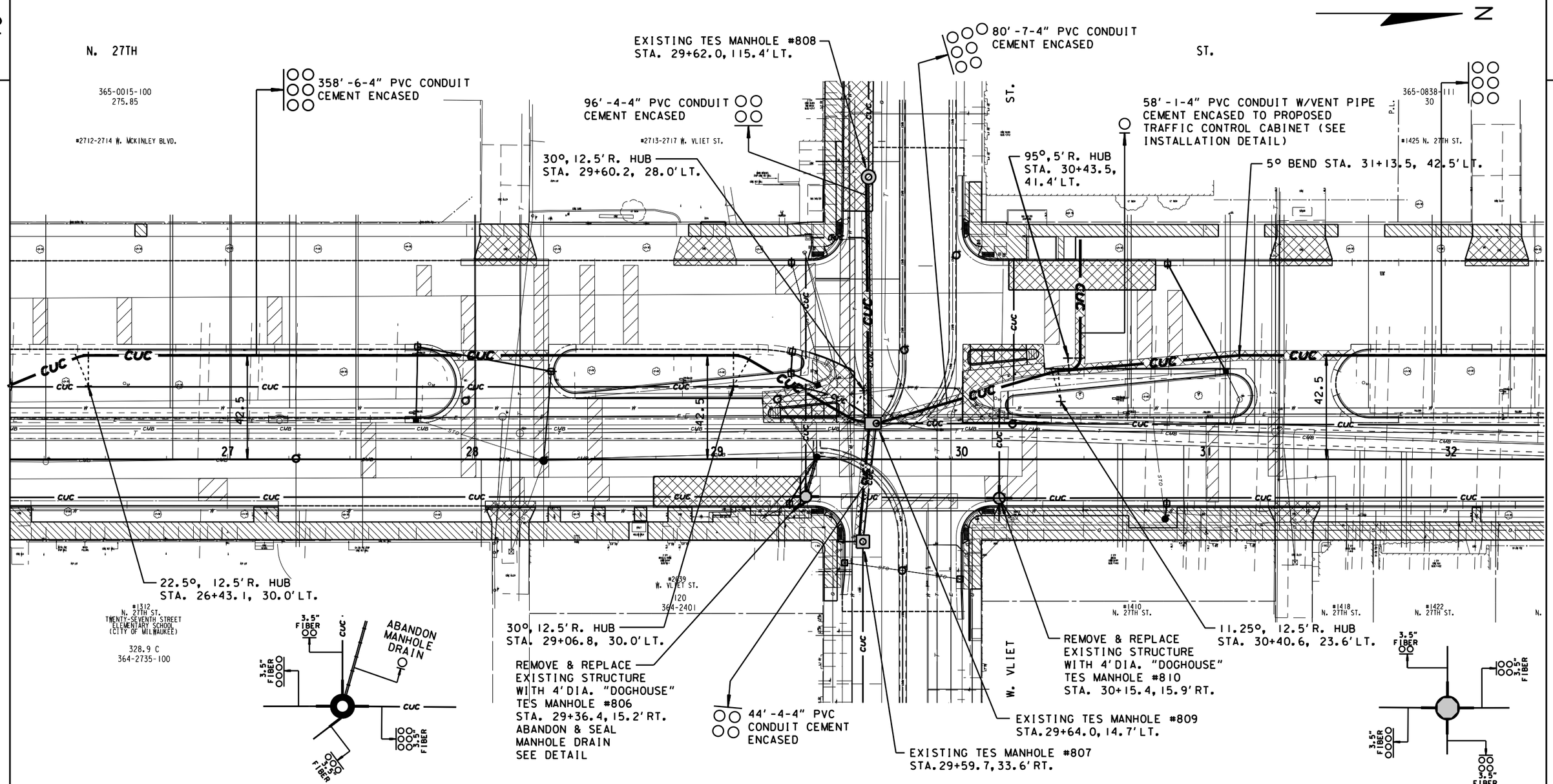


NOTES:

1) THE LOCATION OF EXISTING AND PROPOSED UTILITY INSTALLATIONS AS SHOWN ON THE PLANS IS APPROXIMATE. THERE MAY BE OTHER UTILITY INSTALLATIONS WITHIN THE PROJECT AREA WHICH ARE NOT SHOWN.
2) THE LOCATION OF THE EXISTING AND PROPOSED UTILITY INSTALLATIONS SHALL BE FIELD VERIFIED BY THE CONTRACTOR.
3) DIMENSIONS SHOWN ARE TO CENTER OF MANHOLE, DUCT PACKAGE OR UTILITY.
4) MAINTAIN A STANDARD DEPTH OF 39-INCHES BETWEEN FINISHED GRADE AND TOP OF CONDUIT.

LEGEND

| | |
|---|---|
| — CUC — | PROPOSED 4-INCH CEMENT ENCASED NONMETALLIC CONDUIT, NUMBER OF RUNS AS NOTED. |
| ● | PROPOSED TES MANHOLE |
| — CUC — | EXISTING CONDUIT |
| — — — — | ABANDONED CONDUIT |

SHEET 3 OF 8



| STATE PROJECT NUMBER 2265-00-74 - - | HWY: LOCAL STREET | COUNTY: MILWAUKEE | CITY UG CONDUIT (TES) | SCALE FEET 0' 40' | SHEET NO: | E |
|---|---|---|---|---|---|---|

FILENAME: W:\UGD\CONDUIT WORK FILES\UCONDUIT\2015\27TH HIGHLAND-LISBON\26+25-32+25.DGN

2

N. 27TH ST.

448'-6-4" PVC CONDUIT
CEMENT ENCASED

365-0838-112
228.50
#1455 N. 27TH ST.

EXISTING TES MANHOLE #812
STA. 34+84.8, 13.4' LT.

11.25°, 12.5' R. HUB
STA. 34+93.2, 27.7' LT.

365-0720-100
440
508'-6-4" PVC CONDUIT
CEMENT ENCASED
#1555 N. 27TH ST.

22.5°, 12.5' R. HUB
STA. 34+29.6, 30.0' LT.

REMOVE & REPLACE
EXISTING TES STRUCTURE
WITH 4' DIA. "DOGHOUSE"
MANHOLE #811
STA. 34+48.7, 14.8' RT.
SEE DETAIL

45°, 12.5' R. HUB
STA. 34+71.5, 12.8' LT.

11.25°, 12.5' R. HUB
STA. 35+36.9, 18.7' LT.

11.25°, 12.5' R. HUB
STA. 35+93.8, 30.0' LT.

#1428
N. 27TH ST.
50
364-1760-100

W. CHERRY ST.

#1530
N. 27TH ST.
TIEFENTHALER PARK
(MILWAUKEE COUNTY)
439.95
364-1725-100

33 34 35 36 37 38

42.5

CUC

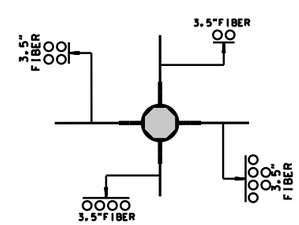


MANHOLE #811 DETAIL

NOTES:

1) THE LOCATION OF EXISTING AND PROPOSED UTILITY INSTALLATIONS AS SHOWN ON THE PLANS IS APPROXIMATE. THERE MAY BE OTHER UTILITY INSTALLATIONS WITHIN THE PROJECT AREA WHICH ARE NOT SHOWN.
2) THE LOCATION OF THE EXISTING AND PROPOSED UTILITY INSTALLATIONS SHALL BE FIELD VERIFIED BY THE CONTRACTOR.
3) DIMENSIONS SHOWN ARE TO CENTER OF MANHOLE, DUCT PACKAGE OR UTILITY.
4) MAINTAIN A STANDARD DEPTH OF 39-INCHES BETWEEN FINISHED GRADE AND TOP OF CONDUIT.

LEGEND

| | |
|---|---|
| — CUC — | PROPOSED 4-INCH CEMENT ENCASED NONMETALLIC CONDUIT, NUMBER OF RUNS AS NOTED. |
| ● | PROPOSED TES MANHOLE |
| — CUC — | EXISTING CONDUIT |
| — — — — | ABANDONED CONDUIT |

SHEET 4 OF 8



| STATE PROJECT NUMBER 2265-00-74 - - | HWY: LOCAL STREET | COUNTY: MILWAUKEE | CITY UG CONDUIT (TES) | SCALE FEET 0' 40' | SHEET NO: | E |
|---|---|---|---|---|---|---|

FILENAME: W:\UGD\CONDUIT WORK FILES\UCONDUIT\2015\27TH HIGHLAND-LISBON\32+25-38+25.DGN

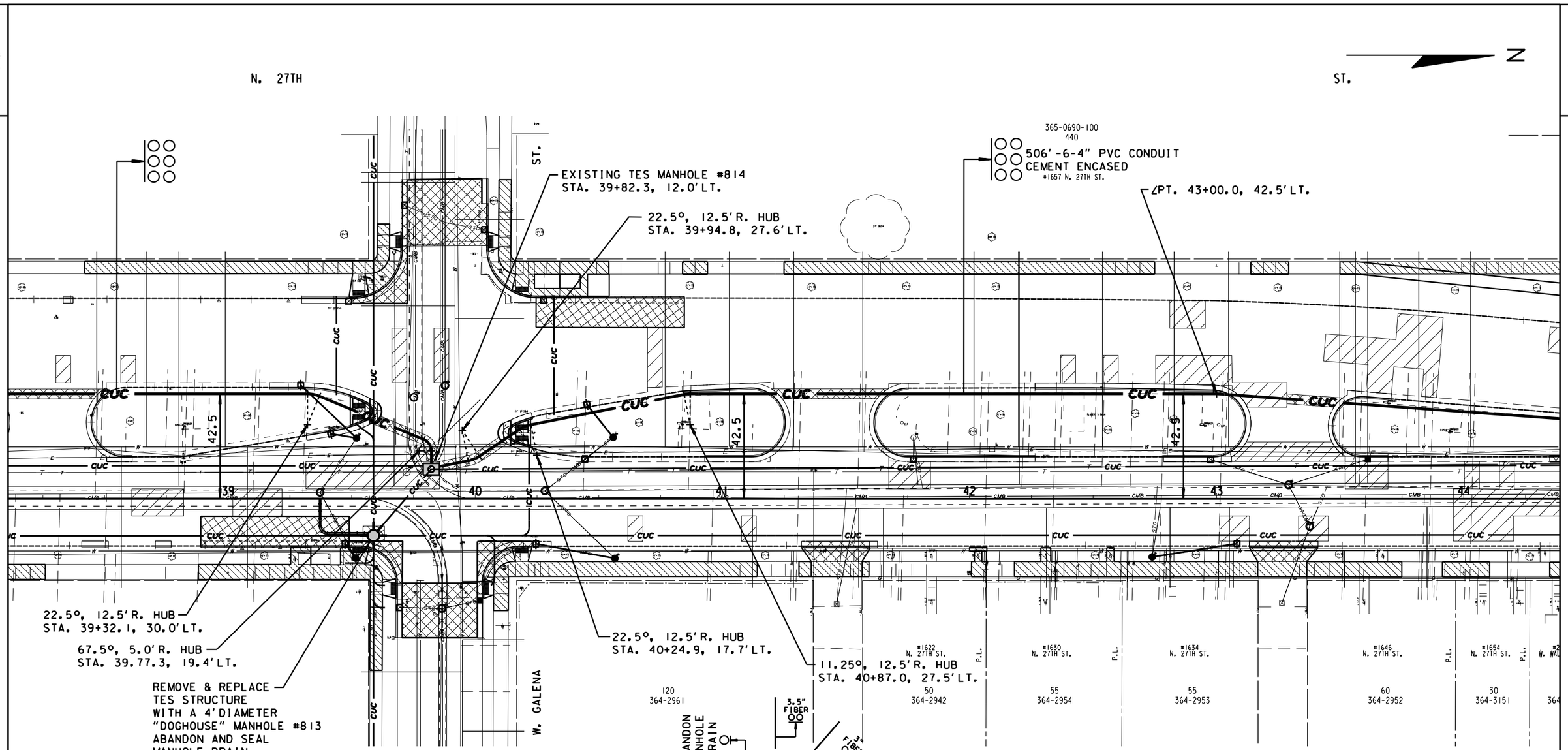


MANHOLE #813 DETAIL

NOTES:

1) THE LOCATION OF EXISTING AND PROPOSED UTILITY INSTALLATIONS AS SHOWN ON THE PLANS IS APPROXIMATE. THERE MAY BE OTHER UTILITY INSTALLATIONS WITHIN THE PROJECT AREA WHICH ARE NOT SHOWN.
2) THE LOCATION OF THE EXISTING AND PROPOSED UTILITY INSTALLATIONS SHALL BE FIELD VERIFIED BY THE CONTRACTOR.
3) DIMENSIONS SHOWN ARE TO CENTER OF MANHOLE, DUCT PACKAGE OR UTILITY.
4) MAINTAIN A STANDARD DEPTH OF 39-INCHES BETWEEN FINISHED GRADE AND TOP OF CONDUIT.

LEGEND

| | |
|---|---|
| — CUC — | PROPOSED 4-INCH CEMENT ENCASED NONMETALLIC CONDUIT, NUMBER OF RUNS AS NOTED. |
| ○ | PROPOSED TES MANHOLE |
| — CUC — | EXISTING CONDUIT |
| — — — — | ABANDONED CONDUIT |

SHEET 5 OF 8



| STATE PROJECT NUMBER 2265-00-74 - - | HWY: LOCAL STREET | COUNTY: MILWAUKEE | CITY UG CONDUIT (TES) | SCALE FEET 0' 40' | SHEET NO: | E |
|---|---|---|---|---|---|---|

FILENAME: W:\UGD\CONDUIT WORK FILES\UCONDUIT\2015\27TH HIGHLAND-LISBON\38+25-44+25.DGN

2

N. 27TH ST.

30'-1-4" PVC CONDUIT WITH VENT PIPE CEMENT ENCASED

165'-7-4" PVC CONDUIT CEMENT ENCASED

95'-6-4" PVC CONDUIT CEMENT ENCASED

N

ST.

AVE.

EXISTING TES MANHOLE #818
STA. 47+44.1, 15.2'LT.

90°, 5.0'R. HUB
STA. 46+45.9, 30.0'LT.

5°∠ BEND
STA. 45+72.2,
25.0'LT.

349-2203
94.05
#2700-2702 W. LISBON AVE.

P.L.

CUC

45 46 47 48 49

29.5 C

42.5 C

50.82

11.25°, 12.5'R. HUB
STA. 44+91.5, 05.4'LT.

EXISTING TES MANHOLE #816
STA. 44+77.3, 13.6'LT.

#2631 W. WALNUT ST.

#2615 W. LISBON AVE.

30
364-3152

30
364-1632-100

W. WALNUT

W. LISBON

EXISTING TES MANHOLE #819
STA. 48+04.0, 12.9'RT.

EXISTING TES MANHOLE #817
STA. 47+03.0, 14.9'RT.

#2624 W. LISBON AVE.

90°, 12.5'R. HUB
STA. 44+65.6, 18.0'LT.

REMOVE & REPLACE
EXISTING TES STRUCTURE
WITH 4'DIA. "DOGHOUSE"
TES MANHOLE #815
STA. 44+53.4, 14.5'RT.
SEE DETAIL

11.25°, 12.5'R. HUB
STA. 46+97.4, 12.7'LT.

3.5" FIBER

MANHOLE #815 DETAIL

NOTES:

1) THE LOCATION OF EXISTING AND PROPOSED UTILITY INSTALLATIONS AS SHOWN ON THE PLANS IS APPROXIMATE. THERE MAY BE OTHER UTILITY INSTALLATIONS WITHIN THE PROJECT AREA WHICH ARE NOT SHOWN.
2) THE LOCATION OF THE EXISTING AND PROPOSED UTILITY INSTALLATIONS SHALL BE FIELD VERIFIED BY THE CONTRACTOR.
3) DIMENSIONS SHOWN ARE TO CENTER OF MANHOLE, DUCT PACKAGE OR UTILITY.
4) MAINTAIN A STANDARD DEPTH OF 39-INCHES BETWEEN FINISHED GRADE AND TOP OF CONDUIT.

LEGEND

| | |
|---|---|
| — CUC — | PROPOSED 4-INCH CEMENT ENCASED NONMETALLIC CONDUIT, NUMBER OF RUNS AS NOTED. |
| ● | PROPOSED TES MANHOLE |
| — CUC — | EXISTING CONDUIT |
| — — — — | ABANDONED CONDUIT |

SHEET 6 OF 8



| STATE PROJECT NUMBER 2265-00-74 - - | HWY: LOCAL STREET | COUNTY: MILWAUKEE | CITY UG CONDUIT (TES) | SCALE FEET 0' 40' | SHEET NO: | E |
|---|---|---|---|---|---|---|

FILENAME: W:\UGD\CONDUIT WORK FILES\UCONDUIT\2015\27TH HIGHLAND-LISBON\44+25-48+70.DGN

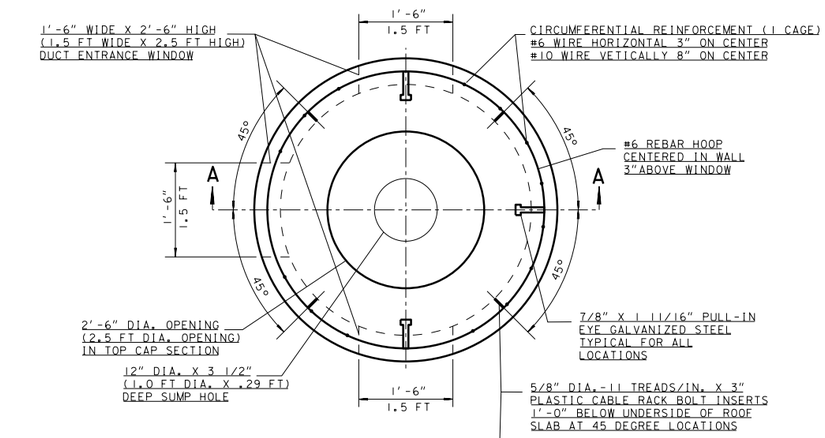


TOP VIEW

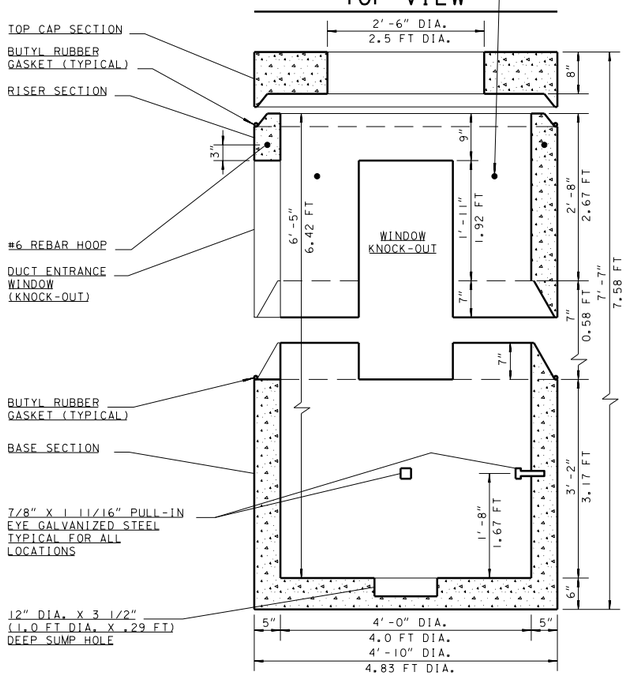


SECTION VIEW "A-A"

N.T.S.

NOTES:
THE JOINTS MAY BE EITHER "BELL UP" OR "SPIGOT UP", THE NUMBER OF PULL-IN IRONS AND CABLE RACK BOLT INSERTS MAY VARY BY ORDER.

REINFORCING IN THE FLOOR & TOP CAP SECTION SHALL CONFORM TO ASTM SPECIFICATION C-478.

SIZE, LOCATION, SHAPE AND NUMBER OF KNOCK-OUT AREAS MAY VARY. (3 WINDOWS SHOWN). UNIT PRICE OF MANHOLE SHALL NOT VARY FOR NUMBER OF OPENINGS.

3 WINDOW OPENING
4' DIA. X 6'-5" HEADROOM
PRECAST CONCRETE MANHOLE

## 4' DIAMETER "DOGHOUSE" TYPE TES DETAIL

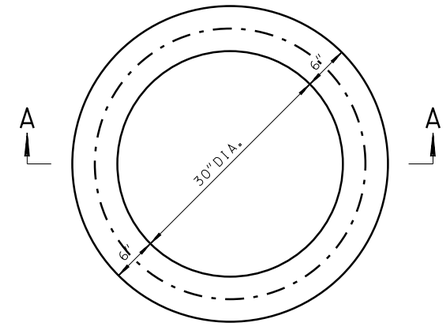


PLAN

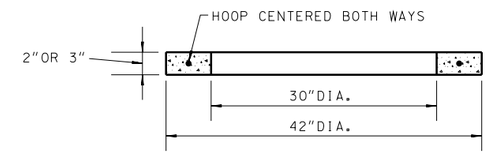


SECTION A-A

THE ADJUSTING RING SHALL BE 2" OR 3" IN HEIGHT.

THE CIRCUMFERENTIAL STEEL SHALL BE CENTERED WITHIN THE RING.

AREA OF CIRCUMFERENTIAL STEEL = 0.07 SQ. INCH PER VERTICAL FOOT WITH A MINIMUM OF .024 SQ. INCH IN ANY ONE RING.

THE MINIMUM COMPRESSIVE STRENGTH OF THE CONCRETE CORE SHALL BE 4000 P.S.I.

## CONCRETE ADJUSTING RING

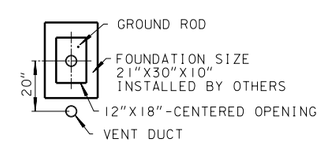


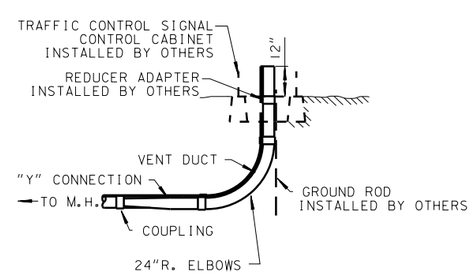


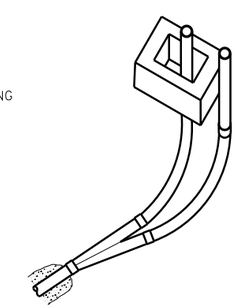

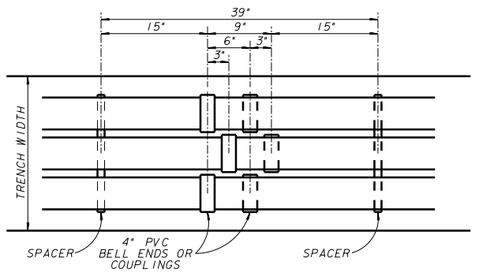


PLAN VIEW
N.T.S.

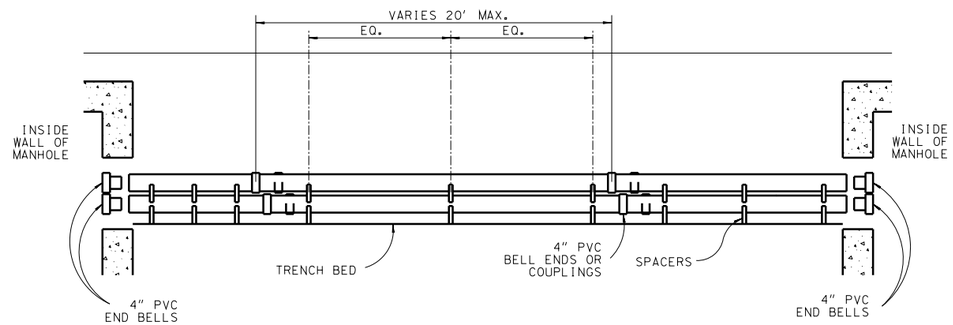


SECTION VIEW
N.T.S.

| COND. | 3" | 4" |
|---|---|---|
| A | 10" | 11 ½" |
| B | 5" | 5 ⅝" |
| C | 1 ½" | 1 ½" |
| D | 3 ½" | 3 ½" |
| E | 1" | 1" |

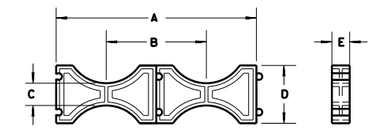


INTERMEDIATE SPACER

| COND. | 3" | 4" |
|---|---|---|
| A | 10" | 11 ½" |
| B | 5" | 5 ⅝" |
| C | 3" | 3" |
| D | 3 ⅞" | 4 ⅛" |
| E | 1" | 1" |
| F | 2 ½" | 2 ½" |

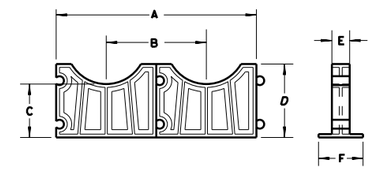


BASE SPACER

INTERMEDIATE AND BASE SPACER DETAIL

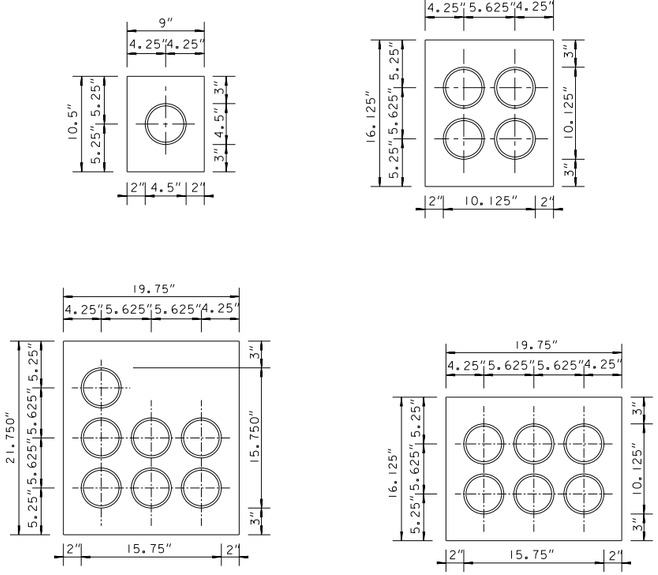


CROSS SECTION VIEW
N.T.S.

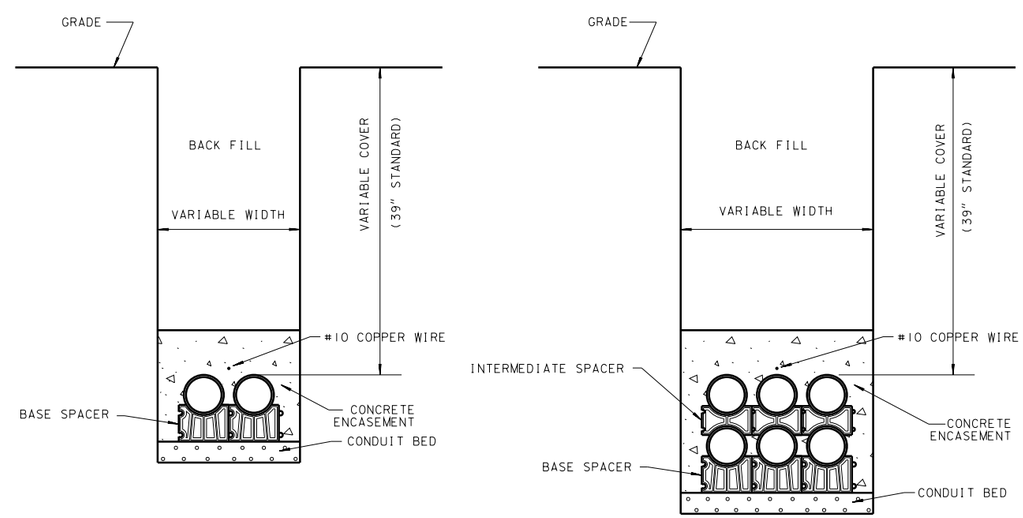


CROSS SECTION VIEW, TYP.
N.T.S.



| STATE PROJECT NUMBER 2265-00-74 | HWY: LOCAL STREET | COUNTY: MILWAUKEE | CITY UG CONDUIT DETAILS (TES) | SCALE FEET | SHEET NO: | E |
|---|---|---|---|---|---|---|

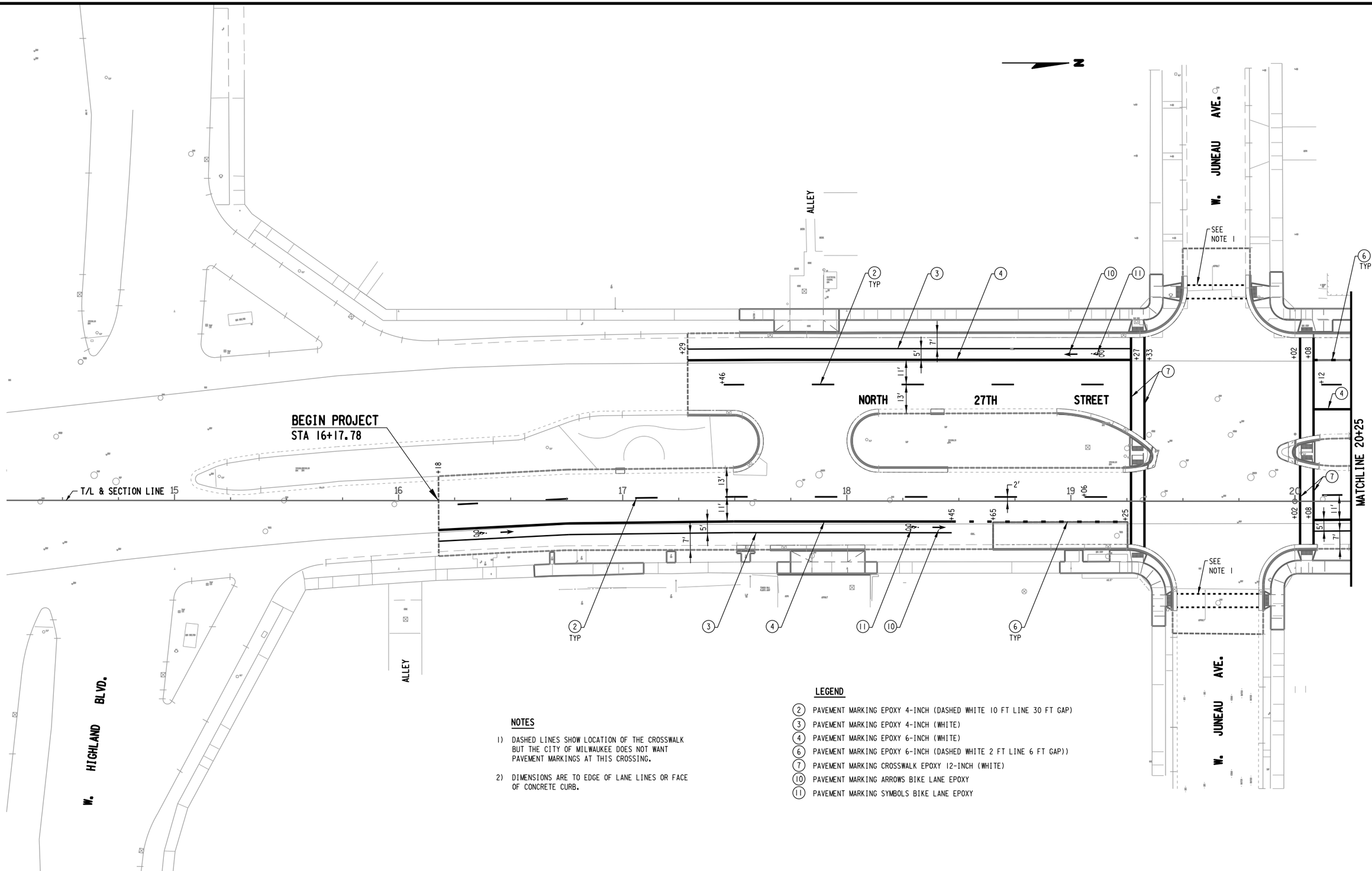


**NOTES**

1) DASHED LINES SHOW LOCATION OF THE CROSSWALK BUT THE CITY OF MILWAUKEE DOES NOT WANT PAVEMENT MARKINGS AT THIS CROSSING.

2) DIMENSIONS ARE TO EDGE OF LANE LINES OR FACE OF CONCRETE CURB.

**LEGEND**

(2) PAVEMENT MARKING EPOXY 4-INCH (DASHED WHITE 10 FT LINE 30 FT GAP)
(3) PAVEMENT MARKING EPOXY 4-INCH (WHITE)
(4) PAVEMENT MARKING EPOXY 6-INCH (WHITE)
(6) PAVEMENT MARKING EPOXY 6-INCH (DASHED WHITE 2 FT LINE 6 FT GAP))
(7) PAVEMENT MARKING CROSSWALK EPOXY 12-INCH (WHITE)
(10) PAVEMENT MARKING ARROWS BIKE LANE EPOXY
(11) PAVEMENT MARKING SYMBOLS BIKE LANE EPOXY

| STATE PROJECT NUMBER 2265-00-74 | HWY: LOCAL | COUNTY: MILWAUKEE | PAVEMENT MARKING PLANS | SCALE FEET 0' 40' | SHEET NO: | E |
|---|---|---|---|---|---|---|



FILE NAME: F:\BM1-3393 N 27th St Milwaukee\5_Design\03_Roads\cds\h1024501_pm.dgn PLOT DATE : 12-APR-2016 14:12 PLOT BY : scook PLOT NAME : h1024501_pm1 PLOT SCALE : 40.000000:1.000000

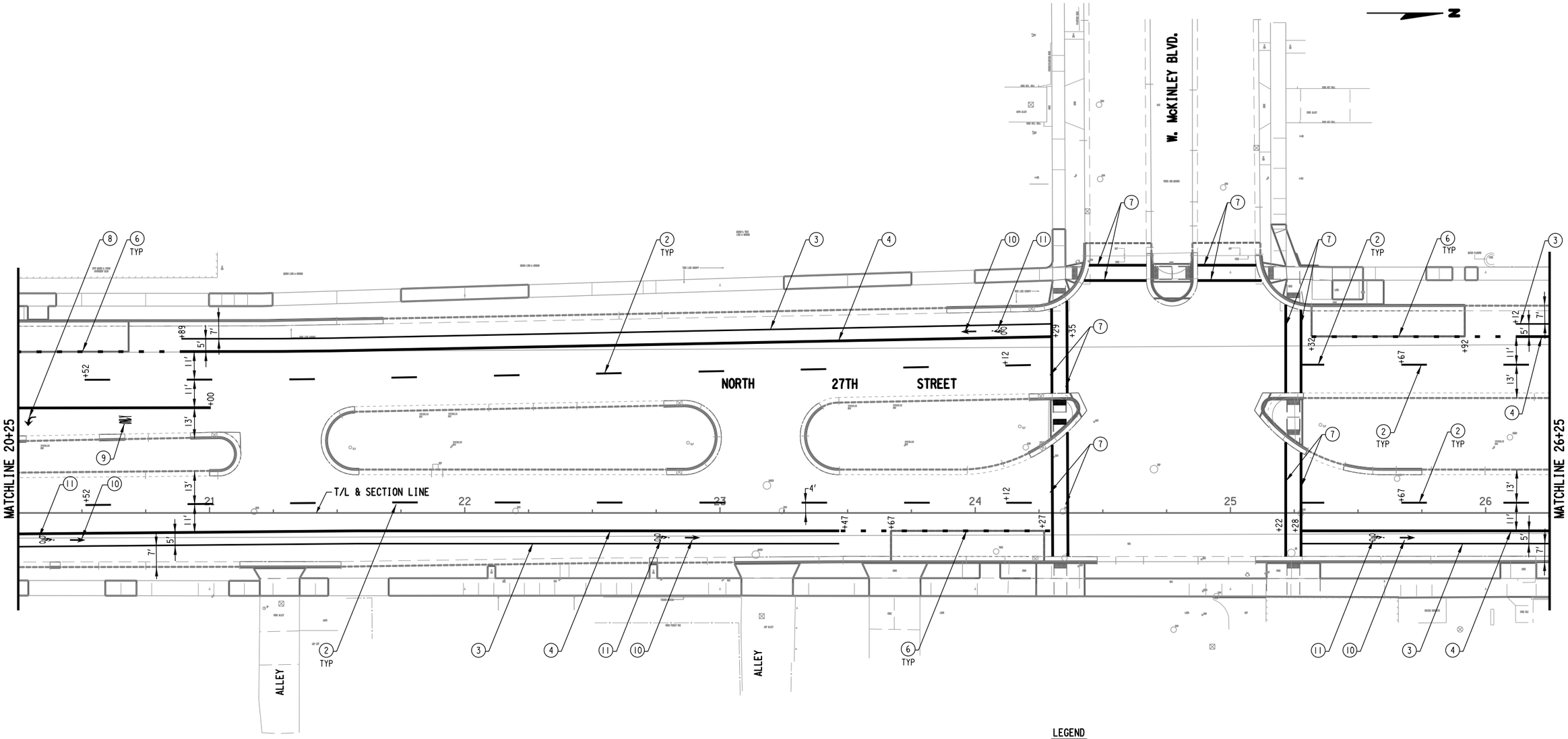


**NOTE**

1) DIMENSIONS ARE TO EDGE OF LANE LINES OR FACE OF CONCRETE CURB.

**LEGEND**

(2) PAVEMENT MARKING EPOXY 4-INCH (DASHED WHITE 10 FT LINE 30 FT GAP)
(3) PAVEMENT MARKING EPOXY 4-INCH (WHITE)
(4) PAVEMENT MARKING EPOXY 6-INCH (WHITE)
(6) PAVEMENT MARKING EPOXY 6-INCH (DASHED WHITE 2 FT LINE 6 FT GAP))
(7) PAVEMENT MARKING CROSSWALK EPOXY 12-INCH (WHITE)
(8) PAVEMENT MARKING ARROWS EPOXY TYPE 2
(9) PAVEMENT MARKING WORDS EPOXY
(10) PAVEMENT MARKING ARROWS BIKE LANE EPOXY
(11) PAVEMENT MARKING SYMBOLS BIKE LANE EPOXY

| STATE PROJECT NUMBER 2265-00-74 | HWY: LOCAL | COUNTY: MILWAUKEE | PAVEMENT MARKING PLANS | SCALE FEET 0 40 | SHEET NO: | E |
|---|---|---|---|---|---|---|



FILE NAME: F:\BM1-3393 N 27th St Milwaukee\5_Design\03_Roads\cds\h1024502_pm.dgn PLOT DATE : 12-APR-2016 14:12 PLOT BY : scook PLOT NAME : h1024502_pm1 PLOT SCALE : 40.000000:1.000000

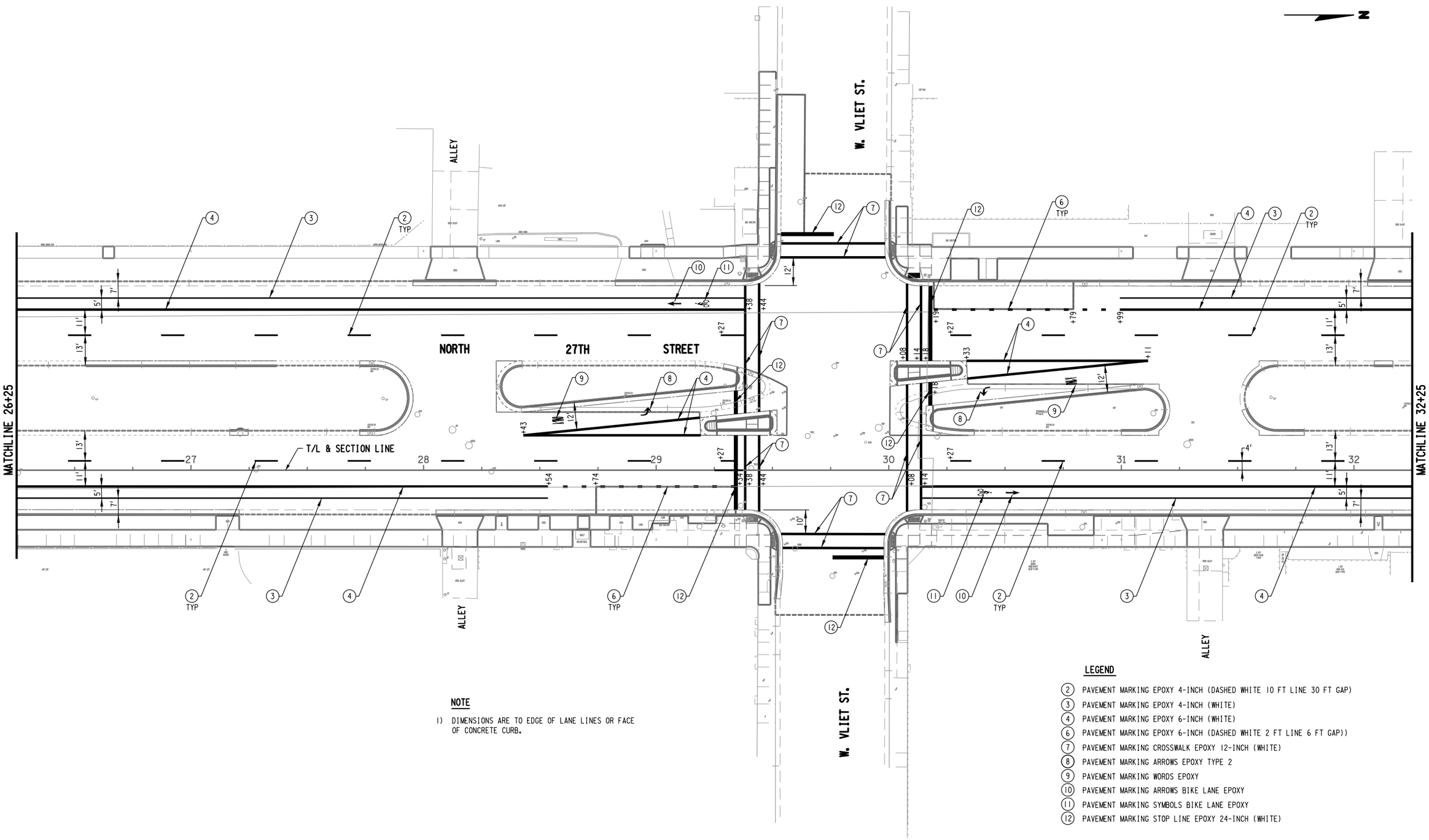


**NOTE**

1) DIMENSIONS ARE TO EDGE OF LANE LINES OR FACE OF CONCRETE CURB.

**LEGEND**

(2) PAVEMENT MARKING EPOXY 4-INCH (DASHED WHITE 10 FT LINE 30 FT GAP)
(3) PAVEMENT MARKING EPOXY 4-INCH (WHITE)
(4) PAVEMENT MARKING EPOXY 6-INCH (WHITE)
(6) PAVEMENT MARKING EPOXY 6-INCH (DASHED WHITE 2 FT LINE 6 FT GAP))
(7) PAVEMENT MARKING CROSSWALK EPOXY 12-INCH (WHITE)
(8) PAVEMENT MARKING ARROWS EPOXY TYPE 2
(9) PAVEMENT MARKING WORDS EPOXY
(10) PAVEMENT MARKING ARROWS BIKE LANE EPOXY
(11) PAVEMENT MARKING SYMBOLS BIKE LANE EPOXY
(12) PAVEMENT MARKING STOP LINE EPOXY 24-INCH (WHITE)

| STATE PROJECT NUMBER 2265-00-74 | HWY: LOCAL | COUNTY: MILWAUKEE | PAVEMENT MARKING PLANS | SCALE FEET 0 40 | SHEET NO: | E |
|---|---|---|---|---|---|---|



FILE NAME: F:\BM1-3393 N 27th St Milwaukee\5_Design\03_Roads\cds\h1024503_pm.dgn PLOT DATE : 12-APR-2016 14:12 PLOT BY : scook PLOT NAME : h1024503_pm1 PLOT SCALE : 40.000000:1.000000

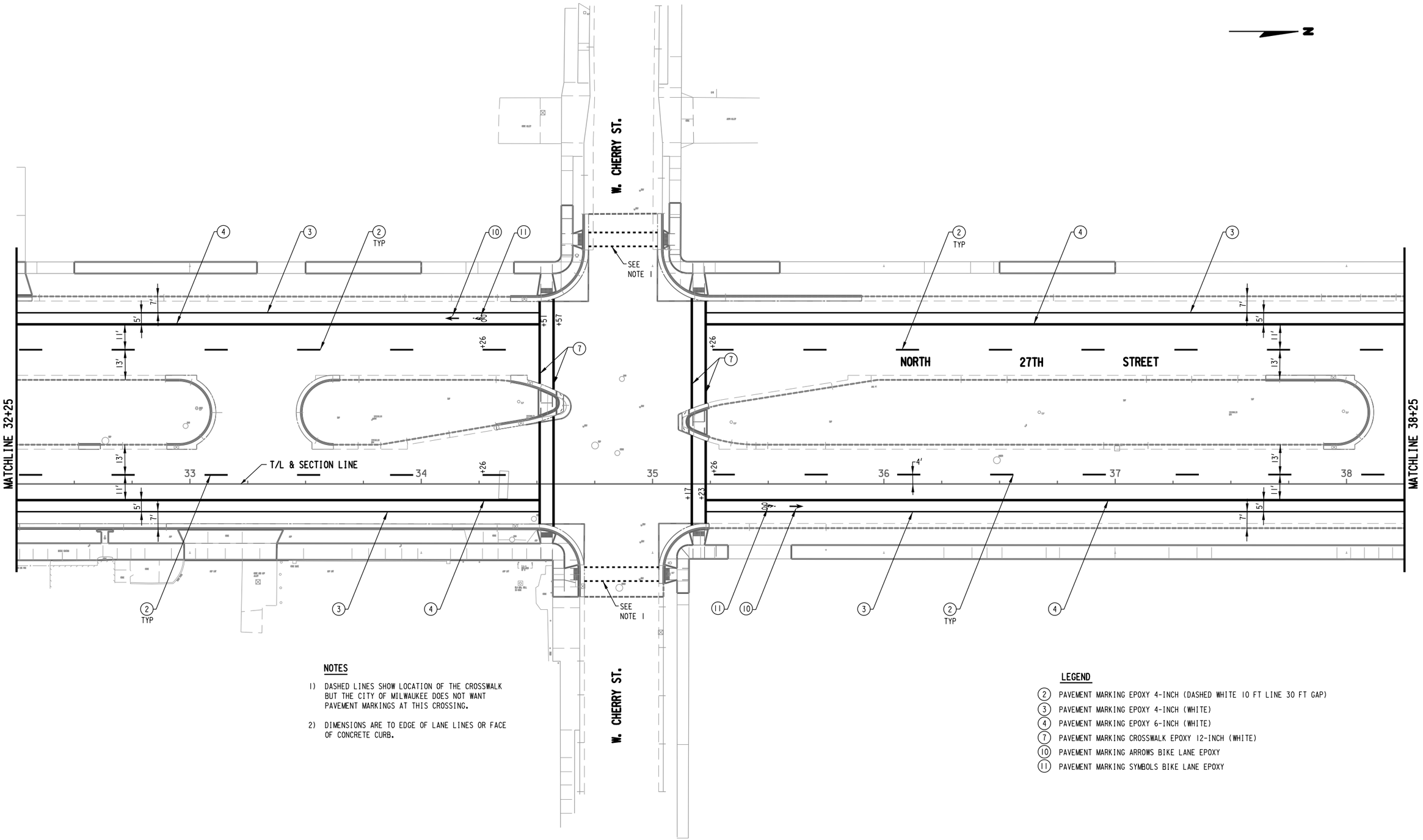


**NOTES**

1) DASHED LINES SHOW LOCATION OF THE CROSSWALK BUT THE CITY OF MILWAUKEE DOES NOT WANT PAVEMENT MARKINGS AT THIS CROSSING.

2) DIMENSIONS ARE TO EDGE OF LANE LINES OR FACE OF CONCRETE CURB.

**LEGEND**

(2) PAVEMENT MARKING EPOXY 4-INCH (DASHED WHITE 10 FT LINE 30 FT GAP)
(3) PAVEMENT MARKING EPOXY 4-INCH (WHITE)
(4) PAVEMENT MARKING EPOXY 6-INCH (WHITE)
(7) PAVEMENT MARKING CROSSWALK EPOXY 12-INCH (WHITE)
(10) PAVEMENT MARKING ARROWS BIKE LANE EPOXY
(11) PAVEMENT MARKING SYMBOLS BIKE LANE EPOXY

| STATE PROJECT NUMBER 2265-00-74 | HWY: LOCAL | COUNTY: MILWAUKEE | PAVEMENT MARKING PLANS | SCALE FEET 0' 40' | SHEET NO: | E |
|---|---|---|---|---|---|---|



FILE NAME: F:\BM1-3393 N 27th St Milwaukee\5_Design\03_Roads\cds\h1024504_pm.dgn PLOT DATE : 12-APR-2016 14:12 PLOT BY : scook PLOT NAME : h1024504_pm1 PLOT SCALE : 40.000000:1.000000

2

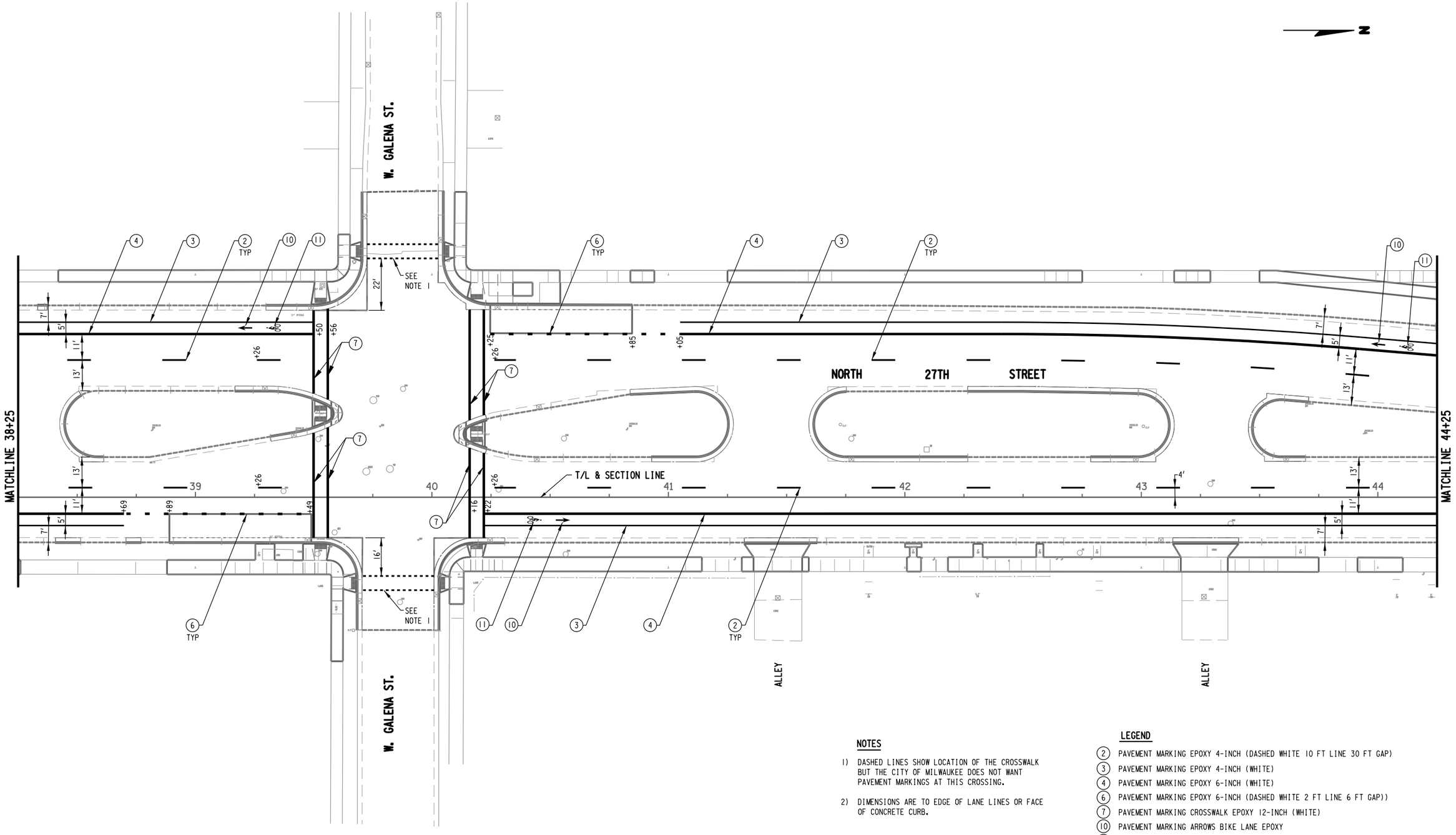


**NOTES**

1) DASHED LINES SHOW LOCATION OF THE CROSSWALK BUT THE CITY OF MILWAUKEE DOES NOT WANT PAVEMENT MARKINGS AT THIS CROSSING.

2) DIMENSIONS ARE TO EDGE OF LANE LINES OR FACE OF CONCRETE CURB.

**LEGEND**

(2) PAVEMENT MARKING EPOXY 4-INCH (DASHED WHITE 10 FT LINE 30 FT GAP)
(3) PAVEMENT MARKING EPOXY 4-INCH (WHITE)
(4) PAVEMENT MARKING EPOXY 6-INCH (WHITE)
(6) PAVEMENT MARKING EPOXY 6-INCH (DASHED WHITE 2 FT LINE 6 FT GAP))
(7) PAVEMENT MARKING CROSSWALK EPOXY 12-INCH (WHITE)
(10) PAVEMENT MARKING ARROWS BIKE LANE EPOXY
(11) PAVEMENT MARKING SYMBOLS BIKE LANE EPOXY

| STATE PROJECT NUMBER 2265-00-74 | HWY: LOCAL | COUNTY: MILWAUKEE | PAVEMENT MARKING PLANS | SCALE FEET 0' 40' | SHEET NO: 85 | E |
|---|---|---|---|---|---|---|

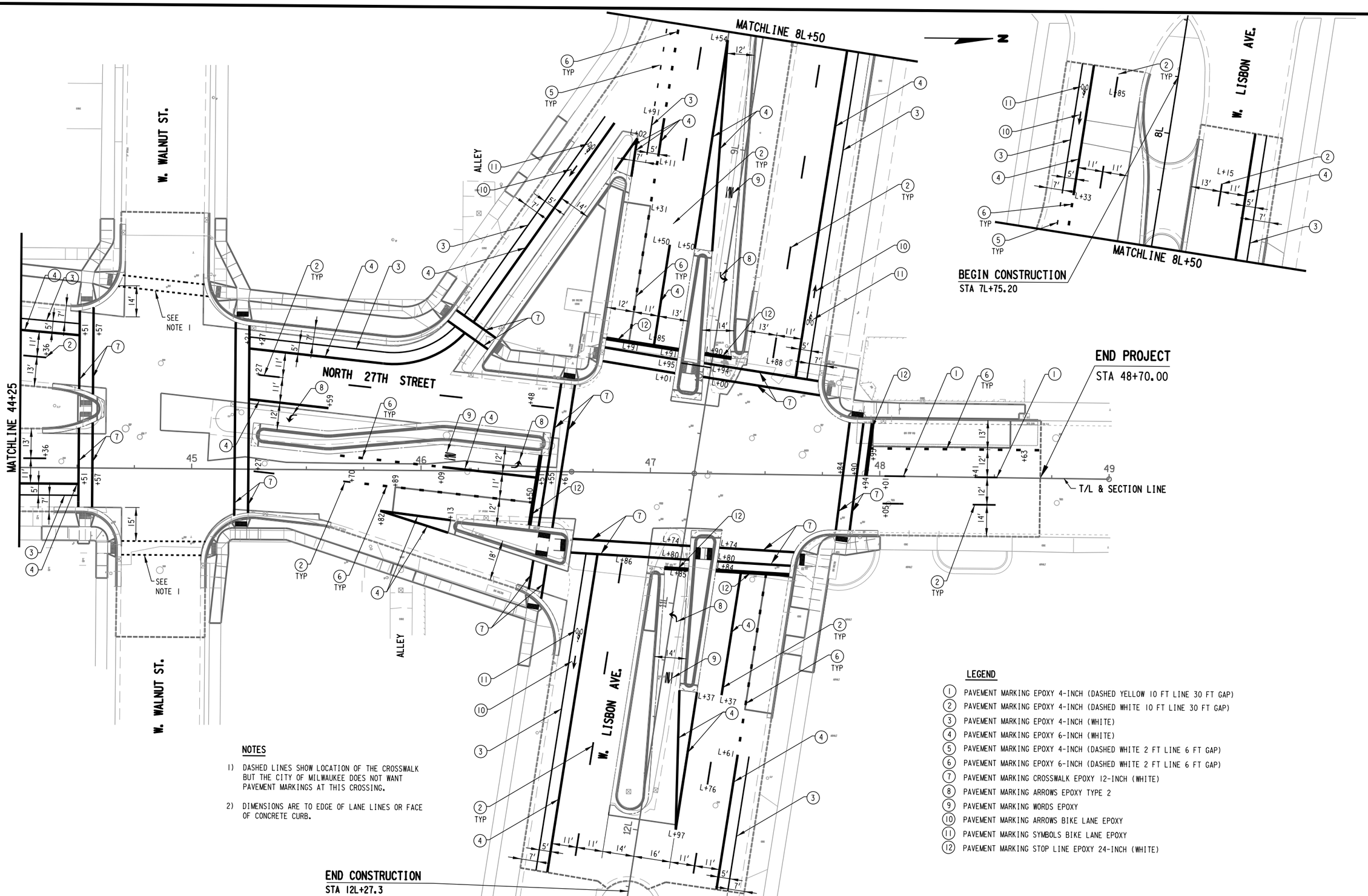


**NOTES**

1) DASHED LINES SHOW LOCATION OF THE CROSSWALK BUT THE CITY OF MILWAUKEE DOES NOT WANT PAVEMENT MARKINGS AT THIS CROSSING.

2) DIMENSIONS ARE TO EDGE OF LANE LINES OR FACE OF CONCRETE CURB.

**LEGEND**

1. PAVEMENT MARKING EPOXY 4-INCH (DASHED YELLOW 10 FT LINE 30 FT GAP)
2. PAVEMENT MARKING EPOXY 4-INCH (DASHED WHITE 10 FT LINE 30 FT GAP)
3. PAVEMENT MARKING EPOXY 4-INCH (WHITE)
4. PAVEMENT MARKING EPOXY 6-INCH (WHITE)
5. PAVEMENT MARKING EPOXY 4-INCH (DASHED WHITE 2 FT LINE 6 FT GAP)
6. PAVEMENT MARKING EPOXY 6-INCH (DASHED WHITE 2 FT LINE 6 FT GAP)
7. PAVEMENT MARKING CROSSWALK EPOXY 12-INCH (WHITE)
8. PAVEMENT MARKING ARROWS EPOXY TYPE 2
9. PAVEMENT MARKING WORDS EPOXY
10. PAVEMENT MARKING ARROWS BIKE LANE EPOXY
11. PAVEMENT MARKING SYMBOLS BIKE LANE EPOXY
12. PAVEMENT MARKING STOP LINE EPOXY 24-INCH (WHITE)

| STATE PROJECT NUMBER 2265-00-74 | HWY: LOCAL | COUNTY: MILWAUKEE | PAVEMENT MARKING PLANS | SCALE FEET 0 40 | SHEET NO: | E |
|---|---|---|---|---|---|---|

FILE NAME: F:\BM1-3393 N 27th St Milwaukee\5_Design\03_Roads\cds\h1024506_pm.dgn PLOT DATE : 12-APR-2016 14:12 PLOT BY : scook PLOT NAME : h1024506_pm1 PLOT SCALE : 40.000000:1.000000

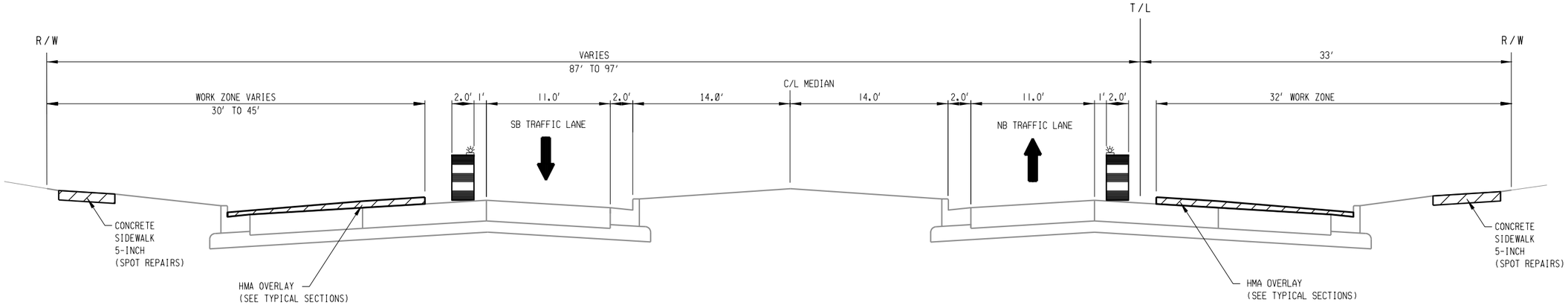


TRAFFIC CONTROL STAGE I

NORTH 27TH ST

STA 30+18 TO STA 44+99

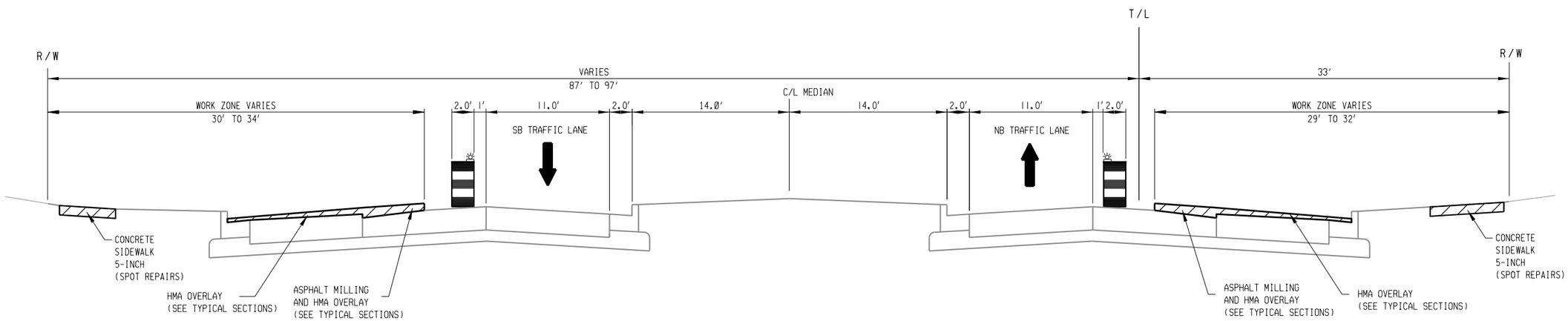


TRAFFIC CONTROL STAGE I

NORTH 27TH ST

STA 16+18 TO STA 30+18

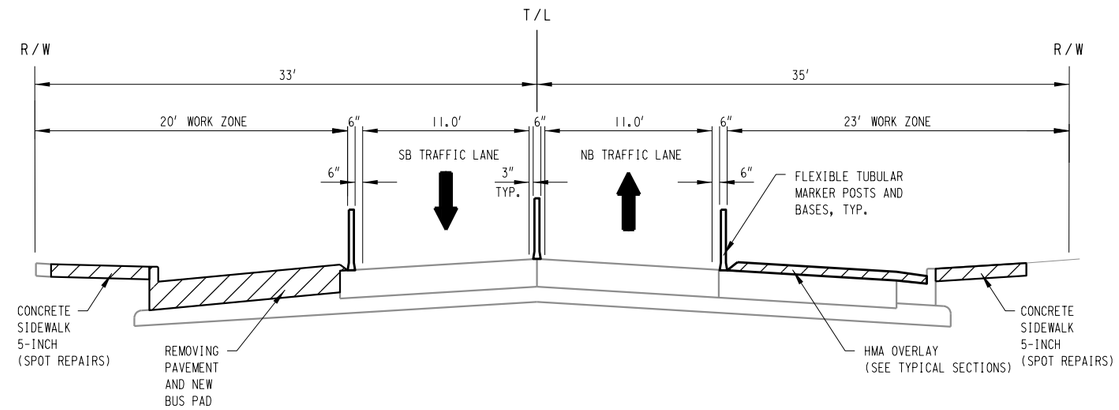


TRAFFIC CONTROL STAGE I

NORTH 27TH ST

STA 47+89 TO STA 48+70

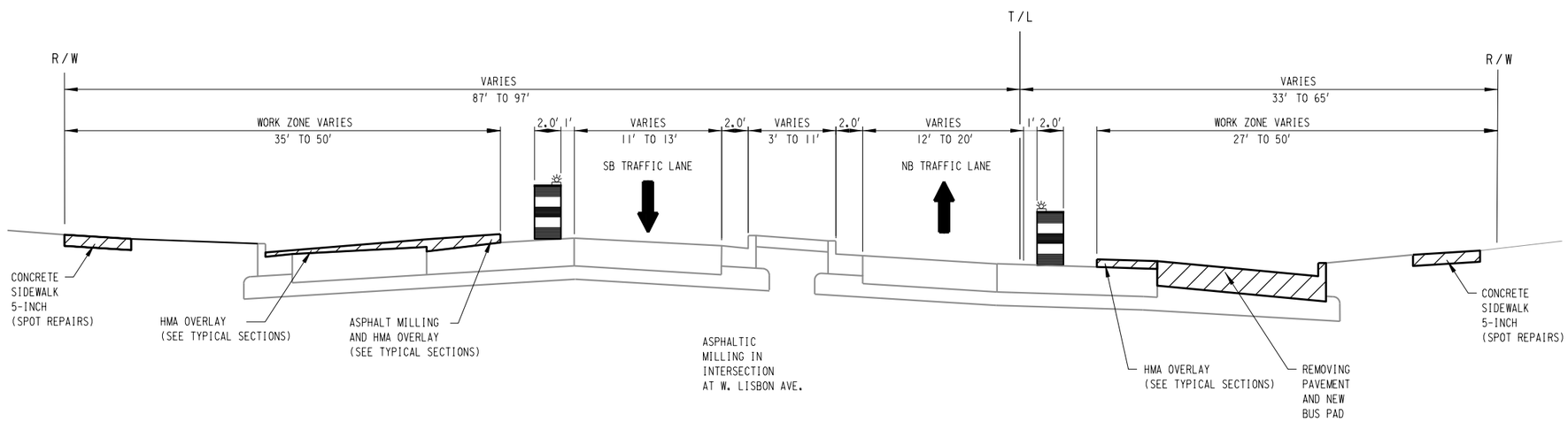


TRAFFIC CONTROL STAGE I

NORTH 27TH ST

STA 44+99 TO STA 47+89

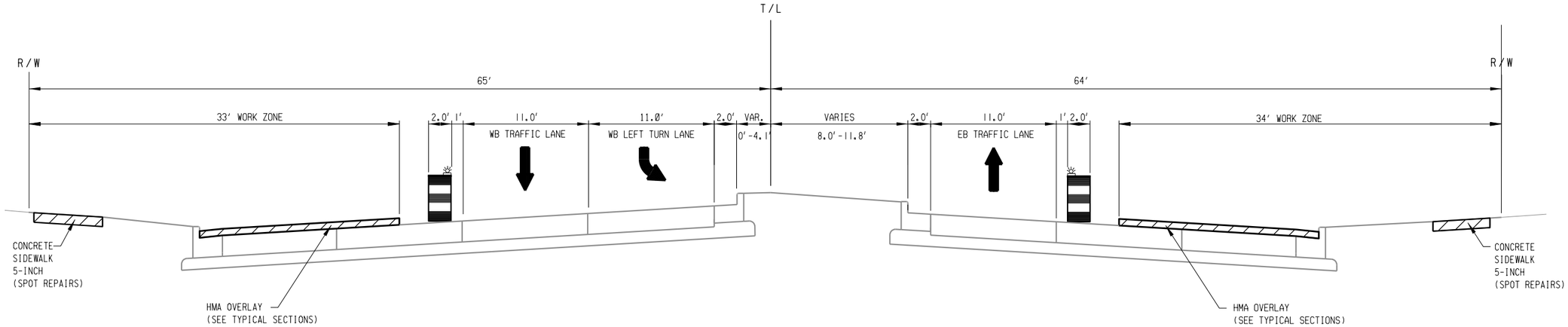


TRAFFIC CONTROL STAGE I

WEST LISBON AVENUE

STA 10L+43 TO STA 12L+27

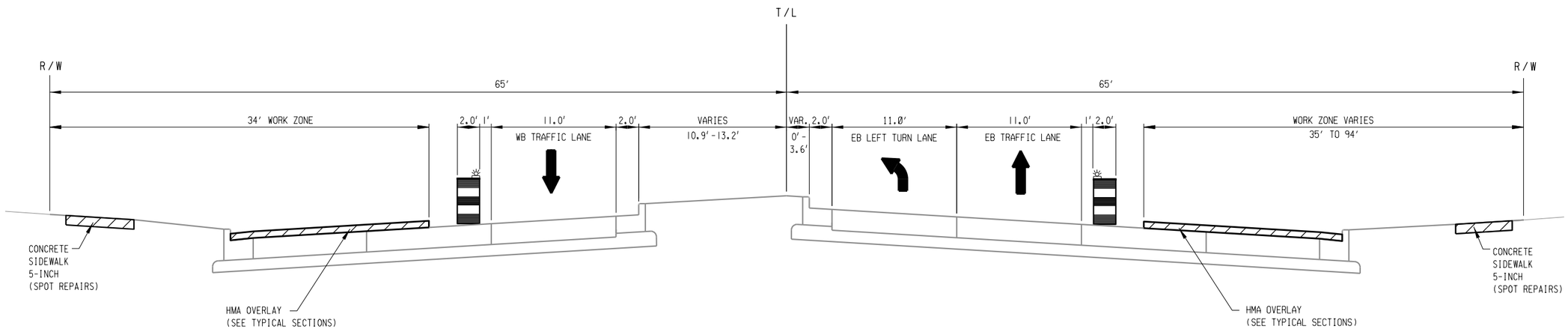


TRAFFIC CONTROL STAGE I

WEST LISBON AVENUE

STA 7L+75 TO STA 10L+43

2

## SIDEWALK CLOSURES

- SIDEWALK CLOSURES SHALL NOT BE IN PLACE AT TWO CONSECUTIVE INTERSECTIONS.
- ALTERNATE SIDEWALK WORK BETWEEN LEFT AND RIGHT SIDE OF ROADWAY TO MAINTAIN PEDESTRIAN ACCESS.
- SEE WISDOT S.D.D. "TRAFFIC CONTROL, PEDESTRIAN ACCOMODATION" FOR SIGNING AT SIDEWALK CLOSURES.

## STREET CLOSURES

- DO NOT CLOSE CONSECUTIVE INTERSECTIONS DURING WORK OPERATIONS.

## STAGE I TRAFFIC

- NORTH 27TH STREET OPEN WITH ONE NB LANE, ONE SB LANE AND FULLY CLOSED PARKING LANES

## STAGE I CONSTRUCTION ACTIVITIES

- MILL EXISTING ASPHALTIC OVERLAY
- CONCRETE BASE PATCHING/CONCRETE PAVEMENT
- CRACK AND JOINT REPAIR
- PLACE NEW BUS PADS, CONCRETE CURB & GUTTER CONCRETE SIDEWALK AND DRIVEWAYS
- ADJUST/RECONSTRUCT COMBINED MANHOLES AND CATCH BASINS
- ADJUST WATER FACILITIES
- INSTALL/ADJUST TRAFFIC SIGNALS
- ADJUST TES CONDUIT AND VAULTS

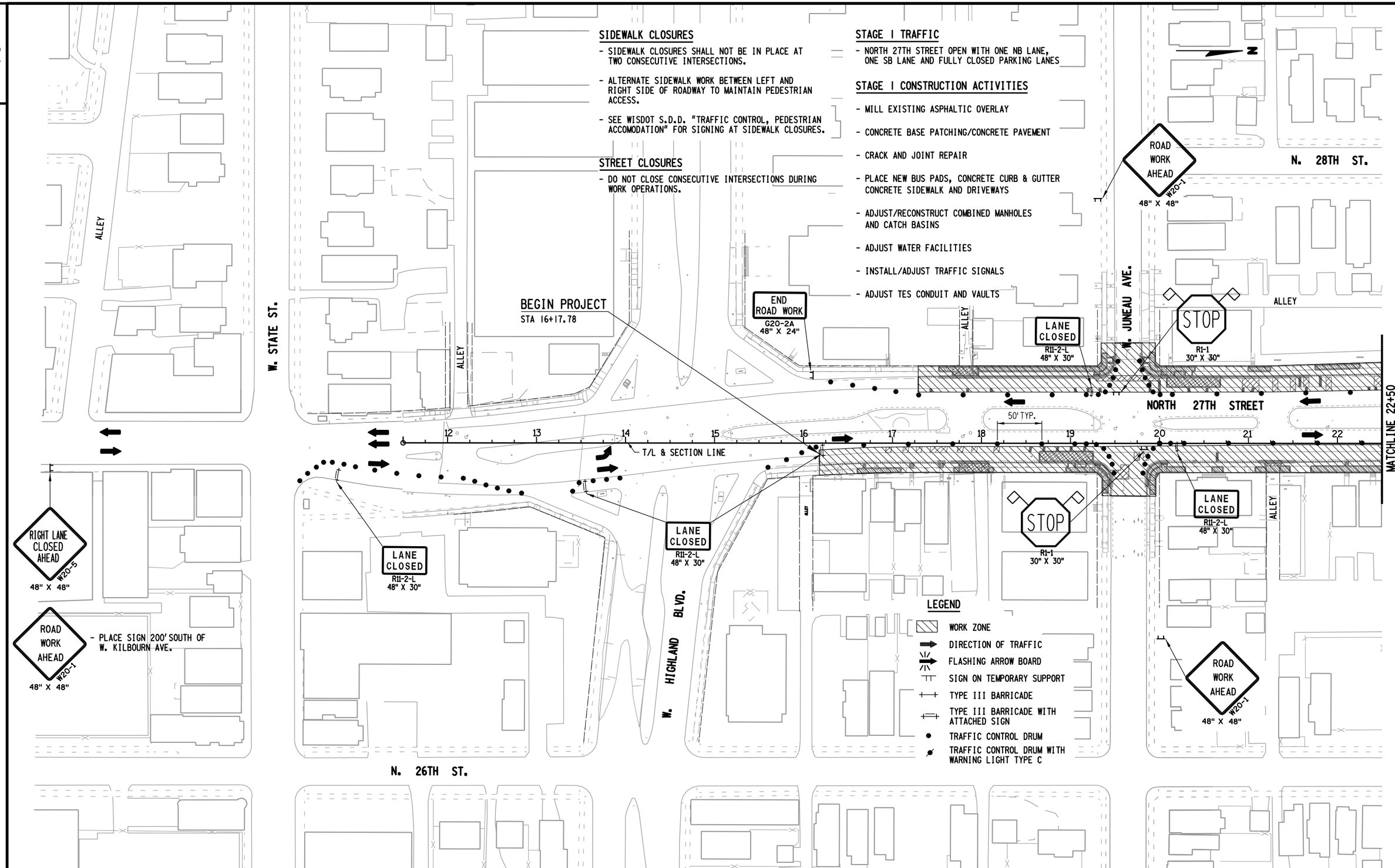


| STATE PROJECT NUMBER 2265-00-74 | HWY: LOCAL | COUNTY: MILWAUKEE | TRAFFIC CONTROL - STAGE I | SCALE FEET | SHEET NO: | E |
|---|---|---|---|---|---|---|



FILE NAME: F:\BM1-3393 N 27th St Milwaukee\5_Design\03_Roads\cds\h1025104_tc.dgn PLOT DATE : 02-MAR-2016 18:09 PLOT BY : scook PLOT NAME : h1025104_tc PLOT SCALE : 100.000000:1.000000

2

## STREET CLOSURES

- DO NOT CLOSE CONSECUTIVE INTERSECTIONS DURING WORK OPERATIONS.

## SIDEWALK CLOSURES

- SIDEWALK CLOSURES SHALL NOT BE IN PLACE AT TWO CONSECUTIVE INTERSECTIONS.
- ALTERNATE SIDEWALK WORK BETWEEN LEFT AND RIGHT SIDE OF ROADWAY TO MAINTAIN PEDESTRIAN ACCESS.
- SEE WISDOT S.D.D. "TRAFFIC CONTROL, PEDESTRIAN ACCOMODATION" FOR SIGNING AT SIDEWALK CLOSURES.

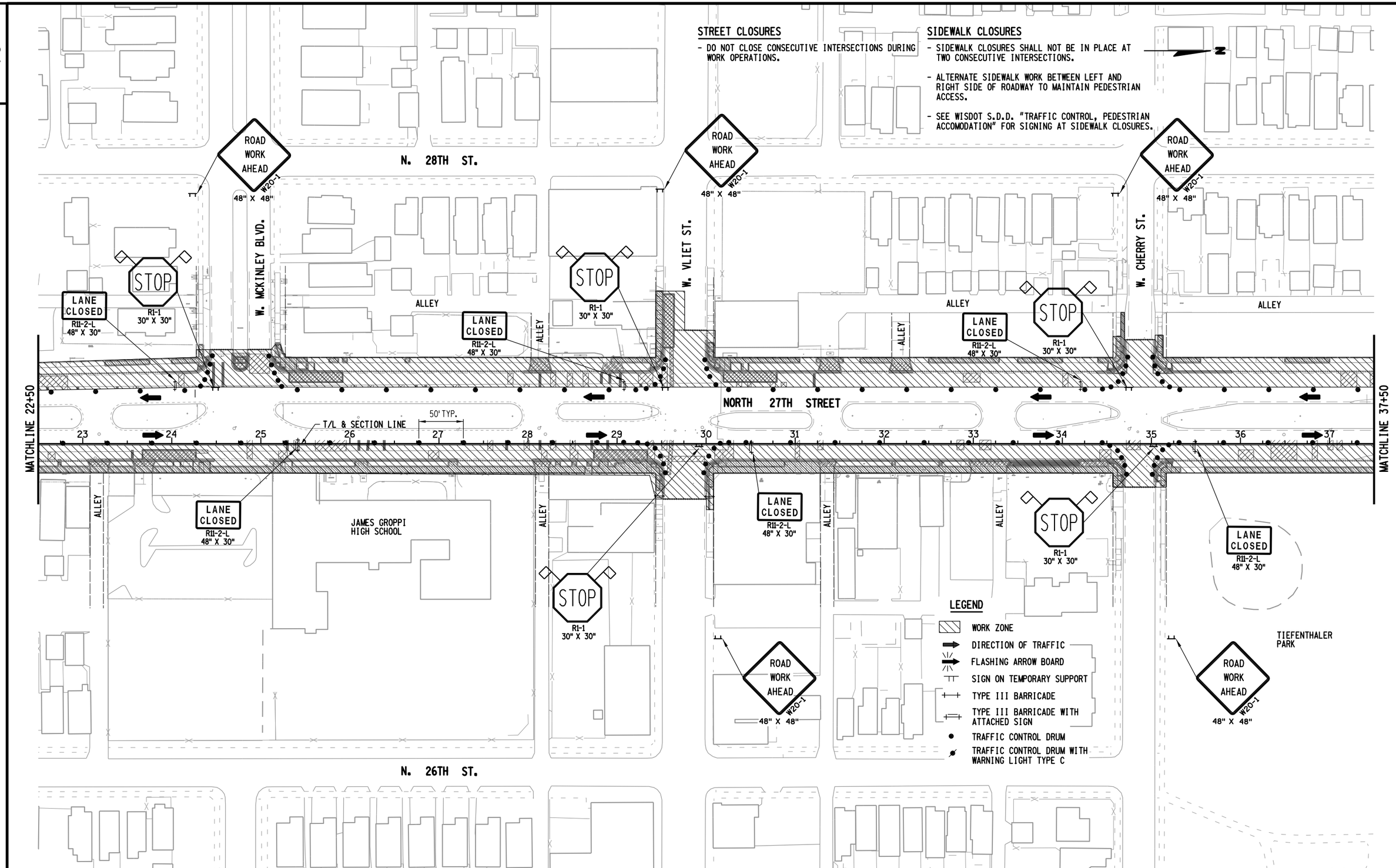


2

| STATE PROJECT NUMBER 2265-00-74 | HWY: LOCAL | COUNTY: MILWAUKEE | TRAFFIC CONTROL - STAGE 1 | SCALE FEET | SHEET NO: | E |
|---|---|---|---|---|---|---|



FILE NAME: F:\BM1-3393 N 27th St Milwaukee\5_Design\03_Roads\cds\h1025105_tc.dgn PLOT DATE : 02-MAR-2016 18:09 PLOT BY : scook PLOT NAME : h1025105_tc PLOT SCALE : 100.000000:1.000000

2

## SIDEWALK CLOSURES

- SIDEWALK CLOSURES SHALL NOT BE IN PLACE AT TWO CONSECUTIVE INTERSECTIONS.
- ALTERNATE SIDEWALK WORK BETWEEN LEFT AND RIGHT SIDE OF ROADWAY TO MAINTAIN PEDESTRIAN ACCESS.
- SEE WISDOT S.D.D. "TRAFFIC CONTROL, PEDESTRIAN ACCOMODATION" FOR SIGNING AT SIDEWALK CLOSURES.

## STREET CLOSURES

- DO NOT CLOSE CONSECUTIVE INTERSECTIONS DURING WORK OPERATIONS.

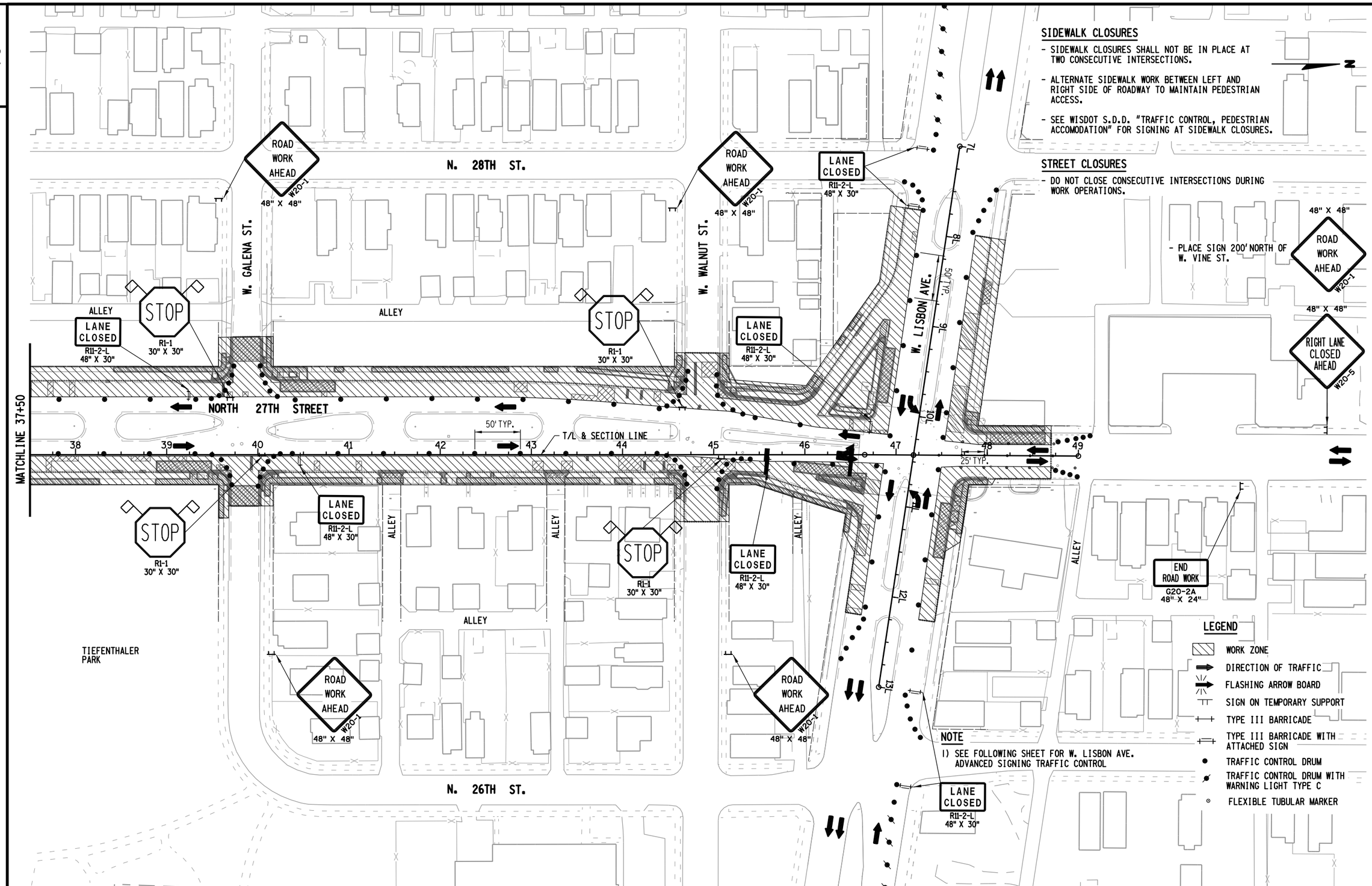


2

| STATE PROJECT NUMBER 2265-00-74 | HWY: LOCAL | COUNTY: MILWAUKEE | TRAFFIC CONTROL - STAGE 1 | SCALE FEET | SHEET NO: | E |
|---|---|---|---|---|---|---|



FILE NAME: F:\BM1-3393 N 27th St Milwaukee\5_Design\03_Roads\cds\h1025106_tc.dgn PLOT DATE : 02-MAR-2016 18:09 PLOT BY : scook PLOT NAME : h1025106_tc PLOT SCALE : 100.000000:1.000000

2

## SIDEWALK CLOSURES

- SIDEWALK CLOSURES SHALL NOT BE IN PLACE AT TWO CONSECUTIVE INTERSECTIONS.
- ALTERNATE SIDEWALK WORK BETWEEN LEFT AND RIGHT SIDE OF ROADWAY TO MAINTAIN PEDESTRIAN ACCESS.
- SEE WISDOT S.D.D. "TRAFFIC CONTROL, PEDESTRIAN ACCOMODATION" FOR SIGNING AT SIDEWALK CLOSURES.

## STREET CLOSURES

- DO NOT CLOSE CONSECUTIVE INTERSECTIONS DURING WORK OPERATIONS.

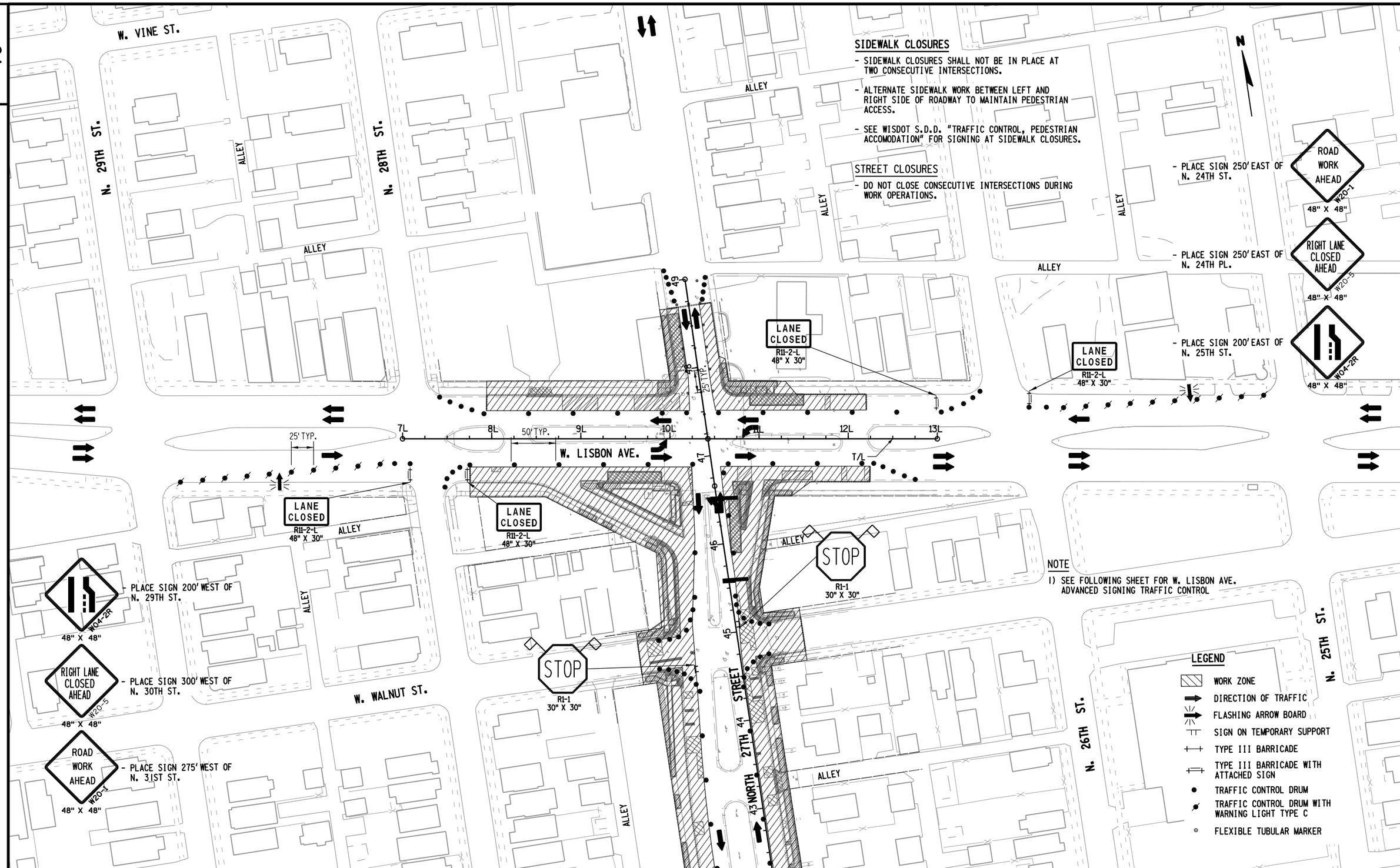


NOTE

1) SEE FOLLOWING SHEET FOR W. LISBON AVE. ADVANCED SIGNING TRAFFIC CONTROL

## LEGEND

- WORK ZONE
- DIRECTION OF TRAFFIC
- FLASHING ARROW BOARD
- SIGN ON TEMPORARY SUPPORT
- TYPE III BARRICADE
- TYPE III BARRICADE WITH ATTACHED SIGN
- TRAFFIC CONTROL DRUM
- TRAFFIC CONTROL DRUM WITH WARNING LIGHT TYPE C
- FLEXIBLE TUBULAR MARKER

| STATE PROJECT NUMBER 2265-00-74 | HWY: LOCAL | COUNTY: MILWAUKEE | TRAFFIC CONTROL - STAGE 1 | SCALE FEET | SHEET NO: | E |
|---|---|---|---|---|---|---|



FILE NAME: F:\BM1-3393 N 27th St Milwaukee\5_Design\03_Roads\cds\h1025107_tc.dgn PLOT DATE : 02-MAR-2016 18:09 PLOT BY : scook PLOT NAME : h1025107_tc PLOT SCALE : 100.000000:1.000000

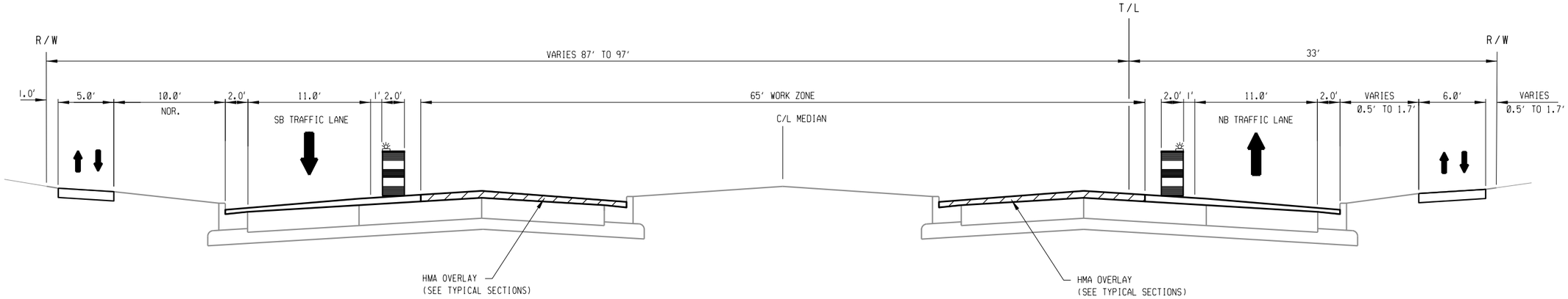


TRAFFIC CONTROL STAGE 2

NORTH 27TH ST

STA 30+18 TO STA 44+99

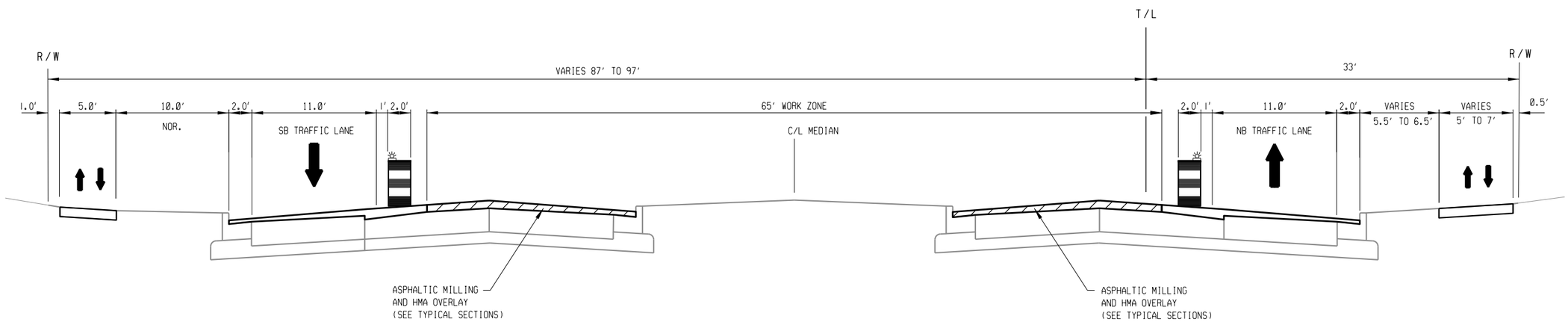


TRAFFIC CONTROL STAGE 2

NORTH 27TH ST

STA 16+18 TO STA 30+18

2

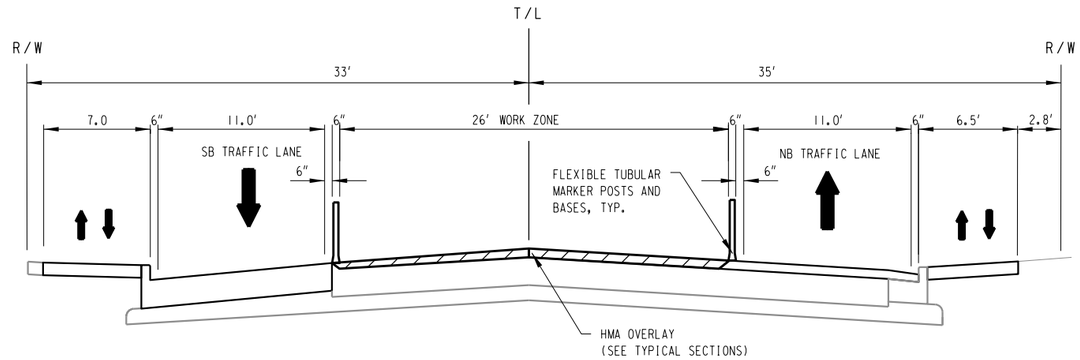


TRAFFIC CONTROL STAGE 2

NORTH 27TH ST

STA 47+89 TO STA 48+70

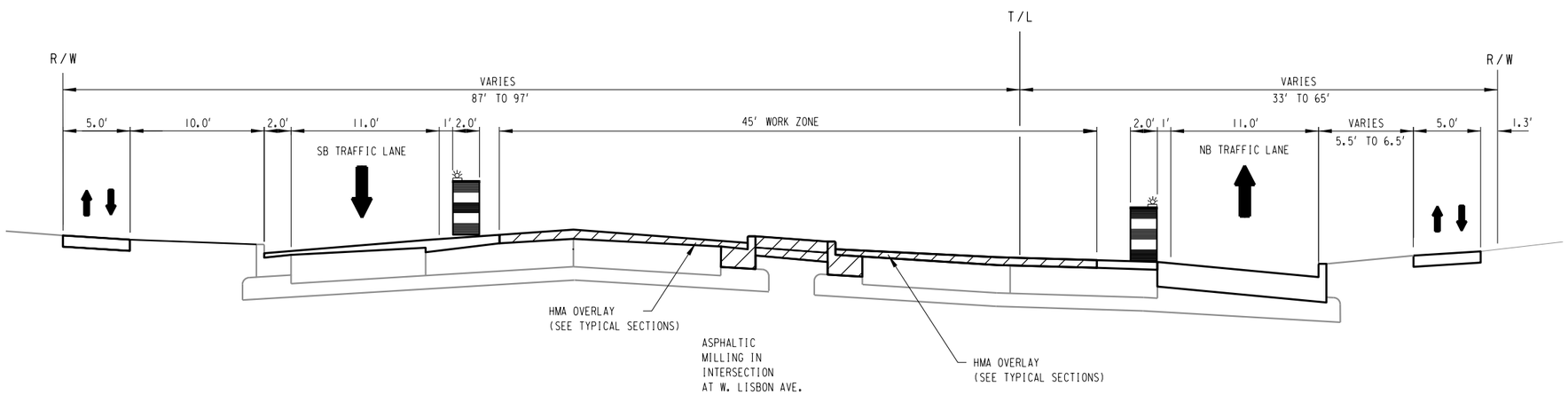


TRAFFIC CONTROL STAGE 2

NORTH 27TH ST

STA 44+99 TO STA 47+89

| STATE PROJECT NUMBER 2265-00-74 | HWY: LOCAL | COUNTY: MILWAUKEE | TRAFFIC CONTROL - STAGE 2 | SCALE FEET | SHEET NO: | E |
|---|---|---|---|---|---|---|



FILE NAME: F:\BM1-3393 N 27th St Milwaukee\5_Design\03_Roads\cds\hl025202_tc.dgn PLOT DATE : 10-FEB-2016 10:21 PLOT BY : vlatifi PLOT NAME : hl025202_tc PLOT SCALE : 10.000000:1.000000

2

## SIDEWALK CLOSURES

- SIDEWALK CLOSURES SHALL NOT BE IN PLACE AT TWO CONSECUTIVE INTERSECTIONS.
- ALTERNATE SIDEWALK WORK BETWEEN LEFT AND RIGHT SIDE OF ROADWAY TO MAINTAIN PEDESTRIAN ACCESS.
- SEE WISDOT S.D.D. "TRAFFIC CONTROL, PEDESTRIAN ACCOMODATION" FOR SIGNING AT SIDEWALK CLOSURES.

## STREET CLOSURES

- DO NOT CLOSE CONSECUTIVE INTERSECTIONS DURING WORK OPERATIONS.

## STAGE 2 TRAFFIC

- NORTH 27TH STREET OPEN WITH ONE NB LANE AND ONE SB LANE
- WEST LISBON AVENUE OPEN WITH ONE EB LANE AND ONE WB LANE AT NORTH 27TH STREET

## STAGE 2 CONSTRUCTION ACTIVITIES

- MILL EXISTING ASPHALTIC OVERLAY
- CONCRETE BASE PATCHING
- CRACK AND JOINT REPAIR
- PLACE NEW BUS PADS, CONCRETE CURB & GUTTER SIDEWALK AND DRIVEWAYS
- ADJUST/RECONSTRUCT COMBINED MANHOLES AND CATCH BASINS
- ADJUST WATER FACILITIES
- INSTALL TRAFFIC SIGNALS
- TES CONDUIT AND VAULTS

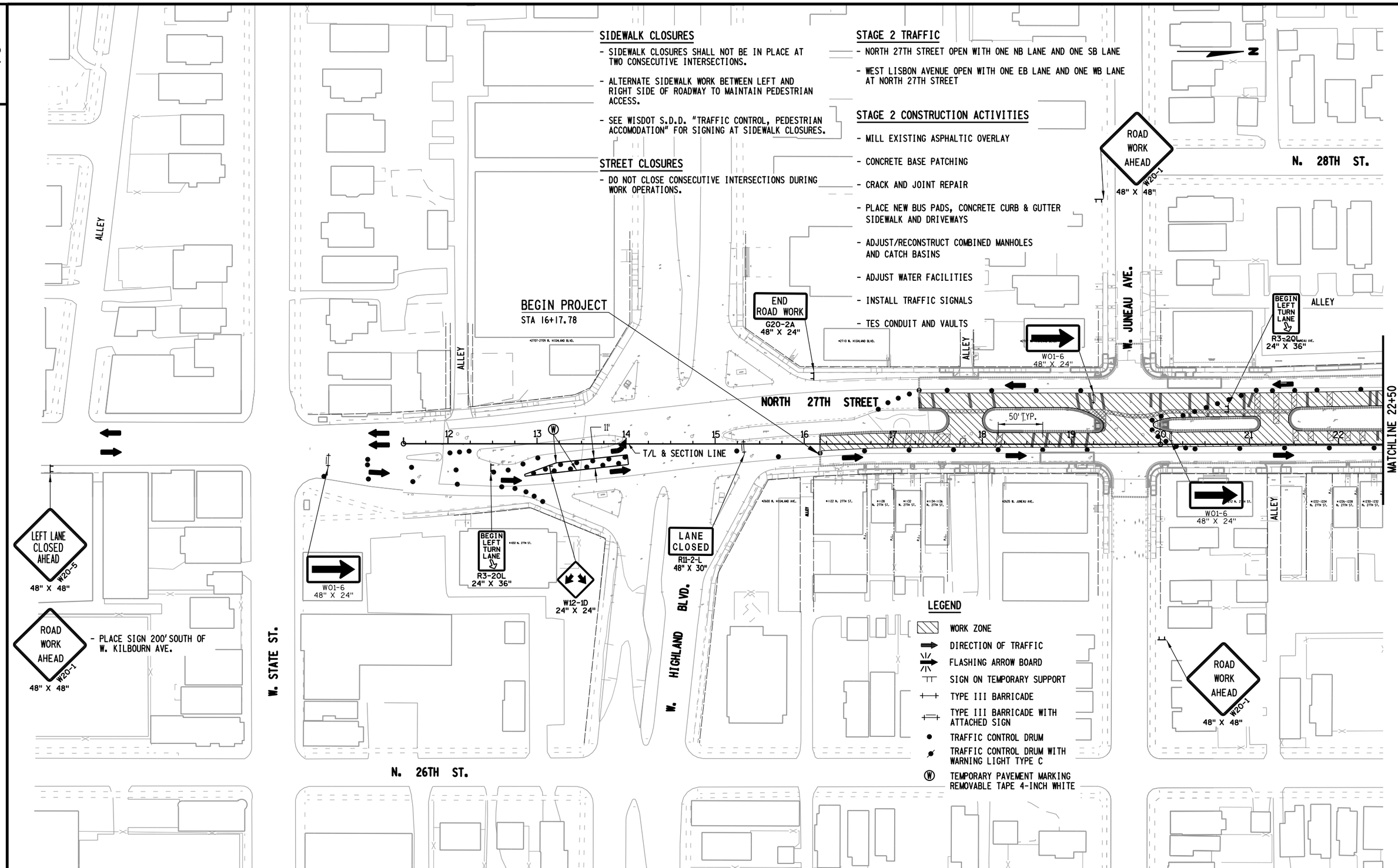


| STATE PROJECT NUMBER 2265-00-74 | HWY: LOCAL | COUNTY: MILWAUKEE | TRAFFIC CONTROL - STAGE 2 | SCALE FEET | SHEET NO: 96 | E |
|---|---|---|---|---|---|---|

FILE NAME: F:\BM1-3393 N 27th St Milwaukee\5_Design\03_Roads\cds\h1025203_tc.dgn PLOT DATE : 10-FEB-2016 10:21 PLOT BY : vlatifi PLOT NAME : h1025203_tc PLOT SCALE : 100.000000:1.000000

2

## STREET CLOSURES

- DO NOT CLOSE CONSECUTIVE INTERSECTIONS DURING WORK OPERATIONS.

## SIDEWALK CLOSURES

- SIDEWALK CLOSURES SHALL NOT BE IN PLACE AT TWO CONSECUTIVE INTERSECTIONS.
- ALTERNATE SIDEWALK WORK BETWEEN LEFT AND RIGHT SIDE OF ROADWAY TO MAINTAIN PEDESTRIAN ACCESS.
- SEE WISDOT S.D.D. "TRAFFIC CONTROL, PEDESTRIAN ACCOMODATION" FOR SIGNING AT SIDEWALK CLOSURES.

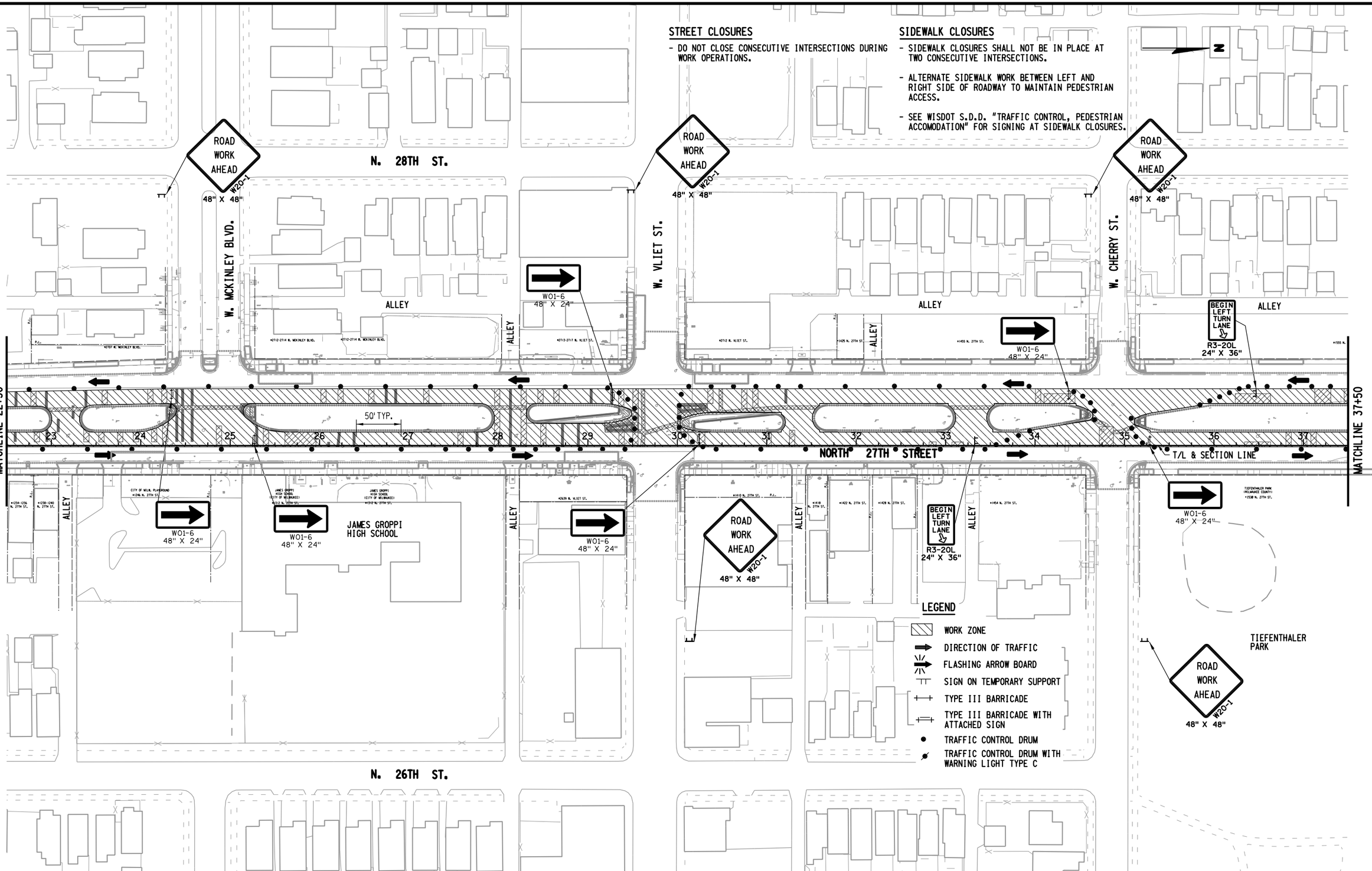


2

| STATE PROJECT NUMBER 2265-00-74 | HWY: LOCAL | COUNTY: MILWAUKEE | TRAFFIC CONTROL - STAGE 2 | SCALE FEET | SHEET NO: 97 | E |
|---|---|---|---|---|---|---|

FILE NAME: F:\BM1-3393 N 27th St Milwaukee\5_Design\03_Roads\cds\h1025204_tc.dgn PLOT DATE : 10-FEB-2016 10:21 PLOT BY : vlatifi PLOT NAME : h1025204_tc PLOT SCALE : 100.000000:1.000000

2

## SIDEWALK CLOSURES

- SIDEWALK CLOSURES SHALL NOT BE IN PLACE AT TWO CONSECUTIVE INTERSECTIONS.
- ALTERNATE SIDEWALK WORK BETWEEN LEFT AND RIGHT SIDE OF ROADWAY TO MAINTAIN PEDESTRIAN ACCESS.
- SEE WISDOT S.D.D. "TRAFFIC CONTROL, PEDESTRIAN ACCOMODATION" FOR SIGNING AT SIDEWALK CLOSURES.

## STREET CLOSURES

- DO NOT CLOSE CONSECUTIVE INTERSECTIONS DURING WORK OPERATIONS.

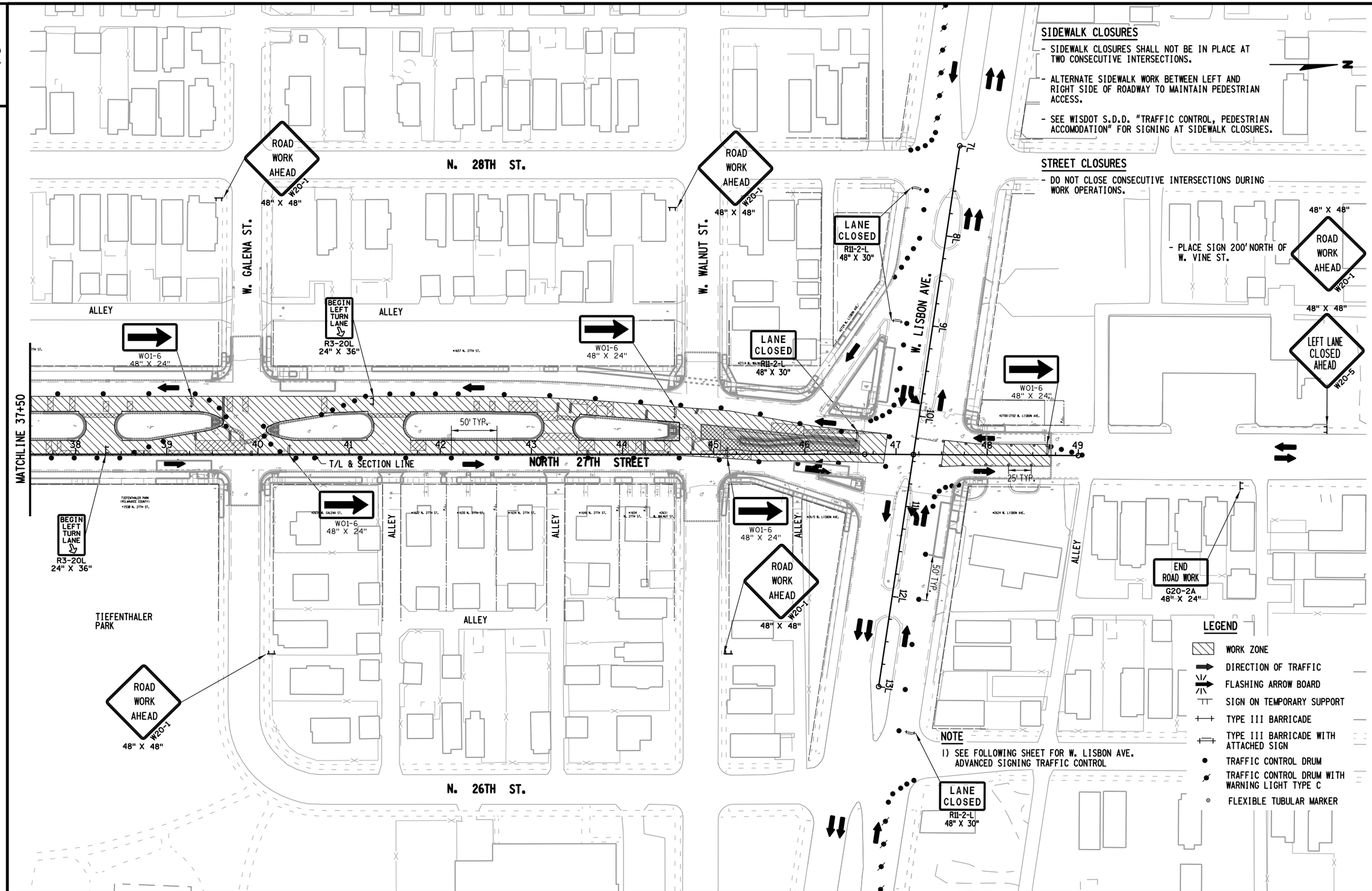


| STATE PROJECT NUMBER | HWY: | COUNTY: | TRAFFIC CONTROL - STAGE 2 | SCALE | SHEET NO: | |
|---|---|---|---|---|---|---|
| 2265-00-74 | LOCAL | MILWAUKEE | | FEET | 98 | E |

FILE NAME: F:\BM1-3393 N 27th St Milwaukee\5_Design\03_Roads\cds\hl025205_tc.dgn PLOT DATE : 10-FEB-2016 10:21 PLOT BY : vlatifi PLOT NAME : hl025205_tc PLOT SCALE : 100.000000:1.000000

2

## SIDEWALK CLOSURES

- SIDEWALK CLOSURES SHALL NOT BE IN PLACE AT TWO CONSECUTIVE INTERSECTIONS.
- ALTERNATE SIDEWALK WORK BETWEEN LEFT AND RIGHT SIDE OF ROADWAY TO MAINTAIN PEDESTRIAN ACCESS.
- SEE WISDOT S.D.D. "TRAFFIC CONTROL, PEDESTRIAN ACCOMODATION" FOR SIGNING AT SIDEWALK CLOSURES.

## STREET CLOSURES

- DO NOT CLOSE CONSECUTIVE INTERSECTIONS DURING WORK OPERATIONS.

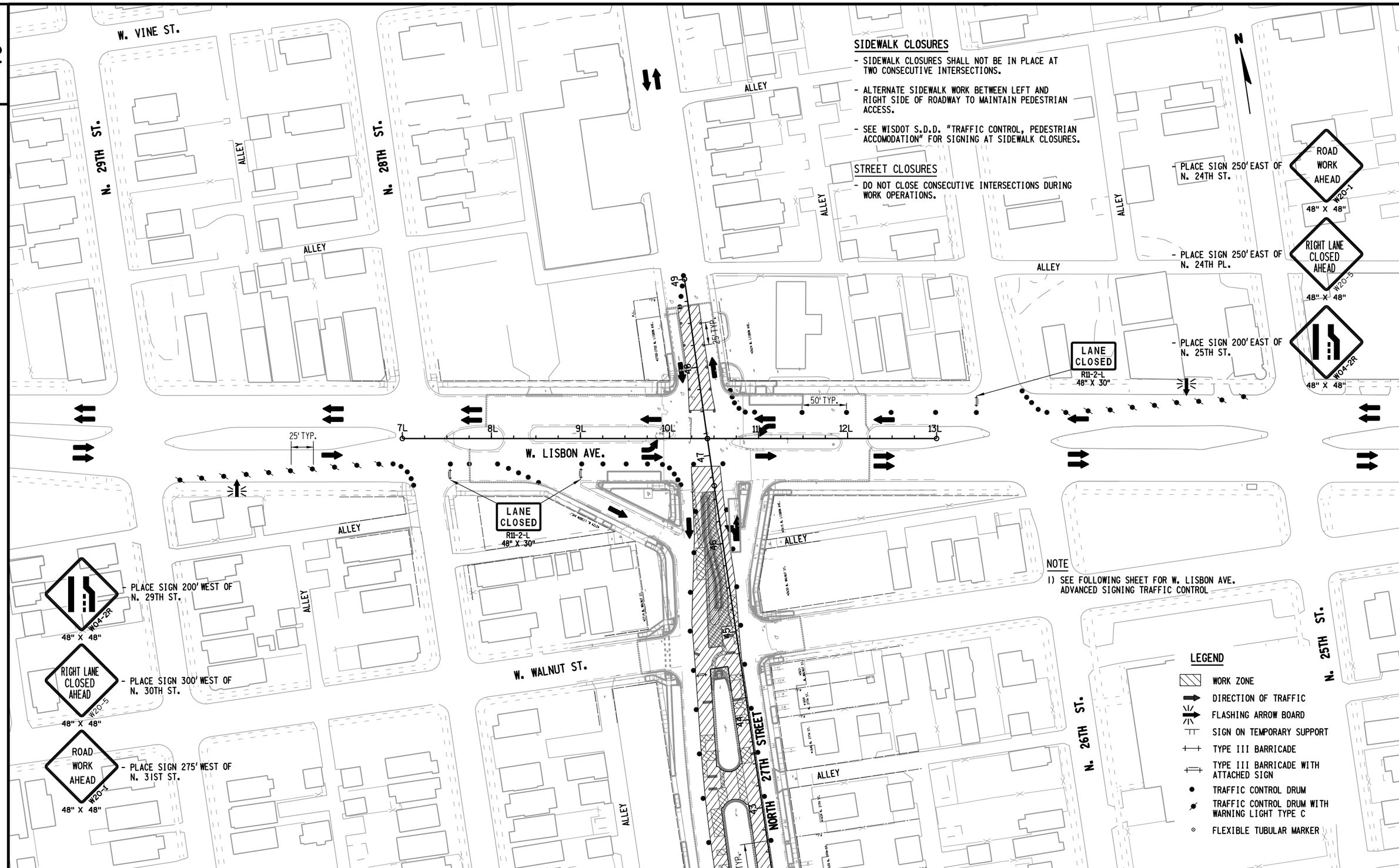


NOTE

1) SEE FOLLOWING SHEET FOR W. LISBON AVE. ADVANCED SIGNING TRAFFIC CONTROL

2

| STATE PROJECT NUMBER 2265-00-74 | HWY: LOCAL | COUNTY: MILWAUKEE | TRAFFIC CONTROL - STAGE 2 | SCALE FEET | SHEET NO: | E |
|---|---|---|---|---|---|---|



FILE NAME: F:\BM1-3393 N 27th St Milwaukee\5_Design\03_Roads\cds\h1025206_tc.dgn PLOT DATE : 10-FEB-2016 10:21 PLOT BY : vlatifi PLOT NAME : h1025206_tc PLOT SCALE : 100.000000:1.000000

2

## STAGE 2A TRAFFIC

- NORTH 27TH STREET OPEN WITH ONE NB LANE AND ONE SB LANE
- WEST LISBON AVENUE OPEN WITH ONE EB LANE AND ONE WB LANE AT NORTH 27TH STREET

## STAGE 2A CONSTRUCTION ACTIVITIES

- MILL EXISTING ASPHALTIC OVERLAY
- PLACE ASPHALTIC OVERLAY
- ADJUST MANHOLES AND WATER FACILITIES

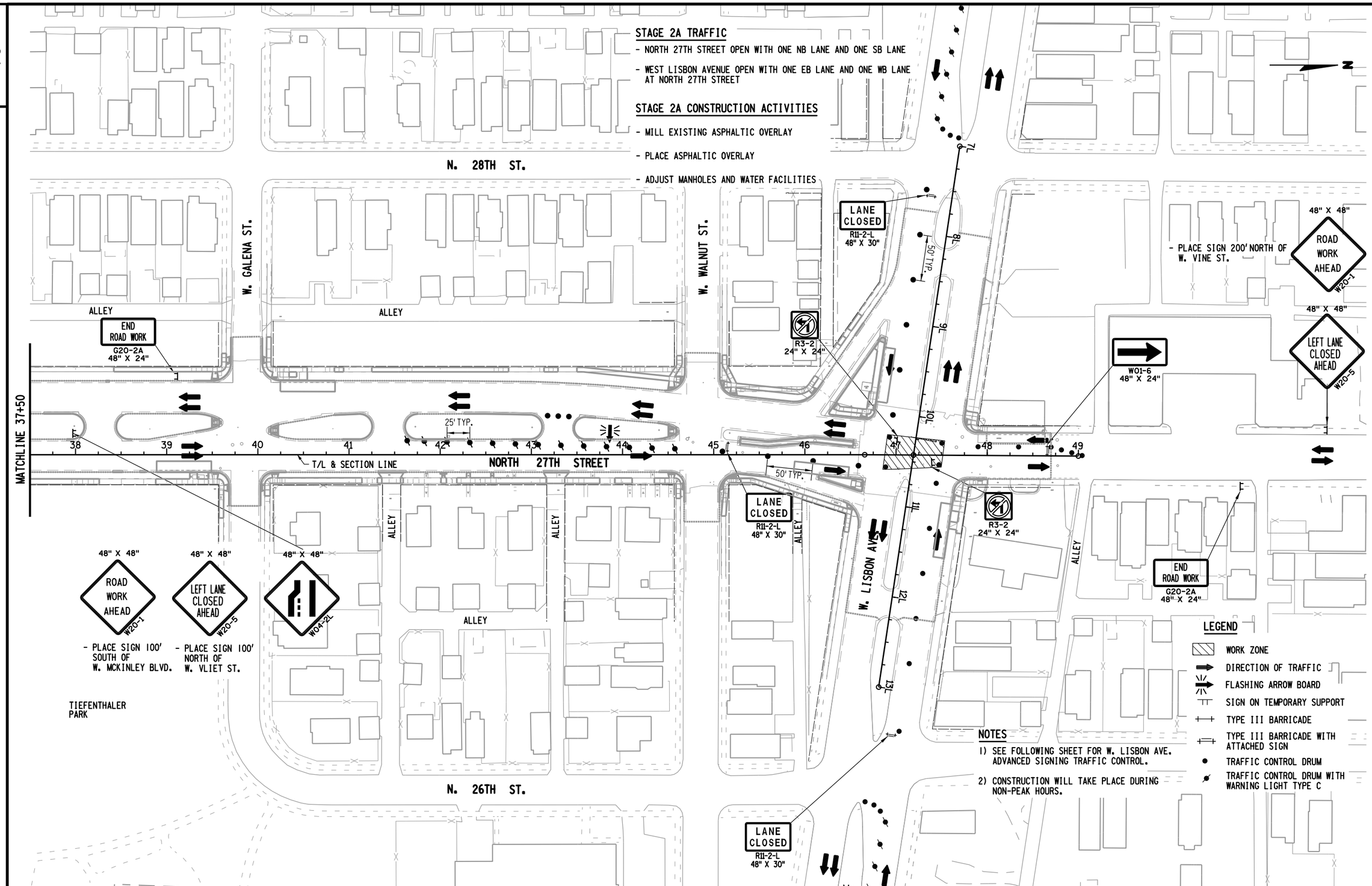


## NOTES

1) SEE FOLLOWING SHEET FOR W. LISBON AVE. ADVANCED SIGNING TRAFFIC CONTROL.
2) CONSTRUCTION WILL TAKE PLACE DURING NON-PEAK HOURS.

2

| STATE PROJECT NUMBER 2265-00-74 | HWY: LOCAL | COUNTY: MILWAUKEE | TRAFFIC CONTROL - STAGE 2A | SCALE FEET | SHEET NO: | E |
|---|---|---|---|---|---|---|



FILE NAME: F:\BM1-3393 N 27th St Milwaukee\5_Design\03_Roads\cds\h1025210_tc.dgn PLOT DATE : 02-MAR-2016 18:23 PLOT BY : scook PLOT NAME : h1025251_tc PLOT SCALE : 100.000000:1.000000

2

W. VINE ST.

N. 29TH ST.

N. 28TH ST.

ALLEY

N

- PLACE SIGN 250' EAST OF N. 24TH ST.

ROAD WORK AHEAD W20-1 48" X 48"

- PLACE SIGN 250' EAST OF N. 24TH PL.

LEFT LANE CLOSED AHEAD W20-5 48" X 48"

- PLACE SIGN 200' EAST OF N. 25TH ST.

W04-2L 48" X 48"

R3-2 24" X 24"

25' TYP.

50' TYP.

7L 8L 9L 10L 11L 12L 13L

49 48 47 46 45 44 43

W. LISBON AVE.

LANE CLOSED R11-2-L 48" X 30"

NORTH 27TH STREET

R3-2 24" X 24"

LANE CLOSED R11-2-L 48" X 30"

- PLACE SIGN 200' WEST OF N. 29TH STREET

W04-2L 48" X 48"

LEFT LANE CLOSED AHEAD W20-5 48" X 48"

- PLACE SIGN 300' WEST OF N. 30TH ST.

ROAD WORK AHEAD W20-1 48" X 48"

- PLACE SIGN 275' WEST OF N. 31ST ST.

W. WALNUT ST.

N. 25TH ST.

N. 26TH ST.

NOTES

1) SEE FOLLOWING SHEET FOR W. LISBON AVE. ADVANCED SIGNING TRAFFIC CONTROL

2) CONSTRUCTION WILL TAKE PLACE DURING NON-PEAK HOURS.

LEGEND

- WORK ZONE
- DIRECTION OF TRAFFIC
- FLASHING ARROW BOARD
- SIGN ON TEMPORARY SUPPORT
- TYPE III BARRICADE
- TYPE III BARRICADE WITH ATTACHED SIGN
- TRAFFIC CONTROL DRUM
- TRAFFIC CONTROL DRUM WITH WARNING LIGHT TYPE C

2

| STATE PROJECT NUMBER 2265-00-74 | HWY: LOCAL | COUNTY: MILWAUKEE | TRAFFIC CONTROL - STAGE 2A | SCALE FEET | SHEET NO: | E |
|---|---|---|---|---|---|---|



FILE NAME: F:\BM1-3393 N 27th St Milwaukee\5_Design\03_Roads\cds\h1025211_tc.dgn PLOT DATE : 02-MAR-2016 18:23 PLOT BY : scook PLOT NAME : h1025252_tc PLOT SCALE : 100.000000:1.000000

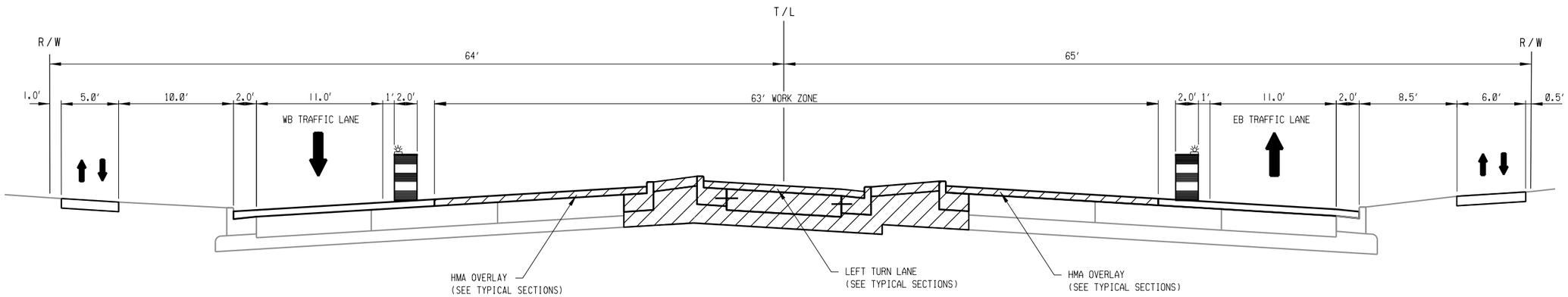


TRAFFIC CONTROL STAGE 3

WEST LISBON AVENUE

STA 10L+43 TO STA 12L+27

## STAGE 3 TRAFFIC

- NORTH 27TH STREET ALL LANES OPEN EXCEPT ONE NB LANE AT W. LISBON AVE. INTERSECTION
- W. LISBON AVENUE OPEN WITH ONE EB LANE, ONE WB LANE AT THE NORTH 27TH STREET INTERSECTION

## STAGE 3 CONSTRUCTION ACTIVITIES

- PLACE ASPHALTIC OVERLAY
- RECONSTRUCT LEFT TURN ISLANDS
- CONCRETE BASE PATCHING/CONCRETE BASE
- PLACE NEW CONCRETE CURB & GUTTER AND CONCRETE SIDEWALK IN ISLANDS
- ADJUST COMBINED MANHOLES AND CATCH BASINS
- ADJUST WATER FACILITIES
- INSTALL/ADJUST TRAFFIC SIGNALS

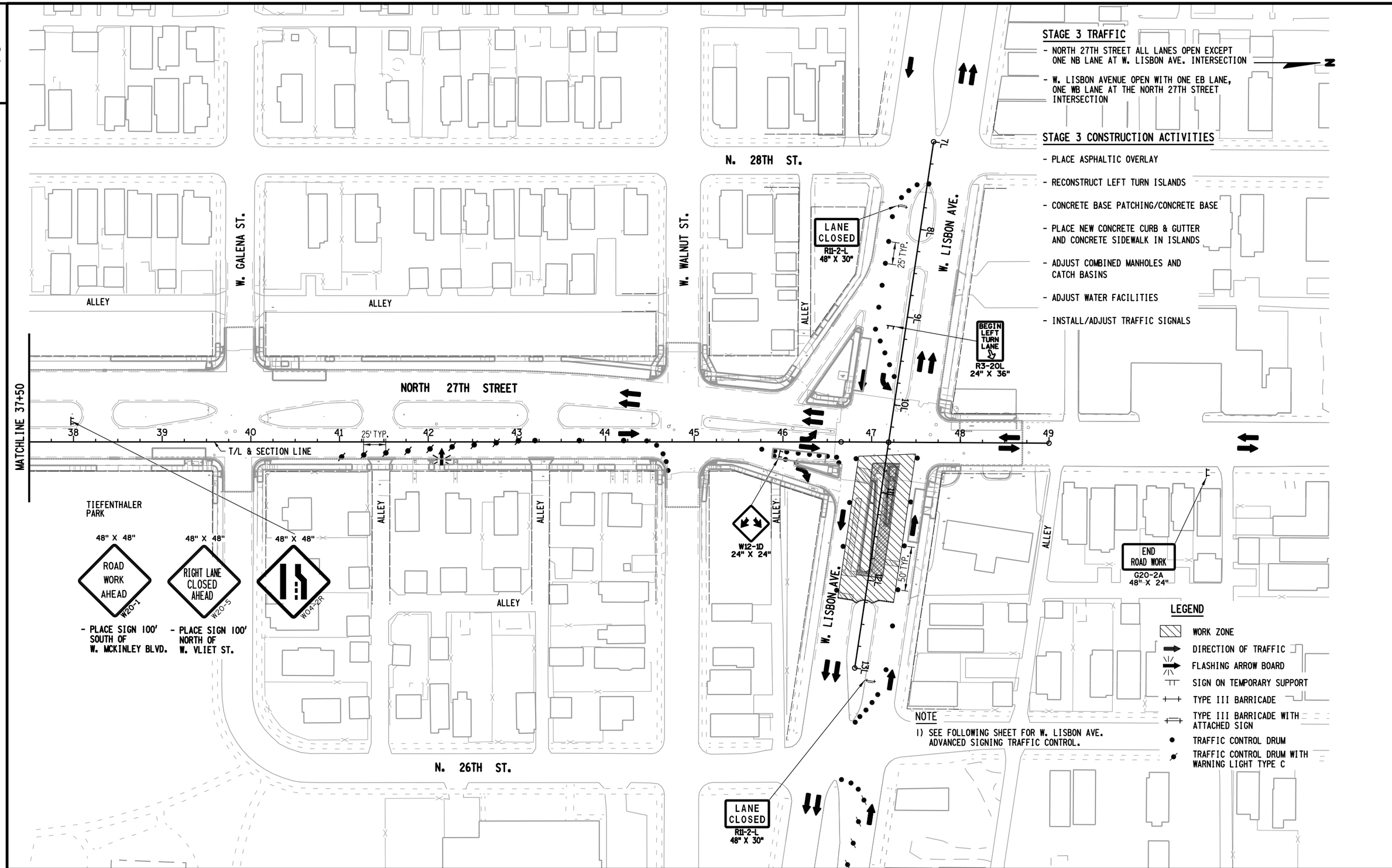


NOTE

1) SEE FOLLOWING SHEET FOR W. LISBON AVE. ADVANCED SIGNING TRAFFIC CONTROL.

| STATE PROJECT NUMBER 2265-00-74 | HWY: LOCAL | COUNTY: MILWAUKEE | TRAFFIC CONTROL - STAGE 3 | SCALE FEET | SHEET NO: | E |
|---|---|---|---|---|---|---|



FILE NAME: F:\BM1-3393 N 27th St Milwaukee\5_Design\03_Roads\cds\h1025302_tc.dgn PLOT DATE : 02-MAR-2016 18:44 PLOT BY : scook PLOT NAME : h1025302_tc PLOT SCALE : 100.000000:1.000000

2

W. VINE ST.

N. 29TH ST.

N. 28TH ST.

ALLEY

N

- PLACE SIGN 250' EAST OF N. 24TH ST.

ROAD WORK AHEAD W20-1 48" X 48"

- PLACE SIGN 250' EAST OF N. 24TH PL.

LEFT LANE CLOSED AHEAD W20-5 48" X 48"

- PLACE SIGN 200' EAST OF N. 25TH ST.

W04-2L 48" X 48"

BEGIN LEFT TURN LANE R3-20L 24" X 36"

W. LISBON AVE.

50' TYP.

25' TYP.

7L 8L 9L 10L 11L 12L 13L

49 48 47 46 45 44 43

LANE CLOSED R11-2-L 48" X 30"

W12-1D 24" X 24"

NOTE

1) SEE FOLLOWING SHEET FOR W. LISBON AVE. ADVANCED SIGNING TRAFFIC CONTROL.

- PLACE SIGN 200' WEST OF N. 29TH ST.

W04-2L 48" X 48"

LEFT LANE CLOSED AHEAD W20-5 48" X 48"

- PLACE SIGN 300' WEST OF N. 30TH ST.

ROAD WORK AHEAD W20-1 48" X 48"

- PLACE SIGN 275' WEST OF N. 31ST ST.

W. WALNUT ST.

NORTH 27TH STREET

N. 26TH ST.

N. 25TH ST.

LEGEND

- WORK ZONE
- DIRECTION OF TRAFFIC
- FLASHING ARROW BOARD
- SIGN ON TEMPORARY SUPPORT
- TYPE III BARRICADE
- TYPE III BARRICADE WITH ATTACHED SIGN
- TRAFFIC CONTROL DRUM
- TRAFFIC CONTROL DRUM WITH WARNING LIGHT TYPE C

2

| STATE PROJECT NUMBER 2265-00-74 | HWY: LOCAL | COUNTY: MILWAUKEE | TRAFFIC CONTROL - STAGE 3 | SCALE FEET | SHEET NO: | E |
|---|---|---|---|---|---|---|



FILE NAME: F:\BM1-3393 N 27th St Milwaukee\5_Design\03_Roads\cds\h1025303_tc.dgn PLOT DATE : 02-MAR-2016 18:44 PLOT BY : scook PLOT NAME : h1025303_tc PLOT SCALE : 100.000000:1.000000

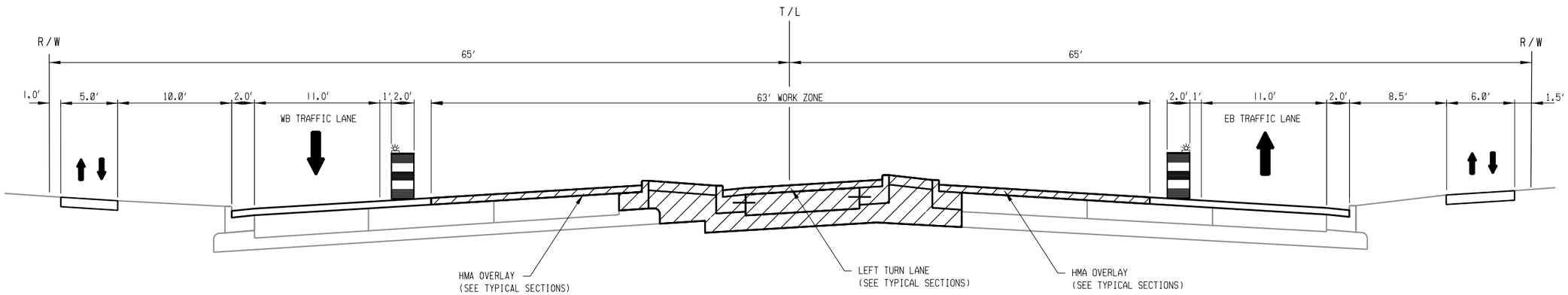


TRAFFIC CONTROL STAGE 4

WEST LISBON AVENUE

STA 7L+75 TO STA 10L+43

2

## STAGE 4 TRAFFIC

- NORTH 27TH STREET ALL LANES OPEN
- W. LISBON AVENUE OPEN WITH ONE EB LANE, ONE WB LANE AT THE NORTH 27TH STREET INTERSECTION

## STAGE 4 CONSTRUCTION ACTIVITIES

- PLACE ASPHALTIC OVERLAY
- RECONSTRUCT LEFT TURN ISLANDS
- CONCRETE BASE PATCHING/CONCRETE PAVEMENT
- PLACE NEW CONCRETE CURB & GUTTER AND SIDEWALK IN ISLANDS
- ADJUST COMBINED MANHOLES AND CATCH BASINS
- ADJUST WATER FACILITIES
- TES CONDUIT AND VAULTS

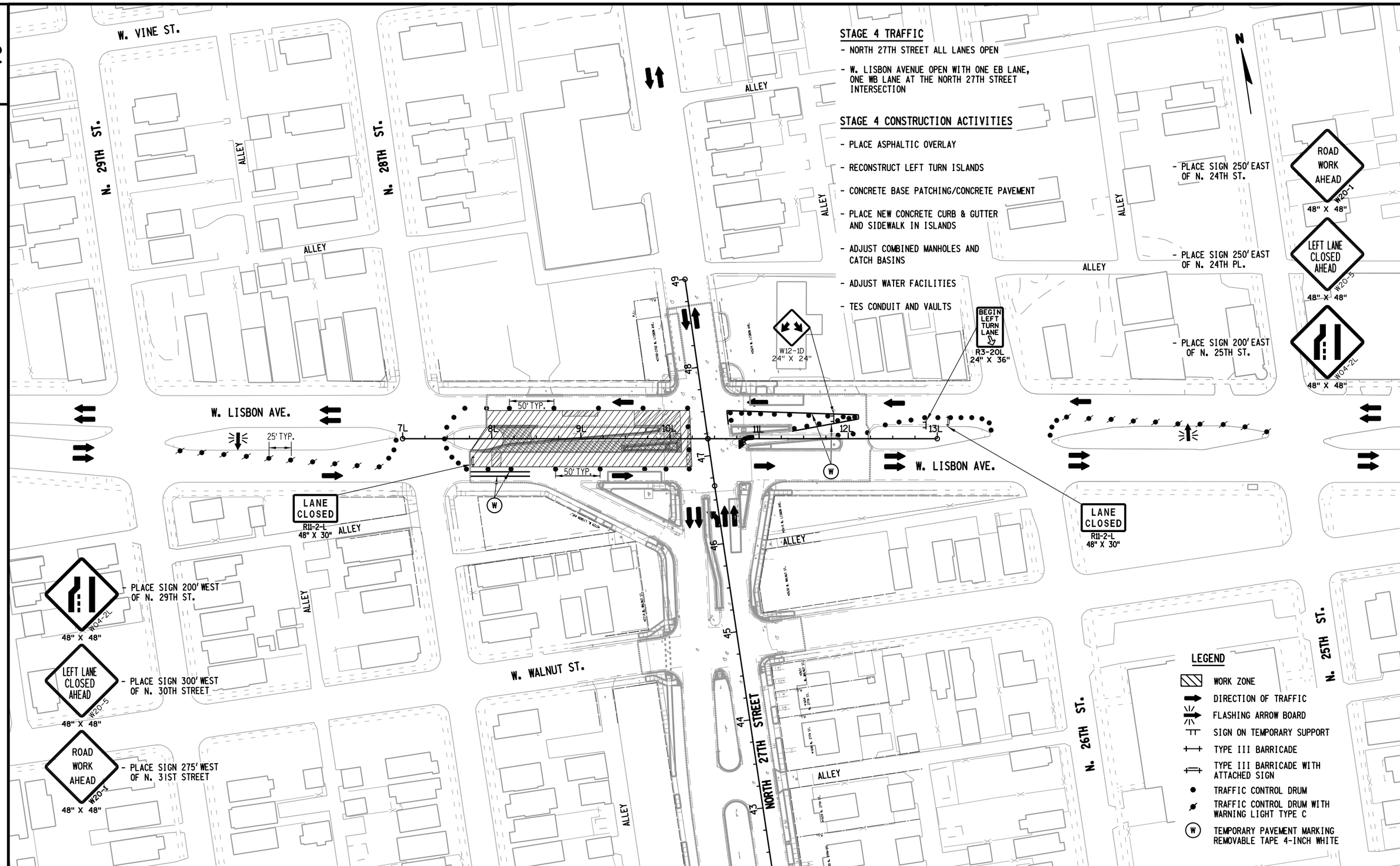


| STATE PROJECT NUMBER | HWY: | COUNTY: | TRAFFIC CONTROL - STAGE 4 | SCALE | SHEET NO: | |
|---|---|---|---|---|---|---|
| 2265-00-74 | LOCAL | MILWAUKEE | | FEET | 106 | E |

FILE NAME: F:\BM1-3393 N 27th St Milwaukee\5_Design\03_Roads\cds\h1025402_tc.dgn PLOT DATE : 10-FEB-2016 10:20 PLOT BY : vlatifi PLOT NAME : h1025402_tc PLOT SCALE : 100.000000:1.000000

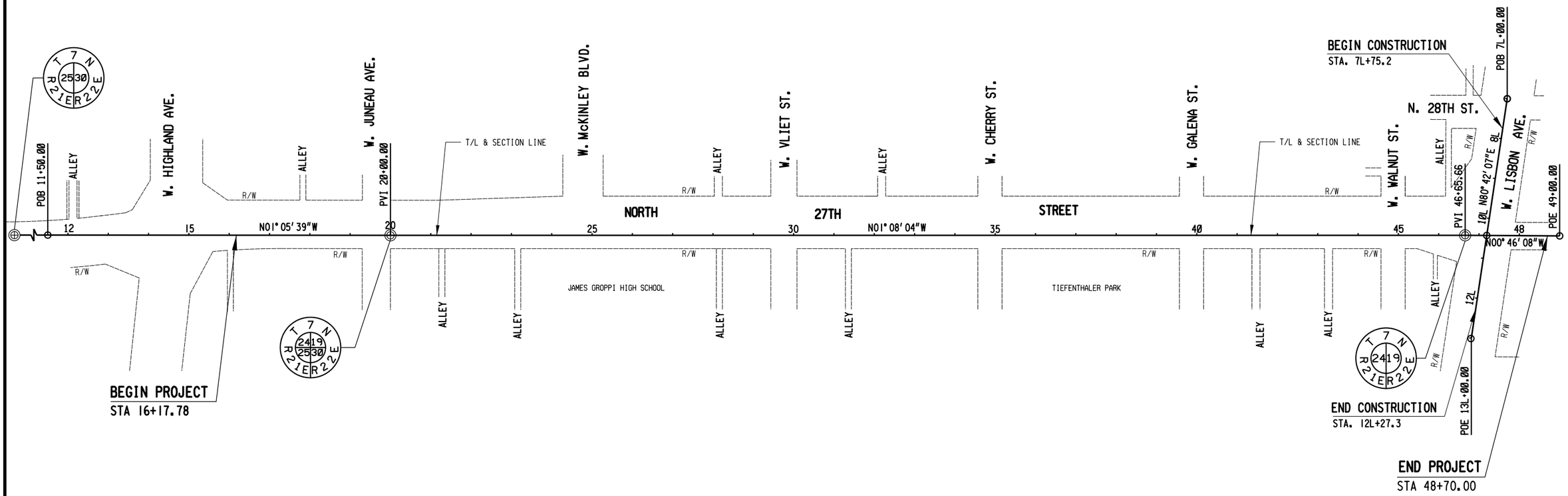


| STATE PROJECT NUMBER 2265-00-74 | HWY: LOCAL | COUNTY: MILWAUKEE | ALIGNMENT PLAN | SCALE FEET | SHEET NO: | E |
|---|---|---|---|---|---|---|



FILE NAME: F:\BM1-3393 N 27th St Milwaukee\5_Design\03_Roads\cds\h1027201_ad.dgn PLOT DATE : 29-OCT-2015 15:31 PLOT BY : scook PLOT NAME : h1027201_ad PLOT SCALE : 250.000000:1.000000

## RECORD OF U. S. PUBLIC LAND SURVEY CONTROL STATION

U. S. PUBLIC LAND SURVEY CORNER 25|30 / 25|30 T 7 N, R 21/22 E, MILWAUKEE COUNTY, WISCONSIN

HORIZONTAL CONTROL SURVEY BY: AERO-METRIC ENGINEERING, INC. YEAR: 1982
VERTICAL CONTROL SURVEY BY: AERO-METRIC ENGINEERING, INC./SEWRPC YEAR: 1982/1997/2011

STATE PLANE COORDINATES OF: QUARTER SECTION CORNER
NORTH 385,298.31
EAST 2,548,642.08
ELEVATION OF STATION: 690.292

HORIZONTAL DATUM: WISCONSIN STATE PLANE COORDINATE SYSTEM, SOUTH ZONE
NORTH AMERICAN DATUM OF 1927

VERTICAL DATUM: NATIONAL GEODETIC VERTICAL DATUM OF 1929 THETA ANGLE: +1-24-37

CONTROL ACCURACY:
HORIZONTAL: THIRD ORDER, CLASS I VERTICAL: SECOND ORDER, CLASS II

LOCATION SKETCH:

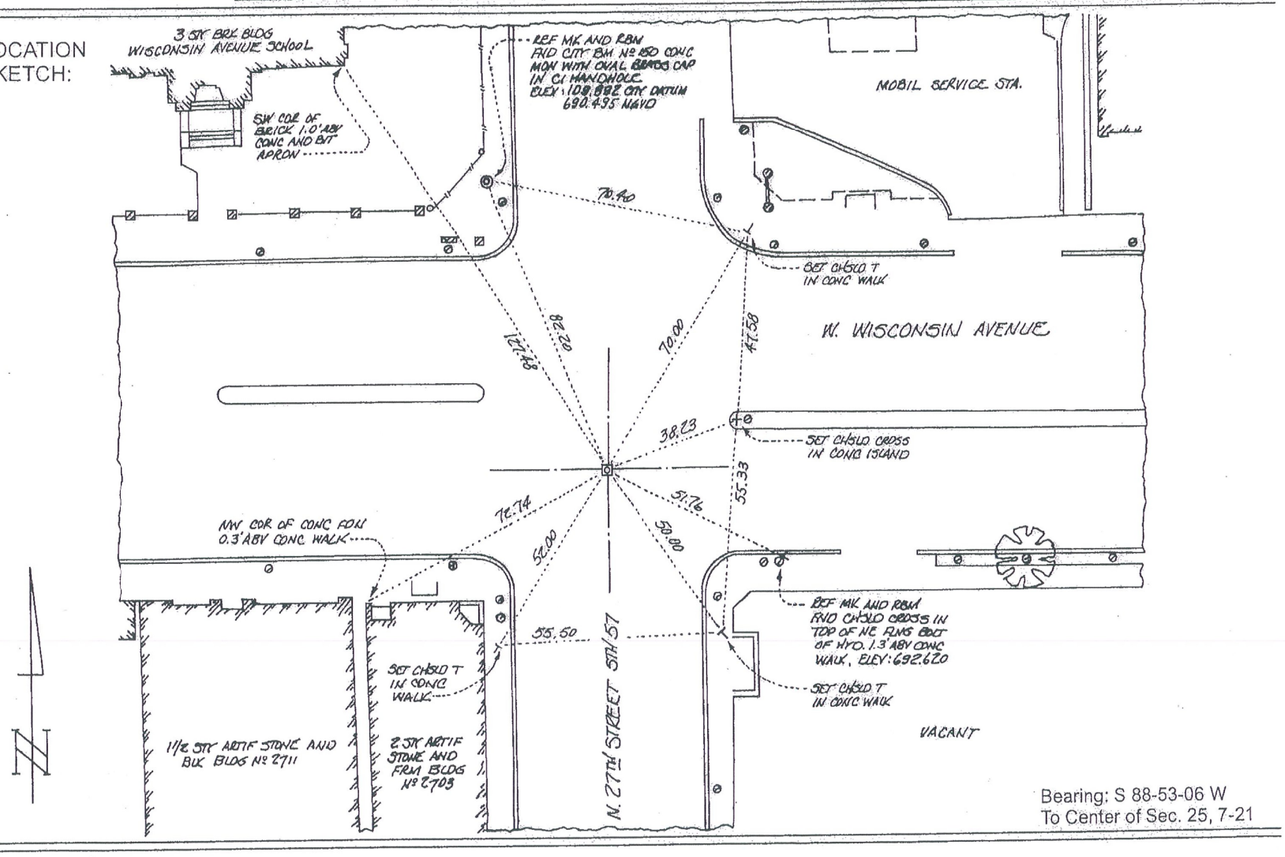


Bearing: S 88-53-06 W
To Center of Sec. 25, 7-21

SURVEYOR'S AFFIDAVIT:

STATE OF WISCONSIN)
MILWAUKEE COUNTY) SS

As Milwaukee County Surveyor, I hereby certify that following storm sewer and water main reconstruction, I found a concrete monument with SEWRPC brass cap as set to mark the location of this corner in July 2010 by Dale A. Meyer, City of Milwaukee Project Engineer; replacing a concrete monument with SEWRPC brass cap set to mark the location of this corner on August 19, 1997 by me as Milwaukee County Surveyor; replacing a plastic pipe monument with SEWRPC brass cap set to mark the location of this corner in June 1982 by Kenneth E. Berke, S-107; the location of this corner having been defined by Mr. Berke by extending and intersecting real property boundary lines using monumentation found along the east right-of-way line of S. 27th Street and the south right-of-way line of W. Wisconsin Avenue; that I have referenced the same as shown hereon; and that this record is correct and complete to the best of my knowledge and belief.

WISCONSIN K.W. BAUER S-157 MILWAUKEE, WI LAND SURVEYOR

DATE OF SURVEY: 26 July 2010 Kurt W. Bauer S - 157
REGISTERED LAND SURVEYOR

130

*FORM PREPARED BY SOUTHEASTERN WISCONSIN REGIONAL PLANNING COMMISSION*

STATE PROJECT NUMBER 2265-00-74 | HWY: LOCAL | COUNTY: MILWAUKEE | ALIGNMENT TIE SHEET | SCALE FEET | SHEET NO: 108 | E

FILE NAME: F:\BM1-3393 N 27th St. Milwaukee\5_Design\03_Roads\cds\h1027202_acd.dgn PLOT DATE : 29-OCT-2015 15:31 PLOT BY : scook PLOT NAME : h1027202.acd PLOT SCALE : 40.000000:1.000000

## RECORD OF U. S. PUBLIC LAND SURVEY CONTROL STATION

U. S. PUBLIC LAND SURVEY CORNER 24|19 / 25|30 T 7 N, R 21/22 E, MILWAUKEE COUNTY, WIS.

GEODETIC SURVEY BY: WISCONSIN DEPARTMENT OF TRANSPORTATION YEAR: 1971

STATE PLANE COORDINATES OF: SECTION CORNER

NORTH 387,965.38

EAST 2,548,591.14

ELEVATION OF STATION: 680.348

HORIZONTAL DATUM: WISCONSIN STATE PLANE COORDINATE SYSTEM, SOUTH ZONE

VERTICAL DATUM: NATIONAL GEODETIC VERTICAL DATUM OF 1929

CONTROL ACCURACY:

HORIZONTAL: THIRD ORDER, CLASS I VERTICAL: SECOND ORDER, CLASS II

THETA ANGLE: + 1-24-37

LOCATION SKETCH:

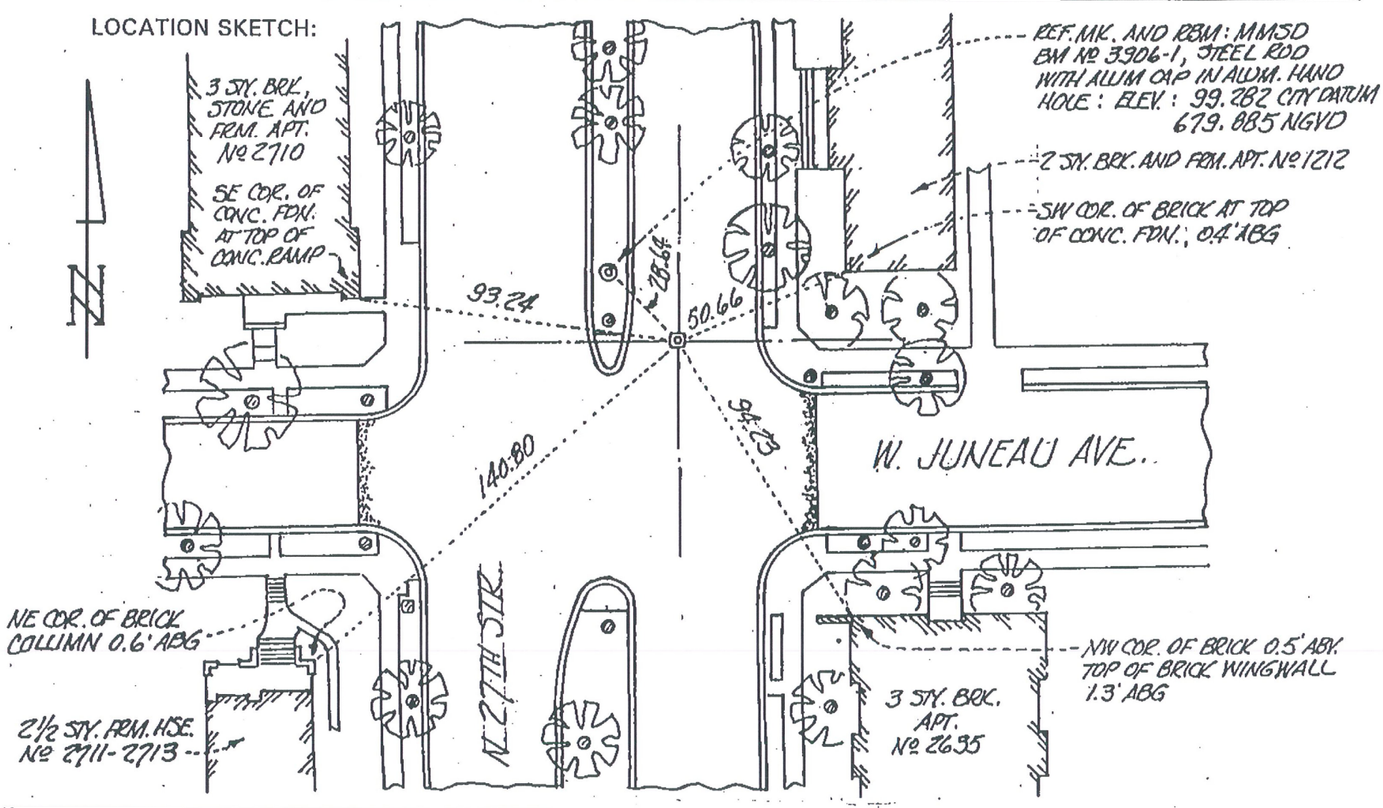


SURVEYOR'S AFFIDAVIT:

STATE OF WISCONSIN) SS

MILWAUKEE COUNTY)

As County Surveyor, I hereby certify that I found a concrete monument with SEWRPC brass cap as set to mark this corner in January 1991 by Kenneth E. Berke, S-107; replacing a chiseled cross set in the concrete pavement then marking this corner, the corner location as marked by the chiseled cross having been verified by Mr. Berke by reconstructing and extending the north street line of W. Juneau Avenue; that I referenced the same as shown hereon; and that this record is correct and complete to the best of my knowledge and belief.

WISCONSIN K. W. BAUER MILWAUKEE, WIS. LAND SURVEYOR

DATE OF SURVEY: 21 October 1997 Kenneth W. Bauer S - 157

REGISTERED LAND SURVEYOR

*FORM PREPARED BY SOUTHEASTERN WISCONSIN REGIONAL PLANNING COMMISSION*

105

STATE PROJECT NUMBER 2265-00-74 | HWY: LOCAL | COUNTY: MILWAUKEE | ALIGNMENT TIE SHEET | SCALE FEET | SHEET NO: 109 | E

FILE NAME: F:\BM1-3393 N 27th St. Milwaukee\5_Design\03_Roads\cds\h1027202_acd.dgn PLOT DATE: 29-OCT-2015 15:32 PLOT BY: scook PLOT NAME: h1027202.pc2 PLOT SCALE: 40.000000:1.000000

## RECORD OF U. S. PUBLIC LAND SURVEY CONTROL STATION

U. S. PUBLIC LAND SURVEY CORNER 24|19 / 24|19 T 7 N, R 21/22 E, MILWAUKEE COUNTY, WIS.

GEODETIC SURVEY BY: AERO-METRIC ENGINEERING, INC. YEAR: 1991

STATE PLANE COORDINATES OF: QUARTER SECTION CORNER

NORTH 390,630.35

EAST 2,548,538.37

ELEVATION OF STATION: 671.870

HORIZONTAL DATUM: WISCONSIN STATE PLANE COORDINATE SYSTEM, SOUTH ZONE

VERTICAL DATUM: NATIONAL GEODETIC VERTICAL DATUM OF 1929

CONTROL ACCURACY:

HORIZONTAL: THIRD ORDER, CLASS I

VERTICAL: SECOND ORDER, CLASS II

THETA ANGLE: + 1-24-34

SURVEYOR'S AFFIDAVIT:

STATE OF WISCONSIN)
MILWAUKEE COUNTY) SS

As County Surveyor, I hereby certify that I found a concrete monument with SEWRPC brass cap in a cast iron handhole as set to mark this corner in November 1995 by Michael F. Chaplock, City of Milwaukee Construction Supervisor, following street reconstruction; replacing a seven-inch-diameter concrete monument with 1.5-inch-diameter brass rod set to mark this corner in 1975 by the City Engineer following street reconstruction; that I referenced the same as shown hereon; and that this record is correct and complete to the best of my knowledge and belief.

WISCONSIN K. W. BAUER MILWAUKEE, WIS. LAND SURVEYOR

REGISTERED LAND SURVEYOR

S-157

DATE OF SURVEY:

21 October 1997

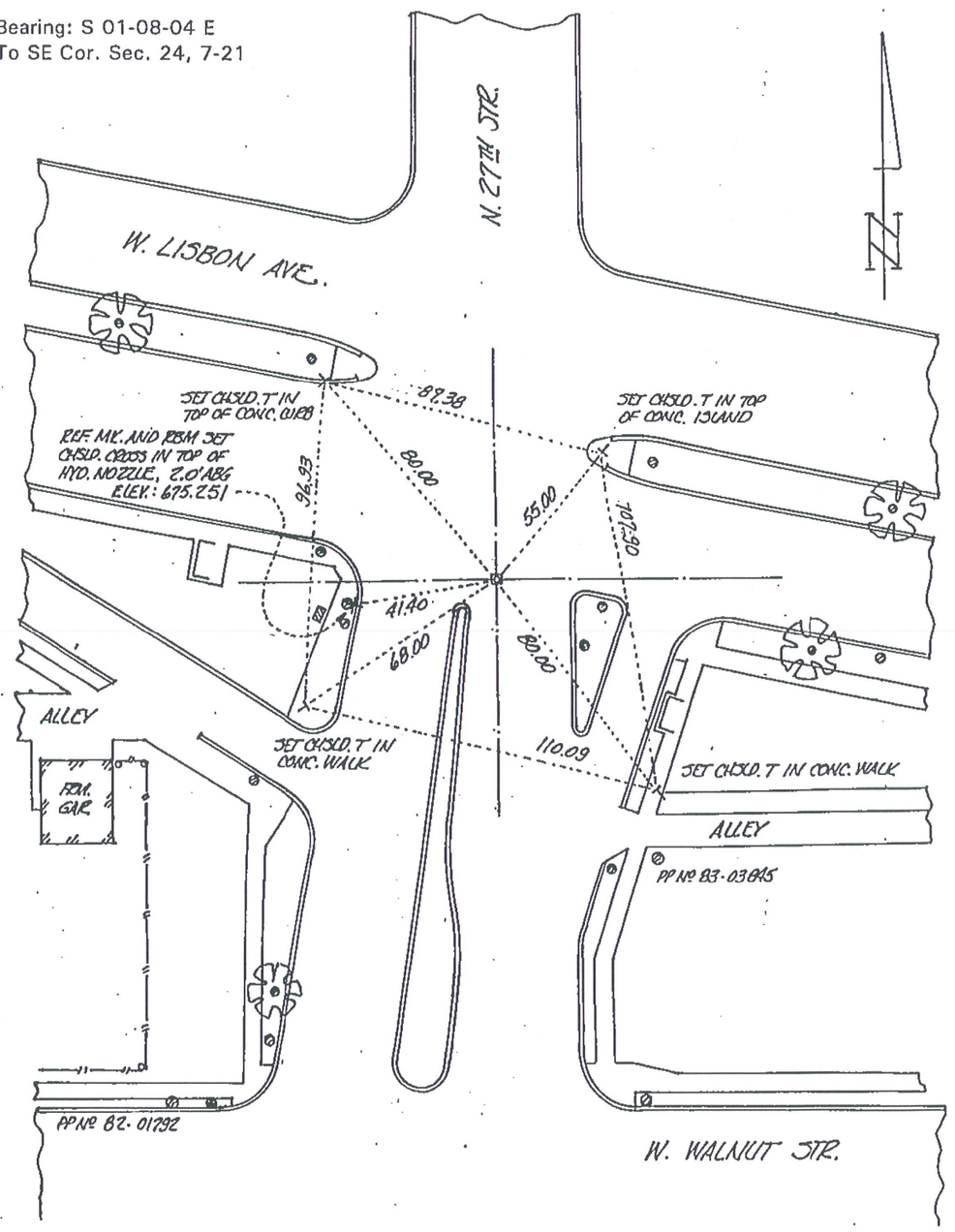


FORM PREPARED BY SOUTHEASTERN WISCONSIN REGIONAL PLANNING COMMISSION



STATE PROJECT NUMBER 2265-00-74 | HWY: LOCAL | COUNTY: MILWAUKEE | ALIGNMENT TIE SHEET | SCALE FEET | SHEET NO: 110 | E

FILE NAME: F:\BM1-3393 N 27th St Milwaukee\5_Design\03_Roads\cds\h1027202_acd.dgn PLOT DATE: 29-OCT-2015 15:32 PLOT BY: scook PLOT NAME: h1027202.pc3 PLOT SCALE: 40.000000:1.000000

3

DATE 03MAY16 E S T I M A T E O F Q U A N T I T I E S

| LINE NUMBER | ITEM | ITEM DESCRIPTION | UNIT | TOTAL | 2265-00-74 QUANTITY |
|---|---|---|---|---|---|
| 0010 | 201.0120 | Clearing | ID | 87.000 | 87.000 |
| 0020 | 201.0220 | Grubbing | ID | 87.000 | 87.000 |
| 0030 | 204.0100 | Removing Pavement | SY | 3,670.000 | 3,670.000 |
| 0040 | 204.0105 | Removing Pavement Butt Joints | SY | 820.000 | 820.000 |
| 0050 | 204.0120 | Removing Asphaltic Surface Milling | SY | 10,620.000 | 10,620.000 |
| 0060 | 204.0150 | Removing Curb & Gutter | LF | 3,830.000 | 3,830.000 |
| 0070 | 204.0155 | Removing Concrete Sidewalk | SY | 3,710.000 | 3,710.000 |
| 0080 | 204.0210 | Removing Manholes | EACH | 1.000 | 1.000 |
| 0090 | 204.0215 | Removing Catch Basins | EACH | 28.000 | 28.000 |
| 0100 | 204.0245 | Removing Storm Sewer (size) 01. 8-Inch | LF | 580.000 | 580.000 |
| 0110 | 204.0245 | Removing Storm Sewer (size) 02. 12-Inch | LF | 27.000 | 27.000 |
| 0120 | 204.0255 | Abandoning Catch Basins | EACH | 1.000 | 1.000 |
| 0130 | 204.0280 | Sealing Pipes | EACH | 4.000 | 4.000 |
| 0140 | 204.0291.S | Abandoning Sewer | CY | 8.000 | 8.000 |
| 0150 | 204.9060.S | Removing (item description) 01. Catch Basin Curb Boxes | EACH | 15.000 | 15.000 |
| 0160 | 204.9060.S | Removing (item description) 02. Catch Basin Covers | EACH | 27.000 | 27.000 |
| 0170 | 204.9060.S | Removing (item description) 03. Manhole Covers | EACH | 42.000 | 42.000 |
| 0180 | 205.0100 | Excavation Common | CY | 1,720.000 | 1,720.000 |
| 0190 | 205.0501.S | Excavation, Hauling, and Disposal of Petroleum Contaminated Soil | TON | 50.000 | 50.000 |
| 0200 | 213.0100 | Finishing Roadway (project) 01. 2265-00-74 | EACH | 1.000 | 1.000 |
| 0210 | 305.0120 | Base Aggregate Dense 1 1/4-Inch | TON | 1,200.000 | 1,200.000 |
| 0220 | 320.0145 | Concrete Base 8-Inch | SY | 2,610.000 | 2,610.000 |
| 0230 | 390.0303 | Base Patching Concrete | SY | 3,700.000 | 3,700.000 |
| 0240 | 390.0403 | Base Patching Concrete Shes | SY | 930.000 | 930.000 |
| 0250 | 415.0080 | Concrete Pavement 8-Inch | SY | 255.000 | 255.000 |
| 0260 | 415.0090 | Concrete Pavement 9-Inch | SY | 870.000 | 870.000 |
| 0270 | 416.0170 | Concrete Driveway 7-Inch | SY | 180.000 | 180.000 |
| 0280 | 416.0270 | Concrete Driveway HES 7-Inch | SY | 95.000 | 95.000 |
| 0290 | 416.0610 | Drilled Tie Bars | EACH | 2,270.000 | 2,270.000 |
| 0300 | 455.0605 | Tack Coat | GAL | 3,230.000 | 3,230.000 |
| 0310 | 460.2000 | Incentive Density HMA Pavement | DOL | 3,710.000 | 3,710.000 |
| 0320 | 460.4000 | HMA Cold Weather Paving | TON | 466.000 | 466.000 |
| 0330 | 460.6224 | HMA Pavement 4 MT 58-28 S | TON | 5,800.000 | 5,800.000 |
| 0340 | 465.0120 | Asphaltic Surface Driveways and Field Entrances | TON | 3.000 | 3.000 |
| 0350 | 465.0125 | Asphaltic Surface Temporary | TON | 20.000 | 20.000 |
| 0360 | 520.8000 | Concrete Collars for Pipe | EACH | 1.000 | 1.000 |
| 0370 | 601.0331 | Concrete Curb & Gutter 31-Inch | LF | 1,020.000 | 1,020.000 |
| 0380 | 601.0600 | Concrete Curb Pedestrian | LF | 50.000 | 50.000 |
| 0390 | 602.0410 | Concrete Sidewalk 5-Inch | SF | 32,700.000 | 32,700.000 |
| 0400 | 602.0420 | Concrete Sidewalk 7-Inch | SF | 840.000 | 840.000 |
| 0410 | 602.0505 | Curb Ramp Detectable Warning Field Yellow | SF | 780.000 | 780.000 |
| 0420 | 608.0412 | Storm Sewer Pipe Reinforced Concrete Class IV 12-Inch | LF | 746.000 | 746.000 |
| 0430 | 611.0410 | Reconstructing Catch Basins | EACH | 8.000 | 8.000 |
| 0440 | 611.0420 | Reconstructing Manholes | EACH | 18.000 | 18.000 |
| 0450 | 611.1230 | Catch Basins 2x3-FT | EACH | 14.000 | 14.000 |
| 0460 | 611.2004 | Manholes 4-FT Diameter | EACH | 2.000 | 2.000 |
| 0470 | 611.8105 | Adjusting Catch Basin Covers | EACH | 30.000 | 30.000 |

3

3

DATE 03MAY16 E S T I M A T E O F Q U A N T I T I E S

| LINE NUMBER | ITEM | ITEM DESCRIPTION | UNIT | TOTAL | 2265-00-74 QUANTITY |
|---|---|---|---|---|---|
| 0480 | 611.8110 | Adjusting Manhole Covers | EACH | 37.000 | 37.000 |
| 0490 | 611.8120.S | Cover Plates Temporary | EACH | 49.000 | 49.000 |
| 0500 | 611.9710 | Salvaged Inlet Covers | EACH | 21.000 | 21.000 |
| 0510 | 619.1000 | Mobilization | EACH | 1.000 | 1.000 |
| 0520 | 620.0300 | Concrete Median Sloped Nose | SF | 840.000 | 840.000 |
| 0530 | 621.0100 | Landmark Reference Monuments | EACH | 2.000 | 2.000 |
| 0540 | 623.0200 | Dust Control Surface Treatment | SY | 3,480.000 | 3,480.000 |
| 0550 | 624.0100 | Water | MGAL | 5.100 | 5.100 |
| 0560 | 625.0100 | Topsoil | SY | 3,480.000 | 3,480.000 |
| 0570 | 628.1905 | Mobilizations Erosion Control | EACH | 4.000 | 4.000 |
| 0580 | 628.1910 | Mobilizations Emergency Erosion Control | EACH | 6.000 | 6.000 |
| 0590 | 629.0210 | Fertilizer Type B | CWT | 9.000 | 9.000 |
| 0600 | 630.0130 | Seeding Mixture No. 30 | LB | 64.000 | 64.000 |
| 0610 | 631.1000 | Sod Lawn | SY | 3,480.000 | 3,480.000 |
| 0620 | 642.5201 | Field Office Type C | EACH | 1.000 | 1.000 |
| 0630 | 643.0100 | Traffic Control (project) 01. 2265-00-74 | EACH | 1.000 | 1.000 |
| 0640 | 643.0300 | Traffic Control Drums | DAY | 24,000.000 | 24,000.000 |
| 0650 | 643.0410 | Traffic Control Barricades Type II | DAY | 900.000 | 900.000 |
| 0660 | 643.0420 | Traffic Control Barricades Type III | DAY | 2,000.000 | 2,000.000 |
| 0670 | 643.0500 | Traffic Control Flexible Tubular Marker Posts | EACH | 1,030.000 | 1,030.000 |
| 0680 | 643.0600 | Traffic Control Flexible Tubular Marker Bases | EACH | 1,030.000 | 1,030.000 |
| 0690 | 643.0705 | Traffic Control Warning Lights Type A | DAY | 4,700.000 | 4,700.000 |
| 0700 | 643.0715 | Traffic Control Warning Lights Type C | DAY | 2,600.000 | 2,600.000 |
| 0710 | 643.0800 | Traffic Control Arrow Boards | DAY | 270.000 | 270.000 |
| 0720 | 643.0900 | Traffic Control Signs | DAY | 5,100.000 | 5,100.000 |
| 0730 | 644.1410.S | Temporary Pedestrian Surface Asphalt | SF | 100.000 | 100.000 |
| 0740 | 644.1601.S | Temporary Curb Ramp | EACH | 4.000 | 4.000 |
| 0750 | 646.0106 | Pavement Marking Epoxy 4-Inch | LF | 6,240.000 | 6,240.000 |
| 0760 | 646.0116 | Pavement Marking Epoxy 6-Inch | LF | 6,030.000 | 6,030.000 |
| 0770 | 647.0166 | Pavement Marking Arrows Epoxy Type 2 | EACH | 7.000 | 7.000 |
| 0780 | 647.0206 | Pavement Marking Arrows Bike Lane Epoxy | EACH | 18.000 | 18.000 |
| 0790 | 647.0306 | Pavement Marking Symbols Bike Lane Epoxy | EACH | 18.000 | 18.000 |
| 0800 | 647.0356 | Pavement Marking Words Epoxy | EACH | 6.000 | 6.000 |
| 0810 | 647.0576 | Pavement Marking Stop Line Epoxy 24-Inch | LF | 270.000 | 270.000 |
| 0820 | 647.0776 | Pavement Marking Crosswalk Epoxy 12-Inch | LF | 2,870.000 | 2,870.000 |
| 0830 | 649.0400 | Temporary Pavement Marking Removable Tape 4-Inch | LF | 620.000 | 620.000 |
| 0840 | 650.4000 | Construction Staking Storm Sewer | EACH | 37.000 | 37.000 |
| 0850 | 650.5500 | Construction Staking Curb Gutter and Curb & Gutter | LF | 6,420.000 | 6,420.000 |
| 0860 | 650.7000 | Construction Staking Concrete Pavement | LF | 860.000 | 860.000 |
| 0870 | 650.8500 | Construction Staking Electrical Installations (project) 01. 2265-00-74 | LS | 1.000 | 1.000 |
| 0880 | 650.9910 | Construction Staking Supplemental Control (project) 01. 2265-00-74 | LS | 1.000 | 1.000 |
| 0890 | 652.0220 | Conduit Rigid Nonmetallic Schedule 40 1 1/2-Inch | LF | 40.000 | 40.000 |
| 0900 | 652.0225 | Conduit Rigid Nonmetallic Schedule 40 2-Inch | LF | 370.000 | 370.000 |
| 0910 | 652.0230 | Conduit Rigid Nonmetallic Schedule 40 2 1/2-Inch | LF | 40.000 | 40.000 |
| 0920 | 652.0235 | Conduit Rigid Nonmetallic Schedule 40 3-Inch | LF | 440.000 | 440.000 |

3

3

DATE 03MAY16 E S T I M A T E O F Q U A N T I T I E S

| LINE NUMBER | ITEM | ITEM DESCRIPTION | UNIT | TOTAL | 2265-00-74 QUANTITY |
|---|---|---|---|---|---|
| 0930 | 652.0615 | Conduit Special 3-Inch | LF | 1,600.000 | 1,600.000 |
| 0940 | 654.0110 | Concrete Bases Type 10 | EACH | 4.000 | 4.000 |
| 0950 | 690.0150 | Sawing Asphalt | LF | 550.000 | 550.000 |
| 0960 | 690.0250 | Sawing Concrete | LF | 17,920.000 | 17,920.000 |
| 0970 | 715.0415 | Incentive Strength Concrete Pavement | DOL | 500.000 | 500.000 |
| 0980 | ASP.1T0A | On-the-Job Training Apprentice at $5. 00/HR | HRS | 300.000 | 300.000 |
| 0990 | ASP.1T0G | On-the-Job Training Graduate at $5.00/HR | HRS | 1,800.000 | 1,800.000 |
| 1000 | SPV.0060 | Special 04. Inlet Cover Type 57 | EACH | 33.000 | 33.000 |
| 1010 | SPV.0060 | Special 05. Manhole Covers Type 58A | EACH | 44.000 | 44.000 |
| 1020 | SPV.0060 | Special 06. Catch Basin Type 44B | EACH | 1.000 | 1.000 |
| 1030 | SPV.0060 | Special 07. Catch Basin Type 45A | EACH | 20.000 | 20.000 |
| 1040 | SPV.0060 | Special 08. Inlet Screens Type M | EACH | 82.000 | 82.000 |
| 1050 | SPV.0060 | Special 09. Construction Staking Curb Ramp | EACH | 87.000 | 87.000 |
| 1060 | SPV.0060 | Special 10. Utility Line Opening (ULO) | EACH | 8.000 | 8.000 |
| 1070 | SPV.0060 | Special 11. Removing TES Manholes | EACH | 8.000 | 8.000 |
| 1080 | SPV.0060 | Special 12. Adjusting TES Manhole Covers | EACH | 12.000 | 12.000 |
| 1090 | SPV.0060 | Special 13. Rectangular Polymer Vault 13-Inch X 24-Inch X 18-Inch | EACH | 14.000 | 14.000 |
| 1100 | SPV.0060 | Special 14. Rectangular Polymer Vault 17-Inch X 30-Inch X 18-Inch | EACH | 10.000 | 10.000 |
| 1110 | SPV.0060 | Special 15. Install Traffic Signal Base | EACH | 11.000 | 11.000 |
| 1120 | SPV.0060 | Special 16. Concrete Base Type 10 Special | EACH | 4.000 | 4.000 |
| 1130 | SPV.0060 | Special 17. Poles Type 10 | EACH | 4.000 | 4.000 |
| 1140 | SPV.0060 | Special 18. Poles Type 12 Special | EACH | 3.000 | 3.000 |
| 1150 | SPV.0060 | Special 19. Poles Type 13 Special | EACH | 1.000 | 1.000 |
| 1160 | SPV.0060 | Special 20. Monotube Arms 20-Feet | EACH | 2.000 | 2.000 |
| 1170 | SPV.0060 | Special 21. Monotube Arms 25-Feet | EACH | 2.000 | 2.000 |
| 1180 | SPV.0060 | Special 22. Monotube Arms 35-Feet | EACH | 2.000 | 2.000 |
| 1190 | SPV.0060 | Special 23. Monotube Arms 40-Feet | EACH | 2.000 | 2.000 |
| 1200 | SPV.0060 | Special 24. Installing Conduit Into Existing Manholes | EACH | 17.000 | 17.000 |
| 1210 | SPV.0060 | Special 25. Manholes Type TES 4-FT Diameter Doghouse | EACH | 8.000 | 8.000 |
| 1220 | SPV.0060 | Special 26. Adjusting Water Service Boxes | EACH | 17.000 | 17.000 |
| 1230 | SPV.0060 | Special 27. Adjusting Water Gate Valves | EACH | 58.000 | 58.000 |
| 1240 | SPV.0060 | Special 28. Water Main Protection | EACH | 19.000 | 19.000 |
| 1250 | SPV.0090 | Special 01. Joint And Crack Repair | LF | 1,550.000 | 1,550.000 |
| 1260 | SPV.0090 | Special 02. Concrete Curb & Gutter Integral 31-Inch | LF | 755.000 | 755.000 |
| 1270 | SPV.0090 | Special 03. Concrete Curb & Gutter 31-Inch Special | LF | 5,020.000 | 5,020.000 |
| 1280 | SPV.0090 | Special 04. Concrete Curb & Gutter 6-Inch Sloped 31-Inch | LF | 95.000 | 95.000 |
| 1290 | SPV.0090 | Special 05. Construction Staking Asphalt Lower Layer | LF | 3,650.000 | 3,650.000 |
| 1300 | SPV.0090 | Special 06. Construction Staking Asphalt Upper Layer | LF | 3,650.000 | 3,650.000 |
| 1310 | SPV.0090 | Special 07. Construction Staking Sidewalk | LF | 4,950.000 | 4,950.000 |
| 1320 | SPV.0090 | Special 08. 7-Duct Conduit Cement Encased 4-Inch Rigid Nonmetallic Conduit DB-60 | LF | 245.000 | 245.000 |

3

DATE 03MAY16 E S T I M A T E O F Q U A N T I T I E S

| LINE NUMBER | ITEM | ITEM DESCRIPTION | UNIT | TOTAL | 2265-00-74 QUANTITY |
|---|---|---|---|---|---|
| 1330 | SPV.0090 | Special 09. 6-Duct Conduit Cement Encased 4-Inch Rigid Nonmetallic Conduit DB-60 | LF | 2,550.000 | 2,550.000 |
| 1340 | SPV.0090 | Special 10. 4-Duct Conduit Cement Encased 4-Inch Rigid Nonmetallic Conduit DB-60 | LF | 140.000 | 140.000 |
| 1350 | SPV.0090 | Special 11. 1-Duct Conduit Cement Encased 4-Inch Rigid Nonmetallic Conduit DB-60 | LF | 88.000 | 88.000 |
| 1360 | SPV.0165 | Special 01. Concrete Sidewalk HES 7-Inch | SF | 700.000 | 700.000 |
| 1370 | SPV.0180 | Special 01. Joint Sealing | SY | 1,120.000 | 1,120.000 |
| 1380 | SPV.0195 | Special 01. Excavation Hauling And Disposal Of Metals And VOC Contaminated Soil | TON | 88.000 | 88.000 |

3

3

3

## CLEARING AND GRUBBING ITEMS

| CATEGORY | LOCATION | OFFSET | 201.0120 CLEARING ID | 201.0220 GRUBBING ID |
|---|---|---|---|---|
| 0010 | N. 27TH ST. | | | |
| | 18+40 | MEDIAN | 3 | 3 |
| | 25+55 | MEDIAN | 4 | 4 |
| | 25+84 | MEDIAN | 3 | 3 |
| | 26+34 | MEDIAN | 13 | 13 |
| | 29+04 | MEDIAN | 4 | 4 |
| | 30+42 | MEDIAN | 3 | 3 |
| | 36+03 | MEDIAN | 11 | 11 |
| | 36+52 | MEDIAN | 15 | 15 |
| | SUBTOTAL | | 56 | 56 |
| 0010 | W. LISBON AVE. | | | |
| | 8L+67 | MEDIAN | 3 | 3 |
| | 9L+17 | MEDIAN | 12 | 12 |
| | 11L+65 | MEDIAN | 16 | 16 |
| | SUBTOTAL | | 31 | 31 |
| | TOTALS | | 87 | 87 |

## REMOVING PAVEMENT

| CATEGORY | LOCATION | OFFSET | 204.0100 SY |
|---|---|---|---|
| 0010 | N. 27TH ST. | | |
| | 16+18 - 19+65 | LT/RT | 233 |
| | 19+65 - 24+77 | LT/RT | 344 |
| | 24+77 - 29+76 | LT/RT | 440 |
| | 29+76 - 34+87 | LT/RT | 543 |
| | 34+87 - 39+87 | LT/RT | 300 |
| | 39+87 - 44+87 | LT/RT | 354 |
| | 44+87 - 48+70 | LT/RT | 595 |
| | SUBTOTAL | | 2,809 |
| 0010 | W. LISBON AVE. | | |
| | 7L+75 - 10L+12 | LT/RT | 497 |
| | 10L+67 - 12L+27 | LT/RT | 364 |
| | SUBTOTAL | | 861 |
| | TOTAL | | 3,670 |

## REMOVING PAVEMENT BUTT JOINTS

| CATEGORY | LOCATION | OFFSET | 204.0105 SY |
|---|---|---|---|
| 0010 | N. 27TH ST. | | |
| | 16+18 - 19+65 | LT/RT | -- |
| | 19+65 - 24+77 | LT | 63 |
| | 24+77 - 29+76 | LT | 32 |
| | 29+76 - 34+87 | LT/RT | 76 |
| | 34+87 - 39+87 | LT/RT | 137 |
| | 39+87 - 44+87 | LT/RT | 121 |
| | 44+87 - 48+70 | LT | 20 |
| | SUBTOTAL | | 448 |
| 0010 | W. LISBON AVE. | | |
| | 7L+75 - 10L+12 | LT/RT | 149 |
| | 10L+67 - 12L+27 | LT/RT | 223 |
| | SUBTOTAL | | 372 |
| | TOTAL | | 820 |

3

## REMOVING ASPHALTIC SURFACE MILLING

| CATEGORY | LOCATION | OFFSET | 204.0120 SY |
|---|---|---|---|
| 0010 | N. 27TH ST. | | |
| | 16+18 - 19+65 | LT/RT | 1,866 |
| | 19+65 - 24+77 | LT/RT | 3,422 |
| | 24+77 - 29+76 | LT/RT | 3,409 |
| | 29+76 - 34+87 | LT/RT | 670 |
| | 34+87 - 39+87 | LT/RT | -- |
| | 39+87 - 44+87 | RT | 77 |
| | 44+87 - 48+70 | LT/RT | 772 |
| | SUBTOTAL | | 10,217 |
| 0010 | W. LISBON AVE. | | |
| | 7L+75 - 10L+12 | LT/RT | 198 |
| | 10L+67 - 12L+27 | LT/RT | 204 |
| | SUBTOTAL | | 402 |
| | TOTAL | | 10,620 |

## REMOVING CURB & GUTTER

| CATEGORY | LOCATION | OFFSET | 204.0150 LF |
|---|---|---|---|
| 0010 | N. 27TH ST. | | |
| | 16+18 - 19+65 | LT/RT | 422 |
| | 19+65 - 24+77 | LT/RT | 617 |
| | 24+77 - 29+76 | LT/RT | 635 |
| | 29+76 - 34+87 | LT/RT | 781 |
| | 34+87 - 39+87 | LT/RT | 360 |
| | 39+87 - 44+87 | LT/RT | 513 |
| | 44+87 48+70 | LT/RT | 39 |
| | SUBTOTAL | | 3,367 |
| 0010 | W. LISBON AVE. | | |
| | 7L+75 - 10L+12 | LT/RT | 351 |
| | 10L+67 - 12L+27 | LT/RT | 112 |
| | SUBTOTAL | | 463 |
| | TOTAL | | 3,830 |

## REMOVING CONCRETE SIDEWALK

| CATEGORY | LOCATION | OFFSET | 204.0155 SY |
|---|---|---|---|
| 0010 | N. 27TH ST. | | |
| | 16+18 - 19+65 | LT/RT | 204 |
| | 19+65 - 24+77 | LT/RT | 531 |
| | 24+77 - 29+76 | LT/RT | 659 |
| | 29+76 - 34+87 | LT/RT | 762 |
| | 34+87 - 39+87 | LT/RT | 467 |
| | 39+87 - 44+87 | LT/RT | 528 |
| | 44+87 - 48+70 | LT/RT | 363 |
| | SUBTOTAL | | 3,514 |
| 0010 | W. LISBON AVE. | | |
| | 7L+75 - 10L+12 | LT/RT | 127 |
| | 10L+67 - 12L+27 | LT/RT | 69 |
| | SUBTOTAL | | 196 |
| | TOTAL | | 3,710 |

3

## REMOVING SEWER ITEMS

| CATEGORY | STRUCTURE FROM | STRUCTURE TO | STATION / OFFSET FROM | STATION / OFFSET TO | 204.0245.01 REMOVING STORM SEWER 8-INCH LF | 204.0245.02 REMOVING STORM SEWER 12-INCH LF | 204.0280 SEALING PIPES EACH | 204.0291.S ABANDONING SEWER CY | REMARKS |
|---|---|---|---|---|---|---|---|---|---|
| 0010 | N. 27TH STREET | | | | | | | | |
| | 100 | 516 | 19+23.4 74.1' LT | 19+65.3 45.6' LT | 52 | -- | -- | -- | |
| | 101 | 500 | 21+01.9 30.6' LT | 21+17.4 0.6' LT | 35 | -- | -- | -- | |
| | 102 | 501 | 24+26.5 25.5' LT | 24+19.7 25.7' LT | 7 | -- | -- | -- | |
| | 103 | 402 | 27+77.6 46.0' LT | 27+77.0 16.0' LT | 30 | -- | -- | -- | |
| | 104 | 502 | 28+32.2 36.0' LT | 28+29.2 0.5' RT | -- | -- | 2 | 4.5 | |
| | 105 | 503 | 29+29.6 18.1' RT | 29+40.9 0.9' LT | 22 | -- | -- | -- | |
| | 107 | 404 | 30+83.8 18.1' RT | 31+08.0 36.0' LT | 7 | -- | -- | -- | |
| | 108 | 504 | 30+84.2 80.0' LT | 30+83.2 24.4' RT | 52 | -- | -- | -- | |
| | 109 | 506 | 34+40.6 18.3' RT | 34+39.3 24.0' RT | 6 | -- | -- | -- | |
| | 110 | 505 | 34+43.0 26.3' LT | 34+32.5 24.3' LT | 11 | -- | -- | -- | |
| | 111 | 505 | 34+47.0 43.7' LT | 34+32.5 24.3' LT | 25 | -- | -- | -- | |
| | 112 | CMB | 37+94.6 15.9' LT | - | 15 | -- | -- | -- | |
| | 113 | 508 | 39+29.3 46.0' LT | 39+51.9 24.6' LT | 33 | -- | -- | -- | |
| | 114 | 508 | 39+41.6 26.3' LT | 39+51.9 24.6' LT | 11 | -- | -- | -- | |
| | 115 | 507 | 39+47.3 18.1' RT | 39+51.6 24.0' RT | 8 | -- | -- | -- | |
| | 116 | 510 | 40+24.5 18.2' RT | 40+56.5 24.1' RT | 34 | -- | -- | -- | |
| | 117 | 509 | 40+45.2 38.4' LT | 40+55.9 24.9' LT | 18 | -- | -- | -- | |
| | 118 | 511 | 43+08.2 18.1' RT | 42+74.0 23.5' RT | 36 | -- | -- | -- | |
| | 119 | 512 | 45+17.8 28.2' LT | 45+21.5 24.8' LT | 6 | -- | -- | -- | |
| | 120 | 517 | 45+20.0 23.7' RT | 45+31.8 2.5' LT | 3 | -- | 2 | 3.5 | REMOVE PIPE TO BACK OF CURB |
| | 121 | 515 | 45+26.6 61.5' LT | 45+21.5 24.8' LT | 38 | -- | -- | -- | |
| | 122 | 120 | 45+32.3 19.4' RT | 45+20.0 23.7' RT | 14 | -- | -- | -- | |
| | 124 | 518 | 47+87.5 24.9' RT | 47+93.4 1.1' LT | -- | 27 | -- | -- | |
| | SUBTOTAL | | | | 463 | 27 | 4 | 8 | |
| 0010 | W. LISBON AVE. | | | | | | | | |
| | 125 | 514 | 9L+89.4 5.8' RT | 9L+97.4 7.7' LT | 9 | -- | -- | -- | |
| | 126 | 515 | 9L+90.6 48.1' LT | 9L+93.8 56.1' LT | 9 | -- | -- | -- | |
| | 127 | 514 | 9L+96.7 47.9' RT | 9L+97.4 7.7' LT | 60 | -- | -- | -- | |
| | 128 | 36 | 11L+81.6 4.9' LT | 11L+82.7 16.4' LT | 27 | -- | -- | -- | |
| | 129 | 128 | 11L+84.1 6.6' RT | 11L+81.6 4.9' LT | 12 | -- | -- | -- | |
| | SUBTOTAL | | | | 117 | 0 | 0 | 0 | |
| | TOTALS | | | | 580 | 27 | 4 | 8 | |

## EARTHWORK SUMMARY

| CATEGORY | LOCATION | STATION TO STATION | (C) CUT EXCAVATION CY | (E) EBS EXCAVATION CY | **P** (1) 205.0100 EXCAVATION COMMON CY | (3) 130% EXPANDED EBS BACKFILL CY | (4) MASS ORDINATE EXCESS (SHORTAGE) CY |
|---|---|---|---|---|---|---|---|
| 0010 | N. 27TH ST. | 16+18 - 19+65 | 45 | -- | 45 | -- | 45 |
| | | 19+65 - 24+77 | 92 | -- | 92 | -- | 92 |
| | | 24+77 - 29+76 | 209 | -- | 209 | -- | 209 |
| | | 29+76 - 34+87 | 135 | -- | 135 | -- | 135 |
| | | 34+87 - 39+87 | 122 | -- | 122 | -- | 122 |
| | | 39+87 - 44+87 | 123 | -- | 123 | -- | 123 |
| | | 44+87 - 48+70 | 255 | -- | 255 | -- | 255 |
| | SUBTOTAL | | | | 980 | | 980 |
| 0010 | W. LISBON AVE. | | | | | | |
| | | 7L+75 - 10L+12 | 418 | -- | 418 | -- | 418 |
| | | 10L+67 - 12L+27 | 322 | -- | 322 | -- | 322 |
| | SUBTOTAL | | | | 740 | | 740 |
| | TOTALS | | | | 1,720 | | 1,720 |

NOTES

1) EXCAVATION COMMON IS THE SUM OF THE CUT ( C ) AND EBS EXCAVATION (E).
2) EBS EXCAVATION ( E ) TO BE BACKFILLED WITH CUT.
3) EXPANDED EBS BACKFILL. THIS IS TO BE FILLED WITH AVAILABLE MATERIAL. EBS EXPANSION FACTOR 1.30.
4) MASS ORDINATE = EXCAVATION COMMON ( 1 ) - EXPANDED EBS BACKFILL ( 3 ).

## ASPHALT PAVEMENT ITEMS

| CATEGORY | LOCATION | OFFSET | 455.0605 TACK COAT GAL | 460.2000 INCENTIVE DENSITY HMA PAVEMENT DOL | 460.4000 HMA COLD WEATHER PAVING TON | 460.6224 HMA PAVEMENT 4 MT 58-28 S TON | 465.0120 ASPHALTIC SURFACE DRIVEWAYS AND FIELD ENTRANCES TON | 465.0125 ASPHALTIC SURFACE TEMPORARY TON |
|---|---|---|---|---|---|---|---|---|
| 0010 | N. 27TH ST. | | | | | | | |
| | 16+18 - 19+65 | LT/RT | 260 | 296 | -- | 463 | 1 | 2 |
| | 19+65 - 24+77 | LT/RT | 400 | 454 | -- | 710 | -- | 2 |
| | 24+77 - 29+76 | LT/RT | 466 | 530 | -- | 828 | 1 | 2 |
| | 29+76 - 34+87 | LT/RT | 497 | 563 | -- | 883 | 1 | 4 |
| | 34+87 - 39+87 | LT/RT | 460 | 524 | -- | 819 | -- | 2 |
| | 39+87 - 44+87 | LT/RT | 469 | 533 | -- | 833 | -- | 2 |
| | 44+87 - 48+70 | LT/RT | 282 | 321 | -- | 502 | -- | 2 |
| | SUBTOTAL | | 2,834 | 3,222 | 0 | 5,037 | 3 | 16 |
| 0010 | W. LISBON AVE. | | | | | | | |
| | 7L+75 - 10L+12 | LT/RT | 242 | 298 | 466 | 466 | -- | 2 |
| | 10L+67 - 12L+27 | LT/RT | 154 | 190 | -- | 297 | -- | 2 |
| | SUBTOTAL | | 396 | 488 | 466 | 763 | 0 | 4 |
| | TOTALS | | 3,230 | 3,710 | 466 | 5,800 | 3 | 20 |

3

## CONCRETE ITEMS

| CATEGORY | LOCATION | OFFSET | 305.0120 BASE AGGREGATE DENSE 1 1/4-INCH TON | 320.0145 CONCRETE BASE 8-INCH SY | 390.0303 BASE PATCHING CONCRETE SY | 390.0403 BASE PATCHING CONCRETE SHES SY | 415.0080 CONCRETE PAVEMENT 8-INCH SY | 415.0090 CONCRETE PAVEMENT 9-INCH SY | 715.0415 INCENTIVE STRENGTH CONCRETE PAVEMENT DOL | 416.0170 CONCRETE DRIVEWAY 7-INCH SY | 416.0270 CONCRETE DRIVEWAY HES 7-INCH SY | 601.0331 CONCRETE CURB & GUTTER 31-INCH LF | 601.0600 CONCRETE CURB PEDESTRIAN LF | 602.0410 CONCRETE SIDEWALK 5-INCH SF | 602.0420 CONCRETE SIDEWALK 7-INCH SF | SPV.0165.01 CONCRETE SIDEWALK 7-INCH HES SF | 602.0505 CURB RAMP DETECTABLE WARNING FIELD YELLOW SF | 620.0300 CONCRETE MEDIAN SLOPED NOSE TYPE 1 SF | 620.0300 CONCRETE MEDIAN SLOPED NOSE TYPE 2 SF | SPV.0090.02 CONCRETE CURB & GUTTER INTEGRAL 31-INCH LF | SPV.0090.03 CONCRETE CURB & GUTTER 31-INCH SPECIAL LF | SPV.0090.04 CONCRETE CURB & GUTTER 6-INCH SLOPED 31-INCH LF |
|---|---|---|---|---|---|---|---|---|---|---|---|---|---|---|---|---|---|---|---|---|---|---|
| 0010 | N. 27TH ST. | | | | | | | | | | | | | | | | | | | | | |
| | 16+18 - 19+65 | LT/RT | 33 | 54 | 169 | 42 | -- | 67 | 20 | 70 | -- | 87 | -- | 1,876 | -- | -- | 60 | -- | 35 | 60 | 409 | -- |
| | 19+65 - 24+77 | LT/RT | 65 | 101 | 378 | 94 | -- | 134 | 40 | 30 | 14 | 319 | -- | 4,288 | 264 | 125 | 120 | -- | 85 | 120 | 335 | -- |
| | 24+77 - 29+76 | LT/RT | 157 | 219 | 572 | 143 | -- | 201 | 60 | 21 | 22 | 227 | 12 | 5,784 | 103 | 109 | 100 | 56 | 88 | 180 | 666 | -- |
| | 29+76 - 34+87 | LT/RT | 154 | 217 | 301 | 75 | 44 | 67 | 33 | 45 | 44 | 129 | -- | 5,859 | 307 | 301 | 80 | 56 | 91 | 60 | 1,018 | -- |
| | 34+87 - 39+87 | LT/RT | 107 | 95 | 531 | 133 | 129 | 67 | 59 | -- | -- | 81 | -- | 4,209 | -- | -- | 100 | -- | 53 | 60 | 425 | -- |
| | 39+87 - 44+87 | LT/RT | 93 | 99 | 452 | 113 | 82 | 67 | 45 | 15 | 15 | 51 | -- | 4,654 | 126 | 125 | 120 | -- | 53 | 60 | 681 | -- |
| | 44+87 - 48+70 | LT/RT | 220 | 1,237 | 181 | 45 | -- | 134 | 40 | -- | -- | 14 | -- | 3,027 | 40 | 40 | 100 | -- | 83 | 95 | 577 | -- |
| | SUBTOTAL | | 828 | 2,021 | 2,585 | 646 | 255 | 736 | 297 | 180 | 95 | 908 | 12 | 29,697 | 840 | 700 | 680 | 112 | 488 | 635 | 4,111 | 0 |
| | | | | | | | | | | | | | | | | | | 600 | | | | |
| 0010 | W. LISBON AVE. | | | | | | | | | | | | | | | | | | | | | |
| | 7L+75 - 10L+12 | LT/RT | 214 | 377 | 452 | 113 | -- | 67 | 20 | -- | -- | 112 | -- | 1,833 | -- | -- | 70 | 68 | 85 | 60 | 523 | 95 |
| | 10L+67 - 12L+27 | LT/RT | 158 | 212 | 181 | 45 | -- | 67 | 20 | -- | -- | -- | -- | 1,170 | -- | -- | 30 | -- | 87 | 60 | 386 | -- |
| | SUBTOTAL | | 372 | 589 | 633 | 158 | 0 | 133 | 40 | 0 | 0 | 112 | 0 | 3,003 | 0 | 0 | 100 | 68 | 172 | 120 | 909 | 95 |
| | | | | | | | | | | | | | | | | | | 240 | | | | |
| | UNDISTRIBUTED 15% | | -- | -- | 482 | 126 | -- | -- | 163 | -- | -- | -- | 38 | -- | -- | -- | -- | -- | | -- | -- | -- |
| | TOTALS | | 1,200 | 2,610 | 3,700 | 930 | 255 | 870 | 500 | 180 | 95 | 1,020 | 50 | 32,700 | 840 | 700 | 780 | 840 | | 755 | 5,020 | 95 |

### FINISHING ROADWAY ID 2265-00-74

| CATEGORY | STAGE | LOCATION | 213.0100 EACH |
|---|---|---|---|
| 0010 | ALL | N. 27TH ST. | 1 |
| | TOTAL | | 1 |

### DRILLED TIE BARS

| CATEGORY | LOCATION | OFFSET | 416.0610 EACH |
|---|---|---|---|
| 0010 | N. 27TH ST. | | |
| | 16+18 - 19+65 | LT/RT | 133 |
| | 19+65 - 24+77 | LT/RT | 332 |
| | 24+77 - 29+76 | LT/RT | 258 |
| | 29+76 - 34+87 | LT/RT | 233 |
| | 34+87 - 39+87 | LT/RT | 312 |
| | 39+87 - 44+87 | LT/RT | 328 |
| | 44+87 - 48+70 | LT/RT | 359 |
| | SUBTOTAL | | 1,955 |
| 0010 | W. LISBON AVE. | | |
| | 7L+75 - 10L+12 | LT/RT | 139 |
| | 10L+67 - 12L+27 | LT/RT | 176 |
| | SUBTOTAL | | 315 |
| | TOTALS | | 2,270 |

### JOINT AND CRACK REPAIR

| CATEGORY | LOCATION | OFFSET | SPV.0090.01 LF |
|---|---|---|---|
| 0010 | N. 27TH ST. | | |
| | 16+18 - 19+65 | LT/RT | 261 |
| | 19+65 - 24+77 | LT/RT | 628 |
| | 24+77 - 29+76 | LT/RT | 381 |
| | 29+76 - 34+87 | LT/RT | 33 |
| | 34+87 - 39+87 | LT/RT | 61 |
| | 39+87 - 44+87 | LT/RT | 176 |
| | 44+87 - 48+70 | LT/RT | 11 |
| | TOTAL | | 1,550 |

3

## REMOVING STORM SEWER ITEMS

| CATEGORY | STRUCT NO. | LOCATION | OFFSET | 204.0210 REMOVING MANHOLES EACH | 204.0215 REMOVING CATCH BASINS EACH | 204.0255 ABANDONING CATCH BASINS EACH | * 204.9060.S.01 REMOVING CATCH BASIN CURB BOXES EACH | * 204.9060.S.02 REMOVING CATCH BASIN COVERS EACH | * 204.9060.S.03 REMOVING MANHOLE COVERS EACH | * 611.9710 SALVAGED INLET COVERS EACH |
|---|---|---|---|---|---|---|---|---|---|---|
| 0010 | N. 27TH STREET | | | | | | | | | |
| | 100 | 19+23.4 | 74.1' LT | -- | 1 | -- | 1 | 1 | -- | -- |
| | 101 | 21+01.9 | 30.6' LT | -- | 1 | -- | -- | 1 | -- | -- |
| | 102 | 24+26.5 | 25.5' LT | -- | 1 | -- | 1 | 1 | -- | -- |
| | 103 | 27+77.6 | 46.0' LT | -- | 1 | -- | -- | -- | -- | 1 |
| | 104 | 28+32.2 | 36.0' LT | -- | 1 | -- | 1 | 1 | -- | -- |
| | 105 | 29+29.6 | 18.1' RT | -- | 1 | -- | -- | -- | -- | 1 |
| | 106 | 29+40.7 | 41.7' LT | -- | 1 | -- | -- | -- | -- | 1 |
| | 107 | 30+83.8 | 18.1' RT | -- | 1 | -- | 1 | 1 | -- | -- |
| | 108 | 30+84.2 | 80.0' LT | -- | 1 | -- | -- | -- | -- | 1 |
| | 109 | 34+40.6 | 18.3' RT | -- | 1 | -- | -- | 1 | -- | -- |
| | 110 | 34+43.0 | 26.3' LT | -- | 1 | -- | 1 | 1 | -- | -- |
| | 111 | 34+47.0 | 43.7' LT | -- | 1 | -- | -- | -- | -- | 1 |
| | 112 | 37+94.6 | 15.9' LT | -- | 1 | -- | -- | 1 | -- | -- |
| | 113 | 39+29.3 | 46.0' LT | -- | 1 | -- | -- | -- | -- | 1 |
| | 114 | 39+41.6 | 26.3' LT | -- | 1 | -- | -- | 1 | -- | -- |
| | 115 | 39+47.3 | 18.1' RT | -- | 1 | -- | -- | -- | -- | 1 |
| | 116 | 40+24.5 | 18.2' RT | -- | 1 | -- | -- | -- | -- | 1 |
| | 117 | 40+45.2 | 38.4' LT | -- | 1 | -- | -- | -- | -- | 1 |
| | 118 | 43+08.2 | 18.1' RT | -- | 1 | -- | -- | -- | -- | 1 |
| | 119 | 45+17.8 | 28.2' LT | -- | 1 | -- | -- | -- | -- | 1 |
| | 120 | 45+20.0 | 23.7' RT | 1 | -- | -- | -- | -- | 1 | -- |
| | 121 | 45+26.6 | 61.5' LT | -- | 1 | -- | -- | -- | -- | 1 |
| | 122 | 45+32.3 | 19.4' RT | -- | 1 | -- | -- | -- | -- | 1 |
| | 123 | 46+28.5 | 20.4' RT | -- | 1 | -- | -- | -- | -- | 1 |
| | 124 | 47+84.4 | 24.9' RT | -- | 1 | -- | -- | -- | -- | 1 |
| | SUBTOTALS | | | 1 | 24 | 0 | 5 | 9 | 1 | 15 |
| 0010 | W. LISBON AVE. | | | | | | | | | |
| | 125 | 9L+89.4 | 5.8' LT | -- | -- | 1 | -- | 1 | -- | -- |
| | 126 | 9L+90.6 | 48.1' LT | -- | 1 | -- | -- | -- | -- | 1 |
| | 127 | 9L+96.7 | 47.9' RT | -- | 1 | -- | -- | -- | -- | 1 |
| | 128 | 11L+81.6 | 4.9' LT | -- | 1 | -- | -- | -- | -- | 1 |
| | 129 | 11L+84.1 | 6.6' RT | -- | 1 | -- | -- | -- | -- | 1 |
| | SUBTOTALS | | | 0 | 4 | 1 | 0 | 1 | 0 | 4 |
| | TOTALS | | | 1 | 28 | 1 | 5 | 10 | 1 | 19 |

## ADJUSTING CATCH BASIN ITEMS

| CATEGORY | STRUCT NO. | LOCATION | OFFSET | * 204.9060.S.01 REMOVING CATCH BASIN CURB BOXES EACH | * 204.9060.S.02 REMOVING CATCH BASIN COVERS EACH | 611.8105 ADJUSTING CATCH BASIN COVERS EACH | * SPV.0060.04 INLET COVER TYPE 57 EACH | REMARKS |
|---|---|---|---|---|---|---|---|---|
| 0010 | N. 27TH STREET | | | | | | | |
| | 200 | 17+47.3 | 39.4' LT | 1 | 1 | 1 | 1 | |
| | 201 | 17+56.7 | 16.4' LT | -- | -- | 1 | -- | REUSE COVER |
| | 202 | 17+65.1 | 73.4' LT | 1 | 1 | 1 | 1 | |
| | 203 | 17+72.0 | 20.8' RT | -- | 1 | 1 | 1 | |
| | 204 | 19+16.6 | 20.3' RT | -- | -- | 1 | -- | REUSE COVER |
| | 205 | 19+24.5 | 31.7' LT | -- | -- | 1 | -- | REUSE COVER |
| | 206 | 19+46.2 | 39.3' RT | -- | 1 | 1 | 1 | |
| | 207 | 19+84.8 | 40.5' RT | -- | -- | 1 | -- | REUSE COVER |
| | 208 | 22+84.1 | 43.0' LT | -- | -- | 1 | -- | REUSE COVER |
| | 209 | 24+22.0 | 79.9' LT | -- | -- | 1 | -- | REUSE COVER |
| | 210 | 24+23.5 | 17.9' RT | -- | -- | 1 | -- | REUSE COVER |
| | 211 | 24+25.7 | 45.8' LT | -- | -- | 1 | -- | REUSE COVER |
| | 212 | 29+30.5 | 80.4' LT | -- | -- | 1 | -- | REUSE COVER |
| | 213 | 29+52.2 | 42.3' RT | -- | -- | 1 | -- | REUSE COVER |
| | 214 | 29+99.3 | 49.0' RT | -- | -- | 1 | -- | REUSE COVER |
| | 215 | 32+94.1 | 15.9' LT | -- | -- | 1 | -- | REUSE COVER |
| | 216 | 34+44.6 | 80.0' LT | 1 | 1 | 1 | 1 | |
| | 217 | 37+94.3 | 46.0' LT | -- | -- | 1 | -- | REUSE COVER |
| | 218 | 39+48.8 | 80.1' LT | 1 | 1 | 1 | 1 | |
| | 219 | 39+69.4 | 43.9' RT | -- | 1 | 1 | 1 | |
| | 220 | 39+71.4 | 118.8' LT | 1 | 1 | 1 | 1 | |
| | 221 | 40+03.7 | 108.9' LT | 1 | 1 | 1 | 1 | |
| | 222 | 40+27.7 | 80.4' LT | -- | -- | 1 | -- | REUSE COVER |
| | 223 | 40+44.3 | 16.2' LT | -- | 1 | 1 | 1 | |
| | 224 | 41+77.4 | 16.0' LT | -- | -- | 1 | -- | REUSE COVER |
| | 225 | 42+97.6 | 15.9' LT | 1 | 1 | 1 | 1 | |
| | 226 | 44+68.6 | 39.7' RT | -- | -- | 1 | -- | REUSE COVER |
| | 227 | 44+69.4 | 102.8' LT | 1 | 1 | 1 | 1 | |
| | 228 | 48+01.2 | 24.0' LT | -- | -- | 1 | -- | REUSE COVER |
| | SUBTOTALS | | | 8 | 12 | 29 | 12 | |
| 0010 | W. LISBON AVE. | | | | | | | |
| | 229 | 9L+80.4 | 110.6' RT | -- | -- | 1 | -- | REUSE COVER |
| | SUBTOTALS | | | 0 | 0 | 1 | 0 | |
| | TOTALS | | | 8 | 12 | 30 | 12 | |

* ADDITIONAL QUANTITY SHOWN ELSEWHWERE

3

## STORM SEWER ITEMS

* ADDITIONAL QUANTITY SHOWN ELSEWHWERE

| CATEGORY | STRUCT NO. | LOCATION | OFFSET | SLOPE | ELEVATIONS RIM | ELEVATIONS INVERT | ELEVATIONS DISCHARGE | STRUCT BOTTOM | STRUCT DEPTH | STRUCTURE FROM | STRUCTURE TO | 520.8000 CONCRETE COLLARS FOR PIPE EACH | 608.0412 STORM SEWER PIPE REINFORCED CONCRETE CLASS IV 12-INCH LF | 611.1230 CATCH BASINS 2x3-FT EACH | 611.2004 MANHOLES 4-FT DIAMETER EACH | * 611.8120.S COVER PLATES TEMPORARY EACH | * SPV.0060.04 INLET COVER TYPE 57 EACH | * SPV.0060.05 MANHOLE COVERS TYPE 58A EACH | SPV.0060.06 CATCH BASINS TYPE 44B EACH | SPV.0060.07 CATCH BASINS TYPE 45A EACH | REMARKS |
|---|---|---|---|---|---|---|---|---|---|---|---|---|---|---|---|---|---|---|---|---|---|
| 0010 | N. 27TH STREET | | | | | | | | | | | | | | | | | | | | |
| | 1 | 19+23.5 | 74.2' LT | 0.5% | 99.70 | 95.45 | 95.19 | 93.78 | 4.75 | 1 | 500 | -- | 51 | -- | -- | -- | 1 | -- | -- | 1 | |
| | 2 | 21+01.9 | 30.5' LT | 1.0% | 98.43 | 94.71 | 94.37 | 93.04 | 4.22 | 2 | 501 | -- | 34 | -- | -- | -- | 1 | -- | 1 | -- | |
| | 3 | 24+28.2 | 26.7' LT | 2.0% | 95.34 | 91.09 | 90.91 | 89.42 | 4.75 | 3 | 502 | -- | 9 | -- | -- | -- | 1 | -- | -- | 1 | |
| | 4 | 27+77.7 | 46.0' LT | 1.0% | 92.97 | 88.91 | 88.61 | 87.24 | 4.56 | 4 | 401 | -- | 30 | 1 | -- | -- | -- | -- | -- | -- | REUSE COVER FROM 103 |
| | 5 | 28+32.3 | 36.0' LT | 1.0% | 92.47 | 89.97 | 89.41 | 88.30 | 3.00 | 5 | 4 | -- | 56 | 1 | -- | -- | 1 | -- | -- | -- | |
| | 6 | 29+29.7 | 18.1' RT | 1.0% | 91.82 | 89.32 | 89.10 | 87.65 | 3.00 | 6 | 504 | -- | 22 | 1 | -- | -- | -- | -- | -- | -- | REUSE COVER FROM 105 |
| | 7 | 29+30.9 | 44.2' LT | 2.0% | 91.66 | 87.41 | 87.23 | 85.74 | 4.75 | 7 | 8 | -- | 9 | -- | -- | -- | -- | -- | -- | 1 | REUSE COVER FROM 106 |
| | 8 | 29+30.4 | 34.9' LT | 1.0% | 91.68 | 86.72 | 86.60 | 85.07 | 5.44 | 8 | 402 | -- | 12 | -- | -- | -- | -- | -- | -- | 1 | REUSE COVER FROM 402 |
| | 9 | 30+83.9 | 18.1' RT | 2.0% | 91.23 | 88.73 | 88.59 | 87.06 | 3.00 | 9 | 505 | -- | 7 | 1 | -- | -- | 1 | -- | -- | -- | |
| | 10 | 30+84.3 | 80.4' LT | 1.0% | 90.24 | 85.99 | 85.49 | 84.32 | 4.75 | 10 | 403 | -- | 50 | -- | -- | -- | -- | -- | -- | 1 | REUSE COVER FROM 108 |
| | 11 | 34+47.1 | 43.5' LT | 1.0% | 90.29 | 86.04 | 85.80 | 84.37 | 4.75 | 11 | 506 | -- | 24 | -- | -- | -- | -- | -- | -- | 1 | |
| | 12 | 34+43.1 | 26.4' LT | 1.0% | 89.84 | 85.59 | 85.48 | 83.92 | 4.75 | 12 | 506 | -- | 11 | -- | -- | -- | 1 | -- | -- | 1 | |
| | 13 | 34+40.7 | 18.4' RT | 2.0% | 89.50 | 87.00 | 86.88 | 85.33 | 3.00 | 13 | 507 | -- | 6 | 1 | -- | -- | 1 | -- | -- | -- | |
| | 14 | 37+94.6 | 16.2' LT | -- | 88.06 | 85.56 | +/- 78.00 | 83.89 | 3.00 | 14 | EX. 96" PIPE | -- | 15 | 1 | -- | -- | 1 | -- | -- | -- | BLIND CONNECTION TO COMBINED SEWER |
| | 15 | 39+29.4 | 45.9' LT | 1.0% | 86.93 | 82.68 | 82.36 | 81.01 | 4.75 | 15 | 509 | -- | 32 | -- | -- | 1 | -- | -- | -- | 1 | |
| | 16 | 39+41.6 | 26.4' LT | 1.0% | 86.65 | 80.53 | 80.42 | 78.86 | 6.62 | 16 | 509 | -- | 11 | -- | -- | -- | 1 | -- | -- | 1 | |
| | 17 | 39+47.4 | 18.1' RT | 2.0% | 86.62 | 84.12 | 83.96 | 82.45 | 3.00 | 17 | 508 | -- | 8 | 1 | -- | -- | -- | -- | -- | -- | REUSE COVER FROM 115 |
| | 18 | 40+24.6 | 18.2' RT | 1.0% | 86.55 | 84.05 | 83.72 | 82.38 | 3.00 | 18 | 511 | -- | 33 | 1 | -- | -- | -- | -- | -- | -- | REUSE COVER FROM 116 |
| | 19 | 40+45.2 | 38.1' LT | 1.0% | 86.87 | 82.62 | 82.45 | 80.95 | 4.75 | 19 | 510 | -- | 17 | -- | -- | -- | -- | -- | -- | 1 | REUSE COVER FROM 117 |
| | 20 | 43+08.3 | 18.3' RT | 1.0% | 87.42 | 84.92 | 84.57 | 83.25 | 3.00 | 20 | 512 | -- | 35 | 1 | -- | -- | -- | -- | -- | -- | REUSE COVER FROM 118 |
| | 21 | 45+27.1 | 63.6' LT | 2.0% | 89.40 | 84.15 | 83.37 | 82.48 | 5.75 | 21 | 513 | -- | 39 | -- | -- | -- | -- | -- | -- | 1 | REUSE COVER FROM 120 |
| | 22 | 45+30.1 | 20.3' RT | 1.0% | 88.60 | 86.10 | 85.87 | 84.43 | 3.00 | 22 | 515 | -- | 23 | 1 | -- | -- | -- | -- | -- | -- | REUSE COVER FROM 121 |
| | 23 | 45+34.8 | 18.2' LT | 1.0% | 89.18 | 86.68 | 86.53 | 85.01 | 3.00 | 23 | 513 | -- | 15 | 1 | -- | -- | -- | -- | -- | -- | REUSE COVER FROM 119 |
| | 24 | 46+29.3 | 42.9' LT | 2.0% | 91.41 | 86.16 | 86.00 | 84.49 | 5.75 | 24 | 406 | -- | 8 | -- | -- | -- | -- | -- | -- | 1 | REUSE COVER FROM 406 |
| | 25 | 46+29.4 | 22.6' RT | -- | 90.45 | 87.95 | -- | 86.28 | 3.00 | 25 | EX. SS PIPE | 1 | 3 | 1 | -- | -- | -- | -- | -- | -- | REUSE COVER FROM 122 |
| | 26 | 46+42.7 | 61.5' LT | 2.0% | 92.17 | 87.92 | 87.78 | 86.25 | 4.75 | 26 | 407 | -- | 7 | -- | -- | -- | 1 | -- | -- | 1 | REUSE COVER FROM 407 |
| | 37 | 47+86.7 | 25.1' RT | 1.0% | 93.88 | 91.38 | 91.12 | 89.71 | 3.00 | 37 | 516 | -- | 26 | 1 | -- | -- | 1 | -- | -- | -- | REUSE COVER FROM 124 |
| | SUBTOTAL | | | | | | | | | | | 1 | 593 | 13 | 0 | 1 | 11 | 0 | 1 | 13 | |
| 0010 | W. LISBON AVE. | | | | | | | | | | | | | | | | | | | | |
| | 27 | 9L+56.2 | 9.2' LT | 1.0% | 94.85 | 90.60 | 90.30 | 88.93 | 4.75 | 27 | 28 | -- | 30 | -- | -- | -- | 1 | -- | -- | 1 | |
| | 28 | 9L+85.6 | 8.0' LT | 1.0% | 94.32 | 90.07 | 89.95 | 88.40 | 4.75 | 28 | 517 | -- | 12 | -- | -- | -- | 1 | -- | -- | 1 | |
| | 29 | 9L+90.6 | 48.2'' LT | 2.0% | 94.27 | 88.16 | 87.98 | 86.49 | 6.61 | 29 | 518 | -- | 9 | -- | -- | -- | -- | -- | -- | 1 | REUSE COVER FROM 125 |
| | 30 | 9L+92.7 | 48.2' RT | 2.0% | 93.17 | 88.92 | 88.78 | 87.25 | 4.75 | 30 | 31 | -- | 7 | -- | -- | -- | -- | -- | -- | 1 | REUSE COVER FROM 126 |
| | 31 | 9L+96.7 | 42.5' RT | 1.0% | 93.20 | 88.53 | 88.03 | 88.53 | 3.34 | 31 | 517 | -- | 50 | -- | 1 | -- | -- | 1 | | -- | |
| | 32 | 10L+04.2 | 3.6' RT | 1.0% | 94.24 | 87.75 | 87.61 | 86.08 | 6.99 | 32 | 517 | -- | 14 | -- | -- | -- | 1 | -- | -- | 1 | |
| | 33 | 11L+83.3 | 12.7' RT | 2.0% | 91.47 | 88.56 | 88.40 | 86.89 | 3.41 | 33 | 34 | -- | 8 | 1 | -- | -- | 1 | -- | -- | -- | |
| | 34 | 11L+83.8 | 5.6' RT | 2.0% | 92.27 | 88.02 | 87.88 | 86.35 | 4.75 | 34 | 35 | -- | 7 | -- | -- | -- | 1 | -- | -- | 1 | REUSE COVER FROM 129 |
| | 35 | 11L+83.2 | 0.9' LT | 2.0% | 92.06 | 87.52 | 87.20 | 85.85 | 5.04 | 35 | 36 | -- | 16 | -- | -- | 1 | -- | -- | -- | 1 | REUSE COVER FROM 127 |
| | 36 | 11L+82.7 | 16.4' LT | -- | 92.51 | -- | -- | 86.64 | 4.54 | 36 | EX. SS PIPE | -- | -- | -- | 1 | -- | -- | 1 | -- | -- | CONSTRUCT OVER EXIST. PIPE |
| | SUBTOTAL | | | | | | | | | | | 0 | 153 | 1 | 2 | 1 | 5 | 2 | 0 | 7 | |
| | TOTALS | | | | | | | | | | | 1 | 746 | 14 | 2 | 2 | 16 | 2 | 1 | 20 | |

3

## MANHOLE COVER ITEMS

| CATEGORY | STRUCT NO. | LOCATION | OFFSET | * 204.9060.S.03 REMOVING MANHOLE COVERS EACH | 611.8110 ADJUSTING MANHOLE COVERS EACH | * 611.8120.S COVER PLATES TEMPORARY EACH | * SPV.0060.05 MANHOLE COVERS TYPE 58A EACH | REMARKS |
|---|---|---|---|---|---|---|---|---|
| 0010 | N. 27TH STREET | | | | | | | |
| | 300 | 17+57.8 | 1.0' RT | 1 | 1 | 1 | 1 | |
| | 301 | 17+84.4 | 24.5' RT | -- | 1 | 1 | -- | REUSE COVER |
| | 302 | 18+19.2 | 0.4' LT | 1 | 1 | 1 | 1 | |
| | 303 | 19+31.9 | 0.6' LT | 1 | 1 | 1 | 1 | |
| | 304 | 19+41.2 | 3.1' LT | 1 | 1 | 1 | 1 | |
| | 306 | 19+65.7 | 45.4' RT | 1 | 1 | 1 | 1 | |
| | 307 | 19+89.9 | 12.3' LT | 1 | 1 | 1 | 1 | |
| | 308 | 20+12.4 | 1.0' LT | -- | 1 | 1 | -- | REUSE COVER |
| | 309 | 22+19.8 | 0.8' LT | 1 | 1 | 1 | 1 | |
| | 310 | 23+24.2 | 0.8' LT | 1 | 1 | 1 | 1 | |
| | 311 | 24+34.3 | 0.6' LT | 1 | 1 | 1 | 1 | |
| | 312 | 24+35.0 | 17.6' RT | -- | 1 | 1 | -- | REUSE COVER |
| | 313 | 25+27.5 | 0.1' RT | 1 | 1 | 1 | 1 | |
| | 314 | 25+65.2 | 13.5' LT | -- | 1 | 1 | -- | REUSE COVER |
| | 315 | 27+27.9 | 0.3' LT | 1 | 1 | 1 | 1 | |
| | 316 | 27+97.3 | 24.0' LT | 1 | 1 | 1 | 1 | |
| | 317 | 29+24.7 | 24.6' LT | 1 | 1 | 1 | 1 | |
| | 318 | 29+75.7 | 45.5' RT | 1 | 1 | 1 | 1 | |
| | 319 | 29+76.6 | 44.7' LT | 1 | 1 | 1 | 1 | |
| | 320 | 29+97.8 | 83.5' LT | 1 | 1 | 1 | 1 | |
| | 321 | 30+20.8 | 14.4' LT | -- | 1 | 1 | -- | REUSE COVER |
| | 322 | 34+86.7 | 45.4' LT | 1 | 1 | 1 | 1 | |
| | 323 | 39+37.2 | 2.6' LT | -- | 1 | 1 | -- | REUSE COVER |
| | 324 | 39+75.2 | 41.1' LT | 1 | 1 | 1 | 1 | |
| | 325 | 39+86.4 | 44.4' RT | 1 | 1 | 1 | 1 | |
| | 326 | 39+87.8 | 45.8' LT | 1 | 1 | 1 | 1 | |
| | 327 | 40+28.2 | 3.2' LT | -- | 1 | 1 | -- | REUSE COVER |
| | 328 | 43+29.1 | 5.7' LT | 1 | 1 | 1 | 1 | |
| | 329 | 43+37.7 | 11.2' RT | -- | 1 | 1 | -- | REUSE COVER |
| | 330 | 44+43.1 | 2.8' LT | -- | 1 | 1 | -- | REUSE COVER |
| | 331 | 44+86.2 | 45.9' LT | 1 | 1 | 1 | 1 | |
| | 332 | 44+86.4 | 44.3' RT | 1 | 1 | 1 | 1 | |
| | 333 | 45+91.6 | 43.4' RT | 1 | 1 | 1 | 1 | |
| | 334 | 47+24.9 | 0.9' RT | 1 | 1 | 1 | 1 | |
| | SUBTOTALS | | | 25 | 34 | 34 | 25 | |
| 0010 | W. LISBON AVE. | | | | | | | |
| | 336 | 9L+88.8 | 33.0' LT | -- | 1 | 1 | -- | |
| | 337 | 10L+84.3 | 32.2' LT | 1 | 1 | 1 | 1 | |
| | 338 | 11L+84.1 | 31.7' LT | -- | 1 | 1 | -- | REUSE COVER |
| | SUBTOTALS | | | 1 | 3 | 3 | 1 | |
| | TOTALS | | | 26 | 37 | 37 | 26 | |

* ADDITIONAL QUANTITY SHOWN ELSEWHWERE

## RECONSTRUCTING CATCH BASIN ITEMS

* ADDITIONAL QUANTITY SHOWN ELSEWHWERE

| CATEGORY | STRUCT NO. | LOCATION | OFFSET | * 204.9060.S.01 REMOVING CATCH BASIN CURB BOXES EACH | * 204.9060.S.02 REMOVING CATCH BASIN COVERS EACH | 611.0410 RECONSTRUCTING CATCH BASINS EACH | * 611.8120.S COVER PLATES TEMPORARY EACH | * 611.9710 SALVAGED INLET COVERS EACH | * SPV.0060.04 INLET COVER TYPE 57 EACH | * SPV.0060.05 INLET COVER TYPE 58A EACH | REMARKS |
|---|---|---|---|---|---|---|---|---|---|---|---|
| 0010 | N. 27TH STREET | | | | | | | | | | |
| | 400 | 22+84.0 | 16.0' LT | -- | 1 | 1 | -- | -- | 1 | -- | |
| | 401 | 27+77.0 | 16.0' LT | -- | 1 | 1 | -- | -- | 1 | -- | |
| | 402 | 29+41.3 | 30.3' LT | -- | -- | 1 | -- | 1 | -- | -- | REUSE COVER ON 8 |
| | 403 | 31+08.0 | 36.0' LT | 1 | 1 | 1 | -- | -- | 1 | -- | |
| | 404 | 40+01.8 | 41.1' RT | 1 | 1 | 1 | -- | -- | 1 | -- | |
| | 405 | 43+61.2 | 16.0' LT | -- | -- | 1 | -- | -- | -- | -- | REUSE COVER |
| | 406 | 46+21.5 | 41.9' LT | -- | -- | 1 | 1 | 1 | -- | 1 | REUSE COVER ON 24 |
| | 407 | 9L+93.8 | 91.5' RT | -- | 1 | 1 | -- | -- | 1 | -- | REUSE COVER ON 26 |
| | TOTALS | | | 2 | 5 | 8 | 1 | 2 | 5 | 1 | |

## RECONSTRUCTING MANHOLE ITEMS

* ADDITIONAL QUANTITY SHOWN ELSEWHWERE

| CATEGORY | STRUCT NO. | LOCATION | OFFSET | * 204.9060.S.03 REMOVING MANHOLE COVERS EACH | 611.0420 RECONSTRUCTING MANHOLES EACH | * 611.8120.S COVER PLATES TEMPORARY EACH | * SPV.0060.05 MANHOLE COVERS TYPE 58A EACH | REMARKS |
|---|---|---|---|---|---|---|---|---|
| 0010 | N. 27TH STREET | | | | | | | |
| | 500 | 19+65.3 | 45.6' LT | 1 | 1 | 1 | 1 | |
| | 501 | 21+17.4 | 0.6' LT | 1 | 1 | 1 | 1 | |
| | 502 | 24+19.7 | 25.7' LT | -- | 1 | -- | -- | REUSE COVER |
| | 503 | 28+29.2 | 0.5' RT | 1 | 1 | 1 | 1 | |
| | 504 | 29+40.8 | 0.9' LT | 1 | 1 | 1 | 1 | |
| | 505 | 30+83.2 | 24.4' RT | 1 | 1 | -- | 1 | |
| | 506 | 34+32.5 | 24.3' LT | 1 | 1 | -- | 1 | |
| | 507 | 34+39.3 | 24.0' RT | 1 | 1 | -- | 1 | |
| | 508 | 39+51.6 | 24.0' RT | 1 | 1 | -- | 1 | |
| | 509 | 39+51.9 | 24.6' LT | 1 | 1 | 1 | 1 | |
| | 510 | 40+55.9 | 24.9' LT | 1 | 1 | -- | 1 | |
| | 511 | 40+56.5 | 24.1' RT | 1 | 1 | -- | 1 | |
| | 512 | 42+74.0 | 23.5' RT | 1 | 1 | -- | 1 | |
| | 513 | 45+21.5 | 24.8' LT | 1 | 1 | 1 | 1 | |
| | 514 | 46+20.2 | 0.5' RT | -- | 1 | 1 | -- | REUSE COVER |
| | 515 | 45+31.8 | 2.5' LT | 1 | 1 | 1 | 1 | |
| | 516 | 47+93.3 | 1.1' LT | -- | 1 | 1 | -- | REUSE COVER |
| | SUBTOTALS | | | 13 | 16 | 8 | 13 | |
| 0010 | W. LISBON AVE. | | | | | | | |
| | 517 | 9L+97.4 | 7.7' LT | 1 | 1 | 1 | 1 | |
| | 518 | 9L+93.8 | 56.1' LT | 1 | 1 | -- | 1 | |
| | SUBTOTALS | | | 2 | 2 | 1 | 2 | |
| | TOTALS | | | 15 | 18 | 9 | 15 | |

3

## EROSION CONTROL MOBILIZATION ITEMS

| CATEGORY | STAGE | LOCATION | 628.1905 MOBILIZATION EROSION CONTROL EACH | 628.1910 MOBILIZATION EMERGENCY EROSION CONTROL EACH |
|---|---|---|---|---|
| 0010 | ALL | N. 27TH ST. | 4 | 6 |
| | TOTALS | | 4 | 6 |

## MOBILIZATION

| CATEGORY | STAGE | LOCATION | 619.1000 EACH |
|---|---|---|---|
| 0010 | ALL | N. 27TH ST. | 1 |
| | TOTAL | | 1 |

## LANDMARK REFERENCE MONUMENTS

| CATEGORY | LOCATION | OFFSET | 621.0100 EACH |
|---|---|---|---|
| 0010 | N. 27TH ST. | | |
| | 20+00.00 | 0.00' ON T/L | 1 |
| | 46+65.60 | 0.00' ON T/L | 1 |
| | TOTALS | | 2 |

## FIELD OFFICE TYPE C

| CATEGORY | STAGE | LOCATION | 642.5201 EACH |
|---|---|---|---|
| 0010 | ALL | N. 27TH ST. | 1 |
| | TOTAL | | 1 |

## RESTORATION ITEMS

| CATEGORY | LOCATION | OFFSET | 623.0200 DUST CONTROL SURFACE TREATMENT SY | 624.0100 WATER MGAL | 625.0100 TOPSOIL SY | 629.0210 FERTILIZER TYPE B CWT | 630.0130 SEEDING MIXTURE NO. 30 LB | 631.1000 SOD LAWN SY |
|---|---|---|---|---|---|---|---|---|
| 0010 | N. 27TH ST. | | | | | | | |
| | 16+18 - 19+65 | LT/RT | 227 | .15 | 227 | 1 | 4 | 227 |
| | 19+65 - 24+77 | LT/RT | 457 | .29 | 457 | 1 | 8 | 457 |
| | 24+77 - 29+76 | LT/RT | 461 | .68 | 461 | 1 | 8 | 461 |
| | 29+76 - 34+87 | LT/RT | 632 | .55 | 632 | 1 | 12 | 632 |
| | 34+87 - 39+87 | LT/RT | 456 | .43 | 456 | 1 | 8 | 456 |
| | 39+87 - 44+87 | LT/RT | 557 | .40 | 557 | 1 | 11 | 557 |
| | 44+87 - 48+70 | LT/RT | 151 | .88 | 151 | 1 | 3 | 151 |
| | SUBTOTAL | | 2,942 | 3.4 | 2,942 | 7 | 55 | 2,942 |
| 0010 | W. LISBON AVE. | | | | | | | |
| | 7L+75 - 10L+12 | LT/RT | 415 | 1.09 | 415 | 1 | 7 | 415 |
| | 10L+67 - 12L+27 | LT/RT | 124 | .66 | 124 | 1 | 2 | 124 |
| | SUBTOTAL | | 538 | 1.8 | 538 | 2 | 10 | 538 |
| | TOTALS | | 3,480 | 5.1 | 3,480 | 9 | 64 | 3,480 |

## EXCAVATION OF CONTAMINATED SOILS

| CATEGORY | STAGE | LOCATION | 205.0501.S EXCAVATION, HAULING, AND DISPOSAL OF PETROLEUM CONTAMINATED SOIL TON | SPV.0195.01 EXCAVATION, HAULING, AND DISPOSAL OF METALS AND VOC CONTAMINATED SOIL TON |
|---|---|---|---|---|
| 0010 | ALL | N. 27TH ST. | 50 | 88 |
| | TOTALS | | 50 | 88 |

## INLET SCREENS TYPE M

| CATEGORY | LOCATION | OFFSET | SPV.0060.08 EACH |
|---|---|---|---|
| 0010 | N. 27TH ST. | | |
| | 16+18 - 19+65 | LT/RT | 8 |
| | 19+65 - 24+77 | LT/RT | 9 |
| | 24+77 - 29+76 | LT/RT | 11 |
| | 29+76 - 34+87 | LT/RT | 9 |
| | 34+87 - 39+87 | LT/RT | 9 |
| | 39+87 - 44+87 | LT/RT | 12 |
| | 44+87 - 48+70 | LT/RT | 10 |
| | SUBTOTAL | | 68 |
| 0010 | W. LISBON AVE. | | |
| | 7L+75 - 10L+12 | LT/RT | 10 |
| | 10L+67 - 12L+27 | LT/RT | 4 |
| | SUBTOTAL | | 14 |
| | TOTAL | | 82 |

3

## TRAFFIC CONTROL ITEMS

| CATEGORY | LOCATION | STAGE DURATION DAYS | 643.0300 TRAFFIC CONTROL DRUMS EACH* | 643.0300 DAYS | 643.0410 TRAFFIC CONTROL BARRICADES TYPE II EACH* | 643.0410 DAYS | 643.0420 TRAFFIC CONTROL BARRICADES TYPE III EACH* | 643.0420 DAYS | 643.0500 TRAFFIC CONTROL FLEXIBLE TUBULAR MARKER POSTS EACH* | 643.0500 DAYS | 643.0600 TRAFFIC CONTROL FLEXIBLE TUBULAR MARKER BASES EACH* | 643.0600 DAYS | 643.0705 TRAFFIC CONTROL WARNING LIGHTS TYPE A EACH* | 643.0705 DAYS | 643.0715 TRAFFIC CONTROL WARNING LIGHTS TYPE C EACH* | 643.0715 DAYS | 643.0800 TRAFFIC CONTROL ARROW BOARDS EACH* | 643.0800 DAYS | 643.0900 TRAFFIC CONTROL SIGNS EACH* | 643.0900 DAYS | 644.1410.S TEMPORARY PEDESTRIAN SURFACE ASPHALT SF | 644.1601.S TEMPORARY CURB RAMP EACH | 649.0400 TEMPORARY PAVEMENT MARKING REMOVABLE TAPE 4-INCH LF |
|---|---|---|---|---|---|---|---|---|---|---|---|---|---|---|---|---|---|---|---|---|---|---|---|
| 0010 | STAGE 1 | 32 | | | | | | | | | | | | | | | | | | | | | |
| | N. 27TH ST. | | 272 | 8,704 | 15 | 484 | 29 | 928 | 17 | 544 | 17 | 544 | 73 | 2,336 | -- | -- | -- | -- | 75 | 2,400 | -- | -- | -- |
| | W. LISBON AVE. | | 59 | 1,888 | 2 | 64 | 6 | 192 | -- | -- | -- | -- | 14 | 448 | 20 | 641 | 2 | 64 | 14 | 448 | -- | -- | -- |
| | STAGE 1 SUBTOTAL | | | 10,592 | | 548 | | 1,120 | | 544 | | 544 | | 2,784 | | 641 | | 64 | | 2,848 | 0 | 0 | 0 |
| 0010 | STAGE 2 | 31 | | | | | | | | | | | | | | | | | | | | | |
| | N. 27TH ST. | | 213 | 6,603 | 4 | 124 | 17 | 527 | 11 | 341 | 11 | 341 | 38 | 1,178 | -- | -- | -- | -- | 40 | 1,240 | -- | -- | 250 |
| | W. LISBON AVE. | | 56 | 1,736 | 4 | 124 | 4 | 124 | -- | -- | -- | -- | 12 | 372 | 19 | 589 | 2 | 62 | 9 | 279 | -- | -- | -- |
| | STAGE 2 SUBTOTAL | | | 8,339 | | 248 | | 651 | | 341 | | 341 | | 1,550 | | 589 | | 62 | | 1,519 | 0 | 0 | 250 |
| 0010 | STAGE 2A | 1 | | | | | | | | | | | | | | | | | | | | | |
| | N. 27TH ST. | | 31 | 31 | -- | -- | 2 | 2 | -- | -- | -- | -- | 4 | 4 | -- | -- | 1 | 1 | 11 | 11 | -- | -- | -- |
| | W. LISBON AVE. | | 39 | 39 | -- | -- | 2 | 2 | -- | -- | -- | -- | 4 | 4 | 20 | 20 | 2 | 2 | 10 | 10 | -- | -- | -- |
| | STAGE 2A SUBTOTAL | | | 70 | | 0 | | 4 | | 0 | | 0 | | 8 | | 20 | | 3 | | 21 | 0 | 0 | 0 |
| 0010 | STAGE 3 | 18 | | | | | | | | | | | | | | | | | | | | | |
| | N. 27TH ST. | | 29 | 522 | -- | -- | -- | -- | -- | -- | -- | -- | -- | -- | 9 | 170 | 1 | 18 | 5 | 90 | -- | -- | -- |
| | W. LISBON AVE. | | 55 | 991 | -- | -- | 2 | 36 | -- | -- | -- | -- | 4 | 72 | 20 | 360 | 2 | 36 | 9 | 162 | -- | -- | -- |
| | STAGE 3 SUBTOTAL | | | 1,513 | | 0 | | 36 | | 0 | | 0 | | 72 | | 530 | | 54 | | 252 | 0 | 0 | 0 |
| 0010 | STAGE 4 | 40 | | | | | | | | | | | | | | | | | | | | | |
| | N. 27TH ST. | | -- | -- | -- | -- | -- | -- | -- | -- | -- | -- | -- | -- | -- | -- | -- | -- | -- | -- | -- | -- | -- |
| | W. LISBON AVE. | | 77 | 3,080 | -- | -- | 2 | 80 | -- | -- | -- | -- | 4 | 160 | 20 | 800 | 2 | 80 | 10 | 400 | -- | -- | 370 |
| | STAGE 4 SUBTOTAL | | | 3,080 | | 0 | | 80 | | 0 | | 0 | | 160 | | 800 | | 80 | | 400 | 0 | 0 | 370 |
| | UNDISTRIBUTED | | | 406 | | 104 | | 109 | | 145 | | 145 | | 126 | | 20 | | 7 | | 60 | 100 | 4 | -- |
| | TOTALS | 122 | | 24,000 | | 900 | | 2,000 | | 1,030 | | 1,030 | | 4,700 | | 2,600 | | 270 | | 5,100 | 100 | 4 | 620 |

## TRAFFIC CONTROL ID 2265-00-74

| CATEGORY | STAGE | LOCATION | 643.0100 EACH |
|---|---|---|---|
| 0010 | ALL | N. 27TH STREET | 1 |
| | TOTAL | | 1 |

3

## PAVEMENT MARKING ITEMS

| CATEGORY | LOCATION | 646.0106 PAVEMENT MARKING EPOXY 4-INCH DASHED YELLOW 10-FT LINE 30-FT GAP LF | 646.0106 DASHED WHITE 10-FT LINE 30-FT GAP LF | 646.0106 DASHED WHITE 2-FT LINE 6-FT GAP LF | 646.0106 WHITE LF | 646.0116 PAVEMENT MARKING EPOXY 6-INCH DASHED WHITE 2-FT LINE 6-FT GAP LF | 646.0116 WHITE LF | 647.0166 PAVEMENT MARKING ARROWS EPOXY TYPE 2 EACH | 647.0206 PAVEMENT MARKING ARROWS BIKE LANE EPOXY EACH | 647.0306 PAVEMENT MARKING SYMBOLS BIKE LANE EPOXY EACH | 647.0356 PAVEMENT MARKING WORDS EPOXY EACH | 647.0576 PAVEMENT MARKING STOP LINE EPOXY 24-INCH LF | 647.0776 PAVEMENT MARKING CROSSWALK EPOXY 12-INCH WHITE LF |
|---|---|---|---|---|---|---|---|---|---|---|---|---|---|
| 0010 | N. 27TH ST. | | | | | | | | | | | | |
| | 16+18 - 19+65 | -- | 130 | -- | 427 | 20 | 427 | -- | 3 | 3 | -- | -- | 155 |
| | 19+65 - 24+77 | -- | 220 | -- | 681 | 40 | 771 | 1 | 3 | 3 | 1 | -- | 374 |
| | 24+77 - 29+76 | -- | 220 | -- | 662 | 40 | 817 | 1 | 2 | 2 | 1 | 65 | 474 |
| | 29+76 - 34+87 | -- | 220 | -- | 791 | 20 | 948 | 1 | 2 | 2 | 1 | 65 | 430 |
| | 34+87 - 39+87 | -- | 220 | -- | 774 | 20 | 774 | -- | 2 | 2 | -- | -- | 331 |
| | 39+87 - 44+87 | -- | 220 | -- | 775 | 20 | 775 | -- | 2 | 2 | -- | -- | 314 |
| | 44+87 - 48+70 | 20 | 70 | -- | 94 | 50 | 235 | 2 | -- | -- | 1 | 54 | 416 |
| | SUBTOTALS | 20 | 1,300 | -- | 4,204 | 210 | 4,747 | 5 | 14 | 14 | 4 | 184 | 2,494 |
| | | | 5,524 | | | 4,957 | | | | | | | |
| 0010 | W. LISBON AVE. | | | | | | | | | | | | |
| | 7L+75 - 10L+12 | -- | 90 | 14 | 363 | 34 | 643 | 1 | 3 | 3 | 1 | 44 | 208 |
| | 10+67 - 12+27 | -- | 60 | -- | 189 | 20 | 376 | 1 | 1 | 1 | 1 | 42 | 168 |
| | SUBTOTALS | -- | 150 | 14 | 552 | 54 | 1,019 | 2 | 4 | 4 | 2 | 86 | 376 |
| | | | 716 | | | 1,073 | | | | | | | |
| | TOTALS | | 6,240 | | | 6,030 | | 7 | 18 | 18 | 6 | 270 | 2,870 |

## CONSTRUCTION STAKING ITEMS

| CATEGORY | LOCATION | 650.4000 CONSTRUCTION STAKING STORM SEWER EACH | 650.5500 CONSTRUCTION STAKING CURB GUTTER AND CURB & GUTTER LF | 650.7000 CONSTRUCTION STAKING CONCRETE PAVEMENT LF | 650.8500 CONSTRUCTION STAKING ELECTRICAL INSTALLATIONS 2265-00-74 LS | 650.9910 CONSTRUCTION STAKING SUPPLEMENTAL CONTROL 2265-00-74 LS | SPV.0060.09 CONSTRUCTION STAKING CURB RAMP EACH | SPV.0090.05 CONSTRUCTION STAKING ASPHALT LOWER LAYER LF | SPV.0090.06 CONSTRUCTION STAKING ASPHALT UPPER LAYER LF | SPV.0090.07 CONSTRUCTION STAKING CONCRETE SIDEWALK LF |
|---|---|---|---|---|---|---|---|---|---|---|
| 0010 | N. 27TH ST. | | | | | | | | | |
| | 16+17 - 48+70 | 27 | 4,880 | 860 | 0.5 | 0.90 | 76 | 3,253 | 3,253 | 4,508 |
| | SUBTOTALS | 27 | 4,880 | 860 | 0.5 | 0.90 | 76 | 3,253 | 3,253 | 4,508 |
| 0010 | W. LISBON AVE. | | | | | | | | | |
| | 7L+75 - 10L+12 | 6 | 1,154 | -- | 0.5 | 0.05 | 8 | 237 | 237 | 277 |
| | 10L+67 - 12L+27 | 4 | 386 | -- | -- | 0.05 | 3 | 160 | 160 | 165 |
| | SUBTOTALS | 10 | 1,540 | 0 | 0.5 | 0.10 | 11 | 397 | 397 | 442 |
| | TOTALS | 37 | 6,420 | 860 | 1.0 | 1.00 | 87 | 3,650 | 3,650 | 4,950 |

## SAWING ITEMS

| CATEGORY | LOCATION | OFFSET | 690.0150 SAWING ASPHALT LF | 690.0250 SAWING CONCRETE LF |
|---|---|---|---|---|
| 0010 | N. 27TH ST. | | | |
| | 16+18 - 19+65 | LT/RT | 137 | 1,273 |
| | 19+65 - 24+77 | LT/RT | 54 | 2,750 |
| | 24+77 - 29+76 | LT/RT | 94 | 3,177 |
| | 29+76 - 34+87 | LT/RT | 137 | 2,659 |
| | 34+87 - 39+87 | LT/RT | -- | 2,368 |
| | 39+87 - 44+87 | LT/RT | 17 | 2,033 |
| | 44+87 - 48+70 | LT/RT | 69 | 1,500 |
| | SUBTOTALS | | 508 | 15,760 |
| 0010 | W. LISBON AVE. | | | |
| | 7L+75 - 10L+12 | LT/RT | -- | 1,163 |
| | 10L+67 - 12L+27 | LT/RT | 42 | 997 |
| | SUBTOTALS | | 42 | 2,160 |
| | TOTALS | | 550 | 17,920 |

## WATER MAIN PROTECTION

| CATEGORY | STRUCT NO. | LOCATION | OFFSET | SPV.0060.28 EACH | REMARKS |
|---|---|---|---|---|---|
| 0010 | N. 27TH STREET | | | | |
| | 1 | 19+23.5 | 74.2' LT | 1 | 6" WATER MAIN |
| | 2 | 21+01.9 | 30.5' LT | 1 | 12' WATER MAIN |
| | 3 | 24+28.2 | 26.7' LT | 1 | 12" WATER MAIN |
| | 4 | 27+77.7 | 46.0' LT | 1 | 12" WATER MAIN |
| | 6 | 29+29.7 | 18.1' RT | 1 | 8" WATER MAIN |
| | 9 | 30+83.9 | 18.1' RT | 1 | 8" WATER MAIN |
| | 13 | 34+40.7 | 26.4' LT | 1 | 8" WATER MAIN |
| | 14 | 37+94.6 | 16.1' LT | 1 | 12" WATER MAIN |
| | 16 | 39+41.6 | 26.4' LT | 1 | 12" WATER MAIN |
| | 17 | 39+47.4 | 18.1' RT | 1 | 8" WATER MAIN |
| | 18 | 40+24.6 | 18.2' RT | 1 | 8" WATER MAIN |
| | 20 | 43+08.3 | 18.3' RT | 1 | 8" WATER MAIN |
| | 22 | 45+30.1 | 20.3' RT | 1 | 8" WATER MAIN |
| | 23 | 45+34.8 | 18.2' LT | 1 | 12" WATER MAIN |
| | 25 | 46+29.4 | 22.6' RT | 1 | 8" WATER MAIN |
| | 36 | 11L+82.7 | 16.4' LT | 1 | 16" WATER MAIN |
| | UNDISTRIBUTED | | | 3 | |
| | TOTAL | | | 19 | |

3

3

TRAFFIC SIGNAL ITEMS

| CATEGORY | LOCATION | OFFSET | 652.0220 CONDUIT RIGID NONMETALLIC SCHEDULE 40 1 1/2-INCH LF | 652.0225 CONDUIT RIGID NONMETALLIC SCHEDULE 40 2-INCH LF | 652.0230 CONDUIT RIGID NONMETALLIC SCHEDULE 40 2 1/2-INCH LF | 652.0235 CONDUIT RIGID NONMETALLIC SCHEDULE 40 3-INCH LF | 652.0615 CONDUIT SPECIAL 3-INCH LF | 654.0110 CONCRETE BASES TYPE 10 EACH | SPV.0060.10 UTILITY LINE OPENING (ULO) EACH | SPV.0060.13 RECTANGULAR POLYMER CONCRETE VAULT 13-INCH x 24-INCH x 18-INCH EACH | SPV.0060.14 RECTANGULAR POLYMER CONCRETE VAULT 17-INCH x 30-INCH x 18-INCH EACH | SPV.0060.15 INSTALL TRAFFIC SIGNAL BASE EACH | SPV.0060.16 CONCRETE BASE TYPE 10 SPECIAL EACH | SPV.0060.17 POLES TYPE 10 EACH | SPV.0060.18 POLES TYPE 12 SPECIAL EACH | SPV.0060.19 POLES TYPE 13 SPECIAL EACH | SPV.0060.20 MONOTUBE ARMS 20-FEET EACH | SPV.0060.21 MONOTUBE ARMS 25-FEET EACH | SPV.0060.22 MONOTUBE ARMS 35-FEET EACH | SPV.0060.23 MONOTUBE ARMS 40-FEET EACH |
|---|---|---|---|---|---|---|---|---|---|---|---|---|---|---|---|---|---|---|---|---|
| 0010 | N. 27TH ST. | | | | | | | | | | | | | | | | | | | |
| | W. VLIET ST. | LT/RT | 21 | 203 | 21 | 270 | 730 | 2 | 4 | 7 | 5 | 5 | 2 | 2 | 2 | -- | 2 | -- | 2 | -- |
| | W. LISBON AVE. | LT/RT | 19 | 167 | 19 | 170 | 870 | 2 | 4 | 7 | 5 | 6 | 2 | 2 | 1 | 1 | -- | 2 | -- | 2 |
| | TOTALS | | 40 | 370 | 40 | 440 | 1,600 | 4 | 8 | 14 | 10 | 11 | 4 | 4 | 3 | 1 | 2 | 2 | 2 | 2 |

3

## CITY UNDERGROUND CONDUIT ITEMS

| CATEGORY | LOCATION | | | SPV.0060.11 REMOVING TES MANHOLES EACH | SPV.0060.12 ADJUSTING TES MANHOLE COVERS EACH | SPV.0060.24 INSTALLING CONDUIT INTO EXISTING MANHOLES EACH | SPV.0060.25 MANHOLES TYPE TES 4-FT DIAMETER DOGHOUSE EACH | SPV.0090.08 7-DUCT CONDUIT CEMENT ENCASED 4-INCH RIGID NONMETALLIC CONDUIT DB-60 LF | SPV.0090.09 6-DUCT CONDUIT CEMENT ENCASED 4-INCH RIGID NONMETALLIC CONDUIT DB-60 LF | SPV.0090.10 4-DUCT CONDUIT CEMENT ENCASED 4-INCH RIGID NONMETALLIC CONDUIT DB-60 LF | SPV.0090.11 1-DUCT CONDUIT CEMENT ENCASED 4-INCH RIGID NONMETALLIC CONDUIT DB-60 LF | FRAME AND COVER PROVIDED BY CITY EACH | REMARKS |
|---|---|---|---|---|---|---|---|---|---|---|---|---|---|
| 0010 | STA 17+29.0, 35.5' LT | TO | MANHOLE 802 | -- | -- | -- | -- | -- | -- | -- | -- | -- | -- |
| | MANHOLE 800 | - | STA 19 + 20.5, 15.4' RT | 1 | -- | -- | 1 | -- | -- | -- | -- | NEW COVER | -- |
| | MANHOLE 801 | - | STA 19 + 34.9, 29.6' LT | 1 | -- | -- | 1 | -- | -- | -- | -- | NEW COVER | -- |
| | MANHOLE 802 | - | STA 19 + 71.2, 29.6' LT | -- | 1 | 2 | -- | -- | -- | -- | -- | NEW COVER | REMOVE CHIMNEY TO ROOF DECK |
| | MANHOLE 802 | TO | MANHOLE 805 | -- | -- | -- | -- | -- | 635 | -- | -- | -- | -- |
| | MANHOLE 803 | - | STA 24 + 08.2, 15.1' RT | 1 | -- | -- | 1 | -- | -- | -- | -- | NEW COVER | -- |
| | MANHOLE 804 | - | STA 25 + 23.8, 15.6' RT | -- | 1 | -- | -- | -- | -- | -- | -- | -- | -- |
| | MANHOLE 805 | - | STA 26 + 09.5, 29.6' LT | -- | 1 | 2 | -- | -- | -- | -- | -- | -- | -- |
| | MANHOLE 805 | TO | MANHOLE 809 | -- | -- | -- | -- | -- | 358 | -- | -- | -- | -- |
| | MANHOLE 806 | - | STA 29 + 36.3, 15.3' RT | 1 | -- | -- | 1 | -- | -- | -- | -- | NEW COVER | -- |
| | MANHOLE 807 | - | STA 29 + 59.7, 33.6' RT | -- | 1 | 1 | -- | -- | -- | -- | -- | NEW COVER | REMOVE CHIMNEY TO ROOF DECK |
| | MANHOLE 807 | TO | MANHOLE 809 | -- | -- | -- | -- | -- | -- | 44 | -- | -- | -- |
| | MANHOLE 808 | - | STA 29 + 62.0, 115.4' LT | -- | 1 | 1 | -- | -- | -- | -- | -- | NEW COVER | -- |
| | MANHOLE 808 | TO | MANHOLE 809 | -- | -- | -- | -- | -- | -- | 96 | -- | -- | -- |
| | MANHOLE 809 | - | STA 29 + 65.2, 14.7' LT | -- | 1 | 4 | -- | -- | -- | -- | -- | NEW COVER | REMOVE CHIMNEY TO ROOF DECK |
| | MANHOLE 809 | TO | STA 30 + 43.9, 34.4' LT | -- | -- | -- | -- | 80 | -- | -- | -- | -- | -- |
| | STA 30 + 43.9, 34.4' LT | TO | TRAFFIC CONTROL CABINET | -- | -- | -- | -- | -- | -- | -- | 58 | -- | -- |
| | STA 30 + 43.9, 34.4' LT | TO | MANHOLE 812 | -- | -- | -- | -- | -- | 448 | -- | -- | -- | -- |
| | MANHOLE 810 | - | STA 30 + 15.4, 15.9' RT | 1 | -- | -- | 1 | -- | -- | -- | -- | NEW COVER | -- |
| | MANHOLE 811 | - | STA 34 + 48.7, 15.1' RT | 1 | -- | -- | 1 | -- | -- | -- | -- | NEW COVER | -- |
| | MANHOLE 812 | - | STA 34 + 84.7, 13.4' LT | -- | 1 | 2 | -- | -- | -- | -- | -- | NEW COVER | REMOVE CHIMNEY TO ROOF DECK |
| | MANHOLE 812 | TO | MANHOLE 814 | -- | -- | -- | -- | -- | 508 | -- | -- | -- | -- |
| | MANHOLE 813 | - | STA 39 + 58.8, 14.9' RT | 1 | -- | -- | 1 | -- | -- | -- | -- | NEW COVER | -- |
| | MANHOLE 814 | - | STA 39 + 82.2, 12.0' LT | -- | 1 | 2 | -- | -- | -- | -- | -- | NEW COVER | -- |
| | MANHOLE 814 | TO | MANHOLE 816 | -- | -- | -- | -- | -- | 506 | -- | -- | -- | -- |
| | MANHOLE 815 | - | STA 44 + 53.4, 14.5' RT | 1 | -- | -- | 1 | -- | -- | -- | -- | NEW COVER | -- |
| | MANHOLE 816 | - | STA 44 + 77.3, 13.7' LT | -- | 1 | 2 | -- | -- | -- | -- | -- | NEW COVER | REMOVE CHIMNEY TO ROOF DECK |
| | MANHOLE 816 | TO | STA 46 + 45.9, 25.0 'LT | -- | -- | -- | -- | 165 | -- | -- | -- | -- | -- |
| | STA 46 + 45.9, 25.0' LT | TO | TRAFFIC CONTROL CABINET | -- | -- | -- | -- | -- | -- | -- | 30 | -- | -- |
| | STA 46 + 45.9, 25.0' LT | TO | MANHOLE 818 | -- | -- | -- | -- | -- | 95 | -- | -- | -- | -- |
| | MANHOLE 817 | - | STA 47 + 03.0, 14.9' RT | -- | 1 | -- | -- | -- | -- | -- | -- | NEW COVER | REMOVE CHIMNEY TO ROOF DECK |
| | MANHOLE 818 | - | STA 47 + 44.0, 15.7' LT | -- | 1 | 1 | -- | -- | -- | -- | -- | NEW COVER | REMOVE CHIMNEY TO ROOF DECK |
| | MANHOLE 819 | - | STA 48 + 03.9, 12.1' RT | -- | 1 | -- | -- | -- | -- | -- | -- | NEW COVER | REMOVE CHIMNEY TO ROOF DECK |
| | TOTALS | | | 8 | 12 | 17 | 8 | 245 | 2,550 | 140 | 88 | | |

3

## ADJUSTING WATER SERVICE BOXES

| CATEGORY | BOX NO. | LOCATION | OFFSET | SPV.0060.26 EACH |
|---|---|---|---|---|
| 0020 | N. 27TH STREET | | | |
| | 600 | 22+15.0 | 26.7' RT | 1 |
| | 601 | 22+36.9 | 26.3' RT | 1 |
| | 602 | 22+76.8 | 26.2' RT | 1 |
| | 603 | 23+00.9 | 26.4' RT | 1 |
| | 604 | 29+25.2 | 26.3' RT | 1 |
| | 605 | 29+27.7 | 27.6' RT | 1 |
| | 606 | 29+98.3 | 45.6' RT | 1 |
| | 607 | 31+89.3 | 32.0' RT | 1 |
| | 608 | 32+03.1 | 27.1' RT | 1 |
| | 609 | 32+56.1 | 26.9' RT | 1 |
| | 610 | 33+90.8 | 27.1' RT | 1 |
| | 611 | 42+06.9 | 26.1' RT | 1 |
| | 612 | 42+34.8 | 26.0' RT | 1 |
| | 613 | 42+64.2 | 26.2' RT | 1 |
| | 614 | 42+66.2 | 26.3' RT | 1 |
| | 615 | 42+78.8 | 26.2' RT | 1 |
| | 616 | 48+08.0 | 28.9' LT | 1 |
| | TOTAL | | | 17 |

## JOINT SEALING

| CATEGORY | LOCATION | OFFSET | SPV.0180.01 SY |
|---|---|---|---|
| 0020 | N. 27TH ST. | | |
| | 16+18 - 19+65 | RT | 67 |
| | 19+65 - 24+77 | LT/RT | 133 |
| | 24+77 - 29+76 | LT/RT | 200 |
| | 29+76 - 34+87 | LT/RT | 111 |
| | 34+87 - 39+87 | LT/RT | 194 |
| | 39+87 - 44+87 | LT/RT | 149 |
| | 44+87 - 48+70 | LT/RT | 133 |
| | SUBTOTAL | | 987 |
| | W. LISBON AVE. | | |
| | 7L+75 - 10L+12 | RT | 67 |
| | 10+67 - 12+27 | LT | 67 |
| | SUBTOTAL | | 133 |
| | TOTAL | | 1,120 |

## ADJUSTING WATER GATE VALVES

| CATEGORY | VALVE | LOCATION | OFFSET | SPV.0060.27 EACH |
|---|---|---|---|---|
| 0020 | N. 27TH STREET | | | |
| | 700 | 19+37.7 | 22.0' LT | 1 |
| | 701 | 19+43.5 | 26.5' LT | 1 |
| | 702 | 19+67.6 | 1.9' LT | 1 |
| | 703 | 19+74.5 | 9.6' RT | 1 |
| | 704 | 19+75.1 | 36.2' RT | 1 |
| | 705 | 19+75.6 | 35.2' LT | 1 |
| | 706 | 19+82.5 | 36.5' RT | 1 |
| | 707 | 24+30.9 | 21.9' LT | 1 |
| | 708 | 24+40.5 | 20.9' RT | 1 |
| | 709 | 24+44.5 | 98.6' LT | 1 |
| | 710 | 24+46.6 | 35.7' LT | 1 |
| | 711 | 24+89.2 | 30.7' RT | 1 |
| | 712 | 24+88.7 | 18.2' RT | 1 |
| | 713 | 29+34.5 | 21.4' RT | 1 |
| | 714 | 29+40.0 | 21.6' RT | 1 |
| | 715 | 29+43.2 | 26.1' LT | 1 |
| | 716 | 29+49.2 | 33.0' LT | 1 |
| | 717 | 29+53.4 | 15.1' LT | 1 |
| | 718 | 29+54.4 | 33.2' LT | 1 |
| | 719 | 29+54.5 | 26.4' LT | 1 |
| | 720 | 29+55.3 | 32.0' RT | 1 |
| | 721 | 29+58.0 | 21.4' RT | 1 |
| | 722 | 29+76.6 | 14.6' LT | 1 |
| | 723 | 29+85.7 | 44.7' RT | 1 |
| | 724 | 29+88.1 | 15.4' LT | 1 |
| | 725 | 29+88.8 | 35.0' RT | 1 |
| | 726 | 29+98.8 | 15.9' LT | 1 |
| | 727 | 30+05.2 | 21.7' LT | 1 |
| | 728 | 30+97.8 | 22.9' RT | 1 |
| | 729 | 34+70.1 | 24.8' LT | 1 |
| | 730 | 34+94.4 | 41.3' RT | 1 |
| | 731 | 34+94.5 | 33.2' LT | 1 |
| | 732 | 34+94.7 | 25.3' RT | 1 |
| | 733 | 34+95.1 | 18.0' RT | 1 |
| | 734 | 39+55.1 | 21.7' LT | 1 |
| | 735 | 39+56.2 | 21.4' RT | 1 |
| | 736 | 39+78.1 | 30.0' LT | 1 |
| | 737 | 39+92.6 | 129.4' LT | 1 |
| | 738 | 39+94.2 | 18.1' RT | 1 |
| | 739 | 40+02.5 | 33.5' RT | 1 |
| | 740 | 40+15.2 | 22.2' LT | 1 |
| | 741 | 40+17.2 | 21.5' RT | 1 |
| | 742 | 44+65.4 | 24.0' RT | 1 |
| | 743 | 44+88.5 | 79.1' LT | 1 |
| | 744 | 44+96.3 | 30.4' RT | 1 |
| | 745 | 44+99.9 | 32.7' RT | 1 |
| | 746 | 45+00.8 | 83.8' LT | 1 |
| | 747 | 46+61.5 | 25.8' LT | 1 |
| | 748 | 47+04.2 | 20.6' RT | 1 |
| | 749 | 47+14.3 | 20.7' RT | 1 |
| | 750 | 47+16.8 | 20.3' LT | 1 |
| | 751 | 47+30.1 | 10.0' RT | 1 |
| | 752 | 47+83.3 | 18.9' RT | 1 |
| | 753 | 47+92.1 | 20.7' RT | 1 |
| | SUBTOTAL | | | 53 |
| 0020 | W. LISBON AVE. | | | |
| | 754 | 10L+02.3 | 40.9' LT | 1 |
| | 755 | 10L+05.9 | 13.7' LT | 1 |
| | 756 | 10L+08.7 | 17.5' LT | 1 |
| | 757 | 10L+77.2 | 10.9' LT | 1 |
| | 758 | 10L+77.9 | 41.5' LT | 1 |
| | SUBTOTAL | | | 5 |
| | TOTAL | | | 58 |

3

# Standard Detail Drawing List

| | |
|---|---|
| 08A09-01 | CATCH BASINS 2X3-FT AND 2.5X3-FT |
| 08B09-01 | MANHOLES 3-FT, 4-FT, 5-FT, 6-FT, 7-FT AND 8-FT DIAMETER |
| 08D05-16A | CURB RAMPS TYPES 1 AND 1-A |
| 08D05-16B | CURB RAMPS TYPES 2 AND 3 |
| 08D05-16C | CURB RAMPS TYPES 4A AND 4A1 |
| 08D05-16D | CURB RAMPS TYPE 4B AND 4B1 |
| 08D05-16E | CURB RAMPS TYPES 5, 6, 7A, 7B & 8 |
| 08D16-10 | CONCRETE GUTTER, CURB AND GUTTER AND PAVEMENT TIES |
| 08F04-07 | JOINT TIES FOR CONCRETE PIPE AND CONCRETE COLLAR DETAIL |
| 09B02-09 | CONDUIT |
| 09C11-08 | CONCRETE BASE TYPE 10 |
| 09E03-05 | NON-FREEWAY LIGHTING UNIT POLE WIRING |
| 09E08-07A | TYPE 9 POLE 15'-30' MONOTUBE ARM |
| 09E08-07B | TYPE 10 POLE 15'-30' MONOTUBE ARM |
| 09E08-07C | TYPE 12 POLE 35'-55' MONOTUBE ARM |
| 09E08-07D | TYPE 13 POLE 35'-55' MONOTBE ARM |
| 09E08-07E | GENERAL NOTES AND HARDWARE DETAILS FOR TYPE 9, 10, 12 & 13 POLES WITH MONOTUBE ARMS |
| 11B02-02 | CONCRETE MEDIAN NOSE |
| 13C09-13A | CONCRETE PAVEMENT REPAIR AND REPLACEMENT |
| 13C09-13B | CONCRETE PAVEMENT REPAIR AND REPLACEMENT |
| 13C09-13C | CONCRETE PAVEMENT REPAIR AND REPLACEMENT |
| 13C14-06A | BASE PATCHING CONCRETE |
| 13C14-06B | BASE PATCHING CONCRETE |
| 13C14-06C | BASE PATCHING CONCRETE |
| 13C15-06A | CONCRETE BASE |
| 13C15-06B | CONCRETE BASE |
| 13C18-03A | CONCRETE PAVEMENT JOINTING |
| 13C18-03B | CONCRETE PAVEMENT STEEL REINFORCEMENT |
| 13C18-03C | CONCRETE PAVEMENT JOINT TIES |
| 13C18-03D | CONCRETE PAVEMENT JOINTING AT UTILITY FIXTURES |
| 15C05-03 | TRAFFIC CONTROL, ADVANCE WARNING SIGNS 40 M.P.H. OR LESS |
| 15C07-12A | PAVEMENT MARKING SYMBOLS |
| 15C07-12B | PAVEMENT MARKING WORDS |
| 15C07-12C | PAVEMENT MARKING ARROWS |
| 15C11-05 | FLEXIBLE TUBULAR MARKER POST, ANCHOR & BASES |
| 15C11-06 | FLEXIBLE TUBULAR MARKER POST |
| 15C29-03E | PAVEMENT MARKING FOR BIKE LANES |
| 15C33-01 | STOP LINE AND CROSSWALK PAVEMENT MARKING |
| 15D20-03 | TRAFFIC CONTROL, SINGLE LANE CLOSURE, NON-FREEWAY/EXPRESSWAY |
| 15D21-03 | TRAFFIC CONTROL, INTERSECTION WITHIN SINGLE LANE CLOSURE |
| 15D30-02A | TRAFFIC CONTROL, PEDESTRIAN ACCOMMODATION |
| 15D30-02B | TRAFFIC CONTROL, TEMPORARY ADA COMPLIANT PEDESTRIAN ACCOMMODATION |
| 15D30-02C | TRAFFIC CONTROL, PEDESTRIAN ACCOMMODATION |
| 16A01-06 | LANDMARK REFERENCE MONUMENTS AND COVERS |



6

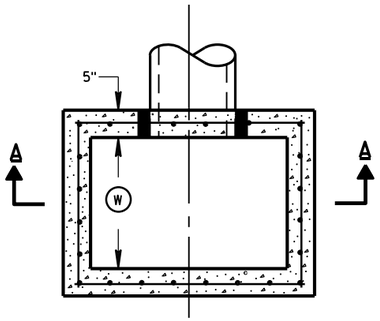


PLAN VIEW

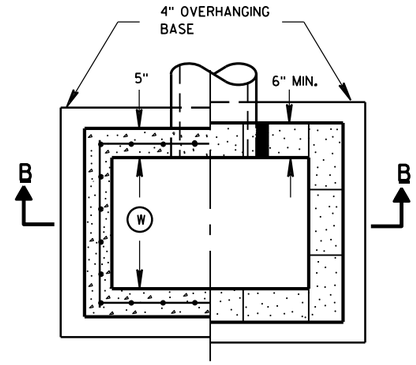


PLAN VIEW

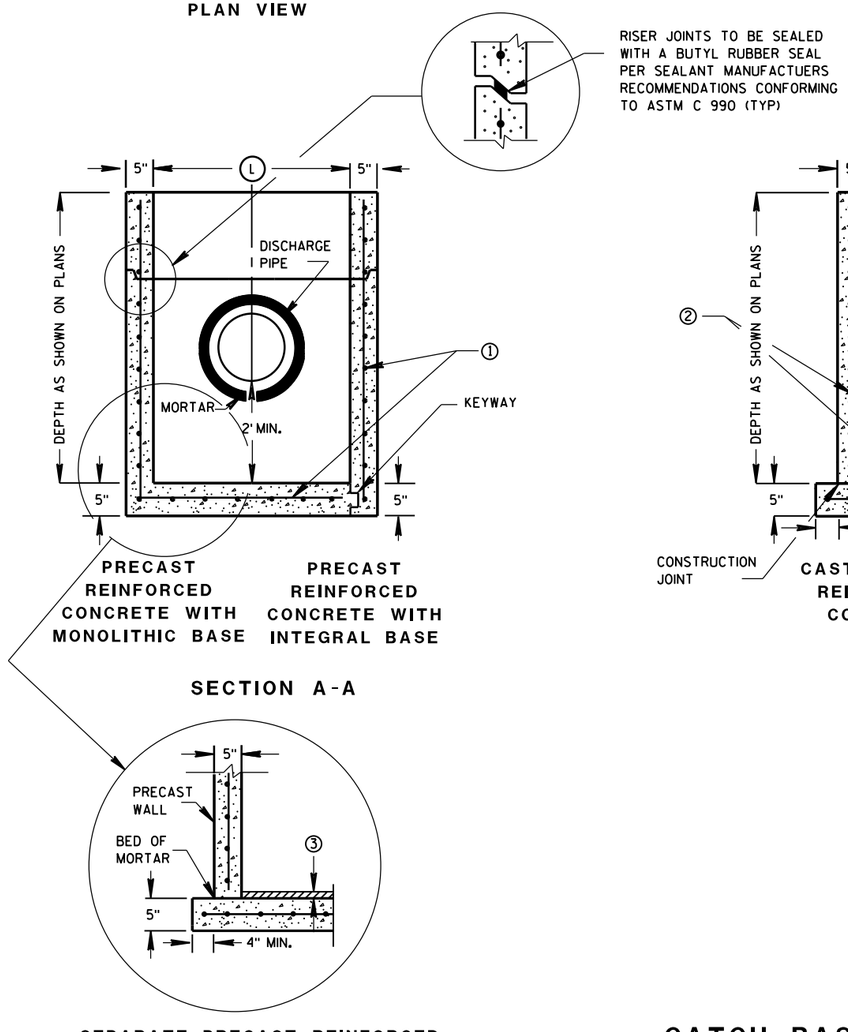


SECTION A-A

SEPARATE PRECAST REINFORCED CONCRETE BASE OPTION

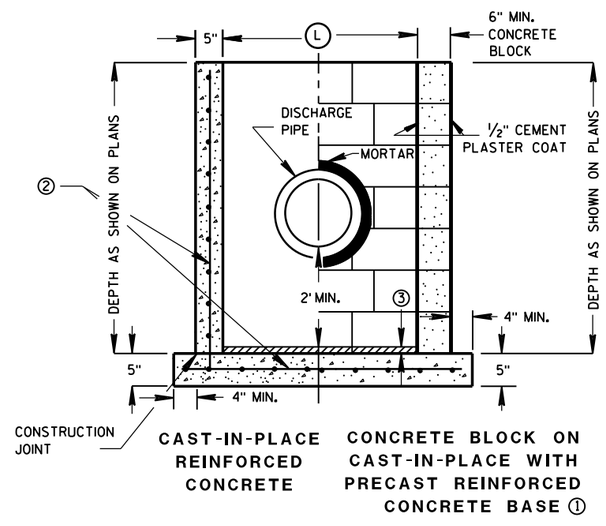


SECTION B-B

## GENERAL NOTES

DETAILS OF CONSTRUCTION, MATERIALS AND WORKMANSHIP NOT SHOWN ON THIS DRAWING SHALL CONFORM TO THE PERTINENT REQUIREMENTS OF THE STANDARD SPECIFICATIONS AND THE APPLICABLE SPECIAL PROVISIONS.

UNLESS OTHERWISE AUTHORIZED IN WRITING BY THE ENGINEER, THE CONTRACTOR SHALL NOT ORDER AND DELIVER PRECAST CATCH BASIN UNITS REQUIRED FOR THE PROJECT UNTIL A LIST OF SIZES IS FURNISHED BY THE ENGINEER.

DETAILED DRAWINGS FOR PROPOSED ALTERNATE DESIGNS FOR UNDERGROUND DRAINAGE STRUCTURES SHALL BE SUBMITTED TO THE ENGINEER FOR APPROVAL PROVIDING THAT SUCH ALTERNATE DESIGNS MAKE PROVISION FOR EQUIVALENT CAPACITY AND STRENGTH.

ALL PRECAST CATCH BASIN UNITS SHALL CONFORM TO THE PERTINENT REQUIREMENTS OF ASTM C 913.

ALL DRAINAGE STRUCTURES ARE DESIGNATED ON THE PLANS AS "MANHOLES 3X3-L", "CATCH BASINS 4-B", "INLETS 2X3-H", ETC. THE FIRST NUMBERS DESIGNATES THE SIZE OF THE STRUCTURE, AND THE FOLLOWING LETTER DESIGNATES THE TYPE OF COVER TO BE USED TO COMPRISE THE COMPLETE UNIT.

BASES SHALL BE PLACED ON A BED OF MATERIAL AT LEAST 6 INCHES IN DEPTH, WHICH MEETS THE REQUIREMENTS OF GRANULAR BACKFILL. THIS BEDDING SHALL BE COMPACTED AND PROVIDE UNIFORM SUPPORT FOR THE ENTIRE AREA OF THE BASE.

ALL BAR STEEL REINFORCEMENT SHALL BE EMBEDDED 2 INCHES CLEAR UNLESS OTHERWISE SHOWN OR NOTED.

PRECAST REINFORCED RISERS SHALL HAVE A TONGUE AND GROOVE JOINT WITH TONGUE UP OR DOWN.

4" OVERHANGING BASES ARE REQUIRED FOR CAST-IN-PLACE REINFORCED CONCRETE AND CONCRETE BLOCK INSTALLATIONS.
4" OVERHANG IS REQUIRED WHEN SEPARATE PRECAST BASE IS PROVIDED.
OVERHANG IS NOT REQUIRED ON PRECAST STRUCTURES WITH AN INTEGRAL OR MONOLITHIC BASE.

MAXIMUM INSIDE PIPE DIAMETER DETERMINED BY 3" CLEARANCE ON EACH SIDE OF THE OUTSIDE WALL OF THE PIPE. SEE DETAIL "A". ASSUMES PIPE ENTERS PERPENDICULAR TO THE STRUCTURE.

① FOR PRECAST CATCH BASINS PROVIDE REINFORCING STEEL IN ACCORDANCE TO ASTM C 913.

② CONTRACTOR TO PROVIDE DRAWING(S) STAMPED BY A PROFESSIONAL ENGINEER FOR STEEL REINFORCING DESIGN FOR CAST-IN-PLACE STRUCTURES.

③ 1" CONCRETE KEY POURED AFTER INSTALLATION. 2' SUMP MEASURED FROM TOP OF KEY.

### CATCH BASIN COVER MATRIX

| CATCH BASIN SIZE | | INLET COVER TYPE | F | ALL H'S |
|---|---|---|---|---|
| | WIDTH (W) (FT) | LENGTH (L) (FT) | | |
| 2X3-FT | 2 | 3 | | X |
| 2.5X3-FT | 2.5 | 3 | X | |

### PIPE MATRIX

| CATCH BASIN SIZE | MAXIMUM INSIDE PIPE DIAMETER FOR TWO PIPES | |
|---|---|---|
| | WIDTH (IN) | LENGTH (IN) |
| 2X3-FT | 12 | 24 |
| 2.5X3-FT | 18 | 24 |

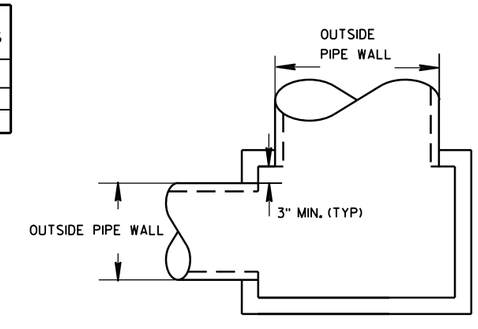


DETAIL "A"

CATCH BASINS 2X3-FT AND 2.5X3-FT

CATCH BASINS 2X3-FT AND 2.5X3-FT

STATE OF WISCONSIN
DEPARTMENT OF TRANSPORTATION

APPROVED
6/5/2012 — DATE
/S/ Jerry H. Zogg — ROADWAY STANDARDS DEVELOPMENT ENGINEER
FHWA
NT

6

6

S.D.D. 8 A 9-1

S.D.D. 8 A 9-1

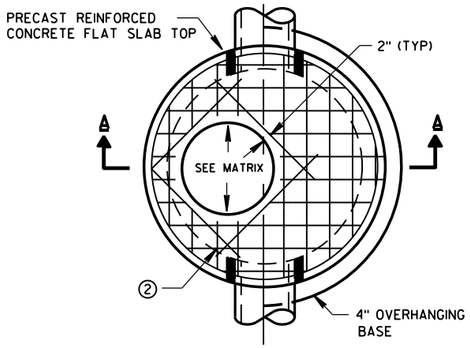


PLAN VIEW CIRCULAR OPENING

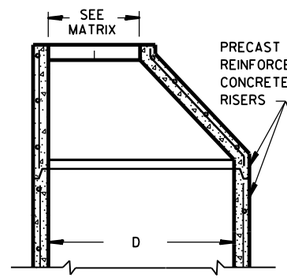


OPTIONAL PRECAST REINFORCED CONCRETE ECCENTRIC TOP

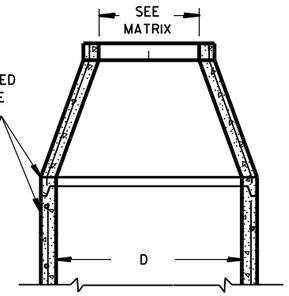


OPTIONAL PRECAST REINFORCED CONCRETE CONCENTRIC TOP

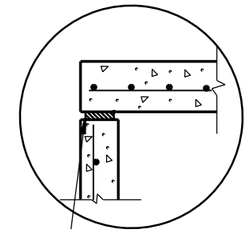

TOP WITH PLAIN END JOINT

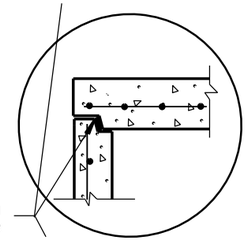

JOINTS TO BE SEALED WITH A BUTYL RUBBER SEAL PER SEALANT MANUFACTURERS RECOMMENDATIONS CONFORMING TO ASTM C990 (TYP)

TOP WITH TONGUE AND GROOVE JOINT

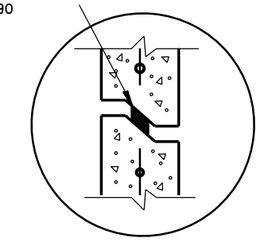

RISER WITH TONGUE AND GROOVE JOINT

DETAIL "B"

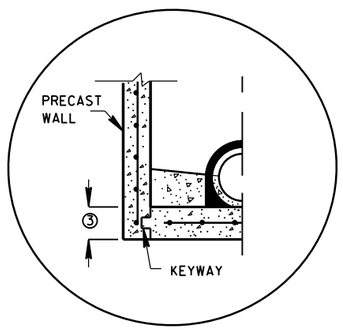


PRECAST REINFORCED CONCRETE WITH INTEGRAL BASE OPTION

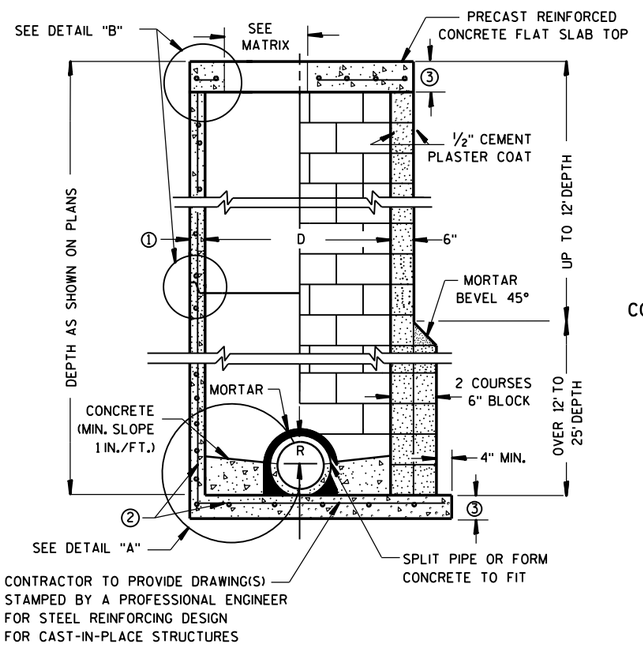


PRECAST REINFORCED CONCRETE WITH MONOLITHIC BASE

CONCRETE BLOCK WITH CAST-IN-PLACE OR PRECAST REINFORCED CONCRETE BASE ②

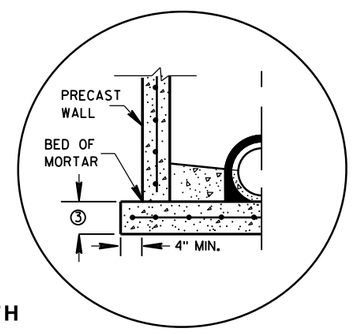


SEPARATE PRECAST REINFORCED CONCRETE BASE OPTION

DETAIL "A"

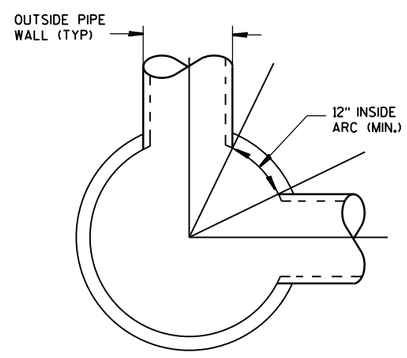


DETAIL "C"

## GENERAL NOTES

DETAILS OF CONSTRUCTION, MATERIALS AND WORKMANSHIP NOT SHOWN ON THIS DRAWING SHALL CONFORM TO THE PERTINENT REQUIREMENTS OF THE STANDARD SPECIFICATIONS AND THE APPLICABLE SPECIAL PROVISIONS.

UNLESS OTHERWISE AUTHORIZED IN WRITING BY THE ENGINEER, THE CONTRACTOR SHALL NOT ORDER AND DELIVER PRECAST MANHOLE UNITS REQUIRED FOR THE PROJECT UNTIL A LIST OF SIZES IS FURNISHED BY THE ENGINEER.

DETAILED DRAWINGS FOR PROPOSED ALTERNATE DESIGNS FOR UNDERGROUND DRAINAGE STRUCTURES SHALL BE SUBMITTED TO THE ENGINEER FOR APPROVAL PROVIDING THAT SUCH ALTERNATE DESIGNS MAKE PROVISION FOR EQUIVALENT CAPACITY AND STRENGTH.

ALL DRAINAGE STRUCTURES ARE DESIGNATED ON THE PLANS AS "MANHOLES 3X3-L", "CATCH BASINS 4-B", "INLETS 2X3-H", ETC. THE FIRST NUMBERS DESIGNATE THE SIZE OF THE STRUCTURE, AND THE FOLLOWING LETTER DESIGNATES THE TYPE OF COVER TO BE USED TO COMPRISE THE COMPLETE UNIT.

BASES SHALL BE PLACED ON A BED OF MATERIAL AT LEAST 6 INCHES IN DEPTH, WHICH MEETS THE REQUIREMENTS OF GRANULAR BACKFILL. THIS BEDDING SHALL BE COMPACTED AND PROVIDE UNIFORM SUPPORT FOR THE ENTIRE AREA OF THE BASE.

PRECAST REINFORCED CONE TOPS (ECCENTRIC OR CONCENTRIC) OR PRECAST REINFORCED FLAT SLAB TOPS MAY BE USED ON CONCRETE BLOCK STRUCTURES. THE CONE TOPS SHALL BE INSTALLED ON A BED OF MORTAR.

ECCENTRIC CONE TOPS MAY BE USED ON ALL STRUCTURES, AND CONCENTRIC CONE TOPS SHALL BE USED ONLY ON STRUCTURES 5 FEET OR LESS IN DEPTH, UNLESS OTHERWISE DIRECTED BY THE ENGINEER.

STEPS MEETING AASHTO M199 AND THE FOLLOWING REQUIREMENTS SHALL BE INSTALLED IN ALL STRUCTURES OVER 5 FEET IN DEPTH: 16 INCH C-C MAXIMUM SPACING; PROJECT A MINIMUM CLEAR DISTANCE OF 4 INCHES FROM THE WALL AT THE POINT OF EMBEDMENT; MINIMUM LENGTH OF 10 INCHES; MINIMUM WALL EMBEDMENT OF 3 INCHES. FERROUS METAL STEPS NOT PAINTED OR TREATED TO RESIST CORROSION SHALL HAVE A MINIMUM CROSS SECTIONAL DIMENSION OF 1 INCH.

STEPS OF APPROVED POLYPROPYLENE PLASTIC COATED REINFORCEMENT BAR ARE ACCEPTABLE. REINFORCING BAR MUST BE A MINIMUM OF ½" AND MEET THE REQUIREMENTS OF ASTM A615.

CERTIFICATION SHALL BE PROVIDED THAT INSTALLED STEPS WHEN TESTED IN ACCORDANCE WITH SECTION 10 OF AASHTO T280 CAN WITHSTAND A VERTICAL LOAD OF 800 LBS. AND A HORIZONTAL LOAD OF 400 LBS.

ALL BAR STEEL REINFORCEMENT SHALL BE EMBEDDED 2 INCHES CLEAR UNLESS OTHERWISE SHOWN OR NOTED.

CONCRETE BLOCK WILL NOT BE PERMITED FOR STRUCTURES GREATER THAN 4 FEET IN DIAMETER.

PRECAST REINFORCED RISERS SHALL HAVE A TONGUE AND GROOVE JOINT WITH TONGUE UP OR DOWN.

ALL PRECAST MANHOLE UNITS SHALL CONFORM TO THE PERTINENT REQUIREMENTS OF AASHTO DESIGNATION M 199.

4" OVERHANGING BASES ARE REQUIRED FOR ALL CONCRETE BLOCK INSTALLATIONS. 4" OVERHANG IS REQUIRED WHEN SEPARATE PRECAST BASE IS PROVIDED. OVERHANG IS NOT REQUIRED ON PRECAST STRUCTURES WITH AN INTEGRAL OR MONOLITHIC BASE.

FOR ADDITIONAL CONFIGURATIONS, MAINTAIN A MINIMUM OF 12 INCHES AS MEASURED FROM THE INSIDE OF THE STRUCTURE WALL BETWEEN THE OUTSIDE PIPE WALLS OF ADJACENT PIPES. SEE DETAIL "C".

① MINIMUM WALL THICKNESS SHALL BE 4 INCHES FOR 3-FT, 5 INCHES FOR 4-FT, 6 INCHES FOR 5-FT, 7 INCHES FOR 6-FT, 8 INCHES FOR 7-FT AND 9 INCHES FOR 8-FT DIAMETER PRECAST MANHOLES.

② FOR PRECAST MANHOLES PROVIDE REINFORCING STEEL IN ACCORDANCE TO AASHTO M199.

③ PRECAST FLAT SLAB TOPS AND BASES WITH A DIAMETER OF 48" AND LESS SHALL HAVE A MINIMUM THICKNESS OF 6". PRECAST FLAT SLAB TOPS AND BASES WITH A DIAMETER LARGER THAN 48" SHALL HAVE A MINIMUM THICKNESS OF 8".

## MANHOLE COVER OPENING MATRIX

| MANHOLE COVER TYPE | C | ALL J'S | K | L | M |
|---|---|---|---|---|---|
| OPENING SIZE (FT) | | | | | |
| 2 DIA. | X | X | | X | |
| 3 DIA. | | | X | | X |

## PIPE MATRIX

| MANHOLE SIZE | MAXIMUM INSIDE PIPE DIAMETER FOR TWO PIPES | |
|---|---|---|
| | 180° SEPARATION (IN) | 90° SEPARATION (IN) |
| 3-FT | 15 | 12 |
| 4-FT | 24 | 18 |
| 5-FT | 36 | 24 |
| 6-FT | 42 | 36 |
| 7-FT | 48 | 36 |
| 8-FT | 60 | 42 |

MANHOLES 3-FT, 4-FT, 5-FT, 6-FT, 7-FT AND 8-FT DIAMETER

STATE OF WISCONSIN
DEPARTMENT OF TRANSPORTATION

APPROVED
6/5/2012 — DATE
/S/ Jerry H. Zogg
ROADWAY STANDARDS DEVELOPMENT ENGINEER
FHWA

MANHOLES 3-FT, 4-FT, 5-FT, 6-FT, 7-FT AND 8-FT DIAMETER




6

S.D.D. 8 B 9-1

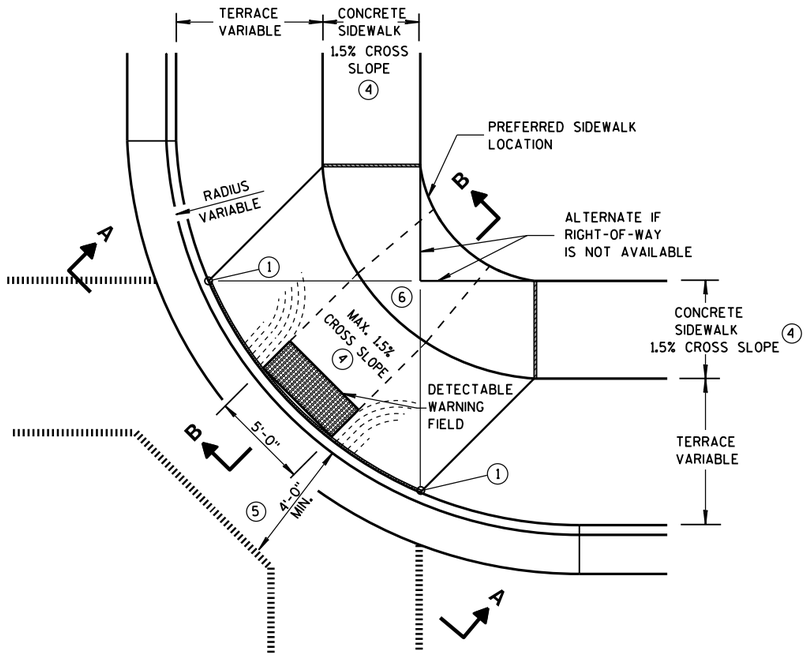


PLAN VIEW

## TYPE 1 RAMP

(CENTER OF CORNER RADIUS)

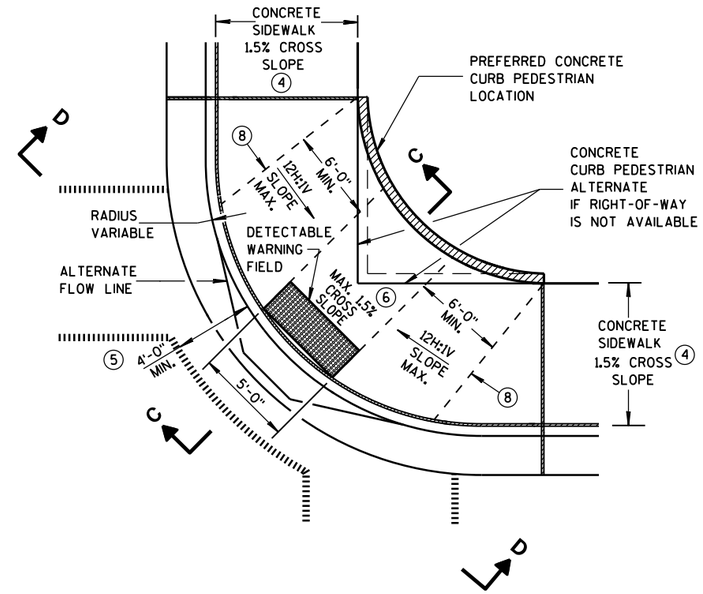


PLAN VIEW

## TYPE 1-A RAMP

(NO TERRACE)

## GENERAL NOTES

DETAILS OF CONSTRUCTION, MATERIALS AND WORKMANSHIP NOT SHOWN ON THIS DRAWING SHALL CONFORM TO THE PERTINENT REQUIREMENTS OF THE STANDARD SPECIFICATIONS AND THE APPLICABLE SPECIAL PROVISIONS.

WHEN NECESSARY, THE SIDEWALK ELEVATION MAY BE LOWERED TO MEET THE HIGH POINT ON THE RAMP.

**TYPE 1 RAMPS SHALL HAVE A NORMAL SIDEWALK APRON AND CURB ON BOTH SIDES OF RAMP.**

DETECTABLE WARNING FIELD SHALL BE MEASURED AND PAID BY THE SQUARE FOOT AS "CURB RAMP DETECTABLE WARNING FIELD". THE CONCRETE PEDESTRIAN CURB, IF NEEDED, SHALL BE MEASURED AND PAID BY THE LINEAL FOOT AS "CONCRETE CURB PEDESTRIAN". CONCRETE SIDEWALK IN THE CURB RAMP AREA SHALL BE MEASURED AND PAID BY THE SQUARE FOOT AS CONCRETE SIDEWALK, INCLUDING THE AREA UNDER THE DETECTABLE WARNING FIELD.

SELECT CURB RAMP DETECTABLE WARNING FIELD MATERIALS AND DEVICES FROM THE DEPARTMENT'S APPROVED MATERIALS LIST. THE COLOR OF THE DETECTABLE WARNING FIELD IS SPECIFIED ELSEWHERE AND IS INCIDENTAL TO THE BID ITEM OF "CURB RAMP DETECTABLE WARNING FIELD".

DETECTABLE WARNING FIELDS THAT ARE INSTALLED AS A GROUP OR SIDE BY SIDE, SHALL BE FROM THE SAME MANUFACTURER.

SURFACE TEXTURE OF THE RAMP SHALL BE OBTAINED BY COARSE BROOMING TRANSVERSE TO THE SLOPE OF THE RAMP.

1. THIS POINT IS AN EXTENSION OF OUTSIDE EDGE OF APPROACHING SIDEWALK WHERE IT MEETS THE BACK OF CONCRETE CURB.
2. GRADE CHANGE BETWEEN GUTTER FLAG SLOPE AND THE CURB RAMP SLOPE SHALL NOT EXCEED 11%. MAXIMUM GUTTER FLAG SLOPE IS 4%. PROVIDE DRAINAGE AWAY FROM CURB RAMP AT GUTTER FLAG INTERFACE. NO VERTICAL LIPS OR DISCONTINUITIES GREATER THAN 1/4-INCH ARE ALLOWED.
3. ABSOLUTE MAXIMUM 12H:1V (8.33%) CURB RAMP SLOPE IS ALLOWABLE WITH FLATTENED GUTTER FLAG SLOPE AND NOT TO EXCEED 11% GRADE CHANGE.
4. ±0.5% CONSTRUCTION TOLERANCE IN SIDEWALK CROSS SLOPE. THE SIDEWALK CROSS SLOPE SHALL NOT EXCEED 2% WITHOUT PRIOR APPROVAL FROM THE ENGINEER.
5. PROVIDE A LEVEL LANDING IN THE STREET AND GUTTER AREA. (2% MAXIMUM SLOPE IN ANY DIRECTION). WHEN THE GUTTER SLOPE EXCEEDS 2%, CONSTRUCT THE LEVEL LANDING IN THE STREET AREA.
6. PROVIDE A LEVEL LANDING (MAXIMUM 2% SLOPE) IN ANY DIRECTION OF PEDESTRIAN TRAVEL. STANDARD LANDING SIZE IS 5 FEET X 5 FEET (MINIMUM 4 FEET X 4 FEET).
8. PROVIDE GRADE BREAK PERPENDICULAR TO DIRECTION OF WHEELCHAIR TRAVEL.

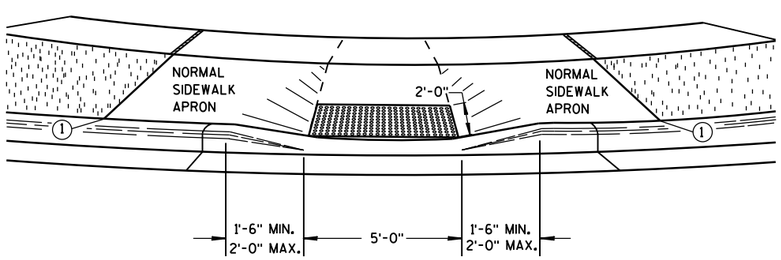


VIEW A-A

** WIDTH SHOWN ELSEWHERE IN THE PLANS

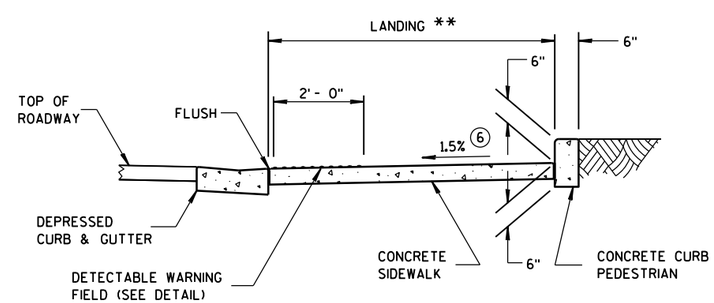


SECTION C-C

### LEGEND

- 1/2" EXPANSION JOINT-SIDEWALK
- CONTRACTION JOINT FIELD LOCATED
- PAVEMENT MARKING CROSSWALK (WHITE)
- ALTERNATIVE LAYOUT

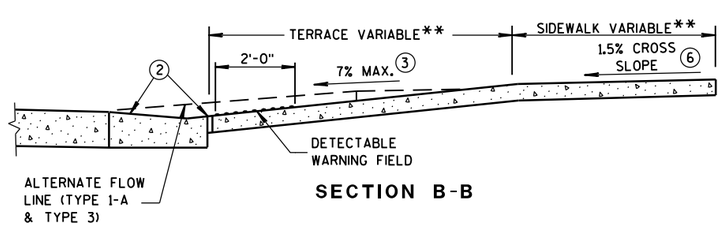


SECTION B-B

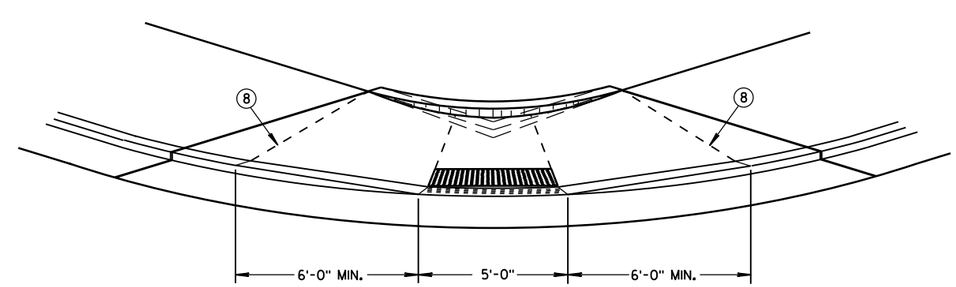


VIEW D-D

CURB RAMPS
TYPES 1 AND 1-A

STATE OF WISCONSIN
DEPARTMENT OF TRANSPOI





6



S.D.D. 8 D 5-16a

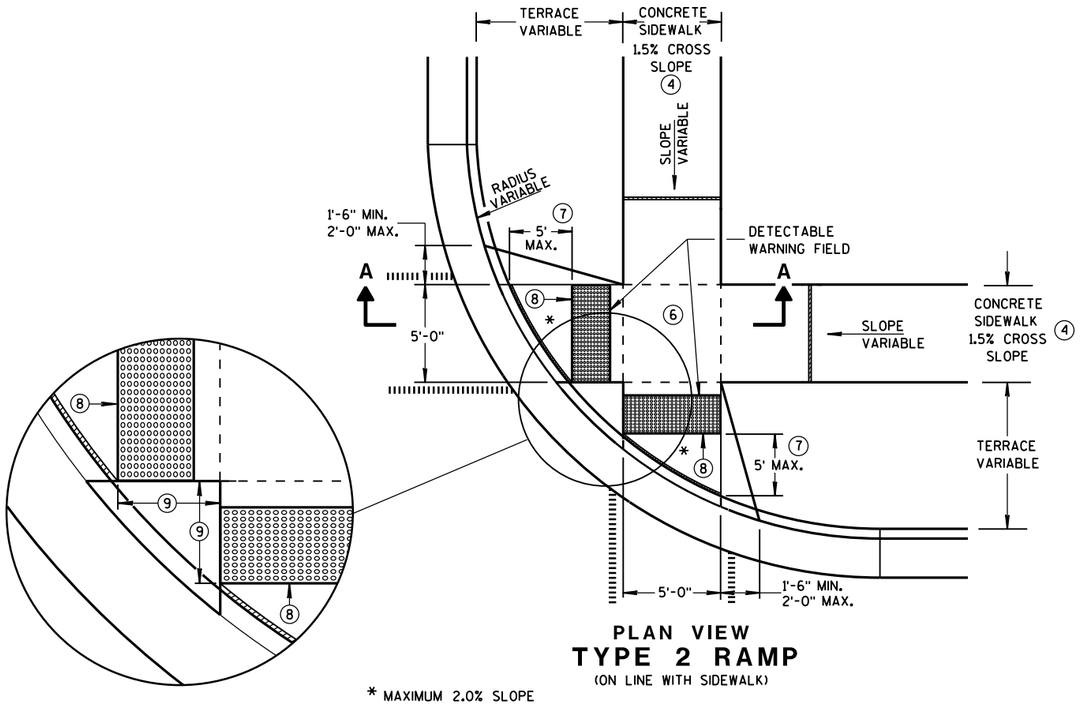


PLAN VIEW
**TYPE 2 RAMP**
(ON LINE WITH SIDEWALK)

* MAXIMUM 2.0% SLOPE IN ALL DIRECTIONS IN FRONT OF GRADE BREAK

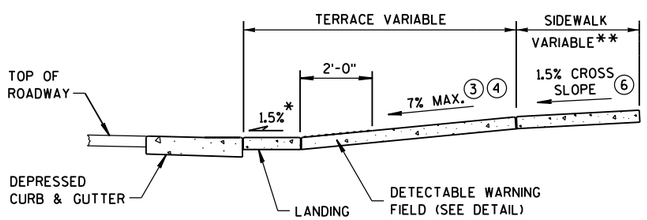


SECTION A-A

** WIDTH SHOWN ELSEWHERE IN THE PLANS

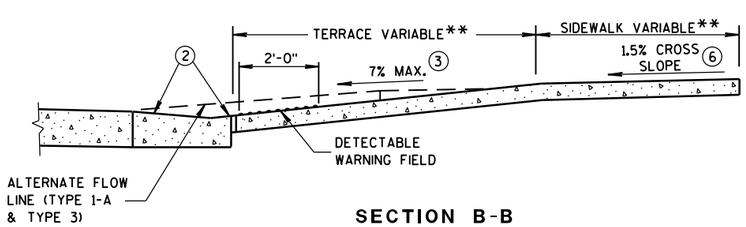


SECTION B-B

## GENERAL NOTES

USE THE TYPE 3 RAMP ONLY WHEN A TYPE 1 OR TYPE 2 CANNOT BE ACHIEVED BECAUSE OF FIELD CONDITIONS.

DETECTABLE WARNING FIELDS THAT ARE INSTALLED AS A GROUP OR SIDE BY SIDE, SHALL BE FROM THE SAME MANUFACTURER.

(2) GRADE CHANGE BETWEEN GUTTER FLAG SLOPE AND THE CURB RAMP SLOPE SHALL NOT EXCEED 11%. MAXIMUM GUTTER FLAG SLOPE IS 4%. PROVIDE DRAINAGE AWAY FROM CURB RAMP AT GUTTER FLAG INTERFACE. NO VERTICAL LIPS OR DISCONTINUITIES GREATER THAN 1/4-INCH ARE ALLOWED.

(3) ABSOLUTE MAXIMUM 12H:1V (8.33%) CURB RAMP SLOPE IS ALLOWABLE WITH FLATTENED GUTTER FLAG SLOPE AND NOT TO EXCEED 11% GRADE CHANGE.

(4) ±0.5% CONSTRUCTION TOLERANCE IN SIDEWALK CROSS SLOPE. THE SIDEWALK CROSS SLOPE SHALL NOT EXCEED 2% WITHOUT PRIOR APPROVAL FROM THE ENGINEER.

(6) PROVIDE A LEVEL LANDING (MAXIMUM 2% SLOPE) IN ANY DIRECTION OF PEDESTRIAN TRAVEL. STANDARD LANDING SIZE IS 5 FEET X 5 FEET (MINIMUM 4 FEET X 4 FEET).

(7) WHEN THIS DISTANCE EXCEEDS 5 FEET, USE MULTIPLE DETECTABLE WARNING PANELS ACROSS THE RAMP AND STAGGER ADDITIONAL DETECTABLE WARNING PANEL(S) FORWARD TO REDUCE THIS DISTANCE.

(8) PROVIDE GRADE BREAK PERPENDICULAR TO DIRECTION OF WHEELCHAIR TRAVEL.

(9) WHEN THIS DISTANCE IS LESS THAN 6'-0", IT MAY BE DIFFICULT TO ACHIEVE A 7% SLOPE OR FLATTER ALONG THE RAMP. REDUCE CURB HEIGHT IN TRIANGLE AREA TO ACHIEVE 7% SLOPE OR FLATTER ON RAMP. 2" MINIMUM CURB HEIGHT.

## LEGEND

- 1/2" EXPANSION JOINT-SIDEWALK
- CONTRACTION JOINT FIELD LOCATED
- PAVEMENT MARKING CROSSWALK (WHITE)
- ALTERNATIVE LAYOUT

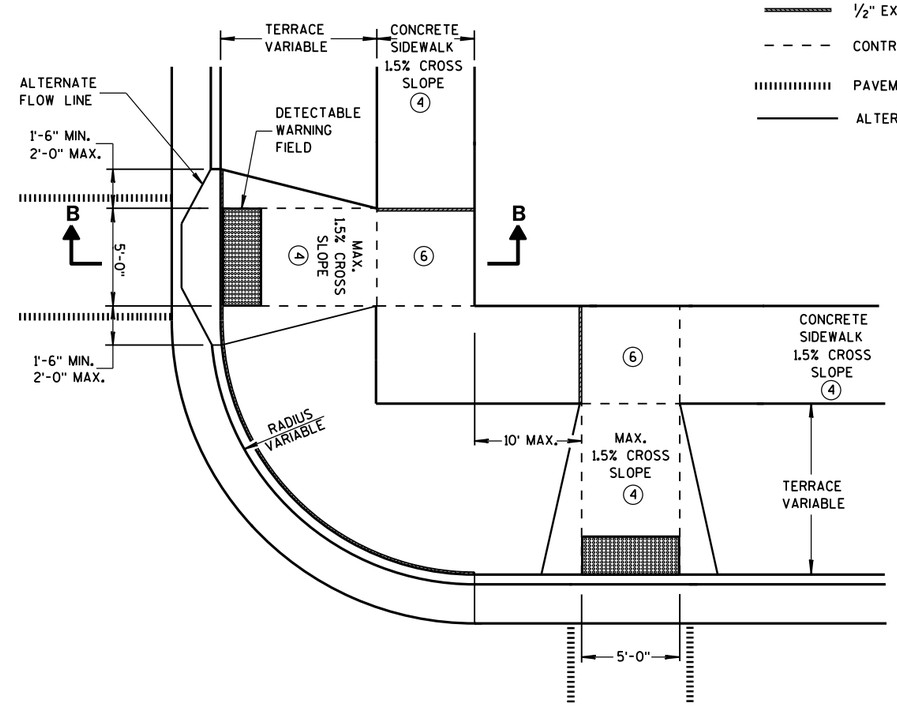


PLAN VIEW
**TYPE 3 RAMP**
(OUTSIDE OF CROSSWALK AREA)

**CURB RAMPS TYPES 2 AND 3**

STATE OF WISCONSIN
DEPARTMENT OF TRANSPO




6

S.D.D. 8 D 5-16b

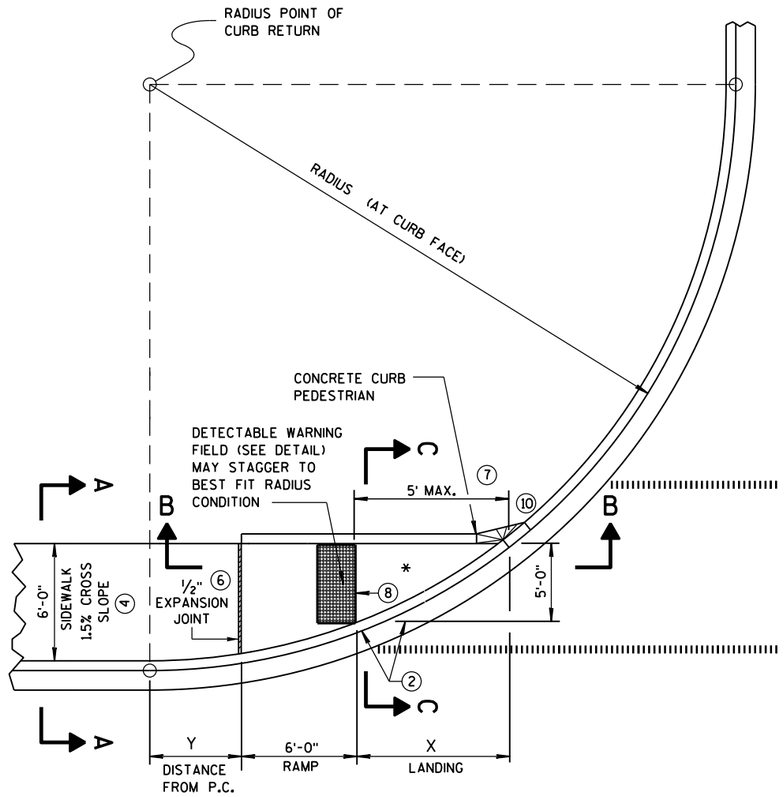


## CURB RAMP TYPE 4A
### PLAN VIEW

| RADIUS (AT CURB FACE) | X | Y |
|---|---|---|
| 20 FEET | 6'-1¾" | 2'-7¼" |
| 30 FEET | 7'-11¾" | 4'-8¼" |
| 40 FEET | 9'-5¼" | 6'-5" |
| 50 FEET | 10'-8¾" | 7'-11¼" |
| 60 FEET | 11'-10¼" | 9'-3½" |

INTERMEDIATE RADII CAN BE INTERPOLATED

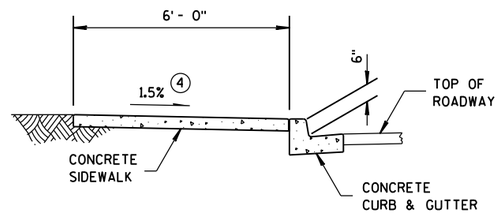


## SECTION A-A FOR TYPE 4A

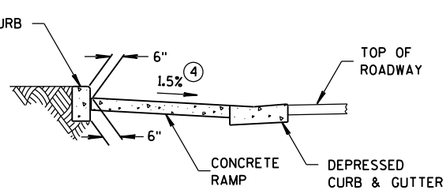


## SECTION C-C FOR TYPE 4A

* MAXIMUM 2.0% SLOPE IN ALL DIRECTIONS IN FRONT OF GRADE BREAK

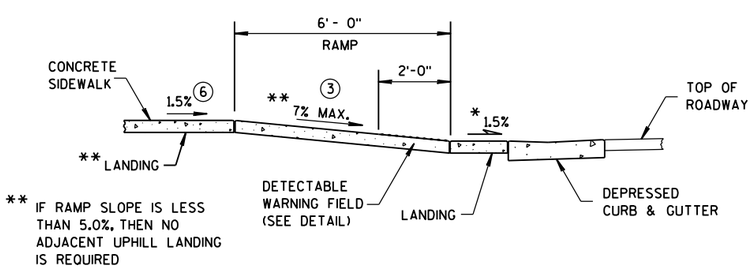


** IF RAMP SLOPE IS LESS THAN 5.0%, THEN NO ADJACENT UPHILL LANDING IS REQUIRED

## SECTION B-B FOR TYPE 4A

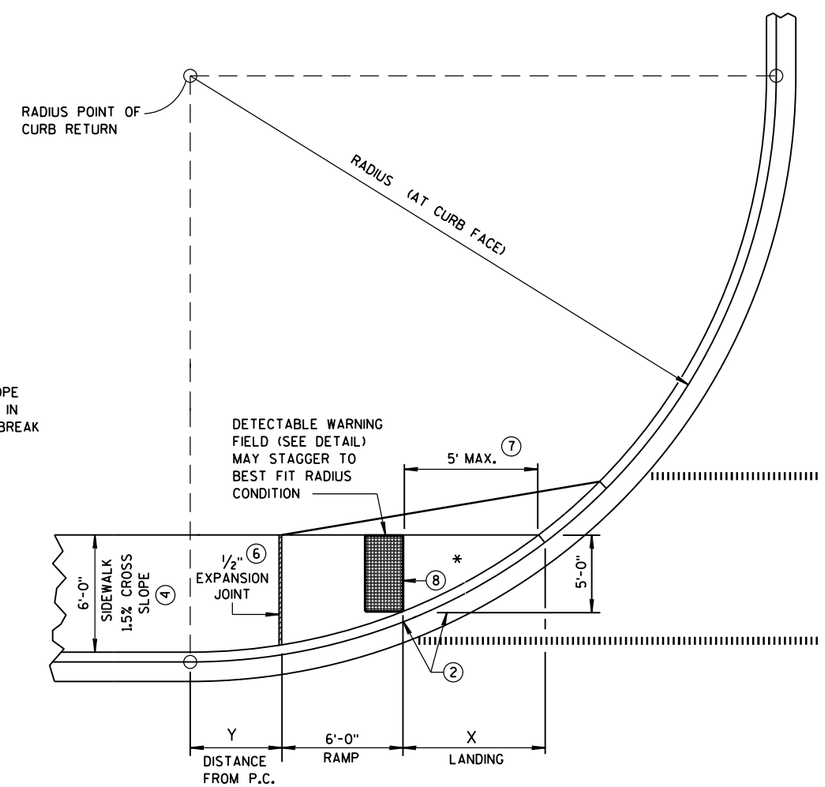


## CURB RAMP TYPE 4A1
### PLAN VIEW

## GENERAL NOTES

AVOID PLACING DRAINAGE STRUCTURES, JUNCTION BOXES OR OTHER OBSTRUCTIONS IN FRONT OF RAMP ACCESS AREAS.

DETECTABLE WARNING FIELDS THAT ARE INSTALLED AS A GROUP OR SIDE BY SIDE, SHALL BE FROM THE SAME MANUFACTURER.

(2) GRADE CHANGE BETWEEN GUTTER FLAG SLOPE AND THE CURB RAMP SLOPE SHALL NOT EXCEED 11%. MAXIMUM GUTTER FLAG SLOPE IS 4%. PROVIDE DRAINAGE AWAY FROM CURB RAMP AT GUTTER FLAG INTERFACE. NO VERTICAL LIPS OR DISCONTINUITIES GREATER THAN ¼-INCH ARE ALLOWED.

(3) ABSOLUTE MAXIMUM 12H:1V (8.33%) CURB RAMP SLOPE IS ALLOWABLE WITH FLATTENED GUTTER FLAG SLOPE AND NOT TO EXCEED 11% GRADE CHANGE.

(4) ±0.5% CONSTRUCTION TOLERANCE IN SIDEWALK CROSS SLOPE. THE SIDEWALK CROSS SLOPE SHALL NOT EXCEED 2% WITHOUT PRIOR APPROVAL FROM THE ENGINEER.

(6) PROVIDE A LEVEL LANDING (MAXIMUM 2% SLOPE) IN ANY DIRECTION OF PEDESTRIAN TRAVEL. STANDARD LANDING SIZE IS 5 FEET X 5 FEET (MINIMUM 4 FEET X 4 FEET).

(7) WHEN THIS DISTANCE EXCEEDS 5 FEET, USE MULTIPLE DETECTABLE WARNING PANELS ACROSS THE RAMP AND STAGGER ADDITIONAL DETECTABLE WARNING PANEL(S) FORWARD TO REDUCE THIS DISTANCE.

(8) PROVIDE GRADE BREAK PERPENDICULAR TO DIRECTION OF WHEELCHAIR TRAVEL.

(10) INSTALL TRANSITION NOSE. (INCIDENTAL TO OTHER PAY ITEMS). DO NOT MARK TRANSITION NOSE.

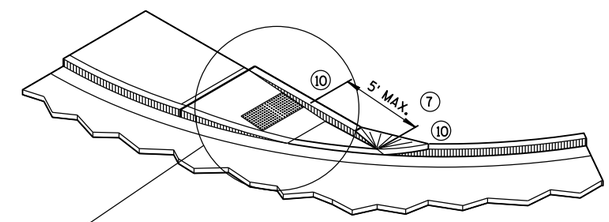


## ISOMETRIC VIEW FOR TYPE 4A

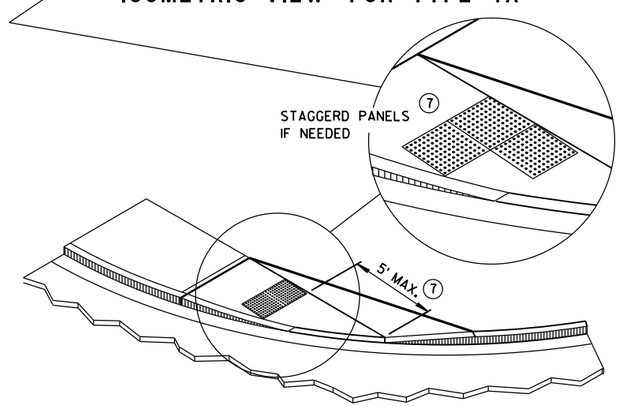


## ISOMETRIC VIEW FOR TYPE 4A1

### LEGEND

- ½" EXPANSION JOINT-SIDEWALK
- CONTRACTION JOINT FIELD LOCATED
- PAVEMENT MARKING CROSSWALK (WHITE)

CURB RAMPS
TYPES 4A AND 4A1

STATE OF WISCONSIN
DEPARTMENT OF TRANSPO




6


S.D.D. 8 D 5-16c

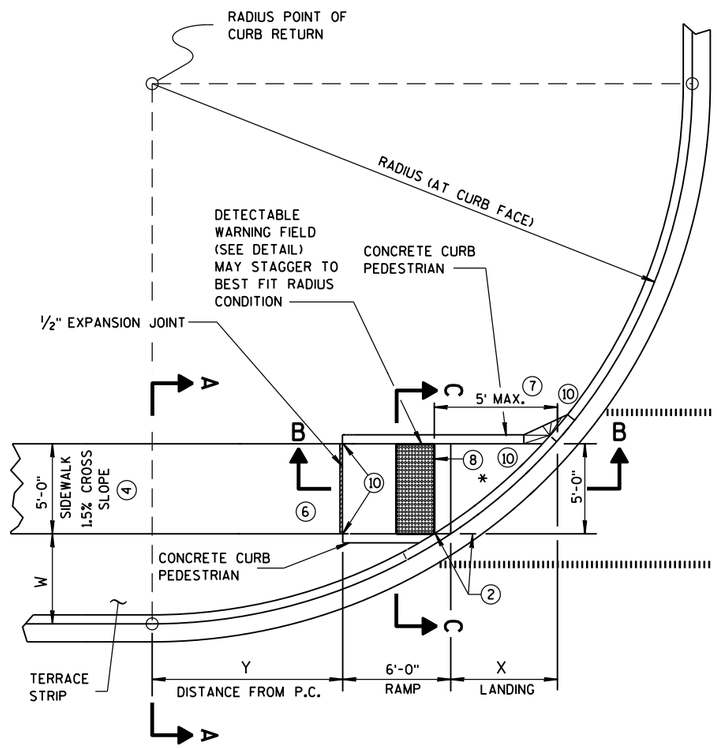


## CURB RAMP TYPE 4B
PLAN VIEW

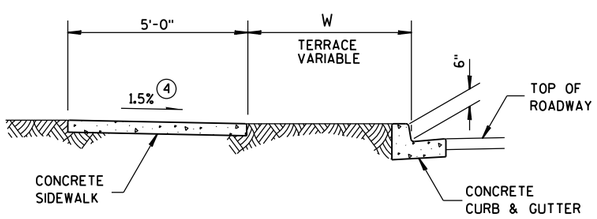


## SECTION A-A FOR TYPE 4B

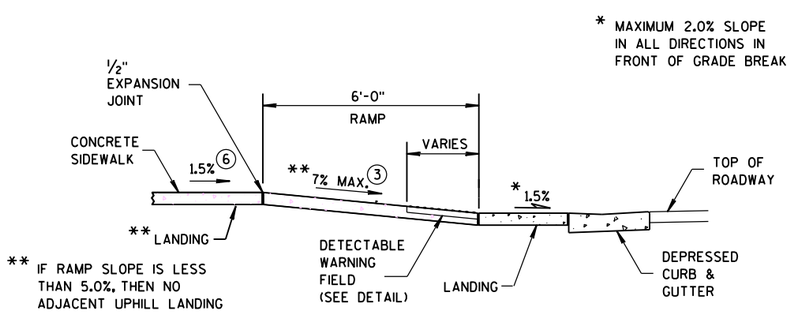


## SECTION B-B FOR TYPE 4B

## LEGEND

- ½" EXPANSION JOINT-SIDEWALK
- CONTRACTION JOINT FIELD LOCATED
- PAVEMENT MARKING CROSSWALK (WHITE)

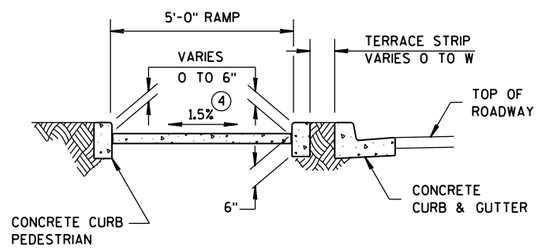


## SECTION C-C FOR TYPE 4B

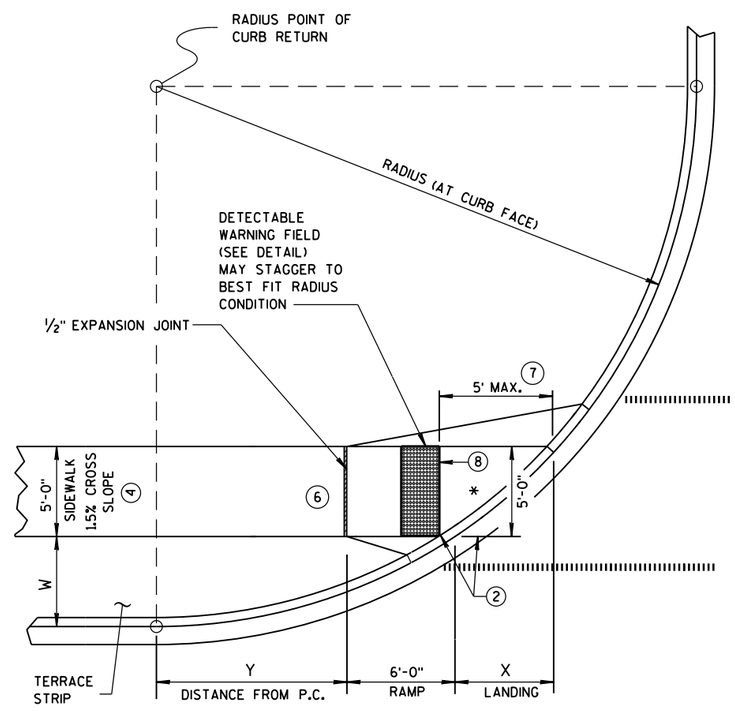


## CURB RAMP TYPE 4B1
PLAN VIEW

| RADIUS (AT CURB FACE) | W = 3' - 0" | | W = 4' - 0" | | W = 5' - 0" | | W = 6' - 0" | | W = 7' - 0" | |
|---|---|---|---|---|---|---|---|---|---|---|
| | X | Y | X | Y | X | Y | X | Y | X | Y |
| 20 FEET | 5'-5½" | 4'-6½" | 4'-8½" | 6'-0" | 4'-1" | 7'-2¾" | 3'-7" | 8'-3½" | 3'-1½" | 9'-2½" |
| 30 FEET | 7'-3¾" | 7'-1" | 6'-5½" | 8'-11½" | 5'-9¼" | 10'-7" | 5'-2½" | 12'-0" | 4'-8¾" | 13'-3¼" |
| 40 FEET | 8'-9½" | 9'-2½" | 7'-10" | 11'-5¼" | 7'-1" | 13'-4½" | 6'-5¾" | 15'-¾" | 5'-11½" | 16'-7¼" |
| 50 FEET | 10'-¾" | 11'-¾" | 9'-¼" | 13'-7¼" | 8'-2½" | 15'-9½" | 7'-6½" | 17'-9" | 6'-11¾" | 19'-6¼" |
| 60 FEET | 11'-2½" | 12'-8¾" | 10'-¾" | 15'-6½" | 9'-2¼" | 17'-11¾" | 8'-5¾" | 20'-1¾" | 7'-10½" | 22'-1½" |

INTERMEDIATE RADII CAN BE INTERPOLATED

## GENERAL NOTES

AVOID PLACING DRAINAGE STRUCTURES, JUNCTION BOXES OR OTHER OBSTRUCTIONS IN FRONT OF RAMP ACCESS AREAS.

DETECTABLE WARNING FIELDS THAT ARE INSTALLED AS A GROUP OR SIDE BY SIDE, SHALL BE FROM THE SAME MANUFACTURER.

(2) GRADE CHANGE BETWEEN GUTTER FLAG SLOPE AND THE CURB RAMP SLOPE SHALL NOT EXCEED 11%. MAXIMUM GUTTER FLAG SLOPE IS 4%. PROVIDE DRAINAGE AWAY FROM CURB RAMP AT GUTTER FLAG INTERFACE. NO VERTICAL LIPS OR DISCONTINUITIES GREATER THAN ¼-INCH ARE ALLOWED.

(3) ABSOLUTE MAXIMUM 12H:1V (8.33%) CURB RAMP SLOPE IS ALLOWABLE WITH FLATTENED GUTTER FLAG SLOPE AND NOT TO EXCEED 11% GRADE CHANGE.

(4) ±0.5% CONSTRUCTION TOLERANCE IN SIDEWALK CROSS SLOPE. THE SIDEWALK CROSS SLOPE SHALL NOT EXCEED 2% WITHOUT PRIOR APPROVAL FROM THE ENGINEER.

(6) PROVIDE A LEVEL LANDING (MAXIMUM 2% SLOPE) IN ANY DIRECTION OF PEDESTRIAN TRAVEL. STANDARD LANDING SIZE IS 5 FEET X 5 FEET (MINIMUM 4 FEET X 4 FEET).

(7) WHEN THIS DISTANCE EXCEEDS 5 FEET, USE MULTIPLE DETECTABLE WARNING PANELS ACROSS THE RAMP AND STAGGER ADDITIONAL DETECTABLE WARNING PANEL(S) FORWARD TO REDUCE THIS DISTANCE.

(8) PROVIDE GRADE BREAK PERPENDICULAR TO DIRECTION OF WHEELCHAIR TRAVEL.

(10) INSTALL TRANSITION NOSE. (INCIDENTAL TO OTHER PAY ITEMS). DO NOT MARK TRANSITION NOSE.

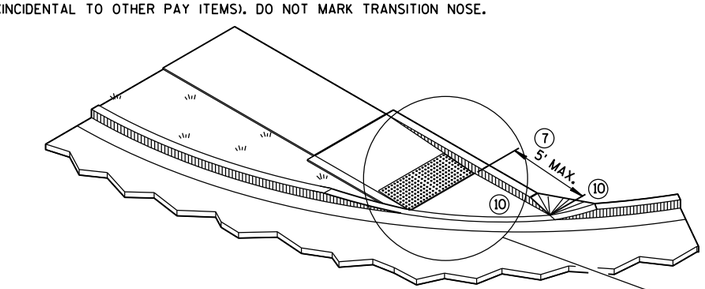


## ISOMETRIC VIEW FOR TYPE 4B

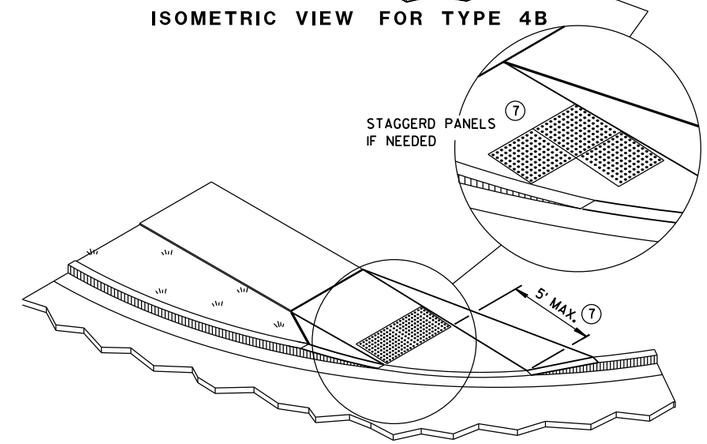


## ISOMETRIC VIEW FOR TYPE 4B1

CURB RAMPS
TYPE 4B AND 4B1

STATE OF WISCONSIN
DEPARTMENT OF TRANSPO



6

S.D.D. 8 D 5-16d

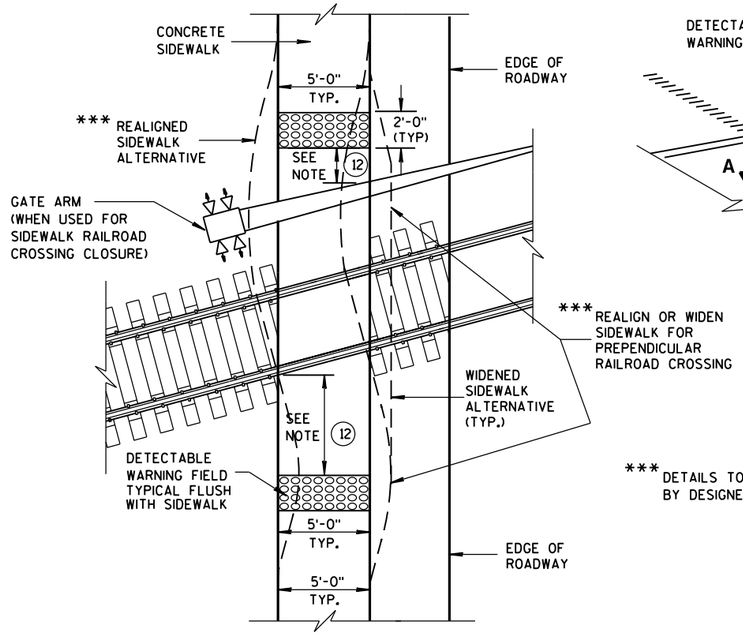


## TYPE 8
### DETECTABLE WARNINGS AT RAILROAD CROSSING

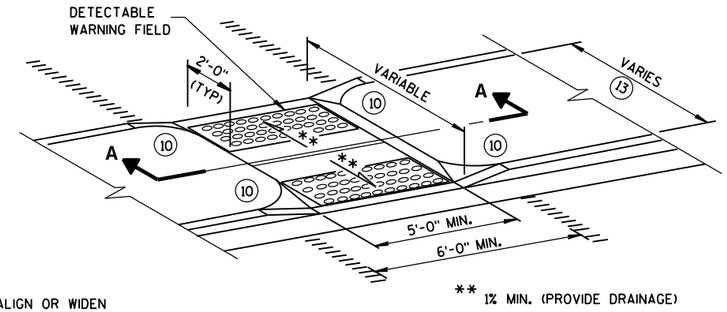


### MEDIAN ISLAND NON-ELEVATED CROSSING
## TYPE 5

*** DETAILS TO BE DETERMINED BY DESIGNER

## GENERAL NOTES

SIDEWALK CROSS SLOPE SHALL NOT EXCEED 2%.

DETECTABLE WARNING FIELDS THAT ARE INSTALLED AS A GROUP OR SIDE BY SIDE, SHALL BE FROM THE SAME MANUFACTURER.

(2) GRADE CHANGE BETWEEN GUTTER FLAG SLOPE AND THE CURB RAMP SLOPE SHALL NOT EXCEED 11%. MAXIMUM GUTTER FLAG SLOPE IS 4%. PROVIDE DRAINAGE AWAY FROM CURB RAMP AT GUTTER FLAG INTERFACE. NO VERTICAL LIPS OR DISCONTINUITIES GREATER THAN 1/4-INCH ARE ALLOWED.

(3) ABSOLUTE MAXIMUM 12H:1V (8.33%) CURB RAMP SLOPE IS ALLOWABLE WITH FLATTENED GUTTER FLAG SLOPE AND NOT TO EXCEED 11% GRADE CHANGE.

(4) ±0.5% CONSTRUCTION TOLERANCE IN SIDEWALK CROSS SLOPE. THE SIDEWALK CROSS SLOPE SHALL NOT EXCEED 2% WITHOUT PRIOR APPROVAL FROM THE ENGINEER.

(6) PROVIDE A LEVEL LANDING (MAXIMUM 2% SLOPE) IN ANY DIRECTION OF PEDESTRIAN TRAVEL. STANDARD LANDING SIZE IS 5 FEET X 5 FEET (MINIMUM 4 FEET X 4 FEET).

(10) INSTALL TRANSITION NOSE. (INCIDENTAL TO OTHER PAY ITEMS). DO NOT MARK TRANSITION NOSE.

(11) SLOPE SIDEWALK TOWARD LANDING AS SHOWN WHERE THERE IS NO TERRACE OR WHERE THE TERRACE WIDTH IS LESS THAN 6 FEET WIDE.

(12) THE EDGE OF THE DETECTABLE WARNING FIELD NEAREST TO A RAILROAD CROSSING SHALL BE 1.5 FEET ± 0.1' FROM THE FACE OF THE GATE ARM IF THE GATE ARM EXTENDS ACROSS THE SIDEWALK. WHERE THERE IS NO PEDESTRIAN GATE, THE EDGE OF THE DETECTABLE WARNING FIELD NEAREST TO THE RAILROAD CROSSING SHALL BE 15 FEET FROM THE NEAREST RAIL.

(13) DO NOT INSTALL DETECTABLE WARNING FIELDS IF MEDIAN WIDTH BETWEEN BACK OF CURBS IS LESS THAN 6 FEET.

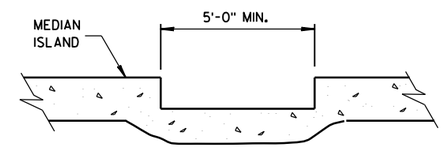


### SECTION A-A

| | MIN. | MAX. |
|---|---|---|
| A | 1.6" | 2.4" |
| B | 0.65" | 1.5" |
| C | * | * |
| D | 0.9" | 1.4" |

* THE C DIMENSION IS 50% TO 65% OF THE D DIMENSION.

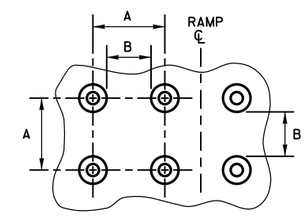


### PLAN VIEW

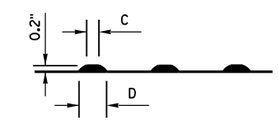


### ELEVATION VIEW
## TRUNCATED DOMES
### DETECTABLE WARNING PATTERN DETAIL

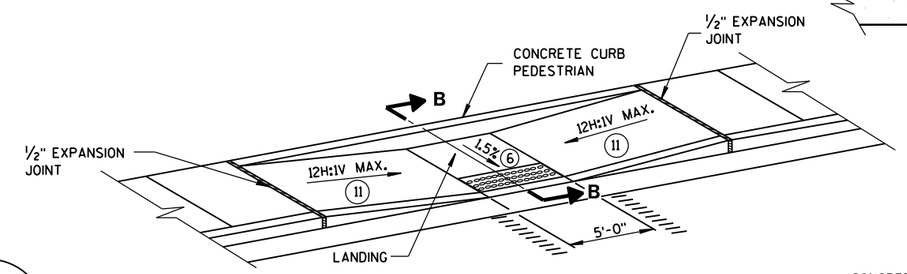


### MID-BLOCK CROSSING
## TYPE 7A

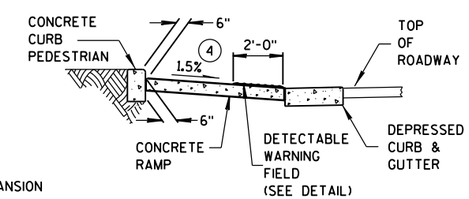


### SECTION B-B

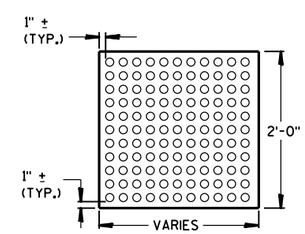


### PLAN VIEW
## DETECTABLE WARNING FIELD (TYPICAL)

REFER TO GENERAL NOTES (2) AND (3) FOR ALL ISLAND CURB RAMPS

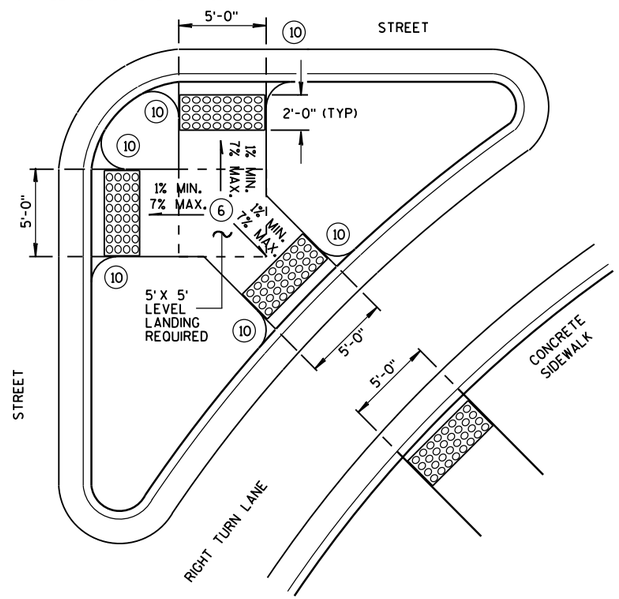


## TYPE 6
### DETECTABLE WARNING AT ISLANDS

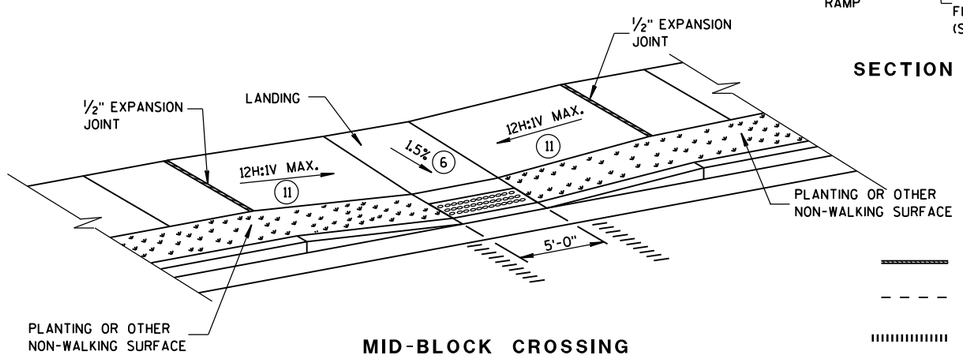


### MID-BLOCK CROSSING
## TYPE 7B

NOTE: THESE PARALLEL AND PARALLEL/PERPENDICULAR CURB RAMPS MAY BE USED AT INTERSECTIONS AND MID BLOCK LOCATIONS.

### LEGEND

- 1/2" EXPANSION JOINT-SIDEWALK
- CONTRACTION JOINT FIELD LOCATED
- PAVEMENT MARKING CROSSWALK (WHITE)

CURB RAMPS
TYPES 5, 6, 7A, 7B & 8

STATE OF WISCONSIN
DEPARTMENT OF TRANSPORTATION

APPROVED
June, 2015 — DATE
/S/ Jerry H. Zogg — ROADWAY STANDARDS DEVELOPMENT ENGINEER
FHWA

6

6

S.D.D. 8 D 5-16e

S.D.D. 8 D 5-16e

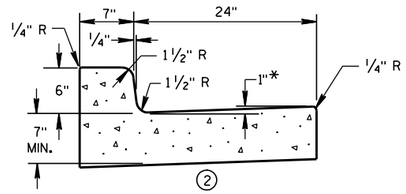


1 CONCRETE CURB & GUTTER 31"

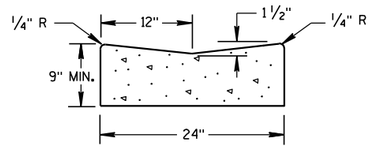


1 CONCRETE GUTTER 24"

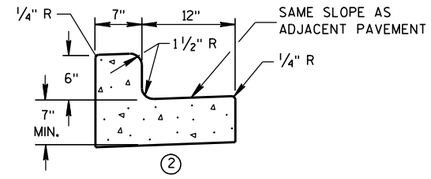


1 CONCRETE CURB & GUTTER 19"

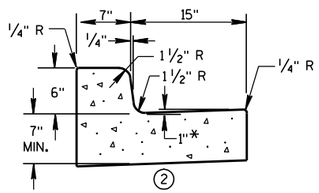


1 CONCRETE CURB & GUTTER 22"

* TO BE MEASURED TO A MAXIMUM OF 3" WHERE DRAINAGE PROBLEMS EXIST.

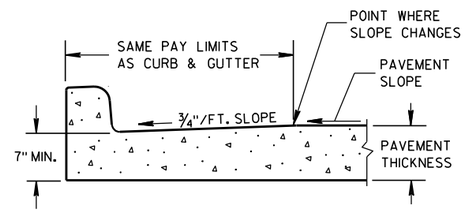


PARTIAL SECTION OF PAVEMENT WITH INTEGRAL CURB & GUTTER

## GENERAL NOTES

DETAILS OF CONSTRUCTION, MATERIALS AND WORKMANSHIP NOT SHOWN ON THIS DRAWING SHALL CONFORM TO THE PERTINENT REQUIREMENTS OF THE CONTRACT.

PAVEMENT TIES AND TIE BARS SHALL BE EPOXY COATED IN CONFORMANCE WITH SUBSECTION 505.2.6.2 OF THE STANDARD SPECIFICATIONS.

INTEGRAL CURB & GUTTER SHALL CONFORM TO THE DETAILS SHOWN FOR CONCRETE CURB & GUTTER INCLUDING THE TRANSVERSE GUTTER SLOPE. A LONGITUDINAL CONSTRUCTION JOINT IS NOT REQUIRED WITH INTEGRAL CURB AND GUTTER.

WHERE THE TRANSVERSE JOINTS IN THE PAVEMENT ARE REQUIRED TO BE SEALED, THE JOINTS IN THE INTEGRAL CURB AND GUTTER SHALL BE SEALED TO THE FACE OF CURB WITH THE SAME TYPE OF SEALANT. THE COST OF FURNISHING AND INSTALLING THIS SEALANT SHALL BE INCIDENTAL TO THE ITEM CONCRETE CURB AND GUTTER.

UNLESS OTHERWISE SHOWN ON THE TYPICAL CROSS SECTIONS, THE BASE COURSE AND UNCLASSIFIED EXCAVATION LIMITS ARE 2'-0" BEHIND THE BACK OF CURB.

1 WHEN PLACED ADJACENT TO NEW CONCRETE, TIE BARS ARE REQUIRED FOR CURB AND GUTTER 31", 22", 19" AND CONCRETE GUTTER 24".

2 THE BOTTOM OF CURB AND GUTTER MAY BE CONSTRUCTED EITHER LEVEL OR PARALLEL TO THE SLOPE OF THE SUBGRADE OR BASE COURSE PROVIDED A 7" MIMIMUM GUTTER THICKNESS IS MAINTAINED.

3 WHEN HIGH SIDE CURB SECTION IS REQUIRED, THE LOCATION(S) WILL BE NOTED ON THE PLAN.

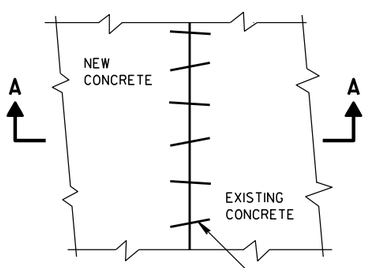


PLAN VIEW

EXISTING AND NEW CONCRETE MAY BE CURB & GUTTER, SURFACE DRAIN, PAVEMENT OR OTHER CONCRETE STRUCTURE.

NO. 6 X 12" DEF. BARS SPACED 3'-0" C-C, INSTALLED ON 6:1 SKEW HORIZONTALLY. DIRECTION OF SKEW ALTERNATING AFTER EVERY ONE OR TWO BARS.

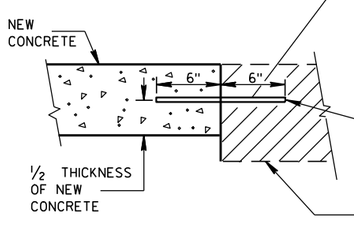


THE HOLE FOR THE BAR SHALL BE DRILLED TO A DEPTH OF 7" AND TO A DIAMETER TO PROVIDE A TIGHT DRIVEN FIT.

SECTION A-A

PAVEMENT TIES

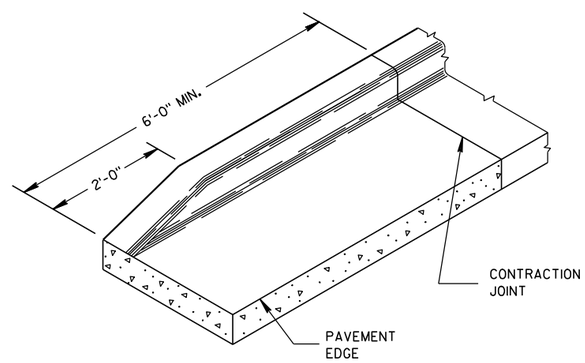


END SECTION CURB & GUTTER

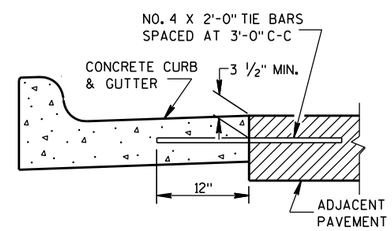


1 TYPICAL TIE BAR LOCATION

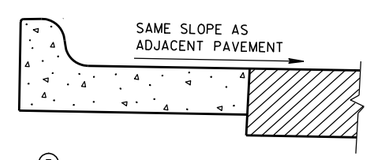


3 HIGH SIDE SECTION

(TYPICAL FOR ALL CURB & GUTTER)

CONCRETE GUTTER, CURB AND GUTTER AND PAVEMENT TIES

(For Optional Use in Milwaukee Co. Only)

STATE OF WISCONSIN
DEPARTMENT OF TRANSPORTATION

APPROVED

11/2/2010 — DATE

/S/ Jerry Zogg — ROADWAY STANDARDS ENGINEER

ENT

FHWA





6



S.D.D. 8 D 16-10

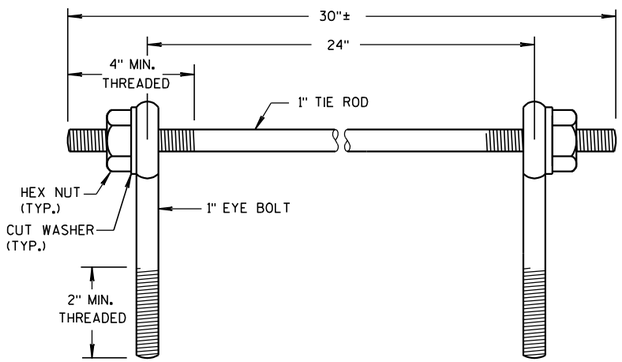


EYE BOLTS AND TIE ROD

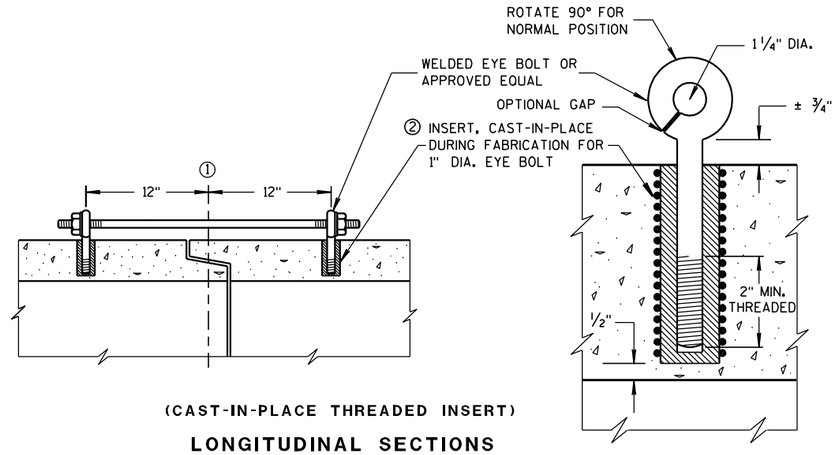


(CAST-IN-PLACE THREADED INSERT)

LONGITUDINAL SECTIONS

## EYE BOLT AND TIE ROD ASSEMBLY (ALTERNATE NO. 1)

## GENERAL NOTES

DETAILS OF CONSTRUCTION, MATERIALS, AND WORKMANSHIP NOT SHOWN ON THIS DRAWING SHALL CONFORM TO THE PERTINENT REQUIREMENTS OF THE STANDARD SPECIFICATIONS AND APPLICABLE SPECIAL PROVISIONS.

CONCRETE CULVERT AND STORM SEWER PIPE SHALL BE TIED TOGETHER IN THE MANNER ILLUSTRATED BY THIS DETAIL AT LOCATIONS DESIGNATED IN THE STANDARD SPECIFICATIONS AND THE PLAN. THE CONTRACTOR MAY USE EITHER ALTERNATE 1, 2 OR 3 FOR DRAINAGE STRUCTURES. ONLY ALTERNATE 1 AND 3 MAY BE USED FOR CATTLE PASSES, UNLESS OTHERWISE STATED IN THE CONTRACT. THE MATERIALS, FABRICATION AND WORK NECESSARY TO TIE THE PIPE BY THIS DETAIL WILL BE CONSIDERED INCIDENTAL TO THE PIPE AND APRON ENDWALLS IF REQUIRED.

DETAILED DRAWINGS FOR PROPOSED ALTERNATE DESIGNS FOR JOINT TIES SHALL BE SUBMITTED TO THE ENGINEER FOR APPROVAL.

JOINT TIES TO BE HOT-DIP GALVANIZED PER ASTM A 153.

① ℄ OF TONGUE AND GROOVE OR BELL AND SPIGOT JOINTS.

② THE INSIDE OF THE THREADED INSERTS SHALL BE CLEAN TO ALLOW THE INSERTION OF THREADED EYE BOLTS.

③ HOLES SHALL BE CAST-IN-PLACE OR DRILLED 12 INCHES FROM ℄ OF TONGUE AND GROOVE.

④ BOLT PROJECTION INSIDE OF PIPE SHALL NOT EXCEED 2 INCHES.

⑤ OPENING TO BE ROD DIAMETER PLUS 1 INCH.

⑥ LENGTH ADEQUATE TO EXTEND TO WITHIN 1/2 INCH OF THE INNER SURFACE OF THE PIPE.

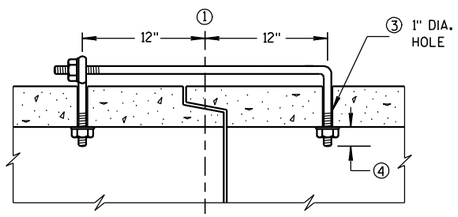


(TONGUE & GROOVE PIPE)

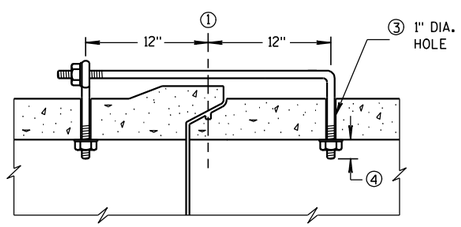


(MODIFIED BELL PIPE)

LONGITUDINAL SECTION

### EYE BOLT DIMENSION TABLE

| PIPE SIZE | L = LENGTH | |
|---|---|---|
| | TONGUE & GROOVE PIPE | MODIFIED BELL PIPE |
| 18" TO 24" | 4 1/2" | 6 1/4" |
| 30" | 5" | 7" |
| 36" | 5 1/2" | 7" |
| 42" | 6" | |
| 48" | 6 1/2" | |
| 60" | 7 1/2" | |
| 66" | 8" | |

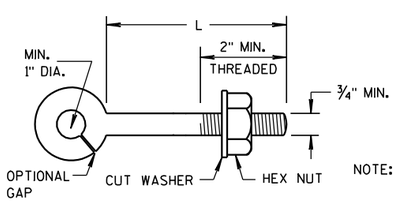


NOTE:

EYE BOLT

NOTE: TWO EYE BOLTS MAY BE USED WITH A 30" LONG THREADED ROD IN LIEU OF THE 90° BENT TIE ROD.

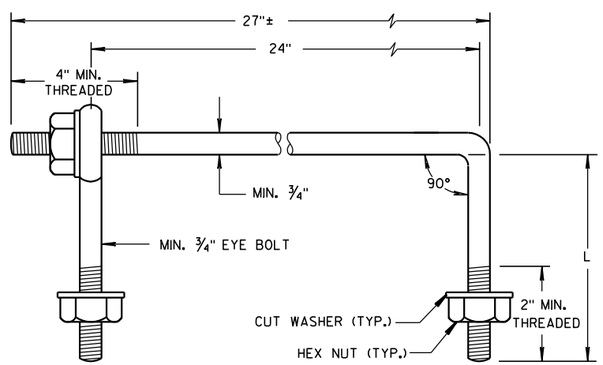


EYE BOLT AND TIE ROD

(JOINT TIES FOR 18" TO 66" DIA. CONCRETE PIPE)

## EYE BOLT AND TIE ROD ASSEMBLY (ALTERNATE NO. 2)

### ADJUSTABLE TIE ROD TABLE

| PIPE DIAMETER | TIE ROD DIAMETER | D | $L_1$ | N |
|---|---|---|---|---|
| 12-60 | 5/8 | 5/8 | 5 | 1/2 |
| 66-84 | 3/4 | 3/4 | 5 | 1/2 |
| 90-108 | 1 | 1 | 7 | 1 7/16 |

DIMENSIONS SHOWN ARE IN INCHES

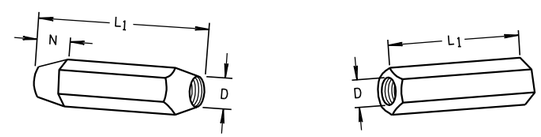


TAPERED PLAIN

RIGHT AND LEFT THREADS

SLEEVE NUTS

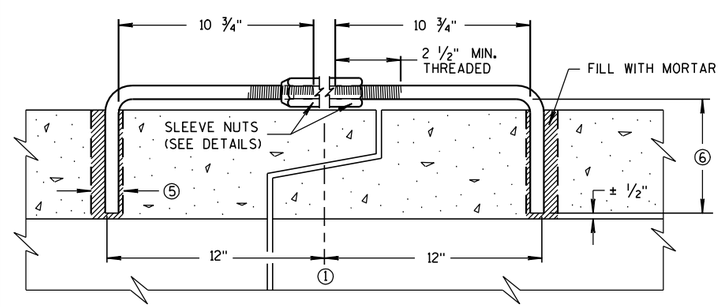


LONGITUDINAL SECTION

(JOINT TIES FOR 12" TO 108" DIA. CONCRETE PIPE)

## ADJUSTABLE TIE ROD (ALTERNATE NO. 3)

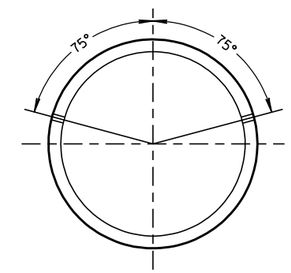


PLACEMENT OF (2) CAST-IN-PLACE INSERTS OR HOLES DURING FABRICATION FOR PIPE SECTIONS REQUIRING TIE RODS

TRANSVERSE SECTION

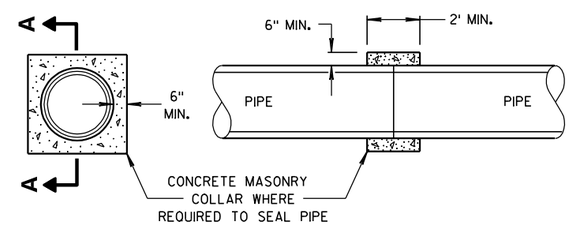


SECTION A-A

## CONCRETE COLLAR DETAIL

JOINT TIES FOR CONCRETE PIPE AND CONCRETE COLLAR DETAIL

STATE OF WISCONSIN
DEPARTMENT OF TRANSPORTATION

APPROVED
6/5/2012 — DATE
/S/ Jerry H. Zogg — ROADWAY STANDARDS DEVELOPMENT ENGINEER
FHWA

6

6

S.D.D. 8 F 4-7

S.D.D. 8 F 4-7

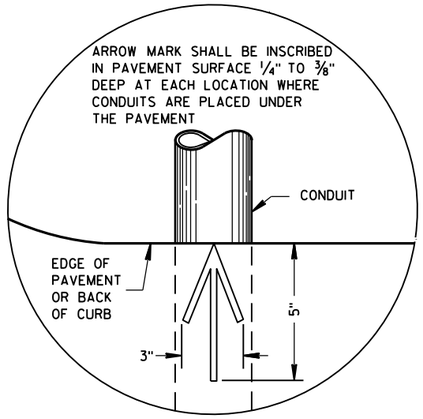


PLAN VIEW

## ARROW MARK

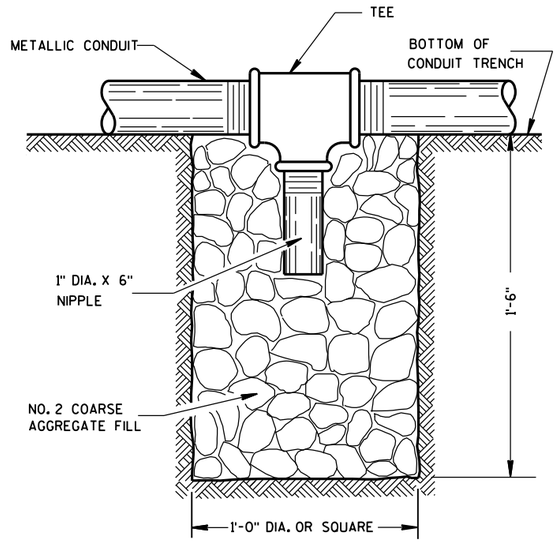


NOTE: INSTALL AT LOCATIONS WHERE METALLIC CONDUITS CANNOT BE PITCHED TO DRAIN INTO A PULL BOX.

## DRAIN SUMP FOR METALLIC CONDUIT

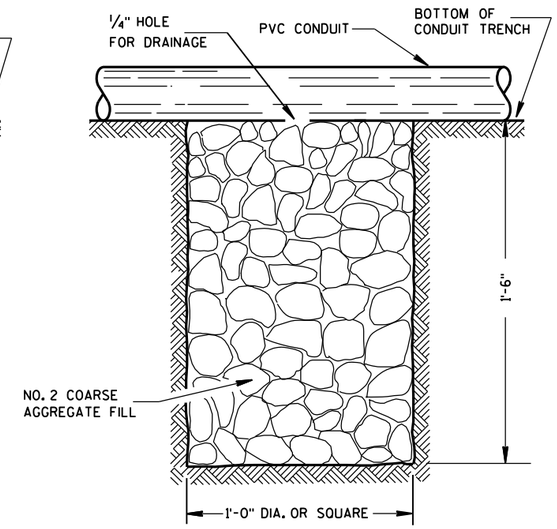


NOTE: INSTALL AT LOCATIONS WHERE PVC CONDUITS CANNOT BE PITCHED TO DRAIN INTO A PULL BOX.

## DRAIN SUMP FOR PVC CONDUIT

## GENERAL NOTES

DETAILS OF CONSTRUCTION, MATERIALS AND WORKMANSHIP NOT SHOWN ON THIS DRAWING SHALL CONFORM TO THE PERTINENT REQUIREMENTS OF THE CONTRACT.

METALLIC (STANDARD SPECIFICATION 652.2.2) OR NONMETALLIC (STANDARD SPECIFICATION 652.2.3) CONDUIT SHALL BE FURNISHED AND PLACED AS SHOWN.

DEPTH OF CONDUIT INSTALLED BELOW THE TRAVELED WAY SHALL BE 24 INCHES MINIMUM AND 36 INCHES MAXIMUM.

DEPTH OF CONDUIT INSTALLED THAT IS NOT BELOW THE TRAVELED WAY SHALL BE 18 INCHES MINIMUM AND 36 INCHES MAXIMUM.

ANY EXCEPTION TO THE MAXIMUM DEPTH SHALL BE ONLY WITH THE WRITTEN APPROVAL OF THE ENGINEER.

THE TRENCH SHALL NOT BE BACKFILLED PRIOR TO INSPECTION OF THE CONDUIT.

ALL METALLIC CONDUIT RACEWAY ENDS SHALL BE REAMED AND THREADED.

ALL METALLIC CONDUIT IN WHICH WIRE OR CABLE IS TO BE INSTALLED SHALL BE BUSHED WITH APPROVED THREADED BUSHINGS BEFORE INSTALLATION OF THE WIRE OR CABLE.

ALL METALLIC CONDUITS IN WHICH WIRE OR CABLE IS NOT TO BE INSTALLED SHALL BE CAPPED WITH THREADED PROTECTIVE CAPS, AS APPROVED BY THE ENGINEER.

ALL NONMETALLIC CONDUIT SHALL BE CAPPED OR PLUGGED IMMEDIATELY AFTER INSTALLATION AND SHALL REMAIN CAPPED OR PLUGGED UNTIL WIRE/CABLES ARE INSTALLED.

NONMETALLIC CONDUITS IN WHICH WIRE OR CABLE IS NOT BEING INSTALLED SHALL REMAIN CAPPED OR PLUGGED.

BENDING OF PVC ELECTRICAL CONDUIT SHALL BE ACCOMPLISHED BY USING A BLANKET OR EMERSION TYPE TANK DESIGNED FOR THE PURPOSE OF BENDING PVC ELECTRICAL CONDUIT.

ALL CUT ENDS SHALL BE TRIMMED INSIDE AND OUTSIDE TO REMOVE ALL ROUGH EDGES ON NONMETALLIC CONDUIT. (SEE NEC 347.5)

WHEN REQUIRED TO CONNECT NONMETALLIC CONDUIT TO METALLIC CONDUIT, ONLY U.L. LISTED ADAPTER FITTINGS SHALL BE USED.

PRIOR TO CONDUIT ACCEPTANCE, CONDUIT CAPS OR PLUGS SHALL BE REMOVED, AND THE CAPS, PLUGS AND CONDUIT ENDS SHALL BE THOROUGHLY CLEANED AND THEN THE CAPS OR PLUGS REINSTALLED TO ENSURE THAT THE CAPS OR PLUGS CAN BE EASILY REMOVED IN THE FUTURE.

ALL CONDUIT BEING FURNISHED AND INSTALLED SHALL HAVE THE U.L. LABEL FIRMLY ATTACHED.

CONDUIT RUNS SHALL BE THE SAME SIZE OF CONDUIT FROM ONE END TO THE OTHER (FROM PULL BOX TO PULL BOX-OR-JUNCTION BOX TO JUNCTION BOX-OR-BASE TO BASE, ETC.).

TRACER WIRE SHALL BE INSTALLED AS STATED IN THE STANDARD SPECIFICATION, ITEM 652.3.1.1.

ALL CONDUIT RUNS SHALL BE STRAIGHT (WITHOUT BENDS) FROM PULL BOX TO PULL BOX, PULL BOX TO BASE AND BASE TO BASE AS SHOWN ON THE PLANS.

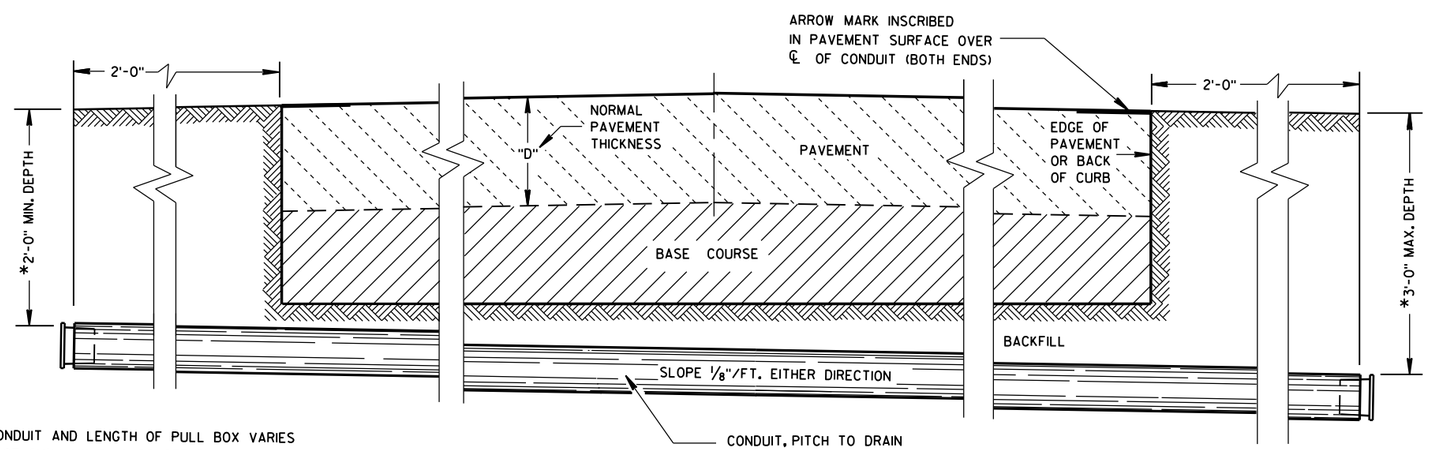


*DEPTH OF CONDUIT AND LENGTH OF PULL BOX VARIES WITH HEIGHT OF CURB USED. ALSO SEE PULL BOX S.D.D. 9B4

SIDE ELEVATION

## DETAIL FOR CONDUIT UNDER PAVED HIGHWAYS

6

6

S.D.D. 9 B 2-9

S.D.D. 9 B 2-9

CONDUIT

STATE OF WISCONSIN
DEPARTMENT OF TRANSPORTATION

APPROVED
June, 2015 — /S/ Ahmet Demirbilek
DATE — STATE ELECTRICAL
FHWA

## GENERAL NOTES

DETAILS OF CONSTRUCTION, MATERIALS AND WORKMANSHIP NOT SHOWN ON THIS DRAWING SHALL CONFORM TO THE PERTINENT REQUIREMENTS OF THE CONTRACT.

BASES SHALL BE EXCAVATED BY USE OF A CIRCULAR AUGER.

TOP SURFACES OF CONCRETE BASES SHALL BE TROWEL FINISHED AND LEVEL.

CONDUIT SIZES AND LOCATIONS SHALL BE AS SHOWN ON THE PLANS.

THE FINAL OR TERMINATING CONCRETE BASE IN A CONDUIT RUN SHALL HAVE A 6" EXIT STUB INSTALLED FOR FUTURE CABLING USE. THE EXIT STUB SHALL BE SIZED AS USED THROUGHOUT THE CONDUIT RUN AS SHOWN AT THE ENTRANCE OF THE BASE.

MINIMUM BENDING RADIUS OF CONDUIT IS EQUAL TO 6 X THE DIAMETER.

CONDUIT HEIGHT ABOVE CONCRETE BASES SHALL BE 4 INCHES. ALL METALLIC CONDUIT ENDS SHALL BE REAMED AND THREADED. NONMETALLIC CONDUIT SHALL HAVE BELL END INSTALLED. ALL CONDUIT SHALL BE SLOPED TO PULL BOX.

ALL CONDUIT ENDS AT THE TOP OF CONCRETE BASES SHALL BE CAPPED IF METALLIC OR PLUGGED IF NONMETALLIC IMMEDIATELY AFTER PLACEMENT AND BEFORE CONCRETE IS POURED. CONDUIT IN WHICH WIRE OR CABLE IS NOT INSTALLED SHALL REMAIN CAPPED OR PLUGGED.

BELL ENDS SHALL BE INSTALLED ON ALL PVC CONDUIT EXPOSED AT THE TOP OF CONCRETE BASES BEFORE INSTALLATION OF CABLE OR WIRE.

ENDS OF CONDUIT INSTALLED BELOW GRADE FOR FUTURE USE SHALL BE CAPPED IF METALLIC OR PLUGGED IF NONMETALLIC.

WHEN REQUIRED TO CONNECT NONMETALLIC CONDUIT TO METALLIC CONDUIT, ONLY ADAPTER FITTINGS, U.L. LISTED FOR ELECTRICAL USE, SHALL BE USED.

IF A BASE REQUIRES A DEEP FORM BECAUSE OF LOOSE DIRT OR FILL, THE FORM SHALL BE REMOVED BEFORE BACKFILLING AROUND THE BASE. BACKFILL SHALL BE TAMPED TIGHT AGAINST THE BARE CONCRETE BASE IN LAYERS OF 1 FOOT OR LESS.

A NO. 4 AWG, STRANDED COPPER EQUIPMENT GROUNDING CONDUCTOR SHALL BE EXOTHERMICALLY WELDED TO THE EQUIPMENT GROUNDING ELECTRODE (GROUND ROD).

THE EQUIPMENT GROUNDING CONDUCTOR SHALL ENTER THE BASE THROUGH A 1 INCH CONDUIT INSTALLED FOR GROUNDING PURPOSES, LEAVING A 4 FOOT COIL OF WIRE ABOVE THE CONCRETE BASE. THE EQUIPMENT GROUNDING CONDUCTOR SHALL BE NEATLY COILED AND THE COILS TIED TOGETHER.

WELDING OF THE ANCHOR RODS TO THE CAGE IS UNACCEPTABLE. TEMPLATES SHALL BE USED.

BAR STEEL REINFORCEMENT SHALL BE COATED WITH POWDERED EPOXY RESIN IN ACCORDANCE WITH SECTION 505 OF THE STANDARD SPECIFICATIONS (LATEST EDITION).

ANCHOR RODS SHALL BE INSTALLED WITH MISALIGNMENTS OF LESS THAN 1:40 FROM VERTICAL.

(1) THE MINIMUM DEPTH OF CONDUIT EXITING THE CONCRETE BASE AND INSTALLED BELOW THE TRAVELED WAY SHALL BE 24 INCHES. THE MINIMUM DEPTH OF CONDUIT EXITING THE CONCRETE BASE THAT IS NOT INSTALLED BELOW THE TRAVELED WAY SHALL BE 18 INCHES. THE MAXIMUM DEPTH OF ALL CONDUIT SHALL BE 36 INCHES, (GREATER THAN 36 INCHES IF INSTALLED IN BREAKER-RUN), EXCEPT WITH WRITTEN APPROVAL BY THE ENGINEER.

(2) (6) NO. 6 X 13'-7" BAR STEEL REINFORCEMENT.

(3) (15) NO. 4 X 7'-4" BAR STEEL REINFORCEMENT @ 1'-0" MAX. C-C.

| | |
|---|---|
| CONCRETE MASONRY | fc=3,500 p.s.i. |
| HIGH STRENGTH BAR STEEL REINFORCEMENT, GRADE 60 | fy=60,000 p.s.i. |
| ANCHOR RODS, AASHTO M314 GRADE 55 | fy=55,000 p.s.i. |
| TEMPLATES, ASTM, A709 GRADE 36 | fy=36,000 p.s.i. |

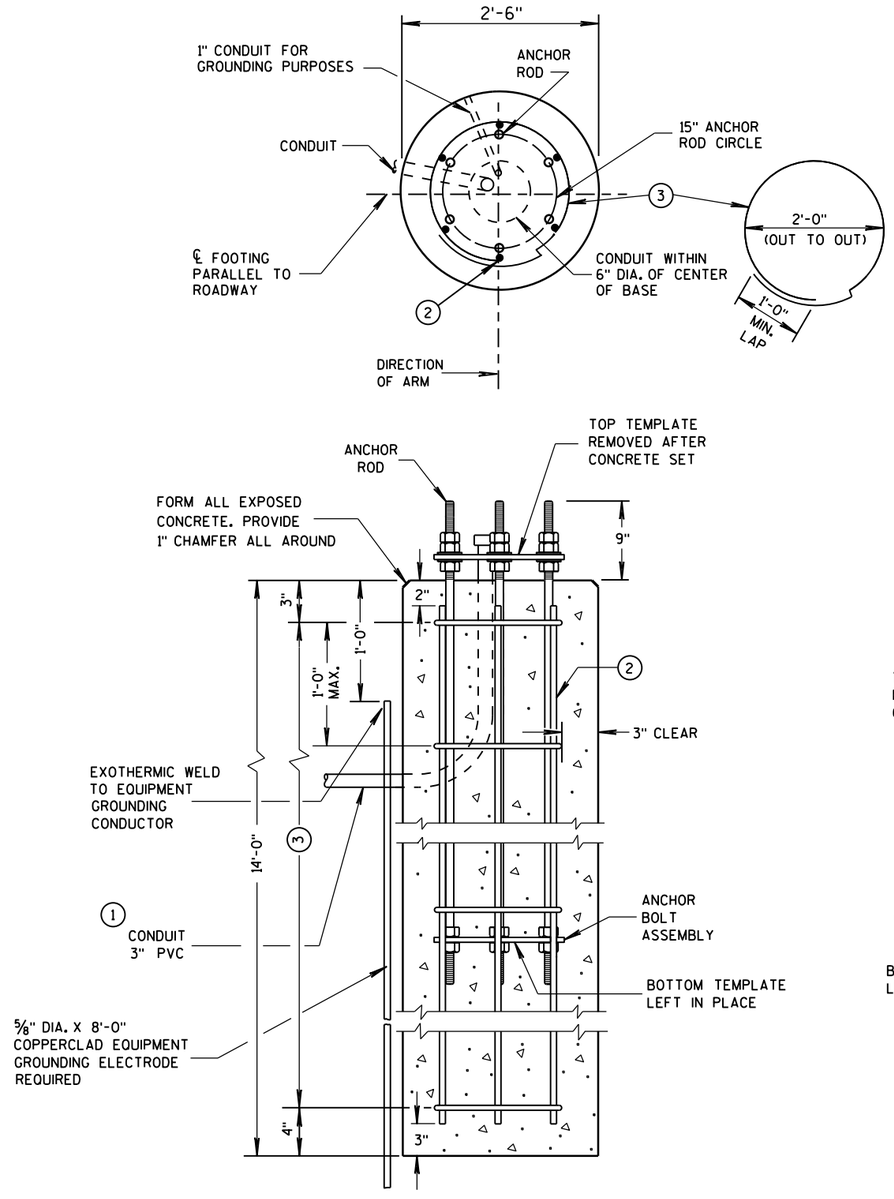


## CONCRETE BASE TYPE 10
### (FOR TYPE 9 & 10 POLES)

TO BE USED WHEN GROUND ELEVATION AT BASE EQUALS OR IS GREATER THAN HIGH POINT OF ROADWAY ELEVATION. SEE S.D.D. 9C13-2 WHEN GROUND ELEVATION AT BASE IS LOWER THAN HIGH POINT OF ROADWAY ELEVATION.

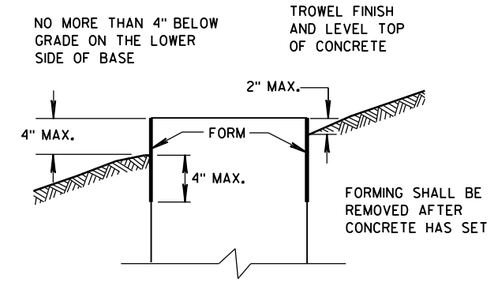


## FORMING DETAIL

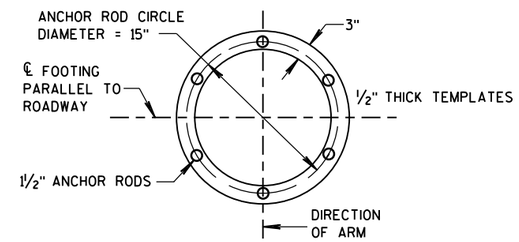


## TOP AND BOTTOM TEMPLATES

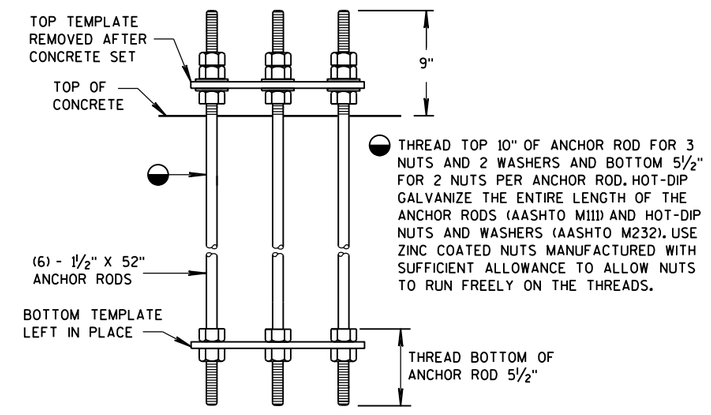


## ANCHOR BOLT ASSEMBLY DETAIL

## CONCRETE BASE TYPE 10
## ANCHOR ASSEMBLY

| QUANTITY REQUIREMENTS | |
|---|---|
| APPROX. CUBIC YARDS OF CONCRETE | 2.5 |
| LBS. OF HOOP BAR STEEL | 69 |
| LBS. OF VERTICAL BAR STEEL | 122 |

CONCRETE BASE TYPE 10

STATE OF WISCONSIN
DEPARTMENT OF TRANSPORTATION

APPROVED
Sept., 2015 — DATE
/S/ Ahmet Demirbilek — STATE ELECTRICAL
FHWA




6

S.D.D. 9 C 11-8

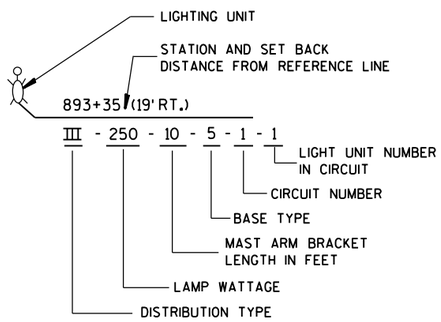


## LIGHTING UNIT CODE
(TYPICAL)

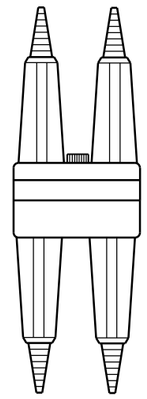

## DETAIL "A"
BREAKAWY DOUBLE POLE WITH WATERPROOF INSULATING BOOT

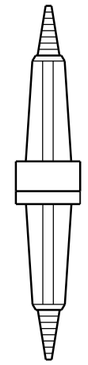

## DETAIL "B"
BREAKAWY SINGLE POLE WITH WATERPROOF INSULATING BOOT

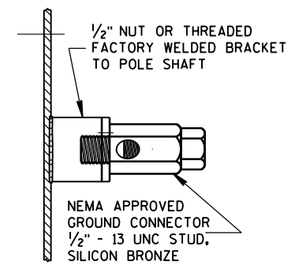


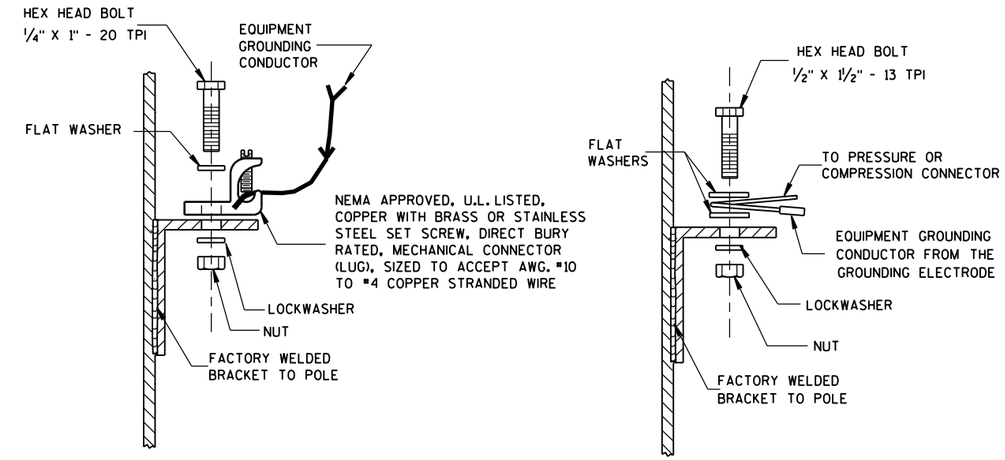


## TYPICAL GROUNDING CONNECTIONS
NUT, BOLT, WASHERS AND LOCKWASHERS SHALL BE STAINLESS STEEL

## GENERAL NOTES
DETAILS OF CONSTRUCTION, MATERIALS AND WORKMANSHIP NOT SHOWN ON THIS DRAWING SHALL CONFORM TO THE PERTINENT REQUIREMENTS OF THE CONTRACT.

THE EQUIPMENT GROUNDING CONNECTOR SHALL BE TAPED WITH 3 WRAPS (MINIMUM) OF APPROVED RUBBER TAPE AND THEN 3 WRAPS (MINIMUM) OF APPROVED VINYL TAPE TO COVER SHARP WIRE ENDS AFTER THE CONNECTION IS COMPLETED.

WHEN TRANSFORMER BASES ARE USED, ALL WIRING CONNECTIONS SHALL OCCUR WITHIN THE TRANSFORMER BASES.

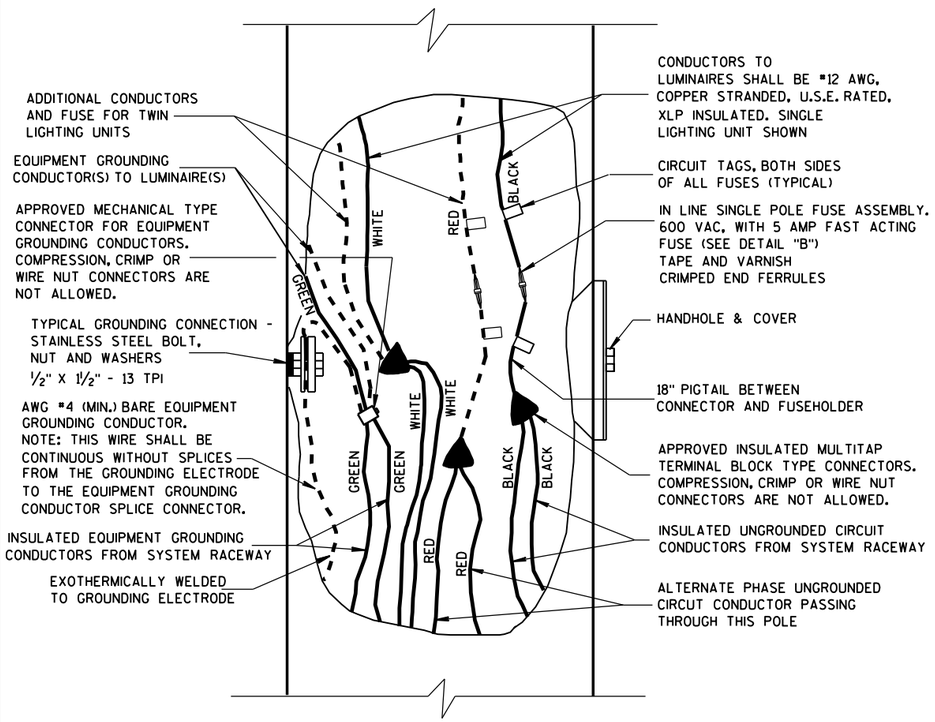


## 3 WIRE - 120, 240 OR 480 VAC (UNGROUNDED CONDUCTOR) WITH GROUNDED CONDUCTOR AND WITH EQUIPMENT GROUNDING CONDUCTOR

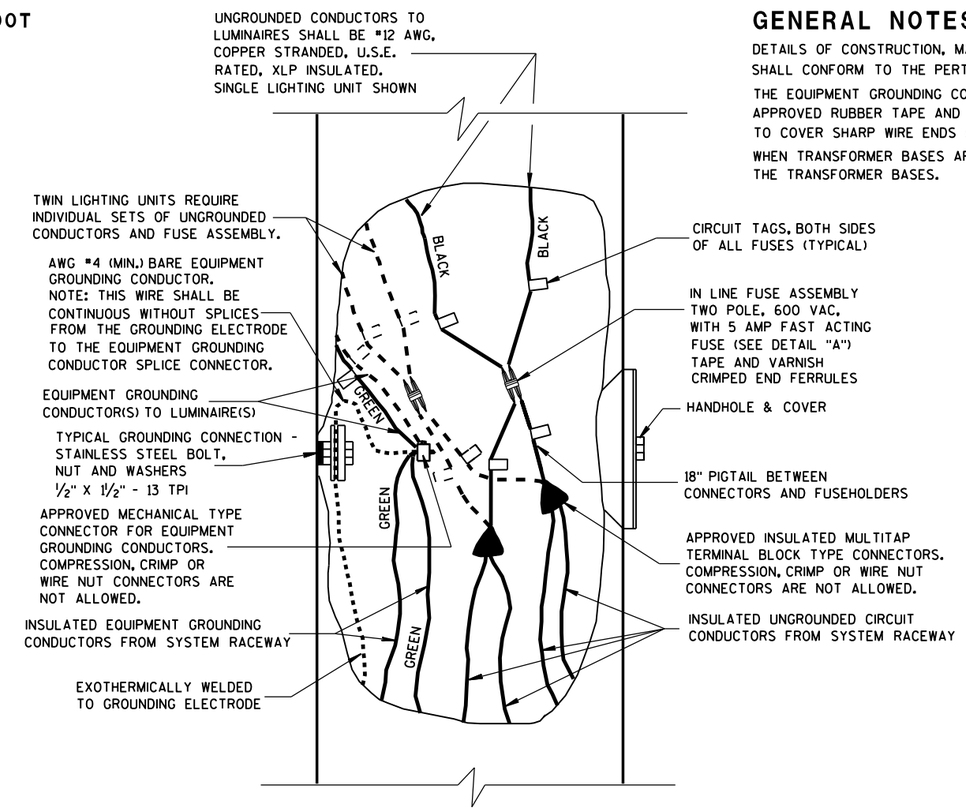


## 2 WIRE - 240 OR 480 VAC (UNGROUNDED CONDUCTORS) WITH EQUIPMENT GROUNDING CONDUCTOR

| NON-FREEWAY LIGHTING UNIT POLE WIRING | |
|---|---|
| STATE OF WISCONSIN DEPARTMENT OF TRANSPORTATION | |
| APPROVED Sept. 2014 DATE | /S/ Ahmet Demirbilek STATE ELECTRICAL |
| FHWA | |

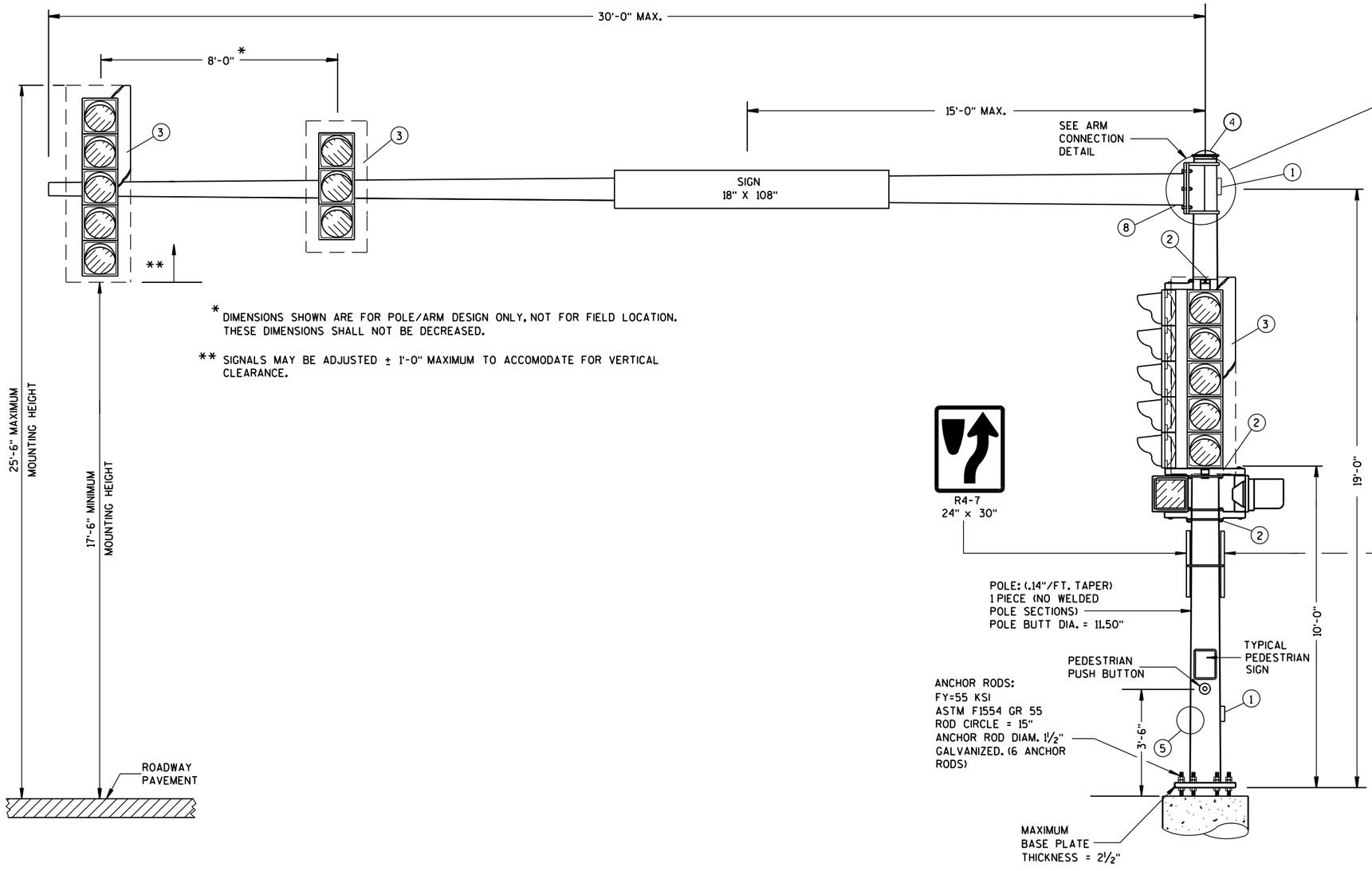


* DIMENSIONS SHOWN ARE FOR POLE/ARM DESIGN ONLY, NOT FOR FIELD LOCATION. THESE DIMENSIONS SHALL NOT BE DECREASED.

** SIGNALS MAY BE ADJUSTED ± 1'-0" MAXIMUM TO ACCOMODATE FOR VERTICAL CLEARANCE.

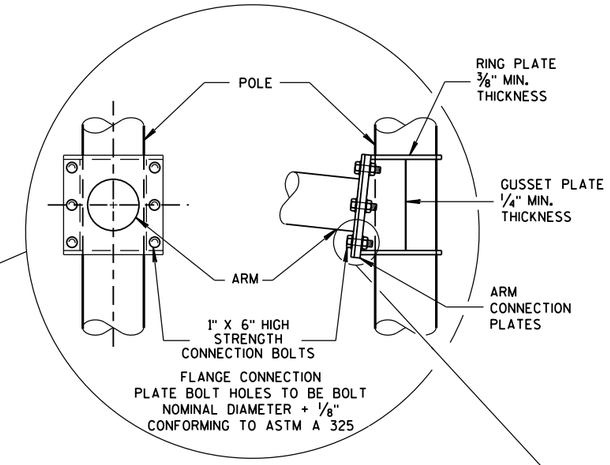


6 BOLT ARM CONNECTION DETAIL

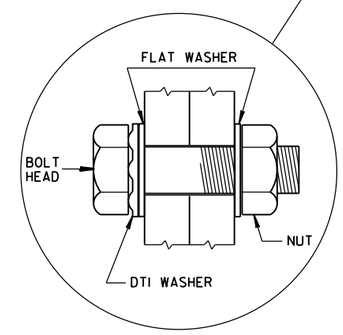


RECOMMENDED BOLT ASSEMBLY DETAIL

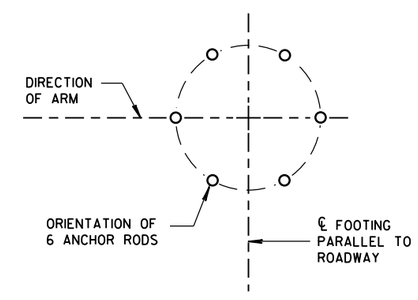


ANCHOR ROD LOCATION

(MAXIMUM LOAD)

TYPE 9 POLE 15'- 30' MONOTUBE ARM

| TYPE 9 POLE 15' - 30' MONOTUBE ARM | |
|---|---|
| STATE OF WISCONSIN DEPARTMENT OF TRANSPORTATION | |
| APPROVED June, 2015 DATE | /S/ Ahmet Demirbilek STATE ELECTRICAL |
| FHWA | |

6

6

S.D.D. 9 E 8-7a

S.D.D. 9 E 8-7a

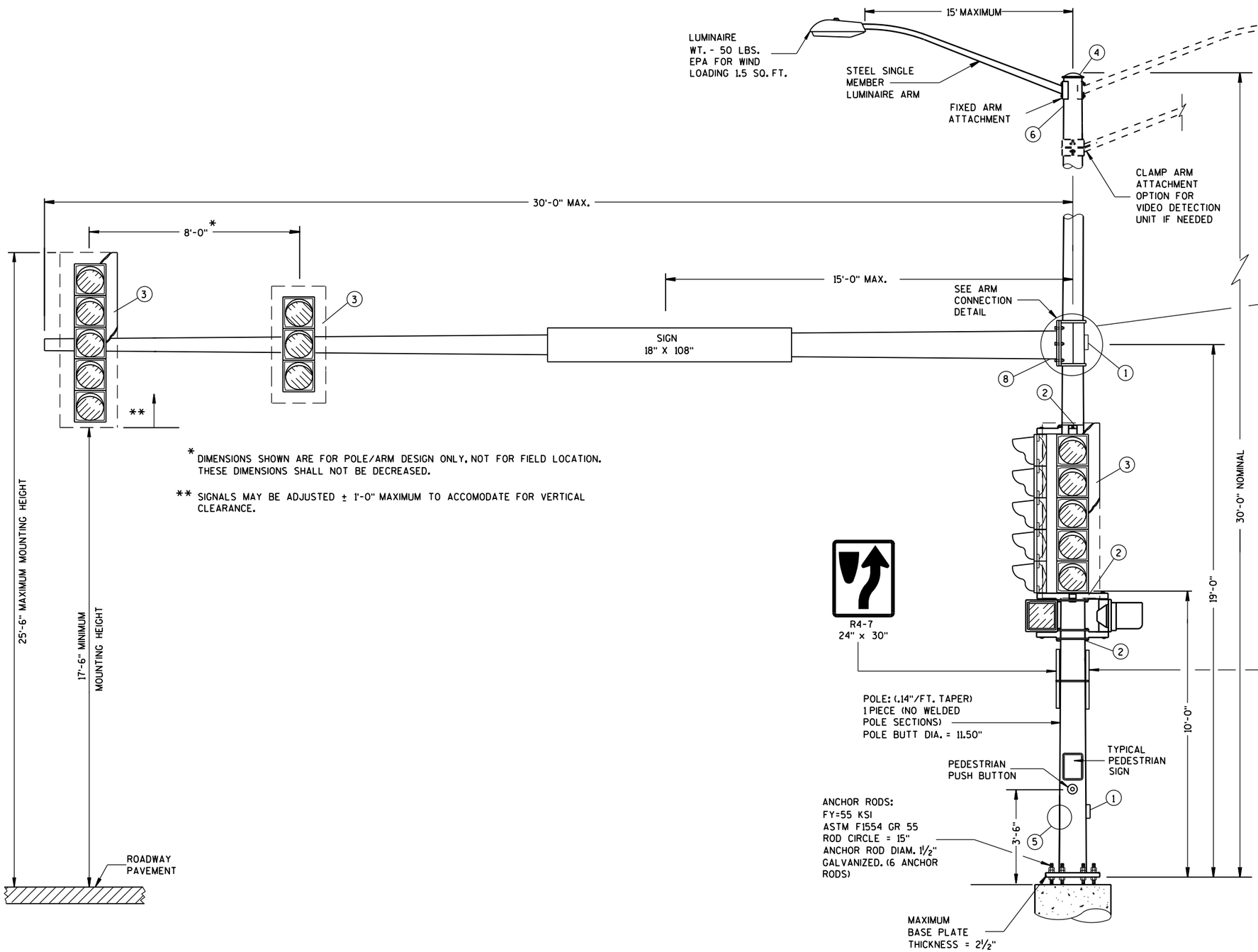


* DIMENSIONS SHOWN ARE FOR POLE/ARM DESIGN ONLY, NOT FOR FIELD LOCATION. THESE DIMENSIONS SHALL NOT BE DECREASED.

** SIGNALS MAY BE ADJUSTED ± 1'-0" MAXIMUM TO ACCOMODATE FOR VERTICAL CLEARANCE.

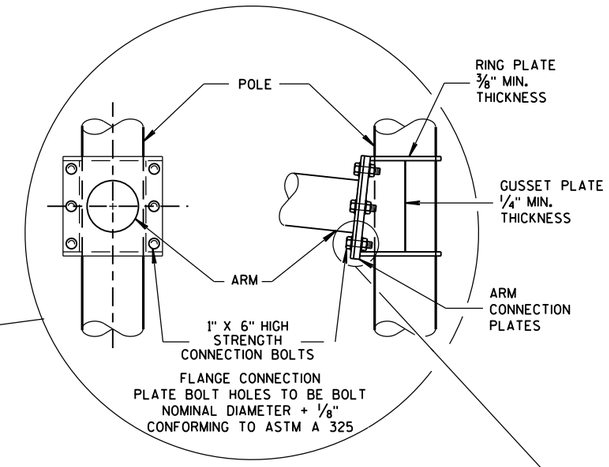


6 BOLT ARM CONNECTION DETAIL

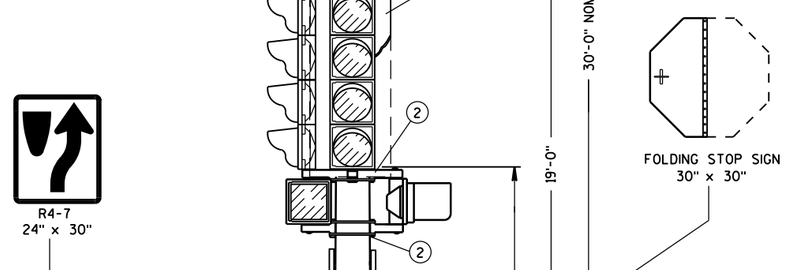


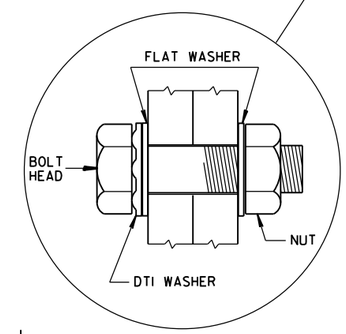


RECOMMENDED BOLT ASSEMBLY DETAIL

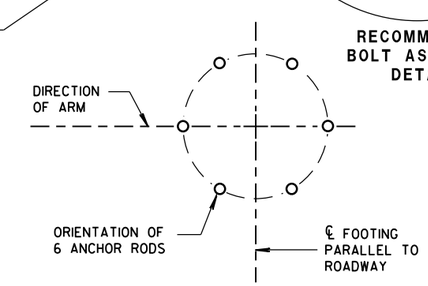


ANCHOR ROD LOCATION

(MAXIMUM LOAD)

**TYPE 10 POLE**
**15'- 30' MONOTUBE ARM**

| |
|---|
| TYPE 10 POLE<br>15' - 30' MONOTUBE ARM |
| STATE OF WISCONSIN<br>DEPARTMENT OF TRANSPORTATION |
| APPROVED<br>June, 2015 — DATE<br>/S/ Ahmet Demirbilek — STATE ELECTRICAL<br>FHWA |

6

S.D.D. 9 E 8-7b

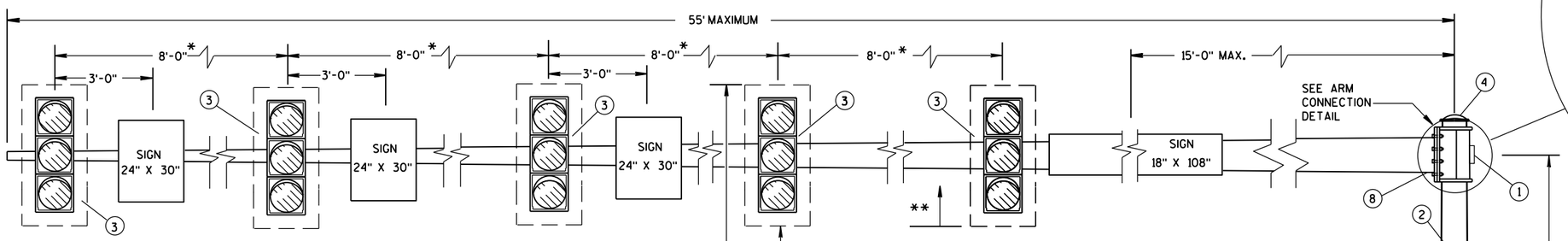


* DIMENSIONS SHOWN ARE FOR POLE/ARM DESIGN ONLY, NOT FOR FIELD LOCATION. THESE DIMENSIONS SHALL NOT BE DECREASED.

** SIGNALS MAY BE ADJUSTED ± 1'-0" MAXIMUM TO ACCOMODATE FOR VERTICAL CLEARANCE.

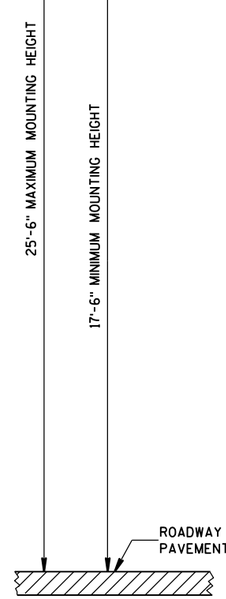


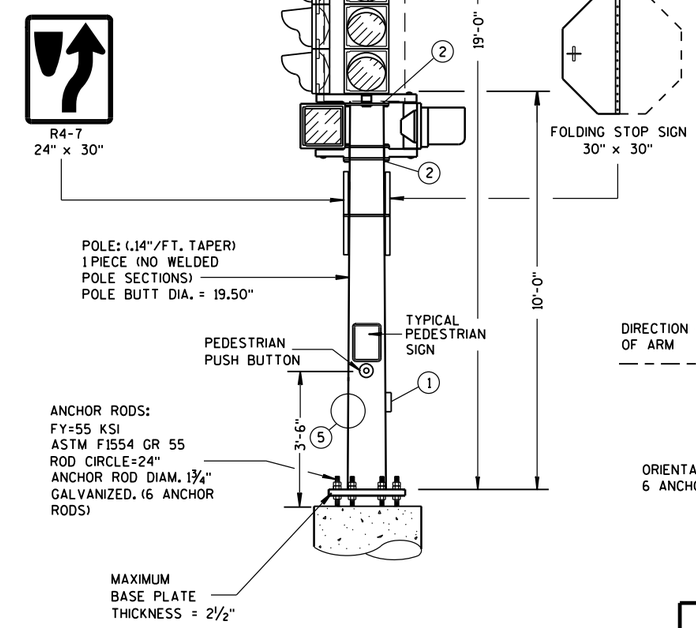


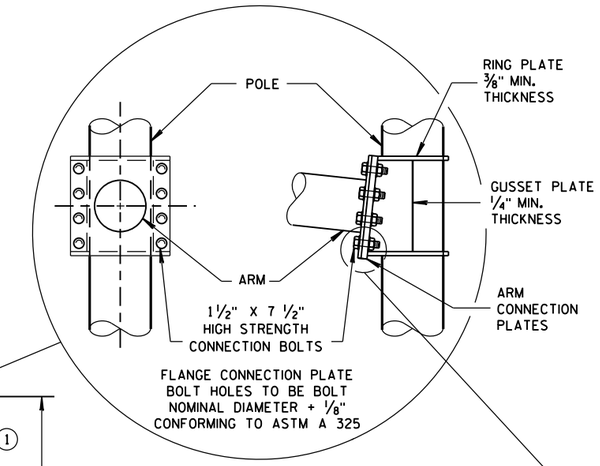


8 BOLT ARM CONNECTION DETAIL

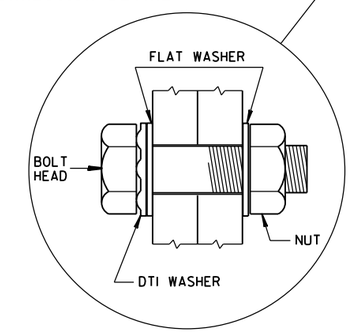


RECOMMENDED BOLT ASSEMBLY DETAIL

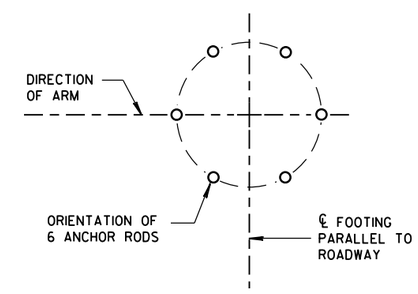


ANCHOR ROD LOCATION

(MAXIMUM LOAD)

## TYPE 12 POLE 35'- 55' MONOTUBE ARM

**TYPE 12 POLE**
**35' - 55' MONOTUBE ARM**

STATE OF WISCONSIN
DEPARTMENT OF TRANSPORTATION

APPROVED
June, 2015 — DATE
/S/ Ahmet Demirbilek — STATE ELECTRICAL
FHWA

6

S.D.D. 9 E 8-7c

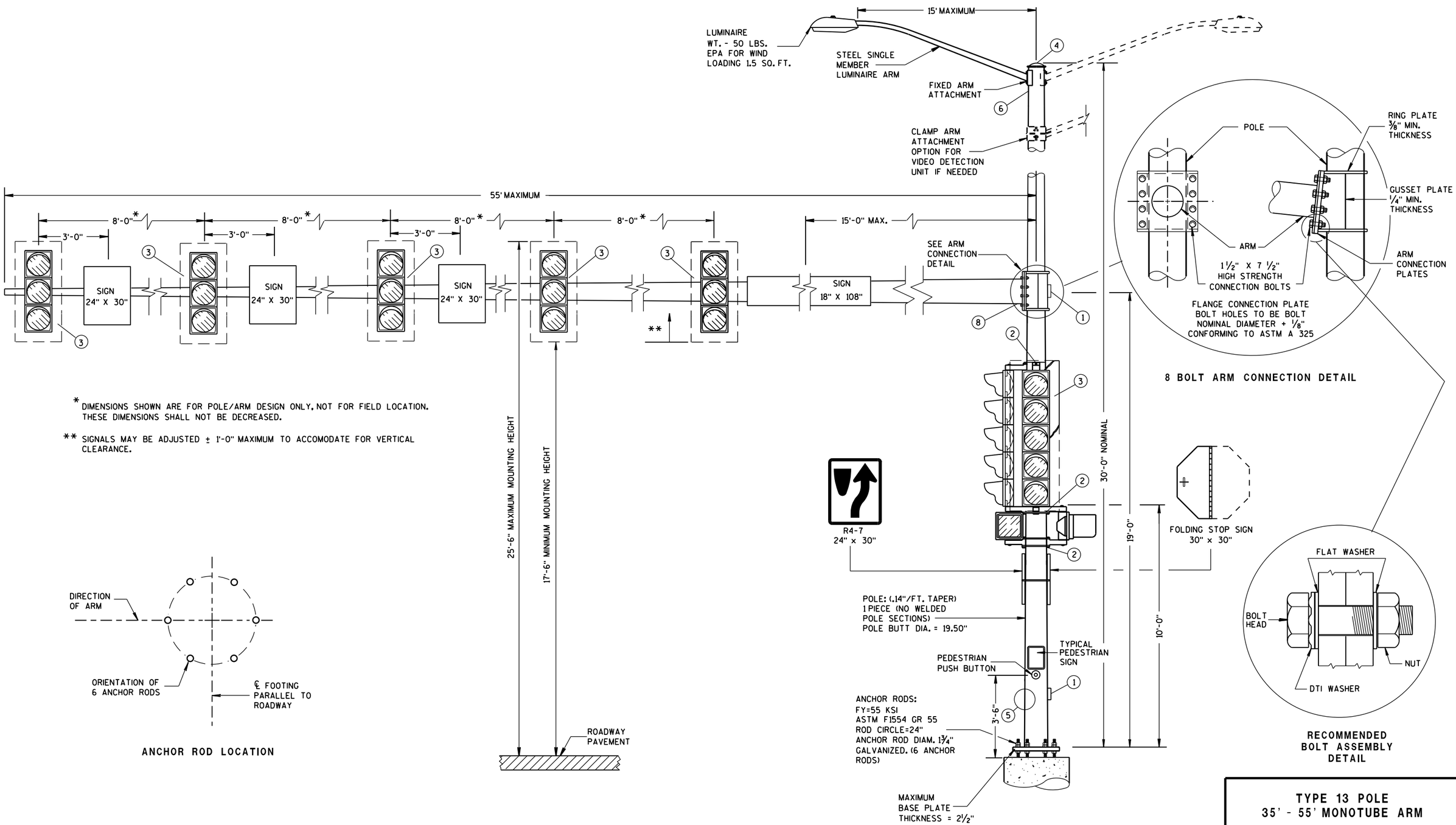


* DIMENSIONS SHOWN ARE FOR POLE/ARM DESIGN ONLY, NOT FOR FIELD LOCATION. THESE DIMENSIONS SHALL NOT BE DECREASED.

** SIGNALS MAY BE ADJUSTED ± 1'-0" MAXIMUM TO ACCOMODATE FOR VERTICAL CLEARANCE.

(MAXIMUM LOAD)

## TYPE 13 POLE 35'- 55' MONOTUBE ARM

**TYPE 13 POLE**
**35' - 55' MONOTUBE ARM**

STATE OF WISCONSIN
DEPARTMENT OF TRANSPORTATION

APPROVED
June, 2015
DATE

/S/ Ahmet Demirbilek
STATE ELECTRICAL

FHWA

## GENERAL NOTES

DETAILS OF CONSTRUCTION, MATERIALS AND WORKMANSHIP NOT SHOWN ON THIS DRAWING SHALL CONFORM TO THE PERTINENT REQUIREMENTS OF THE CONTRACT.

POLE TYPES 9 AND 10 ARE FOR ARM LENGTHS 15-FOOT TO 30-FOOT.

POLE TYPES 12 AND 13 ARE FOR ARM LENGTHS 35-FOOT TO 55-FOOT.

MONOTUBE POLE AND ARM SHALL BE GALVANIZED STEEL.

RING-STIFFENED BUILT-UP BOX TYPE OF ATTACHMENT FOR TRAFFIC SIGNAL ARM.

ONE (1) PIECE POLE CONSTRUCTION (NO WELDED POLE SECTIONS).

STANDARD STRAIGHT ARM DESIGN (3 % ± RISE).

SECTION 657, POLES OF THE STANDARD SPECIFICATIONS SHALL APPLY TO THIS DRAWING.

PROVIDE WIREWAY THRU POLE WALL AND ARM CONNECTION PLATES. PROVIDE ROUND, SMOOTH INSIDE SURFACE.

MANUFACTURER'S SUBMITTED POLE DESIGNS AND DRAWINGS SHALL BE SIGNED AND STAMPED BY A REGISTERED PROFESSIONAL ENGINEER AND CERTIFIED AS BEING IN COMPLIANCE WITH THE AASHTO 2013 6TH EDITION AND ALL PERTINENT WISDOT SPECIFICATIONS AND DRAWINGS FOR TRAFFIC AND LIGHTING STRUCTURES AND AS FOLLOWS:

- CATEGORY III FATIGUE LOADS OF GALLOPING, TRUCK GUSTS (AT 45 MPH VEHICLE VELOCITY) AND NATURAL WIND GUSTS FOR DESIGN OF TYPE 9 AND TYPE 10 STRUCTURES.
- CATEGORY II FATIGUE LOADS OF GALLOPING, TRUCK GUSTS (AT 45 MPH VEHICLE VELOCITY) AND NATURAL WIND GUSTS FOR DESIGN OF TYPE 12 AND TYPE 13 STRUCTURES.
- 90 MPH (3-SECOND GUST) WIND SPEED AND A 50 YEAR DESIGN LIFE.

SECURE THE OPENING BELOW THE BASE PLATE WITH STAINLESS STEEL OR GALVANIZED STEEL MESH AND SECURE THE MESH WITH ¾" S.S. BANDING AROUND THE LEVELING NUTS.

INDENT PRINT (NOMINAL ½" HIGH) THE POLE LENGTH AND FIRST TWO LETTERS OF THE MANUFACTURERS NAME ON TWO SIDES OF THE BASE PLATE 180 DEGREES APART, BEFORE GALVANIZING. THE ARM SHALL BE IDENTIFIED WITH THE SAME INFORMATION BY INDENT PRINT.

SIGNAL FACE SHALL BE MOUNTED 6 INCHES (NOMINAL) FROM THE END OF THE MONOTUBE ARM OR AS SHOWN ON THE PLAN CONSTRUCTION DETAIL OR AS DIRECTED BY THE PROJECT ENGINEER/ELECTRICAL OPERATIONS PERSONNEL. MOUNT ALL LIKE HEADS AT SAME ELEVATION.

SIGN MOUNTING BRACKETS SHALL BE FURNISHED IN ACCORDANCE WITH SECTION 637 OF THE STANDARD SPECIFICATIONS FOR HIGHWAY AND STRUCTURE CONSTRUCTION.

(1) DESIGN FOR MAXIMUM ALLOWABLE HANDHOLE WITH COVER ASSEMBLY WITH TWO ¼" X ¾" - 20 TPI STAINLESS STEEL HEX HEAD BOLTS.

(2) SIGNAL MOUNTING BRACKETS FOR POLE MOUNTING, MOUNT WITH CAP SCREW AND BANDING. (SEE SPECIFICATIONS SEC. 658).

(3) SECURELY MOUNT BACKPLATES, PROJECTING 5" BEYOND ALL SIDES OF THE SIGNAL FACE HOUSING, PER MANUFACTURERS RECOMMENDATIONS.

(4) THE TOP OF THE POLE SHAFT AND THE END OF THE MONOTUBE ARM SHALL BE EQUIPPED WITH A REMOVABLE, VENTILATED CAP HELD SECURELY IN PLACE WITH SET SCREWS.

(5) FACTORY-WELDED BRACKET FOR GROUNDING LUG, OPPOSITE HANDHOLE. (LUG AND HARDWARE PAID UNDER SEPARATE ITEM). PROVIDE HOLE IN BRACKET FOR ¼" X ¾" - 20 TPI STAINLESS STEEL HEX HEAD BOLT.

(6) FACTORY-WELDED "J" HOOK FOR STRAIN RELIEF FOR POLE LUMINAIRE WIRE.

(7) INSTALL STRUCTURAL IDENTIFICATION PLAQUES.

STRUCTURAL IDENTIFICATION PLAQUES SHALL BE PLACED ON THE POLES IN THE SAME DIRECTION AS THE ARM.

MOUNTING HEIGHT SHALL BE 6'-0" ABOVE THE CURB OR SHOULDER. ADJUST IF IT IS KNOWN THAT REQUIRED TRAFFIC SIGNS WILL BE OBSTRUCTED.

(8) FACTORY DRILLED ½" DRAIN HOLE 2" FROM FLANGE CONNECTION PLATE.

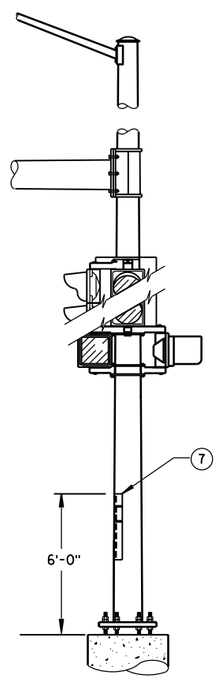


STRUCTURAL IDENTIFICATION PLAQUE PLACEMENT

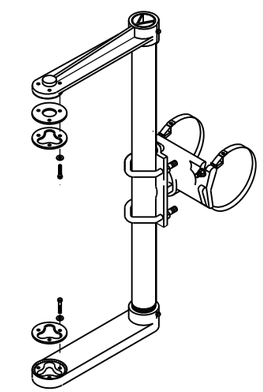

SIGNAL FACE MOUNTING BRACKET DETAIL FOR MONOTUBE ARM

(MOUNT PER MANUFACTURER'S RECOMMENDATION)

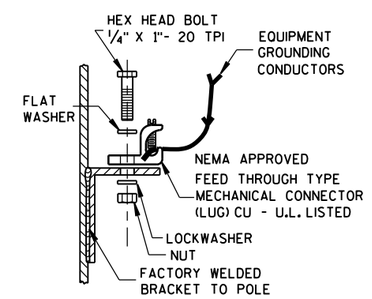


TYPICAL GROUNDING CONNECTIONS (5)

NUT, BOLT AND WASHERS SHALL BE STAINLESS STEEL

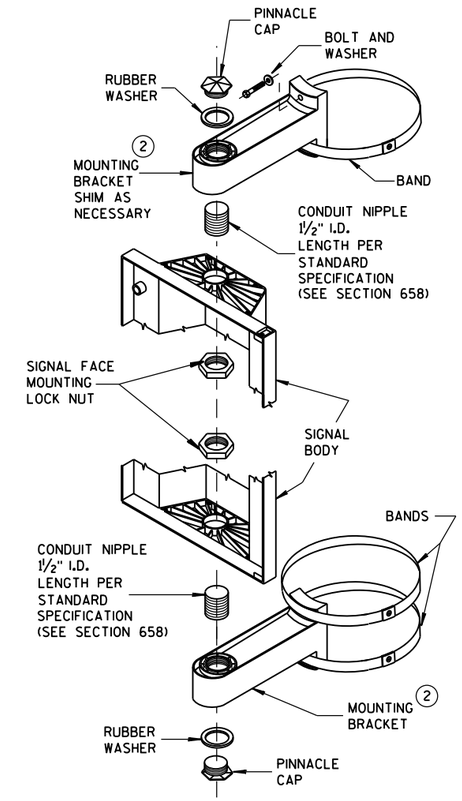


SIGNAL FACE VERTICAL MOUNTING DETAIL

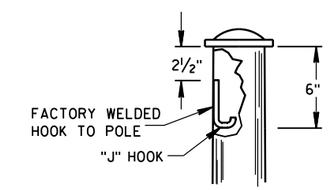


"J" HOOK WIRE SUPPORT (6)

GENERAL NOTES AND HARDWARE DETAILS FOR TYPE 9, 10, 12 & 13 POLES WITH MONOTUBE ARMS

STATE OF WISCONSIN
DEPARTMENT OF TRANSPORTATION

APPROVED
June, 2015 — DATE
/S/ Ahmet Demirbilek — STATE ELECTRICAL
FHWA

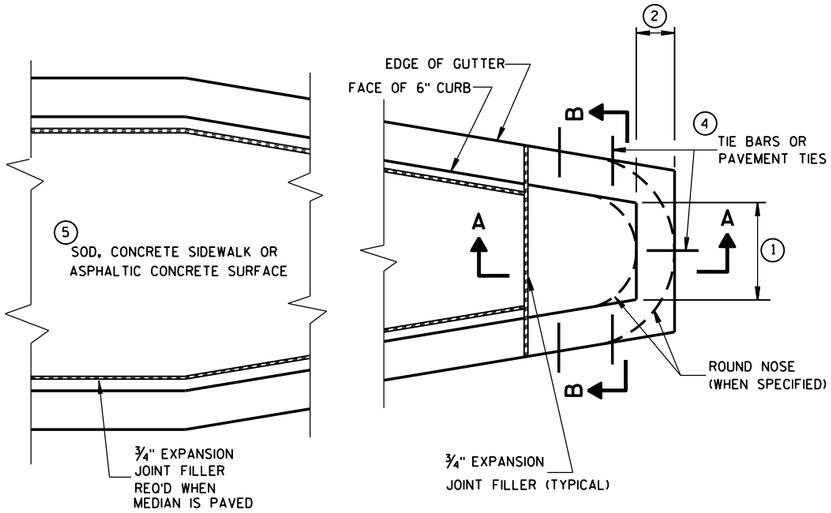


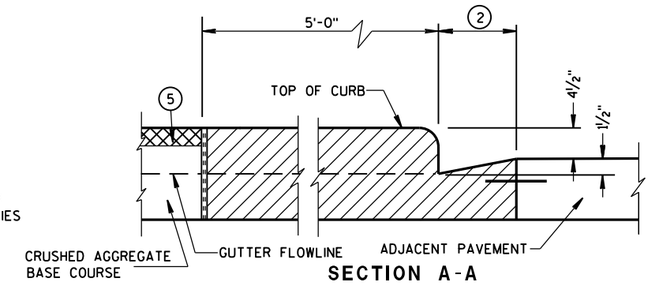


SECTION A-A

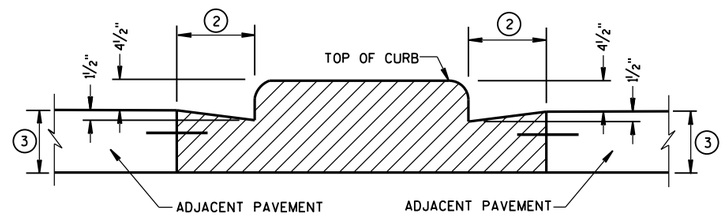


SECTION B-B

## CONCRETE MEDIAN BLUNT NOSE DETAIL

## GENERAL NOTES

DETAILS OF CONSTRUCTION, MATERIALS AND WORKMANSHIP NOT SHOWN ON THIS DRAWING SHALL CONFORM TO THE PERTINENT REQUIREMENTS OF THE STANDARD SPECIFICATIONS AND THE APPLICABLE SPECIAL PROVISIONS.

1. SEE PLAN FOR MEDIAN NOSE WIDTH AND RADIUS (FOR ROUND NOSE ALTERNATE).
2. WIDTH OF GUTTER TO MATCH EXISTING ADJACENT GUTTER OR AS SPECIFIED ELSEWHERE IN THE PLAN.
3. DEPTH EQUAL TO ADJACENT PAVEMENT. ADJACENT PAVEMENT STRUCTURE DETAILS ARE SHOWN ON THE PLAN. TYPICAL OPTIONS ARE:
   (1) NEW OR EXISTING CONCRETE PAVEMENT.
   (2) ASPHALTIC CONCRETE PAVEMENT OVER NEW OR EXISTING CONCRETE BASE COURSE.
   (3) ASPHALTIC CONCRETE PAVEMENT OVER CRUSHED AGGREGATE BASE COURSE.
4. TIE BARS OR PAVEMENT TIES REQUIRED IN NEW CONCRETE PAVEMENT OR CONCRETE BASE COURSE. TIE BARS SHALL BE NO. 4 X 2'-0" SPACED AT 2'-0" C-C.

   PAVEMENT TIES REQUIRED IN EXISTING CONCRETE BASE COURSE. PAVEMENT TIES SHALL BE NO. 6 X 1'-0" SPACED AT 3'-0" C-C INSTALLED ON A HORIZONTAL SKEW OF 6:1. THE DIRECTION OF SKEW SHALL ALTERNATE AFTER EVERY ONE OR TWO BARS.
5. SURFACE TYPE AND DETAILS ARE SHOWN ELSEWHERE IN THE PLAN.

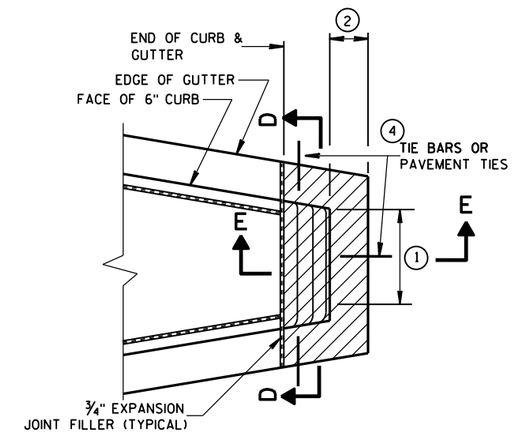


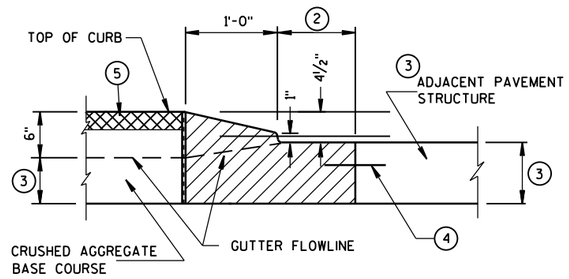


SECTION E-E

## CONCRETE MEDIAN SLOPED NOSE TYPE 2

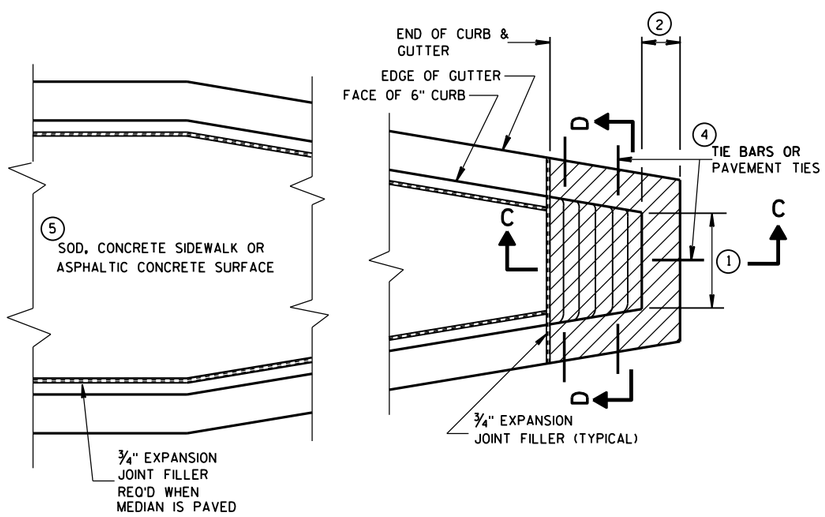


## CONCRETE MEDIAN SLOPED NOSE TYPE 1

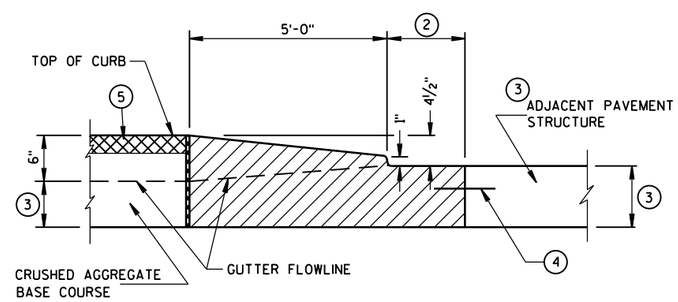


SECTION C-C

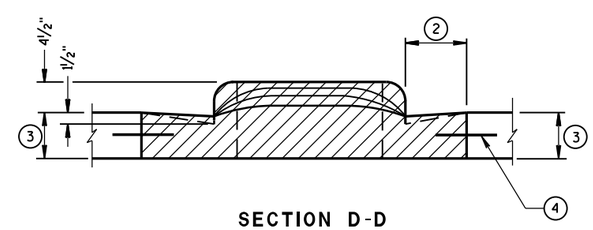

SECTION D-D

| | |
|---|---|
| CONCRETE MEDIAN NOSE | |
| STATE OF WISCONSIN DEPARTMENT OF TRANSPORTATION | |
| APPROVED 6/8/2006 DATE | /S/ Jerry H. Zogg ROADWAY STANDARDS DEVELOPMENT ENGINEER |
| FHWA | |

## GENERAL NOTES

SAW CUT, DRILL, AND LIFT OUT EXISTING CONCRETE PAVEMENT WITHIN THE BOUNDARIES OF CONCRETE REPAIR AREAS. THE CONTRACTOR MAY MAKE ADDITIONAL SAW CUTS INSIDE THE REPAIR LIMITS TO REDUCE WEIGHT AND SIZE OF CONCRETE PIECES.

PROVIDE A 6-FOOT MINIMUM DISTANCE FROM BOUNDARIES OF CONCRETE REPAIR AREAS TO ADJACENT TRANSVERSE JOINT OR CRACK IN THE SAME LANE.

THE LENGTH OF THE REPAIRS MAY VARY FROM THE DIMENSIONS SHOWN IF THE EXISTING CONCRETE PAVEMENT IS NONDOWELED AND THE PAVEMENT IS TO BE OVERLAID AFTER REPAIRING.

(1) DOWEL BARS MIGHT NOT EXIST.

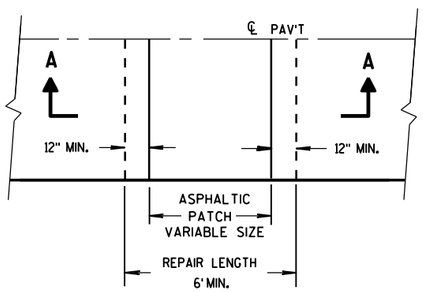


PLAN VIEW

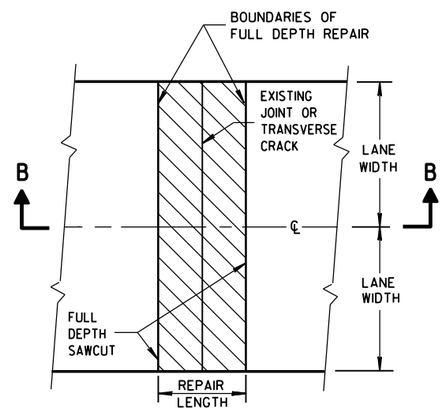


PLAN VIEW
(DOUBLE LANE REPAIR)

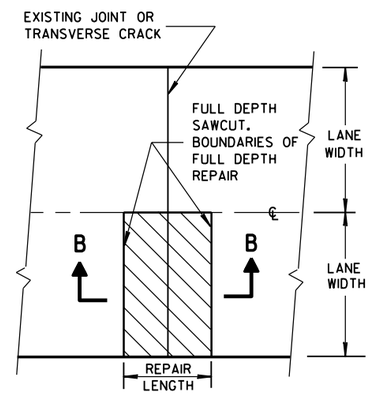


PLAN VIEW
(SINGLE LANE REPAIR)

FULL DEPTH CONCRETE PAVEMENT REMOVAL

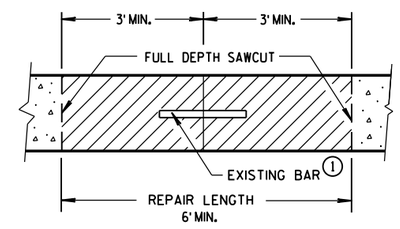


SECTION B-B

CONCRETE REMOVAL

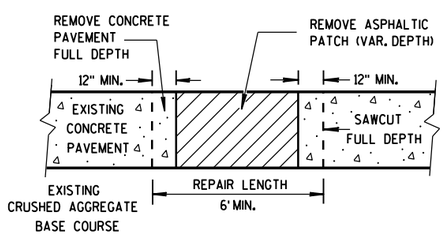


SECTION A-A

HMA PATCH REMOVAL

6

6

S.D.D. 13 C 9-13a

S.D.D. 13 C 9-13a

CONCRETE PAVEMENT REPAIR AND REPLACEMENT

STATE OF WISCONSIN
DEPARTMENT OF TRANSPO

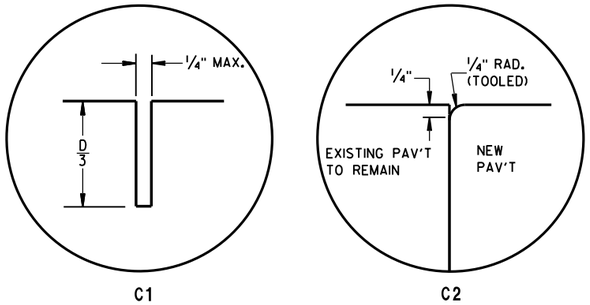


## TRANSVERSE JOINTS

## TIE BAR TABLE

| PAVEMENT DEPTH (D) | TIE BAR SIZE | TIE BAR LENGTH (L) | MAX. TIE BAR SPACING |
|---|---|---|---|
| < 10 1/2" | NO. 4 | 30" | 36" |
| ≥ 10 1/2" | NO. 5 | 36" | 36" |
| | NO. 4 * | 30" | 24" ** |

* SUBSTITUTE BENT BARS AT LONGITUDINAL JOINTS WHEN EQUIPMENT LIMITATIONS DURING CONSTRUCTION WARRANT (e.g. AUXILIARY LANES OR TURN LANES)

** CONFORM TO 15" MINUMUM SPACING FROM TRANSVERSE JOINTS; SPACING BETWEEN TIE BARS WILL BE 30" AT TRANSVERSE JOINTS.

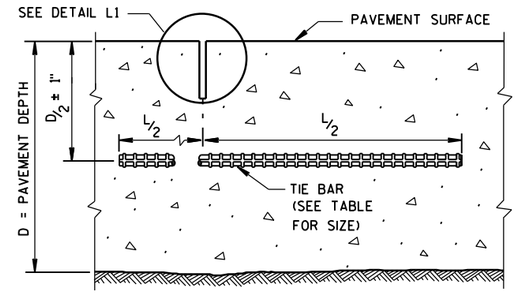


SECTION C-C

## SAWED LONGITUDINAL JOINT

## GENERAL NOTES

INSTALL DOWEL BARS PARALLEL TO THE PAVEMENT CENTERLINE AND PAVEMENT SURFACE.

CONCRETE PAVEMENT REPAIRS OF EXISTING NONDOWELED CONCRETE PAVEMENTS DO NOT NEED TO BE DOWELED.

DO NOT SEAL OR FILL JOINTS.

ANCHOR DOWEL BARS AND TIE BARS INTO DRILLED HOLES WITH AN EPOXY.

FOR MULTI-LANE CONCRETE PAVEMENT REPLACEMENTS, PROVIDE A MINIMUM DISTANCE OF 15 INCHES FROM ALL TRANSVERSE JOINTS OR EDGES OF REPLACEMENT TO THE CENTER OF THE TIE BAR NEAREST THAT JOINT OR EDGE.

(1) APPLY A THIN UNIFORM COATING OF SURFACE TREATMENT TO THE FREE END OF DOWEL BARS TO PREVENT BONDING.

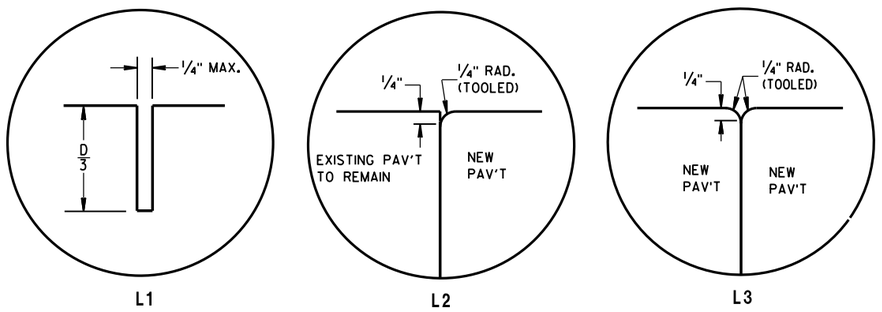


## LONGITUDINAL JOINTS

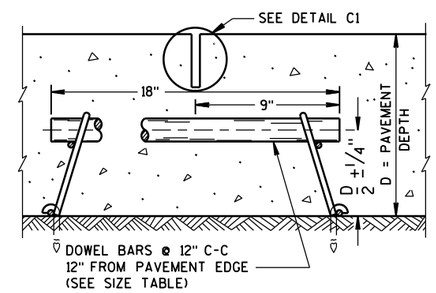


SECTION F-F

## CONTRACTION JOINT

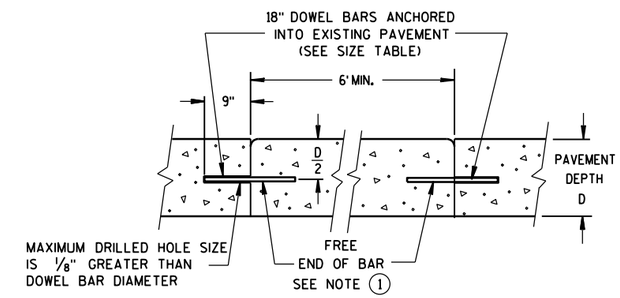


SECTION D-D

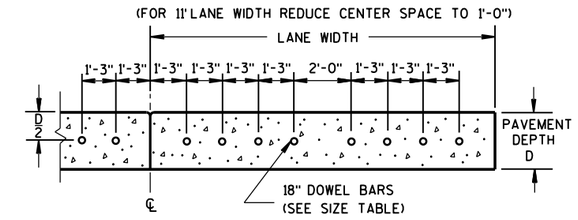


SECTION E-E

## DRILLED DOWEL BAR CONSTRUCTION JOINT

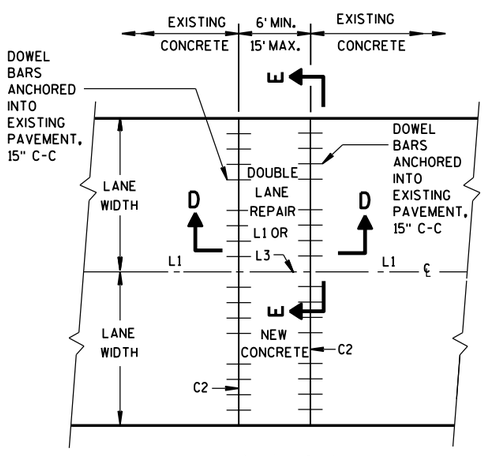


PLAN VIEW

## MULTI-LANE CONCRETE PAVEMENT REPAIR

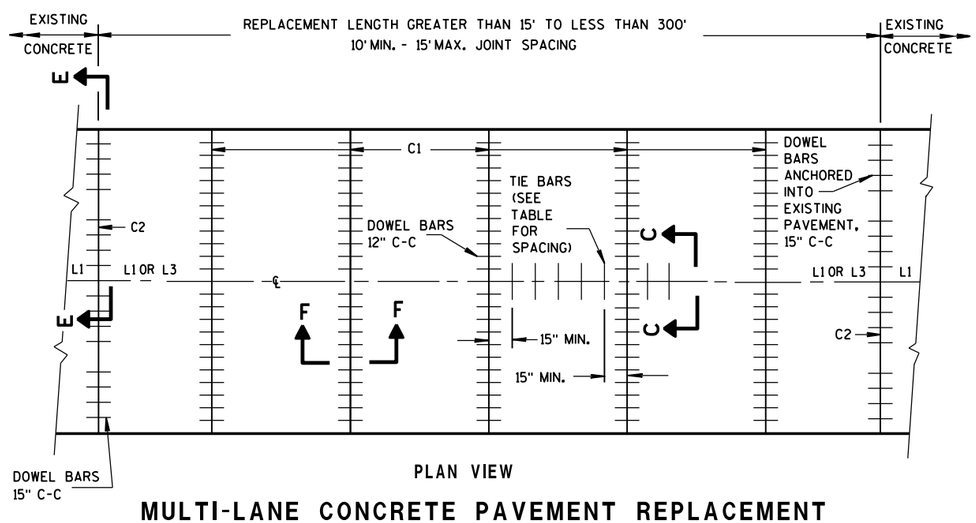


PLAN VIEW

## MULTI-LANE CONCRETE PAVEMENT REPLACEMENT

## PAVEMENT DEPTH, DOWEL BAR SIZE AND JOINT SPACING TABLE

| PAVEMENT DEPTH (D) | DOWEL BAR DIAMETER | CONTRACTION JOINT SPACING |
|---|---|---|
| 5 1/2", 6", 6 1/2" | NONE | 12' |
| 7", 7 1/2" | 1" | 14' |
| 8", 8 1/2" | 1 1/4" | 15' |
| 9", 9 1/2" | 1 1/4" | 15' |
| 10" & ABOVE | 1 1/2" | 15' |

CONCRETE PAVEMENT REPAIR AND REPLACEMENT

STATE OF WISCONSIN
DEPARTMENT OF TRANSPOR




6


S.D.D. 13 C 9-13b

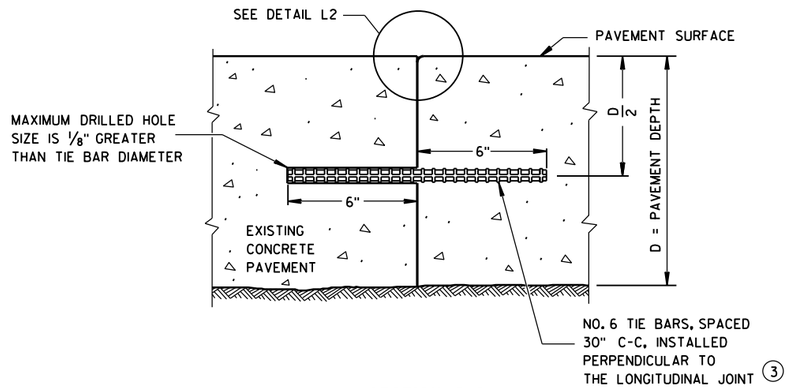


SECTION G-G

## TIE BARS ANCHORED INTO EXISTING PAVEMENT

## GENERAL NOTES

(1) WITH THE APPROVAL OF THE ENGINEER, FOR SINGLE LANE PAVEMENT REPLACEMENTS LESS THAN 30 FEET IN LENGTH, THE CONTRACTOR MAY INSTALL DRILLED TIE BARS ON 6:1 SKEW HORIZONTALLY, DIRECTION OF SKEW ALTERNATING WITH EACH SUCCESSIVE BAR. DRIVE SKEWED TIE BARS TO A DEPTH OF 6 INCHES IN A HOLE OF SUCH A DIAMETER AS TO PROVIDE A TIGHT DRIVEN FIT.

(2) USE AN ENGINEER-APPROVED BOND BREAKER (E.G. RELEASE AGENT, CURING COMPOUND) FOR SINGLE LANE REPAIRS UP TO 15 FEET IN LENGTH.

(3) ANCHOR TIE BARS INTO DRILLED HOLES WITH AN EPOXY.

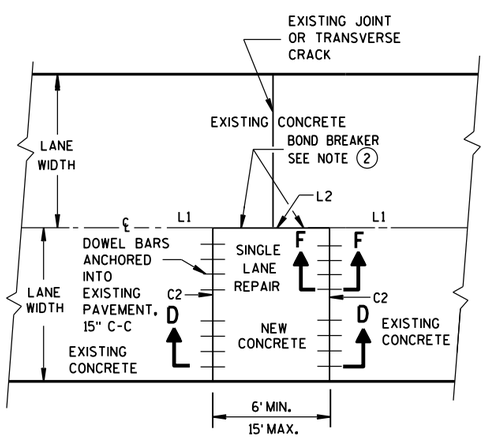


PLAN VIEW

## SINGLE LANE CONCRETE PAVEMENT REPAIR

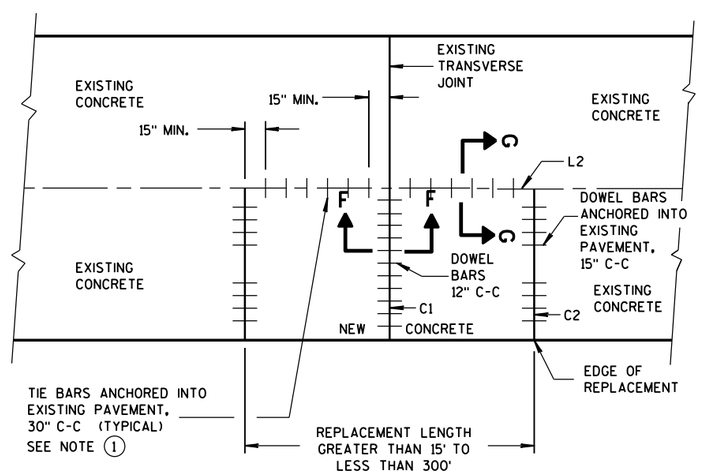


PLAN VIEW

## SINGLE LANE CONCRETE PAVEMENT REPLACEMENT

CONCRETE PAVEMENT REPAIR AND REPLACEMENT

STATE OF WISCONSIN
DEPARTMENT OF TRANSPORTATION

APPROVED
Sept., 2015 — DATE
/S/ Peter Kemp, P.E. — PAVEMENT SUPER
FHWA





6

S.D.D. 13 C 9-13c

## GENERAL NOTES

SAW CUT, DRILL, AND LIFT OUT EXISTING CONCRETE PAVEMENT WITHIN THE BOUNDARIES OF CONCRETE REPAIR AREAS. THE CONTRACTOR MAY MAKE ADDITIONAL SAW CUTS INSIDE THE REPAIR LIMITS TO REDUCE WEIGHT AND SIZE OF CONCRETE PIECES.

PROVIDE 6-FOOT MINIMUM DISTANCE FROM BOUNDARIES OF CONCRETE REPAIR AREAS TO ADJACENT TRANSVERSE JOINT OR CRACK.

THE LENGTH OF THE REPAIRS MAY VARY FROM THE DIMENSIONS SHOWN IF THE EXISTING CONCRETE PAVEMENT IS NONDOWELED AND THE PAVEMENT IS TO BE OVERLAID AFTER REPAIRING.

(1) DOWEL BARS MIGHT NOT EXIST.

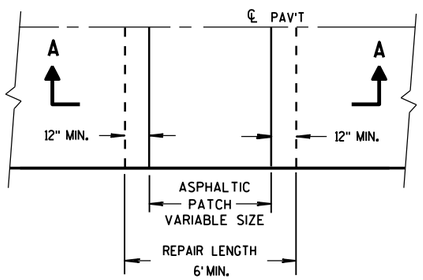


PLAN VIEW

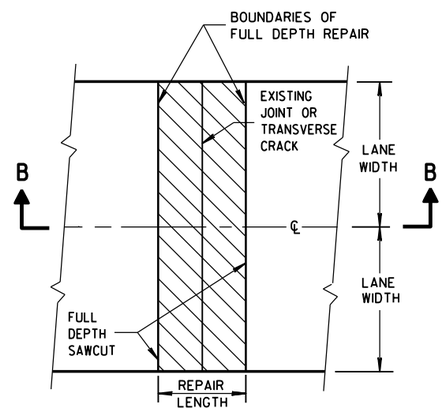


PLAN VIEW
(DOUBLE LANE REPAIR)

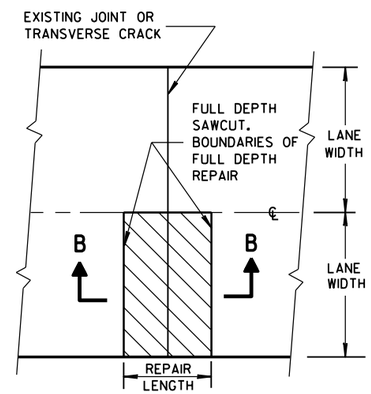


PLAN VIEW
(SINGLE LANE REPAIR)

FULL DEPTH CONCRETE PAVEMENT REMOVAL

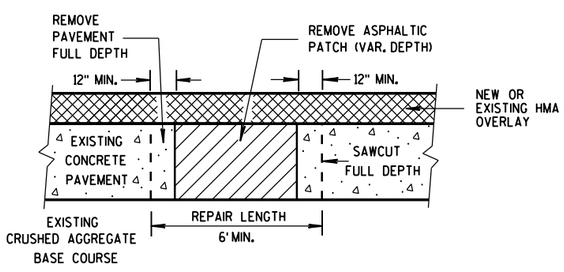


SECTION A-A

HMA PATCH REMOVAL

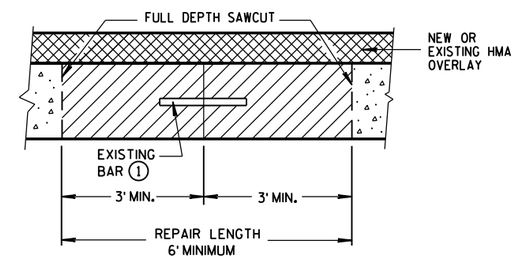


SECTION B-B

CONCRETE REMOVAL

BASE PATCHING CONCRETE

STATE OF WISCONSIN
DEPARTMENT OF TRANSPO







6

S.D.D. 13 C 14-6a

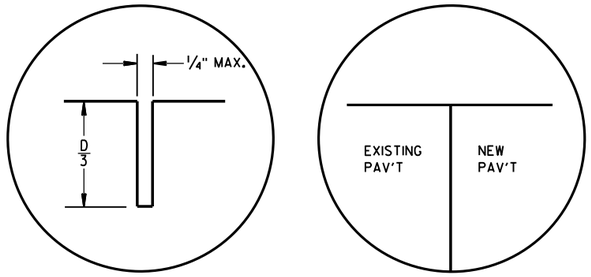


C1 C2

## TRANSVERSE JOINTS

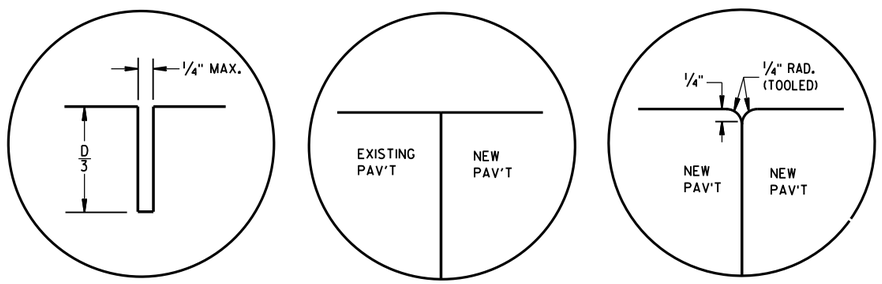


L1 L2 L3

## LONGITUDINAL JOINTS

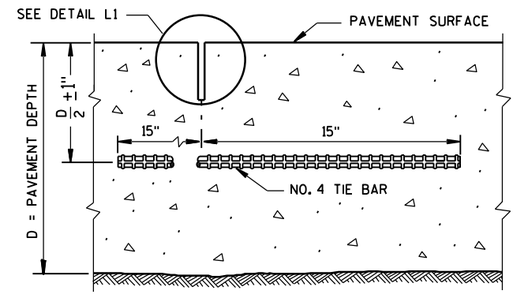


SECTION C-C

## SAWED LONGITUDINAL JOINT

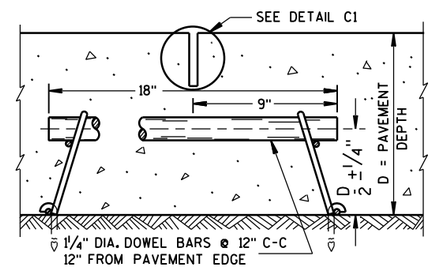


SECTION F-F

## CONTRACTION JOINT

## GENERAL NOTES

INSTALL DOWEL BARS PARALLEL TO THE PAVEMENT CENTERLINE AND PAVEMENT SURFACE.

CONCRETE BASE PATCHES OF EXISTING NONDOWELED CONCRETE PAVEMENTS DO NOT NEED TO BE DOWELED.

DO NOT SEAL OR FILL JOINTS.

ANCHOR DOWEL BARS AND TIE BARS INTO DRILLED HOLES WITH AN EPOXY.

PROVIDE A MINIMUM DISTANCE OF 15 INCHES FROM AN EXISTING TRANSVERSE JOINT OR THE EDGE OF REPLACEMENT TO THE CENTER OF THE TIE BAR NEAREST THAT JOINT OR EDGE.

(1) APPLY A THIN UNIFORM COATING OF SURFACE TREATMENT TO THE FREE END OF DOWEL BARS TO PREVENT BONDING.

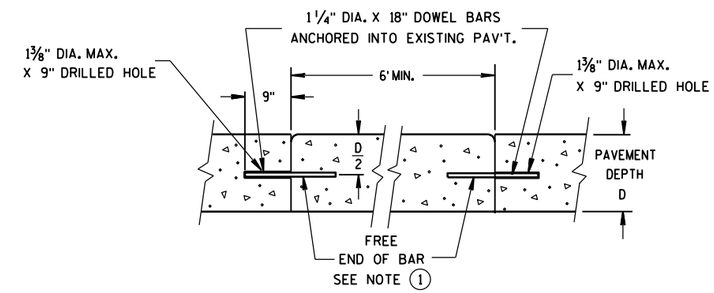


SECTION D-D

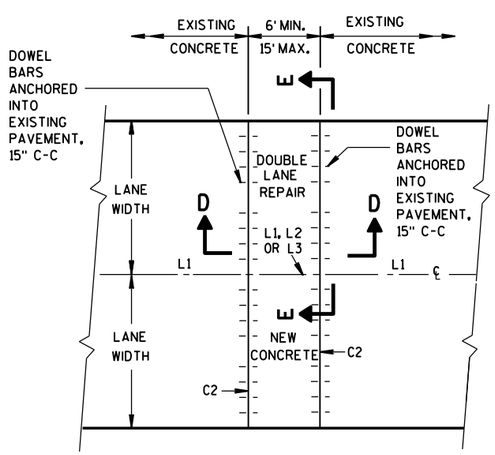


PLAN VIEW

## MULTI-LANE CONCRETE BASE PATCH 15' MAXIMUM LENGTH

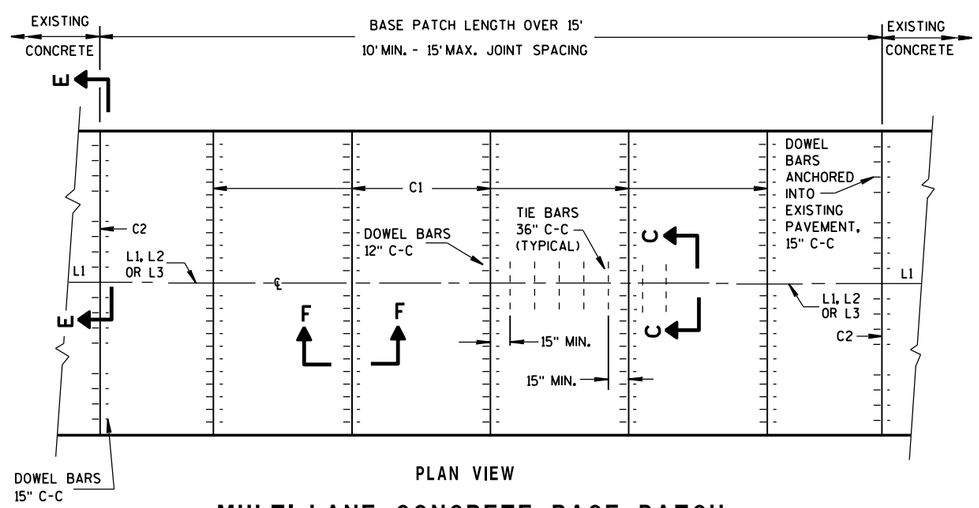


PLAN VIEW

## MULTI-LANE CONCRETE BASE PATCH GREATER THAN 15' IN LENGTH

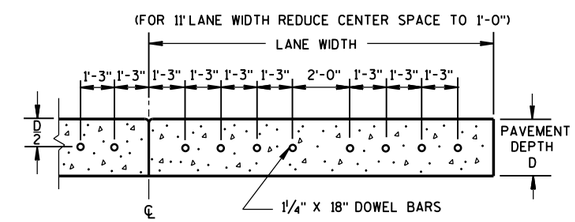


SECTION E-E

## SPACING OF DOWEL BARS ANCHORED INTO EXISTING PAVEMENT

BASE PATCHING CONCRETE

STATE OF WISCONSIN
DEPARTMENT OF TRANSPOR

## GENERAL NOTES

1. USE AN ENGINEER-APPROVED BOND BREAKER (E.G. RELEASE AGENT, CURING COMPOUND) FOR SINGLE LANE BASE PATCHES UP TO 15 FEET IN LENGTH.

2. WITH THE APPROVAL OF THE ENGINEER, FOR SINGLE LANE PAVEMENT REPLACEMENTS LESS THAN 30 FEET IN LENGTH, DRILLED TIE BARS MAY BE INSTALLED ON 6:1 SKEW HORIZONTALLY, DIRECTION OF SKEW ALTERNATING WITH EACH SUCCESSIVE BAR. DRIVE SKEWED TIE BARS TO A DEPTH OF 6 INCHES IN A HOLE OF SUCH A DIAMETER AS TO PROVIDE A TIGHT DRIVEN FIT.

3. ANCHOR TIE BARS INTO DRILLED HOLES WITH AN EPOXY.

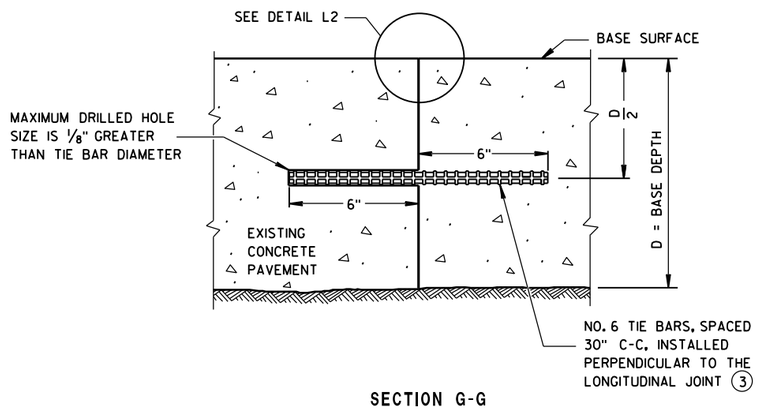


SECTION G-G

### TIE BARS ANCHORED INTO EXISTING PAVEMENT

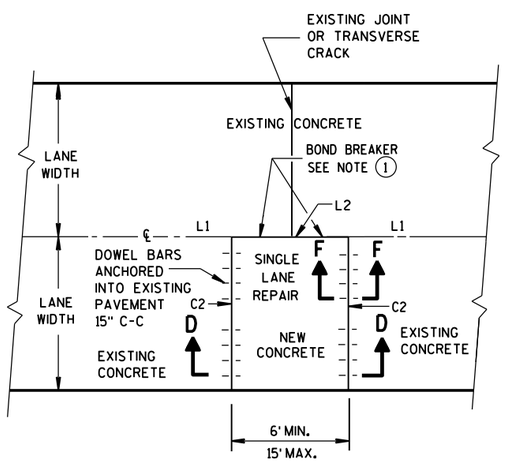


PLAN VIEW

### SINGLE LANE CONCRETE BASE PATCH 15' MAXIMUM LENGTH

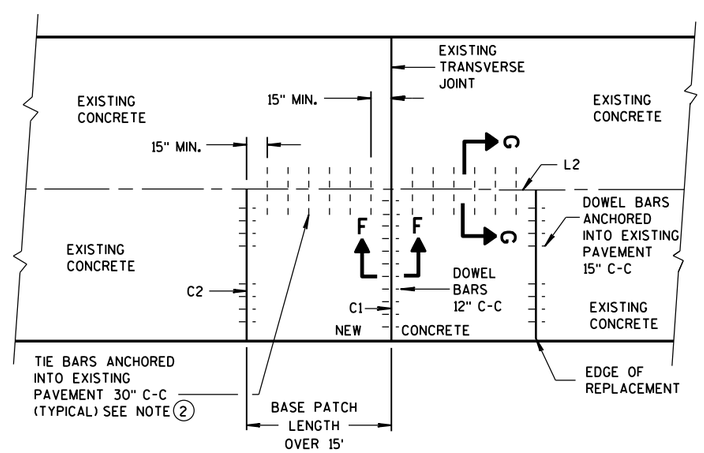


PLAN VIEW

### SINGLE LANE CONCRETE BASE PATCH GREATER THAN 15' IN LENGTH

**BASE PATCHING CONCRETE**

STATE OF WISCONSIN
DEPARTMENT OF TRANSPORTATION

APPROVED
Sept., 2015 — DATE
/S/ Peter Kemp, P.E. — PAVEMENT SUPER
FHWA

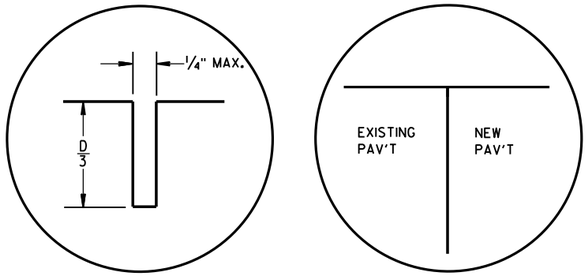


C1 C2

## TRANSVERSE JOINTS

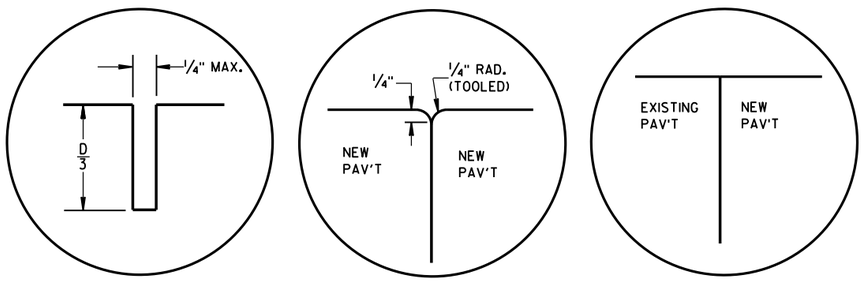


L1 L2 L3

## LONGITUDINAL JOINTS

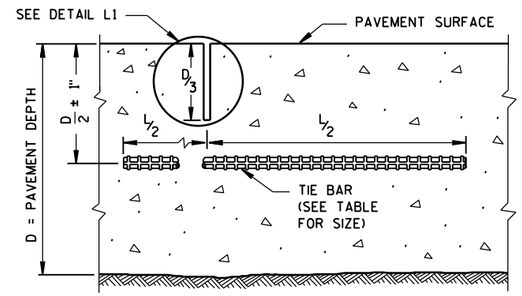


SECTION C-C

## SAWED JOINT

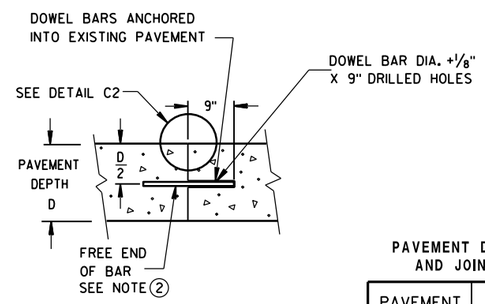


SECTION D-D

## GENERAL NOTES

ANCHOR TIE BARS AND DOWEL BARS INTO DRILLED HOLES WITH AN EPOXY.

PROVIDE A MINIMUM DISTANCE OF 15 INCHES FROM AN EXISTING TRANSVERSE JOINT OR THE EDGE OF REPLACEMENT TO THE CENTER OF THE TIE BAR NEAREST THAT JOINT OR EDGE.

1. INSTALL DOWEL BARS PARALLEL TO THE PAVEMENT CENTERLINE AND PAVEMENT SURFACE.
2. APPLY A THIN UNIFORM COATING OF SURFACE TREATMENT TO THE FREE END OF DOWEL BARS TO PREVENT BONDING.

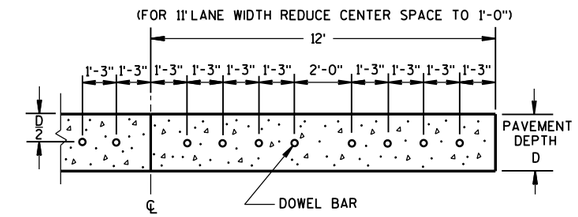


SECTION E-E

## SPACING OF DOWEL BARS ANCHORED INTO EXISTING PAVEMENT

PAVEMENT DEPTH, DOWEL BAR SIZE AND JOINT SPACING TABLE

| PAVEMENT DEPTH (D) | DOWEL BAR DIAMETER | CONTRACTION JOINT SPACING |
|---|---|---|
| 5½", 6, 6 ½" | NONE | 12' |
| 7, 7 ½" | 1" | 14' |
| 8, 8 ½" | 1¼" | 15' |
| 9, 9 ½" | 1¼" | 15' |
| 10" & ABOVE | 1½" | 15' |

## TIE BAR TABLE

| PAVEMENT DEPTH (D) | TIE BAR SIZE | TIE BAR LENGTH (L) | MAX. TIE BAR SPACING |
|---|---|---|---|
| < 10 ½" | NO. 4 | 30" | 36" |
| ≥ 10 ½" | NO. 5 | 36" | 36" |
| | NO. 4 * | 30" | 24" ** |

* SUBSTITUTE BENT BARS AT LONGITUDINAL JOINTS WHEN EQUIPMENT LIMITATIONS DURING CONSTRUCTION WARRANT (e.g. AUXILIARY LANES OR TURN LANES)

** CONFORM TO 15" MINUMUM SPACING FROM TRANSVERSE JOINTS; SPACING BETWEEN TIE BARS WILL BE 30" AT TRANSVERSE JOINTS.

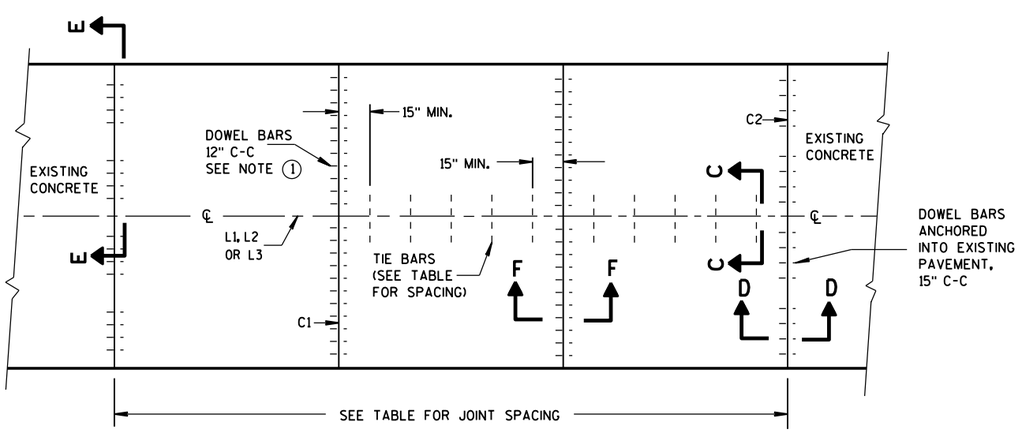


PLAN VIEW

## CONCRETE BASE CONTRACTION JOINT LOCATIONS

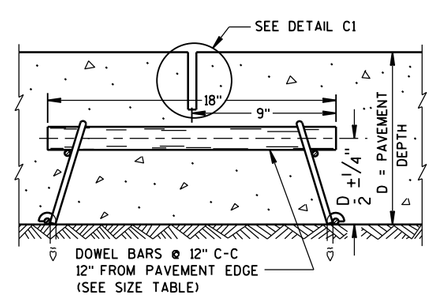


SECTION F-F

## CONTRACTION JOINT

CONCRETE BASE

STATE OF WISCONSIN
DEPARTMENT OF TRANSPO

## GENERAL NOTES

1. USE AN ENGINEER-APPROVED BOND BREAKER (E.G. RELEASE AGENT, CURING COMPOUND) AT THE LONGITUDINAL JOINT IN LIEU OF TIE BARS FOR SINGLE LANE CONCRETE BASE REPAIRS UP TO 15 FEET IN LENGTH.

2. ANCHOR TIE BARS INTO DRILLED HOLES WITH AN EPOXY.

3. PAVEMENT THAT WAS IN PLACE PRIOR TO THE CONTRACT.

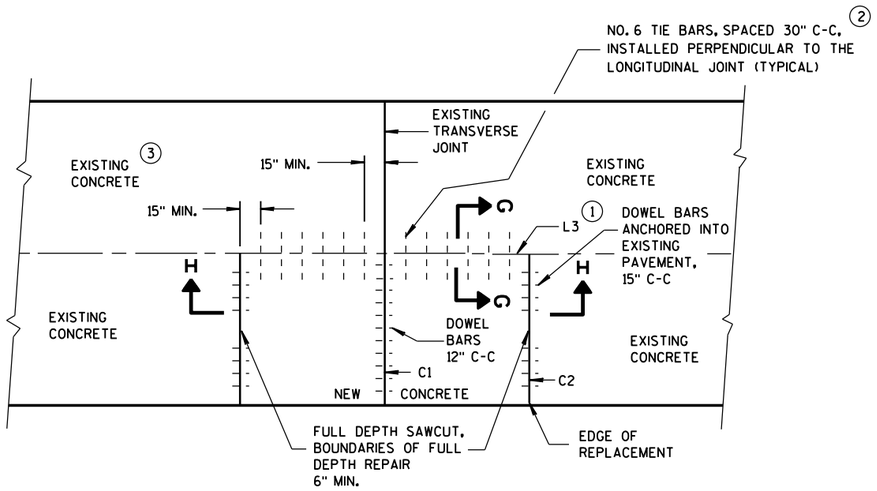


PLAN VIEW

### SINGLE LANE CONCRETE BASE REPAIR

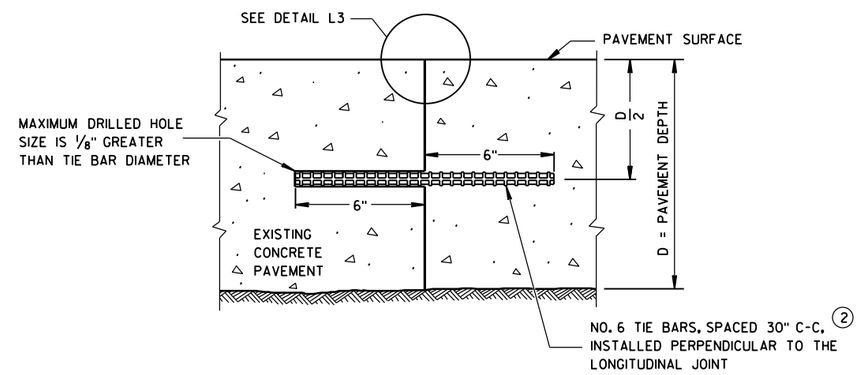


SECTION G-G

### TIE BARS ANCHORED INTO EXISTING PAVEMENT

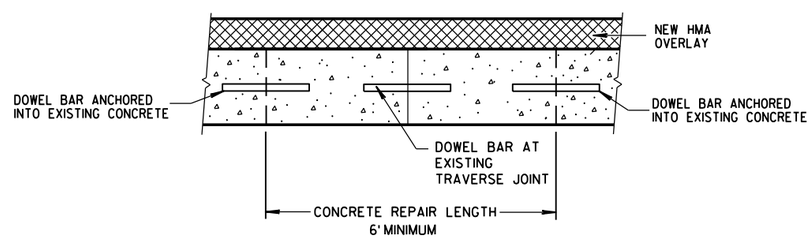


SECTION H-H

CONCRETE BASE

STATE OF WISCONSIN
DEPARTMENT OF TRANSPORTATION

APPROVED
June, 2015 — DATE
/S/ Peter Kemp, P.E. — PAVEMENT SUPEI
FHWA




6


S.D.D. 13 C 15-6b

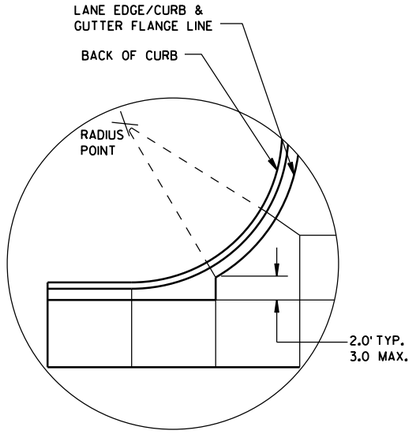


DETAIL "A"

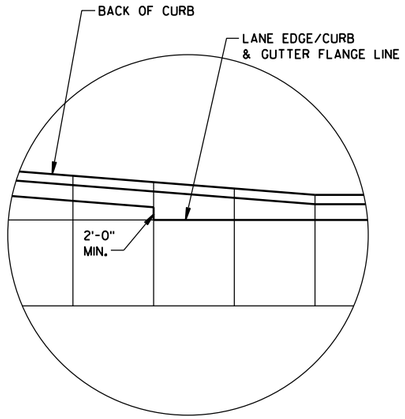


DETAIL "B"

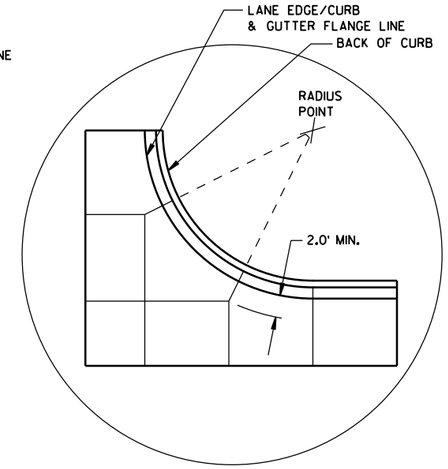


DETAIL "C"

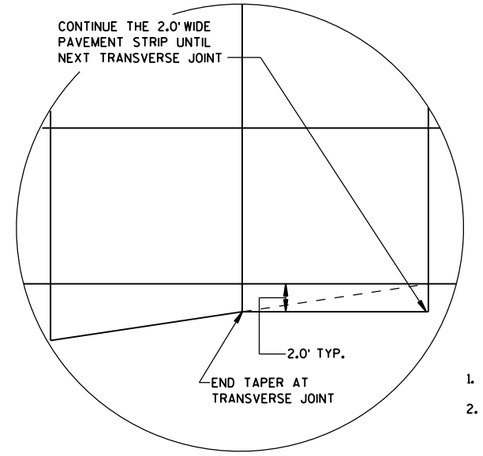


DETAIL "D"

## GENERAL NOTES

THE PRIMARY ROADWAY CONTROLS THE TRANSVERSE JOINT PATTERN.

ALIGN NEW JOINTS WITH EXISTING JOINTS OR CRACKS.

CONSTRUCT TRANSVERSE JOINTS PERPENDICULAR TO THE ROADWAY.

ADJUST TRANSVERSE JOINTS TO ALIGN WITH UTILITY FIXTURES (E.G. MANHOLES AND INLETS) IN THE PAVEMENT STRUCTURE WHEN POSSIBLE. WATER VALVES DO NOT REQUIRE JOINT ADJUSTMENT.

AVOID SLABS LESS THAN 2 FEET WIDE OR GREATER THAN 15 FEET WIDE.

SEE TABLE FOR TRANSVERSE JOINT SPACING. JOINT SPACING SPECIFIED IS MAXIMUM AND ACTUAL SPACING CAN BE ADJUSTED TO ACCOMMODATE INTERSECTIONS.

AVOID ANGLES LESS THAN 60° BY DOGLEGGING JOINTS THROUGH CURVE RADIUS POINTS. USE 90° ANGLES WHEN POSSIBLE.

CORRELATE LONGITUDINAL JOINTS WITH LANE LINES WHEN POSSIBLE.

1. PROVIDE TRANSVERSE JOINTS AT ALL PAVEMENT WIDTH CHANGES.
2. CONSTRUCT DOWELED EXPANSION JOINT ON THE SIDE ROAD OF AN INTERSECTION IF THE SIDE ROAD IS CONCRETE PAVEMENT AND GREATER THAN 300 FEET IN LENGTH. ALIGN EXPANSION JOINT WITH EDGE OF RADIUS.
3. THE ENGINEER MAY APPROVE SLIGHT VARIATIONS FROM THESE JOINTING DETAILS.

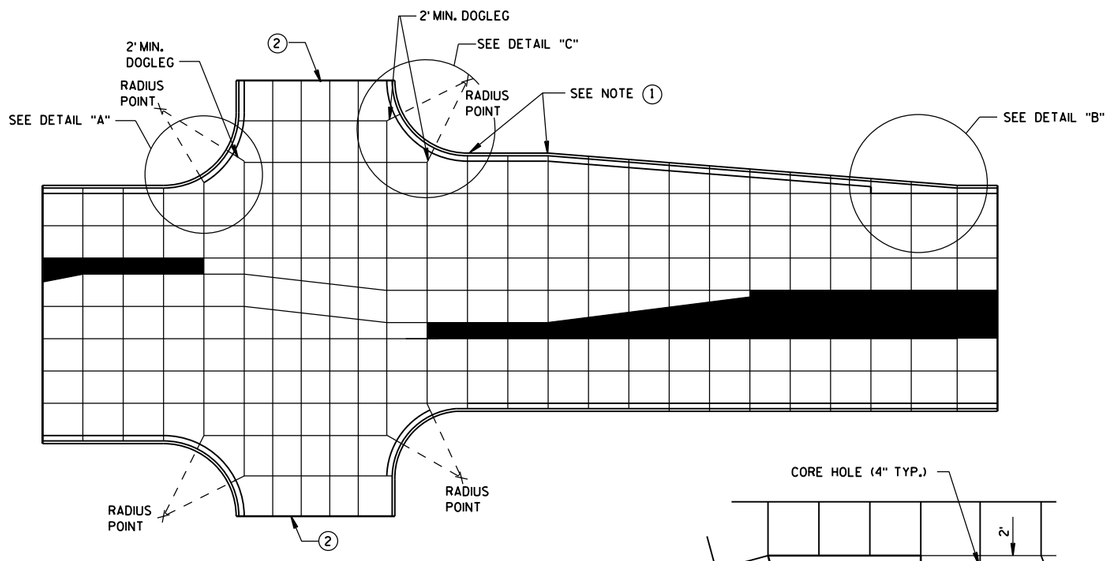


STANDARD INTERSECTION

PAVEMENT DEPTH AND JOINT SPACING TABLE

| PAVEMENT DEPTH (D) | CONTRACTION JOINT SPACING |
|---|---|
| 6", 6½" | 12' |
| 7", 7½" | 14' |
| 8" & ABOVE | 15' |

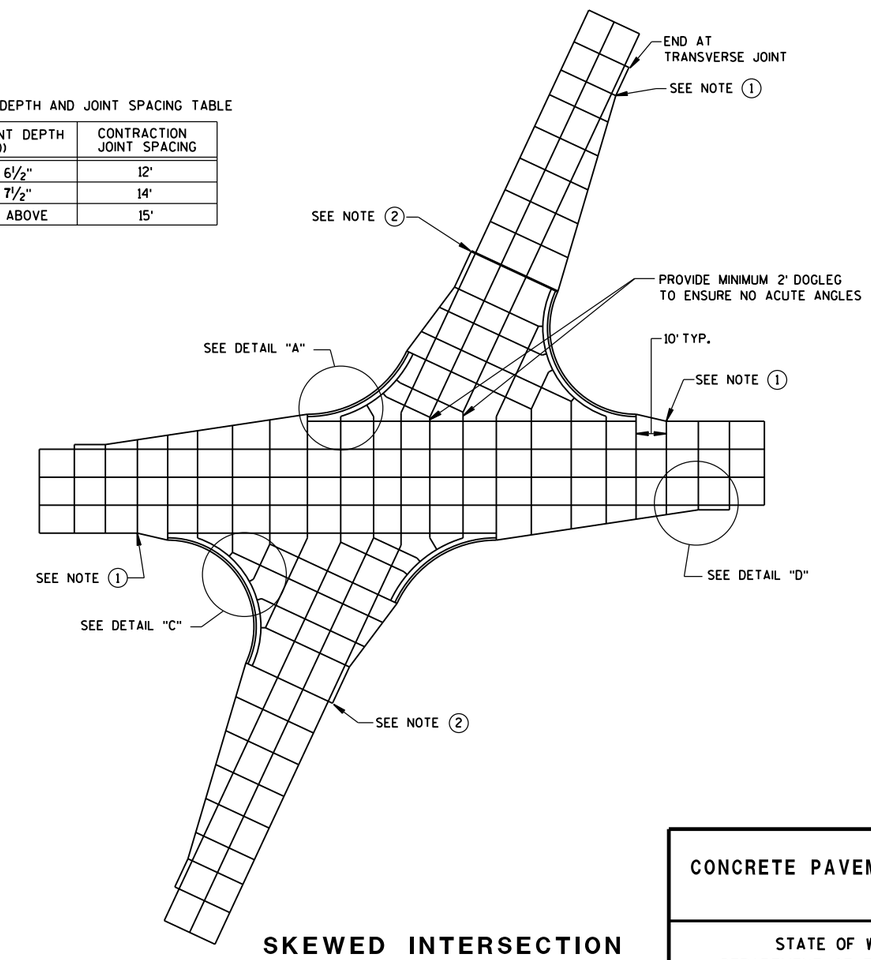


SKEWED INTERSECTION

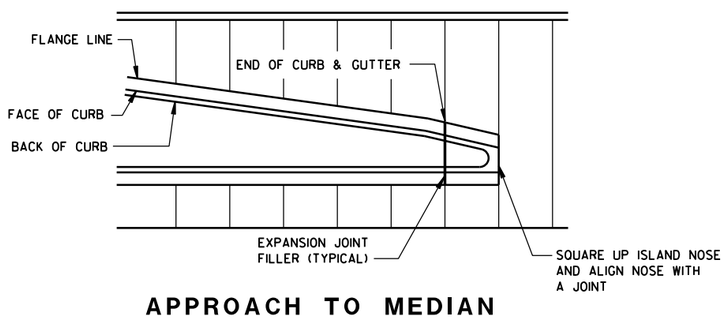


APPROACH TO MEDIAN

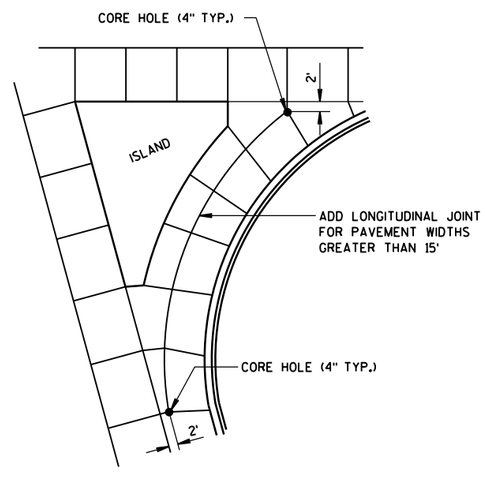


LARGE RIGHT TURN

CONCRETE PAVEMENT JOINTING

STATE OF WISCONSIN
DEPARTMENT OF TRANSPORTATION





6



S.D.D. 13 C 18-3a

## LEGEND

POTENTIAL DOWELED EXPANSION JOINT

DOWELED JOINT

TIED JOINT

## GENERAL NOTES

USE AN EXPANSION JOINT FILLER MEETING THE REQUIREMENTS OF STANDARD SPECIFICATION 415.

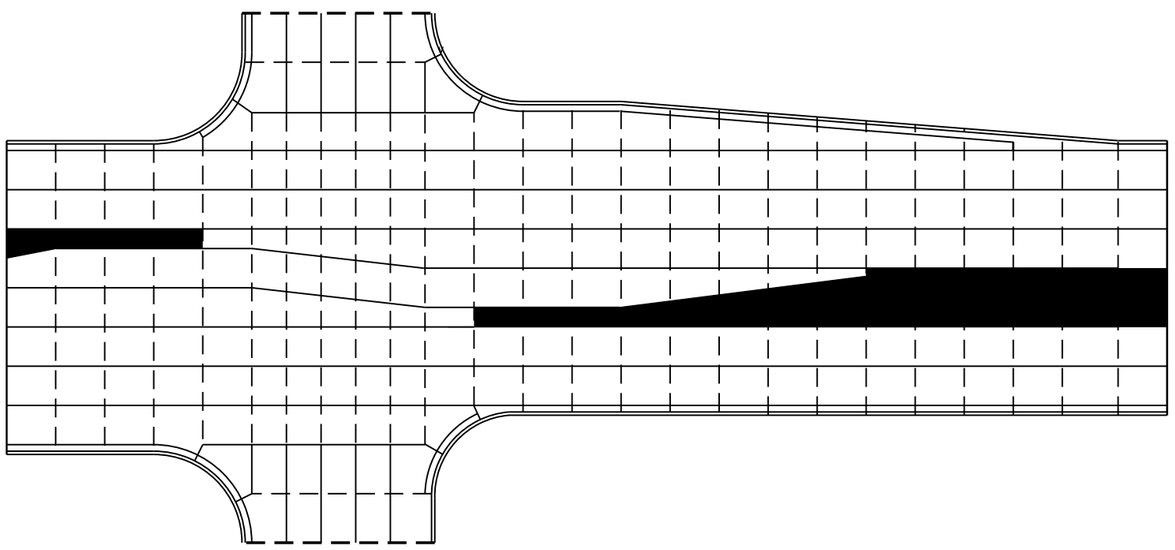

STANDARD INTERSECTION

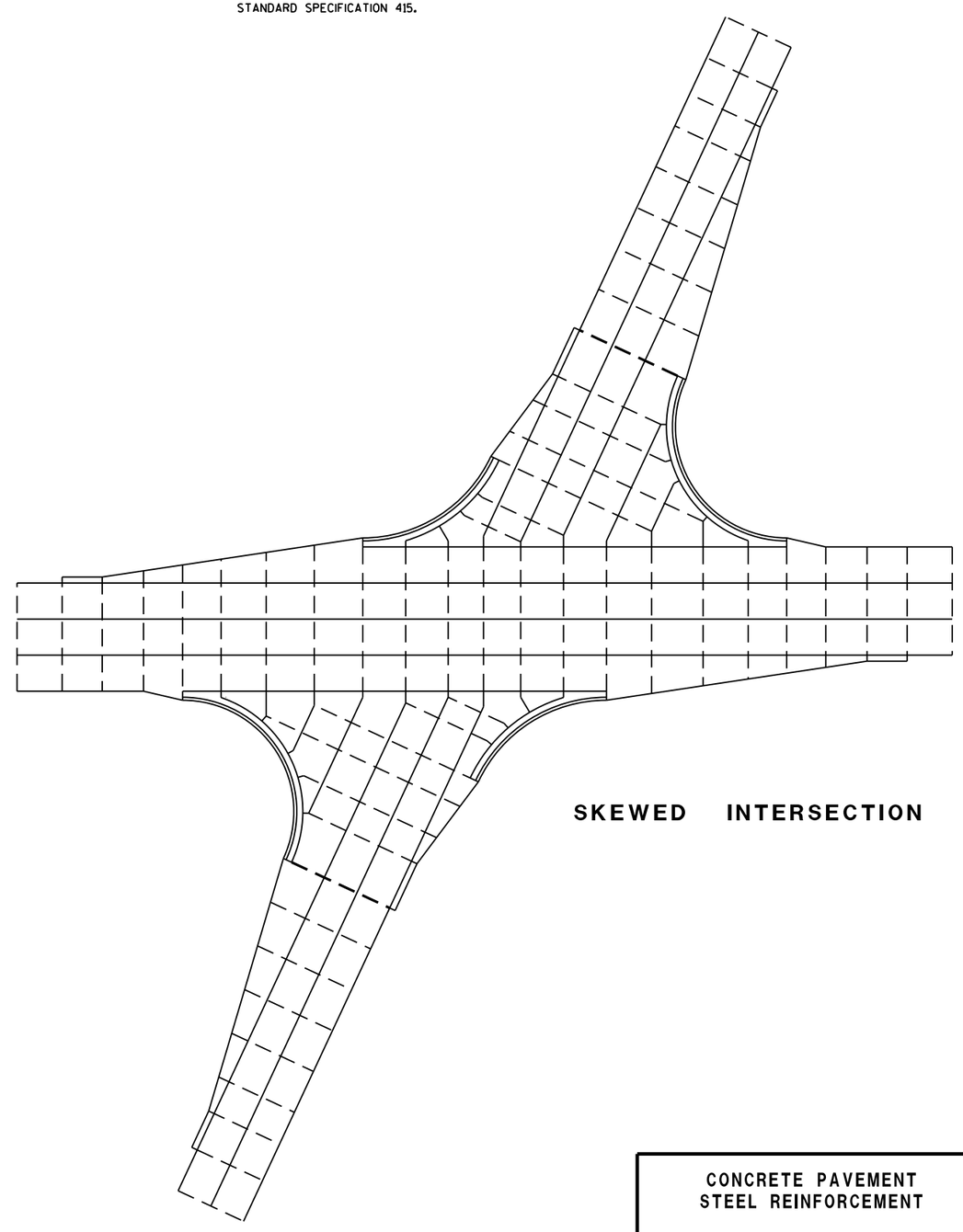

SKEWED INTERSECTION

CONCRETE PAVEMENT
STEEL REINFORCEMENT

STATE OF WISCONSIN
DEPARTMENT OF TRANSPORTATION





6



S.D.D. 13 C 18-3b

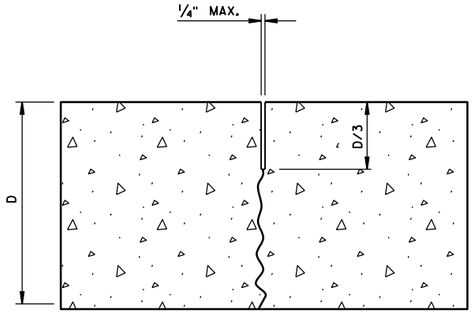


UNDOWELED-TRANSVERSE

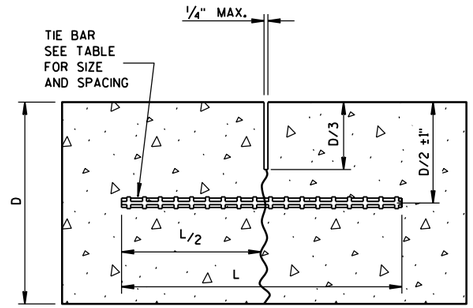


TIED LONGITUDINAL

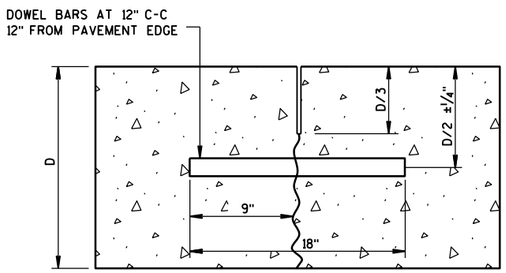


DOWELED-TRANSVERSE

## CONTRACTION JOINTS

SEE NOTE (2)

## TIE BAR TABLE

| PAVEMENT DEPTH (D) | TIE BAR SIZE | TIE BAR LENGTH (L) | MAX. TIE BAR SPACING |
|---|---|---|---|
| < 10 1/2" | NO. 4 | 30" | 36" |
| ≥ 10 1/2" | NO. 5 | 36" | 36" |
| | NO. 4* | 30" | 24"** |

* SUBSTITUTE BENT BARS AT LONGITUDINAL JOINTS WHEN EQUIPMENT LIMITATIONS DURING CONSTRUCTION WARRANT (e.g. AUXILIARY LANES OR TURN LANES)

** CONFORM TO 15" MINUMUM SPACING FROM TRANSVERSE JOINTS; SPACING BETWEEN TIE BARS WILL BE 30" AT TRANSVERSE JOINTS.

## GENERAL NOTES

(1) USE DOWELED EXPANSION JOINTS ON SIDE ROADS AT INTERSECTIONS (TO ISOLATE THE SIDE ROAD FROM THE THROUGH STREET) IF THE SIDE ROAD IS CONCRETE PAVEMENT AND GREATER THAN 300 FEET IN LENGTH.

(2) SPACE CONTRACTION JOINTS IN ACCORDANCE WITH 13C4, 13C11 OR 13C13.

(3) LOCATE CONSTRUCTION JOINTS A MINIMUM OF 6 FEET FROM THE NEAREST CONTRACTION JOINT AND ALIGN PARALLEL TO CONTRACTION JOINTS.

(4) CONSTRUCTION JOINTS CAN BE FORMED OR SAWED.

(5) IF JOINT IS FORMED, PROVIDE A 1/4-INCH RADIUS.

(6) ANCHOR TIE BARS INTO DRILLED HOLES WITH AN EPOXY.

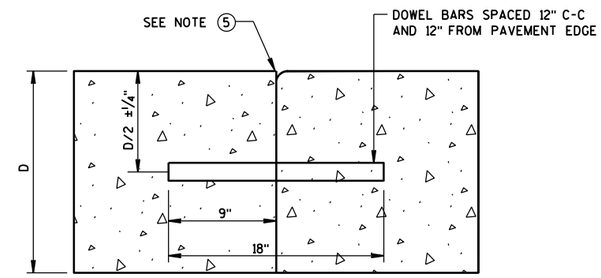


DOWELED TRANSVERSE (3)

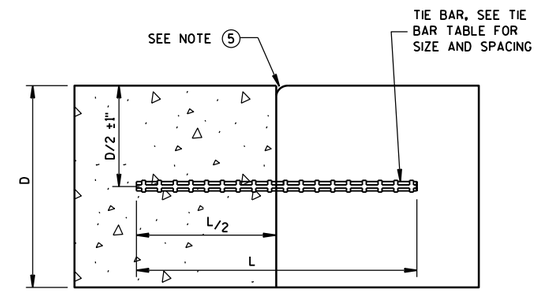


TIED LONGITUDINAL

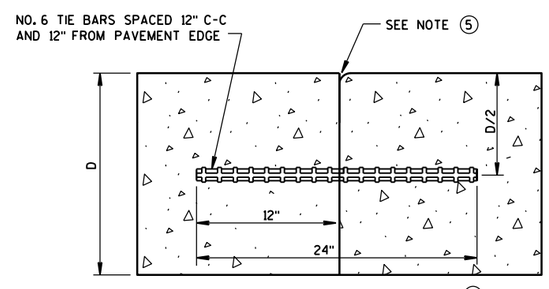


TIED TRANSVERSE (3)

(FOR USE ON NON-DOWELED PAVEMENTS ONLY)

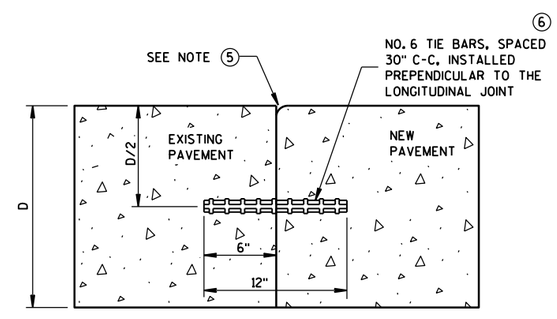


TIED LONGITUDINAL TO EXISTING

## CONSTRUCTION JOINTS

SEE NOTE (4)

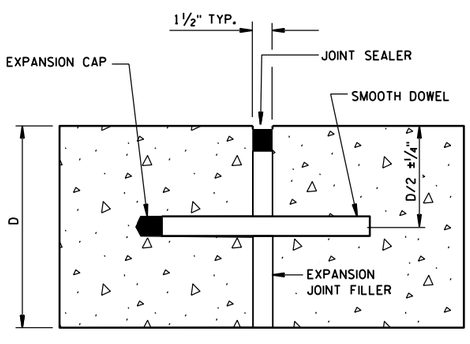


DOWELED-TRANSVERSE

SEE NOTE (1)

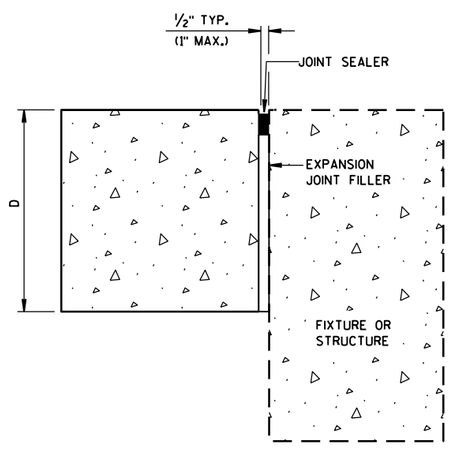


UNTIED-LONGITUDINAL

## EXPANSION JOINTS

CONCRETE PAVEMENT
JOINT TYPES

STATE OF WISCONSIN
DEPARTMENT OF TRANSPOR





6



S.D.D. 13 C 18-3c

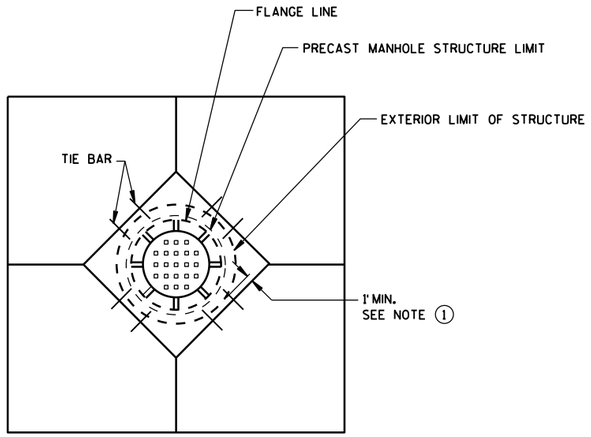


## DIAGONAL MANHOLE BOXOUT FOR CONSTRUCTION JOINTS

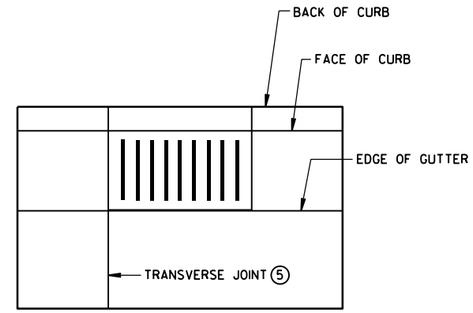


## INLET WITH TRANSVERSE JOINT

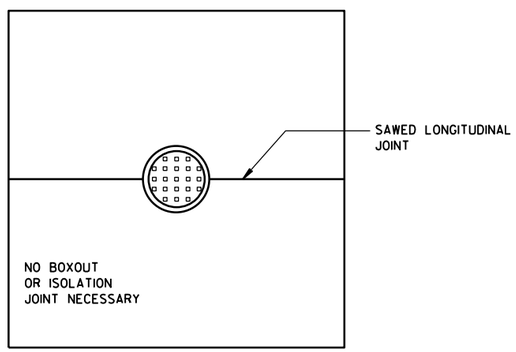


## MANHOLE WITH LONGITUDINAL JOINT

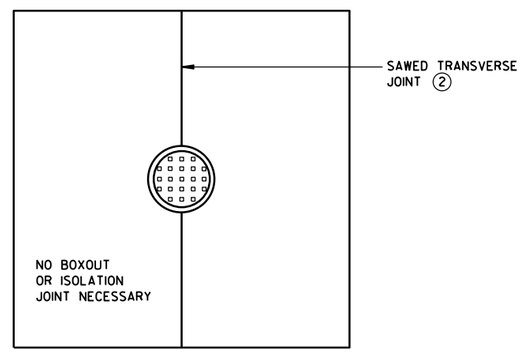


## MANHOLE WITH TRANSVERSE JOINT

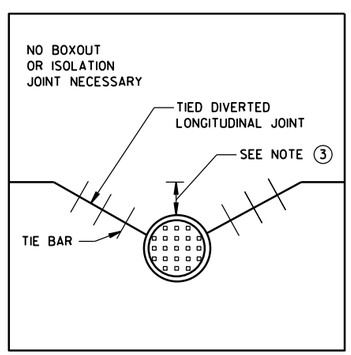


## MANHOLE WITH DIVERTED LONGITUDINAL CONTRACTION JOINT

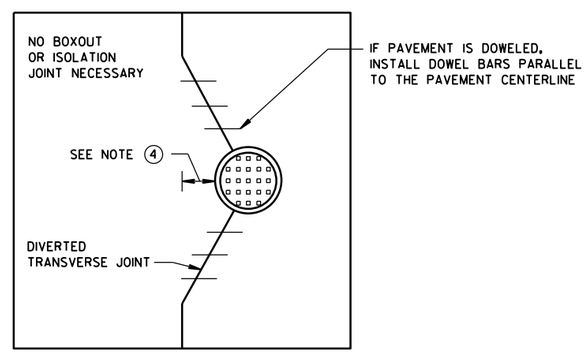


## MANHOLE WITH DIVERTED TRANSVERSE CONTRACTION JOINT

## GENERAL NOTES

1. USE BOXOUTS WHEN UTILITY STRUCTURE IS IN THE PATH OF CONSTRUCTION JOINTS. PROVIDE A 1-FOOT MINIMUM CLEARANCE BETWEEN THE EXTERIOR LIMIT OF THE STRUCTURE TO THE DIAMOND BOXOUT.
2. ADJUST TRANSVERSE JOINT TO INTERSECT MANHOLE IF POSSIBLE.
3. IF DISTANCE BETWEEN THE LONGITUDINAL JOINT AND THE EDGE OF MANHOLE IS 2 FEET OR LESS, DIVERT THE LONGITUDIAL JOINT AT A 2:1 TAPER RATE TO THE CENTER OF THE MANHOLE. IF THE DISTANCE IS GREATER THAN 2 FEET, DO NOT DIVERT THE JOINT AND SAW AS NORMAL. PLACE REBAR REINFORCEMENT AROUND THE MANHOLE.
4. IF DISTANCE FROM THE EDGE OF THE MANHOLE TO THE NEAREST TRANSVERSE JOINT IS 4 FEET OR LESS, REDIRECT JOINT TO INTERSECT THE CENTER OF THE MANHOLE. IF DISTANCE IS GREATER THAN 4 FEET, DO NOT DIVERT THE JOINT AND SAW AS NORMAL. PLACE REBAR REINFORCEMENT AROUND THE MANHOLE.
5. ALIGN TRANSVERSE JOINT WITH ONE EDGE OF INLET WHEN PRACTICAL.

CONCRETE PAVEMENT
JOINTING AT UTILITY FIXTURES

STATE OF WISCONSIN
DEPARTMENT OF TRANSPORTATION

APPROVED
June, 2015 — DATE
/S/ Peter Kemp, P.E. — PAVEMENT SUPER
FHWA


6

S.D.D. 13 C 18-3d

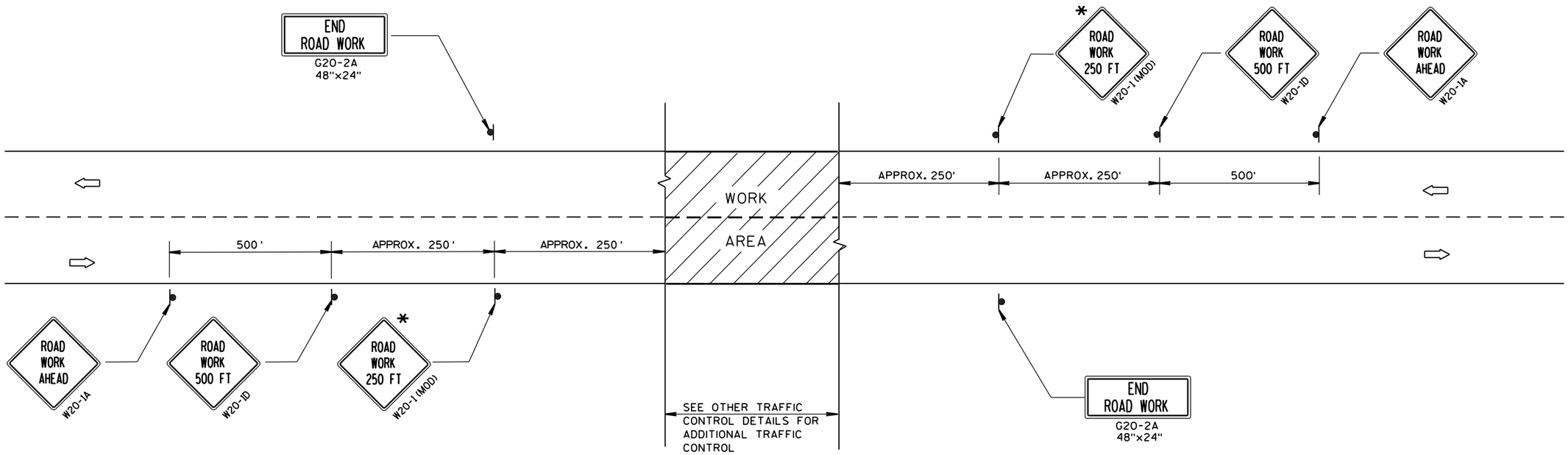


# TYPICAL SIDEROAD APPROACH WARNING SIGN DETAIL

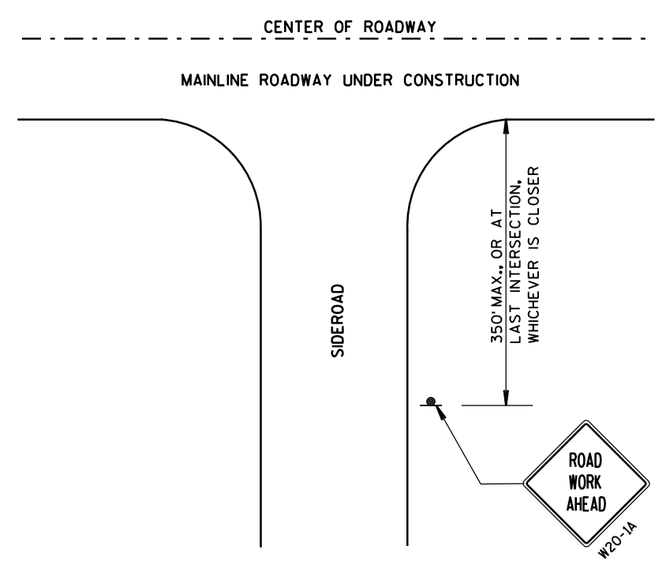


## LEGEND

- SIGN ON PERMANENT SUPPORT
- DIRECTION OF TRAFFIC
- WORK AREA

## GENERAL NOTES

THE EXACT NUMBER, LOCATION, AND SPACING OF ALL SIGNS AND DEVICES SHALL BE ADJUSTED TO FIT FIELD CONDITIONS.

THE SPACING BETWEEN TRAFFIC CONTROL SIGNS SHOULD BE ADJUSTED TO NOT CONFLICT WITH AND SHOULD PROVIDE A DESIRABLE MINIMUM OF 200 FEET CLEARANCE TO EXISTING SIGNS THAT WILL REMAIN IN PLACE.

ALL SIGNS ARE 48"x48" UNLESS OTHERWISE NOTED. IF NECESSARY DUE TO SPACE CONSTRAINTS, 36"x36" SIGNS MAY BE USED INSTEAD OF 48"x48" SIGNS.

SIGNS THAT WILL BE IN PLACE LESS THAN 7 CONTINUOUS DAYS AND NIGHTS MAY BE MOUNTED ON PORTABLE SUPPORTS.

IF A "STOP" SIGN MUST BE REMOVED FOR A WORK OPERATION, A TEMPORARY "STOP" SIGN SHALL BE PLACED PRIOR TO THE SIGN REMOVAL, OR A FLAGGER SHALL BE PROVIDED UNTIL THE SIGN IS RE-ESTABLISHED.

* THE THIRD W20-1 SIGN IS REQUIRED ONLY IF THERE IS AN INTERSECTION BETWEEN THE "ROAD WORK 500 FT" SIGN AND THE WORK ZONE. ADJUST THE PLACEMENT OF THIS SIGN BASED ON INTERSECTION LOCATION AND OTHER FIELD CONDITIONS.

**TRAFFIC CONTROL, ADVANCE WARNING SIGNS 40 M.P.H. OR LESS TWO-WAY UNDIVIDED ROAD OPEN TO TRAFFIC**

STATE OF WISCONSIN
DEPARTMENT OF TRANSPORTATION

APPROVED
Sept. 2015 — DATE
/S/ Peter Amakobe Atepe — STATEWIDE WORK ZONE SAFETY ENGIN — IC
FHWA




S.D.D. 15 C 5-3
6

## GENERAL NOTES

DETAILS OF INSTALLATION, MATERIALS AND WORKMANSHIP NOT SHOWN ON THIS DRAWING SHALL CONFORM TO THE PERTINENT REQUIREMENTS OF THE STANDARD SPECIFICATIONS AND APPLICABLE SPECIAL PROVISIONS.

ALL LETTERS, ARROWS AND SYMBOLS SHALL BE IN CONFORMANCE WITH REQUIREMENTS INCLUDED IN "STANDARD ALPHABETS FOR HIGHWAY SIGNS AND PAVEMENT MARKING" BOOK BY THE FEDERAL HIGHWAY ADMINISTRATION. ALL LETTERS, ARROWS AND SYMBOLS SHALL BE WHITE AND REFLECTORIZED. SMALL DIFFERENCES IN DIMENSIONS WITHIN THE TOLERANCES OF THAT BOOK ARE ACCEPTABLE.

A DETAILED DRAWING OF THE HANDICAPPED PARKING SYMBOL IS ILLUSTRATED IN THE "STANDARD HIGHWAY SIGNS MANUAL" BY THE FEDERAL HIGHWAY ADMINISTRATION.

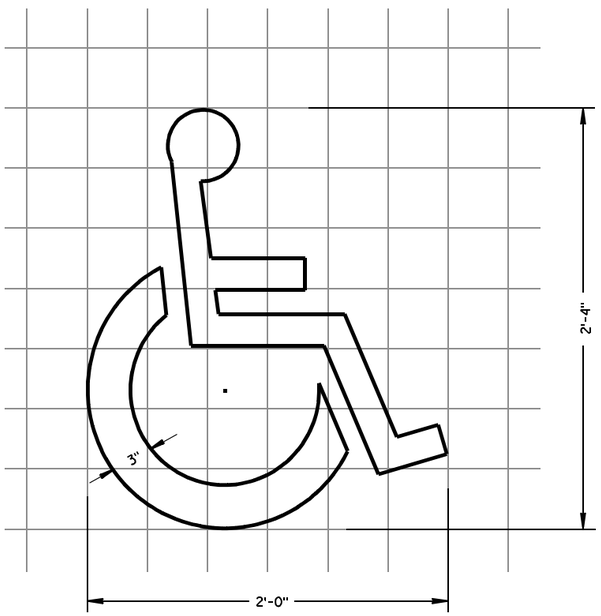


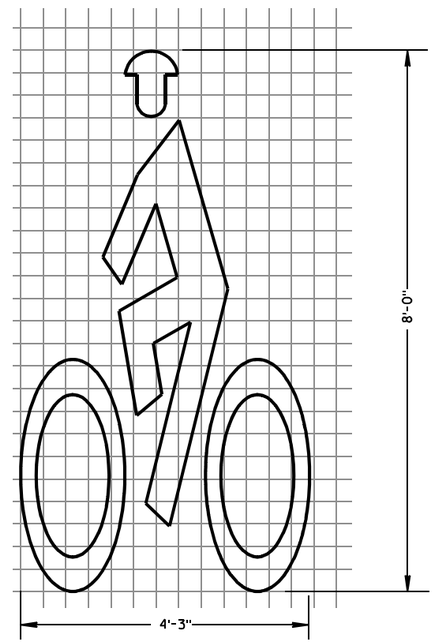


BIKE CROSSING SYMBOL

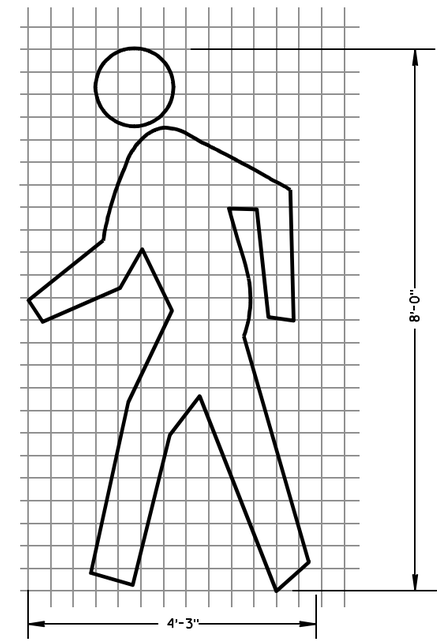


PEDESTRIAN SYMBOL

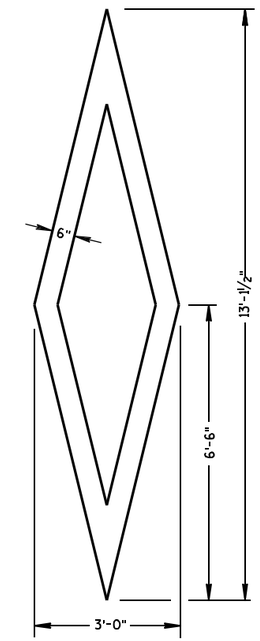


PREFERENTIAL LANE SYMBOL

6

6

S.D.D. 15 C 7-12a

S.D.D. 15 C 7-12a

PAVEMENT MARKING SYMBOLS

STATE OF WISCONSIN
DEPARTMENT OF TRANSPORTATION

APPROVED

7/1/11 — DATE

/S/ Thomas N Notbohm — STATE TRAFFIC ENGINEER

FHWA

## GENERAL NOTES

DETAILS OF INSTALLATION, MATERIALS AND WORKMANSHIP NOT SHOWN ON THIS DRAWING SHALL CONFORM TO THE PERTINENT REQUIREMENTS OF THE STANDARD SPECIFICATIONS AND APPLICABLE SPECIAL PROVISIONS.

ALL LETTERS, ARROWS AND SYMBOLS SHALL BE IN CONFORMANCE WITH REQUIREMENTS INCLUDED IN "STANDARD ALPHABETS FOR HIGHWAY SIGNS AND PAVEMENT MARKING" BOOK BY THE FEDERAL HIGHWAY ADMINISTRATION. ALL LETTERS, ARROWS AND SYMBOLS SHALL BE WHITE AND REFLECTORIZED. SMALL DIFFERENCES IN DIMENSIONS WITHIN THE TOLERANCES OF THAT BOOK ARE ACCEPTABLE.

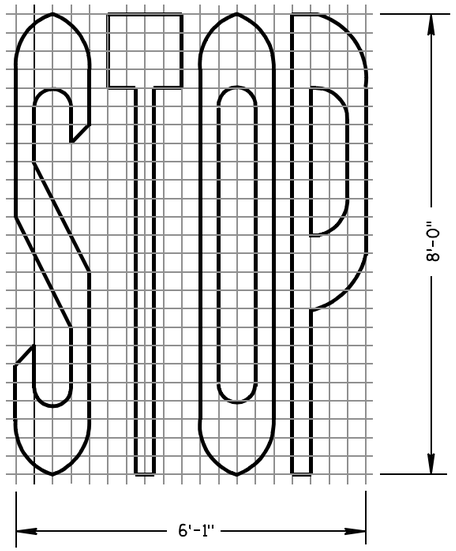


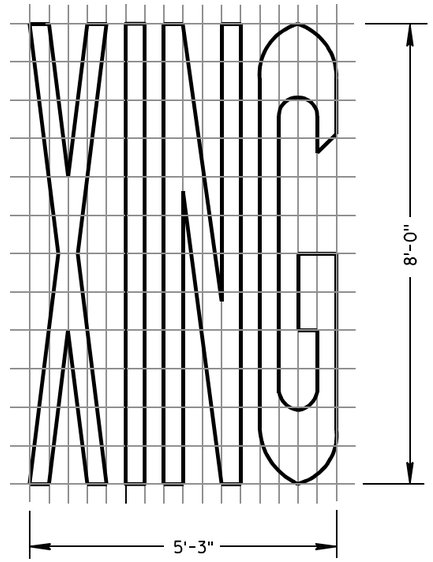


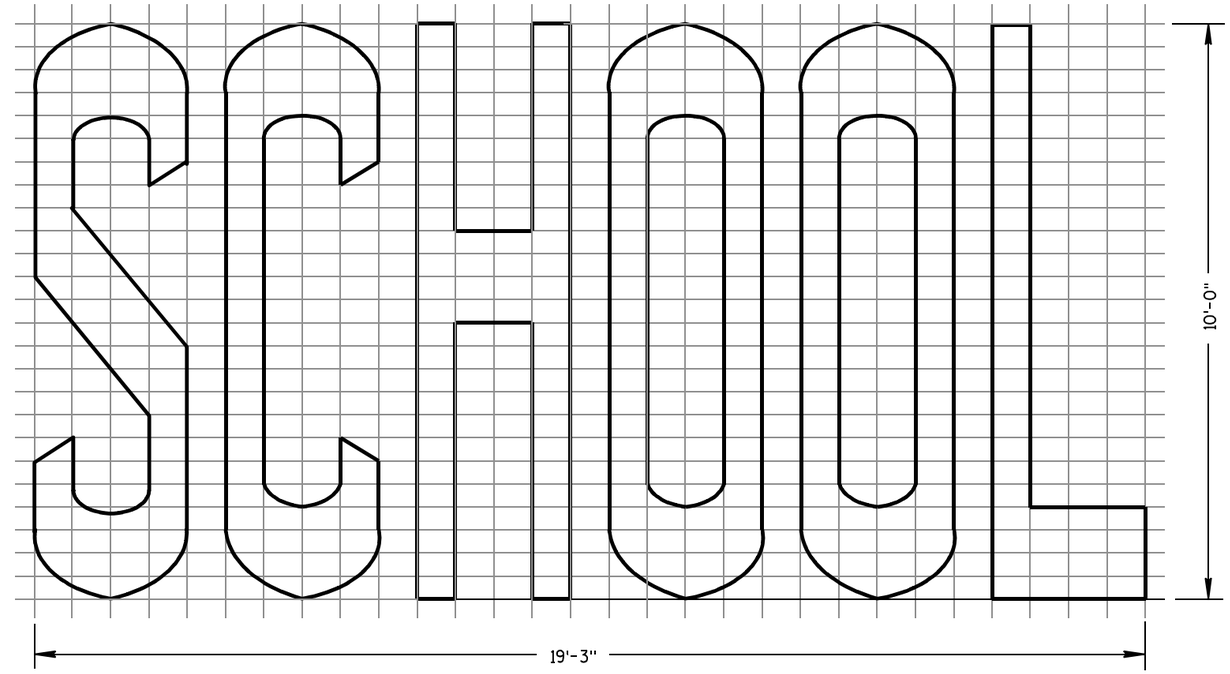


TWO-LANE

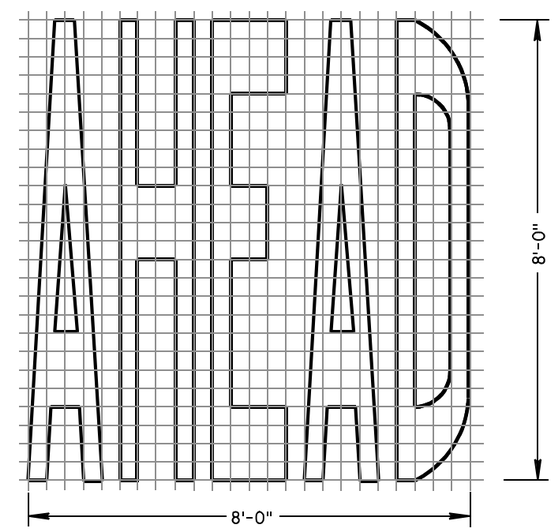


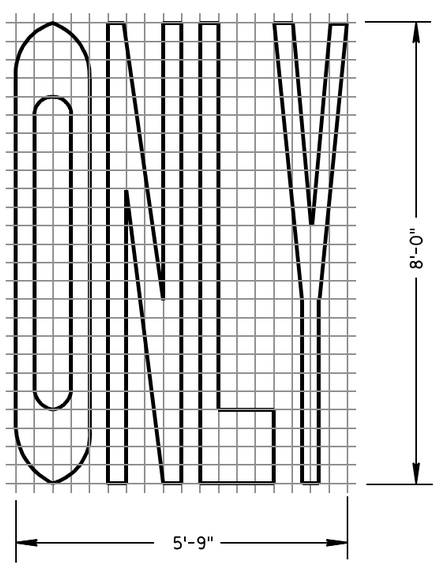


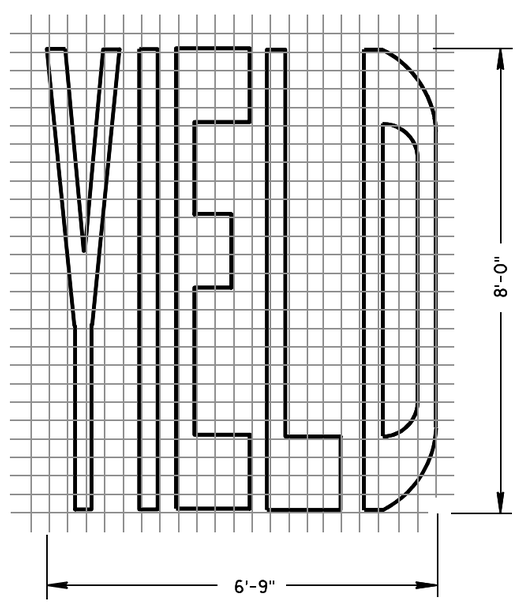


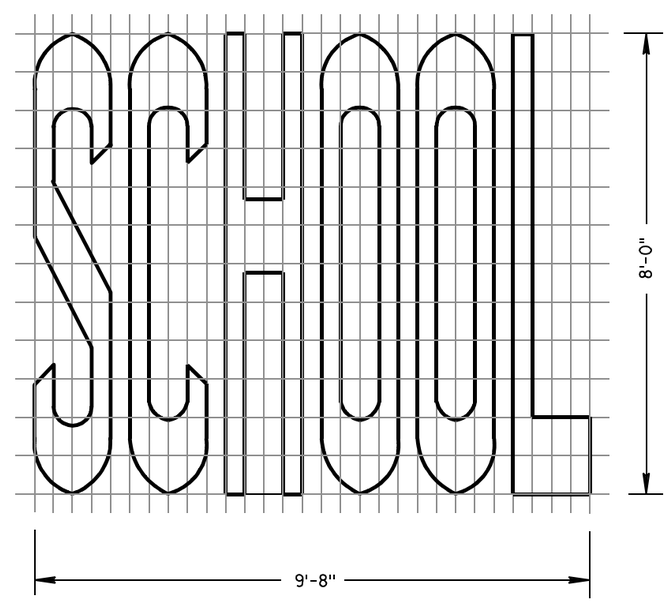


SINGLE-LANE

6

6

S.D.D. 15 C 7-12b

S.D.D. 15 C 7-12b

PAVEMENT MARKING WORDS

STATE OF WISCONSIN
DEPARTMENT OF TRANSPORTATION

APPROVED

7-1-11 — DATE

/S/ Thomas N. Notbohm — STATE TRAFFIC ENGINEER

FHWA

## GENERAL NOTES

DETAILS OF INSTALLATION, MATERIALS AND WORKMANSHIP NOT SHOWN ON THIS DRAWING SHALL CONFORM TO THE PERTINENT REQUIREMENTS OF THE STANDARD SPECIFICATIONS AND APPLICABLE SPECIAL PROVISIONS.

ALL LETTERS, ARROWS AND SYMBOLS SHALL BE IN CONFORMANCE WITH REQUIREMENTS INCLUDED IN "STANDARD ALPHABETS FOR HIGHWAY SIGNS AND PAVEMENT MARKING" BOOK BY THE FEDERAL HIGHWAY ADMINISTRATION. ALL LETTERS, ARROWS AND SYMBOLS SHALL BE WHITE AND REFLECTORIZED. SMALL DIFFERENCES IN DIMENSIONS WITHIN THE TOLERANCES OF THAT BOOK ARE ACCEPTABLE.

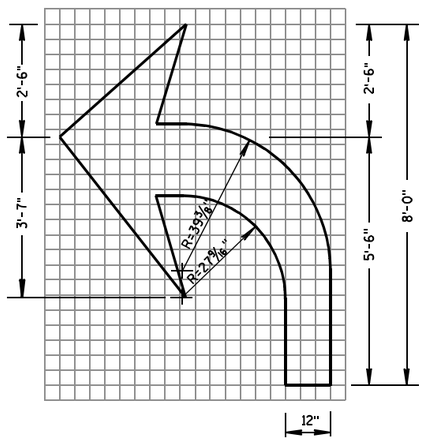


TYPE 2

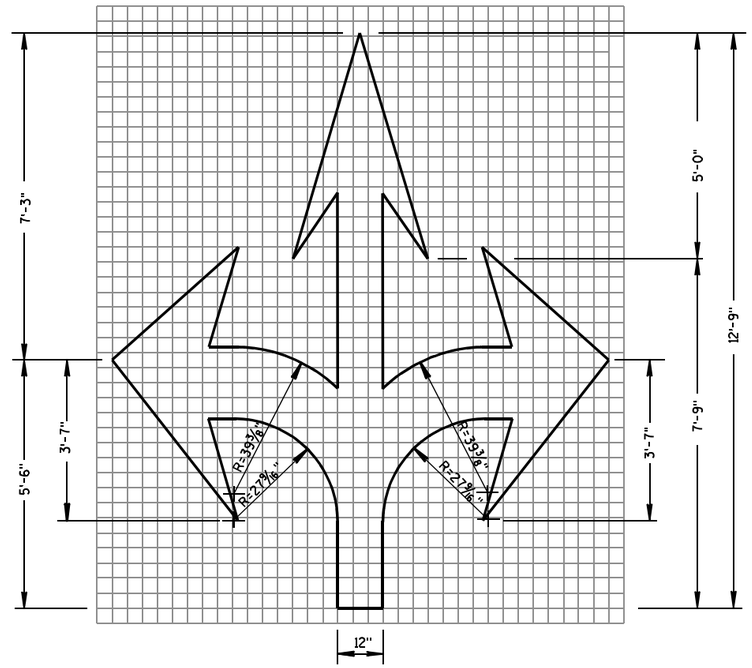


TYPE 6

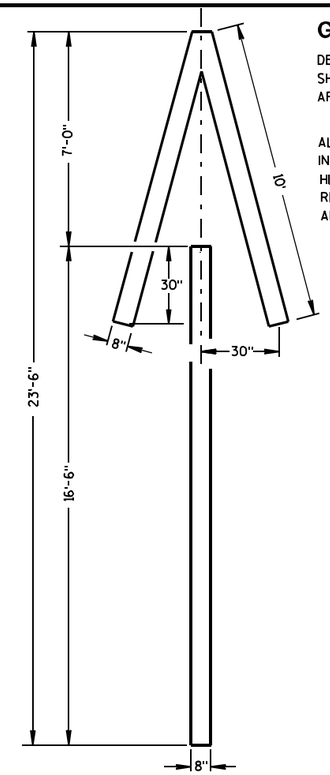


TYPE 4

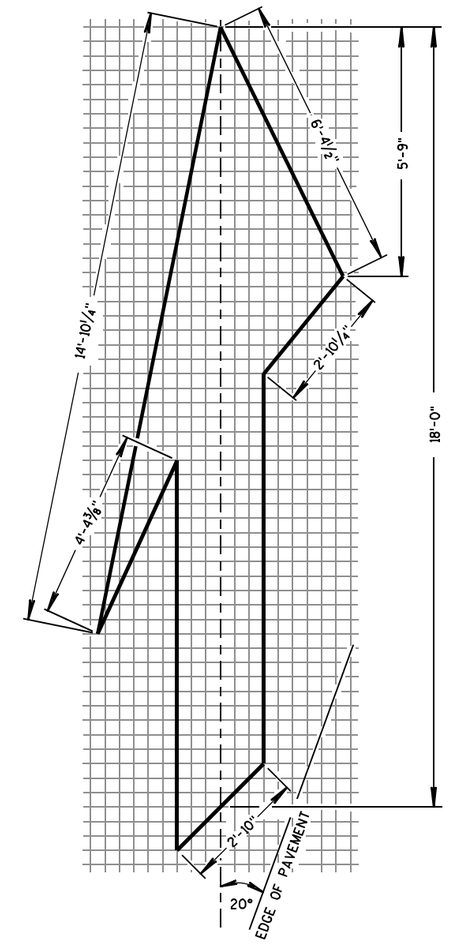


TYPE 5 LANE DROP ARROW

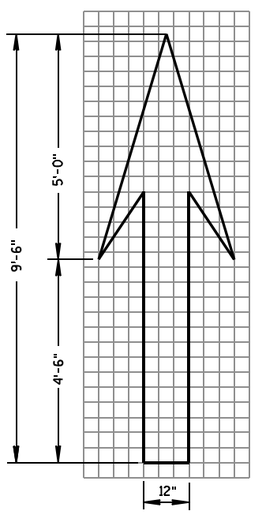


TYPE 1

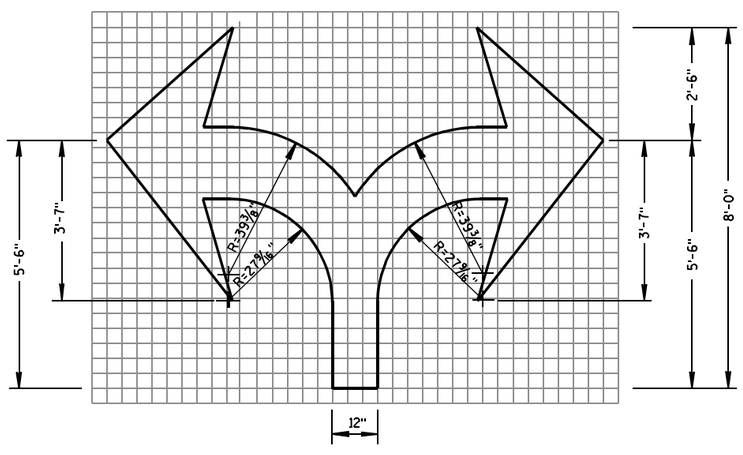


TYPE 7

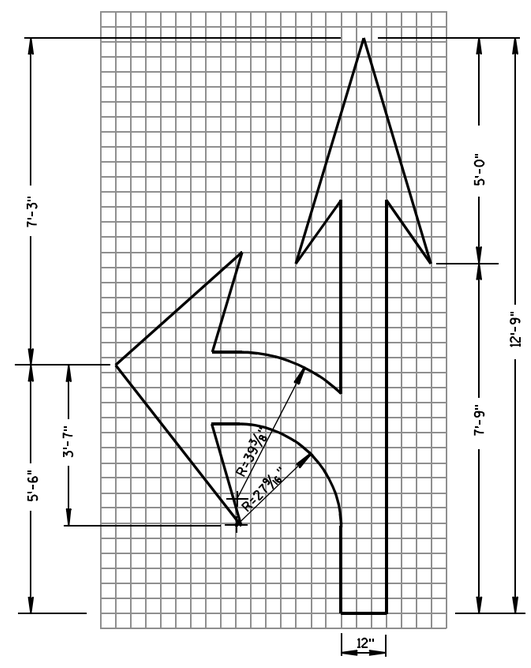


TYPE 3

| | |
|---|---|
| PAVEMENT MARKING ARROWS | |
| STATE OF WISCONSIN<br>DEPARTMENT OF TRANSPORTATION | |
| APPROVED<br>7/1/11<br>DATE | /S/ Thomas N. Nothohm<br>STATE TRAFFIC ENGINEER |
| FHWA | |

6

S.D.D. 15 C 7-12c

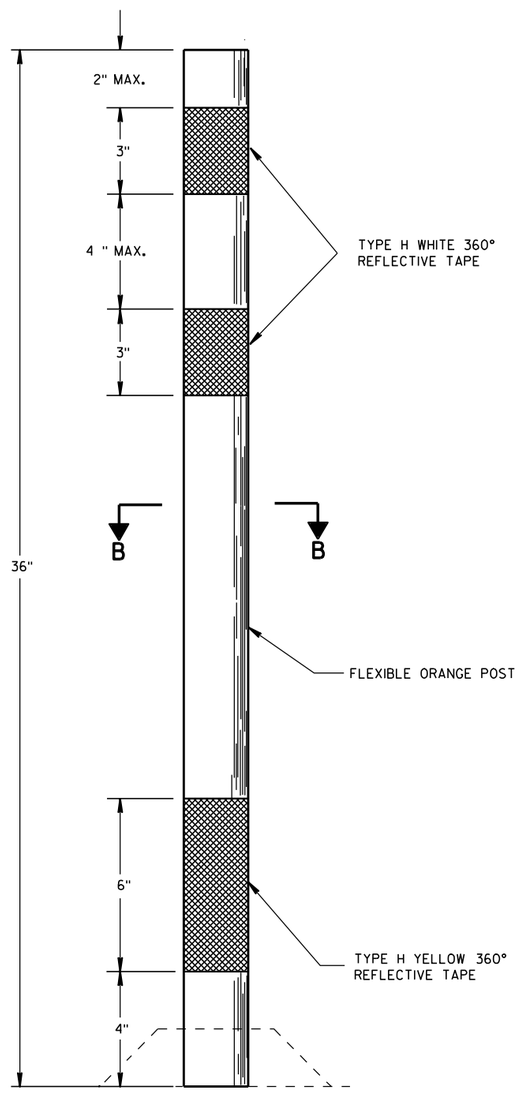


FLEXIBLE TUBULAR MARKER POST

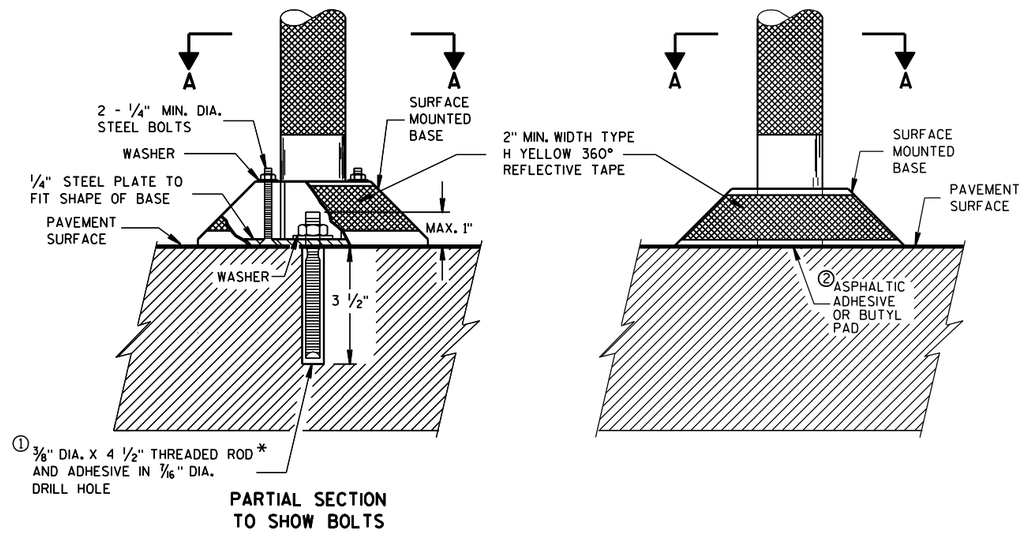


PARTIAL SECTION TO SHOW BOLTS

POST BASES ON NEW OR EXISTING PAVEMENT

## GENERAL NOTES

DETAILS OF CONSTRUCTION NOT SHOWN ON THIS DRAWING SHALL CONFORM TO THE PERTINENT REQUIREMENTS OF THE STANDARD SPECIFICATIONS AND APPLICABLE SPECIAL PROVISIONS.

SURFACE MOUNTED BASES SHALL BE FURNISHED IN ACCORDANCE WITH MANUFACTURERS RECOMMENDATIONS TO BE COMPATIBLE WITH FLEXIBLE TUBULAR MARKER POSTS TO A SIZE AND SHAPE THAT WILL PROVIDE A STABLE POST FOUNDATION WHEN SECURED TO THE PAVEMENT.

① THREADED ROD SHALL BE MACHINED DOWN TO 0.280 INCH DIA. 1 1/4 INCHES FROM THE TOP.

② THE ASPHALTIC ADHESIVE OR BUTYL PAD FURNISHED SHALL BE IN ACCORDANCE WITH MANUFACTURERS RECOMMENDATIONS.

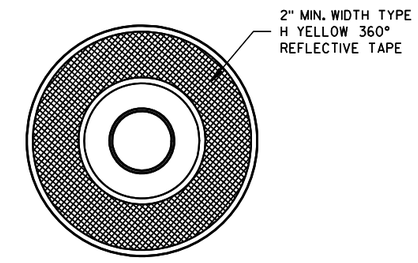


SECTION A-A

SURFACE MOUNTED BASE

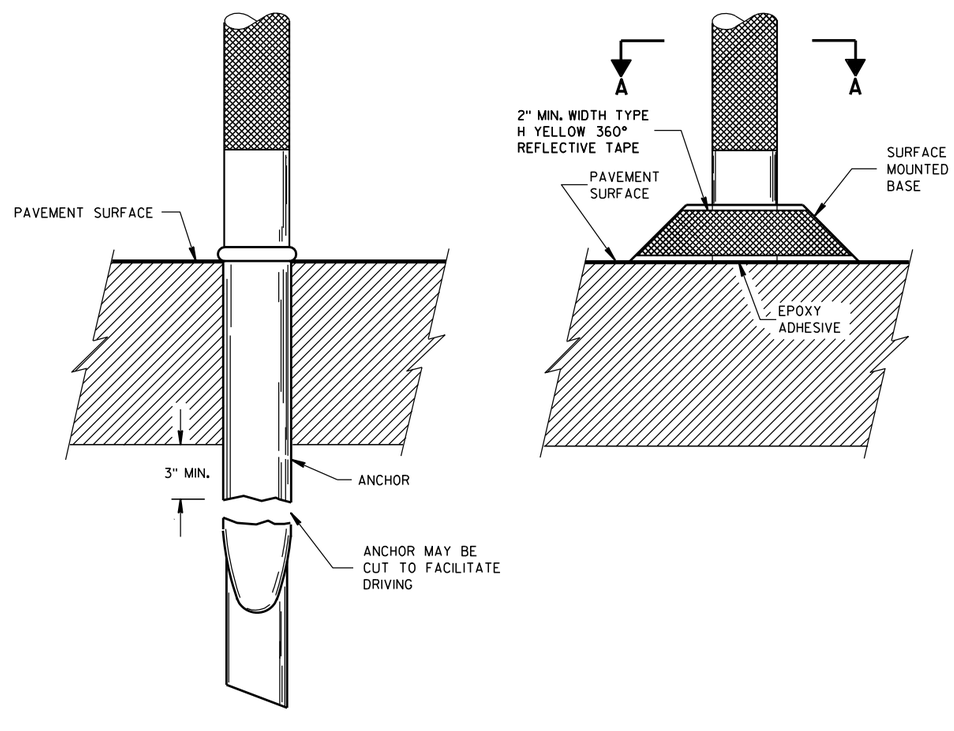


POST ANCHOR AND BASE ON PAVEMENT WHICH WILL BE REMOVED

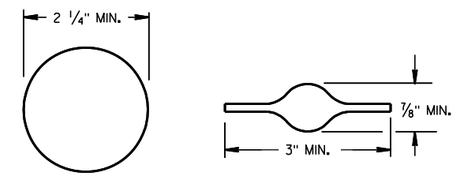


SECTION B-B

ALTERNATIVE SHAPES

| FLEXIBLE TUBULAR MARKER POST, ANCHOR & BASES |
|---|
| STATE OF WISCONSIN DEPARTMENT OF TRANSPORTATION |
| APPROVED 2/17/94 DATE — /S/ Chester J. [illegible] DIRECTOR, OFFICE O[illegible] FHWA |

6

6

S.D.D. 15 C 11-5

S.D.D. 15 C 11-5

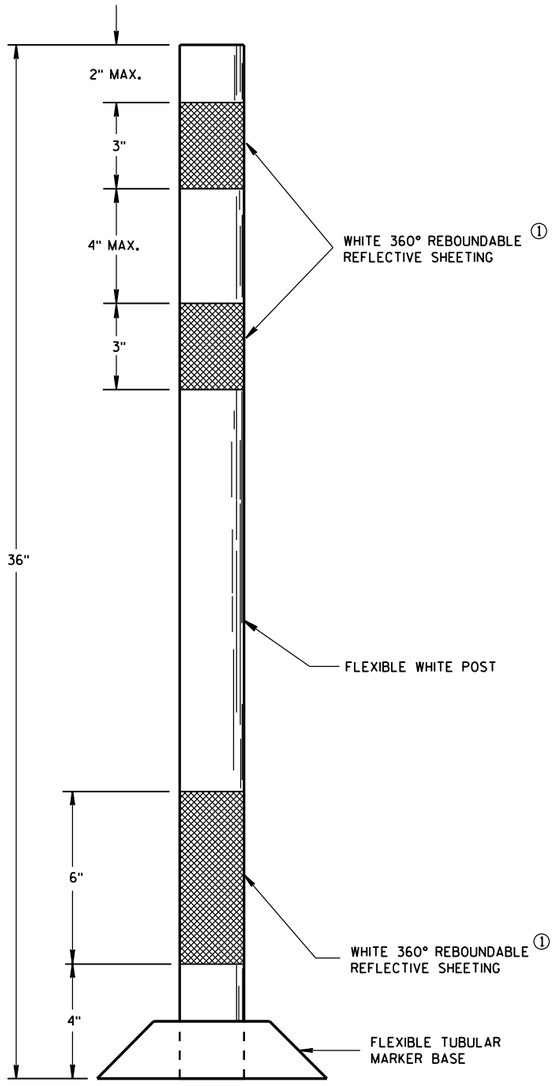


**FLEXIBLE**
**TUBULAR MARKER POST**
**PERMANENT CROSSOVER**

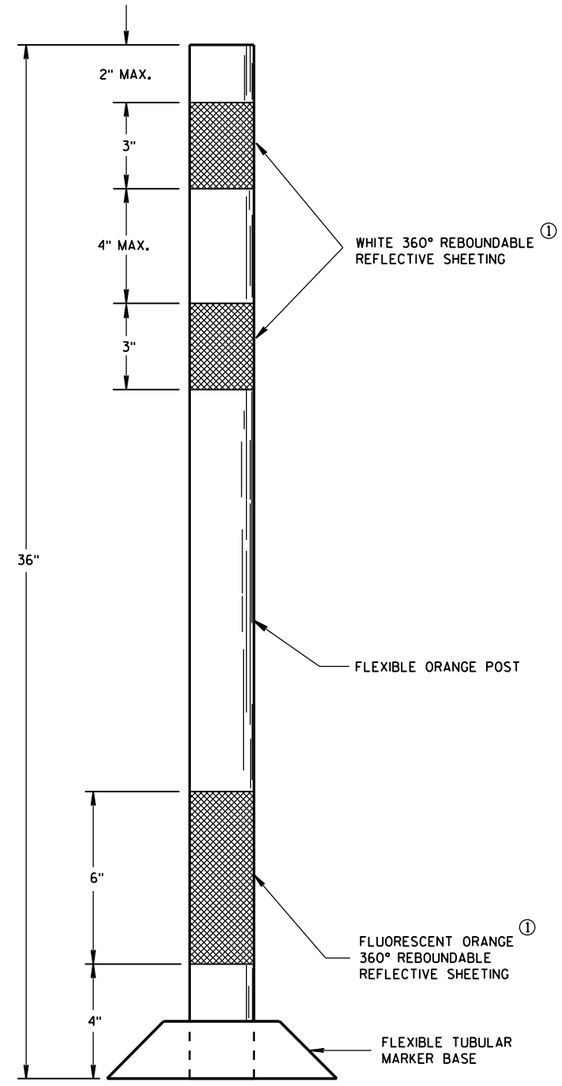


**FLEXIBLE**
**TUBULAR MARKER POST**
**WORK ZONE**

## GENERAL NOTES

DETAILS OF CONSTRUCTION NOT SHOWN ON THIS DRAWING SHALL CONFORM TO THE PERTINENT REQUIREMENTS OF THE STANDARD SPECIFICATIONS AND APPLICABLE SPECIAL PROVISIONS.

SURFACE MOUNTED BASES SHALL BE FURNISHED IN ACCORDANCE WITH MANUFACTURERS RECOMMENDATIONS TO BE COMPATIBLE WITH FLEXIBLE TUBULAR MARKER POSTS TO A SIZE AND SHAPE THAT WILL PROVIDE A STABLE POST FOUNDATION WHEN SECURED TO THE PAVEMENT.

THE ASPHALTIC ADHESIVE OR BUTYL PAD FURNISHED SHALL BE IN ACCORDANCE WITH MANUFACTURERS RECOMMENDATIONS.

① REFLECTIVE SHEETING SHALL FOLLOW THE REQUIREMENTS IN THE APPROVED PRODUCTS LISTING FOR SIGN SHEETING.

6

FLEXIBLE TUBULAR MARKER POST

STATE OF WISCONSIN
DEPARTMENT OF TRANSPORTATION

APPROVED
10-16-2015 — DATE
/S/ Peter Amakobe Atepe — STATEWIDE WORK ZONE SAFETY ENGINEER
FHWA


6
S.D.D. 15 C 11-6

## GENERAL NOTES

DETAILS OF INSTALLATION, MATERIALS AND WORKMANSHIP NOT SHOWN ON THIS DRAWING SHALL CONFORM TO THE PERTINENT REQUIREMENTS OF THE STANDARD SPECIFICATIONS AND APPLICABLE SPECIAL PROVISIONS.

ALL LETTERS, ARROWS AND SYMBOLS SHALL BE IN CONFORMANCE WITH REQUIREMENTS INCLUDED IN "STANDARD ALPHABETS FOR HIGHWAY SIGNS AND PAVEMENT MARKING" BOOK BY THE FEDERAL HIGHWAY ADMINISTRATION. ALL LETTERS, ARROWS AND SYMBOLS SHALL BE WHITE AND REFLECTORIZED. SMALL DIFFERENCES IN DIMENSIONS WITHIN THE TOLERANCES OF THAT BOOK ARE ACCEPTABLE.

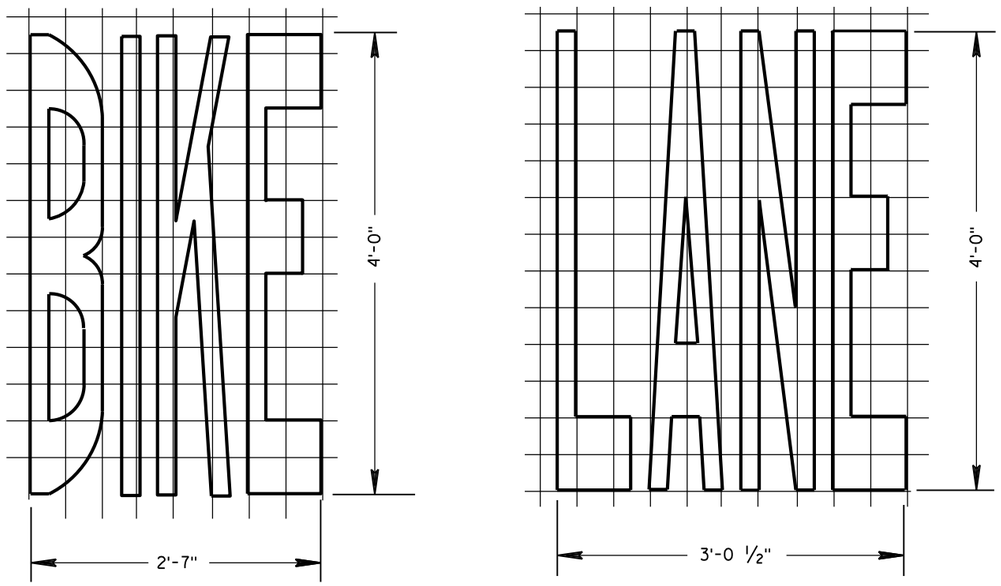


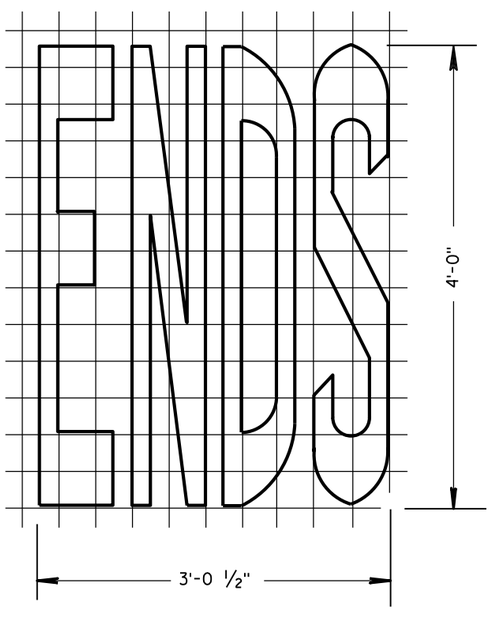


BIKE LANE WORDS

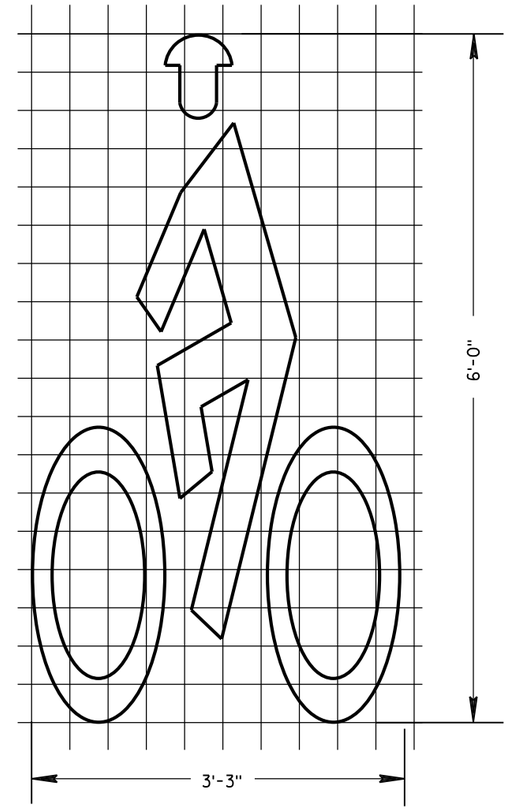


BIKE LANE SYMBOL

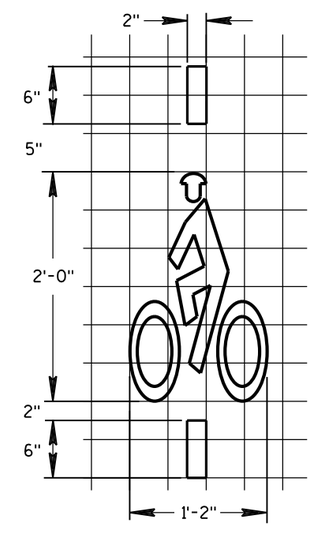


BICYCLE DETECTOR PAVEMENT MARKING

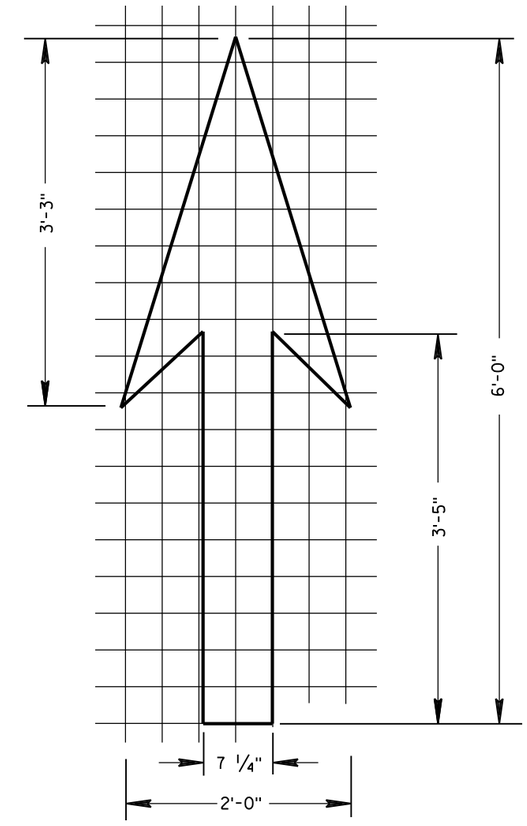


BIKE LANE ARROW

| |
|---|
| PAVEMENT MARKING FOR BIKE LANES |
| STATE OF WISCONSIN DEPARTMENT OF TRANSPORTATION |
| APPROVED 4-30-2013 DATE — /S/ Travis Feltes STATE TRAFFIC EN — FHWA |

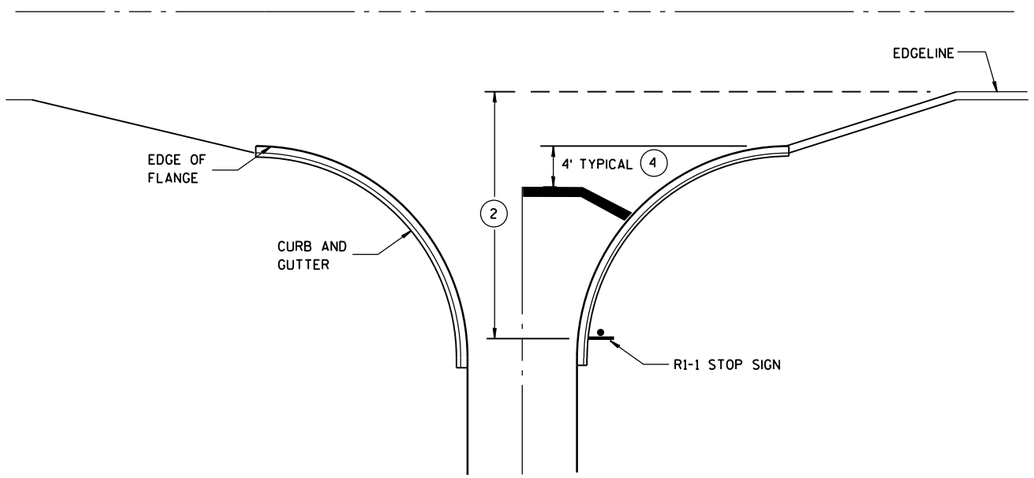


**TYPICAL STOP LINE PAVEMENT MARKING WITH CURB AND GUTTER**

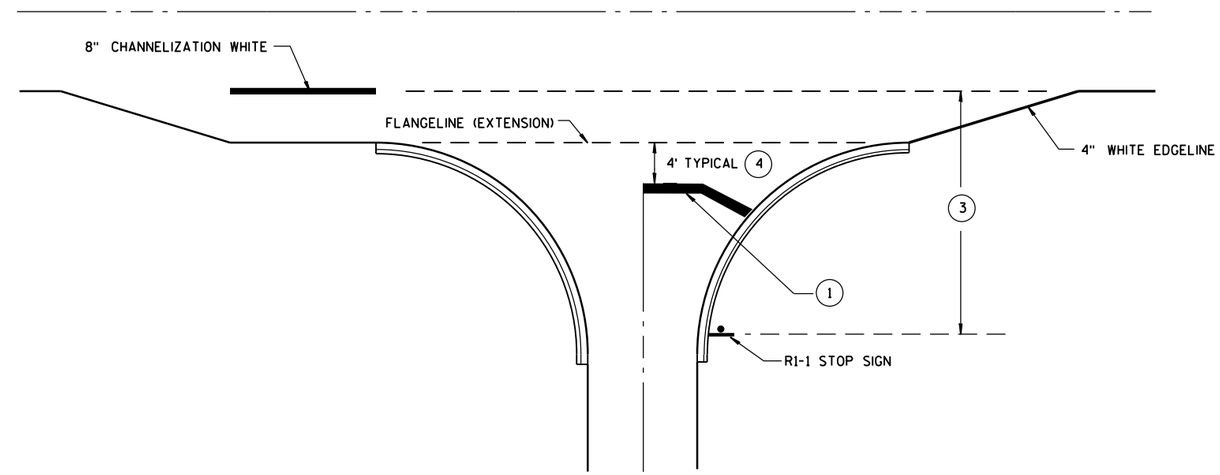


**TYPICAL STOP LINE PAVEMENT MARKING FOR SIDEROADS WITH RIGHT TURN LANE**

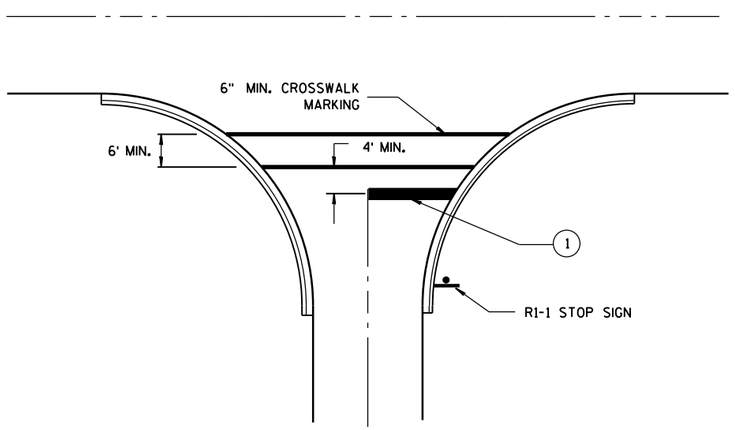


**TYPICAL STOP LINE PAVEMENT MARKING FOR SIDEROADS WITH CROSSWALK MARKING**

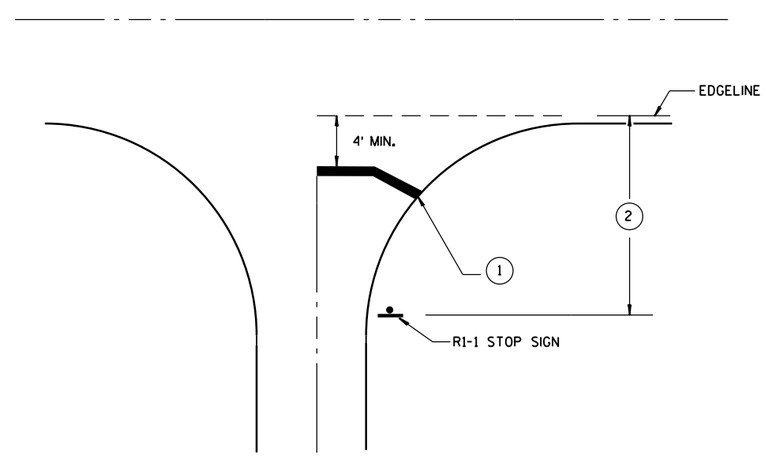


**TYPICAL STOP LINE PAVEMENT MARKING WITHOUT CURB AND GUTTER**

## GENERAL NOTES

1. 18-INCH STOP LINES MAY BE DELETED OR ADDED BY THE PROJECT ENGINEER BASED ON VISIBILITY AND SIGHT LINES.
2. IF STOP SIGN IS LESS THAN OR EQUAL TO 40 FEET FROM THE EDGELINE THAN NO STOP LINE IS REQUIRED.
3. IF STOP SIGN IS LESS THAN OR EQUAL TO 30 FEET FROM THE FLANGELINE EXTENSION THAN NO STOP LINE IS REQUIRED.
4. MOVE CLOSER TO EDGE OF TRAVEL LANE AS NEEDED FOR VISIBILITY AND SIGHT LINES.

**STOP LINE AND CROSSWALK PAVEMENT MARKING**

STATE OF WISCONSIN
DEPARTMENT OF TRANSPORTATION

APPROVED
4/30/2013 — DATE
/S/ Travis Feltes — STATE TRAFFIC E
FHWA


6


S.D.D. 15 C 33-1

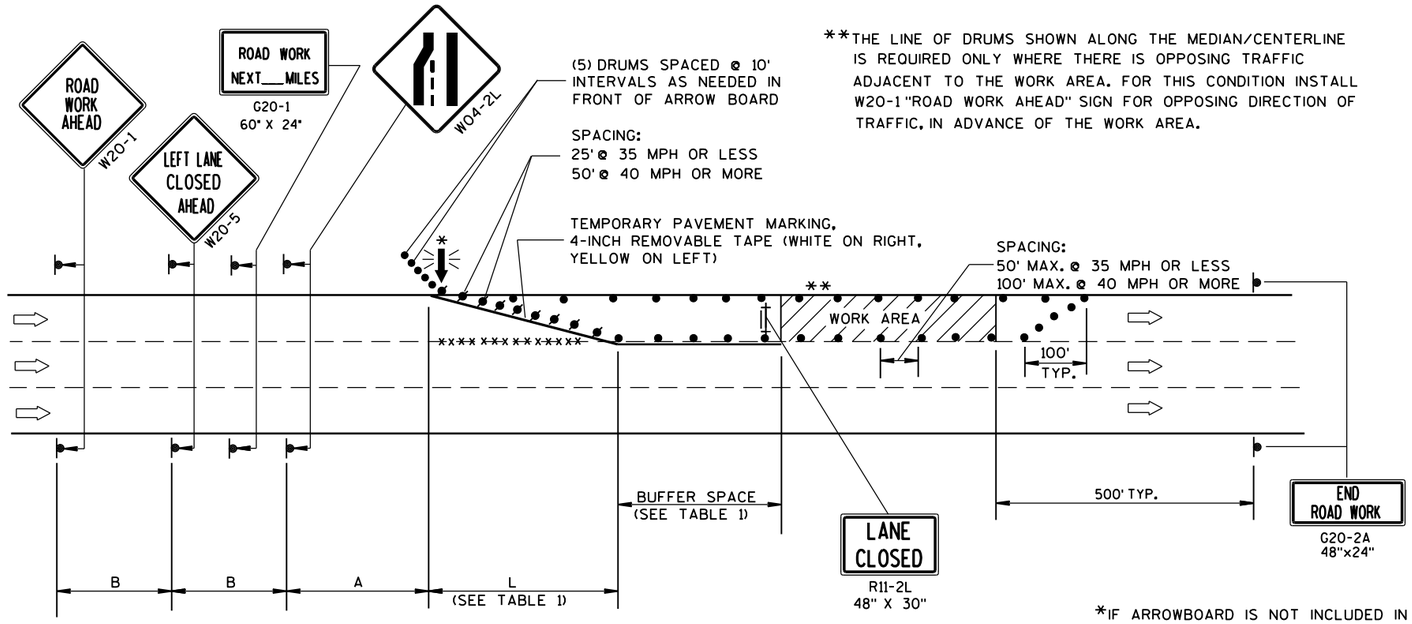


**THE LINE OF DRUMS SHOWN ALONG THE MEDIAN/CENTERLINE IS REQUIRED ONLY WHERE THERE IS OPPOSING TRAFFIC ADJACENT TO THE WORK AREA. FOR THIS CONDITION INSTALL W20-1 "ROAD WORK AHEAD" SIGN FOR OPPOSING DIRECTION OF TRAFFIC, IN ADVANCE OF THE WORK AREA.

B=400' AT 25-30 MPH
700' AT 35-40 MPH
1000' AT 45-55 MPH

A=200' AT 25-30 MPH
350' AT 35-40 MPH
500' AT 45-55 MPH

(PLACE BARRICADE AND SIGN APPROX. EVERY 1000' ACROSS THE CLOSED LANE)

*IF ARROWBOARD IS NOT INCLUDED IN MISCELLANEOUS QUANTITIES, SUBSTITUTE A TYPE III BARRICADE WITH W01-6 SIGN IN THE LANE CLOSURE TAPER.

W01-6
48"x24"

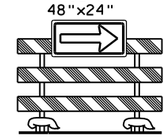

## GENERAL NOTES

THIS LANE CLOSURE DETAIL IS TYPICAL FOR CLOSING THE LEFT LANE. FOR A RIGHT LANE CLOSURE, REVERSE THE TRAFFIC CONTROL.

THIS DETAIL MAY BE USED FOR ROADWAYS WITH EITHER TWO OR THREE LANES IN EACH DIRECTION.

THE EXACT NUMBER, LOCATION, AND SPACING OF ALL SIGNS AND DEVICES SHALL BE ADJUSTED TO FIT FIELD CONDITIONS AS APPROVED BY THE ENGINEER.

THE SPACING BETWEEN TRAFFIC CONTROL SIGNS SHOULD BE ADJUSTED TO NOT CONFLICT WITH AND SHOULD PROVIDE A DESIRABLE MINIMUM OF 200 FEET CLEARANCE TO EXISTING SIGNS THAT WILL REMAIN IN PLACE.

ALL SIGNS ARE 48"x48" UNLESS OTHERWISE NOTED. IF NECESSARY DUE TO SPACE CONSTRAINTS IN URBAN AREAS, 36" X 36" SIGNS MAY BE USED IF APPROVED BY DISTRICT TRAFFIC UNIT.

"WO" SIGNS ARE THE SAME AS "W" SIGNS EXCEPT THE BACKGROUND IS ORANGE.

SIGNS THAT WILL BE IN PLACE LESS THAN 7 CONTINUOUS DAYS AND NIGHTS, OR THAT WILL BE PLACED IN A CLOSED LANE, MAY BE MOUNTED ON PORTABLE SUPPORTS.

ANY SIGNS TEMPORARY OR EXISTING, WHICH CONFLICT WITH TRAFFIC CONTROL "IN USE" SHALL BE REMOVED OR COVERED AS NEEDED AND AS APPROVED BY THE ENGINEER.

REMOVE PAVEMENT MARKINGS AND PLACE TEMPORARY PAVEMENT MARKING, REMOVABLE TAPE IF LANE CLOSURE IS TO BE IN PLACE FOR 4 OR MORE CONTINUOUS DAYS AND NIGHTS.

ON UNDIVIDED ROADWAYS, OMIT THE SIGNS SHOWN ON LEFT SIDE OF ROAD.

W20-1, G20-1 AND G20-2A SIGNS ARE NOT REQUIRED IF THE LANE CLOSURE IS WITHIN A LARGER WORK ZONE WHERE THESE SIGNS ARE ALREADY PRESENT.

OMIT G20-1 SIGNS IF LENGTH OF WORK AREA IS 2 MILES OR LESS.

CONSIDER GEOMETRICS WHEN LOCATING SIGNS AND ARROWBOARDS SO THE APPROACHING DRIVER HAS A CLEAR VIEW OF THE ARROWBOARDS AND LANE CLOSURE DRUMS.

PLACE THE ARROWBOARD AS CLOSE AS POSSIBLE TO THE BEGINNING OF THE LANE CLOSURE TAPER, PREFERABLY ON THE SHOULDER OR TERRACE.

CHANNELIZING DEVICES PLACED ADJACENT TO WORK AREA SHALL BE PULLED BACK FROM THE TRAVEL LANE WHEN WORK IS NOT IN PROGRESS.

BARRICADES IN A CLOSED LANE THAT MUST BE MOVED FOR A WORK OPERATION SHALL BE IMMEDIATELY RE-ESTABLISHED UPON COMPLETION OF THE OPERATION OR, FOR CONTINUING OPERATIONS, AT THE END OF EACH WORKING DAY.

WARNING LIGHTS ARE NOT REQUIRED IF THE LANE CLOSURE IS A DAYTIME ONLY OPERATION.

TABLE 1
TAPER AND BUFFER SPACE
FOR 12' LANE WIDTH

| S | L | BUFFER SPACE |
|---|---|---|
| 25 | 125' | 55' |
| 30 | 180' | 85' |
| 35 | 245' | 120' |
| 40 | 320' | 170' |
| 45 | 540' | 220' |
| 50 | 600' | 280' |
| 55 | 660' | 335' |

FOR LANE WIDTH OTHER THAN 12':

L = WS AT 45 MPH OR GREATER

$L = \frac{WS^2}{60}$ AT 40 MPH OR LESS

L = TAPER LENGTH IN FEET

S = NON-CONSTRUCTION SPEED LIMIT (MPH)

W = WIDTH OF LANE CLOSURE

## LEGEND

- TYPE III BARRICADE WITH ATTACHED SIGN
- SIGN ON PERMANENT SUPPORT
- TRAFFIC CONTROL DRUM WITH TYPE "C" STEADY BURN LIGHT
- TRAFFIC CONTROL DRUM
- FLASHING ARROW BOARD
- DIRECTION OF TRAFFIC
- REMOVING PAVEMENT MARKING (SEE GENERAL NOTES)
- WORK AREA

TRAFFIC CONTROL,
SINGLE LANE CLOSURE,
NON-FREEWAY/EXPRESSWAY

STATE OF WISCONSIN
DEPARTMENT OF TRANSPORTATION

APPROVED
Feb. 2015 — DATE
/S/ Travis Feltes — STATE TRAFFIC ENGINE
FHWA




6


S.D.D. 15 D 20-3

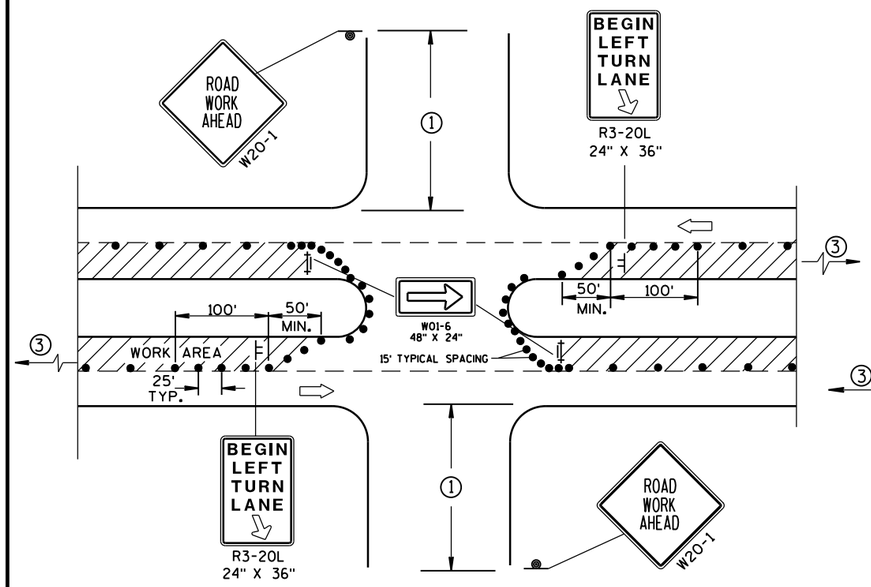


DETAIL A

FOR LEFT LANE CLOSURE AT INTERSECTION OR MEDIAN OPENING

PROVIDE TURN LANES AT INTERSECTIONS WHENEVER STAGING OF WORK ALLOWS. TAPER AND TURN LANE LENGTHS BASED ON FIELD CONDITIONS AS APPROVED BY THE ENGINEER.

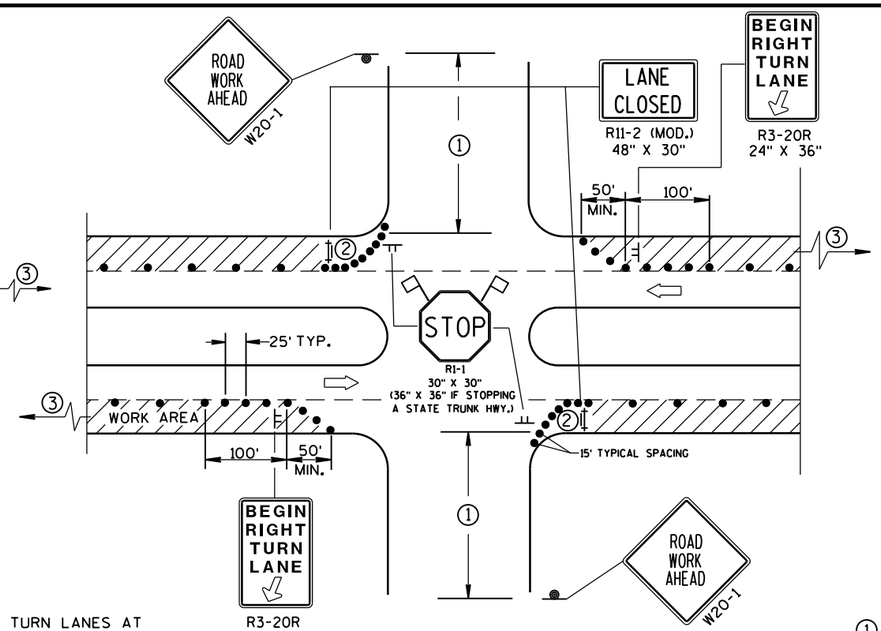


DETAIL B

FOR RIGHT LANE CLOSURE AT INTERSECTION

## GENERAL NOTES

THE EXACT NUMBER, LOCATION, AND SPACING OF ALL SIGNS AND DEVICES SHALL BE ADJUSTED TO FIT FIELD CONDITIONS AS APPROVED BY THE ENGINEER.

THE SPACING BETWEEN SIGNS SHOULD BE ADJUSTED TO NOT CONFLICT WITH AND SHOULD PROVIDE A DESIRABLE MINIMUM OF 200 FEET CLEARANCE TO EXISTING SIGNS THAT WILL REMAIN IN PLACE.

ALL SIGNS ARE 48"x48" UNLESS OTHERWISE NOTED. IF NECESSARY DUE TO SPACE CONSTRAINTS IN URBAN AREAS, 36" X 36" SIGNS MAY BE USED IF APPROVED BY DISTRICT TRAFFIC UNIT.

"WO" SIGNS ARE THE SAME AS "W" SIGNS EXCEPT THE BACKGROUND IS ORANGE.

SIGN LAYOUTS SHALL BE IN ACCORDANCE WITH THE FHWA'S MANUAL OF STANDARD HIGHWAY SIGNS OR THE WISCONSIN STANDARD SIGN PLATES.

SIGNS THAT WILL BE IN PLACE LESS THAN 7 CONTINUOUS DAYS AND NIGHTS, OR THAT WILL BE PLACED IN A CLOSED LANE, MAY BE MOUNTED ON PORTABLE SUPPORTS.

ANY SIGNS TEMPORARY OR EXISTING, WHICH CONFLICT WITH TRAFFIC CONTROL "IN USE" SHALL BE REMOVED OR COVERED AS NEEDED AND AS APPROVED BY THE ENGINEER.

CHANNELIZING DEVICES PLACED ADJACENT TO WORK AREA SHALL BE PULLED BACK FROM THE TRAVEL LANE WHEN WORK IS NOT IN PROGRESS.

BARRICADES IN A CLOSED LANE THAT MUST BE MOVED FOR A WORK OPERATION SHALL BE IMMEDIATELY RE-ESTABLISHED UPON COMPLETION OF THE OPERATION OR, FOR CONTINUING OPERATIONS, AT THE END OF EACH WORKING DAY.

① 500' TYPICAL OR AT LAST INTERSECTION, WHICHEVER IS CLOSER.
350' IF 35-40 MPH.
200' IF 25-30 MPH.

② ALSO USE BARRICADE AND 15-FOOT TYPICAL DRUM SPACING AT COMMERCIAL DRIVEWAYS.

③ SEE SEPARATE LANE CLOSURE DETAIL FOR ADDITIONAL TRAFFIC CONTROL.

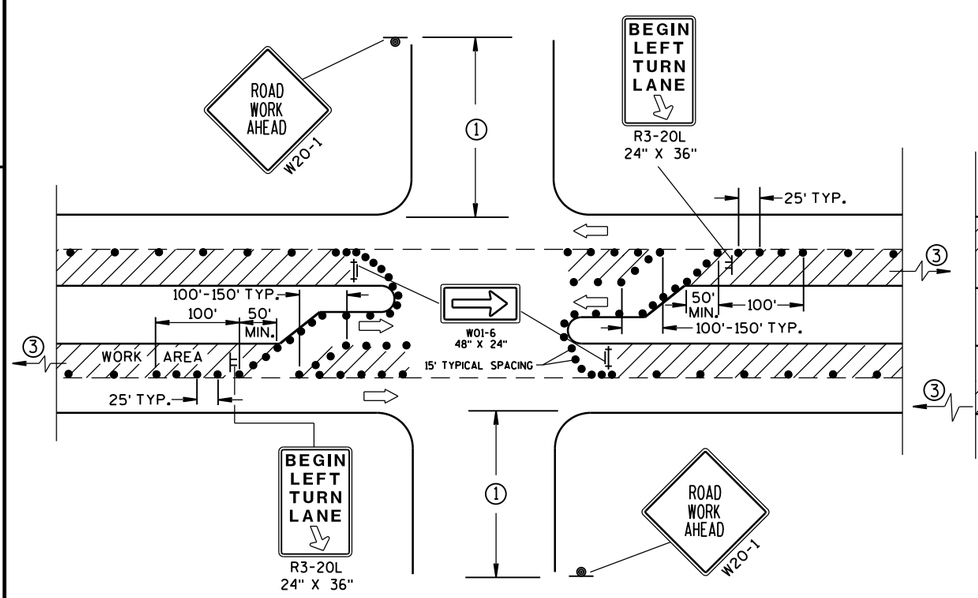


DETAIL C

FOR LEFT LANE CLOSURE AT INTERSECTION OR MEDIAN OPENING (WITH LEFT TURN BAY OPEN)

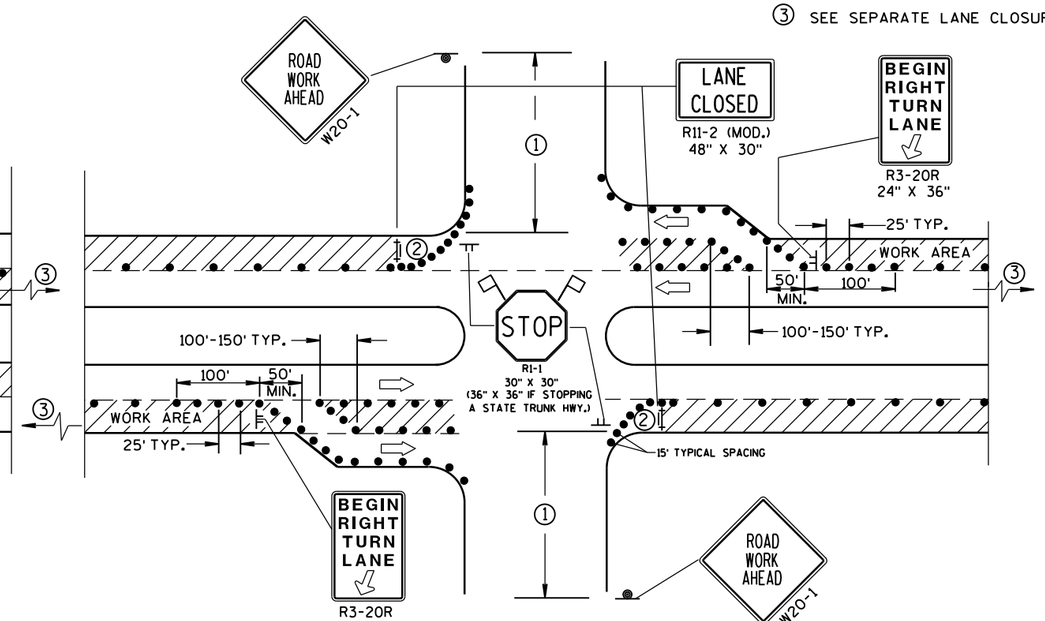


DETAIL D

FOR RIGHT LANE CLOSURE AT INTERSECTION (WITH RIGHT TURN BAY OPEN)

## LEGEND

- TRAFFIC CONTROL DRUM
- SIGN ON PERMANENT SUPPORT
- SIGN ON TEMPORARY SUPPORT (5' MIN. MOUNTING HEIGHT)
- TYPE III BARRICADE WITH ATTACHED SIGN AND TYPE "A" WARNING LIGHT (FLASHING)
- DIRECTION OF TRAFFIC
- FLAGS, 16" X 16" MIN., (ORANGE)
- WORK AREA

TRAFFIC CONTROL, INTERSECTION WITHIN SINGLE LANE CLOSURE

STATE OF WISCONSIN
DEPARTMENT OF TRANSPORTATION

APPROVED
Nov. 2014 — DATE
/S/ Travis Feltes — STATE TRAFFIC ENGINEER
FHWA

NOTE: MAY BE USED ON ROADWAY WITH POSTED SPEED OF LESS THAN 40 MPH.

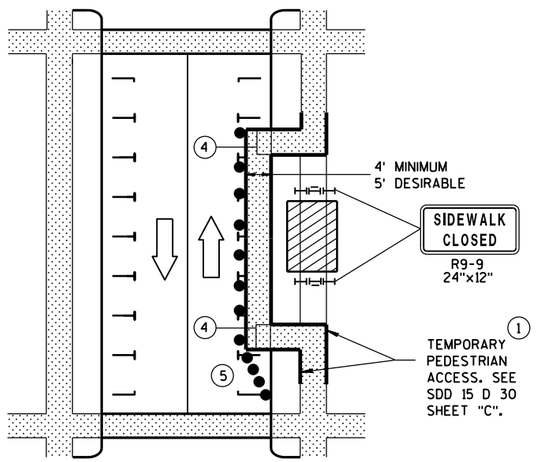


## MID-BLOCK SIDEWALK CLOSURE IN PARKING LANE

NOTE: LAYOUT SAME AS ABOVE.

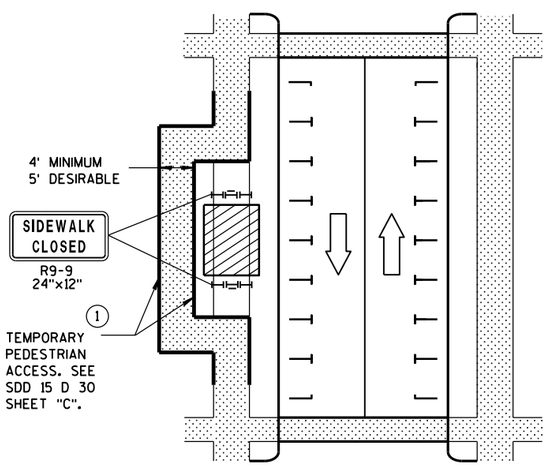


## SIDEWALK DIVERSION

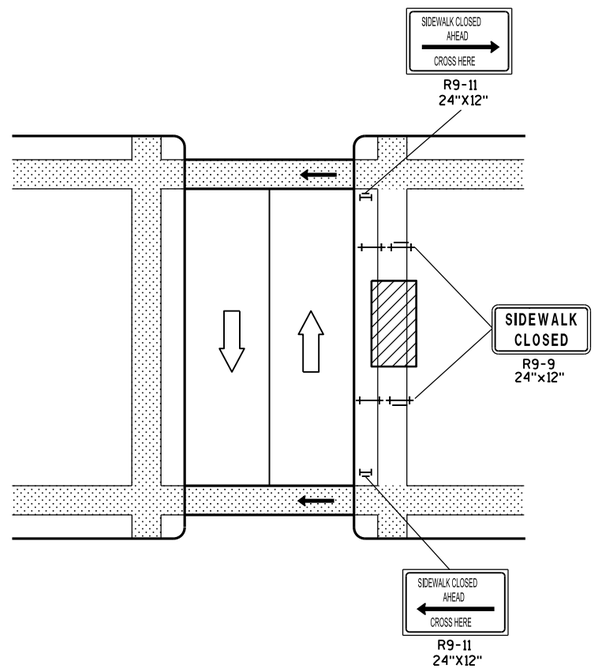


## MID-BLOCK SIDEWALK CLOSURE

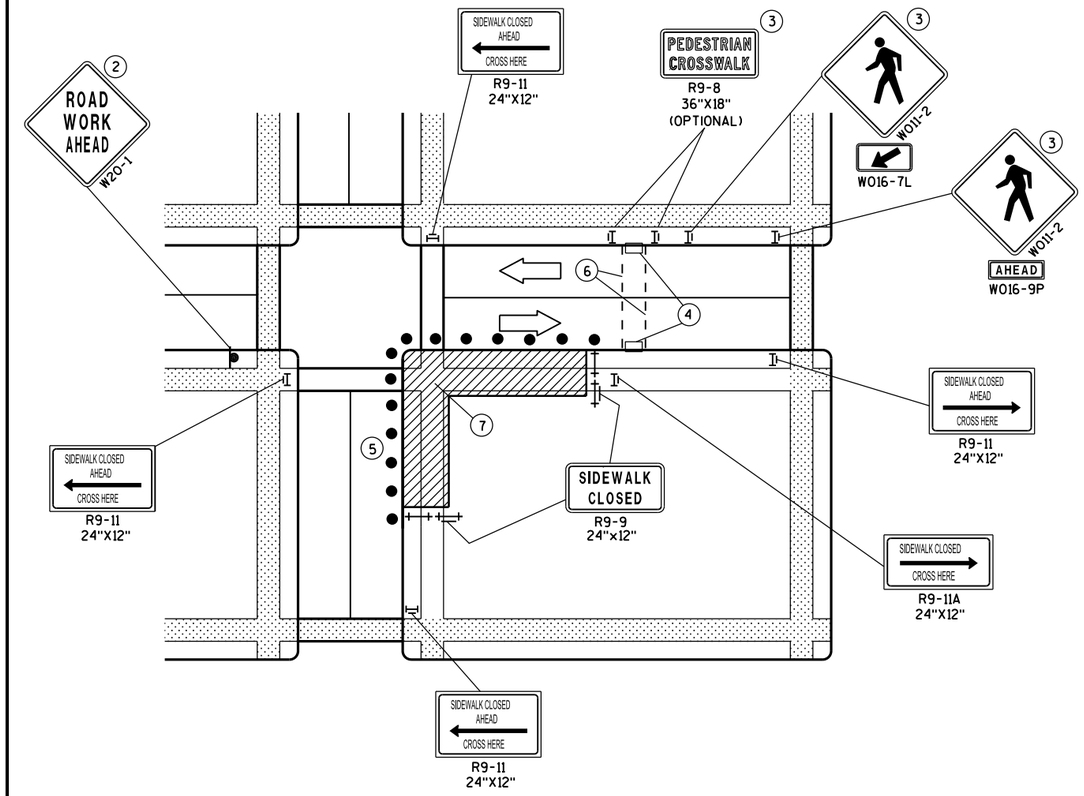


## CORNER SIDEWALK CLOSURE WITH TEMPORARY CROSSWALK

## GENERAL NOTES

WHEN CLOSING OR RELOCATING CROSSWALKS OR SIDEWALKS, PROVIDE DETECABLE TEMPORARY FACILITIES AND INCLUDE ACCESSIBILITY FEATURES CONSISTENT WITH EXISTING PEDESTRIAN FACILITIES.

TEMPORARY TRAFFIC CONTROL DEVICES FOR PEDESTRIANS ARE SHOWN. OTHER DEVICES MAY BE NECESSARY TO CONTROL VEHICULAR TRAFFIC. STAGE WORK, AS NECESSARY, TO PROVIDE A TEMPORARY PEDESTRIAN ACCESS ROUTE AT ALL TIMES. FOR ROADWAYS WITH NO AVAILABLE DETOURS, MAINTAIN ONE OPEN SIDEWALK AT ALL TIMES.

"WO" SIGN IS THE SAME AS "W" SIGN EXCEPT THE BACKGROUND IS ORANGE.

FOR NIGHTTIME CLOSURE USE TYPE "A" FLASHING WARNING LIGHTS ON BARRICADES, SUPPORTING SIGNS AND CLOSING SIDEWALK. USE TYPE "C" STEADY BURN LIGHTS ON CHANNELIZING DEVICES SEPARATING THE WORK AREA FROM VEHICULAR TRAFFIC.

PEDESTRIAN TRAFFIC SIGNAL DISPLAY CONTROLLING CLOSED CROSSWALK SHALL BE COVERED OR DEACTIVATED.

POST MOUNTED SIGNS LOCATED ADJACENT TO A SIDEWALK SHALL HAVE A 7 FOOT MINIMUM CLEARANCE FROM THE BOTTOM OF THE SIGN TO THE SIDEWALK SURFACE.

ALTERNATE SIDEWALK WORK BETWEEN LEFT AND RIGHT SIDE OF ROADWAY TO MAINTAIN PEDESTRIAN ACCESS.

1. IF SIDEWALK CLOSURE AFFECTS AN ACCESSIBLE AND DETECTABLE FACILITY, MAINTAIN ACCESSIBILITY AND DETECTABILITY ALONG THE ALTERNATE PEDESTRIAN ROUTE.
2. "ROAD WORK AHEAD" SIGNS ARE NOT REQUIRED IF THE SIDEWALK CLOSURE OCCURS WITHIN A LARGER WORK ZONE WHERE ADVANCE WARNING SIGNS ARE ALREADY PRESENT, OR IF THE WORK AREA AND EQUIPMENT ARE MORE THAN 2 FEET BEHIND THE CURB.
3. IF TEMPORARY PEDESTRIAN CROSSWALK IS NOT PROVIDED, OMIT R9-8 AND W011-2 SIGN ASSEMBLIES. IF PROVIDED INCLUDE ON BOTH SIDES OF THE CROSSWALK.
4. TEMPORARY CURB RAMPS. SEE SDD 15 D 30 SHEET "B".
5. DRUMS OR BARRICADES AT 25 FOOT SPACING. STREET PARKING SHALL BE PROHIBITED FOR AT LEAST 50 FEET IN ADVANCE OF THE MID-BLOCK CROSSWALK.
6. TEMPORARY PAVEMENT MARKING FOR CROSSWALK LINES.
7. LIMIT WORK TO ONE QUADRANT AT A TIME TO MINIMIZE PEDESTRIAN DISRUPTION.

### LEGEND

- SIGN ON PERMANENT SUPPORT
- UNDER PEDESTRIAN TRAFFIC
- WORK AREA
- PEDESTRIAN CHANNELIZATION DEVICE
- TYPE II BARRICADE WITH/WITHOUT SIGN (ALL WITH ONE WARNING LIGHT, TYPE A, LOW-INTENSITY FLASHING)
- TYPE III BARRICADE WITH/WITHOUT SIGN (ALL WITH ONE WARNING LIGHT, TYPE A, LOW-INTENSITY FLASHING)
- DIRECTION OF TRAFFIC
- TRAFFIC CONTOL DRUM

**TRAFFIC CONTROL, PEDESTRIAN ACCOMMODATION**

STATE OF WISCONSIN
DEPARTMENT OF TRANSPOI

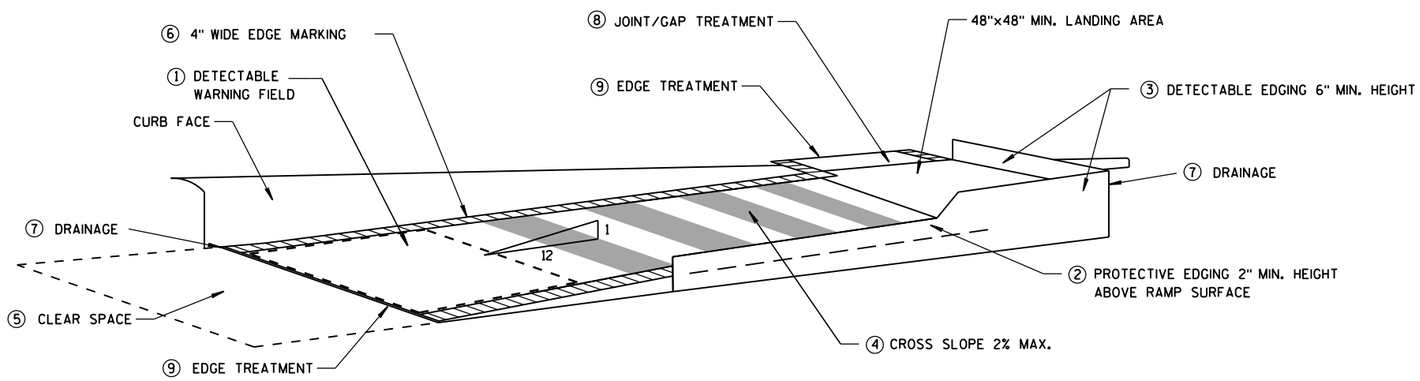


## TEMPORARY CURB RAMP PARALLEL TO CURB

## GENERAL NOTES

NOTIFY THE BUS COMPANY 7 DAYS IN ADVANCE OF THE BUS STOP RELOCATION.

ALTERNATE SIDEWALK WORK BETWEEN LEFT AND RIGHT SIDE OF ROADWAY TO MAINTAIN PEDESTRIAN ACCESS.

① CURB RAMPS SHALL BE 48" MIN. WIDTH WITH A FIRM, STABLE AND SLIP RESISTANT SURFACE. INSTALL CONTRASTING DETECTABLE WARNING FIELD AT PEDESTRIAN STREET CROSSINGS. REFER TO SDD 8D5 SHEET "E".

② PROTECTIVE EDGING WITH A 2" MIN. HEIGHT SHALL BE INSTALLED WHEN A CURB RAMP OR LANDING PLATFORM HAS A VERTICAL DROP OF 6" OR GREATER OR HAS A SIDE APRON SLOPE STEEPER THAN 1:3 (33%). PROTECTIVE EDGING SHOULD BE CONSIDERED WHEN CURB RAMPS OR LANDING PLATFORMS HAVE A VERTICAL DROP OF 3" OR MORE.

③ DETECTABLE EDGING WITH 6" MIN. HEIGHT AND CONTRASTING COLOR SHALL BE INSTALLED ON ALL CURB RAMP LANDINGS WHERE THE WALKWAY CHANGES DIRECTION (TURNS).

④ CURB RAMPS AND LANDINGS SHALL HAVE A 1:50 (2%) MAX. CROSS-SLOPE.

⑤ CLEAR SPACE OF 48"X48" MIN. SHALL BE PROVIDED ABOVE AND BELOW THE CURB RAMP.

⑥ THE CURB RAMP WALKWAY EDGE SHALL BE MARKED WITH A YELLOW COLOR, 4" WIDE MARKING, UNLESS A CONTRASTING DETECTABLE WARNING FIELD IS PROVIDED.

⑦ DO NOT RESTRICT WATER FLOW IN THE GUTTER SYSTEM.

⑧ LATERAL JOINTS OR GAPS BETWEEN SURFACES SHALL BE LESS THAN 1/2" WIDTH.

⑨ CHANGES BETWEEN SURFACE HEIGHTS SHALL NOT EXCEED 1/2". LATERAL EDGES SHALL BE VERTICAL UP TO 1/4" HIGH, AND BEVELED AT 1:2 BETWEEN 1/4" AND 1/2".

⑩ 5' WIDE MIN. WITH PEDSETRIAN SAFETY FENCE, 10' WIDE MIN. WITHOUT PEDESTRIAN SAFETY FENCE.

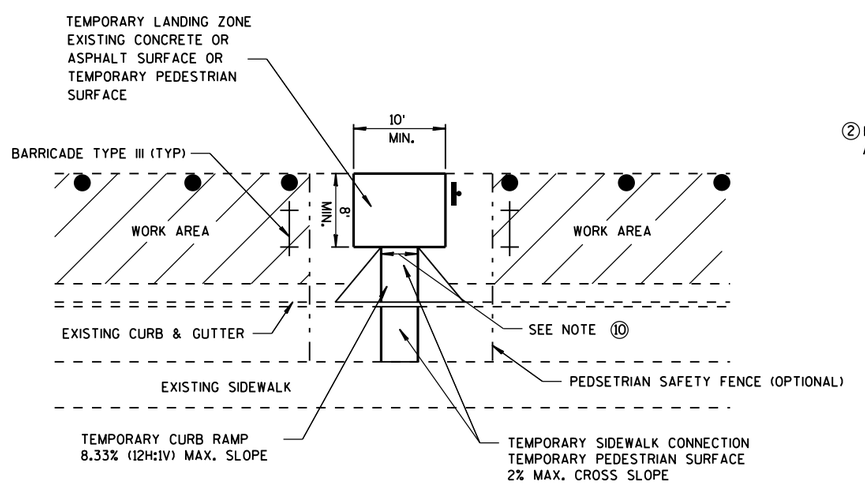


## TEMPORARY BUS STOP PAD

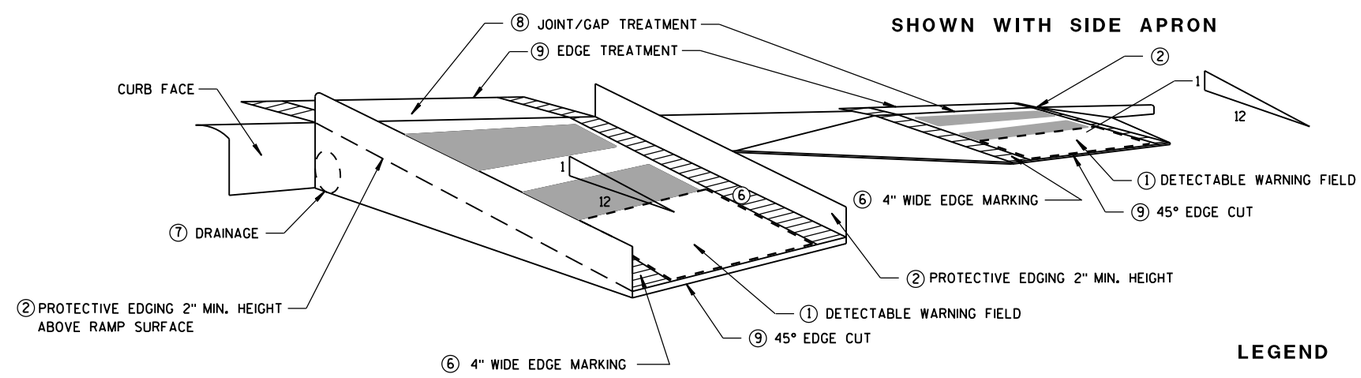


## TEMPORARY CURB RAMP PERPENDICULAR TO CURB

### LEGEND

- WORK AREA
- TYPE III BARRICADE
- TRAFFIC CONTOL DRUM

**TRAFFIC CONTROL, TEMPORARY ADA COMPLIANT PEDESTRIAN ACCOMMODATION**

STATE OF WISCONSIN
DEPARTMENT OF TRANSPORTATION

APPROVED
March 2015 — DATE
/S/ Travis Feltes — STATE TRAFFIC ENGINEER — SIGN
FHWA




6


S.D.D. 15 D 30-2b

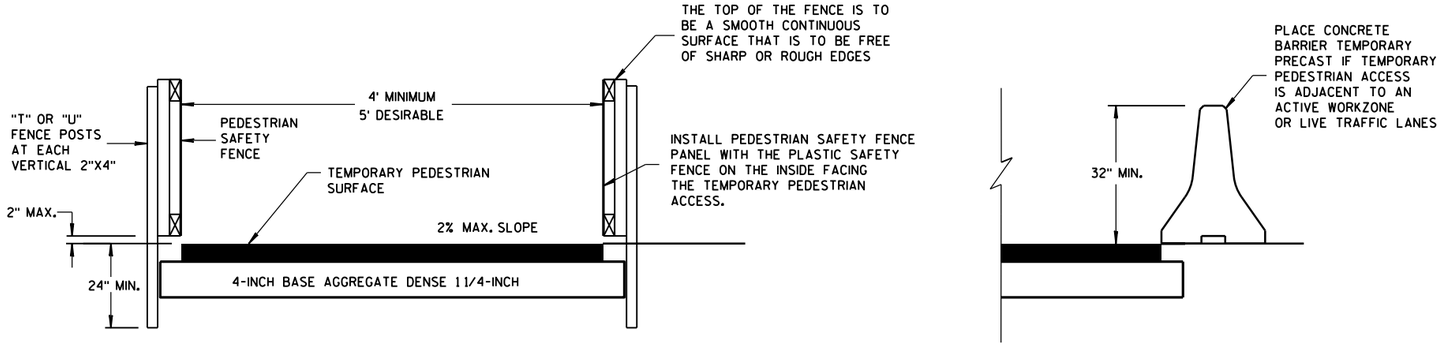


## TEMPORARY PEDESTRIAN ACCESS

## GENERAL NOTES

1. INTERCHANGEABLE WITH THE PEDESTRIAN SAFETY FENCE.

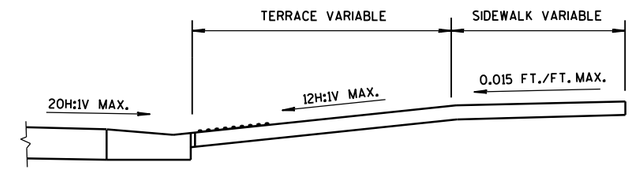


SECTION A-A

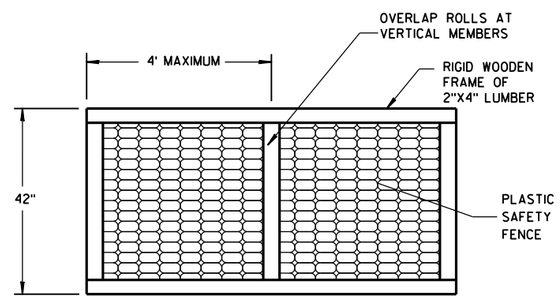


## PEDESTRIAN SAFETY FENCE

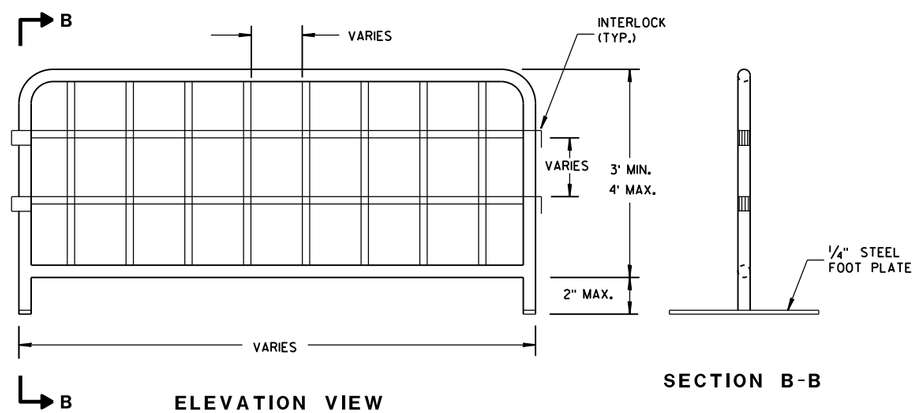


## TEMPORARY PEDESTRIAN STEEL BARRICADE (1)

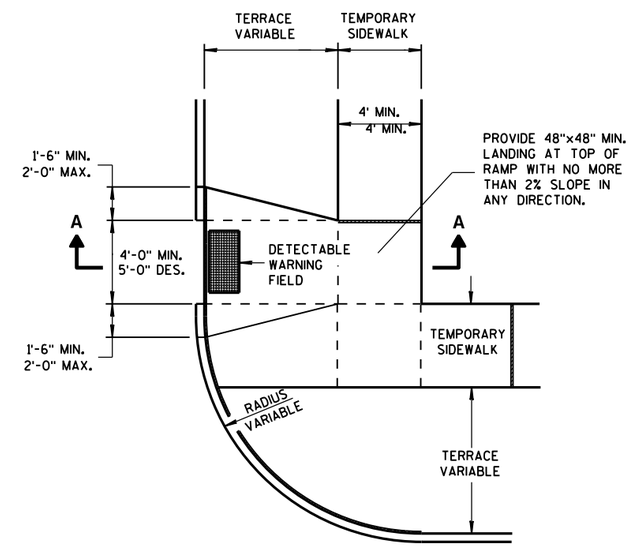


PLAN VIEW

## TEMPORARY TYPE 3 RAMP

(OUTSIDE OF CROSSWALK AREA)

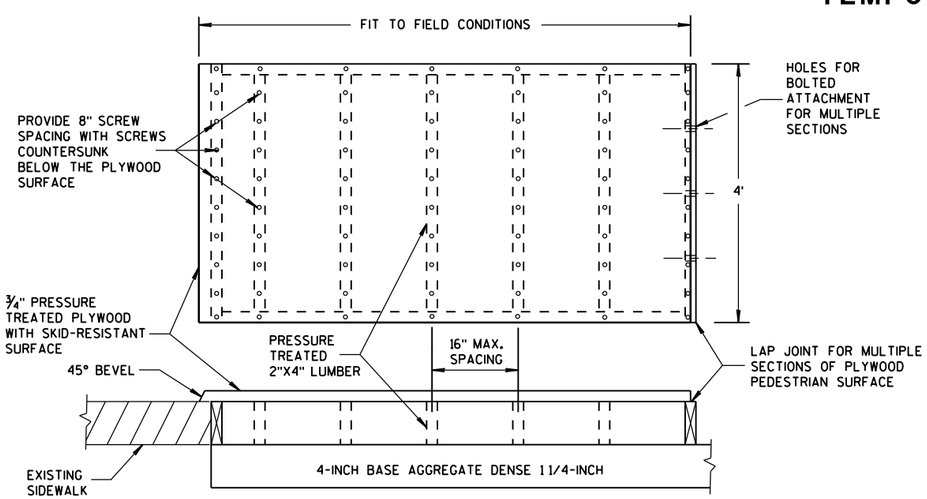


## TEMPORARY PEDESTRIAN SURFACE PLYWOOD

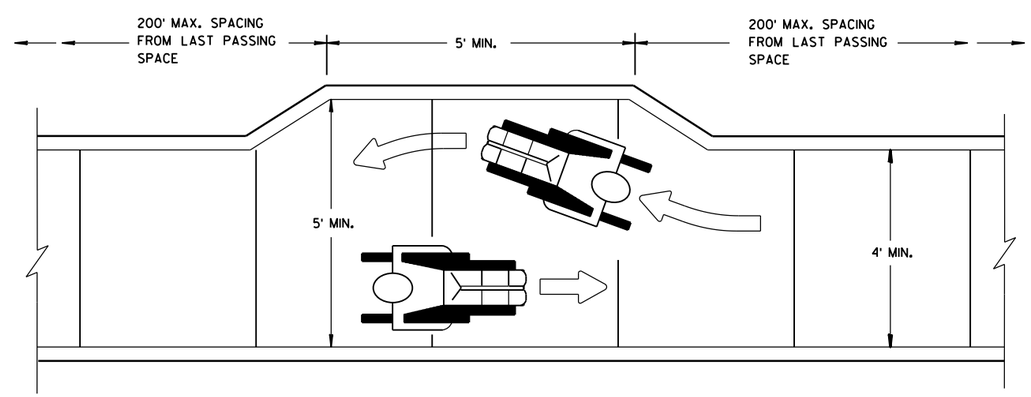


## NARROW SIDEWALK PASSING DETAIL

TRAFFIC CONTROL, PEDESTRIAN ACCOMMODATION

STATE OF WISCONSIN
DEPARTMENT OF TRANSPORTATION

APPROVED
March 2015 — DATE
/S/ Travis Feltes — STATE TRAFFIC ENGINEER — SIGN
FHWA

6

S.D.D. 15 D 30-2c

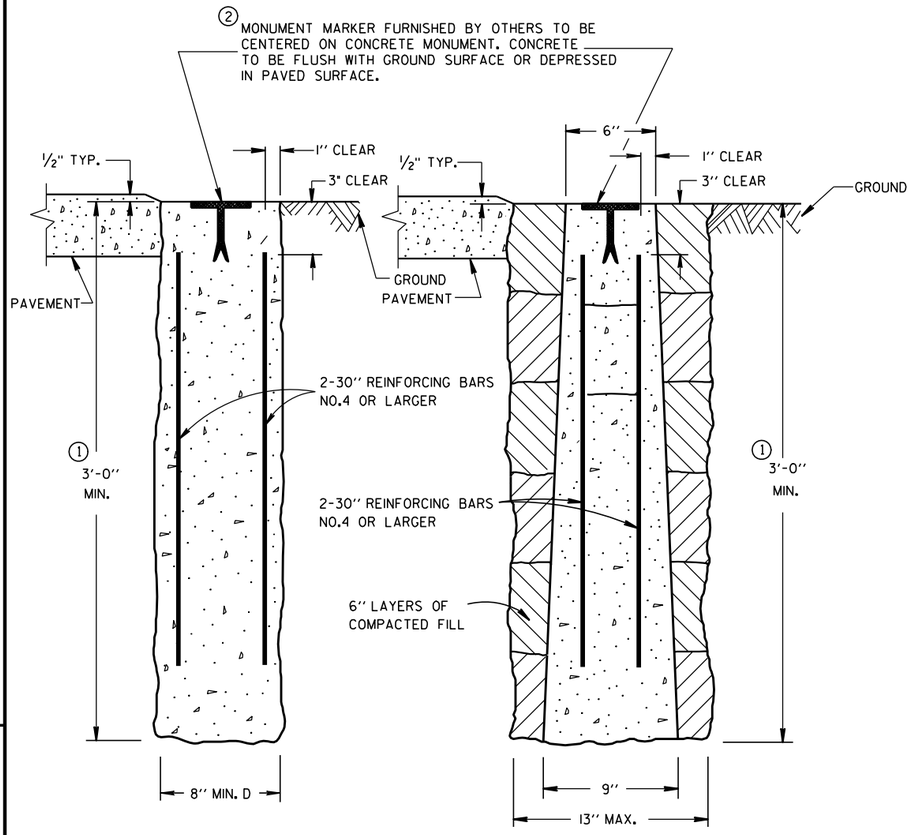


CAST-IN-PLACE PRECAST

CONCRETE MONUMENTS

TYPE A

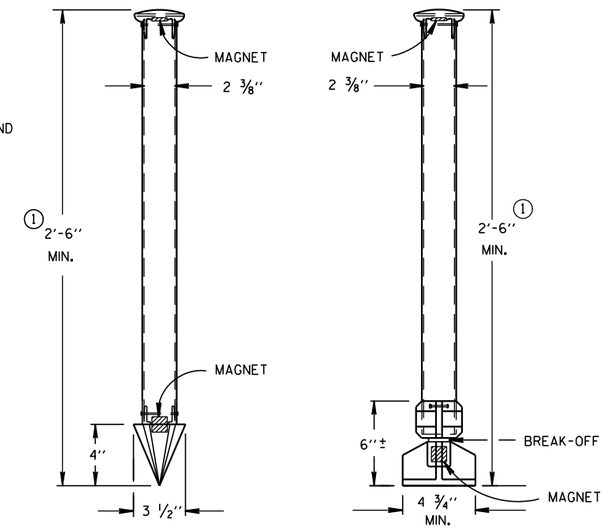


TYPE C TYPE D

DRIVE-IN MONUMENT BREAK-OFF MONUMENT

ALUMINUM MONUMENTS

(INCLUDES MARKER)

## GENERAL NOTES

DETAILS OF CONSTRUCTION, MATERIALS AND WORKMANSHIP NOT SHOWN ON THIS DRAWING SHALL CONFORM TO THE PERTINENT REQUIREMENTS OF THE STANDARD SPECIFICATIONS AND THE APPLICABLE SPECIAL PROVISIONS.

DETAILED DRAWINGS OF PROPOSED ALTERNATE DESIGNS FOR METAL MONUMENTS OR MONUMENT COVERS SHALL BE SUBMITTED TO THE ENGINEER FOR APPROVAL.

INSTALLED METAL MONUMENTS MUST BE EASILY DETECTED WITH A DIP NEEDLE. INSERT PERMANENT MAGNETS SHALL BE ATTACHED NEAR THE TOP AND BOTTOM OF THOSE MONUMENTS CONSTRUCTED OF A METAL ALLOY WHICH IS NOT ATTRACTIVE TO A DIP NEEDLE.

THE CAST IRON MONUMENT COVER SHALL BE A "NON-ROCKING" TYPE. ADJUSTMENT OF THE COVER TO GRADE MAY BE ACCOMPLISHED BY THE USE OF MORTAR AND BRICK, OR BY EITHER PRECAST OR CAST-IN-PLACE REINFORCED CONCRETE GRADE RINGS.

MONUMENTS SHALL BE LOCATED AND PLACED AT THE DIRECTION OF THE ENGINEER.

ALUMINUM MONUMENTS AND MONUMENT COVERS SHALL BE MADE FROM AN ALUMINUM AND MAGNESIUM ALLOY AS DETERMINED BY THE MANUFACTURER.

THE MONUMENT COVERS DETAILED ON THIS DRAWING ARE NOT EQUAL ALTERNATES. MONUMENT COVERS SHALL BE CAST IRON UNLESS ALUMINUM IS SPECIFIED ELSEWHERE IN THE CONTRACT.

MONUMENT SHALL BE CAST-IN-PLACE CONCRETE UNLESS PRECAST CONCRETE OR ALUMINUM MONUMENTS ARE SPECIFIED IN THE CONTRACT OR PERMITTED BY THE ENGINEER.

① MINIMUM LENGTH SHALL BE 4'-0" FOR MONUMENTS INSTALLED IN PAVED AREAS.

② AN OFFICIAL COUNTY MONUMENT MARKER SUPPLIED BY A COUNTY MAY BE REQUIRED FOR SOME SECTION CORNERS AND WITNESS MONUMENTS INSTEAD OF THIS WIS DOT MARKER.

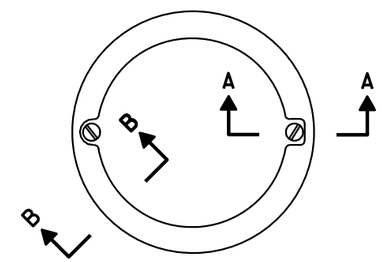


TOP VIEW

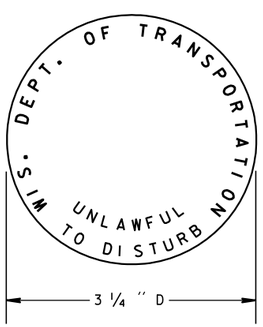


② WIS DOT MONUMENT MARKER LOGO

FOR TYPES "A", "C" & "D"

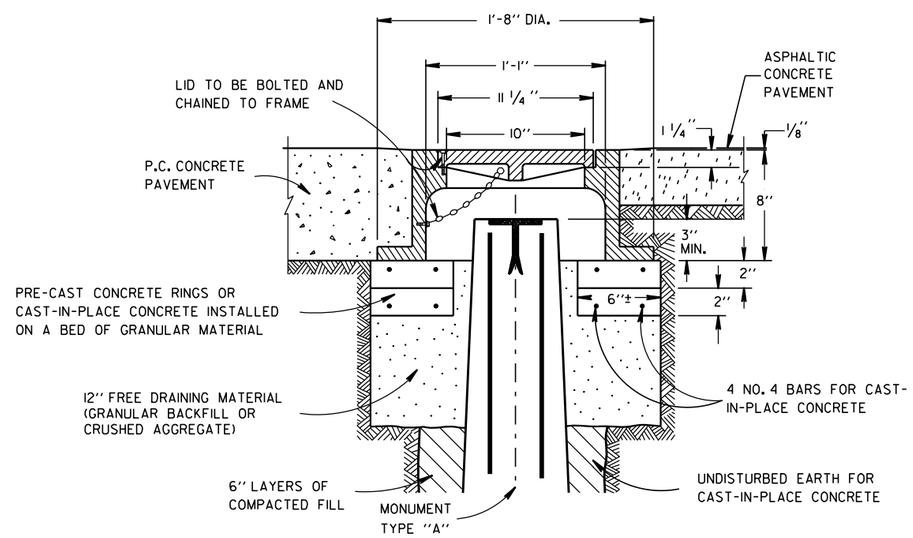


CAST IRON MONUMENT COVER

(APPROXIMATE WEIGHT - 95 LBS.)

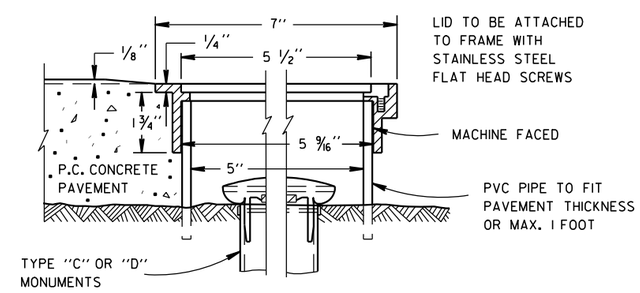


SECTION B-B SECTION A-A

ALUMINUM MONUMENT COVER

(APPROXIMATE WEIGHT 2 LBS)

(FOR CONCRETE PAVEMENT ONLY)

**LANDMARK REFERENCE MOUNMENTS AND COVERS**

STATE OF WISCONSIN
DEPARTMENT OF TRANSPORTATION

APPROVED

9/22/1999 /S/ Rory L. Rhinesmith

DATE CHIEF ROADWAY DEVELOPMENT ENGINEER

FHWA

**Wisconsin Department of Transportation**

Dedicated people creating transportation solutions through innovation and exceptional service.

http://www.dot.wisconsin.gov