RHI MAY 2016

PROJECT ID: 1170-01-75
WITH: N/A

COUNTY: MARATHON

ORDER OF SHEETS

Section No.	1	Title
Section No.	2	Typical Sections and Details
Section No.	3	Estimate of Quantities
Section No.	3	Miscellaneous Quantities
Section No.	5	Plan and Erosion Control
Section No.	6	Standard Detail Drawings
Section No.	7	Sign Plates
Section No.	8	Structure Plans
Section No.	9	Cross Sections

TOTAL SHEETS = 184

STATE PROJECT	FEDERAL PROJECT	
	PROJECT	CONTRACT
1170-01-75	WISC 2016173	1

STATE OF WISCONSIN
DEPARTMENT OF TRANSPORTATION

PLAN OF PROPOSED IMPROVEMENT

WAUSAU-MERRILL

DECATOR DRIVE TO LINCOLN COUNTY LINE

USH 51
MARATHON COUNTY

STATE PROJECT NUMBER
1170-01-75

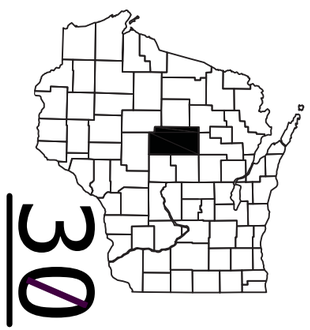

N

DESIGN DESIGNATION 1170-01-75

A.A.D.T.	2018	=	20900
A.A.D.T.	2038	=	27400
D.H.V.	2038	=	3150
D.D.		=	60/40
T.		=	14.5
DESIGN SPEED		=	70MPH
ESALS		=	11,081,400

CONVENTIONAL SYMBOLS

PLAN
- CORPORATE LIMITS
- PROPERTY LINE
- LOT LINE
- LIMITED HIGHWAY EASEMENT
- EXISTING RIGHT OF WAY
- PROPOSED OR NEW R/W LINE
- SLOPE INTERCEPT
- REFERENCE LINE
- EXISTING CULVERT
- PROPOSED CULVERT (Box or Pipe)
- COMBUSTIBLE FLUIDS — CAUTION
- MARSH AREA
- WOODED OR SHRUB AREA

PROFILE
- GRADE LINE
- ORIGINAL GROUND
- MARSH OR ROCK PROFILE (To be noted as such) — ROCK
- SPECIAL DITCH — LABEL
- GRADE ELEVATION — 95.36
- CULVERT (Profile View)

UTILITIES
- ELECTRIC — E
- FIBER OPTIC — FO
- GAS — G
- SANITARY SEWER — SAN
- STORM SEWER — SS
- TELEPHONE — T
- WATER — W
- UTILITY PEDESTAL
- POWER POLE
- TELEPHONE POLE

END PROJECT
STA 771N+18.37
Y=260457.6745
X=278751.1690

EXCEPTION TO NET ℄ LENGTH
B-37-165 (USH 51 NB)
STA 712N+22.00 TO STA 717N+25.00
B-37-166 (USH 51 SB)
STA 711S+70.00 TO STA 716S+73.00

B-37-163 (USH 51 NB)
B-37-164 (USH 51 SB)

LINCOLN COUNTY
MARATHON COUNTY

EXCEPTION TO NET ℄ LENGTH
B-37-161 (USH 51 NB)
STA 578N+52.00 TO STA 583N+68.00
B-37-162 (USH 51 SB)
STA 578S+91.00 TO STA 583S+53.00

EXCEPTION TO NET ℄ LENGTH
B-37-158 (USH 51 NB)
STA 398N+30.00 TO STA 406N+35.00
B-37-159 (USH 51 SB)
STA 398S+05.00 TO 407S+90.00

BEGIN PROJECT
STA 313N+89.00
Y=217986.35
X=273903.09

B-37-155 (USH 51 NB)
B-37-156 (USH 51 SB)

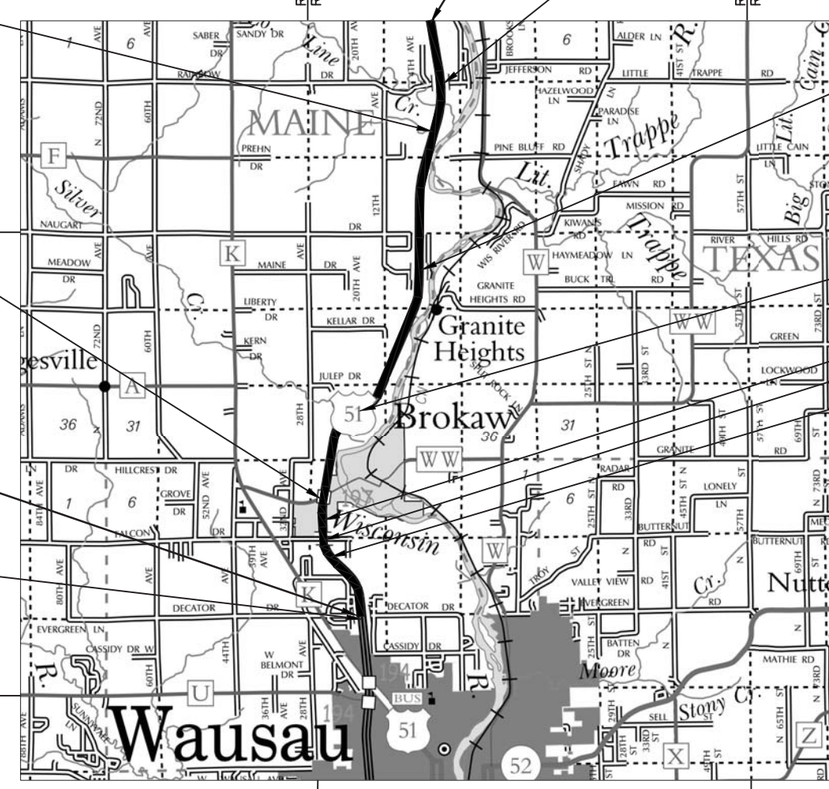

LAYOUT
SCALE 0 1 MI.

TOTAL NET LENGTH OF CENTERLINE = 8.353 MI

HORIZONTAL POSITIONS SHOWN ON THIS PLAN ARE WISCONSIN COUNTY COORDINATES, MARATHON COUNTY, NAD83 (2007), IN U.S. SURVEY FEET. VALUES ARE GRID COORDINATES, GRID BEARINGS, AND GRID DISTANCES. GRID DISTANCES MAY BE USED AS GROUND DISTANCES.

ORIGINAL PLANS PREPARED BY
BLOOM COMPANIES, LLC

WISCONSIN PROFESSIONAL ENGINEER
CHAD R. EVEN
E-40861
Greenville, Wisconsin

1/25/16 (Date) (Signature)

STATE OF WISCONSIN
DEPARTMENT OF TRANSPORTATION

PREPARED BY

Surveyor	BLOOM COMPANIES, LLC
Designer	BLOOM COMPANIES, LLC
Project Manager	MICHAEL GRAGE
Regional Examiner	CHERYL SIMON
Regional Supervisor	ROBIN STAFFORD

APPROVED FOR THE DEPARTMENT
DATE: 1/25/16 (Signature)

E

GENERAL NOTES

THE LOCATIONS OF EXISTING UTILITY INSTALLATION AS SHOWN ON THE PLANS ARE APPROXIMATE. THERE MAY BE OTHER UTILITY INSTALLATIONS WITHIN THE PROJECT AREA THAT ARE NOT SHOWN.

NO TREES OR SHRUBS ARE TO BE REMOVED WITH PRIOR APPROVAL OF THE ENGINEER.

SILT FENCE WITH SMALL ANIMAL TURN AROUNDS SHOWN ON PLANS ARE TO PROTECT THE WOOD TURTLES.

DO NOT DAMAGE A POLYMER OVERLY BY GROOVING OR BLASTING FOR CONTRAST TAPE. USE ONLY EPOXY PAVEMENT MARKINGS ON ALL BRIDGE SURFACES.

NO SOIL BORINGS WERE DONE IN THE AREA OF THE SIGN STRUCTURES. THERE MAY BE HIGH BEDROCK IN THESE AREAS.

DIGGERS HOTLINE

Dial 811 or (800) 242-8511

www.DiggersHotline.com

UTILITY CONTACTS

WISCONSIN PUBLIC SERVICE CORPORATION – GAS PETROLEUM
MICHAEL ALLEN BOSI
1700 SHERMAN STREET
WAUSAU, WI 54402
PHONE: (715) 848-7471
MABosi@wisconsinpublicservice.com

WISCONSIN PUBLIC SERVICE CORPORATION – ELECTRICITY
CLAYTON VIRCKS
PO BOX 1166
WAUSAU, WI 54402
PHONE: (715) 848-73173
chvircks@wisconsinpublicservice.com

FRONTIER COMMUNICATIONS OF WI, LLC
CALVIN KLADE
1851 N 14TH AVE
WAUSAU, WI 54403
PHONE: (715) 847-1504
Calvin.Klade@ftr.com

BROKAW WATER UTILITY
DENNIS M STEIGENBERGER
2737 S. RIDGE RD
GREEN BAY, WI 54304
PHONE: (920) 455-7004
Dennis.steigenberger@cedarcorp.com

CHARTER COMMUNICATIONS
SCOTT OLSON
853 MCINTOSH ST
WAUSAU, WI 54402
PHONE: (715) 301-4079
Scott.Olson@Charter.com

ATC MANAGEMENT, INC. –ELECTRICITY
TONY MARCINIAK
PHONE: (262) 506-6814
tmarciniak@atcllc.com

OTHER AGENCIES

WISCONSIN DNR
MR. MARC HERSHFIELD
WDNR EA LIASION
473 GRIFFITH DRIVE
WISCONSIN RAPIDS, WI 54494
PHONE: (715) 421-7867
marc.hershfield@wisconsin.gov

SECTION 2 ORDER OF SHEETS

GENERAL NOTES
PROJECT OVERVIEW
TYPICAL SECTIONS
CONSTRUCTION DETAILS
PLANTING
PERMANENT SIGNING
PAVEMENT MARKING
TRAFFIC CONTROL

EROSION CONTROL IS SHOWN ON SECTION 5 PLAN SHEETS

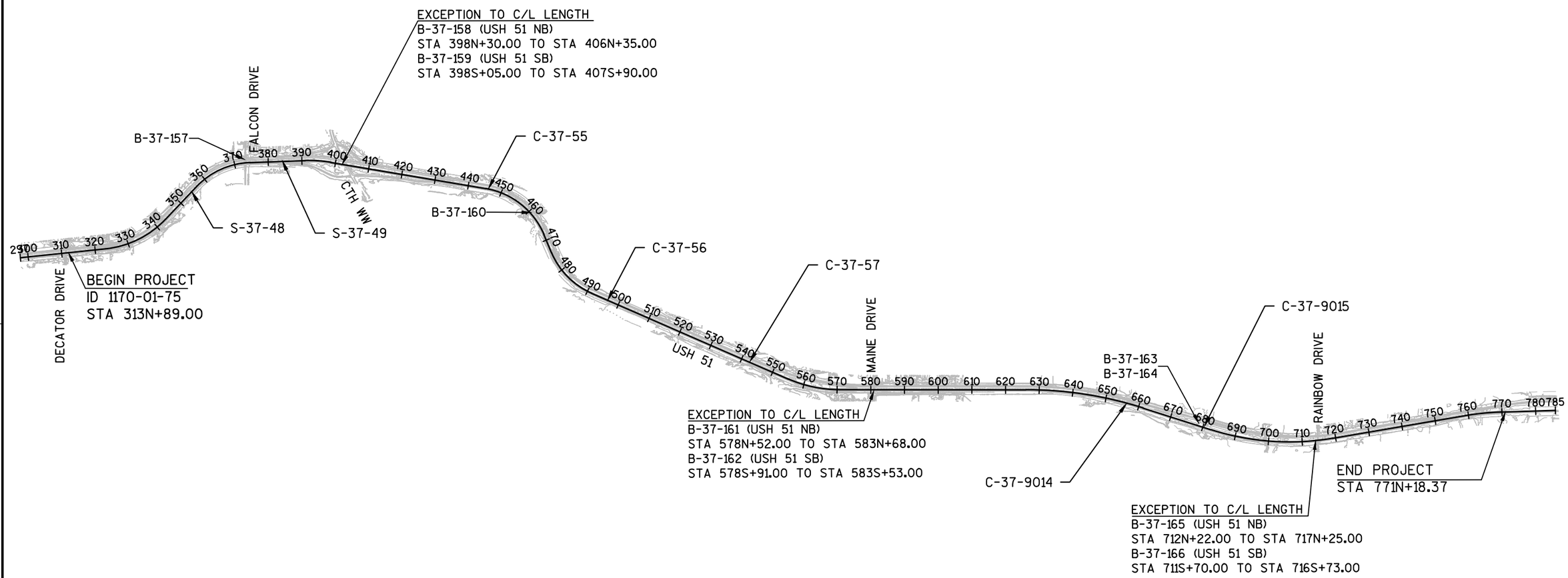

PROJECT NO:1170-01-75	HWY:USH 51	COUNTY:MARATHON	PROJECT OVERVIEW	SHEET 3	E

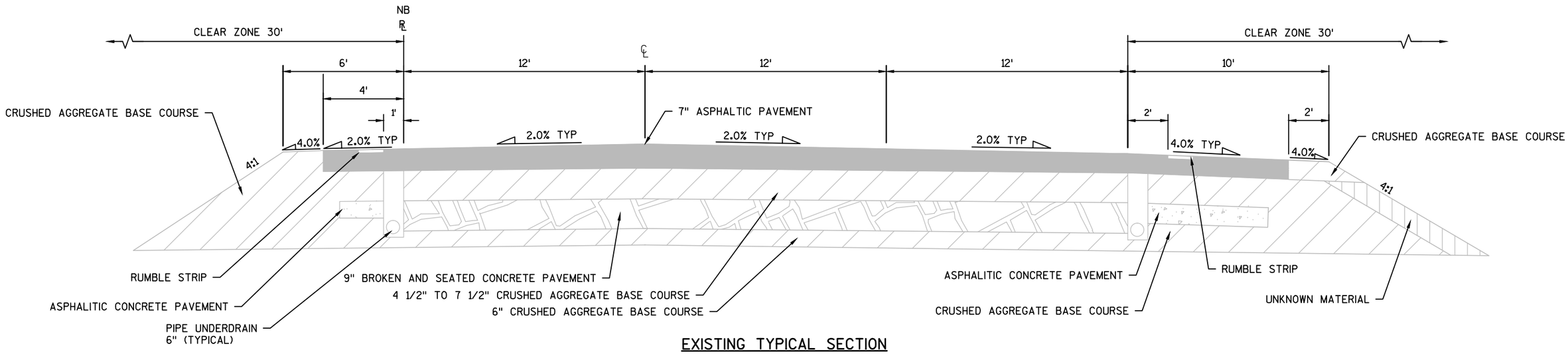

EXISTING TYPICAL SECTION
USH 51 NORTHBOUND
STA 313N+89 TO STA 395N+00

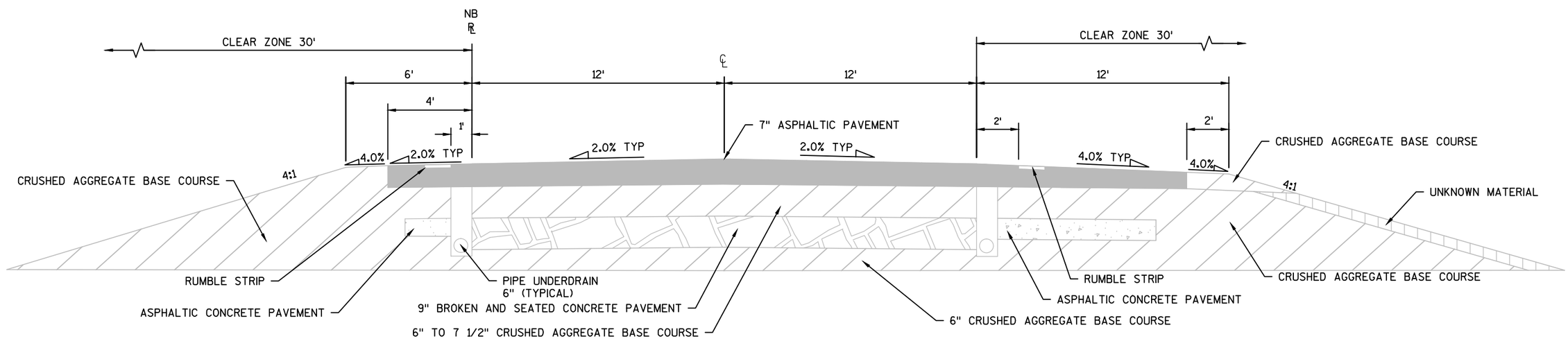

EXISTING TYPICAL SECTION
USH 51 NORTHBOUND
STA 395N+00 TO STA 401N+97

PROJECT NO:1170-01-75	HWY:USH 51	COUNTY:MARATHON	PLAN: TYPICAL SECTIONS	SHEET 4	E

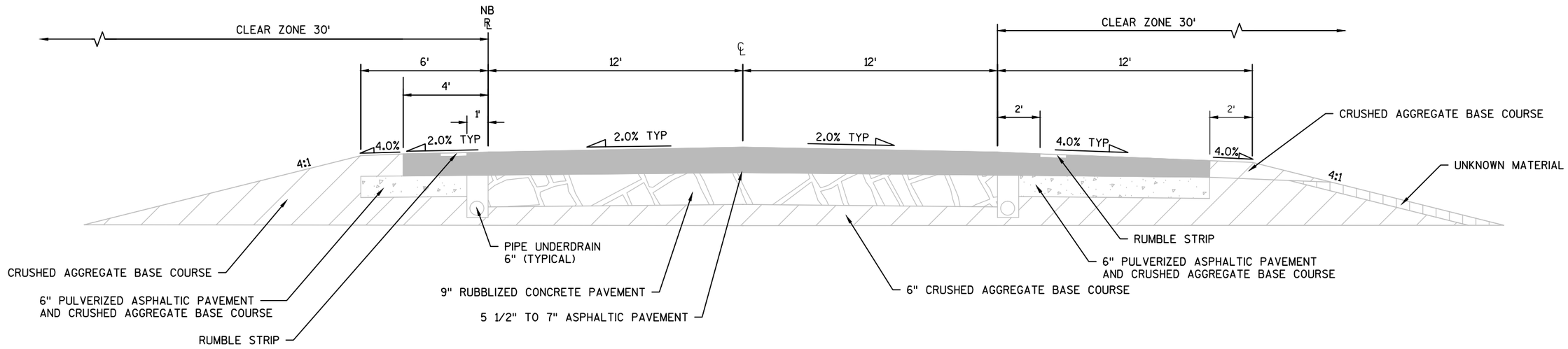

EXISTING TYPICAL SECTION
USH 51 NORTHBOUND
STA 401N+97 TO STA 771N+18.37

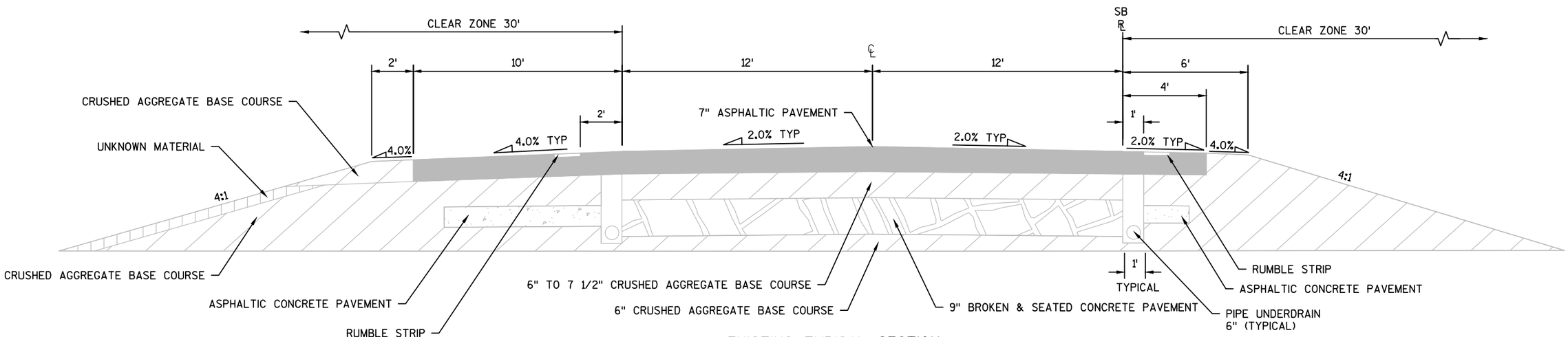

EXISTING TYPICAL SECTION
USH 51 SOUTHBOUND
STA 312S+06.42 TO STA 348S+50

PROJECT NO:1170-01-75	HWY:USH 51	COUNTY:MARATHON	PLAN: TYPICAL SECTIONS	SHEET 5	E

FILE NAME : F:\BM4-1077 US 51\5_DESIGN\03_ROADS\11700175\SHEETSPLAN\020301-TS.DWG
LAYOUT NAME - 020302-ts
PLOT DATE : 12/3/2015 3:19 PM PLOT BY : AARON GLOWINSKI PLOT NAME : PLOT SCALE : 1:5_XREF

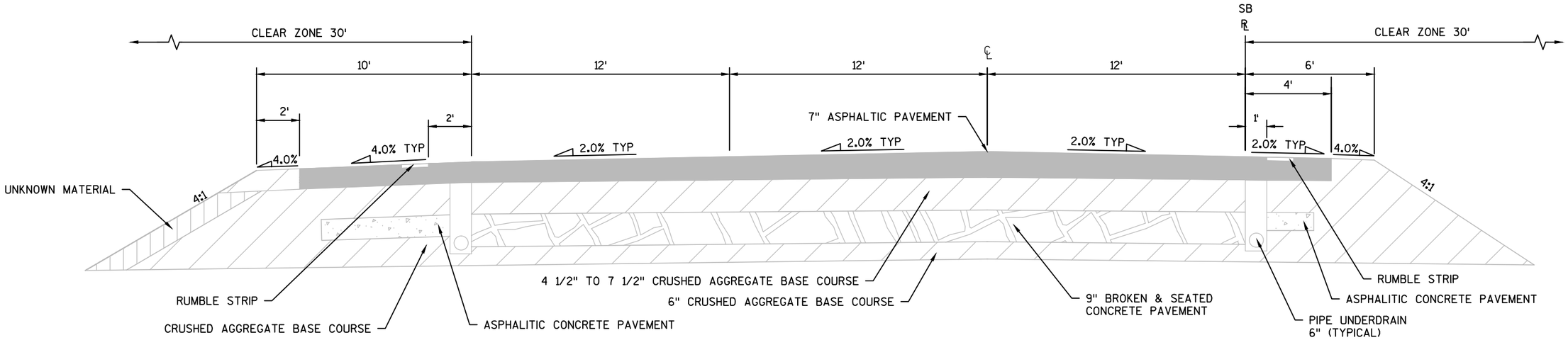

EXISTING TYPICAL SECTION
USH 51 SOUTHBOUND
STA 348S+50 TO STA 401S+21

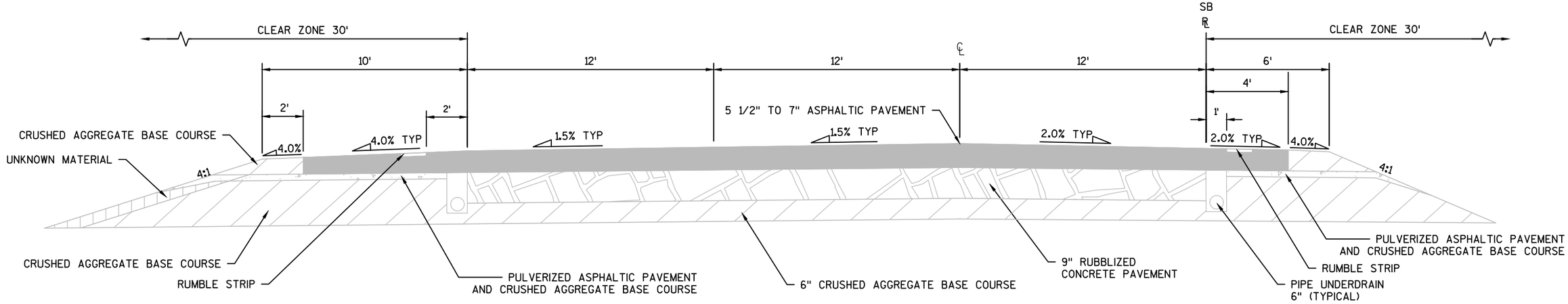

EXISTING TYPICAL SECTION
USH 51 SOUTHBOUND
STA 401S+21 TO STA 442S+50

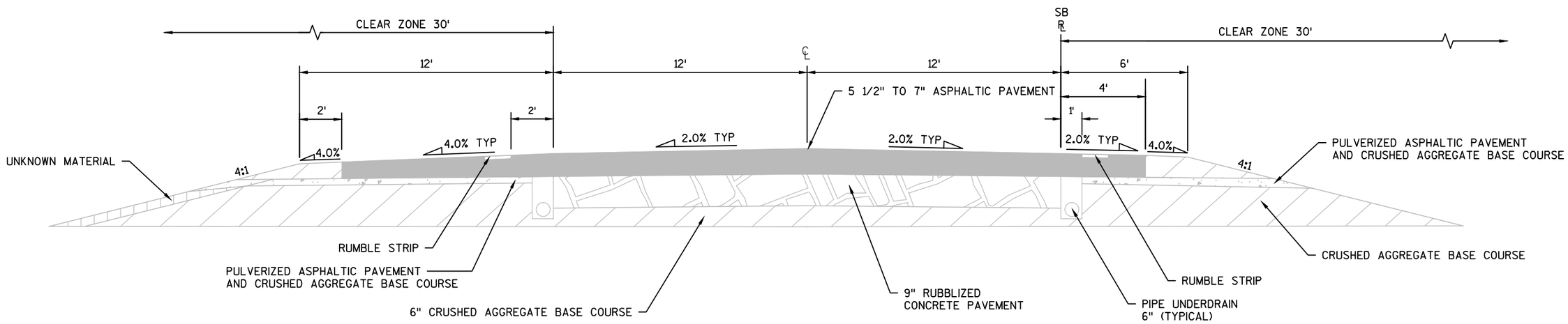

EXISTING TYPICAL SECTION
USH 51 SOUTHBOUND
STA 442S+50 TO STA 771S+18.37

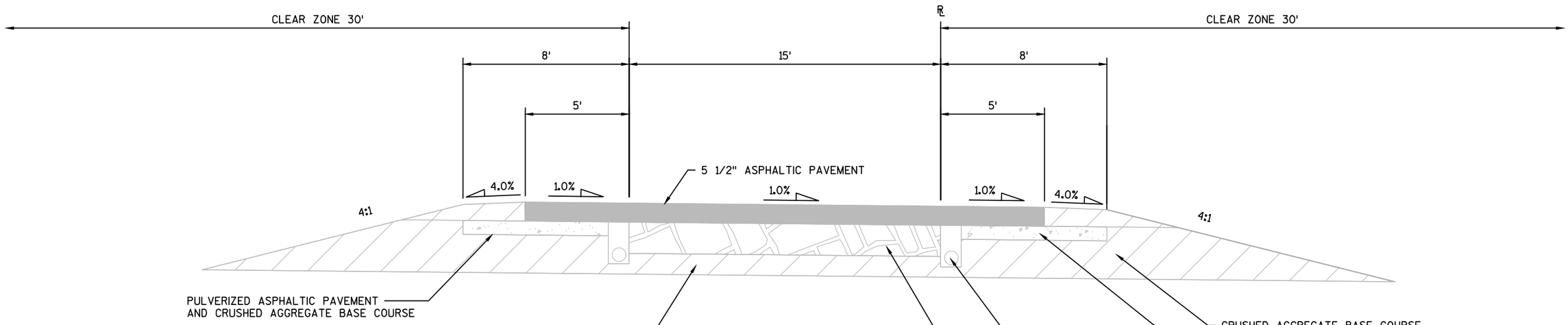

EXISTING TYPICAL SECTION
USH 51 NORTHBOUND RAMPS
STA 83WB+00 TO STA 105WB+83.27
STA 5WA+25 TO STA 44WA+44.06

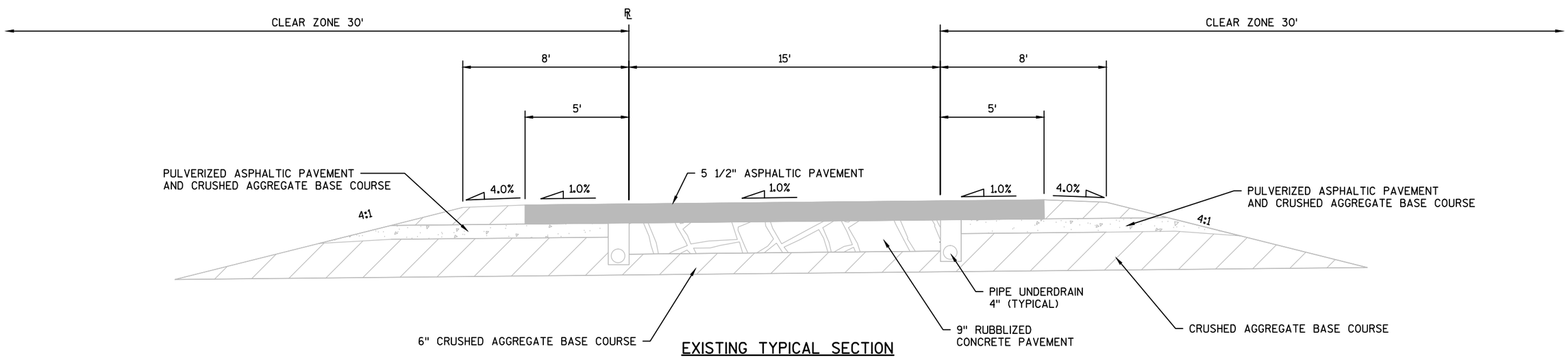

EXISTING TYPICAL SECTION
USH 51 SOUTHBOUND RAMPS
STA 74WC+50 TO STA 100WC+68.29
STA 98WD+00 TO STA 115WD+89.55

PROJECT NO:1170-01-75	HWY:USH 51	COUNTY:MARATHON	PLAN: TYPICAL SECTIONS	SHEET 8	E

2

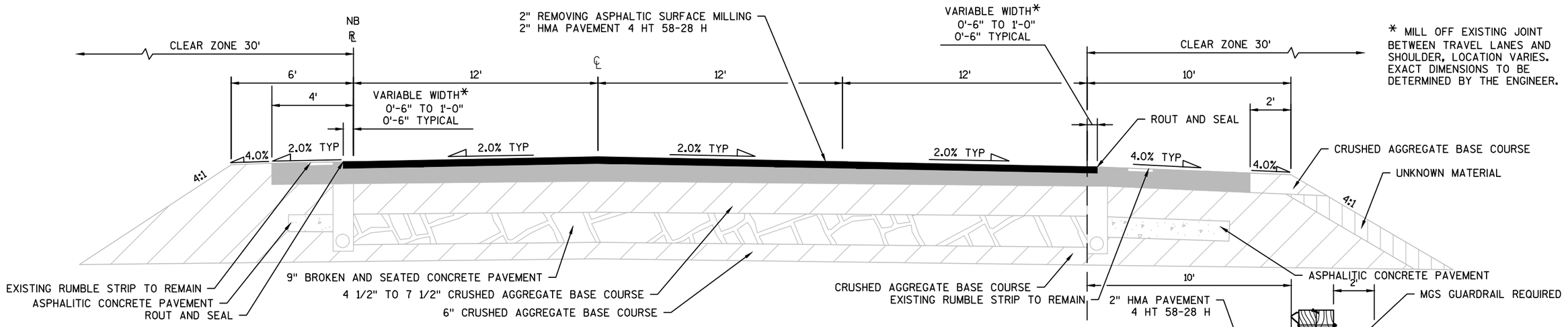

PROPOSED TYPICAL SECTION
USH 51 NORTHBOUND
STA 313N+89 TO STA 395N+00

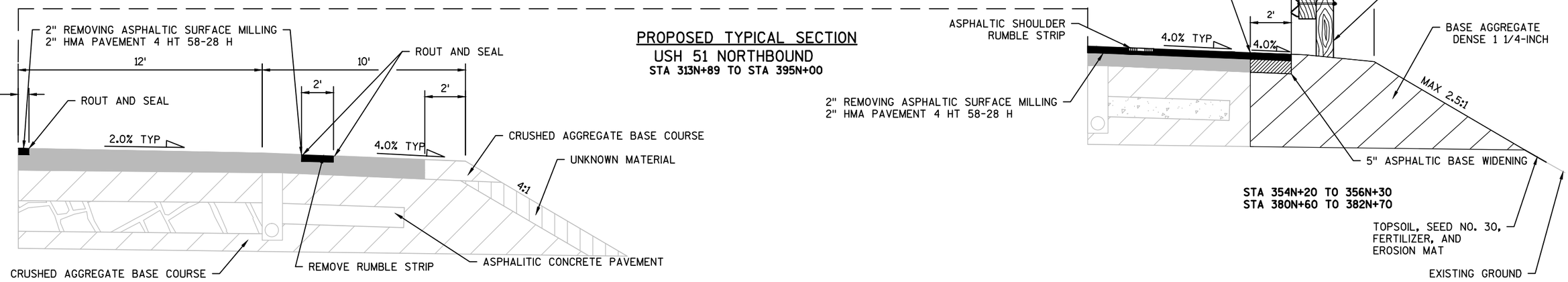

STA 388N+00 TO STA 395N+00

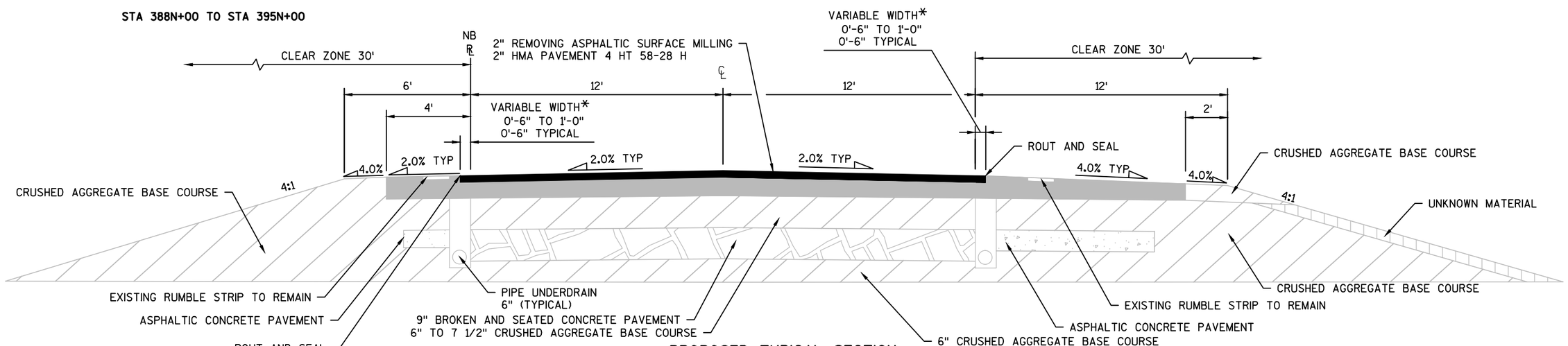

PROPOSED TYPICAL SECTION
USH 51 NORTHBOUND
STA 395N+00 TO STA 401N+97

PROJECT NO:1170-01-75	HWY:USH 51	COUNTY:MARATHON	PLAN: TYPICAL SECTIONS	SHEET 9	E

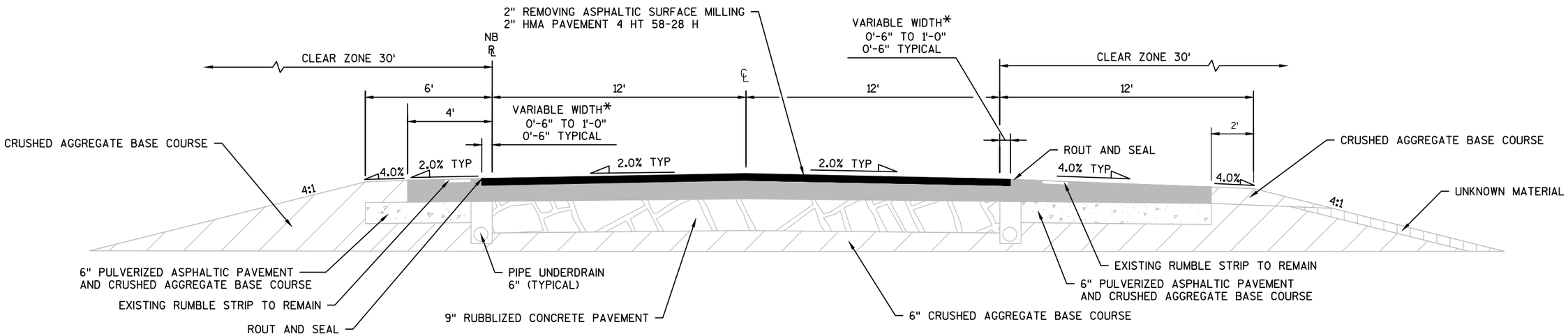

PROPOSED TYPICAL SECTION
USH 51 NORTHBOUND
STA 401N+97 TO STA 771N+18.37

* MILL OFF EXISTING JOINT BETWEEN TRAVEL LANES AND SHOULDER, LOCATION VARIES. EXACT DIMENSIONS TO BE DETERMINED BY THE ENGINEER.

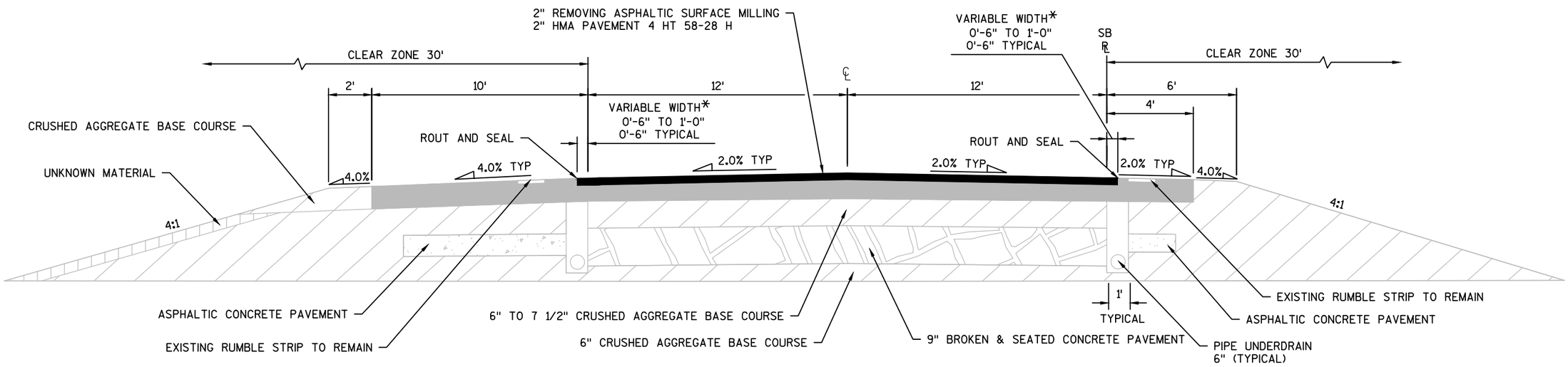

PROPOSED TYPICAL SECTION
USH 51 SOUTHBOUND
STA 312S+06.42 TO STA 348S+50

PROJECT NO:1170-01-75	HWY:USH 51	COUNTY:MARATHON	PLAN: TYPICAL SECTIONS	SHEET 10	E

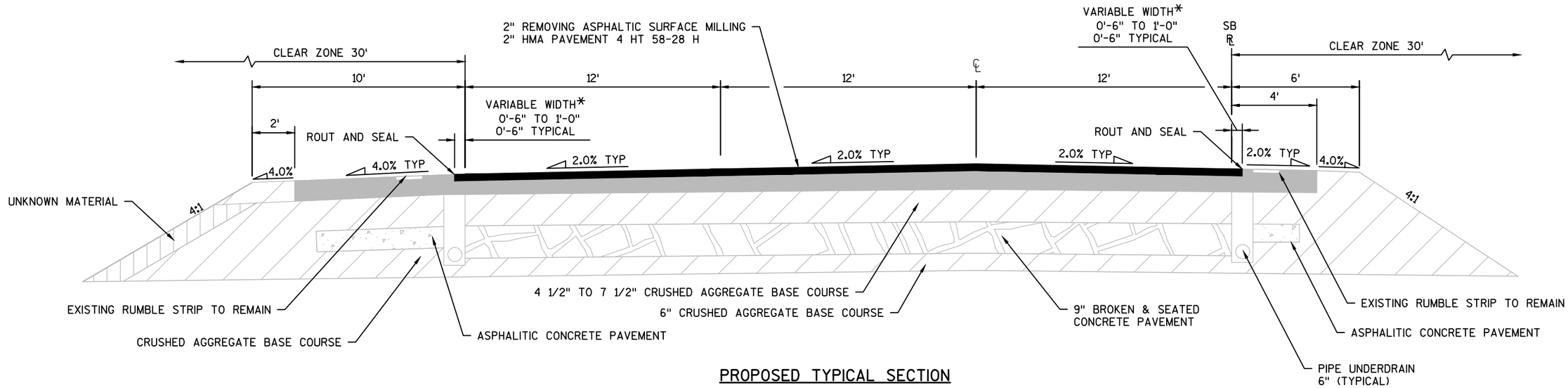

PROPOSED TYPICAL SECTION
USH 51 SOUTHBOUND
STA 348S+50 TO STA 401S+21

* MILL OFF EXISTING JOINT BETWEEN TRAVEL LANES AND SHOULDER, LOCATION VARIES. EXACT DIMENSIONS TO BE DETERMINED BY THE ENGINEER.

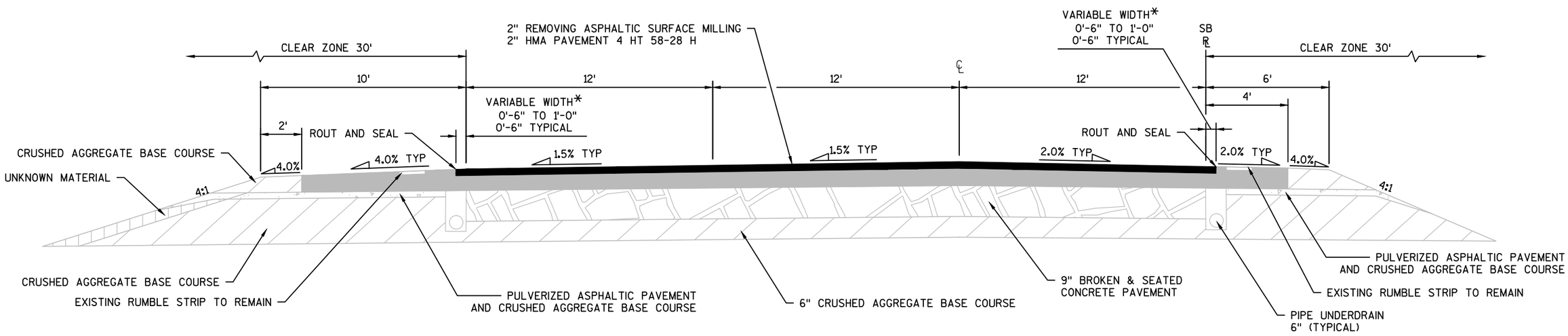

PROPOSED TYPICAL SECTION
USH 51 SOUTHBOUND
STA 401S+21 TO STA 442S+50

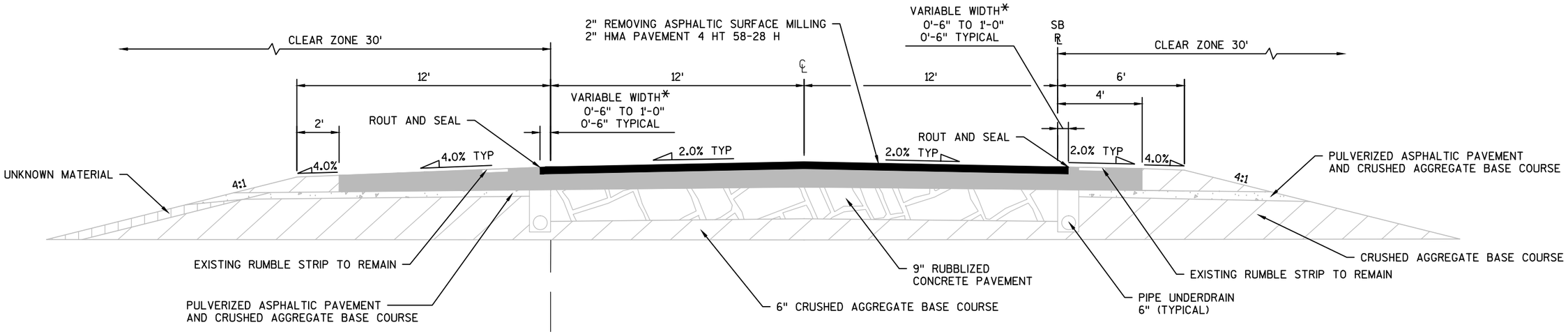

PROPOSED TYPICAL SECTION
USH 51 SOUTHBOUND
STA 442S+50 TO STA 771S+18.37

* MILL OFF EXISTING JOINT BETWEEN TRAVEL LANES AND SHOULDER, LOCATION VARIES. EXACT DIMENSIONS TO BE DETERMINED BY THE ENGINEER.

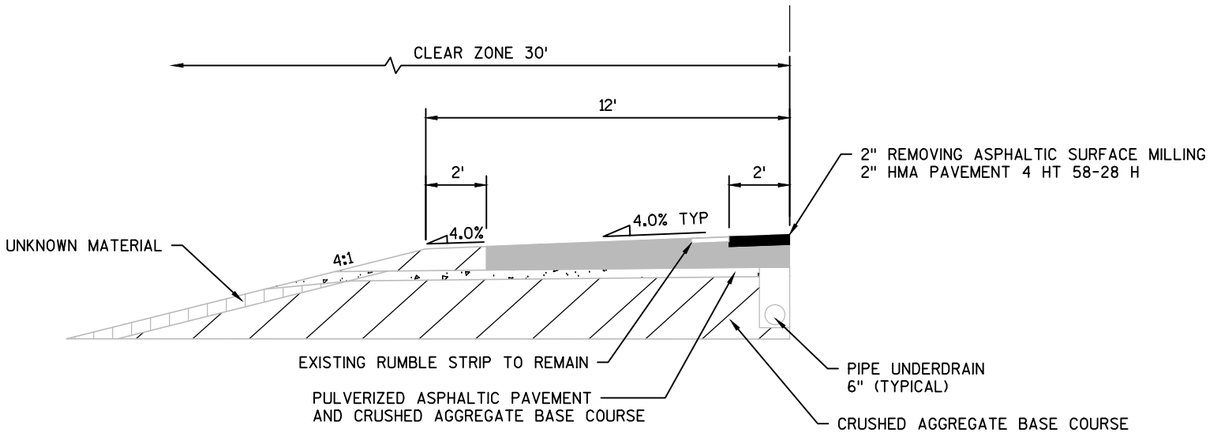

PROPOSED TYPICAL SECTION
USH 51 SOUTHBOUND
STA 350S+00 TO STA 713S+65.01

PROJECT NO:1170-01-75	HWY:USH 51	COUNTY:MARATHON	PLAN: TYPICAL SECTIONS	SHEET 12	E

FILE NAME : F:\BM4-1077 US 51\5_DESIGN\03_ROADS\11700175\SHEETSPLAN\020301-TS.DWG
LAYOUT NAME - 020309-ts
PLOT DATE : 12/3/2015 5:44 PM PLOT BY : CHAD EVEN PLOT NAME : PLOT SCALE : 1:5_XREF

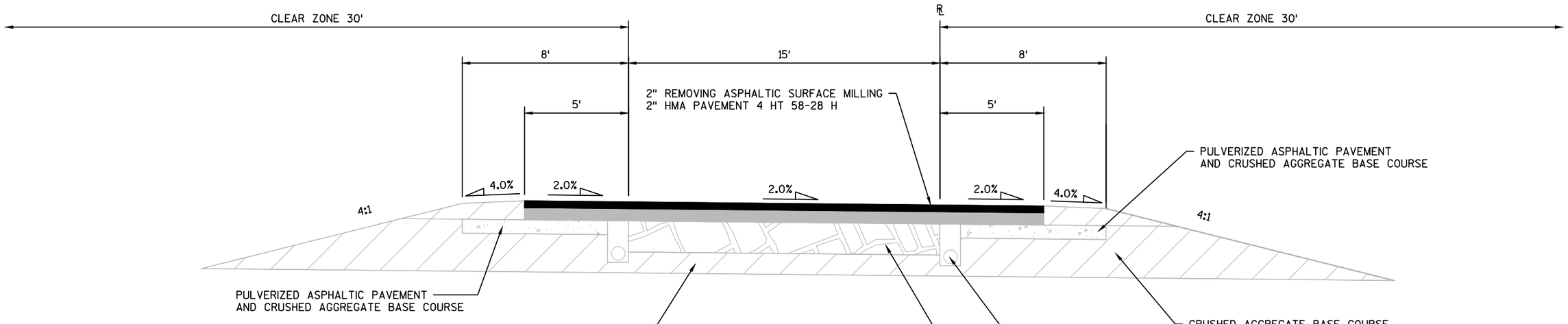

PROPOSED TYPICAL SECTION
USH 51 NORTHBOUND RAMPS
STA 83WB+00 TO STA 105WB+83.27
STA 5WA+25 TO STA 44WA+44.06

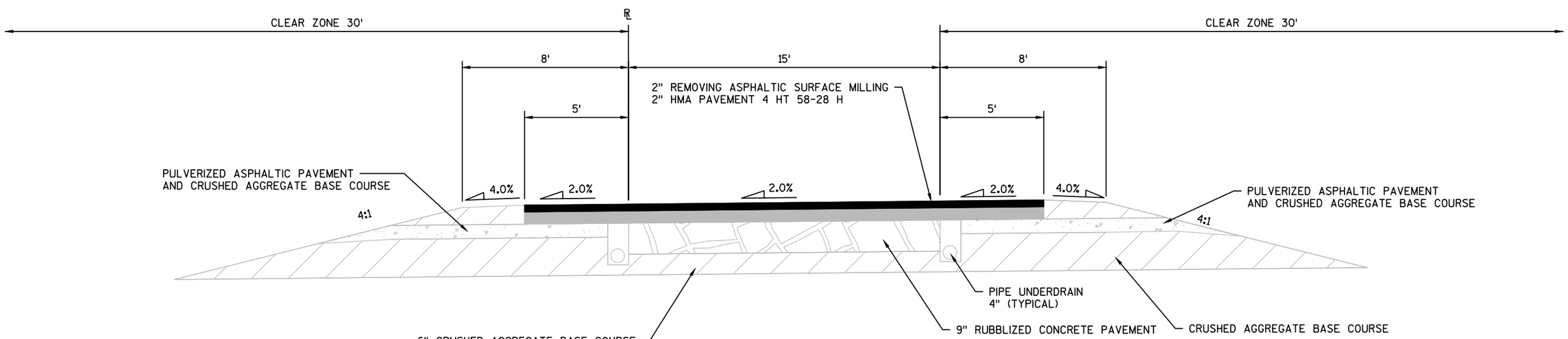

PROPOSED TYPICAL SECTION
USH 51 SOUTHBOUND RAMPS
STA 74WC+50 TO STA 100WC+68.29
STA 98WD+00 TO STA 115WD+89.55

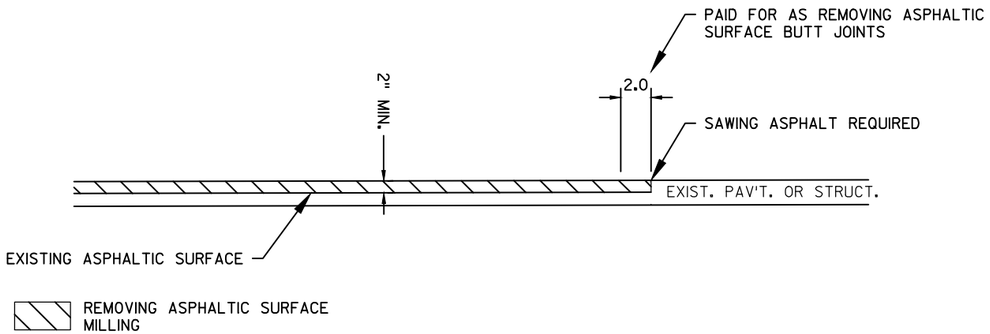

BUTT JOINT DETAIL

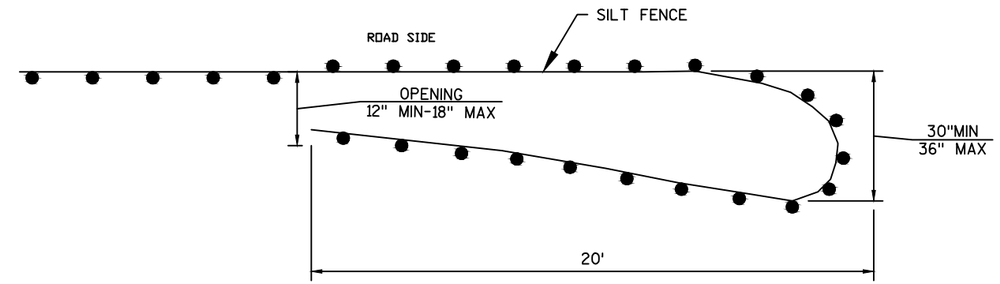

PLAN VIEW

NOTES:

SILT FENCE POSTS FOR THE TURN-AROUND SHOULD BE ON THE OUTSIDE OF THE TURN-AROUND AND TRENCHED IN ACCORDING TO SILT FENCE REQUIREMENTS.

TEMPORARY SMALL ANIMAL TURN-AROUND

STA 352+00 TO 358+00
STA 378+00 TO 384+00

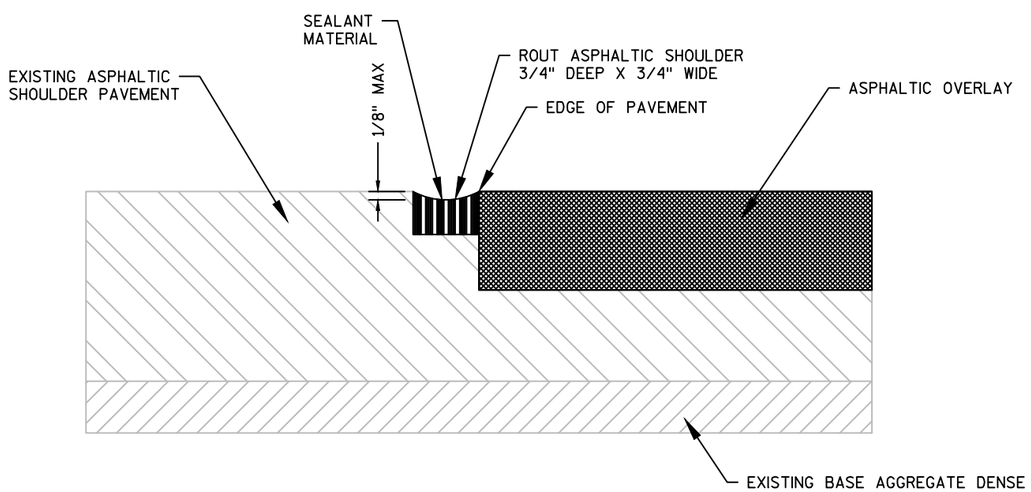

ROUT AND SEAL DETAIL

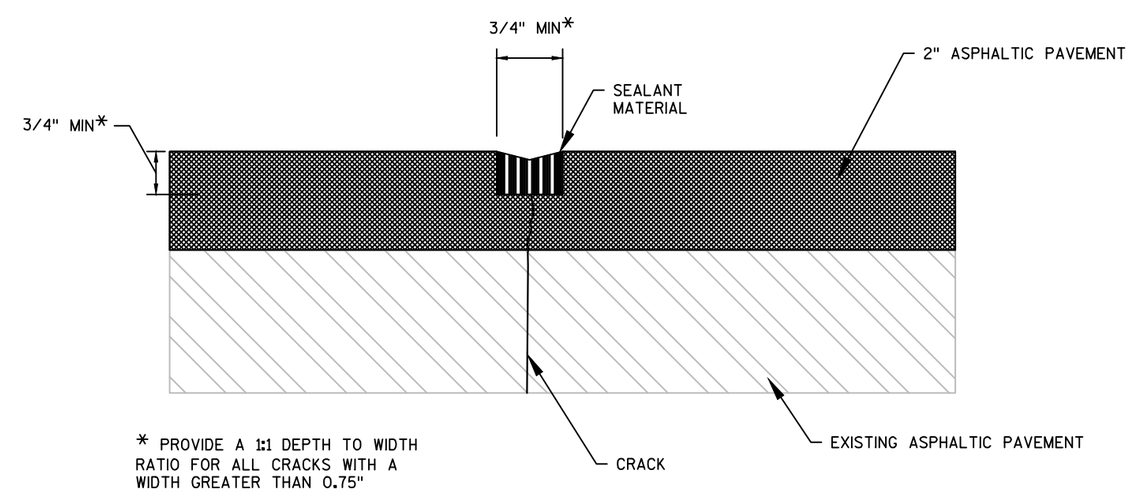

REFLECTIVE CRACK ROUT AND SEAL

(CONSTRUCTION IN FOLLOWING SPRING-AFTER OVERLAY)

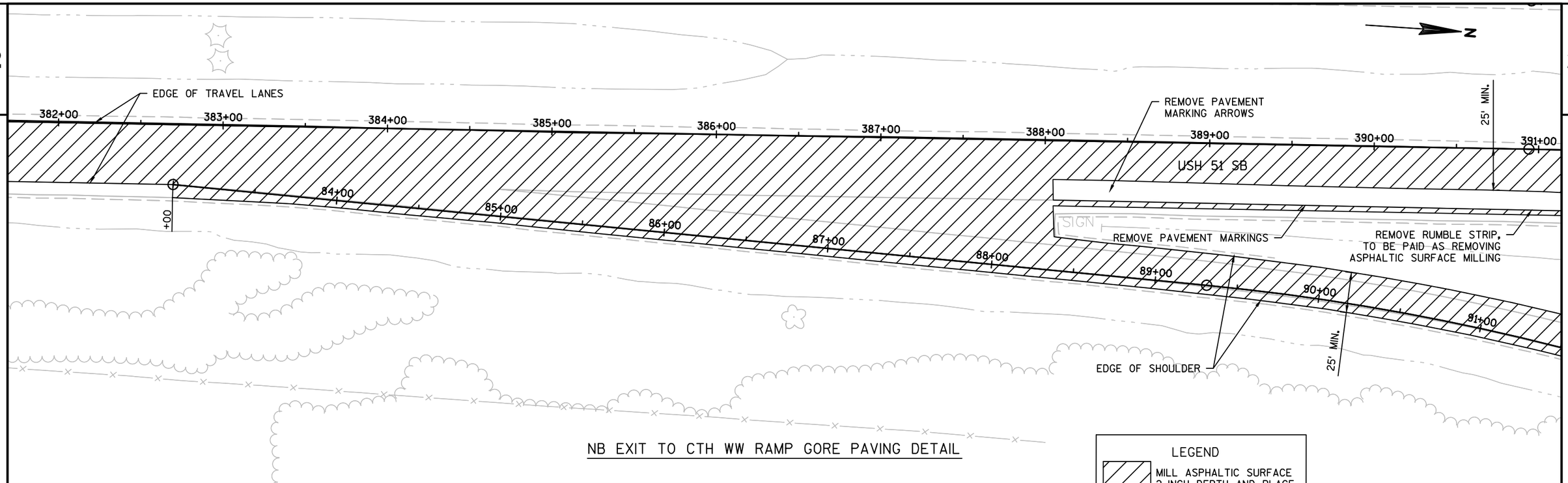

NB EXIT TO CTH WW RAMP GORE PAVING DETAIL

LEGEND

MILL ASPHALTIC SURFACE 2-INCH DEPTH AND PLACE 2-INCH HMA PAVEMENT

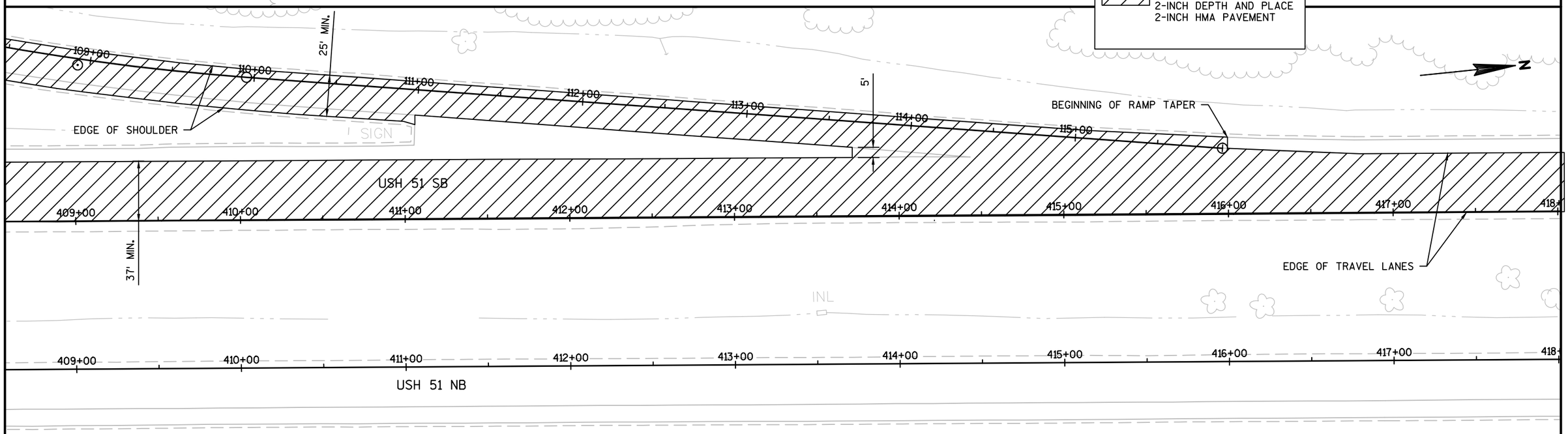

RAMP GORE PAVING DETAIL

PROJECT NO:1170-01-75	HWY:USH 51	COUNTY:MARATHON	PLAN: CONSTRUCTION DETAILS	SHEET 15	E

FILE NAME : F:\BM4-1077 US 51\5_DESIGN\03_ROADS\11700175\SHEETSPLAN\021002-CD.DWG
021002-cd
PLOT DATE : 1/28/2016 4:45 PM PLOT BY : SHANE MCCARTY PLOT NAME : PLOT SCALE : **********
WISDOT/CADDS SHEET 44

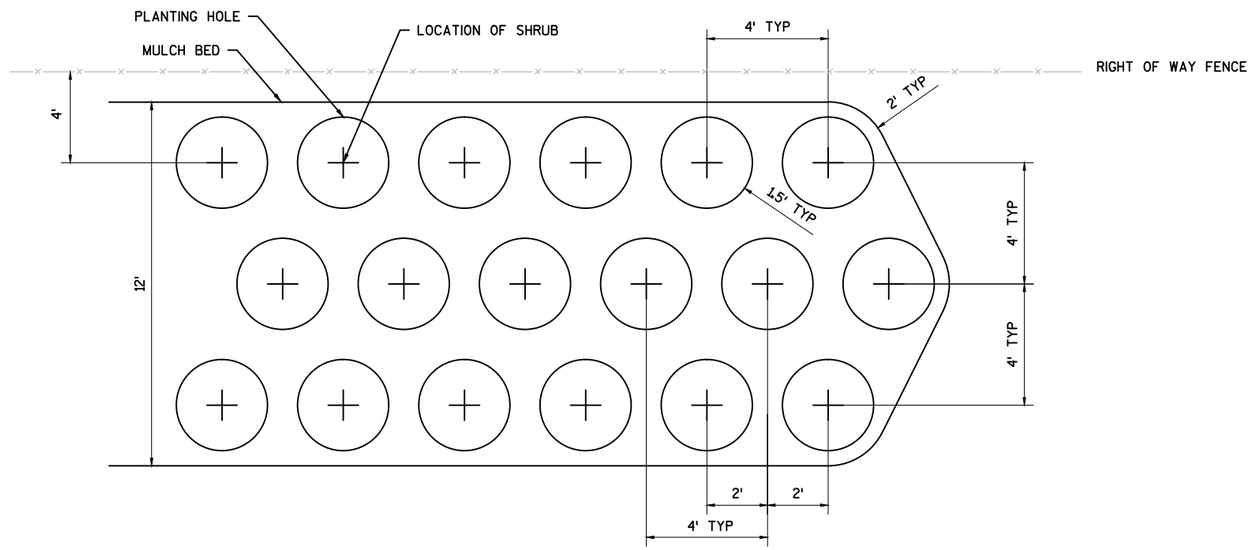

PLANTING DETAIL - LIVING SNOW FENCE

USH 51 STA 332S+85-STA 339S+85
USH 51 STA 358S+75-STA 368S+50
USH 51 STA 605S+50-STA 620S+00
USH 51 STA 637S+75-STA 641S+00
USH 51 STA 641S+75-STA 642S+50

NOTES

1) LIVING SNOW FENCE CONSISTS OF A 3-ROW SHRUB BED 12' WIDE. PLACE 25 SHRUBS PER ROW PER 100' OF LIVING SNOW FENCE STAGGERING PLANTS BETWEEN ROWS.

2) BASE LINE - IF A BASE LINE IS SHOWN, AT LEAST THE FIRST ROW OF PLANTS SHALL FOLLOW THE LINE.

3) PLANTING - SHRUBS ARE TO BE PLANTED IN INDIVIDUAL HOLES OR IN A CONTINUOUS TRENCH AS SPECIFIED ON THE "PLANT DATA CHART." IF PLANTED IN A TRENCH, THE TRENCH SHALL BE AS DEEP AND AS WIDE AS THAT SPECIFIED FOR INDIVIDUAL HOLES ON THE "PLANT DATA CHART." EXCESS EXCAVATED MATERIAL MAY BE DISPOSED OF BETWEEN THE HOLES OR TRENCH IF IN THE JUDGEMENT OF THE ENGINEER IT DOES NOT CAUSE EROSION OR DAMAGE PROBLEMS. IF THIS IS DONE, PLANT ELEVATIONS WILL BE ADJUSTED ACCORDINGLY AND THE ENTIRE BED AREA WILL BE RAKED OR OTHERWISE FINISHED TO PRODUCE A UNIFORM SURFACE CONFORMING TO THE ORIGINAL SHAPE AND CONTOUR. THE ENTIRE BED AREA SHALL BE MULCHED.

4) MULCH LIMITS - FABRIC OR WOOD MULCH MAY BE USED. MULCH LIMITS ARE TO EXTEND BEYOND THE OUTER PLANTS A DISTANCE EQUAL TO OR GREATER THAN THE PLANT SPACING. USE AGED OR OXGYNATED MULCH CUT NO LESS THAN 8 MONTHS PRIOR TO PLANTING. MULCH SHALL BE PLACED A MINIMUM THICKNESS OF 3".

5) MULCH, PLANTING MIXTURE, FERTILIZER, WATER, AND OTHER ITEMS NECESSARY FOR PLANTINGS ARE INCIDENTAL TO SHRUBS.

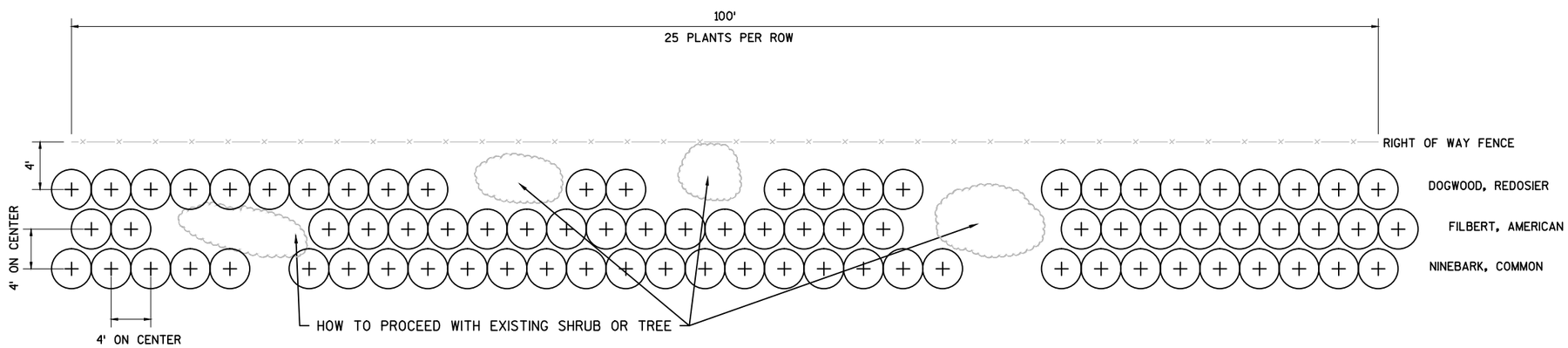

LIVING SNOW FENCE - SHRUB DETAIL

USH 51 STA 332S+85-STA 339S+85
USH 51 STA 359S+00-STA 368S+50
USH 51 STA 605S+50-STA 620S+00
USH 51 STA 637S+75-STA 641S+00
USH 51 STA 641S+75-STA 642S+50

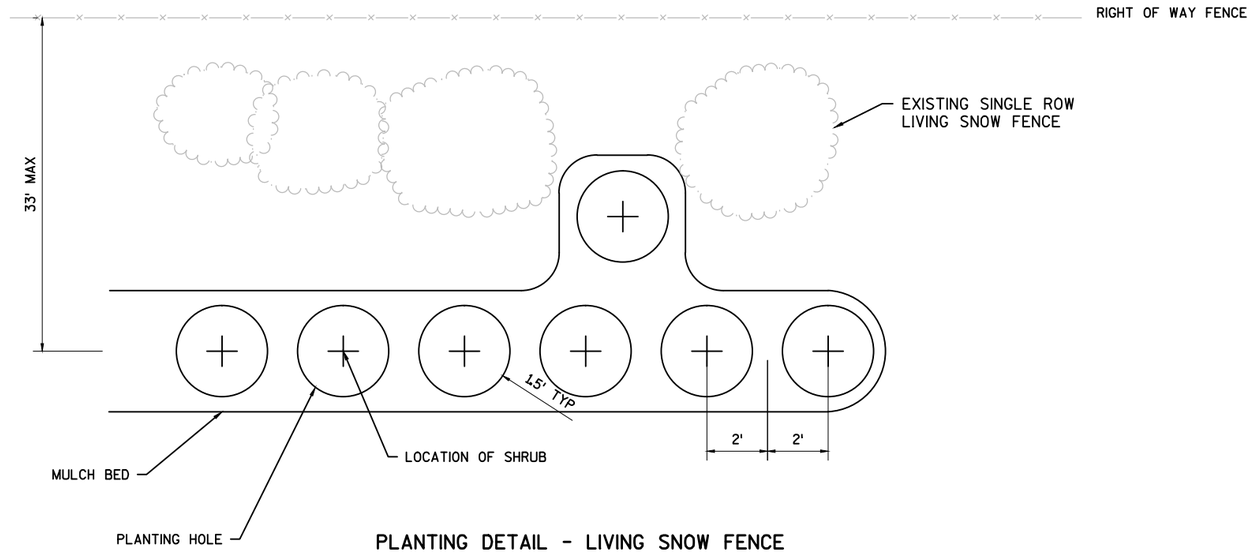

PLANTING DETAIL - LIVING SNOW FENCE

US 51 STA 620S+00-STA 631S+00
US 51 STA 634S+00-STA 637S+75
US 51 STA 641S+00-STA 641S+75
US 51 STA 642S+50-STA 652S+30

NOTES

1) LIVING SNOW FENCE CONSISTS OF A 3-ROW SHRUB BED 12' WIDE. PLACE 25 SHRUBS PER ROW PER 100' OF LIVING SNOW FENCE STAGGERING PLANTS BETWEEN ROWS.

2) BASE LINE - IF A BASE LINE IS SHOWN, AT LEAST THE FIRST ROW OF PLANTS SHALL FOLLOW THE LINE.

3) PLANTING - SHRUBS ARE TO BE PLANTED IN INDIVIDUAL HOLES OR IN A CONTINUOUS TRENCH AS SPECIFIED ON THE "PLANT DATA CHART." IF PLANTED IN A TRENCH, THE TRENCH SHALL BE AS DEEP AND AS WIDE AS THAT SPECIFIED FOR INDIVIDUAL HOLES ON THE "PLANT DATA CHART." EXCESS EXCAVATED MATERIAL MAY BE DISPOSED OF BETWEEN THE HOLES OR TRENCH IF IN THE JUDGEMENT OF THE ENGINEER IT DOES NOT CAUSE EROSION OR DAMAGE PROBLEMS. IF THIS IS DONE, PLANT ELEVATIONS WILL BE ADJUSTED ACCORDINGLY AND THE ENTIRE BED AREA WILL BE RAKED OR OTHERWISE FINISHED TO PRODUCE A UNIFORM SURFACE CONFORMING TO THE ORIGINAL SHAPE AND CONTOUR. THE ENTIRE BED AREA SHALL BE MULCHED.

4) MULCH LIMITS - FABRIC OR WOOD MULCH MAY BE USED. MULCH LIMITS ARE TO EXTEND BEYOND THE OUTER PLANTS A DISTANCE EQUAL TO OR GREATER THAN THE PLANT SPACING. USE AGED OR OXGYNATED MULCH CUT NO LESS THAN 8 MONTHS PRIOR TO PLANTING. MULCH SHALL BE PLACED A MINIMUM THICKNESS OF 3".

5) MULCH, PLANTING MIXTURE, FERTILIZER, WATER, AND OTHER ITEMS NECESSARY FOR PLANTINGS ARE INCIDENTAL TO SHRUBS.

6) PLANT A SINGLE ROW WITHIN 5' IN FRONT OF EXISTING TREE LINE OR A MAXIMUM OF 33' FROM THE FENCE LINE. PLANT A SECOND ROW BETWEEN EXISTING TREES IF THERE IS MORE THAN 5' OF SEPARATION BETWEEN EXISTING TREE LINES.

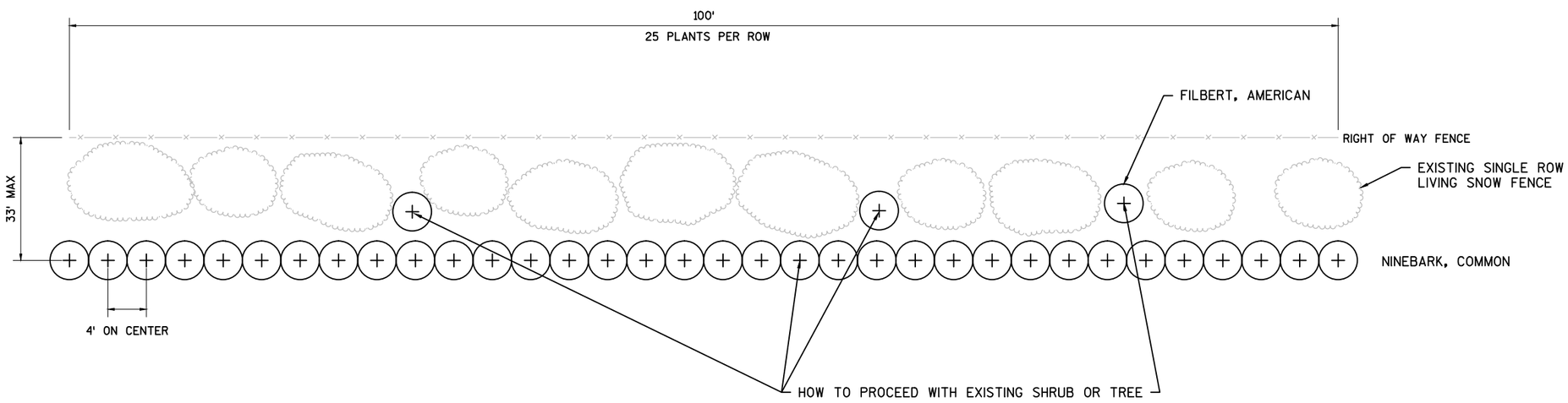

LIVING SNOW FENCE - SHRUB DETAIL

US 51 STA 620S+00-STA 631S+00
US 51 STA 634S+00-STA 637S+75
US 51 STA 641S+00-STA 641S+75
US 51 STA 642S+50-STA 652S+30

PLANT DATA CHART

SYM.	COMMON NAME	SCIENTIFIC NAME	TYPE	AVE MATURE HEIGHT	SIZE WHEN PLANTED HEIGHT	SIZE WHEN PLANTED SPREAD	ROOT ZONE MODE	MINIMUM SIZE BALL/POT SIZE DIAM.	MINIMUM SIZE BALL/POT SIZE DEPTH	MINIMUM SIZE ROOT SPREAD	MINIMUM SIZE PLANT HOLE DIAM.	MINIMUM SIZE PLANT HOLE DEPTH	BRACE OR GUY	FERT. UNITS REQ'D	RODENT PRO.	MULCH RING DIAM.	PLANT BED
	MEDIUM DECIDUOUS SHRUBS																
RD	DOGWOOD, REDOSIER	CORNUS SERICEA	2S	8'	2'	N/A	CG	11"	8"	11"	36"	8"	NO	2	NO	48"	YES
AF	FILBERT, AMERICAN	CORYLUS AMERICANA	3S	8'	2'	N/A	CG	11"	8"	11"	36"	8"	NO	2	NO	48"	YES
CN	NINEBARK, COMMON	PHYSOCARPUS OPULIFOLIUS	3S	10'	2'	N/A	CG	11"	8"	11"	36"	8"	NO	2	NO	48"	YES

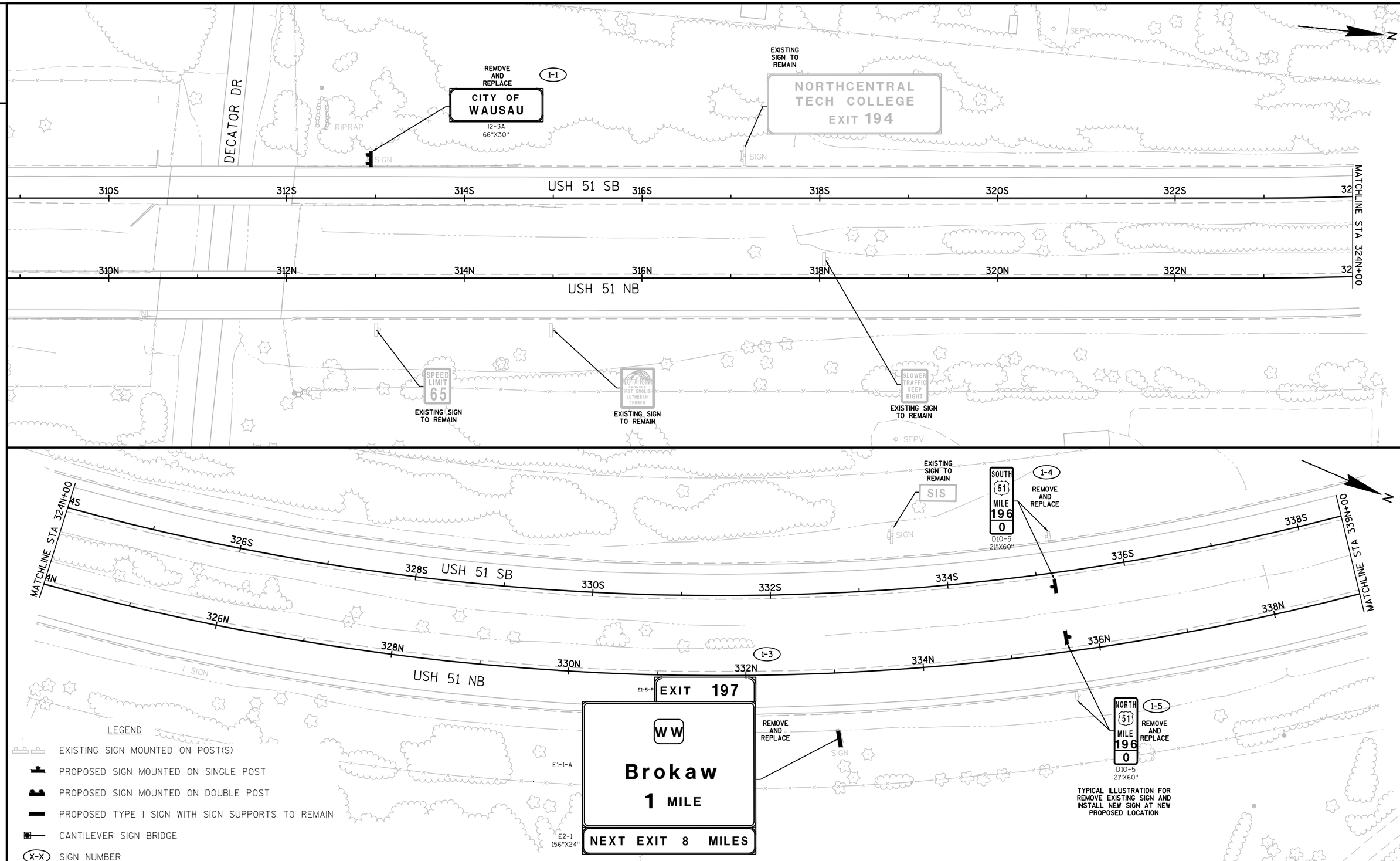

PROJECT NO:1170-01-75	HWY:USH 51	COUNTY:MARATHON	PERMANENT SIGNING	SHEET 19	E

FILE NAME : F:\BM4-1077 US 51\5_DESIGN\03_ROADS\11700175\SHEETSPLAN\023201-PS.DWG
023201-ps
PLOT DATE : 1/29/2016 9:07 AM PLOT BY : SHANE MCCARTY PLOT NAME : PLOT SCALE : 1 IN:100 FT

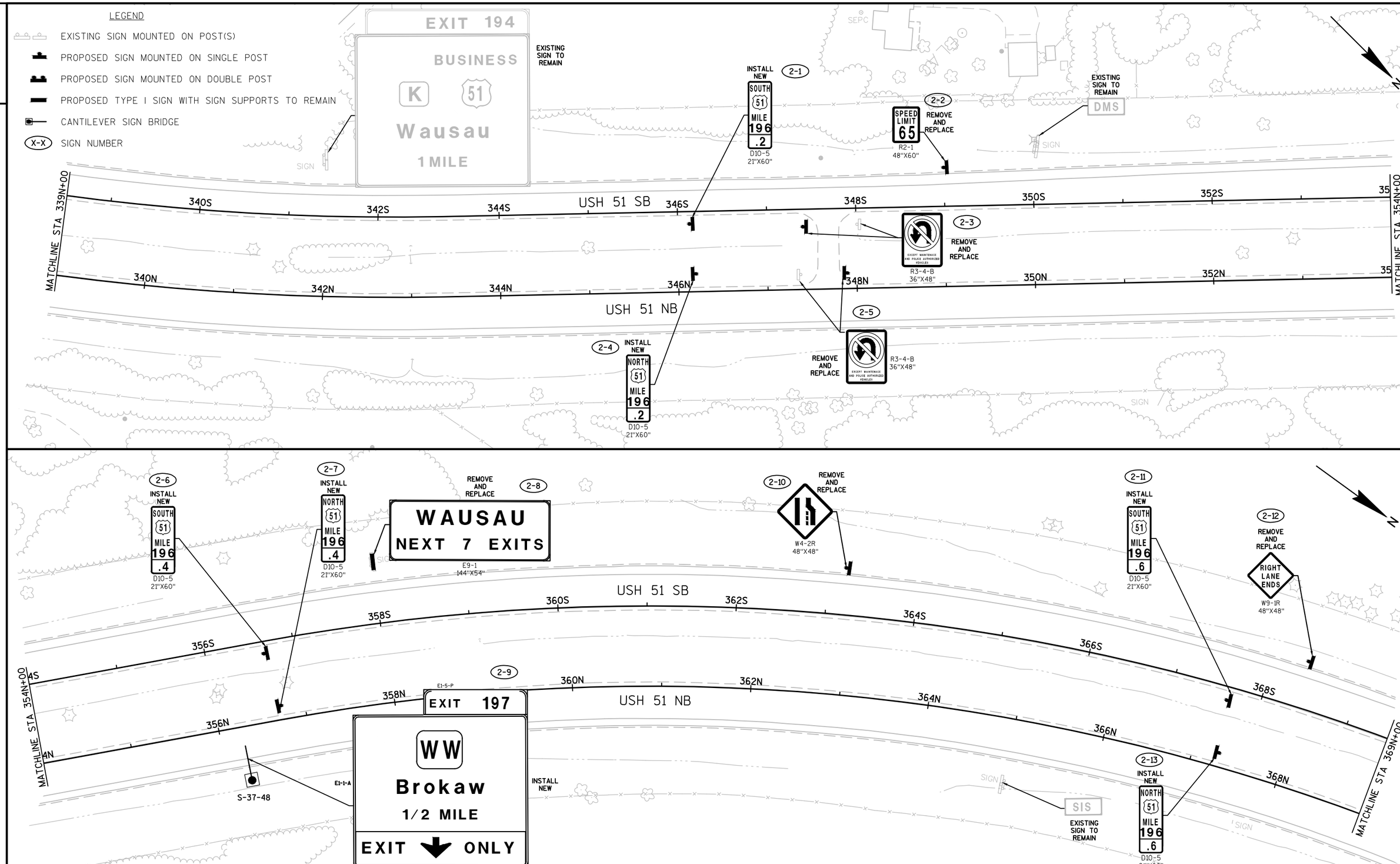

PROJECT NO:1170-01-75	HWY:USH 51	COUNTY:MARATHON	PERMANENT SIGNING	SHEET 20	E

FILE NAME : F:\BM4-1077 US 51\5_DESIGN\03_ROADS\11700175\SHEETSPLAN\023201-PS.DWG
023202-ps
PLOT DATE : 1/29/2016 9:07 AM PLOT BY : SHANE MCCARTY PLOT NAME : PLOT SCALE : 1 IN:100 FT

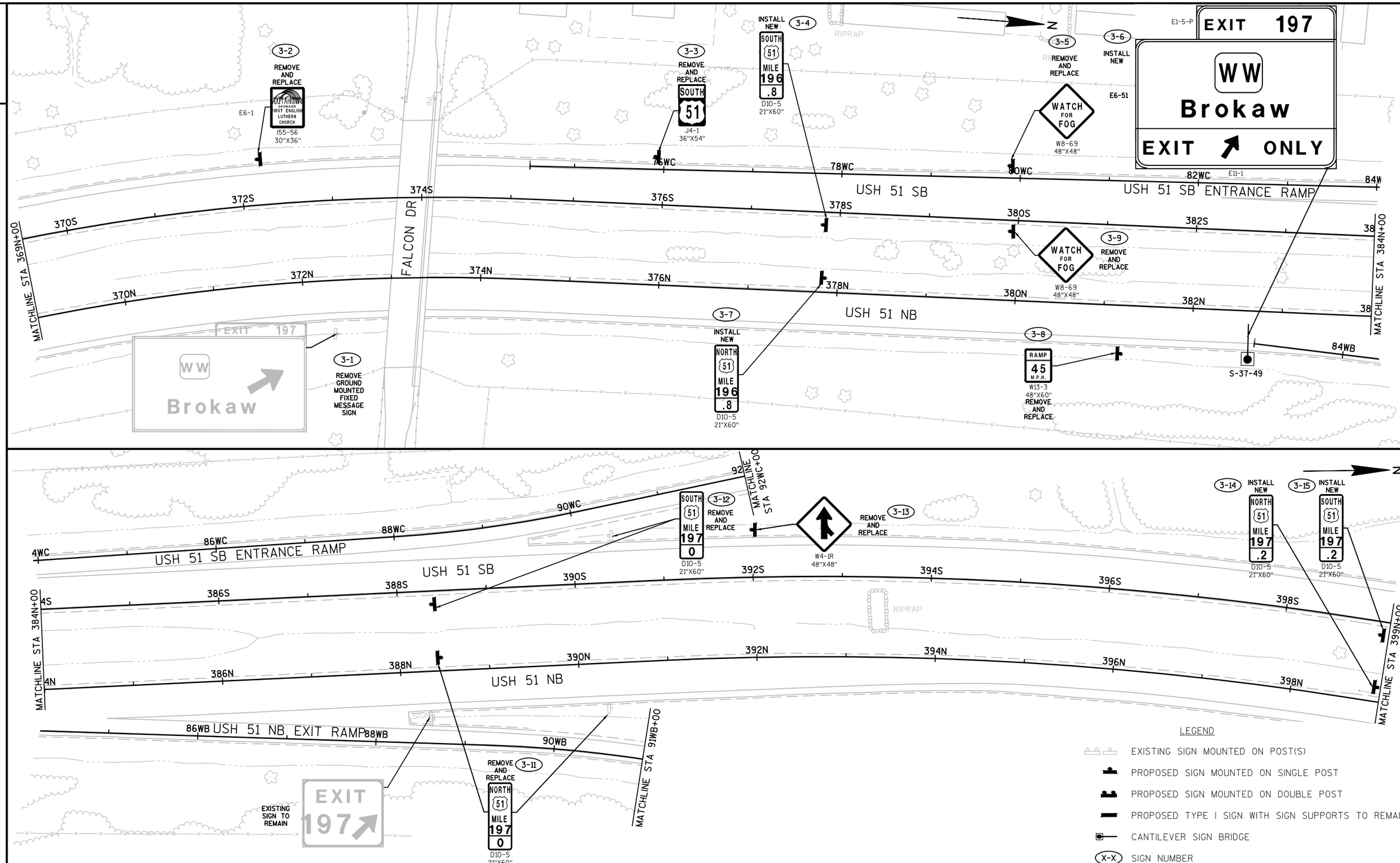

PROJECT NO:1170-01-75	HWY:USH 51	COUNTY:MARATHON	PERMANENT SIGNING	SHEET 21	E

FILE NAME : F:\BM4-1077 US 51\5_DESIGN\03_ROADS\11700175\SHEETSPLAN\023201-PS.DWG 023203-ps PLOT DATE : 1/29/2016 9:07 AM PLOT BY : SHANE MCCARTY PLOT NAME : PLOT SCALE : 1 IN:100 FT

WISDOT/CADDS SHEET 44

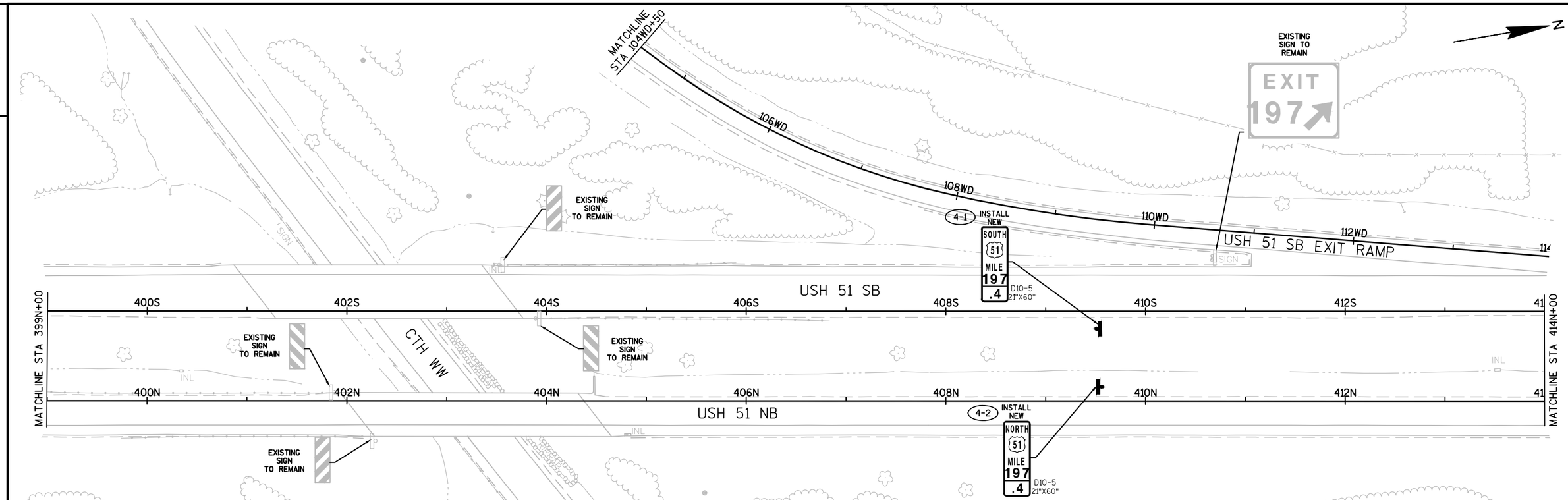

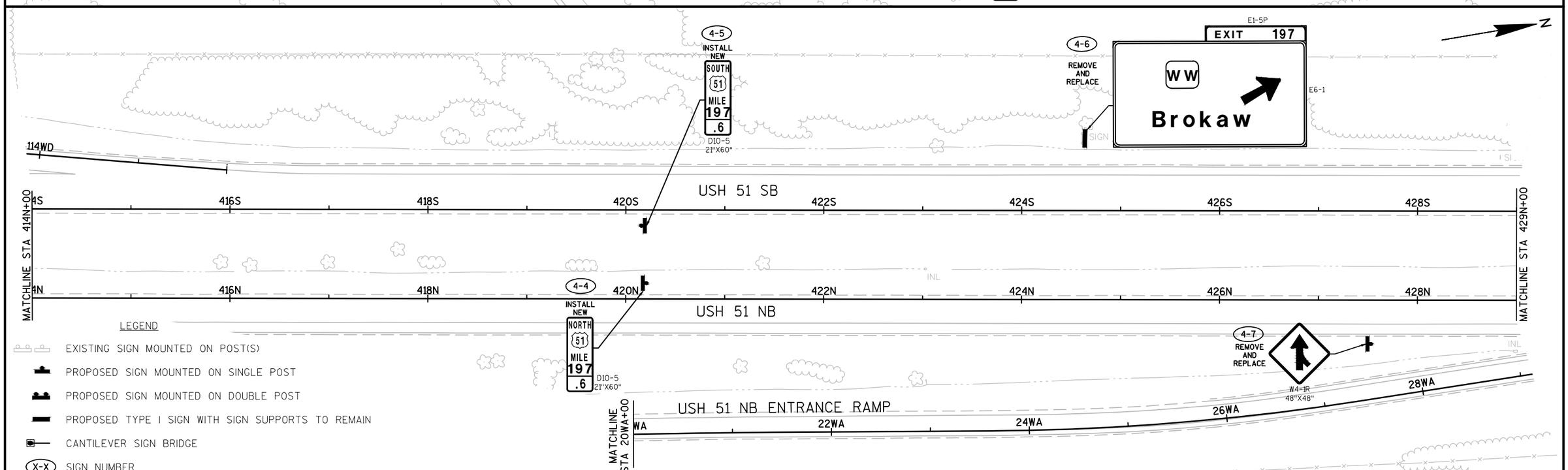

PROJECT NO:1170-01-75	HWY:USH 51	COUNTY:MARATHON	PERMANENT SIGNING	SHEET 22	E

FILE NAME : F:\BM4-1077 US 51\5_DESIGN\03_ROADS\11700175\SHEETSPLAN\023201-PS.DWG 023204-ps PLOT DATE : 1/29/2016 9:08 AM PLOT BY : SHANE MCCARTY PLOT NAME : PLOT SCALE : 1 IN:100 FT

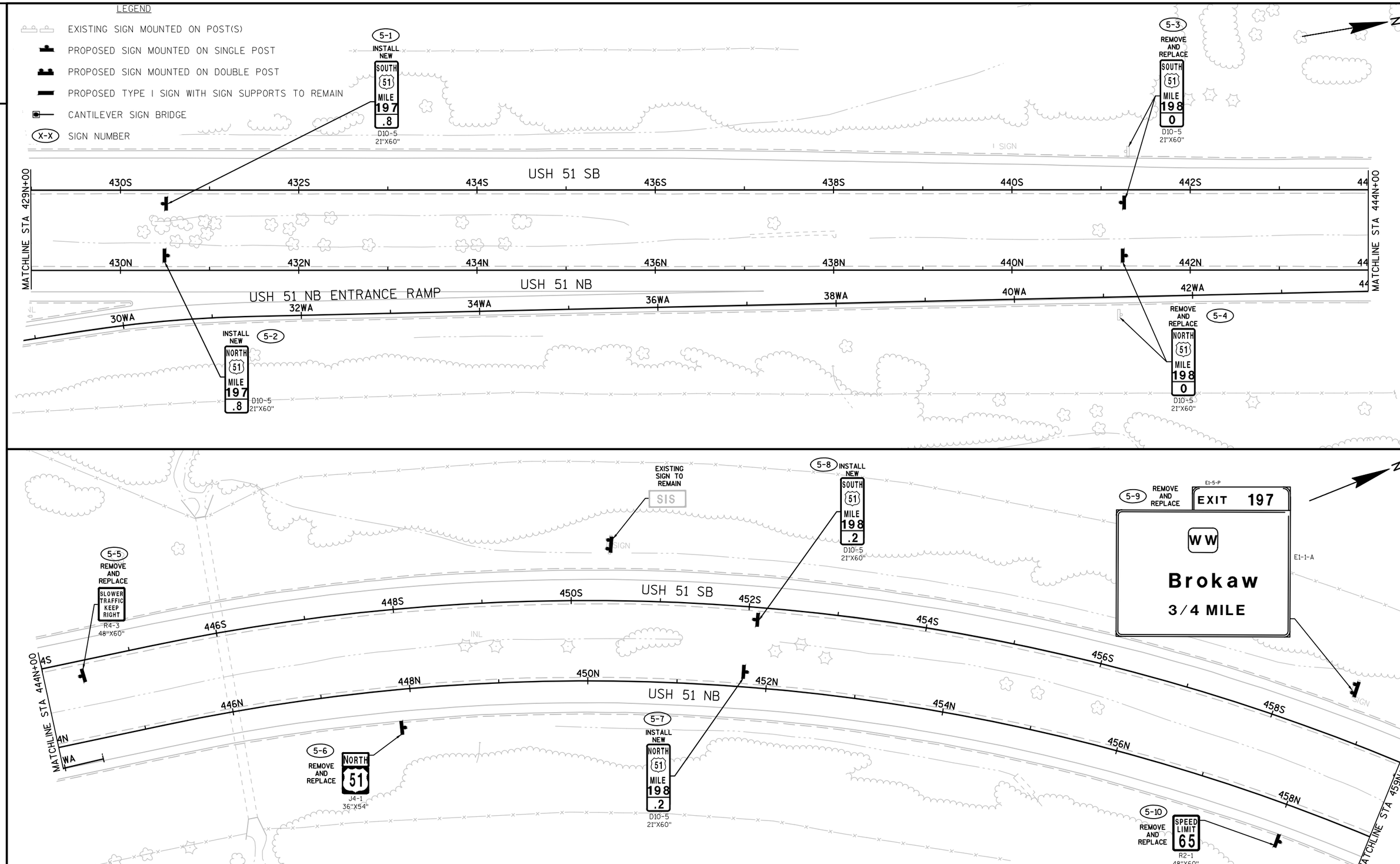

PROJECT NO:1170-01-75	HWY:USH 51	COUNTY:MARATHON	PERMANENT SIGNING	SHEET 23	E

FILE NAME : F:\BM4-1077 US 51\5_DESIGN\03_ROADS\11700175\SHEETSPLAN\023201-PS.DWG 023205-ps PLOT DATE : 1/29/2016 9:08 AM PLOT BY : SHANE MCCARTY PLOT NAME : PLOT SCALE : 1 IN:100 FT

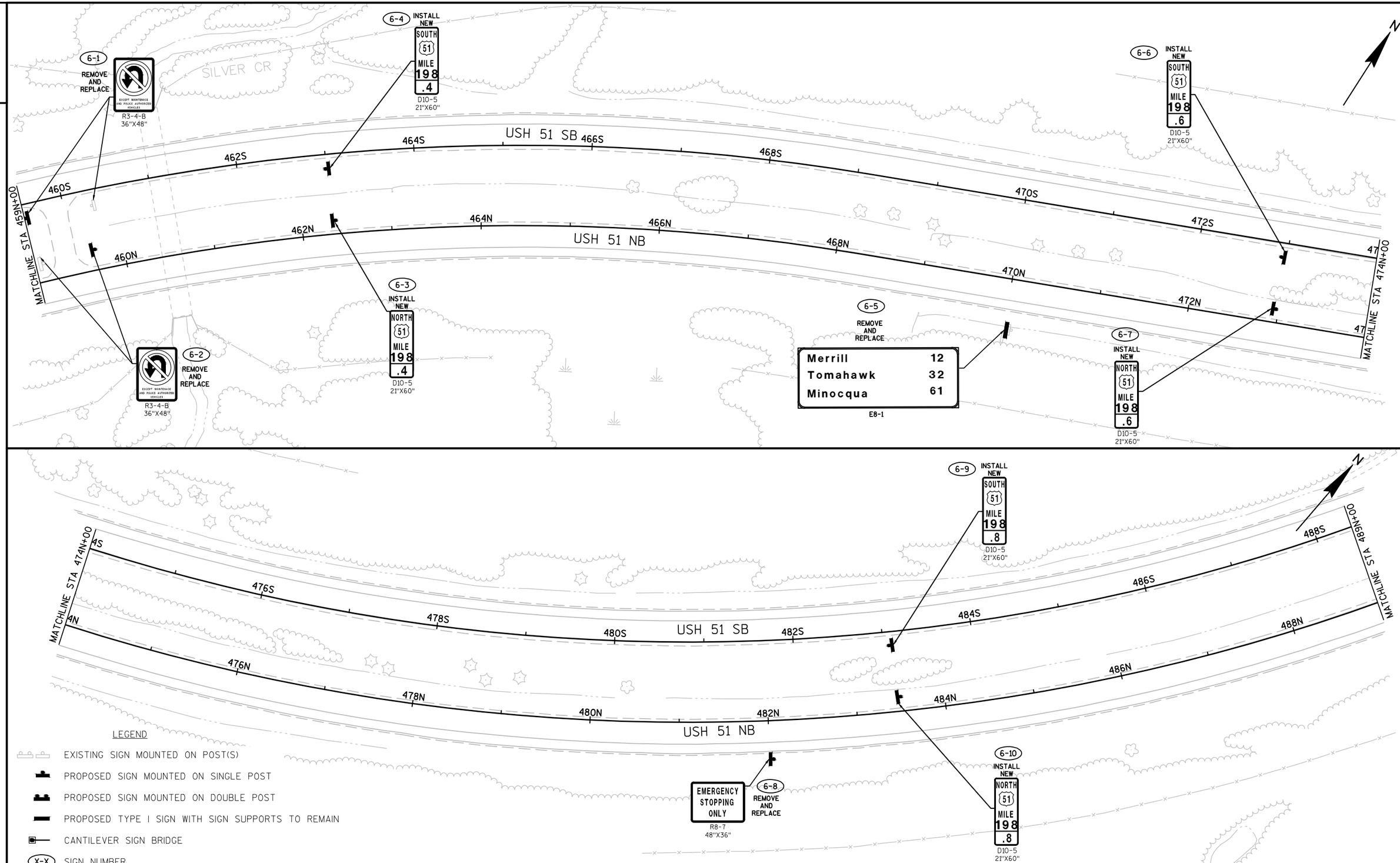

PROJECT NO:1170-01-75	HWY:USH 51	COUNTY:MARATHON	PERMANENT SIGNING	SHEET 24	E

FILE NAME : F:\BM4-1077 US 51\5_DESIGN\03_ROADS\11700175\SHEETSPLAN\023201-PS.DWG 023206-ps PLOT DATE : 1/29/2016 9:09 AM PLOT BY : SHANE MCCARTY PLOT NAME : PLOT SCALE : 1 IN:100 FT

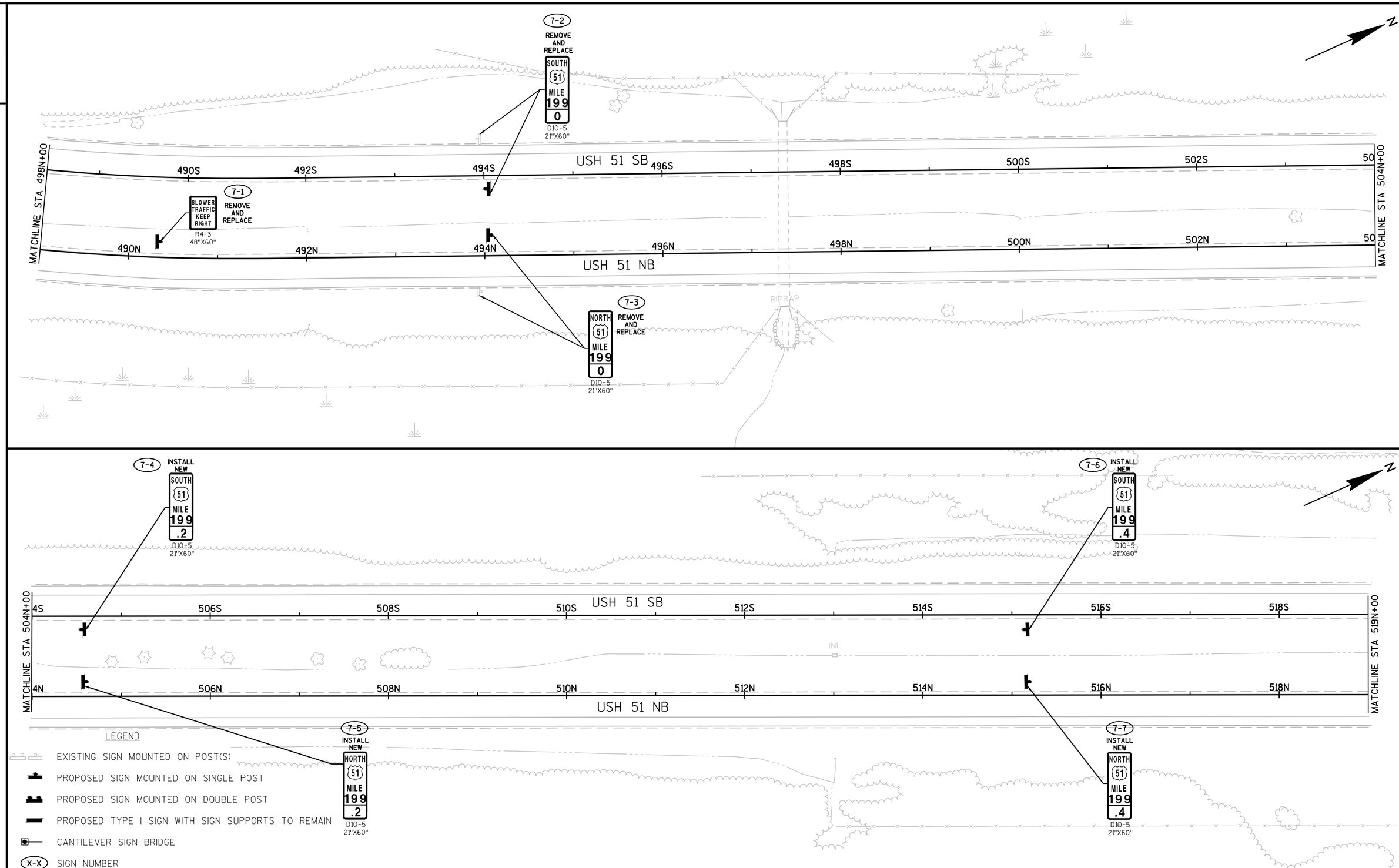

PROJECT NO:1170-01-75	HWY:USH 51	COUNTY:MARATHON	PERMANENT SIGNING	SHEET 25	E

2

8-1 INSTALL NEW
SOUTH 51 MILE 199 .6
D10-5 21"X60"

MATCHLINE STA 519N+00 | 520S | 522S | 524S | 526S | USH 51 SB | 528S | 530S | 532S | 53 | MATCHLINE STA 534N+00

520N | 522N | 524N | 526N | USH 51 NB | 528N | 530N | 532N | 53

8-2 INSTALL NEW
NORTH 51 MILE 199 .6
D10-5 21"X60"

SIGN

8-3 INSTALL NEW
SOUTH 51 MILE 199 .8
D10-5 21"X60"

RIPRAP

8-6 REMOVE AND REPLACE
R3-4-B 36"X48"

8-7 REMOVE AND REPLACE
SOUTH 51 MILE 200 0
D10-5 21"X60"

MATCHLINE STA 534N+00 | 4S | 536S | 538S | 540S | USH 51 SB | 542S | 544S | 546S | 548S | MATCHLINE STA 549N+00

4N | 536N | 538N | 540N | 542N | USH 51 NB | 544N | 546N | 548N

8-4 INSTALL NEW
NORTH 51 MILE 199 .8
D10-5 21"X60"

8-5 REMOVE AND REPLACE
R3-4-B 36"X48"

8-8 REMOVE AND REPLACE
NORTH 51 MILE 200 0
D10-5 21"X60"

WISCONSIN R

LEGEND

- EXISTING SIGN MOUNTED ON POST(S)
- PROPOSED SIGN MOUNTED ON SINGLE POST
- PROPOSED SIGN MOUNTED ON DOUBLE POST
- PROPOSED TYPE I SIGN WITH SIGN SUPPORTS TO REMAIN
- CANTILEVER SIGN BRIDGE
- (X-X) SIGN NUMBER

PROJECT NO:1170-01-75	HWY:USH 51	COUNTY:MARATHON	PERMANENT SIGNING	SHEET 26	E

2

9-1 INSTALL NEW SOUTH 51 MILE 200 .2 D10-5 21"X60"

N

MATCHLINE STA 549N+00

550S 552S 554S USH 51 SB 556S 558S 560S 562S

MATCHLINE STA 564N+00

550N 552N 554N 556N USH 51 NB 558N 560N 562N

9-2 INSTALL NEW NORTH 51 MILE 200 .2 D10-5 21"X60"

SIGN

9-3 INSTALL NEW SOUTH 51 MILE 200 .4 D10-5 21"X60"

9-5 INSTALL NEW SOUTH 51 MILE 200 .6 D10-5 21"X60"

N

MATCHLINE STA 564N+00

564S 566S 568S 570S USH 51 SB 572S 574S 576S 578S

MATCHLINE STA 579N+00

566N 568N 570N 572N USH 51 NB 574N 576N 578N

9-4 INSTALL NEW NORTH 51 MILE 200 .4 D10-5 21"X60"

9-6 INSTALL NEW NORTH 51 MILE 200 .6 D10-5 21"X60"

LEGEND

- EXISTING SIGN MOUNTED ON POST(S)
- PROPOSED SIGN MOUNTED ON SINGLE POST
- PROPOSED SIGN MOUNTED ON DOUBLE POST
- PROPOSED TYPE I SIGN WITH SIGN SUPPORTS TO REMAIN
- CANTILEVER SIGN BRIDGE
- (X-X) SIGN NUMBER

PROJECT NO:1170-01-75	HWY:USH 51	COUNTY:MARATHON	PERMANENT SIGNING	SHEET 27	E

2

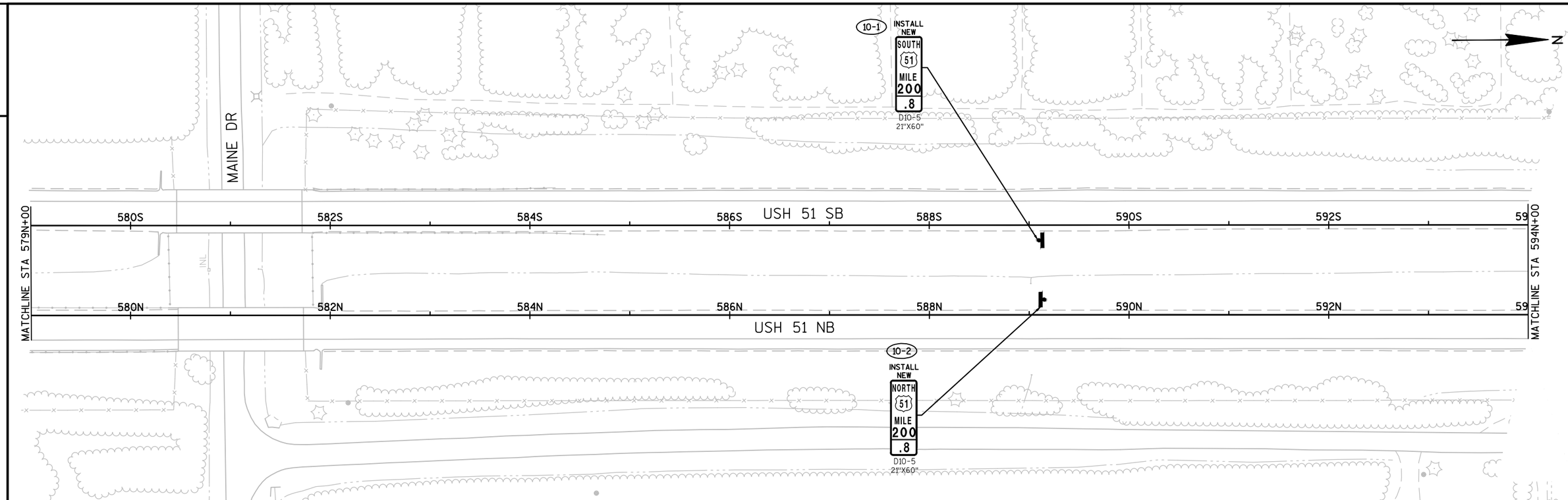

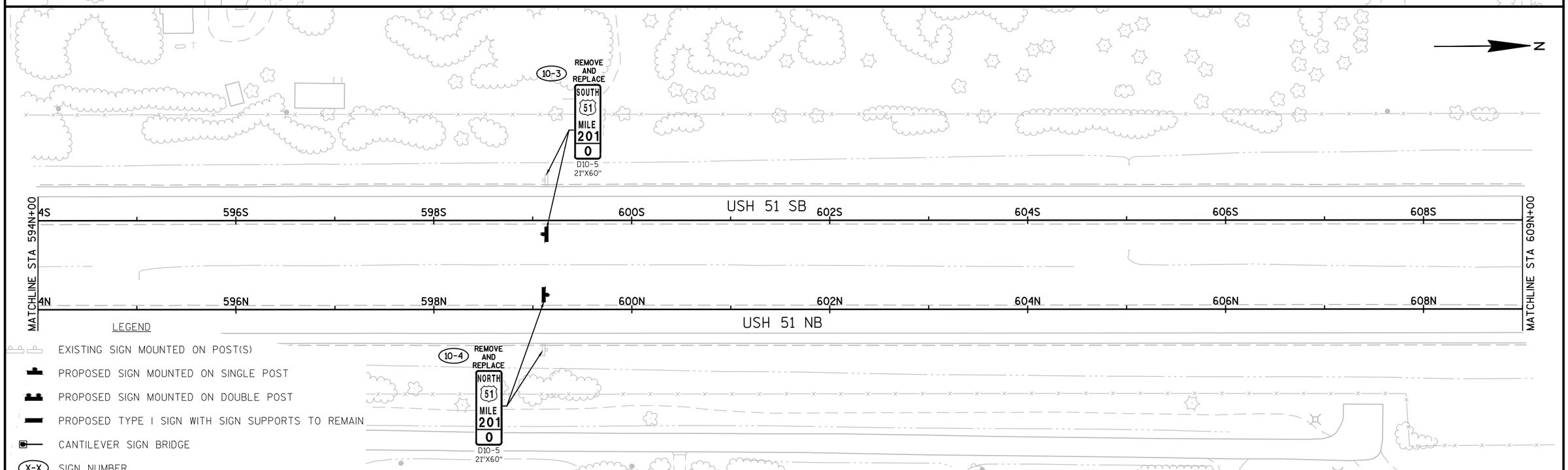

2

PROJECT NO:1170-01-75	HWY:USH 51	COUNTY:MARATHON	PERMANENT SIGNING	SHEET 28	E

FILE NAME : F:\BM4-1077 US 51\5_DESIGN\03_ROADS\11700175\SHEETSPLAN\023201-PS.DWG
023210-ps
PLOT DATE : 1/29/2016 9:10 AM PLOT BY : SHANE MCCARTY PLOT NAME : PLOT SCALE : 1 IN:100 FT

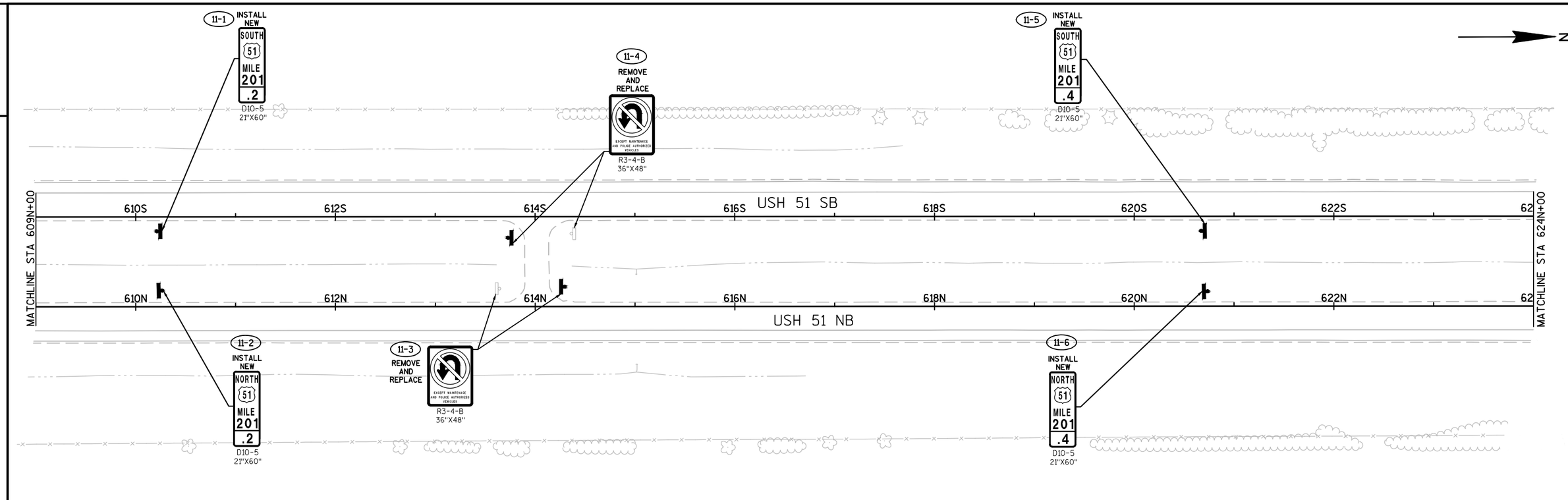

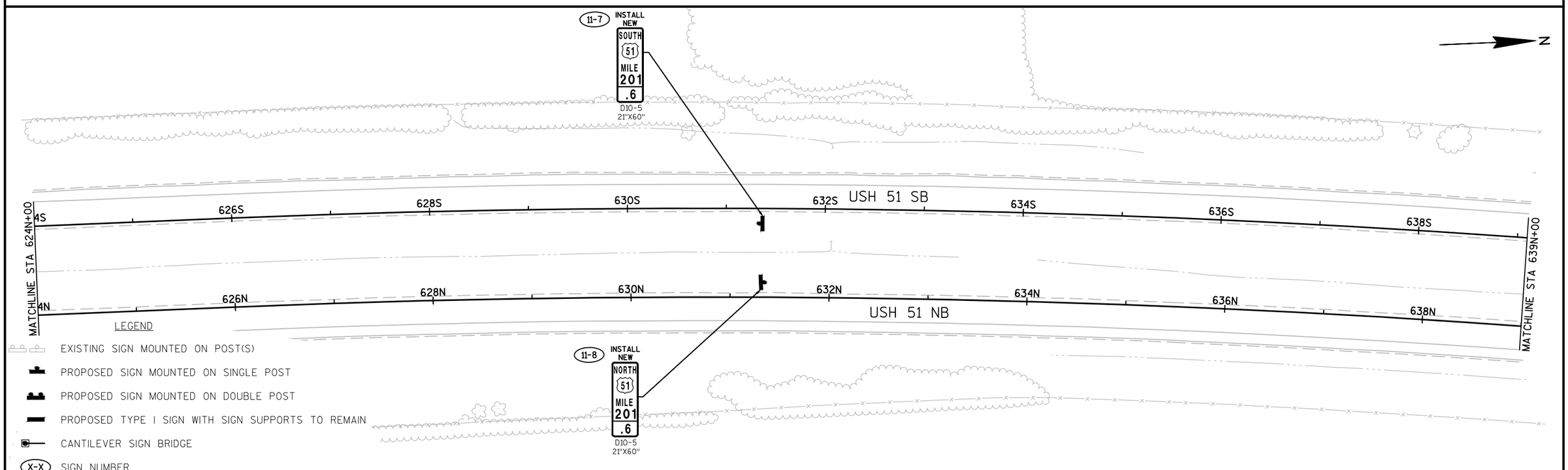

PROJECT NO:1170-01-75	HWY:USH 51	COUNTY:MARATHON	PERMANENT SIGNING	SHEET 29	E

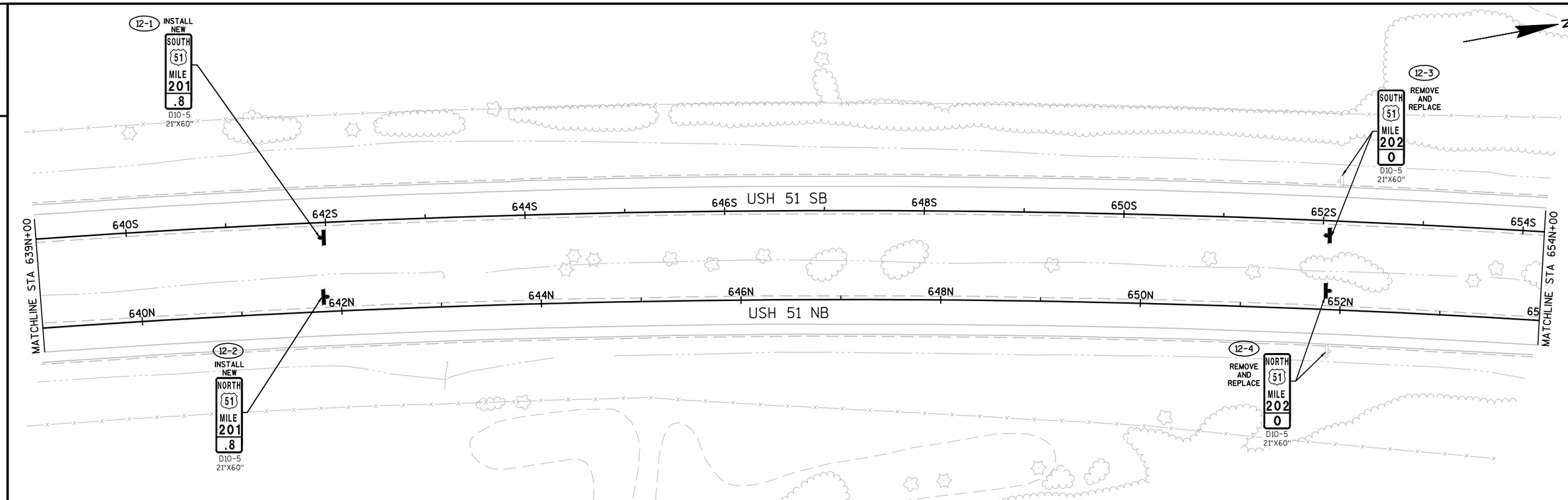

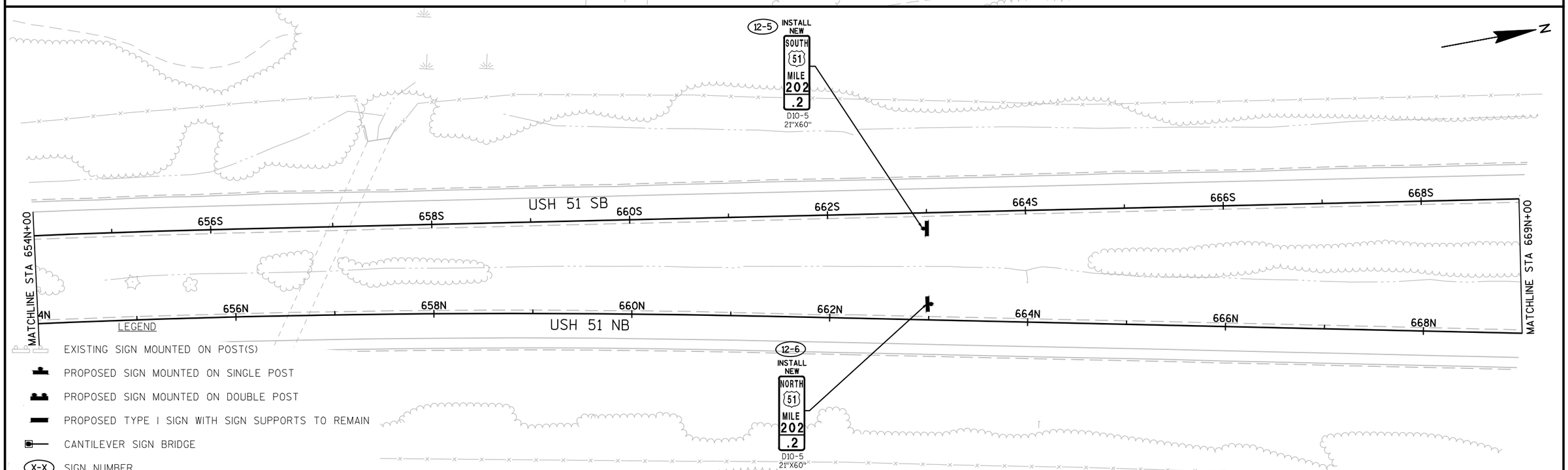

PROJECT NO:1170-01-75	HWY:USH 51	COUNTY:MARATHON	PERMANENT SIGNING	SHEET 30	E

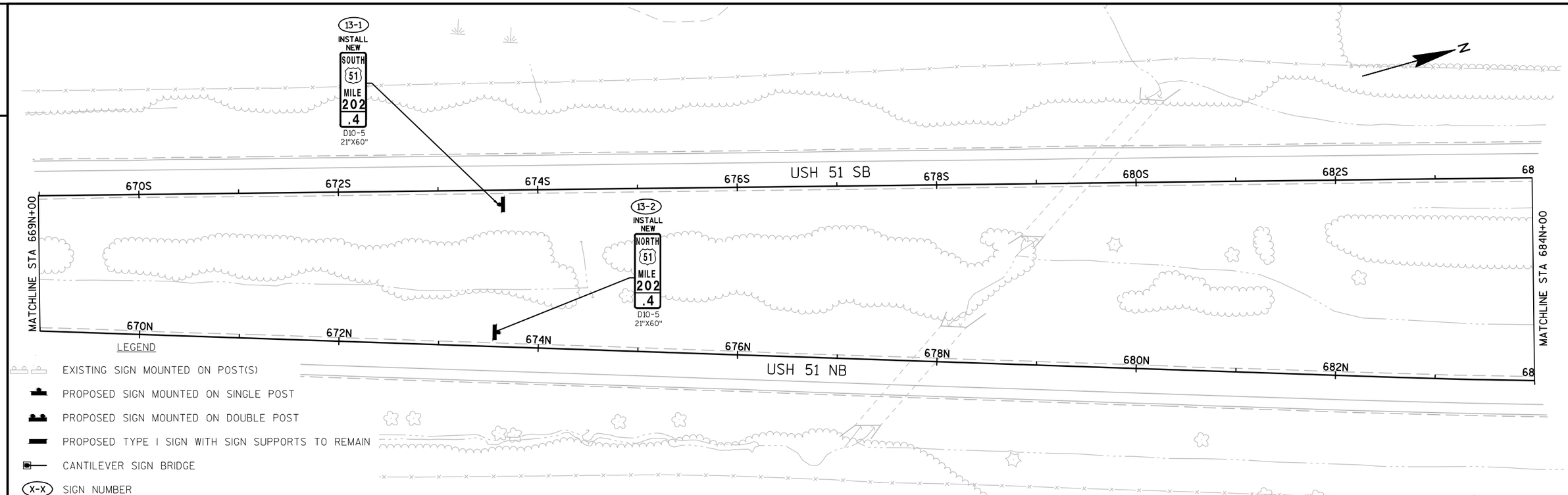

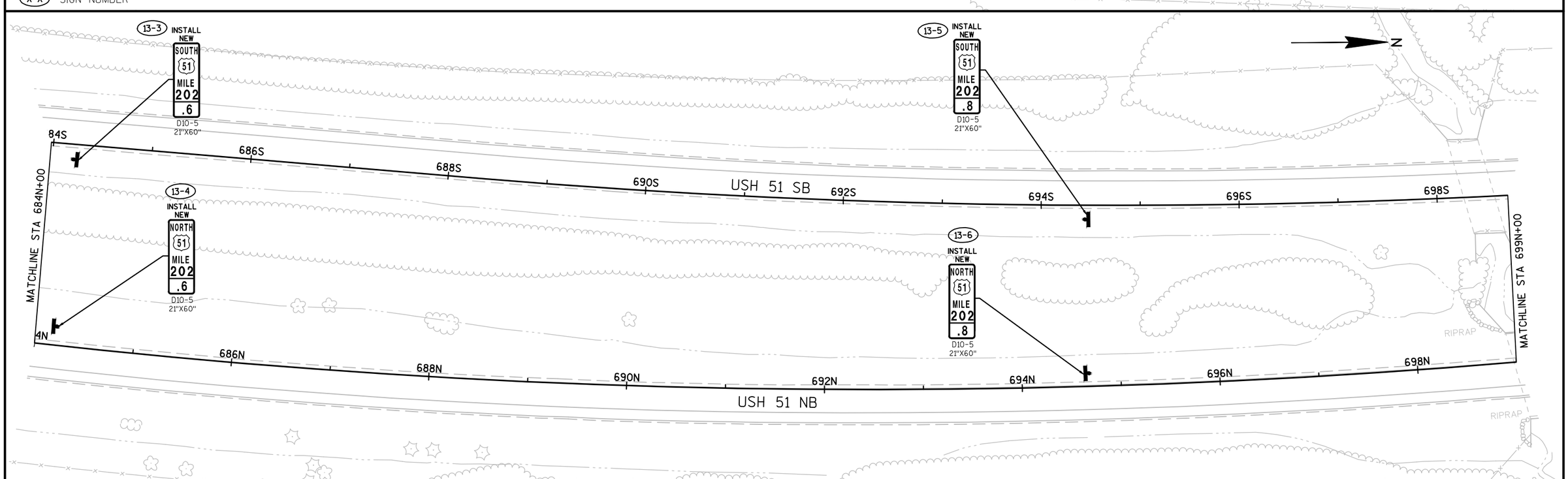

PROJECT NO:1170-01-75	HWY:USH 51	COUNTY:MARATHON	PERMANENT SIGNING	SHEET 31	E

FILE NAME : F:\BM4-1077 US 51\5_DESIGN\03_ROADS\11700175\SHEETSPLAN\023201-PS.DWG 023213-ps PLOT DATE : 1/29/2016 9:12 AM PLOT BY : SHANE MCCARTY PLOT NAME : PLOT SCALE : 1 IN:100 FT

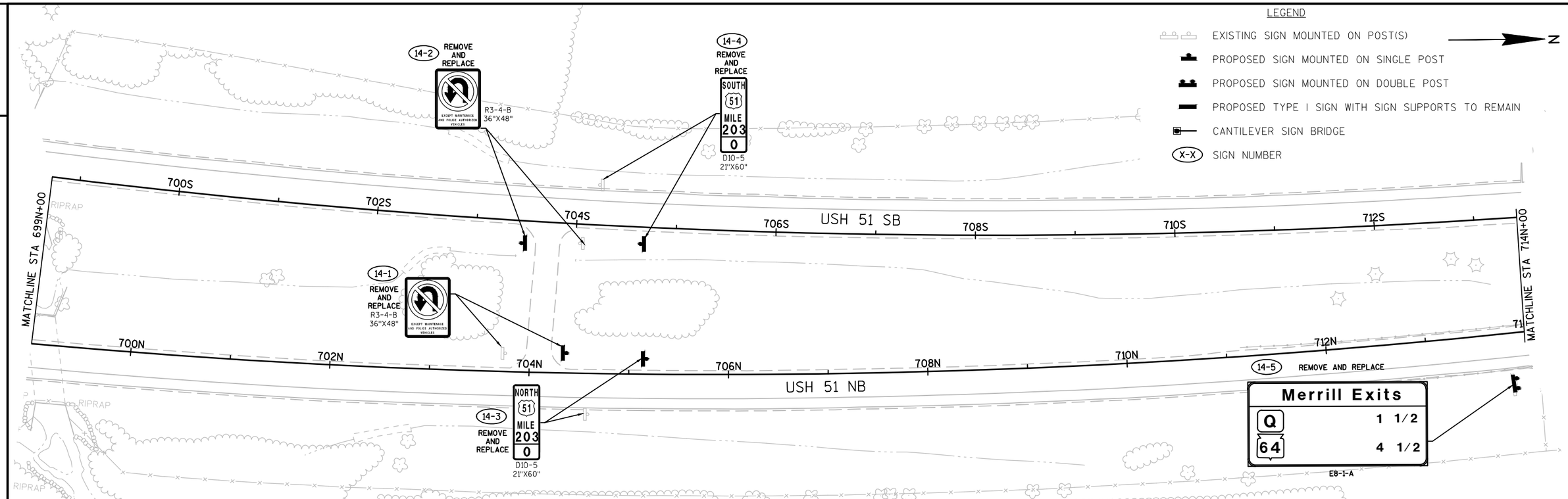

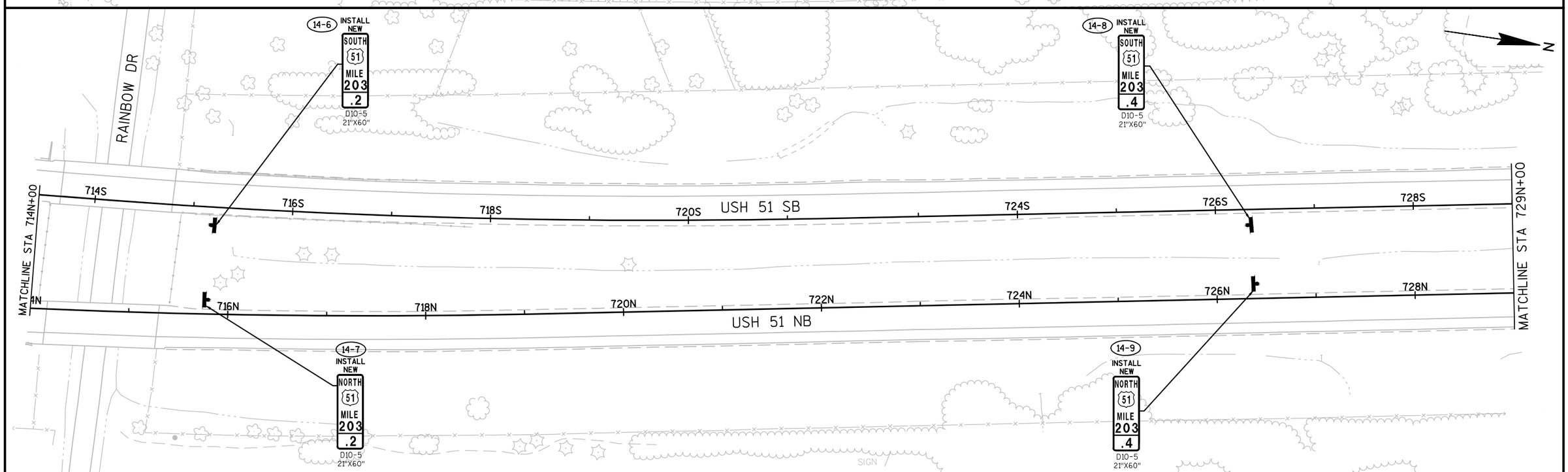

PROJECT NO:1170-01-75	HWY:USH 51	COUNTY:MARATHON	PERMANENT SIGNING	SHEET 32	E

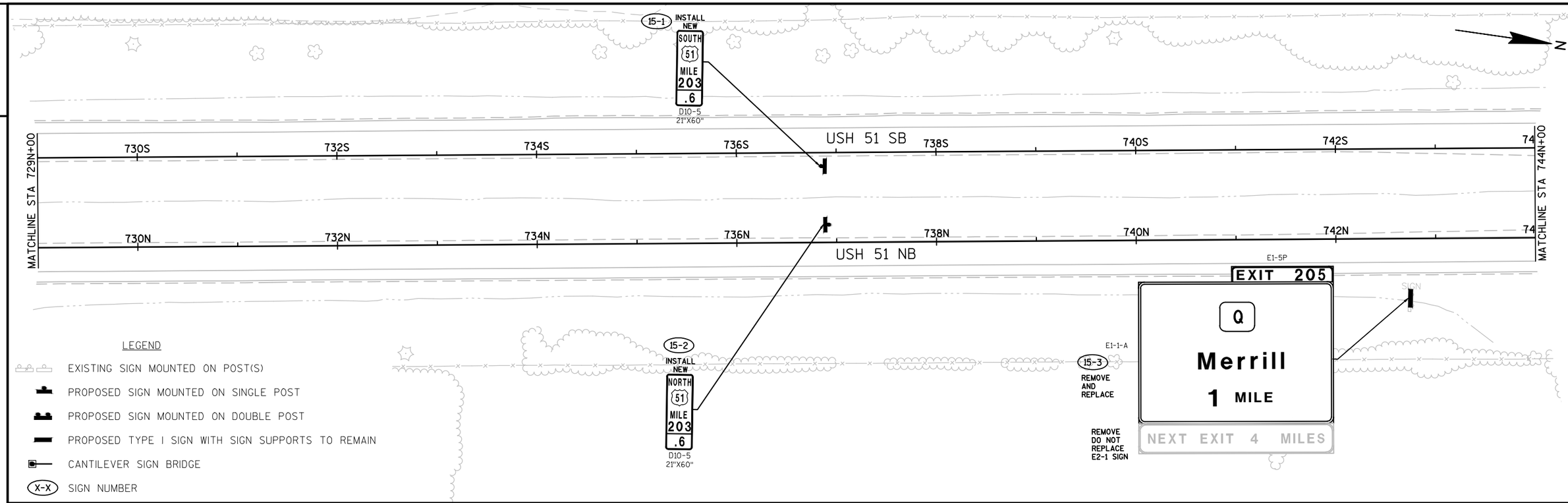

PROJECT NO:1170-01-75	HWY:USH 51	COUNTY:MARATHON	PERMANENT SIGNING	SHEET 33	E

FILE NAME : F:\BM4-1077 US 51\5_DESIGN\03_ROADS\11700175\SHEETSPLAN\023201-PS.DWG
023215-ps
PLOT DATE : 1/29/2016 9:12 AM PLOT BY : SHANE MCCARTY PLOT NAME : PLOT SCALE : 1 IN:100 FT

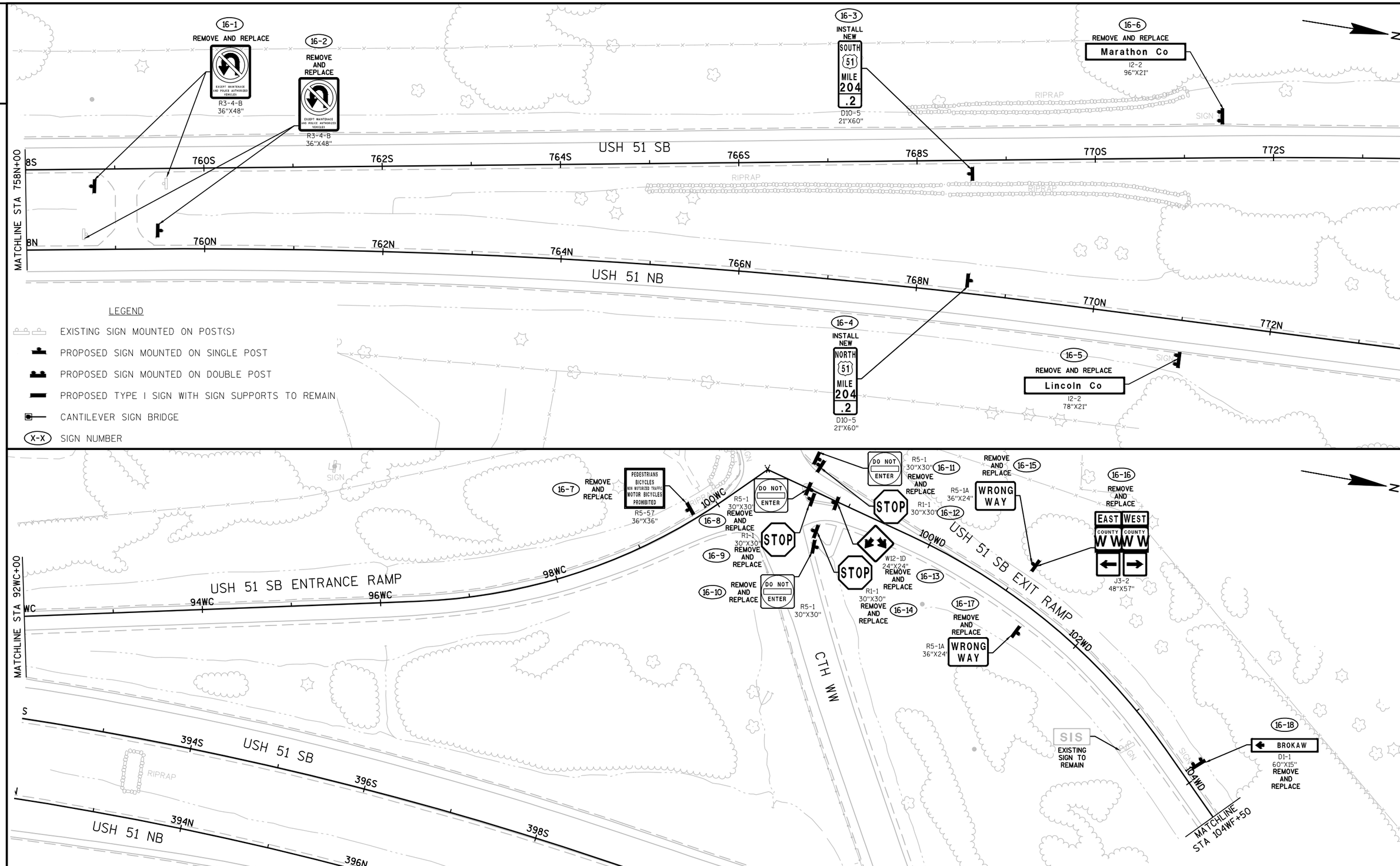

PROJECT NO:1170-01-75	HWY:USH 51	COUNTY:MARATHON	PERMANENT SIGNING - SB ENTRANCE/EXIT RAMPS	SHEET 34	E

FILE NAME : F:\BM4-1077 US 51\5_DESIGN\03_ROADS\11700175\SHEETSPLAN\023201-PS.DWG
023216-ps
PLOT DATE : 1/29/2016 9:13 AM PLOT BY : SHANE MCCARTY PLOT NAME : PLOT SCALE : 1 IN:100 FT

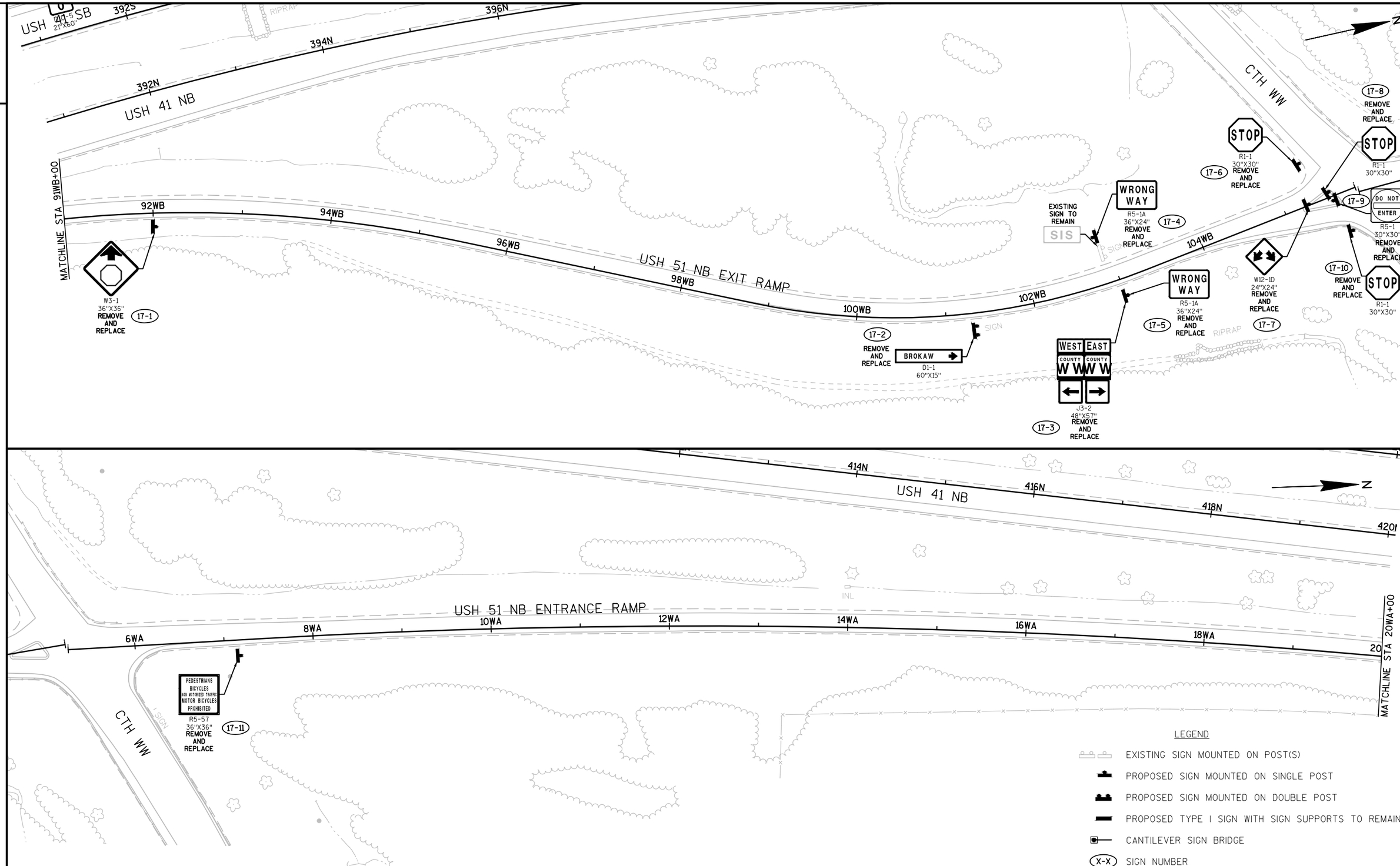

PROJECT NO:1170-01-75	HWY:USH 51	COUNTY:MARATHON	PERMANENT SIGNING - NB EXIT/ENTRANCE RAMPS	SHEET 35	E

FILE NAME : F:\BM4-1077 US 51\5_DESIGN\03_ROADS\11700175\SHEETSPLAN\023201-PS.DWG 023217-ps PLOT DATE : 1/29/2016 9:13 AM PLOT BY : SHANE MCCARTY PLOT NAME : PLOT SCALE : 1 IN:100 FT

WISDOT/CADDS SHEET 44

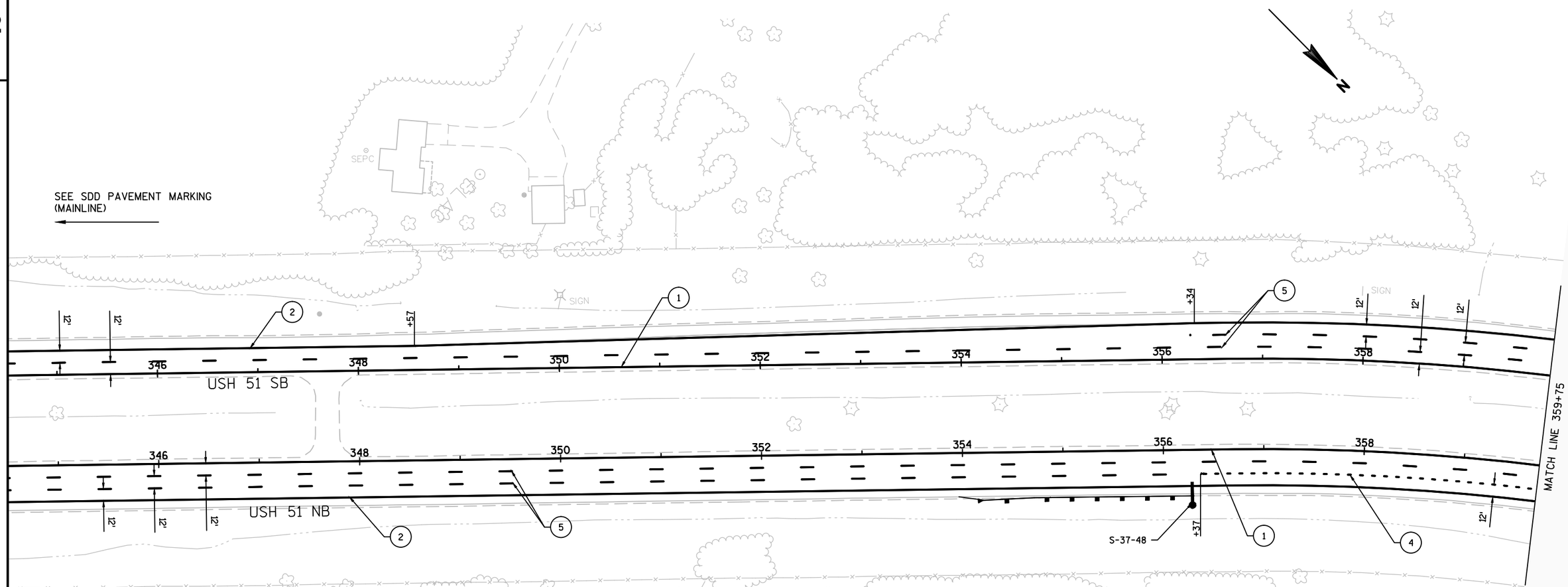

LEGEND

1. PAVEMENT MARKING EPOXY 4-INCH (YELLOW)
2. PAVEMENT MARKING EPOXY 4-INCH (WHITE)
3. PAVEMENT MARKING EPOXY 4-INCH (12.5 FT LINE 37.5 FT SKIP)
4. PAVEMENT MARKING GROOVED WET REFLECTIVE TAPE 8-INCH (3 FT LINE 9 FT SKIP)
5. PAVEMENT MARKING GROOVED WET REFLECTIVE TAPE 4-INCH (12.5 FT LINE 37.5 FT SKIP)
6. PAVEMENT MARKING GROOVED WET REFLECTIVE TAPE 8-INCH
7. PAVEMENT MARKING STOP LINE EPOXY 18-INCH (WHITE)
8. PAVEMENT MARKING EPOXY 8-INCH CHANNELIZING
9. PAVEMENT MARKING DIAGONAL EPOXY 24-INCH

PROJECT NO:1170-01-75	HWY:USH 51	COUNTY:MARATHON	PAVEMENT MARKING	SHEET 36	E

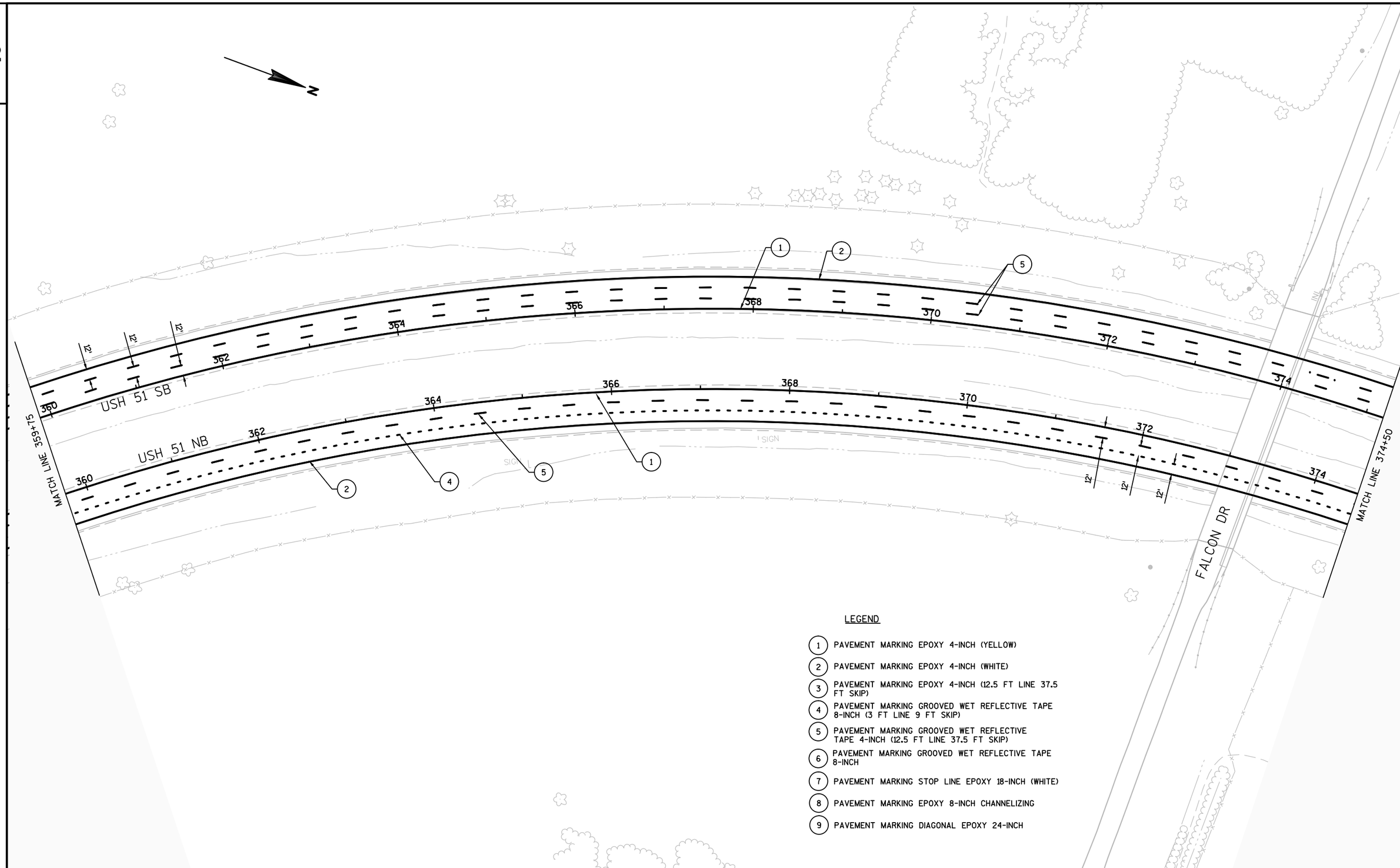

LEGEND

1. PAVEMENT MARKING EPOXY 4-INCH (YELLOW)
2. PAVEMENT MARKING EPOXY 4-INCH (WHITE)
3. PAVEMENT MARKING EPOXY 4-INCH (12.5 FT LINE 37.5 FT SKIP)
4. PAVEMENT MARKING GROOVED WET REFLECTIVE TAPE 8-INCH (3 FT LINE 9 FT SKIP)
5. PAVEMENT MARKING GROOVED WET REFLECTIVE TAPE 4-INCH (12.5 FT LINE 37.5 FT SKIP)
6. PAVEMENT MARKING GROOVED WET REFLECTIVE TAPE 8-INCH
7. PAVEMENT MARKING STOP LINE EPOXY 18-INCH (WHITE)
8. PAVEMENT MARKING EPOXY 8-INCH CHANNELIZING
9. PAVEMENT MARKING DIAGONAL EPOXY 24-INCH

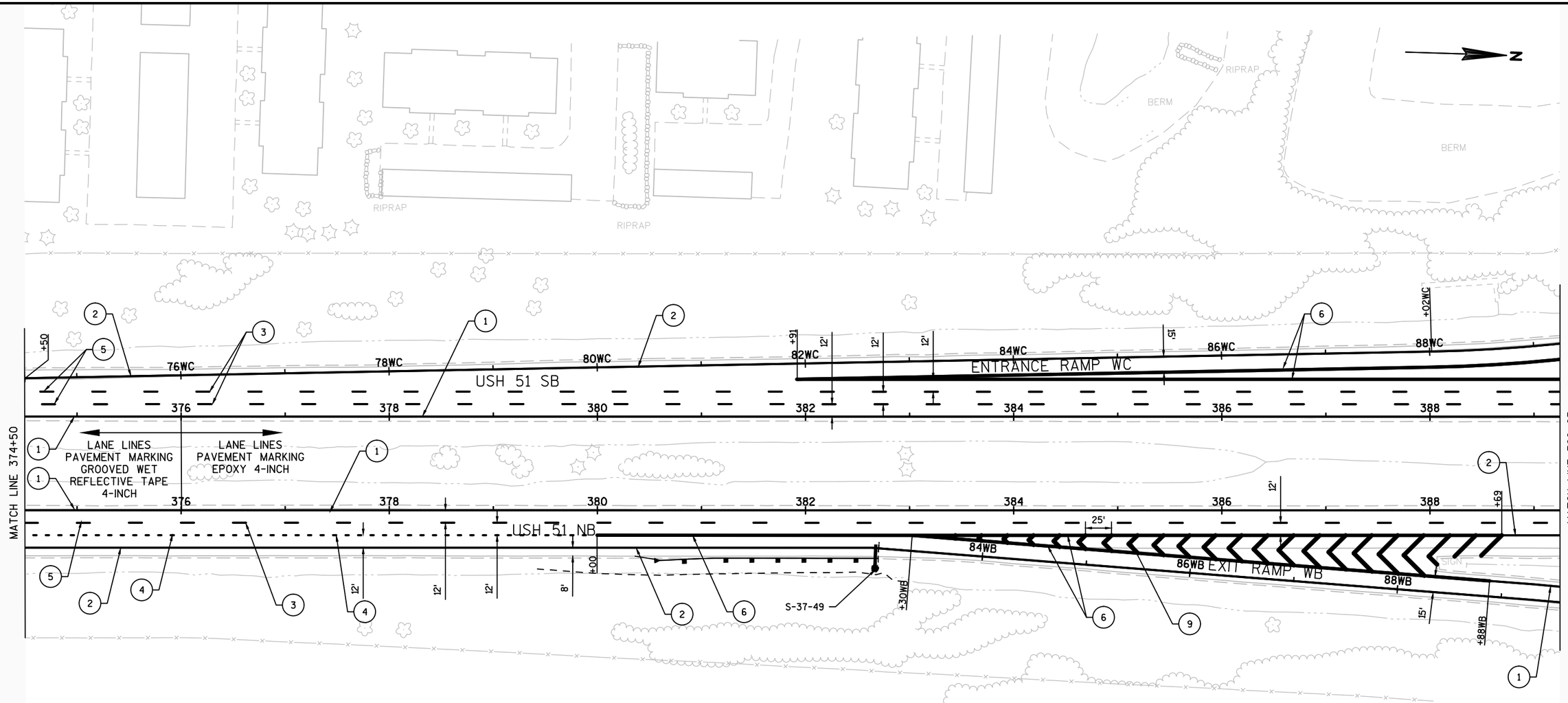

LEGEND

1. PAVEMENT MARKING EPOXY 4-INCH (YELLOW)
2. PAVEMENT MARKING EPOXY 4-INCH (WHITE)
3. PAVEMENT MARKING EPOXY 4-INCH (12.5 FT LINE 37.5 FT SKIP)
4. PAVEMENT MARKING GROOVED WET REFLECTIVE TAPE 8-INCH (3 FT LINE 9 FT SKIP)
5. PAVEMENT MARKING GROOVED WET REFLECTIVE TAPE 4-INCH (12.5 FT LINE 37.5 FT SKIP)
6. PAVEMENT MARKING GROOVED WET REFLECTIVE TAPE 8-INCH
7. PAVEMENT MARKING STOP LINE EPOXY 18-INCH (WHITE)
8. PAVEMENT MARKING EPOXY 8-INCH CHANNELIZING
9. PAVEMENT MARKING DIAGONAL EPOXY 24-INCH

PROJECT NO:1170-01-75	HWY:USH 51	COUNTY:MARATHON	PAVEMENT MARKING	SHEET 38	E

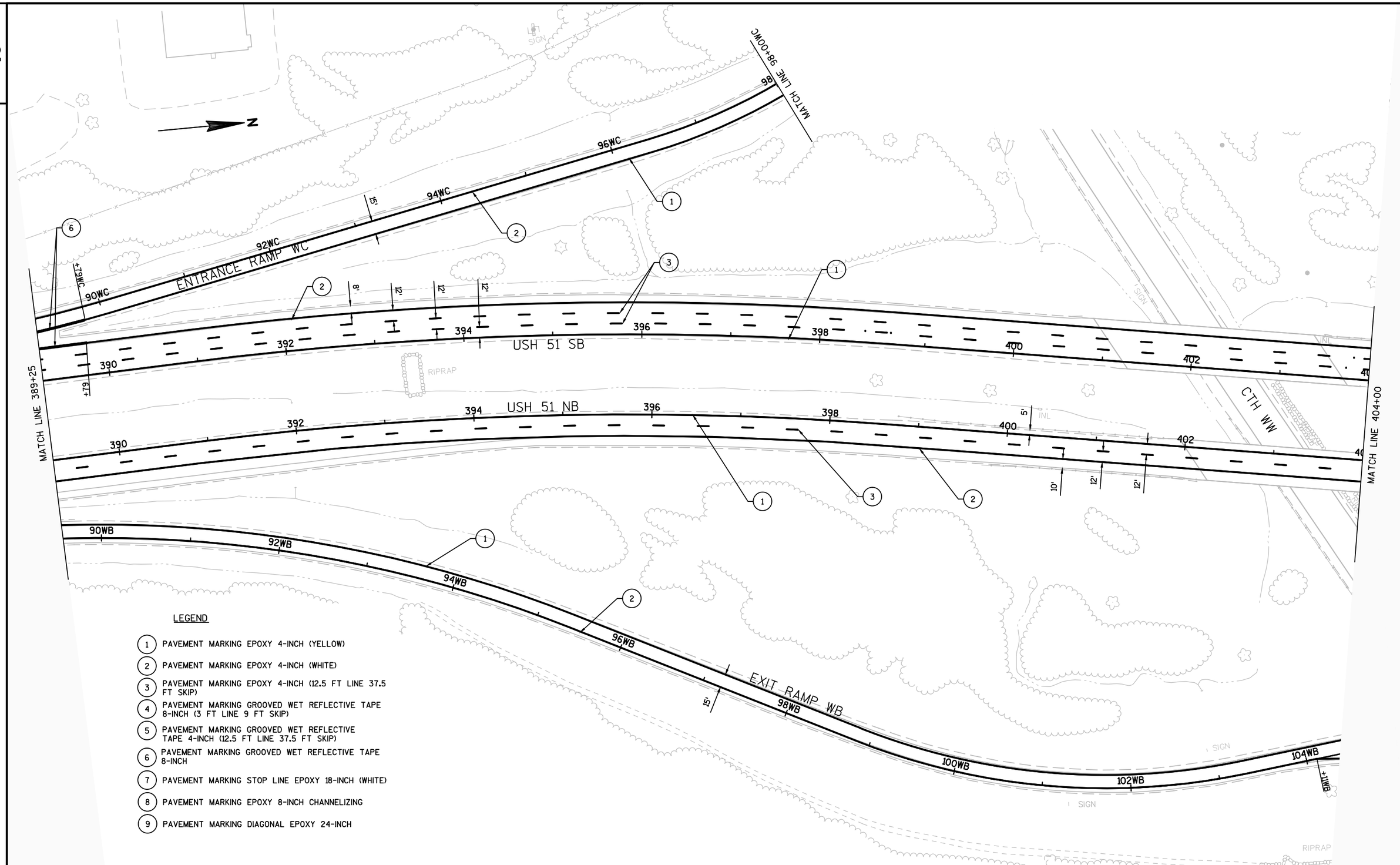

LEGEND

1. PAVEMENT MARKING EPOXY 4-INCH (YELLOW)
2. PAVEMENT MARKING EPOXY 4-INCH (WHITE)
3. PAVEMENT MARKING EPOXY 4-INCH (12.5 FT LINE 37.5 FT SKIP)
4. PAVEMENT MARKING GROOVED WET REFLECTIVE TAPE 8-INCH (3 FT LINE 9 FT SKIP)
5. PAVEMENT MARKING GROOVED WET REFLECTIVE TAPE 4-INCH (12.5 FT LINE 37.5 FT SKIP)
6. PAVEMENT MARKING GROOVED WET REFLECTIVE TAPE 8-INCH
7. PAVEMENT MARKING STOP LINE EPOXY 18-INCH (WHITE)
8. PAVEMENT MARKING EPOXY 8-INCH CHANNELIZING
9. PAVEMENT MARKING DIAGONAL EPOXY 24-INCH

PROJECT NO:1170-01-75	HWY:USH 51	COUNTY:MARATHON	PAVEMENT MARKING	SHEET 39	E

FILE NAME : F:\BM4-1077 US 51\5_DESIGN\03_ROADS\11700175\SHEETSPLAN\024501-PM.DWG
LAYOUT NAME - SHEET - (04)
PLOT DATE : 12/4/2015 11:27 AM PLOT BY : SHANE MCCARTY PLOT NAME : PLOT SCALE : 1 IN:100 FT

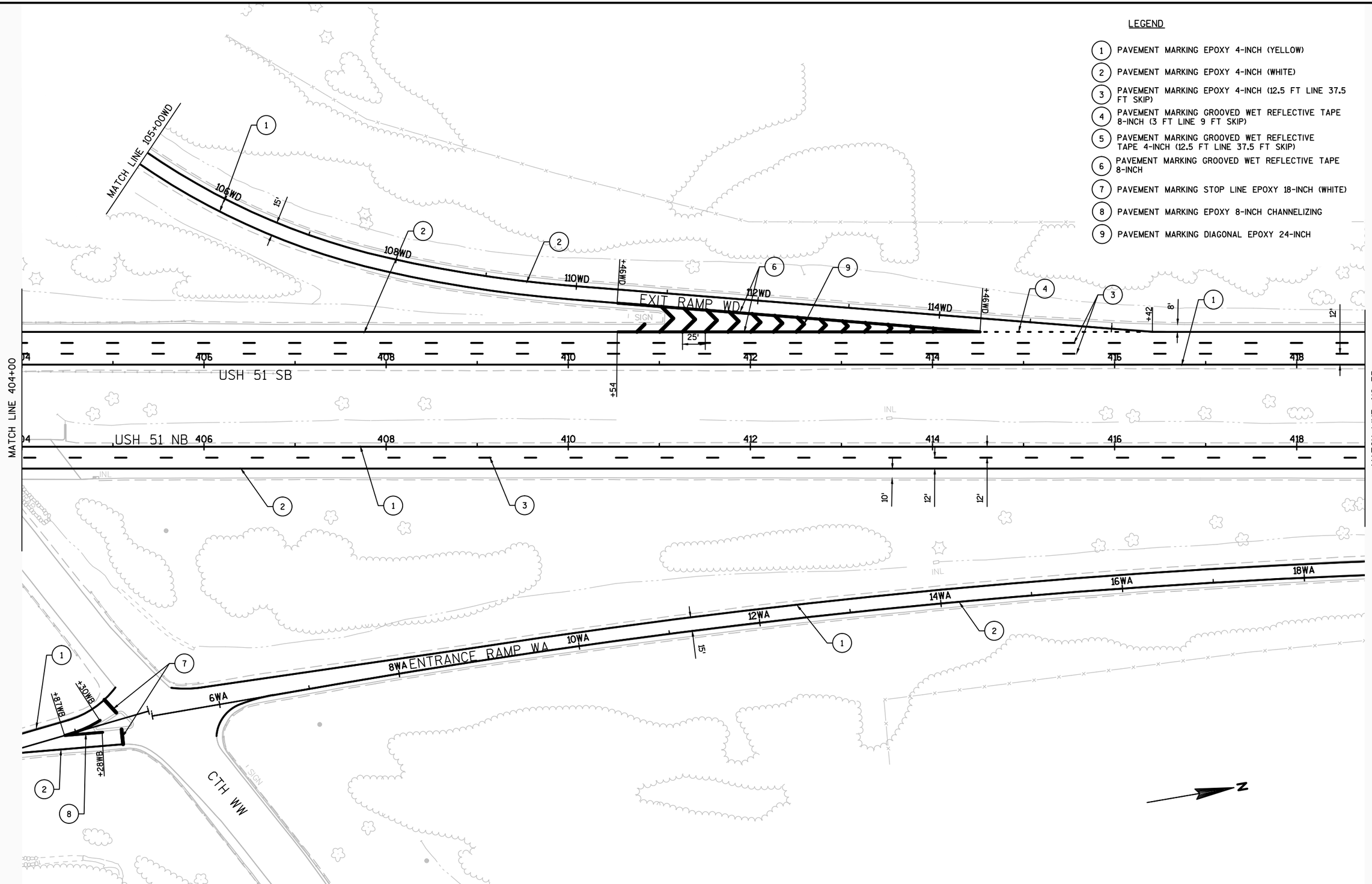

PROJECT NO:1170-01-75	HWY:USH 51	COUNTY:MARATHON	PAVEMENT MARKING	SHEET 40	E

FILE NAME : F:\BM4-1077 US 51\5_DESIGN\03_ROADS\11700175\SHEETSPLAN\024501-PM.DWG
LAYOUT NAME - SHEET - (05)
PLOT DATE : 12/3/2015 5:15 PM PLOT BY : CHAD EVEN PLOT NAME : PLOT SCALE : 1 IN:100 FT

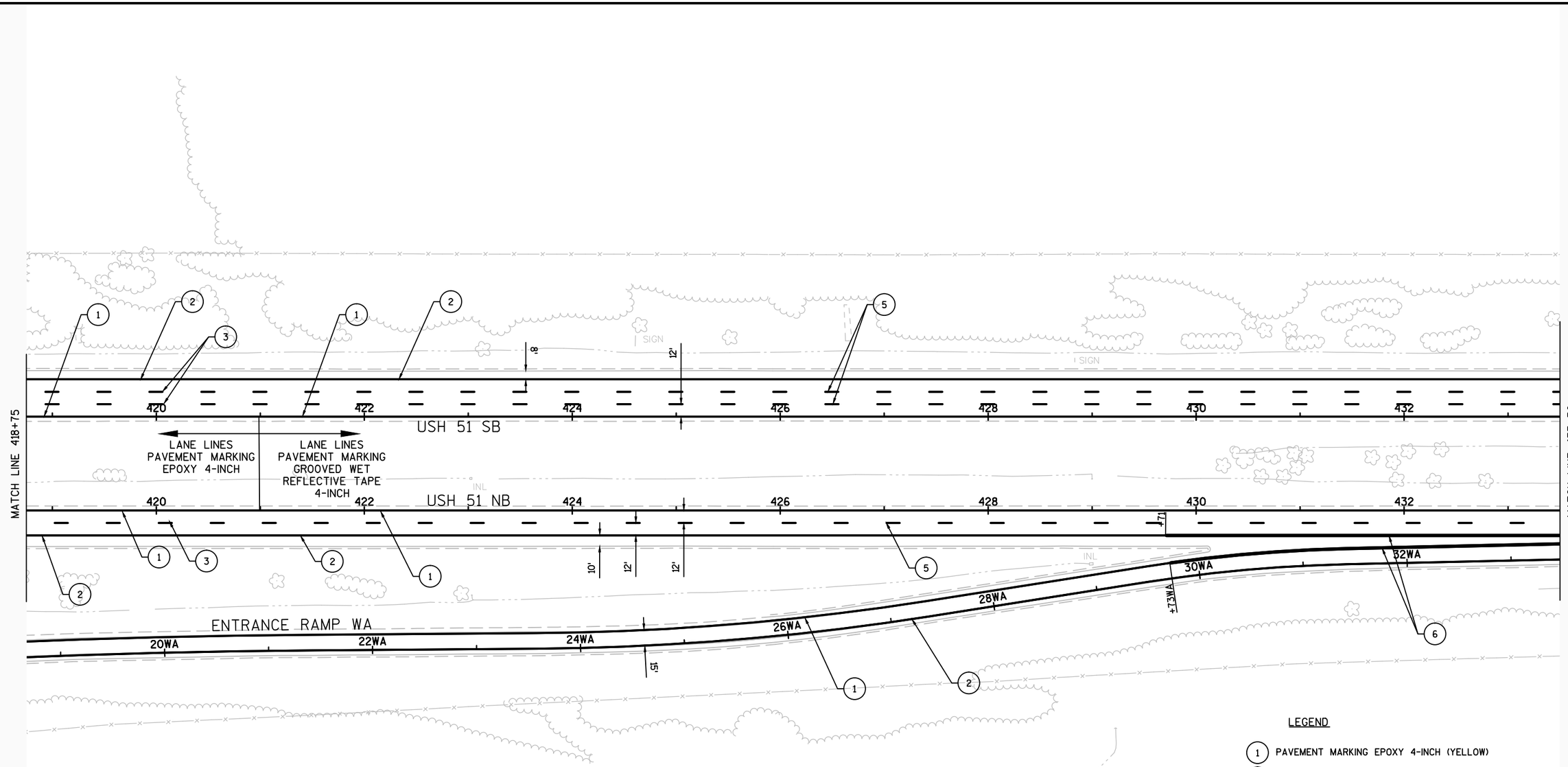

N

LEGEND

1. PAVEMENT MARKING EPOXY 4-INCH (YELLOW)
2. PAVEMENT MARKING EPOXY 4-INCH (WHITE)
3. PAVEMENT MARKING EPOXY 4-INCH (12.5 FT LINE 37.5 FT SKIP)
4. PAVEMENT MARKING GROOVED WET REFLECTIVE TAPE 8-INCH (3 FT LINE 9 FT SKIP)
5. PAVEMENT MARKING GROOVED WET REFLECTIVE TAPE 4-INCH (12.5 FT LINE 37.5 FT SKIP)
6. PAVEMENT MARKING GROOVED WET REFLECTIVE TAPE 8-INCH
7. PAVEMENT MARKING STOP LINE EPOXY 18-INCH (WHITE)
8. PAVEMENT MARKING EPOXY 8-INCH CHANNELIZING
9. PAVEMENT MARKING DIAGONAL EPOXY 24-INCH

PROJECT NO:1170-01-75	HWY:USH 51	COUNTY:MARATHON	PAVEMENT MARKING	SHEET 41	E

FILE NAME : F:\BM4-1077 US 51\5_DESIGN\03_ROADS\11700175\SHEETSPLAN\024501-PM.DWG
LAYOUT NAME - SHEET - (06)
PLOT DATE : 12/3/2015 5:16 PM PLOT BY : CHAD EVEN PLOT NAME : PLOT SCALE : 1 IN:100 FT

LEGEND

1. PAVEMENT MARKING EPOXY 4-INCH (YELLOW)
2. PAVEMENT MARKING EPOXY 4-INCH (WHITE)
3. PAVEMENT MARKING EPOXY 4-INCH (12.5 FT LINE 37.5 FT SKIP)
4. PAVEMENT MARKING GROOVED WET REFLECTIVE TAPE 8-INCH (3 FT LINE 9 FT SKIP)
5. PAVEMENT MARKING GROOVED WET REFLECTIVE TAPE 4-INCH (12.5 FT LINE 37.5 FT SKIP)
6. PAVEMENT MARKING GROOVED WET REFLECTIVE TAPE 8-INCH
7. PAVEMENT MARKING STOP LINE EPOXY 18-INCH (WHITE)
8. PAVEMENT MARKING EPOXY 8-INCH CHANNELIZING
9. PAVEMENT MARKING DIAGONAL EPOXY 24-INCH

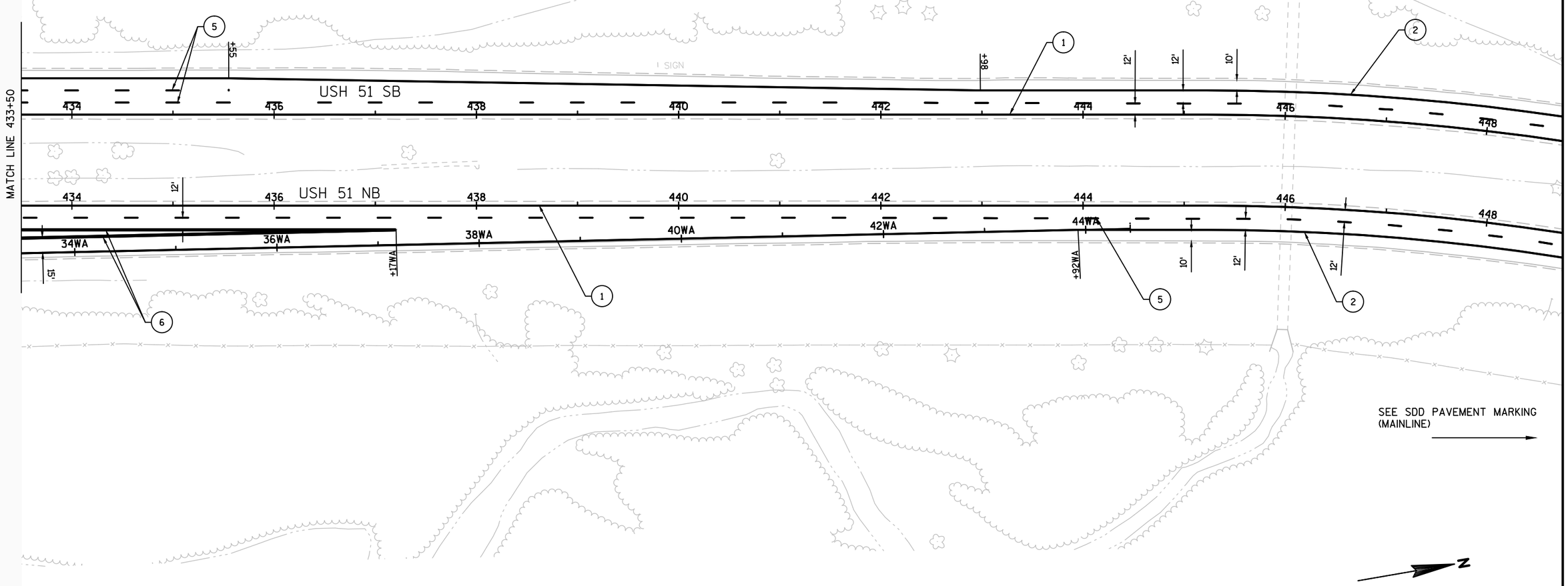

PROJECT NO:1170-01-75	HWY:USH 51	COUNTY:MARATHON	PAVEMENT MARKING	SHEET 42	E

FILE NAME : F:\BM4-1077 US 51\5_DESIGN\03_ROADS\11700175\SHEETSPLAN\024501-PM.DWG
LAYOUT NAME - SHEET - (07)
PLOT DATE : 12/3/2015 5:16 PM PLOT BY : CHAD EVEN PLOT NAME : PLOT SCALE : 1 IN:100 FT

LEGEND

1. PAVEMENT MARKING EPOXY 4-INCH (YELLOW)
2. PAVEMENT MARKING EPOXY 4-INCH (WHITE)
3. PAVEMENT MARKING EPOXY 4-INCH (12.5 FT LINE 37.5 FT SKIP)
4. PAVEMENT MARKING GROOVED WET REFLECTIVE TAPE 8-INCH (3 FT LINE 9 FT SKIP)
5. PAVEMENT MARKING GROOVED WET REFLECTIVE TAPE 4-INCH (12.5 FT LINE 37.5 FT SKIP)
6. PAVEMENT MARKING GROOVED WET REFLECTIVE TAPE 8-INCH
7. PAVEMENT MARKING STOP LINE EPOXY 18-INCH (WHITE)
8. PAVEMENT MARKING EPOXY 8-INCH CHANNELIZING
9. PAVEMENT MARKING DIAGONAL EPOXY 24-INCH

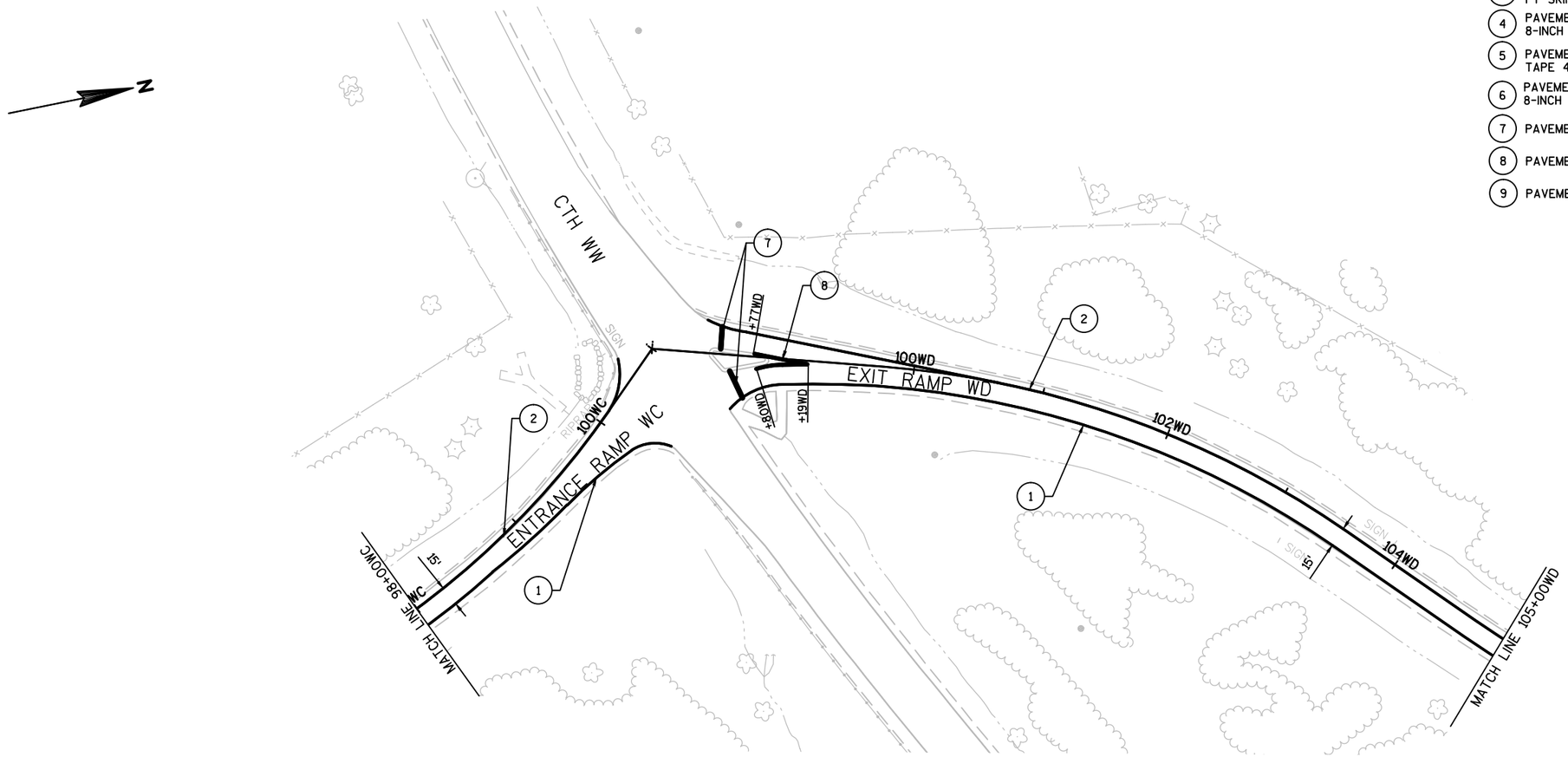

2

CONSTRUCTION STAGE 1

STAGE 1 - CONSTRUCTION: MILL AND OVERLAY INSIDE LANE

CONSTRUCTION STAGE 4NB

STAGE 4 - CONSTRUCTION: REMOVE PINE TREES

CONSTRUCTION STAGE 5

STAGE 5 - CONSTRUCTION: REFLECTIVE JOINTS AND CRACKS ROUT AND SEAL

CONSTRUCTION TRAFFIC

TRAFFIC: LEFT LANES CLOSED

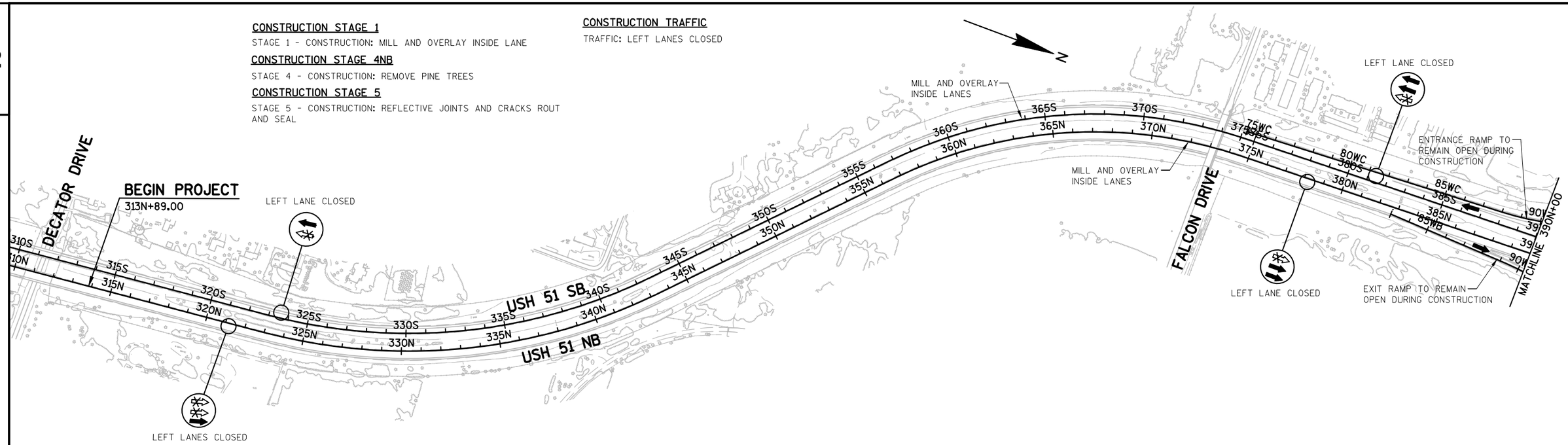

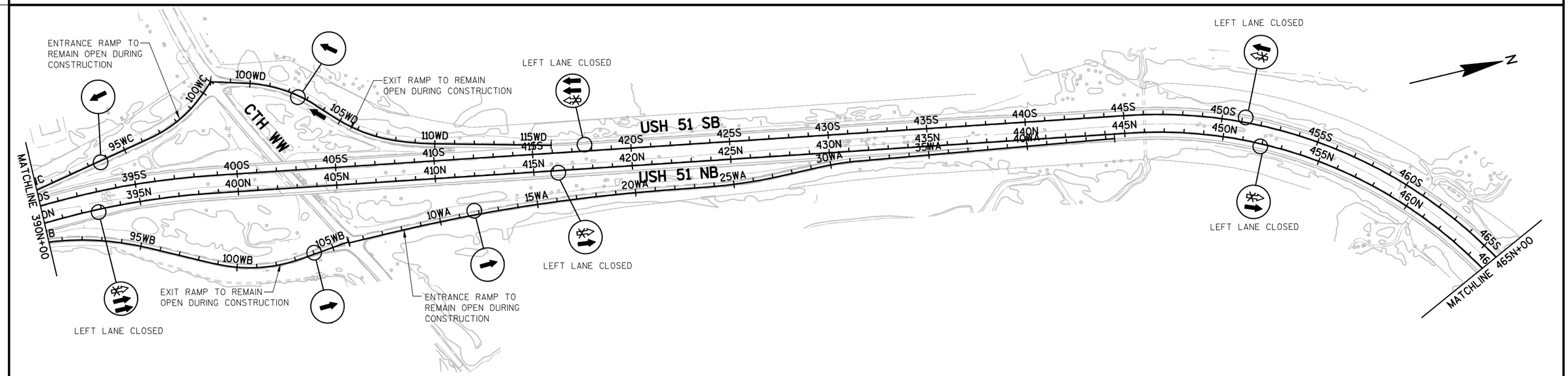

PROJECT NO:1170-01-75	HWY:USH 51	COUNTY:MARATHON	TRAFFIC CONTROL OVERVIEW - STAGE 1, 4NB & 5	SHEET 44	E

2

CONSTRUCTION STAGE 1

STAGE 1 - CONSTRUCTION: MILL AND OVERLAY INSIDE LANE

CONSTRUCTION STAGE 4NB

STAGE 4 - CONSTRUCTION: REMOVE PINE TREES

CONSTRUCTION STAGE 5

STAGE 5 - CONSTRUCTION: REFLECTIVE JOINTS AND CRACKS ROUT AND SEAL

CONSTRUCTION TRAFFIC

TRAFFIC: LEFT LANES CLOSED

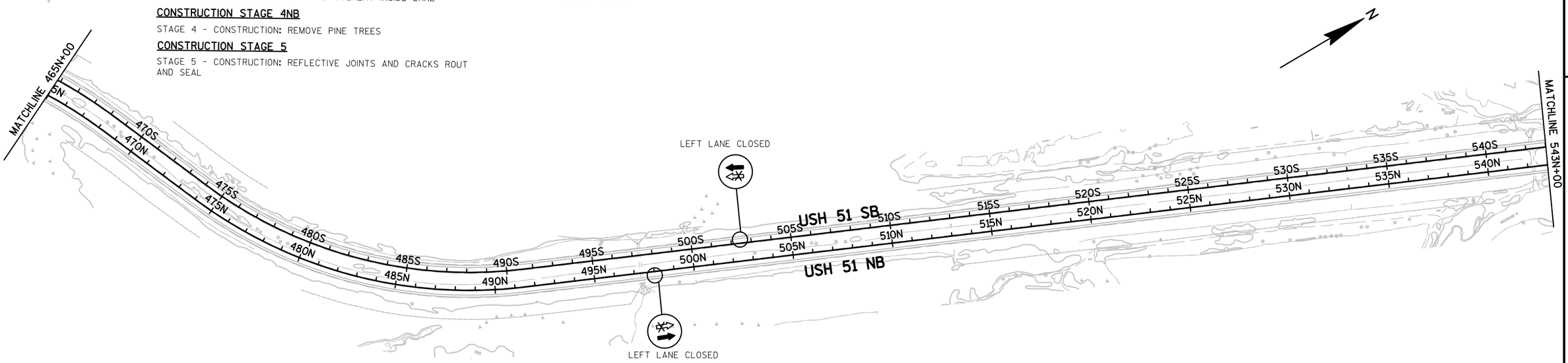

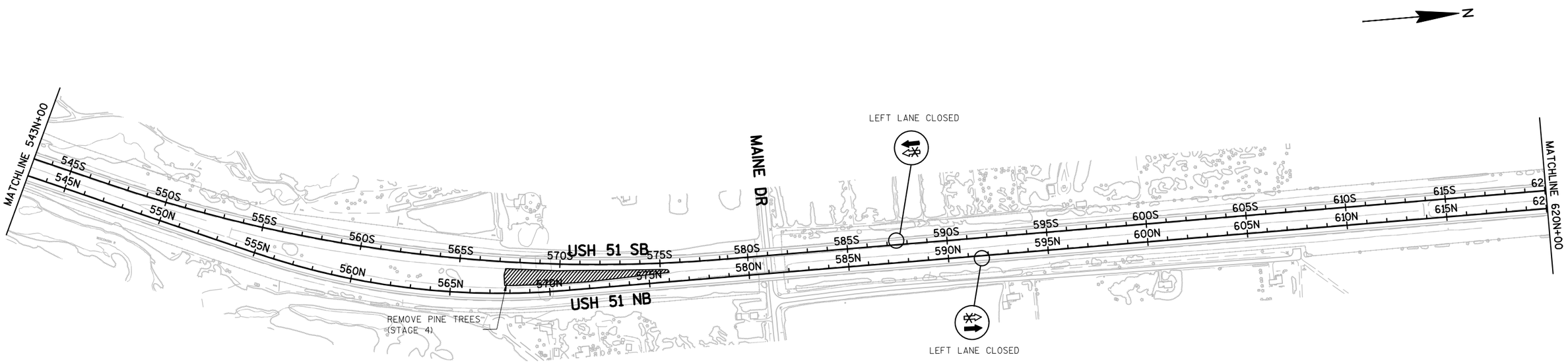

PROJECT NO:1170-01-75	HWY:USH 51	COUNTY:MARATHON	TRAFFIC CONTROL OVERVIEW - STAGE 1, 4NB & 5	SHEET 45	E

2

CONSTRUCTION STAGE 1

STAGE 1 - CONSTRUCTION: MILL AND OVERLAY INSIDE LANE

CONSTRUCTION STAGE 4NB

STAGE 4 - CONSTRUCTION: REMOVE PINE TREES

CONSTRUCTION STAGE 5

STAGE 5 - CONSTRUCTION: REFLECTIVE JOINTS AND CRACKS ROUT AND SEAL

CONSTRUCTION TRAFFIC

TRAFFIC: LEFT LANES CLOSED

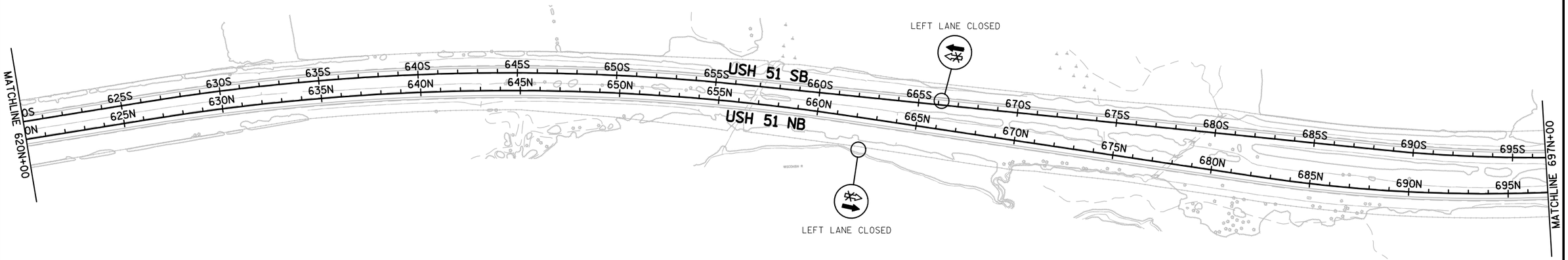

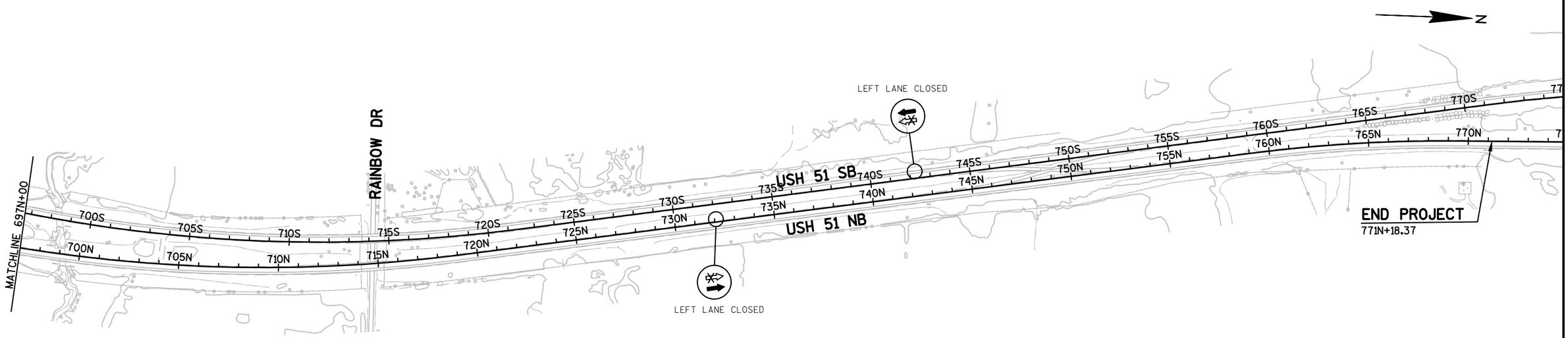

2

PROJECT NO:1170-01-75	HWY:USH 51	COUNTY:MARATHON	TRAFFIC CONTROL OVERVIEW - STAGE 1, 4NB & 5	SHEET 46	E

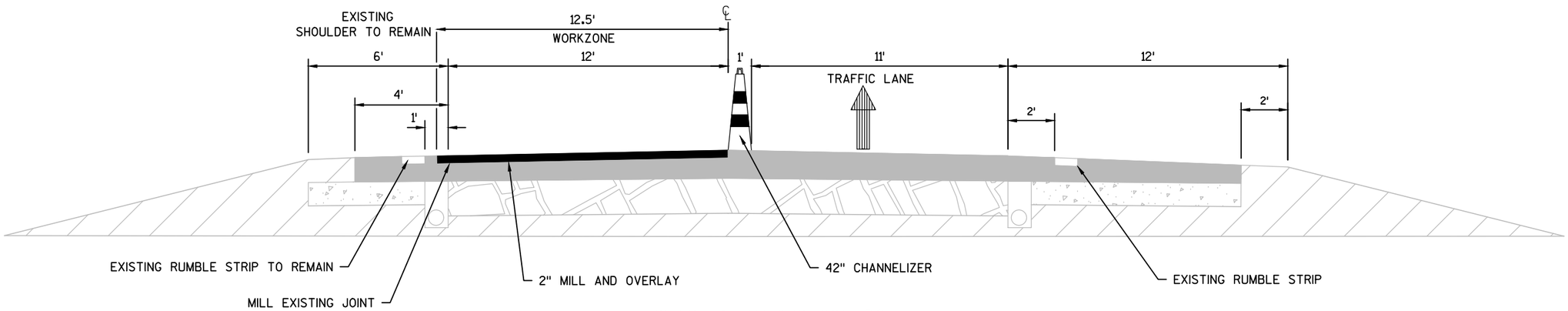

STAGE 1 TRAFFIC CONTROL

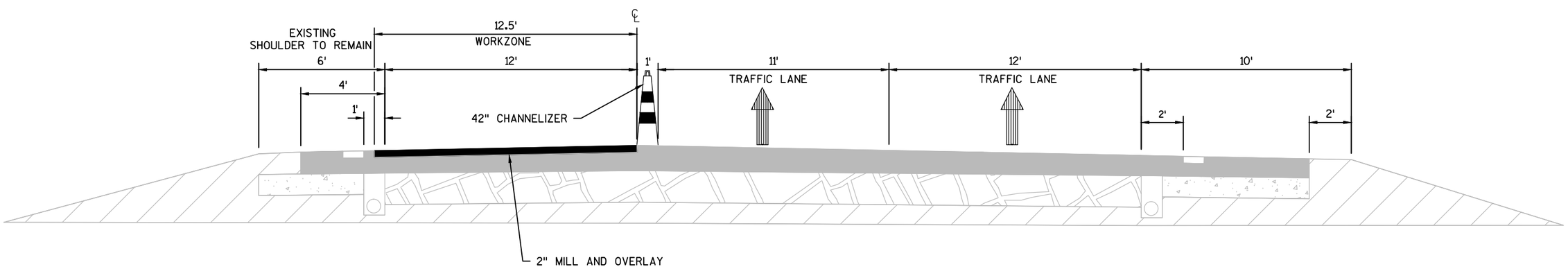

STAGE 1 TRAFFIC CONTROL

2

CONSTRUCTION STAGE 2

STAGE 2 - CONSTRUCTION: MILL AND OVERLAY OUTSIDE LANE

CONSTRUCTION STAGE 4 (SB)

STAGE 4 - CONSTRUCTION: INSTALL LIVING SNOW FENCE (PLANTINGS)

CONSTRUCTION STAGE 6

STAGE 6 - CONSTRUCTION: REFELCTIVE JOINTS AND CRACKS ROUT AND SEAL

CONSTRUCTION TRAFFIC

TRAFFIC: RIGHT LANE CLOSED

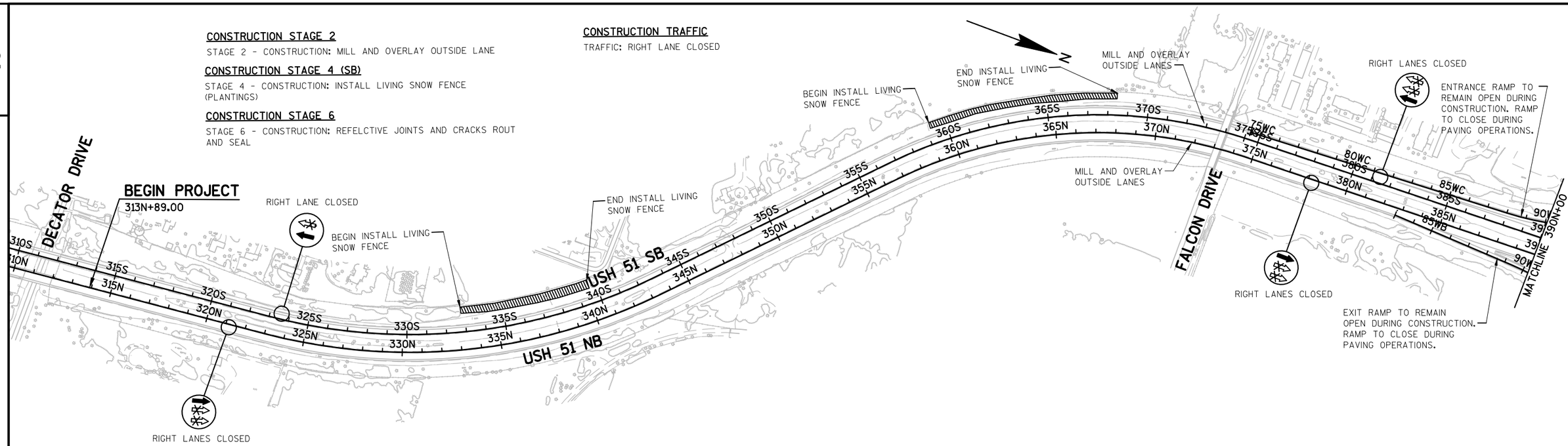

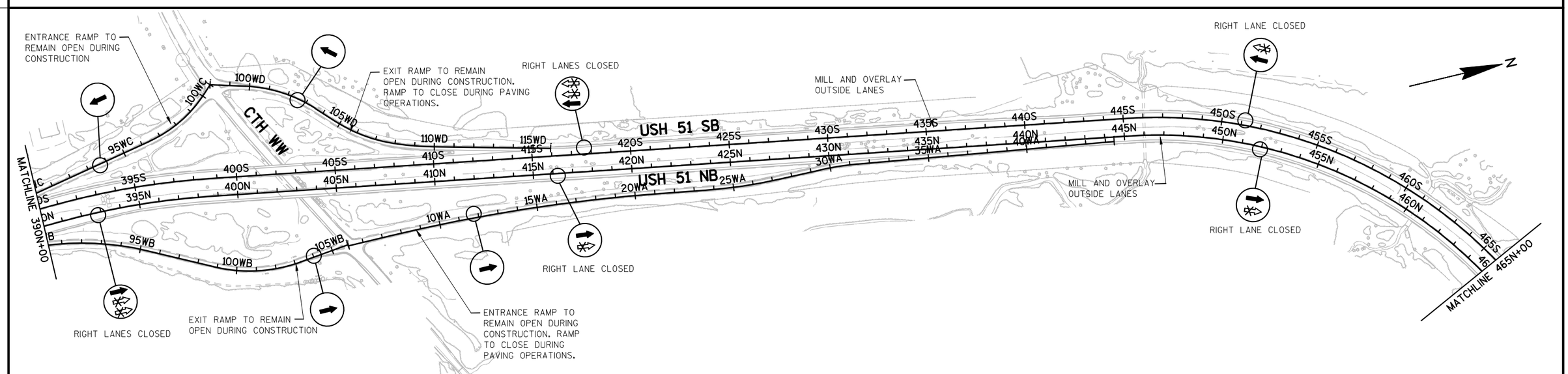

PROJECT NO:1170-01-75	HWY:USH 51	COUNTY:MARATHON	TRAFFIC CONTROL OVERVIEW - STAGE 2, 4(SB) & 6	SHEET 48	E

2

CONSTRUCTION STAGE 2

STAGE 2 - CONSTRUCTION: MILL AND OVERLAY OUTSIDE LANE

CONSTRUCTION STAGE 4 (SB)

STAGE 4 - CONSTRUCTION: INSTALL LIVING SNOW FENCE (PLANTINGS)

CONSTRUCTION STAGE 6

STAGE 6 - CONSTRUCTION: REFELCTIVE JOINTS AND CRACKS ROUT AND SEAL

CONSTRUCTION TRAFFIC

TRAFFIC: RIGHT LANE CLOSED

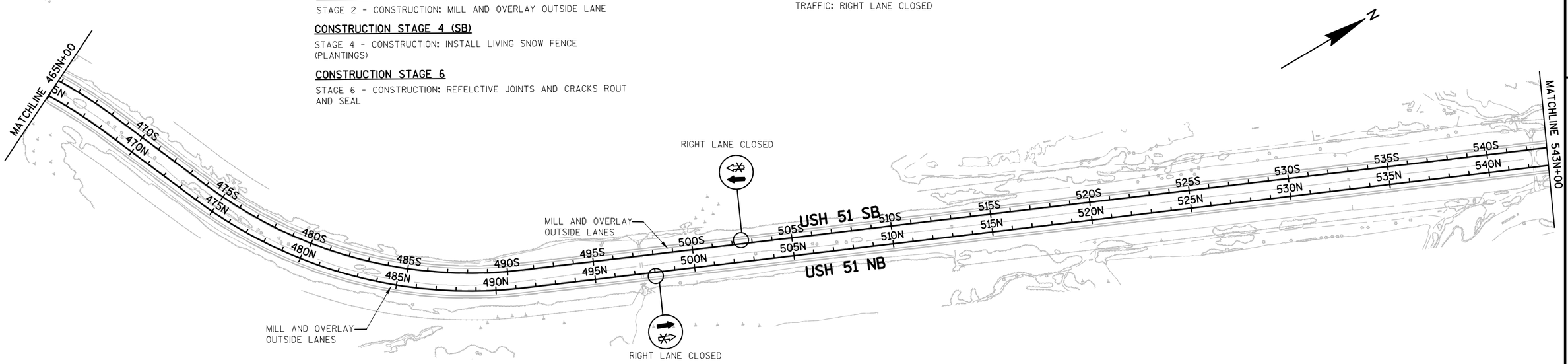

2

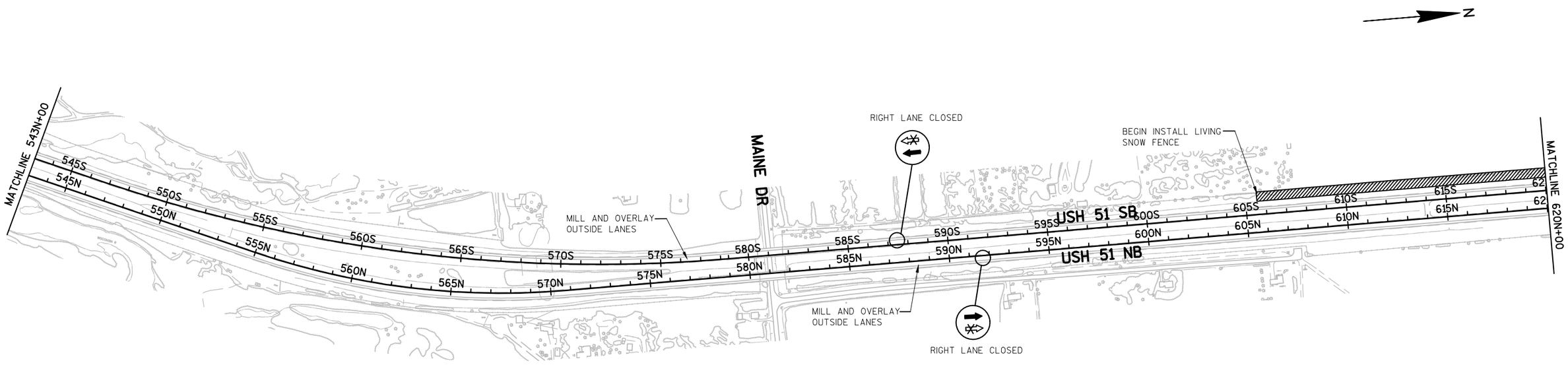

PROJECT NO:1170-01-75	HWY:USH 51	COUNTY:MARATHON	TRAFFIC CONTROL OVERVIEW - STAGE 2, 4(SB) & 6	SHEET 49	E

2

CONSTRUCTION STAGE 2

STAGE 2 - CONSTRUCTION: MILL AND OVERLAY OUTSIDE LANE

CONSTRUCTION STAGE 4 (SB)

STAGE 4 - CONSTRUCTION: INSTALL LIVING SNOW FENCE (PLANTINGS)

CONSTRUCTION STAGE 6

STAGE 6 - CONSTRUCTION: REFELCTIVE JOINTS AND CRACKS ROUT AND SEAL

CONSTRUCTION TRAFFIC

TRAFFIC: RIGHT LANE CLOSED

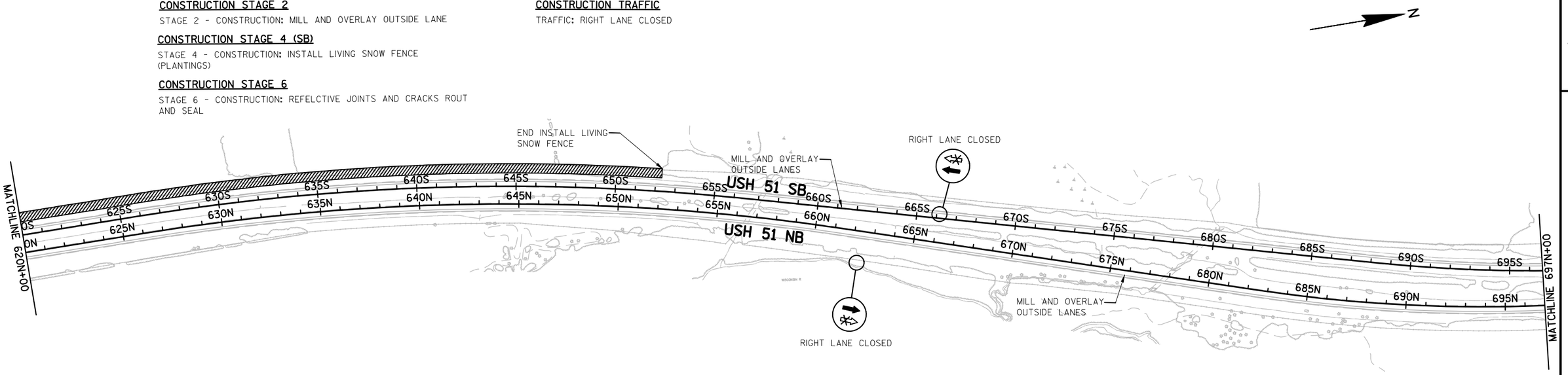

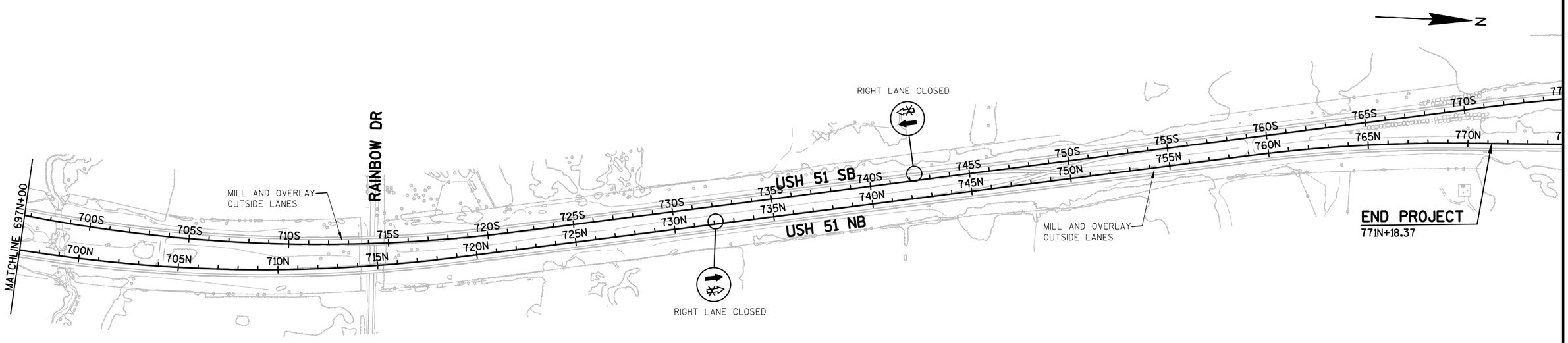

PROJECT NO:1170-01-75	HWY:USH 51	COUNTY:MARATHON	TRAFFIC CONTROL OVERVIEW - STAGE 2, 4(SB) & 6	SHEET 50	E

2

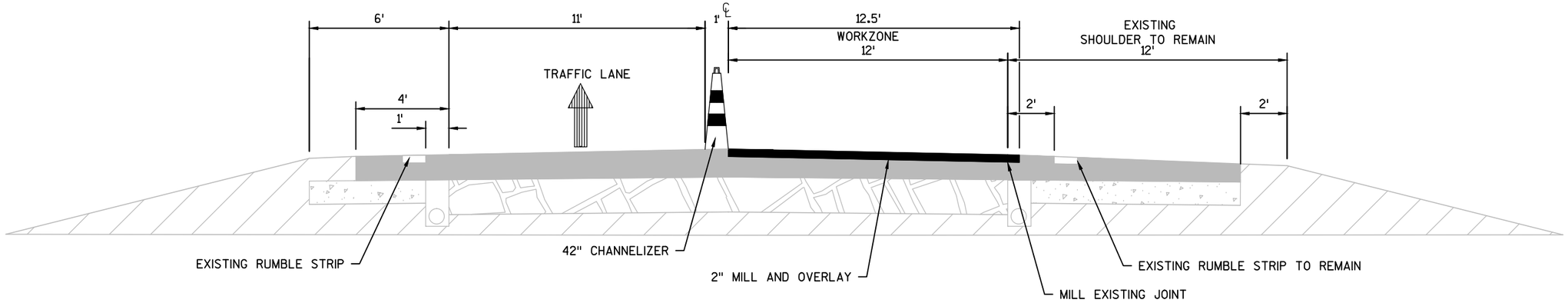

STAGE 2 TRAFFIC CONTROL

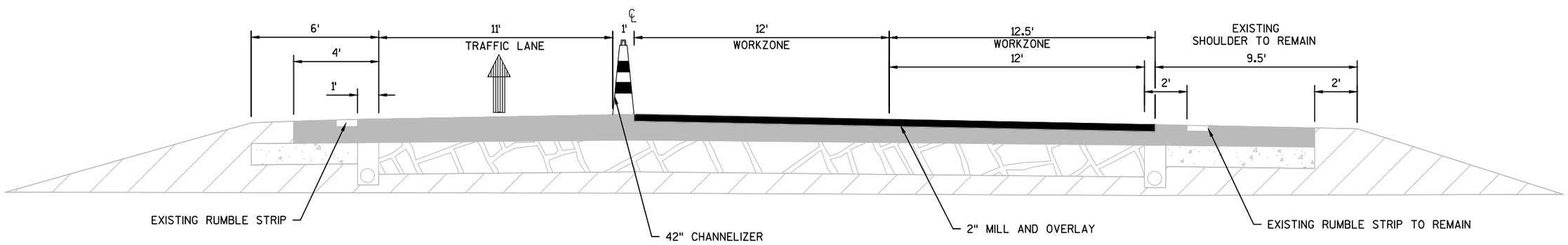

STAGE 2 TRAFFIC CONTROL

2

PROJECT NO:1170-01-75	HWY:USH 51	COUNTY:MARATHON	PLAN: TRAFFIC CONTROL DETAILS	SHEET 51	E

2

SLIMLINE CHANNELIZER SHALL NOT BE USED IN LANE DROP TAPERS OR NEAR THE CTH WW INTERCHANGE

LANE CLOSED
R11-2-L
48"X30"

FLAGS
16"X16"

R1-2
48"X42"

N

R/L WC

50' TYP

76WC

78WC

80W

USH 51 SB

375

450'

MATCHLINE STA 380+00

25' TYP

USH 51 NB

200'

200'

50' TYP

R/L USH 51 SB

390

370

365

11'

FALCON DR

R/L USH 51 NB

ROAD WORK AHEAD
W20-1-A

FLAGS
16"X16"

W03-2

94WC

92WC

90WC

88WC

86WC

84WC

82WC

USH 51 SB ENTRANCE RAMP

R/L WC

LANE CLOSED
R11-2-L
48"X30"

385

395

R/L USH 51 SB

50' TYP

25' TYP

R/L USH 51 NB

W04-1R

RIPRAP

USH 51 NB

84WB

86WB

88WB

200'

R/L WB

USH 51 NB EXIT RAMP

EXIT
E5-1
72"X60"

LEGEND

- TYPE III BARRICADE WITH LIGHTS TYPE A AND ATTACHED SIGN/NO SIGN
- TRAFFIC CONTROL 42" CHANNELIZER
- SIGN ON TEMPORARY SUPPORT
- DIRECTION OF TRAFFIC
- TRAFFIC CONTROL DRUM/WITH LIGHTS TYPE C
- POST MOUNTED ON SIGN

PROJECT NO:1170-01-75	HWY:USH 51	COUNTY:MARATHON	TRAFFIC CONTROL: STAGE 2	SHEET 52	E

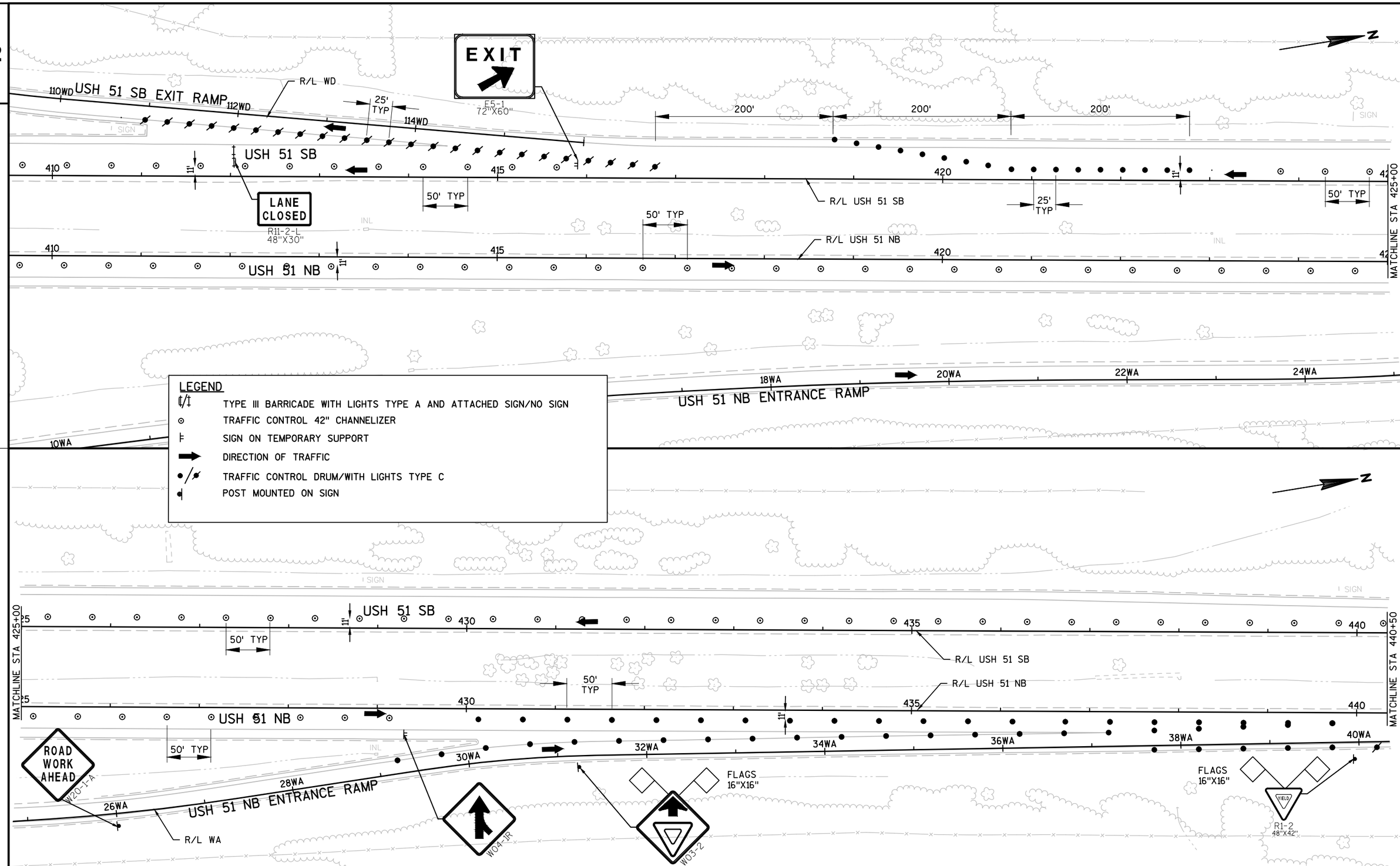

PROJECT NO:1170-01-75	HWY:USH 51	COUNTY:MARATHON	TRAFFIC CONTROL: STAGE 2	SHEET 53	E

FILE NAME : F:\BM4-1077 US 51\5_DESIGN\03_ROADS\11700175\SHEETSPLAN\026202-S2.DWG PLOT DATE : 1/22/2016 3:50 PM PLOT BY : CHAD EVEN PLOT NAME : PLOT SCALE : 1:100_XREF

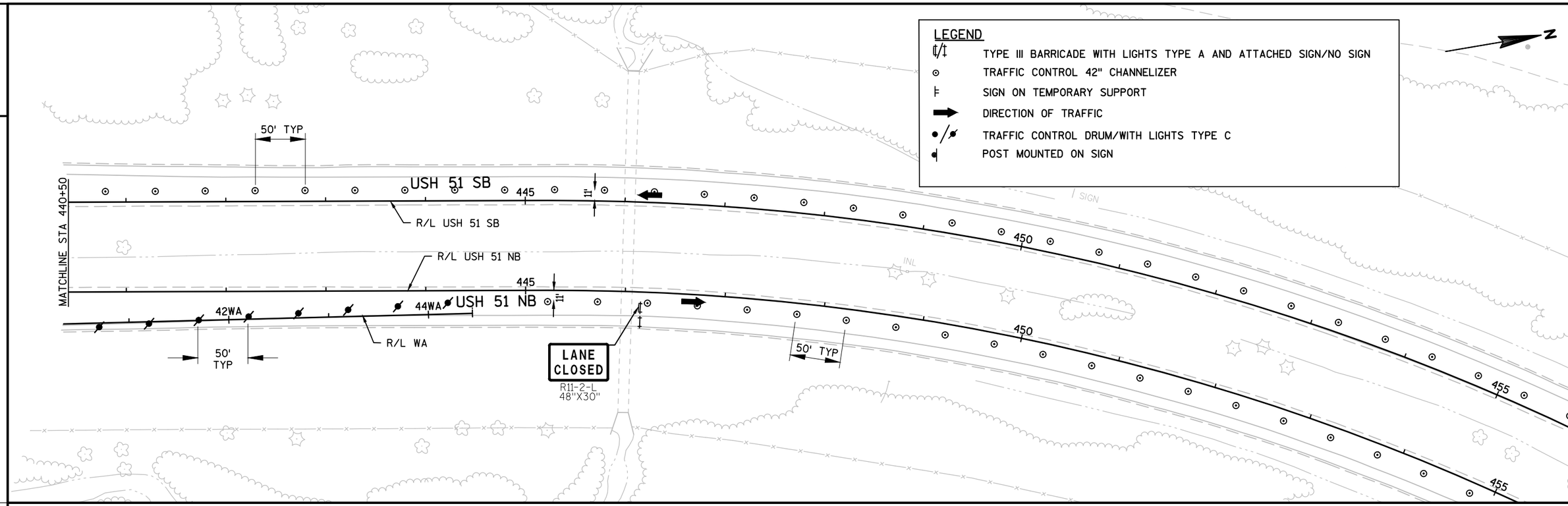
LEGEND
TYPE III BARRICADE WITH LIGHTS TYPE A AND ATTACHED SIGN/NO SIGN
TRAFFIC CONTROL 42" CHANNELIZER
SIGN ON TEMPORARY SUPPORT
DIRECTION OF TRAFFIC
TRAFFIC CONTROL DRUM/WITH LIGHTS TYPE C
POST MOUNTED ON SIGN
N
50' TYP
USH 51 SB
445
11'
R/L USH 51 SB
R/L USH 51 NB
MATCHLINE STA 440+50
445
11'
42WA
44WA
USH 51 NB
R/L WA
50' TYP
LANE CLOSED
R11-2-L
48"X30"
50' TYP
450
450
455
455
SIGN
INL

2

CONSTRUCTION STAGE 3

STAGE 3 - INSTALL SIGN STRUCTURES S-37-48, S-37-49 AND MGS GUARDRAIL

STAGE 3 - TRAFFIC: RIGHT LANE CLOSED

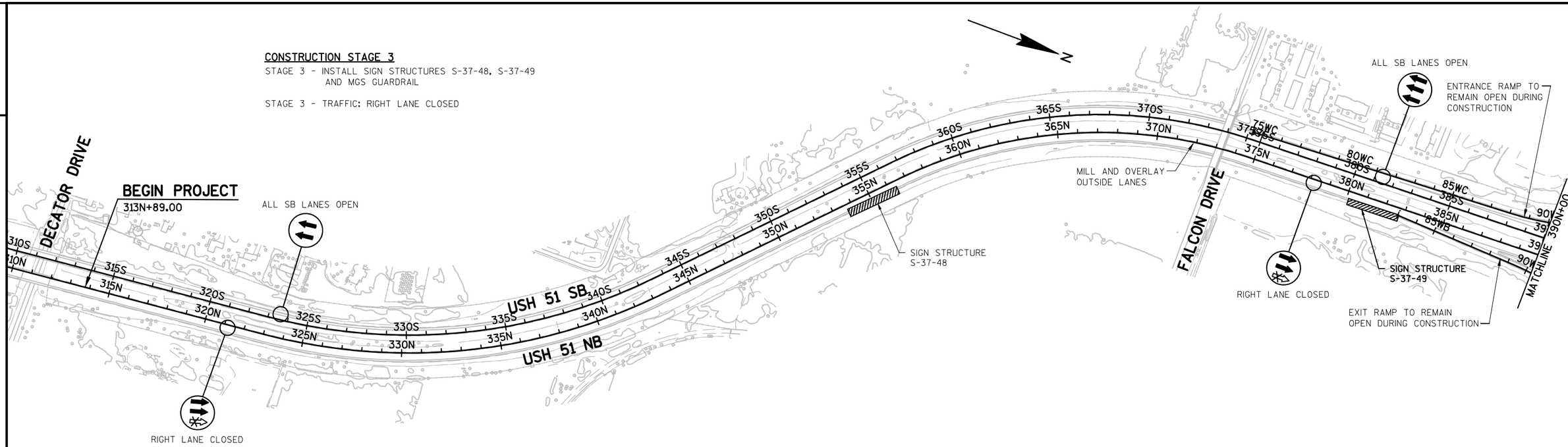

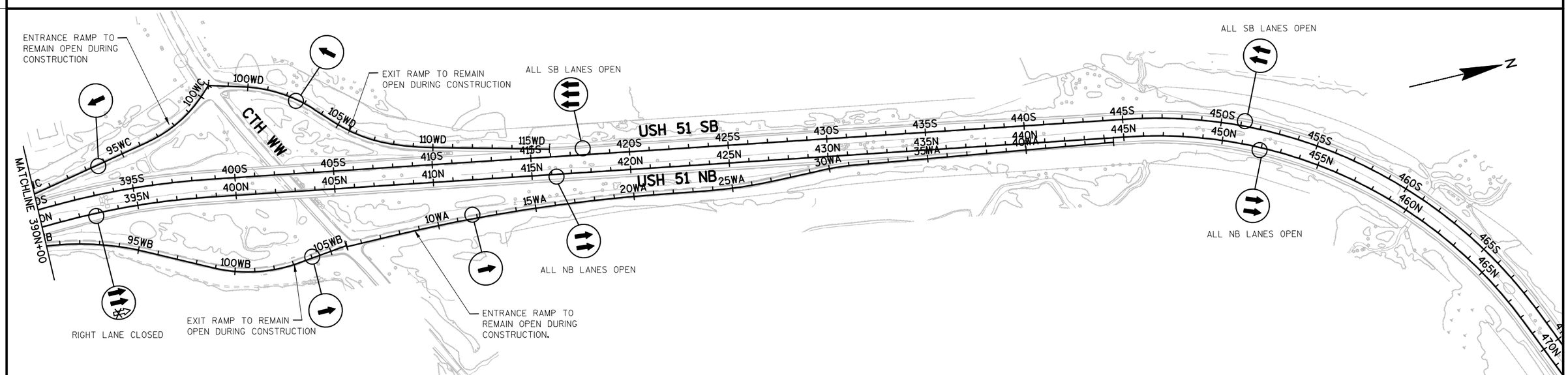

PROJECT NO:1170-01-75	HWY:USH 51	COUNTY:MARATHON	TRAFFIC CONTROL OVERVIEW - STAGE 3	SHEET 55	E

2

DECATOR DRIVE

RIPRAP

SIGN

USH 51 SB

USH 51 NB

305 310 315 320

MATCHLINE STA 320+00

NOTE:

SEE SDD TRAFFIC CONTROL SHOULDER CLOSURE ON DIVIDED ROADWAY, SPEEDS GREATER THAN 40 MPH

LANE CLOSED

R11-2-L
48"X30"

SEPV

SEPTIC

N

MATCHLINE STA 320+00

325 330

MATCHLINE STA 335+00

LEGEND

	TYPE III BARRICADE WITH LIGHTS TYPE A AND ATTACHED SIGN/NO SIGN
	TRAFFIC CONTROL 42" CHANNELIZER
	SIGN ON TEMPORARY SUPPORT
	DIRECTION OF TRAFFIC
XXXX	REMOVING PAVEMENT MARKINGS
	TRAFFIC CONTROL DRUM/WITH LIGHTS TYPE C
	POST MOUNTED ON SIGN

PROJECT NO:1170-01-75	HWY:USH 51	COUNTY:MARATHON	TRAFFIC CONTROL: STAGE 3	SHEET 56	E

2

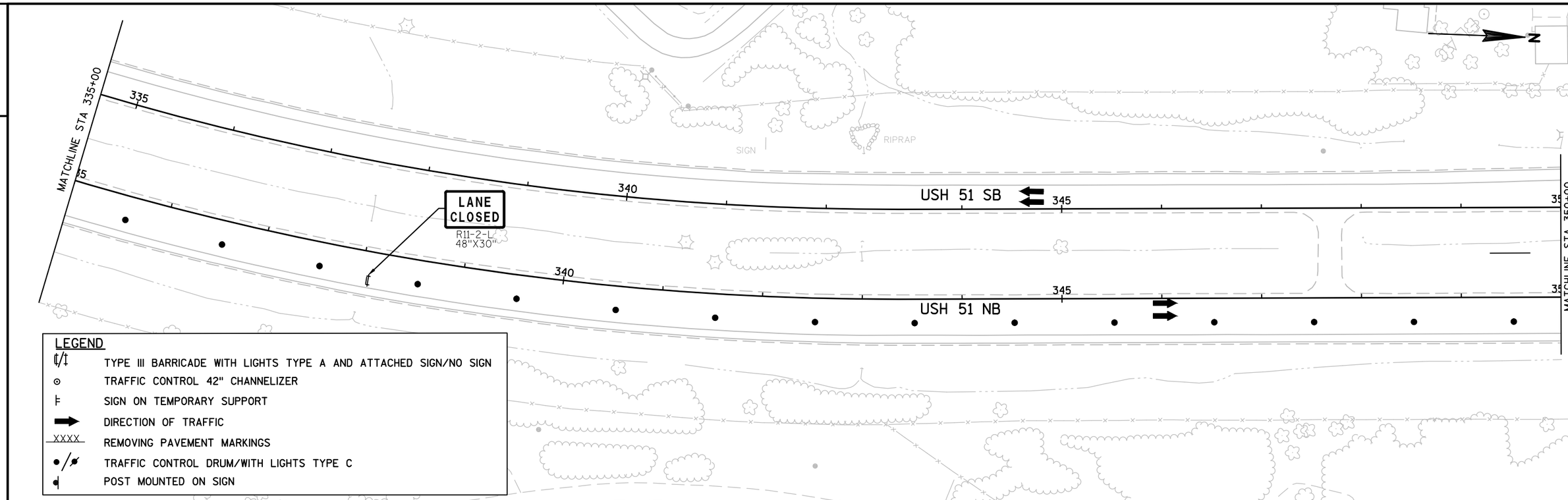

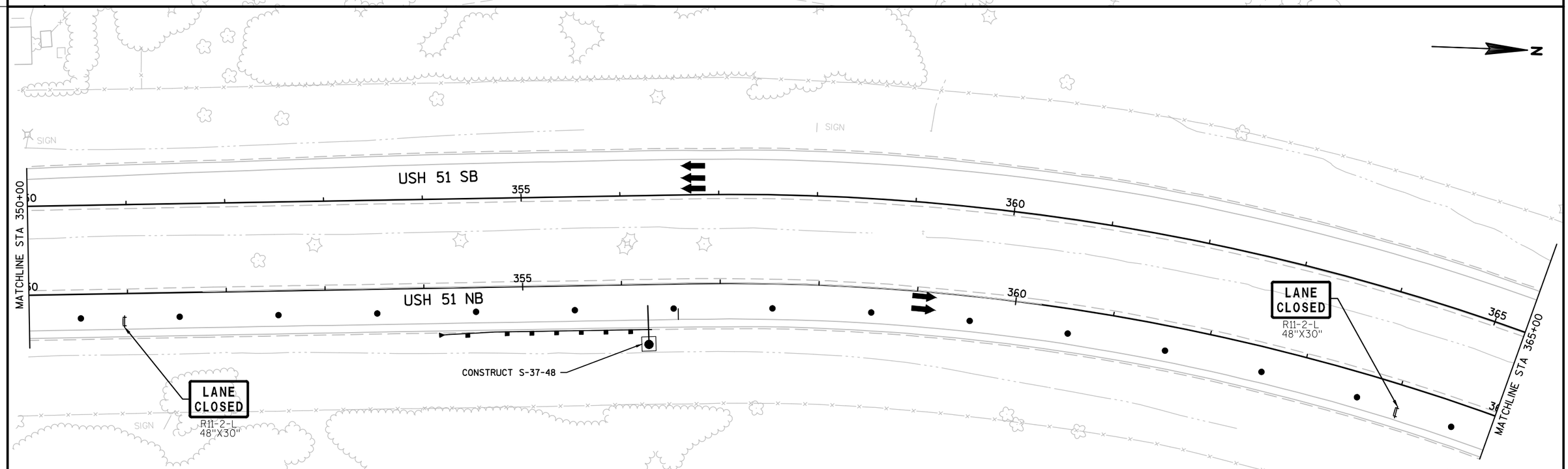

2

PROJECT NO:1170-01-75	HWY:USH 51	COUNTY:MARATHON	TRAFFIC CONTROL: STAGE 3	SHEET 57	E

2

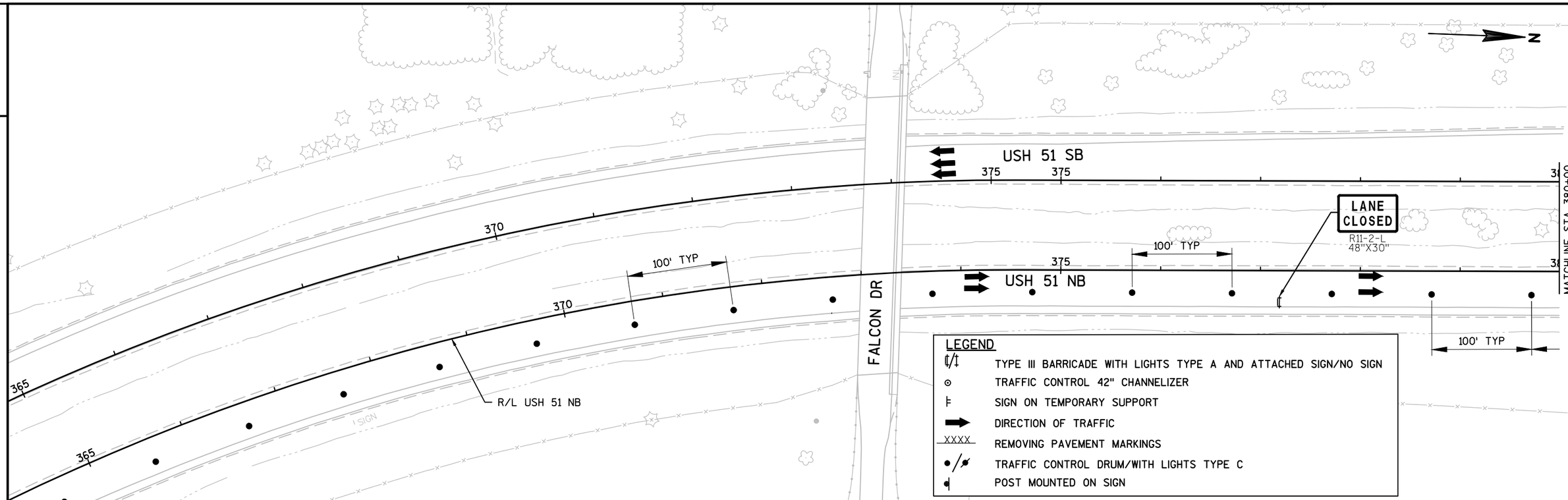

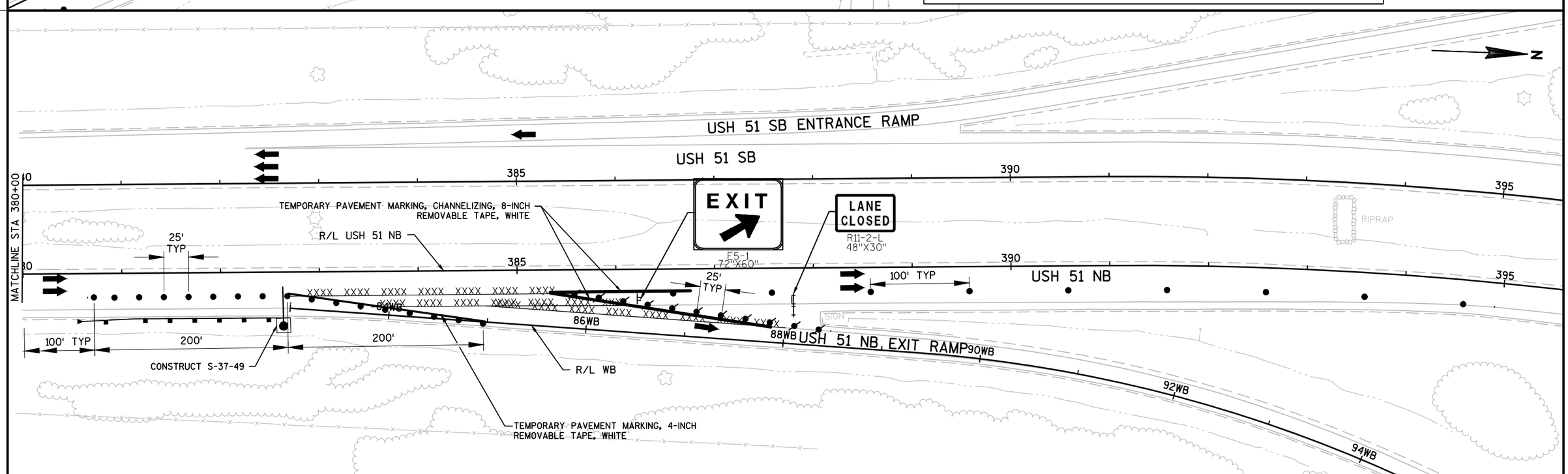

PROJECT NO:1170-01-75	HWY:USH 51	COUNTY:MARATHON	TRAFFIC CONTROL: STAGE 3	SHEET 58	E

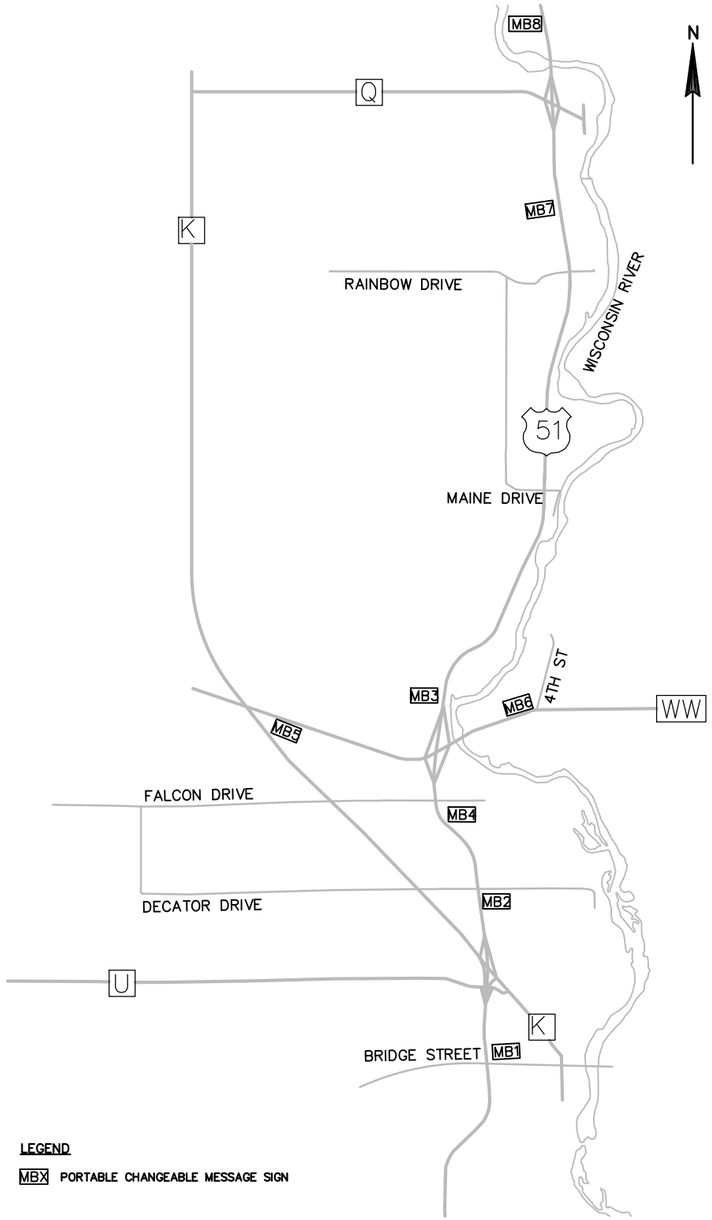

LEGEND

MBX PORTABLE CHANGEABLE MESSAGE SIGN

TRAFFIC CONTROL SIGNS PCMS MESSAGE

		PRIOR TO		DURING INSIDE		DURING OUTSIDE		7 DAYS PRIOR TO		DURING EXIT RAMP		DURING ENTRANCE		EMERGENCY	
		CONSTRUCTION		LANE CLOSURE		LANE CLOSURE		RAMP CLOSURES		CLOSURE AT CTH WW		RAMP CLOSURE AT CTH WW		MESSAGE	
PCMS SIGN NUMBER	PCMS SIGN LOCATION	PHASE 1 (2 SEC)	PHASE 2 (2 SEC)	PHASE 1 (2 SEC)	PHASE 2 (2 SEC)	PHASE 1 (2 SEC)	PHASE 2 (2 SEC)	PHASE 1 (2 SEC)	PHASE 2 (2 SEC)	PHASE 1 (2 SEC)	PHASE 2 (2 SEC)	PHASE 1 (2 SEC)	PHASE 2 (2 SEC)	PHASE 1 (2 SEC)	PHASE 2 (2 SEC)
MB1	NB US 51 1000' NORTH OF BRIDGE ST	ROAD WORK STARTS	APRIL 1ST	N/A	N/A	N/A	N/A	N/A	N/A	EXIT RAMP AT WW	CLOSED USE ALT ROUTE	N/A	N/A	TRAFFIC STOPPED AHEAD	ALT ROUTE Q TO K
MB2	NB US 51 500' SOUTH OF DECATOR DR	ROAD WORK STARTS	APRIL 1ST	LEFT LANE CLOSED	1 MILE MERGE RIGHT	RIGHT LANE CLOSED	1 MILE MERGE LEFT	N/A	N/A	RIGHT LANE CLOSED	1 MILE MERGE RIGHT	RIGHT LANE CLOSED	1 MILE MERGE RIGHT	N/A	N/A
MB3	1000' NORTH OF WW SB EXIT RAMP	ROAD WORK STARTS	APRIL 1ST	N/A	N/A	N/A	N/A	RAMP TO CLOSE	DATE & TIME	EXIT RAMP AT WW	CLOSED USE ALT ROUTE	EXIT RAMP CLOSED	NO ENTRY TO 51	N/A	N/A
MB4	1000' SOUTH OF WW NB EXIT RAMP	ROAD WORK STARTS	APRIL 1ST	N/A	N/A	N/A	N/A	RAMP TO CLOSE	DATE & TIME	EXIT RAMP CLOSED	N/A	EXIT RAMP CLOSED	NO ENTRY TO 51	N/A	N/A
MB5	CTH WW 200FT WEST OF 32ND AVE	ROAD WORK STARTS	APRIL 1ST	N/A	N/A	N/A	N/A	RAMP TO CLOSE	DATE & TIME	N/A	N/A	51 ENTRANCE RAMP CLOSED	USE ALT ROUTE	N/A	N/A
MB6	INTERSECTION OF CTH WW & 4TH ST	ROAD WORK STARTS	APRIL 1ST	N/A	N/A	N/A	N/A	RAMP TO CLOSE	DATE & TIME	N/A	N/A	51 ENTRANCE RAMP CLOSED	USE ALT ROUTE	N/A	N/A
MB7	NB US 51 1 MILE NORTH OF RAINBOW DR	ROAD WORK STARTS	APRIL 1ST	LEFT LANE CLOSED	1 MILE MERGE RIGHT	RIGHT LANE CLOSED	1 MILE MERGE LEFT	N/A	N/A	RIGHT LANE CLOSED	1 MILE MERGE RIGHT	RIGHT LANE CLOSED	1 MILE MERGE RIGHT	N/A	N/A
MB8	SB US 51 1 MILE NORTH OF CTH Q	ROAD WORK STARTS	APRIL 1ST	N/A	N/A	N/A	N/A	N/A	N/A	EXIT RAMP AT WW	CLOSED USE ALT ROUTE	N/A	N/A	TRAFFIC STOPPED AHEAD	ALT ROUTE K TO Q

PCMS NOTES:

1) ADJUST TRAFFIC CONTROL PCMS MESSAGE AS NEEDED BASED ON WORK ZONE AREAS.

2) PLACE MESSAGE BOARDS AS FAR AWAY FROM LIVE TRAFFIC LANES AS POSSIBLE WITHOUT HAMPERING VISIBILITY. IN ADVANCE OF HIGHWAY CONSTRUCTION PROJECTS, THE SIGNS SHOULD BE PLACE ON THE BACKSLOPE ABOVE THE ELEVATION OF THE ROADWAY. FOR INTERMITTENT WORK SUCH AS A LANE CLOSURE OR WHERE SITE CONDITIONS DO NOT ALLOW OTHERWISE, THE SIGNS MAY BE PLACED ON THE SHOULDER. THE SITE SHOULD BE VISITED TO ASSURE VISIBILITY, SAFETY AND MAINTENANCE CONSIDERATIONS. A TAPER OF REFLECTORIZED DRUMS OR BARRICADES SHOULD BE PLACE AHEAD OF THE PCMS PLACED ON A SHOULDER IF IT IS NOT SHIELDED BY A BARRIER.

3) DISPLAY THE "PRIOR TO CONSTRUCTION" MESSAGES 7 DAYS PRIOR TO THE EXPECTED START OF THE PROPOSED WORK THAT WILL REQUIRE LANE CLOSURES. ADJUST THE MESSAGE DATE ACCORDINGLY.

4) PCMS SIGNS MB1 AND MB8 NOT TO BE MOVED. THESE ARE FOR EMERGENCY MESSAGES.

3

DATE 22MAR16 E S T I M A T E O F Q U A N T I T I E S

LINE NUMBER	ITEM	ITEM DESCRIPTION	UNIT	TOTAL	1170-01-75 QUANTITY
0010	201.0115	Clearing	ACRE	0.900	0.900
0020	201.0120	Clearing	ID	10.000	10.000
0030	201.0215	Grubbing	ACRE	0.900	0.900
0040	201.0220	Grubbing	ID	10.000	10.000
0050	204.0115	Removing Asphaltic Surface Butt Joints	SY	135.000	135.000
0060	204.0120	Removing Asphaltic Surface Milling	SY	296,200.000	296,200.000
0070	205.0100	Excavation Common	CY	491.000	491.000
0080	211.0100	Prepare Foundation for Asphaltic Paving (project) 01. 1170-01-75	LS	1.000	1.000
0090	213.0100	Finishing Roadway (project) 01. 1170-01-75	EACH	1.000	1.000
0100	305.0110	Base Aggregate Dense 3/4-Inch	TON	2,115.000	2,115.000
0110	305.0120	Base Aggregate Dense 1 1/4-Inch	TON	400.000	400.000
0120	305.0500	Shaping Shoulders	STA	1,840.000	1,840.000
0130	315.0200	Asphaltic Base Widening	TON	26.000	26.000
0140	415.6000.S	Rout and Seal	LF	176,000.000	176,000.000
0150	440.4410	Incentive IRI Ride	DOL	76,000.000	76,000.000
0160	455.0605	Tack Coat	GAL	17,800.000	17,800.000
0170	460.2000	Incentive Density HMA Pavement	DOL	34,120.000	34,120.000
0180	460.2010	Incentive Air Voids HMA Pavement	DOL	34,120.000	34,120.000
0190	460.4110.S	Reheating HMA Pavement Longitudinal Joints	LF	113,090.000	113,090.000
0200	460.7424	HMA Pavement 4 HT 58-28 H	TON	34,120.000	34,120.000
0210	465.0110	Asphaltic Surface Patching	TON	1,330.000	1,330.000
0220	465.0400	Asphaltic Shoulder Rumble Strips	LF	6,120.000	6,120.000
0230	614.2300	MGS Guardrail 3	LF	318.000	318.000
0240	614.2610	MGS Guardrail Terminal EAT	EACH	2.000	2.000
0250	614.2620	MGS Guardrail Terminal Type 2	EACH	2.000	2.000
0260	618.0100	Maintenance And Repair of Haul Roads (project) 01. 1170-01-75	EACH	1.000	1.000
0270	619.1000	Mobilization	EACH	1.000	1.000
0280	624.0100	Water	MGAL	40.200	40.200
0290	625.0100	Topsoil	SY	11,130.000	11,130.000
0300	628.1504	Silt Fence	LF	3,850.000	3,850.000
0310	628.1520	Silt Fence Maintenance	LF	3,850.000	3,850.000
0320	628.1905	Mobilizations Erosion Control	EACH	3.000	3.000
0330	628.1910	Mobilizations Emergency Erosion Control	EACH	3.000	3.000
0340	628.2002	Erosion Mat Class I Type A	SY	6,750.000	6,750.000
0350	628.7504	Temporary Ditch Checks	LF	540.000	540.000
0360	629.0210	Fertilizer Type B	CWT	5.000	5.000
0370	630.0130	Seeding Mixture No. 30	LB	98.000	98.000
0380	630.0200	Seeding Temporary	LB	145.000	145.000
0390	632.0201	Shrubs (species) (size) (root) 01. Dogwood, Redosier CG#3	EACH	849.000	849.000
0400	632.0201	Shrubs (species) (size) (root) 02. Filbert, American CG#3	EACH	873.000	873.000
0410	632.0201	Shrubs (species) (size) (root) 03. Ninebark, Common CG#3	EACH	1,469.000	1,469.000
0420	632.9101	Landscape Planting Surveillance and Care Cycles	EACH	20.000	20.000
0430	634.0614	Posts Wood 4x6-Inch X 14-FT	EACH	84.000	84.000
0440	634.0616	Posts Wood 4x6-Inch X 16-FT	EACH	29.000	29.000
0450	634.0618	Posts Wood 4x6-Inch X 18-FT	EACH	38.000	38.000
0460	635.0200	Sign Supports Structural Steel HS	LB	1,900.000	1,900.000

3

DATE 22MAR16 E S T I M A T E O F Q U A N T I T I E S

LINE NUMBER	ITEM	ITEM DESCRIPTION	UNIT	TOTAL	1170-01-75 QUANTITY
0470	635.0300	Sign Supports Replacing Base Connection Bolts	EACH	7.000	7.000
0480	636.0100	Sign Supports Concrete Masonry	CY	19.200	19.200
0490	636.1000	Sign Supports Steel Reinforcement HS	LB	68.000	68.000
0500	636.1500	Sign Supports Steel Coated Reinforcement HS	LB	2,060.000	2,060.000
0510	637.1220	Signs Type I Reflective SH	SF	1,326.500	1,326.500
0520	637.2210	Signs Type II Reflective H	SF	1,199.630	1,199.630
0530	637.2230	Signs Type II Reflective F	SF	133.000	133.000
0540	638.2601	Removing Signs Type I	EACH	16.000	16.000
0550	638.2602	Removing Signs Type II	EACH	71.000	71.000
0560	638.3000	Removing Small Sign Supports	EACH	78.000	78.000
0570	638.3100	Removing Structural Steel Sign Supports	EACH	16.000	16.000
0580	641.1200	Sign Bridge Cantilevered (structure) 01. S-37-48	LS	1.000	1.000
0590	641.1200	Sign Bridge Cantilevered (structure) 02. S-37-49	LS	1.000	1.000
0600	642.5001	Field Office Type B	EACH	1.000	1.000
0610	643.0100	Traffic Control (project) 01. 1170-01-75	EACH	1.000	1.000
0620	643.0300	Traffic Control Drums	DAY	14,456.000	14,456.000
0630	643.0420	Traffic Control Barricades Type III	DAY	4,634.000	4,634.000
0640	643.0705	Traffic Control Warning Lights Type A	DAY	9,590.000	9,590.000
0650	643.0715	Traffic Control Warning Lights Type C	DAY	2,724.000	2,724.000
0660	643.0800	Traffic Control Arrow Boards	DAY	286.000	286.000
0670	643.0900	Traffic Control Signs	DAY	4,173.000	4,173.000
0680	643.1050	Traffic Control Signs PCMS	DAY	630.000	630.000
0690	646.0106	Pavement Marking Epoxy 4-Inch	LF	198,700.000	198,700.000
0700	646.0126	Pavement Marking Epoxy 8-Inch	LF	165.000	165.000
0710	646.0406	Pavement Marking Same Day Epoxy 4-Inch	LF	27,300.000	27,300.000
0720	646.0600	Removing Pavement Markings	LF	2,000.000	2,000.000
0730	646.0881.S	Pavement Marking Grooved Wet Reflective Tape 4-Inch	LF	27,300.000	27,300.000
0740	646.0883.S	Pavement Marking Grooved Wet Reflective Tape 8-Inch	LF	6,100.000	6,100.000
0750	647.0566	Pavement Marking Stop Line Epoxy 18-Inch	LF	76.000	76.000
0760	647.0746	Pavement Marking Diagonal Epoxy 24-Inch	LF	960.000	960.000
0770	647.0955	Removing Pavement Markings Arrows	EACH	2.000	2.000
0780	649.0400	Temporary Pavement Marking Removable Tape 4-Inch	LF	200.000	200.000
0790	649.0801	Temporary Pavement Marking Removable Tape 8-Inch	LF	360.000	360.000
0800	650.4500	Construction Staking Subgrade	LF	420.000	420.000
0810	650.5000	Construction Staking Base	LF	420.000	420.000
0820	650.6500	Construction Staking Structure Layout (structure) 01. S-37-48	LS	1.000	1.000
0830	650.6500	Construction Staking Structure Layout (structure) 02. S-37-49	LS	1.000	1.000
0840	650.8000	Construction Staking Resurfacing Reference	LF	200,820.000	200,820.000
0850	650.9910	Construction Staking Supplemental Control (project) 01. 1170-01-75	LS	1.000	1.000
0860	650.9920	Construction Staking Slope Stakes	LF	420.000	420.000
0870	690.0150	Sawing Asphalt	LF	865.000	865.000
0880	ASP.1T0A	On-the-Job Training Apprentice at $5.00/HR	HRS	2,400.000	2,400.000
0890	ASP.1T0G	On-the-Job Training Graduate at $5.00/HR	HRS	1,980.000	1,980.000

3

DATE 22MAR16 E S T I M A T E O F Q U A N T I T I E S

LINE NUMBER	ITEM	ITEM DESCRIPTION	UNIT	TOTAL	1170-01-75 QUANTITY
0900	SPV.0045	Special 01. Traffic Control 42-Inch Slimline Channelizer	DAY	59,182.000	59,182.000
0910	SPV.0045	Special 02. Portable Changeable Message Sign (PCMS) Cellular Communications	DAY	630.000	630.000
0920	SPV.0090	Special 01. Reflective Joint and Cracks Rout and Seal	LF	103,900.000	103,900.000
0930	SPV.0105	Special 01. Hot Mix Asphalt Percent Within Limits (PWL) Test Strip	LS	1.000	1.000

3

3

3

CLEARING AND GRUBBING

STAGE	LOCATION	STA	TO	STA	201.0115 CLEARING ACRE	201.0120 CLEARING ID	201.0215 GRUBBING ACRE	201.0220 GRUBBING ID
4NB	USH 51 NB							
		327N+50			--	10	--	10
		567N+69	-	576N+03	0.9	0	0.9	0
	STAGE 4 SUBTOTAL				0.9	10	0.9	10
	TOTALS				0.9	10	0.9	10

REMOVING ASPHALTIC SURFACE MILLING

STAGE	LOCATION	STA	TO	STA	204.0115 REMOVING ASPHALTIC SURFACE BUTT JOINTS SY	204.0120 REMOVING ASPHALTIC SURFACE MILLING SY	211.0100 * PREPARE FOUNDATION FOR ASPHALTIC PAVING LS
	PROJECT 1170-01-75						1
1	USH 51 NB						
		313N+89	-	398N+30	6	11,700	--
		406N+35	-	578N+52	6	23,900	--
		583N+68	-	712N+22	6	17,900	--
		717N+25	-	771N+18	6	7,500	--
1	USH 51 SB						
		312S+06	-	398S+05	6	11,900	--
		407S+90	-	578S+91	6	23,800	--
		583S+53	-	711S+70	6	17,800	--
		716S+73	-	771S+44	6	7,600	--
	STAGE 1 SUBTOTAL				44	122,100	0
2	USH 51 NB						
		313N+89	-	388N+00	6	20,200	--
		388N+00	-	398N+30	4	1,700	--
		406N+35	-	578N+52	6	23,900	--
		583N+68	-	712N+22	6	17,900	--
		717N+25	-	771N+18	6	7,500	--
2	USH 51 SB						
		312S+06	-	350S+00	4	5,300	--
		350S+00	-	398S+05	6	13,900	--
		407S+90		440S+50	6	9,400	--
		440S+50	-	578S+91	4	21,500	--
		583S+53	-	711S+70	6	19,900	--
		716S+73	-	771S+44	6	7,600	--
2	RAMP WA						
		5WA+50	-	38WA+00	6	9,000	--
2	RAMP WB						
		84WB+00	-	105WB+57	6	6,000	--
2	RAMP WC						
		81WC+00	-	100WC+12	6	5,300	--
2	RAMP WD						
		98WD+50	-	115WD+00	6	4,600	--
	STAGE 2 SUBTOTAL				82	173,700	0
3	USH 51 NB						
		354N+20	-	356N+30	4	200	--
		380N+60	-	382N+70	4	200	--
	STAGE 3 SUBTOTAL				8	400	0
	TOTALS				135	296,200	1

* STATION TO STATION LIMITS SHOW WHERE THIS LUMP SUM ITEM APPLIES

3

3

3

Category	Stage	From/To Station	Location	Common Excavation (1)	(item # 205.0100)	Available Material (5)	Unexpanded Fill	Expanded Fill (13)	Mass Ordinate +/- (14)	Waste	Borrow
				Cut (2)	EBS Excavation (3)			Factor 1.25			(item #208.0100)
0010	3	354N+00 - 356N+28	S-37-48	274	0	274	9	11	263		
	3	380N+50 - 382N+68	S-37-49	217	0	217	15	19	198		
Grand Total				491	0	491	24	31	461	461	0
				Total Common Exc	491						

1) Common Excavation is the sum of the Cut and EBS Excavation columns. Item number 205.0100
5) Available Material = Cut - Salvaged/Unusuable Pavement Material
13) Expanded Fill. Factor = 1.25
14) The Mass Ordinate + or - Qty calculated for the Division. Plus quantity indicates an excess of material within the Division. Minus indicates a shortage of material within the Division.

3

BASE AGGREGATE

STAGE	LOCATION	STA	TO	STA	305.0110 BASE AGGREGATE DENSE 3/4-INCH TON	305.0120 BASE AGGREGATE DENSE 1 1/4-INCH TON	305.0500 SHAPING SHOULDERS STA
1	USH 51 NB						
		313N+89	-	398N+30	55	--	80
		406N+35	-	578N+52	115	--	170
		583N+68	-	712N+22	85	--	130
		717N+25	-	771N+18	35	--	50
	UNDISTRIBUTED				--	50	--
1	USH 51 SB						
		312S+06	-	398S+05	60	--	90
		407S+90	-	578S+91	115	--	170
		583S+53	-	711S+70	85	--	130
		716S+73	-	771S+44	35	--	50
	UNDISTRIBUTED				--	50	--
	STAGE 1 SUBTOTAL				585	100	870
2	USH 51 NB						
		313N+89	-	394N+00	55	40	80
		394N+00	-	398N+30	5	--	6
		406N+35	-	578N+52	115	--	170
		583N+68	-	712N+22	85	--	130
		717N+25	-	771N+18	35	--	50
	UNDISTRIBUTED				--	50	--
2	USH 51 SB						
		312S+06	-	350S+00	25	--	40
		350S+00	-	398S+05	35	--	50
		407S+90		440S+50	20	--	30
		440S+50	-	578S+91	95	--	140
		583S+53	-	711S+70	85	--	130
		716S+73	-	771S+44	35	--	50
	UNDISTRIBUTED				--	50	--
2	RAMP WA						
		5WA+50	-	38WA+00	265	--	30
2	RAMP WB						
		84WB+00	-	105WB+57	175	--	20
2	RAMP WC						
		81WC+00	-	100WC+12	155	--	20
2	RAMP WD						
		98WD+50	-	115WD+00	135	--	20
	STAGE 2 SUBTOTAL				1,320	140	966
3	USH 51 NB						
		354N+20	-	356N+30	105	80	2
		380N+60	-	382N+70	105	80	2
	STAGE 3 SUBTOTAL				210	160	4
	TOTALS				2,115	400	1,840

ASPHALT PAVEMENT ITEMS

STAGE	LOCATION	STA	TO	STA	315.0200 ASPHALTIC BASE WIDENING TON	415.6000.S ROUT AND SEAL LF	455.0605 TACK COAT GAL	460.7424 HMA PAVEMENT 4 HT 58-28 H TON	460.4110.S REHEATING HMA LONGITUDINAL JOINTS LF	465.0110 * ASPHALTIC SURFACE PATCHING TON
1	USH 51 NB									
		313N+89	-	398N+30	--	8,400	705	1,350	--	--
		406N+35	-	578N+52	--	17,200	1,435	2,750	--	--
		583N+68	-	712N+22	--	12,900	1,070	2,050	--	--
		717N+25	-	771N+18	--	5,400	450	860	--	--
	UNDISTRIBUTED				--	--	--	--	--	350
1	USH 51 SB									
		312S+06	-	398S+05	--	8,600	715	1,370	--	--
		407S+90	-	578S+91	--	17,100	1,425	2,730	--	--
		583S+53	-	711S+70	--	12,800	1,070	2,050	--	--
		716S+73	-	771S+44	--	5,500	455	870	--	--
	UNDISTRIBUTED				--	--	--	--	--	350
	STAGE 1 SUBTOTAL					87,900	7,325	14,030	--	700
2	USH 51 NB									
		311N+97	-	388N+00	--	7,600	1,240	2,380	15,200	--
		388N+00	-	398N+30	--	1,000	100	190	1,000	--
		406N+35	-	578N+52	--	17,200	1,435	2,750	17,200	--
		583N+68	-	712N+22	--	12,900	1,070	2,050	12,900	--
		717N+25	-	771N+18	--	5,400	450	860	5,400	--
	UNDISTRIBUTED				--	--	--	--	--	290
2	USH 51 SB									
		312S+06	-	350S+00	--	3,800	315	610	3,800	--
		350S+00	-	398S+05	--	4,800	835	1,600	9,600	--
		407S+90		440S+50	--	3,300	565	1,080	6,500	--
		440S+50	-	578S+91	--	13,800	1,290	2,480	13,800	--
		583S+53	-	711S+70	--	12,800	1,195	2,290	12,800	--
		716S+73	-	771S+44	--	5,500	455	870	5,500	--
	UNDISTRIBUTED				--	--	--	--	--	340
2	RAMP WA									
		5WA+50	-	38WA+00	--	--	540	1,040	3,250	--
2	RAMP WB						--			
		84WB+00	-	105WB+57	--	--	360	690	2,160	--
2	RAMP WC						--			
		81WC+00	-	100WC+12	--	--	320	610	1,910	--
2	RAMP WD						--			
		98WD+50	-	115WD+00	--	--	275	530	1,650	--
	STAGE 2 SUBTOTAL					88,100	10,445	20,030	112,670	630
3	USH 51 NB									
		354N+20	-	356N+30	13	--	15	30	210	--
		380N+60	-	382N+70	13	--	15	30	210	--
	STAGE 3 SUBTOTAL				26	0	30	60	420	0
	TOTALS				26	176,000	17,800	34,120	113,090	1,330

* INTENDED FOR REPAIRING SHOULDER AREAS THAT DETERIORATE DUE TO TRAFFIC

REFLECTIVE JOINT AND CRACKS ROUT AND SEAL

STAGE	LOCATION	STA	TO	STA	SPV.0090.01 LF
5	USH 51 NB				
		313N+89	-	398N+30	4,100
		406N+35	-	578N+52	8,400
		583N+68	-	712N+22	6,200
		717N+25	-	771N+18	2,600
	UNDISTRIBUTED				--
5	USH 51 SB				
		312S+06	-	398S+05	4,200
		407S+90	-	578S+91	8,300
		583S+53	-	711S+70	6,200
		716S+73	-	771S+44	2,700
	UNDISTRIBUTED				--
	STAGE 1 SUBTOTAL				42,700
6	USH 51 NB				
		311N+97	-	394N+00	7,800
		394N+00	-	398N+30	200
		406N+35	-	578N+52	8,400
		583N+68	-	712N+22	6,200
		717N+25	-	771N+18	2,600
	UNDISTRIBUTED				--
6	USH 51 SB				
		312S+06	-	350S+00	1,800
		350S+00	-	398S+05	4,900
		407S+90		440S+50	3,300
		440S+50	-	578S+91	7,500
		583S+53	-	711S+70	7,000
		716S+73	-	771S+44	2,700
	UNDISTRIBUTED				--
6	RAMP WA				
		5WA+50	-	38WA+00	3,200
6	RAMP WB				
		84WB+00	-	105WB+57	2,100
6	RAMP WC				
		81WC+00	-	100WC+12	1,900
6	RAMP WD				
		98WD+50	-	115WD+00	1,600
	STAGE 2 SUBTOTAL				61,200
	TOTALS				103,900

3

3

ASPHALTIC SHOULDER RUMBLE STRIP

STAGE	LOCATION	LOCATION	465.0400 LF
1	USH 51 NB/SB		
		UNDISTRIBUTED	2,500
		STAGE 1 SUBTOTAL	2,500
2	USH 51 NB/SB		
		388N+00 - 395N+00	700
		UNDISTRIBUTED	2,500
		STAGE 1 SUBTOTAL	3,200
3	USH 51 NB/SB		
		354N+20 - 356N+30	210
		380N+60 - 382N+70	210
		STAGE 3 SUBTOTAL	420
	TOTALS		6,120

EROSION CONTROL ITEMS

LOCATION	STAGE	STA	TO	STA	628.1504 SILT FENCE LF	628.1520 SILT FENCE MAINTENANCE LF	628.2002 EROSION MAT CLASS I TYPE A SY	628.7504 TEMPORARY DITCH CHECKS LF	628.1905 MOBILIZATIONS EROSION CONTROL EACH	628.1910 MOBILIZATIONS EMERGENCY EROSION CONTROL EACH
USH 51 SB	2	332S+00	-	340S+00	800	800	--	45	--	--
		358S+50	-	368S+50	1,000	1,000	--	60	--	--
		605S+00	-	620S+00	--	--	--	75	--	--
		620S+00	-	632S+00	--	--	--	30	--	--
		632S+00	-	654S+00	--	--	--	90	--	--
		UNDISTRIBUTED			450	450	--	80	1	1
		STAGE 2 SUBTOTAL			2,250	2,250	--	380	1	1
	3	352N+00	-	359N+00	620	620	600	20	--	--
		377N+00	-	385N+00	660	660	400	20	--	--
		UNDISTRIBUTED			320	320	250	10	1	1
		STAGE 3 SUBTOTAL			1,600	1,600	1,250	50	1	1
	4NB	566S+00	-	574S+00	--	--	--	45	--	--
		566N+00	-	574N+00	--	--	4,400	45	--	--
		UNDISTRIBUTED			--	--	1,100	20	1	1
		STAGE 4 SUBTOTAL			--	--	5,500	110	1	1
	TOTAL				3,850	3,850	6,750	540	3	3

MGS GUARDRAIL ITEMS

STAGE	ROADWAY	LOCATION			OFFSET	614.2300 MGS GUARDRAIL 3 LF	614.2610 MGS GUARDRAIL TERMINAL EAT EACH	614.2620 MGS GUARDRAIL TERMINAL TYPE 2 EACH
3	US 51 NB							
		354N+21	-	356N+30	RT	159	1	1
		380N+61	-	382N+70	RT	159	1	1
	TOTAL					318	2	2

RESTORATION ITEMS

STAGE	LOCATION	STA	TO	STA	625.0100 TOPSOIL SY	629.0210 FERTILIZER TYPE B CWT	630.0130 SEEDING MIXTURE NO. 30 LB	630.0200 SEEDING TEMPORARY LB
3	USH 51 NB							
		352N+02	-	356N+55	600	1	11	16
		379N+42	-	382N+95	400	1	8	11
	STAGE 3 SUBTOTAL				1,000	2	19	27
4NB	USH 51 NB							
		567N+69	-	576N+03	4,400	3	79	118
4SB	USH 51 SB							
		332S+85	-	339S+85	900	--	--	--
		358S+75	-	368S+50	1,300	--	--	--
		605S+50	-	620S+00	1,900	--	--	--
		620S+00	-	631S+00	500	--	--	--
		634S+00	-	637S+75	200	--	--	--
		637S+75	-	641S+00	400	--	--	--
		641S+00	-	641S+75	30	--	--	--
		641S+75	-	642S+50	100	--	--	--
		642S+50	-	652S+30	400	--	--	--
	STAGE 4 SUBTOTAL				10,130	3	79	118
	TOTALS				11,130	5	98	145

3

SHRUBS

STAGE	LOCATION	STA	TO	STA	632.0201.01 DOGWOOD, REDOSIER (CG#3) EACH	632.0201.02 FILBERT, AMERICAN (CG#3) EACH	632.0201.03 NINEBARK, COMMON (CG#3) EACH
4SB	USH 51						
		332S+85	-	337S+00	101	104	107
		337S+55	-	338S+15	18	15	12
		338S+15	-	339S+85	43	43	43
		358S+75	-	368S+50	244	244	244
		605S+50	-	608S+50	64	75	75
		608S+50	-	613S+50	125	125	125
		613S+50	-	620S+07	142	146	164
		620S+07	-	623S+50	--	--	86
		623S+50	-	630S+55	--	--	176
		634S+00	-	637S+50	--	--	88
		637S+50	-	638S+50	23	25	25
		638S+50	-	640S+90	58	60	60
		640S+90	-	641S+65	--	--	19
		641S+65	-	642S+40	19	18	19
		642S+40	-	652S+50	12	18	253
TOTAL					849	873	1,496

COMMON NAME (LATIN NAME)
DOGWOOD, REDOSIER (CORNUS SERICEA)
FILBERT, AMERICAN (CORYLUS AMERICANA)
NINEBARK, COMMON (PHYSOCARPUS OPUILFOLIUS)

WATER

STAGE	LOCATION				624.0100 MGAL
1	USH 51 NB				
		313N+89	-	578N+52	2.9
		583N+68	-	771N+18	2.2
1	USH 51 SB				
		312S+06	-	578S+91	3.0
		583S+53	-	771S+44	2.2
2	USH 51 NB				
		313N+89	-	578N+52	3.6
		583N+68	-	771N+18	2.2
2	USH 51 SB				
		312S+06	-	578S+91	3.0
		583S+53	-	771S+44	2.2
2	RAMP WA				
		5WA+50	-	38WA+00	4.0
2	RAMP WB				
		84WB+00	-	105WB+57	2.6
2	RAMP WC				
		81WC+00	-	100WC+12	2.3
2	RAMP WD				
		98WD+50	-	115WD+00	2.0
3	USH 51 NB				
		354N+20	-	356N+30	4.0
		380N+60	-	382N+70	4.0
	STAGE 3 SUBTOTAL				40.2

LANDSCAPING PLANTING SURVEILLANCE AND CARE CYCLES

LOCATION	STA	632.9101 EACH
USH 51		
	ALL	20
TOTAL		20

TEMPORARY PAVEMENT MARKINGS

STAGE	LOCATION	STA	TO	STA	646.0600 REMOVING PAVEMENT MARKINGS LF	647.0955 REMOVING PAVEMENT MARKINGS ARROWS EACH	649.0400 TEMPORARY PAVEMENT MARKING REMOVABLE TAPE 4-INCH LF	649.0801 TEMPORARY PAVEMENT MARKING REMOVABLE TAPE 8-INCH LF
2	USH 51 NB							
		388N+00	-	395N+00	700	2	--	--
	STAGE 3 SUBTOTAL				700	2	--	--
3	USH 51 NB							
		311N+97	-	402N+00	1,300	--	200	360
	STAGE 3 SUBTOTAL				1,300	--	200	360
	TOTALS				2,000	2	200	360

FOR EXISTING PAVEMENT MARKINGS TO BE REMOVED THAT ARE 8-INCHES WIDE, THE QUANTITIY WAS DOUBLED

3

TRAFFIC CONTROL

STAGE	* STAGE DURATION DAYS	LOCATION	STA	TO	STA	643.0300 TRAFFIC CONTROL DRUMS EACH*	DAYS	643.0420 TRAFFIC CONTROL BARRICADES TYPE III EACH*	DAYS	643.0705 TRAFFIC CONTROL WARNING LIGHTS TYPE A EACH*	DAYS	643.0800 TRAFFIC CONTROL ARROW BOARDS EACH*	DAYS	643.0715 TRAFFIC CONTROL WARNING LIGHTS TYPE C EACH*	DAYS	643.0900 TRAFFIC CONTROL SIGNS EACH*	DAYS	643.1050 TRAFFIC CONTROL SIGNS PCMS EACH*	DAY	SPV.0045.01 TRAFFIC CONTROL 42-INCH SLIMLINE CHANNELIZER EACH*	DAY	SPV.0045.02 PORTABLE CHANGEABLE MESSAGE SIGN (PCMS) CELLULAR COMMUNICATIONS EACH*	DAY
1	7	USH 51 NB																					
4NB	6		311N+97	-	402N+00	82	1,808	14	300	28	616	3	66	34	739	21	458	3	126	180	3,961	3	126
5	9		404N+37	-	580N+47	--	--	10	70	20	440	--	--	--	--	5	110	1	42	132	2,904	1	42
			581N+73	-	714N+17	--	--	--	--	--	--	--	--	--	--	--	--	--	--	--	--	--	--
			715N+30	-	771N+18	--	--	--	--	--	--	--	--	--	--	--	--	1	42	--	--	1	42
1	7	USH 51 SB																					
5	9		312S+06	-	401S+23	--	--	--	--	--	--	--	--	--	--	--	--	--	--	--	--	--	--
			403S+71	-	580S+46	--	--	--	--	--	--	--	--	--	--	--	--	2	56	--	--	2	56
			581S+72	-	713S+65	--	--	15	236	30	480	--	--	--	--	7	118	--	--	194	3,110	--	--
			714S+78	-	771S+44	82	1,315	9	137	18	288	3	48	34	538	18	293	1	28	113	1,813	1	28
		STAGE 1, 4NB & 5 SUBTOTAL					3,124		743		1,824		114		1,277		979		294		11,789		294
2	10	USH 51 NB																					
6	10		311N+97	-	394N+00	131	2,624	12	249	24	480	3	60	--	--	20	404	3	84	141	2,821	3	84
			394N+00	-	402N+00	--	--	1	24	2	40	--	--	--	--	2	32	--	--	16	320	--	--
			404N+37	-	580N+47	55	1,100	27	534	54	1,080	--	--	9	180	17	347	1	28	322	6,444	1	28
			581N+73	-	714N+17	--	--	20	401	40	800	--	--	--	--	10	201	--	--	265	5,298	--	--
			715N+30	-	771N+18	--	--	8	169	16	320	--	--	--	--	4	85	1	28	112	2,235	1	28
2	10	USH 51 SB																					
4SB	15		312S+06	-	350S+00	--	--	6	201	12	420	--	--	--	--	3	101	--	--	76	2,656	--	--
6	10		350S+00	-	401S+23	59	2,065	8	272	16	560	--	--	10	350	8	276	--	--	72	2,536	--	--
			403S+71		440S+50	41	1,435	6	195	12	420	--	--	24	840	4	133	2	56	60	2,085	2	56
			440S+50	-	580S+46	--	--	21	742	42	1,470	--	--	--	--	11	371	--	--	280	9,797	--	--
			581S+72	-	713S+65	--	--	20	700	40	1,400	--	--	--	--	10	350	--	--	264	9,235	--	--
			714S+78	-	771S+44	82	2,877	9	300	18	630	3	105	--	--	18	640	1	28	113	3,966	1	28
2	2	RAMP WA																					
6	1		5WA+50	-	38WA+00	32	96	4	12	4	12	--	--	--	--	12	36	2	28	--	--	2	28
2	2	RAMP WB																					
6	1		84WB+00	-	105WB+57	32	96	4	12	4	12	--	--	--	--	12	36	2	28	--	--	2	28
2	2	RAMP WC																					
6	1		81WC+00	-	100WC+12	32	96	4	12	4	12	--	--	--	--	12	36	2	28	--	--	2	28
2	2	RAMP WD																					
6	1		98WD+50	-	115WD+00	32	96	4	12	4	12	--	--	--	--	12	36	2	28	--	--	2	28
		STAGE 2, 4SB & 6 SUBTOTAL					10,485		3,835		7,668		165		1,370		3,083		336		47,394		336
3	7	USH 51 NB																					
			311N+97	-	402N+00	121	847	8	56	14	98	1	7	11	77	16	112	--	--	--	--	--	--
		STAGE 3 SUBTOTAL					847		56		98		7		77		112		0		0		--
			TOTALS				14,456		4,634		9,590		286		2,724		4,173		630		59,182		630

3

PROJECT NO: 1170-01-75	HWY: USH 51	COUNTY: MARATHON	MISCELLANEOUS QUANTITIES	SHEET NO: 68	E

3

PAVEMENT MARKING

CATEGORY	STAGE	LOCATION	STA	TO	STA	646.0406 PAVEMENT MARKING SAME DAY EPOXY 4-INCH 12.5' DASH LF	646.0106 PAVEMENT MARKING EPOXY 4-INCH YELLOW SOLID LF	646.0106 PAVEMENT MARKING EPOXY 4-INCH WHITE SOLID LF	646.0126 PAVEMENT MARKING EPOXY 8-INCH LF	646.0881.S PAVEMENT MARKING GROOVED WET REFLECTIVE TAPE DASH 4-INCH LF	646.0883.S PAVEMENT MARKING GROOVED WET REFLECTIVE TAPE SOLID 8-INCH LF	646.0883.S PAVEMENT MARKING GROOVED WET REFLECTIVE TAPE DASH 8-INCH LF	647.0566 PAVEMENT MARKING STOP LINE EPOXY 18-INCH LF	647.0746 PAVEMENT MARKING DIAGONAL EPOXY 24-INCH LF
0010	1	USH 51 NB												
			313N+89	-	403N+00	2,200	8,900	--	--	--	--	--	--	--
			403N+00	-	581N+00	4,500	17,800	--	--	--	--	--	--	--
			581N+00	-	715N+00	3,400	13,400	--	--	--	--	--	--	--
			715N+00	-	771N+18	1,400	5,600	--	--	--	--	--	--	--
	1	USH 51 SB												
			312S+06	-	403S+00	2,300	9,100	--	--	--	--	--	--	--
			403S+00	-	581S+00	4,500	17,800	--	--	--	--	--	--	--
			581S+00	-	715S+00	3,400	13,400	--	--	--	--	--	--	--
			715S+00	-	771S+44	1,400	5,600	--	--	--	--	--	--	--
		STAGE 1 SUBTOTAL				23,100	91,600	0	0	0	0	0	0	0
	2	USH 51 NB												
			313N+89	-	394N+00	2,000	--	8,000	--	4,000	860	590	--	650
			394N+00	-	403N+00	--	--	900	--	200	--	--	--	--
			403N+00	-	581N+00	--	--	17,800	--	4,500	750	--	--	--
			581N+00	-	715N+00	--	--	13,400	--	3,400	--	--	--	--
			715N+00	-	771N+18	--	--	5,600	--	1,400	--	--	--	--
	2	USH 51 SB												
			312S+06	-	350S+00	--	--	3,800	--	900	--	--	--	--
			350S+00	-	403S+00	1,300	--	5,300	--	2,700	800	--	--	--
			403S+00		440S+50	900	--	3,800	--	1,900	400	50	--	310
			440S+50	-	581S+00	--	--	14,100	--	3,500	--	--	--	--
			581S+00	-	715S+00	--	--	13,400	--	3,400	--	--	--	--
			715S+00	-	771S+44	--	--	5,600	--	1,400	--	--	--	--
	2	RAMP WA												
			5WA+50	-	38WA+00	--	2,400	3,300	--	--	830	--	--	--
	2	RAMP WB												
			84WB+00	-	105WB+57	--	1,700	2,200	84	--	490	--	36	--
	2	RAMP WC												
			81WC+00	-	100WC+12	--	1,000	1,900	--	--	880	--	--	--
	2	RAMP WD												
			98WD+50	-	115WD+00	--	1,200	1,700	81	--	450	--	40	--
		STAGE 2 SUBTOTAL				4,200	6,300	100,800	165	27,300	5,460	640	76	960
		TOTALS				27,300	97,900	100,800	165	27,300	5,460	640	76	960
							198,700				6,100			

3

3

PERMANENT SIGNING

ROADWAY	SIGN #	SIGN CODE	SIGN DM	637.1220 SIGNS TYPE I REFLECTIVE SH SF	637.2210 SIGNS TYPE II REFLECTIVE H SF	637.2230 SIGNS TYPE II REFLECTIVE F SF	634.0614 POSTS WOOD 4X6-INCH 14-FT EACH	634.0616 POSTS WOOD 4X6-INCH 16-FT EACH	634.0618 POSTS WOOD 4X6-INCH 18-FT EACH	635.0200 SIGN SUPPORTS STRUCTURAL STEEL HS LB	635.0300 SIGN SUPPORTS REPLACING BASE CONNECTION BOLTS EACH	636.0100 SIGN SUPPORTS CONCRETE MASONRY CY	636.1000 SIGN SUPPORTS STEEL REINFORCEMENT HS LB	638.2601 REMOVING SIGNS TYPE I EACH	638.2602 REMOVING SIGNS TYPE II EACH	638.3000 REMOVING SMALL SIGN SUPPORTS EACH	638.3100 REMOVING STRUCTURAL STEEL SIGN SUPPORTS EACH	REMARKS
USH 51	1-1	I2-3A	66 X 30	--	13.75	--	--	2	--	--	--	--	--	--	1	2	--	--
	1-3	E1-5-P	108 X 30	22.50	--	--	--	--	--	--	1	--	--	1	--	--	2	--
		E1-1-A	144 X 120	120.00	--	--	--	--	--	--	--	--	--	1	--	--	--	--
		E2-1	156 X 24	26.00	--	--	--	--	--	--	--	--	--	1	--	--	--	--
	1-4	D10-5	21 X 60	--	8.75	--	1	--	--	--	--	--	--	--	1	1	--	--
	1-5	D10-5	21 X 60	--	8.75	--	1	--	--	--	--	--	--	--	1	1	--	--
	2-1	D10-5	21 X 60	--	8.75	--	1	--	--	--	--	--	--	--	--	--	--	--
	2-2	R2-1	48 X 60	--	20.00	--	--	--	2	--	--	--	--	--	1	1	--	--
	2-3	R3-4-B	36 X 48	--	12.00	--	--	--	1	--	--	--	--	--	1	1	--	--
	2-4	D10-5	21 X 60	--	8.75	--	1	--	--	--	--	--	--	--	--	--	--	--
	2-5	R3-4-B	36 X 48	--	12.00	--	--	--	1	--	--	--	--	--	1	1	--	--
	2-6	D10-5	21 X 60	--	8.75	--	1	--	--	--	--	--	--	--	--	--	--	--
	2-7	D10-5	21 X 60	--	8.75	--	1	--	--	--	--	--	--	--	--	--	--	--
	2-8	E9-1	144 X 54	54.00	--	--	--	--	--	--	1	--	--	1	--	--	2	--
	2-9	E1-5-P	108 X 30	22.50	--	--	--	--	--	--	--	--	--	--	--	--	--	ON SIGN BRIDGE S-37-48 *
		E1-1-A	168 X 108	126.00	--	--	--	--	--	--	--	--	--	--	--	--	--	ON SIGN BRIDGE S-37-48 *
		E11-1	168 X 36	42.00	--	--	--	--	--	--	--	--	--	--	--	--	--	ON SIGN BRIDGE S-37-48 *
	2-10	W4-2R	48 X 48	--	--	16.00	--	--	2	--	--	--	--	--	1	1	--	--
	2-11	D10-5	21 X 60	--	8.75	--	1	--	--	--	--	--	--	--	--	--	--	--
	2-12	W9-1R	48 X 48	--	--	16.00	--	--	2	--	--	--	--	--	1	1	--	--
	2-13	D10-5	21 X 60	--	8.75	--	1	--	--	--	--	--	--	--	--	--	--	--
	3-1	E1-5P	-- -- --	--	--	--	--	--	--	--	--	--	--	1	--	4	--	REMOVE SIGN
		E6-1	-- -- --	--	--	--	--	--	--	--	--	--	--	1	--	--	--	REMOVE SIGN
	3-2	I55-56	30 X 36	--	7.50	--	--	1	--	--	--	--	--	--	1	1	--	--
	3-3	J4-1	36 X 54	--	13.50	--	--	--	1	--	--	--	--	--	1	1	--	--
	3-4	D10-5	21 X 60	--	8.75	--	1	--	--	--	--	--	--	--	--	--	--	--
	3-5	W8-69	48 X 48	--	--	16.00	--	--	2	--	--	--	--	--	1	1	--	--
	3-6	E1-5-P	108 X 30	22.50	--	--	--	--	--	--	--	--	--	--	--	--	--	ON SIGN BRIDGE S-37-49 *
		E6-51	168 X 84	98.00	--	--	--	--	--	--	--	--	--	--	--	--	--	ON SIGN BRIDGE S-37-49 *
		E11-1-D	168 X 42	49.00	--	--	--	--	--	--	--	--	--	--	--	--	--	ON SIGN BRIDGE S-37-49 *
	3-7	D10-5	21 X 60	--	8.75	--	1	--	--	--	--	--	--	--	--	--	--	--
	3-8	W13-3	48 X 60	--	--	20.00	--	--	2	--	--	--	--	--	1	1	--	--
	3-9	W8-69	48 X 48	--	--	16.00	--	--	2	--	--	--	--	--	1	1	--	--
	3-11	D10-5	21 X 60	--	8.75	--	1	--	--	--	--	--	--	--	1	1	--	--
	3-12	D10-5	21 X 60	--	8.75	--	1	--	--	--	--	--	--	--	1	1	--	--
	3-13	W4-1R	48 X 48	--		16.00	--	--	2	--	--	--	--	--	1	1	--	--
	3-14	D10-5	21 X 60	--	8.75	--	1	--	--	--	--	--	--	--	--	--	--	--
	3-15	D10-5	21 X 60	--	8.75	--	1	--	--	--	--	--	--	--	--	--	--	--
	4-1	D10-5	21 X 60	--	8.75	--	1	--	--	--	--	--	--	--	--	--	--	--
	4-2	D10-5	21 X 60	--	8.75	--	1	--	--	--	--	--	--	--	--	--	--	--
	4-4	D10-5	21 X 60	--	8.75	--	1	--	--	--	--	--	--	--	--	--	--	--
	4-5	D10-5	21 X 60	--	8.75	--	1	--	--	--	--	--	--	--	--	--	--	--

CONTINUTED ON NEXT PAGE

3

PERMANENT SIGNING

ROADWAY	SIGN #	SIGN CODE	SIGN DM	637.1220 SIGNS TYPE I REFLECTIVE SH SF	637.2210 SIGNS TYPE II REFLECTIVE H SF	637.2230 SIGNS TYPE II REFLECTIVE F SF	634.0614 POSTS WOOD 4X6-INCH 14-FT EACH	634.0616 POSTS WOOD 4X6-INCH 16-FT EACH	634.0618 POSTS WOOD 4X6-INCH 18-FT EACH	635.0200 SIGN SUPPORTS STRUCTURAL STEEL HS LB	635.0300 SIGN SUPPORTS REPLACING BASE CONNECTION BOLTS EACH	636.0100 SIGN SUPPORTS CONCRETE MASONRY CY	636.1000 SIGN SUPPORTS STEEL REINFORCEMENT HS LB	638.2601 REMOVING SIGNS TYPE I EACH	638.2602 REMOVING SIGNS TYPE II EACH	638.3000 REMOVING SMALL SIGN SUPPORTS EACH	638.3100 REMOVING STRUCTURAL STEEL SIGN SUPPORTS EACH	REMARKS
	4-6	E1-5P	108 X 30	22.50	--	--	--	--	--	--	1	--	--	1	--	--	2	--
		E6-1	192 X 90	120.00	--	--	--	--	--	--	--	--	--	1	--	--	--	--
	4-7	W4-1R	48 X 48	--	--	16.00	--	--	2	--	--	--	--	--	1	1	--	--
	5-1	D10-5	21 X 60	--	8.75	--	1	--	--	--	--	--	--	--	--	--	--	--
	5-2	D10-5	21 X 60	--	8.75	--	1	--	--	--	--	--	--	--	--	--	--	--
	5-3	D10-5	21 X 60	--	8.75	--	1	--	--	--	--	--	--	--	1	1	--	--
	5-4	D10-5	21 X 60	--	8.75	--	1	--	--	--	--	--	--	--	1	1	--	--
	5-5	R4-3	48 X 60	--	20.00	--	--	--	2	--	--	--	--	--	1	1	--	--
	5-6	J4-1	36 X 54	--	13.50	--	--	--	1	--	--	--	--	--	1	1	--	--
	5-7	D10-5	21 X 60	--	8.75	--	1	--	--	--	--	--	--	--	--	--	--	--
	5-8	D10-5	21 X 60	--	8.75	--	1	--	--	--	--	--	--	--	--	--	--	--
	5-9	E1-5-P	108 X 30	22.50	--	--	--	--	--	830	1	--	--	1	--	--	2	--
		E1-1-A	144 X 120	120.00	--	--	--	--	--	--	--	--	--	1	--	--	--	--
	5-10	R2-1	48 X 60	--	20.00	--	--	--	2	--	--	--	--	--	1	1	--	--
	6-1	R3-4-B	36 X 48	--	12.00	--	--	--	1	--	--	--	--	--	1	1	--	--
	6-2	R3-4-B	36 X 48	--	12.00	--	--	--	1	--	--	--	--	--	1	1	--	--
	6-3	D10-5	21 X 60	--	8.75	--	1	--	--	--	--	--	--	--	--	--	--	--
	6-4	D10-5	21 X 60	--	8.75	--	1	--	--	--	--	--	--	--	--	--	--	--
	6-5	E8-1	192 X 84	112.00	--	--	--	--	--	--	1	--	--	1	--	--	2	--
	6-6	D10-5	21 X 60	--	8.75	--	1	--	--	--	--	--	--	--	--	--	--	--
	6-7	D10-5	21 X 60	--	8.75	--	1	--	--	--	--	--	--	--	--	--	--	--
	6-8	R8-7	48 X 36	--	12.00	--	--	1	--	--	--	--	--	--	1	1	--	--
	6-9	D10-5	21 X 60	--	8.75	--	1	--	--	--	--	--	--	--	--	--	--	--
	6-10	D10-5	21 X 60	--	8.75	--	1	--	--	--	--	--	--	--	--	--	--	--
	7-1	R4-3	48 X 60	--	20.00	--	--	--	2	--	--	--	--	--	1	1	--	--
	7-2	D10-5	21 X 60	--	8.75	--	1	--	--	--	--	--	--	--	1	1	--	--
	7-3	D10-5	21 X 60	--	8.75	--	1	--	--	--	--	--	--	--	1	1	--	--
	7-4	D10-5	21 X 60	--	8.75	--	1	--	--	--	--	--	--	--	--	--	--	--
	7-5	D10-5	21 X 60	--	8.75	--	1	--	--	--	--	--	--	--	--	--	--	--
	7-6	D10-5	21 X 60	--	8.75	--	1	--	--	--	--	--	--	--	--	--	--	--
	7-7	D10-5	21 X 60	--	8.75	--	1	--	--	--	--	--	--	--	--	--	--	--
	8-1	D10-5	21 X 60	--	8.75	--	1	--	--	--	--	--	--	--	--	--	--	--
	8-2	D10-5	21 X 60	--	8.75	--	1	--	--	--	--	--	--	--	--	--	--	--
	8-3	D10-5	21 X 60	--	8.75	--	1	--	--	--	--	--	--	--	--	--	--	--
	8-4	D10-5	21 X 60	--	8.75	--	1	--	--	--	--	--	--	--	--	--	--	--
	8-5	R3-4-B	36 X 48	--	12.00	--	--	--	1	--	--	--	--	--	1	1	--	--
	8-6	R3-4-B	36 X 48	--	12.00	--	--	--	1	--	--	--	--	--	1	1	--	--
	8-7	D10-5	21 X 60	--	8.75	--	1	--	--	--	--	--	--	--	1	1	--	--
	8-8	D10-5	21 X 60	--	8.75	--	1	--	--	--	--	--	--	--	1	1	--	--
	9-1	D10-5	21 X 60	--	8.75	--	1	--	--	--	--	--	--	--	--	--	--	--
	9-2	D10-5	21 X 60	--	8.75	--	1	--	--	--	--	--	--	--	--	--	--	--
	9-3	D10-5	21 X 60	--	8.75	--	1	--	--	--	--	--	--	--	--	--	--	--
	9-4	D10-5	21 X 60	--	8.75	--	1	--	--	--	--	--	--	--	--	--	--	--
	9-5	D10-5	21 X 60	--	8.75	--	1	--	--	--	--	--	--	--	--	--	--	--
	9-6	D10-5	21 X 60	--	8.75	--	1	--	--	--	--	--	--	--	--	--	--	--
	10-1	D10-5	21 X 60	--	8.75	--	1	--	--	--	--	--	--	--	--	--	--	--

CONTINUTED ON NEXT PAGE

3

PERMANENT SIGNING

ROADWAY	SIGN #	SIGN CODE	SIGN DM	637.1220 SIGNS TYPE I REFLECTIVE SH SF	637.2210 SIGNS TYPE II REFLECTIVE H SF	637.2230 SIGNS TYPE II REFLECTIVE F SF	634.0614 POSTS WOOD 4X6-INCH 14-FT EACH	634.0616 POSTS WOOD 4X6-INCH 16-FT EACH	634.0618 POSTS WOOD 4X6-INCH 18-FT EACH	635.0200 SIGN SUPPORTS STRUCTURAL STEEL HS LB	635.0300 SIGN SUPPORTS REPLACING BASE CONNECTION BOLTS EACH	636.0100 SIGN SUPPORTS CONCRETE MASONRY CY	636.1000 SIGN SUPPORTS STEEL REINFORCEMENT HS LB	638.2601 REMOVING SIGNS TYPE I EACH	638.2602 REMOVING SIGNS TYPE II EACH	638.3000 REMOVING SMALL SIGN SUPPORTS EACH	638.3100 REMOVING STRUCTURAL STEEL SIGN SUPPORTS EACH	REMARKS
	10-2	D10-5	21 X 60	--	8.75	--	1	--	--	--	--	--	--	--	--	--	--	--
	10-3	D10-5	21 X 60	--	8.75	--	1	--	--	--	--	--	--	--	1	1	--	--
	10-4	D10-5	21 X 60	--	8.75	--	1	--	--	--	--	--	--	--	1	1	--	--
	11-1	D10-5	21 X 60	--	8.75	--	1	--	--	--	--	--	--	--	--	--	--	--
	11-2	D10-5	21 X 60	--	8.75	--	1	--	--	--	--	--	--	--	--	--	--	--
	11-3	R3-4-B	36 X 48	--	12.00	--	--	--	1	--	--	--	--	--	1	1	--	--
	11-4	R3-4-B	36 X 48	--	12.00	--	--	--	1	--	--	--	--	--	1	1	--	--
	11-5	D10-5	21 X 60	--	8.75	--	1	--	--	--	--	--	--	--	--	--	--	--
	11-6	D10-5	21 X 60	--	8.75	--	1	--	--	--	--	--	--	--	--	--	--	--
	11-7	D10-5	21 X 60	--	8.75	--	1	--	--	--	--	--	--	--	--	--	--	--
	11-8	D10-5	21 X 60	--	8.75	--	1	--	--	--	--	--	--	--	--	--	--	--
	12-1	D10-5	21 X 60	--	8.75	--	1	--	--	--	--	--	--	--	--	--	--	--
	12-2	D10-5	21 X 60	--	8.75	--	1	--	--	--	--	--	--	--	--	--	--	--
	12-3	D10-5	21 X 60	--	8.75	--	1	--	--	--	--	--	--	--	1	1	--	--
	12-4	D10-5	21 X 60	--	8.75	--	1	--	--	--	--	--	--	--	1	1	--	--
	12-5	D10-5	21 X 60	--	8.75	--	1	--	--	--	--	--	--	--	--	--	--	--
	12-6	D10-5	21 X 60	--	8.75	--	1	--	--	--	--	--	--	--	--	--	--	--
	13-1	D10-5	21 X 60	--	8.75	--	1	--	--	--	--	--	--	--	--	--	--	--
	13-2	D10-5	21 X 60	--	8.75	--	1	--	--	--	--	--	--	--	--	--	--	--
	13-3	D10-5	21 X 60	--	8.75	--	1	--	--	--	--	--	--	--	--	--	--	--
	13-4	D10-5	21 X 60	--	8.75	--	1	--	--	--	--	--	--	--	--	--	--	--
	13-5	D10-5	21 X 60	--	8.75	--	1	--	--	--	--	--	--	--	--	--	--	--
	13-6	D10-5	21 X 60	--	8.75	--	1	--	--	--	--	--	--	--	--	--	--	--
	14-1	R3-4-B	36 X 48	--	12.00	--	--	--	1	--	--	--	--	--	1	1	--	--
	14-2	R3-4-B	36 X 48	--	12.00	--	--	--	1	--	--	--	--	--	1	1	--	--
	14-3	D10-5	21 X 60	--	8.75	--	1	--	--	--	--	--	--	--	1	1	--	--
	14-4	D10-5	21 X 60	--	8.75	--	1	--	--	--	--	--	--	--	1	1	--	--
	14-5	E8-1-A	156 X 96	104.00	--	--	--	--	--	590	--	1.2	68	1	--	--	2	--
	14-6	D10-5	21 X 60	--	8.75	--	1	--	--	--	--	--	--	--	--	--	--	--
	14-7	D10-5	21 X 60	--	8.75	--	1	--	--	--	--	--	--	--	--	--	--	--
	14-8	D10-5	21 X 60	--	8.75	--	1	--	--	--	--	--	--	--	--	--	--	--
	14-9	D10-5	21 X 60	--	8.75	--	1	--	--	--	--	--	--	--	--	--	--	--
	15-1	D10-5	21 X 60	--	8.75	--	1	--	--	--	--	--	--	--	--	--	--	--
	15-2	D10-5	21 X 60	--	8.75	--	1	--	--	--	--	--	--	--	--	--	--	--
	15-3	E1-5P	120 X 30	25.00	--	--	--	--	--	--	1	--	--	1	--	--	2	--
		E1-1-A	144 X 120	120.00	--	--	--	--	--	--	--	--	--	1	--	--	--	--
		E2-1	-- -- --	--	--	--	--	--	--	--	--	--	--	1	--	--	--	REMOVE SIGN
	15-4	D10-5	21 X 60	--	8.75	--	1	--	--	--	--	--	--	--	--	--	--	--
	15-5	D10-5	21 X 60	--	8.75	--	1	--	--	--	--	--	--	--	--	--	--	--
	15-6	E8-1A	168 X 84	98.00	--	--	--	--	--	480	1	--	--	1	--	--	2	--
	15-7	D10-5	21 X 60	--	8.75	--	1	--	--	--	--	--	--	--	1	1	--	--
	15-8	D10-5	21 X 60	--	8.75	--	1	--	--	--	--	--	--	--	1	1	--	--
	16-1	R3-4-B	36 X 48	--	12.00	--	--	--	1	--	--	--	--	--	1	1	--	--
	16-2	R3-4-B	36 X 48	--	12.00	--	--	--	1	--	--	--	--	--	1	1	--	--
	16-3	D10-5	21 X 60	--	8.75	--	1	--	--	--	--	--	--	--	--	--	--	--

CONTINUTED ON NEXT PAGE

3

PERMANENT SIGNING

ROADWAY	SIGN #	SIGN CODE	SIGN DM	637.1220 SIGNS TYPE I REFLECTIVE SH SF	637.2210 SIGNS TYPE II REFLECTIVE H SF	637.2230 SIGNS TYPE II REFLECTIVE F SF	634.0614 POSTS WOOD 4X6-INCH 14-FT EACH	634.0616 POSTS WOOD 4X6-INCH 16-FT EACH	634.0618 POSTS WOOD 4X6-INCH 18-FT EACH	635.0200 SIGN SUPPORTS STRUCTURAL STEEL HS LB	635.0300 SIGN SUPPORTS REPLACING BASE CONNECTION BOLTS EACH	636.0100 SIGN SUPPORTS CONCRETE MASONRY CY	636.1000 SIGN SUPPORTS STEEL REINFORCEMENT HS LB	638.2601 REMOVING SIGNS TYPE I EACH	638.2602 REMOVING SIGNS TYPE II EACH	638.3000 REMOVING SMALL SIGN SUPPORTS EACH	638.3100 REMOVING STRUCTURAL STEEL SIGN SUPPORTS EACH	REMARKS
	16-4	D10-5	21 X 60	--	8.75	--	1	--	--	--	--	--	--	--	--	--	--	--
	16-5	I2-2	78 X 21	--	11.38	--	--	2	--	--	--	--	--	--	1	2	--	--
	16-6	I2-2	96 X 21	--	14.00	--	--	2	--	--	--	--	--	--	1	2	--	--
	16-7	R5-57	36 X 36	--	9.00	--	--	1	--	--	--	--	--	--	1	1	--	--
	16-8	R5-1	30 X 30	--	6.25	--	--	1	--	--	--	--	--	--	1	1	--	--
	16-9	R1-1	30 X 30	--	6.25	--	--	1	--	--	--	--	--	--	1	1	--	--
	16-10	R5-1	30 X 30	--	6.25	--	--	1	--	--	--	--	--	--	1	1	--	--
	16-11	R5-1	30 X 30	--	6.25	--	--	1	--	--	--	--	--	--	1	1	--	--
	16-12	R1-1	30 X 30	--	6.25	--	--	1	--	--	--	--	--	--	1	1	--	--
	16-13	W12-1D	24 X 24	--	--	4.00	--	1	--	--	--	--	--	--	1	1	--	--
	16-14	R1-1	30 X 30	--	6.25	--	--	1	--	--	--	--	--	--	1	1	--	--
	16-15	R5-1A	36 X 24	--	6.00	--	--	--	--	--	--	--	--	--	1	--	--	ON SAME POST AS 16-15
	16-16	J3-2	48 X 57	--	19.00	--	--	--	1	--	--	--	--	--	1	1	--	--
	16-17	R5-1A	36 X 24	--	6.00	--	--	1	--	--	--	--	--	--	1	1	--	--
	16-18	D1-1	60 X 15	--	6.25	--	--	2	--	--	--	--	--	--	1	2	--	--
	17-1	W3-1	36 X 36	--	--	9.00	--	1	--	--	--	--	--	--	1	1	--	--
	17-2	D1-1	60 X 15	--	6.25	--	--	2	--	--	--	--	--	--	1	2	--	--
	17-3	J3-2	48 X 57	--	19.00	--	--	--	1	--	--	--	--	--	1	1	--	--
	17-4	R5-1A	36 X 24	--	6.00	--	--	1	--	--	--	--	--	--	1	1	--	--
	17-5	R5-1A	36 X 24	--	6.00	--	--	--	--	--	--	--	--	--	1	--	--	ON SAME POST AS 17-3
	17-6	R1-1	30 X 30	--	6.25	--	--	1	--	--	--	--	--	--	1	1	--	--
	17-7	W12-1D	24 X 24	--	--	4.00	--	1	--	--	--	--	--	--	1	1	--	--
	17-8	R1-1	30 X 30	--	6.25	--	--	1	--	--	--	--	--	--	1	1	--	--
	17-9	R5-1	30 X 30	--	6.25	--	--	1	--	--	--	--	--	--	1	1	--	--
	17-10	R1-1	30 X 30	--	6.25	--	--	1	--	--	--	--	--	--	1	1	--	--
	17-11	R5-57	36 X 36	--	9.00	--	--	1	--	--	--	--	--	--	1	1	--	--
TOTAL				1,326.50	1,199.63	133.00	84	29	38	1,900	7	1.2	68	16	71	78	16	

* QUANTITIES CAN BE FOUND IN THE SIGN BRIDGE PLAN SHEETS

3

CONSTRUCTION STAKING

STAGE	LOCATION	STA	TO	STA	650.4500 SUBGRADE LF	650.5000 BASE LF	650.6500.01 STRUCTURE LAYOUT S-37-48 LS	650.6500.02 STRUCTURE LAYOUT S-37-49 LS	650.8000 RESURFACING REFERENCE LF	650.9910 SUPPLEMENTAL CONTROL 1170-01-75 LS	650.9920 SLOPE STAKES LF
	PROJECT 1170-01-75								--	1	--
1	USH 51 NB										
		313N+89	-	398N+30	--	--	--	--	8,440	--	--
		406N+35	-	578N+52	--	--	--	--	17,220	--	--
		583N+68	-	712N+22	--	--	--	--	12,850	--	--
		717N+25	-	771N+18	--	--	--	--	5,390	--	--
1	USH 51 SB										
		312S+06	-	398S+05	--	--	--	--	8,600	--	--
		407S+90	-	578S+91	--	--	--	--	17,100	--	--
		583S+53	-	711S+70	--	--	--	--	12,820	--	--
		716S+73	-	771S+44	--	--	--	--	5,470	--	--
	STAGE 1 SUBTOTAL				--	--	--	--	87,890	1	--
2	USH 51 NB										
		313N+89	-	394N+00	--	--	--	--	16,020	--	--
		394N+00	-	398N+30	--	--	--	--	430	--	--
		406N+35	-	578N+52	--	--	--	--	17,220	--	--
		583N+68	-	712N+22	--	--	--	--	12,850	--	--
		717N+25	-	771N+18	--	--	--	--	5,390	--	--
2	USH 51 SB										
		312S+06	-	350S+00	--	--	--	--	3,790	--	--
		350S+00	-	398S+05	--	--	--	--	9,610	--	--
		407S+90		440S+50	--	--	--	--	6,520	--	--
		440S+50	-	578S+91	--	--	--	--	13,840	--	--
		583S+53	-	711S+70	--	--	--	--	12,820	--	--
		716S+73	-	771S+44	--	--	--	--	5,470	--	--
2	RAMP WA										
		5WA+50	-	38WA+00	--	--	--	--	3,250	--	--
2	RAMP WB										
		84WB+00	-	105WB+57	--	--	--	--	2,160	--	--
2	RAMP WC										
		81WC+00	-	100WC+12	--	--	--	--	1,910	--	--
2	RAMP WD										
		98WD+50	-	115WD+00	--	--	--	--	1,650	--	--
	STAGE 2 SUBTOTAL				--	--	--	--	112,930	--	--
3	USH 51 NB										
		354N+20	-	356N+30	210	210	--	--	--	--	210
		380N+60	-	382N+70	210	210	--	--	--	--	210
3	USH 51 NB	S-37-48			--	--	1	--	--	--	--
3	USH 51 NB	S-37-49			--	--	--	1	--	--	--
	STAGE 3 SUBTOTAL				420	420	1	1	--	--	420
	TOTALS				420	420	1	1	200,820	1	420

SAWING ASPHALT

STAGE	LOCATION	STA	TO	STA	690.0150 LF
1	USH 51 NB				
		313N+98			15
		398N+30			15
		406N+35			15
		578N+52			15
		583N+68			15
		712N+22			15
		717N+25			15
		771N+18			15
1	USH 51 SB				
		398S+05			15
		407S+90			15
		578S+91			15
		583S+53			15
		711S+70			15
		716S+73			15
		771S+44			15
	STAGE 1 SUBTOTAL				225
2	USH 51 NB				
		313N+98			25
		398N+30			25
		406N+35			25
		578N+52			25
		583N+68			25
		712N+22			25
		717N+25			25
		771N+18			25
2	USH 51 SB				
		398S+05			30
		407S+90			30
		578S+91			20
		583S+53			20
		711S+70			20
		716S+73			20
		771S+44			20
2	RAMP WA	5WA+65			85
2	RAMP WB	105WB+57			45
2	RAMP WC	100WC+12			45
2	RAMP WD	98WD+45			65
	STAGE 2 SUBTOTAL				600
3	USH 51 NB				
		354N+20			10
		356N+30			10
		380N+60			10
		382N+70			10
	STAGE 3 SUBTOTAL				40
	TOTALS				865

3

BENCHMARK TABLE			
POINT	COORDINATES	DESCRIPTION	ELEVATION
CP 216 PK	X=273891.47 Y=217708.45	PK NAIL IN S. SHOULDER OF DECATOR DR BETWEEN NB AND SB US 51	1293.84
CP 217 PK	X=274000.77 Y=217729.10	PK NAIL IN N. SHOULDER OF DECATOR DR (71.66' E. OF R/L US 51NB)	1298.70

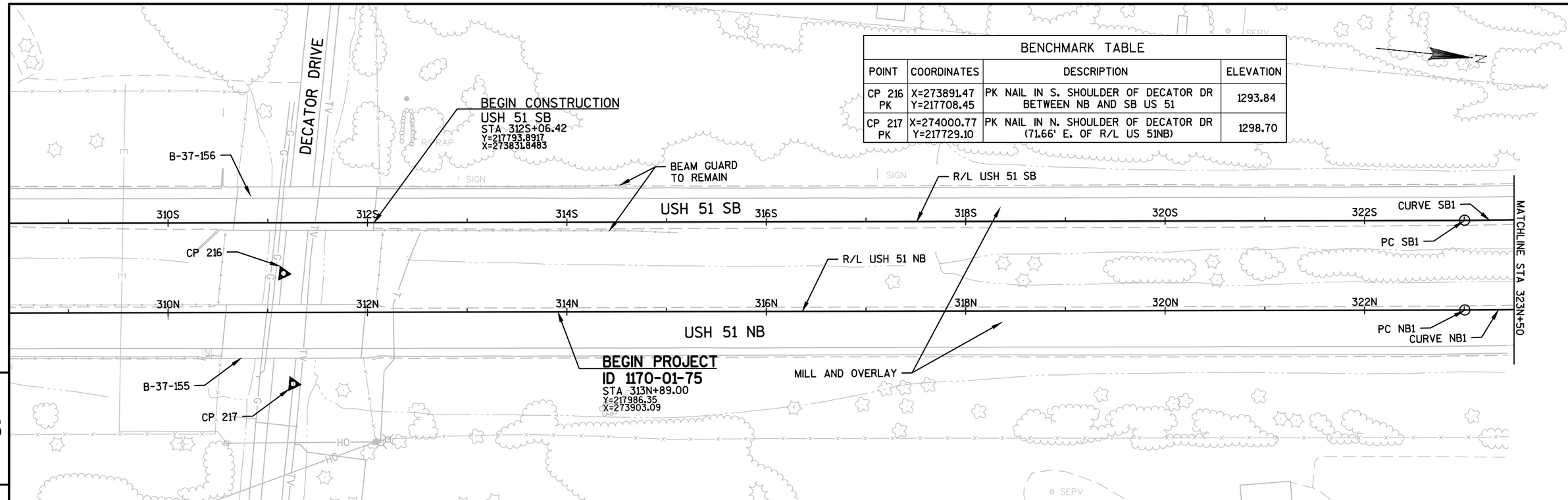

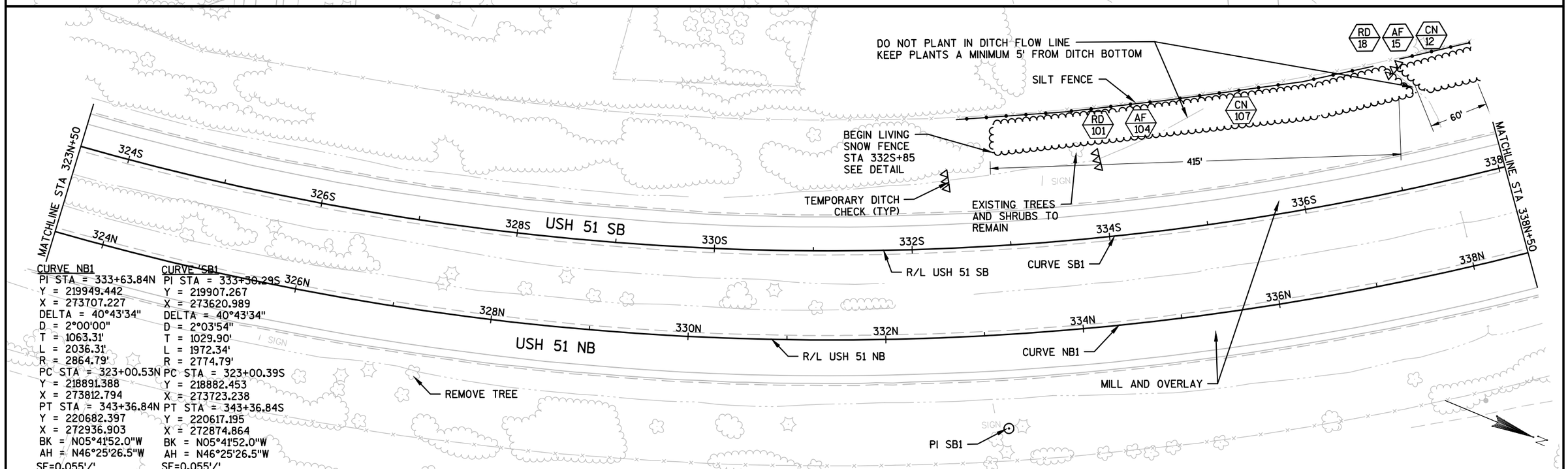

CURVE NB1
PI STA = 333+63.84N
Y = 219949.442
X = 273707.227
DELTA = 40°43'34"
D = 2°00'00"
T = 1063.31'
L = 2036.31'
R = 2864.79'
PC STA = 323+00.53N
Y = 218891.388
X = 273812.794
PT STA = 343+36.84N
Y = 220682.397
X = 272936.903
BK = N05°41'52.0"W
AH = N46°25'26.5"W
SE=0.055'/'

CURVE SB1
PI STA = 333+30.29S
Y = 219907.267
X = 273620.989
DELTA = 40°43'34"
D = 2°03'54"
T = 1029.90'
L = 1972.34'
R = 2774.79'
PC STA = 323+00.39S
Y = 218882.453
X = 273723.238
PT STA = 343+36.84S
Y = 220617.195
X = 272874.864
BK = N05°41'52.0"W
AH = N46°25'26.5"W
SE=0.055'/'

PROJECT NO:1170-01-75	HWY:USH 51	COUNTY:MARATHON	PLAN SHEETS	SHEET 75	E

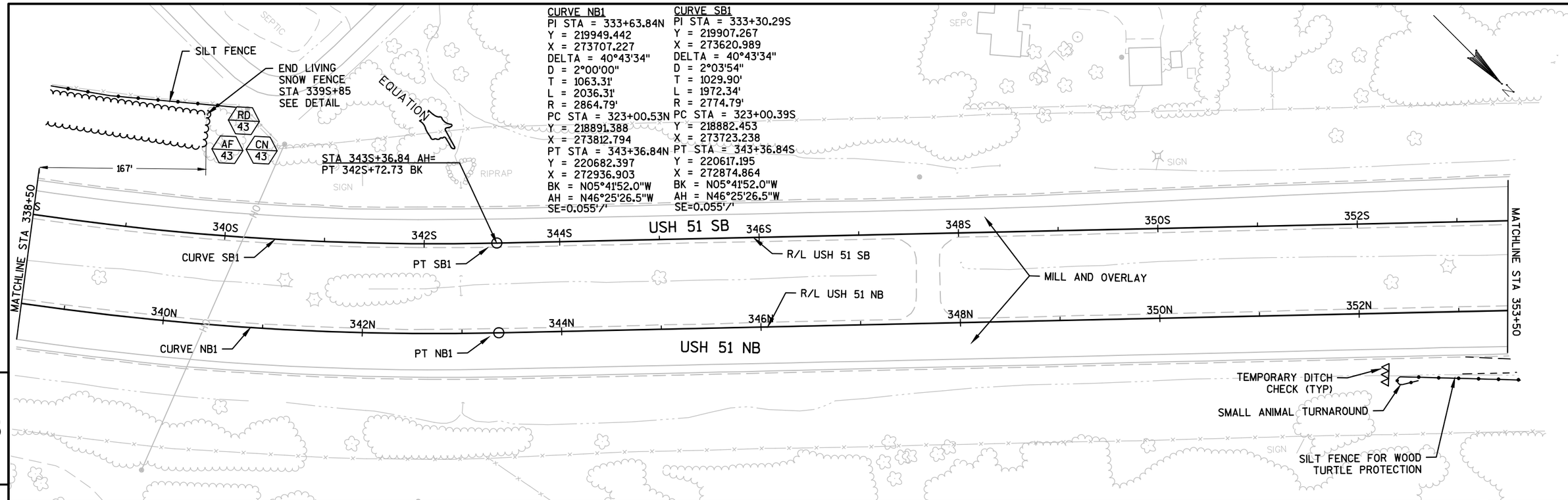

CURVE NB1
PI STA = 333+63.84N
Y = 219949.442
X = 273707.227
DELTA = 40°43'34"
D = 2°00'00"
T = 1063.31'
L = 2036.31'
R = 2864.79'
PC STA = 323+00.53N
Y = 218891.388
X = 273812.794
PT STA = 343+36.84N
Y = 220682.397
X = 272936.903
BK = N05°41'52.0"W
AH = N46°25'26.5"W
SE=0.055'/'

CURVE SB1
PI STA = 333+30.29S
Y = 219907.267
X = 273620.989
DELTA = 40°43'34"
D = 2°03'54"
T = 1029.90'
L = 1972.34'
R = 2774.79'
PC STA = 323+00.39S
Y = 218882.453
X = 273723.238
PT STA = 343+36.84S
Y = 220617.195
X = 272874.864
BK = N05°41'52.0"W
AH = N46°25'26.5"W
SE=0.055'/'

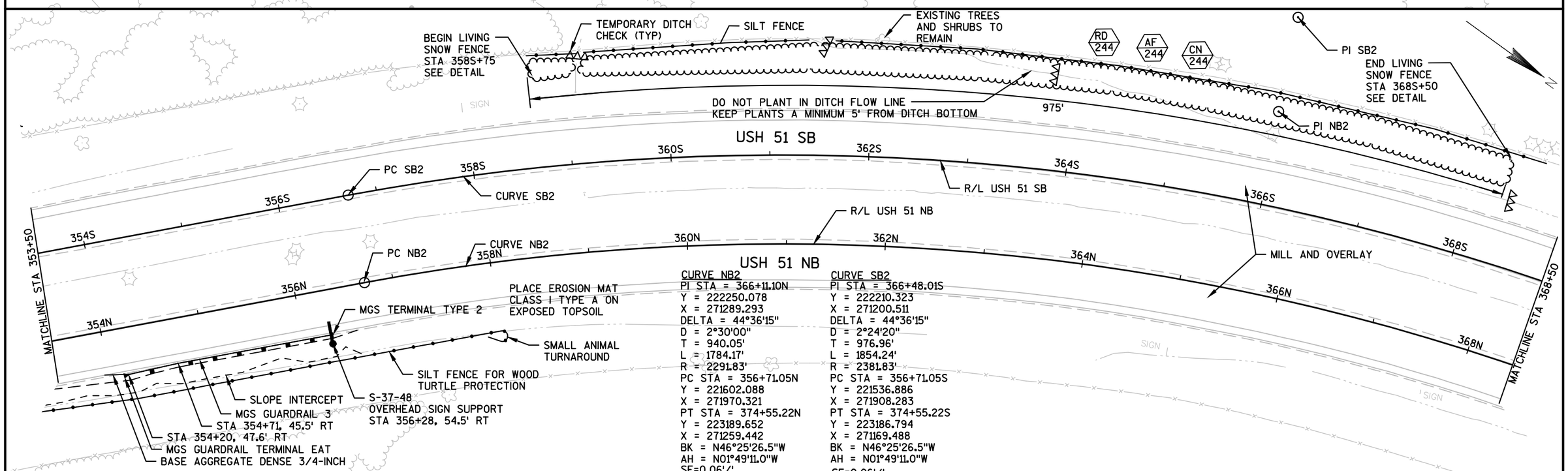

CURVE NB2
PI STA = 366+11.10N
Y = 222250.078
X = 271289.293
DELTA = 44°36'15"
D = 2°30'00"
T = 940.05'
L = 1784.17'
R = 2291.83'
PC STA = 356+71.05N
Y = 221602.088
X = 271970.321
PT STA = 374+55.22N
Y = 223189.652
X = 271259.442
BK = N46°25'26.5"W
AH = N01°49'11.0"W
SE=0.06'/'

CURVE SB2
PI STA = 366+48.01S
Y = 222210.323
X = 271200.511
DELTA = 44°36'15"
D = 2°24'20"
T = 976.96'
L = 1854.24'
R = 2381.83'
PC STA = 356+71.05S
Y = 221536.886
X = 271908.283
PT STA = 374+55.22S
Y = 223186.794
X = 271169.488
BK = N46°25'26.5"W
AH = N01°49'11.0"W
SE=0.06'/'

PROJECT NO:1170-01-75	HWY:USH 51	COUNTY:MARATHON	PLAN SHEETS	SHEET 76	E

CURVE NB2
PI STA = 366+11.10N
Y = 222250.078
X = 271289.293
DELTA = 44°36'15"
D = 2°30'00"
T = 940.05'
L = 1784.17'
R = 2291.83'
PC STA = 356+71.05N
Y = 221602.088
X = 271970.321
PT STA = 374+55.22N
Y = 223189.652
X = 271259.442
BK = N46°25'26.5"W
AH = N01°49'11.0"W
SE=0.06'/'

CURVE SB2
PI STA = 366+48.01S
Y = 222210.323
X = 271200.511
DELTA = 44°36'15"
D = 2°24'20"
T = 976.96'
L = 1854.24'
R = 2381.83'
PC STA = 356+71.05S
Y = 221536.886
X = 271908.283
PT STA = 374+55.22S
Y = 223186.794
X = 271169.488
BK = N46°25'26.5"W
AH = N01°49'11.0"W
SE=0.06'/'

BENCHMARK TABLE			
POINT	COORDINATES	DESCRIPTION	ELEVATION
CP 214 PK	X=271315.71 Y=223007.41	PK NAIL IN E. SHOULDER OF US 51 NB (42.91' E. OF R/L US 51NB)	1406.10
CP 215 PK	X=271128.78 Y=223114.42	PK NAIL IN W. SHOULDER OF US 51 SB (44.02' W. OF R/L US 51SB)	1406.06

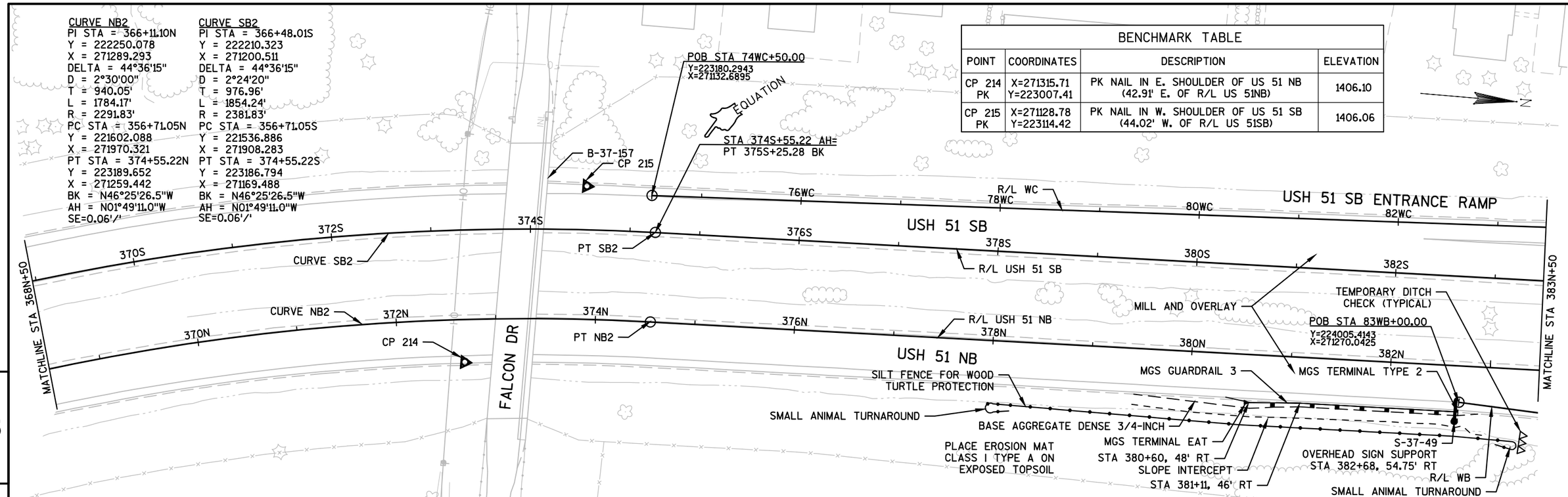

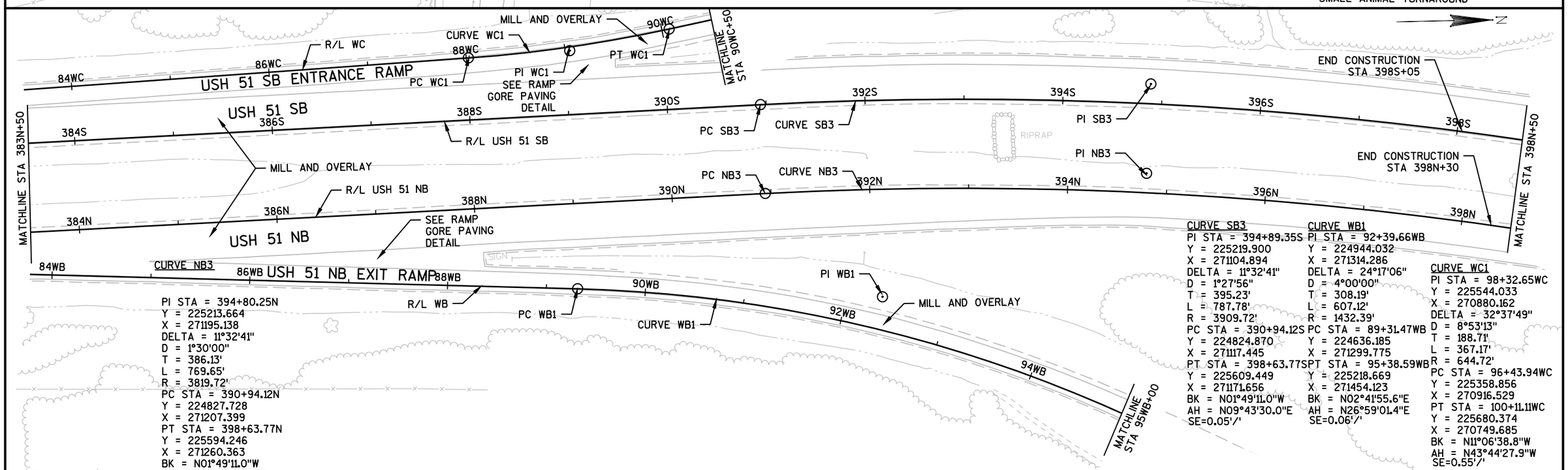

PI STA = 394+80.25N
Y = 225213.664
X = 271195.138
DELTA = 11°32'41"
D = 1°30'00"
T = 386.13'
L = 769.65'
R = 3819.72'
PC STA = 390+94.12N
Y = 224827.728
X = 271207.399
PT STA = 398+63.77N
Y = 225594.246
X = 271260.363
BK = N01°49'11.0"W
AH = N09°43'30.0"E

CURVE SB3
PI STA = 394+89.35S
Y = 225219.900
X = 271104.894
DELTA = 11°32'41"
D = 1°27'56"
T = 395.23'
L = 787.78'
R = 3909.72'
PC STA = 390+94.12S
Y = 224824.870
X = 271117.445
PT STA = 398+63.77S
Y = 225609.449
X = 271171.656
BK = N01°49'11.0"W
AH = N09°43'30.0"E
SE=0.05'/'

CURVE WB1
PI STA = 92+39.66WB
Y = 224944.032
X = 271314.286
DELTA = 24°17'06"
D = 4°00'00"
T = 308.19'
L = 607.12'
R = 1432.39'
PC STA = 89+31.47WB
Y = 224636.185
X = 271299.775
PT STA = 95+38.59WB
Y = 225218.669
X = 271454.123
BK = N02°41'55.6"E
AH = N26°59'01.4"E
SE=0.06'/'

CURVE WC1
PI STA = 98+32.65WC
Y = 225544.033
X = 270880.162
DELTA = 32°37'49"
D = 8°53'13"
T = 188.71'
L = 367.17'
R = 644.72'
PC STA = 96+43.94WC
Y = 225358.856
X = 270916.529
PT STA = 100+11.11WC
Y = 225680.374
X = 270749.685
BK = N11°06'38.8"W
AH = N43°44'27.9"W
SE=0.55'/'

PROJECT NO:1170-01-75	HWY:USH 51	COUNTY:MARATHON	PLAN SHEETS	SHEET 77	E

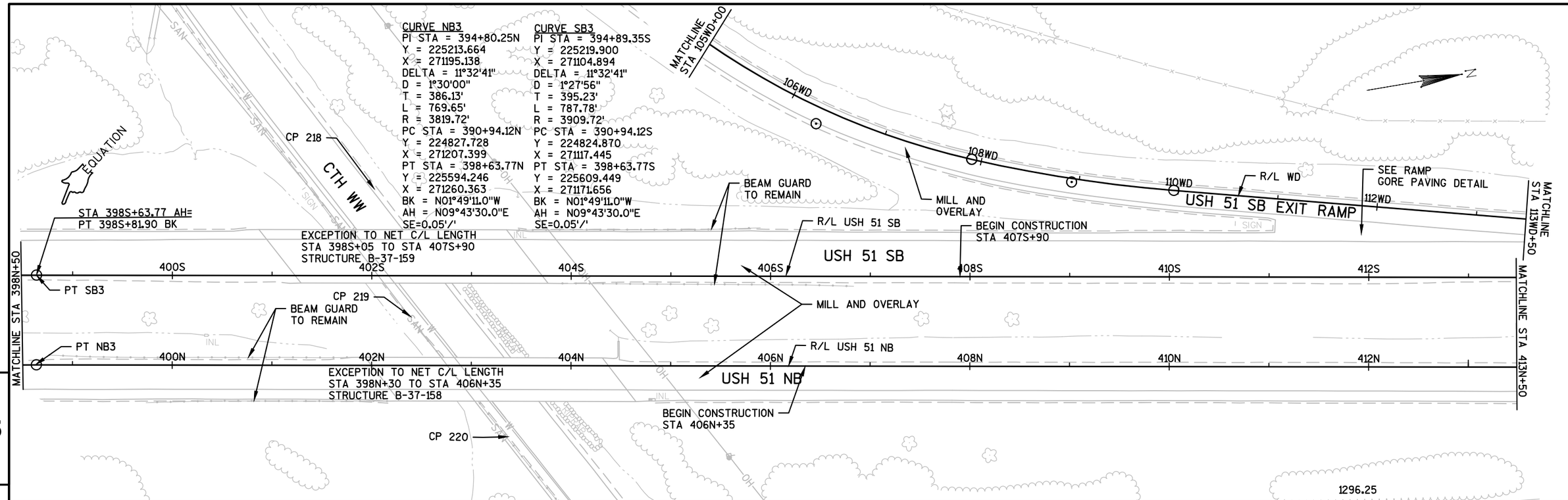

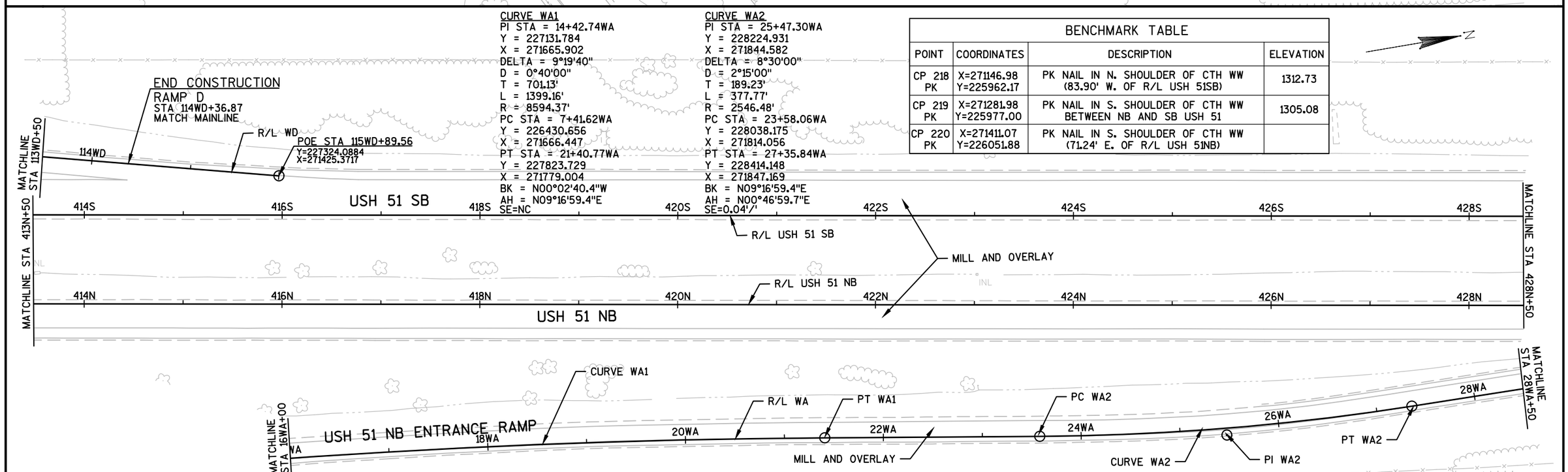

BENCHMARK TABLE			
POINT	COORDINATES	DESCRIPTION	ELEVATION
CP 218 PK	X=271146.98 Y=225962.17	PK NAIL IN N. SHOULDER OF CTH WW (83.90' W. OF R/L USH 51SB)	1312.73
CP 219 PK	X=271281.98 Y=225977.00	PK NAIL IN S. SHOULDER OF CTH WW BETWEEN NB AND SB USH 51	1305.08
CP 220 PK	X=271411.07 Y=226051.88	PK NAIL IN S. SHOULDER OF CTH WW (71.24' E. OF R/L USH 51NB)	

5

5

PROJECT NO:1170-01-75	HWY:USH 51	COUNTY:MARATHON	PLAN SHEETS	SHEET 78	E

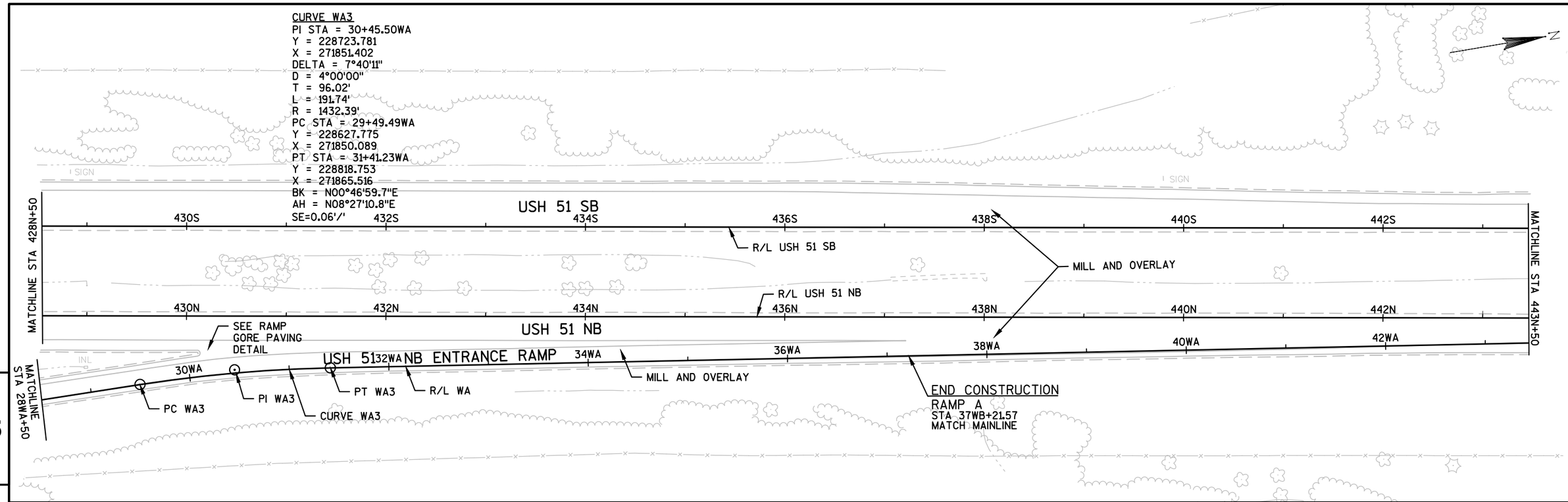

PROJECT NO:1170-01-75	HWY:USH 51	COUNTY:MARATHON	PLAN SHEETS	SHEET 79	E

FILE NAME : F:\BM4-1077 US 51\5_DESIGN\03_ROADS\11700175\SHEETSPLAN\050205-PN.DWG PLOT DATE : 11/30/2015 7:20 PM PLOT BY : CHAD EVEN PLOT NAME : PLOT SCALE : 1:100_XREF

WISDOT/CADDS SHEET 44

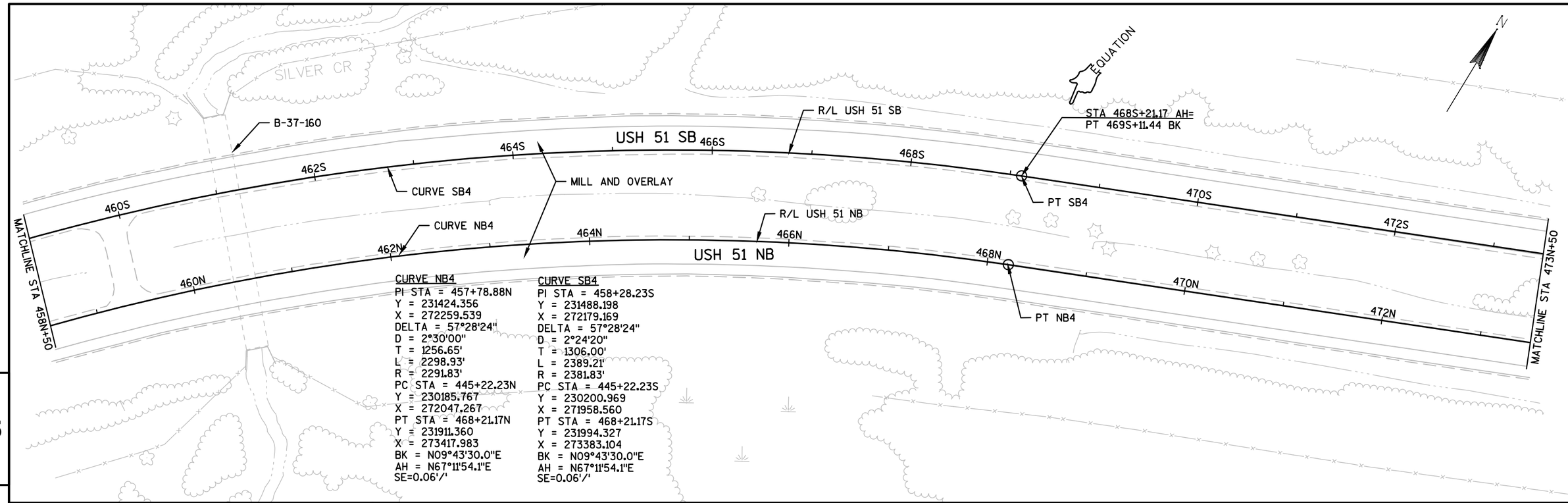

CURVE NB4
PI STA = 457+78.88N
Y = 231424.356
X = 272259.539
DELTA = 57°28'24"
D = 2°30'00"
T = 1256.65'
L = 2298.93'
R = 2291.83'
PC STA = 445+22.23N
Y = 230185.767
X = 272047.267
PT STA = 468+21.17N
Y = 231911.360
X = 273417.983
BK = N09°43'30.0"E
AH = N67°11'54.1"E
SE=0.06'/'

CURVE SB4
PI STA = 458+28.23S
Y = 231488.198
X = 272179.169
DELTA = 57°28'24"
D = 2°24'20"
T = 1306.00'
L = 2389.21'
R = 2381.83'
PC STA = 445+22.23S
Y = 230200.969
X = 271958.560
PT STA = 468+21.17S
Y = 231994.327
X = 273383.104
BK = N09°43'30.0"E
AH = N67°11'54.1"E
SE=0.06'/'

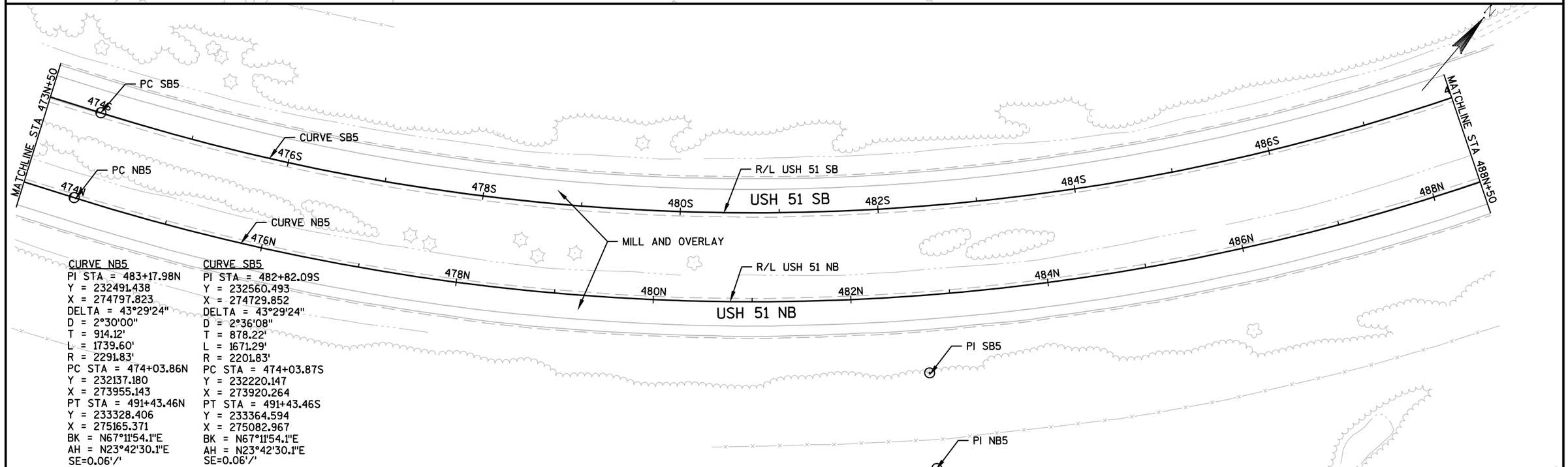

CURVE NB5
PI STA = 483+17.98N
Y = 232491.438
X = 274797.823
DELTA = 43°29'24"
D = 2°30'00"
T = 914.12'
L = 1739.60'
R = 2291.83'
PC STA = 474+03.86N
Y = 232137.180
X = 273955.143
PT STA = 491+43.46N
Y = 233328.406
X = 275165.371
BK = N67°11'54.1"E
AH = N23°42'30.1"E
SE=0.06'/'

CURVE SB5
PI STA = 482+82.09S
Y = 232560.493
X = 274729.852
DELTA = 43°29'24"
D = 2°36'08"
T = 878.22'
L = 1671.29'
R = 2201.83'
PC STA = 474+03.87S
Y = 232220.147
X = 273920.264
PT STA = 491+43.46S
Y = 233364.594
X = 275082.967
BK = N67°11'54.1"E
AH = N23°42'30.1"E
SE=0.06'/'

PROJECT NO:1170-01-75	HWY:USH 51	COUNTY:MARATHON	PLAN SHEETS	SHEET 80	E

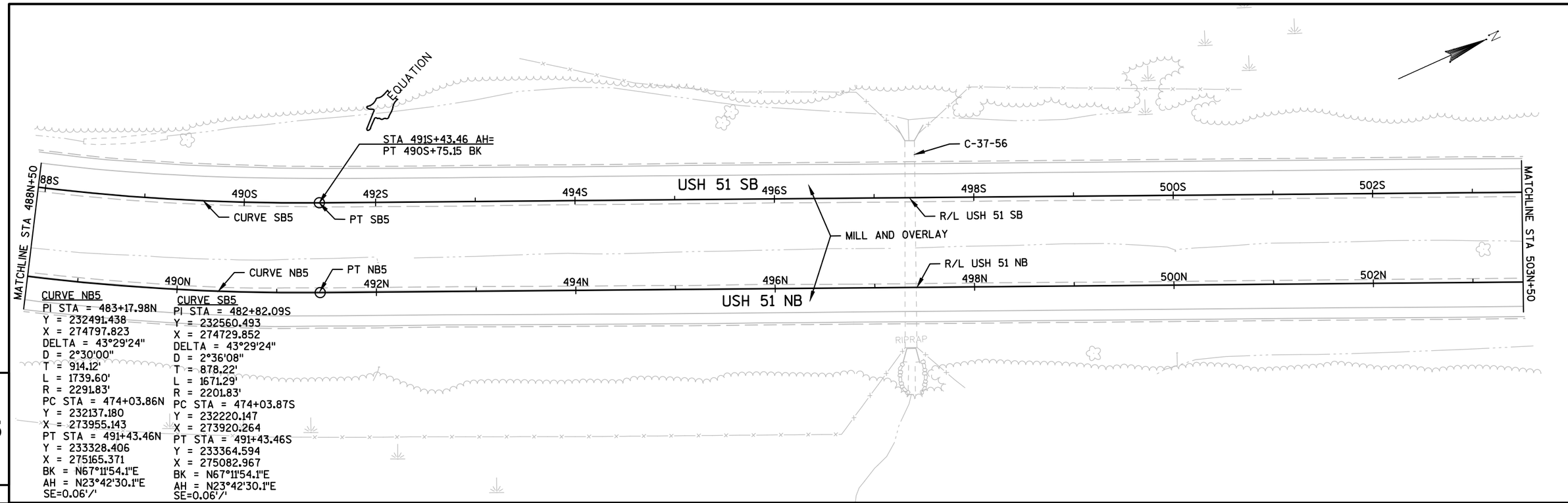

CURVE NB5
PI STA = 483+17.98N
Y = 232491.438
X = 274797.823
DELTA = 43°29'24"
D = 2°30'00"
T = 914.12'
L = 1739.60'
R = 2291.83'
PC STA = 474+03.86N
Y = 232137.180
X = 273955.143
PT STA = 491+43.46N
Y = 233328.406
X = 275165.371
BK = N67°11'54.1"E
AH = N23°42'30.1"E
SE=0.06'/'

CURVE SB5
PI STA = 482+82.09S
Y = 232560.493
X = 274729.852
DELTA = 43°29'24"
D = 2°36'08"
T = 878.22'
L = 1671.29'
R = 2201.83'
PC STA = 474+03.87S
Y = 232220.147
X = 273920.264
PT STA = 491+43.46S
Y = 233364.594
X = 275082.967
BK = N67°11'54.1"E
AH = N23°42'30.1"E
SE=0.06'/'

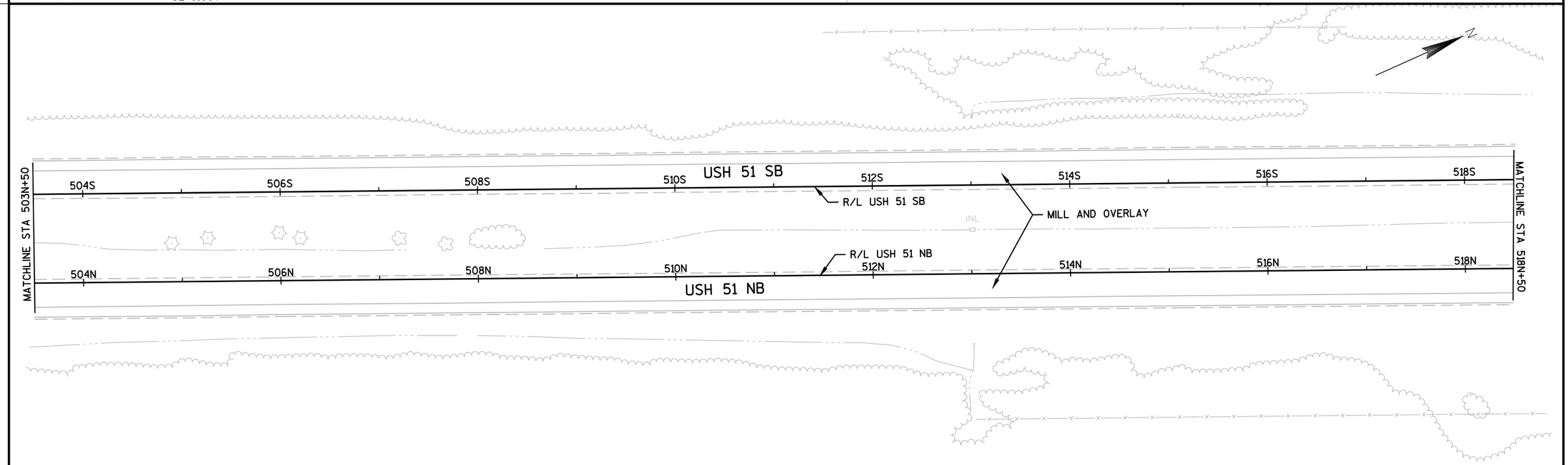

PROJECT NO:1170-01-75	HWY:USH 51	COUNTY:MARATHON	PLAN SHEETS	SHEET	E

FILE NAME : F:\BM4-1077 US 51\5_DESIGN\03_ROADS\11700175\SHEETSPLAN\050207-PN.DWG PLOT DATE : 11/30/2015 7:21 PM PLOT BY : CHAD EVEN PLOT NAME : PLOT SCALE : 1:100_XREF

WISDOT/CADDS SHEET 44

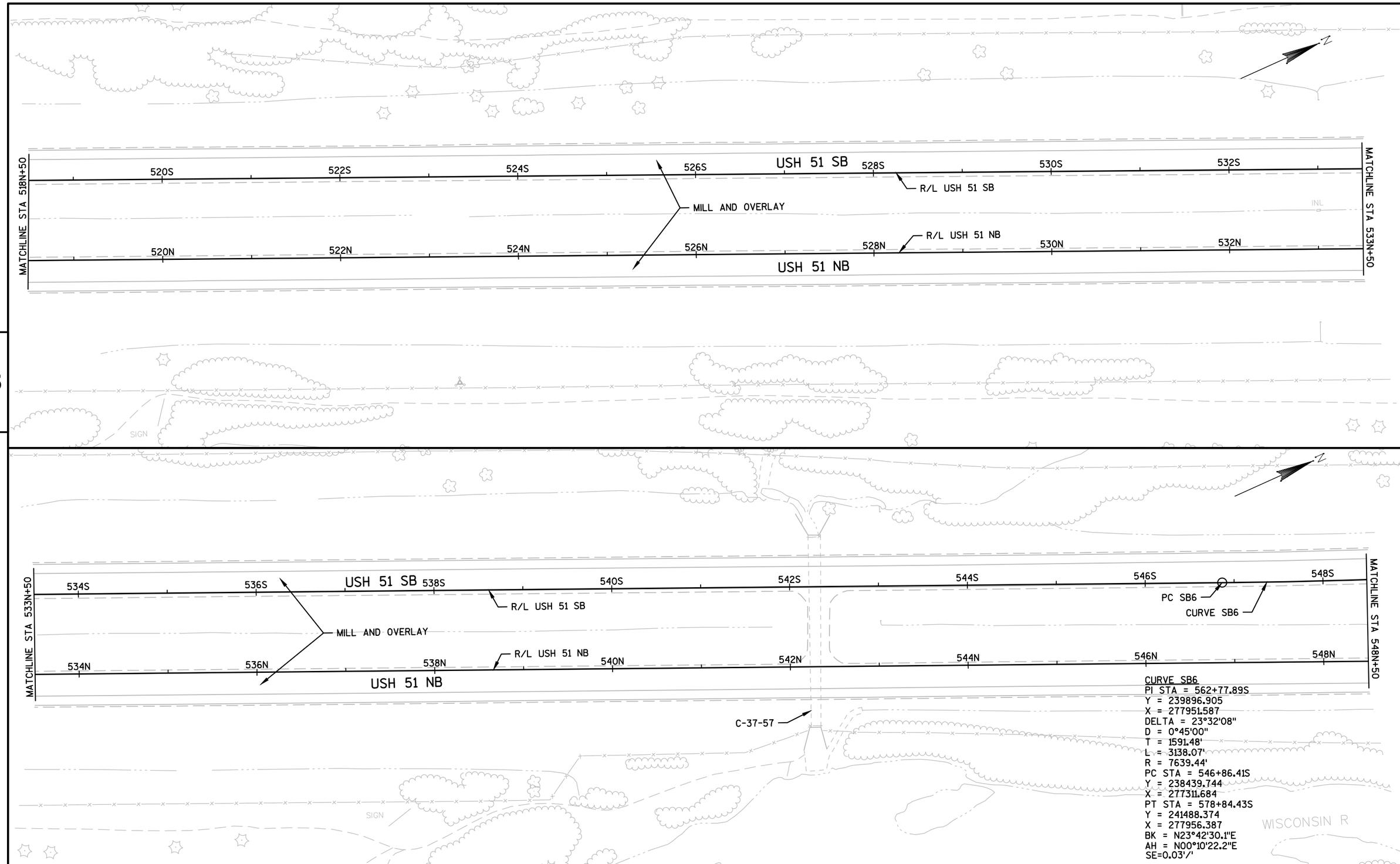

CURVE SB6
PI STA = 562+77.89S
Y = 239896.905
X = 277951.587
DELTA = 23°32'08"
D = 0°45'00"
T = 1591.48'
L = 3138.07'
R = 7639.44'
PC STA = 546+86.41S
Y = 238439.744
X = 277311.684
PT STA = 578+84.43S
Y = 241488.374
X = 277956.387
BK = N23°42'30.1"E
AH = N00°10'22.2"E
SE=0.03'/'

5

5

PROJECT NO:1170-01-75	HWY:USH 51	COUNTY:MARATHON	PLAN SHEETS	SHEET 82	E

FILE NAME : F:\BM4-1077 US 51\5_DESIGN\03_ROADS\11700175\SHEETSPLAN\050208-PN.DWG PLOT DATE : 11/30/2015 7:22 PM PLOT BY : CHAD EVEN PLOT NAME : PLOT SCALE : 1:100_XREF

WISDOT/CADDS SHEET 44

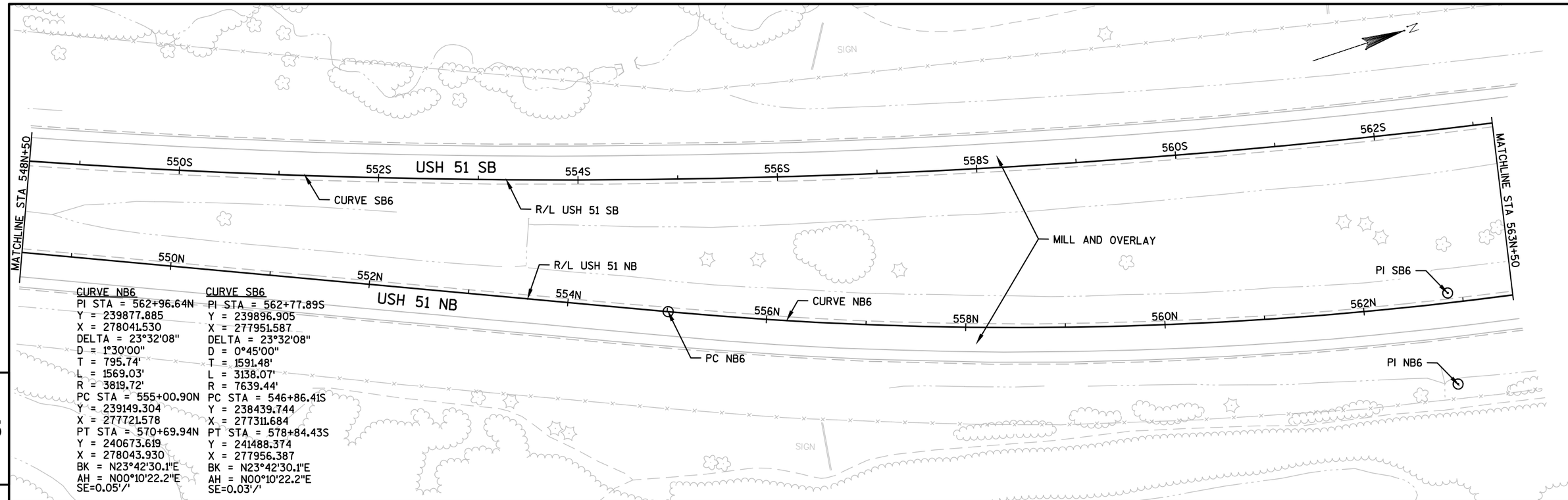

CURVE NB6
PI STA = 562+96.64N
Y = 239877.885
X = 278041.530
DELTA = 23°32'08"
D = 1°30'00"
T = 795.74'
L = 1569.03'
R = 3819.72'
PC STA = 555+00.90N
Y = 239149.304
X = 277721.578
PT STA = 570+69.94N
Y = 240673.619
X = 278043.930
BK = N23°42'30.1"E
AH = N00°10'22.2"E
SE=0.05'/'

CURVE SB6
PI STA = 562+77.89S
Y = 239896.905
X = 277951.587
DELTA = 23°32'08"
D = 0°45'00"
T = 1591.48'
L = 3138.07'
R = 7639.44'
PC STA = 546+86.41S
Y = 238439.744
X = 277311.684
PT STA = 578+84.43S
Y = 241488.374
X = 277956.387
BK = N23°42'30.1"E
AH = N00°10'22.2"E
SE=0.03'/'

5

5

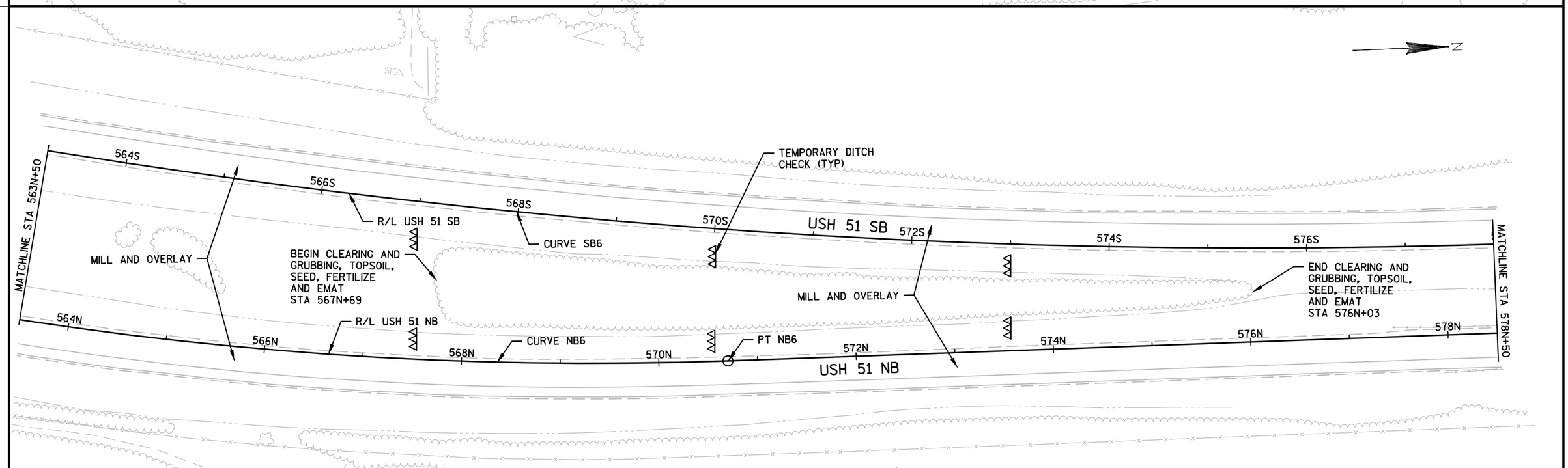

PROJECT NO:1170-01-75	HWY:USH 51	COUNTY:MARATHON	PLAN SHEETS	SHEET 83	E

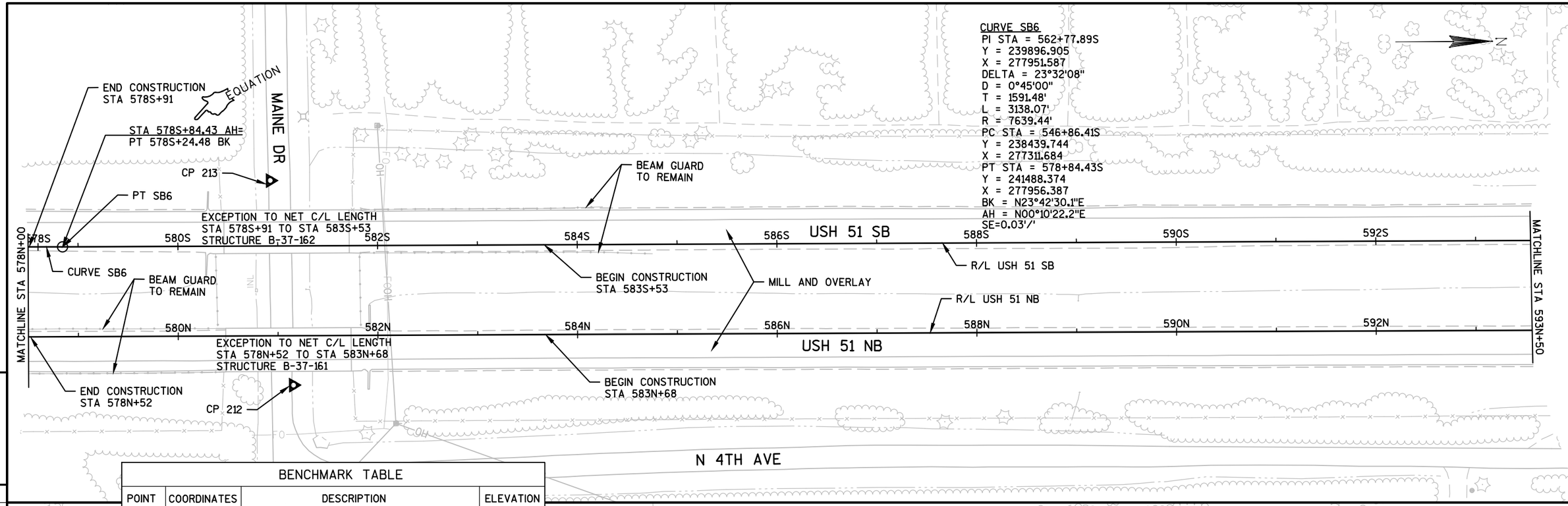

BENCHMARK TABLE			
POINT	COORDINATES	DESCRIPTION	ELEVATION
CP 212 PK	X=278096.54 Y=241718.58	PK NAIL IN N. SHOULDER OF MAINE DR (49.46' E. OF R/L US 51NB)	1222.56
CP 213 PK	X=277891.51 Y=241696.90	PK NAIL IN S. SHOULDER OF MAINE DR (65.51' W. OF R/L US 51SB)	1222.37

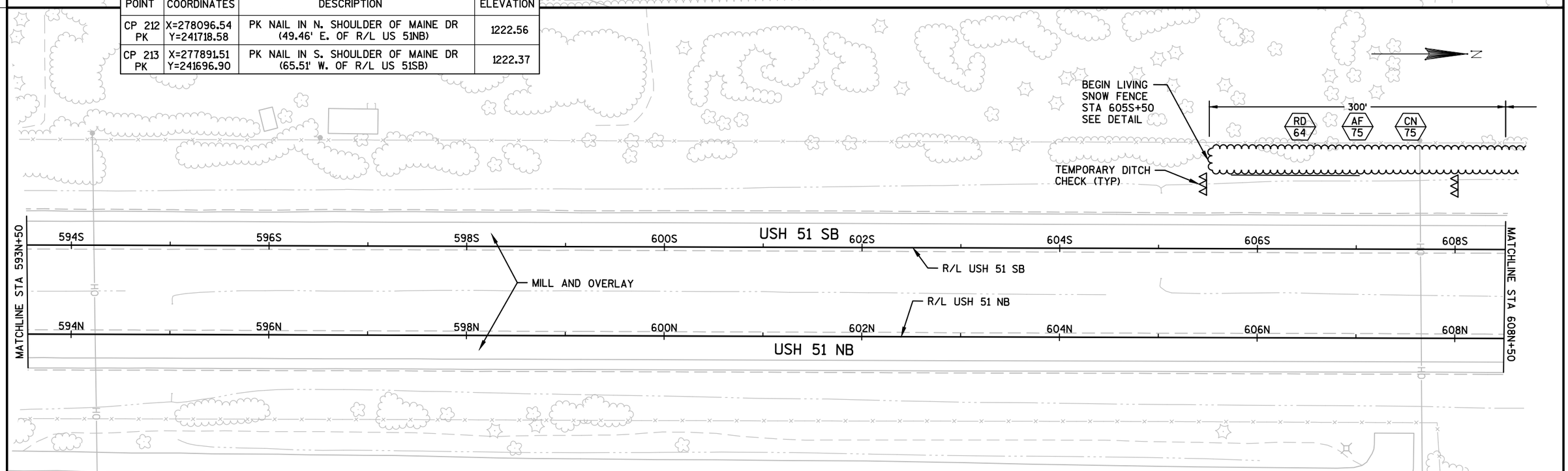

PROJECT NO:1170-01-75	HWY:USH 51	COUNTY:MARATHON	PLAN SHEETS	SHEET 84	E

FILE NAME : F:\BM4-1077 US 51\5_DESIGN\03_ROADS\11700175\SHEETSPLAN\050210-PN.DWG PLOT DATE : 1/29/2016 10:43 AM PLOT BY : SHANE MCCARTY PLOT NAME : PLOT SCALE : 1:100_XREF

WISDOT/CADDS SHEET 44

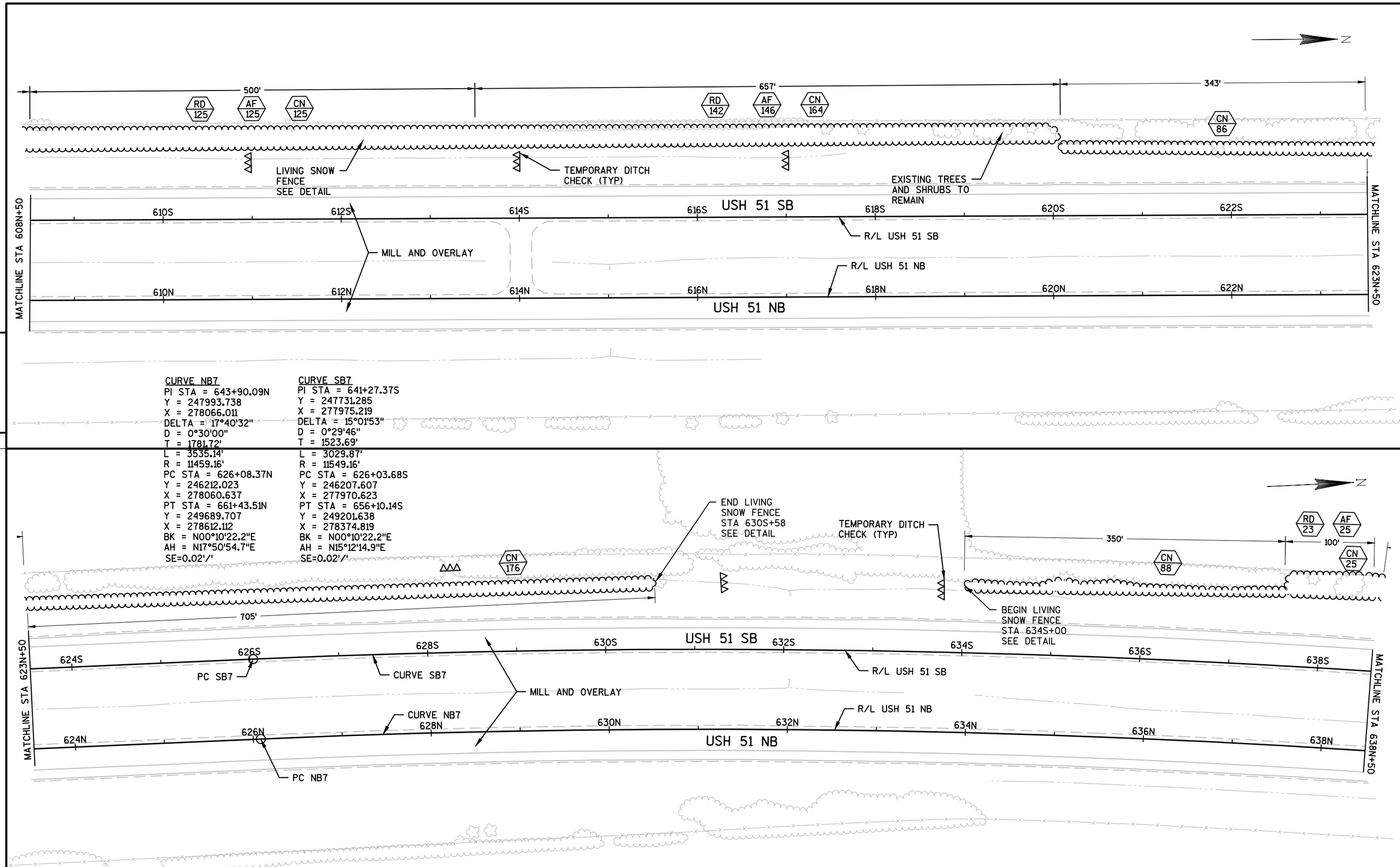

PROJECT NO:1170-01-75	HWY:USH 51	COUNTY:MARATHON	PLAN SHEETS	SHEET 85	E

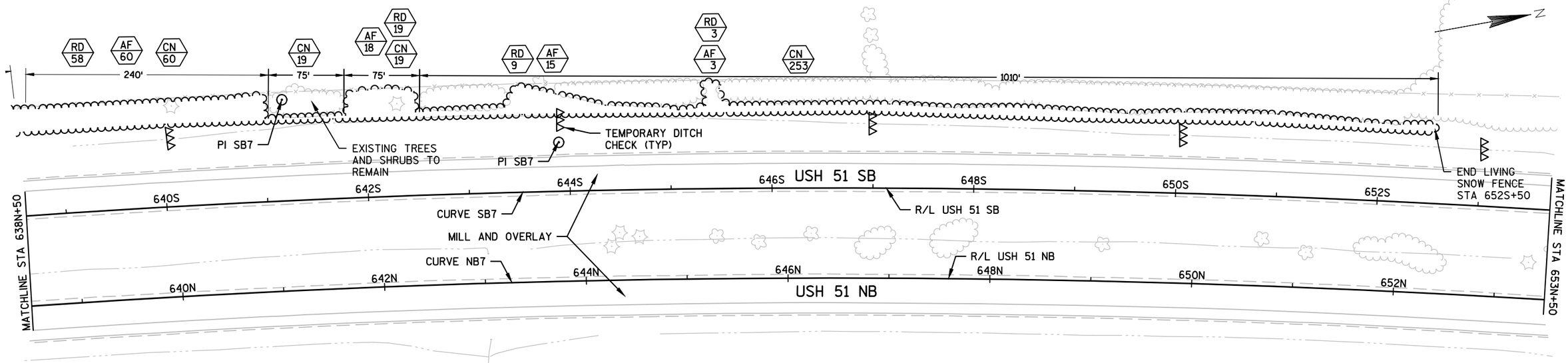

5

5

CURVE NB7
PI STA = 643+90.09N
Y = 247993.738
X = 278066.011
DELTA = 17°40'32"
D = 0°30'00"
T = 1781.72'
L = 3535.14'
R = 11459.16'
PC STA = 626+08.37N
Y = 246212.023
X = 278060.637
PT STA = 661+43.51N
Y = 249689.707
X = 278612.112
BK = N00°10'22.2"E
AH = N17°50'54.7"E
SE=0.02'/'

CURVE SB7
PI STA = 641+27.37S
Y = 247731.285
X = 277975.219
DELTA = 15°01'53"
D = 0°29'46"
T = 1523.69'
L = 3029.87'
R = 11549.16'
PC STA = 626+03.68S
Y = 246207.607
X = 277970.623
PT STA = 656+10.14S
Y = 249201.638
X = 278374.819
BK = N00°10'22.2"E
AH = N15°12'14.9"E
SE=0.02'/'

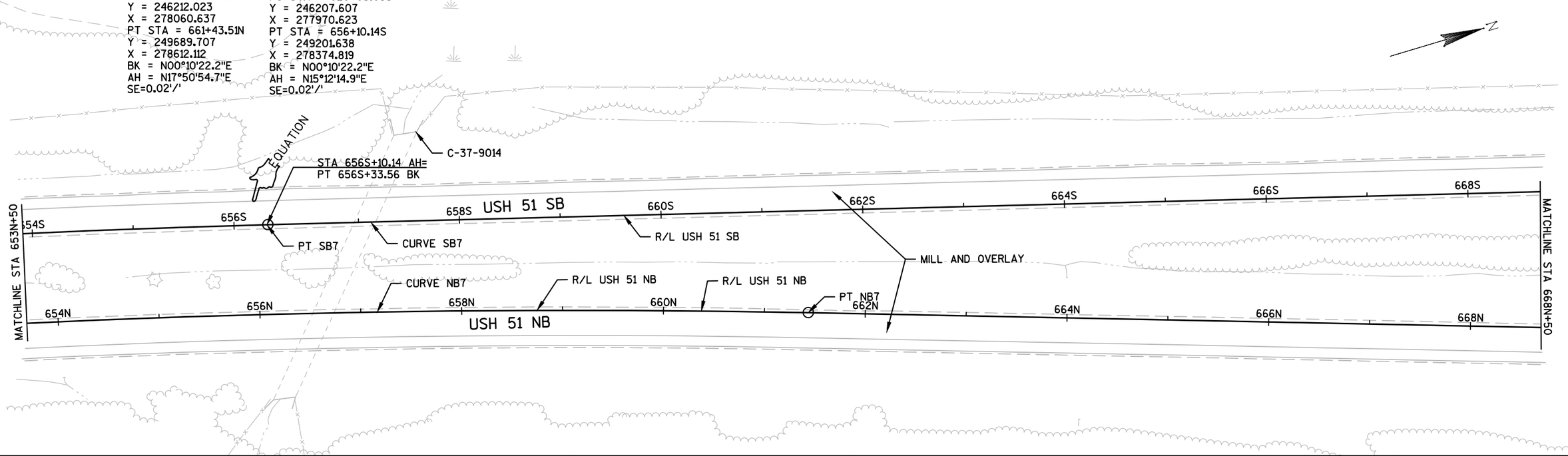

PROJECT NO:1170-01-75	HWY:USH 51	COUNTY:MARATHON	PLAN SHEETS	SHEET 86	E

CURVE NB8
PI STA = 701+14.64N
Y = 253469.708
X = 279829.271
DELTA = 27°23'02"
D = 0°45'00"
T = 1861.15'
L = 3651.18'
R = 7639.44'
PC STA = 682+53.49N
Y = 251698.133
X = 279258.824
PT STA = 719+04.66N
Y = 255305.147
X = 279520.961
BK = N17°50'54.7"E
AH = N09°32'07.1"W
SE=0.03'/'

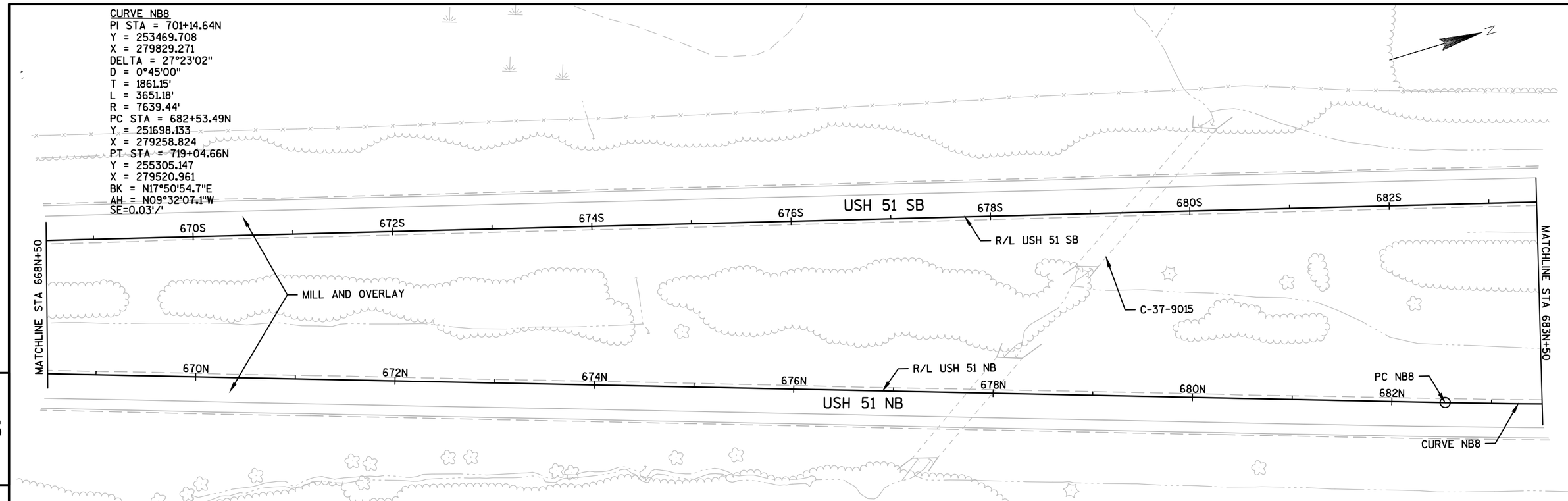

5

5

CURVE SB8
PI STA = 705+11.98S
Y = 253931.906
X = 279660.372
DELTA = 24°44'22"
D = 0°45'00"
T = 1675.41'
L = 3298.59'
R = 7639.44'
PC STA = 688+36.58S
Y = 252315.142
X = 279220.981
PT STA = 722+02.71S
Y = 255584.166
X = 279382.832
BK = N15°12'14.9"E
AH = N09°32'07.1"W
SE=0.03'/'

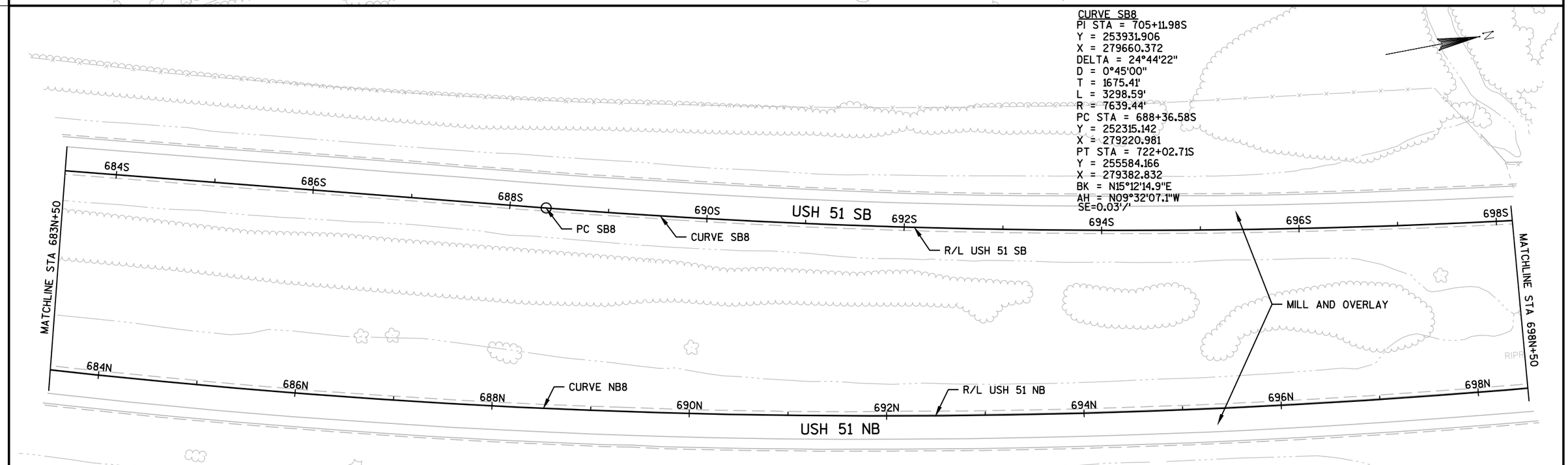

PROJECT NO:1170-01-75	HWY:USH 51	COUNTY:MARATHON	PLAN SHEETS	SHEET 87	E

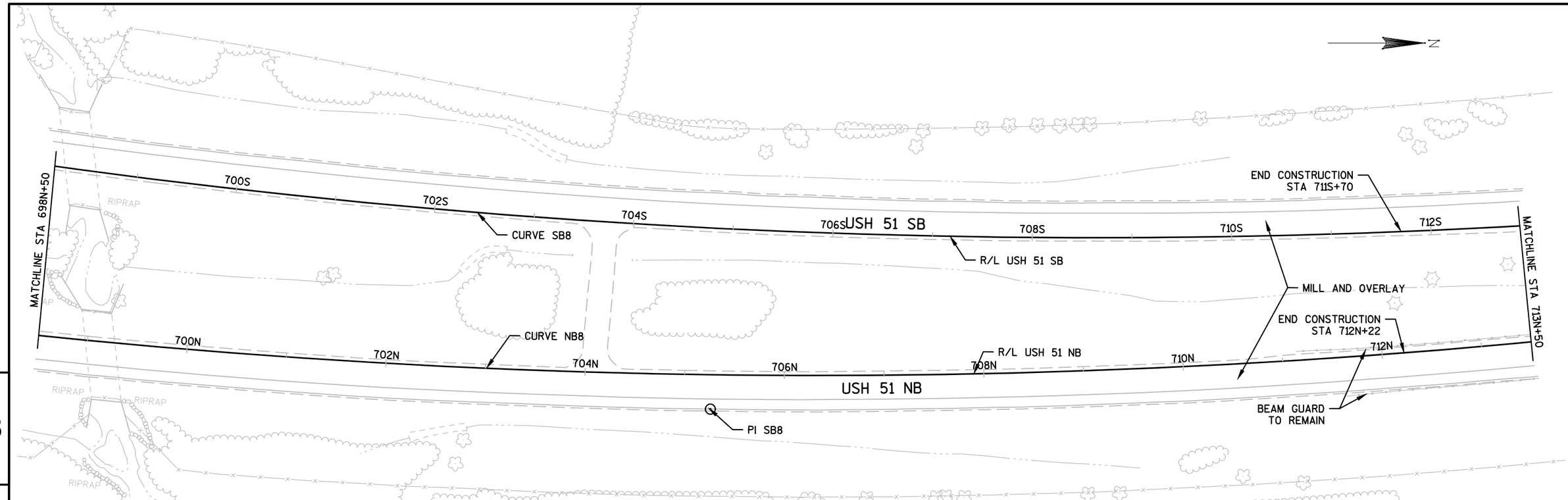

BENCHMARK TABLE			
POINT	COORDINATES	DESCRIPTION	ELEVATION
CP 210 PK	X=279398.35 Y=254861.67	PK NAIL IN S. SHOULDER OF RAINBOW DR (70.53' W. OF R/L US 51SB)	1243.93
CP 211 PK	X=279648.13 Y=254887.25	PK NAIL IN N. SHOULDER OF RAINBOW DR (68.36' E. OF R/L US 51NB)	1248.78

CURVE NB8
PI STA = 701+14.64N
Y = 253469.708
X = 279829.271
DELTA = 27°23'02"
D = 0°45'00"
T = 1861.15'
L = 3651.18'
R = 7639.44'
PC STA = 682+53.49N
Y = 251698.133
X = 279258.824
PT STA = 719+04.66N
Y = 255305.147
X = 279520.961
BK = N17°50'54.7"E
AH = N09°32'07.1"W
SE=0.03'/'

CURVE SB8
PI STA = 705+11.98S
Y = 253931.906
X = 279660.372
DELTA = 24°44'22"
D = 0°45'00"
T = 1675.41'
L = 3298.59'
R = 7639.44'
PC STA = 688+36.58S
Y = 252315.142
X = 279220.981
PT STA = 722+02.71S
Y = 255584.166
X = 279382.832
BK = N15°12'14.9"E
AH = N09°32'07.1"W
SE=0.03'/'

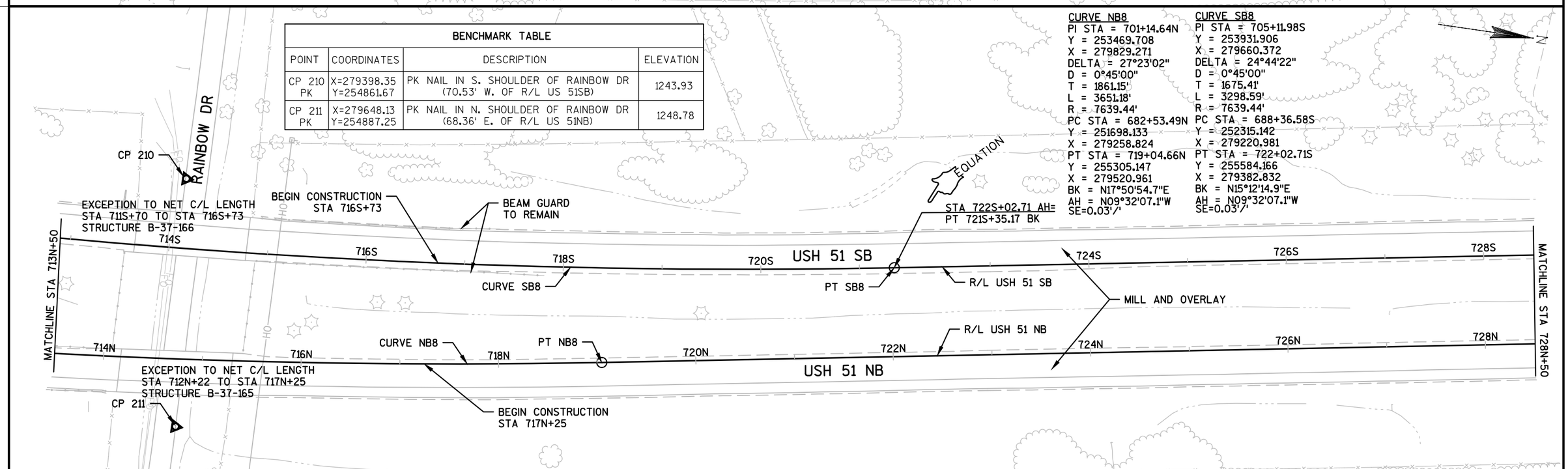

PROJECT NO:1170-01-75	HWY:USH 51	COUNTY:MARATHON	PLAN SHEETS	SHEET 88	E

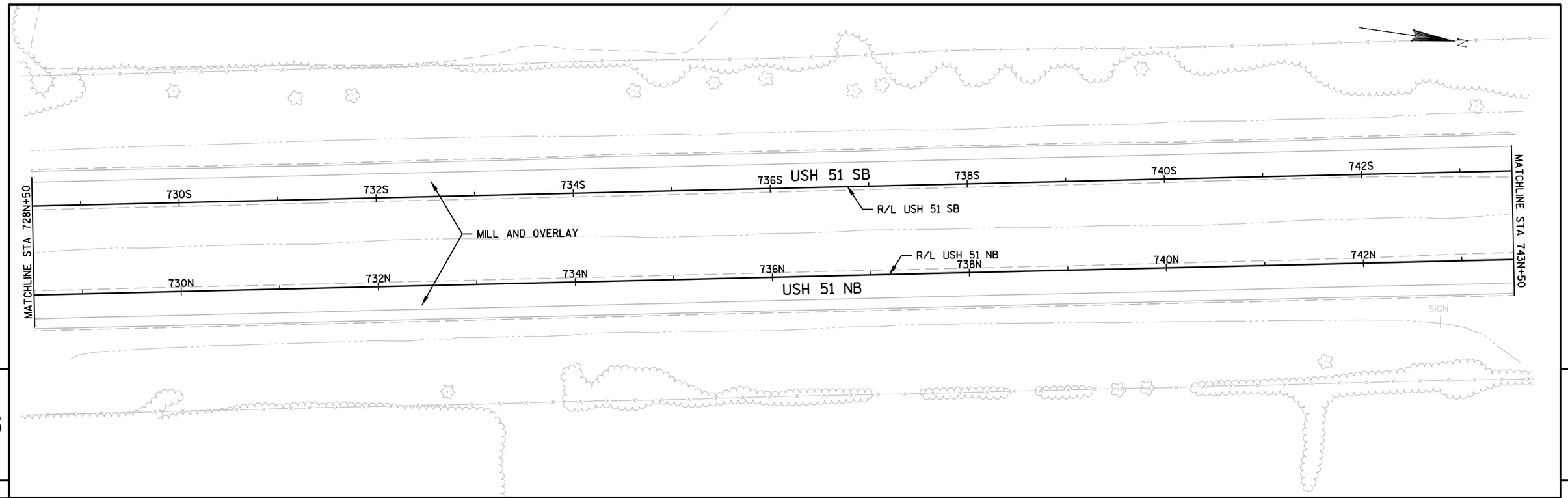

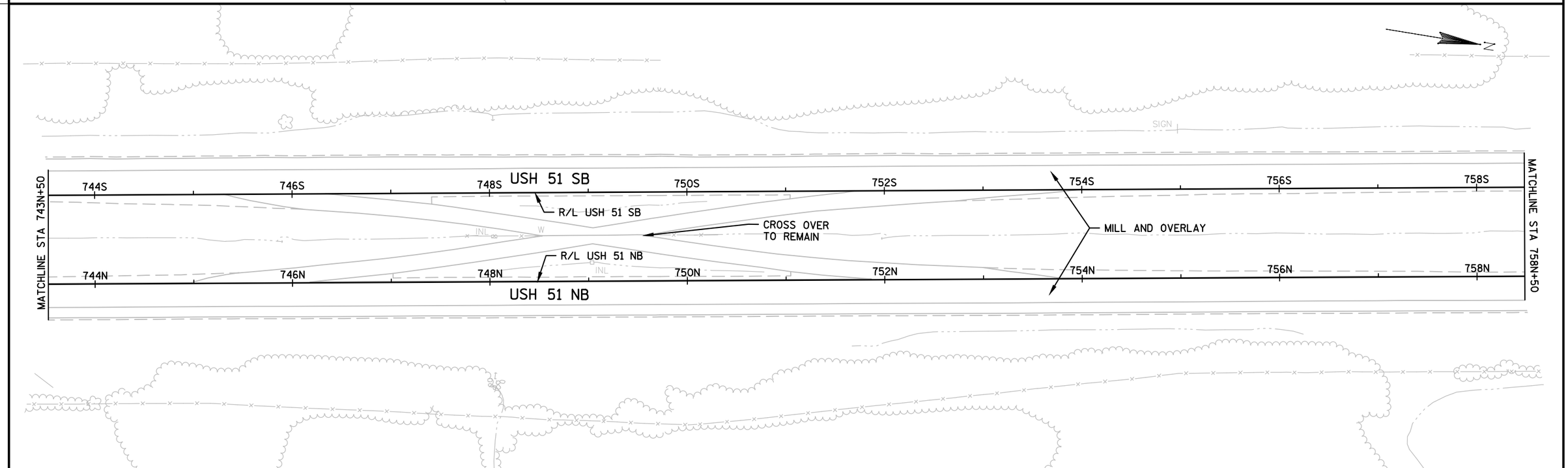

PROJECT NO:1170-01-75	HWY:USH 51	COUNTY:MARATHON	PLAN SHEETS	SHEET 89	E

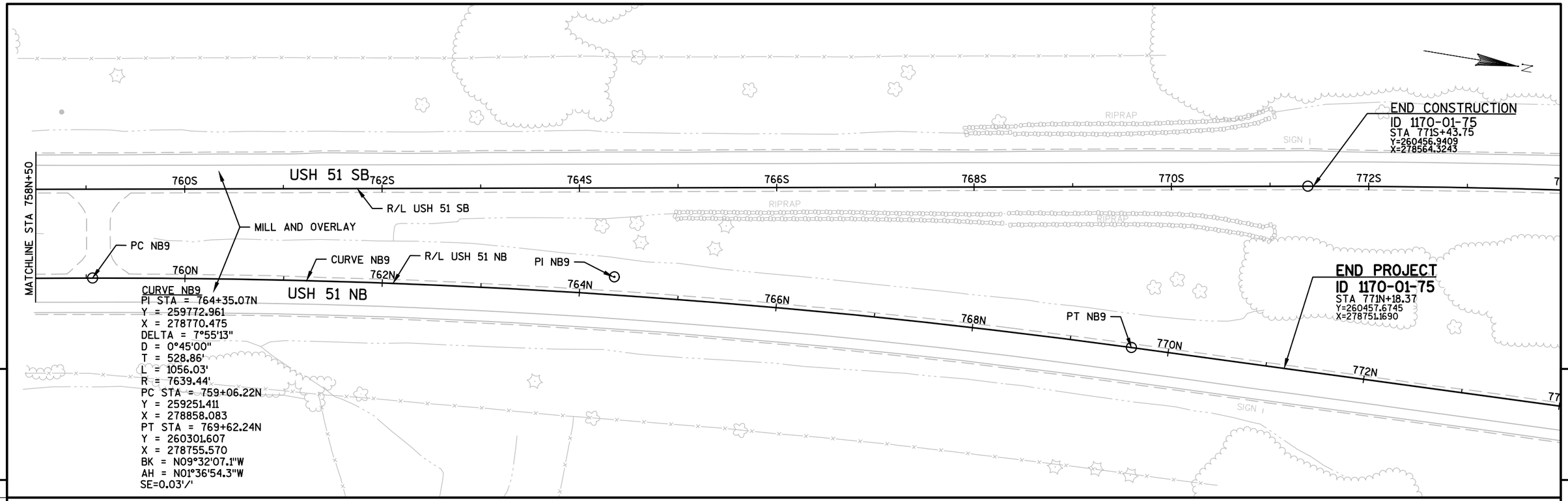

5

5

PROJECT NO:1170-01-75	HWY:USH 51	COUNTY:MARATHON	PLAN SHEETS	SHEET 90	E

FILE NAME : F:\BM4-1077 US 51\5_DESIGN\03_ROADS\11700175\SHEETSPLAN\050216-PN.DWG PLOT DATE : 12/3/2015 6:09 PM PLOT BY : CHAD EVEN PLOT NAME : PLOT SCALE : 1:100_XREF

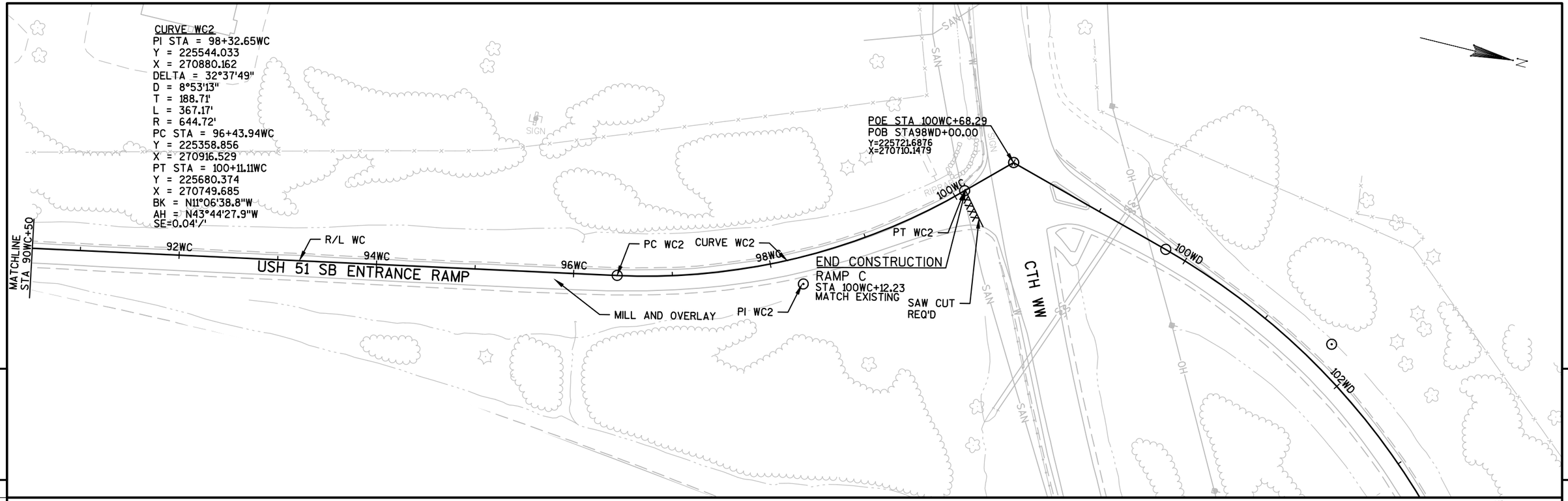

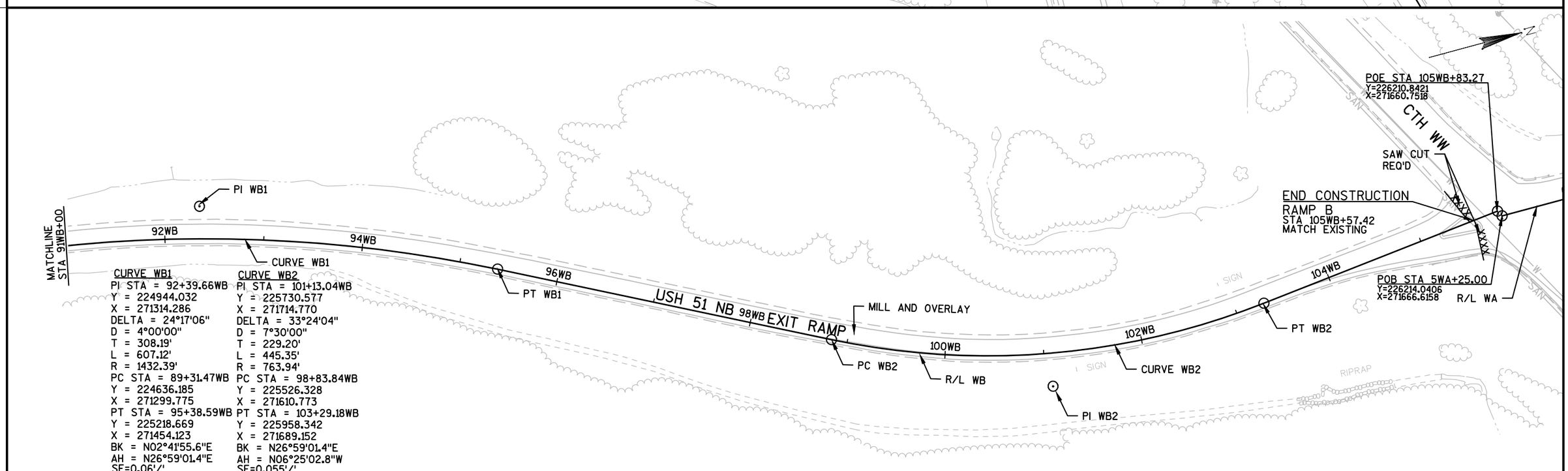

CURVE WB1
PI STA = 92+39.66WB
Y = 224944.032
X = 271314.286
DELTA = 24°17'06"
D = 4°00'00"
T = 308.19'
L = 607.12'
R = 1432.39'
PC STA = 89+31.47WB
Y = 224636.185
X = 271299.775
PT STA = 95+38.59WB
Y = 225218.669
X = 271454.123
BK = N02°41'55.6"E
AH = N26°59'01.4"E
SE=0.06'/'

CURVE WB2
PI STA = 101+13.04WB
Y = 225730.577
X = 271714.770
DELTA = 33°24'04"
D = 7°30'00"
T = 229.20'
L = 445.35'
R = 763.94'
PC STA = 98+83.84WB
Y = 225526.328
X = 271610.773
PT STA = 103+29.18WB
Y = 225958.342
X = 271689.152
BK = N26°59'01.4"E
AH = N06°25'02.8"W
SE=0.055'/'

PROJECT NO:1170-01-75	HWY:USH 51	COUNTY:MARATHON	PLAN SHEETS	SHEET 91	E

CURVE WD1
PI STA = 101+70.74WD
Y = 226078.172
X = 270811.976
DELTA = 30°13'27"
D = 8°00'00"
T = 193.41'
L = 377.80'
R = 716.20'
PC STA = 99+77.33WD
Y = 225892.202
X = 270758.855
PT STA = 103+55.14WD
Y = 226212.121
X = 270951.491
BK = N15°56'30.2"E
AH = N46°09'57.4"E
SE=0.05'/'

CURVE WD2
PI STA = 106+34.47WD
Y = 226405.578
X = 271152.986
DELTA = 23°40'57"
D = 7°30'00"
T = 160.17'
L = 315.77'
R = 763.94'
PC STA = 104+74.30WD
Y = 226294.649
X = 271037.447
PT STA = 107+90.07WD
Y = 226553.573
X = 271214.237
BK = N46°09'57.4"E
AH = N22°29'00.3"E
SE=0.05'/'

CURVE WD3
PI STA = 108+92.91WD
Y = 226648.598
X = 271253.566
DELTA = 8°12'48"
D = 4°00'00"
T = 102.84'
L = 205.33'
R = 1432.39'
PC STA = 107+90.07WD
Y = 226553.574
X = 271214.237
PT STA = 109+95.40WD
Y = 226748.266
X = 271278.915
BK = N22°29'00.3"E
AH = N14°16'12.7"E
SE=0.05'/'

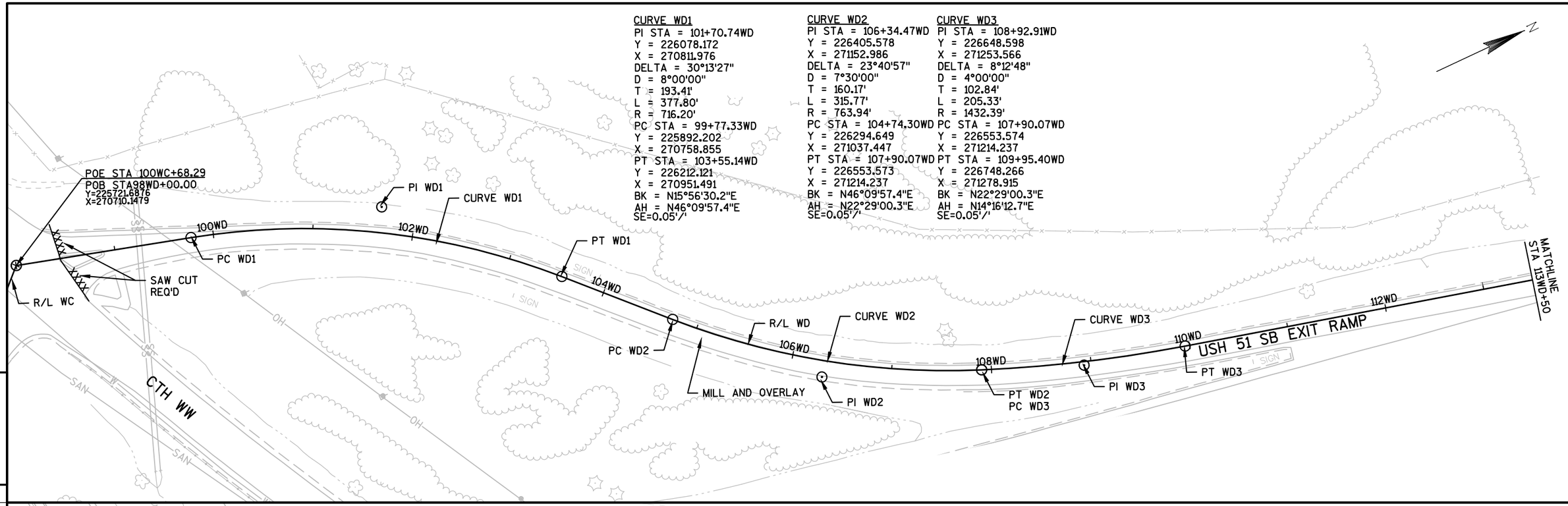

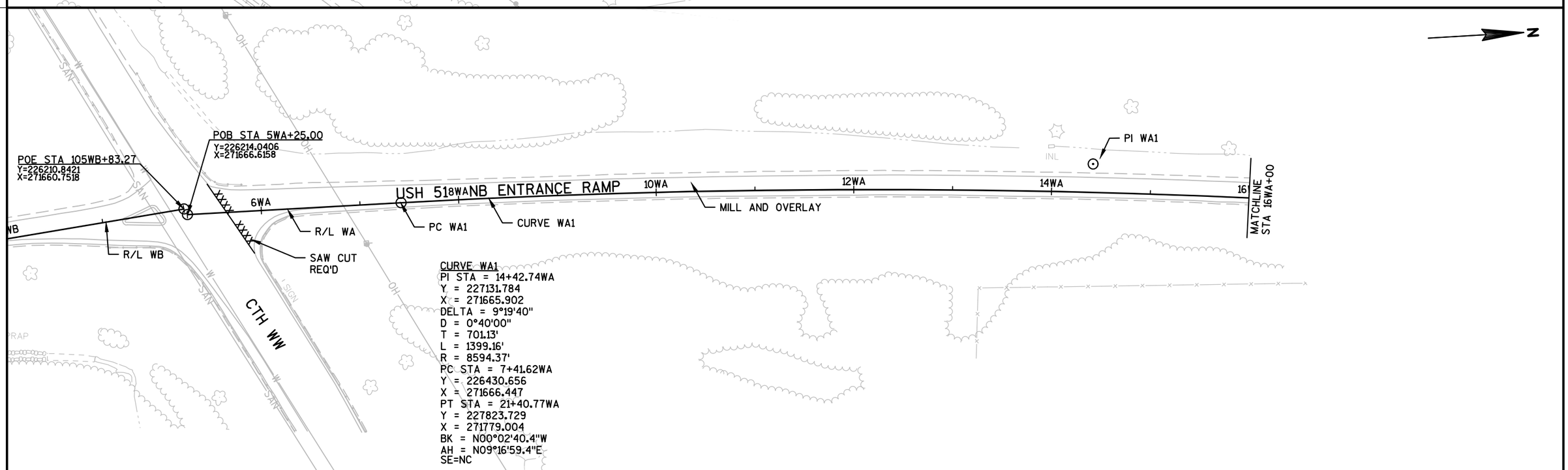

CURVE WA1
PI STA = 14+42.74WA
Y = 227131.784
X = 271665.902
DELTA = 9°19'40"
D = 0°40'00"
T = 701.13'
L = 1399.16'
R = 8594.37'
PC STA = 7+41.62WA
Y = 226430.656
X = 271666.447
PT STA = 21+40.77WA
Y = 227823.729
X = 271779.004
BK = N00°02'40.4"W
AH = N09°16'59.4"E
SE=NC

PROJECT NO:1170-01-75	HWY:USH 51	COUNTY:MARATHON	PLAN SHEETS	SHEET 92	E

Standard Detail Drawing List

08E08-03	TYPICAL INSTALLATIONS OF EROSION BALES / TEMPORARY DITCH CHECKS
08E09-06	SILT FENCE
12A04-03	STRUCTURE IDENTIFICATION PLAQUES, RAMP GATES, SIGN BRIDGES & OVERHEAD SIGN SUPPORTS & TRAFFIC SIGNALS
13A05-05A	SHOULDER RUMBLE STRIP, MILLING
13A05-05B	SHOULDER RUMBLE STRIP, MILLING
14A02-01	TREE PLANTING DETAIL
14B42-03A	MIDWEST GUARDRAIL SYSTEM (MGS) GUARDRAIL
14B42-03B	MIDWEST GUARDRAIL SYSTEM (MGS) GUARDRAIL
14B42-03C	MIDWEST GUARDRAIL SYSTEM (MGS) GUARDRAIL
14B44-02A	MIDWEST GUARDRAIL SYSTEM ENERGY ABSORBING TERMINAL (MGS)
14B44-02B	MIDWEST GUARDRAIL SYSTEM ENERGY ABSORBING TERMINAL (MGS)
14B44-02C	MIDWEST GUARDRAIL SYSTEM ENERGY ABSORBING TERMINAL (MGS)
14B47-02A	MIDWEST GUARDRAIL SYSTEM (MGS) TYPE 2 TERMINAL
14B47-02B	MIDWEST GUARDRAIL SYSTEM (MGS) TYPE 2 TERMINAL
14B47-02C	MIDWEST GUARDRAIL SYSTEM (MGS) TYPE 2 TERMINAL
15C08-16A	PAVEMENT MARKING (MAINLINE)
15C08-16F	PAVEMENT MARKING (ISLANDS)
15C31-01A	PAVEMENT MARKING (RAMPS AND GORES)
15C31-01B	LANE DROP PAVEMENT MARKING
15C33-01	STOP LINE AND CROSSWALK PAVEMENT MARKING
15D12-05A	TRAFFIC CONTROL, LANE CLOSURE
15D12-05B	TRAFFIC CONTROL, LANE CLOSURE, SPEED REDUCTION
15D15-02	TRAFFIC CONTROL, EXIT AND ENTRANCE RAMP WITHIN LANE CLOSURE
15D16-03	TRAFFIC CONTROL, EXIT RAMP CLOSURE
15D27-02	TRAFFIC CONTROL, SHOULDER CLOSURE ON DIVIDED ROADWAY, SPEEDS GREATER THAN 40 MPH

6

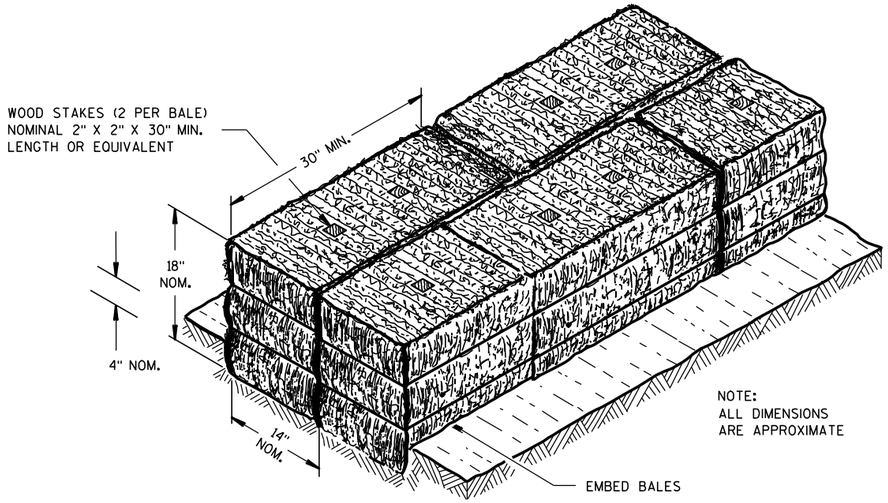

SECTION A-A

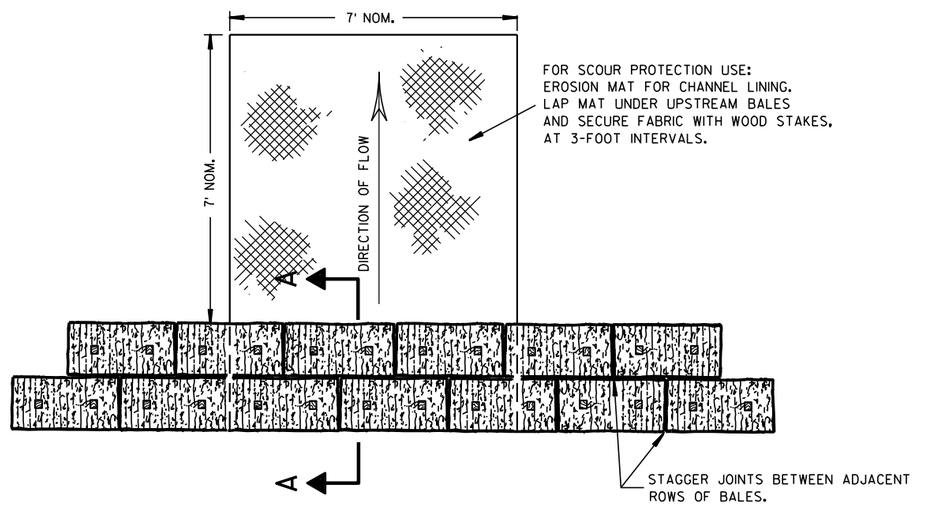

PLAN VIEW

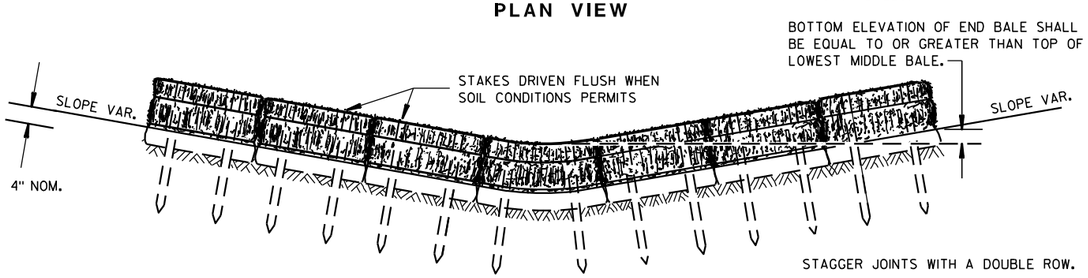

FRONT ELEVATION

TEMPORARY DITCH CHECK USING EROSION BALES ①

GENERAL NOTES

DETAILS OF CONSTRUCTION, MATERIALS AND WORKMANSHIP NOT SHOWN ON THIS DRAWING SHALL CONFORM TO THE PERTINENT REQUIREMENTS OF THE STANDARD SPECIFICATIONS AND THE APPLICABLE SPECIAL PROVISIONS.

① TEMPORARY DITCH CHECKS EITHER EROSION BALES OR MANUFACTURED SHALL BE PAID FOR UNDER THE BID ITEM OF TEMPORARY DITCH CHECK. THE DEPARTMENT WILL NOT PAY FOR TEMPORARY DITCH CHECKS CONSTRUCTED OF A SINGLE ROW OF EROSION BALES.

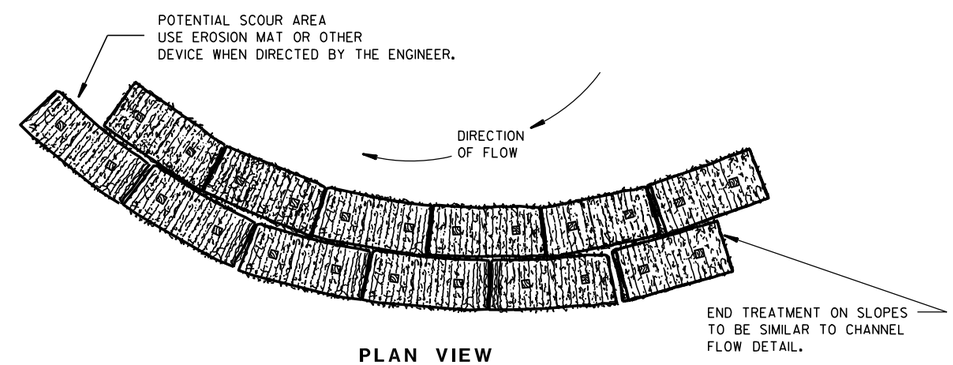

PLAN VIEW

WHEN ALTERING THE DIRECTION OF FLOW

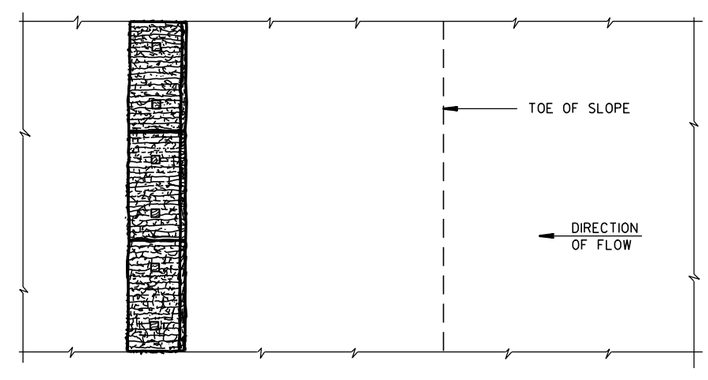

PLAN VIEW

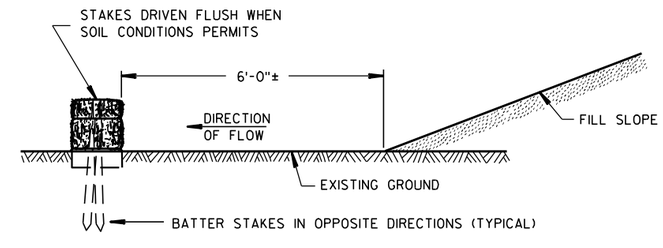

FRONT ELEVATION

WHEN EXISTING GROUND SLOPES AWAY FROM FILL SLOPE

EROSION BALES FOR SHEET FLOW

TYPICAL INSTALLATIONS OF EROSION BALES / TEMPORARY DITCH CHECKS

STATE OF WISCONSIN
DEPARTMENT OF TRANSPORTATION

APPROVED
6/04/02 — DATE
/S/ Beth Cann — CHIEF ROADWAY DEVELOPMENT ENGINEER
FHWA

6
S.D.D. 8 E 8-3

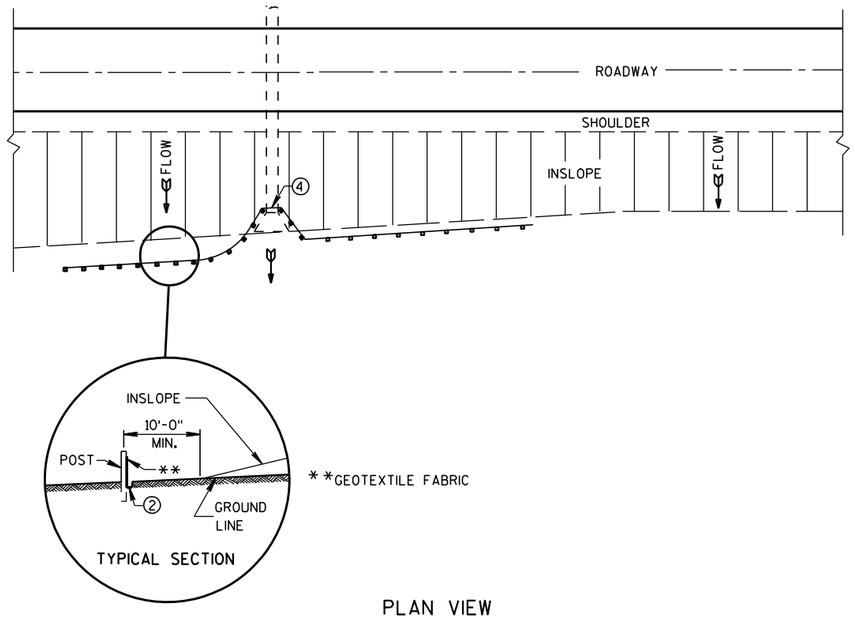

PLAN VIEW

TYPICAL APPLICATION OF SILT FENCE

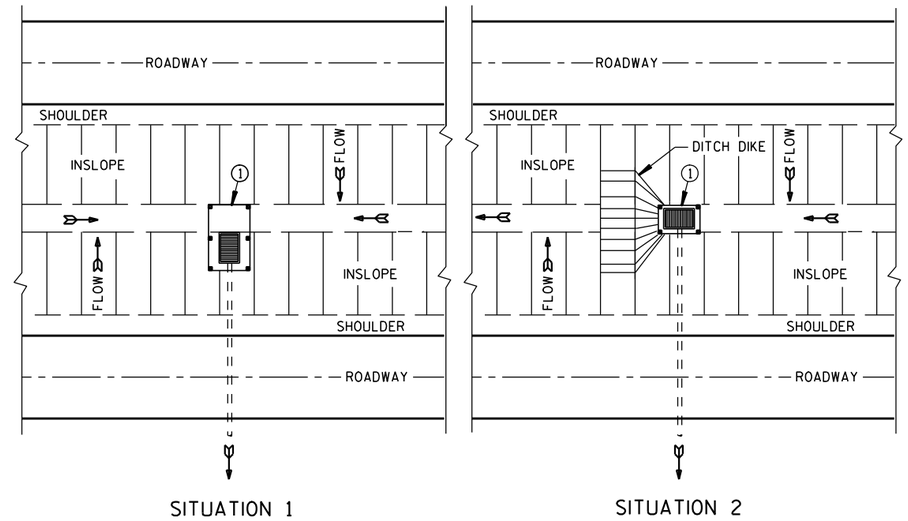

PLAN VIEW

SILT FENCE AT MEDIAN SURFACE DRAINS

GENERAL NOTES

DETAILS OF CONSTRUCTION NOT SHOWN ON THIS DRAWING SHALL CONFORM TO THE PERTINENT REQUIREMENTS OF THE STANDARD SPECIFICATIONS AND APPLICABLE SPECIAL PROVISIONS.

① HORIZONTAL BRACE REQUIRED WITH 2" X 4" WOODEN FRAME OR EQUIVALENT AT TOP OF POSTS.

② FOR MANUAL INSTALLATIONS THE TRENCH SHALL BE A MINIMUM OF 4" WIDE & 6" DEEP TO BURY AND ANCHOR THE GEOTEXTILE FABRIC. FOLD MATERIAL TO FIT TRENCH AND BACKFILL & COMPACT TRENCH WITH EXCAVATED SOIL.

③ WOOD POSTS SHALL BE A MINIMUM SIZE OF 1⅛" X 1⅛" OF OAK OR HICKORY.

④ SILT FENCE TO EXTEND ACROSS THE TOP OF THE PIPE.

⑤ CONSTRUCT SILT FENCE FROM A CONTINUOUS ROLL IF POSSIBLE BY CUTTING LENGTHS TO AVOID JOINTS. IF A JOINT IS NECESSARY USE ONE OF THE FOLLOWING TWO METHODS; A) OVERLAP THE END POSTS AND TWIST, OR ROTATE, AT LEAST 180 DEGREES. B) HOOK THE END OF EACH SILT FENCE LENGTH.

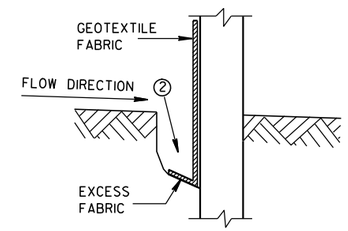

TRENCH DETAIL

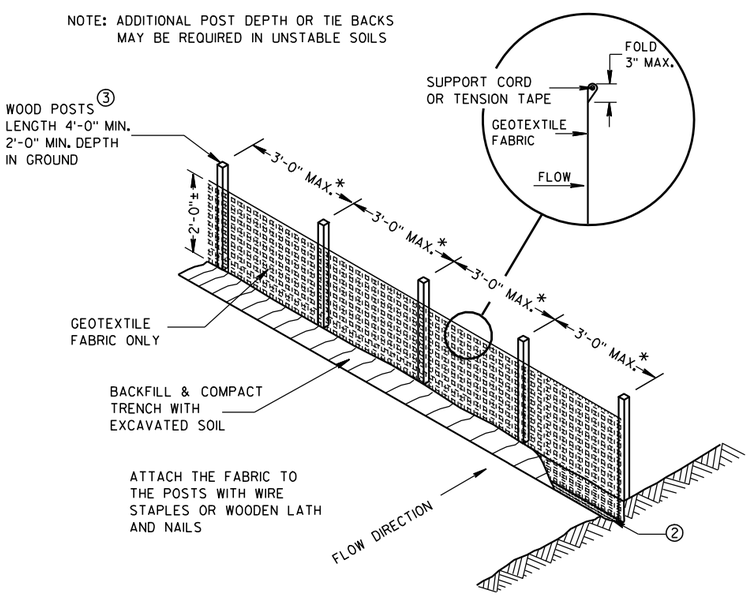

*NOTE: 8'-0" POST SPACING ALLOWED IF A WOVEN GEOTEXTILE FABRIC IS USED.

SILT FENCE

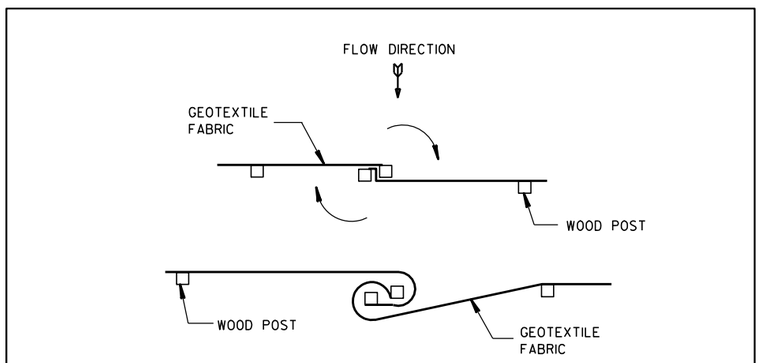

TWIST METHOD

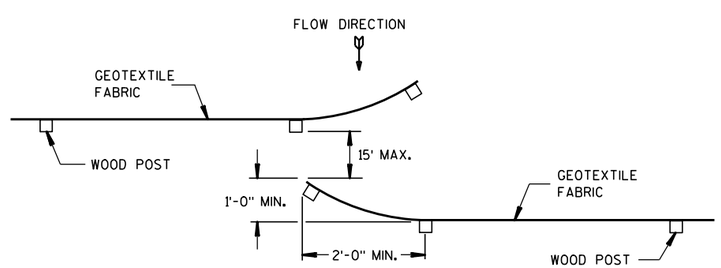

HOOK METHOD

JOINING TWO LENGTHS OF SILT FENCE ⑤

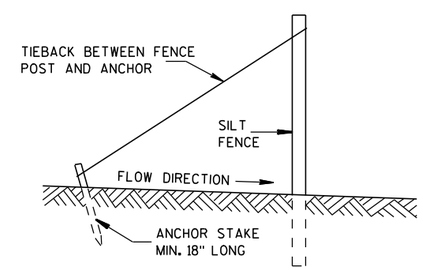

SILT FENCE TIE BACK

(WHEN REQUIRED BY THE ENGINEER)

SILT FENCE
STATE OF WISCONSIN DEPARTMENT OF TRANSPORTATION
APPROVED 4-29-05 /S/ Beth Cann----- DATE CHIEF ROADWAY DEVELOP ENGINEER FHWA

6

6

S.D.D. 8 E 9-6

S.D.D. 8 E 9-6

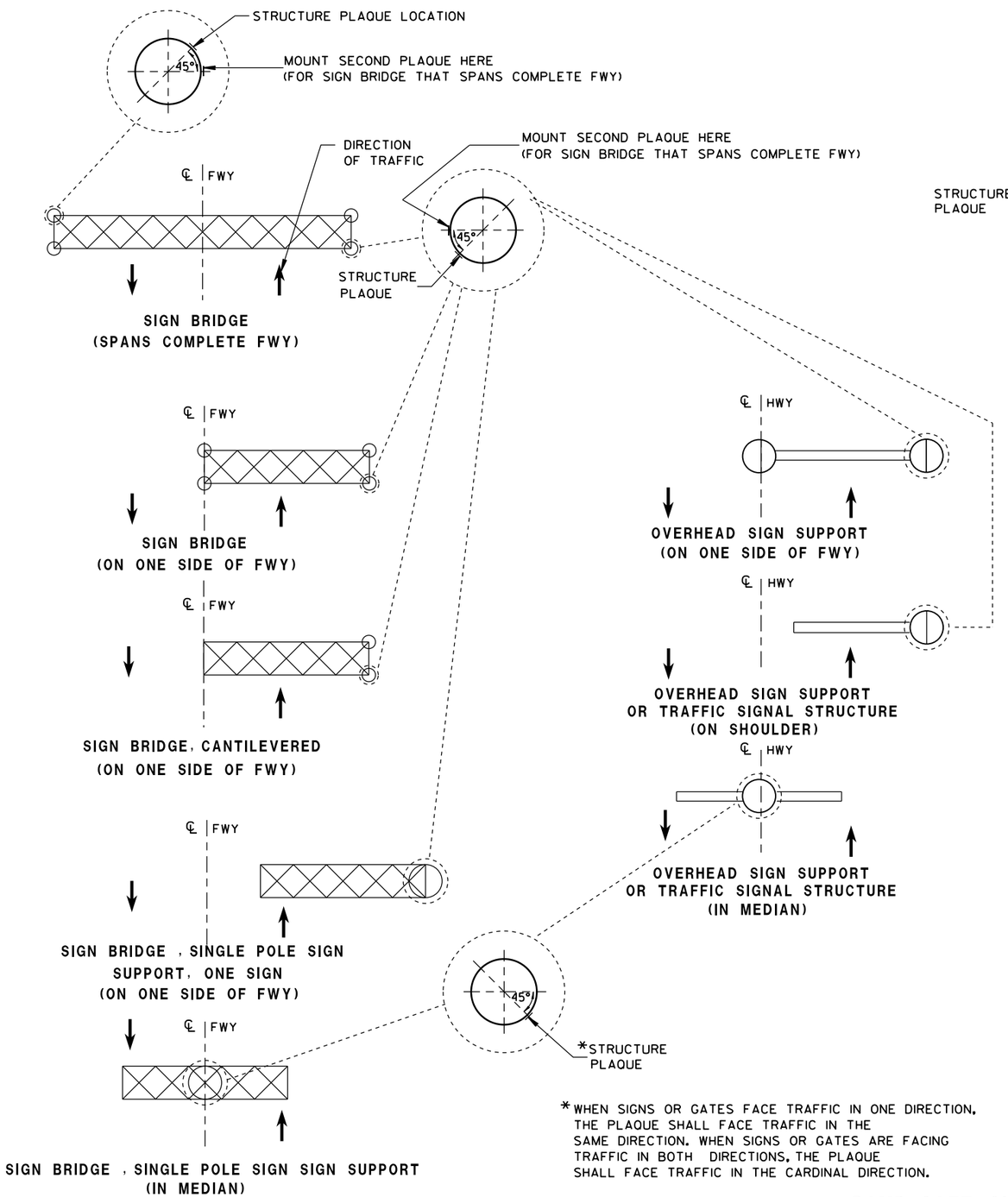

LOCATION OF RAMP GATE, SIGN BRIDGE, OVERHEAD SIGN SUPPORT & TRAFFIC SIGNAL STRUCTURE PLAQUES

* WHEN SIGNS OR GATES FACE TRAFFIC IN ONE DIRECTION, THE PLAQUE SHALL FACE TRAFFIC IN THE SAME DIRECTION. WHEN SIGNS OR GATES ARE FACING TRAFFIC IN BOTH DIRECTIONS, THE PLAQUE SHALL FACE TRAFFIC IN THE CARDINAL DIRECTION.

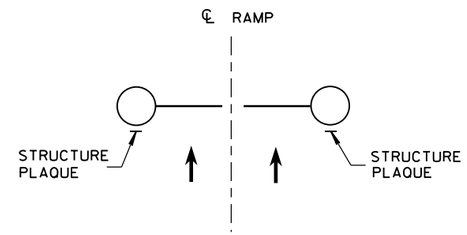

RAMP GATE
(ACROSS FWY ON-RAMP)

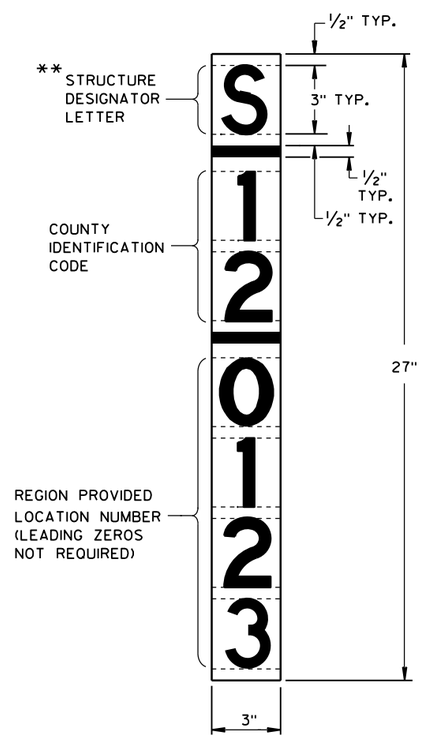

** LETTER "G" UTILIZED FOR RAMP GATES. LETTER "S" UTILIZED FOR SIGN BRIDGES, OVERHEAD SIGN SUPPORTS, AND TRAFFIC SIGNALS.

RAMP GATE, SIGN BRIDGE, OVERHEAD SIGN SUPPORT AND TRAFFIC SIGNAL STRUCTURE PLAQUE FOR SIGN BRIDGES AND OVERHEAD SIGN SUPPORT WHICH ARE NOT STRUCTURE MOUNTED

GENERAL NOTES

DETAILS OF CONSTRUCTION AND WORKMANSHIP NOT SHOWN IN THIS DRAWING SHALL CONFORM TO THE PERTINENT REQUIREMENTS OF THE CONTRACT.

PLAQUES SHALL BE INCIDENTAL TO ALL NEW INSTALLATIONS.

IF THE PROPOSED SIGN BRIDGE OR OVERHEAD SIGN SUPPORT IS REPLACING AN EXISTING SIGN BRIDGE OR OVERHEAD SIGN SUPPORT, A NEW IDENTIFICATION PLAQUE WILL BE REQUIRED.

FASTEN TOP, CENTER AND BOTTOM OF PLAQUE TO POLE OR OTHER LOCATION AS FOLLOWS:

GALVANIZED STEEL SHAFT - 3 STAINLESS STEEL POP RIVETS

A588 STEEL SHAFT - SHIM FOR DRAINAGE WITH STAINLESS WASHERS; FASTEN WITH STAINLESS SELF-TAPPING SCREWS

ALUMINUM SHAFTS - 3 ALUMINUM POP RIVETS

MOUNTING HEIGHT SHALL BE APPROXIMATELY 5.0' ABOVE CURB OR SHOULDER. ADJUST IF IT IS KNOWN THAT REQUIRED TRAFFIC SIGNS WILL OBSTRUCT.

PLAQUE MATERIALS:

BASE - SHEET ALUMINUM, 0.060" THICK.

FACE - WHITE, SELF-ADHESIVE VINYL SHEETING, NON-RETROREFLECTIVE

LINES - BLACK, 1/2" WIDE, SELF-ADHESIVE

CHARACTERS:- BLACK, SELF ADHESIVE, SERIES "D", SIZE AS SHOWN.

FOR SIGN BRIDGES, STRUCTURE MOUNTED, THE STRUCTURE PLAQUE SHALL BE MOUNTED HORIZONTALLY AS SHOWN ON THE DRAWING. THE STRUCTURE PLAQUE SHALL BE MOUNTED HORIZONTALLY TO THE BACK OF THE SIGN, BETWEEN THE ALUMINUM EXTRUSIONS, NEAR THE TOP LEFT HAND CORNER OF THE SIGN. THE BASE MATERIAL SHALL BE OMITTED AND THE FACE ADHERED DIRECTLY TO THE ALUMINUM SURFACE. PRIOR TO ADHERING THE MATERIAL, THE ALUMINUM SURFACE SHALL BE SMOOTH, CLEAN AND DRY.

WHERE SIGN BRIDGE ILLUMINATION IS PROVIDED, THE STRUCTURE MUST ALSO HAVE A SIGN BRIDGE CIRCUIT PLAQUE AS SHOWN IN THE ELECTRICAL DETAILS.

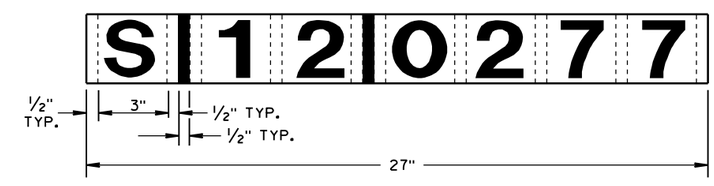

IDENTIFICATION PLAQUE FOR SIGN BRIDGE, STRUCTURE MOUNTED

STRUCTURE IDENTIFICATION PLAQUES, RAMP GATES, SIGN BRIDGES, OVERHEAD SIGN SUPPORTS, & TRAFFIC SIGNALS

STATE OF WISCONSIN
DEPARTMENT OF TRANSPORTATION

APPROVED
12/4/2012 — DATE
/S/ Travis Feltes — STATE TRAFFIC ENGINEER
FHWA

6

S.D.D. 12 A 4-3

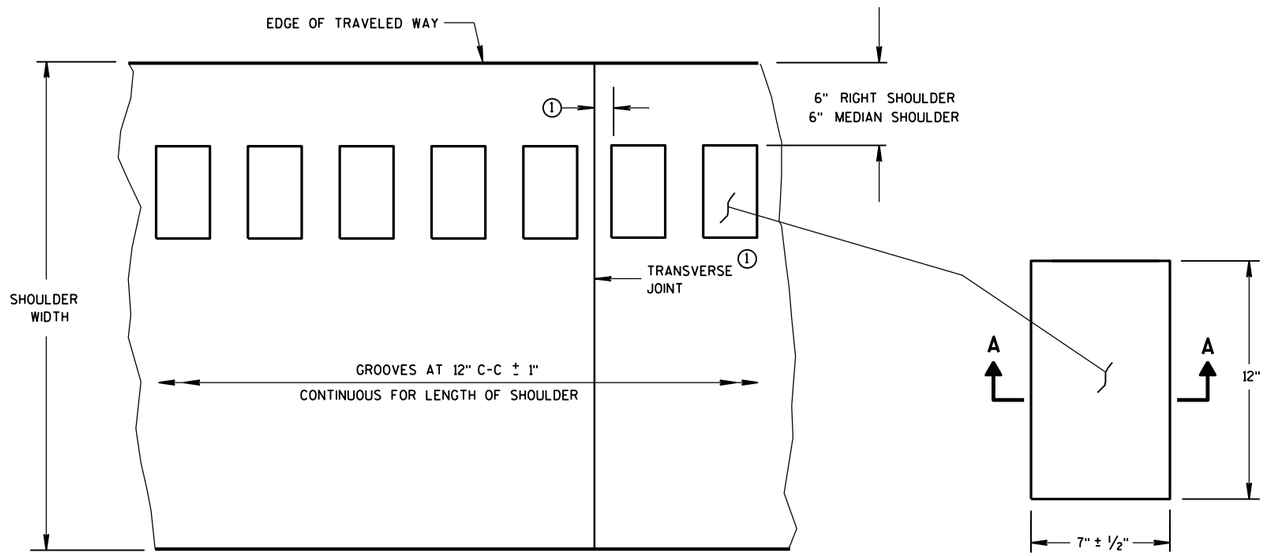

PLAN VIEW
SHOULDER WITH GROOVES

PLAN VIEW
(SINGLE GROOVE)

PLACEMENT DETAIL FOR MILLED RUMBLE STRIP

GENERAL NOTES

DETAILS OF CONSTRUCTION SHOWN ON THIS DRAWING SHALL CONFORM TO THE PERTINENT REQUIREMENTS OF THE STANDARD SPECIFICATIONS AND APPLICABLE SPECIAL PROVISIONS.

RUMBLE STRIPS ON EXPRESSWAYS

DO NOT INSTALL RUMBLE STRIPS ACROSS SIDE ROAD INTERSECTIONS, COMMERCIAL DRIVEWAYS, PRIVATE DRIVEWAYS OR ADJACENT TO RIGHT TURN LANES, LEFT TURN LANES, TURN LANE TAPERS, BRIDGE DECKS, BRIDGE APPROACHES, OR 100 FEET IN ADVANCE OF RAILROAD CROSSING. THE ATTACHED STANDARD DETAIL DRAWING SHOWS THE LOCATION OF THE RUMBLE STRIPS AT INTERCHANGE AREAS.

(1) CONCRETE PAVEMENT - RUMBLE STRIPS SHALL BE A MINIMUM OF 6" AWAY FROM TRANSVERSE JOINTS.

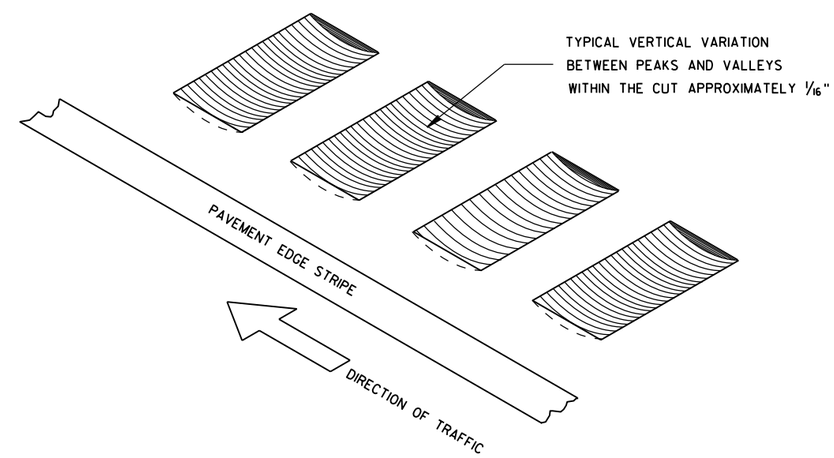

ISOMETRIC

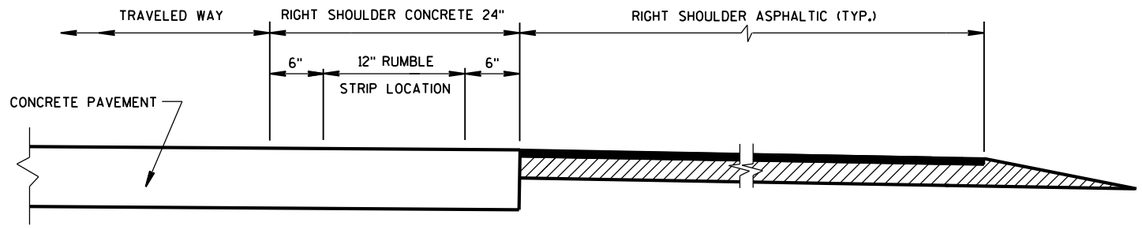

SECTION VIEW
CONCRETE PAVEMENT EXTENDS INTO RIGHT SHOULDER)

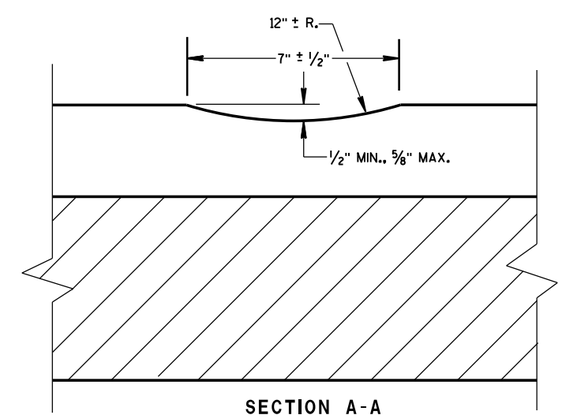

SECTION A-A

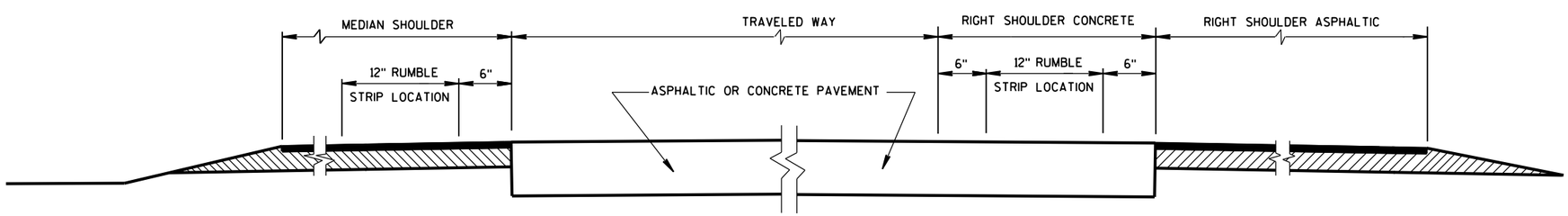

SECTION VIEW

TYPICAL LOCATIONS OF SHOULDER RUMBLE STRIPS
IN RURAL DIVIDED HIGHWAYS

(ONE ROADWAY IS SHOWN)

SHOULDER RUMBLE STRIP, MILLING

STATE OF WISCONSIN
DEPARTMENT OF TRANSPOR

6
S.D.D. 13 A 5-5a

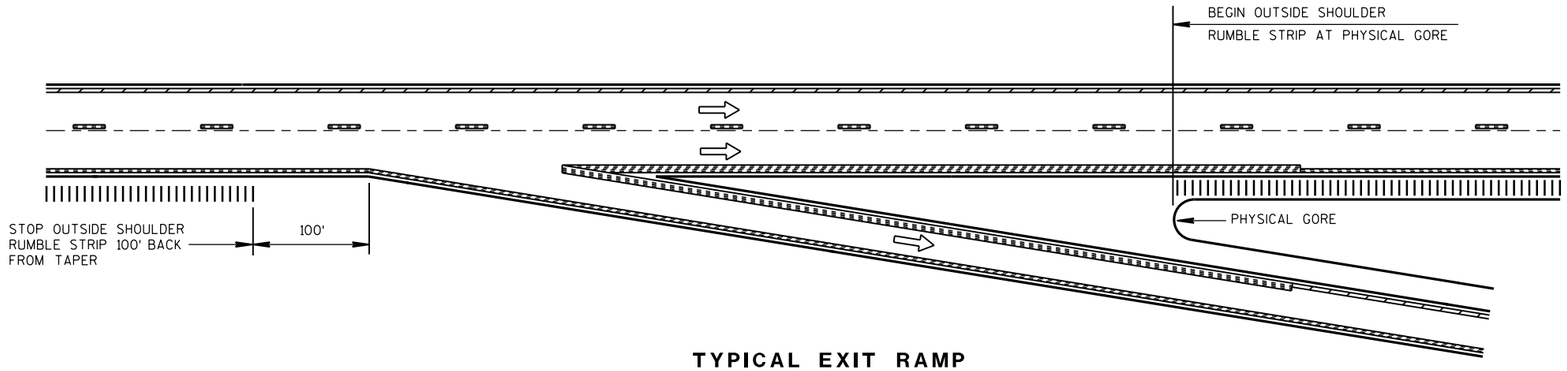

TYPICAL EXIT RAMP

NOTES:

NO RUMBLE STRIP ON EXIT, DIRECTIONAL, OR ENTRANCE RAMPS, EXCEPT NEAR THE ENTRANCE TAPER END AND ALONG THE PARALLEL RAMP AREA AS SHOWN.

PAVEMENT MARKING DETAILS AND SPECIFICATIONS ARE PROVIDED ELSEWHERE IN THE CONTRACT.

NOTE:
ARROW SYMBOL (⇨)
SHOWS DIRECTION OF TRAVEL

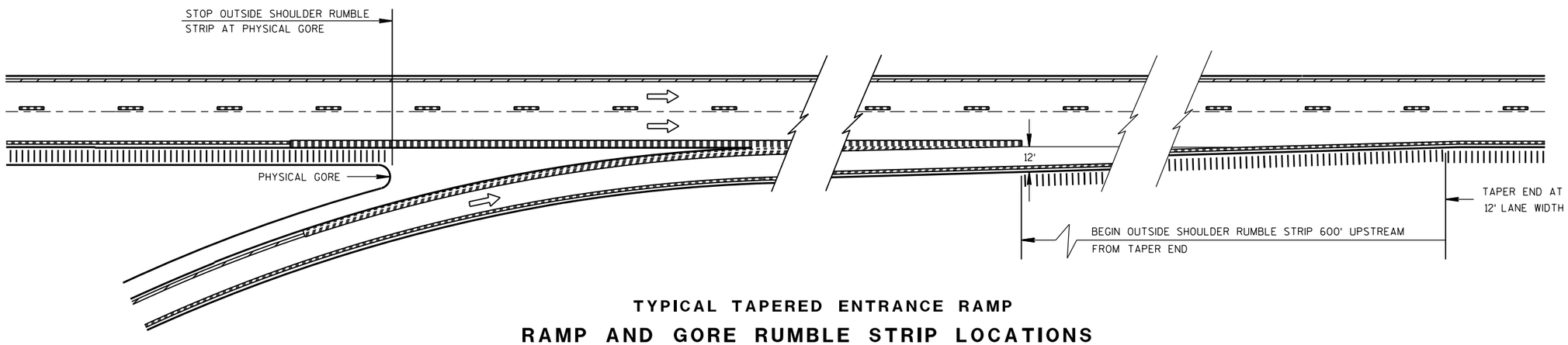

TYPICAL TAPERED ENTRANCE RAMP

RAMP AND GORE RUMBLE STRIP LOCATIONS

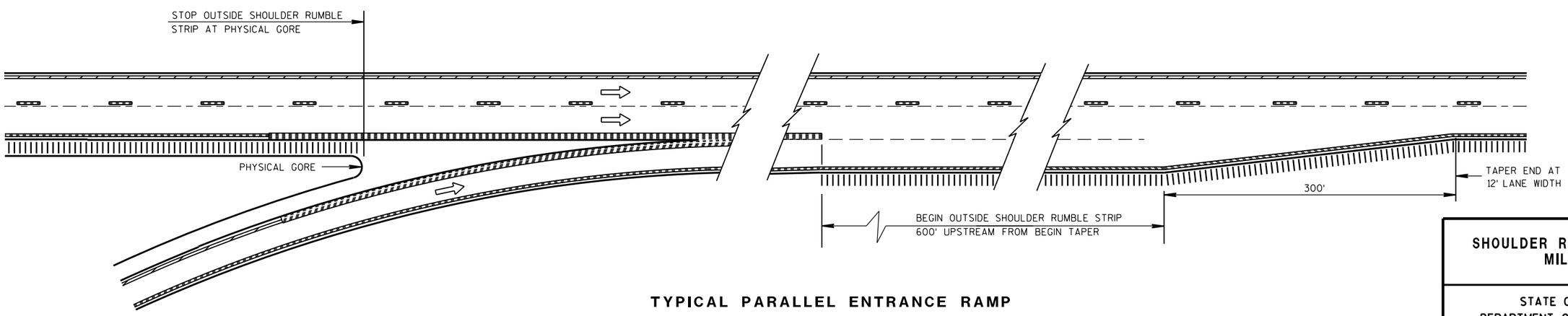

TYPICAL PARALLEL ENTRANCE RAMP

RAMP AND GORE RUMBLE STRIP LOCATIONS

SHOULDER RUMBLE STRIP, MILLING

STATE OF WISCONSIN
DEPARTMENT OF TRANSPORTATION

APPROVED
12/17/2012 — DATE
/S/ Jerry H. Zogg — ROADWAY STANDARDS DEVELOPMENT ENGINEER
FHWA

6

S.D.D. 13 A 5-5b

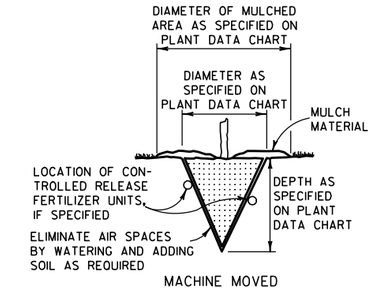

MACHINE MOVED

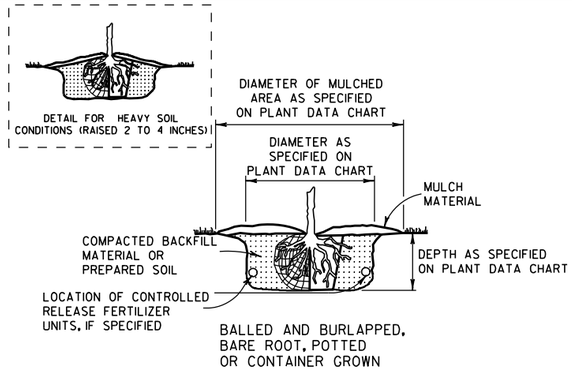

BALLED AND BURLAPPED, BARE ROOT, POTTED OR CONTAINER GROWN

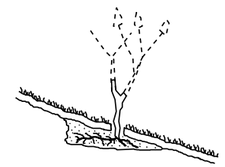

ACCOMMODATE ROOTS (SMOOTH AND STAGHORN SUMAC)

NOTE:
1) ENGINEER SHALL REQUIRE 3 SLITS IN POT TO SPEED DETERIORATION
2) METAL, PLASTIC OR OTHER NONDEGRADABLE POTS SHALL BE REMOVED PRIOR TO PLANTING

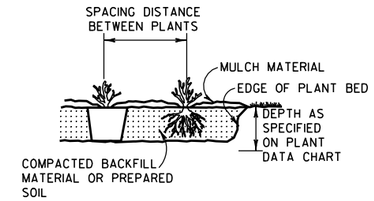

PREPARED BED (BARE ROOT AND POTTED)

PLANTING

TOP VIEW

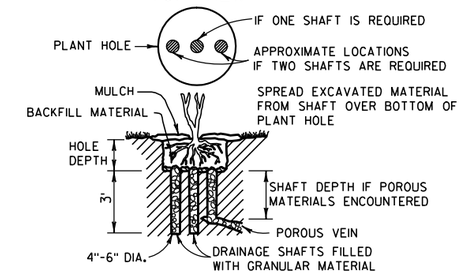

NOTE:
DRAINAGE SHAFT AS SPECIFIED ON PLANT DATA CHART

DRAINING

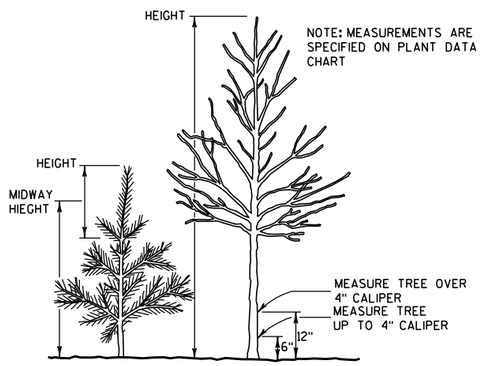

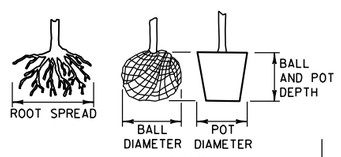

MEASURING

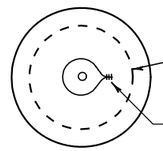

TOP VIEW

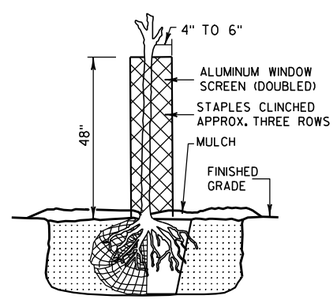

RODENT PROTECTION

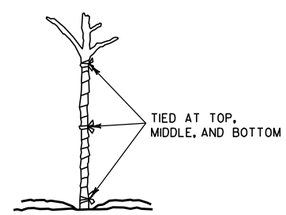

WRAPPING

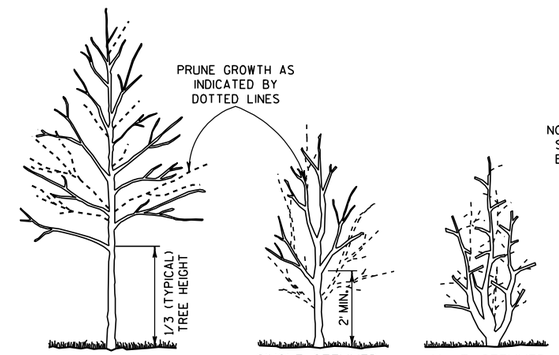

TALL DECIDUOUS TREES (ASH, MAPLE, LINDEN, OAK)

SINGLE STEMMED LOW DECIDUOUS TREES (CRABS AND OTHER SINGLE STEM TYPE)

MULTI-STEMMED LOW DECIDUOUS TREES OR LARGE SHRUBS (HAWTHORN, SERVICEBERRY)

NOTE: WHEN PRUNING, PRESERVE CHARACTER AND SHAPE OF TREE. AVOID LEAVING STUBS - REMOVE BRANCH OR TWIG BACK TO THE NEAREST CROTCH
1) PRUNE TO REMOVE DEAD AND BROKEN BRANCHES
2) PRUNE TO REMOVE BRANCHES THAT TOUCH OR ARE TOO CLOSE TO OTHER BRANCHES

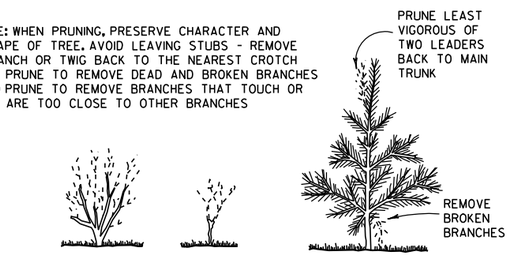

SHRUBS (GRAY DOGWOOD ARROWWOOD VIBURNUM)

SUMAC

TREE TYPE EVERGREENS (PINE, SPRUCE, FIR) EVERGREENS USUALLY ARE NOT PRUNED

PRUNING

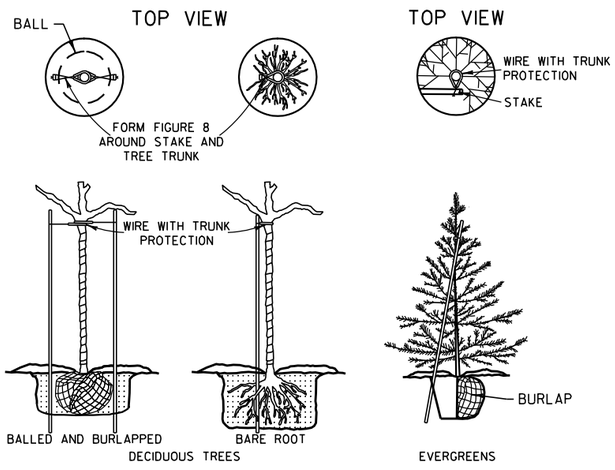

NOTE: BRACING STAKE
1) SHALL BE DRIVEN INTO THE GROUND AS CLOSE TO THE TREE AS POSSIBLE WITHOUT DAMAGING THE BRANCHES.
2) MAY BE DRIVEN AT SUCH AN ANGLE THAT IT DOES NOT PENETRATE THE BALL OR POT.
3) SHALL NOT PROTRUDE ABOVE THE TOP OF THE TREE; AND
4) SHALL HAVE A HOLE NEAR THE TOP TO HOLD THE WIRE IN PLACE.

BRACING

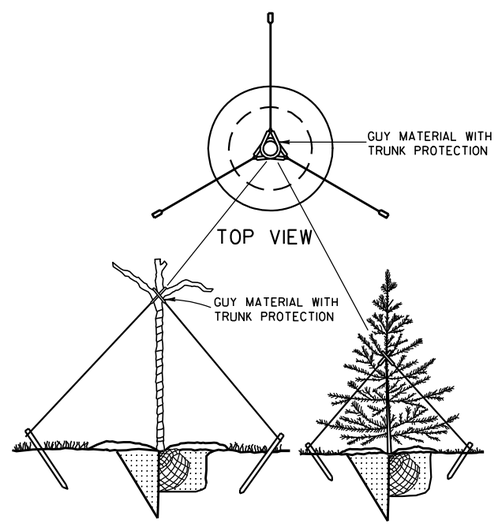

GUYING

PRUNE LARGER SHRUBS BY REMOVING FROM ONE-THIRD TO ONE-HALF TOP GROWTH AS INDICATED BY DOTTED LINE

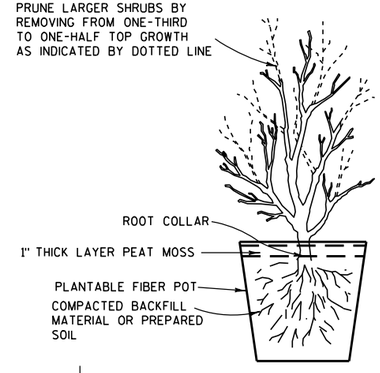

POTTING

NOTES

DETAILS OF CONSTRUCTION NOT SHOWN ON THIS DRAWING SHALL CONFORM TO THE PERTINENT REQUIREMENTS OF THE STANDARD SPECIFICATIONS AND THE APPLICABLE SPECIAL PROVISIONS.

BRACING, WRAPPING, GUYING, RODENT PROTECTION, FERTILIZER AND MULCH SHALL BE USED ONLY WHEN SPECIFIED ON THE PLANT DATA CHART (PART OF PLAN) OR SPECIAL PROVISIONS.

TREE PLANTING DETAIL

STATE OF WISCONSIN
DEPARTMENT OF TRANSPORTATION

APPROVED
4/11/94 — DATE
/S/ Rory L. Rhinesmith — CHIEF METHODS DEVELOPMENT ENGINEER
FHWA

6
S.D.D. 14 A 2-1

GENERAL NOTES

1. WOOD OR STEEL POSTS (w6X9 OR w6X8.5) MAY BE USED. DO NOT INTERMIX WOOD AND STEEL POSTS. INSTALL STEEL POSTS WITH HOLES ON APPROACHING TRAFFIC SIDE.

2. USE WOOD OR APPROVED PLASTIC BLOCKOUTS. WOOD BLOCKOUTS MAY BE CONSTRUCTED OUT OF TWO OR MORE WOOD BLOCKOUTS. SEE ALTERNATE WOOD BLOCKOUT DETAIL. DIMENSIONS OF APPROVED PLASTIC BLOCKOUTS MAY VARY.

3. IF ROCK IS ENCOUNTERED DURING EXCAVATION, PROVIDE A HOLE 12 INCHES IN DIAMETER EXTENDING 20 INCHES DEEP INTO THE ROCK. PLACE APPROXIMATELY 2½ INCHES OF GRANULAR MATERIAL IN THE BOTTOM OF THE HOLE. CUT THE POSTS THE TO LENGTH AMD INSTALL. BACKFILL WITH EXCAVATED MATERIAL AND COMPACT. BACKFILL IS TO BE FREE OF LARGE ROCKS.

4. WHEN THE DISTANCE FROM BACK OF POST TO SHOULDER HINGE POINT IS LESS THAN 2 FEET INSTALL LONGER POST AT HALF POST SPACING (K).

5. FOR NEW MGS INSTALLATION TOP OF W-BEAM RAIL TOLERANCE IS ± 1". FOR EXISTING MGS INSTALLATION TOP OF W-BEAM IS BETWEEN 27¾" TO 32".

6. WHEN USING STEEL POST AND WOOD BLOCKOUTS INSTALL FOUR 16D GALVANIZED NAILS. INSTALL NAILS AT THE BACK CORNERS OF THE BLOCK AND BEND THE NAILS OVER THE FLANGE OF THE STEEL POST.

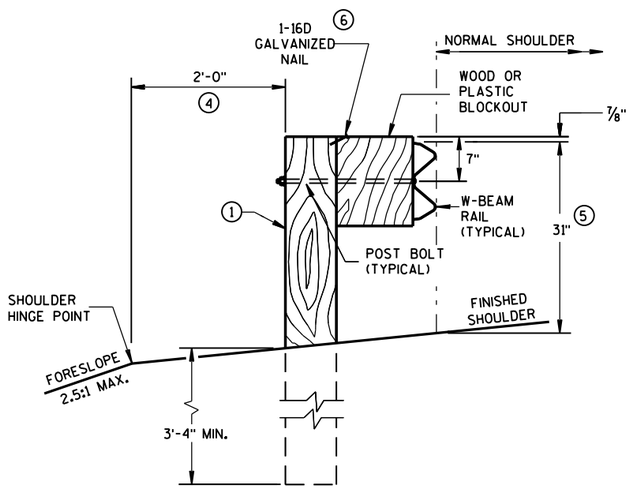

END VIEW

LOCATED ALONG A ROADWAY SHOULDER STANDARD INSTALLATION

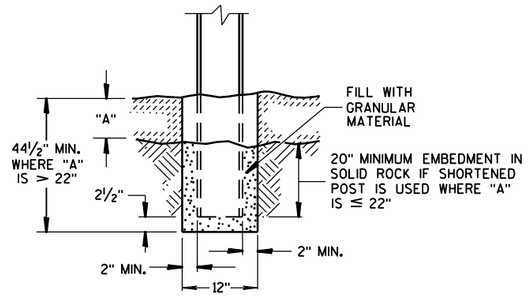

END VIEW

SETTING STEEL OR WOOD POST IN ROCK (3)

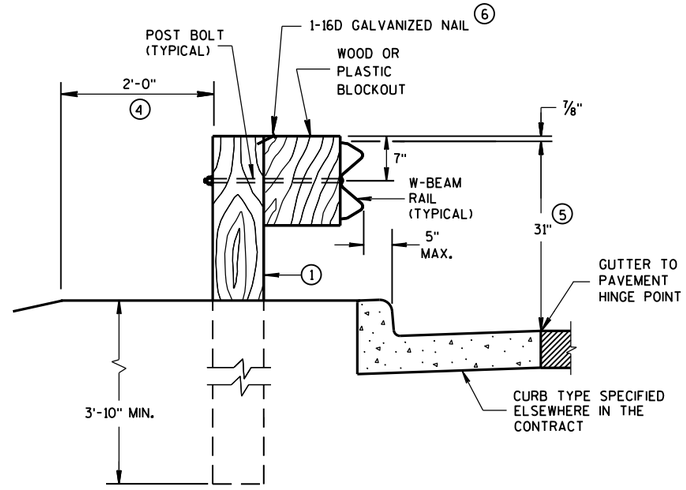

END VIEW

LOCATED ALONG A CURBED ROADWAY

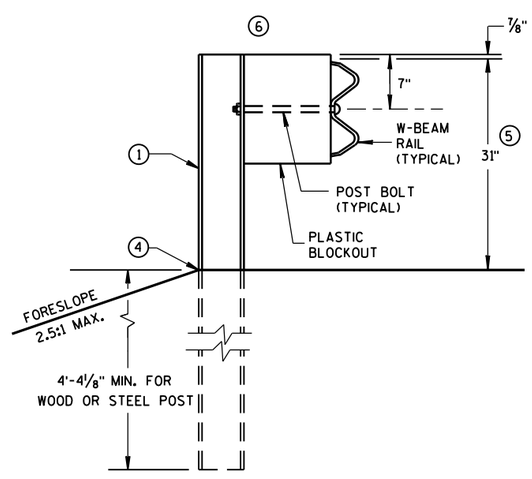

END VIEW

MGS LONGER POST AT HALFPOST SPACING W BEAM (K)

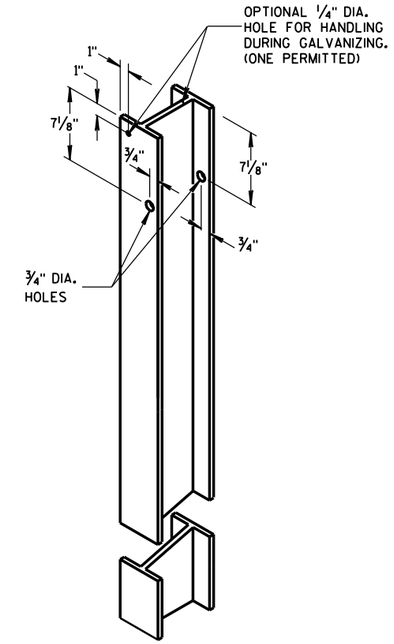

STEEL POST & HOLE PUNCHING DETAIL (w6X9) (1)

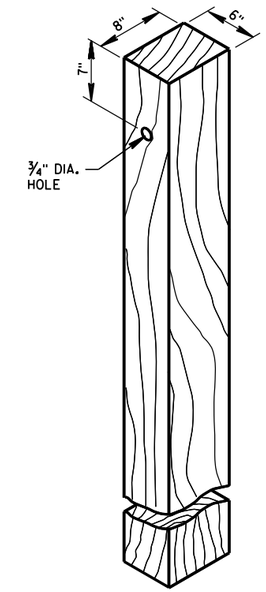

WOOD POST (6" X 8") NOMINAL (1)

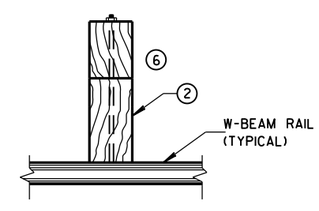

PLAN VIEW

WOOD POST, BLOCKOUT & BEAM

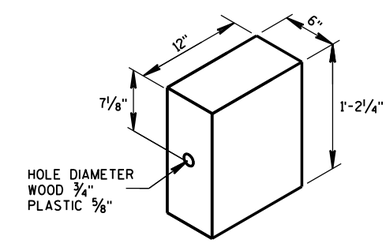

WOOD OR PLASTIC BLOCKOUT (2)

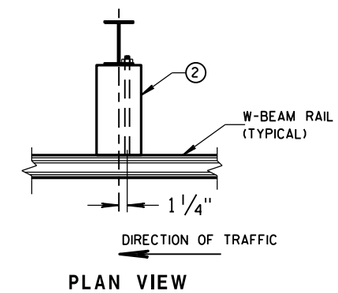

PLAN VIEW

STEEL POST, PLASTIC BLOCKOUT & BEAM

MIDWEST GUARDRAIL SYSTEM (MGS) GUARDRAIL

STATE OF WISCONSIN
DEPARTMENT OF TRANSPO

6

S.D.D. 14 B 42-3a

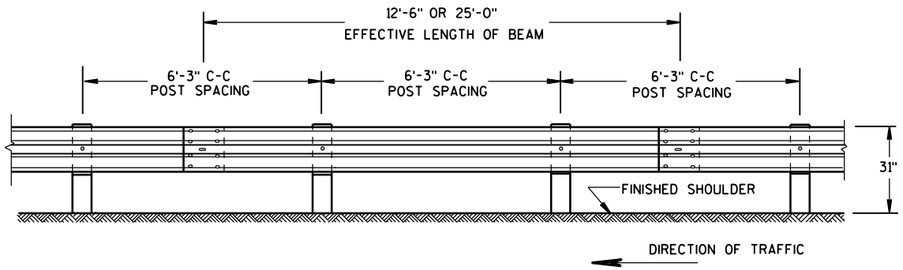

FRONT VIEW

POST SPACING STANDARD INSTALLATION

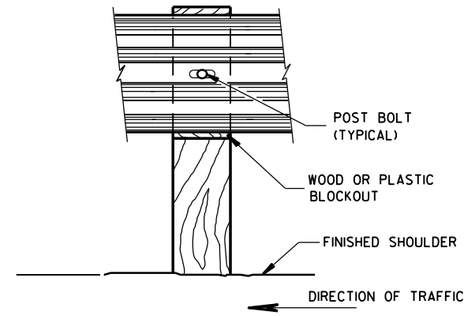

FRONT VIEW AT WOOD POST

GENERAL NOTES

(7) PROVIDE SILVER REFLECTIVE SHEETING ON ALL REFLECTORS EXCEPT THOSE LOCATED ALONG THE LEFT EDGE OF ONE-WAY ROADWAYS, WHICH SHALL BE PROVIDED WITH YELLOW REFLECTIVE SHEETING. SHEETING IS TYPE H. SEE STANDARD SPECIFICATION 637.

(8) DO NOT INSTALL REFLECTORS ON THE FIRST 50 FEET OF THE APPROACH END OF THE ENERGY ABSORBING TERMINAL. RAIL SPLICE LOCATIONS ARE THE ONLY ACCEPTABLE LOCATIONS FOR REFLECTORS.

(9) REVERSE EVERY OTHER REFLECTOR FOR 2-WAY VISIBILITY. THE CONTRACTOR MAY FURNISH TWO-SIDED REFLECTORS IN LIEU OF ONE-SIDED REFLECTORS.

(10) PROVIDE AN ANGLE OF BEND OF 90° ± 1° FOR TWO-SIDED REFLECTORS.

(11) 25 FEET OF HALF POST SPACING IS REQUIRED ON APPROACH AND DEPARTURE ENDS OF QUARTER POST SPACING.

POST BOLTS ARE A 5/8" DIAMETER ASTM A307 GUARDRAIL BOLT. A POST BOLT REQUIRES 5/8" DIAMETER A563A DOUBLE RECESSED (DR) HEAVY HEX NUT AND 5/8" DIAMETER F844 FLAT WASHER. POST BOLTS MAY BE LONGER IF MULTIPLE BLOCKOUTS ARE BEING USED.

GUARD RAIL SPLICE BOLTS ARE A 5/8" DIAMETER ASTM A307 GUARDRAIL HEAD BOLT. A GUARDRAIL SPLICE BOLT REQUIRES 5/8" DIAMETER A563A DOUBLE RECESSED (DR) HEAVY HEX NUT.

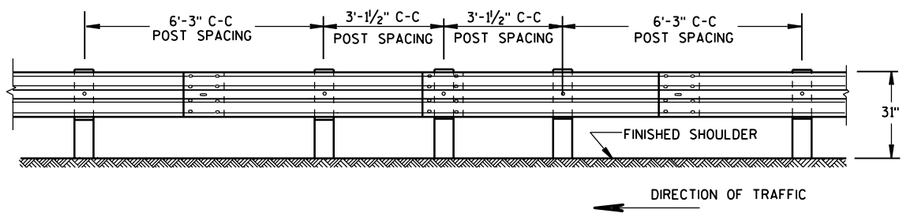

FRONT VIEW

HALF POST SPACING (HS) AND HALF POST SPACING WITH LONGER POSTS (K)

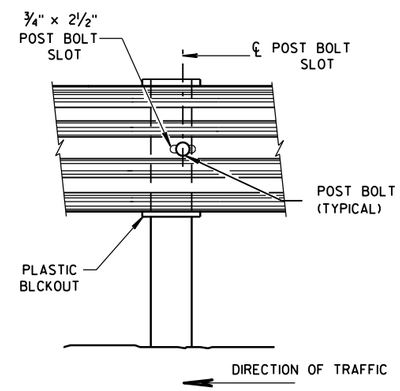

FRONT VIEW AT STEEL POST

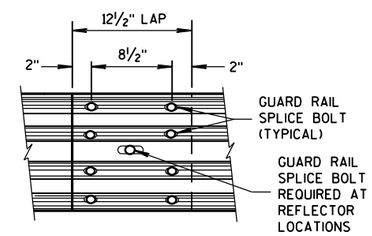

FRONT VIEW

MID-SPAN BEAM SPLICE

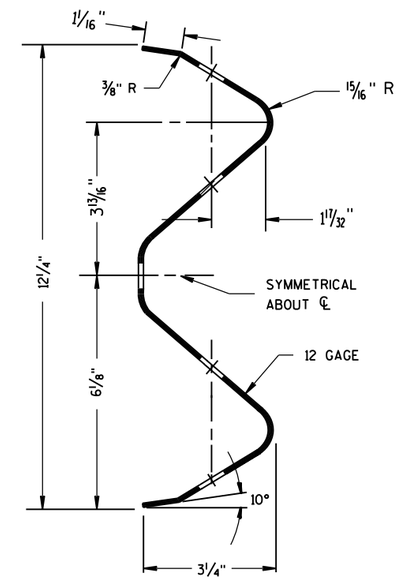

SECTION THRU W-BEAM RAIL

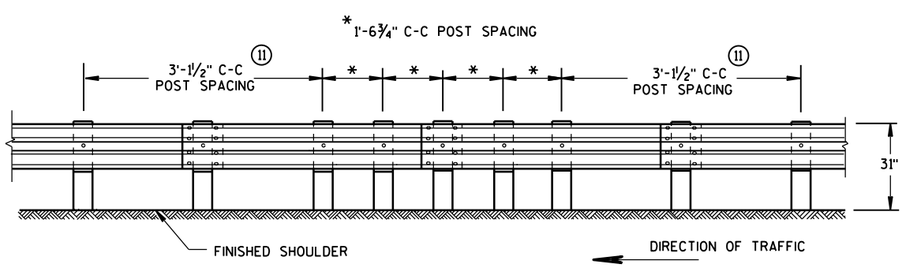

FRONT VIEW

QUARTER POST SPACING (QS)

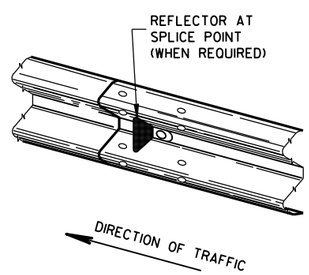

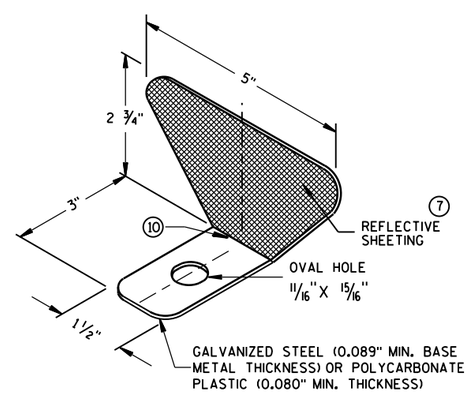

ONE SIDED REFLECTOR DETAIL AND TYPICAL INSTALLATION (7)

REFLECTOR SPACING (8)

	BEAM GUARD LENGTH	REFLECTOR SPACING	NO. SURFACES REFLECTORIZED	MIN. NO. REFLECTORS
ONE WAY TRAFFIC	< 200' > 200'	50' C-C 100' C-C	1 1	3
TWO WAY TRAFFIC	< 200' > 200'	25' C-C 50' C-C	1 (9) 1	6
TWO WAY TRAFFIC	< 200' > 200'	50' C-C 100' C-C	2 (10) 2	3

MIDWEST GUARDRAIL SYSTEM (MGS) GUARDRAIL

STATE OF WISCONSIN
DEPARTMENT OF TRANSPOR

6

6

S.D.D. 14 B 42-3b

S.D.D. 14 B 42-3b

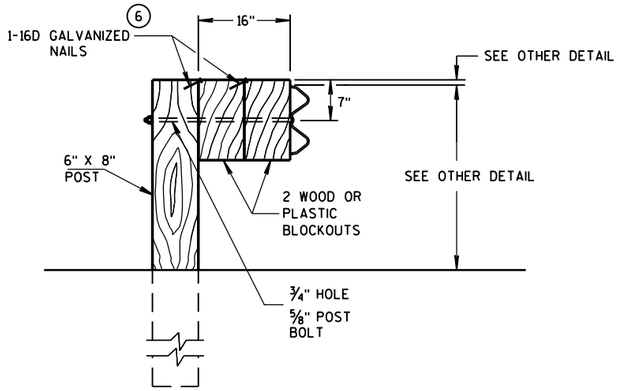

DETAIL FOR 16" BLOCKOUT DEPTH

IT IS ACCEPTABLE TO USE BLOCKOUTS UP TO 16" DEEP TO INCREASE THE POST OFFSET TO AVOID UNDERGROUND OBSTACLES. THERE IS NO LIMIT TO THE NUMBER OF POSTS THAT CAN HAVE ADDITIONAL BLOCKOUTS UP TO 16" DEEP.

NOTE: 1. ALL FILLETS SHALL HAVE A MINIMUM RADIUS OF 1/16".
2. IF THE BOLT EXTENDS MORE THAN 1/4" FROM THE NUT THE BOLT SHOULD BE TRIMMED BACK.

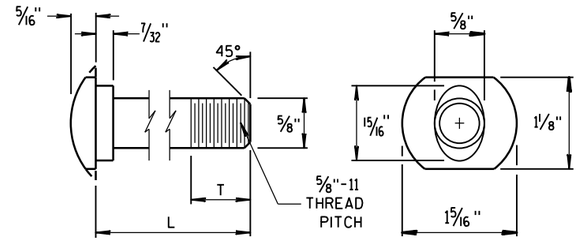

POST BOLT TABLE

L	T (MIN.)
1 1/4"	1 1/8"
2"	1 3/4"
10"	4"
14"	4 1/16"
18"	4"
21"	4 1/16"
25"	4"

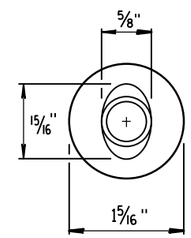

ALTERNATE BOLT HEAD

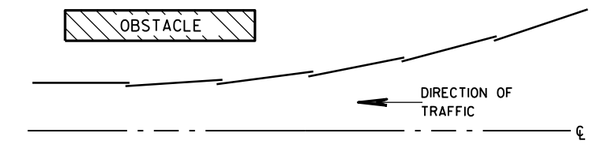

PLAN VIEW

BEAM LAPPING DETAIL

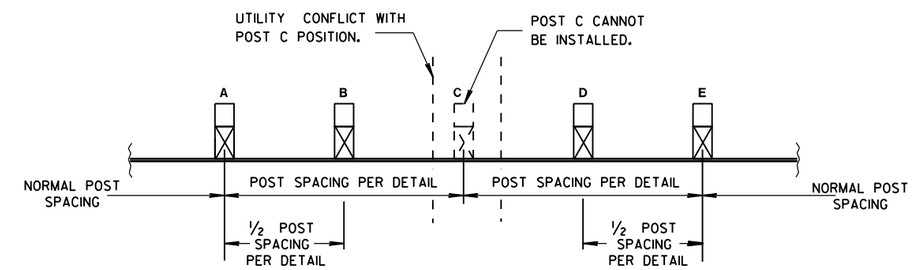

POST DRIVING FOR CONTINUOUS UNDERGROUND OBSTRUCTION

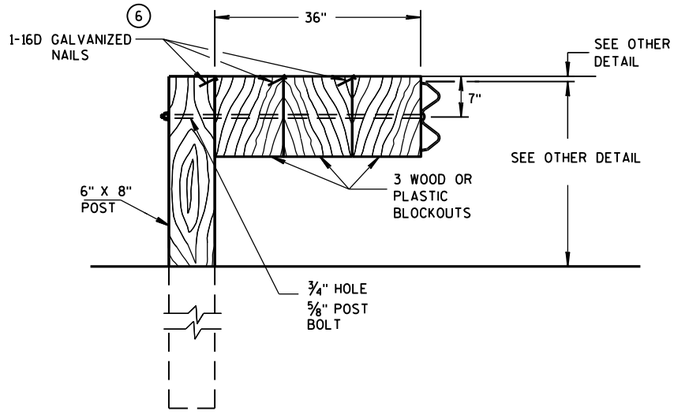

DETAIL FOR 36" BLOCKOUT DEPTH

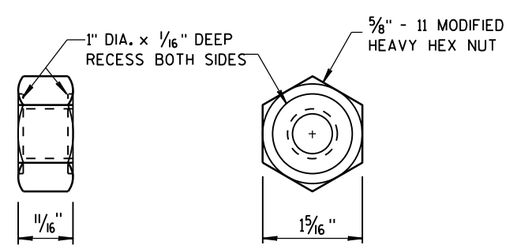

POST BOLT AND RECESS NUT

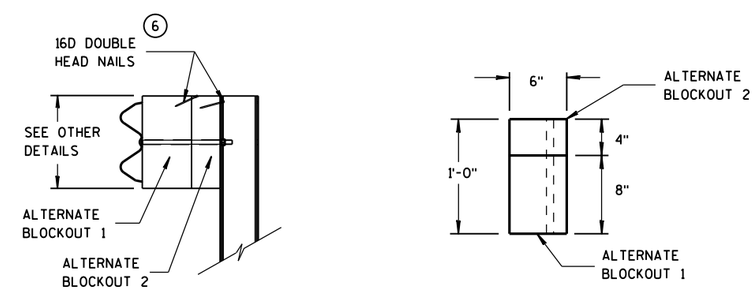

SIDE VIEW TOP VIEW

ALTERNATE WOOD BLOCKOUT DETAIL

NOTES: UNDER SPECIAL CIRCUMSTANCES, SUCH AS AVOIDING OBSTACLES THAT ARE NOT RELOCATED, IT IS ACCEPTABLE TO INSTALL ADDITIONAL BLOCKOUTS TO OBTAIN UP TO 36" DEPTH FOR ONE OR TWO POSTS IN A SECTION OF GUARDRAIL.

DO NOT USE 16" OR 36" BLOCKOUTS IF IT CAUSES THE POST TO BE DRIVEN BEYOND SHOULDER HINGE POINT OR CAUSES A FIXED OBJECT TO BE WITHIN THE DEFLECTION DISTANCE OF THE BARRIER.

MIDWEST GUARDRAIL SYSTEM (MGS) GUARDRAIL

STATE OF WISCONSIN
DEPARTMENT OF TRANSPORTATION

APPROVED
June 2014 — DATE
/S/ Jerry H. Zogg — ROADWAY STANDARDS DEVELOPMENT ENGINEER
FHWA

6

S.D.D. 14 B 42-3c

GENERAL NOTES

(A) THE SLOPE IN THE AREA BOUNDED BY THE GRADELINE, THE HINGE POINT LINE (HPL), AND THE CLEAR ZONE LIMITS (CZL) SHALL BE 4:1 OR FLATTER.

(B) AFTER FINAL ASSEMBLY, RECHECK CABLE TO BE SURE IT IS TAUT AND HAS NOT RELAXED.

(C) DIFFERENT MANUFACTURES REQUIRE DIFFERENT PERFORATED W-BEAM RAIL END PANELS. SEE MANUFACTURES INFORMATION.

(D) THE TOP OF THE STEEL TUBE ON POST 1 AND POST 2 SHALL NOT BE MORE THAN 3" ABOVE THE FINISH GROUND ELEVATION.

(F) ATTACH ALUMINUM SHEET TO E.A.T. HEAD USING 4 STAINLESS STEEL SELF-TAPPING SCREWS. ONE SCREW PER CORNER.

(G) 1/2" DIAMETER X 3" LONG LAG BOLT AND WASHER.

(H) HARDWARE VARIES BETWEEN DIFFERENT MANUFACTURES. SEE MANUFACTURE'S DRAWING FOR INFORMATION.

(I) DIMENSIONS MAY VARY. SEE MANUFACTURE'S INFORMATION.

SEE SDD 14B42 FOR MORE INFORMATION.

* DO NOT ATTACH BLOCKOUTS TO POSTS 1 AND 2.

DO NOT INSTALL REFLECTORS ON THE FIRST 50 FEET OF THE APPROACH END OF THE ENERGY ABSORBING TERMINAL.

W-BEAM RAIL SPLICES ARE LOCATED AT POST NUMBER 3, AND BETWEEN POST 5 AND 6, BETWEEN POSTS 7 AND 8, AND MIDDLE OF THE SPAN AFTER POST 9.

THE CENTER OF THE UPPER 3 1/2" DIAMETER HOLE ON POST NUMBER 3 THROUGH POST 9 IS TO BE FLUSH WITH THE GROUND LINE UP TO A MAXIMUM OF 2" ABOVE GROUND LINE.

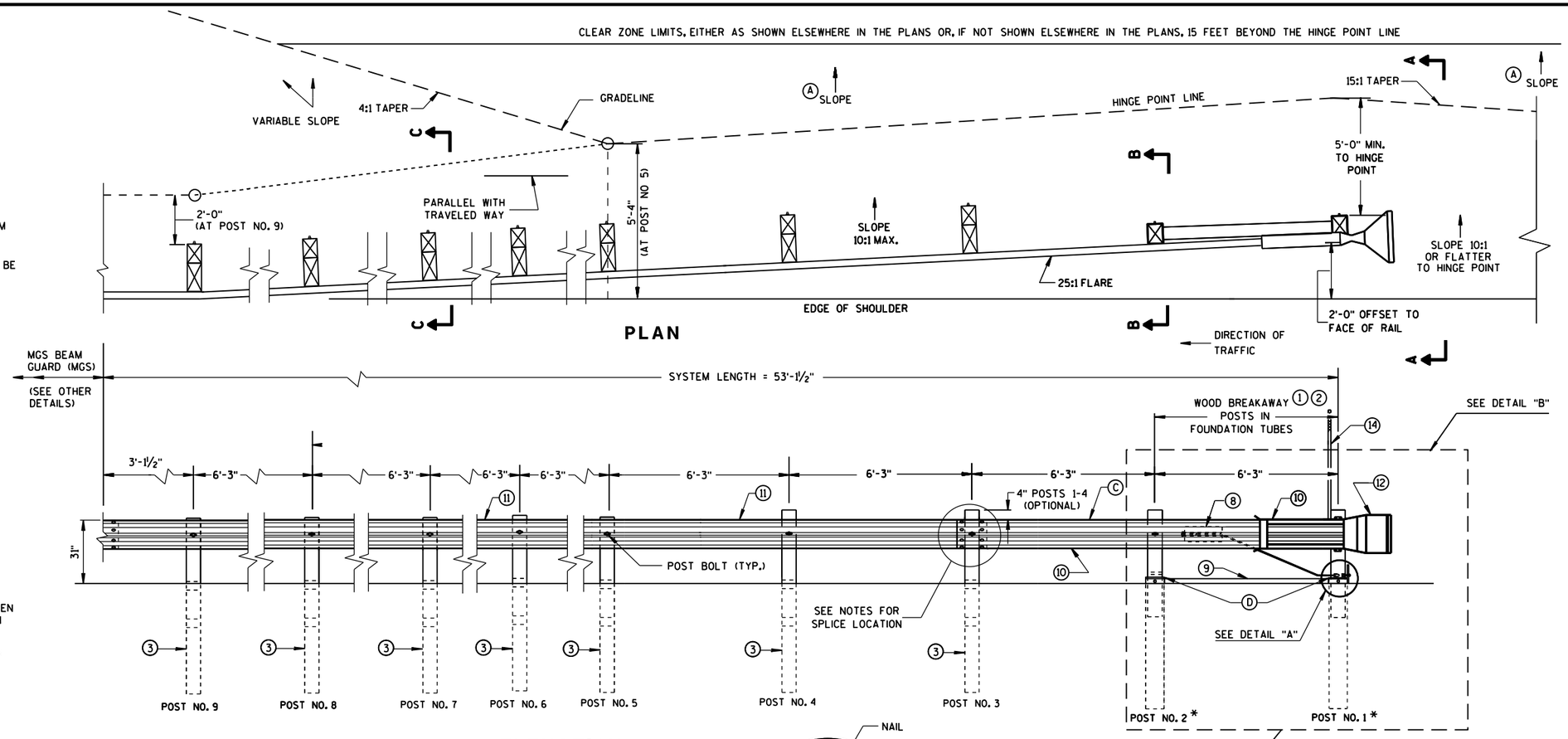

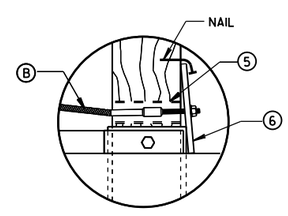

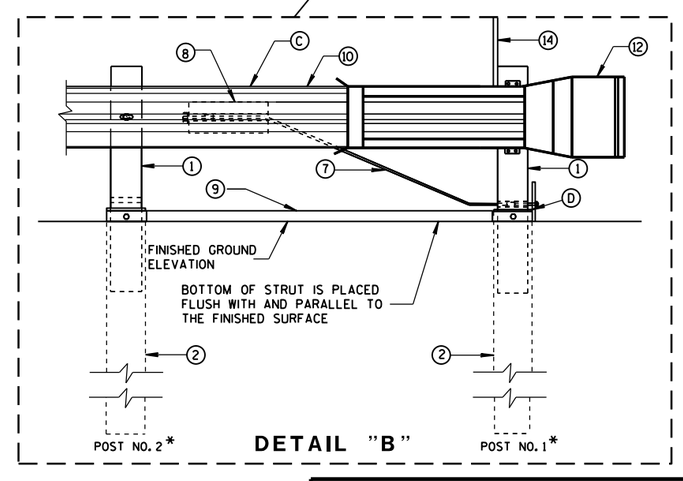

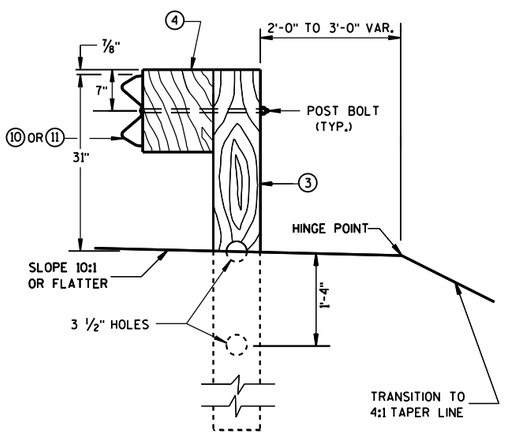

SECTION C-C
TYPICAL AT POST NOS. 3-9

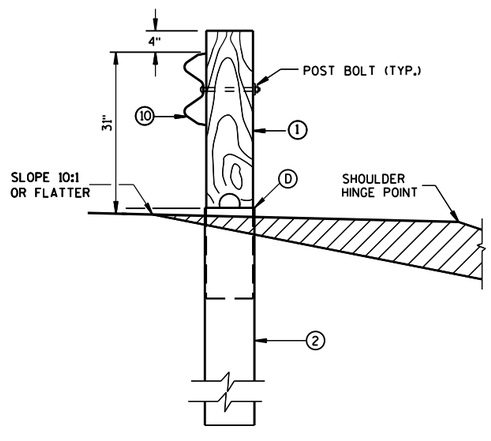

SECTION B-B
TYPICAL AT POST NO. 2*

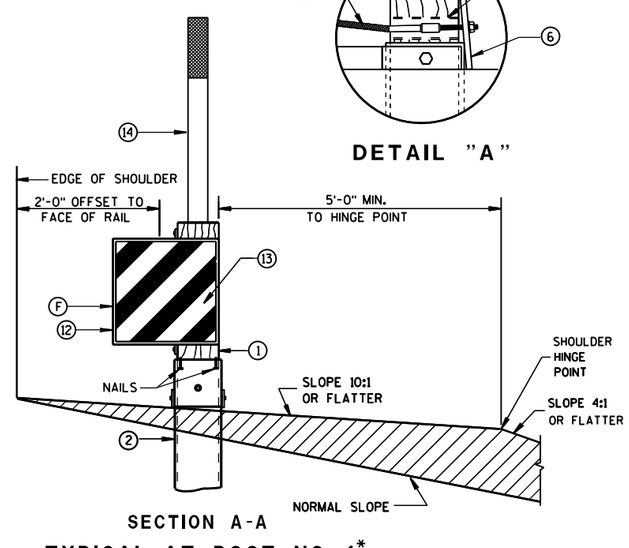

SECTION A-A
TYPICAL AT POST NO. 1*

MIDWEST GUARDRAIL SYSTEM ENERGY ABSORBING TERMINAL (MGS)

STATE OF WISCONSIN
DEPARTMENT OF TRANSPO

S.D.D. 14 B 44-2a

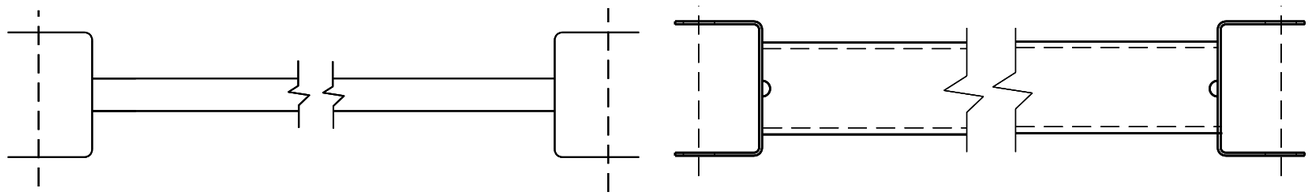

GENERIC GROUND STRUT (9) (H)

BILL OF MATERIALS

PART NO.	DESCRIPTION MATERIALS PROVIDED BY MGS EAT MANUFACTURER. SEE MANUFACTURER'S DETAILS FOR MORE INFORMATION.
1	WOOD BREAKAWAY POST
2	6" X 8" X 0.188", 6'-0" LONG FOUNDATION TUBE AT POSTS 1 AND 2
3	WOOD CRT
4	WOOD BLOCKOUT
5	PIPE SLEEVE
6	BEARING PLATE
7	BCT CABLE ASSEMBLY
8	ANCHOR CABLE BOX
9	GROUND STRUT
10	PERFORATED W-BEAM RAIL END PANEL, 12'-6" LONG.
11	STANDARD W-BEAM RAIL. MULTIPLE SECTIONS REQUIRED. SECTIONS VARY IN LENGTH.
12	END SECTION EAT
13	0.040" ALUMINUM SHEET WITH REFLECTIVE SHEETING TYPE F PER SECTION 637 OF THE STANDARD SPECIFICATIONS
14	EAT MARKER POST - YELLOW (SEE APPROVED PRODUCTS LIST)

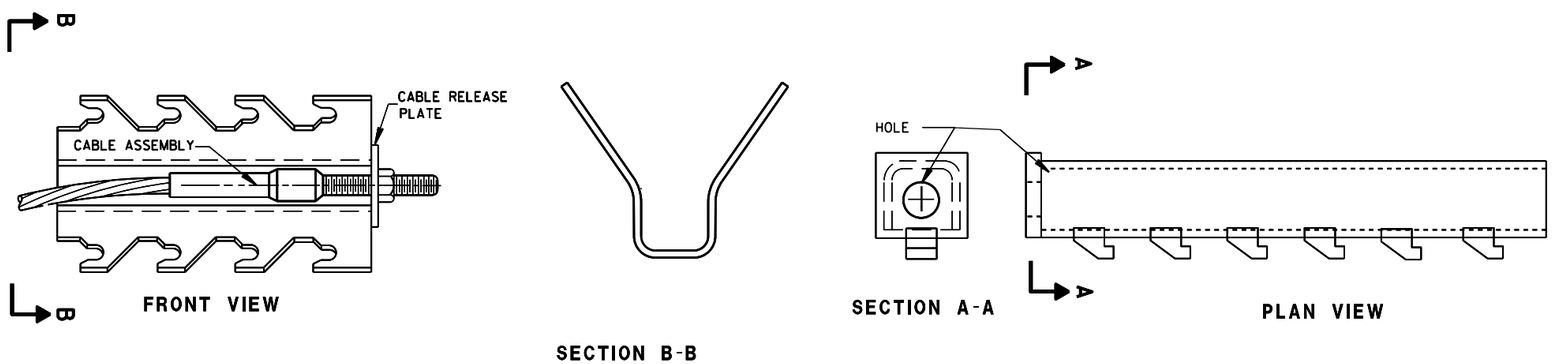

GENERIC ANCHOR CABLE BOX (8) (H)

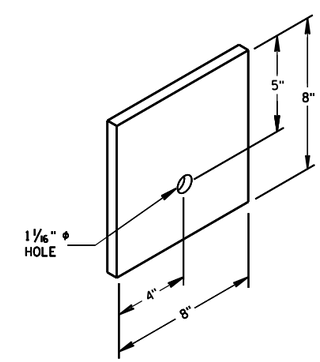

BEARING PLATE (6)

6

6

S.D.D. 14 B 44-2b

S.D.D. 14 B 44-2b

MIDWEST GUARDRAIL SYSTEM
ENERGY ABSORBING TERMINAL
(MGS)

STATE OF WISCONSIN
DEPARTMENT OF TRANSPOI

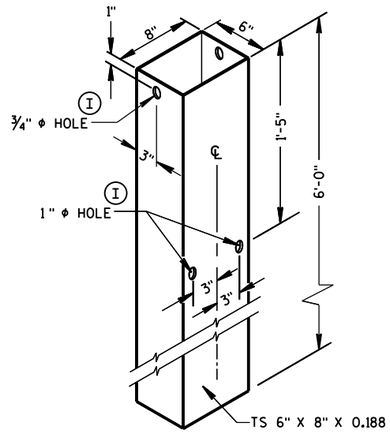

FOUNDATION TUBE (2)

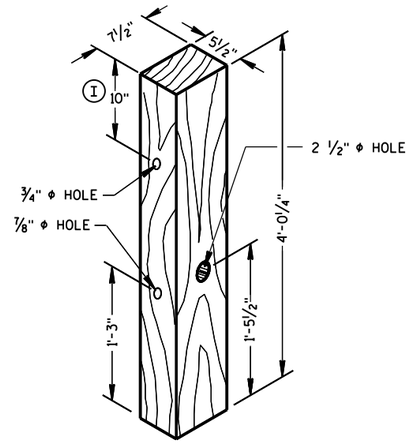

POSTS NUMBER 1 AND 2

WOOD BREAKAWAY POST (1)

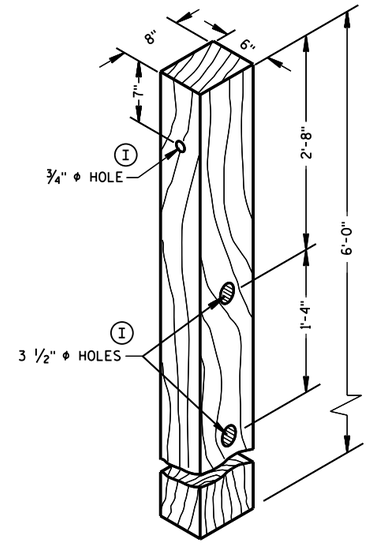

POSTS NUMBER 3-9

WOOD CRT POST (3)

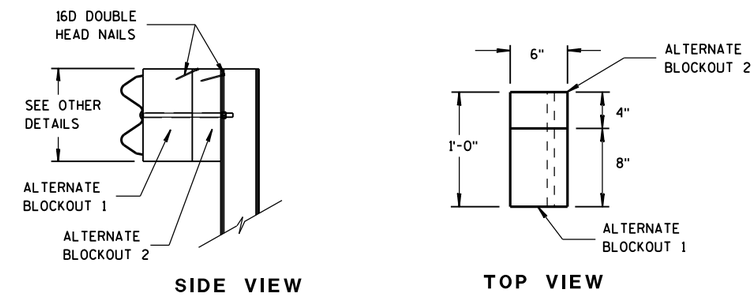

ALTERNATE WOOD BLOCKOUT DETAIL

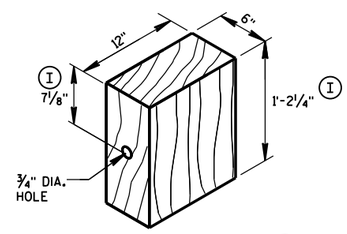

WOOD BLOCKOUT (4)

REQ'D. AT ALL POSTS EXCEPT POST NO'S 1 & 2

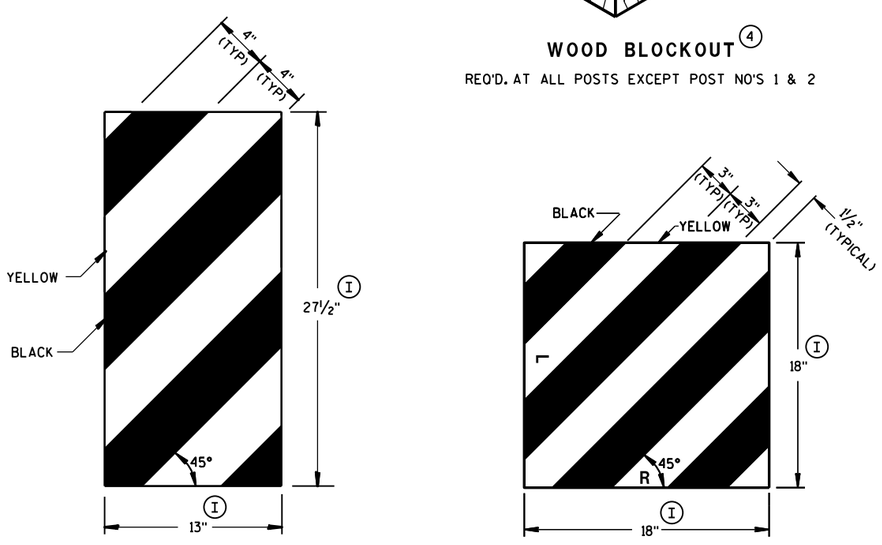

GENERIC REFLECTIVE SHEETING (13) (H)

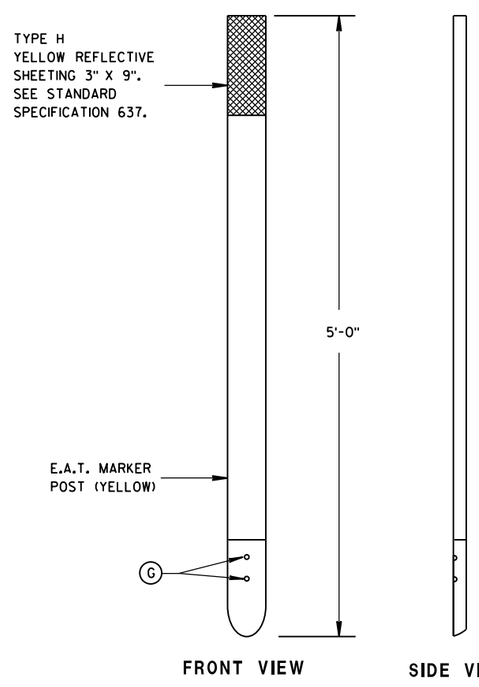

E.A.T. MARKER POST (14)

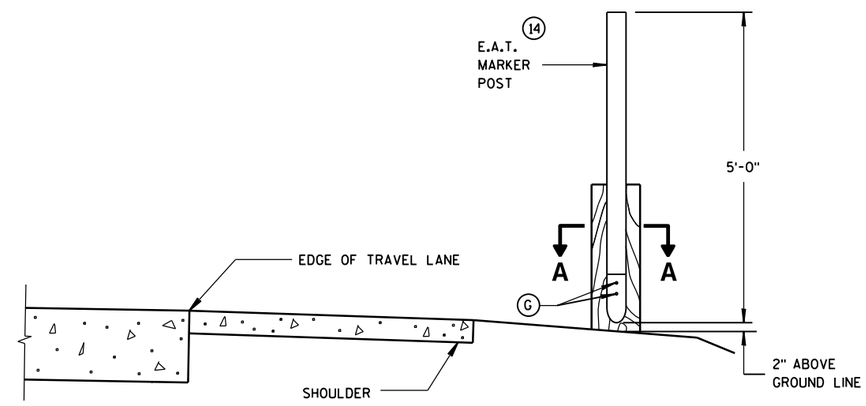

TYPICAL INSTALLATION OF E.A.T. MARKER POST BACKSIDE OF POST NO. 1

(E.A.T. AND RAIL REMOVED FOR CLARITY)

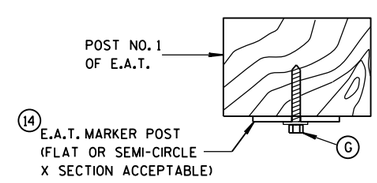

SECTION A-A

MIDWEST GUARDRAIL SYSTEM ENERGY ABSORBING TERMINAL (MGS)

STATE OF WISCONSIN
DEPARTMENT OF TRANSPORTATION

APPROVED
June 2014 — DATE
/S/ Jerry H. Zogg — ROADWAY STANDARDS DEVELOPMENT ENGINEER
FHWA

6

6

S.D.D. 14 B 44-2c

S.D.D. 14 B 44-2c

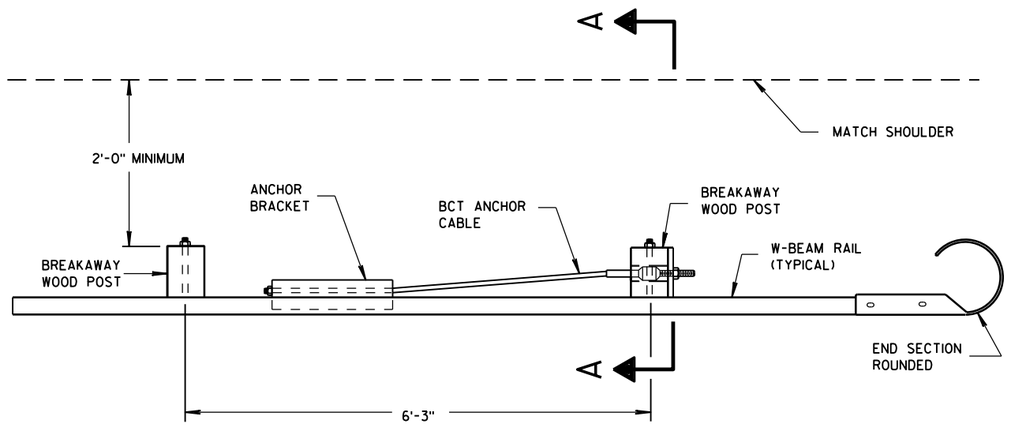

PLAN VIEW

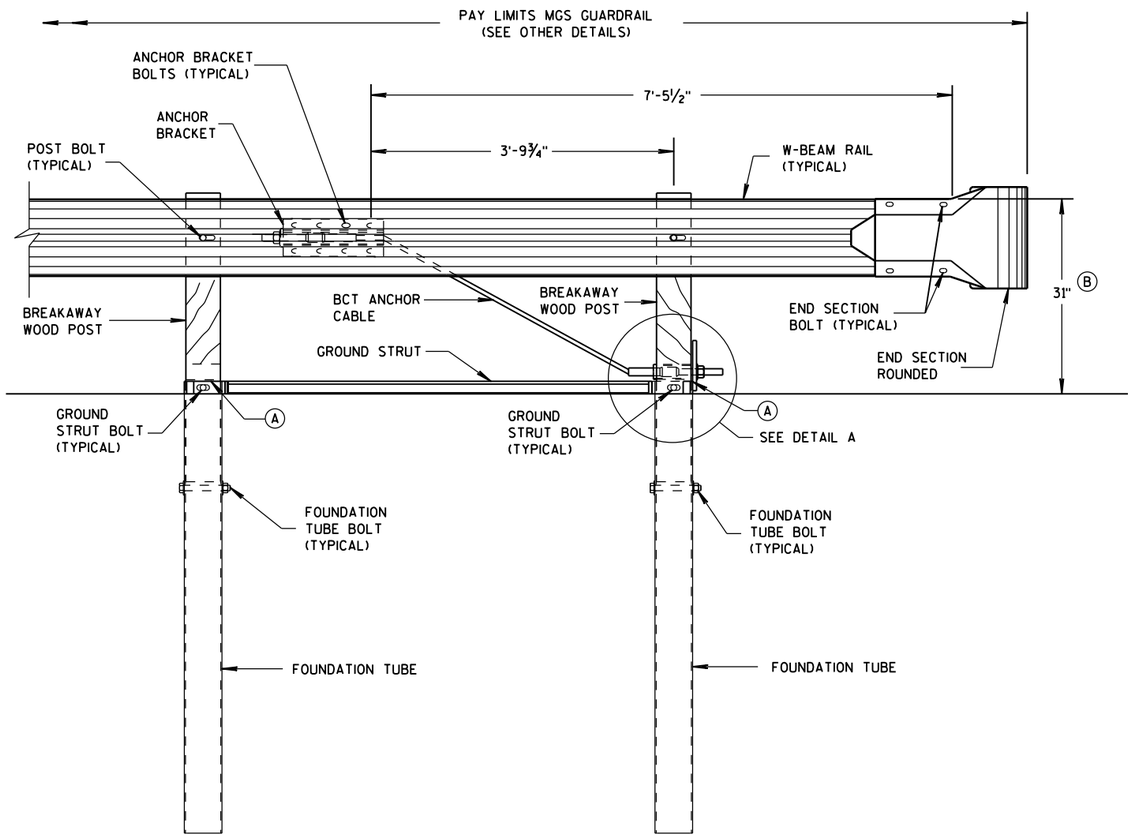

FRONT VIEW

END RAIL DETAIL

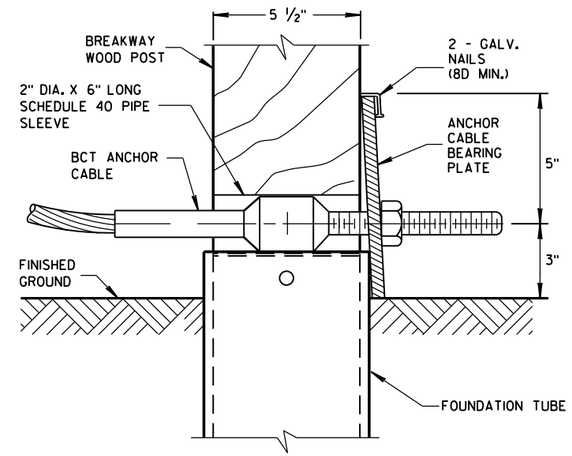

DETAIL A

POST NO. 1
GROUNG STRUT NOT SHOWN FOR CLARITY.

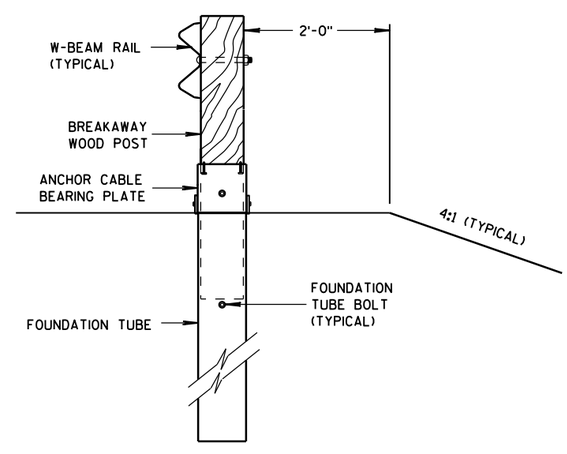

SECTION A-A

GENERAL NOTES

SEE SDD 14 B 42 FOR MORE INFORMATION.

END SECTION BOLTS AND NUTS HAVE THE SAME MATERIAL REQUIREMENTS AS SPLICE BOLTS.

FOUNDATION TUBE BOLTS ARE ⅞" DIAMETER ASTM A307 HEX HEAD BOLT. FOUNDATION TUBE BOLTS REQUIRE ASTM A563 A NUT AND TWO ASTM F844 ⅞" DIAMETER FLAT WASHERS. INSTALL ONE WASHER UNDER BOLT HEAD AND ONE WASHER UNDER NUT.

ANCHOR BRACKET AND GROUND STRUT BOLTS ARE A ⅝" DIAMETER ASTM A307 HEX HEAD BOLT. ANCHOR BRACKET BOLTS REQUIRE ASTM A563 A NUT AND TWO ASTM F844 ⅝" DIAMETER FLAT WASHERS. INSTALL ONE WASHER UNDER BOLT HEAD AND ONE WASHER UNDER NUT.

W-BEAM END SECTION ROUNDED HAS THE SAME MATERIAL PROPERTIES AS STANDARD STEEL RAIL.

(A) TOP OF FOUNDATION TUBE SHALL BE NO MORE THAN 3" ABOVE FINISHED GROUND.

(B) FOR NEW CONSTRUCTION TOP OF RAIL IS 31" ± 1".
FOR EXISTING INSTALLATIONS TOP OF RAIL IS BETWEEN 27¾" TO 32" ± 1".

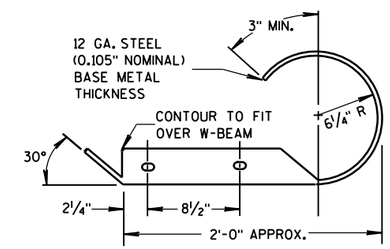

PLAN VIEW

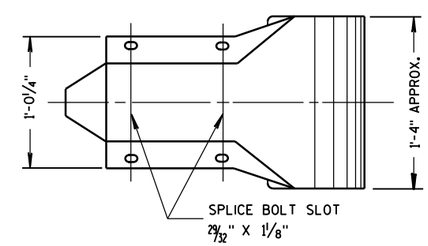

FRONT VIEW

W BEAM END SECTION ROUNDED

MIDWEST GUARDRAIL SYSTEM (MGS) TYPE 2 TERMINAL

STATE OF WISCONSIN
DEPARTMENT OF TRANSPO

6

S.D.D. 14 B 47-2a

GENERAL NOTES

BCT ANCHOR CABLE IS A ¾" DIAMETER 6X19 IWRC IPS GALVANIZED WIRE ROPE. THE SWAGED FITTINGS AND STUD ARE REQUIRED. END FITTING SHALL BE MACHINED FROM HOT-ROLLED CARBON STEEL CONFORMING TO ASTM A576 GRADE 1035 AND GALVANIZED ACCORDING TO ASTM A123. TREADED STUD SHALL CONFORM TO ASTM A325 OR SAE GRADE 5. MINIMUM BREAKING STRENGTH OF WIRE ROPE IS 43,000 LB. WIRE ROPE IS TO BE TAUT.

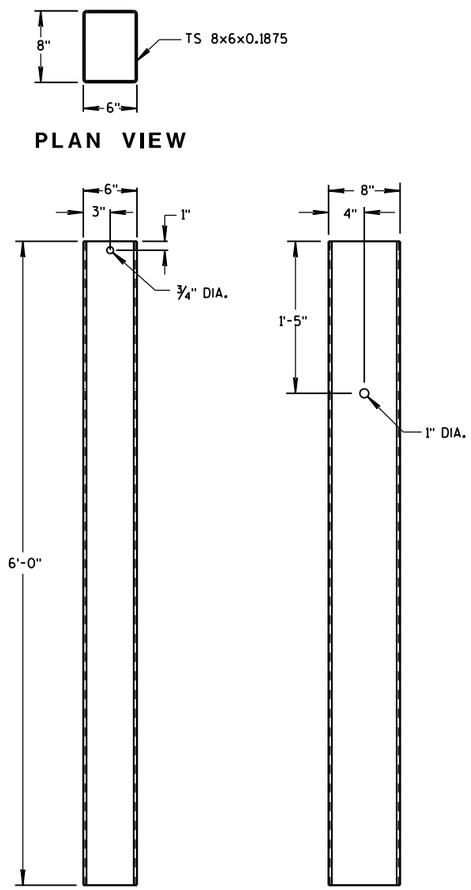

FOUNDATION TUBE

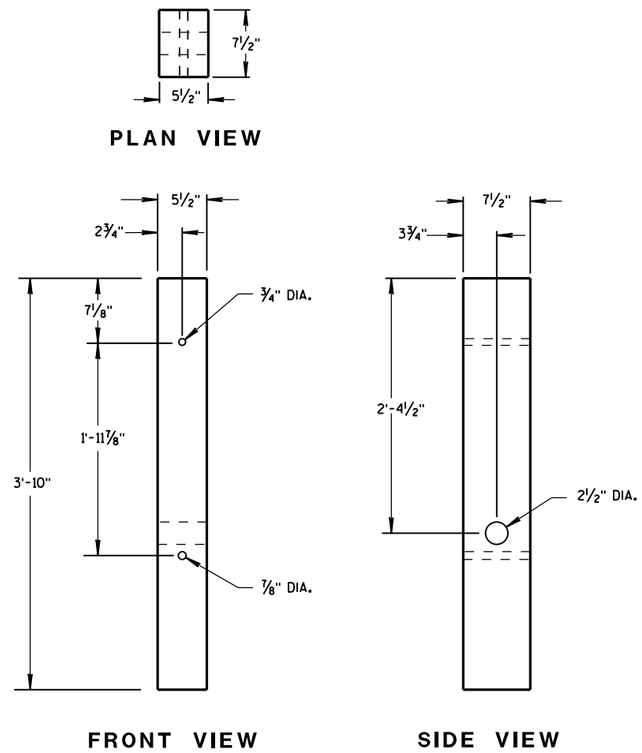

BREAKAWAY WOOD POST

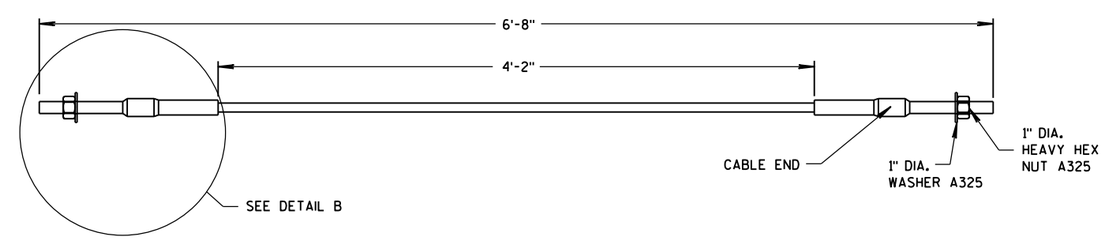

BCT ANCHOR CABLE

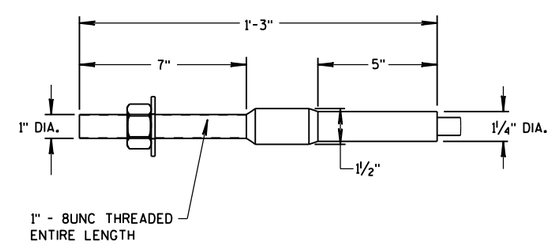

DETAIL B

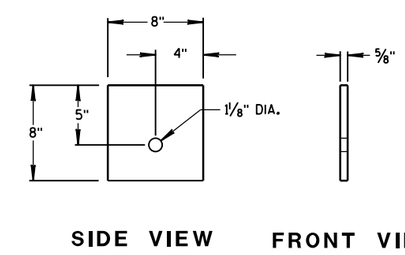

ANCHOR CABLE BEARING PLATE

MIDWEST GUARDRAIL SYSTEM (MGS) TYPE 2 TERMINAL

STATE OF WISCONSIN
DEPARTMENT OF TRANSPO

6

S.D.D. 14 B 47-2b

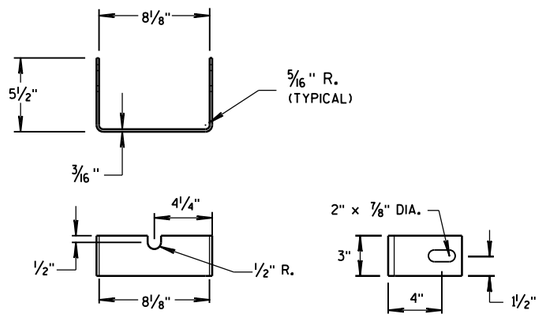

YOKE DETAIL

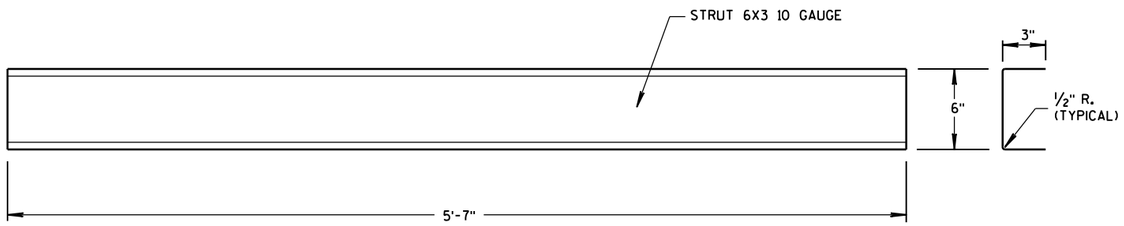

STRUT DETAIL

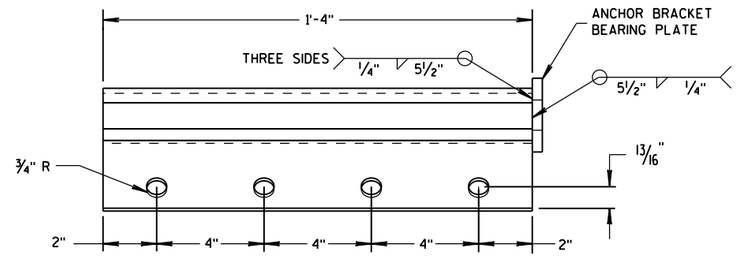

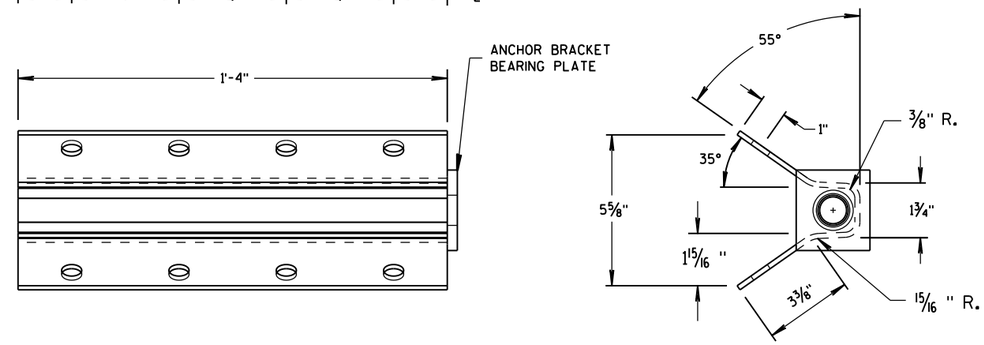

ANCHOR BRACKET

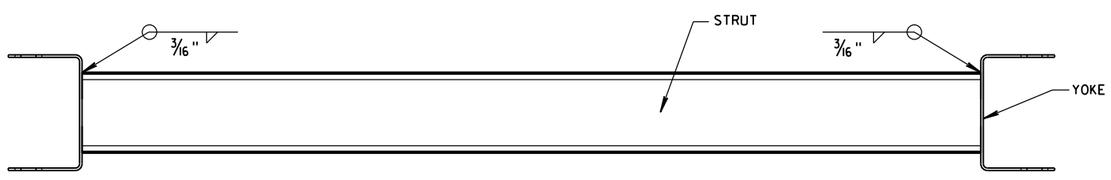

PLAN VIEW

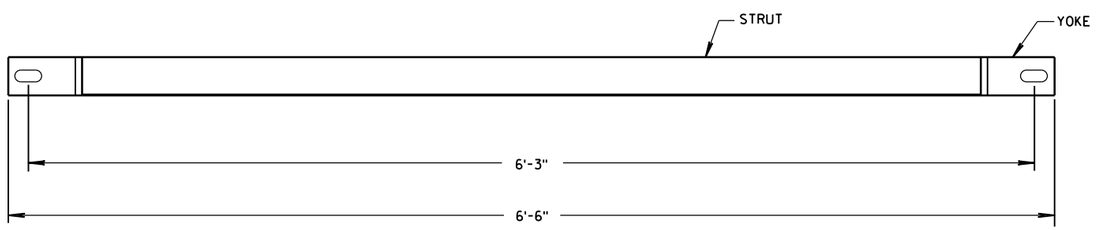

FRONT VIEW

GROUND STRUT DETAIL

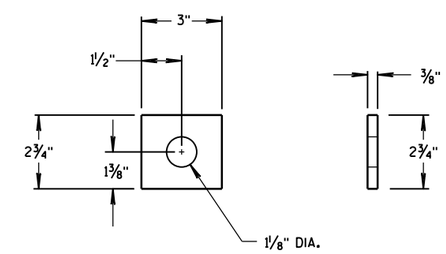

ANCHOR BRACKET
BEARING PLATE

MIDWEST GUARDRAIL
SYSTEM (MGS) TYPE 2 TERMINAL

STATE OF WISCONSIN
DEPARTMENT OF TRANSPORTATION

APPROVED
June 2014 — DATE
/S/ Jerry H. Zogg — ROADWAY STANDARDS ENGINEER
FHWA

6

S.D.D. 14 B 47-2c

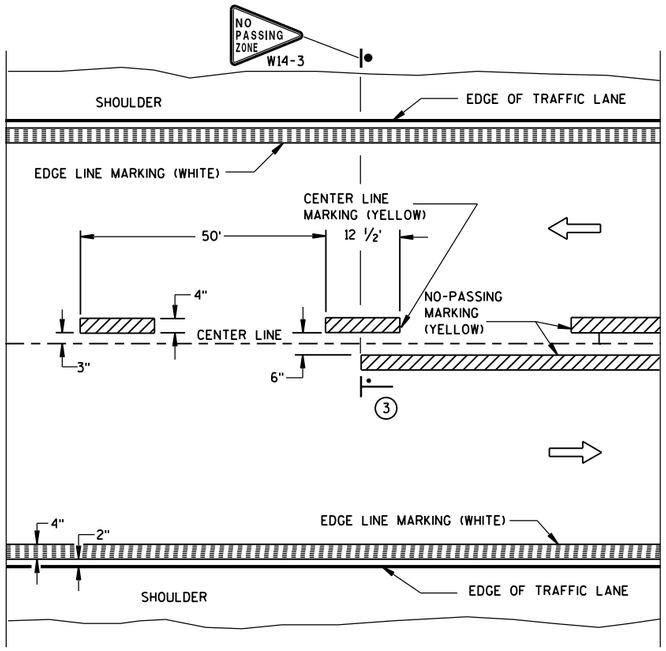

TWO WAY TRAFFIC

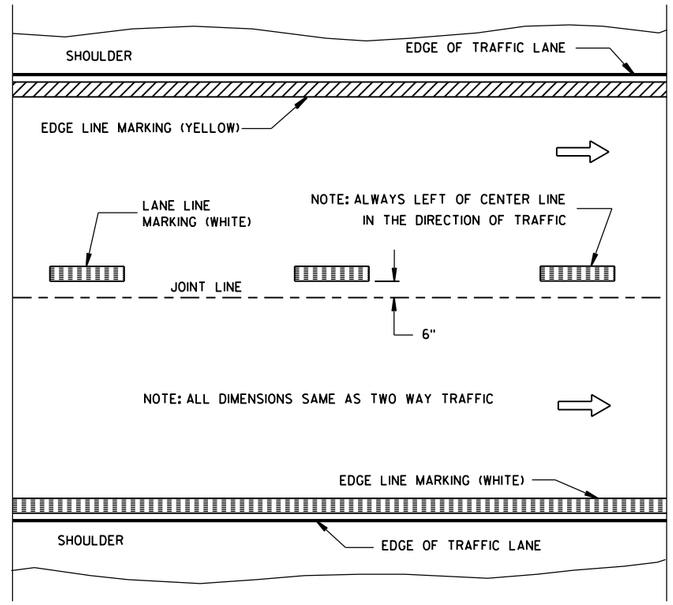

ONE WAY TRAFFIC

PERMANENT PAVEMENT MARKING

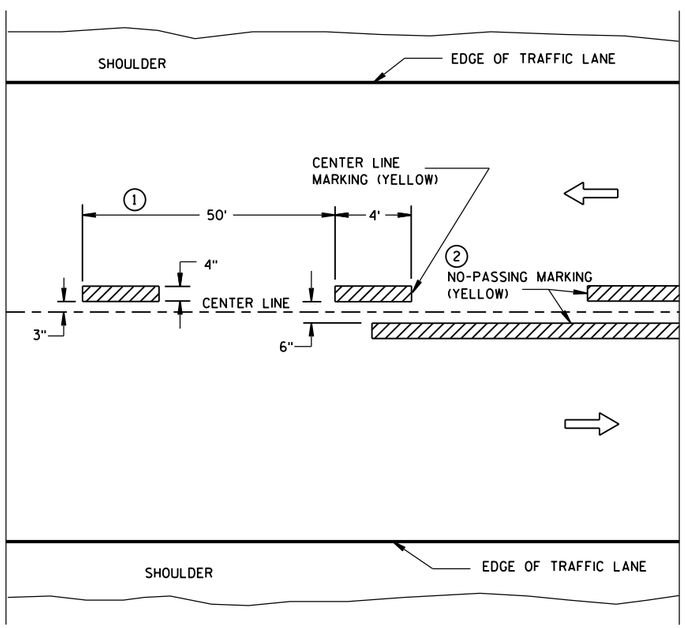

TWO WAY TRAFFIC

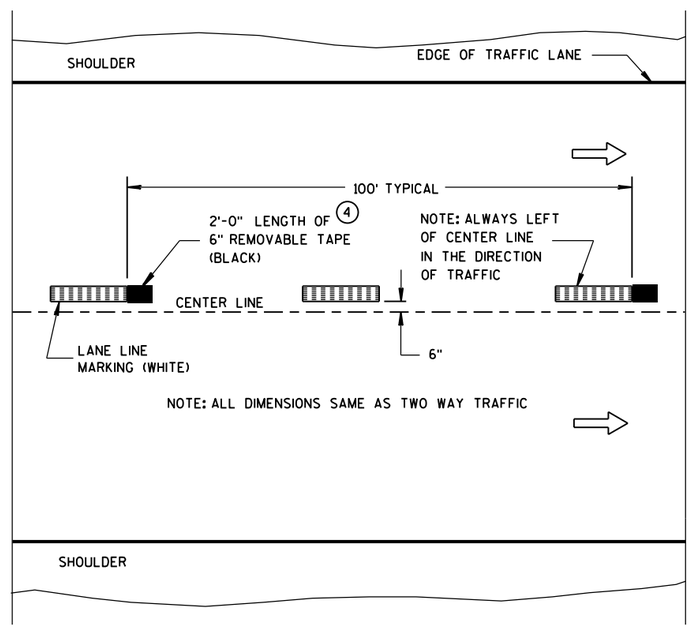

ONE WAY TRAFFIC

TEMPORARY (INTERMEDIATE) PAVEMENT MARKING

(SHOWS CYCLE FOR TEMPORARY CENTER LINE OR TEMPORARY LANE LINE MARKING)

GENERAL NOTES

DETAILS OF CONSTRUCTION NOT SHOWN ON THIS DRAWING SHALL CONFORM TO STANDARD SPECIFICATIONS AND SPECIAL PROVISIONS.

1. HALF CYCLE LENGTHS (25'±) WITH 2' MINIMUM STRIPE LENGTHS SHALL BE PROVIDED ON ROADWAYS (INCLUDING TEMPORARY TRAVELED WAYS) WITH REVERSE CURVATURE, CURVATURE OF OVER 5 DEGREES OR WHEN DIRECTED BY THE ENGINEER TO MARK UNUSUAL ALIGNMENT OF THE TRAVELED WAY.
2. NO PASSING ZONE TEMPORARY PAVEMENT MARKING IS REQUIRED TO BE PLACED, WHERE APPROPRIATE, ALONG WITH CENTERLINE TEMPORARY PAVEMENT MARKING WHEN A SAME DAY PERMANENT PAVEMENT MARKING ITEM IS INCLUDED IN THE CONTRACT.
3. NO PASSING ZONE MARKINGS ARE PLACED ACCORDING TO "T" MARKINGS. IF EXISTING NO PASSING ZONE W14-3 SIGNS ARE BEYOND 50 FEET IN EITHER DIRECTION, THE SIGNS SHALL BE MOVED TO THE "T" MARKINGS.
4. CONCRETE ONLY.

NOTE

ARROW SYMBOL (⇨) SHOWS DIRECTION OF TRAVEL

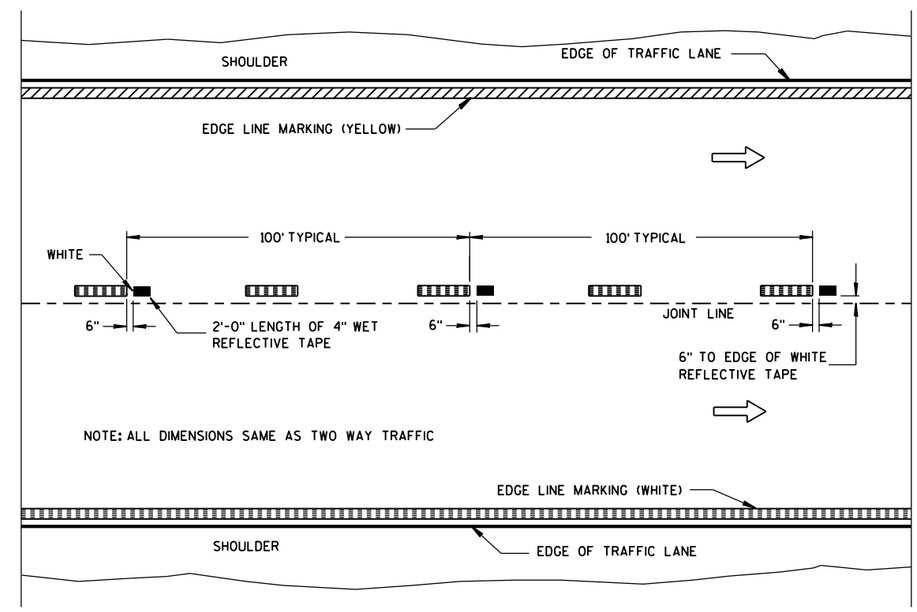

WET REFLECTIVE TAPE SUPPLEMENT TO SPRAYED OR NON WET REFLECTIVE TAPE LANE LINE

LEGEND

"T" MARKING

POST MOUNTED SIGN

PAVEMENT MARKING (MAINLINE)

STATE OF WISCONSIN
DEPARTMENT OF TRANSPORTATION

APPROVED
5-13-2013 DATE
/S/ Travis Feltes STATE TRAFFIC E
FHWA

6

S.D.D. 15 C 8-16a

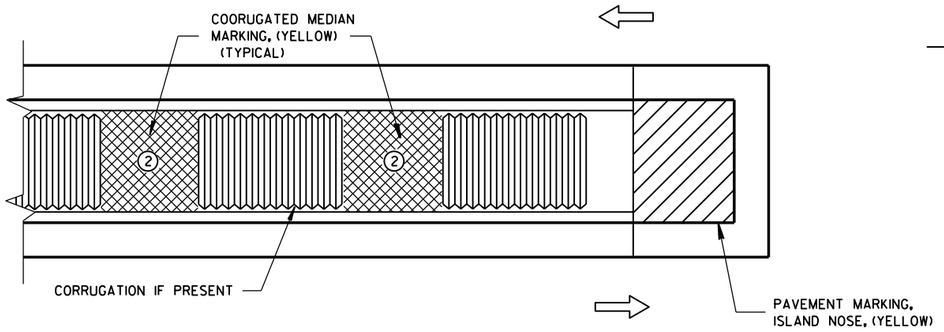

MEDIAN ISLAND WITH SQUARE BLUNT NOSE

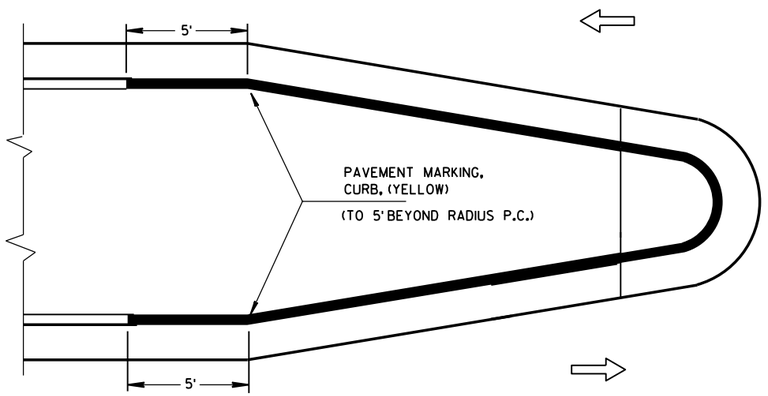

MEDIAN ISLAND WITH ROUND BLUNT NOSE

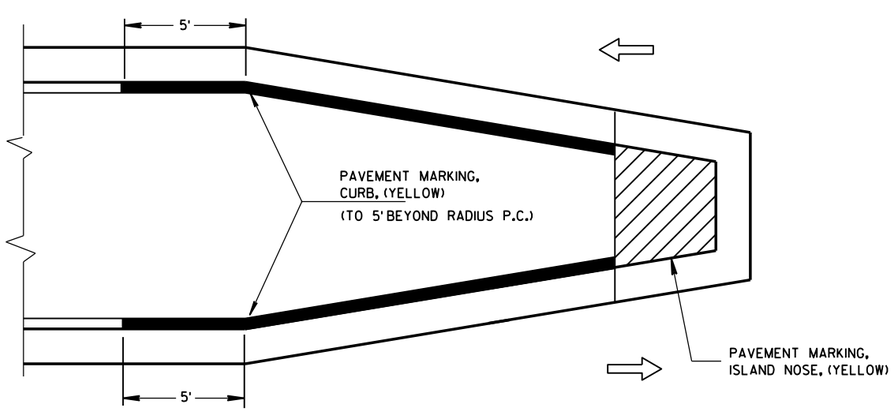

MEDIAN ISLAND WITH SLOPED NOSE

TYPICAL PLACEMENT OF PAVEMENT MARKING ON MEDIAN ISLANDS

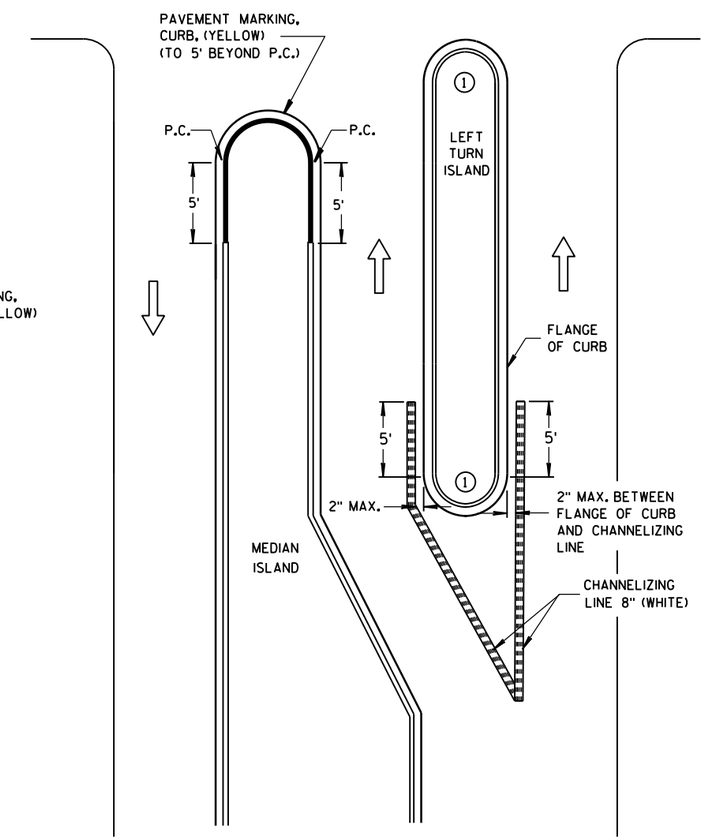

LEFT TURN & MEDIAN ISLAND

GENERAL NOTES

1. DO NOT MARK CURB NOSES THAT SEPARATE LANES OF TRAFFIC TRAVELING IN THE SAME DIRECTION.

2. WHEN CONCRETE CORRUGATED MEDIAN IS CONSTRUCTED TO SEPARATE TRAFFIC OPERATING IN THE OPPOSING DIRECTION YELLOW PAVEMENT MARKING SHALL BE APPLIED TO THE FLAT PORTION OF THE CONCRETE CORRUGATED MEDIAN. THE ITEM OF PAVEMENT MARKING, CONCRETE CORRUGATED MEDIAN, WILL BE MEASURED IN PLACE AND AND ACCEPTED IN ACCORDANCE WITH THE CONTRACT AND PAID FOR AT THE CONTRACT UNIT PRICE PER SQUARE FOOT.

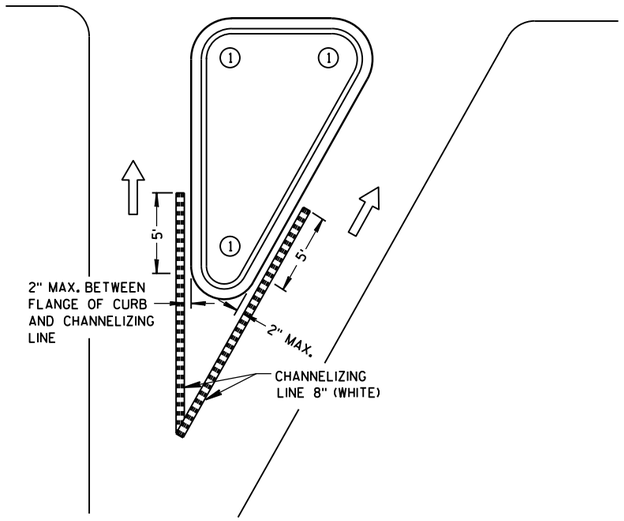

RIGHT TURN ISLAND

LEGEND

- ISLAND NOSE MARKING
- CURB MARKING
- CORRUGATED MEDIAN MARKING
- DIRECTION OF TRAVEL

PAVEMENT MARKING (ISLANDS)

STATE OF WISCONSIN
DEPARTMENT OF TRANSPOI

6

6

S.D.D. 15 C 8-16f

S.D.D. 15 C 8-16f

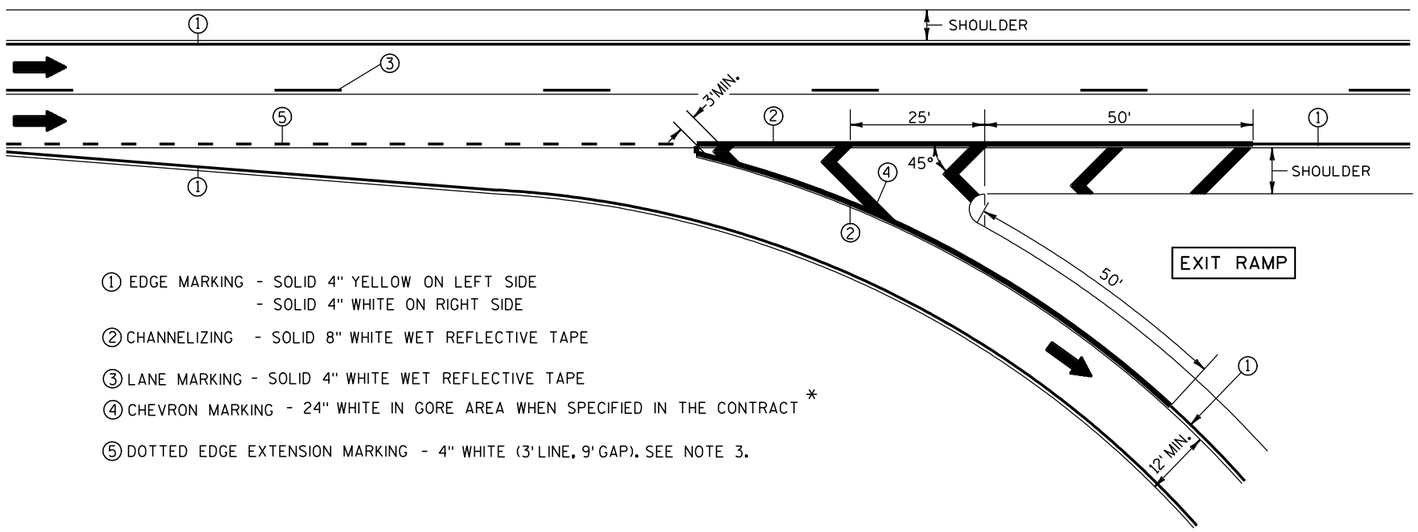

① EDGE MARKING - SOLID 4" YELLOW ON LEFT SIDE
- SOLID 4" WHITE ON RIGHT SIDE

② CHANNELIZING - SOLID 8" WHITE WET REFLECTIVE TAPE

③ LANE MARKING - SOLID 4" WHITE WET REFLECTIVE TAPE

④ CHEVRON MARKING - 24" WHITE IN GORE AREA WHEN SPECIFIED IN THE CONTRACT *

⑤ DOTTED EDGE EXTENSION MARKING - 4" WHITE (3' LINE, 9' GAP). SEE NOTE 3.

NOTES:

1. ARROWS SHOWN ON THIS MARKING PLAN DESIGNATE TRAFFIC FLOW, AND SHALL NOT BE TAKEN AS PROPOSED PAVEMENT MARKINGS.

2. PLACE WHITE EDGE OF TAPE 6" LEFT FROM JOINT.

3. 3' LINE 9' GAP, EXCEPT RETRACE THE EXISTING LINE-GAP PATTERN WHERE EXISTING MARKINGS ARE IN PLACE.

4. RETRACE EXISTING DIAGONAL MARKINGS.

* REFER TO DESIGN NOTES.

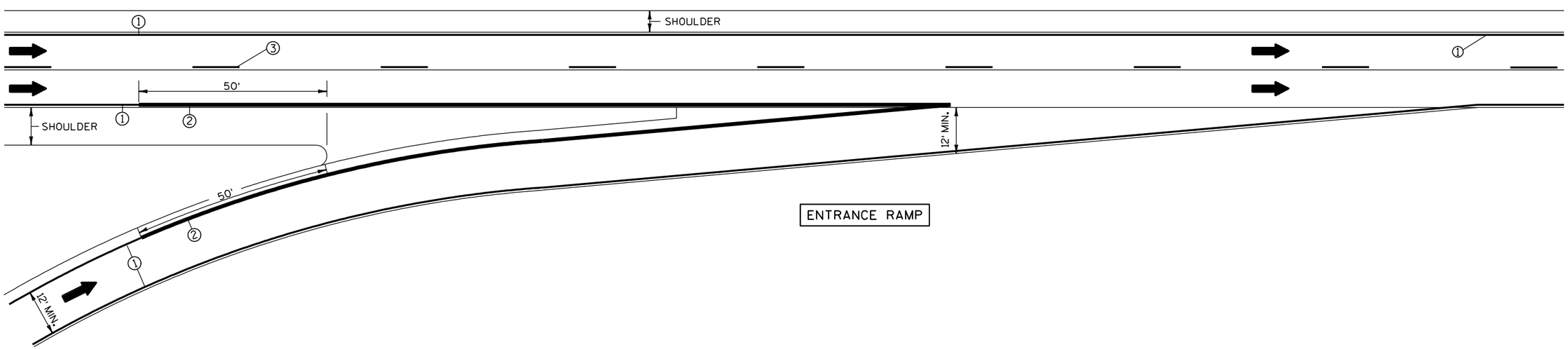

6

6

S.D.D. 15 C 31-1a

S.D.D. 15 C 31-1a

PAVEMENT MARKING
(RAMPS AND GORES)

STATE OF WISCONSIN
DEPARTMENT OF TRANSPORTATION

NOTES:

1. SEE STANDARD DETAIL DRAWING 15 C 10 FOR SPRAYED OR NON WET REFLECTIVE LINE SEGMENTS.

2. ARROWS SHOWN ON THIS MARKING PLAN DESIGNATE TRAFFIC FLOW, AND SHALL NOT BE TAKEN AS PROPOSED PAVEMENT MARKINGS.

3. PLACE WHITE EDGE OF TAPE 6" LEFT FROM JOINT.

4. 3' LINE 9' GAP, EXCEPT RETRACE THE EXISTING LINE-GAP PATTERN WHERE EXISTING MARKINGS ARE IN PLACE.

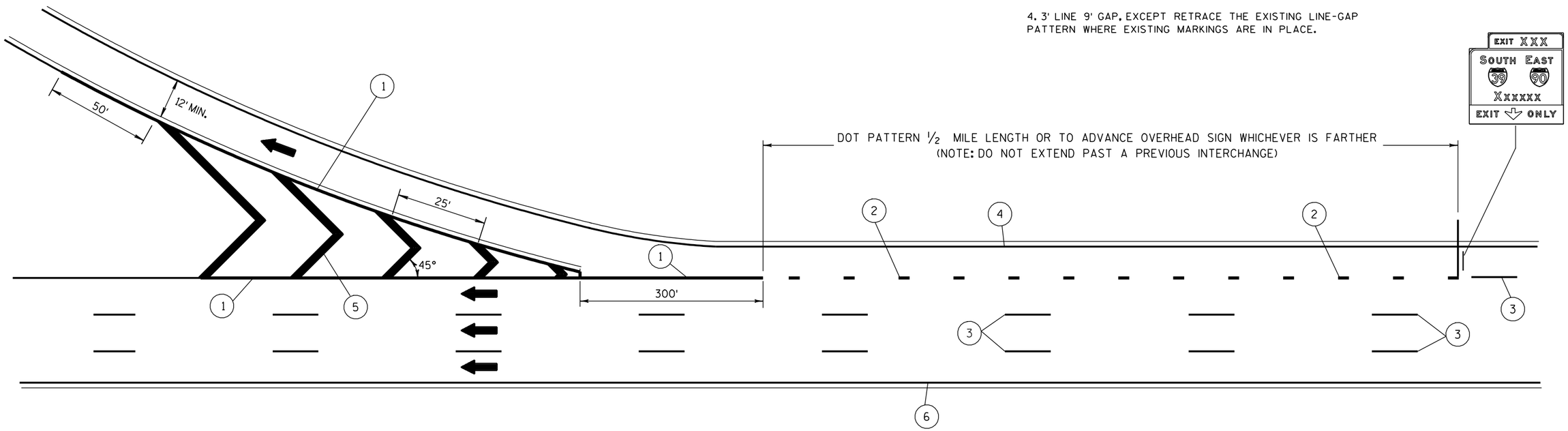

1. CHANNELIZING - SOLID 8" WHITE WET RELECTIVE TAPE
2. 3' LINE, 9' GAP SOLID 8" WHITE WET REFLECTIVE TAPE. SEE NOTE 4.
3. SOLID 4" WHITE WET REFLECTIVE TAPE
4. 4" WHITE EDGELINE
5. CHEVRON MARKING - 24" WHITE WHEN SPECIFIED IN THE CONTRACT
6. 4" YELLOW EDGELINE

LANE DROP PAVEMENT MARKING

STATE OF WISCONSIN
DEPARTMENT OF TRANSPORTATION

6

S.D.D. 15 C 31-1b

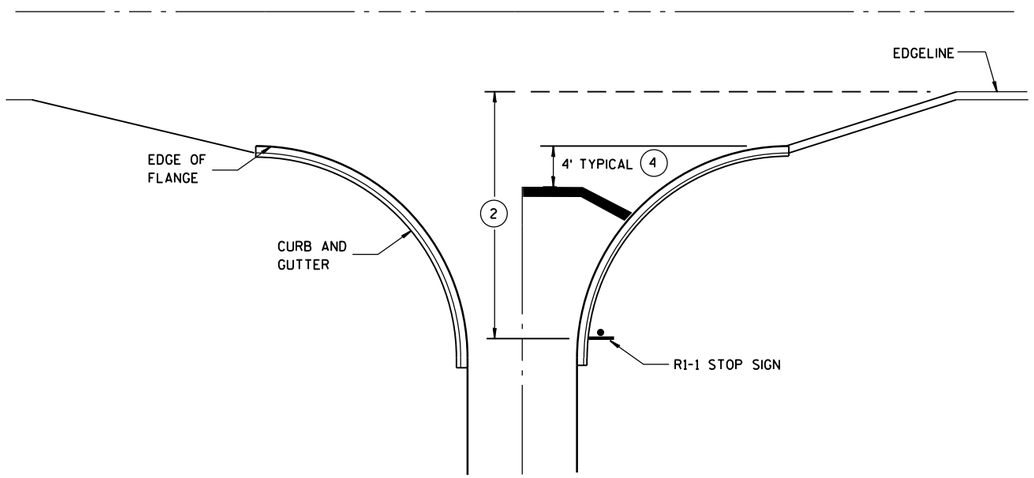

TYPICAL STOP LINE PAVEMENT MARKING WITH CURB AND GUTTER

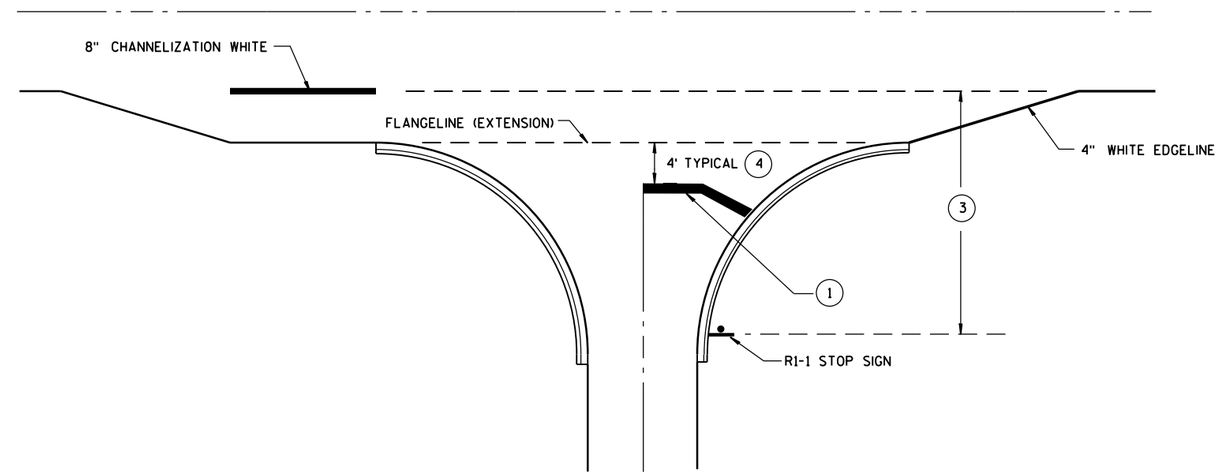

TYPICAL STOP LINE PAVEMENT MARKING FOR SIDEROADS WITH RIGHT TURN LANE

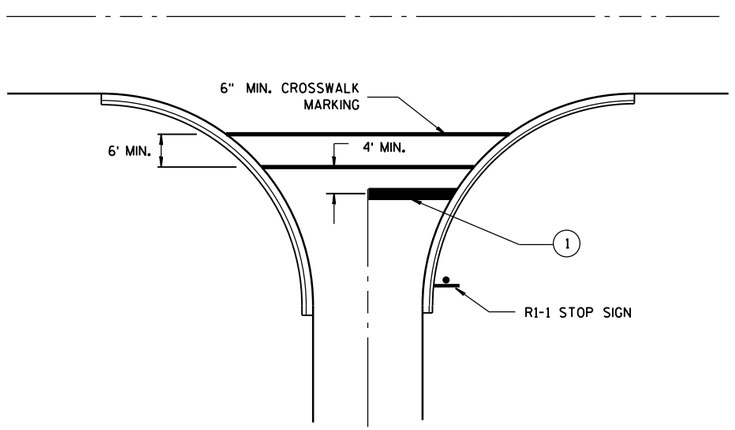

TYPICAL STOP LINE PAVEMENT MARKING FOR SIDEROADS WITH CROSSWALK MARKING

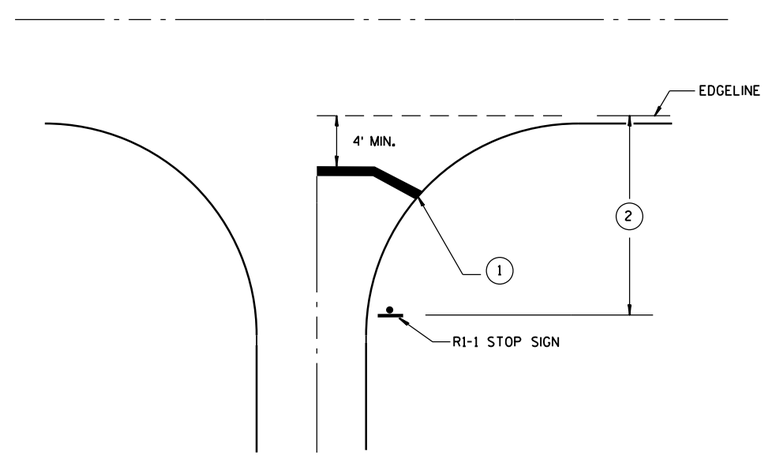

TYPICAL STOP LINE PAVEMENT MARKING WITHOUT CURB AND GUTTER

GENERAL NOTES

1. 18-INCH STOP LINES MAY BE DELETED OR ADDED BY THE PROJECT ENGINEER BASED ON VISIBILITY AND SIGHT LINES.
2. IF STOP SIGN IS LESS THAN OR EQUAL TO 40 FEET FROM THE EDGELINE THAN NO STOP LINE IS REQUIRED.
3. IF STOP SIGN IS LESS THAN OR EQUAL TO 30 FEET FROM THE FLANGELINE EXTENSION THAN NO STOP LINE IS REQUIRED.
4. MOVE CLOSER TO EDGE OF TRAVEL LANE AS NEEDED FOR VISIBILITY AND SIGHT LINES.

STOP LINE AND CROSSWALK PAVEMENT MARKING

STATE OF WISCONSIN
DEPARTMENT OF TRANSPORTATION

APPROVED
4/30/2013 — DATE
/S/ Travis Feltes — STATE TRAFFIC E
FHWA

LEGEND

- TYPE III BARRICADE WITH ATTACHED SIGN
- SIGN ON PERMENENT SUPPORT
- TRAFFIC CONTROL DRUM WITH TYPE "C" STEADY BURN LIGHT
- TRAFFIC CONTROL DRUM
- FLASHING ARROW BOARD
- TYPE "A" WARNING LIGHT (FLASHING)
- REMOVING PAVEMENT MARKING
- DIRECTION OF TRAFFIC
- WORK AREA

GENERAL NOTES

THE EXACT NUMBER, LOCATION, AND SPACING OF ALL SIGNS AND DEVICES SHALL BE ADJUSTED TO FIT FIELD CONDITIONS AS APPROVED BY THE ENGINEER.

THE SPACING BETWEEN SIGNS SHOULD BE ADJUSTED TO NOT CONFLICT WITH AND TO PROVIDE A MINIMUM OF 200 FEET, (500 FEET DESIREABLE) DISTANCE TO EXISTING SIGNS.

THIS LANE CLOSURE IS TYPICAL FOR CLOSING RIGHT LANE - REVERSE FOR CLOSING LEFT LANE.

ALL SIGNS ARE 48"×48" UNLESS OTHERWISE NOTED.

"WO" IS THE SAME AS "W" EXCEPT THE BACKGROUND IS ORANGE.

ANY SIGNS TEMPORARY OR EXISTING, WHICH CONFLICT WITH TRAFFIC CONTROL "IN USE" SHALL BE REMOVED OR COVERED AS NEEDED AND AS APPROVED BY THE ENGINEER. NO WARNING LIGHTS SHALL BE WORKING ON "COVERED" OR "DOWNED" SIGNS.

CONSIDER GEOMETRICS WHEN LOCATING SIGNS AND ARROW BOARD SO THE DRIVER HAS A CLEAR VIEW OF THE ARROW BOARD AND LANE CLOSURE DRUMS FOR A MINIMUM 1500 FEET IN FRONT OF DRUMS.

FOR A LANE CLOSURE THAT IS IN PLACE LESS THAN 7 CONTINUOUS DAYS AND NIGHTS, THE ADVANCED WARNING SIGNS MAY BE MOUNTED ON PORTABLE SUPPORTS.

REMOVE PAVEMENT MARKINGS IF LANE CLOSURE IS TO BE IN PLACE FOR LONGER THAN 4 OR MORE DAYS AND NIGHTS.

WARNING LIGHTS ARE NOT REQUIRED IF THE LANE CLOSURE IS A DAYTIME ONLY OPERATION.

IF THE HORIZONTAL ALIGNMENT IS SUCH THAT A CURVE MAY REQUIRE ADDITIONAL DELINEATION, THE DEVICE SPACING MAY BE DECREASED TO 50 FEET.

ADJUSTMENTS IN BUFFER SPACE NEED TO BE INCORPORATED WHEN THE LANE CLOSURE OCCURS NEAR AN INTERCHANGE EXIT OR ENTRANCE RAMP. THE LANE CLOSURE MUST MUST TAKE PLACE FAR ENOUGH IN ADVANCE OF AN EXIT OR ENTRANCE RAMP TO STILL ALLOW FOR ADEQUATE BUFFER SPACE. THE MINIMUM LENGTH OF THE BUFFER SPACE BEFORE AN EXIT RAMP SHOULD BE 1/2 THE LENGTH OF THE TRANSITION AREA. THE ENTRANCE RAMP SHOULD BE FOLLOWED BY THE ORIGINAL BUFFER SPACE LENGTH OF 800 FEET DESIRABLE PRIOR TO ANOTHER TRAFFIC CONTROL CHANGE SUCH AS A CROSSOVER MANEUVER.

* THE LEFT REVERSE CURVE SIGN (WO1-4L) IS ONLY REQUIRED WHEN THIS DETAIL IS USED IN COMBINATION WITH "SINGLE LANE CROSSOVER" DETAIL.

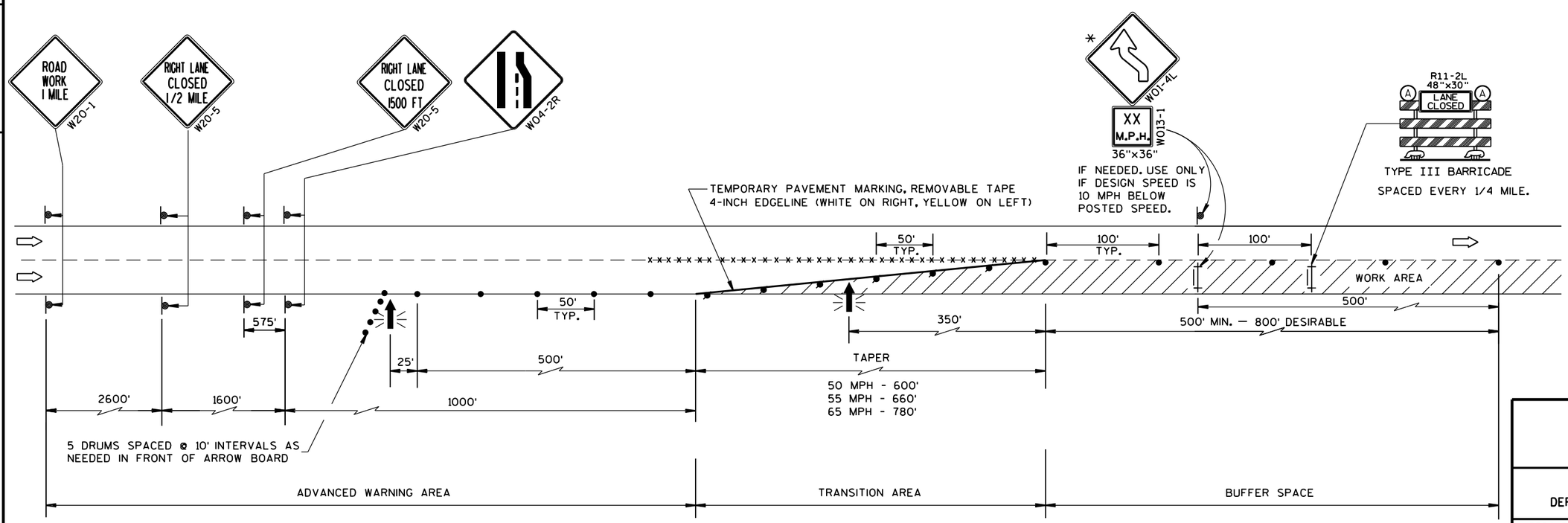

TRAFFIC CONTROL, LANE CLOSURE

STATE OF WISCONSIN
DEPARTMENT OF TRANSPORTATION

APPROVED
Feb. 2015 — DATE
/S/ Travis Feltes — STATE TRAFFIC ENGINEER
FHWA

6

S.D.D. 15 D 12-5a

LEGEND

- TYPE III BARRICADE WITH ATTACHED SIGN
- SIGN ON PERMENENT SUPPORT
- TRAFFIC CONTROL DRUM WITH TYPE "C" STEADY BURN LIGHT
- TRAFFIC CONTROL DRUM
- FLASHING ARROW BOARD
- TYPE "A" WARNING LIGHT (FLASHING)
- REMOVING PAVEMENT MARKING
- DIRECTION OF TRAFFIC
- WORK AREA

GENERAL NOTES

THE EXACT NUMBER, LOCATION, AND SPACING OF ALL SIGNS AND DEVICES SHALL BE ADJUSTED TO FIT FIELD CONDITIONS AS APPROVED BY THE ENGINEER.

THE SPACING BETWEEN SIGNS SHOULD BE ADJUSTED TO NOT CONFLICT WITH AND TO PROVIDE A MINIMUM OF 200 FEET, (500 FEET DESIREABLE) DISTANCE TO EXISTING SIGNS.

THIS LANE CLOSURE IS TYPICAL FOR CLOSING RIGHT LANE - REVERSE FOR CLOSING LEFT LANE.

ALL SIGNS ARE 48"×48" UNLESS OTHERWISE NOTED.

"WO" IS THE SAME AS "W" EXCEPT THE BACKGROUND IS ORANGE.

ANY SIGNS TEMPORARY OR EXISTING, WHICH CONFLICT WITH TRAFFIC CONTROL "IN USE" SHALL BE REMOVED OR COVERED AS NEEDED AND AS APPROVED BY THE ENGINEER. NO WARNING LIGHTS SHALL BE WORKING ON "COVERED" OR "DOWNED" SIGNS.

CONSIDER GEOMETRICS WHEN LOCATING SIGNS AND ARROW BOARD SO THE DRIVER HAS A CLEAR VIEW OF THE ARROW BOARD AND LANE CLOSURE DRUMS FOR A MINIMUM 1500 FEET IN FRONT OF DRUMS.

FOR A LANE CLOSURE THAT IS IN PLACE LESS THAN 7 CONTINUOUS DAYS AND NIGHTS, THE ADVANCED WARNING SIGNS MAY BE MOUNTED ON PORTABLE SUPPORTS.

REMOVE PAVEMENT MARKINGS IF LANE CLOSURE IS TO BE IN PLACE FOR LONGER THAN 4 OR MORE DAYS AND NIGHTS.

WARNING LIGHTS ARE NOT REQUIRED IF THE LANE CLOSURE IS A DAYTIME ONLY OPERATION.

IF THE HORIZONTAL ALIGNMENT IS SUCH THAT A CURVE MAY REQUIRE ADDITIONAL DELINEATION, THE DEVICE SPACING MAY BE DECREASED TO 50 FEET.

ADJUSTMENTS IN BUFFER SPACE NEED TO BE INCORPORATED WHEN THE LANE CLOSURE OCCURS NEAR AN INTERCHANGE EXIT OR ENTRANCE RAMP. THE LANE CLOSURE MUST MUST TAKE PLACE FAR ENOUGH IN ADVANCE OF AN EXIT OR ENTRANCE RAMP TO STILL ALLOW FOR ADEQUATE BUFFER SPACE. THE MINIMUM LENGTH OF THE BUFFER SPACE BEFORE AN EXIT RAMP SHOULD BE 1/2 THE LENGTH OF THE TRANSITION AREA. THE ENTRANCE RAMP SHOULD BE FOLLOWED BY THE ORIGINAL BUFFER SPACE LENGTH OF 800 FEET DESIRABLE PRIOR TO ANOTHER TRAFFIC CONTROL CHANGE SUCH AS A CROSSOVER MANEUVER.

* THE LEFT REVERSE CURVE SIGN (WO1-4L) IS ONLY REQUIRED WHEN THIS DETAIL IS USED IN COMBINATION WITH "SINGLE LANE CROSSOVER" DETAIL.

** A SPEED LIMIT SIGN SHALL BE LOCATED 1500 FEET BEYOND THE END OF THE ACCELERATION LANE OF EACH ENTRANCE RAMP. THERE SHOULD BE A SPEED LIMIT SIGN INCORPORATED A MINIMUM OF EVERY 2 OR 3 MILES. INCLUDE A 65 MPH RESUME SPEED LIMIT SIGN 200 FEET MINIMUM (500 FEET DESIREABLE) BEYOND THE "END OF ROADWORK" SIGN.

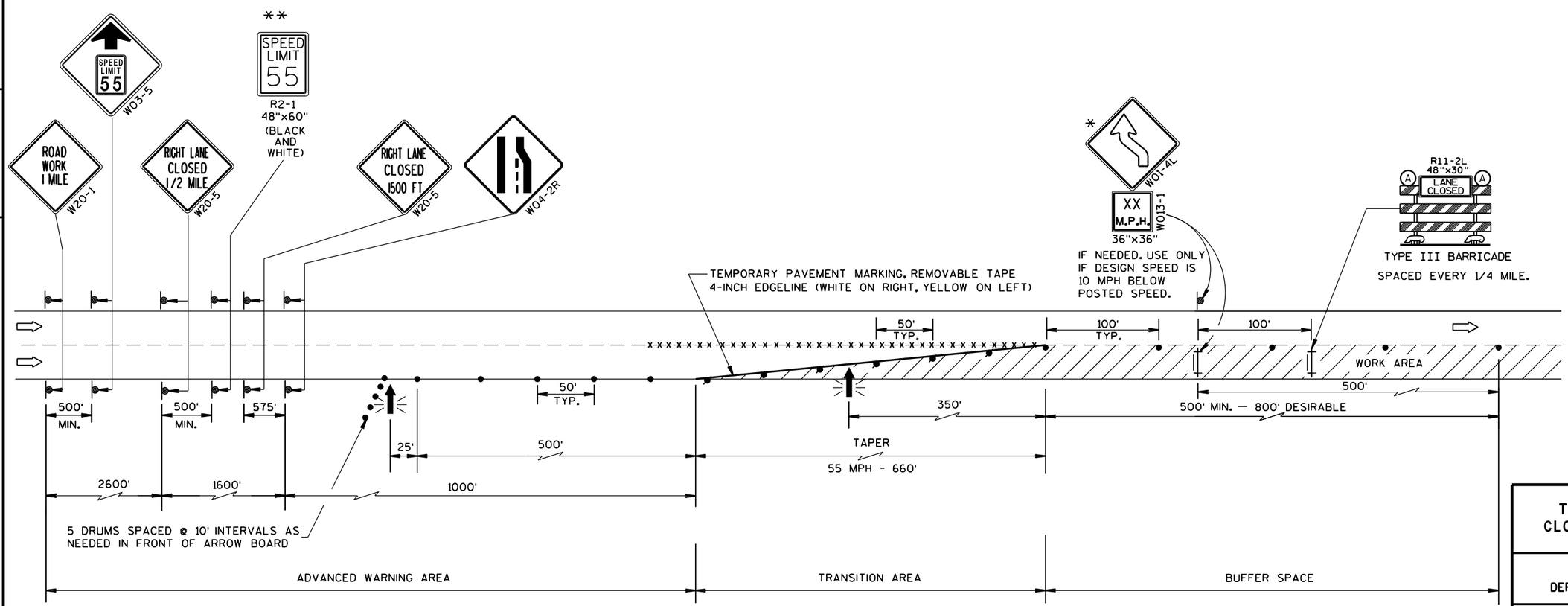

TRAFFIC CONTROL, LANE CLOSURE, SPEED REDUCTION

STATE OF WISCONSIN
DEPARTMENT OF TRANSPORTATION

APPROVED
Feb. 2015 — DATE
/S/ Travis Feltes — STATE TRAFFIC ENGINEER
FHWA

6

S.D.D. 15 D 12-5b

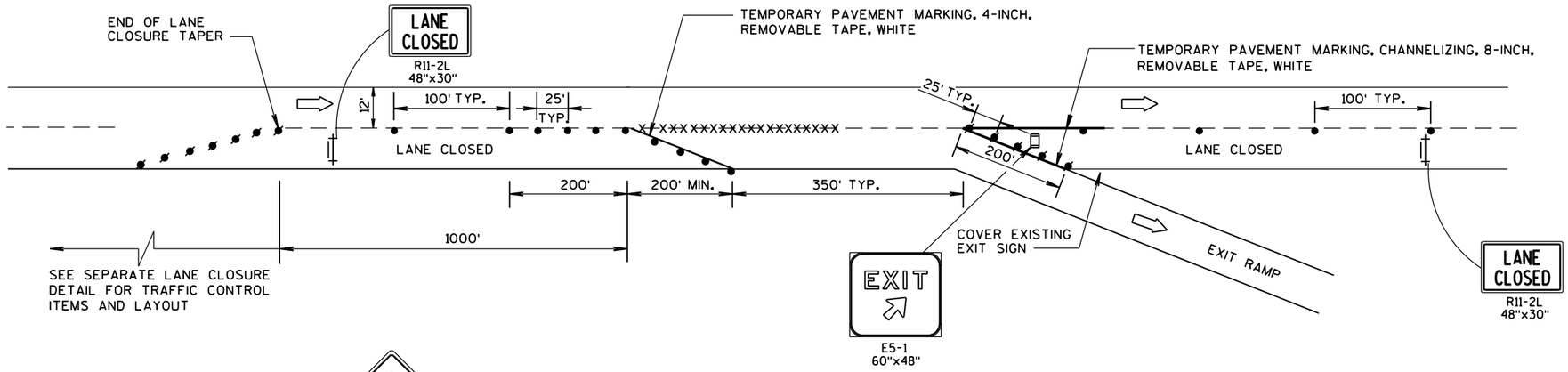

EXIT RAMP

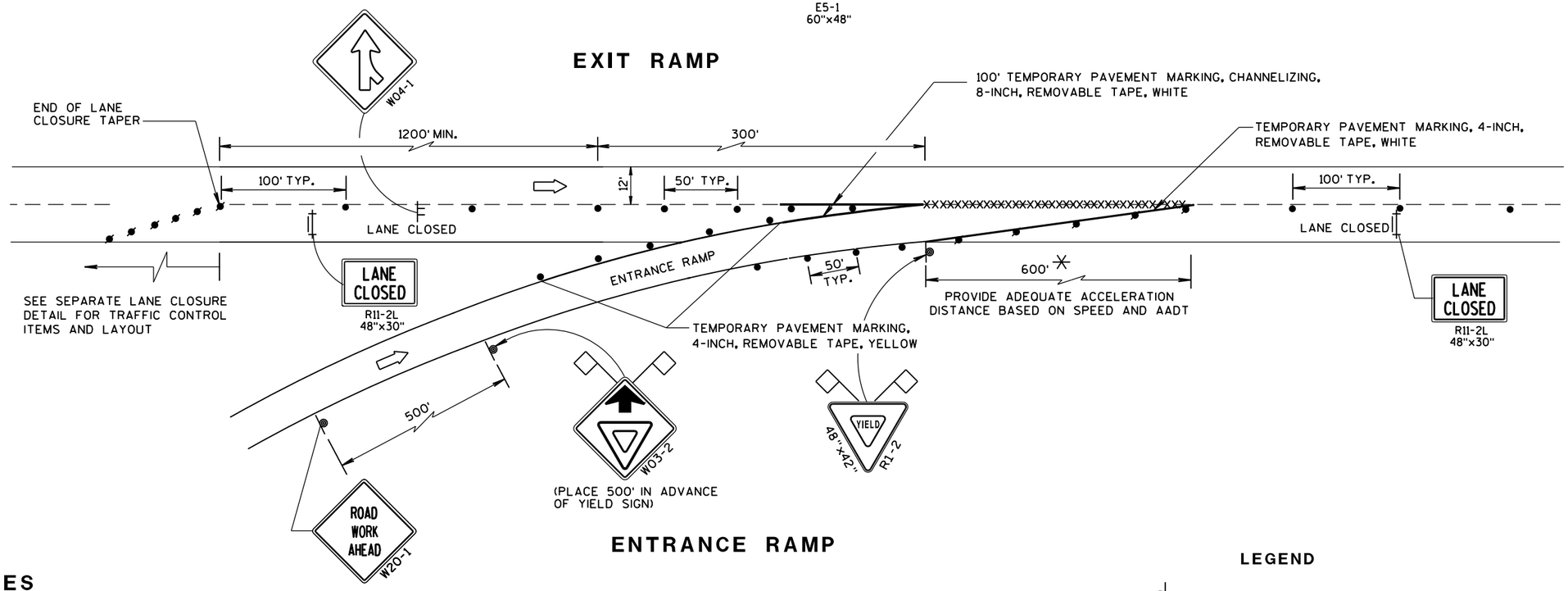

ENTRANCE RAMP

GENERAL NOTES

THE INSTALLATIONS SHOWN ON THIS SHEET ARE TYPICAL EXAMPLES AND ARE NOT INTENDED TO REPRESENT ANY PARTICULAR RAMP. AT SPECIFIC FIELD LOCATIONS, SIMILAR INSTALLATIONS SHALL BE USED AND ADJUSTED TO THE GEOMETRICS OF THE RAMP AS COORDINATED WITH THE ENGINEER.

THE EXACT NUMBER, LOCATION, AND SPACING OF ALL SIGNS AND DEVICES SHALL BE ADJUSTED TO FIT FIELD CONDITIONS AS APPROVED BY THE ENGINEER.

THE SPACING BETWEEN TRAFFIC CONTROL SIGNS SHOULD BE ADJUSTED TO NOT CONFLICT WITH AND SHOULD PROVIDE A MINIMUM OF 200 FEET, (500 FEET DESIRABLE) CLEARANCE TO EXISTING SIGNS THAT WILL REMAIN IN PLACE.

ALL SIGNS ARE 48"x48" UNLESS OTHERWISE NOTED.

"WO" IS THE SAME AS "W" EXCEPT THE BACKGROUND IS ORANGE.

SEE SEPARATE LANE CLOSURE DETAIL FOR TYPICAL SPACING OF TYPE III BARRICADES AND R11-2L "LANE CLOSED" SIGNS.

YIELD SIGN AND WARNING SIGNS ON ENTRANCE RAMP ARE ALSO APPROPRIATE FOR CLOSURE OF THE MAINLINE LEFT LANE. OMIT THE YIELD SIGN IF MORE THAN ONE LANE REMAINS OPEN ON THE MAINLINE AND THE RAMP TAPER IS AT LEAST AS LONG AS THE NORMAL ENTRANCE RAMP TAPER AT THE SITE.

SIGNS THAT WILL BE IN PLACE LESS THAN 7 CONTINUOUS DAYS AND NIGHTS, OR THAT WILL BE PLACED IN A CLOSED LANE, MAY BE MOUNTED ON PORTABLE SUPPORTS.

IF INDICATED IN MISCELLANEOUS QUANTITIES, SUBSTITUTE FLEXIBLE TUBULAR MARKERS FOR DRUMS IN THE GORE BETWEEN THE ENTRANCE RAMP AND MAINLINE TRAFFIC.

ANY SIGNS TEMPORARY OR EXISTING, WHICH CONFLICT WITH TRAFFIC CONTROL "IN USE" SHALL BE REMOVED OR COVERED AS NEEDED AND AS APPROVED BY THE ENGINEER.

REMOVE PAVEMENT MARKINGS AND PLACE TEMPORARY PAVEMENT MARKING, REMOVABLE TAPE IF LANE CLOSURE IS TO BE IN PLACE FOR 7 OR MORE CONTINUOUS DAYS AND NIGHTS.

WARNING LIGHTS ARE NOT REQUIRED IF THE LANE CLOSURE IS A DAYTIME ONLY OPERATION.

* LENGTH OF OPENING MAY BE REDUCED TO 150 FEET DURING STAGING OF WORK IN IMMEDIATE AREA OF RAMP TAPER.

LEGEND

- SIGN ON PERMANENT SUPPORT
- SIGN ON TEMPORARY SUPPORT
- TRAFFIC CONTROL DRUM
- TRAFFIC CONTROL DRUM WITH TYPE "C" STEADY BURN LIGHT
- REMOVING PAVEMENT MARKING (SEE GENERAL NOTES)
- TYPE III BARRICADE WITH ATTACHED SIGN
- FLAGS, 16" x 16" MIN., (ORANGE)
- DIRECTION OF TRAFFIC

TRAFFIC CONTROL: EXIT AND ENTRANCE RAMP WITHIN LANE CLOSURE

STATE OF WISCONSIN
DEPARTMENT OF TRANSPORTATION

APPROVED
Sept. 2015 — DATE
/S/ Peter Amakobe Atepe — STATEWIDE WORK ZONE SAFETY ENGINEER
FHWA

6

S.D.D. 15 D 15-2

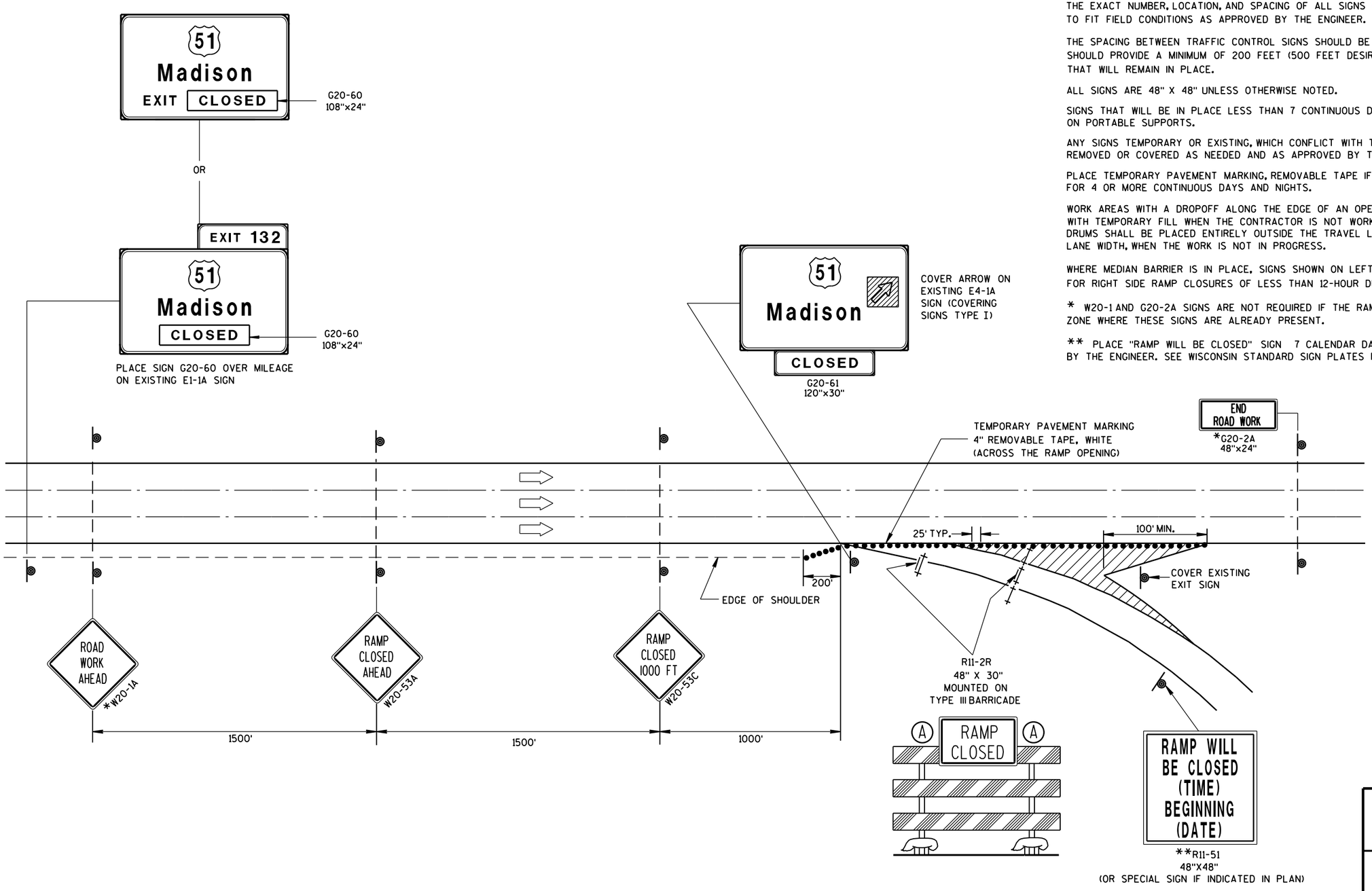

GENERAL NOTES

THIS RAMP CLOSURE DETAIL IS TYPICAL FOR CLOSING A RIGHT SIDE EXIT RAMP. FOR A LEFT SIDE EXIT RAMP, REVERSE THE TRAFFIC CONTROL.

THE EXACT NUMBER, LOCATION, AND SPACING OF ALL SIGNS AND DEVICES SHALL BE ADJUSTED TO FIT FIELD CONDITIONS AS APPROVED BY THE ENGINEER.

THE SPACING BETWEEN TRAFFIC CONTROL SIGNS SHOULD BE ADJUSTED TO NOT CONFLICT WITH AND SHOULD PROVIDE A MINIMUM OF 200 FEET (500 FEET DESIRABLE) CLEARANCE TO EXISTING SIGNS THAT WILL REMAIN IN PLACE.

ALL SIGNS ARE 48" X 48" UNLESS OTHERWISE NOTED.

SIGNS THAT WILL BE IN PLACE LESS THAN 7 CONTINUOUS DAYS AND NIGHTS MAY BE MOUNTED ON PORTABLE SUPPORTS.

ANY SIGNS TEMPORARY OR EXISTING, WHICH CONFLICT WITH TRAFFIC CONTROL "IN USE" SHALL BE REMOVED OR COVERED AS NEEDED AND AS APPROVED BY THE ENGINEER.

PLACE TEMPORARY PAVEMENT MARKING, REMOVABLE TAPE IF RAMP CLOSURE IS TO BE IN PLACE FOR 4 OR MORE CONTINUOUS DAYS AND NIGHTS.

WORK AREAS WITH A DROPOFF ALONG THE EDGE OF AN OPEN TRAVEL LANE SHALL BE LEVELED WITH TEMPORARY FILL WHEN THE CONTRACTOR IS NOT WORKING ADJACENT TO THE TRAVEL LANE. DRUMS SHALL BE PLACED ENTIRELY OUTSIDE THE TRAVEL LANE, ALLOWING THE FULL UNOBSTRUCTED LANE WIDTH, WHEN THE WORK IS NOT IN PROGRESS.

WHERE MEDIAN BARRIER IS IN PLACE, SIGNS SHOWN ON LEFT SIDE OF ROADWAY MAY BE OMITTED FOR RIGHT SIDE RAMP CLOSURES OF LESS THAN 12-HOUR DURATION.

* W20-1 AND G20-2A SIGNS ARE NOT REQUIRED IF THE RAMP CLOSURE IS WITHIN A LARGER WORK ZONE WHERE THESE SIGNS ARE ALREADY PRESENT.

** PLACE "RAMP WILL BE CLOSED" SIGN 7 CALENDAR DAYS PRIOR TO CLOSURE OR AS DIRECTED BY THE ENGINEER. SEE WISCONSIN STANDARD SIGN PLATES FOR SIGN LAYOUT.

LEGEND

- TYPE III BARRICADE
- TYPE III BARRICADE WITH ATTACHED SIGN
- TRAFFIC CONTROL DRUM
- SIGN ON PERMANENT SUPPORT
- (A) TYPE "A" WARNING LIGHT (FLASHING)
- DIRECTION OF TRAFFIC

TRAFFIC CONTROL, EXIT RAMP CLOSURE

STATE OF WISCONSIN
DEPARTMENT OF TRANSPORTATION

APPROVED
Sept. 2015 — DATE
/S/ Peter Amakobe Atepe — STATEWIDE WORK ZONE SAFETY ENGINEER
FHWA — FIC

6

S.D.D. 15 D 16-3

LEGEND

- TRAFFIC CONTROL DRUM
- SIGN ON PERMANENT SUPPORT
- DIRECTION OF TRAFFIC
- FLASHING ARROW BOARD
- WORK AREA

GENERAL NOTES

THIS DETAIL IS TYPICAL FOR CLOSING THE RIGHT SHOULDER. FOR CLOSING THE LEFT SHOULDER, REVERSE THE TRAFFIC CONTROL.

THIS DETAIL MAY BE USED FOR DIVIDED ROADWAYS WITH ANY NUMBER OF TRAVEL LANES.

THE EXACT NUMBER, LOCATION AND SPACING OF ALL SIGNS AND DEVICES SHALL BE ADJUSTED TO FIT FIELD CONDITIONS AS APPROVED BY THE ENGINEER.

ALL SIGNS ARE 48" X 48" UNLESS OTHERWISE NOTED.

SIGN LAYOUTS SHALL BE IN ACCORDANCE WITH THE FHWA'S MANUAL OF STANDARD HIGHWAY SIGNS OR THE WISCONSIN STANDARD SIGN PLATES.

SIGNS THAT WILL BE IN PLACE LESS THAN 7 CONTINUOUS DAYS AND NIGHTS MAY BE MOUNTED ON PORTABLE SUPPORTS.

ANY SIGNS TEMPORARY OR EXISTING, WHICH CONFLICT WITH TRAFFIC CONTROL "IN USE" SHALL BE REMOVED OR COVERED AS NEEDED AND AS APPROVED BY THE ENGINEER.

CHANNELIZING DEVICES PLACED ADJACENT TO THE WORK AREA SHALL BE PULLED BACK FROM THE TRAVEL LANE WHEN WORK IS NOT IN PROGRESS.

WHEN A RAMP INTERSECTS THE FACILITY ON WHICH THE WORK IS BEING PERFORMED, ADDITIONAL TRAFFIC CONTROLS SHALL BE PROVIDED AS SPECIFIED IN THE PLANS AND/OR THE SPECIAL PROVISIONS OR AS APPROVED BY THE ENGINEER.

*FOR SHORT DURATION SHOULDER WORK OF LESS THAN ONE HOUR, THE W21-5a SIGN MAY BE OMITTED.

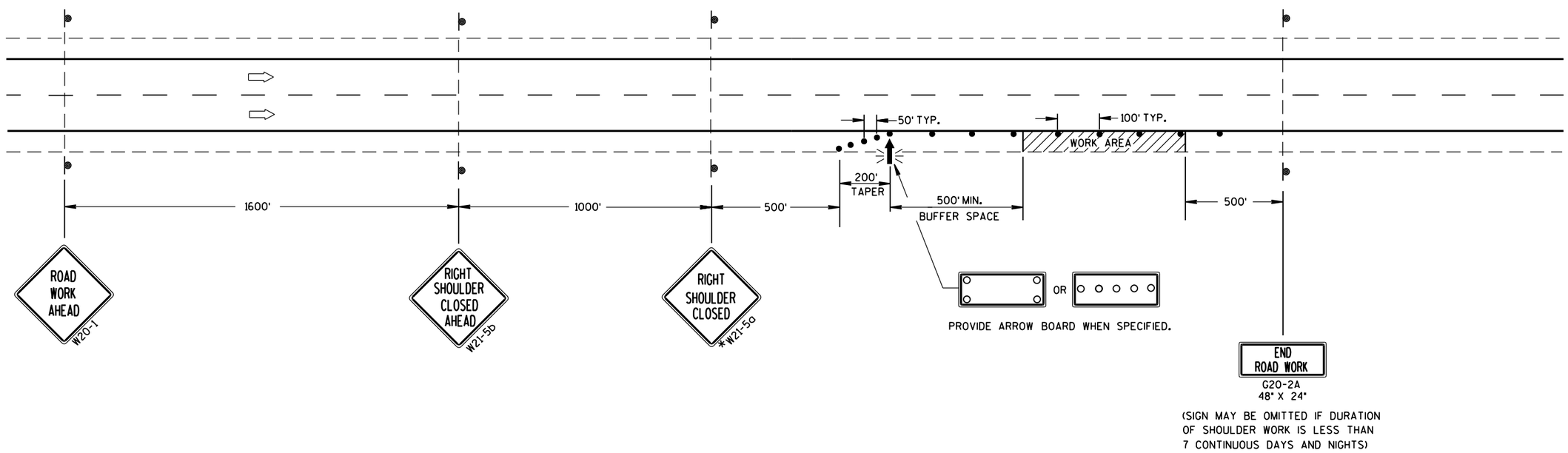

TRAFFIC CONTROL SHOULDER CLOSURE ON DIVIDED ROADWAY, SPEEDS GREATER THAN 40 MPH

STATE OF WISCONSIN
DEPARTMENT OF TRANSPORTATION

APPROVED

8/2013 — DATE

/S/ Travis Feltes — STATE TRAFFIC ENGINE ESIGN

FHWA

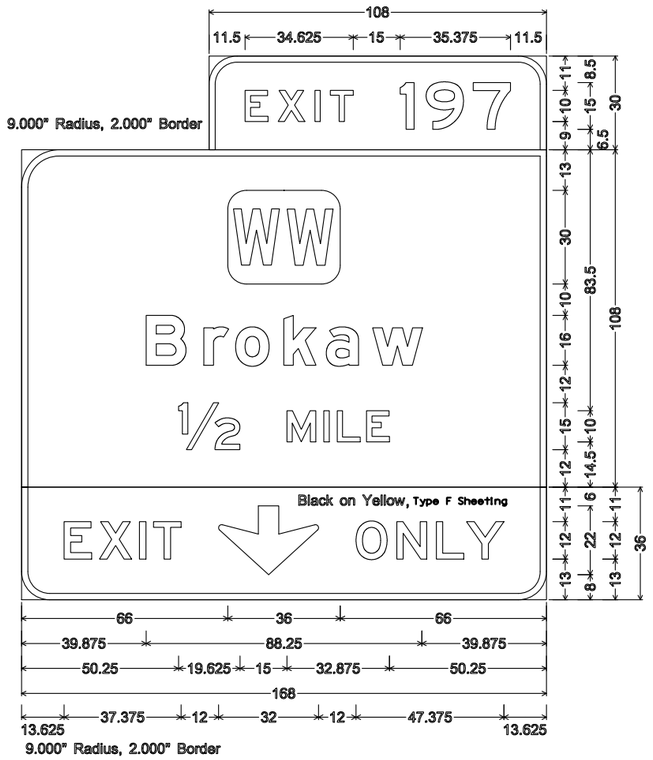

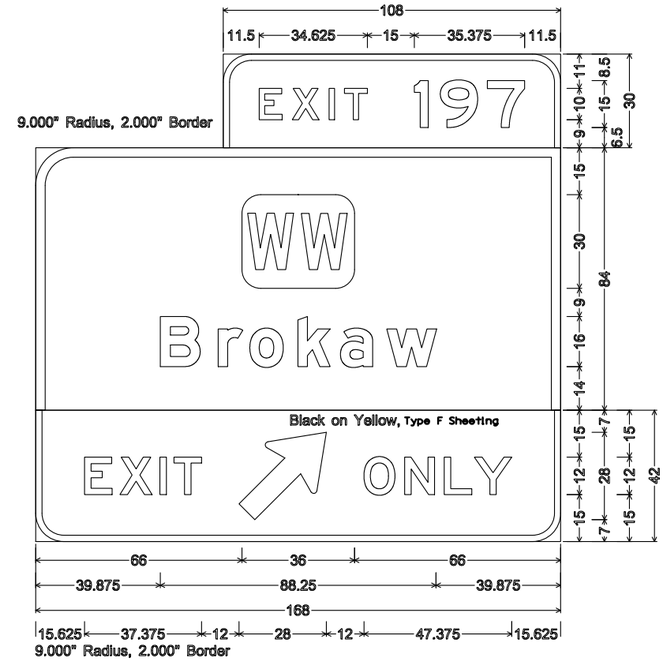

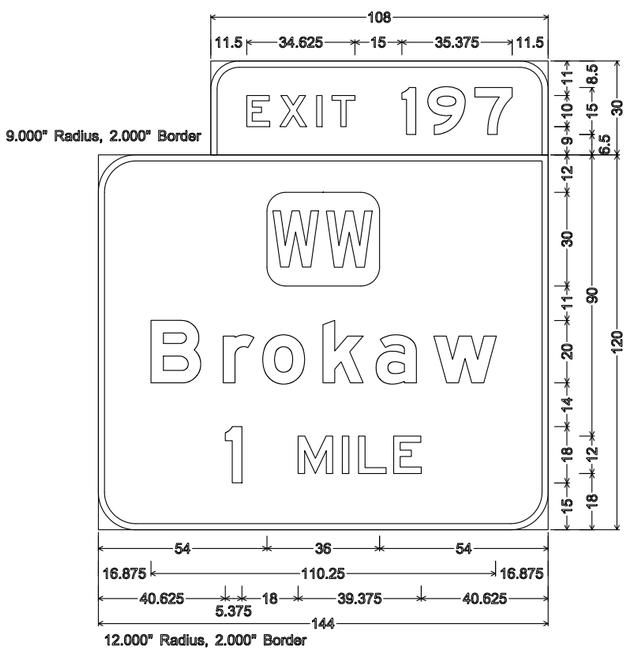

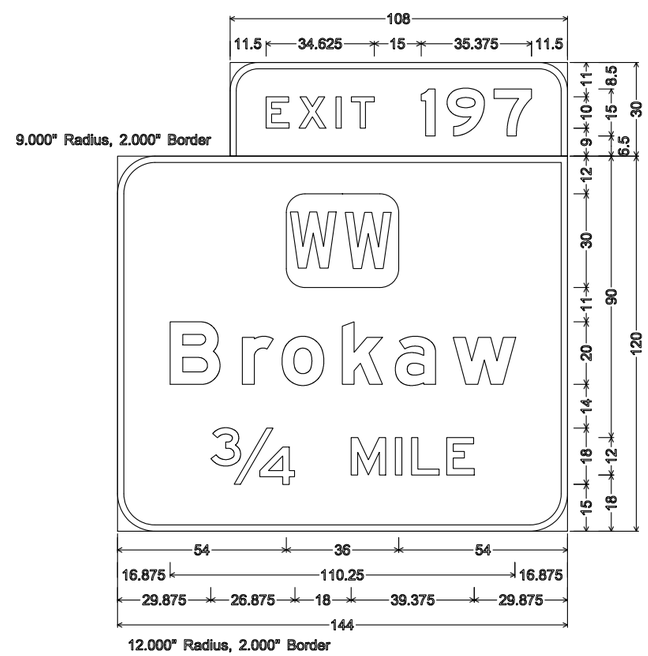

NOTES

1. All Signs Type I - Type SH Reflective except as noted
2. Color:
   Background - GREEN except as noted
   Message - WHITE except as noted
3. Message Series - E Modified exceot All Caps words Series E

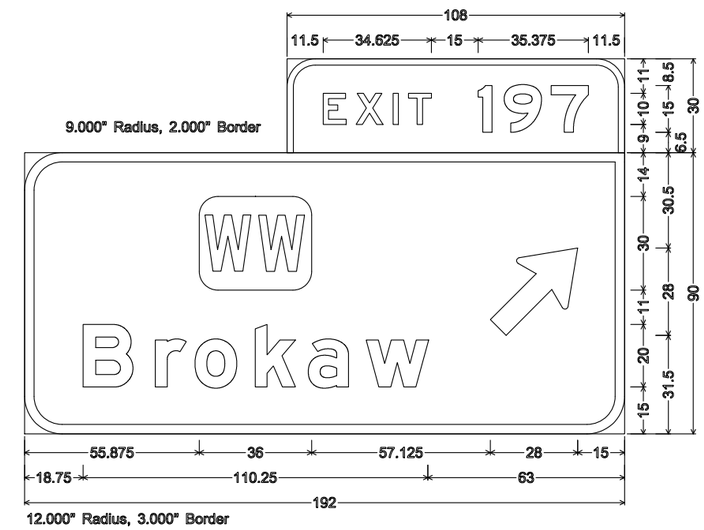

7

7

PROJECT NO: 1170-01-75	HWY: USH 51	COUNTY: MARATHON	PERMANENT SIGNING	SHEET NO. 119	E

NOTES

1. All Signs Type I - Type SH Reflective except as noted
2. Color:
   Background - GREEN except as noted
   Message - WHITE except as noted
3. Message Series - E Modified exceot All Caps words Series E

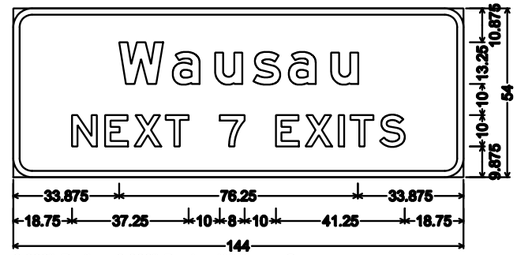

6.000" Radius, 2.000" Border, White on Green;
"Wausau" E Mod; "NEXT" E; "7" E; "EXITS" E;

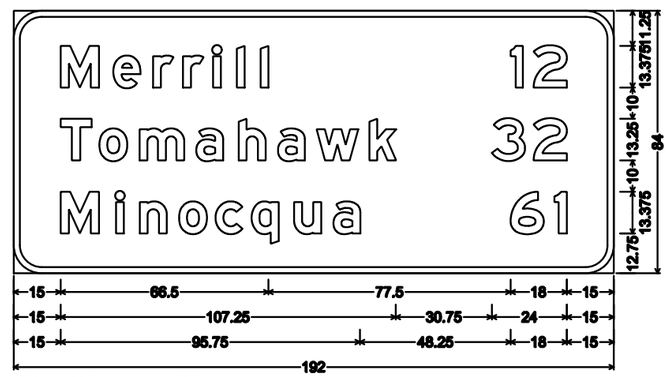

D2-3; 9.000" Radius, 2.000" Border

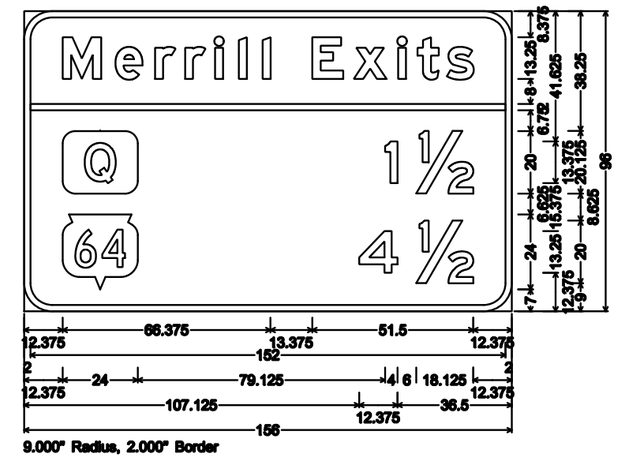

9.000" Radius, 2.000" Border

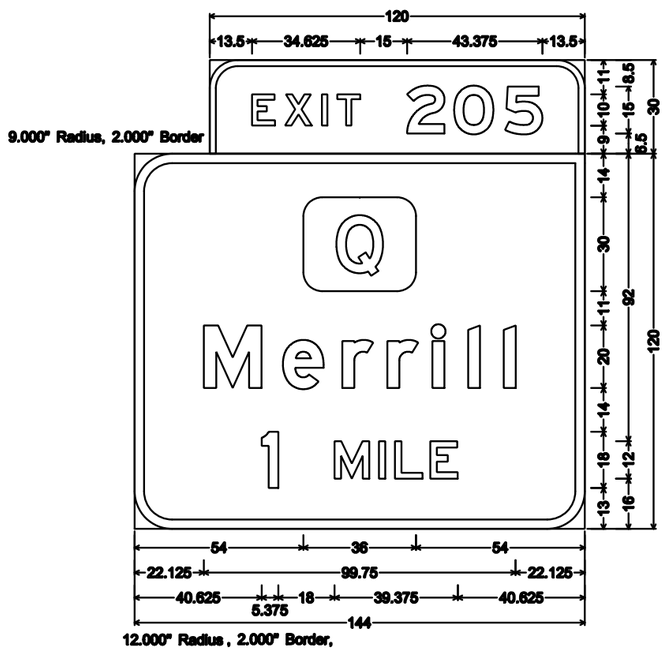

9.000" Radius, 2.000" Border

12.000" Radius, 2.000" Border,

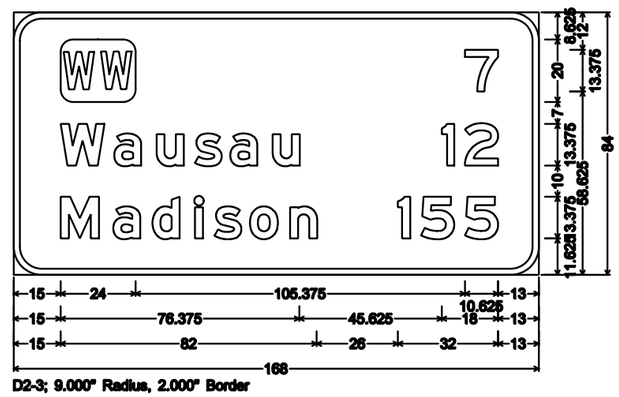

D2-3; 9.000" Radius, 2.000" Border

PROJECT NO: 1170-01-75	HWY: USH 51	COUNTY: MARATHON	PERMANENT SIGNING	SHEET NO. 120	E

NOTES

1. All Signs Type II - Type H Reflective
2. Color:
   Background - GREEN
   Message - WHITE
3. Message Series - E exceot as Shown

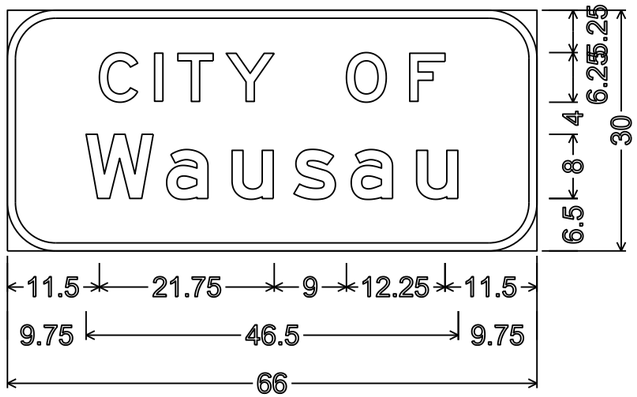

I2-3A;
6.000" Radius, 1.000" Border

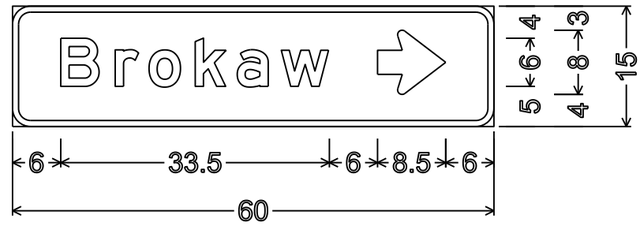

D1-1;
2.250" Radius, 0.750" Border

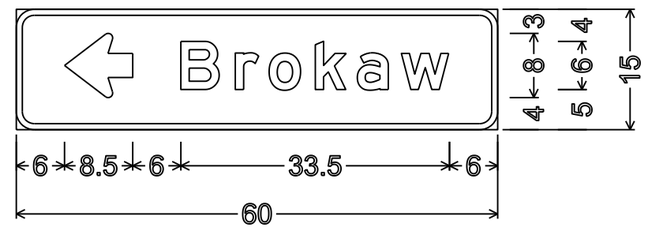

D1-1;
2.250" Radius, 0.750" Border

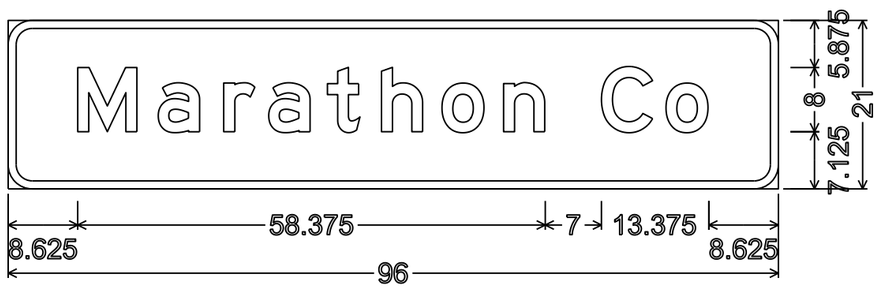

I2-2; 3.000" Radius, 1.000" Border

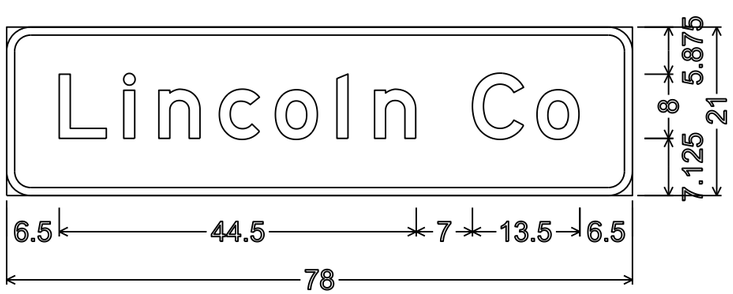

I2-2;
3.000" Radius, 1.000" Border

7

PROJECT NO: 1170-01-75	HWY: USH 51	COUNTY: MARATHON	PERMANENT SIGNING	SHEET NO:	E

TYPICAL ASSEMBLIES

J1-1

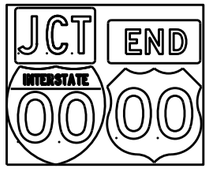

J1-2

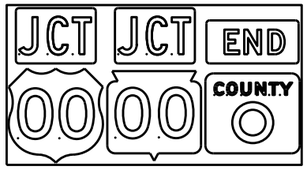

J1-3

J2-1

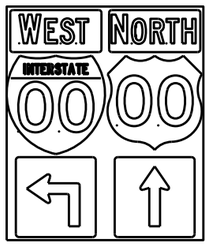

J2-2

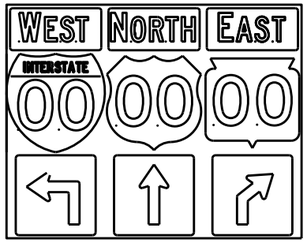

J2-3

JV

(Typical Vertical J-Assembly
See Note 10 and 11)

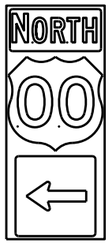

J3-1

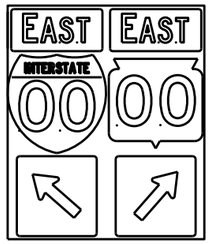

J3-2

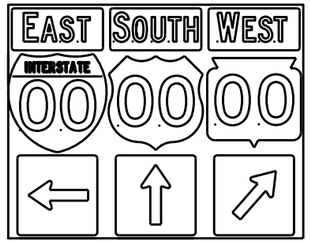

J3-3

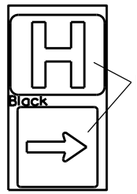

Blue Background

JH-1

J4-1

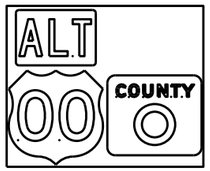

J4-2

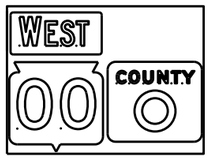

J4-2

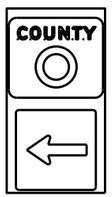

J13-1

J12-1

J32-1

J33-1

J23-1

J22-1

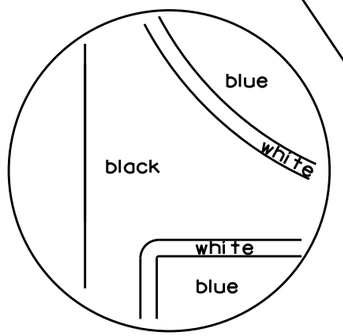

blue background
with interstate

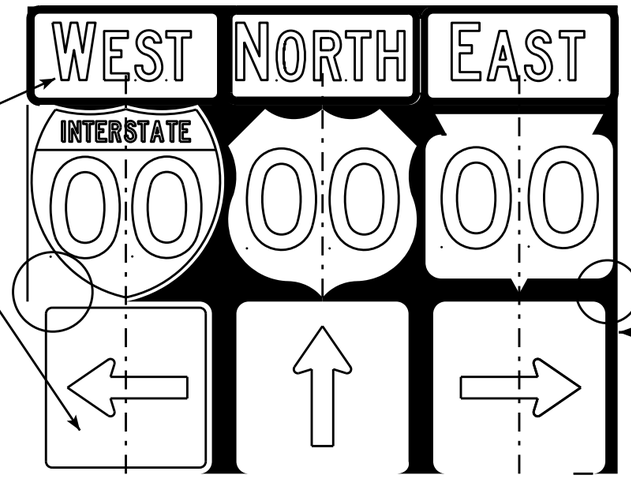

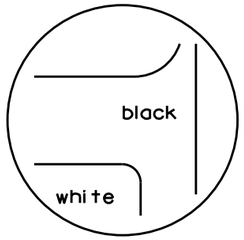

black background

NOTES

1. Signs are Type II - Type H Reflective - reference WIS DOT Standard Specification for HIGHWAY and STRUCTURE CONSTRUCTION latest edition.
2. Color:
   Background - Black Non-reflective
   Message - see Note 5
3. Message Series - See Note 5
4. Corners shall be square or rounded if base material is plywood. If base material is metal the corners shall be rounded.
5. The colors and message spacing on each marker shall be according to the applicable route marker panel specifications.
6. Certain marker heads require the component pieces to be the same color. As an example, all the components used with an M1-1 Interstate marker shall be blue.
7. Single panel j-assemblies shall only be used with route marker shields that are same size. If the route marker shields are different size use multiple piece component.
8. Route assemblies that have 24 inch route shields and have dimensions greater than 48 inches (both vertical and horizontal) shall have one horizontal splice between the arrows and route shields. Vertical splices shall not be used on route assemblies with a horizontal dimension of 144 inches or less. The contractor shall not use more than one vertical joint per sign and the joint shall be between route shields.
9. Route assemblies that have 36 inch shields and have dimensions greater than 48 inchs (both vertical and horizontal) shall have two horizontal splices. One horizontal splice shall be between the cardinal direction and route shields and the other horizontal splice shall be between the arrows and route shields. Vertical splices shall not be used on route assemblies with a horizontal dimension of 144 or less. The contractor shall not use more than one vertical joint per sign and the joint shall be between route shields.
10. All Vertical J Assemblies are given a Sign Code of JV
11. For JV Assemblies that have a mixture of Interstate and non Interstate shields, arrows and cardinals shall be white on blue.

ROUTE MARKERS & COMPONENTS
IN TYPICAL ASSEMBLIES

WISCONSIN DEPT OF TRANSPORTATION

APPROVED Matthew R Rauch
for State Traffic Engineer

DATE 2/06/14 PLATE A2-1S.8

PROJECT NO: | SHEET NO: E

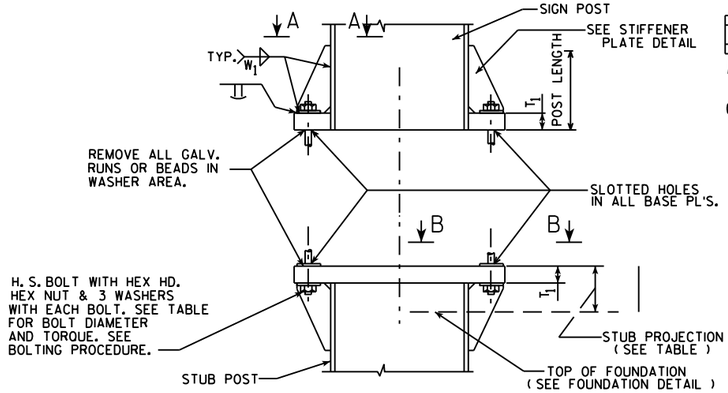

SIGN POST AND STUB POST ELEVATION

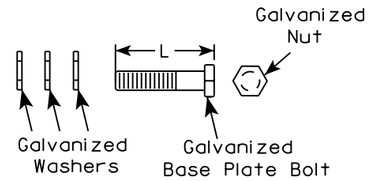

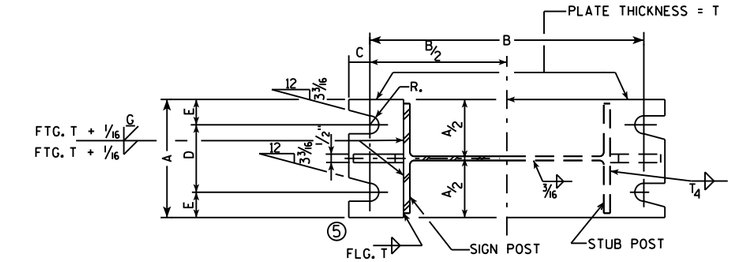

SECTION A-A SECTION B-B

DESIGN DATA

WIND PRESSURE = 75 M.P.H.
WIND COMPONENTS - NORMAL = 1.0 TRANSVERSE = 0.0
ICE LOAD = 3 P.S.F.

GROUP LOADS	PERCENT OF ALLOWABLE STRESS
1. DEAD	100
2. DEAD & WIND	140
3. DEAD, ICE & 1/2 WIND△	140 △25 P.S.F. MIN.

ALLOWABLE SOIL PRESSURE = 1 1/2 T / SQ. FT.
WIND LOAD WAS APPLIED TO THE AREA OF THE SIGN AND TO THE SUPPORTING MEMBERS.
ICE LOAD WAS APPLIED TO ONE FACE OF THE SIGN AND AROUND THE SURFACE OF THE SUPPORTING MEMBERS.

GENERAL NOTES

DRAWINGS SHALL NOT BE SCALED.
DESIGN CONFORMS WITH A.A.S.H.T.O. SPECIFICATIONS 1985.
ALL POSTS, POST STUBS & ATTACHMENTS SHALL BE A.S.T.M. A709 GRADE 50, GALVANIZED IN ACCORDANCE WITH ASTM A123. ⑨
THE POST, BASE PLATES, UPPER SIX INCHES OF STUB POST FLANGE SPLICE PLATE AND FUSE PLATE SHALL BE GALVANIZED AFTER FABRICATION. ⑦④
FURNISH STEEL BOLTS, NUTS, AND WASHERS IN ACCORDANCE WITH SECTION 635 OF THE STANDARD SPECIFICATIONS. ⑨⑧⑤

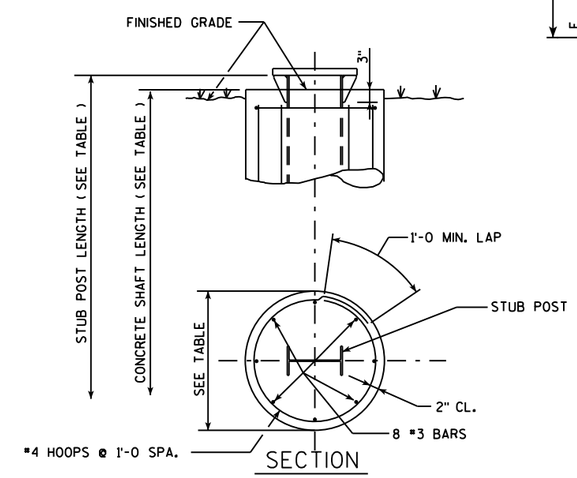

SECTION

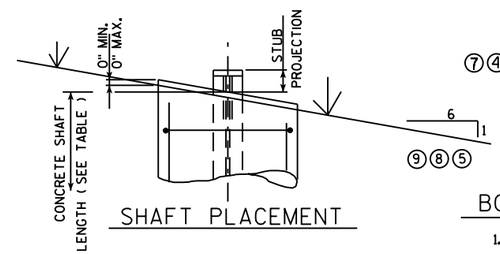

SHAFT PLACEMENT

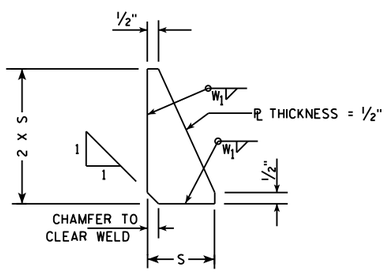

STIFFENER PLATE DETAIL

(SEE TABLE FOR DIMENSIONS)

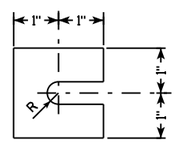

FURNISH 2 @ .012" ± THICK AND 2 @ .032" ± THICK SHIMS PER POST. SHIMS SHALL BE FABRICATED FROM BRASS SHIM STOCK OR STRIP CONFORMING TO A.S.T.M.- B36.

SHIM DETAIL

QUANTITIES FOR 1 FOOTING		
	CONC. MASONRY C.Y.	REINF. STEEL LBS.
A	0.6	34
B	0.8	49
C	0.9	50
D	0.9	56
E	1.0	62

⑦

	TYPE	#3	#4
REINF.	A	8 @ 4'-5	5 @ 6'-3
	B	8 @ 6'-5	7 @ 6'-3
	C	8 @ 6'-11	7 @ 6'-3
	D	8 @ 7'-5	8 @ 6'-3
	E	8 @ 7'-11	9 @ 6'-3

⑦

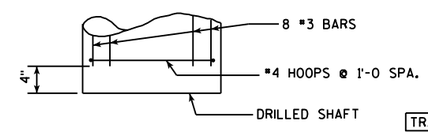

FOUNDATION DETAIL

BOLTING PROCEDURE - BASE CONNECTION

1. ASSEMBLE SIGN POST TO STUB POST WITH BOLTS AND ONE OF THE FLAT WASHERS ON EACH BOLT BETW. PLATES.
2. SHIM AS REQ'D. TO PLUMB POST.
3. PRIOR TO BOLT TIGHTENING LUBRICATE BASE CONNECTION BOLTS WITH BEESWAX OR OTHER HIGH-WAX LUBRICANT.
4. TIGHTEN ALL BOLTS THE MAXIMUM POSSIBLE WITH 12" OR 15" WRENCH TO BED WASHERS & SHIMS AND TO CLEAN BOLT THREADS, THEN LOOSEN EACH BOLT IN TURN AND RETIGHTEN IN A SYSTEMATIC ORDER TO THE PRESCRIBED TORQUE. (SEE TABLE)
5. BURR THREADS AT JUNCTION WITH NUT USING A CENTER PUNCH TO PREVENT NUT LOOSENING.

NOTE:
TIGHTEN THE HIGH STRENGTH BOLTS TO THE TORQUE SHOWN. DO NOT OVERTIGHTEN.

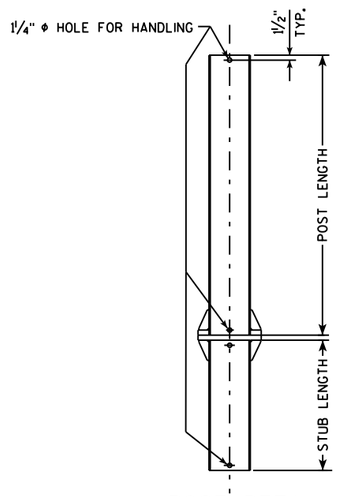

POST DETAIL

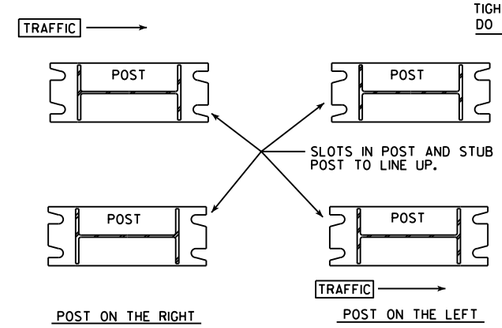

POST SLOT ORIENTATION ⑦

②

L	X	TYPE	POST SIZE \ DIMENSION	BOLT SIZE & TORQUE	A	B	C	D	E	T_1	T_4	W_1	R	S	STUB LENGTH	STUB PROJECTION	SHAFT DIAMETER	SHAFT LENGTH	K
				BASE CONNECTION DATA TABLE											FOUNDATION DATA				
3 3/4	④	A	W10"X12.0 #/FT.	3/4" Φ @ 75#-FT.	5 1/4"	1'-0 3/8	7/8"	3 1/2"	7/8'	1"	3/16"	5/16"	13/32"	2 1/8"	3'-6	3"	2'-0 Φ	5'-0	76.0# ④
4 3/4	④	B	W12"X16.0 #/FT.	7/8" Φ @ 85#-FT.	5 1/2"	1'-4 1/4	1"	3 1/2"	1"	1 1/4"	1/4"	5/16"	15/32"	3"	5'-6	3"	2'-0 Φ	7'-0	146.5# ④
5		C	W12"X19.0 #/FT.	7/8" Φ @ 85#-FT.	5 1/2"	1'-4 1/4	1"	3 1/2"	1"	1 1/2"	5/16"	5/16"	15/32"	3"	6'-0	3"	2'-0 Φ	7'-6	182.1#
5		D	W12"X22.0 #/FT.	7/8" Φ @ 85#-FT.	5 1/2"	1'-4 1/4	1"	3 1/2"	1"	1 1/2"	3/8"	5/16"	15/32"	3"	6'-6	3"	2'-0 Φ	8'-0	210.5#
5	③	E	W12"X26.0 #/FT.	1" Φ @ 90#-FT.	7"	1'-4 1/4	1 1/4"	4"	1 1/2"	1 1/2"	3/8"	5/16"	17/32"	3"	7'-0	3"	2'-0 Φ	8'-6	293.0# ③

① ⑥ ①

STRUCTURAL CARBON STEEL PAY WTS. (1 POST) = K+ (POST LENGTH X POST WT.)
" K " INCLUDES STUB, BASE PLATES, STIFFS., BOLTS, AND WASHERS.

WISCONSIN DEPT OF TRANSPORTATION

APPROVED Matthew R Rauch for State Traffic Engineer

DATE 11/12/15 PLATE NO. A3-1.16

NO.	DATE	REVISION
⑩	1-21-14	LUBRICATION OF BASE BOLTS
⑨	4-26-11	REMOVE NON-GALVANIZED
⑧	10-30-96	NOT GALVANIZED/GALVANIZED
⑦	10-30-92	QUANT., A588 EXCEPT., ADD SLOT VIEW
⑥	8-24-87	BASE CONN. WELD
⑤	10-13-81	BASE CONN. WELD & FUSE PL WASHERS
④	10-19-79	POST A & B, A572 GR. 50, & K
②	11-28-78	"K" ③ 4-23-79 TYPE "E"
①	5-4-78	T_1 , T_2 & W_1

STATE OF WISCONSIN
DEPARTMENT OF TRANSPORTATION
DIVISION OF HIGHWAYS

TYPE A, B, C, D, & E

CONST. SPEC. 2011 | DRAWN BY JPH | PLANS CK'D.

FTG. & SIGN SUPPORT DETAILS GROUND MOUNT BREAK-AWAY SIGNS

SHEET

PROJECT NO: | HWY: | COUNTY: | SHEET NO: | E

STUB AND MASONRY ANCHOR DETAILS

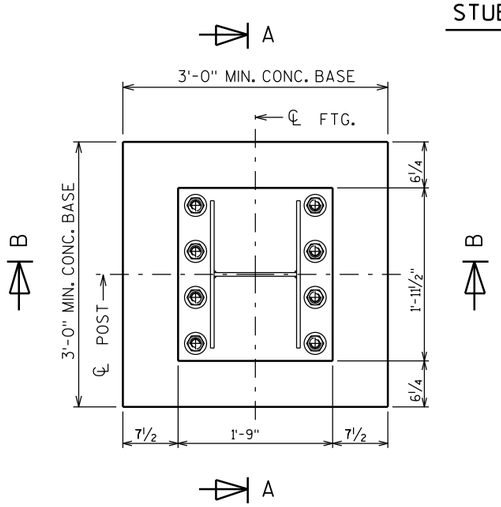

STUB SECTION

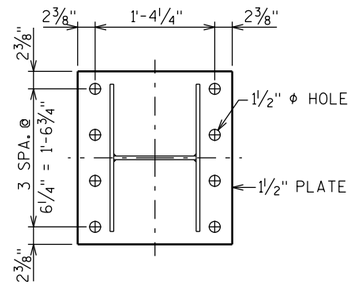

BASE PLATE

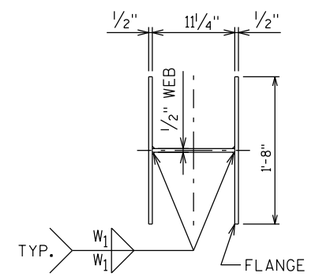

STUB

◐ SEE PLATE NO. A3-1 FOR DETAILS

◕ MASONRY ANCHORS TYPE S 1¼-INCHES (ADHESIVE). ALLOWABLE PULL OUT CAPACITY 14,995 KIPS. EMBED 1'-3" IN ROCK.

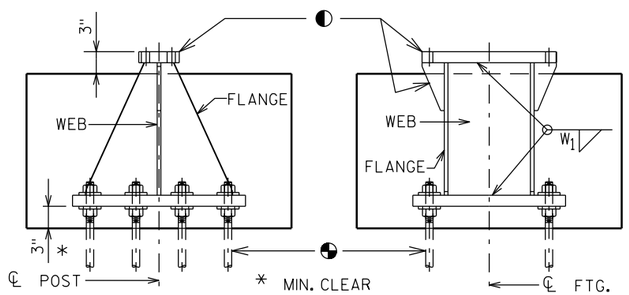

SECTION A

SECTION B

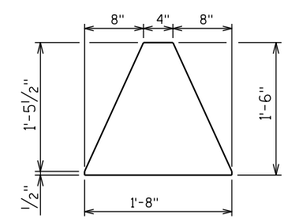

FLANGE

GENERAL NOTES

1. Quantities per Base:
   - REINFORCING BAR STEEL = 62 LBS
   - CONCRETE = 0.6 C.Y.
   - STEEL WEIGHT = 335 LBS
2. All materials, except anchor rod, nuts and washers, are to be A.S.T.M. A709 grade 50. All materials to be galvanized after fabrication.
3. If the contractor encounters rock before reaching the footing depth, per the A3-1 Sign Detail, determine the pull-out capacity of a test adhesive anchor installed in the rock. If the test result equals or exceeds the pull-out capacity of 14,995 KIPS, the contractor may install the breakaway stub for rock, according to this detail.

CONCRETE BASE AND REINFORCING STEEL DETAILS

CONCRETE BASE SECTION

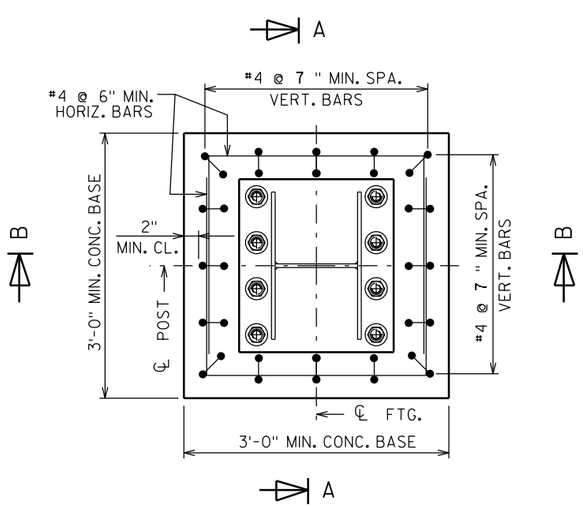

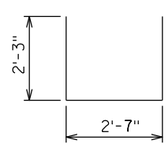

HORIZONTAL BAR

8 BARS @ 6'-11" LENGTH

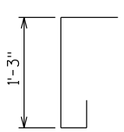

VERTICAL BARS

16 BARS @ 2'-4" LENGTH
MAY BE PLACED IN SKEW
FOR CLEARANCE NEED

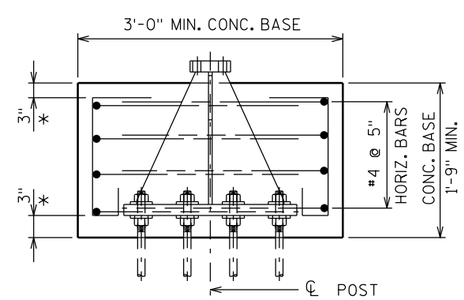

SECTION A

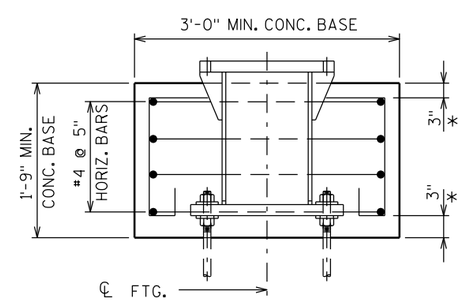

SECTION B

* MIN. CLEAR

ALTERNATE BREAK-AWAY BASE ON ROCK
A3-1M

WISCONSIN DEPT OF TRANSPORTATION

APPROVED Matthew R Rauch
for State Traffic Engineer

DATE 2/06/2014 PLATE A3-1M.1

PROJECT NO:	HWY:	COUNTY:		SHEET NO:	E

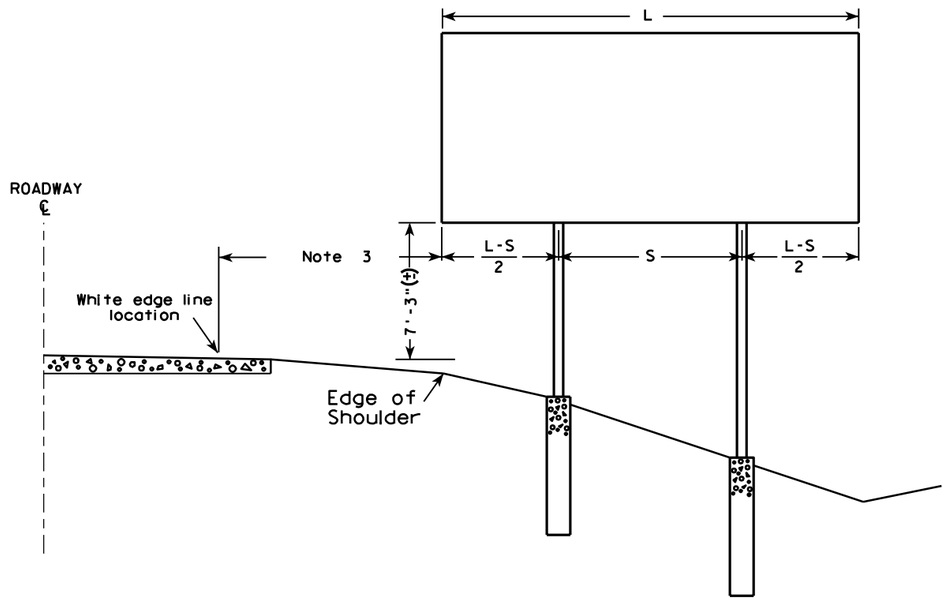

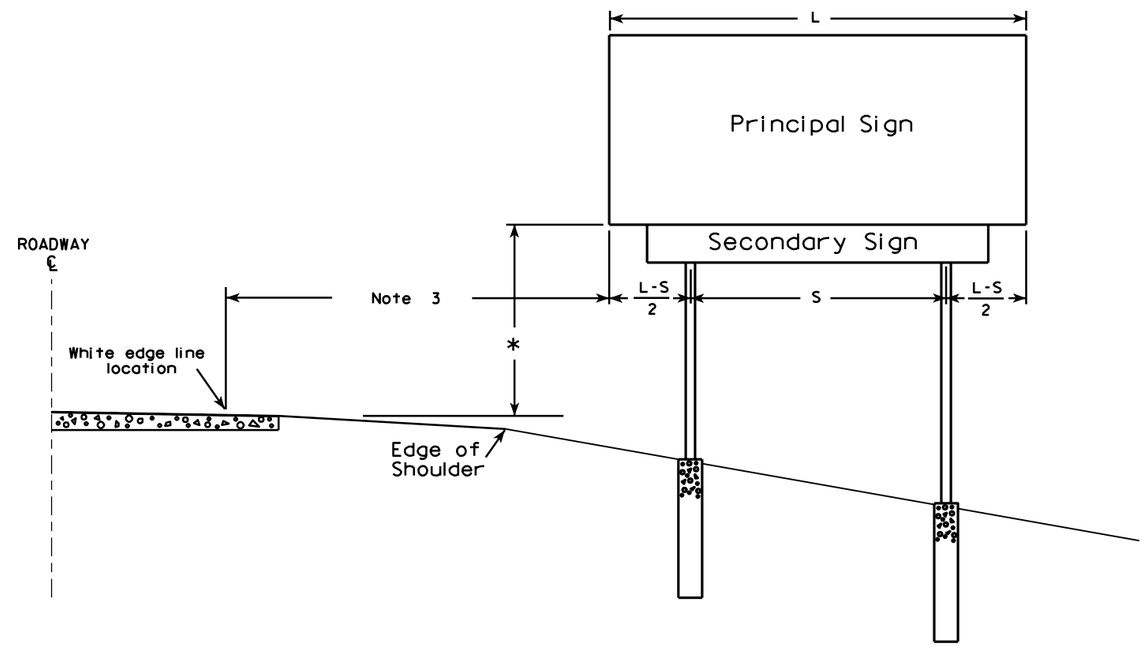

GENERAL NOTES

1. For a 2 post installation, S equals 3L/5, but shall not be less than 9 ft.
2. For a 3 post installation, S equals 5L/7, but shall not be less than 18 ft., and the space between any two posts shall not be less than 9 ft.
3. Unless noted in the plan, the sign offset distance shall be a minimum of 17'-6", desirable 30'-0".
4. The (±) tolerance shown on this sheet is 3 in.
5. The vertical sign height clearance detailed is measured from the bottom of the sign to the near edge of pavement.
6. Post lengths shown in the miscellaneous quantities are estimated lengths. The contractor shall verify post lengths at the time of final grading.
7. Refer to the Traffic Guidelines Manual for further guidance on minimum vertical clearance requirements.

* Clearance is 8'-3"(±) when the secondary sign is 3 ft. or less in height. For secondary signs larger than 3 ft., the clearance to the bottom of the secondary sign shall be 5'-3"(±).

7

7

TYPICAL INSTALLATION OF TYPE I SIGNS

WISCONSIN DEPT OF TRANSPORTATION

APPROVED Matthew R Rauch
for State Traffic Engineer

DATE 4/02/08 PLATE NO. A4-1.9

PROJECT NO:				SHEET NO: 125	E

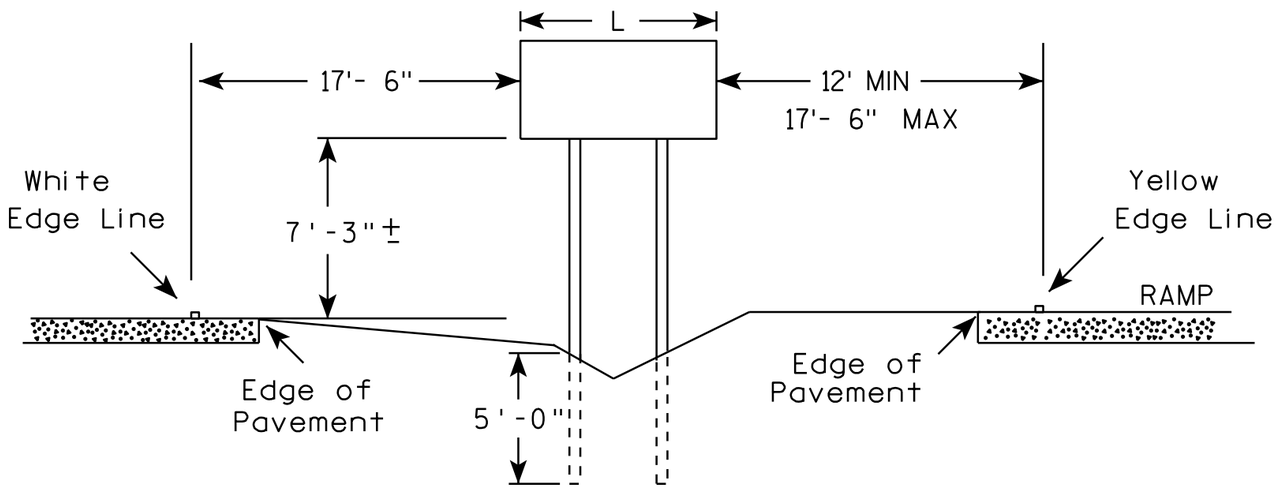

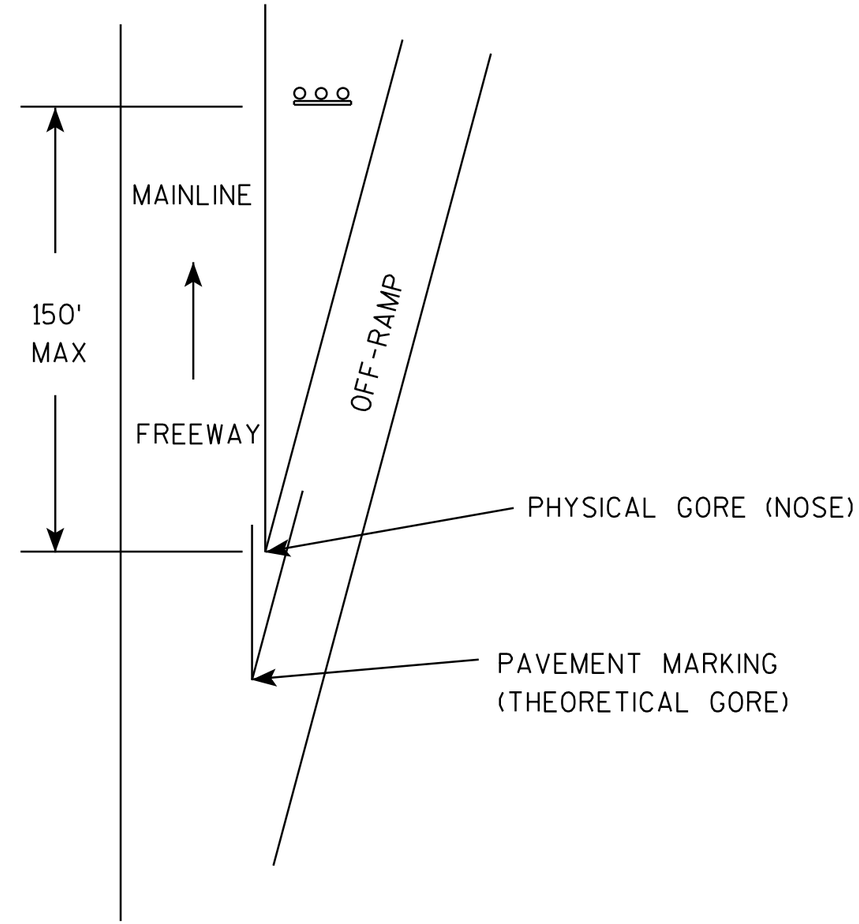

GENERAL NOTES

1. The 150 foot distance from the physical gore (where pavement ends) will normally provide the offsets as shown.
2. If roadway geometrics permit, the sign may be closer than the 150 foot distance as long as the offsets are maintained.
3. At no time shall the location be greater than 150 feet. If the normal offsets cannot be maintained, they can be reduced to 6 feet from the edge of the paved shoulder (both freeway and ramp).
4. The offset from edge of sign to the yellow edge line on the ramp is shown as a minimum of 12 feet and a maximum of 17 feet, 6 inches. Preference is adhering to the maximum rather than the minimum dimension.
5. When L is equal to or exceeds 10 feet, use 3 posts as per A4-4.
6. The (∓) tolerance for the mounting height is 3 inches.

TYPICAL INSTALLATION OF TYPE II SIGNS ON WOOD POSTS IN GORE

WISCONSIN DEPT OF TRANSPORTATION

APPROVED Matthew R Rauch
for State Traffic Engineer

DATE 2/06/14 PLATE A4-2.3

PROJECT NO: | SHEET NO: E

URBAN AREA

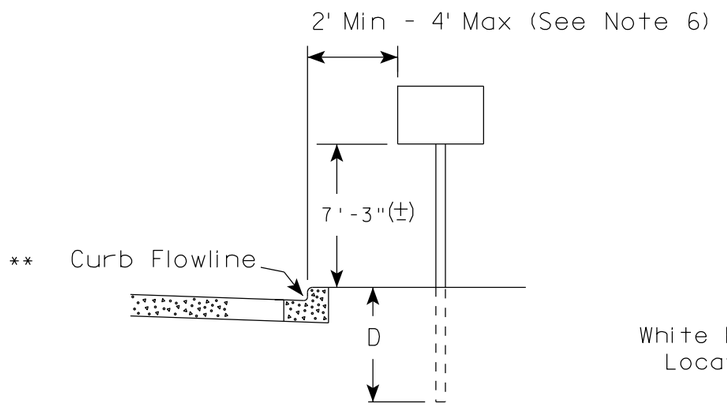

RURAL AREA (See Note 2)

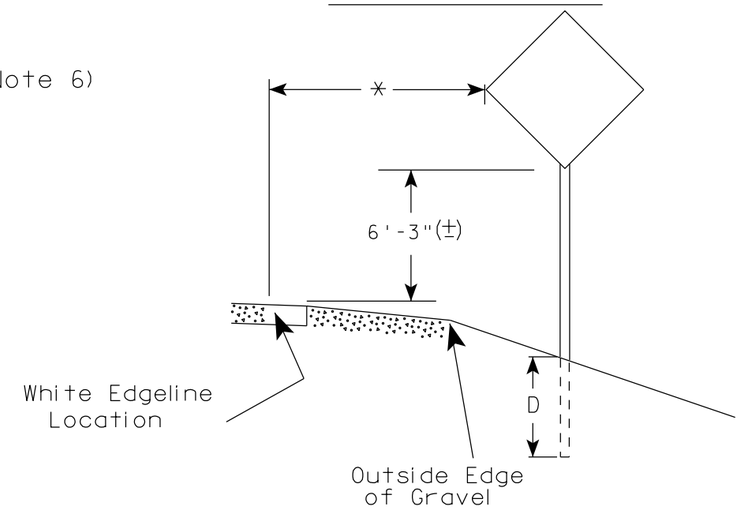

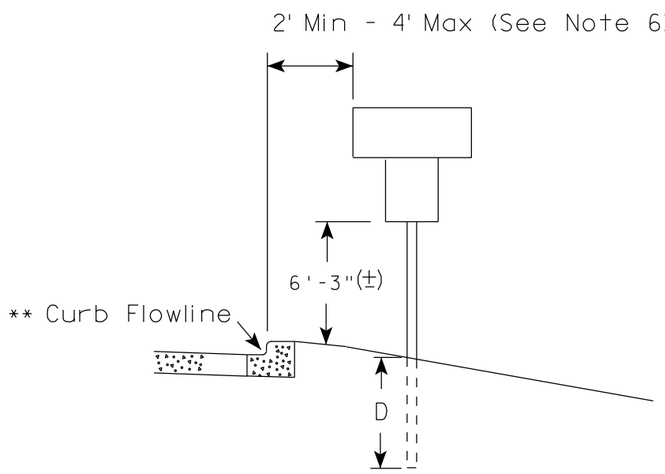

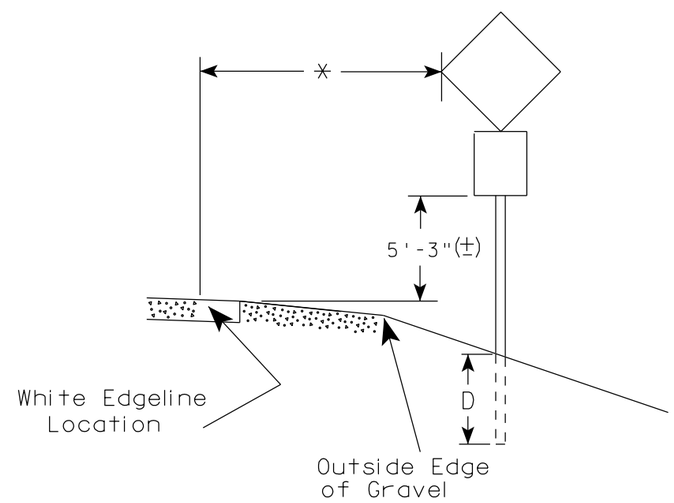

** The existence of curb and gutter does not in itself mandate the vertical clearance illustrated. That height is typically measured where there is sidewalk adjacent to the roadway or parking is permitted. In the absence of sidewalk vertical clearance is measured from the top of the curb. Offset of signs is measured from the flow line.

* 6 feet from edge of a paved shoulder or 12 feet from the edge of pavement (edge line location) or 2 feet from outside edge of gravel, whichever is greater unless directed by project engineer.

GENERAL NOTES

1. Signs wider than 4 feet or 20 sq.ft or larger, shall be mounted on multiple posts. Refer to plate A4-4.
2. If signs are mounted on barrier wall, see A4-10 sign plate.
3. For expressways and freeways, mounting height is 7'- 3" (±) or 6'-3" (±) depending upon existence of a sub-sign.
4. Minimum mounting height for J assemblies (A2-1S) is 7'-3" (±) or 6'-3" (±) per urban or rural detail respectively.
5. Minimum mounting height for signs mounted on traffic signal poles is 5'- 3" (±).
6. Offset distance shall be consistent with existing signs or consistent throughout length of project.
7. The (±) tolerance for mounting height is 3 inches.
8. Folding signs shall be mounted at a height of 5'-3" (±) or as directd by the Engineer.
9. The Double Arrow sign (W12-1) shall be mounted at a height of 2'-3" (±). The Chevron sign (W1-8), Roundabout Chevron panel (R6-4B), Enhanced Reference Markers, Clearance Markers (W5-52), Mile Markers (D10 series), In Road Object Markers (W5-54) & End of Road Markers (W5-56) shall be mounted at a height of 4'-3" (±).

POST EMBEDMENT DEPTH

Area of Sign Installation (Sq. Ft.)	D (Min)
20 or Less	4'
Greater than 20	5'

TYPICAL INSTALLATION OF PERMANENT TYPE II SIGNS ON SINGLE POSTS

WISCONSIN DEPT OF TRANSPORTATION

APPROVED Matthew R Rauch for State Traffic Engineer

DATE 7/23/15 PLATE NO. A4-3.20

PROJECT NO:	HWY:	COUNTY:		SHEET NO:	E

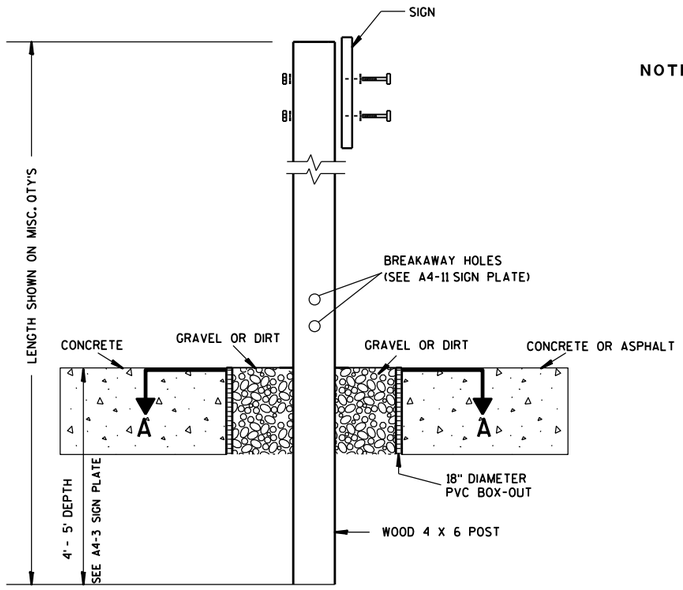

ELEVATION VIEW

DETAIL OF WOOD 4 X 6 SIGN POST IN BOX-OUT

NOTES:
1. ALL MATERIAL TO BE APPROVED BY ENGINEER PRIOR TO INSTALLATION
2. SEE SIGN PLATE A4-8 FOR SIGN HARDWARE REQUIREMENTS
3. 18 INCH X 18 INCH SQUARE BOX-OUTS MAY BE USED FOR INSTALLATIONS IN EXISTING CONCRETE OR ASPHALT LOCATIONS.

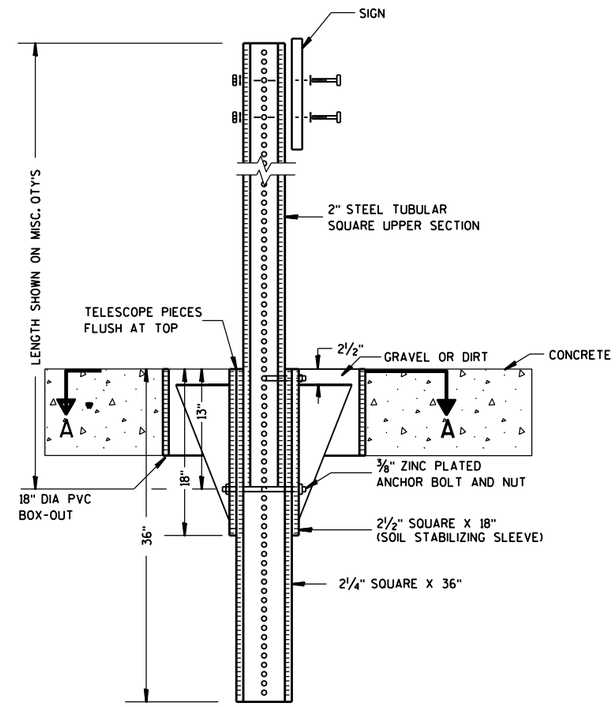

ELEVATION VIEW

DETAIL OF STEEL 2 X 2 SIGN POST IN BOX-OUT

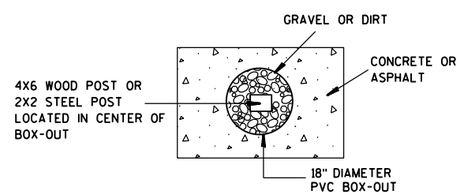

PLAN VIEW

FOR NEW CONCRETE/ASPHALT INSTALLATIONS

SIGN POST
BOX-OUTS
A4-3B

WISCONSIN DEPT OF TRANSPORTATION

APPROVED Matthew R Rauch
for State Traffic Engineer

DATE 1/27/14 PLATE NO. A4-3B.1

PROJECT NO:	HWY:	COUNTY:		SHEET NO:	E

URBAN AREA

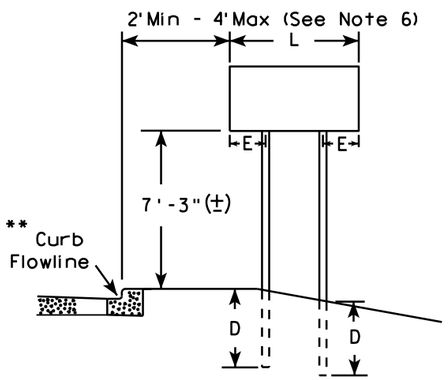

RURAL AREA (See Note 3)

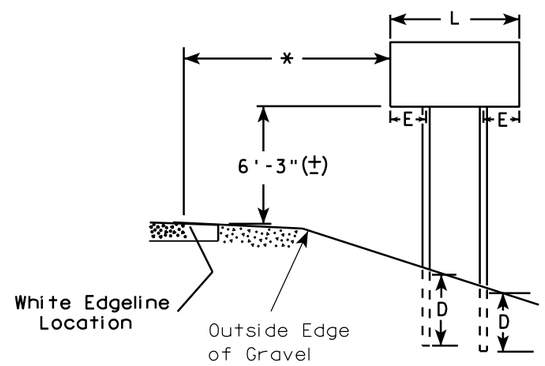

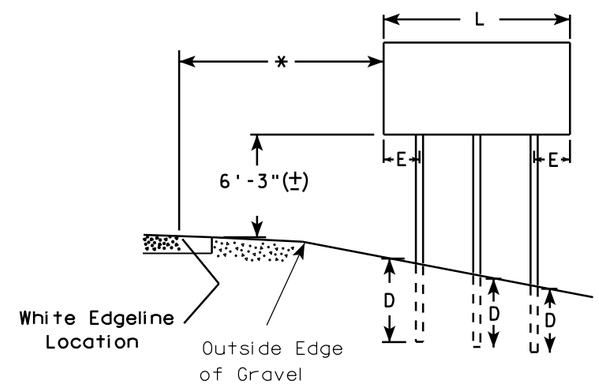

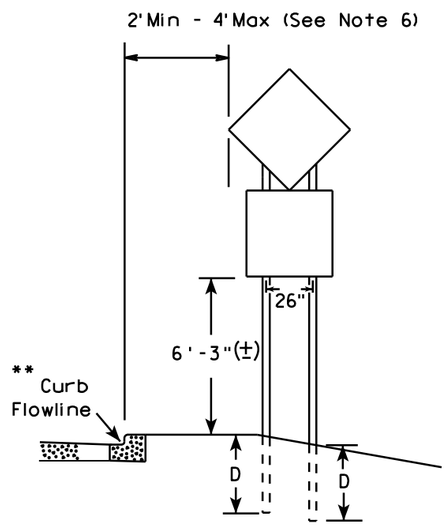

48" DIAMOND WARNING SIGN

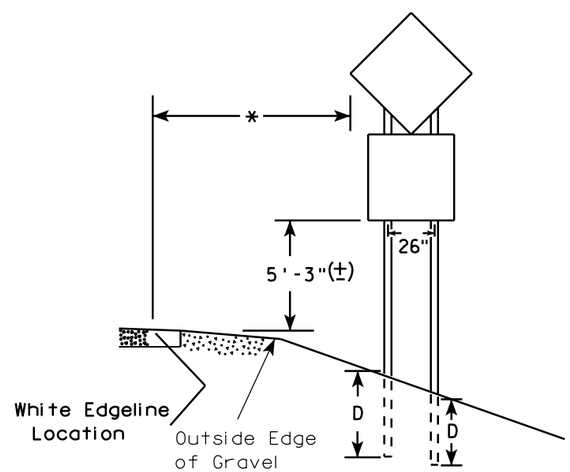

48" DIAMOND WARNING SIGN

GENERAL NOTES

1. For 3 or 4 post installations, individual post spacing shall be greater than 3'-6".
2. See tables below for required number of posts.
3. For expressways and freeways, mounting height is 7'-3" (±) or 6'-3" (±) depending upon existence of sub-sign.
4. The (±) tolerance for mounting height is 3 inches.
5. Minimum mounting height for J assemblies (A2-1S) is 7'-3" (±) or 6'-3" (±) per urban or rural detail respectively.
6. Offset distance shall be consistent with existing signs or consistent throughout length of project.
7. Folding signs shall be mounted at a height of 5'-3" (±) or as directed by the engineer.
8. The Double Arrow sign (W12-1) shall be mounted at a height of 2'-3" (±). The Chevron sign (W1-8), Roundabout Chevron panel (R6-4B), Clearance Markers (W5-52), Mile Markers (D10 series), In Road Object Markers (W5-54) & End of Road Markers (W5-56) shall be mounted at a height of 4"-3" (±).

* 6 feet from edge of a paved shoulder or 12 feet from the edge of pavement (edge line location) or 2 feet from outside edge of gravel, whichever is greater unless directed by project engineer.

** The existence of curb and gutter does not in itself mandate the vertical clearance illustrated. That height is typically measured where there is sidewalk adjacent to the roadway or parking is permitted. In the absence of sidewalk vertical clearance is measured from the top of the curb. Offset of signs is measured from the flow line.

*** See A4-3 sign plate for signs 4' or less in width and less than 20 S.F. in area.

SIGN SHAPE OTHER THAN DIAMOND (TWO POSTS REQUIRED)	
L	E
*** Greater than 48" Less than 60"	12"
60" to 120"	L/5

SIGN SHAPE OTHER THAN DIAMOND (THREE POSTS REQUIRED)	
L	E
Greater than 120" less than 168"	12"

SIGN SHAPE OTHER THAN DIAMOND (FOUR POSTS REQUIRED)	
L	E
168" and greater	12"

POST EMBEDMENT DEPTH

Area of Sign Installation (Sq. Ft.)	D (Min)
20 or Less	4'
Greater than 20	5'

TYPICAL INSTALLATION OF TYPE II SIGNS ON MULTIPLE POSTS

WISCONSIN DEPT OF TRANSPORTATION

APPROVED Matthew R Rauch
for State Traffic Engineer

DATE 7/23/15 PLATE NO. A4-4 14

PROJECT NO:	HWY:	COUNTY:		SHEET NO:	E

GROUND MOUNTED SIGN

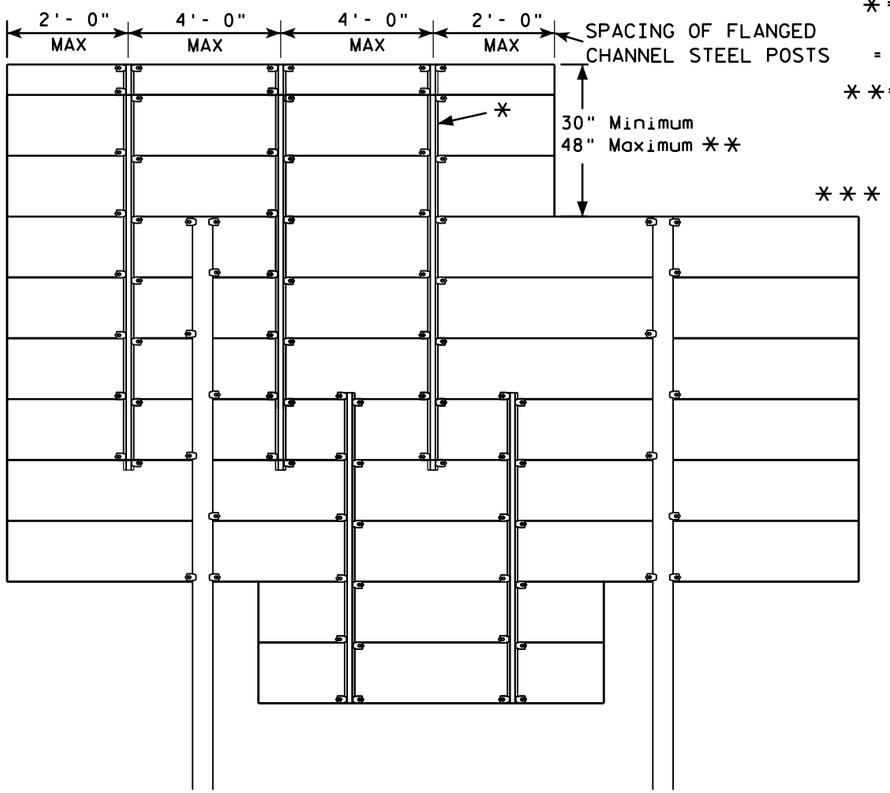

*=2.00 lb/ft FLANGED CHANNEL, MIN. YIELD STRENGTH = 60,000 PSI (GRADE 60) GALVANIZED

**=FOR 48" HEIGHT PANELS ON OVERHEAD STRUCTURES, ENTIRE SIGN SHALL BE CENTERED VERTICALLY ABOUT THE DEPTH OF THE TRUSS.

*** THESE SPACING DISTANCES SHALL ONLY BE USED WHEN THE MAIN SIGN HAS A MAXIMUM HEIGHT (DIMENSION H) OF 16 FT OR LESS. FOR SIGNS WITH A HEIGHT OF GREATER THAN 16 FT, STRUCTURAL CALCULATIONS SHALL BE PERFORMED.

FLANGE CHANNEL DETAIL

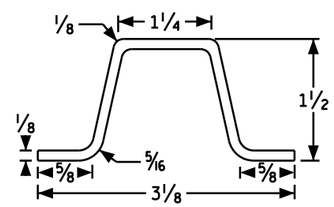

NOT TO SCALE

SIGN BRIDGE MOUNTED SIGN

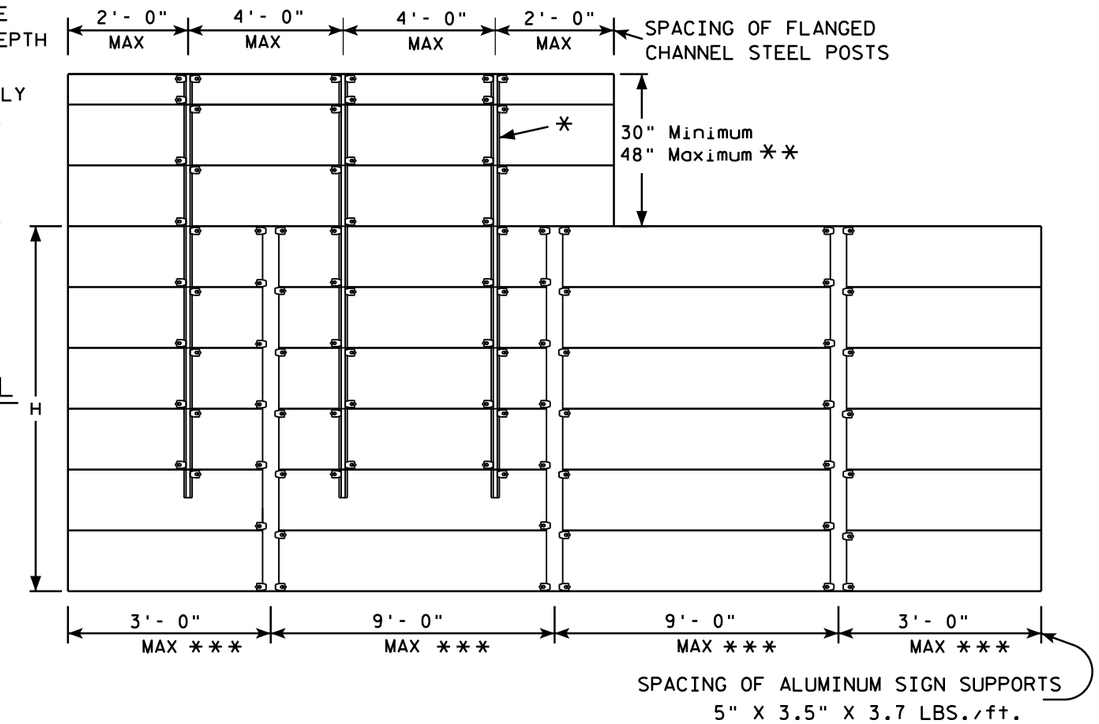

GENERAL NOTES

1. Flanged channel steel posts shall conform to size and material above, and shall be considered as incidental to other items in the contract.
2. Number of Flanged channel steel supports varies with length of panel and shall be spaced as shown:

   PANEL LENGTH 8'-0" OR LESS = 2 CHANNELS
   PANEL LENGTH 9'- 0" - 12'- 0" = 3 CHANNELS
   PANEL LENGTH 13'- 0" OR MORE = 4 CHANNELS

   If the flanged channel steel posts can not be horizontally spaced as shown, they can be moved so as to securely hold the sign.
3. The EXIT NUMBER PANEL shall normally be positioned above the guide sign aligned with the right edge of the guide sign. If the guide sign indicates a left exit, the EXIT NUMBER PANEL shall be aligned with the left edge of the guide sign.
4. If the bolt holes in the top panel (EXIT NUMBER), or sub panel (NEXT EXIT) line up with holes in main sign panel, stitch bolts shall be used in addition to the channels.
5. Provide post clips for each sign as shown. (Please note the differences between a ground mounted versus Sign bridge mounted sign as far as number of clips required on the main supports or beams)
6. Structural steel sign supports shall extend to the top of the main signs, as shown on the above details.

ATTACHMENT OF GUIDE SIGNS TO SUPPORTS

WISCONSIN DEPT OF TRANSPORTATION

APPROVED Matthew R Rauch
for State Traffic Engineer

DATE 12/05/13 PLAT A4-6.12

PROJECT NO:				SHEET NO:	E

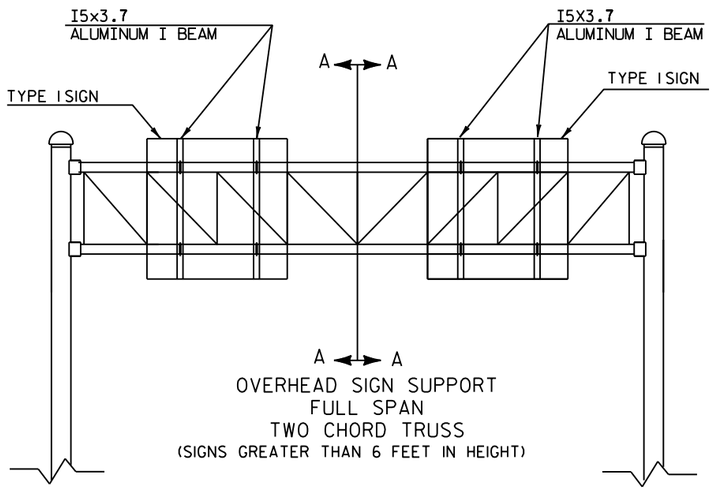

OVERHEAD SIGN SUPPORT
FULL SPAN
TWO CHORD TRUSS
(SIGNS GREATER THAN 6 FEET IN HEIGHT)

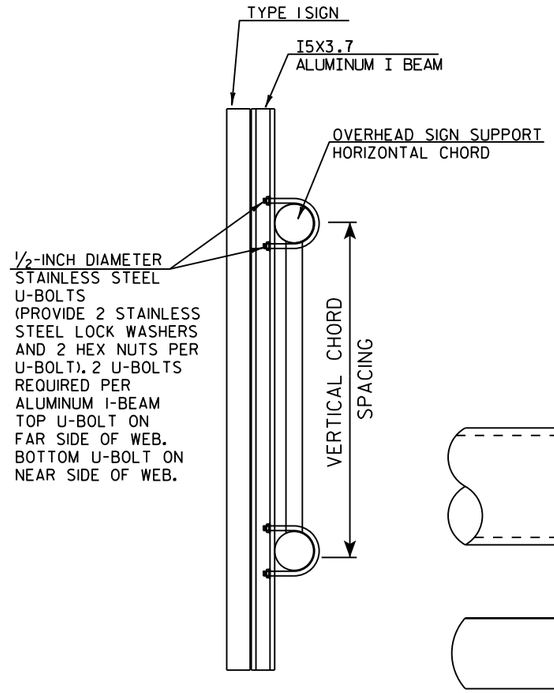

CUT SECTION A-A

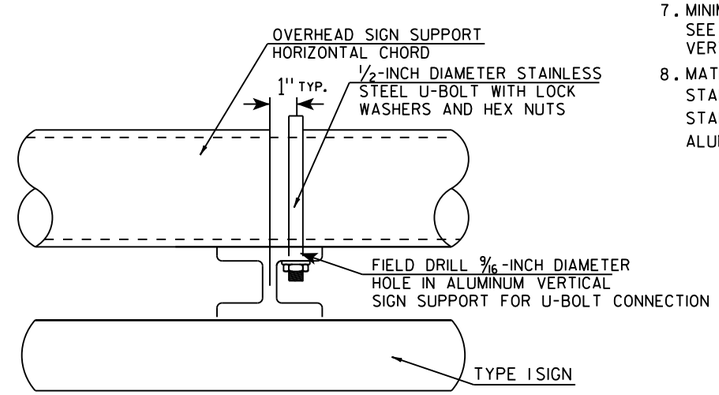

TYPICAL SIGN CONNECTION FOR
TWO CHORD TRUSS
PLAN VIEW

GENERAL NOTES

1. USE STAINLESS STEEL U-BOLTS, WASHERS, AND NUTS.
2. USE CLIPS ON EVERY EXTRUDED PANEL JOINT PER SIGN PLATE A4-6.
3. USE ALUMINUM VERTICAL SIGN SUPPORT BEAMS HAVING A 5 INCH BEAM DEPTH AND WEIGHT OF 3.7 LBS PER FOOT.
4. U-BOLTS SHALL BE STAINLESS STEEL AND MANUFACTURED TO THE PROPER SIZE TO FIT THE CHORDS OF THE OVERHEAD SIGN STRUCTURE.
5. DIAMETER OF U-BOLTS SHALL BE AS SHOWN.
6. THE LENGTH OF THE ALUMINUM VERTICAL SIGN SUPPORT BEAMS SHALL BE THE SAME AS THE HEIGHT OF THE SIGN THEY ARE SUPPORTING. BEAM LENGTHS MAY BE LONGER FOR PROPER ATTACHMENT TO CHORDS.
7. MINIMUM NUMBER OF BRACKETS PER SIGN IS TWO. SEE DETAIL BELOW FOR SPACING OF ALUMINUM VERTICAL SIGN SUPPORTS
8. MATERIAL NOTES:
   STAINLESS STEEL U-BOLTS AND LOCKWASHERS ASTM 304.
   STAINLESS STEEL HEX NUTS ASTM A276.
   ALUMINUM I-BEAMS ARE 6061-T6.

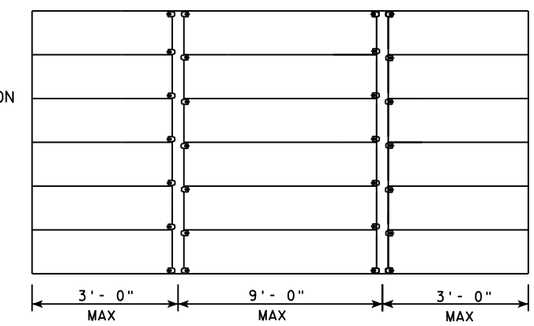

SPACING OF I5X3.7 ALUMINUM
VERTICAL SIGN SUPPORT

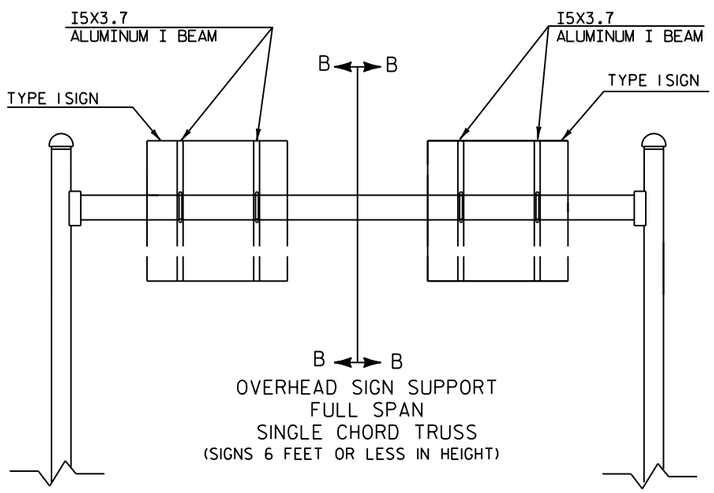

OVERHEAD SIGN SUPPORT
FULL SPAN
SINGLE CHORD TRUSS
(SIGNS 6 FEET OR LESS IN HEIGHT)

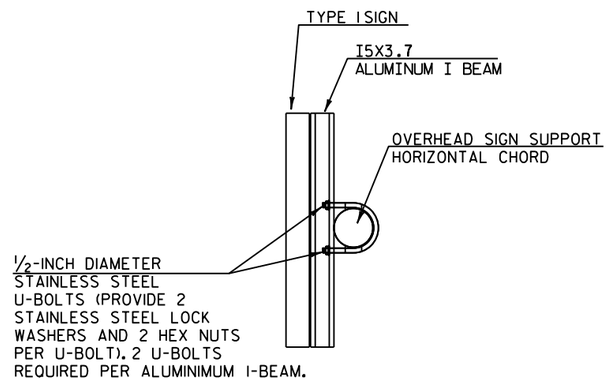

CUT SECTION B-B

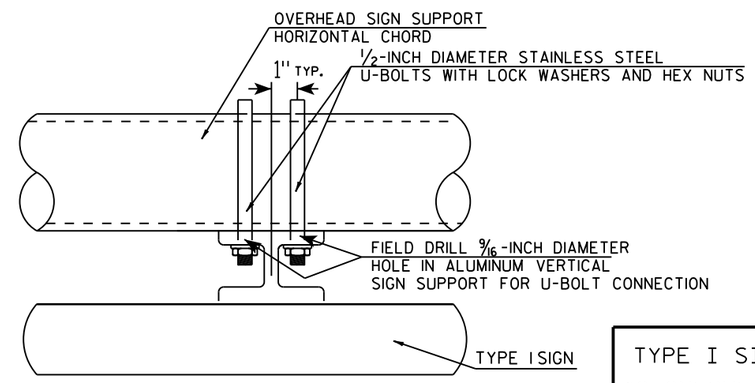

TYPICAL SIGN CONNECTION FOR
SINGLE CHORD TRUSS
PLAN VIEW

TYPE I SIGN CONNECTION
TO OVERHEAD SIGN SUPPORT

WISCONSIN DEPT OF TRANSPORTATION

APPROVED Matthew R Rauch
for State Traffic Engineer

DATE 11/10/15 PLATE NO. A4-7.4

PROJECT NO:	HWY:	COUNTY:		SHEET NO:	E

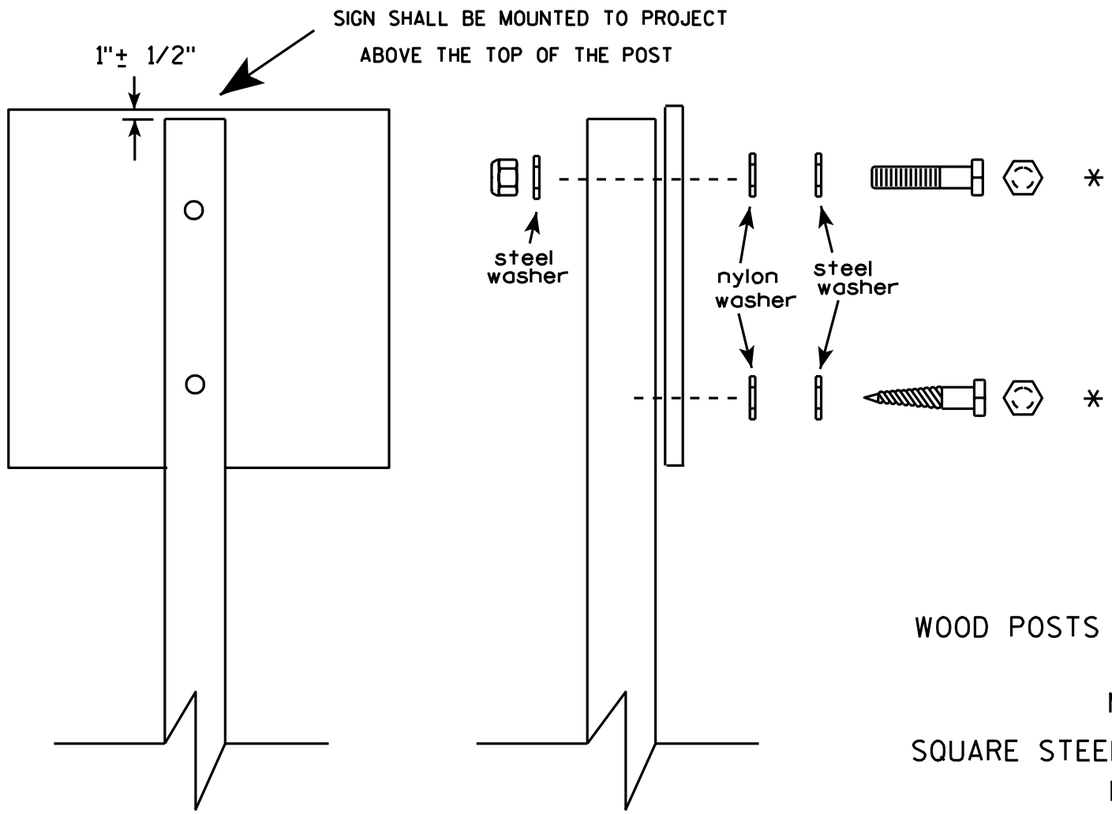

Nuts, bolts and lags used for mounting signs shall have hexagonal heads and shall be either :

a. Hot dip galvanized in accordance with ASTM Designation: A 153, Class D, or SC 3

b. Electro-galvanized in accordance with ASTM Designation : B 633, TYPE III, SC 3.

Threads on bolts and nuts shall be manufactured with sufficient allowance for the cadmium plate or galvanized coating to permit the nuts to run freely on the bolts.

WOOD POSTS (4" x 4" or 4" x 6")

LAG SCREWS - 3/8" X 3"

MACHINE BOLTS - 5/16" X 6-1/2" or 7" Length w/ nuts

SQUARE STEEL POSTS (2" x 2")

MACHINE BOLTS - 3/8" X 3-1/4" Length w/ nuts

RIVETS - 9/32 " (6605-9-6) BULB-TITE, TRI-FOLD, ALUMINUM BODY/MANDREL O.D. FLANGE .720-.765 INCH, GRIP RANGE .042-.375 INCH

WASHERS (ALL POSTS) -

1-1/4" O.D. X 3/8" I.D. X 1/16" STEEL

1-1/4" O.D. X 3/8" I.D. X .080 NYLON for all Type H signs.

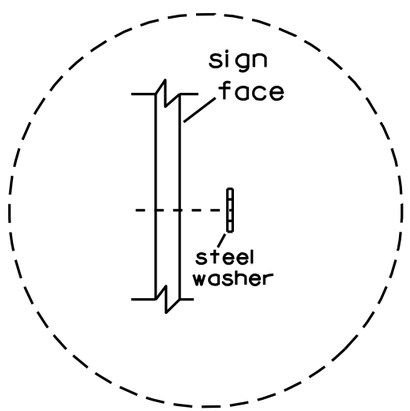

Washer Placement when Sign Has Other Than Type H or Type F Face

* Two different fastening systems are shown for illustration purposes. On any individual sign, either one or the other system shall be used. Actual number of fasteners per sign varies with the sign area, but normally there are two. For a single post installation, all signs greater than 9 sq. ft. require the use of 3 fasteners.

ATTACHMENT OF SIGNS TO POSTS

WISCONSIN DEPT OF TRANSPORTATION

APPROVED Matthew R Rauch
for State Traffic Engineer

DATE 3/23/10 PLATE NO. A4-8.7

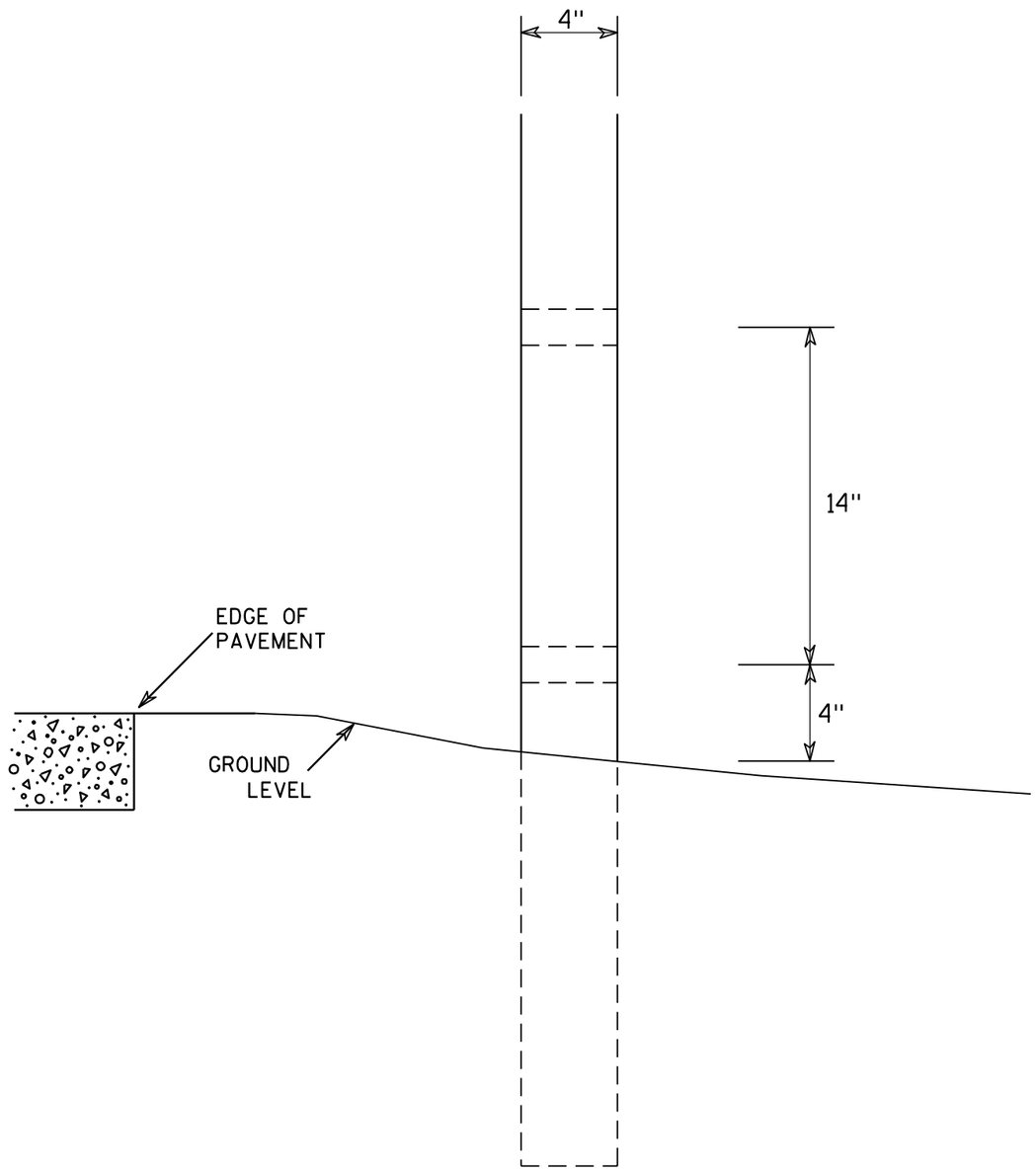

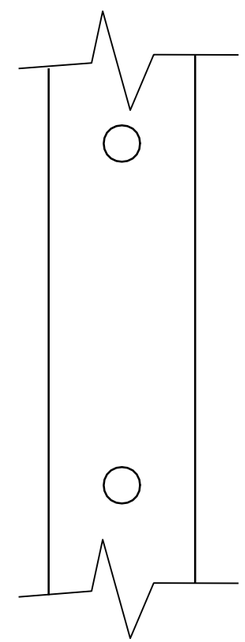

SIDE VIEW

GENERAL NOTES

1. All 4 x 6 Wood Posts shall be modified by having two 1½" diameter holes drilled perpendicular to the roadway centerline.

7

7

4 X 6 WOOD POST MODIFICATIONS

WISCONSIN DEPT OF TRANSPORTATION

APPROVED Chester J Spang for State Traffic Engineer

DATE 3/27/97 PLATE NO. A4-11.2

PROJECT NO:	HWY:	COUNTY:		SHEET NO: 133	E

Extruded Shape

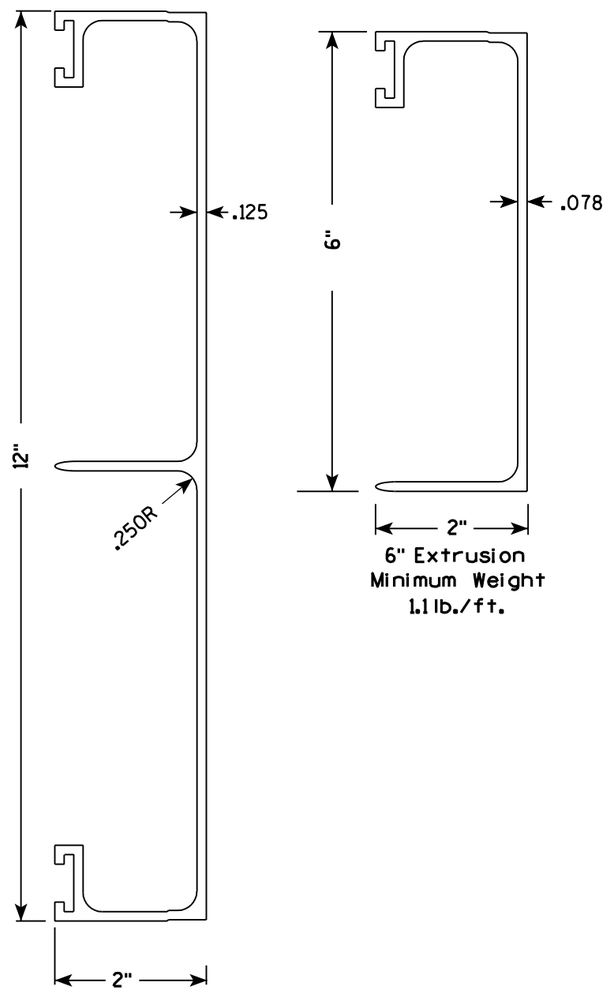

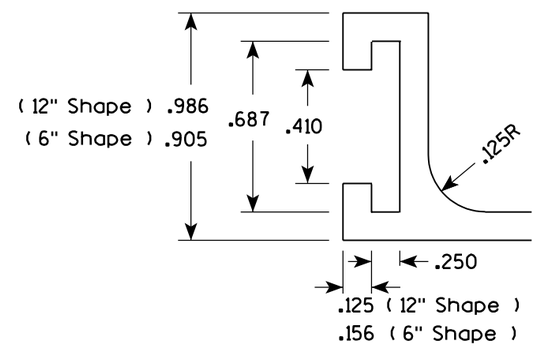

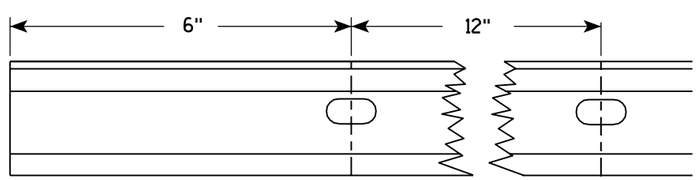

Punch 7/16" x 7/8" oval holes beginning 6" in from end of extrusion 12" CC on both edges of 6" and 12" panels.

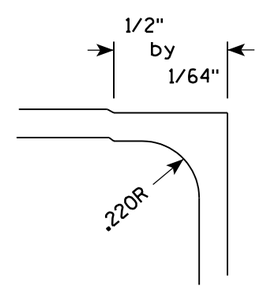

Hardware

STITCH BOLT, WASHER & NUT

The hardware includes:

- 3/8 " - 16 X 3/4 " Economy Bolt 2024-T4 alloy
- 3/8 " - Stainless steel stop nut
- 3/8" X .064 Flat Washers, Alclad 2024-T4 alloy

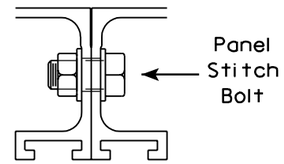

POST CLIP, POST CLIP BOLT, WASHER & NUT

Post Clip shall be Alum. Alloy 356-T6
Post Clip Bolt shall be Stainless Steel.
Flat washer shall be 3/8" X .091, Stainless Steel.
Stop nut shall be stainless steel.

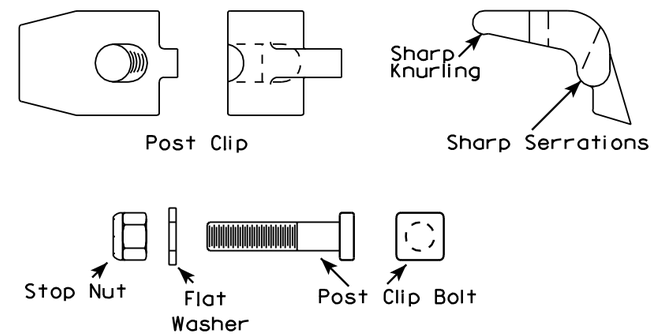

NOTES

1. The contractor may select any brand of extrusion that conforms to the illustrations or meets with the approval of the engineer, but all extrusions used on this contract shall be of the same brand.
2. Panel Stitch Bolts shall be used to assemble adjacent panels. Maximum stitch bolt spacing shall be 24" C-C, and a minimum of 4 bolts shall be used to connect any two extrusions.
3. Post Clips shall be used to attach the sign panel to the sign support.

7

7

ALUMINUM EXTRUSIONS FOR TYPE I SIGNS

WISCONSIN DEPT OF TRANSPORTATION

APPROVED Chester J Spang for State Traffic Engineer

DATE 11/18/99 PLATE NO. A5-2.9

PROJECT NO:

SHEET NO: 134 E

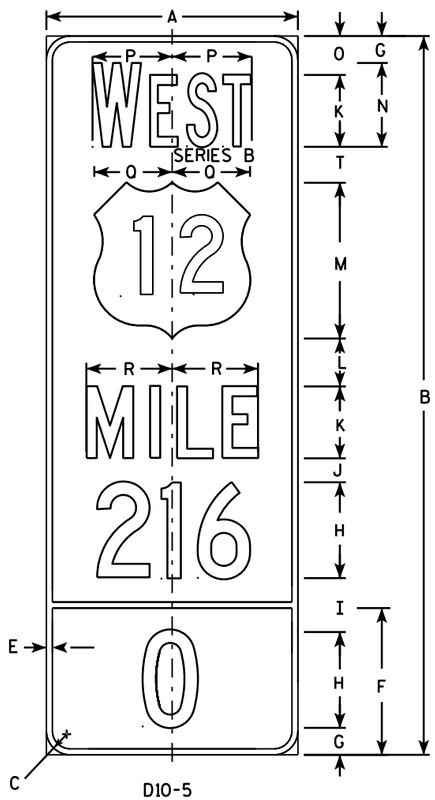

D10-5

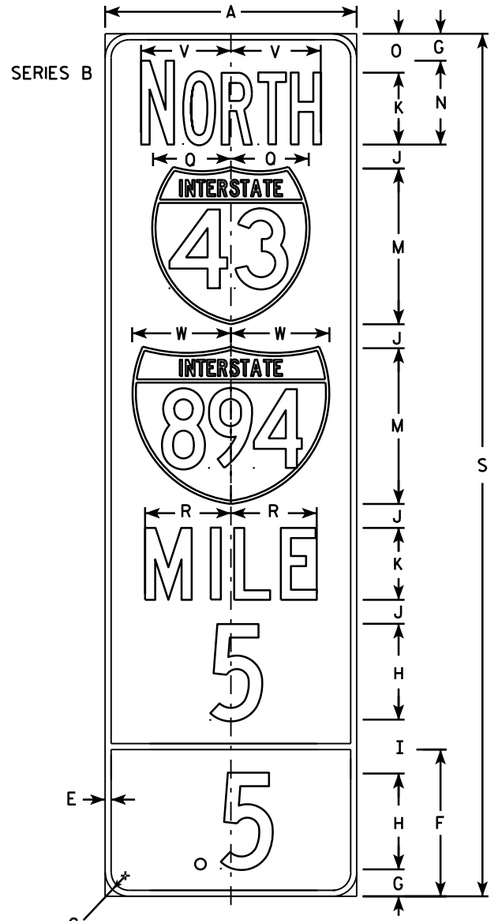

D10-5A

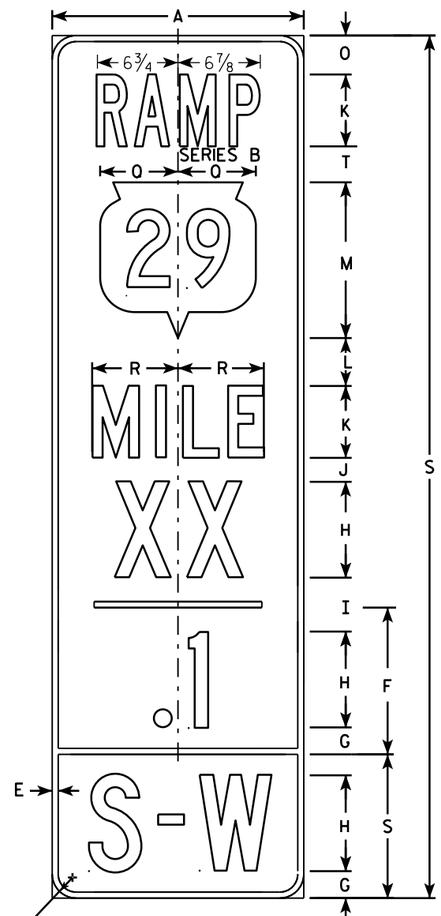

D10-5R

SERIES B

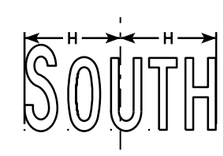

SERIES B

NOTES

1. Sign is Type II - Type H Reflective
2. Color:
   Background - BLUE
   Message - WHITE
3. Interstate Shield Color
   Background - Top Red
   - Bottom Blue
   Message - White
4. Message Series - C or as noted on the Sign.
5. Corners may be square or rounded when base material is plywood but borders shall be rounded as shown. When base material is metal, the corners and borders shall be rounded.
6. The decimal point is required for all digits except "0".
7. Optically adjust mileage numbers about the centerline of the sign to achieve proper balance.
8. Optically adjust Ramp direction letters about the centerline of the sign to achieve proper balance.

SIZE	A	B	C	D	E	F	G	H	I	J	K	L	M	N	O	P	Q	R	S	T	U	V	W	X	Y	Z	D10-5 Area sq. ft.	D10-5A Area sq. ft.	D10-5R Area sq. ft.
1																													
2																													
3																													
4	21	60	1 ½		½	12 ¼	2 ¼	8	4 ½	2	6	4	13	7	3 ¼	6 ⅝	6 ½	7 ⅛	72	3		7 ½	8 ¼				8.75	10.5	10.5
5	21	60	1 ½		½	12 ¼	2 ¼	8	4 ½	2	6	4	13	7	3 ¼	6 ⅝	6 ½	7 ⅛	72	3		7 ½	8 ¼				8.75	10.5	10.5

STANDARD SIGN
D10-5

WISCONSIN DEPT OF TRANSPORTATION

APPROVED Matthew R Rauch
for State Traffic Engineer

DATE 6/26/14 PL D10-5.2

PROJECT NO:

SHEET NO: E

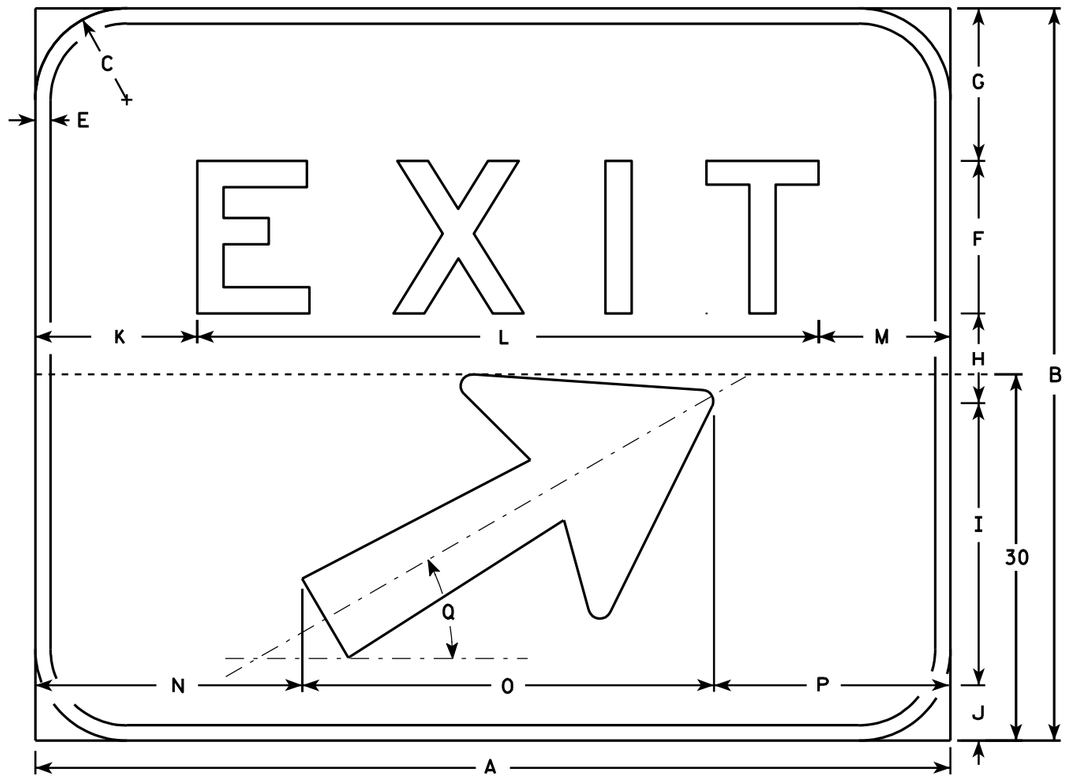

E5-1

NOTES

1. Sign is Type II - Type H reflective - reference WIS DOT Standard Specification for HIGHWAY and STRUCTURE CONSTRUCTION latest edition.
2. Color:
   Background - Green
   Message - White (Type H reflective)
3. Message Series - E
4. Corners may be square or rounded but borders shall be rounded as shown.
5. Base material for this sign shall be plywood and shall be split into two seperate pieces for the 72 x 60 size as shown on the detail by the dashed line (----------).
6. Arrow is Type "A" from sign plate A1-1.
7. As per the Standard Spec's, this sign shall not have a vertical joint.

Metric equivalent for this sign is:

SIZE	
1	
2	
3	
4	1500 mm X 1200 mm
5	1800 mm X 1500 mm

SIZE	A	B	C	D	E	F	G	H	I	J	K	L	M	N	O	P	Q	R	S	T	U	V	W	X	Y	Z	Area sq. ft.	Area m2
1																												
2																												
3																												
4	60	48	6		1	10	10	5 7/8	18 1/2	3 5/8	10 5/8	40 3/4	8 5/8	17 1/2	27	15 1/2	30°										20.0	1.80
5	72	60	6		1	12	12	10	18 1/2	7 1/2	13 1/4	48 1/2	10 1/4	23 1/2	27	21 1/2	30°										30.0	2.70

STANDARD SIGN
E5 - 1

WISCONSIN DEPT OF TRANSPORTATION

APPROVED Chester J Spang
for State Traffic Engineer

DATE 6/22/00 PLATE NO. E5-1.8

PROJECT NO:	HWY:	COUNTY:		SHEET NO: 136	E

NOTES

1. Sign is Type II - Type H Reflective - reference WIS DOT Standard Specification for HIGHWAY and STRUCTURE CONSTRUCTION latest edition.
2. Color:
   Background - White
   Message - (See Note 5)
3. Message Series - (See Note 6)
4. Corners may be square or rounded when base material is plywood but borders shall be rounded as shown. When base material is metal, the corners and borders shall be rounded.
5. Border - Blue
   Line 1 - Red
   Line 2 - Black
   Line 3-5 - Blue
6. Line 1 - Dutch 8011L
   Line 2 - Series E
   Line 3-5 - Series C
7. Contractor shall provide and install a new post bracket in accordance with the I55-56B sign detail.

Background Colors of Symbol*

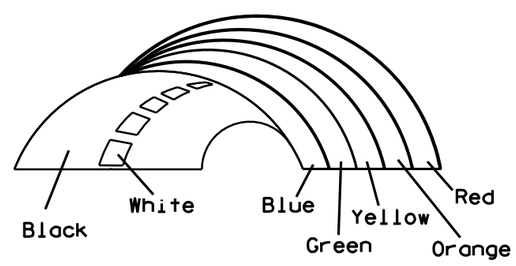

*1/4" Black Border between each color of rainbow and border of rainbow

SIZE	A	B	C	D	E	F	G	H	I	J	K	L	M	N	O	P	Q	R	S	T	U	V	W	X	Y	Z	Area sq. ft.
1																											
2	30	36	1 1/2	1/2	5/8	3	2	3 1/2	2 7/8	1	8	2 1/8	11 1/4	11 1/8	9 3/8	1 1/4		3/4	12 5/8	7 1/2							7.5
3																											
4																											
5																											

STANDARD SIGN
I55-56

WISCONSIN DEPT OF TRANSPORTATION

APPROVED Matthew R Rauch
for State Traffic Engineer

DATE 4/27/11 PLATE NO. 155-56.3

PROJECT NO: | HWY: | COUNTY: | SHEET NO: 137

ISOMETRIC VIEW

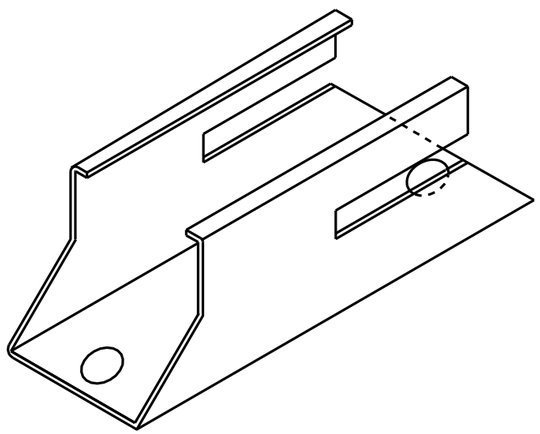

TOP VIEW

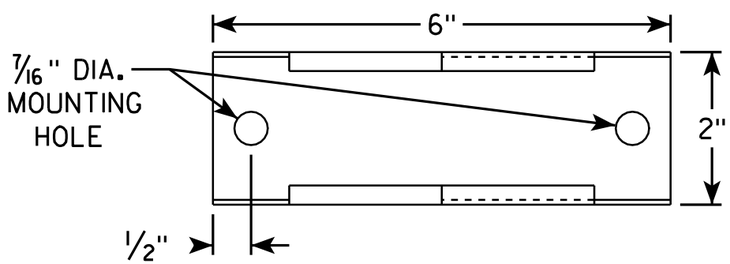

SIDE VIEW

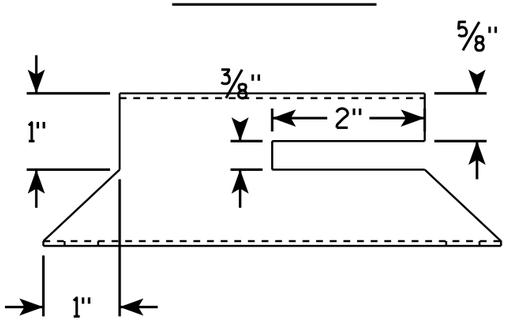

END VIEW

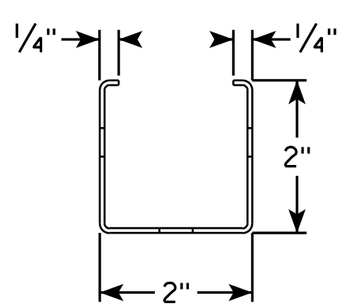

NOTES

1. Must be capable of permanent attachment to a wood or steel channel sign post utilizing the fastening hardware specified on the A4-8 sign plate.
2. Shall be entirely primed and painted with two coats of a black powder coated enamel paint.
3. Shall be made with 12 gauge steel, and incorporate no welds, no hinged components, no threaded lock-type components, and no parts which are loose or can be separated from the main body.
4. Shall have rounded edges with at least 1/8" radii.
5. Shall not have unrounded and uncoated metal edges which can contact the back surface of the roll-up sign.
6. Top of bracket shall be mounted 2' below the bottom of the I55-56 sign.
7. Cost of bracket and fastening hardware shall be incidental to the I55-56 sign.

SIDE VIEW

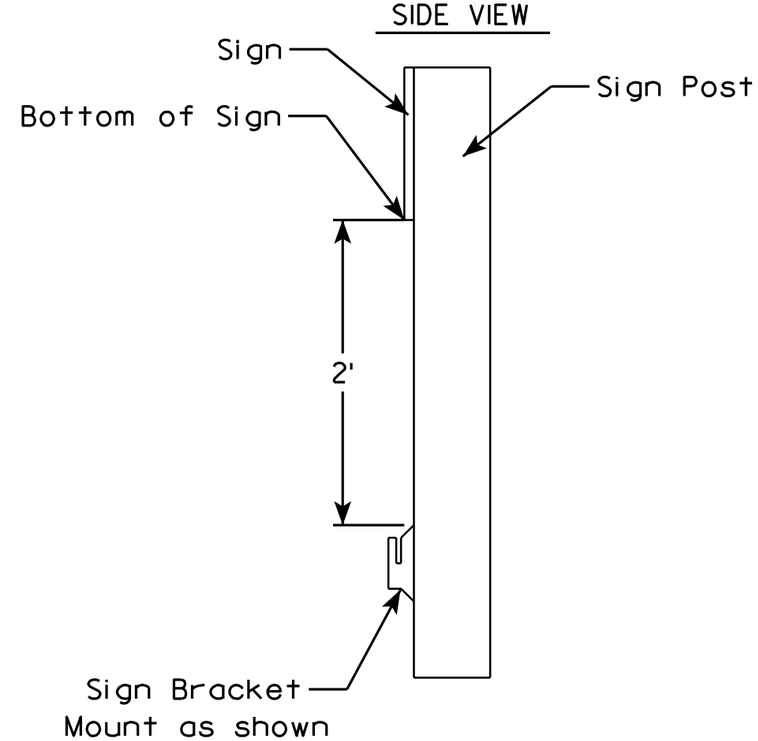

7

7

ROLLUP SIGN BRACKET
I55-56B

WISCONSIN DEPT OF TRANSPORTATION

APPROVED Matthew R Rauch
for State Traffic Engineer

DATE 2/5/10 PLATE NO. I55-56B.1

PROJECT NO:	HWY:	COUNTY:		SHEET NO: 138	E

NOTES

1. Sign is Type II - See Note 6 - reference WIS DOT Standard Specification for HIGHWAY and STRUCTURE CONSTRUCTION latest edition.
2. Color:
   Background - White & Black - See Note 6
   Message - Black
3. Message Series - See note 5
4. Corners may be square or rounded when base material is plywood but borders shall be rounded as shown. When base material is metal, the corners and borders shall be rounded.
5. Substitute appropriate numerals and adjust spacing as per Plate A10-1.
6. Permanent Signs
   Background - Type H Reflective
   Detour or other temporary signs
   Background - Reflective

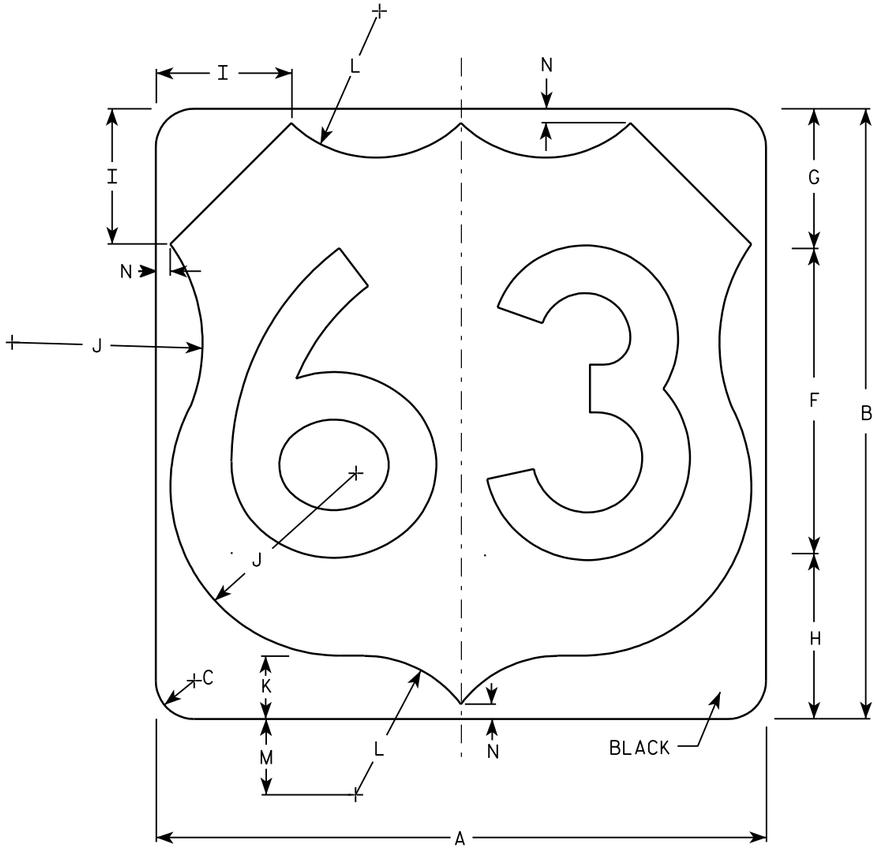

M1-4

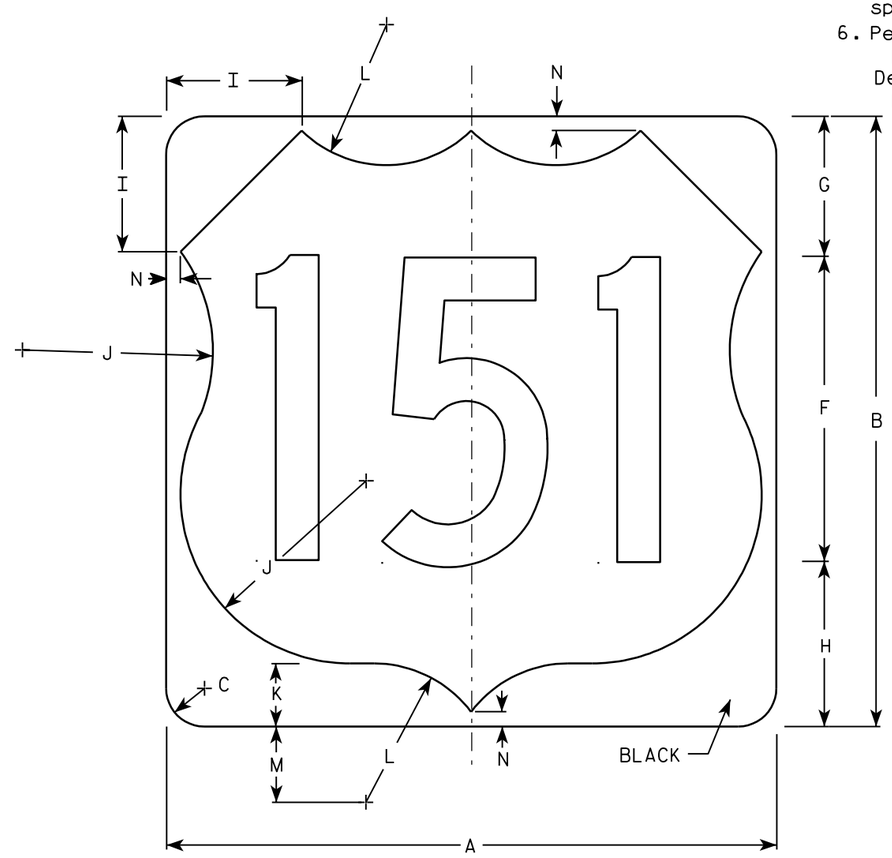

M1-4

Metric equivalent for this sign is:

SIZE	
1	
2	600 mm X 600 mm
3	900 mm X 900 mm
4	900 mm X 900 mm
5	900 mm X 900 mm

SIZE	A	B	C	D	E	F	G	H	I	J	K	L	M	N	O	P	Q	R	S	T	U	V	W	X	Y	Z	Area sq. ft.	Area m2
1																												
2	24	24	1 1/2			12	5 1/2	6 1/2	5	7 1/2	2 1/2	5 1/2	3	1/2													4.0	.36
3	36	36	2 1/4			18	8 1/4	9 1/4	7 1/4	11 1/4	3 3/4	8 1/4	4 1/2	3/4													9.0	.81
4	36	36	2 1/4			18	8 1/4	9 1/4	7 1/4	11 1/4	3 3/4	8 1/4	4 1/2	3/4													9.0	.81
5	36	36	2 1/4			18	8 1/4	9 1/4	7 1/4	11 1/4	3 3/4	8 1/4	4 1/2	3/4													9.0	.81

USH MARKER
M1-4 FOR ASSEMBLIES

WISCONSIN DEPT OF TRANSPORTATION

APPROVED Matthew R Rauch
for State Traffic Engineer

DATE 08/25/05 PLATE NO. M1-4.9

PROJECT NO: | HWY: | COUNTY: | SHEET NO: 139 | E

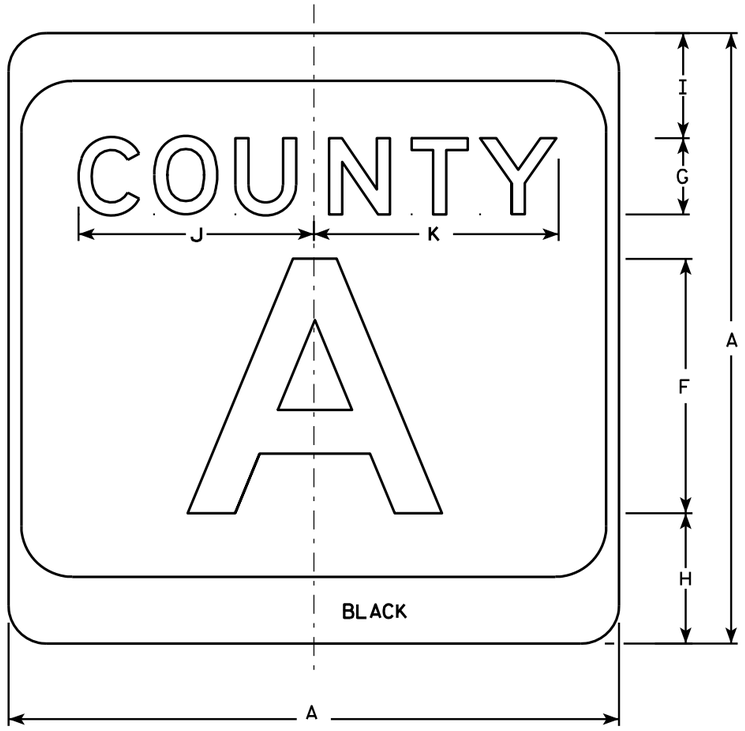

M1-5A

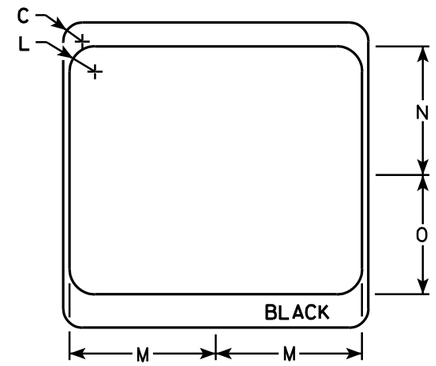

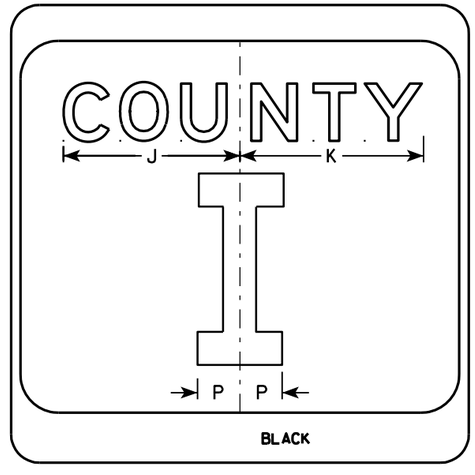

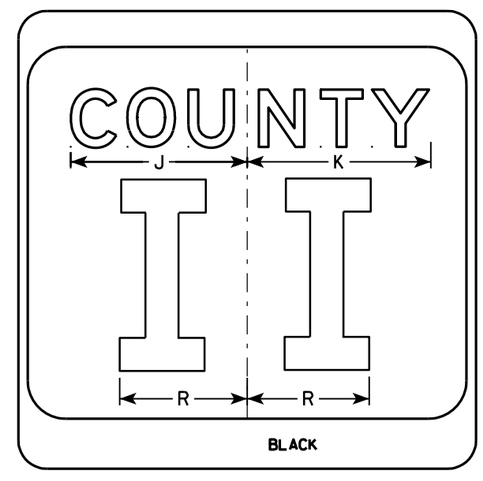

NOTES

1. Sign is Type II - see Note 7 - reference WIS DOT Standard Specification for HIGHWAY and STRUCTURE CONSTRUCTION latest edition.
2. Color:
   Background - White & Black - See Note 7
   Message - Black
3. Message Series - see Note 5
4. Corners may be square or rounded when base material is plywood but borders shall be rounded as shown. When base material is metal, the corners and borders shall be rounded.
5. Message Series E for 1 letter.
   Message Series D for 2 letters unless message is too big then Series C.
   Message Series C for 3 letters unless message is too big then Series B.
6. Substitute appropriate letters & optically center to achieve proper balance.
7. Permanent Signs
   Background - Type H Reflective
   Detour or temporary Signs
   Background - Reflective

SIZE	A	B	C	D	E	F	G	H	I	J	K	L	M	N	O	P	Q	R	S	T	U	V	W	X	Y	Z	Area sq. ft.
1																											
2	24		1 1/2			10	3	5 1/8	4 1/8	9 1/4	9 5/8	2	11 1/2	10 1/8	9 3/8	2 1/4		6 5/8									4.0
3	36		2 1/4			16	4	7 5/8	5 5/8	12 1/4	12 7/8	3	17 1/8	15 1/4	14	3 3/8		10									9.0
4	36		2 1/4			16	4	7 5/8	5 5/8	12 1/4	12 7/8	3	17 1/8	15 1/4	14	3 3/8		10									9.0
5	36		2 1/4			16	4	7 5/8	5 5/8	12 1/4	12 7/8	3	17 1/8	15 1/4	14	3 3/8		10									9.0

CTH MARKER
M1-5A FOR ASSEMBLIES

WISCONSIN DEPT OF TRANSPORTATION

APPROVED Matthew R Rauch
for State Traffic Engineer

DATE 9/27/11 PLATE NO. M1-5A.8

PROJECT NO:	HWY:	COUNTY:		SHEET NO: 140	E

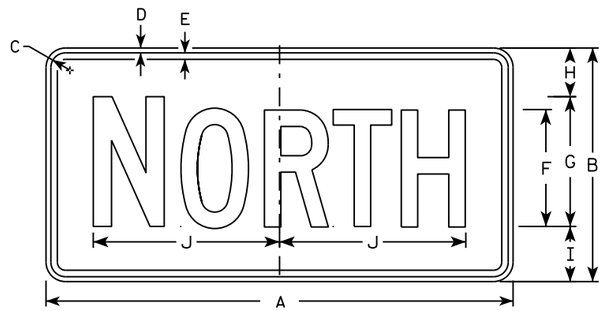

M3-1
MM3-1
MP3-1

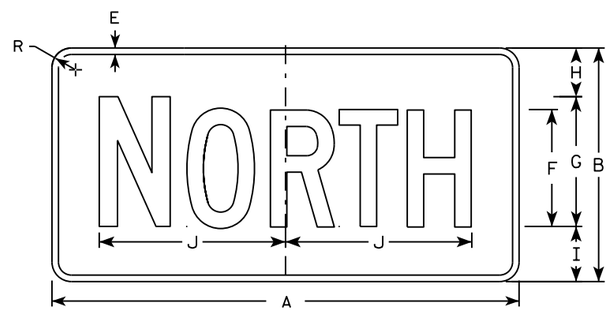

MB3-1
MK3-1
MN3-1

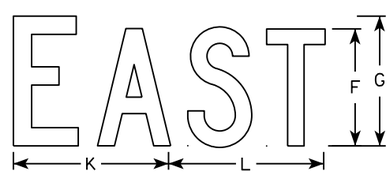

M3-2
MM3-2
MP3-2

MB3-2
MK3-2
MN3-2

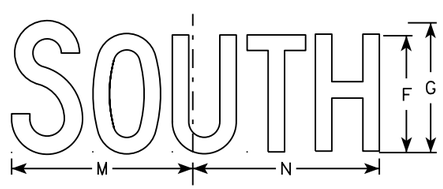

M3-3
MM3-3
MP3-3

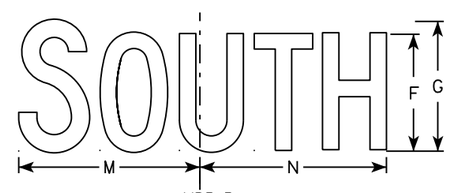

MB3-3
MK3-3
MN3-3

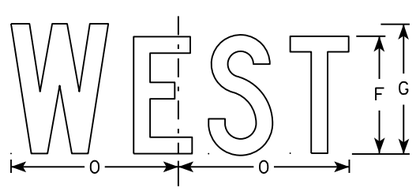

M3-4
MM3-4
MP3-4

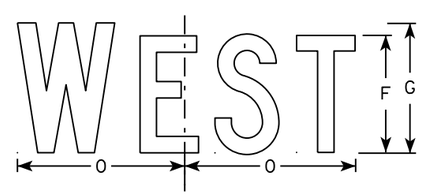

MB3-4
MK3-4
MN3-4

NOTES

1. All Signs Type II - Type H
2. Color:
   Background - See note 5
   Message - See note 5
3. Message Series - C
4. Corners may be square or rounded when base material is plywood but borders shall be rounded as shown. When base material is metal, the corners and borders shall be rounded.
5. M3-1 thru M3-4 Background - White
   Message - Black
   MB3-1 thru MB3-4 Background - Blue
   Message - White
   MK3-1 thru MK3-4 Background - Green
   Message - White
   MM3-1 thru MM3-4 Background - White
   Message - Green
   MN3-1 thru MN3-4 Background - Brown
   Message - White
   MP3-1 thru MP3-4 Background - White
   Message - Blue
6. Note the first letter of each direction is larger than the remainder of the message.

SIZE	A	B	C	D	E	F	G	H	I	J	K	L	M	N	O	P	Q	R	S	T	U	V	W	X	Y	Z	Area sq. ft.
1																											
2	24	12	1 1/8	3/8	3/8	6	7	2 1/4	2 3/4	10 1/4	7 7/8	8 3/8	10 1/4	9 3/4	8 3/4			1 1/2									2.00
3	36	18	1 1/8	3/8	1/2	9	10	3 3/4	4 1/4	14 3/8	12	12 1/8	14	14 1/8	13			1 1/2									4.5
4	36	18	1 1/8	3/8	1/2	9	10	3 3/4	4 1/4	14 3/8	12	12 1/8	14	14 1/8	13			1 1/2									4.5
5	36	18	1 1/8	3/8	1/2	9	10	3 3/4	4 1/4	14 3/8	12	12 1/8	14	14 1/8	13			1 1/2									4.5

STANDARD SIGNS
M3-1 thur M3-4
SERIES

WISCONSIN DEPT OF TRANSPORTATION

APPROVED Matthew R Rauch
for State Traffic Engineer

DATE 10/15/15 PLATE NO M3-1.14

PROJECT NO: | HWY: | COUNTY: | SHEET NO: | E

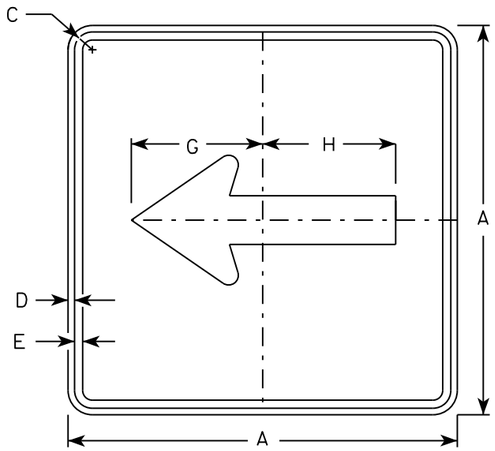

M6-1
MM6-1
MO6-1
MP6-1

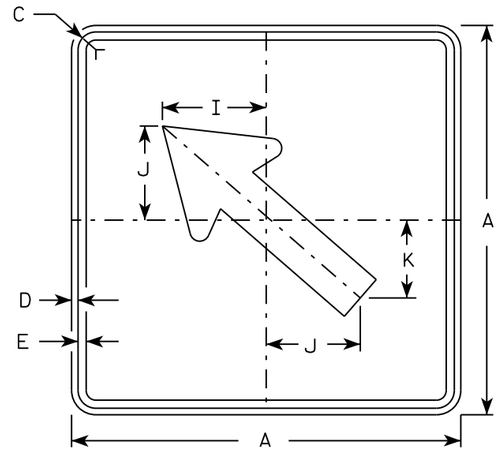

M6-2
MM6-2
MO6-2
MP6-2

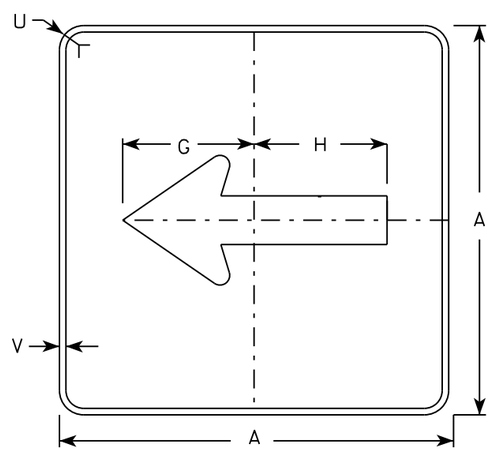

MB6-1
MK6-1
MN6-1
MR6-1

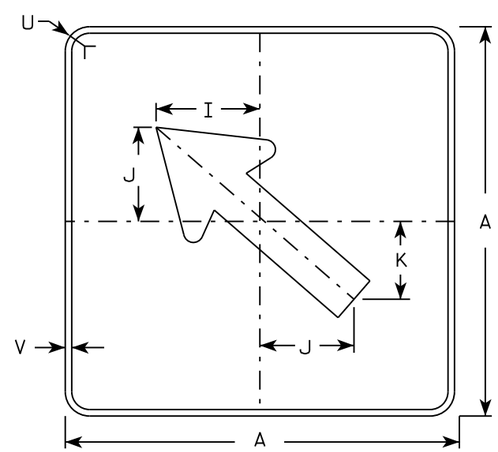

MB6-2
MK6-2
MN6-2
MR6-2

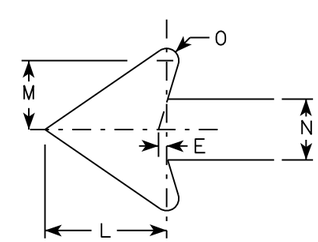

NOTES

1. Signs are Type II - Type H except as Shown
2. Color:
   Background - See note 4
   Message - See note 4
3. Corners may be square or rounded when base material is plywood but borders shall be rounded as shown. When base material is metal, the corners and borders shall be rounded.
4. M6-1 and M6-2 Background - White
   Message - Black
   MB6-1 and MB6-2 Background - Blue
   Message - White
   MK6-1 and MK6-2 Background - Green
   Message - White
   MM6-1 and MM6-2 Background - White
   Message - Green
   MN6-1 and MN6-2 Background - Brown
   Message - White
   MO6-1 and MO6-2 Background - Orange - Type F Reflective
   Message - Black
   MP6-1 and MP6-2 Background - White
   Message - Blue
   MR6-1 and MR6-2 Background - Brown
   Message - Yellow

SIZE	A	B	C	D	E	F	G	H	I	J	K	L	M	N	O	P	Q	R	S	T	U	V	W	X	Y	Z	Area sq. ft.
1																											
2	21		1 1/8	3/8	3/8		7 1/2	7 1/8	5 5/8	5	4 1/4	5 1/4	3	2 5/8	1/2						1 1/2	1/2					3.06
3	30		1 3/8	1/2	5/8		10 3/4	10 1/4	8	7 1/4	6	7 1/2	4 1/4	3 3/4	3/4						1 7/8	1/2					6.25
4	30		1 3/8	1/2	5/8		10 3/4	10 1/4	8	7 1/4	6	7 1/2	4 1/4	3 3/4	3/4						1 7/8	1/2					6.25
5	30		1 3/8	1/2	5/8		10 3/4	10 1/4	8	7 1/4	6	7 1/2	4 1/4	3 3/4	3/4						1 7/8	1/2					6.25

STANDARD SIGN
M6-1 & M6-2
SERIES

WISCONSIN DEPT OF TRANSPORTATION

APPROVED Matthew R Rauch
for State Traffic Engineer

DATE 10/15/15 PLATE 142 M6-1.15

PROJECT NO: | HWY: | COUNTY: | SHEET NO: | E

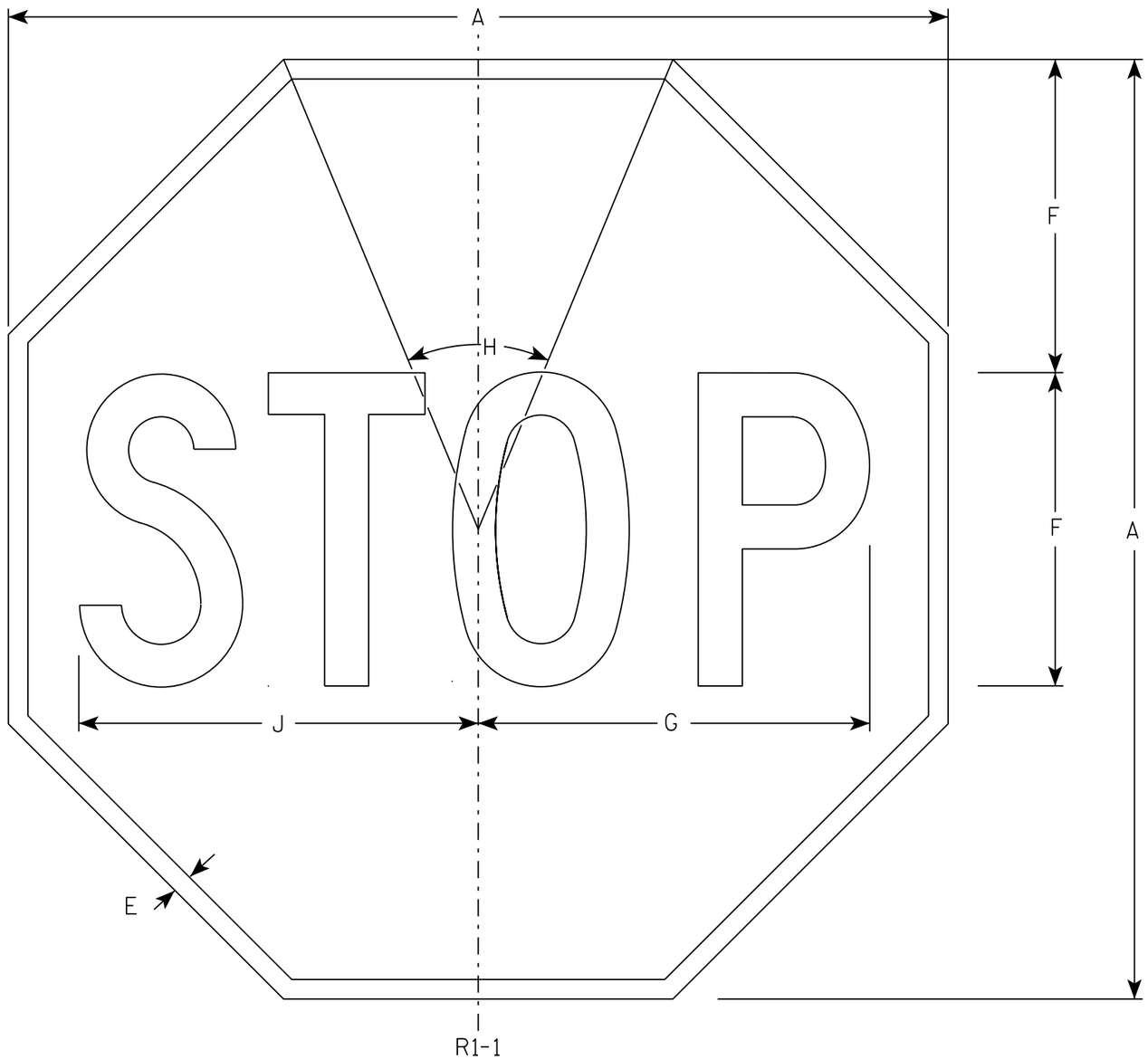

NOTES

1. Sign is Type II - Type H Reflective - reference WIS DOT Standard Specification for HIGHWAY and STRUCTURE CONSTRUCTION latest edition.
2. Color:
   Background - Red
   Message - White
3. Message Series - C

SIZE	A	B	C	D	E	F	G	H	I	J	K	L	M	N	O	P	Q	R	S	T	U	V	W	X	Y	Z	Area sq. ft.
1	30				5/8	10	12 1/2	45°		12 3/4																	5.18
2S	30				5/8	10	12 1/2	45°		12 3/4																	5.18
2M	36				3/4	12	15	45°		15 3/8																	7.46
3	36				3/4	12	15	45°		15 3/8																	7.46
4	48				1	16	20	45°		20 1/2																	13.25
5	48				1	16	20	45°		20 1/2																	13.25
6	18				3/8	6	7 3/4	45°		7 3/4																	1.86
7	12				1/4	4	5	45°		5 1/8																	0.78

STANDARD SIGN
R1-1

WISCONSIN DEPT OF TRANSPORTATION

APPROVED Matthew R Rauch
for State Traffic Engineer

DATE 11/12/15 PLATE NO. R1-1.13

PROJECT NO:	HWY:	COUNTY:		SHEET NO:	E

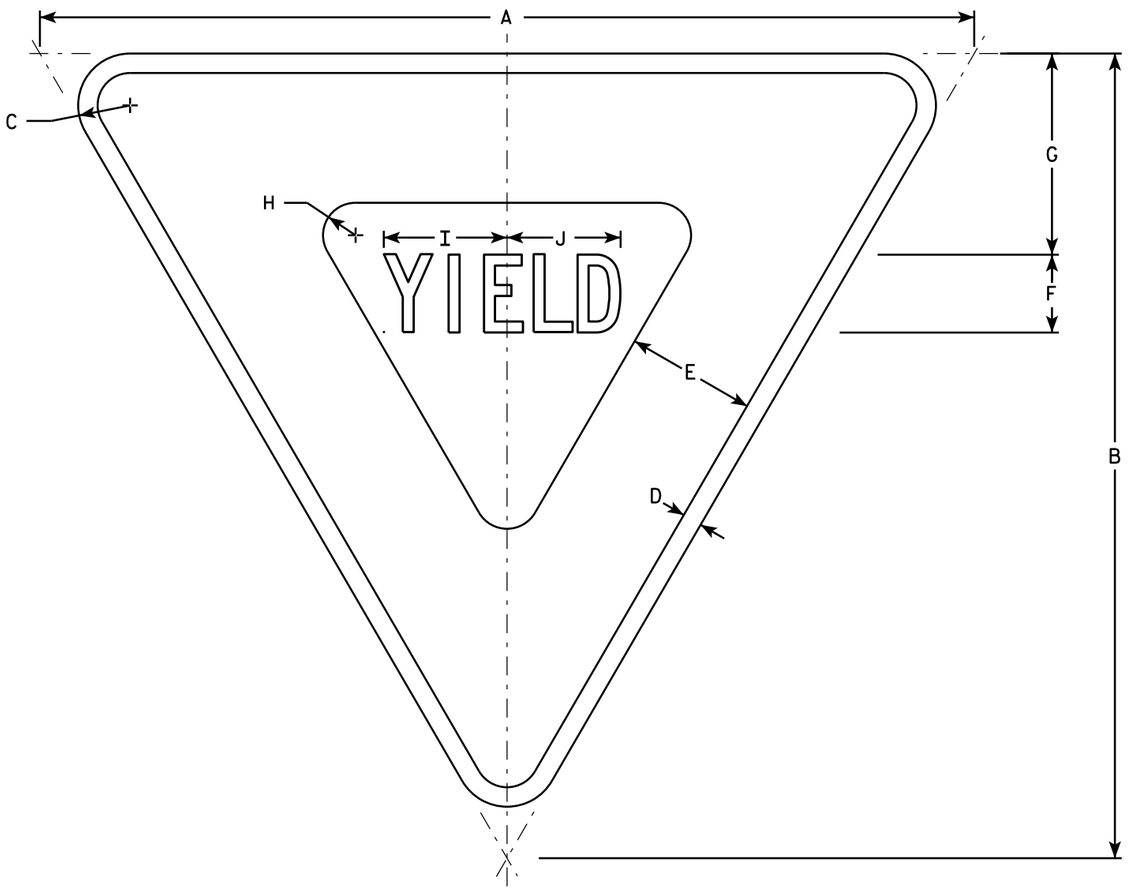

R1-2

NOTES

1. Sign is Type II - Type H Reflective - reference WIS DOT Standard Specification for HIGHWAY and STRUCTURE CONSTRUCTION latest edition.
2. Color:
   Background - White
   Message - See note 5
3. Message Series - C
4. Corners may be square or rounded when base material is plywood but borders shall be rounded as shown. When base material is metal, the corners and borders shall be rounded.
5. The border strip and word message are reflectorized red.

SIZE	A	B	C	D	E	F	G	H	I	J	K	L	M	N	O	P	Q	R	S	T	U	V	W	X	Y	Z	Area sq. ft.
1	30	26	1 1/2	5/8	4	2 1/2	6 3/8	7/8	4	3 5/8																	2.71
2S	36	31	2	3/4	5	3	7 3/4	1 1/4	4 3/4	4 3/8																	3.88
2M	48	42	3	1	6	4	9 3/4	2	6 1/4	5 7/8																	7.00
3	48	42	3	1	6	4	9 3/4	2	6 1/4	5 7/8																	7.00
4	48	42	3	1	6	4	9 3/4	2	6 1/4	5 7/8																	7.00
5	60	52	3	1 1/2	8	5	13	2 1/2	7 7/8	7 1/4																	10.83
6																											
7	18	15 1/2	1	3/8	2 1/2	1 1/2	3 7/8	5/8	2 3/8	2 1/4																	0.97

STANDARD SIGN
R1-2

WISCONSIN DEPT OF TRANSPORTATION

APPROVED Matthew R Rauch
for State Traffic Engineer

DATE 10/13/14 PLATE R1-2.12

PROJECT NO: | HWY: | COUNTY: | SHEET NO: | E

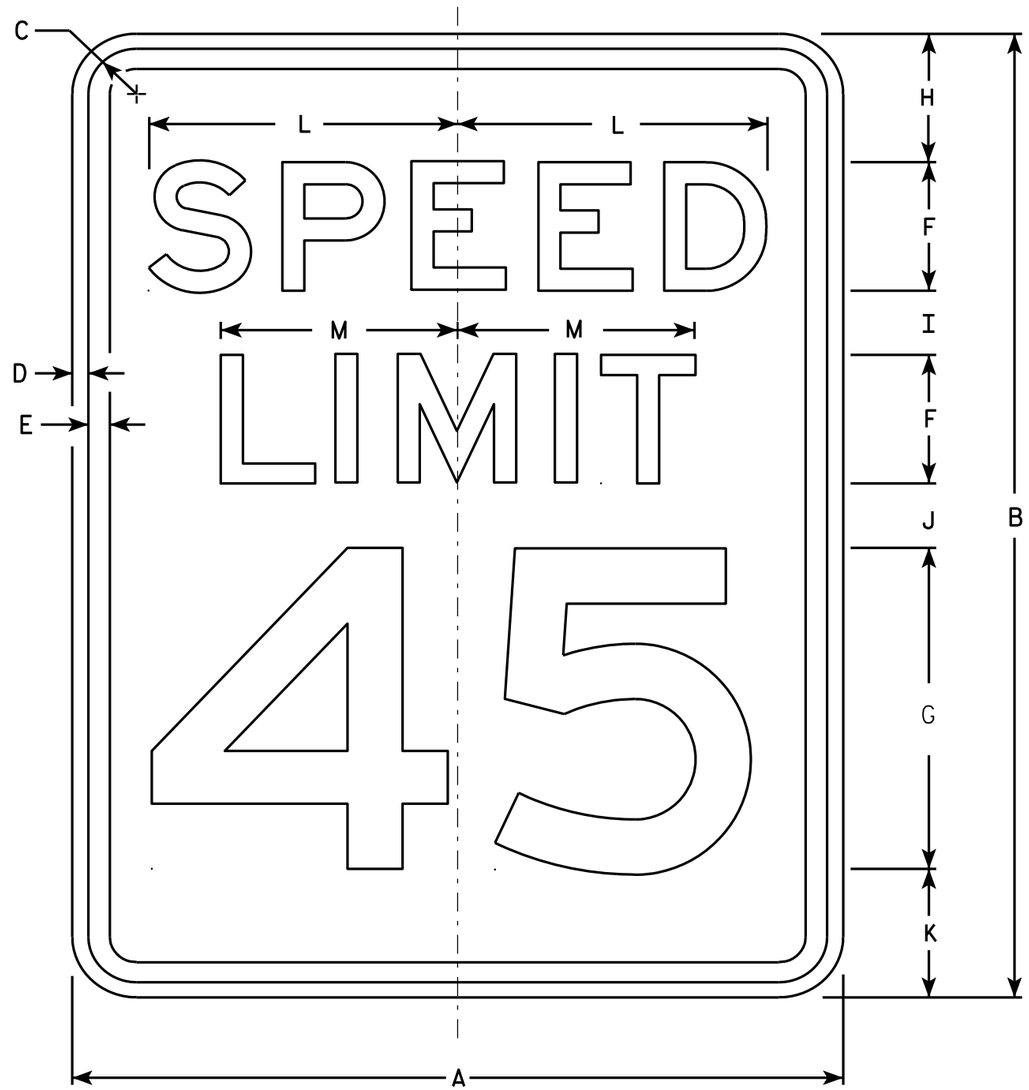

R2-1

NOTES

1. Sign is Type II - Type H Reflective - reference WIS DOT Standard Specification for HIGHWAY and STRUCTURE CONSTRUCTION latest edition.
2. Color:
   Background - White
   Message - Black
3. Message Series - E
4. Corners may be square or rounded when base material is plywood but borders shall be rounded as shown. When base material is metal, the corners and borders shall be rounded.
5. Substitute appropriate numerals and optically adjust spacing to achieve proper balance.

SIZE	A	B	C	D	E	F	G	H	I	J	K	L	M	N	O	P	Q	R	S	T	U	V	W	X	Y	Z	Area sq. ft.
1	18	24	1 1/8	3/8	1/2	3	8	3	2	2	3	7 1/4	5 1/2														3.0
2S	24	30	1 1/8	3/8	1/2	4	10	3	2 1/4	3 3/8	3 3/8	9 5/8	7 3/8														5.0
2M	30	36	1 3/8	1/2	5/8	5	12	5	2 1/2	2 1/2	4	12	9 1/4														7.5
3	36	48	1 3/8	1/2	5/8	6	14	6	5	5	6	14 3/8	11														12.0
4	36	48	1 3/8	1/2	5/8	6	14	6	5	5	6	14 3/8	11														12.0
5	48	60	2 1/4	3/4	1	8	20	6	4 1/2	6 3/4	6 3/4	19 1/4	14 5/8														20.0

STANDARD SIGN
R2-1

WISCONSIN DEPT OF TRANSPORTATION

APPROVED Matthew R Rauch
for State Traffic Engineer

DATE 5/26/10 PLATE NO. R2-1.13

PROJECT NO: | HWY: | COUNTY: | SHEET NO: 145 | E

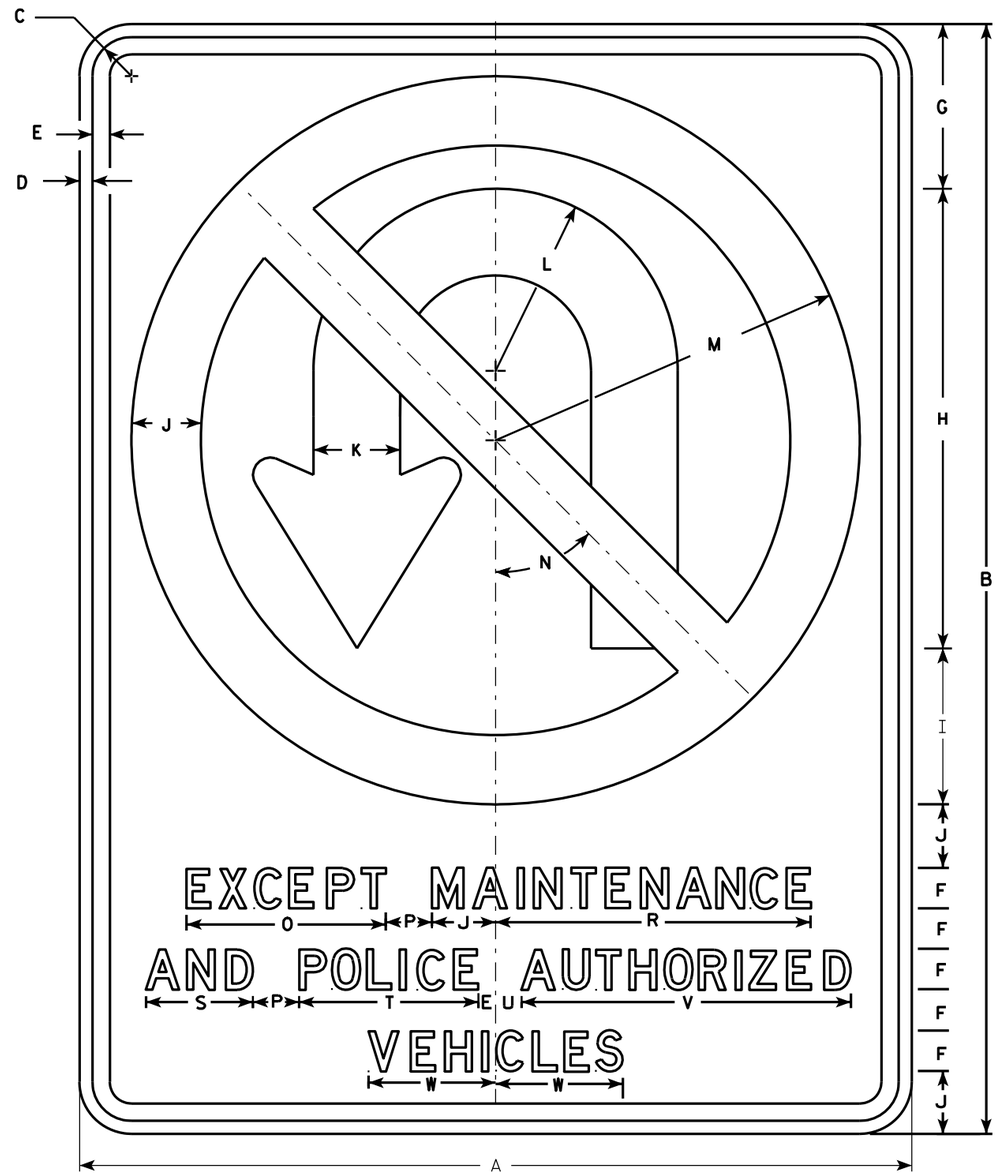

R3-4B

NOTES

1. Sign is Type II - Type H Reflective - reference WIS DOT Standard Specification for HIGHWAY and STRUCTURE CONSTRUCTION latest edition.
2. Color:
   Background - White
   Message - See note 4
3. Corners may be square or rounded when base material is plywood but borders shall be rounded as shown. When base material is metal, the corners and borders shall be rounded.
4. Border & Arrow are non reflective black, the circle with diagonal bar is reflective red.

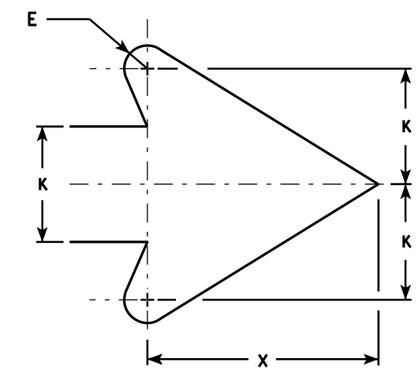

ARROW DETAIL

SIZE	A	B	C	D	E	F	G	H	I	J	K	L	M	N	O	P	Q	R	S	T	U	V	W	X	Y	Z	Area sq. ft.
1																											
2S																											
2M																											
3																											
4	36	48	1 5/8	5/8	3/4	1 3/4	7 1/8	19 7/8	6 3/4	2 3/4	3 3/4	7 7/8	15 3/4	45°	8 5/8	2		13 5/8	4 5/8	7 3/4	1 1/8	14 1/4	5 1/2	7 5/8			12.0
5	36	48	1 5/8	5/8	3/4	1 3/4	7 1/8	19 7/8	6 3/4	2 3/4	3 3/4	7 7/8	15 3/4	45°	8 5/8	2		13 5/8	4 5/8	7 3/4	1 1/8	14 1/4	5 1/2	7 5/8			12.0

STANDARD SIGN
R3-4B

WISCONSIN DEPT OF TRANSPORTATION

APPROVED Matthew R Rauch
for State Traffic Engineer

DATE 3/17/2011 PLATE NO. R3-4B.2

PROJECT NO: | HWY: | COUNTY: | SHEET NO: 146 | E

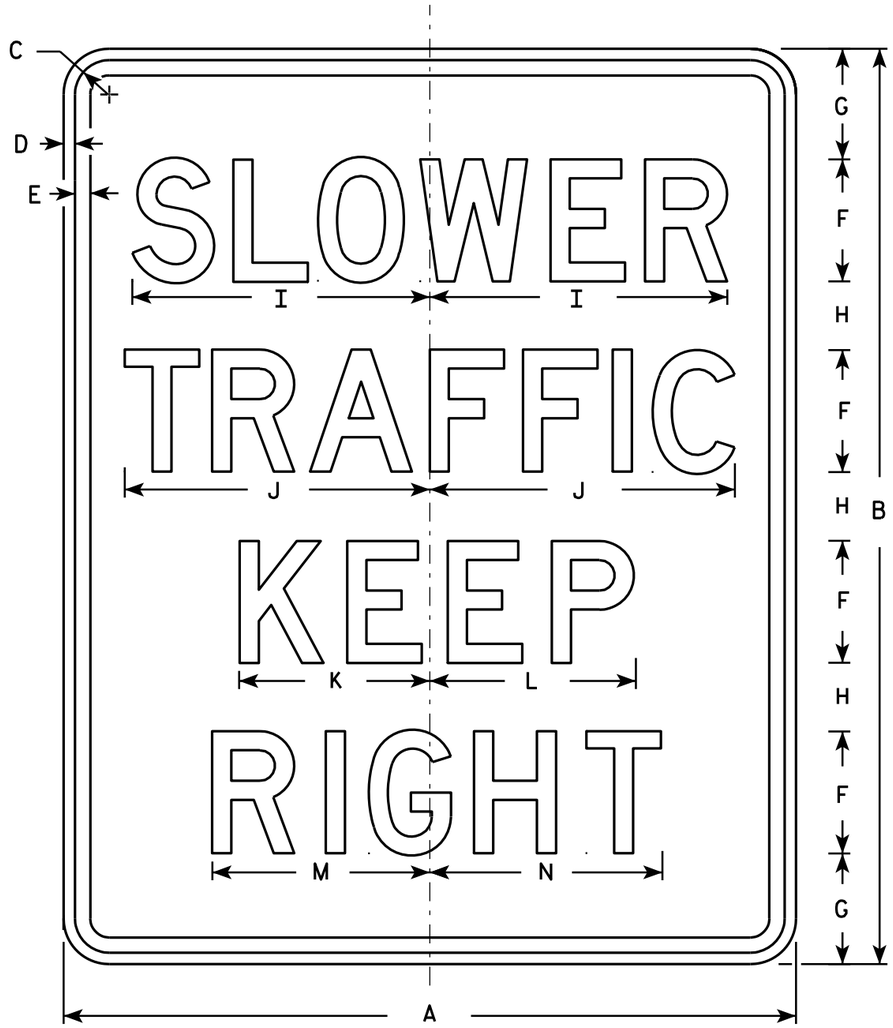

R4-3

NOTES

1. Sign is Type II - Type H Reflective - reference WIS DOT Standard Specification for HIGHWAY and STRUCTURE CONSTRUCTION latest edition.
2. Color:
   Background - White
   Message - Black
3. Message Series - D
4. Corners may be square or rounded when base material is plywood but borders shall be rounded as shown. When base material is metal, the corners and borders shall be rounded.

SIZE	A	B	C	D	E	F	G	H	I	J	K	L	M	N	O	P	Q	R	S	T	U	V	W	X	Y	Z	Area sq. ft.
1																											
2S	24	30	1 1/8	3/8	1/2	4	3 5/8	2 1/4	9 3/4	10	6 1/4	6 3/4	7 1/8	7 5/8													5.0
2M	24	30	1 1/8	3/8	1/2	4	3 5/8	2 1/4	9 3/4	10	6 1/4	6 3/4	7 1/8	7 5/8													5.0
3	36	48	1 5/8	5/8	3/4	6	6	4	14 5/8	15	9 3/8	10	10 3/4	11 3/8													12.0
4	36	48	1 5/8	5/8	3/4	6	6	4	14 5/8	15	9 3/8	10	10 3/4	11 3/8													12.0
5	48	60	2 1/4	3/4	1	8	7 1/4	4 1/2	19 1/2	20	12 1/2	13 1/2	14 1/4	15 1/4													20.0

STANDARD SIGN
R4-3

WISCONSIN DEPT OF TRANSPORTATION

APPROVED Matthew R Rauch
for State Traffic Engineer

DATE 3/25/2011 PLATE NO. R4-3.8

PROJECT NO:

SHEET NO: 147 E

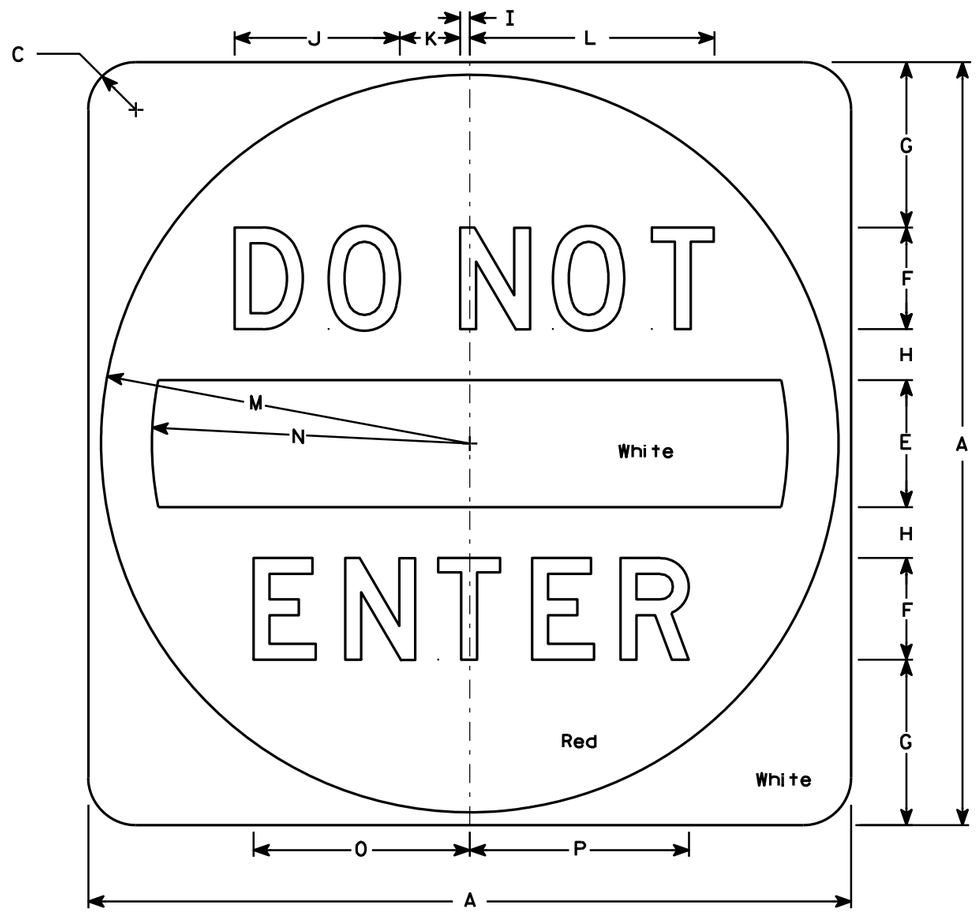

R5-1

NOTES

1. Sign is Type II - Type H Reflective - reference WIS DOT Standard Specification for HIGHWAY and STRUCTURE CONSTRUCTION latest edition.
2. Color:
   Background - See detail
   Message - White - Type H Reflective
3. Message Series - D
4. Corners may be square or rounded when base material is plywood but when base material is metal, the cornors shall be rounded.

SIZE	A	B	C	D	E	F	G	H	I	J	K	L	M	N	O	P	Q	R	S	T	U	V	W	X	Y	Z	Area sq. ft.
1																											
2S	30		1 7/8		5	4	6 1/2	2	3/8	6 1/2	2 3/8	9 5/8	14 1/2	12 1/2	8 1/2	8 5/8											6.26
2M	36		2 1/4		6	5	7 1/2	2 1/2	1/2	8 1/8	3	12 1/8	17 1/2	15	10 5/8	10 3/4											9.0
3	36		2 1/4		6	5	7 1/2	2 1/2	1/2	8 1/8	3	12 1/8	17 1/2	15	10 5/8	10 3/4											9.0
4	36		2 1/4		6	5	7 1/2	2 1/2	1/2	8 1/8	3	12 1/8	17 1/2	15	10 5/8	10 3/4											9.0
5	48		3		8	6	11	3	5/8	9 3/4	3 5/8	14 1/2	23 1/2	20	12 3/4	12 7/8											16.0

STANDARD SIGN
R5-1

WISCONSIN DEPT OF TRANSPORTATION

APPROVED Matthew R Rauch
for State Traffic Engineer

DATE 12/17/10 PLATE NO. R5-1.15

PROJECT NO: | HWY: | COUNTY: | SHEET NO: 148 | E

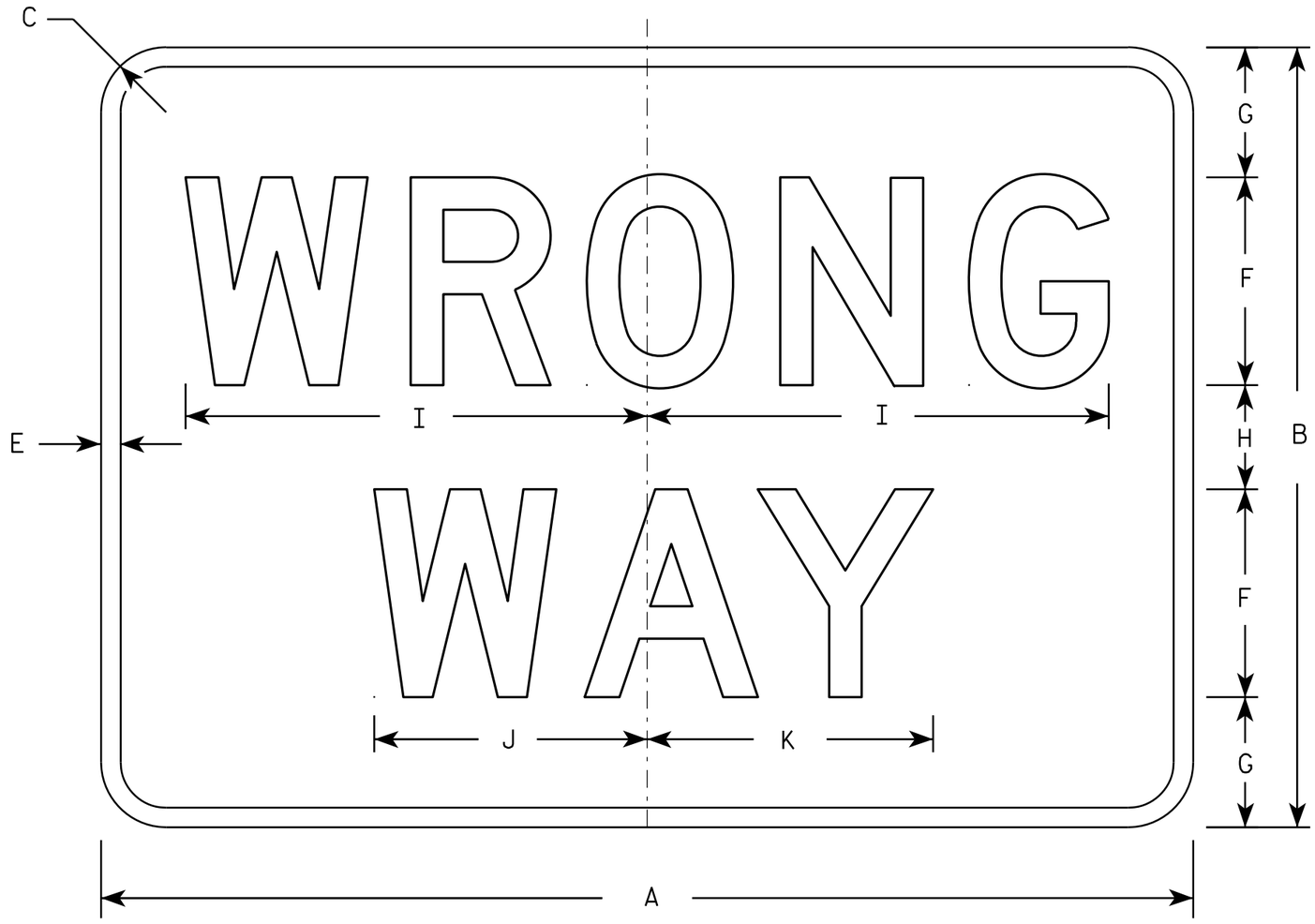

R5-1A

NOTES

1. Sign is Type II - Type H Reflective - reference WIS DOT Standard Specification for HIGHWAY and STRUCTURE CONSTRUCTION latest edition.
2. Color:
   Background - Red
   Message - White
3. Message Series - D
4. Corners may be square or rounded when base material is plywood but borders shall be rounded as shown. When base material is metal, the corners and borders shall be rounded.

SIZE	A	B	C	D	E	F	G	H	I	J	K	L	M	N	O	P	Q	R	S	T	U	V	W	X	Y	Z	Area sq. ft.
1	30	18	1 1/2		1/2	5	3	2	11	6 1/2	6 7/8																3.75
2S	36	24	2		5/8	6	4 1/2	3	13 1/4	7 7/8	8 1/4																6.00
2M	42	30	2 1/2		3/4	8	5	4	17 3/4	10 1/2	11																8.75
3	42	30	2 1/2		3/4	8	5	4	17 3/4	10 1/2	11																8.75
4	42	30	2 1/2		3/4	8	5	4	17 3/4	10 1/2	11																8.75
5	42	30	2 1/2		3/4	8	5	4	17 3/4	10 1/2	11																8.75

STANDARD SIGN
R5-1A

WISCONSIN DEPT OF TRANSPORTATION

APPROVED Matthew R Rauch
for State Traffic Engineer

DATE 12/17/10 PLATE NO. R5-1A.2

PROJECT NO: | HWY: | COUNTY: | SHEET NO: 149 | E

R5-57

NOTES

1. Sign is Type II - Type H Reflective - reference WIS DOT Standard Specification for HIGHWAY and STRUCTURE CONSTRUCTION latest edition.
2. Color:
   Background - White
   Message - Black
3. Message Series - Lines 1, 2, and 5 are Series C.
   Lines 3 and 4 are Series B.
4. Corners may be square or rounded when base material is plywood but borders shall be rounded as shown. When base material is metal, the corners and borders shall be rounded.

SIZE	A	B	C	D	E	F	G	H	I	J	K	L	M	N	O	P	Q	R	S	T	U	V	W	X	Y	Z	Area sq. ft.
1																											
2S																											
2M																											
3																											
4	36		1 5/8	5/8	3/4	4	3	2	3 1/2	14 1/4	14 7/8	11	11 1/2	4 3/4	1 3/4	9		1 3/8	10	11	2 1/2	1 3/4	15 1/2	13	13 5/8		9.0
5	36		1 5/8	5/8	3/4	4	3	2	3 1/2	14 1/4	14 7/8	11	11 1/2	4 3/4	1 3/4	9		1 3/8	10	11	2 1/2	1 3/4	15 1/2	13	13 5/8		9.0

STANDARD SIGN
R5-57

WISCONSIN DEPT OF TRANSPORTATION

APPROVED Matthew R Rauch
for State Traffic Engineer

DATE 3/29/2011 PLATE NO. R5-57.10

PROJECT NO: | HWY: | COUNTY: | SHEET NO: 150 | E

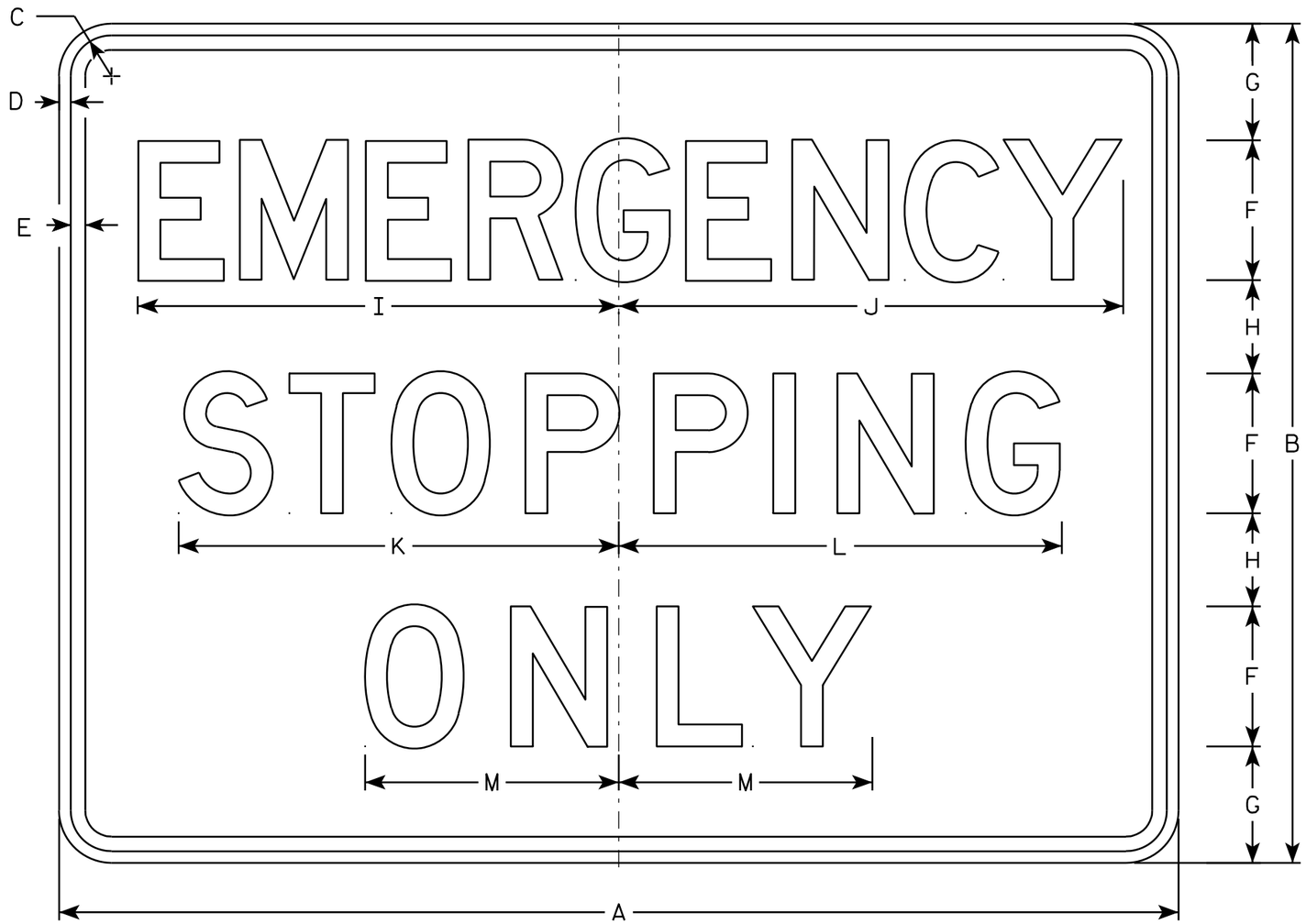

R8 - 7

NOTES

1. Sign is Type II - Type H Reflective - reference WIS DOT Standard Specification for HIGHWAY and STRUCTURE CONSTRUCTION latest edition.
2. Color:
   Background - White
   Message - Black
3. Message Series - D
4. Corners may be square or rounded when base material is plywood but borders shall be rounded as shown. When base material is metal, the corners and borders shall be rounded.

SIZE	A	B	C	D	E	F	G	H	I	J	K	L	M	N	O	P	Q	R	S	T	U	V	W	X	Y	Z	Area sq. ft.
1																											
2S																											
2M																											
3																											
4	48	36	1 3/4	1/2	5/8	6	5	4	20 5/8	21 5/8	18 7/8	19	10 7/8														12.0
5	48	36	1 3/4	1/2	5/8	6	5	4	20 5/8	21 5/8	18 7/8	19	10 7/8														12.0

STANDARD SIGN
R8 - 7

WISCONSIN DEPT OF TRANSPORTATION

APPROVED Matthew R Rauch
for State Traffic Engineer

DATE 3/31/2011 PLATE NO. R8-7.6

PROJECT NO: | HWY: | COUNTY: | SHEET NO: 151 | E

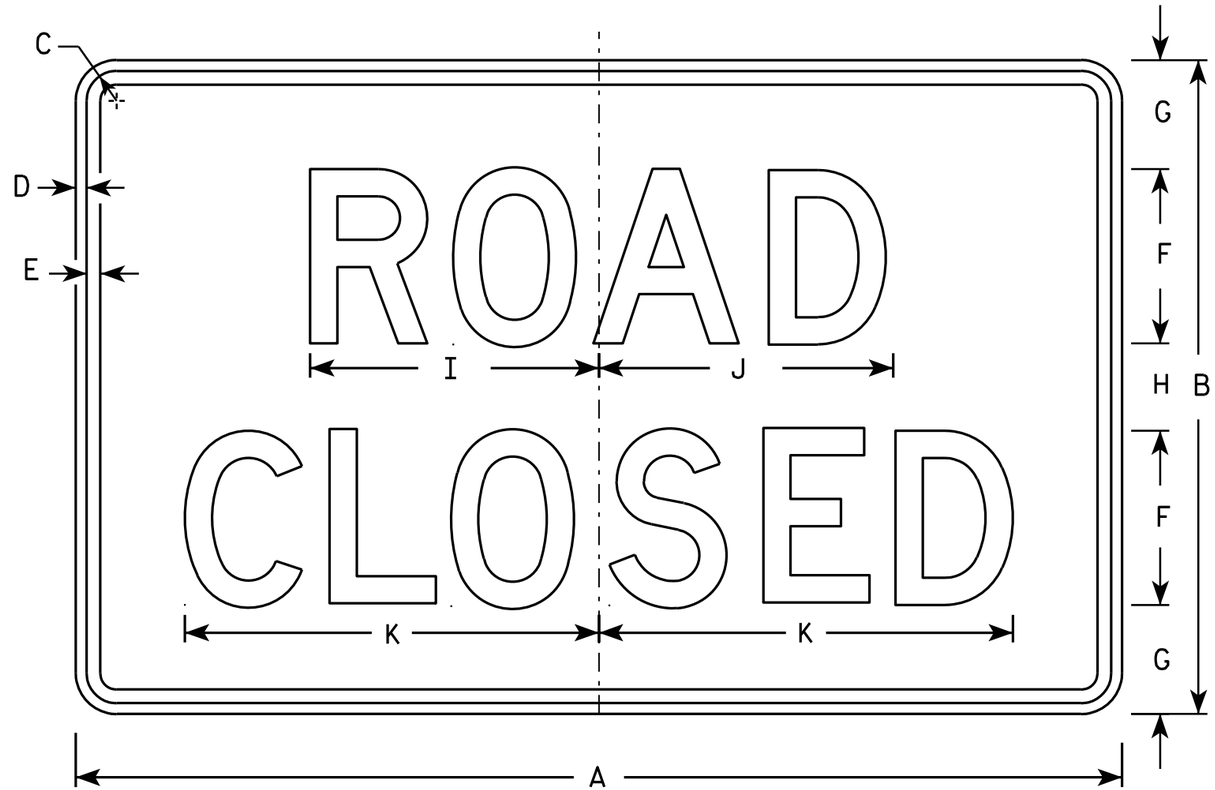

R11-2

NOTES

1. Sign is Type II - Type H Reflective - reference WIS DOT Standard Specification for HIGHWAY and STRUCTURE CONSTRUCTION latest edition.
2. Color:
   Background - White
   Message - Black
3. Message Series - D
4. Corners may be square or rounded when base material is plywood but borders shall be rounded as shown. When base material is metal, the corners and borders shall be rounded.
5. Modify the message as required.

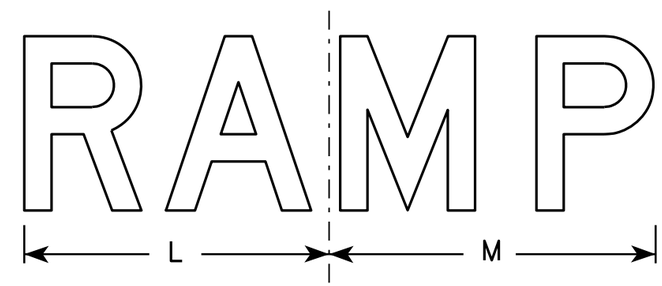

R11-2R

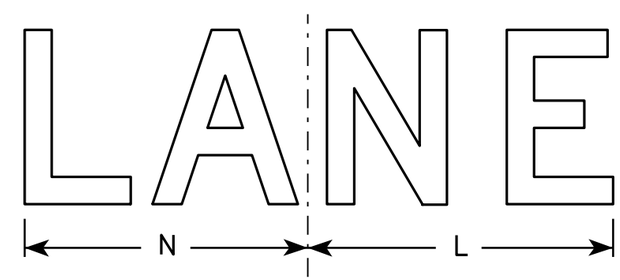

R11-2L

SIZE	A	B	C	D	E	F	G	H	I	J	K	L	M	N	O	P	Q	R	S	T	U	V	W	X	Y	Z	Area sq. ft.
1																											
2S	48	30	1 3/8	1/2	5/8	8	5	4	13 1/4	13 1/2	19	14	15	13													10.0
2M	48	30	1 3/8	1/2	5/8	8	5	4	13 1/4	13 1/2	19	14	15	13													10.0
3	48	30	1 3/8	1/2	5/8	8	5	4	13 1/4	13 1/2	19	14	15	13													10.0
4	48	30	1 3/8	1/2	5/8	8	5	4	13 1/4	13 1/2	19	14	15	13													10.0
5	48	30	1 3/8	1/2	5/8	8	5	4	13 1/4	13 1/2	19	14	15	13													10.0

STANDARD SIGN
R11-2

WISCONSIN DEPT OF TRANSPORTATION

APPROVED Matthew R Rauch
for State Traffic Engineer

DATE 4/1/11 PLATE NO. R11-2.10

PROJECT NO: | HWY: | COUNTY: | SHEET NO: 152 | E

7

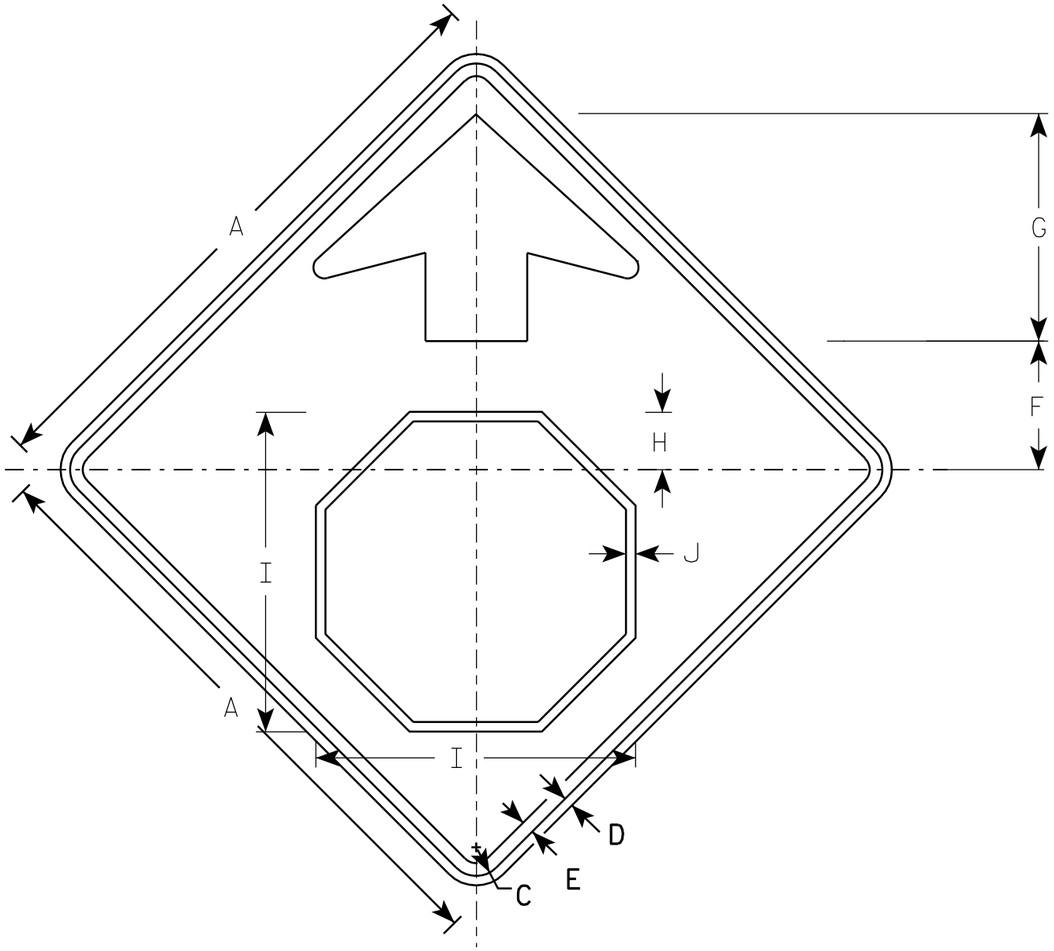

W3-1

NOTES

1. All Signs Type II - Type F Reflective - reference WIS DOT Standard Specification for HIGHWAY and STRUCTURE CONSTRUCTION latest edition.
2. Color:
   - Background - YELLOW
   - Arrow & Border - BLACK
   - Stop Symbol - WHITE BORDER ON RED BACKGROUND

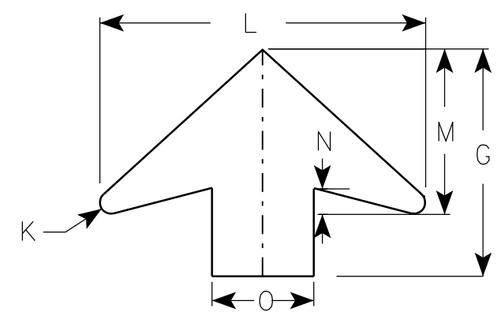

ARROW DETAIL

SIZE	A	B	C	D	E	F	G	H	I	J	K	L	M	N	O	P	Q	R	S	T	U	V	W	X	Y	Z	Area sq. ft.
1	30		1 3/8	1/2	5/8	6 1/4	11 1/4	2 7/8	15 3/4	1/2	1/2	16	8	1 1/4	5												6.25
2S	36		1 5/8	5/8	3/4	7 1/2	13 1/2	3 1/2	19	5/8	5/8	19 1/4	9 3/4	1 5/8	6												9.0
2M	36		1 5/8	5/8	3/4	7 1/2	13 1/2	3 1/2	19	5/8	5/8	19 1/4	9 3/4	1 5/8	6												9.0
3	36		1 5/8	5/8	3/4	7 1/2	13 1/2	3 1/2	19	5/8	5/8	19 1/4	9 3/4	1 5/8	6												9.0
4	48		2 1/4	3/4	1	10	17 7/8	4 1/2	25 1/8	3/4	7/8	25 5/8	13	2	8												16.0
5	48		2 1/4	3/4	1	10	17 7/8	4 1/2	25 1/8	3/4	7/8	25 5/8	13	2	8												16.0

STANDARD SIGN
W3-1

WISCONSIN DEPT OF TRANSPORTATION

APPROVED Matthew R Rauch
for State Traffic Engineer

DATE 6/7/10 PLATE NO. W3-1.12

PROJECT NO:

SHEET NO: 153 E

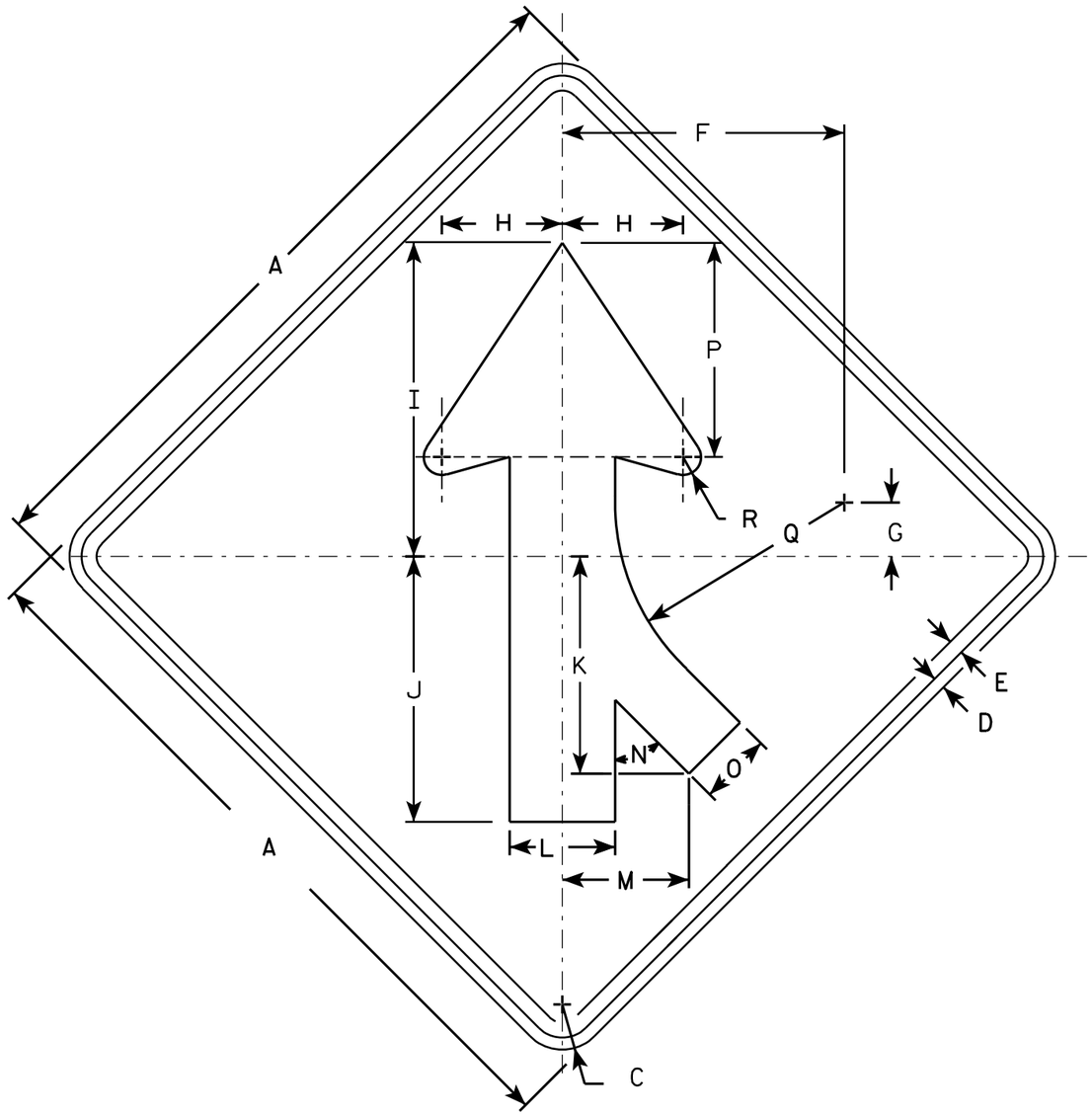

W4-1 R

NOTES

1. Sign is Type II - Type F Reflective - reference WIS DOT Standard Specification for HIGHWAY and STRUCTURE CONSTRUCTION latest edition.
2. Color:
   Background - Yellow
   Message - Black
3. Corners may be square or rounded when base material is plywood but borders shall be rounded as shown. When base material is metal, the corners and borders shall be rounded.
4. W4-1L is the same as W4-1R except the arrow is reversed along the vertical centerline.

SIZE	A	B	C	D	E	F	G	H	I	J	K	L	M	N	O	P	Q	R	S	T	U	V	W	X	Y	Z	Area sq. ft.
1	30		1 3/8	1/2	5/8	11 5/8	2 1/2	5	13	11	9	4 3/8	5 1/4	45°	3	8 7/8	9 1/2	3/4									6.25
2S	36		1 5/8	5/8	3/4	14	2 3/4	6	15 3/4	13 1/4	10 1/4	5 1/4	6 3/8	45°	3 5/8	10 5/8	11 3/8	7/8									9.0
2M	36		1 5/8	5/8	3/4	14	2 3/4	6	15 3/4	13 1/4	10 1/4	5 1/4	6 3/8	45°	3 5/8	10 5/8	11 3/8	7/8									9.0
3	36		1 5/8	5/8	3/4	14	2 3/4	6	15 3/4	13 1/4	10 1/4	5 1/4	6 3/8	45°	3 5/8	10 5/8	11 3/8	7/8									9.0
4	48		2 1/4	3/4	1	18 3/4	3 5/8	8	20 1/2	17 1/2	14 3/8	7	8 3/8	45°	4 3/4	14 1/4	15 1/4	1 1/4									16.0
5	48		2 1/4	3/4	1	18 3/4	3 5/8	8	20 1/2	17 1/2	14 3/8	7	8 3/8	45°	4 3/4	14 1/4	15 1/4	1 1/4									16.0

STANDARD SIGN
W4-1

WISCONSIN DEPT OF TRANSPORTATION

APPROVED Matthew R Rauch
for State Traffic Engineer

DATE 03/12/13 PLATE NO. W4-1.14

PROJECT NO:	HWY:	COUNTY:		SHEET NO: 154	E

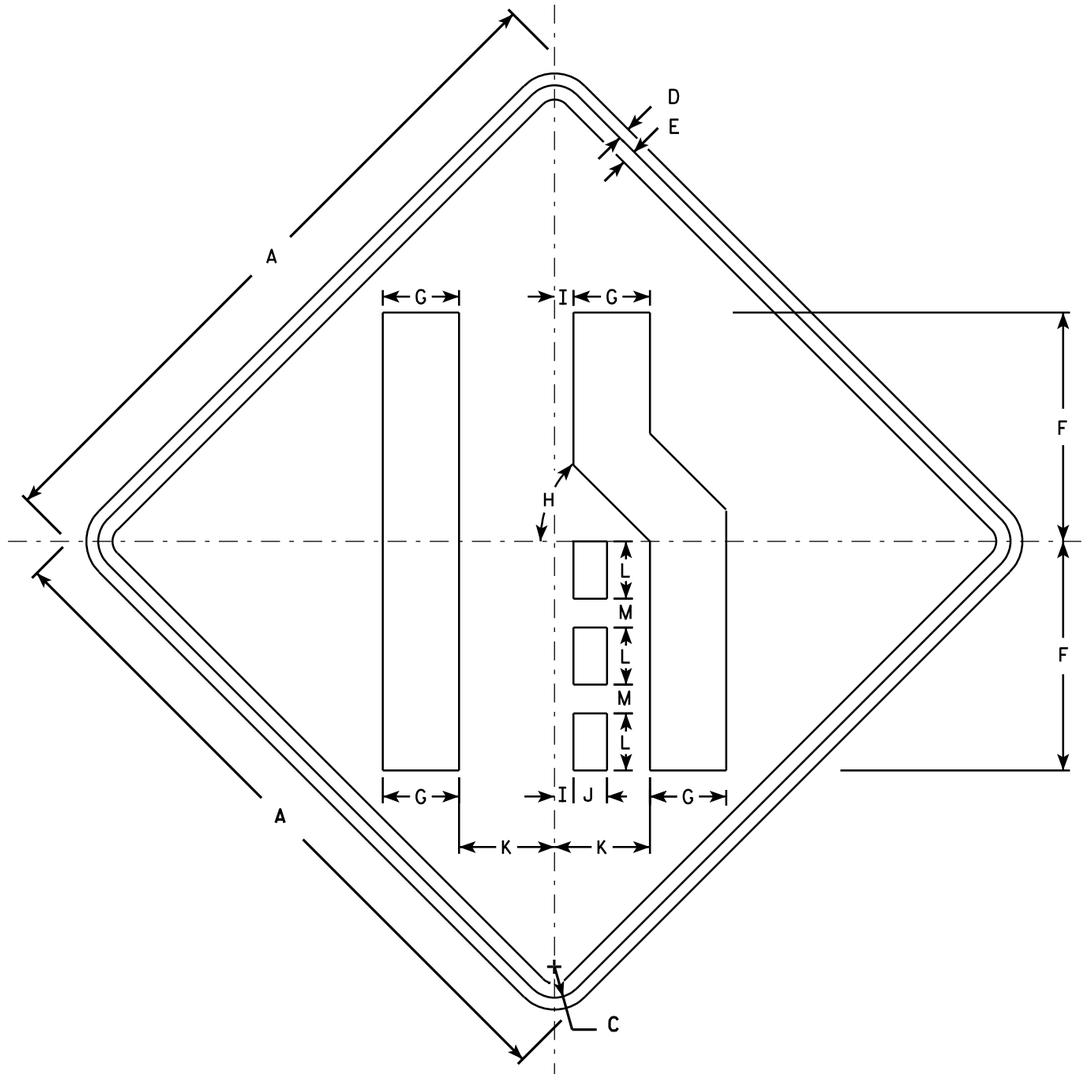

W4-2R

NOTES

1. Sign is Type II - Type F Reflective - reference WIS DOT Standard Specification for HIGHWAY and STRUCTURE CONSTRUCTION latest edition.
2. Color:
   Background - Yellow
   Message - Black
3. Corners may be square or rounded when base material is plywood but borders shall be rounded as shown. When base material is metal, the corners and borders shall be rounded.
4. W4-2L is the same as W4-2R except the symbol is reversed along the vertical centerline.

SIZE	A	B	C	D	E	F	G	H	I	J	K	L	M	N	O	P	Q	R	S	T	U	V	W	X	Y	Z	Area sq. ft.
1	30		1 3/8	1/2	5/8	10	3 3/8	45°	7/8	1 1/2	4 1/4	2 1/2	1 1/4														6.25
2S	36		1 5/8	5/8	3/4	12	4	45°	1	1 3/4	5	3	1 1/2														9.0
2M	36		1 5/8	5/8	3/4	12	4	45°	1	1 3/4	5	3	1 1/2														9.0
3	36		1 5/8	5/8	3/4	12	4	45°	1	1 3/4	5	3	1 1/2														9.0
4	48		2 1/4	3/4	1	16	5 3/8	45°	1 1/4	2 3/8	6 3/4	4	2														16.0
5	48		2 1/4	3/4	1	16	5 3/8	45°	1 1/4	2 3/8	6 3/4	4	2														16.0

STANDARD SIGN
W4-2

WISCONSIN DEPT OF TRANSPORTATION

APPROVED Matthew R Rauch
for State Traffic Engineer

DATE 3/12/13 PLATE NO. W4-2.14

PROJECT NO:

SHEET NO: 155 E

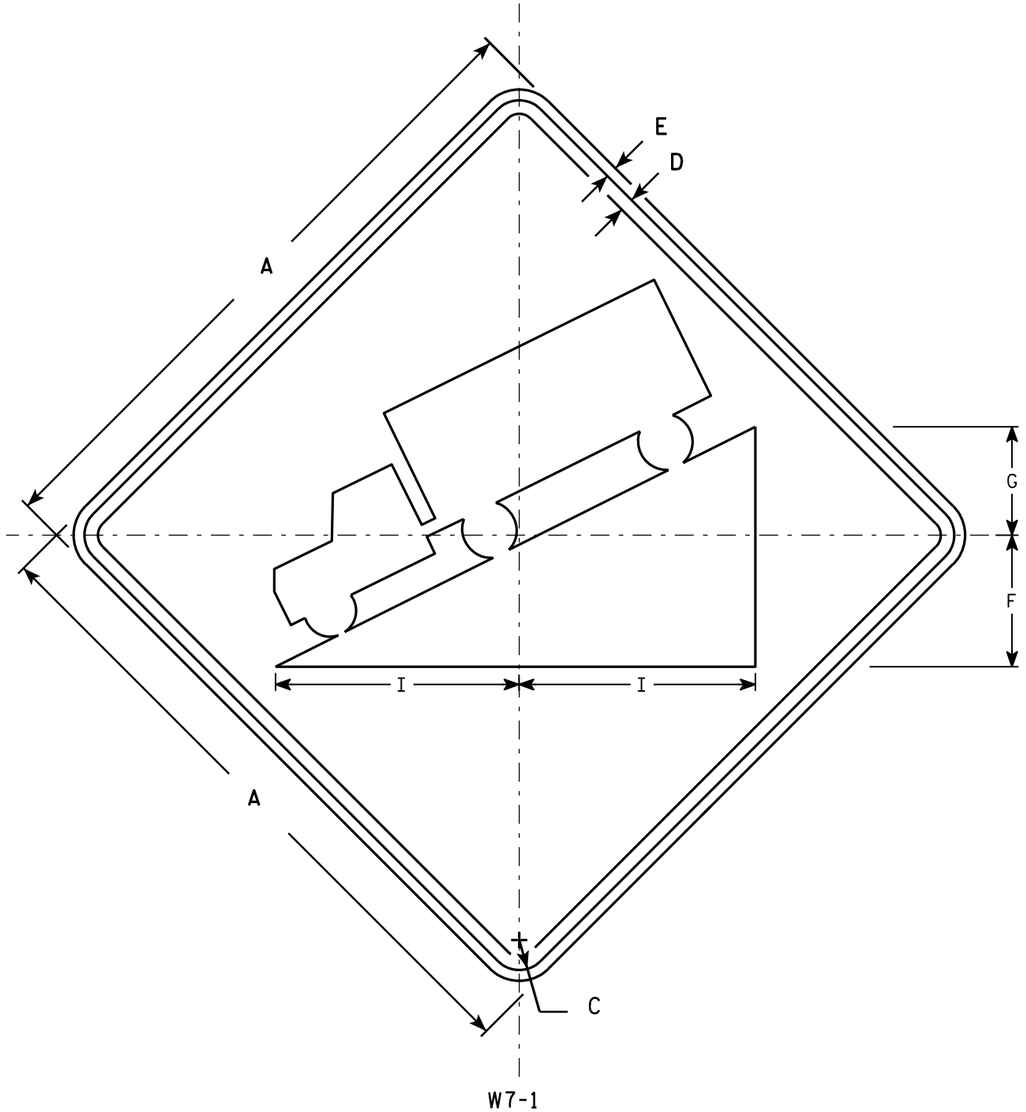

NOTES

1. Sign is Type II - Type F Reflective - reference WIS DOT Standard Specification for HIGHWAY and STRUCTURE CONSTRUCTION latest edition.
2. Color:
   Background - Yellow
   Message - Black
3. Message Series - D
4. Corners may be square or rounded when base material is plywood but borders shall be rounded as shown. When base material is metal, the corners and borders shall be rounded.

SIZE	A	B	C	D	E	F	G	H	I	J	K	L	M	N	O	P	Q	R	S	T	U	V	W	X	Y	Z	Area sq. ft.
1	24		1 1/8	3/8	3/8	5	4		8 3/4																		4.0
2S	30		1 3/8	1/2	5/8	6	5		11																		6.25
2M	36		1 5/8	5/8	3/4	7 1/4	6		13 1/4																		9.0
3	36		1 5/8	5/8	3/4	7 1/4	6		13 1/4																		9.0
4	36		1 5/8	5/8	3/4	7 1/4	6		13 1/4																		9.0
5	48		2 1/4	3/4	1	9 3/4	8		17 1/2																		16.0

STANDARD SIGN
W7-1

WISCONSIN DEPT OF TRANSPORTATION

APPROVED Matthew R Rauch
for State Traffic Engineer
DATE 03/12/13 PLATE NO. W7-1.13

PROJECT NO: | HWY: | COUNTY: | SHEET NO: 156 | E

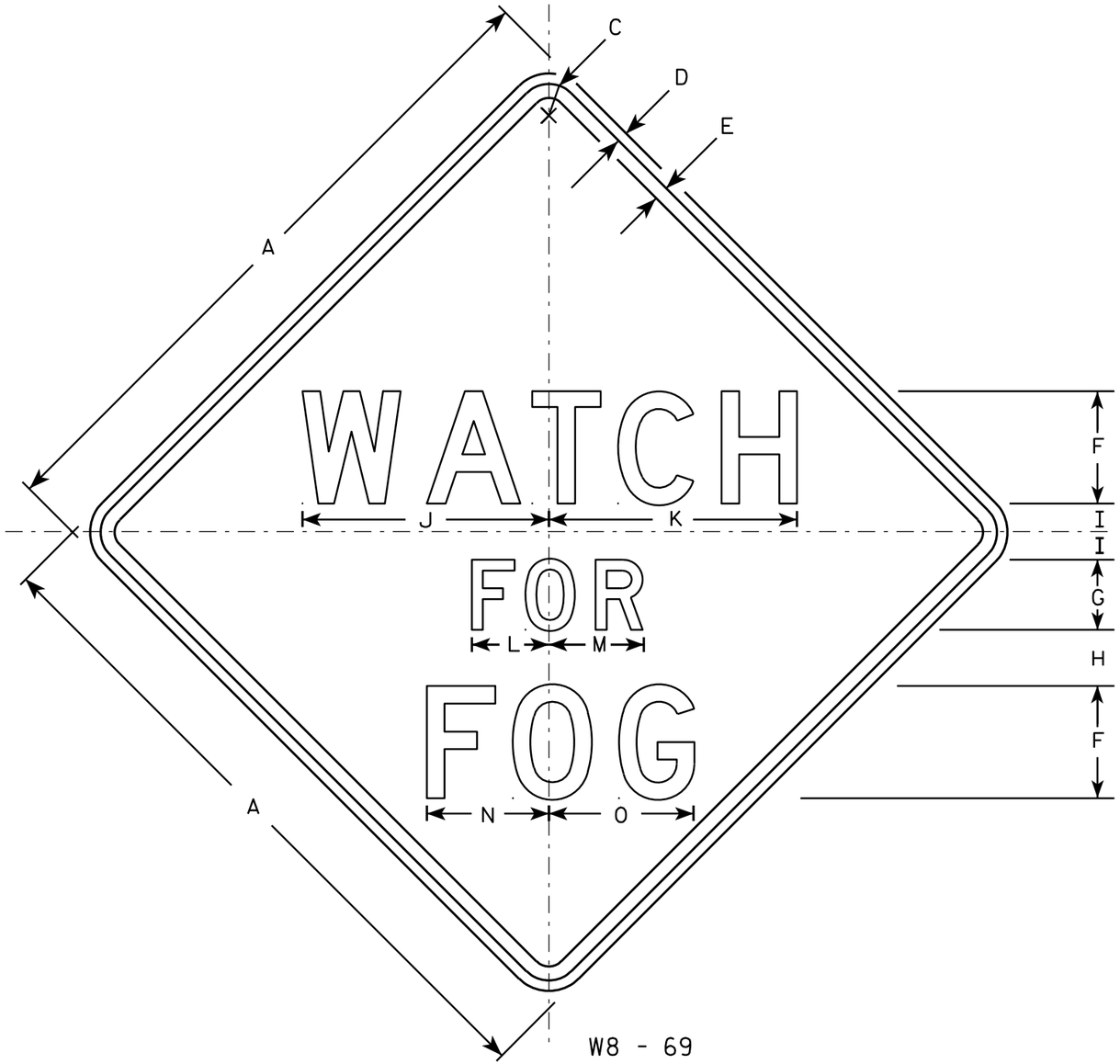

NOTES

1. Sign is Type II - Type F Reflective - reference WIS DOT Standard Specification for HIGHWAY and STRUCTURE CONSTRUCTION latest edition.
2. Color:
   Background - Yellow
   Message - Black
3. Message Series - D
4. Corners may be square or rounded when base material is plywood but borders shall be rounded as shown. When base material is metal, the corners and borders shall be rounded.

SIZE	A	B	C	D	E	F	G	H	I	J	K	L	M	N	O	P	Q	R	S	T	U	V	W	X	Y	Z	Area sq. ft.
1																											
2S	36		1 5/8	5/8	3/4	5	4	2 3/4	1 1/2	13 1/4	13 1/4	4 1/2	5 1/2	6 3/4	8 1/4												9.0
2M	36		1 5/8	5/8	3/4	5	4	2 3/4	1 1/2	13 1/4	13 1/4	4 1/2	5 1/2	6 3/4	8 1/4												9.0
3																											
4	48		2 1/4	3/4	1	8	5	4	2	17 5/8	17 3/4	5 1/2	6 3/4	8 3/4	10 3/8												16.0
5																											

STANDARD SIGN
W8-69

WISCONSIN DEPT OF TRANSPORTATION

APPROVED Matthew R Rauch
for State Traffic Engineer

DATE 03/18/13 PLATE NO. W8-69.4

PROJECT NO:	HWY:	COUNTY:		SHEET NO: 157	E

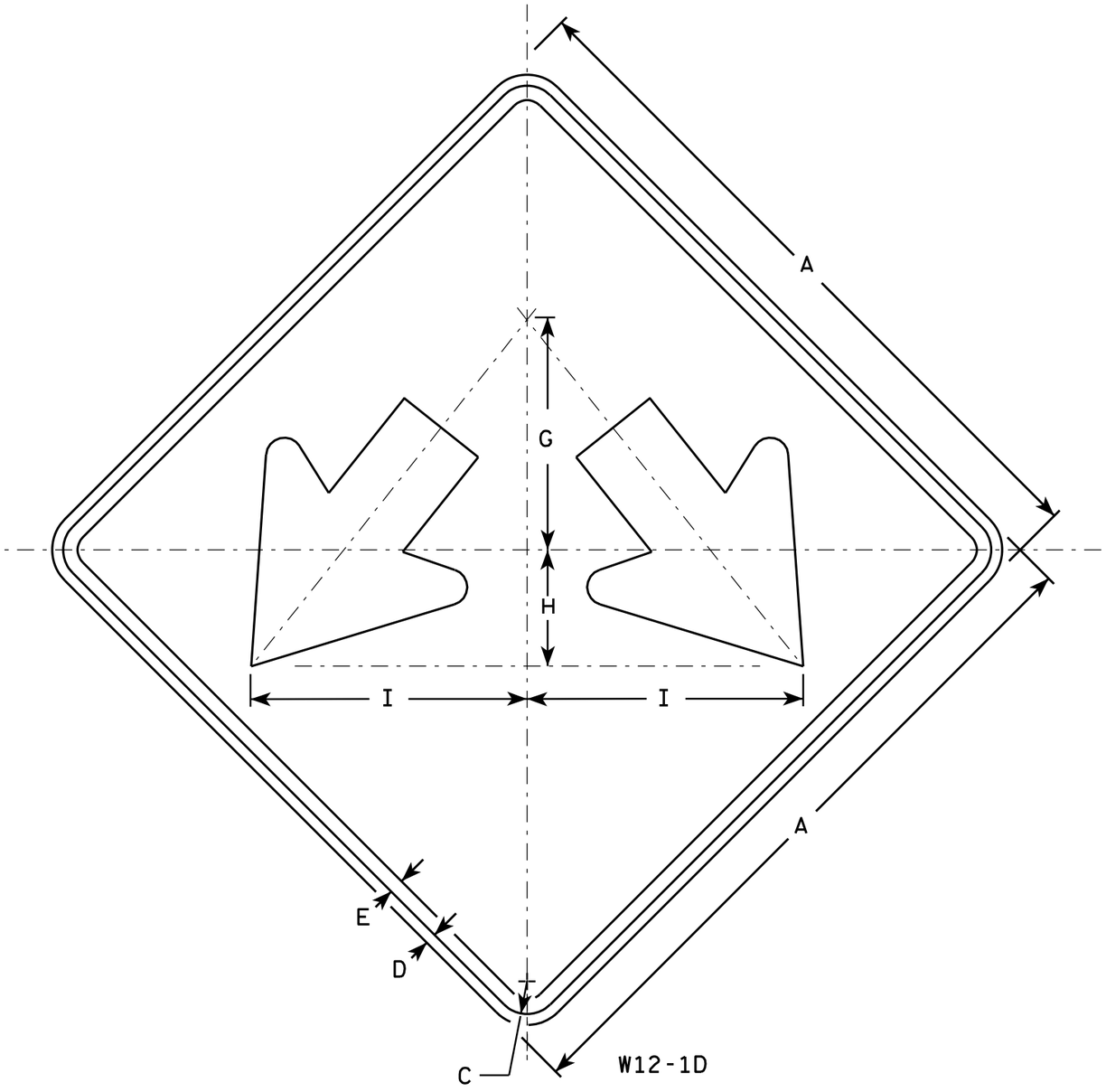

NOTES

1. Sign is Type II - Type F Reflective - reference WIS DOT Standard Specification for HIGHWAY and STRUCTURE CONSTRUCTION latest edition.
2. Color:
   Background - Yellow
   Message - Black
3. Corners may be square or rounded when base material is plywood but borders shall be rounded as shown. When base material is metal, the corners and borders shall be rounded.

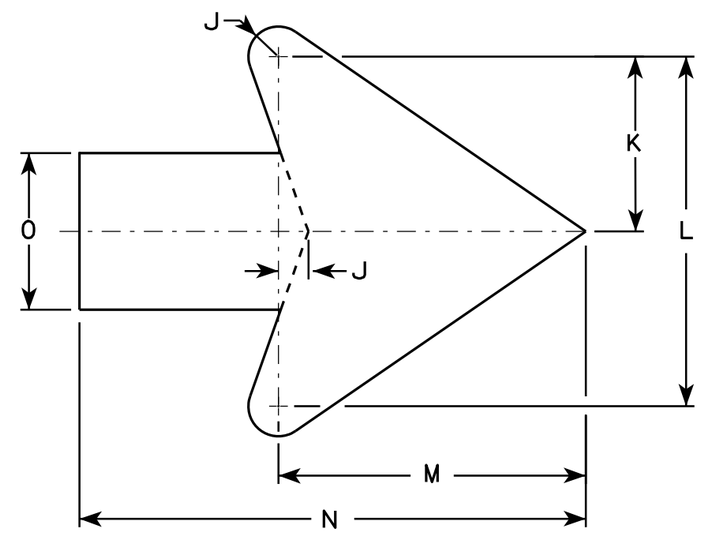

Arrow Detail

SIZE	A	B	C	D	E	F	G	H	I	J	K	L	M	N	O	P	Q	R	S	T	U	V	W	X	Y	Z	Area sq. ft.
1																											
2S	24		1 1/8	1/2	3/8		8	4	9 1/2	3/8	3 3/8	7 1/4	6 3/8	10 3/8	3 1/4												4.0
2M	24		1 1/8	1/2	3/8		8	4	9 1/2	3/8	3 3/8	7 1/4	6 3/8	10 3/8	3 1/4												4.0
3	30		1 3/8	1/2	5/8		10	5	11 7/8	3/4	4 1/2	9	7 7/8	13	4												6.25
4	36		1 3/8	1/2	5/8		12	6	14 1/4	1	5 1/2	10 7/8	9 5/8	15 3/4	4 3/4												9.0
5	48		2 1/4	3/4	1		16	8	19	1 1/4	7 1/4	14 1/2	12 3/4	21	6 1/4												16.0

STANDARD SIGN
W12-1D

WISCONSIN DEPT OF TRANSPORTATION

APPROVED Matthew R Rauch
for State Traffic Engineer

DATE 3/13/13 PLATE NO. W12-1D.15

PROJECT NO: | HWY: | COUNTY: | SHEET NO: 158 | E

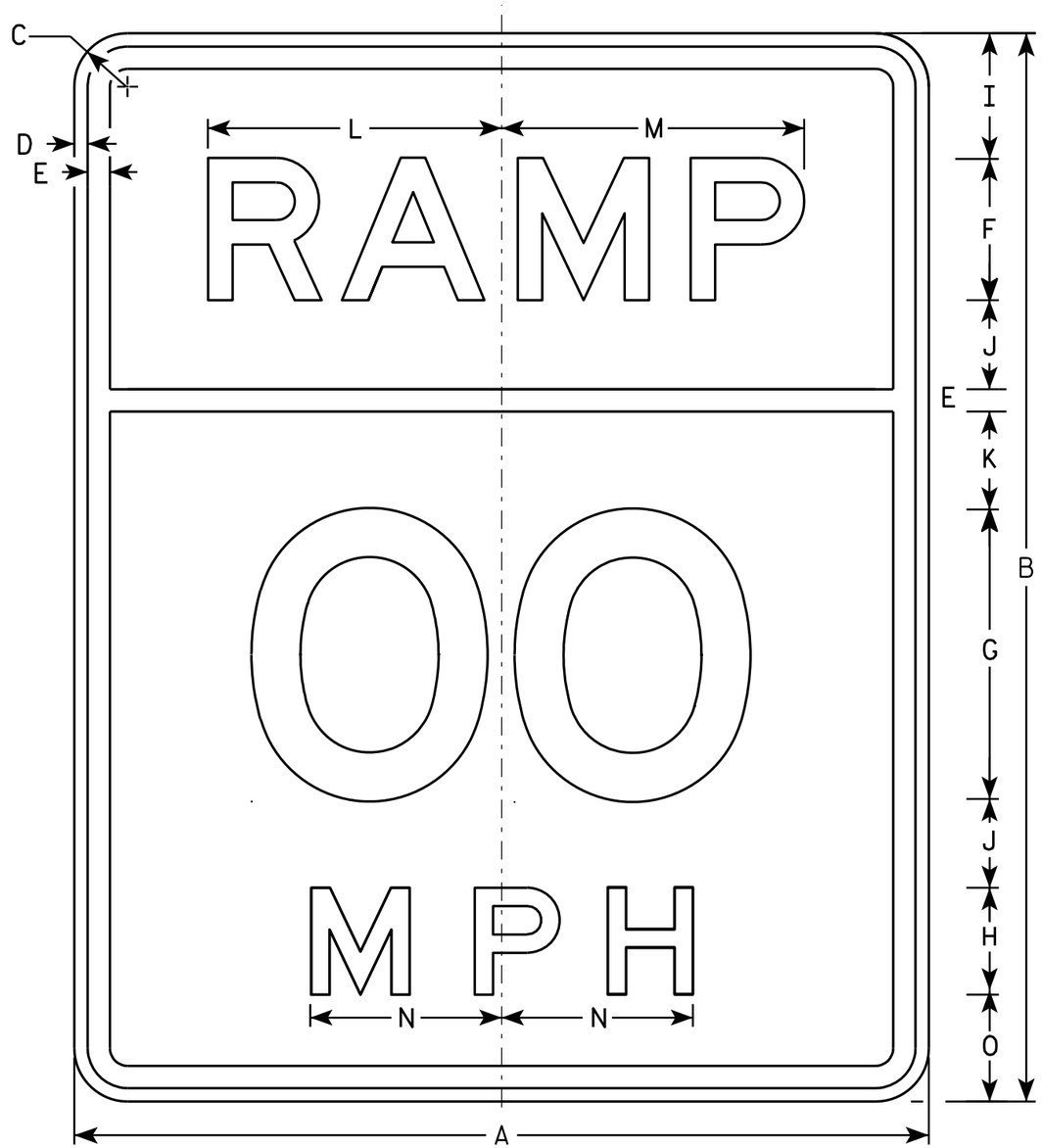

W13-3

NOTES

1. Sign is Type II - Type F Reflective - reference WIS DOT Standard Specification for HIGHWAY and STRUCTURE CONSTRUCTION latest edition.
2. Color:
   Background - Yellow
   Message - Black
3. Message Series - E
4. Corners may be square or rounded when base material is plywood but borders shall be rounded as shown. When base material is metal, the corners and borders shall be rounded.
5. Substitute appropriate numerals and optically space about centerline to achieve proper balance.

SIZE	A	B	C	D	E	F	G	H	I	J	K	L	M	N	O	P	Q	R	S	T	U	V	W	X	Y	Z	Area sq. ft.
1	24	30	1 1/8	3/8	5/8	4	8	3	3 1/2	2 1/2	2 7/8	8 1/4	8 1/2	5 3/8	3												5.0
2S	24	30	1 1/8	3/8	5/8	4	8	3	3 1/2	2 1/2	2 7/8	8 1/4	8 1/2	5 3/8	3												5.0
2M	24	30	1 1/8	3/8	5/8	4	8	3	3 1/2	2 1/2	2 7/8	8 1/4	8 1/2	5 3/8	3												5.0
3																											
4	36	48	1 5/8	5/8	7/8	6	12	4	6	4 1/8	5 1/8	13 1/2	13 5/8	7 1/8	6												12.0
5	48	60	2 1/4	3/4	1 1/4	8	16	6	7	5	5 3/4	16 1/2	17	10 5/8	6												20.0

STANDARD SIGN
W13-3

WISCONSIN DEPT OF TRANSPORTATION

APPROVED Matthew R Rauch
for State Traffic Engineer

DATE 6/13/13 PLATE NO. W13-3.9

PROJECT NO: | HWY: | COUNTY: | SHEET NO: 159 | E

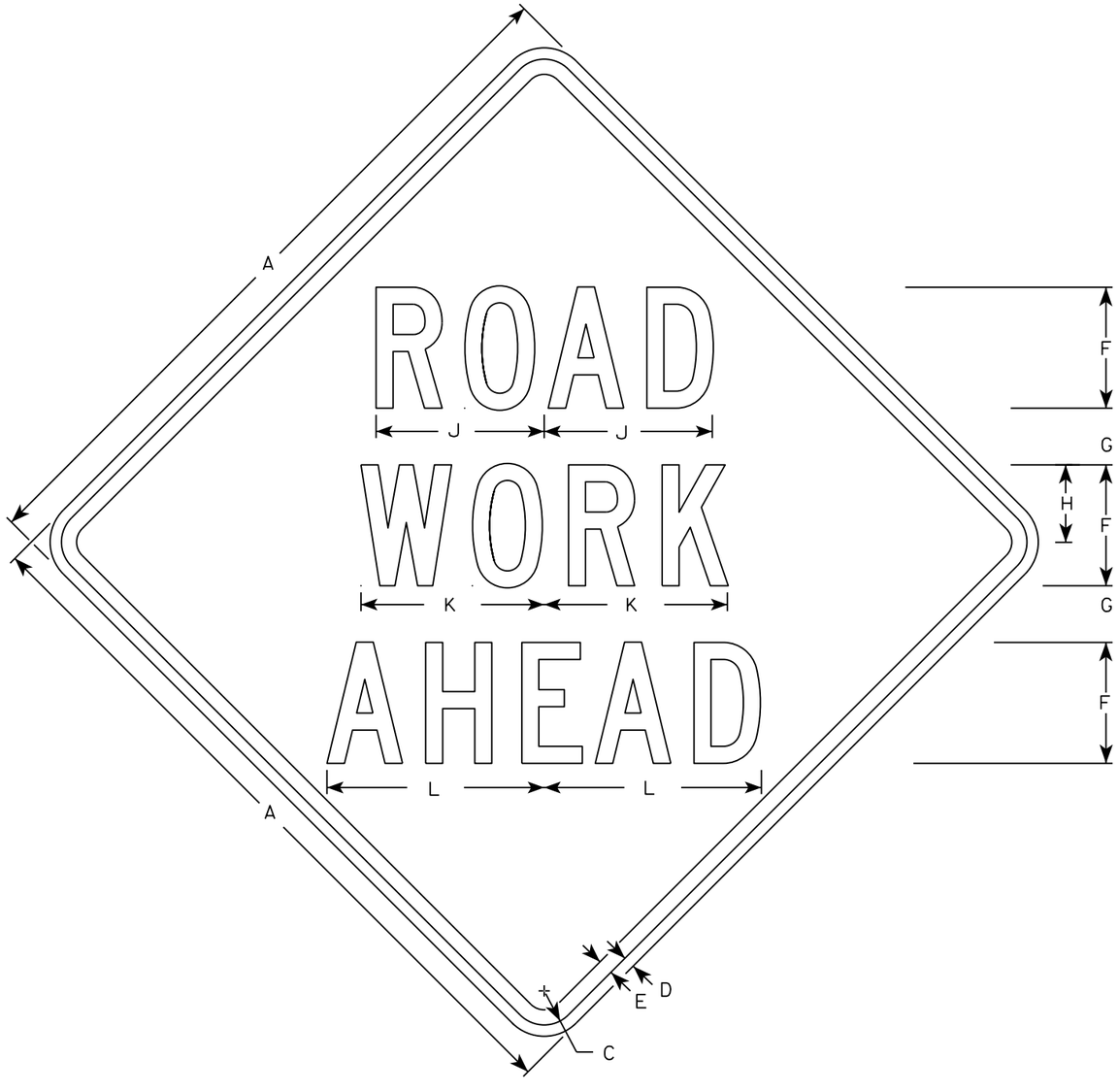

W20-1A

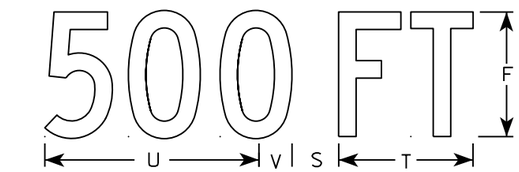

W20-1D

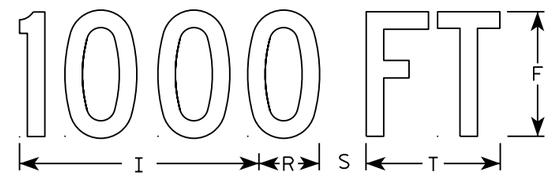

W20-1C

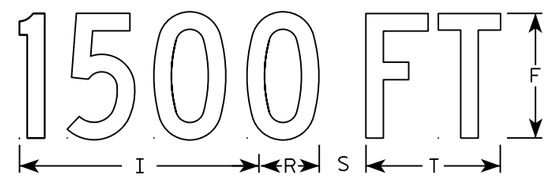

W20-1B

W20-1G

W20-1F

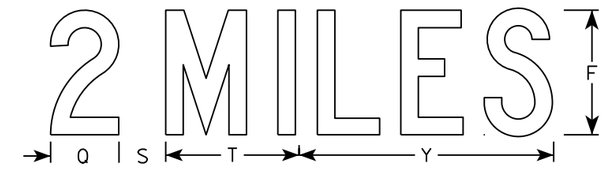

W20-1E

NOTES

1. Sign is Type II - Type F Reflective
2. Color:
   Background - Orange
   Message - Black
3. Message Series - C
4. Corners may be square or rounded when base material is plywood but borders shall be rounded as shown. When base material is metal, the corners and borders shall be rounded.

SIZE	A	B	C	D	E	F	G	H	I	J	K	L	M	N	O	P	Q	R	S	T	U	V	W	X	Y	Z	Area sq. ft.
1	36		1 3/8	1/2	5/8	5	2 5/8	3 1/4	10 1/8	7	7 5/8	8 7/8	1 1/8	4 1/2	3 1/2	9		2 1/2	2 1/4	5 5/8	9	1 3/8	8	1 3/4	10 3/4	6	9.0
2S	48		2 1/4	3/4	1	8	3 3/4	5 1/8	15 3/8	11 1/8	12 1/8	14 3/8	1 5/8	6 7/8	5 3/8	13 7/8	4 3/8	3 7/8	3	8 5/8	13 3/4	2 1/8	11 7/8	2 3/4	16 3/8	9	16.0
2M	48		2 1/4	3/4	1	8	3 3/4	5 1/8	15 3/8	11 1/8	12 1/8	14 3/8	1 5/8	6 7/8	5 3/8	13 7/8	4 3/8	3 7/8	3	8 5/8	13 3/4	2 1/8	11 7/8	2 3/4	16 3/8	9	16.0
3	48		2 1/4	3/4	1	8	3 3/4	5 1/8	15 3/8	11 1/8	12 1/8	14 3/8	1 5/8	6 7/8	5 3/8	13 7/8	4 3/8	3 7/8	3	8 5/8	13 3/4	2 1/8	11 7/8	2 3/4	16 3/8	9	16.0
4	48		2 1/4	3/4	1	8	3 3/4	5 1/8	15 3/8	11 1/8	12 1/8	14 3/8	1 5/8	6 7/8	5 3/8	13 7/8	4 3/8	3 7/8	3	8 5/8	13 3/4	2 1/8	11 7/8	2 3/4	16 3/8	9	16.0
5	48		2 1/4	3/4	1	8	3 3/4	5 1/8	15 3/8	11 1/8	12 1/8	14 3/8	1 5/8	6 7/8	5 3/8	13 7/8	4 3/8	3 7/8	3	8 5/8	13 3/4	2 1/8	11 7/8	2 3/4	16 3/8	9	16.0

STANDARD SIGN
W20-1A, B, C, D, F & G

WISCONSIN DEPT OF TRANSPORTATION

APPROVED Matthew R Rauch
for State Traffic Engineer

DATE 5/07/15 PLATE NO. W20-1.10

PROJECT NO:

SHEET NO: E

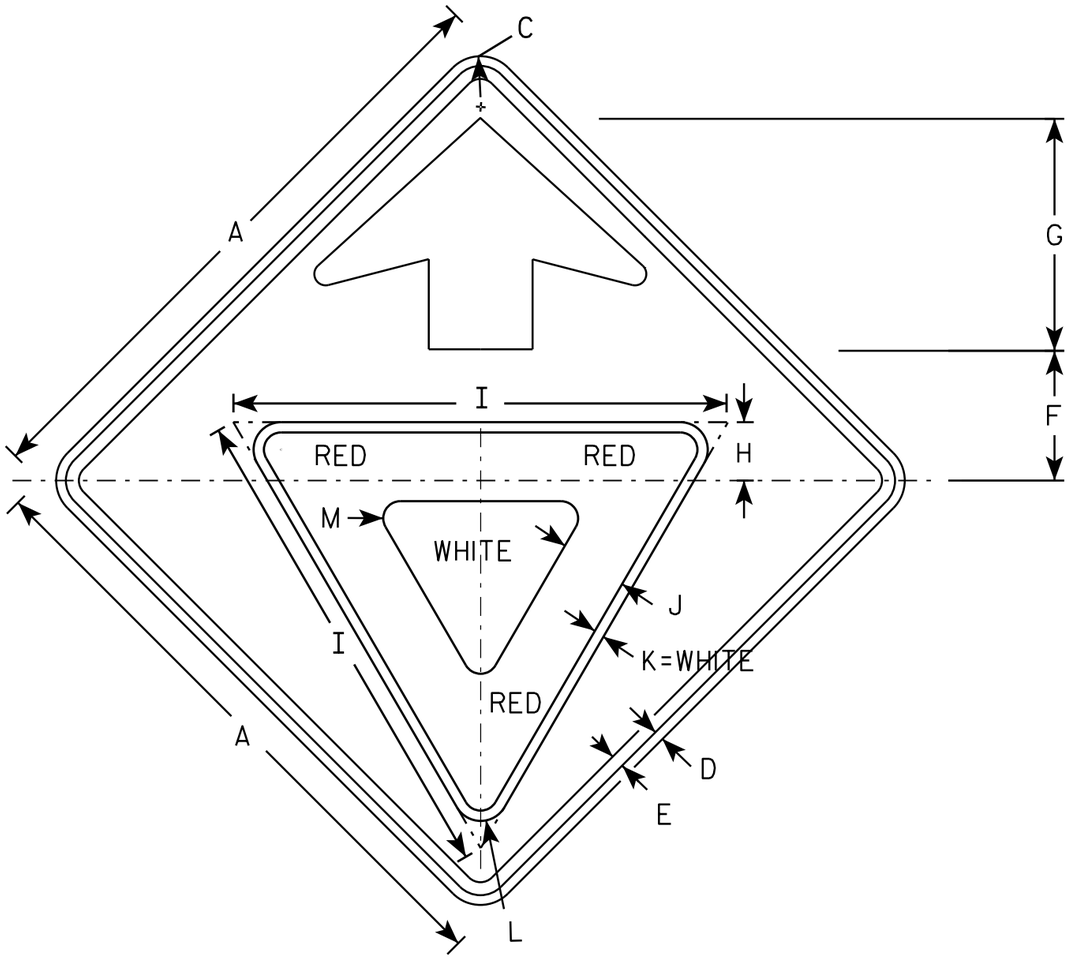

W03-2

NOTES

1. All Signs Type II - Type F Reflective - reference WIS DOT Standard Specification for HIGHWAY and STRUCTURE CONSTRUCTION latest edition.
2. Color:
   Background - ORANGE
   Arrow & Border - BLACK
   Yield Symbol - WHITE BORDER ON RED BACKGROUND

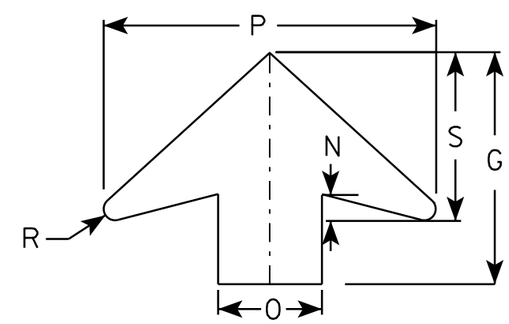

ARROW DETAIL

SIZE	A	B	C	D	E	F	G	H	I	J	K	L	M	N	O	P	Q	R	S	T	U	V	W	X	Y	Z	Area sq. ft.
1	36		1 5/8	5/8	3/4	7 1/2	13 1/2	3 3/8	28	3 3/4	5/8	1 1/2	1	1 5/8	6	19 1/4		5/8	9 3/4								9.0
2S	48		2 1/4	3/4	1	10	17 7/8	4 1/2	38	5	3/4	2 1/8	1 3/8	2	8	25 5/8		7/8	13								16.0
2M	48		2 1/4	3/4	1	10	17 7/8	4 1/2	38	5	3/4	2 1/8	1 3/8	2	8	25 5/8		7/8	13								16.0
3	48		2 1/4	3/4	1	10	17 7/8	4 1/2	38	5	3/4	2 1/8	1 3/8	2	8	25 5/8		7/8	13								16.0
4	48		2 1/4	3/4	1	10	17 7/8	4 1/2	38	5	3/4	2 1/8	1 3/8	2	8	25 5/8		7/8	13								16.0
5	48		2 1/4	3/4	1	10	17 7/8	4 1/2	38	5	3/4	2 1/8	1 3/8	2	8	25 5/8		7/8	13								16.0

STANDARD SIGN
W03-2

WISCONSIN DEPT OF TRANSPORTATION

APPROVED Matthew R Rauch
for State Traffic Engineer

DATE 11/20/13 PLATE NO. W03-2.1

PROJECT NO:

SHEET NO: E

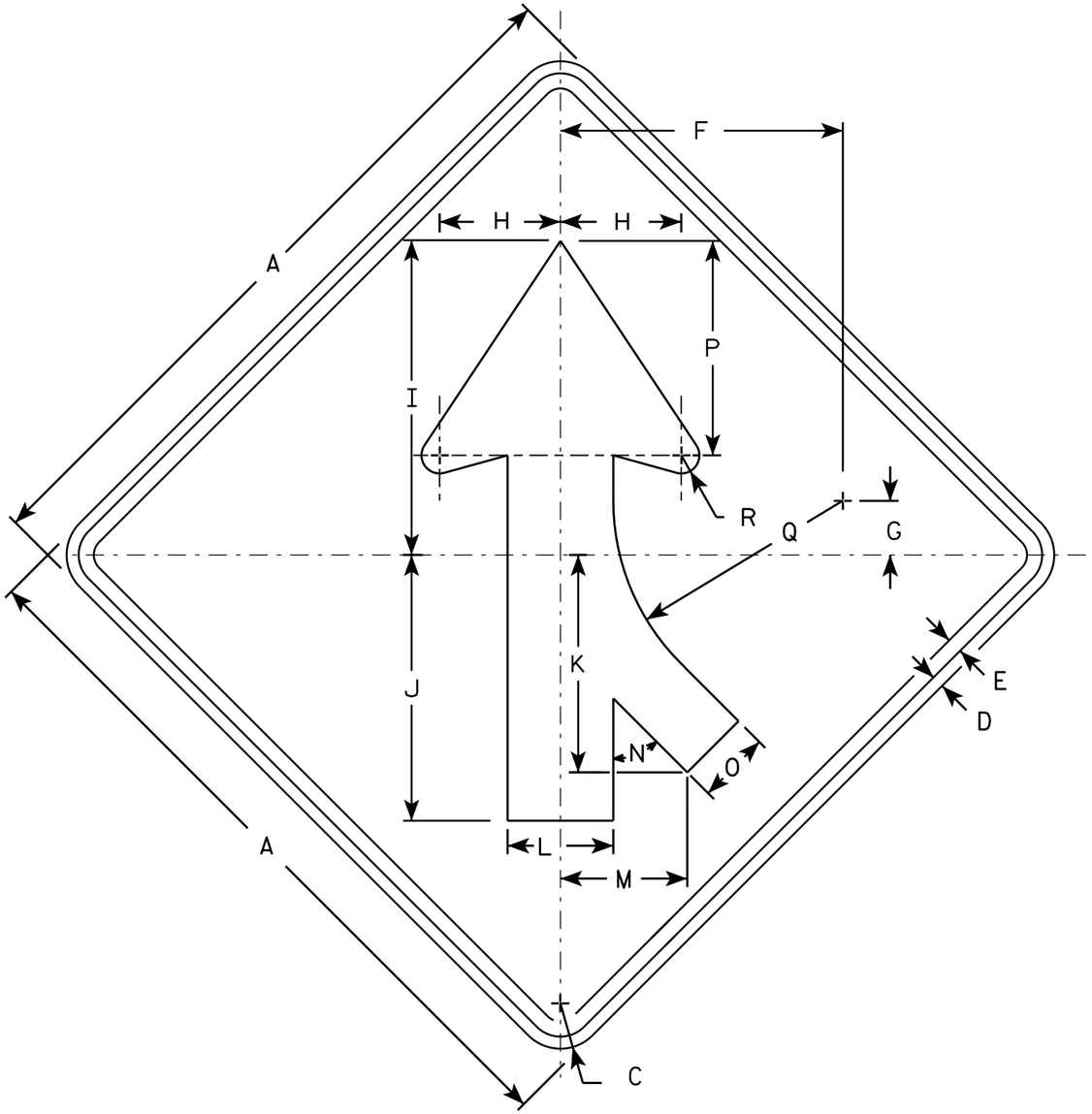

W04-1R

NOTES

1. Sign is Type II - Type F Reflective - reference WIS DOT Standard Specification for HIGHWAY and STRUCTURE CONSTRUCTION latest edition.
2. Color:
   Background - Orange
   Message - Black
3. Corners may be square or rounded when base material is plywood but borders shall be rounded as shown. When base material is metal, the corners and borders shall be rounded.
4. W4-1L is the same as W4-1R except the arrow is reversed along the vertical centerline.

SIZE	A	B	C	D	E	F	G	H	I	J	K	L	M	N	O	P	Q	R	S	T	U	V	W	X	Y	Z	Area sq. ft.
1	36		1 5/8	5/8	3/4	14	2 3/4	6	15 3/4	13 1/4	10 1/4	5 1/4	6 3/8	45°	3 5/8	10 5/8	11 3/8	7/8									9.0
2S	48		2 1/4	3/4	1	18 3/4	3 5/8	8	20 1/2	17 1/2	14 3/8	7	8 3/8	45°	4 3/4	14 1/4	15 1/4	1 1/4									16.0
2M	48		2 1/4	3/4	1	18 3/4	3 5/8	8	20 1/2	17 1/2	14 3/8	7	8 3/8	45°	4 3/4	14 1/4	15 1/4	1 1/4									16.0
3	48		2 1/4	3/4	1	18 3/4	3 5/8	8	20 1/2	17 1/2	14 3/8	7	8 3/8	45°	4 3/4	14 1/4	15 1/4	1 1/4									16.0
4	48		2 1/4	3/4	1	18 3/4	3 5/8	8	20 1/2	17 1/2	14 3/8	7	8 3/8	45°	4 3/4	14 1/4	15 1/4	1 1/4									16.0
5	48		2 1/4	3/4	1	18 3/4	3 5/8	8	20 1/2	17 1/2	14 3/8	7	8 3/8	45°	4 3/4	14 1/4	15 1/4	1 1/4									16.0

STANDARD SIGN
W04-1

WISCONSIN DEPT OF TRANSPORTATION

APPROVED Matthew R Rauch
for State Traffic Engineer

DATE 11/20/13 PLATE NO. W04-1.1

PROJECT NO: | HWY: | COUNTY: | SHEET NO: | E

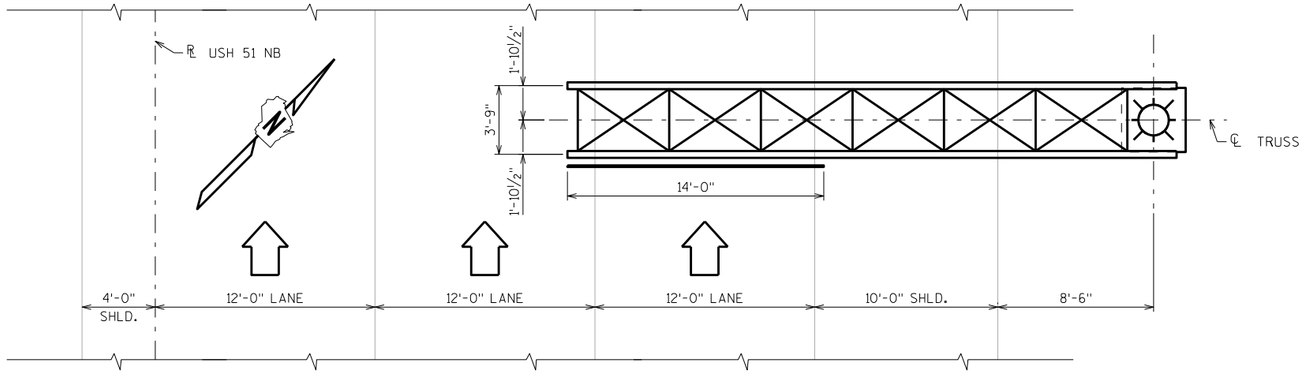

PLAN

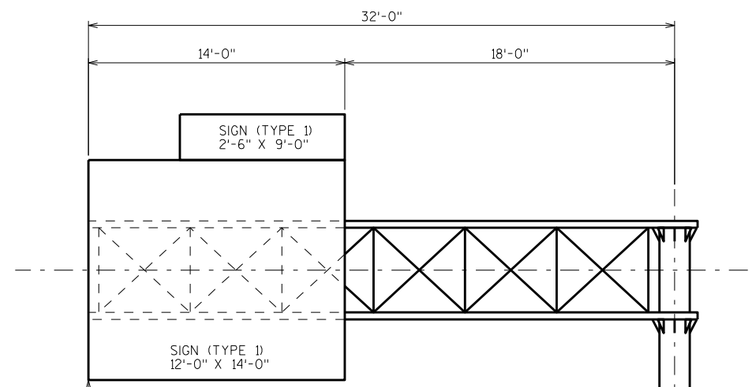

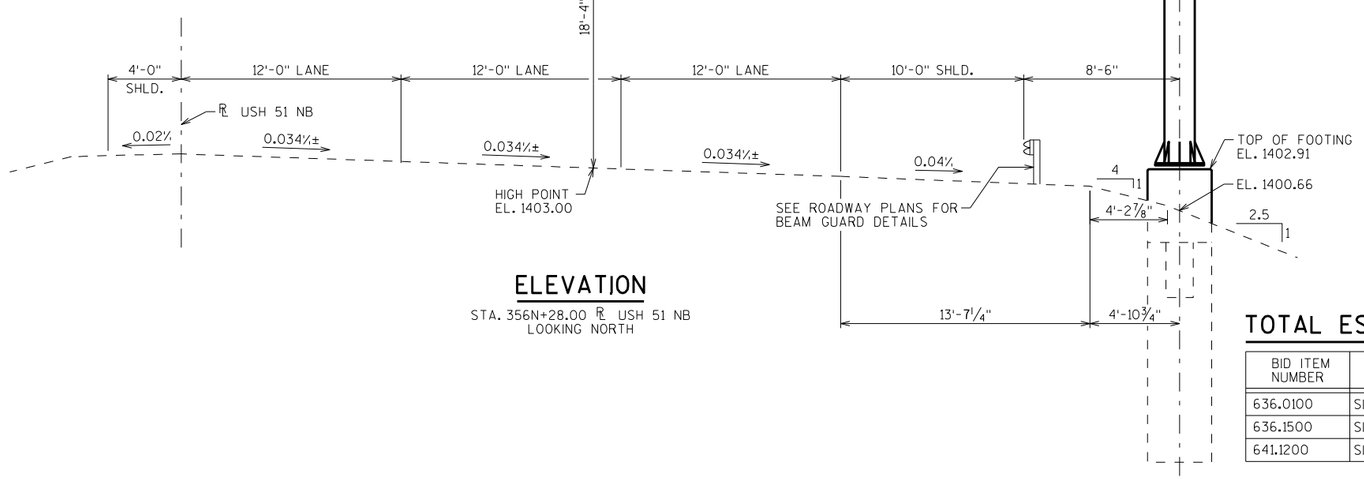

ELEVATION

STA. 356N+28.00 ℄ USH 51 NB
LOOKING NORTH

DESIGN DATA

SIGN BRIDGE	DESIGN SIGN AREA (SQ. FT.)	MAX. SIGN DEPTH
S-37-48	264	12'-0"

WIND VELOCITY = 90 MPH (3-SECOND GUST SPEED) TO SIGN AREA AND EXPOSED MEMBERS.

DEAD LOAD OF SIGNS IS 3 P.S.F.
DEAD LOAD - WEIGHT OF SIGN AND SUPPORTING SIGN STRUCTURE, NO PROVISIONS HAVE BEEN MADE TO ALLOW FOR LIGHTS AND A CATWALK.

ICE LOAD - 3 P.S.F. TO 1 FACE OF SIGN AND AROUND SURFACE OF MEMBERS.

WIND COMPONENTS	NORMAL	TRANSVERSE
COMBINATION 1	1.0	0.2
COMBINATION 2	0.6	0.3

GROUP LOADS	% OF ALLOWABLE STRESS
1. DEAD	100
2. DEAD + WIND	133
3. DEAD + ICE + ½ (WIND *)	133

*MIN. VALUE OF 25 P.S.F. FOR GR. 3

MATERIAL PROPERTIES

CONCRETE MASONRY	f'c = 3,500 PSI
HIGH STRENGTH BAR STEEL REINFORCEMENT, GRADE 60	fy = 60,000 PSI
STEEL COLUMN & CHORD PIPE, A.P.I. 5LX42	fy = 42,000 PSI **
PLATES, BARS & STRUCTURAL ANGLES, ASTM A709 GRADE 36	fy = 36,000 PSI
ANCHOR BOLTS, ASTM F1554 GRADE 55	fy = 55,000 PSI
HIGH STRENGTH BOLTS - A325	fy = 92,000 PSI
STRUCTURAL MEMBERS GALVANIZED A123 HARDWARE GALVANIZED	A153 CLASS C

TRAFFIC VOLUME

USH 51 NB
A.D.T. = 24,300 (2035)
R.D.S. = 70 M.P.H.

GENERAL NOTES

EXACT LOCATION OF SIGN BRIDGE SHALL BE DETERMINED BY THE REGION TRAFFIC ENGINEER.

DRAWINGS SHALL NOT BE SCALED.

ALL STRUCTURAL STEEL MEMBERS SHALL BE GALVANIZED.

ALTERNATE DESIGNS ARE NOT ALLOWED.

HANDHOLES ARE NOT REQUIRED.

CENTER SIGN VERTICALLY ON THE TRUSS.

THE UPPER 12" OF ANCHOR BOLTS, NUTS AND WASHERS SHALL BE GALVANIZED IN ACCORDANCE WITH THE AASHTO SPECIFICATION AS STATED IN SECTION 641 OF THE WISCONSIN DOT STANDARD SPECIFICATIONS.

PROVIDE A ¾" CHAMFER OR 1" DIAMETER RADIUS ON ALL EXPOSED CONCRETE EDGES.

DESIGNED ACCORDING TO THE 4TH EDITION OF AASHTO "STANDARD SPECIFICATIONS FOR STRUCTURAL SUPPORTS FOR HIGHWAY SIGNS, LUMINAIRES, AND TRAFFIC SIGNALS".

PROVIDE AN IDENTIFICATION PLAQUE FOR SIGN BRIDGE CANTILEVER SUPPORT, TO BE CONSIDERED INCIDENTAL TO THE BID ITEM "SIGN BRIDGE CANTILEVERED S-37-48".

SIGNS OR BLANKS SHALL BE INSTALLED ON THE TRUSS AT THE TIME OF ERECTION. BLANKS SHALL BE ¼" THE LENGTH OF THE BRIDGE, 2'-0" DEEPER THAN CENTER TO CENTER OF CHORDS AND SHALL BE CENTERED ON THE BRIDGE. SIGN SHALL BE AS DESIGNATED IN THE PLANS. SIGN BLANKS AND MOUNTING HARDWARE SHALL BE CONSIDERED INCIDENTAL TO "SIGN BRIDGE CANTILEVERED S-37-48".

ALL BOLTED CONNECTIONS SHALL BE MADE WITH ¾"Φ A325 BOLTS, GALVANIZED ASTM A153, CLASS C, AND INSTALLED WITH DTIs.

WELDED CONNECTIONS CAN BE USED IN LIEU OF BOLTED CONNECTIONS, IF UNIT CAN BE GALVANIZED IN ONE PIECE.

STEEL ANCHOR BOLTS SHALL MEET THE REQUIREMENTS OF ASTM F1554, GRADE 55, WITH ASTM A563A HEAVY HEX NUTS, AND ASTM F436 WASHERS.

WELD TEST AS PER AWS D1.1.

** ALTERNATE MATERIAL FOR CHORD LESS THAN 10" DIAMETER MAY BE ASTM A500 GRADE B Fy = 42,000 PSI, GRADE C Fy = 46,000 PSI, OR ASTM A53 GRADE B Fy = 35,000 PSI.

STRUCTURE DESIGN CONTACTS:
MICAH BROOKS (608) 266-5080
LAURA SHADEWALD (608) 267-9592

LIST OF DRAWINGS

1. SIGN BRIDGE LAYOUT
2. GALVANIZED STEEL CANTILEVER SIGN TRUSS
3. GALVANIZED STEEL CANTILEVER SIGN TRUSS DETAILS
4. CANTILEVER TRUSS FOOTING

TOTAL ESTIMATED QUANTITIES

BID ITEM NUMBER	BID ITEMS	UNIT	TOTALS
636.0100	SIGN SUPPORTS CONCRETE MASONRY	CY	9
636.1500	SIGN SUPPORTS STEEL COATED REINFORCEMENT HS	LB	1030
641.1200	SIGN BRIDGE CANTILEVERED S-37-48	LS	1

STATE PROJECT NUMBER
1170-01-75

NO.	DATE	REVISION	BY

Plans Prepared By **WISDOT**
BUREAU OF STRUCTURES
ACCEPTED William C. Dreher LLS 2/17/16
CHIEF STRUCTURES DESIGN ENGINEER DATE

STRUCTURE S-37-48
USH 51 NB
COUNTY MARATHON TOWN ~~/CITY/VILLAGE~~ MAINE
DESIGN SPEC. AASHTO STD. SPEC. FOR HIGHWAY BRIDGES, 17th EDITION
DESIGNED BY MWB DESIGN CK'D. ARC DRAWN BY MWB PLANS CK'D. ARC

SIGN BRIDGE LAYOUT
SHEET 1 OF 4
163

8

8

SCALE = 4

I.D. 1170-01-05A DATE: NOV. 2015

STATE PROJECT NUMBER
1170-01-75

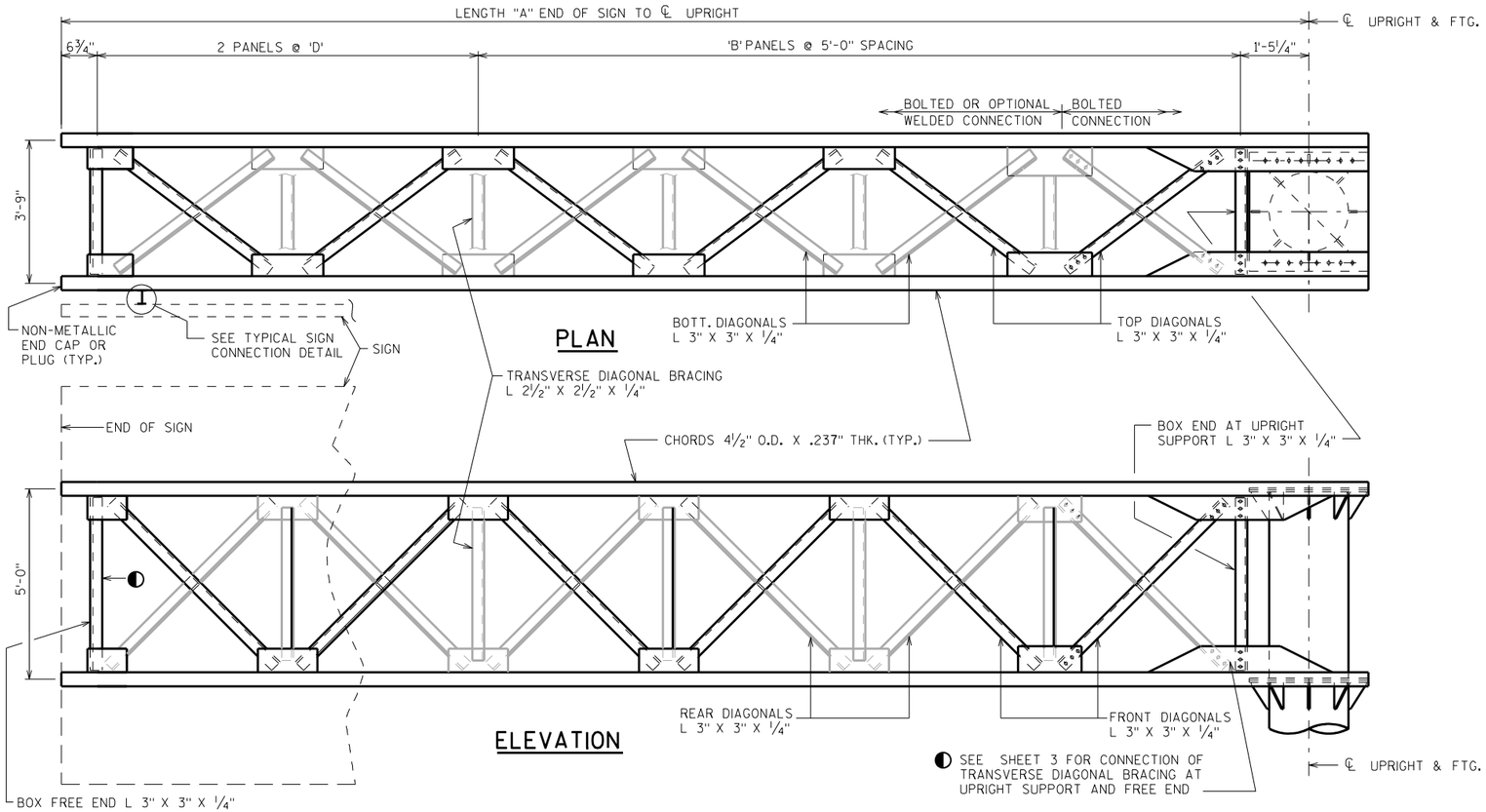

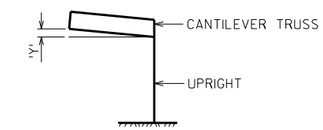

CAMBER DIAGRAM

PREFABRICATE CAMBER INTO THE HORIZONTAL SUPPORT PROVIDING AN AMOUNT "Y" AT END OF TRUSS SHOWN IN "CAMBER DIAGRAM". DO NOT RAKE VERTICAL UPRIGHT BY ADJUSTMENT OF LEVELING NUTS.

STRUCTURE	EL. "R"	EL. "T"	"A"	"L"	"B"	"D"	"Y"
S-37-48	1402.91	1403.00	32'-0"	26'-9"	4	5'-0"	2⅝"

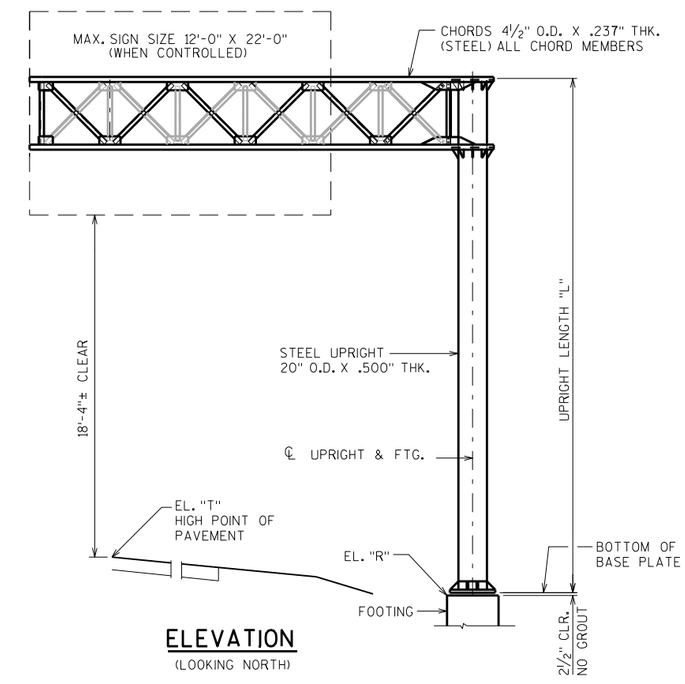

ELEVATION
(LOOKING NORTH)

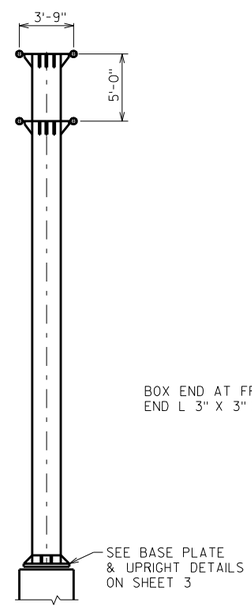

END VIEW

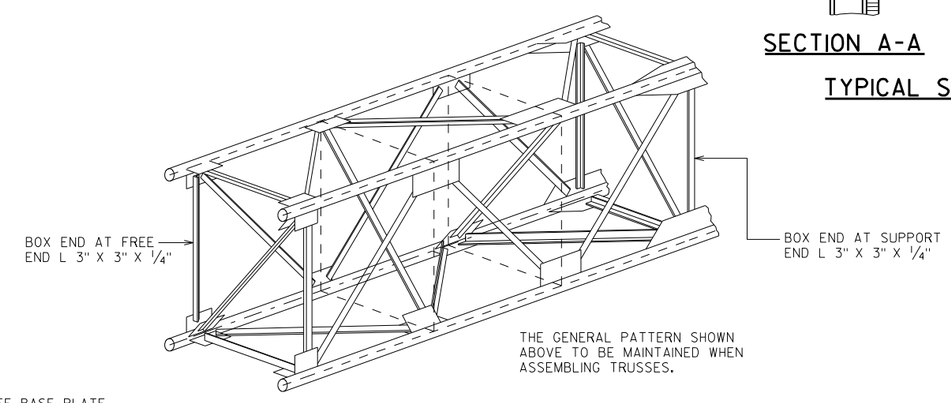

TYPICAL TRUSS SECTION

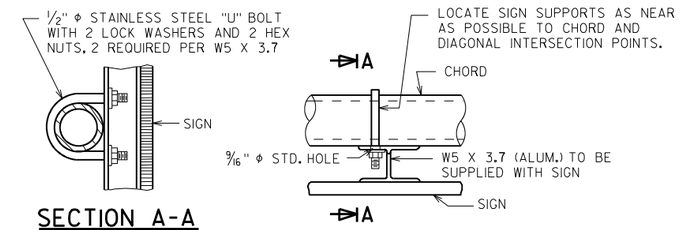

SECTION A-A

TYPICAL SIGN CONNECTION

8

8

NO.	DATE	REVISION	BY

STATE OF WISCONSIN
DEPARTMENT OF TRANSPORTATION
STRUCTURES DESIGN SECTION

STRUCTURE S-37-48

DRAWN BY MWB PLANS CK'D. ARC

GALVANIZED STEEL CANTILEVER SIGN TRUSS

SHEET 2

164

SCALE = 2.25

STATE PROJECT NUMBER

1170-01-75

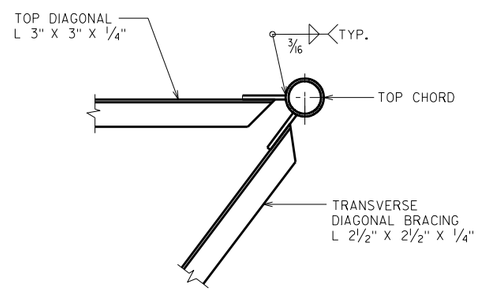

SECTION B-B

* ANGLE	WELD LENGTH (MIN.)
L 2 1/2" X 2 1/2" X 1/4"	7"
L 3" X 3" X 1/4"	8"

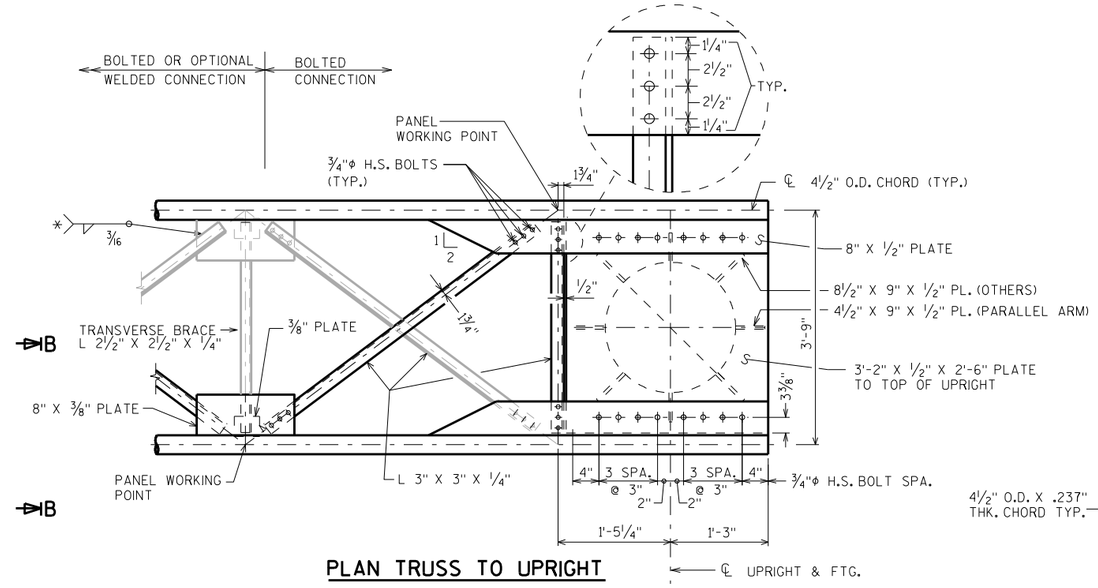

PLAN TRUSS TO UPRIGHT

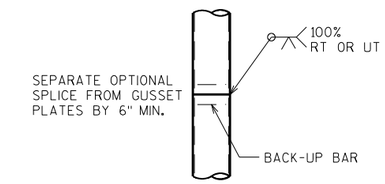

OPTIONAL COLUMN OR CHORD SPLICE DETAIL

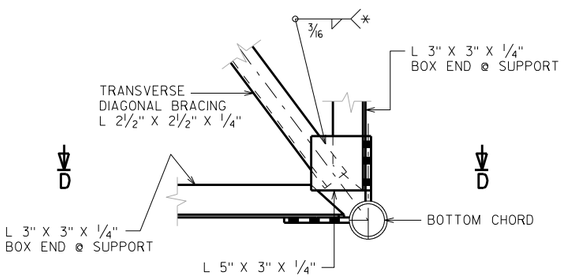

SECTION C-C

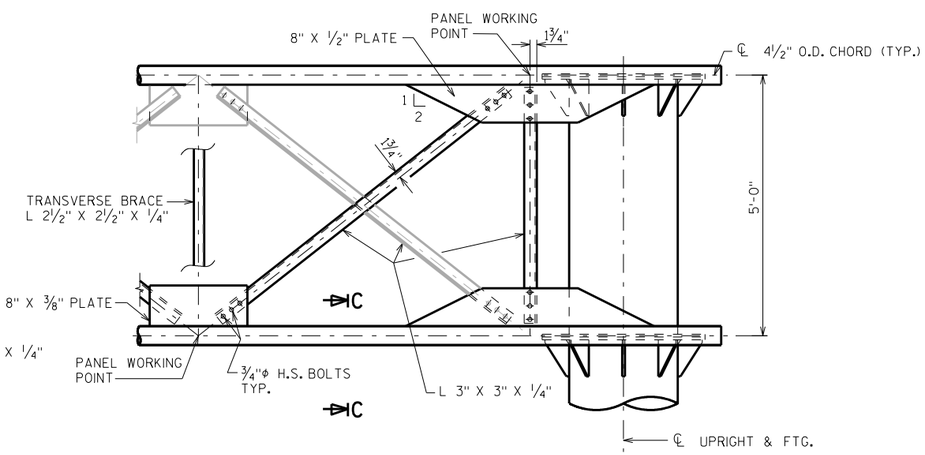

ELEVATION TRUSS TO UPRIGHT

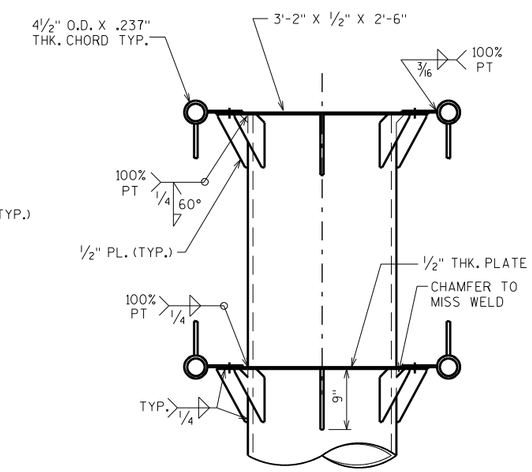

END VIEW TRUSS TO UPRIGHT

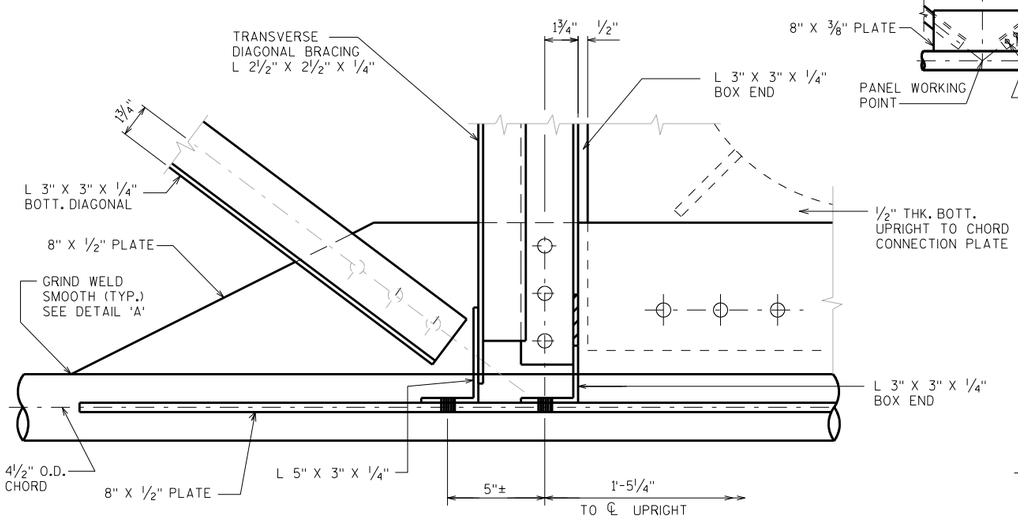

SECTION D-D

(LOOKING DOWN @ BOTT. HORIZ. PLANE @ FRONT CHORD)

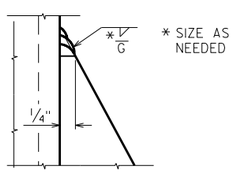

DETAIL 'A'

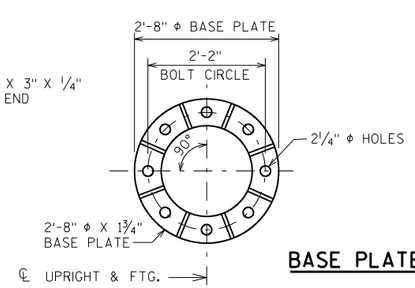

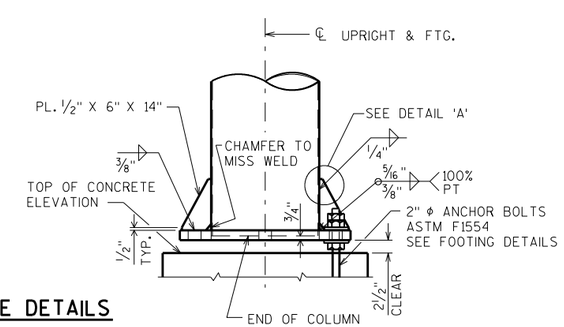

BASE PLATE DETAILS

NO.	DATE	REVISION	BY

STATE OF WISCONSIN
DEPARTMENT OF TRANSPORTATION
STRUCTURES DESIGN SECTION

STRUCTURE S-37-48

DRAWN BY MWB | PLANS CK'D. ARC

GALVANIZED STEEL CANTILEVER SIGN TRUSS DETAILS

SHEET 3

165

SCALE = 2.25

8

8

STATE PROJECT NUMBER

1170-01-75

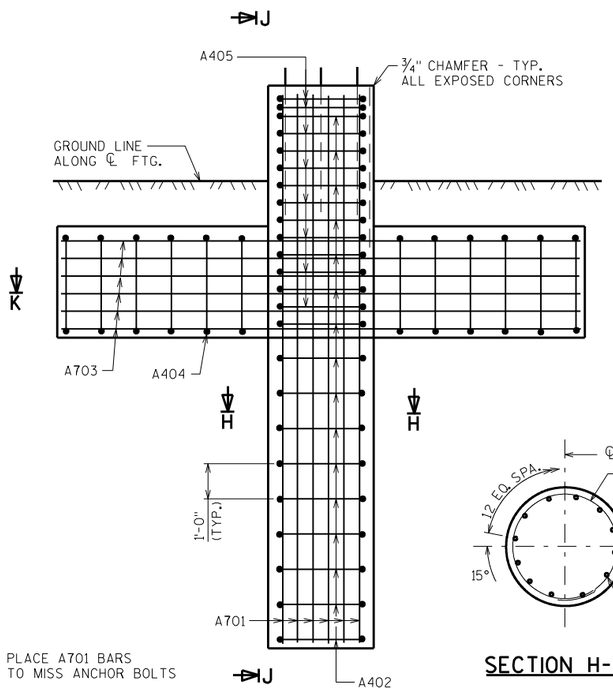

ELEVATION

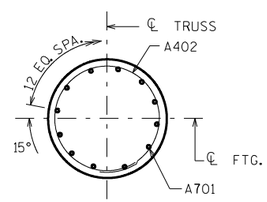

SECTION H-H

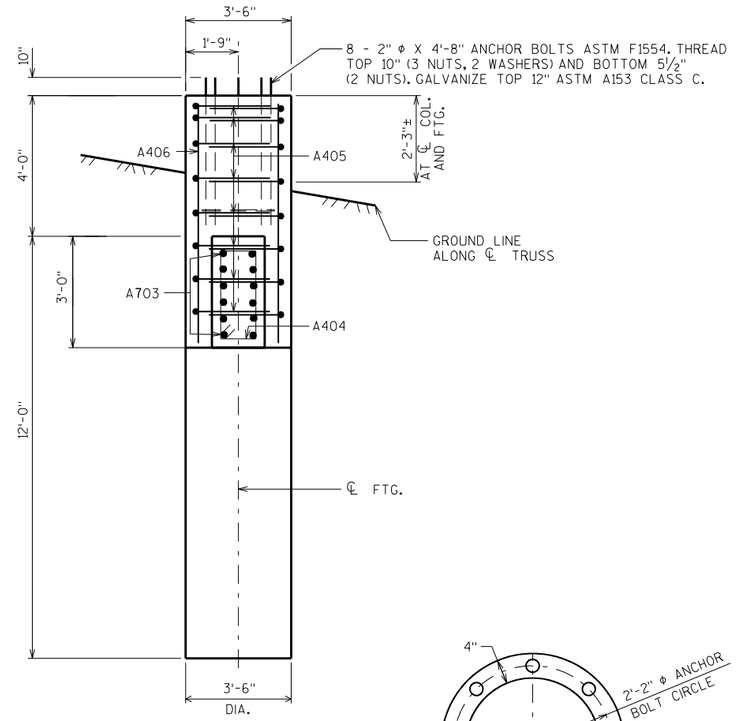

SECTION J-J

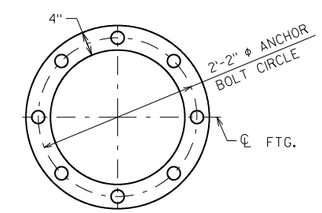

TOP VIEW OF TOP & BOTTOM ANCHOR TEMPLATES

GENERAL NOTES

BAR STEEL REINFORCEMENT SHALL BE EMBEDDED 3" CLEAR UNLESS DETAILED OTHERWISE.

THE FIRST OR FIRST TWO DIGITS OF THE BAR MARK SIGNIFIES THE BAR SIZE.

PRIOR TO INSTALLATION, ANCHOR BOLTS SHALL BE RIGIDLY HELD IN POSITION DURING CONCRETE PLACEMENT USING STEEL ANCHOR PLATE AND TOP PLATE. CENTER ANCHOR BOLT ASSEMBLY TO MISS BAR STEEL REINFORCEMENT.

FOUNDATION DATA

ALLOWABLE SOIL BEARING PRESSURE = 2T/SF

BILL OF BARS

BAR MARK	COAT	NO. REQ'D.	LENGTH	BENT	LOCATION
A701	X	12	15'-6"		FOOTING - COLUMN - VERT.
A402	X	16	11'-2"	X	FOOTING - COLUMN - STIRRUP
A703	X	12	15'-0"		FOOTING - WINGS - HORIZ.
A404	X	12	7'-6"	X	FOOTING - WINGS - STIRRUP
A405	X	16	7'-11"	X	FOOTING - TOP - HORIZ.
A406	X	4	6'-6"		FOOTING - TOP - COLUMNS - VERT.

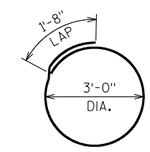

A402

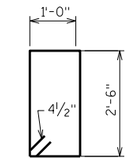

A404

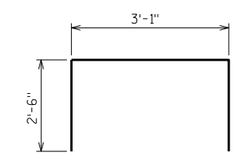

A405

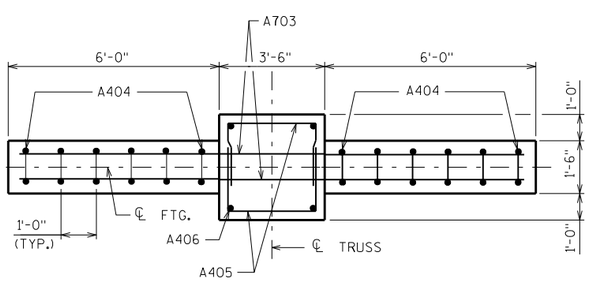

SECTION K-K

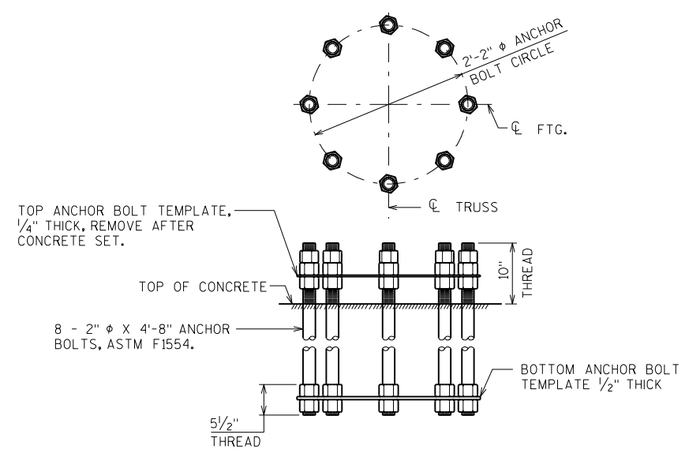

ANCHOR BOLT DETAILS

8

8

NO.	DATE	REVISION	BY

STATE OF WISCONSIN
DEPARTMENT OF TRANSPORTATION
STRUCTURES DESIGN SECTION

STRUCTURE S-37-48

DRAWN BY MWB PLANS CK'D. ARC

CANTILEVER TRUSS FOOTING

SHEET 4

166

SCALE = 1

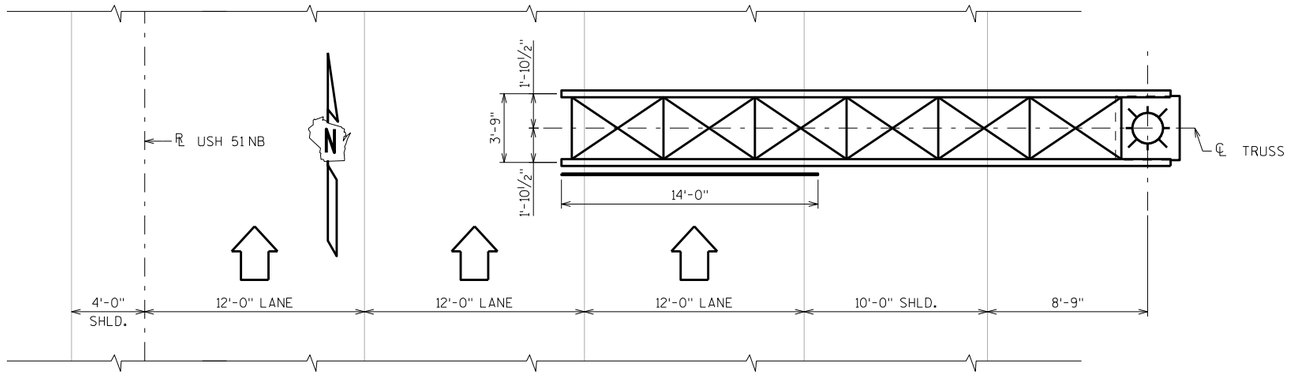

PLAN

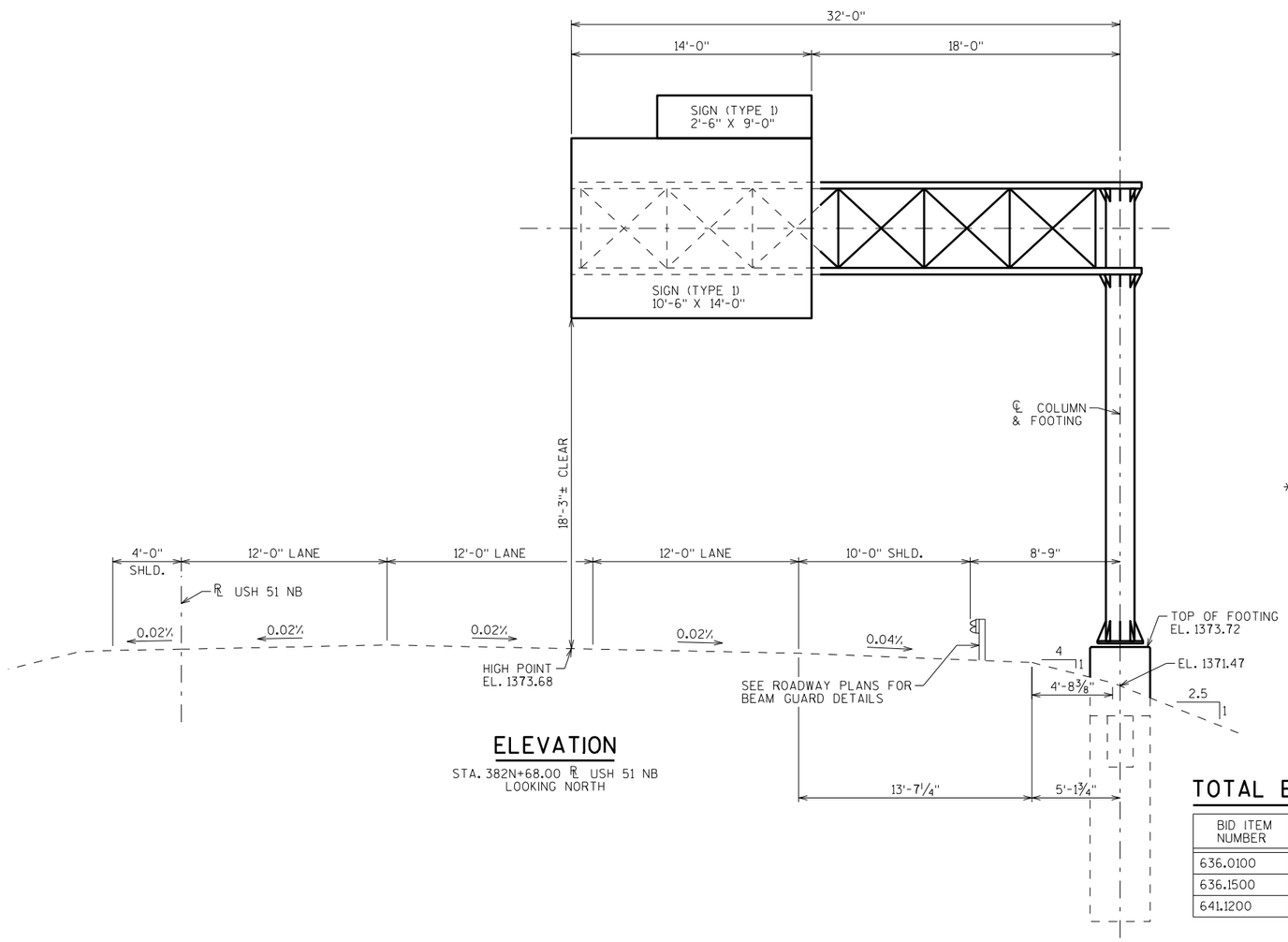

ELEVATION

STA. 382N+68.00 ℄ USH 51 NB
LOOKING NORTH

DESIGN DATA

SIGN BRIDGE	DESIGN SIGN AREA (SQ. FT.)	MAX. SIGN DEPTH
S-37-49	264	12'-0"

WIND VELOCITY = 90 MPH (3-SECOND GUST SPEED) TO SIGN AREA AND EXPOSED MEMBERS.

DEAD LOAD OF SIGNS IS 3 P.S.F.
DEAD LOAD - WEIGHT OF SIGN AND SUPPORTING SIGN STRUCTURE, NO PROVISIONS HAVE BEEN MADE TO ALLOW FOR LIGHTS AND A CATWALK.

ICE LOAD - 3 P.S.F. TO 1 FACE OF SIGN AND AROUND SURFACE OF MEMBERS.

WIND COMPONENTS	NORMAL	TRANSVERSE
COMBINATION 1	1.0	0.2
COMBINATION 2	0.6	0.3

GROUP LOADS	% OF ALLOWABLE STRESS
1. DEAD	100
2. DEAD + WIND	133
3. DEAD + ICE + ½ (WIND *)	133

*MIN. VALUE OF 25 P.S.F. FOR GR. 3

MATERIAL PROPERTIES

CONCRETE MASONRY	f'c = 3,500 PSI
HIGH STRENGTH BAR STEEL REINFORCEMENT, GRADE 60	fy = 60,000 PSI
STEEL COLUMN & CHORD PIPE, A.P.I. 5LX42	fy = 42,000 PSI **
PLATES, BARS & STRUCTURAL ANGLES, ASTM A709 GRADE 36	fy = 36,000 PSI
ANCHOR BOLTS, ASTM F1554 GRADE 55	fy = 55,000 PSI
HIGH STRENGTH BOLTS - A325	fy = 92,000 PSI
STRUCTURAL MEMBERS GALVANIZED A123 HARDWARE GALVANIZED	A153 CLASS C

TRAFFIC VOLUME

USH 51 NB

A.D.T. = 24,300 (2035)
R.D.S. = 70 M.P.H.

GENERAL NOTES

EXACT LOCATION OF SIGN BRIDGE SHALL BE DETERMINED BY THE REGION TRAFFIC ENGINEER.

DRAWINGS SHALL NOT BE SCALED.

ALL STRUCTURAL STEEL MEMBERS SHALL BE GALVANIZED.

ALTERNATE DESIGNS ARE NOT ALLOWED.

HANDHOLES ARE NOT REQUIRED.

CENTER SIGN VERTICALLY ON THE TRUSS.

THE UPPER 12" OF ANCHOR BOLTS, NUTS AND WASHERS SHALL BE GALVANIZED IN ACCORDANCE WITH THE AASHTO SPECIFICATION AS STATED IN SECTION 641 OF THE WISCONSIN DOT STANDARD SPECIFICATIONS.

PROVIDE A ¾" CHAMFER OR 1" DIAMETER RADIUS ON ALL EXPOSED CONCRETE EDGES.

DESIGNED ACCORDING TO THE 4TH EDITION OF AASHTO "STANDARD SPECIFICATIONS FOR STRUCTURAL SUPPORTS FOR HIGHWAY SIGNS, LUMINAIRES, AND TRAFFIC SIGNALS".

PROVIDE AN INDENTIFICATION PLAQUE FOR SIGN BRIDGE CANTILEVERED SUPPORT, TO BE CONSIDERED INCIDENTAL TO THE BID ITEM "SIGN BRIDGE CANTILEVERED S-37-49".

SIGNS OR BLANKS SHALL BE INSTALLED ON THE TRUSS AT THE TIME OF ERECTION. BLANKS SHALL BE ¼" THE LENGTH OF THE BRIDGE, 2'-0" DEEPER THAN CENTER TO CENTER OF CHORDS AND SHALL BE CENTERED ON THE BRIDGE. SIGN SHALL BE AS DESIGNATED IN THE PLANS. SIGN BLANKS AND MOUNTING HARDWARE SHALL BE CONSIDERED INCIDENTAL TO "SIGN BRIDGE CANTILEVERED S-37-49".

ALL BOLTED CONNECTIONS SHALL BE MADE WITH ¾"Φ A325 BOLTS, GALVANIZED ASTM A153, CLASS C, AND INSTALLED WITH DTIs.

WELDED CONNECTIONS CAN BE USED IN LIEU OF BOLTED CONNECTIONS, IF UNIT CAN BE GALVANIZED IN ONE PIECE.

STEEL ANCHOR BOLTS SHALL MEET THE REQUIREMENTS OF ASTM F1554, GRADE 55, WITH ASTM A563A HEAVY HEX NUTS, AND ASTM F436 WASHERS.

WELD TEST AS PER AWS D1.1.

** ALTERNATE MATERIAL FOR CHORD LESS THAN 10" DIAMETER MAY BE ASTM A500 GRADE B Fy = 42,000 PSI, GRADE C Fy = 46,000 PSI, OR ASTM A53 GRADE B Fy = 35,000 PSI.

STRUCTURE DESIGN CONTACTS:
MICAH BROOKS (608) 266-5080
LAURA SHADEWALD (608) 267-9592

LIST OF DRAWINGS

1. SIGN BRIDGE LAYOUT
2. GALVANIZED STEEL CANTILEVER SIGN TRUSS
3. GALVANIZED STEEL CANTILEVER SIGN TRUSS DETAILS
4. CANTILEVER TRUSS FOOTING

TOTAL ESTIMATED QUANTITIES

BID ITEM NUMBER	BID ITEMS	UNIT	TOTALS
636.0100	SIGN SUPPORTS CONCRETE MASONRY	CY	9
636.1500	SIGN SUPPORTS STEEL COATED REINFORCEMENT HS	LB	1030
641.1200	SIGN BRIDGE CANTILEVERED S-37-49	LS	1

STATE PROJECT NUMBER
1170-01-75

NO.	DATE	REVISION	BY

Plans Prepared By **WISDOT**
BUREAU OF STRUCTURES
ACCEPTED William C. Dreher LS 2/17/16
CHIEF STRUCTURES DESIGN ENGINEER — DATE

STRUCTURE S-37-49
USH 51 NB
COUNTY MARATHON TOWN/~~CITY/VILLAGE~~ MAINE
DESIGN SPEC. AASHTO STD. SPEC. FOR HIGHWAY BRIDGES, 17th EDITION
DESIGNED BY MWB DESIGN CK'D. ARC DRAWN BY MWB PLANS CK'D. ARC

SIGN BRIDGE LAYOUT
SHEET 1 OF 4
167

8

8

SCALE = 4

I.D. 1170-01-05B DATE: NOV. 2015

STATE PROJECT NUMBER
1170-01-75

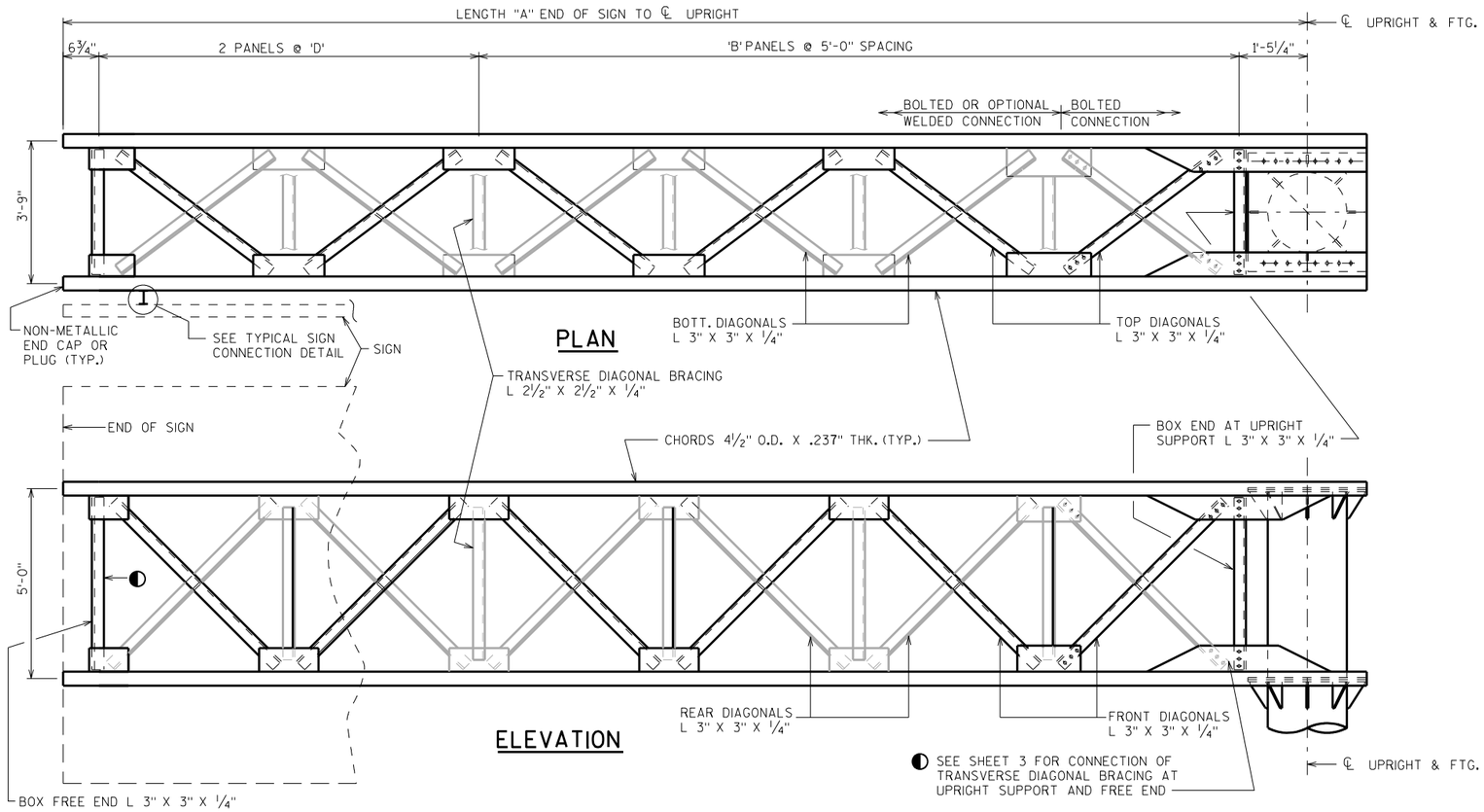

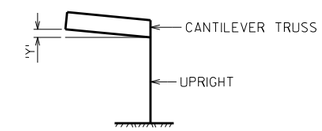

CAMBER DIAGRAM

PREFABRICATE CAMBER INTO THE HORIZONTAL SUPPORT PROVIDING AN AMOUNT "Y" AT END OF TRUSS SHOWN IN "CAMBER DIAGRAM". DO NOT RAKE VERTICAL UPRIGHT BY ADJUSTMENT OF LEVELING NUTS.

STRUCTURE	EL. "R"	EL. "T"	"A"	"L"	"B"	"D"	"Y"
S-37-49	1373.72	1373.68	32'-0"	26'-6"	4	5'-0"	2⅝"

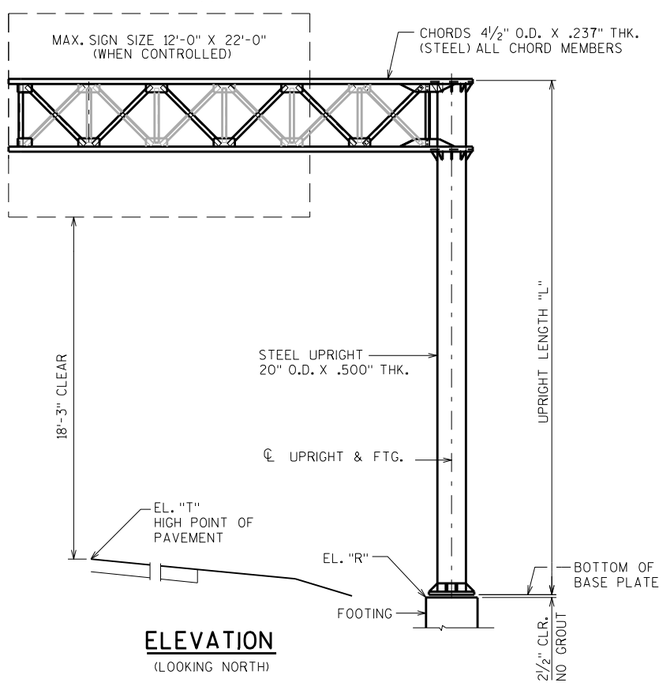

ELEVATION

(LOOKING NORTH)

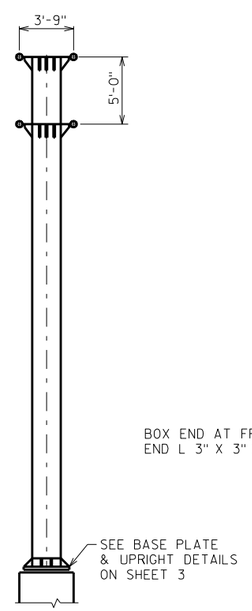

END VIEW

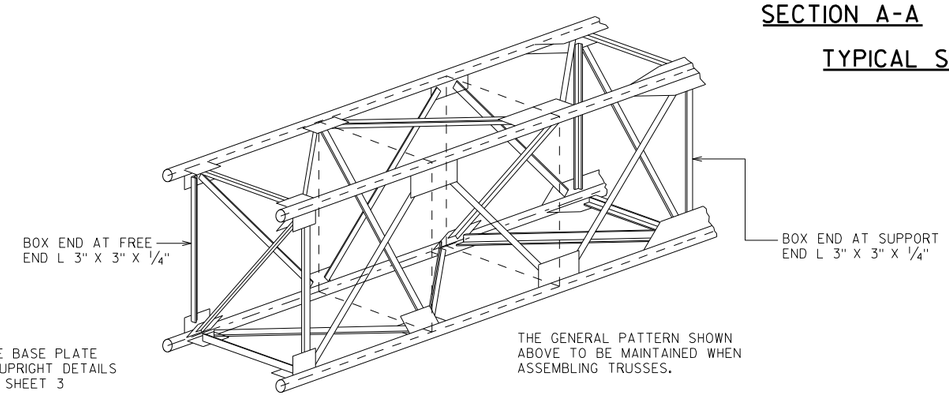

TYPICAL TRUSS SECTION

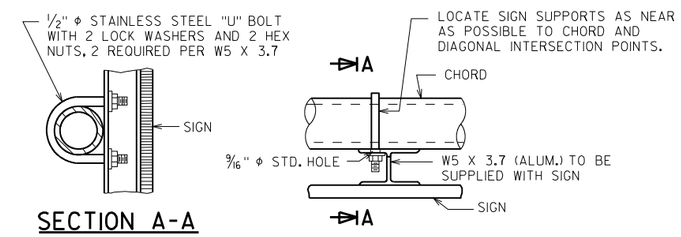

SECTION A-A

TYPICAL SIGN CONNECTION

8

8

NO.	DATE	REVISION	BY

STATE OF WISCONSIN
DEPARTMENT OF TRANSPORTATION
STRUCTURES DESIGN SECTION

STRUCTURE S-37-49

DRAWN BY MWB | PLANS CK'D. ARC

GALVANIZED STEEL CANTILEVER SIGN TRUSS

SHEET 2

168

SCALE = 2.25

STATE PROJECT NUMBER

1170-01-75

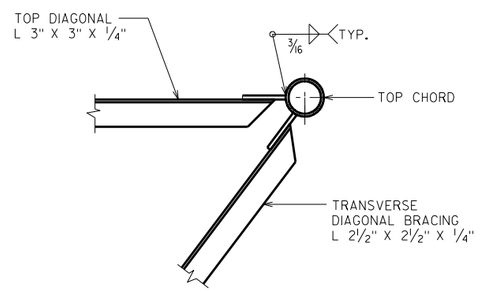

SECTION B-B

* ANGLE	WELD LENGTH (MIN.)
L 2 1/2" X 2 1/2" X 1/4"	7"
L 3" X 3" X 1/4"	8"

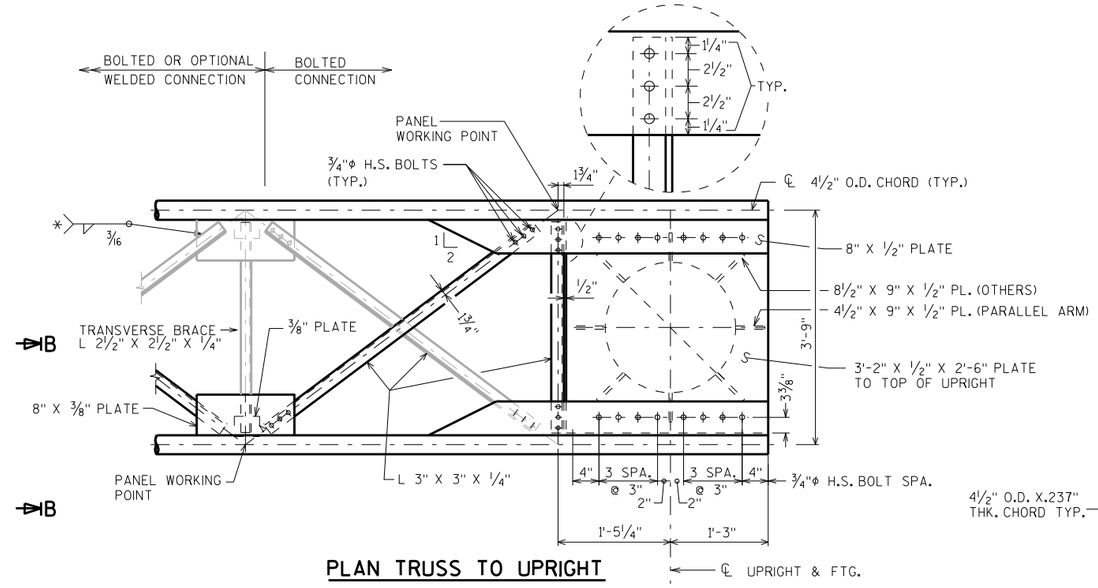

PLAN TRUSS TO UPRIGHT

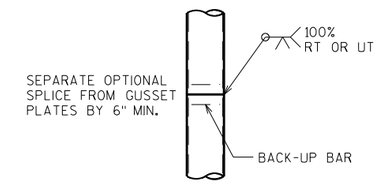

OPTIONAL COLUMN OR CHORD SPLICE DETAIL

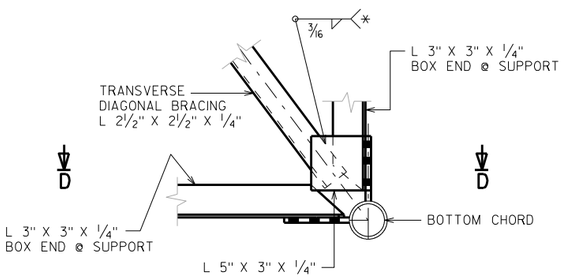

SECTION C-C

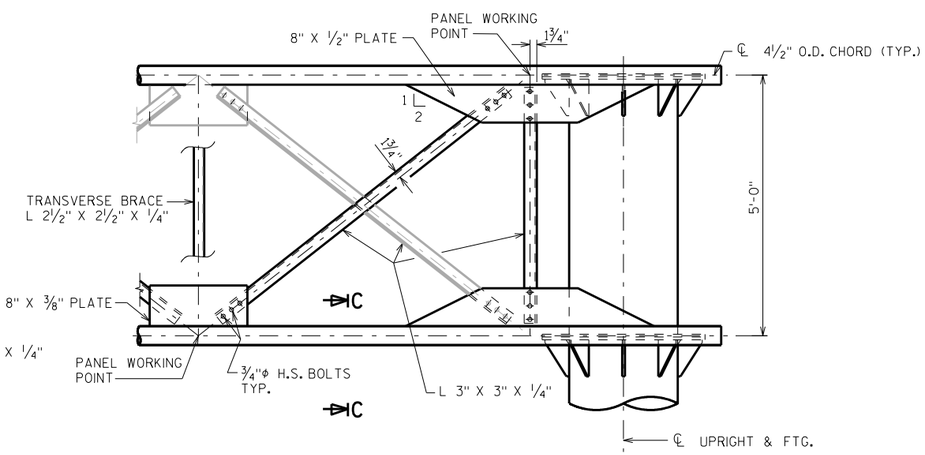

ELEVATION TRUSS TO UPRIGHT

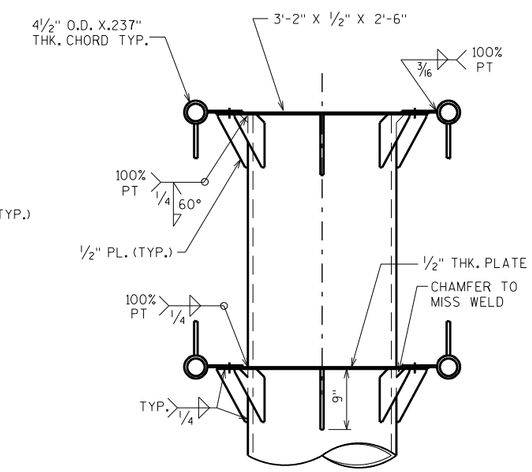

END VIEW TRUSS TO UPRIGHT

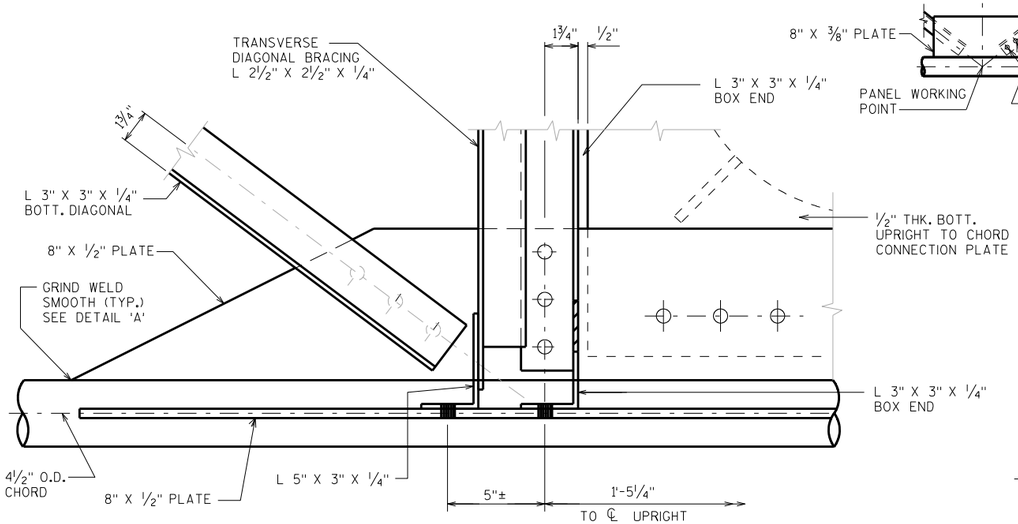

SECTION D-D

(LOOKING DOWN @ BOTT. HORIZ. PLANE @ FRONT CHORD)

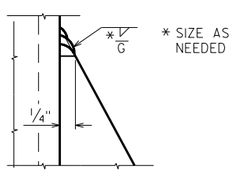

DETAIL 'A'

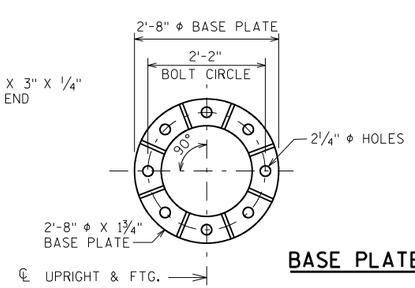

BASE PLATE DETAILS

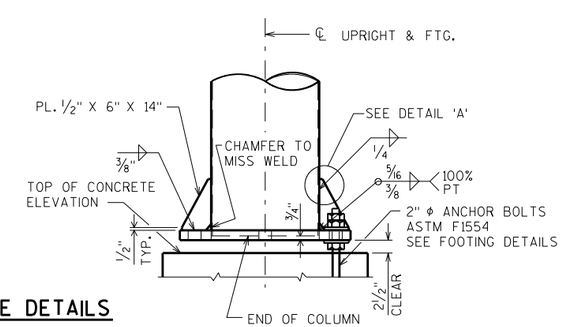

NO.	DATE	REVISION	BY

STATE OF WISCONSIN
DEPARTMENT OF TRANSPORTATION
STRUCTURES DESIGN SECTION

STRUCTURE S-37-49

DRAWN BY MWB | PLANS CK'D. ARC

GALVANIZED STEEL CANTILEVER SIGN TRUSS DETAILS

SHEET 3

169

8

8

SCALE = 2.25

STATE PROJECT NUMBER
1170-01-75

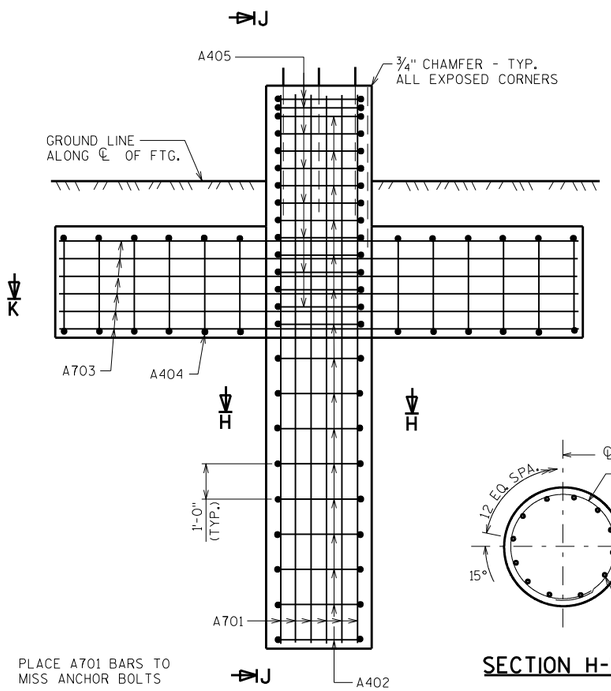

ELEVATION

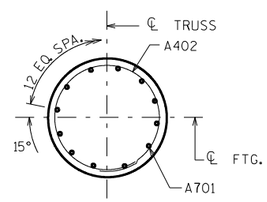

SECTION H-H

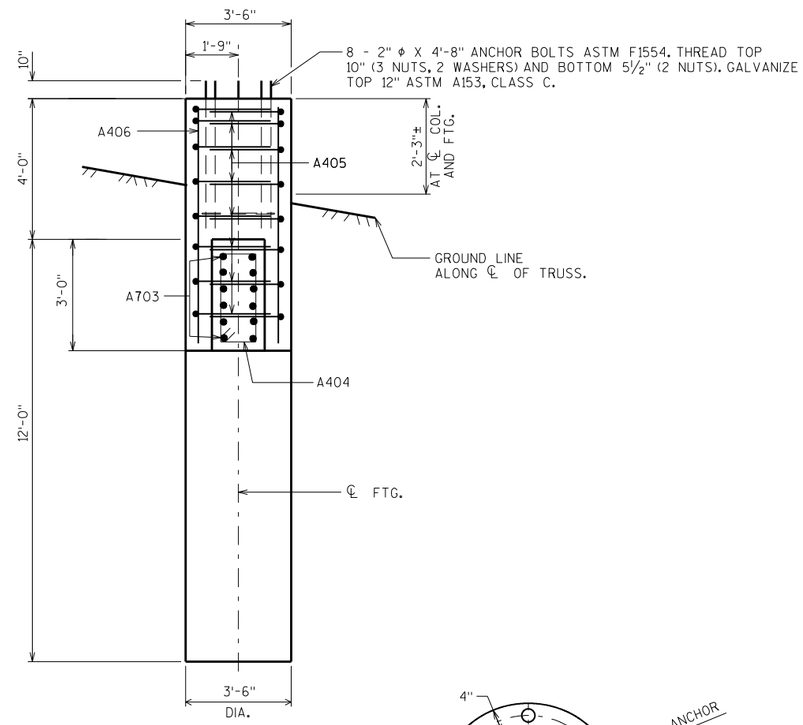

SECTION J-J

GENERAL NOTES

BAR STEEL REINFORCEMENT SHALL BE EMBEDDED 3" CLEAR UNLESS DETAILED OTHERWISE.

THE FIRST OR FIRST TWO DIGITS OF THE BAR MARK SIGNIFIES THE BAR SIZE.

PRIOR TO INSTALLATION, ANCHOR BOLTS SHALL BE RIGIDLY HELD IN POSITION DURING CONCRETE PLACEMENT USING STEEL ANCHOR PLATE AND TOP PLATE. CENTER ANCHOR BOLT ASSEMBLY TO MISS BAR STEEL REINFORCEMENT.

FOUNDATION DATA

ALLOWABLE SOIL BEARING PRESSURE = 2T/SF

BILL OF BARS

BAR MARK	COAT	NO. REQ'D.	LENGTH	BENT	LOCATION
A701	X	12	15'-6"		FOOTING - COLUMN - VERT.
A402	X	16	11'-2"	X	FOOTING - COLUMN - STIRRUP
A703	X	12	15'-0"		FOOTING - WINGS - HORIZ.
A404	X	12	7'-6"	X	FOOTING - WINGS - STIRRUP
A405	X	16	7'-11"	X	FOOTING - TOP - HORIZ.
A406	X	4	6'-6"		FOOTING - TOP - COLUMNS - VERT.

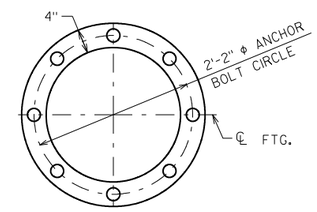

TOP VIEW OF TOP & BOTTOM ANCHOR TEMPLATES

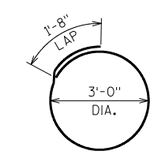

A402

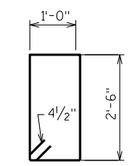

A404

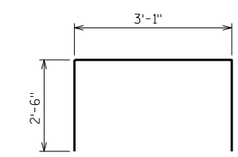

A405

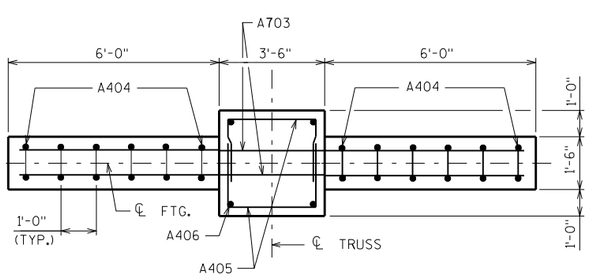

SECTION K-K

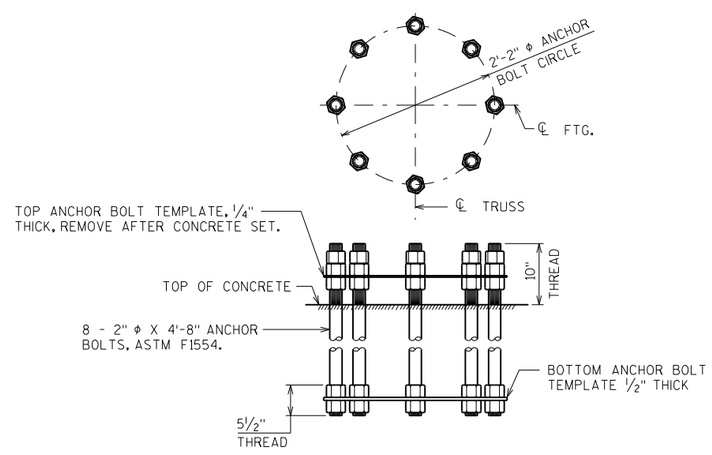

ANCHOR BOLT DETAILS

NO.	DATE	REVISION	BY

STATE OF WISCONSIN
DEPARTMENT OF TRANSPORTATION
STRUCTURES DESIGN SECTION

STRUCTURE S-37-49

DRAWN BY MWB PLANS CK'D. ARC

CANTILEVER TRUSS FOOTING

SHEET 4

170

8

8

SCALE = 1

S-37-48 (353N+02-356N+55) Stage 3

STATION	Distance	AREA (SF) Cut	AREA (SF) Fill	Incremental Vol (CY) (Unadjusted) Cut Note 1	Incremental Vol (CY) (Unadjusted) Fill Note 3	Cumulative Vol (CY) Cut 1.00 Note 1	Cumulative Vol (CY) Expanded Fill 1.25	Mass Ordinate Note 8
BA 353+02	0.00	22.45	0.00	0	0	0	0	0.00
353+50	47.52	21.54	0.00	39	0	39	0	38.71
354+00	50.00	20.58	0.77	39	1	78	1	76.83
354+21.1	21.10	20.54	1.54	16	1	94	2	91.77
354+46	24.90	20.87	0.00	19	1	113	3	109.98
354+50	4.00	20.97	0.00	3	0	116	3	113.08
354+71	21.00	21.94	0.00	17	0	133	3	129.77
355+00	29.00	21.95	0.00	24	0	156	3	153.34
355+50	50.00	21.70	0.00	40	0	197	3	193.75
356+00	50.00	19.37	1.96	38	2	235	5	229.51
356+28	28.00	19.51	2.10	20	2	255	8	247.03
EA 356+55	26.91	19.68	3.55	20	3	274	11	263.04
			Column Totals	274	9			

S-37-49 (379N+42-382N+95) Stage 3

STATION	Distance	AREA (SF) Cut	AREA (SF) Fill	Incremental Vol (CY) (Unadjusted) Cut Note 1	Incremental Vol (CY) (Unadjusted) Fill Note 3	Cumulative Vol (CY) Cut 1.00 Note 1	Cumulative Vol (CY) Expanded Fill 1.25	Mass Ordinate Note 8
BA 379+42	0.00	16.55	0.01	0	0	0	0	0.00
379+50	7.57	16.47	0.10	5	0	5	0	4.61
380+00	50.00	16.56	1.35	31	1	35	2	33.51
380+50	50.00	15.99	3.03	30	4	65	7	58.58
380+60.87	10.87	16.03	3.48	6	1	72	8	63.39
380+85.86	24.99	15.54	2.38	15	3	86	12	74.61
381+00	14.14	15.38	2.01	8	1	95	13	81.27
381+10.86	10.86	15.32	1.79	6	1	101	14	86.50
381+50	39.14	16.62	0.76	23	2	124	16	107.34
382+00	50.00	15.66	0.63	30	1	154	18	135.62
382+50	50.00	18.08	0.12	31	1	185	19	166.00
382+67.91	17.91	19.40	0.21	12	0	197	19	178.29
EA 382+95	26.94	19.99	0.00	20	0	217	19	197.81
			Column Totals	217	15			

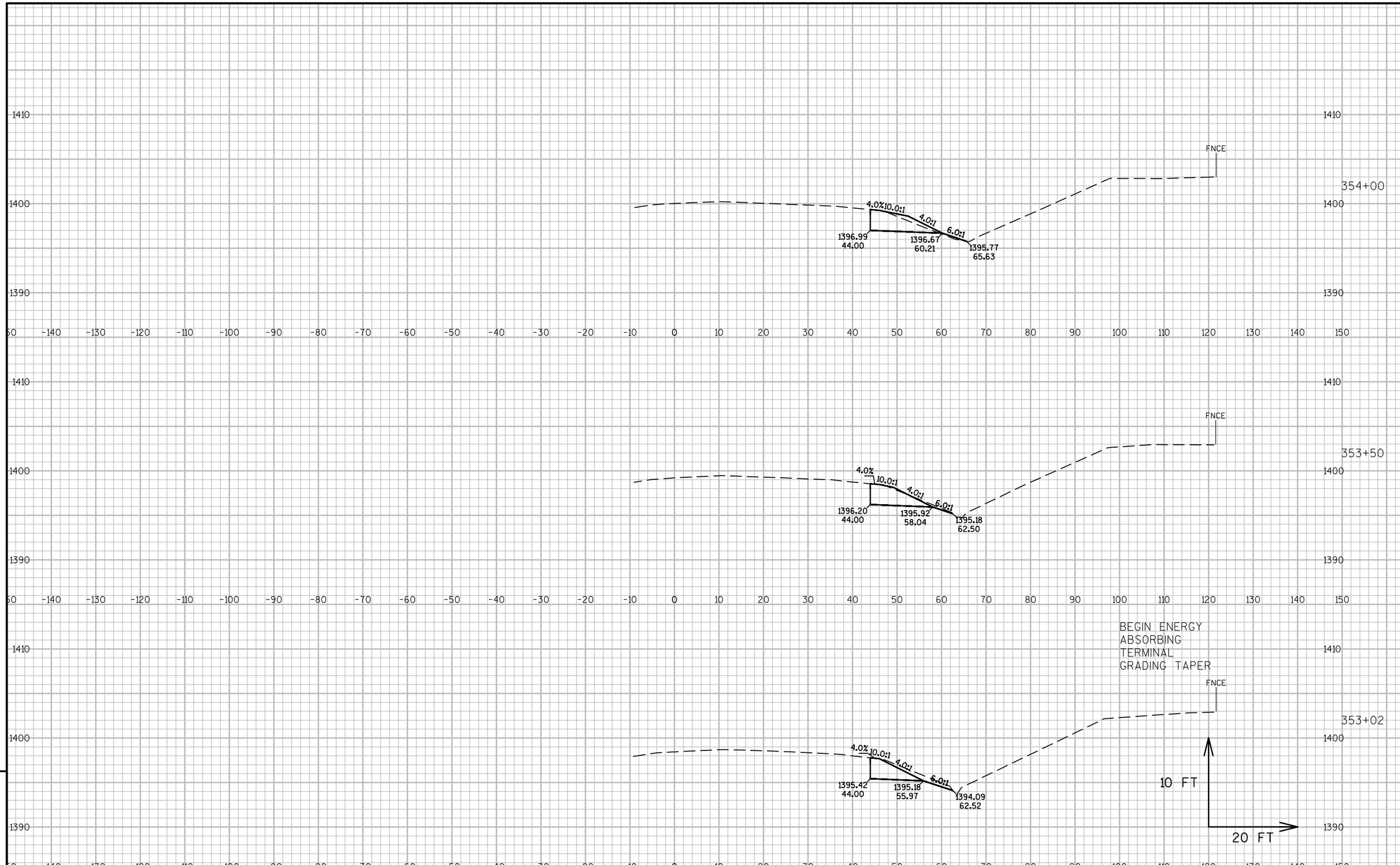

9

9

PROJECT NO:1170-01-75	HWY:USH 51	COUNTY:MARATHON	CROSS SECTIONS: USH 51	SHEET 172	E

FILE NAME : F:\BM4-1077 US 51\5_DESIGN\03_ROADS\11700175\DESIGN\CORRIDORS\CRDR-51.DWG
LAYOUT NAME - 090201-XS
PLOT DATE : 11/18/2015 5:09 PM PLOT BY : SHANE MCCARTY PLOT NAME : PLOT SCALE : 1 IN:20 FT

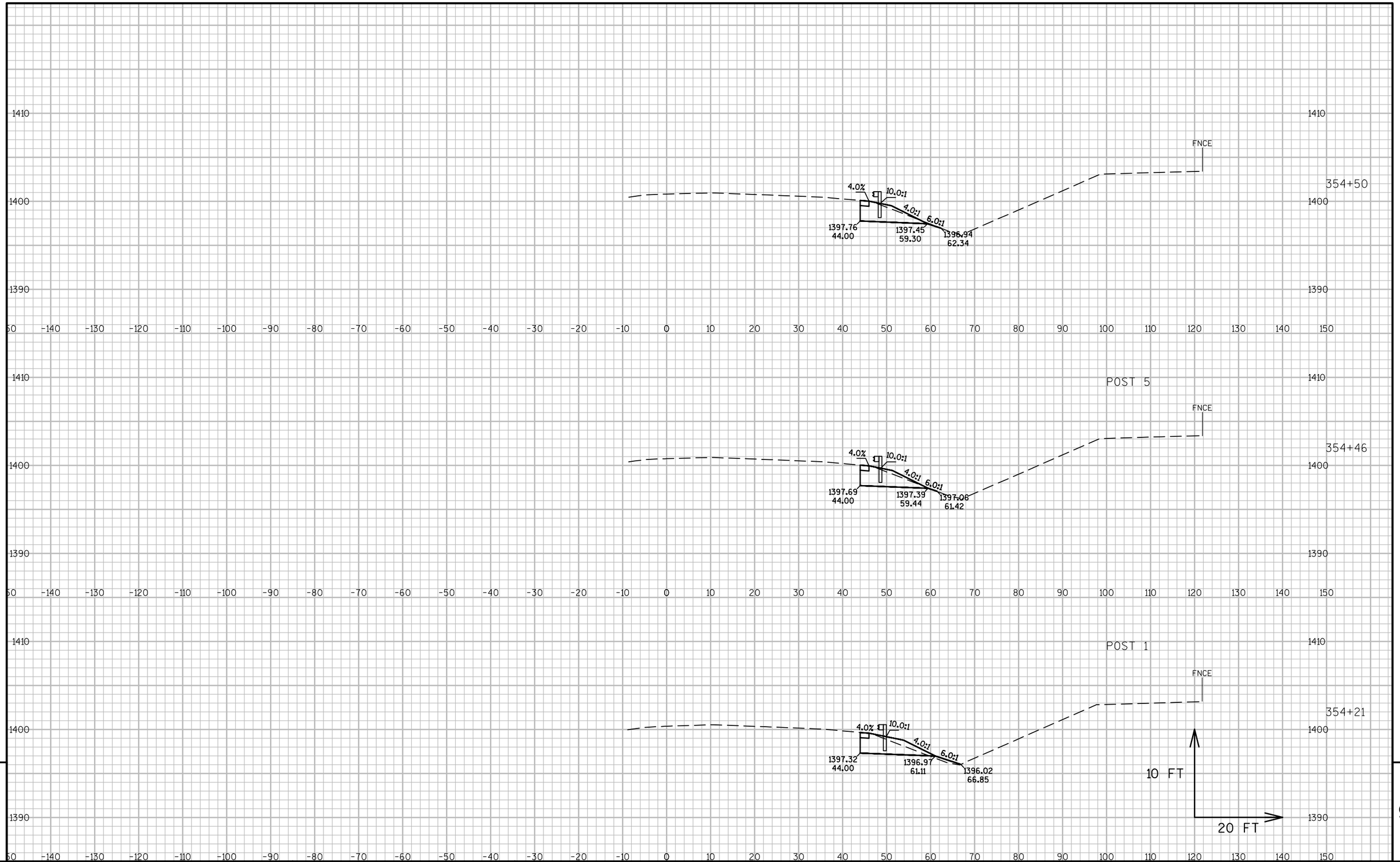

9

9

PROJECT NO:1170-01-75	HWY:USH 51	COUNTY:MARATHON	CROSS SECTIONS: USH 51	SHEET 173	E

FILE NAME : F:\BM4-1077 US 51\5_DESIGN\03_ROADS\11700175\DESIGN\CORRIDORS\CRDR-51.DWG
LAYOUT NAME - 090202-XS
PLOT DATE : 11/18/2015 5:10 PM PLOT BY : SHANE MCCARTY PLOT NAME : PLOT SCALE : 1 IN:20 FT

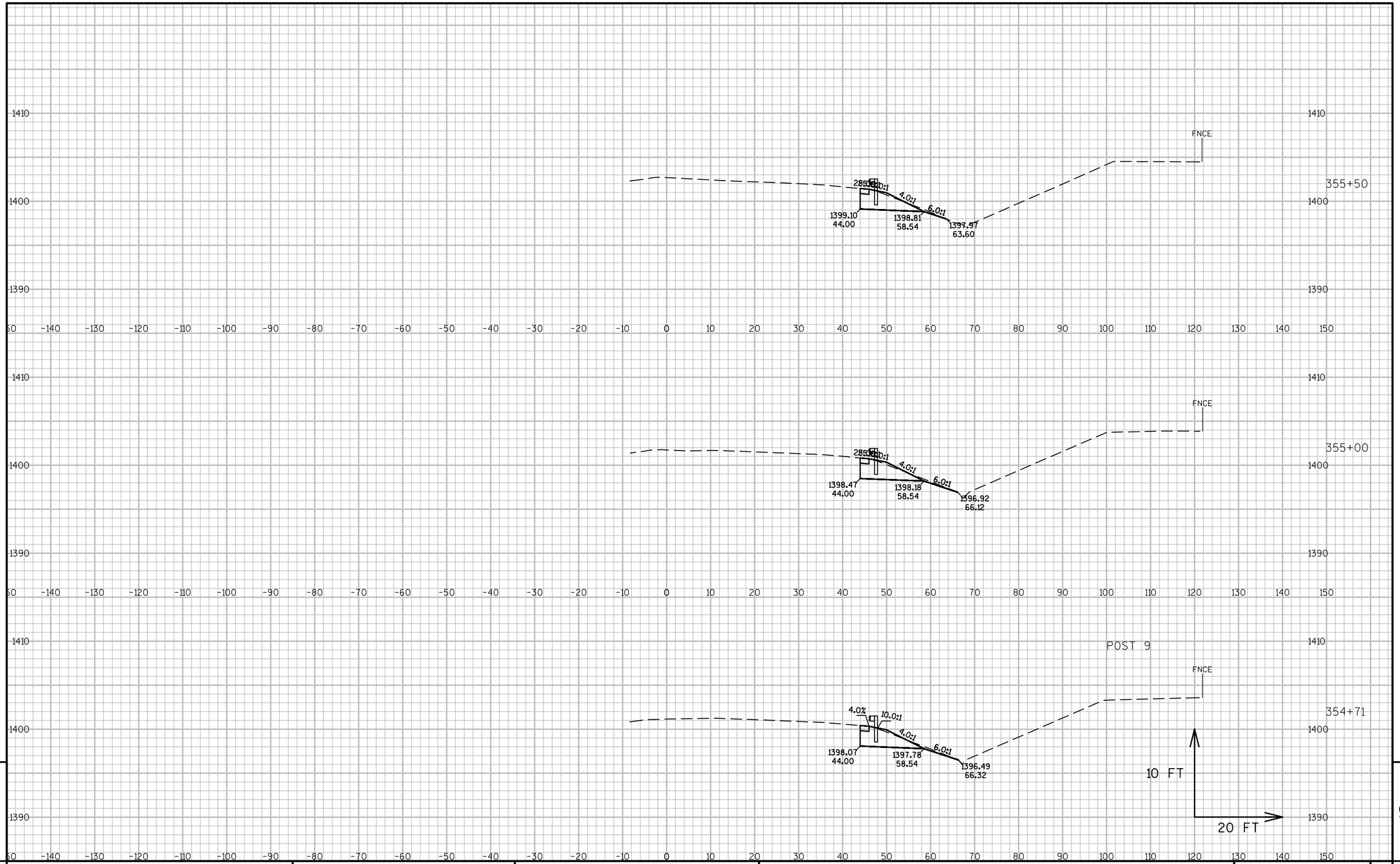

9

9

PROJECT NO:1170-01-75	HWY:USH 51	COUNTY:MARATHON	CROSS SECTIONS:USH 51	SHEET 174	E

FILE NAME : F:\BM4-1077 US 51\5_DESIGN\03_ROADS\11700175\DESIGN\CORRIDORS\CRDR-51.DWG
LAYOUT NAME - 090203-XS
PLOT DATE : 11/18/2015 5:10 PM PLOT BY : SHANE MCCARTY PLOT NAME : PLOT SCALE : 1 IN:20 FT

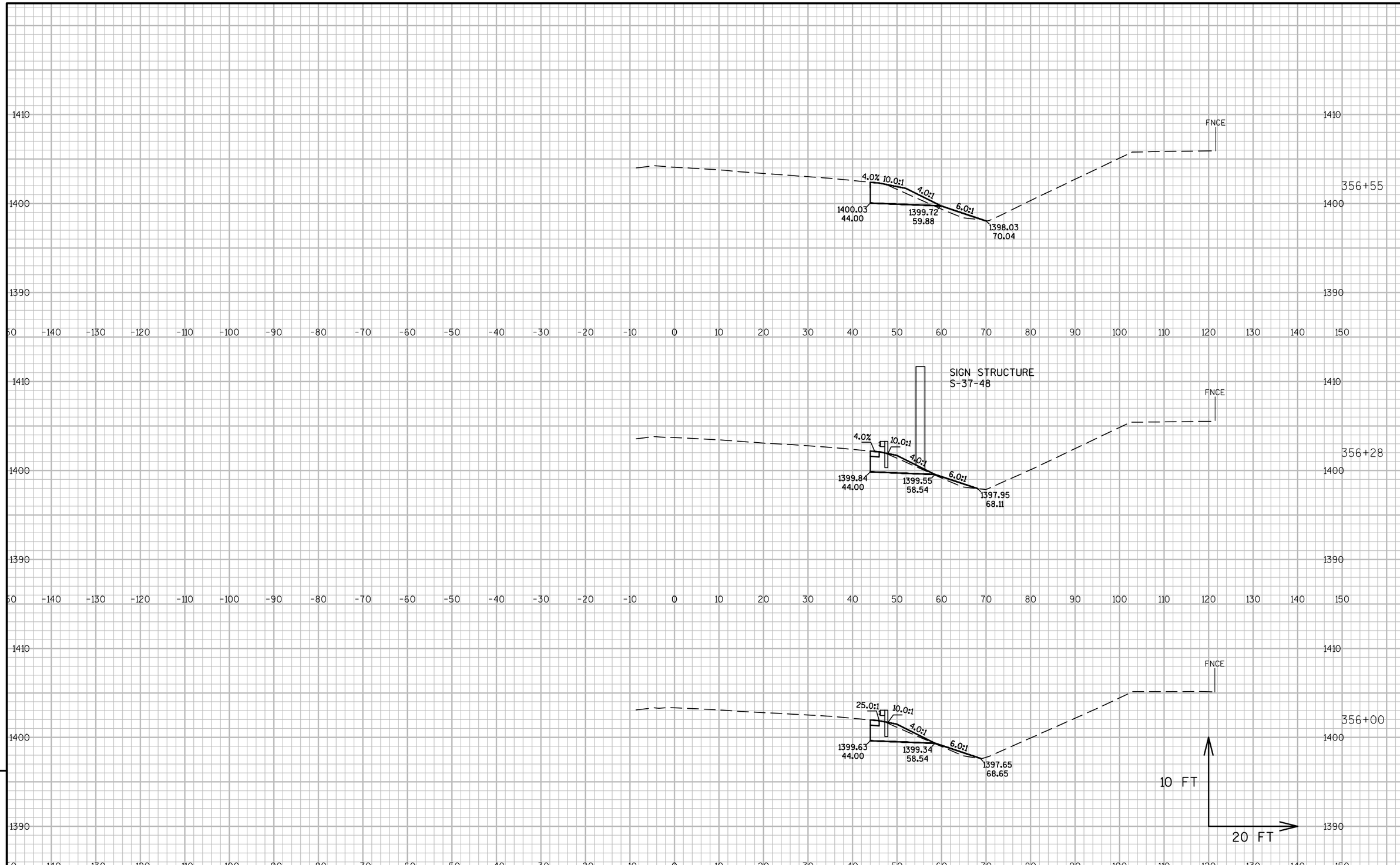

9

9

PROJECT NO:1170-01-75	HWY:USH 51	COUNTY:MARATHON	CROSS SECTIONS: USH 51	SHEET 175	E

FILE NAME : F:\BM4-1077 US 51\5_DESIGN\03_ROADS\11700175\DESIGN\CORRIDORS\CRDR-51.DWG
LAYOUT NAME - 090204-XS

PLOT DATE : 11/18/2015 5:10 PM PLOT BY : SHANE MCCARTY PLOT NAME : PLOT SCALE : 1 IN:20 FT

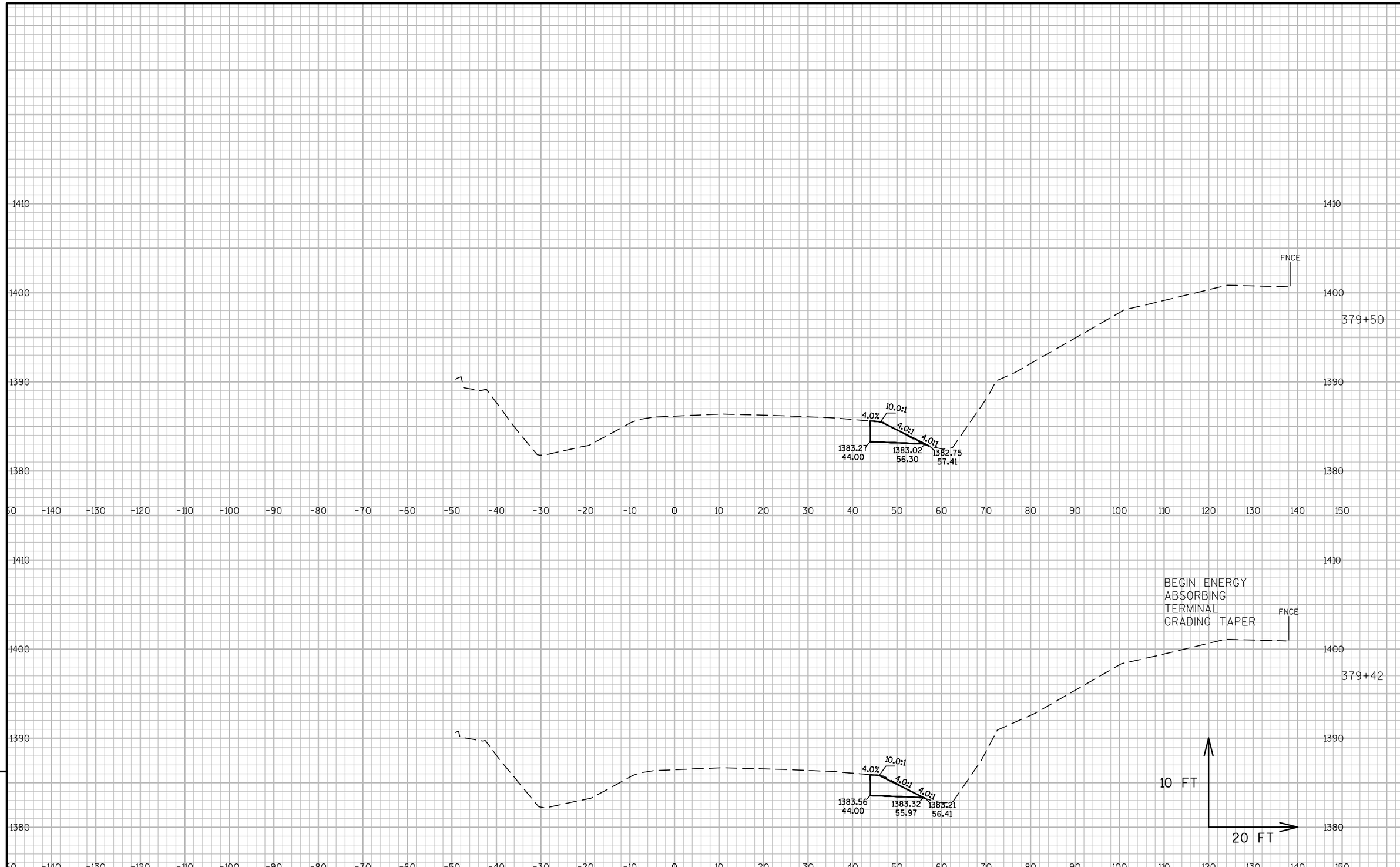

9

9

PROJECT NO:1170-01-75	HWY:USH 51	COUNTY:MARATHON	CROSS SECTIONS:USH 51	SHEET 176	E

FILE NAME : F:\BM4-1077 US 51\5_DESIGN\03_ROADS\11700175\DESIGN\CORRIDORS\CRDR-51.DWG
LAYOUT NAME - 090205-XS

PLOT DATE : 11/18/2015 5:10 PM PLOT BY : SHANE MCCARTY PLOT NAME : PLOT SCALE : 1 IN:20 FT

WISDOT/CADDS SHEET 49

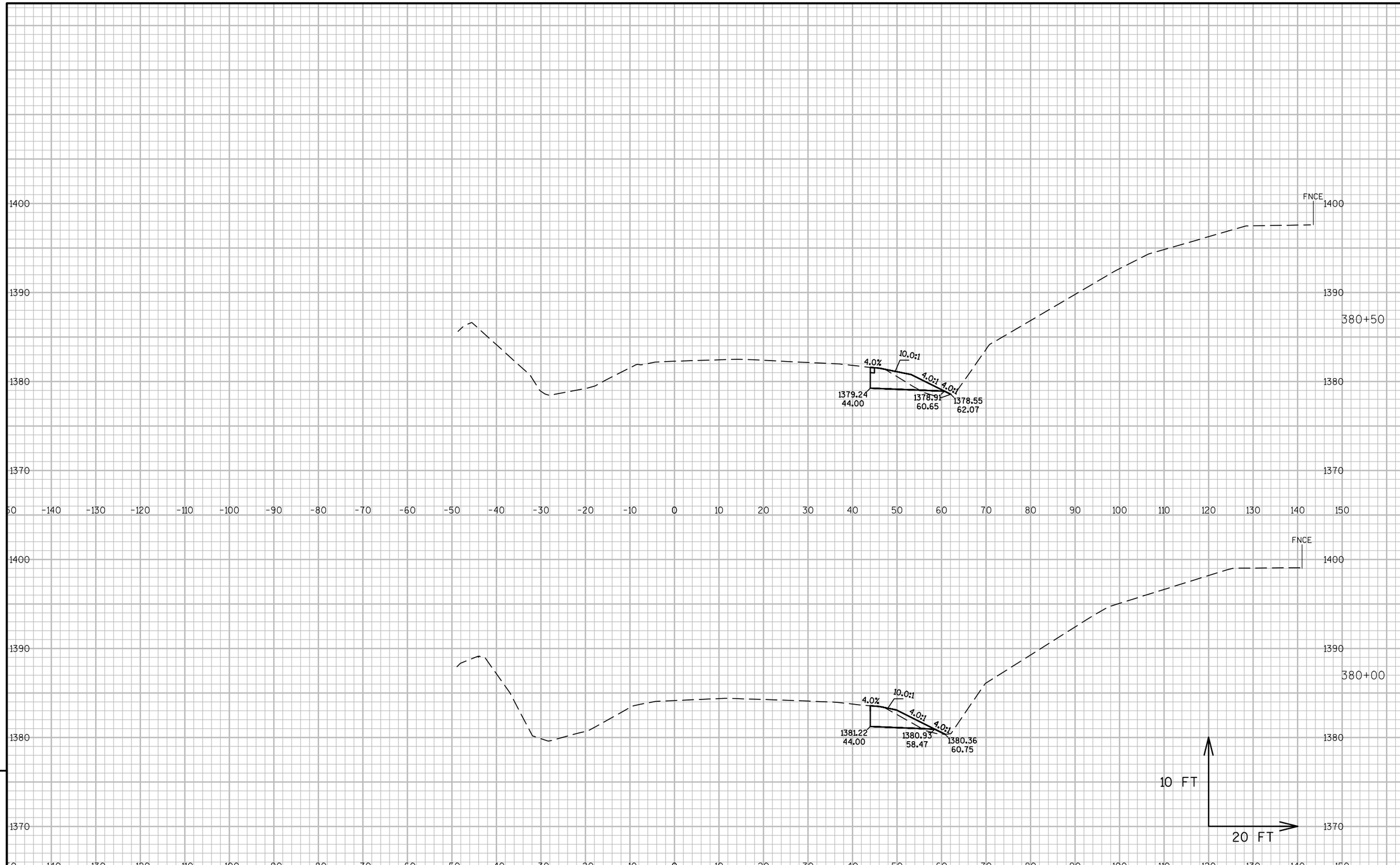

9

9

PROJECT NO:1170-01-75	HWY:USH 51	COUNTY:MARATHON	CROSS SECTIONS:USH 51	SHEET 177	E

FILE NAME : F:\BM4-1077 US 51\5_DESIGN\03_ROADS\11700175\DESIGN\CORRIDORS\CRDR-51.DWG
LAYOUT NAME - 090206-XS
PLOT DATE : 11/18/2015 5:10 PM PLOT BY : SHANE MCCARTY PLOT NAME : PLOT SCALE : 1 IN:20 FT

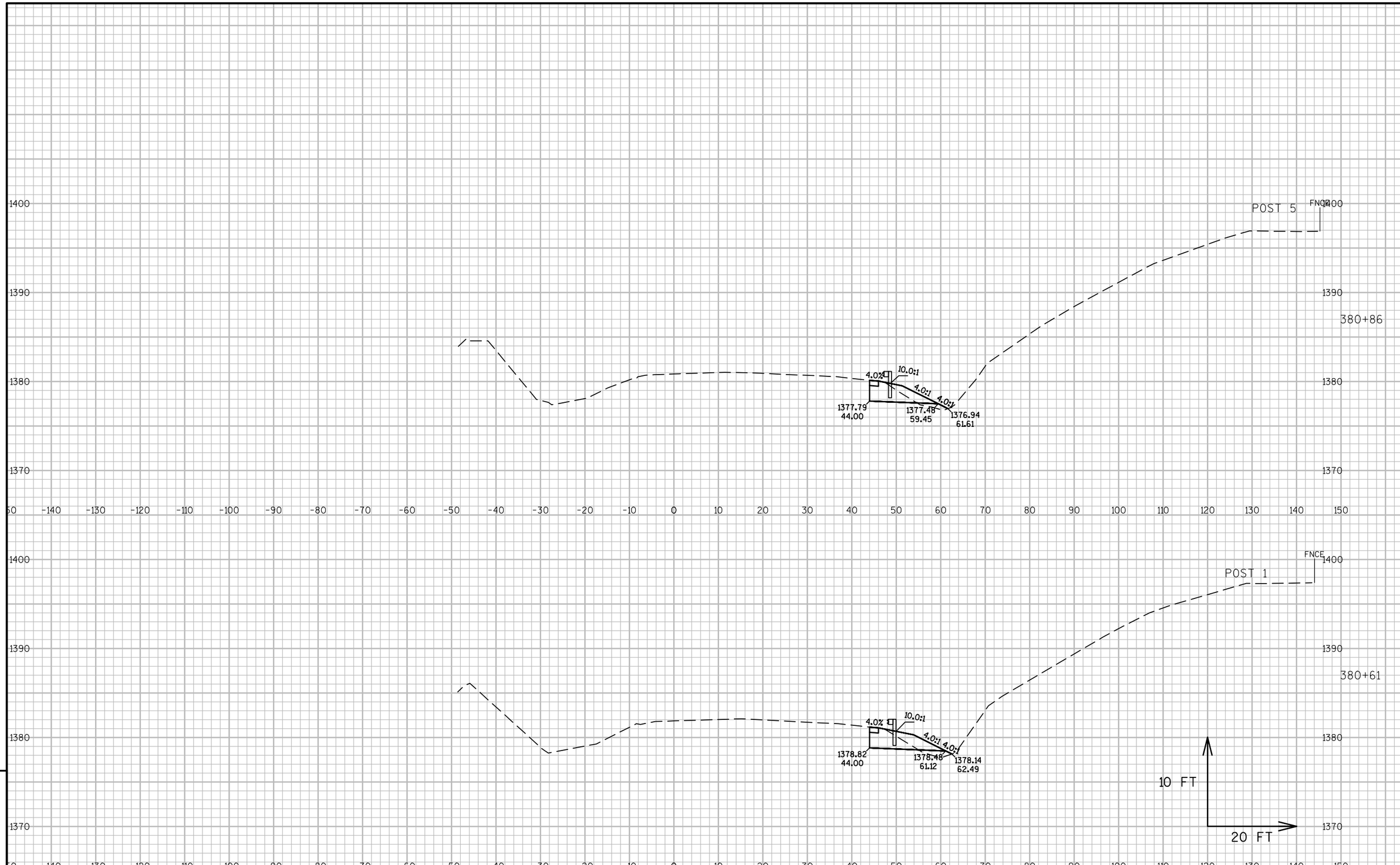

PROJECT NO:1170-01-75	HWY:USH 51	COUNTY:MARATHON	CROSS SECTIONS:USH 51	SHEET 178	E

FILE NAME : F:\BM4-1077 US 51\5_DESIGN\03_ROADS\11700175\DESIGN\CORRIDORS\CRDR-51.DWG
LAYOUT NAME - 090207-XS
PLOT DATE : 11/18/2015 5:10 PM PLOT BY : SHANE MCCARTY PLOT NAME : PLOT SCALE : 1 IN:20 FT

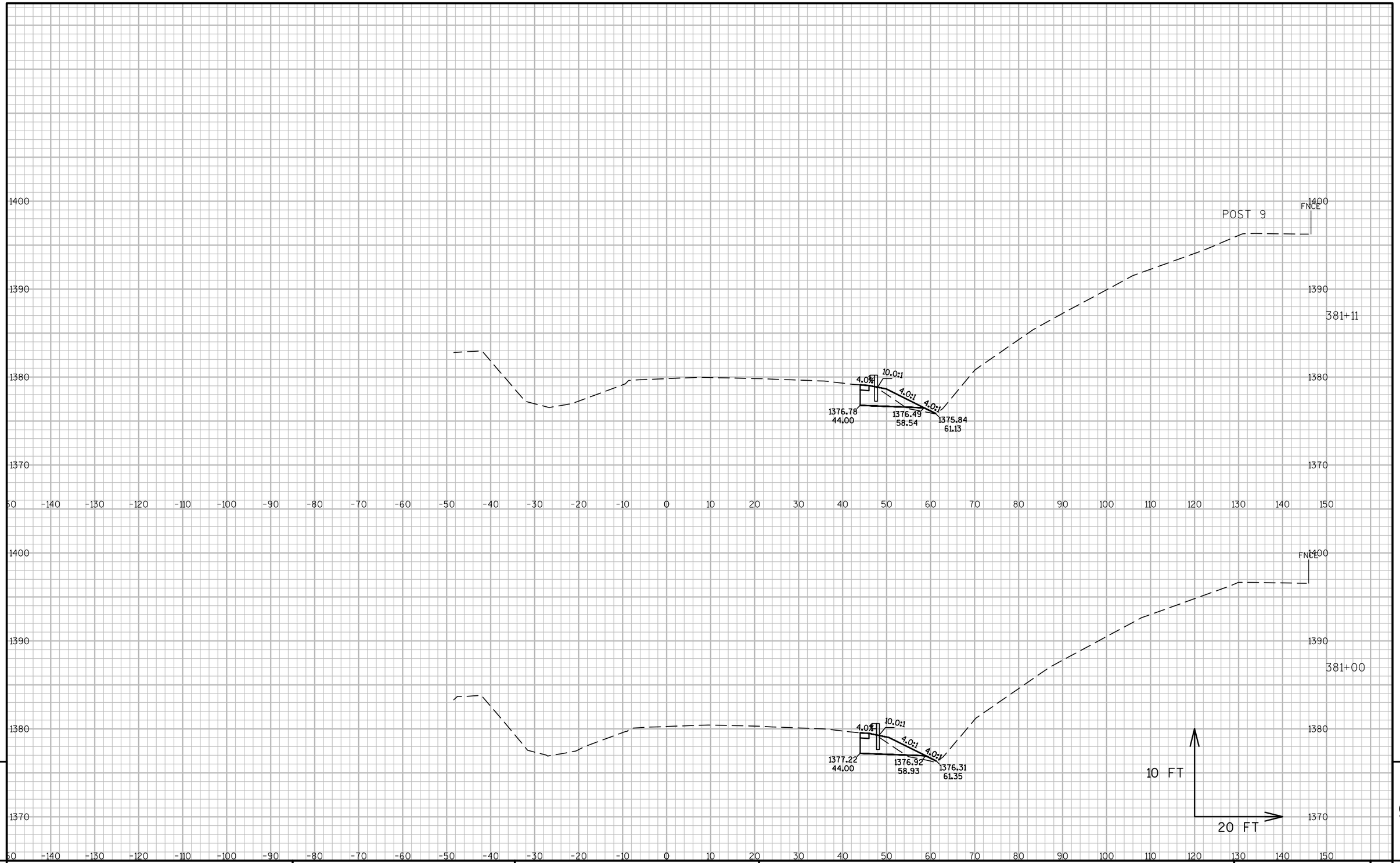

9

9

PROJECT NO:1170-01-75	HWY:USH 51	COUNTY:MARATHON	CROSS SECTIONS:USH 51	SHEET 179	E

FILE NAME : F:\BM4-1077 US 51\5_DESIGN\03_ROADS\11700175\DESIGN\CORRIDORS\CRDR-51.DWG
LAYOUT NAME - 090208-XS
PLOT DATE : 11/18/2015 5:11 PM PLOT BY : SHANE MCCARTY PLOT NAME : PLOT SCALE : 1 IN:20 FT

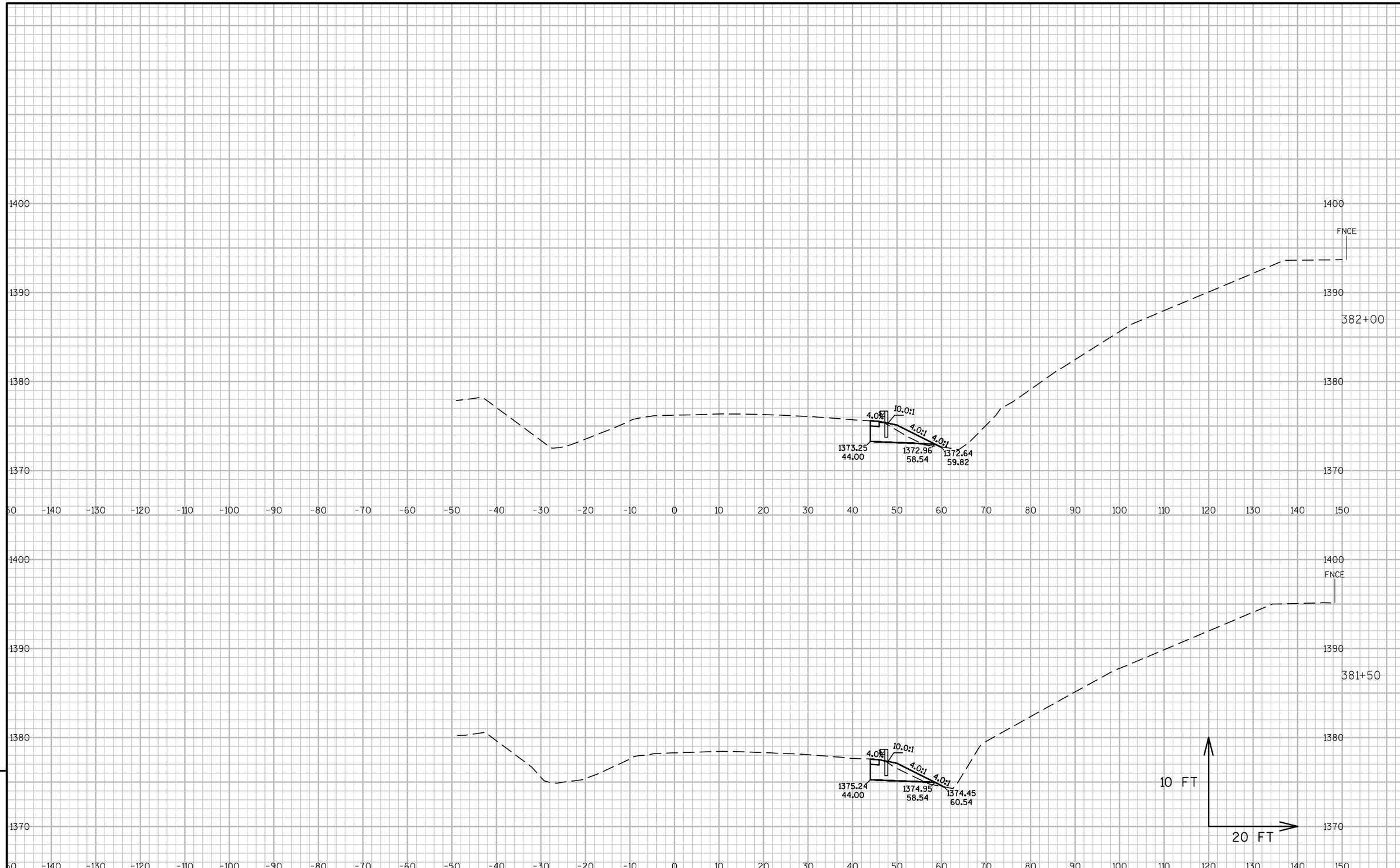

9

9

PROJECT NO:1170-01-75	HWY:USH 51	COUNTY:MARATHON	CROSS SECTIONS:USH 51	SHEET 180	E

FILE NAME : F:\BM4-1077 US 51\5_DESIGN\03_ROADS\11700175\DESIGN\CORRIDORS\CRDR-51.DWG
LAYOUT NAME - 090209-XS
PLOT DATE : 11/18/2015 5:11 PM PLOT BY : SHANE MCCARTY PLOT NAME : PLOT SCALE : 1 IN:20 FT

WISDOT/CADDS SHEET 49

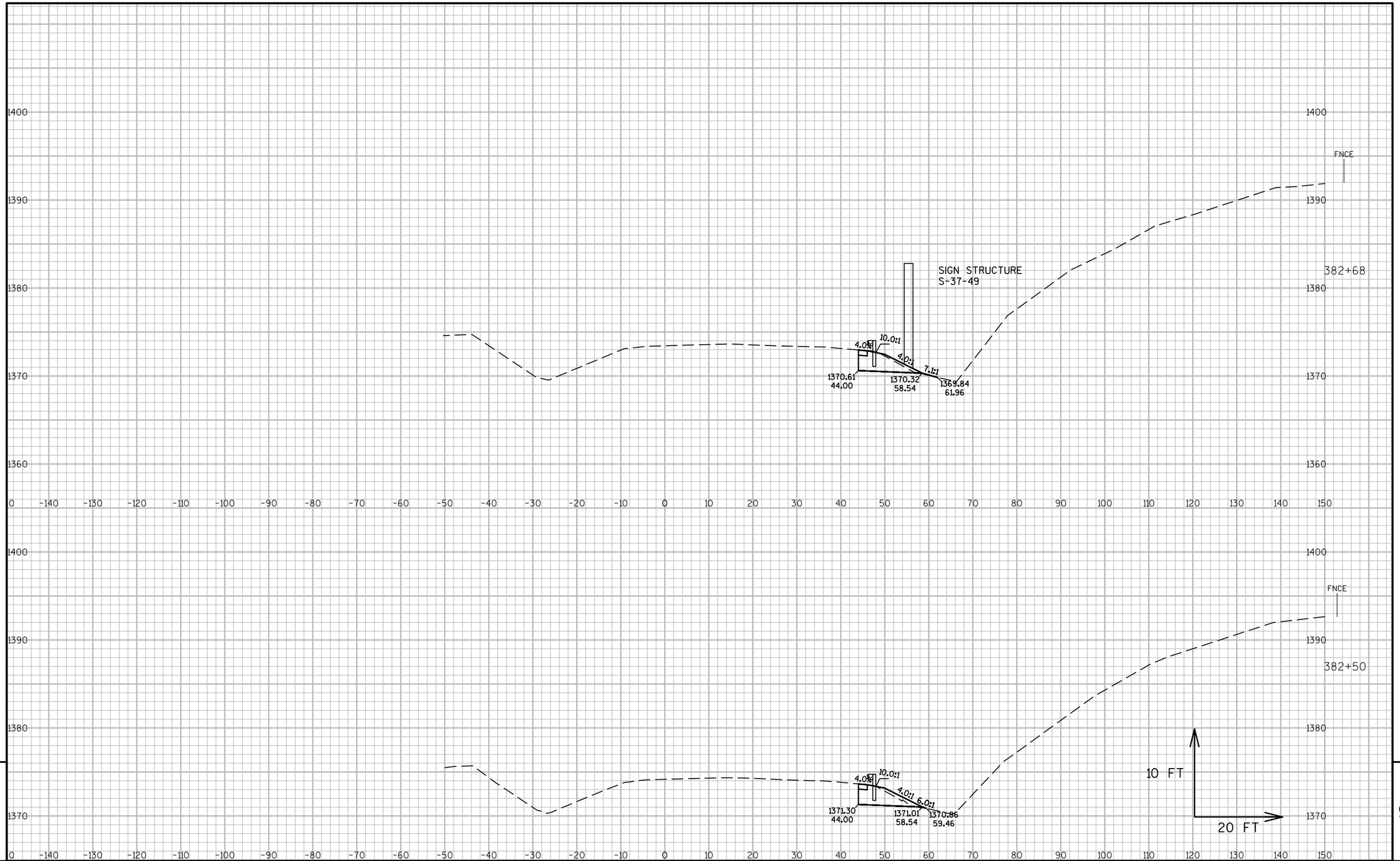

9

9

PROJECT NO:1170-01-75	HWY:USH 51	COUNTY:MARATHON	CROSS SECTIONS:USH 51	SHEET 181	E

FILE NAME : F:\BM4-1077 US 51\5_DESIGN\03_ROADS\11700175\DESIGN\CORRIDORS\CRDR-51.DWG
LAYOUT NAME - 090210-XS

PLOT DATE : 11/18/2015 5:11 PM PLOT BY : SHANE MCCARTY PLOT NAME : PLOT SCALE : 1 IN:20 FT

WISDOT/CADDS SHEET 49

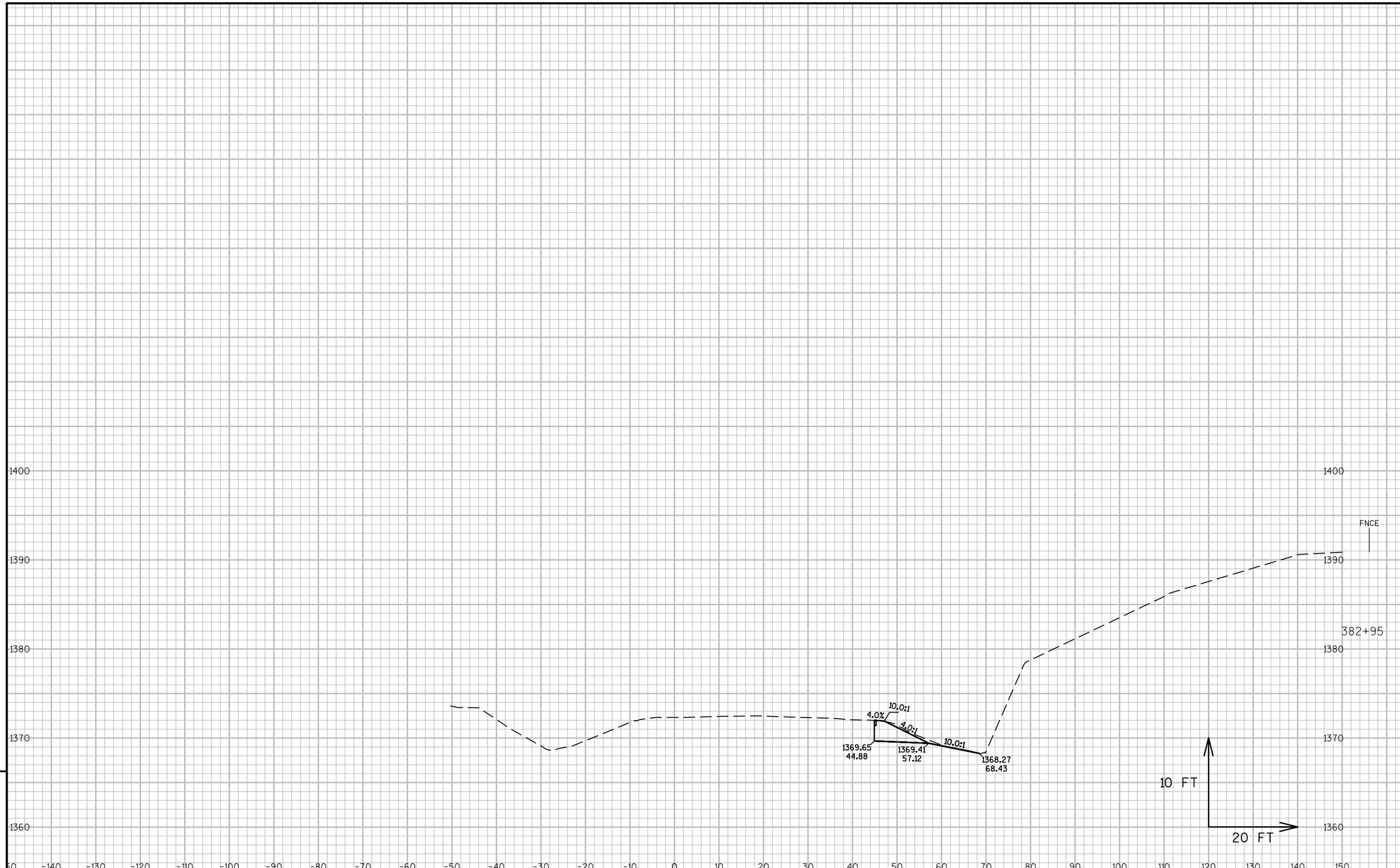

9

9

PROJECT NO:1170-01-75	HWY:USH 51	COUNTY:MARATHON	CROSS SECTIONS:USH 51	SHEET 182	E

FILE NAME : F:\BM4-1077 US 51\5_DESIGN\03_ROADS\11700175\DESIGN\CORRIDORS\CRDR-51.DWG
LAYOUT NAME - 090211-XS

PLOT DATE : 11/18/2015 5:11 PM PLOT BY : SHANE MCCARTY PLOT NAME : PLOT SCALE : 1 IN:20 FT

WISDOT/CADDS SHEET 49

Notes

Wisconsin Department of Transportation

Dedicated people creating transportation solutions through innovation and exceptional service.

http://www.dot.wisconsin.gov