NWL

MAR 2016

PROJECT ID: 7824-00-09
WITH: 7824-00-13

COUNTY: EAU CLAIRE

ORDER OF SHEETS

Section No.	1	Title
Section No.	2	Typical Sections and Details (Includes Erosion Control Plans)
Section No.	3	Estimate of Quantities
Section No.	3	Miscellaneous Quantities
Section No.	4	Right of Way Plat
Section No.	5	Plan and Profile
Section No.	6	Standard Detail Drawings
Section No.	7	Sign Plates
Section No.	9	Computer Earthwork Data
Section No.	9	Cross Sections

TOTAL SHEETS = 228

STATE PROJECT	FEDERAL PROJECT	
	PROJECT	CONTRACT
7824-00-09	WISC 2016071	1
7824-00-13	WISC 2016072	1

STATE OF WISCONSIN
DEPARTMENT OF TRANSPORTATION

PLAN OF PROPOSED IMPROVEMENT

C ALTOONA, CTH AA

HOUSE ROAD - USH 12

CTH AA

EAU CLAIRE COUNTY

STATE PROJECT NUMBER

7824-00-09

C EAU CLAIRE, CTH AA

OTTER CREEK BRIDGE B-18-0229

CTH AA

EAU CLAIRE COUNTY

STATE PROJECT NUMBER

7824-00-13

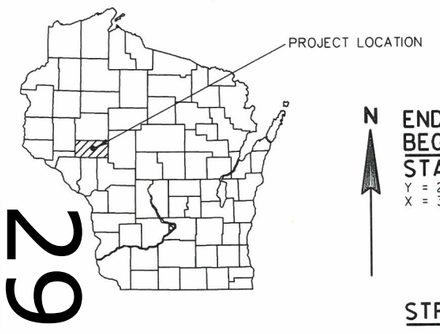

12

29

N

END PROJECT 7824-00-13
BEGIN PROJECT 7824-00-09
STA 104+00.00
Y = 266,600.67
X = 359,853.43

STRUCTURE B-18-0229

BEGIN PROJECT 7824-00-13
STA 95+00.00
Y = 266,606.56
X = 358,953.45

END PROJECT 7824-00-09
STA 186+92.01
Y = 271,453.86
X = 363,287.02

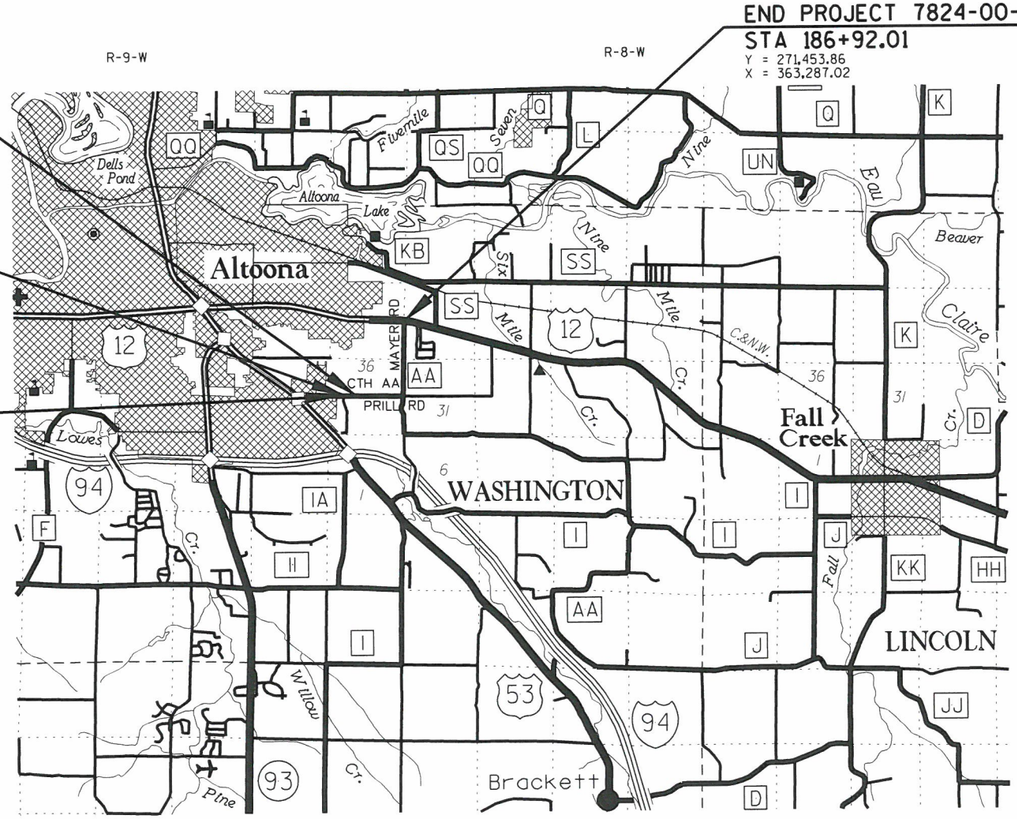

LAYOUT
SCALE 0 1 MI.

TOTAL NET LENGTH OF CENTERLINE ID 7824-00-09 = 1.570 MI.
TOTAL NET LENGTH OF CENTERLINE ID 7824-00-13 = 0.170 MI.

COORDINATES ON THIS PLAN ARE REFERENCED TO THE WISCONSIN COUNTY COORDINATE SYSTEM (WCCS), EAU CLAIRE COUNTY. NAD 83 (2011) CALIBRATED TO COUNTY SECTION CORNERS ON 83/91V. WI_g99 IN U.S. SURVEY FEET.

DESIGN DESIGNATION

A.A.D.T. (2016)	=	2900
A.A.D.T. (2036)	=	3700
D.H.V. (2036)	=	495
D.D.	=	50/50
T.	=	3.3%
DESIGN SPEED	=	50 MPH
ESALS	=	248,200

CONVENTIONAL SYMBOLS

PLAN

- CORPORATE LIMITS
- PROPERTY LINE
- LOT LINE
- LIMITED HIGHWAY EASEMENT
- EXISTING RIGHT OF WAY
- PROPOSED OR NEW R/W LINE
- SLOPE INTERCEPT
- REFERENCE LINE
- EXISTING CULVERT
- PROPOSED CULVERT (Box or Pipe)
- COMBUSTIBLE FLUIDS (CAUTION)
- MARSH AREA
- WOODED OR SHRUB AREA

PROFILE

- GRADE LINE
- ORIGINAL GROUND
- MARSH OR ROCK PROFILE (To be noted as such) (ROCK)
- SPECIAL DITCH (LABEL)
- GRADE ELEVATION (95.36)
- CULVERT (Profile View)

UTILITIES

- ELECTRIC (E)
- FIBER OPTIC (FO)
- GAS (G)
- OVERHEAD LINE (OH)
- SANITARY SEWER (SAN)
- STORM SEWER (SS)
- TELEPHONE (T)
- WATER (W)
- UTILITY PEDESTAL
- POWER POLE
- TELEPHONE POLE

APPROVED FOR EAU CLAIRE COUNTY

DATE: 10/19/15 (Signature & Title of Official)

ORIGINAL PLANS PREPARED BY

CORRE ENGINEERING
1802 WARDEN STREET
EAU CLAIRE, WI 54703
(608)828-1011
WWW.CORREINC.COM

WISCONSIN PROFESSIONAL ENGINEER
KEVIN L. MEYER
E-38309-006
ELK MOUND WI
10/19/15

DATE: _____ (Signature)

STATE OF WISCONSIN
DEPARTMENT OF TRANSPORTATION

PREPARED BY

Surveyor	CORRE, INC.
Designer	CORRE, INC.
Management Consultant	KNIGHT E/A, INC.

APPROVED FOR THE DEPARTMENT

DATE: 10/20/15

Ryan B. McKane
Management Consultant Signature

E

STANDARD ABBREVIATIONS

ABUT	ABUTMENT
AGG	AGGREGATE
ASPH	ASPHALTIC
AVG	AVERAGE
AADT	ANNUAL AVERAGE DAILY TRAFFIC
BK	BACK
BF	BACK FACE
BL or B/L	BASE LINE
BM	BENCH MARK
BLK	BLOCK
BR	BRIDGE
CL or C/L	CENTER LINE
CC	CENTER TO CENTER
CH	CHORD
CH BRG	CHORD BEARING
CONC	CONCRETE
CO	COUNTY
CTH	COUNTY TRUNK HIGHWAY
CR	CREEK
CR	CRUSHED
CABC	CRUSHED AGGREGATE BASE COURSE
CY or CUYD	CUBIC YARD
CP	CULVERT PIPE
C&G	CURB AND GUTTER
D	DEGREE OF CURVE
DHV	DESIGN HOUR VOLUME
DIA	DIAMETER
DWY	DRIVEWAY
E	EAST
EB	EASTBOUND
ELEC	ELECTRIC
EL or ELEV	ELEVATION
ESALS	EQUIVALENT SINGLE AXLE LOADS
EXC	EXCAVATION
EBS	EXCAVATION BELOW SUBGRADE
EXP	EXPANSION
FF	FACE TO FACE OR FRONT FACE
FE	FIELD ENTRANCE
FG	FINISH GRADE
FAB	FLASHING ARROW BOARD
FL or F/L Flow	FLOW LINE
FT	FOOT
FTG	FOOTING
FTMS	FREEWAY TRAFFIC MANAGEMENT SYSTEM
HT	HEIGHT
HES	HIGH EARLY STRENGTH
CWT	HUNDREDWEIGHT
IP	IRON PIPE OR PIN
LT	LEFT
LIN FT or LF	LINEAR FOOT
LS	LUMP SUM
MH	MANHOLE
ML or M/L	MATCH LINE
MB	MESSAGE BOARD
NOM	NOMINAL
N	NORTH
NB	NORTHBOUND
PC	POINT OF CURVATURE
PI	POINT OF INTERSECTION
PT	POINT OF TANGENCY
PCC	PORTLAND CEMENT CONCRETE
PE	PRIVATE ENTRANCE
R	RADIUS
RL or R/L	REFERENCE LINE
RT	RIGHT
R/W	RIGHT-OF-WAY
RD	ROAD
SHLDR	SHOULDER
SW	SIDEWALK
S	SOUTH
SB	SOUTHBOUND
SPECS	SPECIFICATIONS
SF or SQ FT	SQUARE FEET
SY of SQ YD	SQUARE YARD
SDD	STANDARD DETAIL DRAWINGS
STH	STATE TRUNK HIGHWAYS
STA	STATION
SE	SUPERELEVATION
TEL	TELEPHONE
UG	UNDERGROUND
VC	VERTICAL CURVE
VPI	VERTICAL POINT OF INTERSECTION
W	WEST
WB	WESTBOUND

CONSULTANT CONTACT

CORRE, INC.
1802 WARDEN STREET
EAU CLAIRE, WI 54703
KEVIN MEYER, P.E.
608-828-1011
kmeyer@correinc.com

KNIGHT E/A, INC.
RYAN MCKANE, P.E.
700 NORTH 3RD STREET
SUITE 104
LA CROSSE, WI 54601
(608) 519-1455 EXT 2
RMcKane@knighted.com

DNR CONTACT

WISDNR, WEST CENTRAL REGION
CHRIS WILLGER
1300 WEST CLAIREMONT AVENUE
EAU CLAIRE, WI 54702
OFFICE: (715) 839-2786
(715) 839-1609
christopherj.willger@wisconsin.gov

UTILITY CONTACTS

COMMUNICATION
AT&T WIDESIGN ENGINEERING
RICK PODOLAK
304 S. DEWEY STREET
EAU CLAIRE, WI 54701
(715) 839-5565
rp4514@att.com

COMMUNICATIONS
CHARTER COMMUNICATIONS
SHANE YODER
1201 MCCANN DRIVE
ALTOONA, WI 54720
(715) 831-8490 EXT 51113
shane.yoder@chartercom.com

ELECTRICAL
EAU CLAIRE ENERGY COOPERATIVE
DON DRAEGER
PO BOX 368, 8214 US HIGHWAY 12
FALL CREEK, WI 54742
(715) 836-6479
ddraeger@ecec.com

COMMUNICATION/ELECTRICITY
XCEL ENERGY
RYAN DRAPES
P.O. BOX 8
EAU CLAIRE, WI 54702
(715) 737-1404
Ryan.J.Drapes@xcelenergy.com

GAS/PETROLEUM
XCEL ENERGY
SCOTT SEAHOLM
1414 WEST HAMILTON AVENUE
P.O. BOX 8
EAU CLAIRE, WI 54702
(715) 737-2584
scott.j.seaholm@xcelenery.com

CITY OF EAU CLAIRE UTILITIES
LANE BERG
1040 FOREST STREET
EAU CLAIRE, WI 54703
(715) 839-1376
lane.berg@eauclaire.gov

CITY OF ALTOONA UTILITIES
DAVID WALTER, PE
1303 LYNN AVENUE
ALTOONA, WI 54720
(715) 839-6092
davidw@ci.altoona.wi.us

DIGGERS HOTLINE

Call 811 3 Work Days Before You Dig
or Toll Free (800) 242-8511
Hearing Impaired TDD (800) 542-2289
www.DiggersHotline.com

ORDER OF SECTION 2 SHEETS

PROJECT OVERVIEW
TYPICAL SECTIONS
CONSTRUCTION DETAILS
INTERSECTION DETAILS
EROSION CONTROL
SIGNING AND PAVEMENT MARKING
TRAFFIC CONTROL / DETOUR PLANS
ALIGNMENT DIAGRAM & CONTROL POINT DETAIL

GENERAL NOTES

ELEVATIONS SHOWN ON THE PLAN ARE REFERENCED TO NAD 83 (2011) CALIBRATED TO COUNTY SECTION CORNERS ON 83/91V. WI_g99 IN U.S. SURVEY FEET.

WHEN THE QUANTITY OF BASE AGGREGATE OR HMA PAVEMENT IS MEASURED FOR PAYMENT BY THE TON, THE DEPTH OR THICKNESS OF THE LAYER SHOWN ON THE PLANS IS APPROXIMATE AND THE ACTUAL THICKNESS WILL DEPEND ON THE DISTRIBUTION OF THE MATERIAL AS DIRECTED BY THE ENGINEER.

THE LOCATION OF EXISTING AND PROPOSED UTILITY INSTALLATIONS AS SHOWN ON THE PLANS IS APPROXIMATE. THERE MAY BE OTHER UTILITY INSTALLATIONS WITHIN THE PROJECT AREA THAT ARE NOT SHOWN.

NO TREES OR SHRUBS ARE TO BE REMOVED WITHOUT THE APPROVAL OF THE ENGINEER.

CURVE DATA IS BASED ON THE ARC DEFINITION.

DISTURBED AREAS WITHIN THE RIGHT-OF-WAY, EXCEPT THE AREAS WITHIN THE FINISHED SHOULDER POINTS, ARE TO BE 4-INCH SALVAGED TOPSOILED/TOPSOILED, FERTILIZED, AND SODDED/SEEDED AND MULCHED. FINISHED SODDED SURFACE SHALL BE 1-INCH BELOW THE TOP OF ADJACENT CONCRETE.

SEED MIX NO. 40 TO BE USED IN FRONT YARDS THAT WILL BE MAINTAINED BY PROPERTY OWNER.

BEARINGS SHOWN ON THE PLANS ARE GRID BEARINGS TO THE NEAREST SECOND.

THE LOCATION OF ALL DRIVEWAYS WILL BE DETERMINED BY THE ENGINEER.

A VERTICAL SAWCUT SHALL BE MADE THROUGH EXISTING DRIVEWAYS AND PAVEMENTS AT REMOVAL LIMITS.

EXCAVATION BELOW SUBGRADE (EBS) IS NOT USED TO BALANCE YARDAGE AND IS NOT SHOWN ON THE CROSS SECTIONS BUT IS MEASURED AND PAID FOR AS COMMON EXCAVATION.

4.5-INCH HMA TYPE E-0.3 SHALL BE CONSTRUCTED WITH A 2.0-INCH UPPER LAYER WITH NOMINAL AGGREGATE SIZE 12.5mm AND A 2.5-INCH LOWER LAYER WITH NOMINAL AGGREGATE SIZE 19mm.

SILT FENCE IS TO BE PLACED AS SHOWN ON THE PLANS OR AS DIRECTED BY THE ENGINEER, AND IN PLACE PRIOR TO REMOVALS.

UTILITY REFERENCE LINES ON THE CROSS SECTIONS ARE FOR HORIZONTAL REFERENCE ONLY.

EROSION CONTROL FEATURES AS SHOWN IN THE PLANS ARE AT SUGGESTED LOCATIONS, EXACT LOCATIONS WILL BE DETERMINED BY THE E.C.I.P AND APPROVED BY THE ENGINEER IN THE FIELD.

RUNOFF COEFFICIENT TABLE

	HYDROLOGIC SOIL GROUP											
	A			B			C			D		
	SLOPE RANGE (PERCENT)			SLOPE RANGE (PERCENT)			SLOPE RANGE (PERCENT)			SLOPE RANGE (PERCENT)		
LAND USE:	0-2	2-6	6 & OVER	0-2	2-6	6 & OVER	0-2	2-6	6 & OVER	0-2	2-6	6 & OVER
ROW CROPS	.08 .22	.16 .30	.22 .38	.12 .26	.20 .34	.27 .44	.15 .30	.24 .37	.33 .50	.19 .34	.28 .41	.38 .56
MEDIAN STRIP-TURF	.19 .24	.20 .26	.24 .30	.19 .25	.22 .28	.26 .33	.20 .26	.23 .30	.30 .37	.20 .27	.25 .32	.30 .40
SIDE SLOPE-TURF			.25 .32			.27 .34			.28 .36			.30 .38
PAVEMENT:												
ASPHALT	.70 - .95											
CONCRETE	.80 - .95											
BRICK	.70 - .80											
DRIVES, WALKS	.75 - .85											
ROOFS	.75 - .95											
GRAVEL ROADS, SHOULDERS	.40 - .60											

TOTAL PROJECT AREA = 21.5 ACRES
TOTAL AREA EXPECTED TO BE DISTURBED BY CONSTRUCTION ACTIVITIES = 15.3 ACRES

2

PROJECT NO: 7824-00-09/13	HWY: CTH AA	COUNTY: EAU CLAIRE	PROJECT OVERVIEW	SHEET 3	E

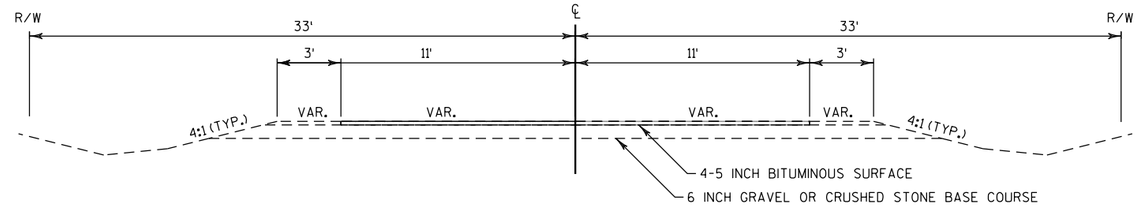

TYPICAL EXISTING SECTION - CTH AA (PRILL ROAD)

STA 95+00.00 TO STA 99+35.75
STA 100+04.25 TO STA 138+25.00

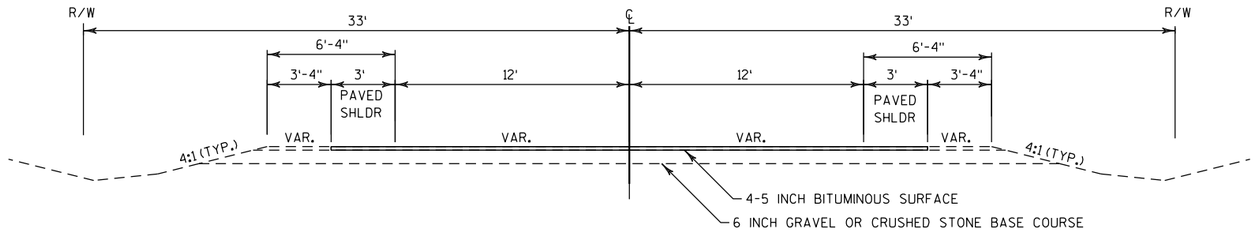

TYPICAL EXISTING SECTION - CTH AA (MAYER ROAD)

STA 138+25.00 TO STA 186+92.01

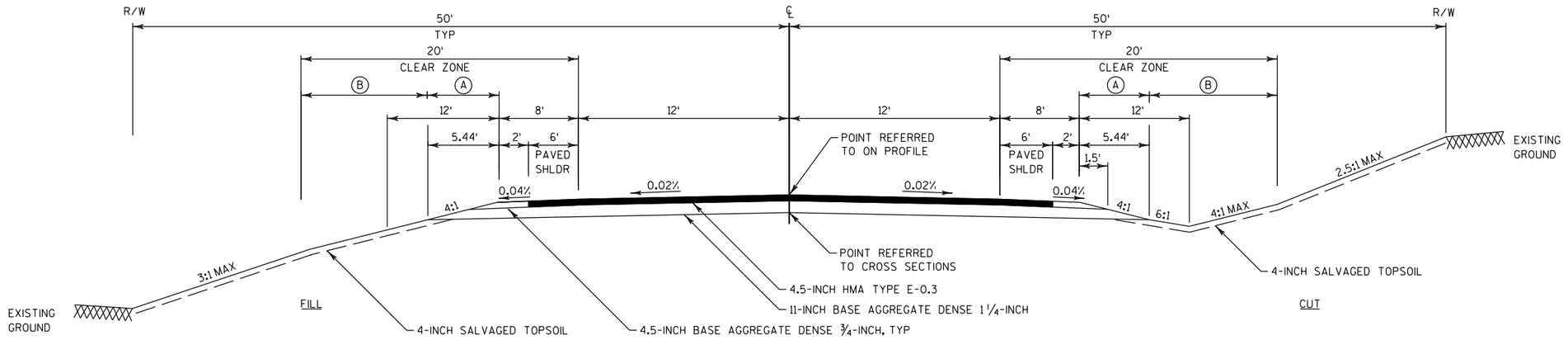

TYPICAL FINISHED SECTION - CTH AA

STA 95+00.00 TO STA 99+35.75
STA 100+04.25 TO STA 186+92.01

(A) FERTILIZER TYPE B; SEEDING MIXTURE NO. 20 (NO. 40 TO BE USED IN FRONT YARDS); SEEDING TEMPORARY

(B) SALVAGED TOPSOIL; MULCHING; FERTILIZER TYPE B; SEEDING MIXTURE NO. 20 (NO. 40 TO BE USED IN FRONT YARDS); SEEDING TEMPORARY

PROJECT NO: 7824-00-09/13	HWY: CTH AA	COUNTY: EAU CLAIRE	TYPICAL SECTIONS	SHEET 4	E

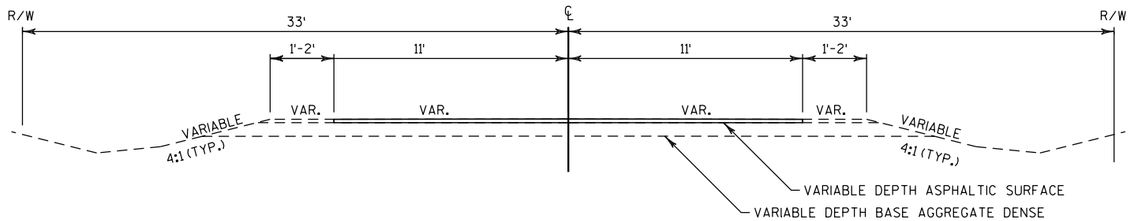

TYPICAL EXISTING SECTION - SIDEROADS

HOUSE ROAD STA 8+53.30'HR' TO STA 10+00.00'HR'
PRILL ROAD STA 10+00.00'E' TO STA 11+34.94'E'
MAYER ROAD STA 10+00.00'S' TO STA 8+50.66'S'
PLEASANT VIEW STREET STA 10+00.00'P' TO STA 11+14.77'P'

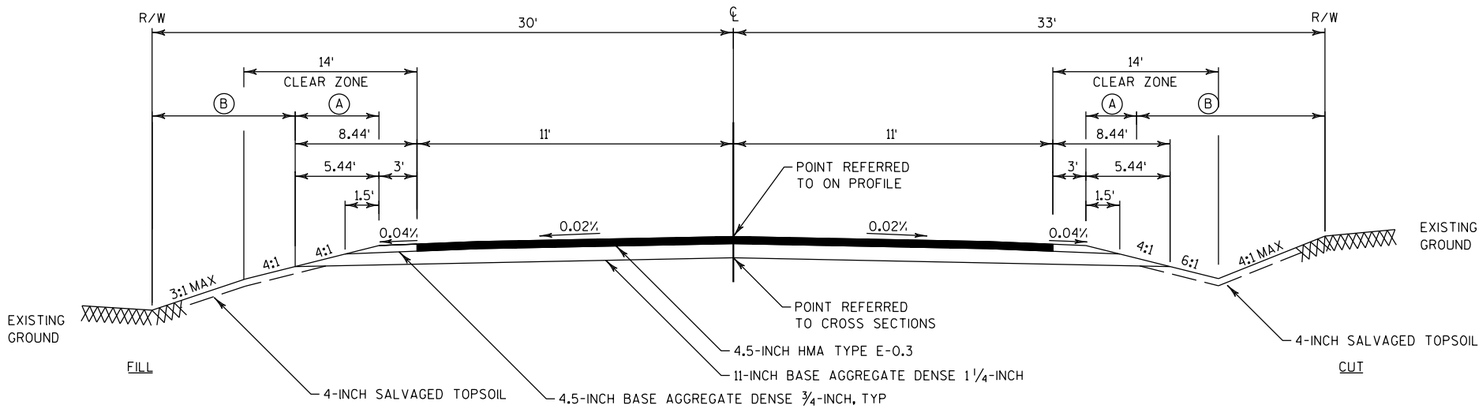

TYPICAL FINISHED SECTION - SIDEROADS

HOUSE ROAD STA 8+53.30'HR' TO STA 10+00.00'HR'
PRILL ROAD STA 10+00.00'E' TO STA 11+34.94'E'
MAYER ROAD STA 10+00.00'S' TO STA 8+50.66'S'
PLEASANT VIEW STREET STA 10+00.00'P' TO STA 11+14.77'P'

(A) FERTILIZER TYPE B; SEEDING MIXTURE NO. 20 (NO. 40 TO BE USED IN FRONT YARDS); SEEDING TEMPORARY

(B) SALVAGED TOPSOIL; MULCHING; FERTILIZER TYPE B; SEEDING MIXTURE NO. 20 (NO. 40 TO BE USED IN FRONT YARDS); SEEDING TEMPORARY

PROJECT NO: 7824-00-09/13	HWY: CTH AA	COUNTY: EAU CLAIRE	TYPICAL SECTIONS	SHEET 5	E

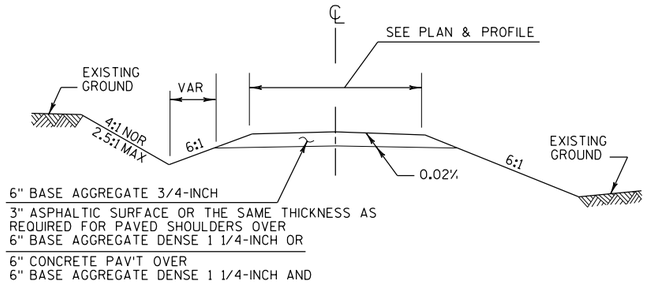

TYPICAL CROSS SECTION

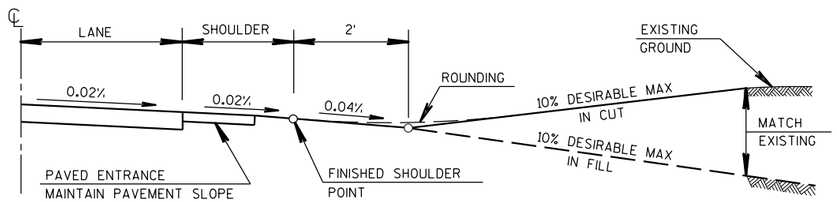

PROFILE VIEW

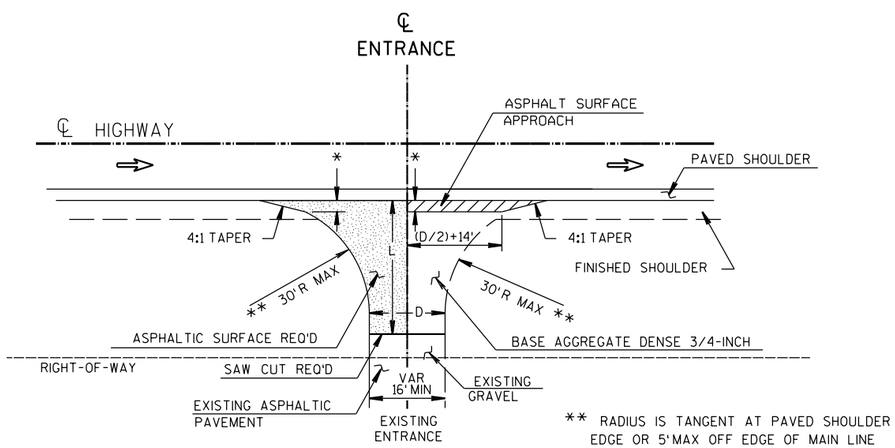

L = VARIABLE, EXACT LENGTH TO BE DETERMINED IN THE FIELD BY THE ENGINEER. BLEND BACK ON THE ENTRANCE FAR ENOUGH TO GET A SMOOTH PROFILE.

D = DRIVEWAY WIDTH
D = SEE PLAN & PROFILE

** RADIUS IS TANGENT AT PAVED SHOULDER EDGE OR 5' MAX OFF EDGE OF MAIN LINE PAVEMENT WHICH EVER IS LESS.

* 3' MAX OR TO FINISHED SHOULDER WHICH EVER IS LESS.

PLAN VIEW

RURAL DRIVEWAY DETAIL (PE's, FE's & CE'S)

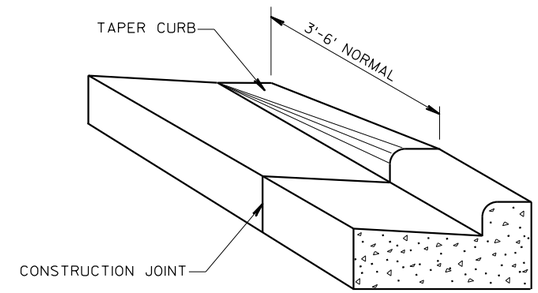

DETAIL OF CURB & GUTTER TERMINI

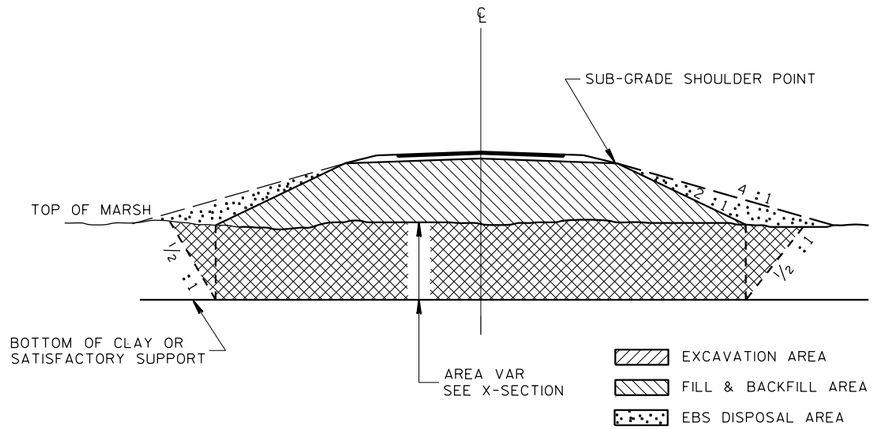

TYPICAL EXCAVATION BELOW SUBGRADE

PROJECT NO: 7824-00-09/13	HWY: CTH AA	COUNTY: EAU CLAIRE	CONSTRUCTION DETAILS	SHEET 6	E

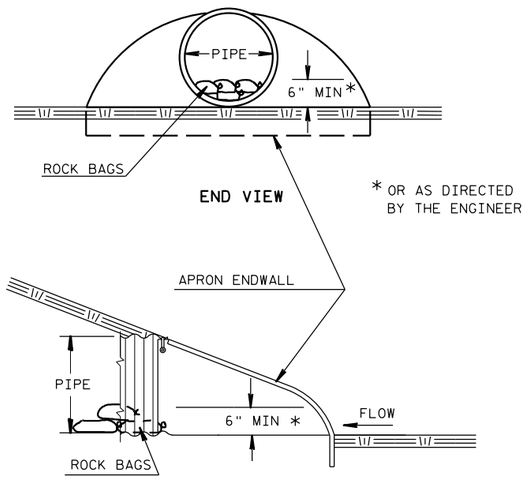

CULVERT PIPE CHECKS

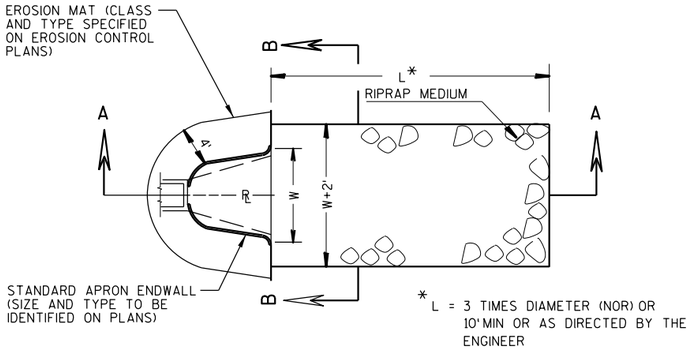

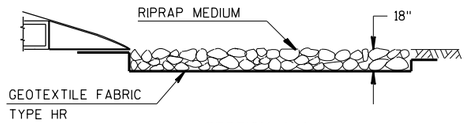

SECTION A-A

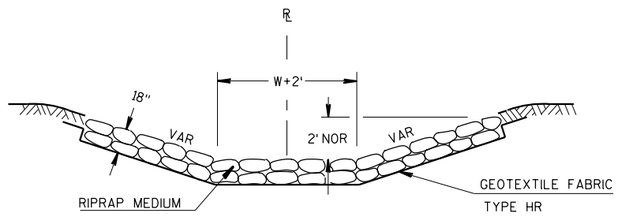

SECTION B-B

SOD, MEDIUM RIPRAP AND GEOTEXTILE FABRIC
DETAIL AT APRON ENDWALLS

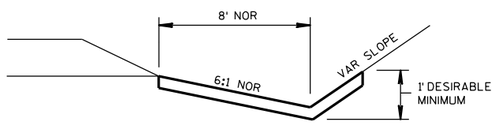

EROSION MAT DETAIL FOR DITCHES

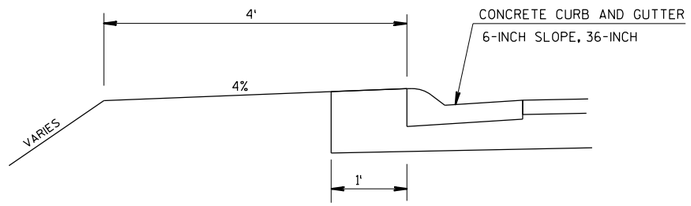

36-INCH CURB AND GUTTER

PROJECT NO: 7824-00-09/13	HWY: CTH AA	COUNTY: EAU CLAIRE	CONSTRUCTION DETAILS	SHEET 7	E

PAVEMENT DETAIL LEGEND:

- (AG01) BASE AGGREGATE DENSE 3/4-INCH, 4.5-INCH
- (AP01) HMA PAVEMENT TYPE E-0.3, 4.5-INCH
- (CG36) CONCRETE CURB AND GUTTER 6-INCH SLOPED 36-INCH TYPE D
- (DR03) ASPHALTIC SURFACE DRIVEWAYS AND FIELD ENTRANCES, 3-INCH
- (SW01) SAWING ASPHALT
- (SW02) SAWING CONCRETE
- (PV01) ASPHALTIC FLUME

POINT	STATION	OFFSET	COMMENT
P50	98+31.85	21.30' LT	MGS GUARDRAIL TERMINAL EAT
P51	98+83.01	19.83' LT	MGS GUARDRAIL 3
P52	98+97.18	19.83' LT	MGS GUARDRAIL THRIE BEAM TRANSITION
P53	99+35.16	19.83' LT	MGS GUARDRAIL THRIE BEAM
P57	98+31.85	21.30' RT	MGS GUARDRAIL TERMINAL EAT
P58	98+83.04	19.83' RT	MGS GUARDRAIL 3
P59	98+97.18	19.83' RT	MGS GUARDRAIL THRIE BEAM TRANSITION
P60	99+35.16	19.83' RT	MGS GUARDRAIL THRIE BEAM
P61	98+06.65	20.93' RT	END CURB FOR DWY
P62	98+45.81	20.00' RT	BEGIN CURB

ALLEN F. & BONNIE J. SCHWEICH

JEROME L & JOAN M ENGEDAL

OTTER CREEK

N

SLOPE INTERCEPTS

STA. 97+67.36 CTH AA (PRILL ROAD) =
STA. 9+96.16'HR' HOUSE ROAD
TYPE D (MOD.) INTERSECTION REQ'D.

R/W

CITY OF EAU CLAIRE UTILITIES (SAN)

CITY OF EAU CLAIRE UTILITIES (WAT)

XCEL ENERGY (OH)

XCEL ENERGY (G)

CHARTER COMMUNICATIONS (TV)

EXIST. R/W

PI STA 97+00.00

96+00

97+00

98+00

99+00

100+00

CTH AA (PRILL ROAD)

S 89°45'22" E

S 89°30'54" E

PT STA 9+75.36

PC STA 9+25.05

PI STA 9+50.26

N20°29'6"E

N30°05'37"E

N 30°05'37" E

8+00'HR' HOUSE ROAD

9+00'HR'

BEGIN PROJECT 7824-00-13
STA 95+00.00
X = 358,953.45
Y = 266,606.56
MATCH EXISTING
SAWCUT REQUIRED

AT&T WI DESIGN ENGINEERING (TELE)

STA 9+27.27'HR', 34.12' LT
4-FT DIA TYPE 'F' INLET
COVER EL = 845.74
IE (NE) = 840.39
IE (SW) = 840.49

STA 9+11.27'HR', 40.95' LT
4-FT DIA TYPE 'B' INLET
COVER EL = 843.29
IE = 840.54

SLOPE INTERCEPTS

XCEL ENERGY (OH)

CITY OF EAU CLAIRE UTILITIES (SS)

STA 9+42.90'HR', RT
18' ASPH PE REQD

STA 9+47.08'HR', 16.67' RT
5-FT DIA TYPE 'F' CB
COVER EL = 845.48

CITY OF EAU CLAIRE

BEGIN CONSTRUCTION
STA. 8+53.30'HR'
X = 359,156.08
Y = 266,478.14
MATCH EXISTING
SAWCUT REQUIRED

TRAVIS W FISCHER

CLIFFORD D & JEANNINE M RASMUSSEN

KAREN E. SCHAUER TRUST

WETLAND BOUNDARY (TYP.)

PI = STA 9+50.26
Y 266,562.030
X 359,204.701
Δ = 09°36'31"
D = 19°05'55"
T = 25.21'
L = 50.31'
R = 300.00'
PC = STA 9+25.05
PT = STA 9+75.36

POINT	STATION	OFFSET	ELEVATION	COMMENT
P1	95+50.00	12.00' LT	---	TAPER POINT
P2	95+50.00	12.00' RT	---	TAPER POINT
P3	95+81.05	18.00' RT	---	TAPER POINT
P4	96+71.05	18.00' RT	846.36	END OF RADIUS
P5	8+93.30'HR'	15.00' LT	846.06	END OF RADIUS
P6	8+92.28'HR'	12.33' RT	846.12	BEGIN C&G
P7	9+52.75'HR'	15.36' RT	845.61	END OF RADIUS
P8	9+78.91'HR'	27.75' RT	845.92	MID POINT
P9	98+06.30	18.96' RT	---	BEGIN DRIVEWAY C&G
P10	98+16.99	18.00' RT	846.24	END OF RADIUS
P11	98+45.81	18.00' RT	---	END DRIVEWAY C&G
P12	98+33.25	18.00' RT	---	POINT AT STATION
P16	98+54.63	12.00' LT	---	TAPER POINT
P17	99+09.25	18.00' LT	---	TAPER POINT
R1	96+71.05	63.00' RT	---	45.00' RADIUS
	8+93.30'HR'	60.00' LT	---	45.00' RADIUS
R2	98+16.99	78.00' RT	---	60.00' RADIUS
	9+46.13'HR'	75.00' RT	---	60.00' RADIUS
M1	97+10.16	40.41' RT	845.41	MID POINT

PROJECT NO: 7824-00-13	HWY: CTH AA	COUNTY: EAU CLAIRE	INTERSECTION DETAILS	SHEET 8	E

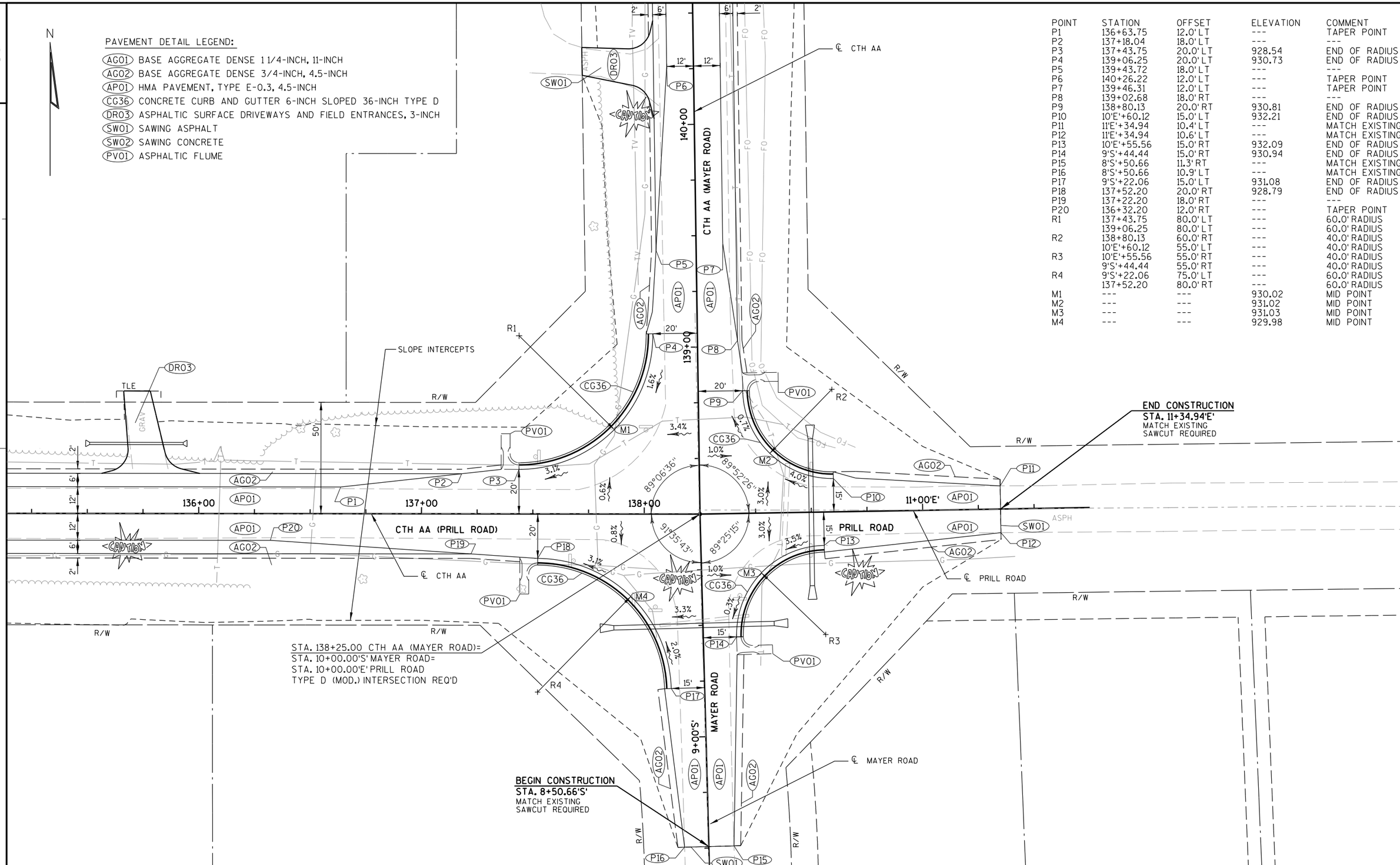

POINT	STATION	OFFSET	ELEVATION	COMMENT
P1	136+63.75	12.0' LT	---	TAPER POINT
P2	137+18.04	18.0' LT	---	---
P3	137+43.75	20.0' LT	928.54	END OF RADIUS
P4	139+06.25	20.0' LT	930.73	END OF RADIUS
P5	139+43.72	18.0' LT	---	---
P6	140+26.22	12.0' LT	---	TAPER POINT
P7	139+46.31	12.0' LT	---	TAPER POINT
P8	139+02.68	18.0' RT	---	---
P9	138+80.13	20.0' RT	930.81	END OF RADIUS
P10	10'E'+60.12	15.0' LT	932.21	END OF RADIUS
P11	11'E'+34.94	10.4' LT	---	MATCH EXISTING
P12	11'E'+34.94	10.6' LT	---	MATCH EXISTING
P13	10'E'+55.56	15.0' RT	932.09	END OF RADIUS
P14	9'S'+44.44	15.0' RT	930.94	END OF RADIUS
P15	8'S'+50.66	11.3' RT	---	MATCH EXISTING
P16	8'S'+50.66	10.9' LT	---	MATCH EXISTING
P17	9'S'+22.06	15.0' LT	931.08	END OF RADIUS
P18	137+52.20	20.0' RT	928.79	END OF RADIUS
P19	137+22.20	18.0' RT	---	---
P20	136+32.20	12.0' RT	---	TAPER POINT
R1	137+43.75	80.0' LT	---	60.0' RADIUS
	139+06.25	80.0' LT	---	60.0' RADIUS
R2	138+80.13	60.0' RT	---	40.0' RADIUS
	10'E'+60.12	55.0' LT	---	40.0' RADIUS
R3	10'E'+55.56	55.0' RT	---	40.0' RADIUS
	9'S'+44.44	55.0' RT	---	40.0' RADIUS
R4	9'S'+22.06	75.0' LT	---	60.0' RADIUS
	137+52.20	80.0' RT	---	60.0' RADIUS
M1	---	---	930.02	MID POINT
M2	---	---	931.02	MID POINT
M3	---	---	931.03	MID POINT
M4	---	---	929.98	MID POINT

PROJECT NO: 7824-00-09	HWY: CTH AA	COUNTY: EAU CLAIRE	INTERSECTION DETAILS	SHEET 9	E

FILE NAME : S:\Projects\NW\Eau Claire County\CTH AA\CAD\Plans\021102_id_AA.dgn PLOT DATE : 10/23/2015 PLOT BY : $$...plotuser...$$ PLOT NAME : PLOT SCALE : 40.0000 sf / in.

WISDOT/CADDS SHEET 42

POINT	STATION	OFFSET	ELEVATION	COMMENT
P100	182+29.80	12.0' RT	---	TAPER POINT
P101	183+12.10	18.0' RT	---	---
P102	183+47.54	20.0' RT	910.33	END OF RADIUS
P103	10'P'+79.08	15.0' RT	910.60	END OF RADIUS
P104	11'P'+50.17	10.9' RT	---	MATCH EXISTING
P105	11'P'+50.17	10.8' LT	---	MATCH EXISTING
P106	10'P'+60.78	15.0' LT	910.32	END OF RADIUS
P107	184+77.96	20.0' RT	911.08	END OF RADIUS
P108	185+14.33	18.0' RT	---	---
P109	185+57.97	12.0' RT	---	TAPER POINT
R100	183+47.54	80.0' RT	---	60.0' RADIUS
	10'P'+79.08	75.0' RT	---	60.0' RADIUS
R101	10'P'+60.78	55.0' LT	---	40.0' RADIUS
	184+77.96	60.0' RT	---	40.0' RADIUS
M100	---	---	909.25	MIDPOINT
M101	---	---	910.22	MIDPOINT

PAVEMENT DETAIL LEGEND:

- (AG01) BASE AGGREGATE DENSE 1 1/4-INCH, 11-INCH
- (AG02) BASE AGGREGATE DENSE 3/4-INCH, 4.5-INCH
- (AP01) HMA PAVEMENT TYPE E-0.3, 4.5-INCH
- (CG36) CONCRETE CURB AND GUTTER 6-INCH SLOPED 36-INCH TYPE D
- (DR03) ASPHALTIC SURFACE DRIVEWAYS AND FIELD ENTRANCES, 3-INCH
- (SW01) SAWING ASPHALT
- (SW02) SAWING CONCRETE
- (PV01) ASPHALTIC FLUME

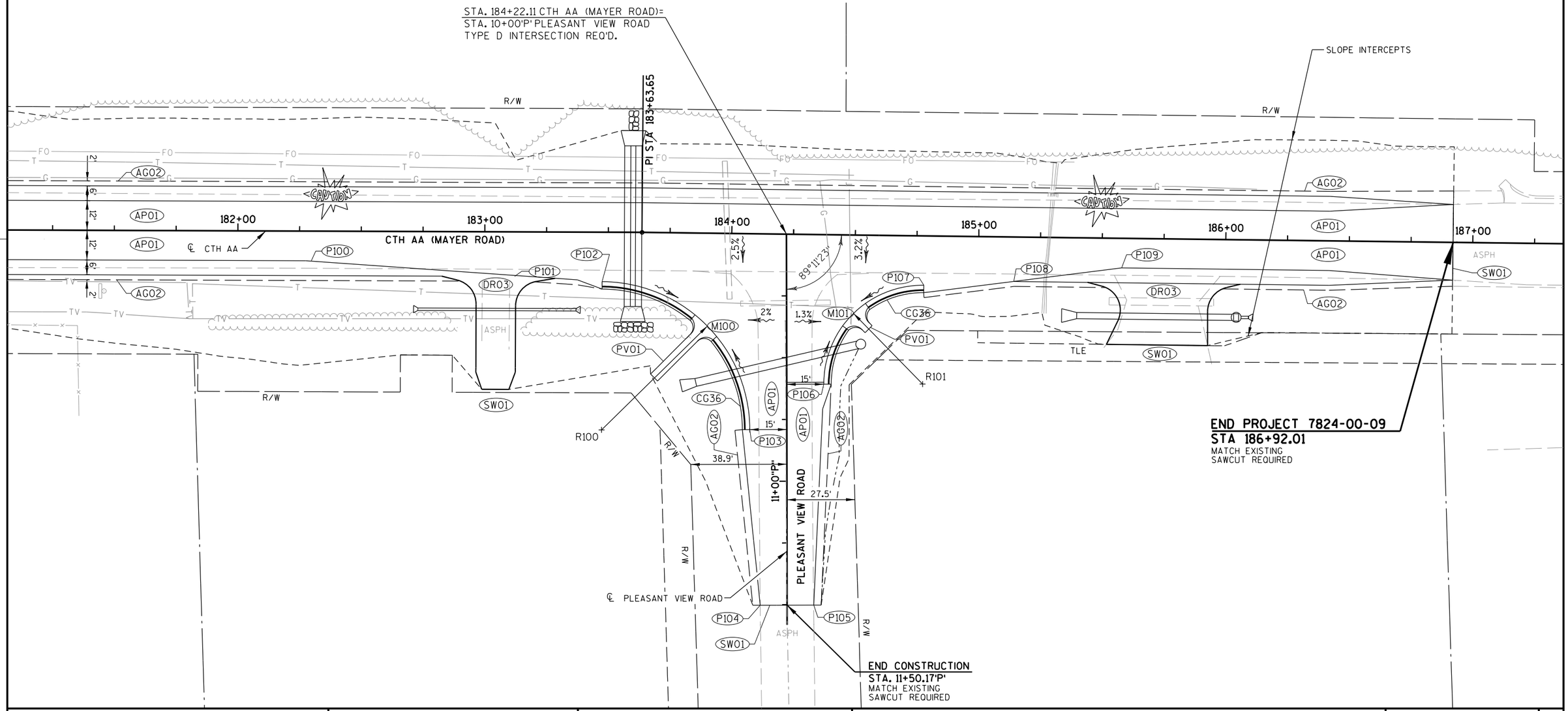

PROJECT NO: 7824-00-09	HWY: CTH AA	COUNTY: EAU CLAIRE	INTERSECTION DETAILS	SHEET 10	E

2

30' TYP.

R/W

EXIST. R/W

BREAKER RUN TRACKING PAD

95+00

96+00

CTH AA (PRILL ROAD)

97+00

98+00

99+00

100+00

MATCH LINE STA. 100+50

BEGIN PROJECT 7824-00-13
STA 95+00.00
MATCH EXISTING
SAWCUT REQUIRED

9+00"HR" HOUSE ROAD

MH

SS

TLE

EXISTING STRUCTURE P-18-0032 TO BE REMOVED

WETLAND BOUNDARY (TYP.)

OTTER CREEK

N

2

THE IMMEDIATE RECEIVING WATER IS OTTER CREEK

LEGEND

- EROSION MAT CLASS I, TYPE A OR B
- EROSION MAT CLASS II, TYPE B
- EROSION MAT CLASS III, TYPE C
- SILT FENCE
- RIP RAP
- INLET PROTECTION
- SLOPE INTERCEPT
- ASPH — ASPHALTIC FLUME
- TEMPORARY DITCH CHECK
- CULVERT PIPE CHECK
- SURFACE WATER FLOW

MATCH LINE STA. 100+50

101+00

CTH AA (PRILL ROAD)

102+00

103+00

MATCH LINE STA. 104+00

END PROJECT 7824-00-13
BEGIN PROJECT 7824-00-09
STA 104+00.00

PROJECT NO: 7824-00-13	HWY: CTH AA	COUNTY: EAU CLAIRE	EROSION CONTROL	SHEET 11	E

FILE NAME : S:\Projects\NW\Eau Claire County\CTH AA\CAD\Plans\022001_ec_OC.dgn PLOT DATE : 1/20/2016 PLOT BY : CORRE, Inc. PLOT NAME : PLOT SCALE : 40.0000 sf / in.

WISDOT/CADDS SHEET 42

2

2

LEGEND

- EROSION MAT CLASS I, TYPE A OR B
- EROSION MAT CLASS II, TYPE B
- EROSION MAT CLASS III, TYPE C
- SILT FENCE
- RIP RAP
- INLET PROTECTION
- SLOPE INTERCEPT
- ASPH — ASPHALTIC FLUME
- TEMPORARY DITCH CHECK
- CULVERT PIPE CHECK
- SURFACE WATER FLOW

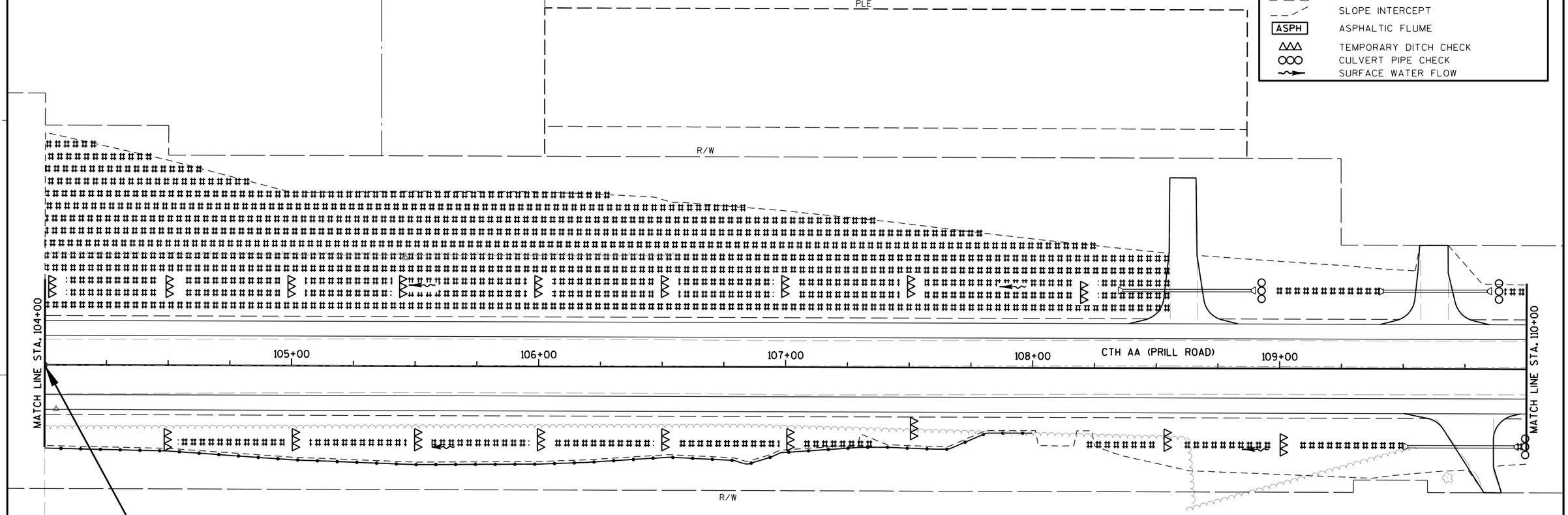

BEGIN PROJECT 7824-00-09
STA 104+00.00
MATCH EXISTING
SAWCUT REQUIRED

N

PROJECT NO: 7824-00-09	HWY: CTH AA	COUNTY: EAU CLAIRE	EROSION CONTROL	SHEET 12	E

FILE NAME : S:\Projects\NW\Eau Claire County\CTH AA\CAD\Plans\022002_ec_AA.dgn PLOT DATE : 10/23/2015 PLOT BY : $$...plotuser...$$ PLOT NAME : PLOT SCALE : 40.0000 sf / in.

WISDOT/CADDS SHEET 42

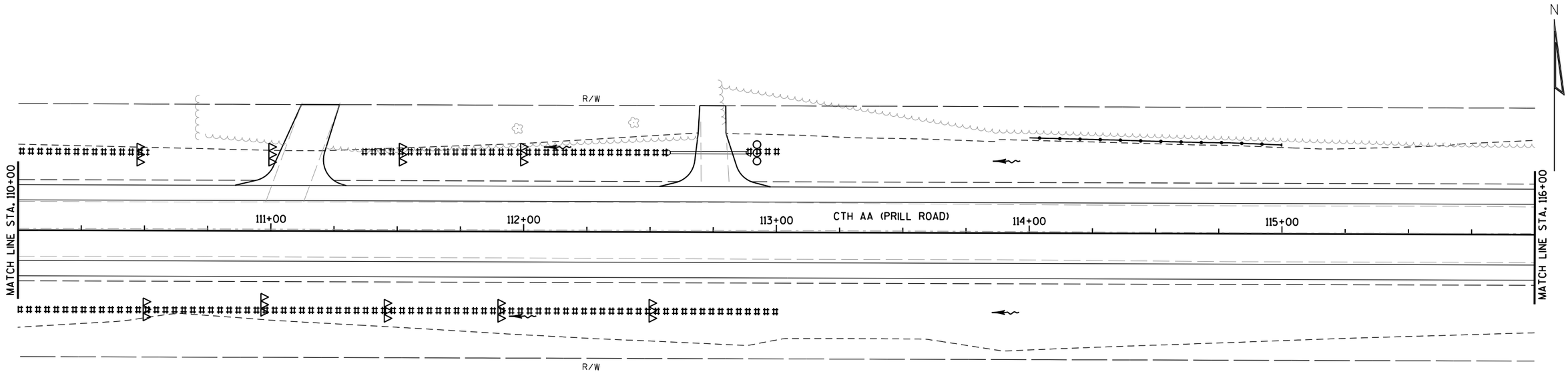

2

LEGEND

- EROSION MAT CLASS I, TYPE A OR B
- EROSION MAT CLASS II, TYPE B
- EROSION MAT CLASS III, TYPE C
- SILT FENCE
- RIP RAP
- INLET PROTECTION
- SLOPE INTERCEPT
- ASPH — ASPHALTIC FLUME
- TEMPORARY DITCH CHECK
- CULVERT PIPE CHECK
- SURFACE WATER FLOW

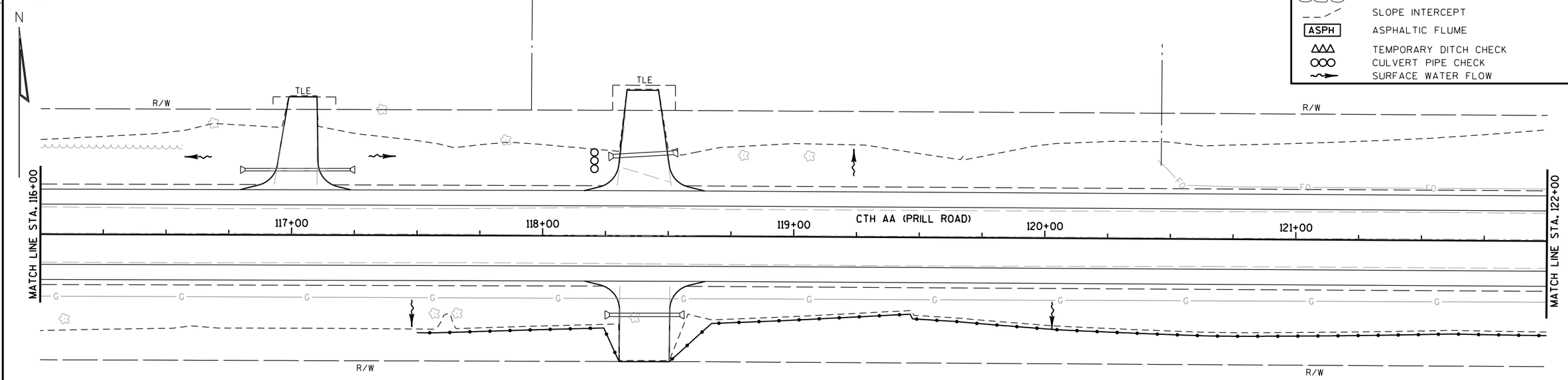

PROJECT NO: 7824-00-09	HWY: CTH AA	COUNTY: EAU CLAIRE	EROSION CONTROL	SHEET 13	E

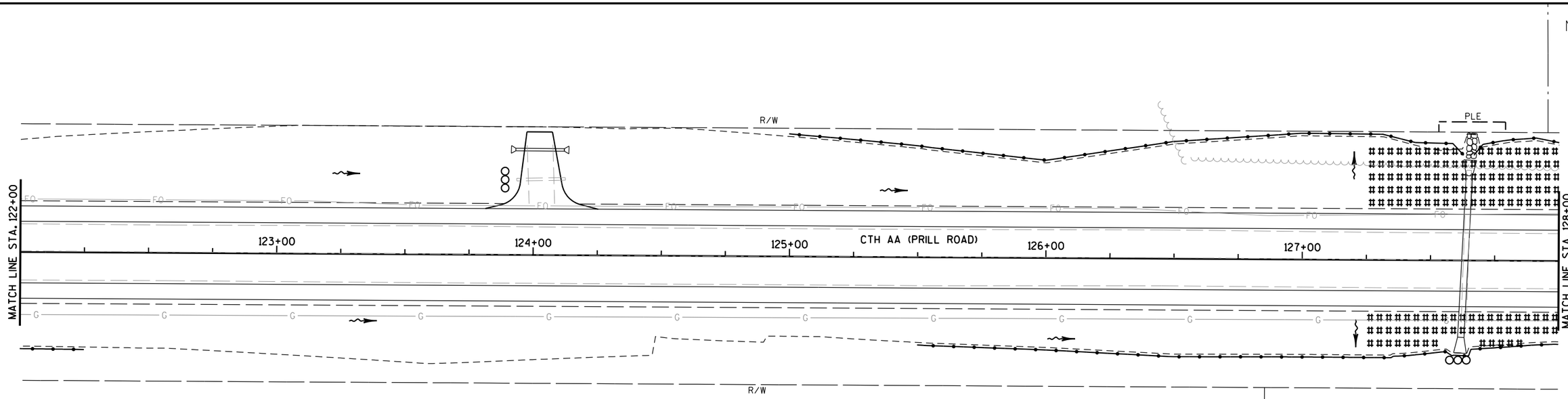

2

LEGEND

- EROSION MAT CLASS I, TYPE A OR B
- EROSION MAT CLASS II, TYPE B
- EROSION MAT CLASS III, TYPE C
- SILT FENCE
- RIP RAP
- INLET PROTECTION
- SLOPE INTERCEPT
- ASPHALTIC FLUME (ASPH)
- TEMPORARY DITCH CHECK
- CULVERT PIPE CHECK
- SURFACE WATER FLOW

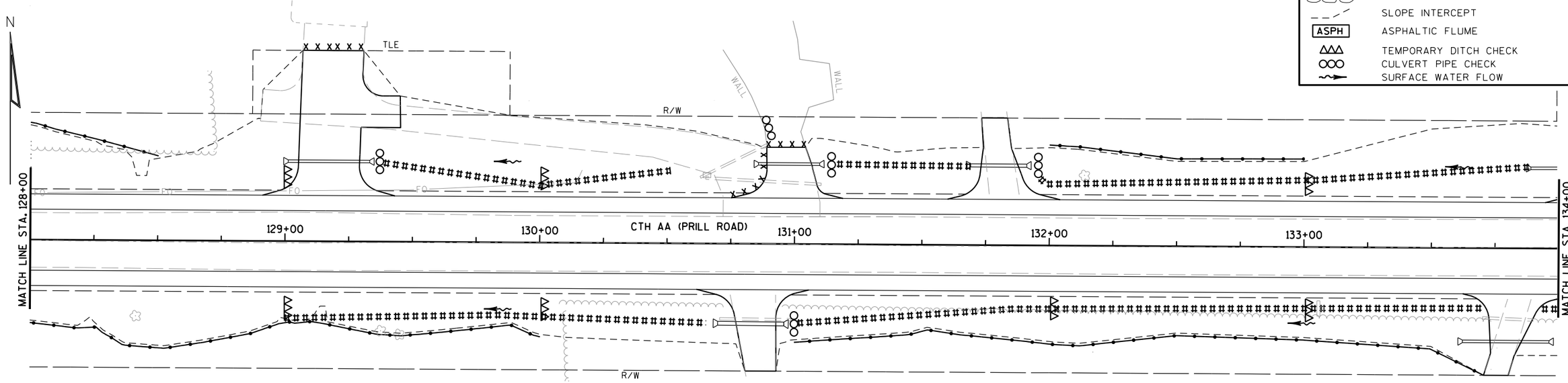

PROJECT NO: 7824-00-09	HWY: CTH AA	COUNTY: EAU CLAIRE	EROSION CONTROL	SHEET 14	E

2

2

TLE

TLE

R/W

R/W

ASPH

MATCH LINE STA. 134+00

135+00

CTH AA (PRILL ROAD)

136+00

137+00

138+00

MATCH LINE STA. 139+00

139

CTH AA (MAYER ROAD)

ASPH

R/W

END CONSTRUCTION
STA. 11+34.94'E'
MATCH EXISTING
SAWCUT REQUIRED

11+00'E'

ASPH

PRILL ROAD

R/W

N

EASEMENT

R/W

ASPH

MAYER ROAD

BEGIN CONSTRUCTION
STA. 8+50.66'S'
MATCH EXISTING
SAWCUT REQUIRED

STA. 138+25.00 CTH AA (MAYER ROAD)=
STA. 10+00.00'S' MAYER ROAD=
STA. 10+00.00'E' PRILL ROAD

9+00'S'

R/W

EASEMENT

R/W

N

LEGEND

- EROSION MAT CLASS I, TYPE A OR B
- EROSION MAT CLASS II, TYPE B
- EROSION MAT CLASS III, TYPE C
- SILT FENCE
- RIP RAP
- INLET PROTECTION
- SLOPE INTERCEPT
- ASPH — ASPHALTIC FLUME
- TEMPORARY DITCH CHECK
- CULVERT PIPE CHECK
- SURFACE WATER FLOW

R/W

MATCH LINE STA. 139+00

140+00

141+00

142+00

143+00

144+00

MATCH LINE STA. 145+00

CTH AA (MAYER ROAD)

R/W

PROJECT NO: 7824-00-09	HWY: CTH AA	COUNTY: EAU CLAIRE	EROSION CONTROL	SHEET 15	E

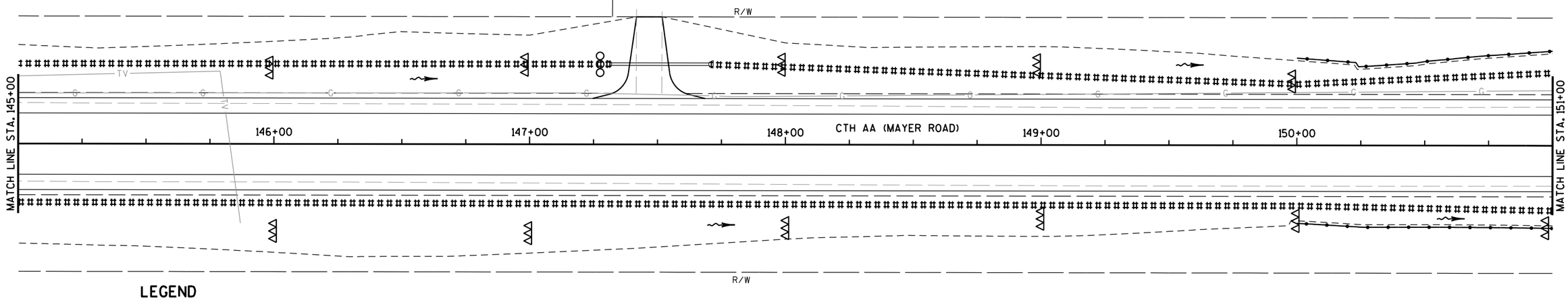

LEGEND

- EROSION MAT CLASS I, TYPE A OR B
- EROSION MAT CLASS II, TYPE B
- EROSION MAT CLASS III, TYPE C
- SILT FENCE
- RIP RAP
- INLET PROTECTION
- SLOPE INTERCEPT
- ASPH — ASPHALTIC FLUME
- TEMPORARY DITCH CHECK
- CULVERT PIPE CHECK
- SURFACE WATER FLOW

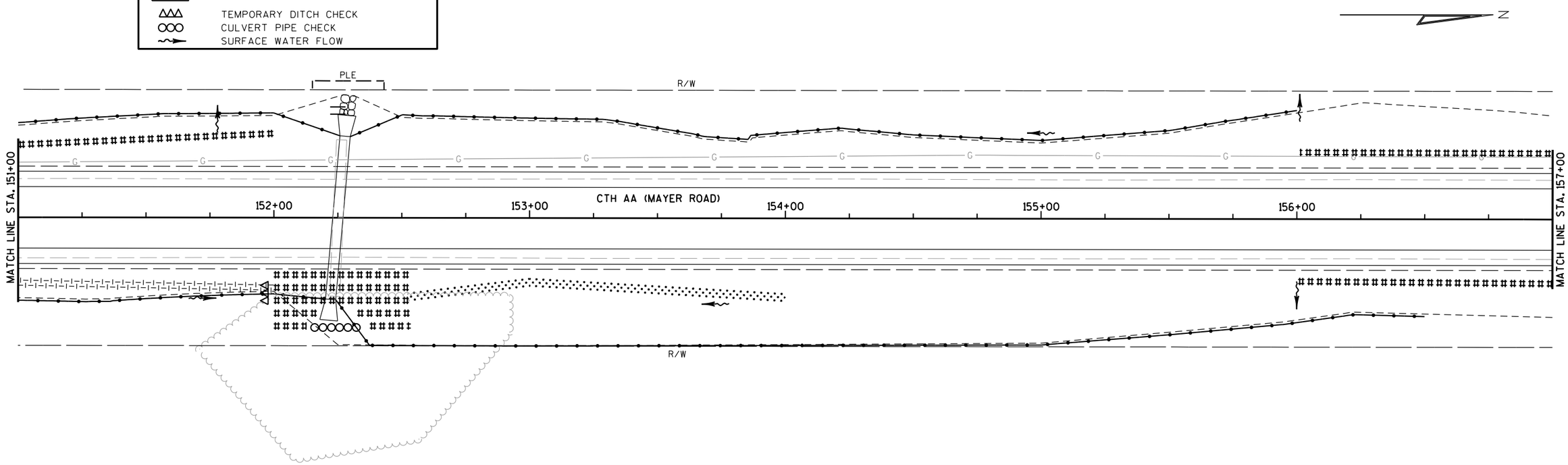

PROJECT NO: 7824-00-09	HWY: CTH AA	COUNTY: EAU CLAIRE	EROSION CONTROL	SHEET 16	E

2

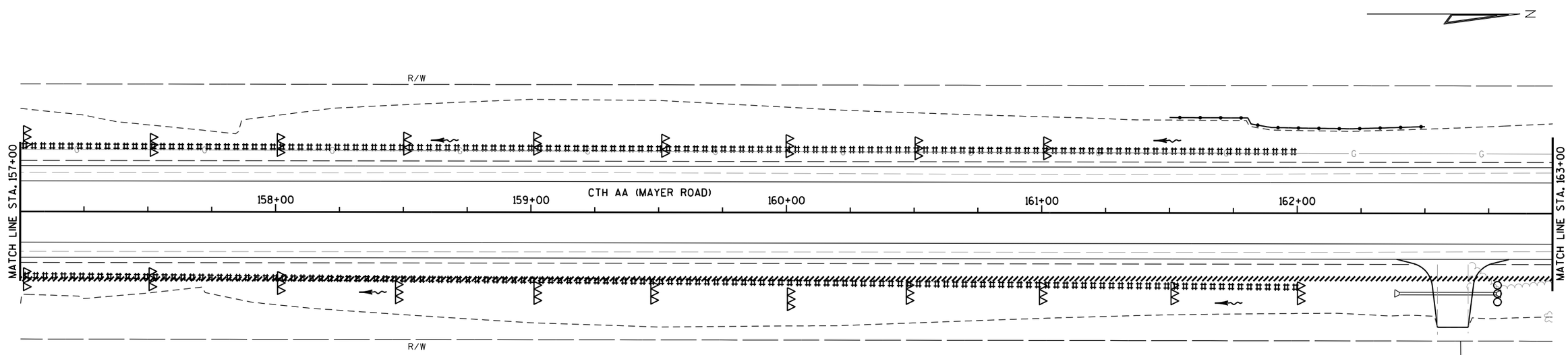

LEGEND

- EROSION MAT CLASS I, TYPE A OR B
- EROSION MAT CLASS II, TYPE B
- EROSION MAT CLASS III, TYPE C
- SILT FENCE
- RIP RAP
- INLET PROTECTION
- SLOPE INTERCEPT
- ASPH — ASPHALTIC FLUME
- TEMPORARY DITCH CHECK
- CULVERT PIPE CHECK
- SURFACE WATER FLOW

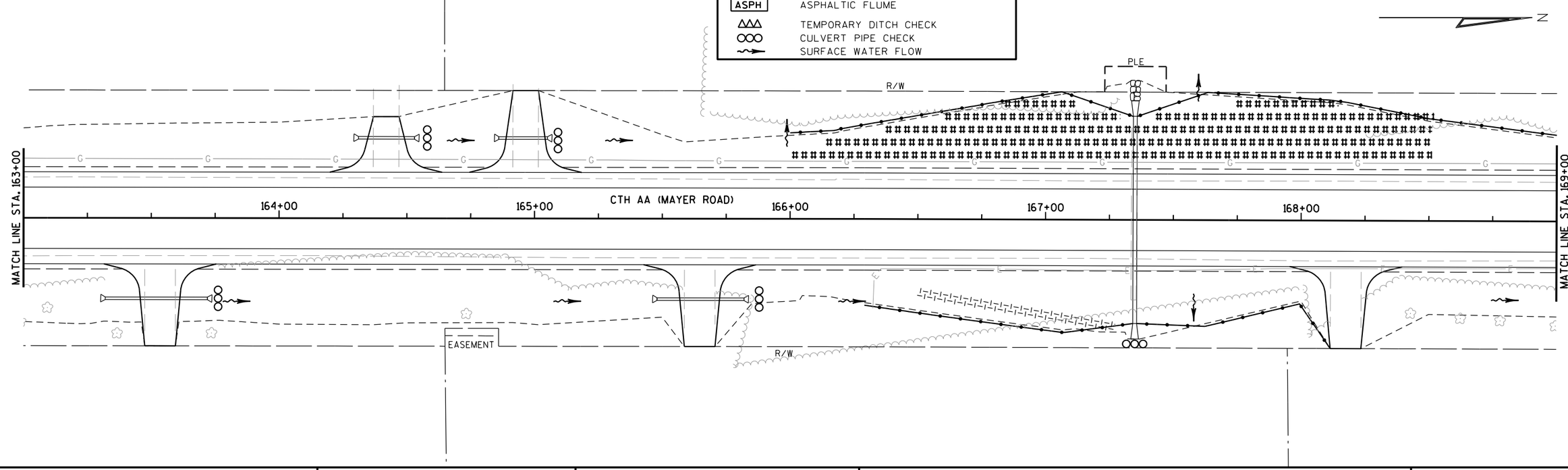

PROJECT NO: 7824-00-09	HWY: CTH AA	COUNTY: EAU CLAIRE	EROSION CONTROL	SHEET 17	E

2

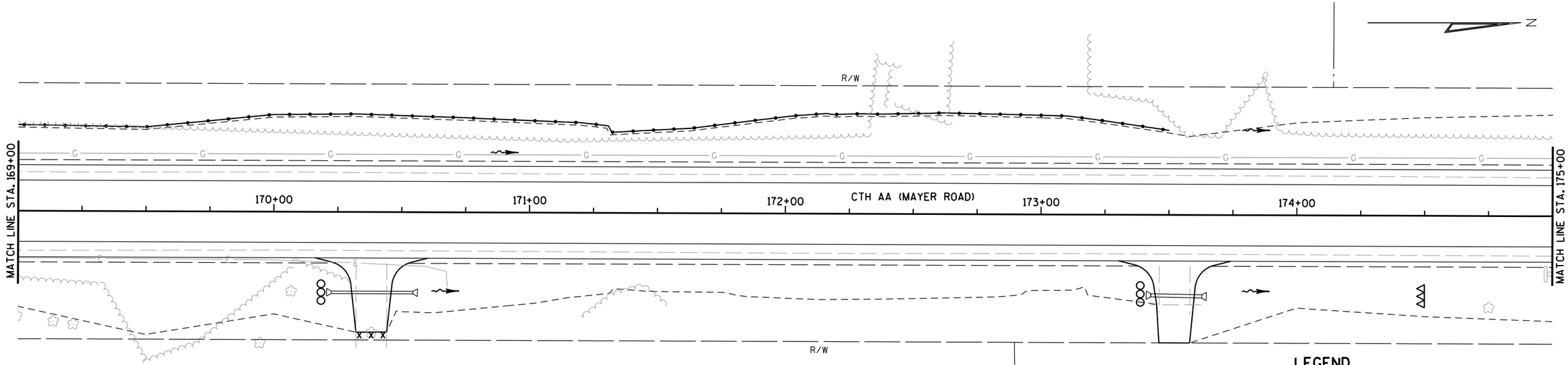

LEGEND

- EROSION MAT CLASS I, TYPE A OR B
- EROSION MAT CLASS II, TYPE B
- EROSION MAT CLASS III, TYPE C
- SILT FENCE
- RIP RAP
- INLET PROTECTION
- SLOPE INTERCEPT
- ASPH — ASPHALTIC FLUME
- TEMPORARY DITCH CHECK
- CULVERT PIPE CHECK
- SURFACE WATER FLOW

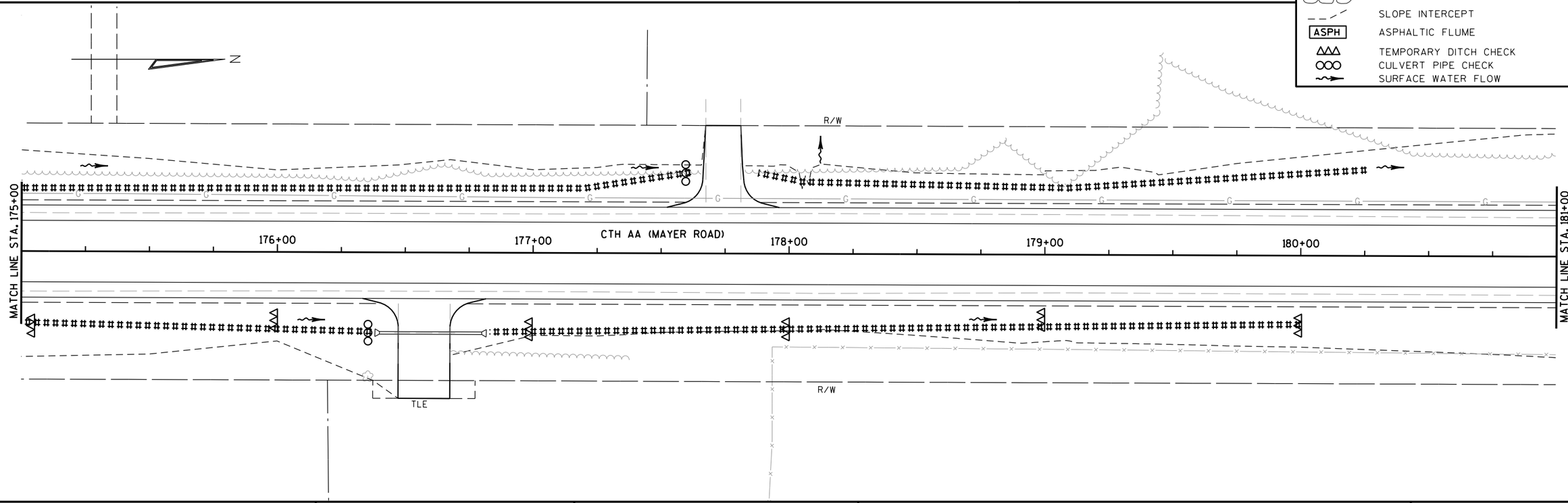

PROJECT NO: 7824-00-09	HWY: CTH AA	COUNTY: EAU CLAIRE	EROSION CONTROL	SHEET 18	E

2

LEGEND

- EROSION MAT CLASS I, TYPE A OR B
- EROSION MAT CLASS II, TYPE B
- EROSION MAT CLASS III, TYPE C
- SILT FENCE
- RIP RAP
- INLET PROTECTION
- SLOPE INTERCEPT
- ASPH — ASPHALTIC FLUME
- TEMPORARY DITCH CHECK
- CULVERT PIPE CHECK
- SURFACE WATER FLOW

N

STA. 184+22.11 CTH AA (MAYER ROAD)=
STA. 10+00'P' PLEASANT VIEW ROAD
TYPE D INTERSECTION REQ'D.

BREAKER RUN
TRACKING PAD

30' TYP

R/W

MATCH LINE STA. 181+00

182+00 CTH AA (MAYER ROAD) 183+00 184+00 185+00 186+00 187+00

ASPH

R/W

ASPH

ASPH

R/W

PLEASANT VIEW STREET

11+00"P"

R/W

R/W

ASPH

END PROJECT 7824-00-09
STA 186+92.01
MATCH EXISTING
SAWCUT REQUIRED

END CONSTRUCTION
STA. 11+50.17'P'
MATCH EXISTING
SAWCUT REQUIRED

2

PROJECT NO: 7824-00-09	HWY: CTH AA	COUNTY: EAU CLAIRE	EROSION CONTROL	SHEET 19	E

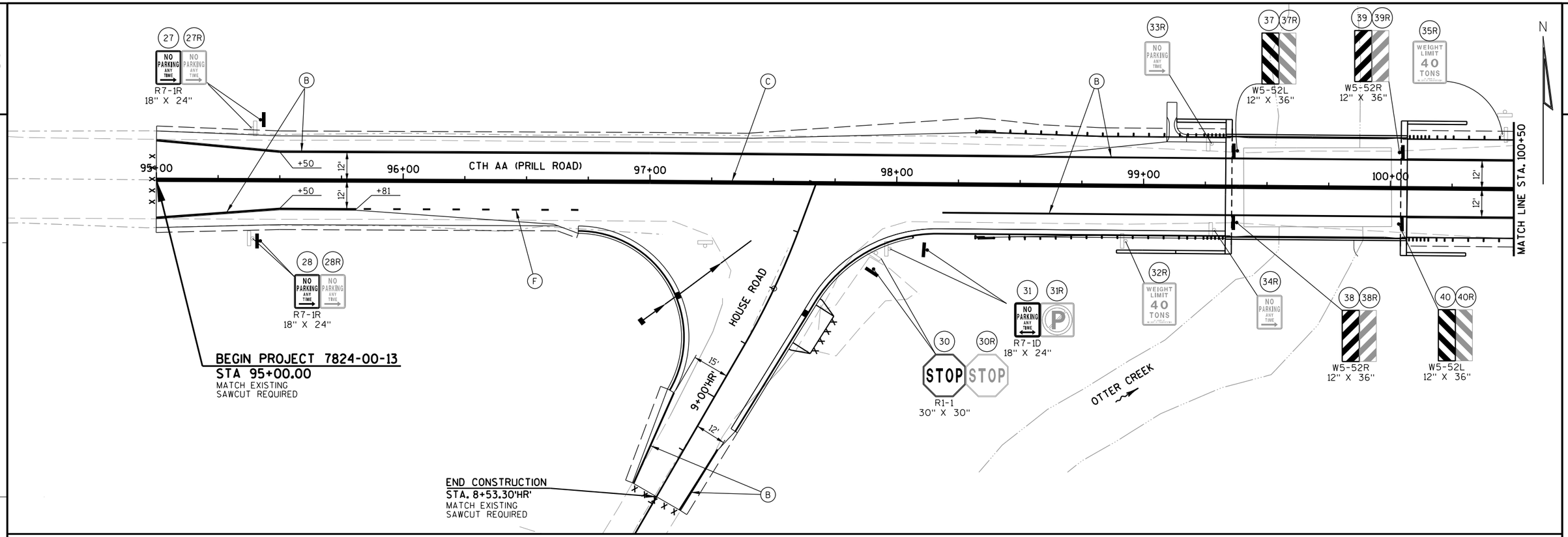

LEGEND

	EXISTING/PROPOSED SIGNS ON WOOD POST(S)
X XR	X-SIGN NUMBER/XR-SIGN TO BE REMOVED
XM	EXISTING SIGN TO BE MOVED
ESTR	EXISTING SIGN TO REMAIN
B	PAVEMENT MARKING EPOXY 4-INCH (WHITE)
C	PAVEMENT MARKING EPOXY 4-INCH (DOUBLE YELLOW)
D	PAVEMENT MARKING EPOXY 4-INCH (YELLOW SKIP 12.5', 37.5' GAP)
E	PAVEMENT MARKING EPOXY 4-INCH (SINGLE YELLOW)
F	PAVEMENT MARKING STOP LINE EPOXY 18-INCH (WHITE)

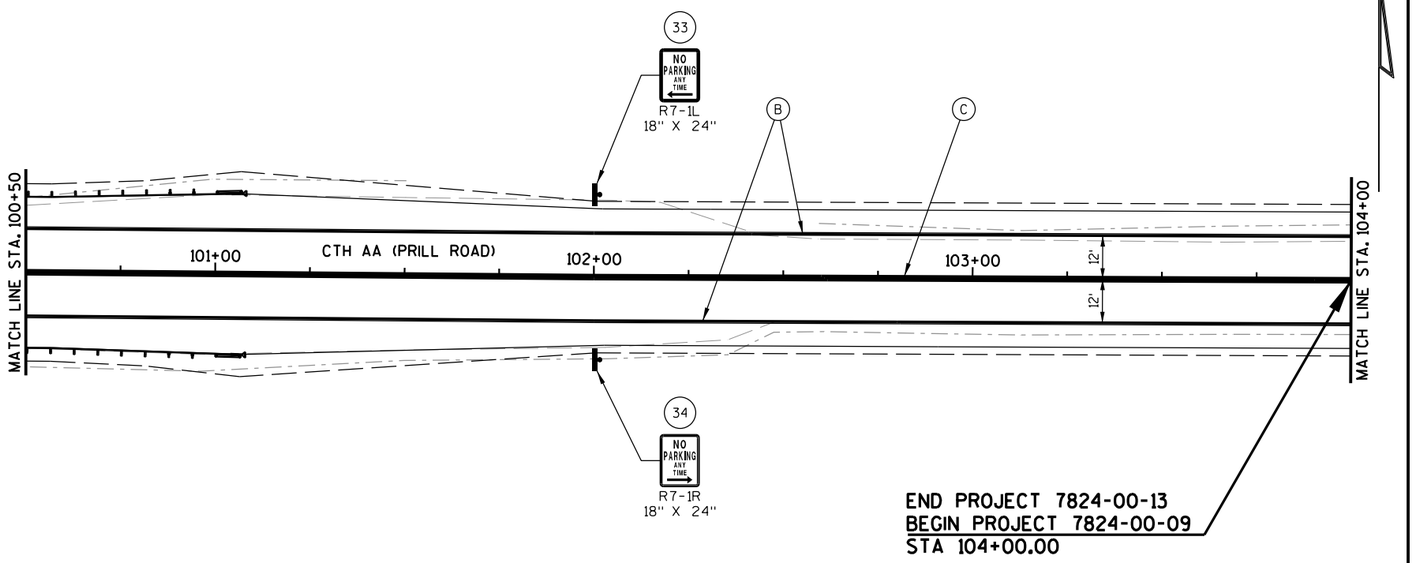

PROJECT NO: 7824-00-13	HWY: CTH AA	COUNTY: EAU CLAIRE	SIGNING / PAVEMENT MARKING	SHEET 20	E

2

2

LEGEND

	EXISTING/PROPOSED SIGNS ON WOOD POST(S)
(X) (XR)	X-SIGN NUMBER/XR-SIGN TO BE REMOVED
(XM)	EXISTING SIGN TO BE MOVED
ESTR	EXISTING SIGN TO REMAIN
(B)	PAVEMENT MARKING EPOXY 4-INCH (WHITE)
(C)	PAVEMENT MARKING EPOXY 4-INCH (DOUBLE YELLOW)
(D)	PAVEMENT MARKING EPOXY 4-INCH (YELLOW SKIP 12.5', 37.5' GAP)
(E)	PAVEMENT MARKING EPOXY 4-INCH (SINGLE YELLOW)
(F)	PAVEMENT MARKING STOP LINE EPOXY 18-INCH (WHITE)

N

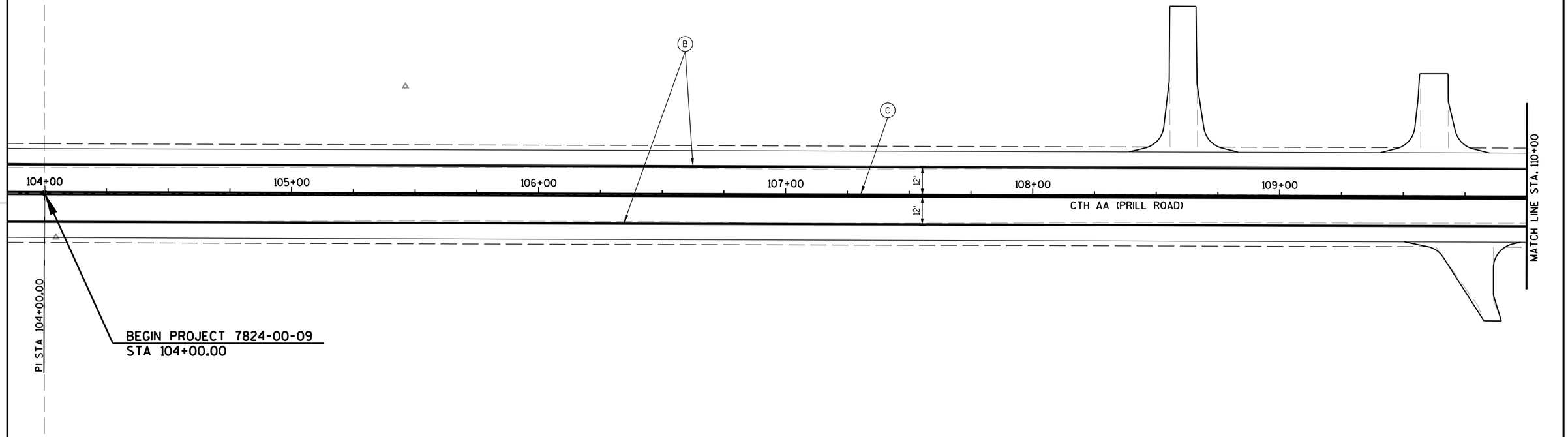

PROJECT NO: 7824-00-09	HWY: CTH AA	COUNTY: EAU CLAIRE	SIGNING / PAVEMENT MARKING	SHEET 21	E

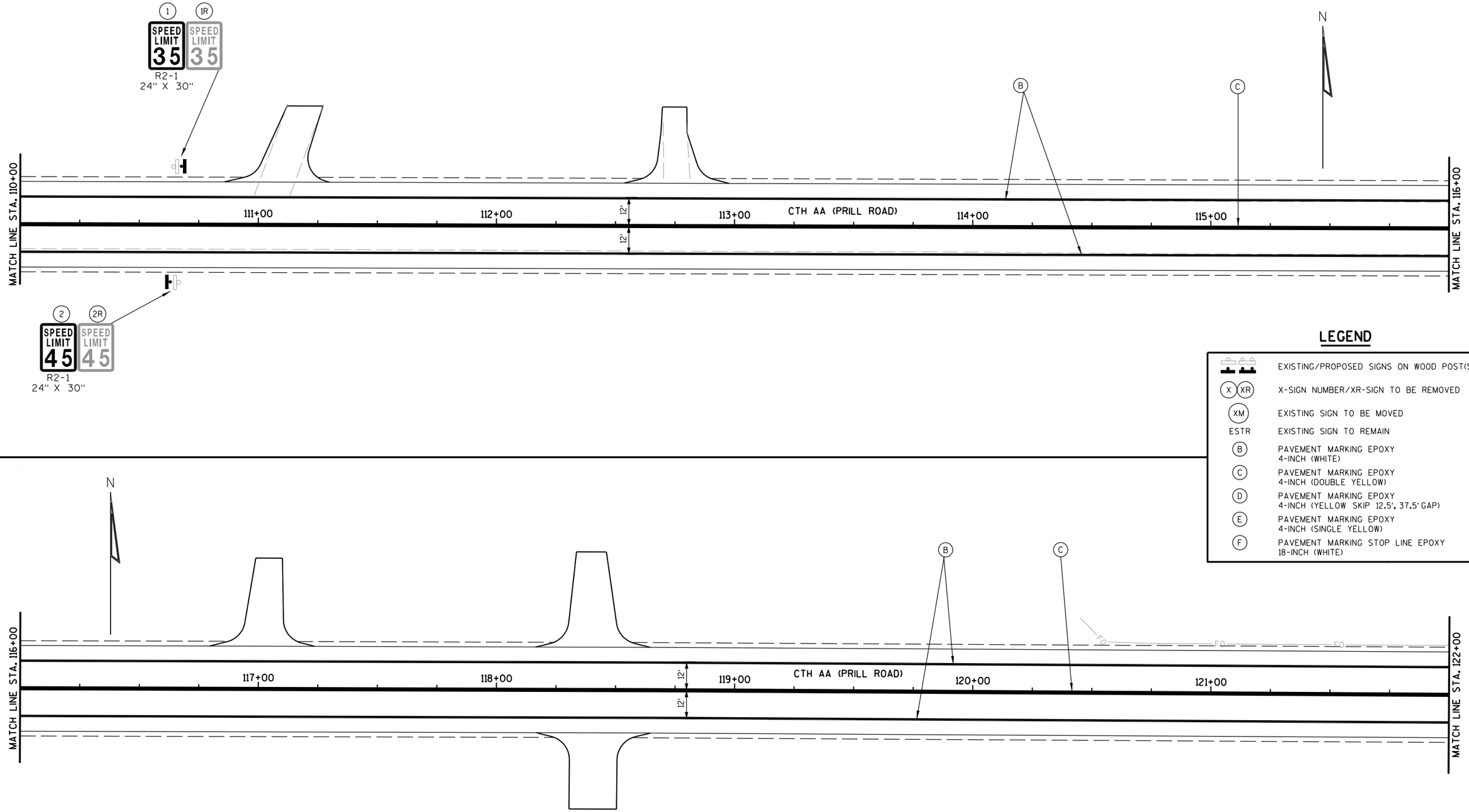

LEGEND

	EXISTING/PROPOSED SIGNS ON WOOD POST(S)
(X) (XR)	X-SIGN NUMBER/XR-SIGN TO BE REMOVED
(XM)	EXISTING SIGN TO BE MOVED
ESTR	EXISTING SIGN TO REMAIN
(B)	PAVEMENT MARKING EPOXY 4-INCH (WHITE)
(C)	PAVEMENT MARKING EPOXY 4-INCH (DOUBLE YELLOW)
(D)	PAVEMENT MARKING EPOXY 4-INCH (YELLOW SKIP 12.5', 37.5' GAP)
(E)	PAVEMENT MARKING EPOXY 4-INCH (SINGLE YELLOW)
(F)	PAVEMENT MARKING STOP LINE EPOXY 18-INCH (WHITE)

PROJECT NO: 7824-00-09	HWY: CTH AA	COUNTY: EAU CLAIRE	SIGNING / PAVEMENT MARKING	SHEET 22	E

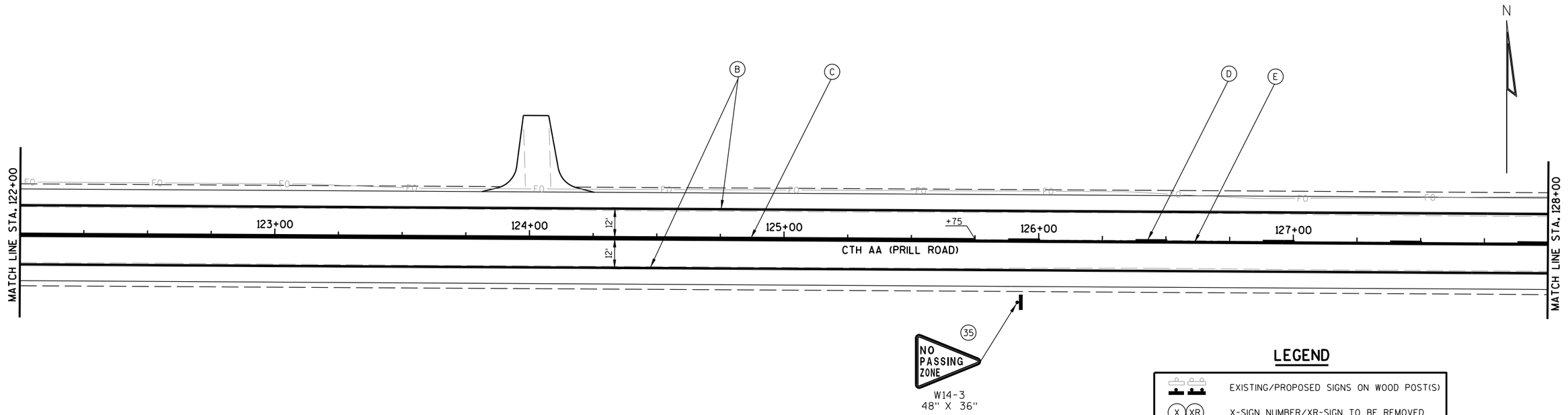

LEGEND

	EXISTING/PROPOSED SIGNS ON WOOD POST(S)
X XR	X-SIGN NUMBER/XR-SIGN TO BE REMOVED
XM	EXISTING SIGN TO BE MOVED
ESTR	EXISTING SIGN TO REMAIN
B	PAVEMENT MARKING EPOXY 4-INCH (WHITE)
C	PAVEMENT MARKING EPOXY 4-INCH (DOUBLE YELLOW)
D	PAVEMENT MARKING EPOXY 4-INCH (YELLOW SKIP 12.5', 37.5' GAP)
E	PAVEMENT MARKING EPOXY 4-INCH (SINGLE YELLOW)
F	PAVEMENT MARKING STOP LINE EPOXY 18-INCH (WHITE)

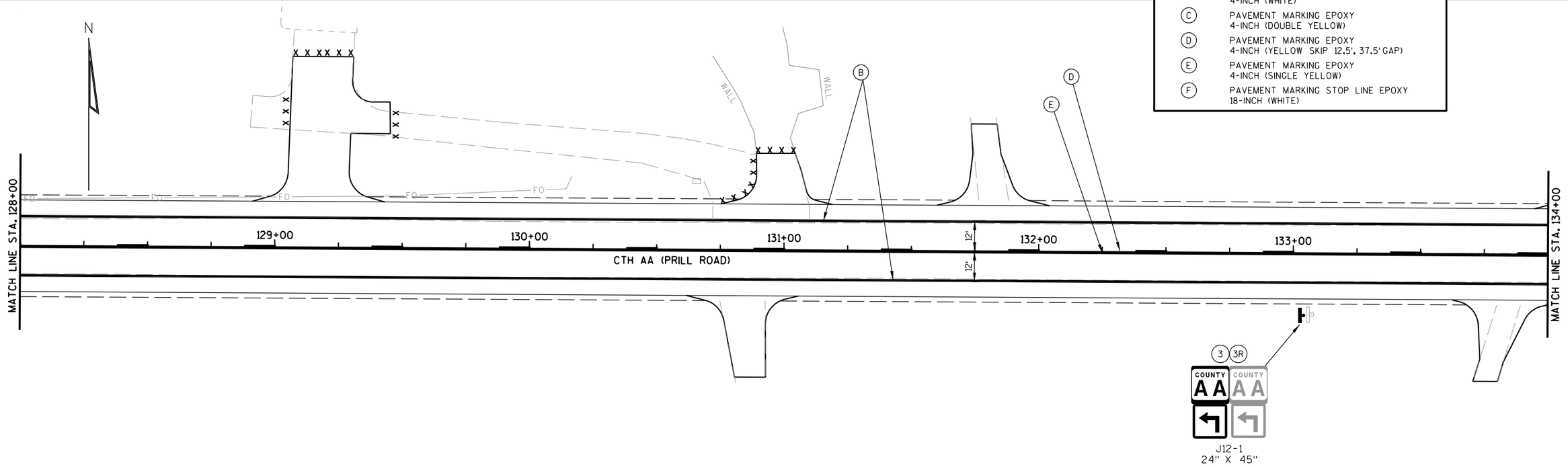

PROJECT NO: 7824-00-09	HWY: CTH AA	COUNTY: EAU CLAIRE	SIGNING / PAVEMENT MARKING	SHEET 23	E

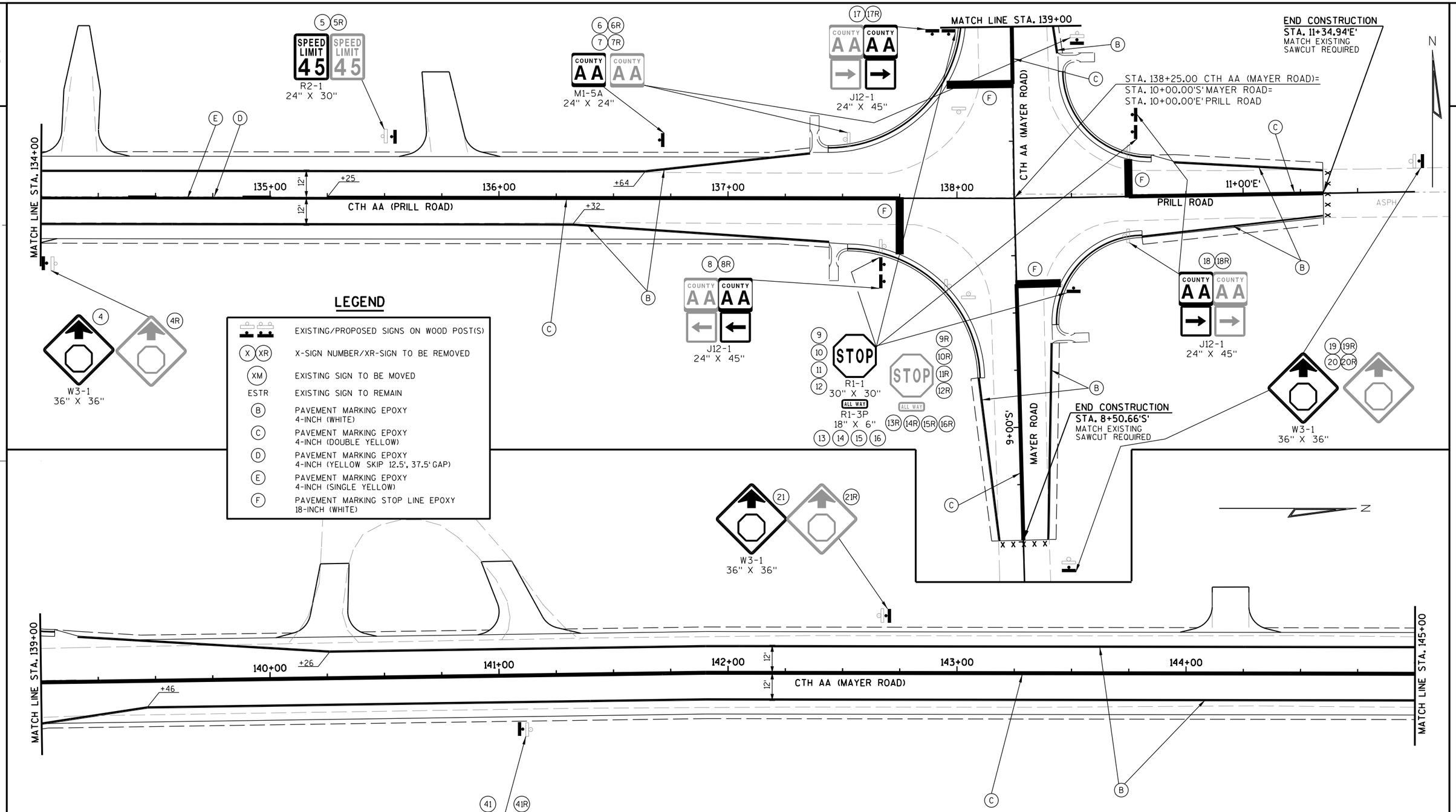

LEGEND

	EXISTING/PROPOSED SIGNS ON WOOD POST(S)
X XR	X-SIGN NUMBER/XR-SIGN TO BE REMOVED
XM	EXISTING SIGN TO BE MOVED
ESTR	EXISTING SIGN TO REMAIN
B	PAVEMENT MARKING EPOXY 4-INCH (WHITE)
C	PAVEMENT MARKING EPOXY 4-INCH (DOUBLE YELLOW)
D	PAVEMENT MARKING EPOXY 4-INCH (YELLOW SKIP 12.5', 37.5' GAP)
E	PAVEMENT MARKING EPOXY 4-INCH (SINGLE YELLOW)
F	PAVEMENT MARKING STOP LINE EPOXY 18-INCH (WHITE)

PROJECT NO: 7824-00-09	HWY: CTH AA	COUNTY: EAU CLAIRE	SIGNING / PAVEMENT MARKING	SHEET 24 E

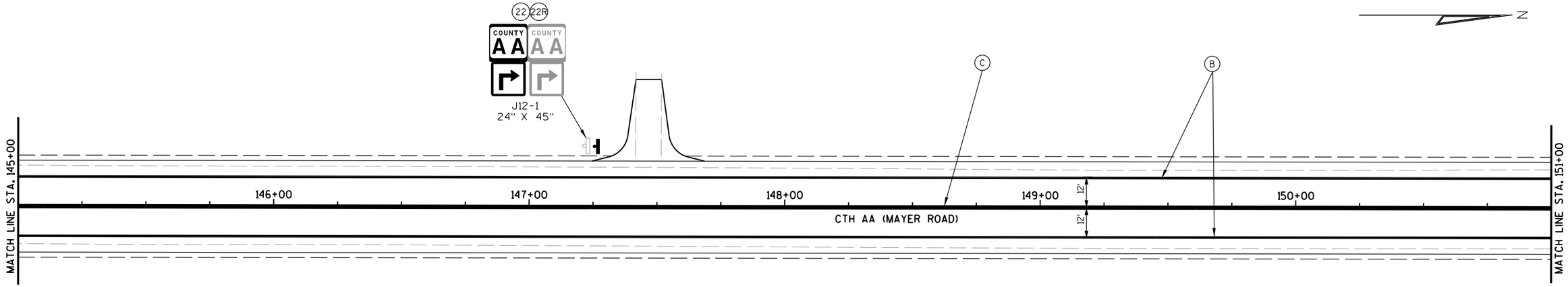

LEGEND

	EXISTING/PROPOSED SIGNS ON WOOD POST(S)
(X) (XR)	X-SIGN NUMBER/XR-SIGN TO BE REMOVED
(XM)	EXISTING SIGN TO BE MOVED
ESTR	EXISTING SIGN TO REMAIN
(B)	PAVEMENT MARKING EPOXY 4-INCH (WHITE)
(C)	PAVEMENT MARKING EPOXY 4-INCH (DOUBLE YELLOW)
(D)	PAVEMENT MARKING EPOXY 4-INCH (YELLOW SKIP 12.5', 37.5' GAP)
(E)	PAVEMENT MARKING EPOXY 4-INCH (SINGLE YELLOW)
(F)	PAVEMENT MARKING STOP LINE EPOXY 18-INCH (WHITE)

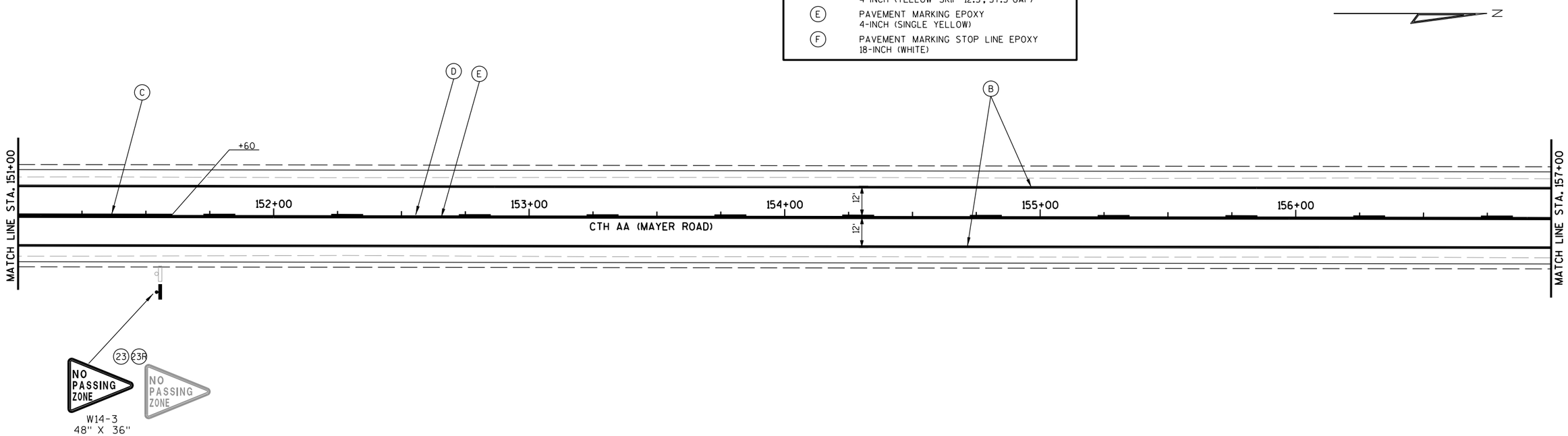

2

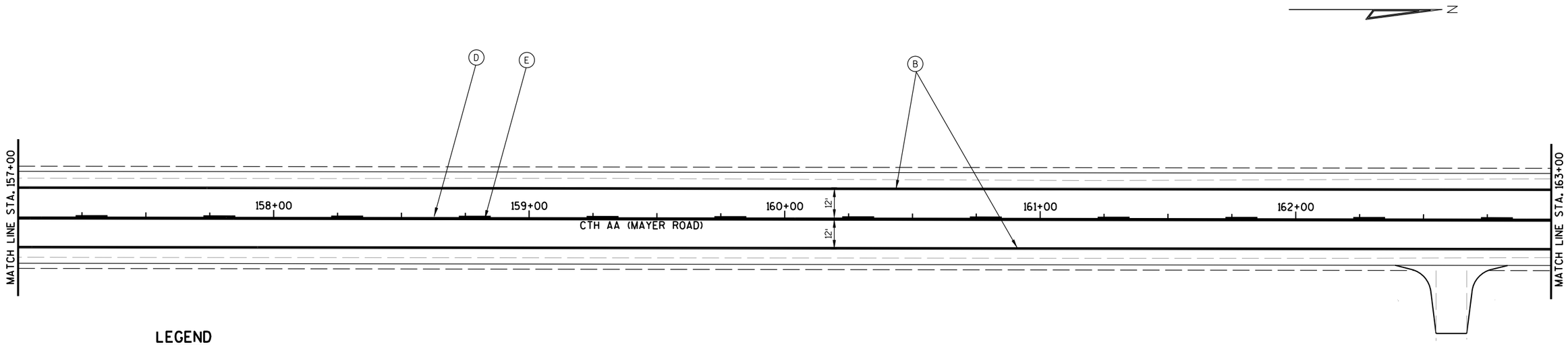

LEGEND

	EXISTING/PROPOSED SIGNS ON WOOD POST(S)
X XR	X-SIGN NUMBER/XR-SIGN TO BE REMOVED
XM	EXISTING SIGN TO BE MOVED
ESTR	EXISTING SIGN TO REMAIN
B	PAVEMENT MARKING EPOXY 4-INCH (WHITE)
C	PAVEMENT MARKING EPOXY 4-INCH (DOUBLE YELLOW)
D	PAVEMENT MARKING EPOXY 4-INCH (YELLOW SKIP 12.5', 37.5' GAP)
E	PAVEMENT MARKING EPOXY 4-INCH (SINGLE YELLOW)
F	PAVEMENT MARKING STOP LINE EPOXY 18-INCH (WHITE)

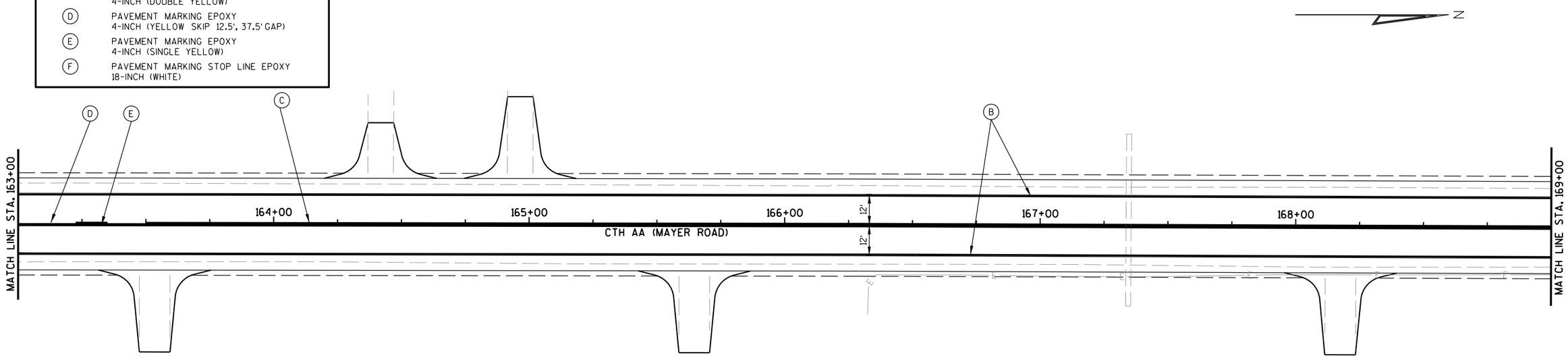

PROJECT NO: 7824-00-09	HWY: CTH AA	COUNTY: EAU CLAIRE	SIGNING / PAVEMENT MARKING	SHEET 26	E

2

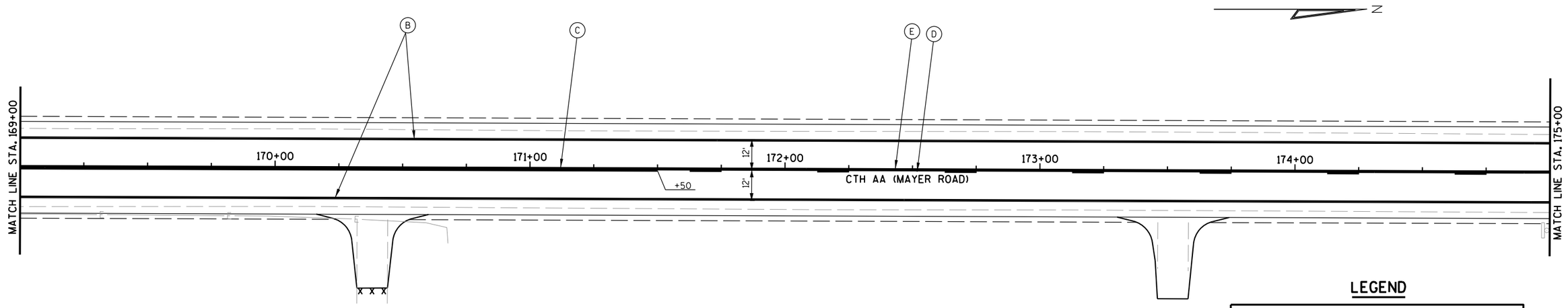

LEGEND

	EXISTING/PROPOSED SIGNS ON WOOD POST(S)
X XR	X-SIGN NUMBER/XR-SIGN TO BE REMOVED
XM	EXISTING SIGN TO BE MOVED
ESTR	EXISTING SIGN TO REMAIN
B	PAVEMENT MARKING EPOXY 4-INCH (WHITE)
C	PAVEMENT MARKING EPOXY 4-INCH (DOUBLE YELLOW)
D	PAVEMENT MARKING EPOXY 4-INCH (YELLOW SKIP 12.5', 37.5' GAP)
E	PAVEMENT MARKING EPOXY 4-INCH (SINGLE YELLOW)
F	PAVEMENT MARKING STOP LINE EPOXY 18-INCH (WHITE)

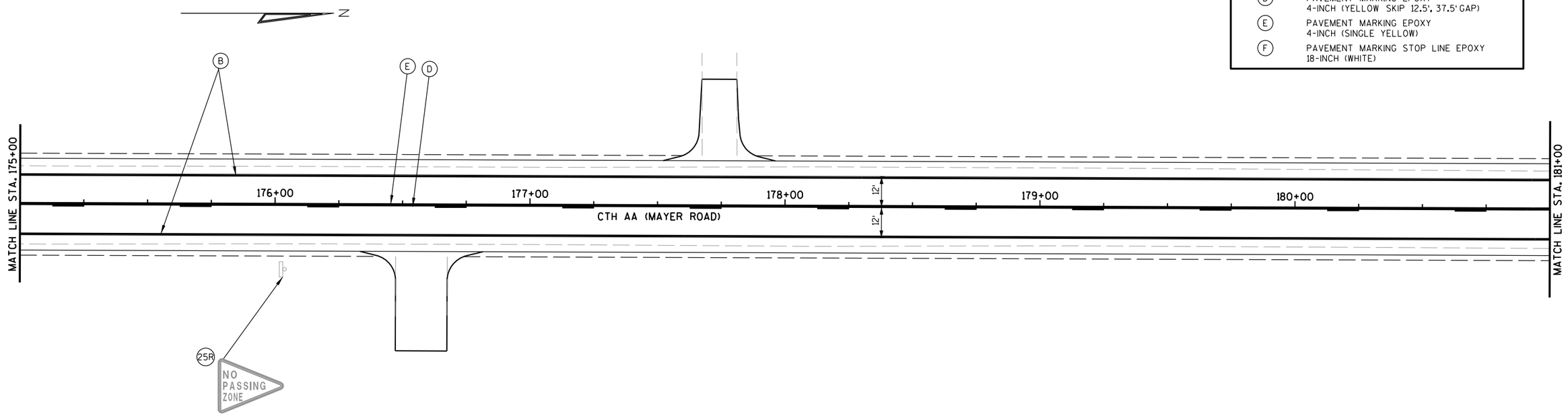

PROJECT NO: 7824-00-09	HWY: CTH AA	COUNTY: EAU CLAIRE	SIGNING / PAVEMENT MARKING	SHEET 27	E

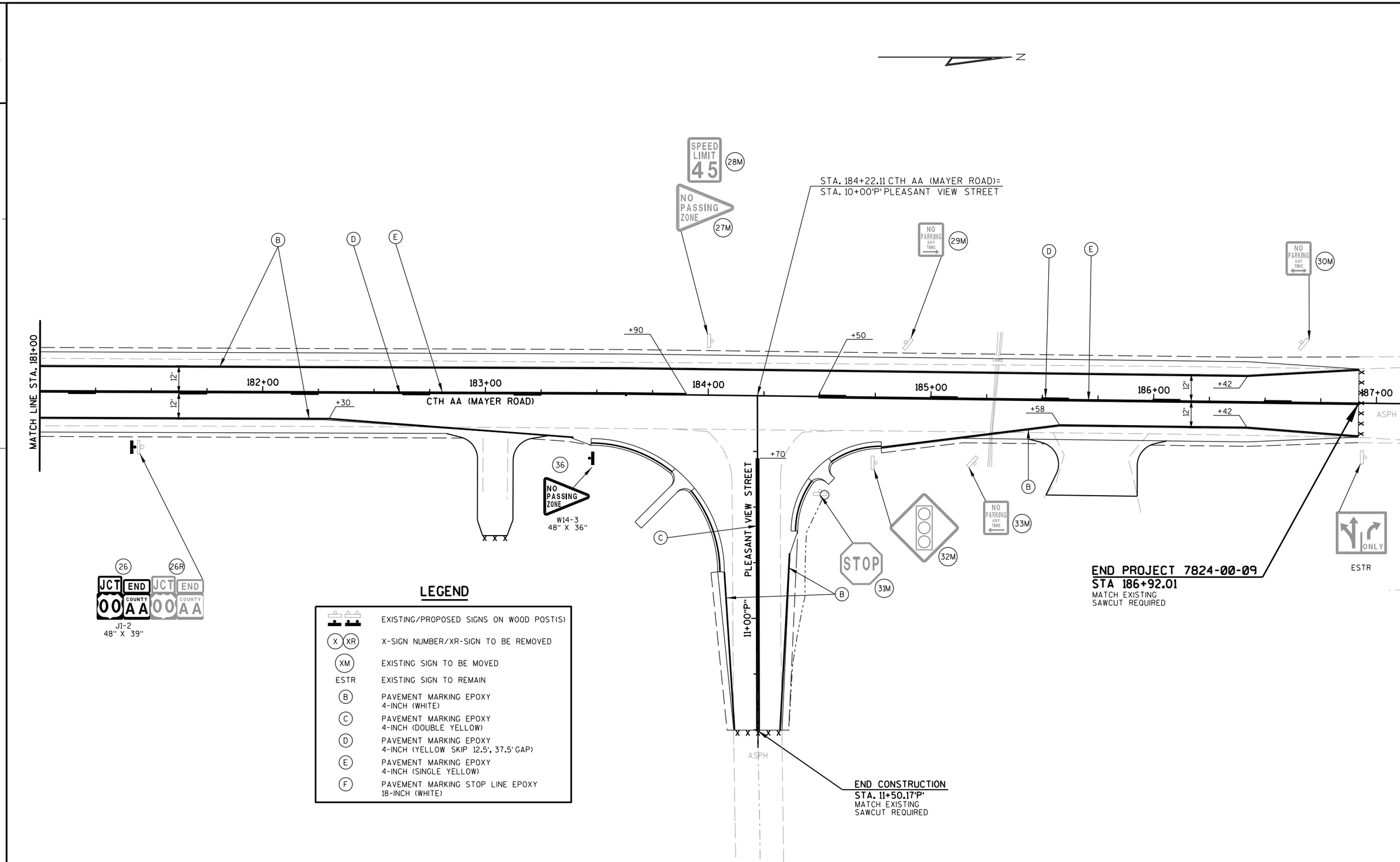

LEGEND

	EXISTING/PROPOSED SIGNS ON WOOD POST(S)
X XR	X-SIGN NUMBER/XR-SIGN TO BE REMOVED
XM	EXISTING SIGN TO BE MOVED
ESTR	EXISTING SIGN TO REMAIN
B	PAVEMENT MARKING EPOXY 4-INCH (WHITE)
C	PAVEMENT MARKING EPOXY 4-INCH (DOUBLE YELLOW)
D	PAVEMENT MARKING EPOXY 4-INCH (YELLOW SKIP 12.5', 37.5' GAP)
E	PAVEMENT MARKING EPOXY 4-INCH (SINGLE YELLOW)
F	PAVEMENT MARKING STOP LINE EPOXY 18-INCH (WHITE)

PROJECT NO: 7824-00-09	HWY: CTH AA	COUNTY: EAU CLAIRE	SIGNING / PAVEMENT MARKING	SHEET 28	E

FILE NAME : S:\Projects\NW\Eau Claire County\CTH AA\CAD\Plans\024509_pm_AA.dgn PLOT DATE : 10/22/2015 PLOT BY : CORRE, Inc. PLOT NAME : PLOT SCALE : 40.0000 sf / in.

WISDOT/CADDS SHEET 42

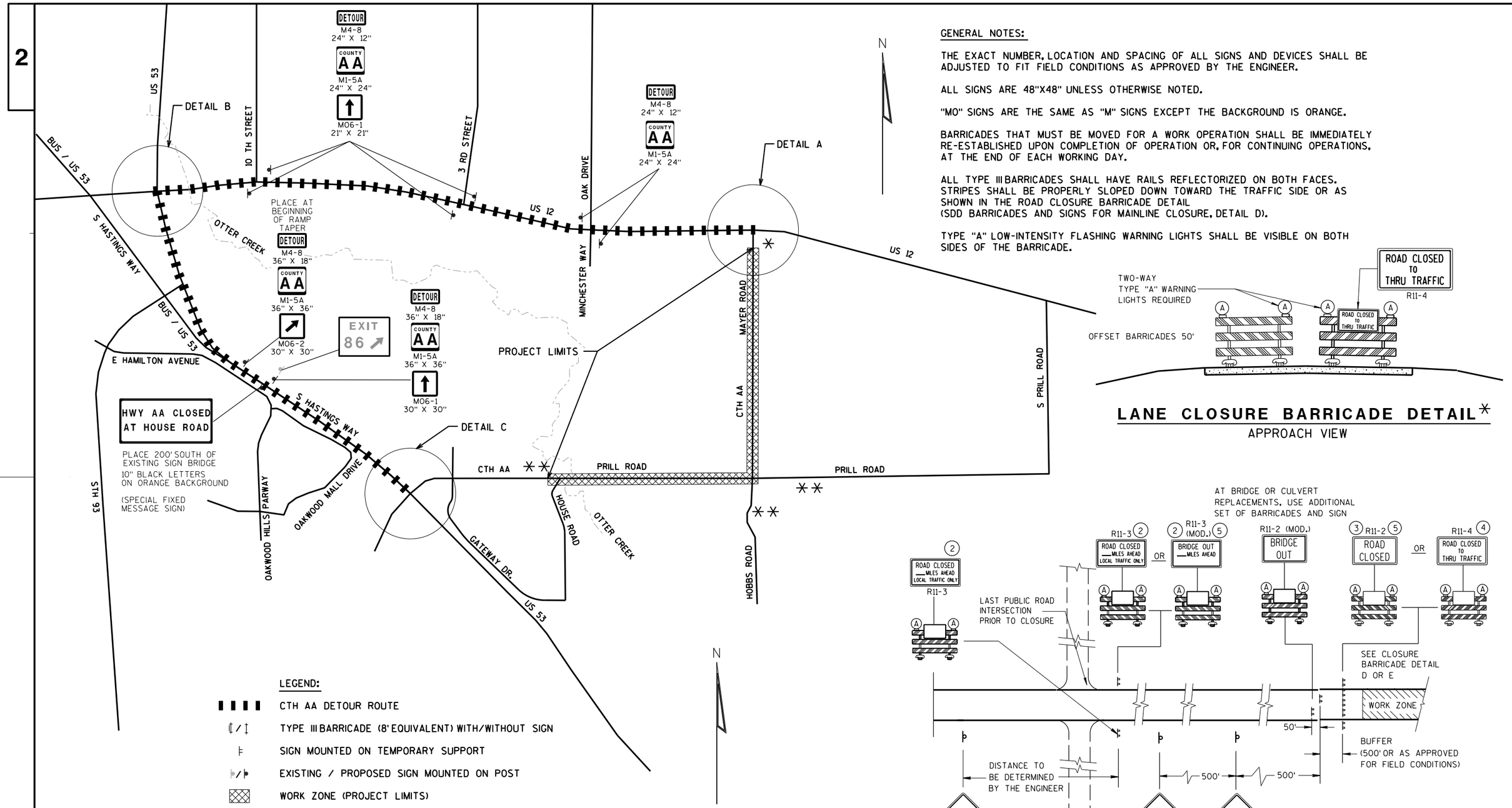

PROJECT NO: 7824-00-09/13	HWY: CTH AA	COUNTY: EAU CLAIRE	DETOUR - OVERVIEW	SHEET 29	E

2

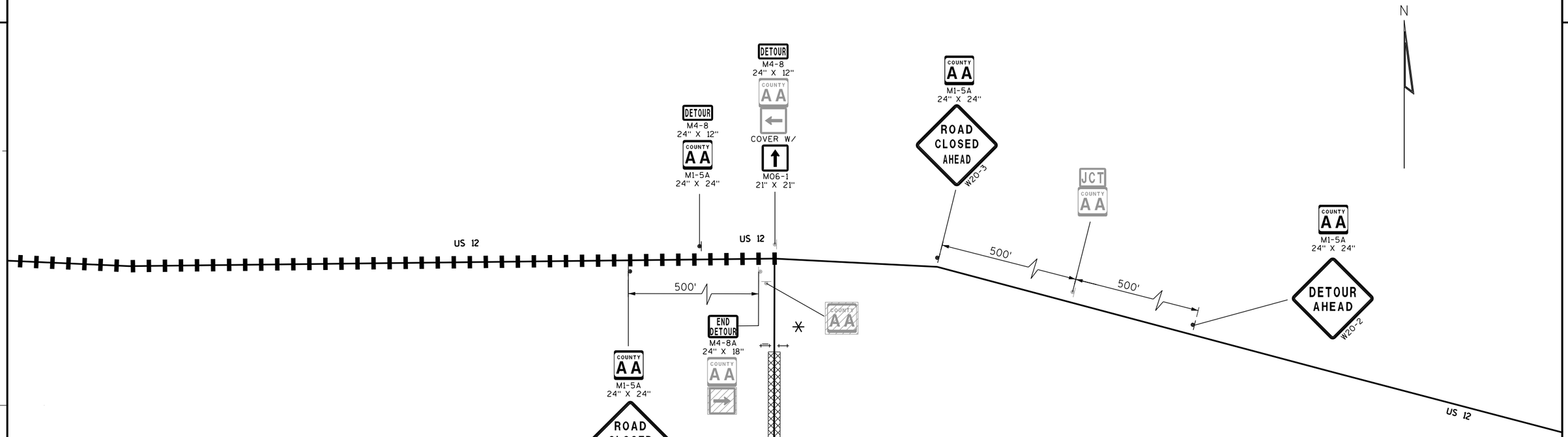

LEGEND:

- CTH AA DETOUR ROUTE
- TYPE III BARRICADE (8' EQUIVALENT) WITH/WITHOUT SIGN
- SIGN MOUNTED ON TEMPORARY SUPPORT
- EXISTING / PROPOSED SIGN MOUNTED ON POST
- WORK ZONE (PROJECT LIMITS)
- EXISTING SIGN
- SIGNS TO BE INSTALLED
- COVER EXISTING SIGN WITH BLANK ORANGE PANEL

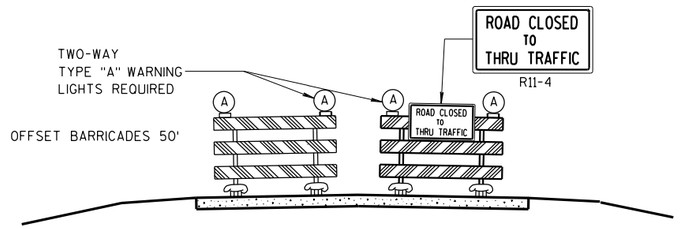

LANE CLOSURE BARRICADE DETAIL*

APPROACH VIEW

PROJECT NO: 7824-00-09/13	HWY: CTH AA	COUNTY: EAU CLAIRE	DETOUR - DETAIL A	SHEET 30	E

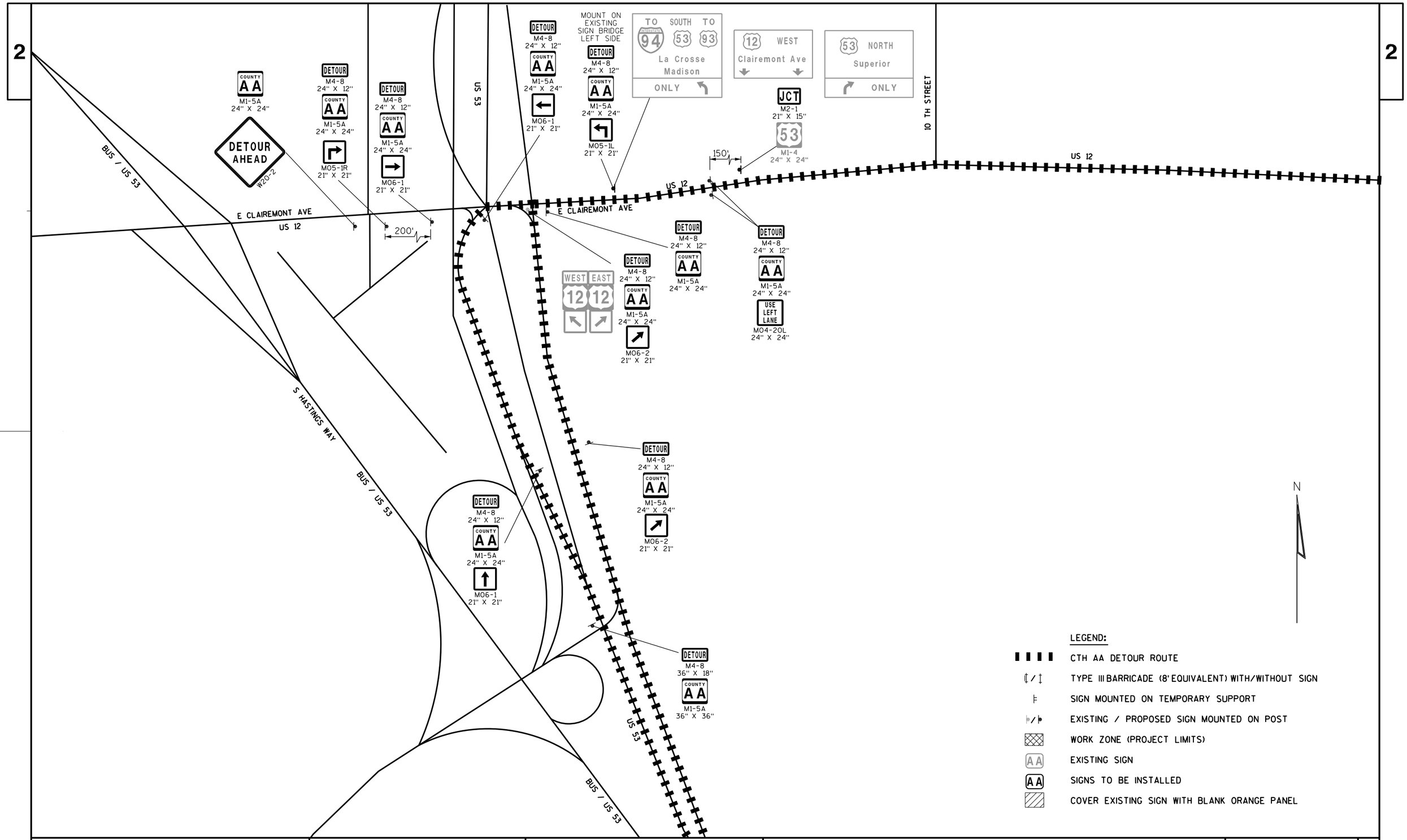

LEGEND:

- CTH AA DETOUR ROUTE
- TYPE III BARRICADE (8' EQUIVALENT) WITH/WITHOUT SIGN
- SIGN MOUNTED ON TEMPORARY SUPPORT
- EXISTING / PROPOSED SIGN MOUNTED ON POST
- WORK ZONE (PROJECT LIMITS)
- EXISTING SIGN
- SIGNS TO BE INSTALLED
- COVER EXISTING SIGN WITH BLANK ORANGE PANEL

PROJECT NO: 7824-00-09/13	HWY: CTH AA	COUNTY: EAU CLAIRE	DETOUR - DETAIL B	SHEET 31	E

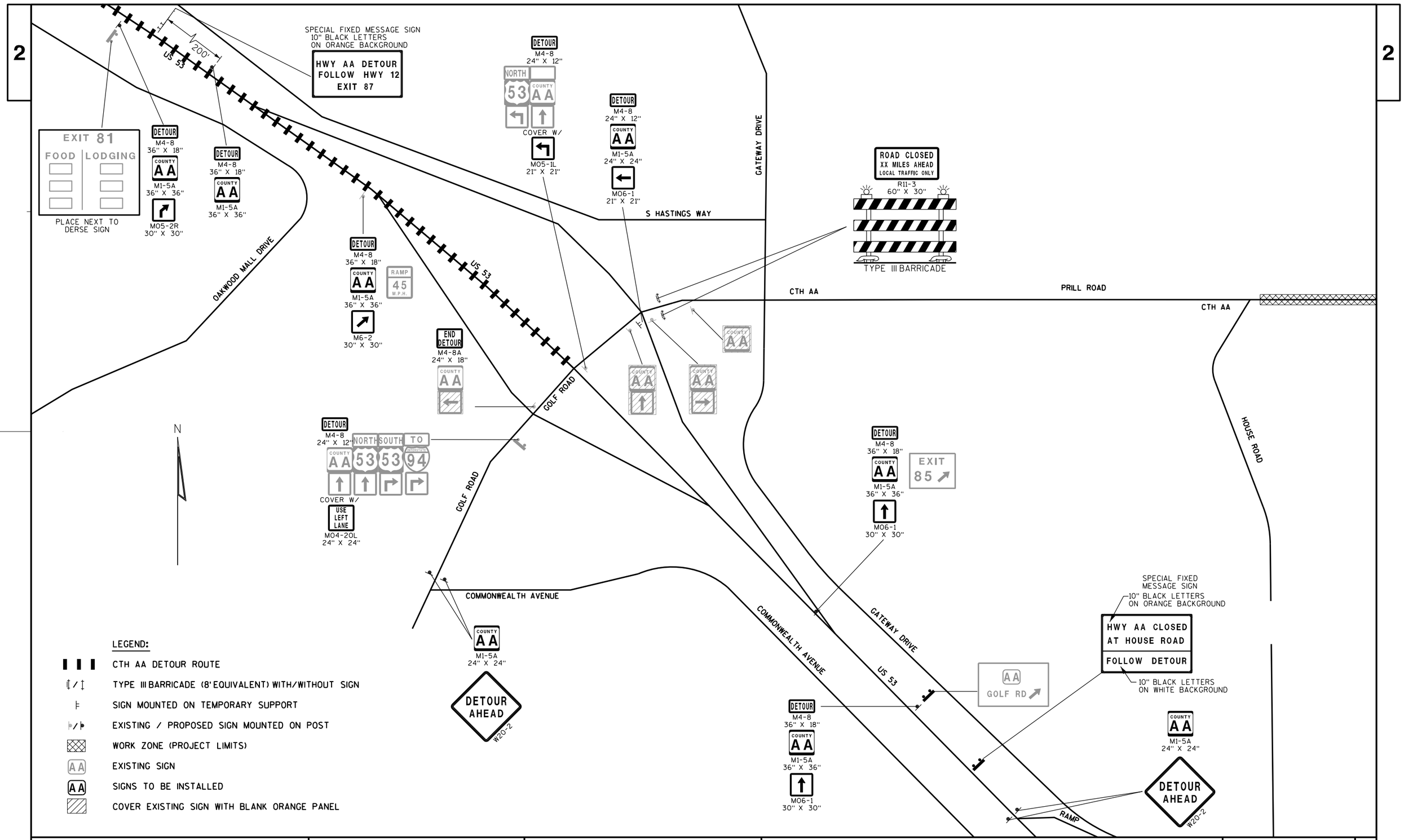

PROJECT NO: 7824-00-09/13	HWY: CTH AA	COUNTY: EAU CLAIRE	DETOUR - DETAIL C	SHEET 32	E

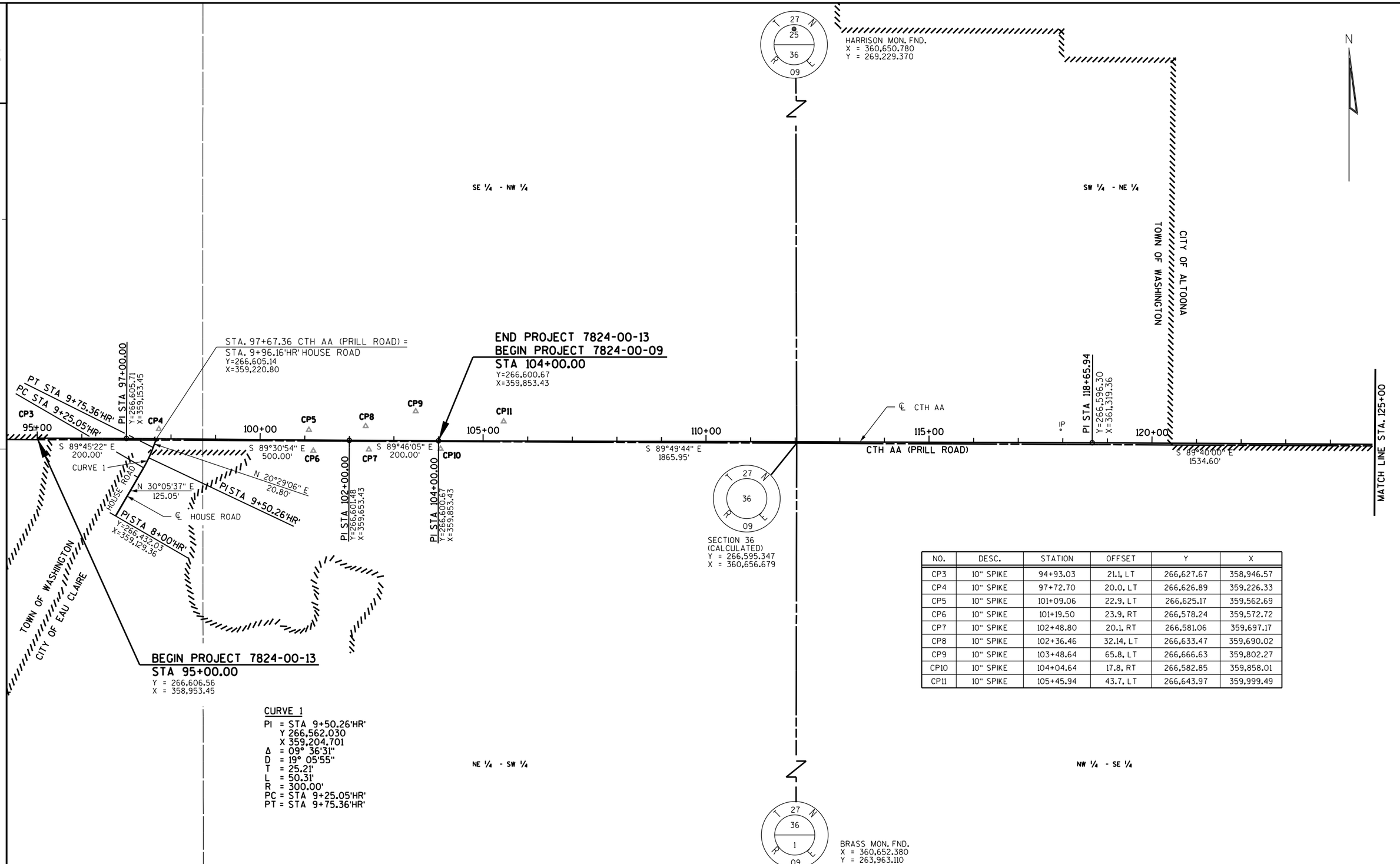

NO.	DESC.	STATION	OFFSET	Y	X
CP3	10" SPIKE	94+93.03	21.1, LT	266,627.67	358,946.57
CP4	10" SPIKE	97+72.70	20.0, LT	266,626.89	359,226.33
CP5	10" SPIKE	101+09.06	22.9, LT	266,625.17	359,562.69
CP6	10" SPIKE	101+19.50	23.9, RT	266,578.24	359,572.72
CP7	10" SPIKE	102+48.80	20.1, RT	266,581.06	359,697.17
CP8	10" SPIKE	102+36.46	32.14, LT	266,633.47	359,690.02
CP9	10" SPIKE	103+48.64	65.8, LT	266,666.63	359,802.27
CP10	10" SPIKE	104+04.64	17.8, RT	266,582.85	359,858.01
CP11	10" SPIKE	105+45.94	43.7, LT	266,643.97	359,999.49

PROJECT NO:7824-00-09/13	HWY:CTH AA	COUNTY:EAU CLAIRE	ALIGNMENT DIAGRAM	SHEET 33	E

2

MATCH LINE STA. 125+00

S 89°40'00" E
1534.60'

CTH AA (PRILL ROAD)

130+00

SE ¼ - NE ¼

CITY OF ALTOONA
TOWN OF WASHINGTON

NE ¼ - NE ¼

N

℄ CTH AA

PI STA 134+00.54
Y=266,587.37
X=362,853.94

135+00

STA. 138+25.00 CTH AA (MAYER ROAD)=
STA. 10+00.00'S' MAYER ROAD=
STA. 10+00.00'E' PRILL ROAD
Y=266,586.93
X=363,278.39

PI STA 8+25.00'S'
Y=266,411.99
X=363,283.08

CP G920
ALUM MON
Y=266,582.96
X=363,301.10

S 89°56'24" E
424.46'

PI STA 141+90.28
Y=266,952.17
X=363,273.10

143+00

CTH AA (MAYER ROAD)

148+00

153+00

N 00°04'56" E
2438.84'

158+00

MATCH LINE STA. 163+00

MAYER ROAD

N 00°49'48" W
365.28'

℄ CTH AA

℄ PRILL ROAD

℄ MAYER ROAD

N 01°32'07" W
175.00'

N 89°02'38" E
175.00'

END CONSTRUCTION
STA. 8+50.66'S'
Y=266,437.64
X=363,282.40

PI STA 8+25.00'E'
Y=266,589.85
X=363,453.37

PRILL ROAD

END CONSTRUCTION
STA. 11+34.94'E'
Y=266,589.28
X=363,413.38

PROJECT NO: 7824-00-09	HWY: CTH AA	COUNTY: EAU CLAIRE	ALIGNMENT DIAGRAM	SHEET 34	E

2

2

MONUMENT
(CALCULATED)
Y = 271,871.010
X = 360,656.970

T 27 N
R 9 W
25

N

MATCH LINE STA. 163+00

CITY OF ALTOONA

TOWN OF WASHINGTON

SE ¼ - SE ¼

PI STA 166+29.12
Y=269391.01
X=363276.61

℄ CTH AA

168+00

173+00

N0°12'35"E
1734.53'

178+00

CTH AA (MAYER ROAD)

183+00

PI STA 183+63.65
Y=271125.52
X=363282.95

CITY OF ALTOONA

TOWN OF WASHINGTON

NE ¼ - SE ¼

STA. 184+22.11 CTH AA (MAYER ROAD)=
STA. 10+00'P' PLEASANT VIEW ROAD
Y=271183.98
X=363283.68

N0°42'32"E
706.35'

188+00

S89°53'55"W
158.13'

℄ PLEASANT
VIEW STREET

END CONSTRUCTION
STA. 11+14.77'P'
Y=271,184.18
X=363,398.45

PI STA 11+58.13'P'
Y=271,184.26
X=363,441.81

PLEASANT VIEW STREET

T 27 N
R 9 E
25
30

CP G956
ALUMINUM MON. FND.
Y = 271,868.518
X = 363,293.907

END PROJECT 7824-00-09
STA 186+92.01
Y=271,453.86
X=363,287.02

SW ¼ - SW ¼

NW ¼ - SW ¼

T 27 N
R 8 W
30

2" ID I.P. MON. FND.
Y = 271,936.977
X = 365,510.400

PROJECT NO: 7824-00-09	HWY: CTH AA	COUNTY: EAU CLAIRE	ALIGNMENT DIAGRAM	SHEET 35	E

DATE 25JAN16 E S T I M A T E O F Q U A N T I T I E S

LINE NUMBER	ITEM	ITEM DESCRIPTION	UNIT	TOTAL	7824-00-09 QUANTITY	7824-00-13 QUANTITY
0010	201.0105	Clearing	STA	6.000	5.000	1.000
0020	201.0205	Grubbing	STA	70.000	60.000	10.000
0030	203.0100	Removing Small Pipe Culverts	EACH	16.000	16.000	
0040	203.0600.S	Removing Old Structure Over Waterway With Minimal Debris (station) 01. 99+70	LS	1.000		1.000
0050	204.0155	Removing Concrete Sidewalk	SY	104.000	104.000	
0060	204.0165	Removing Guardrail	LF	310.000		310.000
0070	204.0170	Removing Fence	LF	347.000	325.000	22.000
0080	204.0220	Removing Inlets	EACH	3.000	1.000	2.000
0090	204.0245	Removing Storm Sewer (size) 01. 12-INCH	LF	20.000		20.000
0100	204.0245	Removing Storm Sewer (size) 02. 18-INCH	LF	23.000		23.000
0110	204.0245	Removing Storm Sewer (size) 03. 19X30-INCH	LF	42.000	42.000	
0120	204.9060.S	Removing (item description) 01. APRON ENDWALL	EACH	1.000		1.000
0130	204.9180.S	Removing (item description) 01. RIPRAP	SY	110.000		110.000
0140	205.0100	Excavation Common	CY	35,345.000	32,435.000	2,910.000
0150	206.1000	Excavation for Structures Bridges (structure) 01. B-18-0229	LS	1.000		1.000
0160	208.0100	Borrow	CY	8,286.000		8,286.000
0170	210.0100	Backfill Structure	CY	900.000		900.000
0180	213.0100	Finishing Roadway (project) 01. 7824-00-09	EACH	1.000	1.000	
0190	213.0100	Finishing Roadway (project) 02. 7824-00-13	EACH	1.000		1.000
0200	305.0110	Base Aggregate Dense 3/4-Inch	TON	958.000	910.000	48.000
0210	305.0120	Base Aggregate Dense 1 1/4-Inch	TON	27,337.000	24,800.000	2,537.000
0220	416.0160	Concrete Driveway 6-Inch	SY	104.000	104.000	
0230	440.4410	Incentive IRI Ride	DOL	6,890.000	6,280.000	610.000
0240	455.0105	Asphaltic Material PG58-28	TON	618.000	559.000	59.000
0250	455.0605	Tack Coat	GAL	1,624.000	1,472.000	152.000
0260	460.1100	HMA Pavement Type E-0.3	TON	10,270.000	9,280.000	990.000
0270	460.2000	Incentive Density HMA Pavement	DOL	6,660.000	6,020.000	640.000
0280	465.0120	Asphaltic Surface Driveways and Field Entrances	TON	193.000	190.000	3.000
0290	465.0315	Asphaltic Flumes	SY	71.000	60.000	11.000
0300	502.0100	Concrete Masonry Bridges	CY	368.000		368.000
0310	502.3200	Protective Surface Treatment	SY	327.000		327.000
0320	502.3210	Pigmented Surface Sealer	SY	61.000		61.000
0330	503.0137	Prestressed Girder Type I 36W-Inch	LF	288.000		288.000
0340	505.0400	Bar Steel Reinforcement HS Structures	LB	13,940.000		13,940.000
0350	505.0600	Bar Steel Reinforcement HS Coated Structures	LB	37,120.000		37,120.000
0360	506.2605	Bearing Pads Elastomeric Non-Laminated 01. B-18-0229	EACH	8.000		8.000
0370	506.4000	Steel Diaphragms (structure) 01. B-18-0229	EACH	6.000		6.000
0380	516.0500	Rubberized Membrane Waterproofing	SY	36.000		36.000
0390	520.1012	Apron Endwalls for Culvert Pipe 12-Inch	EACH	45.000	45.000	
0400	520.3412	Culvert Pipe Class III-A Non-metal 12-Inch	LF	828.000	828.000	
0410	520.3415	Culvert Pipe Class III-A Non-metal 15-Inch	LF	46.000	46.000	
0420	520.3418	Culvert Pipe Class III-A Non-metal 18-Inch	LF	80.000	80.000	

3

DATE 25JAN16 E S T I M A T E O F Q U A N T I T I E S

LINE NUMBER	ITEM	ITEM DESCRIPTION	UNIT	TOTAL	7824-00-09 QUANTITY	7824-00-13 QUANTITY
0430	521.1515	Apron Endwalls for Culvert Pipe Sloped Side Drains Steel 15-Inch 6 to 1	EACH	4.000	4.000	
0440	521.1518	Apron Endwalls for Culvert Pipe Sloped Side Drains Steel 18-Inch 6 to 1	EACH	6.000	6.000	
0450	522.0124	Culvert Pipe Reinforced Concrete Class III 24-Inch	LF	219.000	219.000	
0460	522.0130	Culvert Pipe Reinforced Concrete Class III 30-Inch	LF	193.000	193.000	
0470	522.1024	Apron Endwalls for Culvert Pipe Reinforced Concrete 24-Inch	EACH	6.000	6.000	
0480	522.1030	Apron Endwalls for Culvert Pipe Reinforced Concrete 30-Inch	EACH	8.000	8.000	
0490	523.0119	Culvert Pipe Reinforced Concrete Horizontal Elliptical Class HE-III 19x30-Inch	LF	63.000	63.000	
0500	523.0124	Culvert Pipe Reinforced Concrete Horizontal Elliptical Class HE-III 24x38-Inch	LF	67.000	67.000	
0510	523.0138	Culvert Pipe Reinforced Concrete Horizontal Elliptical Class HE-III 38x60-Inch	LF	64.000	64.000	
0520	523.0519	Apron Endwalls for Culvert Pipe Reinforced Concrete Horizontal Elliptical 19x30-Inch	EACH	1.000	1.000	
0530	523.0524	Apron Endwalls for Culvert Pipe Reinforced Concrete Horizontal Elliptical 24x38-Inch	EACH	1.000	1.000	
0540	523.0538	Apron Endwalls for Culvert Pipe Reinforced Concrete Horizontal Elliptical 38x60-Inch	EACH	2.000	2.000	
0550	550.2104	Piling CIP Concrete 10 3/4 X 0.25-Inch	LF	1,840.000		1,840.000
0560	601.0557	Concrete Curb & Gutter 6-Inch Sloped 36-Inch Type D	LF	816.000	471.000	345.000
0570	606.0200	Riprap Medium	CY	49.000	49.000	
0580	606.0300	Riprap Heavy	CY	525.000		525.000
0590	608.0418	Storm Sewer Pipe Reinforced Concrete Class IV 18-Inch	LF	57.000		57.000
0600	611.0420	Reconstructing Manholes	EACH	1.000		1.000
0610	611.0606	Inlet Covers Type B	EACH	1.000		1.000
0620	611.0615	Inlet Covers Type F	EACH	3.000	1.000	2.000
0630	611.0642	Inlet Covers Type MS	EACH	1.000	1.000	
0640	611.1005	Catch Basins 5-FT Diameter	EACH	1.000		1.000
0650	611.3004	Inlets 4-FT Diameter	EACH	3.000	1.000	2.000
0660	611.3901	Inlets Median 1 Grate	EACH	1.000	1.000	
0670	612.0406	Pipe Underdrain Wrapped 6-Inch	LF	260.000		260.000
0680	614.0150	Anchor Assemblies for Steel Plate Beam Guard	EACH	4.000		4.000
0690	614.2300	MGS Guardrail 3	LF	50.000		50.000
0700	614.2500	MGS Thrie Beam Transition	LF	158.000		158.000
0710	614.2610	MGS Guardrail Terminal EAT	EACH	4.000		4.000
0720	616.0204	Fence Chain Link 4-FT	LF	134.000		134.000
0730	619.1000	Mobilization	EACH	1.000	0.850	0.150
0740	621.0100	Landmark Reference Monuments	EACH	2.000	2.000	
0750	624.0100	Water	MGAL	279.100	253.500	25.600
0760	625.0500	Salvaged Topsoil	SY	64,460.000	57,260.000	7,200.000
0770	627.0200	Mulching	SY	64,460.000	57,260.000	7,200.000
0780	628.1504	Silt Fence	LF	6,745.000	5,745.000	1,000.000

3

DATE 25JAN16 E S T I M A T E O F Q U A N T I T I E S

LINE NUMBER	ITEM	ITEM DESCRIPTION	UNIT	TOTAL	7824-00-09 QUANTITY	7824-00-13 QUANTITY
0790	628.1520	Silt Fence Maintenance	LF	6,745.000	5,745.000	1,000.000
0800	628.1905	Mobilizations Erosion Control	EACH	11.000	6.000	5.000
0810	628.1910	Mobilizations Emergency Erosion Control	EACH	6.000	3.000	3.000
0820	628.2004	Erosion Mat Class I Type B	SY	17,620.000	10,420.000	7,200.000
0830	628.2006	Erosion Mat Urban Class I Type A	SY	5,380.000	5,380.000	
0840	628.2023	Erosion Mat Class II Type B	SY	200.000	200.000	
0850	628.2037	Erosion Mat Class III Type C	SY	588.000	588.000	
0860	628.7005	Inlet Protection Type A	EACH	1.000	1.000	
0870	628.7020	Inlet Protection Type D	EACH	4.000	1.000	3.000
0880	628.7504	Temporary Ditch Checks	LF	1,344.000	1,250.000	94.000
0890	628.7555	Culvert Pipe Checks	EACH	47.000	46.000	1.000
0900	628.7560	Tracking Pads	EACH	2.000	1.000	1.000
0910	629.0210	Fertilizer Type B	CWT	39.000	34.300	4.700
0920	630.0120	Seeding Mixture No. 20	LB	1,686.000	1,486.000	200.000
0930	630.0140	Seeding Mixture No. 40	LB	365.000	365.000	
0940	630.0200	Seeding Temporary	LB	859.400	762.400	97.000
0950	633.5200	Markers Culvert End	EACH	13.000	13.000	
0960	634.0614	Posts Wood 4x6-Inch X 14-FT	EACH	26.000	20.000	6.000
0970	634.0616	Posts Wood 4x6-Inch X 16-FT	EACH	14.000	10.000	4.000
0980	637.2230	Signs Type II Reflective F	SF	200.400	168.220	32.180
0990	638.2102	Moving Signs Type II	EACH	7.000	7.000	
1000	638.2602	Removing Signs Type II	EACH	46.000	34.000	12.000
1010	638.3000	Removing Small Sign Supports	EACH	34.000	22.000	12.000
1020	642.5001	Field Office Type B	EACH	1.000	0.500	0.500
1030	643.0200	Traffic Control Surveillance and Maintenance (project) 01. 7824-00-09	DAY	90.000	90.000	
1040	643.0300	Traffic Control Drums	DAY	2,250.000	2,250.000	
1050	643.0420	Traffic Control Barricades Type III	DAY	2,250.000	2,250.000	
1060	643.0705	Traffic Control Warning Lights Type A	DAY	4,050.000	4,050.000	
1070	643.0900	Traffic Control Signs	DAY	3,060.000	3,060.000	
1080	643.0920	Traffic Control Covering Signs Type II	EACH	6.000	6.000	
1090	643.1000	Traffic Control Signs Fixed Message	SF	144.000	144.000	
1100	643.2000	Traffic Control Detour (project) 01. 7824-00-09	EACH	1.000	1.000	
1110	643.3000	Traffic Control Detour Signs	DAY	8,100.000	8,100.000	
1120	645.0120	Geotextile Fabric Type HR	SY	1,024.000	94.000	930.000
1130	646.0106	Pavement Marking Epoxy 4-Inch	LF	34,810.000	31,410.000	3,400.000
1140	647.0566	Pavement Marking Stop Line Epoxy 18-Inch	LF	134.000	134.000	
1150	648.0100	Locating No-Passing Zones	MI	1.800	1.600	0.200
1160	650.4000	Construction Staking Storm Sewer	EACH	5.000	2.000	3.000
1170	650.4500	Construction Staking Subgrade	LF	9,772.000	8,725.000	1,047.000
1180	650.5000	Construction Staking Base	LF	9,772.000	8,725.000	1,047.000
1190	650.5500	Construction Staking Curb Gutter and Curb & Gutter	LF	816.000	471.000	345.000
1200	650.6000	Construction Staking Pipe Culverts	EACH	36.000	36.000	
1210	650.6500	Construction Staking Structure Layout (structure) 01. B-18-0229	LS	1.000		1.000
1220	650.9910	Construction Staking Supplemental Control (project) 01. 7824-00-09	LS	1.000	1.000	
1230	650.9910	Construction Staking Supplemental Control (project) 02. 7824-00-13	LS	1.000		1.000
1240	650.9920	Construction Staking Slope Stakes	LF	9,772.000	8,725.000	1,047.000
1250	690.0150	Sawing Asphalt	LF	302.000	248.000	54.000
1260	690.0250	Sawing Concrete	LF	40.000	40.000	

3

DATE 25JAN16 E S T I M A T E O F Q U A N T I T I E S

LINE NUMBER	ITEM	ITEM DESCRIPTION	UNIT	TOTAL	7824-00-09 QUANTITY	7824-00-13 QUANTITY
1270	715.0502	Incentive Strength Concrete Structures	DOL	2,208.000		2,208.000
1280	ASP.1T0A	On-the-Job Training Apprentice at $5.00/HR	HRS	2,400.000	1,200.000	1,200.000
1290	ASP.1T0G	On-the-Job Training Graduate at $5.00/HR	HRS	600.000	300.000	300.000
1300	SPV.0060	Special 01. ADJUSTING MANHOLE COVERS	EACH	4.000		4.000
1310	SPV.0060	Special 02. ADJUSTING WATER VALVES	EACH	6.000		6.000
1320	SPV.0060	Special 03. Moving Mailbox	EACH	23.000	22.000	1.000

CLEARING AND GRUBBING ITEMS

PROJECT ID	STATION		STATION	LOCATION	201.0105 CLEARING STA	201.0205 GRUBBING STA
CATEGORY CODE 0010						
7824-00-09						
	104+00	-	119+00	LT & RT	--	15
	121+00	-	141+00	LT & RT	--	20
	151+00	-	153+00	LT & RT	--	2
	163+00	-	179+00	LT & RT	--	16
	180+00	-	186+92	LT & RT	--	7
	UNDISTRIBUTED				5	--
PROJECT TOTAL					**5**	**60**
CATEGORY CODE 0010						
7824-00-13						
	95+00	-	104+00	LT & RT	--	9
	9+00'HR'	-	10+00'HR'	LT	--	1
	UNDISTRIBUTED				1	--
PROJECT TOTAL					**1**	**10**

REMOVING SMALL PIPE CULVERTS

PROJECT ID	STATION	LOCATION	203.0100 EACH	COMMENTS
CATEGORY CODE 0010				
7824-00-09	117+02	LT	1	12" x 22' CMCP
	118+40	LT	1	18" x 20' CMCP
	124+03	LT	1	12" x 19' CMCP
	127+64	CL	1	24" x 56' CMCP
	130+83	RT	1	12" x 28' CPCP
	130+91	LT	1	12" x 45' CMCP
	130+91	LT	1	12" x 30' HDPC
	133+85	RT	1	12" x 20' CMCP
	152+25	CL	1	48" x 60' CMCP
	167+34	CL	1	24" x 87' CMCP
	173+52	RT	1	12" x 20' CMCP
	176+57	RT	1	12" x 24' CMCP
	183+98	CL	1	24" x 56' CMCP
	9+51'S'	CL	1	15" x 40' CMCP
	10+38'E'	CL	1	24" x 41' CMCP
	10+28'P'	CL	1	24'x30' x 50 RCCP
PROJECT TOTAL			**16**	

REMOVING CONCRETE SIDEWALK

PROJECT ID	STATION	LOCATION	204.0115 SY	COMMENTS
CATEGORY CODE 0010				
7824-00-09				
	112+75	LT	33	DRIVEWAY
	144+18	LT	32	DRIVEWAY
	163+53	RT	39	DRIVEWAY
PROJECT TOTAL			**104**	

REMOVING INLETS

PROJECT ID	STATION	LOCATION	204.0220 REMOVING INLETS EACH	COMMENTS
CATEGORY CODE 0010				
7824-00-09				
	185+75	RT	1	DRIVEWAY PIPE INLET
PROJECT TOTAL			**1**	
CATEGORY CODE 0010				
7824-00-13				
	9+56'HR'	RT	1	
	9+64'HR'	RT	1	
PROJECT TOTAL			**2**	

REMOVING STORM SEWER ITEMS

PROJECT ID	STATION		STATION	LOCATION	EXISTING PIPE MATERIAL	204.0245.01 12-INCH LF	204.0245.02 18-INCH LF	204.0245 19x30-INCH LF	204.9060.S AEW EACH	COMMENTS
CATEGORY CODE 0010										
7824-00-09										
	185+75			RT	CONCRETE	--	--	42	--	ELLIPTICAL DRIVEWAY PIPE
PROJECT TOTAL						**--**	**--**	**42**		
CATEGORY CODE 0010										
7824-00-13										
	9+45'HR'	-	9+64'HR'	RT	CONCRETE	20	--	--	--	STORM SEWER
	9+42'HR'	-	9+63'HR'	LT	CONCRETE	--	23	--	1	STORM SEWER
PROJECT TOTAL						**20**	**23**	**--**	**1**	

REMOVALS

PROJECT ID	STATION		STATION	LOCATION	204.0165 REMOVING GUARDRAIL LF	204.0170 REMOVING FENCE LF	204.9180.S REMOVING RIPRAP SY
CATEGORY CODE 0010							
7824-00-09							
	113+25	-	116+75	LT	--	325	--
PROJECT TOTAL					**--**	**325**	**--**
CATEGORY CODE 0010							
7824-00-13							
	98+93	-	100+47	LT & RT	310	--	--
	98+72	-	98+93	LT	--	22	--
	99+90	-	100+28	RT	--	--	110
PROJECT TOTAL					**310**	**22**	**110**

Division	STATION - STATION	Location	205.0100 Common Excavation (1) Cut (2)	Salvaged/Unusable Pavement Material	Available Material (5)	Unexpanded Fill	Expanded Fill (13) Factor 1.25	Mass Ordinate +/- (14)	Waste	208.0100 Borrow
ID 7824-00-09	104+00 to 138+00	Mainline East/West segment	15,035	1,039	13,996	1,439	1,798	12,198	12,198	0
	138+00 - 186+92	Mainline North/South segment	16,754	1,991	14,763	2,458	3,073	23,888	11,690	0
	8+50 - 9+50	Mayer Rd	269	42	228	39	49	24,067	179	0
	10+50 - 11+35	Prill Rd	192	33	159	27	34	24,192	125	0
	10+40 - 11+15	Pleasant View Rd	185	23	162	29	36	24,318	126	0
PROJECT TOTAL			**32,435**	**3,128**	**29,308**	**3,992**	**4,990**		**24,318**	
ID 7824-00-13	95+00 - 104+00	CTH AA Bridge Mainline	2,821	275	2,546	8,731	10,913	-8,368	0	-8,368
	8+53 - 10+00	House Rd	89	8	81	0	0	-8,286	0	81
PROJECT TOTAL			**2,910**	**283**	**2,627**	**8,731**	**10,913**			**-8,286**
		GRAND TOTALS =	35,345	3,410	31,935	12,722	15,903		24,318	-8,286
		TOTAL COMMON EXCAVATION =	35,345							

1) Common Excavation is the sum of the Cut and EBS Excavation columns. Item number 205.0100

2) Salvaged/Unsuable Pavement Material is included in Cut.

5) Available Material = Cut - Salvaged/Unusuable Pavement Material

13) Expanded Fill. Factor = 1.25

Expanded Fill = Unexpanded Fill * Fill Factor

14) The Mass Ordinate + or - Qty calculated for the Division. Plus quantity indicates an excess of material within the Division. Minus indicates a shortage of material within the Division.

BASE AGGREGATE DENSE AND BREAKER RUN ITEMS

PROJECT ID	STATION - STATION	LOCATION	305.0110 BASE AGGREGATE DENSE 3/4-INCH TON	305.0120 BASE AGGREGATE DENSE 1 1/4-INCH TON	624.0100 WATER MGAL	628.7560 TRACKING PADS EACH
CATEGORY CODE 0010						
7824-00-09						
	104+00 - 138+25	MAINLINE BASE	--	9,300	90	--
	138+25 - 186+92	MAINLINE BASE	--	14,000	140	1
	MAYER RD	BASE	--	370	3.6	--
	PRILL RD	BASE	--	360	3.5	--
	PLEASANT VIEW RD	BASE	--	400	3.9	--
	104+00 - 138+25	SHOULDER	220	--	2.2	--
	138+25 - 186+92	SHOULDER	320	--	3.1	--
	108+61 - 185+75	DRIVEWAYS	370	370	7.2	--
PROJECT TOTAL			**910**	**24,800**	**253.5**	**1**
CATEGORY CODE 0010						
7824-00-13						
	95+00 - 99+40	MAINLINE (INCLUDES HOUSE RD)	--	1,500	15	1
	95+00 - 99+40	SHOULDER	24	47	0.7	--
	100+04 - 104+00	MAINLINE BASE	--	940	9.1	--
	100+04 - 104+00	SHOULDER	24	45	0.7	--
	9+40'HR' RT	DRIVEWAY	--	5	0.1	--
PROJECT TOTAL			**48**	**2,537**	**25.6**	**1**

CONCRETE DRIVEWAY ITEMS

PROJECT ID	STATION - STATION	LOCATION	416.0160 6-INCH SY
CATEGORY CODE 0010			
7824-00-09			
	112+75	LT	33
	144+18	LT	32
	163+53	RT	39
		TOTALS	**104**

FINISHING ROADWAY

	213.0100 EACH	COMMENTS
CATEGORY CODE 0010		
ID 7824-00-09	1	
ID 7824-00-13	1	
TOTAL	**2**	

ASPHALTIC ITEMS & MAILBOXES

PROJECT ID	STATION - STATION	LOCATION	455.0105 ASPHALTIC MATERIAL PG58-28 TON	455.0605 TACK COAT GAL	460.1100 HMA PAVEMENT TYPE E-0.3 TON	465.0120 ASPHALTIC SURFACE DRIVEWAYS AND FIELD ENTRANCES TON	465.0315 ASPHALTIC FLUMES SY	SPV.0060.03 MOVING MAILBOXES EACH
CATEGORY CODE 0010								
7824-00-09								
	104+00 - 186+93	LOWER LIFT	290	1,400	4,900	--	--	--
	104+00 - 186+94	UPPER LIFT	240	--	3,900	--	--	--
	MAYER RD	BOTH LIFTS	9	23	160	--	--	--
	PRILL RD	BOTH LIFTS	9	23	150	--	--	--
	PLEASANT VIEW RD	BOTH LIFTS	10	26	170	--	--	--
	109+75 - 185+75	DRIVEWAYS	--	--	--	190	--	22
	137+40	LT	--	--	--	--	11	--
	137+50	RT	--	--	--	--	11	--
	9+40'S'	RT	--	--	--	--	11	--
	138+80	RT	--	--	--	--	11	--
	10+30'P'	LT	--	--	--	--	11	--
	10+30'P'	RT	--	--	--	--	5	--
PROJECT TOTAL			**559**	**1,472**	**9,280**	**190**	**60**	**22**
CATEGORY CODE 0010								
7824-00-13								
	95+00 - 99+40	MAINLINE (INCLUDES HOUSE RD)	36	91	590	--	--	--
	100+04 - 104+00	MAINLINE	23	61	400	--	--	--
	9+42'HR'	DRIVEWAY RT	--	--	--	3	--	1
	99+09	LT	--	--	--	--	11	--
PROJECT TOTAL			**59**	**152**	**990**	**3**	**11**	**1**

CULVERT PIPE ITEMS

PROJECT ID	STATION	LOCATION	PIPE THICKNESS INCHES	CULVERT PIPE CLASS III-A NON-METAL 520.3412 12-INCH LF	520.3415 15-INCH LF	520.3418 18-INCH LF	AEW FOR CULVERT PIPE 520.1012 12-INCH EACH	AEW FOR CULVERT PIPE SLOPED SIDE DRAINS STEEL 6 TO 1 521.1515 15-INCH EACH	521.1518 18-INCH EACH	RCCP Class III 522.0124 24-INCH LF	522.0130 30-INCH LF	AEW FOR RCCP 522.1024 24-INCH EACH	522.1030 30-INCH EACH	RCCP ELLIPTICAL CLASS HE-III 523.0119 19X30-INCH LF	523.0124 24X38-INCH LF	523.0138 38X60-INCH LF	AEW FOR RCCP HE 523.0519 19X30-INCH EACH	523.0524 24X38-INCH EACH	523.0538 38X60-INCH EACH	MARKERS CULVERT END 633.5200 EACH	CONSTRUCTION STAKING 650.6000 PIPE CULVERTS EACH
CATEGORY CODE 0010																					
7824-00-09																					
	108+61	LT	0.064	50	--	--	2	--	--	--	--	--	--	--	--	--	--	--	--	--	1
	109+63	LT	0.064	42	--	--	2	--	--	--	--	--	--	--	--	--	--	--	--	--	1
	109+75	RT	0.064	38	--	--	2	--	--	--	--	--	--	--	--	--	--	--	--	--	1
	112+75	LT	0.064	34	--	--	2	--	--	--	--	--	--	--	--	--	--	--	--	--	1
	117+02	LT	0.064	42	--	--	2	--	--	--	--	--	--	--	--	--	--	--	--	--	1
	118+40	LT	0.064	--	--	26	--	--	2	--	--	--	--	--	--	--	--	--	--	--	1
	118+40	RT	0.064	--	--	28	--	--	2	--	--	--	--	--	--	--	--	--	--	--	1
	124+03	LT	0.064	18	--	--	2	--	--	--	--	--	--	--	--	--	--	--	--	--	1
	127+65	X-DRAIN	--	--	--	--	--	--	--	--	63	--	2	--	--	--	--	--	--	2	1
	129+08	LT	0.064	28	--	--	2	--	--	--	--	--	--	--	--	--	--	--	--	--	1
	130+83	RT	0.064	--	--	26	--	--	2	--	--	--	--	--	--	--	--	--	--	--	1
	130+91	LT	0.064	24	--	--	2	--	--	--	--	--	--	--	--	--	--	--	--	--	1
	131+82	LT	0.064	--	22	--	--	2	--	--	--	--	--	--	--	--	--	--	--	--	1
	133+85	RT	0.064	34	--	--	2	--	--	--	--	--	--	--	--	--	--	--	--	--	1
	134+17	LT	0.064	48	--	--	2	--	--	--	--	--	--	--	--	--	--	--	--	--	1
	135+78	LT	0.064	42	--	--	2	--	--	--	--	--	--	--	--	--	--	--	--	--	1
	141+13	LT	0.064	40	--	--	2	--	--	--	--	--	--	--	--	--	--	--	--	--	1
	144+18	LT	0.064	24	--	--	2	--	--	--	--	--	--	--	--	--	--	--	--	--	1
	147+47	LT	0.064	38	--	--	2	--	--	--	--	--	--	--	--	--	--	--	--	--	1
	152+25	X-DRAIN	--	--	--	--	--	--	--	--	--	--	--	--	--	64	--	--	2	2	1
	162+61	RT	0.064	38	--	--	2	--	--	--	--	--	--	--	--	--	--	--	--	--	1
	163+53	RT	0.064	40	--	--	2	--	--	--	--	--	--	--	--	--	--	--	--	--	1
	164+42	LT	0.064	28	--	--	2	--	--	--	--	--	--	--	--	--	--	--	--	--	1
	164+96	LT	0.064	24	--	--	2	--	--	--	--	--	--	--	--	--	--	--	--	--	1
	165+65	RT	0.064	34	--	--	2	--	--	--	--	--	--	--	--	--	--	--	--	--	1
	167+34	X-DRAIN	--	--	--	--	--	--	--	81	--	2	--	--	--	--	--	--	--	2	1
	170+38	RT	0.064	32	--	--	2	--	--	--	--	--	--	--	--	--	--	--	--	--	1
	173+52	RT	0.064	--	24	--	--	2	--	--	--	--	--	--	--	--	--	--	--	--	1
	176+57	RT	0.064	40	--	--	2	--	--	--	--	--	--	--	--	--	--	--	--	--	1
	183+05	RT	0.064	88	--	--	2	--	--	--	--	--	--	--	--	--	--	--	--	--	1
	183+60	X-DRAIN	--	--	--	--	--	--	--	--	65	--	2	--	--	--	--	--	--	2	1
	183+60	X-DRAIN	--	--	--	--	--	--	--	--	65	--	2	--	--	--	--	--	--	--	1
	185+75	RT	--	2	--	--	1	--	--	--	--	--	--	63	--	--	1	--	--	--	1
	9+50'S'	X-DRAIN	--	--	--	--	--	--	--	72	--	2	--	--	--	--	--	--	--	2	1
	10+50'E'	X-DRAIN	--	--	--	--	--	--	--	66	--	2	--	--	--	--	--	--	--	2	1
	10+60'P'	X-DRAIN	--	--	--	--	--	--	--	--	--	--	2	--	67	--	--	1	--	1	1
PROJECT TOTAL				**828**	**46**	**80**	**45**	**4**	**6**	**219**	**193**	**6**	**8**	**63**	**67**	**64**	**1**	**1**	**2**	**13**	**36**

3

CONCRETE CURB AND GUTTER ITEMS

PROJECT ID	STATION		STATION	LOCATION	601.0557 CONCRETE CURB & GUTTER 6-INCH SLOPED 36-INCH TYPE D LF	650.5500 CONSTRUCTION STAKING CURB, GUTTER AND CURB & GUTTER LF
CATEGORY CODE 0010						
7824-00-49						
	137+50	-	138+10	RT	92	92
	137+51	-	138+11	LT	95	95
	10+15'E	-	10+60'E	RT	63	63
	10+15'E	-	10+60'E	LT	63	63
	10+15'E	-	10+55'E	RT	94	94
	10+15'E	-	10+55'E	LT	64	64
PROJECT TOTAL					**471**	**471**
CATEGORY CODE 0010						
7824-00-13						
	08+94'HR'	-	09+65'HR'	LT	89	89
	08+92'HR'	-	09+32'HR'	RT	120	120
	98+19	-	99+33	RT	120	120
	99+17		99+33	LT	16	16
PROJECT TOTAL					**345**	**345**

UTILITY ADJUSTMENTS

PROJECT ID	STATION	LOCATION	611.0420 RECONSTRUCTING MANHOLES EACH	SPV.0060.02 ADJUSTING WATER VALVES EACH	SPV.0060.01 ADJUSTING MANHOLE COVERS EACH
CATEGORY CODE 0030					
7824-00-13					
	95+04	10' RT	-	1	-
	95+70	4' RT	-	1	-
	95+77	2' LT	-	-	1
	97+79	0' RT	1	-	-
	97+83	10' RT	-	1	-
	9+34'HR'	12' RT	-	1	-
	9+37'HR'	15' RT	-	1	-
	9+38'HR'	3' RT	-	1	1
	9+45'HR'	23' RT	-	-	1
	9+63'HR'	18' LT	-	-	1
PROJECT TOTAL			**1**	**6**	**4**

RIPRAP AND GEOTEXTILE FABRIC ITEMS

PROJECT ID	STATION	LOCATION	606.0200 RIPRAP MEDIUM CY	645.0120 GEOTEXTILE FABRIC TYPE HR SY	REMARKS
CATEGORY CODE 0010					
7824-00-09					
	127+65	LT	5	7	ENDWALL OUTFALL
	152+25	LT	8	14	ENDWALL OUTFALL
	167+35	LT	5	7	ENDWALL OUTFALL
	183+60	LT	11	22	ENDWALL OUTFALL
	183+60	RT	20	44	ENDWALL OUTFALL
PROJECT TOTAL			**49**	**94**	

STORM SEWER ITEMS

PROJECT ID	STRUCTURE	STATION	LOCATION	STORM SEWER PIPE REINF. CONC. 608.0418 CLASS IV 18-INCH LF	611.0606 INLET COVERS TYPE B EACH	611.0615 INLET COVERS TYPE F EACH	611.0642 INLET COVERS TYPE M S EACH	611.1005 CATCH BASINS 5-FT DIAMETER EACH	INLETS 611.3004 4-FT DIAMETER EACH	INLETS 611.3901 MEDIAN 1 GRATE EACH	628.7005 INLET PROTECTION TYPE A EACH	628.7020 INLET PROTECTION TYPE D EACH	650.4000 CONSTRUCTION STAKING STORM SEWER EACH
CATEGORY CODE 0010													
7824-00-09													
	2.0	184+50	40' RT	--	--	1	--	--	1	--	--	1	1
	3.0	186+04	32' RT	--	--	--	1	--	--	1	1	--	1
PROJECT TOTAL				--	**--**	**1**	**1**	**-**	**1**	**1**	**1**	**1**	**2**
CATEGORY CODE 0010													
7824-00-13													
	1.1	9+27	34' LT	39	--	1	--	--	1	--	--	1	1
	1.2	9+11	41' LT	18	1	--	--	--	1	--	--	1	1
	1.3	9+46	18' RT	-	--	1	--	1	-	--	--	1	1
PROJECT TOTAL				**57**	**1**	**2**	**--**	**1**	**2**	**--**	**--**	**3**	**3**

3

BEAM GUARD ITEMS

PROJECT ID	STATION - STATION	LOCATION	614.2300 MGS GUARDRAIL 3 LF	614.2500 MGS THRIE BEAM TRANSITION LF	614.2610 MGS GUARDRAIL TERMINAL EAT EACH
CATEGORY CODE 0010					
7824-00-13					
	98+32 - 99+35	RT	12.5	39.40	1
	98+32 - 99+35	LT	12.5	39.40	1
	100+05 - 101+08	LT	12.5	39.40	1
	100+05 - 101+08	RT	12.5	39.40	1
PROJECT TOTAL			**50**	**158**	**4**

MOBILIZATION

	619.1000 EACH	COMMENTS
CATEGORY CODE 0010		
ID 7824-00-09	0.85	
ID 7824-00-13	0.15	
TOTAL	**1**	

LANDSCAPING ITEMS

PROJECT ID	STATION - STATION	LOCATION	625.0500 SALVAGED TOPSOIL SY	627.0200 MULCHING SY	629.0210 FERTILIZER TYPE B CWT	630.0120 SEED MIX NO. 20 LBS	(1) 630.0140 SEED MIX NO. 40 LBS	630.0200 SEED TEMPORARY LBS
CATEGORY CODE 0010								
7824-00-09								
	104+00 - 137+50	RT	6,200	6,200	3.9	170	12	84
	104+00 - 137+50	LT	11,000	11,000	6.7	290	140	150
	MAYER RD	LT	480	480	0.3	13	--	6.4
	MAYER RD	RT	800	800	0.6	22	--	11
	138+50 - 187+00	LT	14,000	14,000	8.2	360	--	180
	138+50 - 184+00	RT	12,000	12,000	7.2	310	140	160
	184+50 - 187+00	RT	780	780	0.5	21	--	11
	UNDISTRIBUTED (25%)		12,000	12,000	6.9	300	73	160
PROJECT TOTAL			**57,260**	**57,260**	**34.3**	**1,486**	**365**	**762.4**
CATEGORY CODE 0010								
7824-00-13								
	95+00 - 104+00	LT & RT	5,700	5,700	3.7	160	--	77
	UNDISTRIBUTED (25%)		1,500	1,500	1.0	40	--	20
PROJECT TOTAL			**7,200**	**7,200**	**4.7**	**200**	**--**	**97**

(1) SEED MIX NO.40 TO BE USED IN FRONT YARDS THAT WILL BE MAINTAINED BY PROPERTY OWNER.

SILT FENCE ITEMS

PROJECT ID	STATION - STATION	LOCATION	628.1504 SILT FENCE LF	628.1520 MAINTENANCE LF
CATEGORY CODE 0010				
7824-00-09				
	104+00 - 108+00	RT	400	400
	114+00 - 115+00	LT	100	100
	117+50 - 122+25	RT	475	475
	125+00 - 128+50	LT	350	350
	125+50 - 130+00	RT	450	450
	131+00 - 133+75	RT	275	275
	132+00 - 133+00	LT	100	100
	143+00 - 144+10	LT	110	110
	150+00 - 156+00	LT	600	600
	150+00 - 153+00	RT	300	300
	161+50 - 162+50	LT	100	100
	166+00 - 173+50	LT	750	750
	166+25 - 168+10	RT	185	185
	182+00 - 185+50	LT	350	350
	UNDISTRIBUTED (25%)		1,200	1,200
PROJECT TOTAL			**5,745**	**5,745**
CATEGORY CODE 0010				
7824-00-13				
	95+00 - 99+50	LT	450	450
	98+00 - 99+50	RT	150	150
	102+00 - 104+00	RT	200	200
	UNDISTRIBUTED (25%)		200	200
PROJECT TOTAL			**1,000**	**1,000**

3

EROSION MAT ITEMS

PROJECT ID	STATION - STATION	LOCATION	628.2004 CLASS 1 TYPE B SY	628.2006 URBAN CLASS 1 TYPE A SY	628.2023 CLASS 2 TYPE B SY	628.2037 CLASS 3 TYPE C SY
CATEGORY CODE 0010						
7824-00-09						
	104+00 - 108+50	LT	2,500	--	--	--
	104+50 - 113+00	RT	760	--	--	--
	108+50 - 113+00	LT	400	--	--	--
	109+63	LT	--	44	--	--
	109+79	RT	--	89	--	--
	112+75	LT	--	89	--	--
	116+50 - 118+50	LT	--	180	--	--
	127+25 - 128+00	LT	210	--	--	--
	127+25 - 128+00	RT	140	--	--	--
	129+25 - 136+00	LT	320	--	--	--
	129+00 - 136+00	RT	540	--	--	--
	130+50 - 134+00	LT	--	500	--	--
	133+00 - 134+00	RT	--	89	--	--
	135+00 - 148+00	LT	--	1,200	--	--
	148+00 - 152+00	LT	360	--	--	--
	142+00 - 152+00	RT	800	--	--	--
	151+00 - 152+00	RT	--	--	--	89
	152+00 - 152+50	RT	140	--	--	--
	152+25 - 154+00	RT	--	--	160	--
	156+00 - 162+00	LT	540	--	--	--
	156+00 - 162+00	RT	540	--	--	--
	162+00 - 175+00	RT	--	1,200	--	--
	166+00 - 168+50	LT	620	--	--	--
	166+50 - 167+50	RT	--	--	--	89
	175+00 - 180+00	LT	450	--	--	--
	176+00 - 185+00	RT	--	800	--	--
	10+50"E" - 11+30"E"	LT & RT	--	--	--	150
	10+50"P" - 11+50"P"	RT	--	89	--	--
	8+75"S" - 9+50"S"	LT & RT	--	--	--	140
	UNDISTRIBUTED (25%)		2,100	1,100	40	120
PROJECT TOTAL			**10,420**	**5,380**	**200**	**588**
CATEGORY CODE 0010						
7824-00-13						
	95+00 - 104+00	LT & RT	5,700	--	--	--
	UNDISTRIBUTED (25%)		1,500	--	--	--
PROJECT TOTAL			**7,200**	**--**	**--**	**--**

DITCH CHECK ITEMS

PROJECT ID	STATION - STATION	LOCATION	628.7504 TEMPORARY DITCH CHECKS LF	628.7555 CULVERT PIPE CHECKS EACH
CATEGORY CODE 0010				
7824-00-09				
	104+00 - 113+00	RT	200	--
	104+01 - 113+01	LT	200	--
	108+61	LT	--	1
	109+63	LT	--	1
	109+79	RT	--	1
	112+75	LT	--	1
	117+02	LT	--	1
	118+40	LT	--	2
	124+03	LT	--	1
	127+65	CROSSDRAIN	--	2
	129+00 - 136+00	LT	70	--
	129+00 - 136+00	RT	70	--
	130+83	LT	--	1
	130+85	RT	--	2
	131+82	LT	--	1
	134+17	LT	--	1
	135+76	LT	--	1
	141+12	LT	--	1
	142+00 - 152+00	LT	110	--
	142+00 - 152+00	RT	110	--
	144+19	LT	--	1
	147+47	LT	--	1
	152+25	CROSSDRAIN	--	4
	156+00 - 162+00	LT	60	--
	156+00 - 162+00	RT	60	--
	162+61	RT	--	1
	163+53	RT	--	1
	164+42	LT	--	1
	164+96	LT	--	1
	165+65	RT	--	1
	167+35	CROSSDRAIN	--	2
	170+38	RT	--	1
	173+52	RT	--	1
	175+00 - 180+00	LT	60	--
	175+00 - 180+00	RT	60	--
	176+57	RT	--	1
	177+74	LT	--	1
	183+05	RT	--	1
	183+60	CROSSDRAIN	--	3
	185+75	RT	--	2
	9+50'S'	CROSSDRAIN	--	2
	10+50'E'	CROSSDRAIN	--	2
	10+40'P'	CROSSDRAIN	--	2
	UNDISTRIBUTED (25%)		250	--
PROJECT TOTAL			**1,250**	**46**

DITCH CHECK ITEMS CONT.

PROJECT ID	STATION - STATION	LOCATION	628.7504 TEMPORARY DITCH CHECKS LF	628.7555 CULVERT PIPE CHECKS EACH
CATEGORY CODE 0010				
7824-00-13				
	100+00 - 104+00	LT	50	--
	95+00 - 104+00	RT	25	1
	UNDISTRIBUTED (25%)		19	--
PROJECT TOTAL			**94**	**1**

3

SIGNING ITEMS

PROJECT ID	NEW SIGN NO.	STATION	LOCATION	SIGN CODE	SIZE	634.0614 POSTS WOOD 4X6X14 EACH	634.0616 POSTS WOOD 4X6X16 EACH	637.2230 SIGNS TYPE II REFLECTIVE F SF	EXISTING SIGN NO.	638.2102 MOVING SIGNS TYPE II EACH	638.2602 REMOVING SIGNS TYPE II EACH	638.3000 REMOVING SMALL SIGN SUPPORTS EACH	REMARKS
CATEGORY CODE 0010													
7824-00-09													
	1	110+70	LT	R2-1	24 x 30	1	--	5.00	1R	--	1	1	35 MPH
	2	110+70	RT	R2-1	24 x 30	1	--	5.00	2R	--	1	1	45 MPH
	3	133+10	RT	J12-1	24 x 45	--	1	7.50	3R	--	2	1	CTH AA, ARROW
	4	134+00	RT	W3-1	36 x 36	--	1	9.00	4R	--	1	1	STOP AHEAD
	5	135+50	LT	R2-1	24 x 30	1	--	5.00	5R	--	1	1	45 MPH
	6	136+75	LT	M1-5A	24 x 24	1	--	4.00	6R	--	1	1	CTH AA
	7	138+90	RT	M1-5A	24 x 24	1	--	4.00	7R	--	1	1	CTH AA
	8	137+70	RT	J12-1	24 x 45	--	1	7.50	8R	--	2	1	CTH AA, ARROW
	9	137+70	RT	R1-1	30 x 30	1	--	5.18	9R	--	1	1	STOP
	10	9+60'S'	RT	R1-1	30 x 30	1	--	5.18	10R	--	1	1	STOP
	11	10+50'E'	LT	R1-1	30 x 30	1	--	5.18	11R	--	1	1	STOP
	12	139+00	LT	R1-1	30 x 30	1	--	5.18	12R	--	1	1	STOP
	13	137+70	RT	R1-3P	18 x 6	--	--	0.75	13R	--	1	--	ALL WAY
	14	9+60'S'	RT	R1-3P	18 x 6	--	--	0.75	14R	--	1	--	ALL WAY
	15	10+50'E'	LT	R1-3P	18 x 6	--	--	0.75	15R	--	1	--	ALL WAY
	16	139+00	LT	R1-3P	18 x 6	--	--	0.75	16R	--	1	--	ALL WAY
	17	139+00	LT	J12-1	24 x 45	1	--	7.50	17R	--	2	1	CTH AA, ARROW
	18	10+50'E'	LT	J12-1	24 x 45	1	--	7.50	18R	--	2	1	CTH AA, ARROW
	19	8+30'S'	RT	W3-1	36 x 36	--	1	9.00	18R	--	1	1	STOP AHEAD
	20	11+75'E'	LT	W3-1	36 x 36	--	1	9.00	19R	--	1	1	STOP AHEAD
	41	141+10	RT	R2-1	24 x 30	1	--	5.00	41R	--	1	1	45 MPH
	21	142+75	LT	W3-1	36 x 36	--	1	9.00	21R	--	1	1	STOP AHEAD
	22	147+25	LT	J12-1	24 x 45	1	--	7.50	22R	--	2	1	CTH AA, ARROW
	23	151+50	RT	W14-3	48 x 36	--	1	6.00	23R	--	1	1	NO PASSING
	--	176+05	RT	--	--	--	--	--	25R	--	1	1	NO PASSING
	26	181+45	RT	J1-2	48 x 39	--	1	13.00	26R	--	4	1	JCT 12, END CTH AA
	--	184+00	LT	--	--	1	--	--	27M	1	--	--	NO PASSING
	--	184+00	LT	--	--	1	--	--	28M	1	--	--	45 MPH
	--	184+90	LT	--	--	1	--	--	29M	1	--	--	NO PARKING
	--	186+70	LT	--	--	1	--	--	30M	1	--	--	NO PARKING
	--	184+50	RT	--	--	1	--	--	31M	1	--	--	STOP
	--	184+75	RT	--	--	1	--	--	32M	1	--	--	STOP LIGHTS AHEAD
	--	185+20	RT	--	--	1	--	--	33M	1	--	--	NO PARKING
	35	125+90	RT	W14-3	48 x 36	--	1	12.00	--	--	--	--	NO PASSING
	36	183+50	RT	W14-3	48 x 36	--	1	12.00	--	--	--	--	NO PASSING
PROJECT TOTAL						**20**	**10**	**168.22**		**7**	**34**	**22**	
CATEGORY CODE 0010													
7824-00-13													
	27	95+40	LT	R7-1R	18 x 24	1	--	3.00	27R	--	1	1	NO PARKING
	28	95+40	RT	R7-1R	18 x 24	1	--	3.00	28R	--	1	1	NO PARKING
	30	9+85'HR'	RT	R1-1	30 x 30	1	--	5.18	30R	--	1	1	STOP
	31	98+00	RT	R7-1D	18 x 24	1	--	3.00	31R	--	1	1	NO PARKING
	--	98+90	RT	--	--	--	--	--	32R	--	1	1	WEIGHT LIMIT
	33	102+00	LT	R7-1L	18 x 24	1	--	3.00	33R	--	1	1	NO PARKING
	34	102+00	RT	R7-1R	18 x 24	1	--	3.00	34R	--	1	1	NO PARKING
	--	100+45	LT	--	--	--	--	--	35R	--	1	1	WEIGHT LIMIT
	37	99+40	LT	W5-52L	12 X 36	--	1	3.00	37R	--	1	1	OBJECT MARKER
	38	99+40	RT	W5-52R	12 X 36	--	1	3.00	38R	--	1	1	OBJECT MARKER
	39	100+07	LT	W5-52R	12 X 36	--	1	3.00	39R	--	1	1	OBJECT MARKER
	40	100+07	RT	W5-52L	12 X 36	--	1	3.00	40R	--	1	1	OBJECT MARKER
PROJECT TOTAL						**6**	**4**	**32.18**	**--**	**--**	**12**	**12**	

TRAFFIC CONTROL ITEMS

PROJECT ID	LOCATION	643.0300 DRUMS DAY	643.0420 BARRICADES TYPE III DAYS	643.0705 WARNING LIGHTS TYPE A DAYS	643.0900 SIGNS DAYS	643.0920 COVERING SIGNS TYPE II EACH	COVER / UNCOVER CYCLES	643.1000 SIGNS FIXED MESSAGE SF	643.0200 SURVEILLANCE AND MAINTENANCE DAY	REMARKS
CATEGORY CODE 0010										
7824-00-09										
	ADVANCED FROM WEST LIMITS	--	450	900	630	--	--	--	90	
	ADVANCED FROM MAYER ROAD SOUTH	--	450	900	630	--	--	--	--	
	ADVANCED FROM PRILL RD EAST	--	450	900	630	--	--	--	--	
	ADVANCED FROM NORTH LIMITS USH 12	--	360	720	540	2	1	--	--	
	ADVANCED FROM PLEASANT VIEW RD EAST	--	90	180	180	--	--	--	--	
	UNDISTRIBUTED	2,250	450	450	450	--	--	--	--	
	GOLF ROAD	--	--	--	--	4	1	--	--	
	SOUTHBOUND HASTINGS WAY	--	--	--	--	--	--	48	--	HWY AA CLOSED AT HOUSE RD
	NORTHBOUND HASTINGS WAY	--	--	--	--	--	--	48	--	AA DETOUR FOLLOW 12
	NORTHBOUND HASTINGS WAY	--	--	--	--	--	--	48	--	AA CLOSED AT HOUSE RD FOLLOW DETOUR
	TOTALS	**2,250**	**2,250**	**4,050**	**3,060**	**6**	**--**	**144**	**90**	**--**

DETOUR ITEMS

PROJECT ID	LOCATION	643.3000 DETOUR SIGN DAYS
CATEGORY CODE 0010		
7824-00-09		
	USH 12 / CTH AA	630
	USH 12, OAK DR - USH 53	1,440
	USH 53 NORTHBOUND	1,440
	USH 53 SOUTHBOUND	990
	CLAIREMONT AVE WESTBOUND	1,080
	CLAIREMONT AVE EASTBOUND	900
	USH 53 NB TO CLAIREMONT OFFRAMP	540
	GOLF ROAD	1,080
	TOTAL	**8,100**

TRAFFIC CONTROL DETOUR

	213.0100 EACH	COMMENTS
CATEGORY CODE 0010		
ID 7824-00-09	1	
TOTAL	**1**	

REFERENCE MONUMENTS & CONSTRUCTION STAKING ITEMS

PROJECT ID	STATION	-	STATION	LOCATION	621.0100 LANDMARK REFERENCE MONUMENTS EACH	650.4500 SUBGRADE LF	650.5000 BASE LF	650.9910 SUPPLEMENTAL CONTROL LS	650.9920 SLOPE STAKES LF
CATEGORY CODE 0010									
7824-00-09									
	104+00	-	187+00	CTH AA	2	8,300	8,300	1	8,300
	8+50'S'	-	10+00'S'	MAYER RD	--	150	150	--	150
	10+00'E'	-	11+50'E'	PRILL RD	--	150	150	--	150
	10+00'P'	-	11+25'P'	PLEASEANT VIEW	--	125	125	--	125
PROJECT TOTAL					**2**	**8,725**	**8,725**	**1**	**8,725**
CATEGORY CODE 0010									
7824-00-13									
	95+00	-	104+00	CTH AA	--	900	900	1	900
	8+53'HR'	-	10+00'HR'	HOUSE ROAD	--	147	147	--	147
PROJECT TOTAL					--	**1,047**	**1,047**	**1**	**1,047**

STAKING ITEMS FOR STORM SEWER, CURB AND GUTTER, AND PIPE CULVERTS SHOWN ELSEWHERE

LOCATING NO-PASSING ZONES

PROJECT ID	STATION - STATION	648.0100 MI	COMMENTS
CATEGORY CODE 0010			
7824-00-09			
	104+00 - 187+00	**1.6**	
CATEGORY CODE 0010			
7824-00-13			
	95+00 - 104+00	**0.2**	

FIELD OFFICE

	642.5001 TYPE B EACH
CATEGORY CODE 0010	
ID 7824-00-09	0.5
ID 7824-00-13	0.5
	1

SAWING PAVEMENT ITEMS

PROJECT ID	STATION - STATION	LOCATION	690.0150 ASPHALT LF	690.0250 CONCRETE LF	COMMENTS
CATEGORY CODE 0010					
7824-00-09					
	109+75	RT	12	--	DRIVEWAY
	112+75	LT	--	12	DRIVEWAY
	117+00	LT	12	--	DRIVEWAY
	130+91	LT	14	--	DRIVEWAY
	131+82	LT	12	--	DRIVEWAY
	133+85	RT	10	--	DRIVEWAY
	140+34	LT	12	--	DRIVEWAY
	141+13	LT	12	--	DRIVEWAY
	144+18	LT	--	16	DRIVEWAY
	163+53	RT	--	12	DRIVEWAY
	165+65	RT	12	--	DRIVEWAY
	170+38	RT	12	--	DRIVEWAY
	173+52	RT	12	--	DRIVEWAY
	176+57	RT	20	--	DRIVEWAY
	183+04	RT	12	--	DRIVEWAY
	187+00	MAINLINE	30	--	--
	8+50'S'	MAYER RD	22	--	--
	11+50'E'	PRILL RD	22	--	--
	11+25'P'	PLEASEANT VIEW	22	--	--
PROJECT TOTAL			**248**	**40**	
CATEGORY CODE 0010					
7824-00-13					--
	9+50	MAINLINE	32	--	--
	8+53'HR'	HOUSE ROAD	22	--	--
PROJECT TOTAL			**54**	**--**	

PAVEMENT MARKING ITEMS

PROJECT ID	STATION	-	STATION	LOCATION	646.0106 EPOXY 4-INCH WHITE LF	646.0106 EPOXY 4-INCH YELLOW LF	647.0566 STOP LINE EPOXY 18-INCH LF
CATEGORY CODE 0010							
7824-00-09							
	104+00	-	126+00	CTH AA	--	4,400	--
	126+00	-	135+25	CTH AA	--	930	--
	126+00	-	135+25	CTH AA	--	240	--
	135+25	-	138+00	CTH AA	--	550	--
	104+00	-	137+50	CTH AA	6,700	--	--
	8+25	-	9+75	MAYER RD	--	300	--
	8+25	-	9+25	MAYER RD	200	--	--
	10+25	-	11+50	PRILL RD	--	250	--
	10+50	-	11+50	PRILL RD	200	--	--
	138+50	-	151+50	CTH AA	--	2,600	--
	151+50	-	163+50	CTH AA	--	1,200	--
	151+50	-	163+50	CTH AA	--	300	--
	163+50	-	171+50	CTH AA	--	1,600	--
	171+50	-	187+00	CTH AA	--	1,550	--
	171+50	-	187+00	CTH AA	--	390	--
	138+50	-	187+00	CTH AA	9,700	--	--
	10+25	-	11+25	PLEASANT	--	200	--
	10+75	-	11+25	PLEASANT	100	--	--
	138+00	-	-	RT	--	--	38
	9+75	-	-	MAYER RD	--	--	26
	10+25	-	-	PRILL RD	--	--	28
	138+50	-	-	LT	--	--	42
SUBTOTAL					16,900	14,510	134
PROJECT TOTAL						**31,410**	**134**
CATEGORY CODE 0010							
7824-00-13							
	95+00	-	104+00	CTH AA	1,600	1,800	--
SUBTOTAL					1,600	1,800	--
PROJECT TOTAL						**3,400**	**--**

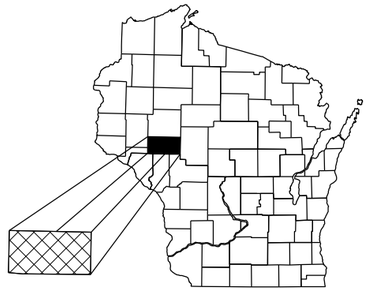

PROJECT NO. 7824-00-12

OTTER CREEK BRIDGE B-18-0229

CTH AA

EAU CLAIRE COUNTY

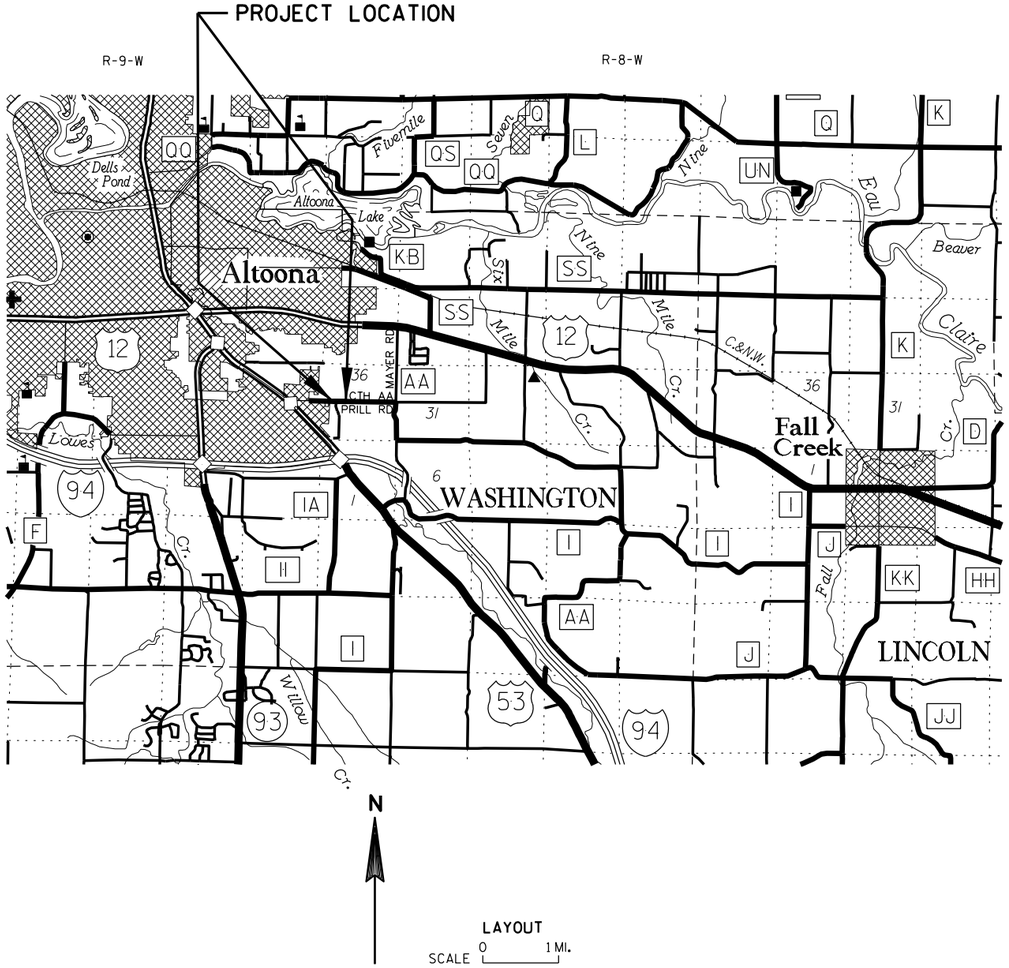

TOTAL NET LENGTH OF CENTERLINE = 1.570 MI.

NOTES:

EXISTING HIGHWAY RIGHT-OF-WAY SHOWN HEREIN IS BASED ON THE FOLLOWING POINTS OF REFERENCE:
EXISTING RIGHT-OF-WAY OF CTH AA IS BASED ON THE EXISTING CENTERLINE AND STATE STATUTE 82.31 COMPLIMENTED BY:
- TRANSPORTATION PROJECT PLAT 7824-00-00
- CSM NO. 1295, V. 7, P. 12, DOC. NO. 704918

EXISTING RIGHT-OF-WAY FOR HOUSE ROAD IS BASED ON:
- CSM NO. 1295, V. 7, P. 12, DOC. NO. 704918

FOR THE LATEST ACCESS/DRIVEWAY INFORMATION CONTACT THE EAU CLAIRE COUNTY HIGHWAY DEPARTMENT.

POSITIONS SHOWN ON THIS PLAT ARE WISCONSIN COUNTY COORDINATES, EAU CLAIRE COUNTY, NAD 83 (2011), CALIBRATED TO COUNTY SECTION CORNERS ON 83/ 91 V. WI_g99, IN US SURVEY FEET. VALUES SHOWN ARE GRID COORDINATES, GRID BEARINGS, AND GRID DISTANCES. GRID DISTANCES MAY BE USED AS GROUND DISTANCES.

ALL NEW RIGHT-OF-WAY MONUMENTS ARE TYPE 2 (TYPICALLY 3"Ø x 18" IRON REBARS), UNLESS OTHERWISE NOTED, AND WILL BE PLACED PRIOR TO THE COMPLETION OF THE PROJECT.

ALL RIGHT-OF-WAY LINES DEPICTED IN NON ACQUISITION AREAS ARE INTENDED TO RE-ESTABLISH EXISTING RIGHT-OF-WAY LINES AS DETERMINED FROM PREVIOUS PROJECTS, OTHER RECORDED DOCUMENTS, OR FROM CENTERLINE OR EXISTING PAVEMENTS.

RIGHT-OF-WAY BOUNDARIES ARE DEFINED WITH COURSES OF THE PERIMETER OF THE HIGHWAY LANDS REFERENCED TO THE U.S. PUBLIC LAND SURVEY SYSTEM OR OTHER "SURVEYS OF PUBLIC RECORD".

PROPERTY LINES SHOWN ON THIS PLAT ARE DRAWN FROM DATA DERIVED FROM MAPS AND DOCUMENTS OF PUBLIC RECORD AND/OR EXISTING OCCUPATIONAL LINES. THIS PLAT MAY NOT BE A TRUE REPRESENTATION OF EXISTING PROPERTY LINES, EXCLUDING RIGHT-OF-WAY LINES, AND SHOULD NOT BE USED AS A SUBSTITUTE FOR AN ACCURATE FIELD SURVEY.

A **TEMPORARY LIMITED EASEMENT** (TLE) IS A RIGHT FOR CONSTRUCTION PURPOSES, AS DEFINED HEREIN, INCLUDING THE RIGHT TO OPERATE NECESSARY EQUIPMENT THEREON AND THE RIGHT OF INGRESS AND EGRESS, AS LONG AS REQUIRED FOR SUCH PUBLIC PURPOSE, INCLUDING THE RIGHT TO PRESERVE, PROTECT, REMOVE, OR PLANT THEREON ANY VEGETATION THAT THE HIGHWAY AUTHORITIES MAY DEEM NECESSARY OR DESIRABLE. ALL TLES EXPIRE AT THE COMPLETION OF THE CONSTRUCTION PROJECT FOR WHICH THIS INSTRUMENT IS GIVEN.

DIMENSIONING FOR THE NEW RIGHT-OF-WAY IS MEASURED ALONG AND PERPENDICULAR TO NEW REFERENCE LINES.

CONVENTIONAL ABBREVIATIONS

ACCESS POINT, DRIVEWAY CONNECTION	AP	REFERENCE LINE	R/L
ACCESS RIGHTS	AR	RELEASE OF RIGHTS	ROR
ACRES	AC.	REMAINING	REM.
AND OTHERS	ET.AL.	RIGHT-OF-WAY	R/W
CENTERLINE	C/L	SECTION	SEC.
CERTIFIED SURVEY MAP	CSM	STATION	STA.
CORNER	COR.	TEMPORARY LIMITED EASEMENT	TLE
DOCUMENT	DOC.	VOLUME	V.
EASEMENT	EASE.		
HIGHWAY EASEMENT	H.E.		
LAND CONTRACT	LC		
MONUMENT	MON.		
PAGE	P.		
PERMANENT LIMITED EASEMENT	PLE		
PROPERTY LINE	PL		
RECORDED AS	(100')		

CURVE DATA

LONG CHORD	LCH
LONG CHORD BEARING	LCB
RADIUS	R
DEGREE OF CURVE	D
CENTRAL ANGLE OR DELTA	DELTA
LENGTH OF CURVE	L
TANGENT	TAN

CONVENTIONAL SYMBOLS

FOUND IRON PIPE/PIN	(1" UNLESS NOTED)	PROPOSED R/W LINE	
R/W MONUMENT	●(SET)	EXISTING H.E. LINE	
R/W STANDARD	▲(SET)	PROPERTY LINE	
SIGN	SIGN	LOT & TIE LINES	
SECTION CORNER MONUMENT		SLOPE INTERCEPTS	
SECTION CORNER SYMBOL		CORPORATE LIMITS	
FEE (HATCH VARIES)		NO ACCESS (BY PREVIOUS ACQUISITION/CONTROL)	
TEMPORARY LIMITED EASEMENT		NO ACCESS (BY ACQUISITION)	
PERMANENT LIMITED EASEMENT		NO ACCESS (BY STATUTORY AUTHORITY)	
R/W BOUNDARY POINT		SECTION LINE	
PARCEL NUMBER	RWB20 / 102 / 92	QUARTER LINE	
UTILITY PARCEL NUMBER		SIXTEENTH LINE	
SIGN NUMBER (OFF PREMISE)	21-1	EXISTING CENTERLINE	
BUILDING		PROPOSED REFERENCE LINE	
		PARALLEL OFFSET	

CONVENTIONAL UTILITY SYMBOLS

WATER	W
GAS	G
TELEPHONE	T
OVERHEAD	OH
TRANSMISSION LINES	
ELECTRIC	E
CABLE TELEVISION	TV
FIBER OPTIC	FO
SANITARY SEWER	SAN
STORM SEWER	SS

	NON COMPENSABLE	COMPENSABLE
POWER POLE		
TELEPHONE POLE		
TELEPHONE PEDESTAL		
ELECTRIC TOWER		

RESERVED FOR REGISTER OF DEEDS
PROJECT NUMBER 7824-00-12 - 4.01
SHEET 2 OF 2
AMENDMENT NO:

FILE NAME : C:\Users\Bryan\Documents\DGN\7824-00-00 CTH AA Eau Claire County\CAD\Plat\Otter Creek TPP\040100_tpp.dgn PLOT DATE : 1/20/2016 PLOT BY : $$...plotuser...$$ PLOT NAME : PLOT SCALE : 200.0000 sf / in.

DATE : 07-07-2015

REVISION DATE :

TRANSPORTATION PROJECT PLAT NO: 7284-00-12 - 4.02

RELOCATION ORDER: OTTER CREEK BRIDGE B-18-0229

R/W MONUMENT POINT NUMBER AND COORDINATE TABLE

R/W MONUMENT POINT NUMBER AND COORDINATE TABLE		
POINT	Y	X
100	266,603.438	358,953.433
101	266,636.437	358,953.574
102	266,676.563	358,953.745
103	266,675.711	359,153.891
104	266,675.618	359,164.855
106	266,665.618	359,164.851
107	266,662.536	359,528.939
108	266,672.535	359,529.024
109	266,671.479	359,653.866
111	266,671.155	359,733.707
112	266,711.155	359,733.869
113	266,710.670	359,853.769
114	266,697.670	359,853.717
116	266,550.671	359,853.278
117	266,551.379	359,678.224
118	266,516.379	359,678.083
119	266,516.481	359,652.897
121	266,517.964	359,477.714
122	266,532.964	359,477.841
123	266,534.258	359,324.917
124	266,568.673	359,324.872
126	266,569.036	359,248.533
127	266,517.415	359,142.595
128	266,569.679	359,113.124
129	266,602.678	359,113.281

POSITIONS SHOWN ON THIS PLAT ARE WISCONSIN COUNTY COORDINATES, EAU CLAIRE COUNTY, NAD 83 (2011), CALIBRATED TO COUNTY SECTION CORNERS ON 83/ 91 V. WI_g99, IN US SURVEY FEET. VALUES SHOWN ARE GRID COORDINATES, GRID BEARINGS, AND GRID DISTANCES. GRID DISTANCES MAY BE USED AS GROUND DISTANCES.

FILE NAME : C:\Users\Bryan\Documents\DGN\7824-00-00 CTH AA Eau Claire County\CAD\Plat\Otter Creek TPP\040102_tpp.dgn PLOT DATE : 10/19/2015 PLOT BY : $$...plotuser...$$ PLOT NAME : PLOT SCALE : 100.0000 sf / in.

APPRAISAL PLAT DATE :

4.02

VOL 1 TPP PAGE 378

TRANSPORTATION PROJECT PLAT NO: 7824-00-00 - 4.02
AMENDMENT NO: 2

REMOVES REFERENCES TO WISDOT SHOWN ON TPP 7824-00-00-4.02 A1 AND RECORDED AS DOC. #1110793

THAT PART OF LOT 1, C.S.M. #2726, LOCATED IN THE SW 1/4 - NE 1/4, PART OF THE SW 1/4 - NE 1/4 AND PART OF THE NW 1/4 - SE 1/4, TOWN OF WASHINGTON AND ALSO THAT PART OF SW 1/4 - NE 1/4, CITY OF ALTOONA, ALL LOCATED IN SECTION 36, TOWN 27 NORTH, RANGE 9 WEST, EAU CLAIRE COUNTY, WISCONSIN.

RELOCATION ORDER CTH AA HOUSE ROAD - USH 12, EAU CLAIRE COUNTY, WISCONSIN

TO PROPERLY ESTABLISH, LAY OUT, WIDEN, ENLARGE, EXTEND, CONSTRUCT, RECONSTRUCT, IMPROVE, OR MAINTAIN A PORTION OF THE HIGHWAY DESIGNATED ABOVE, THE COUNTY OF EAU CLAIRE DEEMS IT NECESSARY TO RELOCATE OR CHANGE SAID HIGHWAY AND ACQUIRE CERTAIN LANDS AND INTERESTS OR RIGHTS IN LANDS FOR THE ABOVE PROJECT.

TO EFFECT THIS CHANGE, PURSUANT TO AUTHORITY GRANTED UNDER SUBSECTIONS 83.07(3), AND 83.08(1a)(1b), WISCONSIN STATUTES, THE COUNTY OF EAU CLAIRE HEREBY ORDERS THAT:
1. THAT PORTION OF SAID HIGHWAY AS SHOWN ON THIS PLAT IS LAID OUT AND ESTABLISHED TO THE LINES AND WIDTHS AS SO SHOWN FOR THE ABOVE NAMED PROJECT.
2. THE LANDS OR INTERESTS OR RIGHTS IN LANDS AS SHOWN ON THIS PLAT ARE REQUIRED BY THE DEPARTMENT FOR THE ABOVE PROJECT AND SHALL BE ACQUIRED IN THE NAME OF THE COUNTY OF EAU CLAIRE, PURSUANT TO THE PROVISIONS OF SUBSECTION 83.08 (1a) OR (1b), WISCONSIN STATUTES.

1113821
KATHRYN A. CHRISTENSON
EAU CLAIRE COUNTY, WI
REGISTER OF DEEDS

RECORDED ON
05/04/2015 4:06 PM

REC FEE:
TRANSFER FEE:
EXEMPT #
PAGES: 1

RESERVED FOR REGISTER OF DEEDS
PROJECT NUMBER 7824-00-00 4.02
AMENDMENT NO: 2

SCHEDULE OF LANDS & INTERESTS REQUIRED

OWNERS NAMES ARE SHOWN FOR REFERENCE ONLY AND ARE SUBJECT TO CHANGE PRIOR TO THE TRANSFER OF LAND INTERESTS TO THE WISCONSIN DEPARTMENT OF TRANSPORTATION.

PARCEL OWNER	OWNER(S)	INTEREST REQUIRED	RIGHT OF WAY SF REQUIRED NEW	EXISTING	TOTAL	TLE SF	PLE SF
2	KAREN E. SCHAUER TRUST	FEE	17,738		17,738	---	---
3	AMY R. ALPINE	FEE, & TLE	12,101		12,101	125	---
4	CARA A. SILVA	FEE & TLE	5,244		5,244	250	---
5	CURT J. & TAMMY L. TAMBORINO	FEE	9,856		9,856	---	---

SCHEDULE OF UTILITIES & INTERESTS REQUIRED

UTILITY NUMBER	OWNER(S)	INTEREST REQUIRED
81	XCEL ENERGY (ELEC)	RELEASE OF RIGHTS
83	EAU CLAIRE ENERGY COOPERATIVE (OH ELEC)	RELEASE OF RIGHTS

HARRISON MON. FND.
Y = 269,229.370
X = 360,650.780

T 27 N, R 9 W, SECTION 36

(81) XCEL ENERGY (ELEC)
NO RECORDED EASEMENTS - ALL PARCELS

(83) EAU CLAIRE ENERGY COOPERATIVE (OH ELEC)
NO RECORDED EASEMENTS - ALL PARCELS

TOWN OF WASHINGTON

SW 1/4 - NE 1/4

UNPLATTED LANDS

CITY OF ALTOONA

S 00°07'42" E 2631.10' FROM MON. TO PI

N 00°07'42" W 2.93' FROM SEC. 36 TO PI

S 00°04'06" E 3.31' FROM PI TO SEC. LINE

1/16 LINE

LOT 1
C.S.M. 2726
V. 15, P. 158-159
DOC. #1033879

P.I.

TLE - DRIVEWAY 250 SF

PI STA 118+65.94
PI = 118+65.94
Y 266,596.295
X 361,319.363
Δ = 00°09'44", RT

TLE - DRIVEWAY 125 SF

STA. 112+03.25

STA. 125+25.47

115+00

120+00

125+00

CTH AA (PRILL ROAD)

S 89°49'44" E

S 89°40'00" E

FND. 1/4" I.P.

50'

66'

33'

200 201 202 203 204 205 206 207

T200 T201 T202 T203 T204 T205 T206 T207

S 00°07'42" E 50.00'

N 00°05'37" E 47.07'

SEE TPP 7824-00-00 - 4.01

SEE TPP 7824-00-00 - 4.03

N 00°05'37" E 2632.24' FROM MON. TO SEC. 36

SECTION 36 (CALCULATED)
Y = 266,595.347
X = 360,656.679

BRASS MON. FND.
Y = 263,963.110
X = 360,652.380

T 26 N, R 9 W, SECTION 1

NOTES:

EXISTING HIGHWAY RIGHT-OF-WAY SHOWN HEREIN IS BASED ON THE FOLLOWING POINTS OF REFERENCE:
EXISTING RIGHT-OF-WAY OF CTH AA IS BASED ON THE EXISTING CENTERLINE AND STATE STATUTE 82.31 COMPLIMENTED BY:
- CSM NO. 2726, V. 15, P. 158-159, DOC. NO. 1033879

FOR THE LATEST ACCESS / DRIVEWAY INFORMATION CONTACT THE EAU CLAIRE COUNTY HIGHWAY DEPARTMENT.

PARCEL IDENTIFICATION NUMBERS MAY NOT POINT TO ALL AREAS OF ACQUISITION, AS NOTED ON THE SCHEDULE OF LANDS AND INTERESTS REQUIRED.

POSITIONS SHOWN ON THIS PLAT ARE WISCONSIN COUNTY COORDINATES, EAU CLAIRE COUNTY, NAD 83 (2011), CALIBRATED TO COUNTY SECTION CORNERS ON 83/ 91 V. WI_g99, IN US SURVEY FEET. VALUES SHOWN ARE GRID COORDINATES, GRID BEARINGS, AND GRID DISTANCES. GRID DISTANCES MAY BE USED AS GROUND DISTANCES.

UNPLATTED LANDS

NW 1/4 - SE 1/4

OF WASHINGTON

OF ALTOONA

GN

SCALE, FEET
0 50 100

FOR ADDITIONAL INFORMATION REFER TO THE TITLE SHEET, RECORDED IN THE OFFICE OF REGISTER OF DEEDS IN EAU CLAIRE COUNTY AS SHEET 2 OF 2 OF DOCUMENT NUMBER 1110792, P. 21B AND FILED IN TPP 7824-00-00 - 4.01 A1, EAU CLAIRE COUNTY.

COURSE TABLE

POINT - POINT	COURSE	DISTANCE
200 - 201	S 89°49'44" E	663.03'
201 - 202	S 89°40'00" E	659.25'
202 - 203	S 00°04'06" E	53.31'
203 - 204	S 00°02'20" W	46.69'
204 - 205	N 89°40'00" W	659.72'
205 - 206	N 89°49'44" W	662.54'
206 - 207	N 00°05'37" E	47.07'
207 - 200	N 00°07'42" W	52.93'

STATION AND OFFSET TABLE

POINT NUMBER	STATION	OFFSET
200	112+02.99	-50.00
201	118+65.94	-50.00
202	125+25.12	-50.00
203	125+25.50	3.31
204	125+25.74	50.00
205	118+65.87	50.00
206	112+03.33	50.00
207	112+03.26	2.93
T200	116+92.50	-50.00
T201	116+92.50	-55.00
T202	117+17.50	-55.00
T203	117+17.50	-50.00
T204	118+27.74	-50.00
T205	118+27.74	-60.00
T206	118+52.74	-60.00
T207	118+52.74	-50.00

PROJECT LOCATION SKETCH

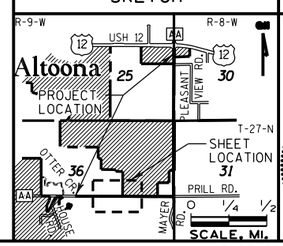

CORRE
2224 Heimstead Road
Eau Claire, WI 54703
608.828.1011
www.corrente.com
Structural - Environmental - Transportation - Real Estate

I, MICHAEL C. CANNIFF PROFESSIONAL LAND SURVEYOR, HEREBY CERTIFY THAT IN FULL COMPLIANCE WITH THE PROVISIONS OF SECTION 84.095 OF THE WISCONSIN STATUTES AND UNDER DIRECTION OF EAU CLAIRE COUNTY, I HAVE SURVEYED TRANSPORTATION PROJECT PLAT 7824-00-00-4.02 AMENDMENT NO. 2 AND THAT SUCH PLAT REPRESENTS ALL EXTERIOR BOUNDARIES OF THE SURVEYED LAND.

WISCONSIN
MICHAEL C. CANNIFF
S-1836
BEAVER DAM, WI
LAND SURVEYOR

DATE: 04-21-2015 Mike Canniff, PLS

THIS PLAT AND RELOCATION ORDER ARE APPROVED FOR EAU CLAIRE COUNTY

DATE: 4-27-15 Eau Claire County Highway Com

FILE NAME : C:\Users\Bryan\Documents\DGN\7824-00-00 CTH AA Eau Claire County\CAD\Plat\Amendment 2\040102_tpp_A2.dgn PLOT DATE : 10/19/2015 PLOT BY : $$...plotuser...$$ PLOT NAME : PLOT SCALE : 100.0000 sf / in.
APPRAISAL PLAT DATE :

4.02 AMENDMENT NO. 2

VOL 10 TPP PAGE 43A

TRANSPORTATION PROJECT PLAT NO: 7824-00-00 - 4.03
AMENDMENT NO: 3

ADDS TLE FOR DRIVEWAY TO PARCEL 6 SHOWN ON TPP 7824-00-00-4.03 A2 AND RECORDED AS DOC. #1113822

THAT PART OF LOTS 1 & 2, C.S.M. #2793, LOCATED IN THE SE 1/4 - NE 1/4, PART OF THE SE 1/4 - NE 1/4, CITY OF ALTOONA, LOT 1, C.S.M. #1000 LOCATED IN THE NE 1/4 - SE 1/4 AND PART OF THE NE 1/4 - SE 1/4, TOWN OF WASHINGTON, LOCATED IN SECTION 36, RANGE 9 WEST. ALSO THAT PART OF LOT 9, SELL SUBDIVISION LOCATED IN THE NW 1/4 - SW 1/4, AND PART OF THE SW 1/4 - NW 1/4, TOWN OF WASHINGTON, LOCATED IN SECTION 31, RANGE 8 WEST. ALL LOCATED IN TOWN 27 NORTH, EAU CLAIRE COUNTY, WISCONSIN.

RELOCATION ORDER CTH AA HOUSE ROAD - USH 12, EAU CLAIRE COUNTY, WISCONSIN

TO PROPERLY ESTABLISH, LAY OUT, WIDEN, ENLARGE, EXTEND, CONSTRUCT, RECONSTRUCT, IMPROVE, OR MAINTAIN A PORTION OF THE HIGHWAY DESIGNATED ABOVE, THE COUNTY OF EAU CLAIRE DEEMS IT NECESSARY TO RELOCATE OR CHANGE SAID HIGHWAY AND ACQUIRE CERTAIN LANDS AND INTERESTS OR RIGHTS IN LANDS FOR THE ABOVE PROJECT.

TO EFFECT THIS CHANGE, PURSUANT TO AUTHORITY GRANTED UNDER SUBSECTIONS 83.07(3), AND 83.08(1a)(1b), WISCONSIN STATUTES, THE COUNTY OF EAU CLAIRE HEREBY ORDERS THAT:
1. THAT PORTION OF SAID HIGHWAY AS SHOWN ON THIS PLAT IS LAID OUT AND ESTABLISHED TO THE LINES AND WIDTHS AS SO SHOWN FOR THE ABOVE NAMED PROJECT.
2. THE LANDS OR INTERESTS OR RIGHTS IN LANDS AS SHOWN ON THIS PLAT ARE REQUIRED BY THE DEPARTMENT FOR THE ABOVE PROJECT AND SHALL BE ACQUIRED IN THE NAME OF THE COUNTY OF EAU CLAIRE, PURSUANT TO THE PROVISIONS OF SUBSECTION 83.08 (1a) OR (1b), WISCONSIN STATUTES.

SCHEDULE OF LANDS & INTERESTS REQUIRED

OWNERS NAMES ARE SHOWN FOR REFERENCE ONLY AND ARE SUBJECT TO CHANGE PRIOR TO THE TRANSFER OF LAND INTERESTS TO THE WISCONSIN DEPARTMENT OF TRANSPORTATION.

PARCEL OWNER	OWNER(S)	INTEREST REQUIRED	RIGHT OF WAY SF REQUIRED NEW	EXISTING	TOTAL	TLE SF	PLE SF
2	KAREN E. SCHAUER TRUST	FEE	2,204		2,204	---	---
5	CURT J. & TAMMY L. TAMBORINO	FEE & PLE	5,451		5,451	---	104
6	MICHAEL LARSON	FEE & TLE	4,382		4,382	2,525	---
7	LAVERNE A. BUNDY	FEE	4,963		4,963	---	---
8	NANCY A. FLASKRUD	FEE & TLE	7,804		7,804	1,069	---
9	MONNA L. CLEMONS	FEE	4,714		4,714	---	---
10	DEMOSS DIVERSIFIED PATHOS PROPERTIES LLC	FEE	3,736		3,736	---	---
11	GREG A. & BONNIE SENN TRUST	FEE	13,153		13,153	---	---
12	MICHAEL K. RICHARD	FEE	4,782		4,782	---	---
13	KEITH W. & MARY L. KAUFMAN	FEE	3,148		3,148	---	---

SCHEDULE OF UTILITIES & INTERESTS REQUIRED

UTILITY NUMBER	OWNER(S)	INTEREST REQUIRED
81	XCEL ENERGY (ELEC)	RELEASE OF RIGHTS
83	EAU CLAIRE ENERGY COOPERATIVE (OH ELEC)	RELEASE OF RIGHTS

1118825
KATHRYN A. CHRISTENSON
EAU CLAIRE COUNTY, WI
REGISTER OF DEEDS
RECORDED ON
08/10/2015 11:05 AM
REC FEE: 25.00
TRANSFER FEE:
EXEMPT #
PAGES: 1

RESERVED FOR REGISTER OF DEEDS
PROJECT NUMBER 7824-00-00 4.03
AMENDMENT NO: 3

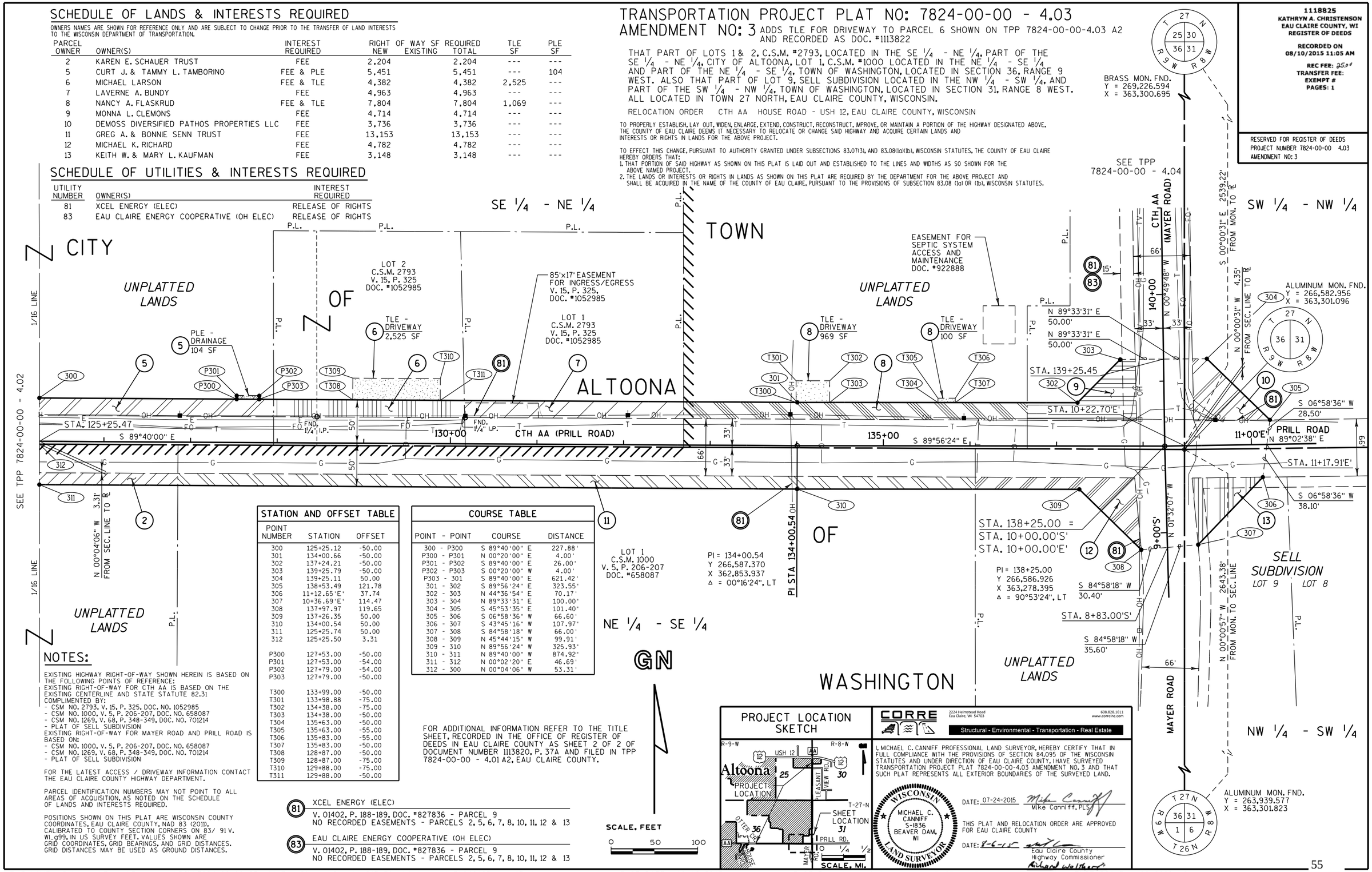

STATION AND OFFSET TABLE		
POINT NUMBER	STATION	OFFSET
300	125+25.12	-50.00
301	134+00.66	-50.00
302	137+24.21	-50.00
303	139+25.79	-50.00
304	139+25.11	50.00
305	138+53.49	121.78
306	11+12.65'E'	37.74
307	10+36.69'E'	114.47
308	137+97.97	119.65
309	137+26.35	50.00
310	134+00.54	50.00
311	125+25.74	50.00
312	125+25.50	3.31
P300	127+53.00	-50.00
P301	127+53.00	-54.00
P302	127+79.00	-54.00
P303	127+79.00	-50.00
T300	133+99.00	-50.00
T301	133+98.88	-75.00
T302	134+38.00	-75.00
T303	134+38.00	-50.00
T304	135+63.00	-50.00
T305	135+63.00	-55.00
T306	135+83.00	-55.00
T307	135+83.00	-50.00
T308	128+87.00	-50.00
T309	128+87.00	-75.00
T310	129+88.00	-75.00
T311	129+88.00	-50.00

COURSE TABLE		
POINT - POINT	COURSE	DISTANCE
300 - P300	S 89°40'00" E	227.88'
P300 - P301	N 00°20'00" E	4.00'
P301 - P302	S 89°40'00" E	26.00'
P302 - P303	S 00°20'00" W	4.00'
P303 - 301	S 89°40'00" E	621.42'
301 - 302	S 89°56'24" E	323.55'
302 - 303	N 44°36'54" E	70.17'
303 - 304	N 89°33'31" E	100.00'
304 - 305	S 45°53'35" E	101.40'
305 - 306	S 06°58'36" W	66.60'
306 - 307	S 43°45'16" W	107.97'
307 - 308	S 84°58'18" W	66.00'
308 - 309	N 45°44'15" W	99.91'
309 - 310	N 89°56'24" W	325.93'
310 - 311	N 89°40'00" W	874.92'
311 - 312	N 00°02'20" E	46.69'
312 - 300	N 00°04'06" W	53.31'

NOTES:

EXISTING HIGHWAY RIGHT-OF-WAY SHOWN HEREIN IS BASED ON THE FOLLOWING POINTS OF REFERENCE:
EXISTING RIGHT-OF-WAY FOR CTH AA IS BASED ON THE EXISTING CENTERLINE AND STATE STATUTE 82.31 COMPLIMENTED BY:
- CSM NO. 2793, V. 15, P. 325, DOC. NO. 1052985
- CSM NO. 1000, V. 5, P. 206-207, DOC. NO. 658087
- CSM NO. 1269, V. 68, P. 348-349, DOC. NO. 701214
- PLAT OF SELL SUBDIVISION

EXISTING RIGHT-OF-WAY FOR MAYER ROAD AND PRILL ROAD IS BASED ON:
- CSM NO. 1000, V. 5, P. 206-207, DOC. NO. 658087
- CSM NO. 1269, V. 68, P. 348-349, DOC. NO. 701214
- PLAT OF SELL SUBDIVISION

FOR THE LATEST ACCESS / DRIVEWAY INFORMATION CONTACT THE EAU CLAIRE COUNTY HIGHWAY DEPARTMENT.

PARCEL IDENTIFICATION NUMBERS MAY NOT POINT TO ALL AREAS OF ACQUISITION, AS NOTED ON THE SCHEDULE OF LANDS AND INTERESTS REQUIRED.

POSITIONS SHOWN ON THIS PLAT ARE WISCONSIN COUNTY COORDINATES, EAU CLAIRE COUNTY, NAD 83 (2011), CALIBRATED TO COUNTY SECTION CORNERS ON 83/ 91 V. WI.g99, IN US SURVEY FEET. VALUES SHOWN ARE GRID COORDINATES, GRID BEARINGS, AND GRID DISTANCES. GRID DISTANCES MAY BE USED AS GROUND DISTANCES.

FOR ADDITIONAL INFORMATION REFER TO THE TITLE SHEET, RECORDED IN THE OFFICE OF REGISTER OF DEEDS IN EAU CLAIRE COUNTY AS SHEET 2 OF 2 OF DOCUMENT NUMBER 1113820, P. 37A AND FILED IN TPP 7824-00-00 - 4.01 A2, EAU CLAIRE COUNTY.

(81) XCEL ENERGY (ELEC)
V. 01402, P. 188-189, DOC. #827836 - PARCEL 9
NO RECORDED EASEMENTS - PARCELS 2, 5, 6, 7, 8, 10, 11, 12 & 13

(83) EAU CLAIRE ENERGY COOPERATIVE (OH ELEC)
V. 01402, P. 188-189, DOC. #827836 - PARCEL 9
NO RECORDED EASEMENTS - PARCELS 2, 5, 6, 7, 8, 10, 11, 12 & 13

PROJECT LOCATION SKETCH

CORRE
2224 Helmstead Road
Eau Claire, WI 54703
608.828.1011
www.correinc.com
Structural - Environmental - Transportation - Real Estate

I, MICHAEL C. CANNIFF PROFESSIONAL LAND SURVEYOR, HEREBY CERTIFY THAT IN FULL COMPLIANCE WITH THE PROVISIONS OF SECTION 84.095 OF THE WISCONSIN STATUTES AND UNDER DIRECTION OF EAU CLAIRE COUNTY, I HAVE SURVEYED TRANSPORTATION PROJECT PLAT 7824-00-00-4.03 AMENDMENT NO. 3 AND THAT SUCH PLAT REPRESENTS ALL EXTERIOR BOUNDARIES OF THE SURVEYED LAND.

WISCONSIN MICHAEL C. CANNIFF S-1836 BEAVER DAM, WI LAND SURVEYOR

DATE: 07-24-2015 Mike Canniff, PLS

THIS PLAT AND RELOCATION ORDER ARE APPROVED FOR EAU CLAIRE COUNTY

DATE: 8-6-15 Eau Claire County Highway Commissioner Richard Weltzer

FILE NAME : C:\Users\Bryan\Documents\DGN\7824-00-00 CTH AA Eau Claire County\CAD\Plat\Amendment 3\040103_tpp_A3.dgn
APPRAISAL PLAT DATE :
PLOT DATE : 10/19/2015
PLOT BY : $$...plotuser...$$ PLOT NAME :
PLOT SCALE : 100.0000 sf / in.

4.03 AMENDMENT NO. 3

SCHEDULE OF LANDS & INTERESTS REQUIRED

OWNERS NAMES ARE SHOWN FOR REFERENCE ONLY AND ARE SUBJECT TO CHANGE PRIOR TO THE TRANSFER OF LAND INTERESTS TO THE WISCONSIN DEPARTMENT OF TRANSPORTATION.

PARCEL OWNER	OWNER(S)	INTEREST REQUIRED	RIGHT OF WAY SF REQUIRED NEW	EXISTING	TOTAL	TLE SF	PLE SF
9	MONNA L. CLEMONS	FEE	7,725		7,725	---	---
10	DEMOSS DIVERSIFIED PATHOS PROPERTIES LLC	FEE	20,663		20,663	---	---
14	RICHARD & ALICE KLINGBEIL	FEE	5,810		5,810	---	---
15	HIDDEN CREEK LLC	FEE	7,233		7,233	---	---

TRANSPORTATION PROJECT PLAT NO: 7824-00-00 - 4.04
AMENDMENT NO: 2

REMOVES REFERENCES TO WISDOT SHOWN ON TPP 7824-00-00-4.04 A1 AND RECORDED AS DOC. #1110795

THAT PART OF THE SE 1/4 - NE 1/4, TOWN OF WASHINGTON, AND PART OF THE SE 1/4 - NE 1/4, CITY OF ALTOONA, LOCATED IN SECTION 36, RANGE 9 WEST. ALSO THAT PART OF THE SW 1/4 - NW 1/4, TOWN OF WASHINGTON, LOCATED IN SECTION 31, RANGE 8 WEST. ALL LOCATED IN TOWN 27 NORTH, EAU CLAIRE COUNTY, WISCONSIN.

RELOCATION ORDER CTH AA HOUSE ROAD - USH 12, EAU CLAIRE COUNTY, WISCONSIN

TO PROPERLY ESTABLISH, LAY OUT, WIDEN, ENLARGE, EXTEND, CONSTRUCT, RECONSTRUCT, IMPROVE, OR MAINTAIN A PORTION OF THE HIGHWAY DESIGNATED ABOVE, THE COUNTY OF EAU CLAIRE DEEMS IT NECESSARY TO RELOCATE OR CHANGE SAID HIGHWAY AND ACQUIRE CERTAIN LANDS AND INTERESTS OR RIGHTS IN LANDS FOR THE ABOVE PROJECT.

TO EFFECT THIS CHANGE, PURSUANT TO AUTHORITY GRANTED UNDER SUBSECTIONS 83.07(3), AND 83.08(1a)(1b), WISCONSIN STATUTES, THE COUNTY OF EAU CLAIRE HEREBY ORDERS THAT:
1. THAT PORTION OF SAID HIGHWAY AS SHOWN ON THIS PLAT IS LAID OUT AND ESTABLISHED TO THE LINES AND WIDTHS AS SO SHOWN FOR THE ABOVE NAMED PROJECT.
2. THE LANDS OR INTERESTS OR RIGHTS IN LANDS AS SHOWN ON THIS PLAT ARE REQUIRED BY THE DEPARTMENT FOR THE ABOVE PROJECT AND SHALL BE ACQUIRED IN THE NAME OF THE COUNTY OF EAU CLAIRE, PURSUANT TO THE PROVISIONS OF SUBSECTION 83.08 (1a) OR (1b), WISCONSIN STATUTES.

1113823
KATHRYN A. CHRISTENSON
EAU CLAIRE COUNTY, WI
REGISTER OF DEEDS

RECORDED ON
05/04/2015 4:06 PM

REC FEE:
TRANSFER FEE:
EXEMPT #
PAGES: 1

RESERVED FOR REGISTER OF DEEDS
PROJECT NUMBER 7824-00-00 4.04
AMENDMENT NO: 2

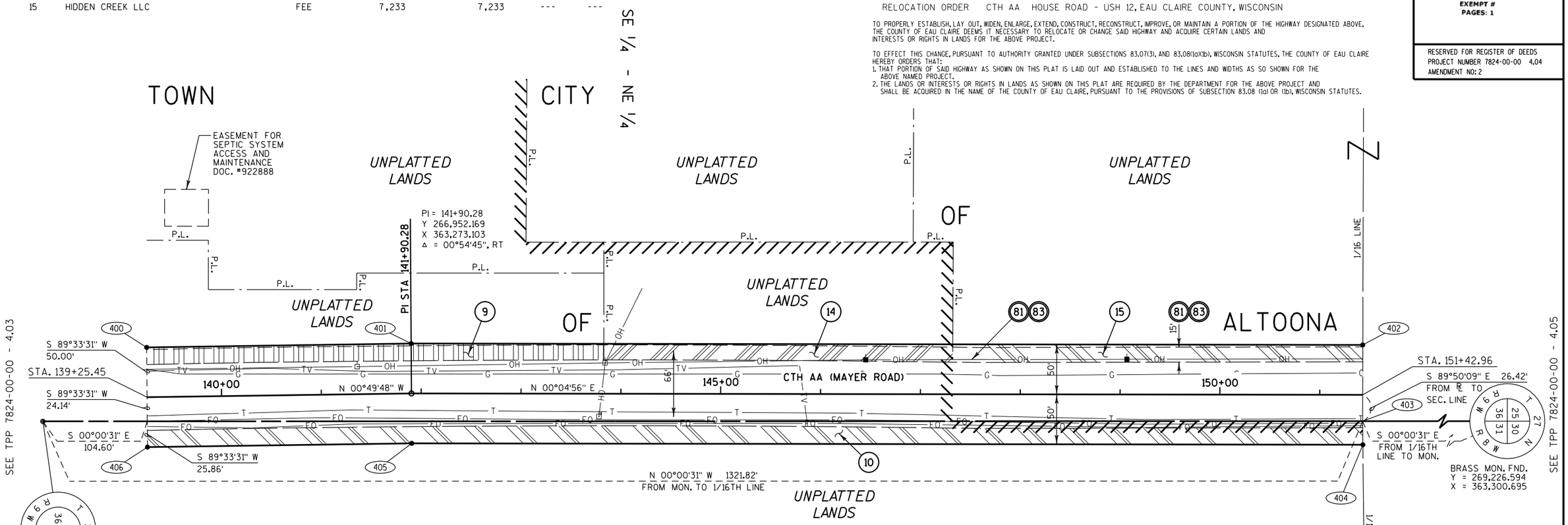

SCHEDULE OF UTILITIES & INTERESTS REQUIRED

UTILITY NUMBER	OWNER(S)	INTEREST REQUIRED
81	XCEL ENERGY (ELEC)	RELEASE OF RIGHTS
83	EAU CLAIRE ENERGY COOPERATIVE (OH ELEC)	RELEASE OF RIGHTS

COURSE TABLE		
POINT - POINT	COURSE	DISTANCE
400 - 401	N 00°49'48" W	264.89'
401 - 402	N 00°04'56" E	953.15'
402 - 403	S 89°50'09" E	76.42'
403 - 404	N 89°21'15" E	23.58'
404 - 405	S 00°04'56" W	952.55'
405 - 406	S 00°49'48" E	264.77'
406 - 400	S 89°33'31" W	100.00'

STATION AND OFFSET TABLE		
POINT NUMBER	STATION	OFFSET
400	139+25.79	-50.00
401	141+90.28	-50.00
402	151+43.04	-50.00
403	151+42.93	26.42
404	151+43.23	50.00
405	141+89.88	50.00
406	139+25.11	50.00

NOTES:

EXISTING HIGHWAY RIGHT-OF-WAY SHOWN HEREIN IS BASED ON THE FOLLOWING POINTS OF REFERENCE:
EXISTING RIGHT-OF-WAY FOR CTH AA IS BASED ON THE EXISTING CENTERLINE AND STATE STATUTE 82.31

FOR THE LATEST ACCESS / DRIVEWAY INFORMATION CONTACT THE EAU CLAIRE COUNTY HIGHWAY DEPARTMENT.

PARCEL IDENTIFICATION NUMBERS MAY NOT POINT TO ALL AREAS OF ACQUISITION, AS NOTED ON THE SCHEDULE OF LANDS AND INTERESTS REQUIRED.

POSITIONS SHOWN ON THIS PLAT ARE WISCONSIN COUNTY COORDINATES, EAU CLAIRE COUNTY, NAD 83 (2011). CALIBRATED TO COUNTY SECTION CORNERS ON 83/ 91 V. WI_g99, IN US SURVEY FEET. VALUES SHOWN ARE GRID COORDINATES. GRID BEARINGS, AND GRID DISTANCES. GRID DISTANCES MAY BE USED AS GROUND DISTANCES.

(81) XCEL ENERGY (ELEC)
V. 1402, P. 188-189, DOC. #827836 - PARCELS 9 & 14
V. 1394, P. 93-94, DOC. #825979 - PARCEL 15
NO RECORDED EASEMENT - PARCEL 10

(83) EAU CLAIRE ENERGY COOPERATIVE (OH ELEC)
V. 1402, P. 188-189, DOC. #827836 - PARCELS 9 & 14
V. 1394, P. 93-94, DOC. #825979 - PARCEL 15
NO RECORDED EASEMENT - PARCEL 10

FOR ADDITIONAL INFORMATION REFER TO THE TITLE SHEET, RECORDED IN THE OFFICE OF REGISTER OF DEEDS IN EAU CLAIRE COUNTY AS SHEET 2 OF 2 OF DOCUMENT NUMBER 1110792, P. 21B AND FILED IN TPP 7824-00-00 - 4.01 A1, EAU CLAIRE COUNTY.

SCALE, FEET
0 50 100

GN

WASHINGTON

PROJECT LOCATION SKETCH

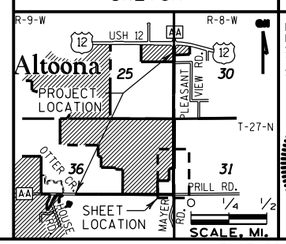

CORRE
2224 Helmstead Road
Eau Claire, WI 54703
608.828.1011
www.correinc.com
Structural - Environmental - Transportation - Real Estate

I, MICHAEL C. CANNIFF PROFESSIONAL LAND SURVEYOR, HEREBY CERTIFY THAT IN FULL COMPLIANCE WITH THE PROVISIONS OF SECTION 84.095 OF THE WISCONSIN STATUTES AND UNDER DIRECTION OF EAU CLAIRE COUNTY, I HAVE SURVEYED TRANSPORTATION PROJECT PLAT 7824-00-00-4.04 AMENDMENT NO. 2 AND THAT SUCH PLAT REPRESENTS ALL EXTERIOR BOUNDARIES OF THE SURVEYED LAND.

WISCONSIN
MICHAEL C. CANNIFF
S-1836
BEAVER DAM, WI
LAND SURVEYOR

DATE: 04-21-2015 Mike Canniff, PLS

THIS PLAT AND RELOCATION ORDER ARE APPROVED FOR EAU CLAIRE COUNTY

DATE: 4-27-15 Eau Claire County Highway Com

FILE NAME : C:\Users\Bryan\Documents\DGN\7824-00-00 CTH AA Eau Claire County\CAD\Plat\Amendment 2\040104_tpp_A2.dgn PLOT DATE : 10/19/2015 PLOT BY : $$...plotuser...$$ PLOT NAME : PLOT SCALE : 100.0000 sf / in.
APPRAISAL PLAT DATE :

4.04 AMENDMENT NO. 2

VOL 1 PP PAGE 39A

TRANSPORTATION PROJECT PLAT NO: 7824-00-00 - 4.05
AMENDMENT NO: 2

REMOVES REFERENCES TO WISDOT SHOWN ON TPP 7824-00-00-4.05 A1 AND RECORDED AS DOC. #1110796

THAT PART OF THE NE 1/4 - NE 1/4, CITY OF ALTOONA, LOCATED IN SECTION 36, RANGE 9 WEST. ALSO THAT PART OF THE NW 1/4 - NW 1/4, TOWN OF WASHINGTON, LOCATED IN SECTION 31, RANGE 8 WEST. ALL LOCATED IN TOWN 27 NORTH, EAU CLAIRE COUNTY, WISCONSIN.

RELOCATION ORDER CTH AA HOUSE ROAD - USH 12, EAU CLAIRE COUNTY, WISCONSIN

TO PROPERLY ESTABLISH, LAY OUT, WIDEN, ENLARGE, EXTEND, CONSTRUCT, RECONSTRUCT, IMPROVE, OR MAINTAIN A PORTION OF THE HIGHWAY DESIGNATED ABOVE, THE COUNTY OF EAU CLAIRE DEEMS IT NECESSARY TO RELOCATE OR CHANGE SAID HIGHWAY AND ACQUIRE CERTAIN LANDS AND INTERESTS OR RIGHTS IN LANDS FOR THE ABOVE PROJECT.

TO EFFECT THIS CHANGE, PURSUANT TO AUTHORITY GRANTED UNDER SUBSECTIONS 83.07(3), AND 83.08(1a)(1b), WISCONSIN STATUTES, THE COUNTY OF EAU CLAIRE HEREBY ORDERS THAT:
1. THAT PORTION OF SAID HIGHWAY AS SHOWN ON THIS PLAT IS LAID OUT AND ESTABLISHED TO THE LINES AND WIDTHS AS SO SHOWN FOR THE ABOVE NAMED PROJECT.
2. THE LANDS OR INTERESTS OR RIGHTS IN LANDS AS SHOWN ON THIS PLAT ARE REQUIRED BY THE DEPARTMENT FOR THE ABOVE PROJECT AND SHALL BE ACQUIRED IN THE NAME OF THE COUNTY OF EAU CLAIRE, PURSUANT TO THE PROVISIONS OF SUBSECTION 83.08 (1a) OR (1b), WISCONSIN STATUTES.

HARRISON MON. FND.
Y = 269,229.370
X = 360,650.780

1113824
KATHRYN A. CHRISTENSON
EAU CLAIRE COUNTY, WI
REGISTER OF DEEDS

RECORDED ON
05/04/2015 4:06 PM

REC FEE:
TRANSFER FEE:
EXEMPT #
PAGES: 1

RESERVED FOR REGISTER OF DEEDS
PROJECT NUMBER 7824-00-00 4.05
AMENDMENT NO: 2

SCHEDULE OF LANDS & INTERESTS REQUIRED

OWNERS NAMES ARE SHOWN FOR REFERENCE ONLY AND ARE SUBJECT TO CHANGE PRIOR TO THE TRANSFER OF LAND INTERESTS TO THE WISCONSIN DEPARTMENT OF TRANSPORTATION.

PARCEL OWNER	OWNER(S)	INTEREST REQUIRED	RIGHT OF WAY SF NEW	RIGHT OF WAY SF EXISTING	RIGHT OF WAY SF REQUIRED TOTAL	TLE SF	PLE SF
10	DEMOSS DIVERSIFIED PATHOS PROPERTIES LLC	FEE	18,667		18,667	---	---
15	HIDDEN CREEK LLC	FEE & PLE	23,016		23,016	---	98
17	ROBERT H. & DARLENE E. BRUMMOND	FEE	3,256		3,256	---	---

SCHEDULE OF UTILITIES & INTERESTS REQUIRED

UTILITY NUMBER	OWNER(S)	INTEREST REQUIRED
81	XCEL ENERGY (ELEC)	RELEASE OF RIGHTS
82	AT&T WIDEDESIGN ENGINEERING (TELE & FIBER)	RELEASE OF RIGHTS
83	EAU CLAIRE ENERGY COOPERATIVE (OH ELEC)	RELEASE OF RIGHTS

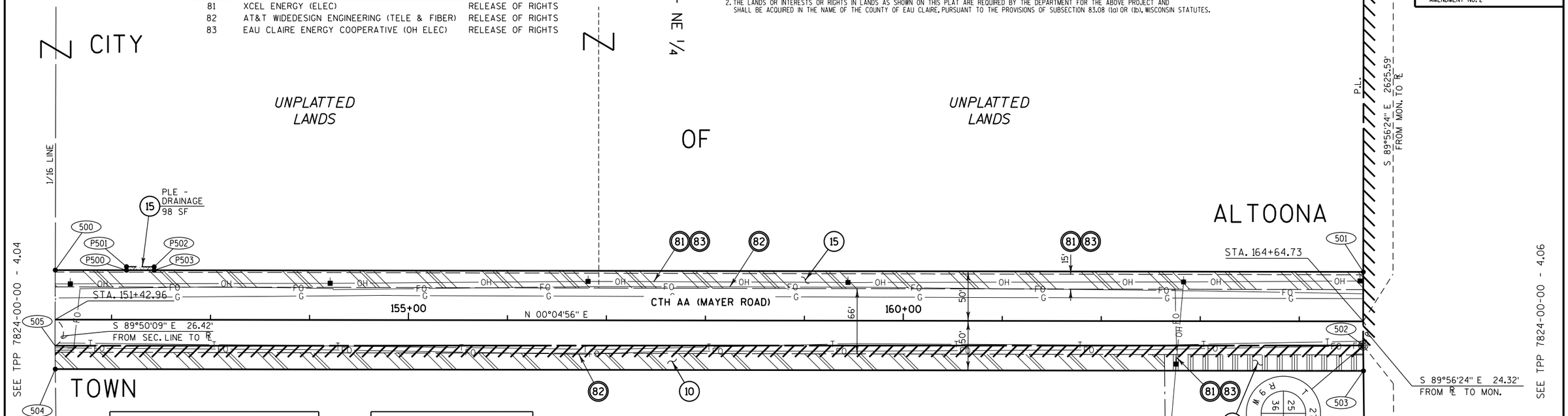

COURSE TABLE

POINT - POINT	COURSE	DISTANCE
500 - P500	N 00°04'56" E	71.96'
P500 - P501	N 89°55'04" W	3.50'
P501 - P502	N 00°04'56" E	28.00'
P502 - P503	S 89°55'04" E	3.50'
P503 - 501	N 00°04'56" E	1221.71'
501 - 502	S 89°56'24" E	74.32'
502 - 503	N 89°25'10" E	25.68'
503 - 504	S 00°04'56" W	1321.81'
504 - 505	S 89°21'15" W	23.58'
505 - 500	N 89°50'09" W	76.42'

STATION AND OFFSET TABLE

POINT NUMBER	STATION	OFFSET
500	151+43.04	-50.00
501	164+64.71	-50.00
502	164+64.74	24.32
503	164+65.04	50.00
504	151+43.23	50.00
505	151+42.93	26.42
P500	152+15.00	-50.00
P501	152+15.00	-53.50
P502	152+43.00	-53.50
P503	152+43.00	-50.00

(81) XCEL ENERGY (ELEC)
V. 1394, P. 93-94, DOC. #825979 - PARCEL 15
NO RECORDED EASEMENT - PARCELS 10 & 17

(82) AT&T WIDEDESIGN ENGINEERING (TELE & FIBER)
NO RECORDED EASEMENTS - ALL PARCELS

(83) EAU CLAIRE ENERGY COOPERATIVE (OH ELEC)
V. 1394, P. 93-94, DOC. #825979 - PARCEL 15
NO RECORDED EASEMENT - PARCELS 10 & 17

NOTES:

EXISTING HIGHWAY RIGHT-OF-WAY SHOWN HEREIN IS BASED ON THE FOLLOWING POINTS OF REFERENCE: EXISTING RIGHT-OF-WAY FOR CTH AA IS BASED ON THE EXISTING CENTERLINE AND STATE STATUTE 82.31

FOR THE LATEST ACCESS / DRIVEWAY INFORMATION CONTACT THE EAU CLAIRE COUNTY HIGHWAY DEPARTMENT.

PARCEL IDENTIFICATION NUMBERS MAY NOT POINT TO ALL AREAS OF ACQUISITION, AS NOTED ON THE SCHEDULE OF LANDS AND INTERESTS REQUIRED.

POSITIONS SHOWN ON THIS PLAT ARE WISCONSIN COUNTY COORDINATES, EAU CLAIRE COUNTY, NAD 83 (2011), CALIBRATED TO COUNTY SECTION CORNERS ON 83/ 91 V. WI_g99, IN US SURVEY FEET. VALUES SHOWN ARE GRID COORDINATES, GRID BEARINGS, AND GRID DISTANCES. GRID DISTANCES MAY BE USED AS GROUND DISTANCES.

FOR ADDITIONAL INFORMATION REFER TO THE TITLE SHEET, RECORDED IN THE OFFICE OF REGISTER OF DEEDS IN EAU CLAIRE COUNTY AS SHEET 2 OF 2 OF DOCUMENT NUMBER 1110792, P. 21B AND FILED IN TPP 7824-00-00 - 4.01 A1, EAU CLAIRE COUNTY.

SCALE, FEET
0 50 100

PROJECT LOCATION SKETCH

CORRE
2224 Helmstead Road
Eau Claire, WI 54703
608.828.1011
www.correinc.com
Structural - Environmental - Transportation - Real Estate

I, MICHAEL C. CANNIFF PROFESSIONAL LAND SURVEYOR, HEREBY CERTIFY THAT IN FULL COMPLIANCE WITH THE PROVISIONS OF SECTION 84.095 OF THE WISCONSIN STATUTES AND UNDER DIRECTION OF EAU CLAIRE COUNTY, I HAVE SURVEYED TRANSPORTATION PROJECT PLAT 7824-00-00-4.05 AMENDMENT NO. 2 AND THAT SUCH PLAT REPRESENTS ALL EXTERIOR BOUNDARIES OF THE SURVEYED LAND.

WISCONSIN MICHAEL C. CANNIFF S-1836 BEAVER DAM, WI LAND SURVEYOR

DATE: 04-21-2015 Mike Canniff, PLS

THIS PLAT AND RELOCATION ORDER ARE APPROVED FOR EAU CLAIRE COUNTY

DATE: 4-27-15 Eau Claire County Highway Commissioner

VOL 10PP PAGE 398

TRANSPORTATION PROJECT PLAT NO: 7824-00-00 - 4.06
AMENDMENT NO: 2

REMOVES REFERENCES TO WISDOT SHOWN ON TPP 7824-00-00-4.06 A1 AND RECORDED AS DOC. #1110797

THAT PART OF LOT 1, C.S.M. #1190, LOCATED IN THE SE 1/4 - SE 1/4, AND PART OF THE SE 1/4 - SE 1/4, LOCATED IN SECTION 25, RANGE 9 WEST. ALSO THAT PART OF LOT 3, C.S.M. #834, LOTS 10, 11, 12 & 31, SCHLEWITZ ADDITION, LOCATED IN THE SW 1/4 - SW 1/4 AND PART OF THE SW 1/4 - SW 1/4, LOCATED IN SECTION 30, RANGE 8 WEST. ALL LOCATED IN TOWN OF WASHINGTON, TOWN 27 NORTH, EAU CLAIRE COUNTY, WISCONSIN.

RELOCATION ORDER CTH AA HOUSE ROAD - USH 12, EAU CLAIRE COUNTY, WISCONSIN

TO PROPERLY ESTABLISH, LAY OUT, WIDEN, ENLARGE, EXTEND, CONSTRUCT, RECONSTRUCT, IMPROVE, OR MAINTAIN A PORTION OF THE HIGHWAY DESIGNATED ABOVE, THE COUNTY OF EAU CLAIRE DEEMS IT NECESSARY TO RELOCATE OR CHANGE SAID HIGHWAY AND ACQUIRE CERTAIN LANDS AND INTERESTS OR RIGHTS IN LANDS FOR THE ABOVE PROJECT.

TO EFFECT THIS CHANGE, PURSUANT TO AUTHORITY GRANTED UNDER SUBSECTIONS 83.07(3), AND 83.08(1a)(1b), WISCONSIN STATUTES, THE COUNTY OF EAU CLAIRE HEREBY ORDERS THAT:
1. THAT PORTION OF SAID HIGHWAY AS SHOWN ON THIS PLAT IS LAID OUT AND ESTABLISHED TO THE LINES AND WIDTHS AS SO SHOWN FOR THE ABOVE NAMED PROJECT.
2. THE LANDS OR INTERESTS OR RIGHTS IN LANDS AS SHOWN ON THIS PLAT ARE REQUIRED BY THE DEPARTMENT FOR THE ABOVE PROJECT AND SHALL BE ACQUIRED IN THE NAME OF THE COUNTY OF EAU CLAIRE, PURSUANT TO THE PROVISIONS OF SUBSECTION 83.08 (1a) OR (1b), WISCONSIN STATUTES.

1113825
KATHRYN A. CHRISTENSON
EAU CLAIRE COUNTY, WI
REGISTER OF DEEDS

RECORDED ON
05/04/2015 4:06 PM

REC FEE:
TRANSFER FEE:
EXEMPT #
PAGES: 1

RESERVED FOR REGISTER OF DEEDS
PROJECT NUMBER 7824-00-00 4.06
AMENDMENT NO: 2

SCHEDULE OF LANDS & INTERESTS REQUIRED

OWNERS NAMES ARE SHOWN FOR REFERENCE ONLY AND ARE SUBJECT TO CHANGE PRIOR TO THE TRANSFER OF LAND INTERESTS TO THE WISCONSIN DEPARTMENT OF TRANSPORTATION.

PARCEL OWNER	OWNER(S)	INTEREST REQUIRED	RIGHT OF WAY SF NEW	RIGHT OF WAY SF EXISTING	RIGHT OF WAY SF TOTAL	TLE SF	PLE SF
16	DAVID J. & PATRICIA MAYER	FEE & PLE	18,748		18,748	---	240
18	LINDA L. PUTMAN	FEE	5,010		5,010	---	---
19	CLINT & CHRISTINA S. HEIMAN	FEE	6,692		6,692	---	---
20	ALLAN H. & JEANNE M. ERICKSON	FEE	7,434		7,434	---	---
21	RILEY H. & DORIS A. FLETSCHOCK	FEE	4,668		4,668	---	---
22	RICHARD E. & SHIRLEY E. BUTLER	FEE & TLE	2,220		2,220	280	---

SCHEDULE OF UTILITIES & INTERESTS REQUIRED

UTILITY NUMBER	OWNER(S)	INTEREST REQUIRED
82	AT&T WIDEDESIGN ENGINEERING (TELE & FIBER)	RELEASE OF RIGHTS
83	EAU CLAIRE ENERGY COOPERATIVE (OH ELEC)	RELEASE OF RIGHTS

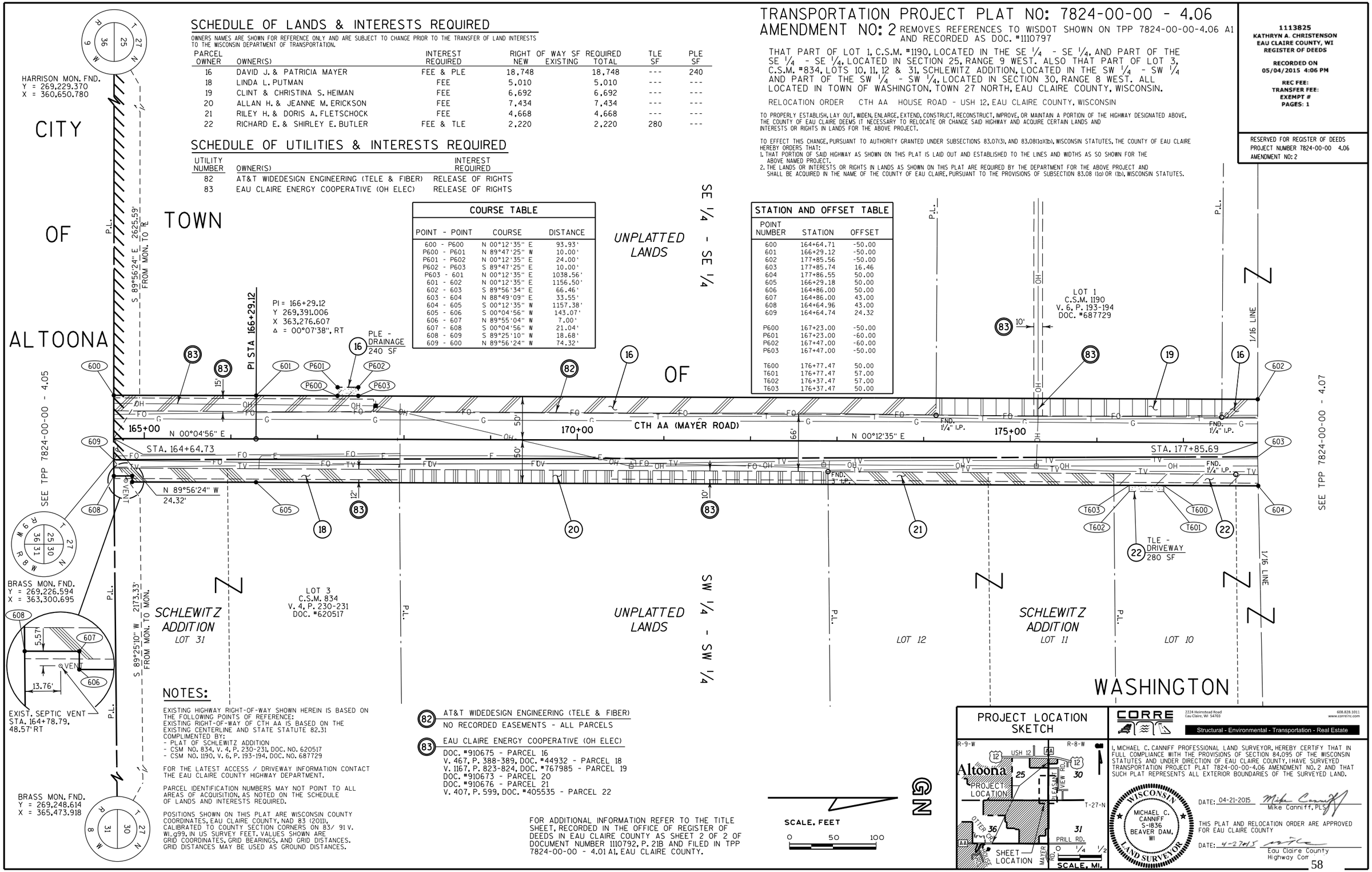

COURSE TABLE

POINT - POINT	COURSE	DISTANCE
600 - P600	N 00°12'35" E	93.93'
P600 - P601	N 89°47'25" W	10.00'
P601 - P602	N 00°12'35" E	24.00'
P602 - P603	S 89°47'25" E	10.00'
P603 - 601	N 00°12'35" E	1038.56'
601 - 602	N 00°12'35" E	1156.50'
602 - 603	S 89°56'34" E	66.46'
603 - 604	N 88°49'09" E	33.55'
604 - 605	S 00°12'35" W	1157.38'
605 - 606	S 00°04'56" W	143.07'
606 - 607	N 89°55'04" W	7.00'
607 - 608	S 00°04'56" W	21.04'
608 - 609	S 89°25'10" W	18.68'
609 - 600	N 89°56'24" W	74.32'

STATION AND OFFSET TABLE

POINT NUMBER	STATION	OFFSET
600	164+64.71	-50.00
601	166+29.12	-50.00
602	177+85.56	-50.00
603	177+85.74	16.46
604	177+86.55	50.00
605	166+29.18	50.00
606	164+86.00	50.00
607	164+86.00	43.00
608	164+64.96	43.00
609	164+64.74	24.32
P600	167+23.00	-50.00
P601	167+23.00	-60.00
P602	167+47.00	-60.00
P603	167+47.00	-50.00
T600	176+77.47	50.00
T601	176+77.47	57.00
T602	176+37.47	57.00
T603	176+37.47	50.00

NOTES:

EXISTING HIGHWAY RIGHT-OF-WAY SHOWN HEREIN IS BASED ON THE FOLLOWING POINTS OF REFERENCE:
EXISTING RIGHT-OF-WAY OF CTH AA IS BASED ON THE EXISTING CENTERLINE AND STATE STATUTE 82.31 COMPLIMENTED BY:
- PLAT OF SCHLEWITZ ADDITION
- CSM NO. 834, V. 4, P. 230-231, DOC. NO. 620517
- CSM NO. 1190, V. 6, P. 193-194, DOC. NO. 687729

FOR THE LATEST ACCESS / DRIVEWAY INFORMATION CONTACT THE EAU CLAIRE COUNTY HIGHWAY DEPARTMENT.

PARCEL IDENTIFICATION NUMBERS MAY NOT POINT TO ALL AREAS OF ACQUISITION, AS NOTED ON THE SCHEDULE OF LANDS AND INTERESTS REQUIRED.

POSITIONS SHOWN ON THIS PLAT ARE WISCONSIN COUNTY COORDINATES, EAU CLAIRE COUNTY, NAD 83 (2011), CALIBRATED TO COUNTY SECTION CORNERS ON 83/ 91 V. WI.g99, IN US SURVEY FEET. VALUES SHOWN ARE GRID COORDINATES, GRID BEARINGS, AND GRID DISTANCES. GRID DISTANCES MAY BE USED AS GROUND DISTANCES.

(82) AT&T WIDEDESIGN ENGINEERING (TELE & FIBER)
NO RECORDED EASEMENTS - ALL PARCELS

(83) EAU CLAIRE ENERGY COOPERATIVE (OH ELEC)
DOC. #910675 - PARCEL 16
V. 467, P. 388-389, DOC. #44932 - PARCEL 18
V. 1167, P. 823-824, DOC. #767985 - PARCEL 19
DOC. #910673 - PARCEL 20
DOC. #910676 - PARCEL 21
V. 407, P. 599, DOC. #405535 - PARCEL 22

FOR ADDITIONAL INFORMATION REFER TO THE TITLE SHEET, RECORDED IN THE OFFICE OF REGISTER OF DEEDS IN EAU CLAIRE COUNTY AS SHEET 2 OF 2 OF DOCUMENT NUMBER 1110792, P. 21B AND FILED IN TPP 7824-00-00 - 4.01 A1, EAU CLAIRE COUNTY.

SCALE, FEET
0 50 100

PROJECT LOCATION SKETCH

CORRE
2224 Heimstead Road
Eau Claire, WI 54703
608.828.1011
www.correinc.com
Structural - Environmental - Transportation - Real Estate

I, MICHAEL C. CANNIFF PROFESSIONAL LAND SURVEYOR, HEREBY CERTIFY THAT IN FULL COMPLIANCE WITH THE PROVISIONS OF SECTION 84.095 OF THE WISCONSIN STATUTES AND UNDER DIRECTION OF EAU CLAIRE COUNTY, I HAVE SURVEYED TRANSPORTATION PROJECT PLAT 7824-00-00-4.06 AMENDMENT NO. 2 AND THAT SUCH PLAT REPRESENTS ALL EXTERIOR BOUNDARIES OF THE SURVEYED LAND.

WISCONSIN MICHAEL C. CANNIFF S-1836 BEAVER DAM, WI LAND SURVEYOR

DATE: 04-21-2015 Mike Canniff, PLS

THIS PLAT AND RELOCATION ORDER ARE APPROVED FOR EAU CLAIRE COUNTY

DATE: 4-27-15 Eau Claire County Highway Com

FILE NAME : C:\Users\Bryan\Documents\DGN\7824-00-00 CTH AA Eau Claire County\CAD\Plat\Amendment 2\040106_tpp_A2.dgn
PLOT DATE : 10/19/2015
PLOT BY : $$...plotuser...$$
PLOT NAME :
PLOT SCALE : 100.0000 sf / in.
APPRAISAL PLAT DATE :

VOL 1 PP PAGE 453

TRANSPORTATION PROJECT PLAT NO: 7824-00-00 - 4.07
AMENDMENT NO: 4

MODIFIES CTH AA RW LINES, NORTH OF PLEASANT VIEW STREET, AND ELIMINATES POINT #705 AS SHOWN ON TPP 7824-00-00-4.07 A3 AND RECORDED AS DOC. #1118826

THAT PART OF THE NE 1/4 - SE 1/4, TOWN OF WASHINGTON AND PART OF THE NE 1/4 - SE 1/4, CITY OF ALTOONA, LOCATED IN SECTION 25, RANGE 9 WEST. ALSO THAT PART OF LOT 1, C.S.M. #1735, AND LOTS 6, 7, 8 & 9, SCHLEWITZ ADDITION, LOCATED IN THE NW 1/4 - SW 1/4, TOWN OF WASHINGTON, LOCATED IN SECTION 30, RANGE 8 WEST. ALL LOCATED IN TOWN 27 NORTH, EAU CLAIRE COUNTY, WISCONSIN.

RELOCATION ORDER CTH AA HOUSE ROAD - USH 12, EAU CLAIRE COUNTY, WISCONSIN

TO PROPERLY ESTABLISH, LAY OUT, WIDEN, ENLARGE, EXTEND, CONSTRUCT, RECONSTRUCT, IMPROVE, OR MAINTAIN A PORTION OF THE HIGHWAY DESIGNATED ABOVE, THE COUNTY OF EAU CLAIRE DEEMS IT NECESSARY TO RELOCATE OR CHANGE SAID HIGHWAY AND ACQUIRE CERTAIN LANDS AND INTERESTS OR RIGHTS IN LANDS FOR THE ABOVE PROJECT.

TO EFFECT THIS CHANGE, PURSUANT TO AUTHORITY GRANTED UNDER SUBSECTIONS 83.07(3), AND 83.08(1a)(1b), WISCONSIN STATUTES, THE COUNTY OF EAU CLAIRE HEREBY ORDERS THAT:
1. THAT PORTION OF SAID HIGHWAY AS SHOWN ON THIS PLAT IS LAID OUT AND ESTABLISHED TO THE LINES AND WIDTHS AS SO SHOWN FOR THE ABOVE NAMED PROJECT.
2. THE LANDS OR INTERESTS OR RIGHTS IN LANDS AS SHOWN ON THIS PLAT ARE REQUIRED BY THE DEPARTMENT FOR THE ABOVE PROJECT AND SHALL BE ACQUIRED IN THE NAME OF THE COUNTY OF EAU CLAIRE, PURSUANT TO THE PROVISIONS OF SUBSECTION 83.08 (1a) OR (1b), WISCONSIN STATUTES.

SCHEDULE OF LANDS & INTERESTS REQUIRED

OWNERS NAMES ARE SHOWN FOR REFERENCE ONLY AND ARE SUBJECT TO CHANGE PRIOR TO THE TRANSFER OF LAND INTERESTS TO THE WISCONSIN DEPARTMENT OF TRANSPORTATION.

PARCEL OWNER	OWNER(S)	INTEREST REQUIRED	RIGHT OF WAY SF NEW	RIGHT OF WAY SF EXISTING	RIGHT OF WAY SF REQUIRED TOTAL	TLE SF
16	DAVID J. & PATRICIA MAYER	FEE	14,569		14,569	---
22	RICHARD E. & SHIRLEY E. BUTLER	FEE	4,901		4,901	---
23	FINLAND HOLDING GROUP	FEE	6,049		6,049	---
24	JEFFREY S. CURTIS	FEE	5,274		5,274	---
25	A+ STORAGE SOLUTIONS LLC	FEE & TLE	255		255	550

SCHEDULE OF UTILITIES & INTERESTS REQUIRED

UTILITY NUMBER	OWNER(S)	INTEREST REQUIRED
82	AT&T WIDEDESIGN ENGINEERING (TELE & FIBER)	RELEASE OF RIGHTS
83	EAU CLAIRE ENERGY COOPERATIVE (OH ELEC)	RELEASE OF RIGHTS

(82) AT&T WIDEDESIGN ENGINEERING (TELE & FIBER)
NO RECORDED EASEMENTS - ALL PARCELS

(83) EAU CLAIRE ENERGY COOPERATIVE (OH ELEC)
DOC. #910674 - PARCEL 22
DOC. #915858 - PARCEL 23
DOC. #910674 - PARCEL 24
V. 499, P. 516, DOC. #470311 - PARCEL 25

TOWN

CITY

OF

OF

UNPLATTED LANDS

UNPLATTED LANDS

N 1/16 LINE

1/16 LINE

1/16 LINE

NE 1/4 - SE 1/4

NW 1/4 - SW 1/4

P.I. STA 183+63.65

PI = 183+63.65
Y 271,125.520
X 363,282.954
Δ = 00°29'57", RT

STA. 177+85.69

STA. 184+22.11 = STA. 10+00'P'

N 89°17'28" W 7.07' SEC. LINE TO R/L

N 00°12'35" E

N 00°42'32" E

180+00

185+00

190+00

10+00'P'

CTH AA (MAYER ROAD)

PLEASANT VIEW STREET

66'

50'

65'

FND. 1/4" I.P.

TLE - DRIVEWAY 550 SF

LOT 1
C.S.M. 1735
V. 9, P. 230-232
DOC. #787430

LOT 2
C.S.M. 1735
V. 9, P. 230-232
DOC. #787430

SCHLEWITZ ADDITION

LOT 9 LOT 8 LOT 7 LOT 6

EXIST. SEPTIC VENT
STA. 182+76.61,
58.73' RT

VENT

8.7'
10.6'
10.4'

P.L.

P.L.

P.L.

SEE TPP 7824-00-00 - 4.06

SEE TPP 7824-00-00 - 4.08

USH 12

MONUMENT (CALCULATED)
Y = 271,871.010
X = 360,656.970

ALUMINUM MON. FND.
Y = 271,868.518
X = 363,293.907

S 89°56'45" E 2636.94' FROM MON. TO MON.

S 00°08'50" E 355.13' FROM MON. TO ℄ EXTENSION LINE

S 89°17'28" E 29.67'

S 88°13'51" W 2217.56' FROM MON. TO MON.

2" ID I.P. MON. FND.
Y = 271,936.977
X = 365,510.400

COURSE TABLE

POINT - POINT	COURSE	DISTANCE
700 - 701	N 00°12'35" E	578.30'
701 - 702	N 00°42'32" E	361.02'
702 - 703	S 89°17'28" E	21.04'
703 - 704	N 68°16'37" E	71.23'
704 - 706	S 00°22'35" W	280.17'
706 - 707	S 43°59'18" E	31.38'
707 - 708	S 26°31'07" E	72.69'
708 - 709	S 50°11'55" W	37.69'
709 - 710	S 00°12'35" W	72.47'
710 - 711	N 89°47'25" W	15.00'
711 - 712	S 00°12'35" W	21.00'
712 - 713	S 89°47'25" E	15.00'
713 - 714	S 00°12'35" W	82.00'
714 - 715	N 89°47'25" W	15.00'
715 - 716	S 00°12'35" W	397.45'
716 - 717	S 88°49'09" W	33.55'
717 - 700	N 89°56'34" W	66.46'

STATION AND OFFSET TABLE

POINT NUMBER	STATION	OFFSET
700	177+85.56	-50.00
701	183+63.65	-50.00
702	187+24.45	-50.00
703	187+24.45	-29.11
704	187+51.63	36.74
706	184+71.46	38.36
707	184+49.16	60.43
708	183+84.52	93.69
709	183+59.47	65.00
710	182+87.00	65.00
711	182+87.00	50.00
712	182+66.00	50.00
713	182+66.00	65.00
714	181+84.00	65.00
715	181+84.00	50.00
716	177+86.55	50.00
717	177+85.74	16.46
T700	186+15.00	37.53
T701	186+00.00	43.00
T702	185+00.00	43.00
T703	185+00.00	38.20

NOTES:

EXISTING HIGHWAY RIGHT-OF-WAY SHOWN HEREIN IS BASED ON THE FOLLOWING POINTS OF REFERENCE:
EXISTING RIGHT-OF-WAY FOR CTH AA IS BASED ON THE EXISTING CENTERLINE AND STATE STATUTE 82.31 COMPLIMENTED BY:
- TPP 7080-00-23
- PLAT OF SCHLEWITZ ADDITION
EXISTING RIGHT-OF-WAY FOR PLEASANT VIEW ROAD IS BASED ON:
- PLAT OF SCHLEWITZ ADDITION

FOR THE LATEST ACCESS / DRIVEWAY INFORMATION CONTACT THE EAU CLAIRE COUNTY HIGHWAY DEPARTMENT.

PARCEL IDENTIFICATION NUMBERS MAY NOT POINT TO ALL AREAS OF ACQUISITION, AS NOTED ON THE SCHEDULE OF LANDS AND INTERESTS REQUIRED.

POSITIONS SHOWN ON THIS PLAT ARE WISCONSIN COUNTY COORDINATES, EAU CLAIRE COUNTY, NAD 83 (2011), CALIBRATED TO COUNTY SECTION CORNERS ON 83/ 91 V. WI_g99, IN US SURVEY FEET. VALUES SHOWN ARE GRID COORDINATES. GRID BEARINGS, AND GRID DISTANCES. GRID DISTANCES MAY BE USED AS GROUND DISTANCES.

FOR ADDITIONAL INFORMATION REFER TO THE TITLE SHEET, RECORDED IN THE OFFICE OF REGISTER OF DEEDS IN EAU CLAIRE COUNTY AS SHEET 2 OF 2 OF DOCUMENT NUMBER 1113820, P. 37AB AND FILED IN TPP 7824-00-00 - 4.01 A2, EAU CLAIRE COUNTY.

SCALE, FEET
0 50 100

GN

PROJECT LOCATION SKETCH

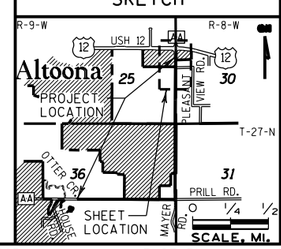

CORRE
2224 Helmstead Road
Eau Claire, WI 54703
608.828.1011
www.correinc.com
Structural - Environmental - Transportation - Real Estate

I, MICHAEL C. CANNIFF PROFESSIONAL LAND SURVEYOR, HEREBY CERTIFY THAT IN FULL COMPLIANCE WITH THE PROVISIONS OF SECTION 84.095 OF THE WISCONSIN STATUTES AND UNDER DIRECTION OF EAU CLAIRE COUNTY, I HAVE SURVEYED TRANSPORTATION PROJECT PLAT 7824-00-00-4.07 AMENDMENT NO. 4 AND THAT SUCH PLAT REPRESENTS ALL EXTERIOR BOUNDARIES OF THE SURVEYED LAND.

WISCONSIN
MICHAEL C. CANNIFF
S-1836
BEAVER DAM, WI
LAND SURVEYOR

DATE: 9-2-2015 Mike Canniff, PLS

THIS PLAT AND RELOCATION ORDER ARE APPROVED FOR EAU CLAIRE COUNTY Rich Wathers

DATE: 9-9-15 Eau Claire County Highway Commissioner

1120288
KATHRYN A. CHRISTENSON
EAU CLAIRE COUNTY, WI
REGISTER OF DEEDS
RECORDED ON
09/14/2015 2:51 PM
REC FEE:
TRANSFER FEE:
EXEMPT #
PAGES: 1

RESERVED FOR REGISTER OF DEEDS
PROJECT NUMBER 7824-00-00 4.07
AMENDMENT NO: 4

FILE NAME : C:\Users\Bryan\Documents\DGN\7824-00-00 CTH AA Eau Claire County\CAD\Plat\Amendment 4\040107_tpp_A4.dgn PLOT DATE : 10/19/2015 PLOT BY : $$...plotuser...$$ PLOT NAME : PLOT SCALE : 100.0000 sf / in.
APPRAISAL PLAT DATE :

DATE : 04-02-2015

REVISION DATE :

TRANSPORTATION PROJECT PLAT NO: 7284-00-00 - 4.08
AMENDMENT NO. 2

RELOCATION ORDER CTH AA
HOUSE ROAD - USH 12,
EAU CLAIRE COUNTY, WISCONSIN

R/W MONUMENT POINT NUMBER AND COORDINATE TABLE

R/W MONUMENT POINT NUMBER AND COORDINATE TABLE		
POINT	Y	X
100	266,632.163	359,853.521
101	266,697.670	359,853.717
102	266,697.521	359,903.717
103	266,685.521	359,903.681
104	266,684.104	360,378.290
105	266,649.104	360,378.290
106	266,648.274	360,656.560
107	266,595.347	360,656.679
108	266,548.273	360,656.602
109	266,548.999	360,413.276
110	266,553.999	360,413.290
111	266,554.089	360,383.291
112	266,549.089	360,383.276
113	266,550.671	359,853.278
114	266,566.163	359,853.324
200	266,648.274	360,656.560
201	266,646.295	361,319.583
202	266,642.461	361,978.824
203	266,589.151	361,978.888
204	266,542.459	361,978.856
205	266,546.296	361,319.143
206	266,548.273	360,656.602
207	266,595.347	360,656.679
300	266,642.461	361,978.824
301	266,637.370	362,854.108
302	266,637.032	363,177.658
303	266,686.980	363,226.940
304	266,687.750	363,326.939
305	266,617.178	363,399.747
306	266,551.073	363,391.657
307	266,473.085	363,316.990
308	266,467.301	363,251.244
309	266,537.029	363,179.696
310	266,537.371	362,853.765
311	266,542.459	361,978.856
312	266,589.151	361,978.888
400	266,686.980	363,226.940
401	266,951.842	363,223.102
402	267,904.994	363,224.472
403	267,904.775	363,300.896
404	267,905.041	363,324.472
405	266,952.495	363,323.103
406	266,687.750	363,326.939
500	267,904.994	363,224.472
501	269,226.672	363,226.371
502	269,226.594	363,300.695
503	269,226.854	363,326.371
504	267,905.041	363,324.472
505	267,904.775	363,300.896
600	269,226.672	363,226.371
601	269,391.133	363,226.607
602	270,547.622	363,230.839
603	270,547.556	363,297.301
604	270,548.247	363,330.842
605	269,390.879	363,326.607
606	269,247.814	363,326.401
607	269,247.824	363,319.401
608	269,226.783	363,319.371
609	269,226.594	363,300.695

R/W MONUMENT POINT NUMBER AND COORDINATE TABLE		
POINT	Y	X
700	270,547.622	363,230.839
701	271,125.921	363,232.955
702	271,504.894	363,237.643
703	271,504.822	363,243.433
704	271,558.578	363,338.315
705	271,558.560	363,339.788
706	271,265.548	363,334.690
707	271,211.697	363,391.155
708	271,145.233	363,376.897
709	271,121.104	363,347.938
710	271,048.636	363,347.673
711	271,048.691	363,332.673
712	271,027.691	363,332.596
713	271,027.636	363,347.596
714	270,945.637	363,347.296
715	270,945.692	363,332.296
716	270,548.247	363,330.842
717	270,547.556	363,297.301

FILE NAME : C:\Users\Bryan\Documents\DGN\7824-00-00 CTH AA Eau Claire County\CAD\Plat\Amendment 2\040108_tpp_A2.dgn PLOT DATE : 10/19/2015 PLOT BY : $$...plotuser...$$ PLOT NAME : PLOT SCALE : 100.0000 sf / in.
APPRAISAL PLAT DATE :

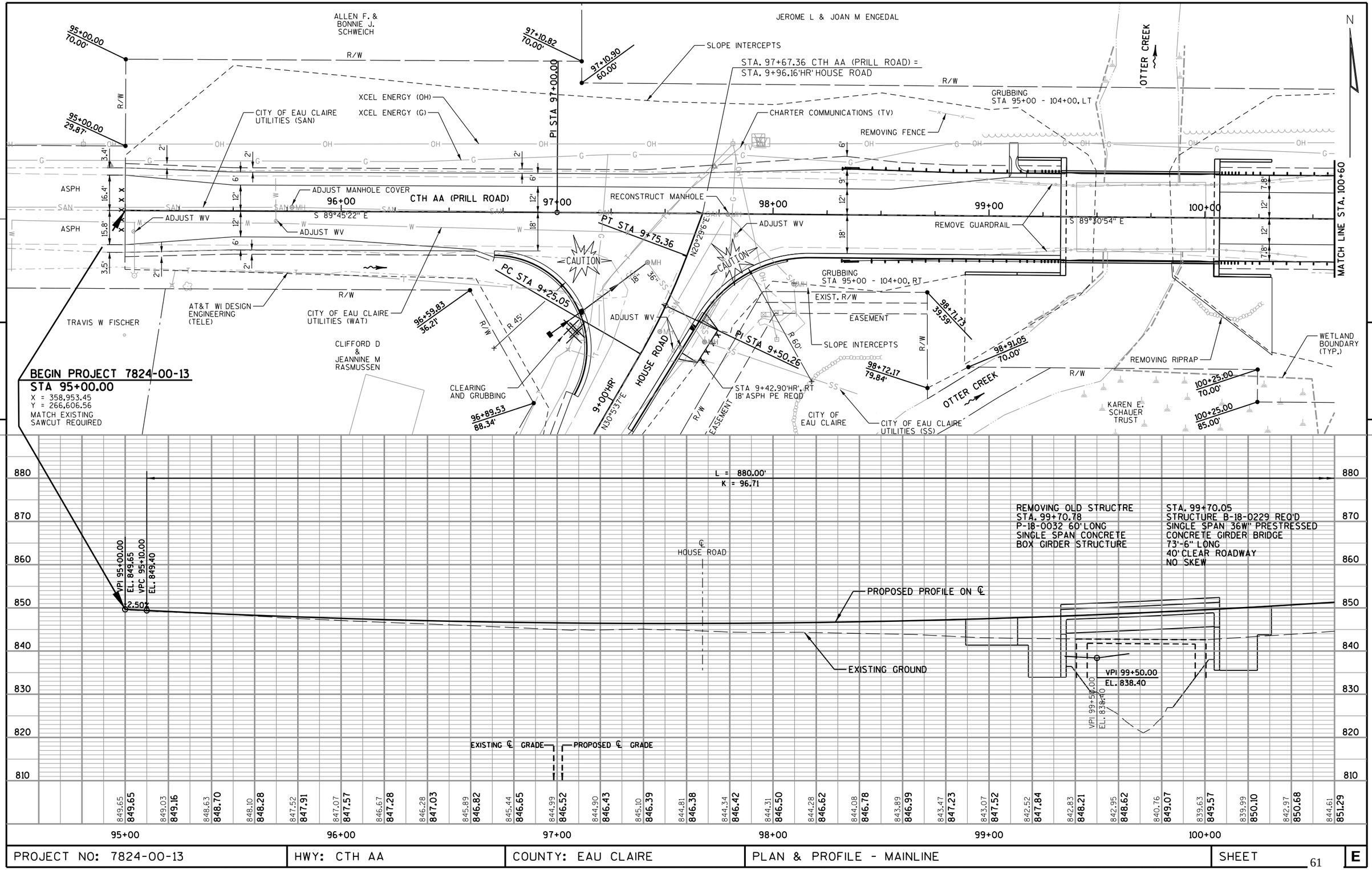

PROJECT NO: 7824-00-13	HWY: CTH AA	COUNTY: EAU CLAIRE	PLAN & PROFILE - MAINLINE	SHEET 61 E

JEROME L & JOAN M ENGEDAL

102+80.00
110.00'

R/W

103+99.90
110.00'

103+99.90
97.00'

R/W

N

100+75.00
70.00'

100+75.00
60.00'

SLOPE INTERCEPTS

102+80.00
70.00'

R/W

WORK TO BE COMPLETED
UNDER PROJECT ID 7824-00-09

XCEL ENERGY (OH)

OH OH OH OH OH OH OH OH OH OH OH OH OH OH

G G G G G G G G G G G G G G

MATCH LINE STA. 100+60

6' 9' 12' 12' 9' 6'

2' 6' 12' 12' 6' 2'

7.8' 12' 12' 1.8'

101+00 102+00 CTH AA (PRILL ROAD) 103+00 104+00 105+00 106+00

S 89°46'05" E

WETLAND
BOUNDARY
(TYP.)

PI STA 102+00.00

102+25.00
50.00'

102+25.00
85.00'

R/W

XCEL ENERGY (G)

SLOPE INTERCEPTS

KAREN E.
SCHAUER
TRUST

PI STA 104+00.00

104+00.00
50.00'

R/W

END PROJECT 7824-00-13
STA 104+00.00
X = 359,853.43
Y = 266,600.67

5

5

890 880 870 860 850 840 830 820 810

L = 880.00'
K = 96.71

VPT 103+90.00
EL. 867.44

VPI 104+00.00
EL. 868.10

-8.60%

PROPOSED PROFILE ON ℄

EXISTING GROUND

EXISTING ℄ GRADE

PROPOSED ℄ GRADE

844.61	845.40	846.22	847.39	848.57
851.29	**851.95**	**852.65**	**853.39**	**854.17**
849.84	851.23	852.61	853.78	855.28
855.00	**855.86**	**856.77**	**857.72**	**858.71**
857.10	858.77	860.43	862.07	863.68
859.74	**860.81**	**861.92**	**863.07**	**864.27**
865.29	866.58	868.16		
865.51	**866.79**	**868.10**		

101+00 102+00 103+00 104+00

PROJECT NO: 7824-00-13	HWY: CTH AA	COUNTY: EAU CLAIRE	PLAN & PROFILE - MAINLINE	SHEET 62 E

JEROME L.
&
JOAN M. ENGEDAL

AMY R. ALPINE

PL

PLE

R/W

104+50.00
85.00'

104+50.00
97.00'

109+24.61
85.00'

109+24.72
85.00'

BENCH MARKS

NO.	STATION	DESCRIPTION	ELEV.
1	109+80	PK NAIL IN ℄ PE, 20' RT	902.95

STA 108+61 (31.4' LT)
CONSTRUCT 16' BAD FE
12"X50' CMP REQ'D
2-12" AEW REQ'D

STA 109+63 (31.4' LT)
CONSTRUCT 16' BAD FE
12"X42' CMP REQ'D
2-12" AEW REQ'D

XCEL ENERGY (OH)

AT&T WI DESIGN ENGINEERING (T)

GRAV

+39 18'

+83 18'

+41 18'

+85 18'

2'
6'
12'
12'
6'
2'

104+00 105+00 106+00 107+00 108+00 109+00

℄ CTH AA

CTH AA (PRILL ROAD)

MATCH LINE STA. 110+00

CAUTION

BM #1

+97.5 18'

+50.5' 18'

PRIVATE GEOTHERMAL SYSTEM TO REMAIN

XCEL ENERGY (G)

SLOPE INTERCEPTS

ASPH

PI STA 104+00.00

BEGIN PROJECT 7824-00-09
STA 104+00.00
X = 359853.43
Y = 266600.67
MATCH EXISTING
SAWCUT REQUIRED

KAREN E. SCHAUER TRUST

109+30.00
45' 50'

109+60.00
50' 45'

STA 109+75 (31.4' RT)
CONSTRUCT 16' HMA PE
12"X44' CMP REQ'D
2-12" AEW REQ'D

EL. 868.10

6.74%

VPC 106+20.00
EL. 882.94

EXISTING GROUND

PROPOSED PROFILE ON ℄

L = 1250.00'
K = 143

EXISTING ℄ GRADE

PROPOSED ℄ GRADE

920 910 900 890 880 870 860 850 840

868.47 868.10 870.43 869.79 872.32 871.47 874.21 873.16 876.06 874.85 877.91 876.53 879.63 878.22 881.28 879.90 882.90 881.59 884.45 883.27 886.01 884.93 887.42 886.54 888.84 888.11 890.28 889.64 891.71 891.12 893.14 892.55 894.57 893.95 895.99 895.30 897.42 896.61 898.56 897.87 899.63 899.09 900.69 900.26 901.68 901.40 902.61 902.49 903.54 903.53

104+00 105+00 106+00 107+00 108+00 109+00 110+00

PROJECT NO: 7824-00-09	HWY: CTH AA	COUNTY: EAU CLAIRE	PLAN AND PROFILE	SHEET 63	E

FILE NAME : S:\Projects\NW\Eau Claire County\CTH AA\CAD\Plans\050103_pp_AA.dgn PLOT DATE : 10/23/2015 PLOT BY : $$...plotuser...$$ PLOT NAME : PLOT SCALE : 40.0000 sf / in.

WISDOT/CADDS SHEET 35

STA 111+10 (31' LT)
CONSTRUCT 20' BAD PE

STA 112+75 (31.4' LT)
CONSTRUCT 16' CONC PE
12"X34' CMP REQ'D
2-12" AEW REQ'D

AMY R. ALPINE

N

R/W

AT&T WI DESIGN ENGINEERING (T)

XCEL ENERGY (OH)

MATCH LINE STA. 110+00

+35.8 18'

+30 18'

+39 18'

+83 18'

GRAV

CONC

111+00 112+00 113+00 CTH AA (PRILL ROAD) 114+00 115+00

2' 6' 12' 12' 6' 2'

℄ CTH AA

MATCH LINE STA. 116+00

CAUTION

CAUTION

SLOPE INTERCEPTS

XCEL ENERGY (G)

R/W

KAREN E. SCHAUER TRUST

VPI 112+45.00
EL. 925.09

EXISTING GROUND

PROPOSED PROFILE ON ℄

L = 1250.00'
K = 143

EXISTING ℄ GRADE

PROPOSED ℄ GRADE

110+00	111+00	112+00	113+00	114+00	115+00	116+00
903.54	904.46	905.39	906.28	907.15	908.02	908.88
903.53	904.53	905.49	906.40	907.28	908.10	908.89
909.75	910.53	911.16	911.80	912.43	912.98	913.40
909.63	910.32	910.98	911.59	912.15	912.67	913.15
913.81	914.23	914.55	914.77	914.98	915.20	915.27
913.59	913.98	914.33	914.63	914.89	915.11	915.28
915.31	915.35	915.38	915.35			
915.41	915.50	915.54	915.54			

PROJECT NO: 7824-00-09	HWY: CTH AA	COUNTY: EAU CLAIRE	PLAN AND PROFILE	SHEET 64	E

FILE NAME : S:\Projects\NW\Eau Claire County\CTH AA\CAD\Plans\050104_pp_AA.dgn PLOT DATE : 10/23/2015 PLOT BY : $$...plotuser...$$ PLOT NAME : PLOT SCALE : 40.0000 sf / in.

WISDOT/CADDS SHEET 35

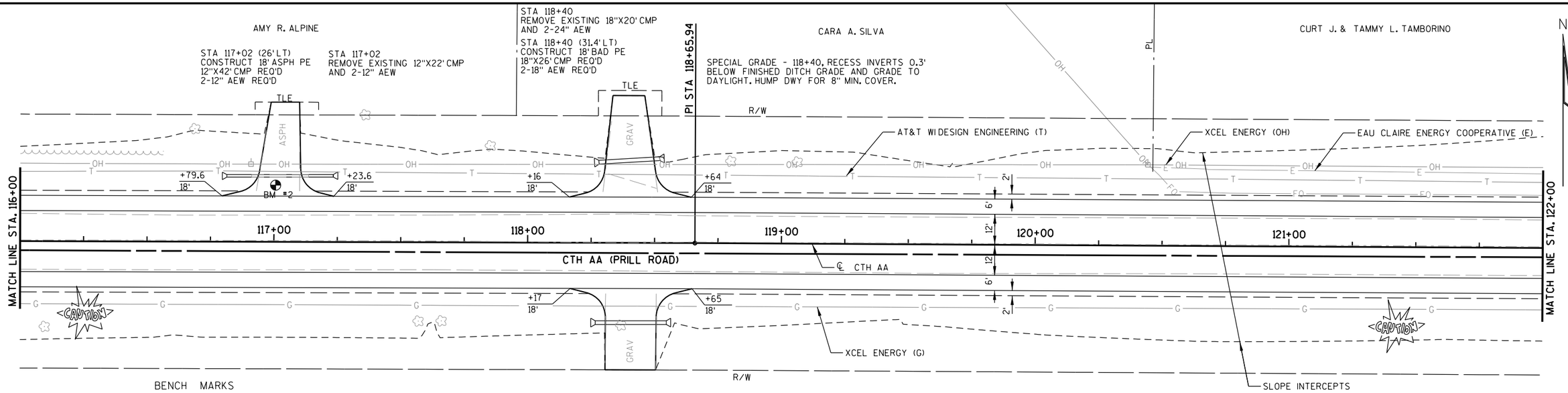

NO.	STATION	DESCRIPTION	ELEV.
2	117+01	PK NAIL, 22' LT	915.64

5

5

PROJECT NO: 7824-00-09	HWY: CTH AA	COUNTY: EAU CLAIRE	PLAN AND PROFILE	SHEET 65	E

FILE NAME : S:\Projects\NW\Eau Claire County\CTH AA\CAD\Plans\050105_pp_AA.dgn PLOT DATE : 10/23/2015 PLOT BY : $$...plotuser...$$ PLOT NAME : PLOT SCALE : 40.0000 sf / in.

WISDOT/CADDS SHEET 35

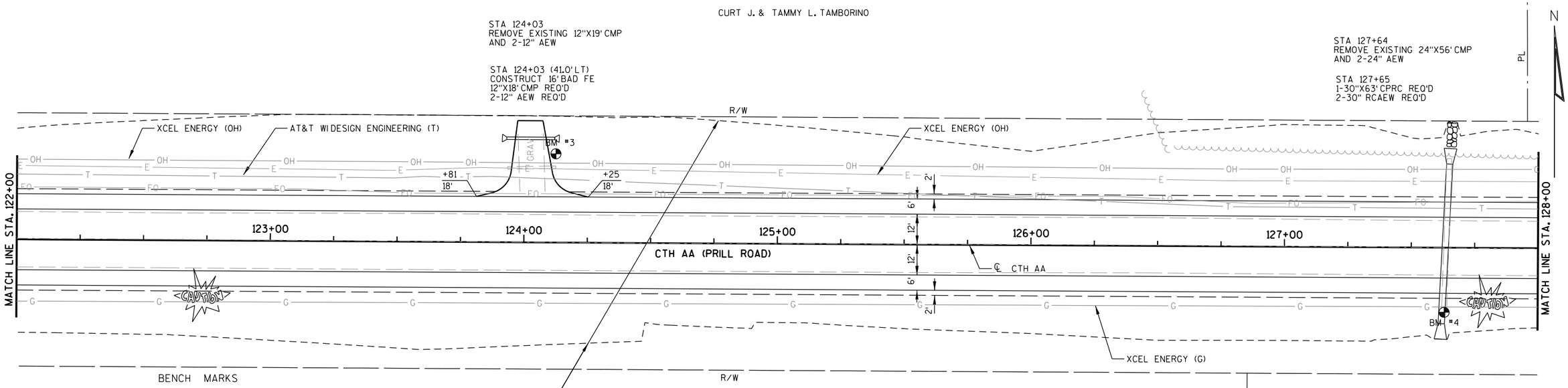

BENCH MARKS

NO.	STATION	DESCRIPTION	ELEV.
3	124+12	60d NAIL IN WOOD POST, 35' LT	910.50
4	127+63	PK NAIL TOP OF CMP, 26' RT	902.82

PROJECT NO: 7824-00-09	HWY: CTH AA	COUNTY: EAU CLAIRE	PLAN AND PROFILE	SHEET 66	E

FILE NAME : S:\Projects\NW\Eau Claire County\CTH AA\CAD\Plans\050106_pp_AA.dgn PLOT DATE : 10/23/2015 PLOT BY : $$...plotuser...$$ PLOT NAME : PLOT SCALE : 40.0000 sf / in.

WISDOT/CADDS SHEET 35

STA 129+08 (31.4' LT)
CONSTRUCT 20' HMA PE
12"X28' CMP REQ'D
2-12" AEW REQ'D

STA 130+81, LT
REMOVE EXISTING
12"X45' CMP &
12"X30' HDPC

STA 130+91 (31.4' LT)
CONSTRUCT 20' HMA PE
12"X24' CMP REQ'D.
2-12" AEW REQ'D.

STA 131+82 (31.4' LT)
CONSTRUCT 16' HMA PE
15"X22' CMP REQ'D
2-15" AEW REQ'D

MICHAEL LARSON

LAVERNE A. BUNDY

NANCY A. FLASKRUD

AT&T WI DESIGN ENGINEERING (T)

REMOVE DRIVEWAY

XCEL ENERGY (OH)

MATCH LINE STA. 128+00

MATCH LINE STA. 134+00

CTH AA (PRILL ROAD)

℄ CTH AA

SLOPE INTERCEPTS

XCEL ENERGY (G)

STA 133+85
REMOVE EXISTING 12"X20' CMP
AND 2-12" AEW

STA 133+85 36.7' RT
CONSTRUCT 18' HMA PE
12"X34" CMP REQ'D
2-12" AEW REQ'D

BM =5

BENCH MARKS

NO.	STATION	DESCRIPTION	ELEV.
5	133+88	PK NAIL TOP OF CMP, 27' RT	917.11

GREG A. & BONNIE SENN TRUST

STA 130+83 (31.4' RT)
CONSTRUCT 16' BAD PE
18"X26' CMP REQ'D
2-18" AEW REQ'D

STA 130+83
REMOVE EXISTING 12"X28' CMP
AND 2-12" AEW

SPECIAL GRADE - RECESS INVERT 0.3' BELOW
FINISHED DITCH GRADE AND GRADE TO DAYLIGHT.
HUMP DWY TO 8" MIN. COVER.

L = 340.00'
K = 97

L = 150.00'
K = 115

LO 128+24.05
EL. 905.74

VPI 128+52.00
EL. 904.30

VPT 130+22.00
EL. 907.75

VPC 130+62.00
EL. 908.56

VPI 131+37.00
EL. 910.09

VPT 132+12.00
EL. 912.59

2.03%

3.34%

EXISTING GROUND

PROPOSED PROFILE ON ℄

EXISTING ℄ GRADE

PROPOSED ℄ GRADE

905.50 905.77 | 905.55 905.74 | 905.72 905.78 | 905.89 905.88 | 906.07 906.04 | 906.35 906.26 | 906.65 906.56 | 906.95 906.91 | 907.39 907.33 | 908.05 907.81 | 908.71 908.32 | 909.37 908.84 | 909.95 909.40 | 910.45 910.02 | 910.99 910.69 | 911.59 911.41 | 912.20 912.20 | 912.80 913.02 | 913.50 913.86 | 914.25 914.69 | 915.00 915.53 | 915.74 916.36 | 916.64 917.19 | 917.55 918.03 | 918.46 918.86

128+00 129+00 130+00 131+00 132+00 133+00 134+00

950 940 930 920 910 900 890 880 870

PROJECT NO: 7824-00-09	HWY: CTH AA	COUNTY: EAU CLAIRE	PLAN AND PROFILE	SHEET 67	E

FILE NAME : S:\Projects\NW\Eau Claire County\CTH AA\CAD\Plans\050107_pp_AA.dgn PLOT DATE : 10/23/2015 PLOT BY : $$...plotuser...$$ PLOT NAME : PLOT SCALE : 40.0000 sf / in.

WISDOT/CADDS SHEET 35

STA 134+17 (31.4' LT)
CONSTRUCT 16' BAD PE
12"X48' CMP REQ'D
2-12" AEW REQ'D

NANCY A FLASKRUD

STA 135+78 (31.4' LT)
CONSTRUCT 16' BAD PE
12"X42' CMP REQ'D
2-12" AEW REQ'D

MONNA L CLEMONS

137+24.21
50.00'

MATCH LINE STA. 139+00

DEMOSS DIVERSIFIED PATHOS PROPERTIES LLC

STA 10+38'E'
REMOVE EXISTING 24"X41' CMP
AND 2-24" AEW

STA 10+50'E'
1-24"X66' CPRC REQ'D
2-24" RCAEW REQ'D

138+53.49
121.78'

TLE

XCEL ENERGY (OH)

AT&T WI DESIGN ENGINEERING (T)

AT&T WI DESIGN ENGINEERING (T)

R/W

PL

GRAV

OH

T

G

+33.7
18'

+56.3
18'

+0.50
18'

+64
12'

+36
20'

+43.7
20'

+80
20'

+70.1
15'

+60.1
15'

+55.6
15'

+22
18'

+52
20'

+32
12'

+44.4
15'

+22
15'

9:1

20:1

23.5:1

18:1

R 60.00'

R 40.00'

20'

15'

11'

12'

6'

2'

CAUTION

135+00

136+00

137+00

138+00

11+00'E'

CTH AA

CTH AA (MAYER ROAD)

CTH AA (PRILL ROAD)

℄ CTH AA

℄ PRILL ROAD

PRILL ROAD

ASPH

END CONSTRUCTION
STA. 11+34.94'E'
MATCH EXISTING
SAWCUT REQUIRED

11+12.65'E'
37.47'

EASEMENT

N

MATCH LINE STA. 134+00

PI STA 134+00.54

XCEL ENERGY (G)

SLOPE INTERCEPTS

137+26.35
50.00'

STA. 138+25.00 CTH AA (MAYER / PRILL ROAD)=
STA. 10+00.00'S' MAYER ROAD=
STA. 10+00.00'E' PRILL ROAD
TYPE D (MODIFIED) INTERSECTION REQ'D

STA 9+51'S'
REMOVE EXISTING 15"X40' CMP
AND 2-15" AEW

STA 9+50'S'
1-24"X68' CPRC REQ'D
2-24" RCAEW REQ'D

BM #6

℄ MAYER ROAD

9+00'S'

MAYER ROAD

10+36.69'E'
114.47'

137+97.97
119.65'

END CONSTRUCTION
STA. 8+50.66'S'
MATCH EXISTING
SAWCUT REQUIRED

3'

11'

11'

3'

X X X X X

ASPH

BENCH MARKS

NO.	STATION	DESCRIPTION	ELEV.
6	9+54"S"	PK NAIL ON CMP, 21' RT	931.72

960
950
940
930
920
910
900
890

EXISTING GROUND

PROPOSED PROFILE ON ℄

VPI 135+78.00
EL. 924.80

VPI 138+25.00
EL. 931.38

MAYER ROAD

3.34%

2.66%

-0.31%

VPC 135+03.00
EL. 922.30

VPT 136+53.00
EL. 926.80

L = 150.00'
K = 223

EXISTING ℄ GRADE

PROPOSED ℄ GRADE

| | | |

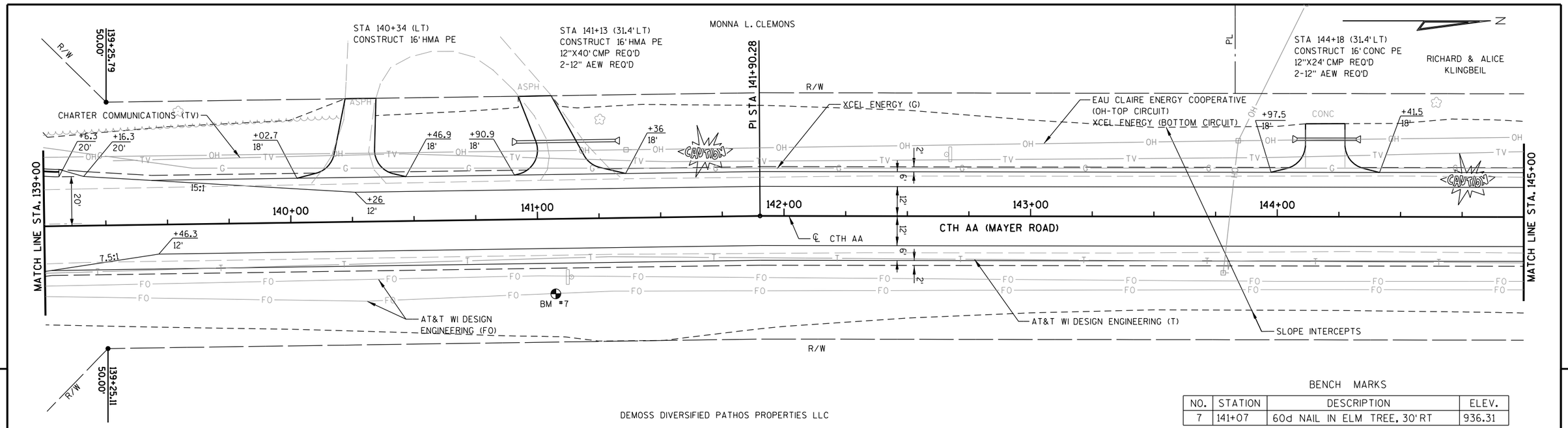

BENCH MARKS

NO.	STATION	DESCRIPTION	ELEV.
7	141+07	60d NAIL IN ELM TREE, 30' RT	936.31

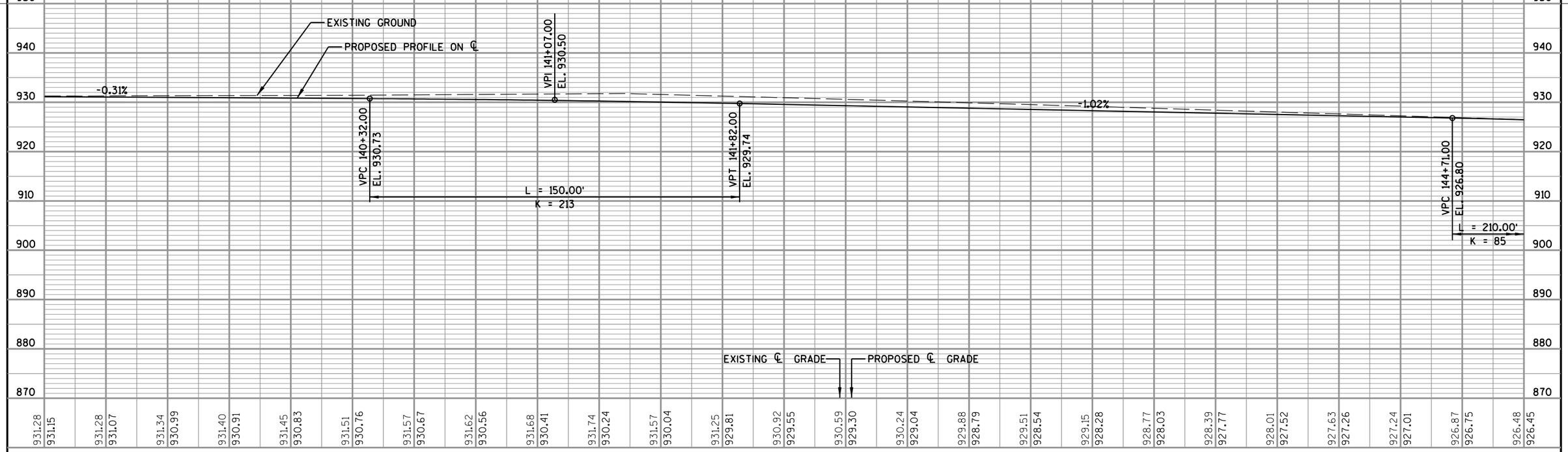

PROJECT NO: 7824-00-09	HWY: CTH AA	COUNTY: EAU CLAIRE	PLAN AND PROFILE	SHEET 69 E

RICHARD & ALICE KLINGBEIL

BM #8

STA 147+47 (31.4' LT)
CONSTRUCT 16' BAD FE
12"X38' CMP REQ'D
2-12" AEW REQ'D

HIDDEN CREEK LLC

N

SLOPE INTERCEPTS

PL

GRAV

R/W

CHARTER COMMUNICATIONS (TV)

XCEL ENERGY (G)

EAU CLAIRE ENERGY COOPERATIVE (OH-TOP CIRCUIT)
XCEL ENERGY (BOTTOM CIRCUIT)

OH

TV

G

+24.6
18'

+68.6
18'

2'
6"
12'
12'
6"
2'

CAUTION

MATCH LINE STA. 145+00

MATCH LINE STA. 151+00

146+00 147+00 148+00 149+00 150+00

CTH AA (MAYER ROAD)

℄ CTH AA

T

FO

AT&T WI DESIGN ENGINEERING (T)

AT&T WI DESIGN ENGINEERING (FO)

R/W

DEMOSS DIVERSIFIED PATHOS PROPERTIES LLC

BENCH MARKS

NO.	STATION	DESCRIPTION	ELEV.
8	146+45	TOP BOLT SW COR. PUMP, 68' LT	925.22

5

5

950 940 930 920 910 900 890 880 870

VPI 145+76.00
EL. 925.73

VPT 146+81.00
EL. 922.05

L = 210.00'
K = 85

3.50%

VPC 148+12.00
EL. 917.47'

L = 380.00'
K = 136

VPI 150+02.00
EL. 910.82

EXISTING GROUND

PROPOSED PROFILE ON ℄

EXISTING ℄ GRADE

PROPOSED ℄ GRADE

926.48 926.45 926.10 926.07 925.72 925.62 925.34 925.10 924.95 924.50 924.56 923.83 923.90 923.08 923.19 922.26 922.52 921.39 921.84 920.51 920.89 919.64 919.86 918.76 918.84 917.89 917.82 917.02 916.80 916.19 915.78 915.41 914.76 914.67 913.75 913.98 912.98 913.34 912.24 912.74 911.54 912.19 910.84 911.68 910.46 911.22 910.13 910.81 909.72 910.44

145+00 146+00 147+00 148+00 149+00 150+00 151+00

PROJECT NO: 7824-00-09	HWY: CTH AA	COUNTY: EAU CLAIRE	PLAN AND PROFILE	SHEET 70	E

HIDDEN CREEK LLC

STA 152+25
1-48"X64' CPRC REQ'D
2-48" RCAEW REQ'D

N

R/W

EAU CLAIRE ENERGY COOPERATIVE (OH-TOP CIRCUIT)
XCEL ENERGY (BOTTOM CIRCUIT)

XCEL ENERGY (G)

SLOPE INTERCEPTS

MATCH LINE STA. 151+00

MATCH LINE STA. 157+00

CAUTION

CAUTION

152+00 153+00 154+00 155+00 156+00

CTH AA (MAYER ROAD)

BM #9

AT&T WI DESIGN ENGINEERING (FO)

AT&T WI DESIGN ENGINEERING (T)

R/W

STA 152+25
REMOVE EXISTING 48"X60' CMP
AND 2-48" AEW

DEMOSS DIVERSIFIED PATHOS PROPERTIES LLC

BENCH MARKS

NO.	STATION	DESCRIPTION	ELEV.
9	152+24	PK NAIL TOP OF CMP, 30' RT	907.77

L = 380.00'
K = 136

VPT 151+92.00
EL. 909.49

-0.70%

VPC 152+58.00
EL. 909.02

L = 190.00'
K = 136

LO 153+53.00
EL. 908.69

VPI 153+53.00
EL. 908.36

VPT 154+48.00
EL. 909.02

0.70%

VPC 155+58.00
EL. 909.79

L = 330.00'
K = 137

EXISTING GROUND

PROPOSED PROFILE ON ℄

STA 152+25
48" CPRC REQ'D.
IE = 901.75

EXISTING ℄ GRADE

PROPOSED ℄ GRADE

950 940 930 920 910 900 890 880 870

909.72 910.44 | 909.31 910.12 | 909.15 909.85 | 909.01 909.62 | 908.88 909.43 | 908.74 909.26 | 908.78 909.08 | 908.83 908.92 | 908.80 908.80 | 908.75 908.72 | 908.90 908.69 | 909.04 908.71 | 909.12 908.77 | 909.19 908.88 | 909.23 909.04 | 909.26 909.21 | 909.30 909.39 | 909.33 909.56 | 909.32 909.74 | 909.31 909.92 | 909.35 910.15 | 909.40 910.43 | 909.74 910.75 | 910.09 911.11 | 910.46 911.52

151+00 152+00 153+00 154+00 155+00 156+00 157+00

PROJECT NO: 7824-00-09	HWY: CTH AA	COUNTY: EAU CLAIRE	PLAN AND PROFILE	SHEET E

FILE NAME : S:\Projects\NW\Eau Claire County\CTH AA\CAD\Plans\050111_pp_AA.dgn PLOT DATE : 10/23/2015 PLOT BY : $$...plotuser...$$ PLOT NAME : PLOT SCALE : 40.0000 sf / in.

WISDOT/CADDS SHEET 35

HIDDEN CREEK LLC

STA 164+42 (31.4' LT)
CONSTRUCT 16' BAD FE
12"X28' CMP REQ'D
2-12" AEW REQ'D

STA 164+96 (31.4' LT)
CONSTRUCT 16' BAD FE
12"X24' CMP REQ'D
2-12" AEW REQ'D

EAU CLAIRE ENERGY COOPERATIVE
(OH-TOP CIRCUIT)
XCEL ENERGY (BOTTOM CIRCUIT)

DAVID J. & PATRICIA MAYER

STA 167+34
1-24"X81' CPRC REQ'D
2-24" RCAEW REQ'D

PI STA 166+29.12

PLE

R/W

SLOPE INTERCEPTS

AT&T WI DESIGN ENGINEERING (FO)

XCEL ENERGY (G)

MATCH LINE STA. 163+00

MATCH LINE STA. 169+00

164+00 165+00 166+00 167+00 168+00

+19.8 18' +63.8 18' +74.4 18' +18.4 18'

+31.5 18' +75.5 18' +42.7 18' +86.7 18' +95.6 18' +39.6 18'

CTH AA (MAYER ROAD)

℄ CTH AA

2' 6' 12' 12' 6' 2'

AT&T WI DESIGN ENGINEERING (T)

CHARTER COMMUNICATIONS (TV)

EASEMENT

AT&T WI DESIGN ENGINEERING (FO)

R/W

164+64.96
43.00'
164+65.04
50.00'

164+86.00
50.00'
43.00'

STA 163+53 (31.4' RT)
CONSTRUCT 16' CONC PE
12"X40' CMP REQ'D
2-12" AEW REQ'D

ROBERT H. & DARLENE E.
BRUMMOND

STA 165+65 (31.4' RT)
CONSTRUCT 16' HMA PE
12"X34' CMP REQ'D
2-12" AEW REQ'D

LINDA L. PUTMAN

STA 167+34
REMOVE EXISTING 24"X87' CMP
AND 2-24" AEW

STA 168+18 (RT)
CONSTRUCT 16' BAD PE

ALLAN H. & JEANNE M.
ERICKSON

950 940 930 920 910 900 890 880 870

EXISTING GROUND

PROPOSED PROFILE ON ℄

VPI 166+60.00
EL. 928.14

0.50%

-0.50%

VPC 165+85.00
EL. 927.77

VPT 163+99.00
EL. 926.84

VPT 167+35.00
EL. 927.77

L = 390.00'
K = 150

L = 150.00'
K = 150

EXISTING ℄ GRADE

PROPOSED ℄ GRADE

926.17 926.01 926.47 926.28 926.51 926.51 926.55 926.70 926.58 926.84 926.61 926.97 926.63 927.09 926.70 927.22 926.69 927.34 926.60 927.47 926.53 927.59 926.46 927.72 926.40 927.83 926.26 927.91 926.20 927.95 926.14 927.95 926.09 927.90 926.05 927.81 926.03 927.69 925.98 927.57 925.91 927.44 925.91 927.32 925.96 927.19 925.97 927.07 925.92 926.94

163+00 164+00 165+00 166+00 167+00 168+00 169+00

PROJECT NO: 7824-00-09	HWY: CTH AA	COUNTY: EAU CLAIRE	PLAN AND PROFILE	SHEET 72	E

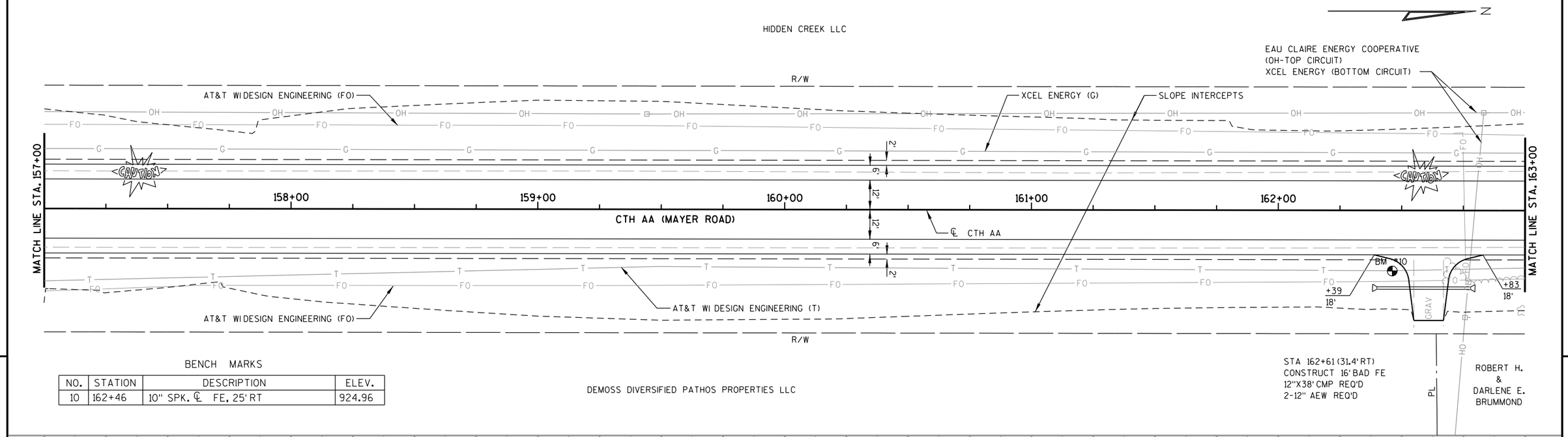

BENCH MARKS

NO.	STATION	DESCRIPTION	ELEV.
10	162+46	10" SPK. ℄ FE, 25' RT	924.96

PROJECT NO: 7824-00-09	HWY: CTH AA	COUNTY: EAU CLAIRE	PLAN AND PROFILE	SHEET 73 E

DAVID J. & PATRICIA MAYER

CLINT & CHRISTINA S. HEIMAN

N

R/W

AT&T WI DESIGN ENGINEERING (FO)

XCEL ENERGY (G)

AT&T WI DESIGN ENGINEERING (T)

PL

MATCH LINE STA. 169+00

MATCH LINE STA. 175+00

170+00 171+00 172+00 173+00 174+00

CTH AA (MAYER ROAD)

℄ CTH AA

+16.3 18'

+60.3 18'

+30.3 18'

+74.3 18'

BM #11

AT&T WI DESIGN ENGINEERING (FO)

EAU CLAIRE ENERGY COOPERATIVE (OH-TOP CIRCUIT)
XCEL ENERGY (BOTTOM CIRCUIT - ENDS)

SLOPE INTERCEPTS

EAU CLAIRE ENERGY COOPERATIVE (OH)

CHARTER COMMUNICATIONS (TV)

R/W

BENCH MARKS

NO.	STATION	DESCRIPTION	ELEV.
11	170+69	WHITE PAINTED "X" ON PED, 31' RT	925.36

STA 170+38 (31.4' RT)
CONSTRUCT 16' HMA PE
12"X32' CMP REQ'D
2-12" AEW REQ'D

ALLAN H. & JEANNE M. ERICKSON

STA 173+52 (31.4' RT)
CONSTRUCT 16' HMA PE
15"X24' CMP REQ'D
2-15" AEW REQ'D

STA 173+52
REMOVE EXISTING 12"X20' CMP
AND 2-12" AEW

RILEY H. & DORIS A. FLETSCHOCK

EXISTING GROUND

PROPOSED PROFILE ON ℄

-0.50%

VPC 170+48.00
EL. 926.20

VPI 171+98.00
EL. 925.45

-2.18%

VPT 173+48.00
EL. 922.18

L = 300.00'
K = 179

EXISTING ℄ GRADE

PROPOSED ℄ GRADE

950 940 930 920 910 900 890 880 870

925.92 926.94 | 925.87 926.82 | 925.82 926.69 | 925.79 926.57 | 925.76 926.44 | 925.59 926.32 | 925.22 926.19 | 924.85 926.05 | 924.48 925.86 | 924.11 925.65 | 923.76 925.40 | 923.38 925.11 | 922.99 924.79 | 922.63 924.44 | 922.32 924.05 | 922.02 923.62 | 921.75 923.16 | 921.47 922.67 | 921.20 922.14 | 920.93 921.59 | 920.67 921.05 | 920.36 920.50 | 920.02 919.96 | 919.68 919.41 | 919.34 918.87

169+00 170+00 171+00 172+00 173+00 174+00 175+00

PROJECT NO: 7824-00-09	HWY: CTH AA	COUNTY: EAU CLAIRE	PLAN AND PROFILE	SHEET 74	E

FILE NAME : S:\Projects\NW\Eau Claire County\CTH AA\CAD\Plans\050114_pp_AA.dgn PLOT DATE : 10/23/2015 PLOT BY : $$...plotuser...$$ PLOT NAME : PLOT SCALE : 40.0000 sf / in.

WISDOT/CADDS SHEET 35

BENCH MARKS

NO.	STATION	DESCRIPTION	ELEV.
12	176+69	PK NAIL TOP OF CMP, 32' RT	915.02

CLINT & CHRISTINA S. HEIMAN

STA 177+75 (31.4' LT)
CONSTRUCT 16' BAD PE

DAVID J. & PATRICIA MAYER

EASEMENT

EASEMENT

R/W

AT&T WI DESIGN ENGINEERING (FO)

XCEL ENERGY (G)

AT&T WI DESIGN ENGINEERING (T)

SLOPE INTERCEPTS

MATCH LINE STA. 175+00

MATCH LINE STA. 181+00

176+00

177+00

178+00

179+00

180+00

+52.2
18'

+96.2
18'

+33.4
18'

+81.6
18'

℄ CTH AA

CTH AA (MAYER ROAD)

BM #12

ASPH

TLE

EAU CLAIRE ENERGY COOPERATIVE (OH)

CHARTER COMMUNICATIONS (TV)

STA 176+57
REMOVE EXISTING 12"X24' CMP
AND 2-12" AEW

STA 176+57 (31.4' RT)
CONSTRUCT 20' HMA PE
12"X40' CMP REQ'D
2-12" AEW REQ'D

RILEY H. & DORIS A. FLETSCHOCK

RICHARD E. & SHIRLEY E. BUTLER

PROPOSED PROFILE ON ℄

-2.18%

VPC 177+25.00
EL. 913.96

L = 250.00'
K = 149

VPT 179+75.00
EL. 910.61

-0.50%

L = 150.00'
K = 150

VPC 180+75.00
EL. 910.11

EXISTING GROUND

VPI 178+50.00
EL. 911.24

EXISTING ℄ GRADE

PROPOSED ℄ GRADE

175+00	176+00	177+00	178+00	179+00	180+00	181+00
919.34 / 918.87	918.84 / 918.32	918.17 / 917.78	917.48 / 917.23	916.75 / 916.69	916.05 / 916.14	915.37 / 915.60
914.72 / 915.05	914.11 / 914.51	913.57 / 913.96	913.09 / 913.44	912.57 / 912.96	912.01 / 912.52	911.59 / 912.12
911.29 / 911.76	911.04 / 911.45	910.82 / 911.18	910.69 / 910.95	910.73 / 910.76	910.77 / 910.61	910.82 / 910.49
910.83 / 910.36	910.77 / 910.24	910.73 / 910.11	910.75 / 910.01			

PROJECT NO: 7824-00-09	HWY: CTH AA	COUNTY: EAU CLAIRE	PLAN AND PROFILE	SHEET 75	E

FILE NAME : S:\Projects\NW\Eau Claire County\CTH AA\CAD\Plans\050115_pp_AA.dgn PLOT DATE : 10/23/2015 PLOT BY : $$...plotuser...$$ PLOT NAME : PLOT SCALE : 40.0000 sf / in.

WISDOT/CADDS SHEET 35

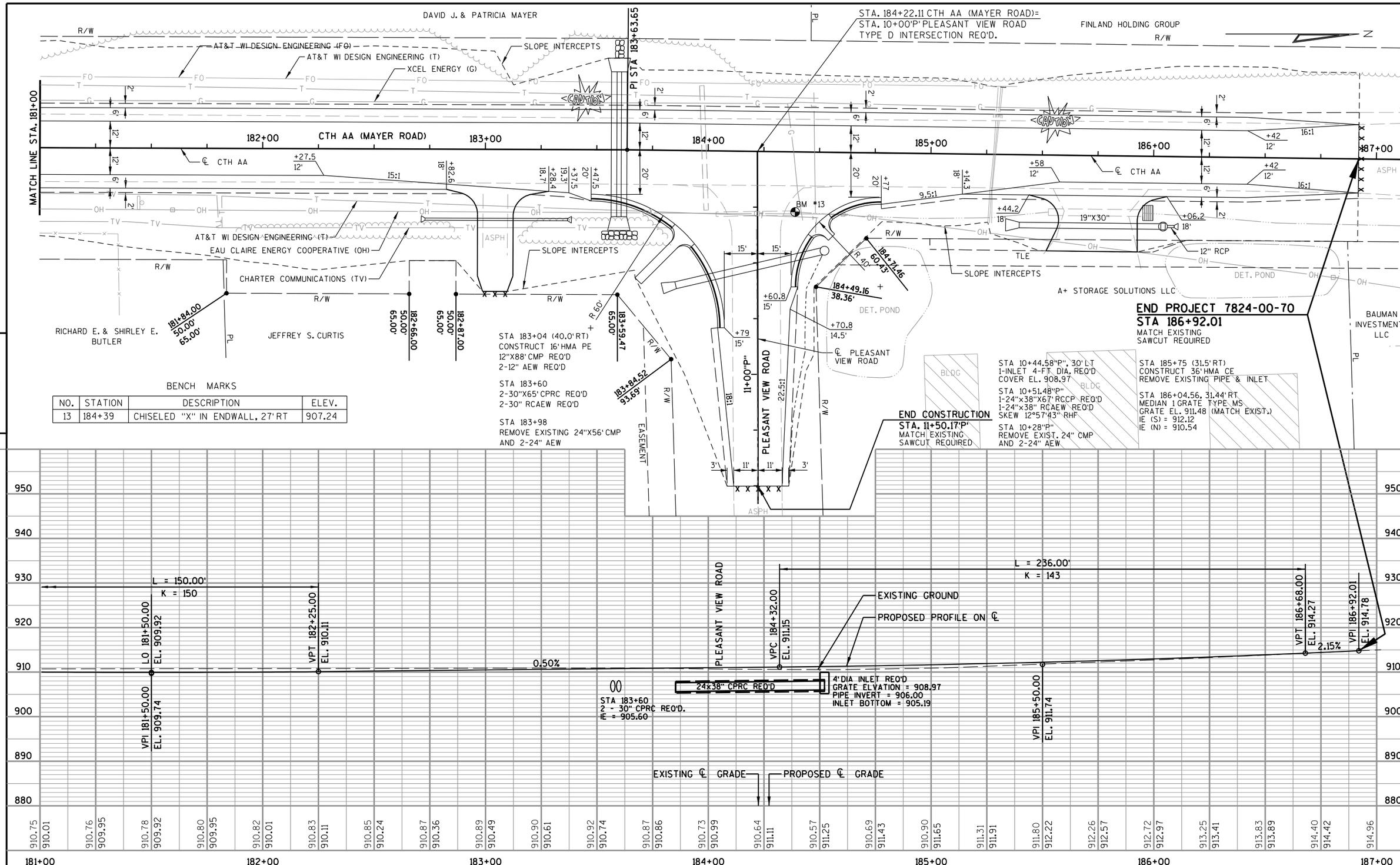

BENCH MARKS

NO.	STATION	DESCRIPTION	ELEV.
13	184+39	CHISELED "X" IN ENDWALL, 27' RT	907.24

5

5

PROJECT NO: 7824-00-09	HWY: CTH AA	COUNTY: EAU CLAIRE	PLAN AND PROFILE	SHEET 76	E

FILE NAME : S:\Projects\NW\Eau Claire County\CTH AA\CAD\Plans\050116_pp_AA.dgn

40.0000 sf / in.

WISDOT/CADDS SHEET 35

(1.1) STA 9+27.27'HR', 34.12' LT
4-FT DIA TYPE 'F' INLET
COVER EL = 845.74
IE (NE) = 840.39
IE (SW) = 840.49

(1.2) STA 9+11.27'HR', 40.95' LT
4-FT DIA TYPE 'B' INLET
COVER EL = 843.29
IE = 840.54

(1.3) STA 9+47.08'HR', 16.67' RT
5-FT DIA TYPE 'F' CB
COVER EL = 845.48

CITY OF EAU CLAIRE UTILITIES (SAN)
96+59.83
36.21'
SLOPE INTERCEPTS
R 45'
PC STA 9+25.05
18'
PI STA 97+00.00
97+10.82
70.00'
97+10.90
60.00'
97.00
STA. 97+67.36 CTH AA (PRILL ROAD) =
STA. 9+96.16'HR' HOUSE ROAD
CHARTER COMMUNICATIONS (TV)
AT&T WI DESIGN ENGINEERING (TELE)
96+89.53
88.34'
R/W
P-2
P-1
PT STA 9+75.36
IE = 838.05
XCEL ENERGY (OH)
8+00'HR' HOUSE ROAD 9+00'HR'
11.2'
15'
11.3'
N 30°05'37" E
ASPH
N20°29'6"E
16.6'
ADJUST MANHOLE COVER
ADJUST WV
98+00 CTH AA (PRILL ROAD)
EXIST. R/W
CITY OF EAU CLAIRE UTILITIES (WAT)
EASEMENT
STA 9+42.90'HR', RT
18' ASPH PE REOD
17.3'
XCEL ENERGY (G)
END CONSTRUCTION
STA. 8+53.30'HR'
MATCH EXISTING
SAWCUT REQUIRED
PI STA 9+50.26
R 60'
EASEMENT
R/W
CITY OF EAU CLAIRE UTILITIES (SS)
SLOPE INTERCEPTS

PROPOSED PROFILE ON ℄
L = 60.00'
K = 10.98
L = 75.00'
K = 27.41
VPI 8+53.30'HR" EL. 846.90
VPT 8+83.30'HR" EL. 846.50
VPC 9+08.46'HR" EL. 846.16
VPI 9+45.96'HR" EL. 845.65
VPT 9+83.46'HR" EL. 846.17
VPI 9+96.16'HR" EL. 846.42
VPI 9+84.16'HR" EL. 846.18
-1.35%
1.39%
2.00%
EXISTING GROUND
EXISTING ℞ GRADE
PROPOSED ℄ GRADE

8+00'HR'	9+00'HR'	10+00'HR'
Existing:		
849.17	847.93	
847.06	847.06	
846.54	846.54	
846.27	846.27	
846.02	846.02	
845.91	845.91	
845.95	845.95	
846.12	846.12	

PROJECT NO: 7824-00-13	HWY: CTH AA	COUNTY: EAU CLAIRE	PLAN & PROFILE - HOUSE ROAD	SHEET 77	E

FILE NAME : S:\Projects\NW\Eau Claire County\CTH AA\CAD\Plans\050117_pp_OC.dgn PLOT DATE : 1/25/2016 PLOT BY : CORRE, Inc. PLOT NAME : PLOT SCALE : 40.0000 sf / in.

WISDOT/CADDS SHEET 40

STA. 138+25.00 CTH AA (MAYER ROAD)=
STA. 10+00.00'S' MAYER ROAD=
STA. 10+00.00'E' PRILL ROAD
TYPE D (MODIFIED) INTERSECTION REQUIRED

MICHAEL K. RICHARD
EAU CLAIRE ENERGY COOPERATIVE (OH)
137+97.97
119.65
60'R
R/W
+50, 40' LT
IE = 926.09
CTH AA (PRILL ROAD) 138+00
SLOPE INTERCEPTS
9+00'S' MAYER ROAD
℄ MAYER ROAD
ASPH
CAUTION
AT&T WI DESIGN ENGINEERING (T)
+50, 32' RT
IE = 921.12
40'R
EASEMENT
KEITH W. & MARY L. KAUFMAN
10+36.69
114.47'
XCEL ENERGY (G)
BEGIN CONSTRUCTION
STA. 8+50.66'S'
MATCH EXISTING SAWCUT REQUIRED
STA 9+01'S'
REMOVE EXISTING 15" CMP AND 2-15" AEW
STA 9+50'S'
1-24"X72' CPRC REQ'D
2-24" RCAEW REQ'D

L = 120.00'
K = 38
VPI 8+50.66'S"
EL. 932.72
VPC 8+57.16'S"
EL. 932.55
PROPOSED PROFILE ON ℄
VPI 9+17.16'S"
EL. 930.96
LO 9+58.11'S"
EL. 931.21
VPT 9+77.16'S"
EL. 931.26
VPI 10+00'S"
EL. 931.38
-2.65%
0.50%
EXISTING GROUND
STA. 9+50'S"
24" CMP REQ'D
IE = 926.69
CTH AA (PRILL ROAD)

933.18 932.73 932.34 932.12 932.03 931.66 931.78 931.36 931.53 931.22 931.44 931.25 931.38
9+00'S' 10+00'S"

STA 10+38'E'
REMOVE EXISTING 24" CMP AND 2-24" AEW
STA 10+50'E'
1-24"X66' CPRC REQ'D
2-24" RCAEW REQ'D
SLOPE INTERCEPT
AT&T WI DESIGN ENGINEERING (T)
DEMOSS DIVERSIFIED PATHOS PROPERTIES LLC
EAU CLAIRE ENERGY COOPERATIVE (OH)
138+53.49
121.78'
R/W
40'R
+50, 35' LT
IE = 927.76
CTH AA (MAYER ROAD) 139+00
AT&T WI DESIGN ENGINEERING (T)
PRILL ROAD 11+00'E'
℄ PRILL ROAD
ASPH
CAUTION
XCEL ENERGY (G)
+50, 35' RT
IE = 927.49
END CONSTRUCTION
STA. 11+34.94'E'
MATCH EXISTING SAWCUT REQUIRED
11+12.65'E'
37.74'
EASEMENT
KEITH W. & MARY L. KAUFMAN
SLOPE INTERCEPT
PL

L = 90.00'
K = 38
VPC 10+00"E"
EL. 931.38
PROPOSED PROFILE ON ℄
VPI 10+45"E"
EL. 931.87
VPT 10+90"E"
EL. 933.43
VPI 11+34.94"E"
EL. 934.98
3.46%
STA. 10+50"E"
24" CMP REQ'D
IE = 927.63
EXISTING GROUND
CTH AA (PRILL ROAD)

931.38 931.38 931.95 931.73 932.55 932.25 933.14 932.94 933.78 933.77 934.76 934.64 935.32
EXISTING ℄ GRADE
PROPOSED ℄ GRADE
10+00"E" 11+00"E"

STA. 138+25.00 CTH AA (MAYER ROAD)=
STA. 10+00.00'S' MAYER ROAD=
STA. 10+00.00'E' PRILL ROAD
TYPE D (MODIFIED) INTERSECTION REQUIRED

STA. 184+22.11 CTH AA (MAYER ROAD)=
STA. 10+00'P' PLEASANT VIEW ROAD
TYPE D INTERSECTION REQUIRED
STA 10+44.58"P", 30' LT
1-INLET 4-FT DIA. REQ'D
COVER EL. 908.97
STA 10+51.48"P"
1-24"x38"X67' RCCP REQ'D
1-24"x38" RCAEW REQ'D
SKEW 12°57'43" RHF
STA 10+28"P"
REMOVE EXIST. 24" CMP AND 2-24" AEW
184+71.46
60.43'
40'R
R/W
DET. POND
A+ STORAGE SOLUTIONS LLC
DITCH, SPECIAL
184+49.16
38.36'
SLOPE INTERCEPT
CTH AA (MAYER ROAD) 185+00
184+00
AT&T WI DESIGN ENGINEERING (T)
℄ PLEASANT VIEW STREET 11+00"P"
PLEASANT VIEW STREET
ASPH
CAUTION
XCEL ENERGY (G)
STA. 10+59.96'P'
36.81'RT
183+84.52
93.69'
EASEMENT
183+59.47
65.00'
60'R
JEFFREY S. CURTIS
END CONSTRUCTION
STA. 11+50.17'P'
MATCH EXISTING SAWCUT REQUIRED
EAU CLAIRE ENERGY COOPERATIVE (OH)

L = 75.00'
K = 12.65
VPI 10+00"P"
EL. 911.10
VPC 10+17.50"P"
EL. 910.75
VPI 10+55"P"
EL. 910.00
VPT 10+92.50"P"
EL. 911.47
VPI 11+50.17"P"
EL. 913.74
PROPOSED PROFILE ON ℄
-2.00%
3.93%
STA. 10+44.58"P"
24"X38" CMP REQ'D
IE = 906.00
EXISTING GROUND
DITCH, SPECIAL, LT
CTH AA (PRILL ROAD)

911.10 909.83 910.65 910.27 910.55 910.83 910.83 911.53 911.52 912.58 912.58 913.73 913.73
10+00"P" 11+00"P"

950 940 930 920 910 900 890 880 870

PROJECT NO: 7824-00-09	HWY: CTH AA	COUNTY: EAU CLAIRE	PLAN AND PROFILE - SIDE ROADS	SHEET 78	E

Standard Detail Drawing List

08A05-19B	INLET COVERS TYPE B, B-A, C, MS, MS-A, & WM
08A05-19C	INLET COVERS TYPE F, HM, HM-S, S, T, V, HM-GJ, & HM-GJ-S
08A08-01	CATCH BASINS 3-FT, 4-FT, 5-FT AND 6-FT DIAMETER
08C06-01	INLETS 3-FT AND 4-FT DIAMETER
08C08-01	INLETS MEDIAN 1 AND 2 GRATE
08D01-18	CONCRETE CURB, CONCRETE CURB AND GUTTER AND TIES
08D04-05	CONCRETE SURFACE DRAINS & ASPHALTIC FLUMES
08E08-03	TYPICAL INSTALLATIONS OF EROSION BALES / TEMPORARY DITCH CHECKS
08E09-06	SILT FENCE
08E10-02	INLET PROTECTION TYPE A, B, C AND D
08E14-01	TRACKING PAD
08F01-11	APRON ENDWALLS FOR CULVERT PIPE
08F02-01	APRON ENDWALLS FOR PIPE ARCH AND ELLIPTICAL PIPE
08F04-07	JOINT TIES FOR CONCRETE PIPE AND CONCRETE COLLAR DETAIL
08F08-02	STEEL APRON ENDWALLS FOR CULVERT PIPE AND PIPE ARCH SLOPED CROSS DRAINS
09A01-13A	AT-GRADE SIDE ROAD INTERSECTION, TYPES "B1", "B2", "C" AND D AND TEE INTERSECTION BYPASS LANE
14B42-03A	MIDWEST GUARDRAIL SYSTEM (MGS) GUARDRAIL
14B42-03B	MIDWEST GUARDRAIL SYSTEM (MGS) GUARDRAIL
14B42-03C	MIDWEST GUARDRAIL SYSTEM (MGS) GUARDRAIL
14B44-02A	MIDWEST GUARDRAIL SYSTEM ENERGY ABSORBING TERMINAL (MGS)
14B44-02B	MIDWEST GUARDRAIL SYSTEM ENERGY ABSORBING TERMINAL (MGS)
14B44-02C	MIDWEST GUARDRAIL SYSTEM ENERGY ABSORBING TERMINAL (MGS)
14B45-04A	MIDWEST GUARDRAIL SYSTEM THRIE BEAM TRANSITION (MGS)
14B45-04B	MIDWEST GUARDRAIL SYSTEM THRIE BEAM TRANSITION (MGS)
14B45-04C	MIDWEST GUARDRAIL SYSTEM THRIE BEAM TRANSITION (MGS)
14B45-04D	MIDWEST GUARDRAIL SYSTEM THRIE BEAM TRANSITION (MGS)
14B45-04K	MIDWEST GUARDRAIL SYSTEM THRIE BEAM TRANSITION (MGS)
14B45-04L	MIDWEST GUARDRAIL SYSTEM THRIE BEAM TRANSITION (MGS)
15A03-02A	FLEXIBLE MARKER POST FOR CULVERT END
15A03-02B	FLEXIBLE MARKER POST FOR CULVERT END
15B03-15A	FENCE CHAIN LINK
15B03-15B	FENCE CHAIN LINK
15C02-05A	BARRICADES AND SIGNS FOR MAINLINE CLOSURES
15C02-05B	BARRICADES AND SIGNS FOR MAINLINE CLOSURES
15C02-05C	DETOUR SIGNING FOR MAINLINE CLOSURES
15C08-16A	PAVEMENT MARKING (MAINLINE)
15C08-16B	PAVEMENT MARKING (INTERSECTIONS)
15C33-01	STOP LINE AND CROSSWALK PAVEMENT MARKING
16A01-06	LANDMARK REFERENCE MONUMENTS AND COVERS

6

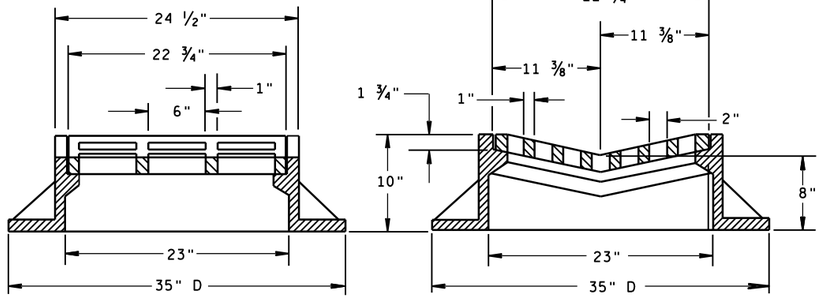

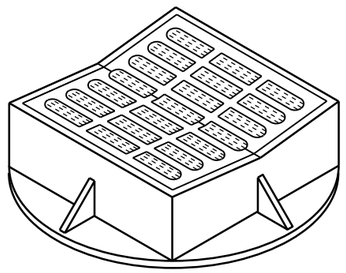

TYPE "B"

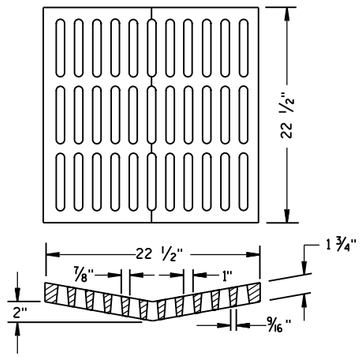

ALTERNATIVE GRATE FOR TYPE "B" COVER

USE WHERE PEDESTRIAN OR BICYCLE TRAFFIC IS POSSIBLE.
NOTED AS TYPE B-A ON THE DRAINAGE TABLE

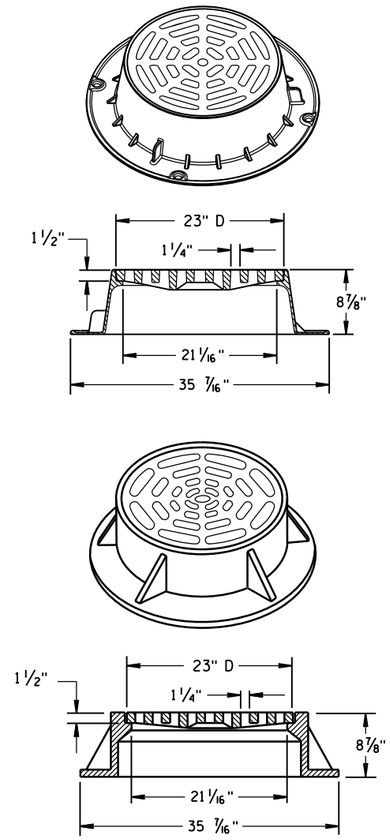

TYPE "C"

NOTE: EITHER CASTING IS ACCEPTABLE

GENERAL NOTES

DETAILS OF CONSTRUCTION, MATERIALS AND WORKMANSHIP NOT SHOWN ON THIS DRAWING SHALL CONFORM TO THE PERTINENT REQUIREMENTS OF THE STANDARD SPECIFICATIONS AND THE APPLICABLE SPECIAL PROVISIONS.

DETAIL DRAWINGS FOR PROPOSED ALTERNATE DESIGNS FOR CATCH BASIN, MANHOLE AND INLET COVERS SHALL BE SUBMITTED TO THE ENGINEER FOR APPROVAL PROVIDING THAT SUCH ALTERNATE DESIGNS MAKE PROVISION FOR EQUIVALENT CAPACITY AND STRENGTH.

ROUND FRAMES AND COVERS SHALL HAVE CONTINUOUSLY MACHINED BEARING SURFACES TO PREVENT ROCKING AND RATTLING.

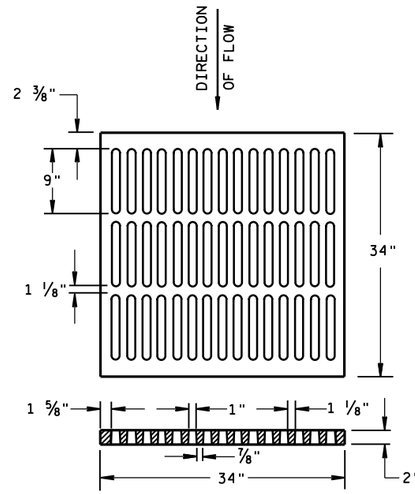

ALTERNATIVE TYPE "MS"

USE WHERE PEDESTRIAN OR BICYCLE TRAFFIC IS PERMITTED
NOTED AS TYPE MS-A ON THE DRAINAGE TABLE

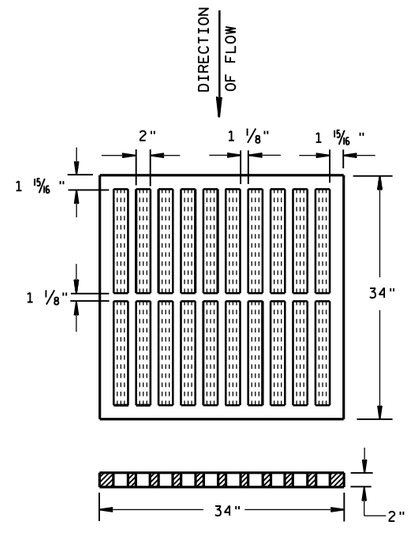

TYPE "MS"

USE ON FREEWAYS AND EXPRESSWAYS
NOTED AS TYPE MS ON DRAINAGE TABLE

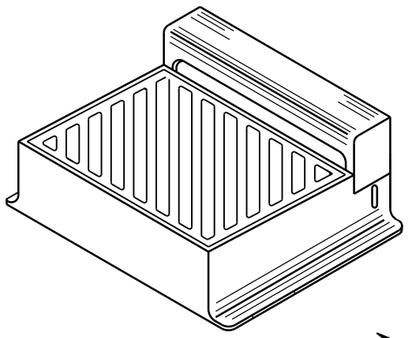

DIAGONAL SLOTS, SHALL BE ORIENTED TO THE DIRECTION OF FLOW AS ILLUSTRATED. GRATES ARE MANUFACTURED TO BE REVERSIBLE.

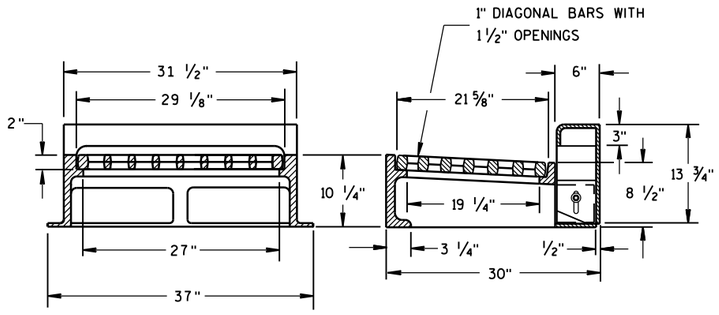

NOTE: CURB BOX HEIGHT ADJUSTABLE 6" TO 9"

TYPE "WM"

INLET COVERS
TYPE B, B-A, C, MS, MS-A, & WM

STATE OF WISCONSIN
DEPARTMENT OF TRANSPORTATION

APPROVED
11/27/2013 — DATE
/S/ Jerry H. Zogg — ROADWAY STANDARDS ENGINEER
FHWA

6

S.D.D. 8 A 5-19b

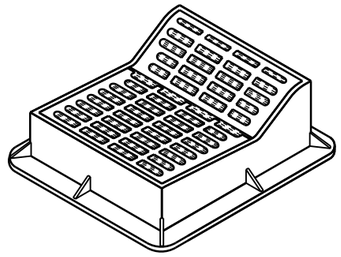

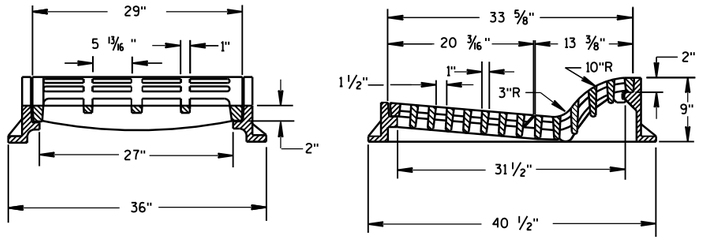

TYPE "F"

USE WITH TYPES A & D CONCRETE CURB & GUTTER, 36 INCH.

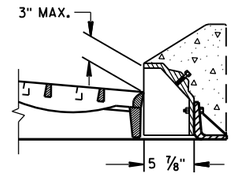

ALTERNATIVE CURB BOX FOR TYPE "HM" COVER

USE WITH TYPES G & J CONCRETE CURB & GUTTER, 30 INCH
NOTED AS TYPE HM-GJ ON DRAINAGE TABLE

NOTE:
SPECIAL GRATE FOR THE
TYPE "H" COVER MAY ALSO BE
USED FOR THE TYPE "HM-GJ" COVER
NOTED AS TYPE HM-GJ-S ON DRAINAGE TABLE

GENERAL NOTES

DETAILS OF CONSTRUCTION, MATERIALS AND WORKMANSHIP NOT SHOWN ON THIS DRAWING SHALL CONFORM TO THE PERTINENT REQUIREMENTS OF THE STANDARD SPECIFICATIONS AND THE APPLICABLE SPECIAL PROVISIONS.

DETAIL DRAWINGS FOR PROPOSED ALTERNATE DESIGNS FOR INLET COVERS SHALL BE SUBMITTED TO THE ENGINEER FOR APPROVAL PROVIDING THAT SUCH ALTERNATE DESIGNS MAKE PROVISION FOR EQUIVALENT CAPACITY AND STRENGTH.

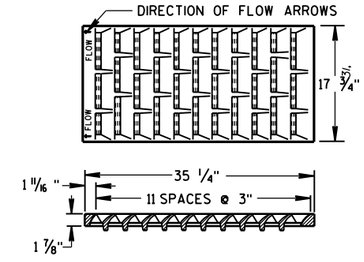

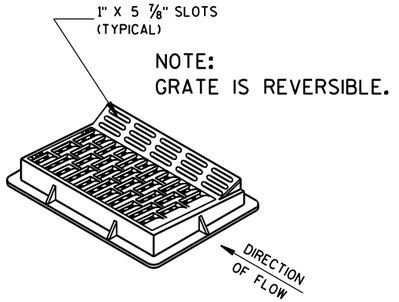

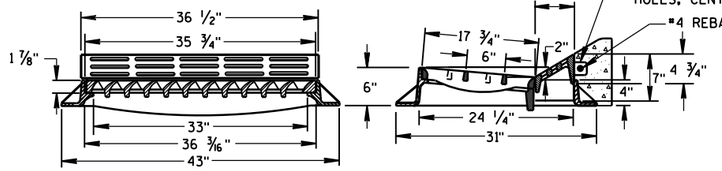

TYPE "HM"

USE WITH TYPES A & D CONCRETE CURB & GUTTER, 36 INCH.

NOTE:
SPECIAL GRATE FOR THE
TYPE "H" COVER MAY ALSO BE
USED FOR THE TYPE "HM" COVER
NOTED AS TYPE HM-S ON DRAINAGE TABLE

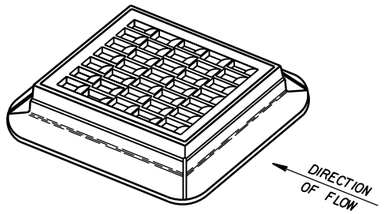

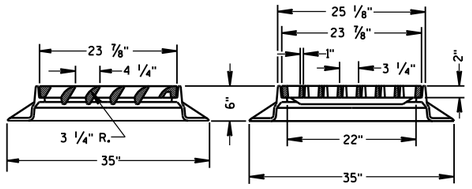

TYPE "S"

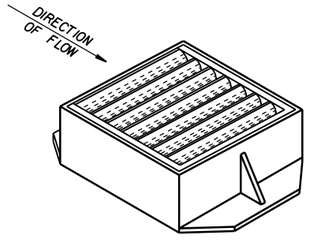

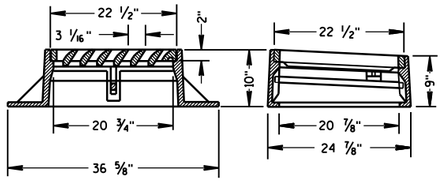

TYPE "V"

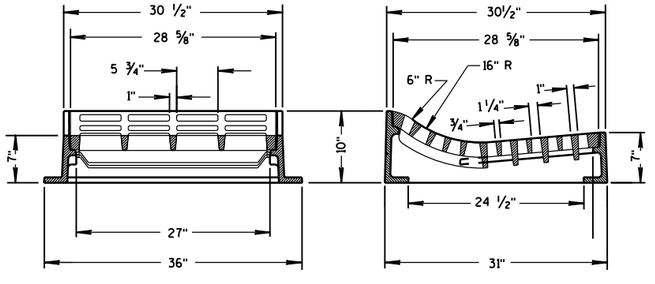

TYPE "T"

USE WITH TYPES R & T CONCRETE CURB & GUTTER, 36 INCH.

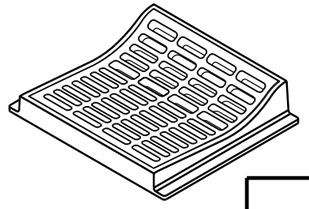

INLET COVERS
TYPE F, HM, HM-S, S, T, V, HM-GJ, & HM-GJ-S

STATE OF WISCONSIN
DEPARTMENT OF TRANSPORTATION

APPROVED
11/27/2013
DATE

/S/ Jerry H. Zogg
ROADWAY STANDARDS ENGINEER

FHWA

6

S.D.D. 8 A 5-19c

6

S.D.D. 8 A 5-19c

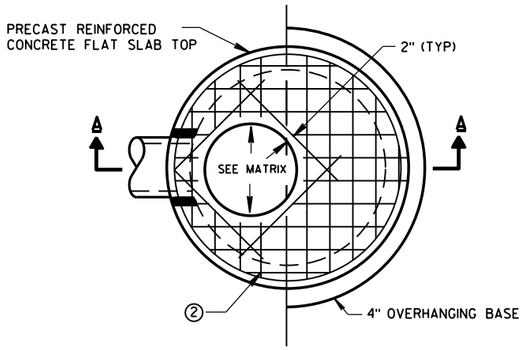

PLAN VIEW CIRCULAR OPENING

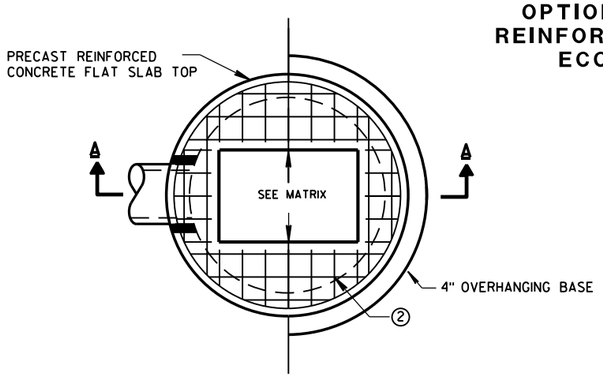

PLAN VIEW RECTANGULAR OPENING

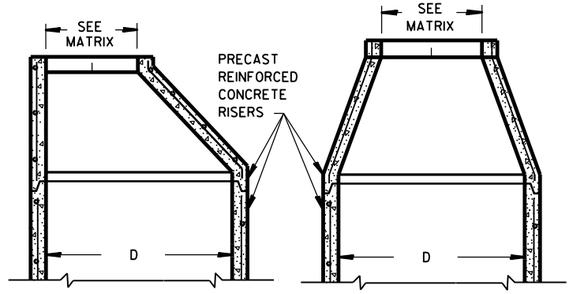

OPTIONAL PRECAST REINFORCED CONCRETE ECCENTRIC TOP

OPTIONAL PRECAST REINFORCED CONCRETE CONCENTRIC TOP

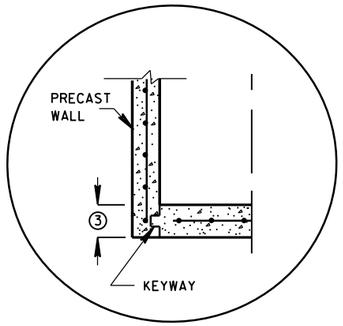

PRECAST REINFORCED CONCRETE WITH INTEGRAL BASE OPTION

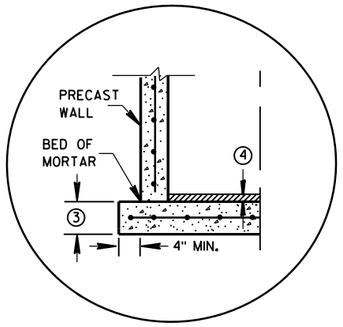

SEPARATE PRECAST REINFORCED CONCRETE BASE OPTION

DETAIL "A"

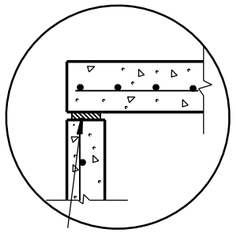

TOP WITH PLAIN END JOINT

JOINTS TO BE SEALED WITH A BUTYL RUBBER SEAL PER SEALANT MANUFACTURERS RECOMMENDATIONS CONFORMING TO ASTM C 990 (TYP)

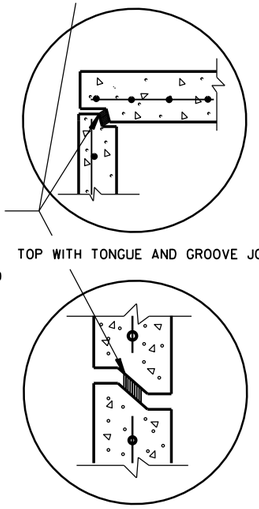

TOP WITH TONGUE AND GROOVE JOINT

RISER WITH TONGUE AND GROOVE JOINT

DETAIL "B"

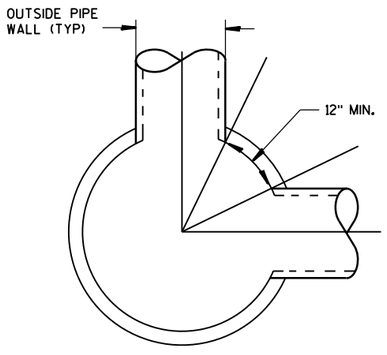

DETAIL "C"

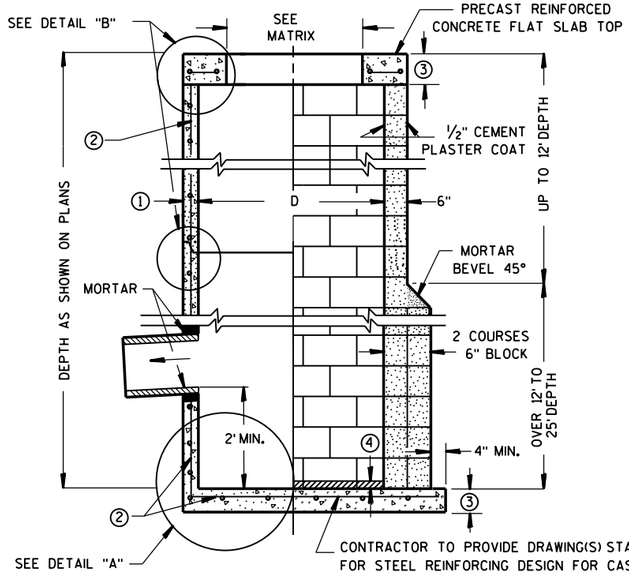

CONTRACTOR TO PROVIDE DRAWING(S) STAMPED BY A PROFESSIONAL ENGINEER FOR STEEL REINFORCING DESIGN FOR CAST-IN-PLACE STRUCTURES

SECTION A-A

PRECAST REINFORCED CONCRETE WITH MONOLITHIC BASE

CONCRETE BLOCK WITH CAST-IN-PLACE OR PRECAST REINFORCED CONCRETE BASE ②

GENERAL NOTES

DETAILS OF CONSTRUCTION, MATERIALS AND WORKMANSHIP NOT SHOWN ON THIS DRAWING SHALL CONFORM TO THE PERTINENT REQUIREMENTS OF THE STANDARD SPECIFICATIONS AND THE APPLICABLE SPECIAL PROVISIONS.

UNLESS OTHERWISE AUTHORIZED IN WRITING BY THE ENGINEER, THE CONTRACTOR SHALL NOT ORDER AND DELIVER PRECAST CATCH BASIN UNITS REQUIRED FOR THE PROJECT UNTIL A LIST OF SIZES IS FURNISHED BY THE ENGINEER.

DETAILED DRAWINGS FOR PROPOSED ALTERNATE DESIGNS FOR UNDERGROUND DRAINAGE STRUCTURES SHALL BE SUBMITTED TO THE ENGINEER FOR APPROVAL PROVIDING THAT SUCH ALTERNATE DESIGNS MAKE PROVISION FOR EQUIVALENT CAPACITY AND STRENGTH.

ALL DRAINAGE STRUCTURES ARE DESIGNATED ON THE PLANS AS "MANHOLES 3X3-L", "CATCH BASINS 4-B", "INLETS 2X3-H", ETC. THE FIRST NUMBERS DESIGNATE THE SIZE OF THE STRUCTURE, AND THE FOLLOWING LETTER DESIGNATES THE TYPE OF COVER TO BE USED TO COMPRISE THE COMPLETE UNIT.

BASES SHALL BE PLACED ON A BED OF MATERIAL AT LEAST 6 INCHES IN DEPTH, WHICH MEETS THE REQUIREMENTS OF GRANULAR BACKFILL. THIS BEDDING SHALL BE COMPACTED AND PROVIDE UNIFORM SUPPORT FOR THE ENTIRE AREA OF THE BASE.

PRECAST REINFORCED CONCRETE CONE TOPS (ECCENTRIC OR CONCENTRIC) OR PRECAST REINFORCED CONCRETE FLAT SLAB TOPS MAY BE USED ON CONCRETE BLOCK STRUCTURES. THE TOPS SHALL BE INSTALLED ON A BED OF MORTAR.

ECCENTRIC CONE TOPS MAY BE USED ON ALL STRUCTURES, AND CONCENTRIC CONE TOPS SHALL BE USED ONLY ON STRUCTURES 5 FEET OR LESS IN DEPTH, UNLESS OTHERWISE DIRECTED BY THE ENGINEER.

STEPS MEETING AASHTO M199 AND THE FOLLOWING REQUIREMENTS SHALL BE INSTALLED IN ALL STRUCTURES OVER 5 FEET IN DEPTH: 16 INCH C-C MAXIMUM SPACING; PROJECT A MINIMUM CLEAR DISTANCE OF 4 INCHES FROM THE WALL AT THE POINT OF EMBEDMENT; MINIMUM LENGTH OF 10 INCHES; MINIMUM WALL EMBEDMENT OF 3 INCHES. FERROUS METAL STEPS NOT PAINTED OR TREATED TO RESIST CORROSION SHALL HAVE A MINIMUM CROSS SECTIONAL DIMENSION OF 1 INCH.

STEPS OF APPROVED POLYPROPYLENE PLASTIC COATED REINFORCEMENT BAR ARE ACCEPTABLE. REINFORCING BAR MUST BE A MINIMUM OF 1/2 INCH AND MEET THE REQUIREMENTS OF ASTM A615.

CERTIFICATION SHALL BE PROVIDED THAT INSTALLED STEPS WHEN TESTED IN ACCORDANCE WITH SECTION 10 OF AASHTO T280 CAN WITHSTAND A VERTICAL LOAD OF 800 LBS. AND A HORIZONTAL LOAD OF 400 LBS.

ALL BAR STEEL REINFORCEMENT SHALL BE EMBEDDED 2 INCHES CLEAR UNLESS OTHERWISE SHOWN OR NOTED.

ALL PRECAST INLET UNITS SHALL CONFORM TO THE PERTINENT REQUIREMENTS OF AASHTO DESIGNATION M199.

PRECAST REINFORCED RISERS SHALL HAVE A TONGUE AND GROOVE JOINT WITH TONGUE UP OR DOWN.

CONCRETE BLOCK WILL NOT BE PERMITED FOR STRUCTURES GREATER THAN 4 FEET IN DIAMETER.

4" OVERHANGING BASES ARE REQUIRED FOR ALL CONCRETE BLOCK INSTALLATIONS. 4" OVERHANG IS REQUIRED WHEN SEPARATE PRECAST BASE IS PROVIDED. OVERHANG IS NOT REQUIRED ON PRECAST STRUCTURES WITH AN INTEGRAL OR MONOLITHIC BASE.

FOR ADDITIONAL CONFIGURATIONS, MAINTAIN A MINIMUM OF 12 INCHES AS MEASURED FROM THE INSIDE OF THE STRUCTURE WALL BETWEEN THE OUTSIDE PIPE WALLS OF ADJACENT PIPES. SEE DETAIL "C".

① MINIMUM WALL THICKNESS SHALL BE 4 INCHES FOR 3-FT, 5 INCHES FOR 4-FT, 6 INCHES FOR 5-FT AND 7 INCHES FOR 6-FT DIAMETER PRECAST CATCH BASINS.

② FOR PRECAST CATCH BASINS PROVIDE REINFORCING STEEL IN ACCORDANCE TO AASHTO M199.

③ PRECAST FLAT SLAB TOPS AND BASES WITH A DIAMETER OF 48" AND LESS SHALL HAVE A MINIMUM THICKNESS OF 6". PRECAST FLAT SLAB TOPS AND BASES WITH A DIAMETER LARGER THAN 48" SHALL HAVE A MINIMUM THICKNESS OF 8".

④ 1" CONCRETE KEY POURED AFTER INSTALLATION. 2' SUMP MEASURED FROM TOP OF KEY.

CATCH BASIN COVER OPENING MATRIX

CATCH BASIN SIZE	INLET COVER TYPE	ALL A'S	ALL B'S	BW	C	F	ALL H'S	S	T	V	WM	Z
	OPENING SIZE (FT)											
3-FT	2X2	X	X					X		X		
	2 DIA.				X							X
4-FT-6-FT	2X2	X	X					X		X		
	2X2.5			X				X	X	X	X	
	2 DIA.				X							X
	2X3						X					
	2.5X3					X						

PIPE MATRIX

CATCH BASIN SIZE	MAXIMUM INSIDE PIPE DIAMETER FOR TWO PIPES	
	180° SEPARATION (IN)	90° SEPARATION (IN)
3-FT	15	12
4-FT	24	18
5-FT	36	24
6-FT	42	30

CATCH BASINS 3-FT, 4-FT, 5-FT AND 6-FT DIAMETER

CATCH BASINS 3-FT, 4-FT, 5-FT AND 6-FT DIAMETER

STATE OF WISCONSIN
DEPARTMENT OF TRANSPORTATION

APPROVED
6/5/2012 DATE
/S/ Jerry H. Zogg
ROADWAY STANDARDS ENGINEER
FHWA

S.D.D. 8 A 8-1

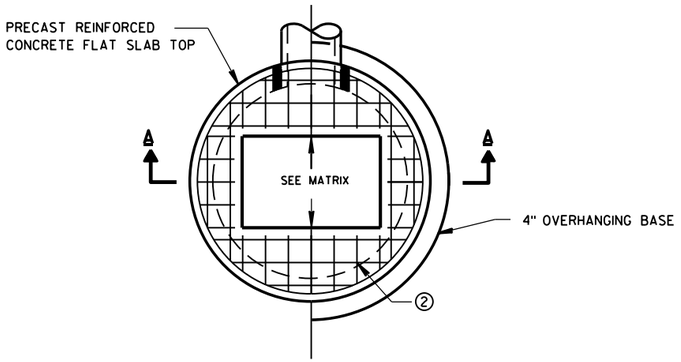

PLAN VIEW RECTANGULAR OPENING

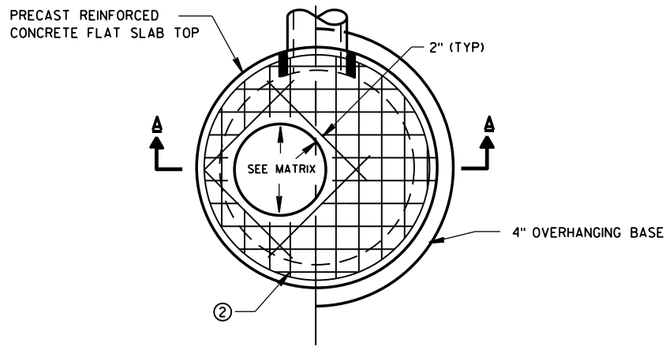

PLAN VIEW CIRCULAR OPENING

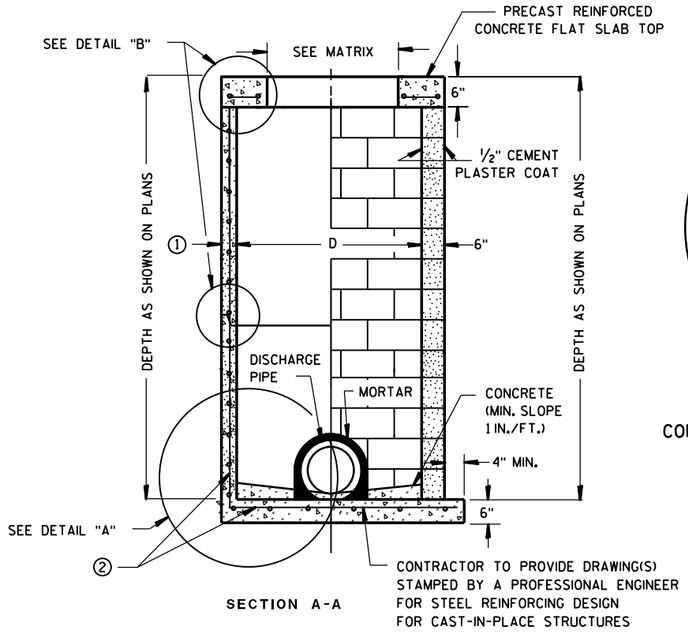

SECTION A-A

PRECAST REINFORCED CONCRETE WITH MONOLITHIC BASE

CONCRETE BLOCK WITH CAST-IN-PLACE OR PRECAST REINFORCED CONCRETE BASE ②

CIRCULAR INLETS W/ FLAT TOP

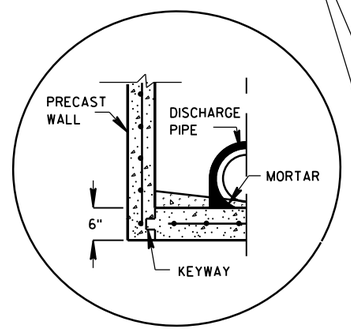

PRECAST REINFORCED CONCRETE WITH INTEGRAL BASE OPTION

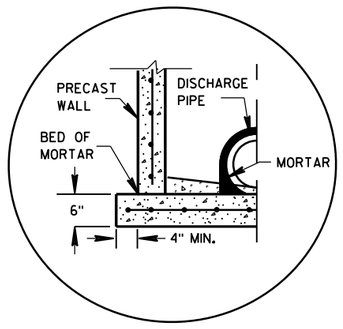

SEPARATE PRECAST REINFORCED CONCRETE BASE OPTION

DETAIL "A"

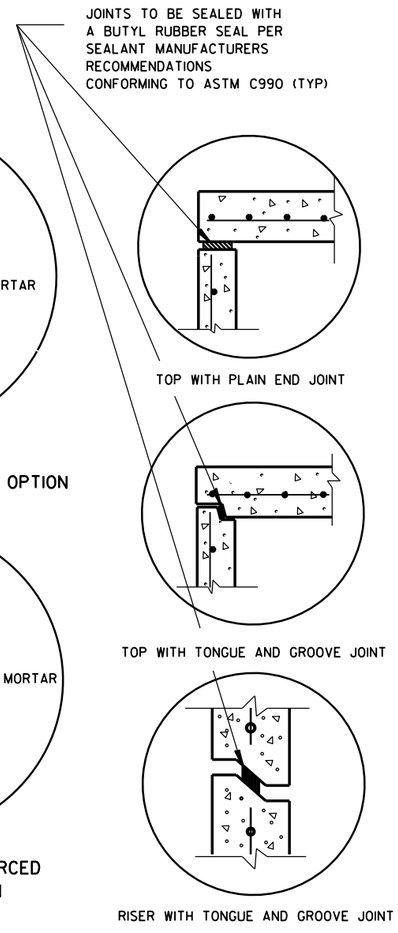

DETAIL "B"

GENERAL NOTES

DETAILS OF CONSTRUCTION, MATERIALS AND WORKMANSHIP NOT SHOWN ON THIS DRAWING SHALL CONFORM TO THE PERTINENT REQUIREMENTS OF THE STANDARD SPECIFICATIONS AND THE APPLICABLE SPECIAL PROVISIONS.

UNLESS OTHERWISE AUTHORIZED IN WRITING BY THE ENGINEER, THE CONTRACTOR SHALL NOT ORDER AND DELIVER PRECAST INLET UNITS REQUIRED FOR THE PROJECT UNTIL A LIST OF SIZES IS FURNISHED BY THE ENGINEER.

DETAILED DRAWINGS FOR PROPOSED ALTERNATE DESIGNS FOR UNDERGROUND DRAINAGE STRUCTURES SHALL BE SUBMITTED TO THE ENGINEER FOR APPROVAL PROVIDING THAT SUCH ALTERNATE DESIGNS MAKE PROVISION FOR EQUIVALENT CAPACITY AND STRENGTH.

ALL DRAINAGE STRUCTURES ARE DESIGNATED ON THE PLANS AS "MANHOLES 3X3-L", "CATCH BASINS 4-B", "INLETS 2X3-H", ETC. THE FIRST NUMBERS DESIGNATE THE SIZE OF THE STRUCTURE, AND THE FOLLOWING LETTER DESIGNATES THE TYPE OF COVER TO BE USED TO COMPRISE THE COMPLETE UNIT.

BASES SHALL BE PLACED ON A BED OF MATERIAL AT LEAST 6 INCHES IN DEPTH, WHICH MEETS THE REQUIREMENTS OF GRANULAR BACKFILL. THIS BEDDING SHALL BE COMPACTED AND PROVIDE UNIFORM SUPPORT FOR THE ENTIRE AREA OF THE BASE.

ALL BAR STEEL REINFORCEMENT SHALL BE EMBEDDED 2 INCHES CLEAR UNLESS OTHERWISE SHOWN OR NOTED.

ALL PRECAST INLET UNITS SHALL CONFORM TO THE PERTINENT REQUIREMENTS OF AASHTO DESIGNATION M199.

PRECAST REINFORCED RISERS SHALL HAVE A TONGUE AND GROOVE JOINT WITH TONGUE UP OR DOWN.

4" OVERHANGING BASES ARE REQUIRED FOR ALL CONCRETE BLOCK INSTALLATIONS. 4" OVERHANG IS REQUIRED WHEN SEPARATE PRECAST BASE IS PROVIDED. OVERHANG IS NOT REQUIRED ON PRECAST STRUCTURES WITH AN INTEGRAL OR MONOLITHIC BASE.

FOR ADDITIONAL CONFIGURATIONS, MAINTAIN A MINIMUM OF 12 INCHES AS MEASURED FROM THE INSIDE OF THE STRUCTURE WALL BETWEEN THE OUTSIDE PIPE WALLS OF ADJACENT PIPES. SEE DETAIL "C".

① MINIMUM WALL THICKNESS SHALL BE 4-IN FOR 3-FT DIAMETER AND 5-IN FOR 4-FT DIAMETER PRECAST INLETS.

② FOR PRECAST CATCH BASINS PROVIDE REINFORCING STEEL IN ACCORDANCE TO AASHTO M199.

INLET COVER OPENING MATRIX

	INLET COVER TYPE	ALL A'S	ALL B'S	BW	C	F	ALL H'S	S	T	V	WM	Z
INLET SIZE	OPENING SIZE (FT)											
3-FT	2 DIA.				X							X
	2X2	X	X					X		X		
4-FT	2 DIA.				X							X
	2X2	X	X					X		X		
	2X2.5			X				X	X	X	X	
	2X3						X					
	2.5X3					X						

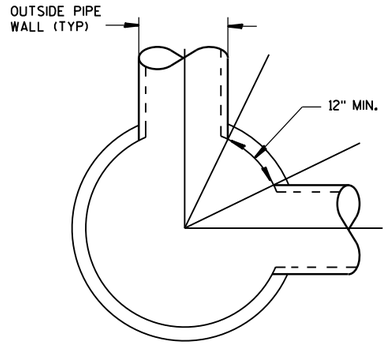

DETAIL "C"

PIPE MATRIX

INLET SIZE	MAXIMUM INSIDE PIPE DIAMETER FOR TWO PIPES	
	180° SEPARATION (IN)	90° SEPARATION (IN)
3-FT	15	12
4-FT	24	18

INLETS 3-FT AND 4-FT DIAMETER

STATE OF WISCONSIN
DEPARTMENT OF TRANSPORTATION

APPROVED
6/5/2012 — DATE
/S/ Jerry H. Zogg — ROADWAY STANDARDS DEVELOPMENT ENGINEER
FHWA

6
S.D.D. 8 C 6-1

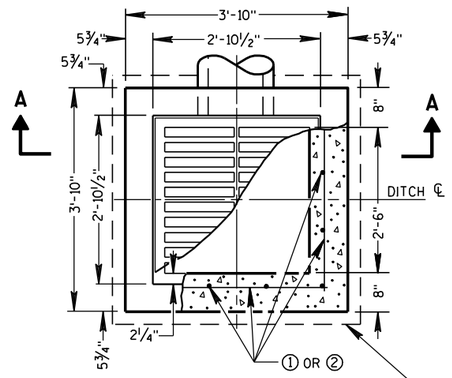

PLAN VIEW

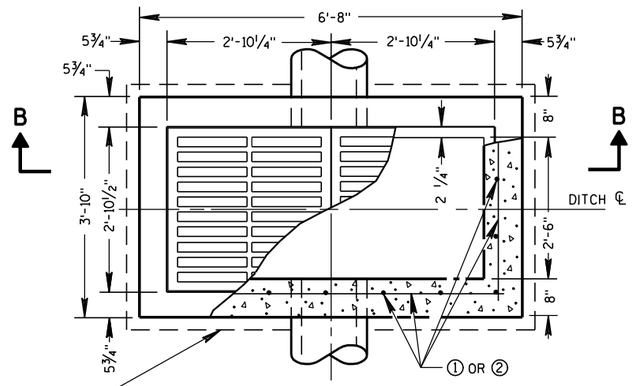

PLAN VIEW

4" OVERHANGING BASE ON REINFORCED CAST-IN-PLACE CONCRETE INLETS

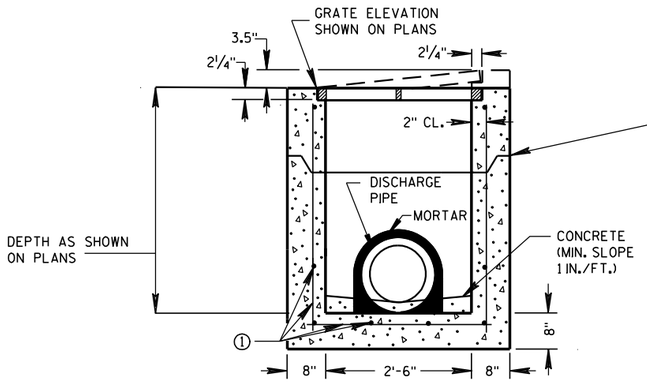

PRECAST REINFORCED CONCRETE SECTION A-A

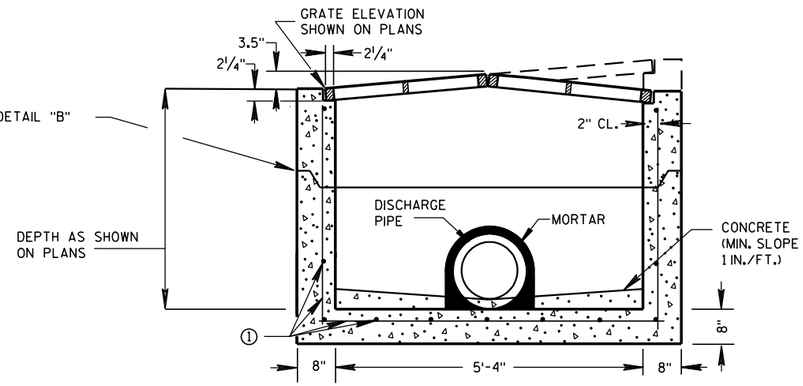

PRECAST REINFORCED CONCRETE SECTION B-B

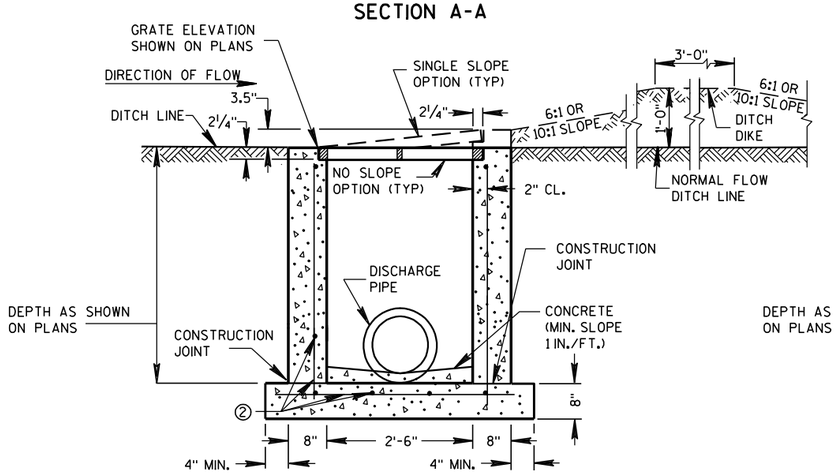

REINFORCED CAST-IN-PLACE CONCRETE SECTION A-A

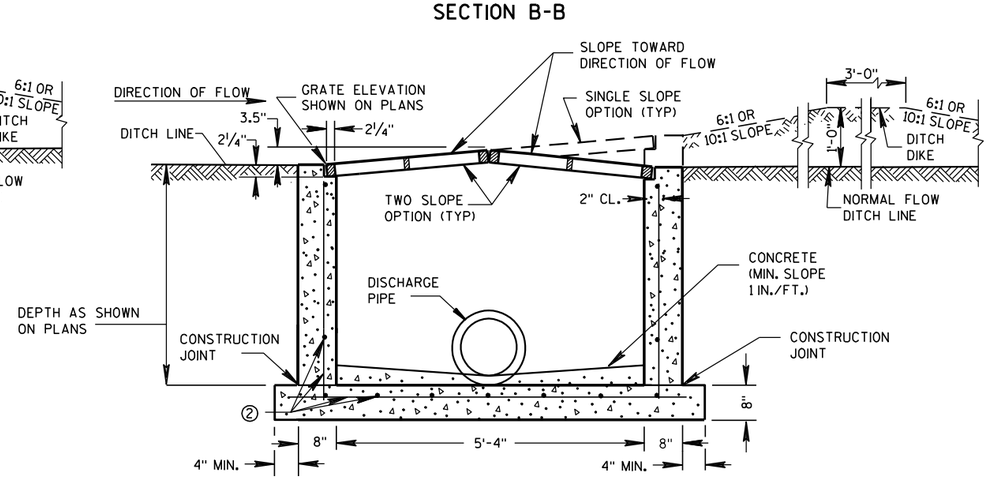

REINFORCED CAST-IN-PLACE CONCRETE SECTION B-B

INLETS MEDIAN 1 GRATE

INLETS MEDIAN 2 GRATE

GENERAL NOTES

DETAILS OF CONSTRUCTION, MATERIALS AND WORKMANSHIP NOT SHOWN ON THIS DRAWING SHALL CONFORM TO THE PERTINENT REQUIREMENTS OF THE STANDARD SPECIFICATIONS AND THE APPLICABLE SPECIAL PROVISIONS.

UNLESS OTHERWISE AUTHORIZED IN WRITING BY THE ENGINEER, THE CONTRACTOR SHALL NOT ORDER AND DELIVER PRECAST INLET UNITS REQUIRED FOR THE PROJECT UNTIL A LIST OF SIZES IS FURNISHED BY THE ENGINEER.

DETAILED DRAWINGS FOR PROPOSED ALTERNATE DESIGNS FOR INLETS WHICH MAY INCLUDE PRECAST REINFORCED CONCRETE INLETS, SHALL BE SUBMITTED TO THE ENGINEER FOR APPROVAL PROVIDING THAT SUCH ALTERNATE DESIGNS MAKE PROVISION FOR EQUIVALENT CAPACITY AND STRENGTH.

ALL MEDIAN INLETS ARE DESIGNATED ON THE PLANS AS "INLETS, 1G-MS", ETC. THE FIRST NUMBER AND LETTER DESIGNATE THE TYPE OF STRUCTURE, AND THE FOLLOWING LETTERS DESIGNATE THE TYPE OF COVER TO BE USED TO COMPRISE THE COMPLETE UNIT.

ALL BAR STEEL REINFORCEMENT SHALL BE EMBEDDED 2 INCHES CLEAR UNLESS OTHERWISE SHOWN OR NOTED.

PRECAST REINFORCED RISERS SHALL HAVE A TONGUE AND GROOVE JOINT WITH TONGUE UP OR DOWN.

ALL PRECAST INLET UNITS SHALL CONFORM TO THE PERTINENT REQUIREMENTS OF ASTM C 913.

MAXIMUM INSIDE PIPE DIAMETER DETERMINED BY 3" CLEARANCE ON EACH SIDE OF THE OUTSIDE WALL OF THE PIPE. SEE DETAIL "A". ASSUMES PIPE ENTERS PERPENDICULAR TO THE STRUCTURE.

① FOR PRECAST INLETS PROVIDE REINFORCING STEEL IN ACCORDANCE TO ASTM C 913.

② CONTRACTOR TO PROVIDE DRAWING(S) STAMPED BY A PROFESSIONAL ENGINEER FOR STEEL REINFORCING DESIGN FOR CAST-IN-PLACE STRUCTURES.

PIPE MATRIX

	MAXIMUM INSIDE PIPE DIAMETER	
INLET SIZE	WIDTH (IN)	LENGTH (IN)
1 GRATE	18	18
2 GRATE	18	42

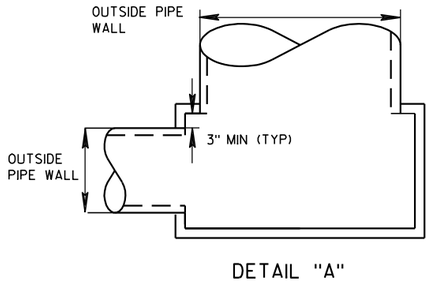

DETAIL "A"

JOINTS TO BE SEALED WITH A BUTYL RUBBER SEAL PER SEALANT MANUFACTURERS RECOMMENDATIONS CONFORMING TO ASTM C 990 (TYP)

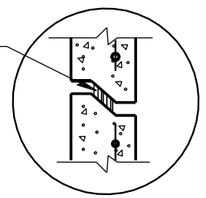

DETAIL "B"

INLETS MEDIAN 1 AND 2 GRATE

STATE OF WISCONSIN
DEPARTMENT OF TRANSPORTATION

APPROVED
6/5/2012 — DATE
/S/ Jerry H. Zogg — ROADWAY STANDARDS DEVELOPMENT ENGINEER
FHWA

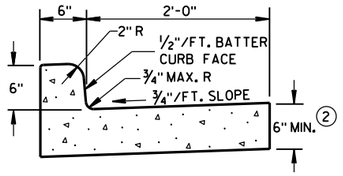

TYPES A & D ①

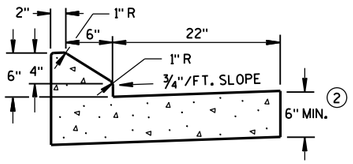

6" SLOPED CURB TYPES G & J ①

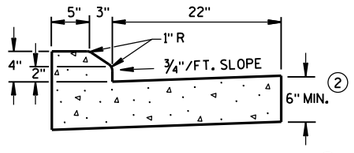

4" SLOPED CURB TYPES G & J ①

CONCRETE CURB & GUTTER 30"

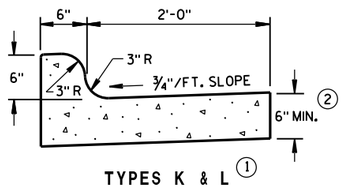

TYPES K & L ①

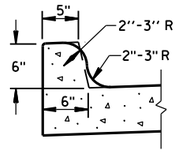

OPTIONAL CURB SHAPE FOR TYPES K & L ①

CONCRETE CURB & GUTTER 30"

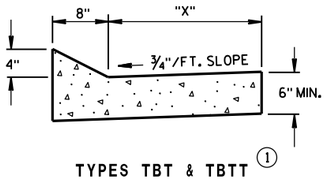

TYPES TBT & TBTT ①

CONCRETE CURB & GUTTER

TBT & TBTT	"X"
30"	22"
36"	28"

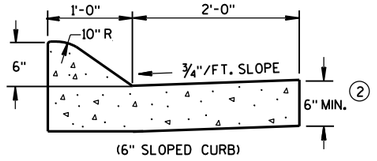

(6" SLOPED CURB)

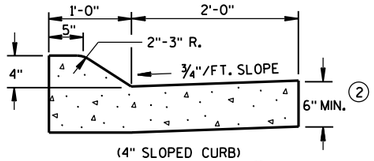

(4" SLOPED CURB)

TYPES A & D ①

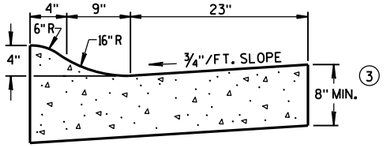

4" SLOPED CURB TYPES R & T ① ④

CONCRETE CURB & GUTTER 36"

GENERAL NOTES

DETAILS OF CONSTRUCTION, MATERIALS AND WORKMANSHIP NOT SHOWN ON THIS DRAWING SHALL CONFORM TO THE PERTINENT REQUIREMENTS OF THE CONTRACT.

PAVEMENT TIES AND TIE BARS SHALL BE EPOXY COATED IN CONFORMANCE WITH SUBSECTION 505.2.6.2 OF THE STANDARD SPECIFICATIONS.

INTEGRAL CURB & GUTTER SHALL CONFORM TO THE DETAILS SHOWN FOR CONCRETE CURB & GUTTER INCLUDING THE TRANSVERSE GUTTER SLOPE. A LONGITUDINAL CONSTRUCTION JOINT IS NOT REQUIRED WITH INTEGRAL CURB AND GUTTER.

WHERE THE TRANSVERSE JOINTS IN THE PAVEMENT ARE REQUIRED TO BE SEALED, THE JOINTS IN THE INTEGRAL CURB AND GUTTER SHALL BE SEALED TO THE FACE OF CURB WITH THE SAME TYPE OF SEALANT. THE COST OF FURNISHING AND INSTALLING THIS SEALANT SHALL BE INCIDENTAL TO THE ITEM CONCRETE CURB AND GUTTER.

UNLESS OTHERWISE SHOWN ON THE TYPICAL CROSS SECTIONS, THE BASE AGGREGATE AND COMMON EXCAVATION LIMITS ARE 2'-0" BEHIND THE BACK OF CURBS.

① TIE BARS ARE REQUIRED FOR CURB AND GUTTER TYPES A, G, K, R AND TBTT.

② THE BOTTOM OF CURB AND GUTTER MAY BE CONSTRUCTED EITHER LEVEL OR PARALLEL TO THE SLOPE OF THE SUBGRADE OR BASE AGGREGATE PROVIDED A 6" MINIMUM GUTTER THICKNESS IS MAINTAINED.

③ THE BOTTOM OF CURB AND GUTTER MAY BE CONSTRUCTED EITHER LEVEL OR PARALLEL TO THE SLOPE OF THE SUBGRADE OR BASE AGGREGATE PROVIDED A 8" MINIMUM GUTTER THICKNESS IS MAINTAINED.

④ THE FACE OF CURB IS 6" FROM THE BACK OF CURB.

⑤ WHEN REVERSE SLOPE GUTTER IS REQUIRED, THE LOCATION(S) WILL BE SHOWN ELSEWHERE IN THE PLAN.

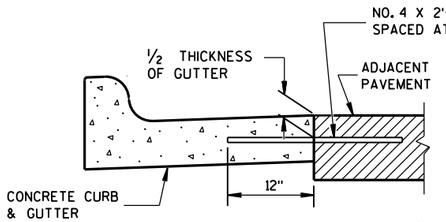

TYPICAL TIE BAR LOCATION ①

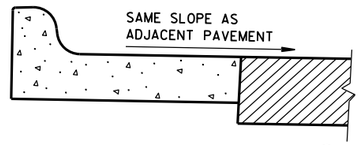

REVERSE SLOPE GUTTER ⑤
(TYPICAL FOR ALL CURB & GUTTER TYPES)

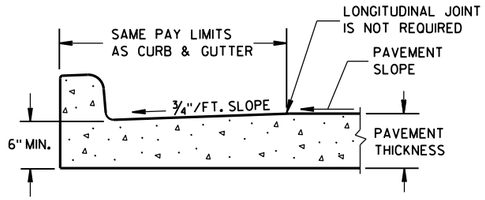

PARTIAL SECTION OF PAVEMENT
WITH INTEGRAL CURB & GUTTER

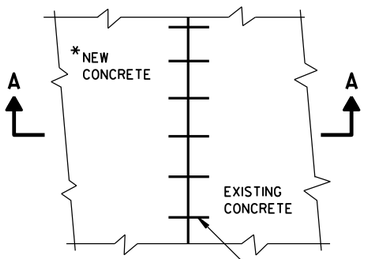

PLAN VIEW

*NEW CURB & GUTTER, SURFACE DRAINS, CONCRETE PAVEMENT OR OTHER NEW CONCRETE.

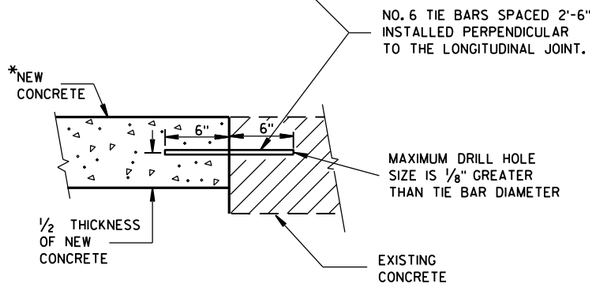

SECTION A-A

TIE BARS DRILLED
INTO EXISTING PAVEMENT

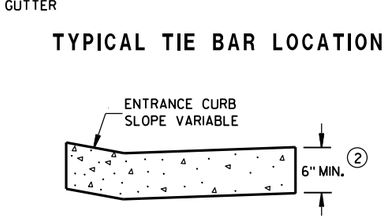

DRIVEWAY ENTRANCE CURB
(WHEN DIRECTED BY THE ENGINEER)

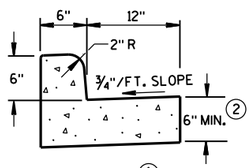

① TYPES A & D

CONCRETE CURB & GUTTER 18"

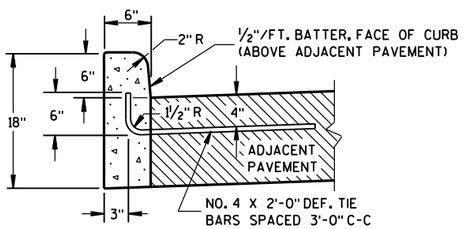

① TYPES A & D

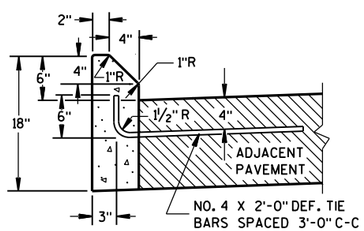

① TYPES G & J

CONCRETE CURB

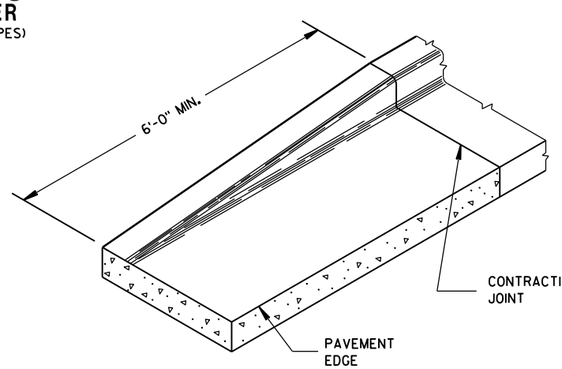

END SECTION CURB & GUTTER

CONCRETE CURB, CONCRETE CURB & GUTTER AND TIES

STATE OF WISCONSIN
DEPARTMENT OF TRANSPORTATION

APPROVED
June, 2015 — DATE
/S/ Jerry H. Zogg — ROADWAY STANDARDS ENGINEER
FHWA

6

S.D.D. 8 D 1-18

ASPHALTIC FLUME

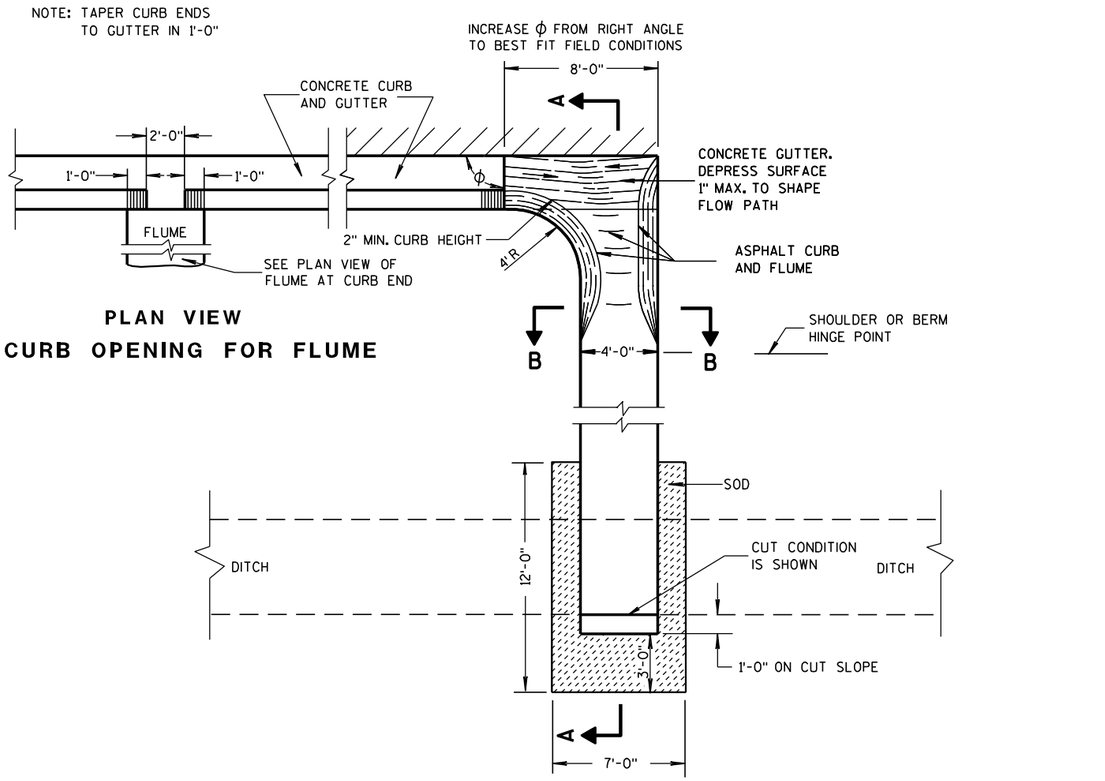

PLAN VIEW
CURB OPENING FOR FLUME

PLAN VIEW
FLUME AT CURB END

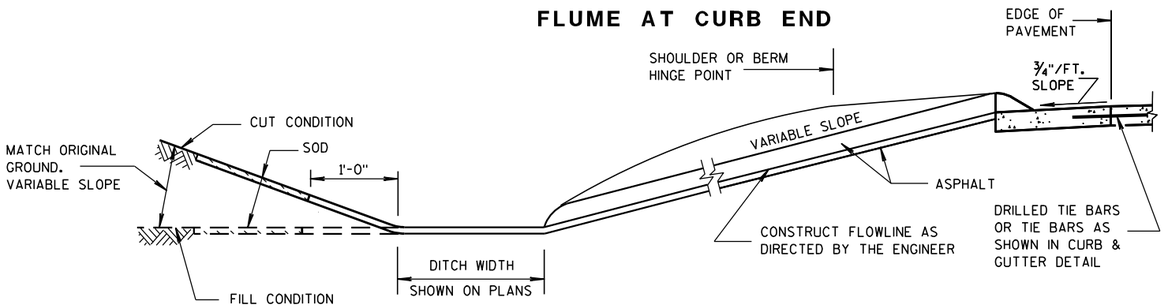

SECTION A-A

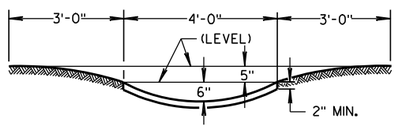

SECTION B-B

GENERAL NOTES

DETAILS OF CONSTRUCTION, MATERIALS AND WORKMANSHIP NOT SHOWN ON THIS DRAWING SHALL CONFORM TO PERTINENT REQUIREMENTS OF THE STANDARD SPECIFICATIONS AND APPLICABLE SPECIAL PROVISIONS.

WELDED STEEL WIRE FABRIC SHALL BE IN ACCORDANCE WITH AASHTO SPECIFICATION M55.

① JOINTS SHALL BE $\frac{1}{8}$ TO $\frac{1}{4}$ INCH WIDE BY $1\frac{1}{2}$ INCHES DEEP AND SPACED AT UNIFORM INTERVALS OF APPROXIMATELY 4 FEET.

② GEOTEXTILE FABRIC TYPE "R" SHALL UNDERLAY THE FULL LENGTH AND WIDTH OF THE CONCRETE SURFACE DRAIN AND RIPRAP.

③ CONCRETE SURFACE DRAIN WITHOUT CURB AND GUTTER MAY BE USED ON BACKSLOPES WHEN SPECIFIED

③ CONCRETE SURFACE DRAIN

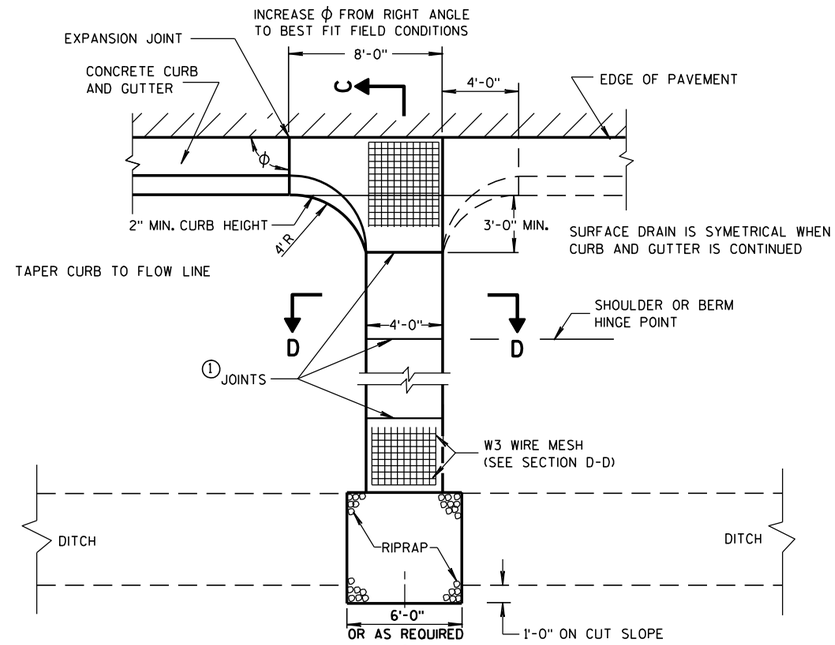

PLAN VIEW

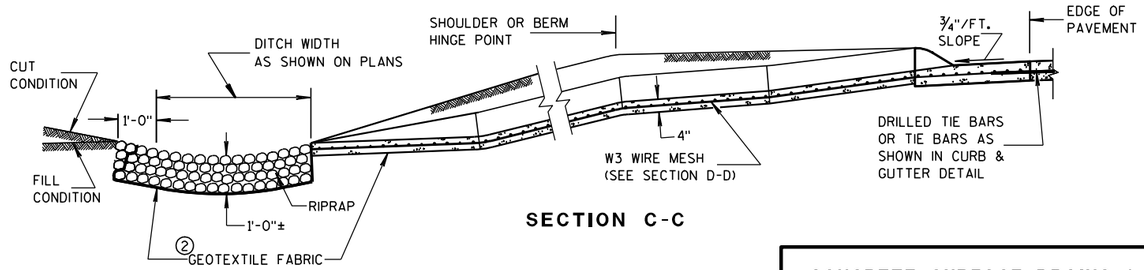

SECTION C-C

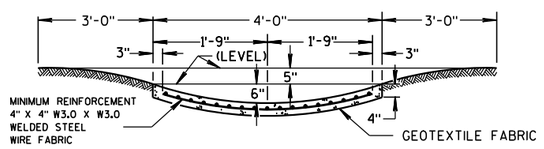

SECTION D-D

CONCRETE SURFACE DRAINS & ASPHALTIC FLUMES

STATE OF WISCONSIN
DEPARTMENT OF TRANSPORTATION

APPROVED
9-4-08 DATE
/S/ Jerry H. Zogg
ROADWAY STANDARDS ENGINEER
MENT
FHWA

6

S.D.D. 8 D 4-5

6

S.D.D. 8 D 4-5

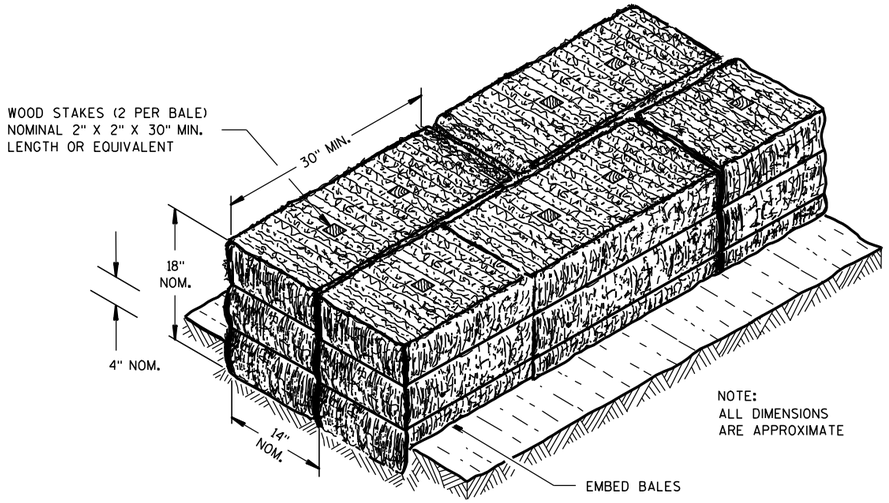

SECTION A-A

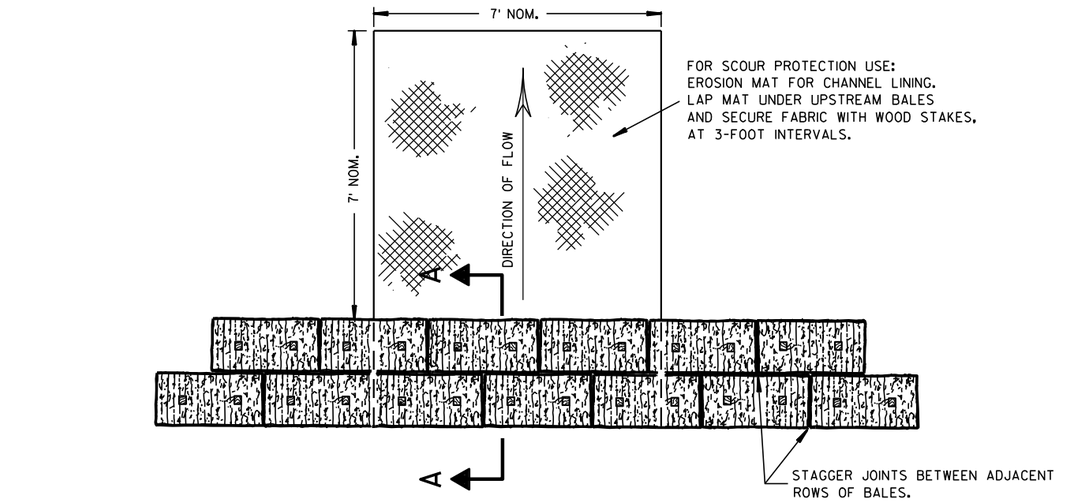

PLAN VIEW

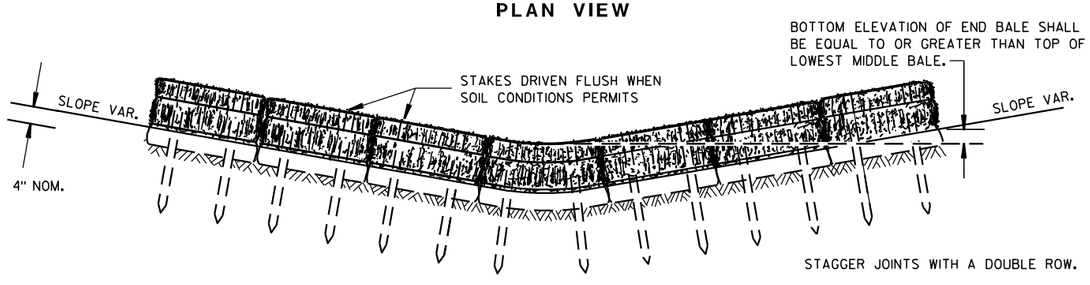

FRONT ELEVATION

TEMPORARY DITCH CHECK USING EROSION BALES (1)

GENERAL NOTES

DETAILS OF CONSTRUCTION, MATERIALS AND WORKMANSHIP NOT SHOWN ON THIS DRAWING SHALL CONFORM TO THE PERTINENT REQUIREMENTS OF THE STANDARD SPECIFICATIONS AND THE APPLICABLE SPECIAL PROVISIONS.

(1) TEMPORARY DITCH CHECKS EITHER EROSION BALES OR MANUFACTURED SHALL BE PAID FOR UNDER THE BID ITEM OF TEMPORARY DITCH CHECK. THE DEPARTMENT WILL NOT PAY FOR TEMPORARY DITCH CHECKS CONSTRUCTED OF A SINGLE ROW OF EROSION BALES.

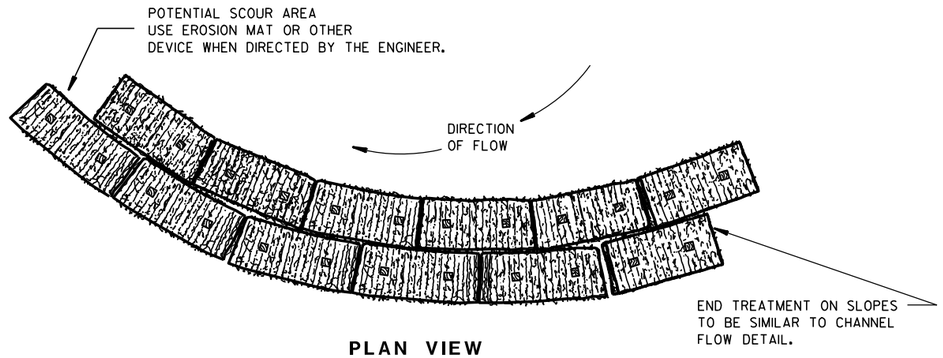

PLAN VIEW

WHEN ALTERING THE DIRECTION OF FLOW

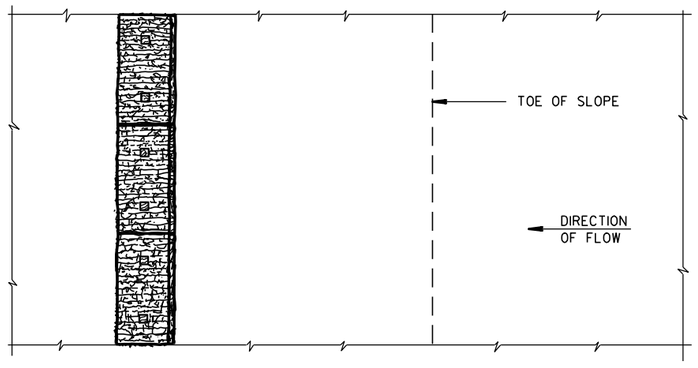

PLAN VIEW

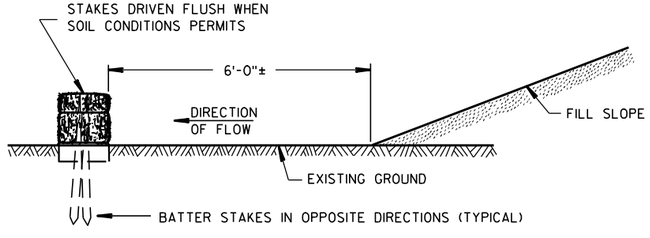

FRONT ELEVATION

WHEN EXISTING GROUND SLOPES AWAY FROM FILL SLOPE

EROSION BALES FOR SHEET FLOW

TYPICAL INSTALLATIONS OF EROSION BALES / TEMPORARY DITCH CHECKS

STATE OF WISCONSIN
DEPARTMENT OF TRANSPORTATION

APPROVED

6/04/02 — DATE

/S/ Beth Cannestra — CHIEF ROADWAY DEVELOPMENT ENGINEER

FHWA

6

S.D.D. 8 E 8-3

6

S.D.D. 8 E 8-3

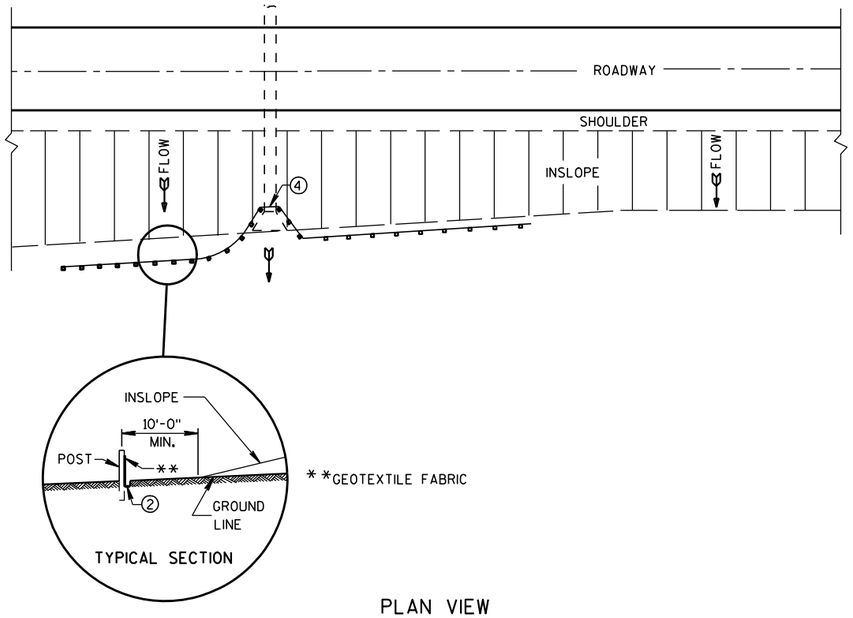

PLAN VIEW

TYPICAL APPLICATION OF SILT FENCE

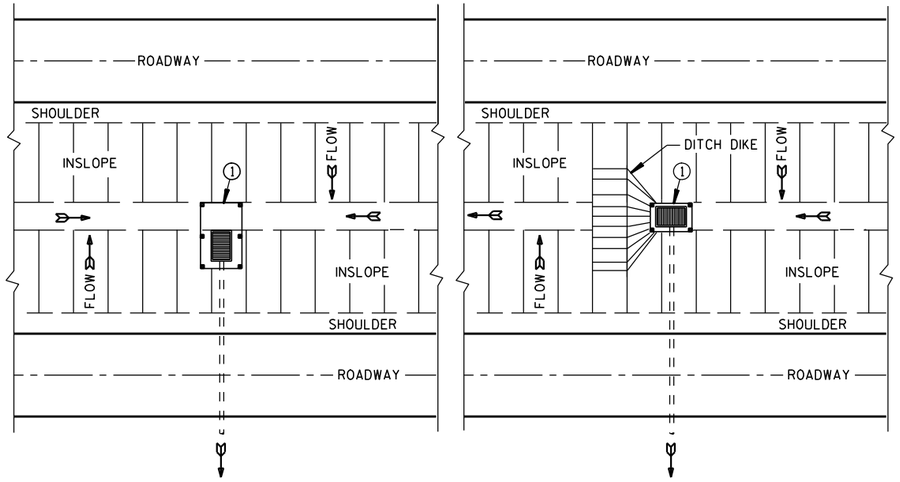

PLAN VIEW

SILT FENCE AT MEDIAN SURFACE DRAINS

GENERAL NOTES

DETAILS OF CONSTRUCTION NOT SHOWN ON THIS DRAWING SHALL CONFORM TO THE PERTINENT REQUIREMENTS OF THE STANDARD SPECIFICATIONS AND APPLICABLE SPECIAL PROVISIONS.

① HORIZONTAL BRACE REQUIRED WITH 2" X 4" WOODEN FRAME OR EQUIVALENT AT TOP OF POSTS.

② FOR MANUAL INSTALLATIONS THE TRENCH SHALL BE A MINIMUM OF 4" WIDE & 6" DEEP TO BURY AND ANCHOR THE GEOTEXTILE FABRIC. FOLD MATERIAL TO FIT TRENCH AND BACKFILL & COMPACT TRENCH WITH EXCAVATED SOIL.

③ WOOD POSTS SHALL BE A MINIMUM SIZE OF 1⅛" X 1⅛" OF OAK OR HICKORY.

④ SILT FENCE TO EXTEND ACROSS THE TOP OF THE PIPE.

⑤ CONSTRUCT SILT FENCE FROM A CONTINUOUS ROLL IF POSSIBLE BY CUTTING LENGTHS TO AVOID JOINTS. IF A JOINT IS NECESSARY USE ONE OF THE FOLLOWING TWO METHODS; A) OVERLAP THE END POSTS AND TWIST, OR ROTATE, AT LEAST 180 DEGREES, B) HOOK THE END OF EACH SILT FENCE LENGTH.

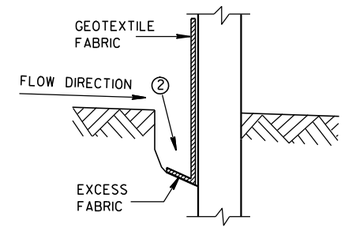

TRENCH DETAIL

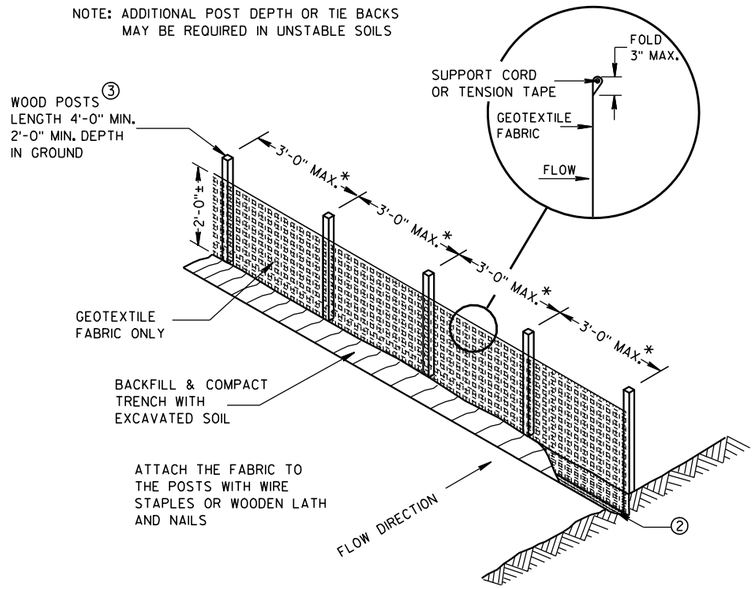

SILT FENCE

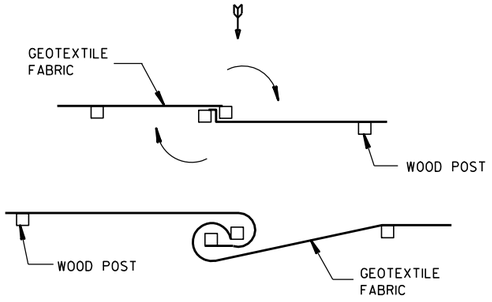

TWIST METHOD

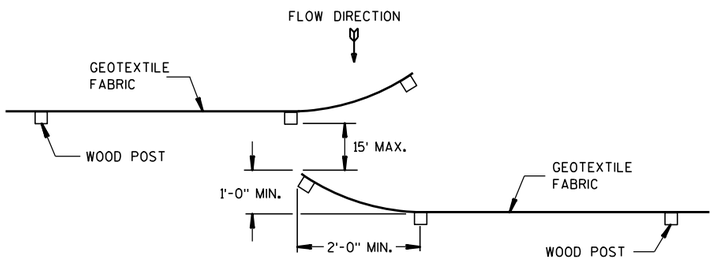

HOOK METHOD

JOINING TWO LENGTHS OF SILT FENCE ⑤

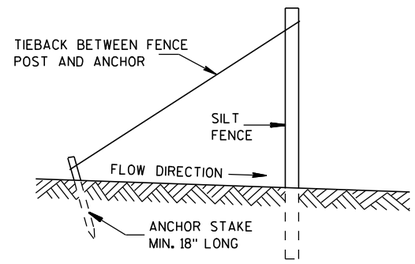

SILT FENCE TIE BACK

(WHEN REQUIRED BY THE ENGINEER)

SILT FENCE

STATE OF WISCONSIN
DEPARTMENT OF TRANSPORTATION

APPROVED
4-29-05
DATE
/S/ Beth Cannestra
CHIEF ROADWAY DEVELOPMENT ENGINEER
FHWA

6

S.D.D. 8 E 9-6

6

S.D.D. 8 E 9-6

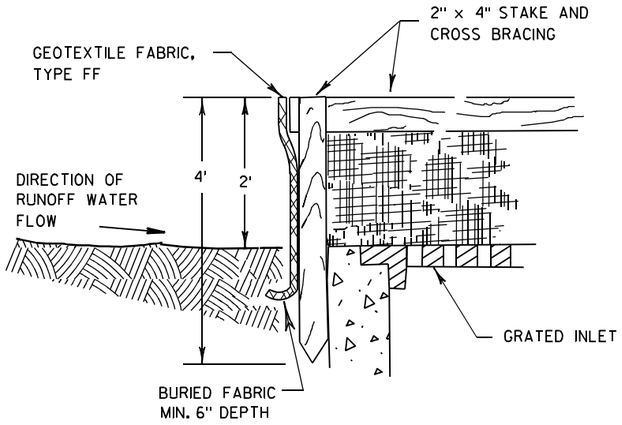

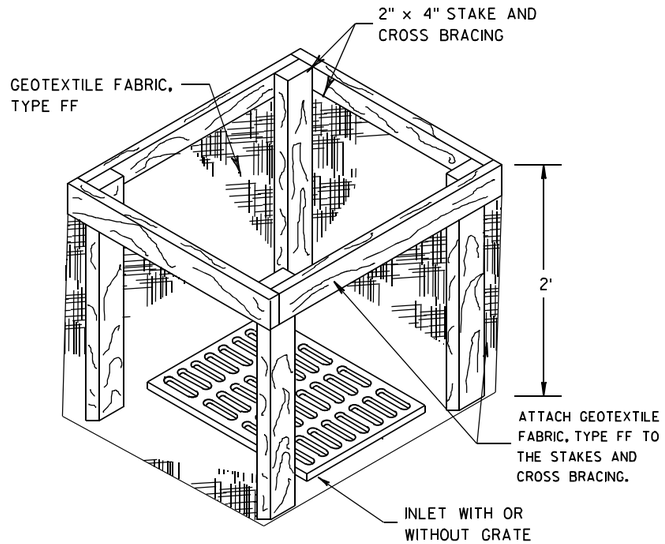

INLET PROTECTION, TYPE A

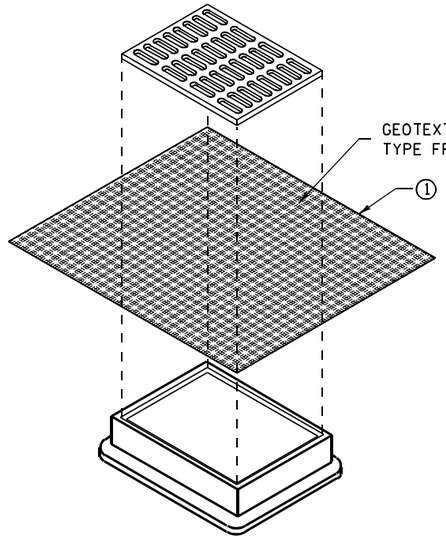

INLET PROTECTION, TYPE B
(WITHOUT CURB BOX)

(CAN BE INSTALLED IN ANY INLET WITHOUT A CURB BOX)

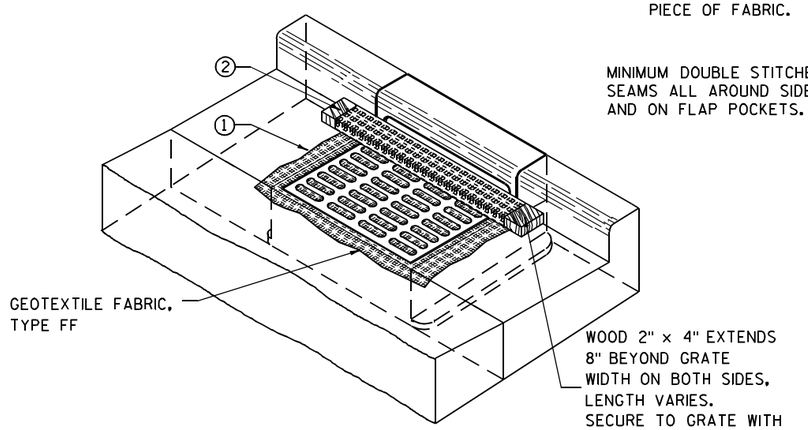

INLET PROTECTION, TYPE C (WITH CURB BOX)

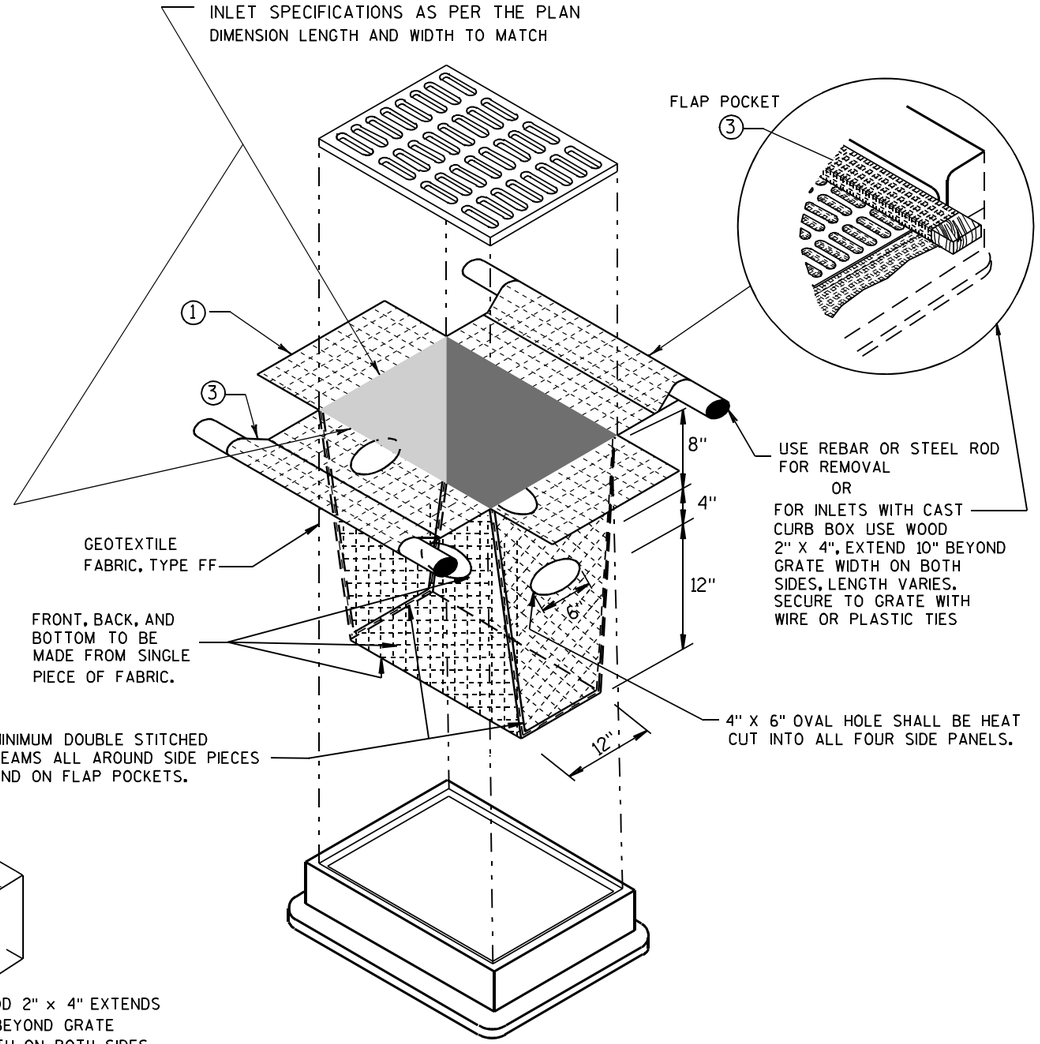

INLET PROTECTION, TYPE D

(CAN BE INSTALLED IN ANY INLET TYPE WITH
OR WITHOUT A CURB BOX AS PER NOTE ②)

GENERAL NOTES

INLET PROTECTION DEVICES SHALL BE MAINTAINED OR REPLACED AT THE DIRECTION OF THE ENGINEER.

MANUFACTURED ALTERNATIVES APPROVED AND LISTED ON THE DEPARTMENT'S EROSION CONTROL PRODUCT ACCEPTABILITY LIST MAY BE SUBSTITUTED.

WHEN REMOVING OR MAINTAINING INLET PROTECTION, CARE SHALL BE TAKEN SO THAT THE SEDIMENT TRAPPED ON THE GEOTEXTILE FABRIC DOES NOT FALL INTO THE INLET. ANY MATERIAL FALLING INTO THE INLET SHALL BE REMOVED IMMEDIATELY.

① FINISHED SIZE, INCLUDING FLAP POCKETS WHERE REQUIRED, SHALL EXTEND A MINIMUM OF 10" AROUND THE PERIMETER TO FACILITATE MAINTENANCE OR REMOVAL.

② FOR INLET PROTECTION, TYPE C (WITH CURB BOX), AN ADDITIONAL 18" OF FABRIC IS WRAPPED AROUND THE WOOD AND SECURED WITH STAPLES. THE WOOD SHALL NOT BLOCK THE ENTIRE HEIGHT OF THE CURB BOX OPENING.

③ FLAP POCKETS SHALL BE LARGE ENOUGH TO ACCEPT WOOD 2X4.

INSTALLATION NOTES

TYPE B & C

TRIM EXCESS FABRIC IN THE FLOW LINE TO WITHIN 3" OF THE GRATE.

THE CONTRACTOR SHALL DEMONSTRATE A METHOD OF MAINTENANCE, USING A SEWN FLAP, HAND HOLDS OR OTHER METHOD TO PREVENT ACCUMULATED SEDIMENT FROM ENTERING THE INLET.

TYPE D

DO NOT INSTALL INLET PROTECTION TYPE D IN INLETS SHALLOWER THAN 30", MEASURED FROM THE BOTTOM OF THE INLET TO THE TOP OF THE GRATE.

TRIM EXCESS FABRIC IN THE FLOW LINE TO WITHIN 3" OF THE GRATE.

THE INSTALLED BAG SHALL HAVE A MINIMUM SIDE CLEARANCE, BETWEEN THE INLET WALLS AND THE BAG, MEASURED AT THE BOTTOM OF THE OVERFLOW HOLES, OF 3". WHERE NECESSARY THE CONTRACTOR SHALL CINCH THE BAG, USING PLASTIC ZIP TIES, TO ACHIEVE THE 3" CLEARANCE. THE TIES SHALL BE PLACED AT A MAXIMUM OF 4" FROM THE BOTTOM OF THE BAG.

INLET PROTECTION
TYPE A, B, C, AND D

STATE OF WISCONSIN
DEPARTMENT OF TRANSPORTATION

APPROVED
10/16/02
DATE
/S/ Beth Cannestra
CHIEF ROADWAY DEVELOPMENT ENGINEER
FHWA

6
S.D.D. 8 E 10-2

GENERAL NOTES

DETAILS OF CONSTRUCTION, MATERIALS AND WORKMANSHIP NOT SHOWN ON THIS DRAWING SHALL CONFORM TO THE PERTINENT REQUIREMENTS OF THE STANDARD SPECIFICATIONS AND THE APPLICABLE SPECIAL PROVISIONS.

TRACKING PAD SHALL BE INSPECTED DAILY. DEFICIENT AREAS SHALL BE REPAIRED OR REPLACED IMMEDIATELY.

TRACKING PAD TO BE REMOVED AFTER CONSTRUCTION IS COMPLETED.

TRACKING PAD SHALL BE THE FULL WIDTH OF THE EGRESS POINT.

SURFACE WATER MUST BE PREVENTED FROM PASSING THROUGH THE TRACKING PAD. FLOWS SHALL BE DIVERTED AWAY, AROUND OR CONVEYED UNDER THE TRACKING PAD.

CULVERT PIPE OR OTHER BMP USED TO DIVERT WATER AWAY, AROUND OR UNDER THE TRACKING PAD SHALL BE DESIGNED TO CONVEY THE 2 YEAR - 24 HOUR EVENT.

THE COST OF ADDITIONAL BMP TO DIVERT WATER ARE INCIDENTAL TO THE TRACKING PAD BID ITEM.

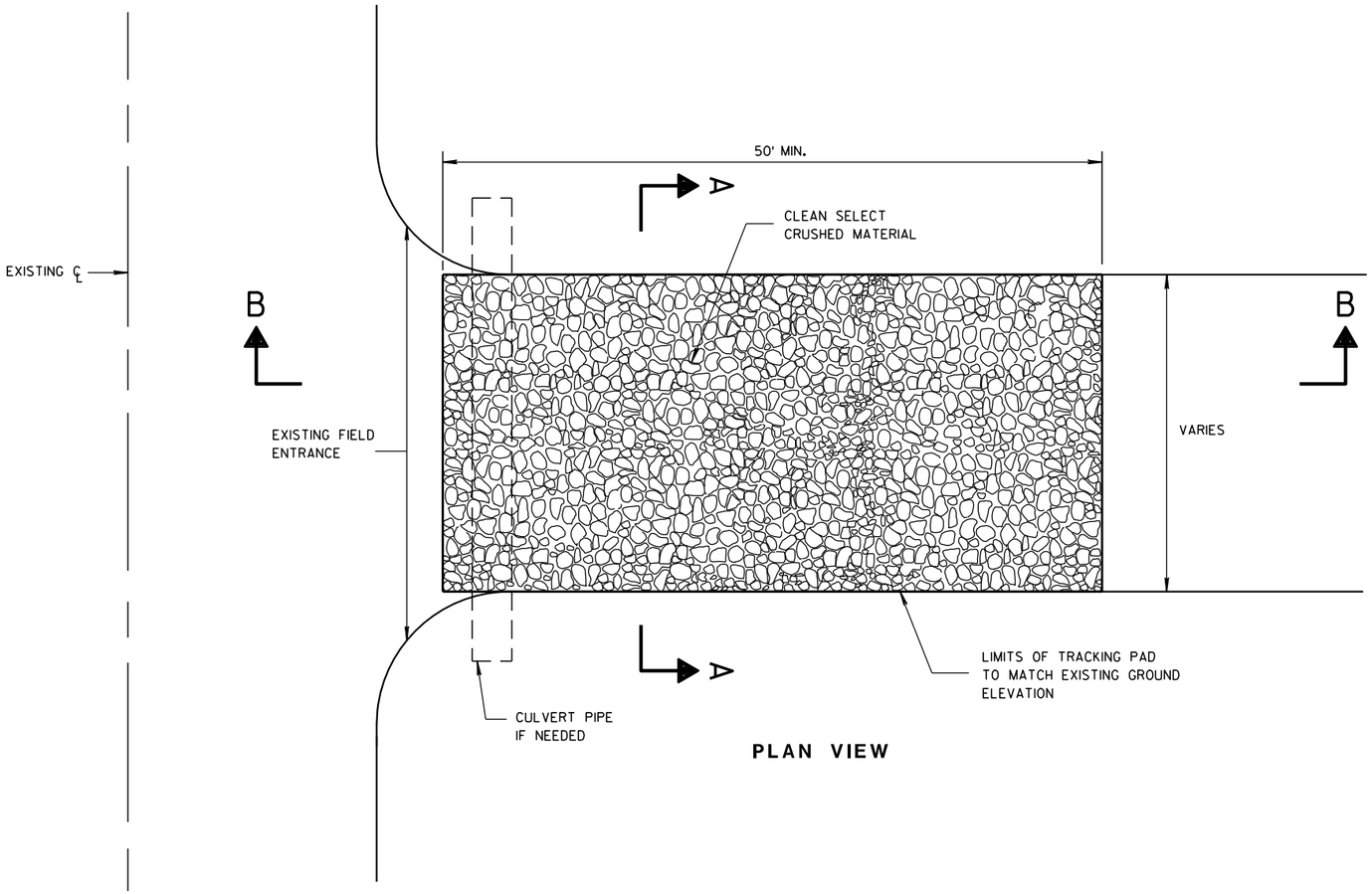

PLAN VIEW

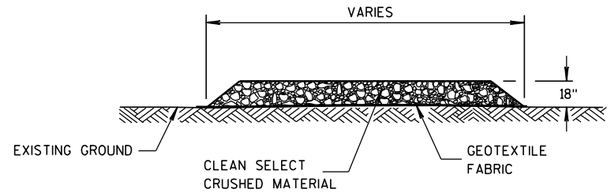

SECTION A-A

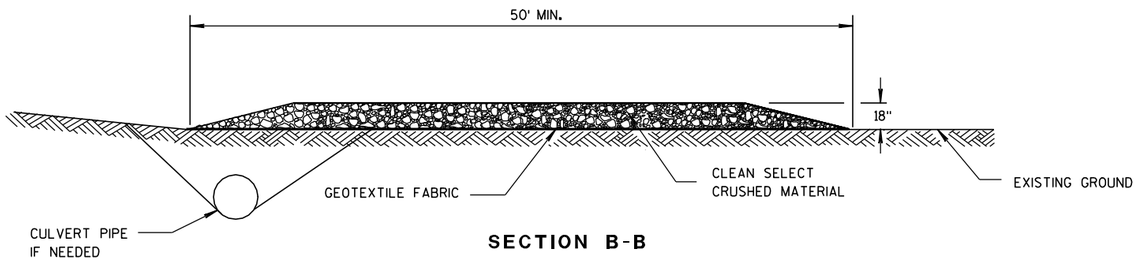

SECTION B-B

TRACKING PAD

TRACKING PAD

STATE OF WISCONSIN
DEPARTMENT OF TRANSPORTATION

APPROVED
3/24/2011 /S/ Jerry H. Zogg
DATE ROADWAY STANDARDS ENGINEER ENT
FHWA

6

6

S.D.D. 8 E 14-1

S.D.D. 8 E 14-1

METAL APRON ENDWALLS

PIPE DIA. (IN.)	MIN. THICK. (Inches) STEEL	MIN. THICK. (Inches) ALUM.	DIMENSIONS (Inches) A (±1")	B (MAX.)	H (±1")	L (±1 1/2")	L1 ①	L2 ①	W (±2")	APPROX. SLOPE	BODY
12	.064	.060	6	6	6	21	12	17 1/2	24	2 1/2 to 1	1 Pc.
15	.064	.060	7	8	6	26	14	21 3/4	30	2 1/2 to 1	1 Pc.
18	.064	.060	8	10	6	31	15	28 1/4	36	2 1/2 to 1	1 Pc.
21	.064	.060	9	12	6	36	18	29 5/8	42	2 1/2 to 1	1 Pc.
24	.064	.075	10	13	6	41	18	37 1/4	48	2 1/2 to 1	1 Pc.
30	.079	.075	12	16	8	51	18	52 1/4	60	2 1/2 to 1	1 Pc.
36	.079	.105	14	19	9	60	24	59 3/4	72	2 1/2 to 1	2 Pc.
42	.109	.105	16	22	11	69	24	75 5/8	84	2 1/2 to 1	2 Pc.
48	.109	.105	18	27	12	78	24	81	90	2 1/4 to 1	3 Pc.
54	.109	.105	18	30	12	84	30	85 1/2	102	2 1/4 to 1	3 Pc.
60	.109×	.105×	18	33	12	87	—	—	114	2 to 1	3 Pc.
66	.109×	.105×	18	36	12	87	—	—	120	2 to 1	3 Pc.
72	.109×	.105×	18	39	12	87	—	—	126	2 to 1	3 Pc.
78	.109×	.105×	18	42	12	87	—	—	132	1 1/2 to 1	3 Pc.
84	.109×	.105×	18	45	12	87	—	—	138	1 1/2 to 1	3 Pc.
90	.109×	.105×	18	37	12	87	—	—	144	1 1/2 to 1	3 Pc.
96	.109×	.105×	18	35	12	87	—	—	150	1 1/2 to 1	3 Pc.

× EXCEPT CENTER PANEL SEE GENERAL NOTES

REINFORCED CONCRETE APRON ENDWALLS

PIPE DIA. (IN.)	DIMENSIONS (Inches) T	A	B	C	D	E	G	APPROX. SLOPE
12	2	4	24	48 7/8	72 1/8	24	2	3 to 1
15	2 1/4	6	27	46	73	30	2 1/4	3 to 1
18	2 1/2	9	27	46	73	36	2 1/2	3 to 1
21	2 3/4	9	36	37 1/2	73 1/2	42	2 3/4	3 to 1
24	3	9 1/2	43 1/2	30	73 1/2	48	3	3 to 1
27	3 1/4	10 1/2	49 1/2	24	73 1/2	54	3 1/4	3 to 1
30	3 1/2	12	54	19 3/4	73 1/2	60	3 1/2	3 to 1
36	4	15	63	34 3/4	97 3/4	72	4	3 to 1
42	4 1/2	21	63	35	98	78	4 1/2	3 to 1
48	5	24	72	26	98	84	5	3 to 1
54	5 1/2	27	65	* 33 1/4 - ** 35	* 98 1/4 - ** 100	90	5 1/2	2 2/5 to 1
60	6	* 30 - ** 35	60	39	99	96	5	2 to 1
66	6 1/2	* 24 - ** 30	* 72 - ** 78	* 21 - ** 27	99	102	5 1/2	2 to 1
72	7	* 24 - ** 36	78	21	99	108	6	2 to 1
78	7 1/2	* 24 - ** 36	78	21	99	114	6 1/2	2 to 1
84	8	36	90 1/2	21	111 1/2	120	6 1/2	1 1/2 to 1
90	8 1/2	41	87 1/2	24	111 1/2	132	6 1/2	1 1/2 to 1

* MINIMUM
** MAXIMUM

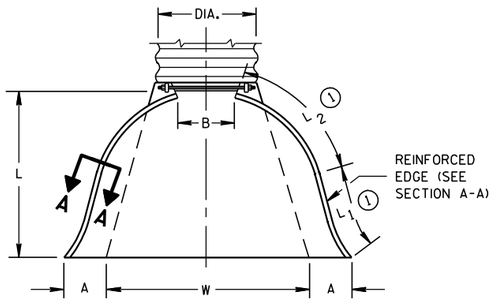

PLAN VIEW

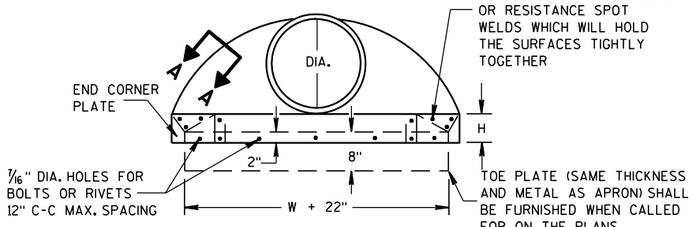

END VIEW

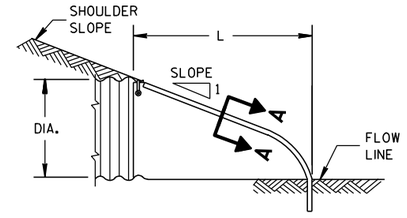

SIDE ELEVATION

METAL ENDWALLS

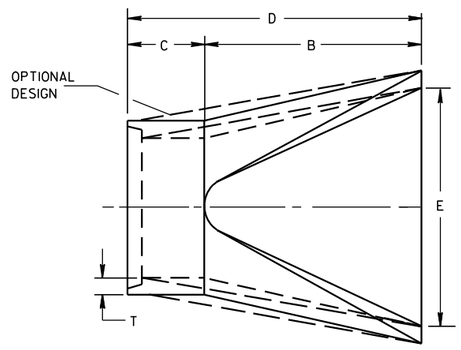

PLAN

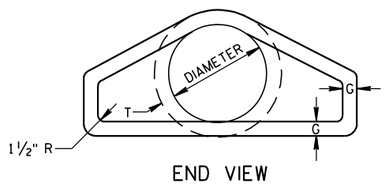

END VIEW

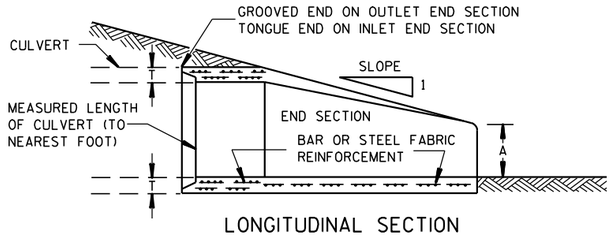

LONGITUDINAL SECTION

CONCRETE ENDWALLS

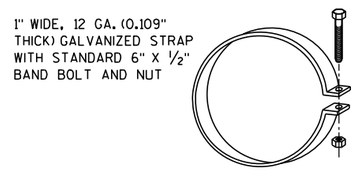

ALTERNATE FOR TYPE 1 CONNECTION

END SECTION CONNECTOR STRAP

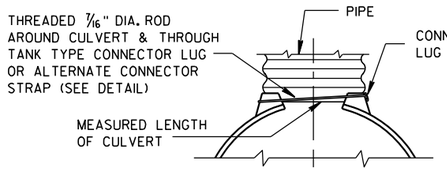

TYPE 1
FOR 12" THRU 24" CORR. PIPE

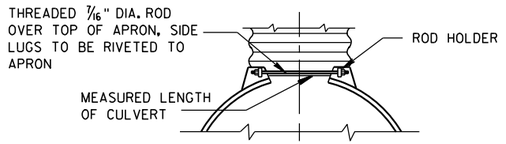

TYPE 2
FOR 30" THRU 96" CORR. PIPE

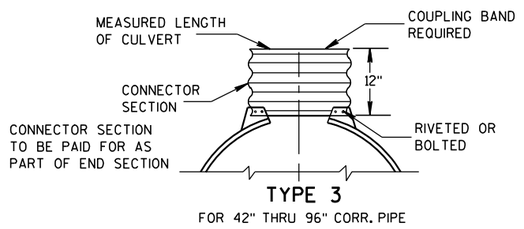

TYPE 3
FOR 42" THRU 96" CORR. PIPE

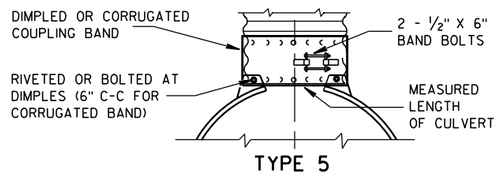

TYPE 5
ALTERNATE FOR:
ALL SIZES CORRUGATED CIRCULAR PIPE

NOTE: DIMPLED BAND FITS OVER OUTSIDE OF ENDWALL. AND CORRUGATED BAND FITS INSIDE ENDWALL. DIMPLED BAND MAY BE USED WITH HELICALLY CORRUGATED PIPE.

FOR CIRCUMFERENTIALLY CORRUGATED PIPE USE ENDWALL CONNECTION DETAILS 1, 2, 3 OR 5 AS APPLICABLE.

FOR HELICALLY CORRUGATED PIPE USE ENDWALL CONNECTION DETAILS 1, 2 OR 5.

FOR HELICALLY CORRUGATED PIPES WITH TWO CIRCUMFERENTIAL CORRUGATIONS AT EACH END USE ENDWALL CONNECTION DETAILS 1, 2 OR 3.

CONNECTION DETAILS

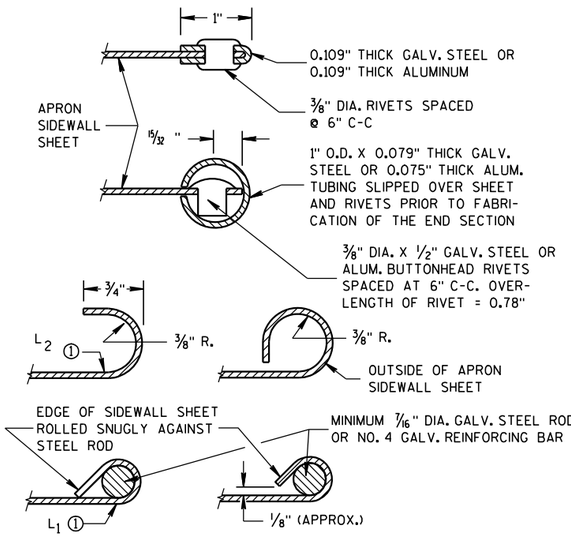

SECTION A-A

GENERAL NOTES

DETAILS OF CONSTRUCTION, MATERIALS AND WORKMANSHIP NOT SHOWN ON THIS DRAWING SHALL CONFORM TO THE PERTINENT REQUIREMENTS OF THE STANDARD SPECIFICATIONS AND THE APPLICABLE SPECIAL PROVISIONS.

CONCRETE CULVERT ENDWALLS MAY NOT BE USED WITH GALVANIZED STEEL OR ALUMINUM CULVERT PIPE OR VISE VERSA. GALVANIZED STEEL OR ALUMINUM ENDWALLS SHALL NORMALLY BE INSTALLED ON CULVERT PIPE OF THE SAME METAL.

ALL THREE PIECE STEEL APRON ENDWALLS FOR 60" DIAMETER PIPE AND LARGER SHALL HAVE 0.109" SIDES AND 0.138" CENTER PANELS. ALL THREE PIECE ALUMINUM APRON ENDWALLS FOR 60" DIAMETER PIPE AND LARGER SHALL HAVE 0.105" SIDES AND 0.134" CENTER PANELS. THE WIDTH OF CENTER PANELS SHALL BE GREATER THAN 20 PERCENT OF THE PIPE PERIMETER.

LAP SEAMS SHALL BE TIGHTLY JOINED BY GALVANIZED RIVETS OR BOLTS FOR STEEL UNITS AND ALUMINUM RIVETS AND BOLTS FOR ALUMINUM UNITS. FOR THE 60" THROUGH 96" DIAMETER APRON ENDWALL SIZES, THE REINFORCED EDGES AND CENTER PANEL SEAMS SHALL BE FURTHER REINFORCED WITH GALVANIZED STEEL OR ALUMINUM STIFFENER ANGLES. THE ANGLES SHALL BE ATTACHED BY GALVANIZED NUTS AND BOLTS FOR STEEL UNITS AND ALUMINUM NUTS AND BOLTS FOR ALUMINUM UNITS.

WHERE TWO OR MORE PIPES WITH APRON ENDWALLS ARE LAID ADJACENT TO EACH OTHER, THEY SHALL BE SEPARATED BY A DISTANCE SUFFICIENT TO PROVIDE A MINIMUM CLEARANCE OF 6 INCHES BETWEEN APRON ENDWALLS.

① FOR PIPE SIZES UP TO 60" DIAMETER, A 180° ROLLED EDGE MAY BE USED INSTEAD OF STEEL ROD REINFORCEMENT. SEE SECTION A-A.

APRON ENDWALLS FOR CULVERT PIPE

STATE OF WISCONSIN
DEPARTMENT OF TRANSPORTATION

APPROVED
11/30/94 DATE
/S/ Rory L. Rhinesmith
CHIEF ROADWAY DEVELOPMENT ENGINEER
FHWA

6
S.D.D. 8 F 1-11

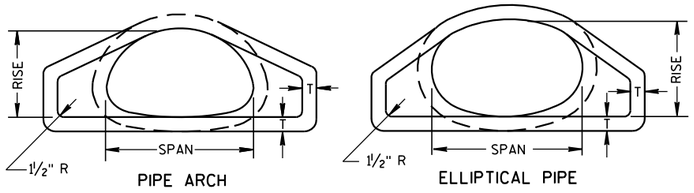

END VIEW

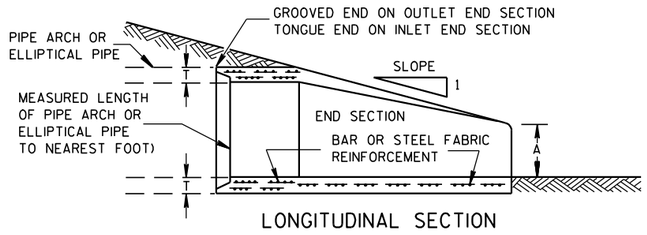

LONGITUDINAL SECTION

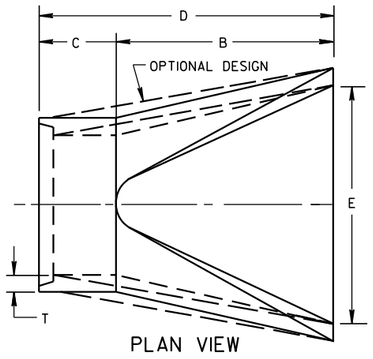

PLAN VIEW

CONCRETE ENDWALLS

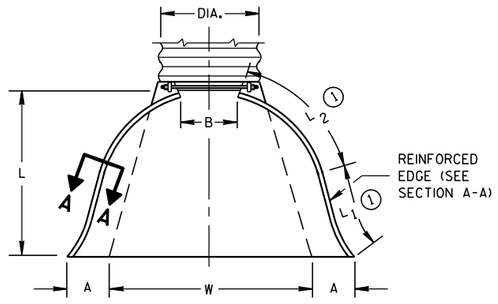

PLAN VIEW

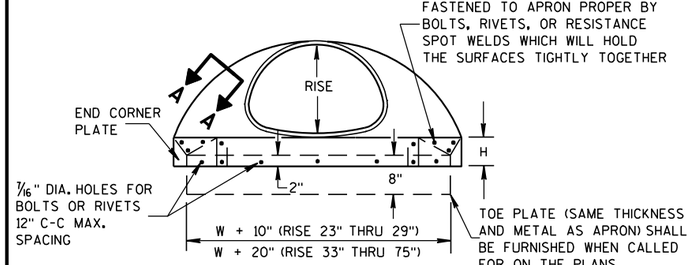

END VIEW

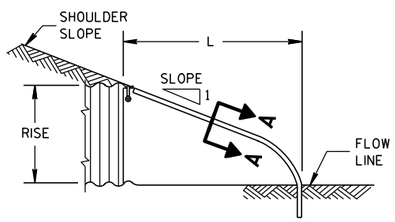

SIDE ELEVATION

METAL ENDWALLS

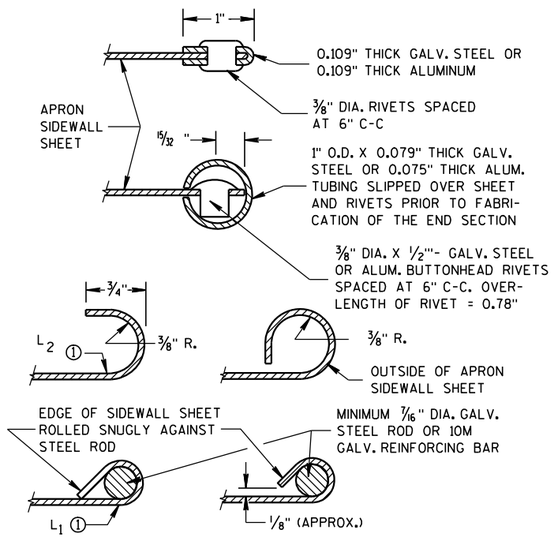

SECTION A-A

2- 2/3" X 1/2" CORRUGATIONS

EQUIV. DIA. (Inches)	(Inches) SPAN	(Inches) RISE	MIN. THICK. (Inches) STEEL	MIN. THICK. (Inches) ALUM.	DIMENSIONS (Inches) A (±1")	B (MAX.)	H (±1")	L (±1 1/2")	L1 ①	L2 ①	W (±2")	APPROX. SLOPE	BODY
15	17	13	.064	.060	7	9	6	19	14	16	30	2½ to 1	1 Pc.
18	21	15	.064	.060	7	10	6	23	14	19⅜	36	2½ to 1	1 Pc.
21	24	18	.064	.060	8	12	6	28	18	21¾	42	2½ to 1	1 Pc.
24	28	20	.064	.060	9	14	6	32	18	27½	48	2½ to 1	1 Pc.
30	35	24	.079	.075	10	16	6	39	18	37⅝	60	2½ to 1	1 Pc.
36	42	29	.079	.075	12	18	8	46	24	45⅜	75	2½ to 1	1 Pc.
42	49	33	.109	.105	13	21	9	53	24	54¾	85	2½ to 1	2 Pc.
48	57	38	.109	.105	18	26	12	63	24	68	90	2½ to 1	3 Pc.
54	64	43	.109	.105	18	30	12	70	24	72¾	102	2¼ to 1	3 Pc.
60	71	47	.109*	.105*	18	33	12	77	30	82¼	114	2¼ to 1	3 Pc.
66	77	52	.109*	.105*	18	36	12	77	—	—	126	2 to 1	3 Pc.
72	83	57	.109*	.105*	18	39	12	77	—	—	138	2 to 1	3 Pc.

3" X 1" CORRUGATIONS

EQUIV. DIA. (Inches)	(Inches) SPAN	(Inches) RISE	MIN. THICK. (Inches) STEEL	MIN. THICK. (Inches) ALUM.	DIMENSIONS (Inches) A (±1")	B (MAX.)	H (±1")	L (±1 1/2")	L1 ①	L2 ①	W (±2")	APPROX. SLOPE	BODY
48	53	41	.109	.105	18	26	12	63	24	72¾	90	2½ to 1	2 Pc.
54	60	46	.109	.105	18	30	12	70	30	82¼	102	2 to 1	2 Pc.
60	66	51	.109*	.105*	18	33	12	77	—	—	114	1½ to 1	3 Pc.
66	73	55	.109*	.105*	18	36	12	77	—	—	126	1½ to 1	3 Pc.
72	81	59	.109*	.105*	18	39	12	77	—	—	138	2 to 1	3 Pc.
78	87	63	.109*	.105*	22	38	12	77	—	—	148	1½ to 1	3 Pc.
84	95	67	.109*	.105*	22	34	12	77	—	—	162	1½ to 1	3 Pc.
90	103	71	.109*	.105*	22	38	12	77	—	—	174	1½ to 1	3 Pc.
96	112	75	.109*	.105*	24	40	12	77	—	—	174	1½ to 1	3 Pc.

NOTE: ALL SPLICES TO BE LAP RIVETED OR BOLTED.

* EXCEPT CENTER PANEL SEE GENERAL NOTES

REINFORCED CONCRETE PIPE ARCH

EQUIV. DIA. (Inches)	DIMENSIONS (Inches) ** SPAN	** RISE	T	A	B	C	D	E	APPROX. SLOPE
24	29	18	3	8½	39	33	72	48	3 to 1
30	36	22	3½	9½	50	46	96	60	3 to 1
36	44	27	4	11⅛	60	36	96	72	3 to 1
42	51	31	4½	15 13/16	60	36	96	78	3 to 1
48	58	36	5	21	60	36	96	84	3 to 1
54	65	40	5½	25½	60	36	96	90	3 to 1
60	73	45	6	31	60	36	96	96	3 to 1
72	88	54	7	31	60	39	99	120	2 to 1
84	102	62	8	28½	83	19	102	144	2 to 1

REINFORCED CONCRETE ELLIPTICAL PIPE

EQUIV. DIA. (Inches)	DIMENSIONS (Inches) ** SPAN	** RISE	T	A	B	C	D	E	APPROX. SLOPE
24	30	19	3¼	8½	39	33	72	48	3 to 1
30	38	24	3¾	9½	54	18	72	60	3 to 1
36	45	29	4½	11⅛	60	24	84	72	2½ to 1
42	53	34	5	15¾	60	36	96	78	2½ to 1
48	60	38	5½	21	60	36	96	84	2½ to 1
54	68	43	6	25½	60	36	96	90	2½ to 1
60	76	48	6½	30	60	36	96	96	2½ to 1

**NOMINAL SIZE

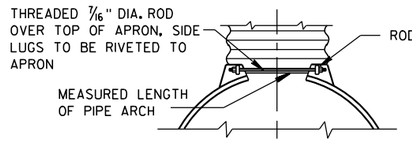

TYPE 2

FOR 17" X 13" THRU 112" X 75" PIPE ARCH

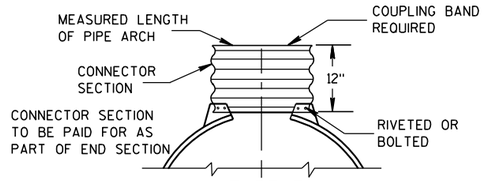

TYPE 3

FOR 64" X 43" THRU 112" X 75" PIPE ARCH

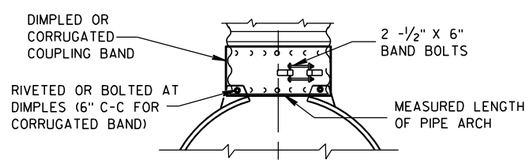

TYPE 5

ALTERNATE FOR:

ALL SIZES CORRUGATED PIPE ARCHES

NOTE: DIMPLED BAND FITS OVER OUTSIDE OF ENDWALL, AND CORRUGATED BAND FITS INSIDE ENDWALL.

CONNECTION DETAILS

GENERAL NOTES

DETAILS OF CONSTRUCTION, MATERIALS AND WORKMANSHIP NOT SHOWN ON THIS DRAWING SHALL CONFORM TO THE PERTINENT REQUIREMENTS OF THE STANDARD SPECIFICATIONS AND THE APPLICABLE SPECIAL PROVISIONS.

CONCRETE APRON ENDWALLS MAY NOT BE USED WITH GALVANIZED STEEL OR ALUMINUM CULVERT PIPE OR VISE VERSA. GALVANIZED STEEL OR ALUMINUM APRON ENDWALLS SHALL NORMALLY BE INSTALLED ON CULVERT PIPE OF THE SAME METAL.

ALL THREE PIECE STEEL APRON ENDWALLS FOR 66" X 51" PIPE ARCH AND LARGER SHALL HAVE 0.109" SIDES AND 0.138" CENTER PANELS. ALL THREE PIECE ALUMINUM APRON ENDWALLS FOR 66" X 51" PIPE ARCH AND LARGER SHALL HAVE 0.105" SIDES AND 0.134" CENTER PANELS. THE WIDTH OF CENTER PANELS SHALL BE GREATER THAN 20 PERCENT OF THE PIPE ARCH PERIMETER.

LAP SEAMS SHALL BE TIGHTLY JOINED BY GALVANIZED RIVETS OR BOLTS FOR STEEL UNITS AND ALUMINUM RIVETS AND BOLTS FOR ALUMINUM UNITS. FOR THE 77" X 52" THROUGH 112" X 75" APRON ENDWALL SIZES, THE REINFORCED EDGES AND CENTER PANEL SEAMS SHALL BE FURTHER REINFORCED WITH GALVANIZED STEEL OR ALUMINUM STIFFENER ANGLES. THE ANGLES SHALL BE ATTACHED BY GALVANIZED NUTS AND BOLTS FOR STEEL UNITS AND ALUMINUM NUTS AND BOLTS FOR ALUMINUM UNITS.

WHERE TWO OR MORE PIPES WITH APRON ENDWALLS ARE LAID ADJACENT TO EACH OTHER, THEY SHALL BE SEPARATED BY A DISTANCE SUFFICIENT TO PROVIDE A MINIMUM CLEARANCE OF 6 INCHES BETWEEN APRON ENDWALLS.

① FOR PIPE ARCH SIZES UP TO 73" X 55" A 180° ROLLED EDGE MAY BE USED INSTEAD OF STEEL ROD REINFORCEMENT. SEE SECTION A-A.

APRON ENDWALLS FOR PIPE ARCH AND ELLIPTICAL PIPE

STATE OF WISCONSIN
DEPARTMENT OF TRANSPORTATION

APPROVED

11/30/94 — DATE

/S/ Rory L. Rhinesmith — CHIEF ROADWAY DEVELOPMENT ENGINEER

FHWA

6

S.D.D. 8 F 2-1

6

S.D.D. 8 F 2-1

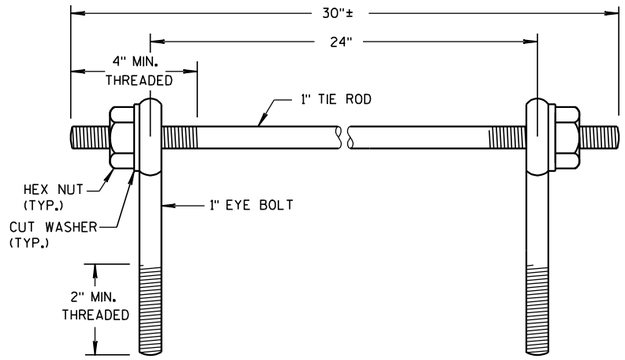

EYE BOLTS AND TIE ROD

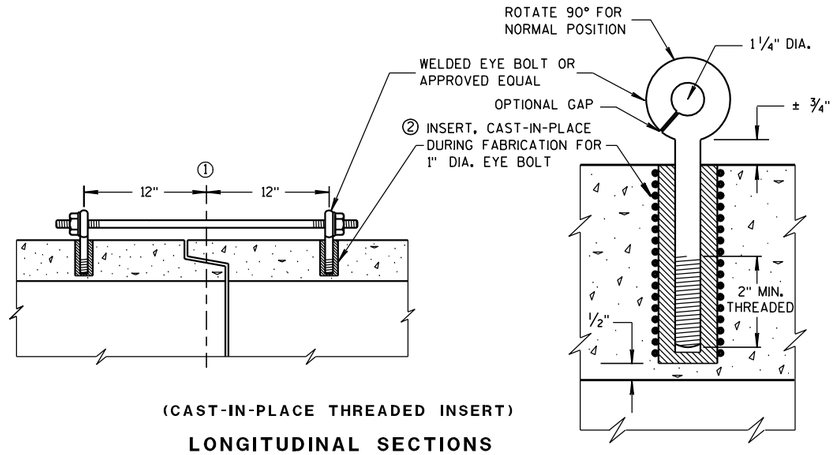

(CAST-IN-PLACE THREADED INSERT)

LONGITUDINAL SECTIONS

EYE BOLT AND TIE ROD ASSEMBLY (ALTERNATE NO. 1)

GENERAL NOTES

DETAILS OF CONSTRUCTION, MATERIALS, AND WORKMANSHIP NOT SHOWN ON THIS DRAWING SHALL CONFORM TO THE PERTINENT REQUIREMENTS OF THE STANDARD SPECIFICATIONS AND APPLICABLE SPECIAL PROVISIONS.

CONCRETE CULVERT AND STORM SEWER PIPE SHALL BE TIED TOGETHER IN THE MANNER ILLUSTRATED BY THIS DETAIL AT LOCATIONS DESIGNATED IN THE STANDARD SPECIFICATIONS AND THE PLAN. THE CONTRACTOR MAY USE EITHER ALTERNATE 1, 2 OR 3 FOR DRAINAGE STRUCTURES. ONLY ALTERNATE 1 AND 3 MAY BE USED FOR CATTLE PASSES, UNLESS OTHERWISE STATED IN THE CONTRACT. THE MATERIALS, FABRICATION AND WORK NECESSARY TO TIE THE PIPE BY THIS DETAIL WILL BE CONSIDERED INCIDENTAL TO THE PIPE AND APRON ENDWALLS IF REQUIRED.

DETAILED DRAWINGS FOR PROPOSED ALTERNATE DESIGNS FOR JOINT TIES SHALL BE SUBMITTED TO THE ENGINEER FOR APPROVAL.

JOINT TIES TO BE HOT-DIP GALVANIZED PER ASTM A 153.

① ℄ OF TONGUE AND GROOVE OR BELL AND SPIGOT JOINTS.

② THE INSIDE OF THE THREADED INSERTS SHALL BE CLEAN TO ALLOW THE INSERTION OF THREADED EYE BOLTS.

③ HOLES SHALL BE CAST-IN-PLACE OR DRILLED 12 INCHES FROM ℄ OF TONGUE AND GROOVE.

④ BOLT PROJECTION INSIDE OF PIPE SHALL NOT EXCEED 2 INCHES.

⑤ OPENING TO BE ROD DIAMETER PLUS 1 INCH.

⑥ LENGTH ADEQUATE TO EXTEND TO WITHIN 1/2 INCH OF THE INNER SURFACE OF THE PIPE.

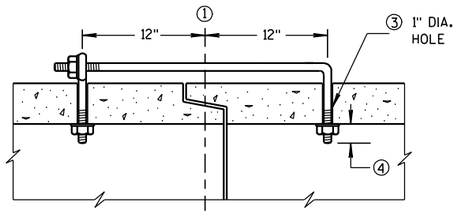

(TONGUE & GROOVE PIPE)

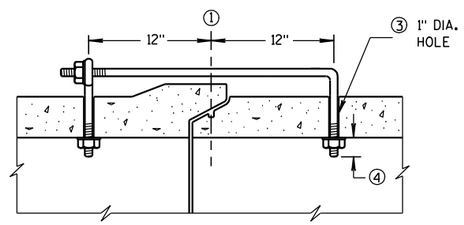

(MODIFIED BELL PIPE)

LONGITUDINAL SECTION

EYE BOLT DIMENSION TABLE

PIPE SIZE	L = LENGTH	
	TONGUE & GROOVE PIPE	MODIFIED BELL PIPE
18" TO 24"	4 1/2"	6 1/4"
30"	5"	7"
36"	5 1/2"	7"
42"	6"	
48"	6 1/2"	
60"	7 1/2"	
66"	8"	

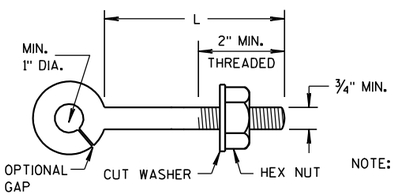

NOTE:

EYE BOLT

NOTE: TWO EYE BOLTS MAY BE USED WITH A 30" LONG THREADED ROD IN LIEU OF THE 90° BENT TIE ROD.

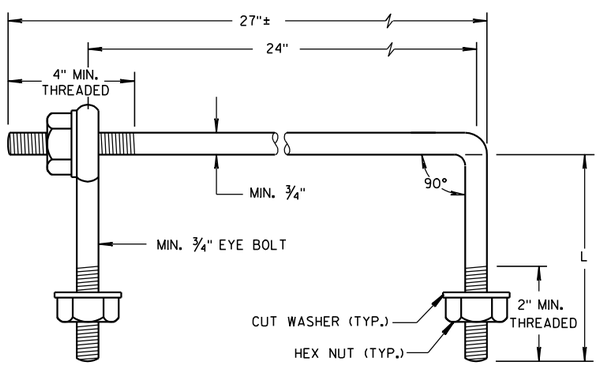

EYE BOLT AND TIE ROD

(JOINT TIES FOR 18" TO 66" DIA. CONCRETE PIPE)

EYE BOLT AND TIE ROD ASSEMBLY (ALTERNATE NO. 2)

ADJUSTABLE TIE ROD TABLE

PIPE DIAMETER	TIE ROD DIAMETER	D	L_1	N
12-60	5/8	5/8	5	1/2
66-84	3/4	3/4	5	1/2
90-108	1	1	7	1 1/16

DIMENSIONS SHOWN ARE IN INCHES

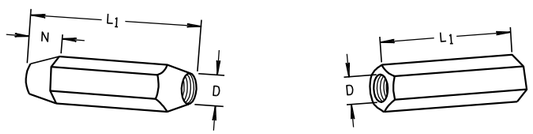

TAPERED PLAIN

RIGHT AND LEFT THREADS

SLEEVE NUTS

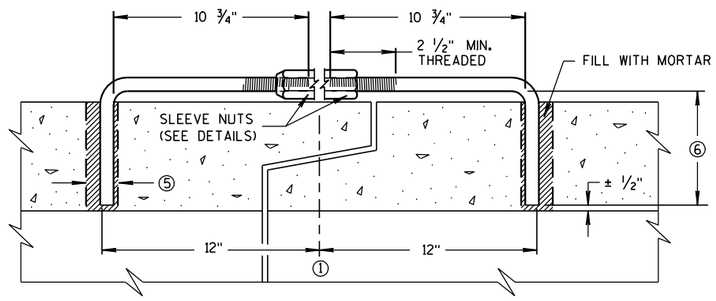

LONGITUDINAL SECTION

(JOINT TIES FOR 12" TO 108" DIA. CONCRETE PIPE)

ADJUSTABLE TIE ROD (ALTERNATE NO. 3)

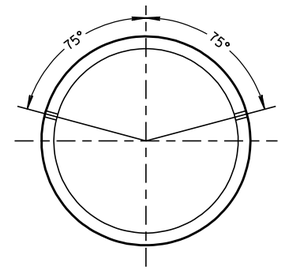

PLACEMENT OF (2) CAST-IN-PLACE INSERTS OR HOLES DURING FABRICATION FOR PIPE SECTIONS REQUIRING TIE RODS

TRANSVERSE SECTION

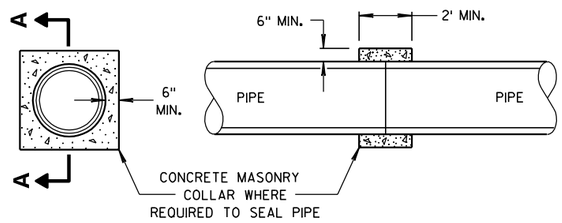

SECTION A-A

CONCRETE COLLAR DETAIL

JOINT TIES FOR CONCRETE PIPE AND CONCRETE COLLAR DETAIL

STATE OF WISCONSIN
DEPARTMENT OF TRANSPORTATION

APPROVED
6/5/2012 — DATE
/S/ Jerry H. Zogg — ROADWAY STANDARDS ENGINEER
93
FHWA

6

S.D.D. 8 F 4-7

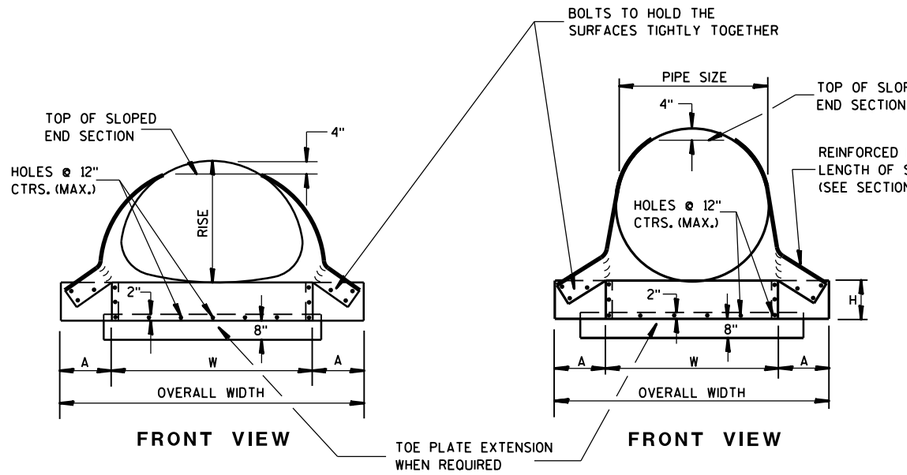

FRONT VIEW

FRONT VIEW

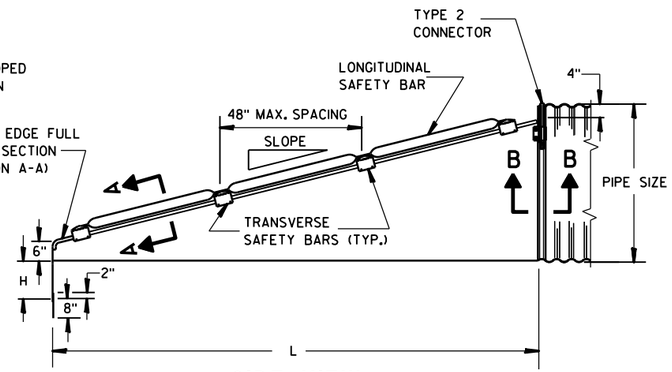

SIDE VIEW
(48" SIZE ILLUSTRATED)

GENERAL NOTES

DETAILS OF CONSTRUCTION, MATERIALS AND WORKMANSHIP NOT SHOWN ON THIS DRAWING SHALL CONFORM TO THE PERTINENT REQUIREMENTS OF THE STANDARD SPECIFICATIONS AND APPLICABLE SPECIAL PROVISIONS.

SAFETY GRATES SHALL BE FABRICATED FROM 3-INCH DIAMETER GALVANIZED PIPE MEETING THE REQUIREMENTS OF ASTM A-53, GRADE B, SCHEDULE 40 OR APPROVED EQUAL. THE LONGITUDINAL BAR SHALL BE WELDED TO THE TRANSVERSE BARS WHERE THE BARS CROSS. THE NUMBER OF TRANSVERSE BARS REQUIRED WILL VARY DEPENDING ON THE LENGTH OF THE END SECTION.

SLOPED STEEL ENDWALLS LOCATED AT THE ENDS OF CONCRETE CULVERT PIPE SHALL BE FURNISHED WITH STEEL ADAPTER SLEEVES.

STEEL APRON ENDWALLS FOR CULVERT PIPE CROSS DRAINS

PIPE DIA. (IN.)	MIN. THICK.		DIMENSIONS (Inches)				L DIMENSIONS			
	IN.	GAGE	A	H	W	OVERALL WIDTH	SLOPE	LENGTH INCHES	SLOPE	LENGTH INCHES
36	.109	12	12	9	42	66	4:1	104	6:1	156
42	.109	12	16	12	48	80	4:1	128	6:1	192
48	.109	12	16	12	54	86	4:1	152	6:1	228
54	.109	12	16	12	60	92	4:1	176	6:1	264
60	.109	12	16	12	66	98	4:1	200	6:1	300

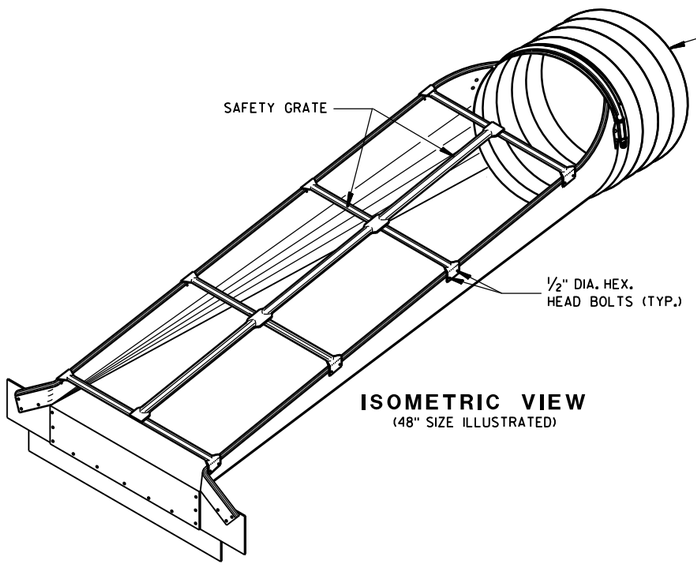

ISOMETRIC VIEW
(48" SIZE ILLUSTRATED)

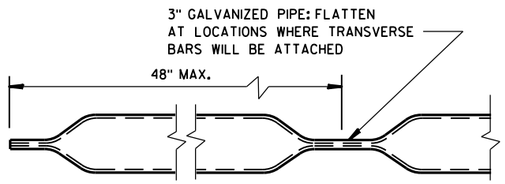

LONGITUDINAL SAFETY BAR

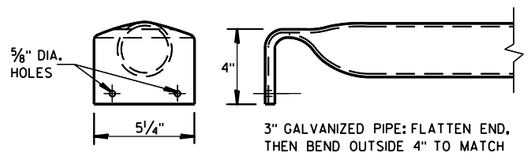

TRANSVERSE SAFETY BAR

STEEL APRON ENDWALLS FOR PIPE ARCH SLOPED CROSS DRAINS

EQUIV. DIA. (IN.)	INCHES		MIN. THICK.		DIMENSIONS (Inches)				L DIMENSIONS			
	SPAN	RISE	IN.	GAGE	A	H	W	OVERALL WIDTH	SLOPE	LENGTH INCHES	SLOPE	LENGTH INCHES
30	35	24	.079	14	12	9	41	65	4:1	56	6:1	84
36	42	29	.109	12	12	9	48	72	4:1	76	6:1	114
42	49	33	.109	12	16	12	55	87	4:1	92	6:1	138
48	57	38	.109	12	16	12	63	95	4:1	112	6:1	168
54	64	43	.109	12	16	12	70	102	4:1	132	6:1	198
60	71	47	.109	12	16	12	77	109	4:1	148	6:1	222

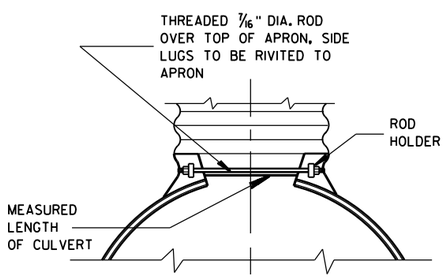

TYPE 2 CONNECTOR DETAIL

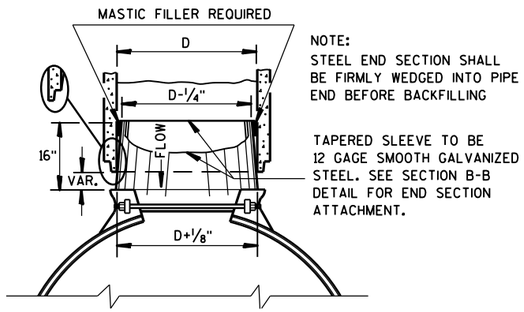

STEEL ADAPTER SLEEVE FOR CONCRETE PIPE

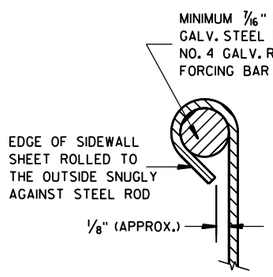

SECTION A-A

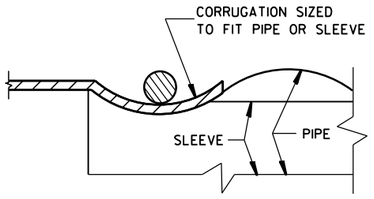

SECTION B-B

STEEL APRON ENDWALLS FOR CULVERT PIPE AND PIPE ARCH SLOPED CROSS DRAINS

STATE OF WISCONSIN
DEPARTMENT OF TRANSPORTATION

APPROVED
6/5/2012 — DATE
/S/ Jerry H. Zogg — ROADWAY STANDARDS ENGINEER
FHWA

6

S.D.D. 8 F 8-2

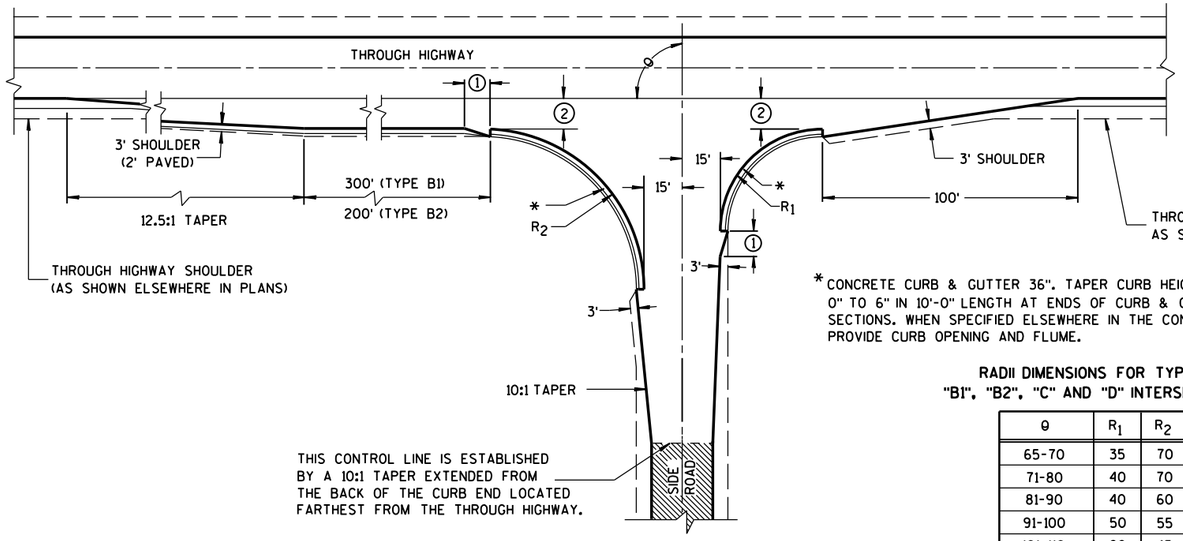

TYPE "B1" AND "B2"

*CONCRETE CURB & GUTTER 36". TAPER CURB HEIGHT 0" TO 6" IN 10'-0" LENGTH AT ENDS OF CURB & GUTTER SECTIONS. WHEN SPECIFIED ELSEWHERE IN THE CONTRACT, PROVIDE CURB OPENING AND FLUME.

RADII DIMENSIONS FOR TYPES "B1", "B2", "C" AND "D" INTERSECTIONS

θ	R_1	R_2
65-70	35	70
71-80	40	70
81-90	40	60
91-100	50	55
101-110	60	45

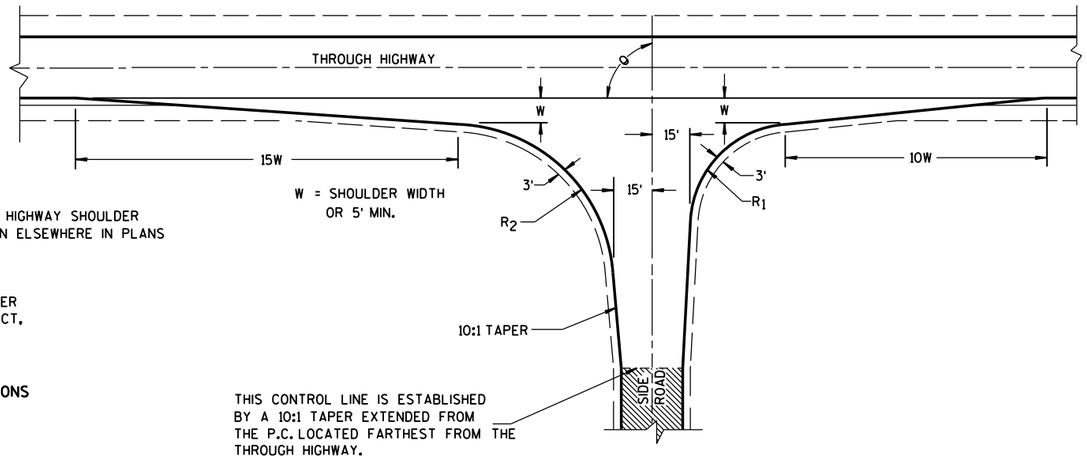

TYPE "C"

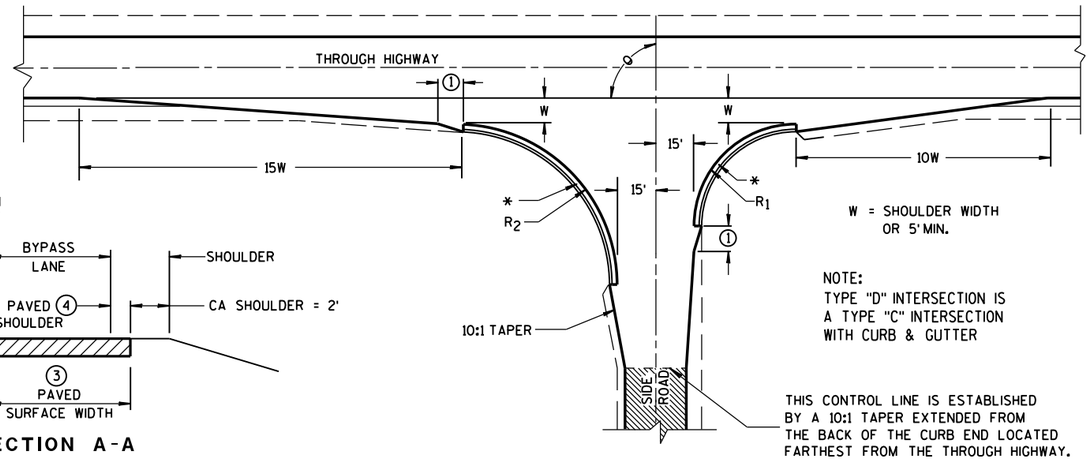

TYPE "D"

GENERAL NOTES

DESIGNS MAY BE USED INTERCHANGEABLY IN COMBINATION OR SEPARATELY FOR ANY ONE COMPLETE INTERSECTION DEPENDING UPON INTERSECTION ANGLE AND SURFACING OF EACH APPROACH ROADWAY.

SIDE ROAD SURFACING NOTE

WHEN THE SIDE ROAD IS NOT PRESENTLY PAVED, PAVEMENT SHALL BE PLACED TO THE LIMITS SHOWN UNLESS OTHERWISE PROVIDED IN THE CONTRACT. WHERE THE CONSTRUCTION LIMITS ARE BEYOND THE PAVING LIMITS, CRUSHED AGGREGATE SURFACING SHALL BE PLACED BETWEEN THE PAVING LIMITS AND CONSTRUCTION LIMITS.

WHEN THE SIDE ROAD IS PRESENTLY PAVED, NEW PAVEMENT SHALL BE PLACED TO THE LIMITS OF DESIGN AS SHOWN AND BEYOND, IF NECESSARY, TO MEET EXISTING PAVEMENT.

WHEN THE SIDE ROAD IS THE CONSTRUCTION PROJECT, THE INTERSECTION SURFACING SHALL BE THE SAME AS FOR THE PROJECT.

EXISTING PAVED SURFACE

BYPASS LANE

(1) 10-FT TYPICAL.

(2) 12-FT** PLUS ADDITIONAL WIDTH FOR BIKE LANE IF SHOWN ELSEWHERE IN THE PLAN.

**10-FT MAY BE USED ON TYPE B2 ON RESURFACING PROJECTS IF SPECIFIED IN THE CONTRACT.

(3) BYPASS LANE PAVED SURFACE WIDTH OUTSIDE OF TRAVEL LANE
-ASPHALT = 12-FT PLUS PAVED SHOULDER WIDTH.
-PC CPNCRETE = 13-FT PLUS PAVED SHOULDER WIDTH.

(4) BYPASS LANE PAVED SHOULDER WIDTH = THE GREATER OF 1-FT OR THE PAVED SHOULDER WIDTH OF THE THROUGH HIGHWAY.

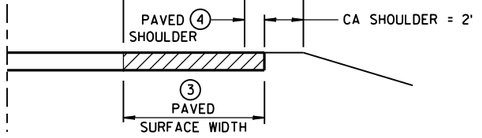

SECTION A-A
(SHOWING BYPASS LANE AND SHOULDER)

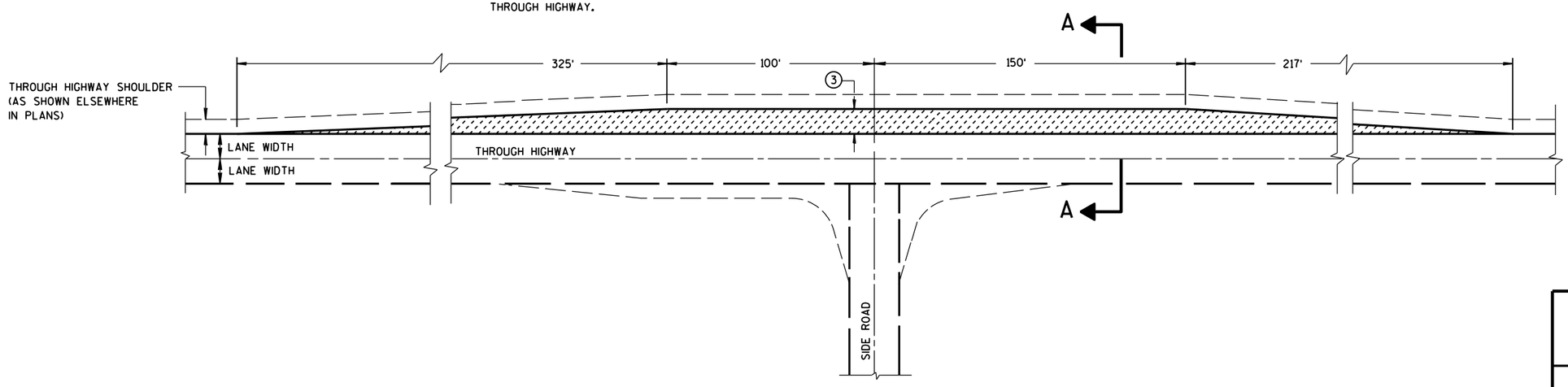

TEE INTERSECTION BYPASS LANE DETAIL

AT-GRADE SIDE ROAD INTERSECTION, TYPES "B1", "B2", "C" AND "D" AND TEE INTERSECTION BYPASS LANE

STATE OF WISCONSIN
DEPARTMENT OF TRANSPOR

6
S.D.D. 9 A 1-13a

GENERAL NOTES

1. WOOD OR STEEL POSTS (w6X9 OR w6X8.5) MAY BE USED. DO NOT INTERMIX WOOD AND STEEL POSTS. INSTALL STEEL POSTS WITH HOLES ON APPROACHING TRAFFIC SIDE.

2. USE WOOD OR APPROVED PLASTIC BLOCKOUTS. WOOD BLOCKOUTS MAY BE CONSTRUCTED OUT OF TWO OR MORE WOOD BLOCKOUTS. SEE ALTERNATE WOOD BLOCKOUT DETAIL. DIMENSIONS OF APPROVED PLASTIC BLOCKOUTS MAY VARY.

3. IF ROCK IS ENCOUNTERED DURING EXCAVATION, PROVIDE A HOLE 12 INCHES IN DIAMETER EXTENDING 20 INCHES DEEP INTO THE ROCK. PLACE APPROXIMATELY 2½ INCHES OF GRANULAR MATERIAL IN THE BOTTOM OF THE HOLE. CUT THE POSTS THE TO LENGTH AMD INSTALL. BACKFILL WITH EXCAVATED MATERIAL AND COMPACT. BACKFILL IS TO BE FREE OF LARGE ROCKS.

4. WHEN THE DISTANCE FROM BACK OF POST TO SHOULDER HINGE POINT IS LESS THAN 2 FEET INSTALL LONGER POST AT HALF POST SPACING (K).

5. FOR NEW MGS INSTALLATION TOP OF W-BEAM RAIL TOLERANCE IS ± 1". FOR EXISTING MGS INSTALLATION TOP OF W-BEAM IS BETWEEN 27¾" TO 32".

6. WHEN USING STEEL POST AND WOOD BLOCKOUTS INSTALL FOUR 16D GALVANIZED NAILS. INSTALL NAILS AT THE BACK CORNERS OF THE BLOCK AND BEND THE NAILS OVER THE FLANGE OF THE STEEL POST.

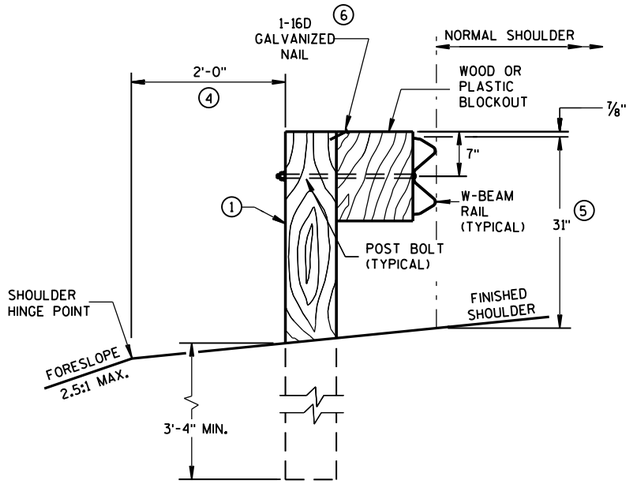

END VIEW

LOCATED ALONG A ROADWAY SHOULDER
STANDARD INSTALLATION

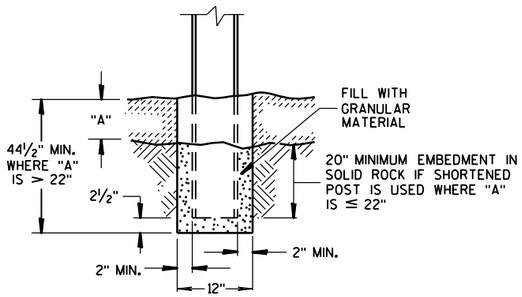

END VIEW

SETTING STEEL OR WOOD POST IN ROCK 3

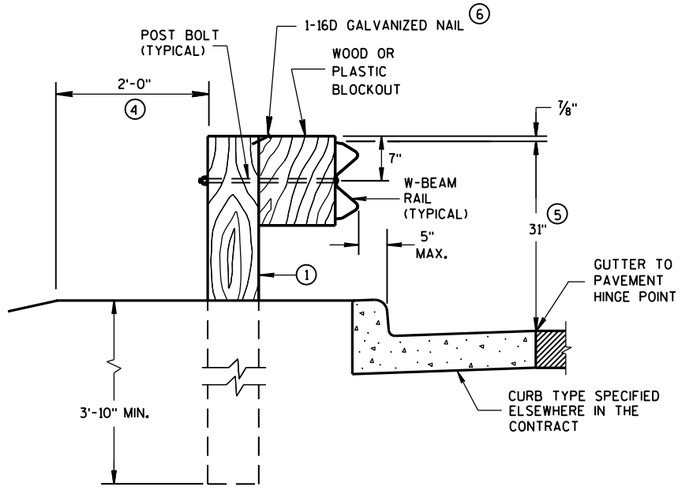

END VIEW

LOCATED ALONG A CURBED ROADWAY

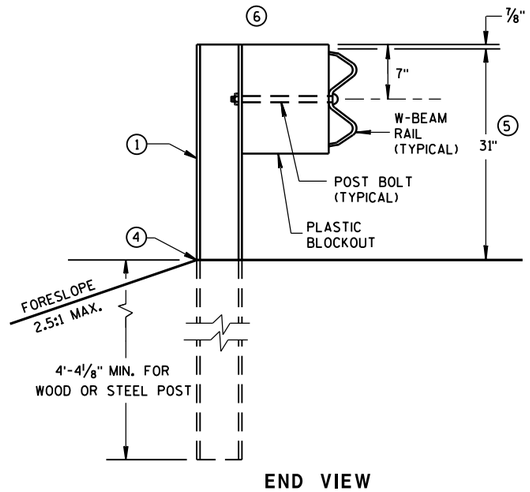

END VIEW

MGS LONGER POST AT HALFPOST SPACING W BEAM (K)

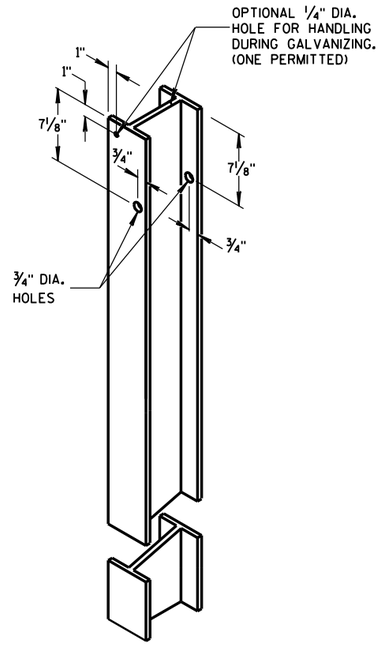

STEEL POST &
HOLE PUNCHING DETAIL
(w6X9) 1

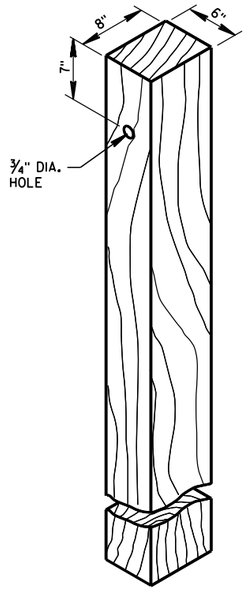

WOOD POST
(6" X 8") NOMINAL 1

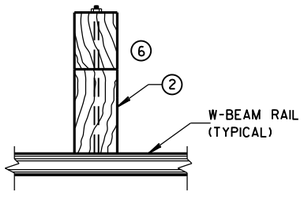

PLAN VIEW
WOOD POST,
BLOCKOUT & BEAM

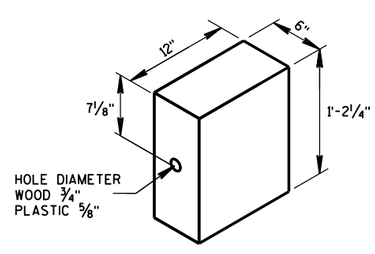

WOOD OR
PLASTIC BLOCKOUT 2

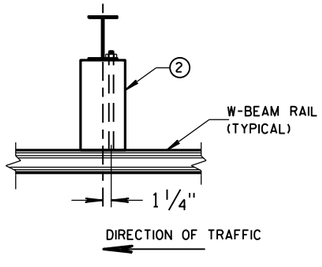

PLAN VIEW
STEEL POST,
PLASTIC BLOCKOUT & BEAM

MIDWEST GUARDRAIL SYSTEM
(MGS) GUARDRAIL

STATE OF WISCONSIN
DEPARTMENT OF TRANSPO

6
S.D.D. 14 B 42-3a

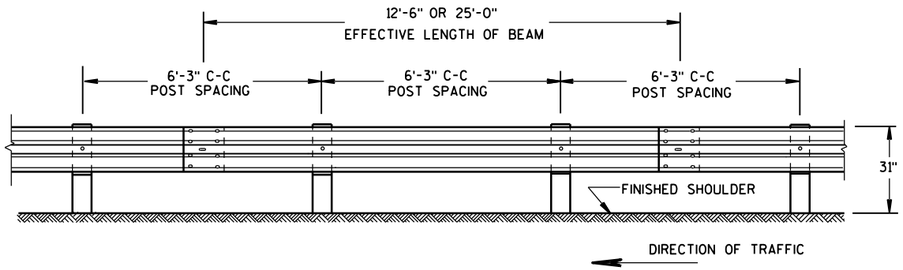

FRONT VIEW

POST SPACING STANDARD INSTALLATION

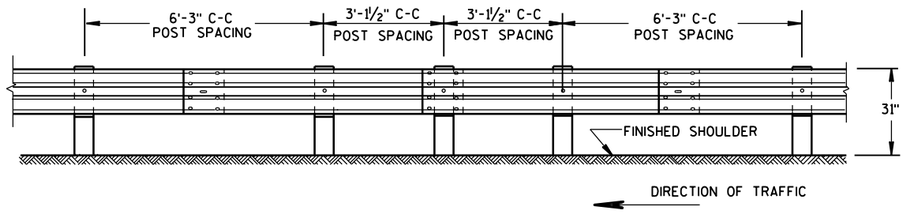

FRONT VIEW

HALF POST SPACING (HS) AND HALF POST SPACING WITH LONGER POSTS (K)

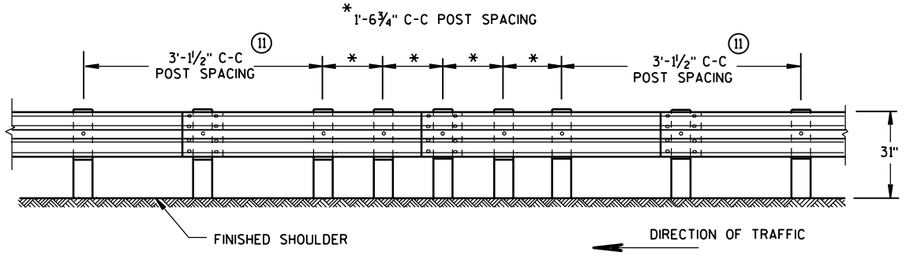

FRONT VIEW

QUARTER POST SPACING (QS)

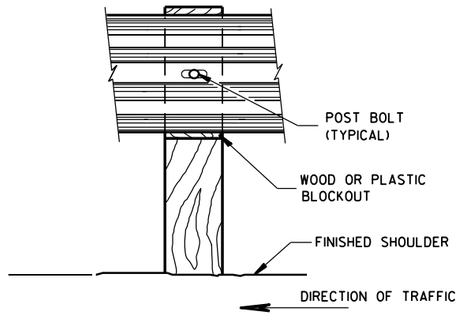

FRONT VIEW AT WOOD POST

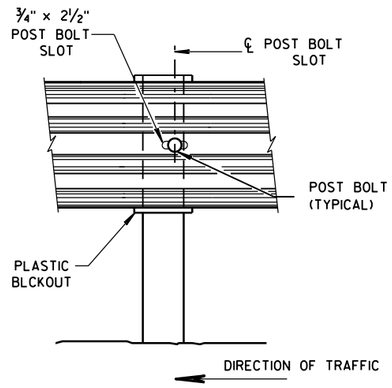

FRONT VIEW AT STEEL POST

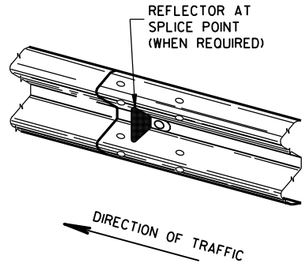

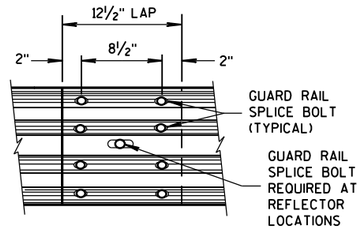

FRONT VIEW

MID-SPAN BEAM SPLICE

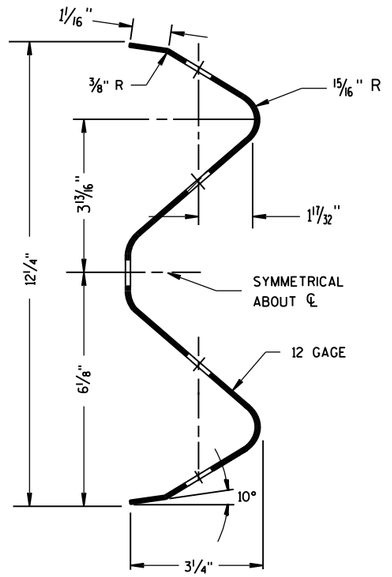

SECTION THRU W-BEAM RAIL

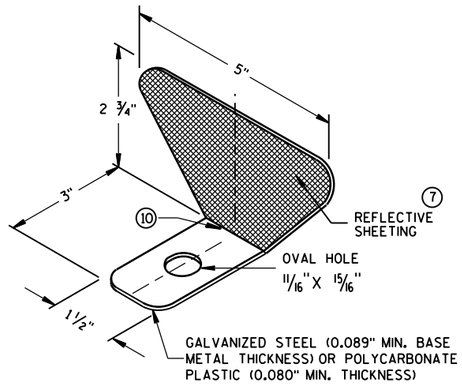

GENERAL NOTES

⑦ PROVIDE SILVER REFLECTIVE SHEETING ON ALL REFLECTORS EXCEPT THOSE LOCATED ALONG THE LEFT EDGE OF ONE-WAY ROADWAYS, WHICH SHALL BE PROVIDED WITH YELLOW REFLECTIVE SHEETING. SHEETING IS TYPE H. SEE STANDARD SPECIFICATION 637.

⑧ DO NOT INSTALL REFLECTORS ON THE FIRST 50 FEET OF THE APPROACH END OF THE ENERGY ABSORBING TERMINAL. RAIL SPLICE LOCATIONS ARE THE ONLY ACCEPTABLE LOCATIONS FOR REFLECTORS.

⑨ REVERSE EVERY OTHER REFLECTOR FOR 2-WAY VISIBILITY. THE CONTRACTOR MAY FURNISH TWO-SIDED REFLECTORS IN LIEU OF ONE-SIDED REFLECTORS.

⑩ PROVIDE AN ANGLE OF BEND OF 90° ± 1° FOR TWO-SIDED REFLECTORS.

⑪ 25 FEET OF HALF POST SPACING IS REQUIRED ON APPROACH AND DEPARTURE ENDS OF QUARTER POST SPACING.

POST BOLTS ARE A ⅝" DIAMETER ASTM A307 GUARDRAIL BOLT. A POST BOLT REQUIRES ⅝" DIAMETER A563A DOUBLE RECESSED (DR) HEAVY HEX NUT AND ⅝" DIAMETER F844 FLAT WASHER. POST BOLTS MAY BE LONGER IF MULTIPLE BLOCKOUTS ARE BEING USED.

GUARD RAIL SPLICE BOLTS ARE A ⅝" DIAMETER ASTM A307 GUARDRAIL HEAD BOLT. A GUARDRAIL SPLICE BOLT REQUIRES ⅝" DIAMETER A563A DOUBLE RECESSED (DR) HEAVY HEX NUT.

REFLECTOR SPACING ⑧

	BEAM GUARD LENGTH	REFLECTOR SPACING	NO. SURFACES REFLECTORIZED	MIN. NO. REFLECTORS
ONE WAY TRAFFIC	< 200'	50' C-C	1	3
	> 200'	100' C-C	1	
TWO WAY TRAFFIC	< 200'	25' C-C	1 ⑨	6
	> 200'	50' C-C	1	
TWO WAY TRAFFIC	< 200'	50' C-C	2	3
	> 200'	100' C-C	2 ⑩	

ONE SIDED REFLECTOR DETAIL AND TYPICAL INSTALLATION ⑦

MIDWEST GUARDRAIL SYSTEM
(MGS) GUARDRAIL

STATE OF WISCONSIN
DEPARTMENT OF TRANSPO

S.D.D. 14 B 42-3b

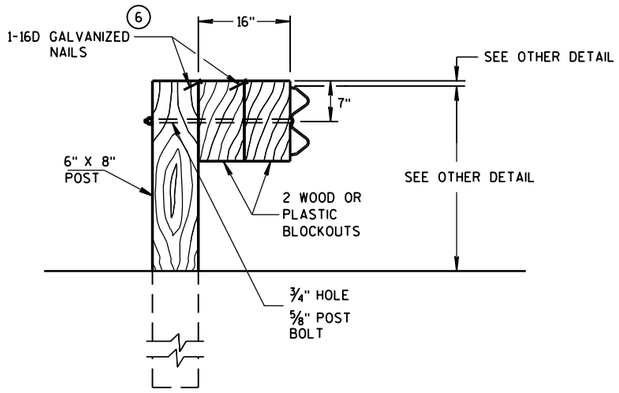

DETAIL FOR 16" BLOCKOUT DEPTH

IT IS ACCEPTABLE TO USE BLOCKOUTS UP TO 16" DEEP TO INCREASE THE POST OFFSET TO AVOID UNDERGROUND OBSTACLES. THERE IS NO LIMIT TO THE NUMBER OF POSTS THAT CAN HAVE ADDITIONAL BLOCKOUTS UP TO 16" DEEP.

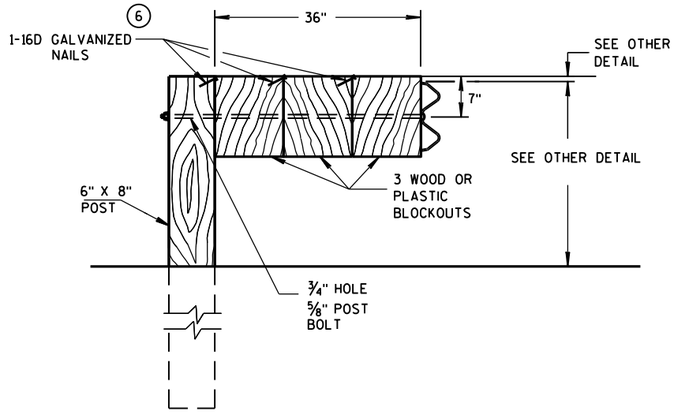

DETAIL FOR 36" BLOCKOUT DEPTH

NOTES: UNDER SPECIAL CIRCUMSTANCES, SUCH AS AVOIDING OBSTACLES THAT ARE NOT RELOCATED, IT IS ACCEPTABLE TO INSTALL ADDITIONAL BLOCKOUTS TO OBTAIN UP TO 36" DEPTH FOR ONE OR TWO POSTS IN A SECTION OF GUARDRAIL.

DO NOT USE 16" OR 36" BLOCKOUTS IF IT CAUSES THE POST TO BE DRIVEN BEYOND SHOULDER HINGE POINT OR CAUSES A FIXED OBJECT TO BE WITHIN THE DEFLECTION DISTANCE OF THE BARRIER.

NOTE: 1. ALL FILLETS SHALL HAVE A MINIMUM RADIUS OF 1/16".
2. IF THE BOLT EXTENDS MORE THAN 1/4" FROM THE NUT THE BOLT SHOULD BE TRIMMED BACK.

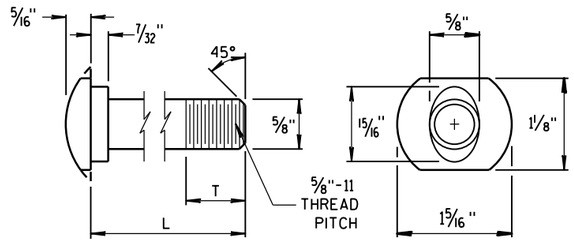

POST BOLT TABLE

L	T (MIN.)
1 1/4"	1 1/8"
2"	1 3/4"
10"	4"
14"	4 1/16"
18"	4"
21"	4 1/16"
25"	4"

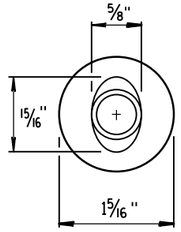

ALTERNATE BOLT HEAD

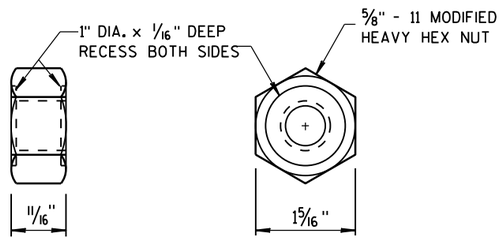

POST BOLT AND RECESS NUT

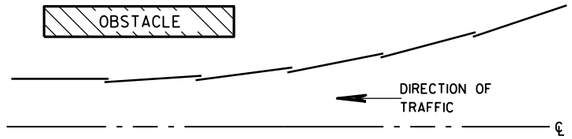

PLAN VIEW

BEAM LAPPING DETAIL

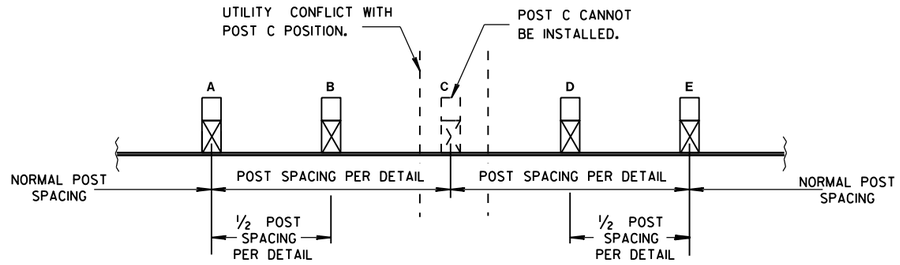

POST DRIVING FOR CONTINUOUS UNDERGROUND OBSTRUCTION

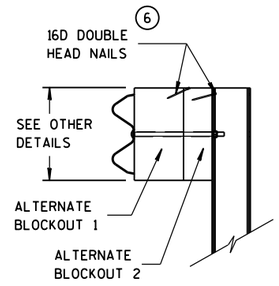

SIDE VIEW

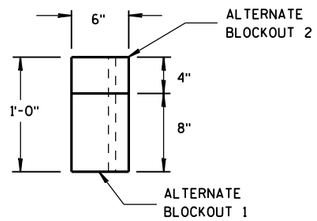

TOP VIEW

ALTERNATE WOOD BLOCKOUT DETAIL

MIDWEST GUARDRAIL SYSTEM (MGS) GUARDRAIL

STATE OF WISCONSIN
DEPARTMENT OF TRANSPORTATION

APPROVED
June 2014
DATE
/S/ Jerry H. Zogg
ROADWAY STANDARDS ENGINEER
FHWA

6
S.D.D. 14 B 42-3c

GENERAL NOTES

(A) THE SLOPE IN THE AREA BOUNDED BY THE GRADELINE, THE HINGE POINT LINE (HPL), AND THE CLEAR ZONE LIMITS (CZL) SHALL BE 4:1 OR FLATTER.

(B) AFTER FINAL ASSEMBLY, RECHECK CABLE TO BE SURE IT IS TAUT AND HAS NOT RELAXED.

(C) DIFFERENT MANUFACTURES REQUIRE DIFFERENT PERFORATED W-BEAM RAIL END PANELS. SEE MANUFACTURES INFORMATION.

(D) THE TOP OF THE STEEL TUBE ON POST 1 AND POST 2 SHALL NOT BE MORE THAN 3" ABOVE THE FINISH GROUND ELEVATION.

(F) ATTACH ALUMINUM SHEET TO E.A.T. HEAD USING 4 STAINLESS STEEL SELF-TAPPING SCREWS. ONE SCREW PER CORNER.

(G) ½" DIAMETER X 3" LONG LAG BOLT AND WASHER.

(H) HARDWARE VARIES BETWEEN DIFFERENT MANUFACTURES. SEE MANUFACTURE'S DRAWING FOR INFORMATION.

(I) DIMENSIONS MAY VARY. SEE MANUFACTURE'S INFORMATION.

SEE SDD 14B42 FOR MORE INFORMATION.

* DO NOT ATTACH BLOCKOUTS TO POSTS 1 AND 2.

DO NOT INSTALL REFLECTORS ON THE FIRST 50 FEET OF THE APPROACH END OF THE ENERGY ABSORBING TERMINAL.

W-BEAM RAIL SPLICES ARE LOCATED AT POST NUMBER 3, AND BETWEEN POST 5 AND 6, BETWEEN POSTS 7 AND 8, AND MIDDLE OF THE SPAN AFTER POST 9.

THE CENTER OF THE UPPER 3½" DIAMETER HOLE ON POST NUMBER 3 THROUGH POST 9 IS TO BE FLUSH WITH THE GROUND LINE UP TO A MAXIMUM OF 2" ABOVE GROUND LINE.

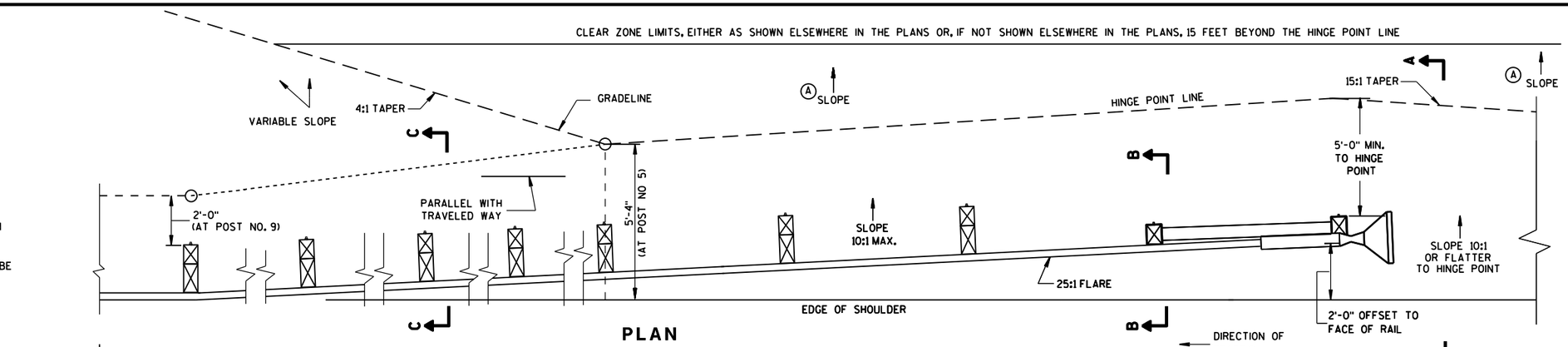

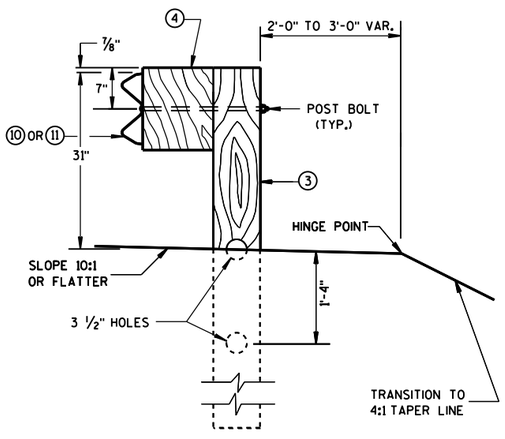

SECTION C-C
TYPICAL AT POST NOS. 3-9

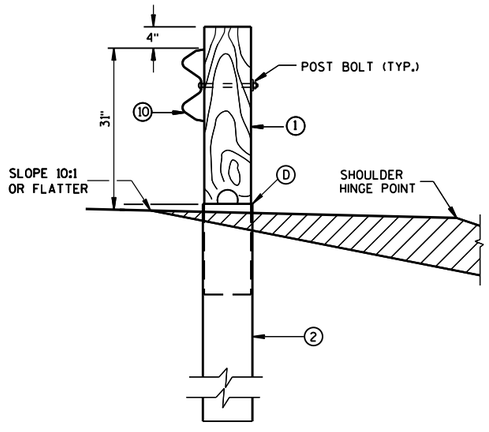

SECTION B-B
TYPICAL AT POST NO. 2*

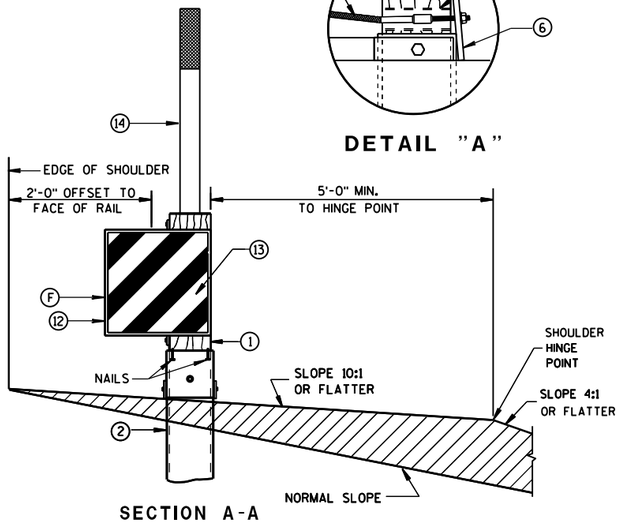

SECTION A-A
TYPICAL AT POST NO. 1*

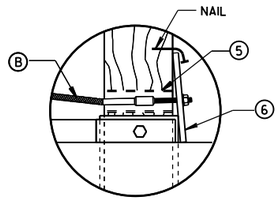

DETAIL "A"

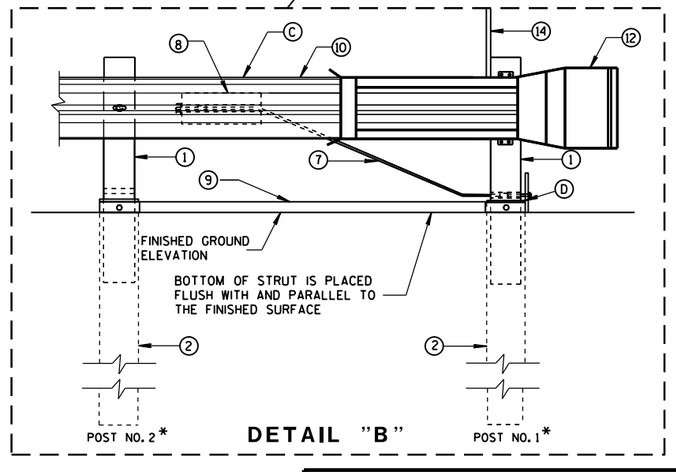

DETAIL "B"

MIDWEST GUARDRAIL SYSTEM
ENERGY ABSORBING TERMINAL
(MGS)

STATE OF WISCONSIN
DEPARTMENT OF TRANSPOR 99

S.D.D. 14 B 44-2a

6

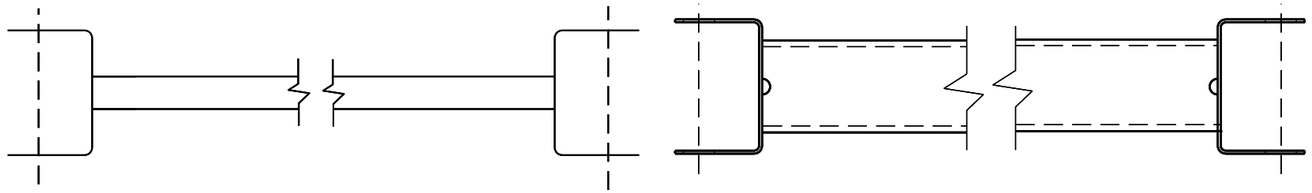

GENERIC GROUND STRUT (9) (H)

BILL OF MATERIALS

PART NO.	DESCRIPTION MATERIALS PROVIDED BY MGS EAT MANUFACTURER. SEE MANUFACTURER'S DETAILS FOR MORE INFORMATION.
(1)	WOOD BREAKAWAY POST
(2)	6" X 8" X 0.188", 6'-0" LONG FOUNDATION TUBE AT POSTS 1 AND 2
(3)	WOOD CRT
(4)	WOOD BLOCKOUT
(5)	PIPE SLEEVE
(6)	BEARING PLATE
(7)	BCT CABLE ASSEMBLY
(8)	ANCHOR CABLE BOX
(9)	GROUND STRUT
(10)	PERFORATED W-BEAM RAIL END PANEL, 12'-6" LONG.
(11)	STANDARD W-BEAM RAIL. MULTIPLE SECTIONS REQUIRED. SECTIONS VARY IN LENGTH.
(12)	END SECTION EAT
(13)	0.040" ALUMINUM SHEET WITH REFLECTIVE SHEETING TYPE F PER SECTION 637 OF THE STANDARD SPECIFICATIONS
(14)	EAT MARKER POST - YELLOW (SEE APPROVED PRODUCTS LIST)

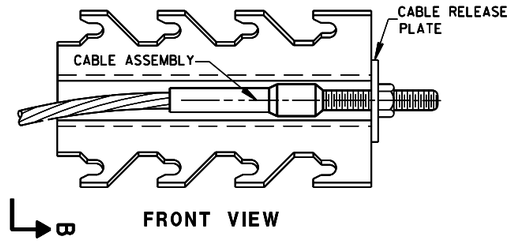

FRONT VIEW

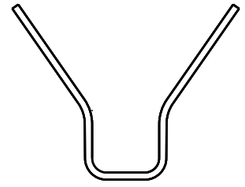

SECTION B-B

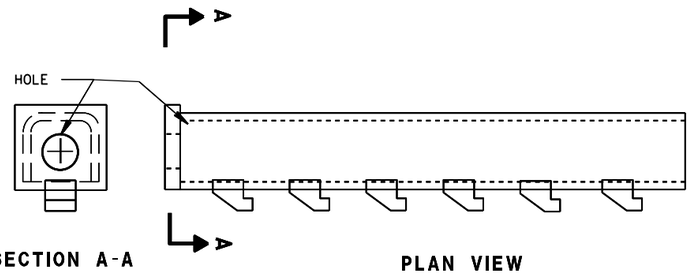

SECTION A-A

PLAN VIEW

GENERIC ANCHOR CABLE BOX (8) (H)

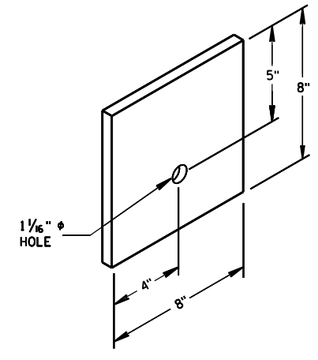

BEARING PLATE (6)

MIDWEST GUARDRAIL SYSTEM
ENERGY ABSORBING TERMINAL
(MGS)

STATE OF WISCONSIN
DEPARTMENT OF TRANSPOI

6

S.D.D. 14 B 44-2b

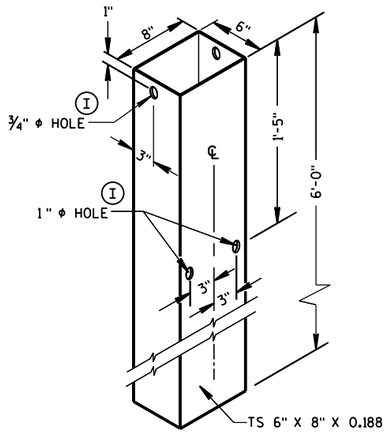

FOUNDATION TUBE (2)

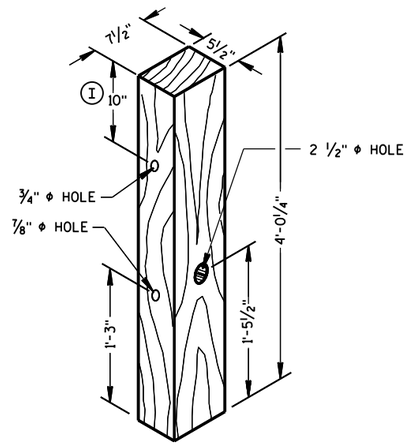

POSTS NUMBER 1 AND 2

WOOD BREAKAWAY POST (1)

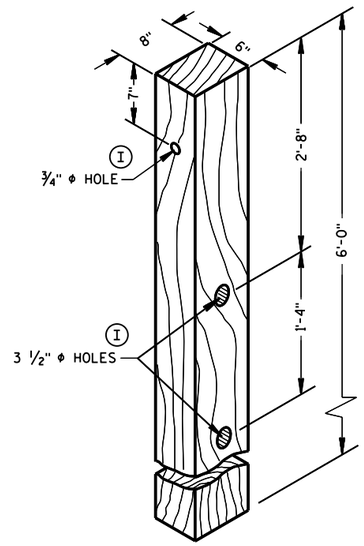

POSTS NUMBER 3-9

WOOD CRT POST (3)

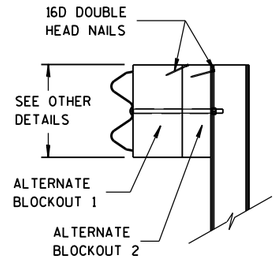

SIDE VIEW

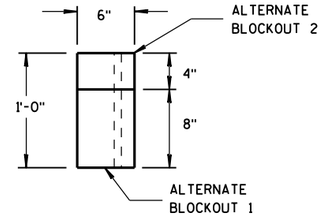

TOP VIEW

ALTERNATE WOOD BLOCKOUT DETAIL

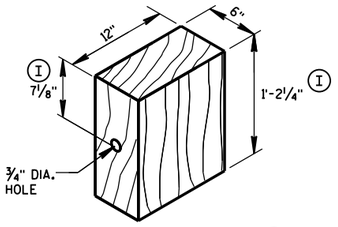

WOOD BLOCKOUT (4)

REQ'D. AT ALL POSTS EXCEPT POST NO'S 1 & 2

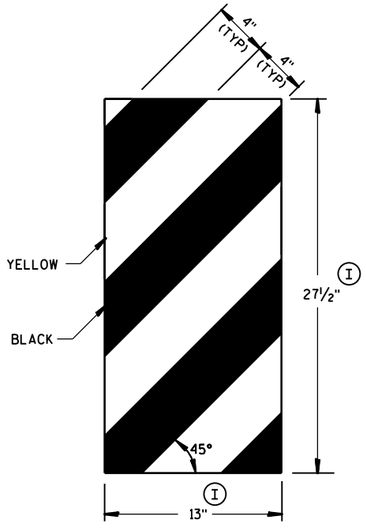

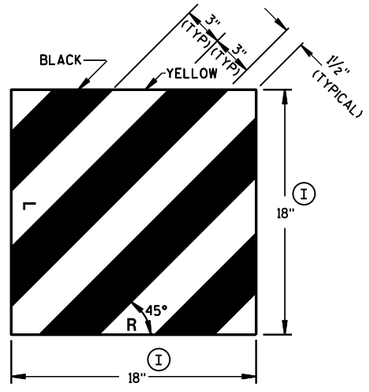

GENERIC REFLECTIVE SHEETING (13) (H)

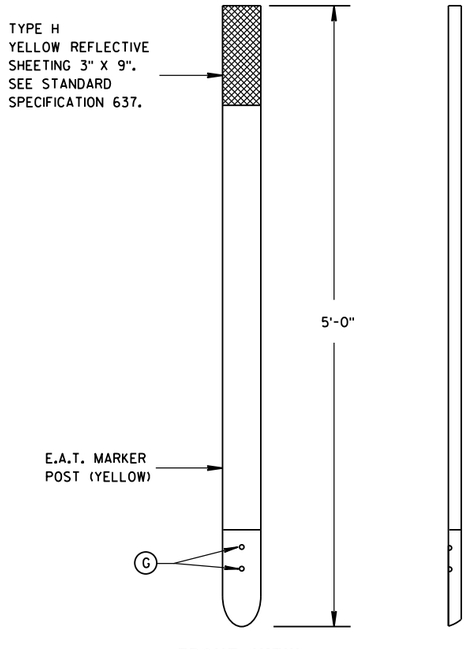

FRONT VIEW

SIDE VIEW

E.A.T. MARKER POST (14)

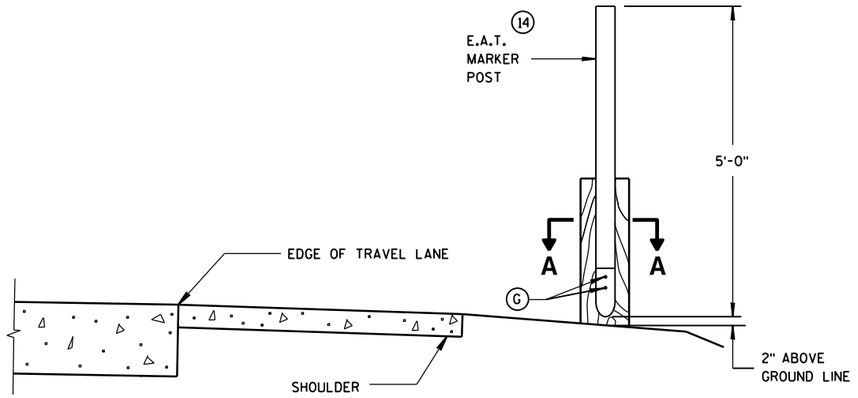

TYPICAL INSTALLATION OF E.A.T. MARKER POST BACKSIDE OF POST NO. 1

(E.A.T. AND RAIL REMOVED FOR CLARITY)

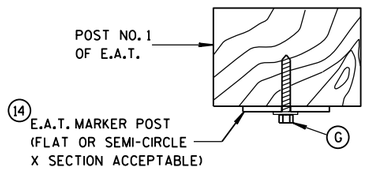

SECTION A-A

MIDWEST GUARDRAIL SYSTEM ENERGY ABSORBING TERMINAL (MGS)

STATE OF WISCONSIN
DEPARTMENT OF TRANSPORTATION

APPROVED
June 2014 — DATE
/S/ Jerry H. Zogg — ROADWAY STANDARDS ENGINEER
FHWA

6

S.D.D. 14 B 44-2c

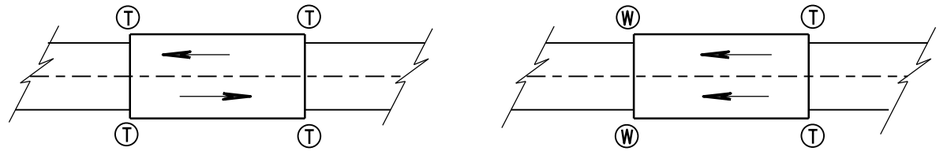

TWO WAY TRAFFIC

ONE WAY TRAFFIC

Ⓣ THRIE BEAM CONNECTION

Ⓦ W-BEAM CONNECTION WHEN REQUIRED

TYPICAL LOCATIONS OF THRIE BEAM AND W-BEAM CONNECTIONS TO BRIDGE

GENERAL NOTES

IF ROCK IS ENCOUNTERED, REMOVE ROCK TO FULL DEPTH OF POST PLUS 2½", AND 12" DIAMETER AROUND POST. SEE 14B42 FOR MORE DETAILS.

TRANSITION USES STEEL POSTS ONLY.

SEE STANDARD DETAIL DRAWING 14 B 42 FOR MORE INFORMATION.

① BRIDGE RAILING TYPE "W" DOES NOT REQUIRE A TERMINAL CONNECTOR.

② OPTIONAL CURB AND GUTTER OR DRAINAGE FEATURE SEE PLAN FOR INFORMATION.

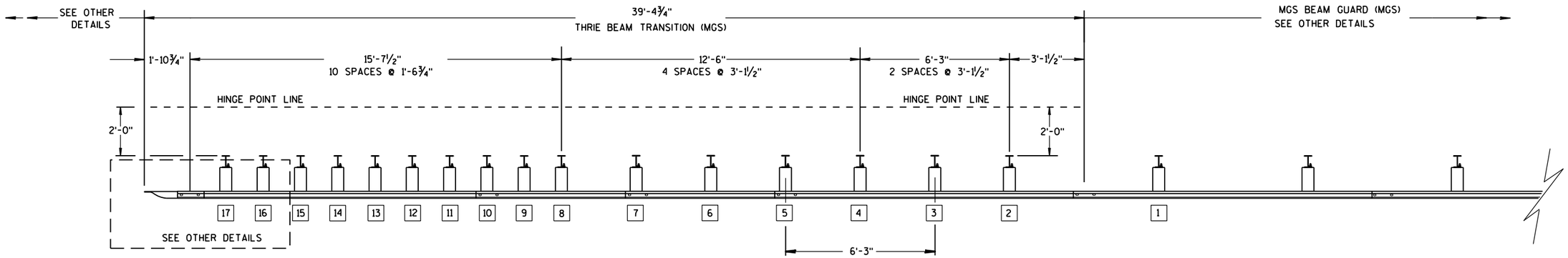

PLAN VIEW

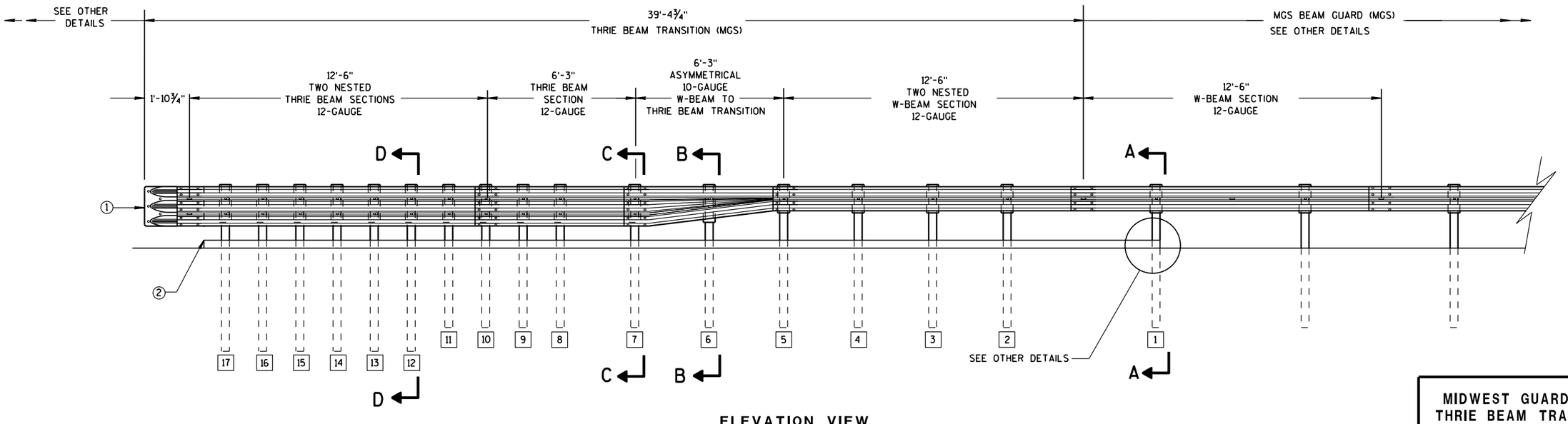

ELEVATION VIEW

MIDWEST GUARDRAIL SYSTEM THRIE BEAM TRANSITION

MIDWEST GUARDRAIL SYSTEM
THRIE BEAM TRANSITION (MGS)

STATE OF WISCONSIN
DEPARTMENT OF TRANSPOI

6

S.D.D. 14 B 45-4a

GENERAL NOTES

(2) OPTIONAL CURB AND GUTTER OR DRAINAGE_FEATURE SEE PLAN FOR INFORMATION.

(3) WHEN USING STEEL POSTS AND WOOD BLOCKOUTS INSTALL FOUR 10D GALVANIZED NAILS. INSTALL NAILS AT THE BACK CORNERS OF THE BLOCK AND BEND THE NAILS OVER THE FLANGE OF THE STEEL POST.

(4) TOLERANCE FOR TOP OF W-BEAM RAIL IS ± 1".

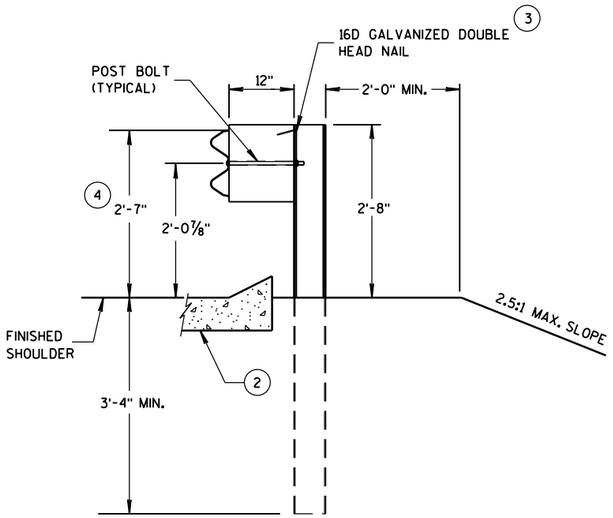

SECTION A-A

POSTS 1-5

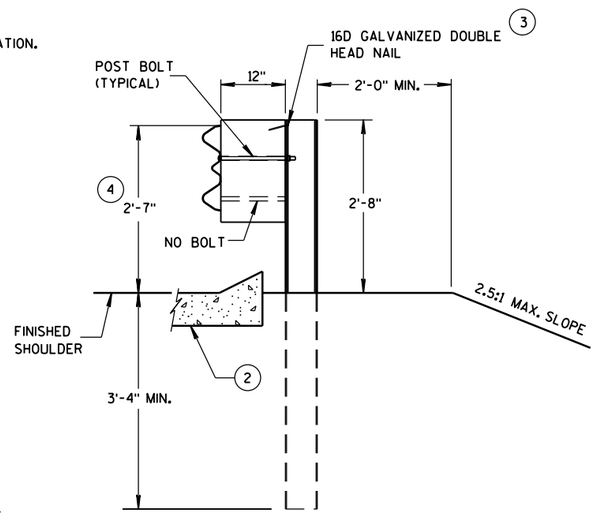

SECTION B-B

POST 6

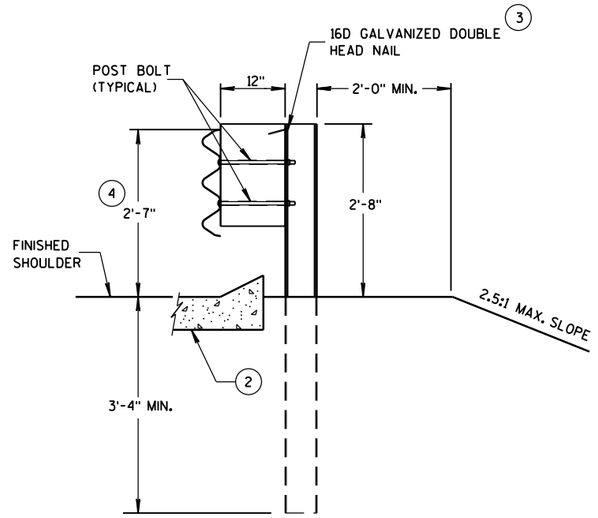

SECTION C-C

POSTS 7-11

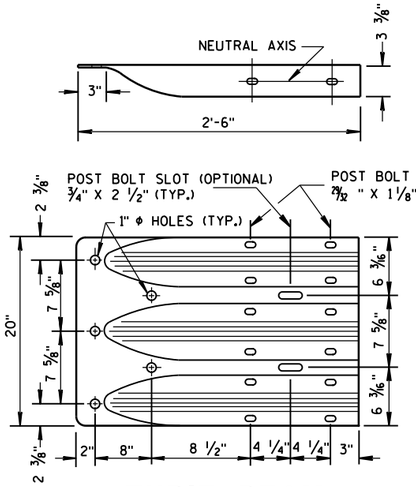

THRIE BEAM TERMINAL CONNECTOR

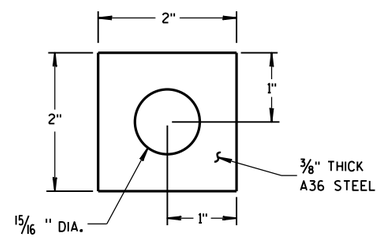

PLATE WASHER DETAIL

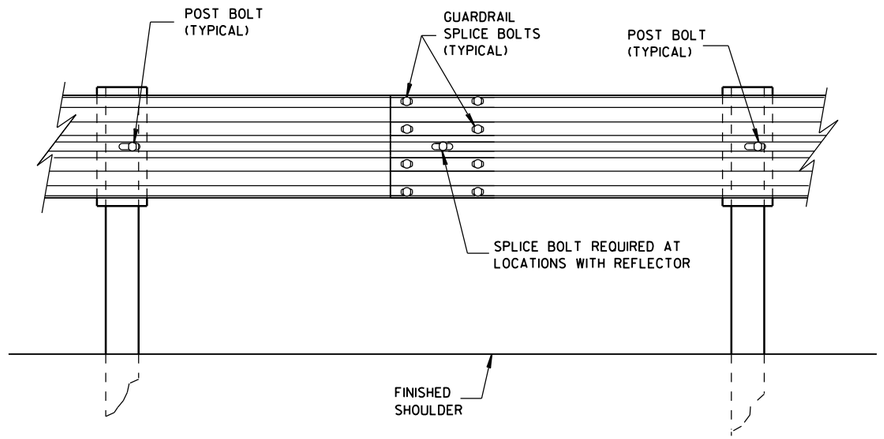

SPLICE DETAIL

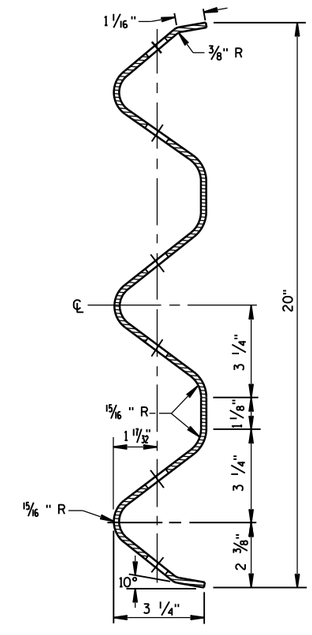

SECTION THRU THRIE BEAM RAIL ELEMENT

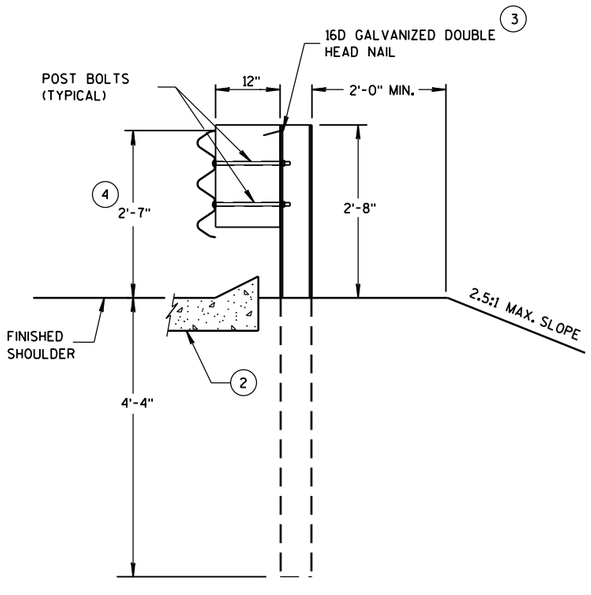

SECTION D-D

POSTS 12-17

MIDWEST GUARDRAIL SYSTEM
THRIE BEAM TRANSITION (MGS)

STATE OF WISCONSIN
DEPARTMENT OF TRANSPOI

6

S.D.D. 14 B 45-4b

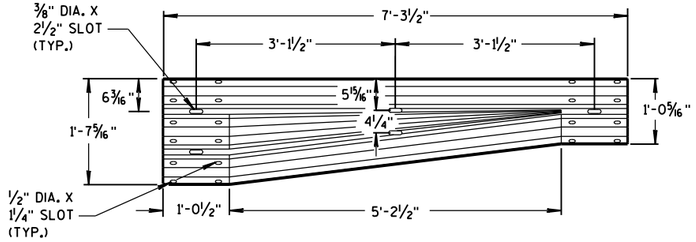

W-BEAM TO THRIE BEAM TRANSITION SECTION

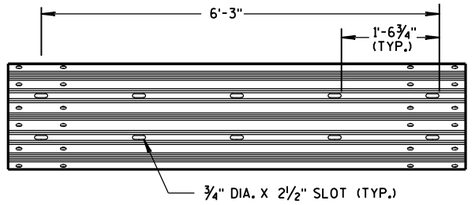

6'-3" THRIE BEAM SECTION

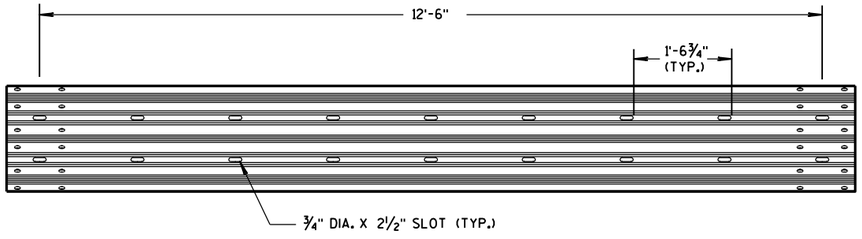

12'-6" THRIE BEAM SECTION

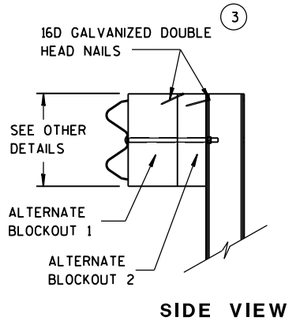

SIDE VIEW

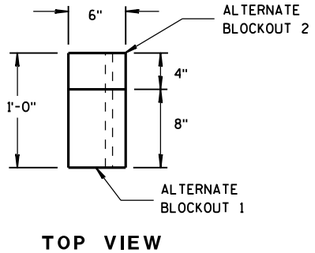

TOP VIEW

ALTERNATE WOOD BLOCKOUT DETAIL

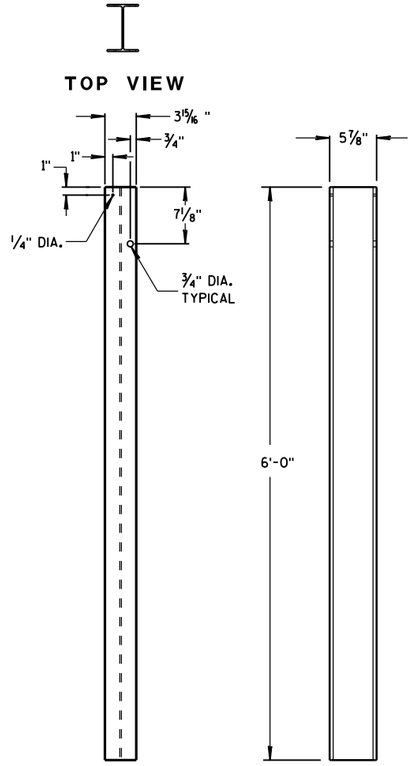

STEEL POSTS 1-5

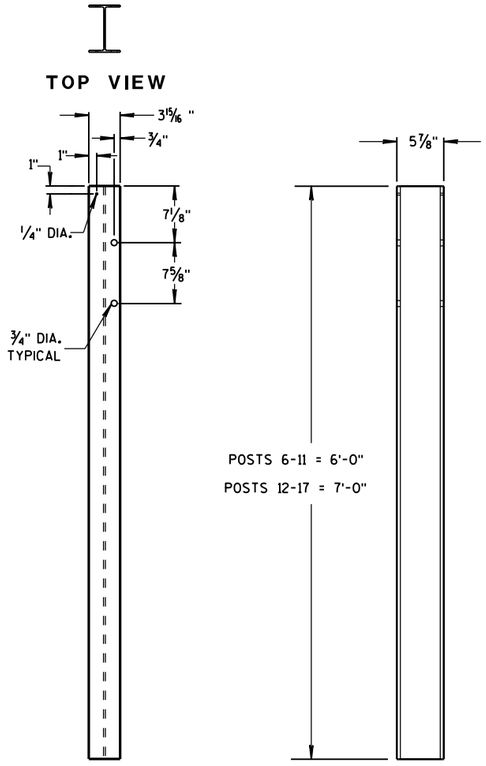

STEEL POSTS 6-17

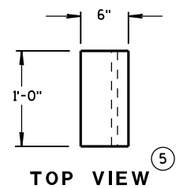

TOP VIEW

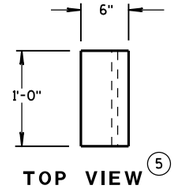

TOP VIEW

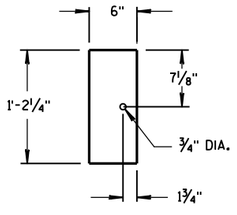

FRONT VIEW

BLOCKOUT POSTS 1-5

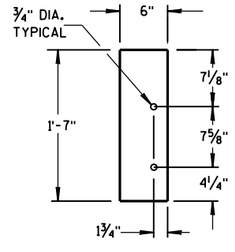

FRONT VIEW

BLOCKOUT POSTS 6-17

GENERAL NOTES

STEEL POSTS ARE W6X9 OR W6X8.5.

BOLT HOLES FOR POST ARE ON FRONT AND OF SIDE OF POST.

(3) WHEN USING STEEL POSTS AND WOOD BLOCKOUTS INSTALL FOUR 16D GALVANIZED NAILS. INSTALL NAILS AT THE BACK CORNERS OF THE BLOCK AND BEND THE NAILS OVER THE FLANGE OF THE STEEL POST.

(5) WOOD BLOCKS MAY BE CONSTRUCTED OUT OF 2 WOOD BLOCKS. SEE ALTERNATE WOOD BLOCK DETAIL.

MIDWEST GUARDRAIL SYSTEM
THRIE BEAM TRANSITION (MGS)

STATE OF WISCONSIN
DEPARTMENT OF TRANSPOI

6

S.D.D. 14 B 45-4c

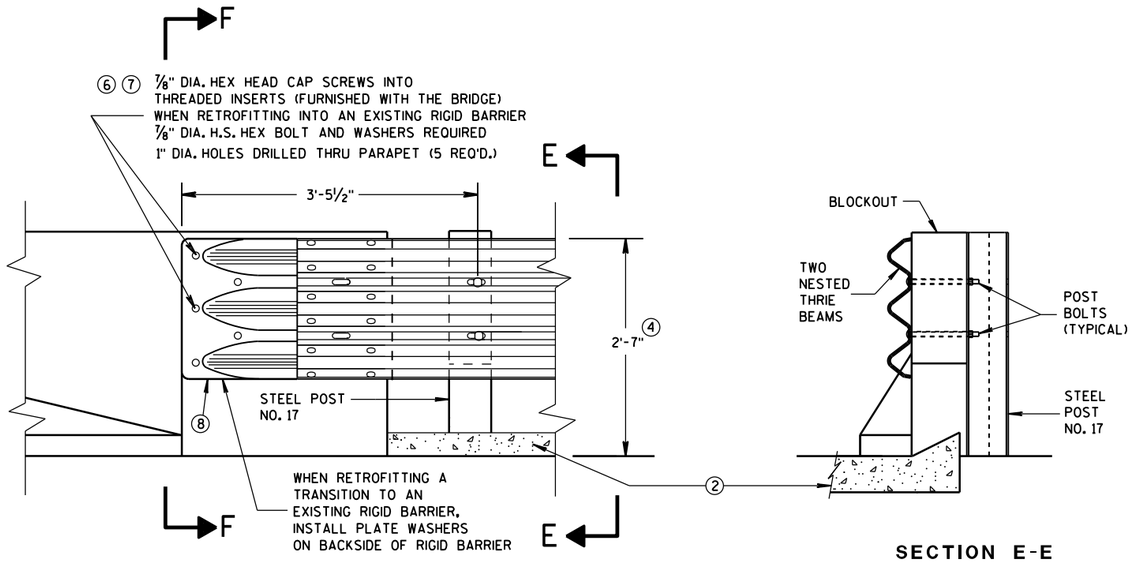

FRONT VIEW

SECTION E-E

THRIE BEAM CONNECTION TO BRIDGE PARAPET WITH SQUARE ENDS

GENERAL NOTES

THESE ARE TYPICAL CONNECTION DETAILS. ADJUST THE POSTION OF CONNECTIONS TO EXISTING BRIDGES TO FIT THE ACTUAL BRIDGE AND SITE DIMENSIONS.

② OPTIONAL CURB AND GUTTER OR DRAINAGE FEATURE SEE PLAN FOR INFORMATION.

④ TOLERANCE FOR TOP OF BEAM IS ± 1".

⑥ DRILLING BOLT HOLES THROUGH THE PARAPET, BOLTS, NUTS, WASHERS AND REPAIRING DAMAGED CONCRETE ARE INCIDENTAL TO THE CONTRACT.

⑦ BOLTS MAY BE A325 BOLTS OR A449 BOLTS. BOLT LENGTH AND THREADING LENGTH ARE TO ALLOW FOR A TIGHT CONNECTION BETWEEN RIGID BARRIER AND THRIE BEAM CONNECTION PLATE. CONTRACTOR IS TO FIELD VERIFY BOLT LENGTH AND THREAD LENGTH. ONE ROUND WASHER REQUIRED BETWEEN BOLT HEAD AND THRIE BEAM CONNECTOR PLATE. BOLTS THAT EXTEND THROUGH THE PARAPET AND OUT THE BACK FACE REQUIRE A HARDENED ROUND STEEL WASHER THAT IS 2" O.D. X 5/8" THICK AND ONE PLATE WASHER. REPAIR ANY DAMAGED CONCRETE FROM BOLT INSTALLATION.

⑧ THE RECESS FOR A W-BEAM CONNECTION, WHICH EXISTS ON SOME PARAPETS OF THIS TYPE, SHALL BE FILLED WITH A TREATED TIMBER BLOCKOUT. BLOCKOUT SIZE IS 1'-6" X 2'-0" X 3 1/2".

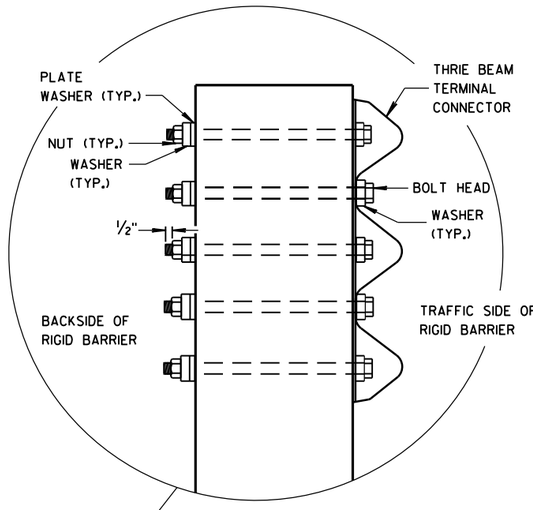

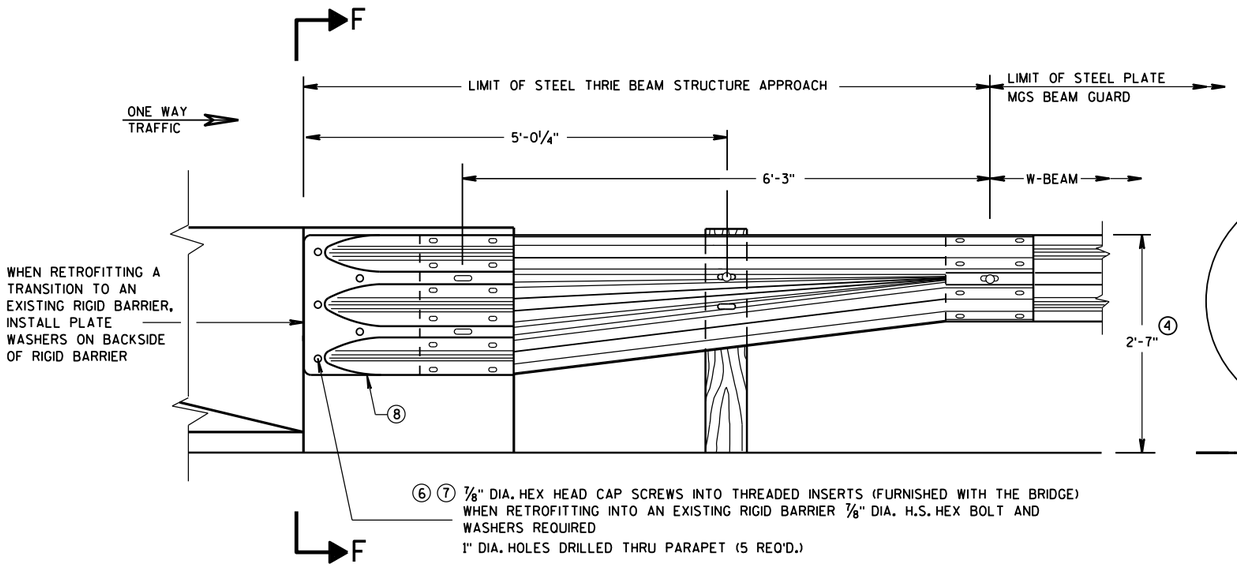

FRONT VIEW

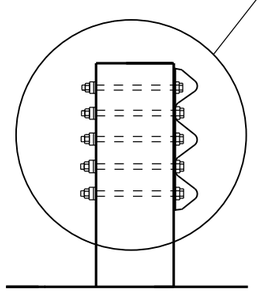

SECTION F-F

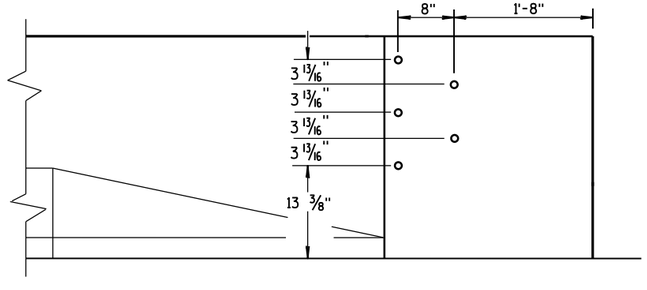

DRILL HOLE LOCATION

W BEAM TRANSITION AND CONNECTION TO BRIDGE PARAPETS WITH SQUARE ENDS

(USE ONLY ON THE TRAFFIC EXIT END OF ONE WAY BRIDGES)

MIDWEST GUARDRAIL SYSTEM
THRIE BEAM TRANSITION (MGS)

STATE OF WISCONSIN
DEPARTMENT OF TRANSPORTATION

APPROVED
June, 2015 — DATE
/S/ Jerry H. Zogg — ROADWAY STANDARDS DEVELOPMENT ENGINEER
FHWA

6

S.D.D. 14 B 45-4d

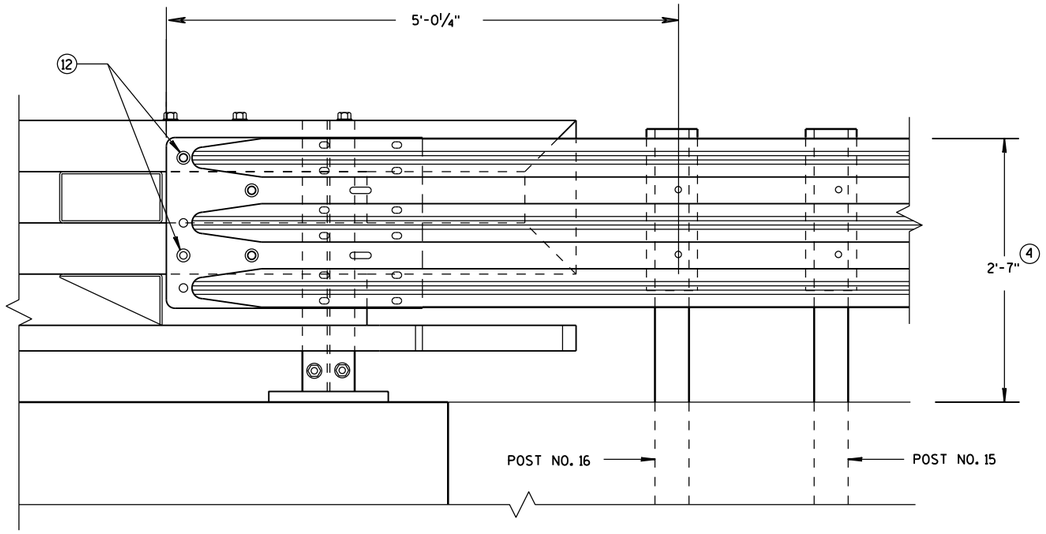

ELEVATION OF DETAIL AT NY3 END POST

THRIE BEAM RAIL ATTACHMENT

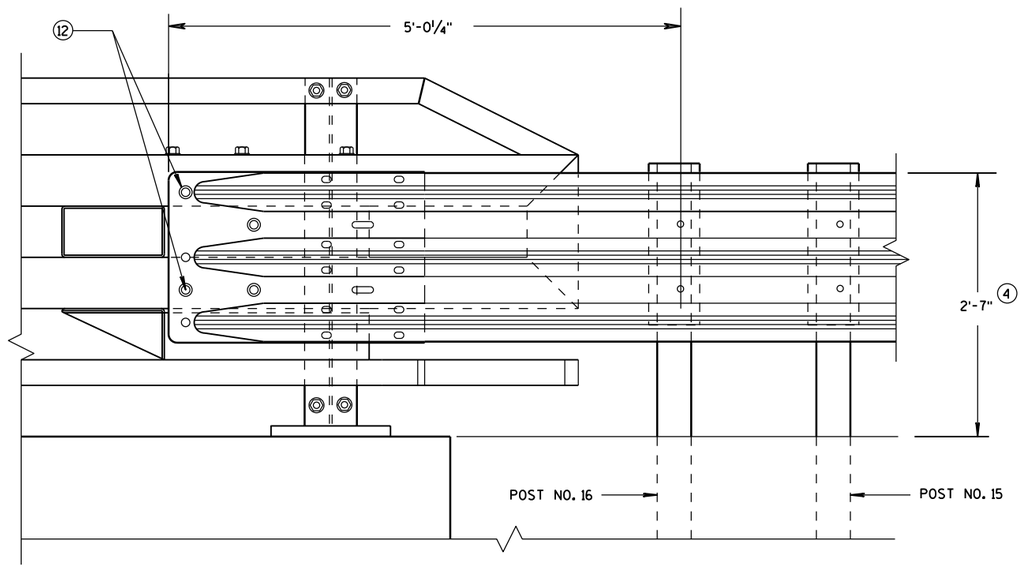

ELEVATION OF DETAIL AT NY4 END POST

THRIE BEAM RAIL ATTACHMENT

GENERAL NOTES

(4) TOLERANCE FOR TOP OF BEAM IS ± 1".

(12) BOLTS MAY BE A325 BOLTS OR A449 BOLTS. BOLT LENGTH AND THREADING LENGTH ARE TO ALLOW FOR A TIGHT CONNECTION BETWEEN RIGID BARRIER AND THRIE BEAM CONNECTION PLATE. CONTRACTOR IS TO FIELD VERIFY BOLT LENGTH AND THREAD LENGTH. ONE ROUND WASHER REQUIRED BETWEEN BOLT HEAD AND THRIE BEAM CONNECTOR PLATE. ON BACKSIDE OF PARAPET ONE ROUND WASHER, AND NUT REQUIRED. BOLT THREAD IS TO EXTEND ½-INCH BEYOND NUT.

MIDWEST GUARDRAIL SYSTEM
THRIE BEAM TRANSITION (MGS)

STATE OF WISCONSIN
DEPARTMENT OF TRANSPORTATION

APPROVED
June, 2015
DATE

/S/ Jerry H. Zogg
ROADWAY STANDARDS D ENGINEER

FHWA

NT

6

S.D.D. 14 B 45-4k

6

S.D.D. 14 B 45-4k

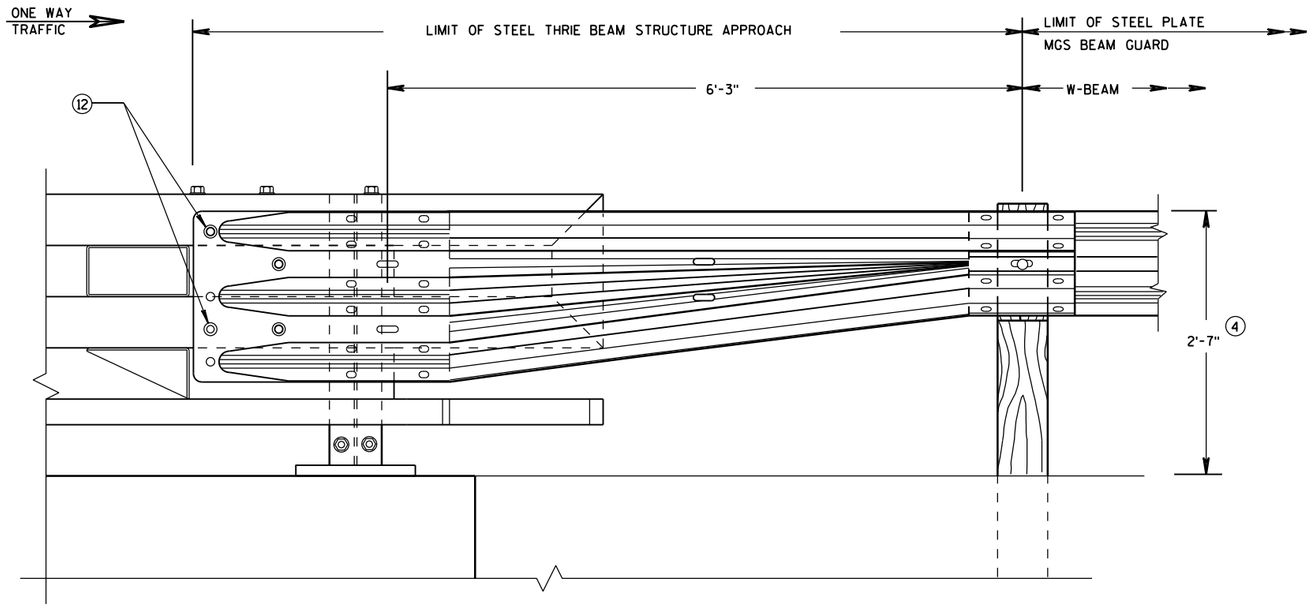

FRONT VIEW

W BEAM TRANSITION AND CONNECTION TO BRIDGE RAILING TYPE "NY3"

(USE ONLY ON THE TRAFFIC EXIT END OF ONE WAY BRIDGES)

GENERAL NOTES

(4) TOLERANCE FOR TOP OF BEAM IS ± 1".

(12) BOLTS MAY BE A325 BOLTS OR A449 BOLTS. BOLT LENGTH AND THREADING LENGTH ARE TO ALLOW FOR A TIGHT CONNECTION BETWEEN RIGID BARRIER AND THRIE BEAM CONNECTION PLATE. CONTRACTOR IS TO FIELD VERIFY BOLT LENGTH AND THREAD LENGTH. ONE ROUND WASHER REQUIRED BETWEEN BOLT HEAD AND THRIE BEAM CONNECTOR PLATE. ON BACKSIDE OF PARAPET ONE ROUND WASHER, AND NUT REQUIRED. BOLT THREAD IS TO EXTEND ½-INCH BEYOND NUT.

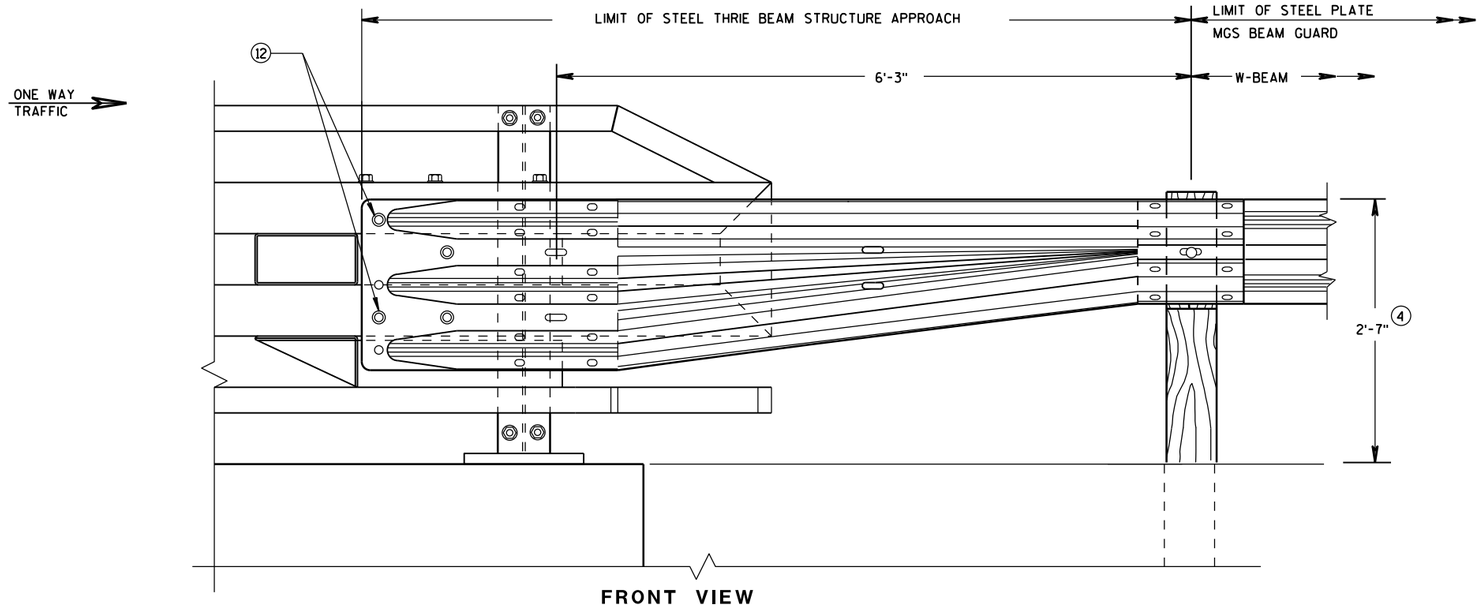

FRONT VIEW

W BEAM TRANSITION AND CONNECTION TO BRIDGE RAILING TYPE "NY4"

(USE ONLY ON THE TRAFFIC EXIT END OF ONE WAY BRIDGES)

MIDWEST GUARDRAIL SYSTEM
THRIE BEAM TRANSITION (MGS)

STATE OF WISCONSIN
DEPARTMENT OF TRANSPORTATION

APPROVED
June, 2015 — DATE
/S/ Jerry H. Zogg — ROADWAY STANDARDS DEVELOPMENT ENGINEER
FHWA

6

S.D.D. 14 B 45-4L

6

S.D.D. 14 B 45-4L

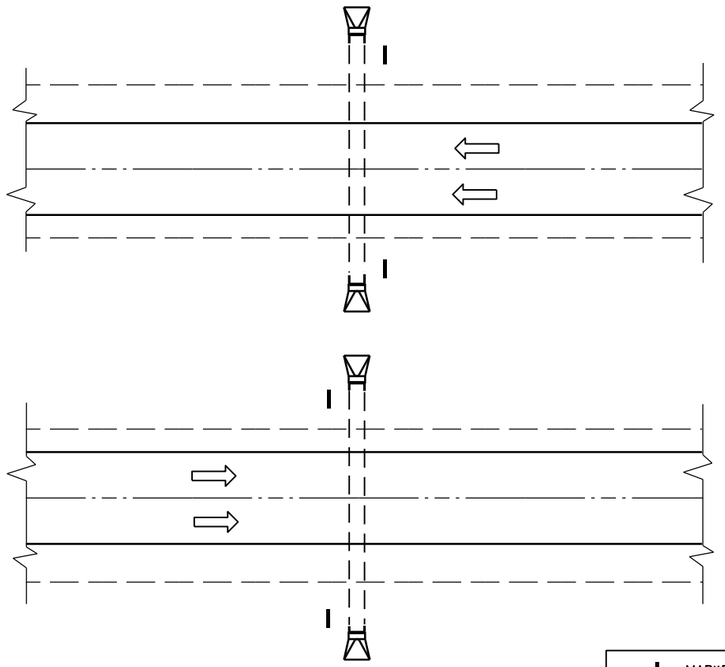

PLAN VIEW

DIVIDED HIGHWAY

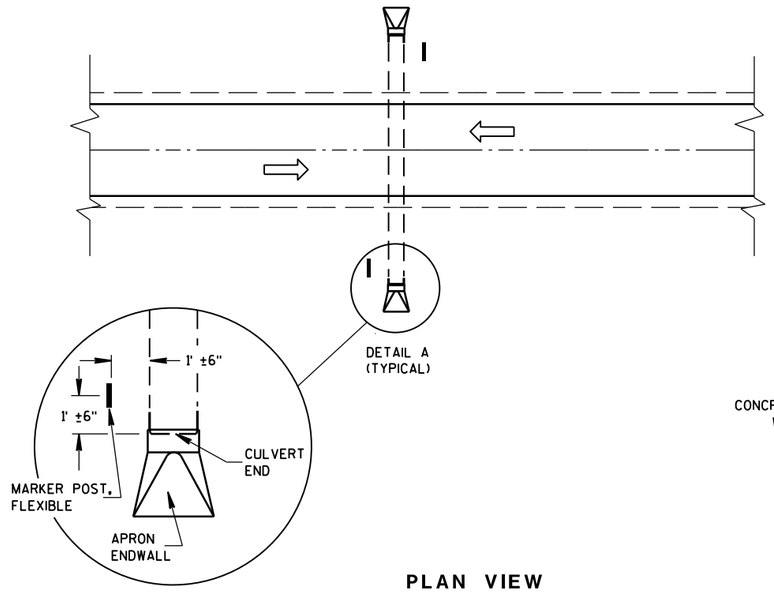

DETAIL A
(TYPICAL)

PLAN VIEW

UNDIVIDED HIGHWAY

MARKER POST, FLEXIBLE

DIRECTION OF TRAFFIC FLOW

GENERAL NOTES

DETAILS OF CONSTRUCTION, MATERIALS AND WORKMANSHIP NOT SHOWN ON THIS DRAWING SHALL CONFORM TO THE PERTINENT REQUIREMENTS OF THE STANDARD SPECIFICATIONS AND THE APPLICABLE SPECIAL PROVISIONS.

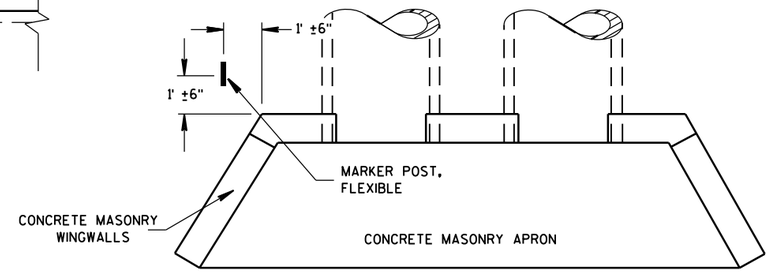

PLAN VIEW

CONCRETE MASONRY ENDWALLS FOR CULVERT PIPE AND PIPE ARCH

FLEXIBLE MARKER POST LOCATION

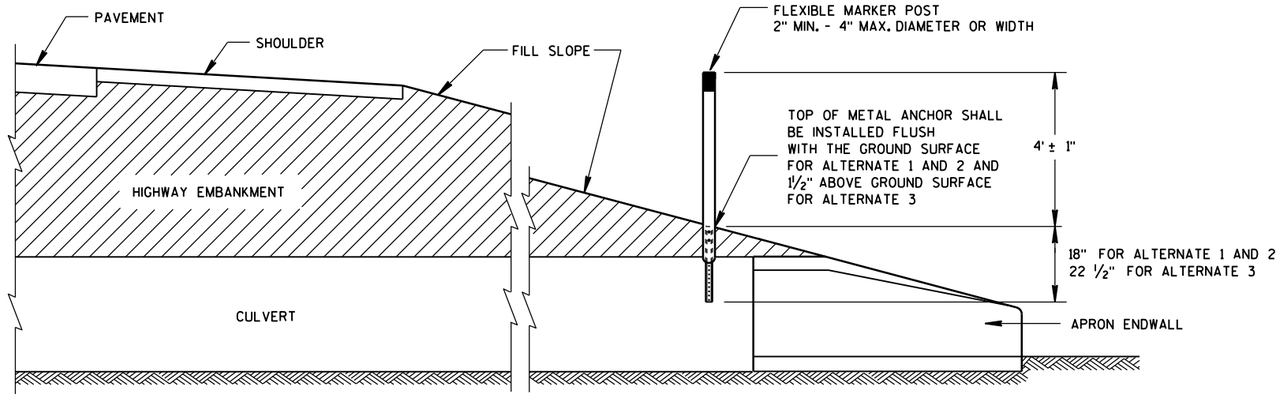

CROSS SECTION

FLEXIBLE MARKER POST

FLEXIBLE MARKER POST FOR CULVERT END

STATE OF WISCONSIN
DEPARTMENT OF TRANSPOI

6

S.D.D. 15 A 3-2a

6

S.D.D. 15 A 3-2a

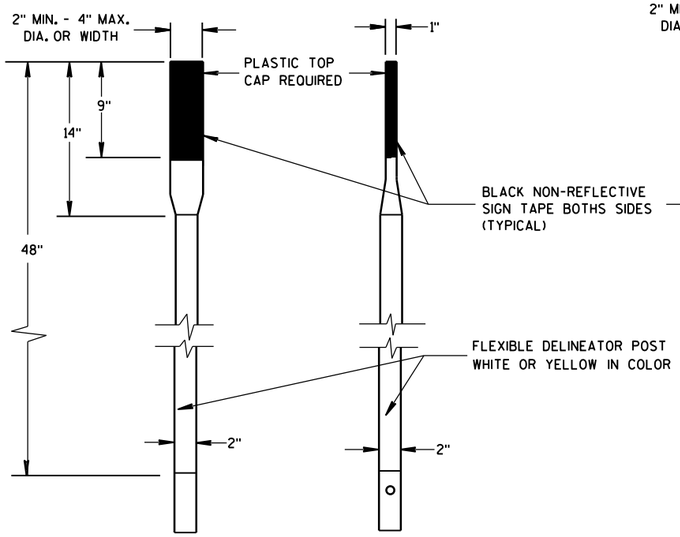

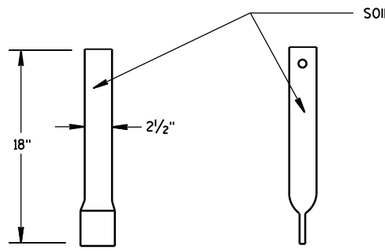

FRONT VIEW SIDE VIEW

ALTERNATE 1

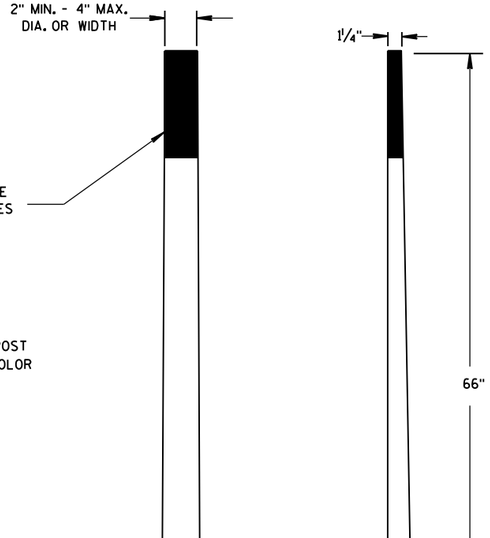

FRONT VIEW SIDE VIEW

ALTERNATE 2

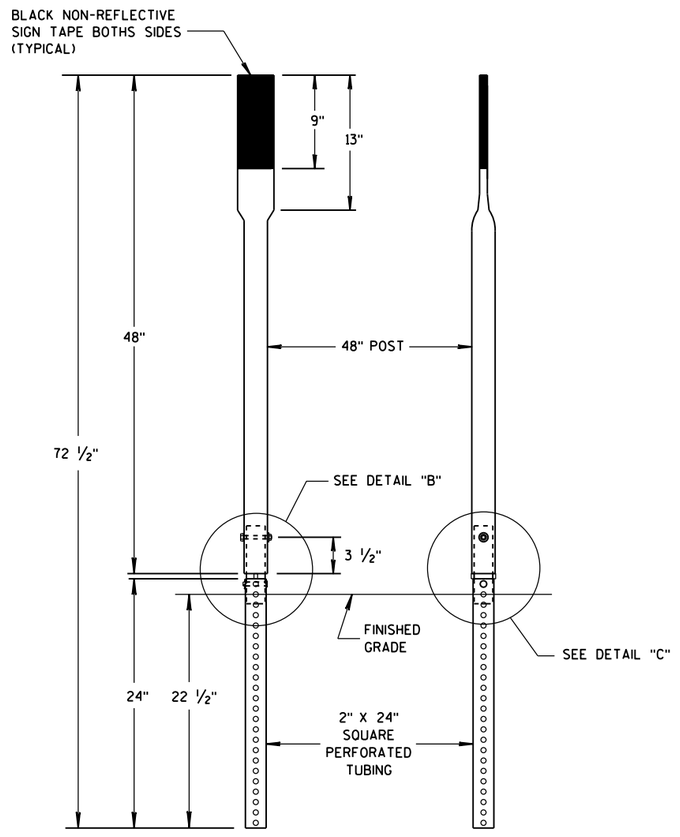

FRONT VIEW SIDE VIEW

ALTERNATE 3

FLEXIBLE MARKER POSTS

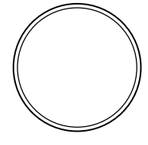

SECTION A-A

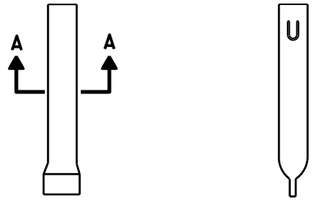

FRONT VIEW SIDE VIEW

ALTERNATE 1

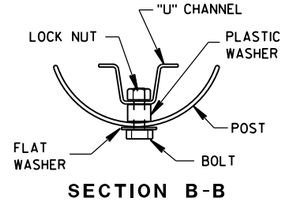

SECTION B-B

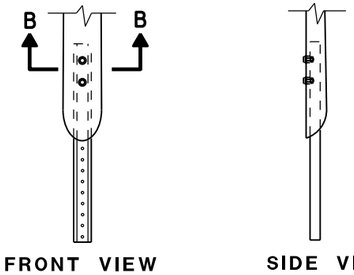

FRONT VIEW SIDE VIEW

ALTERNATE 2

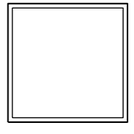

SECTION C-C

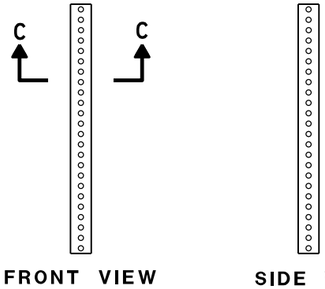

FRONT VIEW SIDE VIEW

ALTERNATE 3

FLEXIBLE MARKER POST ANCHORS

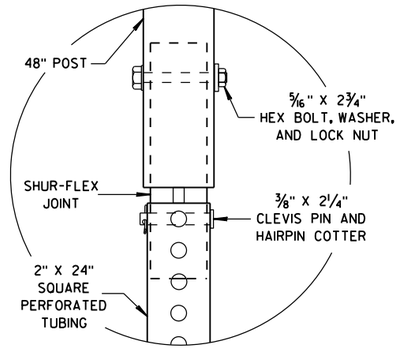

DETAIL B

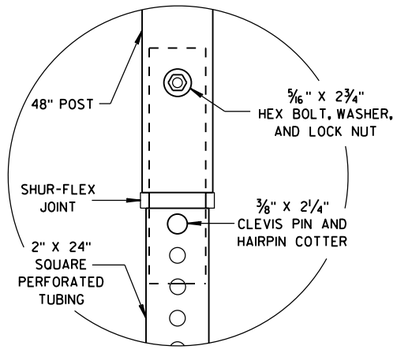

DETAIL C

FLEXIBLE MARKER POST
FOR CULVERT END

STATE OF WISCONSIN
DEPARTMENT OF TRANSPORTATION

APPROVED
10/1/2012
DATE
/S/ Travis Feltes
STATE TRAFFIC ENGINEER
FHWA

6

S.D.D. 15 A 3-2b

6

S.D.D. 15 A 3-2b

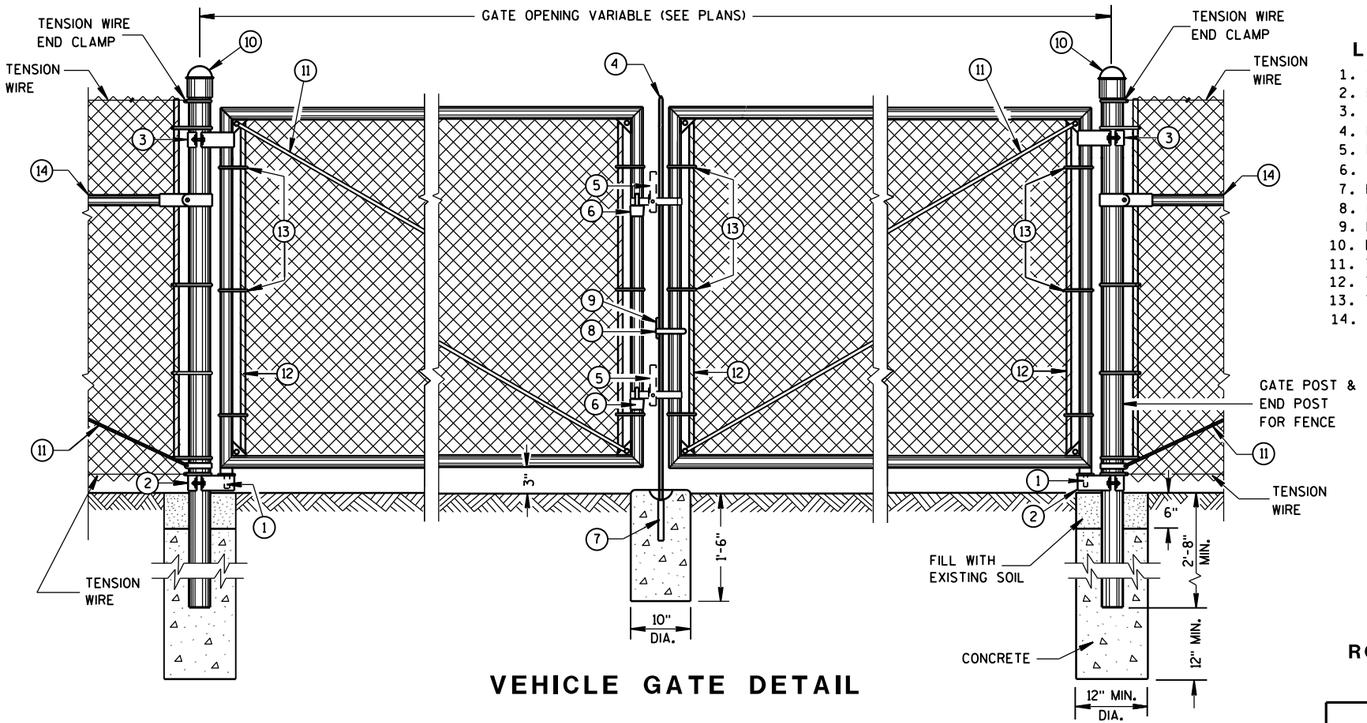

VEHICLE GATE DETAIL

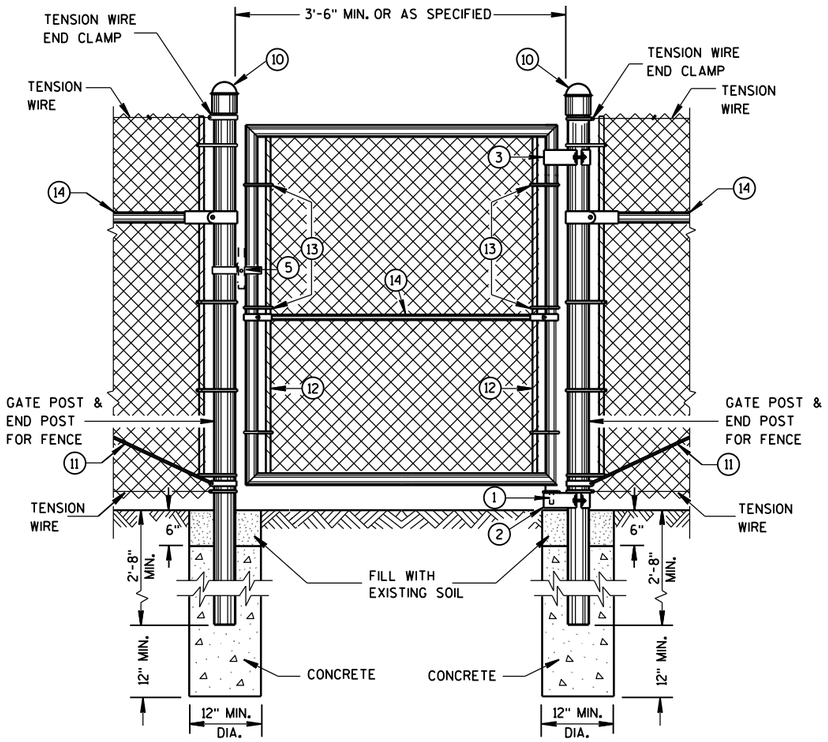

PEDESTRIAN GATE DETAIL

LEGEND

1. STRAIGHT PLUG
2. BOTTOM HINGE
3. TOP HINGE
4. PLUNGER ROD
5. FULCRUM LATCH
6. FORK CATCH *
7. PLUNGER ROD CATCH
8. LOCK KEEPER GUIDE
9. LOCK KEEPER
10. DOME TOPS
11. TRUSS RODS
12. TENSION BAR
13. TENSION BANDS
14. BRACE RAIL

*NOT REQUIRED ON SINGLE SWING PEDESTRIAN GATE

GENERAL NOTES

FENCE POSTS INSTALLED ON CONCRETE WALLS SHALL BE ANCHORED INTO EMBEDDED METAL SLEEVES OR CORED HOLE BY FILLING THE ANNULAR SPACE WITH PEA GRAVEL FOLLOWED BY AN EPOXY RESIN ADHESIVE. THE EPOXY RESIN ADHESIVE SHALL CONFORM TO THE REQUIREMENTS OF AASHTO M 235, CLASS A, B OR C.

USE FENCE FABRIC KNUCKLED AT BOTH SELVAGES.

FOR LEAF GATES GREATER THAN 8 FEET WIDE, INSTALL INTERIOR VERTICAL BRACE RAIL AT 8 FOOT INTERVALS.

FOR FABRIC HEIGHTS GREATER THAN 8 FEET, INSTALL INTERIOR HORIZONTAL BRACE RAILS TO LEAF GATE.

MAXIMUM SAG FOR OUTER GATE MEMBER SHALL NOT EXCEED THE GREATER OF 1% OF THE LEAF GATE WIDTH OR 2 INCHES.

USE TYPE 2, CLASS 3, MARCELLED/CRIMPED, TENSION WIRE PER ASTM A 817.

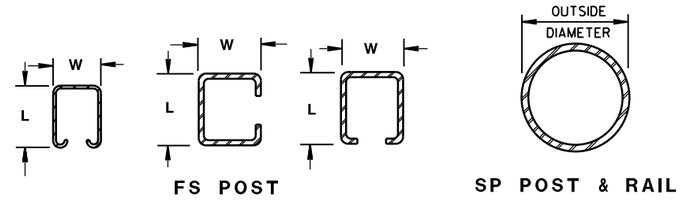

FS POST

SP POST & RAIL

CROSS SECTIONS OF POSTS AND RAILS

ROLLED-FORMED STEEL FENCE POST (2.0 OZ./SQ. FT. COATING)

POST TYPE	LENGTH (L) INCH	WIDTH (W) INCH	WEIGHT LBS/FT
FS1	1.625	1.25	1.35
FS2†	1.875	1.625	1.850
FS2	1.875	1.625	2.400
FS3	2.250	1.700	2.780

ROUND STEEL FENCE POST (1.8 OZ./SQ. FT. COATING)

POST TYPE	OUTSIDE DIMENSION INCH	WALL THICKNESS INCH	WEIGHT LBS/FT
SP1	1.660	0.140	2.270
SP2	1.900	0.145	2.720
SP3	2.375	0.154	3.650
SP4	2.875	0.203	5.800
SP5	4.000	0.226	9.120
SP6	6.625	0.280	18.990
SP7	8.625	0.322	28.580

REQUIRED FENCE POST SIZES

USE	FABRIC HEIGHTS FEET	POST TYPE
TERMINAL POSTS **	LESS THAN OR EQUAL TO 6 FT.	SP3
	GREATER THAN OR EQUAL TO 6 FT.	SP4
LINE POSTS	LESS THAN OR EQUAL TO 6 FT.	SP2
	LESS THAN OR EQUAL TO 8 FT.	SP3
	GREATER THAN OR EQUAL TO 8 FT.	SP4
	LESS THAN OR EQUAL TO 8 FT.	FS2 OR FS2†
	GREATER THAN OR EQUAL TO 8 FT.	FS3

REQUIRED POST SIZE FOR GATES

USE	LEAF WIDTHS FEET	POST TYPE
GATES	LESS THAN OR EQUAL TO 6 FT.	SP4
	LESS THAN OR EQUAL TO 13 FT.	SP5
	LESS THAN OR EQUAL TO 18 FT.	SP6
	LESS THAN OR EQUAL TO 23 FT.	SP7

BRACE RAIL TYPES

USE		TYPE
BRACE RAIL		SP1 OR FS1

** INCLUDES END, CORNER, ANGLE, INTERSECTION AND INTERMEDIATE BRACED POSTS

FENCE CHAIN LINK

STATE OF WISCONSIN
DEPARTMENT OF TRANSPOI

6

S.D.D. 15 B 3-15a

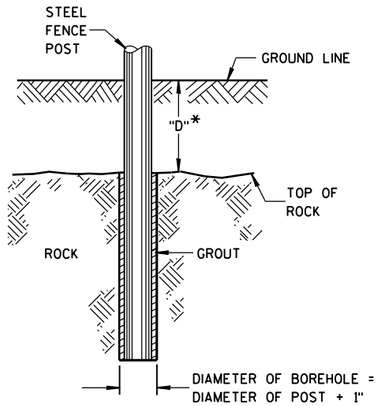

*IF "D" IS LESS THAN 2'-6", DRILL ROCK AND INSTALL GROUT

ROCK INSTALLATION OF LINE POST

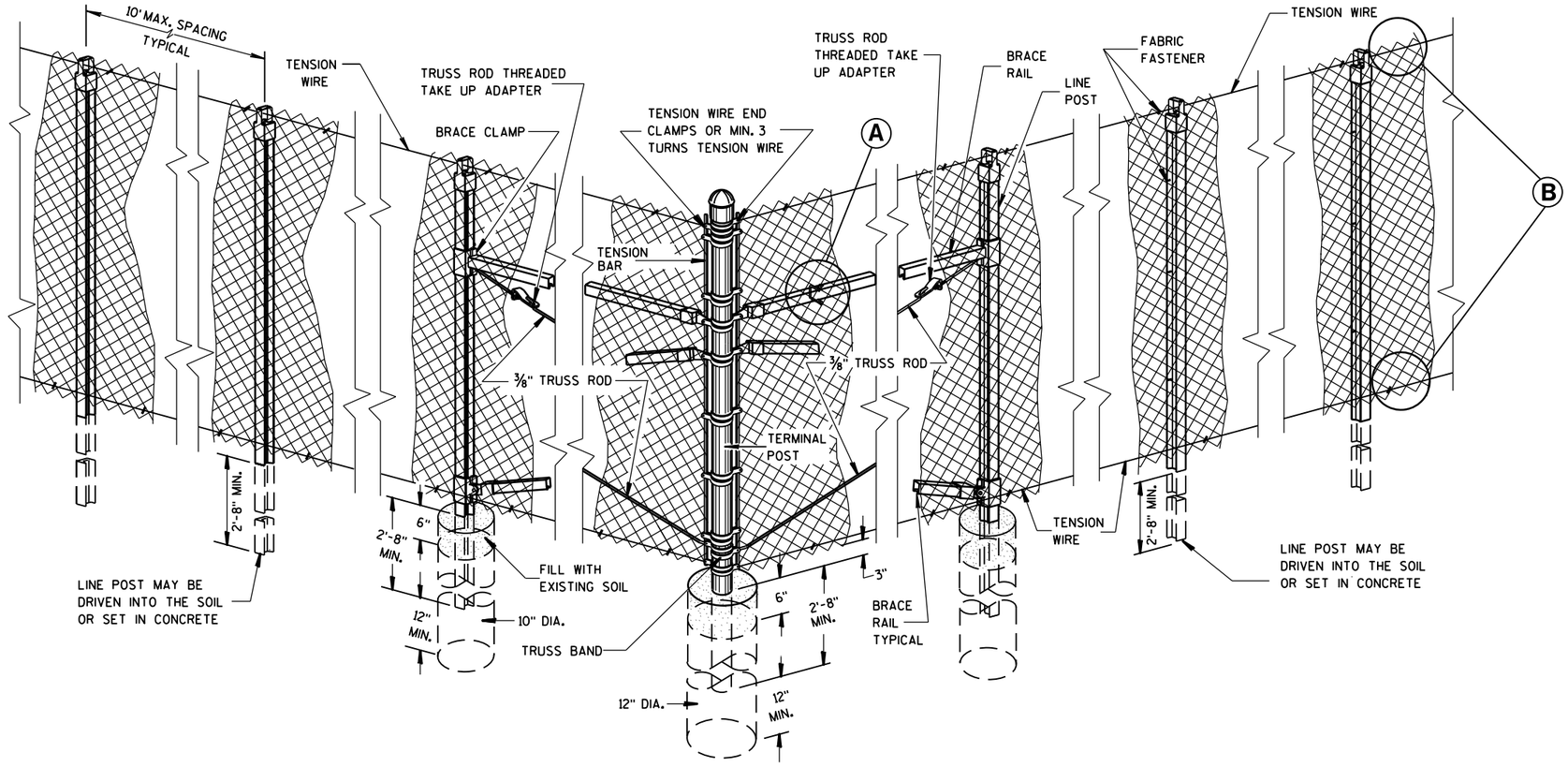

END, CORNER, ANGLE INTERSECTION & INTERMEDIATE BRACED POSTS

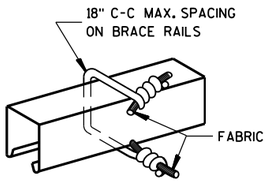

BRACE RAIL

FABRIC FASTENER

Ⓐ

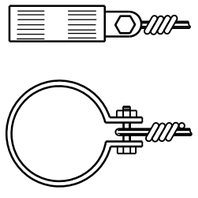

TENSION WIRE END CLAMP

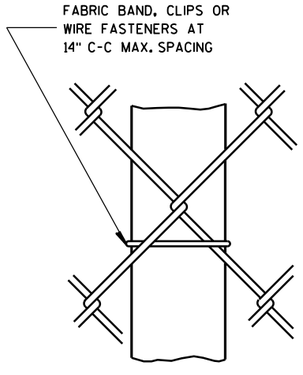

LINE POST

FABRIC FASTENER

AT TOP

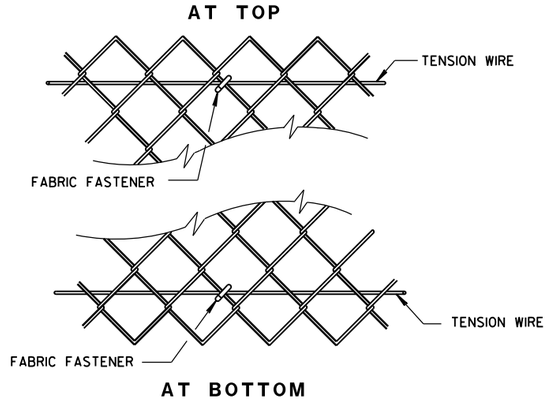

AT BOTTOM

SELVAGES

Ⓑ

FENCE CHAIN LINK

STATE OF WISCONSIN
DEPARTMENT OF TRANSPORTATION

APPROVED
FEB. 2015 DATE
/S/ Jerry H. Zogg
ROADWAY STANDARDS DEVELOPMENT ENGINEER
FHWA

6

S.D.D. 15 B 3-15b

6

S.D.D. 15 B 3-15b

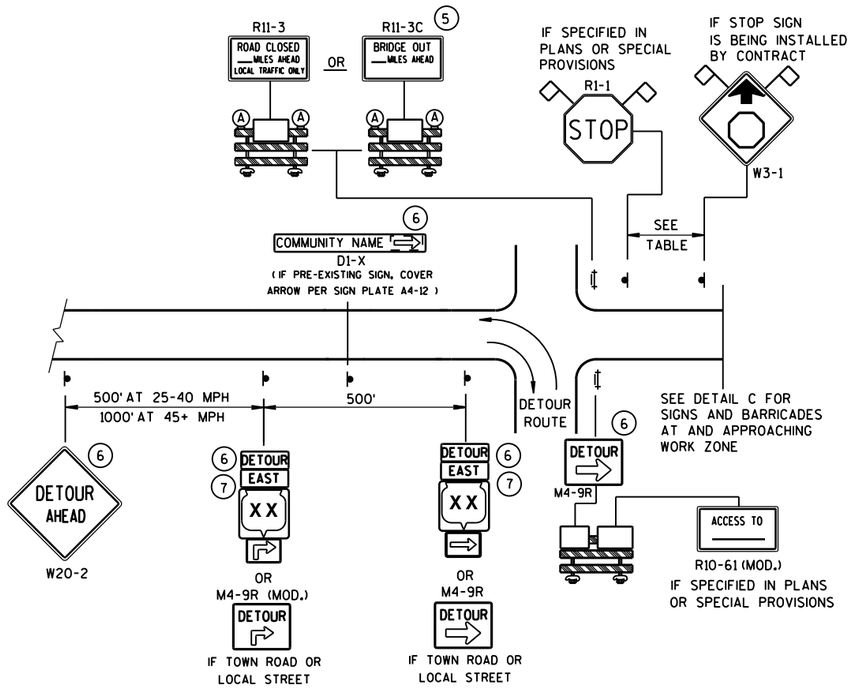

DETAIL A
MAINLINE CLOSURE WITH POSTED DETOUR

WORK ZONE GREATER THAN ½ MILE FROM DETOUR ROUTE (1000 FEET IF URBAN)

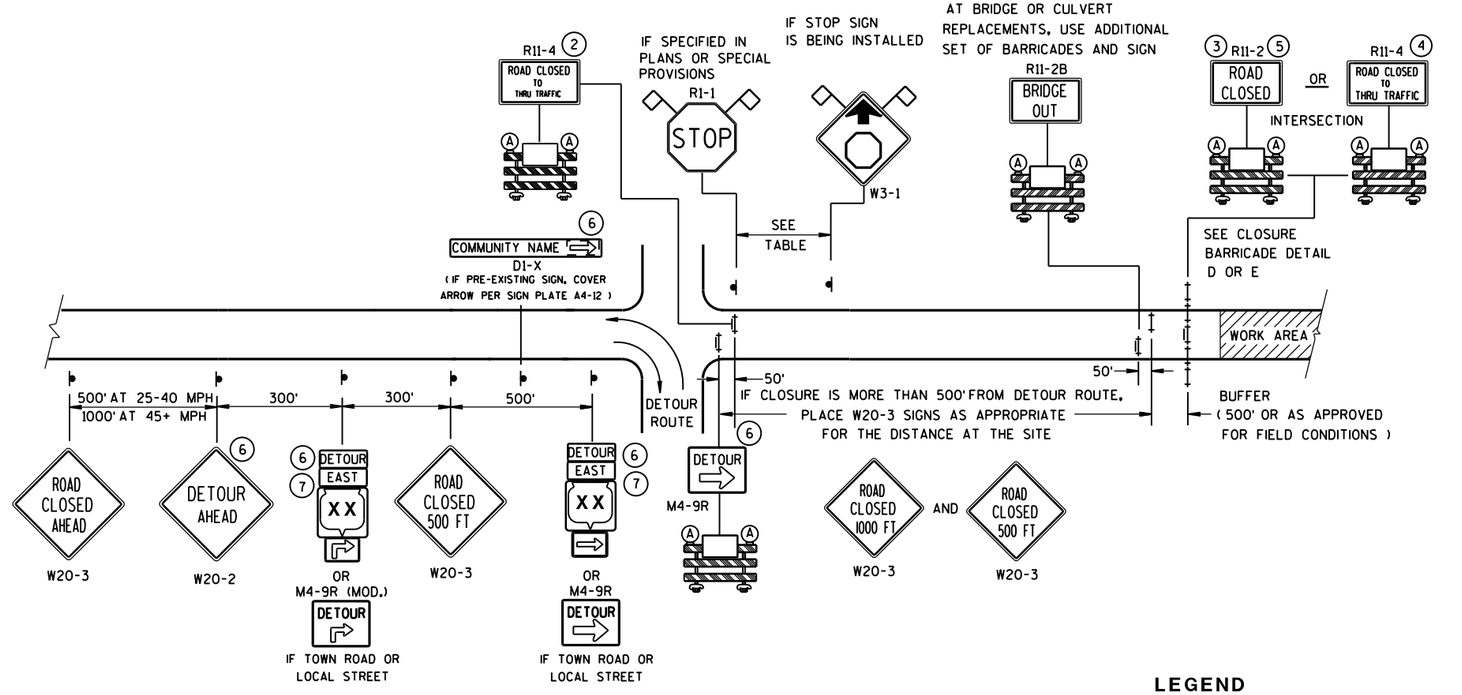

DETAIL B
MAINLINE CLOSURE WITH POSTED DETOUR

WORK ZONE LESS THAN ½ MILE FROM DETOUR ROUTE (1000 FEET IF URBAN)

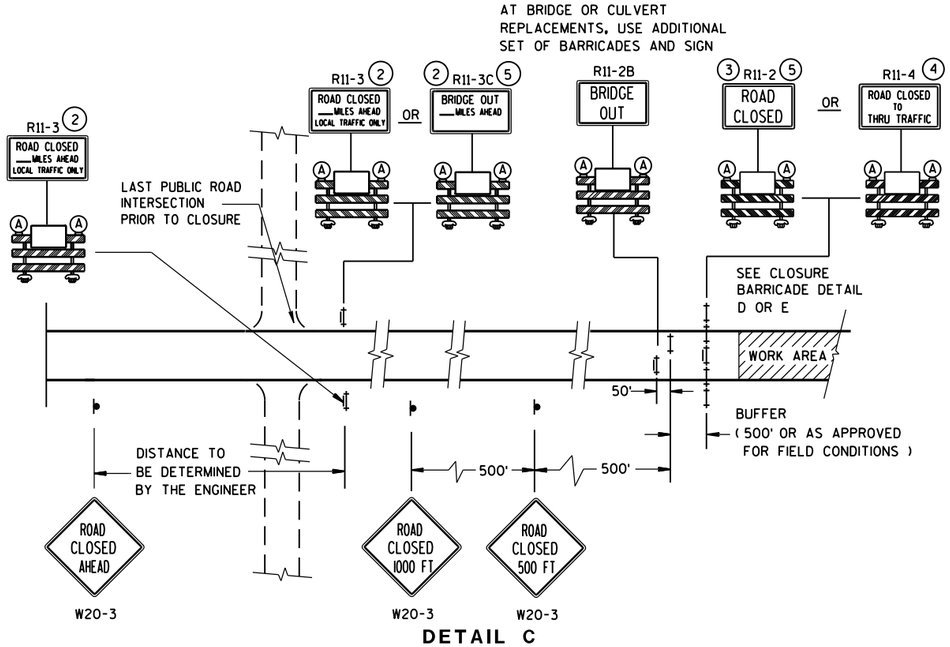

DETAIL C
MAINLINE CLOSURE, NO POSTED DETOUR

SPEED LIMIT (MPH)	"STOP AHEAD" ADVANCE WARNING DISTANCE (FT)
25	200
30	200
35	350
40	350
45	500
50	550
55	750

SEE SDD 15C2-SHEET "**b**"
FOR GENERAL NOTES
AND FOOTNOTES (1) THROUGH (7)

LEGEND

- SIGN ON PERMANENT SUPPORT
- TYPE III BARRICADE
- TYPE III BARRICADE WITH ATTACHED SIGN
- (A) TYPE "A" WARNING LIGHT (FLASHING)
- WORK AREA
- DETOUR / EAST — M4-8 / M3-X
- XX — M1-4; COUNTY XX — M1-5A; XX — M1-6
- M05-1 OR M06-1
- FLAGS, 16" X 16" MIN., (ORANGE)

BARRICADES AND SIGNS FOR MAINLINE CLOSURES

STATE OF WISCONSIN
DEPARTMENT OF TRANSPORTATION

8/2013 DATE
/S/ Travis Feltes
STATE TRAFFIC ENGINEER

FHWA

6

S.D.D. 15 C 2-5a

6

S.D.D. 15 C 2-5a

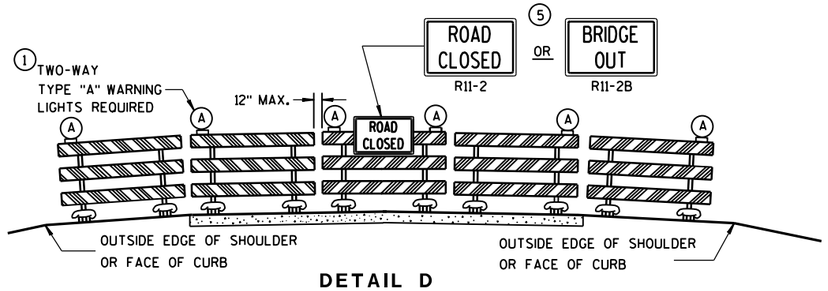

DETAIL D

ROAD CLOSURE BARRICADE DETAIL

APPROACH VIEW

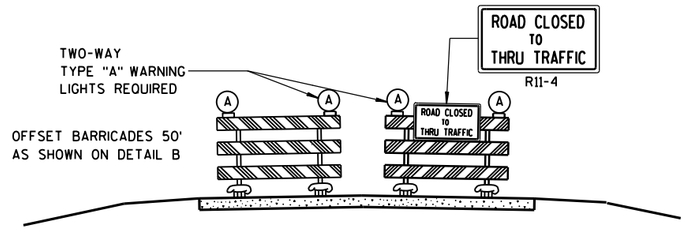

DETAIL E

LANE CLOSURE BARRICADE DETAIL

APPROACH VIEW

SEE SDD 15C2-SHEET "**a**" FOR LEGEND

GENERAL NOTES

THE EXACT NUMBER, LOCATION, AND SPACING OF ALL SIGNS AND BARRICADES SHALL BE ADJUSTED TO FIT FIELD CONDITIONS AS APPROVED BY THE ENGINEER.

ANY SIGNS TEMPORARY OR EXISTING, WHICH CONFLICT WITH TRAFFIC CONTROL "IN USE" SHALL BE REMOVED OR COVERED AS NEEDED AND AS APPROVED BY THE ENGINEER.

THE SPACING BETWEEN TRAFFIC CONTROL SIGNS SHOULD BE ADJUSTED TO NOT CONFLICT WITH AND SHOULD PROVIDE A DESIRABLE MINIMUM OF 200 FEET CLEARANCE TO EXISTING SIGNS THAT WILL REMAIN IN PLACE.

BARRICADES THAT MUST BE MOVED FOR A WORK OPERATION SHALL BE IMMEDIATELY RE-ESTABLISHED UPON COMPLETION OF THE OPERATION OR, FOR CONTINUING OPERATIONS, AT THE END OF EACH WORKING DAY.

SIGNS THAT WILL BE IN PLACE LESS THAN 7 CONTINUOUS DAYS AND NIGHTS MAY BE MOUNTED ON PORTABLE SUPPORTS.

ALL TYPE III BARRICADES SHALL HAVE RAILS REFLECTORIZED ON BOTH FACES. STRIPES SHALL BE PROPERLY SLOPED DOWN TOWARD THE TRAFFIC SIDE OR AS SHOWN IN THE ROAD CLOSURE BARRICADE DETAIL D FOR FULL ROAD CLOSURES.

TYPE "A" LOW-INTENSITY FLASHING WARNING LIGHTS SHALL BE VISIBLE ON BOTH SIDES OF THE BARRICADE.

THE R11-2, R11-3, M4-9, R11-4 AND R10-61 SIGNS PLACED ON BARRICADES SHALL COVER NO MORE THAN THE TOP RAIL. THE SIGNS SHALL NOT COVER ANY PORTION OF THE MIDDLE OR BOTTOM RAILS.

"WO AND "MO" SIGNS ARE THE SAME AS "W" AND "M" SIGNS EXCEPT THE BACKGROUND IS ORANGE.

ALL SIGNS SHALL BE 48" X 48" UNLESS OTHERWISE NOTED BELOW:
- R11-2 SHALL BE 48" X 30".
- R11-3, R11-4 AND R10-61 SHALL BE 60" X 30".
- M4-9 SHALL BE 30" X 24".
- M3-X SHALL BE 24" X 12". (36" X 18" IF NEEDED TO MATCH EXISTING SIGNS.)
- M4-8 SHALL BE 24" X 12". (30" X 15" IF NEEDED TO MATCH EXISTING SIGNS.)
- M1-4, M1-5A, AND M1-6 SHALL BE 24" X 24". (36" X 36" IF NEEDED TO MATCH EXISTING SIGNS.)
- M05-1 AND M06-1 SHALL BE 21" X 21". (30" X 30" IF NEEDED TO MATCH EXISTING SIGNS.)
- D1-X SHALL BE AS SHOWN ON SPECIFIC PROJECT SIGNING DETAIL SHEETS.
- R1-1 SHALL BE 36" X 36".

(1) TWO WARNING LIGHTS SHALL BE PROVIDED ON THE CENTER BARRICADE AND A MINIMUM OF ONE WARNING LIGHT SHALL BE PROVIDED ON EACH OF THE OTHER BARRICADES WITHIN THE ROADWAY LIMITS. SPACING OF THE WARNING LIGHTS SHALL BE UNIFORM TO THE EDGE OF ROADWAY AS SHOWN (APPROX. 8-FOOT LIGHT SPACING).

(2) THESE SIGNS AND BARRICADES ARE NOT REQUIRED IF ROAD CLOSURE BEGINS AT INTERSECTION.

(3) FOR ROAD CLOSURE WITHOUT LOCAL ACCESS TO PROJECT, SEE ROAD CLOSURE BARRICADE DETAIL D.

(4) FOR ROAD CLOSURE WITH LOCAL ACCESS TO PROJECT, SEE LANE CLOSURE BARRICADE DETAIL E.

(5) FOR BRIDGE OR CULVERT REPLACEMENTS, SUBSTITUTE "BRIDGE OUT" INSTEAD OF "ROAD CLOSED" ON R11-2 AND R11-3 SIGNS.

(6) INSTALL DETOUR AND COMMUNITY GUIDE SIGNS AND ARROWS ONLY IF SPECIFIED IN THE CONTRACT. IF THERE ARE EXISTING ROUTE MARKER ASSEMBLIES THAT WILL REMAIN IN PLACE, ADJUST THE LOCATION OF THE DETOUR ROUTE SIGNS TO CORRESPOND WITH THE EXISTING ASSEMBLIES. MODIFY EXISTING SIGNS WHERE POSSIBLE. SEE SPECIFIC PROJECT DETOUR SIGNING DETAIL SHEETS. IF DETOUR SIGNS ARE BEING INSTALLED BY OTHERS, PLACE THE CONTRACTED TRAFFIC CONTROL SIGNS TO ALLOW FOR PLACEMENT OF ALL WARNING, DETOUR AND GUIDE SIGNS AS SHOWN.

(7) "EAST" CARDINAL DIRECTION MARKERS AND RIGHT TURN ARROWS ARE SHOWN. USE OTHER CARDINAL DIRECTIONS AND ARROWS AS APPROPRIATE.

BARRICADES AND SIGNS FOR MAINLINE CLOSURES

STATE OF WISCONSIN
DEPARTMENT OF TRANSPORTATION

8/2013 — DATE
/S/ Travis Feltes — STATE TRAFFIC ENGINEER
FHWA

6

S.D.D. 15 C 2-5b

THIS DRAWING PROVIDES GENERAL GUIDANCE ON TYPICAL DETOUR SIGN LAYOUT AND SPACING. SEE PROJECT DETOUR SIGNING SHEETS FOR SPECIFIC DETAILS FOR EACH PROJECT.

GENERAL NOTES

THE EXACT NUMBER, LOCATION AND SPACING OF ALL SIGNS SHALL BE ADJUSTED TO FIT FIELD CONDITIONS AS APPROVED BY THE ENGINEER.

IF THERE ARE EXISTING ROUTE MARKER ASSEMBLIES THAT WILL REMAIN IN PLACE, ADJUST THE LOCATION OF THE DETOUR ROUTE SIGNS TO CORRESPOND WITH THE EXISTING ASSEMBLIES. SEE SPECIFIC PROJECT DETOUR SIGNING DETAIL SHEETS. MODIFY EXISTING SIGNS WHERE POSSIBLE.

THE SPACING BETWEEN TRAFFIC CONTROL AND DETOUR SIGNS SHOULD BE ADJUSTED TO NOT CONFLICT WITH AND TO PROVIDE A DESIRABLE MINIMUM OF 200 FEET CLEARANCE TO EXISTING SIGNS THAT WILL REMAIN IN PLACE.

ANY SIGNS TEMPORARY OR EXISTING, WHICH CONFLICT WITH TRAFFIC CONTROL "IN USE", SHALL BE REMOVED OR COVERED AS NEEDED AND AS APPROVED BY THE ENGINEER.

SIGNS THAT WILL BE IN PLACE LESS THAN 7 CONTINUOUS DAYS AND NIGHTS MAY BE MOUNTED ON PORTABLE SUPPORTS.

"MO" SIGNS ARE THE SAME AS "M" SIGNS EXCEPT THE BACKGROUND IS ORANGE.

SIGN SIZES SHALL BE AS FOLLOWS:

- M3-X SHALL BE 24" X 12". (36" X 18" IF NEEDED TO MATCH EXISTING SIGNS.)
- M4-8 SHALL BE 24" X 12". (30" X 15" IF NEEDED TO MATCH EXISTING SIGNS.)
- M1-4, M1-5A, AND M1-6 SHALL BE 24" X 24". (36" X 36" IF NEEDED TO MATCH EXISTING SIGNS.)
- M05-1 AND M06-1 SHALL BE 21" X 21". (30" X 30" IF NEEDED TO MATCH EXISTING SIGNS.)
- M4-9 SHALL BE 30" X 24".
- M4-8a SHALL BE 24" X 18".
- G20-51 SHALL BE 60" X 24".
- W20-2 SHALL BE 48" X 48".
- D1-X SHALL BE AS SHOWN ON SPECIFIC PROJECT SIGNING DETAIL SHEETS.

* OPTIONAL SIGNS. SEE SPECIFIC PROJECT DETOUR SIGNING DETAIL SHEETS.

** FOR A TOWN ROAD OR LOCAL STREET DETOURED ONTO A STATE TRUNK HIGHWAY, PLACE A ROAD NAME PLAQUE ABOVE THE M4-9 SIGN AS SPECIFIED IN THE CONTRACT.

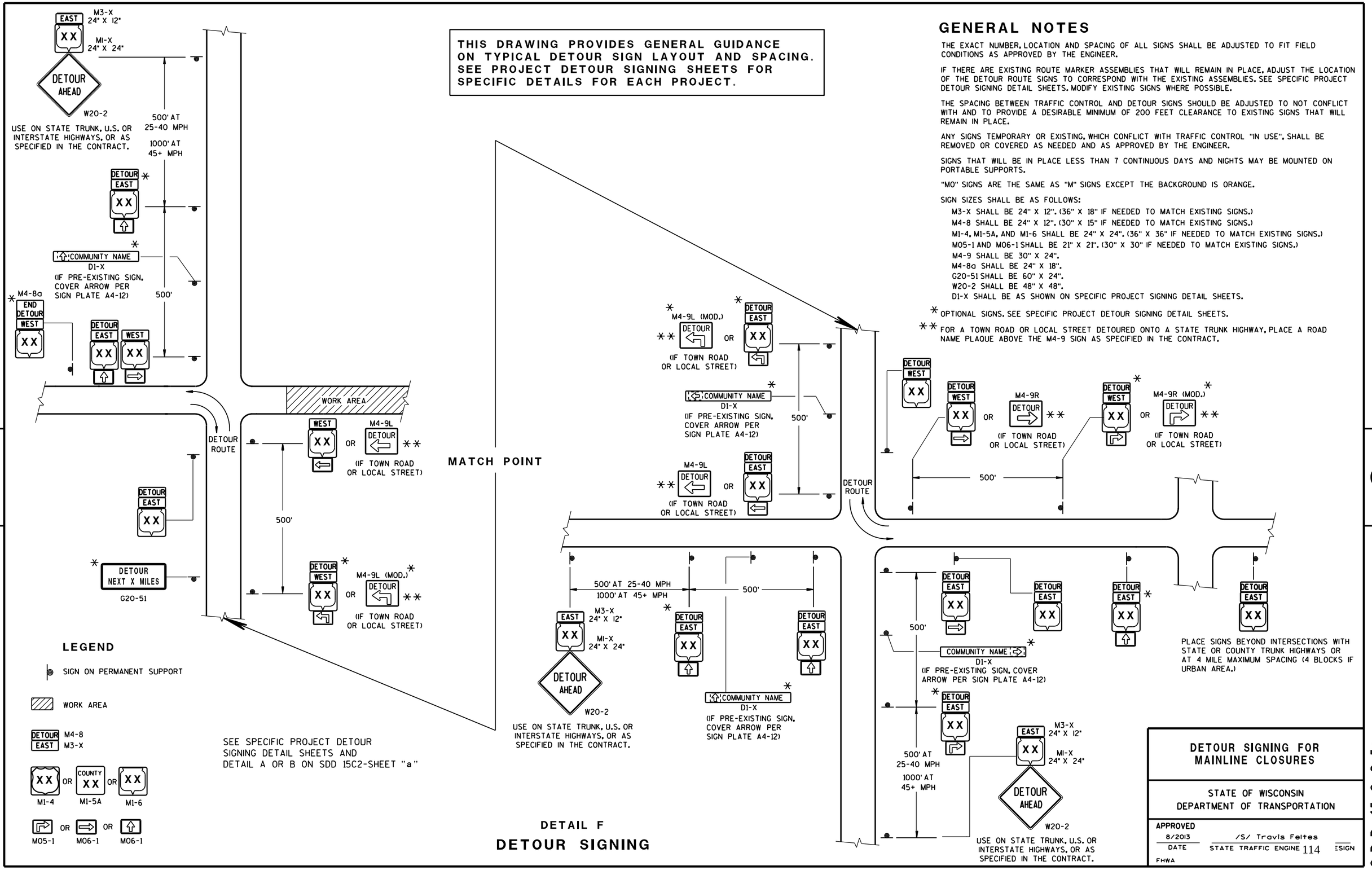

DETAIL F

DETOUR SIGNING

DETOUR SIGNING FOR MAINLINE CLOSURES

STATE OF WISCONSIN
DEPARTMENT OF TRANSPORTATION

APPROVED
8/2013 — DATE
/S/ Travis Feltes — STATE TRAFFIC ENGINEER
FHWA

S.D.D. 15 C 2-5c

6

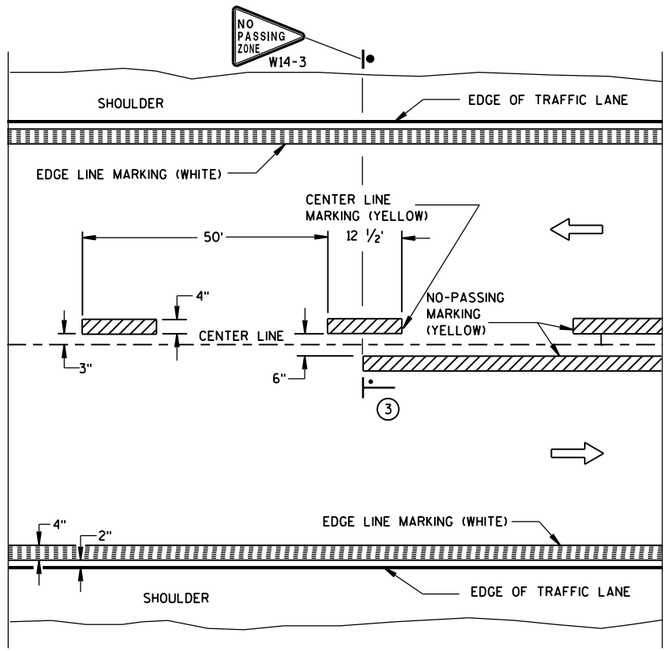

TWO WAY TRAFFIC

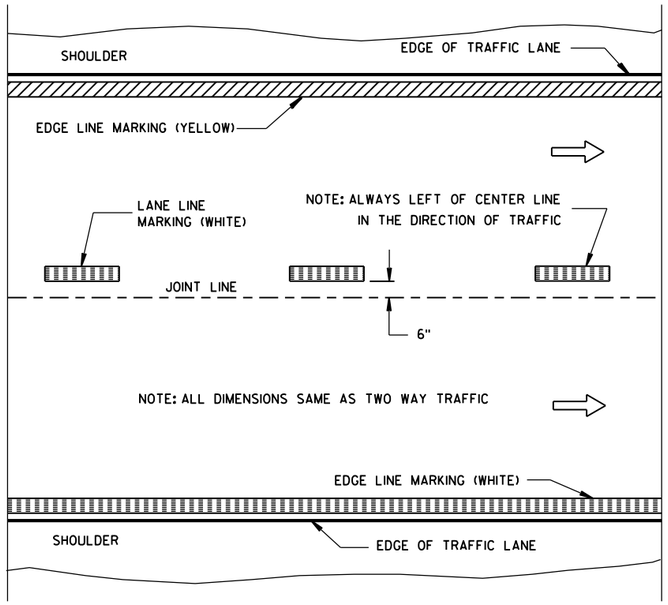

ONE WAY TRAFFIC

PERMANENT PAVEMENT MARKING

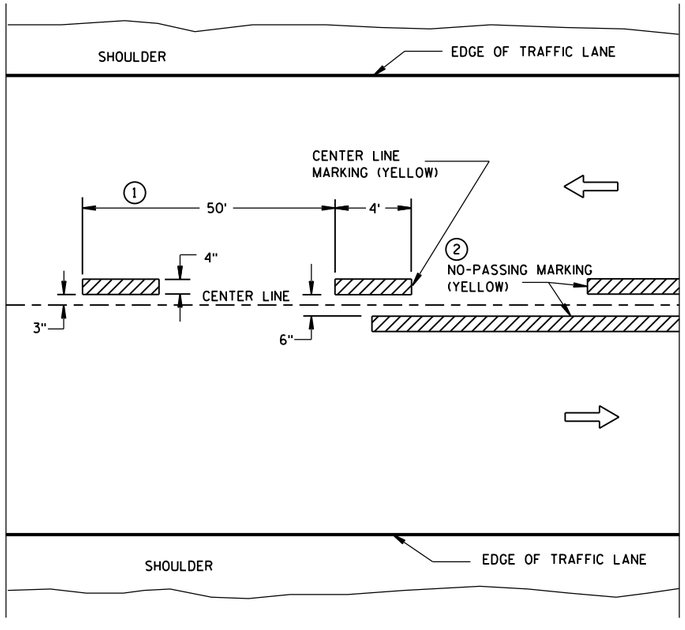

TWO WAY TRAFFIC

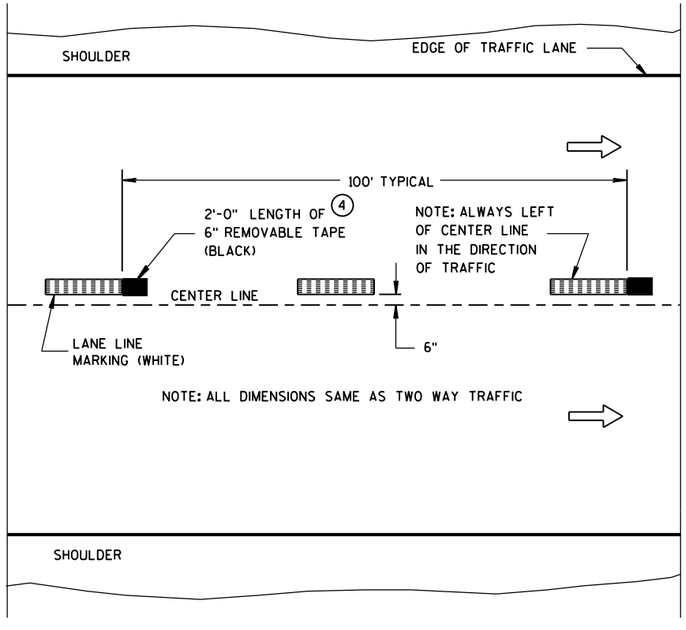

ONE WAY TRAFFIC

TEMPORARY (INTERMEDIATE) PAVEMENT MARKING

(SHOWS CYCLE FOR TEMPORARY CENTER LINE OR TEMPORARY LANE LINE MARKING)

GENERAL NOTES

DETAILS OF CONSTRUCTION NOT SHOWN ON THIS DRAWING SHALL CONFORM TO STANDARD SPECIFICATIONS AND SPECIAL PROVISIONS.

1. HALF CYCLE LENGTHS (25'±) WITH 2' MINIMUM STRIPE LENGTHS SHALL BE PROVIDED ON ROADWAYS (INCLUDING TEMPORARY TRAVELED WAYS) WITH REVERSE CURVATURE, CURVATURE OF OVER 5 DEGREES OR WHEN DIRECTED BY THE ENGINEER TO MARK UNUSUAL ALIGNMENT OF THE TRAVELED WAY.
2. NO PASSING ZONE TEMPORARY PAVEMENT MARKING IS REQUIRED TO BE PLACED, WHERE APPROPRIATE, ALONG WITH CENTERLINE TEMPORARY PAVEMENT MARKING WHEN A SAME DAY PERMANENT PAVEMENT MARKING ITEM IS INCLUDED IN THE CONTRACT.
3. NO PASSING ZONE MARKINGS ARE PLACED ACCORDING TO "T" MARKINGS. IF EXISTING NO PASSING ZONE W14-3 SIGNS ARE BEYOND 50 FEET IN EITHER DIRECTION, THE SIGNS SHALL BE MOVED TO THE "T" MARKINGS.
4. CONCRETE ONLY.

NOTE

ARROW SYMBOL (⇨) SHOWS DIRECTION OF TRAVEL

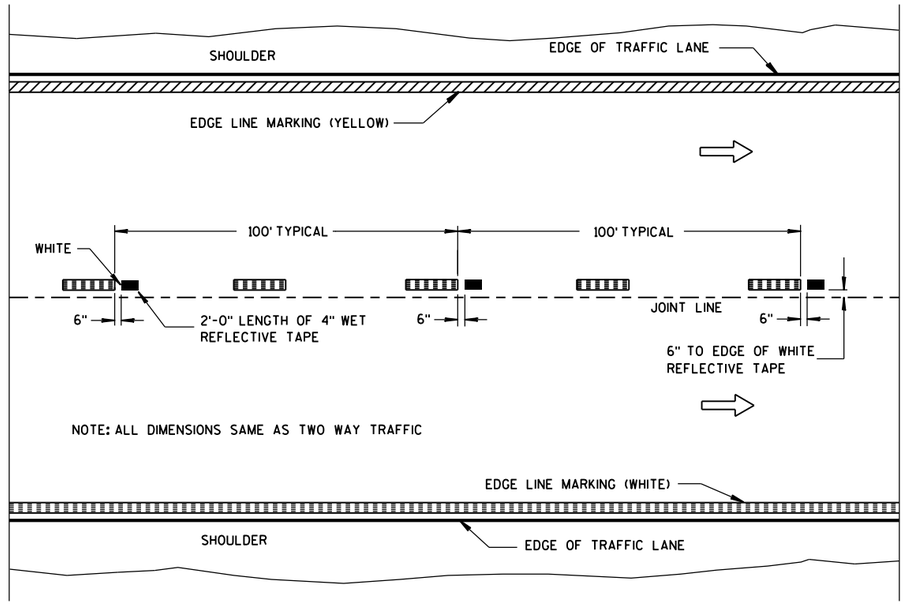

WET REFLECTIVE TAPE SUPPLEMENT TO
SPRAYED OR NON WET REFLECTIVE TAPE LANE LINE

LEGEND

"T" MARKING

POST MOUNTED SIGN

PAVEMENT MARKING (MAINLINE)

STATE OF WISCONSIN
DEPARTMENT OF TRANSPORTATION

APPROVED

5-13-2013 DATE

/S/ Travis Feltes STATE TRAFFIC E

FHWA

6

S.D.D. 15 C 8-16a

6

S.D.D. 15 C 8-16a

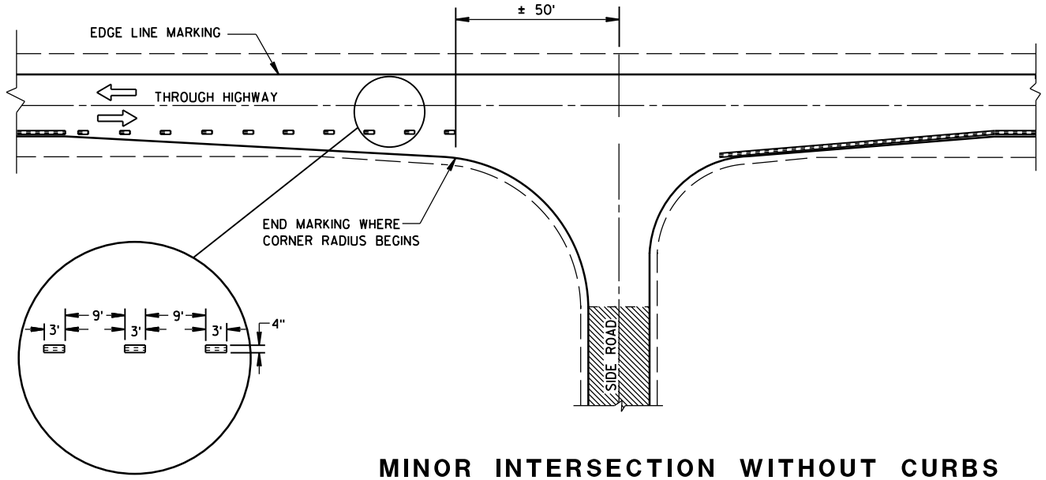

MINOR INTERSECTION WITHOUT CURBS

GENERAL NOTES

EDGE LINES SHALL BE OMITTED THROUGH INTERSECTIONS. EDGE LINES SHALL BE CONTINUED THROUGH DRIVEWAYS.

(1) WHEN DISTANCE "A" IS LESS THAN 250 FEET, OMIT LANE LINE.

(2) WHEN DISTANCE "B" IS LESS THAN 100 FEET, OMIT CHANNELIZING LANE LINE.

(3) ALTERNATIVE MARKING SHALL BE PROVIDED WHEN SPECIFIED IN THE CONTRACT. TYPICAL SITUATIONS WHERE THIS MARKING MAY BE REQUIRED ARE WHERE THE INTERSECTION IS ON A SHARP HORIZONTAL CURVE OR CREST VERTICAL CURVE IN AN UNLIGHTED AREA SUCH THAT THE EDGE LINE MAY BE MISLEADING TO THE MOTORIST OR DISAPPEAR FROM SIGHT.

(4) THE EDGE LINE IN THE TAPER AREAS OF THE BYPASS LANE AND THE BYPASS LANE SHALL BE LOCATED 1-FOOT FROM EDGE OF PAVEMENT TO THE OUTSIDE EDGE OF EDGE LINE.

(5) BARRIER LINE ENDS AT SIDE ROAD PAVEMENT/SURFACE EDGE EXTENSION.

(6) BARRIER LINE STARTS 500 FEET PRIOR TO THE BYPASS TAPER.

(7) IF THE DISTANCE BETWEEN 2 SUCCESSIVE NO-PASSING ZONES IS LESS THAN THE MINIMUM DISTANCE BETWEEN ZONES, CONNECT THE 2 ZONES.

(8) 3' LINE 9' GAP, EXCEPT RETRACE THE EXISTING LINE - GAP PATTERN WHERE EXISTING MARKINGS ARE IN PLACE.

ARROW SYMBOL (⇨) SHOWS DIRECTION OF TRAVEL

(7)

POSTED SPEED (MPH)	MINIMUM DISTANCE BETWEEN ZONES (FEET)
25 - 30	528
35 - 40	528
45 - 50	686
55	792

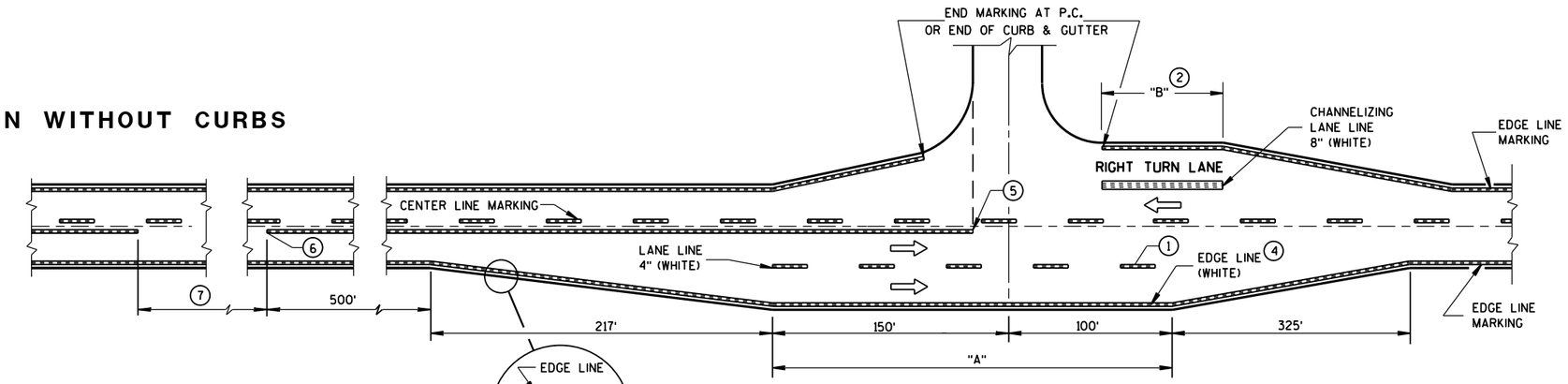

MAJOR INTERSECTIONS

(INTERSECTION WITH FULL RIGHT TURN LANE OR BYPASS LANES)

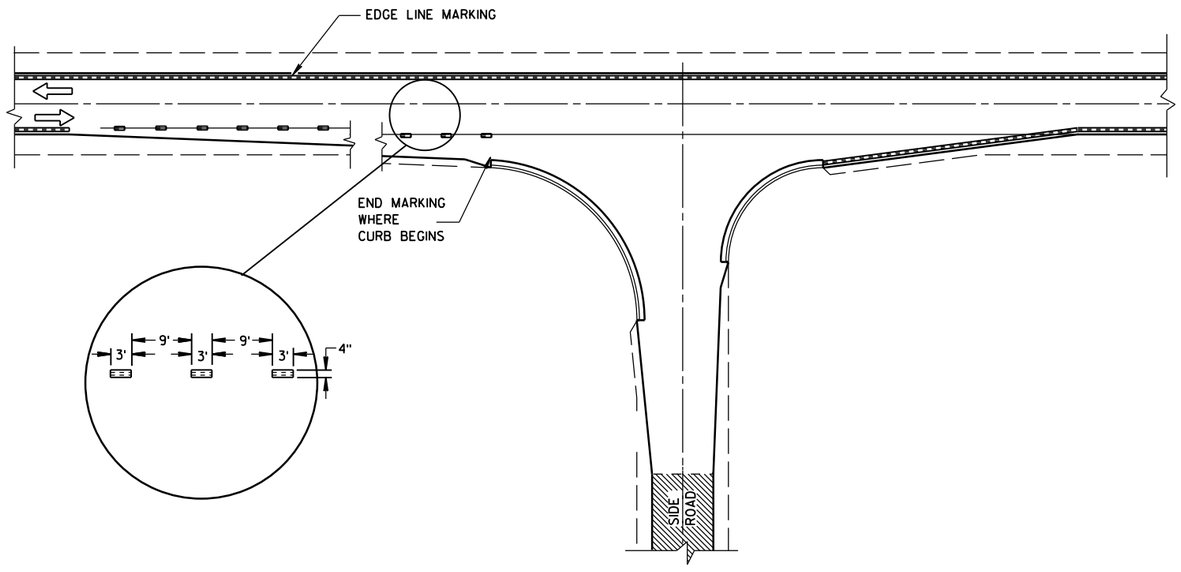

MINOR INTERSECTION WITH CURBS

(TYPICAL MARKING)

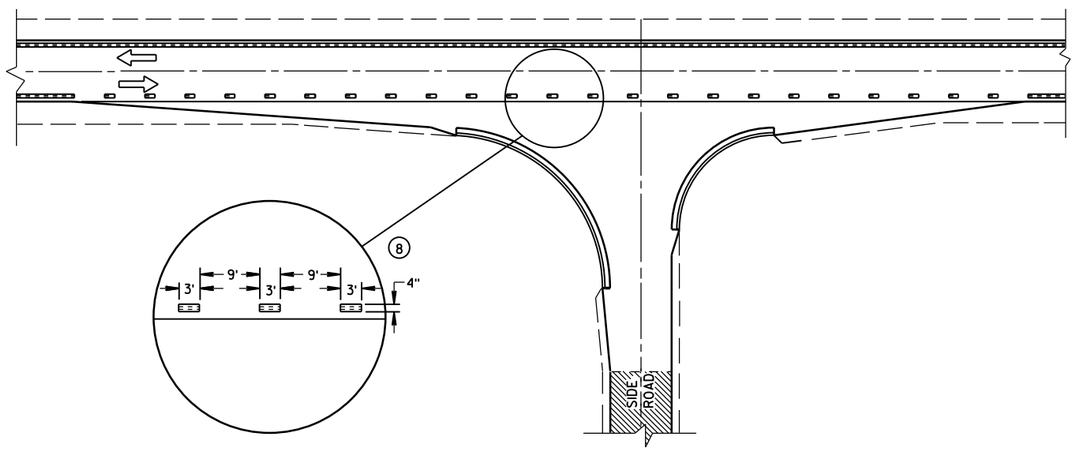

MINOR INTERSECTION WITH CURBS

(3) (FOR SPECIAL CONDITIONS AS SPECIFIED)

PAVEMENT MARKING
(INTERSECTIONS)

STATE OF WISCONSIN
DEPARTMENT OF TRANSPOR

6

S.D.D. 15 C 8-16b

6

S.D.D. 15 C 8-16b

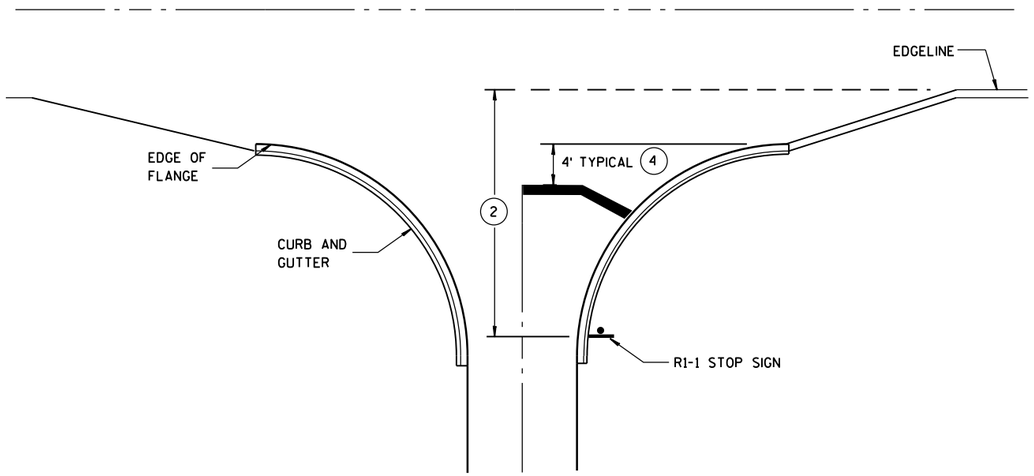

TYPICAL STOP LINE PAVEMENT MARKING WITH CURB AND GUTTER

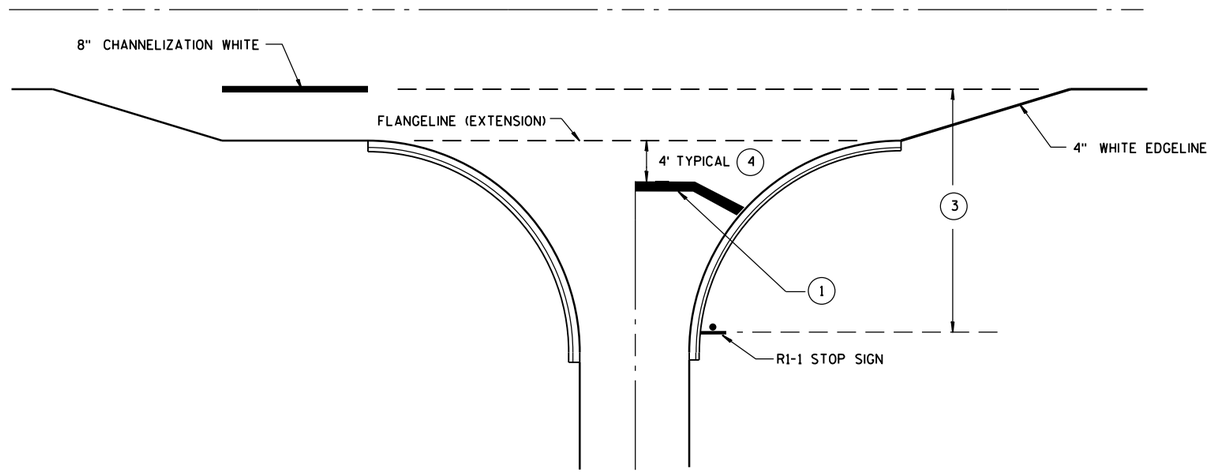

TYPICAL STOP LINE PAVEMENT MARKING FOR SIDEROADS WITH RIGHT TURN LANE

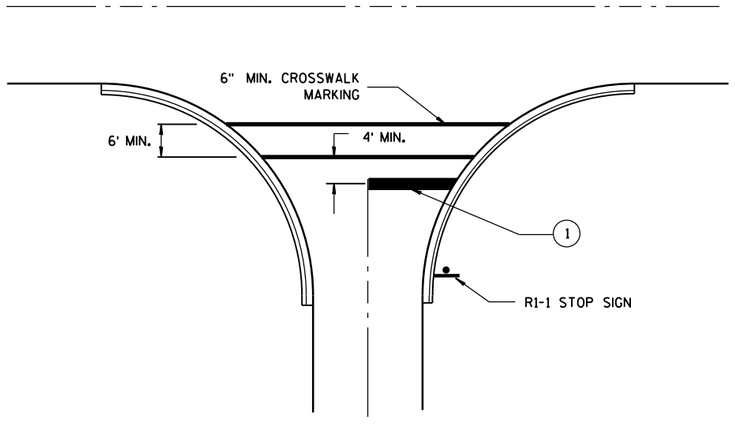

TYPICAL STOP LINE PAVEMENT MARKING FOR SIDEROADS WITH CROSSWALK MARKING

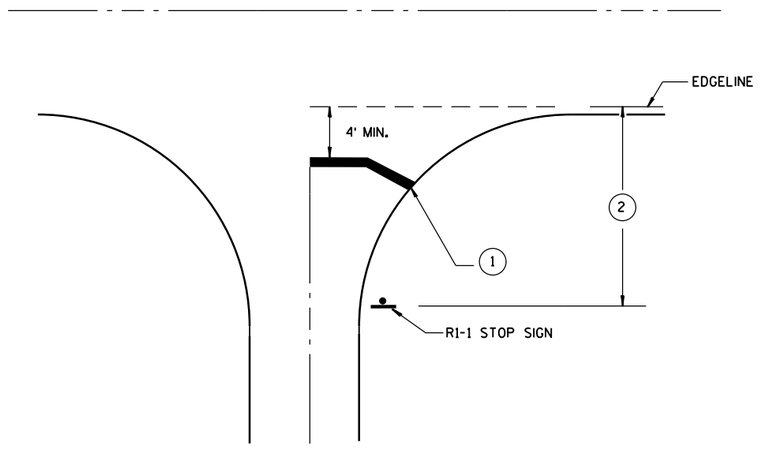

TYPICAL STOP LINE PAVEMENT MARKING WITHOUT CURB AND GUTTER

GENERAL NOTES

1. 18-INCH STOP LINES MAY BE DELETED OR ADDED BY THE PROJECT ENGINEER BASED ON VISIBILITY AND SIGHT LINES.
2. IF STOP SIGN IS LESS THAN OR EQUAL TO 40 FEET FROM THE EDGELINE THAN NO STOP LINE IS REQUIRED.
3. IF STOP SIGN IS LESS THAN OR EQUAL TO 30 FEET FROM THE FLANGELINE EXTENSION THAN NO STOP LINE IS REQUIRED.
4. MOVE CLOSER TO EDGE OF TRAVEL LANE AS NEEDED FOR VISIBILITY AND SIGHT LINES.

STOP LINE AND CROSSWALK PAVEMENT MARKING

STATE OF WISCONSIN
DEPARTMENT OF TRANSPORTATION

APPROVED

4/30/2013
DATE

/S/ Travis Feltes
STATE TRAFFIC E

FHWA

6

S.D.D. 15 C 33-1

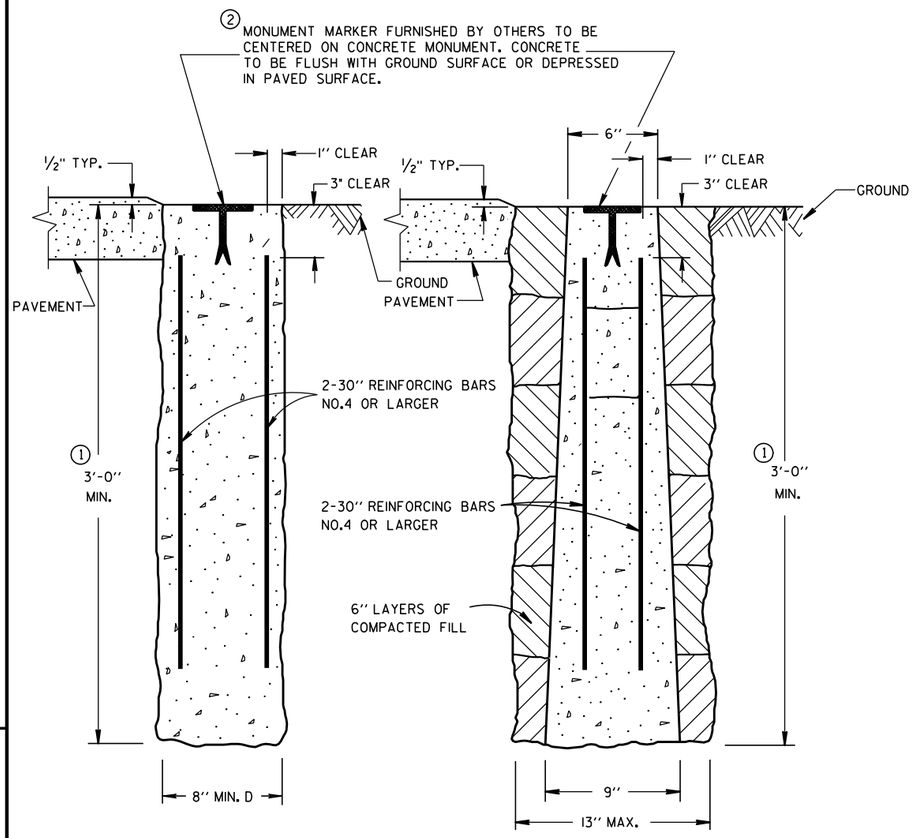

CAST-IN-PLACE PRECAST

CONCRETE MONUMENTS

TYPE A

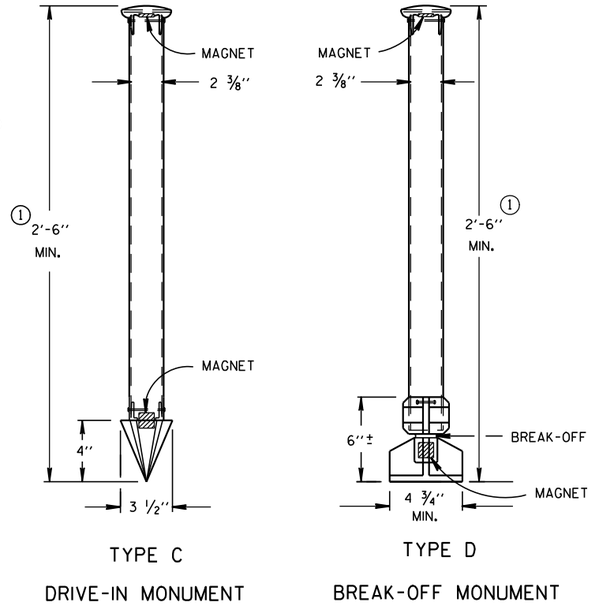

TYPE C DRIVE-IN MONUMENT

TYPE D BREAK-OFF MONUMENT

ALUMINUM MONUMENTS

(INCLUDES MARKER)

GENERAL NOTES

DETAILS OF CONSTRUCTION, MATERIALS AND WORKMANSHIP NOT SHOWN ON THIS DRAWING SHALL CONFORM TO THE PERTINENT REQUIREMENTS OF THE STANDARD SPECIFICATIONS AND THE APPLICABLE SPECIAL PROVISIONS.

DETAILED DRAWINGS OF PROPOSED ALTERNATE DESIGNS FOR METAL MONUMENTS OR MONUMENT COVERS SHALL BE SUBMITTED TO THE ENGINEER FOR APPROVAL.

INSTALLED METAL MONUMENTS MUST BE EASILY DETECTED WITH A DIP NEEDLE. INSERT PERMANENT MAGNETS SHALL BE ATTACHED NEAR THE TOP AND BOTTOM OF THOSE MONUMENTS CONSTRUCTED OF A METAL ALLOY WHICH IS NOT ATTRACTIVE TO A DIP NEEDLE.

THE CAST IRON MONUMENT COVER SHALL BE A "NON-ROCKING" TYPE. ADJUSTMENT OF THE COVER TO GRADE MAY BE ACCOMPLISHED BY THE USE OF MORTAR AND BRICK, OR BY EITHER PRECAST OR CAST-IN-PLACE REINFORCED CONCRETE GRADE RINGS.

MONUMENTS SHALL BE LOCATED AND PLACED AT THE DIRECTION OF THE ENGINEER.

ALUMINUM MONUMENTS AND MONUMENT COVERS SHALL BE MADE FROM AN ALUMINUM AND MAGNESIUM ALLOY AS DETERMINED BY THE MANUFACTURER.

THE MONUMENT COVERS DETAILED ON THIS DRAWING ARE NOT EQUAL ALTERNATES. MONUMENT COVERS SHALL BE CAST IRON UNLESS ALUMINUM IS SPECIFIED ELSEWHERE IN THE CONTRACT.

MONUMENT SHALL BE CAST-IN-PLACE CONCRETE UNLESS PRECAST CONCRETE OR ALUMINUM MONUMENTS ARE SPECIFIED IN THE CONTRACT OR PERMITTED BY THE ENGINEER.

① MINIMUM LENGTH SHALL BE 4'-0" FOR MONUMENTS INSTALLED IN PAVED AREAS.

② AN OFFICIAL COUNTY MONUMENT MARKER SUPPLIED BY A COUNTY MAY BE REQUIRED FOR SOME SECTION CORNERS AND WITNESS MONUMENTS INSTEAD OF THIS WIS DOT MARKER.

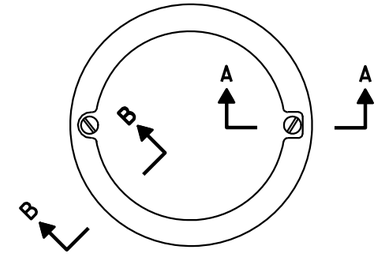

TOP VIEW

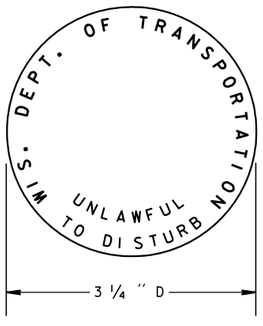

② WIS DOT MONUMENT MARKER LOGO FOR TYPES "A", "C" & "D"

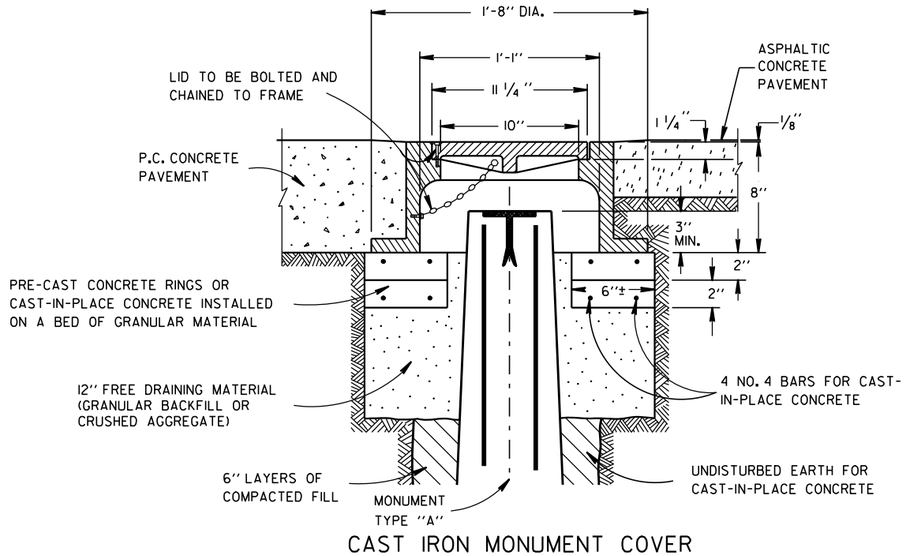

CAST IRON MONUMENT COVER

(APPROXIMATE WEIGHT - 95 LBS.)

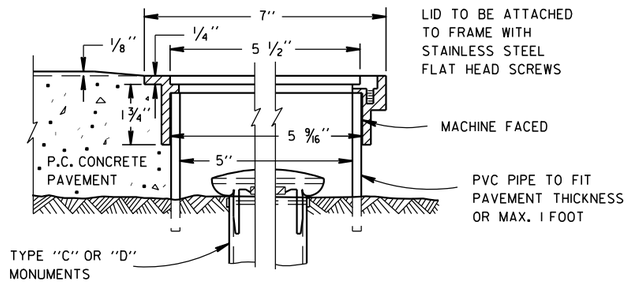

SECTION B-B SECTION A-A

ALUMINUM MONUMENT COVER

(APPROXIMATE WEIGHT 2 LBS)

(FOR CONCRETE PAVEMENT ONLY)

LANDMARK REFERENCE MOUNMENTS AND COVERS

STATE OF WISCONSIN
DEPARTMENT OF TRANSPORTATION

APPROVED

9/22/1999 DATE

/S/ Rory L. Rhinesmith
CHIEF ROADWAY DEVELOPMENT ENGINEER

FHWA

6

S.D.D. 16 A 1-6

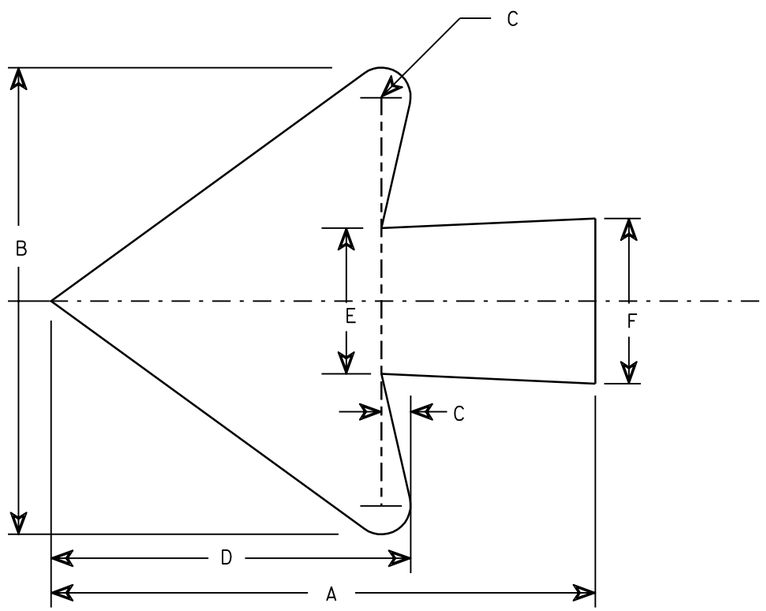

Lower Case Copy Size	A Right or Left	A * 2 Town	A * 3 Town	B	C	D	E	F
3¾ Series C	7	11	18	6	⅜	4⅝	1⅞	2⅛

* Indicates Ahead and Tilt for 2 & 3 Town applications.

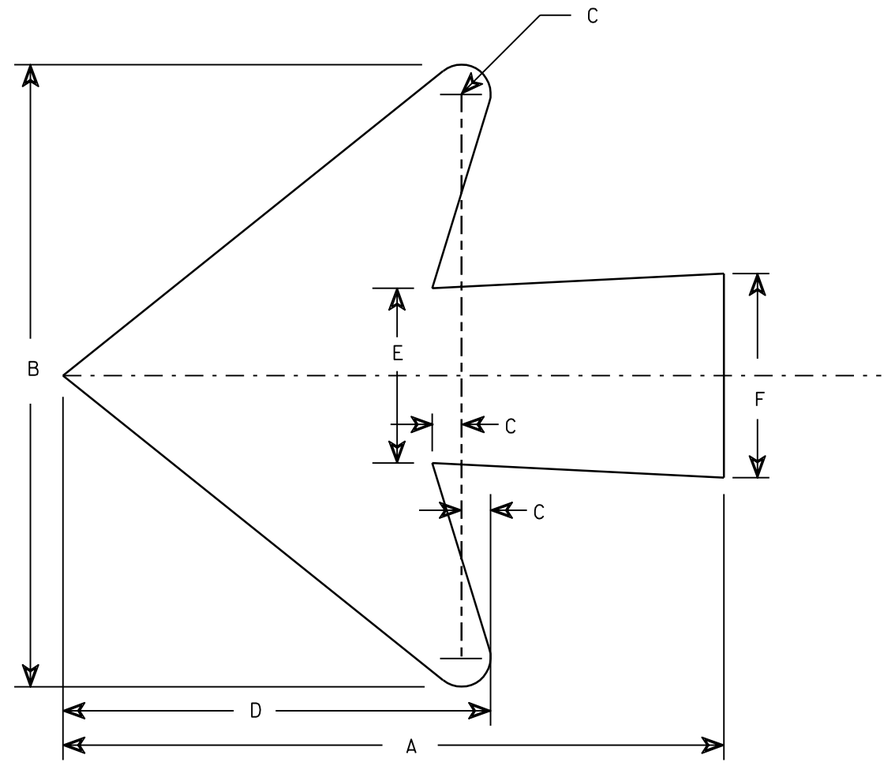

Lower Case Copy Size	A Right or Left	A * 2 Town	A * 3 Town	B	C	D	E	F
4½ Series D&E	8½	11	18	8	⅜	5½	2¼	2⅝
6 Series D&E	12	18	24	10¾	½	7⅜	3¼	3½
8 Series E	15½	24	30	14¼	¾	9¾	4¼	4½

* Indicates Ahead and Tilt for 2 & 3 Town applications.

STANDARD ARROWS FOR D1 GUIDE SIGNS

WISCONSIN DEPT OF TRANSPORTATION

APPROVED Chester J Spang for State Traffic Engineer

DATE 8/10/92 PLATE NO. A1-2.3

7

7

PROJECT NO:

SHEET NO: 119 E

TYPICAL ASSEMBLIES

J1-1

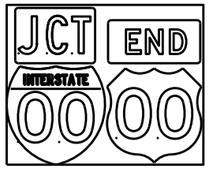

J1-2

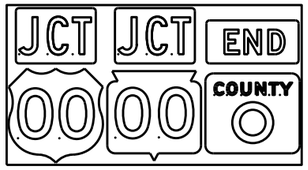

J1-3

J2-1

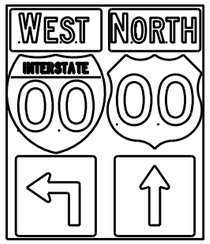

J2-2

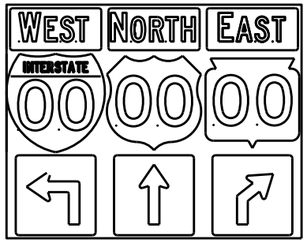

J2-3

JV

(Typical Vertical J-Assembly
See Note 10 and 11)

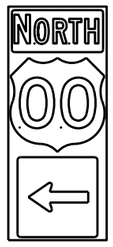

J3-1

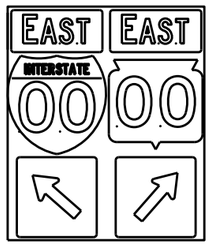

J3-2

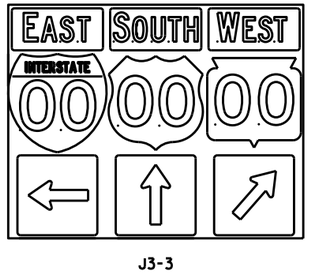

J3-3

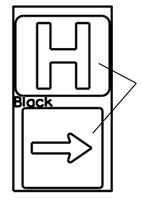

JH-1

J4-1

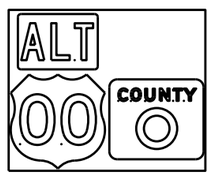

J4-2

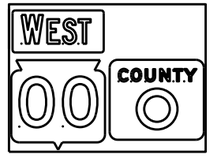

J4-2

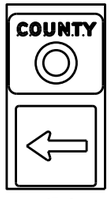

J13-1

J12-1

J32-1

J33-1

J23-1

J22-1

[blue background with interstate]

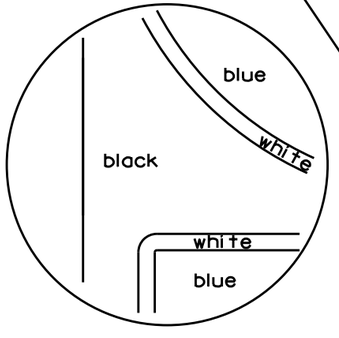

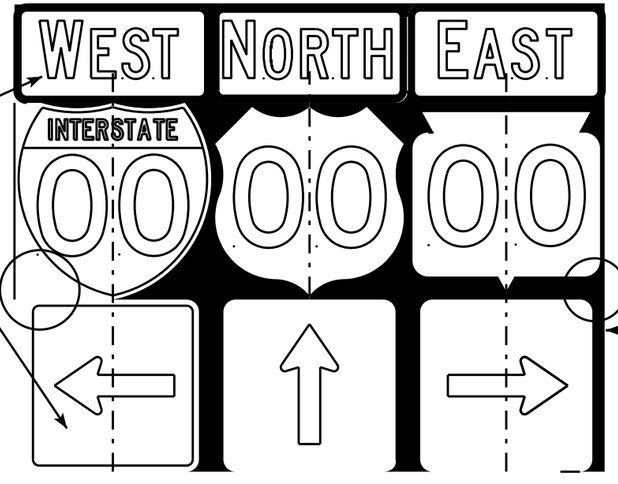

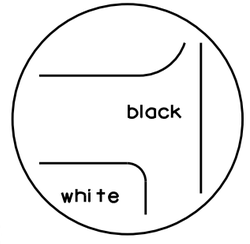

[black background]

NOTES

1. Signs are Type II - Type H Reflective - reference WIS DOT Standard Specification for HIGHWAY and STRUCTURE CONSTRUCTION latest edition.
2. Color:
   Background - Black Non-reflective
   Message - see Note 5
3. Message Series - See Note 5
4. Corners shall be square or rounded if base material is plywood. If base material is metal the corners shall be rounded.
5. The colors and message spacing on each marker shall be according to the applicable route marker panel specifications.
6. Certain marker heads require the component pieces to be the same color. As an example, all the components used with an M1-1 Interstate marker shall be blue.
7. Single panel j-assemblies shall only be used with route marker shields that are same size. If the route marker shields are different size use multiple piece component.
8. Route assemblies that have 24 inch route shields and have dimensions greater than 48 inches (both vertical and horizontal) shall have one horizontal splice between the arrows and route shields. Vertical splices shall not be used on route assemblies with a horizontal dimension of 144 inches or less. The contractor shall not use more than one vertical joint per sign and the joint shall be between route shields.
9. Route assemblies that have 36 inch shields and have dimensions greater than 48 inchs (both vertical and horizontal) shall have two horizontal splices. One horizontal splice shall be between the cardinal direction and route shields and the other horizontal splice shall be between the arrows and route shields. Vertical splices shall not be used on route assemblies with a horizontal dimension of 144 or less. The contractor shall not use more than one vertical joint per sign and the joint shall be between route shields.
10. All Vertical J Assemblies are given a Sign Code of JV
11. For JV Assemblies that have a mixture of Interstate and non Interstate shields, arrows and cardinals shall be white on blue.

ROUTE MARKERS & COMPONENTS
IN TYPICAL ASSEMBLIES

WISCONSIN DEPT OF TRANSPORTATION

APPROVED Matthew R Rauch
for State Traffic Engineer

DATE 2/06/14 PL... A2-1S.8

PROJECT NO: SHEET NO: E

FILE NAME : C:\CAEFiles\Projects\tr_stdplate\A21S.DGN PLOT DATE : 06-FEB-2014 14:10 PLOT BY : mscsja PLOT NAME :
WISDOT/CADDS SHEET 42

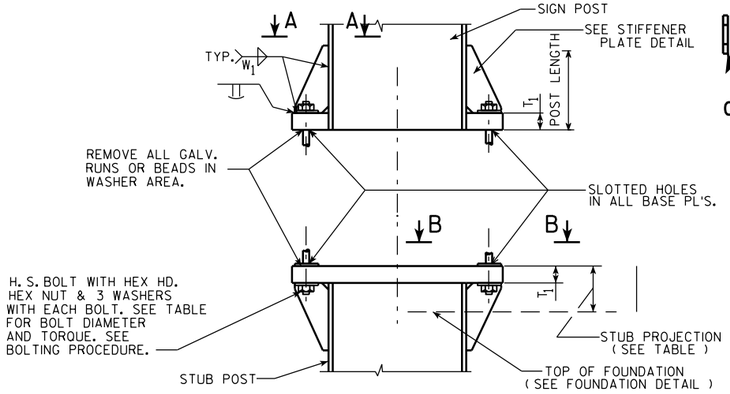

SIGN POST AND STUB POST ELEVATION

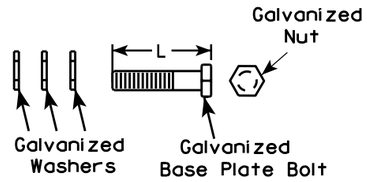

STIFFENER PLATE DETAIL

(SEE TABLE FOR DIMENSIONS)

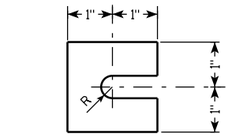

FURNISH 2 @ .012" ± THICK AND 2 @ .032" ± THICK SHIMS PER POST. SHIMS SHALL BE FABRICATED FROM BRASS SHIM STOCK OR STRIP CONFORMING TO A.S.T.M.- B36.

SHIM DETAIL

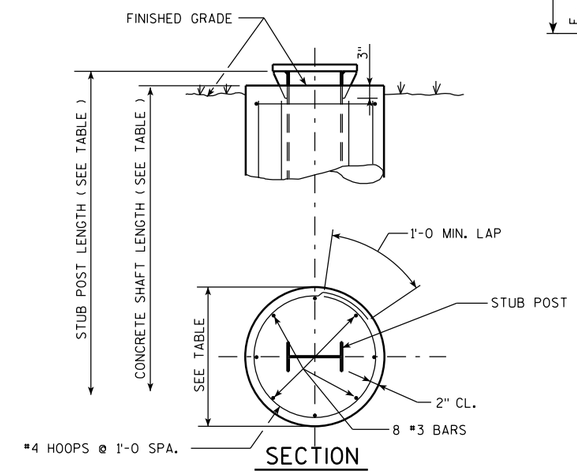

SECTION

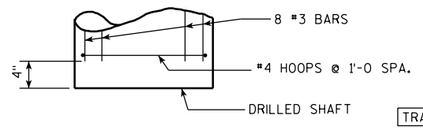

FOUNDATION DETAIL

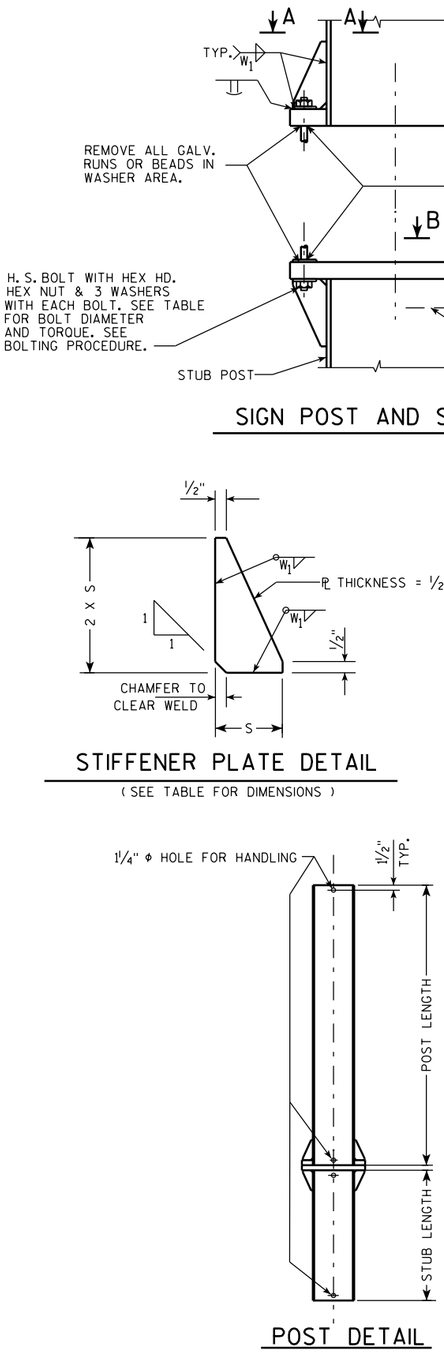

POST DETAIL

	QUANTITIES FOR 1 FOOTING	
	CONC. MASONRY C.Y.	REINF. STEEL LBS.
A	0.6	34
B	0.8	49
C	0.9	50
D	0.9	56
E	1.0	62

⑦

REINF.	TYPE	#3	#4
	A	8 @ 4'-5	5 @ 6'-3
	B	8 @ 6'-5	7 @ 6'-3
	C	8 @ 6'-11	7 @ 6'-3
	D	8 @ 7'-5	8 @ 6'-3
	E	8 @ 7'-11	9 @ 6'-3

⑦

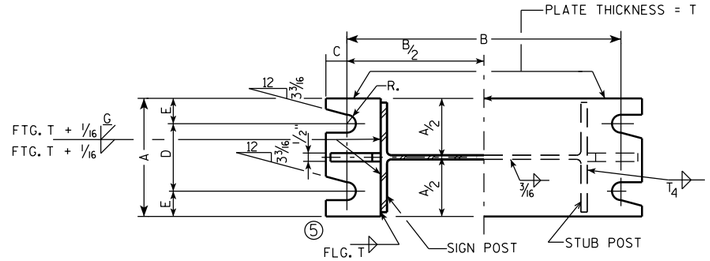

SECTION A-A SECTION B-B

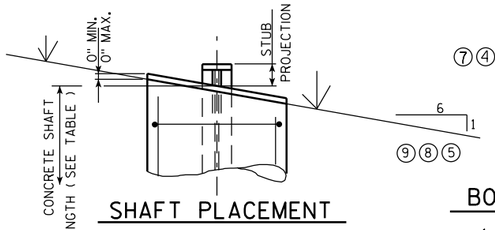

SHAFT PLACEMENT

DESIGN DATA

WIND PRESSURE = 75 M.P.H.
WIND COMPONENTS - NORMAL = 1.0 TRANSVERSE = 0.0
ICE LOAD = 3 P.S.F.

GROUP LOADS	PERCENT OF ALLOWABLE STRESS
1. DEAD	100
2. DEAD & WIND	140
3. DEAD, ICE & ½ WIND[4]	140 [4]25 P.S.F. MIN.

ALLOWABLE SOIL PRESSURE = 1½T / SQ. FT.
WIND LOAD WAS APPLIED TO THE AREA OF THE SIGN AND TO THE SUPPORTING MEMBERS.
ICE LOAD WAS APPLIED TO ONE FACE OF THE SIGN AND AROUND THE SURFACE OF THE SUPPORTING MEMBERS.

GENERAL NOTES

DRAWINGS SHALL NOT BE SCALED.
DESIGN CONFORMS WITH A.A.S.H.T.O. SPECIFICATIONS 1985.
ALL POSTS, POST STUBS & ATTACHMENTS SHALL BE A.S.T.M. A709 GRADE 50.
⑨ THE POST, BASE PLATES, UPPER SIX INCHES OF STUB POST FLANGE SPLICE PLATE AND FUSE PLATE SHALL BE GALVANIZED AFTER FABRICATION.
H.S. BOLTS, WASHERS & NUTS SHALL BE A325 GALVANIZED WHEN POSTS, POST STUBS AND ATTACHMENTS ARE A709 GRADE 50 AND GALVANIZED.

BOLTING PROCEDURE - BASE CONNECTION

1. ASSEMBLE SIGN POST TO STUB POST WITH BOLTS AND ONE OF THE FLAT WASHERS ON EACH BOLT BETW. PLATES.
2. SHIM AS REQ'D. TO PLUMB POST.
3. PRIOR TO BOLT TIGHTENING LUBRICATE BASE CONNECTION BOLTS WITH BEESWAX OR OTHER HIGH-WAX LUBRICANT.
4. TIGHTEN ALL BOLTS THE MAXIMUM POSSIBLE WITH 12" OR 15" WRENCH TO BED WASHERS & SHIMS AND TO CLEAN BOLT THREADS, THEN LOOSEN EACH BOLT IN TURN AND RETIGHTEN IN A SYSTEMATIC ORDER TO THE PRESCRIBED TORQUE. (SEE TABLE)
5. BURR THREADS AT JUNCTION WITH NUT USING A CENTER PUNCH TO PREVENT NUT LOOSENING.

NOTE:
TIGHTEN THE HIGH STRENGTH BOLTS TO THE TORQUE SHOWN. DO NOT OVERTIGHTEN.

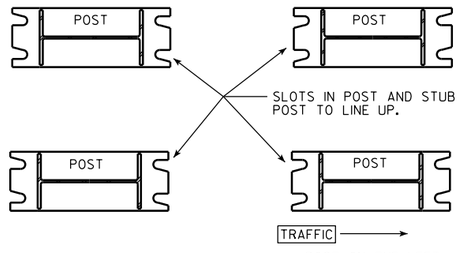

POST SLOT ORIENTATION ⑦

				BASE CONNECTION DATA TABLE										FOUNDATION DATA				②
L	X	TYPE	DIMENSION / POST SIZE	BOLT SIZE & TORQUE	A	B	C	D	E	T_1	T_4	W_1	R	S	STUB LENGTH	STUB PROJECTION	SHAFT DIAMETER	SHAFT LENGTH	K	
3 ¾	④	A	W10"X12.0 #/FT.	¾" Φ @ 75#-FT.	5¼"	1'-0⅜	⅞"	3½"	⅞"	1"	3/16"	5/16"	13/32"	2⅛"	3'-6	3"	2'-0 Φ	5'-0	76.0#	④
4 ¾	④	B	W12"X16.0 #/FT.	⅞" Φ @ 85#-FT.	5½"	1'-4¼	1"	3½"	1"	1¼"	¼"	5/16"	15/32"	3"	5'-6	3"	2'-0 Φ	7'-0	146.5#	④
5		C	W12"X19.0 #/FT.	⅞" Φ @ 85#-FT.	5½"	1'-4¼	1"	3½"	1"	1½"	5/16"	5/16"	15/32"	3"	6'-0	3"	2'-0 Φ	7'-6	182.1#	
5		D	W12"X22.0 #/FT.	⅞" Φ @ 85#-FT.	5½"	1'-4¼	1"	3½"	1"	1½"	⅜"	5/16"	15/32"	3"	6'-6	3"	2'-0 Φ	8'-0	210.5#	
5	③	E	W12"X26.0 #/FT.	1" Φ @ 90#-FT.	7"	1'-4¼	1¼"	4"	1½"	1½"	⅜"	5/16"	11/32"	3"	7'-0	3"	2'-0 Φ	8'-6	293.0#	③

① ⑥ ①

STRUCTURAL CARBON STEEL PAY WTS. (1 POST) = K+ (POST LENGTH X POST WT.)
" K " INCLUDES STUB, BASE PLATES, STIFFS., BOLTS, AND WASHERS.

WISCONSIN DEPT OF TRANSPORTATION

APPROVED Matthew R Rauch for State Traffic Engineer

DATE 6/30/14 PLATE NO. A3-1.15

⑩	1-21-14	LUBRICATION OF BASE BOLTS
⑨	4-26-11	REMOVE NON-GALVANIZED
⑧	10-30-96	NOT GALVANIZED/GALVANIZED
⑦	10-30-92	QUANT., A588 EXCEPT., ADD SLOT VIEW
⑥	8-24-87	BASE CONN. WELD
⑤	10-13-81	BASE CONN. WELD & FUSE PL WASHERS
④	10-19-79	POST A & B, A572 GR. 50, & K
②	11-28-78	"K" ③ 4-23-79 TYPE "E"
①	5-4-78	T_1 , T_2 & W_1
NO.	DATE	REVISION

STATE OF WISCONSIN
DEPARTMENT OF TRANSPORTATION
DIVISION OF HIGHWAYS

TYPE A, B, C, D, & E

CONST. SPEC. 2011	DRAWN BY JPH	PLANS CK'D.

FTG. & SIGN SUPPORT DETAILS GROUND MOUNT BREAK-AWAY SIGNS

SHEET 121

PROJECT NO: | HWY: | COUNTY: | SHEET NO: E

URBAN AREA

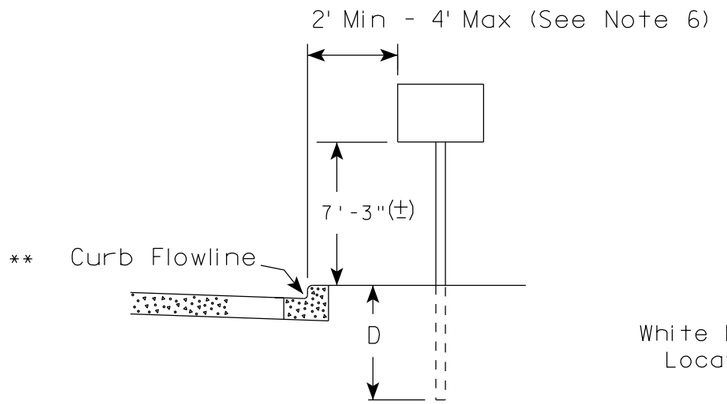

RURAL AREA (See Note 2)

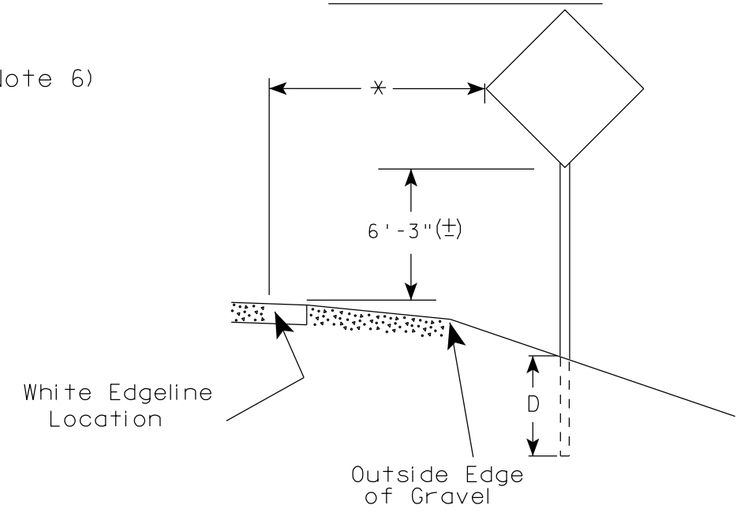

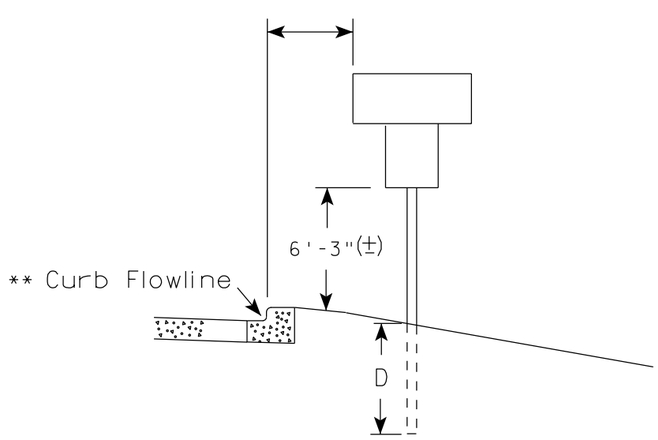

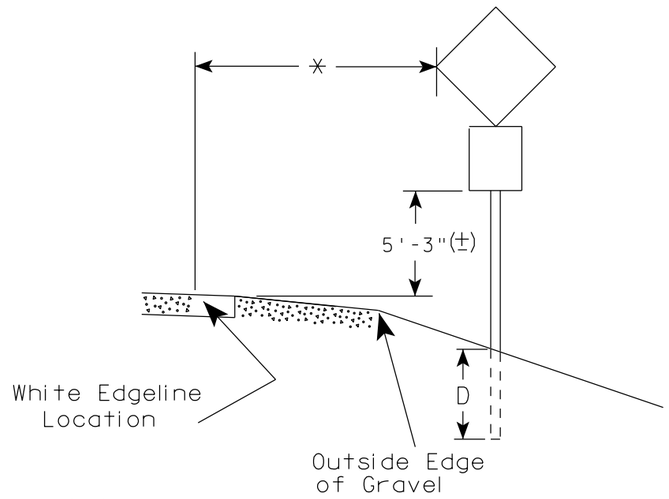

** The existence of curb and gutter does not in itself mandate the vertical clearance illustrated. That height is typically measured where there is sidewalk adjacent to the roadway or parking is permitted. In the absence of sidewalk vertical clearance is measured from the top of the curb. Offset of signs is measured from the flow line.

* 6 feet from edge of a paved shoulder or 12 feet from the edge of pavement (edge line location) or 2 feet from outside edge of gravel, whichever is greater unless directed by project engineer.

POST EMBEDMENT DEPTH

Area of Sign Installation (Sq. Ft.)	D (Min)
20 or Less	4'
Greater than 20	5'

GENERAL NOTES

1. Signs wider than 4 feet, 20 sq.ft or larger, shall be mounted on multiple posts. Refer to plate A4-4.
2. If signs are mounted on barrier wall, see A4-10 sign plate.
3. For expressways and freeways, mounting height is 7'- 3" (±) or 6'-3" (±) depending upon existence of a sub-sign.
4. Minimum mounting height for J assemblies (A2-1S) is 7'-3" (±) or 6'-3" (±) per urban or rural detail respectively.
5. Minimum mounting height for signs mounted on traffic signal poles is 5'- 3" (±).
6. Offset distance shall be consistent with existing signs or consistent throughout length of project.
7. The (±) tolerance for mounting height is 3 inches.
8. Folding signs shall be mounted at a height of 5'-3" (±) or as directd by the Engineer.
9. The Double Arrow sign (W12-1) shall be mounted at a height of 2'-3" (±). The Chevron sign (W1-8), Roundabout Chevron panel (R6-4B), Enhanced Reference Markers, Clearance Markers (W5-52), Mile Markers (D10 series), In Road Object Markers (W5-54) & End of Road Markers (W5-56) shall be mounted at a height of 4'-3" (±).

TYPICAL INSTALLATION OF PERMANENT TYPE II SIGNS ON SINGLE POSTS

WISCONSIN DEPT OF TRANSPORTATION

APPROVED Matthew R Rauch
for State Traffic Engineer

DATE 11/12/14 PLATE NO. A4-3.19

PROJECT NO:	HWY:	COUNTY:		SHEET NO:	E

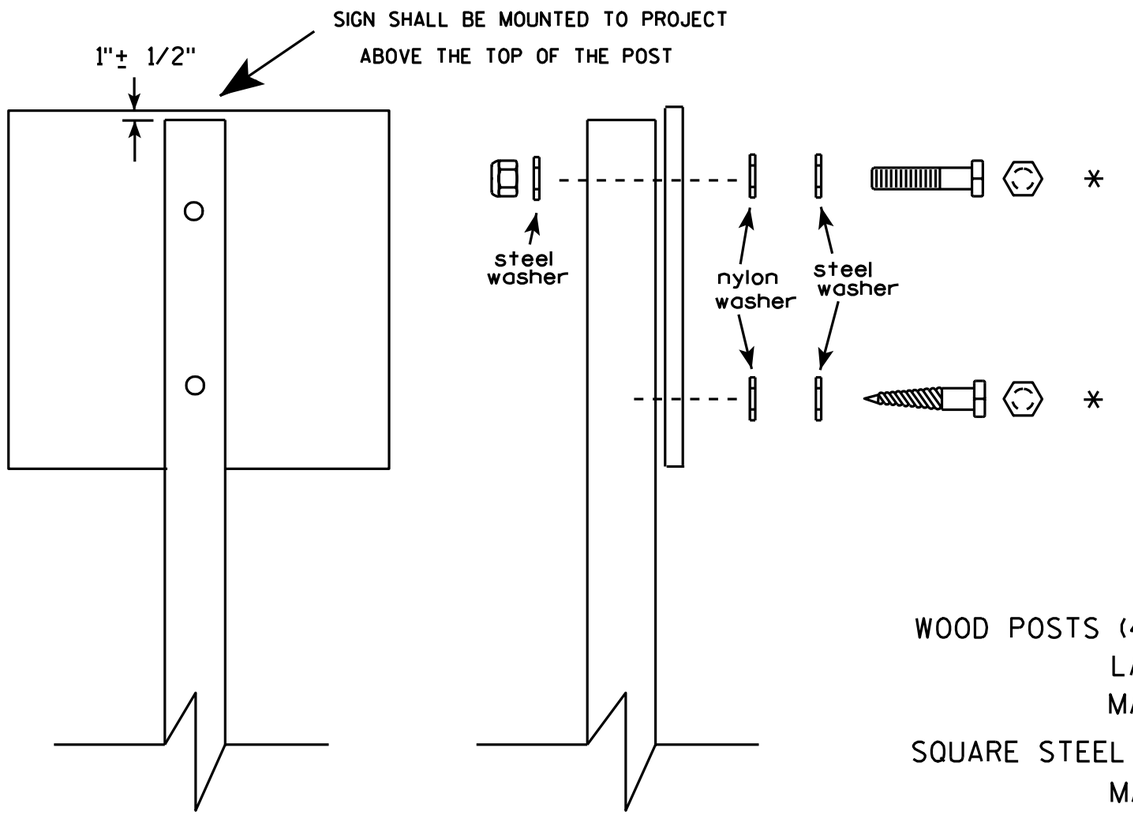

Nuts, bolts and lags used for mounting signs shall have hexagonal heads and shall be either :

a. Hot dip galvanized in accordance with ASTM Designation: A 153, Class D, or SC 3

b. Electro-galvanized in accordance with ASTM Designation : B 633, TYPE III, SC 3.

Threads on bolts and nuts shall be manufactured with sufficient allowance for the cadmium plate or galvanized coating to permit the nuts to run freely on the bolts.

WOOD POSTS (4" x 4" or 4" x 6")
LAG SCREWS - 3/8" X 3"
MACHINE BOLTS - 5/16" X 6-1/2" or 7" Length w/ nuts

SQUARE STEEL POSTS (2" x 2")
MACHINE BOLTS - 3/8" X 3-1/4" Length w/ nuts
RIVETS - 9/32 " (6605-9-6) BULB-TITE, TRI-FOLD, ALUMINUM BODY/MANDREL
O.D. FLANGE .720-.765 INCH, GRIP RANGE .042-.375 INCH

WASHERS (ALL POSTS) -
1-1/4" O.D. X 3/8" I.D. X 1/16" STEEL
1-1/4" O.D. X 3/8" I.D. X .080 NYLON for all Type H signs.

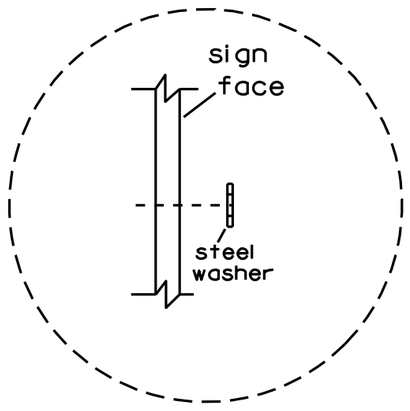

Washer Placement when Sign Has Other Than Type H or Type F Face

* Two different fastening systems are shown for illustration purposes. On any individual sign, either one or the other system shall be used. Actual number of fasteners per sign varies with the sign area, but normally there are two. For a single post installation, all signs greater than 9 sq. ft. require the use of 3 fasteners.

ATTACHMENT OF SIGNS TO POSTS

WISCONSIN DEPT OF TRANSPORTATION

APPROVED Matthew R Rauch
for State Traffic Engineer

DATE 3/23/10 PLATE NO. A4-8.7

7

7

PROJECT NO:

SHEET NO: 123 E

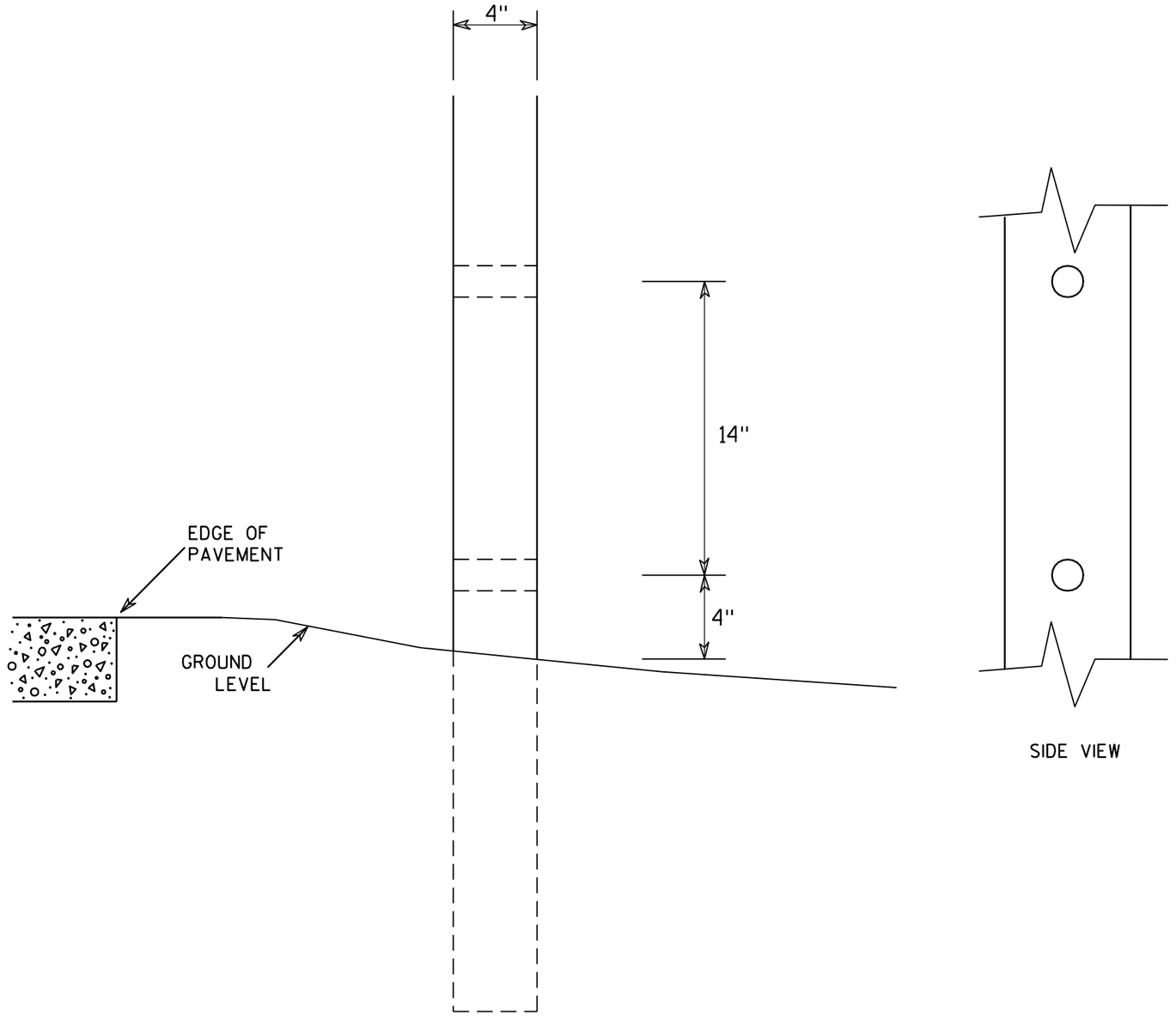

SIDE VIEW

GENERAL NOTES

1. All 4 x 6 Wood Posts shall be modified by having two 1½" diameter holes drilled perpendicular to the roadway centerline.

4 X 6 WOOD POST MODIFICATIONS

WISCONSIN DEPT OF TRANSPORTATION

APPROVED Chester J Spang for State Traffic Engineer

DATE 3/27/97 PLATE NO. A4-11.2

PROJECT NO:	HWY:	COUNTY:		SHEET NO: 124	E

NOTES

1. Sign is Type II - See Note 6 - reference WIS DOT Standard Specification for HIGHWAY and STRUCTURE CONSTRUCTION latest edition.
2. Color:
   Background - White & Black - See Note 6
   Message - Black
3. Message Series - See note 5
4. Corners may be square or rounded when base material is plywood but borders shall be rounded as shown. When base material is metal, the corners and borders shall be rounded.
5. Substitute appropriate numerals and adjust spacing as per Plate A10-1.
6. Permanent Signs
   Background - Type H Reflective
   Detour or other temporary signs
   Background - Reflective

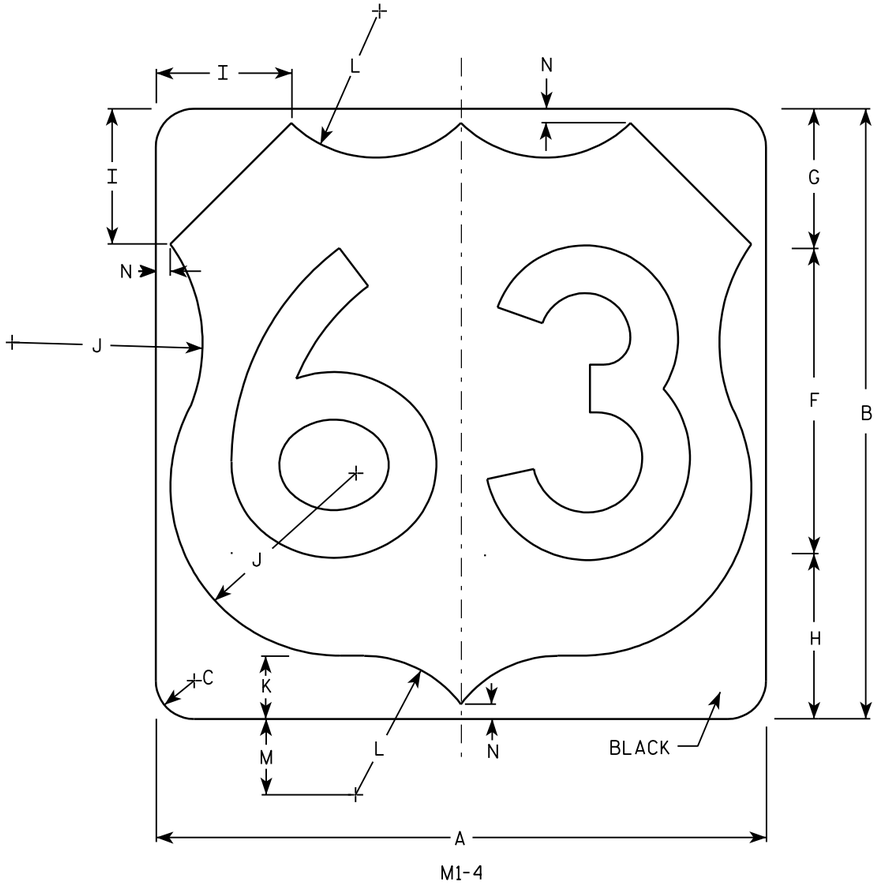

M1-4

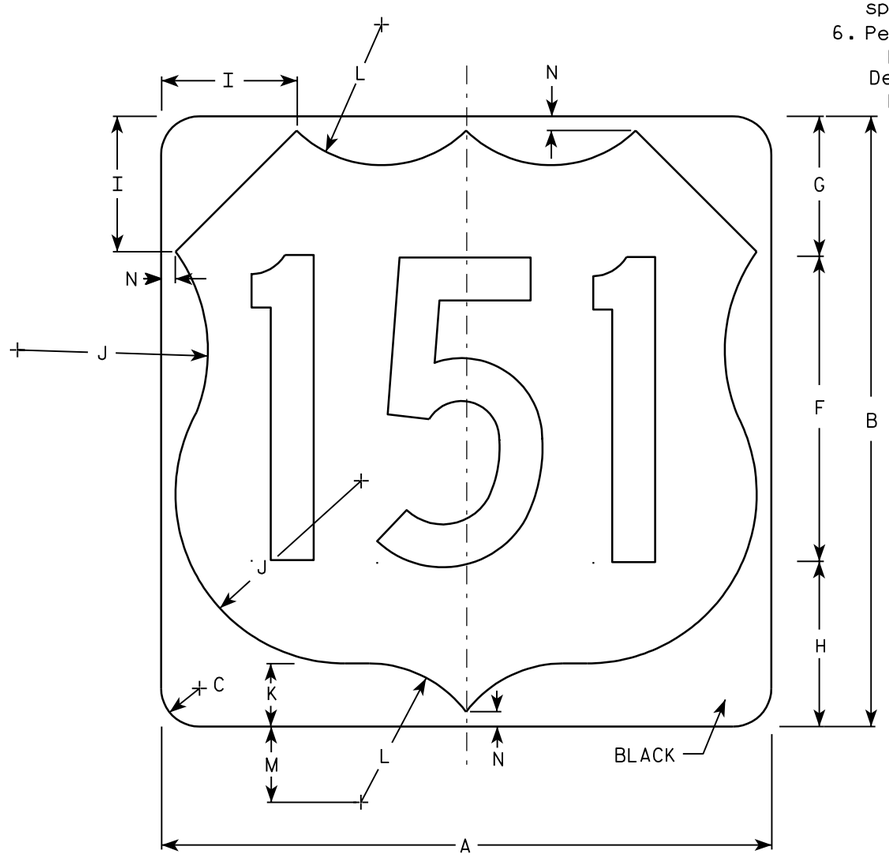

M1-4

Metric equivalent for this sign is:

SIZE	
1	
2	600 mm X 600 mm
3	900 mm X 900 mm
4	900 mm X 900 mm
5	900 mm X 900 mm

SIZE	A	B	C	D	E	F	G	H	I	J	K	L	M	N	O	P	Q	R	S	T	U	V	W	X	Y	Z	Area sq. ft.	Area m2
1																												
2	24	24	1 1/2			12	5 1/2	6 1/2	5	7 1/2	2 1/2	5 1/2	3	1/2													4.0	.36
3	36	36	2 1/4			18	8 1/4	9 1/4	7 1/4	11 1/4	3 3/4	8 1/4	4 1/2	3/4													9.0	.81
4	36	36	2 1/4			18	8 1/4	9 1/4	7 1/4	11 1/4	3 3/4	8 1/4	4 1/2	3/4													9.0	.81
5	36	36	2 1/4			18	8 1/4	9 1/4	7 1/4	11 1/4	3 3/4	8 1/4	4 1/2	3/4													9.0	.81

USH MARKER
M1-4 FOR ASSEMBLIES

WISCONSIN DEPT OF TRANSPORTATION

APPROVED Matthew R Rauch
for State Traffic Engineer

DATE 08/25/05 PLATE NO. M1-4.9

PROJECT NO: | HWY: | COUNTY: | SHEET NO: 125 | E

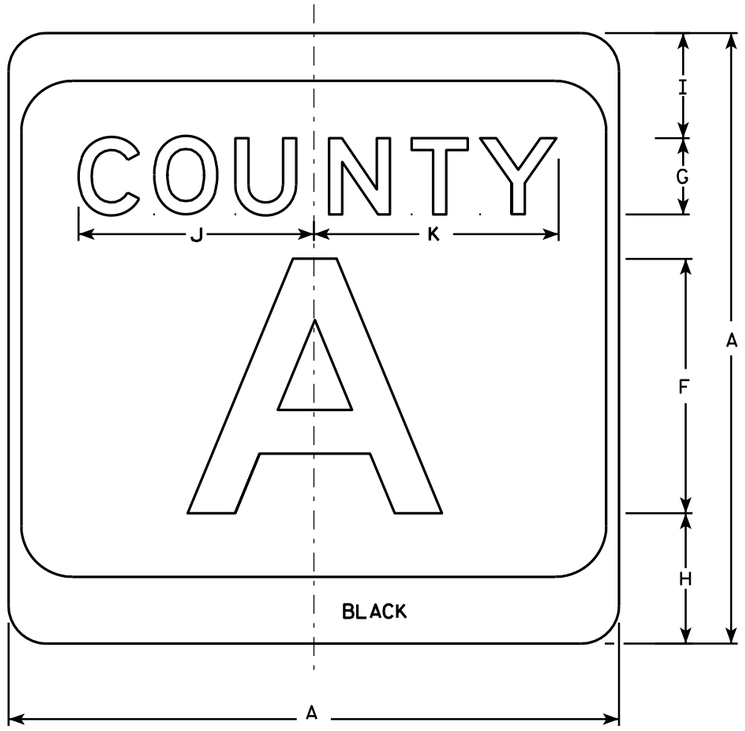

M1-5A

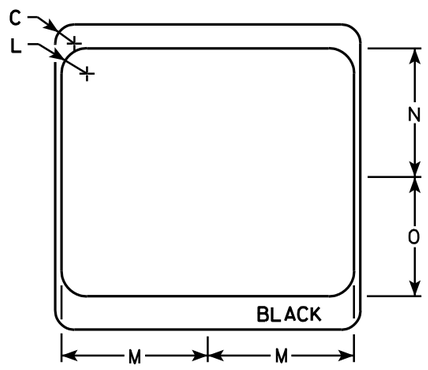

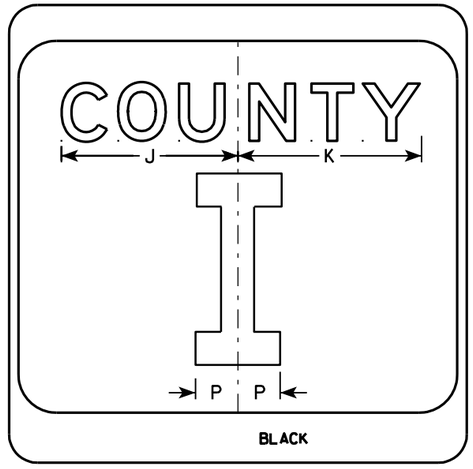

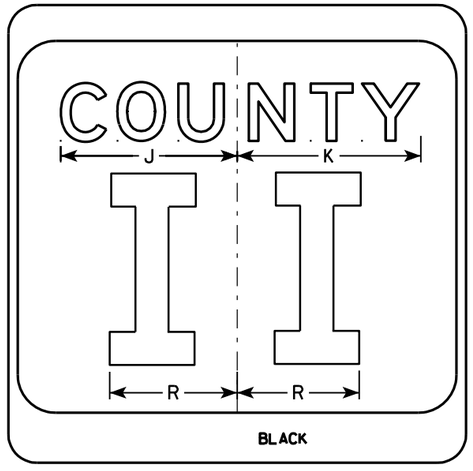

NOTES

1. Sign is Type II - see Note 7 - reference WIS DOT Standard Specification for HIGHWAY and STRUCTURE CONSTRUCTION latest edition.
2. Color:
   Background - White & Black - See Note 7
   Message - Black
3. Message Series - see Note 5
4. Corners may be square or rounded when base material is plywood but borders shall be rounded as shown. When base material is metal, the corners and borders shall be rounded.
5. Message Series E for 1 letter.
   Message Series D for 2 letters unless message is too big then Series C.
   Message Series C for 3 letters unless message is too big then Series B.
6. Substitute appropriate letters & optically center to achieve proper balance.
7. Permanent Signs
   Background - Type H Reflective
   Detour or temporary Signs
   Background - Reflective

SIZE	A	B	C	D	E	F	G	H	I	J	K	L	M	N	O	P	Q	R	S	T	U	V	W	X	Y	Z	Area sq. ft.
1																											
2	24		1 1/2			10	3	5 1/8	4 1/8	9 1/4	9 5/8	2	11 1/2	10 1/8	9 3/8	2 1/4		6 5/8									4.0
3	36		2 1/4			16	4	7 5/8	5 5/8	12 1/4	12 7/8	3	17 1/8	15 1/4	14	3 3/8		10									9.0
4	36		2 1/4			16	4	7 5/8	5 5/8	12 1/4	12 7/8	3	17 1/8	15 1/4	14	3 3/8		10									9.0
5	36		2 1/4			16	4	7 5/8	5 5/8	12 1/4	12 7/8	3	17 1/8	15 1/4	14	3 3/8		10									9.0

CTH MARKER
M1-5A FOR ASSEMBLIES

WISCONSIN DEPT OF TRANSPORTATION

APPROVED Matthew R Rauch
for State Traffic Engineer

DATE 9/27/11 PLATE NO. M1-5A.8

PROJECT NO: | HWY: | COUNTY: | SHEET NO: 126 | E

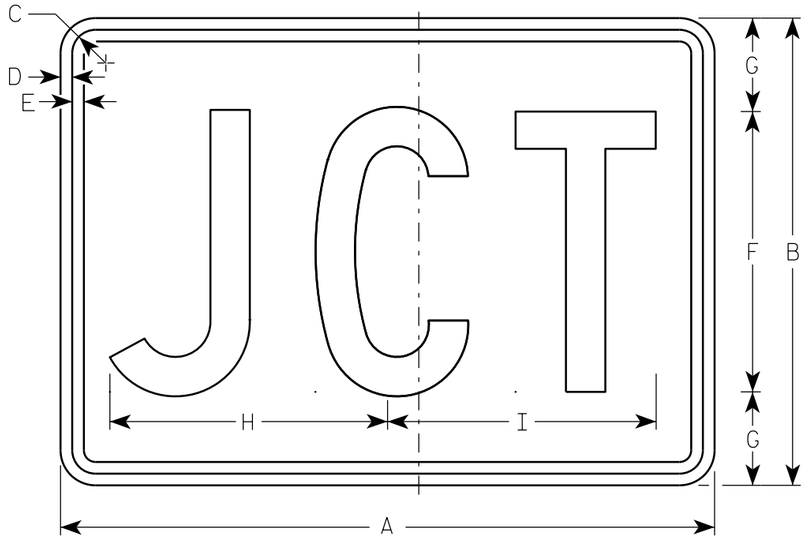

M2-1
MK2-1
MM2-1
MN2-1
MR2-1

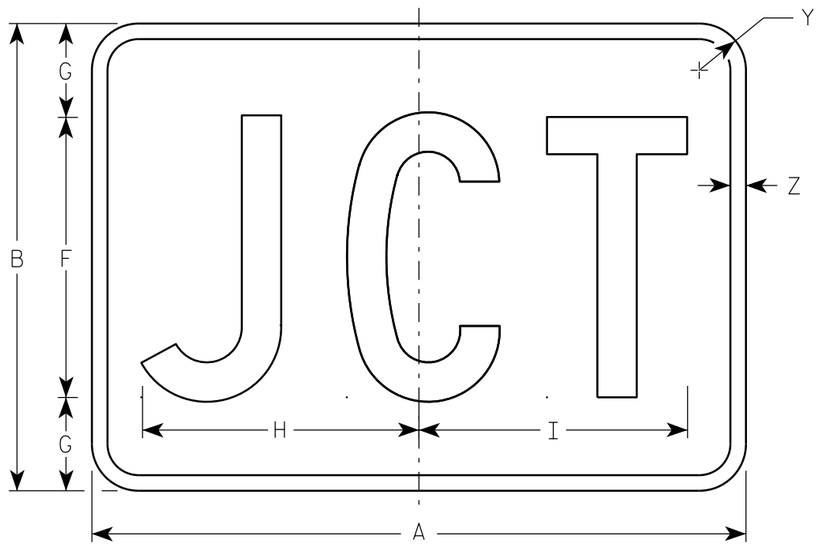

MB2-1

NOTES

1. Sign is Type II - Type H
2. Color:
   Background - See note 5
   Message - See note 5
3. Message Series - C
4. Corners may be square or rounded when base material is plywood but borders shall be rounded as shown. When base material is metal, the corners and borders shall be rounded.
5. M2-1 Background - White
   Message - Black
   MB2-1 Background - Blue
   Message - White
   MK2-1 Background - Green
   Message - White
   MM2-1 Background - White
   Message - Green
   MN2-1 Background - Brown
   Message - White
   MR2-1 Background - Brown
   Message - Yellow

SIZE	A	B	C	D	E	F	G	H	I	J	K	L	M	N	O	P	Q	R	S	T	U	V	W	X	Y	Z	Area sq. ft.
1																											
2	21	15	1 1/8	3/8	3/8	9	3	8 7/8	8 5/8																1 1/2	1/2	2.20
3	30	21	1 1/8	3/8	3/8	13	4	12 7/8	12 3/8																1 1/2	1/2	4.40
4	30	21	1 1/8	3/8	3/8	13	4	12 7/8	12 3/8																1 1/2	1/2	4.40
5	30	21	1 1/8	3/8	3/8	13	4	12 7/8	12 3/8																1 1/2	1/2	4.40

STANDARD SIGN
M2-1

WISCONSIN DEPT OF TRANSPORTATION

APPROVED Matthew R Rauch
For State Traffic Engineer

DATE 6/30/14 PLATE 127 12-1.11

PROJECT NO:	HWY:	COUNTY:		SHEET NO:	E

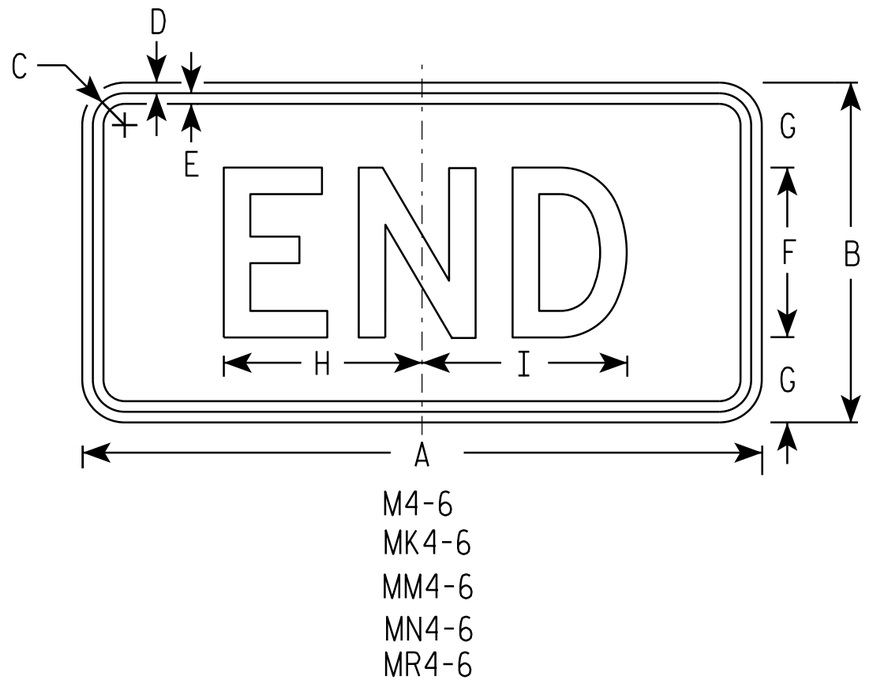

M4-6
MK4-6
MM4-6
MN4-6
MR4-6

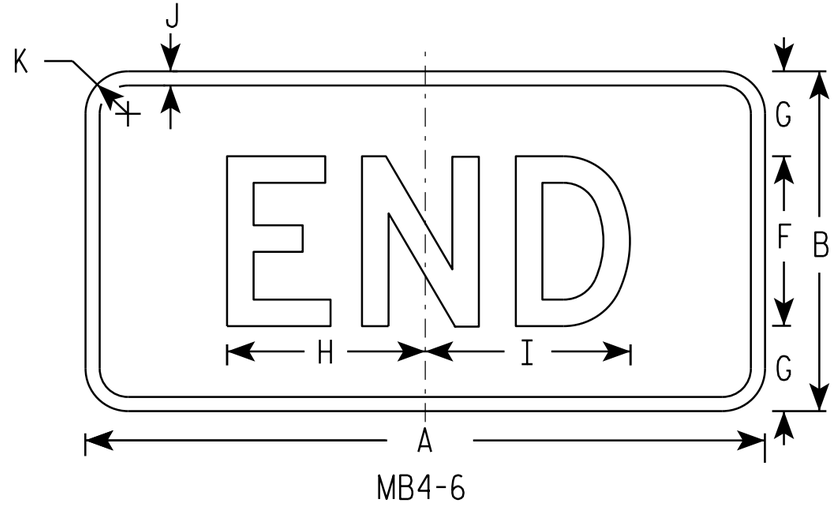

MB4-6

NOTES

1. Sign is Type II - Type H
2. Color:
   Background - See note 5
   Message - See note 5
3. Message Series - D
4. Corners may be square or rounded when base material is plywood but borders shall be rounded as shown. When base material is metal, the corners and borders shall be rounded.
5. M4-6 Background - White
   Message - Black

   MB4-6 Background - Blue
   Message - White

   MK4-6 Background - Green
   Message - White

   MM4-6 Background - White
   Message - Green

   MN4-6 Background - Brown
   Message - White

   MR4-6 Background - Brown
   Message - Yellow

SIZE	A	B	C	D	E	F	G	H	I	J	K	L	M	N	O	P	Q	R	S	T	U	V	W	X	Y	Z	Area sq. ft.
1																											
2	24	12	1 1/8	3/8	3/8	6	3	7	7 1/4	1/2	1 1/2																2.00
3	36	18	1 1/8	3/8	1/2	9	4 1/2	12	11 7/8	1/2	1 1/2																4.5
4	36	18	1 1/8	3/8	1/2	9	4 1/2	12	11 7/8	1/2	1 1/2																4.5
5	36	18	1 1/8	3/8	1/2	9	4 1/2	12	11 7/8	1/2	1 1/2																4.5

STANDARD SIGN
M4-6

WISCONSIN DEPT OF TRANSPORTATION

APPROVED Matthew R Rauch
for State Traffic Engineer

DATE 6/30/14 PLATE 14-7.8

PROJECT NO:	HWY:	COUNTY:		SHEET NO:	E

7

FILE NAME : C:\CAEFiles\Projects\tr_stdplate\M46.DGN PLOT DATE : 30-JUN-2014 15:51 PLOT BY : mscsja PLOT NAME : PLOT SCALE : 5.351066:1.000000 WISDOT/CADDS SHEET 42

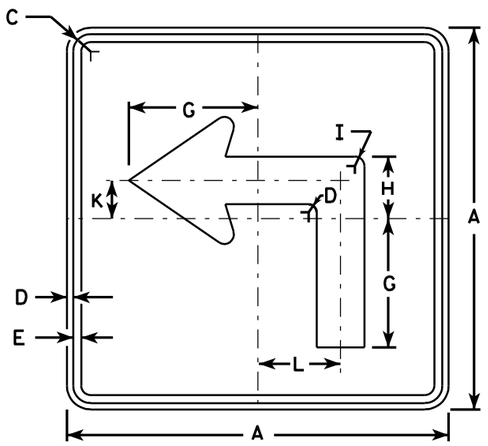

M5-1L
MK5-1L
MM5-1L
MO5-1L
MP5-1L
MR5-1L

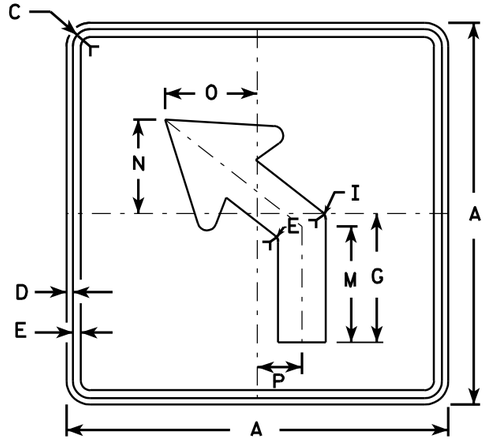

M5-2L
MK5-2L
MM5-2L
MO5-2L
MP5-2L
MR5-2L

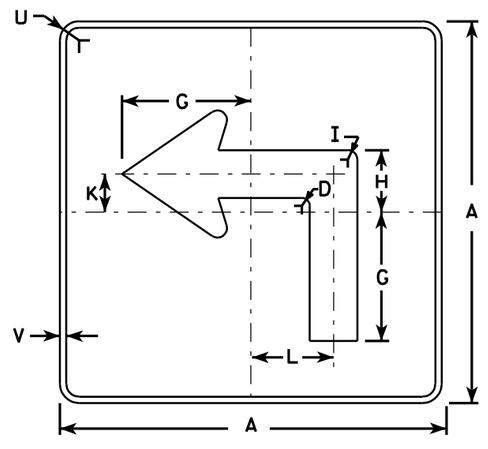

MB5-1L
MG5-1L
MN5-1L

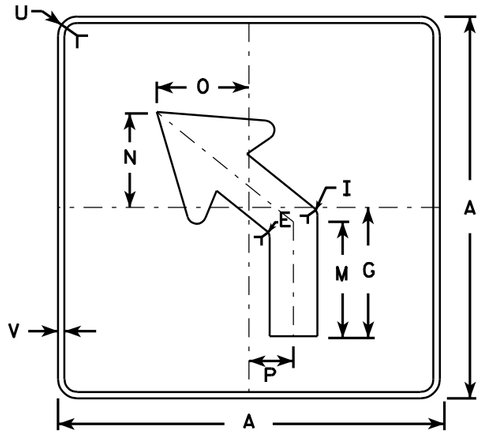

MB5-2L
MG5-2L
MN5-2L

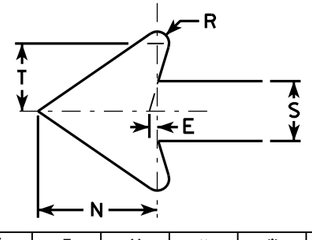

NOTES

1. Signs are Type II - See Note 4 - reference WIS DOT Standard Specification for HIGHWAY and STRUCTURE CONSTRUCTION latest edition.
2. Color:
   Background - See note 4
   Message - See note 4
3. Corners may be square or rounded when base material is plywood but borders shall be rounded as shown. When base material is metal, the corners and borders shall be rounded.
4. M5-1 and M5-2 Background - White - Type H Reflective
   Message - Black
   MB5-1 and MB5-2 Background - Blue
   Message - White - Type H Reflective
   MG5-1 and MG5-2 Background - Green
   Message - White - Type H Reflective
   MK5-1 and MK5-2 Background - Green
   Message - White Type H Reflective
   MM5-1 and MM5-2 Background - White - Type H Reflective
   Message - Green
   MN5-1 and MN5-2 Background - Brown
   Message - White - Type H Reflective
   MO5-1 and MO5-2 Background - Orange - Type F Reflective
   Message - Black
   MP5-1 and MP5-2 Background - White - Type H Reflective
   Message - Blue
   MR5-1 and MR5-2 Background - Brown
   Message - Yellow - Type H Reflective
5. M5-1R same as M5-1L except arrow points right.
6. M5-2R same as M5-2L except arrow tilts right.

SIZE	A	B	C	D	E	F	G	H	I	J	K	L	M	N	O	P	Q	R	S	T	U	V	W	X	Y	Z	Area sq. ft.
1																											
2	21		1 1/8	3/8	3/8		7	3 3/8	5/8		2 1/8	4 1/2	6 3/8	5 1/4	5	2 1/2		1/2	2 5/8	3	1 1/2	1/2					3.06
3	30		1 3/8	1/2	5/8		10 1/8	4 1/8	7/8		3	6 1/2	9 1/8	7 1/2	7 1/4	3 1/2		3/4	3 3/4	4 1/4	1 7/8	1/2					6.25
4	30		1 3/8	1/2	5/8		10 1/8	4 1/8	7/8		3	6 1/2	9 1/8	7 1/2	7 1/4	3 1/2		3/4	3 3/4	4 1/4	1 7/8	1/2					6.25
5	30		1 3/8	1/2	5/8		10 1/8	4 1/8	7/8		3	6 1/2	9 1/8	7 1/2	7 1/4	3 1/2		3/4	3 3/4	4 1/4	1 7/8	1/2					6.25

STANDARD SIGN
M5-1 & M5-2

WISCONSIN DEPT OF TRANSPORTATION

APPROVED Matthew R Rauch
for State Traffic Engineer

DATE 7/29/13 PLATE NO. M5-1.12

PROJECT NO:	HWY:	COUNTY:		SHEET NO: 129	E

FILE NAME : C:\CAEFiles\Projects\tr_stdplate\M51.DGN PLOT DATE : 29-JUL-2013 13:34 PLOT BY : mscj9h PLOT NAME : PLOT SCALE : 11.908552:1.000000

WISDOT/CADDS SHEET 42

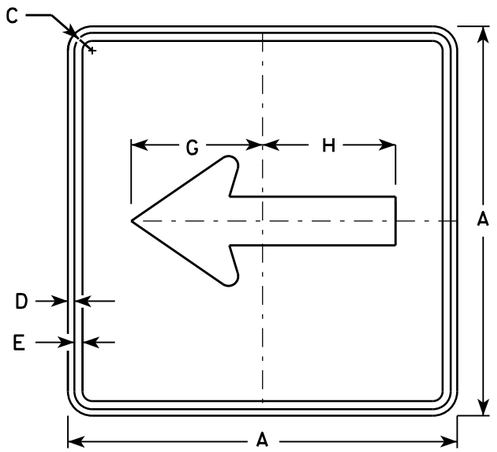

M6-1
MK6-1
MM6-1
MN6-1
MO6-1
MP6-1
MR6-1

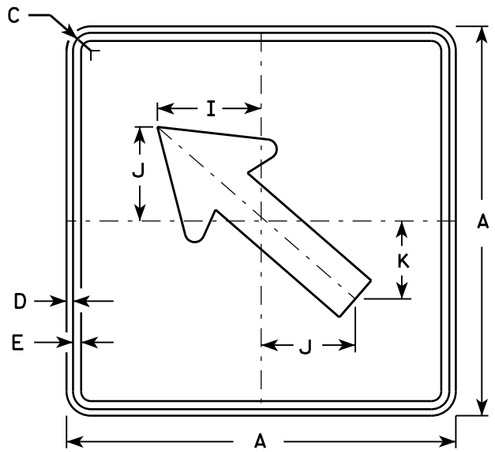

M6-2
MK6-2
MM6-2
MN6-2
MO6-2
MP6-2
MR6-2

NOTES

1. Signs are Type II - Type H except as Shown
2. Color:
   Background - See note 4
   Message - See note 4
3. Corners may be square or rounded when base material is plywood but borders shall be rounded as shown. When base material is metal, the corners and borders shall be rounded.
4. M6-1 and M6-2 Background - White
   Message - Black
   MB6-1 and MB6-2 Background - Blue
   Message - White
   MG6-1 and MG6-2 Background - Green
   Message - White
   MK6-1 and MK6-2 Background - Green
   Message - White
   MM6-1 and MM6-2 Background - White
   Message - Green
   MN6-1 and MN6-2 Background - Brown
   Message - White
   MO6-1 and MO6-2 Background - Orange - Type F Reflective
   Message - Black
   MP6-1 and MP6-2 Background - White
   Message - Blue
   MR6-1 and MR6-2 Background - Brown
   Message - Yellow

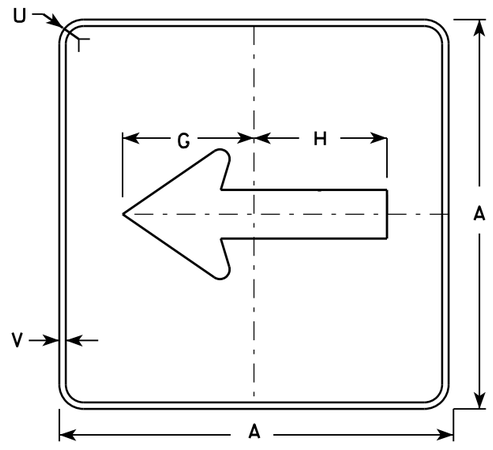

MB6-1

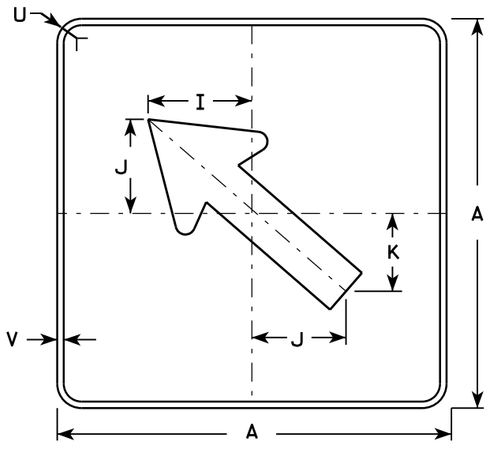

MB6-2

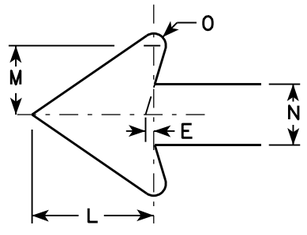

SIZE	A	B	C	D	E	F	G	H	I	J	K	L	M	N	O	P	Q	R	S	T	U	V	W	X	Y	Z	Area sq. ft.
1																											
2	21		1 1/8	3/8	3/8		7 1/2	7 1/8	5 5/8	5	4 1/4	5 1/4	3	2 5/8	1/2						1 1/2	1/2						3.06
3	30		1 3/8	1/2	5/8		10 3/4	10 1/4	8	7 1/4	6	7 1/2	4 1/4	3 3/4	3/4						1 7/8	1/2						6.25
4	30		1 3/8	1/2	5/8		10 3/4	10 1/4	8	7 1/4	6	7 1/2	4 1/4	3 3/4	3/4						1 7/8	1/2						6.25
5	30		1 3/8	1/2	5/8		10 3/4	10 1/4	8	7 1/4	6	7 1/2	4 1/4	3 3/4	3/4						1 7/8	1/2						6.25

STANDARD SIGN M6-1 & M6-2 SERIES

WISCONSIN DEPT OF TRANSPORTATION

APPROVED Matthew R Rauch
for State Traffic Engineer

DATE 7/03/14 PLATE 130 M6-1.14

PROJECT NO: | HWY: | COUNTY: | SHEET NO: E

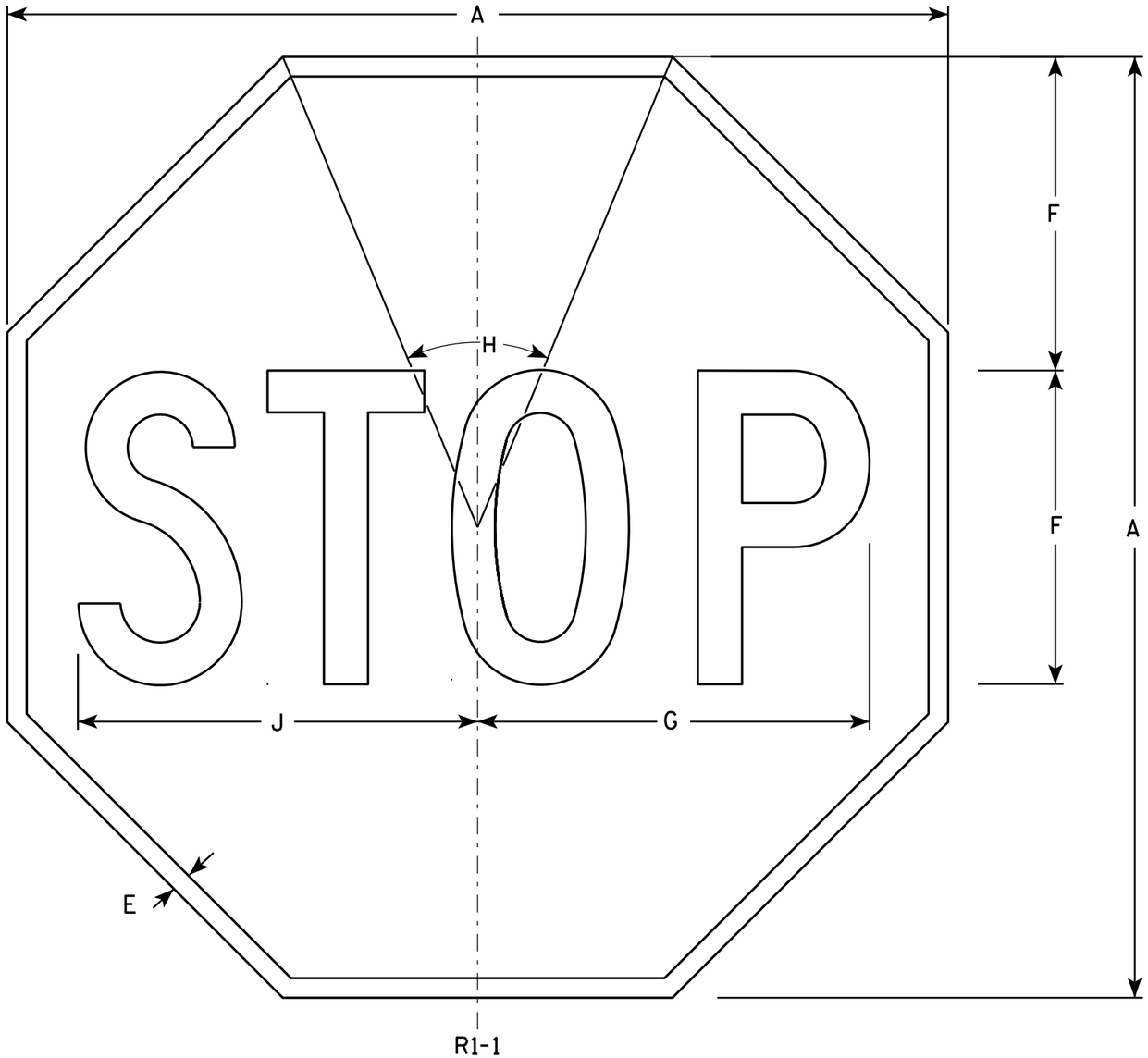

NOTES

1. Sign is Type II - Type H Reflective - reference WIS DOT Standard Specification for HIGHWAY and STRUCTURE CONSTRUCTION latest edition.
2. Color:
   Background - Red
   Message - White
3. Message Series - C

SIZE	A	B	C	D	E	F	G	H	I	J	K	L	M	N	O	P	Q	R	S	T	U	V	W	X	Y	Z	Area sq. ft.
1	24				3/8	8	10	45°		10 1/4																	3.31
2S	30				5/8	10	12 1/2	45°		12 3/4																	5.18
2M	36				3/4	12	15	45°		15 3/8																	7.46
3	36				3/4	12	15	45°		15 3/8																	7.46
4	48				1	16	20	45°		20 1/2																	13.25
5	48				1	16	20	45°		20 1/2																	13.25
6	18				3/8	6	7 3/4	45°		7 3/4																	1.86
7	12				1/4	4	5	45°		5 1/8																	0.78

STANDARD SIGN
R1-1

WISCONSIN DEPT OF TRANSPORTATION

APPROVED Matthew R Rauch
for State Traffic Engineer

DATE 12/03/10 PLATE NO. R1-1.12

PROJECT NO:	HWY:	COUNTY:		SHEET NO: 131	E

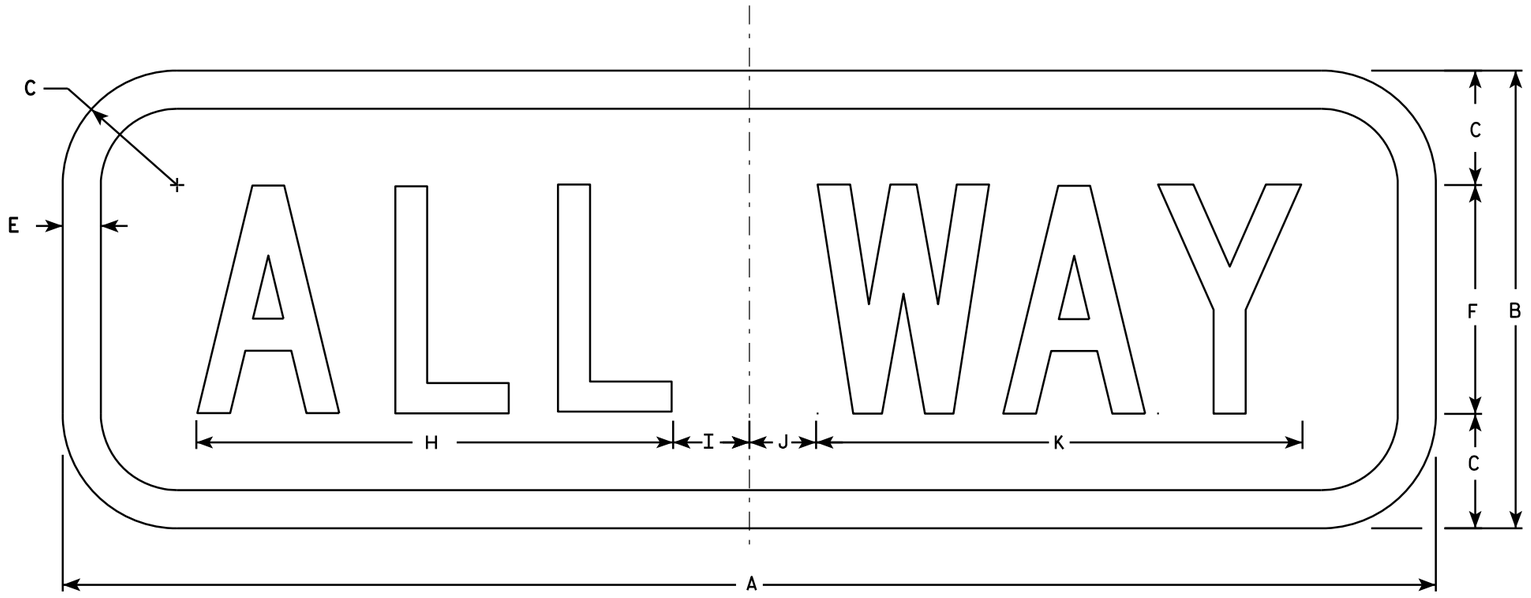

R1-3P

NOTES

1. Sign is Type II - Type H Reflective - reference WIS DOT Standard Specification for HIGHWAY and STRUCTURE CONSTRUCTION latest edition.
2. Color:
   Background - Red
   Message - White
3. Message Series - C
4. Corners may be square or rounded when base material is plywood but borders shall be rounded as shown. When base material is metal, the corners and borders shall be rounded.

SIZE	A	B	C	D	E	F	G	H	I	J	K	L	M	N	O	P	Q	R	S	T	U	V	W	X	Y	Z	Area sq. ft.
1	18	6	1 1/2		1/2	3		6 1/4	1 1/4	7/8	6 3/8																0.75
2S	18	6	1 1/2		1/2	3		6 1/4	1 1/4	7/8	6 3/8																1.5
2M	24	9	1 1/2		1/2	5		9 1/4	1 1/4	3/4	9 3/4																1.5
3	30	12	2 1/4		5/8	6		11	2 1/4	1 1/2	11 3/4																2.5
4																											
5																											

STANDARD SIGN
R1-3P

WISCONSIN DEPT OF TRANSPORTATION

APPROVED Matthew R Rauch
for State Traffic Engineer

DATE 11/02/10 PLATE NO. R1-3P.1

PROJECT NO: | HWY: | COUNTY: | SHEET NO: 132 | E

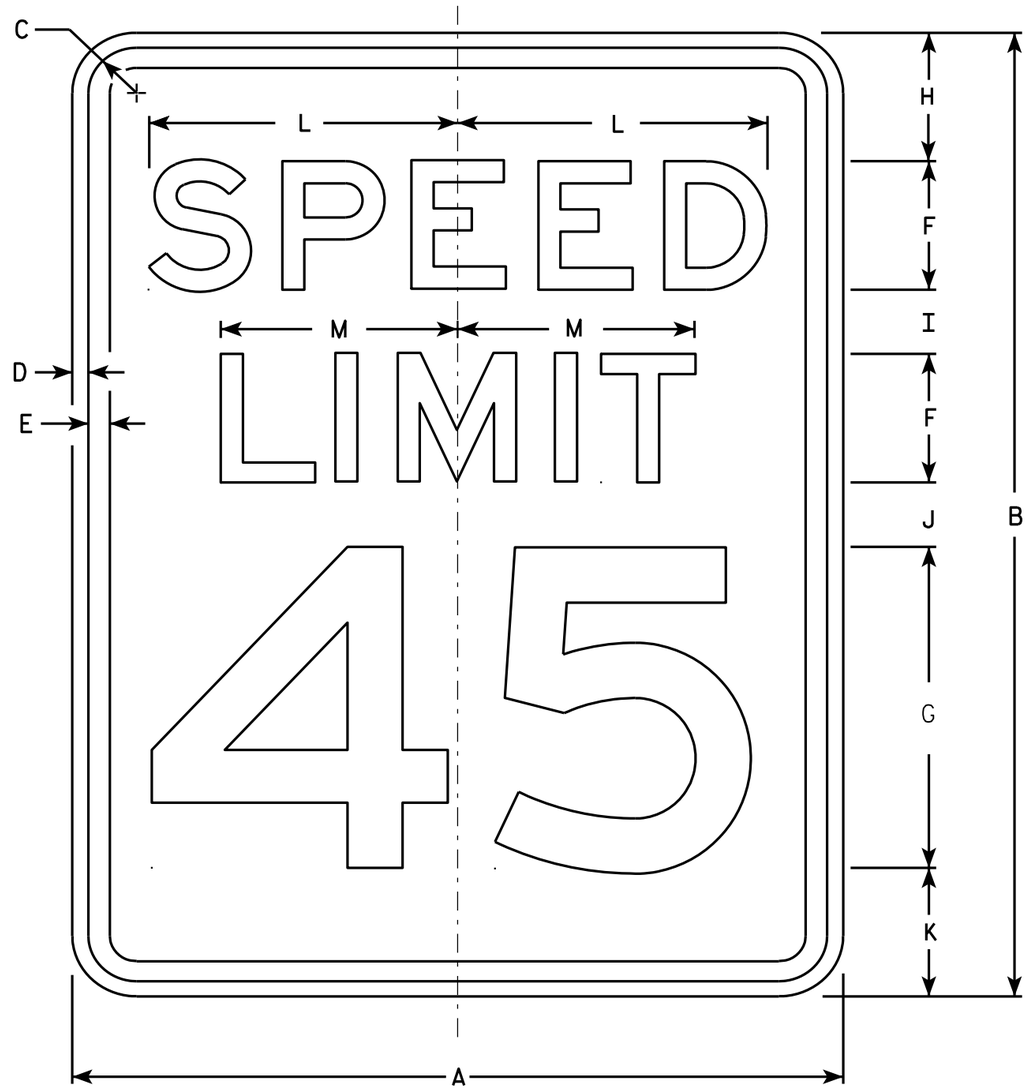

R2-1

NOTES

1. Sign is Type II - Type H Reflective - reference WIS DOT Standard Specification for HIGHWAY and STRUCTURE CONSTRUCTION latest edition.
2. Color:
   Background - White
   Message - Black
3. Message Series - E
4. Corners may be square or rounded when base material is plywood but borders shall be rounded as shown. When base material is metal, the corners and borders shall be rounded.
5. Substitute appropriate numerals and optically adjust spacing to achieve proper balance.

SIZE	A	B	C	D	E	F	G	H	I	J	K	L	M	N	O	P	Q	R	S	T	U	V	W	X	Y	Z	Area sq. ft.
1	18	24	1 1/8	3/8	1/2	3	8	3	2	2	3	7 1/4	5 1/2														3.0
2S	24	30	1 1/8	3/8	1/2	4	10	3	2 1/4	3 3/8	3 3/8	9 5/8	7 3/8														5.0
2M	30	36	1 3/8	1/2	5/8	5	12	5	2 1/2	2 1/2	4	12	9 1/4														7.5
3	36	48	1 3/8	1/2	5/8	6	14	6	5	5	6	14 3/8	11														12.0
4	36	48	1 3/8	1/2	5/8	6	14	6	5	5	6	14 3/8	11														12.0
5	48	60	2 1/4	3/4	1	8	20	6	4 1/2	6 3/4	6 3/4	19 1/4	14 5/8														20.0

STANDARD SIGN
R2-1

WISCONSIN DEPT OF TRANSPORTATION

APPROVED Matthew R Rauch
for State Traffic Engineer

DATE 5/26/10 PLATE NO. R2-1.13

PROJECT NO: | HWY: | COUNTY: | SHEET NO: 133 | E

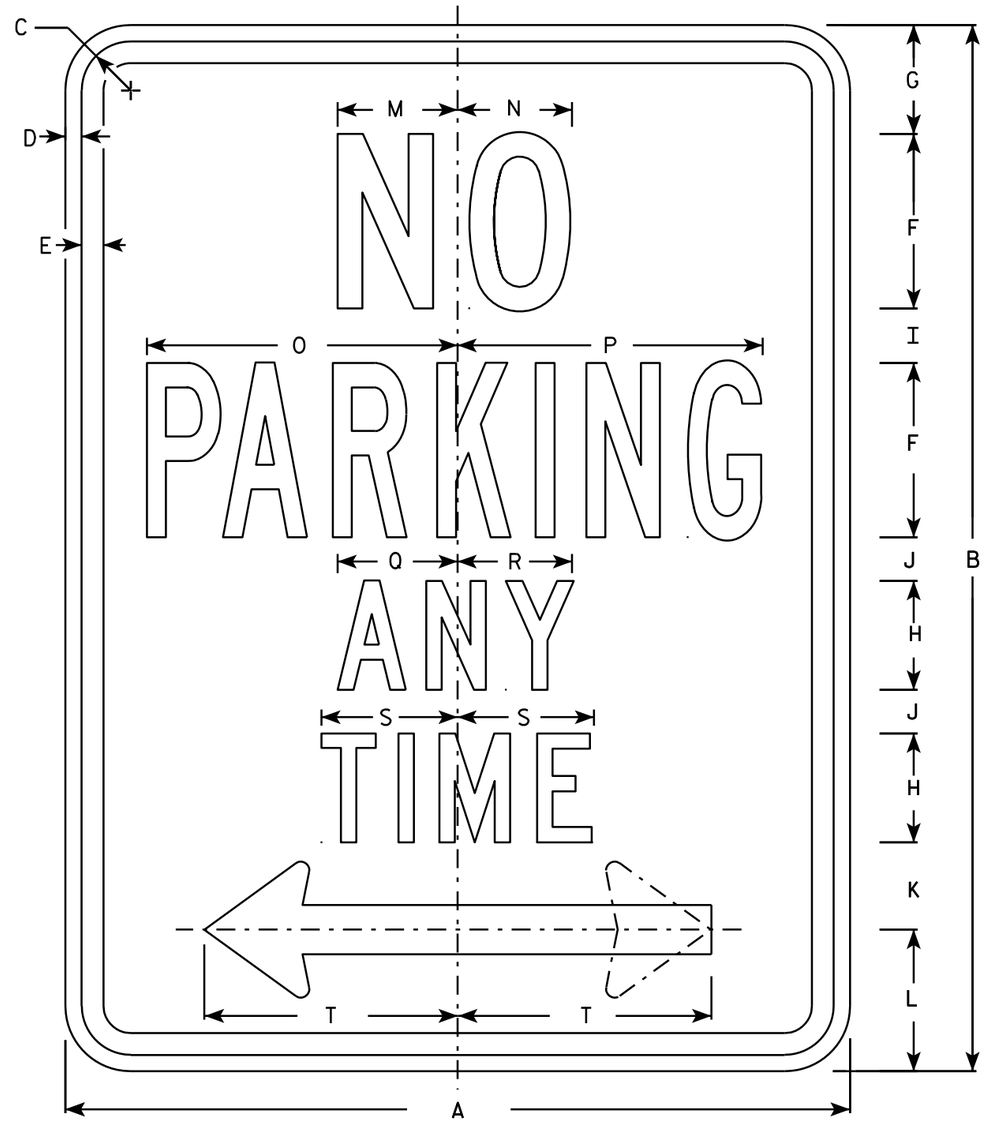

R7-1

NOTES

1. Sign is Type II - Type H Reflective - reference WIS DOT Standard Specification for HIGHWAY and STRUCTURE CONSTRUCTION latest edition.
2. Color:
   Background - White
   Message - Red
3. Message Series - See Note 5
4. Corners may be square or rounded when base material is plywood but borders shall be rounded as shown. When base material is metal, the corners and borders shall be rounded.
5. Lines 1, 3 and 4 are series C, line 2 is series B.
6. R7-1D (double arrow)
   R7-1L (left arrow)
   R7-1R (right arrow)

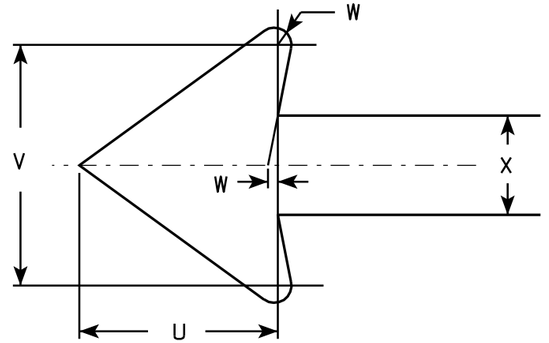

SIZE	A	B	C	D	E	F	G	H	I	J	K	L	M	N	O	P	Q	R	S	T	U	V	W	X	Y	Z	Area sq. ft.
1	12	18	1 1/8	3/8	3/8	3	1 7/8	2	7/8	5/8	1 1/2	2 1/2	2	2	4 7/8	4 7/8	2 1/4	2 1/8	2 1/2	3 7/8	1 1/2	1 3/4	1/8	3/4			1.5
2S	18	24	1 1/8	3/8	1/2	4	2 1/2	2 1/2	1 1/4	1	2	3 1/4	2 3/4	2 5/8	7 1/8	7	2 3/4	2 5/8	3 1/8	5 7/8	2 1/4	2 5/8	1/4	1 1/8			3.0
2M	24	30	1 1/8	3/8	1/2	5	3	3	2	1 1/4	2 1/2	4	3 1/4	3 3/8	9 1/4	9 1/4	3 1/4	3 1/4	3 3/4	7 3/4	3	3 1/2	1/4	1 1/2			5.0
3	24	30	1 1/8	3/8	1/2	5	3	3	2	1 1/4	2 1/2	4	3 1/4	3 3/8	9 1/4	9 1/4	3 1/4	3 1/4	3 3/4	7 3/4	3	3 1/2	1/4	1 1/2			5.0
4																											
5																											

STANDARD SIGN
R7-1

WISCONSIN DEPT OF TRANSPORTATION

APPROVED Matthew R Rauch
for State Traffic Engineer

DATE 3/31/2011 PLATE NO. R7-1.9

PROJECT NO: | HWY: | COUNTY: | SHEET NO: 134 | E

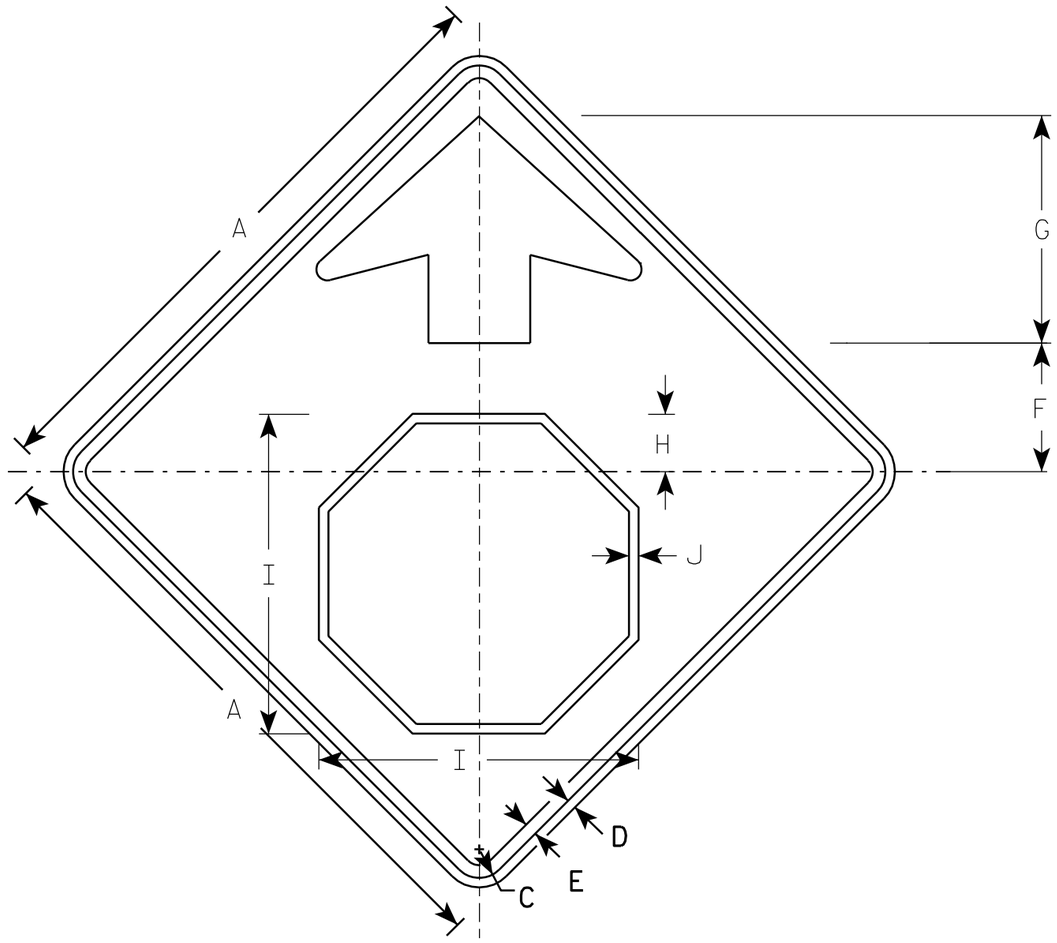

W3-1

NOTES

1. All Signs Type II - Type F Reflective - reference WIS DOT Standard Specification for HIGHWAY and STRUCTURE CONSTRUCTION latest edition.
2. Color:
   Background - YELLOW
   Arrow & Border - BLACK
   Stop Symbol - WHITE BORDER ON RED BACKGROUND

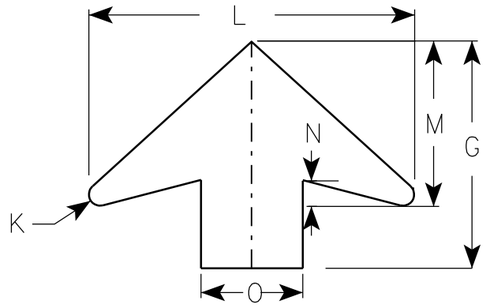

ARROW DETAIL

SIZE	A	B	C	D	E	F	G	H	I	J	K	L	M	N	O	P	Q	R	S	T	U	V	W	X	Y	Z	Area sq. ft.
1	30		1 3/8	1/2	5/8	6 1/4	11 1/4	2 7/8	15 3/4	1/2	1/2	16	8	1 1/4	5												6.25
2S	36		1 5/8	5/8	3/4	7 1/2	13 1/2	3 1/2	19	5/8	5/8	19 1/4	9 3/4	1 5/8	6												9.0
2M	36		1 5/8	5/8	3/4	7 1/2	13 1/2	3 1/2	19	5/8	5/8	19 1/4	9 3/4	1 5/8	6												9.0
3	36		1 5/8	5/8	3/4	7 1/2	13 1/2	3 1/2	19	5/8	5/8	19 1/4	9 3/4	1 5/8	6												9.0
4	48		2 1/4	3/4	1	10	17 7/8	4 1/2	25 1/8	3/4	7/8	25 5/8	13	2	8												16.0
5	48		2 1/4	3/4	1	10	17 7/8	4 1/2	25 1/8	3/4	7/8	25 5/8	13	2	8												16.0

STANDARD SIGN
W3-1

WISCONSIN DEPT OF TRANSPORTATION

APPROVED Matthew R Rauch
for State Traffic Engineer

DATE 6/7/10 PLATE NO. W3-1.12

PROJECT NO:

SHEET NO: 135 E

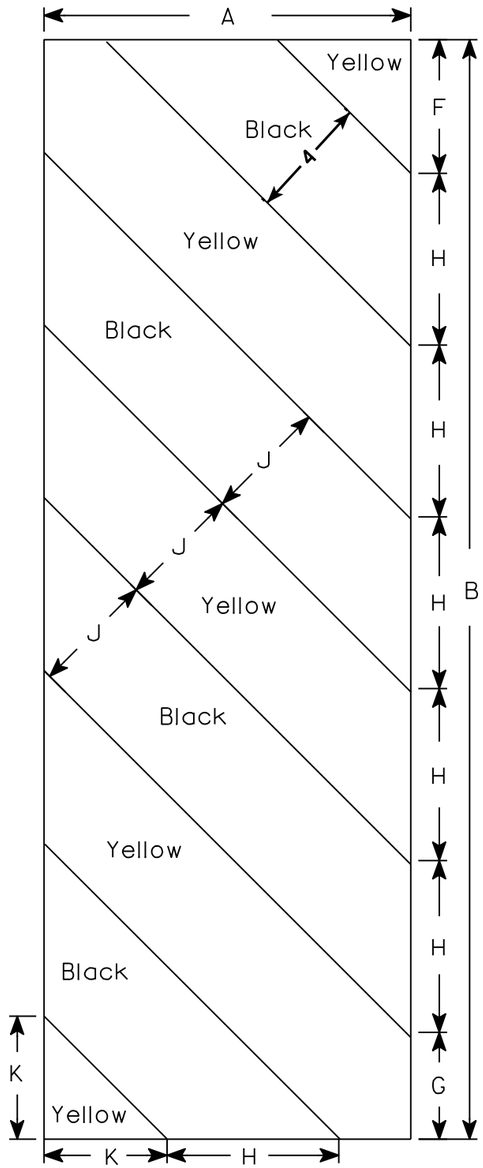

W5-52L

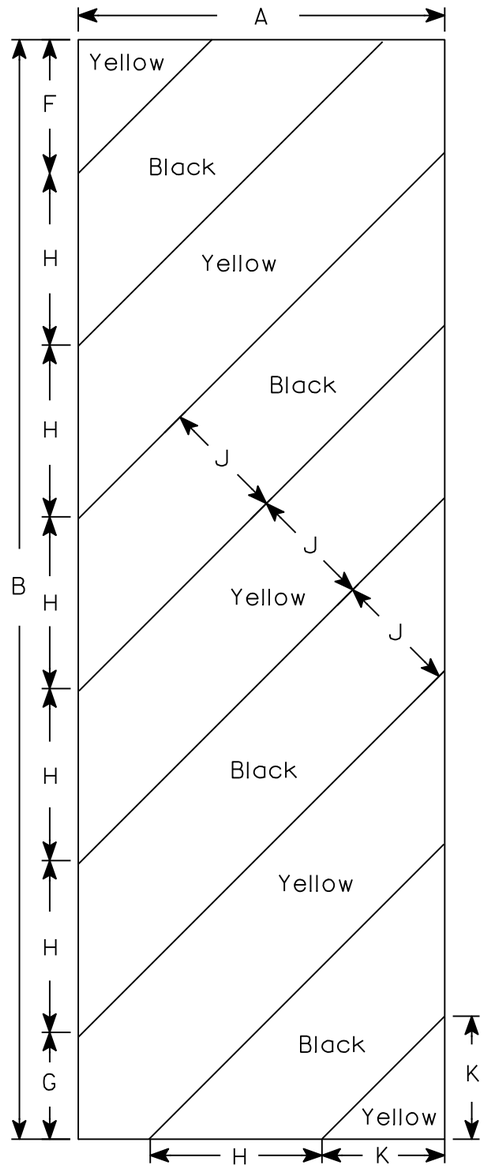

W5-52R

NOTES

1. Sign is Type II - Type F Reflective - reference WIS DOT Standard Specification for HIGHWAY and STRUCTURE CONSTRUCTION latest edition.
2. Color:
   Background - Yellow
   Message - Black
3. Corners may be square or rounded when base material is plywood but borders shall be rounded as shown. When base material is metal, the corners and borders shall be rounded.
4. Alternate colors of stripes as shown.

SIZE	A	B	C	D	E	F	G	H	I	J	K	L	M	N	O	P	Q	R	S	T	U	V	W	X	Y	Z	Area sq. ft.
1																											
2S	12	36				4 3/8	3 1/2	5 5/8	45°	4	4																3.0
2M	12	36				4 3/8	3 1/2	5 5/8	45°	4	4																3.0
3	18	54				6	5 1/2	8 1/2	45°	6	6 9/16																6.75
4																											
5																											

STANDARD SIGN

W5-52L & W5-52R

WISCONSIN DEPT OF TRANSPORTATION

APPROVED Matthew R Rauch
for State Traffic Engineer

DATE 5/29/12 PLATE NO. W5-52.9

PROJECT NO:	HWY:	COUNTY:		SHEET NO: 136	E

NOTES

1. Sign is Type II - Type F Reflective - reference WIS DOT Standard Specification for HIGHWAY and STRUCTURE CONSTRUCTION latest edition.
2. Color:
   Background - Yellow
   Message - Black
3. Message Series - See note 5
4. Corners and borders shall be rounded on all base materials for this sign.
5. Lines 1 and 2 are Series D.
   Line 3 is series C.

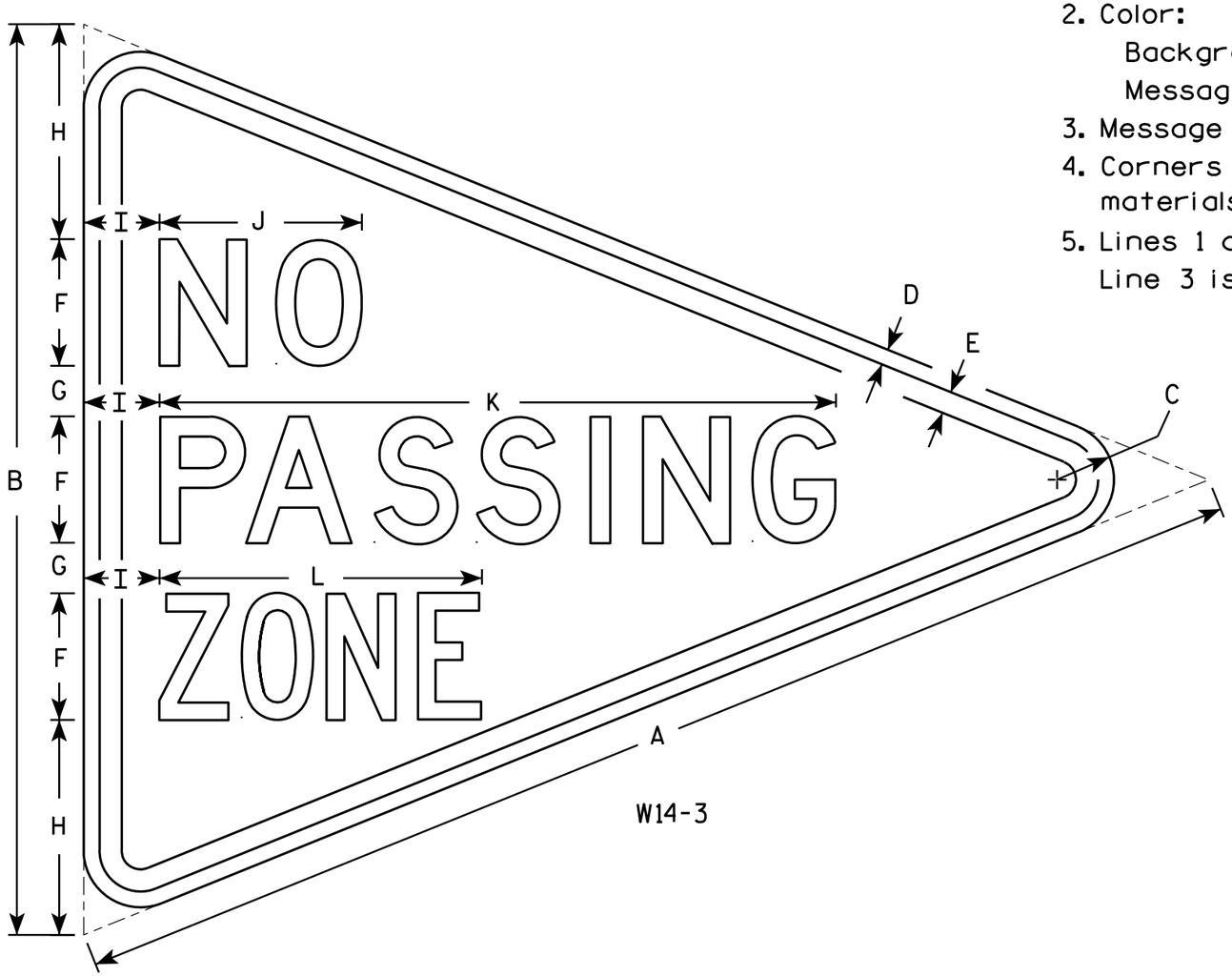

W14-3

SIZE	A	B	C	D	E	F	G	H	I	J	K	L	M	N	O	P	Q	R	S	T	U	V	W	X	Y	Z	Area sq. ft.
1																											
2S	48	36	2 1/4	5/8	7/8	5	2	8 1/2	3	8	26 3/4	12 3/4															6.0
2M	48	36	2 1/4	5/8	7/8	5	2	8 1/2	3	8	26 3/4	12 3/4															6.0
3	64	48	3	3/4	1 1/4	6	3	12	4	10 3/4	33 5/8	16 1/2															10.7
4																											
5																											

STANDARD SIGN
W14-3

WISCONSIN DEPT OF TRANSPORTATION

APPROVED Matthew R Rauch
for State Traffic Engineer

DATE 6/7/10 PLATE NO. W14-3.9

PROJECT NO:	HWY:	COUNTY:		SHEET NO: 137	E

$PRFNAME$
U:\42-0943.00 - Eau Claire Co - CTH AA\BRIDGE\420943 gp.dgn

DATE:
DATE:
DATE:

CHECKED BY:
BACK CHECKED BY:
CORRECTED BY:

8

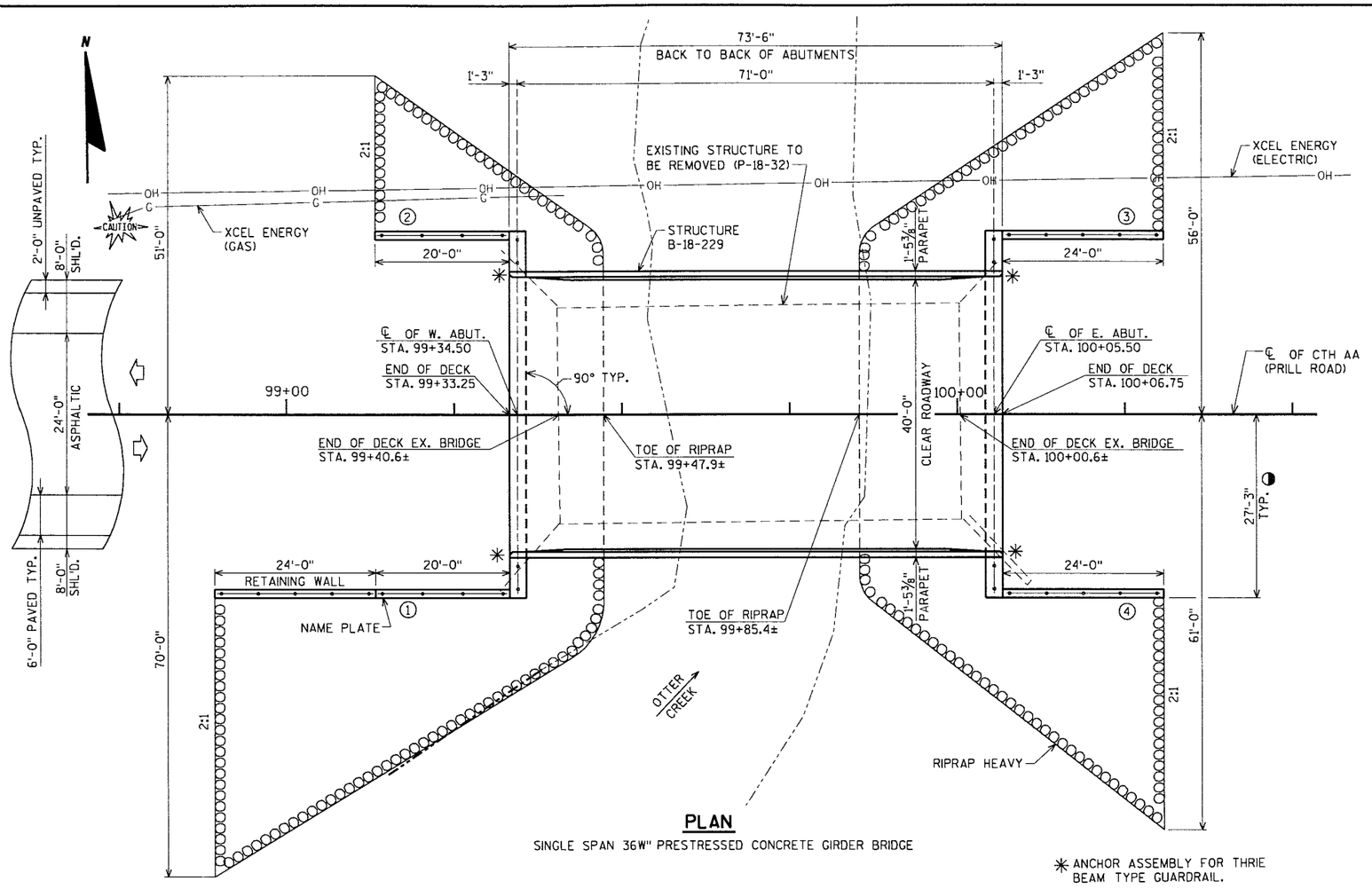

PLAN

SINGLE SPAN 36W" PRESTRESSED CONCRETE GIRDER BRIDGE

✳ ANCHOR ASSEMBLY FOR THRIE BEAM TYPE GUARDRAIL.

◯ DENOTES WING NUMBER.

◑ BRIDGE ABUTMENTS WILL BE CONSTRUCTED IN ORDER TO ACCOMODIATE FUTURE SIDEWALKS ON BOTH SIDES.

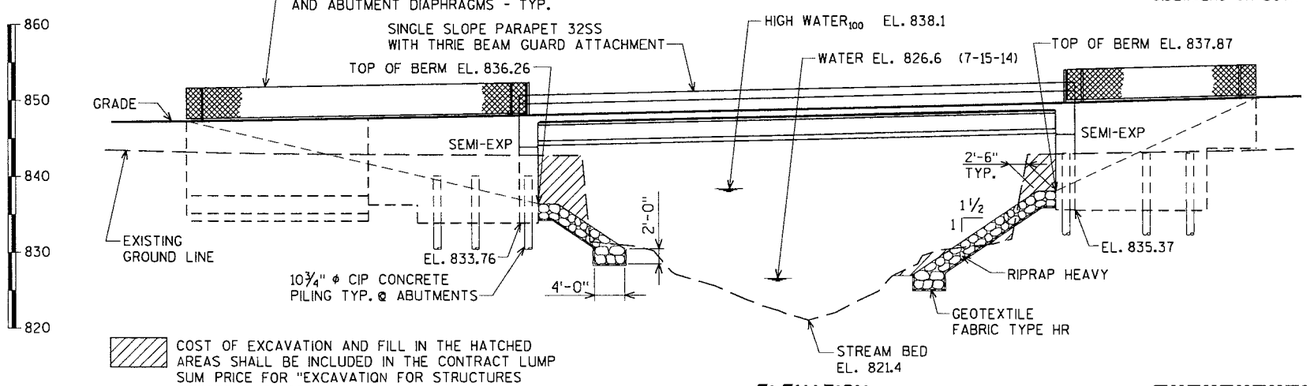

COST OF EXCAVATION AND FILL IN THE HATCHED AREAS SHALL BE INCLUDED IN THE CONTRACT LUMP SUM PRICE FOR "EXCAVATION FOR STRUCTURES BRIDGES B-18-229".

ELEVATION

DESIGN DATA

LIVE LOAD:

DESIGN LOADING: HL-93
INVENTORY RATING FACTOR: 1.21
OPERATING RATING FACTOR: 1.89
WISCONSIN STANDARD PERMIT VEHICLE (WIS-SPV) = 250 KIPS

STRUCTURE IS DESIGNED FOR A FUTURE WEARING SURFACE OF 20 #/S.F.

MATERIAL PROPERTIES:

CONCRETE MASONRY — SUPERSTRUCTURE f'_c = 4,000 p.s.i.; ALL OTHER f'_c = 3,500 p.s.i.
HIGH STRENGTH BAR STEEL REINFORCEMENT (GRADE 60) f_y = 60,000 p.s.i.

36W" PRESTRESSED GIRDER
CONCRETE MASONRY f'_c = 8,000 p.s.i.
STRANDS - 0.6" DIA. WITH ULTIMATE TENSILE STRENGTH OF = 270,000 p.s.i.

HYDRAULIC DATA:

100 YEAR FLOOD
DRAINAGE AREA = 58.7 sq. mi.
WATERWAY AREA = 505 sq. ft.
V = 6.7 f.p.s.
Q_{100} = 3,400 c.f.s.
HIGH WATER$_{100}$ EL. 838.1
HIGH WATER$_2$ EL. 832.8
REGULATORY HIGHWATER$_{100}$ EL. 844.5
RDWY. OVERFLOW = N/A
SCOUR CRITICAL CODE = 8
NAVD 88 DATUM (2012)

FOUNDATION DATA:

WEST ABUTMENT TO BE SUPPORTED ON 10 3/4"ϕ X 0.25" C.I.P CONCRETE PILING DRIVEN TO A REQUIRED DRIVING RESISTANCE OF 120 TONS ǂ PER PILE AS DETERMINED BY THE MODIFIED GATES DYNAMIC FORMULA. ESTIMATED LENGTH 55'-0".

EAST ABUTMENT TO BE SUPPORTED ON 10 3/4"ϕ X 0.25" C.I.P CONCRETE PILING DRIVEN TO A REQUIRED DRIVING RESISTANCE OF 120 TONS ǂ PER PILE AS DETERMINED BY THE MODIFIED GATES DYNAMIC FORMULA. ESTIMATED LENGTH 60'-0".

ǂ THE FACTORED AXIAL RESISTANCE OF PILES IN COMPRESSION USED FOR DESIGN IS THE REQUIRED DRIVING RESISTANCE MULTIPLIED BY A RESISTANCE FACTOR OF 0.5 USING MODIFIED GATES TO DETERMINE DRIVEN PILE CAPACITY.

TRAFFIC DATA:

A.D.T. = 2,900 (2016)
A.D.T. = 3,700 (2036)
R.D.S. = 50 M.P.H.

LIST OF DRAWINGS

1. GENERAL PLAN
2. TYPICAL SECTION, QUANTITIES AND NOTES
3. SUBSURFACE EXPLORATION
4. WEST ABUTMENT
5. WEST ABUTMENT DETAILS
6. WEST ABUTMENT WING 1 DETAILS
7. RETAINING WALL DETAILS
8. WEST ABUTMENT WING 2 DETAILS & BILL OF BARS
9. EAST ABUTMENT
10. EAST ABUTMENT DETAILS
11. EAST ABUTMENT WING DETAILS & BILL OF BARS
12. 36W" PRESTRESSED GIRDER DETAILS
13. 36W" PRESTRESSED GIRDER DETAILS
14. STEEL INTER. DIAPHRAGM DETAILS
15. SUPERSTRUCTURE
16. SUPERSTRUCTURE PLAN
17. SUPERSTRUCTURE DETAILS
18. SINGLE SLOPE PARAPET 32SS
19. CHAIN LINK FENCE ELEVATIONS
20. CHAIN LINK FENCE DETAILS
21. ALTERNATE CONSTRUCTION JOINT

FOR TYPICAL SECTION, PROFILE GRADE LINE, AND GENERAL NOTES, SEE SHEET 2

BRIDGE OFFICE CONTACT:
WILLIAM DREHER
(608)-266-8489

CONSULTANT CONTACT:
CHRIS MCMAHON
(715)-834-3161

WISCONSIN
CHRISTOPHER B. McMAHON
E-29454
EAU CLAIRE
PROFESSIONAL ENGINEER
10/27/15

NO.	DATE	REVISION	BY

ORIGINAL PLANS PREPARED BY
AYRES ASSOCIATES
3433 Oakwood Hills Parkway
Eau Claire, WI 54701
www.AyresAssociates.com

STATE OF WISCONSIN
DEPARTMENT OF TRANSPORTATION

ACCEPTED _____ _____
CHIEF STRUCTURES DESIGN ENGINEER — DATE

STATE PROJECT NUMBER
7824-00-13

STRUCTURE B-18-229

CTH AA (PRILL ROAD) OVER OTTER CREEK

COUNTY EAU CLAIRE | TOWN/~~CITY/VILLAGE~~ WASHINGTON

DESIGN SPEC. AASHTO LRFD BRIDGE DESIGN SPECIFICATIONS

DESIGNED BY	CJM	DESIGN CK'D.	JWZ	DRAWN BY	CLS	PLANS CK'D.	CBM

GENERAL PLAN

SHEET 1 OF 21
138

8

STATE PROJECT NUMBER

7824-00-13

GENERAL NOTES

DRAWINGS SHALL NOT BE SCALED.

BAR STEEL REINFORCEMENT SHALL BE EMBEDDED 2" CLEAR UNLESS SHOWN OR NOTED OTHERWISE.

THE FIRST DIGIT OF A THREE DIGIT BAR NO. AND THE FIRST TWO DIGITS OF A FOUR DIGIT BAR NO. SIGNIFIES THE BAR SIZE.

JOINT FILLER SHALL CONFORM TO THE REQUIREMENTS OF A.A.S.H.T.O. DESIGNATION M 153, TYPE I, II OR III OR A.A.S.H.T.O. DESIGNATION M 213.

THE SLOPE OF THE FILL IN FRONT OF THE ABUTMENTS SHALL BE COVERED WITH RIPRAP HEAVY AND GEOTEXTILE FABRIC TYPE HR TO THE EXTENT SHOWN ON THE GENERAL PLAN SHEET AND IN THE ABUTMENT DETAILS.

PROTECTIVE SURFACE TREATMENT AND PIGMENTED SURFACE SEALER ARE TO BE APPLIED AS SHOWN IN THE DETAIL ON THIS SHEET.

THE HAUNCH CONCRETE QUANTITY IS BASED ON AN AVERAGE HAUNCH DEPTH SHOWN ON THE PRESTRESSED GIRDER DETAIL SHEETS.

ELASTOMERIC BEARING PADS NEED NOT BE INDIVIDUALLY MOLDED PROVIDED THE CUT EDGES ARE SMOOTH AND TRUE.

THE EXISTING GROUNDLINE SHALL BE THE UPPER LIMIT FOR EXCAVATION FOR STRUCTURES.

BEVEL EXPOSED EDGES OF CONCRETE ¾" UNLESS NOTED OTHERWISE.

THE EXISTING STRUCTURE, P-18-0032, TO BE REMOVED, IS A SINGLE SPAN PRESTRESSED CONCRETE CHANNEL BRIDGE, 60.0 FT. LONG WITH A 29.9 FT. CLEAR ROADWAY WIDTH.

AT BACKFACE OF ABUTMENTS ALL EXCAVATED VOLUME NOT OCCUPIED BY THE NEW STRUCTURE SHALL BE BACKFILLED WITH BACKFILL STRUCTURE.

THE QUANTITY OF BACKFILL STRUCTURE, BID ITEM 210.010.0 IS CALCULATED BASED ON APPLICABLE FIGURES 12.6-1 AND 12.6-2 IN THE WISCONSIN DEPARTMENT OF TRANSPORTATION BRIDGE MANUAL.

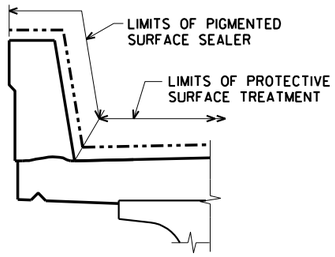

PROTECTIVE SURFACE TREATMENT AND PIGMENTED SURFACE SEALER DETAIL

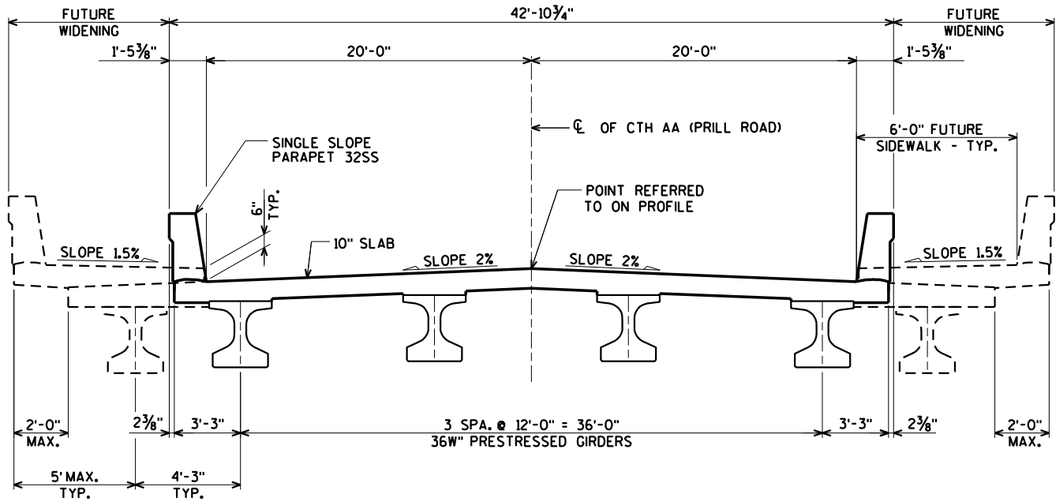

CROSS SECTION THRU ROADWAY

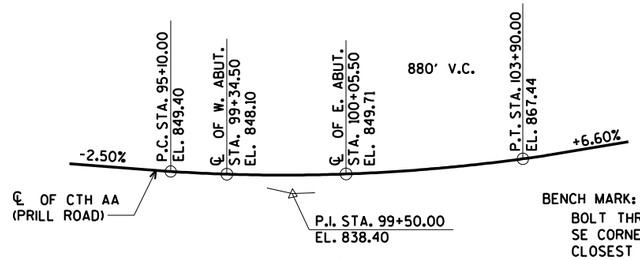

PROFILE GRADE LINE

CTH AA (PRILL ROAD)

BENCH MARK:

BOLT THROUGH WINGWALL PILING AT SE CORNER OF BRIDGE (FIRST PILING CLOSEST TO DECK.)
STA. 100+02.7±, 18.4' RT
EL. 834.61

TOTAL ESTIMATED QUANTITIES

BID ITEM NUMBER	BID ITEMS	UNIT	W. ABUT.	E. ABUT.	SUPER.	TOTAL
203.0600.S	REMOVING OLD STRUCTURE OVER WATERWAY WITH MINIMAL DEBRIS STATION 99+70	LS	-----	-----	-----	1
206.1000	EXCAVATION FOR STRUCTURES BRIDGES B-18-229	LS	-----	-----	-----	1
210.0100	BACKFILL STRUCTURE	CY	545	355	-----	900
502.0100	CONCRETE MASONRY BRIDGES	CY	116	96	156	368
502.3200	PROTECTIVE SURFACE TREATMENT	SY	-----	-----	327	327
502.3210	PIGMENTED SURFACE SEALER	SY	-----	-----	61	61
503.0137	PRESTRESSED GIRDER TYPE I 36W-INCH	LF	-----	-----	288	288
505.0400	BAR STEEL REINFORCEMENT HS STRUCTURES	LB	7,610	6,330	-----	13,940
505.0600	BAR STEEL REINFORCEMENT HS COATED STRUCTURES	LB	5,420	5,080	26,620	37,120
506.2605	BEARING PADS ELASTOMERIC NON-LAMINATED	EACH	-----	-----	8	8
506.4000	STEEL DIAPHRAGMS B-18-229	EACH	-----	-----	6	6
516.0500	RUBBERIZED MEMBRANE WATERPROOFING	SY	18	18	-----	36
550.2104	PILING CIP CONCRETE 10¾ x 0.25-INCH	LF	880	960	-----	1,840
606.0300	RIPRAP HEAVY	CY	250	275	-----	525
612.0406	PIPE UNDERDRAIN WRAPPED 6-INCH	LF	145	115	-----	260
614.0150	ANCHOR ASSEMBLIES FOR STEEL PLATE BEAM GUARD	EACH	-----	-----	4	4
616.0204	FENCE CHAIN LINK 4-FT	LF	64	48	22	134
645.0120	GEOTEXTILE FABRIC TYPE HR	SY	445	485	-----	930
	NON-BID ITEMS					
	FILLER	SIZE	-----	-----	-----	½" & ¾"

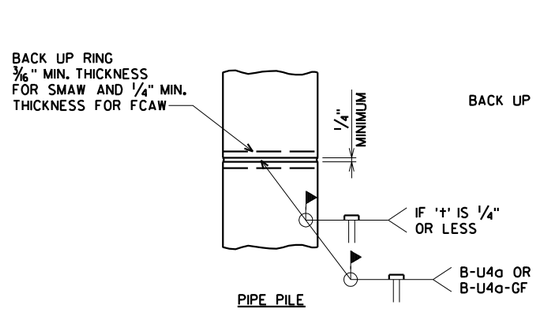

PILE SPLICE DETAIL

CAST-IN-PLACE PILE SHELL MATERIAL SHALL BE IN ACCORDANCE WITH THE STANDARD SPECIFICATIONS.

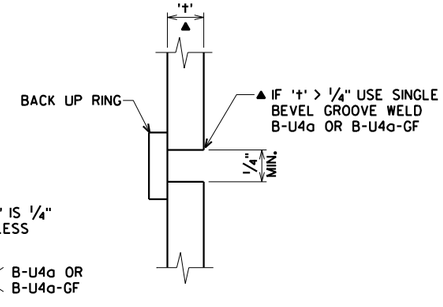

CIP PILE WELD DETAIL

NO.	DATE	REVISION	BY

STATE OF WISCONSIN
DEPARTMENT OF TRANSPORTATION

STRUCTURE B-18-229

DRAWN BY CLS | PLANS CK'D. CBM

TYPICAL SECTION, QUANTITIES AND NOTES

SHEET 2 OF 21

139

ORIGINAL PLANS PREPARED BY
AYRES ASSOCIATES
3433 Oakwood Hills Parkway
Eau Claire, WI 54701
www.AyresAssociates.com

8

8

$PRFNAME$
U:\42-0943.00 - Eau Claire Co - CTH AA\BRIDGE\420943 gp.dgn

10/27/2015

PENTABLE:BReau_shd_util.tbl

$PRFNAME$
U:\42-0943.00 - Eau Claire Co - CTH AA\BRIDGE\420943 soils.dgn

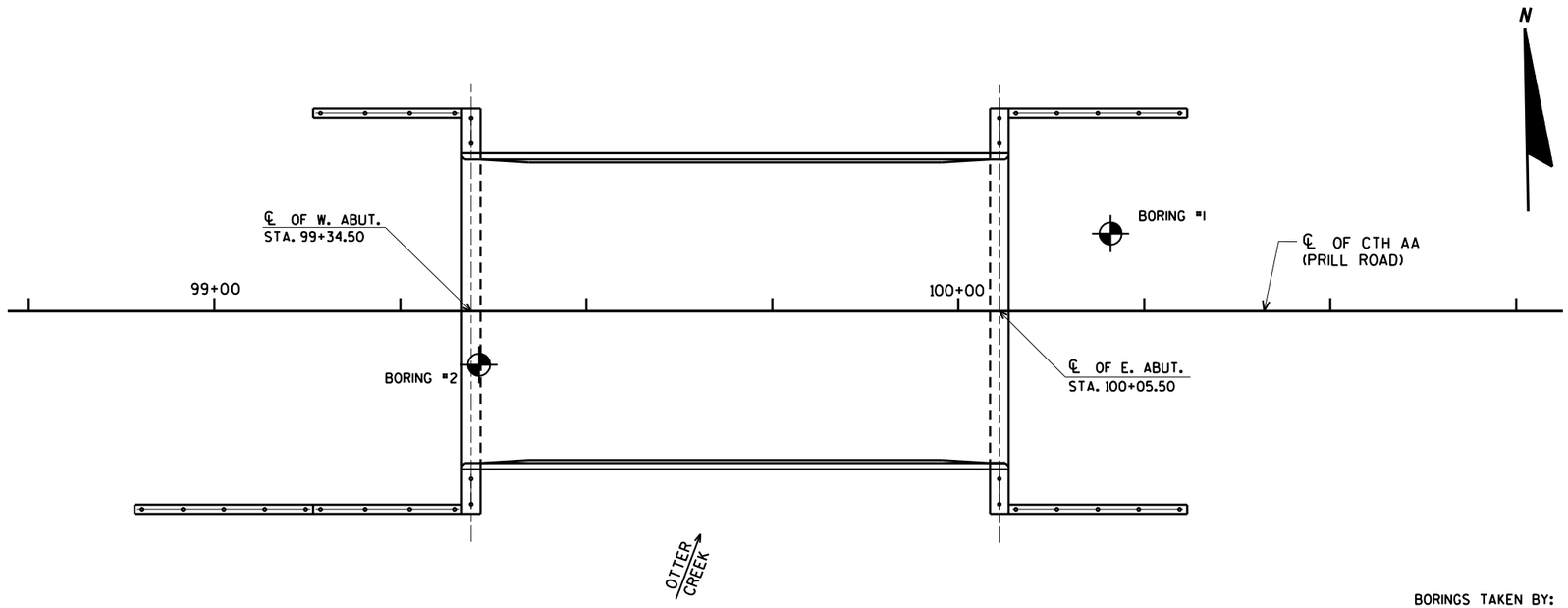

BORINGS TAKEN BY:
CHOSEN VALLEY TESTING, INC
ROCHESTER, MN
JANUARY 2, 2015

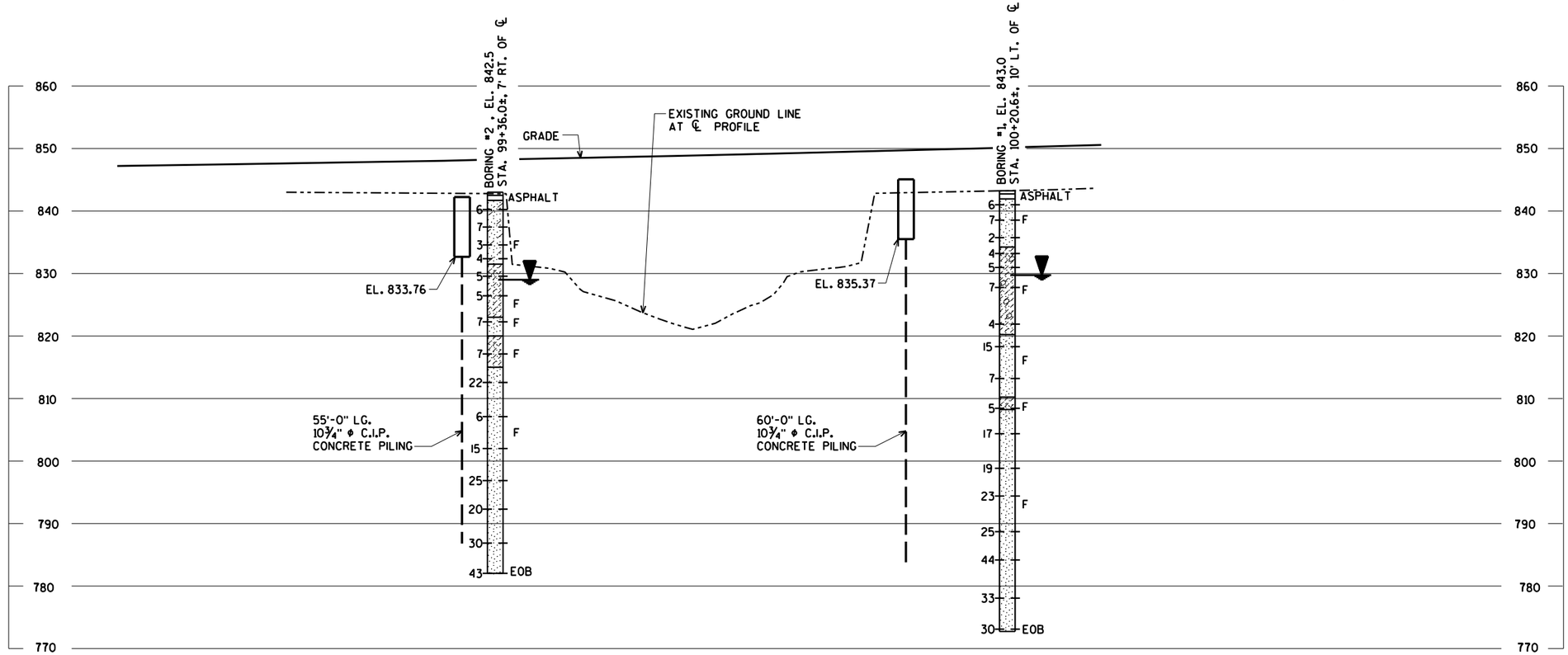

STATE PROJECT NUMBER

7824-00-13

ABBREVIATIONS

F — FINE M — MEDIUM C — COARSE
WS — WEATHERED SO — SOUND

MATERIAL SYMBOLS

TOPSOIL, SILT, SANDSTONE
SAND, PEAT, LIMESTONE
GRAVEL, CLAY, IGNEOUS ROCK

LEGEND OF PROBING

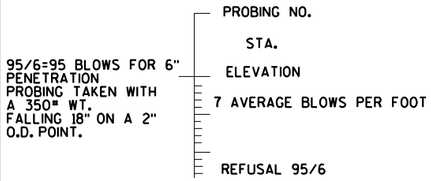

LEGEND OF BORING

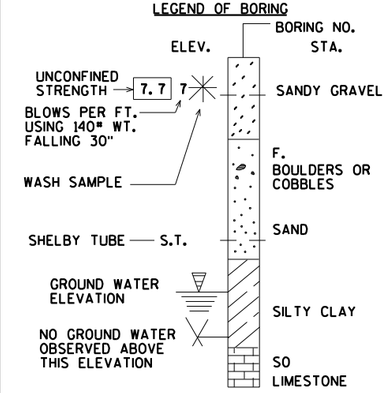

UNLESS OTHERWISE SPECIFIED, THE BLOWS PER FOOT AT THE LOCATIONS INDICATED ARE BASED ON DRIVING A 2" O.D. X 1.4" I.D. SPLIT SPOON SAMPLER WITH A 140# HAMMER HAVING A FREE FALL OF 30". THE BLOW COUNT IS TAKEN IN UNDISTURBED SOIL IMMEDIATELY BELOW A CASED OR OPEN HOLE ELIMINATING SIDE FRICTION ON THE DRIVE PIPE.

SUBSURFACE EXPLORATION FOR FOUNDATION DESIGN AND BIDDERS INFORMATION

TO OBTAIN RELATIVE DATA CONCERNING THE CHARACTER OF MATERIAL IN AND UPON WHICH THE FOUNDATION MIGHT BE BUILT, BORINGS AND/OR SOUNDINGS WERE MADE AT POINTS APPROXIMATELY AS INDICATED ON THIS DRAWING. THE DATA PRESENTED HEREIN REPRESENTS THE FINDINGS OF THE SUBSURFACE EXPLORATIONS MADE. HOWEVER, BECAUSE THE DEPTHS INVESTIGATED ARE LIMITED AND THE AREA OF THE BORINGS AND/OR SOUNDINGS IS VERY SMALL IN RELATION TO THE ENTIRE AREA, THE WISCONSIN DEPARTMENT OF TRANSPORTATION DOES NOT WARRANT CONDITIONS BELOW THE DEPTHS INVESTIGATED OR THAT THE CLASSIFICATION OF MATERIAL ENCOUNTERED IN THESE INVESTIGATIONS IS NECESSARILY TYPICAL OF THE ENTIRE SITE.

NO.	DATE	REVISION	BY

STATE OF WISCONSIN
DEPARTMENT OF TRANSPORTATION

STRUCTURE B-18-229

DRAWN BY CJM | PLANS CK'D. CBM

SUBSURFACE EXPLORATION

SHEET 3 OF 21
140

8

8

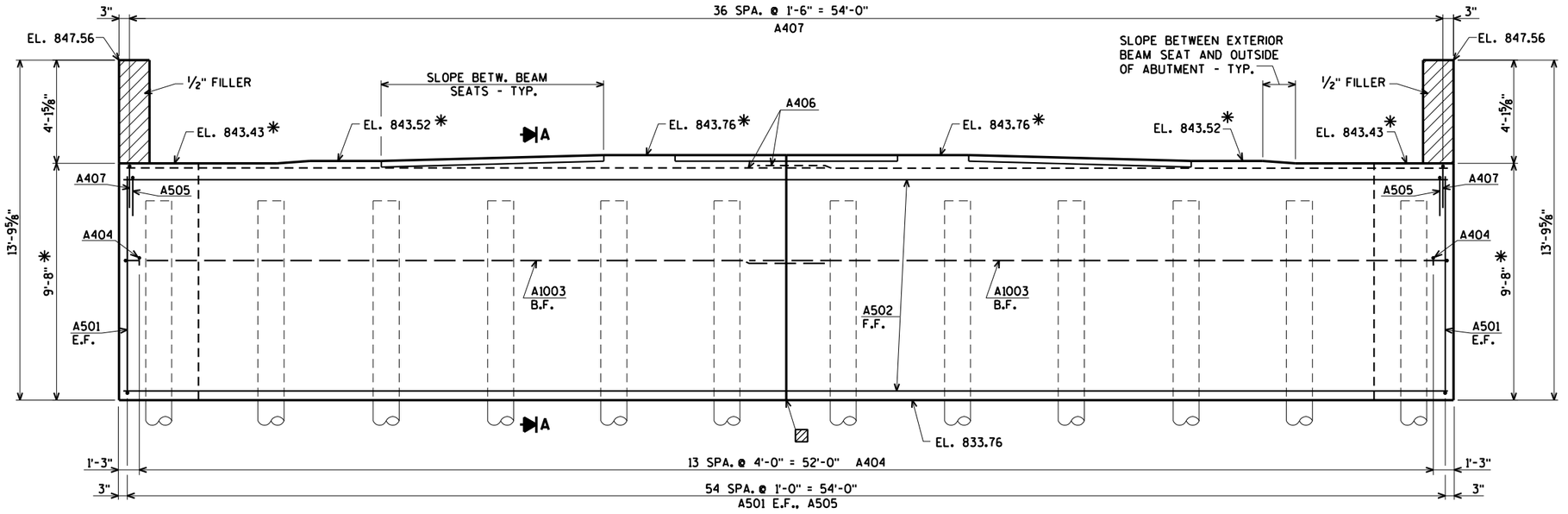

ELEVATION
(LOOKING WEST)

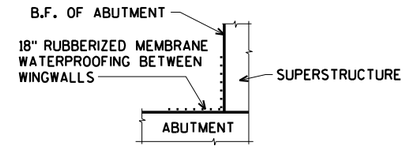

SECTION D

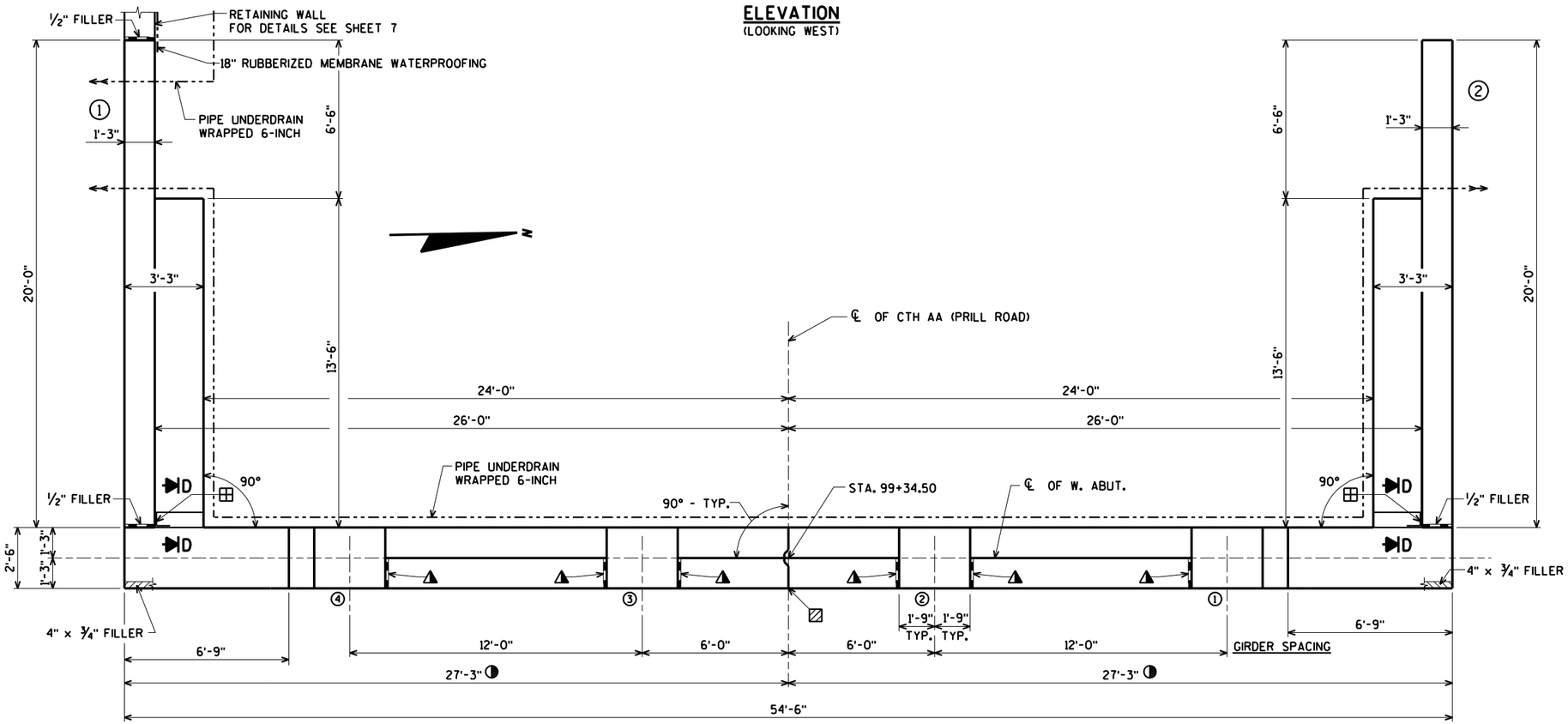

PLAN

NOTE:
SEAL ALL EXPOSED HORIZONTAL AND VERTICAL SURFACES OF ½" FILLER WITH NON-STAINING GRAY NON-BITUMINOUS JOINT SEALER. (1" DEEP AND HOLD ⅛" BELOW SURFACE OF CONCRETE).

* ELEVATIONS AND DIMENSIONS TAKEN AT ℄ OF ABUT.

FOR SECTION A SEE SHEET 5.

▨ VERTICAL CONSTRUCTION JOINT - KEYWAY FORMED BY A BEVELED 2" x 8". BEVEL EXPOSED EDGES ¾". FOR ALTERNATE CONSTRUCTION JOINT DETAILS SEE SHEET 21. SEAL JOINT AT BACKFACE WITH 18" RUBBERIZED MEMBRANE WATERPROOFING.

◑ BRIDGE ABUTMENTS WILL BE CONSTRUCTED IN ORDER TO ACCOMODIATE FUTURE SIDEWALKS ON BOTH SIDES.

◭ ¾" CORK FILLER ON VERTICAL FACE ONLY.

⊞ 18" RUBBERIZED MEMBRANE WATERPROOFING SEAL ALL HORIZONTAL AND VERTICAL JOINTS ON BACK FACE OF ABUTMENT.

FOR PILE SPLICE DETAIL SEE SHEET 2.

F.F. DENOTES FRONT FACE

B.F. DENOTES BACK FACE

E.F. DENOTES EACH FACE

NO.	DATE	REVISION	BY

STATE OF WISCONSIN
DEPARTMENT OF TRANSPORTATION

STRUCTURE B-18-229

DRAWN BY CLS | PLANS CK'D. CBM

WEST ABUTMENT

SHEET 4 OF 21
141

ORIGINAL PLANS PREPARED BY
AYRES ASSOCIATES
3433 Oakwood Hills Parkway
Eau Claire, WI 54701
www.AyresAssociates.com

$PRFNAME$
U:\42-0943.00 - Eau Claire Co - CTH AA\BRIDGE\420943 wa.dgn

STATE PROJECT NUMBER

7824-00-13

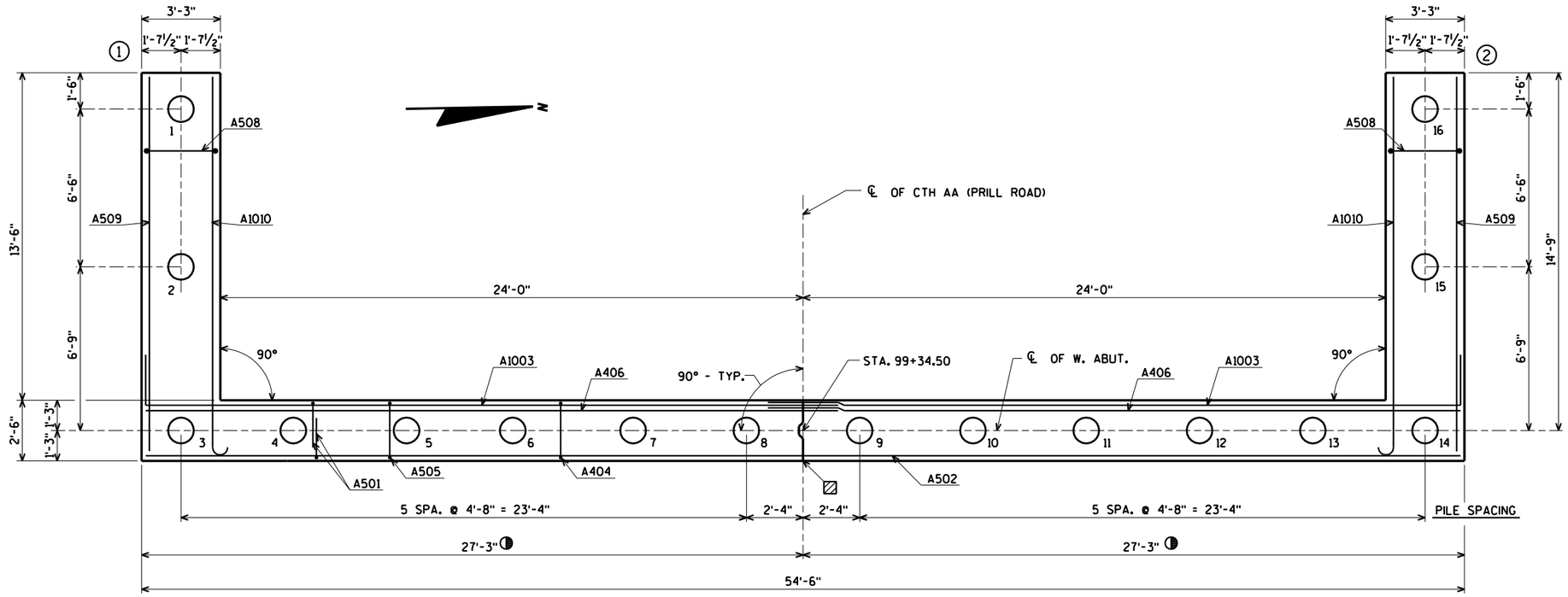

PILE LAYOUT

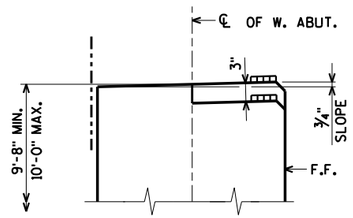

SLOPED BEAM SEAT DETAIL

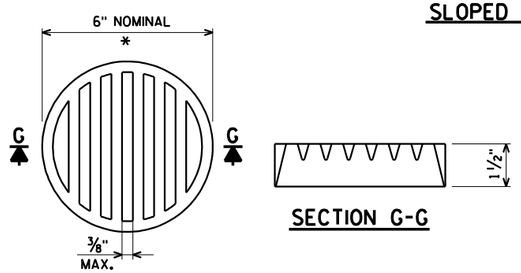

SECTION G-G

* DIMENSIONS ARE APPROXIMATE. THE GRATE IS SIZED TO FIT INTO A PIPE COUPLING. ORIENT SO SLOTS ARE VERTICAL.

THE RODENT SHIELD, PIPE COUPLING AND SCREWS SHALL BE CONSIDERED INCIDENTAL TO THE BID ITEM "PIPE UNDERDRAIN WRAPPED 6-INCH".

THE RODENT SHIELD SHALL BE A PVC GRATE SIMILAR TO THIS DETAIL. THE GRATE IS COMMERCIALLY AVAILABLE AS A FLOOR STRAINER. A PIPE COUPLING IS REQUIRED FOR THE ATTACHMENT OF THIS SHIELD TO THE EXPOSED END OF THE PIPE UNDERDRAIN. THE SHIELD SHALL BE FASTENED TO THE PIPE COUPLING WITH TWO OR MORE NO. 10 x 1-INCH STAINLESS STEEL SHEET METAL SCREWS.

RODENT SHIELD DETAIL

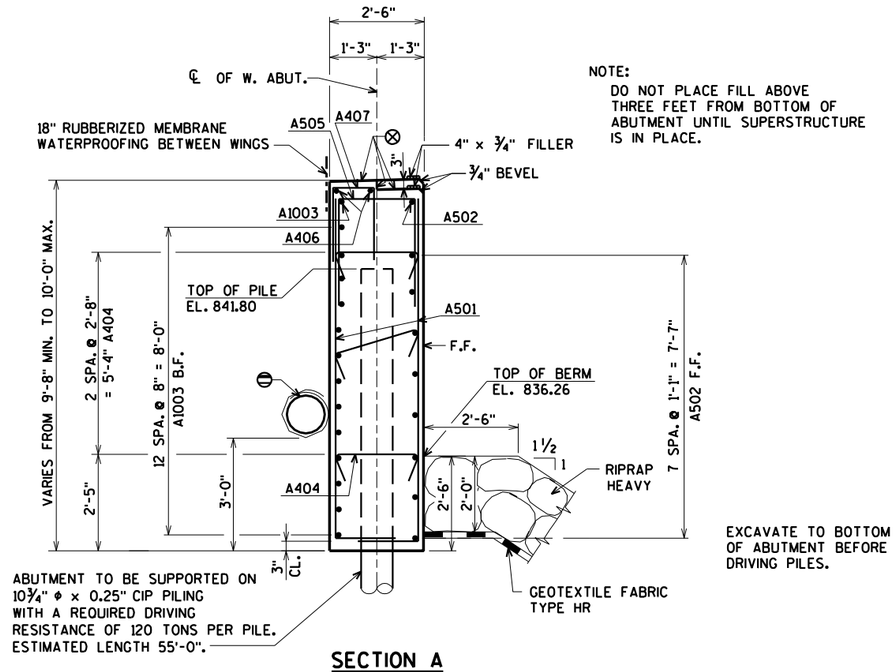

SECTION A

NOTE:
DO NOT PLACE FILL ABOVE THREE FEET FROM BOTTOM OF ABUTMENT UNTIL SUPERSTRUCTURE IS IN PLACE.

EXCAVATE TO BOTTOM OF ABUTMENT BEFORE DRIVING PILES.

▨ VERTICAL CONSTRUCTION JOINT - KEYWAY FORMED BY A BEVELED 2" × 8". BEVEL EXPOSED EDGES ¾". FOR ALTERNATE CONSTRUCTION JOINT DETAILS SEE SHEET 21. SEAL JOINT AT BACKFACE WITH 18" RUBBERIZED MEMBRANE WATERPROOFING.

◑ BRIDGE ABUTMENTS WILL BE CONSTRUCTED IN ORDER TO ACCOMODIATE FUTURE SIDEWALKS ON BOTH SIDES.

⊖ PIPE UNDERDRAIN WRAPPED 6-INCH. SLOPE 0.5% MIN. TO SUITABLE DRAINAGE. ATTACH RODENT SHIELD AT ENDS OF PIPE UNDERDRAIN. SEE DETAIL ON THIS SHEET.

⊗ STEEL TROWEL TOP SURFACE OF ABUTMENT. PLACE MULTIPLE LAYERS OF POLYETHYLENE SHEETS OVER ENTIRE ABUTMENT TOP BEFORE PLACING BEARING PADS AND SUPERSTRUCTURE. TOTAL THICKNESS OF SHEETS SHALL BE AT LEAST 0.03".

FOR SPLICE DETAIL SEE SHEET 2.

FOR LOCATION OF SECTION A SEE SHEET 4.

F.F. DENOTES FRONT FACE.

B.F. DENOTES BACK FACE.

NO.	DATE	REVISION	BY

STATE OF WISCONSIN
DEPARTMENT OF TRANSPORTATION

STRUCTURE B-18-229

DRAWN BY CLS | PLANS CK'D. CBM

WEST ABUTMENT DETAILS

SHEET 5 OF 21
142

ORIGINAL PLANS PREPARED BY
AYRES ASSOCIATES
3433 Oakwood Hills Parkway
Eau Claire, WI 54701
www.AyresAssociates.com

$PRFNAME$
U:\42-0943.00 - Eau Claire Co - CTH AA\BRIDGE\420943 wa.dgn

8

8

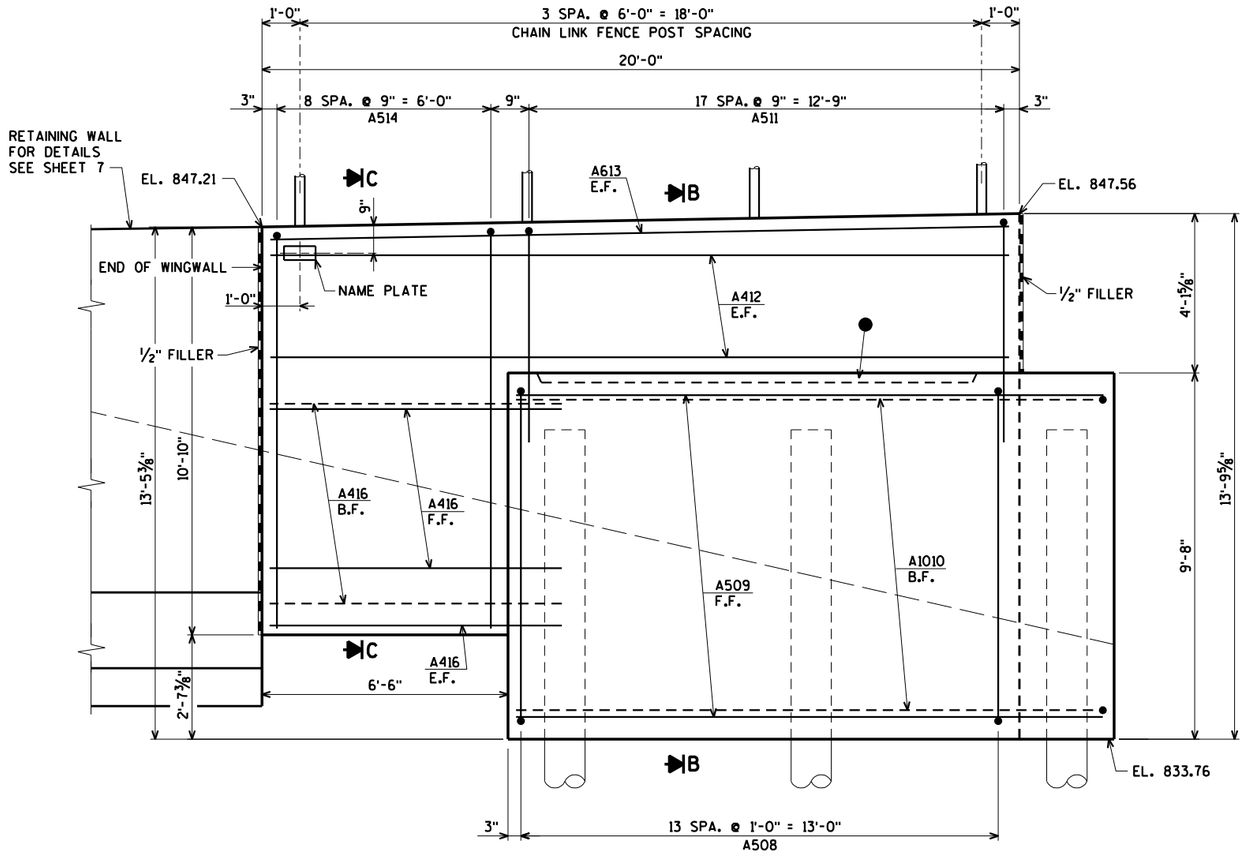

ELEVATION - WING 1

RETAINING WALL CONNECTION
DETAILS ON SHEET 7

CHAIN LINK FENCE NOT SHOWN.
FOR DETAILS SEE SHEETS 19 & 20

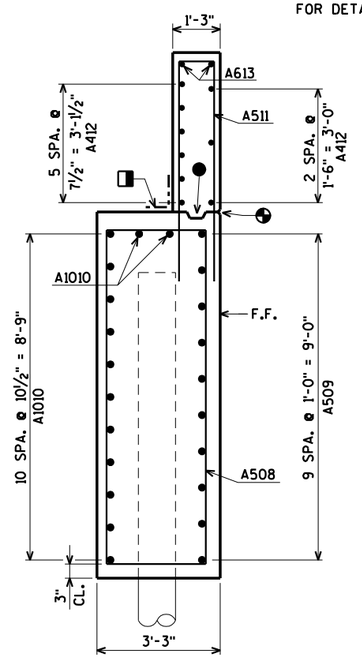

SECTION B

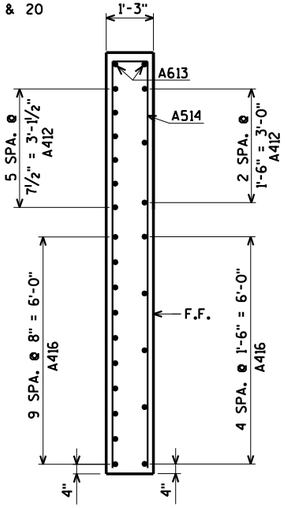

SECTION C

18" RUBBERIZED MEMBRANE WATERPROOFING. SEAL ALL HORIZONTAL AND VERTICAL JOINTS ON BACKFACE.

OPT. CONST. JOINT FORMED BY A BEVELED 2" x 6" KEYWAY.

¾" V-GROOVE ON FRONT FACE ONLY.

F.F. DENOTES FRONT FACE

E.F. DENOTES EACH FACE

B.F. DENOTES BACK FACE

NO.	DATE	REVISION	BY

STATE OF WISCONSIN
DEPARTMENT OF TRANSPORTATION

STRUCTURE B-18-229

DRAWN BY CLS | PLANS CK'D. CBM

WEST ABUTMENT
WING 1 DETAILS

SHEET 6 OF 21
143

ORIGINAL PLANS PREPARED BY
AYRES ASSOCIATES
3433 Oakwood Hills Parkway
Eau Claire, WI 54701
www.AyresAssociates.com

$PRFNAME$
U:\42-0943.00 - Eau Claire Co - CTH AA\BRIDGE\420943 wa.dgn
8/24/2015
PENTABLE:BReau_shd_util.tbl

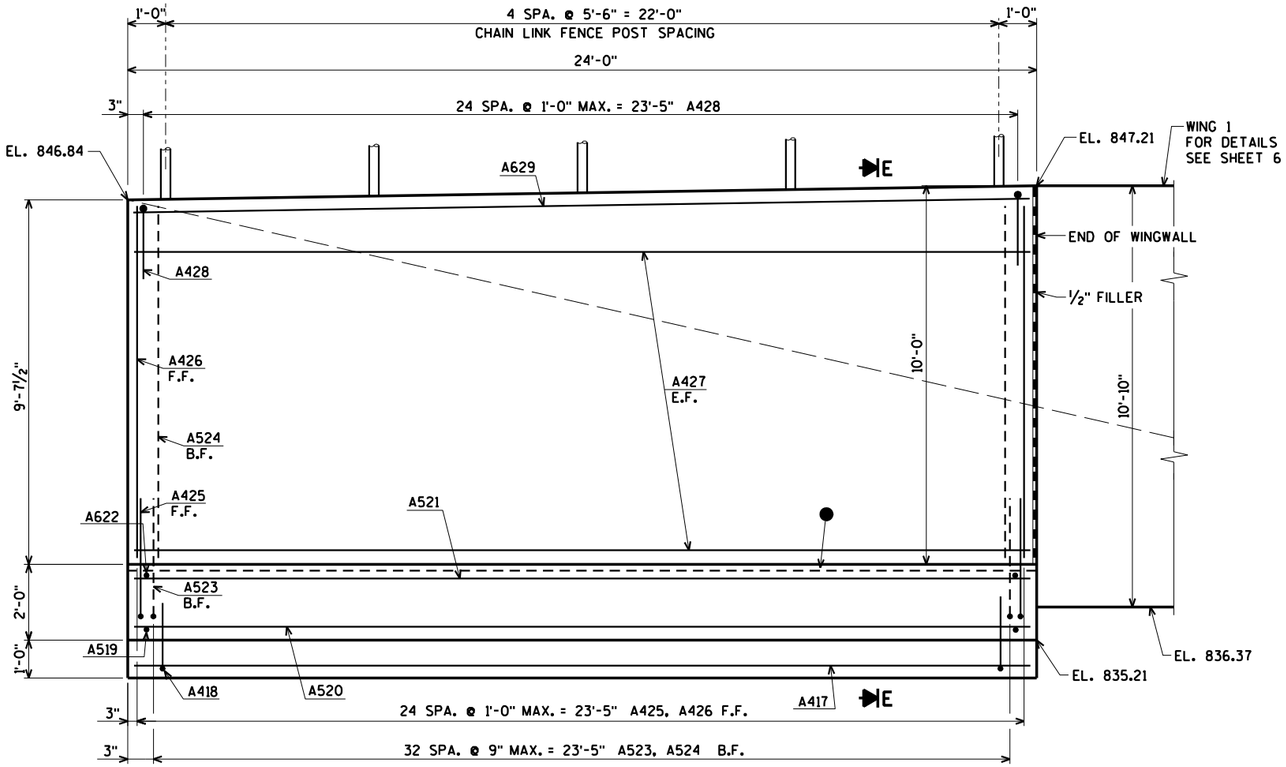

ELEVATION - RETAINING WALL

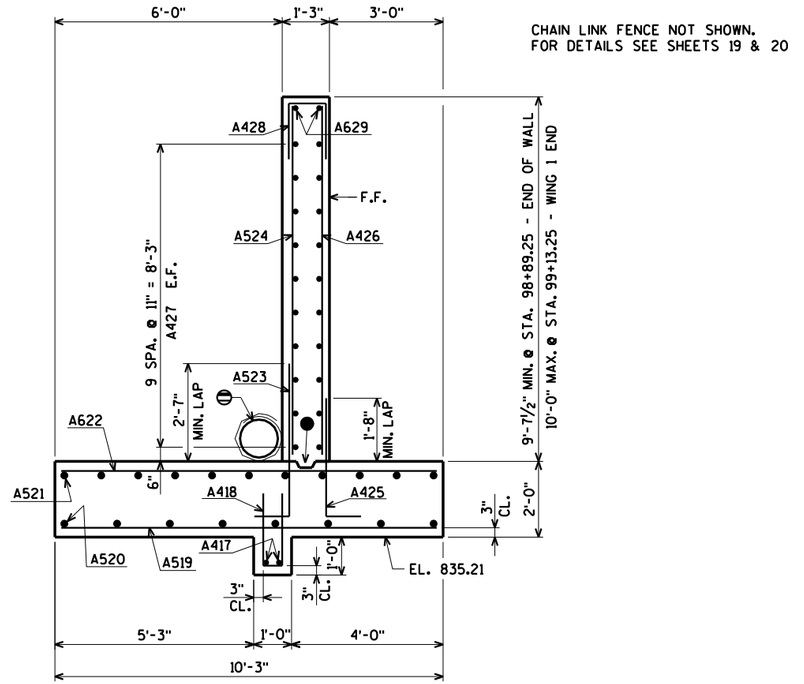

SECTION E

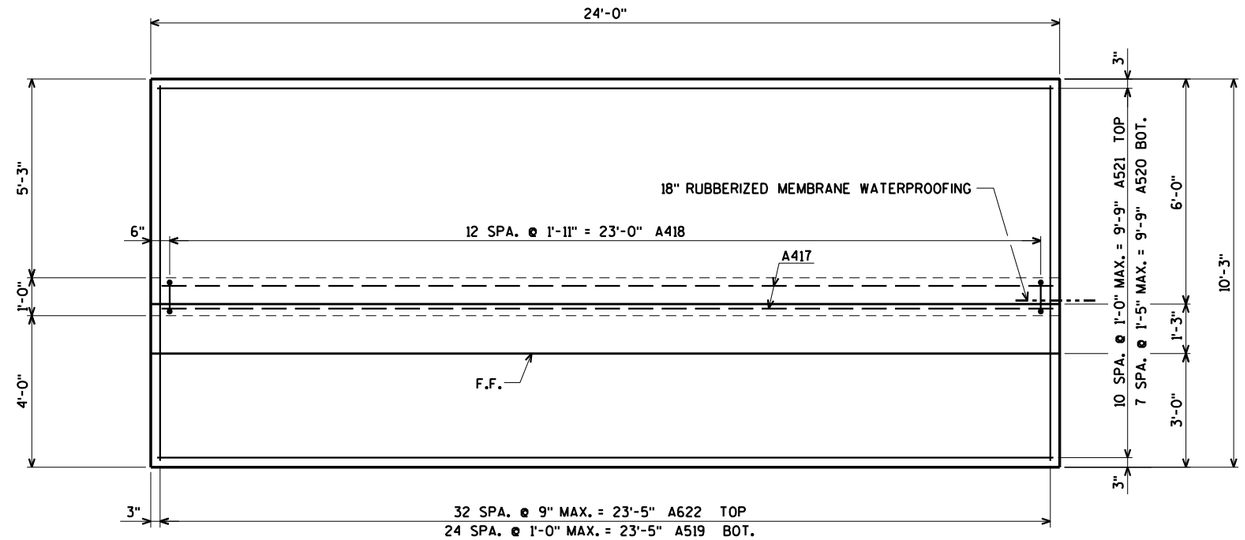

FOOTING PLAN - RETAINING WALL

- ⊖ PIPE UNDERDRAIN WRAPPED 6-INCH. SLOPE 0.5% MIN. TO SUITABLE DRAINAGE. ATTACH RODENT SHIELD AT ENDS OF PIPE UNDERDRAIN. SEE DETAIL ON SHEET 5.
- ● CONST. JOINT FORMED BY SURFACED BEVELED 2" x 6".

F.F. DENOTES FRONT FACE

E.F. DENOTES EACH FACE

B.F. DENOTES BACK FACE

NO.	DATE	REVISION	BY

STATE OF WISCONSIN
DEPARTMENT OF TRANSPORTATION

STRUCTURE B-18-229

DRAWN BY CLS | PLANS CK'D. CBM

RETAINING WALL DETAILS

SHEET 7 OF 21
144

ORIGINAL PLANS PREPARED BY
AYRES ASSOCIATES
3433 Oakwood Hills Parkway
Eau Claire, WI 54701
www.AyresAssociates.com

$PRFNAME$
U:\42-0943.00 - Eau Claire Co - CTH AA\BRIDGE\420943 wa.dgn

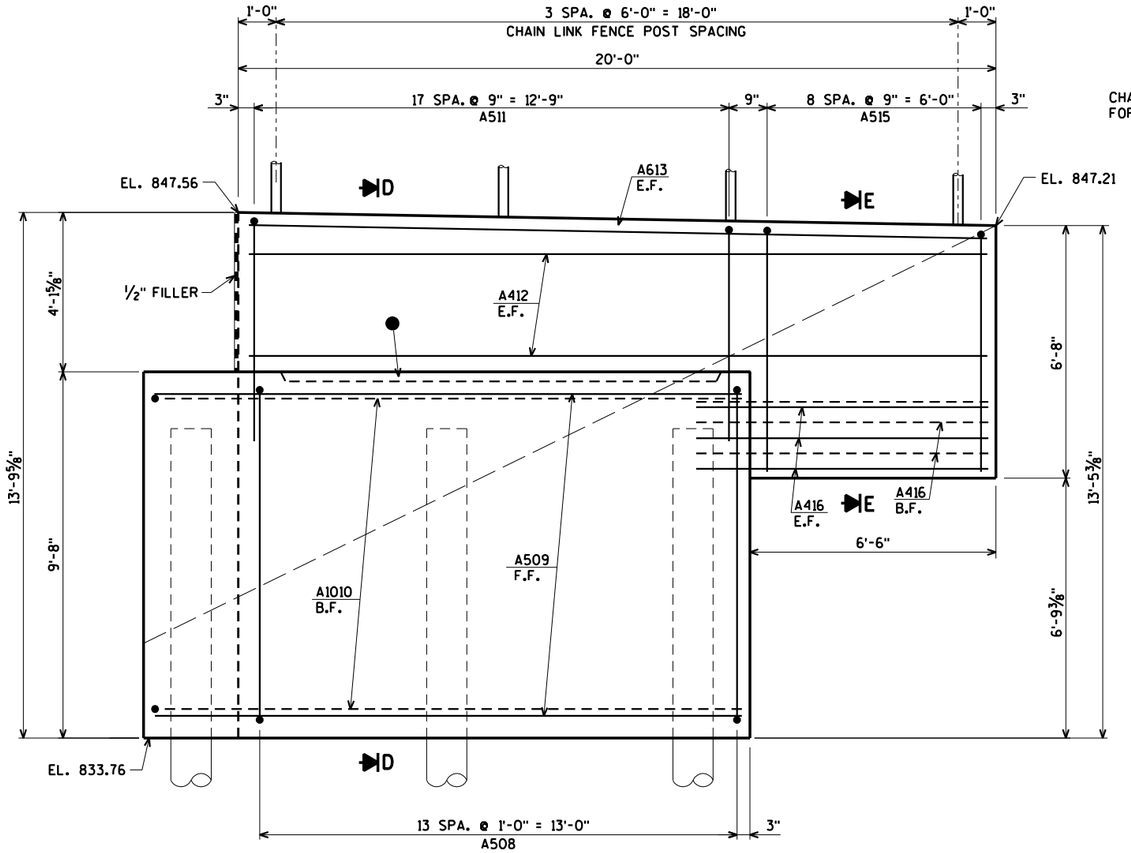

ELEVATION - WING 2

CHAIN LINK FENCE NOT SHOWN.
FOR DETAILS SEE SHEETS 19 & 20

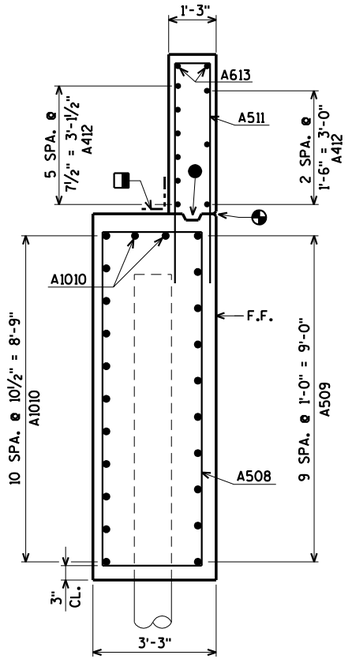

SECTION D

BILL OF BARS

BAR. NO.	COATED BAR	NO. REQ'D.	LENGTH	BENT BAR	BUNDLED BAR SERIES	5,420# COATED 7,610# UNCOATED LOCATION
A501		110	10-6	X		BODY VERT. E.F.
A502		9	54-2			BODY HORIZ. F.F.
A1003		28	32-10	X		BODY HORIZ. B.F.
A404		42	2-11	X		BODY TIES
A505		55	6-11	X		BODY VERT. TOP
A406		4	28-0			BODY HORIZ. TOP
A407		37	4-5	X		BODY VERT. TOP
A508	X	28	24-8	X		WING VERT. E.F.
A509	X	20	15-8	X		WING HORIZ. F.F.
A1010	X	26	17-1	X		WING HORIZ.
A511	X	36	12-8	X		WING VERT.
A412	X	18	19-7			WING HORIZ. E.F.
A613	X	4	19-7			WING HORIZ. TOP
A514	X	9	21-6	X		WING 1 VERT.
A515	X	9	13-2	X		WING 2 VERT.
A416	X	23	7-9			WING HORIZ. E.F.
A417		2	23-6			RETAINING WALL SHEAR KEY HORIZ.
A418		13	3-10	X		RETAINING WALL SHEAR KEY VERT.
A519		25	9-11			RETAINING WALL FOOTING BOT.
A520		8	23-7			RETAINING WALL FOOTING BOT.
A521		11	23-7			RETAINING WALL FOOTING TOP
A622		33	9-11			RETAINING WALL FOOTING TOP
A523	X	33	5-5	X		RETAINING WALL DOWEL B.F.
A524	X	33	9-4			RETAINING WALL VERT. B.F.
A425	X	25	4-4	X		RETAINING WALL DOWEL F.F.
A426	X	25	9-4			RETAINING WALL VERT. F.F.
A427	X	20	23-7			RETAINING WALL HORIZ. E.F.
A428	X	25	3-9	X		RETAINING WALL VERT. TOP
A629	X	2	23-7			RETAINING WALL HORIZ. TOP

BENDING DIMENSIONS ARE OUT TO OUT OF BARS.

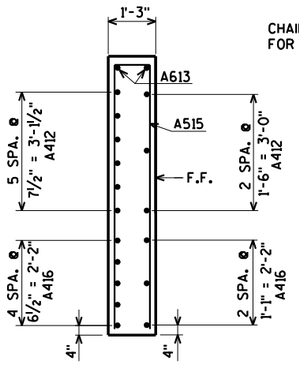

SECTION E

CHAIN LINK FENCE NOT SHOWN.
FOR DETAILS SEE SHEETS 19 & 20

- 18" RUBBERIZED MEMBRANE WATERPROOFING. SEAL ALL HORIZONTAL AND VERTICAL JOINTS ON BACKFACE.
- OPT. CONST. JOINT FORMED BY A BEVELED 2" x 6" KEYWAY.
- ¾" V-GROOVE ON FRONT FACE ONLY.

F.F. DENOTES FRONT FACE

E.F. DENOTES EACH FACE

B.F. DENOTES BACK FACE

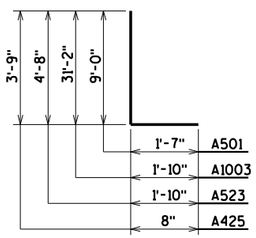

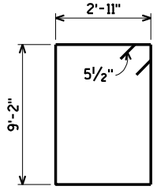

A508

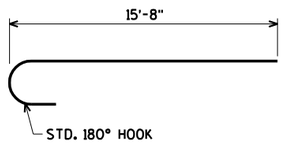

A1010

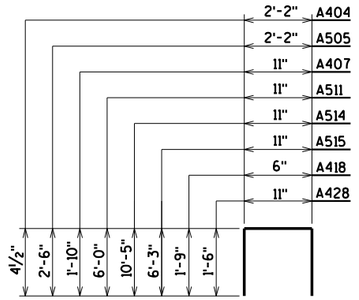

NO.	DATE	REVISION	BY

STATE OF WISCONSIN
DEPARTMENT OF TRANSPORTATION

STRUCTURE B-18-229

DRAWN BY CLS | PLANS CK'D. CBM

WEST ABUTMENT WING 2 DETAILS & BILL OF BARS

SHEET 8 OF 21
145

ORIGINAL PLANS PREPARED BY
AYRES ASSOCIATES
3433 Oakwood Hills Parkway
Eau Claire, WI 54701
www.AyresAssociates.com

$PRFNAME$
U:\42-0943.00 - Eau Claire Co - CTH AA\BRIDGE\420943 wa.dgn
10/20/2015
PENTABLE:BReau_shd_util.tbl

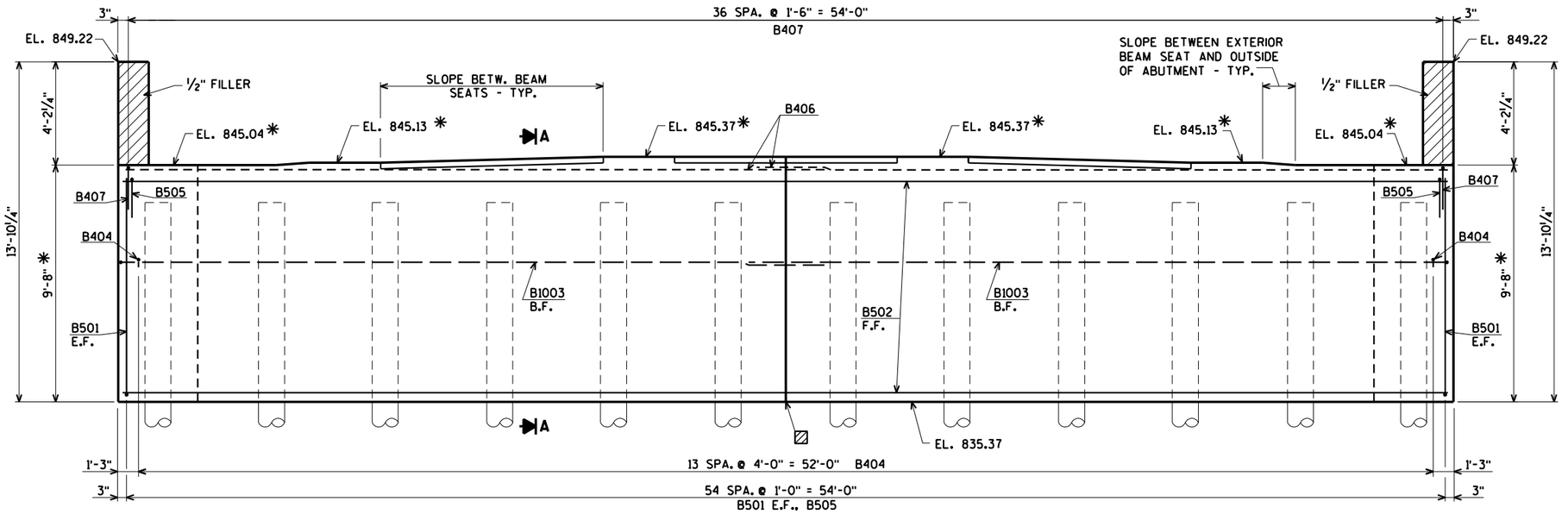

ELEVATION
(LOOKING EAST)

NOTE:
SEAL ALL EXPOSED HORIZONTAL AND VERTICAL SURFACES OF ½" FILLER WITH NON-STAINING GRAY NON-BITUMINOUS JOINT SEALER. (1" DEEP AND HOLD ⅛" BELOW SURFACE OF CONCRETE).

* ELEVATIONS AND DIMENSIONS TAKEN AT ℄ OF ABUT.

FOR SECTION A SEE SHEET 10.

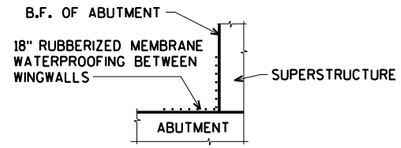

SECTION D

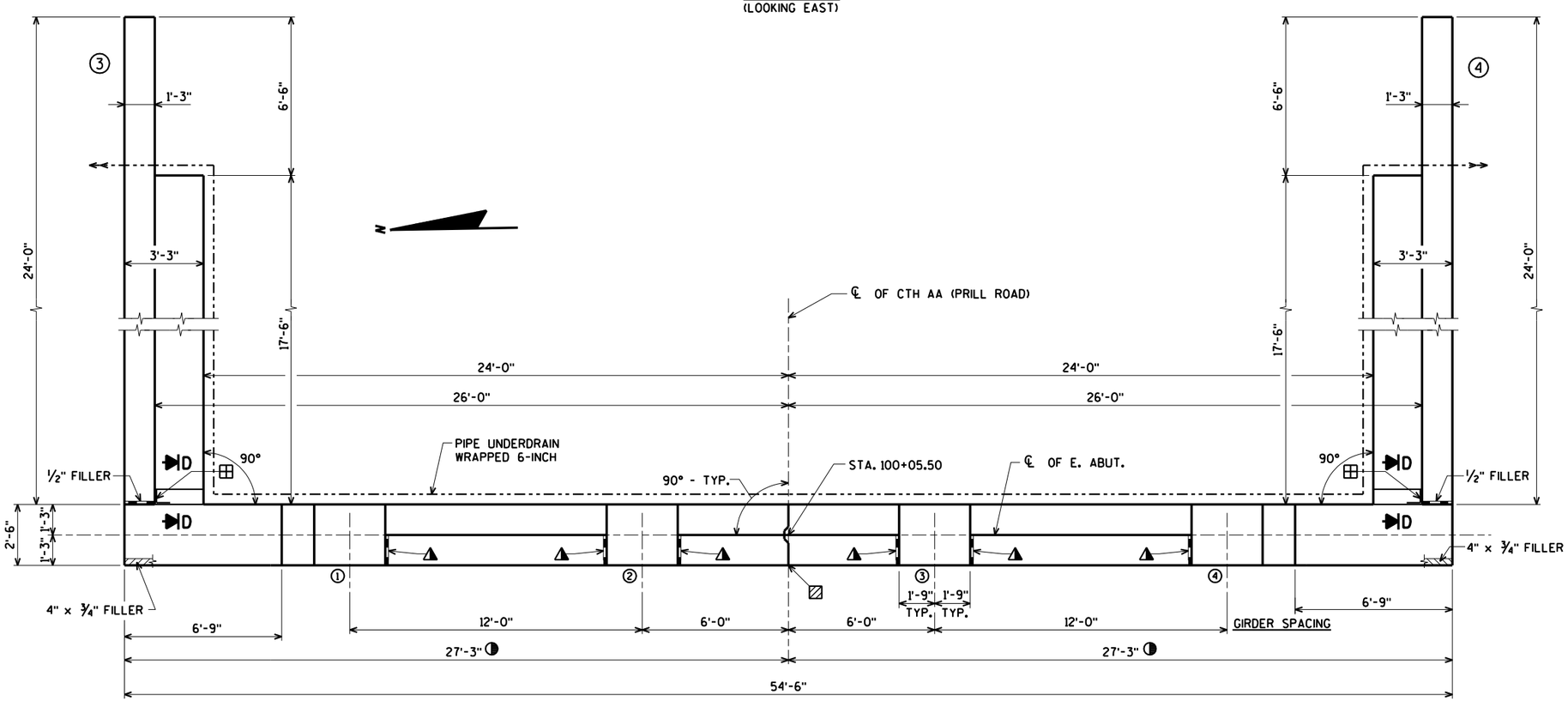

PLAN

▨ VERTICAL CONSTRUCTION JOINT - KEYWAY FORMED BY A BEVELED 2" × 8". BEVEL EXPOSED EDGES ¾". FOR ALTERNATE CONSTRUCTION JOINT DETAILS SEE SHEET 21. SEAL JOINT AT BACKFACE WITH 18" RUBBERIZED MEMBRANE WATERPROOFING.

◑ BRIDGE ABUTMENTS WILL BE CONSTRUCTED IN ORDER TO ACCOMODIATE FUTURE SIDEWALKS ON BOTH SIDES.

◭ ¾" CORK FILLER ON VERTICAL FACE ONLY.

⊞ 18" RUBBERIZED MEMBRANE WATERPROOFING SEAL ALL HORIZONTAL AND VERTICAL JOINTS ON BACK FACE OF ABUTMENT.

FOR PILE SPLICE DETAIL SEE SHEET 2.

F.F. DENOTES FRONT FACE

B.F. DENOTES BACK FACE

E.F. DENOTES EACH FACE

NO.	DATE	REVISION	BY

STATE OF WISCONSIN
DEPARTMENT OF TRANSPORTATION

STRUCTURE B-18-229

DRAWN BY CLS | PLANS CK'D. CBM

EAST ABUTMENT

SHEET 9 OF 21
146

ORIGINAL PLANS PREPARED BY
AYRES ASSOCIATES
3433 Oakwood Hills Parkway
Eau Claire, WI 54701
www.AyresAssociates.com

$PRFNAME$
U:\42-0943.00 - Eau Claire Co - CTH AA\BRIDGE\420943 ea.dgn

STATE PROJECT NUMBER

7824-00-13

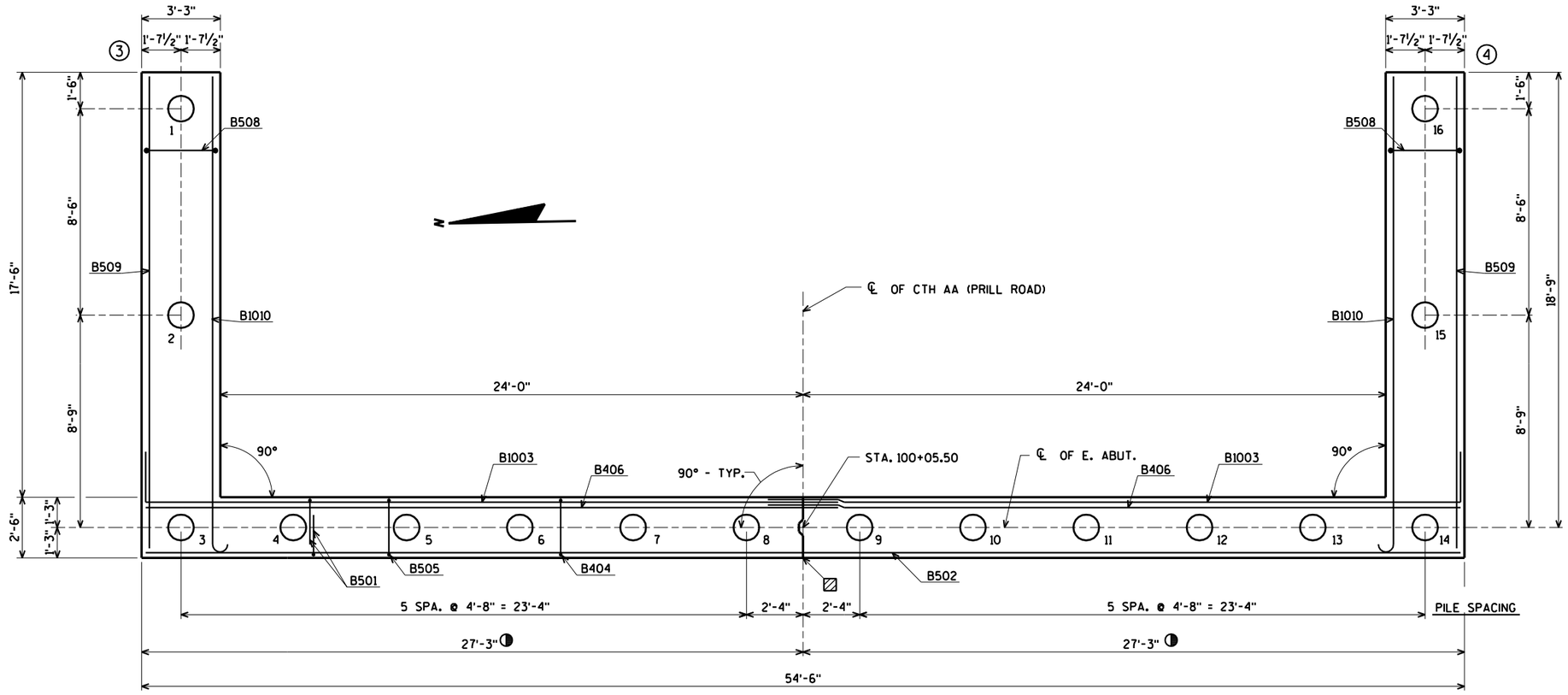

PILE LAYOUT

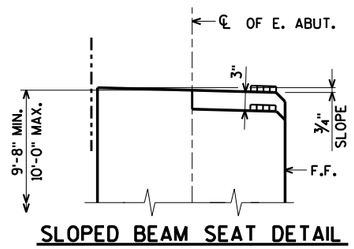

SLOPED BEAM SEAT DETAIL

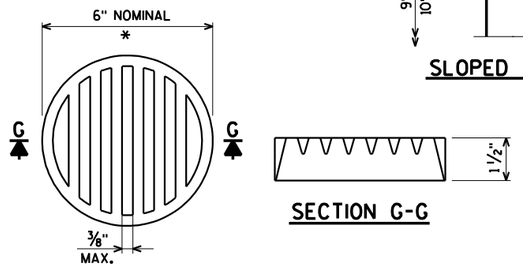

SECTION G-G

* DIMENSIONS ARE APPROXIMATE. THE GRATE IS SIZED TO FIT INTO A PIPE COUPLING. ORIENT SO SLOTS ARE VERTICAL.

THE RODENT SHIELD, PIPE COUPLING AND SCREWS SHALL BE CONSIDERED INCIDENTAL TO THE BID ITEM "PIPE UNDERDRAIN WRAPPED 6-INCH".

THE RODENT SHIELD SHALL BE A PVC GRATE SIMILAR TO THIS DETAIL. THE GRATE IS COMMERCIALLY AVAILABLE AS A FLOOR STRAINER. A PIPE COUPLING IS REQUIRED FOR THE ATTACHMENT OF THIS SHIELD TO THE EXPOSED END OF THE PIPE UNDERDRAIN. THE SHIELD SHALL BE FASTENED TO THE PIPE COUPLING WITH TWO OR MORE NO. 10 x 1-INCH STAINLESS STEEL SHEET METAL SCREWS.

RODENT SHIELD DETAIL

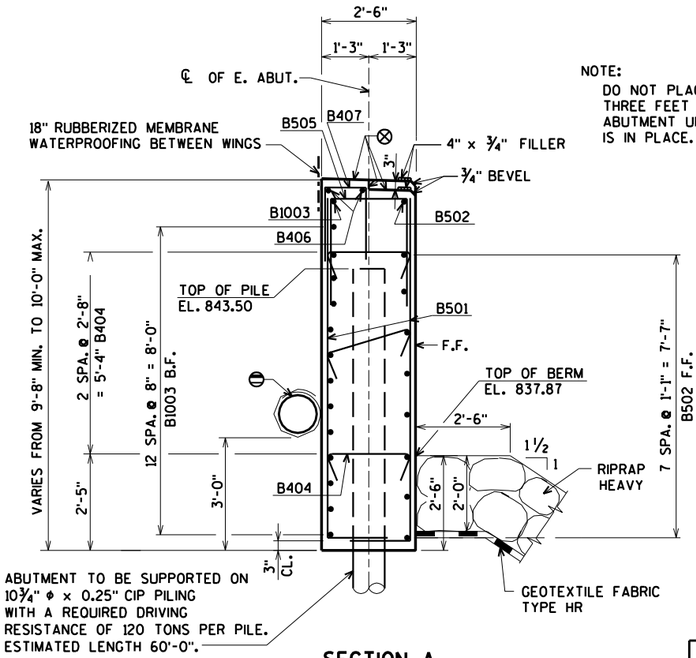

SECTION A

NOTE:
DO NOT PLACE FILL ABOVE THREE FEET FROM BOTTOM OF ABUTMENT UNTIL SUPERSTRUCTURE IS IN PLACE.

EXCAVATE TO BOTTOM OF ABUTMENT BEFORE DRIVING PILES.

▨ VERTICAL CONSTRUCTION JOINT - KEYWAY FORMED BY A BEVELED 2" × 8". BEVEL EXPOSED EDGES ¾". FOR ALTERNATE CONSTRUCTION JOINT DETAILS SEE SHEET 21. SEAL JOINT AT BACKFACE WITH 18" RUBBERIZED MEMBRANE WATERPROOFING.

◑ BRIDGE ABUTMENTS WILL BE CONSTRUCTED IN ORDER TO ACCOMODIATE FUTURE SIDEWALKS ON BOTH SIDES.

⊖ PIPE UNDERDRAIN WRAPPED 6-INCH. SLOPE 0.5% MIN. TO SUITABLE DRAINAGE. ATTACH RODENT SHIELD AT ENDS OF PIPE UNDERDRAIN. SEE DETAIL ON THIS SHEET.

⊗ STEEL TROWEL TOP SURFACE OF ABUTMENT. PLACE MULTIPLE LAYERS OF POLYETHYLENE SHEETS OVER ENTIRE ABUTMENT TOP BEFORE PLACING BEARING PADS AND SUPERSTRUCTURE. TOTAL THICKNESS OF SHEETS SHALL BE AT LEAST 0.03".

FOR SPLICE DETAIL SEE SHEET 2.

FOR LOCATION OF SECTION A SEE SHEET 9.

F.F. DENOTES FRONT FACE.

B.F. DENOTES BACK FACE.

NO.	DATE	REVISION	BY

STATE OF WISCONSIN
DEPARTMENT OF TRANSPORTATION

STRUCTURE B-18-229

DRAWN BY CLS | PLANS CK'D. CBM

EAST ABUTMENT DETAILS

SHEET 10 OF 21
147

ORIGINAL PLANS PREPARED BY
AYRES ASSOCIATES
3433 Oakwood Hills Parkway
Eau Claire, WI 54701
www.AyresAssociates.com

$PRFNAME$
U:\42-0943.00 - Eau Claire Co - CTH AA\BRIDGE\420943 ea.dgn
10/27/2015
PENTABLE:BReau_shd_util.tbl

8

8

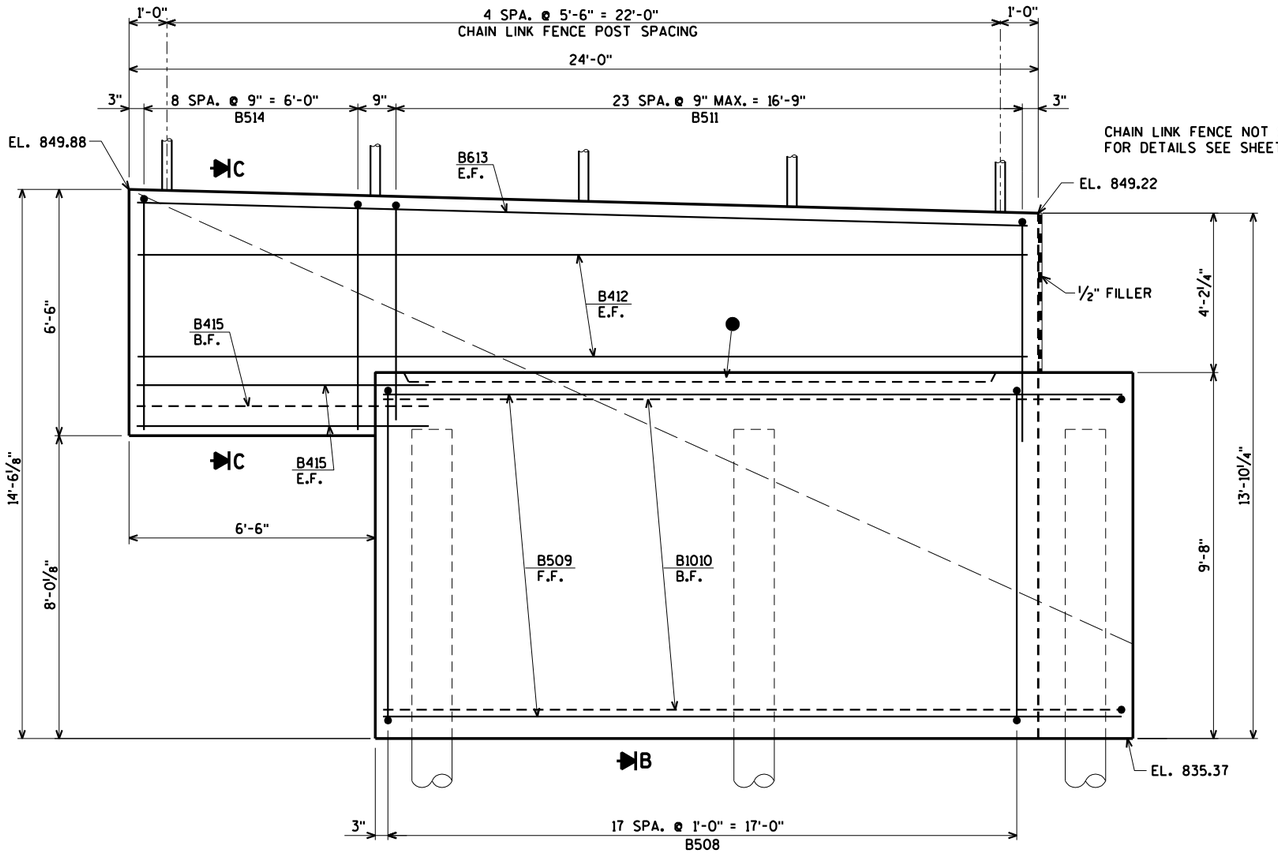

CHAIN LINK FENCE NOT SHOWN.
FOR DETAILS SEE SHEETS 19 & 20

ELEVATION - WING 3

(WING 4 SIMILAR)

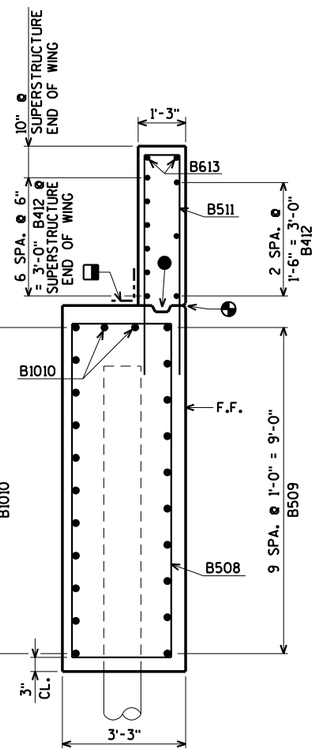

SECTION B

BILL OF BARS

BAR. NO.	COATED BAR	NO. REQ'D.	LENGTH	BENT BAR	BUNDLED BAR SERIES	5.080" COATED 6.330" UNCOATED LOCATION
B501		110	10-6	X		BODY VERT. E.F.
B502		9	54-2			BODY HORIZ. F.F.
B1003		28	32-10	X		BODY HORIZ. B.F.
B404		42	2-11	X		BODY TIES
B505		55	6-11	X		BODY VERT. TOP
B406		4	28-0			BODY HORIZ. TOP
B407		37	4-5	X		BODY VERT. TOP
B508	X	36	24-8	X		WING VERT. E.F.
B509	X	20	19-8	X		WING HORIZ. F.F.
B1010	X	26	21-1	X		WING HORIZ.
B511	X	48	12-8	X		WING VERT.
B412	X	20	23-7			WING HORIZ. E.F.
B613	X	4	23-7			WING HORIZ. TOP
B514	X	18	12-11	X		WING VERT.
B415	X	10	7-9			WING HORIZ. E.F.

BENDING DIMENSIONS ARE OUT TO OUT OF BARS.

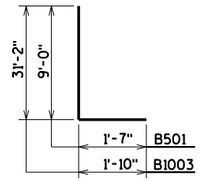

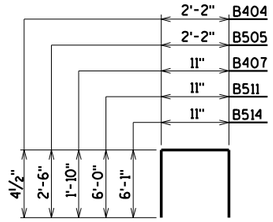

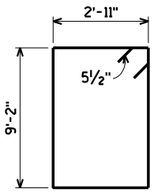

B508

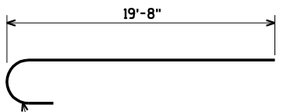

B1010

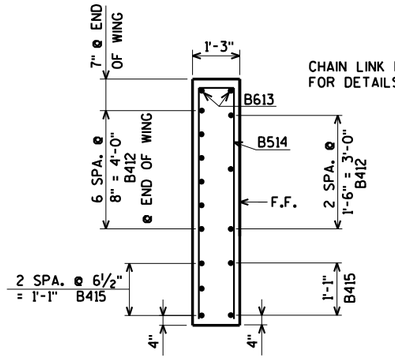

CHAIN LINK FENCE NOT SHOWN.
FOR DETAILS SEE SHEETS 19 & 20

SECTION C

◨ 18" RUBBERIZED MEMBRANE WATERPROOFING. SEAL ALL HORIZONTAL AND VERTICAL JOINTS ON BACKFACE.

● OPT. CONST. JOINT FORMED BY A BEVELED 2" x 6" KEYWAY.

◔ ¾" V-GROOVE ON FRONT FACE ONLY.

F.F. DENOTES FRONT FACE

E.F. DENOTES EACH FACE

B.F. DENOTES BACK FACE

NO.	DATE	REVISION	BY

STATE OF WISCONSIN
DEPARTMENT OF TRANSPORTATION

STRUCTURE B-18-229

DRAWN BY CLS | PLANS CK'D. CBM

EAST ABUTMENT WING DETAILS & BILL OF BARS

SHEET 11 OF 21
148

ORIGINAL PLANS PREPARED BY
AYRES ASSOCIATES
3433 Oakwood Hills Parkway
Eau Claire, WI 54701
www.AyresAssociates.com

$PRFNAME$
U:\42-0943.00 - Eau Claire Co - CTH AA\BRIDGE\420943 ea.dgn

STATE PROJECT NUMBER

7824-00-13

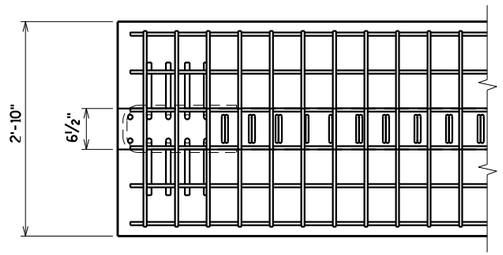

TOP FLANGE

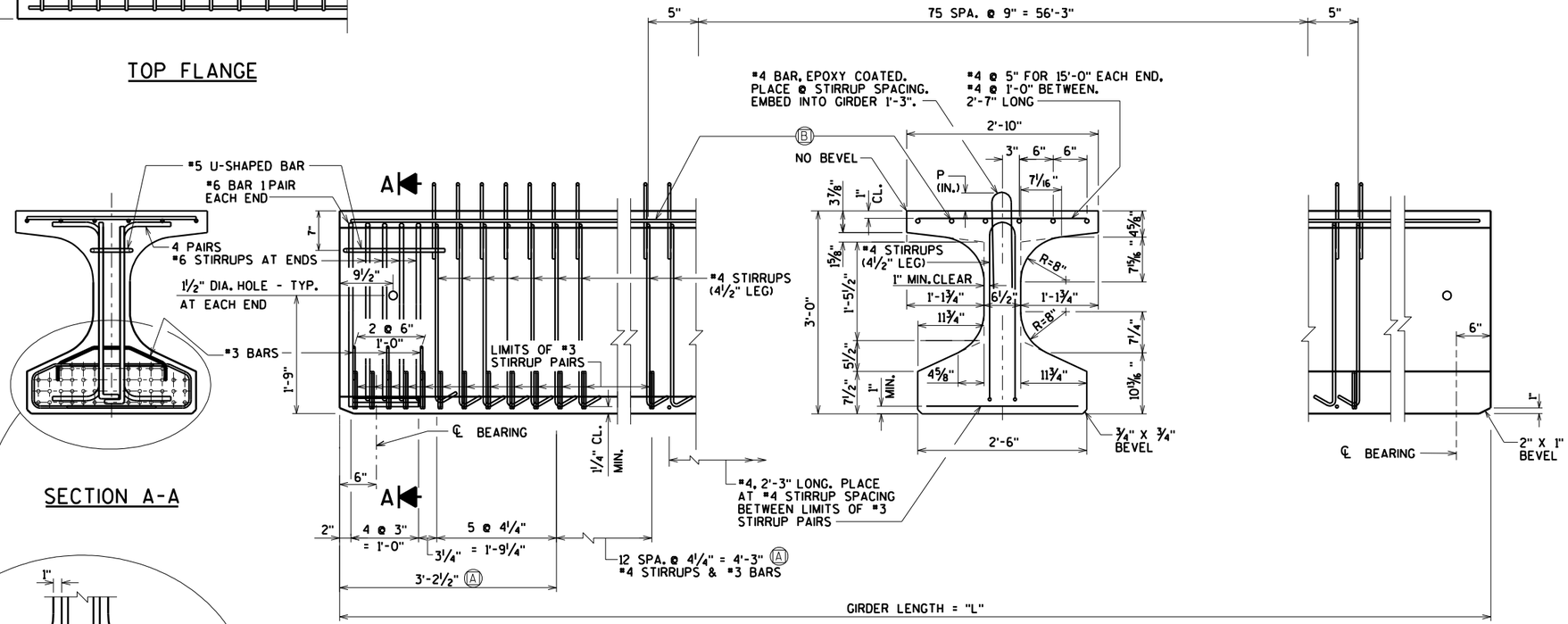

SECTION A-A

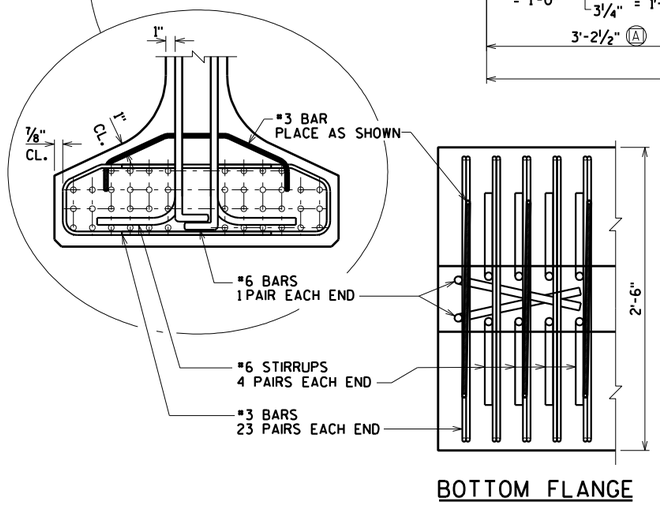

BOTTOM FLANGE

SIDE VIEW & TYPICAL SECTION IN SPAN

Ⓐ DETAIL TYP. AT EACH END

Ⓑ 6 #4 BARS, FULL LENGTH, MIN. LAP = 2'-4"

GIRDER NOTES

TOP OF GIRDER TO BE ROUGH FLOATED AND BROOMED TRANSVERSELY, EXCEPT THE THE OUTSIDE 8" OF GIRDER, WHICH SHALL RECEIVE A SMOOTH FINISH. AN APPROVED CONCRETE SEALER SHALL BE APPLIED TO ALL SMOOTH SURFACES INCLUDING THE OUTSIDE 8" OF THE TOP FLANGE.

DO NOT APPLY CONCRETE SEALER TO SURFACES RECEIVING APPLICATION OF CONCRETE STAINING.

THE GIRDERS SHALL BE PROVIDED WITH A SUITABLE LIFTING DEVICE FOR HANDLING AND ERECTING THE GIRDERS.

STRANDS SHALL BE FLUSH WITH END OF GIRDER. FOR GIRDER ENDS EMBEDDED COMPLETELY IN CONCRETE, END OF STRANDS SHALL BE COATED WITH NON-BITUMINOUS JOINT SEALER. FOR GIRDER ENDS THAT ARE FINALLY EXPOSED, COAT THE GIRDER ENDS, EXPOSED STRAND ENDS AND ALL NON-BONDING SURFACES WITHIN 2 FEET OF THE GIRDER ENDS WITH A NON-PIGMENTED EPOXY CONFORMING TO AASHTO M-235 TYPE III, GRADE 2, CLASS B OR C. THE EPOXY SHALL BE APPLIED AT LEAST 3 DAYS AFTER MOIST CURING HAS CEASED AND PRIOR TO THE APPLICATION OF THE SEALER.

ALL GIRDERS SHALL BE CAST FULL LENGTH AS SHOWN.

SPACING SHOWN FOR #4 STIRRUPS IS FOR GRADE 60 REINFORCEMENT.

AN ALTERNATE EQUIVALENT OF WELDED WIRE FABRIC (WWF) ASTM A497 MAY BE SUBSTITUTED FOR THE STIRRUP REINFORCEMENT SHOWN, UPON APPROVAL OF THE STRUCTURES DEVELOPMENT SECTION.

PRESTRESSING STRANDS SHALL BE (0.6" DIA.)-7 WIRE LOW-RELAXATION STRANDS WITH AN ULTIMATE STRENGTH OF 270,000 PSI.

FOR DIAPHRAGM INSERT & CONNECTION DETAILS SEE "STEEL INTER. DIAPHRAGM DETAILS" SHEET.

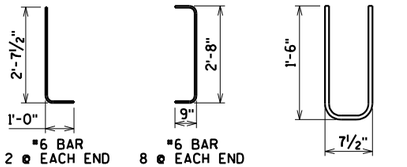

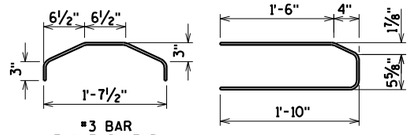

* MINIMUM CYLINDER STRENGTH OF CONCRETE @ TIME OF TRANSFER OF PRESTRESS FORCE.

GIRDER DATA

SPAN	GIRDER	GIRDER LENGTH "L"	DEAD LOAD DEFL. (IN.) 1/10	2/10	3/10	4/10	5/10	6/10	7/10	8/10	9/10	CONC. STRGTH. f'c (p.s.i.)	"P" 1ST 1/3 OF GIRDER	"P" MID 1/3 OF GIRDER	"P" END 1/3 OF GIRDER	DIA. OF STRAND (IN.)	DRAPED PATTERN TOTAL NO. OF STRANDS	f'ci (P.S.I.) *	(IN.) "A"	"B" MIN.	"B" MAX.	"C"	UNDRAPED PATTERN TOTAL NO. OF STRANDS	f'ci (P.S.I.) *
1	ALL	72'-0"	0.5	0.9	1.3	1.5	1.5	1.5	1.3	0.9	0.5	8,000	9.0	6.5	9.0	0.6	32	6,400	32	11	14	4		

NO.	DATE	REVISION	BY

STATE OF WISCONSIN
DEPARTMENT OF TRANSPORTATION

STRUCTURE B-18-229

DRAWN BY CLS | PLANS CK'D. CBM

36W" PRESTRESSED GIRDER DETAILS

SHEET 12 OF 21
149

ORIGINAL PLANS PREPARED BY
AYRES ASSOCIATES
3433 Oakwood Hills Parkway
Eau Claire, WI 54701
www.AyresAssociates.com

$PRFNAME$
U:\42-0943.00 - Eau Claire Co - CTH AA\BRIDGE\420943 36W.dgn
8/24/2015
PENTABLE:BReau_shd_util.tbl
7-13
G36W

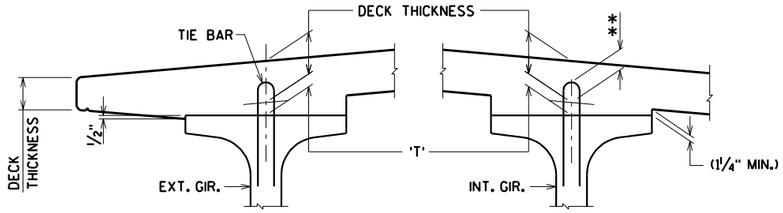

DECK HAUNCH DETAIL

IF 1¼" MINIMUM HAUNCH HEIGHT AT EDGE OF GIRDER CANNOT BE MAINTAINED, THE GRADE LINE MAY BE REVISED BY THE ENGINEER AT THE OPTION OF THE CONTRACTOR. THE PLAN DECK THICKNESS SHALL BE HELD. NOTIFY THE STRUCTURES SECTION IF THE GRADE LINE IS RAISED FROM THE PLAN PROFILE BY MORE THAN ½" OR,

** IF 3" MINIMUM DECK EMBEDMENT OF TIE BAR CANNOT BE OBTAINED.

TO DETERMINE 'T', ELEV. OF TOP OF GIR'S. AT ℄ OF SUBSTRUCTURE UNITS & AT 1/10 POINTS OF EACH SPAN SHALL BE TAKEN. THEN FOLLOW THIS PROCESS:

TOP OF DECK ELEV. AT FINAL GRADE
- TOP OF GIRDER ELEVATION
+ DEAD LOAD DEFLECTION
- DECK THICKNESS
= HAUNCH HEIGHT 'T'

NOTE: AN AVERAGE HAUNCH ('T') OF 3⅛" WAS USED IN THE QUANTITY "CONCRETE MASONRY BRIDGES".

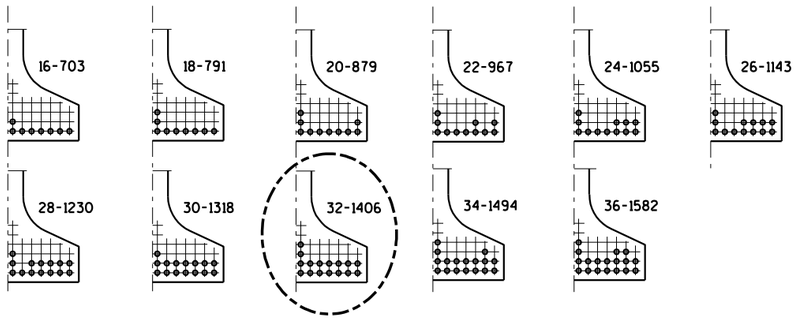

ARRANGEMENT AT ℄ SPAN - FOR GIRDERS WITH DRAPED STRANDS

0.6"Φ STRANDS

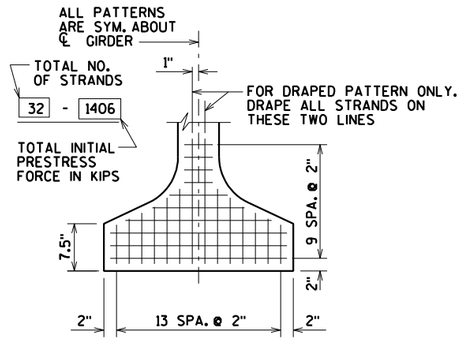

TYP. STRAND PATTERN

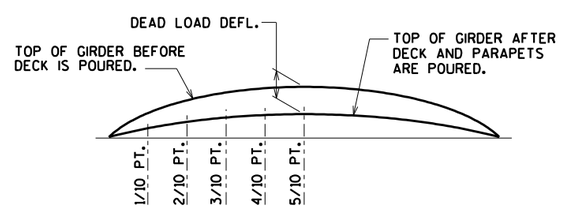

DEAD LOAD DEFLECTION DIAGRAM

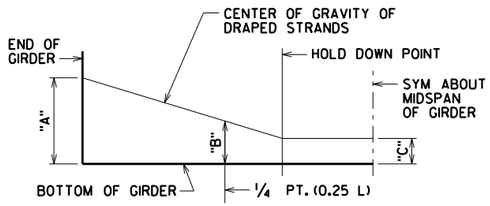

DRAPED STRAND PROFILE

*THE THEORETICAL INITIAL CAMBER VALUE AT THE TIME OF STRAND RELEASE AT MIDSPAN MULTIPLIED BY A FACTOR OF 1.4 TO ACCOUNT FOR CAMBER GROWTH FROM THE TIME OF STRAND RELEASE TO JOBSITE PLACEMENT.

SPAN	CAMBER (IN.) *
1	1.4

THESE VALUES ARE NOT TO BE USED IN DETERMINING 'T', USE ACTUAL GIRDER SHOTS.
THESE VALUES ARE FOR INFORMATIONAL PURPOSES ONLY.

ORIGINAL PLANS PREPARED BY
AYRES ASSOCIATES
3433 Oakwood Hills Parkway
Eau Claire, WI 54701
www.AyresAssociates.com

NO.	DATE	REVISION	BY

STATE OF WISCONSIN
DEPARTMENT OF TRANSPORTATION

STRUCTURE B-18-229

DRAWN BY CLS | PLANS CK'D. CBM

36W" PRESTRESSED GIRDER DETAILS

SHEET 13 OF 21
150

$PRFNAME$
U:\42-0943.00 - Eau Claire Co - CTH AA\BRIDGE\420943 36W.dgn

8

8

STATE PROJECT NUMBER

7824-00-13

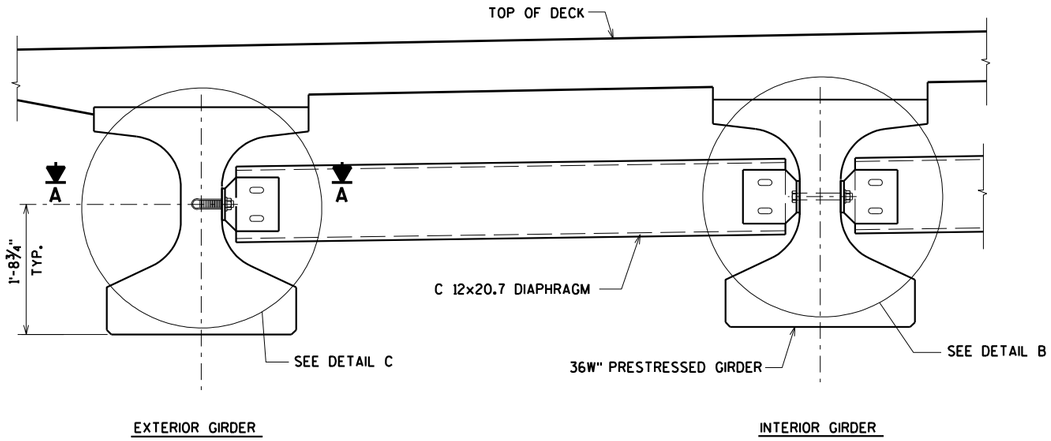

PART TRANSVERSE SECTION AT DIAPHRAGM

NOTES

ALL DIAPHRAGM MATERIAL NOT EMBEDDED IN THE CONCRETE GIRDER SHALL BE PAID FOR AT THE UNIT PRICE BID FOR "STEEL DIAPHRAGMS B-18-229", EACH.

EACH DIAPHRAGM BETWEEN GIRDERS SHALL CONSTITUTE ONE UNIT.

ALL DIAPHRAGM STRUCTURAL STEEL SHALL BE ASTM A709 GRADE 36. ALL BOLTS, NUTS AND WASHERS SHALL BE ASTM A325 TYPE 1.

ALL DIAPHRAGM STRUCTURAL STEEL SHOWN SHALL BE HOT-DIPPED GALVANIZED. ALL BOLTS, NUTS AND WASHERS SHALL BE HOT-DIPPED GALVANIZED IN ACCORDANCE WITH ASTM A153 CLASS C. GALVANIZED NUTS SHALL BE TAPPED OVERSIZE IN ACCORDANCE WITH THE REQUIREMENTS OF ASTM A563 AND SHALL MEET THE REQUIREMENTS OF SUPPLEMENTARY REQUIREMENT S1 OF ASTM A563, LUBRICANT AND TEST FOR COATED NUTS.

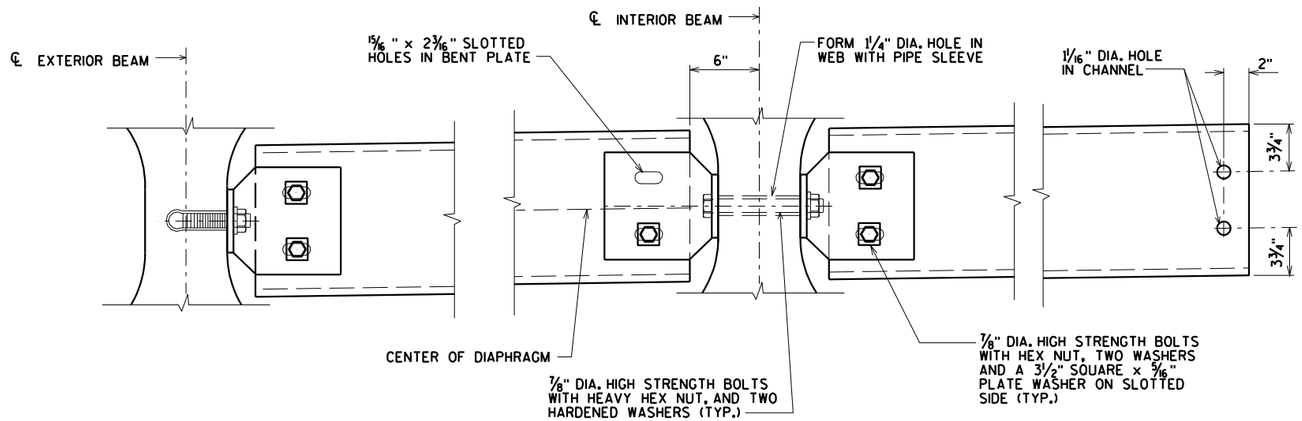

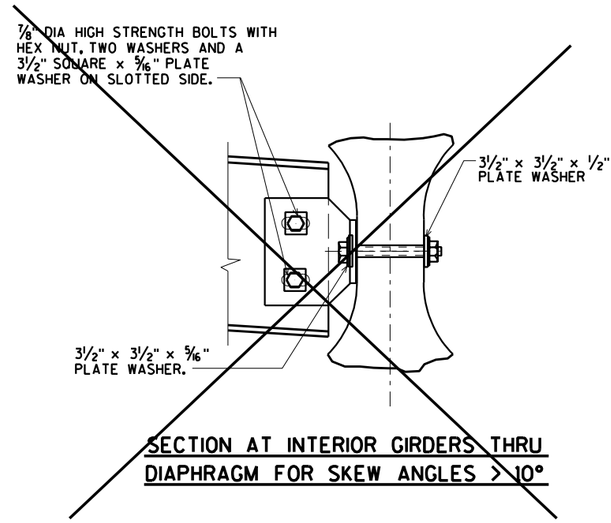

SECTION AT INTERIOR GIRDERS THRU DIAPHRAGM FOR SKEW ANGLES > 10°

DETAIL C

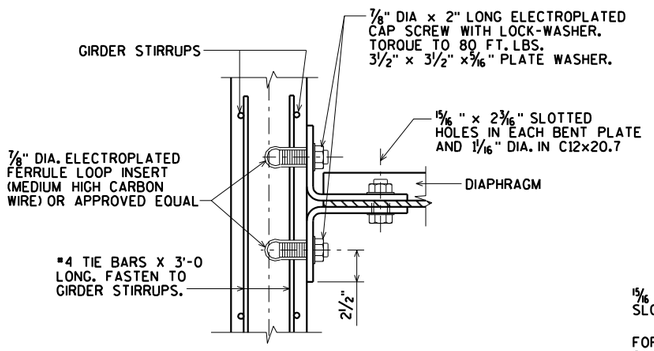

SECTION A-A

(FOR EXTERIOR ATTACHMENT)

DETAIL B

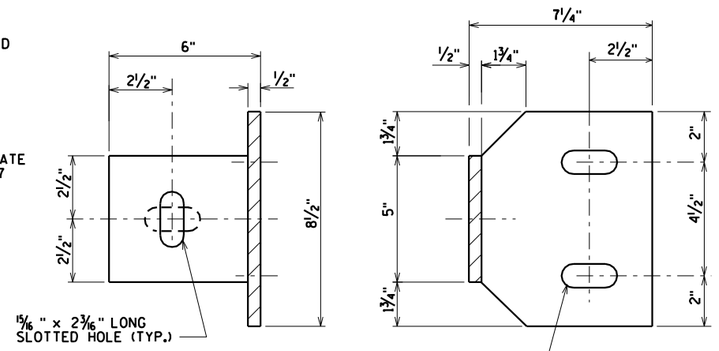

FOR EACH PAIR OF ANGLES ON A GIVEN BEAM FACE, ONE SLOTTED HOLE TO BE VERTICAL AND ONE TO BE HORIZONTAL.

BEAM FACE

DIAPHRAGM FACE

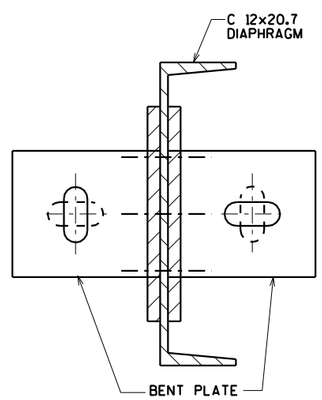

ATTACHMENT TO CHANNEL

NO.	DATE	REVISION	BY

STATE OF WISCONSIN
DEPARTMENT OF TRANSPORTATION

STRUCTURE B-18-229

DRAWN BY CLS | PLANS CK'D. CBM

STEEL INTER. DIAPHRAGM DETAILS

SHEET 14 OF 21

151

ORIGINAL PLANS PREPARED BY
AYRES ASSOCIATES
3433 Oakwood Hills Parkway
Eau Claire, WI 54701
www.AyresAssociates.com

8

8

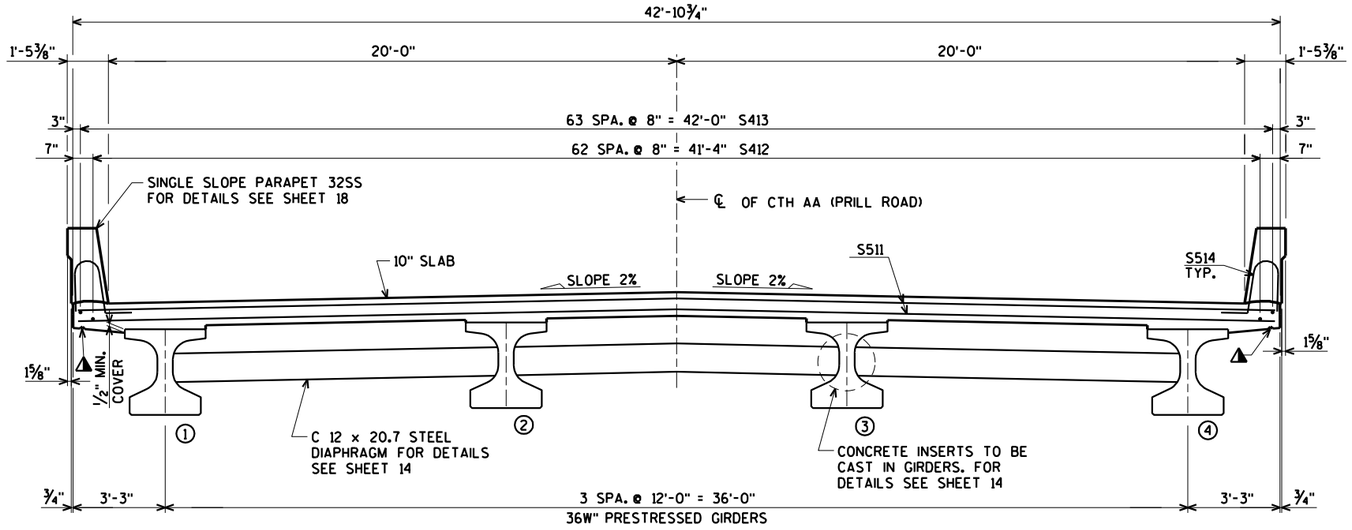

TYPICAL CROSS SECTION THRU ROADWAY

(LOOKING EAST)

⚠ ¾" V - GROOVE. EXTEND V-GROOVE TO 6" FROM FRONT FACE OF ABUTMENT DIAPHRAGM.

BILL OF BARS

BAR. NO.	COATED BAR	NO. REQ'D.	LENGTH	BENT BAR	BUNDLED BAR SERIES	26,620# COATED LOCATION
S401	X	54	3-2	X		DIAPH. @ ABUT. VERT. @ NOTCH
S402	X	12	8-1			DIAPH. @ ABUT. HORIZ. @ NOTCH
S503	X	122	9-11	X		DIAPH. @ ABUT. VERT.
S504	X	16	7-10	X		DIAPH. @ ABUT. VERT. @ GIRDERS
S505	X	122	7-1	X		DIAPH. @ ABUT. VERT.
S606	X	20	28-8			DIAPH. @ ABUT. HORIZ.
S607	X	4	7-8			DIAPH. @ ABUT. HORIZ. EXT. GIRDERS
S608	X	36	7-1			DIAPH. @ ABUT. HORIZ. BETW. GIRDERS
S609	X	8	8-4			DIAPH. @ ABUT. HORIZ. EXT. GIRDERS
S510	X	16	6-0			DIAPH. @ ABUT. HORIZ. THRU GIRDER
S511	X	293	42-2			SLAB TRANS. TOP & BOT.
S412	X	126	37-5			SLAB LONG. BOT.
S413	X	128	37-5			SLAB LONG. TOP
S514	X	168	4-5	X		SLAB @ PARAPET VERT.
S515	X	168	5-0	X		PARAPET VERT.
S516	X	48	2-9	X		SLAB @ PARAPET VERT.
S517	X	24	28-6			PARAPET HORIZ.
S518	X	68	4-4	X		SLAB @ PARAPET VERT.
S519	X	44	4-9	X		PARAPET VERT.
S520	X	24	4-10	X		PARAPET VERT.
S521	X	4	11-0	X		PARAPET HORIZ.
S522	X	20	10-10			PARAPET HORIZ.

BENDING DIMENSIONS ARE OUT TO OUT OF BARS.

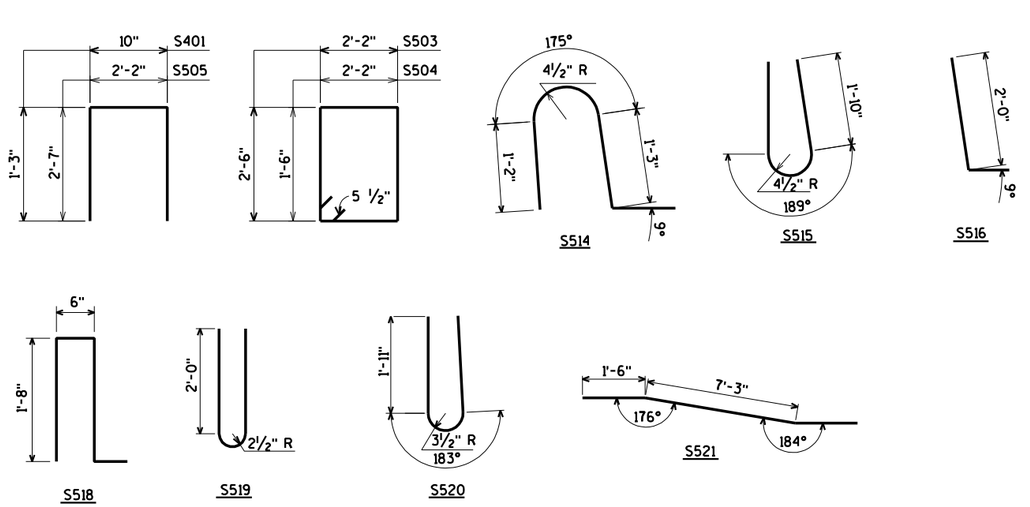

NO.	DATE	REVISION	BY

STATE OF WISCONSIN
DEPARTMENT OF TRANSPORTATION

STRUCTURE B-18-229

DRAWN BY CLS | PLANS CK'D. CBM

SUPERSTRUCTURE

SHEET 15 OF 21
152

ORIGINAL PLANS PREPARED BY
AYRES ASSOCIATES
3433 Oakwood Hills Parkway
Eau Claire, WI 54701
www.AyresAssociates.com

$PRFNAME$
U:\42-0943.00 - Eau Claire Co - CTH AA\BRIDGE\420943 super.dgn

STATE PROJECT NUMBER

7824-00-13

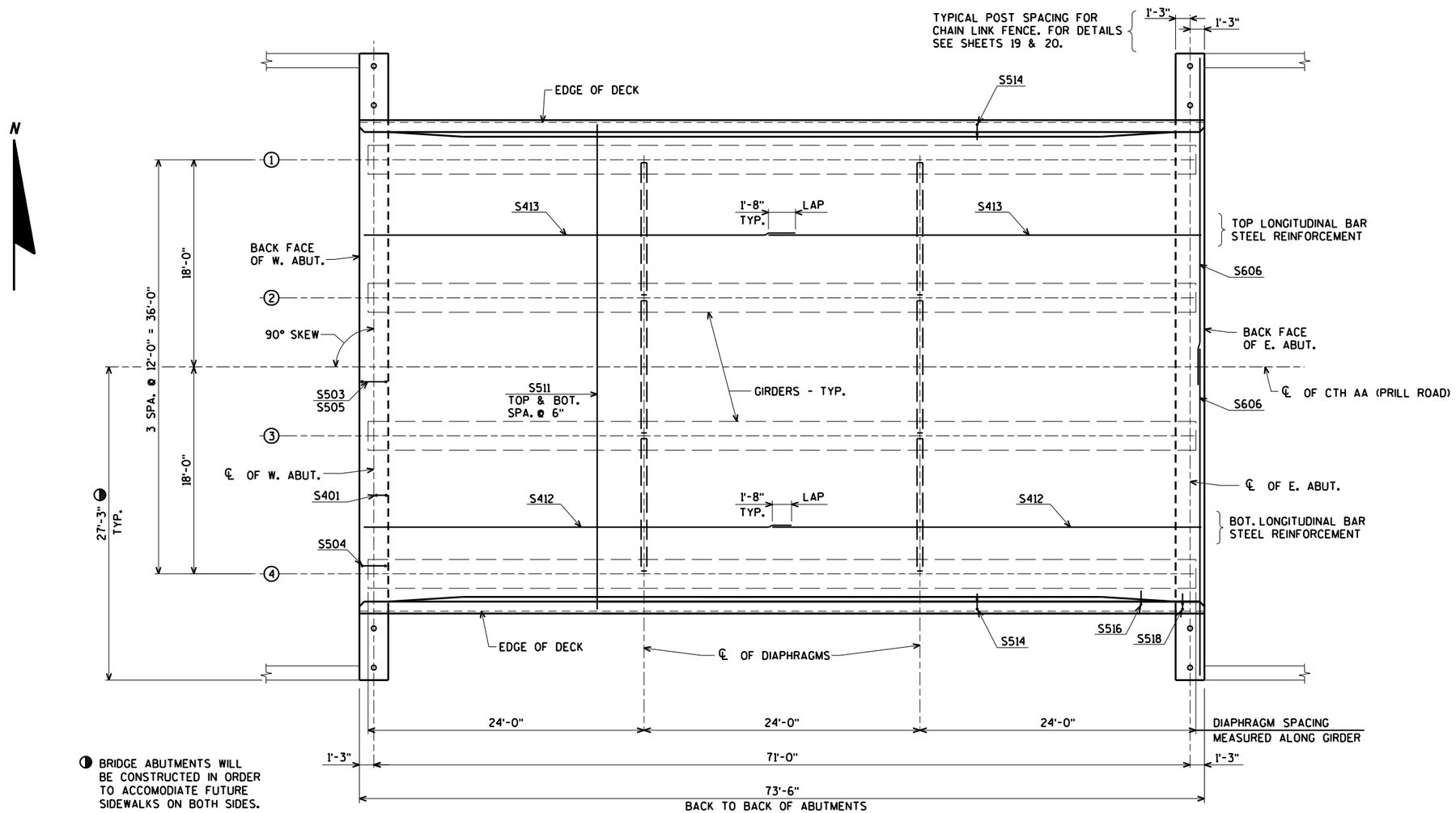

◑ BRIDGE ABUTMENTS WILL BE CONSTRUCTED IN ORDER TO ACCOMODIATE FUTURE SIDEWALKS ON BOTH SIDES.

PLAN

TOP OF DECK ELEVATIONS

	℄ OF W. ABUT.	0.1 PT.	0.2 PT.	0.3 PT.	0.4 PT.	0.5 PT.	0.6 PT.	0.7 PT.	0.8 PT.	0.9 PT.	℄ OF E. ABUT.
△ N. SLAB EDGE	847.70	847.84	847.98	848.13	848.28	848.44	848.60	848.77	848.94	849.12	849.31
GIRDER 1	847.74	847.88	848.02	848.17	848.32	848.48	848.64	848.81	848.98	849.16	849.35
GIRDER 2	847.98	848.12	848.26	848.41	848.56	848.72	848.88	849.05	849.22	849.40	849.59
℄ RDWY	848.10	848.24	848.38	848.53	848.68	848.84	849.00	849.17	849.34	849.52	849.71
GIRDER 3	847.98	848.12	848.26	848.41	848.56	848.72	848.88	849.05	849.22	849.40	849.59
GIRDER 4	847.74	847.88	848.02	848.17	848.32	848.48	848.64	848.81	848.98	849.16	849.35
△ S. SLAB EDGE	847.70	847.84	847.98	848.13	848.28	848.44	848.60	848.77	848.94	849.12	849.31

ELEVATIONS SHOWN ARE FINISHED DECK AND DO NOT INCLUDE ALLOWANCES OF DEAD LOAD DEFLECTION AND FUTURE CREEP.

△ EDGE OF DECK ELEVATIONS ACCOUNT FOR LEVEL AREA UNDER SINGLE SLOPE PARAPET.

NO.	DATE	REVISION	BY

STATE OF WISCONSIN
DEPARTMENT OF TRANSPORTATION

STRUCTURE B-18-229

DRAWN BY CLS | PLANS CK'D. CBM

SUPERSTRUCTURE PLAN

SHEET 16 OF 21
153

ORIGINAL PLANS PREPARED BY
AYRES ASSOCIATES
3433 Oakwood Hills Parkway
Eau Claire, WI 54701
www.AyresAssociates.com

8

8

$PRFNAME$
U:\42-0943.00 - Eau Claire Co - CTH AA\BRIDGE\420943 super.dgn

9/30/2015

PENTABLE:BReau_shd_util.tbl

STATE PROJECT NUMBER

7824-00-13

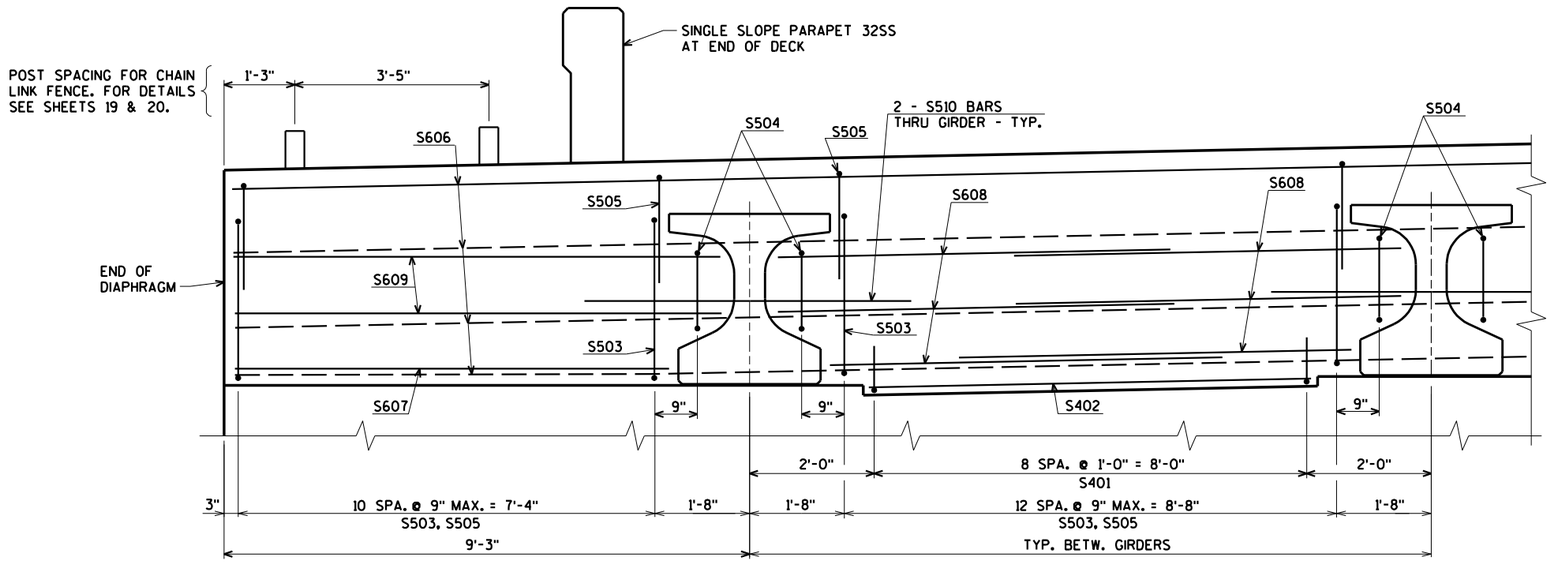

PART SECTION AT ABUTMENT

(LOOKING EAST AT WINGS 1 & 3. WINGS 2 & 4 SIMILAR)

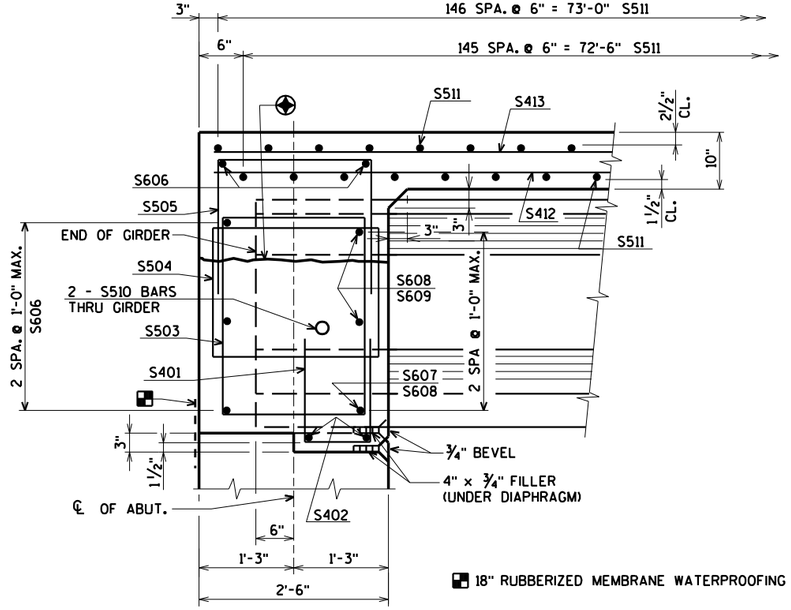

PART LONGITUDINAL SECTION

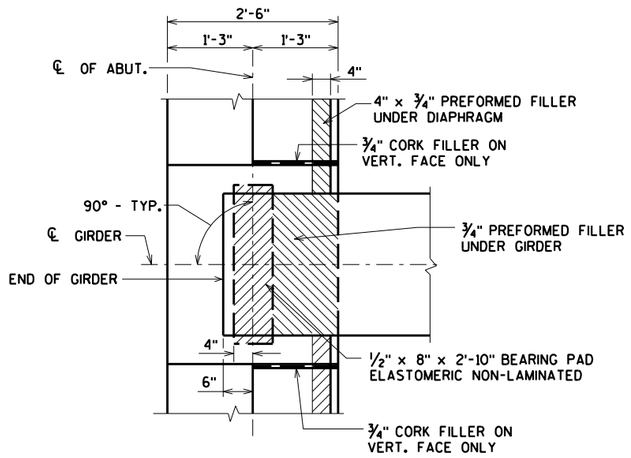

BEARING PAD DETAIL

NO.	DATE	REVISION	BY

STATE OF WISCONSIN
DEPARTMENT OF TRANSPORTATION

STRUCTURE B-18-229

DRAWN BY CLS | PLANS CK'D. CBM

SUPERSTRUCTURE DETAILS

SHEET 17 OF 21
154

ORIGINAL PLANS PREPARED BY
AYRES ASSOCIATES
3433 Oakwood Hills Parkway
Eau Claire, WI 54701
www.AyresAssociates.com

$PRFNAME$
U:\42-0943.00 - Eau Claire Co - CTH AA\BRIDGE\420943 super.dgn

8

8

STATE PROJECT NUMBER

7824-00-13

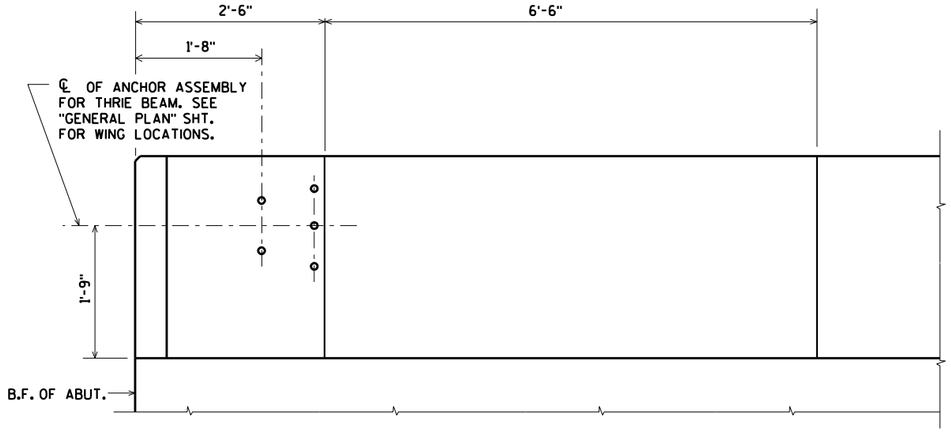

INSIDE ELEVATION

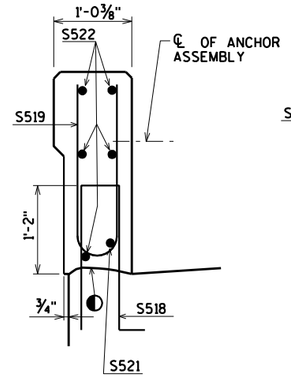

SECTION A

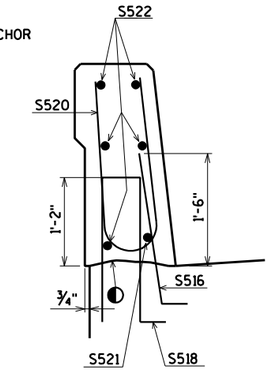

SECTION B

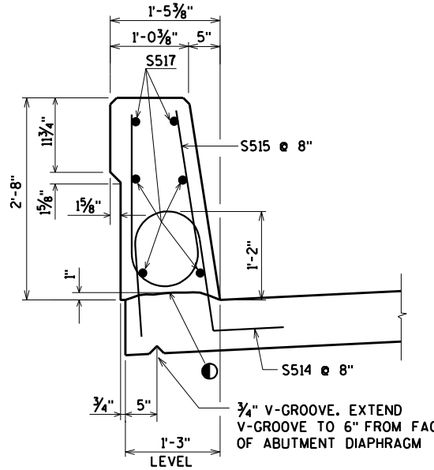

SECTION THRU PARAPET ON BRIDGE
SECTION C

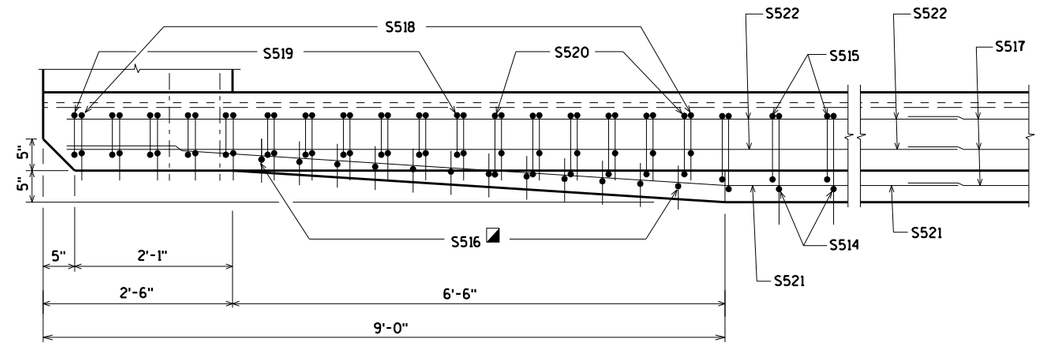

PLAN

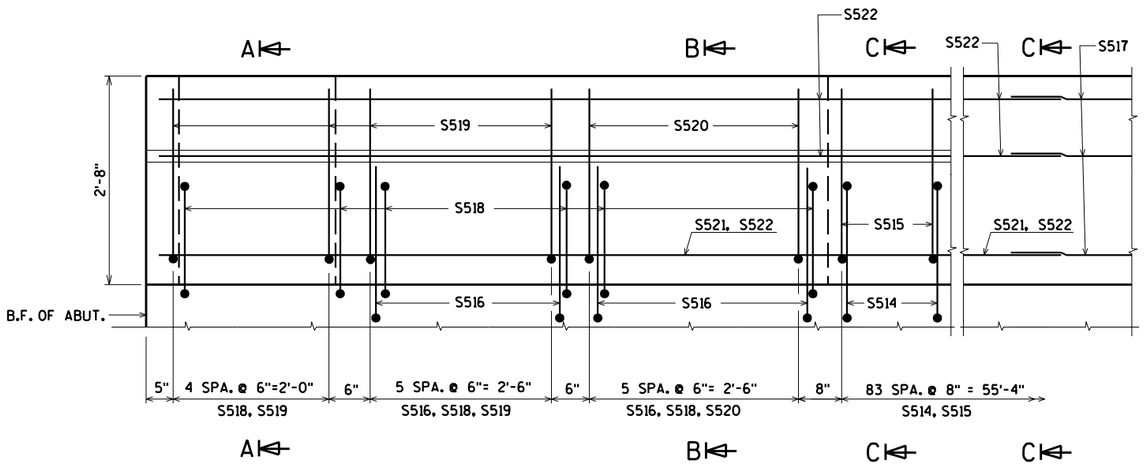

OUTSIDE ELEVATION

◐ CONST. JOINT - STRIKE OFF AS SHOWN.

◪ USE CARE TO PLACE S516 BARS CORRECTLY ALONG TRANSITION OF PARAPET.

LAP LONG. BARS A MIN. OF 1'-9"

B.F. DENOTES BACK FACE

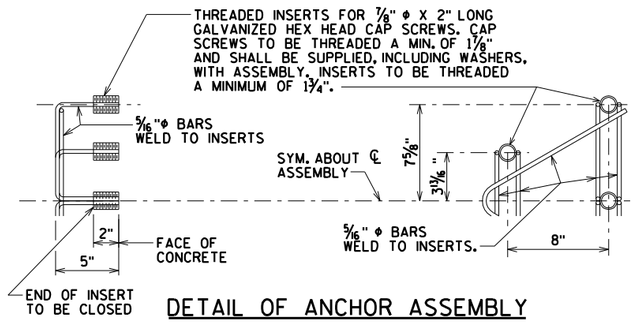

DETAIL OF ANCHOR ASSEMBLY

NOTE: HEX HEAD CAP SCREWS & WASHERS TO BE GALVANIZED IN ACCORDANCE WITH AASHTO M232 CLASS C.

ASSEMBLY SHALL BE BID ITEM "ANCHOR ASSEMBLIES FOR STEEL PLATE BEAM GUARD", EACH.

NO.	DATE	REVISION	BY

STATE OF WISCONSIN
DEPARTMENT OF TRANSPORTATION

STRUCTURE B-18-229

DRAWN BY CLS | PLANS CK'D. CBM

SINGLE SLOPE PARAPET 32SS

SHEET 18 OF 21
155

ORIGINAL PLANS PREPARED BY
AYRES ASSOCIATES
3433 Oakwood Hills Parkway
Eau Claire, WI 54701
www.AyresAssociates.com

$PRFNAME$
U:\42-0943.00 - Eau Claire Co - CTH AA\BRIDGE\420943 32SS.dgn

8

1 2 3 4

8/24/2015

PENTABLE:BReau_shd_util.tbl

32SSDEC
1-14

STATE PROJECT NUMBER

7824-00-13

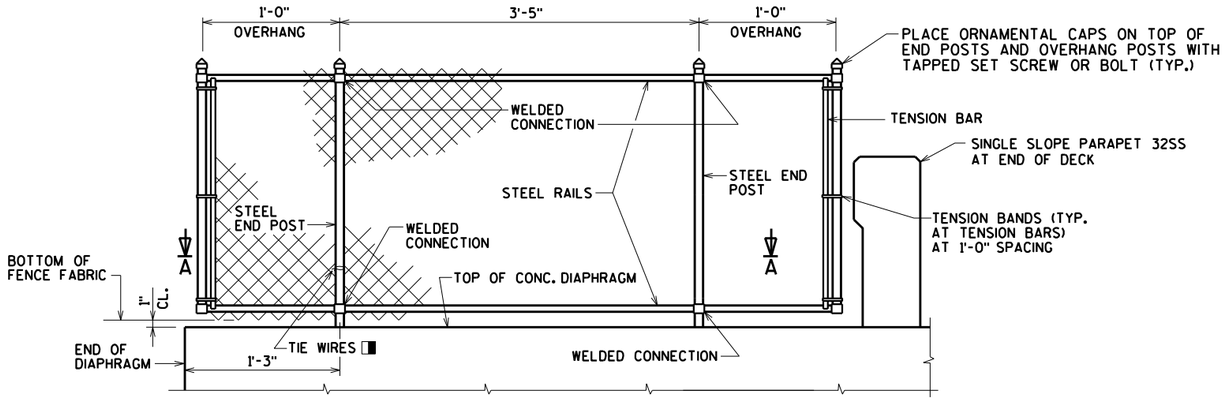

FENCE PART ELEVATION ON SUPERSTRUCTURE

VIEWING NON FABRIC SIDE
(WINGS 1 AND 3 SHOWN, WINGS 2 AND 4 SIMILAR)

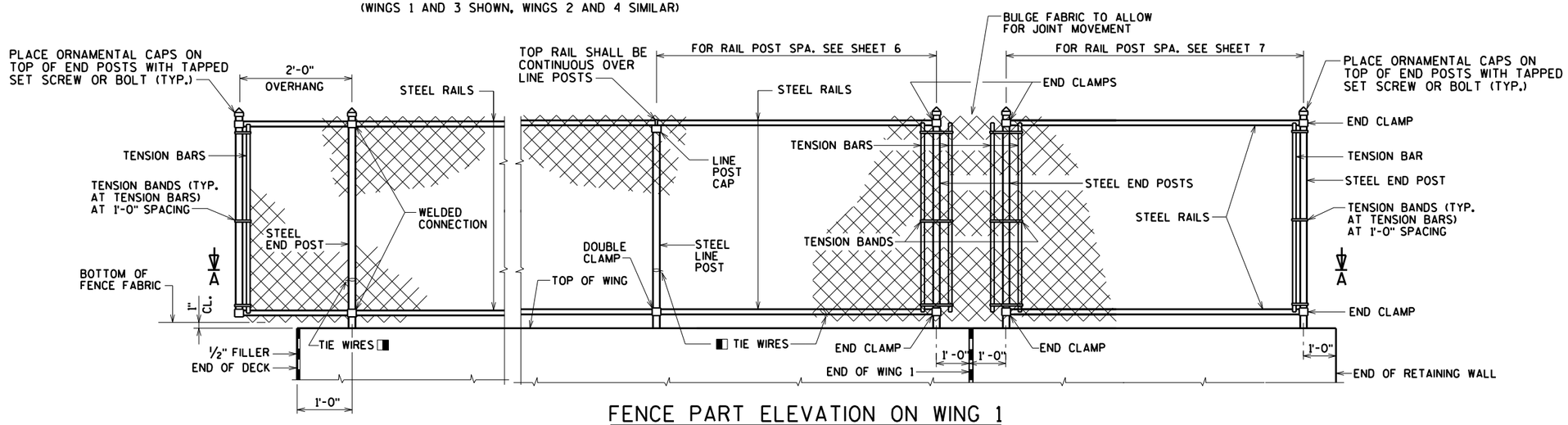

FENCE PART ELEVATION ON WING 1

VIEWING FABRIC SIDE
(WING 1 SHOWN)

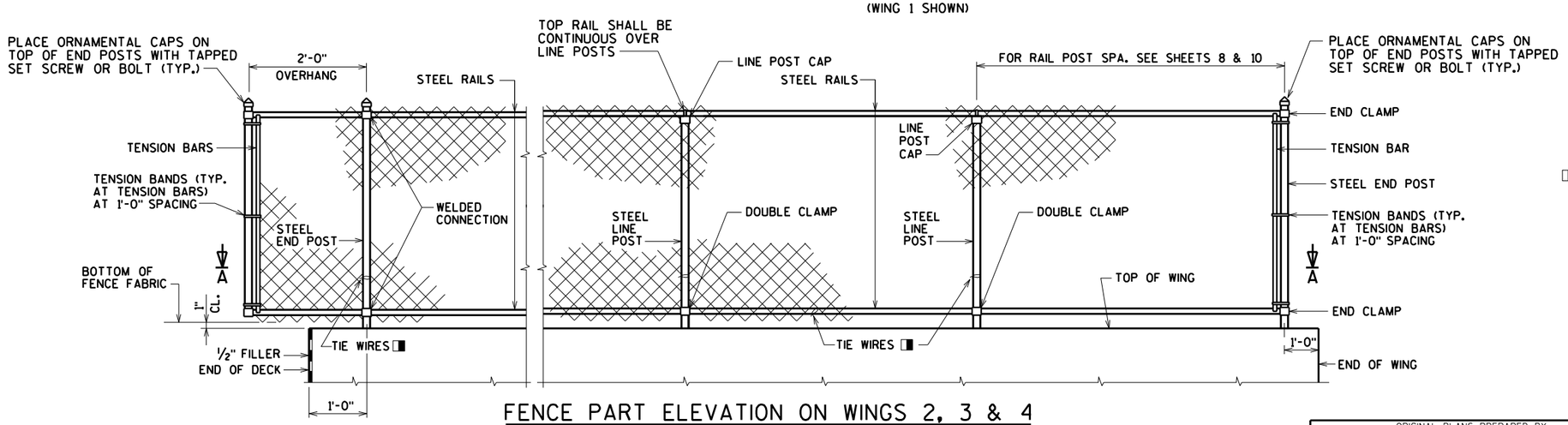

FENCE PART ELEVATION ON WINGS 2, 3 & 4

VIEWING FABRIC SIDE
(WING 3 SHOWN, WINGS 2 AND 4 SIMILAR)

◨ ATTACH FABRIC TO RAILS, AND TO POSTS WITHOUT TENSION BANDS, WITH TIE WIRES (ROUND, 9-GAGE) SPACED AT 1'-0".

NO.	DATE	REVISION	BY

STATE OF WISCONSIN
DEPARTMENT OF TRANSPORTATION

STRUCTURE B-18-229

DRAWN BY CLS | PLANS CK'D. CBM

CHAIN LINK FENCE ELEVATIONS

SHEET 19 OF 21
156

ORIGINAL PLANS PREPARED BY
AYRES ASSOCIATES
3433 Oakwood Hills Parkway
Eau Claire, WI 54701
www.AyresAssociates.com

$PRFNAME$
U:\42-0943.00 - Eau Claire Co - CTH AA\BRIDGE\420943 fence elev.dgn

8

8

8/24/2015

PENTABLE:BReau_shd_util.tbl

STATE PROJECT NUMBER

7824-00-13

FENCE MEMBER SIZE & WEIGHT

STEEL FENCE MEMBER	OUTSIDE DIAMETER (INCHES)	WEIGHT (LB/FT)
RAILS	1.660	2.27
END POST	2.875	5.80
OVERHANG POST	2.875	5.80
LINE POST	2.375	3.65
POST SLEEVE	4.000	9.12

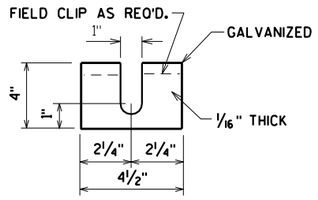

POST SHIM DETAILS

SHIMS REQUIRED ONLY WHEN END POSTS ARE WELDED TO BASE PLATES. PROVIDE 4 SHIMS PER POST. USE WHERE REQUIRED FOR ALIGNMENT.

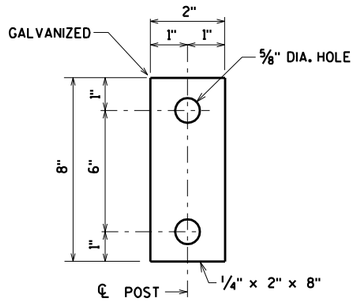

ANCHOR PLATE

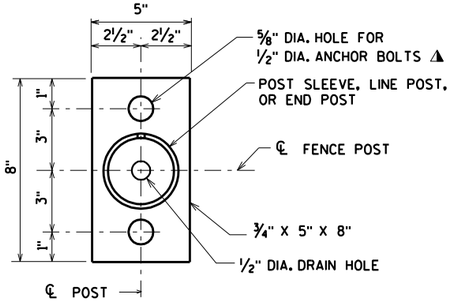

BASE PLATE

GENERAL NOTES

POSTS ARE TO BE SET VERTICAL.

ALL FENCE COMPONENTS SHALL BE GALVANIZED STEEL, EXCEPT THE FENCE FABRIC WHICH MAY BE ALUMINUM-COATED STEEL OR GALVANIZED STEEL.

FABRIC SHALL CONFORM TO ASTM A491 OR A392, CLASS 2. STEEL RAILS, POSTS AND POST SLEEVES SHALL CONFORM TO ASTM F1083, STANDARD WEIGHT PIPE (SCHEDULE 40). FITTINGS SHALL CONFORM TO ASTM F626.

COMPLETE ANY REQUIRED WELDING OF COMPONENTS BEFORE GALVANIZING.

POST BASE PLATES SHALL BE FLAT WITH ALL SURFACES SMOOTH AND FREE FROM WARP AND ALL EDGES SMOOTH, STRAIGHT AND VERTICAL. ALL PLATE CUTS SHALL BE MACHINE OR MACHINE FLAME CUT.

BASE PLATES, ANCHOR PLATES AND SHIMS SHALL BE ASTM A709, GRADE 36.

ALL POST SPACINGS ARE MEASURED HORIZONTALLY ALONG THE C/L OF THE POST.

THE BID ITEM SHALL BE "FENCE CHAIN LINK 4-FT", LF.

◪ CAULK AROUND PERIMETER OF BASE PLATE AND FILL PORTION OF SLOTTED HOLE AROUND ANCHOR BOLT IN SHIM WITH NON-STAINING GRAY NON-BITUMINOUS JOINT SEALER.

◭ 1/2" DIA. X 6 7/8" LONG GALVANIZED HEX BOLT WITH NUT & WASHER. TYPE "S", 1/2" DIA. CONCRETE MASONRY ANCHORS MAY BE SUBSTITUTED FOR 1/2" DIA. BOLTS. ANCHOR PLATE NOT REQUIRED WHEN TYPE "S" ANCHORS ARE USED. SEE ✩

✩ MASONRY ANCHOR, TYPE "S", 1/2-INCH. EMBED 6" IN CONCRETE. ANCHOR, WASHER, AND NUT SHALL BE GALVANIZED.

◨ ATTACH FABRIC TO RAILS, AND TO POSTS WITHOUT TENSION BANDS, WITH TIE WIRES (ROUND, 9-GAGE) SPACED AT 1'-0".

◹ BOLT RAIL TO RAIL END TO SECURE OVERHANG SECTION. ALTERNATE IS TO WELD RAIL DIRECTLY TO END POST.

✳ ALTERNATE TO DOUBLE CLAMP: USE LINE RAIL CLAMP (BOULEVARD) OR 180° BRACE BAND, WHICH MAY BE USED WHEN THE POSTS ARE EITHER BOLTED TO THE POST SLEEVES OR DIRECTLY WELDED TO THE BASE PLATE.

⊗ 6" ON WINGS
⊗⊗ 9" ON WINGS
⊗⊗⊗ 1'-3" ON SUPERSTRUCTURE DIAPHRAGM

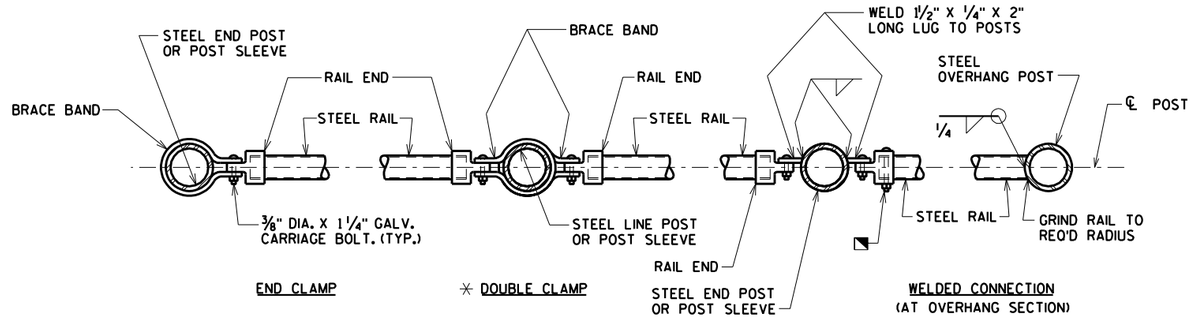

END CLAMP ✳ DOUBLE CLAMP

WELDED CONNECTION (AT OVERHANG SECTION)

SECTION A-A

NOTE: PLACE ALL BOLT HEADS ON SIDE OF FENCE ADJACENT TO PEDESTRIANS

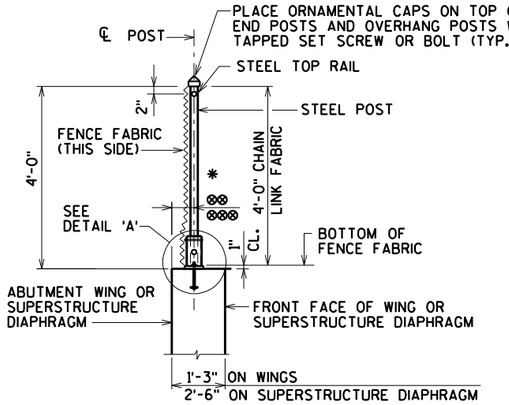

SECTION THRU FENCE

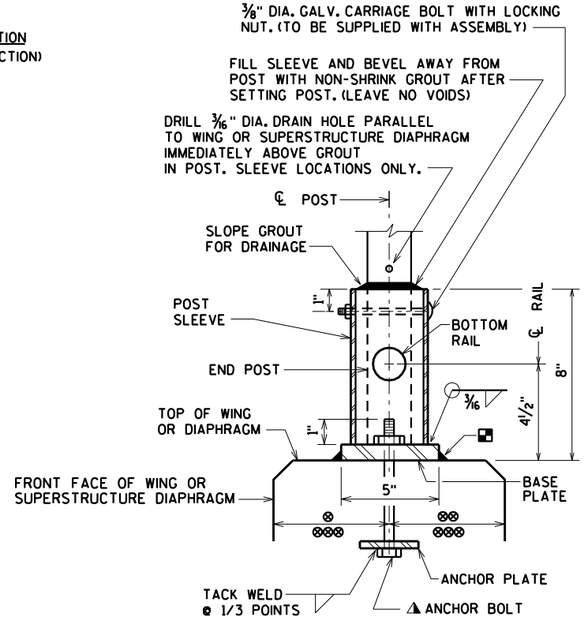

DETAIL 'A'

UNIT SHALL BE GALVANIZED AFTER FABRICATION

NOTE: IN LIEU OF USING THE POST SLEEVE, THE FENCE POST MAY BE WELDED TO THE BASE PLATE.

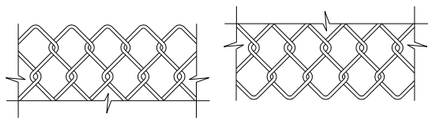

TOP DETAIL BOTTOM DETAIL

FENCE FABRIC

FENCE FABRIC WOVEN OF 9-GAGE WIRE IN 2" DIAMOND PATTERN MESH WITH BOTH THE TOP AND BOTTOM SELVAGES KNUCKLED.

NO.	DATE	REVISION	BY

STATE OF WISCONSIN
DEPARTMENT OF TRANSPORTATION

STRUCTURE B-18-229

DRAWN BY CLS | PLANS CK'D. CBM

CHAIN LINK FENCE DETAILS

SHEET 20 OF 21
157

ORIGINAL PLANS PREPARED BY
AYRES ASSOCIATES
3433 Oakwood Hills Parkway
Eau Claire, WI 54701
www.AyresAssociates.com

$PRFNAME$
U:\42-0943.00 - Eau Claire Co - CTH AA\BRIDGE\420943 fence.dgn
8/24/2015
PENTABLE:BReau_shd_util.tbl

STATE PROJECT NUMBER

7824-00-13

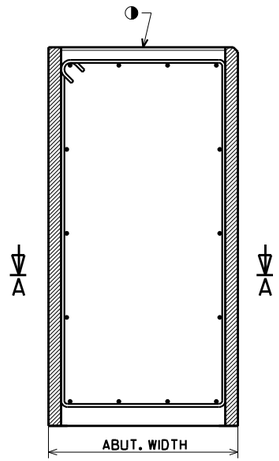

SECTION THRU
ABUTMENT BODY

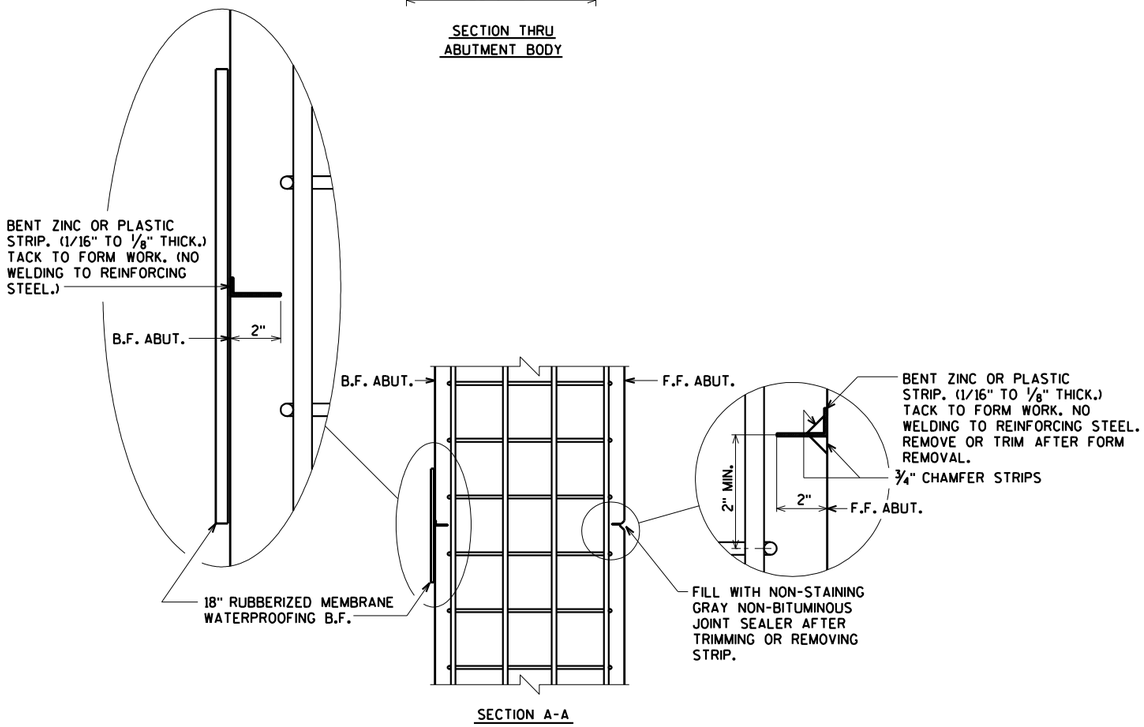

SECTION A-A

ALTERNATE CONSTRUCTION JOINT AT ABUTMENT

NOTES

PARTIAL ZINC OR PLASTIC BULKHEAD MAY BE USED AS ALTERNATE CONSTRUCTION JOINT, WITH THE PERMISSION OF THE ENGINEER, AT THE CONTRACTOR'S EXPENSE.

VERTICAL CONSTRUCTION JOINT KEYWAY IS NOT REQUIRED WHEN USING ALTERNATE CONSTRUCTION JOINT.

CARE IS TO BE USED IN CASTING CONCRETE AROUND BULKHEAD TO PREVENT DISLOCATION OR MISALIGNMENT OF THE BULKHEAD.

SAW CUTTING JONT IS NOT ALLOWED.

◑ USE A JOINT TOOL TO CONSTRUCT A CONTRACTION JOINT APPROXIMATELY 1/2" DEEP.

F.F. DENOTES FRONT FACE

B.F. DENOTES BACK FACE

NO.	DATE	REVISION	BY

STATE OF WISCONSIN
DEPARTMENT OF TRANSPORTATION

STRUCTURE B-18-229

DRAWN BY CLS | PLANS CK'D. CBM

ALTERNATE CONSTRUCTION JOINT

SHEET 21 OF 21
158

ORIGINAL PLANS PREPARED BY
AYRES ASSOCIATES
3433 Oakwood Hills Parkway
Eau Claire, WI 54701
www.AyresAssociates.com

$PRFNAME$
U:\42-0943.00 - Eau Claire Co - CTH AA\BRIDGE\420943 alt jt.dgn

8/24/2015

8

8

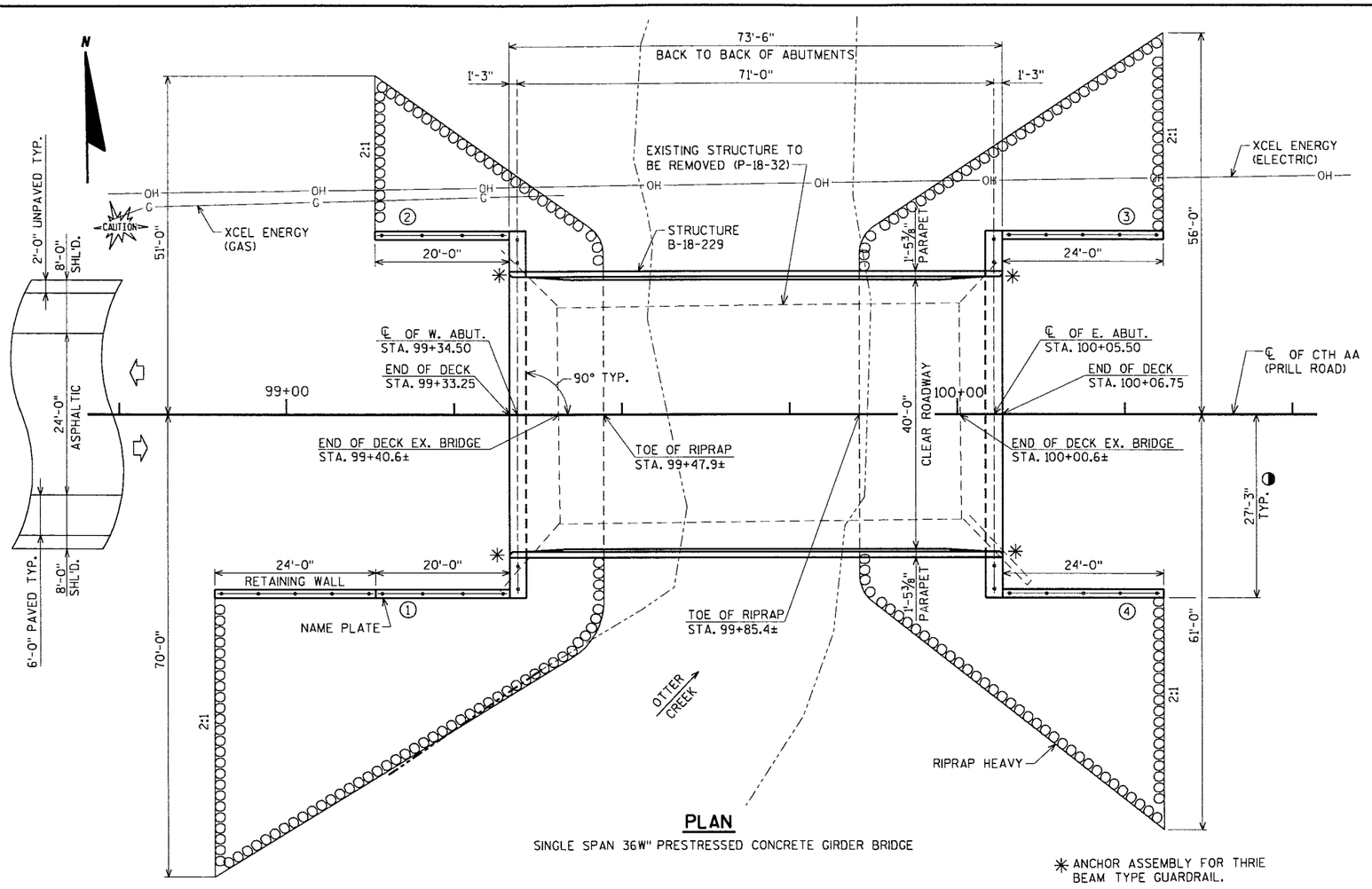

PLAN

SINGLE SPAN 36W" PRESTRESSED CONCRETE GIRDER BRIDGE

✳ ANCHOR ASSEMBLY FOR THRIE BEAM TYPE GUARDRAIL.

◯ DENOTES WING NUMBER.

◑ BRIDGE ABUTMENTS WILL BE CONSTRUCTED IN ORDER TO ACCOMODIATE FUTURE SIDEWALKS ON BOTH SIDES.

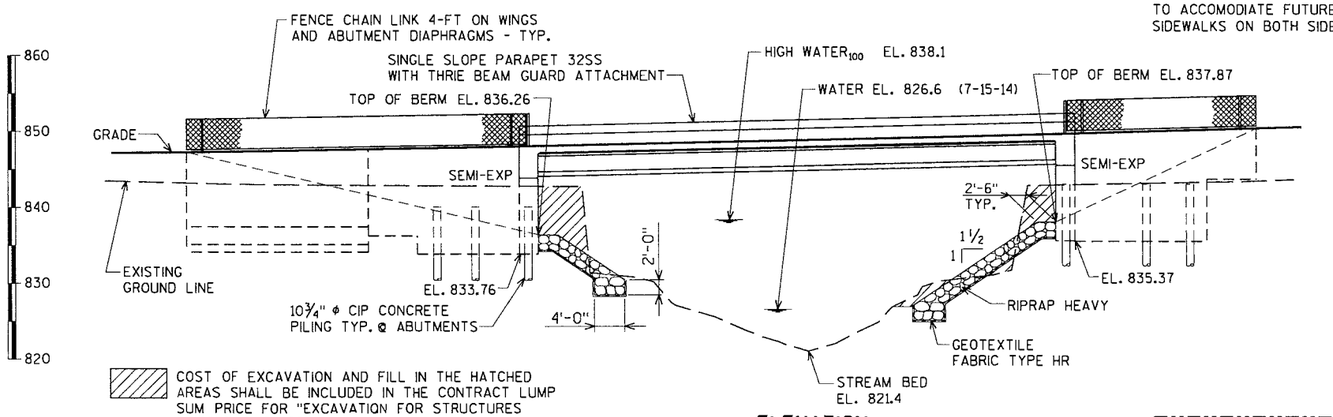

COST OF EXCAVATION AND FILL IN THE HATCHED AREAS SHALL BE INCLUDED IN THE CONTRACT LUMP SUM PRICE FOR "EXCAVATION FOR STRUCTURES BRIDGES B-18-229".

ELEVATION

DESIGN DATA

LIVE LOAD:

DESIGN LOADING: HL-93
INVENTORY RATING FACTOR: 1.21
OPERATING RATING FACTOR: 1.89
WISCONSIN STANDARD PERMIT VEHICLE (WIS-SPV) = 250 KIPS

STRUCTURE IS DESIGNED FOR A FUTURE WEARING SURFACE OF 20 #/S.F.

MATERIAL PROPERTIES:

CONCRETE MASONRY — SUPERSTRUCTURE f'_c = 4,000 p.s.i.; ALL OTHER f'_c = 3,500 p.s.i.
HIGH STRENGTH BAR STEEL REINFORCEMENT (GRADE 60) f_y = 60,000 p.s.i.

36W" PRESTRESSED GIRDER
CONCRETE MASONRY f'_c = 8,000 p.s.i.
STRANDS - 0.6" DIA. WITH ULTIMATE TENSILE STRENGTH OF = 270,000 p.s.i.

HYDRAULIC DATA:

100 YEAR FLOOD
DRAINAGE AREA = 58.7 sq. mi.
WATERWAY AREA = 505 sq. ft.
V = 6.7 f.p.s.
Q_{100} = 3,400 c.f.s.
HIGH WATER100 EL. 838.1
HIGH WATER2 EL. 832.8
REGULATORY HIGHWATER100 EL. 844.5
RDWY. OVERFLOW = N/A
SCOUR CRITICAL CODE = 8
NAVD 88 DATUM (2012)

FOUNDATION DATA:

WEST ABUTMENT TO BE SUPPORTED ON 10¾"ϕ X 0.25" C.I.P CONCRETE PILING DRIVEN TO A REQUIRED DRIVING RESISTANCE OF 120 TONS ǂ PER PILE AS DETERMINED BY THE MODIFIED GATES DYNAMIC FORMULA. ESTIMATED LENGTH 55'-0".

EAST ABUTMENT TO BE SUPPORTED ON 10¾"ϕ X 0.25" C.I.P CONCRETE PILING DRIVEN TO A REQUIRED DRIVING RESISTANCE OF 120 TONS ǂ PER PILE AS DETERMINED BY THE MODIFIED GATES DYNAMIC FORMULA. ESTIMATED LENGTH 60'-0".

ǂ THE FACTORED AXIAL RESISTANCE OF PILES IN COMPRESSION USED FOR DESIGN IS THE REQUIRED DRIVING RESISTANCE MULTIPLIED BY A RESISTANCE FACTOR OF 0.5 USING MODIFIED GATES TO DETERMINE DRIVEN PILE CAPACITY.

TRAFFIC DATA:

A.D.T. = 2,900 (2016)
A.D.T. = 3,700 (2036)
R.D.S. = 50 M.P.H.

LIST OF DRAWINGS

1. GENERAL PLAN
2. TYPICAL SECTION, QUANTITIES AND NOTES
3. SUBSURFACE EXPLORATION
4. WEST ABUTMENT
5. WEST ABUTMENT DETAILS
6. WEST ABUTMENT WING 1 DETAILS
7. RETAINING WALL DETAILS
8. WEST ABUTMENT WING 2 DETAILS & BILL OF BARS
9. EAST ABUTMENT
10. EAST ABUTMENT DETAILS
11. EAST ABUTMENT WING DETAILS & BILL OF BARS
12. 36W" PRESTRESSED GIRDER DETAILS
13. 36W" PRESTRESSED GIRDER DETAILS
14. STEEL INTER. DIAPHRAGM DETAILS
15. SUPERSTRUCTURE
16. SUPERSTRUCTURE PLAN
17. SUPERSTRUCTURE DETAILS
18. SINGLE SLOPE PARAPET 32SS
19. CHAIN LINK FENCE ELEVATIONS
20. CHAIN LINK FENCE DETAILS
21. ALTERNATE CONSTRUCTION JOINT

FOR TYPICAL SECTION, PROFILE GRADE LINE, AND GENERAL NOTES, SEE SHEET 2

BRIDGE OFFICE CONTACT:
WILLIAM DREHER
(608)-266-8489

CONSULTANT CONTACT:
CHRIS MCMAHON
(715)-834-3161

WISCONSIN — CHRISTOPHER B. McMAHON — E-29454 — EAU CLAIRE — PROFESSIONAL ENGINEER — 10/27/15

STATE PROJECT NUMBER
7824-00-13

NO.	DATE	REVISION	BY

ORIGINAL PLANS PREPARED BY
AYRES ASSOCIATES
3433 Oakwood Hills Parkway
Eau Claire, WI 54701
www.AyresAssociates.com

STATE OF WISCONSIN
DEPARTMENT OF TRANSPORTATION

ACCEPTED William C. Dreher SDR 11/04/15
CHIEF STRUCTURES DESIGN ENGINEER — DATE

STRUCTURE B-18-229

CTH AA (PRILL ROAD) OVER OTTER CREEK

COUNTY: EAU CLAIRE — TOWN/~~CITY/VILLAGE~~: WASHINGTON

DESIGN SPEC.: AASHTO LRFD BRIDGE DESIGN SPECIFICATIONS

DESIGNED BY	DESIGN CK'D.	DRAWN BY	PLANS CK'D.
CJM	JWZ	CLS	CBM

GENERAL PLAN

SHEET 1 OF 21
159

$PRFNAME$
U:\42-0943.00 - Eau Claire Co - CTH AA\BRIDGE\420943 gp.dgn

DATE:
DATE:
DATE:

CHECKED BY:
BACK CHECKED BY:
CORRECTED BY:

8

8

GENERAL NOTES

DRAWINGS SHALL NOT BE SCALED.

BAR STEEL REINFORCEMENT SHALL BE EMBEDDED 2" CLEAR UNLESS SHOWN OR NOTED OTHERWISE.

THE FIRST DIGIT OF A THREE DIGIT BAR NO. AND THE FIRST TWO DIGITS OF A FOUR DIGIT BAR NO. SIGNIFIES THE BAR SIZE.

JOINT FILLER SHALL CONFORM TO THE REQUIREMENTS OF A.A.S.H.T.O. DESIGNATION M 153, TYPE I, II OR III OR A.A.S.H.T.O. DESIGNATION M 213.

THE SLOPE OF THE FILL IN FRONT OF THE ABUTMENTS SHALL BE COVERED WITH RIPRAP HEAVY AND GEOTEXTILE FABRIC TYPE HR TO THE EXTENT SHOWN ON THE GENERAL PLAN SHEET AND IN THE ABUTMENT DETAILS.

PROTECTIVE SURFACE TREATMENT AND PIGMENTED SURFACE SEALER ARE TO BE APPLIED AS SHOWN IN THE DETAIL ON THIS SHEET.

THE HAUNCH CONCRETE QUANTITY IS BASED ON AN AVERAGE HAUNCH DEPTH SHOWN ON THE PRESTRESSED GIRDER DETAIL SHEETS.

ELASTOMERIC BEARING PADS NEED NOT BE INDIVIDUALLY MOLDED PROVIDED THE CUT EDGES ARE SMOOTH AND TRUE.

THE EXISTING GROUNDLINE SHALL BE THE UPPER LIMIT FOR EXCAVATION FOR STRUCTURES.

BEVEL EXPOSED EDGES OF CONCRETE ¾" UNLESS NOTED OTHERWISE.

THE EXISTING STRUCTURE, P-18-0032, TO BE REMOVED, IS A SINGLE SPAN PRESTRESSED CONCRETE CHANNEL BRIDGE, 60.0 FT. LONG WITH A 29.9 FT. CLEAR ROADWAY WIDTH.

AT BACKFACE OF ABUTMENTS ALL EXCAVATED VOLUME NOT OCCUPIED BY THE NEW STRUCTURE SHALL BE BACKFILLED WITH BACKFILL STRUCTURE.

THE QUANTITY OF BACKFILL STRUCTURE, BID ITEM 210.010.0 IS CALCULATED BASED ON APPLICABLE FIGURES 12.6-1 AND 12.6-2 IN THE WISCONSIN DEPARTMENT OF TRANSPORTATION BRIDGE MANUAL.

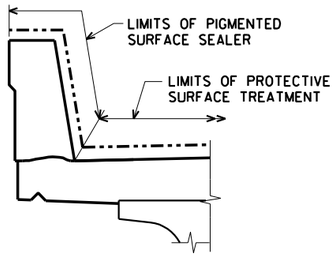

PROTECTIVE SURFACE TREATMENT AND PIGMENTED SURFACE SEALER DETAIL

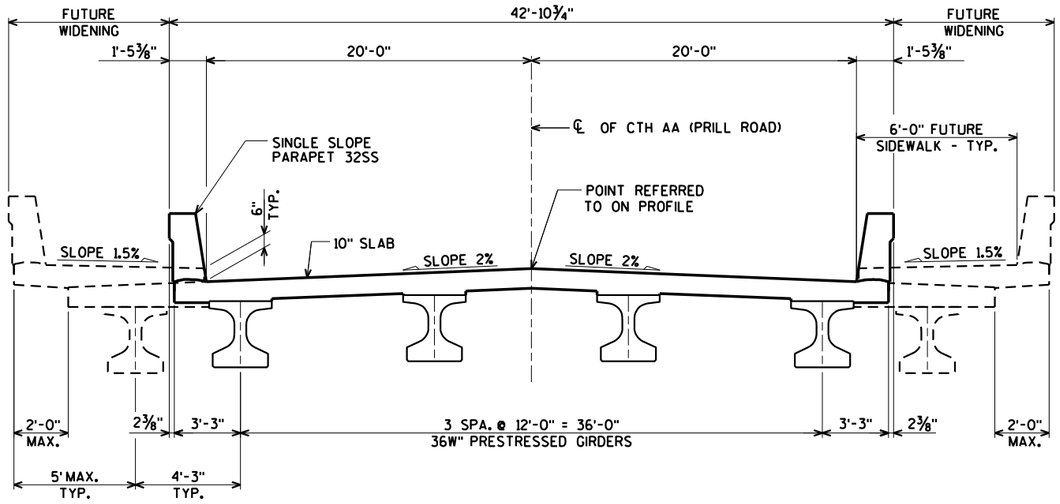

CROSS SECTION THRU ROADWAY

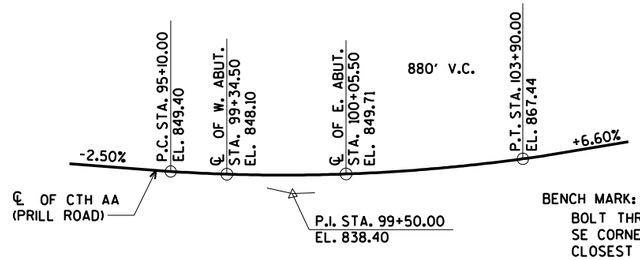

PROFILE GRADE LINE

CTH AA (PRILL ROAD)

BENCH MARK:

BOLT THROUGH WINGWALL PILING AT SE CORNER OF BRIDGE (FIRST PILING CLOSEST TO DECK.)
STA. 100+02.7±, 18.4' RT
EL. 834.61

TOTAL ESTIMATED QUANTITIES

BID ITEM NUMBER	BID ITEMS	UNIT	W. ABUT.	E. ABUT.	SUPER.	TOTAL
203.0600.S	REMOVING OLD STRUCTURE OVER WATERWAY WITH MINIMAL DEBRIS STATION 99+70	LS	-----	-----	-----	1
206.1000	EXCAVATION FOR STRUCTURES BRIDGES B-18-229	LS	-----	-----	-----	1
210.0100	BACKFILL STRUCTURE	CY	545	355	-----	900
502.0100	CONCRETE MASONRY BRIDGES	CY	116	96	156	368
502.3200	PROTECTIVE SURFACE TREATMENT	SY	-----	-----	327	327
502.3210	PIGMENTED SURFACE SEALER	SY	-----	-----	61	61
503.0137	PRESTRESSED GIRDER TYPE I 36W-INCH	LF	-----	-----	288	288
505.0400	BAR STEEL REINFORCEMENT HS STRUCTURES	LB	7,610	6,330	-----	13,940
505.0600	BAR STEEL REINFORCEMENT HS COATED STRUCTURES	LB	5,420	5,080	26,620	37,120
506.2605	BEARING PADS ELASTOMERIC NON-LAMINATED	EACH	-----	-----	8	8
506.4000	STEEL DIAPHRAGMS B-18-229	EACH	-----	-----	6	6
516.0500	RUBBERIZED MEMBRANE WATERPROOFING	SY	18	18	-----	36
550.2104	PILING CIP CONCRETE 10¾ x 0.25-INCH	LF	880	960	-----	1,840
606.0300	RIPRAP HEAVY	CY	250	275	-----	525
612.0406	PIPE UNDERDRAIN WRAPPED 6-INCH	LF	145	115	-----	260
614.0150	ANCHOR ASSEMBLIES FOR STEEL PLATE BEAM GUARD	EACH	-----	-----	4	4
616.0204	FENCE CHAIN LINK 4-FT	LF	64	48	22	134
645.0120	GEOTEXTILE FABRIC TYPE HR	SY	445	485	-----	930
	NON-BID ITEMS					
	FILLER	SIZE	-----	-----	-----	½" & ¾"

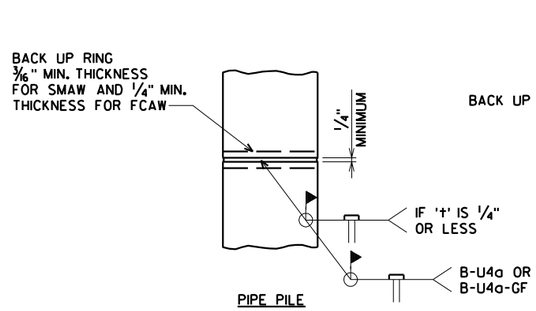

PILE SPLICE DETAIL

CAST-IN-PLACE PILE SHELL MATERIAL SHALL BE IN ACCORDANCE WITH THE STANDARD SPECIFICATIONS.

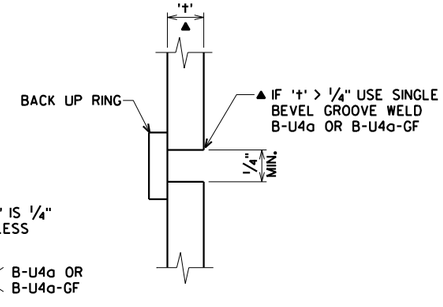

CIP PILE WELD DETAIL

NO.	DATE	REVISION	BY

STATE OF WISCONSIN
DEPARTMENT OF TRANSPORTATION

STRUCTURE B-18-229

DRAWN BY CLS | PLANS CK'D. CBM

TYPICAL SECTION, QUANTITIES AND NOTES

SHEET 2 OF 21
160

ORIGINAL PLANS PREPARED BY
AYRES ASSOCIATES
3433 Oakwood Hills Parkway
Eau Claire, WI 54701
www.AyresAssociates.com

$PRFNAME$
U:\42-0943.00 - Eau Claire Co - CTH AA\BRIDGE\420943 gp.dgn

$PRFNAME$
U:\42-0943.00 - Eau Claire Co - CTH AA\BRIDGE\420943 soils.dgn

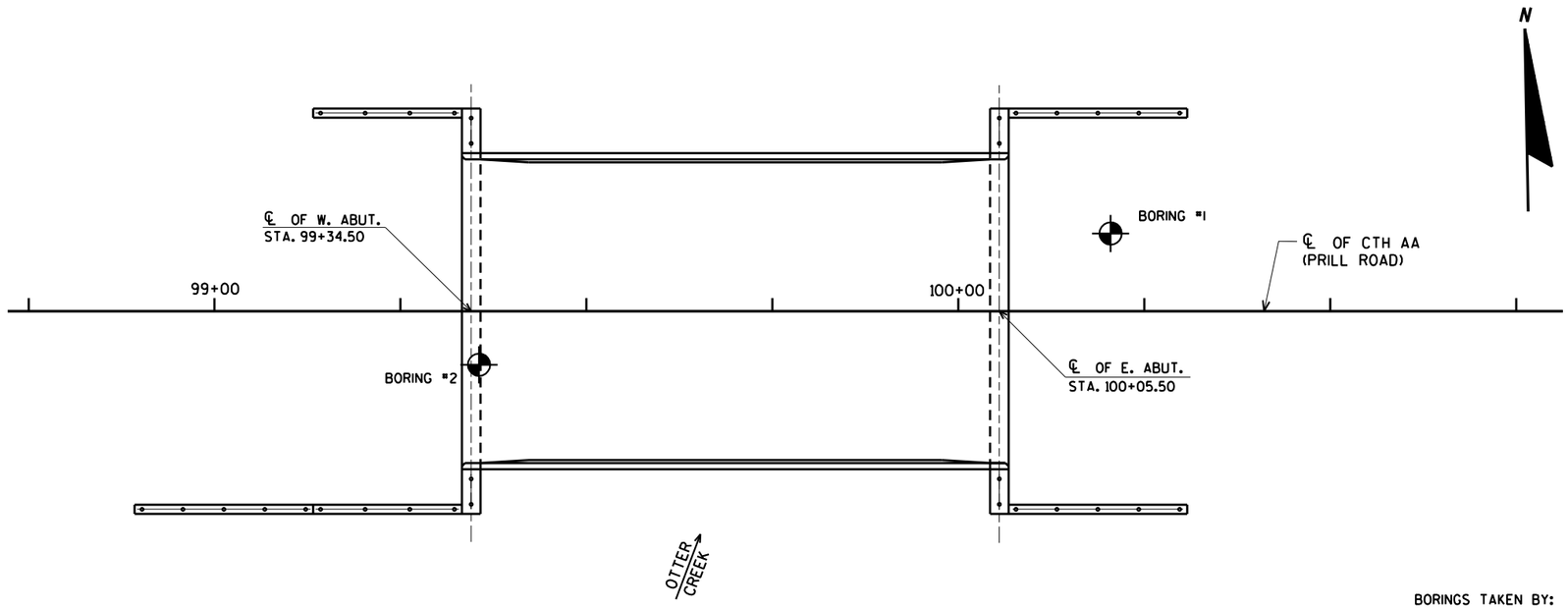

BORINGS TAKEN BY:
CHOSEN VALLEY TESTING, INC
ROCHESTER, MN
JANUARY 2, 2015

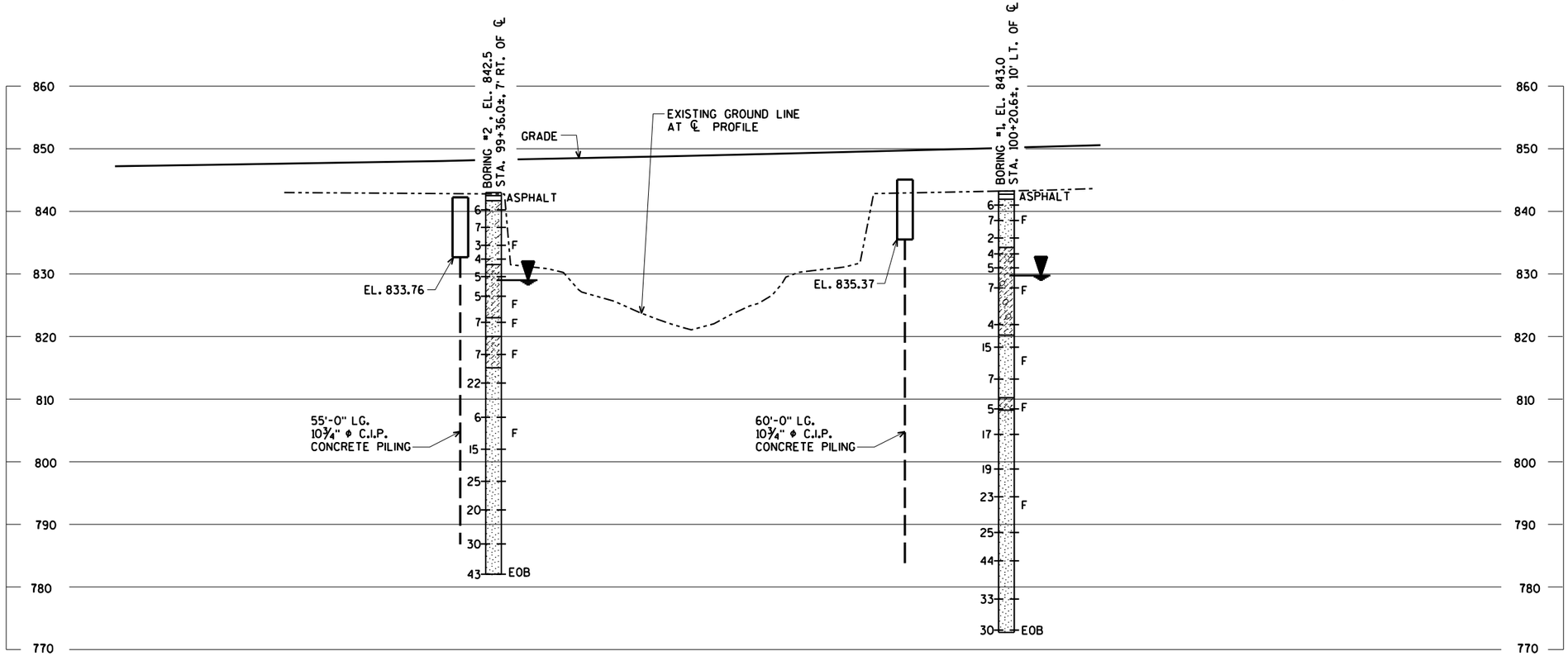

STATE PROJECT NUMBER

7824-00-13

ABBREVIATIONS

F — FINE M — MEDIUM C — COARSE
WS — WEATHERED SO — SOUND

MATERIAL SYMBOLS

TOPSOIL, SILT, SANDSTONE, SAND, PEAT, LIMESTONE, GRAVEL, CLAY, IGNEOUS ROCK

LEGEND OF PROBING

PROBING NO.
STA.
ELEVATION
7 AVERAGE BLOWS PER FOOT
REFUSAL 95/6

95/6=95 BLOWS FOR 6" PENETRATION
PROBING TAKEN WITH A 350# WT. FALLING 18" ON A 2" O.D. POINT.

LEGEND OF BORING

BORING NO.
ELEV.
STA.
UNCONFINED STRENGTH → 7.7 7
BLOWS PER FT. USING 140# WT. FALLING 30"
WASH SAMPLE
SHELBY TUBE — S.T.
GROUND WATER ELEVATION
NO GROUND WATER OBSERVED ABOVE THIS ELEVATION
SANDY GRAVEL
F. BOULDERS OR COBBLES
SAND
SILTY CLAY
SO LIMESTONE

UNLESS OTHERWISE SPECIFIED, THE BLOWS PER FOOT AT THE LOCATIONS INDICATED ARE BASED ON DRIVING A 2" O.D. X 1.4" I.D. SPLIT SPOON SAMPLER WITH A 140# HAMMER HAVING A FREE FALL OF 30". THE BLOW COUNT IS TAKEN IN UNDISTURBED SOIL IMMEDIATELY BELOW A CASED OR OPEN HOLE ELIMINATING SIDE FRICTION ON THE DRIVE PIPE.

SUBSURFACE EXPLORATION FOR FOUNDATION DESIGN AND BIDDERS INFORMATION

TO OBTAIN RELATIVE DATA CONCERNING THE CHARACTER OF MATERIAL IN AND UPON WHICH THE FOUNDATION MIGHT BE BUILT, BORINGS AND/OR SOUNDINGS WERE MADE AT POINTS APPROXIMATELY AS INDICATED ON THIS DRAWING. THE DATA PRESENTED HEREIN REPRESENTS THE FINDINGS OF THE SUBSURFACE EXPLORATIONS MADE. HOWEVER, BECAUSE THE DEPTHS INVESTIGATED ARE LIMITED AND THE AREA OF THE BORINGS AND/OR SOUNDINGS IS VERY SMALL IN RELATION TO THE ENTIRE AREA, THE WISCONSIN DEPARTMENT OF TRANSPORTATION DOES NOT WARRANT CONDITIONS BELOW THE DEPTHS INVESTIGATED OR THAT THE CLASSIFICATION OF MATERIAL ENCOUNTERED IN THESE INVESTIGATIONS IS NECESSARILY TYPICAL OF THE ENTIRE SITE.

NO.	DATE	REVISION	BY

STATE OF WISCONSIN
DEPARTMENT OF TRANSPORTATION

STRUCTURE B-18-229

DRAWN BY CJM | PLANS CK'D. CBM

SUBSURFACE EXPLORATION

SHEET 3 OF 21
161

8

8

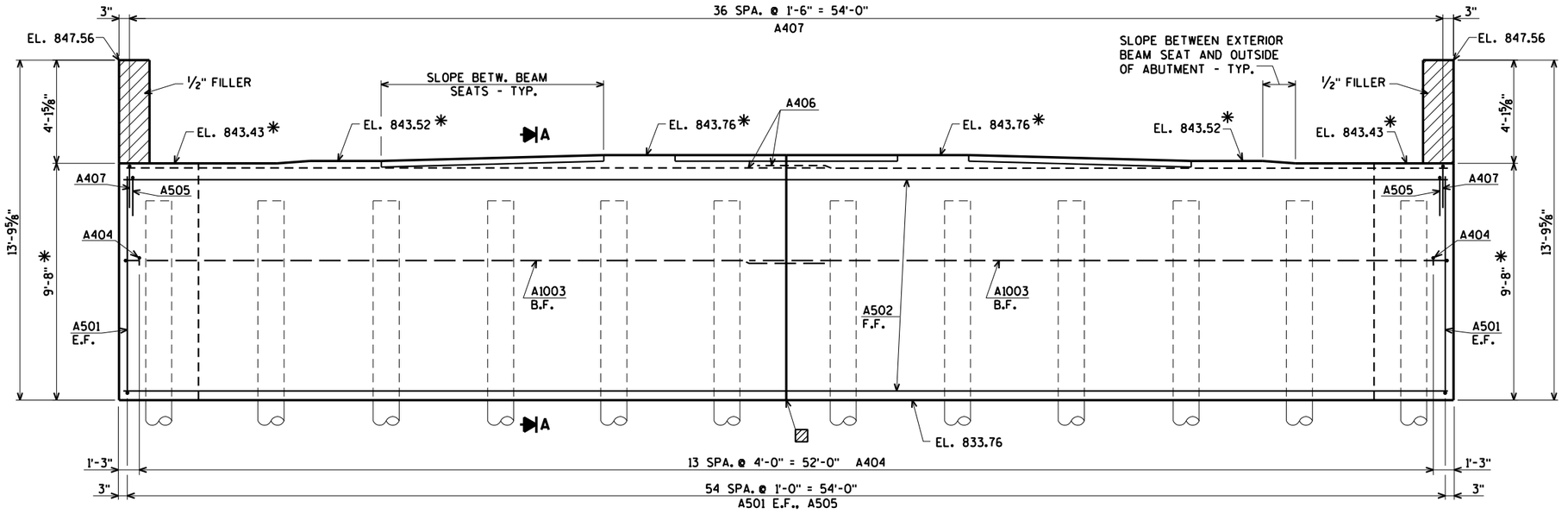

ELEVATION
(LOOKING WEST)

NOTE:
SEAL ALL EXPOSED HORIZONTAL AND VERTICAL SURFACES OF ½" FILLER WITH NON-STAINING GRAY NON-BITUMINOUS JOINT SEALER. (1" DEEP AND HOLD ⅛" BELOW SURFACE OF CONCRETE).

* ELEVATIONS AND DIMENSIONS TAKEN AT ℄ OF ABUT.

FOR SECTION A SEE SHEET 5.

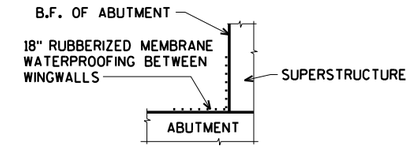

SECTION D

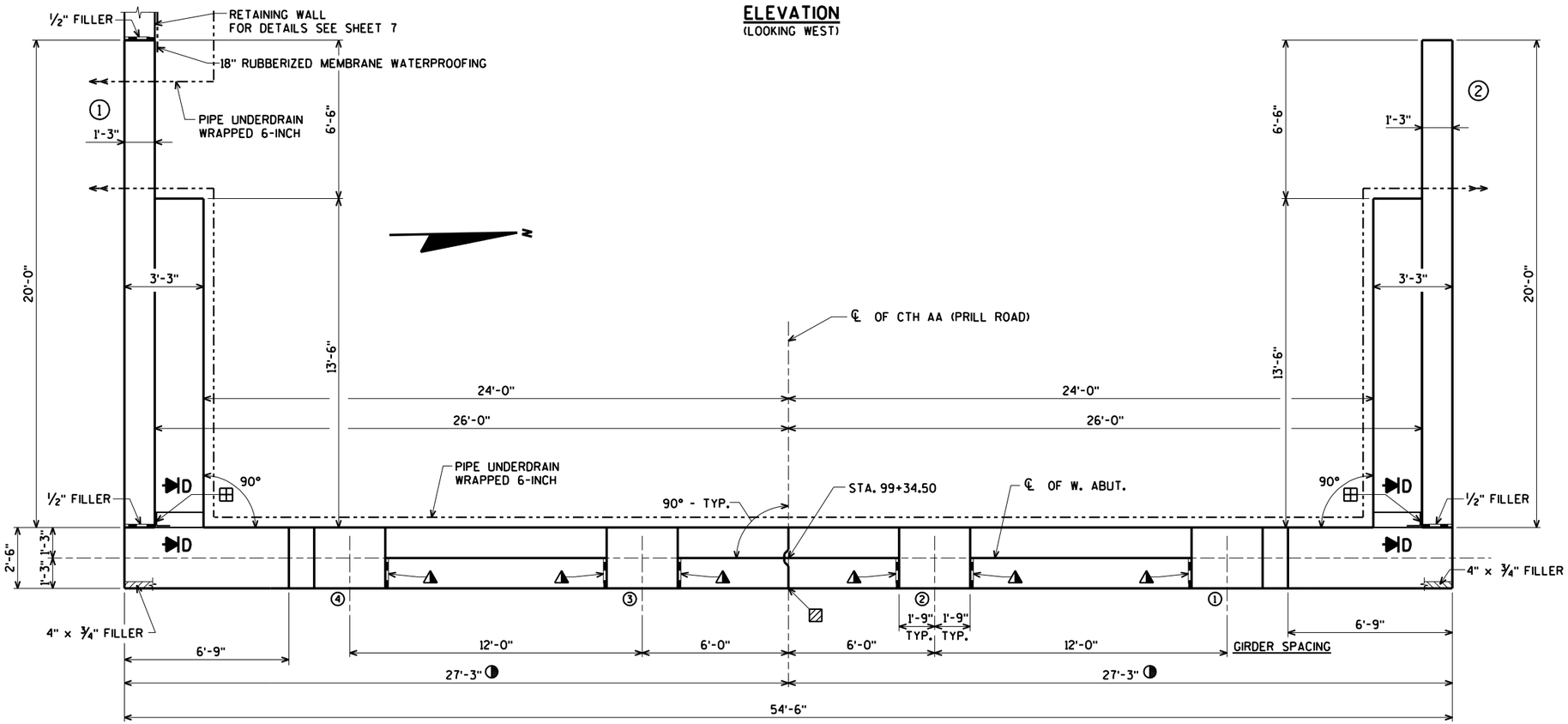

PLAN

▨ VERTICAL CONSTRUCTION JOINT - KEYWAY FORMED BY A BEVELED 2" × 8". BEVEL EXPOSED EDGES ¾". FOR ALTERNATE CONSTRUCTION JOINT DETAILS SEE SHEET 21. SEAL JOINT AT BACKFACE WITH 18" RUBBERIZED MEMBRANE WATERPROOFING.

◑ BRIDGE ABUTMENTS WILL BE CONSTRUCTED IN ORDER TO ACCOMODIATE FUTURE SIDEWALKS ON BOTH SIDES.

◭ ¾" CORK FILLER ON VERTICAL FACE ONLY.

⊞ 18" RUBBERIZED MEMBRANE WATERPROOFING SEAL ALL HORIZONTAL AND VERTICAL JOINTS ON BACK FACE OF ABUTMENT.

FOR PILE SPLICE DETAIL SEE SHEET 2.

F.F. DENOTES FRONT FACE

B.F. DENOTES BACK FACE

E.F. DENOTES EACH FACE

NO.	DATE	REVISION	BY

STATE OF WISCONSIN
DEPARTMENT OF TRANSPORTATION

STRUCTURE B-18-229

DRAWN BY CLS | PLANS CK'D. CBM

WEST ABUTMENT

SHEET 4 OF 21
162

ORIGINAL PLANS PREPARED BY
AYRES ASSOCIATES
3433 Oakwood Hills Parkway
Eau Claire, WI 54701
www.AyresAssociates.com

$PRFNAME$
U:\42-0943.00 - Eau Claire Co - CTH AA\BRIDGE\420943 wa.dgn

STATE PROJECT NUMBER

7824-00-13

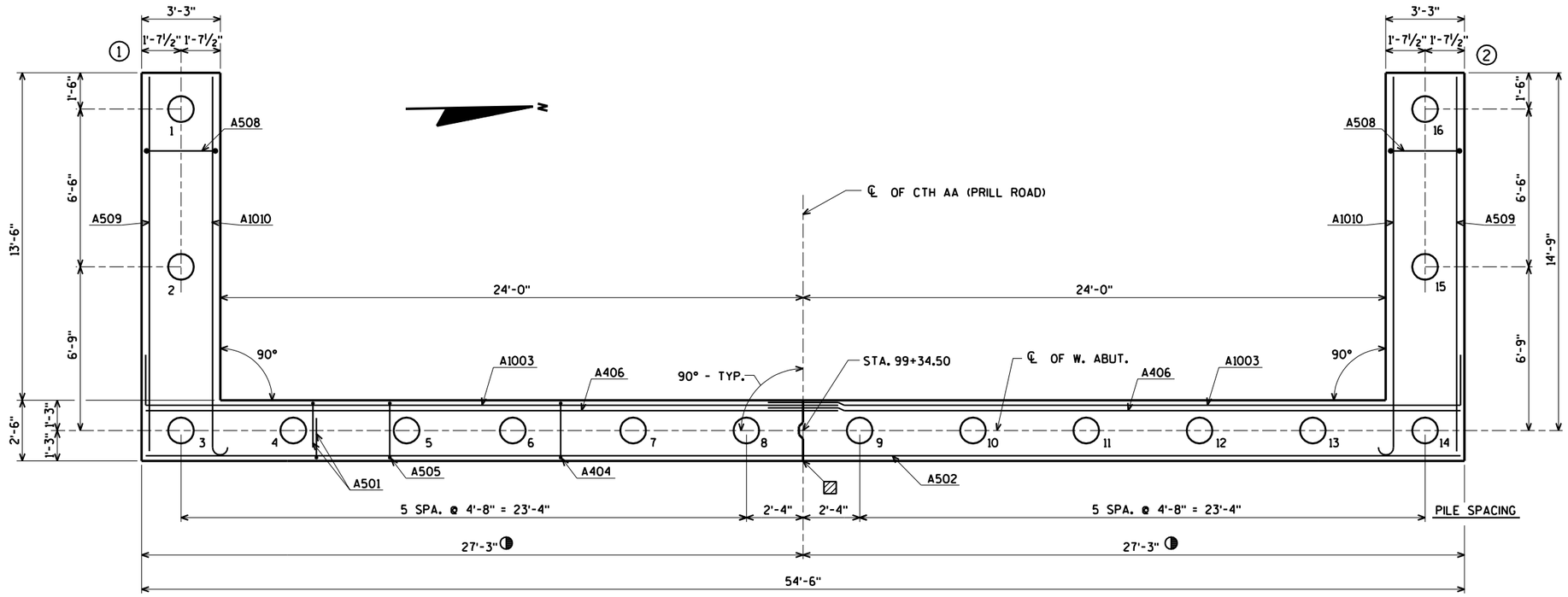

PILE LAYOUT

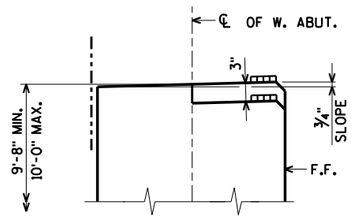

SLOPED BEAM SEAT DETAIL

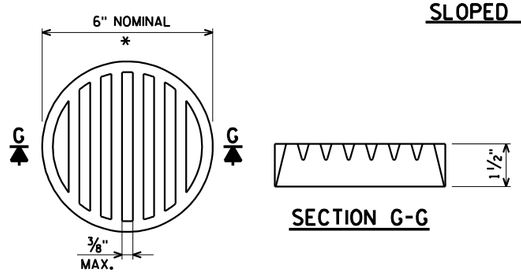

SECTION G-G

* DIMENSIONS ARE APPROXIMATE. THE GRATE IS SIZED TO FIT INTO A PIPE COUPLING. ORIENT SO SLOTS ARE VERTICAL.

THE RODENT SHIELD, PIPE COUPLING AND SCREWS SHALL BE CONSIDERED INCIDENTAL TO THE BID ITEM "PIPE UNDERDRAIN WRAPPED 6-INCH".

THE RODENT SHIELD SHALL BE A PVC GRATE SIMILAR TO THIS DETAIL. THE GRATE IS COMMERCIALLY AVAILABLE AS A FLOOR STRAINER. A PIPE COUPLING IS REQUIRED FOR THE ATTACHMENT OF THIS SHIELD TO THE EXPOSED END OF THE PIPE UNDERDRAIN. THE SHIELD SHALL BE FASTENED TO THE PIPE COUPLING WITH TWO OR MORE NO. 10 x 1-INCH STAINLESS STEEL SHEET METAL SCREWS.

RODENT SHIELD DETAIL

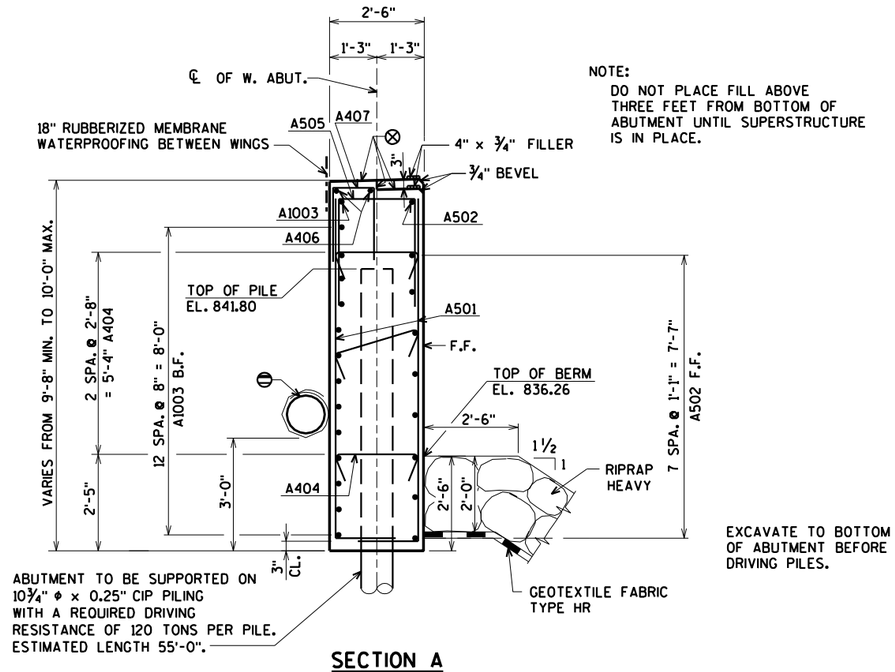

SECTION A

NOTE:
DO NOT PLACE FILL ABOVE THREE FEET FROM BOTTOM OF ABUTMENT UNTIL SUPERSTRUCTURE IS IN PLACE.

EXCAVATE TO BOTTOM OF ABUTMENT BEFORE DRIVING PILES.

▨ VERTICAL CONSTRUCTION JOINT - KEYWAY FORMED BY A BEVELED 2" × 8". BEVEL EXPOSED EDGES ¾". FOR ALTERNATE CONSTRUCTION JOINT DETAILS SEE SHEET 21. SEAL JOINT AT BACKFACE WITH 18" RUBBERIZED MEMBRANE WATERPROOFING.

◑ BRIDGE ABUTMENTS WILL BE CONSTRUCTED IN ORDER TO ACCOMODIATE FUTURE SIDEWALKS ON BOTH SIDES.

⊖ PIPE UNDERDRAIN WRAPPED 6-INCH. SLOPE 0.5% MIN. TO SUITABLE DRAINAGE. ATTACH RODENT SHIELD AT ENDS OF PIPE UNDERDRAIN. SEE DETAIL ON THIS SHEET.

⊗ STEEL TROWEL TOP SURFACE OF ABUTMENT. PLACE MULTIPLE LAYERS OF POLYETHYLENE SHEETS OVER ENTIRE ABUTMENT TOP BEFORE PLACING BEARING PADS AND SUPERSTRUCTURE. TOTAL THICKNESS OF SHEETS SHALL BE AT LEAST 0.03".

FOR SPLICE DETAIL SEE SHEET 2.

FOR LOCATION OF SECTION A SEE SHEET 4.

F.F. DENOTES FRONT FACE.

B.F. DENOTES BACK FACE.

NO.	DATE	REVISION	BY

STATE OF WISCONSIN
DEPARTMENT OF TRANSPORTATION

STRUCTURE B-18-229

DRAWN BY CLS | PLANS CK'D. CBM

WEST ABUTMENT DETAILS

SHEET 5 OF 21
163

ORIGINAL PLANS PREPARED BY
AYRES ASSOCIATES
3433 Oakwood Hills Parkway
Eau Claire, WI 54701
www.AyresAssociates.com

$PRFNAME$
U:\42-0943.00 - Eau Claire Co - CTH AA\BRIDGE\420943 wa.dgn

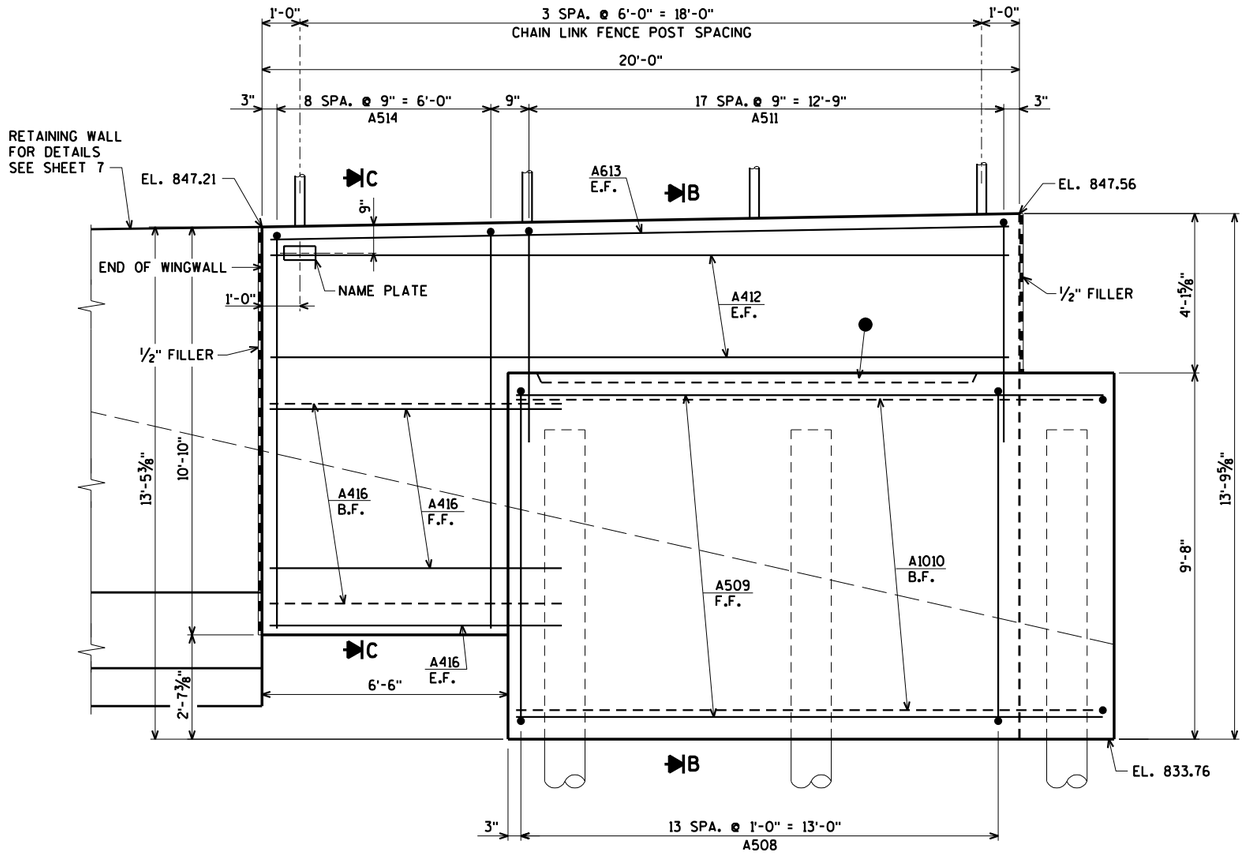

ELEVATION - WING 1
RETAINING WALL CONNECTION
DETAILS ON SHEET 7

CHAIN LINK FENCE NOT SHOWN.
FOR DETAILS SEE SHEETS 19 & 20

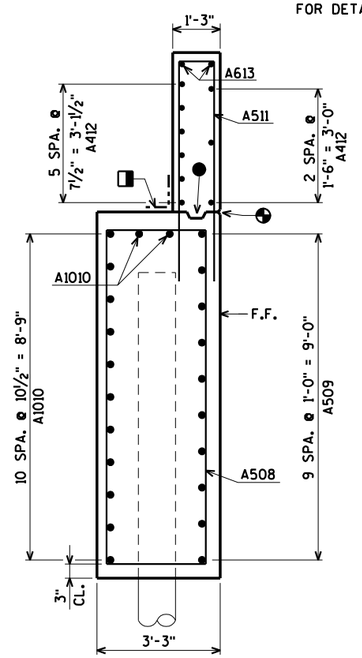

SECTION B

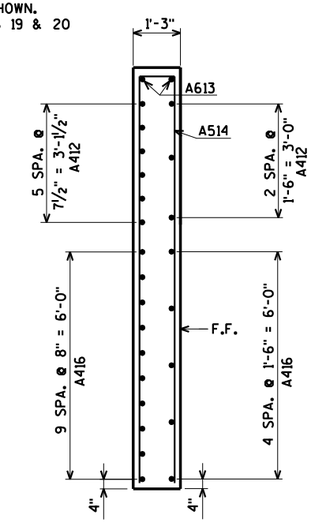

SECTION C

18" RUBBERIZED MEMBRANE WATERPROOFING. SEAL ALL HORIZONTAL AND VERTICAL JOINTS ON BACKFACE.

OPT. CONST. JOINT FORMED BY A BEVELED 2" x 6" KEYWAY.

¾" V-GROOVE ON FRONT FACE ONLY.

F.F. DENOTES FRONT FACE

E.F. DENOTES EACH FACE

B.F. DENOTES BACK FACE

NO.	DATE	REVISION	BY

STATE OF WISCONSIN
DEPARTMENT OF TRANSPORTATION

STRUCTURE B-18-229

DRAWN BY CLS | PLANS CK'D. CBM

WEST ABUTMENT
WING 1 DETAILS

SHEET 6 OF 21
164

ORIGINAL PLANS PREPARED BY
AYRES ASSOCIATES
3433 Oakwood Hills Parkway
Eau Claire, WI 54701
www.AyresAssociates.com

$PRFNAME$
U:\42-0943.00 - Eau Claire Co - CTH AA\BRIDGE\420943 wa.dgn
8/24/2015
PENTABLE:BReau_shd_util.tbl

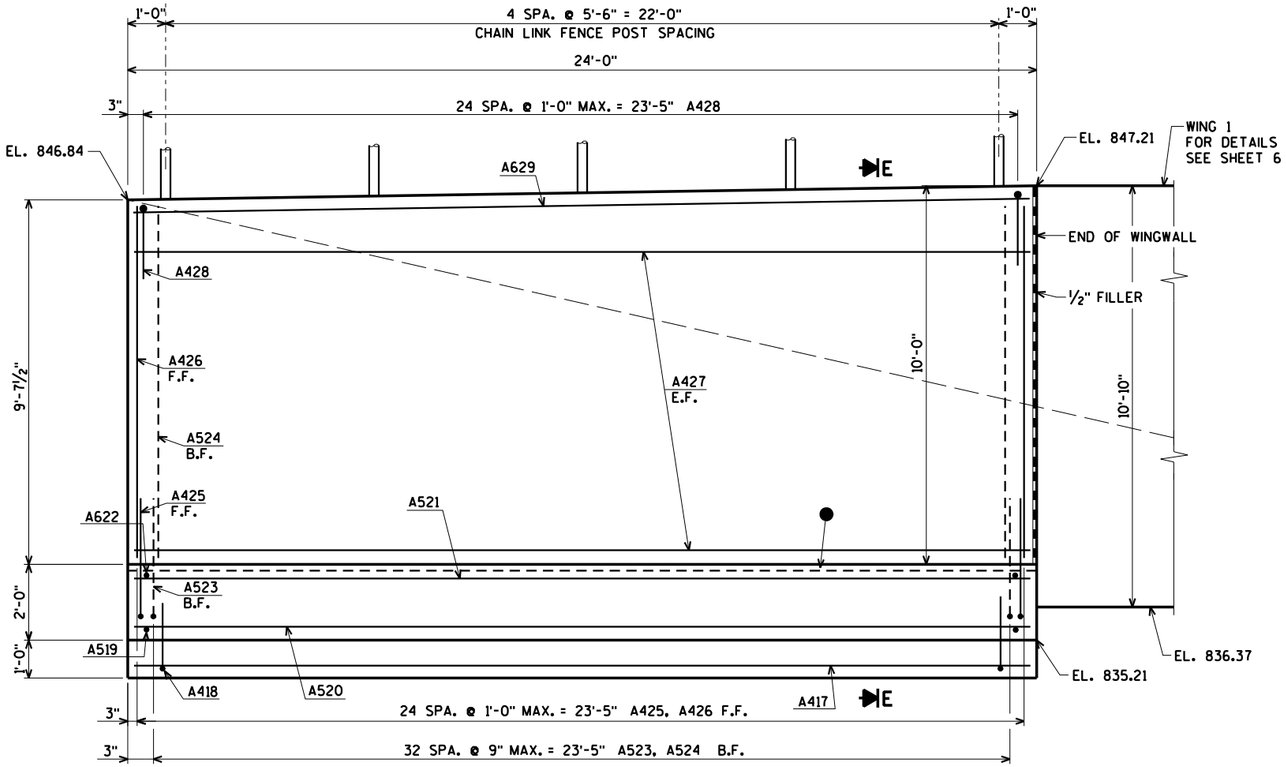

ELEVATION - RETAINING WALL

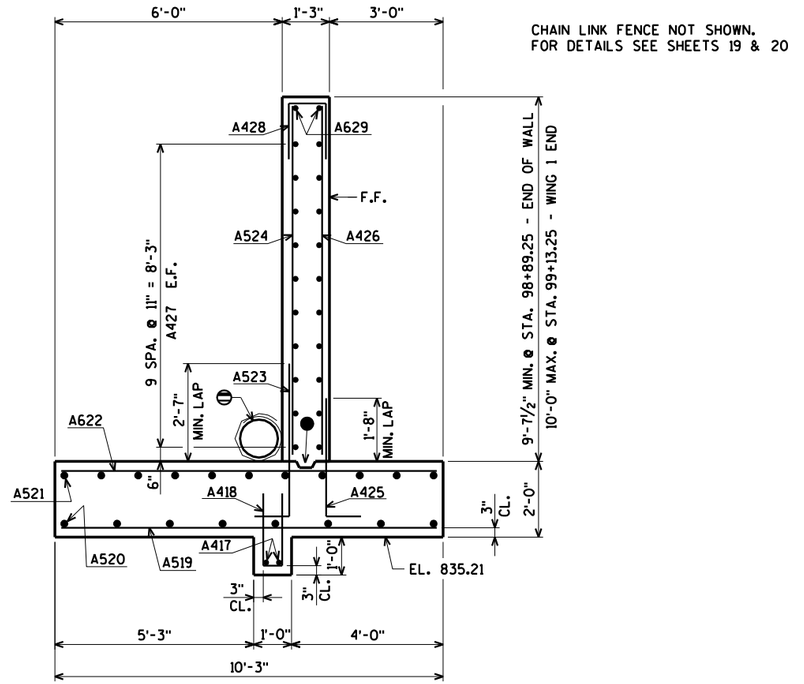

SECTION E

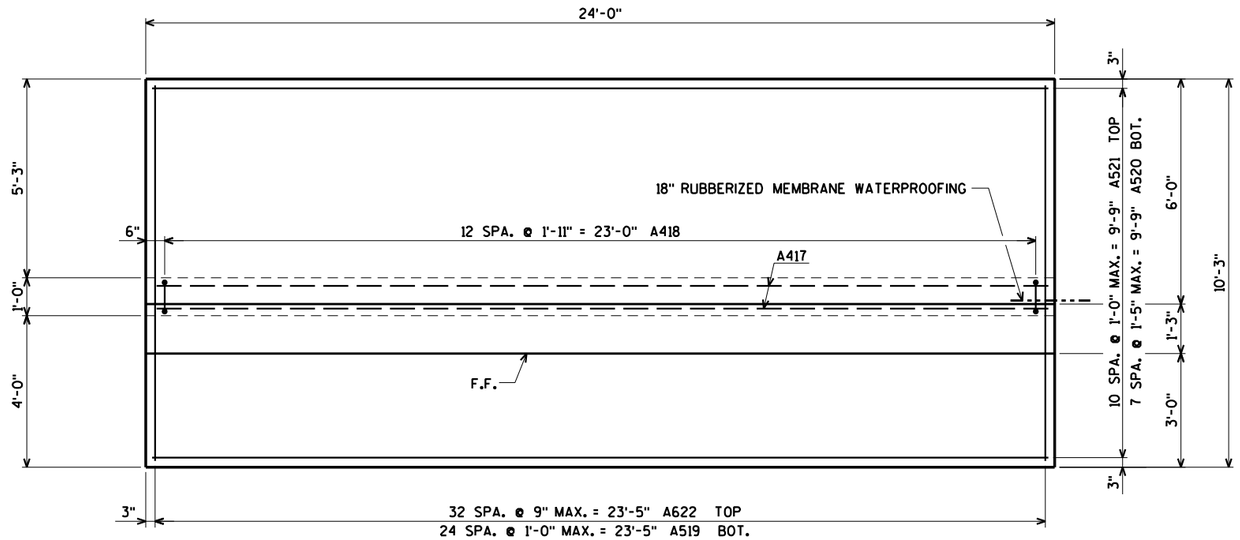

FOOTING PLAN - RETAINING WALL

- PIPE UNDERDRAIN WRAPPED 6-INCH. SLOPE 0.5% MIN. TO SUITABLE DRAINAGE. ATTACH RODENT SHIELD AT ENDS OF PIPE UNDERDRAIN. SEE DETAIL ON SHEET 5.
- CONST. JOINT FORMED BY SURFACED BEVELED 2" x 6".

F.F. DENOTES FRONT FACE

E.F. DENOTES EACH FACE

B.F. DENOTES BACK FACE

NO.	DATE	REVISION	BY

STATE OF WISCONSIN
DEPARTMENT OF TRANSPORTATION

STRUCTURE B-18-229

DRAWN BY CLS | PLANS CK'D. CBM

RETAINING WALL DETAILS

SHEET 7 OF 21
165

ORIGINAL PLANS PREPARED BY
AYRES ASSOCIATES
3433 Oakwood Hills Parkway
Eau Claire, WI 54701
www.AyresAssociates.com

$PRFNAME$
U:\42-0943.00 - Eau Claire Co - CTH AA\BRIDGE\420943 wa.dgn

$PRFNAME$
U:\42-0943.00 - Eau Claire Co - CTH AA\BRIDGE\420943 wa.dgn

STATE PROJECT NUMBER

7824-00-13

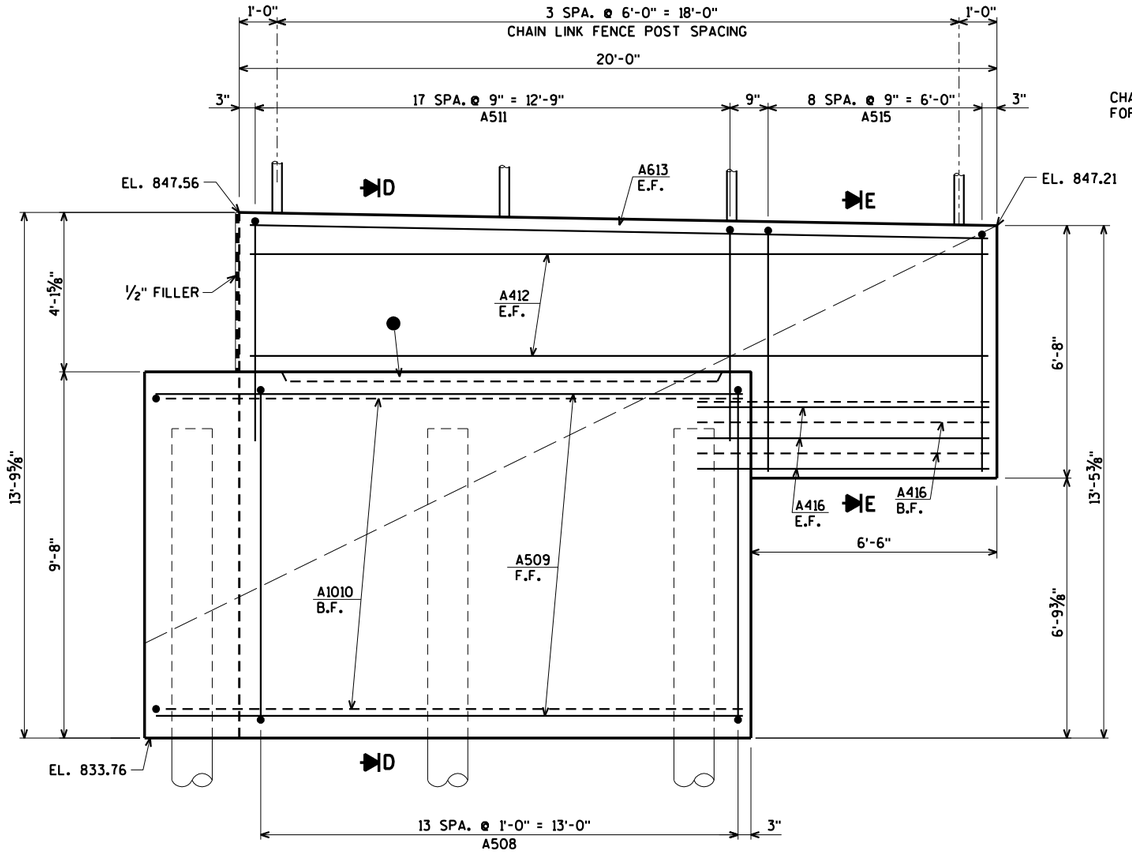

ELEVATION - WING 2

CHAIN LINK FENCE NOT SHOWN.
FOR DETAILS SEE SHEETS 19 & 20

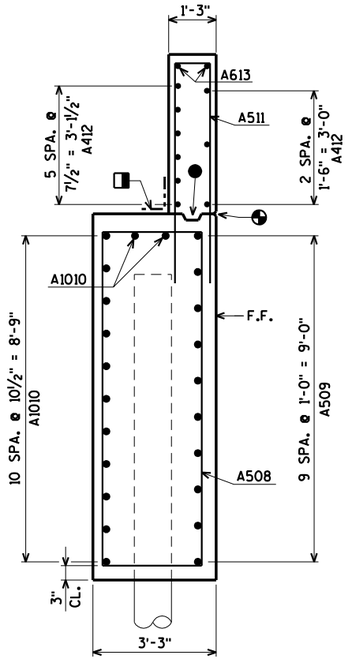

SECTION D

BILL OF BARS

BAR. NO.	COATED BAR	NO. REQ'D.	LENGTH	BENT BAR	BUNDLED BAR SERIES	5,420# COATED 7,610# UNCOATED LOCATION
A501		110	10-6	X		BODY VERT. E.F.
A502		9	54-2			BODY HORIZ. F.F.
A1003		28	32-10	X		BODY HORIZ. B.F.
A404		42	2-11	X		BODY TIES
A505		55	6-11	X		BODY VERT. TOP
A406		4	28-0			BODY HORIZ. TOP
A407		37	4-5	X		BODY VERT. TOP
A508	X	28	24-8	X		WING VERT. E.F.
A509	X	20	15-8	X		WING HORIZ. F.F.
A1010	X	26	17-1	X		WING HORIZ.
A511	X	36	12-8	X		WING VERT.
A412	X	18	19-7			WING HORIZ. E.F.
A613	X	4	19-7			WING HORIZ. TOP
A514	X	9	21-6	X		WING 1 VERT.
A515	X	9	13-2	X		WING 2 VERT.
A416	X	23	7-9			WING HORIZ. E.F.
A417		2	23-6			RETAINING WALL SHEAR KEY HORIZ.
A418		13	3-10	X		RETAINING WALL SHEAR KEY VERT.
A519		25	9-11			RETAINING WALL FOOTING BOT.
A520		8	23-7			RETAINING WALL FOOTING BOT.
A521		11	23-7			RETAINING WALL FOOTING TOP
A622		33	9-11			RETAINING WALL FOOTING TOP
A523	X	33	5-5	X		RETAINING WALL DOWEL B.F.
A524	X	33	9-4			RETAINING WALL VERT. B.F.
A425	X	25	4-4	X		RETAINING WALL DOWEL F.F.
A426	X	25	9-4			RETAINING WALL VERT. F.F.
A427	X	20	23-7			RETAINING WALL HORIZ. E.F.
A428	X	25	3-9	X		RETAINING WALL VERT. TOP
A629	X	2	23-7			RETAINING WALL HORIZ. TOP

BENDING DIMENSIONS ARE OUT TO OUT OF BARS.

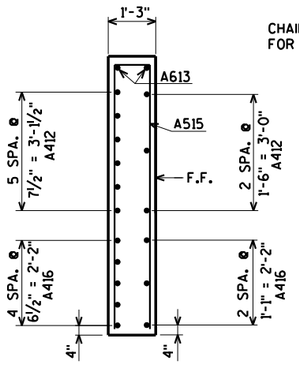

SECTION E

CHAIN LINK FENCE NOT SHOWN.
FOR DETAILS SEE SHEETS 19 & 20

- 18" RUBBERIZED MEMBRANE WATERPROOFING. SEAL ALL HORIZONTAL AND VERTICAL JOINTS ON BACKFACE.
- OPT. CONST. JOINT FORMED BY A BEVELED 2" x 6" KEYWAY.
- ¾" V-GROOVE ON FRONT FACE ONLY.

F.F. DENOTES FRONT FACE

E.F. DENOTES EACH FACE

B.F. DENOTES BACK FACE

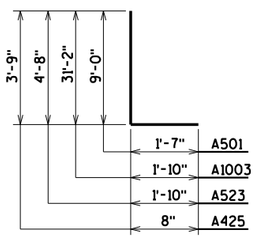

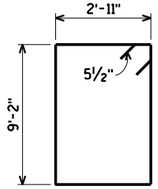

A508

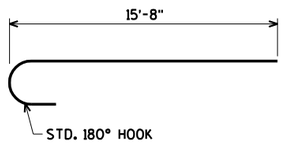

A1010

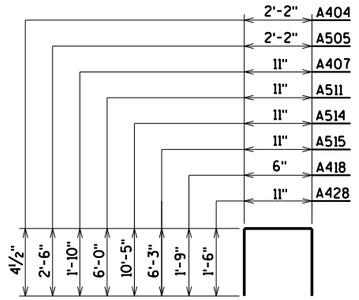

NO.	DATE	REVISION	BY

STATE OF WISCONSIN
DEPARTMENT OF TRANSPORTATION

STRUCTURE B-18-229

DRAWN BY CLS | PLANS CK'D. CBM

WEST ABUTMENT WING 2 DETAILS & BILL OF BARS

SHEET 8 OF 21
166

ORIGINAL PLANS PREPARED BY
AYRES ASSOCIATES
3433 Oakwood Hills Parkway
Eau Claire, WI 54701
www.AyresAssociates.com

8

8

10/20/2015

PENTABLE:BReau_shd_util.tbl

STATE PROJECT NUMBER

7824-00-13

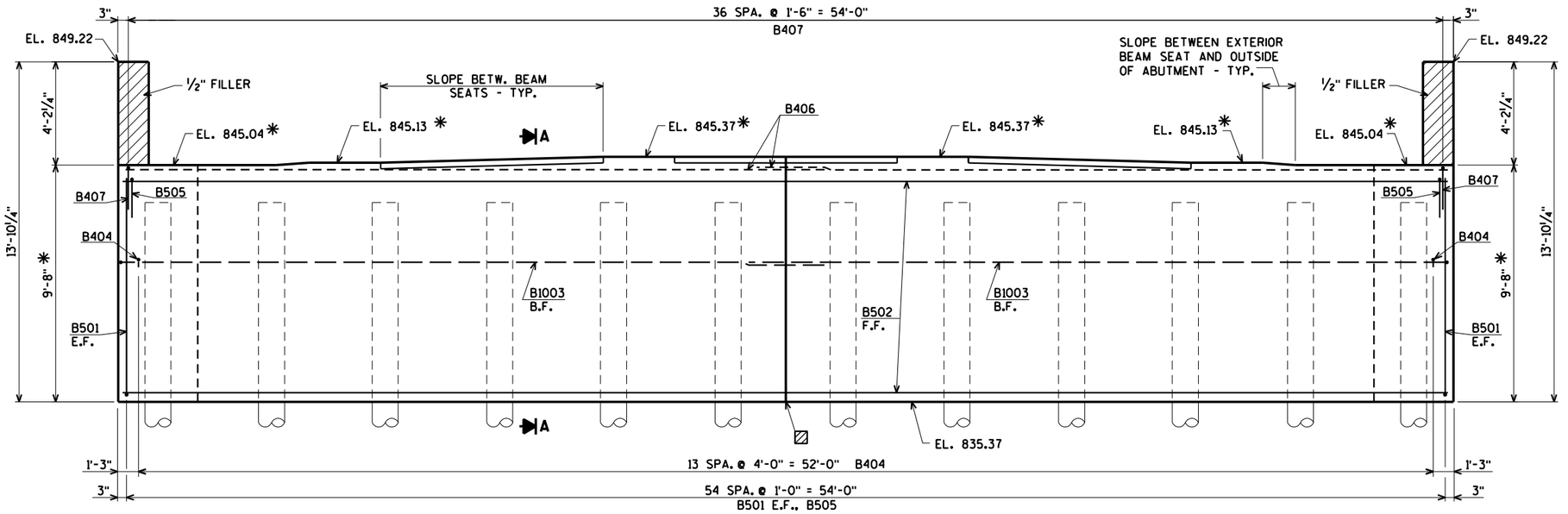

ELEVATION
(LOOKING EAST)

NOTE:
SEAL ALL EXPOSED HORIZONTAL AND VERTICAL SURFACES OF ½" FILLER WITH NON-STAINING GRAY NON-BITUMINOUS JOINT SEALER. (1" DEEP AND HOLD ⅛" BELOW SURFACE OF CONCRETE).

* ELEVATIONS AND DIMENSIONS TAKEN AT ℄ OF ABUT.

FOR SECTION A SEE SHEET 10.

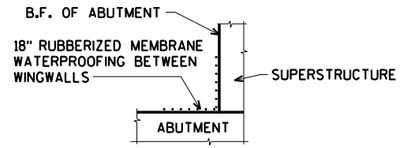

SECTION D

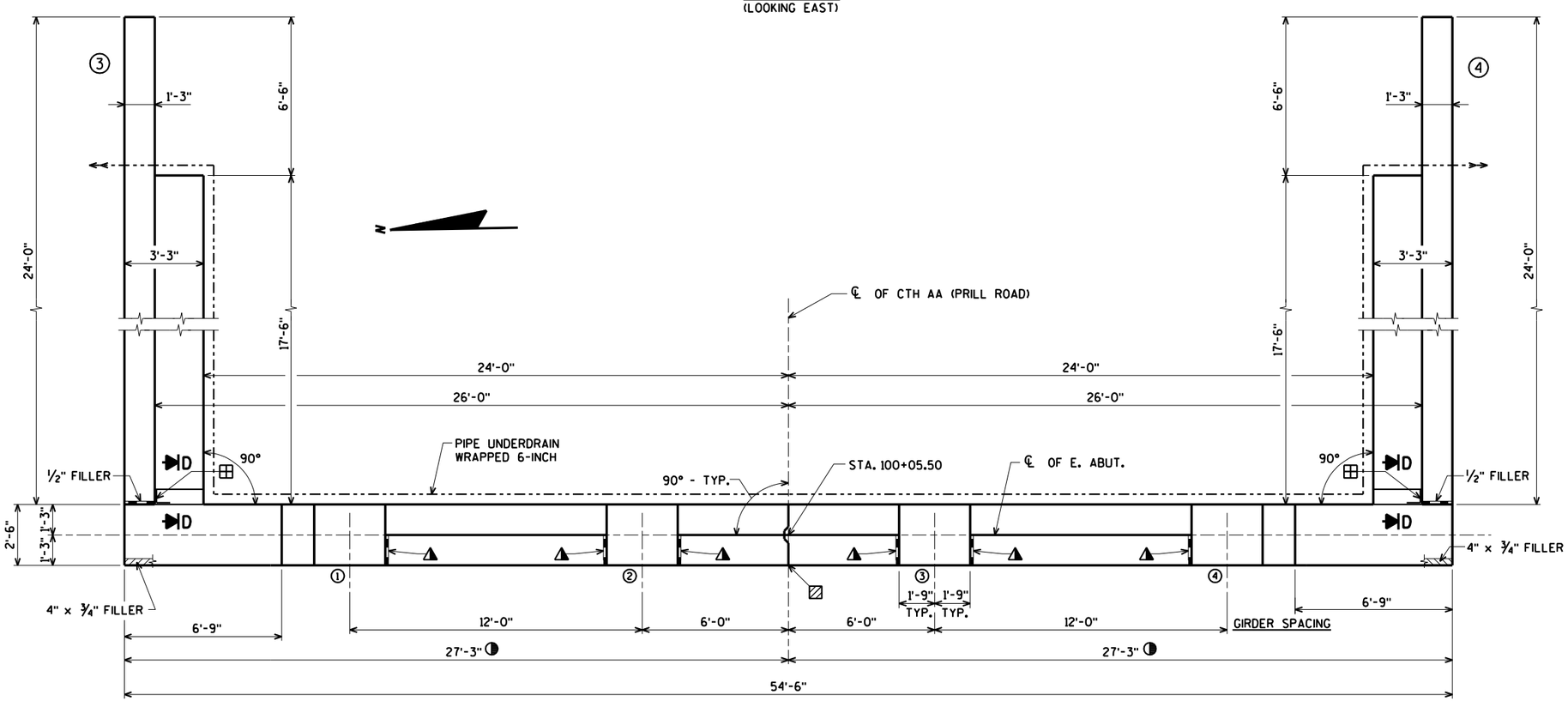

PLAN

◪ VERTICAL CONSTRUCTION JOINT - KEYWAY FORMED BY A BEVELED 2" × 8". BEVEL EXPOSED EDGES ¾". FOR ALTERNATE CONSTRUCTION JOINT DETAILS SEE SHEET 21. SEAL JOINT AT BACKFACE WITH 18" RUBBERIZED MEMBRANE WATERPROOFING.

◑ BRIDGE ABUTMENTS WILL BE CONSTRUCTED IN ORDER TO ACCOMODIATE FUTURE SIDEWALKS ON BOTH SIDES.

◭ ¾" CORK FILLER ON VERTICAL FACE ONLY.

⊞ 18" RUBBERIZED MEMBRANE WATERPROOFING SEAL ALL HORIZONTAL AND VERTICAL JOINTS ON BACK FACE OF ABUTMENT.

FOR PILE SPLICE DETAIL SEE SHEET 2.

F.F. DENOTES FRONT FACE

B.F. DENOTES BACK FACE

E.F. DENOTES EACH FACE

NO.	DATE	REVISION	BY

STATE OF WISCONSIN
DEPARTMENT OF TRANSPORTATION

STRUCTURE B-18-229

DRAWN BY CLS | PLANS CK'D. CBM

EAST ABUTMENT

SHEET 9 OF 21
167

ORIGINAL PLANS PREPARED BY
AYRES ASSOCIATES
3433 Oakwood Hills Parkway
Eau Claire, WI 54701
www.AyresAssociates.com

$PRFNAME$
U:\42-0943.00 - Eau Claire Co - CTH AA\BRIDGE\420943 ea.dgn

STATE PROJECT NUMBER

7824-00-13

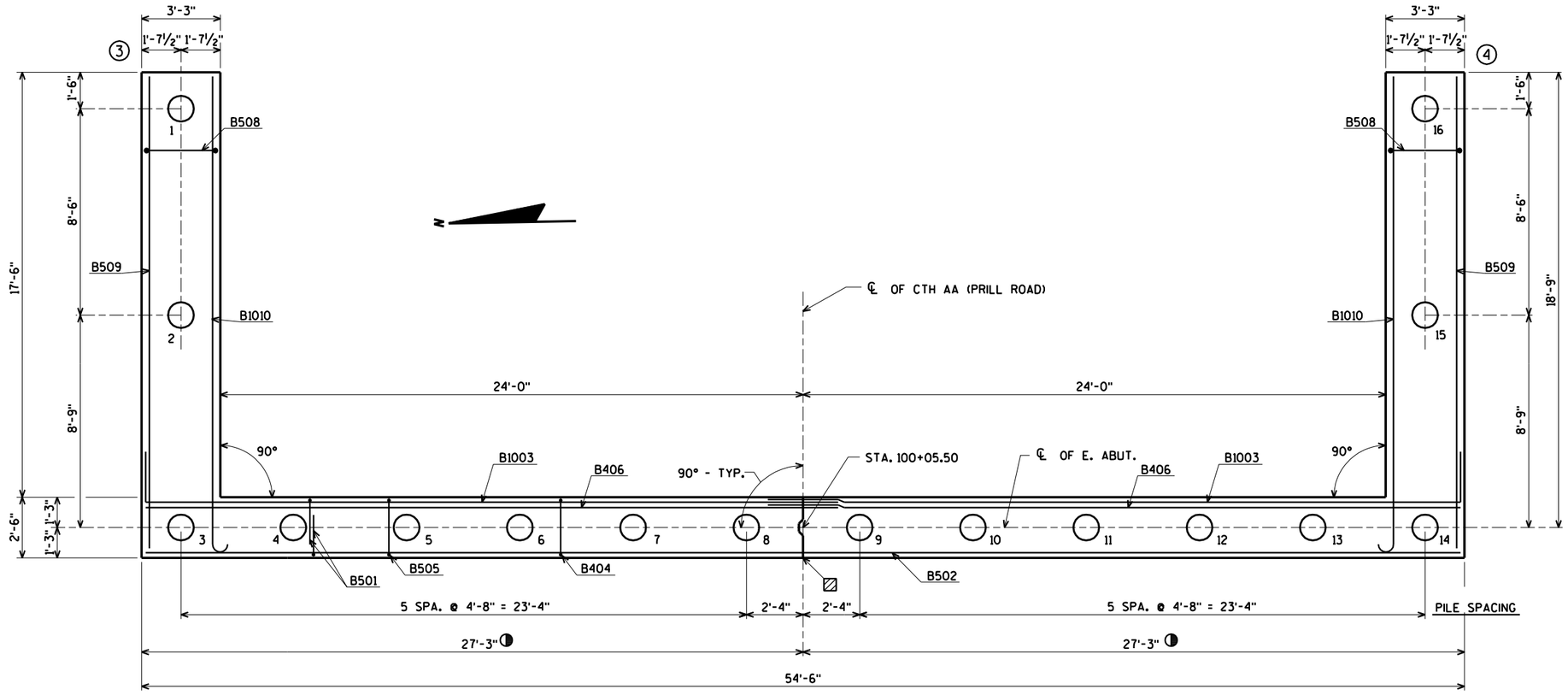

PILE LAYOUT

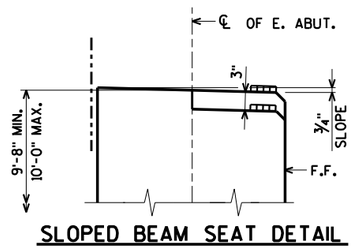

SLOPED BEAM SEAT DETAIL

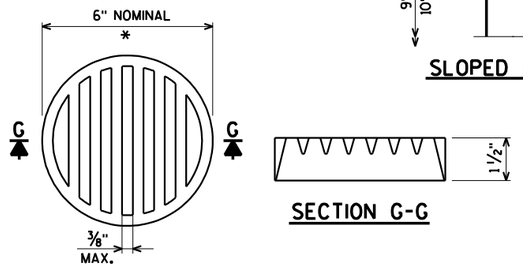

SECTION G-G

* DIMENSIONS ARE APPROXIMATE. THE GRATE IS SIZED TO FIT INTO A PIPE COUPLING. ORIENT SO SLOTS ARE VERTICAL.

THE RODENT SHIELD, PIPE COUPLING AND SCREWS SHALL BE CONSIDERED INCIDENTAL TO THE BID ITEM "PIPE UNDERDRAIN WRAPPED 6-INCH".

THE RODENT SHIELD SHALL BE A PVC GRATE SIMILAR TO THIS DETAIL. THE GRATE IS COMMERCIALLY AVAILABLE AS A FLOOR STRAINER. A PIPE COUPLING IS REQUIRED FOR THE ATTACHMENT OF THIS SHIELD TO THE EXPOSED END OF THE PIPE UNDERDRAIN. THE SHIELD SHALL BE FASTENED TO THE PIPE COUPLING WITH TWO OR MORE NO. 10 x 1-INCH STAINLESS STEEL SHEET METAL SCREWS.

RODENT SHIELD DETAIL

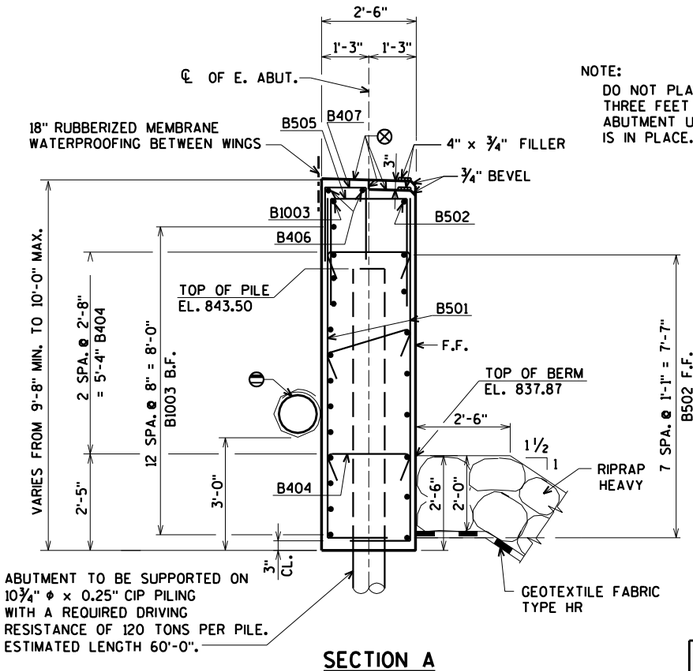

SECTION A

NOTE:
DO NOT PLACE FILL ABOVE THREE FEET FROM BOTTOM OF ABUTMENT UNTIL SUPERSTRUCTURE IS IN PLACE.

EXCAVATE TO BOTTOM OF ABUTMENT BEFORE DRIVING PILES.

▨ VERTICAL CONSTRUCTION JOINT - KEYWAY FORMED BY A BEVELED 2" x 8". BEVEL EXPOSED EDGES ¾". FOR ALTERNATE CONSTRUCTION JOINT DETAILS SEE SHEET 21. SEAL JOINT AT BACKFACE WITH 18" RUBBERIZED MEMBRANE WATERPROOFING.

◑ BRIDGE ABUTMENTS WILL BE CONSTRUCTED IN ORDER TO ACCOMODIATE FUTURE SIDEWALKS ON BOTH SIDES.

⊖ PIPE UNDERDRAIN WRAPPED 6-INCH. SLOPE 0.5% MIN. TO SUITABLE DRAINAGE. ATTACH RODENT SHIELD AT ENDS OF PIPE UNDERDRAIN. SEE DETAIL ON THIS SHEET.

⊗ STEEL TROWEL TOP SURFACE OF ABUTMENT. PLACE MULTIPLE LAYERS OF POLYETHYLENE SHEETS OVER ENTIRE ABUTMENT TOP BEFORE PLACING BEARING PADS AND SUPERSTRUCTURE. TOTAL THICKNESS OF SHEETS SHALL BE AT LEAST 0.03".

FOR SPLICE DETAIL SEE SHEET 2.

FOR LOCATION OF SECTION A SEE SHEET 9.

F.F. DENOTES FRONT FACE.

B.F. DENOTES BACK FACE.

NO.	DATE	REVISION	BY

STATE OF WISCONSIN
DEPARTMENT OF TRANSPORTATION

STRUCTURE B-18-229

DRAWN BY CLS | PLANS CK'D. CBM

EAST ABUTMENT DETAILS

SHEET 10 OF 21
168

ORIGINAL PLANS PREPARED BY
AYRES ASSOCIATES
3433 Oakwood Hills Parkway
Eau Claire, WI 54701
www.AyresAssociates.com

$PRFNAME$
U:\42-0943.00 - Eau Claire Co - CTH AA\BRIDGE\420943 ea.dgn
10/27/2015
PENTABLE:BReau_shd_util.tbl

8

8

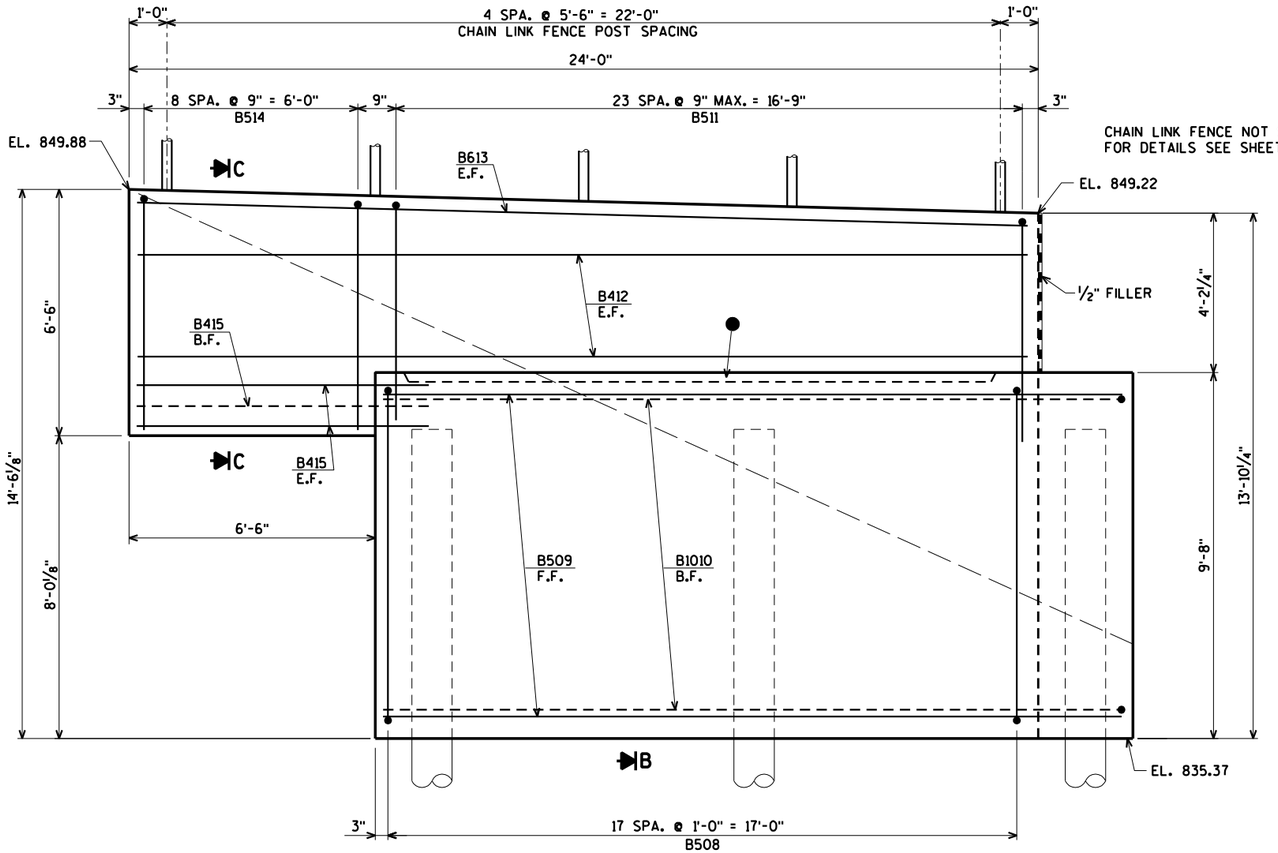

CHAIN LINK FENCE NOT SHOWN.
FOR DETAILS SEE SHEETS 19 & 20

ELEVATION - WING 3

(WING 4 SIMILAR)

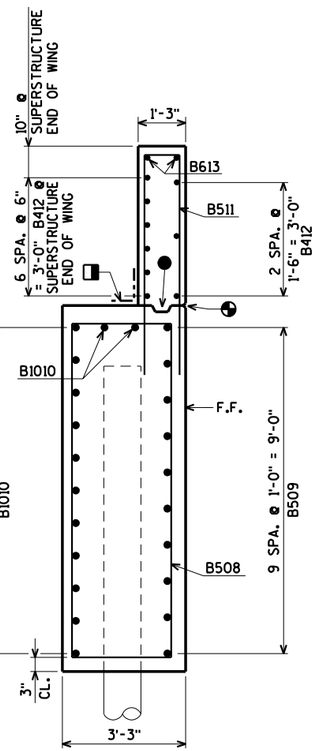

SECTION B

BILL OF BARS

BAR. NO.	COATED BAR	NO. REQ'D.	LENGTH	BENT BAR	BUNDLED BAR SERIES	5.080" COATED 6.330" UNCOATED LOCATION
B501		110	10-6	X		BODY VERT. E.F.
B502		9	54-2			BODY HORIZ. F.F.
B1003		28	32-10	X		BODY HORIZ. B.F.
B404		42	2-11	X		BODY TIES
B505		55	6-11	X		BODY VERT. TOP
B406		4	28-0			BODY HORIZ. TOP
B407		37	4-5	X		BODY VERT. TOP
B508	X	36	24-8	X		WING VERT. E.F.
B509	X	20	19-8	X		WING HORIZ. F.F.
B1010	X	26	21-1	X		WING HORIZ.
B511	X	48	12-8	X		WING VERT.
B412	X	20	23-7			WING HORIZ. E.F.
B613	X	4	23-7			WING HORIZ. TOP
B514	X	18	12-11	X		WING VERT.
B415	X	10	7-9			WING HORIZ. E.F.

BENDING DIMENSIONS ARE OUT TO OUT OF BARS.

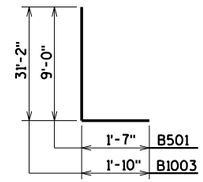

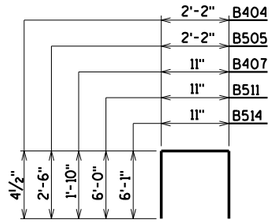

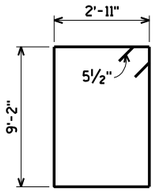

B508

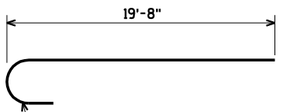

B1010

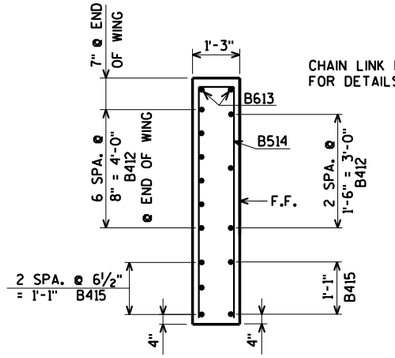

CHAIN LINK FENCE NOT SHOWN.
FOR DETAILS SEE SHEETS 19 & 20

SECTION C

◨ 18" RUBBERIZED MEMBRANE WATERPROOFING. SEAL ALL HORIZONTAL AND VERTICAL JOINTS ON BACKFACE.

● OPT. CONST. JOINT FORMED BY A BEVELED 2" x 6" KEYWAY.

◔ ¾" V-GROOVE ON FRONT FACE ONLY.

F.F. DENOTES FRONT FACE

E.F. DENOTES EACH FACE

B.F. DENOTES BACK FACE

NO.	DATE	REVISION	BY

STATE OF WISCONSIN
DEPARTMENT OF TRANSPORTATION

STRUCTURE B-18-229

DRAWN BY CLS | PLANS CK'D. CBM

EAST ABUTMENT WING DETAILS & BILL OF BARS

SHEET 11 OF 21
169

ORIGINAL PLANS PREPARED BY
AYRES ASSOCIATES
3433 Oakwood Hills Parkway
Eau Claire, WI 54701
www.AyresAssociates.com

$PRFNAME$
U:\42-0943.00 - Eau Claire Co - CTH AA\BRIDGE\420943 ea.dgn

STATE PROJECT NUMBER

7824-00-13

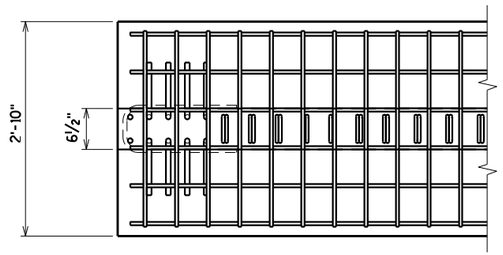

TOP FLANGE

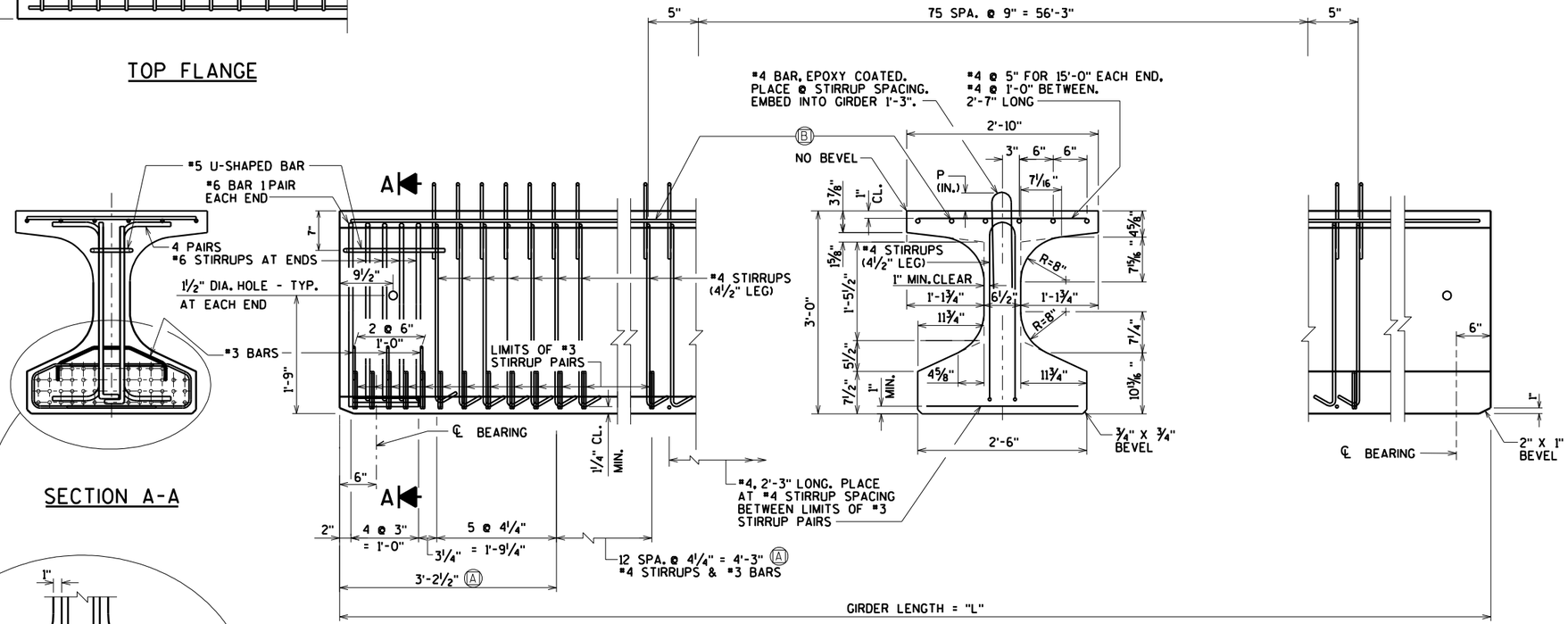

SECTION A-A

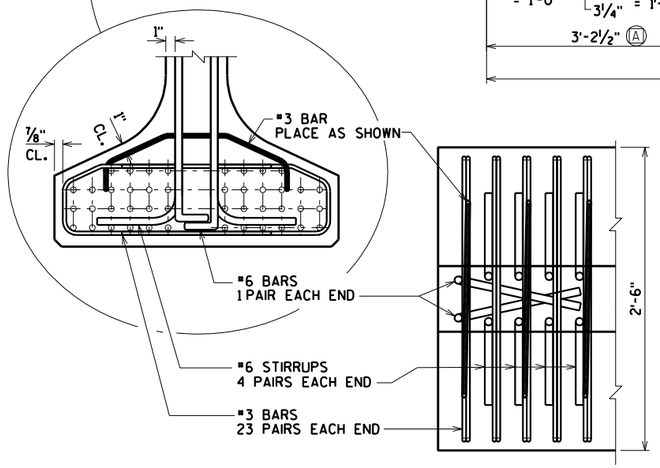

BOTTOM FLANGE

SIDE VIEW & TYPICAL SECTION IN SPAN

Ⓐ DETAIL TYP. AT EACH END

Ⓑ 6 #4 BARS, FULL LENGTH, MIN. LAP = 2'-4"

GIRDER NOTES

TOP OF GIRDER TO BE ROUGH FLOATED AND BROOMED TRANSVERSELY, EXCEPT THE THE OUTSIDE 8" OF GIRDER, WHICH SHALL RECEIVE A SMOOTH FINISH. AN APPROVED CONCRETE SEALER SHALL BE APPLIED TO ALL SMOOTH SURFACES INCLUDING THE OUTSIDE 8" OF THE TOP FLANGE.

DO NOT APPLY CONCRETE SEALER TO SURFACES RECEIVING APPLICATION OF CONCRETE STAINING.

THE GIRDERS SHALL BE PROVIDED WITH A SUITABLE LIFTING DEVICE FOR HANDLING AND ERECTING THE GIRDERS.

STRANDS SHALL BE FLUSH WITH END OF GIRDER. FOR GIRDER ENDS EMBEDDED COMPLETELY IN CONCRETE, END OF STRANDS SHALL BE COATED WITH NON-BITUMINOUS JOINT SEALER. FOR GIRDER ENDS THAT ARE FINALLY EXPOSED, COAT THE GIRDER ENDS, EXPOSED STRAND ENDS AND ALL NON-BONDING SURFACES WITHIN 2 FEET OF THE GIRDER ENDS WITH A NON-PIGMENTED EPOXY CONFORMING TO AASHTO M-235 TYPE III, GRADE 2, CLASS B OR C. THE EPOXY SHALL BE APPLIED AT LEAST 3 DAYS AFTER MOIST CURING HAS CEASED AND PRIOR TO THE APPLICATION OF THE SEALER.

ALL GIRDERS SHALL BE CAST FULL LENGTH AS SHOWN.

SPACING SHOWN FOR #4 STIRRUPS IS FOR GRADE 60 REINFORCEMENT.

AN ALTERNATE EQUIVALENT OF WELDED WIRE FABRIC (WWF) ASTM A497 MAY BE SUBSTITUTED FOR THE STIRRUP REINFORCEMENT SHOWN, UPON APPROVAL OF THE STRUCTURES DEVELOPMENT SECTION.

PRESTRESSING STRANDS SHALL BE (0.6" DIA.)-7 WIRE LOW-RELAXATION STRANDS WITH AN ULTIMATE STRENGTH OF 270,000 PSI.

FOR DIAPHRAGM INSERT & CONNECTION DETAILS SEE "STEEL INTER. DIAPHRAGM DETAILS" SHEET.

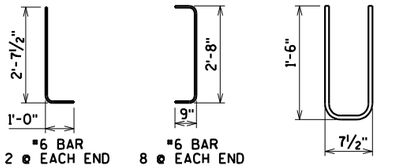

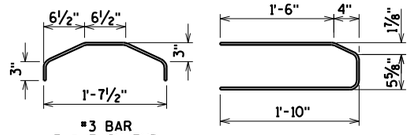

* MINIMUM CYLINDER STRENGTH OF CONCRETE @ TIME OF TRANSFER OF PRESTRESS FORCE.

GIRDER DATA

SPAN	GIRDER	GIRDER LENGTH "L"	DEAD LOAD DEFL. (IN.) 1/10	2/10	3/10	4/10	5/10	6/10	7/10	8/10	9/10	CONC. STRGTH. f'c (p.s.i.)	"P" 1ST 1/3 OF GIRDER	"P" MID 1/3 OF GIRDER	"P" END 1/3 OF GIRDER	DIA. OF STRAND (IN.)	DRAPED PATTERN TOTAL NO. OF STRANDS	f'ci (P.S.I.) *	(IN.) "A"	"B" MIN.	"B" MAX.	"C"	UNDRAPED PATTERN TOTAL NO. OF STRANDS	f'ci (P.S.I.) *
1	ALL	72'-0"	0.5	0.9	1.3	1.5	1.5	1.5	1.3	0.9	0.5	8,000	9.0	6.5	9.0	0.6	32	6,400	32	11	14	4		

ORIGINAL PLANS PREPARED BY

AYRES ASSOCIATES

3433 Oakwood Hills Parkway
Eau Claire, WI 54701
www.AyresAssociates.com

NO.	DATE	REVISION	BY

STATE OF WISCONSIN
DEPARTMENT OF TRANSPORTATION

STRUCTURE B-18-229

DRAWN BY CLS | PLANS CK'D. CBM

36W" PRESTRESSED GIRDER DETAILS

SHEET 12 OF 21
170

$PRFNAME$
U:\42-0943.00 - Eau Claire Co - CTH AA\BRIDGE\420943 36W.dgn

8/24/2015

PENTABLE:BReau_shd_util.tbl

7-13
G36W

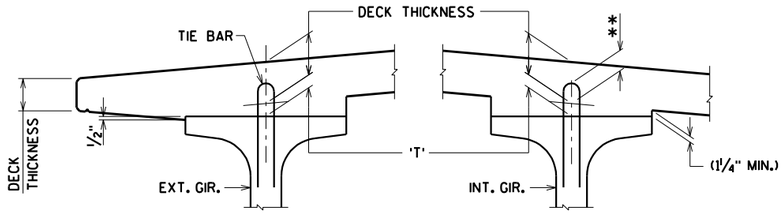

DECK HAUNCH DETAIL

IF 1¼" MINIMUM HAUNCH HEIGHT AT EDGE OF GIRDER CANNOT BE MAINTAINED, THE GRADE LINE MAY BE REVISED BY THE ENGINEER AT THE OPTION OF THE CONTRACTOR. THE PLAN DECK THICKNESS SHALL BE HELD. NOTIFY THE STRUCTURES SECTION IF THE GRADE LINE IS RAISED FROM THE PLAN PROFILE BY MORE THAN ½" OR,

** IF 3" MINIMUM DECK EMBEDMENT OF TIE BAR CANNOT BE OBTAINED.

TO DETERMINE 'T', ELEV. OF TOP OF GIR'S. AT ℄ OF SUBSTRUCTURE UNITS & AT 1/10 POINTS OF EACH SPAN SHALL BE TAKEN. THEN FOLLOW THIS PROCESS:

TOP OF DECK ELEV. AT FINAL GRADE
- TOP OF GIRDER ELEVATION
+ DEAD LOAD DEFLECTION
- DECK THICKNESS
= HAUNCH HEIGHT 'T'

NOTE: AN AVERAGE HAUNCH ('T') OF 3⅛" WAS USED IN THE QUANTITY "CONCRETE MASONRY BRIDGES".

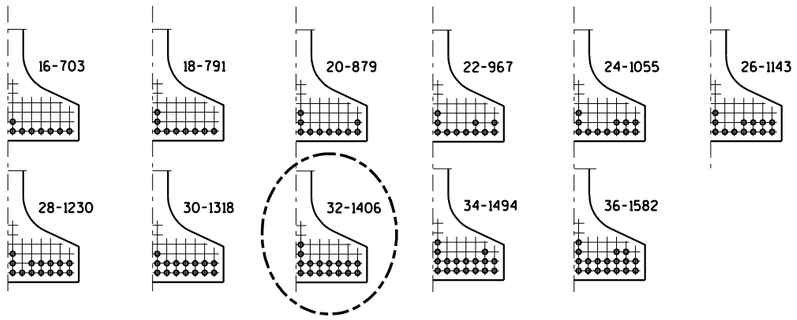

ARRANGEMENT AT ℄ SPAN - FOR GIRDERS WITH DRAPED STRANDS

0.6"ϕ STRANDS

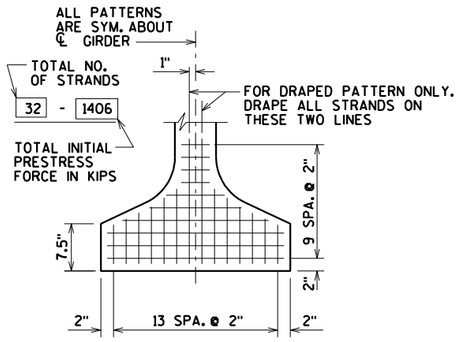

TYP. STRAND PATTERN

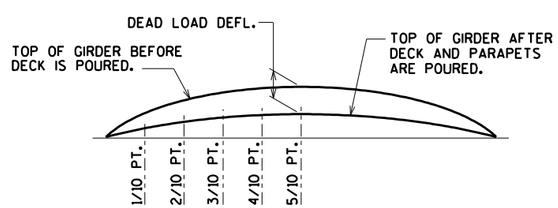

DEAD LOAD DEFLECTION DIAGRAM

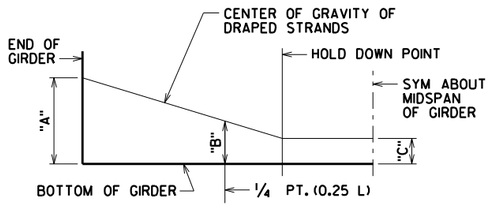

DRAPED STRAND PROFILE

*THE THEORETICAL INITIAL CAMBER VALUE AT THE TIME OF STRAND RELEASE AT MIDSPAN MULTIPLIED BY A FACTOR OF 1.4 TO ACCOUNT FOR CAMBER GROWTH FROM THE TIME OF STRAND RELEASE TO JOBSITE PLACEMENT.

SPAN	CAMBER (IN.) *
1	1.4

THESE VALUES ARE NOT TO BE USED IN DETERMINING 'T', USE ACTUAL GIRDER SHOTS.
THESE VALUES ARE FOR INFORMATIONAL PURPOSES ONLY.

NO.	DATE	REVISION	BY

STATE OF WISCONSIN
DEPARTMENT OF TRANSPORTATION

STRUCTURE B-18-229

DRAWN BY CLS | PLANS CK'D. CBM

36W" PRESTRESSED GIRDER DETAILS

SHEET 13 OF 21
171

ORIGINAL PLANS PREPARED BY
AYRES ASSOCIATES
3433 Oakwood Hills Parkway
Eau Claire, WI 54701
www.AyresAssociates.com

$PRFNAME$
U:\42-0943.00 - Eau Claire Co - CTH AA\BRIDGE\420943 36W.dgn

8

8

STATE PROJECT NUMBER

7824-00-13

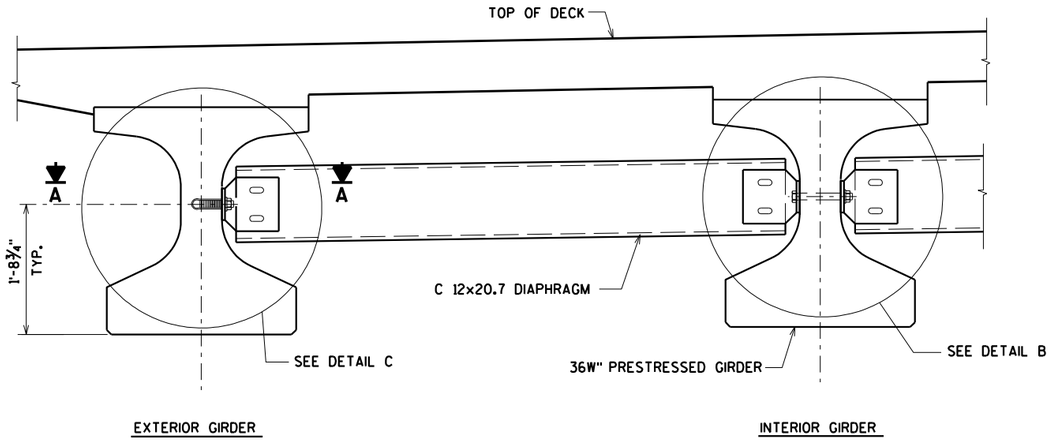

PART TRANSVERSE SECTION AT DIAPHRAGM

NOTES

ALL DIAPHRAGM MATERIAL NOT EMBEDDED IN THE CONCRETE GIRDER SHALL BE PAID FOR AT THE UNIT PRICE BID FOR "STEEL DIAPHRAGMS B-18-229", EACH.

EACH DIAPHRAGM BETWEEN GIRDERS SHALL CONSTITUTE ONE UNIT.

ALL DIAPHRAGM STRUCTURAL STEEL SHALL BE ASTM A709 GRADE 36. ALL BOLTS, NUTS AND WASHERS SHALL BE ASTM A325 TYPE 1.

ALL DIAPHRAGM STRUCTURAL STEEL SHOWN SHALL BE HOT-DIPPED GALVANIZED. ALL BOLTS, NUTS AND WASHERS SHALL BE HOT-DIPPED GALVANIZED IN ACCORDANCE WITH ASTM A153 CLASS C. GALVANIZED NUTS SHALL BE TAPPED OVERSIZE IN ACCORDANCE WITH THE REQUIREMENTS OF ASTM A563 AND SHALL MEET THE REQUIREMENTS OF SUPPLEMENTARY REQUIREMENT S1 OF ASTM A563, LUBRICANT AND TEST FOR COATED NUTS.

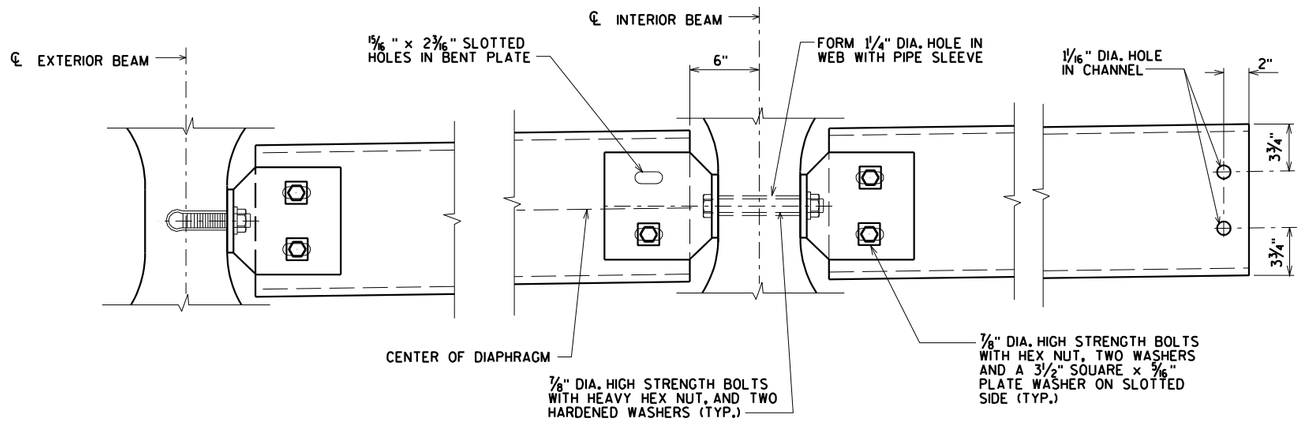

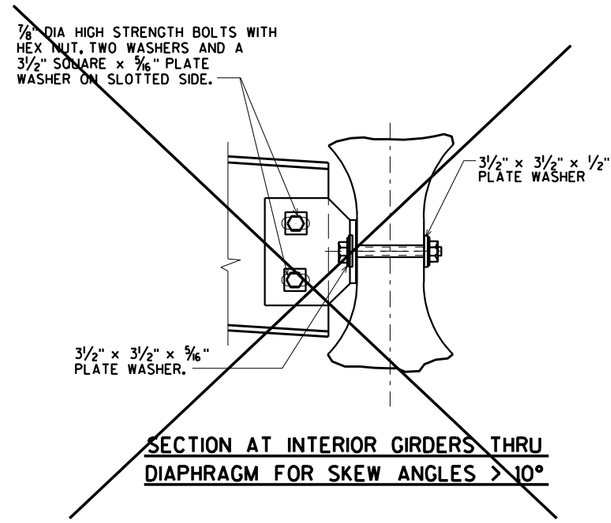

SECTION AT INTERIOR GIRDERS THRU DIAPHRAGM FOR SKEW ANGLES > 10°

DETAIL C

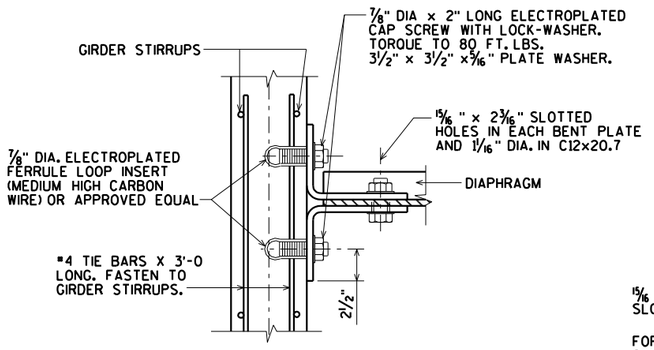

SECTION A-A

(FOR EXTERIOR ATTACHMENT)

DETAIL B

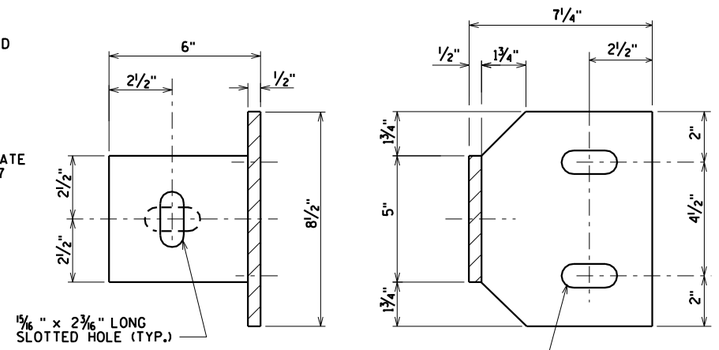

FOR EACH PAIR OF ANGLES ON A GIVEN BEAM FACE, ONE SLOTTED HOLE TO BE VERTICAL AND ONE TO BE HORIZONTAL.

BEAM FACE

DIAPHRAGM FACE

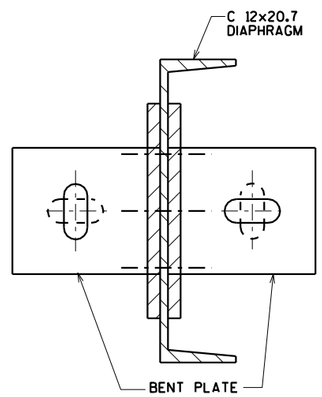

ATTACHMENT TO CHANNEL

NO.	DATE	REVISION	BY

STATE OF WISCONSIN
DEPARTMENT OF TRANSPORTATION

STRUCTURE B-18-229

DRAWN BY CLS | PLANS CK'D. CBM

STEEL INTER. DIAPHRAGM DETAILS

SHEET 14 OF 21

172

ORIGINAL PLANS PREPARED BY
AYRES ASSOCIATES
3433 Oakwood Hills Parkway
Eau Claire, WI 54701
www.AyresAssociates.com

8

8

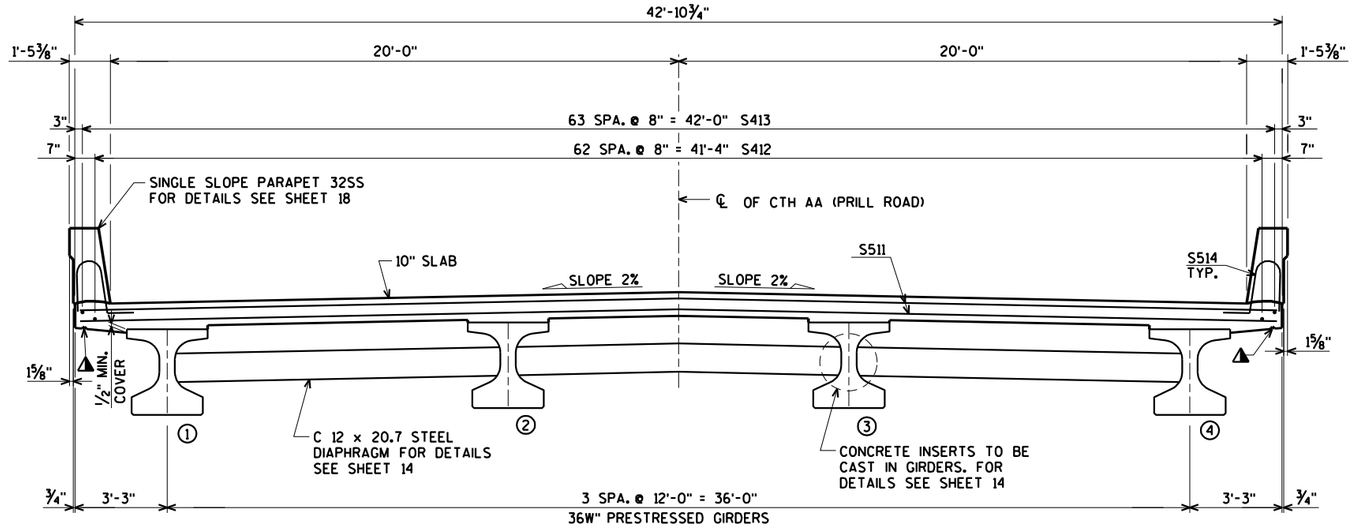

TYPICAL CROSS SECTION THRU ROADWAY

(LOOKING EAST)

⚠ ¾" V - GROOVE. EXTEND V-GROOVE TO 6" FROM FRONT FACE OF ABUTMENT DIAPHRAGM.

BILL OF BARS

BAR. NO.	COATED BAR	NO. REQ'D.	LENGTH	BENT BAR	BUNDLED BAR SERIES	26,620# COATED LOCATION
S401	X	54	3-2	X		DIAPH. @ ABUT. VERT. @ NOTCH
S402	X	12	8-1			DIAPH. @ ABUT. HORIZ. @ NOTCH
S503	X	122	9-11	X		DIAPH. @ ABUT. VERT.
S504	X	16	7-10	X		DIAPH. @ ABUT. VERT. @ GIRDERS
S505	X	122	7-1	X		DIAPH. @ ABUT. VERT.
S606	X	20	28-8			DIAPH. @ ABUT. HORIZ.
S607	X	4	7-8			DIAPH. @ ABUT. HORIZ. EXT. GIRDERS
S608	X	36	7-1			DIAPH. @ ABUT. HORIZ. BETW. GIRDERS
S609	X	8	8-4			DIAPH. @ ABUT. HORIZ. EXT. GIRDERS
S510	X	16	6-0			DIAPH. @ ABUT. HORIZ. THRU GIRDER
S511	X	293	42-2			SLAB TRANS. TOP & BOT.
S412	X	126	37-5			SLAB LONG. BOT.
S413	X	128	37-5			SLAB LONG. TOP
S514	X	168	4-5	X		SLAB @ PARAPET VERT.
S515	X	168	5-0	X		PARAPET VERT.
S516	X	48	2-9	X		SLAB @ PARAPET VERT.
S517	X	24	28-6			PARAPET HORIZ.
S518	X	68	4-4	X		SLAB @ PARAPET VERT.
S519	X	44	4-9	X		PARAPET VERT.
S520	X	24	4-10	X		PARAPET VERT.
S521	X	4	11-0	X		PARAPET HORIZ.
S522	X	20	10-10			PARAPET HORIZ.

BENDING DIMENSIONS ARE OUT TO OUT OF BARS.

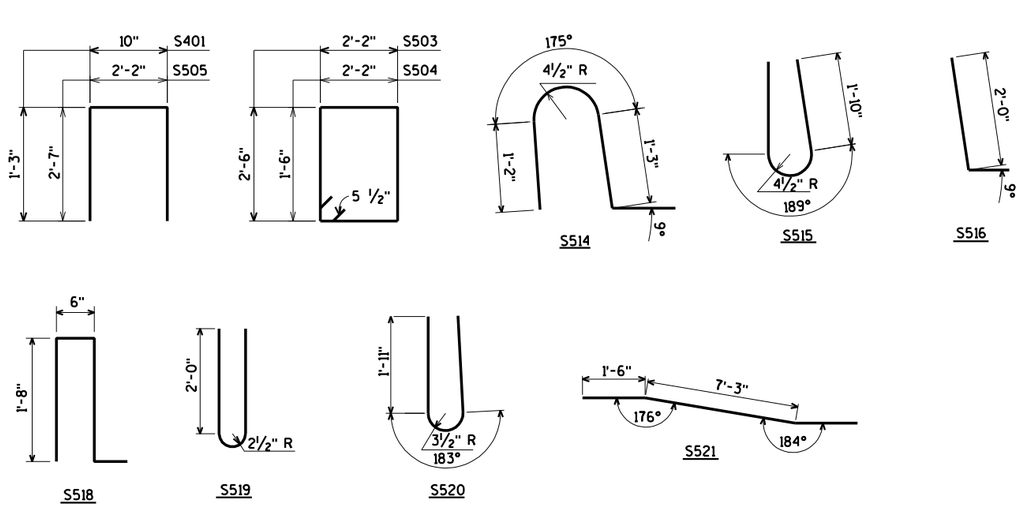

NO.	DATE	REVISION	BY

STATE OF WISCONSIN
DEPARTMENT OF TRANSPORTATION

STRUCTURE B-18-229

DRAWN BY CLS | PLANS CK'D. CBM

SUPERSTRUCTURE

SHEET 15 OF 21
173

ORIGINAL PLANS PREPARED BY
AYRES ASSOCIATES
3433 Oakwood Hills Parkway
Eau Claire, WI 54701
www.AyresAssociates.com

$PRFNAME$
U:\42-0943.00 - Eau Claire Co - CTH AA\BRIDGE\420943 super.dgn

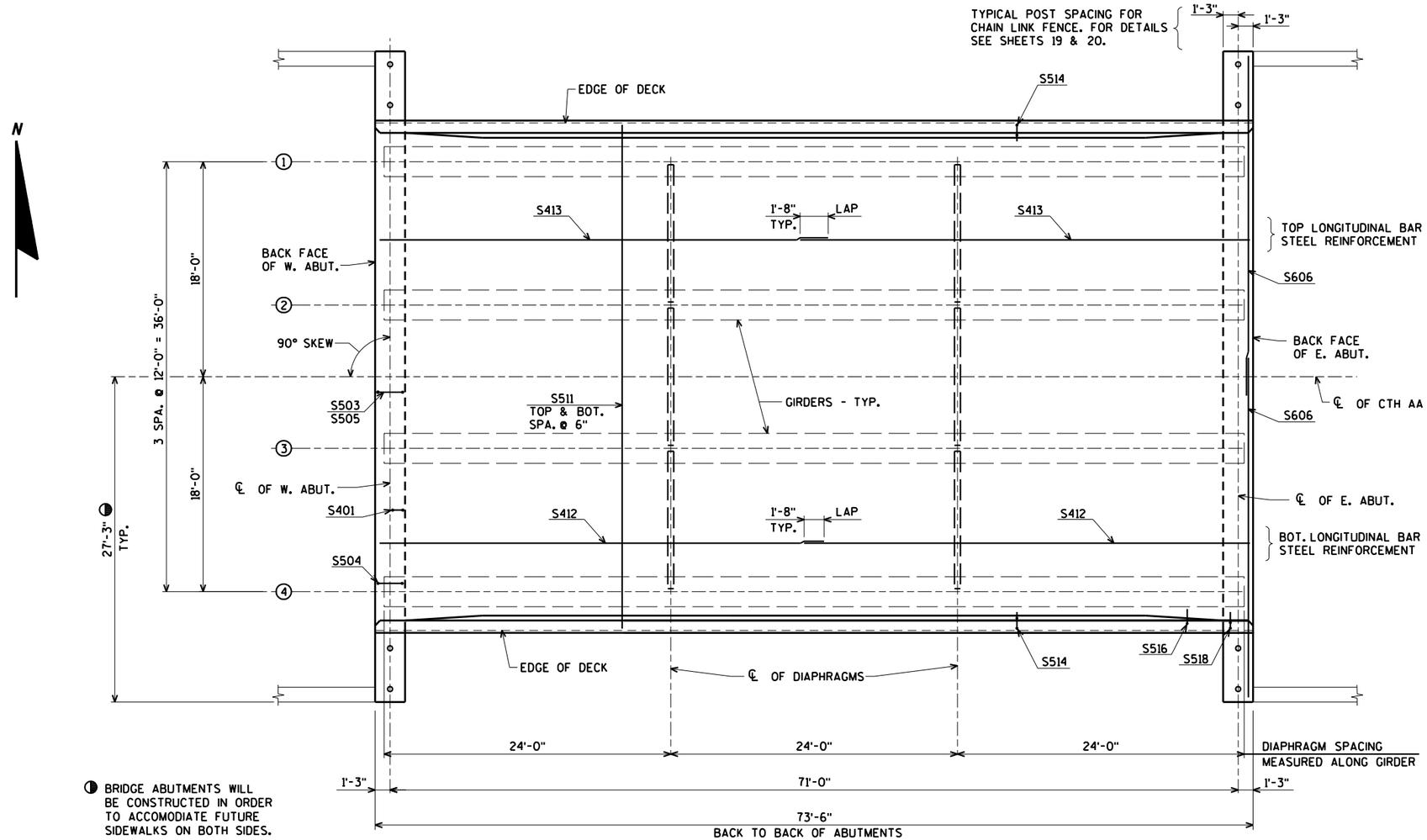

◑ BRIDGE ABUTMENTS WILL BE CONSTRUCTED IN ORDER TO ACCOMODIATE FUTURE SIDEWALKS ON BOTH SIDES.

PLAN

TOP OF DECK ELEVATIONS

	℄ OF W. ABUT.	0.1 PT.	0.2 PT.	0.3 PT.	0.4 PT.	0.5 PT.	0.6 PT.	0.7 PT.	0.8 PT.	0.9 PT.	℄ OF E. ABUT.
△ N. SLAB EDGE	847.70	847.84	847.98	848.13	848.28	848.44	848.60	848.77	848.94	849.12	849.31
GIRDER 1	847.74	847.88	848.02	848.17	848.32	848.48	848.64	848.81	848.98	849.16	849.35
GIRDER 2	847.98	848.12	848.26	848.41	848.56	848.72	848.88	849.05	849.22	849.40	849.59
℄ RDWY	848.10	848.24	848.38	848.53	848.68	848.84	849.00	849.17	849.34	849.52	849.71
GIRDER 3	847.98	848.12	848.26	848.41	848.56	848.72	848.88	849.05	849.22	849.40	849.59
GIRDER 4	847.74	847.88	848.02	848.17	848.32	848.48	848.64	848.81	848.98	849.16	849.35
△ S. SLAB EDGE	847.70	847.84	847.98	848.13	848.28	848.44	848.60	848.77	848.94	849.12	849.31

ELEVATIONS SHOWN ARE FINISHED DECK AND DO NOT INCLUDE ALLOWANCES OF DEAD LOAD DEFLECTION AND FUTURE CREEP.

△ EDGE OF DECK ELEVATIONS ACCOUNT FOR LEVEL AREA UNDER SINGLE SLOPE PARAPET.

NO.	DATE	REVISION	BY

STATE OF WISCONSIN
DEPARTMENT OF TRANSPORTATION

STRUCTURE B-18-229

DRAWN BY CLS | PLANS CK'D. CBM

SUPERSTRUCTURE PLAN

SHEET 16 OF 21
174

ORIGINAL PLANS PREPARED BY
AYRES ASSOCIATES
3433 Oakwood Hills Parkway
Eau Claire, WI 54701
www.AyresAssociates.com

$PRFNAME$
U:\42-0943.00 - Eau Claire Co - CTH AA\BRIDGE\420943 super.dgn
9/30/2015
PENTABLE:BReau_shd_util.tbl

STATE PROJECT NUMBER

7824-00-13

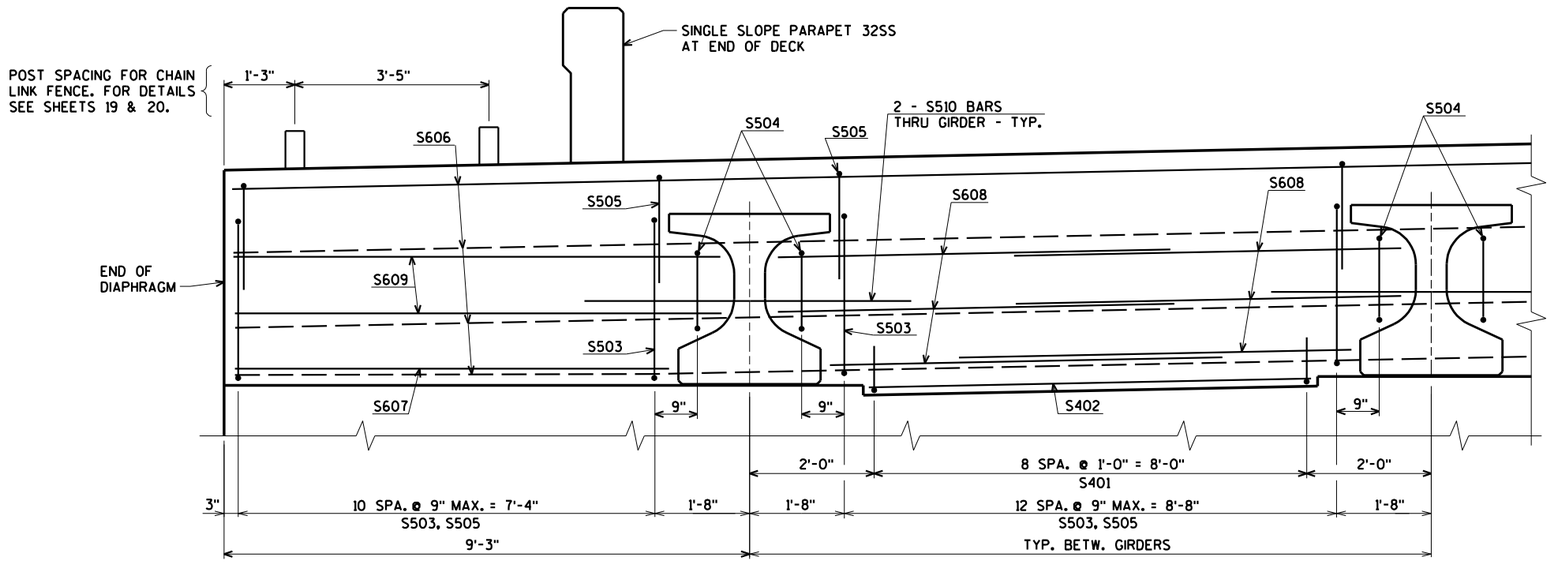

PART SECTION AT ABUTMENT

(LOOKING EAST AT WINGS 1 & 3. WINGS 2 & 4 SIMILAR)

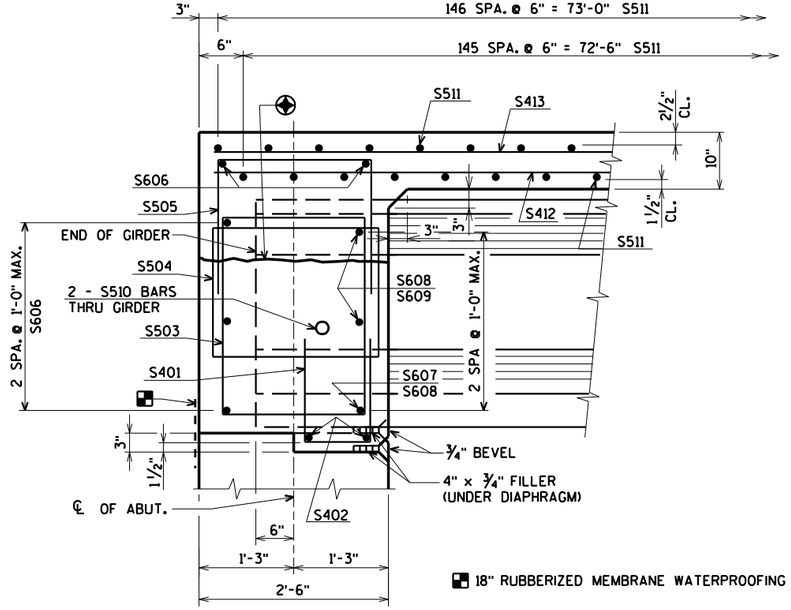

■ 18" RUBBERIZED MEMBRANE WATERPROOFING

◈ OPTIONAL CONSTRUCTION JOINT 1'-2" BELOW TOP OF GIRDER. IF USED, DECK POUR MUST BE WITHIN 2 WEEKS FROM THE TIME OF THE DIAPHRAGM POUR.

PART LONGITUDINAL SECTION

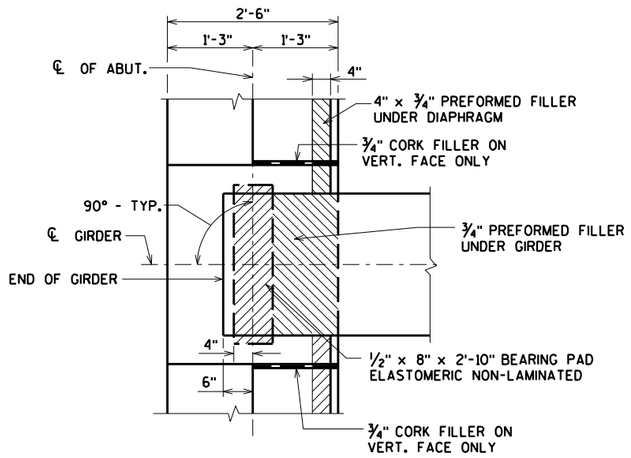

BEARING PAD DETAIL

NO.	DATE	REVISION	BY

STATE OF WISCONSIN
DEPARTMENT OF TRANSPORTATION

STRUCTURE B-18-229

DRAWN BY CLS | PLANS CK'D. CBM

ORIGINAL PLANS PREPARED BY
AYRES ASSOCIATES
3433 Oakwood Hills Parkway
Eau Claire, WI 54701
www.AyresAssociates.com

SUPERSTRUCTURE DETAILS

SHEET 17 OF 21
175

8

8

$PRFNAME$
U:\42-0943.00 - Eau Claire Co - CTH AA\BRIDGE\420943 super.dgn

8/24/2015

PENTABLE:BReau_shd_util.tbl

STATE PROJECT NUMBER

7824-00-13

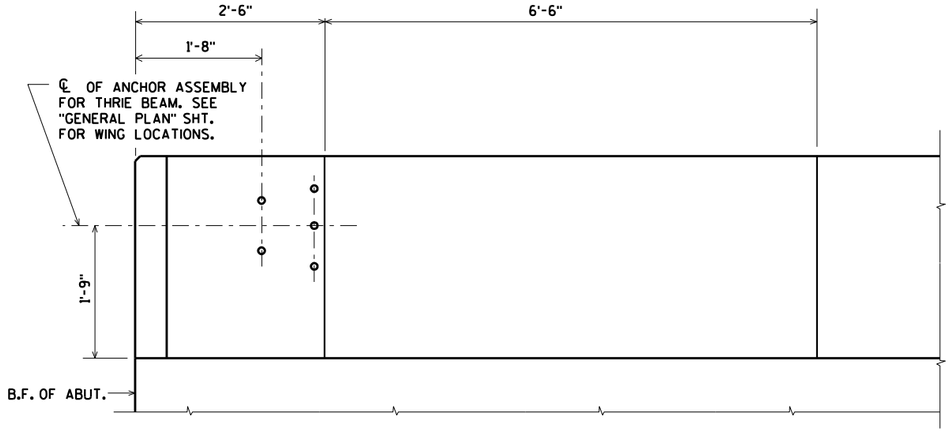

INSIDE ELEVATION

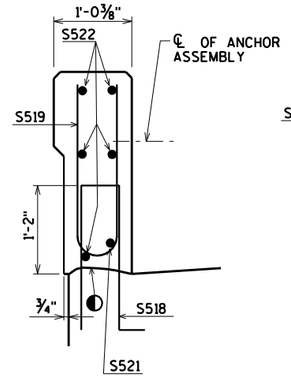

SECTION A

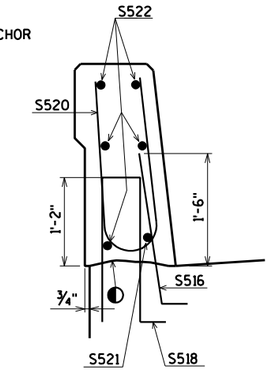

SECTION B

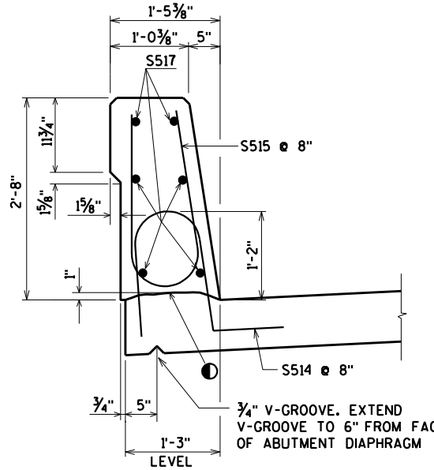

SECTION THRU PARAPET ON BRIDGE
SECTION C

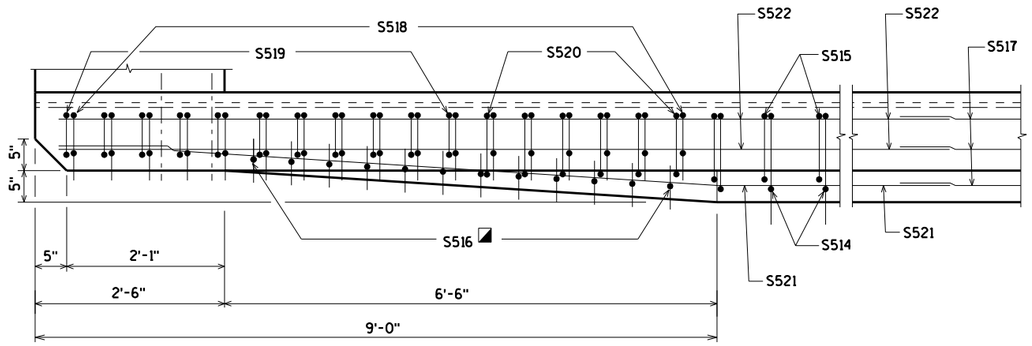

PLAN

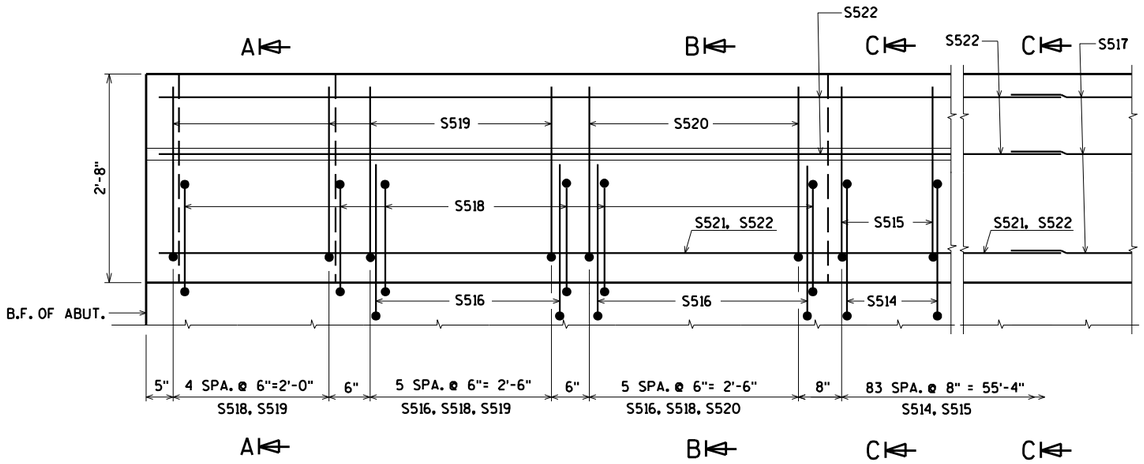

OUTSIDE ELEVATION

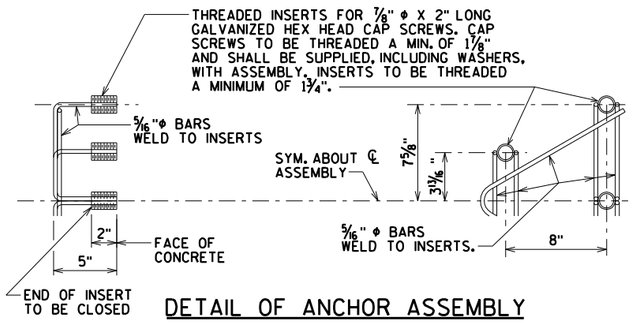

DETAIL OF ANCHOR ASSEMBLY

NOTE: HEX HEAD CAP SCREWS & WASHERS TO BE GALVANIZED IN ACCORDANCE WITH AASHTO M232 CLASS C.

ASSEMBLY SHALL BE BID ITEM "ANCHOR ASSEMBLIES FOR STEEL PLATE BEAM GUARD", EACH.

◐ CONST. JOINT - STRIKE OFF AS SHOWN.

◪ USE CARE TO PLACE S516 BARS CORRECTLY ALONG TRANSITION OF PARAPET.

LAP LONG. BARS A MIN. OF 1'-9"

B.F. DENOTES BACK FACE

NO.	DATE	REVISION	BY

STATE OF WISCONSIN
DEPARTMENT OF TRANSPORTATION

STRUCTURE B-18-229

DRAWN BY CLS | PLANS CK'D. CBM

SINGLE SLOPE PARAPET 32SS

SHEET 18 OF 21
176

ORIGINAL PLANS PREPARED BY
AYRES ASSOCIATES
3433 Oakwood Hills Parkway
Eau Claire, WI 54701
www.AyresAssociates.com

$PRFNAME$
U:\42-0943.00 - Eau Claire Co - CTH AA\BRIDGE\420943 32SS.dgn

8

1 2 3 4

8/24/2015

PENTABLE:BReau_shd_util.tbl

32SSDEC
1-14

STATE PROJECT NUMBER

7824-00-13

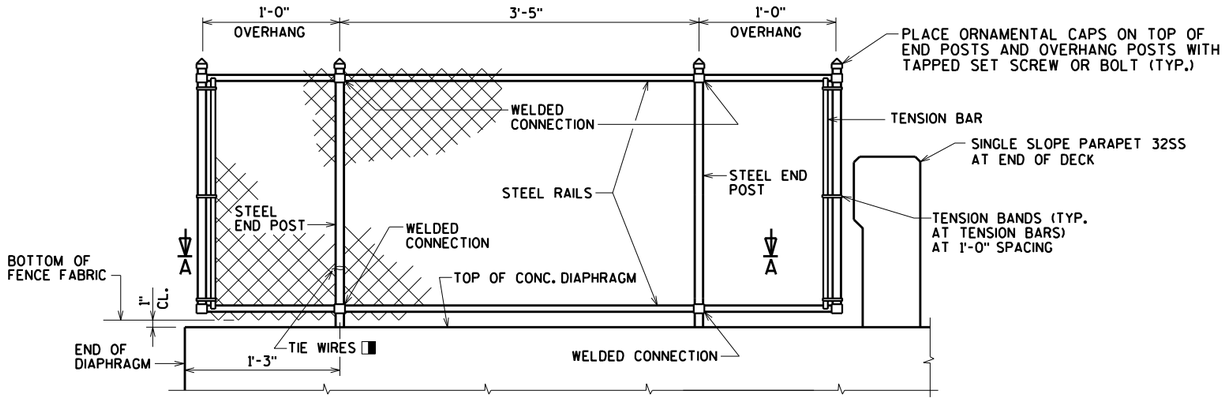

FENCE PART ELEVATION ON SUPERSTRUCTURE

VIEWING NON FABRIC SIDE
(WINGS 1 AND 3 SHOWN, WINGS 2 AND 4 SIMILAR)

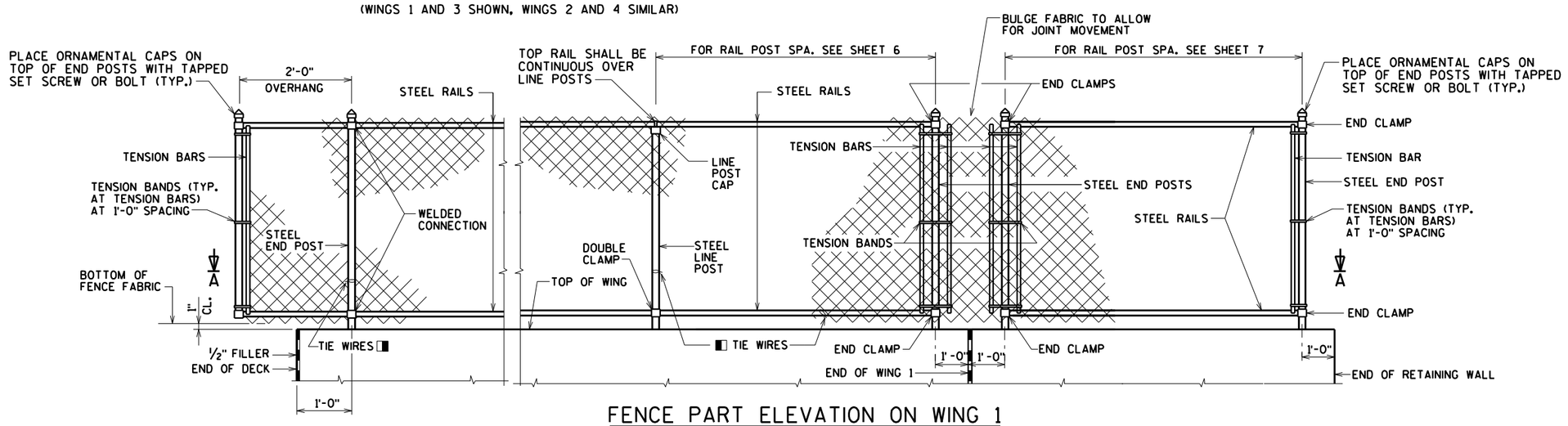

FENCE PART ELEVATION ON WING 1

VIEWING FABRIC SIDE
(WING 1 SHOWN)

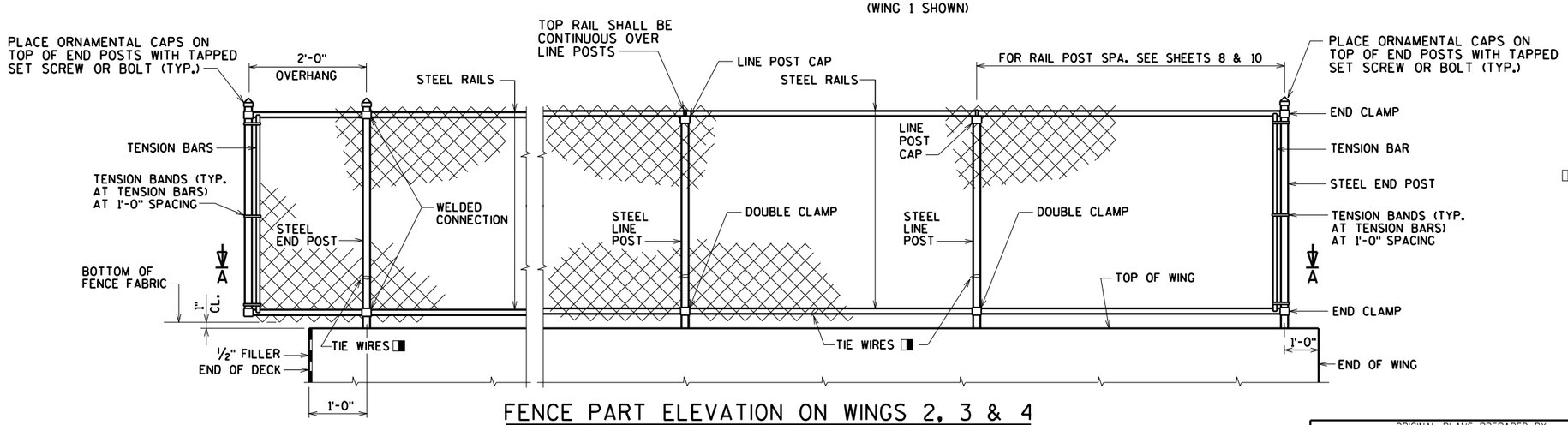

FENCE PART ELEVATION ON WINGS 2, 3 & 4

VIEWING FABRIC SIDE
(WING 3 SHOWN, WINGS 2 AND 4 SIMILAR)

◨ ATTACH FABRIC TO RAILS, AND TO POSTS WITHOUT TENSION BANDS, WITH TIE WIRES (ROUND, 9-GAGE) SPACED AT 1'-0".

NO.	DATE	REVISION	BY

STATE OF WISCONSIN
DEPARTMENT OF TRANSPORTATION

STRUCTURE B-18-229

DRAWN BY CLS | PLANS CK'D. CBM

CHAIN LINK FENCE ELEVATIONS

SHEET 19 OF 21
177

ORIGINAL PLANS PREPARED BY
AYRES ASSOCIATES
3433 Oakwood Hills Parkway
Eau Claire, WI 54701
www.AyresAssociates.com

8

8

$PRFNAME$
U:\42-0943.00 - Eau Claire Co - CTH AA\BRIDGE\420943 fence elev.dgn

8/24/2015

PENTABLE:BReau_shd_util.tbl

STATE PROJECT NUMBER

7824-00-13

FENCE MEMBER SIZE & WEIGHT

STEEL FENCE MEMBER	OUTSIDE DIAMETER (INCHES)	WEIGHT (LB/FT)
RAILS	1.660	2.27
END POST	2.875	5.80
OVERHANG POST	2.875	5.80
LINE POST	2.375	3.65
POST SLEEVE	4.000	9.12

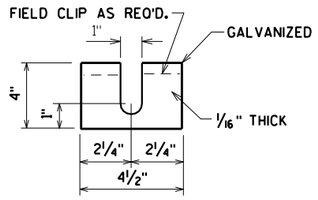

POST SHIM DETAILS

SHIMS REQUIRED ONLY WHEN END POSTS ARE WELDED TO BASE PLATES. PROVIDE 4 SHIMS PER POST. USE WHERE REQUIRED FOR ALIGNMENT.

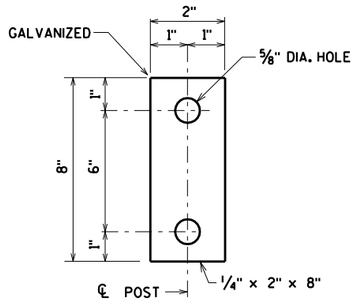

ANCHOR PLATE

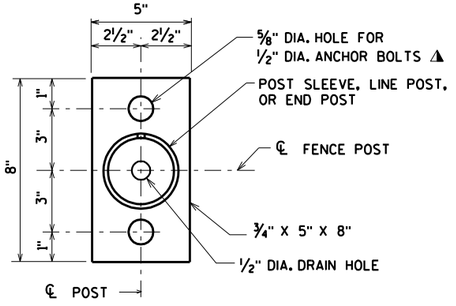

BASE PLATE

GENERAL NOTES

POSTS ARE TO BE SET VERTICAL.

ALL FENCE COMPONENTS SHALL BE GALVANIZED STEEL, EXCEPT THE FENCE FABRIC WHICH MAY BE ALUMINUM-COATED STEEL OR GALVANIZED STEEL.

FABRIC SHALL CONFORM TO ASTM A491 OR A392, CLASS 2. STEEL RAILS, POSTS AND POST SLEEVES SHALL CONFORM TO ASTM F1083, STANDARD WEIGHT PIPE (SCHEDULE 40). FITTINGS SHALL CONFORM TO ASTM F626.

COMPLETE ANY REQUIRED WELDING OF COMPONENTS BEFORE GALVANIZING.

POST BASE PLATES SHALL BE FLAT WITH ALL SURFACES SMOOTH AND FREE FROM WARP AND ALL EDGES SMOOTH, STRAIGHT AND VERTICAL. ALL PLATE CUTS SHALL BE MACHINE OR MACHINE FLAME CUT.

BASE PLATES, ANCHOR PLATES AND SHIMS SHALL BE ASTM A709, GRADE 36.

ALL POST SPACINGS ARE MEASURED HORIZONTALLY ALONG THE C/L OF THE POST.

THE BID ITEM SHALL BE "FENCE CHAIN LINK 4-FT", LF.

◪ CAULK AROUND PERIMETER OF BASE PLATE AND FILL PORTION OF SLOTTED HOLE AROUND ANCHOR BOLT IN SHIM WITH NON-STAINING GRAY NON-BITUMINOUS JOINT SEALER.

◭ 1/2" DIA. X 6 7/8" LONG GALVANIZED HEX BOLT WITH NUT & WASHER. TYPE "S", 1/2" DIA. CONCRETE MASONRY ANCHORS MAY BE SUBSTITUTED FOR 1/2" DIA. BOLTS. ANCHOR PLATE NOT REQUIRED WHEN TYPE "S" ANCHORS ARE USED. SEE ✩

✩ MASONRY ANCHOR, TYPE "S", 1/2-INCH. EMBED 6" IN CONCRETE. ANCHOR, WASHER, AND NUT SHALL BE GALVANIZED.

◨ ATTACH FABRIC TO RAILS, AND TO POSTS WITHOUT TENSION BANDS, WITH TIE WIRES (ROUND, 9-GAGE) SPACED AT 1'-0".

◹ BOLT RAIL TO RAIL END TO SECURE OVERHANG SECTION. ALTERNATE IS TO WELD RAIL DIRECTLY TO END POST.

✳ ALTERNATE TO DOUBLE CLAMP: USE LINE RAIL CLAMP (BOULEVARD) OR 180° BRACE BAND, WHICH MAY BE USED WHEN THE POSTS ARE EITHER BOLTED TO THE POST SLEEVES OR DIRECTLY WELDED TO THE BASE PLATE.

⊗ 6" ON WINGS
⊗⊗ 9" ON WINGS
⊗⊗⊗ 1'-3" ON SUPERSTRUCTURE DIAPHRAGM

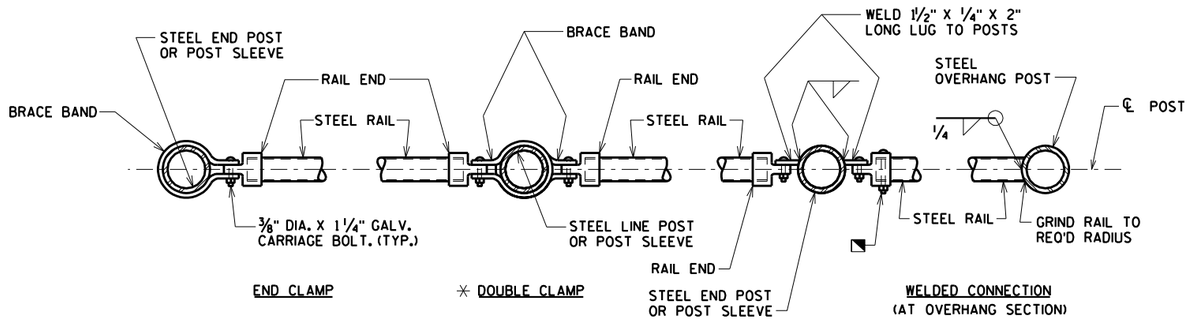

END CLAMP ✳ DOUBLE CLAMP

WELDED CONNECTION (AT OVERHANG SECTION)

SECTION A-A

NOTE: PLACE ALL BOLT HEADS ON SIDE OF FENCE ADJACENT TO PEDESTRIANS

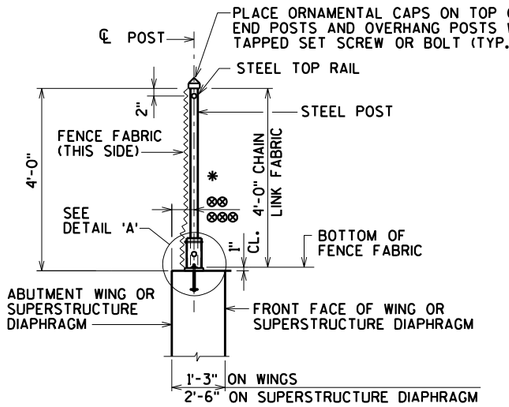

SECTION THRU FENCE

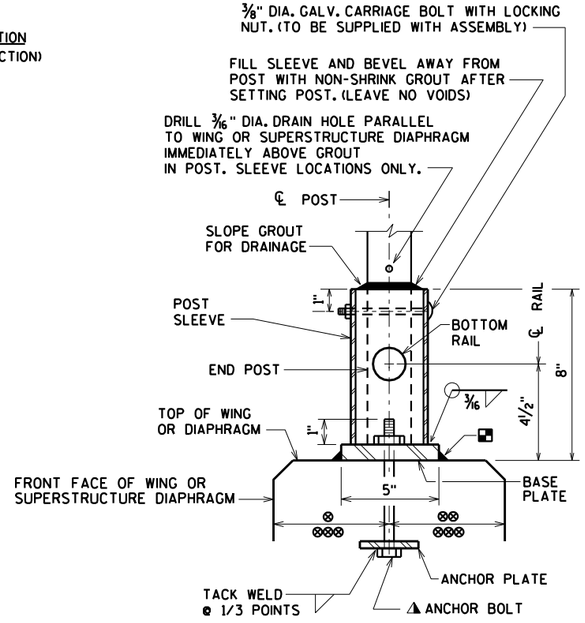

DETAIL 'A'

UNIT SHALL BE GALVANIZED AFTER FABRICATION

NOTE: IN LIEU OF USING THE POST SLEEVE, THE FENCE POST MAY BE WELDED TO THE BASE PLATE.

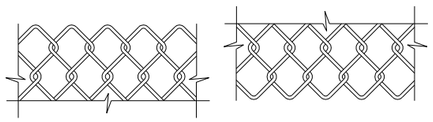

TOP DETAIL BOTTOM DETAIL

FENCE FABRIC

FENCE FABRIC WOVEN OF 9-GAGE WIRE IN 2" DIAMOND PATTERN MESH WITH BOTH THE TOP AND BOTTOM SELVAGES KNUCKLED.

NO.	DATE	REVISION	BY

STATE OF WISCONSIN
DEPARTMENT OF TRANSPORTATION

STRUCTURE B-18-229

DRAWN BY CLS | PLANS CK'D. CBM

CHAIN LINK FENCE DETAILS

SHEET 20 OF 21
178

ORIGINAL PLANS PREPARED BY
AYRES ASSOCIATES
3433 Oakwood Hills Parkway
Eau Claire, WI 54701
www.AyresAssociates.com

8

8

$PRFNAME$
U:\42-0943.00 - Eau Claire Co - CTH AA\BRIDGE\420943 fence.dgn

8/24/2015

PENTABLE:BReau_shd_util.tbl

STATE PROJECT NUMBER

7824-00-13

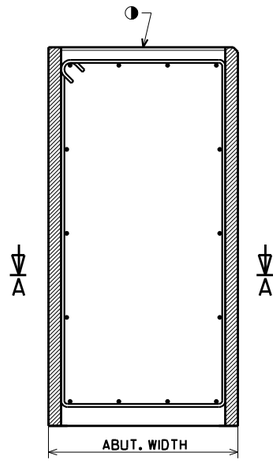

SECTION THRU
ABUTMENT BODY

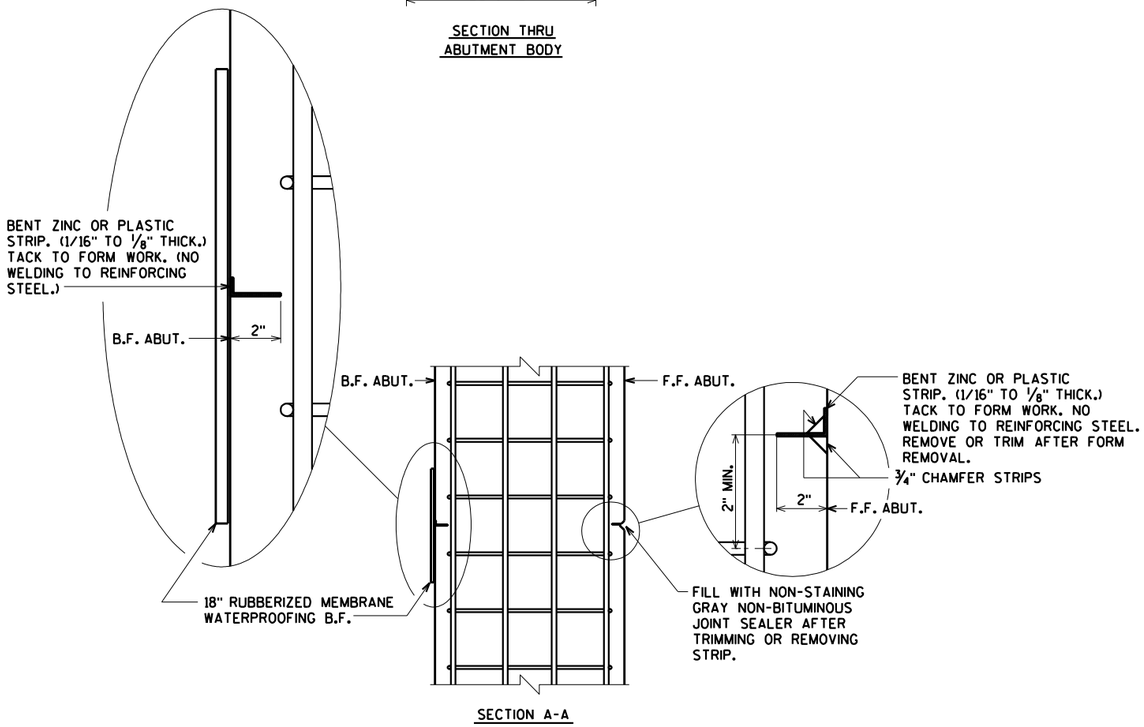

SECTION A-A

ALTERNATE CONSTRUCTION JOINT AT ABUTMENT

NOTES

PARTIAL ZINC OR PLASTIC BULKHEAD MAY BE USED AS ALTERNATE CONSTRUCTION JOINT, WITH THE PERMISSION OF THE ENGINEER, AT THE CONTRACTOR'S EXPENSE.

VERTICAL CONSTRUCTION JOINT KEYWAY IS NOT REQUIRED WHEN USING ALTERNATE CONSTRUCTION JOINT.

CARE IS TO BE USED IN CASTING CONCRETE AROUND BULKHEAD TO PREVENT DISLOCATION OR MISALIGNMENT OF THE BULKHEAD.

SAW CUTTING JONT IS NOT ALLOWED.

◑ USE A JOINT TOOL TO CONSTRUCT A CONTRACTION JOINT APPROXIMATELY 1/2" DEEP.

F.F. DENOTES FRONT FACE

B.F. DENOTES BACK FACE

NO.	DATE	REVISION	BY

STATE OF WISCONSIN
DEPARTMENT OF TRANSPORTATION

STRUCTURE B-18-229

DRAWN BY CLS | PLANS CK'D. CBM

ALTERNATE CONSTRUCTION JOINT

SHEET 21 OF 21
179

ORIGINAL PLANS PREPARED BY
AYRES ASSOCIATES
3433 Oakwood Hills Parkway
Eau Claire, WI 54701
www.AyresAssociates.com

$PRFNAME$
U:\42-0943.00 - Eau Claire Co - CTH AA\BRIDGE\420943 alt jt.dgn

8/24/2015

8

8

CTH AA

STATION	AREA (SF)			Incremental Vol (CY) (Unadjusted)			Cumulative Vol (CY)		Mass Ordinate (14)
	Cut (2)	Salvaged Unusable Pvm't Mtrl	Fill	Cut (2)	Salvaged Unusable Pvm't Mtrl	Fill	Cut 1.00	Expanded Fill (13) 1.25	
104+00.00	570	8.25	0	0	0	0	0	0	0
105+00.00	341	8.25	0	1687	31	0	1687	0	1656
106+00.00	408	8.25	0	1387	31	0	3074	0	3013
107+00.00	291	8.25	0	1295	31	0	4369	0	4277
108+00.00	224	8.25	0	954	31	0	5323	0	5201
108+61.00	230	8.25	0	512	19	0	5836	0	5695
109+00.00	177	8.25	0	294	12	0	6129	0	5977
109+63.00	122	8.25	0	350	19	0	6479	0	6307
109+75.00	112	8.25	0	52	4	0	6531	0	6355
110+00.00	103	8.25	0	99	8	0	6630	0	6447
111+00.00	79	8.25	0	336	31	0	6967	0	6753
112+00.00	131	8.25	0	389	31	0	7356	0	7111
112+75.00	124	8.25	0	354	23	0	7709	0	7442
113+00.00	134	8.25	0	119	8	0	7829	0	7554
114+00.00	131	8.25	0	492	31	0	8320	1	8014
115+00.00	68	8.25	0	369	31	1	8689	1	8352
116+00.00	92	8.25	0	295	31	0	8985	2	8616
117+00.00	93	8.25	0	342	31	0	9326	2	8927
118+00.00	63	8.25	0	289	31	0	9615	2	9185
118+40.00	30	8.25	53	69	12	39	9684	51	9193
119+00.00	66	8.25	12	107	18	71	9790	140	9192
120+00.00	91	8.25	1	292	31	24	10082	170	9423
121+00.00	119	8.25	0	390	31	2	10472	173	9780
122+00.00	102	8.25	0	409	31	1	10881	173	10158
123+00.00	88	8.25	6	351	31	11	11232	187	10464
124+00.00	20	8.25	19	200	31	46	11432	244	10577
125+00.00	20	8.25	51	75	31	129	11507	406	10459
126+00.00	1	8.25	57	40	31	200	11547	656	10219
127+00.00	12	8.25	131	25	31	348	11571	1091	9777
127+64.00	39	8.25	47	61	20	211	11632	1355	9555
128+00.00	26	8.25	66	43	11	75	11676	1450	9493
129+00.00	68	8.25	11	173	31	144	11849	1629	9456
129+18.61	84	8.25	16	52	6	9	11901	1641	9490
130+00.00	101	8.25	0	279	25	25	12180	1672	9713
130+84.00	110	8.25	0	329	26	1	12509	1673	10015
130+91.00	110	8.25	0	29	2	0	12537	1673	10042
131+00.00	106	8.25	0	36	3	0	12573	1673	10075
131+82.00	63	8.25	7	257	25	11	12830	1687	10293
132+00.00	77	8.25	1	47	6	3	12877	1690	10331
133+00.00	24	8.25	11	186	31	22	13063	1718	10459
133+85.00	114	8.25	13	218	26	38	13281	1765	10604
134+00.00	119	8.25	0	65	5	4	13346	1770	10659
134+17.00	104	8.25	1	70	5	0	13416	1770	10724
135+00.00	130	8.25	6	361	25	11	13777	1784	11045
135+78.00	115	8.25	0	355	24	9	14132	1796	11365
136+00.00	133	8.25	0	101	7	0	14233	1796	11459
137+00.00	97	8.25	1	426	31	1	14659	1797	11854
138+00.00	106	8.25	0	376	31	1	15035	1798	12198
			EAST/WEST TOTAL =	15035	1039	1439			

INCLUDES 1.25 FILL EXPANSION FACTOR

2) Salvaged/Unsuable Pavement Material is included in Cut.

13) Expanded Fill. Factor = 1.25 **Expanded Fill - Unexpanded Fill * Fill Factor**

14) The Mass Ordinate + or - Qty calculated for the Division. Plus quantity indicates an excess of material within the Division. Minus indicates a shortage of material within the Division.

CTH AA

STATION	AREA (SF)			Incremental Vol (CY) (Unadjusted)			Cumulative Vol (CY)		Mass Ordinate (14)
	Cut (2)	Salvaged Unusable Pvm't Mtrl	Fill	Cut (2)	Salvaged Unusable Pvm't Mtrl	Fill	Cut 1.00	Expanded Fill (13) 1.25	
139+00.00	102	8.25	0	0	0	0	0	0	0
140+00.00	193	11.25	0	545	36	0	545	0	509
140+27.90	205	11.25	0	205	12	0	751	0	703
141+00.00	265	11.25	0	627	30	0	1378	0	1300
141+13.00	317	11.25	0	140	5	0	1518	0	1435
142+00.00	262	11.25	0	933	36	0	2451	0	2332
143+00.00	157	11.25	0	777	42	0	3229	0	3067
144+00.00	118	11.25	0	510	42	0	3739	0	3536
144+19.41	99	11.25	0	78	8	0	3816	0	3606
145+00.00	100	11.25	0	296	34	0	4112	0	3868
146+00.00	153	11.25	0	467	42	0	4579	0	4293
147+00.00	206	11.25	0	665	42	0	5244	0	4916
147+47.00	198	11.25	0	352	20	0	5596	0	5248
148+00.00	157	11.25	0	348	22	0	5944	0	5575
149+00.00	90	11.25	0	457	42	0	6401	0	5989
150+00.00	31	11.25	6.03	225	42	11	6625	14	6158
151+00.00	25	11.25	18.89	104	42	46	6729	72	6163
152+00.00	60	11.25	32.09	157	42	94	6887	190	6161
152+25.00	45	11.25	35.99	49	10	32	6936	229	6160
153+00.00	91	11.25	25.87	189	31	86	7125	336	6211
154+00.00	156	11.25	4.32	456	42	56	7581	406	6555
155+00.00	95	11.25	2.35	465	42	12	8046	422	6963
156+00.00	27	11.25	49.28	226	42	96	8272	541	7028
157+00.00	17	11.25	48.76	82	42	182	8354	768	6841
158+00.00	60	11.25	1.87	143	42	94	8497	885	6825
159+00.00	186	11.25	0	456	42	3	8953	890	7235
160+00.00	188	11.25	0	692	42	0	9645	890	7886
161+00.00	120	11.25	0	571	42	0	10216	890	8415
162+00.00	84	11.25	1.64	378	42	3	10593	894	8747
162+61.00	68	11.25	1.64	171	25	4	10764	898	8888
163+00.00	110	11.25	0	129	16	1	10893	900	8999
163+53.00	103	11.25	0	210	22	0	11103	900	9187
164+00.00	120	11.25	0	195	20	0	11297	900	9362

CTH AA

STATION	AREA (SF)			Incremental Vol (CY) (Unadjusted)			Cumulative Vol (CY)		Mass Ordinate (14)
	Cut (2)	Salvaged Unusable Pvm't Mtrl	Fill	Cut (2)	Salvaged Unusable Pvm't Mtrl	Fill	Cut 1.00	Expanded Fill (13) 1.25	
164+42.00	97	11.25	0	169	18	0	11466	900	9513
164+96.00	79	11.25	7.42	176	23	7	11643	909	9658
165+00.00	81	11.25	7.35	12	2	1	11655	910	9667
165+65.00	15	11.25	20.38	115	27	33	11770	952	9713
166+00.00	2	11.25	18.03	11	15	25	11781	983	9678
167+00.00	0	11.25	129.14	4	42	273	11785	1324	9300
167+35.00	0	11.25	164.48	0	15	190	11785	1562	9048
168+00.00	1	11.25	78.11	1	27	292	11786	1927	8657
168+17.54	2	11.25	75.09	1	7	50	11787	1989	8588
169+00.00	33	11.25	9.78	53	34	130	11840	2151	8445
170+00.00	74	11.25	1.17	199	42	20	12039	2176	8576
170+38.23	34	11.25	10.18	77	16	8	12115	2186	8627
171+00.00	16	11.25	13.19	57	26	27	12172	2220	8625
172+00.00	0	11.25	56.6	29	42	129	12201	2381	8451
173+00.00	2	11.25	33.77	4	42	167	12205	2590	8204
173+52.26	24	11.25	18.65	25	22	51	12231	2654	8144
174+00.00	56	11.25	2.06	70	20	18	12301	2677	8171
175+00.00	150	11.25	0	381	42	4	12682	2682	8506
176+00.00	69	11.25	0.54	406	42	1	13089	2683	8870
176+57.00	74	11.25	9.12	151	24	10	13240	2696	8984
177+00.00	52	11.25	4.85	100	18	11	13340	2709	9053
177+74.15	46	11.25	4.31	135	31	13	13475	2725	9141
178+00.00	51	11.25	0.02	47	11	2	13521	2728	9174
179+00.00	43	11.25	8.81	175	42	16	13696	2748	9287
180+00.00	100	11.25	0	265	42	16	13962	2769	9490
181+00.00	204	11.25	0	562	42	0	14524	2769	10011
182+00.00	225	11.25	0	794	42	0	15318	2769	10764
183+00.00	63	11.25	18.12	534	42	34	15853	2811	11214
183+60.00	99	11.25	26.6	181	25	50	16033	2873	11308
184+00.00	34	11.25	27.34	99	17	40	16132	2923	11340
184+22.11	35	11.25	18.68	28	9	19	16160	2946	11335
185+00.00	24	11.25	23.16	84	32	60	16244	3022	11311
185+75.00	67	11.25	0.49	126	31	33	16371	3063	11366
186+00.00	83	11.25	3.14	70	10	2	16440	3065	11423
186+92.00	101	11.25	0.74	314	38	7	16754	3073	11690
NORTH/SOUTH TOTAL (INCLUDES STA 139+00 - 186+92) =				16754	1991	2458			

INCLUDES 1.25 FILL EXPANSION FACTOR

2) Salvaged/Unsuable Pavement Material is included in Cut.

13) Expanded Fill. Factor = 1.25 **Expanded Fill - Unexpanded Fill * Fill Factor**

14) The Mass Ordinate + or - Qty calculated for the Division. Plus quantity indicates an excess of material within the Division. Minus indicates a shortage of material within the Division.

9

9

PROJECT NO: 7824-00-09/13	HWY: CTH AA	COUNTY: EAU CLAIRE	EARTHWORK DETAIL – CTH AA	SHEET NO: 182	E

FILE NAME : S:\Projects\NW\Eau Claire County\CTH K\500_CADD\501_C3D\10100202\Design\Quantities\EWKDetailWorkbooks PLOT DATE : 10/26/2015 PLOT BY : _____ PLOT NAME : _____ ORG DATE : _Dec. 2003 ORIGINATOR : DIST 4_ PLOT SCALE : 1:1

CTH AA

STATION	AREA (SF)			Incremental Vol (CY) (Unadjusted)			Cumulative Vol (CY)		Mass Ordinate (14)
	Cut (2)	Salvaged Unusable Pvm't Mtrl	Fill	Cut (2)	Salvaged Unusable Pvm't Mtrl	Fill	Cut 1.00	Expanded Fill (13) 1.25	
95+00.00	77	8.25	49	0	0	0	0	0	0
96+00.00	26	8.25	114	190	31	302	190	378	-219
97+00.00	6	8.25	75	58	31	350	248	815	-629
97+39.00	5	8.25	61	8	12	98	256	938	-756
98+00.00	10	8.25	108	17	19	191	273	1177	-996
98+33.00	0	8.25	178	6	10	174	279	1395	-1218
98+58.00	0	8.25	298	0	8	220	279	1671	-1501
98+83.00	0	8.25	400	0	8	324	279	2075	-1913
99+00.00	0	8.25	288	0	5	217	279	2346	-2190
99+33.00	0	8.25	427	0	10	437	279	2893	-2746
100+00.00	0	8.25	0	0	20	530	279	3554	-3428
100+06.75	0	8.25	321	0	2	40	279	3605	-3481
100+57.00	0	8.25	876	0	15	1113	279	4996	-4888
100+82.00	0	8.25	876	0	8	811	279	6010	-5909
101+00.00	0	8.25	863	0	6	580	279	6735	-6639
101+07.00	0	8.25	869	0	2	224	279	7015	-6922
102+00.00	0	8.25	420	0	28	2219	279	9789	-9724
103+00.00	388	8.25	33	718	31	838	997	10837	-10085
104+00.00	597	8.25	0	1824	31	61	2821	10913	-8368
			7824-00-13 TOTAL	2821	275	8731			

INCLUDES 1.25 FILL EXPANSION FACTOR

2) Salvaged/Unsuable Pavement Material is included in Cut.

13) Expanded Fill. Factor = 1.25 **Expanded Fill - Unexpanded Fill * Fill Factor**

14) The Mass Ordinate + or - Qty calculated for the Division. Plus quantity indicates an excess of material within the Division. Minus indicates a shortage of material within the Division.

9

9

PROJECT NO: 7824-00-09/13	HWY: CTH AA	COUNTY: EAU CLAIRE	EARTHWORK DETAIL – CTH AA	SHEET NO:	E

FILE NAME : S:\Projects\NW\Eau Claire County\CTH K\500_CADD\501_C3D\10100202\Design\Quantities\EWKDetailWorkbooks PLOT DATE : 10/26/2015 PLOT BY : _____ PLOT NAME : _____ ORG DATE : _Dec. 2003 ORIGINATOR : DIST 4_ PLOT SCALE : 1:1

CTH AA

	STATION	AREA (SF)			Incremental Vol (CY) (Unadjusted)			Cumulative Vol (CY)		Mass Ordinate (14)
		Cut (2)	Salvaged Unusable Pvm't Mtrl	Fill	Cut (2)	Salvaged Unusable Pvm't Mtrl	Fill	Cut 1.00	Expanded Fill (13) 1.25	
Mayer Rd	08+50	29	11	0	0	0	0	0	0	0
	09+00	70	11	15	91	21	14	91	17	53
	09+50	123	11	13	178	21	25	269	49	179
				Mayer Rd Total	**269**	**42**	**39**			
Prill Rd	10+50	110	11	12	0	0	0	0	0	0
	11+00	46	11	10	144	19	20	144	25	99
	11+35	27	11	0	47	14	7	192	34	125
				Prill Rd Total	**192**	**33**	**27**			
Pleasant View Rd	10+40	57	8	45	0	0	0	0	0	0
	10+50	102	8	15	29	3	11	29	14	13
	11+15	28	8	0	156	20	18	185	36	126
				Pleasant View Rd Total	**185**	**23**	**29**			
House Rd	08+53	51	8	0	0	0	0	0	0	0
	09+00	51	0	0	89	8	0	89	0	81
				House Rd Total	**89**	**8**	**0**			

2) Salvaged/Unsuable Pavement Material is included in Cut.

13) Expanded Fill. Factor = 1.25 **Expanded Fill - Unexpanded Fill * Fill Factor**

14) The Mass Ordinate + or - Qty calculated for the Division. Plus quantity indicates an excess of material within the Division. Minus indicates a shortage of material within the Division.

9

9

PROJECT NO: 7824-00-09/13	HWY: CTH AA	COUNTY: EAU CLAIRE	EARTHWORK DETAIL – CTH AA	SHEET NO: 184	E

FILE NAME : S:\Projects\NW\Eau Claire County\CTH K\500_CADD\501_C3D\10100202\Design\Quantities\EWKDetailWorkbooks PLOT DATE : 10/26/2015 PLOT BY : _____ PLOT NAME : _____ ORG DATE : _Dec. 2003 ORIGINATOR : DIST 4_ PLOT SCALE : 1:1

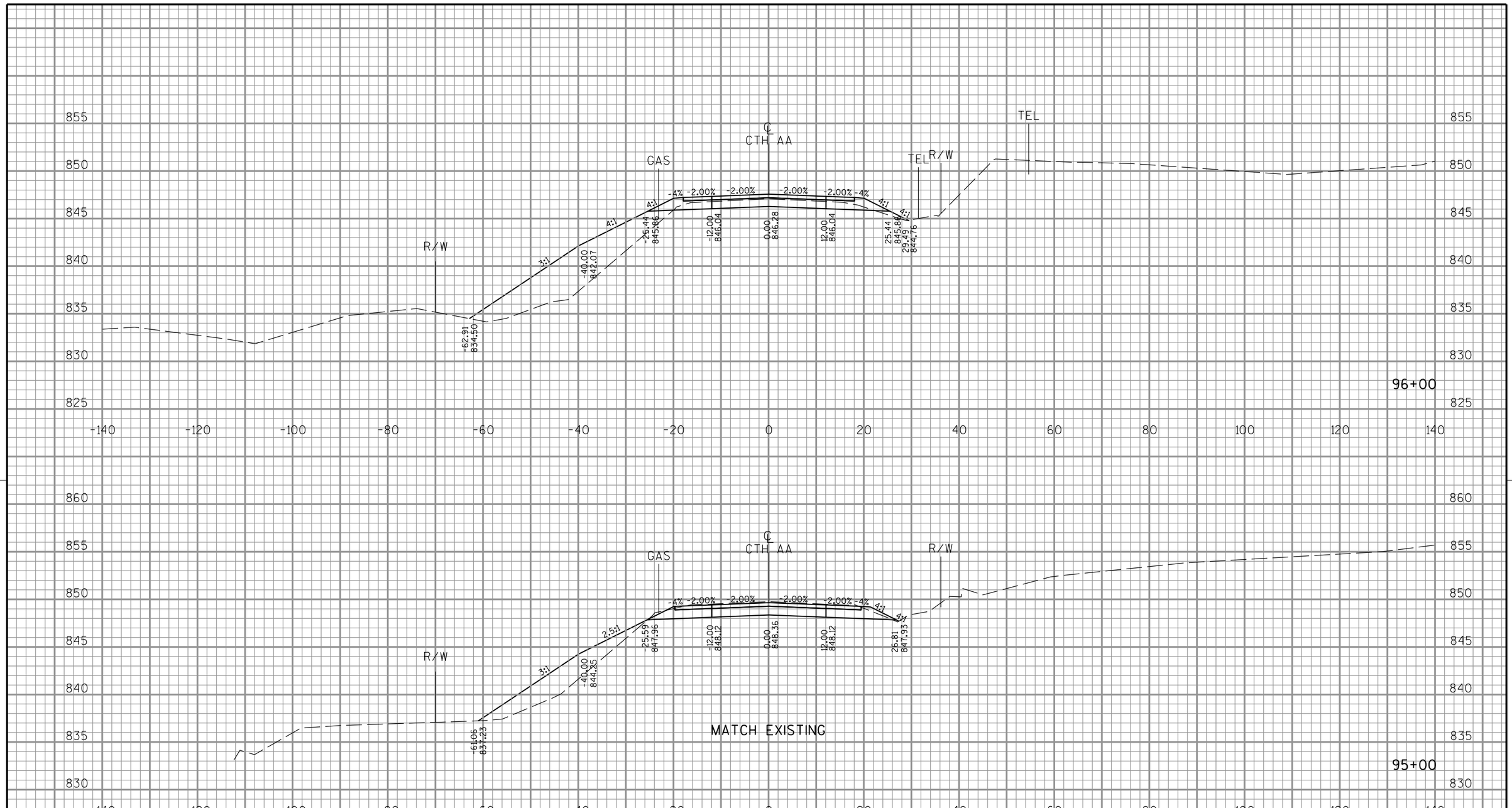

PROJECT NO: 7824-00-13	HWY: CTH AA	COUNTY: EAU CLAIRE	CROSS SECTIONS: MAINLINE	SHEET 185	E

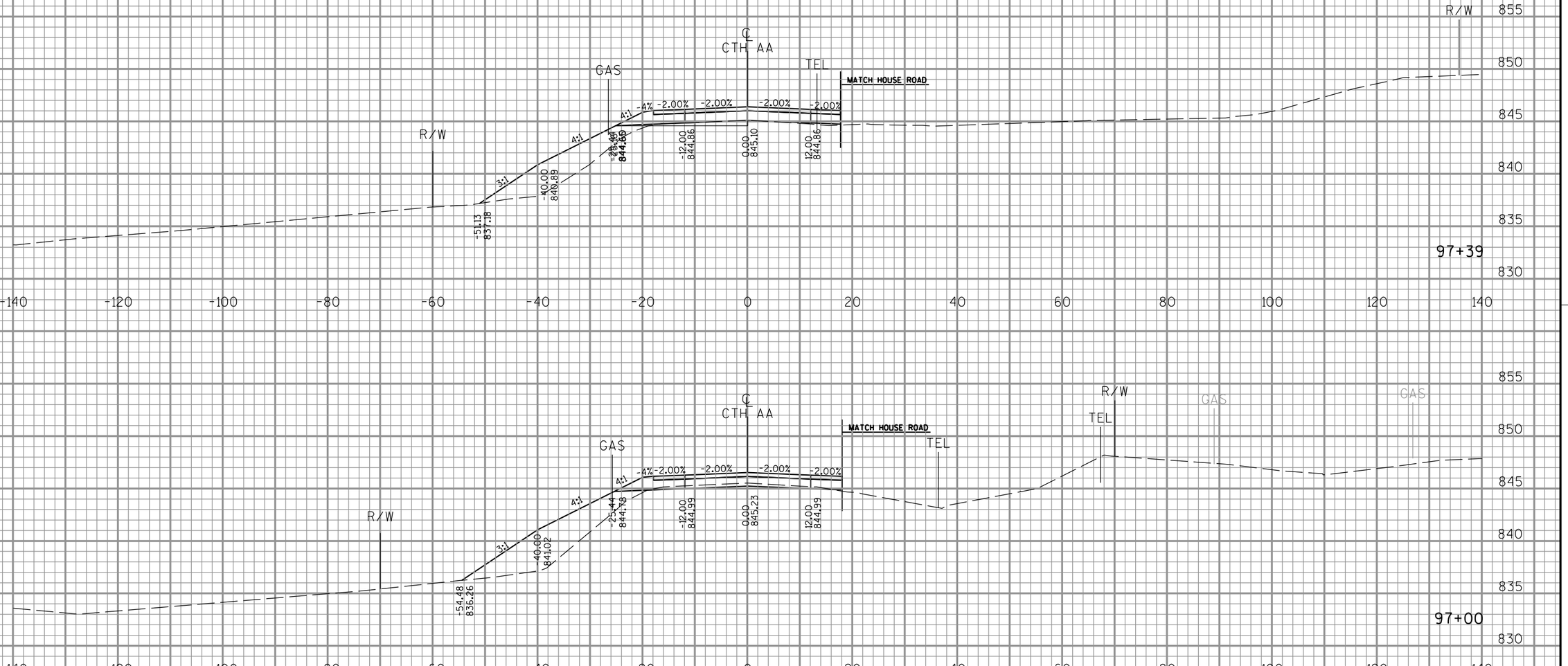

9

9

PROJECT NO: 7824-00-13	HWY: CTH AA	COUNTY: EAU CLAIRE	CROSS SECTIONS: MAINLINE	SHEET 186	E

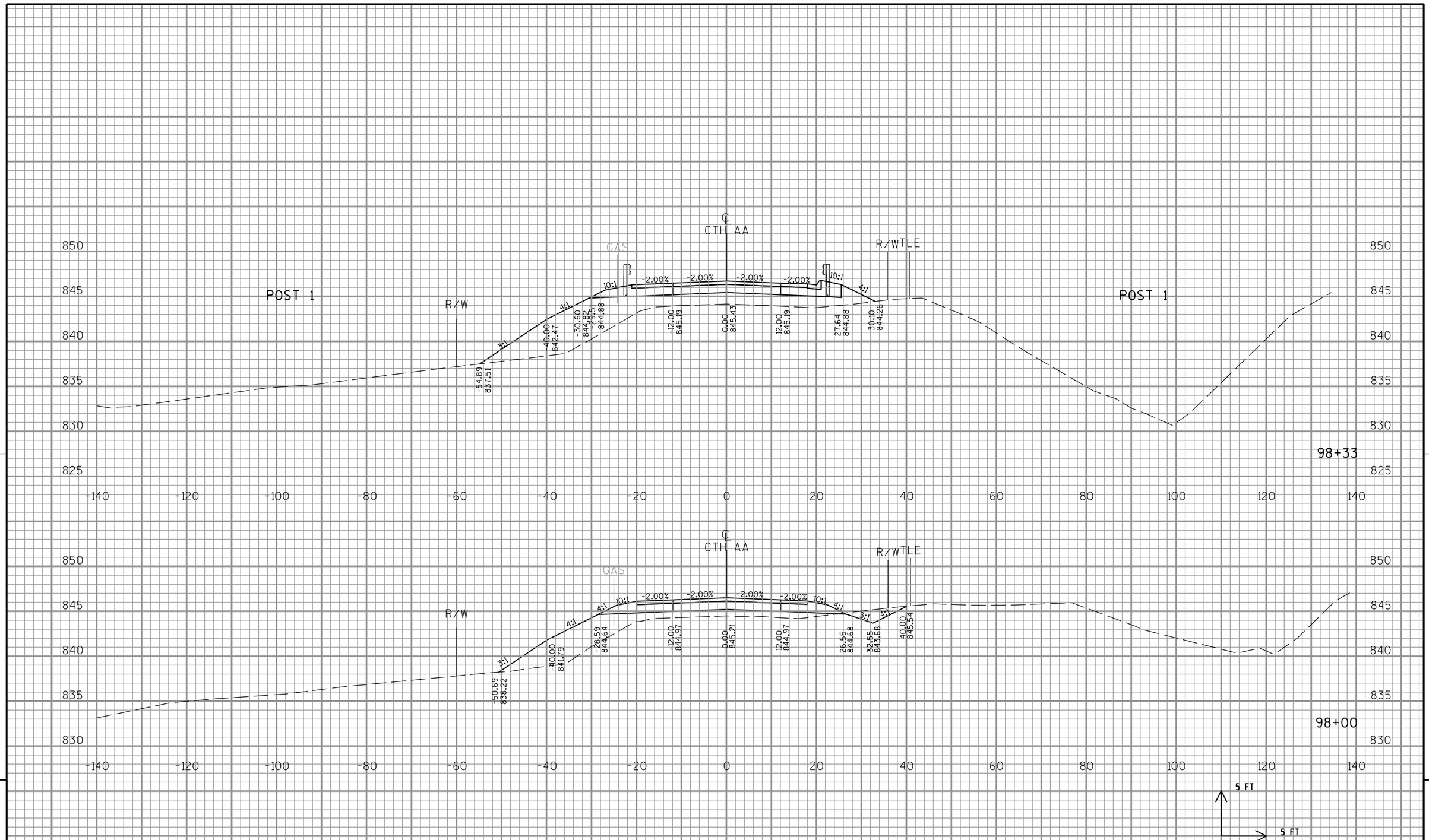

9

9

PROJECT NO: 7824-00-13	HWY: CTH AA	COUNTY: EAU CLAIRE	CROSS SECTIONS: MAINLINE	SHEET 187	E

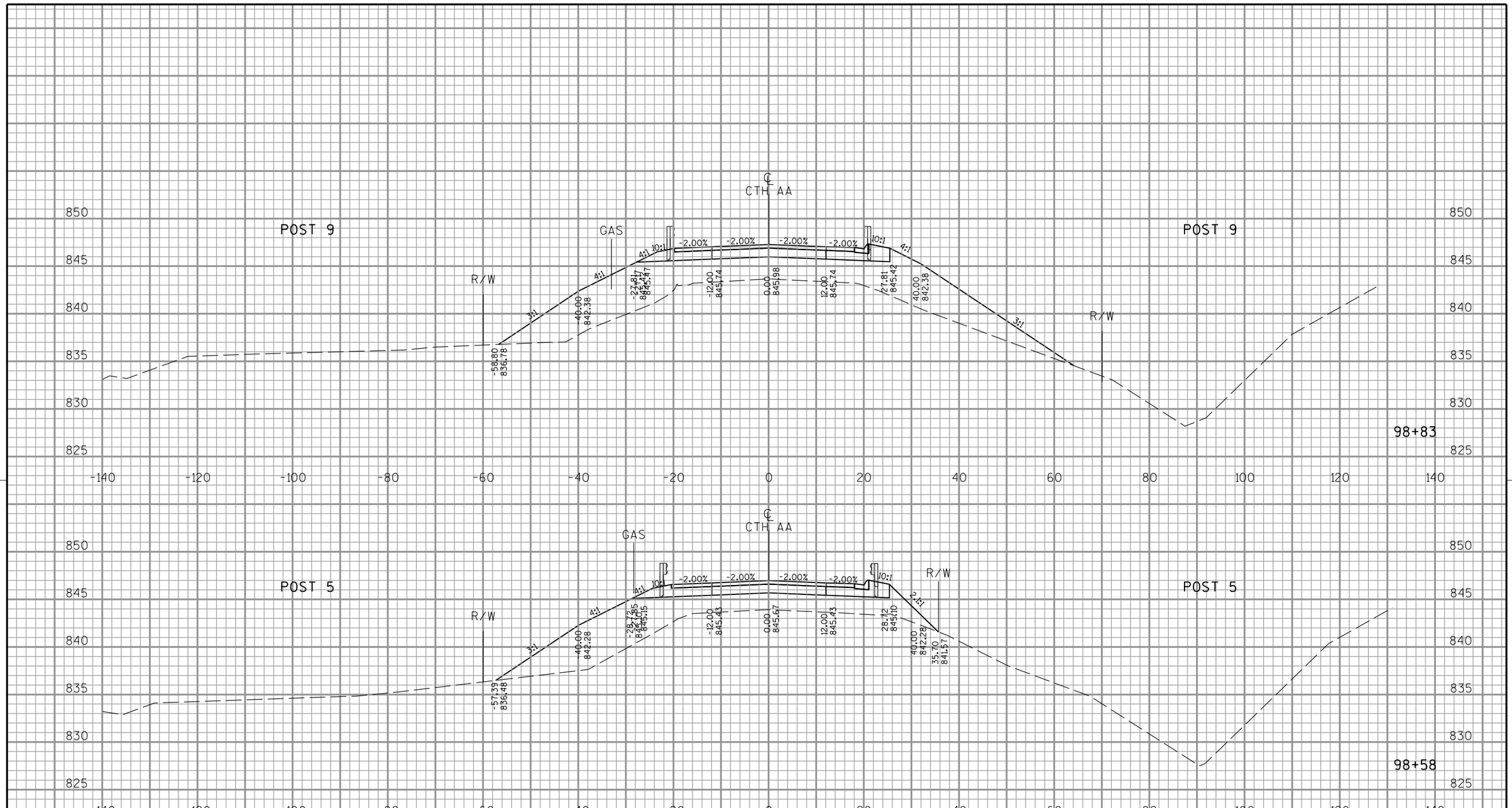

9

9

PROJECT NO: 7824-00-13	HWY: CTH AA	COUNTY: EAU CLAIRE	CROSS SECTIONS: MAINLINE	SHEET 188	E

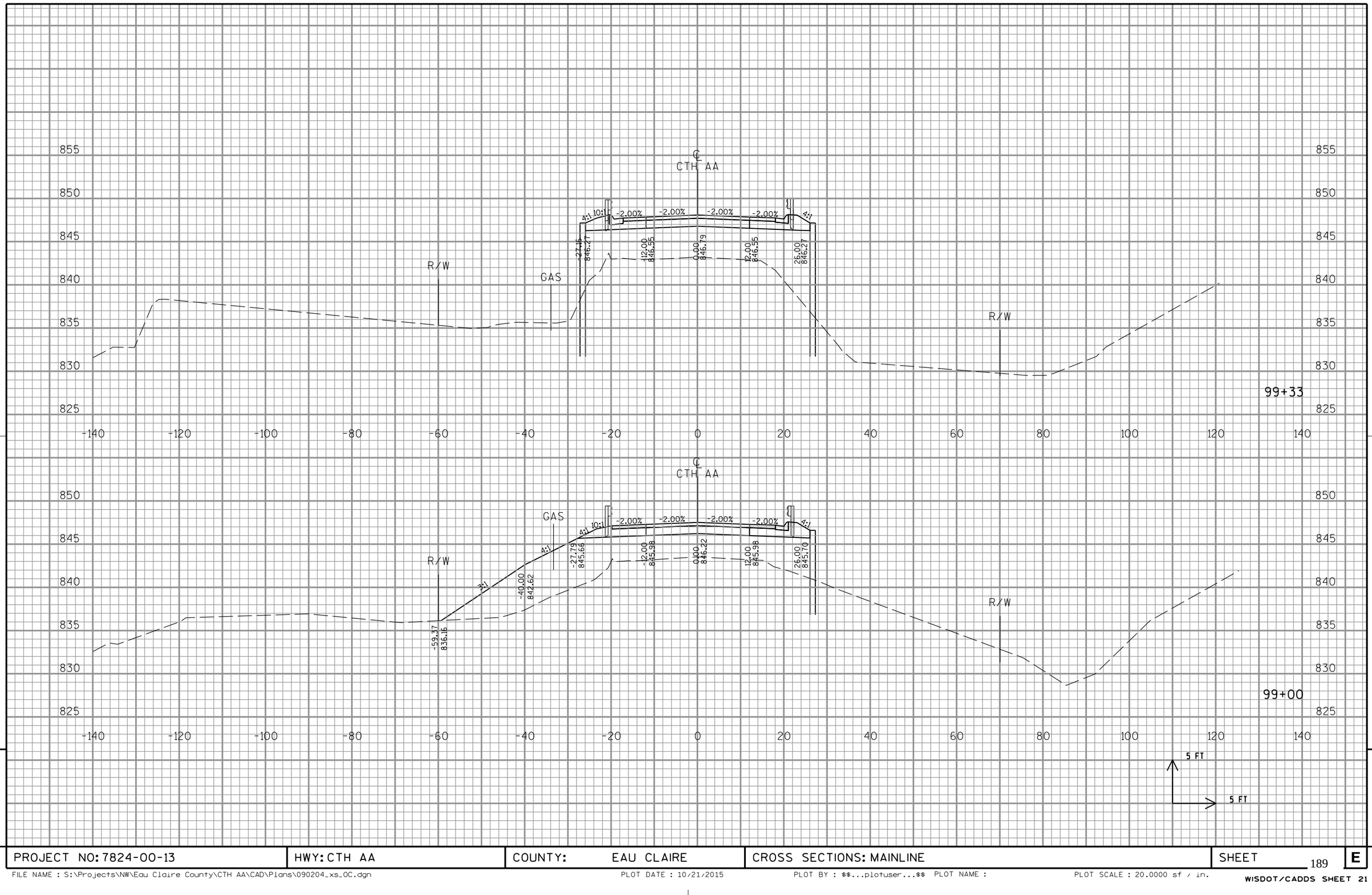

9

9

PROJECT NO: 7824-00-13	HWY: CTH AA	COUNTY: EAU CLAIRE	CROSS SECTIONS: MAINLINE	SHEET 189	E

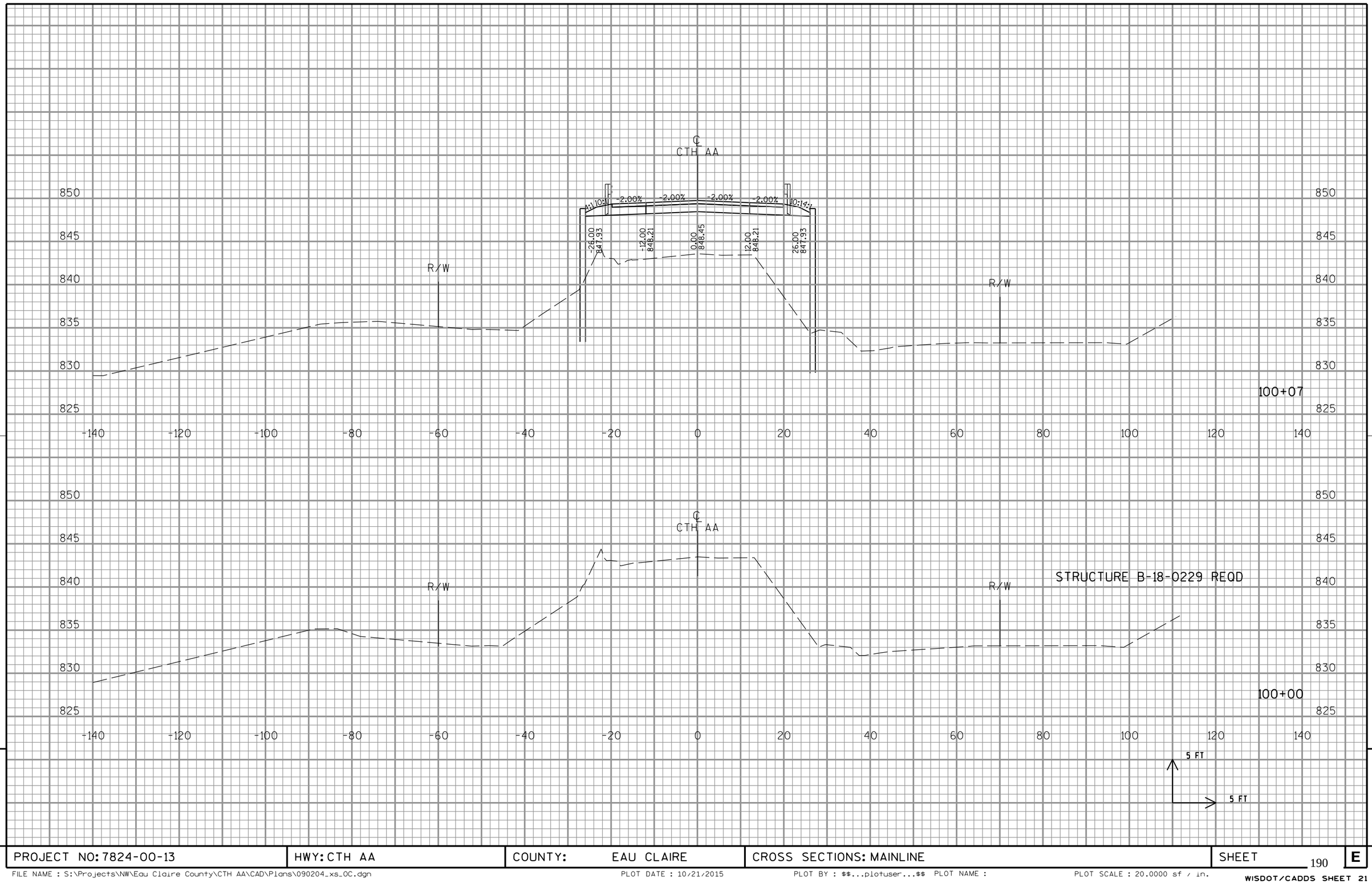

9

9

PROJECT NO: 7824-00-13	HWY: CTH AA	COUNTY: EAU CLAIRE	CROSS SECTIONS: MAINLINE	SHEET 190	E

FILE NAME : S:\Projects\NW\Eau Claire County\CTH AA\CAD\Plans\090204_xs_0C.dgn PLOT DATE : 10/21/2015 PLOT BY : $$...plotuser...$$ PLOT NAME : PLOT SCALE : 20.0000 sf / in.

POST 5

CTH AA

POST 5

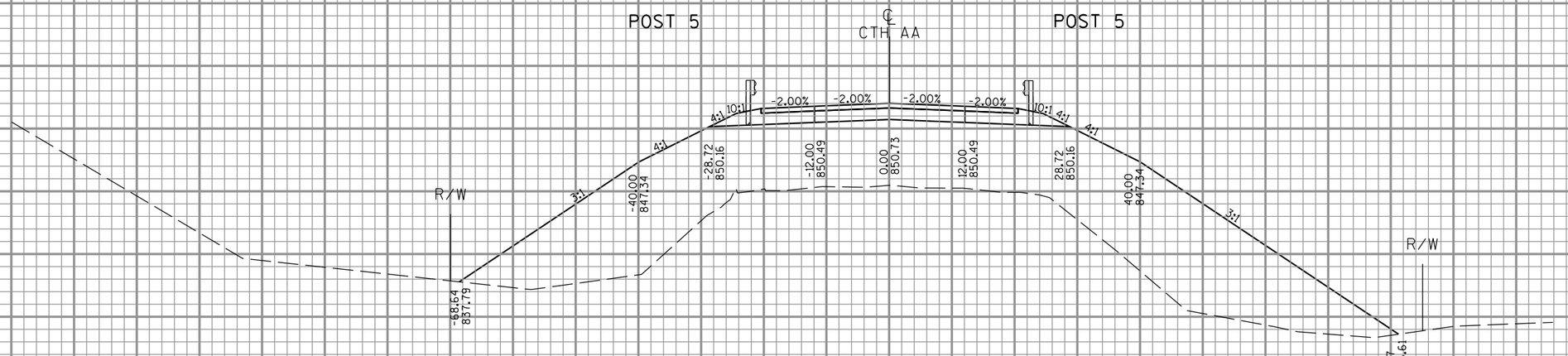

POST 9

CTH AA

POST 9

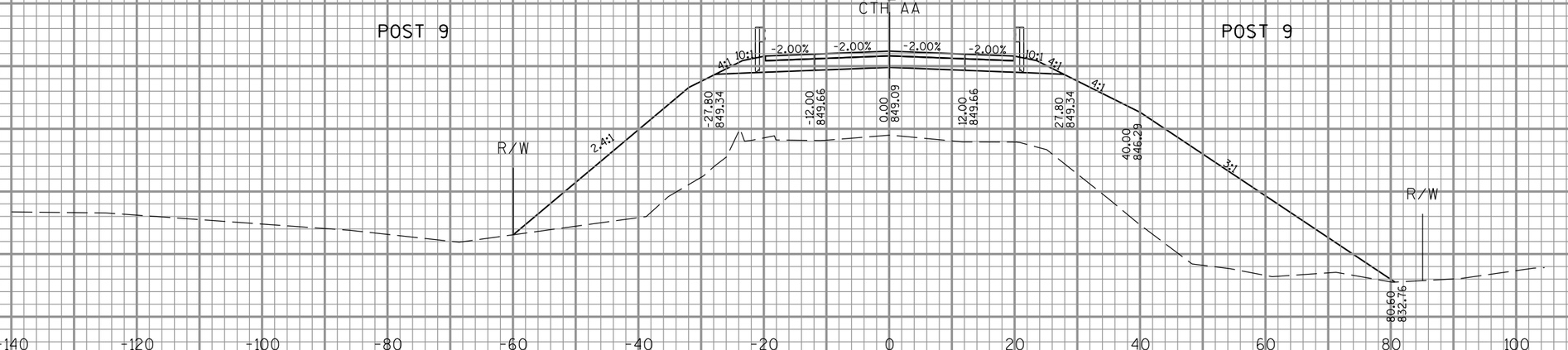

5 FT

5 FT

9

9

PROJECT NO: 7824-00-13	HWY: CTH AA	COUNTY: EAU CLAIRE	CROSS SECTIONS: MAINLINE	SHEET 191	E

FILE NAME : S:\Projects\NW\Eau Claire County\CTH AA\CAD\Plans\090204_xs_0C.dgn PLOT DATE : 10/21/2015 PLOT BY : $$...plotuser...$$ PLOT NAME : PLOT SCALE : 20.0000 sf / in.

WISDOT/CADDS SHEET 21

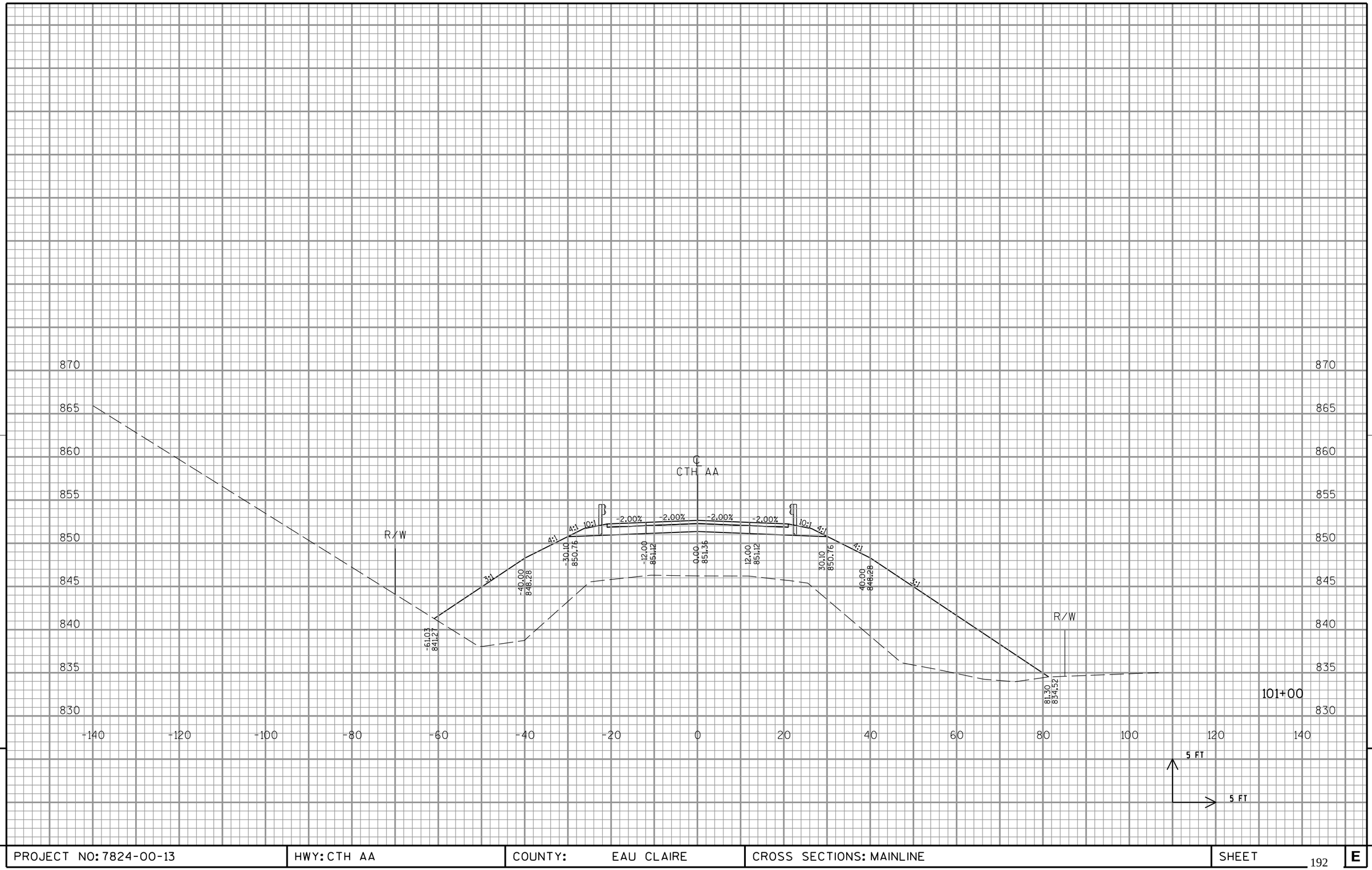

PROJECT NO: 7824-00-13	HWY: CTH AA	COUNTY: EAU CLAIRE	CROSS SECTIONS: MAINLINE	SHEET 192	E

FILE NAME : S:\Projects\NW\Eau Claire County\CTH AA\CAD\Plans\090204_xs_0C.dgn PLOT DATE : 10/21/2015 PLOT BY : $$...plotuser...$$ PLOT NAME : PLOT SCALE : 20.0000 sf / in.

WISDOT/CADDS SHEET 21

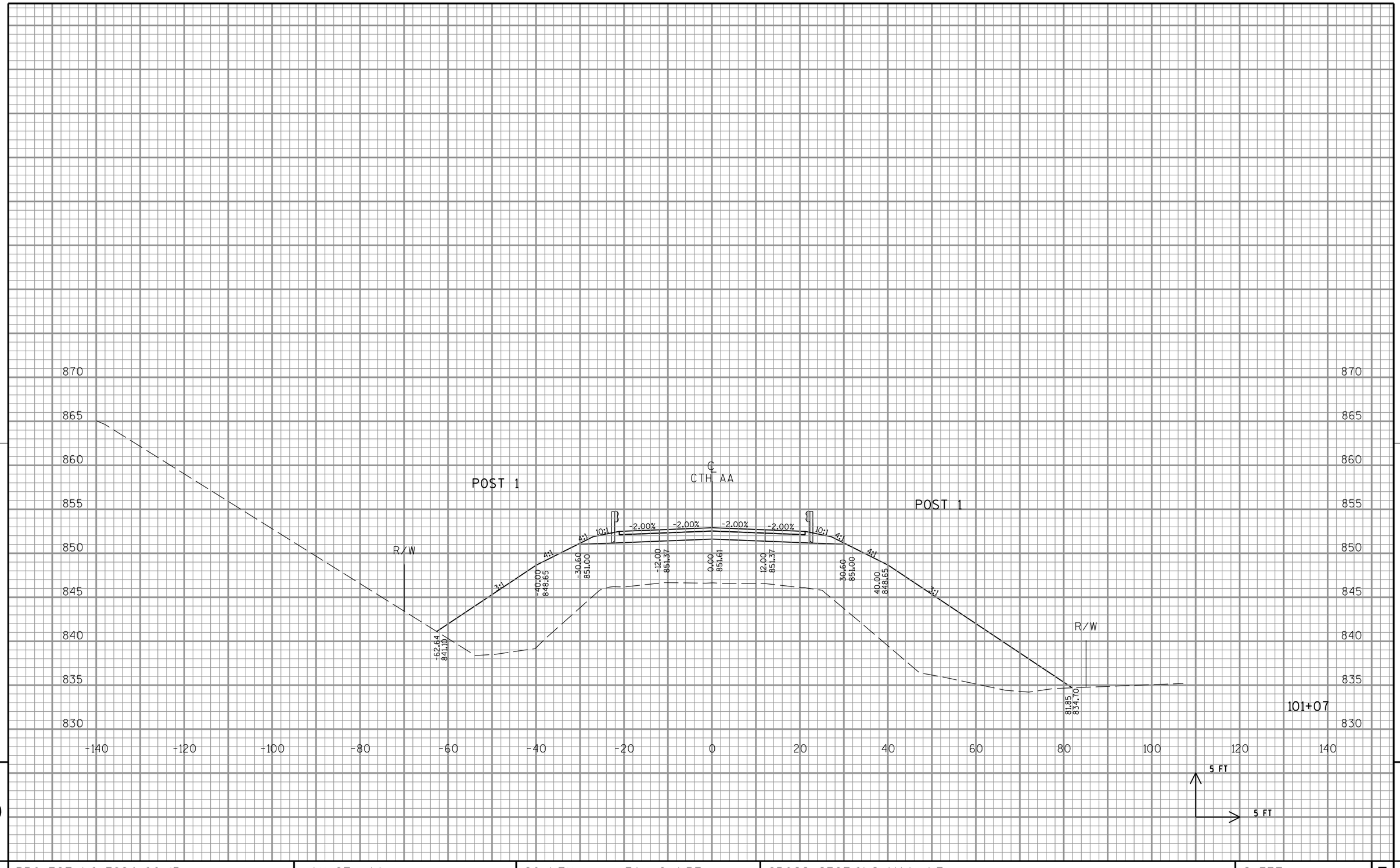

PROJECT NO: 7824-00-13	HWY: CTH AA	COUNTY: EAU CLAIRE	CROSS SECTIONS: MAINLINE	SHEET 193	E

FILE NAME : S:\Projects\NW\Eau Claire County\CTH AA\CAD\Plans\090204_xs_0C.dgn PLOT DATE : 10/21/2015 PLOT BY : $$...plotuser...$$ PLOT NAME : PLOT SCALE : 20.0000 sf / in.

WISDOT/CADDS SHEET 21

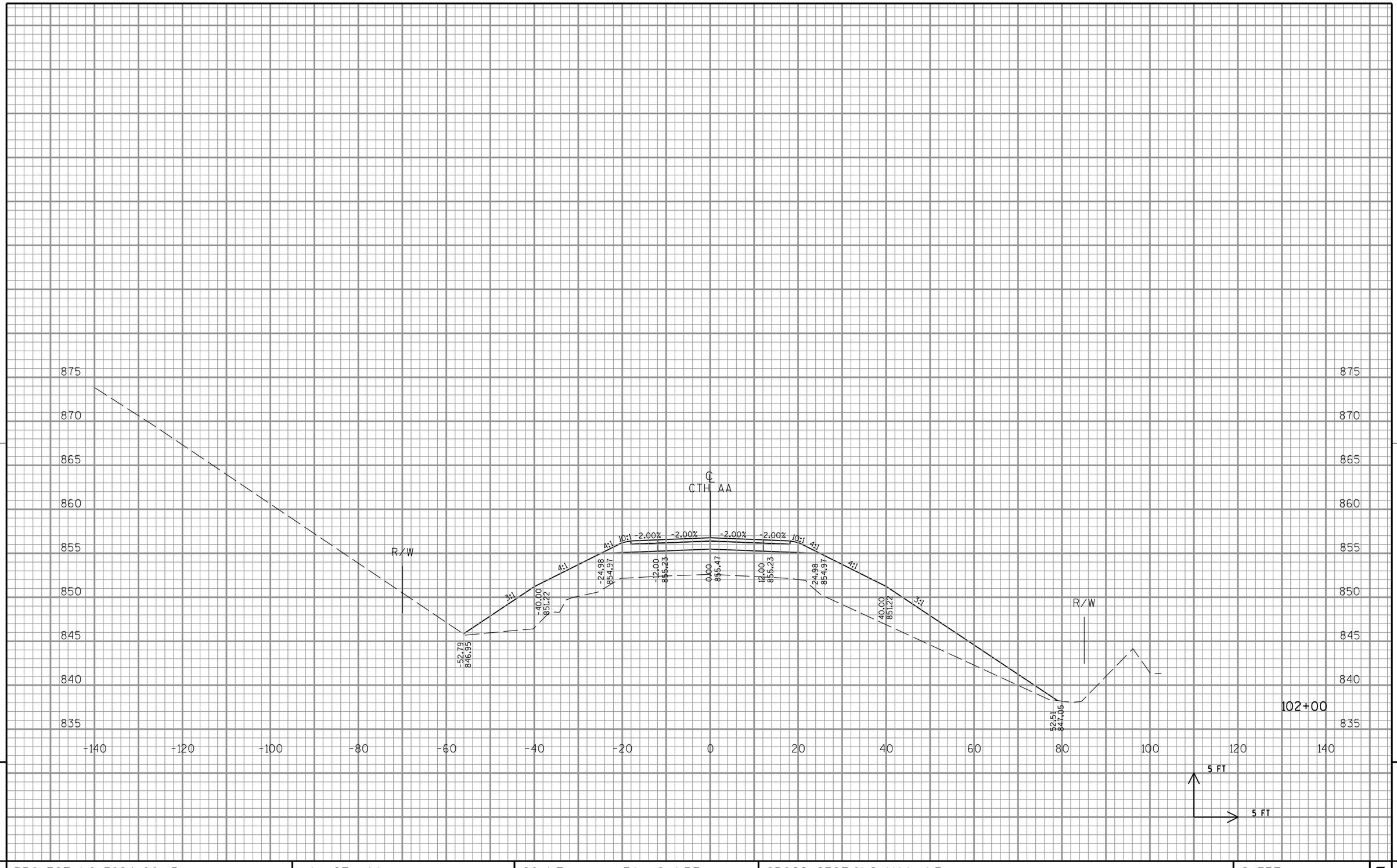

9

9

PROJECT NO: 7824-00-13	HWY: CTH AA	COUNTY: EAU CLAIRE	CROSS SECTIONS: MAINLINE	SHEET 194	E

FILE NAME : S:\Projects\NW\Eau Claire County\CTH AA\CAD\Plans\090204_xs_0C.dgn PLOT DATE : 10/21/2015 PLOT BY : $$...plotuser...$$ PLOT NAME : PLOT SCALE : 20.0000 sf / in.

WISDOT/CADDS SHEET 21

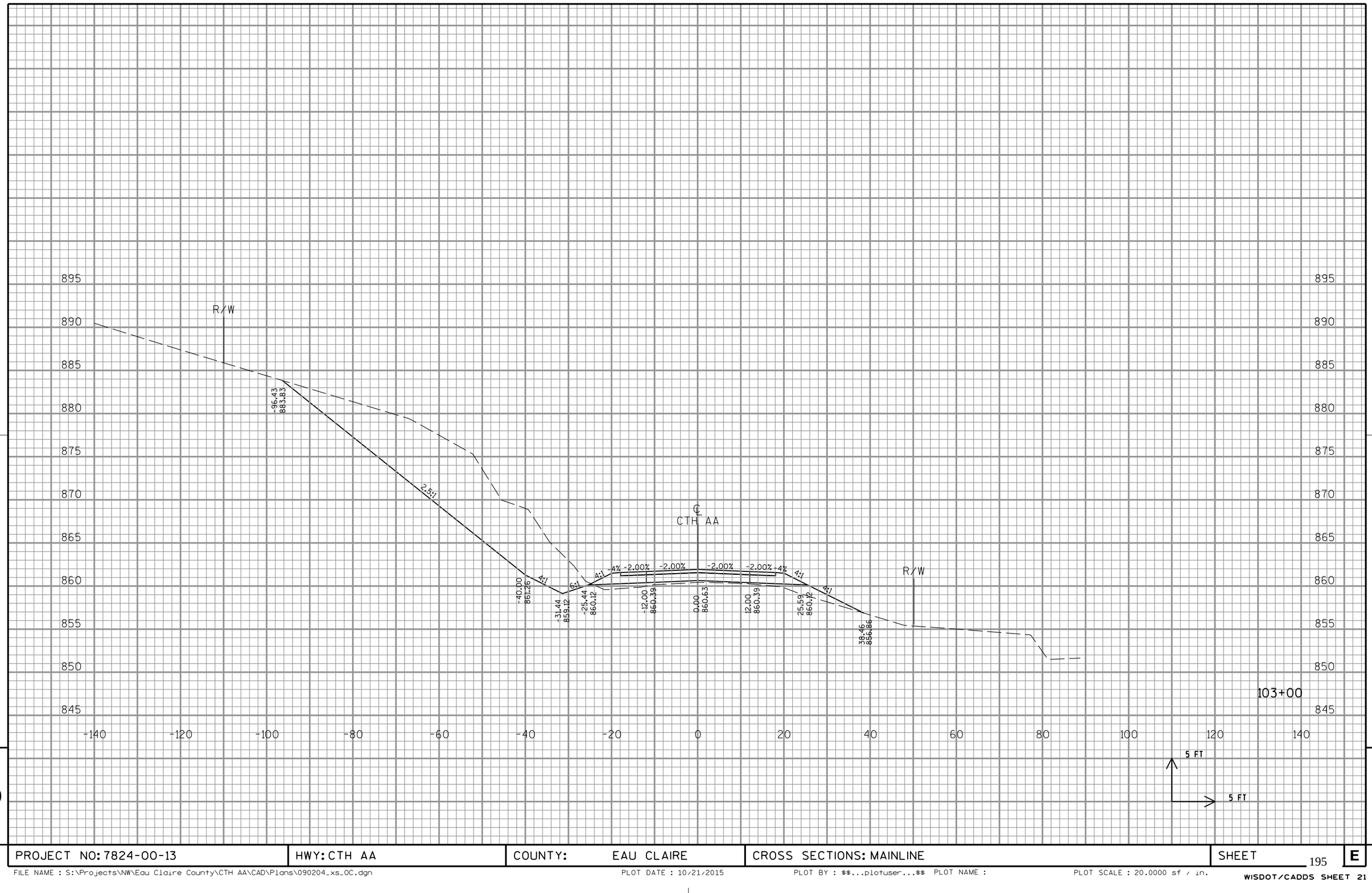

9

9

PROJECT NO: 7824-00-13	HWY: CTH AA	COUNTY: EAU CLAIRE	CROSS SECTIONS: MAINLINE	SHEET 195	E

FILE NAME : S:\Projects\NW\Eau Claire County\CTH AA\CAD\Plans\090204_xs_0C.dgn PLOT DATE : 10/21/2015 PLOT BY : $$...plotuser...$$ PLOT NAME : PLOT SCALE : 20.0000 sf / in.

WISDOT/CADDS SHEET 21

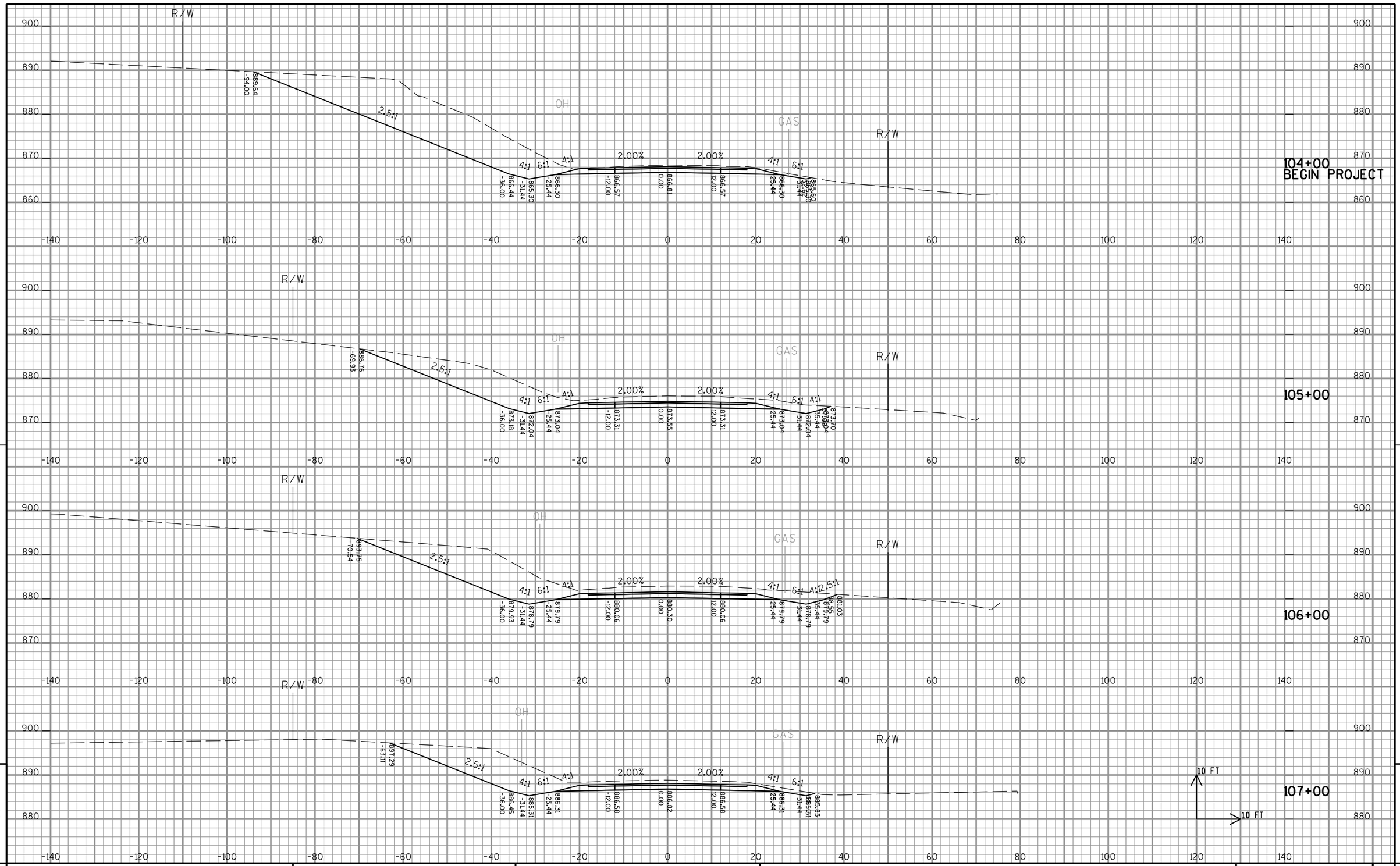

9

9

PROJECT NO: 7824-00-09	HWY: CTH AA	COUNTY: EAU CLAIRE	CROSS SECTIONS: CTH AA	SHEET 196	E

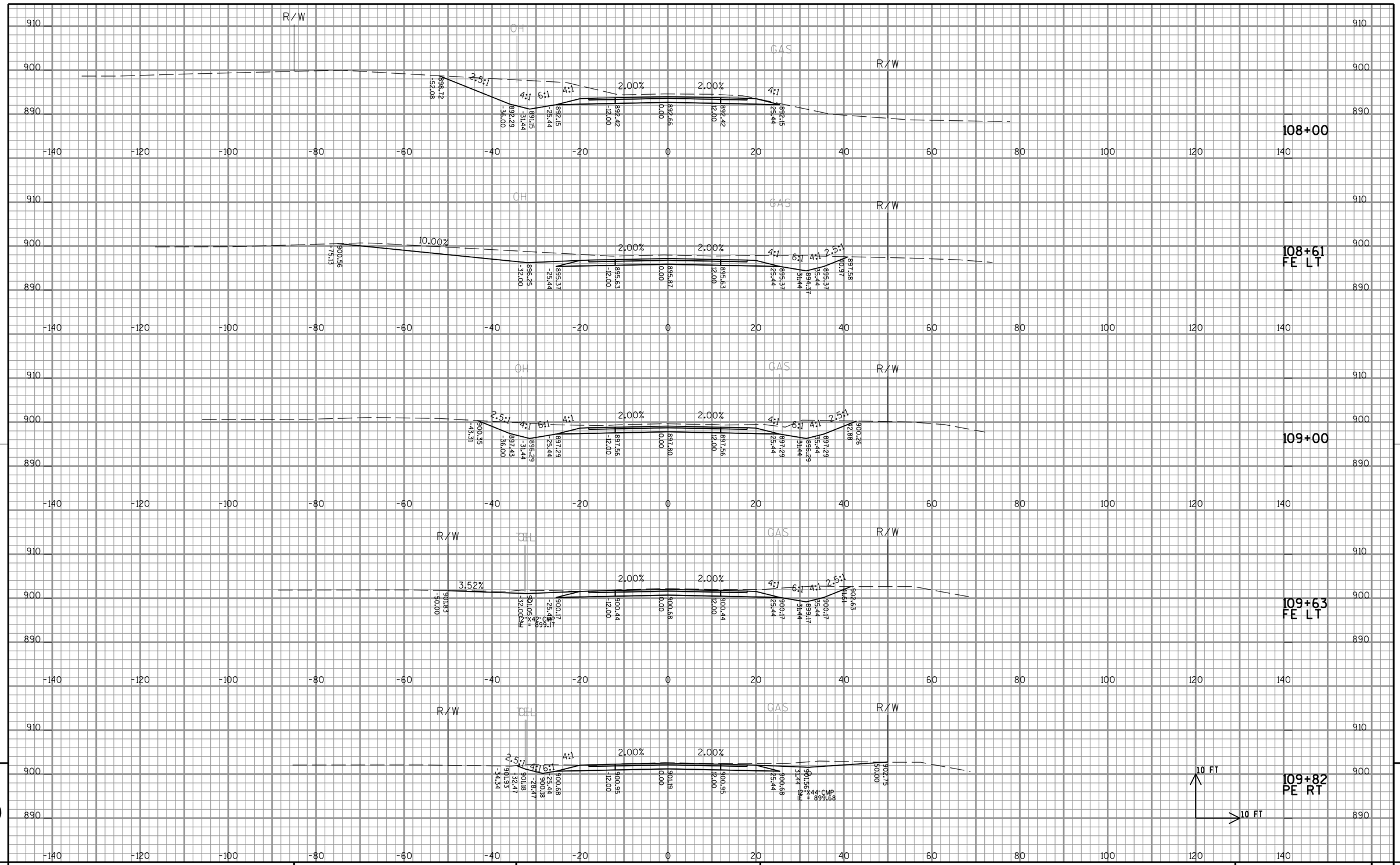

9

9

PROJECT NO: 7824-00-09	HWY: CTH AA	COUNTY: EAU CLAIRE	CROSS SECTIONS: CTH AA	SHEET 197	E

FILE NAME : S:\Projects\NW\Eau Claire County\CTH AA\CAD\Plans\090201_xs_AA.dgn PLOT DATE : 10/23/2015 PLOT BY : CORRE, Inc. PLOT NAME : PLOT SCALE : 20.0000 sf / in.

WISDOT/CADDS SHEET 21

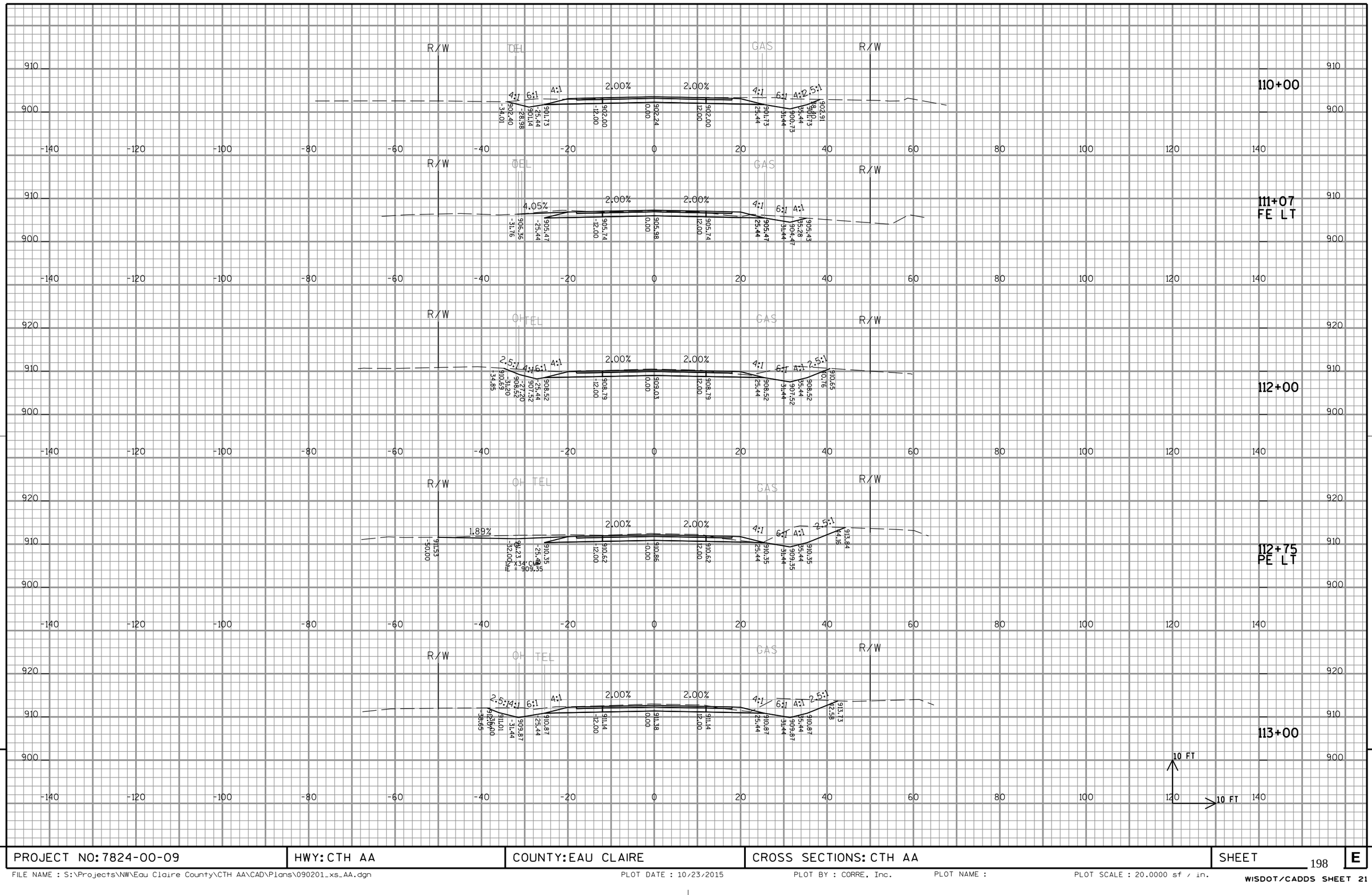

9

9

PROJECT NO: 7824-00-09	HWY: CTH AA	COUNTY: EAU CLAIRE	CROSS SECTIONS: CTH AA	SHEET 198	E

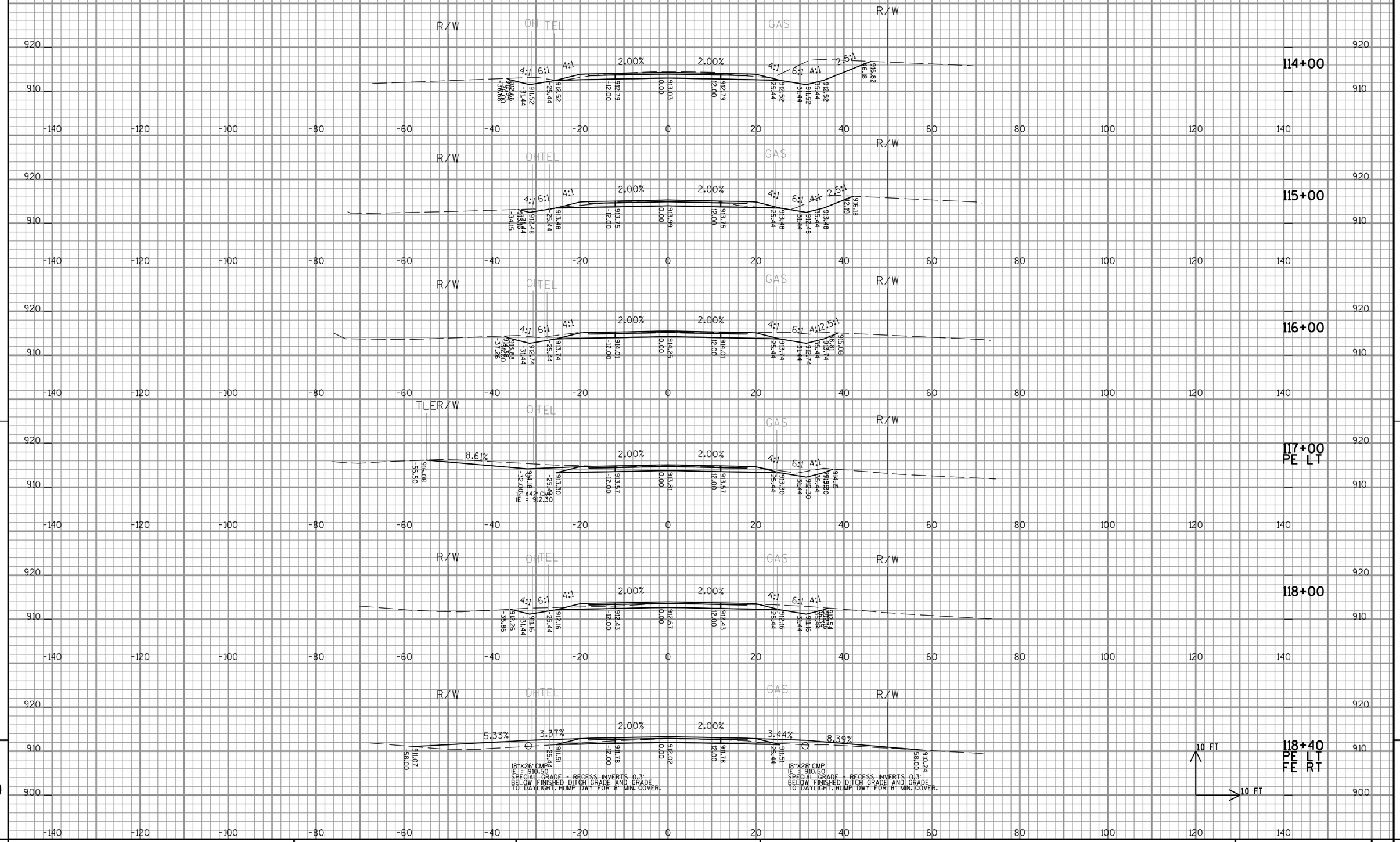

9

PROJECT NO: 7824-00-09	HWY: CTH AA	COUNTY: EAU CLAIRE	CROSS SECTIONS: CTH AA	SHEET 199	E

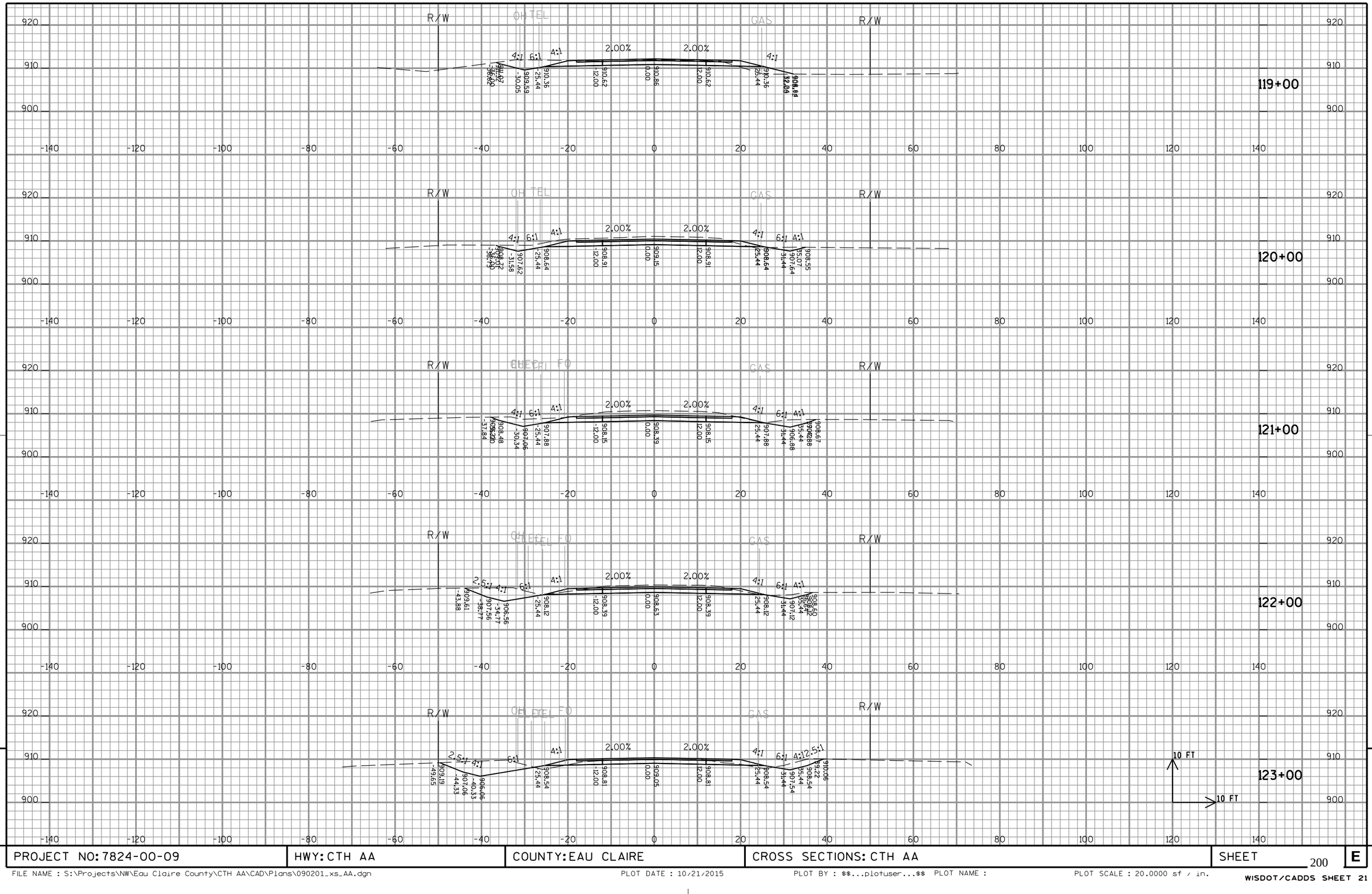

9

9

PROJECT NO: 7824-00-09	HWY: CTH AA	COUNTY: EAU CLAIRE	CROSS SECTIONS: CTH AA	SHEET 200	E

FILE NAME : S:\Projects\NW\Eau Claire County\CTH AA\CAD\Plans\090201_xs_AA.dgn PLOT DATE : 10/21/2015 PLOT BY : $$...plotuser...$$ PLOT NAME : PLOT SCALE : 20.0000 sf / in.

WISDOT/CADDS SHEET 21

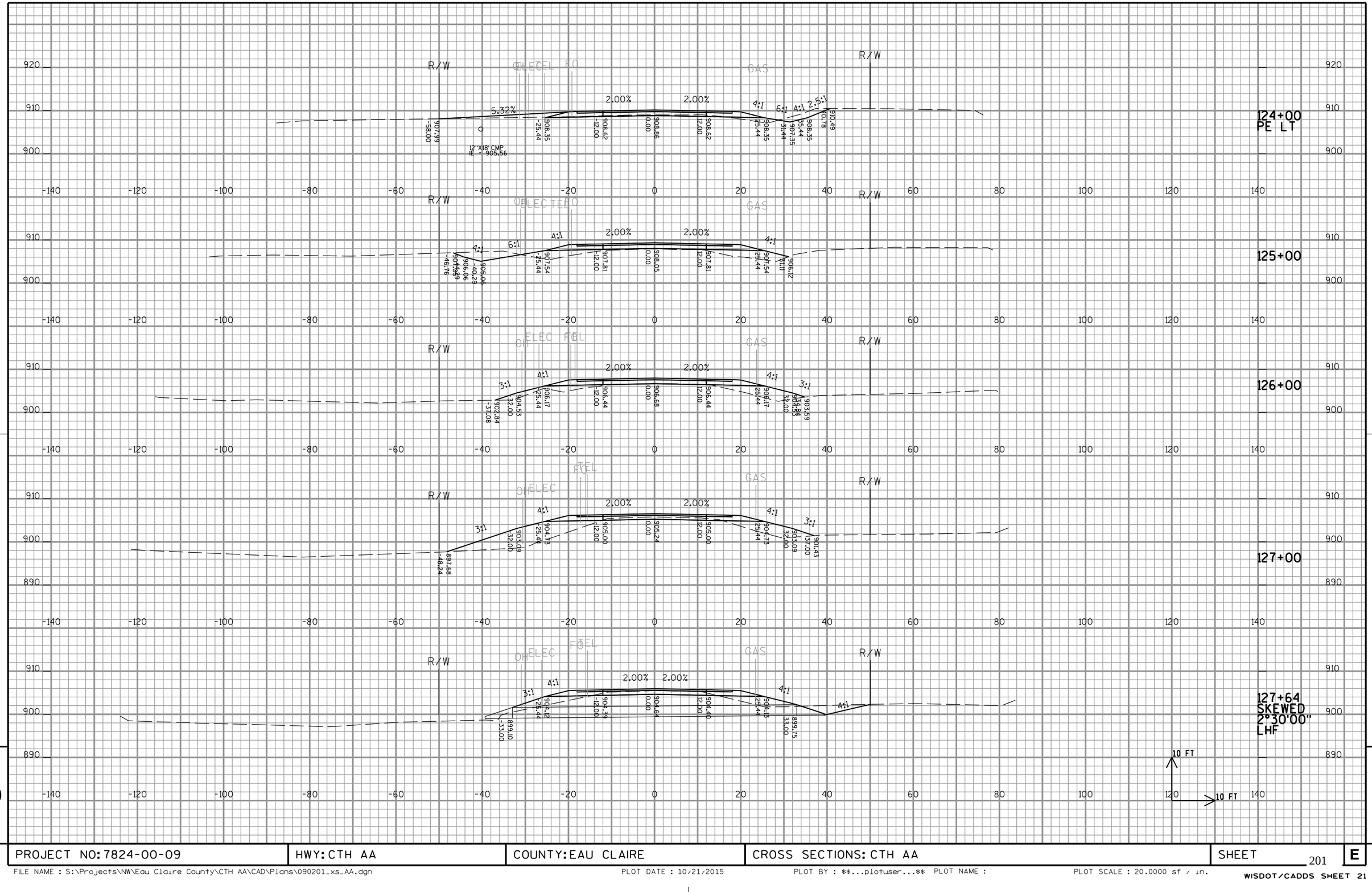

PROJECT NO: 7824-00-09	HWY: CTH AA	COUNTY: EAU CLAIRE	CROSS SECTIONS: CTH AA	SHEET 201	E

FILE NAME : S:\Projects\NW\Eau Claire County\CTH AA\CAD\Plans\090201_xs_AA.dgn PLOT DATE : 10/21/2015 PLOT BY : $$...plotuser...$$ PLOT NAME : PLOT SCALE : 20.0000 sf / in.

WISDOT/CADDS SHEET 21

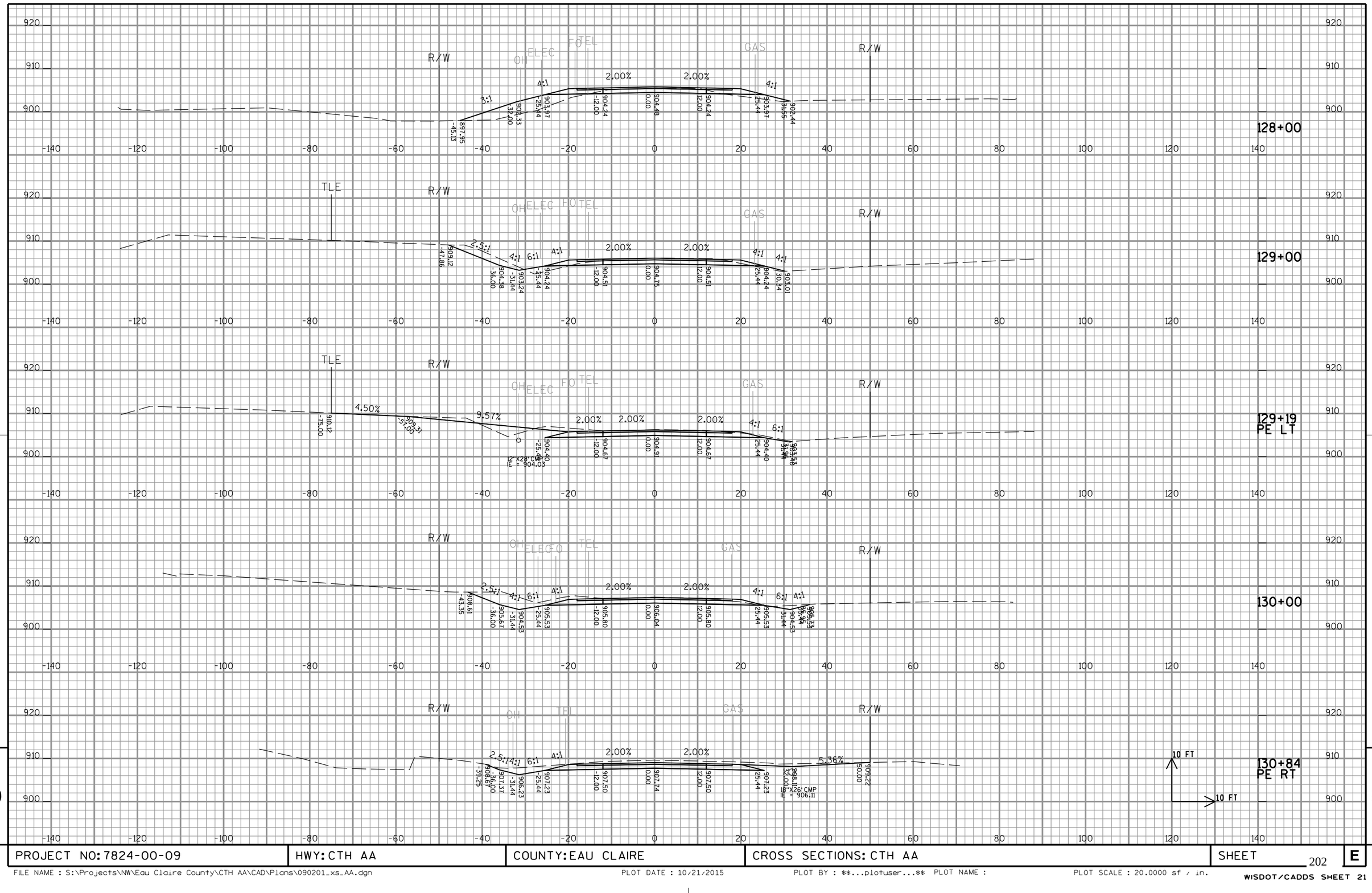

9

9

PROJECT NO: 7824-00-09	HWY: CTH AA	COUNTY: EAU CLAIRE	CROSS SECTIONS: CTH AA	SHEET 202	E

FILE NAME : S:\Projects\NW\Eau Claire County\CTH AA\CAD\Plans\090201_xs_AA.dgn PLOT DATE : 10/21/2015 PLOT BY : $$...plotuser...$$ PLOT NAME : PLOT SCALE : 20.0000 sf / in.

WISDOT/CADDS SHEET 21

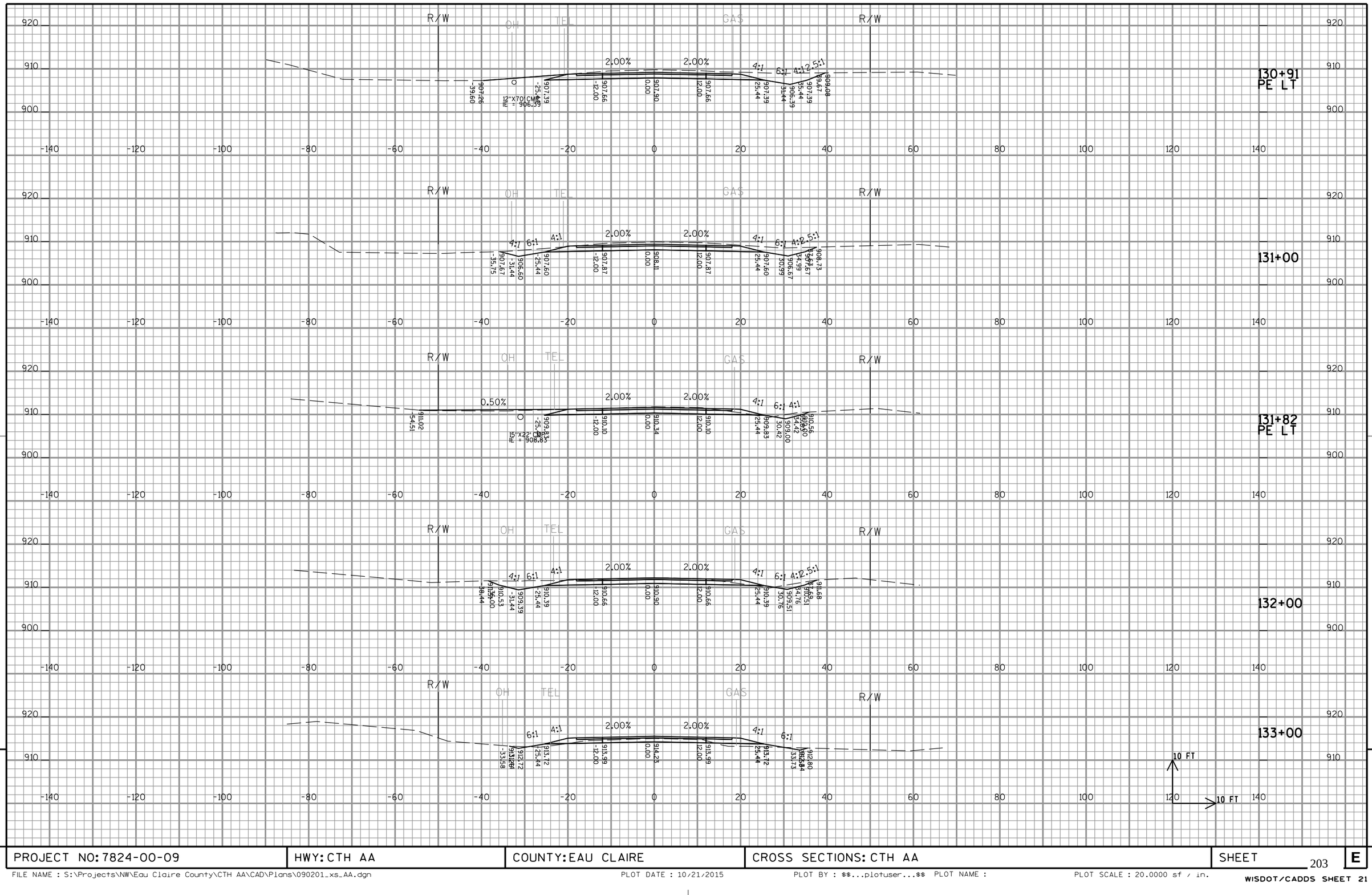

9

9

PROJECT NO: 7824-00-09	HWY: CTH AA	COUNTY: EAU CLAIRE	CROSS SECTIONS: CTH AA	SHEET 203	E

FILE NAME : S:\Projects\NW\Eau Claire County\CTH AA\CAD\Plans\090201_xs_AA.dgn PLOT DATE : 10/21/2015 PLOT BY : $$...plotuser...$$ PLOT NAME : PLOT SCALE : 20.0000 sf / in.

WISDOT/CADDS SHEET 21

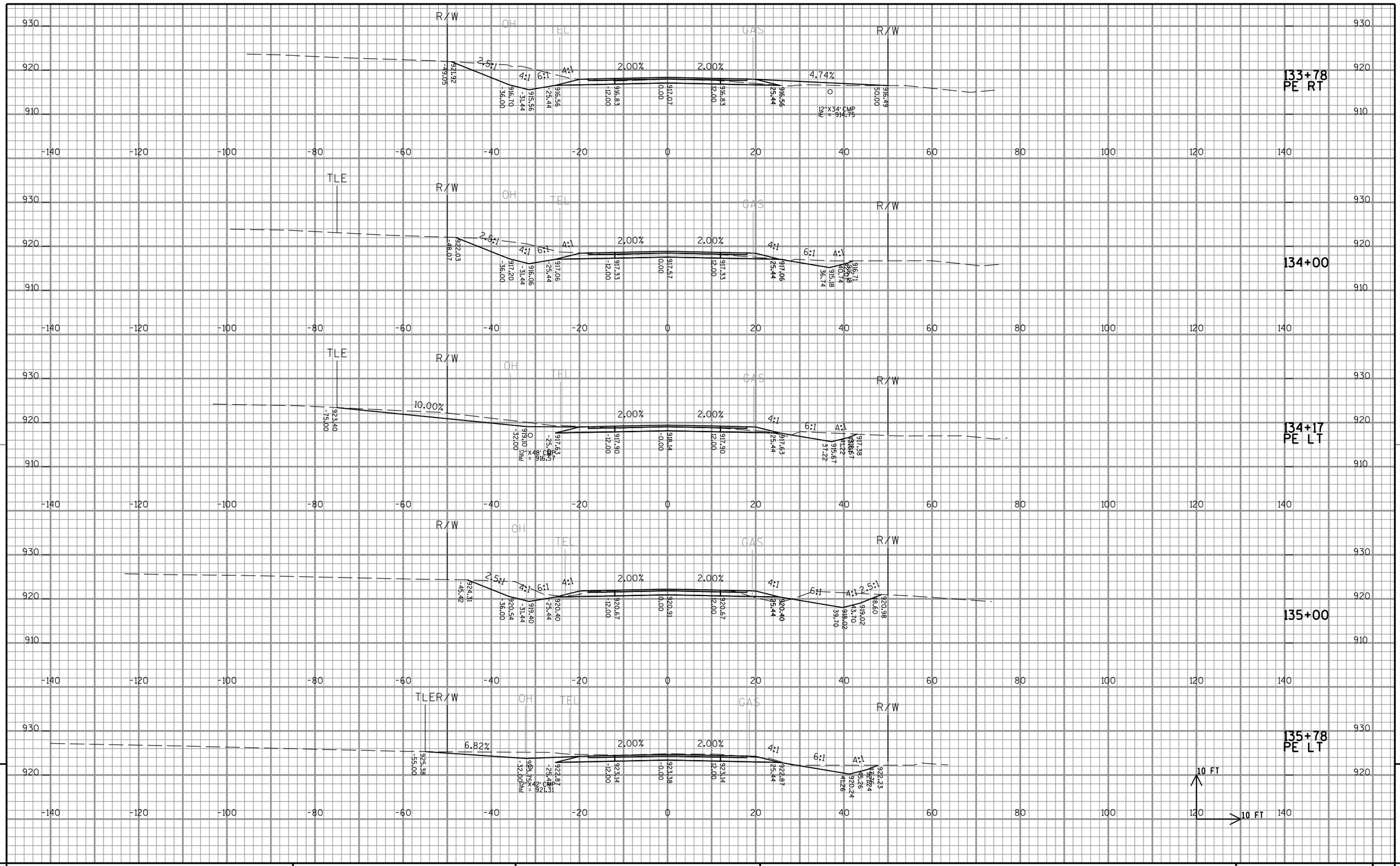

PROJECT NO: 7824-00-09	HWY: CTH AA	COUNTY: EAU CLAIRE	CROSS SECTIONS: CTH AA	SHEET 204	E

FILE NAME : S:\Projects\NW\Eau Claire County\CTH AA\CAD\Plans\090201_xs_AA.dgn PLOT DATE : 10/21/2015 PLOT BY : $$...plotuser...$$ PLOT NAME : PLOT SCALE : 20.0000 sf / in.

WISDOT/CADDS SHEET 21

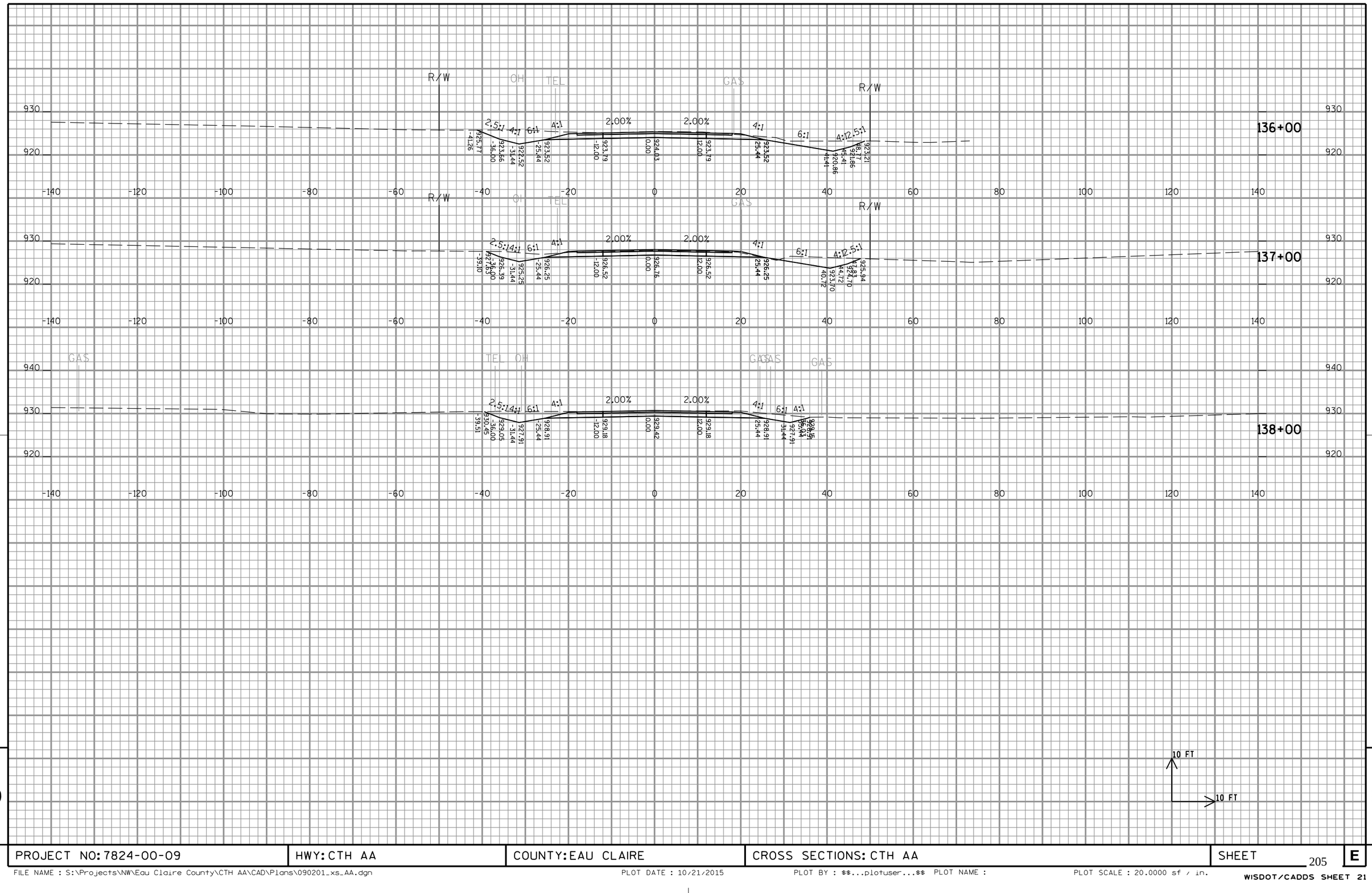

9

9

PROJECT NO: 7824-00-09	HWY: CTH AA	COUNTY: EAU CLAIRE	CROSS SECTIONS: CTH AA	SHEET 205	E

FILE NAME : S:\Projects\NW\Eau Claire County\CTH AA\CAD\Plans\090201_xs_AA.dgn PLOT DATE : 10/21/2015 PLOT BY : $$...plotuser...$$ PLOT NAME : PLOT SCALE : 20.0000 sf / in.

WISDOT/CADDS SHEET 21

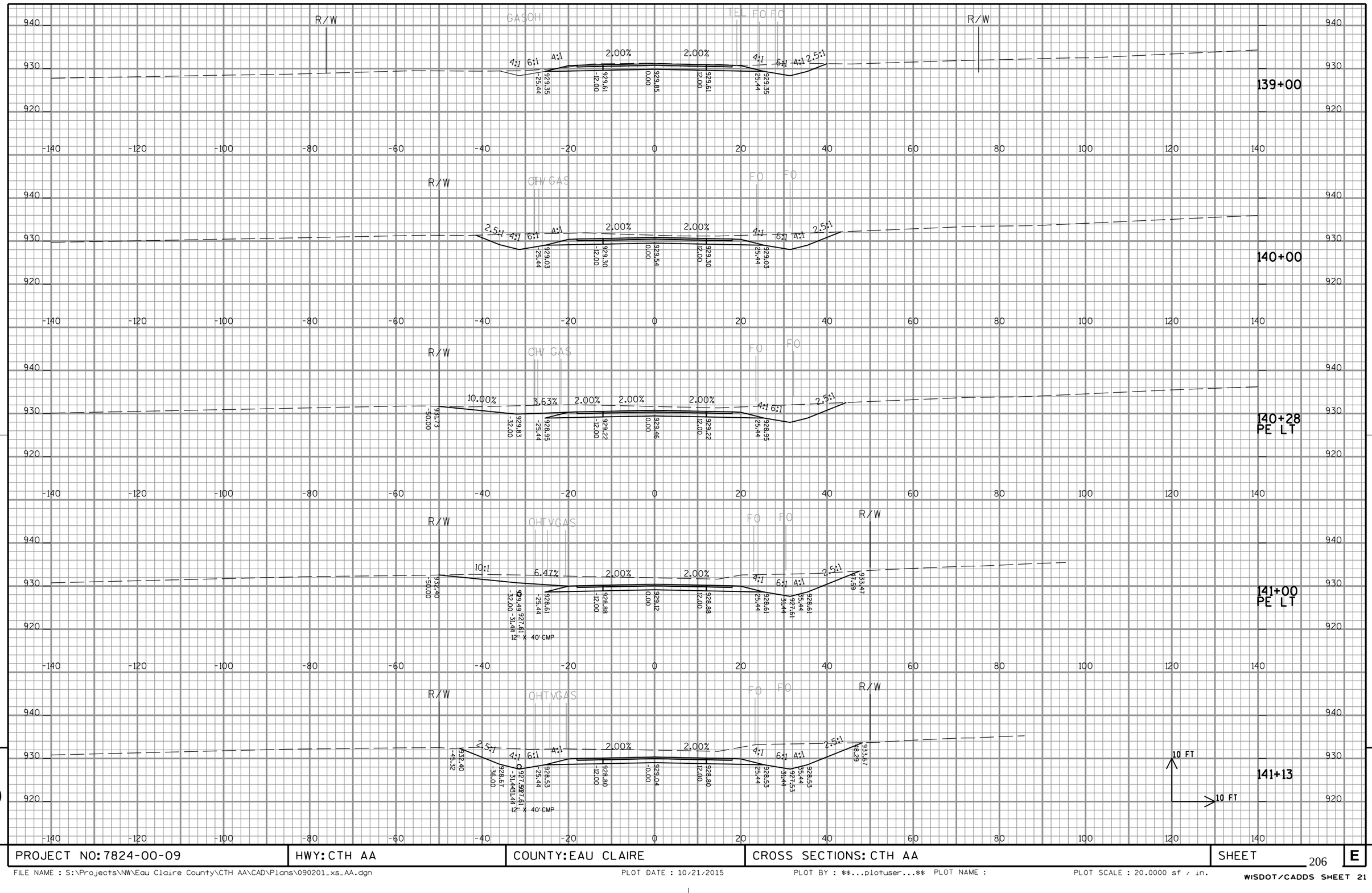

9

9

PROJECT NO: 7824-00-09	HWY: CTH AA	COUNTY: EAU CLAIRE	CROSS SECTIONS: CTH AA	SHEET 206	E

FILE NAME : S:\Projects\NW\Eau Claire County\CTH AA\CAD\Plans\090201_xs_AA.dgn PLOT DATE : 10/21/2015 PLOT BY : $$...plotuser...$$ PLOT NAME : PLOT SCALE : 20.0000 sf / in.

WISDOT/CADDS SHEET 21

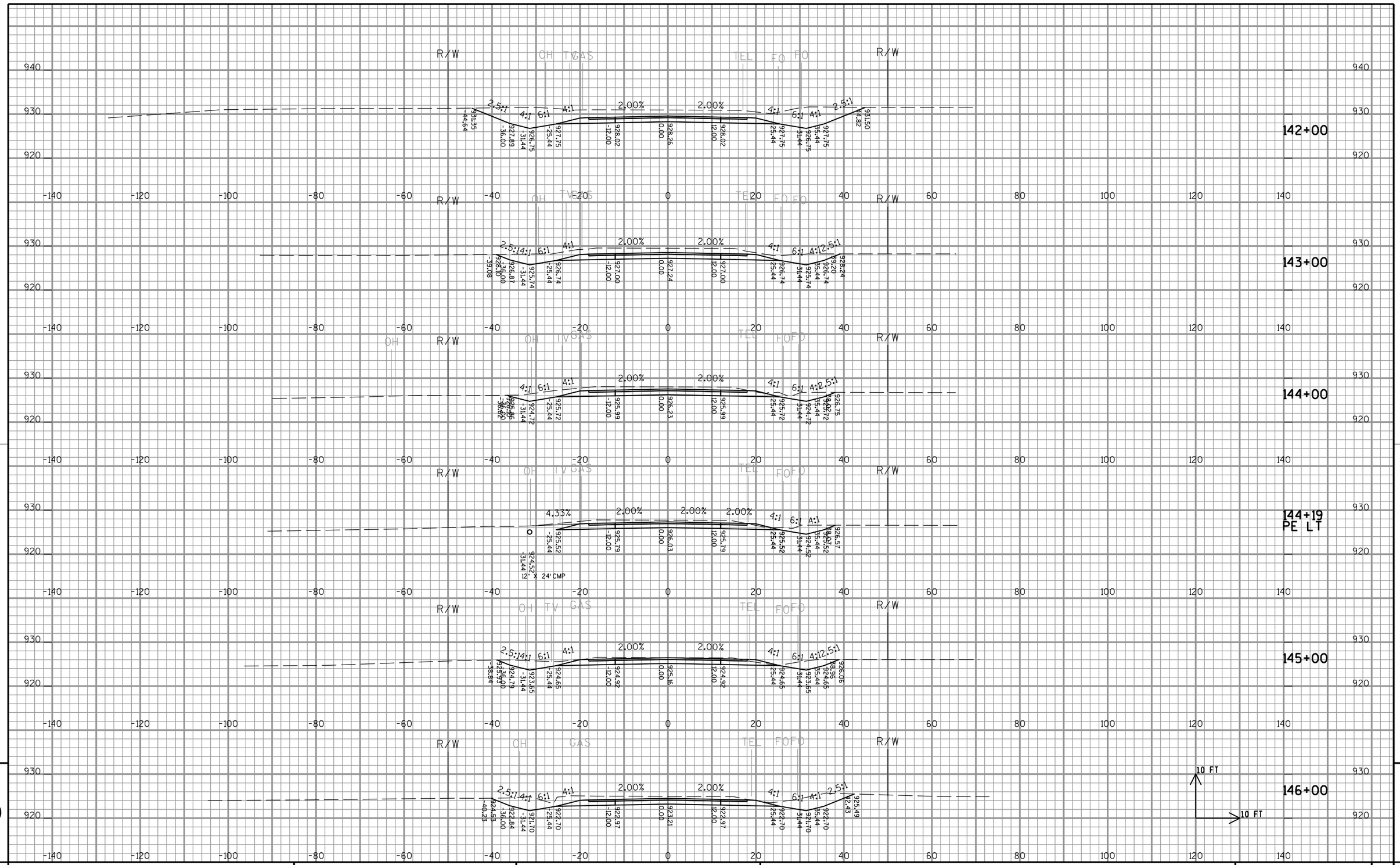

PROJECT NO: 7824-00-09	HWY: CTH AA	COUNTY: EAU CLAIRE	CROSS SECTIONS: CTH AA	SHEET 207	E

FILE NAME : S:\Projects\NW\Eau Claire County\CTH AA\CAD\Plans\090201_xs_AA.dgn PLOT DATE : 10/21/2015 PLOT BY : $$...plotuser...$$ PLOT NAME : PLOT SCALE : 20.0000 sf / in.

WISDOT/CADDS SHEET 21

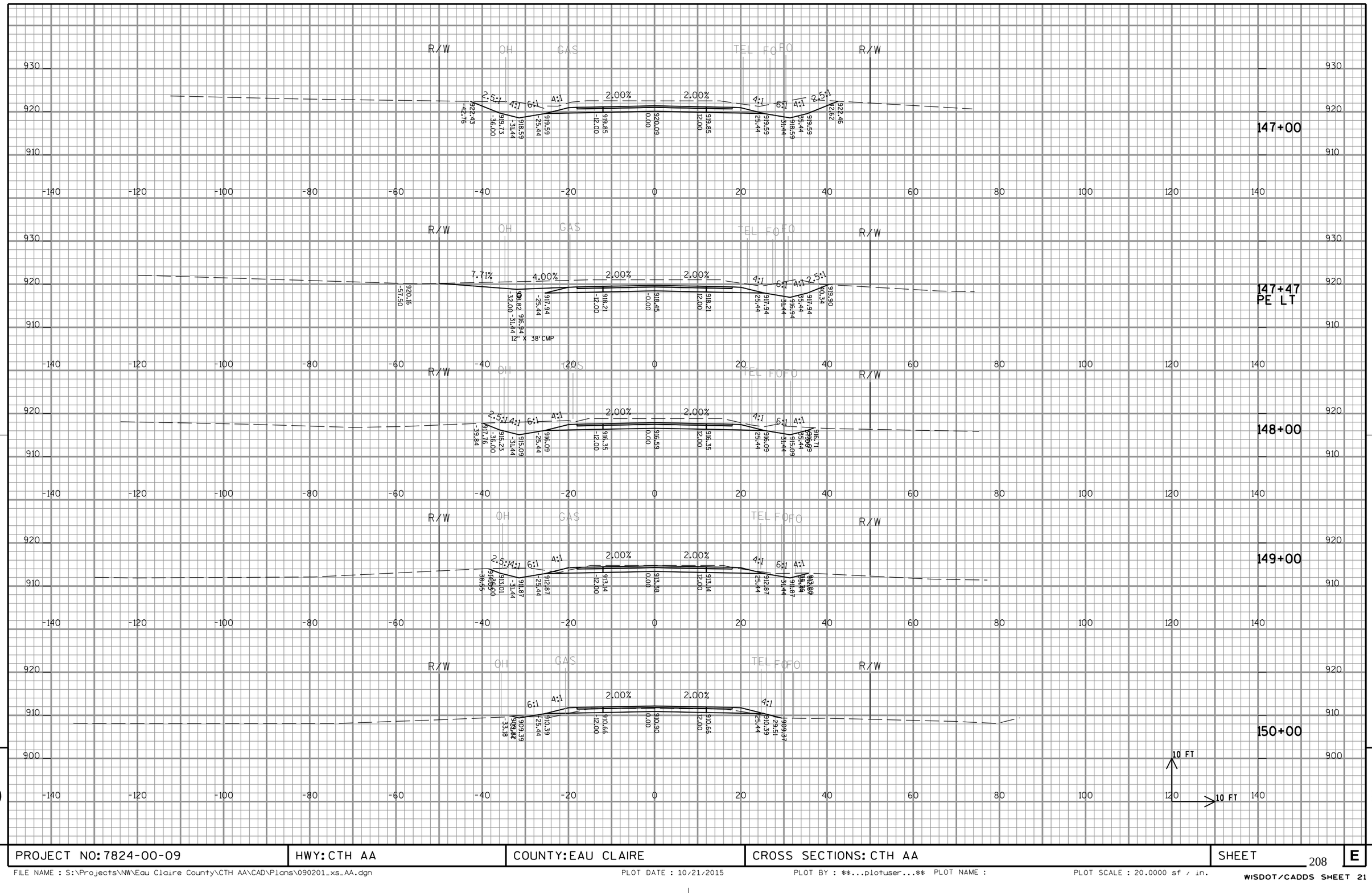

PROJECT NO: 7824-00-09	HWY: CTH AA	COUNTY: EAU CLAIRE	CROSS SECTIONS: CTH AA	SHEET 208	E

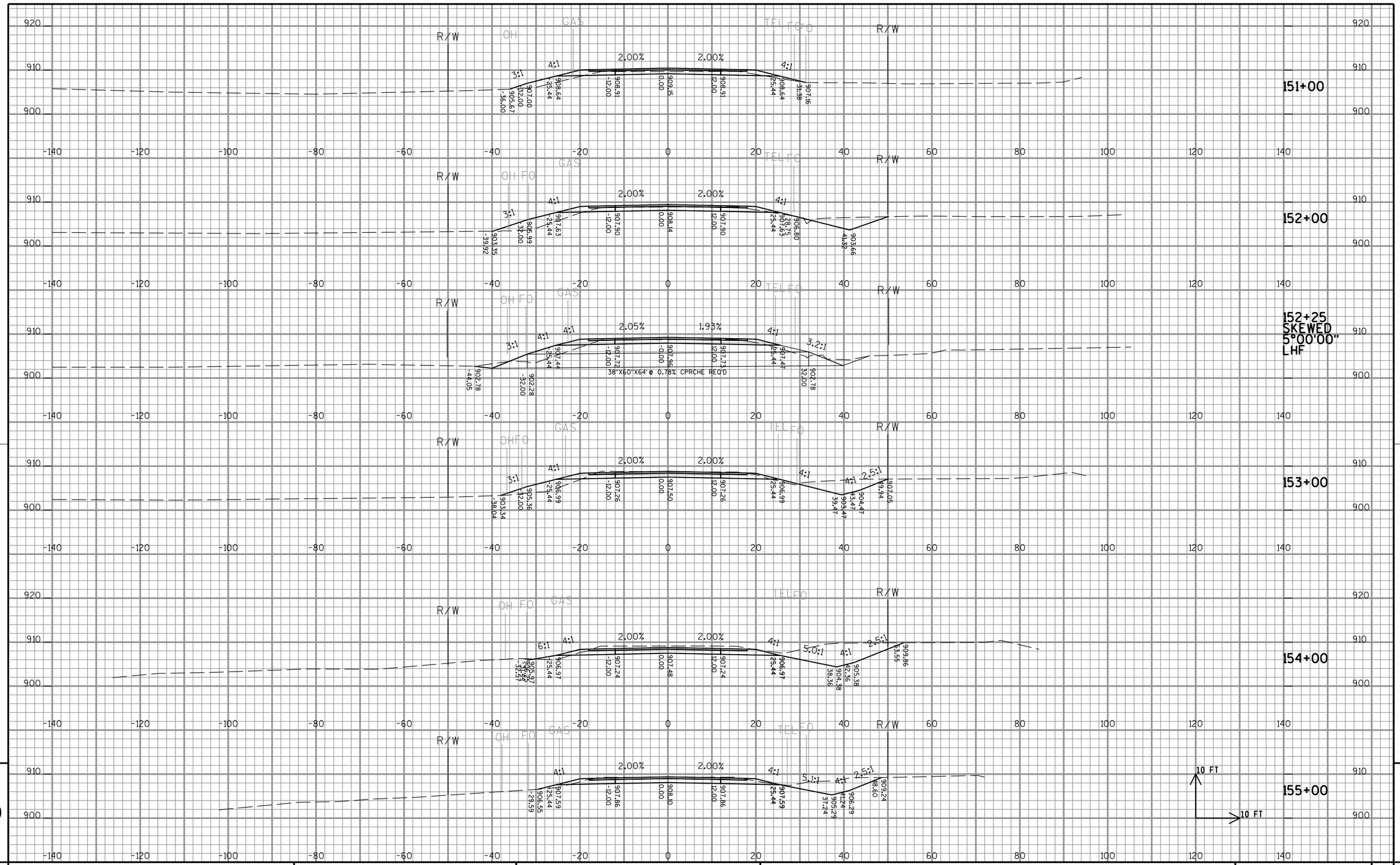

9

9

PROJECT NO: 7824-00-09	HWY: CTH AA	COUNTY: EAU CLAIRE	CROSS SECTIONS: CTH AA	SHEET 209	E

FILE NAME : S:\Projects\NW\Eau Claire County\CTH AA\CAD\Plans\090201_xs_AA.dgn PLOT DATE : 10/21/2015 PLOT BY : $$...plotuser...$$ PLOT NAME : PLOT SCALE : 20.0000 sf / in.

WISDOT/CADDS SHEET 21

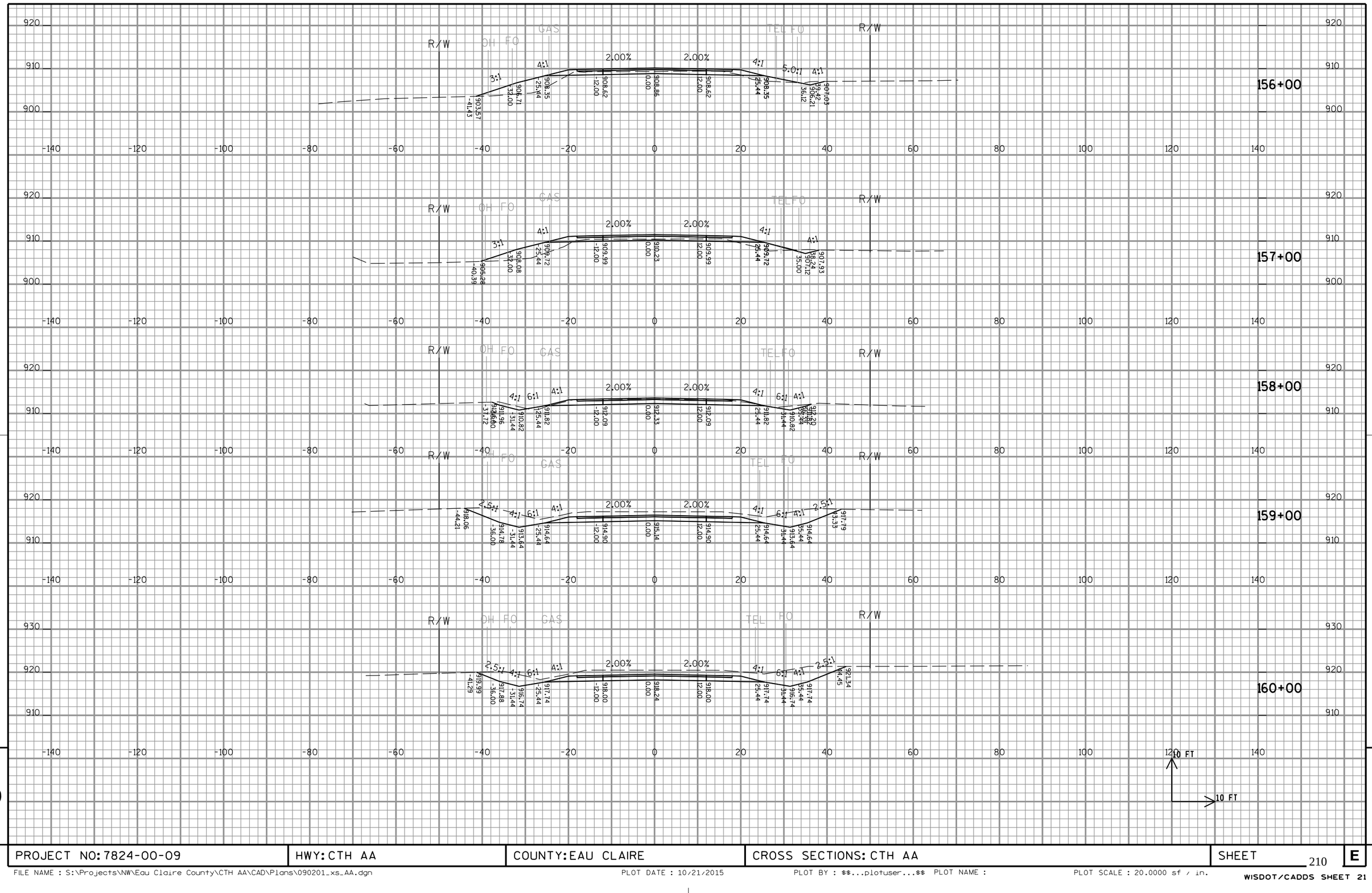

PROJECT NO: 7824-00-09	HWY: CTH AA	COUNTY: EAU CLAIRE	CROSS SECTIONS: CTH AA	SHEET 210	E

FILE NAME : S:\Projects\NW\Eau Claire County\CTH AA\CAD\Plans\090201_xs_AA.dgn PLOT DATE : 10/21/2015 PLOT BY : $$...plotuser...$$ PLOT NAME : PLOT SCALE : 20.0000 sf / in.

WISDOT/CADDS SHEET 21

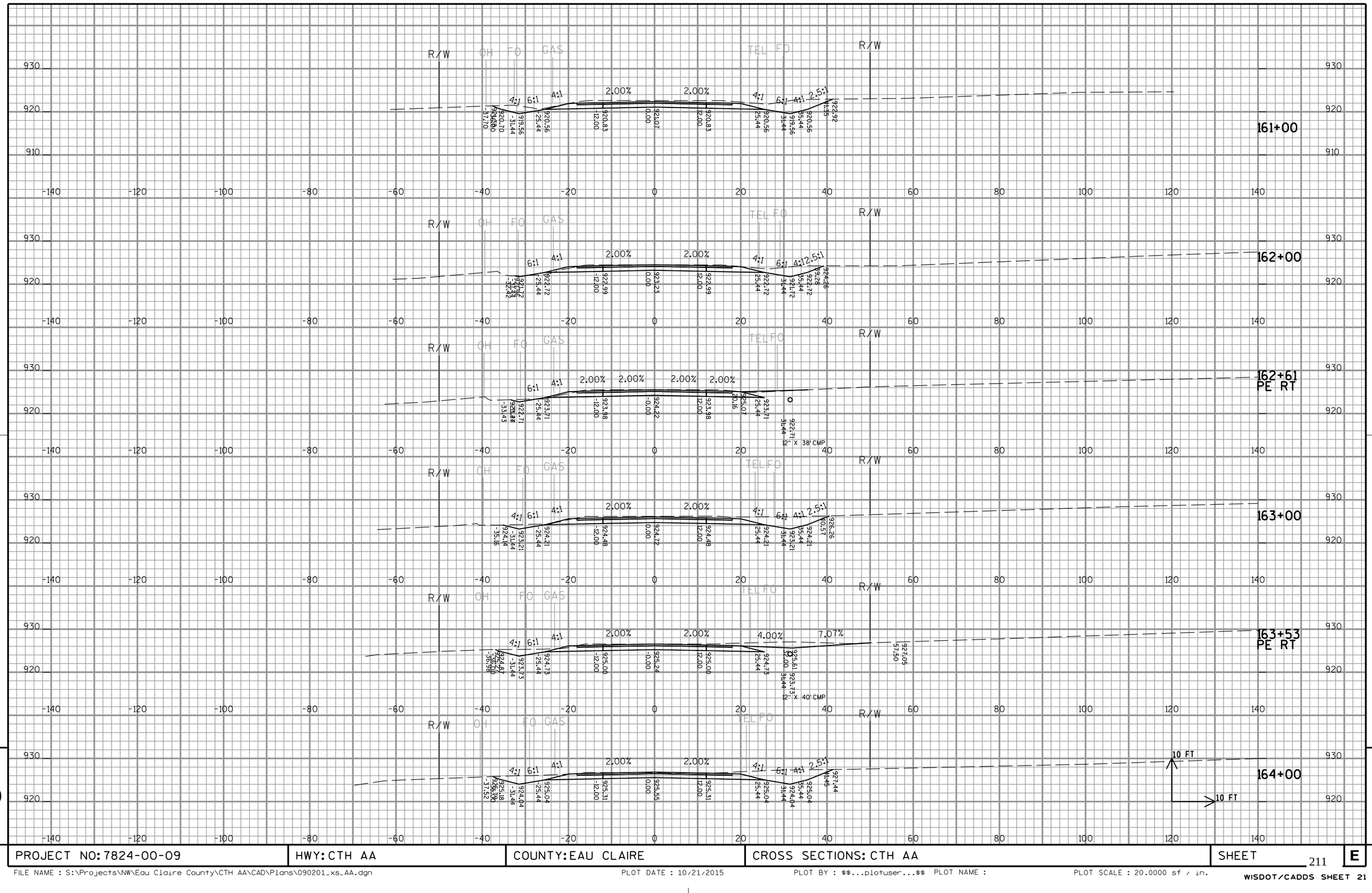

9

9

PROJECT NO: 7824-00-09	HWY: CTH AA	COUNTY: EAU CLAIRE	CROSS SECTIONS: CTH AA	SHEET 211	E

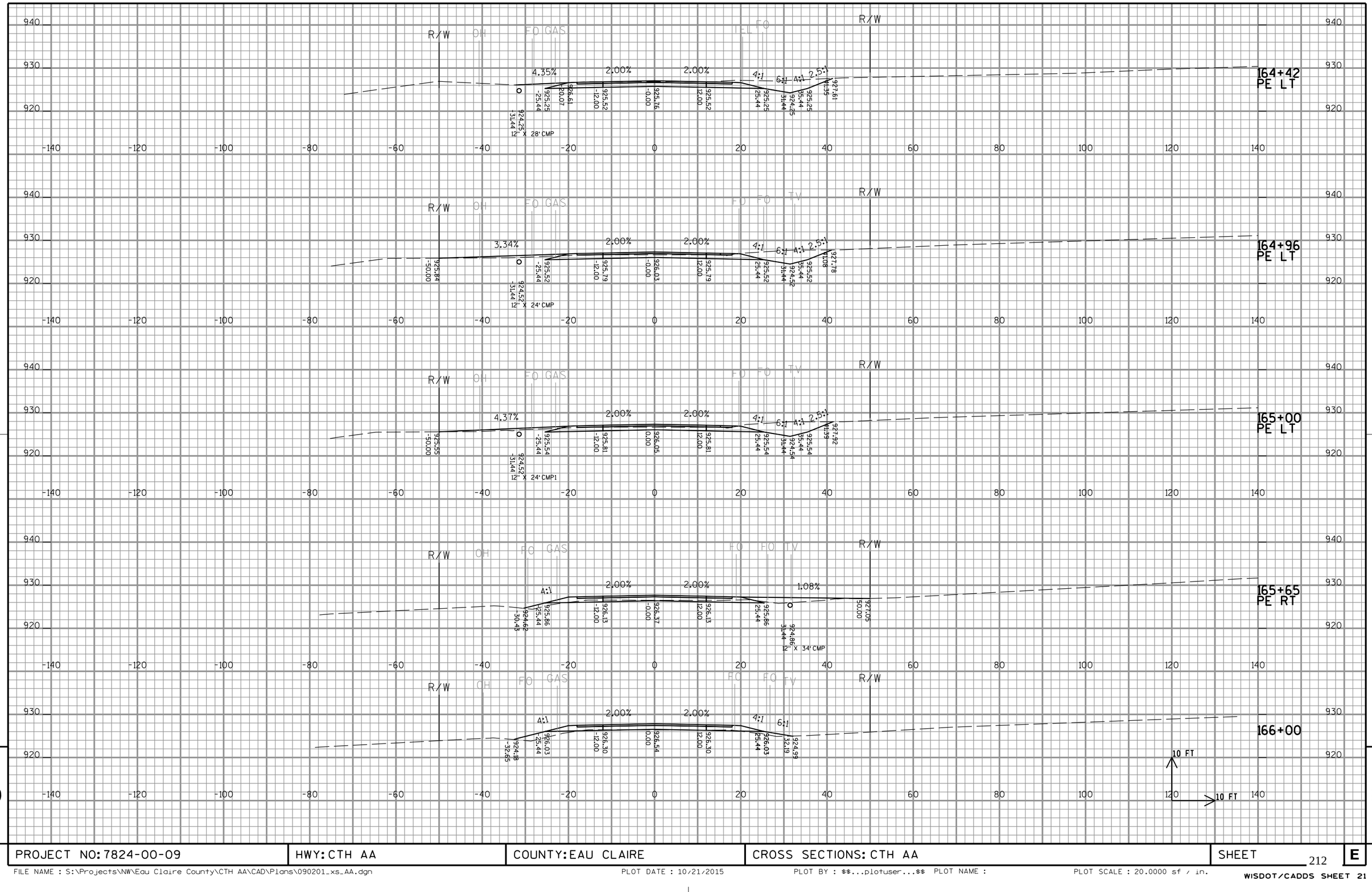

9

9

PROJECT NO: 7824-00-09	HWY: CTH AA	COUNTY: EAU CLAIRE	CROSS SECTIONS: CTH AA	SHEET 212	E

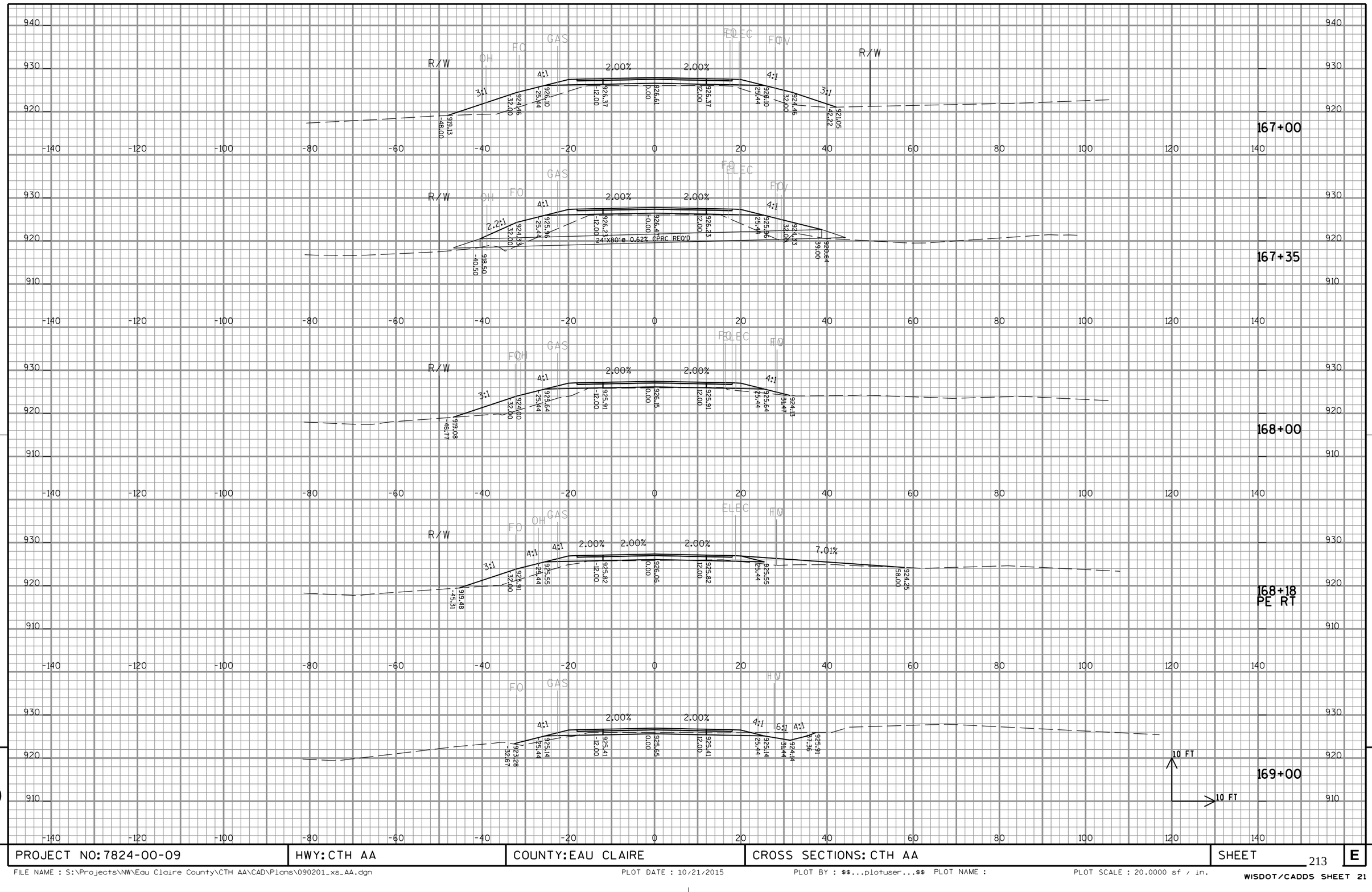

9

PROJECT NO: 7824-00-09	HWY: CTH AA	COUNTY: EAU CLAIRE	CROSS SECTIONS: CTH AA	SHEET 213	E

FILE NAME : S:\Projects\NW\Eau Claire County\CTH AA\CAD\Plans\090201_xs_AA.dgn PLOT DATE : 10/21/2015 PLOT BY : $$...plotuser...$$ PLOT NAME : PLOT SCALE : 20.0000 sf / in.

WISDOT/CADDS SHEET 21

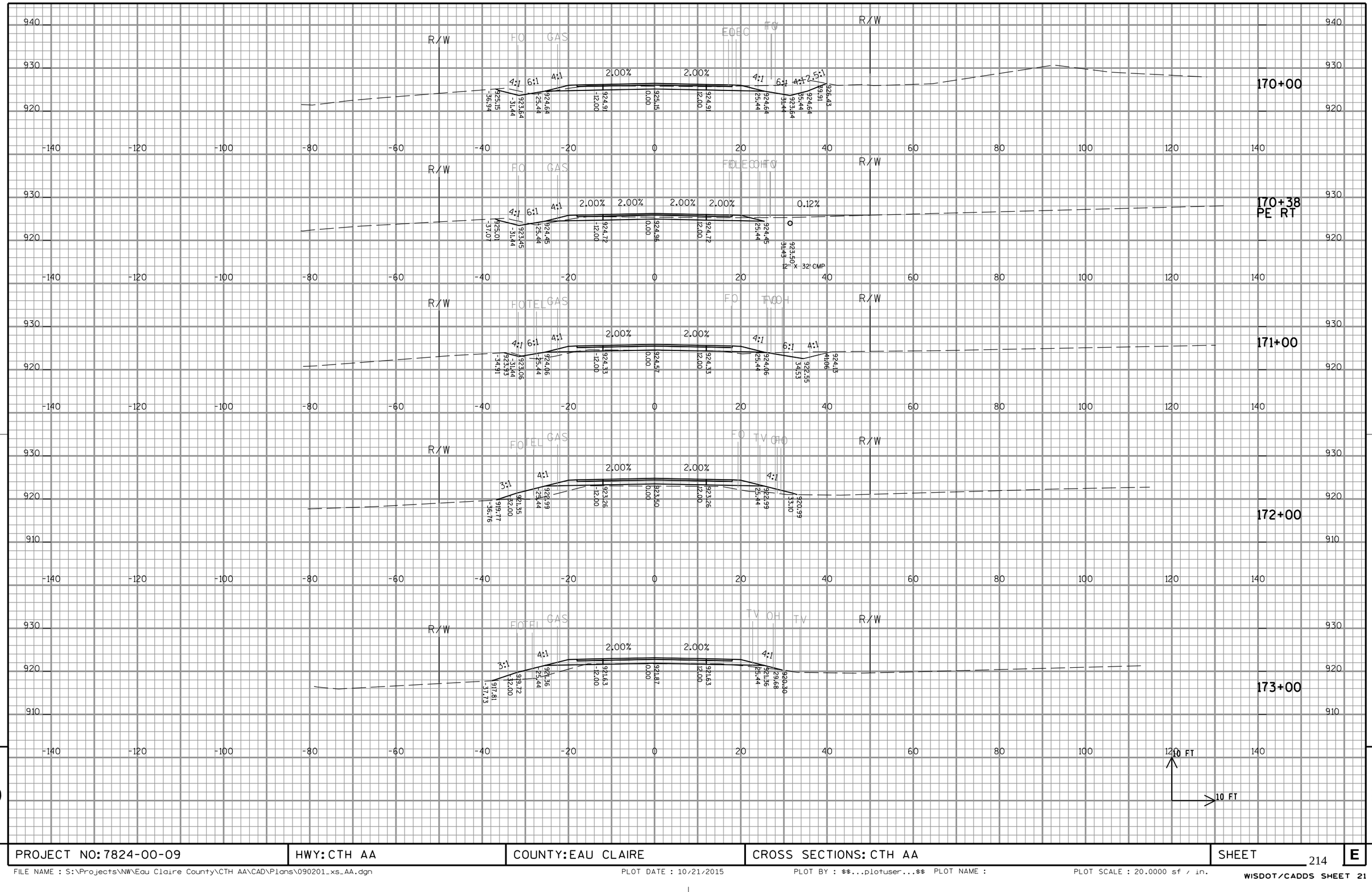

9

9

PROJECT NO: 7824-00-09	HWY: CTH AA	COUNTY: EAU CLAIRE	CROSS SECTIONS: CTH AA	SHEET 214	E

9

9

PROJECT NO: 7824-00-09	HWY: CTH AA	COUNTY: EAU CLAIRE	CROSS SECTIONS: CTH AA	SHEET 215	E

FILE NAME : S:\Projects\NW\Eau Claire County\CTH AA\CAD\Plans\090201_xs_AA.dgn PLOT DATE : 10/21/2015 PLOT BY : $$...plotuser...$$ PLOT NAME : PLOT SCALE : 20.0000 sf / in.

WISDOT/CADDS SHEET 21

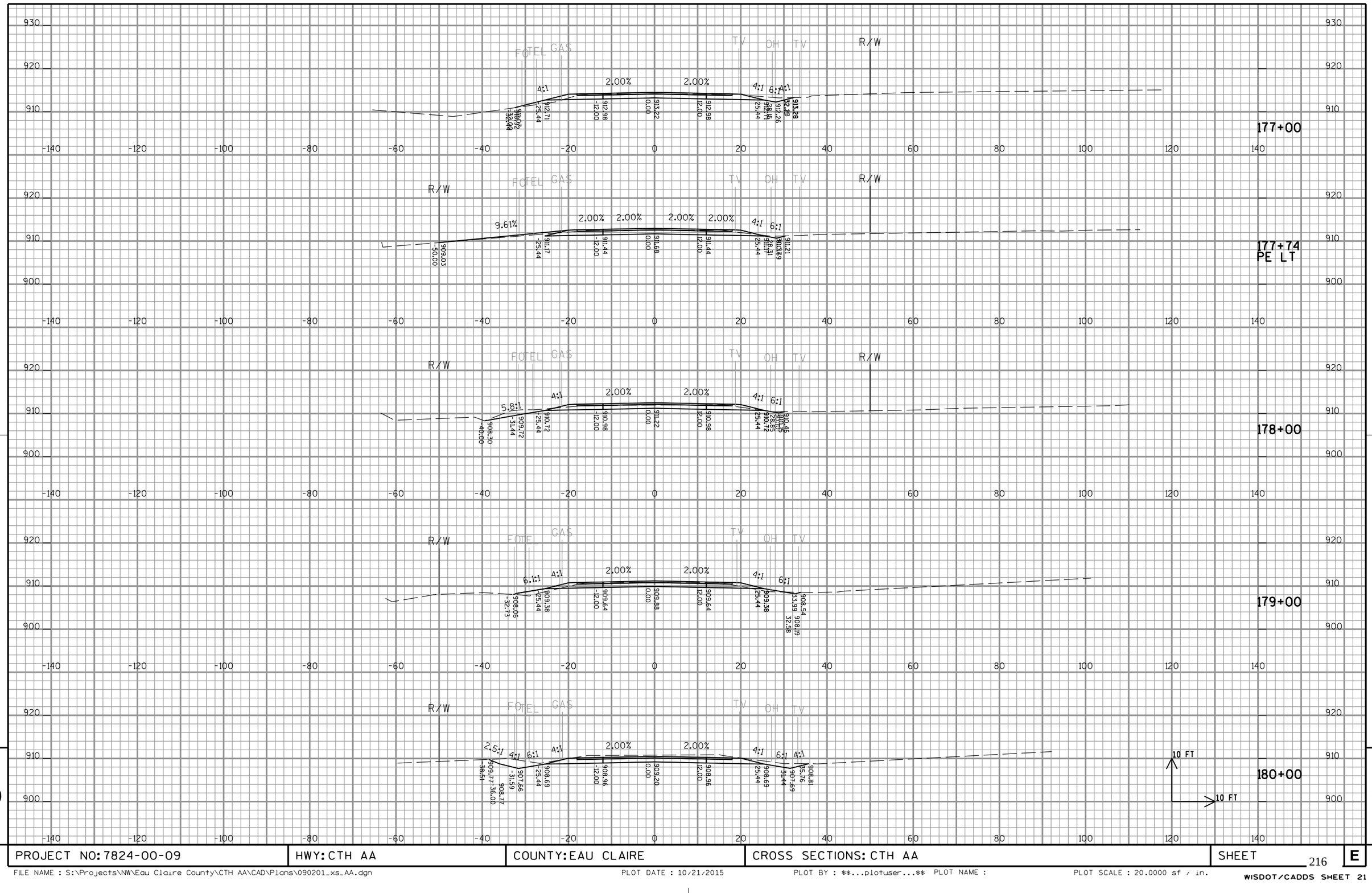

PROJECT NO: 7824-00-09	HWY: CTH AA	COUNTY: EAU CLAIRE	CROSS SECTIONS: CTH AA	SHEET 216	E

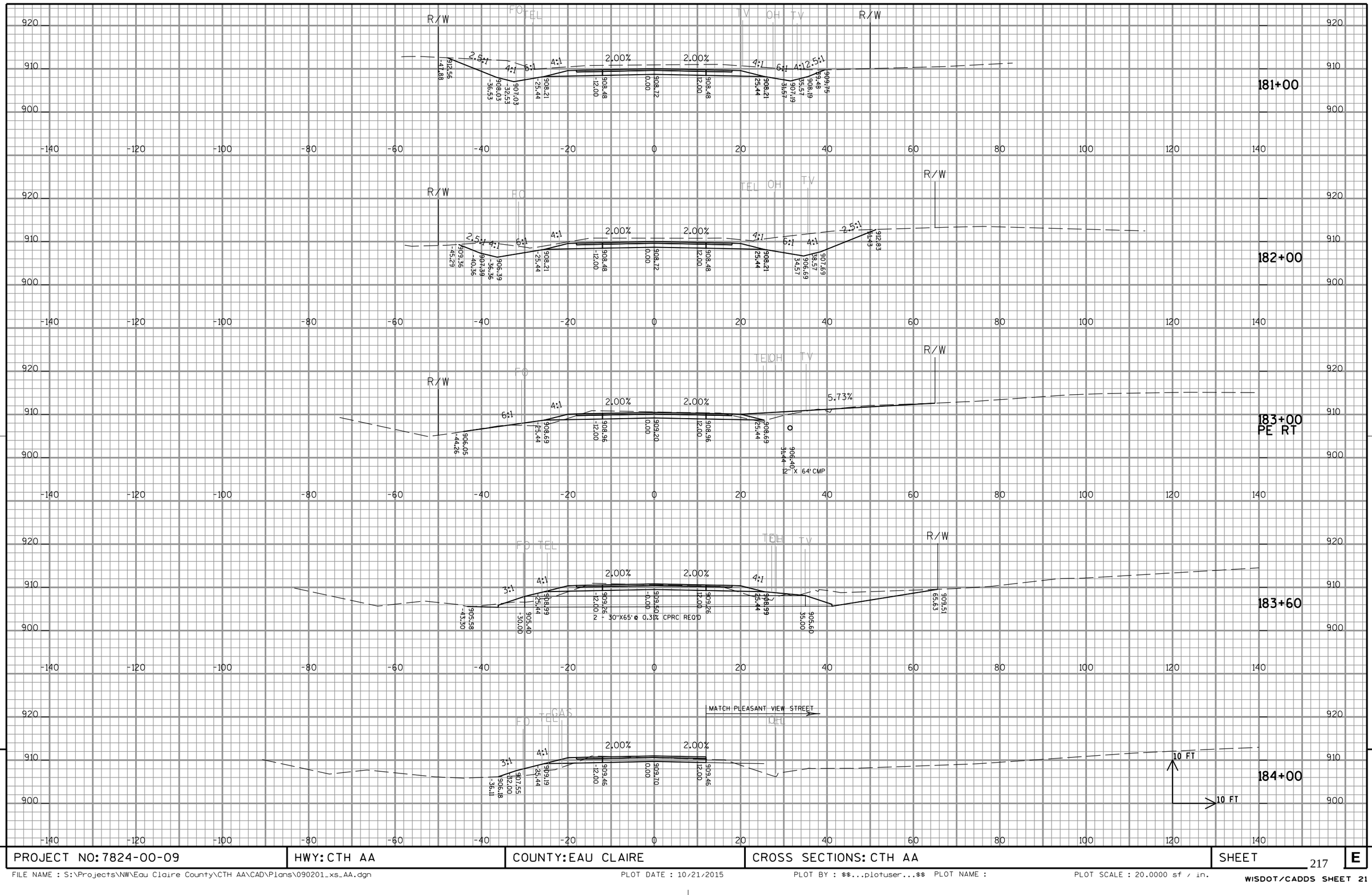

9

9

PROJECT NO: 7824-00-09	HWY: CTH AA	COUNTY: EAU CLAIRE	CROSS SECTIONS: CTH AA	SHEET 217	E

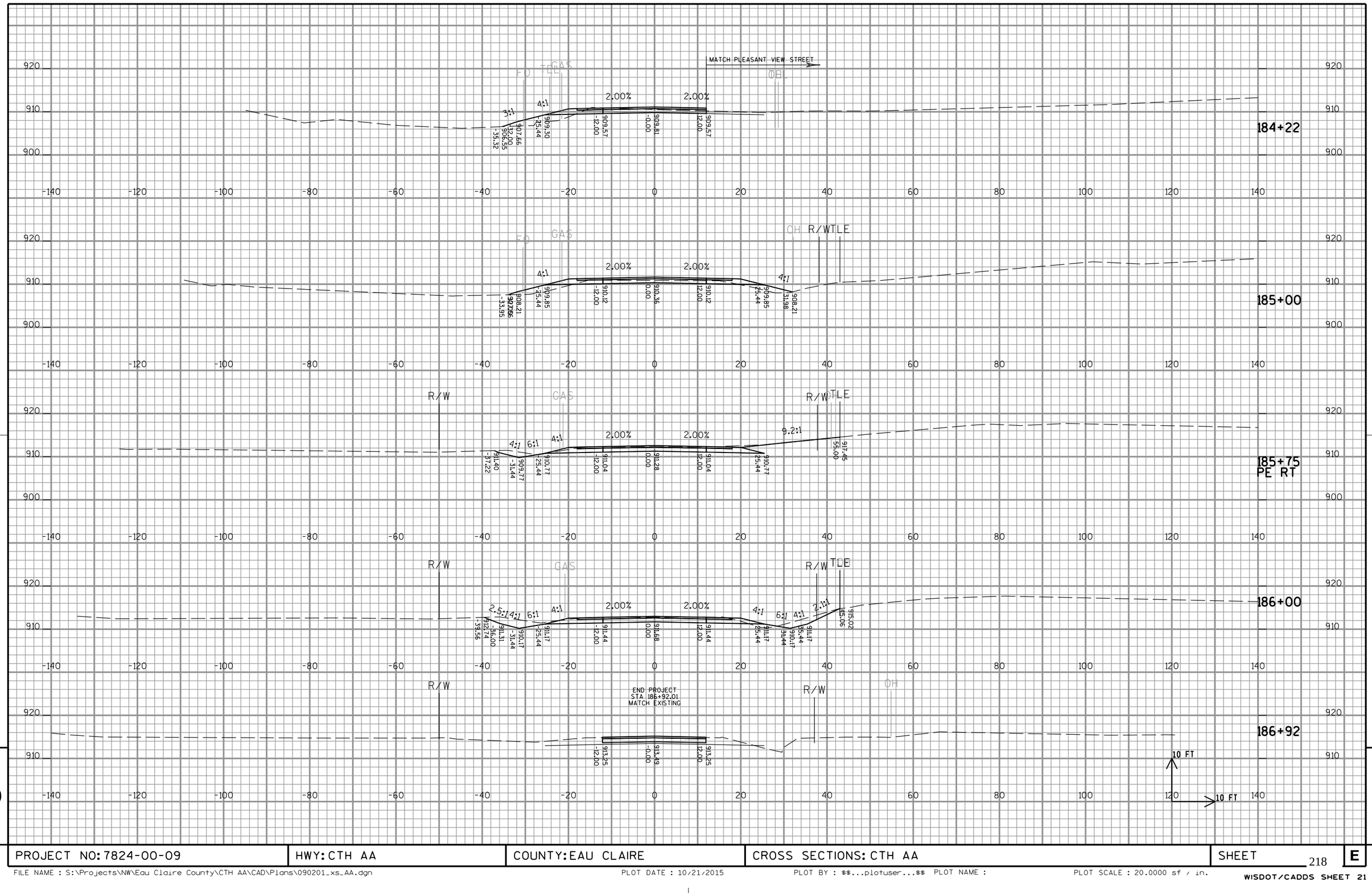

9

9

PROJECT NO: 7824-00-09	HWY: CTH AA	COUNTY: EAU CLAIRE	CROSS SECTIONS: CTH AA	SHEET 218	E

FILE NAME : S:\Projects\NW\Eau Claire County\CTH AA\CAD\Plans\090201_xs_AA.dgn PLOT DATE : 10/21/2015 PLOT BY : $$...plotuser...$$ PLOT NAME : PLOT SCALE : 20.0000 sf / in.

WISDOT/CADDS SHEET 21

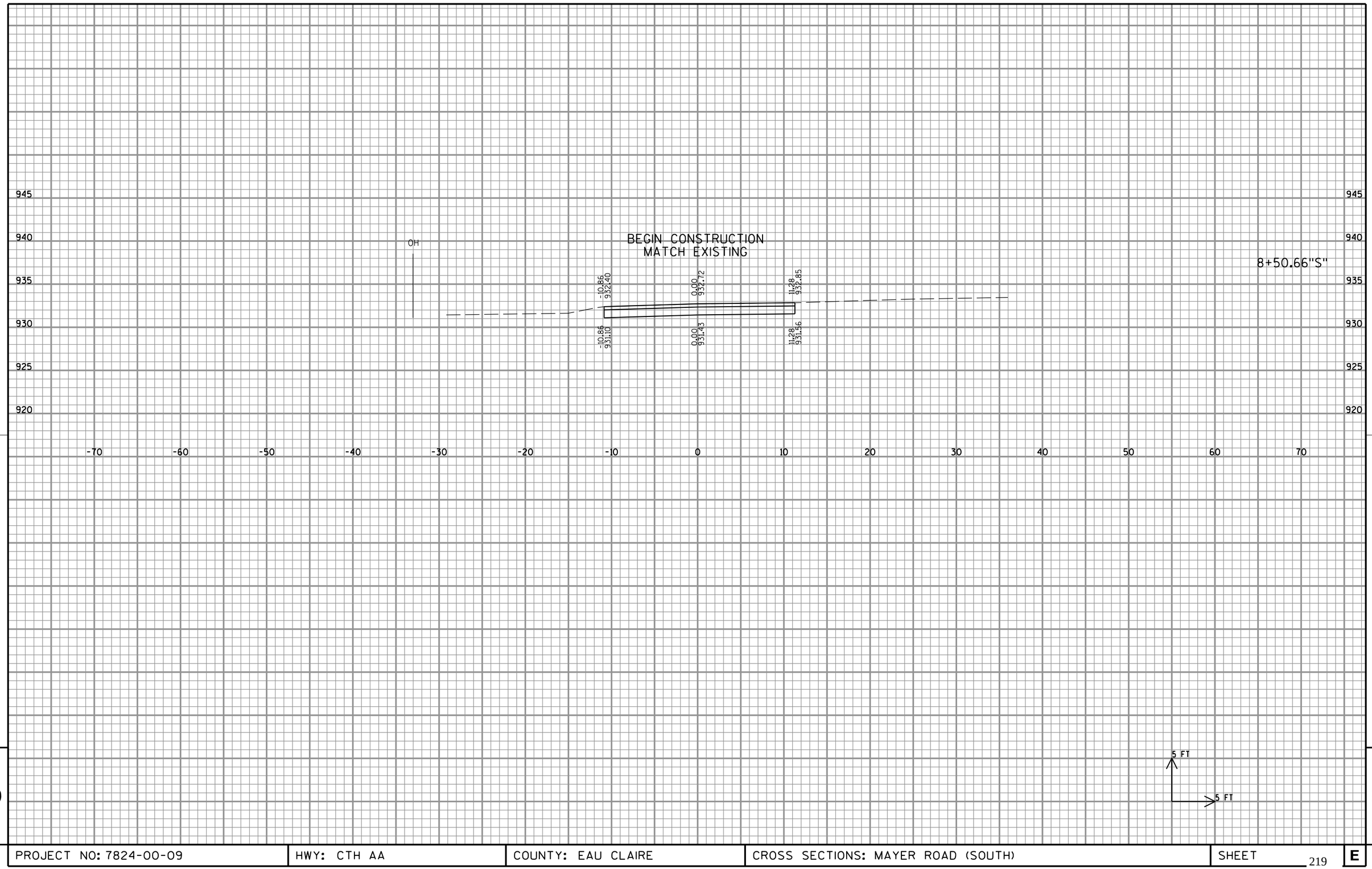

9

9

PROJECT NO: 7824-00-09	HWY: CTH AA	COUNTY: EAU CLAIRE	CROSS SECTIONS: MAYER ROAD (SOUTH)	SHEET 219	E

FILE NAME : S:\Projects\NW\Eau Claire County\CTH AA\CAD\Plans\090203_xs_AA.dgn PLOT DATE : 10/16/2015 PLOT BY : $$...plotuser...$$ PLOT NAME : PLOT SCALE : 10.0000 sf / in.

WISDOT/CADDS SHEET 21

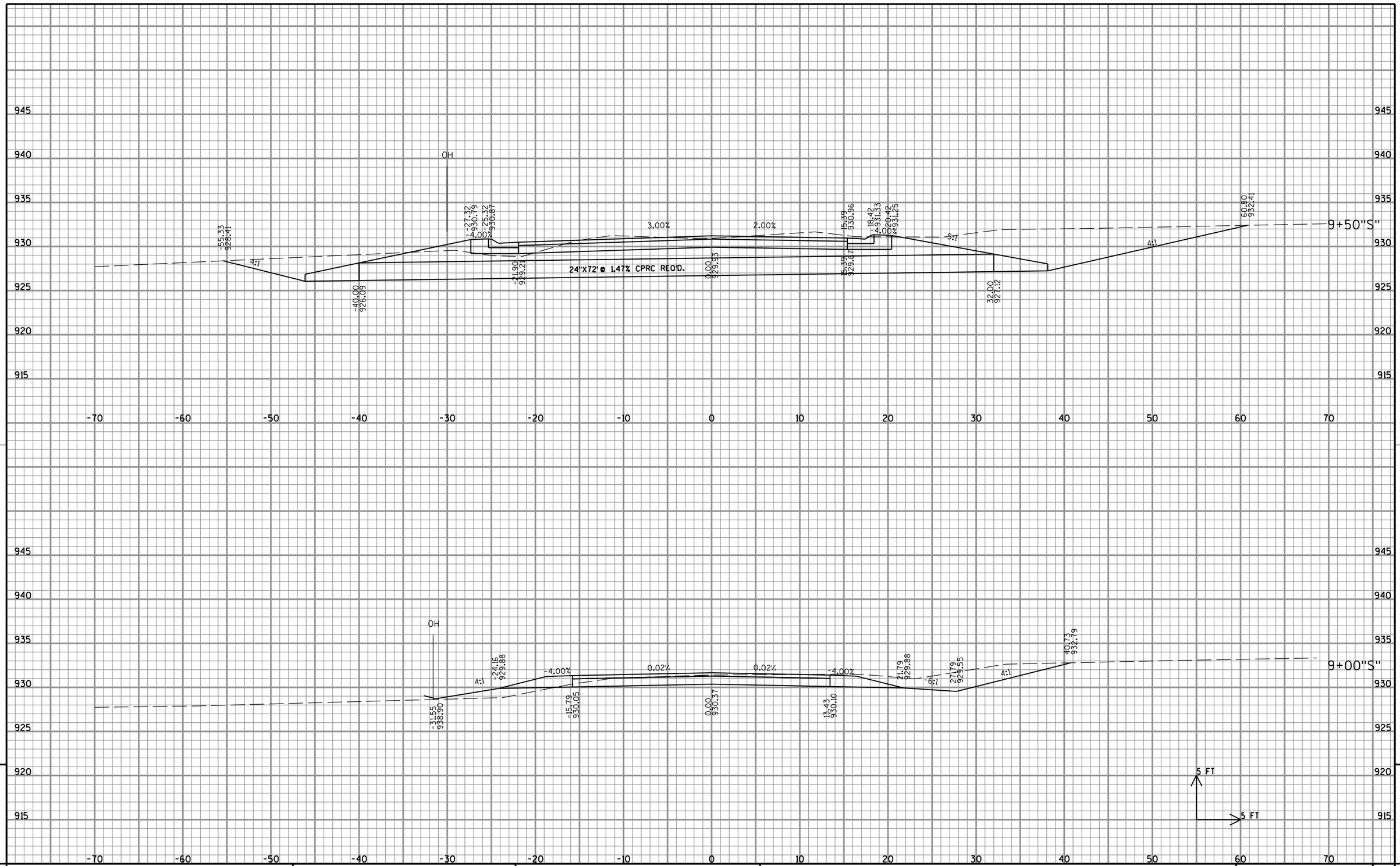

9

9

PROJECT NO: 7824-00-09	HWY: CTH AA	COUNTY: EAU CLAIRE	CROSS SECTIONS: MAYER ROAD (SOUTH)	SHEET 220	E

FILE NAME : S:\Projects\NW\Eau Claire County\CTH AA\CAD\Plans\090203_xs_AA.dgn PLOT DATE : 10/16/2015 PLOT BY : $$...plotuser...$$ PLOT NAME : PLOT SCALE : 10.0000 sf / in.

WISDOT/CADDS SHEET 21

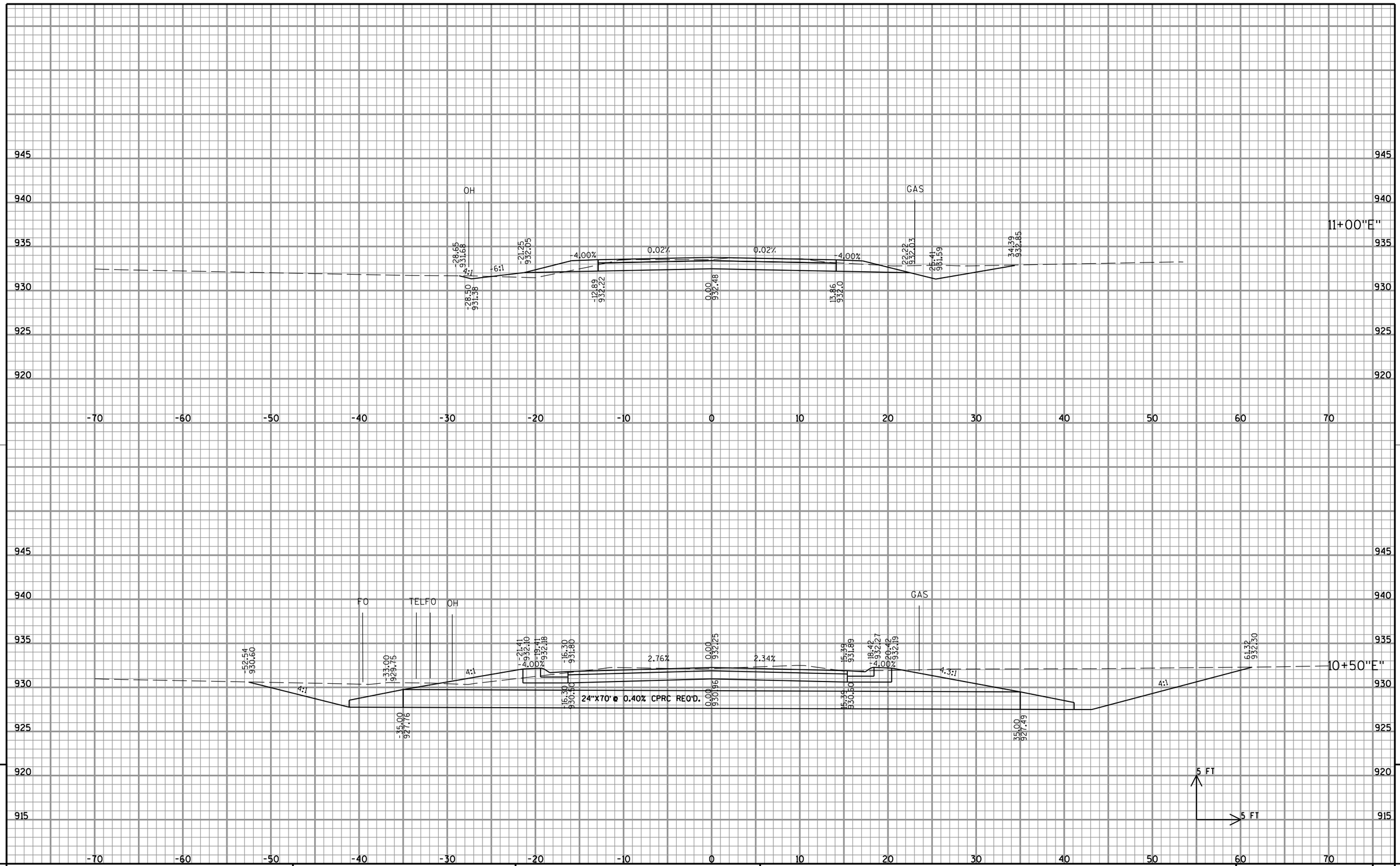

9

PROJECT NO: 7824-00-09	HWY: CTH AA	COUNTY: EAU CLAIRE	CROSS SECTIONS: PRILL ROAD (EAST)	SHEET	E

9

FILE NAME : S:\Projects\NW\Eau Claire County\CTH AA\CAD\Plans\090203_xs_AA.dgn PLOT DATE : 10/16/2015 PLOT BY : $$...plotuser...$$ PLOT NAME : PLOT SCALE : 10.0000 sf / in.

WISDOT/CADDS SHEET 21

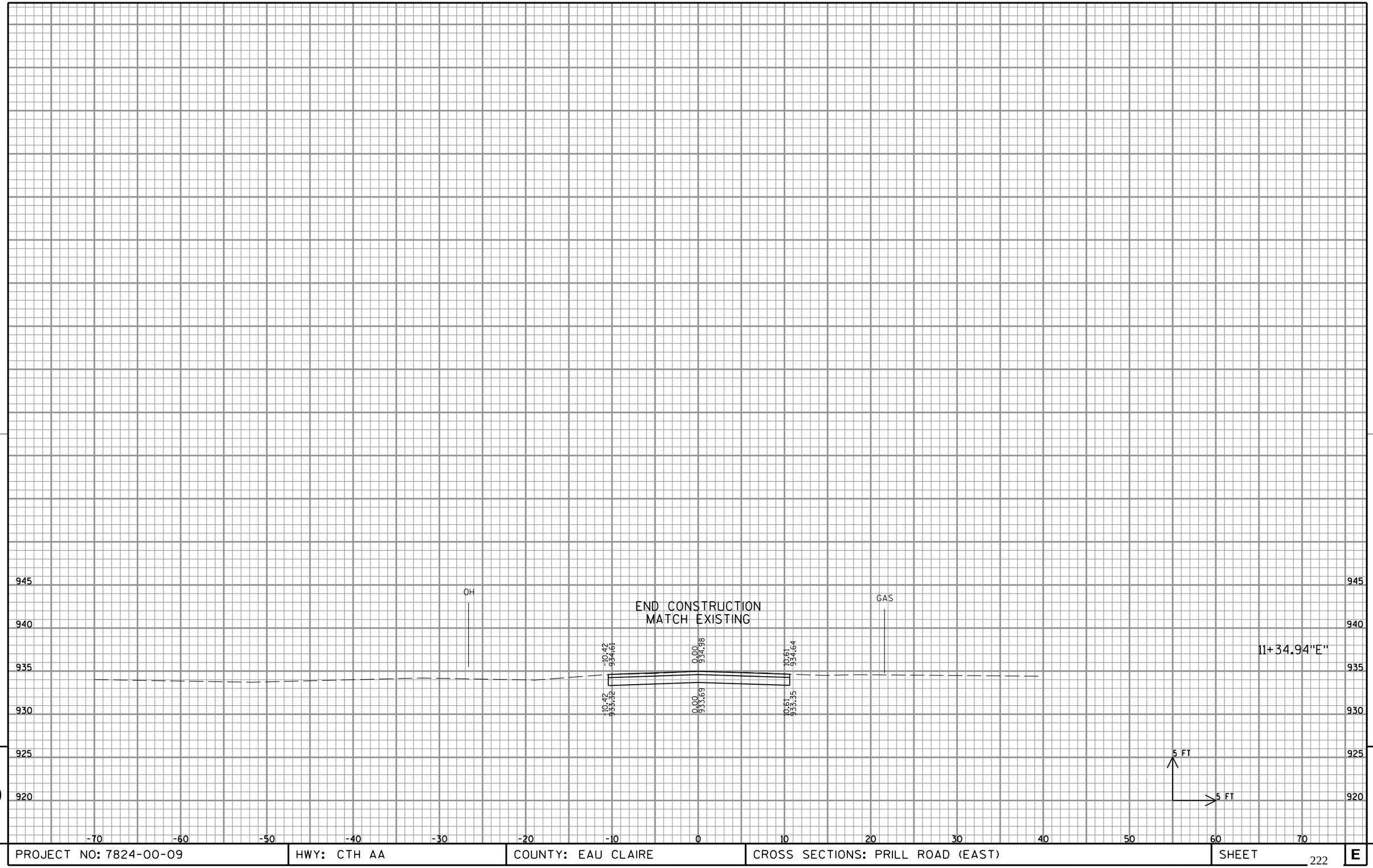

9

9

PROJECT NO: 7824-00-09	HWY: CTH AA	COUNTY: EAU CLAIRE	CROSS SECTIONS: PRILL ROAD (EAST)	SHEET 222	E

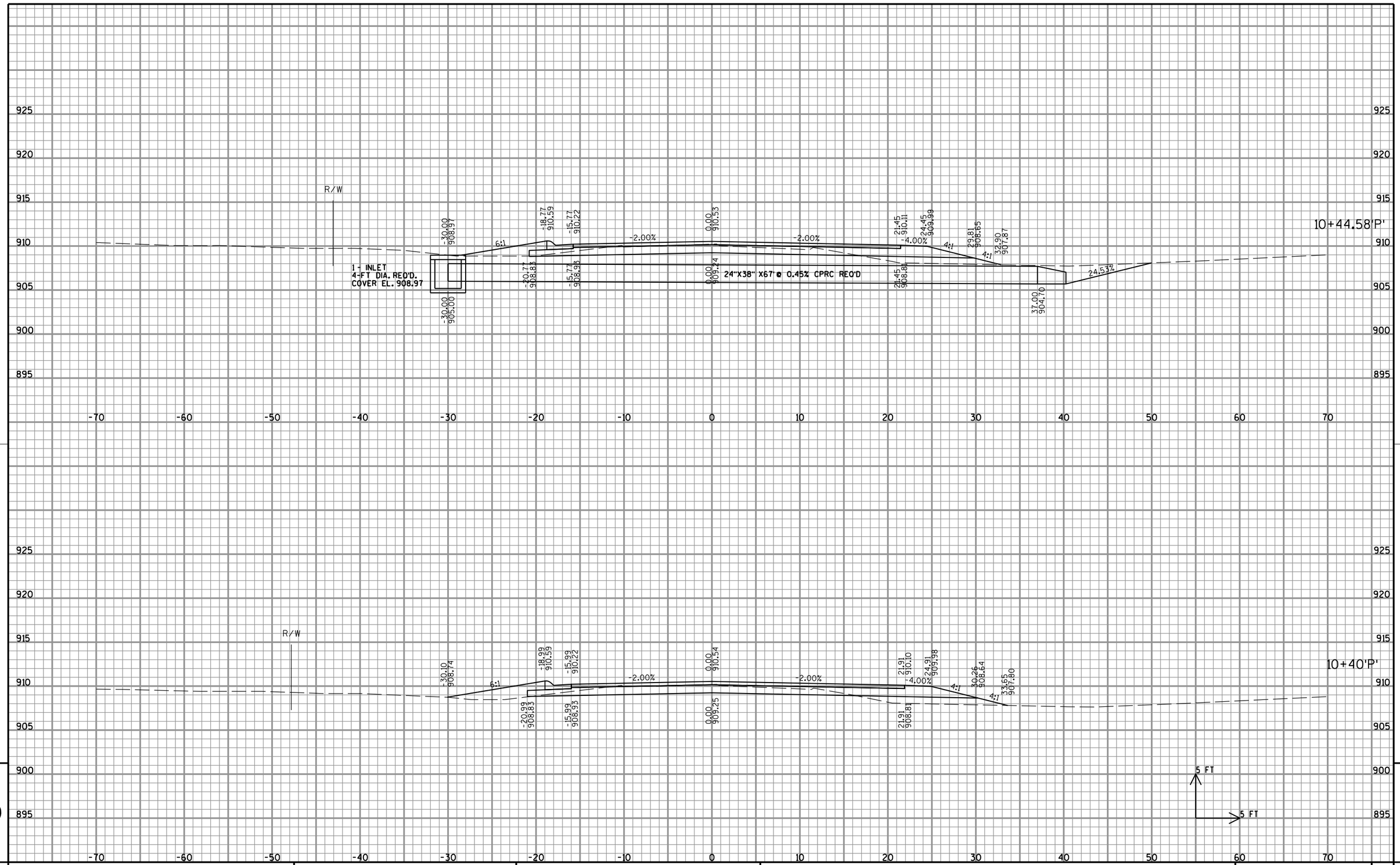

9

PROJECT NO: 7824-00-09	HWY: CTH AA	COUNTY: EAU CLAIRE	CROSS SECTIONS: PLEASANT VIEW STREET	SHEET 223	E

9

FILE NAME : S:\Projects\NW\Eau Claire County\CTH AA\CAD\Plans\090203_xs_AA.dgn PLOT DATE : 10/16/2015 PLOT BY : $$...plotuser...$$ PLOT NAME : PLOT SCALE : 10.0000 sf / in.

WISDOT/CADDS SHEET 21

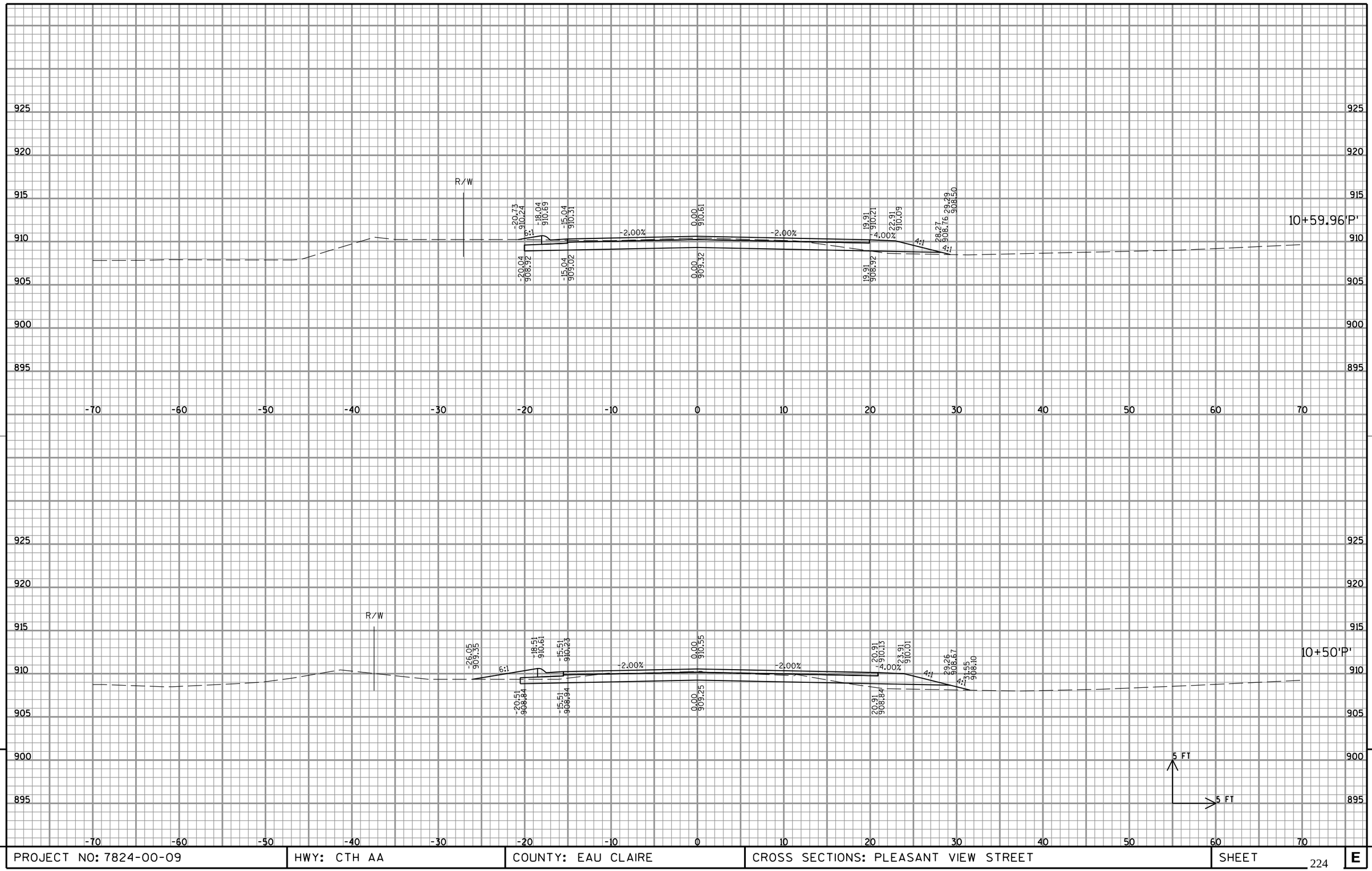

9

9

PROJECT NO: 7824-00-09	HWY: CTH AA	COUNTY: EAU CLAIRE	CROSS SECTIONS: PLEASANT VIEW STREET	SHEET 224	E

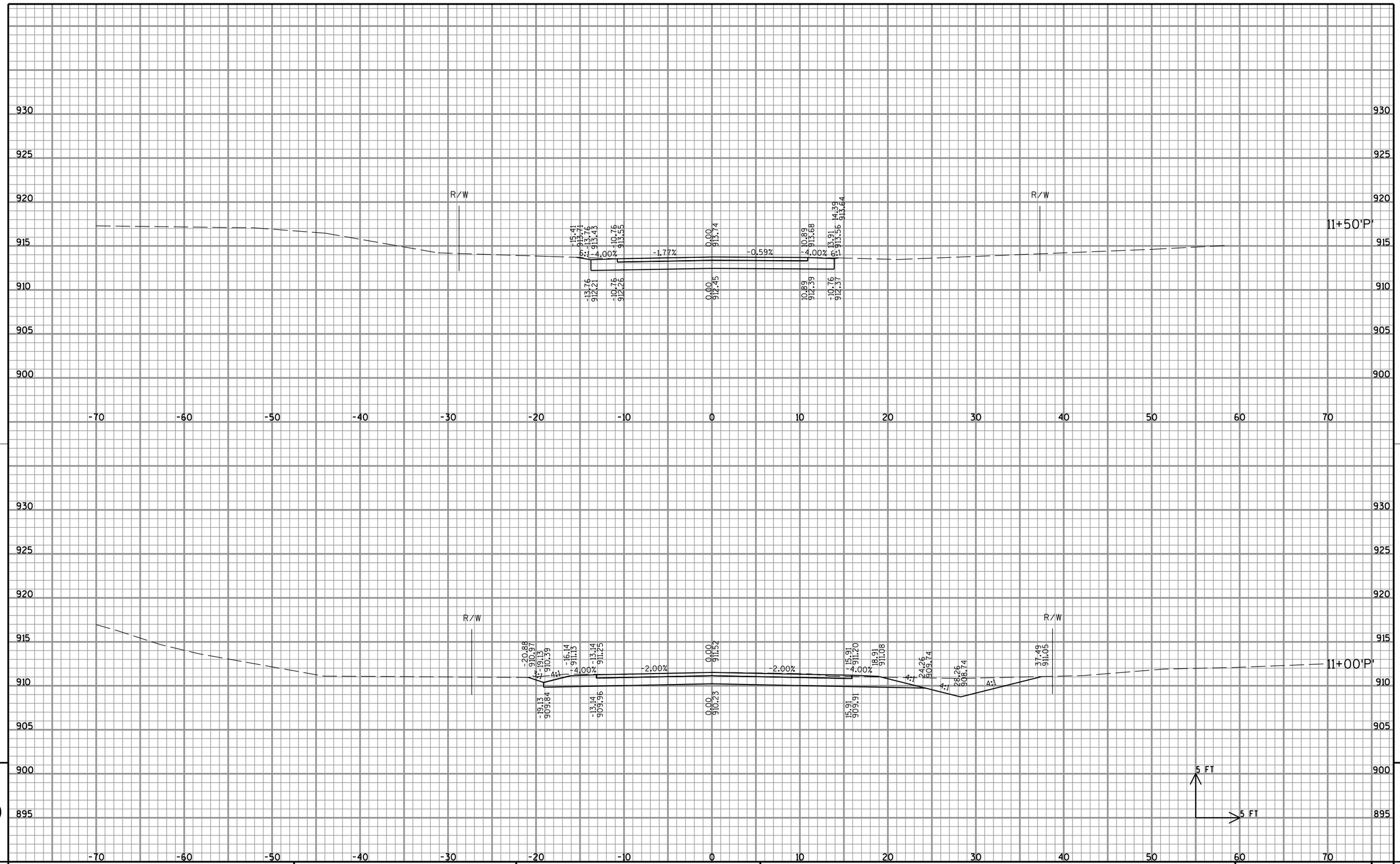

PROJECT NO: 7824-00-09	HWY: CTH AA	COUNTY: EAU CLAIRE	CROSS SECTIONS: PLEASANT VIEW STREET	SHEET	E

FILE NAME : S:\Projects\NW\Eau Claire County\CTH AA\CAD\Plans\090203_xs_AA.dgn PLOT DATE : 10/16/2015 PLOT BY : $$...plotuser...$$ PLOT NAME : PLOT SCALE : 10.0000 sf / in.

WISDOT/CADDS SHEET 21

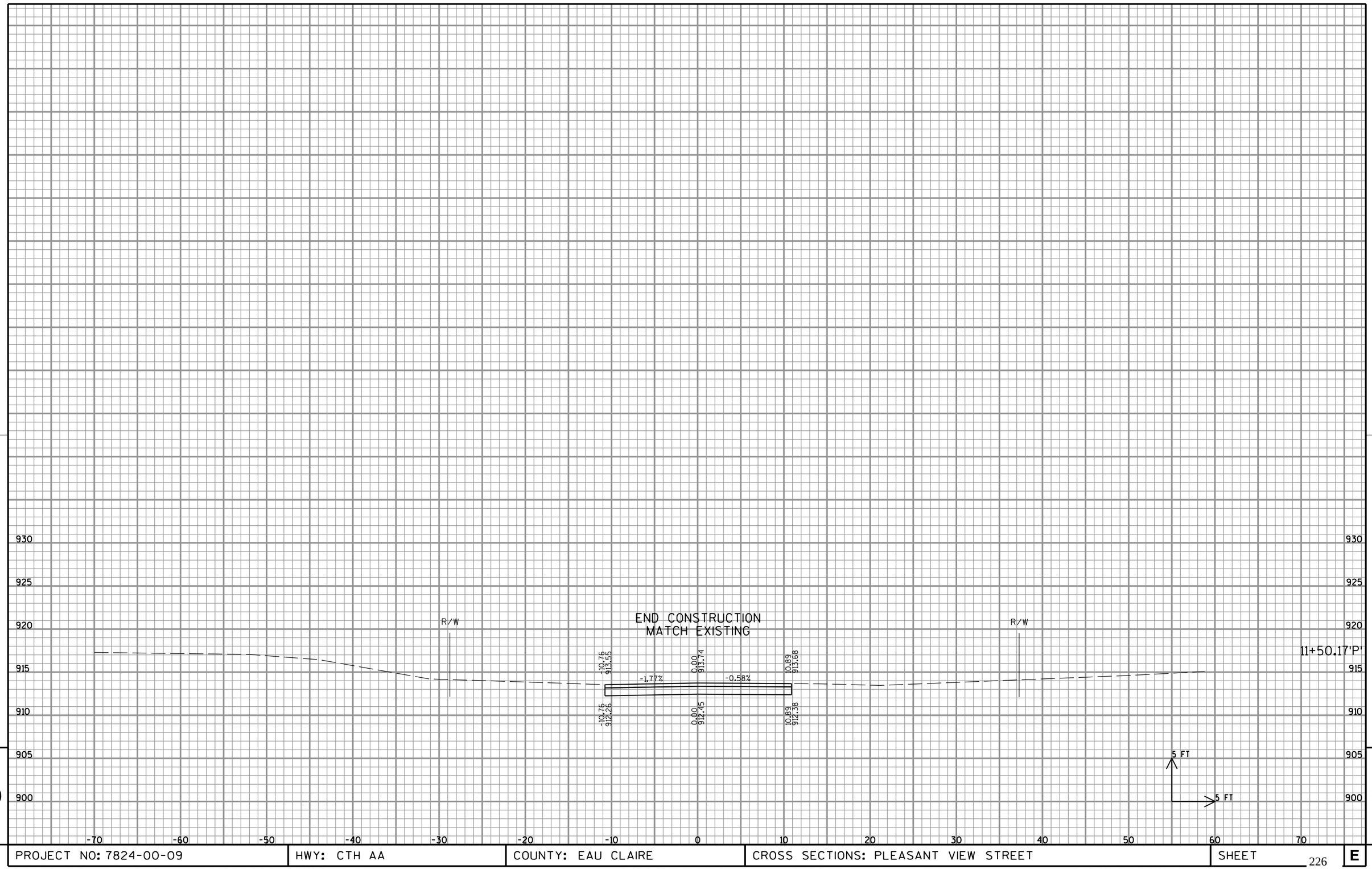

9

9

PROJECT NO: 7824-00-09	HWY: CTH AA	COUNTY: EAU CLAIRE	CROSS SECTIONS: PLEASANT VIEW STREET	SHEET	E

FILE NAME : S:\Projects\NW\Eau Claire County\CTH AA\CAD\Plans\090203_xs_AA.dgn PLOT DATE : 10/16/2015 PLOT BY : $$...plotuser...$$ PLOT NAME : PLOT SCALE : 10.0000 sf / in.

WISDOT/CADDS SHEET 21

Notes

Wisconsin Department of Transportation

Dedicated people creating transportation solutions
through innovation and exceptional service.

http://www.dot.wisconsin.gov