NEL MAR 2016

PROJECT ID: 4987-02-57

WITH:

COUNTY: BROWN

ORDER OF SHEETS

Section No. 1 Title
Section No. 2 Typical Sections and Details
Section No. 3 Estimate of Quantities
Section No. 3 Miscellaneous Quantities
Section No. 4 Right of Way Plat
Section No. 5 Plan and Profile
Section No. 6 Standard Detail Drawings
~~Section No. 7 Sign Plates~~
~~Section No. 8 Structure Plans~~
Section No. 9 Computer Earthwork Data
Section No. 9 Cross Sections

TOTAL SHEETS = 200

19

N

DESIGN DESIGNATION CORNELIUS-CTH EA — CTH EA-SPARTAN

A.A.D.T.	2016	=	3,900	1,400
A.A.D.T.	2036	=	5,200	1,600
D.H.V.		=	660	205
D.D.		=	59/41	59/41
T.		=	4.7%	4.7%
DESIGN SPEED		=	45 MPH	45 MPH
ESALS		=	481,800	167,900

CONVENTIONAL SYMBOLS

PLAN

- CORPORATE LIMITS
- PROPERTY LINE
- MINOR LOT LINE
- LIMITED HIGHWAY EASEMENT
- EXISTING RIGHT OF WAY
- PROPOSED OR NEW R/W LINE
- SLOPE INTERCEPT
- REFERENCE LINE
- EXISTING CULVERT
- PROPOSED CULVERT (Box or Pipe)
- COMBUSTIBLE FLUIDS (CAUTION)
- MARSH AREA
- WOODED OR SHRUB AREA

PROFILE

- GRADE LINE
- ORIGINAL GROUND
- MARSH OR ROCK PROFILE (To be noted as such) (ROCK)
- SPECIAL DITCH (LABEL)
- GRADE ELEVATION (95.36)
- CULVERT (Profile View)

UTILITIES

- ELECTRIC (E)
- FIBER OPTIC (FO)
- GAS (G)
- SANITARY SEWER (SAN)
- STORM SEWER (SS)
- TELEPHONE (T)
- WATER (W)
- UTILITY PEDESTAL
- POWER POLE
- TELEPHONE POLE

STATE OF WISCONSIN
DEPARTMENT OF TRANSPORTATION

PLAN OF PROPOSED IMPROVEMENT

CITY OF GREEN BAY, CTH N

CORNELIUS DRIVE TO SPARTAN ROAD

CTH N

BROWN COUNTY

STATE PROJECT NUMBER
4987-02-57

STATE PROJECT	FEDERAL PROJECT	
	PROJECT	CONTRACT
4987-02-57	WISC 2016061	1

BEGIN PROJECT
ID 4987-02-57
STA 500+19.00
Y=566699.73
X=122573.34

END PROJECT
ID 4987-02-57
STA 569+00.00
Y=566685.90
X=129451.21

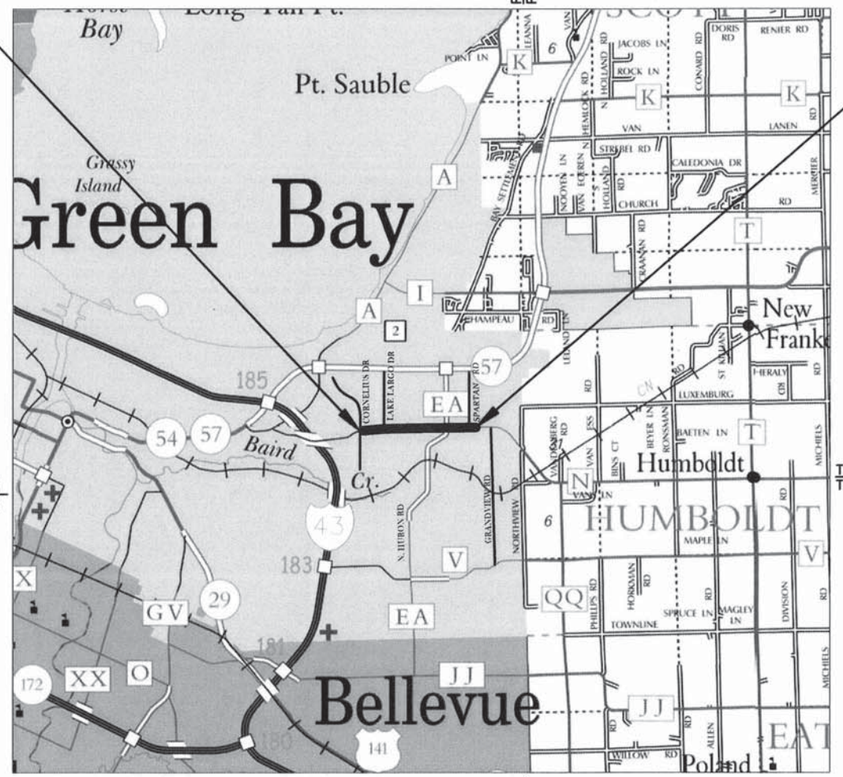

LAYOUT

SCALE 0 2 MILE

TOTAL NET LENGTH OF CENTERLINE = 1.30

HORIZONTAL POSITIONS SHOWN ON THIS PLAN ARE WISCONSIN COUNTY COORDINATES, BROWN COUNTY, NAD83 (1987), IN U.S. SURVEY FEET. VALUES ARE GRID COORDINATES, GRID BEARINGS, AND GRID DISTANCES. GRID DISTANCES MAY BE USED AS GROUND DISTANCES. ELEVATIONS SHOWN IN THIS PLAN ARE REFERENCED TO THE NORTH AMERICAN VERTICAL DATUM OF 1988 (NAVD 88)

ACCEPTED FOR BROWN COUNTY BY

10/16/15 (Date) (Signature)

ORIGINAL PLANS PREPARED BY

BLOOM COMPANIES, LLC

WISCONSIN PROFESSIONAL ENGINEER
MICHELLE M. GARRIGAN
E-31966
GREEN BAY, WISCONSIN

10-13-15 (Date) Michelle Garrigan (Signature)

STATE OF WISCONSIN
DEPARTMENT OF TRANSPORTATION

PREPARED BY

Surveyor	Bloom Companies, LLC
Designer	Bloom Companies, LLC
Management Consultant	PAT DUCHATEAU
C.O. Examiner	

APPROVED FOR THE DEPARTMENT

DATE: 10/20/15 (Management Consultant Signature)

E

DIGGERS HOTLINE

Dial 811 or (800) 242-8511

www.DiggersHotline.com

ORDER OF SECTION 2 DETAIL SHEETS

GENERAL NOTES
TYPICAL SECTIONS
CONSTRUCTION DETAILS
PLAN DETAILS
EROSION CONTROL
STORM SEWER
PERMANENT SIGNING
PAVEMENT MARKING PLAN
TRAFFIC CONTROL/CONSTRUCTION STAGING
DETOUR PLAN
ALIGNMENT PLAN

UTILITY CONTACTS

BROWN COUNTY - COMMUNICATION
P.O. BOX 11064
GREEN BAY, WI 54307
DAN BECKER
(920) 676-3496
dbecker@mcae.biz

CITY OF GREEN BAY - SEWER
100 N. JEFFERSON STREET
GREEN BAY, WI 54301
KRISTIN ROMANOWICZ
(920) 448-3100
kristinro@greenbaywi.gov

GREEN BAY WATER UTILITY
631 S. ADAMS STREET
GREEN BAY, WI 54305
JEFF WOLFORD
(920) 621-8071
JeffWo@greenbaywi.gov

TIME WARNER CABLE
3520 DESTINATION DRIVE
APPLETON, WI 54915
VINCE ALBIN
(920) 831-9249
Vince.Albin@twcable.com

AT&T WISCONSIN - COMMUNICATION
221 W WASHINGTON ST, 4TH FLOOR
APPLETON, WI 54911
JOE KASSAB
(920) 735-3206
JK572K@att.com

WISCONSIN PUBLIC SERVICE - GAS
2850 S. ASHLAND AVE
P.O. BOX 19001
GREEN BAY, WI 54307-9001
DAVID RETZLAFF
(920) 617-5237
dpretzlaff@wisconsinpublicservice.com

WISCONSIN PUBLIC SERVICE - ELECTRICITY
2850 S ASHLAND AVE
P.O. BOX 19001
GREEN BAY, WI 54307-9001
RANDY STEIER
(920) 617-5167
rdsteier@wisconsinpublicservice.com

OTHER CONTACTS

CITY OF GREEN BAY
PUBLIC WORKS
100 N. JEFFERSON STREET
ROOM 300
GREEN BAY, WI 54301
KRISTIN ROMANOWICZ - ENGINEERING
(920) 448-3100
kristinro@greenbaywi.gov

BROWN COUNTY
PUBLIC WORKS
2198 GLENDALE AVENUE
GREEN BAY, WI 54303
RACHEL BALLAST - ENGINEERING
(920) 662-2155
Ballast_RL@co.brown.wi.us

WISCONSIN DNR
2984 SHAWANO AVENUE
GREEN BAY, WI 54313
JAMES DOPERALSKI
(920) 662-5119
james.doperalski@wisconsin.gov

THE LOCATION OF EXISTING UTILITY FACILITY AS SHOWN ON THE PLANS ARE APPROXIMATE. THERE MAY BE OTHER UTILITY FACILITIES WITHIN THE PROJECT AREA NOT SHOWN.

NO TREES OR SHRUBS SHALL BE REMOVED UNLESS SUCH TREES OR SHRUBS HAVE BEEN DESIGNATED FOR REMOVAL BY THE ENGINEER

BENCH MARK ELEVATIONS AND CONTROL POINT LOCATIONS WERE ESTABLISHED USING GPS.

EXISTING DRIVEWAYS AND FIELD ENTRANCES BEYOND SIDEWALK SHALL BE REPLACED IN KIND AS SHOWN IN THE PLANS. BASE AGGREGATE WILL BE USED UNDER ALL DRIVEWAYS

THE EXACT LOCATION AND WIDTH OF PRIVATE DRIVEWAYS AND COMMERICAL DRIVEWAYS, AS WELL AS REMOVAL AND REPLACMENT LIMITS SHALL BE DETERMINED BY THE ENGINEER IN THE FIELD

CURB RADII ARE SHOWN TO THE FLANGE LINE OF CURB.

EXPANSION JOINTS SHALL BE CONSTRUCTED AT ALL RADUIS POINTS IN THE CURB AND GUTTER.

CURB RAMPS SHOWN ON THE PLAN SHALL BE IN CONFORMANCE WITH THE STANDARD DETAIL DRAWINGS. CURB RAMP DETECTABLE WARNING FIELDS ARE REQUIRED AT ALL CURB RAMP LOCATIONS. REFER TO THE PAVING DETAIL FOR CURB RAMP INFORMATION. CURB RAMPS ARE TO BE CONSTRUCTED WITH CONC. SIDEWALK 6-INCH

BROKEN CONCRETE SHALL BE DISPOSED OF BY THE CONTRACTOR.

THE REMOVAL OF CONCRETE DRIVEWAYS WILL BE MEASURED AND PAID FOR AS REMOVING PAVEMENT. THE REMOVAL OF SIDEWALK WITHIN THE LIMITS OF THE DRIVEWAY WILL BE PAID FOR AS REMOVING PAVEMENT. REMOVING ASPHALT DRIVEWAY APRONS AND ASPHALTIC DRIVEWAYS BEHIND THE SIDEWALK WILL BE PAID AS COMMON EXCAVATION.

THE LIMITS OF PAVEMENT REMOVAL ON SIDE STREETS IS APPROXIMATE AND SHALL BE VERIFIED BY THE ENGINEER IN THE FIELD.

AFTER CONSTRUCTION OF ANY INLET, CONTRACTOR SHALL CONSTRUCT THE EROSION CONTROL PROTECTION IN ACCORDANCE WITH THE DETAILS SHOWN ON THE PLANS TO MINIMIZE SEDIMENTATION IN THE INLET AND STORM SEWER.

THE EXACT LOCATION OF ALL EROSION CONTROL ITEMS SHALL BE DETERMINED BY THE ENGINEER IN THE FIELD.

DISTURBED AREAS WITHIN THE RIGHT OF WAY SHALL BE TOPSOILED, FERTILIZED, AND SEEDED WITHIN 7 DAYS AFTER PLACEMENT OF TOPSOIL AS DIRECTED BY THE ENGINEER.

REMOVAL OF EROSION CONTROL DEVICES IS INCLUDED IN THE COST OF THEIR RESPECTIVE BID ITEMS.

PRIOR TO ORDERING DRAINAGE PIPES AND STRUCTURES, THE CONTRACTOR SHALL VERIFY RELATED DRAINAGE INFORMATION IN THE PLANS WITH THE ENGINEER.

ALL INLET CASTINGS SHALL CONTAIN THE ENVIRO LOGO AS SEEN ON THE STANDARD DETAIL DRAWINGS

WHERE PROPOSED STORM SEWER TIES INTO EXISTING STORM SEWER, THE EXISTING INVERTS ARE TO BE VERIFIED IN THE FIELD PRIOR TO INSTALLING UPSTREAM SYSTEM.

FILL AS SHOWN ON THE PLAN PERTAINS TO EMBANKMENT CONSTRUCTED FROM COMMON EXCAVATION. THE FACTOR USED FOR EXPANDING THE FILLS TO COMPLETE THE VOLUME OF MATERIAL REQUIRED IS 25% FOR COMMON EXCAVATION.

EXCAVATION BELOW SUBGRADE (EBS) AREAS ARE NOT SHOWN ON THE CROSS SECTIONS. UNDISTRIBUTED EBS IS INCLUDED IN THE PLAN QUANTITIES FOR COMMON EXCAVATION. EBS IS NOT USED TO BALANCE YARDAGE. EBS AREAS ARE TO BE BACKFILLED WITH BREAKER RUN. EXACT LOCATIONS OF EBS WILL BE DETERMINED BY THE ENGINEER.

REMOVAL, STOCKPILING, AND REPLACMENT OF LANDSCAPING STONE AND MATERIALS IMPACTED BY CONSTRUCTION OUTSIDE OF THE RIGHT OF WAY SHALL BE CONSIDERED INCIDENTAL TO EXCAVATION COMMON.

ANY MESH FOUND IN EXISTING CONCRETE PAVEMENT THAT NEEDS TO BE REMOVED SHALL BE CONSIDERED INCIDENTAL TO REMOVING PAVEMENT.

HMA SHALL BE CONSTRUCTED WITH THE FOLLOWING LAYERS AND GRADATIONS (BY OTHERS):

TOTAL LAYER PAVEMENT THICKNESS	LAYERS	NOMINAL MAXIMUM SIZE GRADATION
4.5”	2" UPPER LAYER	12.5 mm
	2 1/2" LOWER LAYER	19.0 mm

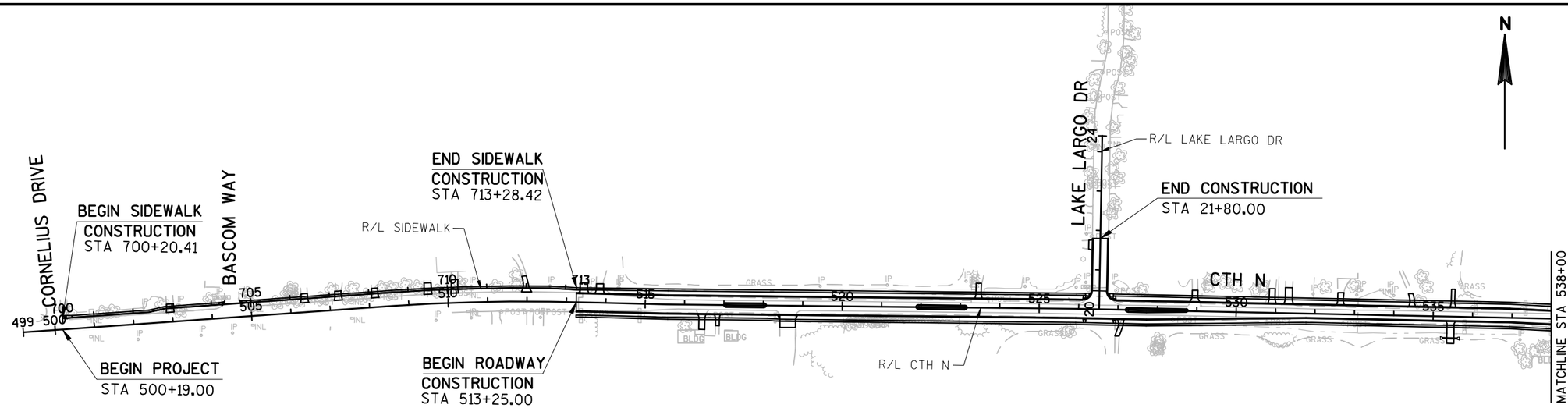

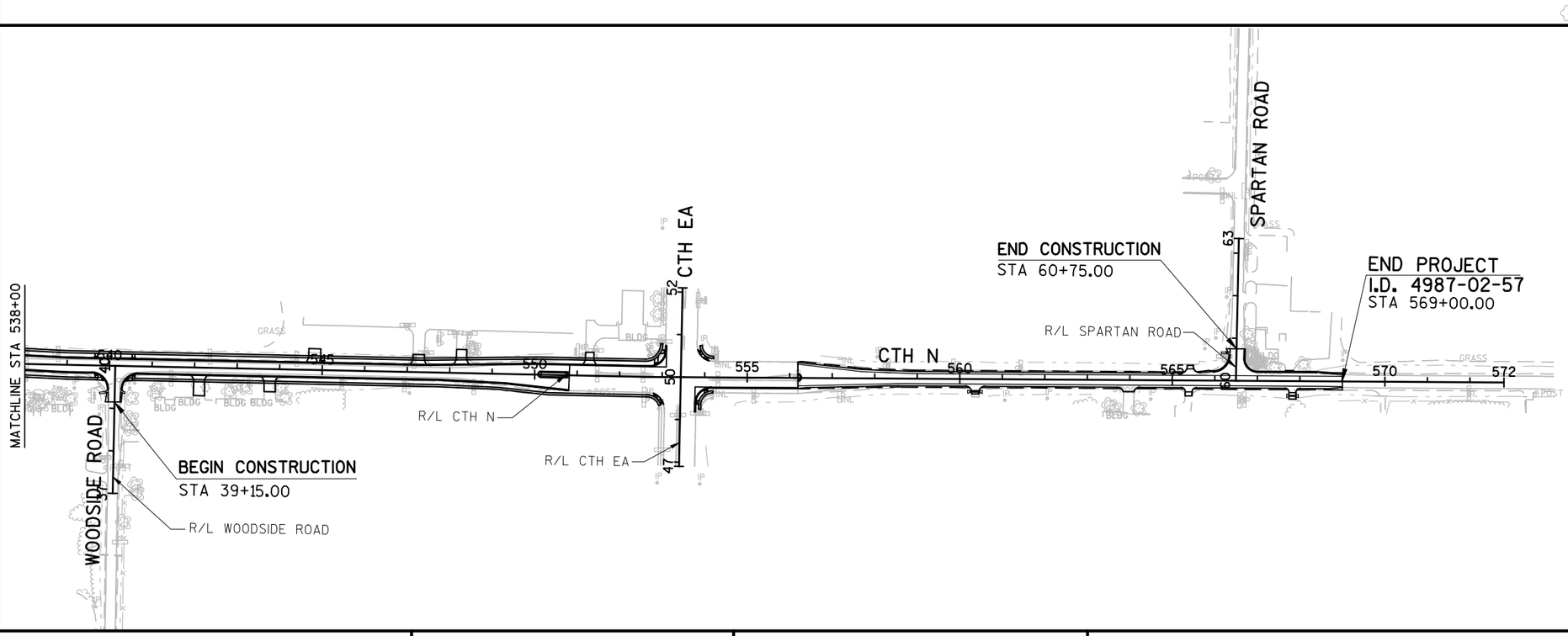

PROJECT NO: 4987-02-57	HWY: HUMBOLDT ROAD/CTH N	COUNTY: BROWN	PROJECT OVERVIEW	SHEET 3	E

FILE NAME : F:\BM4-1048 CTH N\49870256\SHEETSPLAN\020201-PO.DWG
020201-po
PLOT DATE : 10/28/2015 2:13 PM PLOT BY : SHANE MCCARTY PLOT NAME : PLOT SCALE : 1 IN:300 FT
WISDOT/CADDS SHEET 44

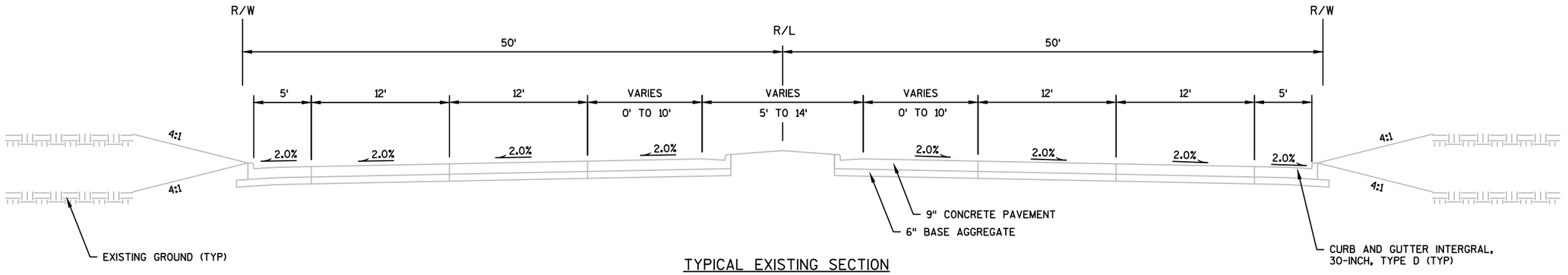

TYPICAL EXISTING SECTION
CTH N
STA 550+81 TO STA 556+20

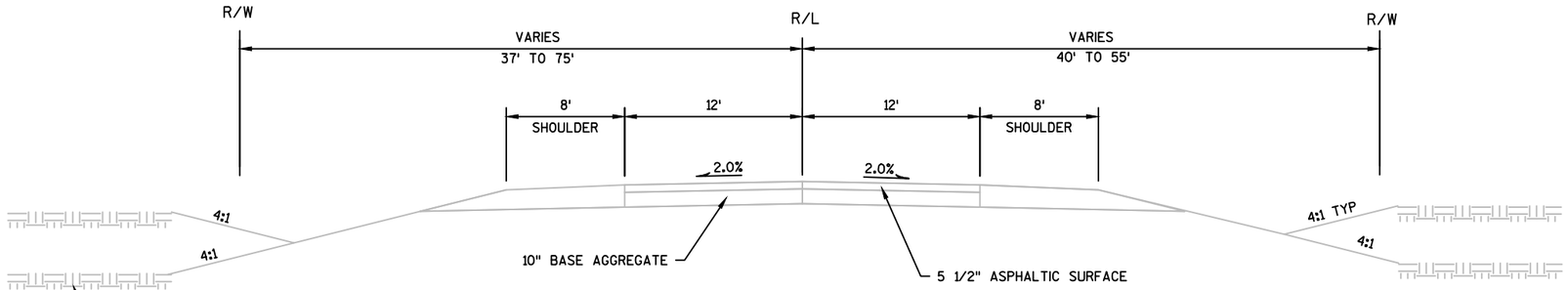

TYPICAL EXISTING SECTION
CTH N
STA 513+25 TO STA 550+81
STA 556+20 TO STA 569+00

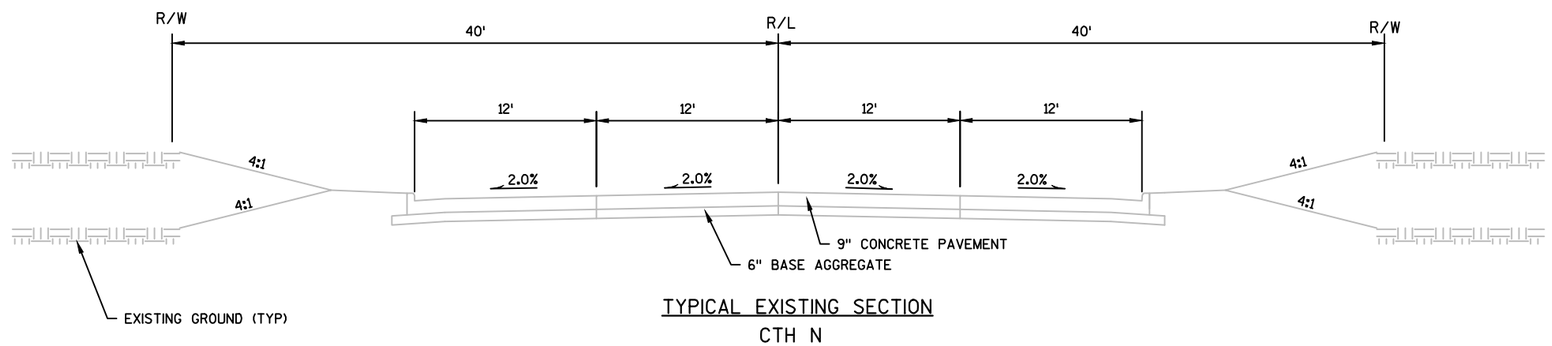

TYPICAL EXISTING SECTION
CTH N
STA 500+00 TO STA 513+25

PROJECT NO: 4987-02-57	HWY: HUMBOLDT ROAD/CTH N	COUNTY: BROWN	PLAN: TYPICAL SECTIONS	SHEET 4	E

FILE NAME : F:\BM4-1048 CTH N\49870256\SHEETSPLAN\020301-TS.DWG PLOT DATE : 10/29/2015 4:03 PM PLOT BY : SHANE MCCARTY PLOT NAME : PLOT SCALE : 1:10_XREF

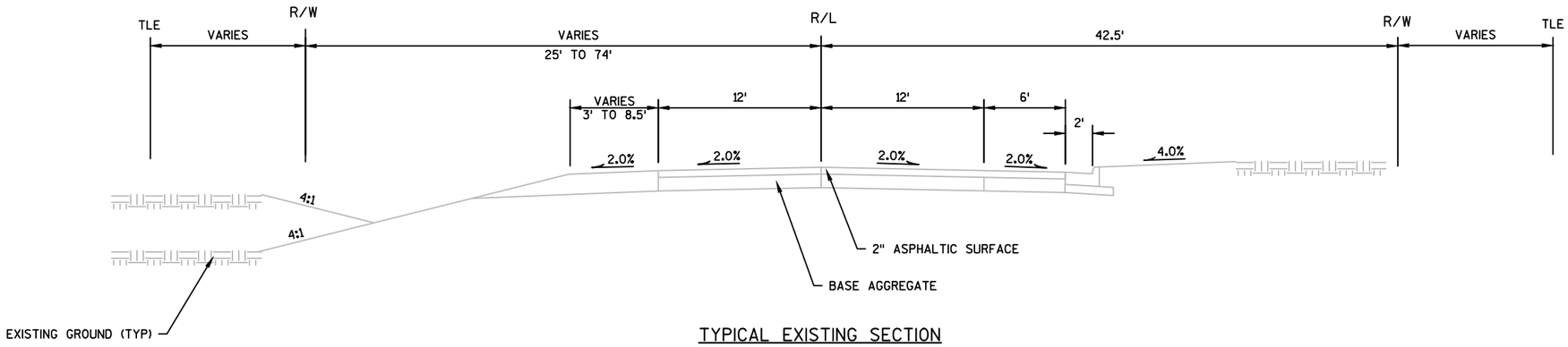

TYPICAL EXISTING SECTION

SPARTAN RD

STA 60+19.22 TO STA 60+75.00

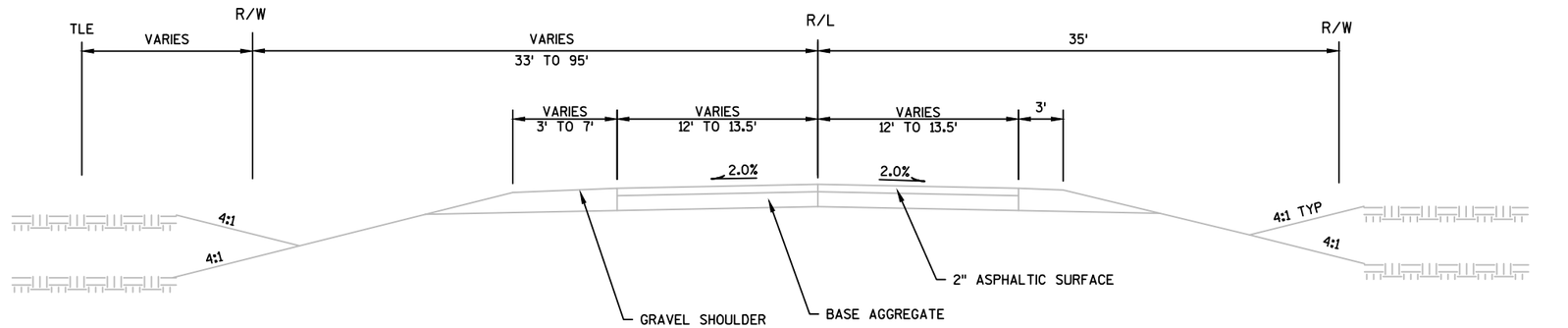

TYPICAL EXISTING SECTION

WOODSIDE RD

STA 39+15.00 TO STA 39+44.00

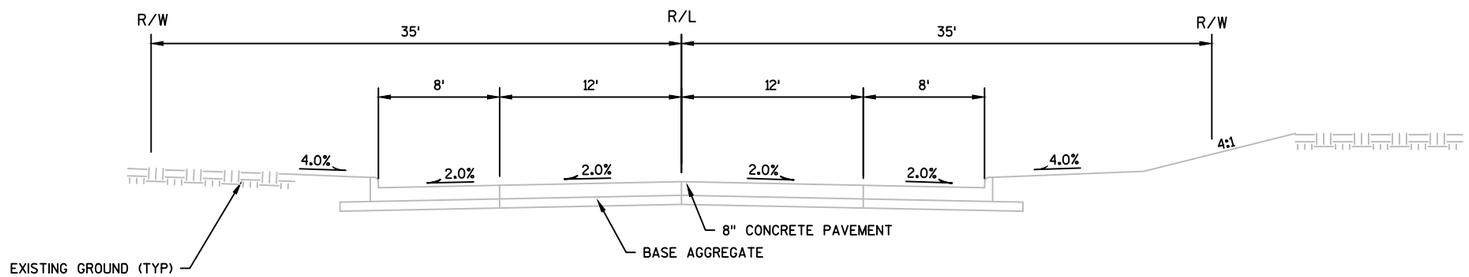

TYPICAL EXISTING SECTION

LAKE LARGO DR

STA 20+54.89 TO STA 21+80.00

PROJECT NO: 4987-02-57	HWY: HUMBOLDT ROAD/CTH N	COUNTY: BROWN	PLAN: TYPICAL SECTIONS	SHEET 5	E

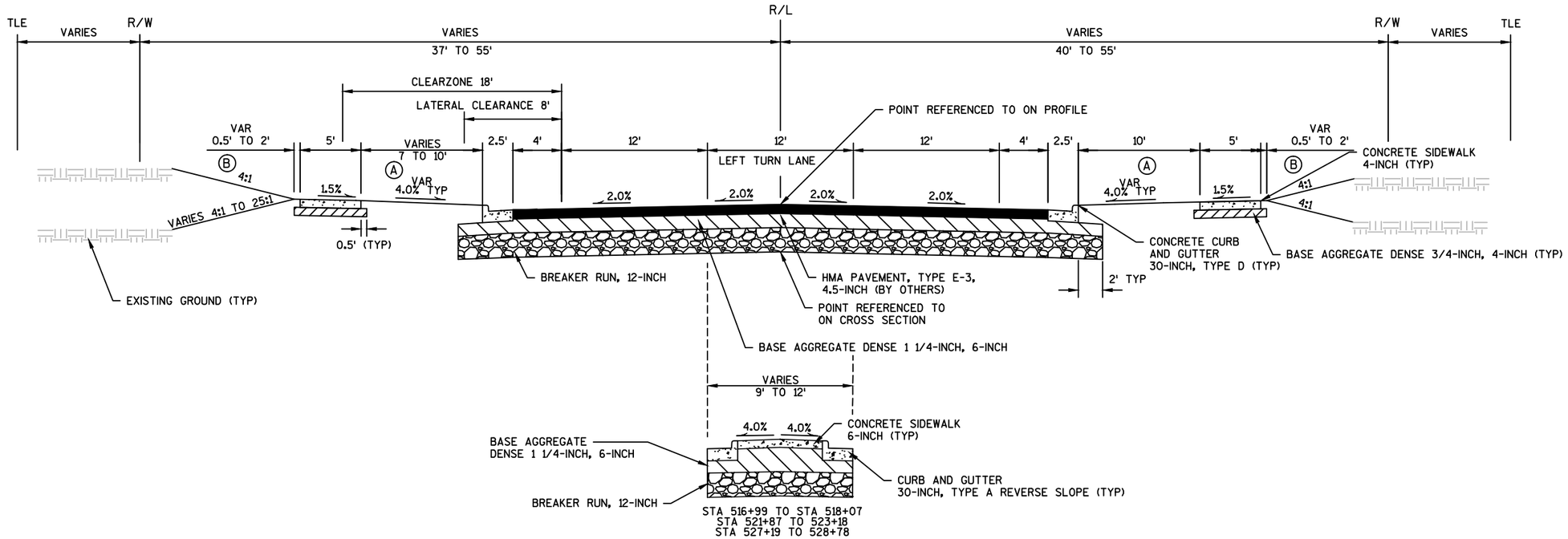

TYPICAL FINISHED SECTION
CTH N
STA 513+25 TO STA 531+67

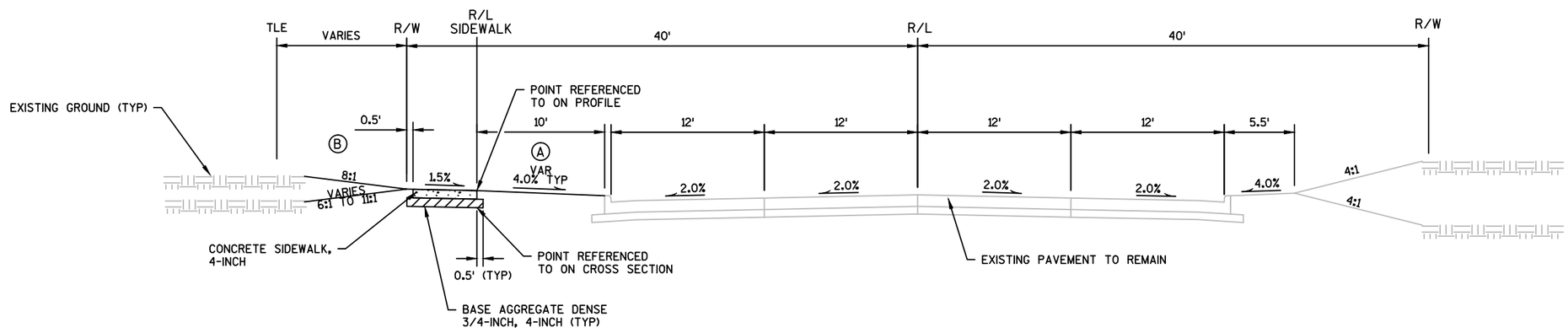

TYPICAL FINISHED SECTION
CTH N
STA 500+00 TO STA 513+25
STA 700+00 TO STA 713+25 R/L SIDEWALK

LEGEND

(A) TOPSOIL, SEED NO. 40, FERTILIZE & EROSION MAT URBAN CLASS I TYPE A
(B) TOPSOIL, SEED NO. 40, FERTILIZE & MULCH
(C) TOPSOIL, SEED NO. 30, FERTILIZE & MULCH

PROJECT NO: 4987-02-57	HWY: HUMBOLDT ROAD/CTH N	COUNTY: BROWN	PLAN: TYPICAL SECTIONS	SHEET 6	E

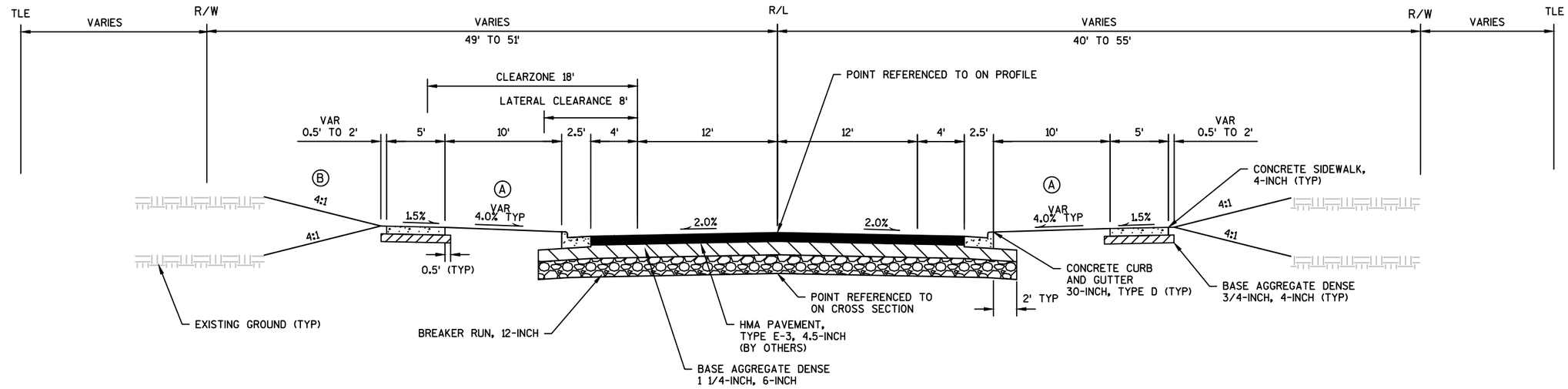

TYPICAL FINISHED SECTION

CTH N

STA 537+00 TO STA 550+81

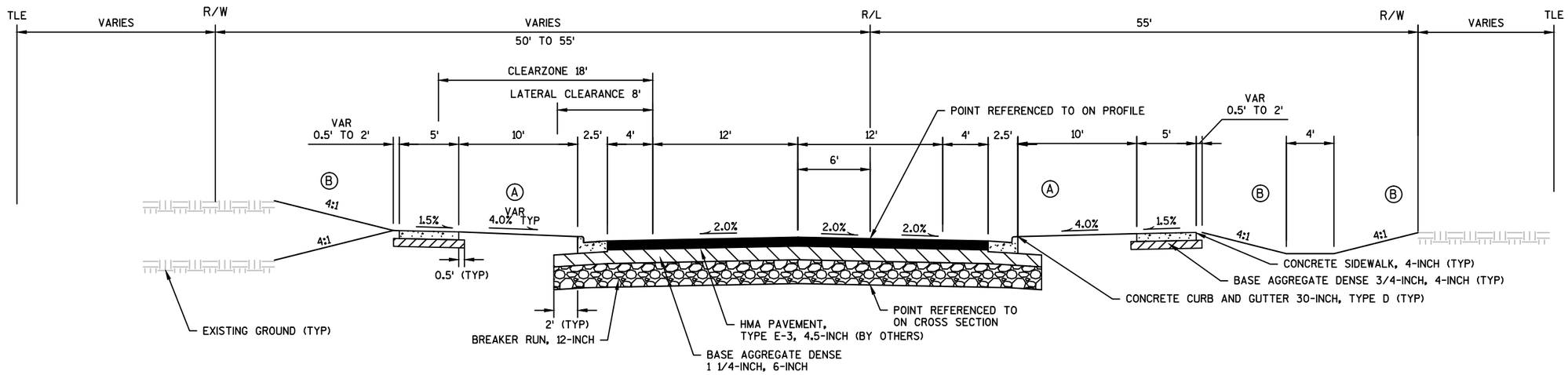

TYPICAL FINISHED SECTION

CTH N

STA 531+67 TO STA 537+00

LEGEND

Ⓐ TOPSOIL, SEED NO. 40, FERTILIZE & EROSION MAT URBAN CLASS I TYPE A

Ⓑ TOPSOIL, SEED NO. 40, FERTILIZE & MULCH

Ⓒ TOPSOIL, SEED NO. 30, FERTILIZE & MULCH

PROJECT NO: 4987-02-57	HWY: HUMBOLDT ROAD/CTH N	COUNTY: BROWN	PLAN: TYPICAL SECTIONS	SHEET 7	E

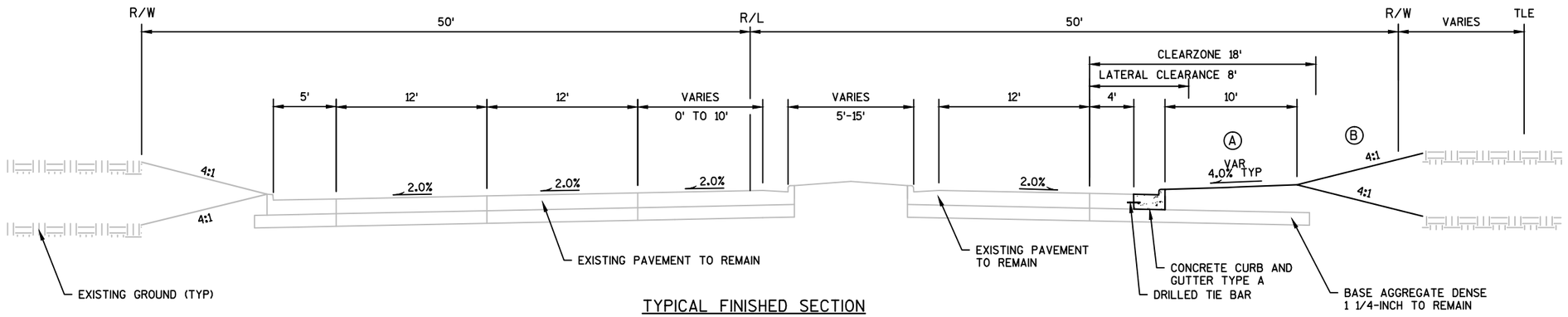

TYPICAL FINISHED SECTION

CTH N

STA 553+77 TO STA 556+19

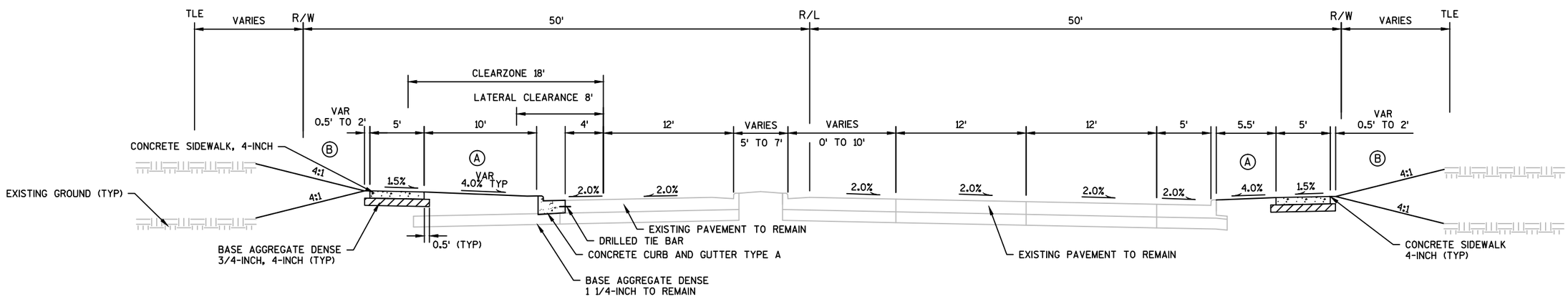

TYPICAL FINISHED SECTION

CTH N

STA 550+81 TO STA 553+10

LEGEND

(A) TOPSOIL, SEED NO. 40, FERTILIZE & EROSION MAT URBAN CLASS I TYPE A

(B) TOPSOIL, SEED NO. 40, FERTILIZE & MULCH

(C) TOPSOIL, SEED NO. 30, FERTILIZE & MULCH

PROJECT NO: 4987-02-57	HWY: HUMBOLDT ROAD/CTH N	COUNTY: BROWN	PLAN: TYPICAL SECTIONS	SHEET 8	E

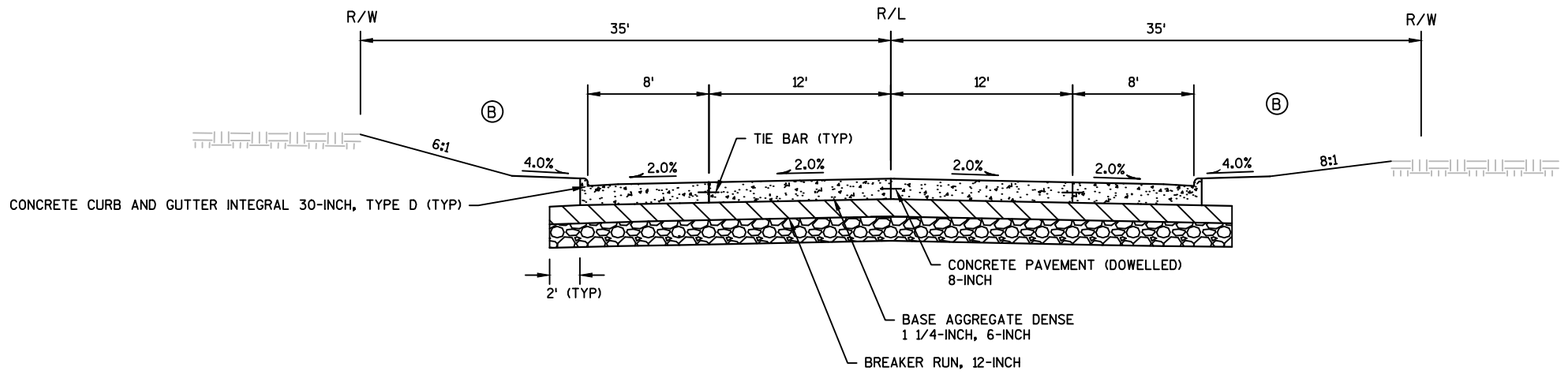

TYPICAL FINISHED SECTION

LAKE LARGO DR

STA 20+54.89 TO STA 21+80.00

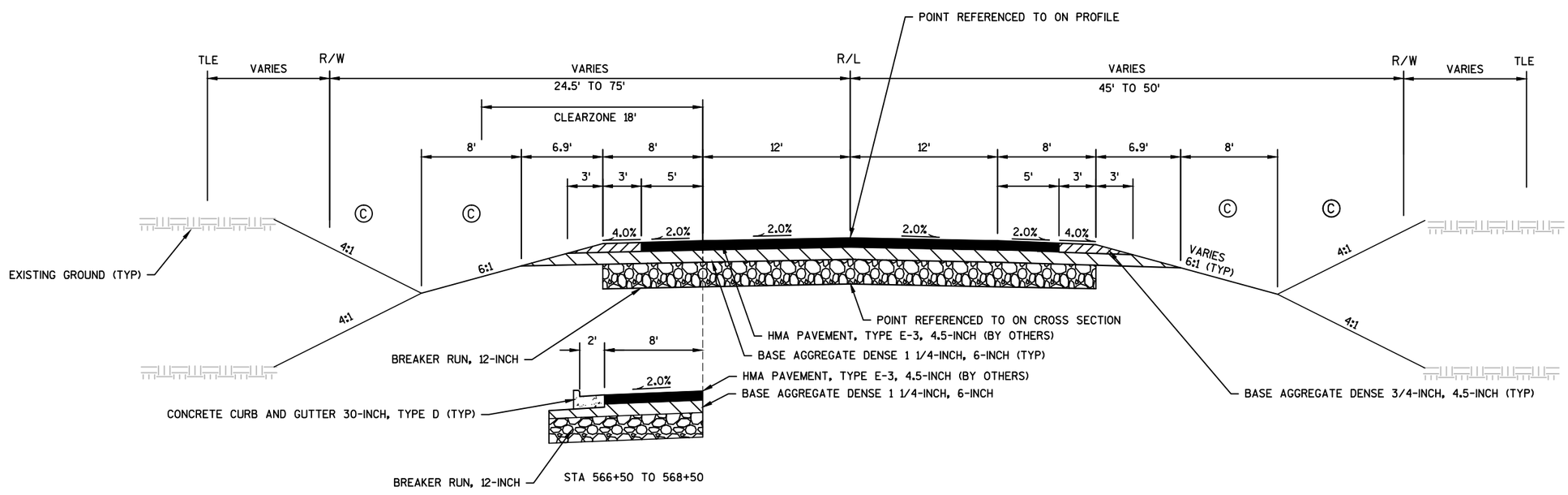

TYPICAL FINISHED SECTION

CTH N

STA 556+19 TO STA 569+00

LEGEND

Ⓐ TOPSOIL, SEED NO. 40, FERTILIZE & EROSION MAT URBAN CLASS I TYPE A

Ⓑ TOPSOIL, SEED NO. 40, FERTILIZE & MULCH

Ⓒ TOPSOIL, SEED NO. 30, FERTILIZE & MULCH

PROJECT NO: 4987-02-57	HWY: HUMBOLDT ROAD/CTH N	COUNTY: BROWN	PLAN: TYPICAL SECTIONS	SHEET 9	E

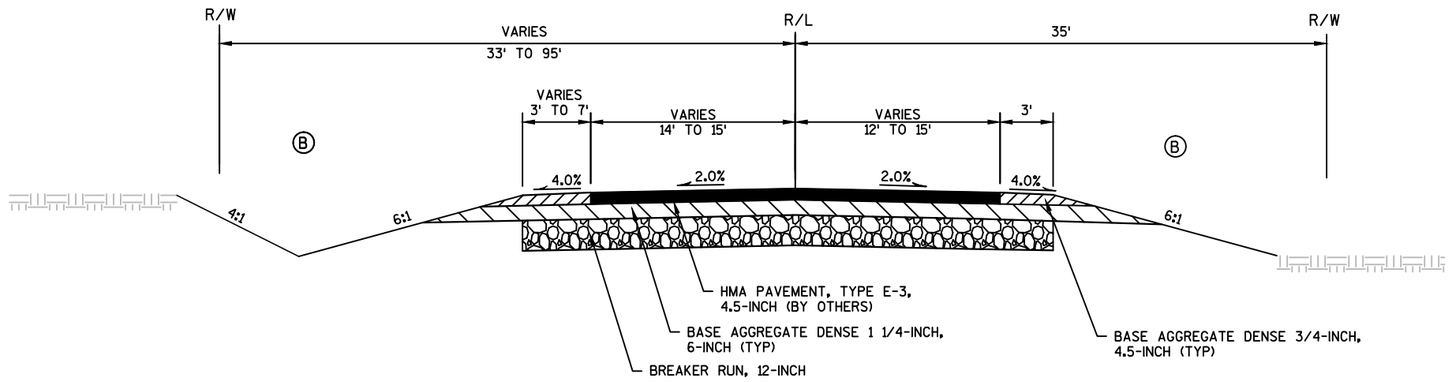

TYPICAL EXISTING SECTION

WOODSIDE RD

STA 39+15.00 TO STA 39+44.00

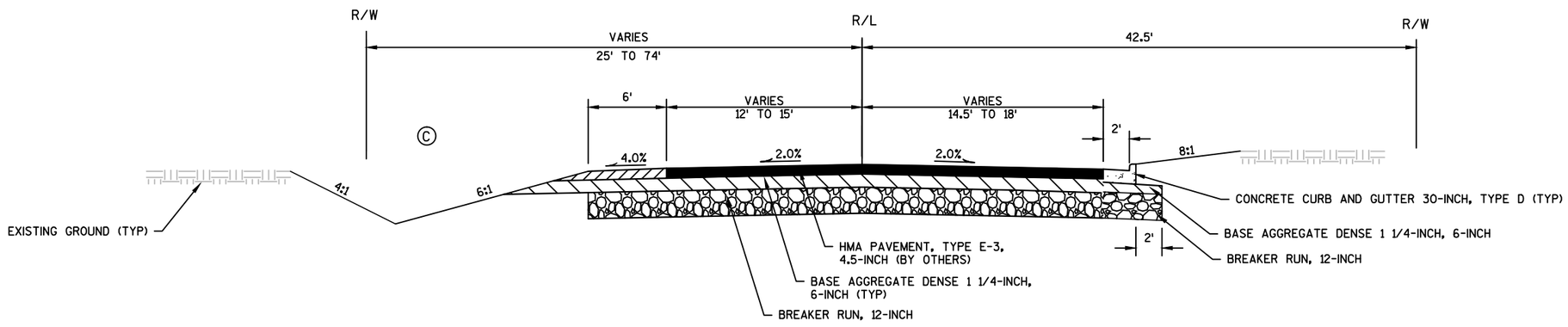

TYPICAL FINISHED SECTION

SPARTAN RD

STA 60+19.22 TO STA 60+75.00

LEGEND

Ⓐ TOPSOIL, SEED NO. 40, FERTILIZE & EROSION MAT URBAN CLASS I TYPE A

Ⓑ TOPSOIL, SEED NO. 40, FERTILIZE & MULCH

Ⓒ TOPSOIL, SEED NO. 30, FERTILIZE & MULCH

PROJECT NO: 4987-02-57	HWY: HUMBOLDT ROAD/CTH N	COUNTY: BROWN	PLAN: TYPICAL SECTIONS	SHEET 10	E

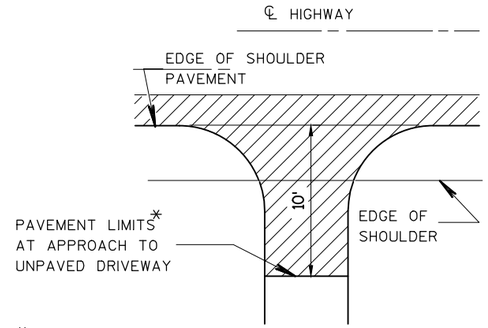

PLAN VIEW

PLAN VIEW
(PAVED SHOULDER ON HIGHWAY)

RURAL DRIVEWAY INTERSECTION DETAIL

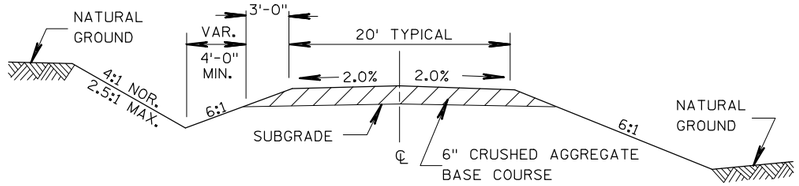

IN CUT

IN FILL

TYPICAL CROSS SECTION FOR PRIVATE DRIVE OR FIELD ENTRANCE

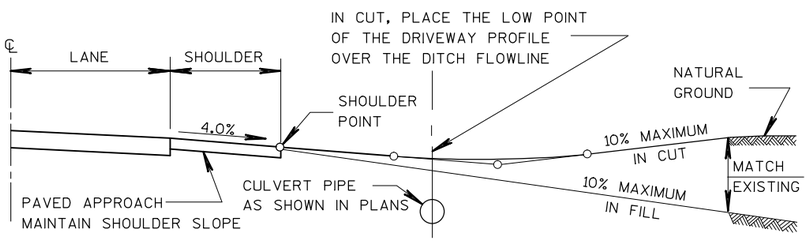

TYPICAL DRIVEWAY PROFILES

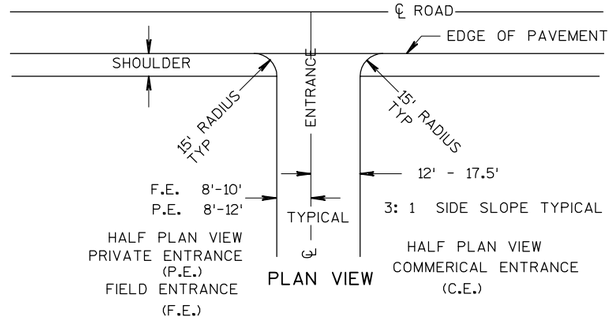

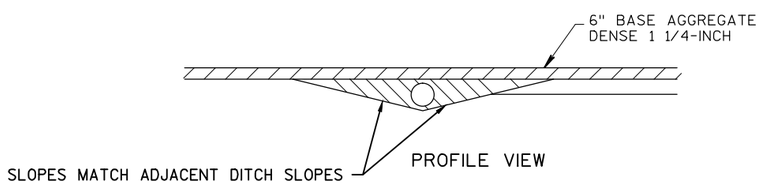

RURAL DRIVEWAY DETAIL

2

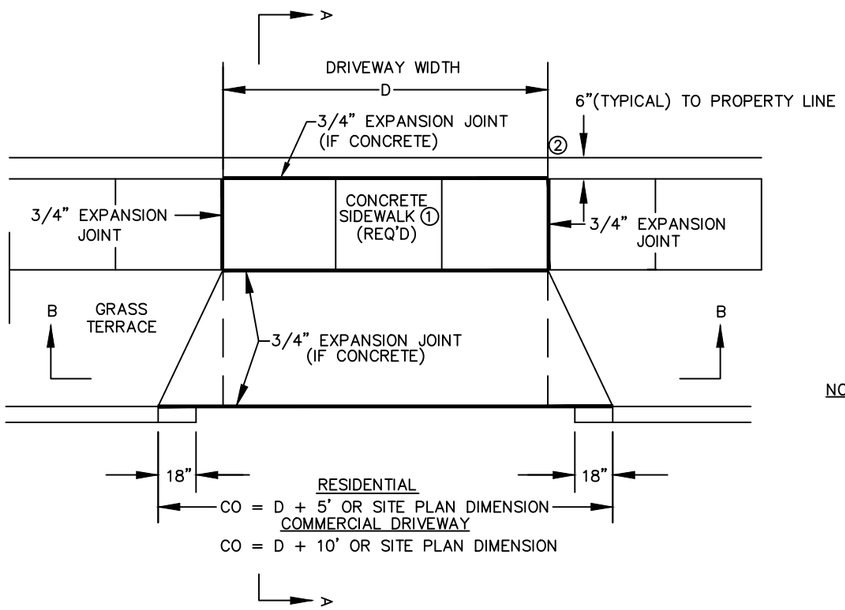

PLAN VIEW

MAX D = 12' SINGLE WIDTH RESIDENTIAL
MAX D = 20' DOUBLE WIDTH RESIDENTIAL
MAX D = 15' COMMERCIAL ONE-WAY
MAX D = 25' COMMERCIAL TWO-WAY
MAX CO = 17' SINGLE WIDTH RESIDENTIAL
MAX CO = 25' DOUBLE WIDTH RESIDENTIAL
MAX CO = 25' COMMERCIAL ONE-WAY OR AS SHOWN ON APPROVED SITE PLAN
MAX CO = 35' COMMERCIAL TWO-WAY OR AS SHOWN ON AN APPROVED SITE PLAN

NOTES:

1. ALL DRIVEWAYS REQUIRE A 5' CONCRETE SIDEWALK SECTION.
2. ALL PARKING LOT CURBING MUST BE TAPERED TO MEET THE BACK OF THE SIDEWALK.

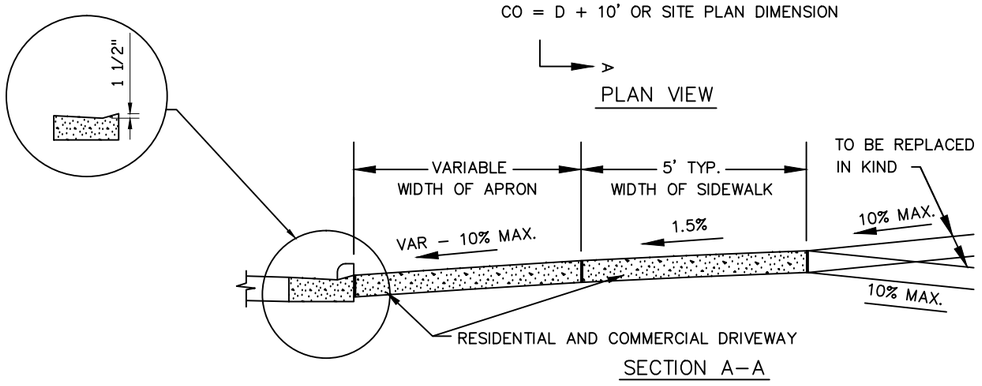

SECTION A-A

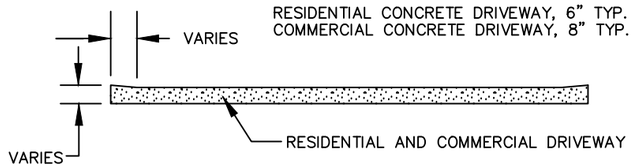

SECTION B-B

URBAN DRIVEWAY

PROJECT NO: 4987-02-57	HWY: HUMBOLDT ROAD/CTH N	COUNTY: BROWN	CONSTRUCTION DETAIL	SHEET 12	E

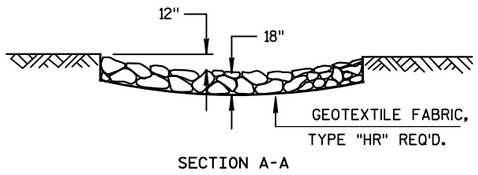

SECTION A-A

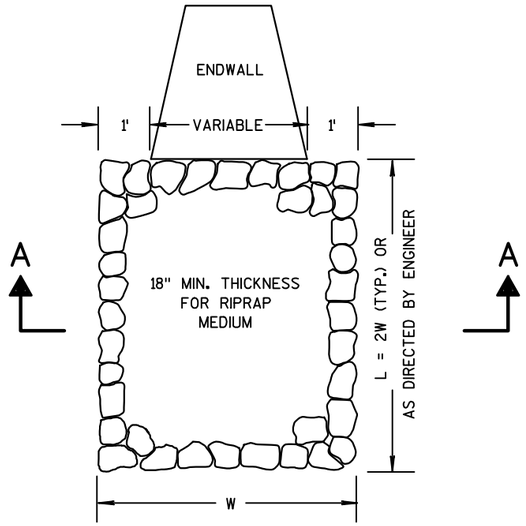

RIPRAP MEDIUM TREATMENT AT CULVERTS

SEE EROSION CONTROL PLANS
FOR LOCATIONS

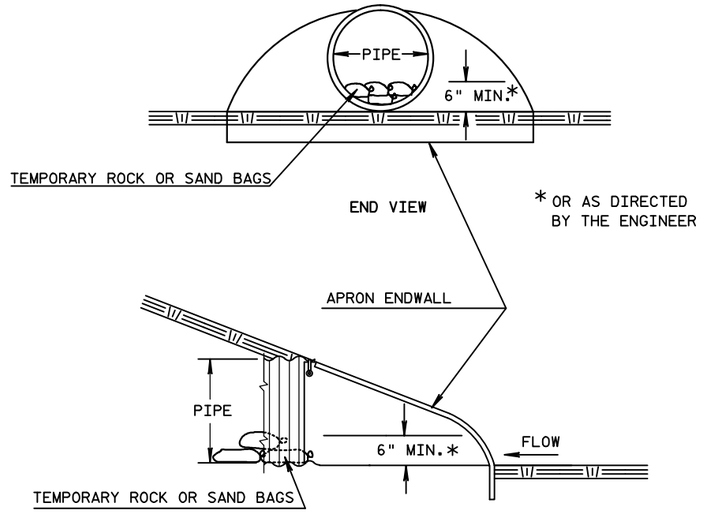

SIDE VIEW

CULVERT PIPE CHECKS

SEE EROSION CONTROL PLANS
FOR LOCATIONS

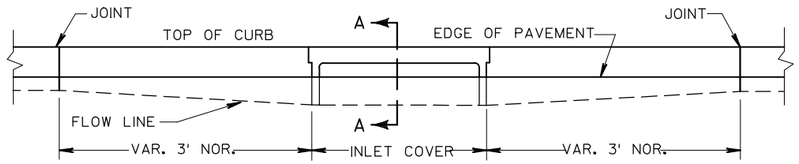

ELEVATION

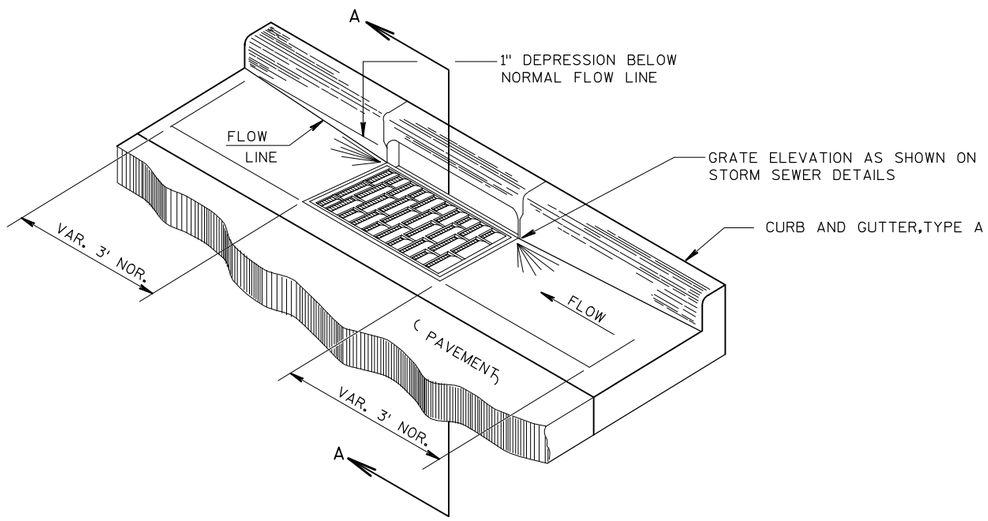

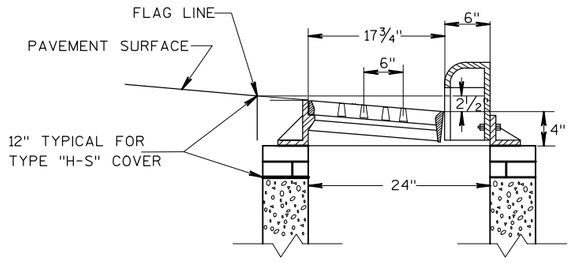

SECTION A-A

DETAIL OF CURB AND GUTTER AT INLETS

(TYPE 3-H-S INLET SHOWN)

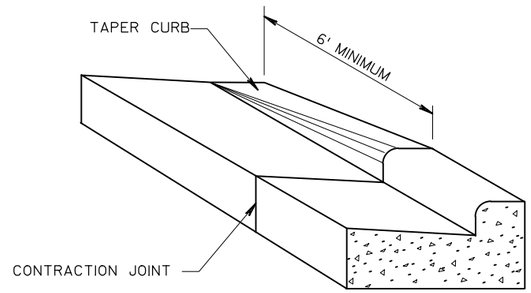

DETAIL OF CURB & GUTTER TERMINI

STA 556+13 TO 556+19

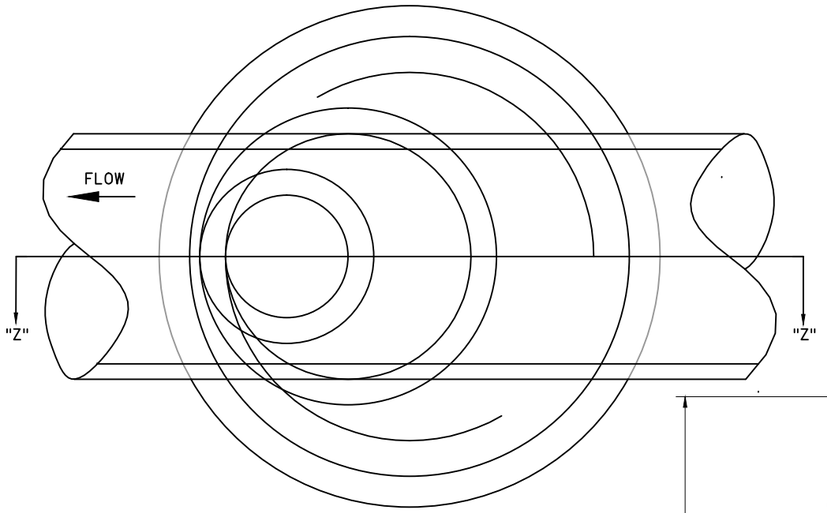

PLAN VIEW

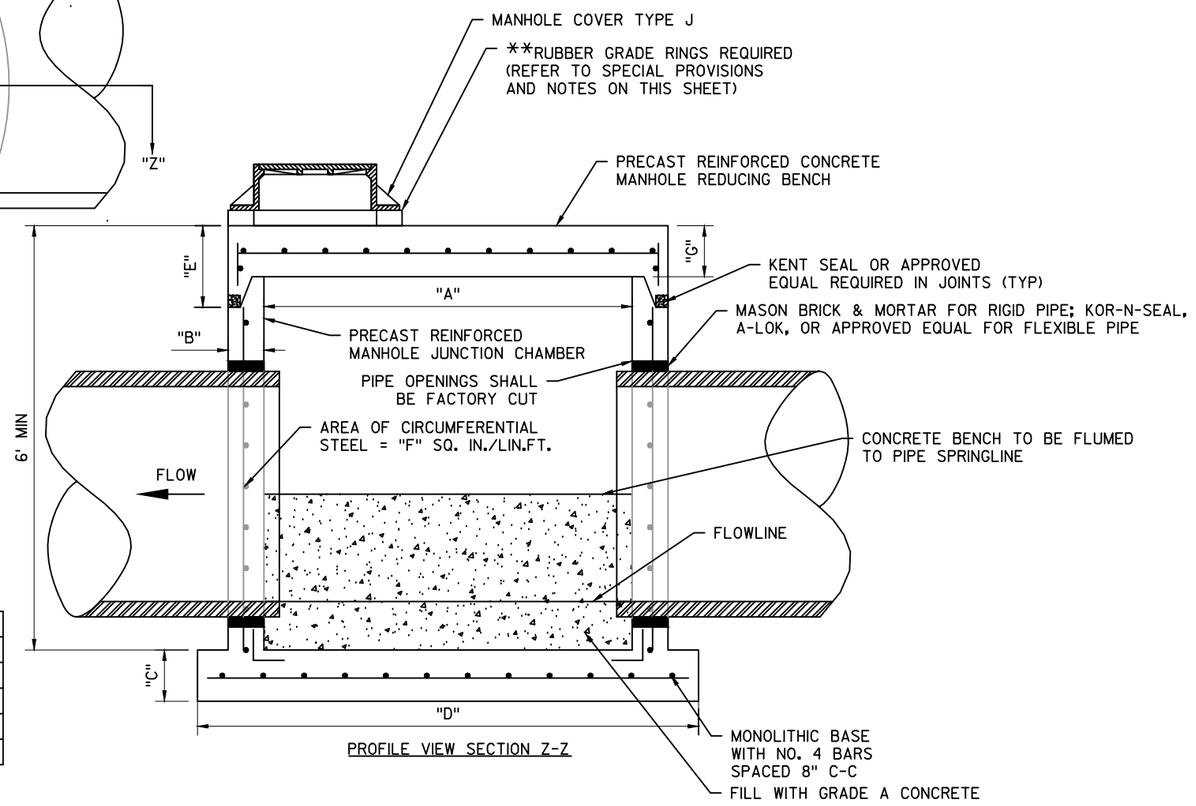

PROFILE VIEW SECTION Z-Z

MANHOLE 4-FT SPECIAL MANHOLE 5-FT SPECIAL

GENERAL NOTES:
NEW REINFORCED CONCRETE MANHOLE SECTIONS SHALL MEET ASTM C-478

NEW MANHOLE SECTIONS SHALL BE REINFORCED, PRECAST CONCRETE

STEPS ARE PROHIBITED IN ALL MANHOLE SECTIONS

CHAMBER CAN ACCOMODATE A 60" PIPE IF NO FLEXIBLE CONNCETION IS REQUIRED

A TEE MANHOLE, PRECAST BOX OR CAST IN PLACE, CAN BE USED FOR LARGER PIPE

OPENING TO BE PLACED OVER OUTFLOW PIPE

MANHOLE INFORMATION KEY						
A	B	C	D	E	F	G
48"	5"	8"	68"	12"	0.12	8"
60"	6"	15"	10"	84"	0.17	10"
72"	7"	16"	10"	98"	0.18	10"
96"	9"	17"	12"	126"	0.24	12"

**NOTES:
PROVIDE AND SET RUBBER GRADE RINGS FOR MANHOLES WITHIN THE ROADWAY LIMITS (BACK OF CURB TO BACK OF CURB) OF AN ASPHALT ROADWAY

PROVIDE AND SET RUBBER GRADE RINGS FOR MANHOLES WITHIN THE ROADWAY LIMITS (BACK OF CURB TO BACK OF CURB) OF A CONCRETE ROADWAY WHERE HAND POURING IS THE METHOD OF PLACEMENT

2

GENERAL NOTES:

① ALL INLETS TO BE REMOVED AND REPLACED SHALL CONSIST OF SAID INLETS BEING TOTALLY REMOVED AND REPLACED, INCLUDING: BASE, RISER SECTIONS, CASTING, AND FINAL ADJUSTMENT, UNLESS OTHERWISE NOTED.

② ALL INLETS SHALL MEET ASTM C–478 STANDARDS FOR REINFORCED CONCRETE INLETS.

③ SPECIAL INLET CASTINGS SHALL BE NEENAH R–3067 FRAME, GRATE, & CURB BOX. CURB BOX SHALL HAVE THE ENVIRO–CURB LOGO.

④ 6" UNDERDRAIN IN RESIDENTIAL AREAS. SEE DETAIL "UNDERDRAIN FOR SPECIAL INLETS". INCIDENTAL TO INLET CONSTRUCTION.

⑤ AN ADDITIONAL 12" STUB SHALL BE REQUIRED IN COMMERCIAL AREAS.

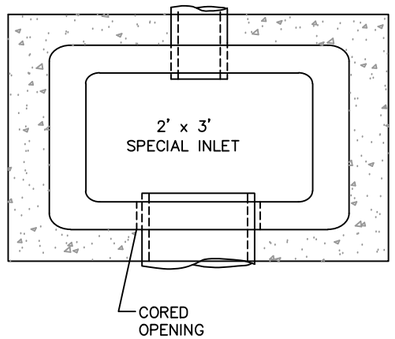

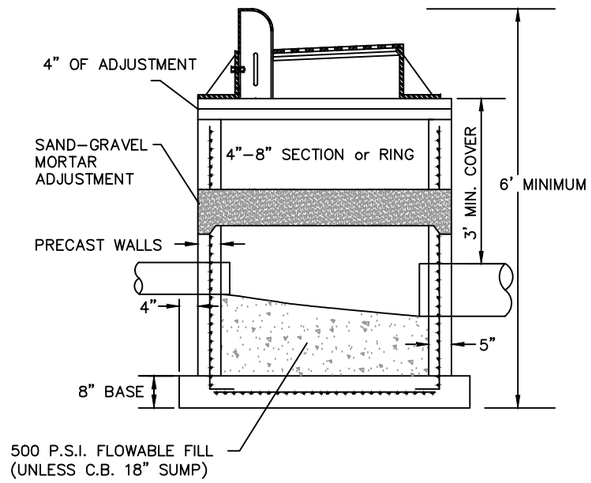

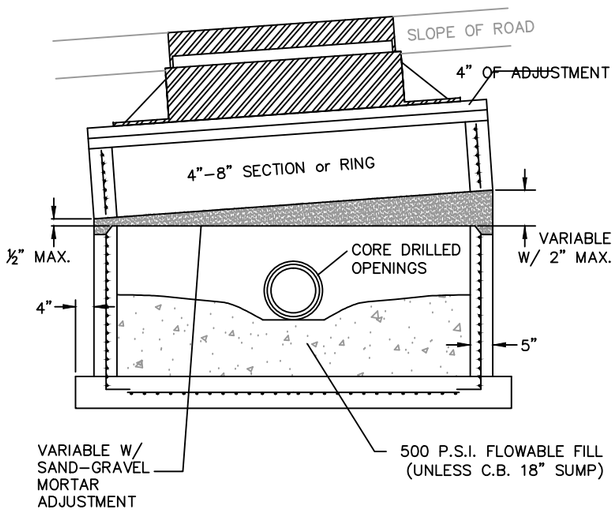

SPECIAL INLET

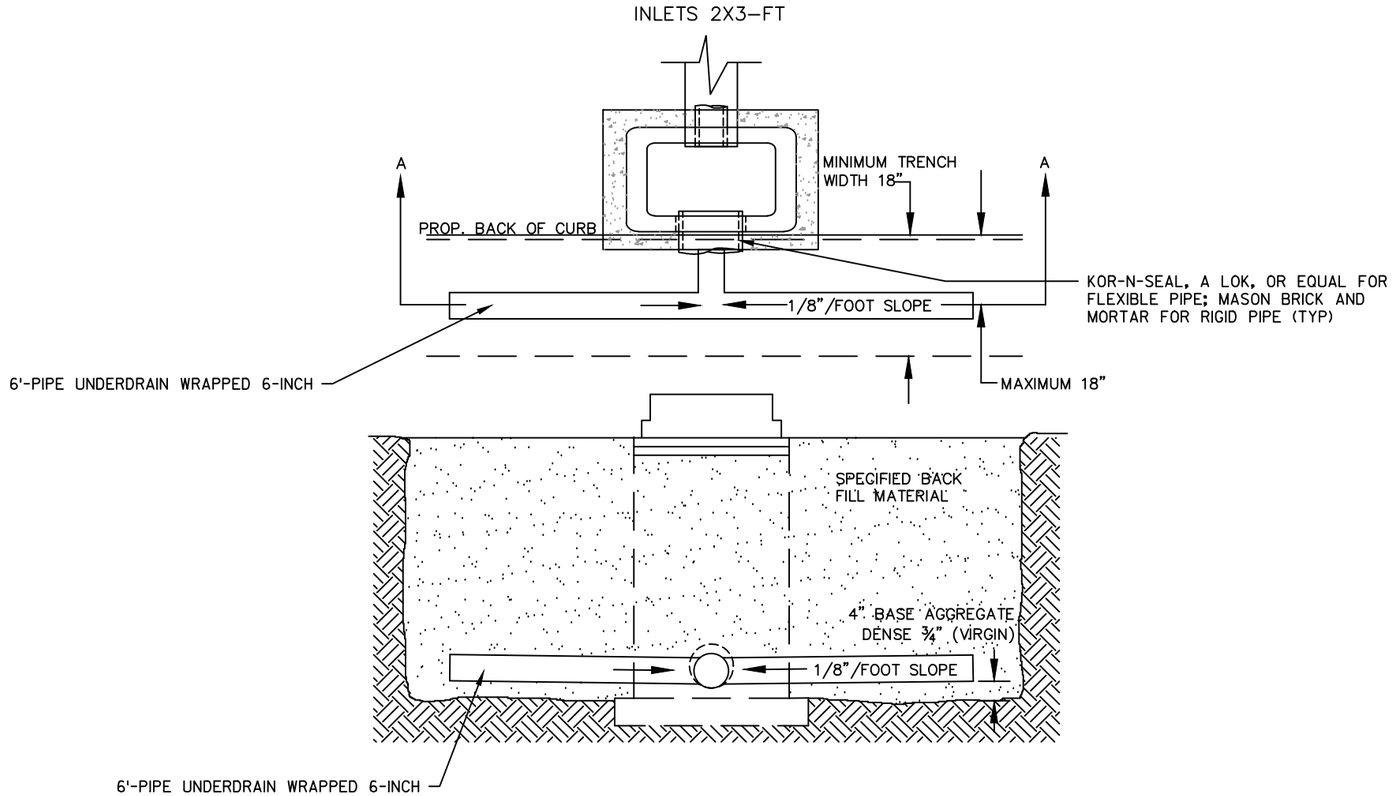

ALL TEES TO BE MANUFACTURED OR CORE DRILLED
NOTE: BULKHEAD ALL UNDER DRAIN AND STUBS

SECTION A-A

GENERAL NOTES:

1. ALL INLETS WILL BE CONSTRUCTED WITH PIPE UNDERDRAIN WRAPPED 6-INCH ATTACHED, AS SHOWN.
2. TRENCH WIDTH TO BE IN ACCORDANCE WITH SECTION 607 OF THE STANDARD SPECIFICATIONS
3. TRACER WIRE REQUIRED ON UNDERDRAINS. TRACER WIRE INCIDENTAL TO PIPE UNDERDRAIN.

CASTING COVER SHALL BE NON-ROCKING, SELF-SEALING AND HAVE OPEN PICK HOLES. COVER SHALL HAVE INDENTED TOP DESIGN.

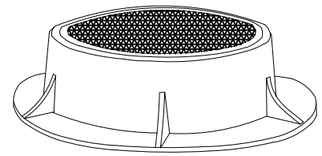

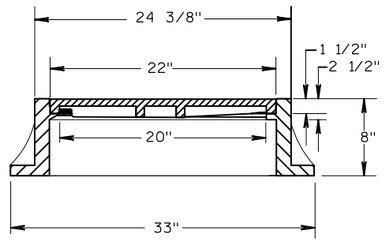

MANHOLE COVER TYPE GB

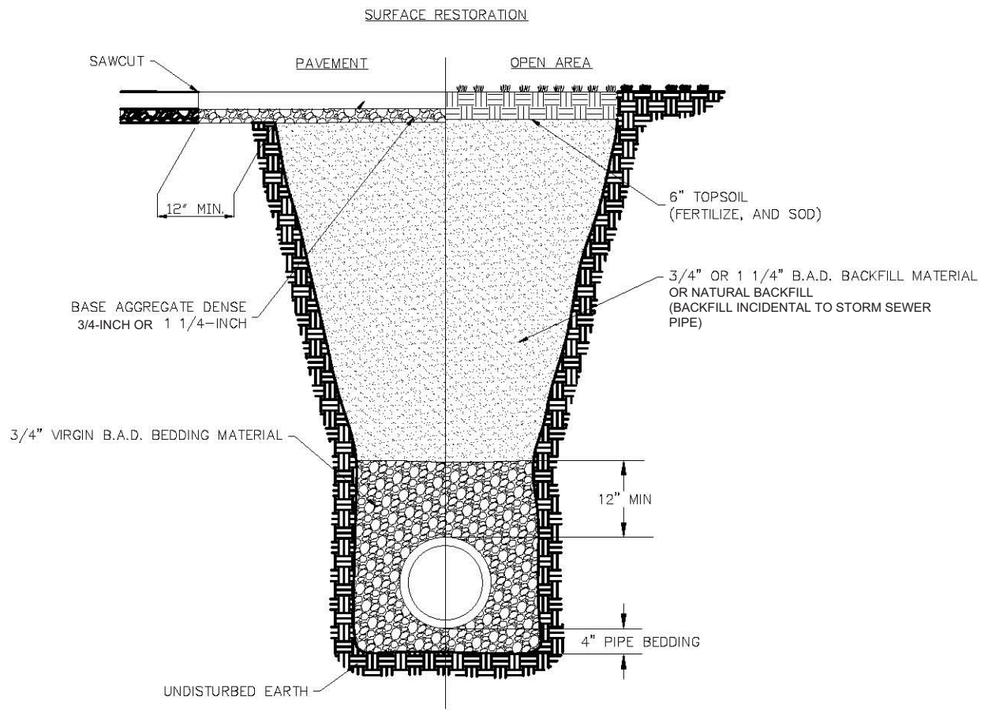

NOTES:
ALL PIPE SHALL BE INSTALLED IN ACCORDANCE WITH ASTM DESIGNATION D 2321

IF RUNNING, CAVING, OR SQUEEZING SOILS ARE ENCOUNTERED, THE ENGINEER SHALL BE IMMEDIATELY NOTIFIED IN ORDER TO DETERMINE WHAT CORRECTIVE MEASURES SHALL BE TAKEN

BASE AGGREGATE DENSE USED FOR BEDDING AND BACKFILL MATERIAL IS INCIDENTAL TO THE STORM SEWER PIPE ITEMS

STORM SEWER, INLET LEAD, AND STORM LATERAL TYPICAL TRENCH DETAIL

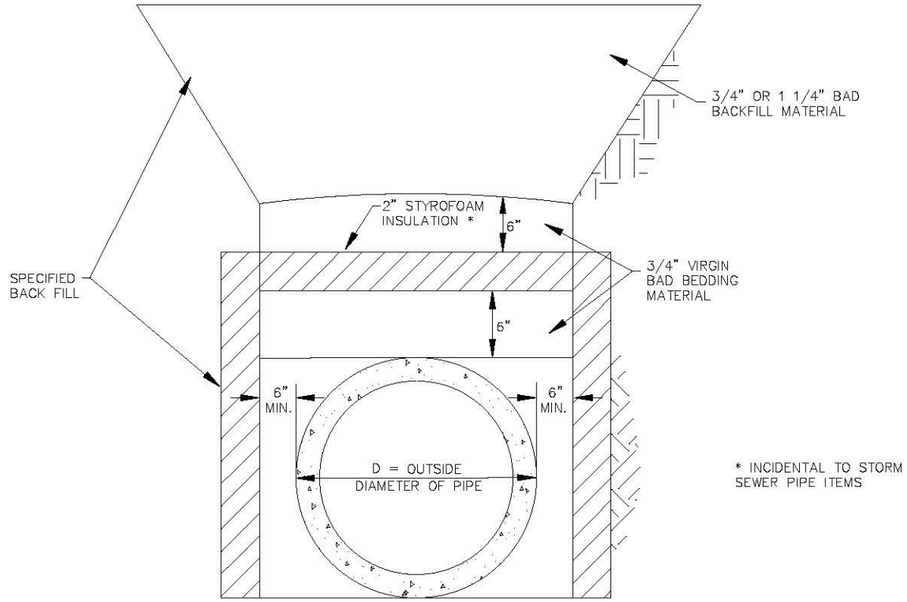

* INCIDENTAL TO STORM SEWER PIPE ITEMS

FOR PIPES WITH LESS THAN THREE FEET OF COVER FROM FINISHED PAVEMENT

FROST PROTECTION DETAIL

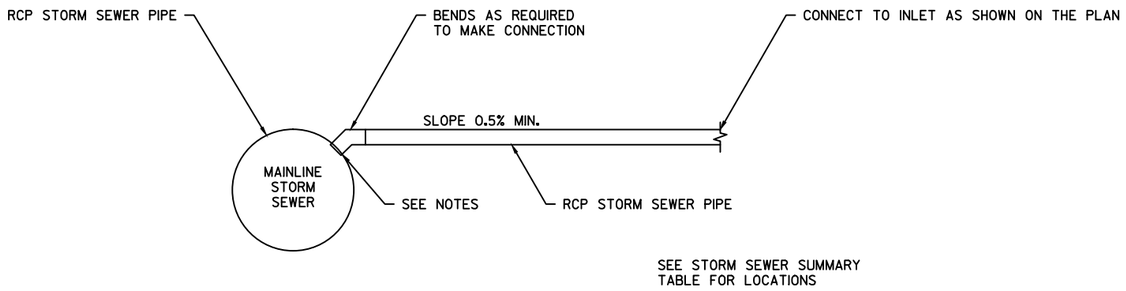

STORM SEWER LATERAL CONNECTION DETAIL (CIRCULAR PIPE)

NOTES:

THE ELEVATION OF THE INLET LEAD MAINLINE CONNECTION AS SHOWN ON THE PLANS IS BASED ON THE FOLLOWING:

AT A MINIMUM THE SPRINGLINE OF THE INLET LEAD SHALL MATCH THE SPRINGLINE OF THE MAINLINE STORM SEWER. IDEALLY THE FLOWLINE OF THE INLET LEAD SHALL MATCH THE SPRINGLINE OF THE MAINLINE STORM SEWER.

INLET LEADS SHALL BE CONNECTED TO THE STORM SEWER MAIN USING MANUFACTURE TEES, FEILD TAP, OR BE CONNECTED TO MANHOLES.

A FEILD TAP IS ALLOWED WHEN BOTH OF THE FOLLOWING CONDITIONS ARE SATISFIED: (A) STORM SEWER MAIN IS GRATER THAN 24 INCH DIAMETER, AND (B) STORM SEWER PIPE (TAPPING PIPE) TO BE CONNECTED TO THE MAIN SHALL BE A MINIMUM OF TWO (2) PIPE SIZES SMALLER THAN THE MAIN. ALL OTHER SIZES SHALL BE CONNECTED USING MANUFACTURED WYES OR TEES.

ALL MANHOLES, INLETS AND PIPES TO BE FIELD TAPPED WITH NON-RIGID PIPE SHALL BE CORE DRILLED AND GASKETED WITH KOR-N-SEAL, INSERT-A-TEE, (RESPECTIVELY) OR APPROVED EQUAL.

TRACER WIRE IS REQUIRED FOR ALL INLET LEADS. TRACER WIRE IS INCIDENTAL TO STORM SEWER PIPE.

LIMIT INLET LEAD PENETRATION INTO THE STORM SEWER PIPE TO 1" MAX.

IF A FIELD TAP IS REQUIRED, CONSTRUCT IT A MIN. OF 2' AWAY FROM ANY JOINTS PREFERABLY IN THE DOWNSTREAM DIRECTION.

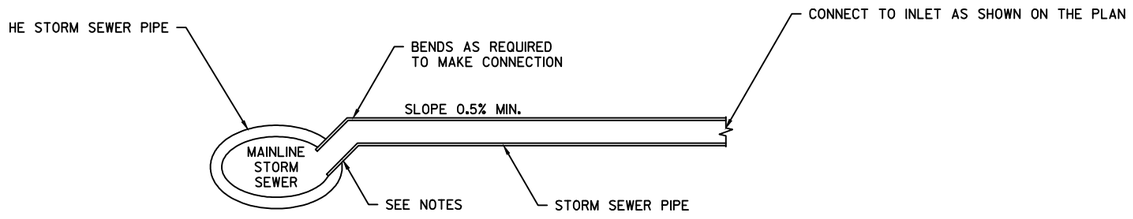

STORM SEWER LATERAL CONNECTION DETAIL (ELLIPTICAL PIPE)

NOTES:

THE ELEVATION OF THE INLET LEAD MAINLINE CONNECTION AS SHOWN ON THE PLANS IS BASED ON THE FOLLOWING:

AT A MINIMUM THE SPRINGLINE OF THE INLET LEAD SHALL MATCH THE SPRINGLINE OF THE MAINLINE STORM SEWER. IDEALLY THE FLOWLINE OF THE INLET LEAD SHALL MATCH THE SPRINGLINE OF THE MAINLINE STORM SEWER.

INLET LEADS SHALL BE CONNECTED TO THE STORM SEWER MAIN USING MANUFACTURE TEES, FEILD TAP, OR BE CONNECTED TO MANHOLES.

A FEILD TAP IS ALLOWED WHEN BOTH OF THE FOLLOWING CONDITIONS ARE SATISFIED: (A) STORM SEWER MAIN IS GRATER THAN 24 INCH DIAMETER, AND (B) STORM SEWER PIPE (TAPPING PIPE) TO BE CONNECTED TO THE MAIN SHALL BE A MINIMUM OF TWO (2) PIPE SIZES SMALLER THAN THE MAIN. ALL OTHER SIZES SHALL BE CONNECTED USING MANUFACTURED WYES OR TEES.

ALL MANHOLES, INLETS AND PIPES TO BE FIELD TAPPED WITH NON-RIGID PIPE SHALL BE CORE DRILLED AND GASKETED WITH KOR-N-SEAL, INSERT-A-TEE, (RESPECTIVELY) OR APPROVED EQUAL.

TRACER WIRE IS REQUIRED FOR ALL INLET LEADS. TRACER WIRE IS INCIDENTAL TO STORM SEWER PIPE.

LIMIT INLET LEAD PENETRATION INTO THE STORM SEWER PIPE TO 1" MAX.

IF A FIELD TAP IS REQUIRED, CONSTRUCT IT A MIN. OF 2' AWAY FROM ANY JOINTS PREFERABLY IN THE DOWNSTREAM DIRECTION.

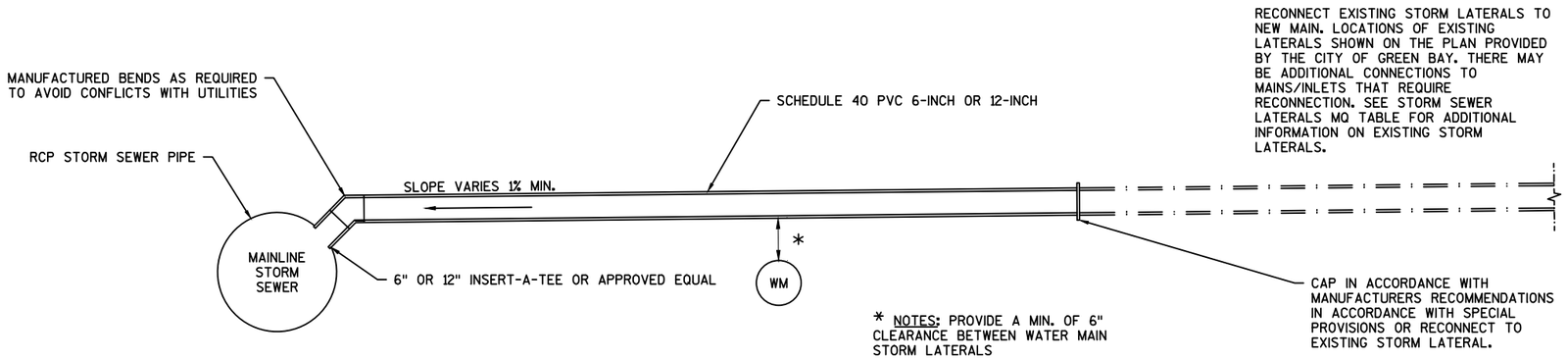

STORM SEWER LATERAL 6-INCH OR 12-INCH (CIRCULAR PIPE CONNECTION)

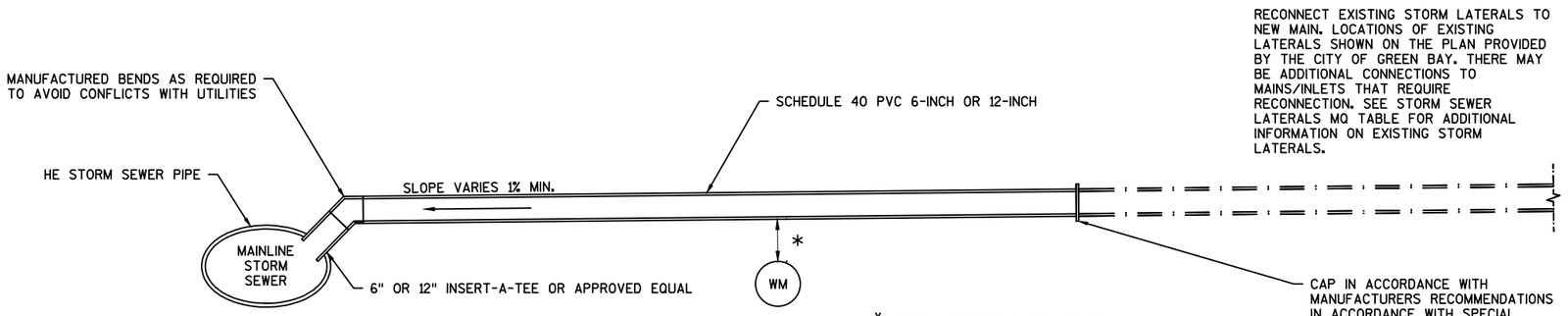

STORM SEWER LATERAL 6-INCH OR 12-INCH (ELLIPTICAL PIPE CONNECTION)

2

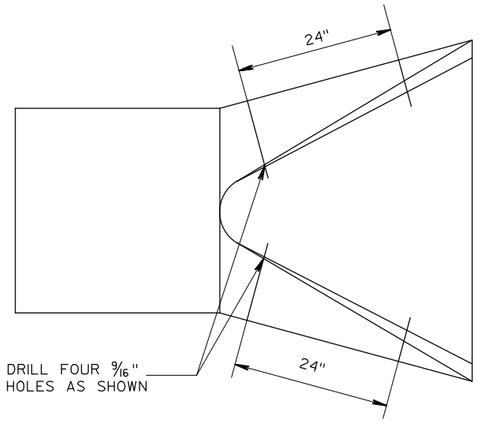

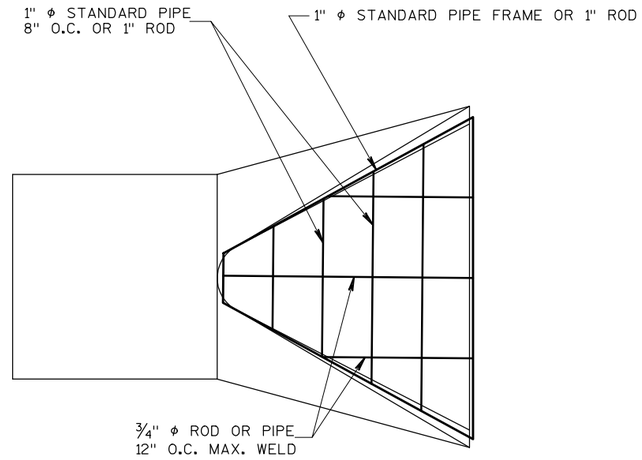

AT EACH PIPE

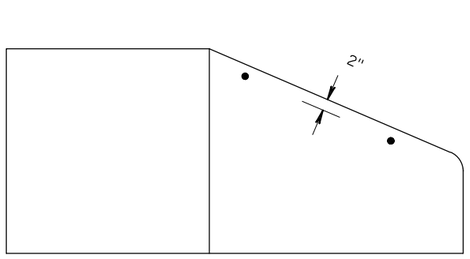

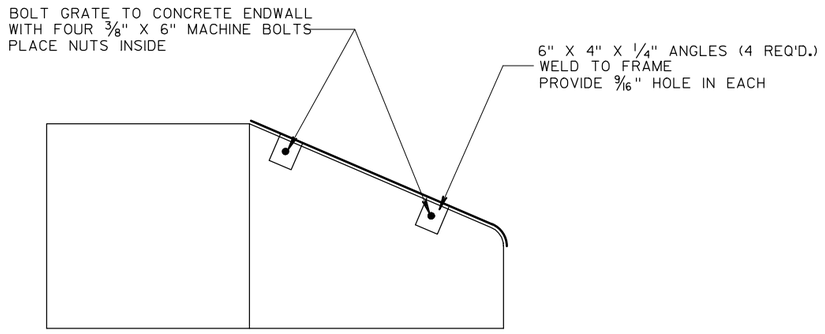

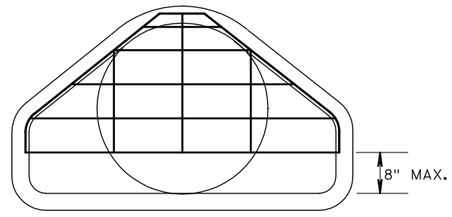

PIPE GRATE DETAIL

PROJECT NO: 4987-02-57	HWY: HUMBOLDT ROAD/CTH N	COUNTY: BROWN	CONSTRUCTION DETAIL	SHEET 21	E

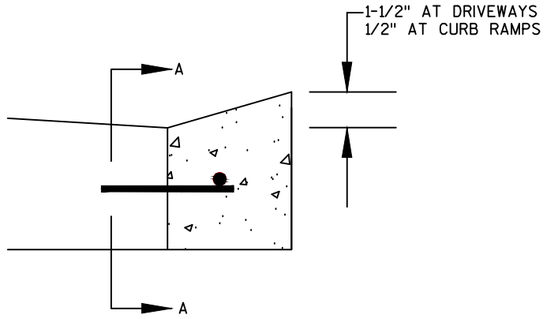

-TYPICAL SECTION AT DRIVEWAY OPENING AND CURB RAMPS-

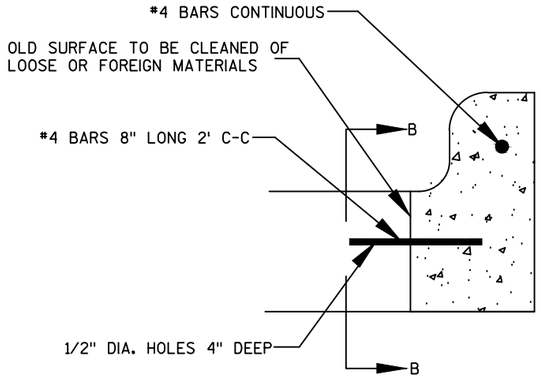

NORMAL
CROSS-SECTION

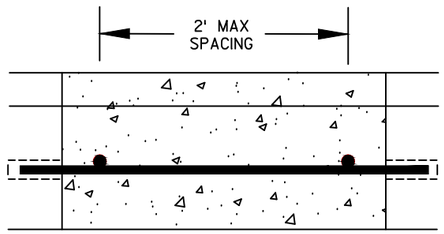

SECTION A-A

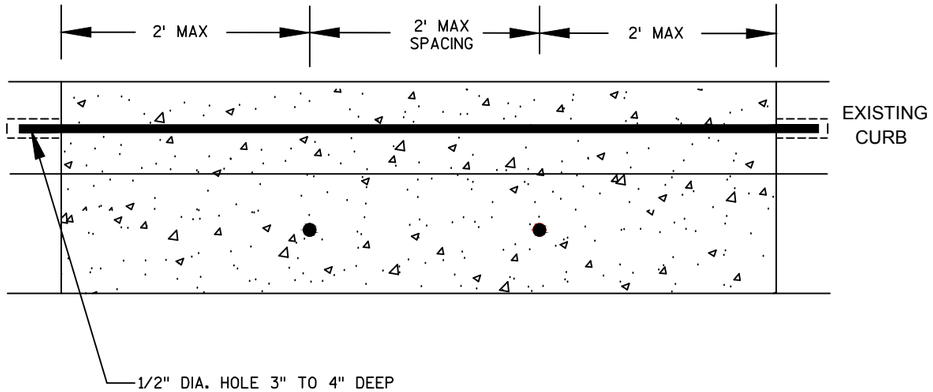

SECTION BB

CONCRETE CURB TYPE A DETAIL

STA 525+00, LT	STA 552+90, RT
STA 504+30, LT	STA 553+05, RT
STA 504+75, LT	STA 553+85, LT
	STA 554+05, LT

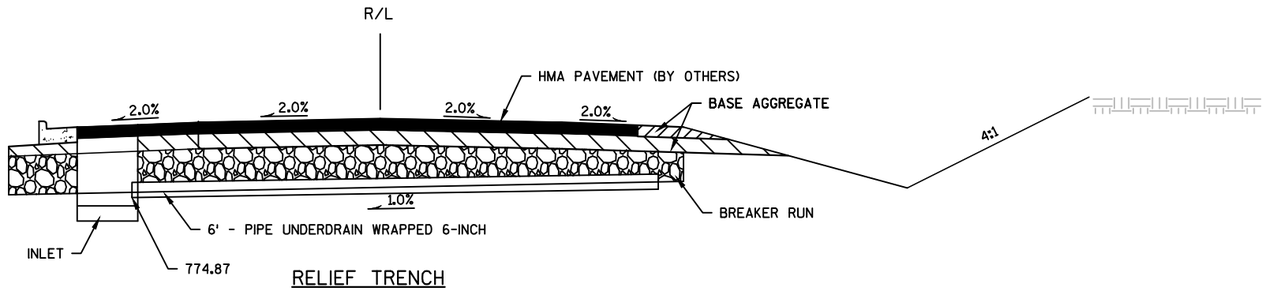

RELIEF TRENCH

STA 568+46

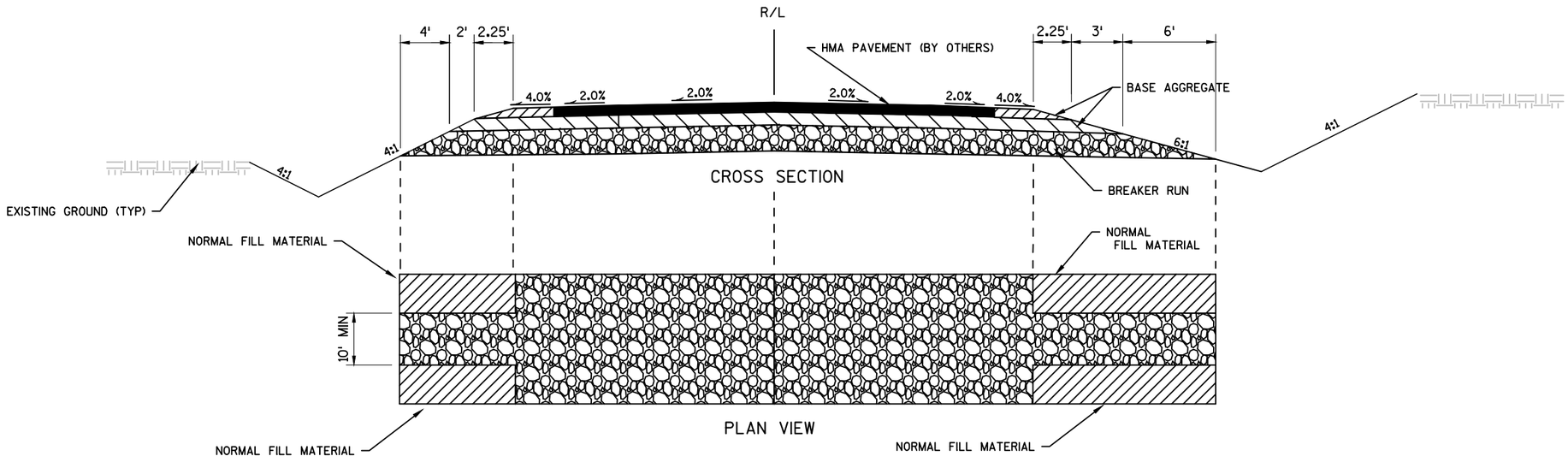

RELIEF TRENCH

STA 557+19
STA 560+00
STA 565+00, LT

PROJECT NO: 4987-02-57	HWY: HUMBOLDT ROAD/CTH N	COUNTY: BROWN	CONSTRUCTION DETAIL	SHEET 23	E

NOTES:
1. ALL POINTS & RADII ARE TO FLANGE LINE, UNLESS OTHERWISE NOTED.

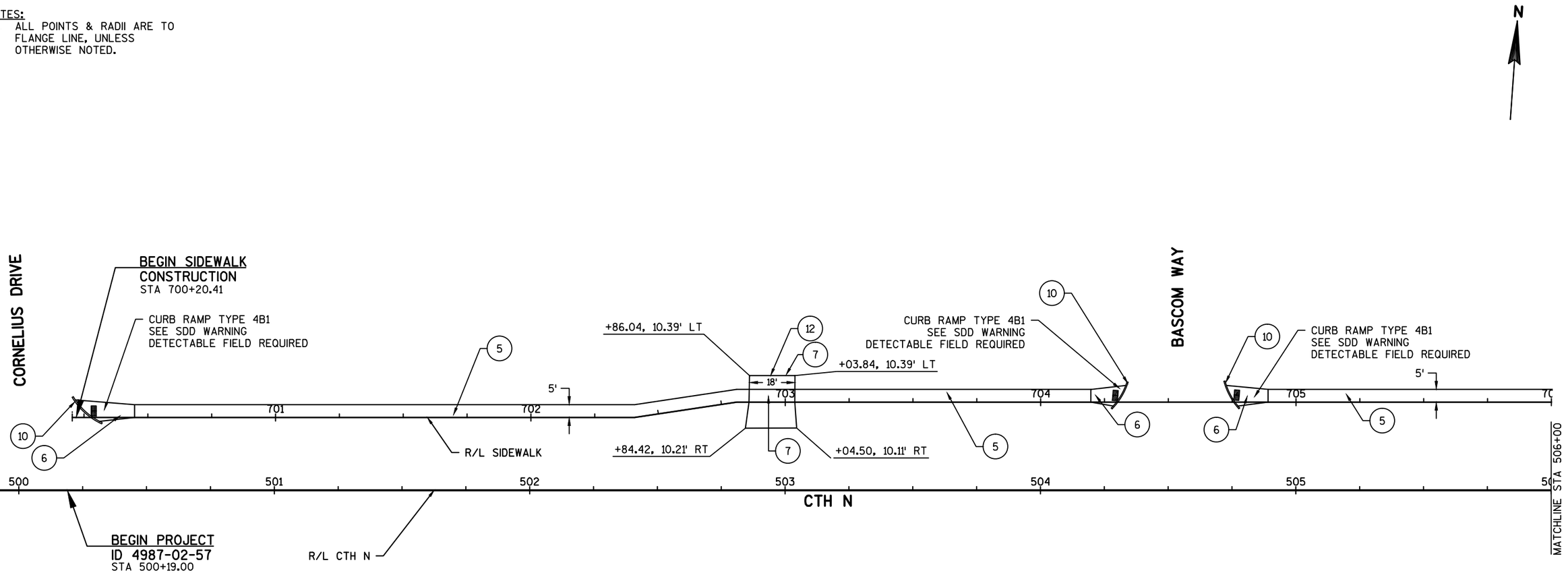

LEGEND

1. CONCRETE CURB AND GUTTER 30-INCH TYPE A
2. CONCRETE CURB AND GUTTER 30-INCH TYPE D
3. CONCRETE CURB AND GUTTER 6-INCH SLOPED 36-INCH TYPE D
4. CONCRETE MEDIAN SLOPED NOSE
5. CONCRETE SIDEWALK 4-INCH
6. CONCRETE SIDEWALK 6-INCH
7. CONCRETE DRIVEWAY 6-INCH
8. ASPHALTIC SURFACE DRIVEWAYS AND FIELD ENTRANCES (BY OTHERS)
9. BASE AGGREGATE DENSE 3/4-INCH
10. CONCRETE CURB TYPE A
11. CONCRETE PAVEMENT 9-INCH
12. SAWING CONCRETE
13. SAWING ASPHALT
14. CONCRETE PAVEMENT 8-INCH
15. CONCRETE SURFACE DRAIN
16. HMA PAVEMENT TYPE E-3 (BY OTHERS)

REVERSE SLOPE CURB AND GUTTER

NOTES:
1. ALL POINTS & RADII ARE TO FLANGE LINE, UNLESS OTHERWISE NOTED.

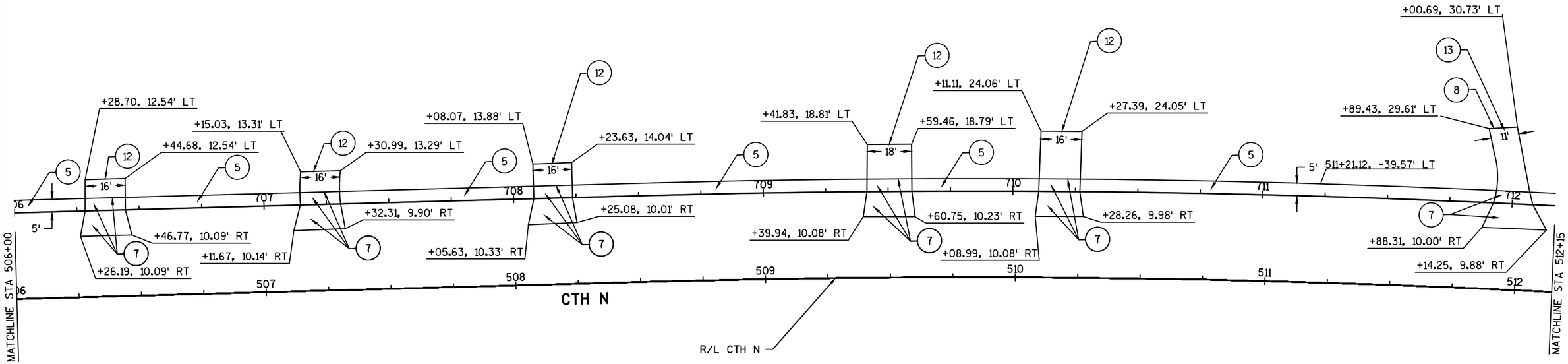

LEGEND

1. CONCRETE CURB AND GUTTER 30-INCH TYPE A
2. CONCRETE CURB AND GUTTER 30-INCH TYPE D
3. CONCRETE CURB AND GUTTER 6-INCH SLOPED 36-INCH TYPE D
4. CONCRETE MEDIAN SLOPED NOSE
5. CONCRETE SIDEWALK 4-INCH
6. CONCRETE SIDEWALK 6-INCH
7. CONCRETE DRIVEWAY 6-INCH
8. ASPHALTIC SURFACE DRIVEWAYS AND FIELD ENTRANCES (BY OTHERS)
9. BASE AGGREGATE DENSE 3/4-INCH
10. CONCRETE CURB TYPE A
11. CONCRETE PAVEMENT 9-INCH
12. SAWING CONCRETE
13. SAWING ASPHALT
14. CONCRETE PAVEMENT 8-INCH
15. CONCRETE SURFACE DRAIN
16. HMA PAVEMENT TYPE E-3 (BY OTHERS)

REVERSE SLOPE CURB AND GUTTER

NOTES:
1. ALL POINTS & RADII ARE TO FLANGE LINE, UNLESS OTHERWISE NOTED.

N

RADIUS TABLE

(A) STA. 517+05.36, R/L, 6.0' R

(B) STA. 518+01.90, R/L, 6.0' R

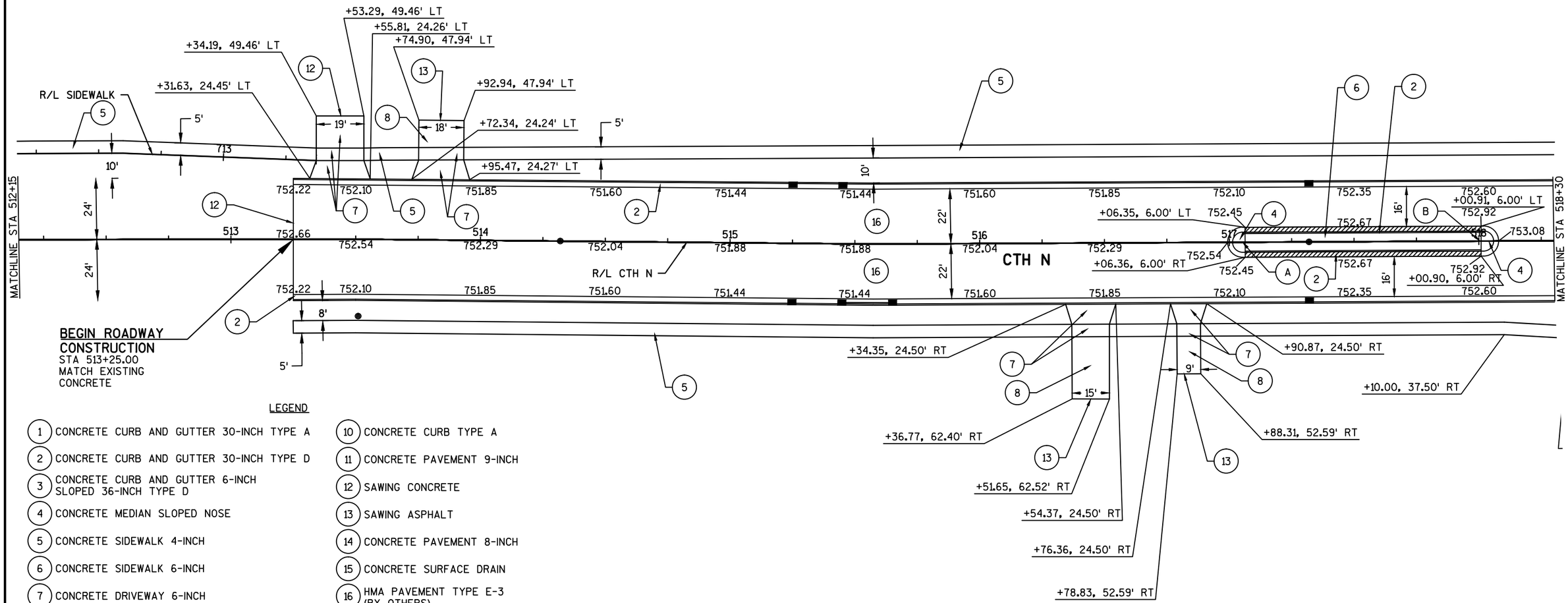

LEGEND

1. CONCRETE CURB AND GUTTER 30-INCH TYPE A
2. CONCRETE CURB AND GUTTER 30-INCH TYPE D
3. CONCRETE CURB AND GUTTER 6-INCH SLOPED 36-INCH TYPE D
4. CONCRETE MEDIAN SLOPED NOSE
5. CONCRETE SIDEWALK 4-INCH
6. CONCRETE SIDEWALK 6-INCH
7. CONCRETE DRIVEWAY 6-INCH
8. ASPHALTIC SURFACE DRIVEWAYS AND FIELD ENTRANCES (BY OTHERS)
9. BASE AGGREGATE DENSE 3/4-INCH
10. CONCRETE CURB TYPE A
11. CONCRETE PAVEMENT 9-INCH
12. SAWING CONCRETE
13. SAWING ASPHALT
14. CONCRETE PAVEMENT 8-INCH
15. CONCRETE SURFACE DRAIN
16. HMA PAVEMENT TYPE E-3 (BY OTHERS)

REVERSE SLOPE CURB AND GUTTER

PROJECT NO: 4987-02-57	HWY: HUMBOLDT ROAD/CTH N	COUNTY: BROWN	PLAN DETAILS	SHEET 26	E

NOTES:
1. ALL POINTS & RADII ARE TO FLANGE LINE, UNLESS OTHERWISE NOTED.

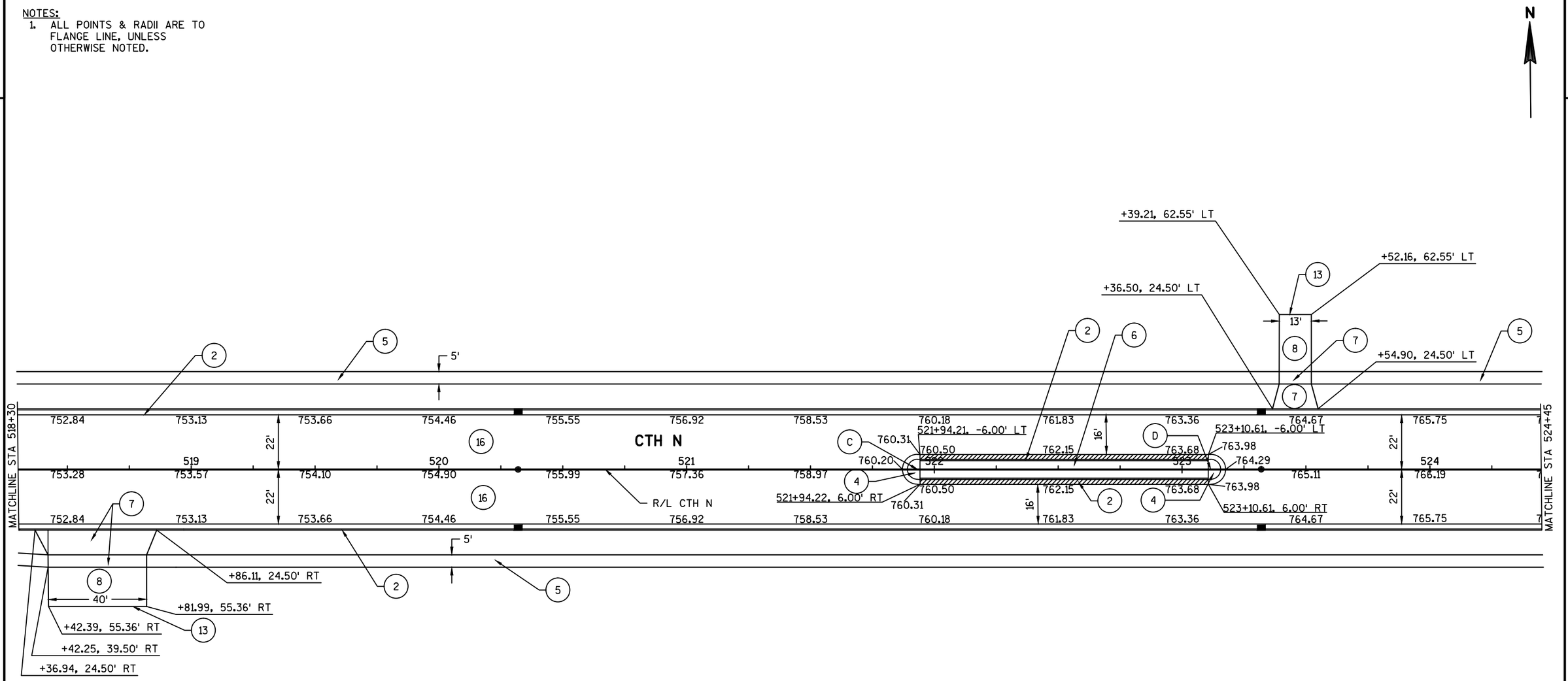

LEGEND

1. CONCRETE CURB AND GUTTER 30-INCH TYPE A
2. CONCRETE CURB AND GUTTER 30-INCH TYPE D
3. CONCRETE CURB AND GUTTER 6-INCH SLOPED 36-INCH TYPE D
4. CONCRETE MEDIAN SLOPED NOSE
5. CONCRETE SIDEWALK 4-INCH
6. CONCRETE SIDEWALK 6-INCH
7. CONCRETE DRIVEWAY 6-INCH
8. ASPHALTIC SURFACE DRIVEWAYS AND FIELD ENTRANCES (BY OTHERS)
9. BASE AGGREGATE DENSE 3/4-INCH
10. CONCRETE CURB TYPE A
11. CONCRETE PAVEMENT 9-INCH
12. SAWING CONCRETE
13. SAWING ASPHALT
14. CONCRETE PAVEMENT 8-INCH
15. CONCRETE SURFACE DRAIN
16. HMA PAVEMENT TYPE E-3 (BY OTHERS)

REVERSE SLOPE CURB AND GUTTER

RADIUS TABLE

C STA. 521+93.21, R/L, 6.0' R

D STA. 523+11.60, R/L, 6.0' R

PROJECT NO: 4987-02-57	HWY: HUMBOLDT ROAD/CTH N	COUNTY: BROWN	PLAN DETAILS	SHEET 27	E

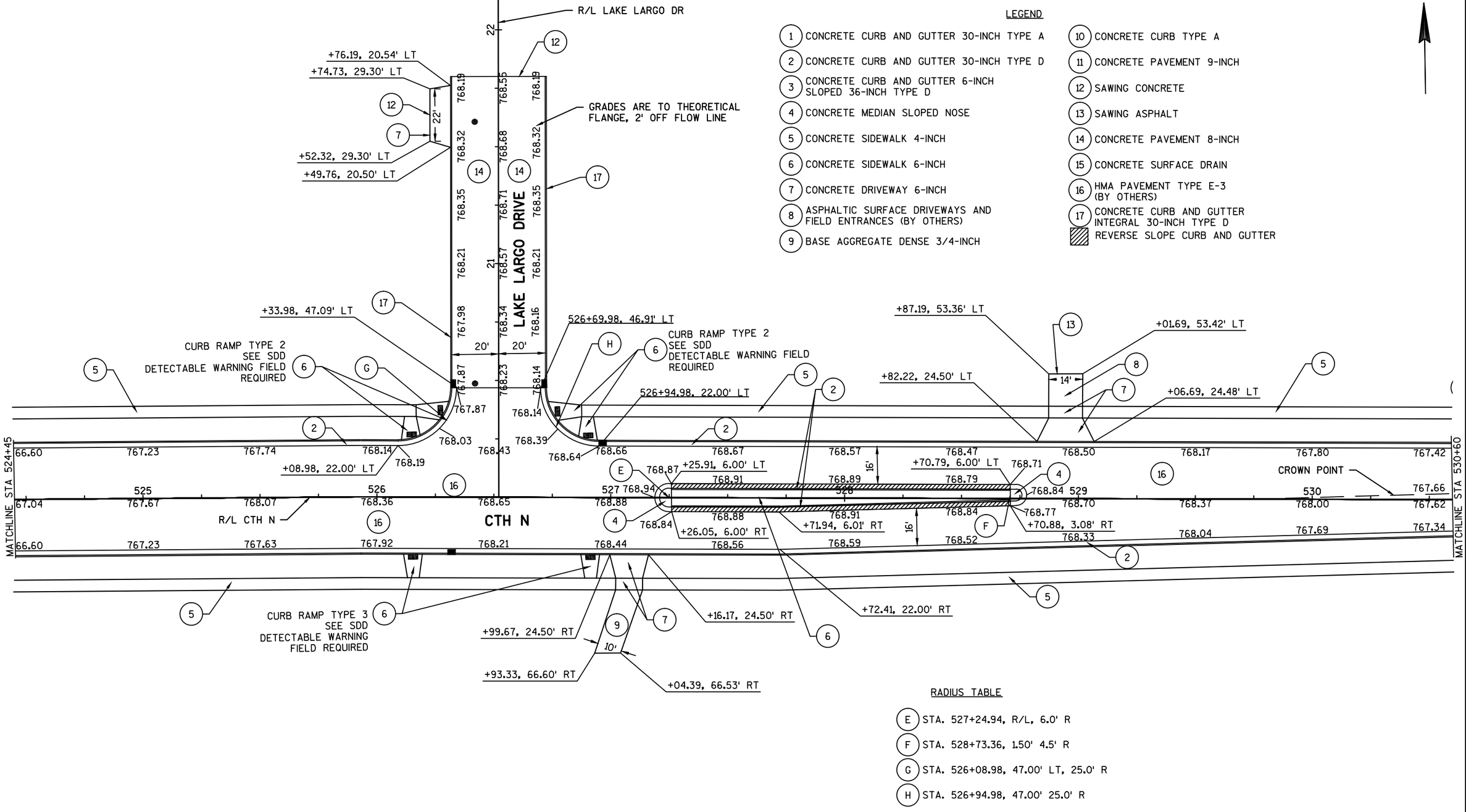

LEGEND

1. CONCRETE CURB AND GUTTER 30-INCH TYPE A
2. CONCRETE CURB AND GUTTER 30-INCH TYPE D
3. CONCRETE CURB AND GUTTER 6-INCH SLOPED 36-INCH TYPE D
4. CONCRETE MEDIAN SLOPED NOSE
5. CONCRETE SIDEWALK 4-INCH
6. CONCRETE SIDEWALK 6-INCH
7. CONCRETE DRIVEWAY 6-INCH
8. ASPHALTIC SURFACE DRIVEWAYS AND FIELD ENTRANCES (BY OTHERS)
9. BASE AGGREGATE DENSE 3/4-INCH
10. CONCRETE CURB TYPE A
11. CONCRETE PAVEMENT 9-INCH
12. SAWING CONCRETE
13. SAWING ASPHALT
14. CONCRETE PAVEMENT 8-INCH
15. CONCRETE SURFACE DRAIN
16. HMA PAVEMENT TYPE E-3 (BY OTHERS)
17. CONCRETE CURB AND GUTTER INTEGRAL 30-INCH TYPE D

REVERSE SLOPE CURB AND GUTTER

RADIUS TABLE

- E STA. 527+24.94, R/L, 6.0' R
- F STA. 528+73.36, 1.50' 4.5' R
- G STA. 526+08.98, 47.00' LT, 25.0' R
- H STA. 526+94.98, 47.00' 25.0' R

PROJECT NO: 4987-02-57	HWY: HUMBOLDT ROAD/CTH N	COUNTY: BROWN	PLAN DETAILS	SHEET 28	E

2

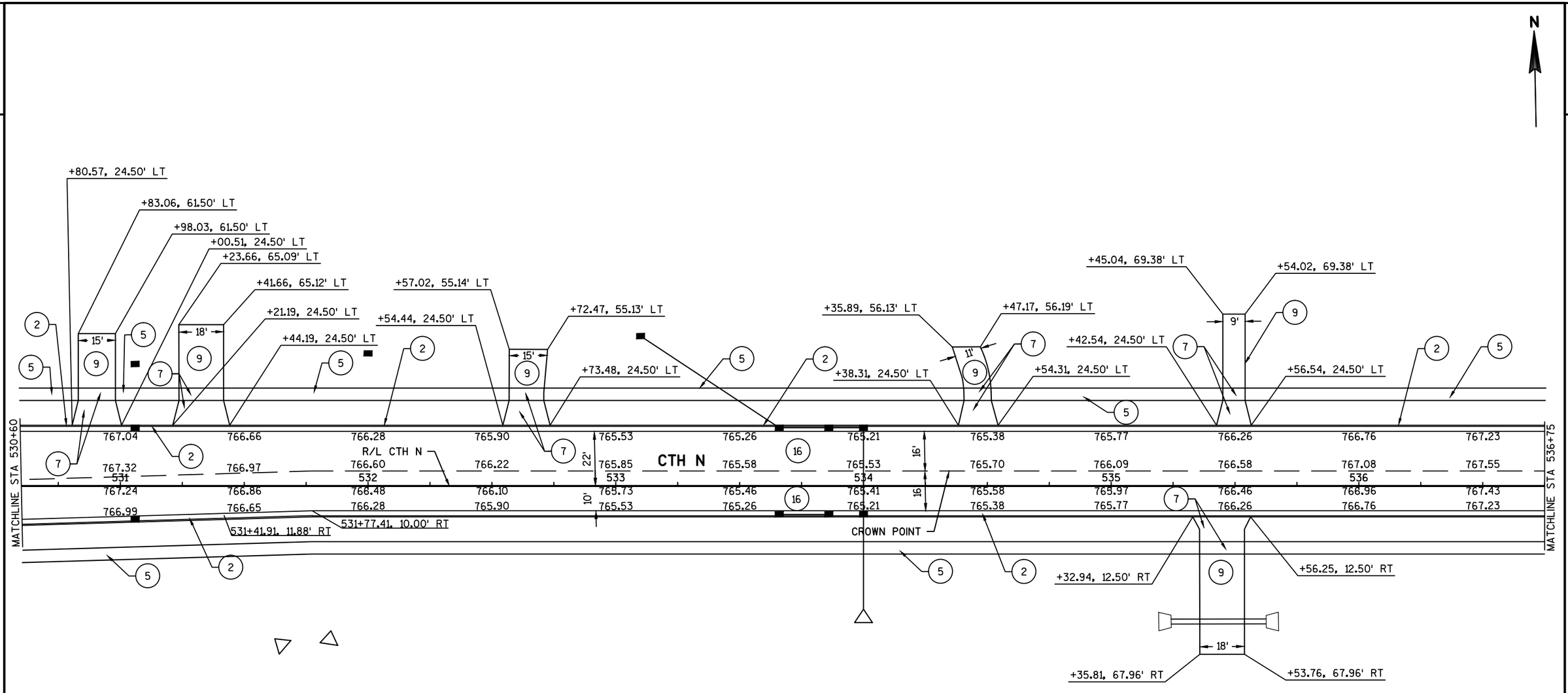

LEGEND

1	CONCRETE CURB AND GUTTER 30-INCH TYPE A
2	CONCRETE CURB AND GUTTER 30-INCH TYPE D
3	CONCRETE CURB AND GUTTER 6-INCH SLOPED 36-INCH TYPE D
4	CONCRETE MEDIAN SLOPED NOSE
5	CONCRETE SIDEWALK 4-INCH
6	CONCRETE SIDEWALK 6-INCH
7	CONCRETE DRIVEWAY 6-INCH
8	ASPHALTIC SURFACE DRIVEWAYS AND FIELD ENTRANCES (BY OTHERS)
9	BASE AGGREGATE DENSE 3/4-INCH
10	CONCRETE CURB TYPE A
11	CONCRETE PAVEMENT 9-INCH
12	SAWING CONCRETE
13	SAWING ASPHALT
14	CONCRETE PAVEMENT 8-INCH
15	CONCRETE SURFACE DRAIN
16	HMA PAVEMENT TYPE E-3 (BY OTHERS)

REVERSE SLOPE CURB AND GUTTER

LEGEND

1. CONCRETE CURB AND GUTTER 30-INCH TYPE A
2. CONCRETE CURB AND GUTTER 30-INCH TYPE D
3. CONCRETE CURB AND GUTTER 6-INCH SLOPED 36-INCH TYPE D
4. CONCRETE MEDIAN SLOPED NOSE
5. CONCRETE SIDEWALK 4-INCH
6. CONCRETE SIDEWALK 6-INCH
7. CONCRETE DRIVEWAY 6-INCH
8. ASPHALTIC SURFACE DRIVEWAYS AND FIELD ENTRANCES (BY OTHERS)
9. BASE AGGREGATE DENSE 3/4-INCH
10. CONCRETE CURB TYPE A
11. CONCRETE PAVEMENT 9-INCH
12. SAWING CONCRETE
13. SAWING ASPHALT
14. CONCRETE PAVEMENT 8-INCH
15. CONCRETE SURFACE DRAIN
16. HMA PAVEMENT TYPE E-3 (BY OTHERS)

REVERSE SLOPE CURB AND GUTTER

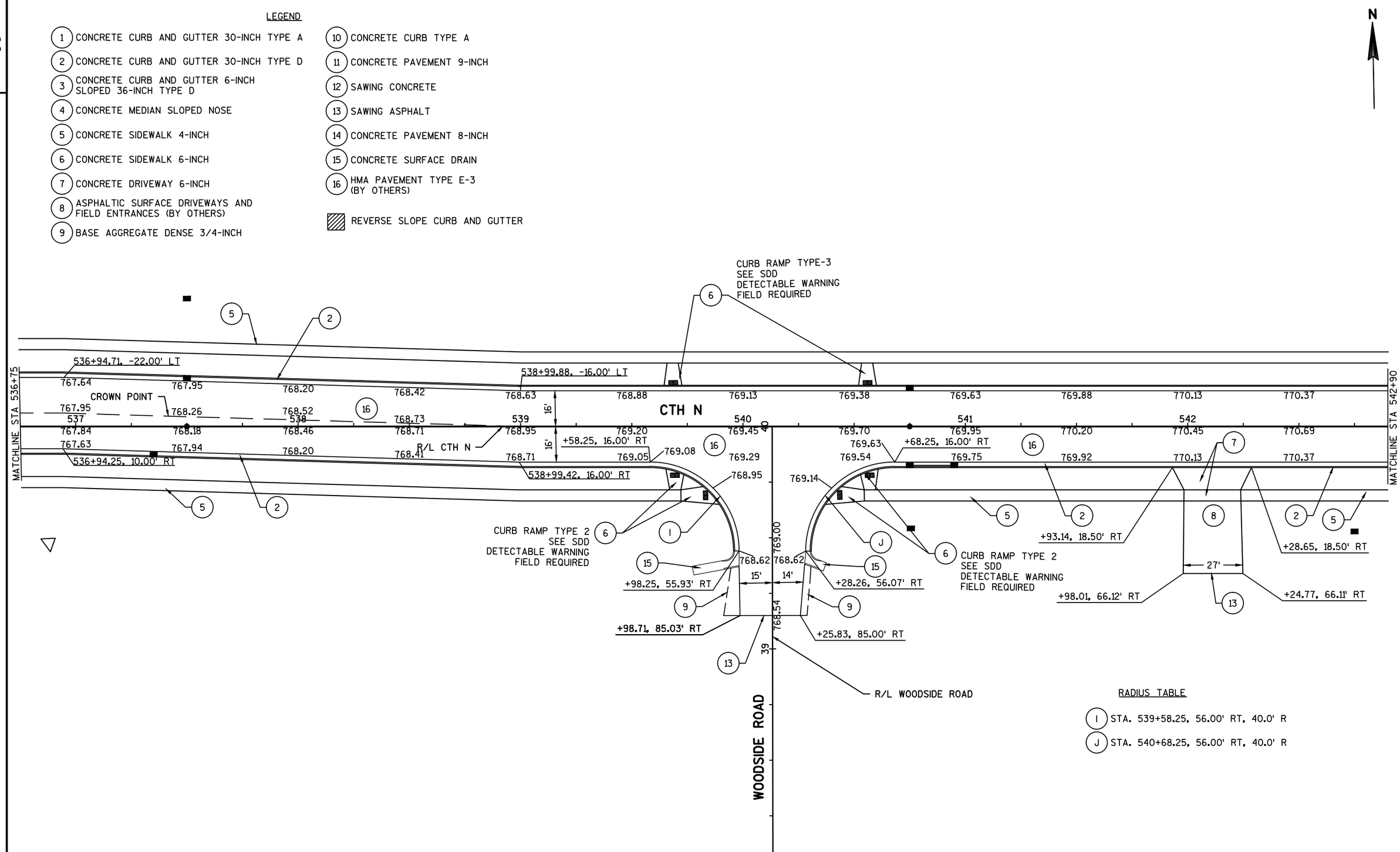

RADIUS TABLE

I STA. 539+58.25, 56.00' RT, 40.0' R

J STA. 540+68.25, 56.00' RT, 40.0' R

PROJECT NO:4987-02-57	HWY:HUMBOLDT ROAD/CTH N	COUNTY:BROWN	PLAN DETAILS	SHEET 30	E

LEGEND

1. CONCRETE CURB AND GUTTER 30-INCH TYPE A
2. CONCRETE CURB AND GUTTER 30-INCH TYPE D
3. CONCRETE CURB AND GUTTER 6-INCH SLOPED 36-INCH TYPE D
4. CONCRETE MEDIAN SLOPED NOSE
5. CONCRETE SIDEWALK 4-INCH
6. CONCRETE SIDEWALK 6-INCH
7. CONCRETE DRIVEWAY 6-INCH
8. ASPHALTIC SURFACE DRIVEWAYS AND FIELD ENTRANCES (BY OTHERS)
9. BASE AGGREGATE DENSE 3/4-INCH
10. CONCRETE CURB TYPE A
11. CONCRETE PAVEMENT 9-INCH
12. SAWING CONCRETE
13. SAWING ASPHALT
14. CONCRETE PAVEMENT 8-INCH
15. CONCRETE SURFACE DRAIN
16. HMA PAVEMENT TYPE E-3 (BY OTHERS)

REVERSE SLOPE CURB AND GUTTER

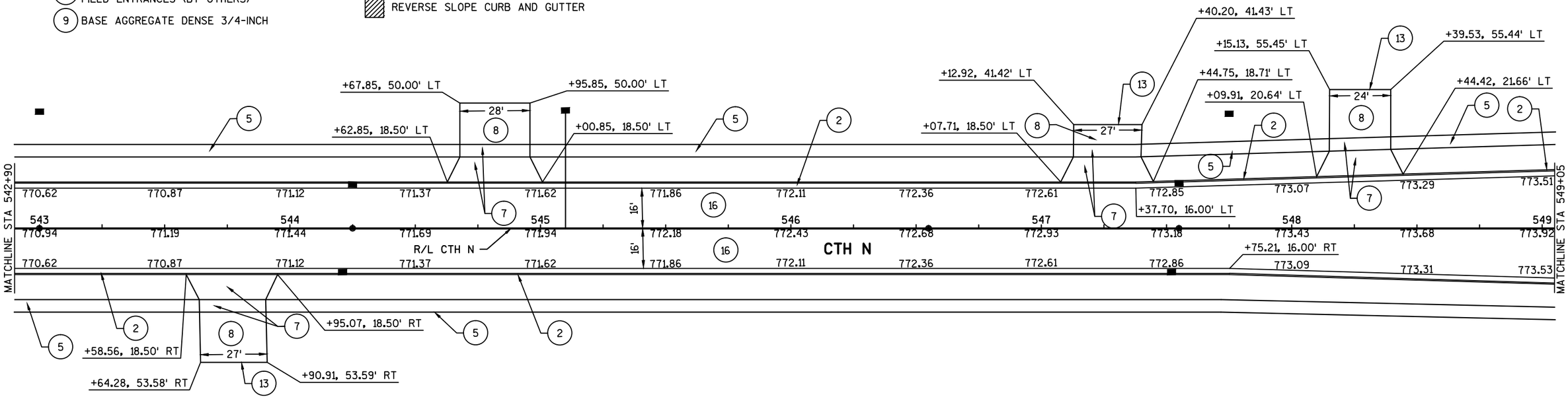

PROJECT NO: 4987-02-57	HWY: HUMBOLDT ROAD/CTH N	COUNTY: BROWN	PLAN DETAILS	SHEET 31	E

2

N

R/L CTH EA

MATCHLINE STA 549+05

MATCHLINE STA 555+20

CTH N

R/L CTH N

CTH EA

+01.27, 77.97' LT

CURB RAMP TYPE 4B1
SEE SDD
DETECTABLE WARNING
FIELD REQUIRED

+07.54, 66.25' LT

+10.00, 63.42' LT

+07.06, 58.24' LT

MATCH
EXISTING
JOINTS

+84.04, 64.11' LT

CURB RAMP TYPE 4B1
SEE SDD
DETECTABLE WARNING
FIELD REQUIRED

+87.22, 56.76' LT

+02.69, 41.79' LT

+10.13, 38.85' LT

+18.76, 55.00' LT

+13.66, 26.50' LT

+38.62, 55.00' LT

+07.70, 24.00' LT

20'

+44.17, 26.50' LT

773.73

773.95

774.18

774.38

+81.88, 24.00' LT

+72.67, 8.00' LT

774.61

+15.44, 8.00' LT

774.33

774.50

774.17

774.42

774.64

774.52

774.35

+15.44, 7.00' RT

+57.11, 7.00' RT

+73.11, 5.99' RT

+30.80, 20.62' RT

773.73

773.89

774.03

774.08

+14.46, 36.73' RT

+32.49, 47.26' RT

+80.69, 33.98' RT

+60.19, 36.49' LT

+69.43, 23.99' LT

+81.33, 28.23' LT

+88.65, 31.45' LT

+81.20, 39.35' RT

+65.30, 42.26' RT

+88.15, 43.31' RT

+00.40, 56.91' RT

CURB RAMP TYPE 4B1
SEE SDD
DETECTABLE WARNING
FIELD REQUIRED

+97.14, 65.36' RT

+08.11, 26.61' RT

+00.23, 29.54' RT

+77.84, 23.00' RT

+17.16, 23.00' RT

+19.30, 32.12' RT

MATCH
EXISTING
JOINTS

+80.12, 57.14' RT

+77.17, 62.32' RT

+79.61, 65.79' RT

+03.62, 64.23' RT

+86.14, 75.54' RT

CURB RAMP TYPE 4B1
SEE SDD
DETECTABLE WARNING
FIELD REQUIRED

550 551 552 553 554 555

51 50 49

LEGEND

1. CONCRETE CURB AND GUTTER 30-INCH TYPE A
2. CONCRETE CURB AND GUTTER 30-INCH TYPE D
3. CONCRETE CURB AND GUTTER 6-INCH SLOPED 36-INCH TYPE D
4. CONCRETE MEDIAN SLOPED NOSE
5. CONCRETE SIDEWALK 4-INCH
6. CONCRETE SIDEWALK 6-INCH
7. CONCRETE DRIVEWAY 6-INCH
8. ASPHALTIC SURFACE DRIVEWAYS AND FIELD ENTRANCES (BY OTHERS)
9. BASE AGGREGATE DENSE 3/4-INCH
10. CONCRETE CURB TYPE A
11. CONCRETE PAVEMENT 9-INCH
12. SAWING CONCRETE
13. SAWING ASPHALT
14. CONCRETE PAVEMENT 8-INCH
15. CONCRETE SURFACE DRAIN
16. HMA PAVEMENT TYPE E-3 (BY OTHERS)

REVERSE SLOPE CURB AND GUTTER

RADIUS TABLE

- K STA. 550+15.44, 0.50' LT, 7.5' R
- L STA. 550+72.67, 1.00' LT, 7.0' R
- M STA. 552+70.00, 63.98' LT, 40.0' R
- N STA. 552+65.30, 77.26' RT, 35.0' R
- O STA. 554+17.16, 63.00' RT, 40.0' R
- P STA. 554+19.30, 65.12' RT, 33.0' R
- Q STA. 552+60.20, 76.49' LT, 40.0' R

PROJECT NO: 4987-02-57	HWY: HUMBOLDT ROAD/CTH N	COUNTY: BROWN	PLAN DETAILS	SHEET 32	E

LEGEND

1. CONCRETE CURB AND GUTTER 30-INCH TYPE A
2. CONCRETE CURB AND GUTTER 30-INCH TYPE D
3. CONCRETE CURB AND GUTTER 6-INCH SLOPED 36-INCH TYPE D
4. CONCRETE MEDIAN SLOPED NOSE
5. CONCRETE SIDEWALK 4-INCH
6. CONCRETE SIDEWALK 6-INCH
7. CONCRETE DRIVEWAY 6-INCH
8. ASPHALTIC SURFACE DRIVEWAYS AND FIELD ENTRANCES (BY OTHERS)
9. BASE AGGREGATE DENSE 3/4-INCH
10. CONCRETE CURB TYPE A
11. CONCRETE PAVEMENT 9-INCH
12. SAWING CONCRETE
13. SAWING ASPHALT
14. CONCRETE PAVEMENT 8-INCH
15. CONCRETE SURFACE DRAIN
16. HMA PAVEMENT TYPE E-3 (BY OTHERS)

REVERSE SLOPE CURB AND GUTTER

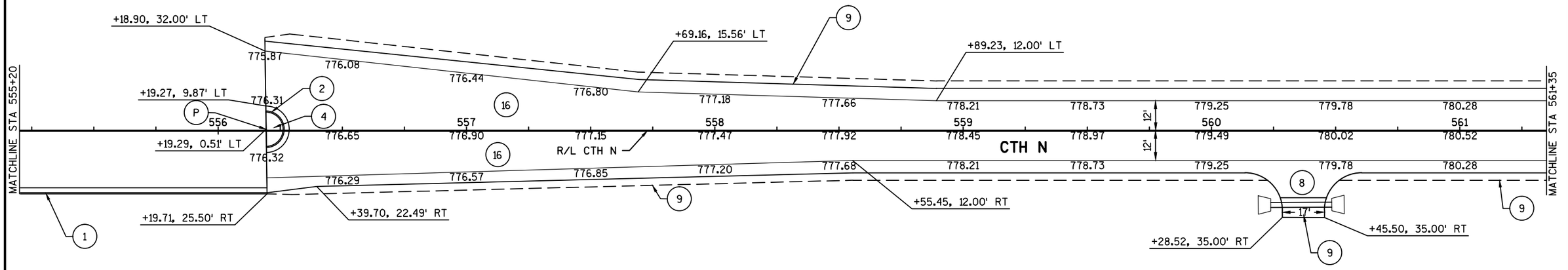

RADIUS TABLE

P STA. 556+19.27, 8.90' RT, 7.37' R

PROJECT NO: 4987-02-57	HWY: HUMBOLDT ROAD/CTH N	COUNTY: BROWN	PLAN DETAILS	SHEET 33	E

FILE NAME : F:\BM4-1048 CTH N\49870256\SHEETSPLAN\021201-PD.DWG
0202010-pd

PLOT DATE : 10/30/2015 10:04 AM PLOT BY : SHANE MCCARTY PLOT NAME : PLOT SCALE : 1 IN:40 FT

LEGEND

1. CONCRETE CURB AND GUTTER 30-INCH TYPE A
2. CONCRETE CURB AND GUTTER 30-INCH TYPE D
3. CONCRETE CURB AND GUTTER 6-INCH SLOPED 36-INCH TYPE D
4. CONCRETE MEDIAN SLOPED NOSE
5. CONCRETE SIDEWALK 4-INCH
6. CONCRETE SIDEWALK 6-INCH
7. CONCRETE DRIVEWAY 6-INCH
8. ASPHALTIC SURFACE DRIVEWAYS AND FIELD ENTRANCES (BY OTHERS)
9. BASE AGGREGATE DENSE 3/4-INCH
10. CONCRETE CURB TYPE A
11. CONCRETE PAVEMENT 9-INCH
12. SAWING CONCRETE
13. SAWING ASPHALT
14. CONCRETE PAVEMENT 8-INCH
15. CONCRETE SURFACE DRAIN
16. HMA PAVEMENT TYPE E-3 (BY OTHERS)

REVERSE SLOPE CURB AND GUTTER

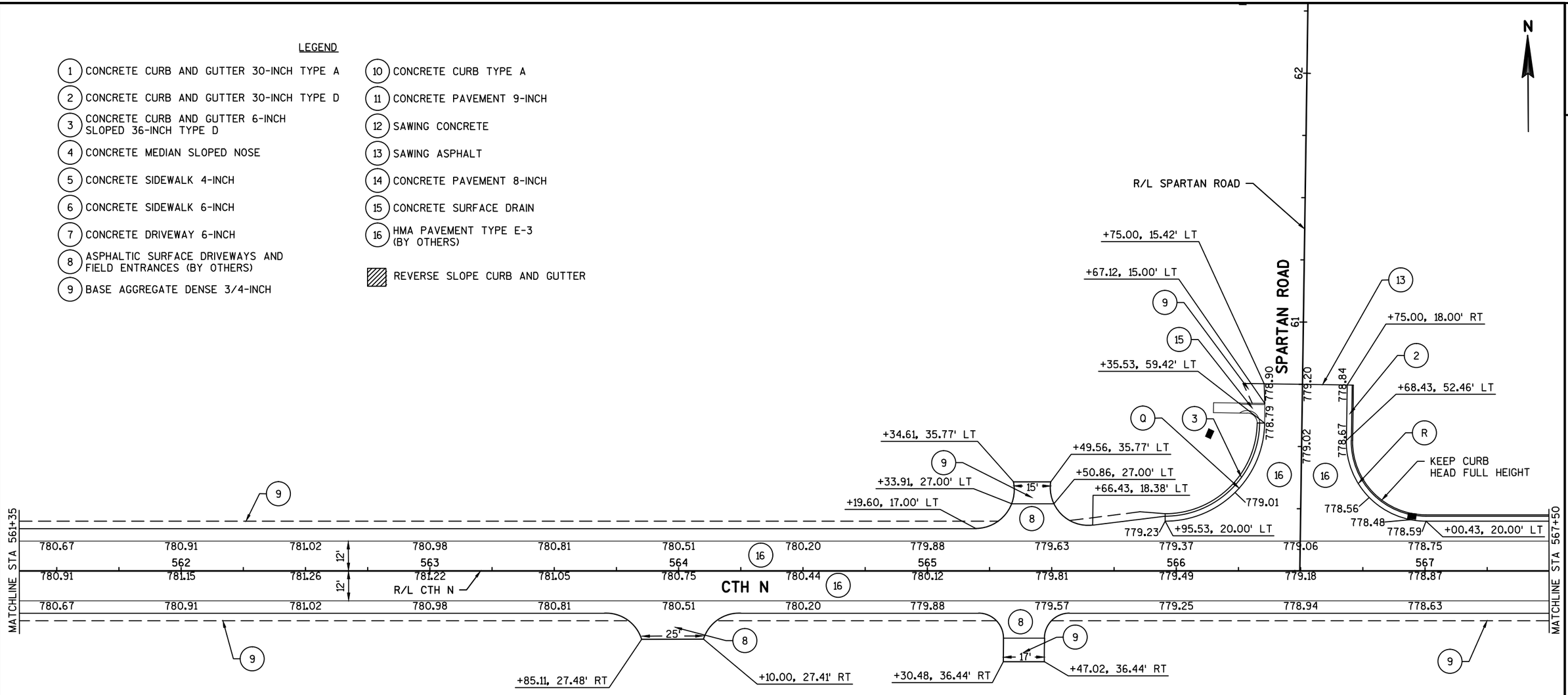

RADIUS TABLE

- Q STA. 565+95.52, 60.00' LT, 40.0' R
- R STA. 567+00.41, 52.00' LT, 32.0' R

PROJECT NO: 4987-02-57	HWY: HUMBOLDT ROAD/CTH N	COUNTY: BROWN	PLAN DETAILS	SHEET 34	E

2

LEGEND

1. CONCRETE CURB AND GUTTER 30-INCH TYPE A
2. CONCRETE CURB AND GUTTER 30-INCH TYPE D
3. CONCRETE CURB AND GUTTER 6-INCH SLOPED 36-INCH TYPE D
4. CONCRETE MEDIAN SLOPED NOSE
5. CONCRETE SIDEWALK 4-INCH
6. CONCRETE SIDEWALK 6-INCH
7. CONCRETE DRIVEWAY 6-INCH
8. ASPHALTIC SURFACE DRIVEWAYS AND FIELD ENTRANCES (BY OTHERS)
9. BASE AGGREGATE DENSE 3/4-INCH
10. CONCRETE CURB TYPE A
11. CONCRETE PAVEMENT 9-INCH
12. SAWING CONCRETE
13. SAWING ASPHALT
14. CONCRETE PAVEMENT 8-INCH
15. CONCRETE SURFACE DRAIN
16. HMA PAVEMENT TYPE E-3 (BY OTHERS)

REVERSE SLOPE CURB AND GUTTER

N

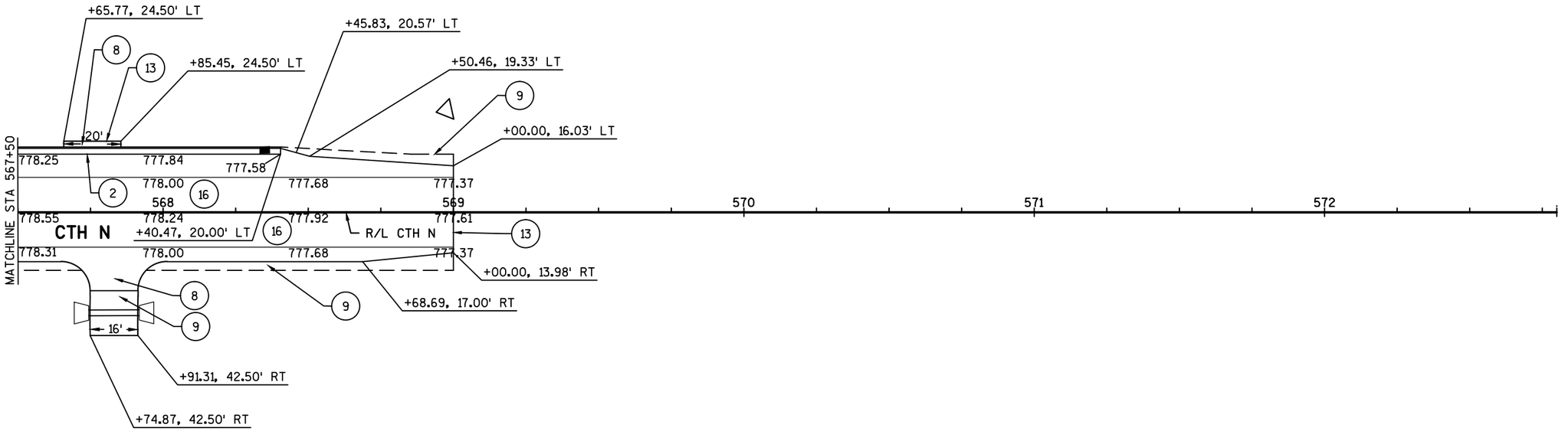

PROJECT NO: 4987-02-57	HWY: HUMBOLDT ROAD/CTH N	COUNTY: BROWN	PLAN DETAILS	SHEET 35	E

LEGEND

- ###### EROSION MAT URBAN CLASS I, TYPE A
- SILT FENCE
- RIP RAP OR ROCK BAGS
- SLOPE INTERCEPT
- (A) INLET PROTECTION TYPE A
- (C) INLET PROTECTION TYPE C
- (D) INLET PROTECTION TYPE D
- TEMPORARY DITCH CHECK
- CULVERT PIPE CHECKS
- SURFACE WATER FLOW

NOTE:

AFTER CONSTRUCTION OF INLET, PLACE INLET PROTECTION TYPE A UNTIL CURB & GUTTER IS POURED, THEN PLACE RESPECTIVE INLET PROTECTION.

PLACE INLET PROTECTION TYPE D AT FIRST SET OF INLETS ON SIDE STREETS.

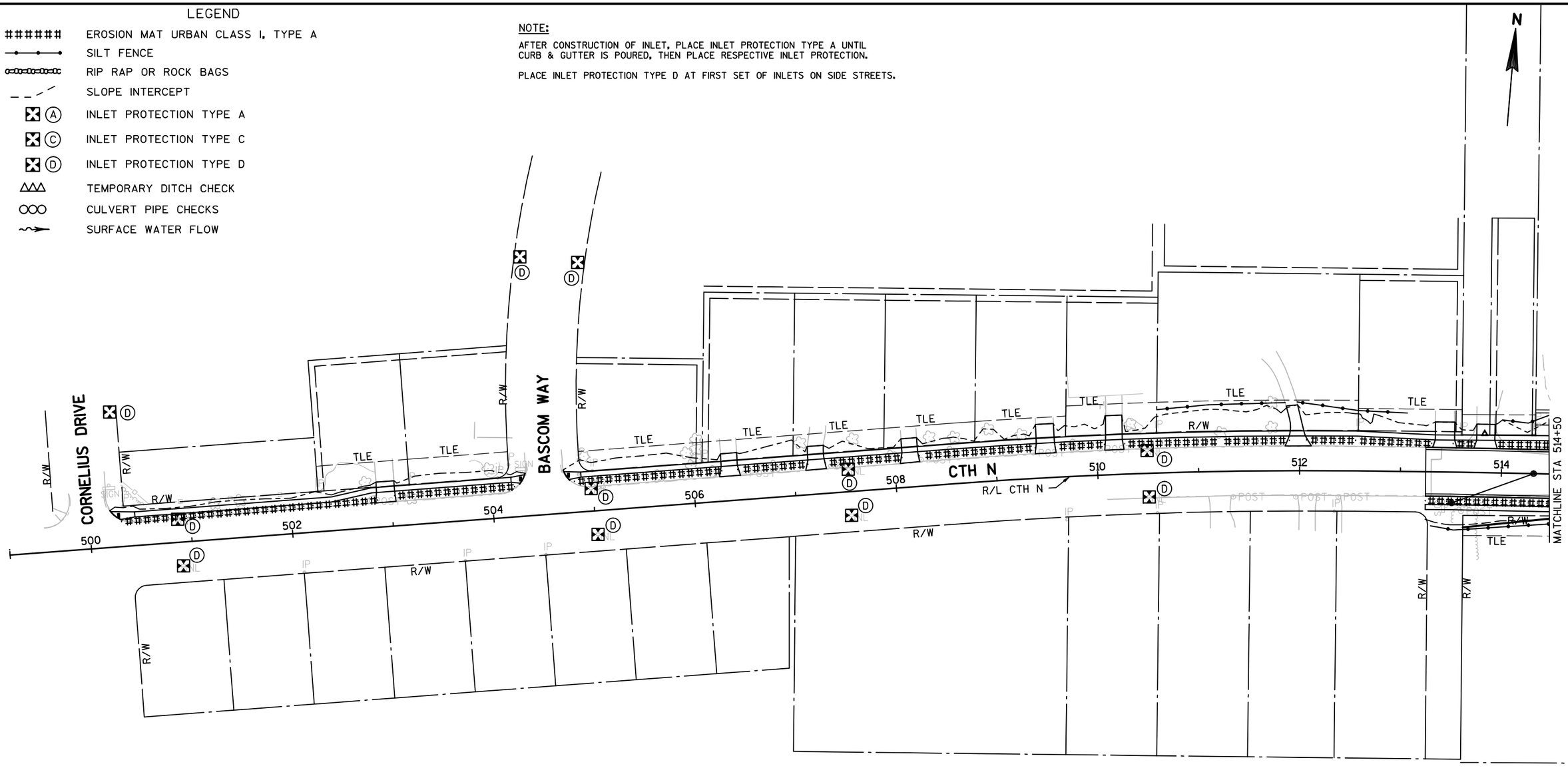

PROJECT NO: 4987-02-57	HWY: HUMBOLDT ROAD/CTH N	COUNTY: BROWN	EROSION CONTROL	SHEET 36	E

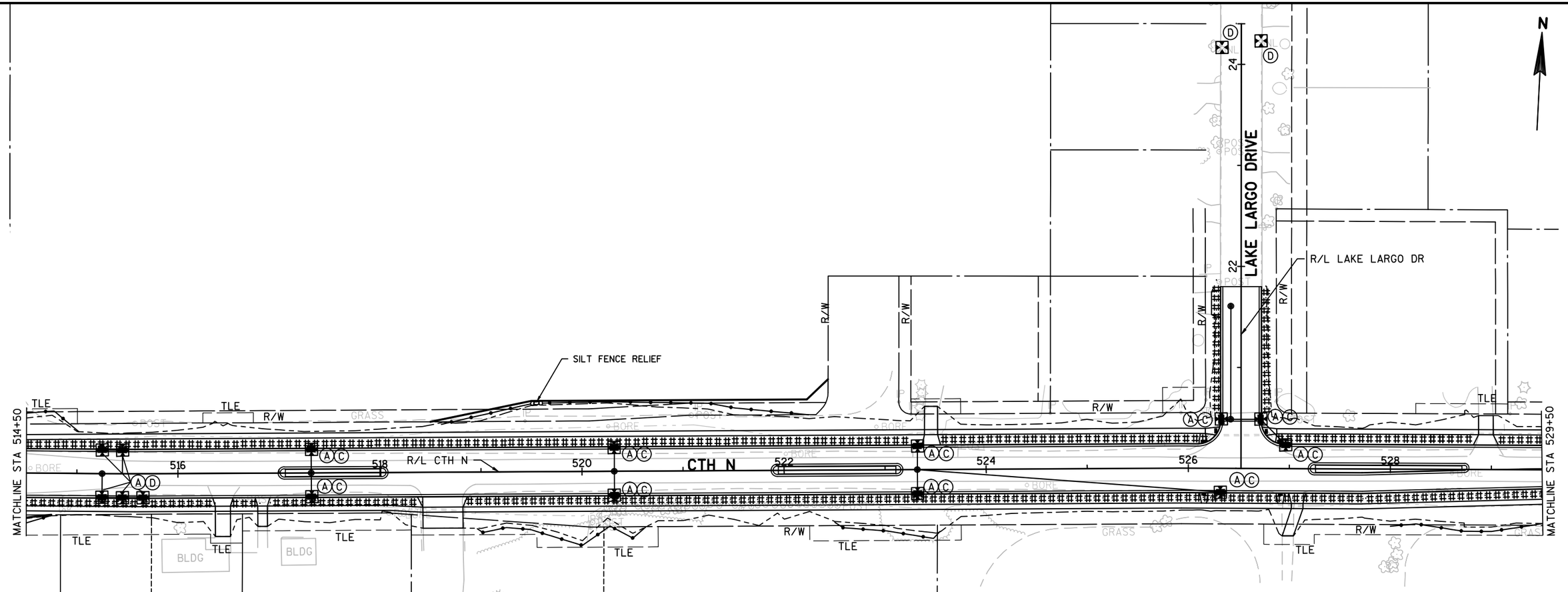

LEGEND

######	EROSION MAT URBAN CLASS I, TYPE A
—•—•—	SILT FENCE
—o—o—o—o—	RIP RAP OR ROCK BAGS
_ _ _ /	SLOPE INTERCEPT
⊠ (A)	INLET PROTECTION TYPE A
⊠ (C)	INLET PROTECTION TYPE C
⊠ (D)	INLET PROTECTION TYPE D
△△△	TEMPORARY DITCH CHECK
○○○	CULVERT PIPE CHECKS
~~→	SURFACE WATER FLOW

NOTE:

AFTER CONSTRUCTION OF INLET, PLACE INLET PROTECTION TYPE A UNTIL CURB & GUTTER IS POURED, THEN PLACE RESPECTIVE INLET PROTECTION.

PLACE INLET PROTECTION TYPE D AT FIRST SET OF INLETS ON SIDE STREETS.

PROJECT NO: 4987-02-57	HWY: HUMBOLDT ROAD/CTH N	COUNTY: BROWN	EROSION CONTROL	SHEET 37	E

2

N

MATCHLINE STA 529+50

MATCHLINE STA 544+50

CTH N

R/L CTH N

R/L WOODSIDE ROAD

WOODSIDE ROAD

38

530 532 534 536 538 540 542 544

(EXISTING INLET)

R/W TLE GRASS BLDG SIGN IP

DRAINAGE DITCH (BY OTHERS)

LEGEND

######	EROSION MAT URBAN CLASS I, TYPE A
	SILT FENCE
	RIP RAP OR ROCK BAGS
	SLOPE INTERCEPT
Ⓐ	INLET PROTECTION TYPE A
Ⓒ	INLET PROTECTION TYPE C
Ⓓ	INLET PROTECTION TYPE D
△△△	TEMPORARY DITCH CHECK
○○○	CULVERT PIPE CHECKS
	SURFACE WATER FLOW

NOTE:

AFTER CONSTRUCTION OF INLET, PLACE INLET PROTECTION TYPE A UNTIL CURB & GUTTER IS POURED, THEN PLACE RESPECTIVE INLET PROTECTION.

PLACE INLET PROTECTION TYPE D AT FIRST SET OF INLETS ON SIDE STREETS.

PROJECT NO: 4987-02-57	HWY: HUMBOLDT ROAD/CTH N	COUNTY: BROWN	EROSION CONTROL	SHEET 38	E

FILE NAME : F:\BM4-1048 CTH N\49870256\SHEETSPLAN\022001-EC.DWG
022003-ec

PLOT DATE : 10/29/2015 3:32 PM PLOT BY : SHANE MCCARTY PLOT NAME : PLOT SCALE : 1 IN:100 FT

WISDOT/CADDS SHEET 42

NOTE:

AFTER CONSTRUCTION OF INLET, PLACE INLET PROTECTION TYPE A UNTIL CURB & GUTTER IS POURED, THEN PLACE RESPECTIVE INLET PROTECTION.

PLACE INLET PROTECTION TYPE D AT FIRST SET OF INLETS ON SIDE STREETS.

N

LEGEND

- EROSION MAT URBAN CLASS I, TYPE A
- SILT FENCE
- RIP RAP OR ROCK BAGS
- SLOPE INTERCEPT
- (A) INLET PROTECTION TYPE A
- (C) INLET PROTECTION TYPE C
- (D) INLET PROTECTION TYPE D
- TEMPORARY DITCH CHECK
- CULVERT PIPE CHECKS
- SURFACE WATER FLOW

MATCHLINE STA 544+50

MATCHLINE STA 559+50

CTH N

CTH EA

R/L CTH N

R/L CTH EA

PLACE AT FIRST SET OF INLETS ON CTH EA

BLDG

TLE

R/W

546 548 550 552 554 556 558

52

50

48

PROJECT NO: 4987-02-57	HWY: HUMBOLDT ROAD/CTH N	COUNTY: BROWN	EROSION CONTROL	SHEET 39 E

FILE NAME : F:\BM4-1048 CTH N\49870256\SHEETSPLAN\022001-EC.DWG
022004-ec

PLOT DATE : 10/29/2015 3:32 PM PLOT BY : SHANE MCCARTY PLOT NAME : PLOT SCALE : 1 IN:100 FT

2

N

SPARTAN ROAD

62

R/W

TLE

R/L SPARTAN ROAD

R/W

R/W

R/L CTH N

MATCHLINE STA 559+50

560 562 564 566 568 570 572

CTH N

R/W

TLE

R/W

R/W

GRASS

BLDG

BLDG

POST

BORE

SIGN

IP

LEGEND

######	EROSION MAT URBAN CLASS I, TYPE A
	SILT FENCE
	RIP RAP OR ROCK BAGS
	SLOPE INTERCEPT
Ⓐ	INLET PROTECTION TYPE A
Ⓒ	INLET PROTECTION TYPE C
Ⓓ	INLET PROTECTION TYPE D
△△△	TEMPORARY DITCH CHECK
○○○	CULVERT PIPE CHECKS
	SURFACE WATER FLOW

NOTE:

AFTER CONSTRUCTION OF INLET, PLACE INLET PROTECTION TYPE A UNTIL CURB & GUTTER IS POURED, THEN PLACE RESPECTIVE INLET PROTECTION.

PLACE INLET PROTECTION TYPE D AT FIRST SET OF INLETS ON SIDE STREETS.

PROJECT NO: 4987-02-57	HWY: HUMBOLDT ROAD/CTH N	COUNTY: BROWN	EROSION CONTROL	SHEET 40	E

FILE NAME : F:\BM4-1048 CTH N\49870256\SHEETSPLAN\022001-EC.DWG
022005-ec

PLOT DATE : 10/29/2015 3:32 PM PLOT BY : SHANE MCCARTY PLOT NAME : PLOT SCALE : 1 IN:100 FT

WISDOT/CADDS SHEET 42

STORM SEWER T CONNECTION 4A

EXISTING 18" RCCP TO BE REMOVED STA 514+10

STA 514+32, 0.0' MANHOLE 5FT SPECIAL-GB 1A

BEGIN ROADWAY CONSTRUCTION STA 513+25.00

STA 515+25, 23.5' LT CITY SPECIAL INLET-H-S 2A

STA 515+45, 23.5' LT CITY SPECIAL INLET-H-S 5A

STORM SEWER T CONNECTION 7A

STA 517+32, 23.5' LT CITY SPECIAL INLET-H-S 2B

STA 517+32, 0.0' MANHOLE 5FT SPECIAL-GB 1B

STA 520+32, 23.5' LT CITY SPECIAL INLET-H-S 2C

STA 520+32, 0.0' MANHOLE 4FT SPECIAL-GB 1C

STORM LATERAL TYP (SEE MQ TABLE)

STA 523+32, 23.5' LT CITY SPECIAL INLET-H-S 2D

TLE

R/W

REMOVE STORM SEWER

CONNECT TO EXISTING STORM SEWER MANHOLE ADJUSTING MANHOLE COVERS REQUIRED

STA 515+65, 23.5' RT CITY SPECIAL INLET-H-S 8A

STA 515+45, 23.5' RT CITY SPECIAL INLET-H-S 6A

STA 515+25, 23.5' RT CITY SPECIAL INLET-H-S 3A

STA 517+32, 23.5' RT CITY SPECIAL INLET-H-S 3B

STA 520+32, 23.5' RT CITY SPECIAL INLET-H-S 3C

R/L CTH N

STA 523+32, 0.0' MANHOLE 4FT SPECIAL-GB 1D

STA 523+32, 23.5' RT CITY SPECIAL INLET-H-S 3D

CTH N

512 514 516 518 520 522 524 526

MATCHLINE STA 526+00

N

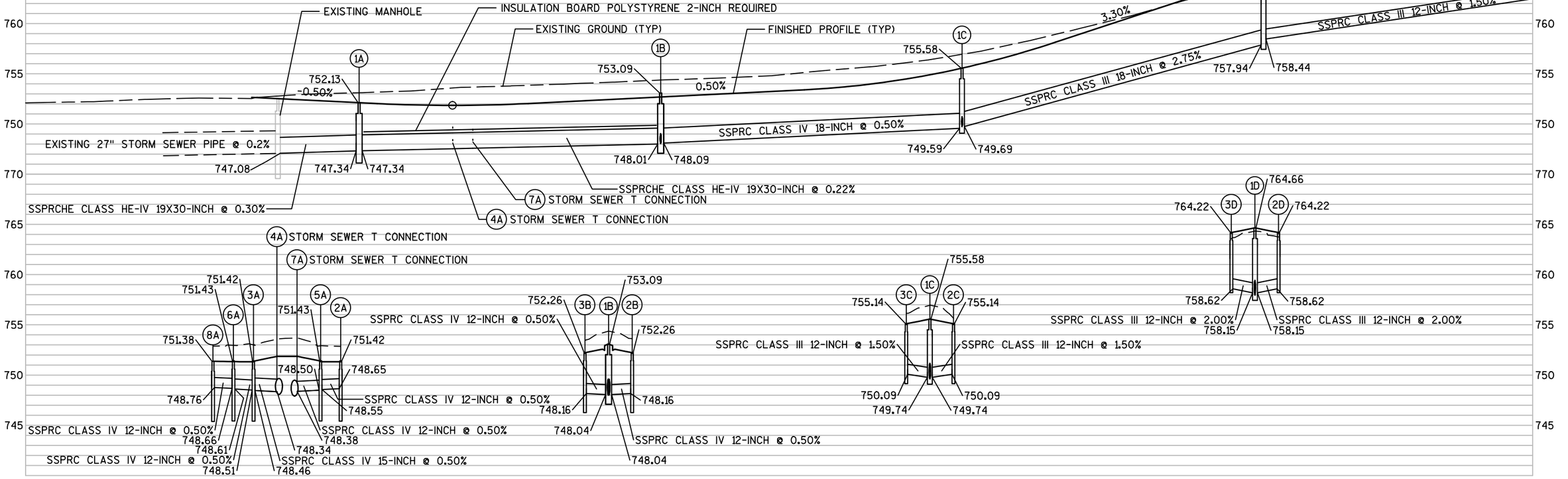

PROJECT NO: 4987-02-57	HWY: HUMBOLDT ROAD/CTH N	COUNTY: BROWN	STORM SEWER	SHEET 41	E

FILE NAME : F:\BM4-1048 CTH N\49870256\SHEETSPLAN\022501-SS.DWG
022501-ss

PLOT DATE : 10/27/2015 12:35 PM PLOT BY : SHANE MCCARTY PLOT NAME : PLOT SCALE : 1:100_XREF

WISDOT/CADDS SHEET 41

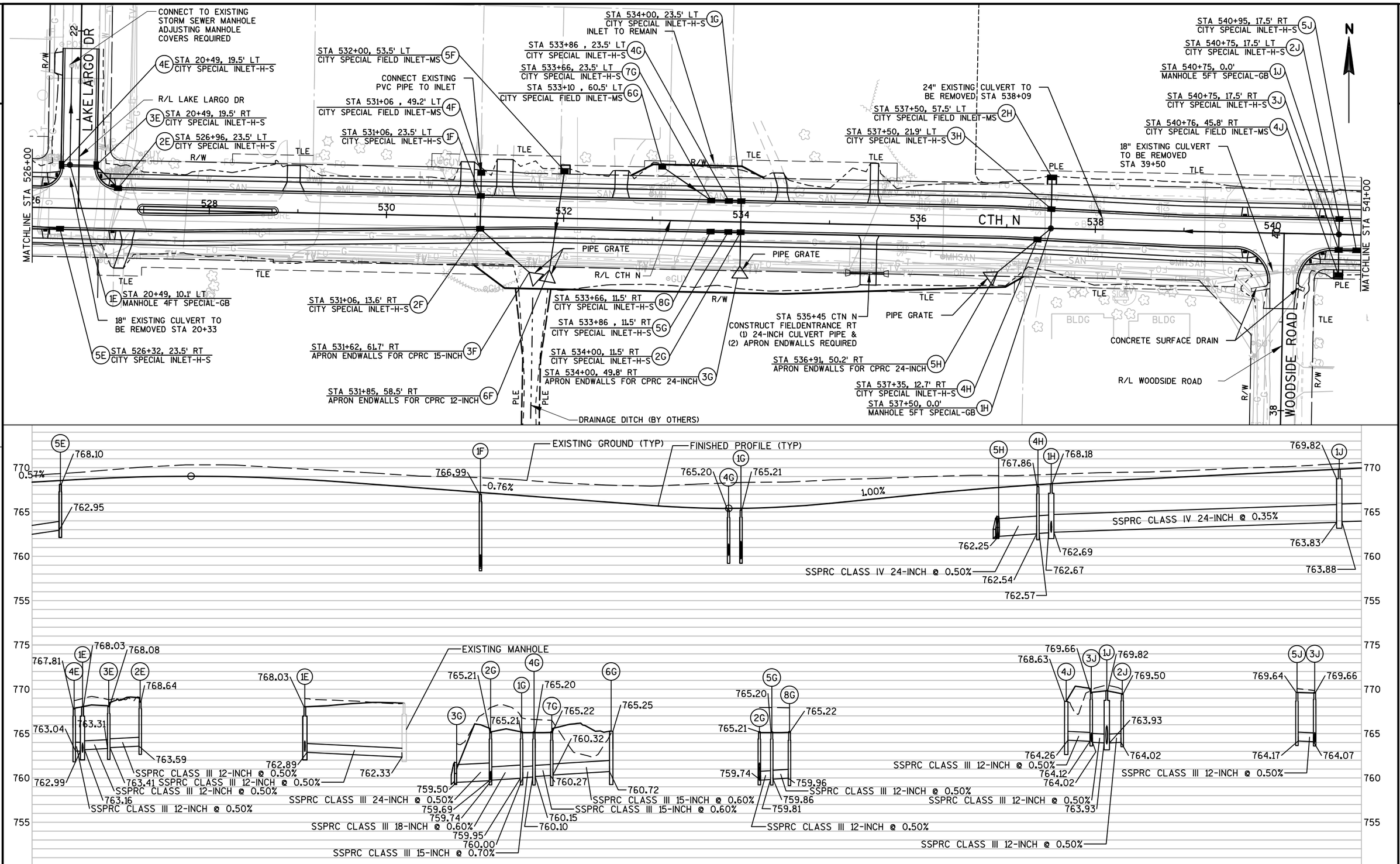

PROJECT NO: 4987-02-57	HWY: HUMBOLDT ROAD/CTH N	COUNTY: BROWN	STORM SEWER	SHEET 42	E

FILE NAME : F:\BM4-1048 CTH N\49870256\SHEETSPLAN\022501-SS.DWG 022502-ss
PLOT DATE : 10/29/2015 3:52 PM PLOT BY : SHANE MCCARTY PLOT NAME : PLOT SCALE : 1" = 100'_XREF
WISDOT/CADDS SHEET 41

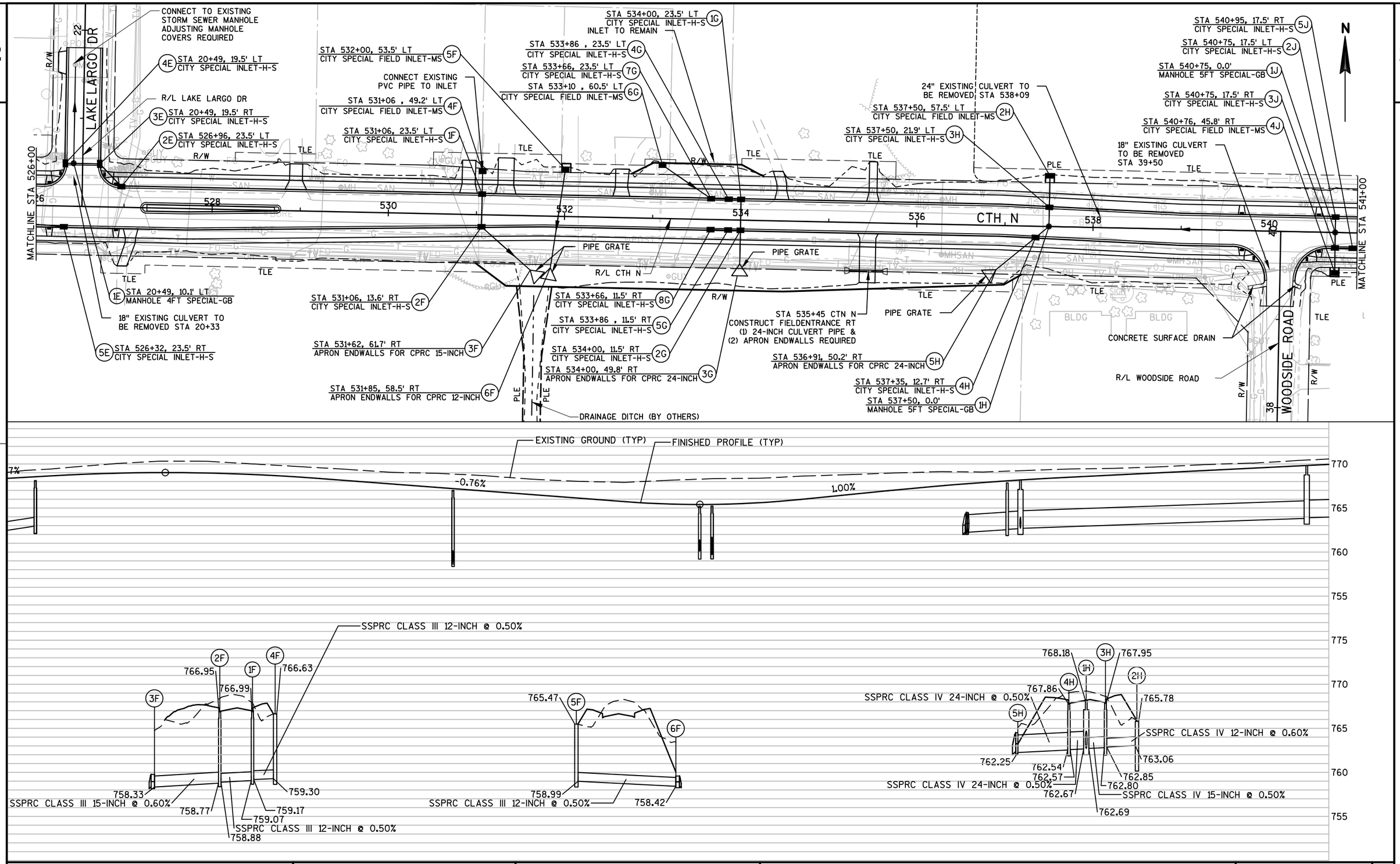

PROJECT NO: 4987-02-57	HWY: HUMBOLDT ROAD/CTH N	COUNTY: BROWN	STORM SEWER	SHEET 43	E

FILE NAME : F:\BM4-1048 CTH N\49870256\SHEETSPLAN\022501-SS.DWG
022502-ss
PLOT DATE : 10/27/2015 12:36 PM PLOT BY : SHANE MCCARTY PLOT NAME : PLOT SCALE : 1:100_XREF
WISDOT/CADDS SHEET 41

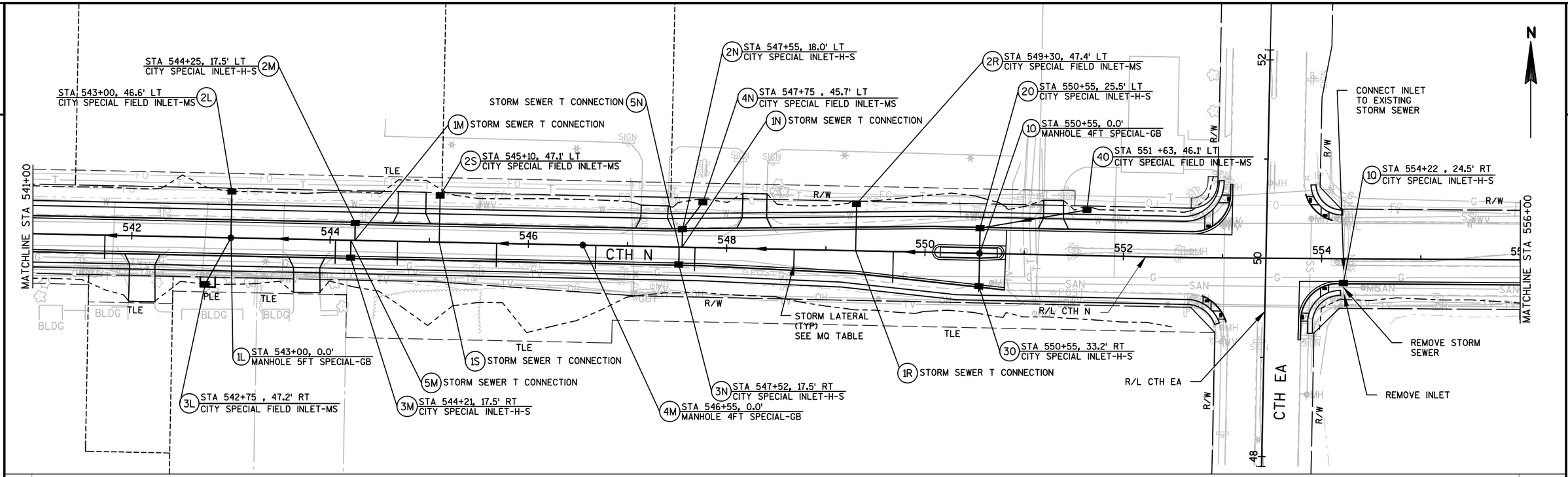

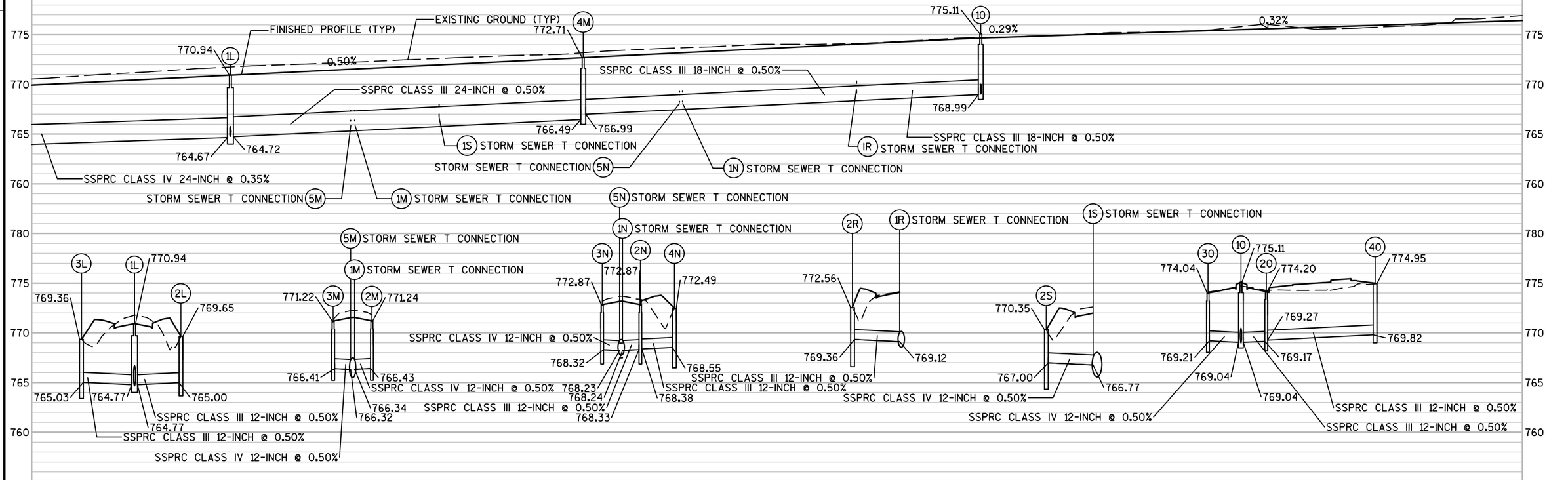

PROJECT NO: 4987-02-57	HWY: HUMBOLDT ROAD/CTH N	COUNTY: BROWN	STORM SEWER	SHEET 44	E

FILE NAME : F:\BM4-1048 CTH N\49870256\SHEETSPLAN\022501-SS.DWG
022503-ss
PLOT DATE : 10/27/2015 2:02 PM
PLOT BY : CHAD EVEN
PLOT NAME :
PLOT SCALE : 1:100_XREF
WISDOT/CADDS SHEET 41

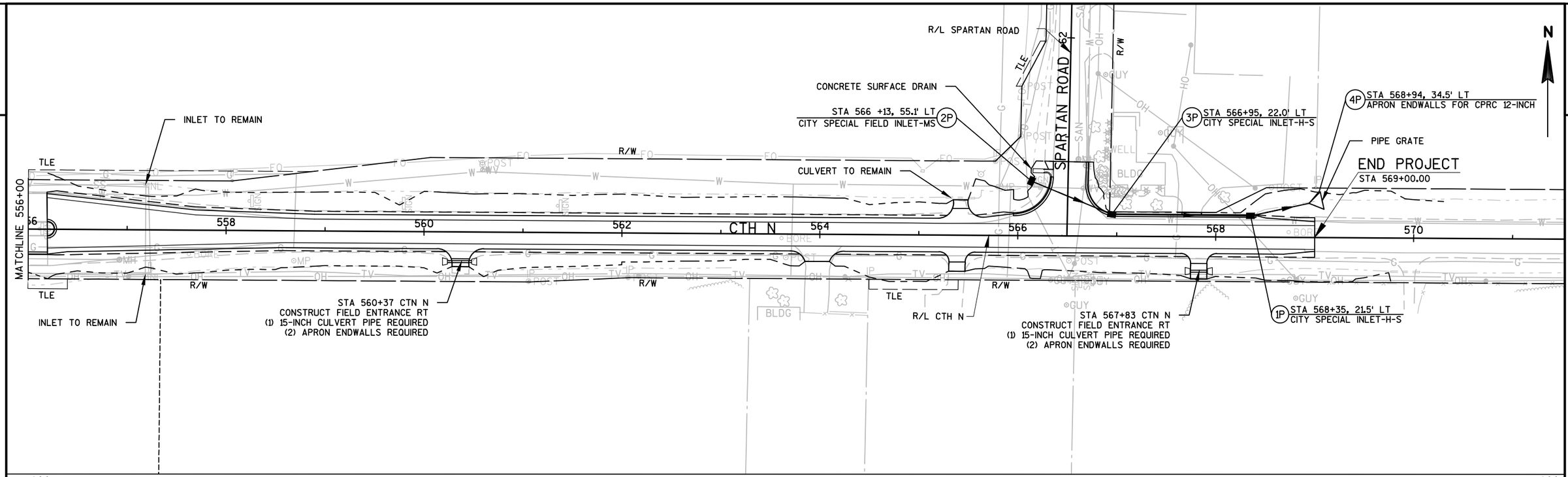

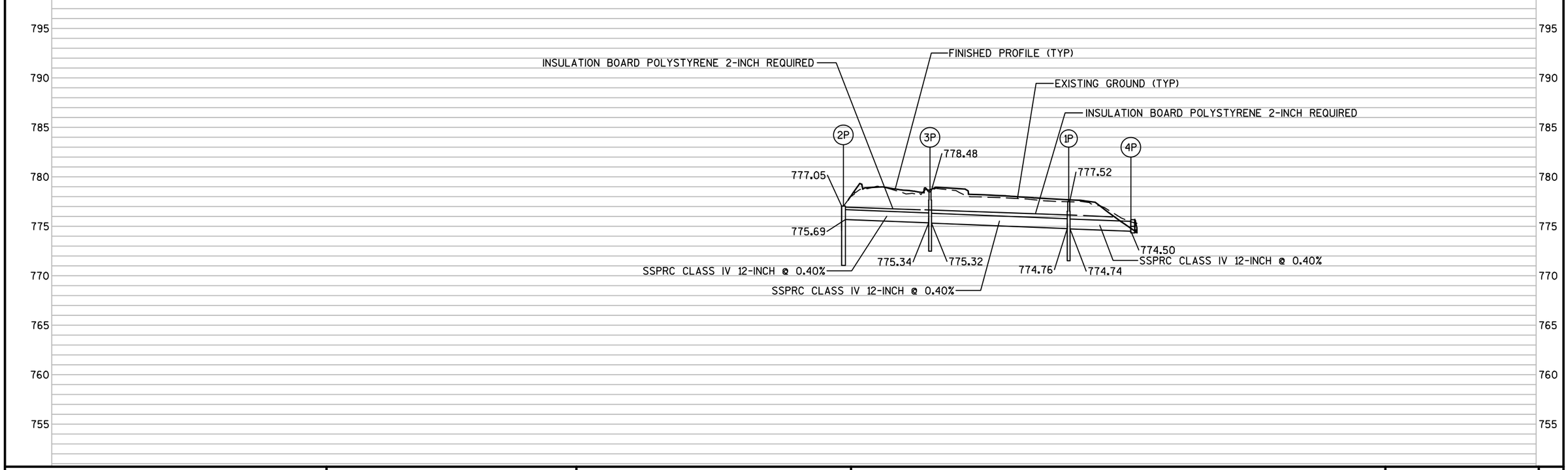

PROJECT NO: 4987-02-57	HWY: HUMBOLDT ROAD/CTH N	COUNTY: BROWN	STORM SEWER	SHEET 45	E

FILE NAME : F:\BM4-1048 CTH N\49870256\SHEETSPLAN\022501-SS.DWG
022504-ss
PLOT DATE : 10/28/2015 5:55 PM PLOT BY : SHANE MCCARTY PLOT NAME : PLOT SCALE : 1" = 100'_XREF
WISDOT/CADDS SHEET 41

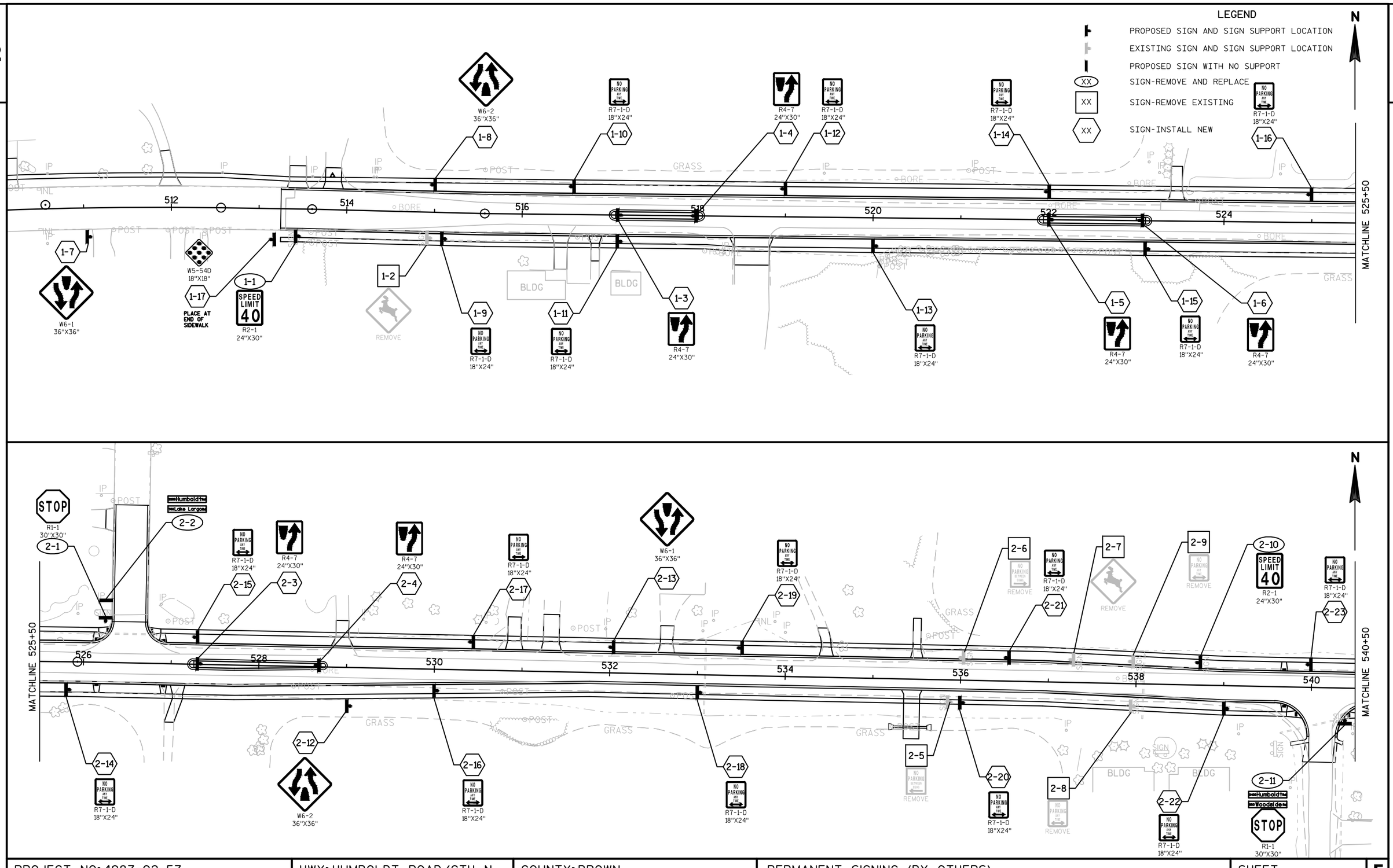

PROJECT NO: 4987-02-57	HWY: HUMBOLDT ROAD/CTH N	COUNTY: BROWN	PERMANENT SIGNING (BY OTHERS)	SHEET 46	E

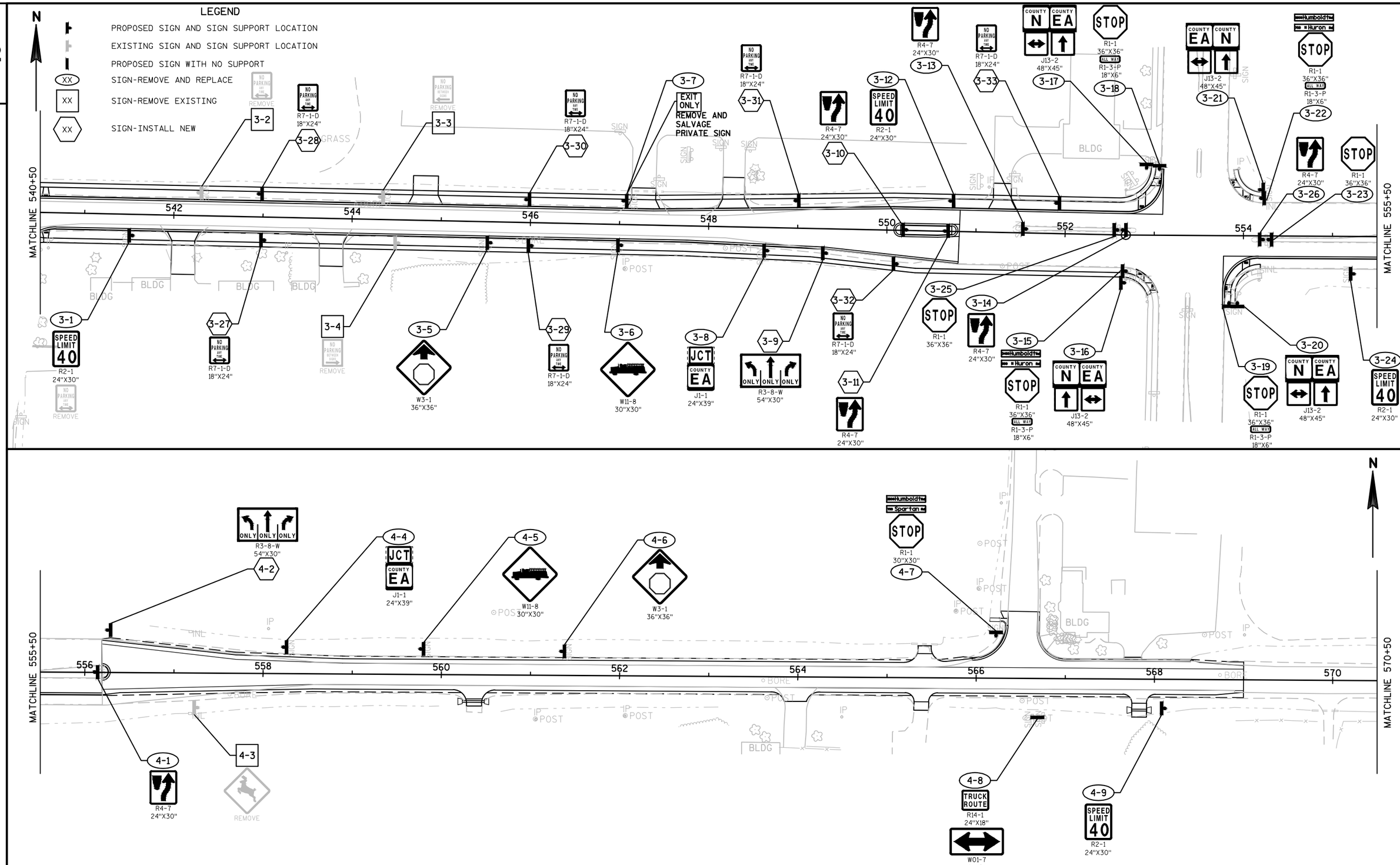

PROJECT NO:4987-02-57	HWY:HUMBOLDT ROAD/CTH N	COUNTY:BROWN	PERMANENT SIGNING (BY OTHERS)	SHEET 47	E

FILE NAME : F:\BM4-1048 CTH N\49870256\SHEETSPLAN\023201-PS.DWG
023202-ps
PLOT DATE : 10/23/2015 2:09 PM PLOT BY : CHAD EVEN PLOT NAME : PLOT SCALE : ##########

2

N

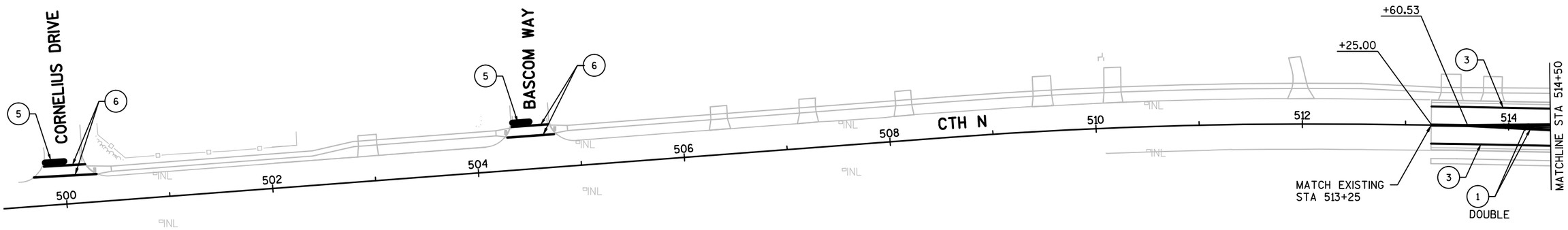

LEGEND

1. PAVEMENT MARKING EPOXY 4-INCH (YELLOW)
2. PAVEMENT MARKING EPOXY 4-INCH (DASHED YELLOW 12.5 FT LINE 37.5 FT SKIP)
3. PAVEMENT MARKING EPOXY 4-INCH (WHITE)
4. PAVEMENT MARKING EPOXY 8-INCH (CHANNELIZING WHITE)
5. PAVEMENT MARKING STOP LINE EPOXY 24-INCH (WHITE)
6. PAVEMENT MARKING CROSSWALK 8-INCH EPOXY (WHITE)
7. PAVEMENT MARKING DIAGONAL EPOXY 12-INCH (YELLOW)
8. PAVEMENT MARKING ISLAND NOSE EPOXY
9. PAVEMENT MARKING CURB EPOXY (YELLOW)
10. PAVEMENT MARKING ARROWS TYPE 2
11. PAVEMENT MARKING WORDS EPOXY "ONLY"
12. PAVEMENT MARKING EPOXY 4-INCH (DASHED WHITE 3 FT LINE, 9 FT SKIP)

PROJECT NO: 4987-02-57	HWY: HUMBOLDT ROAD/CTH N	COUNTY: BROWN	PAVEMENT MARKING	SHEET 48	E

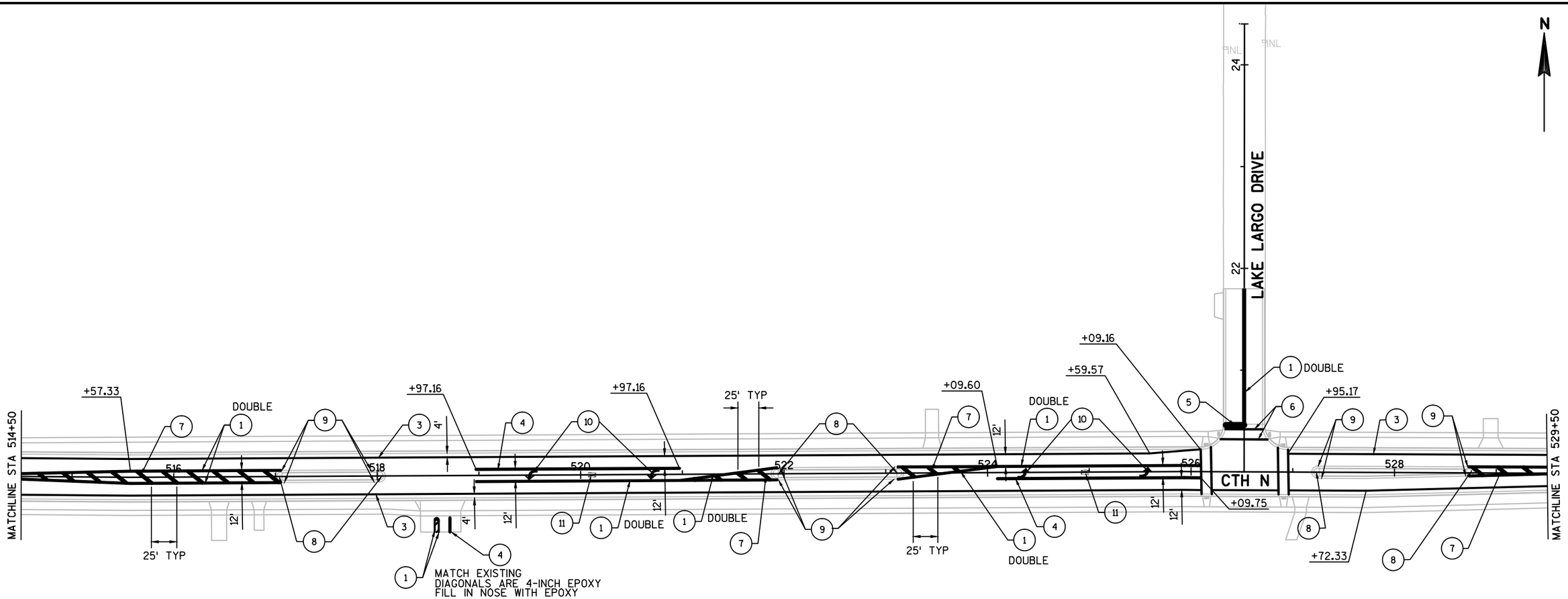

LEGEND

1. PAVEMENT MARKING EPOXY 4-INCH (YELLOW)
2. PAVEMENT MARKING EPOXY 4-INCH (DASHED YELLOW 12.5 FT LINE 37.5 FT SKIP)
3. PAVEMENT MARKING EPOXY 4-INCH (WHITE)
4. PAVEMENT MARKING EPOXY 8-INCH (CHANNELIZING WHITE)
5. PAVEMENT MARKING STOP LINE EPOXY 24-INCH (WHITE)
6. PAVEMENT MARKING CROSSWALK 8-INCH EPOXY (WHITE)
7. PAVEMENT MARKING DIAGONAL EPOXY 12-INCH (YELLOW)
8. PAVEMENT MARKING ISLAND NOSE EPOXY
9. PAVEMENT MARKING CURB EPOXY (YELLOW)
10. PAVEMENT MARKING ARROWS TYPE 2
11. PAVEMENT MARKING WORDS EPOXY "ONLY"
12. PAVEMENT MARKING EPOXY 4-INCH (DASHED WHITE 3 FT LINE, 9 FT SKIP)

PROJECT NO: 4987-02-57	HWY: HUMBOLDT ROAD/CTH N	COUNTY: BROWN	PAVEMENT MARKING	SHEET 49	E

2

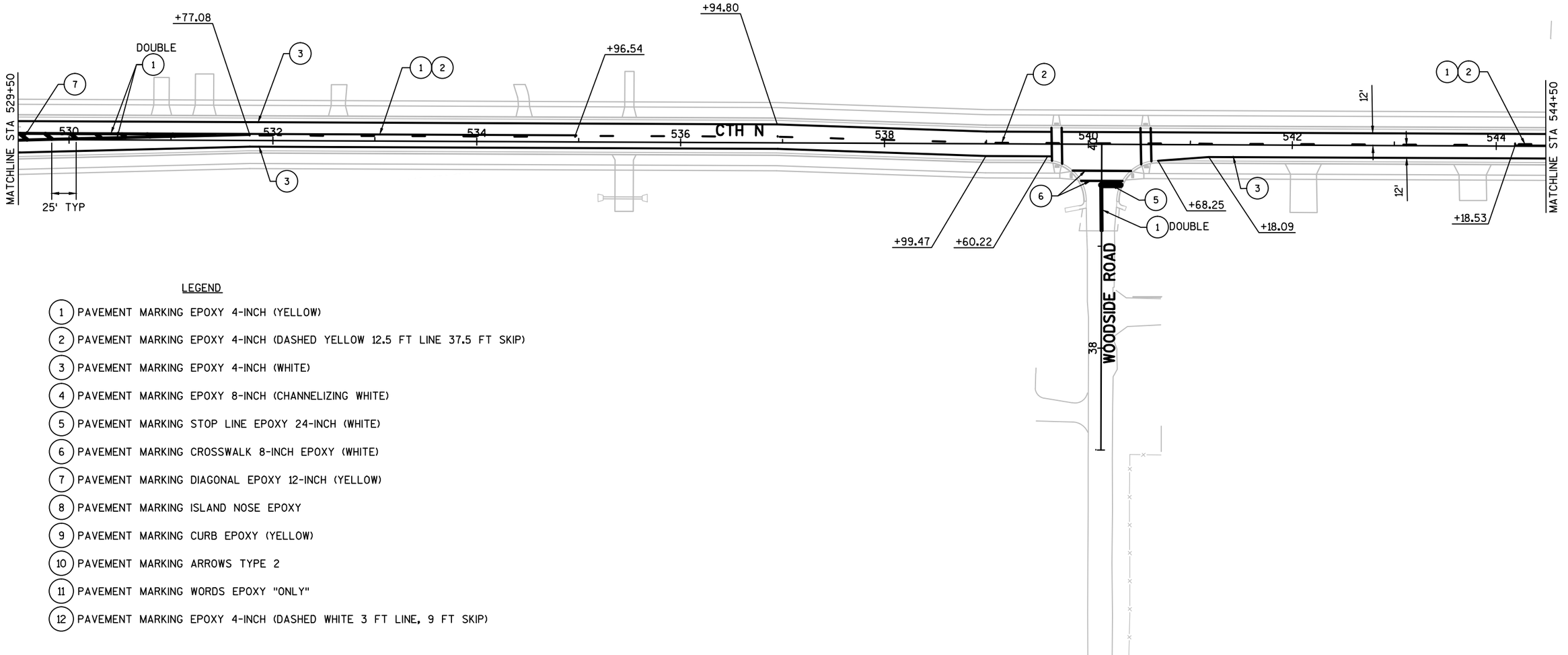

LEGEND

1. PAVEMENT MARKING EPOXY 4-INCH (YELLOW)
2. PAVEMENT MARKING EPOXY 4-INCH (DASHED YELLOW 12.5 FT LINE 37.5 FT SKIP)
3. PAVEMENT MARKING EPOXY 4-INCH (WHITE)
4. PAVEMENT MARKING EPOXY 8-INCH (CHANNELIZING WHITE)
5. PAVEMENT MARKING STOP LINE EPOXY 24-INCH (WHITE)
6. PAVEMENT MARKING CROSSWALK 8-INCH EPOXY (WHITE)
7. PAVEMENT MARKING DIAGONAL EPOXY 12-INCH (YELLOW)
8. PAVEMENT MARKING ISLAND NOSE EPOXY
9. PAVEMENT MARKING CURB EPOXY (YELLOW)
10. PAVEMENT MARKING ARROWS TYPE 2
11. PAVEMENT MARKING WORDS EPOXY "ONLY"
12. PAVEMENT MARKING EPOXY 4-INCH (DASHED WHITE 3 FT LINE, 9 FT SKIP)

PROJECT NO: 4987-02-57	HWY: HUMBOLDT ROAD/CTH N	COUNTY: BROWN	PAVEMENT MARKING	SHEET 50	E

2

N

REMOVE EXISTING CROSSWALK AND STOP LINE PAVEMENT MARKINGS WITHIN CTH EA INTERSECTION

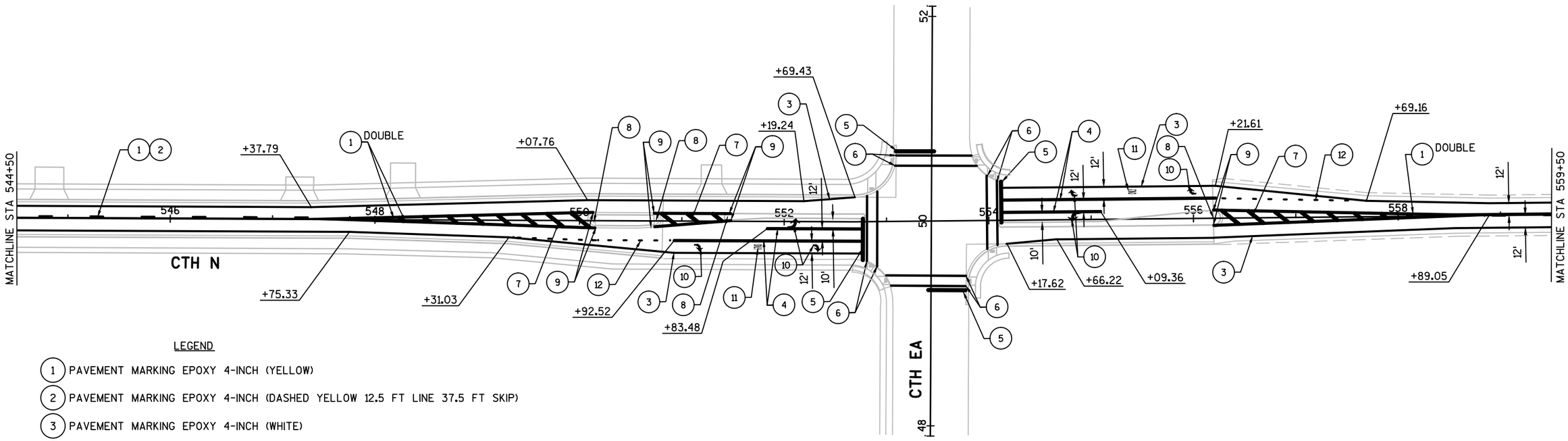

LEGEND

1. PAVEMENT MARKING EPOXY 4-INCH (YELLOW)
2. PAVEMENT MARKING EPOXY 4-INCH (DASHED YELLOW 12.5 FT LINE 37.5 FT SKIP)
3. PAVEMENT MARKING EPOXY 4-INCH (WHITE)
4. PAVEMENT MARKING EPOXY 8-INCH (CHANNELIZING WHITE)
5. PAVEMENT MARKING STOP LINE EPOXY 24-INCH (WHITE)
6. PAVEMENT MARKING CROSSWALK 8-INCH EPOXY (WHITE)
7. PAVEMENT MARKING DIAGONAL EPOXY 12-INCH (YELLOW)
8. PAVEMENT MARKING ISLAND NOSE EPOXY
9. PAVEMENT MARKING CURB EPOXY (YELLOW)
10. PAVEMENT MARKING ARROWS TYPE 2
11. PAVEMENT MARKING WORDS EPOXY "ONLY"
12. PAVEMENT MARKING EPOXY 4-INCH (DASHED WHITE 3 FT LINE, 9 FT SKIP)

PROJECT NO: 4987-02-57	HWY: HUMBOLDT ROAD/CTH N	COUNTY: BROWN	PAVEMENT MARKING	SHEET 51	E

FILE NAME : F:\BM4-1048 CTH N\49870256\SHEETSPLAN\024501-PM.DWG
024504-pm
PLOT DATE : 10/29/2015 1:33 PM PLOT BY : ANDY PIEPER PLOT NAME : PLOT SCALE : **********
WISDOT/CADDS SHEET 42

2

N

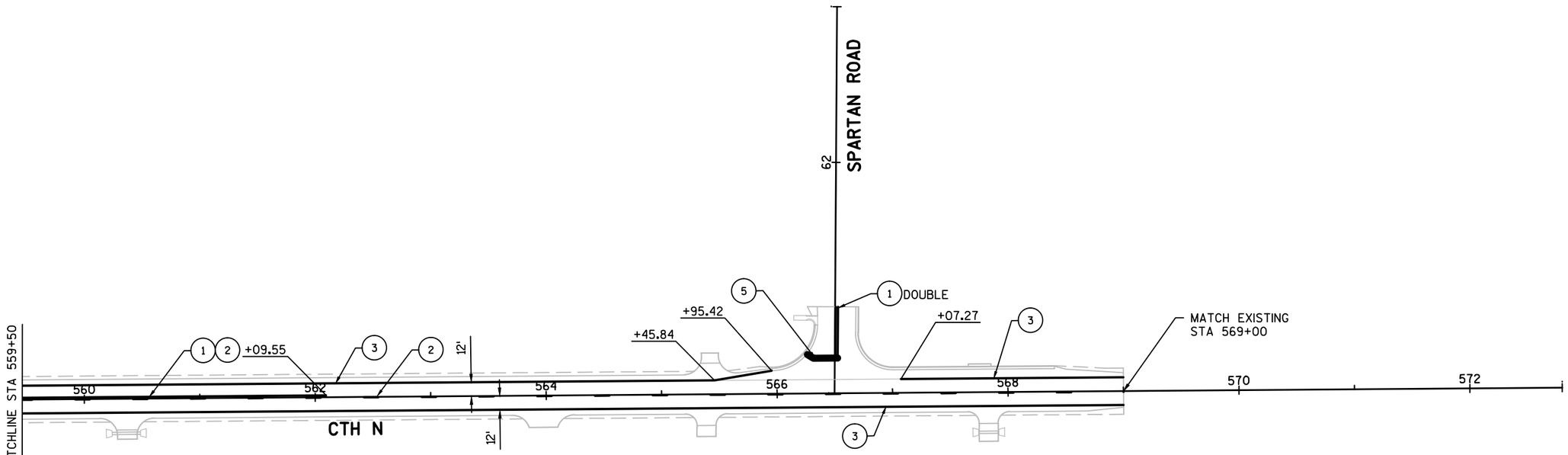

LEGEND

1. PAVEMENT MARKING EPOXY 4-INCH (YELLOW)
2. PAVEMENT MARKING EPOXY 4-INCH (DASHED YELLOW 12.5 FT LINE 37.5 FT SKIP)
3. PAVEMENT MARKING EPOXY 4-INCH (WHITE)
4. PAVEMENT MARKING EPOXY 8-INCH (CHANNELIZING WHITE)
5. PAVEMENT MARKING STOP LINE EPOXY 24-INCH (WHITE)
6. PAVEMENT MARKING CROSSWALK 8-INCH EPOXY (WHITE)
7. PAVEMENT MARKING DIAGONAL EPOXY 12-INCH (YELLOW)
8. PAVEMENT MARKING ISLAND NOSE EPOXY
9. PAVEMENT MARKING CURB EPOXY (YELLOW)
10. PAVEMENT MARKING ARROWS TYPE 2
11. PAVEMENT MARKING WORDS EPOXY "ONLY"
12. PAVEMENT MARKING EPOXY 4-INCH (DASHED WHITE 3 FT LINE, 9 FT SKIP)

2

PLACE SIGN ON BARRICADE TYPE III AT THE INTERSECTION OF CTH N AND UNIVERSITY AVENUE

ROAD CLOSED 1.6MILES AHEAD LOCAL TRAFFIC ONLY
R11-3
60"X30"

ROAD CLOSED 1000 FT
W20-3-C

CORNELIUS DR

ROAD CLOSED 500 FT
W20-3-D

BASCOM WAY

499 500 505 510

500'

500'

ROAD CLOSED AHEAD
W20-3-A

ROAD CLOSED TO THRU TRAFFIC
R11-4
60"X30"

PLACE TRAFFIC CONTROL SIGN PORTABLE CHANGEABLE MESSAGE FOR TWO WEEKS PRIOR TO THE START OF CONSTRUCTION (TYP)
(SEE PCMS DETAIL)
** "ROAD TO CLOSE"
"BEGINNING MM/DD"

MB

NOTES

CTH N STA 513+25 TO 553+00
ROAD CLOSED TO THRU TRAFFIC

CTH N STA 556+85 RT STA 570+50 RT
ROAD OPEN TO TRAFFIC. CONSTRUCTION OPERATIONS TO BE DONE UNDER FLAGGING. ROAD TO BE OPEN TO TWO WAY TRAFFIC DURING NON-WORKING (NIGHTTIME) HOURS.

ROAD CLOSED AHEAD
W20-3-A

ROAD CLOSED 500 FT
W20-3-D

500'

500'

24

END ROAD WORK
G20-2A
48"X24"

LAKE LARGO DR

ROAD CLOSED
R11-2
48"X30"

HUMBOLDT ROAD

515 520 525 530 535

MATCHLINE STA 538+00

N

2

LEGEND

- TYPE III BARRICADE
- TYPE III BARRICADE WTH ATTACHED SIGN
- SIGN ON TEMPORARY SUPPORT
- MB PORTABLE CHANGEABLE MESSAGE BOARD
- DIRECTION OF TRAFFIC
- WORK AREA

NOTES

* PLACE DURING DAYTIME WORKING HOURS
** PCMS MESSAGE

ROAD WORK AHEAD
W20-1-A

END ROAD WORK
G20-2A
48"X24"

CTH EA

ROAD CLOSED 500 FT
W20-3-D

ROAD CLOSED 1000 FT
W20-3-C

ROAD WORK AHEAD
W20-1-A

LOOSE GRAVEL
W8-7

SPARTAN RD

ROAD CLOSED AHEAD
W20-3-A

LOOSE GRAVEL
W8-7

*
W20-7A

650'

ONE LANE ROAD AHEAD
W20-4-A

350'

ROAD WORK AHEAD
W20-1-A

1000'

N

ROAD CLOSED TO THRU TRAFFIC
R11-4
60"X30"

MATCHLINE STA 538+00

CTH N

540 545 550 555 560 565 570 572

HUMBOLDT RD

ROAD CLOSED
R11-2
48"X30"

LANE CLOSED
R11-2-L
48"X30"

WOODSIDE RD

500'

500'

ROAD CLOSED 500 FT
W20-3-D

ROAD CLOSED AHEAD
W20-3-A

ONE LANE ROAD AHEAD
W20-4-A

LANE CLOSED
R11-2-L
48"X30"

MB

END ROAD WORK
G20-2A
48"X24"

END ROAD WORK
G20-2A
48"X24"

N HURON RD

CTH EA

END ROAD WORK
G20-2A
48"X24"

ROAD WORK AHEAD
W20-1-A

*
W20-7A

LOOSE GRAVEL
W8-7

PLACE TRAFFIC CONTROL SIGN PORTABLE CHANGEABLE MESSAGE FOR TWO WEEKS PRIOR TO THE START OF CONSTRUCTION (TYP)
(SEE PCMS DETAIL)
** "ROAD TO CLOSE"
"BEGINNING MM/DD"

GRANDVIEW RD

PROJECT NO: 4987-02-57	HWY: HUMBOLDT ROAD/CTH N	COUNTY: BROWN	TRAFFIC CONTROL OVERVIEW DAYTIME	SHEET 53	E

FILE NAME : F:\BM4-1048 CTH N\49870256\SHEETSPLAN\026001-S1A.DWG PLOT DATE : 10/28/2015 3:53 PM PLOT BY : SHANE MCCARTY PLOT NAME : PLOT SCALE : **********

2

PLACE SIGN ON BARRICADE TYPE III AT THE INTERSECTION OF CTH N AND UNIVERSITY AVENUE

ROAD CLOSED 1.6MILES AHEAD LOCAL TRAFFIC ONLY
R11-3
60"X30"

ROAD CLOSED 1000 FT
W20-3-C

CORNELIUS DR

ROAD CLOSED 500 FT
W20-3-D

BASCOM WAY

499 500 505 510

500' 500'

ROAD CLOSED AHEAD
W20-3-A

ROAD CLOSED TO THRU TRAFFIC
R11-4
60"X30"

PLACE TRAFFIC CONTROL SIGN PORTABLE CHANGEABLE MESSAGE FOR TWO WEEKS PRIOR TO THE START OF CONSTRUCTION (TYP) (SEE PCMS DETAIL)
** "ROAD TO CLOSE"
"BEGINNING MM/DD"

MB

NOTES

CTH N STA 513+25 TO 553+00
ROAD CLOSED TO THRU TRAFFIC

CTH N STA 556+85 RT STA 570+50 RT
ROAD OPEN TO TRAFFIC. CONSTRUCTION OPERATIONS TO BE DONE UNDER FLAGGING. ROAD TO BE OPEN TO TWO WAY TRAFFIC DURING NON-WORKING (NIGHTTIME) HOURS.

ROAD CLOSED AHEAD
W20-3-A

ROAD CLOSED 500 FT
W20-3-D

500' 500'

24

LAKE LARGO DR

END ROAD WORK
G20-2A
48"X24"

ROAD CLOSED
R11-2
48"X30"

HUMBOLDT ROAD

515 520 525 530 535

MATCHLINE STA 538+00

LEGEND

- TYPE III BARRICADE
- TYPE III BARRICADE WTH ATTACHED SIGN
- SIGN ON TEMPORARY SUPPORT
- DRUMS
- MB PORTABLE CHANGEABLE MESSAGE BOARD
- DIRECTION OF TRAFFIC
- WORK AREA

N

2

ROAD WORK AHEAD
W20-1-A

END ROAD WORK
G20-2A
48"X24"

CTH EA

ROAD CLOSED TO THRU TRAFFIC
R11-4
60"X30"

ROAD CLOSED 500 FT
W20-3-D

ROAD CLOSED 1000 FT
W20-3-C

ROAD WORK AHEAD
W20-1-A

LOOSE GRAVEL
W8-7

END ROAD WORK
G20-2A
48"X24"

SPARTAN RD

ROAD CLOSED AHEAD
W20-3-A

LOOSE GRAVEL
W8-7

ROAD WORK 1000 FT
W20-1

1000' 1000'

ROAD WORK AHEAD
W20-1-A

MATCHLINE STA 538+00

CTH N

540 545 550 555 560 565 570 572

HUMBOLDT RD

ROAD CLOSED
R11-2
48"X30"

WOODSIDE RD

500' 500'

ROAD CLOSED 500 FT
W20-3-D

ROAD CLOSED AHEAD
W20-3-A

END ROAD WORK
G20-2A
48"X24"

N HURON RD

CTH EA

END ROAD WORK
G20-2A
48"X24"

ROAD WORK AHEAD
W20-1-A

W06-3

LOOSE GRAVEL
W8-7

MB

R4-7
24"X30"

W06-3

END ROAD WORK
G20-2A
48"X24"

PLACE TRAFFIC CONTROL SIGN
R4-7 WITH FIRST DRUM IN LINE

PLACE TRAFFIC CONTROL SIGN
PORTABLE CHANGEABLE
MESSAGE FOR TWO WEEKS
PRIOR TO THE START OF CONSTRUCTION (TYP)
(SEE PCMS DETAIL)
** "ROAD TO CLOSE"
"BEGINNING MM/DD"

GRANDVIEW RD

NOTES

- * PLACE DURING NIGHTTIME WORKING HOURS
- ** PCMS MESSAGE

N

PROJECT NO: 4987-02-57	HWY: HUMBOLDT ROAD/CTH N	COUNTY: BROWN	TRAFFIC CONTROL OVERVIEW NIGHTTIME	SHEET 54	E

FILE NAME : F:\BM4-1048 CTH N\49870256\SHEETSPLAN\026001-S1B.DWG PLOT DATE : 10/28/2015 3:54 PM PLOT BY : SHANE MCCARTY PLOT NAME : PLOT SCALE : **********

2

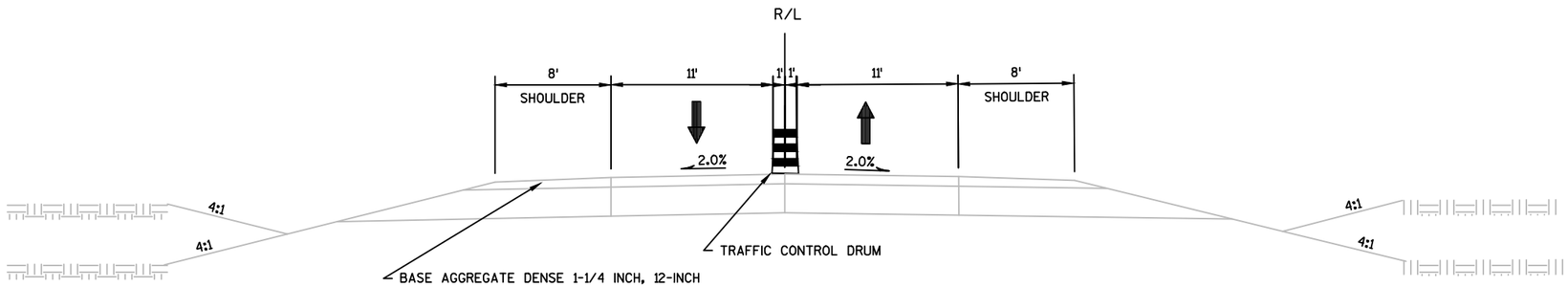

CONSTRUCTION TYPICAL NIGHTTIME

STA 556+19 TO 569+00

PROJECT NO: 4987-02-57	HWY: HUMBOLDT ROAD/CTH N	COUNTY: BROWN	CONSTRUCTION STAGING TYPICAL	SHEET 55	E

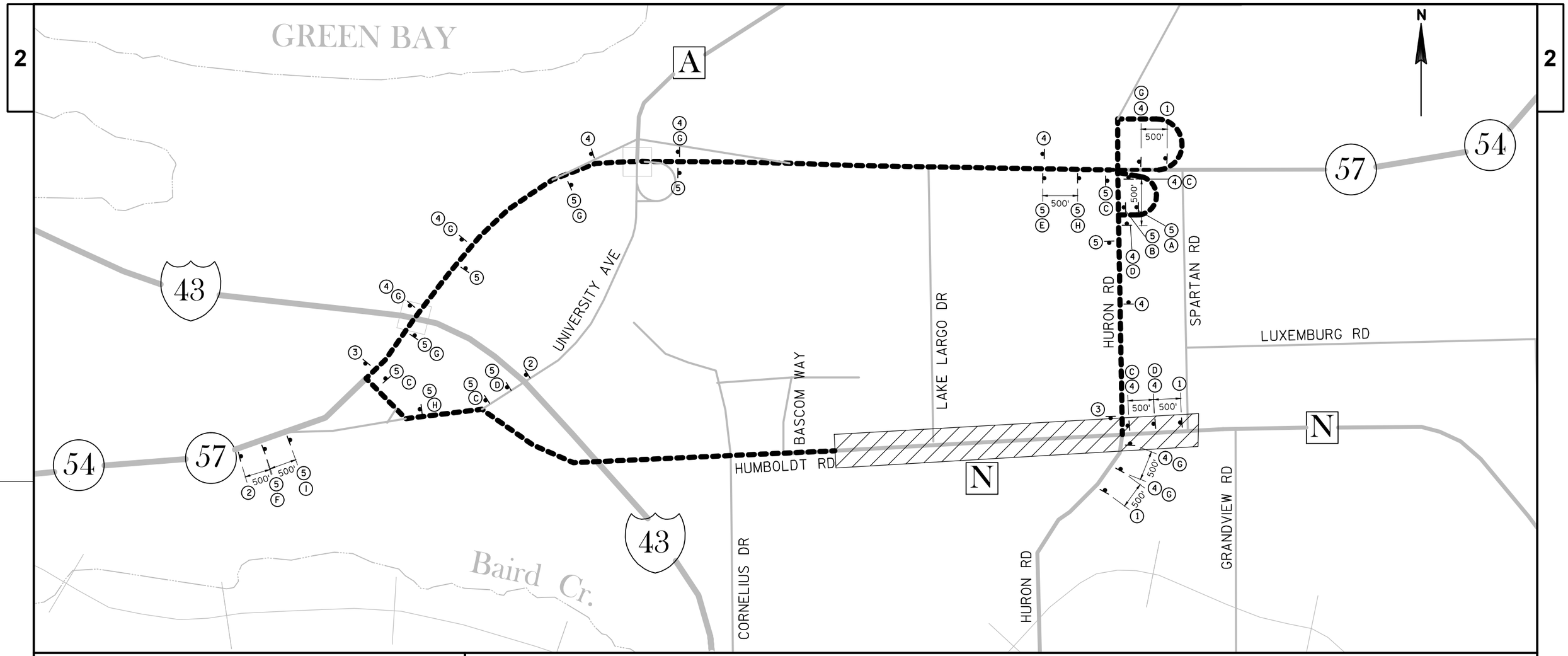

LEGEND

SIGN ON TEMPORARY SUPPORT

DETOUR ROUTE

WORK AREA

NOTE

- DETOUR SIGNING TO BE COMPLETED BY OTHERS.
- COVER EXISTING SIGNS THAT ARE IN CONFLICT WITH DETOUR ROUTE (BY OTHERS)

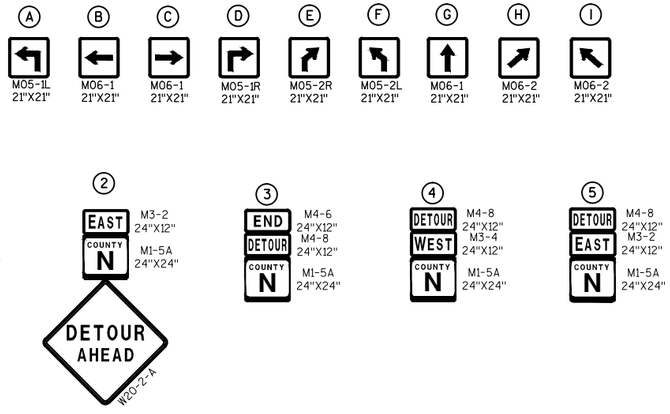

PROJECT NO: 4987-02-57	HWY: HUMBOLDT ROAD/CTH N	COUNTY: BROWN	DETOUR ROUTE SIGNING PLAN (BY OTHERS)	SHEET 56	E

FILE NAME : F:\BM4-1048 CTH N\49870256\SHEETSPLAN\027001-DT.DWG
027001-dt

PLOT DATE : 10/23/2015 2:17 PM PLOT BY : CHAD EVEN PLOT NAME : PLOT SCALE : 1 IN: 1500 FT

WISDOT/CADDS SHEET 44

2

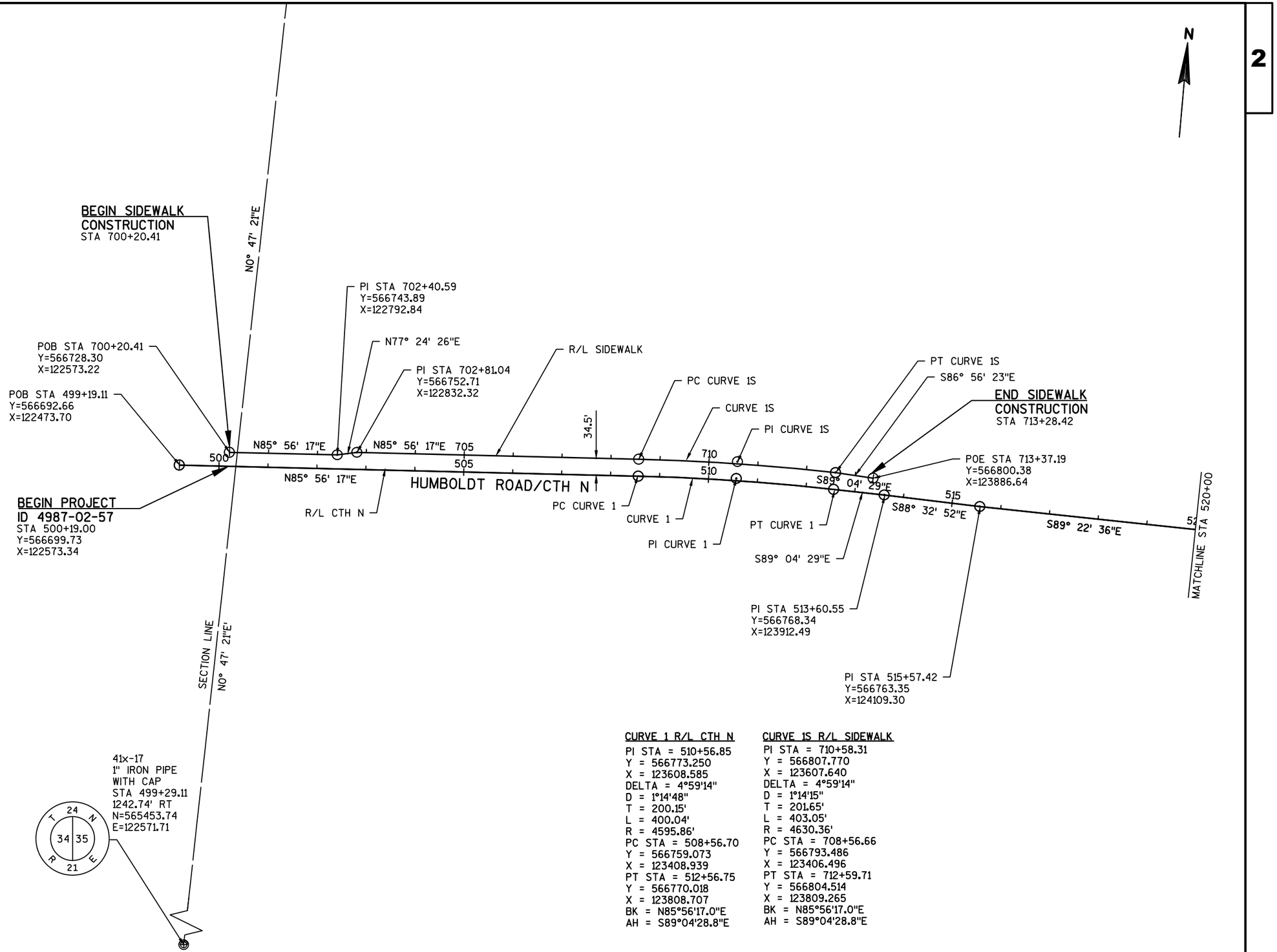

CURVE 1 R/L CTH N

PI STA = 510+56.85
Y = 566773.250
X = 123608.585
DELTA = 4°59'14"
D = 1°14'48"
T = 200.15'
L = 400.04'
R = 4595.86'
PC STA = 508+56.70
Y = 566759.073
X = 123408.939
PT STA = 512+56.75
Y = 566770.018
X = 123808.707
BK = N85°56'17.0"E
AH = S89°04'28.8"E

CURVE 1S R/L SIDEWALK

PI STA = 710+58.31
Y = 566807.770
X = 123607.640
DELTA = 4°59'14"
D = 1°14'15"
T = 201.65'
L = 403.05'
R = 4630.36'
PC STA = 708+56.66
Y = 566793.486
X = 123406.496
PT STA = 712+59.71
Y = 566804.514
X = 123809.265
BK = N85°56'17.0"E
AH = S89°04'28.8"E

PROJECT NO: 4987-02-57	HWY: HUMBOLDT ROAD/CTH N	COUNTY: BROWN	ALIGNMENT PLAN	SHEET 57	E

2

BENCHMARK TABLE			
POINT	ELEVATION	COORDINATES	DESCRIPTION
5L06	679.43'	N=572043.78 E=125487.73	NGS MONUMENT-SURVEY DISK, SET IN TOP OF CONCRETE MONUMENT

5L06

T 24 N R 21 E
26
35

41V-19
CUT CROSS
STA 526+77.42
1345.46' LT
N=568095.45
E=125257.16

POE STA 24+40.17
Y=567190.97
X=125211.55

R/L LAKE LARGO DRIVE

LAKE LARGO DRIVE
24
22
N0° 59' 18"E

STA 526+52.15 R/L CTH N=
POB STA 20+00.00 R/L LAKE LARGO
Y=566750.86
X=125203.96

STA 540+13.16 R/L CTH N=
POE STA 40+00.00 R/L WOODSIDE ROAD=
Y=566722.60
X=126564.68

MATCHLINE STA 520+00

0 S89° 22' 36"E 525 530 535 S88° 48' 36"E 540 545 S88° 48' 36"E

MATCHLINE STA 550+00

HUMBOLDT ROAD/CTH N

PI STA 525+93.22
Y=566752.08
X=125145.04

R/L CTH N

WOODSIDE ROAD
38
N1° 05' 45"E

R/L WOODSIDE ROAD

POB STA 37+00
Y=566422.68
X=126558.94

N0° 59' 25"E 5351.94'
1/4 SECTION LINE

T 24 N R 21 E
35
2
T 23 N R 21 E

CONCRETE MONUMENT
WITH BRASS CAP
STA 526+96.06
4006.44' RT
N=562744.38
E=125164.66

PROJECT NO: 4987-02-57	HWY: HUMBOLDT ROAD/CTH N	COUNTY: BROWN	ALIGNMENT PLAN	SHEET 58	E

2

N

1" IRON PIPE WITH
PLASTIC CAP
STA 553+62.91
-1330.05' LT
N=568025.94
E=127922.82

T 24 N
26 25
35 36
R 21 E

POE STA 52+08.25
Y=566906.64
X=127900.43

N1° 11' 45"E

52

PI STA 552+68.22
Y=566696.53
X=127819.46

STA 553+43.80 R/L CTH N=
STA 50+00.00 R/L CTH EA
Y=566696.04
X=127895.47

MATCHLINE STA 550+00

50

S88° 48' 36"E

555

560

S89° 37' 36"E

565

570

HUMBOLDT ROAD/CTH N

R/L SPARTAN ROAD

POE STA 63+34.74
Y=567022.20
X=129207.89

SPARTAN ROAD

62

N1° 11' 52"E

POE STA 570+80.00
Y=566683.42
X=129831.21

R/L CTH EA

R/L CTH N

STA 566+49.42 R/L CTH N=
POB STA 60+00.00 R/L SPARTAN
Y=566687.53
X=129200.89

END PROJECT
4987-02-57
STA 569+00.00
Y=566685.90
X=129451.21

CTH EA/N HURON ROAD

48

N1° 11' 45" E 2683.75'

SECTION LINE

POB STA 47+88.95
Y=566487.46
X=127890.55

T 24 N
35 36
R 21 E

41x-21
CONCRETE MONUMENT
WITH BRASS CAP
STA 553+24.38
1353.42' RT
N=565342.80
E=127866.84

BENCHMARK TABLE			
POINT	ELEVATION	COORDINATES	DESCRIPTION
U19	763.06'	N=562691.31 E=130412.54	NGS MONUMENT-SURVEY DISK, SET IN TOP OF CONCRETE MONUMENT

U19

PROJECT NO: 4987-02-57	HWY: HUMBOLDT ROAD/CTH N	COUNTY: BROWN	ALIGNMENT PLAN	SHEET 59	E

DATE 07JAN16 E S T I M A T E O F Q U A N T I T I E S

LINE NUMBER	ITEM	ITEM DESCRIPTION	UNIT	TOTAL	4987-02-57 QUANTITY
0010	201.0205	Grubbing	STA	8.000	8.000
0020	201.0220	Grubbing	ID	90.000	90.000
0030	203.0100	Removing Small Pipe Culverts	EACH	19.000	19.000
0040	204.0100	Removing Pavement	SY	2,015.000	2,015.000
0050	204.0130	Removing Curb	LF	120.000	120.000
0060	204.0150	Removing Curb & Gutter	LF	210.000	210.000
0070	204.0185	Removing Masonry	CY	0.800	0.800
0080	204.0220	Removing Inlets	EACH	1.000	1.000
0090	204.0245	Removing Storm Sewer (size) 01. 12-Inch	LF	56.000	56.000
0100	205.0100	Excavation Common	CY	30,451.000	30,451.000
0110	211.0100	Prepare Foundation for Asphaltic Paving (project) 01. 4987-02-57	LS	1.000	1.000
0120	213.0100	Finishing Roadway (project) 01. 4987-02-57	EACH	1.000	1.000
0130	305.0110	Base Aggregate Dense 3/4-Inch	TON	2,637.000	2,637.000
0140	305.0120	Base Aggregate Dense 1 1/4-Inch	TON	10,675.000	10,675.000
0150	311.0110	Breaker Run	TON	24,585.000	24,585.000
0160	415.0080	Concrete Pavement 8-Inch	SY	70.000	70.000
0170	415.0090	Concrete Pavement 9-Inch	SY	80.000	80.000
0180	415.0210	Concrete Pavement Gaps	EACH	1.000	1.000
0190	416.0160	Concrete Driveway 6-Inch	SY	1,045.000	1,045.000
0200	416.0610	Drilled Tie Bars	EACH	204.000	204.000
0210	416.0620	Drilled Dowel Bars	EACH	10.000	10.000
0220	416.1010	Concrete Surface Drains	CY	3.000	3.000
0230	520.1015	Apron Endwalls for Culvert Pipe 15-Inch	EACH	4.000	4.000
0240	520.1024	Apron Endwalls for Culvert Pipe 24-Inch	EACH	2.000	2.000
0250	520.4115	Culvert Pipe Class IV 15-Inch	LF	43.000	43.000
0260	520.4124	Culvert Pipe Class IV 24-Inch	LF	36.000	36.000
0270	522.1012	Apron Endwalls for Culvert Pipe Reinforced Concrete 12-Inch	EACH	2.000	2.000
0280	522.1015	Apron Endwalls for Culvert Pipe Reinforced Concrete 15-Inch	EACH	1.000	1.000
0290	522.1024	Apron Endwalls for Culvert Pipe Reinforced Concrete 24-Inch	EACH	2.000	2.000
0300	601.0105	Concrete Curb Type A	LF	120.000	120.000
0310	601.0409	Concrete Curb & Gutter 30-Inch Type A	LF	525.000	525.000
0320	601.0411	Concrete Curb & Gutter 30-Inch Type D	LF	8,550.000	8,550.000
0330	601.0452	Concrete Curb & Gutter Integral 30-Inch Type D	LF	320.000	320.000
0340	601.0557	Concrete Curb & Gutter 6-Inch Sloped 36-Inch Type D	LF	60.000	60.000
0350	602.0405	Concrete Sidewalk 4-Inch	SF	43,210.000	43,210.000
0360	602.0415	Concrete Sidewalk 6-Inch	SF	4,580.000	4,580.000
0370	602.0515	Curb Ramp Detectable Warning Field Natural Patina	SF	230.000	230.000
0380	606.0200	Riprap Medium	CY	21.000	21.000
0390	608.0312	Storm Sewer Pipe Reinforced Concrete Class III 12-Inch	LF	1,210.000	1,210.000
0400	608.0315	Storm Sewer Pipe Reinforced Concrete Class III 15-Inch	LF	175.000	175.000
0410	608.0318	Storm Sewer Pipe Reinforced Concrete Class III 18-Inch	LF	735.000	735.000
0420	608.0324	Storm Sewer Pipe Reinforced Concrete Class III 24-Inch	LF	393.000	393.000
0430	608.0412	Storm Sewer Pipe Reinforced Concrete Class IV 12-Inch	LF	589.000	589.000

3

DATE 07JAN16 E S T I M A T E O F Q U A N T I T I E S

LINE 4987-02-57

LINE NUMBER	ITEM	ITEM DESCRIPTION	UNIT	TOTAL	4987-02-57 QUANTITY
0440	608.0415	Storm Sewer Pipe Reinforced Concrete Class IV 15-Inch	LF	46.000	46.000
0450	608.0418	Storm Sewer Pipe Reinforced Concrete Class IV 18-Inch	LF	300.000	300.000
0460	608.0424	Storm Sewer Pipe Reinforced Concrete Class IV 24-Inch	LF	628.000	628.000
0470	610.0419	Storm Sewer Pipe Reinforced Concrete Horizontal Elliptical Class HE-IV 19x30-Inch	LF	386.000	386.000
0480	611.0639	Inlet Covers Type H-S	EACH	37.000	37.000
0490	611.0642	Inlet Covers Type MS	EACH	12.000	12.000
0500	611.8110	Adjusting Manhole Covers	EACH	2.000	2.000
0510	611.9800.S	Pipe Grates	EACH	5.000	5.000
0520	612.0406	Pipe Underdrain Wrapped 6-Inch	LF	454.000	454.000
0530	612.0902.S	Insulation Board Polystyrene (inch) 01. 2-Inch	SY	250.000	250.000
0540	619.1000	Mobilization	EACH	1.000	1.000
0550	620.0300	Concrete Median Sloped Nose	SF	600.000	600.000
0560	624.0100	Water	MGAL	186.000	186.000
0570	625.0100	Topsoil	SY	30,000.000	30,000.000
0580	627.0200	Mulching	SY	19,400.000	19,400.000
0590	628.1504	Silt Fence	LF	3,310.000	3,310.000
0600	628.1520	Silt Fence Maintenance	LF	3,310.000	3,310.000
0610	628.1905	Mobilizations Erosion Control	EACH	4.000	4.000
0620	628.1910	Mobilizations Emergency Erosion Control	EACH	4.000	4.000
0630	628.2006	Erosion Mat Urban Class I Type A	SY	10,600.000	10,600.000
0640	628.7005	Inlet Protection Type A	EACH	50.000	50.000
0650	628.7015	Inlet Protection Type C	EACH	24.000	24.000
0660	628.7020	Inlet Protection Type D	EACH	27.000	27.000
0670	628.7504	Temporary Ditch Checks	LF	300.000	300.000
0680	628.7555	Culvert Pipe Checks	EACH	16.000	16.000
0690	628.7570	Rock Bags	EACH	15.000	15.000
0700	629.0210	Fertilizer Type B	CWT	23.000	23.000
0710	630.0130	Seeding Mixture No. 30	LB	92.000	92.000
0720	630.0140	Seeding Mixture No. 40	LB	1,375.000	1,375.000
0730	630.0200	Seeding Temporary	LB	966.000	966.000
0740	642.5001	Field Office Type B	EACH	1.000	1.000
0750	643.0100	Traffic Control (project) 01. 4987-02-57	EACH	1.000	1.000
0760	643.0300	Traffic Control Drums	DAY	1,350.000	1,350.000
0770	643.0420	Traffic Control Barricades Type III	DAY	1,980.000	1,980.000
0780	643.0705	Traffic Control Warning Lights Type A	DAY	2,700.000	2,700.000
0790	643.0715	Traffic Control Warning Lights Type C	DAY	1,350.000	1,350.000
0800	643.0900	Traffic Control Signs	DAY	3,420.000	3,420.000
0810	643.1050	Traffic Control Signs PCMS	DAY	28.000	28.000
0820	645.0120	Geotextile Fabric Type HR	SY	126.000	126.000
0830	646.0106	Pavement Marking Epoxy 4-Inch	LF	18,805.000	18,805.000
0840	646.0126	Pavement Marking Epoxy 8-Inch	LF	995.000	995.000
0850	646.0600	Removing Pavement Markings	LF	1,850.000	1,850.000
0860	647.0166	Pavement Marking Arrows Epoxy Type 2	EACH	10.000	10.000
0870	647.0356	Pavement Marking Words Epoxy	EACH	4.000	4.000
0880	647.0456	Pavement Marking Curb Epoxy	LF	90.000	90.000
0890	647.0576	Pavement Marking Stop Line Epoxy 24-Inch	LF	253.000	253.000
0900	647.0606	Pavement Marking Island Nose Epoxy	EACH	6.000	6.000
0910	647.0726	Pavement Marking Diagonal Epoxy 12-Inch	LF	550.000	550.000

3

DATE 07JAN16 — E S T I M A T E O F Q U A N T I T I E S

LINE NUMBER	ITEM	ITEM DESCRIPTION	UNIT	TOTAL	4987-02-57 QUANTITY
0920	648.0100	Locating No-Passing Zones	MI	0.170	0.170
0930	650.4000	Construction Staking Storm Sewer	EACH	64.000	64.000
0940	650.4500	Construction Staking Subgrade	LF	5,320.000	5,320.000
0950	650.5000	Construction Staking Base	LF	7,030.000	7,030.000
0960	650.5500	Construction Staking Curb Gutter and Curb & Gutter	LF	8,780.000	8,780.000
0970	650.7000	Construction Staking Concrete Pavement	LF	130.000	130.000
0980	650.9910	Construction Staking Supplemental Control (project) 01. 4987-02-57	LS	1.000	1.000
0990	650.9920	Construction Staking Slope Stakes	LF	7,160.000	7,160.000
1000	690.0150	Sawing Asphalt	LF	390.000	390.000
1010	690.0250	Sawing Concrete	LF	1,580.000	1,580.000
1020	715.0415	Incentive Strength Concrete Pavement	DOL	500.000	500.000
1030	ASP.1T0A	On-the-Job Training Apprentice at $5. 00/HR	HRS	1,200.000	1,200.000
1040	ASP.1T0G	On-the-Job Training Graduate at $5.00/HR	HRS	600.000	600.000
1050	SPV.0060	Special 01. Storm Sewer Lateral Connection	EACH	8.000	8.000
1060	SPV.0060	Special 02. Manhole Covers Type GB	EACH	10.000	10.000
1070	SPV.0060	Special 03. Manhole 4 FT Special	EACH	5.000	5.000
1080	SPV.0060	Special 04. Manhole 5 FT Special	EACH	5.000	5.000
1090	SPV.0060	Special 05. City Special Inlet	EACH	37.000	37.000
1100	SPV.0060	Special 06. City Special Field Inlet	EACH	12.000	12.000
1110	SPV.0060	Special 07. Adjusting Sanitary Manhole Covers	EACH	31.000	31.000
1120	SPV.0075	Special 01. Street Sweeping	HRS	40.000	40.000
1130	SPV.0090	Special 01. Storm Sewer Lateral 6-Inch	LF	406.000	406.000
1140	SPV.0090	Special 02. Storm Sewer Lateral 12-Inch	LF	203.000	203.000
1150	SPV.0090	Special 03. Pavement Marking Crosswalk Epoxy 8-Inch	LF	1,270.000	1,270.000
1160	SPV.0090	Special 04. SHES Concrete Curb & Gutter 30-Inch Type D	LF	30.000	30.000
1170	SPV.0105	Special 01. Concrete Pavement Joint Layout	LS	1.000	1.000
1180	SPV.0180	Special 01. Concrete Joint Sealing	SY	210.000	210.000
1190	SPV.0180	Special 02. SHES Concrete Driveway 6-Inch	SY	80.000	80.000

3

GRUBBING

ROADWAY	LOCATION			201.0205 GRUBBING STA	201.0220 GRUBBING ID
CTH N					
	501+25		LT	--	8
	501+50		LT	--	8
	503+20		LT	--	8
	504+05		LT	--	2
	506+00		LT	--	2
	506+25		LT	--	5
	506+85		LT	--	7
	507+45		LT	--	2
	507+95		LT	--	11
	508+55		LT	--	6
	509+80		LT	--	5
	511+25		LT	--	2
	511+75		LT	--	2
	513+50	- 513+75	RT	1	--
	523+40		LT	--	2
	519+50	- 523+99	RT	5	--
	534+75		LT	--	3
	541+10		RT	--	8
	542+27		RT	--	2
	542+99		RT	--	7
	544+00	- 545+50	RT	2	--
	TOTALS			8	90

REMOVING SMALL PIPE CULVERTS

LOCATION			203.0100 STA	REMARKS
CTH N				
	515+40	RT	1	18 INCH
	518+61	RT	1	18 INCH
	523+46	LT	1	24 INCH
	526+52	LT	1	24 INCH
	526+99	RT	1	24 INCH
	528+95	LT	1	24 INCH
	530+90	LT	1	24 INCH
	531+33	LT	1	24 INCH
	532+65	LT	1	24 INCH
	533+09	LT/RT	1	30 INCH
	534+47	LT	1	18 INCH
	535+45	RT	1	24 INCH
	535+50	LT	1	18 INCH
	538+08	LT/RT	1	24 INCH
	540+13	RT	1	18 INCH
	542+12	RT	1	18 INCH
	547+27	LT	1	18 INCH
	548+27	LT	1	18 INCH
	569+95	RT	1	12 INCH
	TOTALS		19	

ALL ITEMS ON THIS PAGE
ARE IN CATEGORY 0010

REMOVING INLETS AND STORM SEWER

LOCATION	STA	TO	STA	204.0220 REMOVING INLETS EACH	204.0245.01 REMOVING STORM SEWER 12-INCH LF
CTH N					
	513+50	-	513+95	--	45
	554+24	-	RT	1	11
	TOTALS			1	56

REMOVING PAVEMENT

LOCATION	STA	TO	STA	204.0100 SY	REMARKS
CTH N					
	502+97			40	DRIVEWAY
	506+37			40	DRIVEWAY
	507+24			40	DRIVEWAY
	508+17			40	DRIVEWAY
	509+50			60	DRIVEWAY
	510+18			60	DRIVEWAY
	513+44			60	DRIVEWAY
	513+25	-	513+40	40	
	550+81	-	553+12	390	
	551+25			50	DRIVEWAY
	553+75	-	556+19	420	
LAKE LARGO DRIVE					
	20+55	-	21+80	570	
	21+70			20	DRIVEWAY
CTH EA					
	NW QUADRANT			50	SIDEWALK
	SW QUADRANT			40	SIDEWALK
	NE QUADRANT			45	SIDEWALK
	SE QUADRANT			50	SIDEWALK
	TOTALS			2,015	

REMOVING MASONRY

LOCATION	STA	TO	STA	204.0185 CY
CTH N				
	519+00	-	522+00	0.8
	TOTALS			0.8

PREPARE FOUNDATION FOR ASPHALTIC PAVING

LOCATION				211.0100 LS
CTH N	513+25	-	569+00	1
	TOTALS			1

REMOVING CURB AND GUTTER

LOCATION	STA	TO	STA	204.0130 REMOVING CURB LF	204.0150 REMOVING CURB AND GUTTER LF
CTH N					
	500+19	-	513+25	45	--
	552+60	-	554+25	75	--
	566+70	-	568+40	--	190
SPARTAN ROAD					
	60+52	-	61+02	--	20
	TOTALS			120	210

ALL ITEMS ON THIS PAGE
ARE IN CATEGORY 0010

2

Division	From / To Station	Common Excavation (1)	(item # 205.0100)	Salvaged / Unusable Pavement Material (4)	Available Material (5)	Reduced EBS in Fill (9)	Expanded EBS Backfill (11)	Unexpanded Fill	Expanded Fill (13)	Mass Ordinate + / - (14)	Waste	Comment:
		Cut (2)	EBS Excavation (3)			Factor 0.80	Factor 1.30		Factor 1.25			
Division 1												
Sidewalk	700+44.84/713+27.5	257	0	0	257	0	0	308	385	-128	0	
Cty-N	513+25/570+30	25,561	0	202	25,359	0	0	8,098	10,122	15,237	15,237	
Lake Largo Drive	20+47/21+80	456	0	135	321	0	0	0	0	321	321	
Spartan Road	60+52/60+75	67	0	0	67	0	0	0	0	66	66	
Woodside Road	39+15/39+56	109	0	0	109	0	0	5	6	103	103	
Undistributed	---	0	4,000	0	0	0	0	0	0	0	0	
Division 1 Subtotal		26,451	4,000	337	26,114	0	0	8,411	10,514	15,600	15,728	
Grand Total		26,451	4,000	337	26,114	0	0	8,411	10,514	15,600	15,728	
		Total Common Exc	30,451									

1) Common Excavation is the sum of the Cut and EBS Excavation columns. Item number 205.0100
2) Salvaged/Unsuable Pavement Material is included in Cut.
3) EBS Excavation to be backfilled with Breaker Run
4) Salvaged/Unusable Pavement Material
5) Available Material = Cut - Salvaged/Unusuable Pavement Material
9) Reduced EBS in Fill - Excavated EBS material is usuable in Fills outside the 1:1 slope. EBS in Fill Reduction factor = 0.8
11) Expanded EBS Backfill - This is to be filled with Select Borrow material. EBS Backfill Factor = 1.3. Item number 208.1100
13) Expanded Fill. Factor = 1.25
Depending on select **Expanded Fill = (Unexpanded Fill - Rock* Rock Factor - Reduced Marsh - Reduced EBS) * Fill Factor**
Expanded Fill = (Unexpanded Fill - Rock* Rock Factor - Reduced EBS) * Fill Factor
Expanded Fill = (Unexpanded Fill - Rock* Rock Factor - Reduced Marsh) * Fill Factor
Expanded Fill = (Unexpanded Fill - Rock* Rock Factor) * Fill Factor
14) The Mass Ordinate + or - Qty calculated for the Division. Plus quantity indicates an excess of material within the Division. Minus indicates a shortage of material within the Division.

BASE AGGREGATE

LOCATION	STA	TO	STA	* 305.0110 BASE AGGREGATE DENSE 3/4-INCH TON	305.0120 BASE AGGREGATE DENSE 1 1/4-INCH TON	311.0110 BREAKER RUN TON
CTH N						
	513+25	-	527+32	--	2,760	4,970
	527+32	-	531+87	--	790	1,425
	531+87	-	547+38	--	2,355	4,240
	547+38	-	550+81	--	685	1,235
	556+19	-	558+55	--	450	810
	558+55	-	569+00	245	2,115	2,970
LAKE LARGO DRIVE						
	20+21	-	21+80	--	265	475
WOODSIDE ROAD						
	39+15	-	39+85	15	185	335
SPARTAN ROAD						
	60+20	-	61+75	1	70	125
UNDISTRIBUTED				30	1,000	8,000
	TOTALS			291	10,675	24,585

* ADDITIONAL QUANTITIES SHOWN ELSEWHERE, SEE DRIVEWAY ITEMS, SIDEWALK ITEMS

CONCRETE ITEMS

LOCATION	STA	TO	STA	415.0080 CONCRETE PAVEMENT 8-INCH SY	415.0090 CONCRETE PAVEMENT 9-INCH SY	416.0610 DRILLED TIE BARS EACH	416.0620 DRILLED DOWEL BARS EACH	601.0105 CONCRETE CURB TYPE A LF	601.0409 CONCRETE CURB AND GUTTER 30-INCH TYPE A LF	601.0411 CONCRETE CURB AND GUTTER 30-INCH TYPE D LF	601.0452 CONCRETE CURB AND GUTTER INTEGRAL 30-INCH TYPE D LF	601.0557 CONCRETE CURB AND GUTTER 6-INCH SLOPED 36-INCH TYPE D LF	620.0300 CONCRETE MEDIAN SLOPED NOSE SF	SPV.0180.01 CONCRETE JOINT SEALING SY
CTH N														
	500+19	-	504+50	--	--	3	--	15	--	--	--	--	--	3
	504+50	-	513+25	--	--	6	--	30	--	--	--	--	--	7
	513+25	-	526+50	--	--	--	--	--	--	3,070	--	--	270	--
	526+50	-	540+15	--	--	--	--	--	--	3,020	--	--	120	--
	540+15	-	550+81	--	--	--	--	--	--	2,250	--	--	210	--
	550+81	-	553+15	--	40	95	--	35	240	--	--	--	--	60
	553+70	-	554+20	--	40	100	--	40	285	--	--	--	--	70
	565+98	-	568+41	--	--	--	--	--	--	210	--	60	--	--
LAKE LARGO DRIVE														
	20+21	-	21+80	70	--	--	10	--	--	--	320	--	--	--
	TOTALS			70	80	204	10	120	525	8,550	320	60	600	140

ALL ITEMS ON THIS PAGE ARE IN CATEGORY 0010

DRIVEWAY ITEMS

LOCATION	STA		* 305.0110 BASE AGGREGATE DENSE 3/4 INCH TON	415.0210 CONCRETE PAVEMENT GAPS EACH	416.0160 CONCRETE DRIVEWAY 6-INCH SY	SPV.0090.03 SHES CONCRETE CURB AND GUTTER 30-INCH TYPE D LF	SPV.0180.02 SHES CONCRETE DRIVEWAY 6-INCH SY
CTH N							
	502+97	LT	13	--	45	--	--
	506+37	LT	13	--	45	--	--
	507+24	LT	13	--	45	--	--
	508+17	LT	13	--	45	--	--
	509+50	LT	18	--	60	--	--
	510+18	LT	19	--	65	--	--
	511+99	LT	16	--	55	--	--
	513+44	LT	17	--	55	--	--
	513+85	LT	15	--	30	--	--
	516+44	RT	21	--	30	--	--
	516+84	RT	10	--	20	--	--
	518+61	RT	42	1	70	--	--
	523+45	LT	18	--	25	--	--
	526+99	RT	17	--	20	--	--
	528+97	LT	16	--	30	--	--
	530+95	LT	19	--	30	--	--
	531+33	LT	25	--	35	--	--
	532+65	LT	16	--	25	--	--
	534+46	LT	6	--	20	--	--
	535+42	RT	24	--	20	--	--
	535+52	LT	12	--	20	--	--
	542+05	RT	43	--	50	--	--
	543+80	RT	33	--	50	--	--
	544+83	LT	31	--	50	--	--
	547+26	LT	25	--	60	--	--
	548+26	LT	30	--	45	--	--
	551+48	LT	25	--	--	30	80
	560+30	RT	6	--	--	--	--
	563+95	RT	8	--	--	--	--
	565+39	RT	10	--	--	--	--
	565+43	LT	11	--	--	--	--
	567+90	LT	1	--	--	--	--
	569+95	RT	3	--	--	--	--
TOTALS			586	1	1,045	30	80

* ADDITIONAL QUANTITIES SHOWN ELSEWHERE, SEE BASE AGGREGATE AND SIDEWALK ITEMS
BASE AGGREGATE UNDER DRIVEWAYS WAS CALCULATED AT 6 INCHES

EROSION CONTROL ITEMS

ALL ITEMS ON THIS PAGE ARE IN CATEGORY 0010

LOCATION	STA	TO	STA	606.0200 RIPRAP MEDIUM CY	628.1504 SILT FENCE LF	628.1520 SILT FENCE MAINTENANCE LF	628.1905 MOBILIZATIONS EROSION CONTROL EACH	628.1910 MOBILIZATIONS EMERGENCY EROSION CONTROL EACH	628.2006 EROSION MAT URBAN CLASS I TYPE A SY	628.7005 INLET PROTECTION TYPE A EACH	628.7015 INLET PROTECTION TYPE C EACH	628.7020 INLET PROTECTION TYPE D EACH	628.7504 TEMPORARY DITCH CHECKS LF	628.7555 CULVERT PIPE CHECKS EACH	628.7570 ROCK BAGS EACH	645.0120 * GEOTEXTILE FABRIC TYPE HR SY
CTH N	500+19	-	513+25	--	250	250	--	--	1,240	--	--	11	--	--	--	--
	513+25	-	553+50	16	2,250	2,250	--	--	8,020	45	22	13	70	4	10	66
	553+50	-	569+00	3	510	510	--	--	100	5	2	3	200	12	--	15
LAKE LARGO	20+52	-	21+75	--	--	--	--	--	280	--	--	--	--	--	--	--
UNDISTRIBUTED				2	300	300	4	4	960	--	--	--	30	--	5	8
TOTALS				21	3,310	3,310	4	4	10,600	50	24	27	300	16	15	89

* ADDITIONAL QUANTITIES SHOWN ELSEWHERE. SEE CONCRETE SURFACE DRAINS

RESTORATION ITEMS

LOCATION	STA	TO	STA	625.0100 TOPSOIL SY	627.0200 MULCHING SY	629.0210 FERTILIZER TYPE B CWT	630.0130 SEEDING MIXTURE NO. 30 LB	630.0140 SEEDING MIXTURE NO. 40 LB	630.0200 SEEDING TEMPORARY LB
CTH N									
	500+19	-	513+25	2,200	1,000	1.4	--	100	60
	513+25	-	527+32	5,600	2,800	3.5	--	250	150
	527+32	-	535+50	5,600	3,600	3.5	--	250	152
	535+50	-	547+38	7,500	4,700	4.7	--	340	202
	547+38	-	553+10	2,700	1,400	1.7	--	120	72
	553+70	-	558+55	1,000	1,100	0.8	14	20	33
	558+55	-	570+30	2,000	2,600	1.9	52	--	81
LAKE LARGO DRIVE									
	20+21	-	21+80	200	200	0.1	--	10	6
SPARTAN ROAD									
	60+20	-	61+75	500	200	0.4	7	10	17
UNDISTRIBUTED				2,700	1,800	4.5	18	275	193
TOTAL				30,000	19,400	23	92	1,375	966

SEED MIXTURE 30 IS APPLIED AT 2 LBS PER 1000 SQUARE FEET
SEED MIXTURE 40 IS APPLIED AT 5 LBS PER 1000 SQUARE FEET
TEMPORARY SEED IS APPLIED AT 3 LBS PER 1000 SQUARE FEET

WATER

LOCATION	STA	TO	STA	624.0100 MGAL
CTH N				
	500+19	-	527+32	80
	527+32	-	531+87	12
	531+87	-	547+38	35
	547+38	-	550+81	10
	556+19	-	558+55	7
	558+55	-	569+00	32
LAKE LARGO DRIVE				
	20+21	-	21+80	4
WOODSIDE ROAD				
	39+15	-	39+85	3
SPARTAN ROAD				
	60+20	-	61+75	3
TOTALS				186

WATER BASED ON 15 MGAL PER TON OF BASE AGG 1 1/4-INCH

SIDEWALK ITEMS

LOCATION	STA	TO	STA	* 305.0110 BASE AGGREGATE DENSE 3/4-INCH TON	602.0405 CONCRETE SIDEWALK 4-INCH SF	602.0415 CONCRETE SIDEWALK 6-INCH SF	602.0515 CURB RAMP DETECTABLE WARNING FIELD NATURAL PATINA SF
CTH N							
	500+19	-	504+50	75	1,850	200	20
	504+50	-	513+25	110	3,720	95	10
	513+25	-	526+50	555	12,500	1,675	30
	526+50	-	540+15	510	12,710	1,270	60
	540+15	-	550+81	370	9,940	770	30
	550+81	-	553+15	95	1,920	325	40
	553+70	-	554+20	45	570	245	40
TOTALS				1,760	43,210	4,580	230

* ADDITIONAL QUANTITIES SHOWN ELSEWHERE, SEE BASE AGGREGATE AND DRIVEWAYS

ALL ITEMS ON THIS PAGE
ARE IN CATEGORY 0010

2

STORM SEWER STRUCTURES

				522.1012	522.1015	522.1024	611.0639	611.0642	SPV.0060.03	SPV.0060.04	SPV.0060.05	SPV.0060.06	611.9800.S	612.0406	SPV.0060.01	SPV.0060.02			
				APRON ENDWALLS FOR CULVERT PIPE REINFORCED CONCRETE			INLET ** COVERS		MANHOLE 4 FT	MANHOLE 5 FT	CITY SPECIAL	CITY SPECIAL	PIPE	PIPE UNDERDRAIN	STORM SEWER LATERAL	MANHOLE COVERS			
				12-INCH	15-INCH	24-INCH	TYPE H-S	TYPE MS	SPECIAL	SPECIAL	INLET	FIELD INLET	GRATES	WRAPPED 6-INCH	CONNECTION	TYPE GB	RIM	INVERT	DEPTH***
STRUCTURE	STATION	OFFSET*	LOCATION	EACH	EACH	EACH	EACH	EACH	EACH	EACH	EACH	EACH	EACH	LF	EACH	EACH	ELEVATION	ELEVATION	FT
1A	514+32	0' RT	CTH N	--	--	--	--	--	--	1	--	--	--	--	--	1	752.13	747.34	5.24
1B	517+32	0' RT	CTH N	--	--	--	--	--	--	1	--	--	--	--	--	1	753.09	748.01	5.53
1C	520+32	0' RT	CTH N	--	--	--	--	--	1	--	--	--	--	--	--	1	755.58	749.59	5.80
1D	523+32	0' RT	CTH N	--	--	--	--	--	1	--	--	--	--	--	--	1	764.66	757.94	6.53
1E	20+49	10.1' LT	LAKE LARGO ROAD	--	--	--	--	--	1	--	--	--	--	--	--	1	768.03	762.89	4.93
1F	531+06	23.5' LT	CTH N	--	--	--	1	--	--	--	1	--	--	13	--	--	766.99	759.07	7.92
1G	534+00	23.5' LT	CTH N	--	--	--	1	--	--	--	1	--	--	13	--	--	765.21	759.95	5.30
1H	537+50	0' RT	CTH N	--	--	--	--	--	--	1	--	--	--	--	--	1	768.18	762.67	5.94
1J	540+75	0' RT	CTH N	--	--	--	--	--	--	1	--	--	--	--	--	1	769.82	763.83	6.42
1L	543+00	0' RT	CTH N	--	--	--	--	--	--	1	--	--	--	--	--	1	770.94	764.67	6.70
1M	544+25	0' RT	CTH N	--	--	--	--	--	--	--	--	--	--	--	1	--	--	--	--
1N	547+55	0' RT	CTH N	--	--	--	--	--	--	--	--	--	--	--	1	--	--	--	--
1O	550+55	0' RT	CTH N	--	--	--	--	--	1	--	--	--	--	--	--	1	775.11	768.99	5.93
1P	568+35	21.5' LT	CTH N	--	--	--	1	--	--	--	1	--	--	38	--	--	777.52	774.74	5.17
1Q	554+22	24.5' RT	CTH N	--	--	--	1	--	--	--	1	--	--	13	--	--	775.07	772.07	5.17
1R	549+30	0' RT	CTH N	--	--	--	--	--	--	--	--	--	--	--	1	--	--	--	--
1S	545+10	0' RT	CTH N	--	--	--	--	--	--	--	--	--	--	--	1	--	--	--	--
2A	515+25	23.5' LT	CTH N	--	--	--	1	--	--	--	1	--	--	13	--	--	751.42	748.65	5.17
2B	517+32	23.5' LT	CTH N	--	--	--	1	--	--	--	1	--	--	13	--	--	752.26	748.16	5.17
2C	520+32	23.5' LT	CTH N	--	--	--	1	--	--	--	1	--	--	13	--	--	755.14	750.09	5.17
2D	523+32	23.5' LT	CTH N	--	--	--	1	--	--	--	1	--	--	13	--	--	764.22	758.62	5.60
2E	526+96	23.5' LT	CTH N	--	--	--	1	--	--	--	1	--	--	13	--	--	768.64	763.59	5.17
2F	531+06	13.6' RT	CTH N	--	--	--	1	--	--	--	1	--	--	13	--	--	766.95	758.77	8.20
2G	534+00	11.5' RT	CTH N	--	--	--	1	--	--	--	1	--	--	13	--	--	765.21	759.69	5.60
2H	537+50	57.5' LT	CTH N	--	--	--	--	1	--	--	--	1	--	--	--	--	765.78	763.06	5.17
2J	540+75	17.5' LT	CTH N	--	--	--	1	--	--	--	1	--	--	13	--	--	769.50	764.02	5.48
2L	543+00	46.6' LT	CTH N	--	--	--	--	1	--	--	--	1	--	--	--	--	769.65	765.00	5.17
2M	544+25	17.5' LT	CTH N	--	--	--	1	--	--	--	1	--	--	13	--	--	771.24	766.43	5.17
2N	547+55	18' LT	CTH N	--	--	--	1	--	--	--	1	--	--	13	--	--	772.87	768.33	5.17
2O	550+55	25.5' LT	CTH N	--	--	--	1	--	--	--	1	--	--	13	--	--	774.20	769.17	5.17

REMARKS
* STATIONS AND OFFSETS ARE TO CENTER OF STRUCTURE
** ALL INLET CASTING SHALL CONTAIN THE ENVIRO LOGO AS SEEN IN THE STANDARD DETAIL DRAWING
*** DEPTH = RIM ELEV- COVER HEIGHT- 4 INCH ADJUSTMENT RING HEIGHT - BOTTOM OF STRUCTURE BASE ELEV
MINIMUM STRUCTURE DEPTH FROM RIM ELEVATION TO BOTTOM OF STRUCTURE BASE IS 6 FT

CONTINUED ON NEXT PAGE

STORM SEWER STRUCTURES

ALL ITEMS ON THIS PAGE ARE IN CATEGORY 0010

STRUCTURE	STATION	OFFSET*	LOCATION	522.1012 APRON ENDWALLS FOR CULVERT PIPE REINFORCED CONCRETE 12-INCH EACH	522.1015 APRON ENDWALLS FOR CULVERT PIPE REINFORCED CONCRETE 15-INCH EACH	522.1024 APRON ENDWALLS FOR CULVERT PIPE REINFORCED CONCRETE 24-INCH EACH	611.0639 INLET ** COVERS TYPE H-S EACH	611.0642 INLET ** COVERS TYPE MS EACH	SPV.0060.03 MANHOLE 4 FT SPECIAL EACH	SPV.0060.04 MANHOLE 5 FT SPECIAL EACH	SPV.0060.05 CITY SPECIAL INLET EACH	SPV.0060.06 CITY SPECIAL FIELD INLET EACH	611.9800.S PIPE GRATES EACH	612.0406 PIPE UNDERDRAIN WRAPPED 6-INCH LF	SPV.0060.01 STORM SEWER LATERAL CONNECTION EACH	SPV.0060.02 MANHOLE COVERS TYPE GB EACH	RIM ELEVATION	INVERT ELEVATION	DEPTH*** FT
2P	566+13	55.1' LT	CTH N	--	--	--	--	1	--	--	--	1	--	--	--	--	777.05	775.69	5.17
2R	549+30	47.4' LT	CTH N	--	--	--	--	1	--	--	--	1	--	--	--	--	772.56	769.36	5.17
2S	545+10	47.1' LT	CTH N	--	--	--	--	1	--	--	--	1	--	--	--	--	770.35	767.00	5.17
3A	515+25	23.5' RT	CTH N	--	--	--	1	--	--	--	1	--	--	13	--	--	751.42	748.46	5.17
3B	517+32	23.5' RT	CTH N	--	--	--	1	--	--	--	1	--	--	13	--	--	752.26	748.16	5.17
3C	520+32	23.5' RT	CTH N	--	--	--	1	--	--	--	1	--	--	13	--	--	755.14	750.09	5.17
3D	523+32	23.5' RT	CTH N	--	--	--	1	--	--	--	1	--	--	13	--	--	764.22	758.62	5.60
3E	20+49	19.5' RT	LAKE LARGO ROAD	--	--	--	1	--	--	--	1	--	--	13	--	--	768.08	763.31	5.17
3F	531+62	61.7' RT	CTH N	--	1	--	--	--	--	--	--	--	1	--	--	--	--	758.33	--
3G	534+00	49.8' RT	CTH N	--	--	1	--	--	--	--	--	--	1	--	--	--	--	759.50	--
3H	537+50	21.9' LT	CTH N	--	--	--	1	--	--	--	1	--	--	13	--	--	767.95	762.80	5.17
3J	540+75	17.5' RT	CTH N	--	--	--	1	--	--	--	1	--	--	13	--	--	769.66	764.02	5.64
3L	542+75	47.2' LT	CTH N	--	--	--	--	1	--	--	--	1	--	--	--	--	769.36	765.03	5.17
3M	544+21	17.5' RT	CTH N	--	--	--	1	--	--	--	1	--	--	13	--	--	771.22	766.41	5.17
3N	547+52	17.5' RT	CTH N	--	--	--	1	--	--	--	1	--	--	13	--	--	772.87	768.32	5.17
3O	550+55	33.2' RT	CTH N	--	--	--	1	--	--	--	1	--	--	13	--	--	774.04	769.21	5.17
3P	566+95	22' LT	CTH N	--	--	--	1	--	--	--	1	--	--	13	--	--	778.48	775.32	5.17
4A	515+25	0' RT	CTH N	--	--	--	--	--	--	--	--	--	--	--	1	--	--	--	--
4E	20+49	19.5' LT	LAKE LARGO ROAD	--	--	--	1	--	--	--	1	--	--	13	--	--	767.81	763.04	5.17
4F	531+06	49.2' LT	CTH N	--	--	--	--	1	--	--	--	1	--	--	--	--	766.63	759.30	7.33
4G	533+86	23.5' LT	CTH N	--	--	--	1	--	--	--	1	--	--	13	--	--	765.20	760.10	5.17
4H	537+35	12.7' RT	CTH N	--	--	--	1	--	--	--	1	--	--	13	--	--	767.86	762.54	5.40
4J	540+76	45.8' RT	CTH N	--	--	--	--	1	--	--	--	1	--	--	--	--	768.63	764.26	5.17
4M	546+55	0' RT	CTH N	--	--	--	--	--	1	--	--	--	--	--	--	1	772.71	766.49	6.07
4N	547+75	45.7' LT	CTH N	--	--	--	--	1	--	--	--	1	--	--	--	--	772.49	768.55	5.17
4O	551+63	46.1' LT	CTH N	--	--	--	--	1	--	--	--	1	--	--	--	--	774.95	769.82	5.17
4P	568+94	34.5' LT	CTH N	1	--	--	--	--	--	--	--	--	1	--	--	--	--	774.50	--
5A	515+45	23.5' LT	CTH N	--	--	--	1	--	--	--	1	--	--	13	--	--	751.43	748.50	5.17
5E	526+32	23.5' RT	CTH N	--	--	--	1	--	--	--	1	--	--	13	--	--	768.10	762.95	5.17
5F	532+00	53.5' LT	CTH N	--	--	--	--	1	--	--	--	1	--	--	--	--	765.47	758.99	6.48
5G	533+86	11.5' RT	CTH N	--	--	--	1	--	--	--	1	--	--	13	--	--	765.20	759.81	5.39
5H	536+91	50.2' RT	CTH N	--	--	1	--	--	--	--	--	--	1	--	--	--	--	762.25	--
5J	540+95	17.5' RT	CTH N	--	--	--	1	--	--	--	1	--	--	--	--	--	769.64	764.17	5.47
5M	544+21	0' RT	CTH N	--	--	--	--	--	--	--	--	--	--	--	1	--	--	--	--
5N	547+52	0' RT	CTH N	--	--	--	--	--	--	--	--	--	--	--	1	--	--	--	--
6A	515+45	23.5' RT	CTH N	--	--	--	1	--	--	--	1	--	--	13	--	--	751.43	748.61	5.17
6F	531+85	58.5' RT	CTH N	1	--	--	--	--	--	--	--	--	1	--	--	--	--	758.42	--
6G	533+10	60.5' LT	CTH N	--	--	--	--	1	--	--	--	1	--	--	--	--	765.25	760.72	5.17
7A	515+45	0' RT	CTH N	--	--	--	--	--	--	--	--	--	--	--	1	--	--	--	--
7G	533+66	23.5' LT	CTH N	--	--	--	1	--	--	--	1	--	--	--	--	--	765.22	760.27	5.17
8A	515+65	23.5' RT	CTH N	--	--	--	1	--	--	--	1	--	--	--	--	--	751.38	748.76	5.17
8G	533+66	11.5' RT	CTH N	--	--	--	1	--	--	--	1	--	--	--	--	--	765.22	759.96	5.26
			TOTALS	2	1	2	37	12	5	5	37	12	5	454	8	10			

REMARKS

* STATIONS AND OFFSETS ARE TO CENTER OF STRUCTURE

** ALL INLET CASTING SHALL CONTAIN THE ENVIRO LOGO AS SEEN IN THE STANDARD DETAIL DRAWING

*** DEPTH = RIM ELEV- COVER HEIGHT- 4 INCH ADJUSTMENT RING HEIGHT - BOTTOM OF STRUCTURE BASE ELEV

MINIMUM STRUCTURE DEPTH FROM RIM ELEVATION TO BOTTOM OF STRUCTURE BASE IS 6 FT

ALL ITEMS ON THIS PAGE
ARE IN CATEGORY 0010

2

STORM SEWER PIPES

FROM STRUCTURE	-	TO STRUCTURE	608.0312 STORM SEWER PIPE REINFORCED CONCRETE CLASS III 12-INCH LF	608.0315 STORM SEWER PIPE REINFORCED CONCRETE CLASS III 15-INCH LF	608.0318 STORM SEWER PIPE REINFORCED CONCRETE CLASS III 18-INCH LF	608.0324 STORM SEWER PIPE REINFORCED CONCRETE CLASS III 24-INCH LF	608.0412 STORM SEWER PIPE REINFORCED CONCRETE CLASS IV 12-INCH LF	608.0415 STORM SEWER PIPE REINFORCED CONCRETE CLASS IV 15-INCH LF	608.0418 STORM SEWER PIPE REINFORCED CONCRETE CLASS IV 18-INCH LF	608.0424 STORM SEWER PIPE REINFORCED CONCRETE CLASS IV 24-INCH LF	610.0419 STORM SEWER PIPE REINFORCED CONCRETE HORIZONTAL ELLIPTICAL CLASS HE-IV 19X30-INCH LF	JOINT TIES* EACH	INLET ELEVATION	DISCHARGE ELEVATION	SLOPE
1A	-	EXISTING MH	--	--	--	--	--	--	--	--	86	--	747.34	747.08	0.30%
1B	-	1A	--	--	--	--	--	--	--	--	300	--	748.01	747.34	0.22%
1C	-	1B	--	--	--	--	--	--	300	--	--	--	749.59	748.09	0.50%
1D	-	1C	--	--	300	--	--	--	--	--	--	--	757.94	749.69	2.75%
1E	-	EXISTING MH	112	--	--	--	--	--	--	--	--	--	762.89	762.33	0.50%
1F	-	2F	37	--	--	--	--	--	--	--	--	--	759.07	758.88	0.51%
1G	-	2G	--	--	35	--	--	--	--	--	--	--	759.95	759.74	0.60%
1H	-	4H	--	--	--	--	--	--	--	20	--	--	762.67	762.57	0.50%
1J	-	1H	--	--	--	--	--	--	--	325	--	--	763.83	762.69	0.35%
1L	-	1J	--	--	--	--	--	--	--	225	--	--	764.67	763.88	0.35%
1O	-	4M	--	--	400	--	--	--	--	--	--	--	768.99	766.99	0.50%
1P	-	4P	--	--	--	--	60	--	--	--	--	6	774.74	774.50	0.40%
2A	-	5A	--	--	--	--	20	--	--	--	--	--	748.65	748.55	0.50%
2B	-	1B	--	--	--	--	24	--	--	--	--	--	748.16	748.04	0.50%
2C	-	1C	24	--	--	--	--	--	--	--	--	--	750.09	749.74	1.46%
2D	-	1D	24	--	--	--	--	--	--	--	--	--	758.62	758.15	1.96%
2E	-	3E	36	--	--	--	--	--	--	--	--	--	763.59	763.41	0.50%
2F	-	3F	--	74	--	--	--	--	--	--	--	6	758.77	758.33	0.59%
2G	-	3G	--	--	--	38	--	--	--	--	--	6	759.69	759.50	0.50%
2H	-	3H	--	--	--	--	36	--	--	--	--	--	763.06	762.85	0.58%
2J	-	1J	18	--	--	--	--	--	--	--	--	--	764.02	763.93	0.50%
2L	-	1L	47	--	--	--	--	--	--	--	--	--	765.00	764.77	0.49%
2M	-	1M	--	--	--	--	18	--	--	--	--	--	766.43	766.34	0.50%
2N	-	1N	18	--	--	--	--	--	--	--	--	--	768.33	768.24	0.50%
2O	-	1O	25	--	--	--	--	--	--	--	--	--	769.17	769.04	0.52%
2P	-	3P	--	--	--	--	88	--	--	--	--	--	775.69	775.34	0.40%
2R	-	1R	47	--	--	--	--	--	--	--	--	--	769.36	769.12	0.51%
2S	-	1S	--	--	--	--	47	--	--	--	--	--	767.00	766.77	0.49%
3A	-	4A	--	--	--	--	--	24	--	--	--	--	748.46	748.34	0.50%
3B	-	1B	--	--	--	--	24	--	--	--	--	--	748.16	748.04	0.50%

* NON-BID ITEM: FOR INFORMATION ONLY

CONTINUED ON NEXT PAGE

ALL ITEMS ON THIS PAGE
ARE IN CATEGORY 0010

2

STORM SEWER PIPES

FROM STRUCTURE	-	TO STRUCTURE	608.0312 STORM SEWER PIPE REINFORCED CONCRETE CLASS III 12-INCH LF	608.0315 STORM SEWER PIPE REINFORCED CONCRETE CLASS III 15-INCH LF	608.0318 STORM SEWER PIPE REINFORCED CONCRETE CLASS III 18-INCH LF	608.0324 STORM SEWER PIPE REINFORCED CONCRETE CLASS III 24-INCH LF	608.0412 STORM SEWER PIPE REINFORCED CONCRETE CLASS IV 12-INCH LF	608.0415 STORM SEWER PIPE REINFORCED CONCRETE CLASS IV 15-INCH LF	608.0418 STORM SEWER PIPE REINFORCED CONCRETE CLASS IV 18-INCH LF	608.0424 STORM SEWER PIPE REINFORCED CONCRETE CLASS IV 24-INCH LF	610.0419 STORM SEWER PIPE REINFORCED CONCRETE HORIZONTAL ELLIPTICAL CLASS HE-IV 19X30-INCH LF	JOINT TIES* EACH	INLET ELEVATION	DISCHARGE ELEVATION	SLOPE
3C	-	1C	24	--	--	--	--	--	--	--	--	--	750.09	749.74	1.46%
3D	-	1D	24	--	--	--	--	--	--	--	--	--	758.62	758.15	1.96%
3E	-	1E	30	--	--	--	--	--	--	--	--	--	763.31	763.16	0.50%
3H	-	1H	--	--	--	--	--	22	--	--	--	--	762.80	762.69	0.50%
3J	-	1J	17	--	--	--	--	--	--	--	--	--	764.02	763.93	0.53%
3L	-	1L	53	--	--	--	--	--	--	--	--	--	765.03	764.77	0.49%
3M	-	5M	--	--	--	--	18	--	--	--	--	--	766.41	766.32	0.50%
3N	-	5N	--	--	--	--	18	--	--	--	--	--	768.32	768.23	0.50%
3O	-	1O	--	--	--	--	33	--	--	--	--	--	769.21	769.04	0.52%
3P	-	1P	--	--	--	--	140	--	--	--	--	--	775.32	774.76	0.40%
4E	-	1E	9	--	--	--	--	--	--	--	--	--	763.04	762.99	0.56%
4F	-	1F	26	--	--	--	--	--	--	--	--	--	759.30	759.17	0.50%
4G	-	1G	--	14	--	--	--	--	--	--	--	--	760.10	760.00	0.71%
4H	-	5H	--	--	--	--	--	--	--	58	--	6	762.54	762.25	0.50%
4J	-	3J	28	--	--	--	--	--	--	--	--	--	764.26	764.12	0.50%
4M	-	1L	--	--	--	355	--	--	--	--	--	--	766.49	764.72	0.50%
4N	-	2N	34	--	--	--	--	--	--	--	--	--	768.55	768.38	0.50%
4O	-	2O	109	--	--	--	--	--	--	--	--	--	769.82	769.27	0.50%
5A	-	7A	--	--	--	--	23	--	--	--	--	--	748.50	748.38	0.52%
5E	-	1D	301	--	--	--	--	--	--	--	--	--	762.95	758.44	1.50%
5F	-	6F	113	--	--	--	--	--	--	--	--	6	758.99	758.42	0.50%
5G	-	2G	14	--	--	--	--	--	--	--	--	--	759.81	759.74	0.50%
5J	-	3J	20	--	--	--	--	--	--	--	--	--	764.17	764.07	0.50%
6A	-	3A	--	--	--	--	20	--	--	--	--	--	748.61	748.51	0.50%
6G	-	7G	--	67	--	--	--	--	--	--	--	--	760.72	760.32	0.60%
7G	-	4G	--	20	--	--	--	--	--	--	--	--	760.27	760.15	0.60%
8A	-	6A	--	--	--	--	20	--	--	--	--	--	748.76	748.66	0.50%
8G	-	5G	20	--	--	--	--	--	--	--	--	--	759.96	759.86	0.50%
			1,210	175	735	393	589	46	300	628	386	30			

* NON-BID ITEM: FOR INFORMATION ONLY

CONTINUED

ADJUSTING MANHOLE COVERS

LOCATION	611.8110 EACH
CTH N	
513+49 30' RT	1
LAKE LARGO DR	
21+61 10' LT	1
TOTAL	2

INSULATION BOARD POLYSTYRENE

LOCATION	STATION			612.0902.S 2-INCH SY
CTH N				
	514+32	- 517+32		130
	515+25	- 515+45	LT	10
	515+25	- 515+45	RT	10
	566+13	- 568+46	LT	100
TOTAL				250

ALL ITEMS ON THIS PAGE
ARE IN CATEGORY 0010

2

CONCRETE SURFACE DRAINS

LOCATION	STATION		416.1010 CONCRETE SURFACE DRAINS CY	645.0120 * GEOTEXTILE FABRIC TYPE HR SY
WOODSIDE ROAD				
	39+39	LT	1	14
	39+39	RT	1	9
SPARTAN ROAD				
	60+65	LT	1	14
TOTAL			3	37

* ADDITIONAL QUANTITIES SHOWN ELSEWHERE
SEE EROSION CONTROL

CULVERTS

INLET STATION	INLET OFFSET	INLET ELEVATION	DISCHARGE STATION	DISCHARGE OFFSET	DISCHARGE ELEVATION	SLOPE	520.1015 APRON ENDWALLS FOR CULVERT PIPE 15-INCH EACH	520.1024 APRON ENDWALLS FOR CULVERT PIPE 24-INCH EACH	520.4115 CULVERT PIPE CLASS IV 15-INCH LF	520.4124 CULVERT PIPE CLASS IV 24-INCH LF	REMARKS
535+61.41	54.85' RT	761.51	535+25.31	54.66' RT	761.14	1.03%	--	2	--	36	PRIVATE ENTRANCE
560+49.36	31.25' RT	777.23	560+23.80	31.05' RT	776.98	0.96%	2	--	26	--	PRIVATE ENTRANCE
567+74.65	36.22' RT	775.18	567+91.98	36.23' RT	775.09	0.53%	2		17	--	PRIVATE ENTRANCE
TOTALS							4	2	43	36	

1. STATIONS AND OFFSETS ARE TO THE END OF PIPE. FIELD VERIFY CULVERT PIPE LOCATIONS AND ELEVATIONS PRIOR TO INSTALLATION.
2. PIPE LENGTHS DO NOT INCLUDE LAYING LENGTH OF THE ENDWALLS
3. MINIMUM PIPE THICKNESS FOR CORRUGATED STEEL IS 0.064" FOR BOTH PIPE SIZES.
4. MINIMUM PIPE THICKNESS FOR ALUMINUM IS 0.060" FOR 15-INCH PIPE AND 0.075" FOR 24-INCH PIPE.

PAVEMENT MARKING

LOCATION	STA	TO	STA	646.0106 PAVEMENT MARKING EPOXY 4-INCH YELLOW SOLID LF	646.0106 PAVEMENT MARKING EPOXY 4-INCH WHITE SOLID LF	646.0106 PAVEMENT MARKING EPOXY 4-INCH YELLOW 12.5' LINE LF	646.0106 PAVEMENT MARKING EPOXY 4-INCH WHITE 3' LINE LF	646.0126 PAVEMENT MARKING EPOXY 8-INCH CHANNELIZING WHITE LF	646.0600 * REMOVING PAVEMENT MARKINGS LF	647.0166 PAVEMENT MARKING ARROWS EPOXY TYPE 2 EACH	647.0356 PAVEMENT MARKING EPOXY WORDS "ONLY" EACH	647.0456 PAVEMENT MARKING CURB EPOXY YELLOW LF	647.0576 PAVEMENT MARKING STOP LINE EPOXY 24-INCH LF	647.0606 PAVEMENT MARKING ISLAND NOSE EPOXY EACH	647.0726 PAVEMENT MARKING DIAGONAL EPOXY 12-INCH LF	SPV.0090.03 PAVEMENT MARKING CROSSWALK EPOXY 8-INCH LF
CTH N																
	499+75	-	513+25	--	--	--	--	--	--	--	--	--	34	--	--	170
	513+25	-	527+00	3,090	2,660	--	--	400	--	4	2	40	--	4	230	180
	527+00	-	540+50	930	2,600	220	--	--	--	--	--	20	--	2	70	140
	540+50	-	553+00	1,720	2,430	170	40	280	470	3	1	20	42	--	150	150
	553+00	-	569+00	1,300	2,860	250	40	300	460	3	1	10	40	--	100	150
ARNIE WOLFF DRIVEWAY				45	--	--	--	15	--	--	--	--	--	--	--	--
LAKE LARGO DRIVE				270	--	--	--	--	--	--	--	--	18	--	--	70
WOODSIDE ROAD				90	--	--	--	--	--	--	--	--	18	--	--	100
CTH EA				--	--	--	--	--	920	--	--	--	74	--	--	310
SPARTAN ROAD				90	--	--	--	--	--	--	--	--	27	--	--	--
TOTALS				7,535	10,550	640	80	995	1,850	10	4	90	253	6	550	1,270
				18,805												

* REMOVE EXISTING CROSSWALKS AND STOP LINES WITHIN THE CTH EA INTERSECTION

ALL ITEMS ON THIS PAGE ARE IN CATEGORY 0010

2

TRAFFIC CONTROL

LOCATIO	STA	TO	STA	STAGE DURATION DAYS	643.0100 TRAFFIC CONTROL 4987-02-57 LS	643.0300 DRUMS EACH	643.0300 DRUMS DAYS	643.0420 BARRICADES TYPE III EACH	643.0420 BARRICADES TYPE III DAYS	643.0705 WARNING LIGHTS TYPE A EACH	643.0705 WARNING LIGHTS TYPE A DAYS	643.0715 WARNING LIGHTS TYPE C EACH	643.0715 WARNING LIGHTS TYPE C DAYS	643.0900 SIGNS EACH	643.0900 SIGNS DAYS	643.1050 SIGNS PCMS EACH	643.1050 SIGNS PCMS DAY
CTH N	500+19	-	513+25	90	1	--	--	9	810	14	1,260	--	--	6	540	1	14
	513+25	-	553+50		--	--	--	4	360	6	540	--	--	1	90	--	--
	553+50	-	569+00		--	15	1,350	2	180	--	--	15	1,350	16	1,440	1	14
LAKE LARGO DRIVE					--	--		4	360	6	540	--	--	4	360	--	--
WOODSIDE ROAD					--	--		3	270	4	360	--	--	4	360	--	--
CTH EA					--	--		--	--	--	--	--	--	4	360	--	--
SPARTAN ROAD					--	--		--	--	--	--	--	--	3	270	--	--
TOTALS					1	15	1,350	22	1,980	30	2,700	15	1,350	38	3,420	2	28

* PCMS MESSAGES "ROAD TO CLOSE" & "BEGINNING MM/DD"

LOCATING NO-PASSING ZONES

LOCATION	STATION			648.0100 MI
CTH N				
	534+96	- 544+19	LT	0.17
TOTAL				0.17

SAWING ITEMS

LOCATION	STA			690.0150 SAWING ASPHALT LF	690.0250 SAWING CONCRETE LF
CTH N					
	500+19		LT	--	20
	502+97		LT	--	20
	504+34		LT	--	20
	504+72		LT	--	20
	506+37		LT	--	20
	507+24		LT	--	20
	508+17		LT	--	20
	509+50		LT	--	20
	510+18		LT	--	20
	511+99		LT	--	10
	513+25			--	50
	513+44		LT	--	20
	513+85		LT	20	--
	516+44		RT	20	--
	516+84		RT	10	--
	518+61		RT	40	--
	523+45		LT	10	--
	528+97		LT	10	--
	534+46		LT	10	--
	542+05		RT	30	--
	543+80		RT	30	--
	547+26		LT	30	--
	548+26		LT	30	--
	551+48		LT	--	20
	552+80	- 553+00		--	40
	553+85	- 554+10		--	40
	563+95		RT	30	--
	567+90		LT	30	--
	569+00			30	--
	550+82	- 553+10		--	280
	553+78	- 556+20		--	300
LAKE LARGO DRIVE					
	21+80			--	40
WOODSIDE ROAD					
	39+15			30	--
CTH EA					
	550+81	- 552+12		--	290
	553+76	- 556+19		--	310
SPARTAN ROAD					
	61+75			30	--
	TOTALS			390	1,580

ALL ITEMS ON THIS PAGE ARE IN CATEGORY 0010

CONSTRUCTION STAKING

LOCATION	STA	TO	STA	650.4000 STORM SEWER EACH	650.4500 SUBGRADE LF	650.5000 * BASE LF	650.5500 CURB GUTTER CURB AND GUTTER LF	650.7000 CONCRETE PAVEMENT LF	650.9910 SUPPLEMENTAL CONTROL 4987-02-57 LS	650.9920 SLOPE STAKES LF
PROJECT 4987-02-57	500+19	-	569+00	--	--	--	--	--	1	--
CTH N	500+19	-	513+25	--	--	1,310	--	--	--	1,310
	513+25	-	527+00	16	1,380	1,380	3,230	--	--	1,380
	527+00	-	540+50	19	1,350	1,350	3,010	--	--	1,350
	540+50	-	550+81	19	1,030	1,030	2,210	--	--	1,030
	550+81	-	556+19	2	--	530	--	--	--	530
	556+19	-	569+00	4	1,280	1,280	250	--	--	1,280
LAKE LARGO ROAD	20+49	-	21+80	4	130	--	--	130	--	130
WOODSIDE ROAD	39+15	-	39+44	--	30	30	--	--	--	30
SPARTAN ROAD	60+52	-	61+75	--	120	120	80	--	--	120
	TOTALS			64	5,320	7,030	8,780	130	1	7,160

* STAKING FOR SIDEWALK ONLY IS PAID FOR AS CONSTRUCTION STAKING BASE

STREET SWEEPING

LOCATION	STATION	SPV.0075.01 STREET SWEEPING HRS
CTH N	4987-02-57	40
TOTAL		40

BASED ON 2 HOURS PER WEEK

CONCRETE PAVEMENT JOINT LAYOUT

LOCATION	STATION	SPV.0105.01 CONCRETE PAVEMENT JOINT LAYOUT LS
CTH N	4987-02-57	1
TOTAL		1

ADJUSTING SANITARY MANHOLE COVERS

LOCATION	STA		SPV.0060.07 EACH
CTH N			
	513+70	RT	1
	513+74	LT	1
	513+74	RT	1
	514+47	LT	2
	517+72	RT	1
	517+78	LT	1
	521+69	RT	1
	521+75	LT	1
	525+59	RT	1
	525+75	LT	1
	528+89	RT	1
	529+46	LT	1
	530+95	RT	1
	532+99	LT	1
	534+25	RT	1
	536+28	LT	1
	536+28	RT	1
	537+37	RT	1
	538+86	RT	1
	541+50	RT	1
	543+77	RT	1
	546+77	RT	1
	550+69	RT	1
	554+44	RT	1
	556+93	RT	1
	559+93	RT	1
	562+22	RT	1
	566+22	RT	1
	568+90	RT	1
LAKE LARGO DRIVE			
	21+42	CL	1
TOTALS			31

ALL ITEMS ON THIS PAGE
ARE IN CATEGORY 0020

2

STORM SEWER ITEMS

LOCATION	STATION	OFFSET	SPV.0090.01 STORM SEWER LATERAL 6-INCH LF	SPV.0090.02 STORM SEWER LATERAL 12-INCH LF	REMARKS
CTH N					
	514+23	RT	26	--	
	514+89	LT	30	--	
	515+29	RT	30	--	
	515+98	LT	30	--	
	516+18	RT	30	--	
	517+08	LT	30	--	
	517+45	RT	30	--	
	518+18	LT	30	--	
	519+28	LT	30	--	
	520+38	LT	30	--	
	521+61	LT	30		
	523+92	LT	34	--	
	524+01	RT	24	--	
	525+09	RT	15	--	
	526+20	RT	7	--	
	541+73	RT	--	24	
	544+05	RT	--	24	
	544+68	RT	--	24	
	545+68	RT	--	24	
	546+68	RT	--	24	
	547+68	RT	--	24	
	548+68	RT	--	26	
	549+63	RT	--	31	
	550+55	RT	--	5	CONNECT TO INLET
TOTAL			406	203	

R/W PROJECT NUMBER 4987-02-56	SHEET NUMBER	TOTAL SHEETS
FEDERAL PROJECT NUMBER	4.01	8

PLAT OF RIGHT OF WAY REQUIRED FOR

CITY OF GREEN BAY, CTH N

CORNELIUS DRIVE TO SPARTAN ROAD

CTH N — BROWN COUNTY

CONSTRUCTION PROJECT NUMBER
4987-02-57

4

CONVENTIONAL SYMBOLS

SECTION LINE
QUARTER LINE
SIXTEENTH LINE
NEW REFERENCE LINE
NEW R/W LINE
EXISTING R/W LINE
PROPERTY LINE
LOT, TIE & OTHER MINOR LINES
CORPORATE LIMITS
UNDERGROUND FACILITY (COMMUNICATIONS, ELECTRIC, ETC) — W (TYPE)
FEE ACQUISITION AREA (HATCHING VARIES BY OWNER)
TEMPORARY LIMITED EASEMENT AREA
EASEMENT AREA (HIGHWAY, PERMANENT LIMITED, OR RESTRICTED DEVELOPMENT)
TRANSMISSION STRUCTURES
BUILDING

SECTION CORNER
NOTATION FOR COMBUSTABLE FLUIDS — CAUTION
NOTATION FOR HIGH VOLTAGE TRANSMISSION LINES — CAUTION

R/W MONUMENT
NON-MONUMENTED R/W POINT
FOUND IRON PIN
VALVE (GAS, WATER, ETC.) — (TYPE)
SIGN — SIGN
OFF-PREMISE SIGN — 41-25 — SIGN

	COMPENSABLE	NON-COMPENSABLE
ELECTRIC POLE		
TELEPHONE POLE		
PEDESTAL (LABEL TYPE) (TV, TEL, ELEC, ETC.)		

PARCEL NUMBER 25
UTILITY NUMBER 40

CONVENTIONAL ABBREVIATIONS

ACRES	AC	REMAINING	REM
AHEAD	AH	RIGHT	RT
AND OTHERS	ET AL	RIGHT OF WAY	R/W
BACK	BK	SECTION	SEC
BLOCK	BLK	SEPTIC VENT	SEPV
CENTERLINE	C/L	SQUARE FEET	SF
CERTIFIED SURVEY MAP	CSM	STATE TRUNK HIGHWAY	STH
CONCRETE	CONC	STATION	STA
COUNTY	CO	SUBDIVISION	SUBD
COUNTY TRUNK HIGHWAY	CTH	TANGENT	TAN
DISTANCE	DIST	TELEPHONE PEDESTAL	TP
CORNER	COR	TEMPORARY LIMITED EASEMENT	TLE
DOCUMENT NUMBER	DOC	TRANSPORTATION PROJECT PLAT	TPP
EASEMENT	EASE	UNITED STATES HIGHWAY	USH
EXISTING	EX	VOLUME	V
GAS VALVE	GV		
IDENTIFICATION	ID		
LAND CONTRACT	LC		
LEFT	LT		
MONUMENT	MON		
NATIONAL GEODETIC SURVEY	NGS		
NUMBER	NO		
OUTLOT	OL		
PAGE	P		
POINT OF TANGENCY	PT		
PERMANENT LIMITED EASEMENT	PLE		
POINT OF BEGINNING	POB		
POINT OF CURVATURE	PC		
POINT OF INTERSECTION	PI		
PROPERTY LINE	PL		
RECORDED AS	(100')		
REFERENCE LINE	R/L		

CURVE DATA

LONG CHORD	LC
LONG CHORD BEARING	LCB
RADIUS	R
DEGREE OF CURVE	D
CENTRAL ANGLE OR DELTA	Δ
LENGTH OF CURVE	L
TANGENT	T
DIRECTION AHEAD	DA
DIRECTION BACK	DB

CONVENTIONAL UTILITY SYMBOLS

WATER	W
GAS	G
TELEPHONE	T
OVERHEAD TRANSMISSION LINES	OH
ELECTRIC	E
CABLE TELEVISION	TV
FIBER OPTIC	FO
SANITARY SEWER	SAN
STORM SEWER	SS

RECEIVED
OCT 2015
Sandra L. Juno
Brown County Clerk

RECEIVED
JUN 2015

GN

BEGIN RELOCATION ORDER
STA 500+19.00
1,245.99' NORTH & 1.63' EAST OF THE EAST 1/4 CORNER, SECTION 34, T 24 N, R 21 E, CITY OF GREEN BAY, BROWN COUNTY

END RELOCATION ORDER
STA 568+42.89
1,343.49' NORTH & 1,527.29' EAST OF THE WEST 1/4 CORNER SECTION 36, T 24 N, R 21 E, CITY OF GREEN BAY, BROWN COUNTY

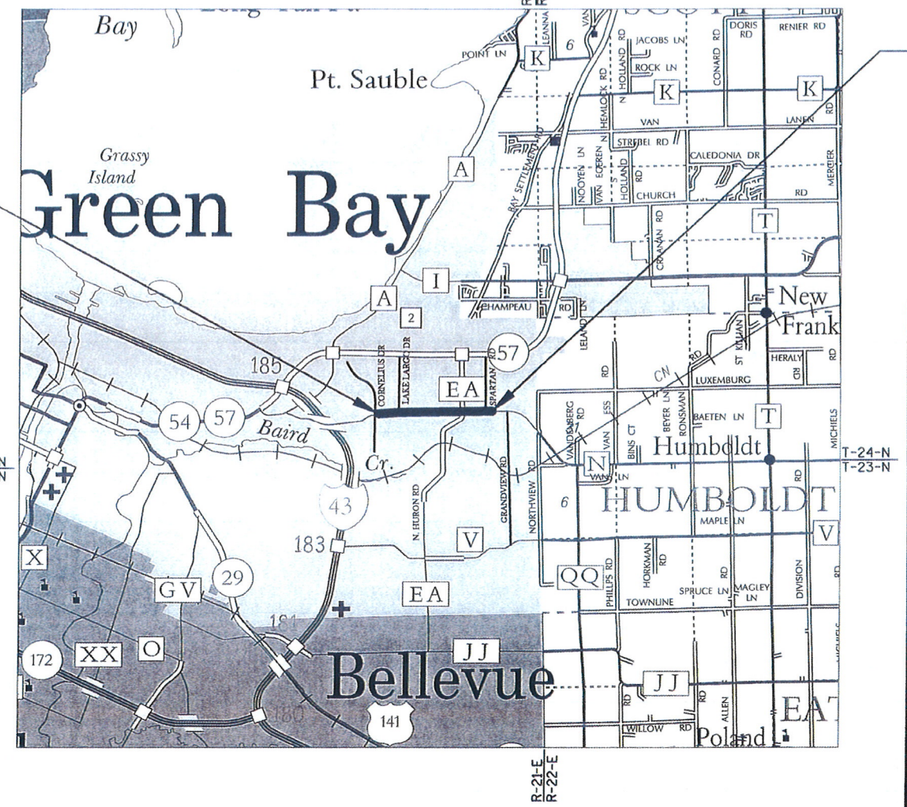

LAYOUT
SCALE 0 — 2 MILE

TOTAL NET LENGTH OF CENTERLINE = 1.292 MILES

NOTES:

POSITIONS SHOWN ON THIS PLAT ARE WISCONSIN COUNTY COORDINATES, BROWN COUNTY, NAD83(1987), IN US SURVEY FEET. VALUES SHOWN ARE GRID COORDINATES, GRID BEARINGS, AND GRID DISTANCES. GRID DISTANCES MAY BE USED AS GROUND DISTANCES.

RIGHT OF WAY MONUMENTS ARE TYPE 2 MONUMENTS (TYPICALLY 1" X 24" IRON PIPE) AND WILL BE PLACED PRIOR TO THE COMPLETION OF THE PROJECT.

RIGHT OF WAY BOUNDARIES ARE DEFINED WITH COURSES OF THE PERIMETER OF THE HIGHWAY LANDS REFERENCED TO THE U.S. PUBLIC LAND SURVEY OR OTHER SURVEYS OF PUBLIC RECORD.

PROPERTY LINES SHOWN ON THIS PLAT ARE DRAWN FROM DATA DERIVED FROM MAPS AND DOCUMENTS OF PUBLIC RECORD AND/OR EXISTING OCCUPATIONAL LINES. THIS PLAT MAY NOT BE A TRUE REPRESENTATION OF EXISTING PROPERTY LINES, EXCLUDING RIGHT-OF-WAY LINES, AND SHOULD NOT BE USED AS A SUBSTITUTE FOR AN ACCURATE FIELD SURVEY.

EXISTING HIGHWAY RIGHT-OF-WAY SHOWN HEREIN IS BASED ON THE FOLLOWING POINTS OF REFERENCE: EXISTING HIGHWAY RIGHT-OF-WAY FOR CTH N ESTABLISHED FROM PREVIOUS PROJECT E1457 (53) (61-N-2), SUBDIVISION PLATS AND CERTIFIED SURVEY MAPS.
EXISTING HIGHWAY RIGHT-OF-WAY FOR SIDE ROADS ESTABLISHED FROM SUBDIVISION PLATS, CERTIFIED SURVEY MAPS, OR CENTERLINE OF EXISTING PAVEMENTS.

Public Works Director / Highway Commissioner

ACCEPTED FOR BROWN COUNTY
BY
6/24/15 (Date) (Signature)

ORIGINAL PLAT PREPARED BY
BLOOM COMPANIES, LLC

WISCONSIN
RONALD J. HARDY
S-2433
APPLETON, WISCONSIN
LAND SURVEYOR

6/24/15 (Date) Ronald J Hardy (Signature)

REVISION DATE
10/13/15

E

SCHEDULE OF LANDS & INTEREST REQUIRED

OWNERS NAMES ARE SHOWN FOR REFERENCE PURPOSED ONLY AND ARE SUBJECT TO CHANGE PROIR TO THE TRANSFER OF LAND INTERESTS TO THE DEPARTMENT

PARCEL NUMBER	SHEET NUMBER	OWNER	INTEREST REQUIRED	EXISTING ACRES	RW ACRES REQUIRED			TOTAL REMAINING ACRES	TLE ACRES	PLE ACRES
					NEW RW	EXISTING RW	TOTAL RW			
-	-	-	-	-	-	-	-		-	-
2	4.04	THOMAS H BRUNETTE	TLE	.268	-	-	-		.052	-
3	4.04	JOSEPH A & TAMARA H BETHEL	TLE	.218	-	-	-		.056	-
4	4.04	MARK P PETERSON	TLE	.273	-	-	-		.056	-
5	4.04	WAYNE F WILQUET	TLE	.341	-	-	-		.042	-
6	4.04	KENNETH L & DIANE M COOK	TLE	.328	-	-	-		.042	-
7	4.04	MARVIN RUCKER	TLE	.308	-	-	-		.042	-
8	4.04	BECKY M KRUEGER	TLE	.293	-	-	-		.041	-
9	4.04	BRUCE H SHEFCHIK ETAL	TLE	.279	-	-	-		.062	-
-	-	-	-	-	-	-	-		-	-
11	4.04	STANLEY C ZDEB ETAL	TLE	.718	-	-	-		.138	-
12	4.04	JEFFREY M WERY	TLE	.363	-	-	-		.052	-
13	4.04	RONALD J GAUTHIER & MARY M GAUTHIER	TLE	10.061	-	-	-		.014	-
14	4.04	DONNA MARIE PUYLEART	TLE	.213	-	-	-		.019	-
15	4.05	ROBERT J VANDEN AVOND	FEE & TLE	2.074	.015	0.000	.015	2.058	.105	-
16	4.05, 4.06 & 4.09	BASTEN FAMILY REAL ESTATE DEVELOPMENT LP	FEE, PLE & TLE	62.928	.439	0.000	.439	62.489	.170	.302
17	4.05	BETTY M DEKEYSER	TLE	.468	-	-	-		.017	-
18	4.05	JOEY J DEKEYSER	TLE	.476	-	-	-		.024	-
19	4.05	ROBERT J VANDEN AVOND & ELIZABETH VANDEN AVOND	TLE	.552	-	-	-		.089	-
-	-	-	-	-	-	-	-		-	-
21	4.05 & 4.07	CITY OF GREEN BAY	TLE	34.900	-	-	-		.158	-
22	4.06	CRAIG J & JANICE BASTEN	TLE	1.060	-	-	-		.021	-
23	4.06	THOMAS R PETERSON	TLE	.794	-	-	-		.020	-
24	4.06	RANDY JOSEPH BAIN	TLE	.387	-	-	-		.040	-
25	4.06	PETER J BASTEN & GINA M BASTEN	FEE, PLE & TLE	.529	.008	0.000	.008	.521	.021	.002
26	4.06	REX J BASTEN FAMILY TRUST	FEE & TLE	23.831	.022	0.000	.022	23.809	.001	-
27	4.06 & 4.07	BAYSIDE CHRISTIAN FELLOWSHIP INC	FEE, PLE & TLE	28.913	.007	0.000	.007	28.906	.573	.002
28	4.06	CROCUS ESTATES LLC	TLE	2.98	-	-	-		.051	-
29	4.07	GREAT LAKES PROPERTIES MANAGEMENT GROUP LLC	PLE & TLE	1.81	-	-	-		.102	.006
-	-	-	-	-	-	-	-		-	-
31	4.07	THOMAS S EVANS & LINDA L EVANS	TLE	.539	-	-	-		.031	-
32	4.07 & 4.08	KINSHIP VII LLC	TLE	22.443	-	-	-		.690	-
33	4.08	US OIL CO INC	TLE	10.356	-	-	-		.062	-
-	-	-	-	-	-	-	-		-	-
35	4.08	RICHARD B SCHAETZ & DOROTHY M SCHAETZ	TLE	1.726	-	-	-		.021	-
-	-	-	-	-	-	-	-		-	-
-	-	-	-	-	-	-	-		-	-
-	-	-	-	-	-	-	-		-	-
-	-	-	-	-	-	-	-		-	-
-	-	-	-	-	-	-	-		-	-
-	-	-	-	-	-	-	-		-	-
-	-	-	-	-	-	-	-		-	-
-	-	-	-	-	-	-	-		-	-
-	-	-	-	-	-	-	-		-	-

4

4

REVISION DATE			
OCT 13, 2015			

DATE JUNE 19, 2015

GRID FACTOR _____

SCALE, FEET 0 50 100

HWY: HUMBOLDT RD/CTH N

COUNTY: BROWN

STATE R/W PROJECT NUMBER 4987-02-56

CONSTRUCTION PROJECT NUMBER 4987-02-57

PLAT SHEET 4.02

PS&E SHEET _____ E

FILE NAME : 040402-RP.DWG
LAYOUT NAME - ****

PLOT DATE : 10/13/2015 12:35 PM PLOT BY : SHANE MCCARTY PLOT NAME : PLOT SCALE : 1 IN:100 FT

WISDOT/CADDS

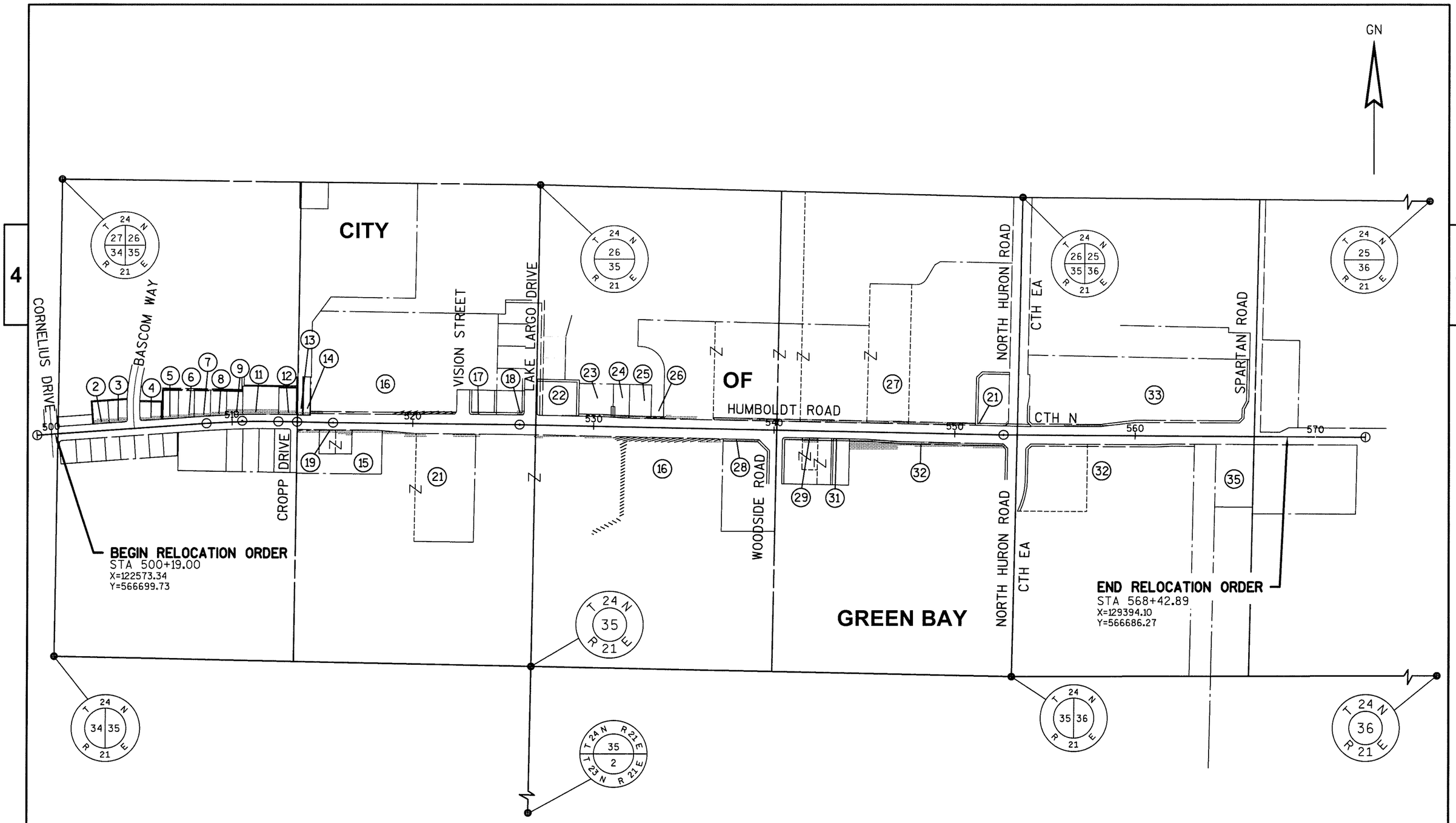

REVISION DATE OCT 13, 2015	DATE JUNE 19, 2015	SCALE, FEET 0 250 500	HWY: HUMBOLDT RD/CTH N	STATE R/W PROJECT NUMBER 4987-02-56	PLAT SHEET 4.03
	GRID FACTOR _____		COUNTY: BROWN	CONSTRUCTION PROJECT NUMBER 4987-02-57	PS&E SHEET ----- E

FILE NAME : 040403-RP.DWG
LAYOUT NAME - ####
PLOT DATE : 10/13/2015 12:36 PM PLOT BY : SHANE MCCARTY PLOT NAME : PLOT SCALE : 1 IN:500 FT
WISDOT/CADD: 77
T 75

BASIS FOR EXISTING R/W ESTABLISHED FROM PREVIOUS PROJECT E1457(53) (61-N-2), SUBDIVISION PLATS, AND CERTIFIED SURVEY MAPS

T 24 N R 21 E — 27 26 34 35

NOT RECOVERED
RECORDED AS
Y=568126.75
X=122608.53

CITY OF GREEN BAY

GN

NE-NE

NW-NW

SW-NW

4

4

CORNELIUS DRIVE — R/W — NO° 47' 21"E 1426.05'

UNIVERSITY HEIGHTS — 70.00' — R/W — R/W — BASCOM WAY

UNIVERSITY HEIGHTS

6' UTILITY EASEMENT

P.L.

LOT 64 — WAYNE F WILQUET — 5

LOT 65 — KENNETH L & DIANE M COOK — 6

LOT 66 — MARVIN RUCKER — 7

LOT 67 — BECKY M KRUEGER — 8

BRUCE H SHEFCHIK ETAL — LOT 68 — 9

STANLEY C ZDEB ETAL

6' UTILITY EASEMENT — JEFFREY M WERY — 6' ROADWAY EASEMENT — LOT 69 — 12

THOMAS H BRUNETTE — LOT 1 — 2

JOSEPH A & TAMARA H BETHEL — LOT 2 — 3

MARK P PETERSON — LOT 63 — 4

ANTHONY M & DANEEN R KLEHN

502+28.11
65.00'

504+18.31
65.00'

1/16 LINE
S89°03'45"E

20' TLE DRIVES & SLOPES

60'

70'

62'

SLOPE INTERCEPT

509+71.28
60.00'

30' TLE DRIVE & SLOPES

22' TLE DRIVE & SLOPES

25' TLE DRIVE & SLOPES

SLOPE INTERCEPT

40.00'

502 — 504 — 506 — 508 — 510 — 512 — 514

HUMBOLDT ROAD

R/L N85° 56' 17"E

CTH N

PC 1

PI 1

PT 1

CURVE 1

R/L S89°04'29"E

CURVE 1
PI STA = 510+56.85
Y = 566773.250
X = 123608.585
DELTA = 4°59'14"
D = 1°14'48"
T = 200.15'
L = 400.04'
R = 4595.86'
PC STA = 508+56.70
Y = 566759.073
X = 123408.939
PT STA = 512+56.75
Y = 566770.018
X = 123808.707
BK = N85°56'17.0"E
AH = S89°04'28.8"E

LOT 1 11CSM1 — LOT 2 11CSM1 — LOT 1 46CSM148 — LOT 2 46CSM148 — LOT 3 46CSM148

SLOPE INTERCEPT — 35.00' — R/W — CROPP DRIVE — 1/16 LINE

STA 500+34.59
Y=566700.84
X=122588.89

BEGIN RELOCATION ORDER
STA 500+19.00
Y=566699.73
X=122573.34

LOT 1 5CSM295 — LOT 2 5CSM295 — LOT 3 5CSM295 — LOT 4 5CSM295 — LOT 1 5CSM293 — LOT 2 5CSM293 — LOT 3 5CSM293 — LOT 4 5CSM293

SECTION LINE — NO° 47' 21"E 1247.21'

T 24 N R 21 E — 34 35

41x-17
1" IRON PIPE
WITH CAP
Y=565453.74
X=122571.71

513+60.51
57.15'

513+87.54
57.53'

514+32.94
58.20'

514+29.64
58.15'

3.31'

513+60.52
37.15'

513+87.84
37.53'

514+29.83
38.15'

514+33.10
38.20'

13 — RONALD GAUTHIER J & MARY M GAUTHIER

14 — DONNA MARIE PUYLEART

1/16 LINE — 6' UTILITY EASEMENT — P.L. — 6' ROADWAY EASEMENT

HUMBOLDT ROAD — 514 — R/L S88°32'52"E — CTH N

R/L S89°04'29"E — PI STA 513+60.55
Y=566768.34
X=123912.49

CROPP DRIVE — 1/16 LINE

REVISION DATE			
OCT 13, 2015			

DATE JUNE 19, 2015

GRID FACTOR _____

SCALE, FEET
0 50 100

HWY: HUMBOLDT RD/CTH N

COUNTY: BROWN

STATE R/W PROJECT NUMBER 4987-02-56

CONSTRUCTION PROJECT NUMBER 4987-02-57

PLAT SHEET 4.04

PS&E SHEET _____

E

FILE NAME : 040404-RP.DWG
LAYOUT NAME - ****

PLOT DATE : 10/13/2015 12:36 PM PLOT BY : SHANE MCCARTY PLOT NAME : PLOT SCALE : 1 IN:100 FT

WISDOT/CADDS

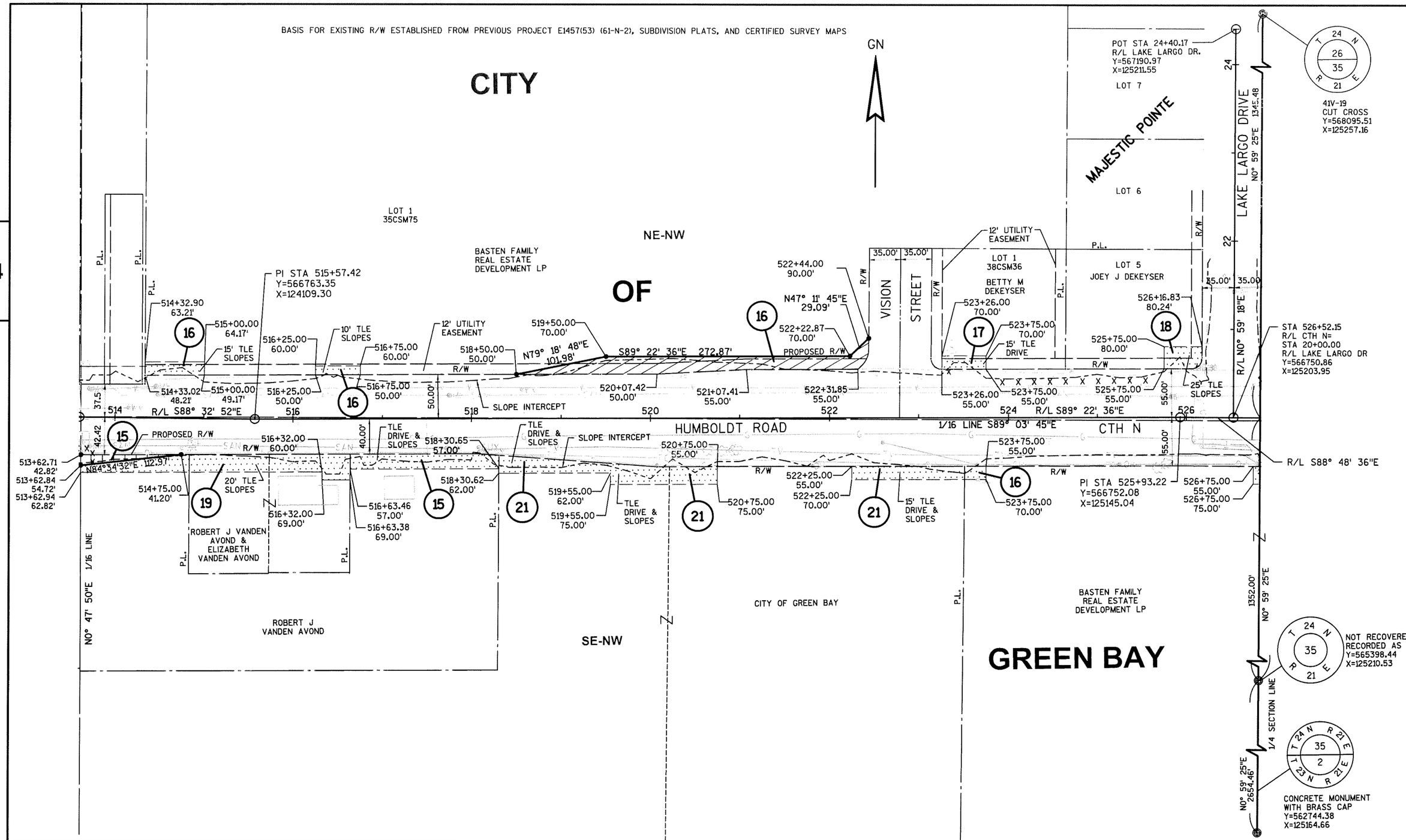

REVISION DATE JULY 16, 2015	DATE JUNE 19, 2015	SCALE, FEET 0 50 100	HWY: HUMBOLDT RD/CTH N	STATE R/W PROJECT NUMBER 4987-02-56	PLAT SHEET 4.05	
	GRID FACTOR _____		COUNTY: BROWN	CONSTRUCTION PROJECT NUMBER 4987-02-57	PS&E SHEET -----	E

FILE NAME : 040405-RP.DWG
LAYOUT NAME - 040402-rp
PLOT DATE : 10/13/2015 12:37 PM PLOT BY : SHANE MCCARTY PLOT NAME : PLOT SCALE : 1 IN:100 FT
WISDOT/CADD: 79 T 75

4

4

T 24 N R 21 E 26 35

41V-19
CUT CROSS IN PAV'T
Y=568095.51
X=125257.16

NW-NE

N0° 59' 25"E 1345.48'

CITY

15' WPS EASEMENT

12' UTILITY EASEMENT

LOT 1 3CSM613 CRAIG J & JANICE BASTEN

LOT 1 45CSM349 THOMAS R PETERSON

LOT 2 45CSM349 RANDY JEREMY BAIN

LOT 3 45CSM349 PETER J BASTEN & GINA M BASTEN

OUTLOT 1 45CSM349 REX J BASTEN FAMILY TRUST

BAYSIDE CHRISTIAN FELLOWSHIP INC

20'x60' SANITARY SEWER EASEMENT

12' UTILITY EASEMENT

10' TLE DRIVE & SLOPES

TLE DRIVE & SLOPES

20' TLE DRIVE & SLOPES

15' TLE SLOPES

STA 526+82.10
Y=566750.24
X=125233.90

SLOPE INTERCEPT
R/L S88° 48' 36"E

HUMBOLDT ROAD
CTH N

1/16 LINE S88° 39' 07"E

1/16 LINE N1° 00' 00"E

STA 540+13.16 CTH N =
STA 40+00.00 WOODSIDE RD
Y=566722.60
X=126564.68

531+96.00' 60.00'
531+96.00' 50.00'
532+06.00 60.00'
532+06.00 50.00'
532+90.00 67.00'
532+90.00 60.00'
533+00.00 63.00'
533+25.00 67.00'
533+25.00 63.00'
534+00.00 70.00'
534+00.00 63.00'
N63°43'06"E 28.18'
S88°48'36"E 100.00'
S61°20'08"E 28.18'
532+75.00 50.00'
174.04' N88°48'36"W
534+25.00 50.00'
PLE
TLE
PROPOSED R/W
IP

528+25.00 65.00'
528+25.00 55.00'
529+16.00 65.00'
529+16.04 55.00'
530+50.00 70.00'
530+50.00 55.00'
530+57.41 55.00'
531+05.24 70.00'
531+95.24 70.00'
531+95.24 60.00'
531+95.25
531+57.34 50.00'
535+75.00 70.00'
535+75.00 50.00'
536+63.38 65.00'
536+75.38 50.00'
537+45.00 60.00'
537+45.00 50.00'
537+55.00 60.00'
537+55.00 50.00'

526+75.00 55.00'
526+75.00 75.00'
527+25.00 65.00'
527+25.00 75.00'
S53° 16' 20"E 43.01'
531+00.00 55.00'
531+14.00 65.00'
531+35.00 80.00'
534+50.00 80.00'
535+46.15 75.00'
537+20.00 55.00'
537+10.00 61.00'
N60° 13' 34"E 23.32'
537+00.00 67.00'
537+10.00 75.00'
537+21.63 55.00'
537+21.65 66.00'
539+18.26 55.00'
539+29.28 66.00'
S88° 48' 36"E 315.00'
N88° 12' 48"E 250.34'
R/W
TLE
PLE
SLOPE INTERCEPT

16 16 16

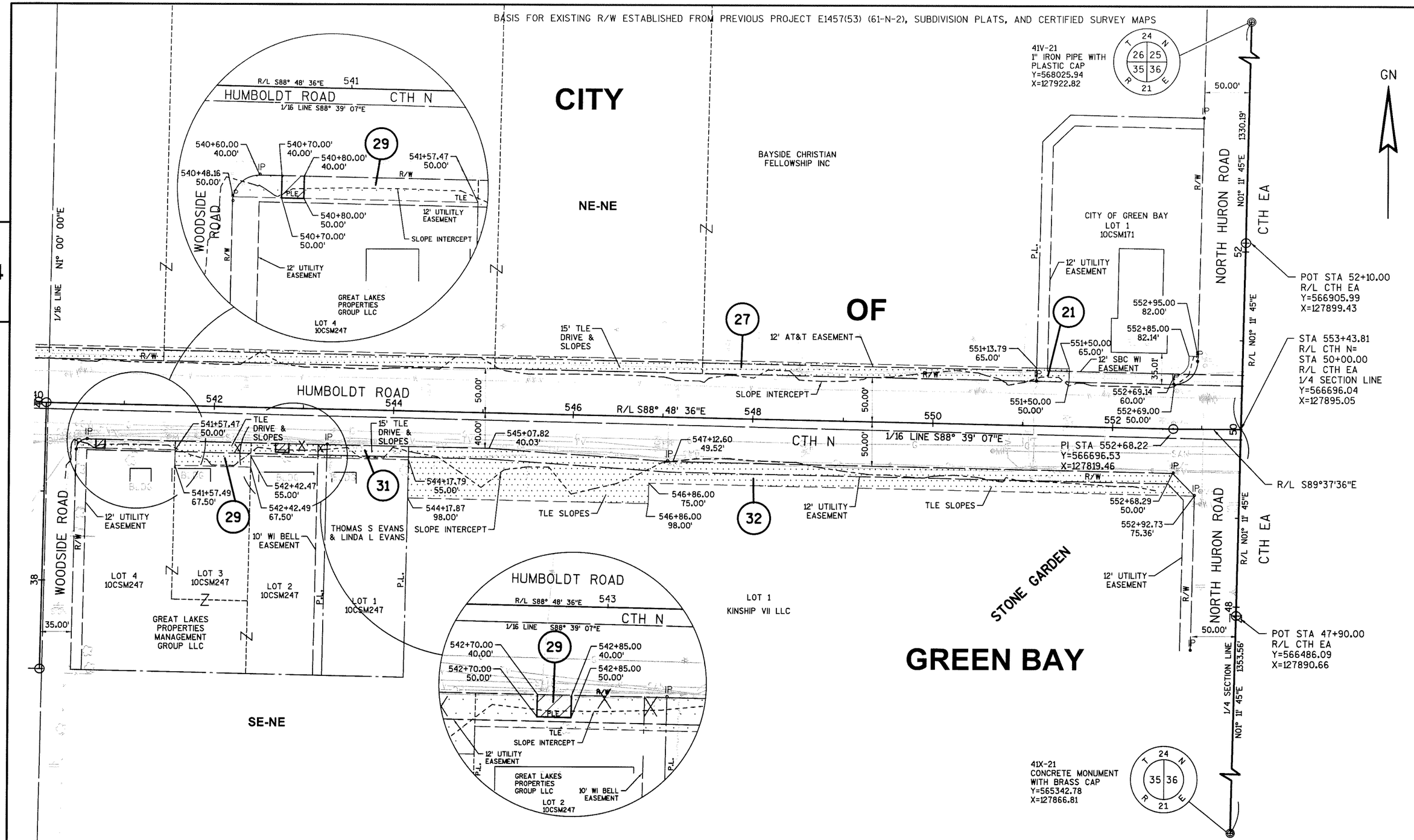

REVISION DATE JULY 16, 2015	DATE JUNE 19, 2015	SCALE, FEET 0 50 100	HWY: HUMBOLDT RD/CTH N	STATE R/W PROJECT NUMBER 4987-02-56	PLAT SHEET 4.07	
	GRID FACTOR _____		COUNTY: BROWN	CONSTRUCTION PROJECT NUMBER 4987-02-57	PS&E SHEET -----	E

FILE NAME : 040407-RP.DWG
LAYOUT NAME - ****
PLOT DATE : 10/13/2015 12:38 PM PLOT BY : SHANE MCCARTY PLOT NAME : PLOT SCALE : 1 IN:100 FT
WISDOT/CADDS 81 75

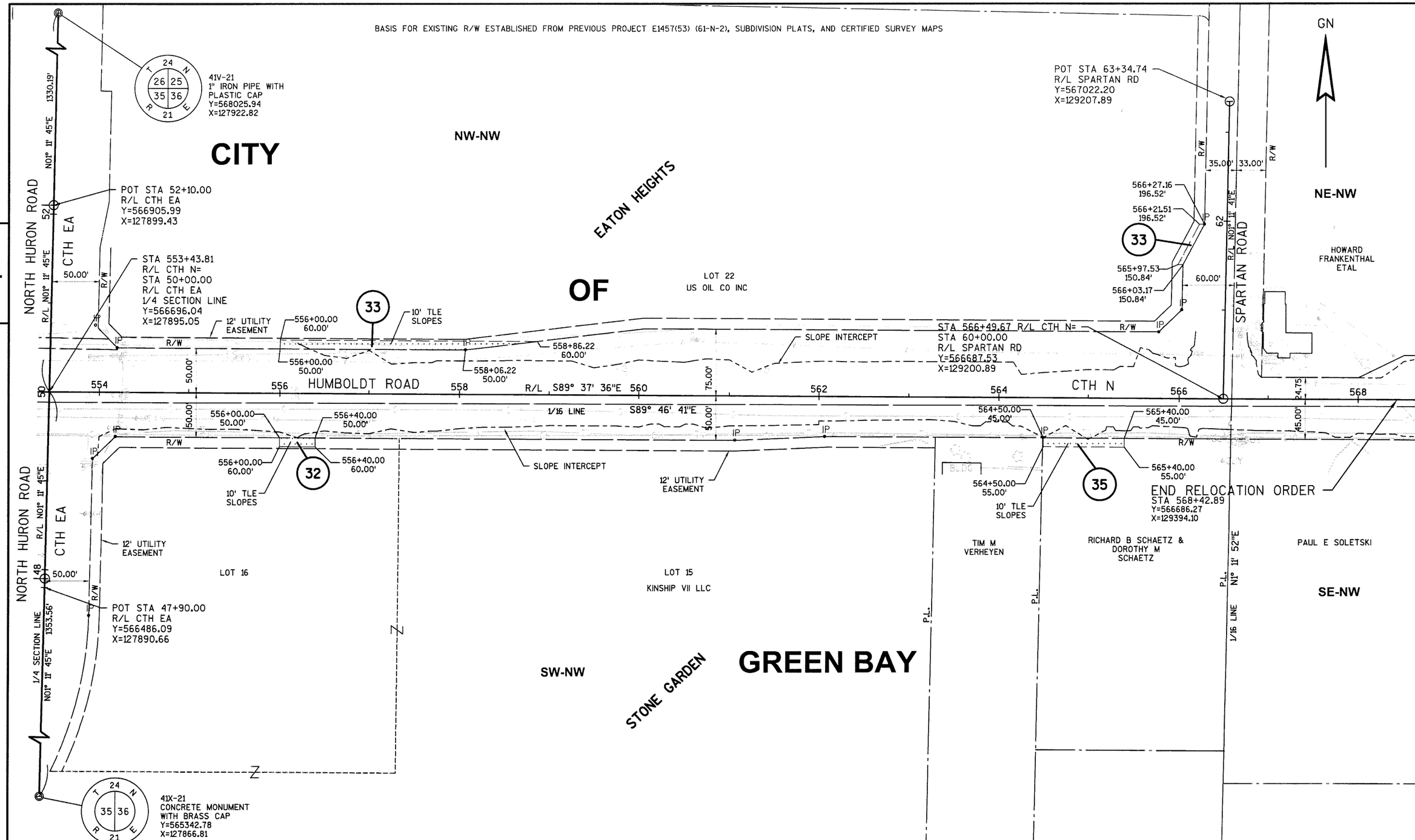

REVISION DATE OCT 13, 2015	DATE JUNE 19, 2015	SCALE, FEET 0 50 100	HWY: HUMBOLDT RD/CTH N	STATE R/W PROJECT NUMBER 4987-02-56	PLAT SHEET 4.08
	GRID FACTOR _____		COUNTY: BROWN	CONSTRUCTION PROJECT NUMBER 4987-02-57	PS&E SHEET ----- E

FILE NAME : 040408-RP.DWG
LAYOUT NAME - ****
PLOT DATE : 10/13/2015 12:39 PM PLOT BY : SHANE MCCARTY PLOT NAME : PLOT SCALE : 1 IN:100 FT
WISDOT/CADDS 82 75

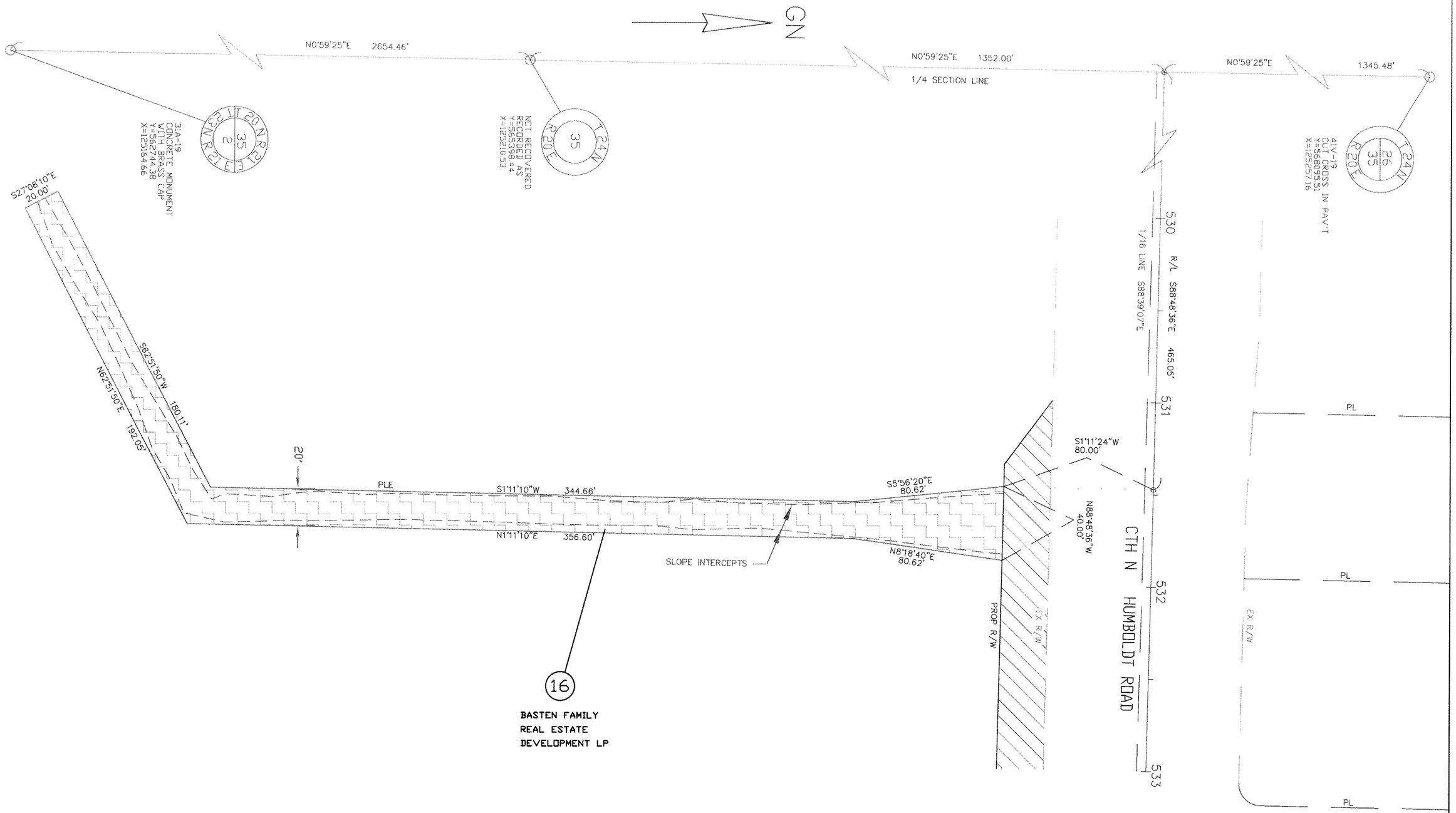

REVISION DATE SEPT 21, 2015	DATE JUNE 19, 2015	SCALE, FEET 0 50	HWY: HUMBOLDT RD/CTH N	CONSTRUCTION PROJECT NUMBER 4987-02-57	PLAT SHEET NO: 4.09	
	GRID FACTOR _____		COUNTY: BROWN	STATE R/W PROJECT NUMBER 4987-02-56	PS&E SHEET NO: 83	E

FILE NAME : N16 PLAT X

PLOT SCALE : 1" = 50'

WISDOT/CADDS SHEET 75

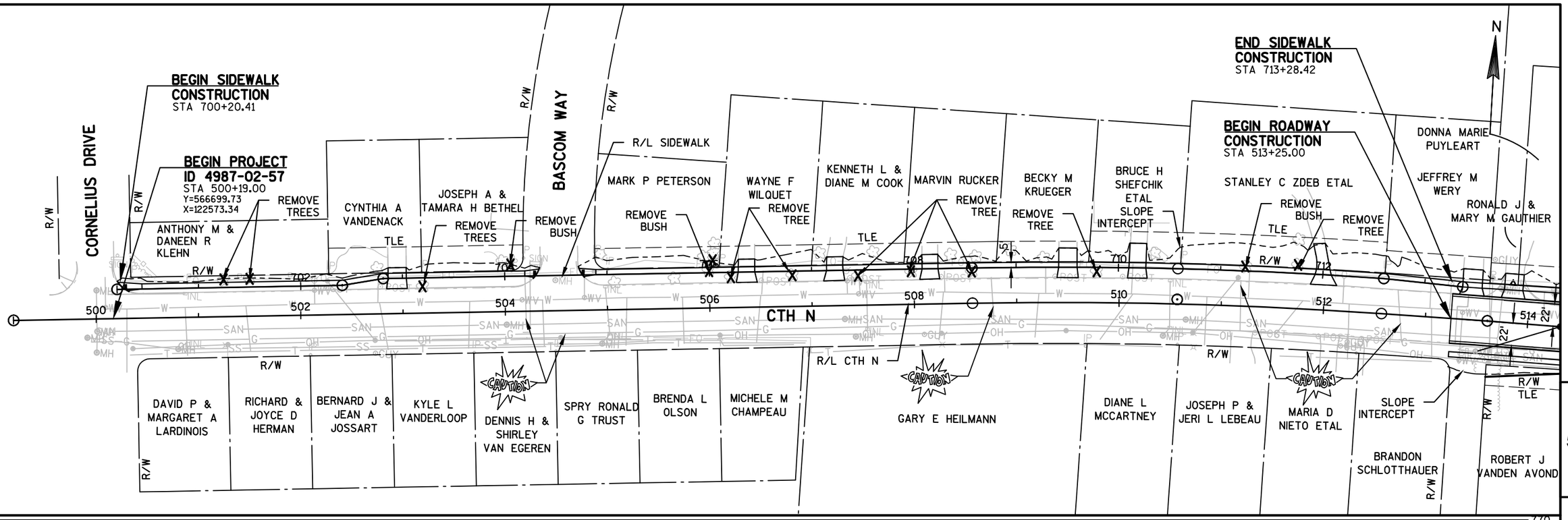

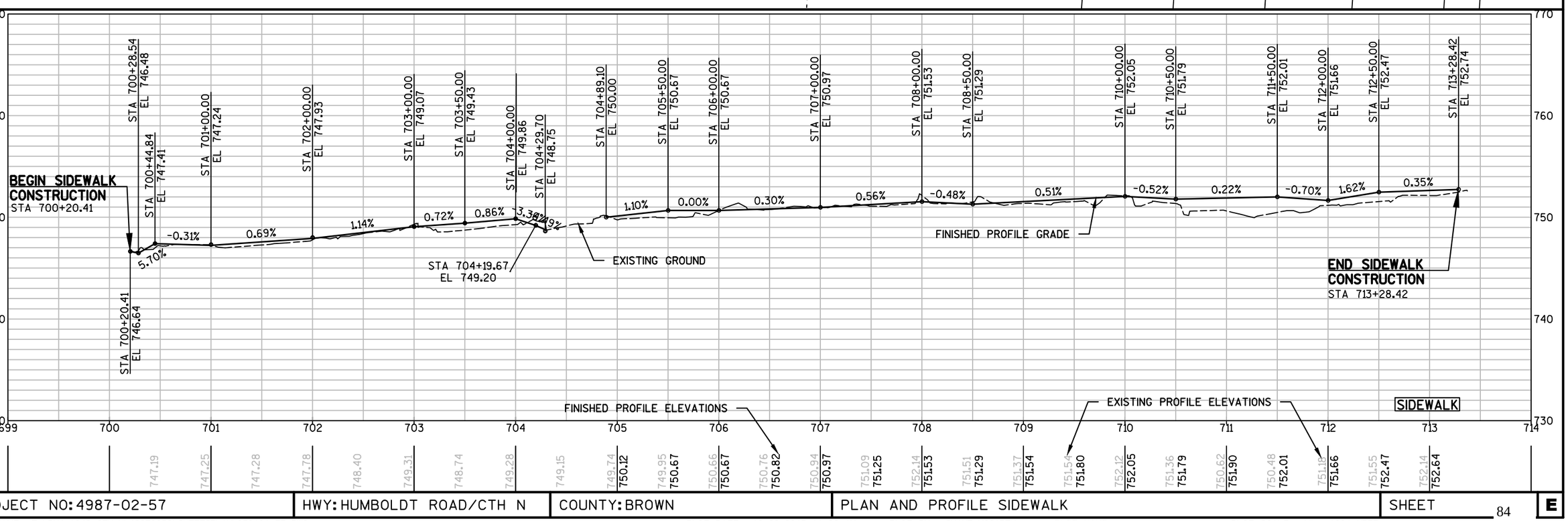

PROJECT NO: 4987-02-57	HWY: HUMBOLDT ROAD/CTH N	COUNTY: BROWN	PLAN AND PROFILE SIDEWALK	SHEET 84	E

RONALD J & MARY M GAUTHIER

DONNA MARIE PUYLEART

RONALD J & MARY M GAUTHIER

BASTEN FAMILY REAL ESTATE DEVELOPMENT LP

BASTEN FAMILY REAL ESTATE DEVELOPMENT LP

N

BEGIN ROADWAY CONSTRUCTION
STA 513+25.00
MATCH EXISTING CONCRETE

JEFFREY M WERY

STANLEY C ZDEB ETAL

BETTY M DE KEYSER

JOEY J DE KEYSER

LANDSCAPING TO REMAIN IN PLACE

REMOVE SMALL PIPE CULVERT

REMOVE BUSH

TLE

SLOPE INTERCEPT

R/W

5'

22'

512 514 516 518 520 522 524

CTH N

MATCHLINE 525+50

R/W TLE REMOVE SMALL PIPE CULVERT

TLE ROBERT & ELIZABETH VANDEN AVOND

SAVE TREE

ROBERT & ELIZABETH VANDEN AVOND

REMOVE SMALL PIPE CULVERT

R/W TLE

R/L CTH N

SLOPE INTERCEPT

REMOVE MASONRY (REMOVE CONCRETE FENCE POSTS) STA 520+07 TO 522+53

JOSEPH P & JERI L LEBEAU

MARIE D NIETO ETAL

BRANDON SCHLOTTHAUER

CAUTION

CITY OF GREEN BAY

CITY OF GREEN BAY

BASTEN FAMILY REAL ESTATE DEVELOPMENT LP

ROBERT J VANDEN AVOND

5

5

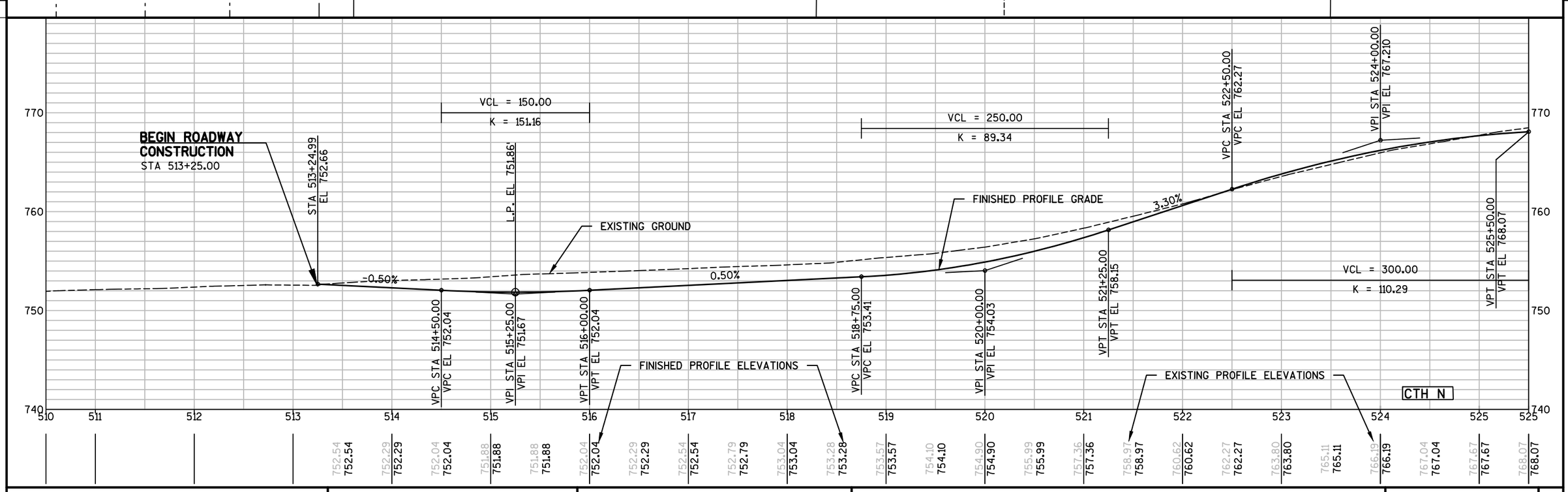

PROJECT NO: 4987-02-57	HWY: HUMBOLDT ROAD/CTH N	COUNTY: BROWN	PLAN AND PROFILE CTH N	SHEET 85	E

FILE NAME : F:\BM4-1048 CTH N\49870256\SHEETSPLAN\050101-PP.DWG
LAYOUT NAME - 050102-pp

PLOT DATE : 10/29/2015 3:33 PM PLOT BY : SHANE MCCARTY PLOT NAME : PLOT SCALE : 1:100_XREF

WISDOT/CADDS SHEET 44

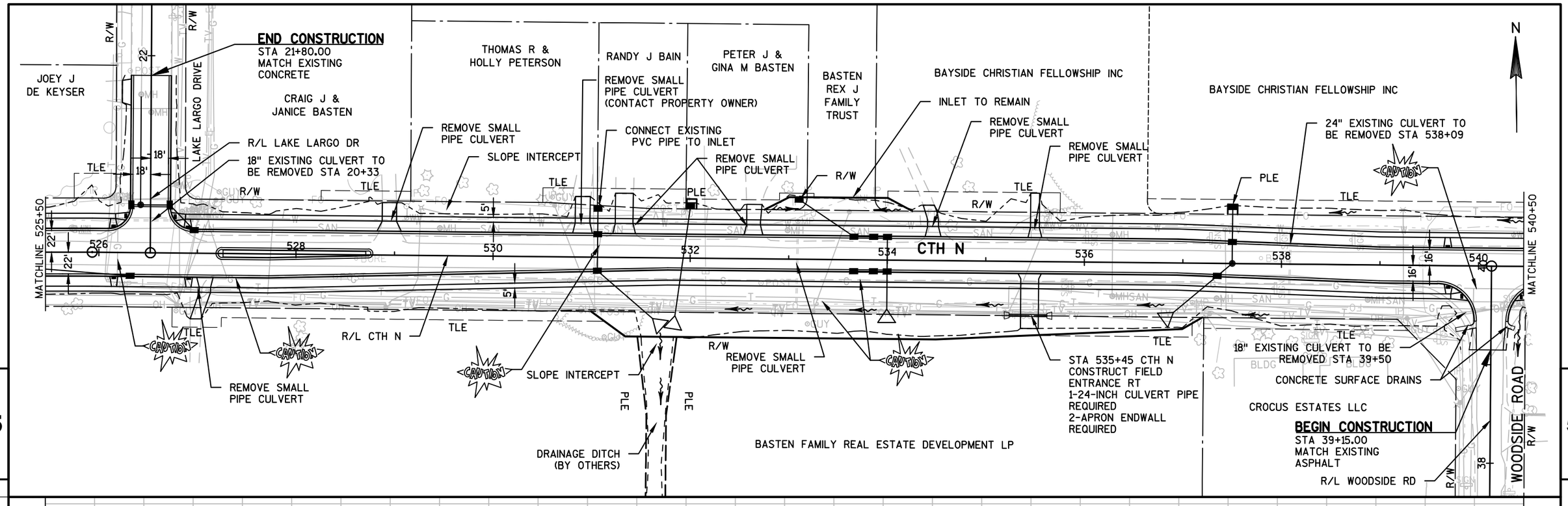

PROJECT NO: 4987-02-57	HWY: HUMBOLDT ROAD/CTH N	COUNTY: BROWN	PLAN AND PROFILE CTH N	SHEET 86	E

FILE NAME : F:\BM4-1048 CTH N\49870256\SHEETSPLAN\050101-PP.DWG
LAYOUT NAME - 050103-pp

PLOT DATE : 10/28/2015 1:49 PM PLOT BY : SHANE MCCARTY PLOT NAME : PLOT SCALE : **********

WISDOT/CADDS SHEET 44

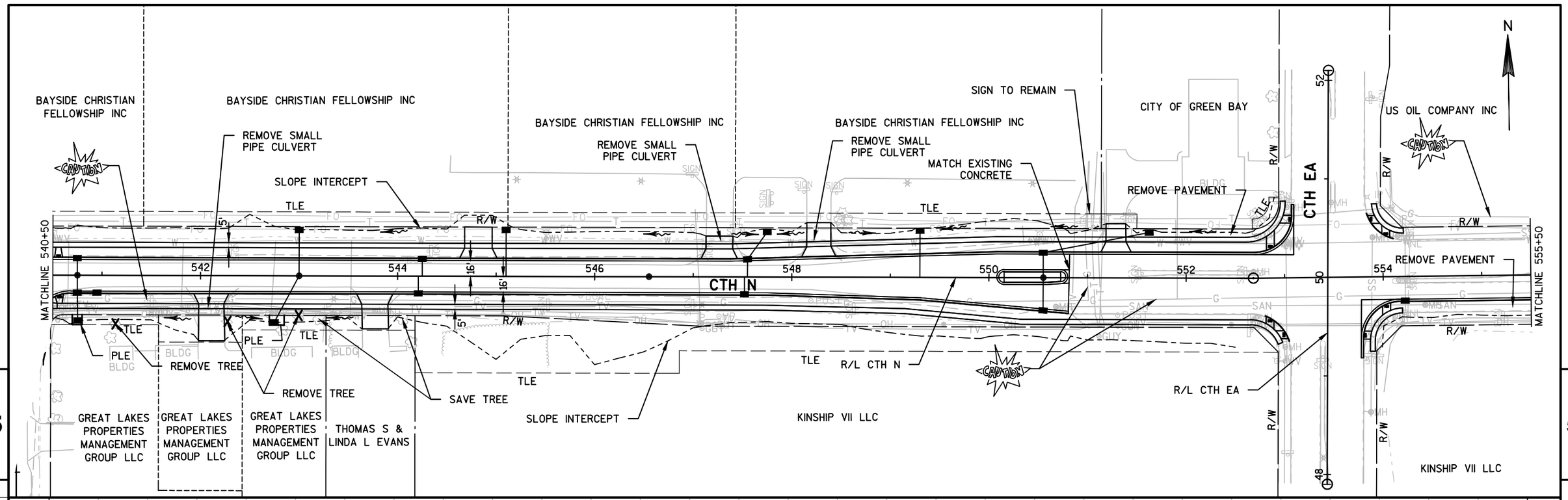

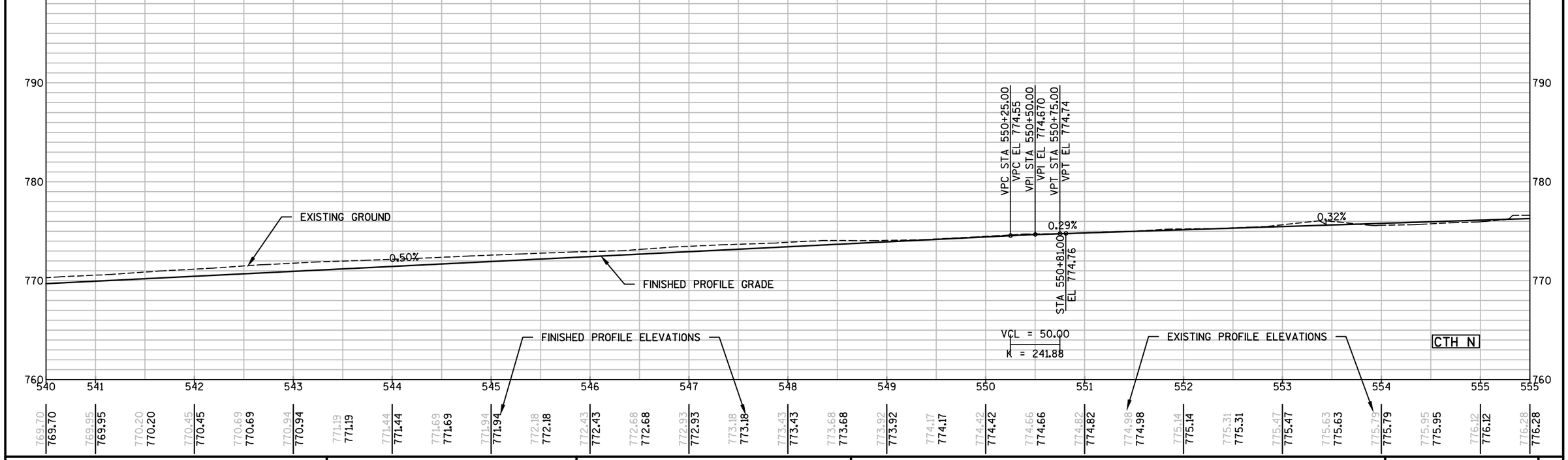

PROJECT NO: 4987-02-57	HWY: HUMBOLDT ROAD/CTH N	COUNTY: BROWN	PLAN AND PROFILE CTH N	SHEET 87	E

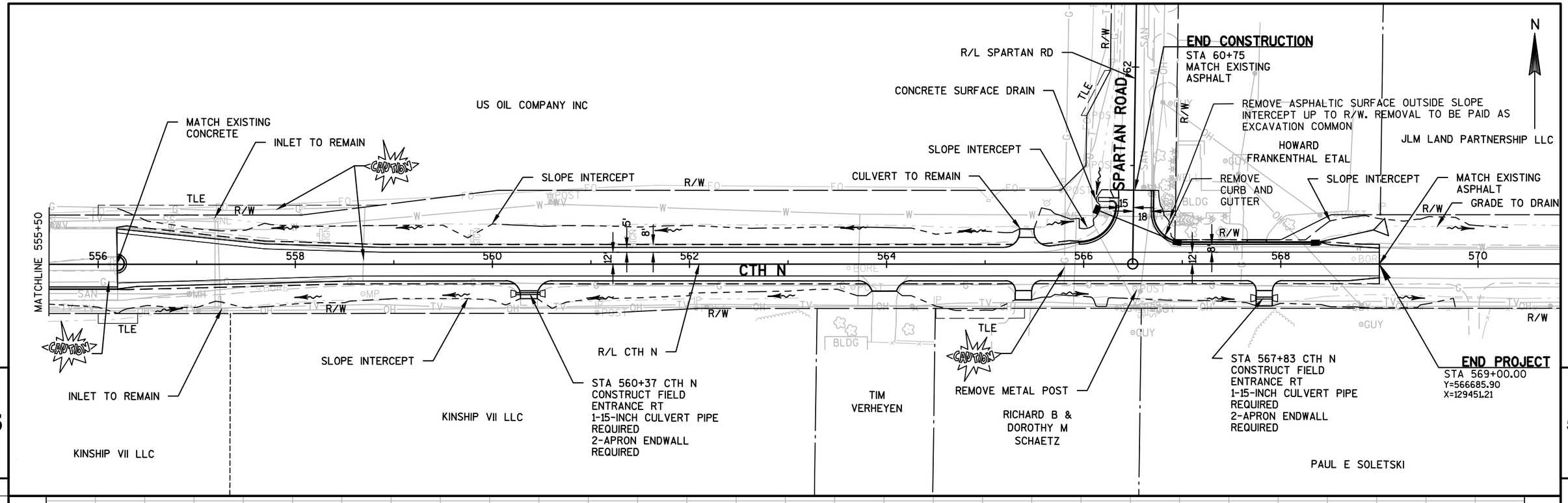

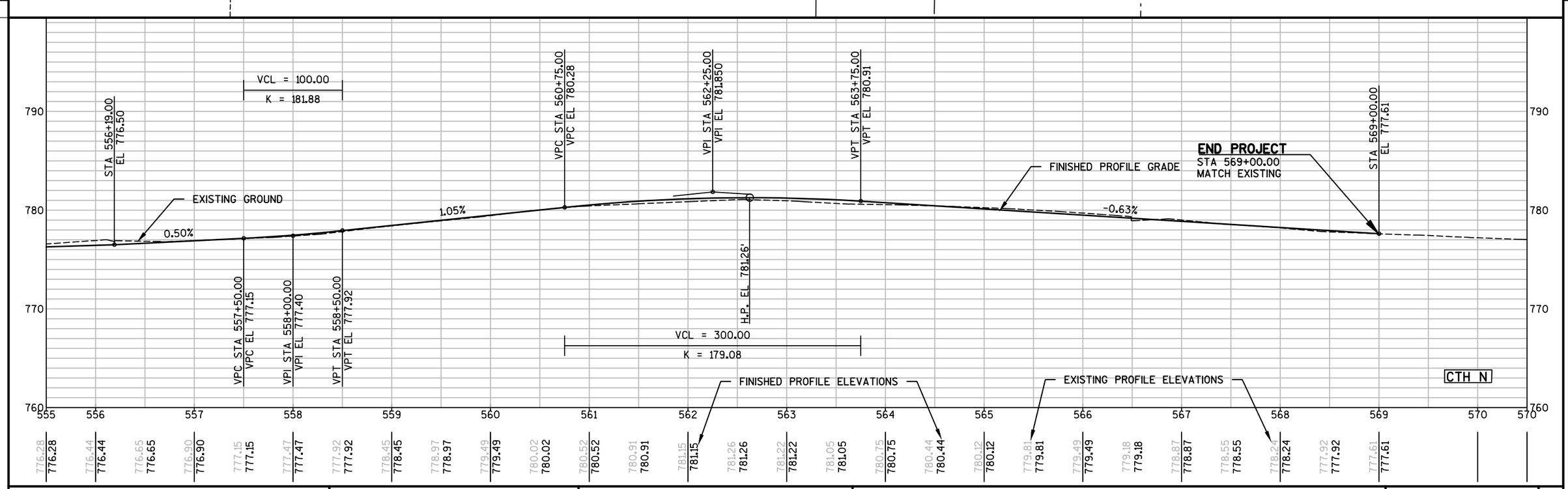

PROJECT NO: 4987-02-57	HWY: HUMBOLDT ROAD/CTH N	COUNTY: BROWN	PLAN AND PROFILE CTH N	SHEET 88	E

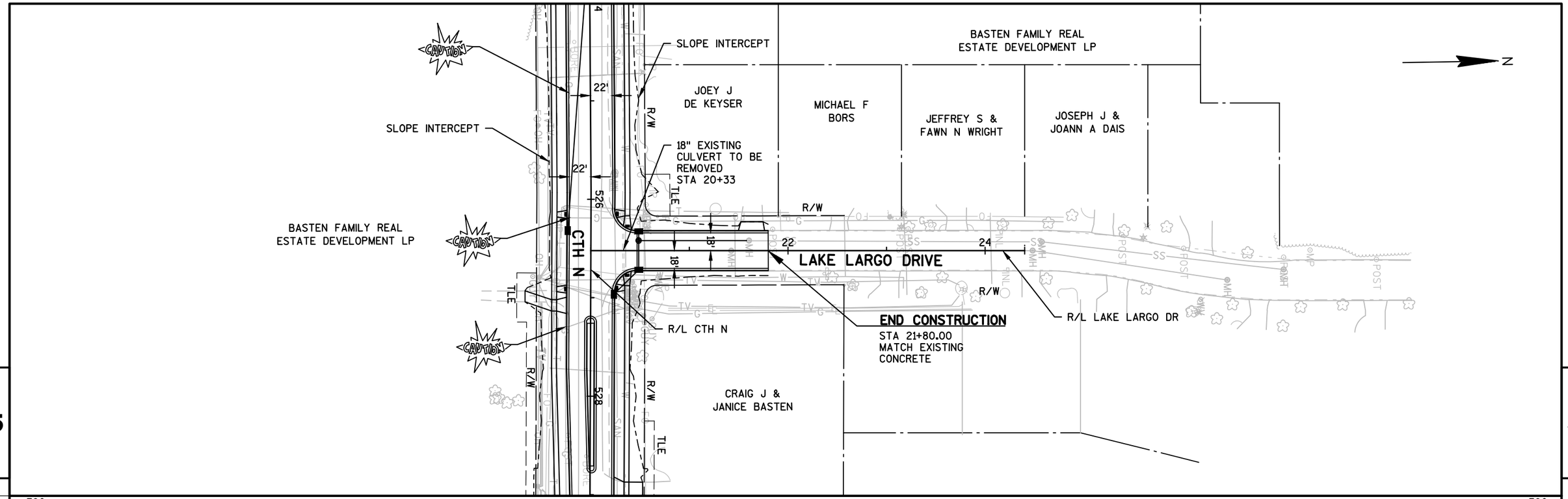

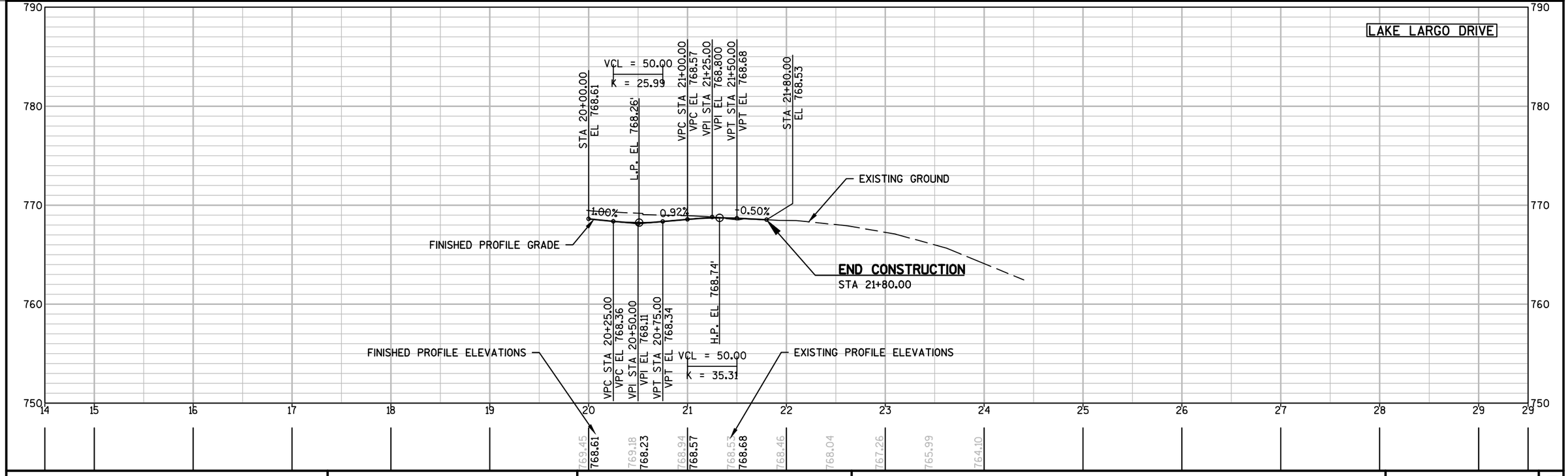

PROJECT NO: 4987-02-57	HWY: HUMBOLDT ROAD/CTH N	COUNTY: BROWN	PLAN AND PROFILE: LAKE LARGO DRIVE	SHEET 89	E

FILE NAME : F:\BM4-1048 CTH N\49870256\SHEETSPLAN\050102-PP.DWG
050106-pp

PLOT DATE : 10/27/2015 1:39 PM PLOT BY : CHAD EVEN PLOT NAME : PLOT SCALE : 1 IN:100 FT

WISDOT/CADDS SHEET 44

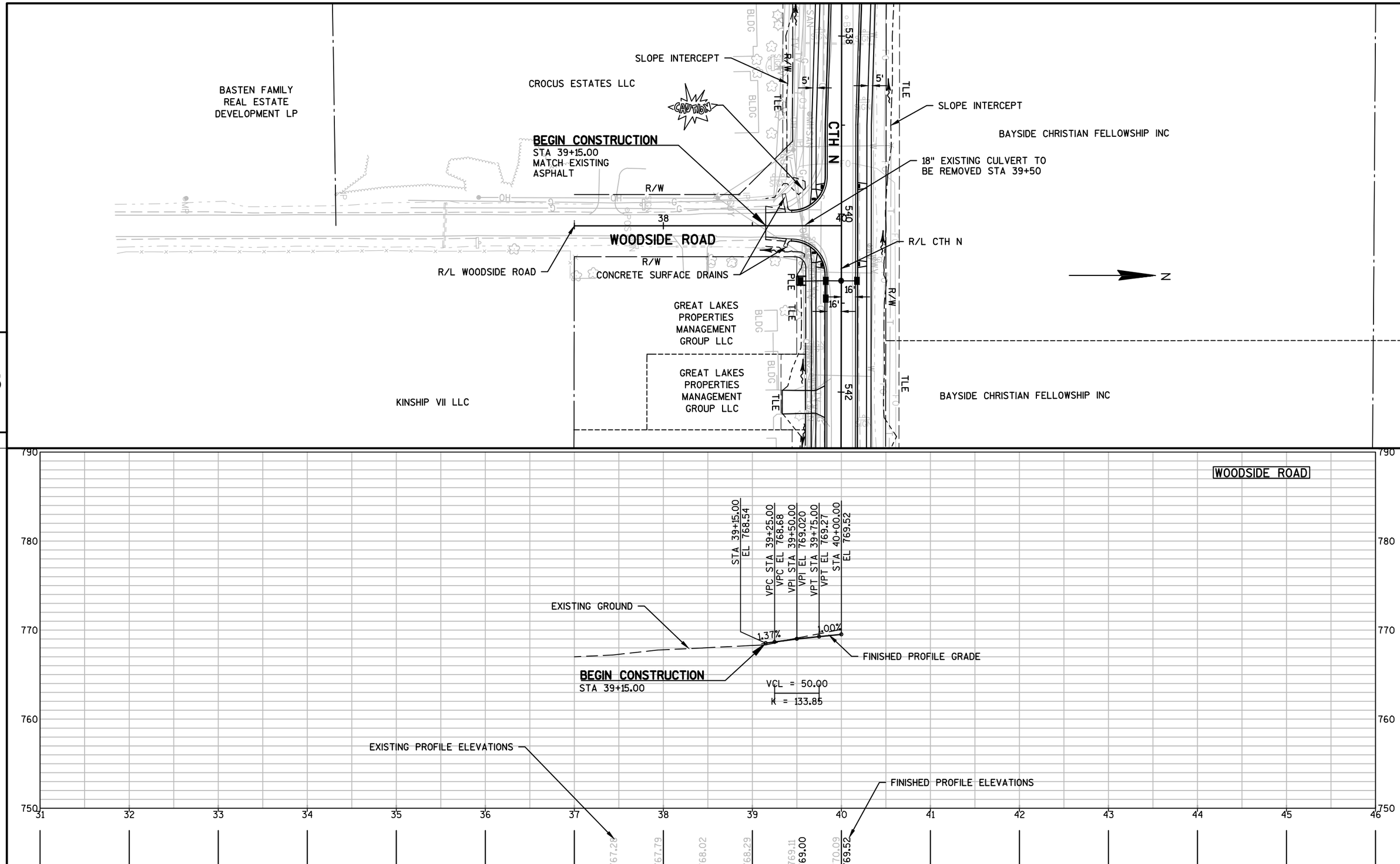

PROJECT NO:4987-02-57	HWY:HUMBOLDT ROAD/CTH N	COUNTY:BROWN	PLAN AND PROFILE: WOODSIDE ROAD	SHEET 90	E

FILE NAME : F:\BM4-1048 CTH N\49870256\SHEETSPLAN\050102-PP.DWG
LAYOUT NAME - 050107-pp
PLOT DATE : 10/23/2015 2:31 PM PLOT BY : CHAD EVEN PLOT NAME : PLOT SCALE : 1 IN:100 FT
WISDOT/CADDS SHEET 44

TIM M VERHEYEN

R/L CTH N

SLOPE INTERCEPT

SLOPE INTERCEPT

US OIL COMPANY INC

CULVERT TO REMAIN

CONCRETE SURFACE DRAIN

END CONSTRUCTION
STA 60+75
MATCH EXISTING
ASPHALT

RICHARD B &
DOROTHY M
SCHAETZ

SATELLITE LANE

SAR
INDUSTRIES LLC

BAY SETTLEMENT
INVESTMENTS LLC

CTH N

SPARTAN ROAD

R/L SPARTAN ROAD

REMOVE CURB AND GUTTER

REMOVE ASPHALTIC SURFACE OUTSIDE SLOPE INTERCEPT UP TO R/W. REMOVAL TO BE PAID AS EXCAVATION COMMON.

BASTEN REX J &
PEARL REVOCABLE TRUST

PAUL E SOLETSKI

HOWARD FRANKENTHAL ETAL

JLM LAND
PARTNERSHIP LLC

SLOPE INTERCEPT

5

5

N

SPARTAN ROAD

VCL = 50.00
K = 50.37

STA 60+00.00
EL 779.20

STA 60+25.00
EL 778.95

STA 60+75.00
EL 779.20

EXISTING GROUND

-1.00% 0.00% 1.00%

FINISHED PROFILE GRADE

END CONSTRUCTION
STA 60+75

VPC STA 60+25.00
VPC EL 778.95 L.P.

VPI STA 60+50.00
VPI EL 778.96

VPT STA 60+75.00
VPT EL 779.20

FINISHED PROFILE ELEVATIONS

EXISTING PROFILE ELEVATIONS

800 790 780 770 760

54 55 56 57 58 59 60 61 62 63 64 65 66 67 68 69

778.92 779.20 778.99 779.02 779.42 780.04 780.73 781.25 781.53

PROJECT NO: 4987-02-57	HWY: HUMBOLDT ROAD/CTH N	COUNTY: BROWN	PLAN AND PROFILE: SPARTAN ROAD	SHEET 91 E

FILE NAME : F:\BM4-1048 CTH N\49870256\SHEETSPLAN\050102-PP.DWG
LAYOUT NAME -050108-pp

PLOT DATE : 10/28/2015 5:50 PM PLOT BY : SHANE MCCARTY PLOT NAME : PLOT SCALE : 1 IN:100 FT

Standard Detail Drawing List

08A05-19A	INLET COVERS TYPE A, H, A-S, H-S & Z
08A05-19B	INLET COVERS TYPE B, B-A, C, MS, MS-A, & WM
08B09-01	MANHOLES 3-FT, 4-FT, 5-FT, 6-FT, 7-FT AND 8-FT DIAMETER
08C07-01	INLETS 2X2-FT, 2X2.5-FT, 2X3-FT AND 2.5X3-FT
08C08-01	INLETS MEDIAN 1 AND 2 GRATE
08D01-18	CONCRETE CURB, CONCRETE CURB AND GUTTER AND TIES
08D04-05	CONCRETE SURFACE DRAINS & ASPHALTIC FLUMES
08D05-16A	CURB RAMPS TYPES 1 AND 1-A
08D05-16B	CURB RAMPS TYPES 2 AND 3
08D05-16C	CURB RAMPS TYPES 4A AND 4A1
08D05-16D	CURB RAMPS TYPE 4B AND 4B1
08D05-16E	CURB RAMPS TYPES 5, 6, 7A, 7B & 8
08E08-03	TYPICAL INSTALLATIONS OF EROSION BALES / TEMPORARY DITCH CHECKS
08E09-06	SILT FENCE
08E10-02	INLET PROTECTION TYPE A, B, C AND D
08F01-11	APRON ENDWALLS FOR CULVERT PIPE
08F04-07	JOINT TIES FOR CONCRETE PIPE AND CONCRETE COLLAR DETAIL
09A01-13A	AT-GRADE SIDE ROAD INTERSECTION, TYPES "B1", "B2", "C" AND D AND TEE INTERSECTION BYPASS LANE
11B02-02	CONCRETE MEDIAN NOSE
13C01-18	CONCRETE PAVEMENT LONGITUDINAL JOINTS AND TIES
13C13-08	URBAN DOWELED CONCRETE PAVEMENT
13C18-03A	CONCRETE PAVEMENT JOINTING
13C18-03B	CONCRETE PAVEMENT STEEL REINFORCEMENT
13C18-03C	CONCRETE PAVEMENT JOINT TIES
13C18-03D	CONCRETE PAVEMENT JOINTING AT UTILITY FIXTURES
15C02-05A	BARRICADES AND SIGNS FOR MAINLINE CLOSURES
15C02-05B	BARRICADES AND SIGNS FOR MAINLINE CLOSURES
15C02-05C	DETOUR SIGNING FOR MAINLINE CLOSURES
15C03-02	BARRICADES AND SIGNS FOR SIDEROAD CLOSURES
15C05-02	TRAFFIC CONTROL, ADVANCE WARNING SIGNS 40 M.P.H. OR LESS
15C07-12B	PAVEMENT MARKING WORDS
15C07-12C	PAVEMENT MARKING ARROWS
15C08-16A	PAVEMENT MARKING (MAINLINE)
15C08-16B	PAVEMENT MARKING (INTERSECTIONS)
15C08-16E	PAVEMENT MARKING (LEFT TURN LANE)
15C08-16F	PAVEMENT MARKING (ISLANDS)
15C12-04	TRAFFIC CONTROL FOR LANE CLOSURE (SUITABLE FOR MOVING OPERATIONS)
15C18-03	MEDIAN ISLAND MARKING

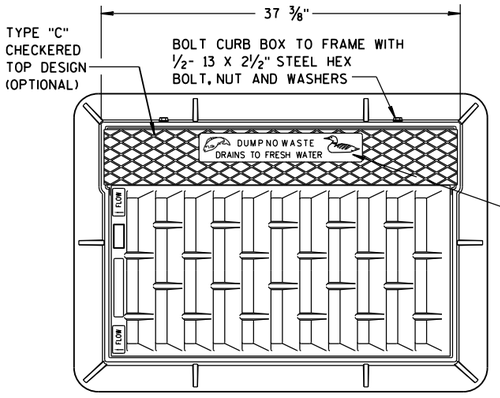

NOTE:
GRATE IS REVERSIBLE.

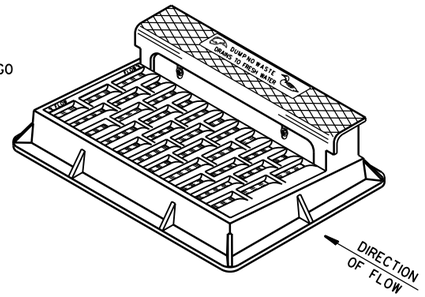

NOTE: CURB BOX HEIGHT ADJUSTABLE 6" TO 9"

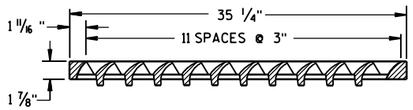

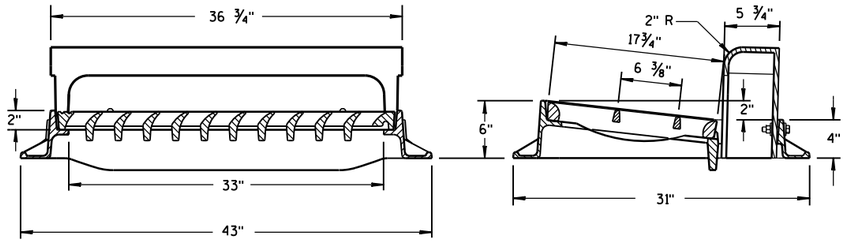

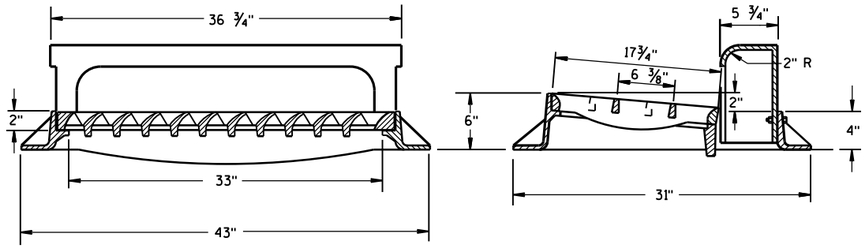

TYPE "H"

NOTE: EITHER CASTING IS ACCEPTABLE

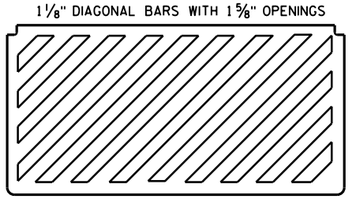

SPECIAL GRATE FOR TYPE "H" COVER

(MEASURES 35 1/4" X 17 3/4" X 2")

(NOTED AS TYPE H-S ON DRAINAGE TABLE)

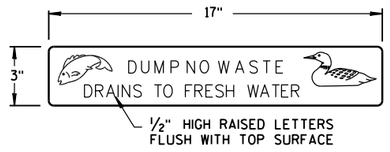

LOGO DETAIL

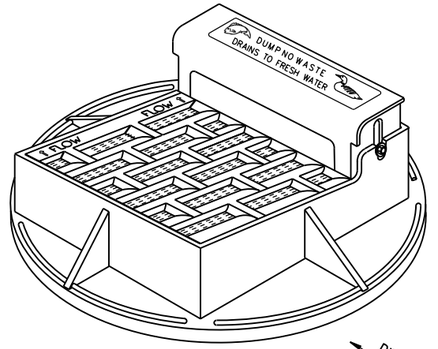

NOTE: CURB BOX ADJUSTABLE 4" TO 9"

NOTE:
GRATE IS REVERSIBLE.

GENERAL NOTES

DETAILS OF CONSTRUCTION, MATERIALS AND WORKMANSHIP NOT SHOWN ON THIS DRAWING SHALL CONFORM TO THE PERTINENT REQUIREMENTS OF THE STANDARD SPECIFICATIONS AND THE APPLICABLE SPECIAL PROVISIONS.

DETAIL DRAWINGS FOR PROPOSED ALTERNATE DESIGNS FOR CATCH BASIN, MANHOLE AND INLET COVERS SHALL BE SUBMITTED TO THE ENGINEER FOR APPROVAL PROVIDING THAT SUCH ALTERNATE DESIGNS MAKE PROVISION FOR EQUIVALENT CAPACITY AND STRENGTH.

ROUND FRAMES AND COVERS SHALL HAVE CONTINUOUSLY MACHINED BEARING SURFACES TO PREVENT ROCKING AND RATTLING.

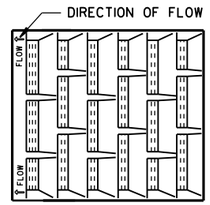

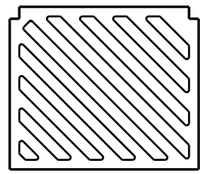

SPECIAL GRATE FOR TYPE "A" COVER

(MEASURES 19 3/4" X 17" X 1 7/8")

(NOTED AS TYPE A-S ON DRAINAGE TABLE)

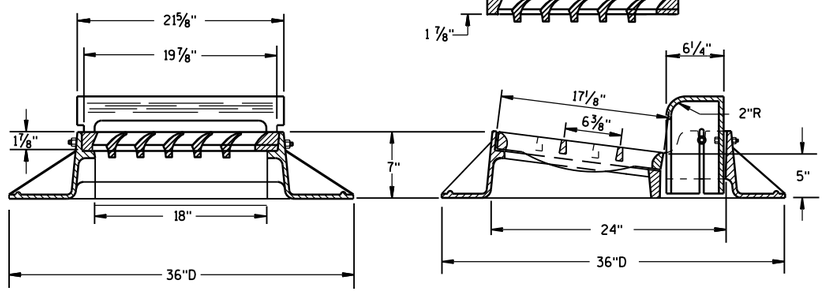

TYPE "A"

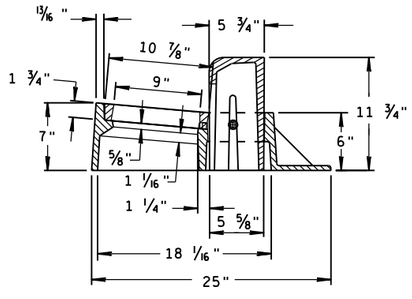

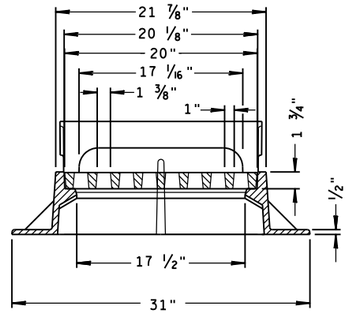

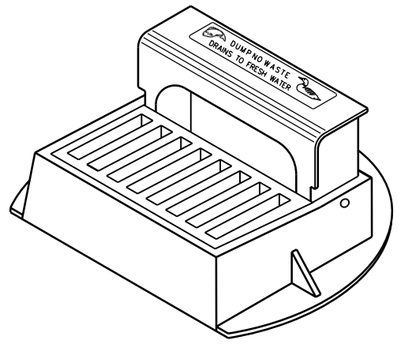

TYPE "Z"

INLET COVERS
TYPE A, H, A-S, H-S & Z

STATE OF WISCONSIN
DEPARTMENT OF TRANSPORTATION

APPROVED
11-27-13 — DATE
/S/ Jerry H. Zogg — ROADWAY STANDARDS ENGINEER
FHWA

6

S.D.D. 8 A 5-19a

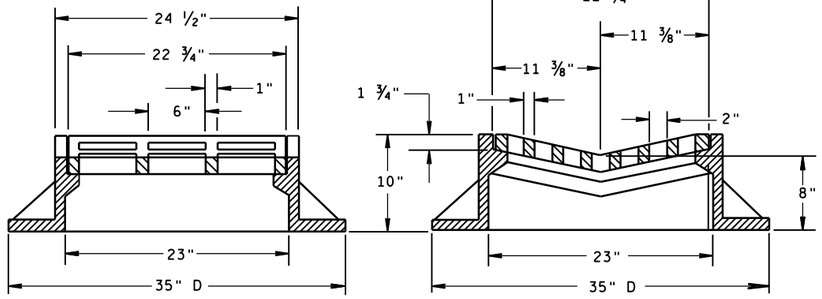

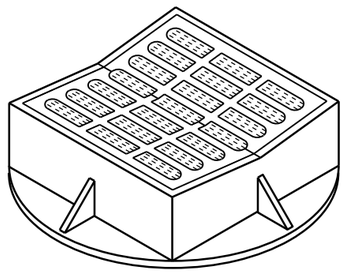

TYPE "B"

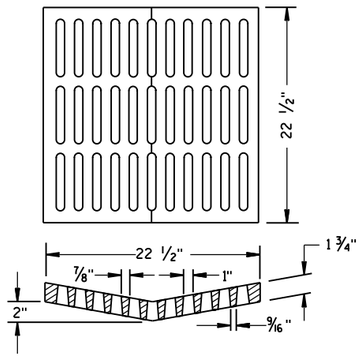

ALTERNATIVE GRATE FOR TYPE "B" COVER

USE WHERE PEDESTRIAN OR BICYCLE TRAFFIC IS POSSIBLE.
NOTED AS TYPE B-A ON THE DRAINAGE TABLE

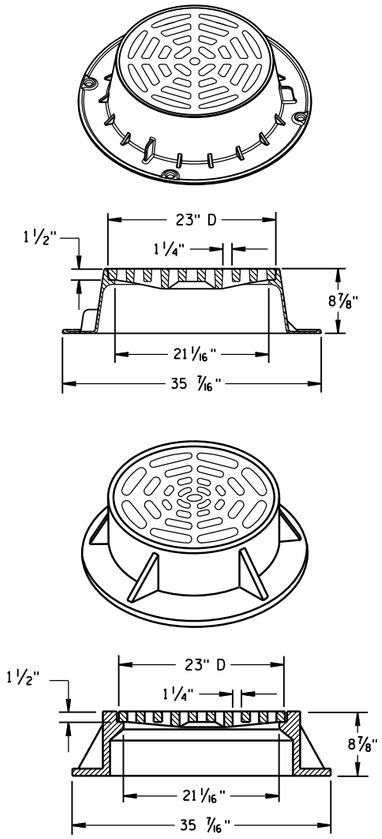

TYPE "C"

NOTE: EITHER CASTING IS ACCEPTABLE

GENERAL NOTES

DETAILS OF CONSTRUCTION, MATERIALS AND WORKMANSHIP NOT SHOWN ON THIS DRAWING SHALL CONFORM TO THE PERTINENT REQUIREMENTS OF THE STANDARD SPECIFICATIONS AND THE APPLICABLE SPECIAL PROVISIONS.

DETAIL DRAWINGS FOR PROPOSED ALTERNATE DESIGNS FOR CATCH BASIN, MANHOLE AND INLET COVERS SHALL BE SUBMITTED TO THE ENGINEER FOR APPROVAL PROVIDING THAT SUCH ALTERNATE DESIGNS MAKE PROVISION FOR EQUIVALENT CAPACITY AND STRENGTH.

ROUND FRAMES AND COVERS SHALL HAVE CONTINUOUSLY MACHINED BEARING SURFACES TO PREVENT ROCKING AND RATTLING.

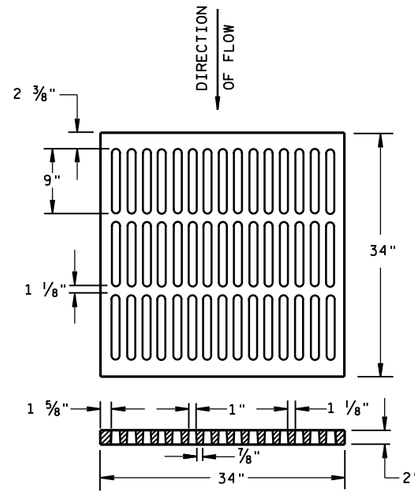

ALTERNATIVE TYPE "MS"

USE WHERE PEDESTRIAN OR BICYCLE TRAFFIC IS PERMITTED
NOTED AS TYPE MS-A ON THE DRAINAGE TABLE

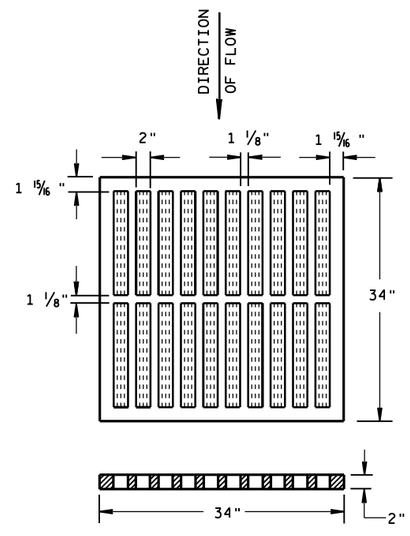

TYPE "MS"

USE ON FREEWAYS AND EXPRESSWAYS
NOTED AS TYPE MS ON DRAINAGE TABLE

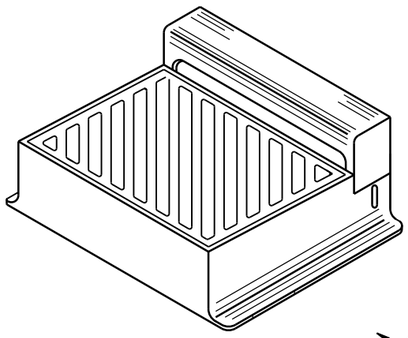

DIAGONAL SLOTS, SHALL BE ORIENTED TO THE DIRECTION OF FLOW AS ILLUSTRATED. GRATES ARE MANUFACTURED TO BE REVERSIBLE.

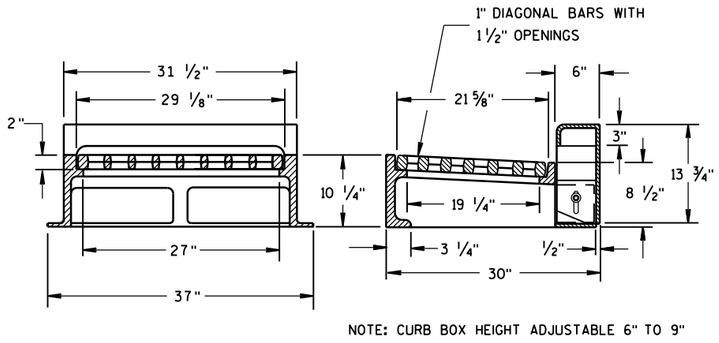

NOTE: CURB BOX HEIGHT ADJUSTABLE 6" TO 9"

TYPE "WM"

INLET COVERS
TYPE B, B-A, C, MS, MS-A, & WM

STATE OF WISCONSIN
DEPARTMENT OF TRANSPORTATION

APPROVED
11/27/2013 — DATE
/S/ Jerry H. Zogg — ROADWAY STANDARDS ENGINEER
FHWA

6

S.D.D. 8 A 5-19b

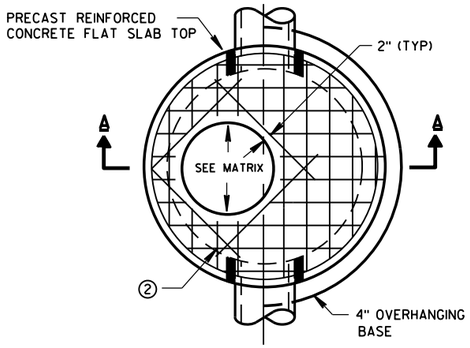

PLAN VIEW CIRCULAR OPENING

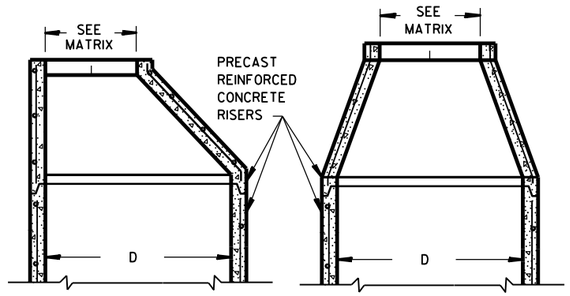

OPTIONAL PRECAST REINFORCED CONCRETE ECCENTRIC TOP

OPTIONAL PRECAST REINFORCED CONCRETE CONCENTRIC TOP

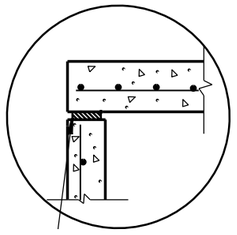

TOP WITH PLAIN END JOINT

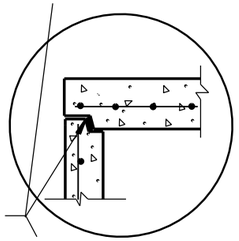

JOINTS TO BE SEALED WITH A BUTYL RUBBER SEAL PER SEALANT MANUFACTURERS RECOMMENDATIONS CONFORMING TO ASTM C990 (TYP)

TOP WITH TONGUE AND GROOVE JOINT

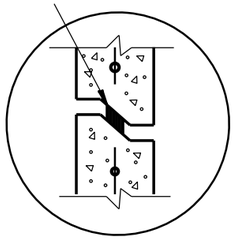

RISER WITH TONGUE AND GROOVE JOINT

DETAIL "B"

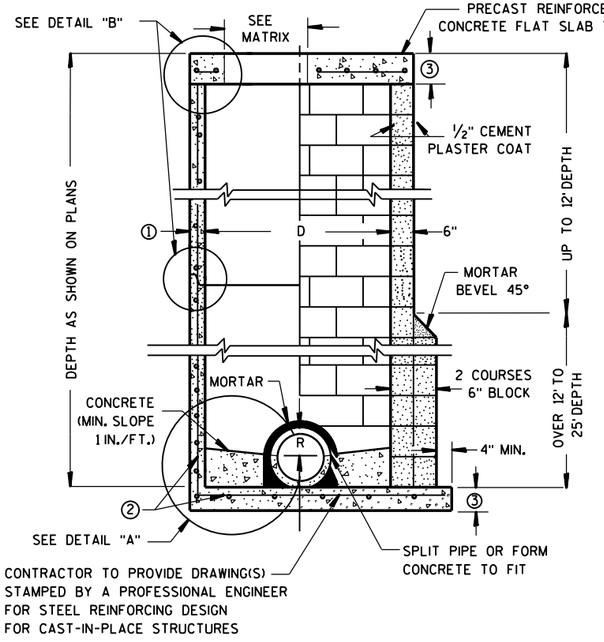

PRECAST REINFORCED CONCRETE WITH MONOLITHIC BASE

CONCRETE BLOCK WITH CAST-IN-PLACE OR PRECAST REINFORCED CONCRETE BASE ②

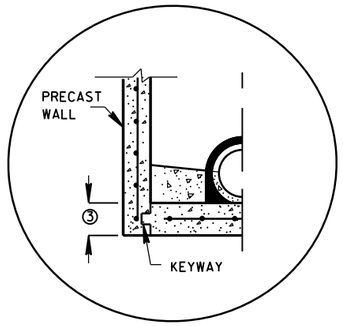

PRECAST REINFORCED CONCRETE WITH INTEGRAL BASE OPTION

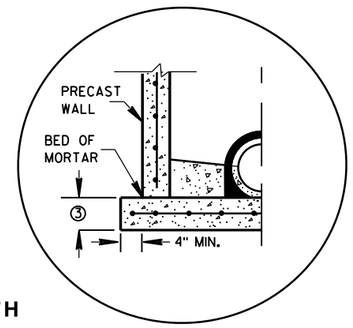

SEPARATE PRECAST REINFORCED CONCRETE BASE OPTION

DETAIL "A"

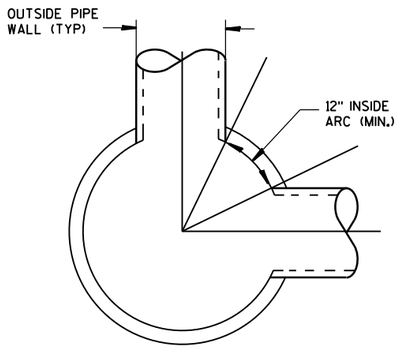

DETAIL "C"

GENERAL NOTES

DETAILS OF CONSTRUCTION, MATERIALS AND WORKMANSHIP NOT SHOWN ON THIS DRAWING SHALL CONFORM TO THE PERTINENT REQUIREMENTS OF THE STANDARD SPECIFICATIONS AND THE APPLICABLE SPECIAL PROVISIONS.

UNLESS OTHERWISE AUTHORIZED IN WRITING BY THE ENGINEER, THE CONTRACTOR SHALL NOT ORDER AND DELIVER PRECAST MANHOLE UNITS REQUIRED FOR THE PROJECT UNTIL A LIST OF SIZES IS FURNISHED BY THE ENGINEER.

DETAILED DRAWINGS FOR PROPOSED ALTERNATE DESIGNS FOR UNDERGROUND DRAINAGE STRUCTURES SHALL BE SUBMITTED TO THE ENGINEER FOR APPROVAL PROVIDING THAT SUCH ALTERNATE DESIGNS MAKE PROVISION FOR EQUIVALENT CAPACITY AND STRENGTH.

ALL DRAINAGE STRUCTURES ARE DESIGNATED ON THE PLANS AS "MANHOLES 3X3-L", "CATCH BASINS 4-B", "INLETS 2X3-H", ETC. THE FIRST NUMBERS DESIGNATE THE SIZE OF THE STRUCTURE, AND THE FOLLOWING LETTER DESIGNATES THE TYPE OF COVER TO BE USED TO COMPRISE THE COMPLETE UNIT.

BASES SHALL BE PLACED ON A BED OF MATERIAL AT LEAST 6 INCHES IN DEPTH, WHICH MEETS THE REQUIREMENTS OF GRANULAR BACKFILL. THIS BEDDING SHALL BE COMPACTED AND PROVIDE UNIFORM SUPPORT FOR THE ENTIRE AREA OF THE BASE.

PRECAST REINFORCED CONE TOPS (ECCENTRIC OR CONCENTRIC) OR PRECAST REINFORCED FLAT SLAB TOPS MAY BE USED ON CONCRETE BLOCK STRUCTURES. THE CONE TOPS SHALL BE INSTALLED ON A BED OF MORTAR.

ECCENTRIC CONE TOPS MAY BE USED ON ALL STRUCTURES, AND CONCENTRIC CONE TOPS SHALL BE USED ONLY ON STRUCTURES 5 FEET OR LESS IN DEPTH, UNLESS OTHERWISE DIRECTED BY THE ENGINEER.

STEPS MEETING AASHTO M199 AND THE FOLLOWING REQUIREMENTS SHALL BE INSTALLED IN ALL STRUCTURES OVER 5 FEET IN DEPTH: 16 INCH C-C MAXIMUM SPACING; PROJECT A MINIMUM CLEAR DISTANCE OF 4 INCHES FROM THE WALL AT THE POINT OF EMBEDMENT; MINIMUM LENGTH OF 10 INCHES; MINIMUM WALL EMBEDMENT OF 3 INCHES. FERROUS METAL STEPS NOT PAINTED OR TREATED TO RESIST CORROSION SHALL HAVE A MINIMUM CROSS SECTIONAL DIMENSION OF 1 INCH.

STEPS OF APPROVED POLYPROPYLENE PLASTIC COATED REINFORCEMENT BAR ARE ACCEPTABLE. REINFORCING BAR MUST BE A MINIMUM OF ½" AND MEET THE REQUIREMENTS OF ASTM A615.

CERTIFICATION SHALL BE PROVIDED THAT INSTALLED STEPS WHEN TESTED IN ACCORDANCE WITH SECTION 10 OF AASHTO T280 CAN WITHSTAND A VERTICAL LOAD OF 800 LBS. AND A HORIZONTAL LOAD OF 400 LBS.

ALL BAR STEEL REINFORCEMENT SHALL BE EMBEDDED 2 INCHES CLEAR UNLESS OTHERWISE SHOWN OR NOTED.

CONCRETE BLOCK WILL NOT BE PERMITED FOR STRUCTURES GREATER THAN 4 FEET IN DIAMETER.

PRECAST REINFORCED RISERS SHALL HAVE A TONGUE AND GROOVE JOINT WITH TONGUE UP OR DOWN.

ALL PRECAST MANHOLE UNITS SHALL CONFORM TO THE PERTINENT REQUIREMENTS OF AASHTO DESIGNATION M 199.

4" OVERHANGING BASES ARE REQUIRED FOR ALL CONCRETE BLOCK INSTALLATIONS. 4" OVERHANG IS REQUIRED WHEN SEPARATE PRECAST BASE IS PROVIDED. OVERHANG IS NOT REQUIRED ON PRECAST STRUCTURES WITH AN INTEGRAL OR MONOLITHIC BASE.

FOR ADDITIONAL CONFIGURATIONS, MAINTAIN A MINIMUM OF 12 INCHES AS MEASURED FROM THE INSIDE OF THE STRUCTURE WALL BETWEEN THE OUTSIDE PIPE WALLS OF ADJACENT PIPES. SEE DETAIL "C".

① MINIMUM WALL THICKNESS SHALL BE 4 INCHES FOR 3-FT, 5 INCHES FOR 4-FT, 6 INCHES FOR 5-FT, 7 INCHES FOR 6-FT, 8 INCHES FOR 7-FT AND 9 INCHES FOR 8-FT DIAMETER PRECAST MANHOLES.

② FOR PRECAST MANHOLES PROVIDE REINFORCING STEEL IN ACCORDANCE TO AASHTO M199.

③ PRECAST FLAT SLAB TOPS AND BASES WITH A DIAMETER OF 48" AND LESS SHALL HAVE A MINIMUM THICKNESS OF 6". PRECAST FLAT SLAB TOPS AND BASES WITH A DIAMETER LARGER THAN 48" SHALL HAVE A MINIMUM THICKNESS OF 8".

MANHOLE COVER OPENING MATRIX

MANHOLE COVER TYPE	C	ALL J'S	K	L	M
OPENING SIZE (FT)					
2 DIA.	X	X		X	
3 DIA.			X		X

PIPE MATRIX

MANHOLE SIZE	MAXIMUM INSIDE PIPE DIAMETER FOR TWO PIPES	
	180° SEPARATION (IN)	90° SEPARATION (IN)
3-FT	15	12
4-FT	24	18
5-FT	36	24
6-FT	42	36
7-FT	48	36
8-FT	60	42

MANHOLES 3-FT, 4-FT, 5-FT, 6-FT, 7-FT AND 8-FT DIAMETER

STATE OF WISCONSIN
DEPARTMENT OF TRANSPORTATION

APPROVED
6/5/2012 — DATE
/S/ Jerry H. Zogg — ROADWAY STANDARDS DEVELOPMENT ENGINEER
FHWA

S.D.D. 8 B 9-1

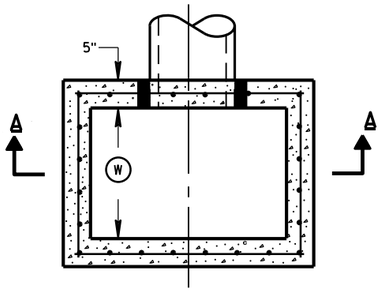

PLAN VIEW

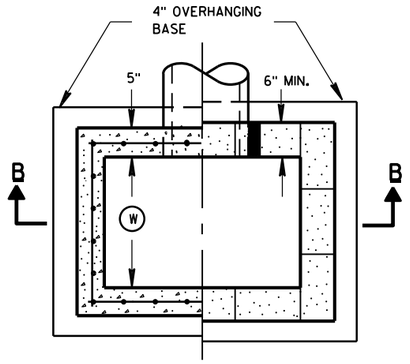

PLAN VIEW

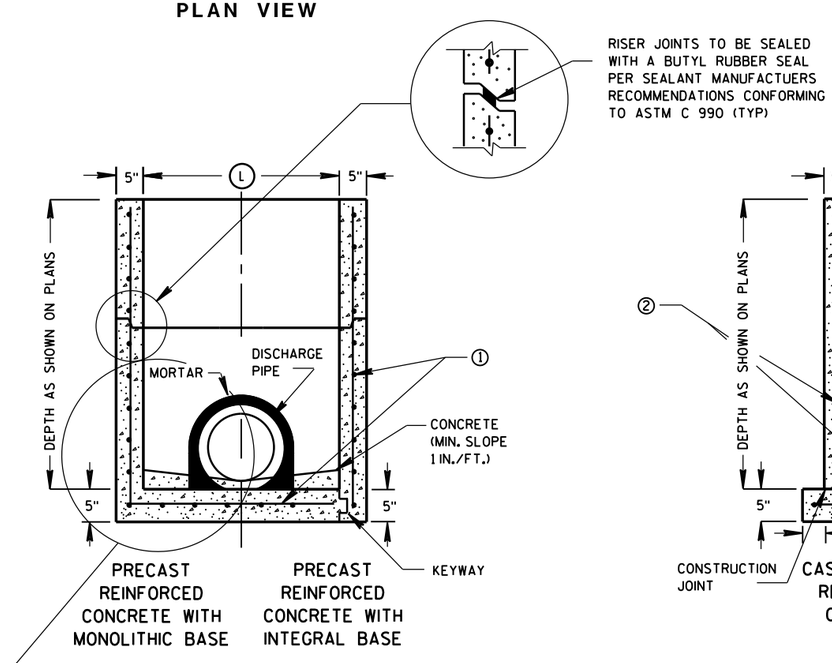

SECTION A-A

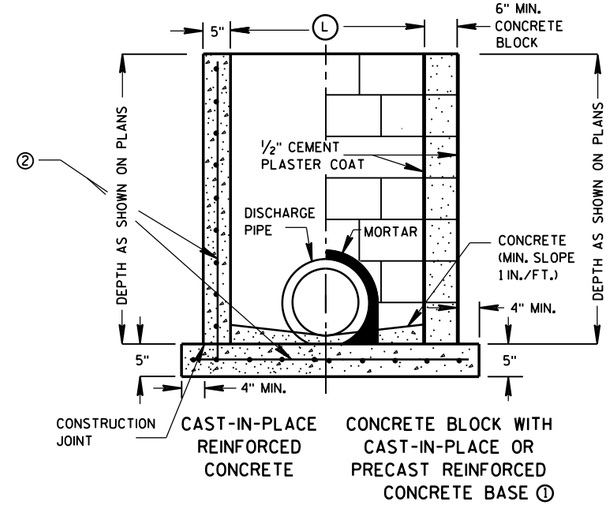

SECTION B-B

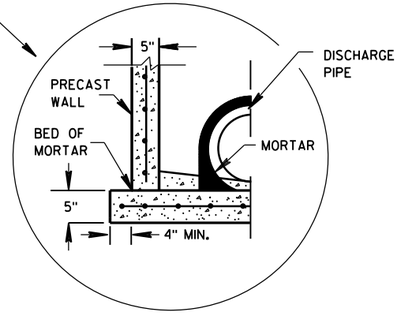

SEPARATE PRECAST REINFORCED CONCRETE BASE OPTION

GENERAL NOTES

DETAILS OF CONSTRUCTION, MATERIALS AND WORKMANSHIP NOT SHOWN ON THIS DRAWING SHALL CONFORM TO THE PERTINENT REQUIREMENTS OF THE STANDARD SPECIFICATIONS AND THE APPLICABLE SPECIAL PROVISIONS.

UNLESS OTHERWISE AUTHORIZED IN WRITING BY THE ENGINEER, THE CONTRACTOR SHALL NOT ORDER AND DELIVER PRECAST INLET UNITS REQUIRED FOR THE PROJECT UNTIL A LIST OF SIZES IS FURNISHED BY THE ENGINEER.

DETAILED DRAWINGS FOR PROPOSED ALTERNATE DESIGNS FOR UNDERGROUND DRAINAGE STRUCTURES SHALL BE SUBMITTED TO THE ENGINEER FOR APPROVAL PROVIDING THAT SUCH ALTERNATE DESIGNS MAKE PROVISION FOR EQUIVALENT CAPACITY AND STRENGTH.

ALL PRECAST INLET UNITS SHALL CONFORM TO THE PERTINENT REQUIREMENTS OF ASTM C 913.

ALL DRAINAGE STRUCTURES ARE DESIGNATED ON THE PLANS AS "MANHOLES 3X3-L", "CATCH BASINS 4-B", "INLETS 2X3-H", ETC. THE FIRST NUMBERS DESIGNATES THE SIZE OF THE STRUCTURE, AND THE FOLLOWING LETTER DESIGNATES THE TYPE OF COVER TO BE USED TO COMPRISE THE COMPLETE UNIT.

BASES SHALL BE PLACED ON A BED OF MATERIAL AT LEAST 6 INCHES IN DEPTH, WHICH MEETS THE REQUIREMENTS OF GRANULAR BACKFILL. THIS BEDDING SHALL BE COMPACTED AND PROVIDE UNIFORM SUPPORT FOR THE ENTIRE AREA OF THE BASE.

ALL BAR STEEL REINFORCEMENT SHALL BE EMBEDDED 2 INCHES CLEAR UNLESS OTHERWISE SHOWN OR NOTED.

PRECAST REINFORCED RISERS SHALL HAVE A TONGUE AND GROOVE JOINT WITH TONGUE UP OR DOWN.

4" OVERHANGING BASES ARE REQUIRED FOR CAST-IN-PLACE REINFORCED CONCRETE AND CONCRETE BLOCK INSTALLATIONS.
4" OVERHANG IS REQUIRED WHEN SEPARATE PRECAST BASE IS PROVIDED.
OVERHANG IS NOT REQUIRED ON PRECAST STRUCTURES WITH AN INTEGRAL OR MONOLITHIC BASE.

MAXIMUM INSIDE PIPE DIAMETER DETERMINED BY 3 INCH CLEARANCE ON EACH SIDE OF THE OUTSIDE WALL OF THE PIPE. SEE DETAIL "A". ASSUMES PIPE ENTERS PERPENDICULAR TO THE STRUCTURE.

① FOR PRECAST INLETS PROVIDE REINFORCING STEEL IN ACCORDANCE TO ASTM C 913.

② CONTRACTOR TO PROVIDE DRAWING(S) STAMPED BY A PROFESSIONAL ENGINEER FOR STEEL REINFORCING DESIGN FOR CAST-IN-PLACE STRUCTURES.

INLET COVER MATRIX

INLET SIZE		INLET COVER TYPE	ALL A'S	ALL B'S	BW	F	ALL H'S	S	T	V	WM
	WIDTH (W) (FT)	LENGTH (L) (FT)									
2X2-FT	2	2	X	X				X		X	
2X2.5-FT	2	2.5			X			X	X	X	X
2X3-FT	2	3					X				
2.5X3-FT	2.5	3				X					

PIPE MATRIX

INLET SIZE	MAXIMUM INSIDE PIPE DIAMETER	
	WIDTH (IN)	LENGTH (IN)
2X2-FT	12	12
2X2.5-FT	12	18
2X3-FT	12	24
2.5X3-FT	18	24

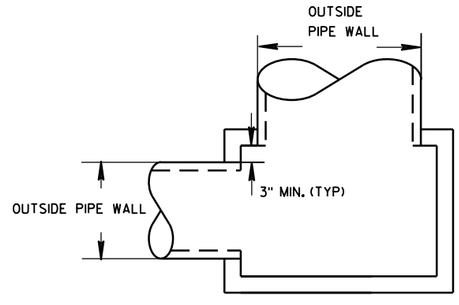

DETAIL "A"

INLETS 2X2-FT, 2X2.5-FT, 2X3-FT AND 2.5X3-FT

STATE OF WISCONSIN
DEPARTMENT OF TRANSPORTATION

APPROVED
6/5/2012
DATE
FHWA

/S/ Jerry H. Zogg
ROADWAY STANDARDS DE
ENGINEER

6
S.D.D. 8 C 7-1

INLETS 2X2-FT, 2X2.5-FT, 2X3-FT AND 2.5X3-FT

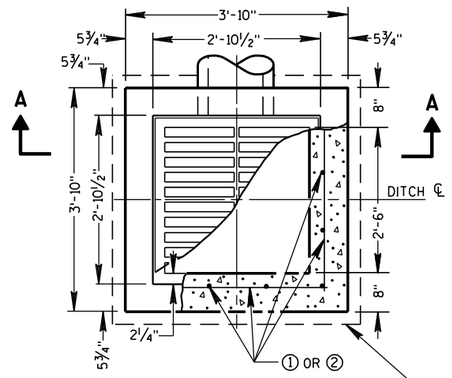

PLAN VIEW

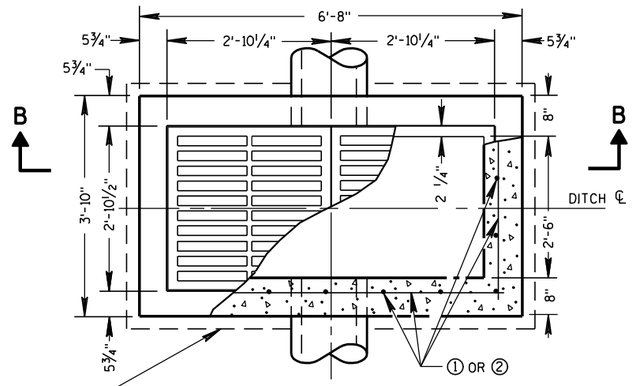

PLAN VIEW

4" OVERHANGING BASE ON REINFORCED CAST-IN-PLACE CONCRETE INLETS

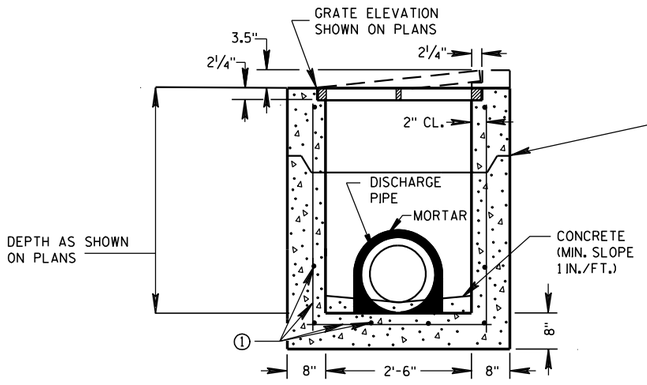

PRECAST REINFORCED CONCRETE SECTION A-A

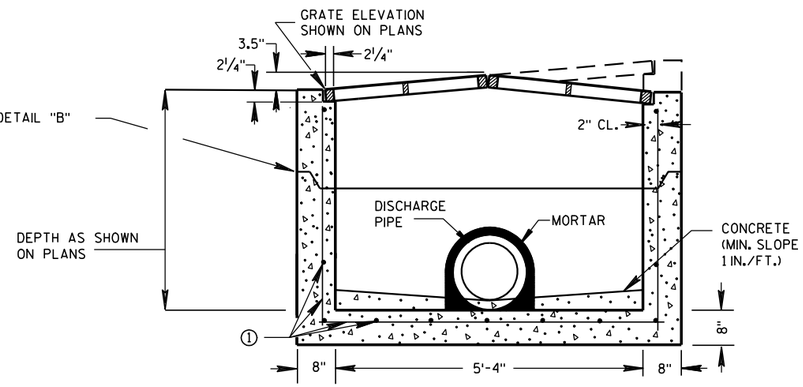

PRECAST REINFORCED CONCRETE SECTION B-B

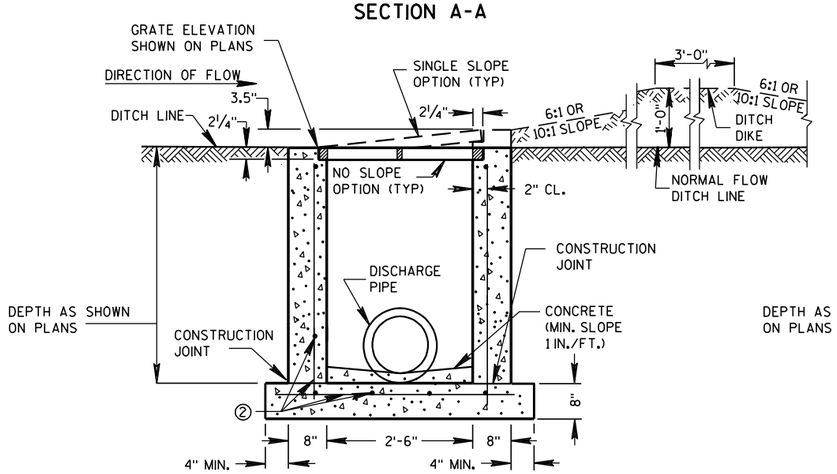

REINFORCED CAST-IN-PLACE CONCRETE SECTION A-A

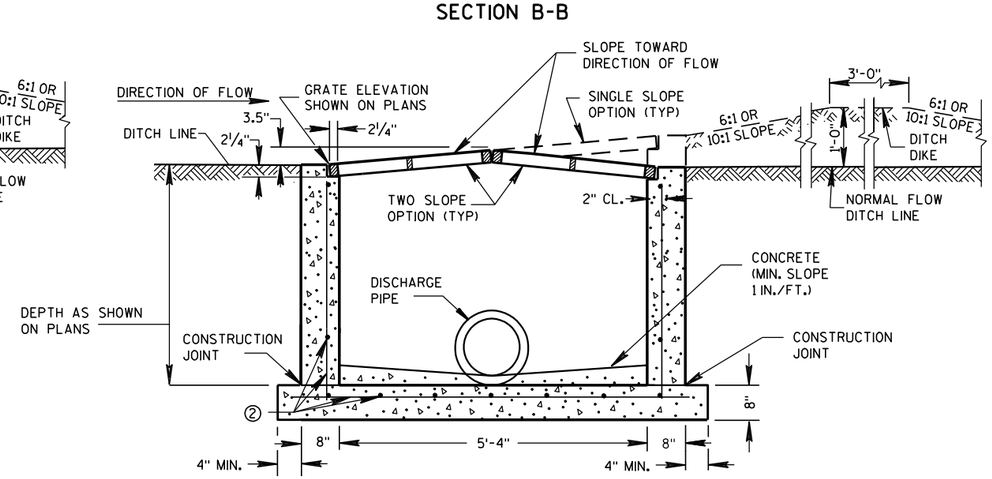

REINFORCED CAST-IN-PLACE CONCRETE SECTION B-B

INLETS MEDIAN 1 GRATE

INLETS MEDIAN 2 GRATE

GENERAL NOTES

DETAILS OF CONSTRUCTION, MATERIALS AND WORKMANSHIP NOT SHOWN ON THIS DRAWING SHALL CONFORM TO THE PERTINENT REQUIREMENTS OF THE STANDARD SPECIFICATIONS AND THE APPLICABLE SPECIAL PROVISIONS.

UNLESS OTHERWISE AUTHORIZED IN WRITING BY THE ENGINEER, THE CONTRACTOR SHALL NOT ORDER AND DELIVER PRECAST INLET UNITS REQUIRED FOR THE PROJECT UNTIL A LIST OF SIZES IS FURNISHED BY THE ENGINEER.

DETAILED DRAWINGS FOR PROPOSED ALTERNATE DESIGNS FOR INLETS WHICH MAY INCLUDE PRECAST REINFORCED CONCRETE INLETS, SHALL BE SUBMITTED TO THE ENGINEER FOR APPROVAL PROVIDING THAT SUCH ALTERNATE DESIGNS MAKE PROVISION FOR EQUIVALENT CAPACITY AND STRENGTH.

ALL MEDIAN INLETS ARE DESIGNATED ON THE PLANS AS "INLETS, 1G-MS", ETC. THE FIRST NUMBER AND LETTER DESIGNATE THE TYPE OF STRUCTURE, AND THE FOLLOWING LETTERS DESIGNATE THE TYPE OF COVER TO BE USED TO COMPRISE THE COMPLETE UNIT.

ALL BAR STEEL REINFORCEMENT SHALL BE EMBEDDED 2 INCHES CLEAR UNLESS OTHERWISE SHOWN OR NOTED.

PRECAST REINFORCED RISERS SHALL HAVE A TONGUE AND GROOVE JOINT WITH TONGUE UP OR DOWN.

ALL PRECAST INLET UNITS SHALL CONFORM TO THE PERTINENT REQUIREMENTS OF ASTM C 913.

MAXIMUM INSIDE PIPE DIAMETER DETERMINED BY 3" CLEARANCE ON EACH SIDE OF THE OUTSIDE WALL OF THE PIPE. SEE DETAIL "A". ASSUMES PIPE ENTERS PERPENDICULAR TO THE STRUCTURE.

① FOR PRECAST INLETS PROVIDE REINFORCING STEEL IN ACCORDANCE TO ASTM C 913.

② CONTRACTOR TO PROVIDE DRAWING(S) STAMPED BY A PROFESSIONAL ENGINEER FOR STEEL REINFORCING DESIGN FOR CAST-IN-PLACE STRUCTURES.

PIPE MATRIX

	MAXIMUM INSIDE PIPE DIAMETER	
INLET SIZE	WIDTH (IN)	LENGTH (IN)
1 GRATE	18	18
2 GRATE	18	42

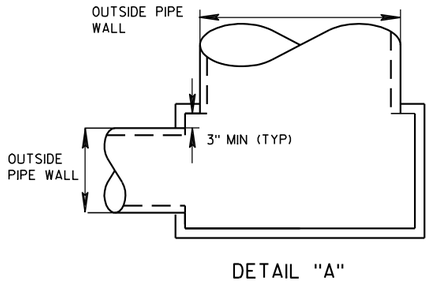

DETAIL "A"

JOINTS TO BE SEALED WITH A BUTYL RUBBER SEAL PER SEALANT MANUFACTURERS RECOMMENDATIONS CONFORMING TO ASTM C 990 (TYP)

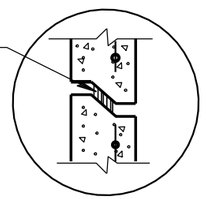

DETAIL "B"

INLETS MEDIAN 1 AND 2 GRATE

STATE OF WISCONSIN
DEPARTMENT OF TRANSPORTATION

APPROVED

6/5/2012
DATE

/S/ Jerry H. Zogg
ROADWAY STANDARDS ENGINEER

FHWA

6

S.D.D. 8 C 8-1

6

S.D.D. 8 C 8-1

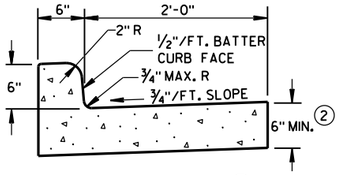

TYPES A & D ①

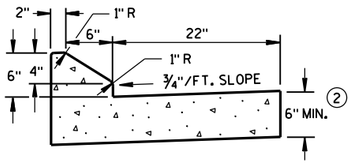

6" SLOPED CURB TYPES G & J ①

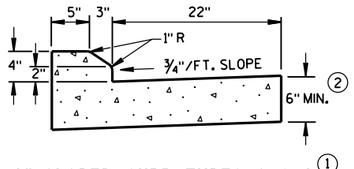

4" SLOPED CURB TYPES G & J ①

CONCRETE CURB & GUTTER 30"

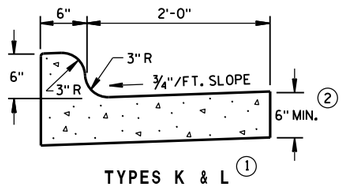

TYPES K & L ①

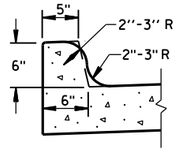

OPTIONAL CURB SHAPE FOR TYPES K & L ①

CONCRETE CURB & GUTTER 30"

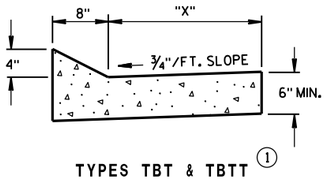

TYPES TBT & TBTT ①

CONCRETE CURB & GUTTER

TBT & TBTT	"X"
30"	22"
36"	28"

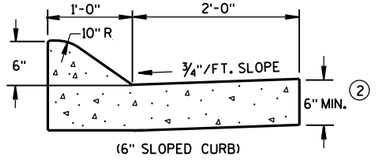

(6" SLOPED CURB)

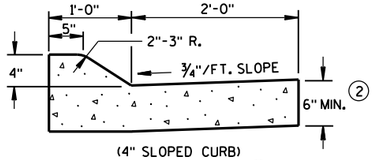

(4" SLOPED CURB)

TYPES A & D ①

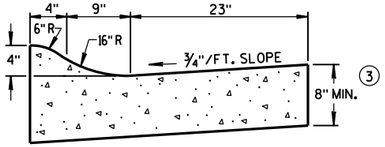

4" SLOPED CURB TYPES R & T ① ④

CONCRETE CURB & GUTTER 36"

GENERAL NOTES

DETAILS OF CONSTRUCTION, MATERIALS AND WORKMANSHIP NOT SHOWN ON THIS DRAWING SHALL CONFORM TO THE PERTINENT REQUIREMENTS OF THE CONTRACT.

PAVEMENT TIES AND TIE BARS SHALL BE EPOXY COATED IN CONFORMANCE WITH SUBSECTION 505.2.6.2 OF THE STANDARD SPECIFICATIONS.

INTEGRAL CURB & GUTTER SHALL CONFORM TO THE DETAILS SHOWN FOR CONCRETE CURB & GUTTER INCLUDING THE TRANSVERSE GUTTER SLOPE. A LONGITUDINAL CONSTRUCTION JOINT IS NOT REQUIRED WITH INTEGRAL CURB AND GUTTER.

WHERE THE TRANSVERSE JOINTS IN THE PAVEMENT ARE REQUIRED TO BE SEALED, THE JOINTS IN THE INTEGRAL CURB AND GUTTER SHALL BE SEALED TO THE FACE OF CURB WITH THE SAME TYPE OF SEALANT. THE COST OF FURNISHING AND INSTALLING THIS SEALANT SHALL BE INCIDENTAL TO THE ITEM CONCRETE CURB AND GUTTER.

UNLESS OTHERWISE SHOWN ON THE TYPICAL CROSS SECTIONS, THE BASE AGGREGATE AND COMMON EXCAVATION LIMITS ARE 2'-0" BEHIND THE BACK OF CURBS.

① TIE BARS ARE REQUIRED FOR CURB AND GUTTER TYPES A, G, K, R AND TBTT.

② THE BOTTOM OF CURB AND GUTTER MAY BE CONSTRUCTED EITHER LEVEL OR PARALLEL TO THE SLOPE OF THE SUBGRADE OR BASE AGGREGATE PROVIDED A 6" MINIMUM GUTTER THICKNESS IS MAINTAINED.

③ THE BOTTOM OF CURB AND GUTTER MAY BE CONSTRUCTED EITHER LEVEL OR PARALLEL TO THE SLOPE OF THE SUBGRADE OR BASE AGGREGATE PROVIDED A 8" MINIMUM GUTTER THICKNESS IS MAINTAINED.

④ THE FACE OF CURB IS 6" FROM THE BACK OF CURB.

⑤ WHEN REVERSE SLOPE GUTTER IS REQUIRED, THE LOCATION(S) WILL BE SHOWN ELSEWHERE IN THE PLAN.

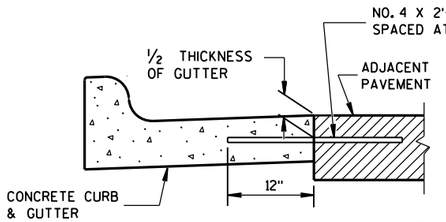

TYPICAL TIE BAR LOCATION ①

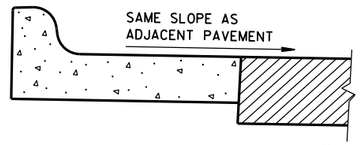

REVERSE SLOPE GUTTER ⑤
(TYPICAL FOR ALL CURB & GUTTER TYPES)

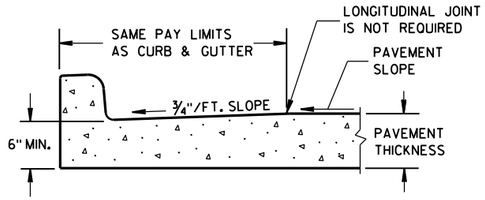

PARTIAL SECTION OF PAVEMENT
WITH INTEGRAL CURB & GUTTER

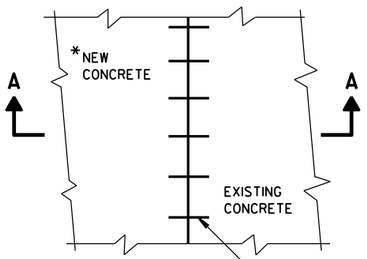

PLAN VIEW

*NEW CURB & GUTTER, SURFACE DRAINS, CONCRETE PAVEMENT OR OTHER NEW CONCRETE.

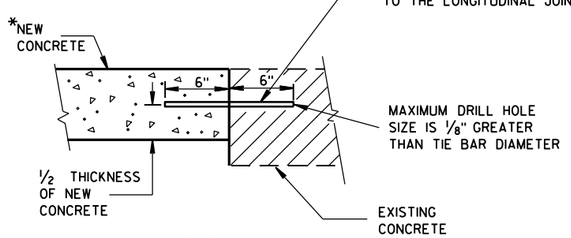

SECTION A-A

TIE BARS DRILLED
INTO EXISTING PAVEMENT

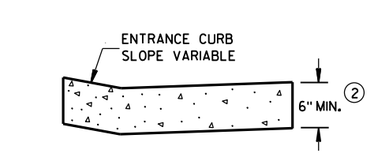

DRIVEWAY ENTRANCE CURB
(WHEN DIRECTED BY THE ENGINEER)

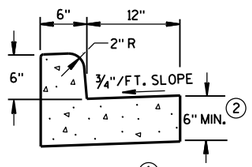

① TYPES A & D

CONCRETE CURB & GUTTER 18"

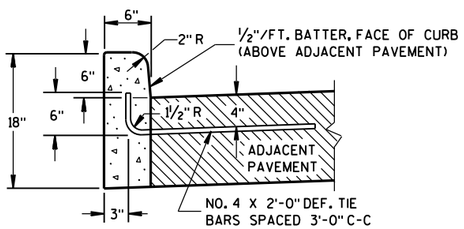

① TYPES A & D

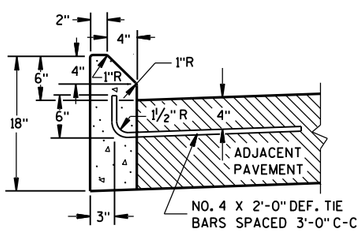

① TYPES G & J

CONCRETE CURB

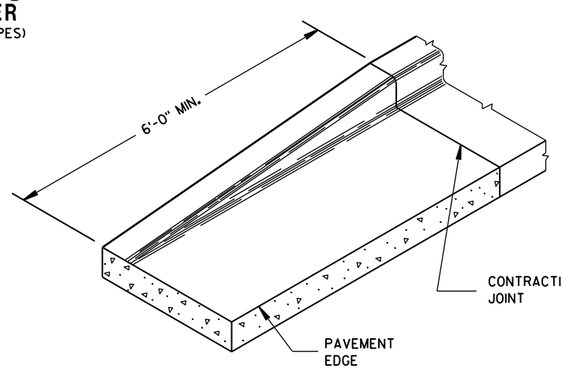

END SECTION CURB & GUTTER

CONCRETE CURB, CONCRETE CURB & GUTTER AND TIES

STATE OF WISCONSIN
DEPARTMENT OF TRANSPORTATION

APPROVED
June, 2015 — DATE
/S/ Jerry H. Zogg — ROADWAY STANDARDS ENGINEER
FHWA

6

S.D.D. 8 D 1-18

ASPHALTIC FLUME

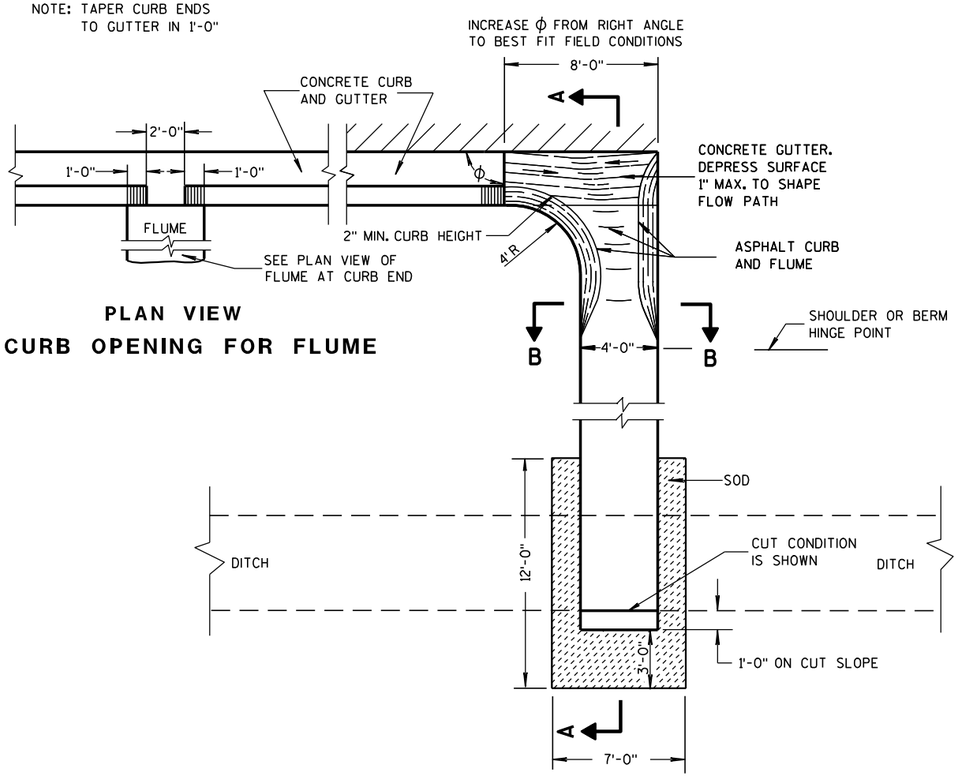

PLAN VIEW
CURB OPENING FOR FLUME

PLAN VIEW
FLUME AT CURB END

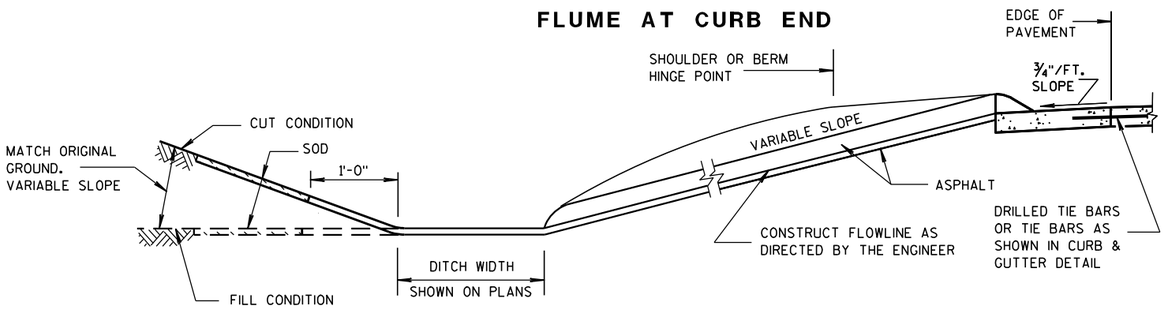

SECTION A-A

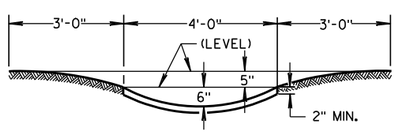

SECTION B-B

GENERAL NOTES

DETAILS OF CONSTRUCTION, MATERIALS AND WORKMANSHIP NOT SHOWN ON THIS DRAWING SHALL CONFORM TO PERTINENT REQUIREMENTS OF THE STANDARD SPECIFICATIONS AND APPLICABLE SPECIAL PROVISIONS.

WELDED STEEL WIRE FABRIC SHALL BE IN ACCORDANCE WITH AASHTO SPECIFICATION M55.

① JOINTS SHALL BE ⅛ TO ¼ INCH WIDE BY 1½ INCHES DEEP AND SPACED AT UNIFORM INTERVALS OF APPROXIMATELY 4 FEET.

② GEOTEXTILE FABRIC TYPE "R" SHALL UNDERLAY THE FULL LENGTH AND WIDTH OF THE CONCRETE SURFACE DRAIN AND RIPRAP.

③ CONCRETE SURFACE DRAIN WITHOUT CURB AND GUTTER MAY BE USED ON BACKSLOPES WHEN SPECIFIED

③ CONCRETE SURFACE DRAIN

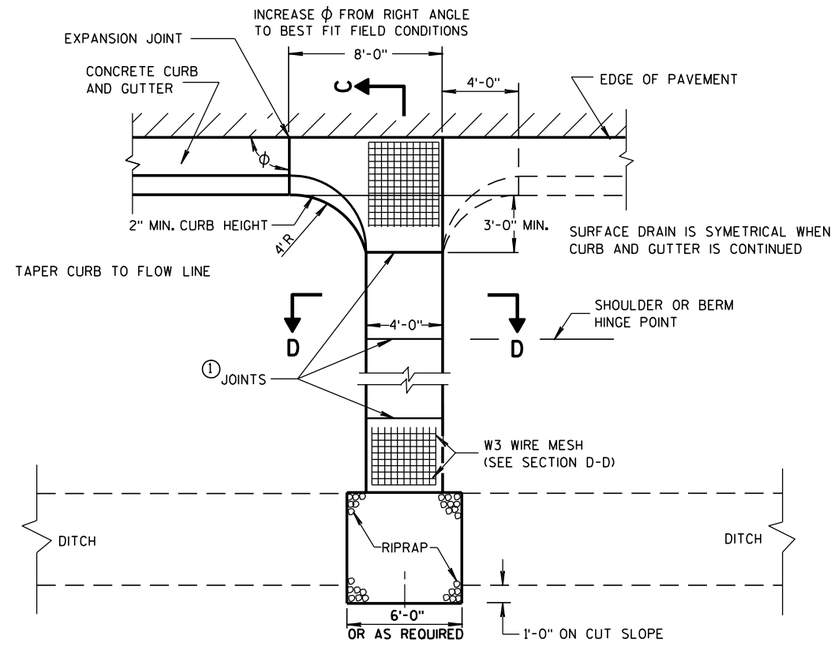

PLAN VIEW

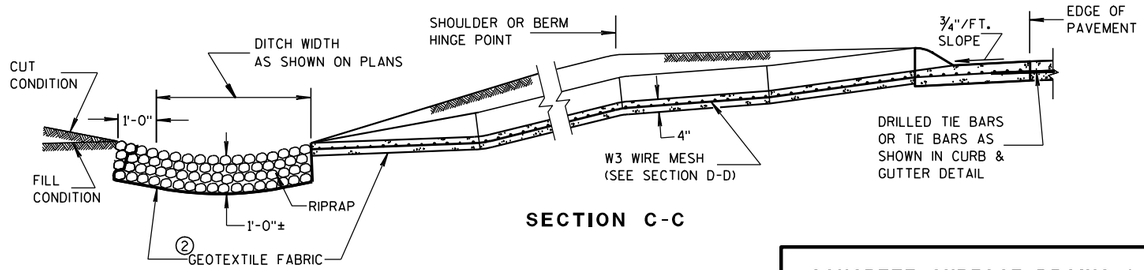

SECTION C-C

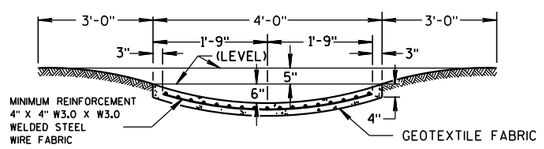

SECTION D-D

CONCRETE SURFACE DRAINS & ASPHALTIC FLUMES

STATE OF WISCONSIN
DEPARTMENT OF TRANSPORTATION

APPROVED
9-4-08 DATE
/S/ Jerry H. Zogg
ROADWAY STANDARDS ENGINEER
99
MENT
FHWA

6

S.D.D. 8 D 4-5

6

S.D.D. 8 D 4-5

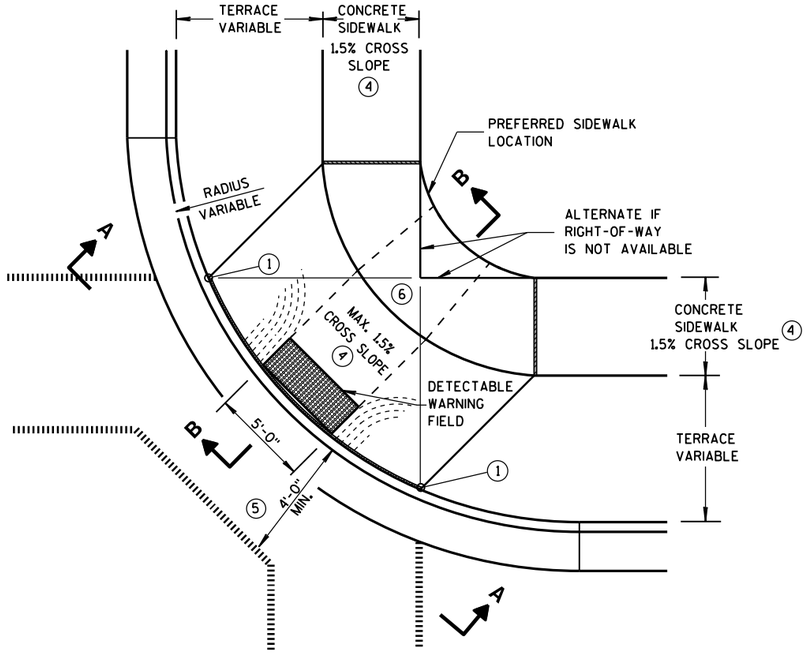

PLAN VIEW

TYPE 1 RAMP

(CENTER OF CORNER RADIUS)

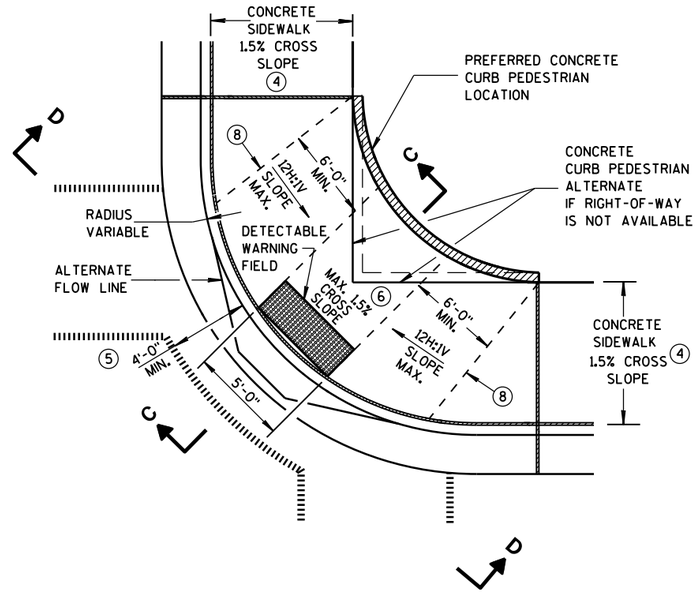

PLAN VIEW

TYPE 1-A RAMP

(NO TERRACE)

GENERAL NOTES

DETAILS OF CONSTRUCTION, MATERIALS AND WORKMANSHIP NOT SHOWN ON THIS DRAWING SHALL CONFORM TO THE PERTINENT REQUIREMENTS OF THE STANDARD SPECIFICATIONS AND THE APPLICABLE SPECIAL PROVISIONS.

WHEN NECESSARY, THE SIDEWALK ELEVATION MAY BE LOWERED TO MEET THE HIGH POINT ON THE RAMP.

TYPE 1 RAMPS SHALL HAVE A NORMAL SIDEWALK APRON AND CURB ON BOTH SIDES OF RAMP.

DETECTABLE WARNING FIELD SHALL BE MEASURED AND PAID BY THE SQUARE FOOT AS "CURB RAMP DETECTABLE WARNING FIELD". THE CONCRETE PEDESTRIAN CURB, IF NEEDED, SHALL BE MEASURED AND PAID BY THE LINEAL FOOT AS "CONCRETE CURB PEDESTRIAN". CONCRETE SIDEWALK IN THE CURB RAMP AREA SHALL BE MEASURED AND PAID BY THE SQUARE FOOT AS CONCRETE SIDEWALK, INCLUDING THE AREA UNDER THE DETECTABLE WARNING FIELD.

SELECT CURB RAMP DETECTABLE WARNING FIELD MATERIALS AND DEVICES FROM THE DEPARTMENT'S APPROVED MATERIALS LIST. THE COLOR OF THE DETECTABLE WARNING FIELD IS SPECIFIED ELSEWHERE AND IS INCIDENTAL TO THE BID ITEM OF "CURB RAMP DETECTABLE WARNING FIELD".

DETECTABLE WARNING FIELDS THAT ARE INSTALLED AS A GROUP OR SIDE BY SIDE, SHALL BE FROM THE SAME MANUFACTURER.

SURFACE TEXTURE OF THE RAMP SHALL BE OBTAINED BY COARSE BROOMING TRANSVERSE TO THE SLOPE OF THE RAMP.

(1) THIS POINT IS AN EXTENSION OF OUTSIDE EDGE OF APPROACHING SIDEWALK WHERE IT MEETS THE BACK OF CONCRETE CURB.

(2) GRADE CHANGE BETWEEN GUTTER FLAG SLOPE AND THE CURB RAMP SLOPE SHALL NOT EXCEED 11%. MAXIMUM GUTTER FLAG SLOPE IS 4%. PROVIDE DRAINAGE AWAY FROM CURB RAMP AT GUTTER FLAG INTERFACE. NO VERTICAL LIPS OR DISCONTINUITIES GREATER THAN 1/4-INCH ARE ALLOWED.

(3) ABSOLUTE MAXIMUM 12H:1V (8.33%) CURB RAMP SLOPE IS ALLOWABLE WITH FLATTENED GUTTER FLAG SLOPE AND NOT TO EXCEED 11% GRADE CHANGE.

(4) ±0.5% CONSTRUCTION TOLERANCE IN SIDEWALK CROSS SLOPE. THE SIDEWALK CROSS SLOPE SHALL NOT EXCEED 2% WITHOUT PRIOR APPROVAL FROM THE ENGINEER.

(5) PROVIDE A LEVEL LANDING IN THE STREET AND GUTTER AREA. (2% MAXIMUM SLOPE IN ANY DIRECTION). WHEN THE GUTTER SLOPE EXCEEDS 2%, CONSTRUCT THE LEVEL LANDING IN THE STREET AREA.

(6) PROVIDE A LEVEL LANDING (MAXIMUM 2% SLOPE) IN ANY DIRECTION OF PEDESTRIAN TRAVEL. STANDARD LANDING SIZE IS 5 FEET X 5 FEET (MINIMUM 4 FEET X 4 FEET).

(8) PROVIDE GRADE BREAK PERPENDICULAR TO DIRECTION OF WHEELCHAIR TRAVEL.

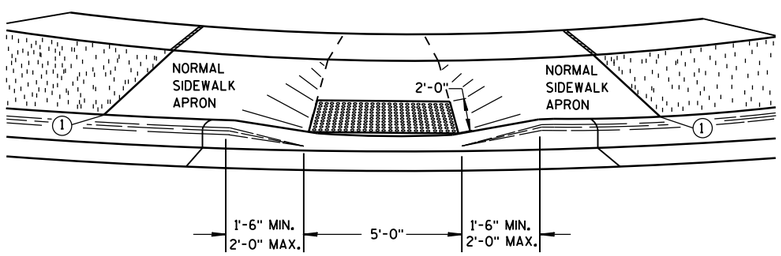

VIEW A-A

** WIDTH SHOWN ELSEWHERE IN THE PLANS

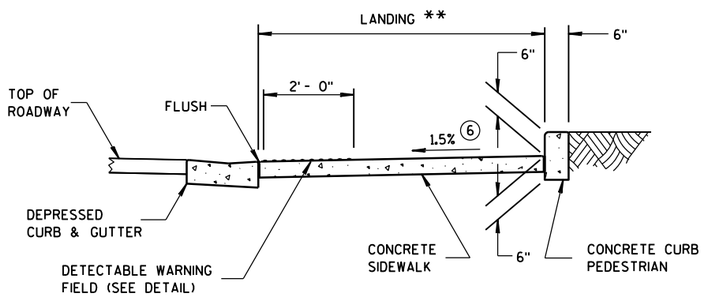

SECTION C-C

LEGEND

- ½" EXPANSION JOINT-SIDEWALK
- CONTRACTION JOINT FIELD LOCATED
- PAVEMENT MARKING CROSSWALK (WHITE)
- ALTERNATIVE LAYOUT

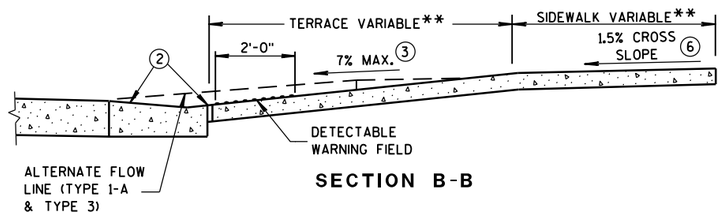

SECTION B-B

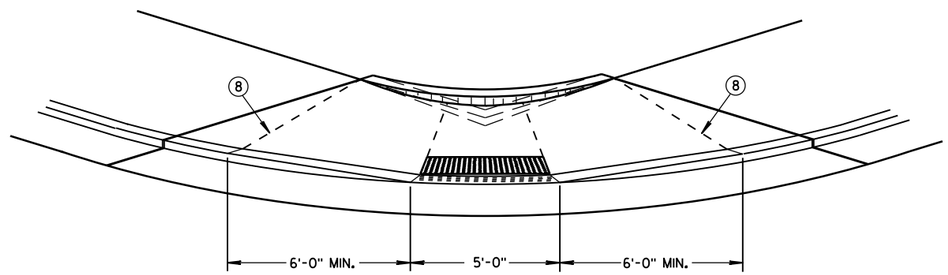

VIEW D-D

CURB RAMPS TYPES 1 AND 1-A

STATE OF WISCONSIN
DEPARTMENT OF TRANSPOI

6

S.D.D. 8 D 5-16a

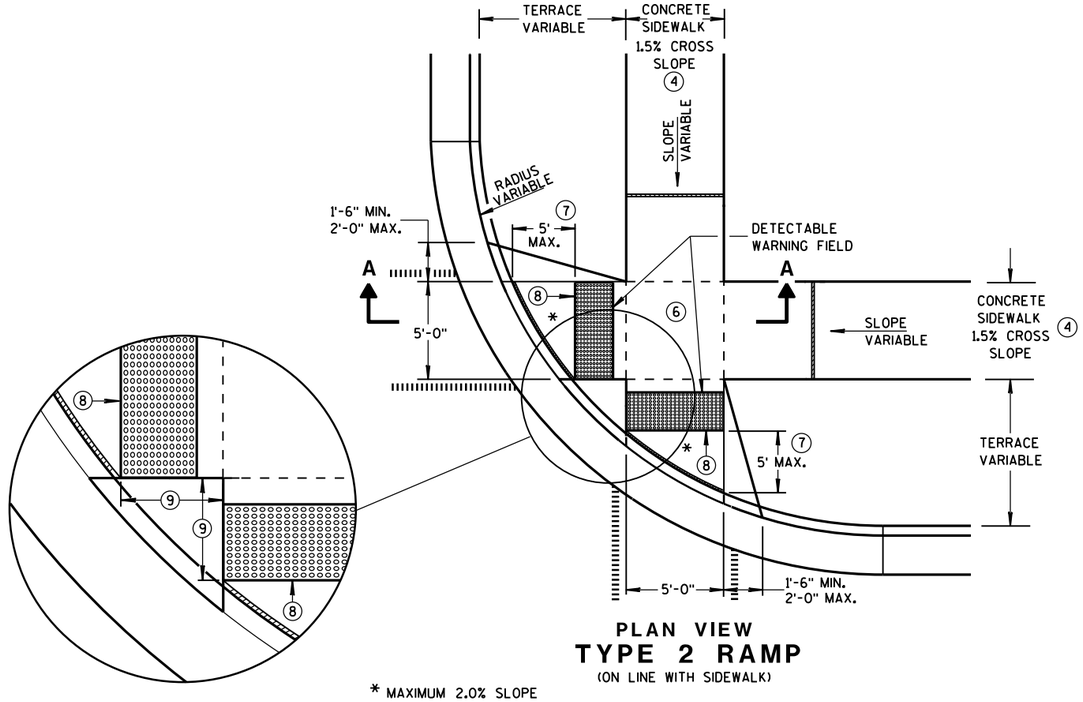

PLAN VIEW

TYPE 2 RAMP

(ON LINE WITH SIDEWALK)

* MAXIMUM 2.0% SLOPE IN ALL DIRECTIONS IN FRONT OF GRADE BREAK

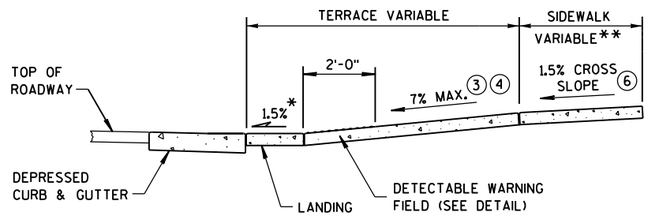

SECTION A-A

** WIDTH SHOWN ELSEWHERE IN THE PLANS

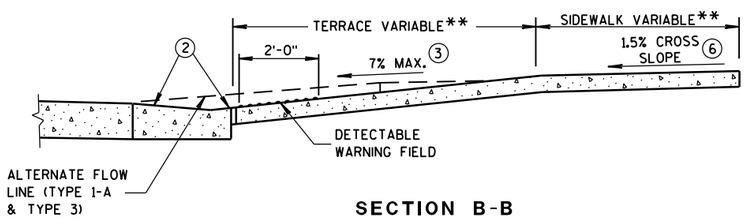

SECTION B-B

GENERAL NOTES

USE THE TYPE 3 RAMP ONLY WHEN A TYPE 1 OR TYPE 2 CANNOT BE ACHIEVED BECAUSE OF FIELD CONDITIONS.

DETECTABLE WARNING FIELDS THAT ARE INSTALLED AS A GROUP OR SIDE BY SIDE, SHALL BE FROM THE SAME MANUFACTURER.

(2) GRADE CHANGE BETWEEN GUTTER FLAG SLOPE AND THE CURB RAMP SLOPE SHALL NOT EXCEED 11%. MAXIMUM GUTTER FLAG SLOPE IS 4%. PROVIDE DRAINAGE AWAY FROM CURB RAMP AT GUTTER FLAG INTERFACE. NO VERTICAL LIPS OR DISCONTINUITIES GREATER THAN 1/4-INCH ARE ALLOWED.

(3) ABSOLUTE MAXIMUM 12H:1V (8.33%) CURB RAMP SLOPE IS ALLOWABLE WITH FLATTENED GUTTER FLAG SLOPE AND NOT TO EXCEED 11% GRADE CHANGE.

(4) ±0.5% CONSTRUCTION TOLERANCE IN SIDEWALK CROSS SLOPE. THE SIDEWALK CROSS SLOPE SHALL NOT EXCEED 2% WITHOUT PRIOR APPROVAL FROM THE ENGINEER.

(6) PROVIDE A LEVEL LANDING (MAXIMUM 2% SLOPE) IN ANY DIRECTION OF PEDESTRIAN TRAVEL. STANDARD LANDING SIZE IS 5 FEET X 5 FEET (MINIMUM 4 FEET X 4 FEET).

(7) WHEN THIS DISTANCE EXCEEDS 5 FEET, USE MULTIPLE DETECTABLE WARNING PANELS ACROSS THE RAMP AND STAGGER ADDITIONAL DETECTABLE WARNING PANEL(S) FORWARD TO REDUCE THIS DISTANCE.

(8) PROVIDE GRADE BREAK PERPENDICULAR TO DIRECTION OF WHEELCHAIR TRAVEL.

(9) WHEN THIS DISTANCE IS LESS THAN 6'-0", IT MAY BE DIFFICULT TO ACHIEVE A 7% SLOPE OR FLATTER ALONG THE RAMP. REDUCE CURB HEIGHT IN TRIANGLE AREA TO ACHIEVE 7% SLOPE OR FLATTER ON RAMP. 2" MINIMUM CURB HEIGHT.

LEGEND

- ½" EXPANSION JOINT-SIDEWALK
- CONTRACTION JOINT FIELD LOCATED
- PAVEMENT MARKING CROSSWALK (WHITE)
- ALTERNATIVE LAYOUT

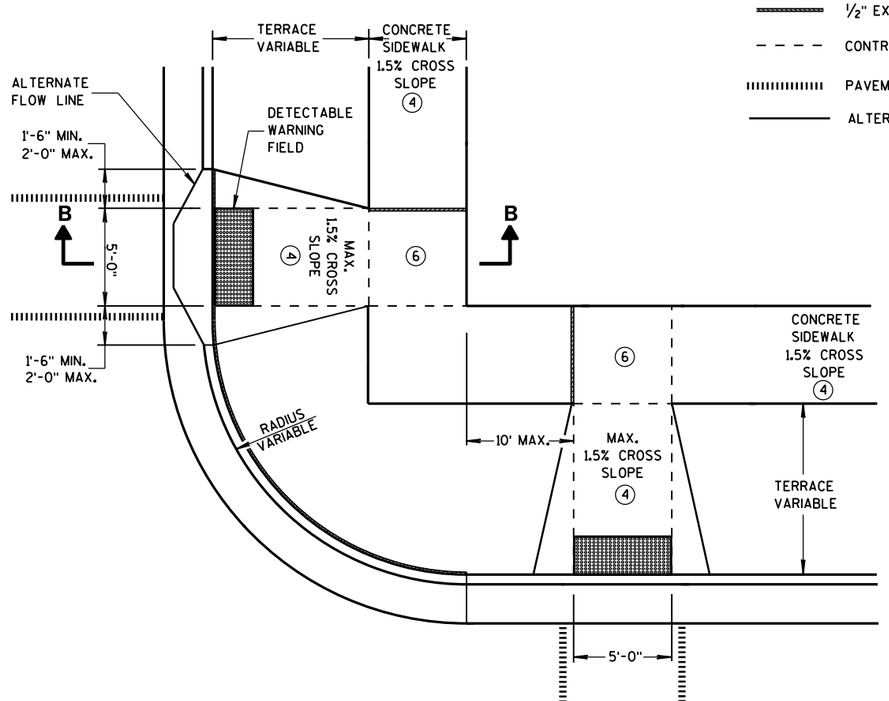

PLAN VIEW

TYPE 3 RAMP

(OUTSIDE OF CROSSWALK AREA)

CURB RAMPS TYPES 2 AND 3

STATE OF WISCONSIN
DEPARTMENT OF TRANSPOR

6

S.D.D. 8 D 5-16b

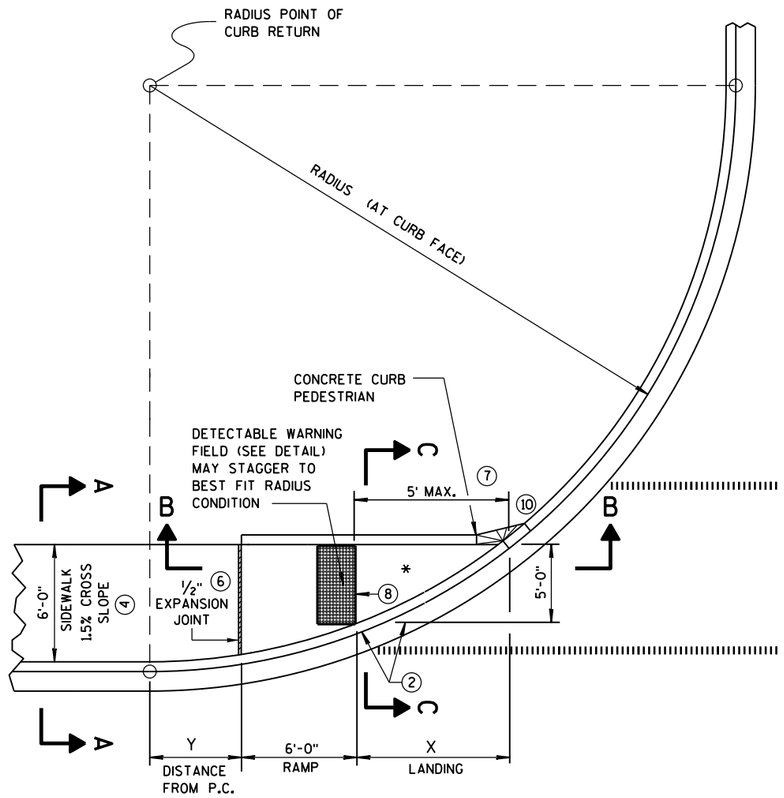

CURB RAMP TYPE 4A
PLAN VIEW

RADIUS (AT CURB FACE)	X	Y
20 FEET	6'-1¾"	2'-7¼"
30 FEET	7'-11¾"	4'-8¼"
40 FEET	9'-5¼"	6'-5"
50 FEET	10'-8¾"	7'-11¼"
60 FEET	11'-10¼"	9'-3½"

INTERMEDIATE RADII CAN BE INTERPOLATED

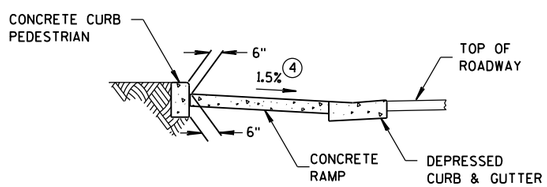

SECTION C-C FOR TYPE 4A

SECTION A-A FOR TYPE 4A

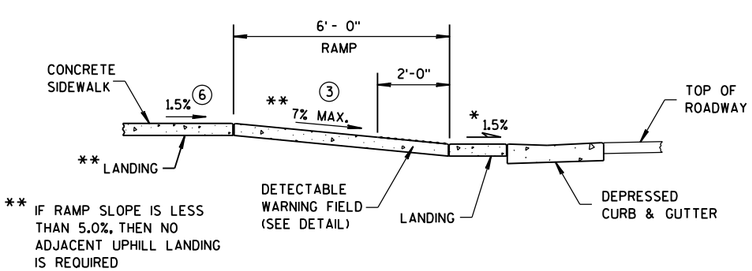

** IF RAMP SLOPE IS LESS THAN 5.0%, THEN NO ADJACENT UPHILL LANDING IS REQUIRED

SECTION B-B FOR TYPE 4A

* MAXIMUM 2.0% SLOPE IN ALL DIRECTIONS IN FRONT OF GRADE BREAK

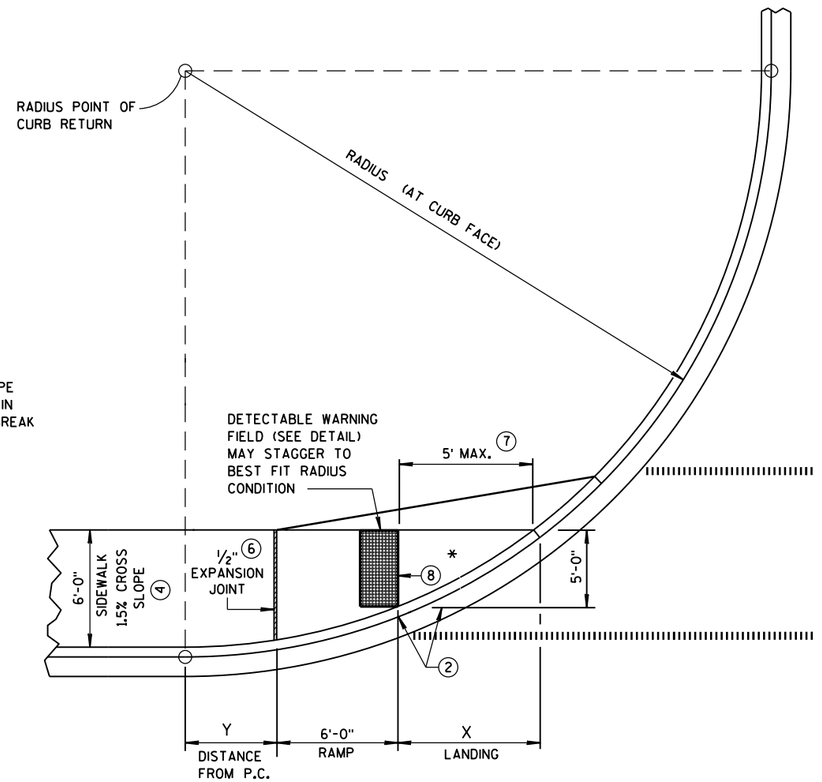

CURB RAMP TYPE 4A1
PLAN VIEW

GENERAL NOTES

AVOID PLACING DRAINAGE STRUCTURES, JUNCTION BOXES OR OTHER OBSTRUCTIONS IN FRONT OF RAMP ACCESS AREAS.

DETECTABLE WARNING FIELDS THAT ARE INSTALLED AS A GROUP OR SIDE BY SIDE, SHALL BE FROM THE SAME MANUFACTURER.

(2) GRADE CHANGE BETWEEN GUTTER FLAG SLOPE AND THE CURB RAMP SLOPE SHALL NOT EXCEED 11%. MAXIMUM GUTTER FLAG SLOPE IS 4%. PROVIDE DRAINAGE AWAY FROM CURB RAMP AT GUTTER FLAG INTERFACE. NO VERTICAL LIPS OR DISCONTINUITIES GREATER THAN 1/4-INCH ARE ALLOWED.

(3) ABSOLUTE MAXIMUM 12H:1V (8.33%) CURB RAMP SLOPE IS ALLOWABLE WITH FLATTENED GUTTER FLAG SLOPE AND NOT TO EXCEED 11% GRADE CHANGE.

(4) ±0.5% CONSTRUCTION TOLERANCE IN SIDEWALK CROSS SLOPE. THE SIDEWALK CROSS SLOPE SHALL NOT EXCEED 2% WITHOUT PRIOR APPROVAL FROM THE ENGINEER.

(6) PROVIDE A LEVEL LANDING (MAXIMUM 2% SLOPE) IN ANY DIRECTION OF PEDESTRIAN TRAVEL. STANDARD LANDING SIZE IS 5 FEET X 5 FEET (MINIMUM 4 FEET X 4 FEET).

(7) WHEN THIS DISTANCE EXCEEDS 5 FEET, USE MULTIPLE DETECTABLE WARNING PANELS ACROSS THE RAMP AND STAGGER ADDITIONAL DETECTABLE WARNING PANEL(S) FORWARD TO REDUCE THIS DISTANCE.

(8) PROVIDE GRADE BREAK PERPENDICULAR TO DIRECTION OF WHEELCHAIR TRAVEL.

(10) INSTALL TRANSITION NOSE. (INCIDENTAL TO OTHER PAY ITEMS). DO NOT MARK TRANSITION NOSE.

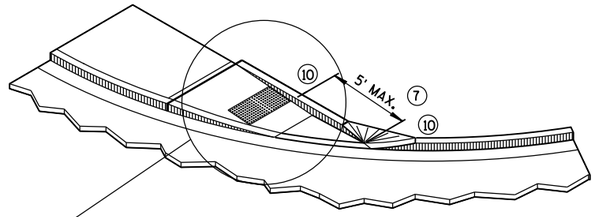

ISOMETRIC VIEW FOR TYPE 4A

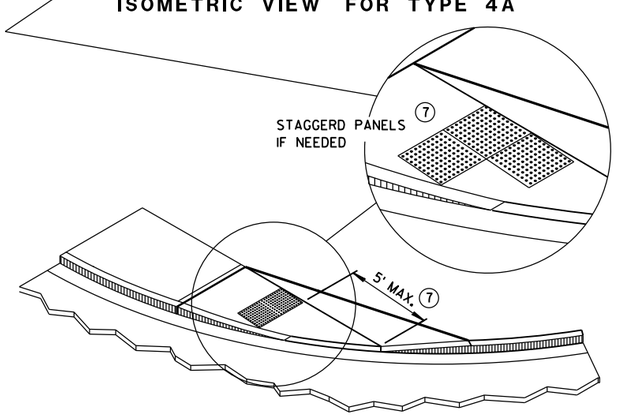

ISOMETRIC VIEW FOR TYPE 4A1

LEGEND

- ½" EXPANSION JOINT-SIDEWALK
- CONTRACTION JOINT FIELD LOCATED
- PAVEMENT MARKING CROSSWALK (WHITE)

CURB RAMPS TYPES 4A AND 4A1

STATE OF WISCONSIN
DEPARTMENT OF TRANSPO

6

S.D.D. 8 D 5-16c

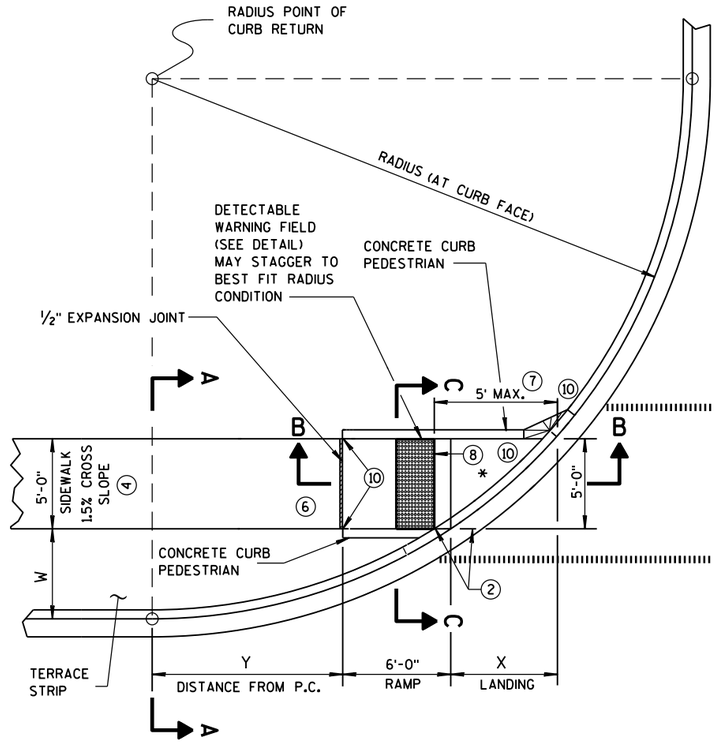

CURB RAMP TYPE 4B
PLAN VIEW

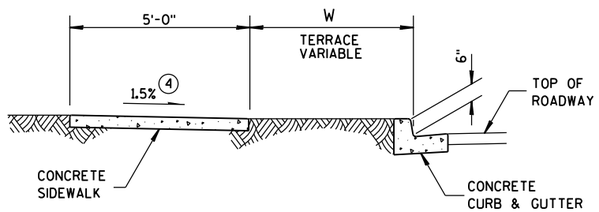

SECTION A-A FOR TYPE 4B

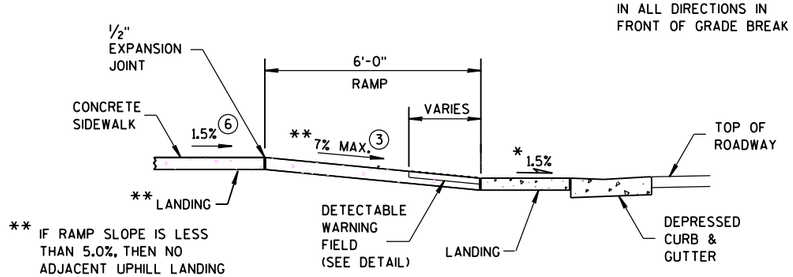

* MAXIMUM 2.0% SLOPE IN ALL DIRECTIONS IN FRONT OF GRADE BREAK

SECTION B-B FOR TYPE 4B

LEGEND

½" EXPANSION JOINT-SIDEWALK

CONTRACTION JOINT FIELD LOCATED

PAVEMENT MARKING CROSSWALK (WHITE)

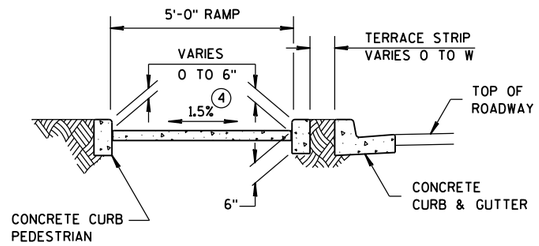

SECTION C-C FOR TYPE 4B

RADIUS (AT CURB FACE)	W = 3'-0"		W = 4'-0"		W = 5'-0"		W = 6'-0"		W = 7'-0"	
	X	Y	X	Y	X	Y	X	Y	X	Y
20 FEET	5'-5½"	4'-6½"	4'-8½"	6'-0"	4'-1"	7'-2¾"	3'-7"	8'-3½"	3'-1½"	9'-2½"
30 FEET	7'-3¾"	7'-1"	6'-5½"	8'-11½"	5'-9¼"	10'-7"	5'-2½"	12'-0"	4'-8¾"	13'-3¼"
40 FEET	8'-9½"	9'-2½"	7'-10"	11'-5¼"	7'-1"	13'-4½"	6'-5¾"	15'-¾"	5'-11½"	16'-7¼"
50 FEET	10'-¾"	11'-¾"	9'-¼"	13'-7¼"	8'-2½"	15'-9½"	7'-6½"	17'-9"	6'-11¾"	19'-6¼"
60 FEET	11'-2½"	12'-8¾"	10'-¾"	15'-6½"	9'-2¼"	17'-11¾"	8'-5¾"	20'-1¾"	7'-10½"	22'-1½"

INTERMEDIATE RADII CAN BE INTERPOLATED

GENERAL NOTES

AVOID PLACING DRAINAGE STRUCTURES, JUNCTION BOXES OR OTHER OBSTRUCTIONS IN FRONT OF RAMP ACCESS AREAS.

DETECTABLE WARNING FIELDS THAT ARE INSTALLED AS A GROUP OR SIDE BY SIDE, SHALL BE FROM THE SAME MANUFACTURER.

(2) GRADE CHANGE BETWEEN GUTTER FLAG SLOPE AND THE CURB RAMP SLOPE SHALL NOT EXCEED 11%. MAXIMUM GUTTER FLAG SLOPE IS 4%. PROVIDE DRAINAGE AWAY FROM CURB RAMP AT GUTTER FLAG INTERFACE. NO VERTICAL LIPS OR DISCONTINUITIES GREATER THAN ¼-INCH ARE ALLOWED.

(3) ABSOLUTE MAXIMUM 12H:1V (8.33%) CURB RAMP SLOPE IS ALLOWABLE WITH FLATTENED GUTTER FLAG SLOPE AND NOT TO EXCEED 11% GRADE CHANGE.

(4) ±0.5% CONSTRUCTION TOLERANCE IN SIDEWALK CROSS SLOPE. THE SIDEWALK CROSS SLOPE SHALL NOT EXCEED 2% WITHOUT PRIOR APPROVAL FROM THE ENGINEER.

(6) PROVIDE A LEVEL LANDING (MAXIMUM 2% SLOPE) IN ANY DIRECTION OF PEDESTRIAN TRAVEL. STANDARD LANDING SIZE IS 5 FEET X 5 FEET (MINIMUM 4 FEET X 4 FEET).

(7) WHEN THIS DISTANCE EXCEEDS 5 FEET, USE MULTIPLE DETECTABLE WARNING PANELS ACROSS THE RAMP AND STAGGER ADDITIONAL DETECTABLE WARNING PANEL(S) FORWARD TO REDUCE THIS DISTANCE.

(8) PROVIDE GRADE BREAK PERPENDICULAR TO DIRECTION OF WHEELCHAIR TRAVEL.

(10) INSTALL TRANSITION NOSE. (INCIDENTAL TO OTHER PAY ITEMS). DO NOT MARK TRANSITION NOSE.

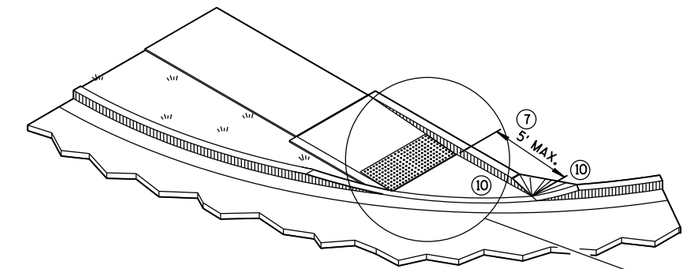

ISOMETRIC VIEW FOR TYPE 4B

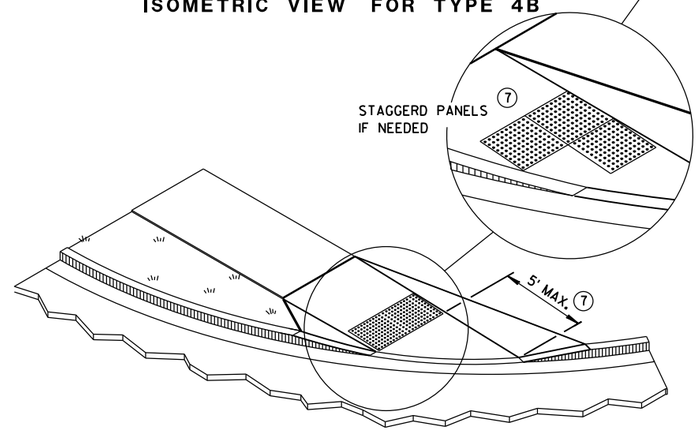

ISOMETRIC VIEW FOR TYPE 4B1

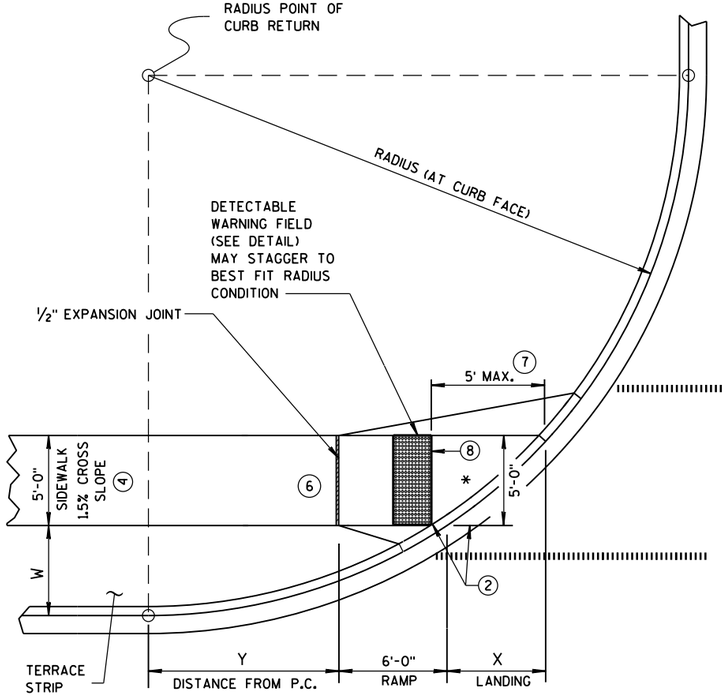

CURB RAMP TYPE 4B1
PLAN VIEW

CURB RAMPS
TYPE 4B AND 4B1

STATE OF WISCONSIN
DEPARTMENT OF TRANSPOI

6

S.D.D. 8 D 5-16d

6

S.D.D. 8 D 5-16d

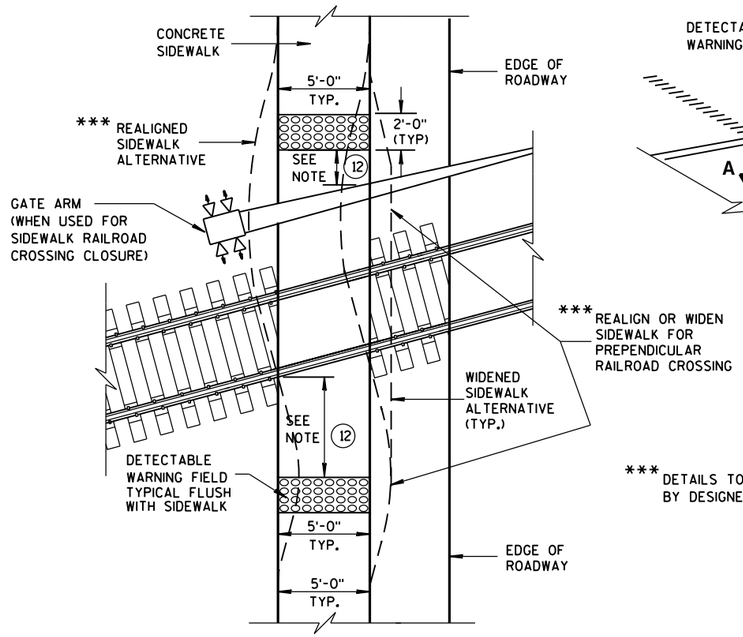

TYPE 8
DETECTABLE WARNINGS AT RAILROAD CROSSING

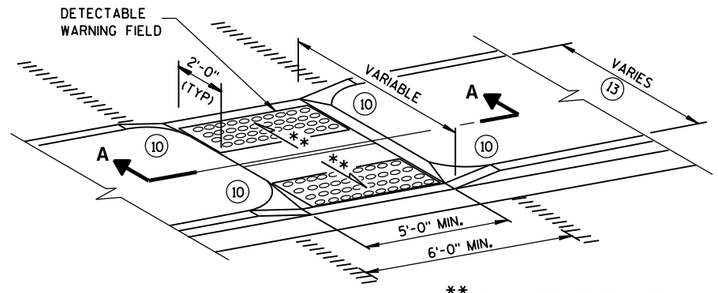

** 1% MIN. (PROVIDE DRAINAGE)

MEDIAN ISLAND
NON-ELEVATED CROSSING
TYPE 5

*** DETAILS TO BE DETERMINED BY DESIGNER

GENERAL NOTES

SIDEWALK CROSS SLOPE SHALL NOT EXCEED 2%.

DETECTABLE WARNING FIELDS THAT ARE INSTALLED AS A GROUP OR SIDE BY SIDE, SHALL BE FROM THE SAME MANUFACTURER.

(2) GRADE CHANGE BETWEEN GUTTER FLAG SLOPE AND THE CURB RAMP SLOPE SHALL NOT EXCEED 11%. MAXIMUM GUTTER FLAG SLOPE IS 4%. PROVIDE DRAINAGE AWAY FROM CURB RAMP AT GUTTER FLAG INTERFACE. NO VERTICAL LIPS OR DISCONTINUITIES GREATER THAN 1/4-INCH ARE ALLOWED.

(3) ABSOLUTE MAXIMUM 12H:1V (8.33%) CURB RAMP SLOPE IS ALLOWABLE WITH FLATTENED GUTTER FLAG SLOPE AND NOT TO EXCEED 11% GRADE CHANGE.

(4) ±0.5% CONSTRUCTION TOLERANCE IN SIDEWALK CROSS SLOPE. THE SIDEWALK CROSS SLOPE SHALL NOT EXCEED 2% WITHOUT PRIOR APPROVAL FROM THE ENGINEER.

(6) PROVIDE A LEVEL LANDING (MAXIMUM 2% SLOPE) IN ANY DIRECTION OF PEDESTRIAN TRAVEL. STANDARD LANDING SIZE IS 5 FEET X 5 FEET (MINIMUM 4 FEET X 4 FEET).

(10) INSTALL TRANSITION NOSE. (INCIDENTAL TO OTHER PAY ITEMS). DO NOT MARK TRANSITION NOSE.

(11) SLOPE SIDEWALK TOWARD LANDING AS SHOWN WHERE THERE IS NO TERRACE OR WHERE THE TERRACE WIDTH IS LESS THAN 6 FEET WIDE.

(12) THE EDGE OF THE DETECTABLE WARNING FIELD NEAREST TO A RAILROAD CROSSING SHALL BE 1.5 FEET ± 0.1' FROM THE FACE OF THE GATE ARM IF THE GATE ARM EXTENDS ACROSS THE SIDEWALK. WHERE THERE IS NO PEDESTRIAN GATE, THE EDGE OF THE DETECTABLE WARNING FIELD NEAREST TO THE RAILROAD CROSSING SHALL BE 15 FEET FROM THE NEAREST RAIL.

(13) DO NOT INSTALL DETECTABLE WARNING FIELDS IF MEDIAN WIDTH BETWEEN BACK OF CURBS IS LESS THAN 6 FEET.

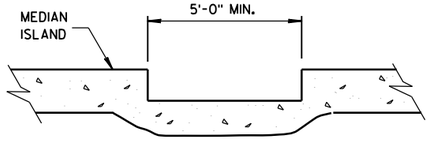

SECTION A-A

	MIN.	MAX.
A	1.6"	2.4"
B	0.65"	1.5"
C	*	*
D	0.9"	1.4"

* THE C DIMENSION IS 50% TO 65% OF THE D DIMENSION.

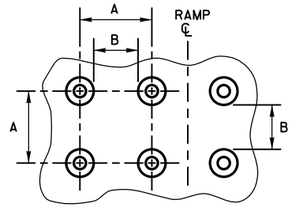

PLAN VIEW

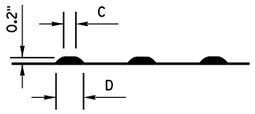

ELEVATION VIEW
TRUNCATED DOMES
DETECTABLE WARNING PATTERN DETAIL

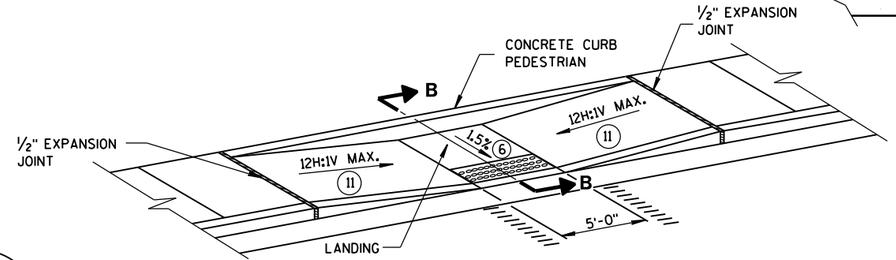

MID-BLOCK CROSSING
TYPE 7A

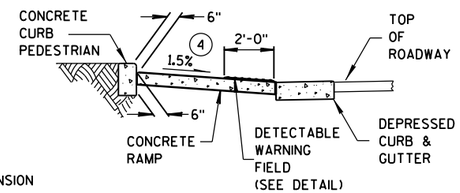

SECTION B-B

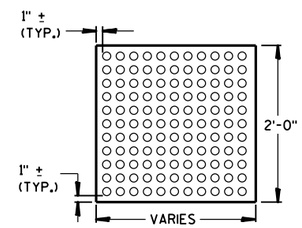

PLAN VIEW
DETECTABLE WARNING FIELD (TYPICAL)

REFER TO GENERAL NOTES (2) AND (3) FOR ALL ISLAND CURB RAMPS

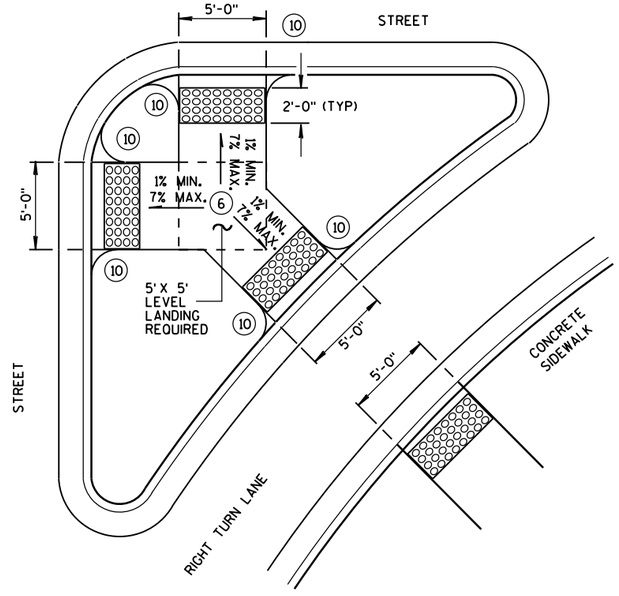

TYPE 6
DETECTABLE WARNING AT ISLANDS

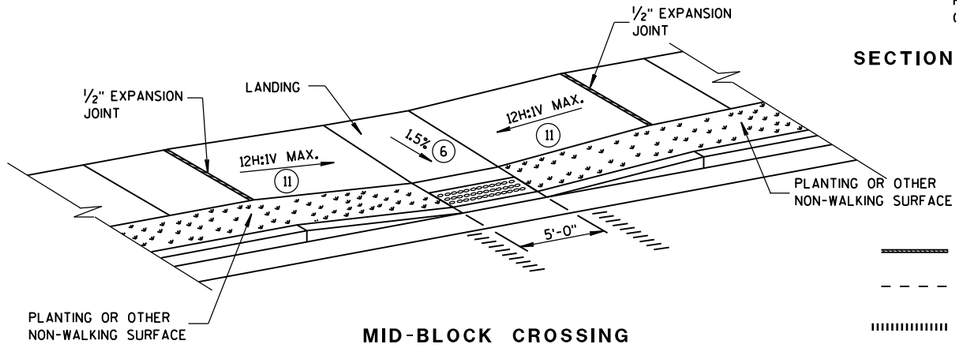

MID-BLOCK CROSSING
TYPE 7B

NOTE: THESE PARALLEL AND PARALLEL/PERPENDICULAR CURB RAMPS MAY BE USED AT INTERSECTIONS AND MID BLOCK LOCATIONS.

LEGEND

- 1/2" EXPANSION JOINT-SIDEWALK
- CONTRACTION JOINT FIELD LOCATED
- PAVEMENT MARKING CROSSWALK (WHITE)

CURB RAMPS
TYPES 5, 6, 7A, 7B & 8

STATE OF WISCONSIN
DEPARTMENT OF TRANSPORTATION

APPROVED
June, 2015 — DATE
/S/ Jerry H. Zogg — ROADWAY STANDARDS [illegible] ENGINEER
FHWA

6

S.D.D. 8 D 5-16e

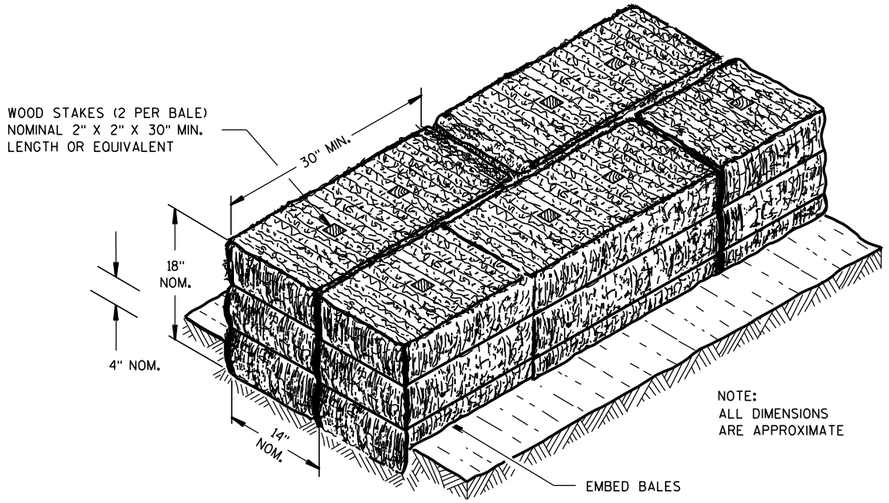

SECTION A-A

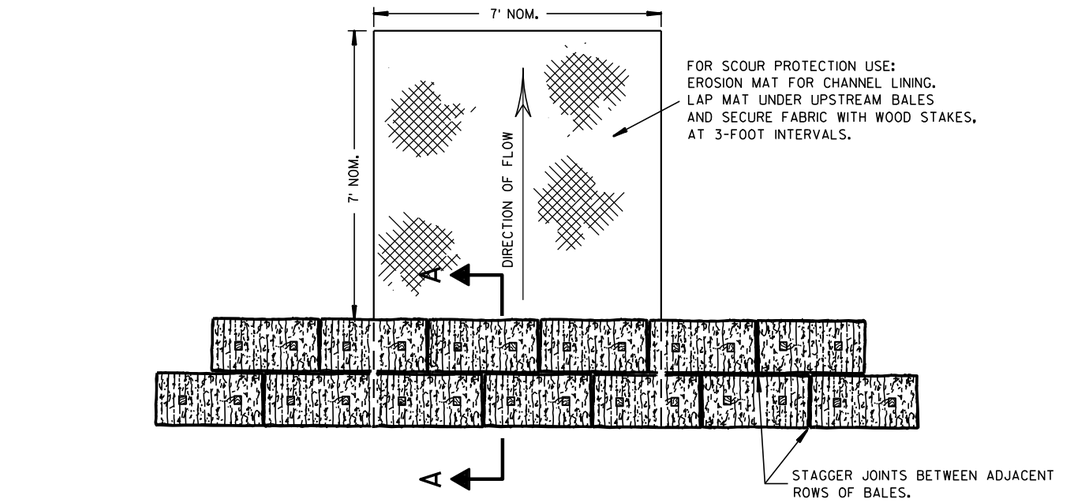

PLAN VIEW

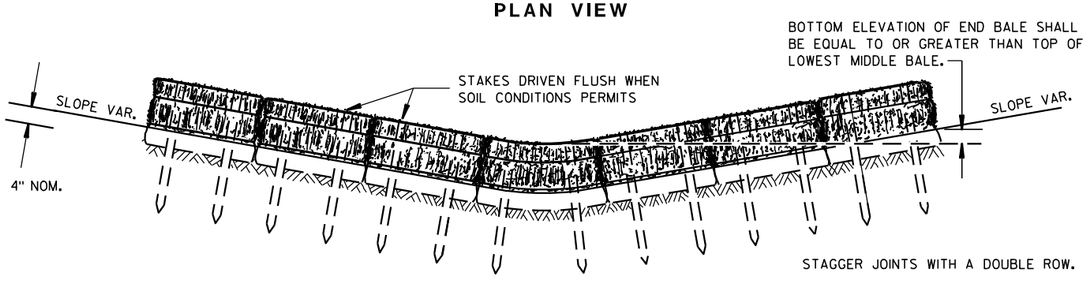

FRONT ELEVATION

TEMPORARY DITCH CHECK USING EROSION BALES (1)

GENERAL NOTES

DETAILS OF CONSTRUCTION, MATERIALS AND WORKMANSHIP NOT SHOWN ON THIS DRAWING SHALL CONFORM TO THE PERTINENT REQUIREMENTS OF THE STANDARD SPECIFICATIONS AND THE APPLICABLE SPECIAL PROVISIONS.

(1) TEMPORARY DITCH CHECKS EITHER EROSION BALES OR MANUFACTURED SHALL BE PAID FOR UNDER THE BID ITEM OF TEMPORARY DITCH CHECK. THE DEPARTMENT WILL NOT PAY FOR TEMPORARY DITCH CHECKS CONSTRUCTED OF A SINGLE ROW OF EROSION BALES.

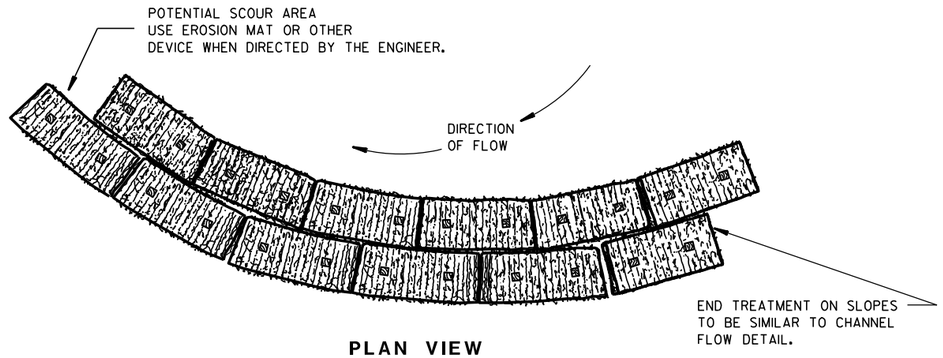

PLAN VIEW

WHEN ALTERING THE DIRECTION OF FLOW

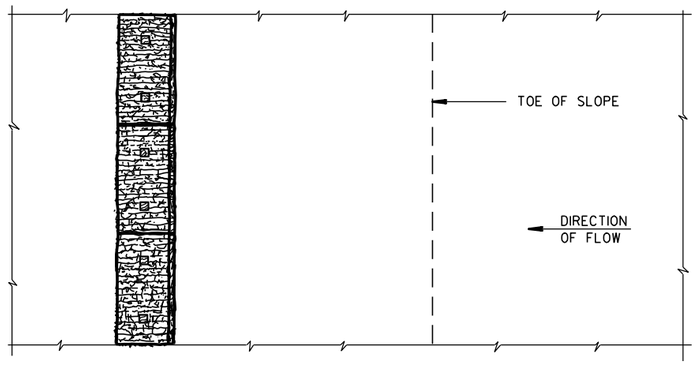

PLAN VIEW

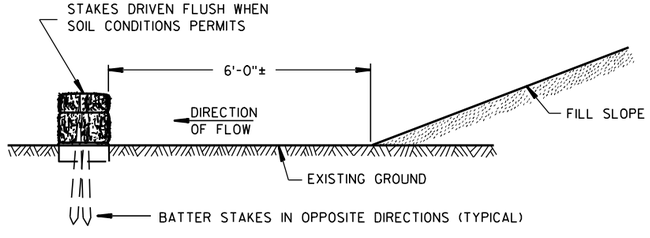

FRONT ELEVATION

WHEN EXISTING GROUND SLOPES AWAY FROM FILL SLOPE

EROSION BALES FOR SHEET FLOW

TYPICAL INSTALLATIONS OF EROSION BALES / TEMPORARY DITCH CHECKS

STATE OF WISCONSIN
DEPARTMENT OF TRANSPORTATION

APPROVED
6/04/02 — DATE
/S/ Beth Cannestra — CHIEF ROADWAY DEVELOPMENT ENGINEER
FHWA

6

S.D.D. 8 E 8-3

6

S.D.D. 8 E 8-3

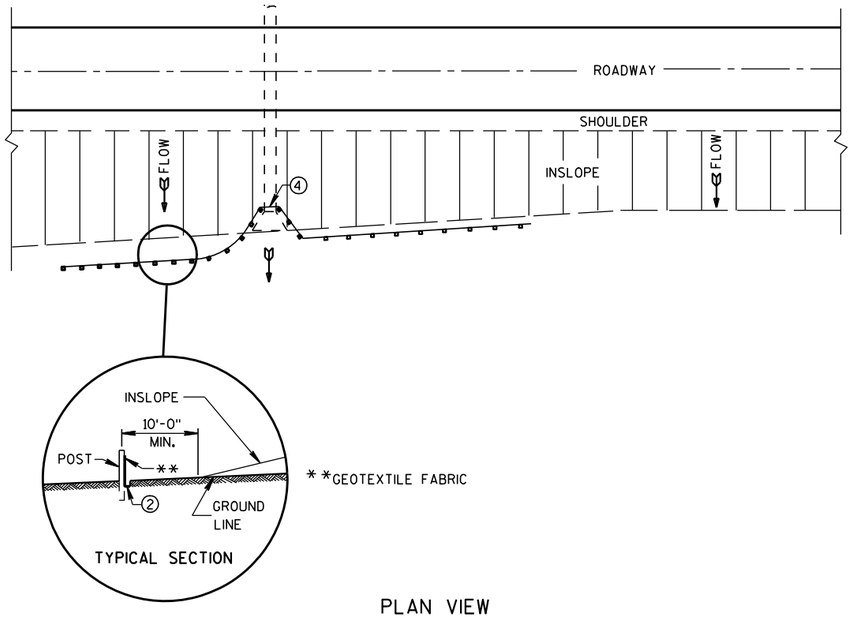

PLAN VIEW

TYPICAL APPLICATION OF SILT FENCE

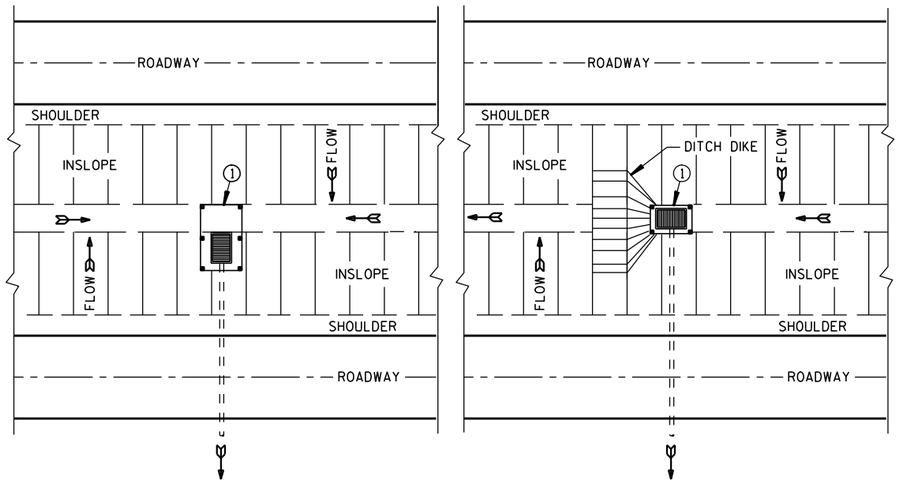

PLAN VIEW

SILT FENCE AT MEDIAN SURFACE DRAINS

GENERAL NOTES

DETAILS OF CONSTRUCTION NOT SHOWN ON THIS DRAWING SHALL CONFORM TO THE PERTINENT REQUIREMENTS OF THE STANDARD SPECIFICATIONS AND APPLICABLE SPECIAL PROVISIONS.

① HORIZONTAL BRACE REQUIRED WITH 2" X 4" WOODEN FRAME OR EQUIVALENT AT TOP OF POSTS.

② FOR MANUAL INSTALLATIONS THE TRENCH SHALL BE A MINIMUM OF 4" WIDE & 6" DEEP TO BURY AND ANCHOR THE GEOTEXTILE FABRIC. FOLD MATERIAL TO FIT TRENCH AND BACKFILL & COMPACT TRENCH WITH EXCAVATED SOIL.

③ WOOD POSTS SHALL BE A MINIMUM SIZE OF 1⅛" X 1⅛" OF OAK OR HICKORY.

④ SILT FENCE TO EXTEND ACROSS THE TOP OF THE PIPE.

⑤ CONSTRUCT SILT FENCE FROM A CONTINUOUS ROLL IF POSSIBLE BY CUTTING LENGTHS TO AVOID JOINTS. IF A JOINT IS NECESSARY USE ONE OF THE FOLLOWING TWO METHODS; A) OVERLAP THE END POSTS AND TWIST, OR ROTATE, AT LEAST 180 DEGREES, B) HOOK THE END OF EACH SILT FENCE LENGTH.

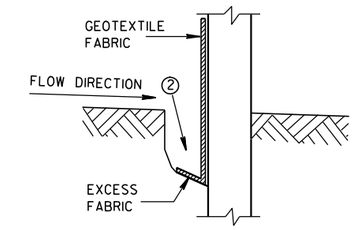

TRENCH DETAIL

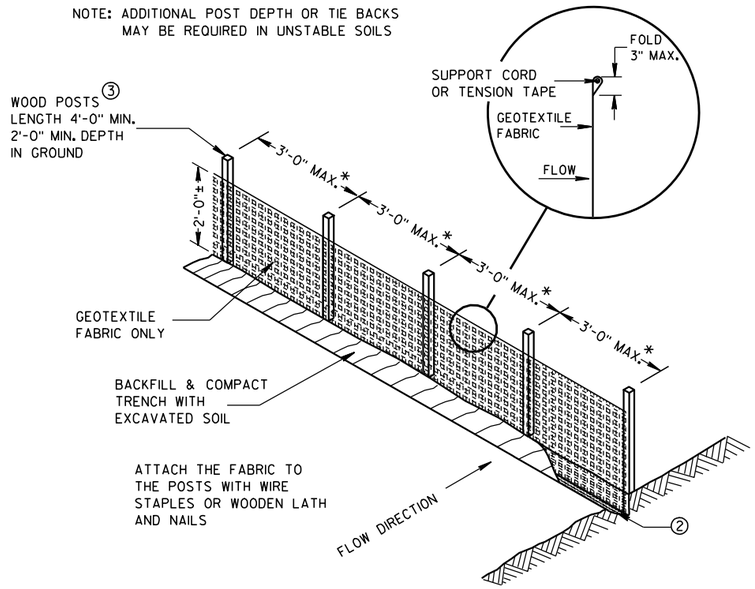

SILT FENCE

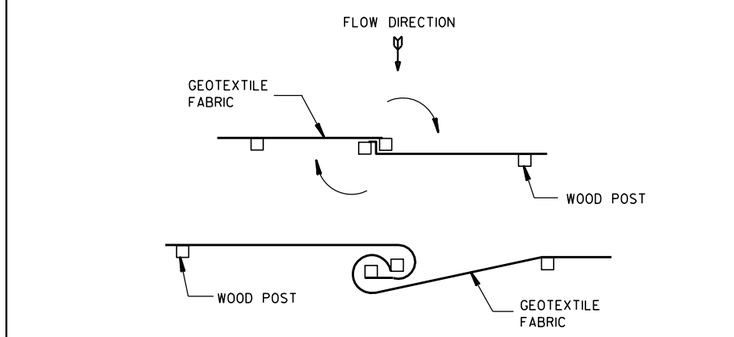

TWIST METHOD

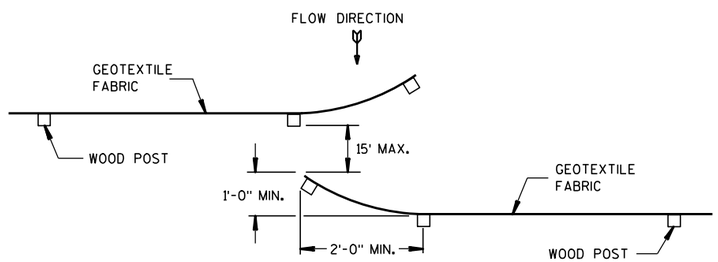

HOOK METHOD

JOINING TWO LENGTHS OF SILT FENCE ⑤

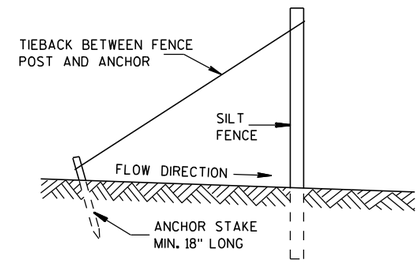

SILT FENCE TIE BACK

(WHEN REQUIRED BY THE ENGINEER)

SILT FENCE

STATE OF WISCONSIN
DEPARTMENT OF TRANSPORTATION

APPROVED
4-29-05 DATE
/S/ Beth Cannestra
CHIEF ROADWAY DEVELOPMENT ENGINEER
FHWA

6

S.D.D. 8 E 9-6

6

S.D.D. 8 E 9-6

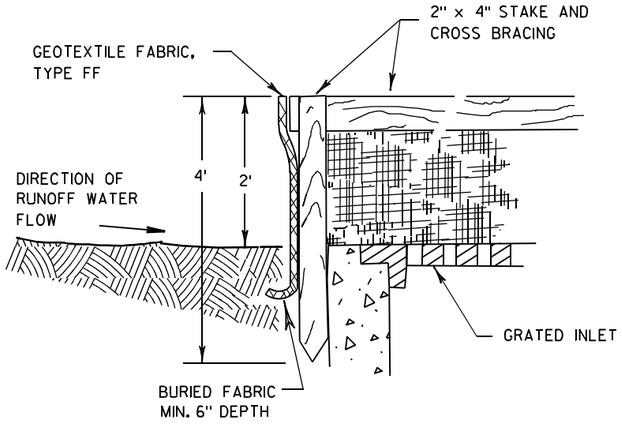

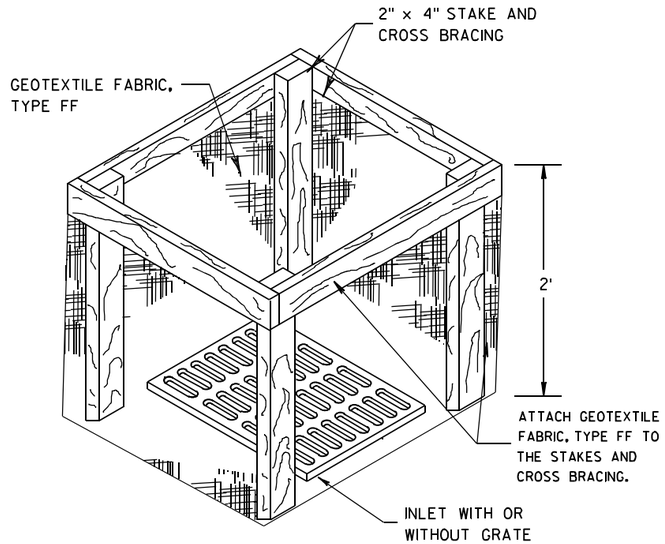

INLET PROTECTION, TYPE A

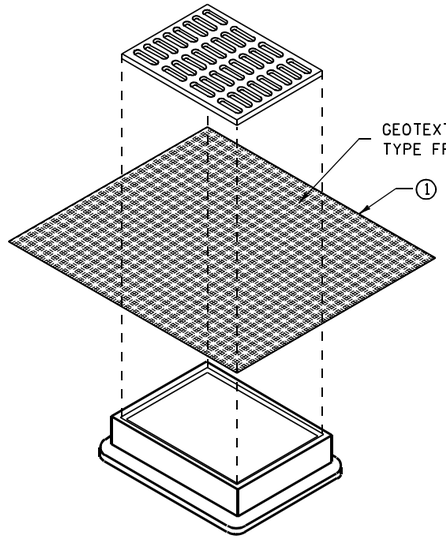

INLET PROTECTION, TYPE B
(WITHOUT CURB BOX)

(CAN BE INSTALLED IN ANY INLET WITHOUT A CURB BOX)

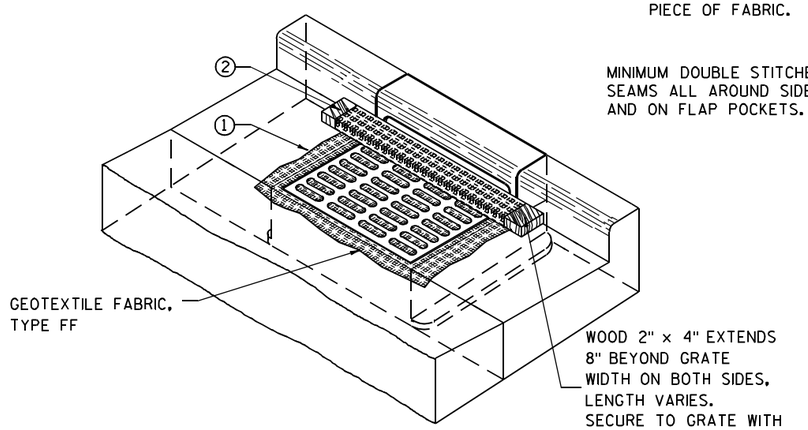

INLET PROTECTION, TYPE C (WITH CURB BOX)

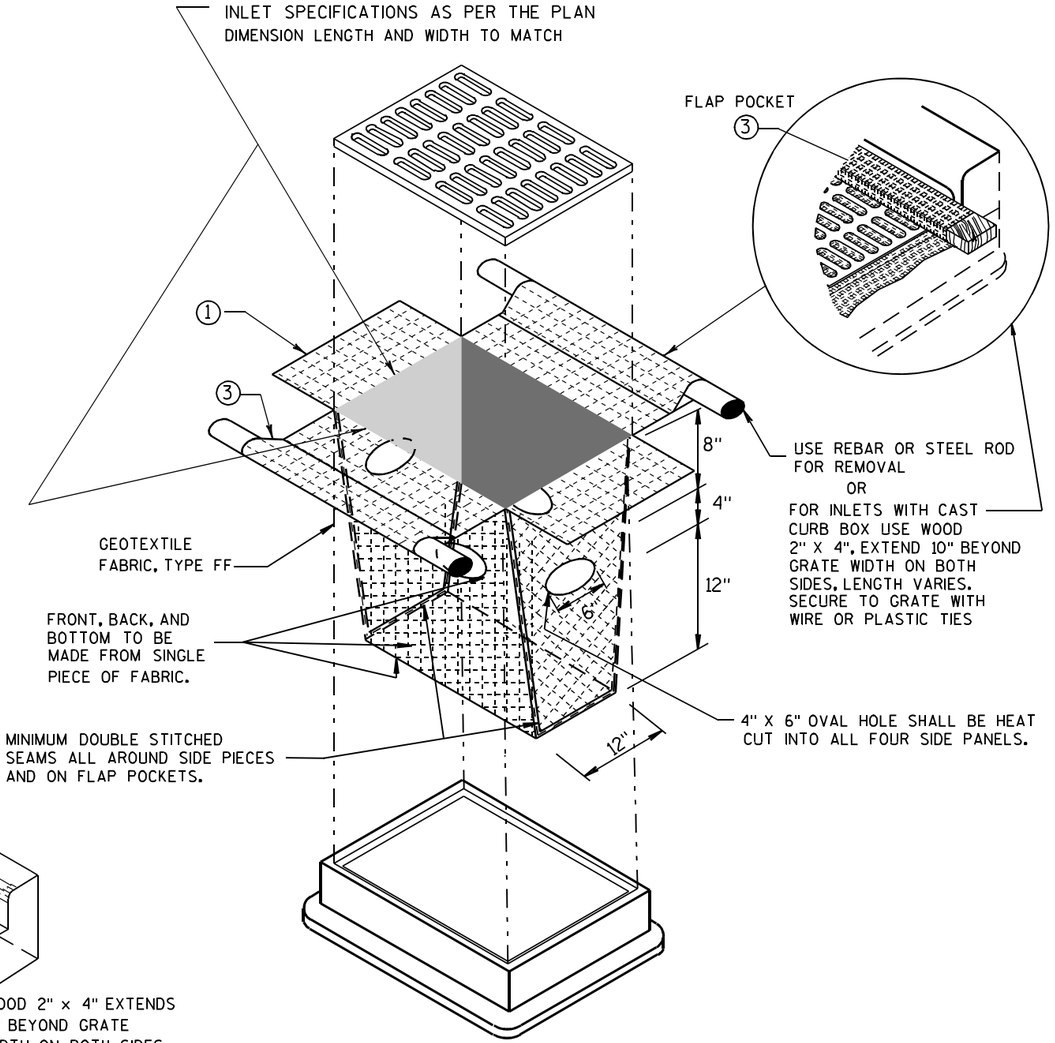

INLET PROTECTION, TYPE D

(CAN BE INSTALLED IN ANY INLET TYPE WITH
OR WITHOUT A CURB BOX AS PER NOTE ②)

GENERAL NOTES

INLET PROTECTION DEVICES SHALL BE MAINTAINED OR REPLACED AT THE DIRECTION OF THE ENGINEER.

MANUFACTURED ALTERNATIVES APPROVED AND LISTED ON THE DEPARTMENT'S EROSION CONTROL PRODUCT ACCEPTABILITY LIST MAY BE SUBSTITUTED.

WHEN REMOVING OR MAINTAINING INLET PROTECTION, CARE SHALL BE TAKEN SO THAT THE SEDIMENT TRAPPED ON THE GEOTEXTILE FABRIC DOES NOT FALL INTO THE INLET. ANY MATERIAL FALLING INTO THE INLET SHALL BE REMOVED IMMEDIATELY.

① FINISHED SIZE, INCLUDING FLAP POCKETS WHERE REQUIRED, SHALL EXTEND A MINIMUM OF 10" AROUND THE PERIMETER TO FACILITATE MAINTENANCE OR REMOVAL.

② FOR INLET PROTECTION, TYPE C (WITH CURB BOX), AN ADDITIONAL 18" OF FABRIC IS WRAPPED AROUND THE WOOD AND SECURED WITH STAPLES. THE WOOD SHALL NOT BLOCK THE ENTIRE HEIGHT OF THE CURB BOX OPENING.

③ FLAP POCKETS SHALL BE LARGE ENOUGH TO ACCEPT WOOD 2X4.

INSTALLATION NOTES

TYPE B & C

TRIM EXCESS FABRIC IN THE FLOW LINE TO WITHIN 3" OF THE GRATE.

THE CONTRACTOR SHALL DEMONSTRATE A METHOD OF MAINTENANCE, USING A SEWN FLAP, HAND HOLDS OR OTHER METHOD TO PREVENT ACCUMULATED SEDIMENT FROM ENTERING THE INLET.

TYPE D

DO NOT INSTALL INLET PROTECTION TYPE D IN INLETS SHALLOWER THAN 30", MEASURED FROM THE BOTTOM OF THE INLET TO THE TOP OF THE GRATE.

TRIM EXCESS FABRIC IN THE FLOW LINE TO WITHIN 3" OF THE GRATE.

THE INSTALLED BAG SHALL HAVE A MINIMUM SIDE CLEARANCE, BETWEEN THE INLET WALLS AND THE BAG, MEASURED AT THE BOTTOM OF THE OVERFLOW HOLES, OF 3". WHERE NECESSARY THE CONTRACTOR SHALL CINCH THE BAG, USING PLASTIC ZIP TIES, TO ACHIEVE THE 3" CLEARANCE. THE TIES SHALL BE PLACED AT A MAXIMUM OF 4" FROM THE BOTTOM OF THE BAG.

INLET PROTECTION
TYPE A, B, C, AND D

STATE OF WISCONSIN
DEPARTMENT OF TRANSPORTATION

APPROVED
10/16/02
DATE
/S/ Beth Cannestra
CHIEF ROADWAY DEVELOPMENT ENGINEER
FHWA

6
S.D.D. 8 E 10-2

METAL APRON ENDWALLS

PIPE DIA. (IN.)	MIN. THICK. (Inches) STEEL	MIN. THICK. (Inches) ALUM.	DIMENSIONS (Inches) A (±1")	B (MAX.)	H (±1")	L (±1 1/2")	L1 ①	L2 ①	W (±2")	APPROX. SLOPE	BODY
12	.064	.060	6	6	6	21	12	17 1/2	24	2 1/2 to 1	1 Pc.
15	.064	.060	7	8	6	26	14	21 3/4	30	2 1/2 to 1	1 Pc.
18	.064	.060	8	10	6	31	15	28 1/4	36	2 1/2 to 1	1 Pc.
21	.064	.060	9	12	6	36	18	29 5/8	42	2 1/2 to 1	1 Pc.
24	.064	.075	10	13	6	41	18	37 1/4	48	2 1/2 to 1	1 Pc.
30	.079	.075	12	16	8	51	18	52 1/4	60	2 1/2 to 1	1 Pc.
36	.079	.105	14	19	9	60	24	59 3/4	72	2 1/2 to 1	2 Pc.
42	.109	.105	16	22	11	69	24	75 5/8	84	2 1/2 to 1	2 Pc.
48	.109	.105	18	27	12	78	24	81	90	2 1/4 to 1	3 Pc.
54	.109	.105	18	30	12	84	30	85 1/2	102	2 1/4 to 1	3 Pc.
60	.109×	.105×	18	33	12	87	—	—	114	2 to 1	3 Pc.
66	.109×	.105×	18	36	12	87	—	—	120	2 to 1	3 Pc.
72	.109×	.105×	18	39	12	87	—	—	126	2 to 1	3 Pc.
78	.109×	.105×	18	42	12	87	—	—	132	1 1/2 to 1	3 Pc.
84	.109×	.105×	18	45	12	87	—	—	138	1 1/2 to 1	3 Pc.
90	.109×	.105×	18	37	12	87	—	—	144	1 1/2 to 1	3 Pc.
96	.109×	.105×	18	35	12	87	—	—	150	1 1/2 to 1	3 Pc.

× EXCEPT CENTER PANEL SEE GENERAL NOTES

REINFORCED CONCRETE APRON ENDWALLS

PIPE DIA. (IN.)	DIMENSIONS (Inches) T	A	B	C	D	E	G	APPROX. SLOPE
12	2	4	24	48 7/8	72 1/8	24	2	3 to 1
15	2 1/4	6	27	46	73	30	2 1/4	3 to 1
18	2 1/2	9	27	46	73	36	2 1/2	3 to 1
21	2 3/4	9	36	37 1/2	73 1/2	42	2 3/4	3 to 1
24	3	9 1/2	43 1/2	30	73 1/2	48	3	3 to 1
27	3 1/4	10 1/2	49 1/2	24	73 1/2	54	3 1/4	3 to 1
30	3 1/2	12	54	19 3/4	73 1/2	60	3 1/2	3 to 1
36	4	15	63	34 3/4	97 3/4	72	4	3 to 1
42	4 1/2	21	63	35	98	78	4 1/2	3 to 1
48	5	24	72	26	98	84	5	3 to 1
54	5 1/2	27	65	* 33 1/4 - ** 35	* 98 1/4 - ** 100	90	5 1/2	2 2/5 to 1
60	6	* 30 - ** 35	60	39	99	96	5	2 to 1
66	6 1/2	* 24 - ** 30	* 72 - ** 78	* 21 - ** 27	99	102	5 1/2	2 to 1
72	7	* 24 - ** 36	78	21	99	108	6	2 to 1
78	7 1/2	* 24 - ** 36	78	21	99	114	6 1/2	2 to 1
84	8	36	90 1/2	21	111 1/2	120	6 1/2	1 1/2 to 1
90	8 1/2	41	87 1/2	24	111 1/2	132	6 1/2	1 1/2 to 1

*MINIMUM
**MAXIMUM

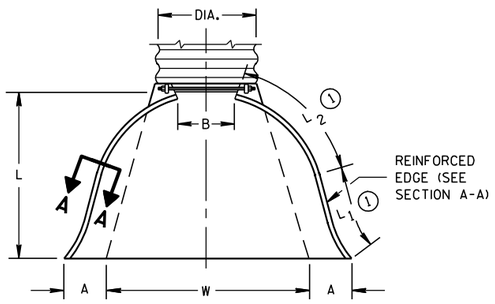

PLAN VIEW

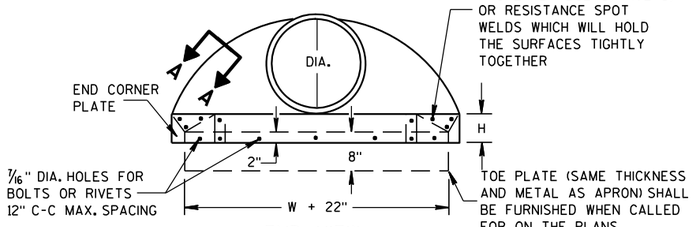

END VIEW

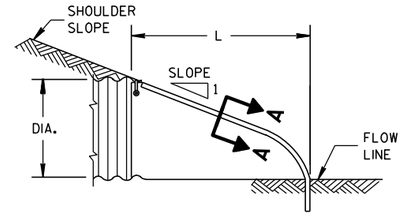

SIDE ELEVATION

METAL ENDWALLS

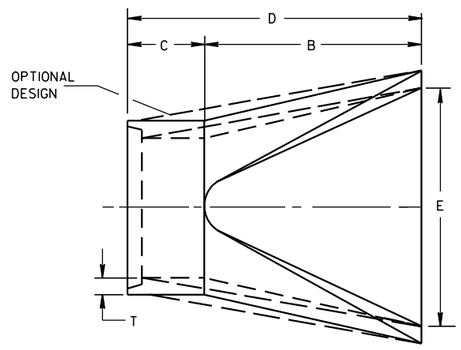

PLAN

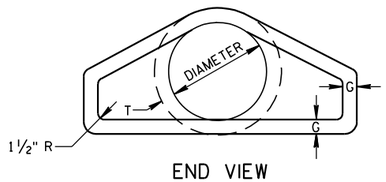

END VIEW

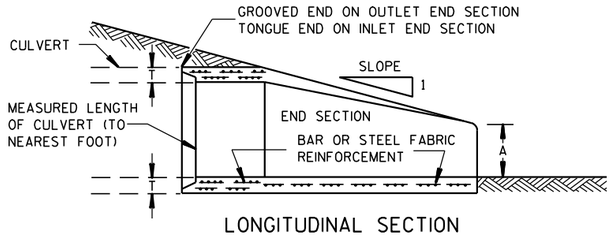

LONGITUDINAL SECTION

CONCRETE ENDWALLS

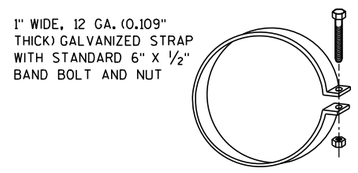

ALTERNATE FOR TYPE 1 CONNECTION

END SECTION CONNECTOR STRAP

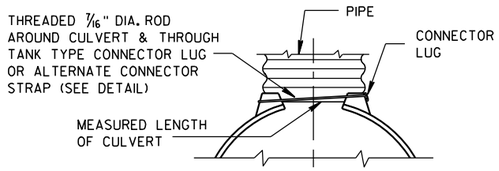

TYPE 1
FOR 12" THRU 24" CORR. PIPE

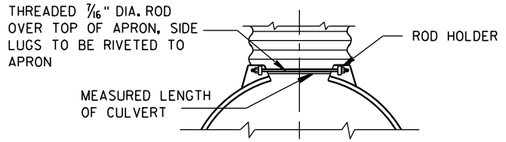

TYPE 2
FOR 30" THRU 96" CORR. PIPE

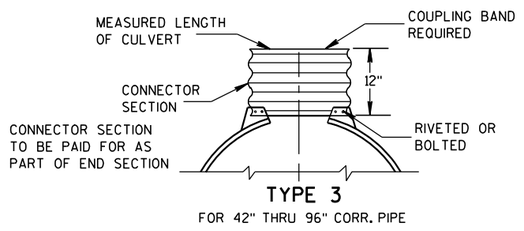

TYPE 3
FOR 42" THRU 96" CORR. PIPE

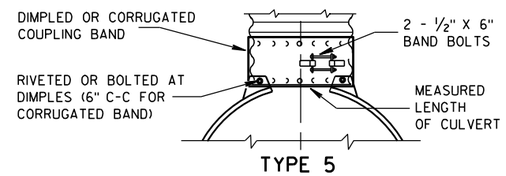

TYPE 5
ALTERNATE FOR:
ALL SIZES CORRUGATED CIRCULAR PIPE

NOTE: DIMPLED BAND FITS OVER OUTSIDE OF ENDWALL. AND CORRUGATED BAND FITS INSIDE ENDWALL. DIMPLED BAND MAY BE USED WITH HELICALLY CORRUGATED PIPE.

FOR CIRCUMFERENTIALLY CORRUGATED PIPE USE ENDWALL CONNECTION DETAILS 1, 2, 3 OR 5 AS APPLICABLE.

FOR HELICALLY CORRUGATED PIPE USE ENDWALL CONNECTION DETAILS 1, 2 OR 5.

FOR HELICALLY CORRUGATED PIPES WITH TWO CIRCUMFERENTIAL CORRUGATIONS AT EACH END USE ENDWALL CONNECTION DETAILS 1, 2 OR 3.

CONNECTION DETAILS

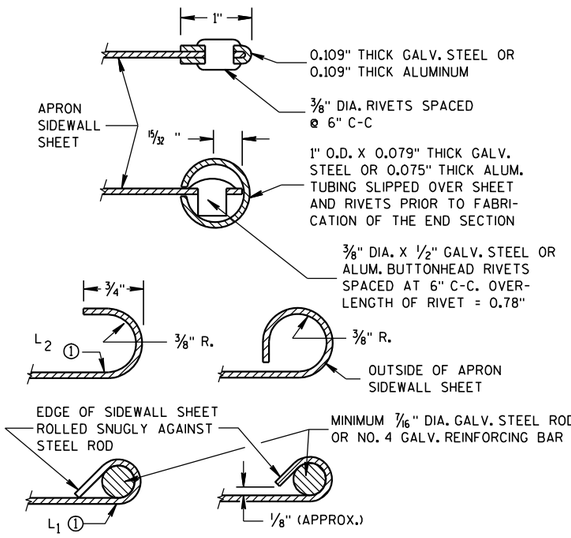

SECTION A-A

GENERAL NOTES

DETAILS OF CONSTRUCTION, MATERIALS AND WORKMANSHIP NOT SHOWN ON THIS DRAWING SHALL CONFORM TO THE PERTINENT REQUIREMENTS OF THE STANDARD SPECIFICATIONS AND THE APPLICABLE SPECIAL PROVISIONS.

CONCRETE CULVERT ENDWALLS MAY NOT BE USED WITH GALVANIZED STEEL OR ALUMINUM CULVERT PIPE OR VISE VERSA. GALVANIZED STEEL OR ALUMINUM ENDWALLS SHALL NORMALLY BE INSTALLED ON CULVERT PIPE OF THE SAME METAL.

ALL THREE PIECE STEEL APRON ENDWALLS FOR 60" DIAMETER PIPE AND LARGER SHALL HAVE 0.109" SIDES AND 0.138" CENTER PANELS. ALL THREE PIECE ALUMINUM APRON ENDWALLS FOR 60" DIAMETER PIPE AND LARGER SHALL HAVE 0.105" SIDES AND 0.134" CENTER PANELS. THE WIDTH OF CENTER PANELS SHALL BE GREATER THAN 20 PERCENT OF THE PIPE PERIMETER.

LAP SEAMS SHALL BE TIGHTLY JOINED BY GALVANIZED RIVETS OR BOLTS FOR STEEL UNITS AND ALUMINUM RIVETS AND BOLTS FOR ALUMINUM UNITS. FOR THE 60" THROUGH 96" DIAMETER APRON ENDWALL SIZES, THE REINFORCED EDGES AND CENTER PANEL SEAMS SHALL BE FURTHER REINFORCED WITH GALVANIZED STEEL OR ALUMINUM STIFFENER ANGLES. THE ANGLES SHALL BE ATTACHED BY GALVANIZED NUTS AND BOLTS FOR STEEL UNITS AND ALUMINUM NUTS AND BOLTS FOR ALUMINUM UNITS.

WHERE TWO OR MORE PIPES WITH APRON ENDWALLS ARE LAID ADJACENT TO EACH OTHER, THEY SHALL BE SEPARATED BY A DISTANCE SUFFICIENT TO PROVIDE A MINIMUM CLEARANCE OF 6 INCHES BETWEEN APRON ENDWALLS.

① FOR PIPE SIZES UP TO 60" DIAMETER, A 180° ROLLED EDGE MAY BE USED INSTEAD OF STEEL ROD REINFORCEMENT. SEE SECTION A-A.

APRON ENDWALLS FOR CULVERT PIPE

STATE OF WISCONSIN
DEPARTMENT OF TRANSPORTATION

APPROVED
11/30/94 DATE
/S/ Rory L. Rhinesmith
CHIEF ROADWAY DEVELOPMENT ENGINEER
FHWA

6
S.D.D. 8 F 1-11

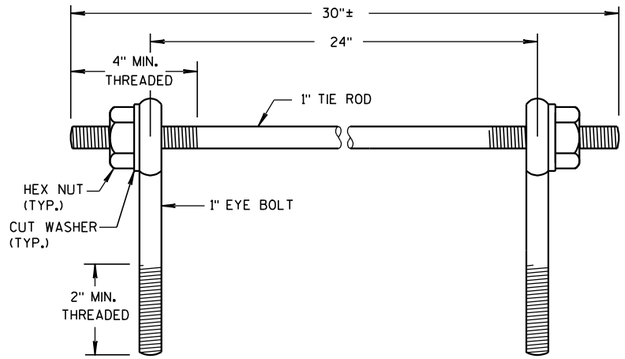

EYE BOLTS AND TIE ROD

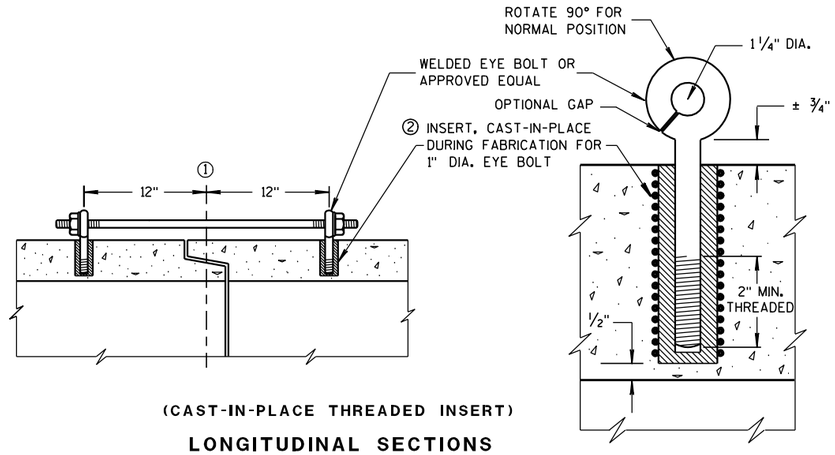

(CAST-IN-PLACE THREADED INSERT)

LONGITUDINAL SECTIONS

EYE BOLT AND TIE ROD ASSEMBLY (ALTERNATE NO. 1)

GENERAL NOTES

DETAILS OF CONSTRUCTION, MATERIALS, AND WORKMANSHIP NOT SHOWN ON THIS DRAWING SHALL CONFORM TO THE PERTINENT REQUIREMENTS OF THE STANDARD SPECIFICATIONS AND APPLICABLE SPECIAL PROVISIONS.

CONCRETE CULVERT AND STORM SEWER PIPE SHALL BE TIED TOGETHER IN THE MANNER ILLUSTRATED BY THIS DETAIL AT LOCATIONS DESIGNATED IN THE STANDARD SPECIFICATIONS AND THE PLAN. THE CONTRACTOR MAY USE EITHER ALTERNATE 1, 2 OR 3 FOR DRAINAGE STRUCTURES. ONLY ALTERNATE 1 AND 3 MAY BE USED FOR CATTLE PASSES, UNLESS OTHERWISE STATED IN THE CONTRACT. THE MATERIALS, FABRICATION AND WORK NECESSARY TO TIE THE PIPE BY THIS DETAIL WILL BE CONSIDERED INCIDENTAL TO THE PIPE AND APRON ENDWALLS IF REQUIRED.

DETAILED DRAWINGS FOR PROPOSED ALTERNATE DESIGNS FOR JOINT TIES SHALL BE SUBMITTED TO THE ENGINEER FOR APPROVAL.

JOINT TIES TO BE HOT-DIP GALVANIZED PER ASTM A 153.

① ℄ OF TONGUE AND GROOVE OR BELL AND SPIGOT JOINTS.

② THE INSIDE OF THE THREADED INSERTS SHALL BE CLEAN TO ALLOW THE INSERTION OF THREADED EYE BOLTS.

③ HOLES SHALL BE CAST-IN-PLACE OR DRILLED 12 INCHES FROM ℄ OF TONGUE AND GROOVE.

④ BOLT PROJECTION INSIDE OF PIPE SHALL NOT EXCEED 2 INCHES.

⑤ OPENING TO BE ROD DIAMETER PLUS 1 INCH.

⑥ LENGTH ADEQUATE TO EXTEND TO WITHIN 1/2 INCH OF THE INNER SURFACE OF THE PIPE.

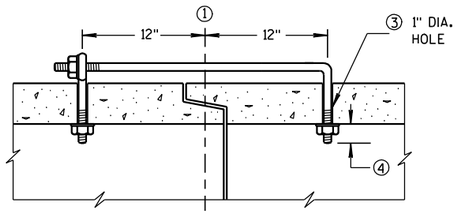

(TONGUE & GROOVE PIPE)

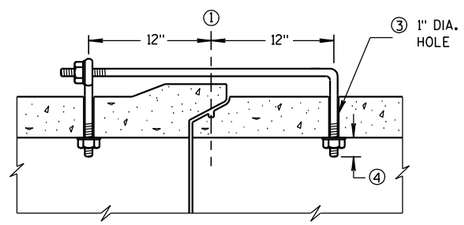

(MODIFIED BELL PIPE)

LONGITUDINAL SECTION

EYE BOLT DIMENSION TABLE

PIPE SIZE	L = LENGTH	
	TONGUE & GROOVE PIPE	MODIFIED BELL PIPE
18" TO 24"	4 1/2"	6 1/4"
30"	5"	7"
36"	5 1/2"	7"
42"	6"	
48"	6 1/2"	
60"	7 1/2"	
66"	8"	

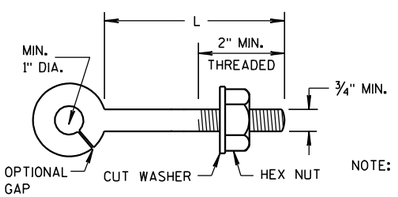

NOTE:

EYE BOLT

NOTE: TWO EYE BOLTS MAY BE USED WITH A 30" LONG THREADED ROD IN LIEU OF THE 90° BENT TIE ROD.

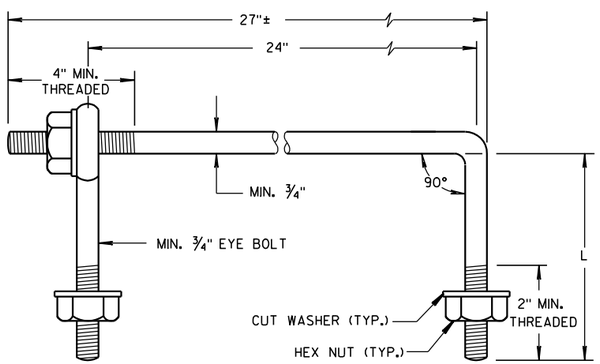

EYE BOLT AND TIE ROD

(JOINT TIES FOR 18" TO 66" DIA. CONCRETE PIPE)

EYE BOLT AND TIE ROD ASSEMBLY (ALTERNATE NO. 2)

ADJUSTABLE TIE ROD TABLE

PIPE DIAMETER	TIE ROD DIAMETER	D	L_1	N
12-60	5/8	5/8	5	1/2
66-84	3/4	3/4	5	1/2
90-108	1	1	7	1 1/16

DIMENSIONS SHOWN ARE IN INCHES

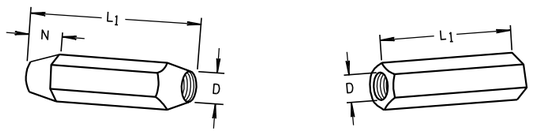

TAPERED PLAIN

RIGHT AND LEFT THREADS

SLEEVE NUTS

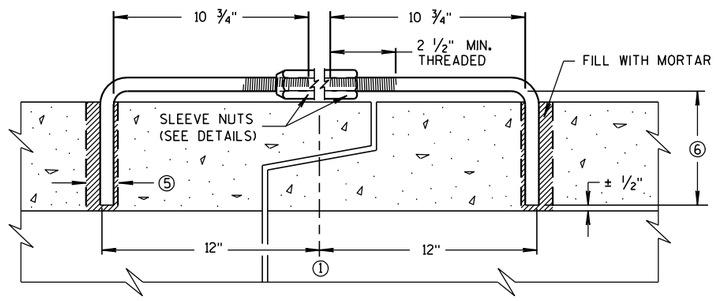

LONGITUDINAL SECTION

(JOINT TIES FOR 12" TO 108" DIA. CONCRETE PIPE)

ADJUSTABLE TIE ROD (ALTERNATE NO. 3)

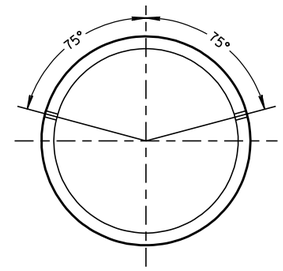

PLACEMENT OF (2) CAST-IN-PLACE INSERTS OR HOLES DURING FABRICATION FOR PIPE SECTIONS REQUIRING TIE RODS

TRANSVERSE SECTION

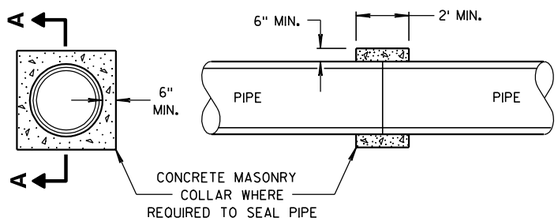

SECTION A-A

CONCRETE COLLAR DETAIL

JOINT TIES FOR CONCRETE PIPE AND CONCRETE COLLAR DETAIL

STATE OF WISCONSIN
DEPARTMENT OF TRANSPORTATION

APPROVED
6/5/2012 — DATE
/S/ Jerry H. Zogg — ROADWAY STANDARDS ENGINEER
FHWA

6

S.D.D. 8 F 4-7

6

S.D.D. 8 F 4-7

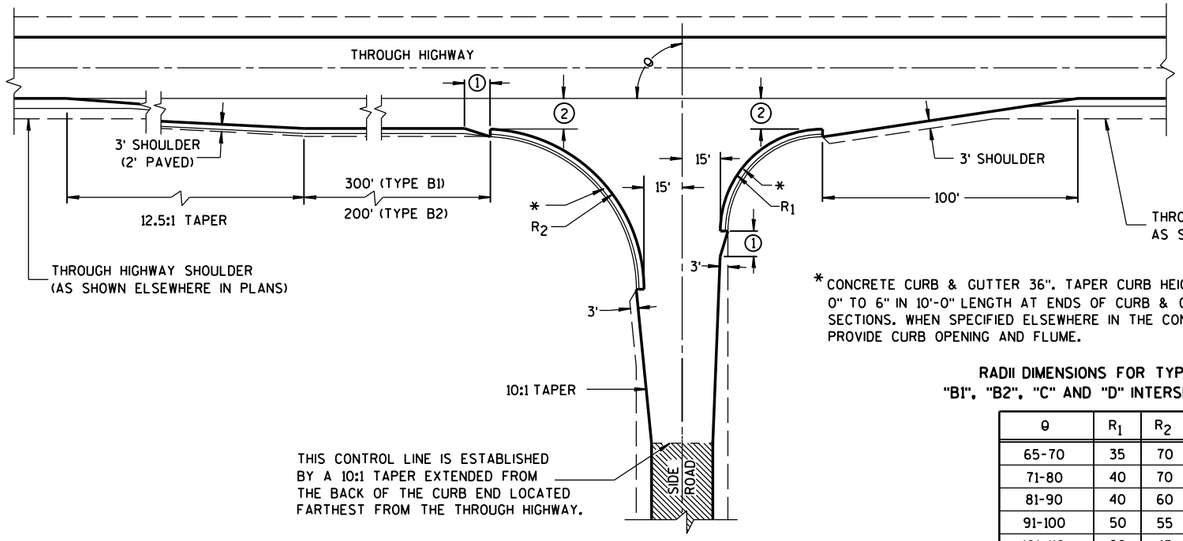

TYPE "B1" AND "B2"

*CONCRETE CURB & GUTTER 36". TAPER CURB HEIGHT 0" TO 6" IN 10'-0" LENGTH AT ENDS OF CURB & GUTTER SECTIONS. WHEN SPECIFIED ELSEWHERE IN THE CONTRACT, PROVIDE CURB OPENING AND FLUME.

RADII DIMENSIONS FOR TYPES "B1", "B2", "C" AND "D" INTERSECTIONS

θ	R_1	R_2
65-70	35	70
71-80	40	70
81-90	40	60
91-100	50	55
101-110	60	45

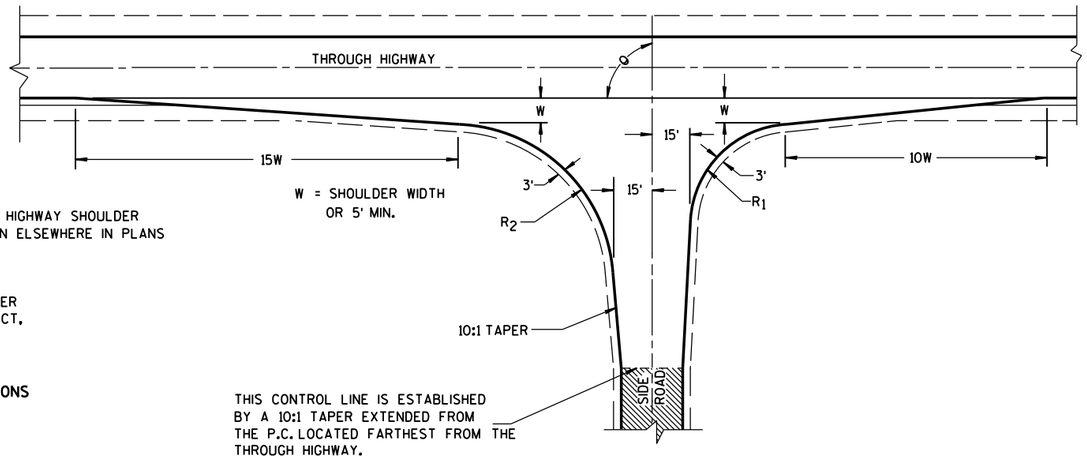

TYPE "C"

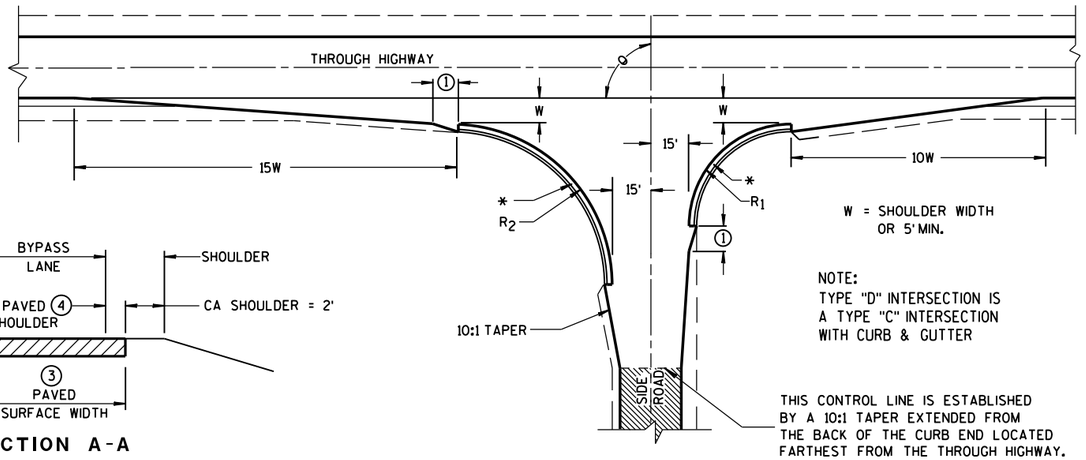

TYPE "D"

GENERAL NOTES

DESIGNS MAY BE USED INTERCHANGEABLY IN COMBINATION OR SEPARATELY FOR ANY ONE COMPLETE INTERSECTION DEPENDING UPON INTERSECTION ANGLE AND SURFACING OF EACH APPROACH ROADWAY.

SIDE ROAD SURFACING NOTE

WHEN THE SIDE ROAD IS NOT PRESENTLY PAVED, PAVEMENT SHALL BE PLACED TO THE LIMITS SHOWN UNLESS OTHERWISE PROVIDED IN THE CONTRACT. WHERE THE CONSTRUCTION LIMITS ARE BEYOND THE PAVING LIMITS, CRUSHED AGGREGATE SURFACING SHALL BE PLACED BETWEEN THE PAVING LIMITS AND CONSTRUCTION LIMITS.

WHEN THE SIDE ROAD IS PRESENTLY PAVED, NEW PAVEMENT SHALL BE PLACED TO THE LIMITS OF DESIGN AS SHOWN AND BEYOND, IF NECESSARY, TO MEET EXISTING PAVEMENT.

WHEN THE SIDE ROAD IS THE CONSTRUCTION PROJECT, THE INTERSECTION SURFACING SHALL BE THE SAME AS FOR THE PROJECT.

EXISTING PAVED SURFACE

BYPASS LANE

(1) 10-FT TYPICAL.

(2) 12-FT** PLUS ADDITIONAL WIDTH FOR BIKE LANE IF SHOWN ELSEWHERE IN THE PLAN.

**10-FT MAY BE USED ON TYPE B2 ON RESURFACING PROJECTS IF SPECIFIED IN THE CONTRACT.

(3) BYPASS LANE PAVED SURFACE WIDTH OUTSIDE OF TRAVEL LANE
-ASPHALT = 12-FT PLUS PAVED SHOULDER WIDTH.
-PC CPNCRETE = 13-FT PLUS PAVED SHOULDER WIDTH.

(4) BYPASS LANE PAVED SHOULDER WIDTH = THE GREATER OF 1-FT OR THE PAVED SHOULDER WIDTH OF THE THROUGH HIGHWAY.

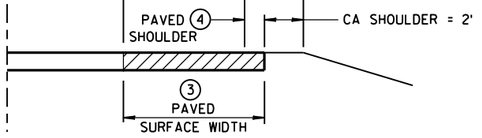

SECTION A-A
(SHOWING BYPASS LANE AND SHOULDER)

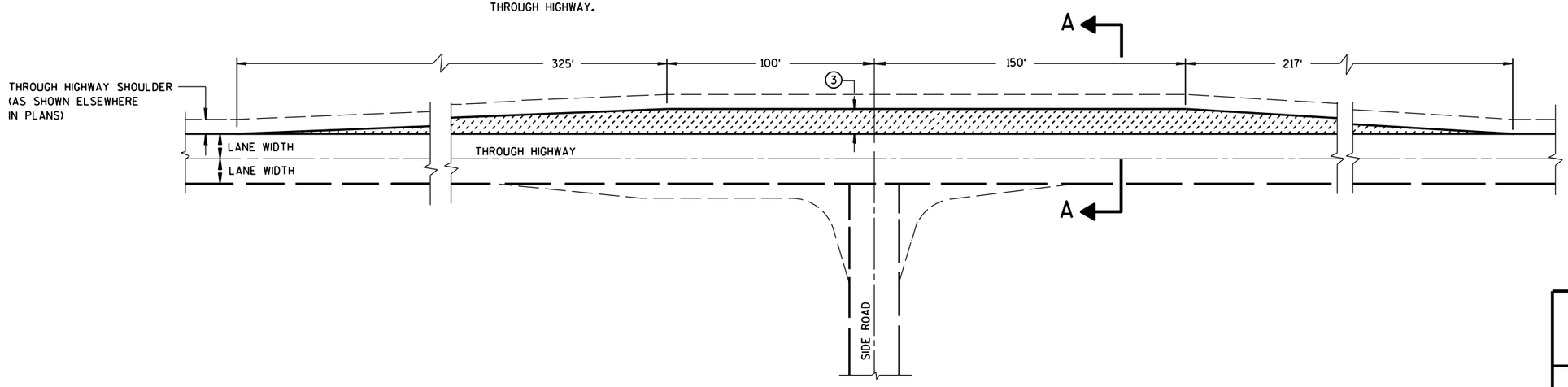

TEE INTERSECTION BYPASS LANE DETAIL

AT-GRADE SIDE ROAD INTERSECTION, TYPES "B1", "B2", "C" AND "D" AND TEE INTERSECTION BYPASS LANE

STATE OF WISCONSIN
DEPARTMENT OF TRANSPOR

6
S.D.D. 9 A 1-13a

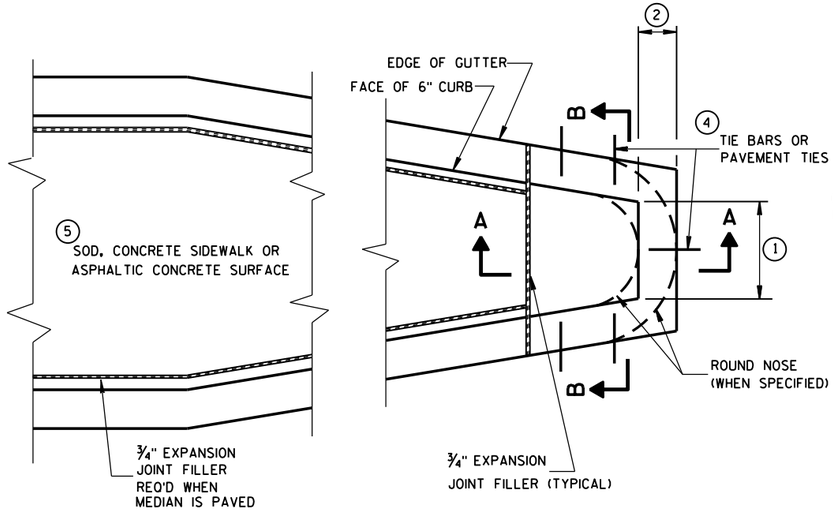

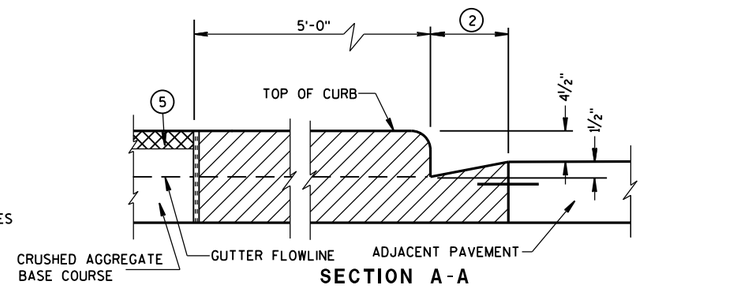

CONCRETE MEDIAN BLUNT NOSE DETAIL

GENERAL NOTES

DETAILS OF CONSTRUCTION, MATERIALS AND WORKMANSHIP NOT SHOWN ON THIS DRAWING SHALL CONFORM TO THE PERTINENT REQUIREMENTS OF THE STANDARD SPECIFICATIONS AND THE APPLICABLE SPECIAL PROVISIONS.

(1) SEE PLAN FOR MEDIAN NOSE WIDTH AND RADIUS (FOR ROUND NOSE ALTERNATE).

(2) WIDTH OF GUTTER TO MATCH EXISTING ADJACENT GUTTER OR AS SPECIFIED ELSEWHERE IN THE PLAN.

(3) DEPTH EQUAL TO ADJACENT PAVEMENT. ADJACENT PAVEMENT STRUCTURE DETAILS ARE SHOWN ON THE PLAN. TYPICAL OPTIONS ARE:

(1) NEW OR EXISTING CONCRETE PAVEMENT.

(2) ASPHALTIC CONCRETE PAVEMENT OVER NEW OR EXISTING CONCRETE BASE COURSE.

(3) ASPHALTIC CONCRETE PAVEMENT OVER CRUSHED AGGREGATE BASE COURSE.

(4) TIE BARS OR PAVEMENT TIES REQUIRED IN NEW CONCRETE PAVEMENT OR CONCRETE BASE COURSE. TIE BARS SHALL BE NO. 4 X 2'-0" SPACED AT 2'-0" C-C.

PAVEMENT TIES REQUIRED IN EXISTING CONCRETE BASE COURSE. PAVEMENT TIES SHALL BE NO. 6 X 1'-0" SPACED AT 3'-0" C-C INSTALLED ON A HORIZONTAL SKEW OF 6:1. THE DIRECTION OF SKEW SHALL ALTERNATE AFTER EVERY ONE OR TWO BARS.

(5) SURFACE TYPE AND DETAILS ARE SHOWN ELSEWHERE IN THE PLAN.

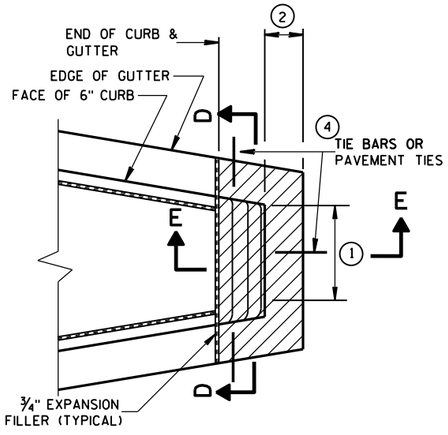

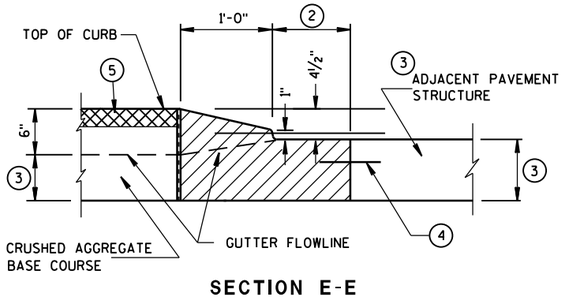

SECTION E-E

CONCRETE MEDIAN SLOPED NOSE TYPE 2

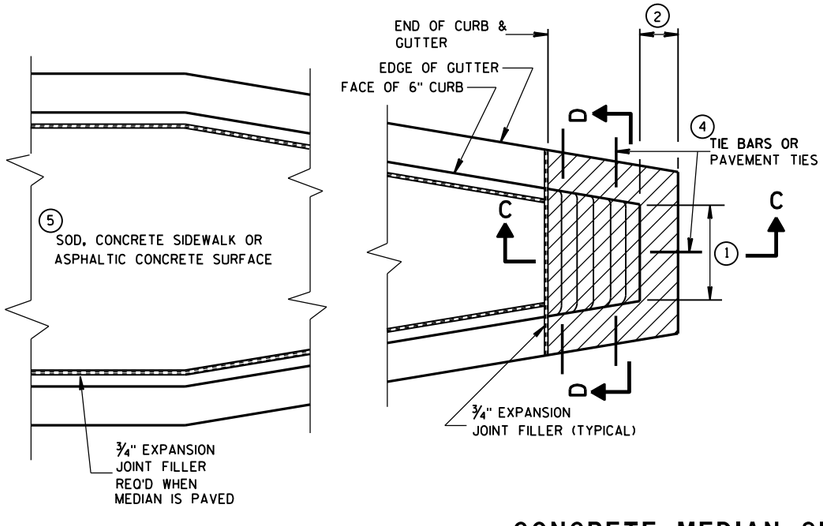

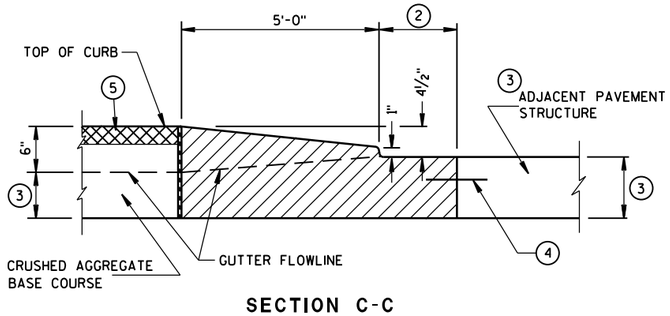

SECTION C-C

CONCRETE MEDIAN SLOPED NOSE TYPE 1

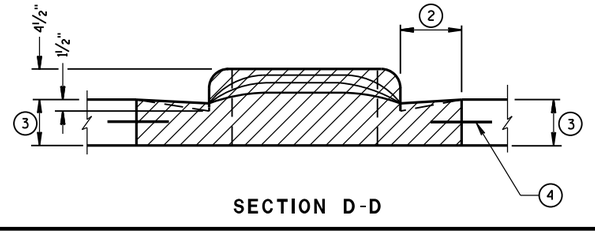

SECTION D-D

CONCRETE MEDIAN NOSE

STATE OF WISCONSIN
DEPARTMENT OF TRANSPORTATION

APPROVED
6/8/2006
DATE
/S/ Jerry H. Zogg
ROADWAY STANDARDS DEVELOPMENT ENGINEER

FHWA

6

S.D.D. 11 B 2-2

6

S.D.D. 11 B 2-2

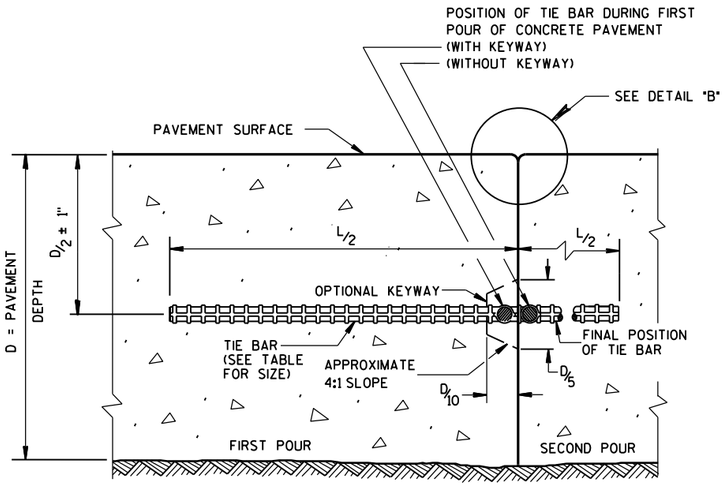

CONSTRUCTION JOINT

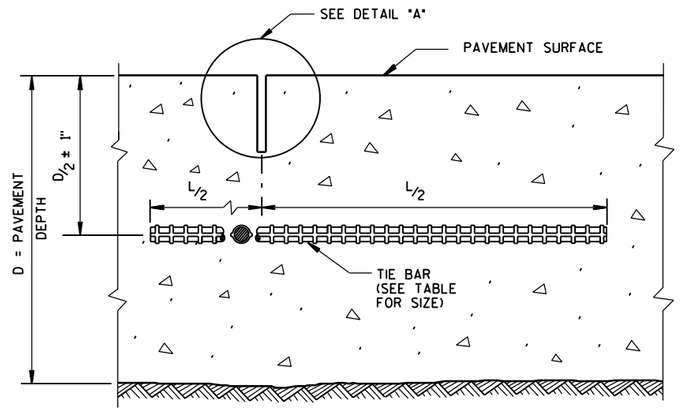

SAWED JOINT

GENERAL NOTES

DO NOT SEAL OR FILL LONGITUDINAL JOINTS.

CREATE A LONGITUDINAL JOINT FOR PAVEMENT WIDTHS GREATER THAN 15 FEET.

CORRELATE LONGITUDINAL JOINTS WITH LANE LINES WHEN POSSIBLE.

(1) ANCHOR TIE BARS INTO DRILLED HOLES WITH AN EPOXY.

(2) PAVEMENT THAT WAS IN PLACE PRIOR TO THE CONTRACT.

PLAN VIEW

SECTION A-A

LONGITUDINAL CONSTRUCTION JOINT TIE BARS ANCHORED INTO EXISTING PAVEMENT

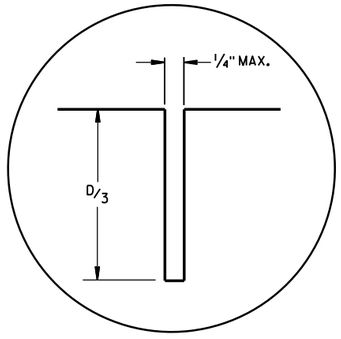

DETAIL "A"

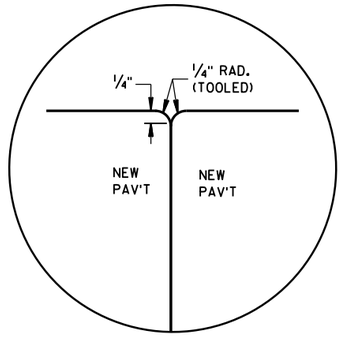

DETAIL "B"

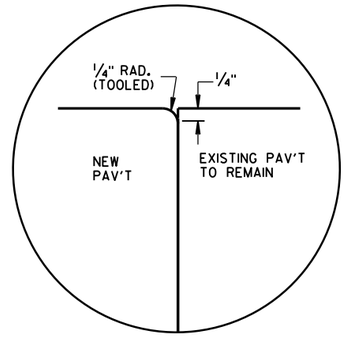

DETAIL "C"

TIE BAR TABLE

PAVEMENT DEPTH (D)	TIE BAR SIZE	TIE BAR LENGTH (L)	MAX. TIE BAR SPACING
< 10 1/2"	NO. 4	30"	36"
≥ 10 1/2"	NO. 5	36"	36"
	NO. 4 *	30"	24"**

* SUBSTITUTE BENT BARS AT LONGITUDINAL JOINTS WHEN EQUIPMENT LIMITATIONS DURING CONSTRUCTION WARRANT (e.g. AUXILIARY LANES OR TURN LANES)

** CONFORM TO 15" MINUMUM SPACING FROM TRANSVERSE JOINTS; SPACING BETWEEN TIE BARS WILL BE 30" AT TRANSVERSE JOINTS.

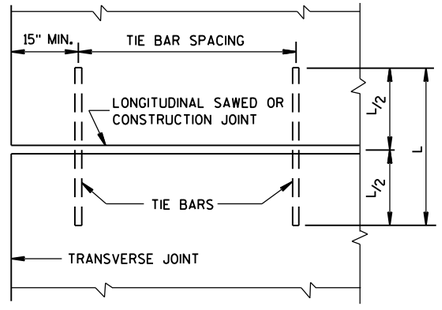

PLAN VIEW
SHOWING LOCATION OF TIE BARS

CONCRETE PAVEMENT LONGITUDINAL JOINTS AND TIES

STATE OF WISCONSIN
DEPARTMENT OF TRANSPORTATION

APPROVED
June, 2015
DATE

/S/ Peter Kemp, P.E.
PAVEMENT SUPER

FHWA

6

S.D.D. 13 C 1-18

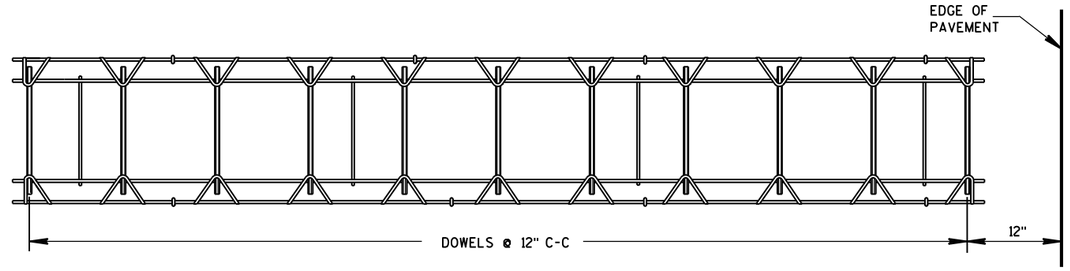

PLAN VIEW

SIDE VIEW

CONTRACTION JOINT DOWEL ASSEMBLY ①

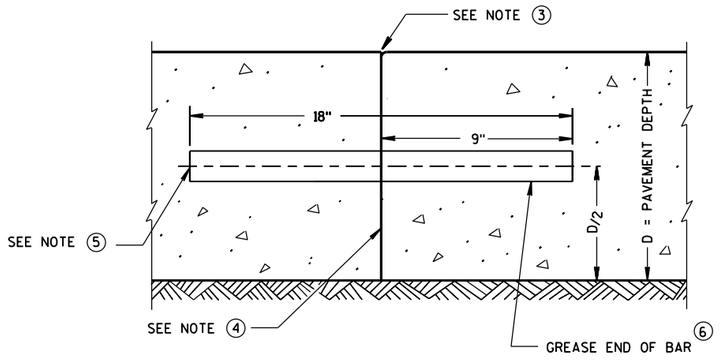

TRANSVERSE CONSTRUCTION JOINT

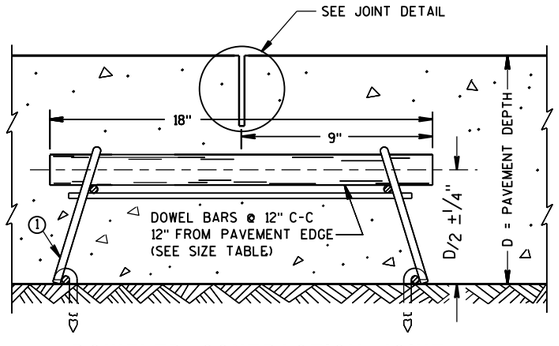

DOWELED CONTRACTION JOINT

PAVEMENT DEPTH, DOWEL BAR SIZE AND JOINT SPACING TABLE

PAVEMENT DEPTH (D)	DOWEL BAR DIAMETER	CONTRACTION JOINT SPACING
5 ½", 6", 6 ½"	NONE	12'
7", 7 ½"	1"	14'
8", 8 ½"	1 ¼"	15'
9", 9 ½"	1 ¼"	15'
10" & ABOVE	1 ½"	15'

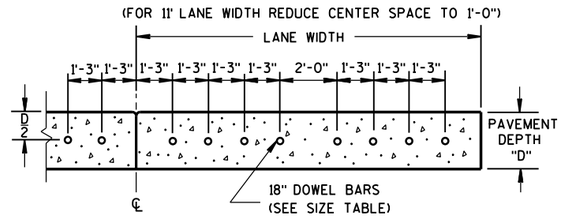

DRILLED DOWEL BAR CONSTRUCTION JOINT ⑦

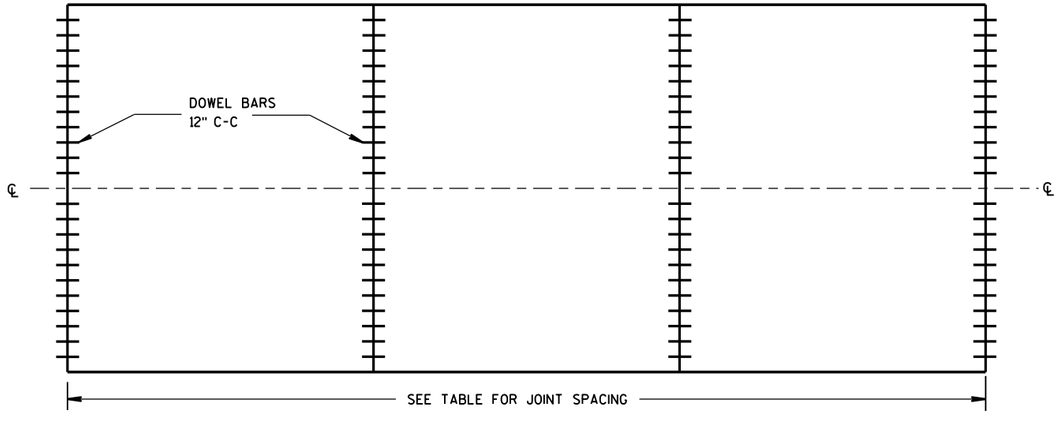

CONTRACTION JOINT LOCATIONS

GENERAL NOTES

CONTRACTION JOINTS

CONSTRUCT TRANSVERSE CONTRACTION JOINTS NORMAL TO THE CENTERLINE. SHOW THE LOCATION OF CONTRACTION JOINTS THROUGH INTERSECTIONS ON THE PLANS OR AS DIRECTED BY THE ENGINEER.

DO NOT SEAL OR FILL CONTRACTION JOINTS.

INSTALL DOWEL BARS PARALLEL TO THE PAVEMENT CENTERLINE AND PAVEMENT SURFACE.

FOR PAVEMENT SLABS OF VARYING WIDTHS, LOCATE THE OUTER MOST DOWEL BAR SO THAT THE CENTER OF THE BAR IS A MINIMUM OF 6 INCHES AND A MAXIMUM OF 18 INCHES FROM THE LONGITUDINAL JOINT AND THE FREE EDGE OF PAVEMENT.

CONSTRUCTION JOINTS

LOCATE CONSTRUCTION JOINTS A MINIMUM OF 6 FEET FROM THE NEAREST CONTRACTION JOINT AND ALIGN PARALLEL TO CONTRACTION JOINTS.

① **OBTAIN THE ENGINEER'S APPROVAL FOR THE USE OF ALTERNATIVE DESIGNS OF THE DOWEL ASSEMBLY. USE MECHANICAL DOWEL BAR INSERTERS OR DOWEL ASSEMBLIES WHEN CONSTRUCTING CONTRACTION JOINTS.**

② SECURE BASKETS WITH ANCHORS TO HOLD DOWEL BARS IN THE CORRECT POSITION AND ALIGNMENT. TYPE, LOCATION, NUMBER AND LENGTH OF ANCHORS ARE DEPENDENT UPON FIELD CONDITIONS.

③ FORM OR SAW CONSTRUCTION JOINTS. PROVIDE A ¼-INCH RADIUS AT FORMED JOINTS.

④ PROVIDE A SMOOTH VERTICAL FACE FOR THE ENTIRE DEPTH OF THE PAVEMENT WHEN FORMING CONSTRUCTION JOINTS.

⑤ INSTALL DOWEL BARS AT CONSTRUCTION JOINTS BY FORMING OR DRILLING. INSTALL FORMED DOWEL BARS 12 INCHES C-C AND 12 INCHES FROM PAVEMENT EDGE. REMOVE EXCESS CONCRETE FROM THE FREE END OF THE DOWEL BAR IF DOWEL BARS ARE FORMED THROUGH A HEADER BOARD. INSTALL DRILLED DOWEL BARS ACCORDING TO *DRILLED DOWEL BAR CONSTRUCTION JOINT* DETAIL.

⑥ APPLY A THIN UNIFORM COATING OF SURFACE TREATMENT TO THE FREE END OF DOWEL BARS TO PREVENT BONDING.

⑦ ANCHOR DOWEL BARS INTO DRILLED HOLES WITH AN EPOXY. MAXIMUM DRILLED HOLE SIZE IS ⅛-INCH GREATER THAN DOWEL BAR DIAMETER, 9 INCHES IN LENGTH.

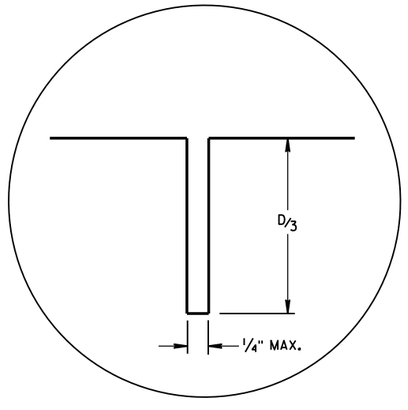

JOINT DETAIL

URBAN DOWELED CONCRETE PAVEMENT

STATE OF WISCONSIN
DEPARTMENT OF TRANSPORTATION

APPROVED
5/3/2013 DATE
/S/ Deb Bischoff
PAVEMENT POLICY & DE ...NEER
FHWA

6

S.D.D. 13 C 13-8

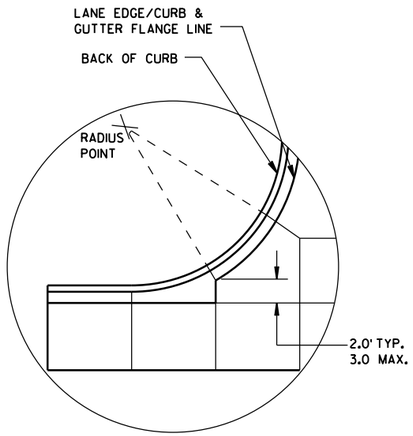

DETAIL "A"

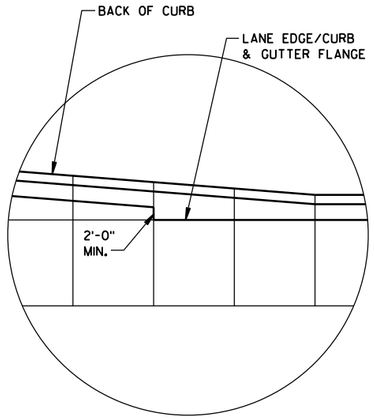

DETAIL "B"

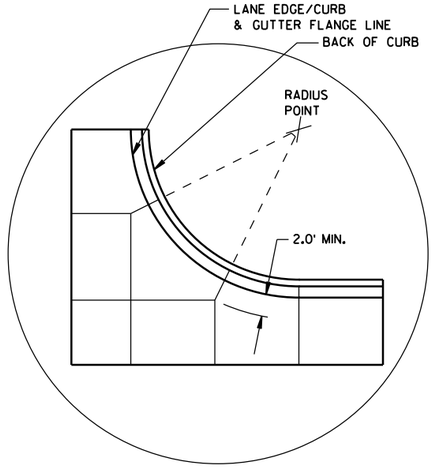

DETAIL "C"

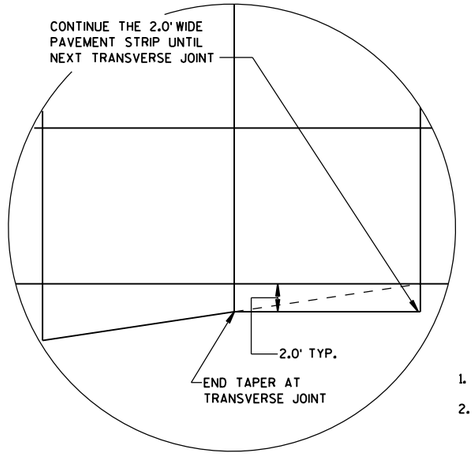

DETAIL "D"

GENERAL NOTES

THE PRIMARY ROADWAY CONTROLS THE TRANSVERSE JOINT PATTERN.

ALIGN NEW JOINTS WITH EXISTING JOINTS OR CRACKS.

CONSTRUCT TRANSVERSE JOINTS PERPENDICULAR TO THE ROADWAY.

ADJUST TRANSVERSE JOINTS TO ALIGN WITH UTILITY FIXTURES (E.G. MANHOLES AND INLETS) IN THE PAVEMENT STRUCTURE WHEN POSSIBLE. WATER VALVES DO NOT REQUIRE JOINT ADJUSTMENT.

AVOID SLABS LESS THAN 2 FEET WIDE OR GREATER THAN 15 FEET WIDE.

SEE TABLE FOR TRANSVERSE JOINT SPACING. JOINT SPACING SPECIFIED IS MAXIMUM AND ACTUAL SPACING CAN BE ADJUSTED TO ACCOMMODATE INTERSECTIONS.

AVOID ANGLES LESS THAN 60° BY DOGLEGGING JOINTS THROUGH CURVE RADIUS POINTS. USE 90° ANGLES WHEN POSSIBLE.

CORRELATE LONGITUDINAL JOINTS WITH LANE LINES WHEN POSSIBLE.

1. PROVIDE TRANSVERSE JOINTS AT ALL PAVEMENT WIDTH CHANGES.
2. CONSTRUCT DOWELED EXPANSION JOINT ON THE SIDE ROAD OF AN INTERSECTION IF THE SIDE ROAD IS CONCRETE PAVEMENT AND GREATER THAN 300 FEET IN LENGTH. ALIGN EXPANSION JOINT WITH EDGE OF RADIUS.
3. THE ENGINEER MAY APPROVE SLIGHT VARIATIONS FROM THESE JOINTING DETAILS.

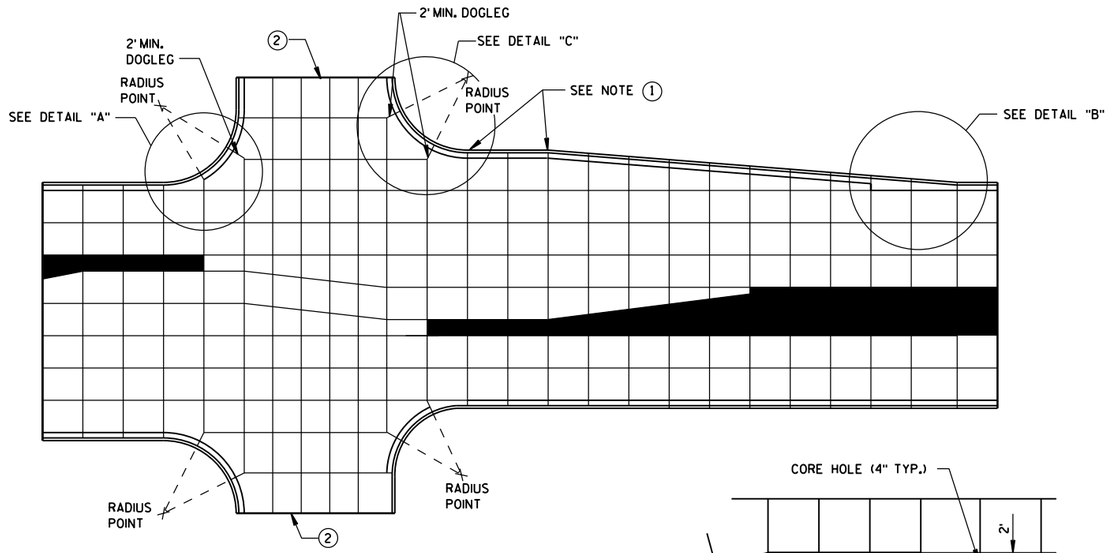

STANDARD INTERSECTION

PAVEMENT DEPTH AND JOINT SPACING TABLE

PAVEMENT DEPTH (D)	CONTRACTION JOINT SPACING
6", 6½"	12'
7", 7½"	14'
8" & ABOVE	15'

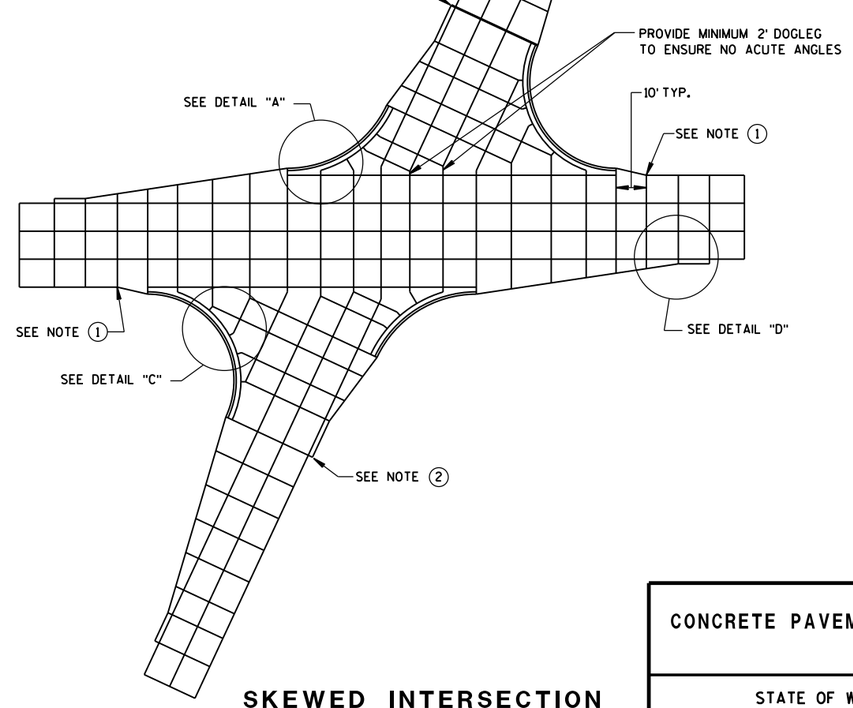

SKEWED INTERSECTION

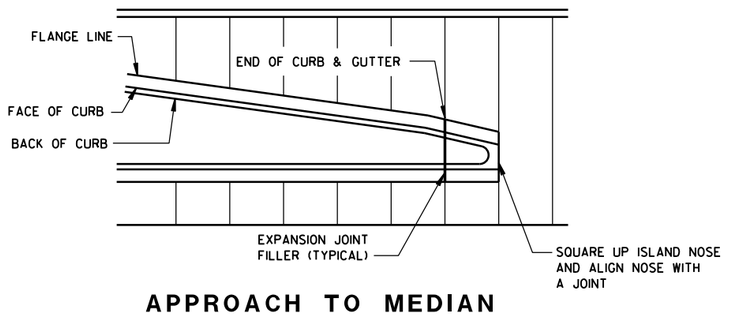

APPROACH TO MEDIAN

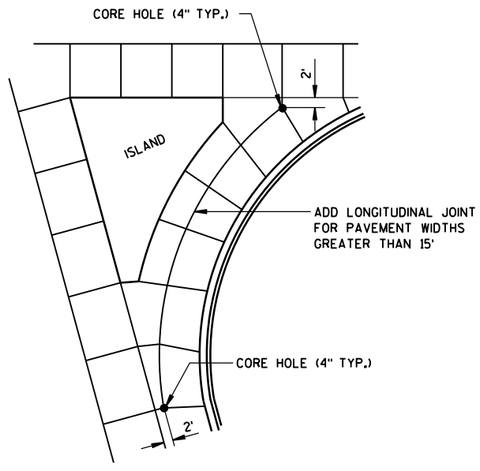

LARGE RIGHT TURN

CONCRETE PAVEMENT JOINTING

STATE OF WISCONSIN
DEPARTMENT OF TRANSPOR

6
S.D.D. 13 C 18-3a

LEGEND

POTENTIAL DOWELED EXPANSION JOINT

DOWELED JOINT

TIED JOINT

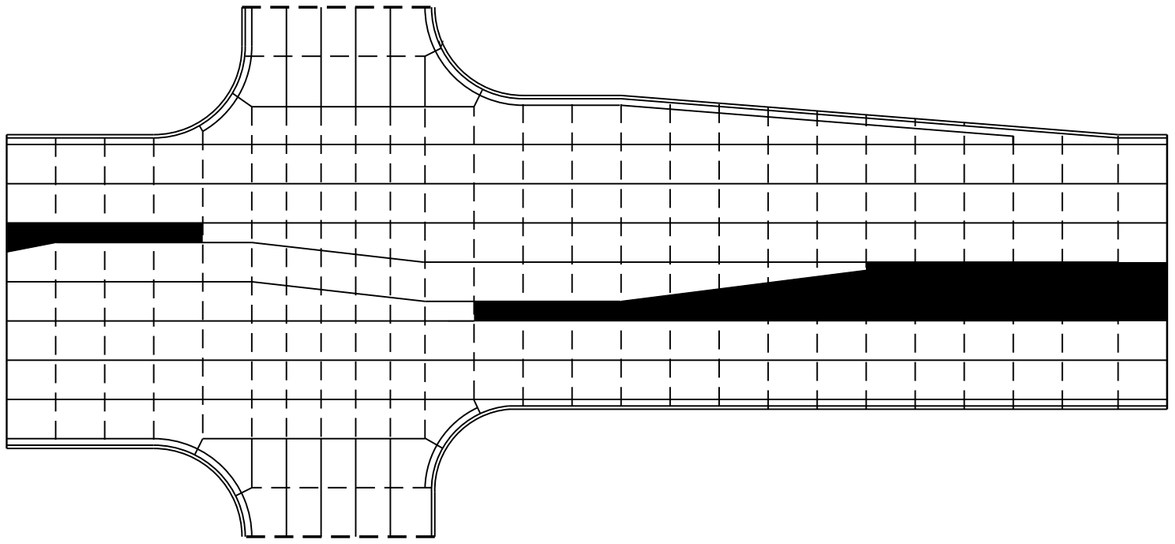

STANDARD INTERSECTION

GENERAL NOTES

USE AN EXPANSION JOINT FILLER MEETING THE REQUIREMENTS OF STANDARD SPECIFICATION 415.

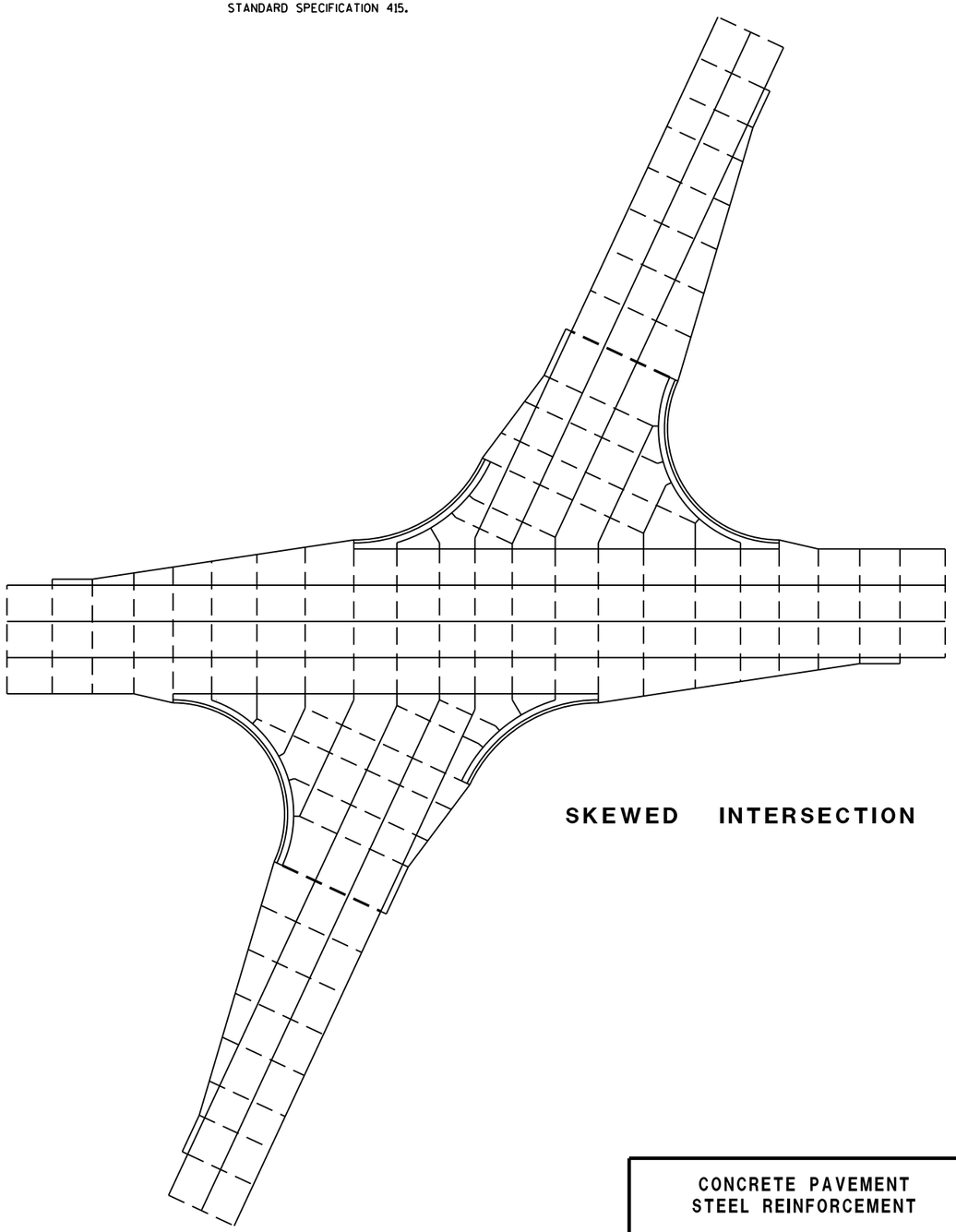

SKEWED INTERSECTION

CONCRETE PAVEMENT
STEEL REINFORCEMENT

STATE OF WISCONSIN
DEPARTMENT OF TRANSPOI

6

S.D.D. 13 C 18-3b

6

S.D.D. 13 C 18-3b

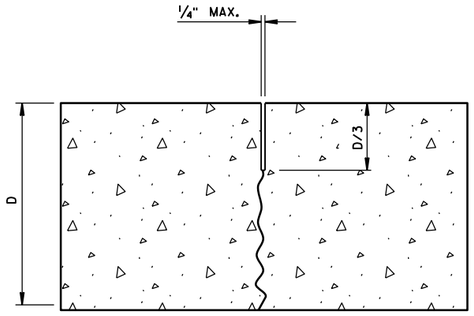

UNDOWELED-TRANSVERSE

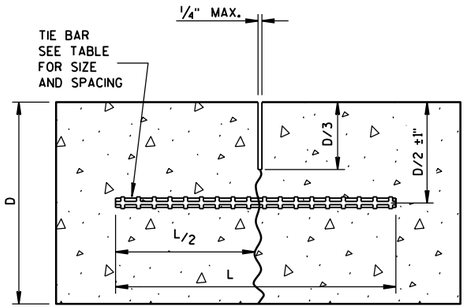

TIED LONGITUDINAL

TIE BAR TABLE

PAVEMENT DEPTH (D)	TIE BAR SIZE	TIE BAR LENGTH (L)	MAX. TIE BAR SPACING
< 10 1/2"	NO. 4	30"	36"
≥ 10 1/2"	NO. 5	36"	36"
	NO. 4*	30"	24"**

* SUBSTITUTE BENT BARS AT LONGITUDINAL JOINTS WHEN EQUIPMENT LIMITATIONS DURING CONSTRUCTION WARRANT (e.g. AUXILIARY LANES OR TURN LANES)

** CONFORM TO 15" MINUMUM SPACING FROM TRANSVERSE JOINTS; SPACING BETWEEN TIE BARS WILL BE 30" AT TRANSVERSE JOINTS.

GENERAL NOTES

1. USE DOWELED EXPANSION JOINTS ON SIDE ROADS AT INTERSECTIONS (TO ISOLATE THE SIDE ROAD FROM THE THROUGH STREET) IF THE SIDE ROAD IS CONCRETE PAVEMENT AND GREATER THAN 300 FEET IN LENGTH.
2. SPACE CONTRACTION JOINTS IN ACCORDANCE WITH 13C4, 13C11 OR 13C13.
3. LOCATE CONSTRUCTION JOINTS A MINIMUM OF 6 FEET FROM THE NEAREST CONTRACTION JOINT AND ALIGN PARALLEL TO CONTRACTION JOINTS.
4. CONSTRUCTION JOINTS CAN BE FORMED OR SAWED.
5. IF JOINT IS FORMED, PROVIDE A 1/4-INCH RADIUS.
6. ANCHOR TIE BARS INTO DRILLED HOLES WITH AN EPOXY.

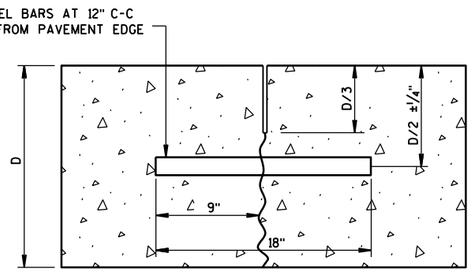

DOWELED-TRANSVERSE

CONTRACTION JOINTS

SEE NOTE (2)

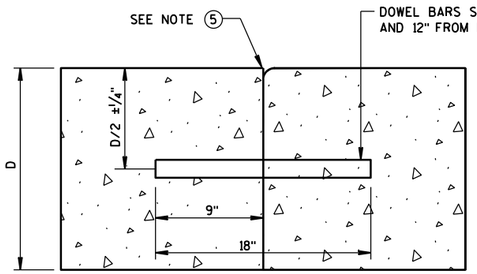

DOWELED TRANSVERSE (3)

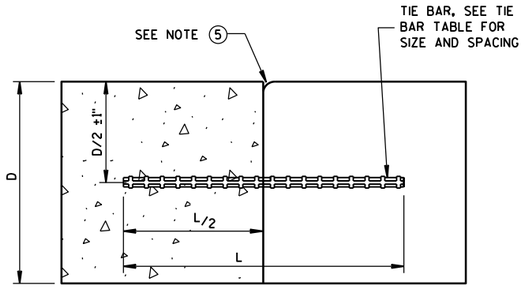

TIED LONGITUDINAL

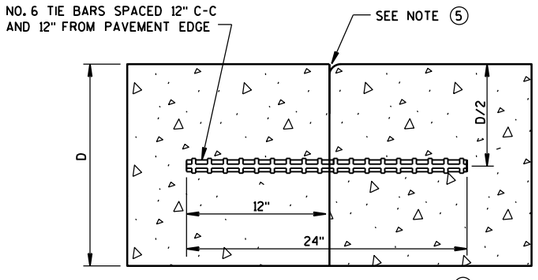

TIED TRANSVERSE (3)

(FOR USE ON NON-DOWELED PAVEMENTS ONLY)

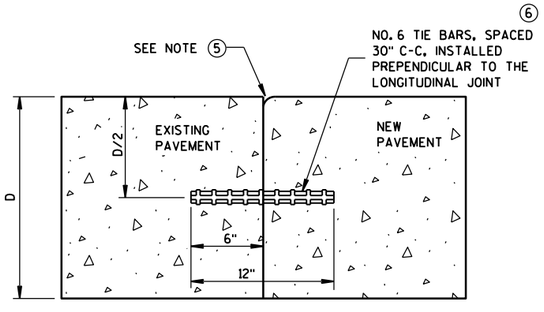

TIED LONGITUDINAL TO EXISTING

CONSTRUCTION JOINTS

SEE NOTE (4)

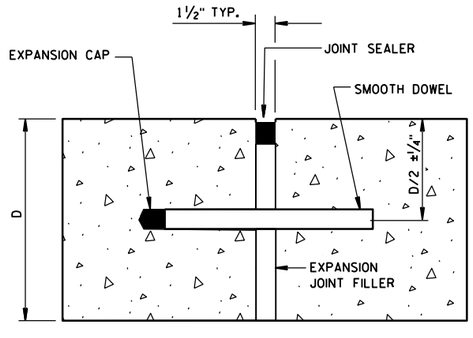

DOWELED-TRANSVERSE

SEE NOTE (1)

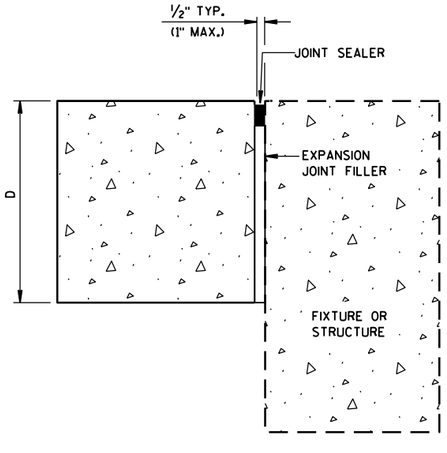

UNTIED-LONGITUDINAL

EXPANSION JOINTS

CONCRETE PAVEMENT
JOINT TYPES

STATE OF WISCONSIN
DEPARTMENT OF TRANSPOI

6

S.D.D. 13 C 18-3c

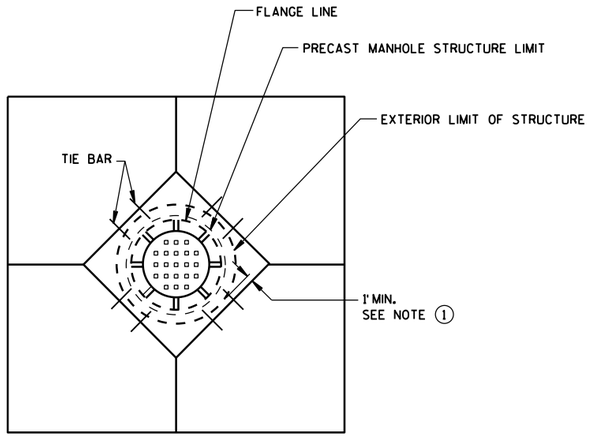

DIAGONAL MANHOLE BOXOUT FOR CONSTRUCTION JOINTS

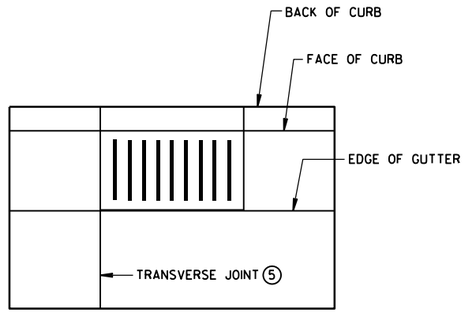

INLET WITH TRANSVERSE JOINT

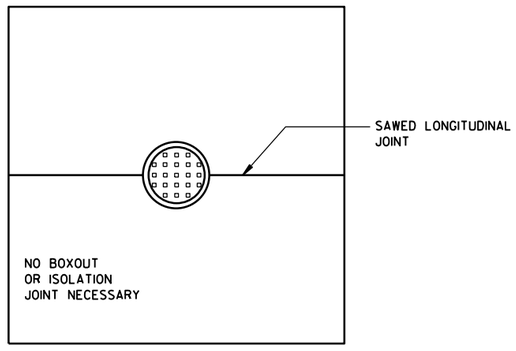

MANHOLE WITH LONGITUDINAL JOINT

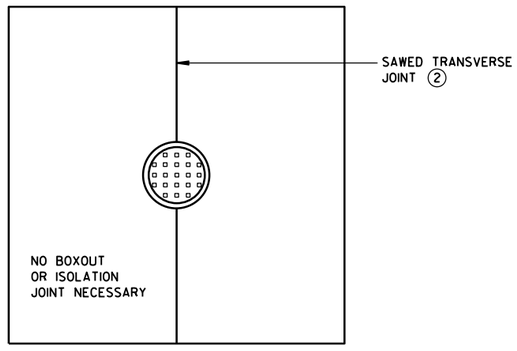

MANHOLE WITH TRANSVERSE JOINT

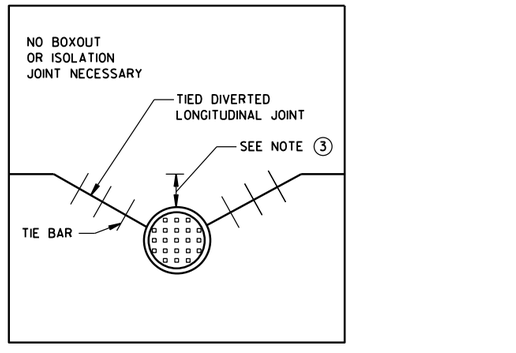

MANHOLE WITH DIVERTED LONGITUDINAL CONTRACTION JOINT

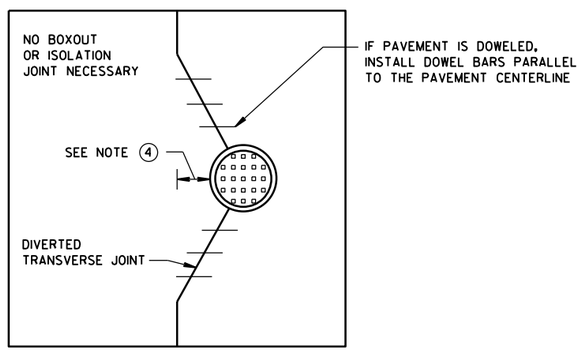

MANHOLE WITH DIVERTED TRANSVERSE CONTRACTION JOINT

GENERAL NOTES

(1) USE BOXOUTS WHEN UTILITY STRUCTURE IS IN THE PATH OF CONSTRUCTION JOINTS. PROVIDE A 1-FOOT MINIMUM CLEARANCE BETWEEN THE EXTERIOR LIMIT OF THE STRUCTURE TO THE DIAMOND BOXOUT.

(2) ADJUST TRANSVERSE JOINT TO INTERSECT MANHOLE IF POSSIBLE.

(3) IF DISTANCE BETWEEN THE LONGITUDINAL JOINT AND THE EDGE OF MANHOLE IS 2 FEET OR LESS, DIVERT THE LONGITUDIAL JOINT AT A 2:1 TAPER RATE TO THE CENTER OF THE MANHOLE. IF THE DISTANCE IS GREATER THAN 2 FEET, DO NOT DIVERT THE JOINT AND SAW AS NORMAL. PLACE REBAR REINFORCEMENT AROUND THE MANHOLE.

(4) IF DISTANCE FROM THE EDGE OF THE MANHOLE TO THE NEAREST TRANSVERSE JOINT IS 4 FEET OR LESS, REDIRECT JOINT TO INTERSECT THE CENTER OF THE MANHOLE. IF DISTANCE IS GREATER THAN 4 FEET, DO NOT DIVERT THE JOINT AND SAW AS NORMAL. PLACE REBAR REINFORCEMENT AROUND THE MANHOLE.

(5) ALIGN TRANSVERSE JOINT WITH ONE EDGE OF INLET WHEN PRACTICAL.

CONCRETE PAVEMENT JOINTING AT UTILITY FIXTURES

STATE OF WISCONSIN
DEPARTMENT OF TRANSPORTATION

APPROVED
June, 2015
DATE
/S/ Peter Kemp, P.E.
PAVEMENT SUPER
FHWA

6

S.D.D. 13 C 18-3d

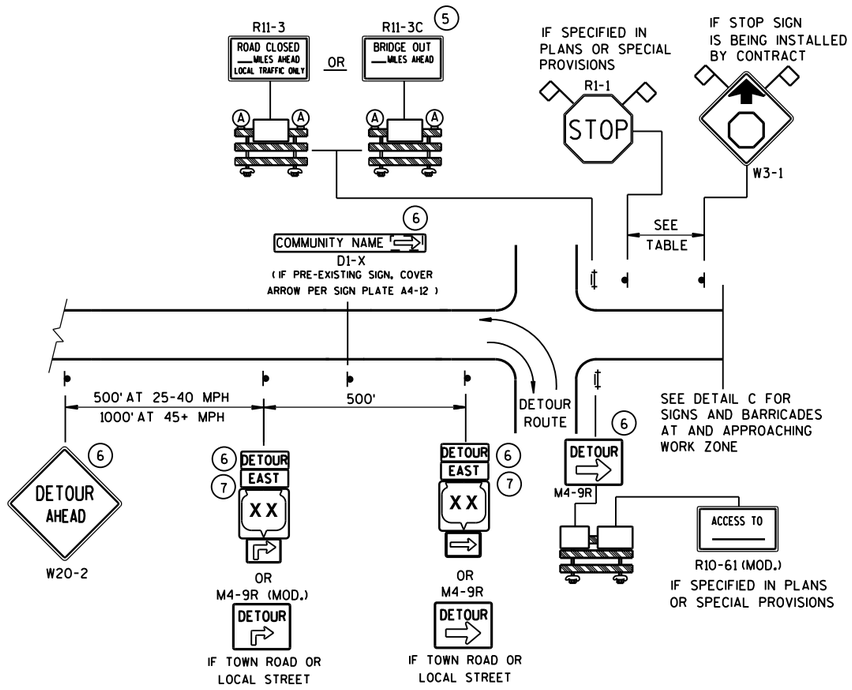

DETAIL A
MAINLINE CLOSURE WITH POSTED DETOUR

WORK ZONE GREATER THAN ½ MILE FROM DETOUR ROUTE (1000 FEET IF URBAN)

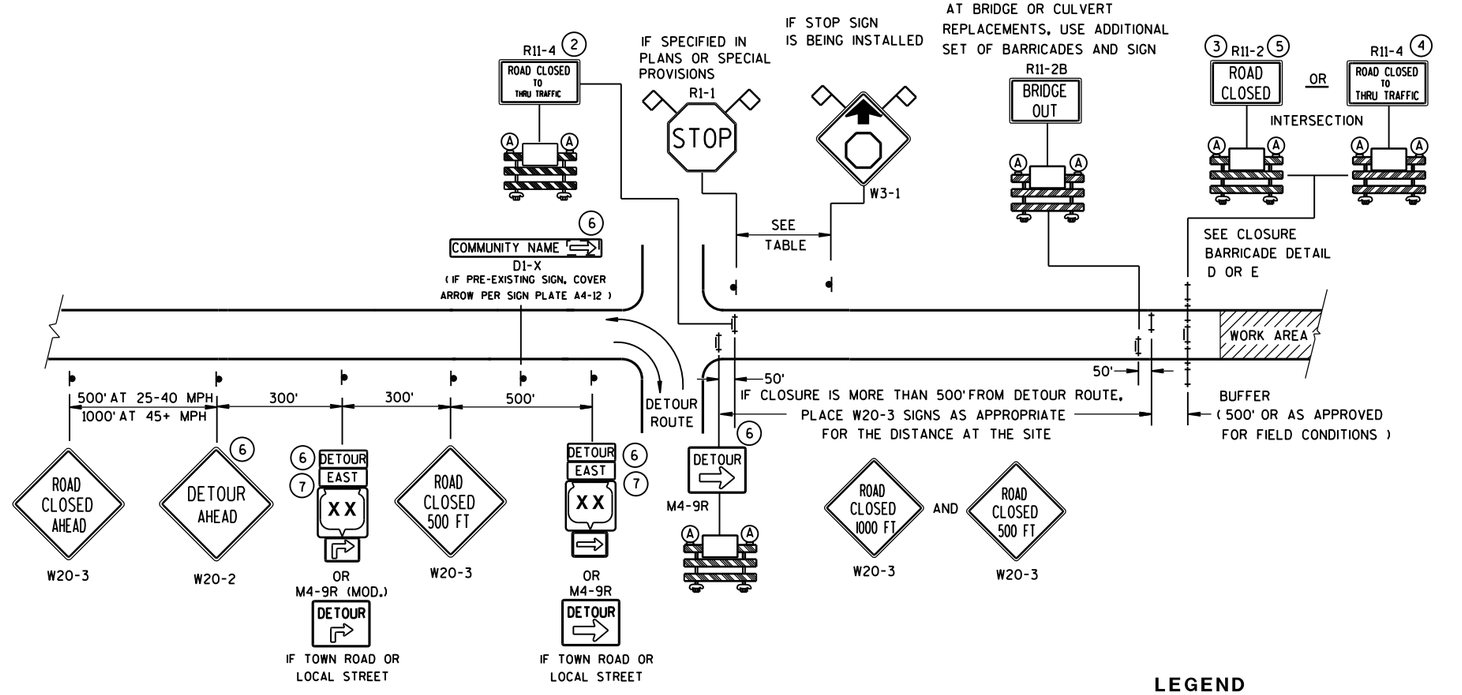

DETAIL B
MAINLINE CLOSURE WITH POSTED DETOUR

WORK ZONE LESS THAN ½ MILE FROM DETOUR ROUTE (1000 FEET IF URBAN)

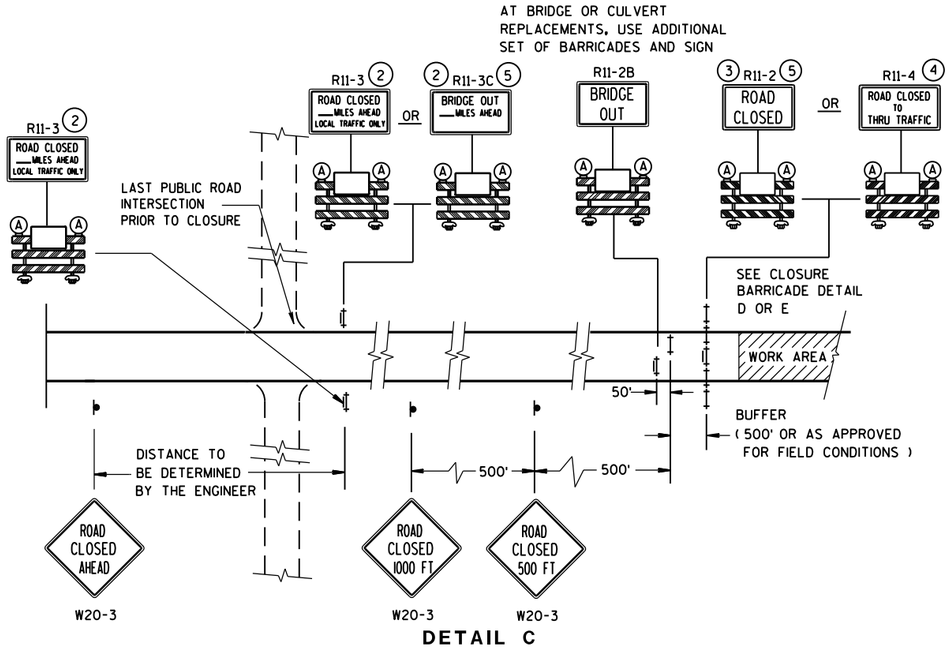

DETAIL C
MAINLINE CLOSURE, NO POSTED DETOUR

SPEED LIMIT (MPH)	"STOP AHEAD" ADVANCE WARNING DISTANCE (FT)
25	200
30	200
35	350
40	350
45	500
50	550
55	750

SEE SDD 15C2-SHEET "**b**" FOR GENERAL NOTES AND FOOTNOTES (1) THROUGH (7)

LEGEND

- SIGN ON PERMANENT SUPPORT
- TYPE III BARRICADE
- TYPE III BARRICADE WITH ATTACHED SIGN
- (A) TYPE "A" WARNING LIGHT (FLASHING)
- WORK AREA
- DETOUR / EAST — M4-8 / M3-X
- XX — M1-4; COUNTY XX — M1-5A; XX — M1-6
- M05-1 OR M06-1
- FLAGS, 16" X 16" MIN., (ORANGE)

BARRICADES AND SIGNS FOR MAINLINE CLOSURES

STATE OF WISCONSIN
DEPARTMENT OF TRANSPORTATION

8/2013 DATE — /S/ Travis Feltes STATE TRAFFIC ENGINEER — DESIGN

FHWA

6

S.D.D. 15 C 2-5a

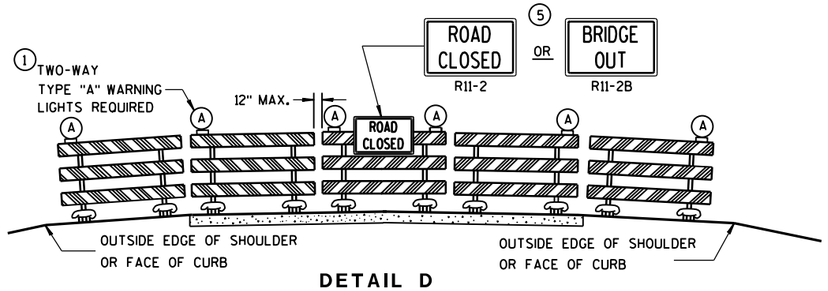

DETAIL D

ROAD CLOSURE BARRICADE DETAIL

APPROACH VIEW

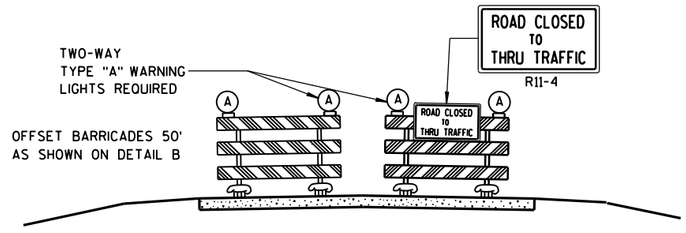

DETAIL E

LANE CLOSURE BARRICADE DETAIL

APPROACH VIEW

SEE SDD 15C2-SHEET "**a**" FOR LEGEND

GENERAL NOTES

THE EXACT NUMBER, LOCATION, AND SPACING OF ALL SIGNS AND BARRICADES SHALL BE ADJUSTED TO FIT FIELD CONDITIONS AS APPROVED BY THE ENGINEER.

ANY SIGNS TEMPORARY OR EXISTING, WHICH CONFLICT WITH TRAFFIC CONTROL "IN USE" SHALL BE REMOVED OR COVERED AS NEEDED AND AS APPROVED BY THE ENGINEER.

THE SPACING BETWEEN TRAFFIC CONTROL SIGNS SHOULD BE ADJUSTED TO NOT CONFLICT WITH AND SHOULD PROVIDE A DESIRABLE MINIMUM OF 200 FEET CLEARANCE TO EXISTING SIGNS THAT WILL REMAIN IN PLACE.

BARRICADES THAT MUST BE MOVED FOR A WORK OPERATION SHALL BE IMMEDIATELY RE-ESTABLISHED UPON COMPLETION OF THE OPERATION OR, FOR CONTINUING OPERATIONS, AT THE END OF EACH WORKING DAY.

SIGNS THAT WILL BE IN PLACE LESS THAN 7 CONTINUOUS DAYS AND NIGHTS MAY BE MOUNTED ON PORTABLE SUPPORTS.

ALL TYPE III BARRICADES SHALL HAVE RAILS REFLECTORIZED ON BOTH FACES. STRIPES SHALL BE PROPERLY SLOPED DOWN TOWARD THE TRAFFIC SIDE OR AS SHOWN IN THE ROAD CLOSURE BARRICADE DETAIL D FOR FULL ROAD CLOSURES.

TYPE "A" LOW-INTENSITY FLASHING WARNING LIGHTS SHALL BE VISIBLE ON BOTH SIDES OF THE BARRICADE.

THE R11-2, R11-3, M4-9, R11-4 AND R10-61 SIGNS PLACED ON BARRICADES SHALL COVER NO MORE THAN THE TOP RAIL. THE SIGNS SHALL NOT COVER ANY PORTION OF THE MIDDLE OR BOTTOM RAILS.

"WO AND "MO" SIGNS ARE THE SAME AS "W" AND "M" SIGNS EXCEPT THE BACKGROUND IS ORANGE.

ALL SIGNS SHALL BE 48" X 48" UNLESS OTHERWISE NOTED BELOW:
- R11-2 SHALL BE 48" X 30".
- R11-3, R11-4 AND R10-61 SHALL BE 60" X 30".
- M4-9 SHALL BE 30" X 24".
- M3-X SHALL BE 24" X 12". (36" X 18" IF NEEDED TO MATCH EXISTING SIGNS.)
- M4-8 SHALL BE 24" X 12". (30" X 15" IF NEEDED TO MATCH EXISTING SIGNS.)
- M1-4, M1-5A, AND M1-6 SHALL BE 24" X 24". (36" X 36" IF NEEDED TO MATCH EXISTING SIGNS.)
- M05-1 AND M06-1 SHALL BE 21" X 21". (30" X 30" IF NEEDED TO MATCH EXISTING SIGNS.)
- D1-X SHALL BE AS SHOWN ON SPECIFIC PROJECT SIGNING DETAIL SHEETS.
- R1-1 SHALL BE 36" X 36".

(1) TWO WARNING LIGHTS SHALL BE PROVIDED ON THE CENTER BARRICADE AND A MINIMUM OF ONE WARNING LIGHT SHALL BE PROVIDED ON EACH OF THE OTHER BARRICADES WITHIN THE ROADWAY LIMITS. SPACING OF THE WARNING LIGHTS SHALL BE UNIFORM TO THE EDGE OF ROADWAY AS SHOWN (APPROX. 8-FOOT LIGHT SPACING).

(2) THESE SIGNS AND BARRICADES ARE NOT REQUIRED IF ROAD CLOSURE BEGINS AT INTERSECTION.

(3) FOR ROAD CLOSURE WITHOUT LOCAL ACCESS TO PROJECT, SEE ROAD CLOSURE BARRICADE DETAIL D.

(4) FOR ROAD CLOSURE WITH LOCAL ACCESS TO PROJECT, SEE LANE CLOSURE BARRICADE DETAIL E.

(5) FOR BRIDGE OR CULVERT REPLACEMENTS, SUBSTITUTE "BRIDGE OUT" INSTEAD OF "ROAD CLOSED" ON R11-2 AND R11-3 SIGNS.

(6) INSTALL DETOUR AND COMMUNITY GUIDE SIGNS AND ARROWS ONLY IF SPECIFIED IN THE CONTRACT. IF THERE ARE EXISTING ROUTE MARKER ASSEMBLIES THAT WILL REMAIN IN PLACE, ADJUST THE LOCATION OF THE DETOUR ROUTE SIGNS TO CORRESPOND WITH THE EXISTING ASSEMBLIES. MODIFY EXISTING SIGNS WHERE POSSIBLE. SEE SPECIFIC PROJECT DETOUR SIGNING DETAIL SHEETS. IF DETOUR SIGNS ARE BEING INSTALLED BY OTHERS, PLACE THE CONTRACTED TRAFFIC CONTROL SIGNS TO ALLOW FOR PLACEMENT OF ALL WARNING, DETOUR AND GUIDE SIGNS AS SHOWN.

(7) "EAST" CARDINAL DIRECTION MARKERS AND RIGHT TURN ARROWS ARE SHOWN. USE OTHER CARDINAL DIRECTIONS AND ARROWS AS APPROPRIATE.

BARRICADES AND SIGNS FOR MAINLINE CLOSURES

STATE OF WISCONSIN
DEPARTMENT OF TRANSPORTATION

8/2013 — DATE
/S/ Travis Feltes — STATE TRAFFIC ENGINEER
DESIGN
FHWA

6

S.D.D. 15 C 2-5b

THIS DRAWING PROVIDES GENERAL GUIDANCE ON TYPICAL DETOUR SIGN LAYOUT AND SPACING. SEE PROJECT DETOUR SIGNING SHEETS FOR SPECIFIC DETAILS FOR EACH PROJECT.

GENERAL NOTES

THE EXACT NUMBER, LOCATION AND SPACING OF ALL SIGNS SHALL BE ADJUSTED TO FIT FIELD CONDITIONS AS APPROVED BY THE ENGINEER.

IF THERE ARE EXISTING ROUTE MARKER ASSEMBLIES THAT WILL REMAIN IN PLACE, ADJUST THE LOCATION OF THE DETOUR ROUTE SIGNS TO CORRESPOND WITH THE EXISTING ASSEMBLIES. SEE SPECIFIC PROJECT DETOUR SIGNING DETAIL SHEETS. MODIFY EXISTING SIGNS WHERE POSSIBLE.

THE SPACING BETWEEN TRAFFIC CONTROL AND DETOUR SIGNS SHOULD BE ADJUSTED TO NOT CONFLICT WITH AND TO PROVIDE A DESIRABLE MINIMUM OF 200 FEET CLEARANCE TO EXISTING SIGNS THAT WILL REMAIN IN PLACE.

ANY SIGNS TEMPORARY OR EXISTING, WHICH CONFLICT WITH TRAFFIC CONTROL "IN USE", SHALL BE REMOVED OR COVERED AS NEEDED AND AS APPROVED BY THE ENGINEER.

SIGNS THAT WILL BE IN PLACE LESS THAN 7 CONTINUOUS DAYS AND NIGHTS MAY BE MOUNTED ON PORTABLE SUPPORTS.

"MO" SIGNS ARE THE SAME AS "M" SIGNS EXCEPT THE BACKGROUND IS ORANGE.

SIGN SIZES SHALL BE AS FOLLOWS:

- M3-X SHALL BE 24" X 12". (36" X 18" IF NEEDED TO MATCH EXISTING SIGNS.)
- M4-8 SHALL BE 24" X 12". (30" X 15" IF NEEDED TO MATCH EXISTING SIGNS.)
- M1-4, M1-5A, AND M1-6 SHALL BE 24" X 24". (36" X 36" IF NEEDED TO MATCH EXISTING SIGNS.)
- M05-1 AND M06-1 SHALL BE 21" X 21". (30" X 30" IF NEEDED TO MATCH EXISTING SIGNS.)
- M4-9 SHALL BE 30" X 24".
- M4-8a SHALL BE 24" X 18".
- G20-51 SHALL BE 60" X 24".
- W20-2 SHALL BE 48" X 48".
- D1-X SHALL BE AS SHOWN ON SPECIFIC PROJECT SIGNING DETAIL SHEETS.

* OPTIONAL SIGNS. SEE SPECIFIC PROJECT DETOUR SIGNING DETAIL SHEETS.

** FOR A TOWN ROAD OR LOCAL STREET DETOURED ONTO A STATE TRUNK HIGHWAY, PLACE A ROAD NAME PLAQUE ABOVE THE M4-9 SIGN AS SPECIFIED IN THE CONTRACT.

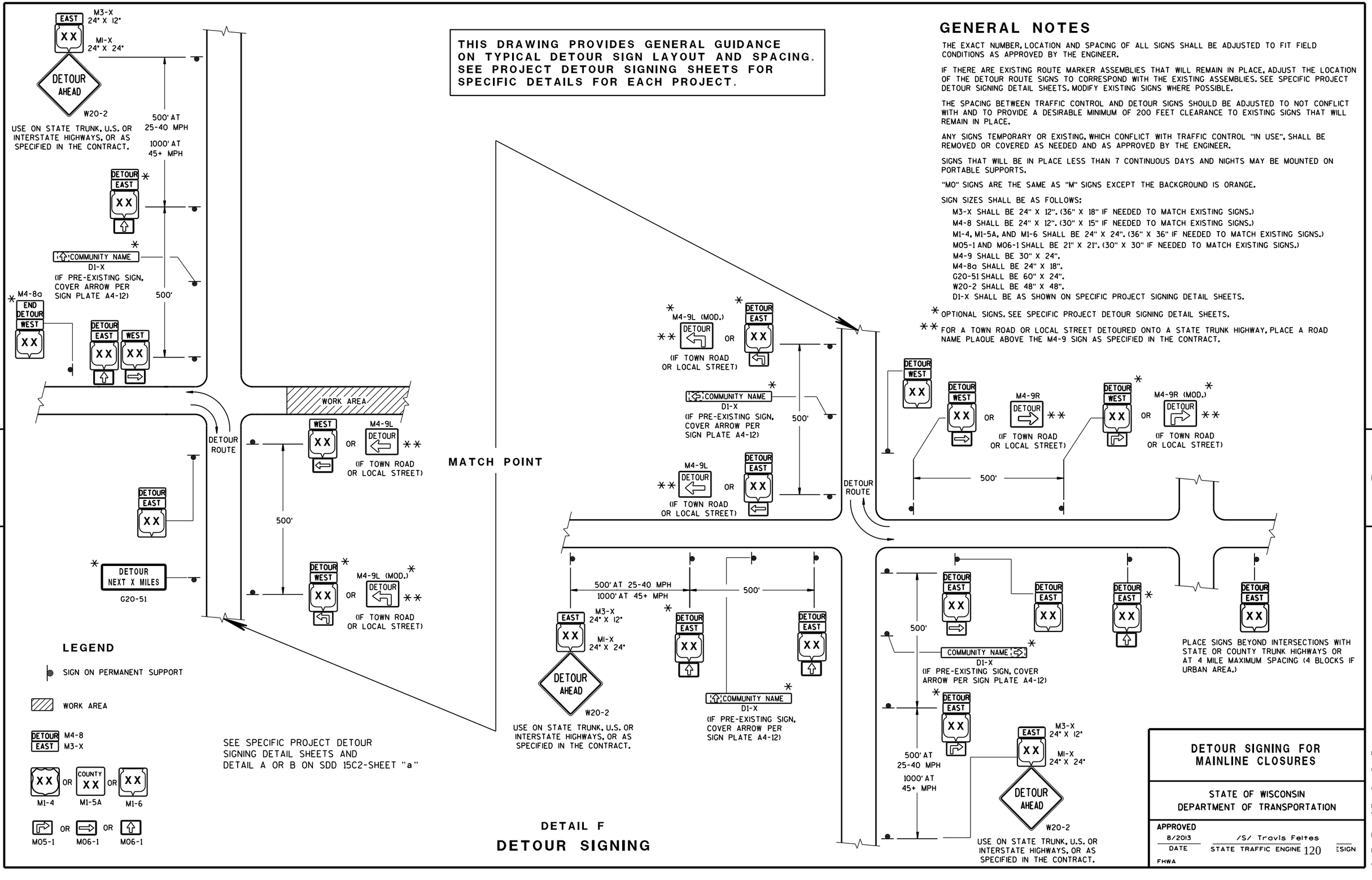

LEGEND

- SIGN ON PERMANENT SUPPORT
- WORK AREA
- DETOUR EAST — M4-8, M3-X
- XX OR COUNTY XX OR XX — M1-4, M1-5A, M1-6
- MO5-1 OR MO6-1 OR MO6-1

SEE SPECIFIC PROJECT DETOUR SIGNING DETAIL SHEETS AND DETAIL A OR B ON SDD 15C2-SHEET "a"

DETAIL F

DETOUR SIGNING

DETOUR SIGNING FOR MAINLINE CLOSURES

STATE OF WISCONSIN
DEPARTMENT OF TRANSPORTATION

APPROVED
8/2013 — DATE
/S/ Travis Feltes — STATE TRAFFIC ENGINEER
FHWA

S.D.D. 15 C 2-5c

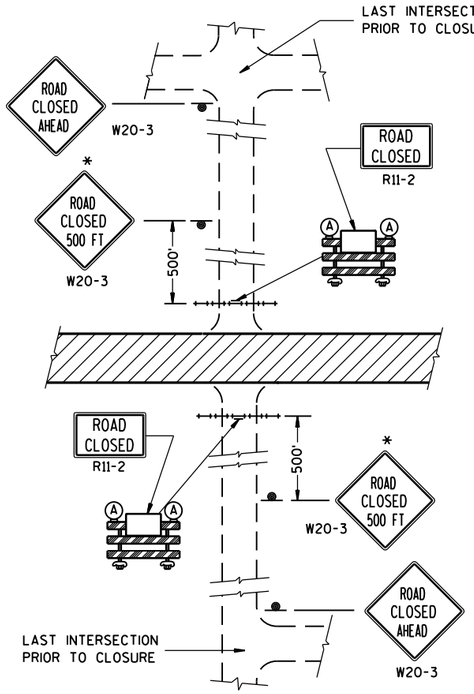

DETAIL 1

(NO ACCESS TO PROJECT)

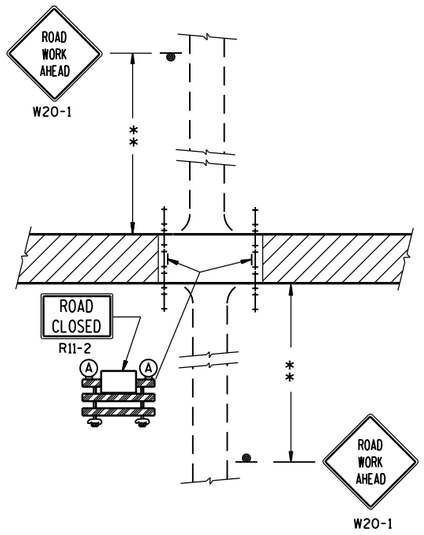

DETAIL 2

(PUBLIC CROSS-TRAFFIC MAINTAINED. NO ACCESS TO PROJECT).

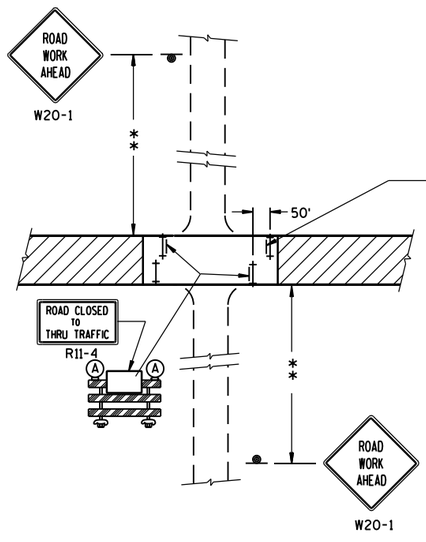

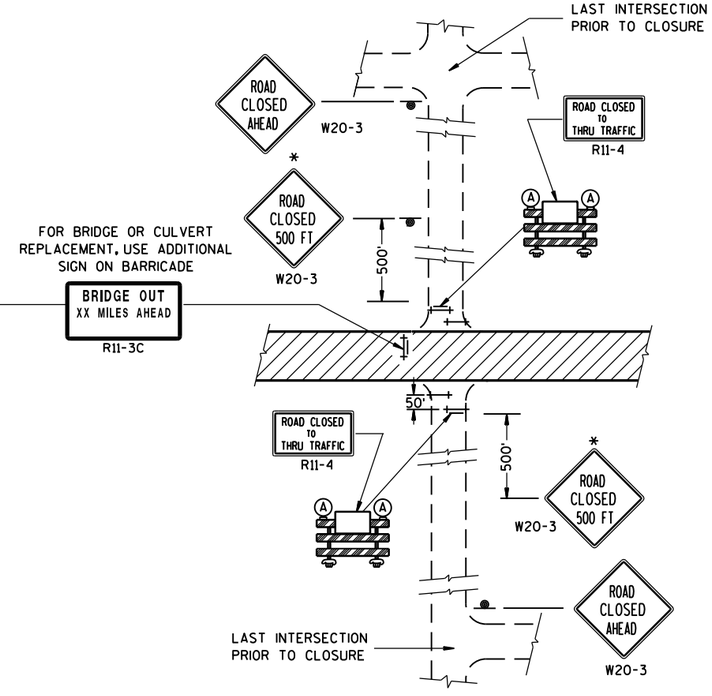

DETAIL 3

(PUBLIC CROSS-TRAFFIC MAINTAINED. CONTRACTOR, LOCAL BUSINESS AND RESIDENT ACCESS).

DETAIL 4

(CONTRACTOR, LOCAL BUSINESS AND RESIDENT ACCESS TO PROJECT)

GENERAL NOTES

THE EXACT NUMBER, LOCATION, AND SPACING OF ALL SIGNS AND BARRICADES SHALL BE ADJUSTED TO FIT FIELD CONDITIONS AS APPROVED BY THE ENGINEER.

ANY SIGNS TEMPORARY OR EXISTING, WHICH CONFLICT WITH TRAFFIC CONTROL "IN USE" SHALL BE REMOVED OR COVERED AS NEEDED AND AS APPROVED BY THE ENGINEER.

THE SPACING BETWEEN TRAFFIC CONTROL SIGNS SHOULD BE ADJUSTED TO NOT CONFLICT WITH AND SHOULD PROVIDE A DESIRABLE MINIMUM OF 200 FEET CLEARANCE TO EXISTING SIGNS THAT WILL REMAIN IN PLACE.

IF A "STOP" SIGN MUST BE REMOVED FOR A WORK OPERATION, A TEMPORARY "STOP" SIGN SHALL BE PLACED PRIOR TO THE SIGN REMOVAL, OR A FLAGGER SHALL BE PROVIDED UNTIL THE SIGN IS RE-ESTABLISHED.

BARRICADES THAT MUST BE MOVED FOR A WORK OPERATION SHALL BE IMMEDIATELY RE-ESTABLISHED UPON COMPLETION OF THE OPERATION OR, FOR CONTINUING OPERATIONS, AT THE END OF EACH WORKING DAY.

SIGNS THAT WILL BE IN PLACE LESS THAN 7 CONTINUOUS DAYS AND NIGHTS MAY BE MOUNTED ON PORTABLE SUPPORTS.

ALL TYPE III BARRICADES SHALL HAVE RAILS REFLECTORIZED ON BOTH FACES. STRIPES SHALL BE PROPERLY SLOPED DOWN TOWARD THE TRAFFIC SIDE OR AS SHOWN IN THE ROAD CLOSURE BARRICADE DETAIL D FOR FULL ROAD CLOSURES.

TYPE "A" LOW-INTENSITY FLASHING WARNING LIGHTS SHALL BE VISIBLE ON BOTH SIDES OF THE BARRICADE.

THE R11-2, R11-3 AND R11-4 SIGNS PLACED ON BARRICADES SHALL COVER NO MORE THAN THE TOP RAIL. THE SIGNS SHALL NOT COVER ANY PORTION OF THE MIDDLE OR BOTTOM RAILS.

ALL SIGNS SHALL BE 48" X 48" UNLESS OTHERWISE NOTED BELOW:
R11-2 SHALL BE 48" X 30".
R11-4 AND R11-3 SHALL BE 60" X 30".

*OMIT THE "ROAD CLOSED 500 FT." SIGN IF THE LAST INTERSECTION IS 500 FT. OR LESS FROM THE WORK ZONE.

**500' MAX. OR AT LAST INTERSECTION WHICHEVER IS CLOSER.

LEGEND

- SIGN ON PERMANENT SUPPORT
- TYPE III BARRICADE
- TYPE III BARRICADE WITH ATTACHED SIGN
- (A) TYPE "A" WARNING LIGHT (FLASHING)
- WORK AREA

BARRICADES AND SIGNS FOR SIDEROAD CLOSURES

STATE OF WISCONSIN
DEPARTMENT OF TRANSPORTATION

APPROVED
8/2013 — DATE
/S/ Travis Feltes — STATE TRAFFIC ENGINEER
FHWA

6

S.D.D. 15 C 3-2

6

S.D.D. 15 C 3-2

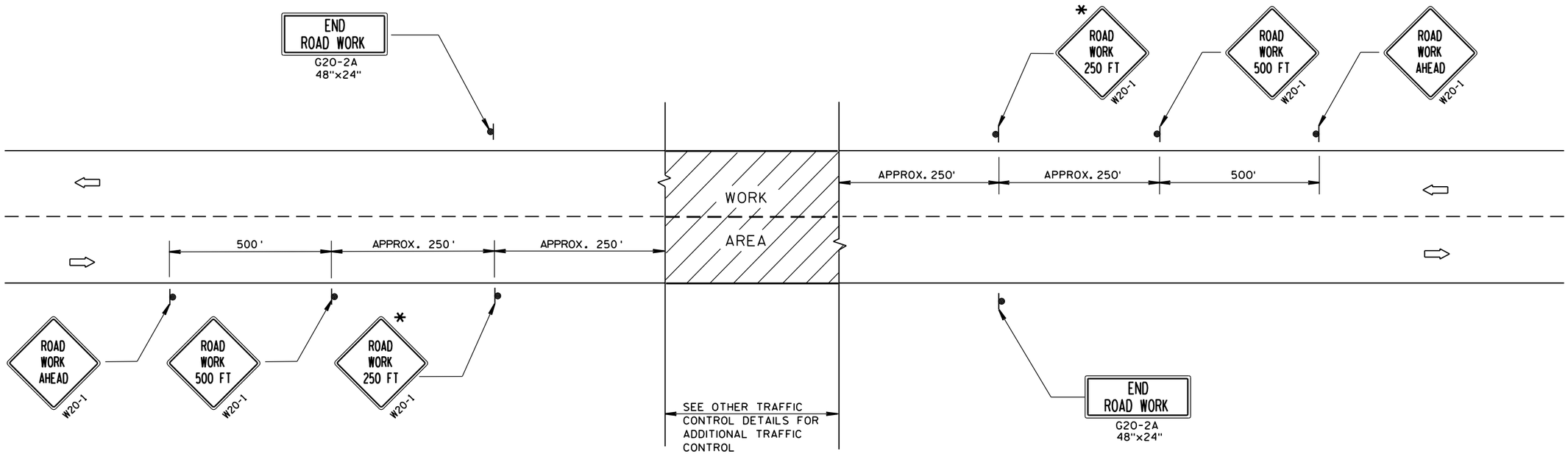

TYPICAL SIDEROAD APPROACH WARNING SIGN DETAIL

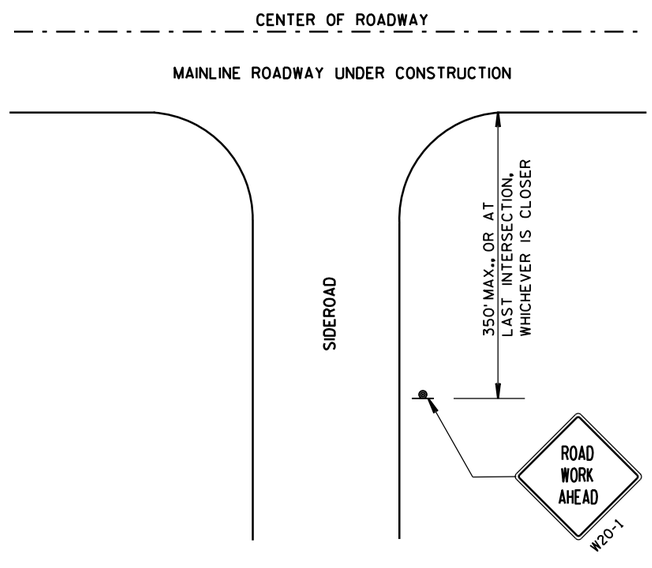

GENERAL NOTES

THE EXACT NUMBER, LOCATION, AND SPACING OF ALL SIGNS AND DEVICES SHALL BE ADJUSTED TO FIT FIELD CONDITIONS.

THE SPACING BETWEEN TRAFFIC CONTROL SIGNS SHOULD BE ADJUSTED TO NOT CONFLICT WITH AND SHOULD PROVIDE A DESIRABLE MINIMUM OF 200 FEET CLEARANCE TO EXISTING SIGNS THAT WILL REMAIN IN PLACE.

ALL SIGNS ARE 48"x48" UNLESS OTHERWISE NOTED. IF NECESSARY DUE TO SPACE CONSTRAINTS, 36"x36" SIGNS MAY BE USED INSTEAD OF 48"x48" SIGNS.

SIGNS THAT WILL BE IN PLACE LESS THAN 7 CONTINUOUS DAYS AND NIGHTS MAY BE MOUNTED ON PORTABLE SUPPORTS.

IF A "STOP" SIGN MUST BE REMOVED FOR A WORK OPERATION, A TEMPORARY "STOP" SIGN SHALL BE PLACED PRIOR TO THE SIGN REMOVAL, OR A FLAGGER SHALL BE PROVIDED UNTIL THE SIGN IS RE-ESTABLISHED.

* THE THIRD W20-1 SIGN IS REQUIRED ONLY IF THERE IS AN INTERSECTION BETWEEN THE "ROAD WORK 500 FT" SIGN AND THE WORK ZONE. ADJUST THE PLACEMENT OF THIS SIGN BASED ON INTERSECTION LOCATION AND OTHER FIELD CONDITIONS.

LEGEND

- SIGN ON PERMANENT SUPPORT
- DIRECTION OF TRAFFIC
- WORK AREA

TRAFFIC CONTROL, ADVANCE WARNING SIGNS 40 M.P.H. OR LESS TWO-WAY UNDIVIDED ROAD OPEN TO TRAFFIC

STATE OF WISCONSIN
DEPARTMENT OF TRANSPORTATION

APPROVED

8/2013 — DATE

/S/ Travis Feltes — STATE TRAFFIC ENGINEER

SIGN

FHWA

6

S.D.D. 15 C 5-2

6

S.D.D. 15 C 5-2

GENERAL NOTES

DETAILS OF INSTALLATION, MATERIALS AND WORKMANSHIP NOT SHOWN ON THIS DRAWING SHALL CONFORM TO THE PERTINENT REQUIREMENTS OF THE STANDARD SPECIFICATIONS AND APPLICABLE SPECIAL PROVISIONS.

ALL LETTERS, ARROWS AND SYMBOLS SHALL BE IN CONFORMANCE WITH REQUIREMENTS INCLUDED IN "STANDARD ALPHABETS FOR HIGHWAY SIGNS AND PAVEMENT MARKING" BOOK BY THE FEDERAL HIGHWAY ADMINISTRATION. ALL LETTERS, ARROWS AND SYMBOLS SHALL BE WHITE AND REFLECTORIZED. SMALL DIFFERENCES IN DIMENSIONS WITHIN THE TOLERANCES OF THAT BOOK ARE ACCEPTABLE.

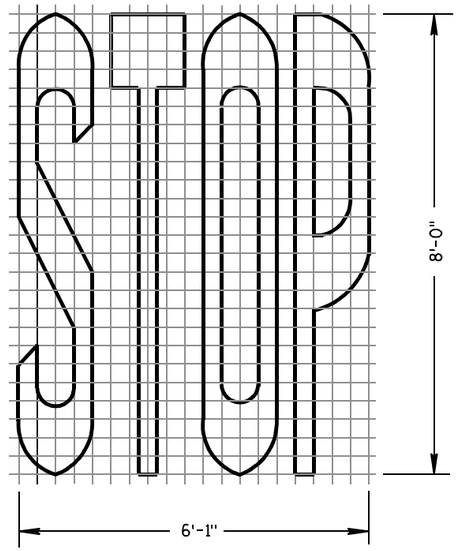

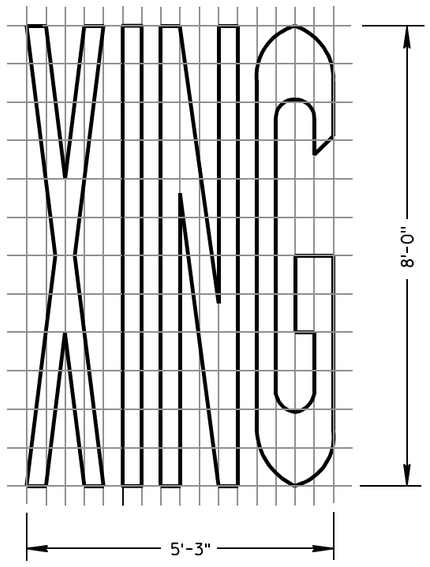

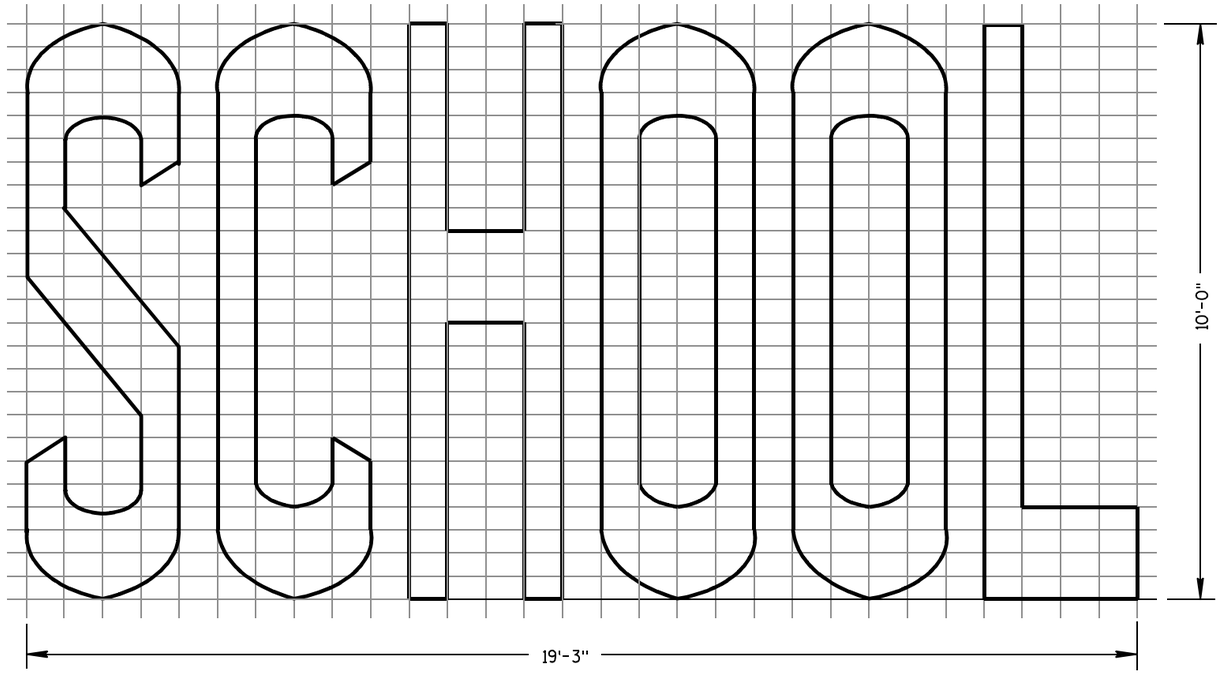

TWO-LANE

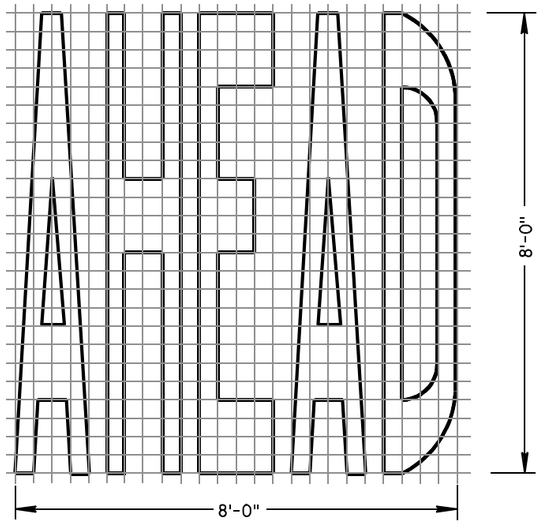

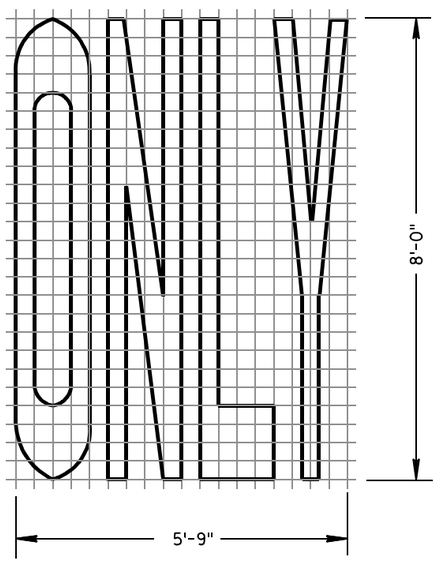

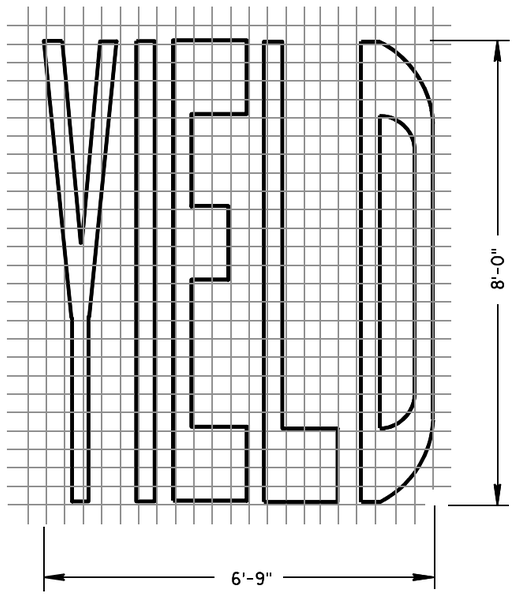

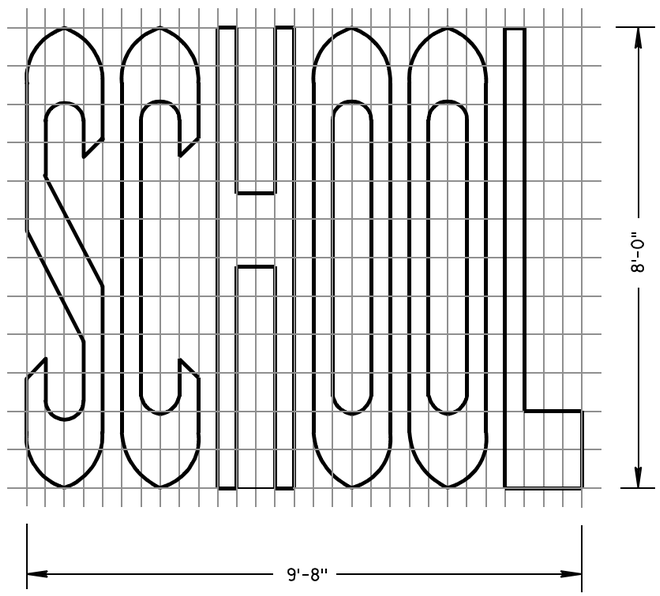

SINGLE-LANE

PAVEMENT MARKING WORDS

STATE OF WISCONSIN
DEPARTMENT OF TRANSPORTATION

APPROVED

7-1-11 — DATE

/S/ Thomas N. Nothohm — STATE TRAFFIC ENGINEER

FHWA

6

S.D.D. 15 C 7-12b

GENERAL NOTES

DETAILS OF INSTALLATION, MATERIALS AND WORKMANSHIP NOT SHOWN ON THIS DRAWING SHALL CONFORM TO THE PERTINENT REQUIREMENTS OF THE STANDARD SPECIFICATIONS AND APPLICABLE SPECIAL PROVISIONS.

ALL LETTERS, ARROWS AND SYMBOLS SHALL BE IN CONFORMANCE WITH REQUIREMENTS INCLUDED IN "STANDARD ALPHABETS FOR HIGHWAY SIGNS AND PAVEMENT MARKING" BOOK BY THE FEDERAL HIGHWAY ADMINISTRATION. ALL LETTERS, ARROWS AND SYMBOLS SHALL BE WHITE AND REFLECTORIZED. SMALL DIFFERENCES IN DIMENSIONS WITHIN THE TOLERANCES OF THAT BOOK ARE ACCEPTABLE.

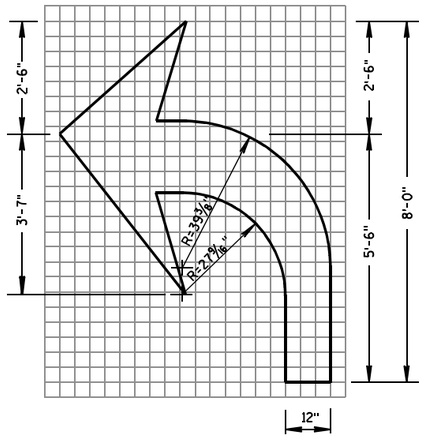

TYPE 2

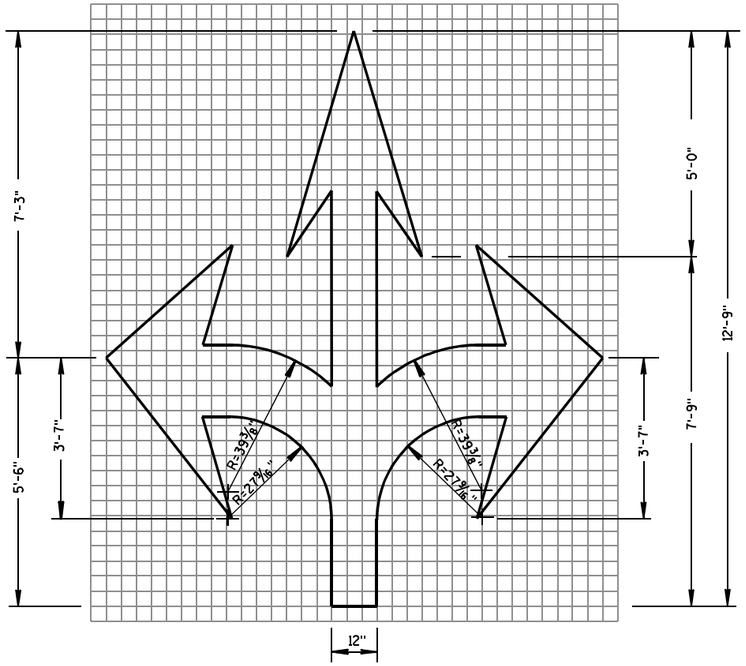

TYPE 6

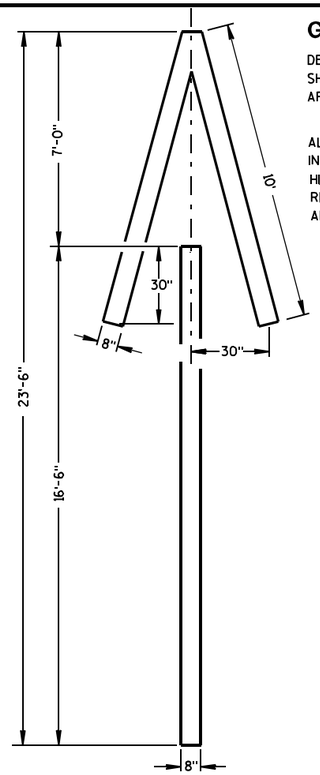

TYPE 4

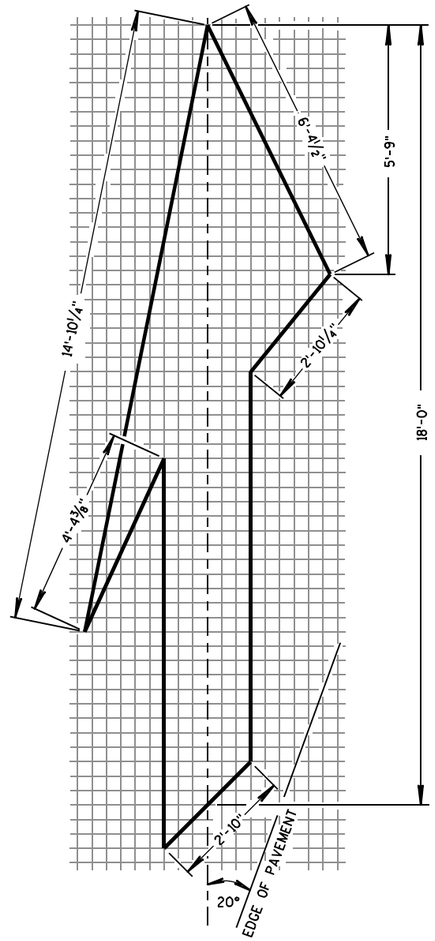

TYPE 5 LANE DROP ARROW

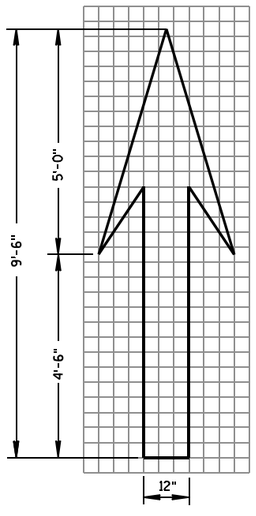

TYPE 1

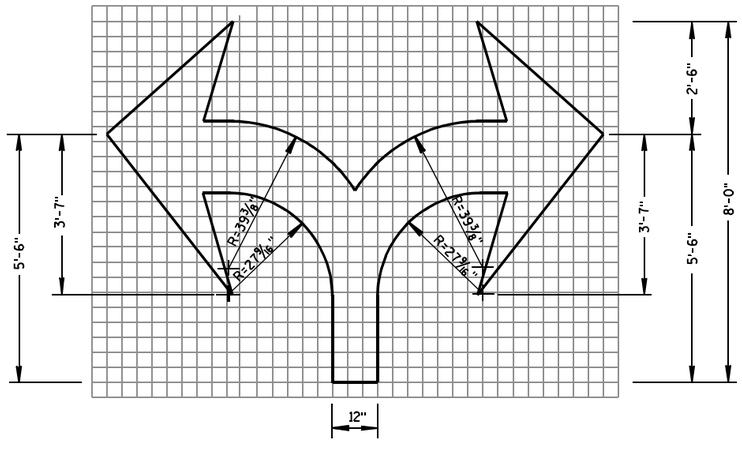

TYPE 7

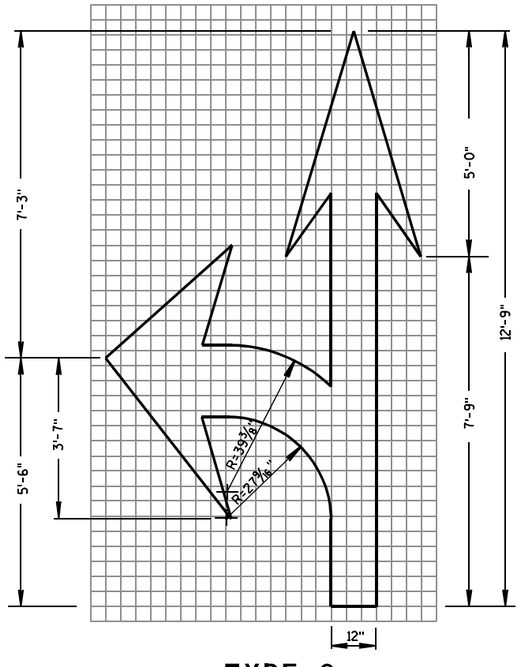

TYPE 3

PAVEMENT MARKING ARROWS

STATE OF WISCONSIN
DEPARTMENT OF TRANSPORTATION

APPROVED

7/1/11 — DATE

/S/ Thomas N. Nothdurft — STATE TRAFFIC ENGINEER

FHWA

6

S.D.D. 15 C 7-12c

6

S.D.D. 15 C 7-12c

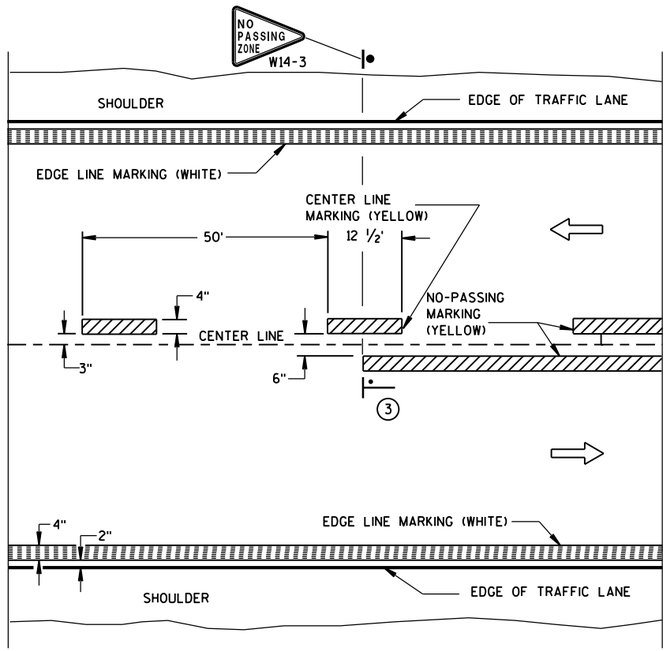

TWO WAY TRAFFIC

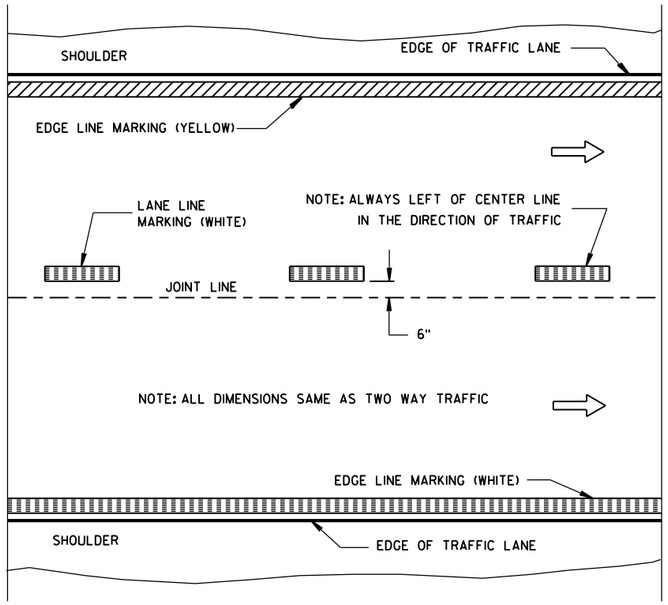

ONE WAY TRAFFIC

PERMANENT PAVEMENT MARKING

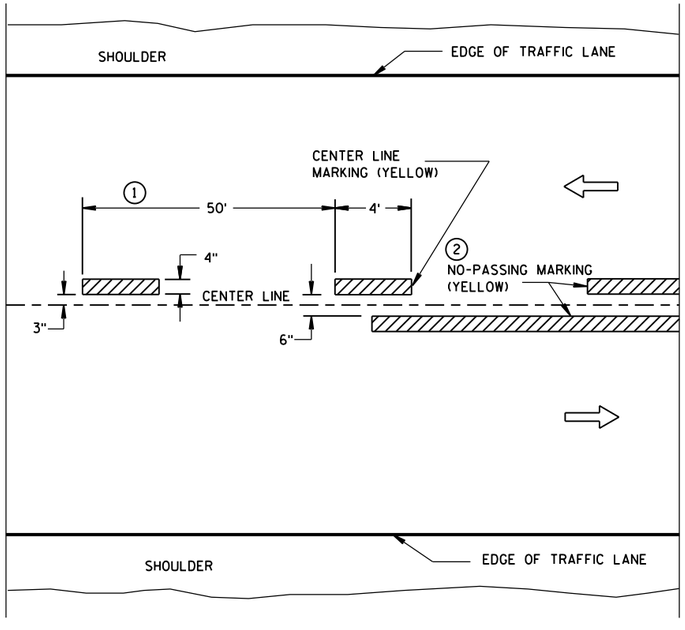

TWO WAY TRAFFIC

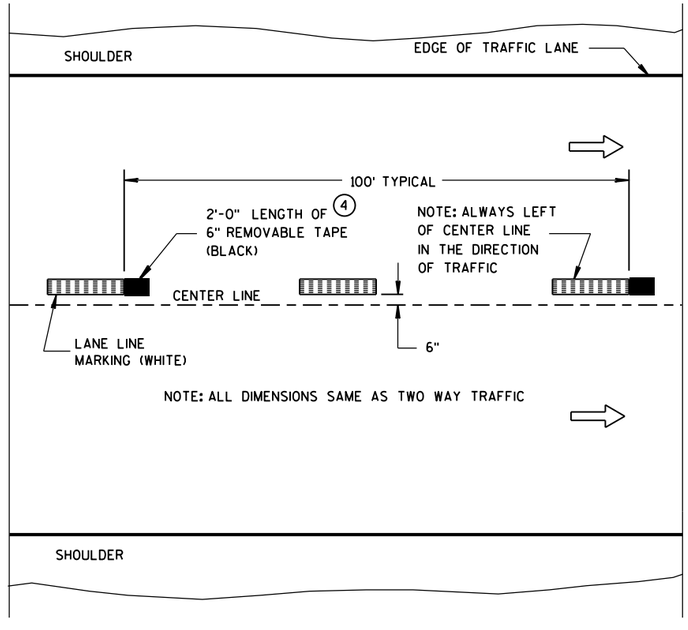

ONE WAY TRAFFIC

TEMPORARY (INTERMEDIATE) PAVEMENT MARKING

(SHOWS CYCLE FOR TEMPORARY CENTER LINE OR TEMPORARY LANE LINE MARKING)

GENERAL NOTES

DETAILS OF CONSTRUCTION NOT SHOWN ON THIS DRAWING SHALL CONFORM TO STANDARD SPECIFICATIONS AND SPECIAL PROVISIONS.

1. HALF CYCLE LENGTHS (25'±) WITH 2' MINIMUM STRIPE LENGTHS SHALL BE PROVIDED ON ROADWAYS (INCLUDING TEMPORARY TRAVELED WAYS) WITH REVERSE CURVATURE, CURVATURE OF OVER 5 DEGREES OR WHEN DIRECTED BY THE ENGINEER TO MARK UNUSUAL ALIGNMENT OF THE TRAVELED WAY.
2. NO PASSING ZONE TEMPORARY PAVEMENT MARKING IS REQUIRED TO BE PLACED, WHERE APPROPRIATE, ALONG WITH CENTERLINE TEMPORARY PAVEMENT MARKING WHEN A SAME DAY PERMANENT PAVEMENT MARKING ITEM IS INCLUDED IN THE CONTRACT.
3. NO PASSING ZONE MARKINGS ARE PLACED ACCORDING TO "T" MARKINGS. IF EXISTING NO PASSING ZONE W14-3 SIGNS ARE BEYOND 50 FEET IN EITHER DIRECTION, THE SIGNS SHALL BE MOVED TO THE "T" MARKINGS.
4. CONCRETE ONLY.

NOTE

ARROW SYMBOL (⇨) SHOWS DIRECTION OF TRAVEL

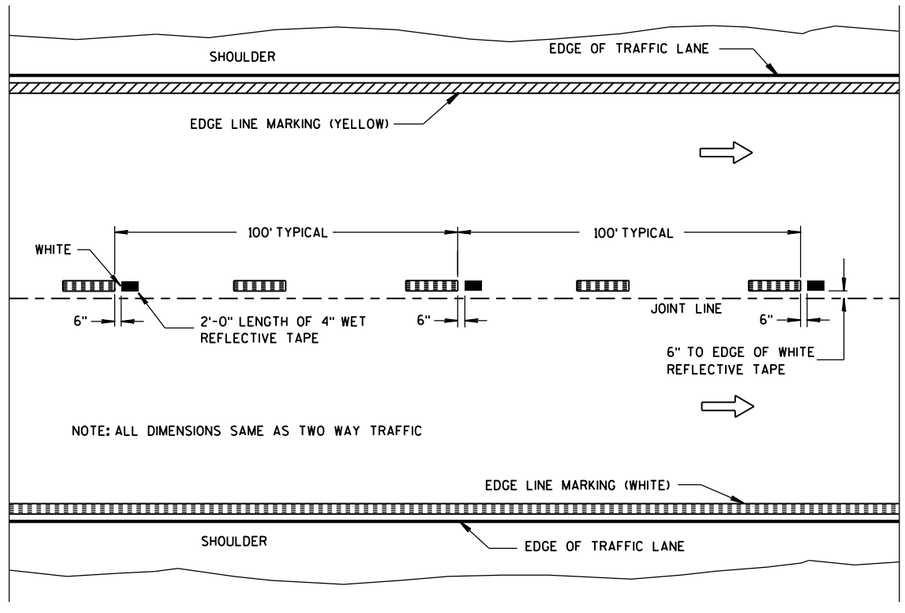

WET REFLECTIVE TAPE SUPPLEMENT TO
SPRAYED OR NON WET REFLECTIVE TAPE LANE LINE

LEGEND

"T" MARKING

POST MOUNTED SIGN

PAVEMENT MARKING (MAINLINE)

STATE OF WISCONSIN
DEPARTMENT OF TRANSPORTATION

APPROVED

5-13-2013 — DATE

/S/ Travis Feltes — STATE TRAFFIC E

FHWA

6

S.D.D. 15 C 8-16a

6

S.D.D. 15 C 8-16a

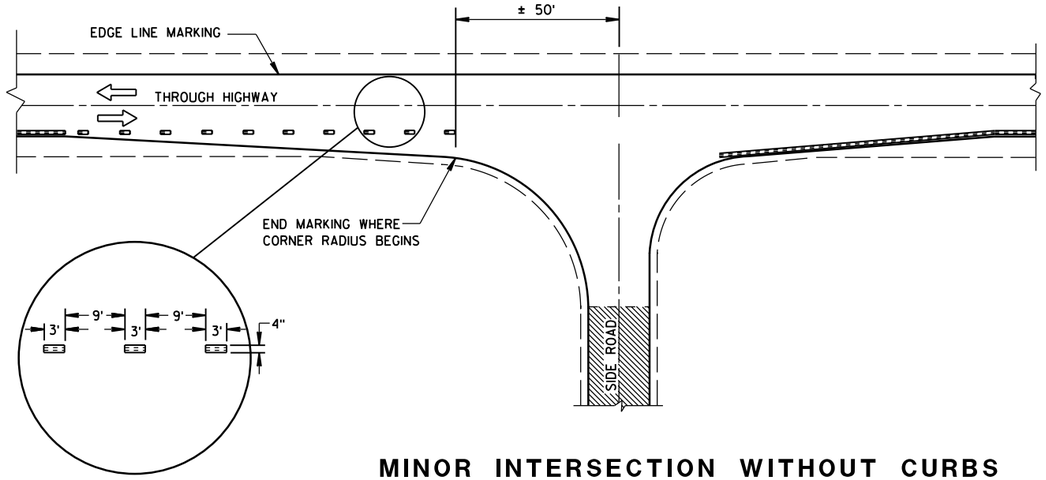

MINOR INTERSECTION WITHOUT CURBS

GENERAL NOTES

EDGE LINES SHALL BE OMITTED THROUGH INTERSECTIONS. EDGE LINES SHALL BE CONTINUED THROUGH DRIVEWAYS.

(1) WHEN DISTANCE "A" IS LESS THAN 250 FEET, OMIT LANE LINE.

(2) WHEN DISTANCE "B" IS LESS THAN 100 FEET, OMIT CHANNELIZING LANE LINE.

(3) ALTERNATIVE MARKING SHALL BE PROVIDED WHEN SPECIFIED IN THE CONTRACT. TYPICAL SITUATIONS WHERE THIS MARKING MAY BE REQUIRED ARE WHERE THE INTERSECTION IS ON A SHARP HORIZONTAL CURVE OR CREST VERTICAL CURVE IN AN UNLIGHTED AREA SUCH THAT THE EDGE LINE MAY BE MISLEADING TO THE MOTORIST OR DISAPPEAR FROM SIGHT.

(4) THE EDGE LINE IN THE TAPER AREAS OF THE BYPASS LANE AND THE BYPASS LANE SHALL BE LOCATED 1-FOOT FROM EDGE OF PAVEMENT TO THE OUTSIDE EDGE OF EDGE LINE.

(5) BARRIER LINE ENDS AT SIDE ROAD PAVEMENT/SURFACE EDGE EXTENSION.

(6) BARRIER LINE STARTS 500 FEET PRIOR TO THE BYPASS TAPER.

(7) IF THE DISTANCE BETWEEN 2 SUCCESSIVE NO-PASSING ZONES IS LESS THAN THE MINIMUM DISTANCE BETWEEN ZONES, CONNECT THE 2 ZONES.

(8) 3' LINE 9' GAP, EXCEPT RETRACE THE EXISTING LINE - GAP PATTERN WHERE EXISTING MARKINGS ARE IN PLACE.

ARROW SYMBOL (⇨) SHOWS DIRECTION OF TRAVEL

(7)

POSTED SPEED (MPH)	MINIMUM DISTANCE BETWEEN ZONES (FEET)
25 - 30	528
35 - 40	528
45 - 50	686
55	792

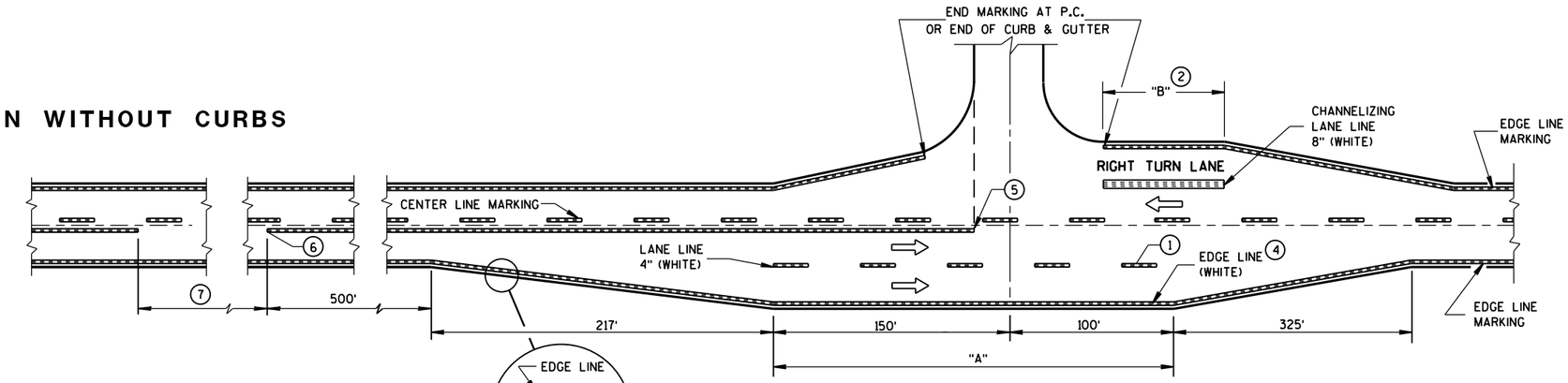

MAJOR INTERSECTIONS

(INTERSECTION WITH FULL RIGHT TURN LANE OR BYPASS LANES)

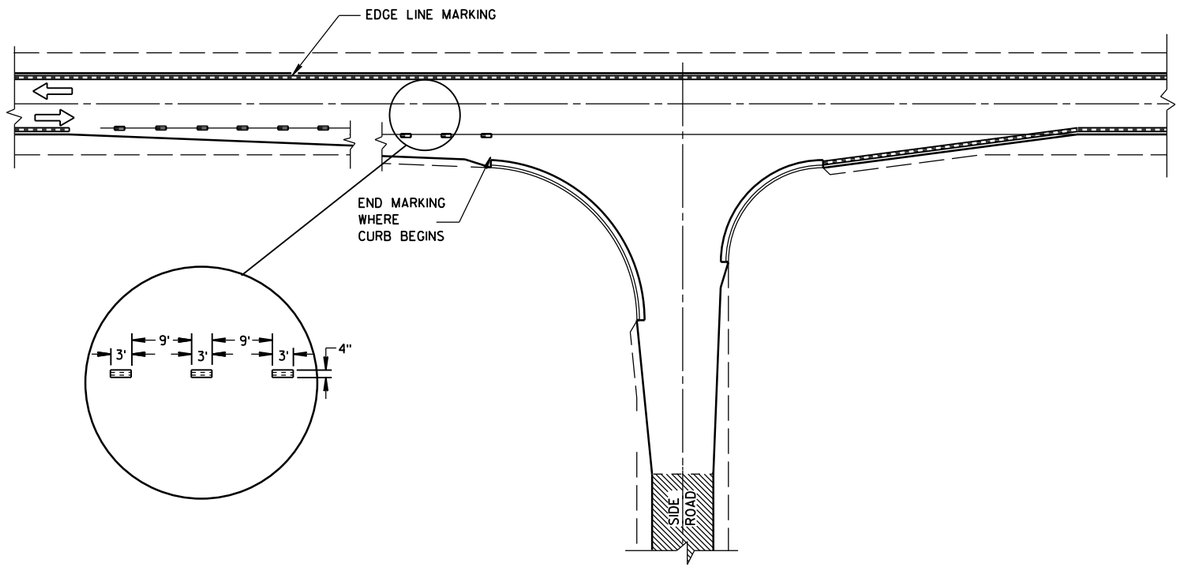

MINOR INTERSECTION WITH CURBS

(TYPICAL MARKING)

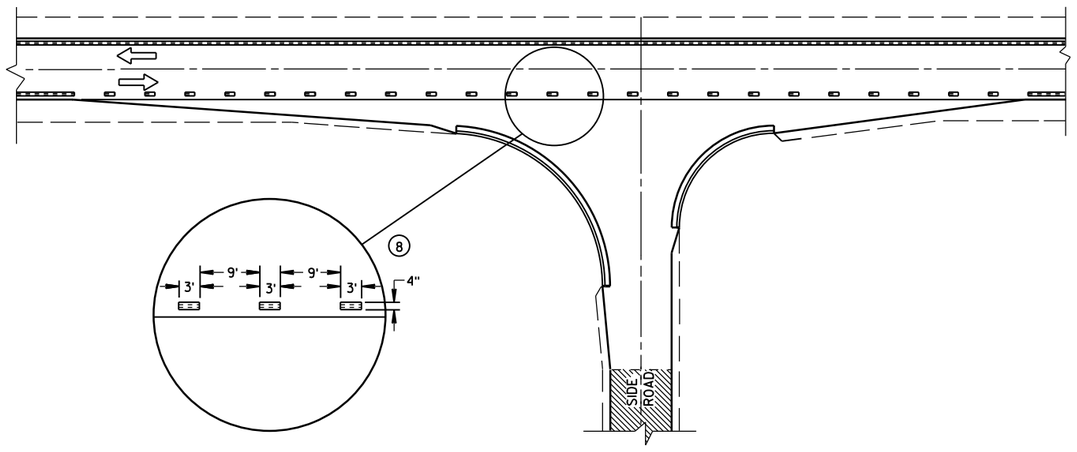

MINOR INTERSECTION WITH CURBS

(3) (FOR SPECIAL CONDITIONS AS SPECIFIED)

PAVEMENT MARKING
(INTERSECTIONS)

STATE OF WISCONSIN
DEPARTMENT OF TRANSPOR

6

S.D.D. 15 C 8-16b

6

S.D.D. 15 C 8-16b

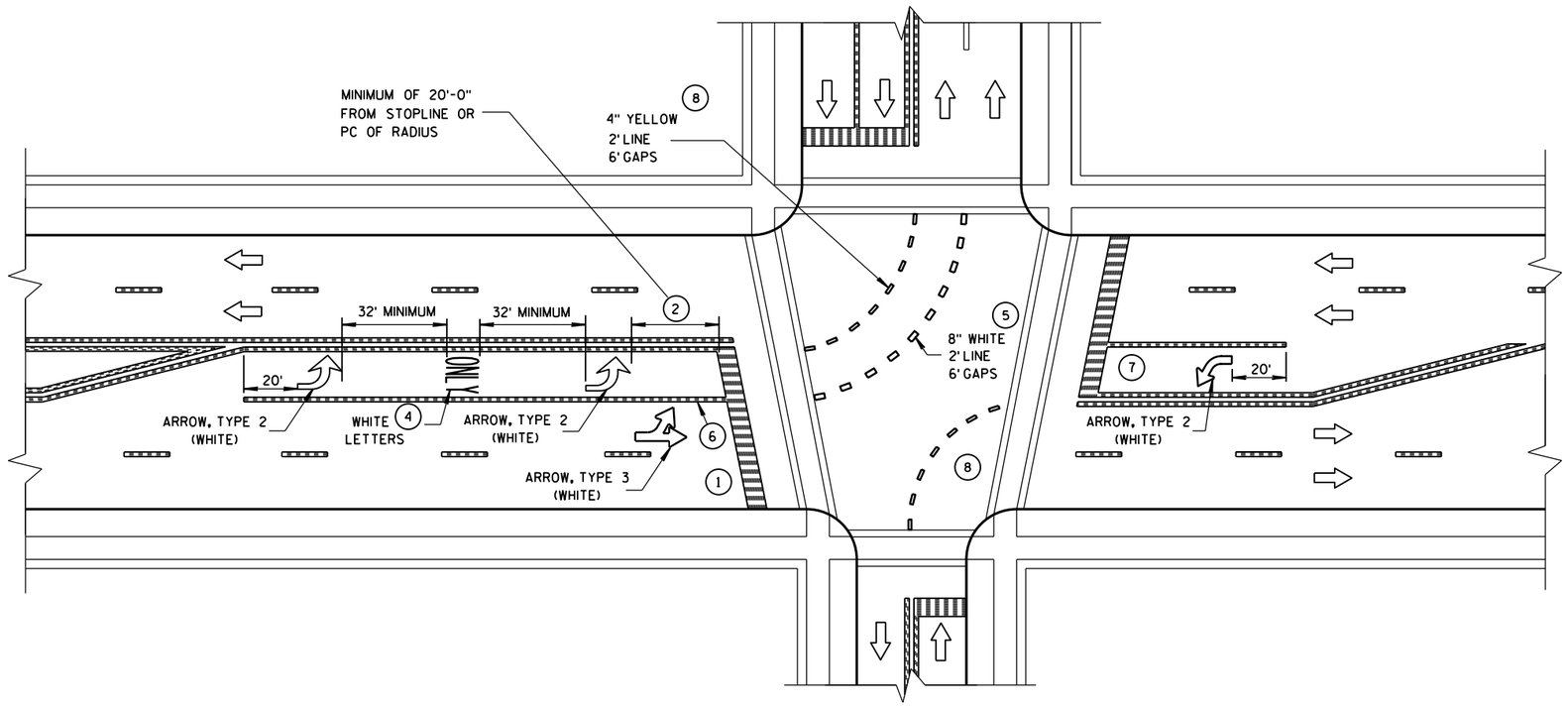

GENERAL NOTES

1. STOP BAR IS REQUIRED ONLY WHEN SPECIFIED IN THE CONTRACT.
2. DISTANCE MAY BE ADJUSTED TO ACCOMODATE SHORT LEFT TURN LANES. AS APPROVED BY THE ENGINEER.
3. A SET OF ARROWS IS REQUIRED EVERY 400 FEET OR NEAR INTERSECTIONS OR DRIVEWAYS WITH TURNING TRAFFIC.
4. ADD EXTRA SETS OF ONE ARROW AND ONE ONLY PER 160 FEET OR WHEN ON A CURVE.
5. 8" WHITE WITH 2' LINE 6' GAPS FOR DUAL TURN LANE.
6. 8" WHITE
7. ADD SECOND ARROW WHEN TURN BAY IS GREATER THAN OR EQUAL TO 108 FEET.
8. REQUIRED ONLY WHEN SPECIFIED IN THE CONTRACT.

NOTE:
ARROW SYMBOL (⇨)
SHOWS DIRECTION OF TRAVEL

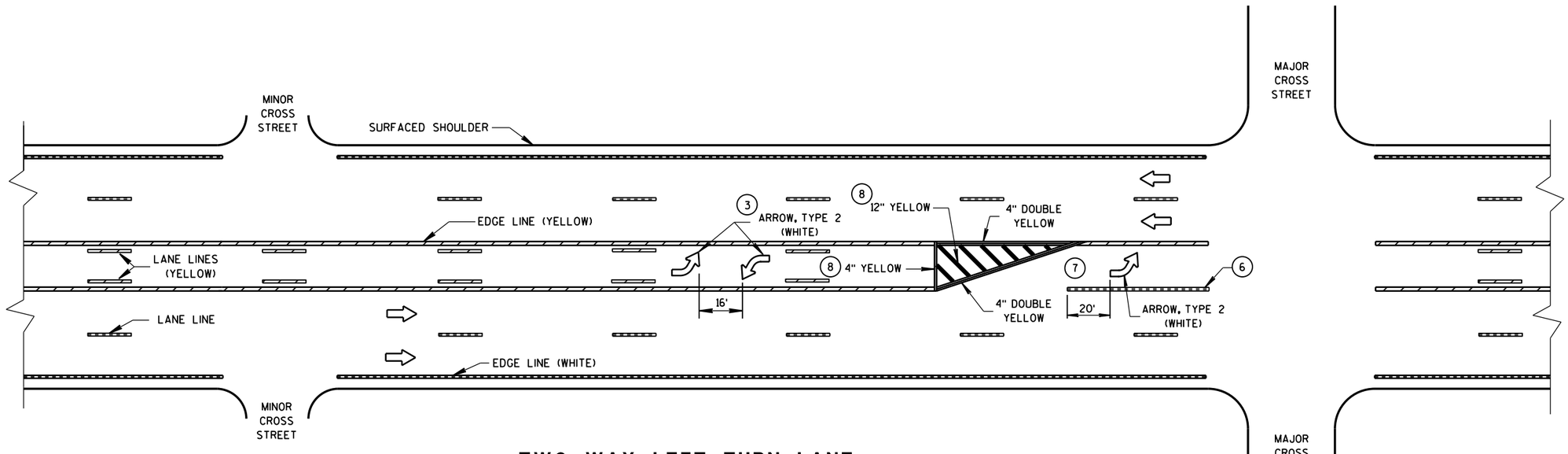

TWO WAY LEFT TURN LANE

PAVEMENT MARKING (LEFT TURN LANE)

STATE OF WISCONSIN
DEPARTMENT OF TRANSPORTATION

6

S.D.D. 15 C 8-16e

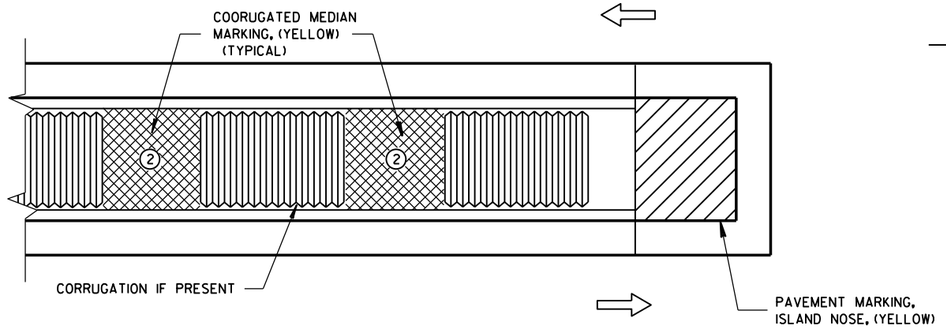

MEDIAN ISLAND WITH SQUARE BLUNT NOSE

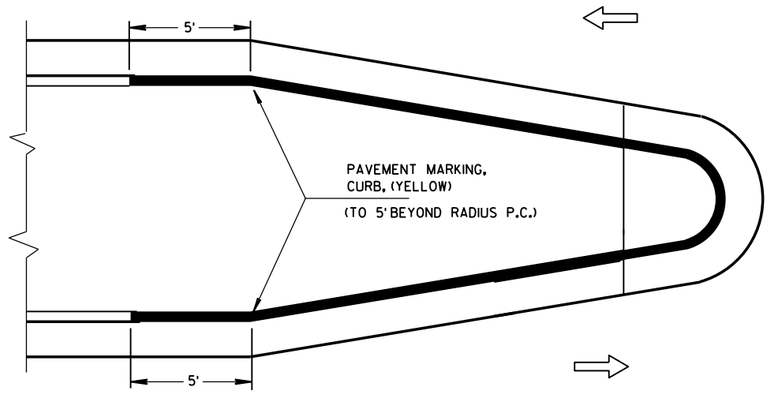

MEDIAN ISLAND WITH ROUND BLUNT NOSE

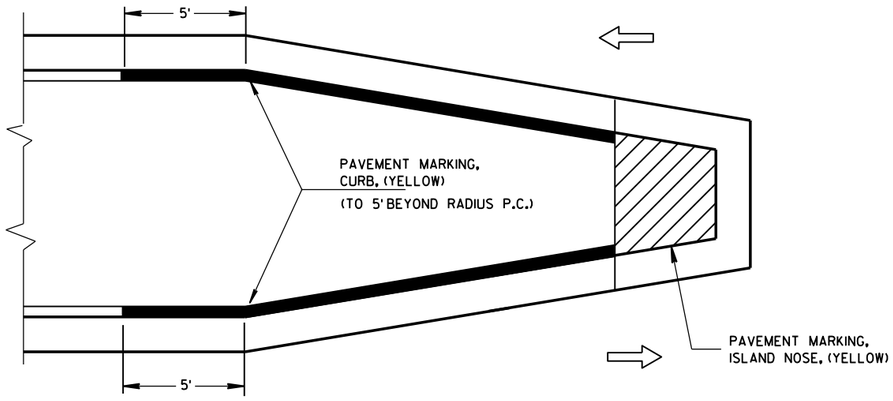

MEDIAN ISLAND WITH SLOPED NOSE

TYPICAL PLACEMENT OF PAVEMENT MARKING ON MEDIAN ISLANDS

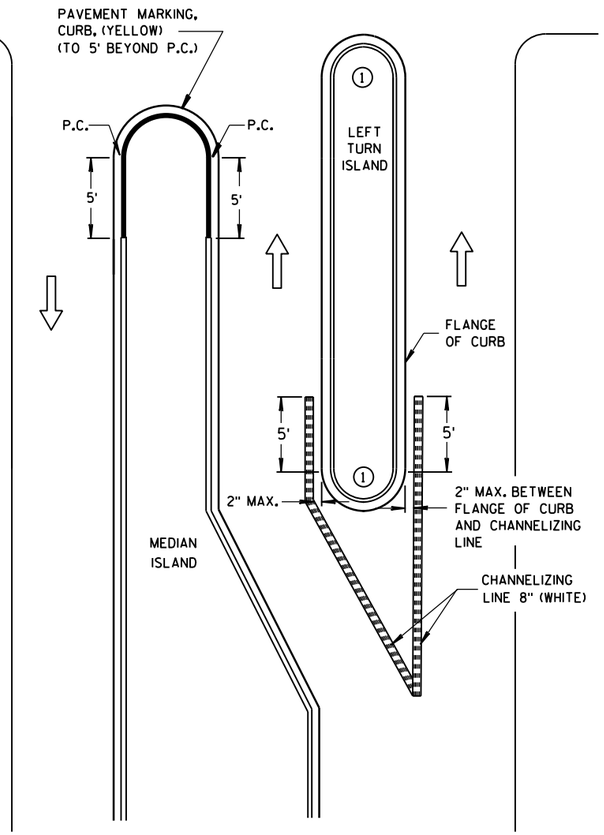

LEFT TURN & MEDIAN ISLAND

GENERAL NOTES

1. DO NOT MARK CURB NOSES THAT SEPARATE LANES OF TRAFFIC TRAVELING IN THE SAME DIRECTION.

2. WHEN CONCRETE CORRUGATED MEDIAN IS CONSTRUCTED TO SEPARATE TRAFFIC OPERATING IN THE OPPOSING DIRECTION YELLOW PAVEMENT MARKING SHALL BE APPLIED TO THE FLAT PORTION OF THE CONCRETE CORRUGATED MEDIAN. THE ITEM OF PAVEMENT MARKING, CONCRETE CORRUGATED MEDIAN, WILL BE MEASURED IN PLACE AND AND ACCEPTED IN ACCORDANCE WITH THE CONTRACT AND PAID FOR AT THE CONTRACT UNIT PRICE PER SQUARE FOOT.

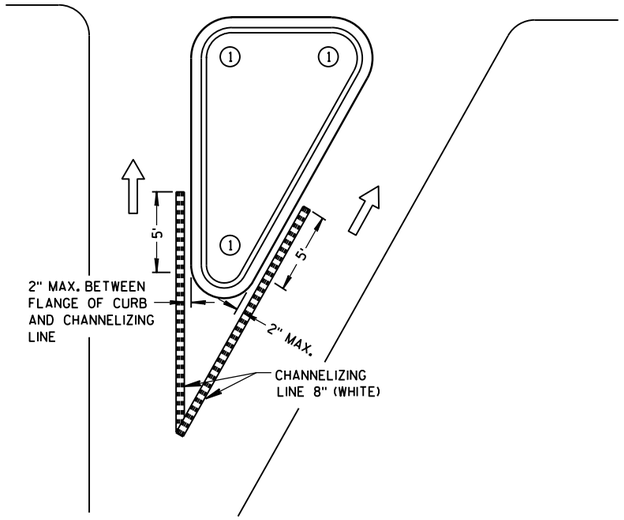

RIGHT TURN ISLAND

LEGEND

- ISLAND NOSE MARKING
- CURB MARKING
- CORRUGATED MEDIAN MARKING
- DIRECTION OF TRAVEL

PAVEMENT MARKING
(ISLANDS)

STATE OF WISCONSIN
DEPARTMENT OF TRANSPOI

6

S.D.D. 15 C 8-16f

6

S.D.D. 15 C 8-16f

LEGEND

SIGN ON PORTABLE OR PERMANENT SUPPORT

DIRECTION OF TRAFFIC

WORK AREA

FLAGGER, EQUIPPED WITH STOP/SLOW PADDLE FASTENED ON SUPPORT STAFF

SIGN SPACING TABLE

SPEED LIMIT	SIGN SPACING A,B,C
25-35 MPH	200'
35-40 MPH	350'
45-55 MPH	500'

W3-4

USE OF THE "BE PREPARED TO STOP" SIGN IS OPTIONAL. WHEN USED, THIS SIGN SHALL BE LOCATED BETWEEN THE W20-7a AND W20-4 SIGNS. A 500' TYPICAL SPACING SHALL BE PROVIDED BETWEEN THE SIGNS.

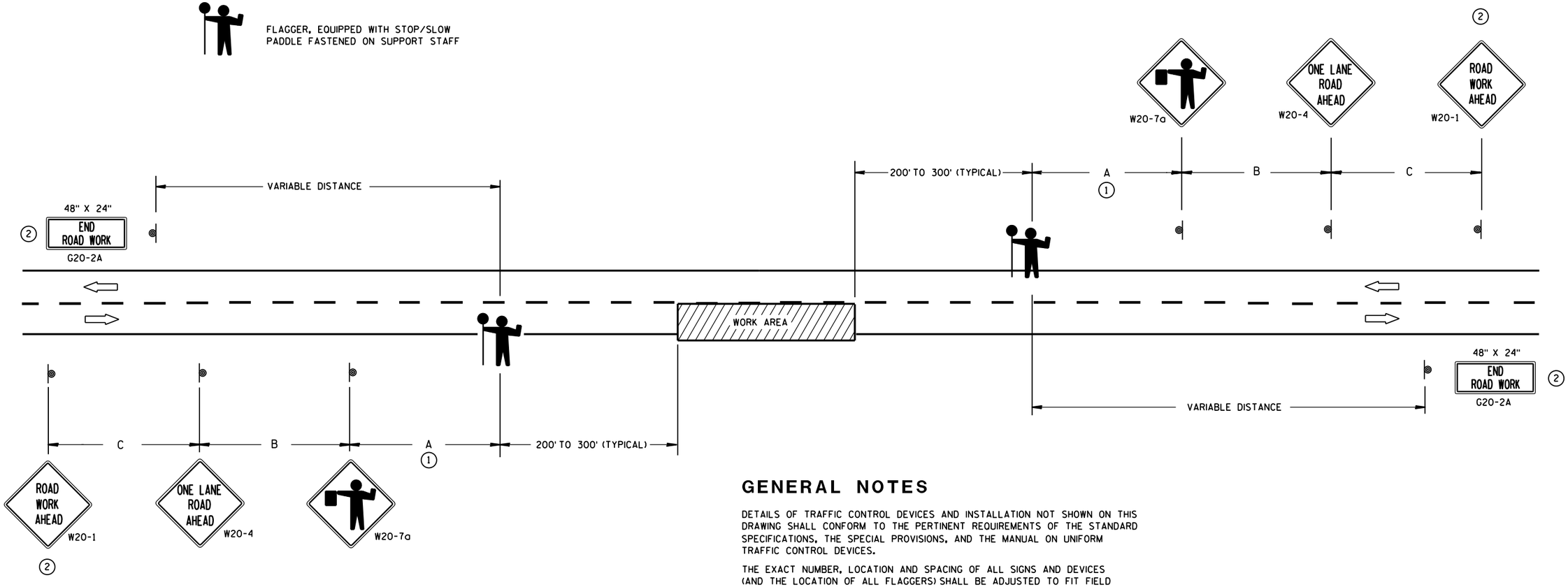

(1) FOR A MOVING WORK OPERATION,
SIGNING FOR BOTH DIRECTIONS SHALL BE REESTABLISHED (AS SIMULTANEOUSLY AS PRACTICAL) AT APPROXIMATELY 3500 FOOT INTERVALS IN THE MOVING WORK OPERATION OR AS APPROVED BY THE ENGINEER.

(2) SIGN NOT REQUIRED IF FLAGGING OPERATION OCCURS WITHIN A SIGNED ROAD WORK ZONE AREA.

GENERAL NOTES

DETAILS OF TRAFFIC CONTROL DEVICES AND INSTALLATION NOT SHOWN ON THIS DRAWING SHALL CONFORM TO THE PERTINENT REQUIREMENTS OF THE STANDARD SPECIFICATIONS, THE SPECIAL PROVISIONS, AND THE MANUAL ON UNIFORM TRAFFIC CONTROL DEVICES.

THE EXACT NUMBER, LOCATION AND SPACING OF ALL SIGNS AND DEVICES (AND THE LOCATION OF ALL FLAGGERS) SHALL BE ADJUSTED TO FIT FIELD CONDITIONS AS APPROVED BY THE ENGINEER.

THE FIRST ADVANCE WARNING SIGN SHOULD TYPICALLY BE LOCATED IN ADVANCE OF THE ANTICIPATED TRAFFIC BACKUP OR QUEUE.

WHEN A SIDE ROAD OR RAMP INTERSECTS THE FACILITY ON WHICH THE WORK IS BEING PERFORMED, ADDITIONAL TRAFFIC CONTROLS SHALL BE PROVIDED AS SPECIFIED IN THE PLANS AND/OR THE SPECIAL PROVISIONS OR AS APPROVED BY THE ENGINEER.

FLAGGERS SHALL BE IN SIGHT OF EACH OTHER OR IN DIRECT COMMUNICATION AT ALL TIMES. THEY SHALL BE EQUIPPED WITH STOP/SLOW PADDLES FASTENED ON SUPPORT STAFFS. WHEN THE FLAGGING OPERATION IS NOT IN EFFECT, COVER OR REMOVE ALL TEMPORARY TRAFFIC CONTROL SIGNS.

ALL SIGNS ARE 48" X 48" UNLESS OTHERWISE NOTED.

TRAFFIC CONTROL FOR LANE CLOSURE (SUITABLE FOR MOVING OPERATIONS)

STATE OF WISCONSIN
DEPARTMENT OF TRANSPORTATION

APPROVED
8/2013 — DATE
/S/ Travis Feltes — STATE TRAFFIC ENGINEER
FHWA

6

S.D.D. 15 C 12-4

6

S.D.D. 15 C 12-4

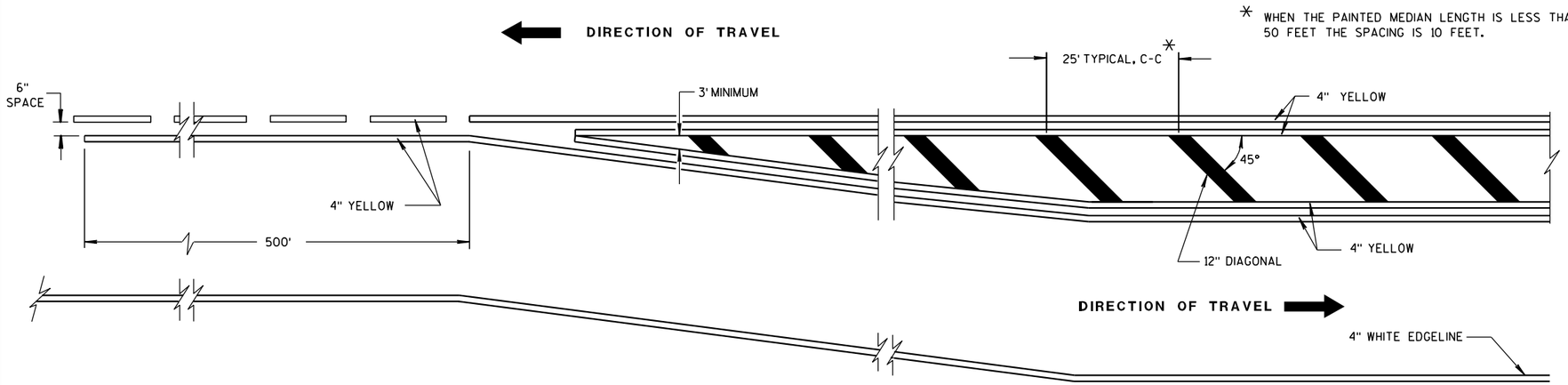

MEDIAN ISLAND DETAIL

GENERAL NOTE

DIAGONALS ARE OPTIONAL WHEN PAINTED ISLAND IS LESS THAN 6 FEET AT WIDEST POINT.

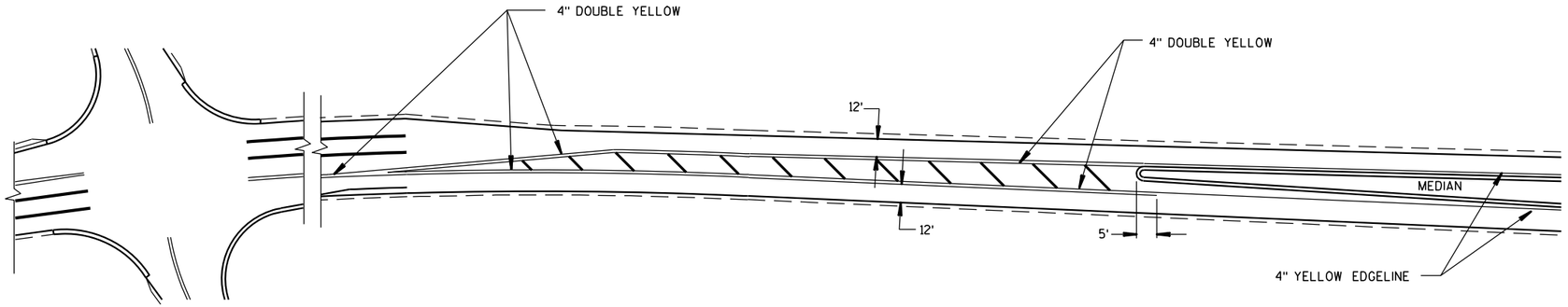

APPROACH MARKINGS FOR OTHER MEDIAN TYPES

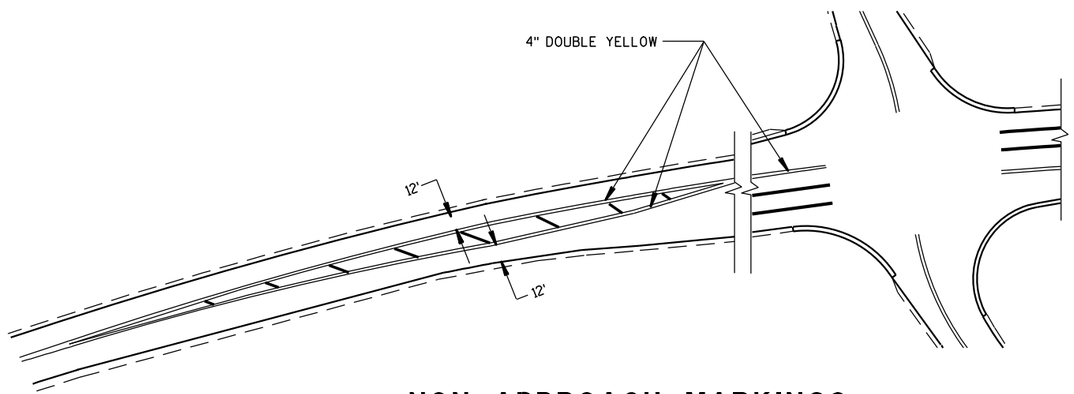

NON APPROACH MARKINGS

MEDIAN ISLAND MARKING	
STATE OF WISCONSIN DEPARTMENT OF TRANSPORTATION	
APPROVED 2-5-09 DATE	/S/ Thomas N. Nothohm STATE TRAFFIC ENGINEER
FHWA	130 IGN

6

S.D.D. 15 C 18-3

6

S.D.D. 15 C 18-3

SIDEWALK

STATION	AREA (SF)			Incremental Vol (CY) (Unadjusted)			Cumulative Vol (CY)		Mass Ordinate
	Cut	Fill	EBS	Cut	Fill	EBS	Cut 1.00	Expanded Fill 1.25	
BA 700+44.84	0.72	2.81	0.00	0	0	0	0	0	0.00
700+50	2.10	0.82	0.00	0	0	0	0	0	-0.16
701+00	3.20	0.10	0.00	5	1	0	5	1	3.68
701+50	1.14	1.94	0.00	4	2	0	9	4	5.35
702+00	2.76	0.63	0.00	4	2	0	13	7	5.99
702+25	0.50	4.53	0.00	2	2	0	14	10	4.52
702+50	2.41	0.83	0.00	1	2	0	16	13	2.77
702+81.03	3.48	0.63	0.00	3	1	0	19	14	5.10
702+94.95	18.03	0.00	0.00	6	0	0	25	14	10.44
703+00	19.27	0.00	0.00	3	0	0	28	14	13.93
703+50	0.00	9.46	0.00	18	9	0	46	25	20.82
704+00	0.06	6.75	0.00	0	15	0	46	44	2.12
EA 704+19.67	8.25	0.00	0.00	3	2	0	49	47	2.08
BA 704+89.11	4.77	1.02	0.00	0	0	0	0	0	2.08
705+00	1.03	4.57	0.00	1	1	0	50	48	1.84
705+50	0.12	10.52	0.00	1	14	0	51	66	-14.56
706+00	4.58	1.13	0.00	4	11	0	56	79	-23.69
706+36.71	19.46	0.00	0.00	16	1	0	72	80	-8.30
706+50	3.31	0.96	0.00	6	0	0	78	81	-2.99
707+00	3.08	2.82	0.00	6	4	0	83	85	-1.46
707+22.71	19.74	0.00	0.00	10	1	0	93	86	6.66
707+50	4.70	1.08	0.00	12	1	0	105	87	18.33
708+00	10.41	0.00	0.00	14	1	0	119	88	31.06
708+15.96	19.61	0.00	0.00	9	0	0	128	88	39.94
708+50	7.89	0.00	0.00	17	0	0	146	88	57.27
708+56.66	13.90	0.00	0.00	3	0	0	148	88	59.96
709+00	2.43	4.93	0.00	13	4	0	161	93	68.11
709+50	19.84	0.00	0.00	21	5	0	182	99	83.03
709+50.97	19.96	0.00	0.00	1	0	0	183	99	83.74
710+00	5.72	0.00	0.00	23	0	0	206	99	107.06
710+18.92	11.84	0.00	0.00	6	0	0	212	99	113.22
710+50	0.87	4.09	0.00	7	2	0	220	102	117.59
710+58.18	0.13	23.62	0.00	0	4	0	220	107	112.50
711+00	0.01	43.89	0.00	0	52	0	220	173	47.25
711+50	0.06	38.55	0.00	0	76	0	220	268	-48.10
711+99	17.17	0.06	0.00	16	35	0	235	312	-76.26
712+00	19.51	0.03	0.00	1	0	0	236	312	-75.58
712+50	0.00	25.28	0.00	18	23	0	254	341	-86.80
712+59.7	0.00	26.49	0.00	0	9	0	254	353	-98.43
713+00	0.96	4.23	0.00	1	23	0	255	381	-126.37
EA 713+27.5	3.52	1.95	0.00	2	3	0	257	385	-128.03
TOTALS				257	308	0			

CTH N

STATION	AREA (SF)			Incremental Vol (CY) (Unadjusted)			Cumulative Vol (CY)		Mass Ordinate
	Cut	Fill	EBS	Cut	Fill	EBS	Cut 1.00	Expanded Fill 1.25	
513+25	103.48	17.10	0.00	0	0	0	0	0	0.0
513+44	129.52	27.02	0.00	82	16	0	82	19	62.6
513+50	133.18	25.56	0.00	29	6	0	111	27	84.5
513+84	151.48	15.68	0.00	179	26	0	290	59	231.2
514+00	147.09	32.87	0.00	88	14	0	379	77	301.7
514+50	156.22	25.20	0.00	281	54	0	660	144	515.3
515+00	177.28	4.81	0.00	309	28	0	968	179	789.4
515+50	198.73	2.32	0.00	348	7	0	1,317	187	1129.3
516+00	208.28	2.14	0.00	377	4	0	1,694	192	1501.0
516+45	243.96	8.13	0.00	377	9	0	2,070	203	1867.2
516+50	242.40	8.61	0.00	45	2	0	2,115	205	1910.3
516+84	218.51	5.62	0.00	290	9	0	2,406	216	2189.3
517+00	194.76	4.23	0.00	122	3	0	2,528	220	2308.1
517+50	185.54	5.23	0.00	352	9	0	2,880	231	2649.3
518+00	176.77	13.00	0.00	335	17	0	3,216	252	2963.6
518+50	223.06	17.33	0.00	370	28	0	3,586	287	3298.7
518+62	221.02	23.81	0.00	99	9	0	3,685	299	3386.0
519+00	178.24	50.60	0.00	281	52	0	3,966	364	3601.5
519+50	172.27	114.57	0.00	325	153	0	4,290	555	3734.9
520+00	167.35	171.52	0.00	314	265	0	4,605	886	3718.2
520+50	157.73	115.66	0.00	301	266	0	4,906	1,219	3686.8
521+00	145.24	111.31	0.00	281	210	0	5,186	1,481	3704.6
521+50	123.29	75.42	0.00	249	173	0	5,435	1,698	3737.2
522+00	103.51	62.42	0.00	210	128	0	5,645	1,857	3787.6
522+50	86.50	62.04	0.00	176	115	0	5,821	2,001	3819.5
523+00	74.74	65.02	0.00	149	118	0	5,970	2,148	3821.7
523+46	107.99	52.47	0.00	156	100	0	6,126	2,273	3852.3
523+50	106.59	58.11	0.00	16	8	0	6,141	2,284	3857.9
524+00	75.19	75.32	0.00	168	124	0	6,310	2,438	3871.8
524+50	77.78	67.63	0.00	142	132	0	6,451	2,603	3848.0
525+00	89.53	66.81	0.00	155	124	0	6,606	2,759	3847.3
525+50	108.40	52.89	0.00	183	111	0	6,790	2,898	3892.1
526+00	124.70	49.92	0.00	216	95	0	7,005	3,017	3988.9
526+50	193.87	13.00	0.00	295	58	0	7,300	3,089	4211.0
526+99	185.82	22.74	0.00	345	32	0	7,645	3,130	4515.0
527+00	187.25	22.60	0.00	7	1	0	7,652	3,131	4520.9
527+50	144.77	14.52	0.00	307	34	0	7,959	3,174	4785.4
528+00	150.32	16.08	0.00	273	28	0	8,233	3,209	5023.2
528+50	149.37	20.71	0.00	277	34	0	8,510	3,252	5258.1
528+94	180.32	12.38	0.00	269	27	0	8,779	3,286	5493.0

STATION	AREA (SF)			Incremental Vol (CY) (Unadjusted)			Cumulative Vol (CY)		Mass Ordinate
	Cut	Fill	EBS	Cut	Fill	EBS	Cut 1.00	Expanded Fill 1.25	
529+00	180.64	12.45	0.00	40	3	0	8,819	3,289	5529.6
529+50	136.96	29.12	0.00	294	38	0	9,113	3,337	5775.6
530+00	136.57	26.01	0.00	253	51	0	9,366	3,401	5965.0
530+50	140.27	40.20	0.00	256	61	0	9,622	3,478	6144.7
530+91	188.13	27.77	0.00	249	52	0	9,872	3,542	6329.6
531+00	150.11	31.98	0.00	56	10	0	9,928	3,555	6373.5
531+33	188.77	30.01	0.00	207	38	0	10,135	3,602	6533.2
531+50	144.95	55.40	0.00	105	27	0	10,240	3,636	6604.7
531+67	303.93	72.46	0.00	141	40	0	10,382	3,686	6695.7
532+00	216.75	40.10	0.00	318	69	0	10,700	3,772	6927.9
532+50	193.00	42.77	0.00	379	77	0	11,079	3,868	7211.4
532+64	228.44	13.65	0.00	109	15	0	11,188	3,886	7302.3
533+00	199.31	77.09	0.00	285	60	0	11,474	3,962	7511.9
533+50	264.53	71.19	0.00	429	137	0	11,903	4,133	7769.8
533+67	263.68	57.26	0.00	166	40	0	12,069	4,184	7885.5
534+00	288.94	37.75	0.00	338	58	0	12,407	4,256	8150.6
534+46	372.42	0.00	0.00	563	32	0	12,970	4,297	8673.8
534+50	364.93	0.00	0.00	55	0	0	13,025	4,297	8728.4
535+00	297.82	1.22	0.00	614	1	0	13,639	4,298	9340.7
535+46	367.96	0.00	0.00	567	1	0	14,206	4,299	9906.5
535+50	351.71	0.00	0.00	53	0	0	14,259	4,299	9959.8
536+00	207.18	11.69	0.00	517	11	0	14,777	4,313	10463.8
536+50	179.35	26.36	0.00	358	35	0	15,135	4,357	10777.6
537+00	159.72	46.02	0.00	314	67	0	15,449	4,441	11007.8
537+50	119.03	70.65	0.00	258	108	0	15,707	4,576	11130.9
538+00	113.63	122.08	0.00	215	178	0	15,922	4,799	11123.3
538+50	108.30	117.51	0.00	205	222	0	16,128	5,076	11051.5
539+00	102.81	112.79	0.00	195	213	0	16,323	5,343	10980.4
539+50	98.31	99.63	0.00	186	197	0	16,509	5,589	10920.7
540+00	155.92	41.82	0.00	235	131	0	16,745	5,752	10992.4
540+50	103.83	59.05	0.00	241	93	0	16,985	5,869	11116.2
541+00	100.13	73.80	0.00	189	123	0	17,174	6,023	11151.3
541+50	104.65	66.04	0.00	190	129	0	17,364	6,185	11179.0
542+00	116.69	44.49	0.00	205	102	0	17,569	6,313	11256.0
542+12	120.91	40.42	0.00	53	19	0	17,621	6,336	11285.3
542+50	109.50	78.33	0.00	162	84	0	17,784	6,441	11342.9
543+00	105.72	69.22	0.00	199	137	0	17,983	6,611	11371.5
543+50	103.40	48.29	0.00	194	109	0	18,176	6,747	11429.1
543+77	126.17	31.54	0.00	115	40	0	18,291	6,797	11494.0
544+00	103.16	45.93	0.00	98	33	0	18,389	6,838	11550.4

STATION	AREA (SF)			Incremental Vol (CY) (Unadjusted)			Cumulative Vol (CY)		Mass Ordinate
	Cut	Fill	EBS	Cut	Fill	EBS	Cut 1.00	Expanded Fill 1.25	
544+50	101.14	65.28	0.00	189	103	0	18,578	6,967	11610.9
544+81.86	103.79	139.17	0.00	121	121	0	18,699	7,118	11581.0
545+00	99.77	190.87	0.00	68	111	0	18,767	7,257	11510.8
545+50	96.46	165.72	0.00	182	330	0	18,949	7,669	11279.8
546+00	94.60	169.55	0.00	177	310	0	19,126	8,057	11068.6
546+50	95.85	135.99	0.00	176	283	0	19,302	8,411	10891.3
547+00	98.34	78.35	0.00	180	198	0	19,482	8,659	10823.1
547+27	116.69	46.07	0.00	108	62	0	19,590	8,737	10852.8
547+50	98.92	69.80	0.00	92	49	0	19,681	8,798	10883.0
548+00	101.21	77.56	0.00	185	136	0	19,867	8,969	10897.7
548+27	122.85	34.20	0.00	112	56	0	19,979	9,039	10939.9
548+50	101.63	62.43	0.00	96	41	0	20,074	9,090	10984.1
549+00	101.18	72.47	0.00	188	125	0	20,262	9,246	11015.7
549+50	106.83	80.05	0.00	193	141	0	20,455	9,423	11031.8
550+00	117.62	73.67	0.00	208	142	0	20,663	9,601	11061.7
550+50	126.90	41.77	0.00	226	107	0	20,889	9,734	11154.5
550+81	129.42	14.77	0.00	147	32	0	21,036	9,775	11261.1
551+00	11.91	15.36	0.00	50	11	0	21,086	9,788	11297.6
551+29	20.27	13.23	0.00	17	15	0	21,103	9,808	11295.7
551+50	13.19	19.61	0.00	13	13	0	21,116	9,823	11292.7
552+00	13.58	19.12	0.00	25	36	0	21,141	9,868	11272.7
552+50	13.96	12.01	0.00	26	29	0	21,166	9,904	11262.1
EA 553+00	14.92	13.21	0.00	27	23	0	21,193	9,934	11259.7
BA 554+00	8.66	4.53	0.00	0	0	0	0	0	11259.7
554+50	8.43	4.80	0.00	16	9	0	21,209	9,944	11264.7
555+00	8.42	4.96	0.00	16	9	0	21,225	9,956	11269.0
555+50	8.44	4.74	0.00	16	9	0	21,240	9,967	11273.4
556+00	8.41	4.56	0.00	16	9	0	21,256	9,978	11278.3
556+19	8.42	4.59	0.00	6	3	0	21,262	9,982	11280.1
556+20	153.66	0.63	0.00	60	2	0	21,316	9,980	11335.9
556+50	138.89	0.00	0.00	163	0	0	21,478	9,980	11498.0
557+00	122.54	0.00	0.00	242	0	0	21,720	9,980	11740.0
557+19	113.74	0.00	0.00	83	0	0	21,804	9,980	11823.2
557+50	102.21	0.00	0.00	124	0	0	21,928	9,980	11947.1
558+00	90.44	3.90	0.00	178	4	0	22,106	9,985	12121.0
558+50	80.44	5.62	0.00	158	9	0	22,264	9,996	12268.2
559+00	81.32	4.08	0.00	150	9	0	22,414	10,007	12406.8
559+50	82.84	1.94	0.00	152	6	0	22,566	10,014	12551.8
560+00	83.53	4.91	0.00	154	6	0	22,720	10,022	12697.9
560+38	105.50	4.82	0.00	133	7	0	22,853	10,031	12822.4

CTH N

STATION	AREA (SF)			Incremental Vol (CY) (Unadjusted)			Cumulative Vol (CY)		Mass Ordinate
	Cut	Fill	EBS	Cut	Fill	EBS	Cut 1.00	Expanded Fill 1.25	
560+50	79.37	3.42	0.00	41	2	0	22,894	10,033	12861.2
561+00	75.50	4.13	0.00	143	7	0	23,038	10,042	12995.8
561+50	64.19	3.63	0.00	129	7	0	23,167	10,051	13116.2
562+00	61.24	6.60	0.00	116	9	0	23,283	10,063	13220.5
562+50	62.99	4.89	0.00	115	11	0	23,398	10,076	13322.2
563+00	61.09	4.03	0.00	115	8	0	23,513	10,086	13426.8
563+50	58.13	4.44	0.00	110	8	0	23,623	10,096	13527.3
563+97	68.56	2.25	0.00	110	6	0	23,734	10,103	13630.3
564+00	69.59	2.07	0.00	8	0	0	23,741	10,104	13637.7
564+50	85.21	0.00	0.00	143	2	0	23,885	10,106	13778.6
565+00	88.65	0.00	0.00	161	0	0	24,046	10,106	13939.6
565+39	99.39	0.00	0.00	136	0	0	24,181	10,106	14075.4
565+43	98.24	0.00	0.00	15	0	0	24,196	10,106	14090.1
565+50	93.12	0.00	0.00	25	0	0	24,221	10,106	14114.9
566+00	92.66	0.00	0.00	172	0	0	24,393	10,106	14286.9
566+50	139.90	0.00	0.00	215	0	0	24,608	10,106	14502.2
567+00	90.25	0.00	0.00	213	0	0	24,821	10,106	14715.3
567+50	86.33	0.00	0.00	164	0	0	24,985	10,106	14878.8
567+76	86.53	0.00	0.00	83	0	0	25,068	10,106	14962.0
568+00	84.68	3.47	0.00	76	2	0	25,144	10,108	15036.2
568+50	101.99	0.00	0.00	173	3	0	25,317	10,112	15205.0
EA 569+00	100.89	0.00	0.00	188	0	0	25,505	10,112	15392.9
BA 569+00	17.18	1.72	0.00	0	0	0	0	0	15392.9
569+50	17.18	1.72	0.00	32	3	0	25,537	10,116	15420.7
570+00	1.13	0.35	0.00	17	2	0	25,554	10,118	15435.3
570+30	1.86	0.00	0.00	2	0	0	25,555	10,118	15436.7
TOTALS				25,561	8,098	0			

LAKE LARGO DRIVE

STATION	AREA (SF)			Incremental Vol (CY) (Unadjusted)			Cumulative Vol (CY)		
	Cut	Fill	EBS	Cut	Fill	EBS	Cut **1.00**	Expanded Fill 1.25	Mass Ordinate
20+47	118.98	0.00	0.00	0	0	0	0	0	0.00
20+50	119.70	0.00	0.00	13	0	0	13	0	13.26
21+00	94.69	0.00	0.00	199	0	0	212	0	211.76
21+49.6	74.21	0.00	0.00	155	0	0	367	0	366.89
21+64	82.96	0.00	0.00	42	0	0	409	0	408.81
21+80	77.87	0.00	0.00	48	0	0	456	0	456.46
TOTALS				456	0	0			

WOODSIDE ROAD

STATION	AREA (SF)			Incremental Vol (CY) (Unadjusted)			Cumulative Vol (CY)		Mass Ordinate
	Cut	Fill	EBS	Cut	Fill	EBS	Cut 1.00	Expanded Fill 1.25	
39+15	62.21	0.02	0.00	0	0	0	0	0	0.00
39+25	64.30	0.03	0.00	23	0	0	23	0	23.42
39+56	84.95	7.93	0.00	86	5	0	109	6	103.39
TOTALS				109	5	0			

SPARTAN ROAD

STATION	AREA (SF)			Incremental Vol (CY) (Unadjusted)			Cumulative Vol (CY)		Mass Ordinate
	Cut	Fill	EBS	Cut	Fill	EBS	Cut 1.00	Expanded Fill 1.25	
60+52	78.87	4.34	0.00	0	0	0	0	0	0.00
60+75	78.24	0.18	0.00	67	0	0	67	0	66.46
TOTALS				67	0	0			

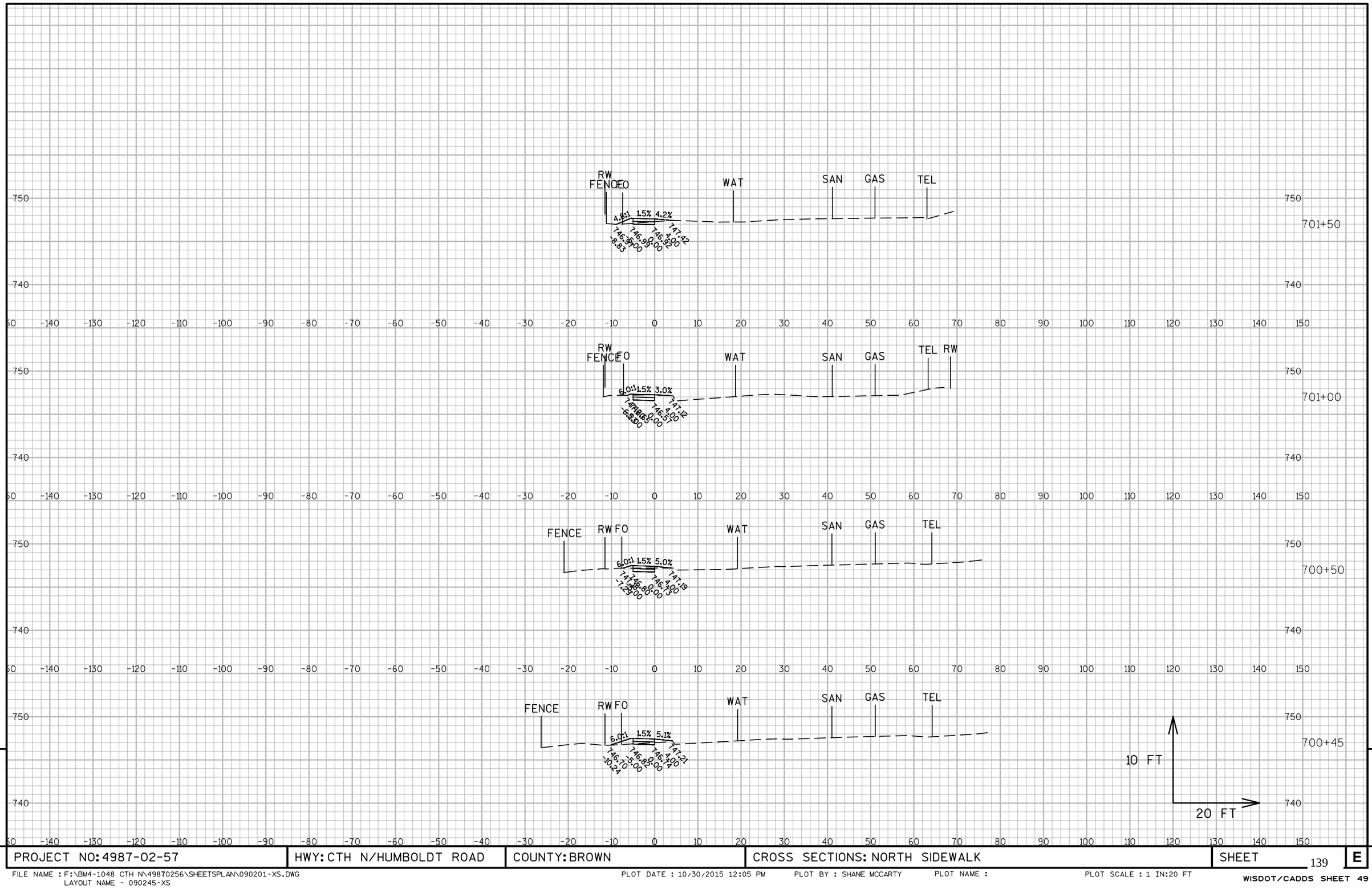

9

9

PROJECT NO: 4987-02-57	HWY: CTH N/HUMBOLDT ROAD	COUNTY: BROWN	CROSS SECTIONS: NORTH SIDEWALK	SHEET 139	E

FILE NAME : F:\BM4-1048 CTH N\49870256\SHEETSPLAN\090201-XS.DWG
LAYOUT NAME - 090245-XS

PLOT DATE : 10/30/2015 12:05 PM PLOT BY : SHANE MCCARTY PLOT NAME : PLOT SCALE : 1 IN:20 FT

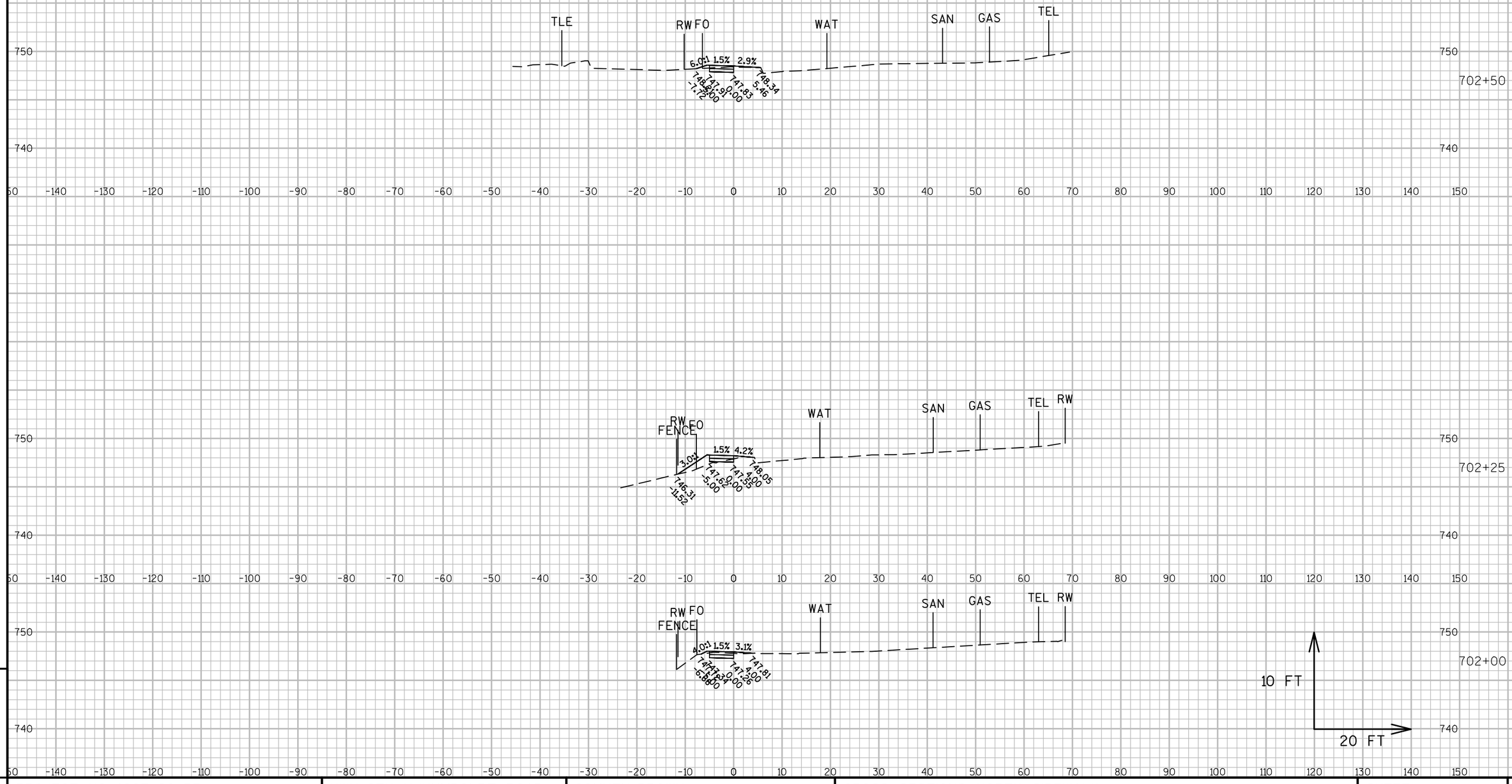

9

9

PROJECT NO: 4987-02-57	HWY: CTH N/HUMBOLDT ROAD	COUNTY: BROWN	CROSS SECTIONS: NORTH SIDEWALK	SHEET 140	E

FILE NAME : F:\BM4-1048 CTH N\49870256\SHEETSPLAN\090201-XS.DWG
LAYOUT NAME - 090246-XS

PLOT DATE : 10/30/2015 12:06 PM PLOT BY : SHANE MCCARTY PLOT NAME : PLOT SCALE : 1 IN:20 FT

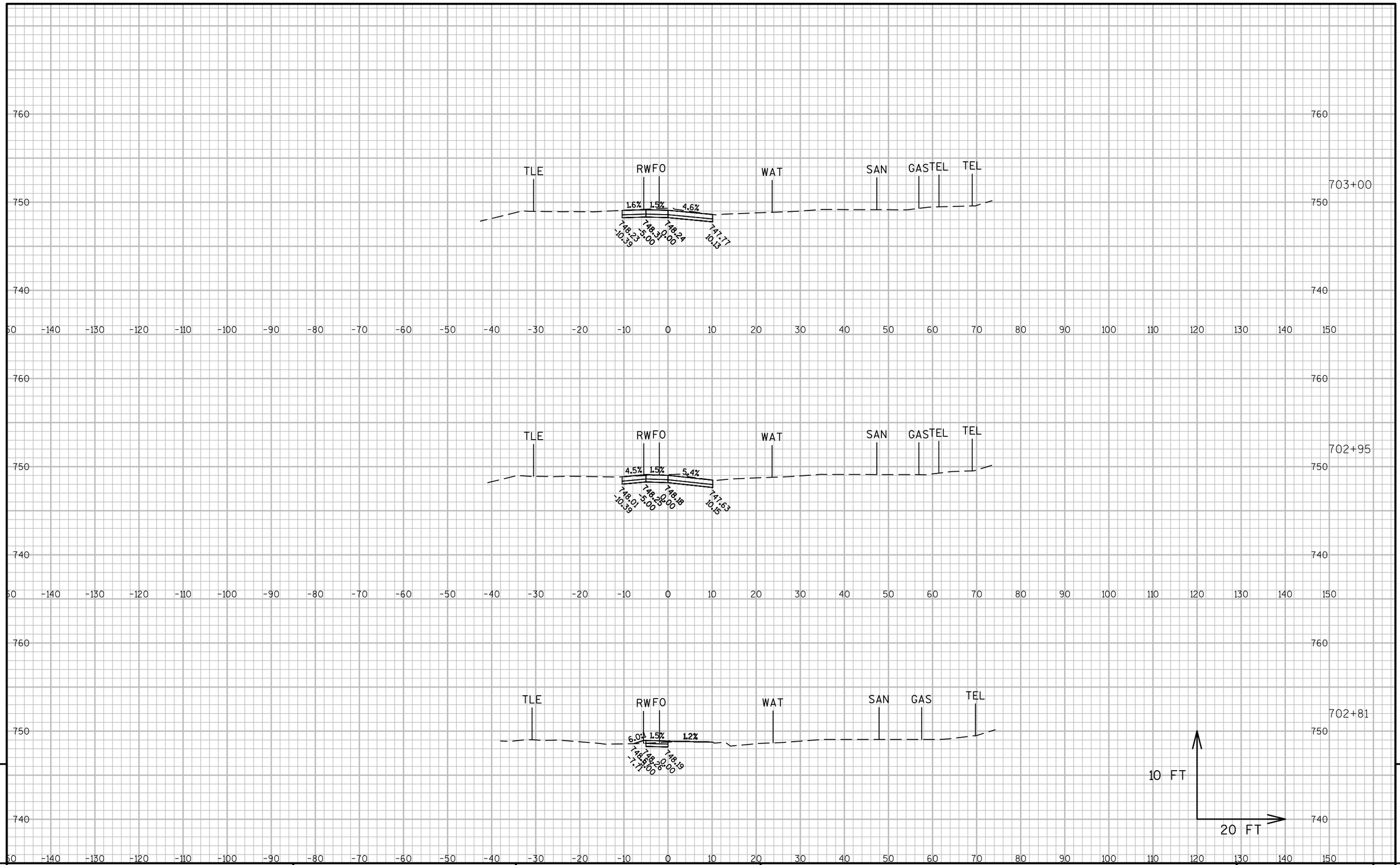

9	PROJECT NO: 4987-02-57	HWY: CTH N/HUMBOLDT ROAD	COUNTY: BROWN	CROSS SECTIONS: NORTH SIDEWALK	SHEET 141 E

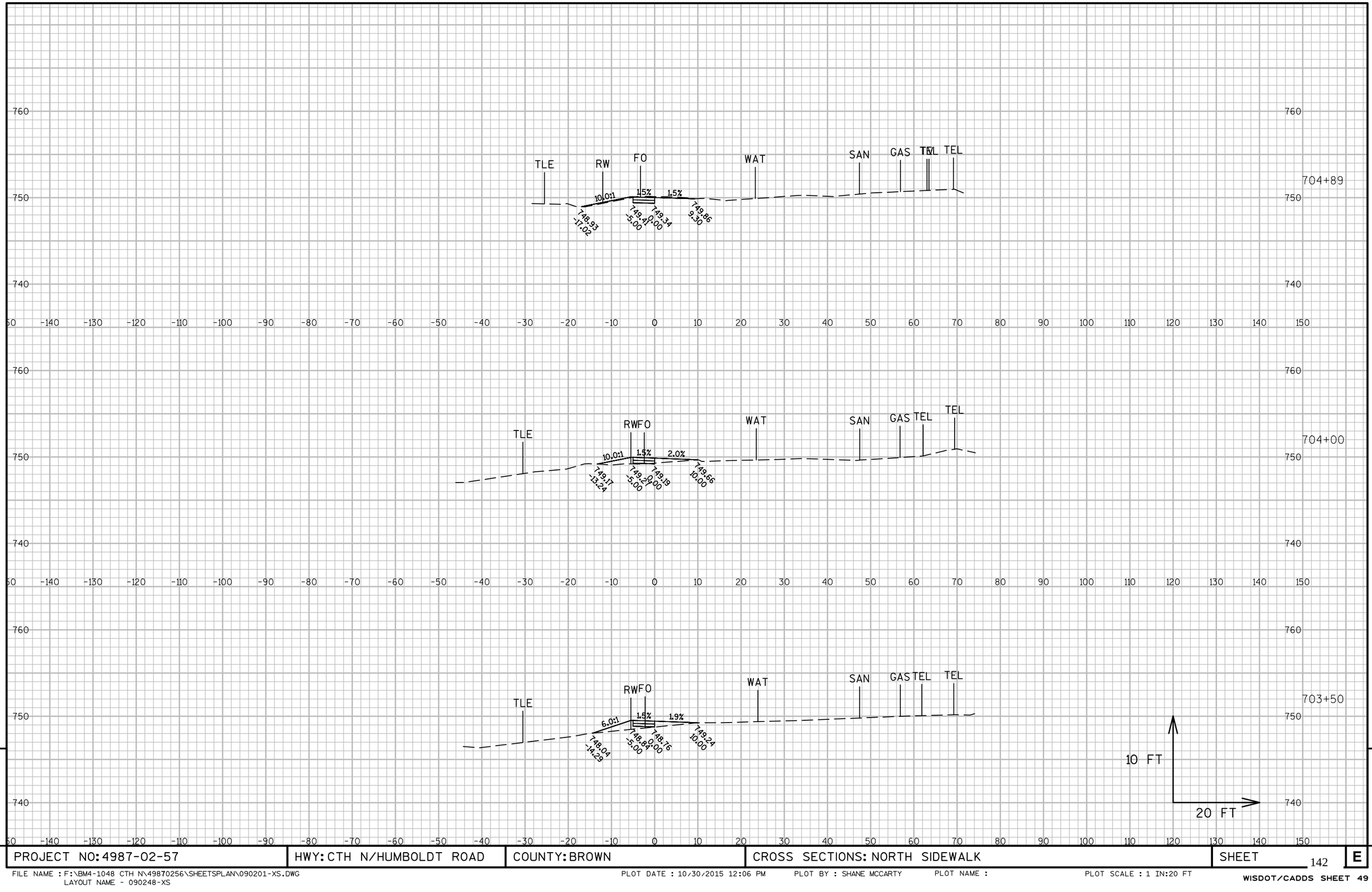

9

9

PROJECT NO: 4987-02-57	HWY: CTH N/HUMBOLDT ROAD	COUNTY: BROWN	CROSS SECTIONS: NORTH SIDEWALK	SHEET 142	E

FILE NAME : F:\BM4-1048 CTH N\49870256\SHEETSPLAN\090201-XS.DWG
LAYOUT NAME - 090248-XS

PLOT DATE : 10/30/2015 12:06 PM PLOT BY : SHANE MCCARTY PLOT NAME : PLOT SCALE : 1 IN:20 FT

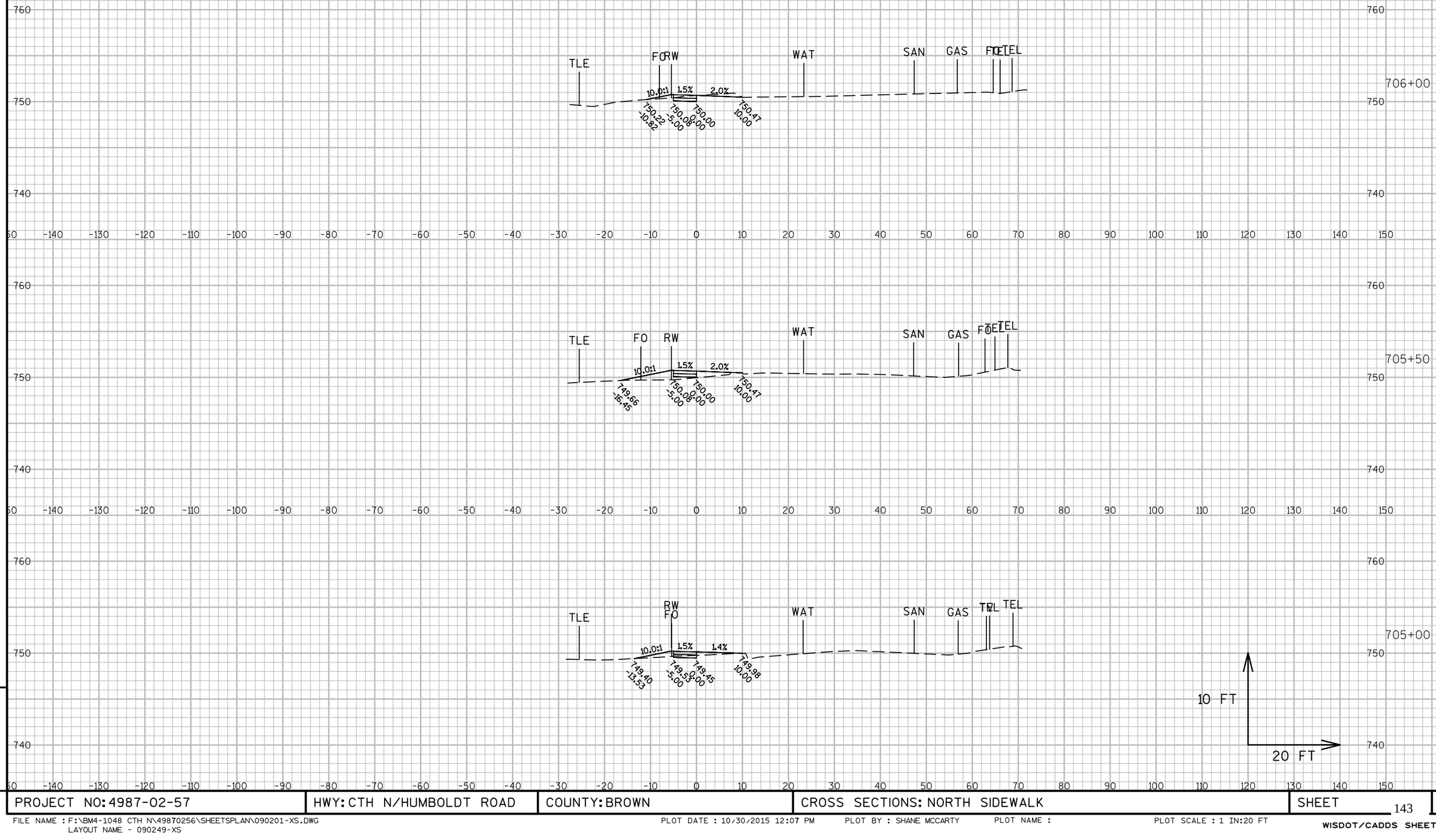

9

9

PROJECT NO: 4987-02-57	HWY: CTH N/HUMBOLDT ROAD	COUNTY: BROWN	CROSS SECTIONS: NORTH SIDEWALK	SHEET 143	E

FILE NAME : F:\BM4-1048 CTH N\49870256\SHEETSPLAN\090201-XS.DWG
LAYOUT NAME - 090249-XS

PLOT DATE : 10/30/2015 12:07 PM PLOT BY : SHANE MCCARTY PLOT NAME : PLOT SCALE : 1 IN:20 FT

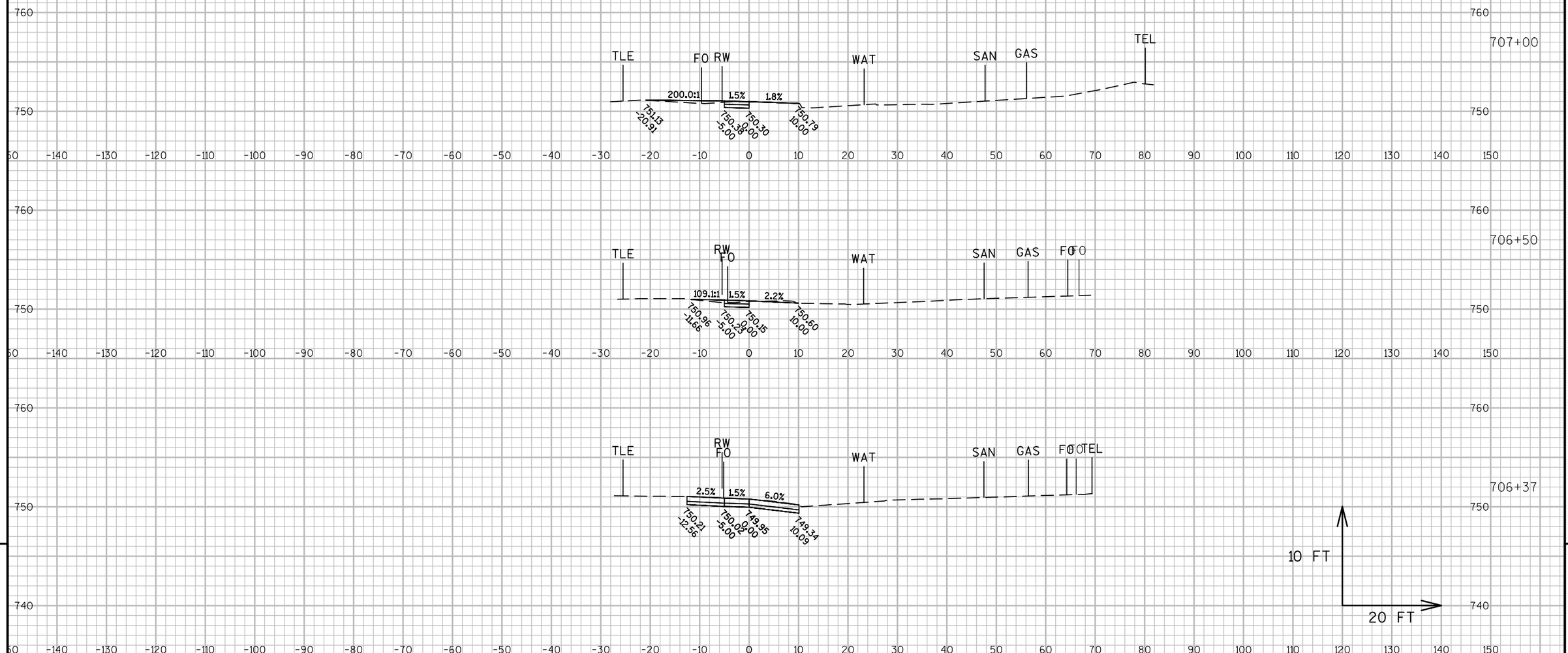

9

9

PROJECT NO: 4987-02-57	HWY: CTH N/HUMBOLDT ROAD	COUNTY: BROWN	CROSS SECTIONS: NORTH SIDEWALK	SHEET 144 E

FILE NAME : F:\BM4-1048 CTH N\49870256\SHEETSPLAN\090201-XS.DWG
LAYOUT NAME - 090250-XS

PLOT DATE : 10/30/2015 12:07 PM PLOT BY : SHANE MCCARTY PLOT NAME : PLOT SCALE : 1 IN:20 FT

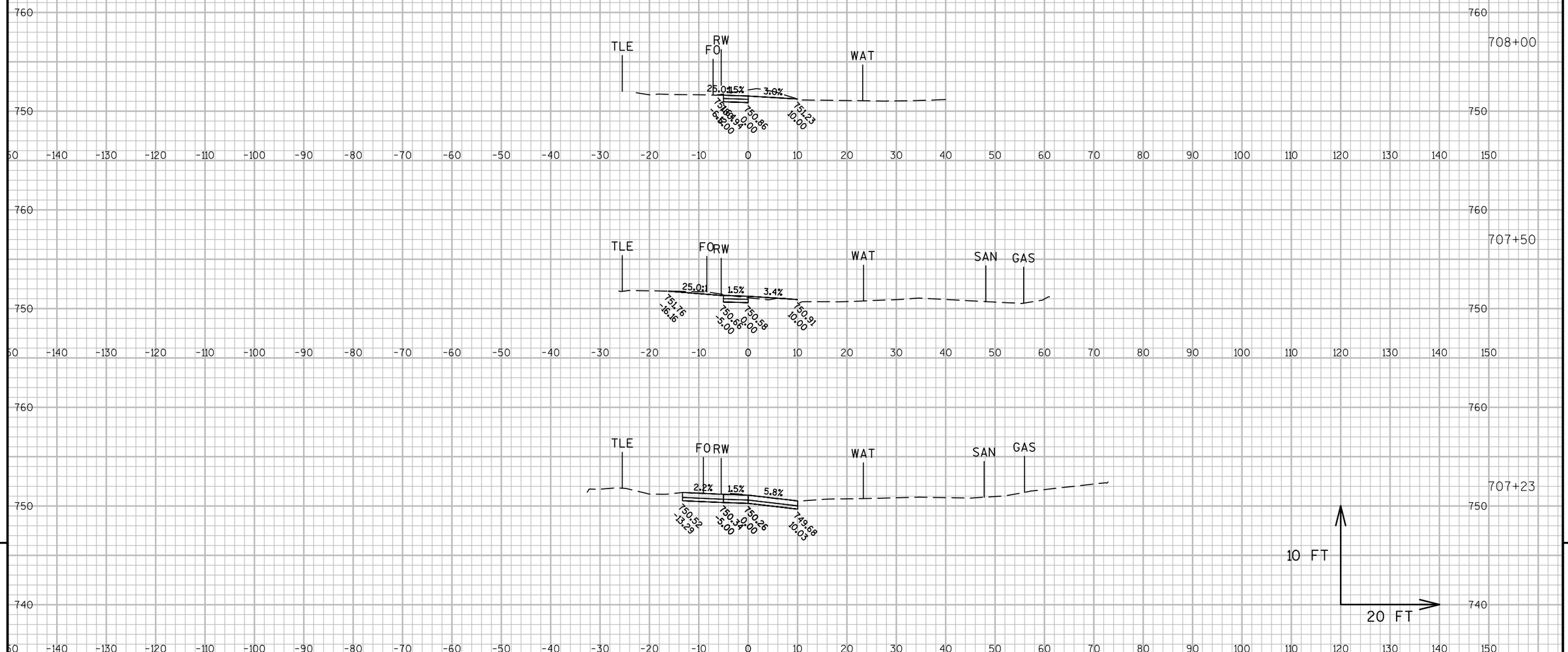

9

9

PROJECT NO: 4987-02-57	HWY: CTH N/HUMBOLDT ROAD	COUNTY: BROWN	CROSS SECTIONS: NORTH SIDEWALK	SHEET 145	E

FILE NAME : F:\BM4-1048 CTH N\49870256\SHEETSPLAN\090201-XS.DWG
LAYOUT NAME - 090251-XS

PLOT DATE : 10/30/2015 12:08 PM PLOT BY : SHANE MCCARTY PLOT NAME : PLOT SCALE : 1 IN:20 FT

WISDOT/CADDS SHEET 49

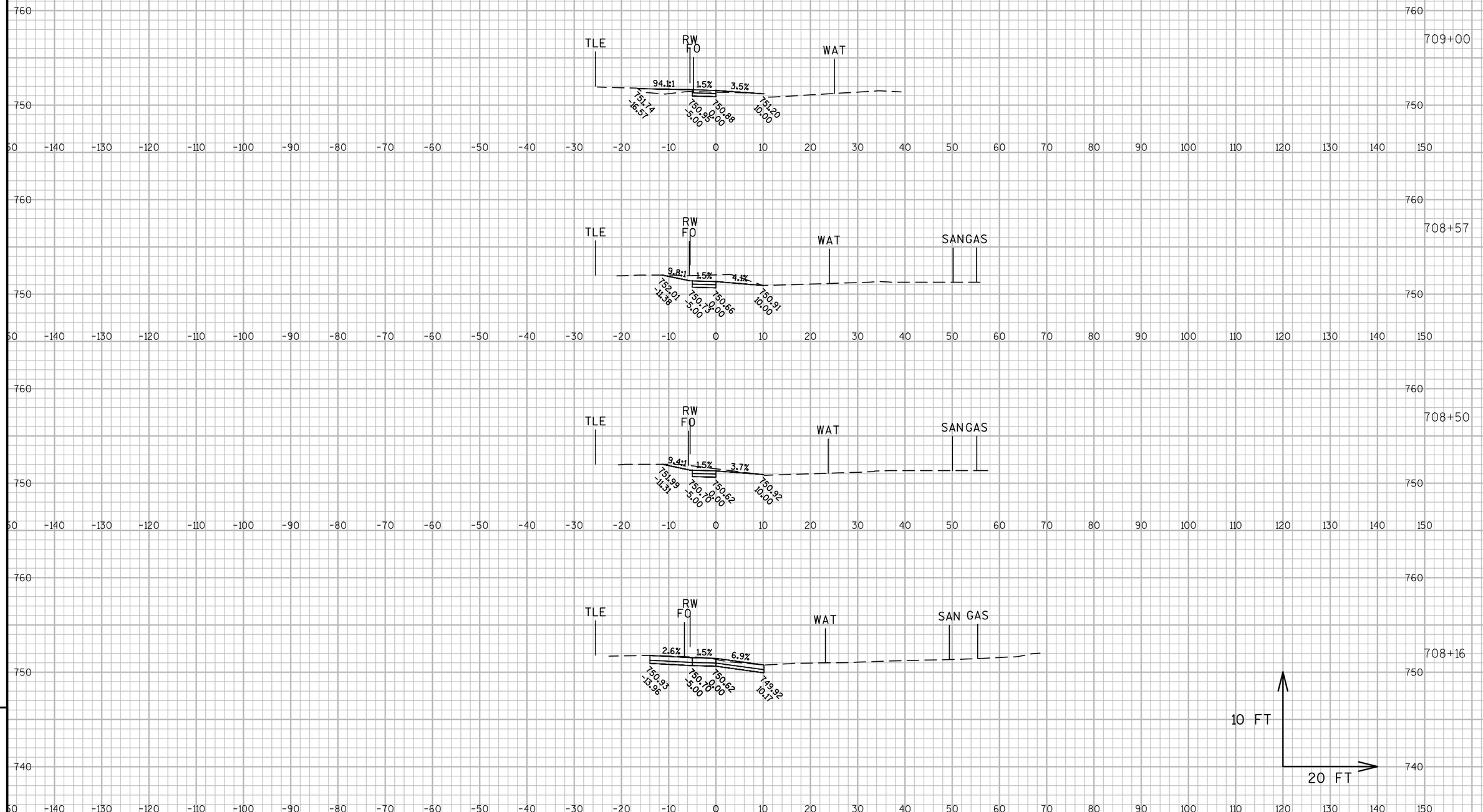

9

9

PROJECT NO: 4987-02-57	HWY: CTH N/HUMBOLDT ROAD	COUNTY: BROWN	CROSS SECTIONS: NORTH SIDEWALK	SHEET 146	E

FILE NAME : F:\BM4-1048 CTH N\49870256\SHEETSPLAN\090201-XS.DWG
LAYOUT NAME - 090252-XS

PLOT DATE : 10/30/2015 12:08 PM PLOT BY : SHANE MCCARTY PLOT NAME : PLOT SCALE : 1 IN:20 FT

WISDOT/CADDS SHEET 49

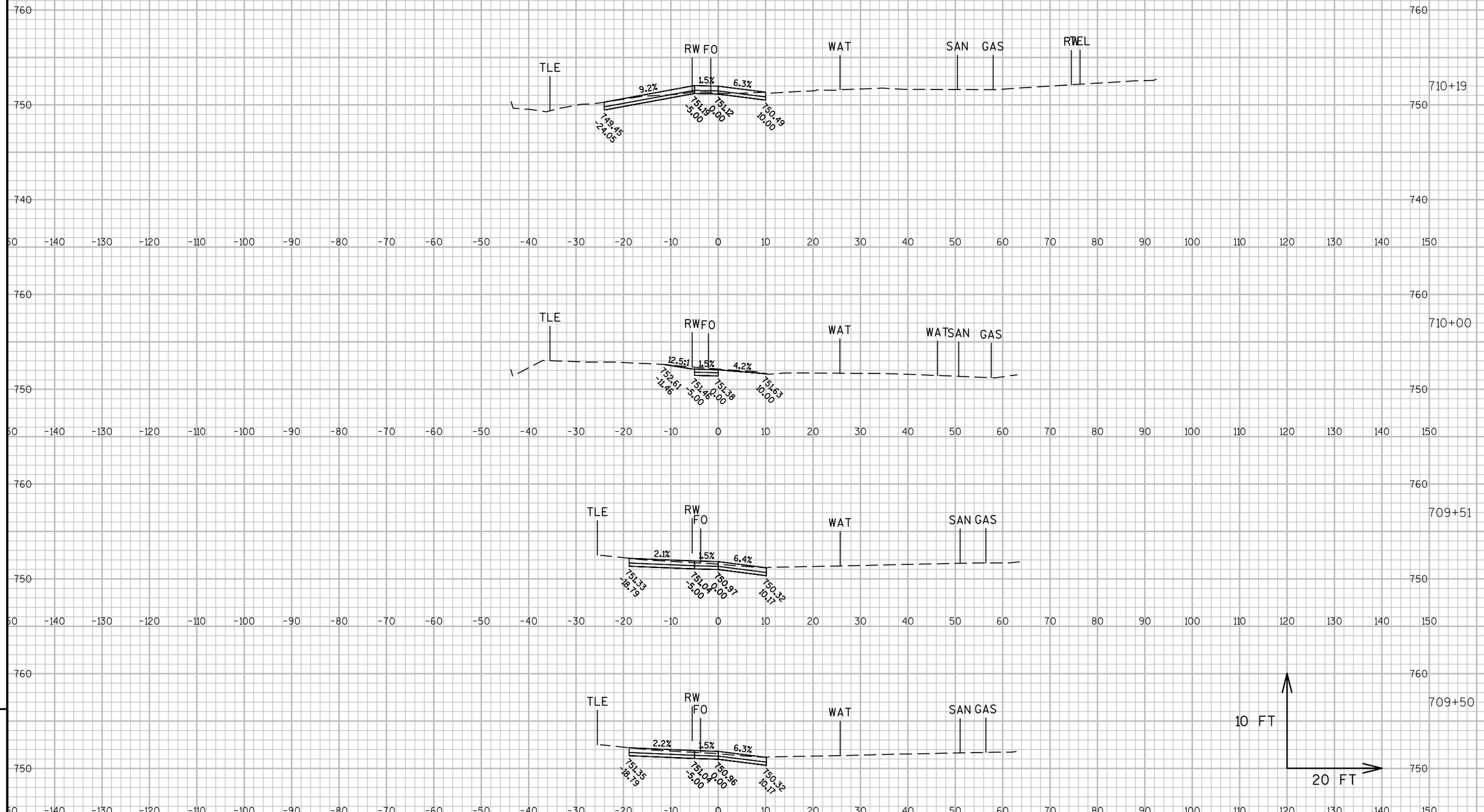

9

PROJECT NO: 4987-02-57	HWY: CTH N/HUMBOLDT ROAD	COUNTY: BROWN	CROSS SECTIONS: NORTH SIDEWALK	SHEET 147	E

9

FILE NAME : F:\BM4-1048 CTH N\49870256\SHEETSPLAN\090201-XS.DWG
LAYOUT NAME - 090253-XS
PLOT DATE : 10/30/2015 12:08 PM PLOT BY : SHANE MCCARTY PLOT NAME : PLOT SCALE : 1 IN:20 FT
WISDOT/CADDS SHEET 49

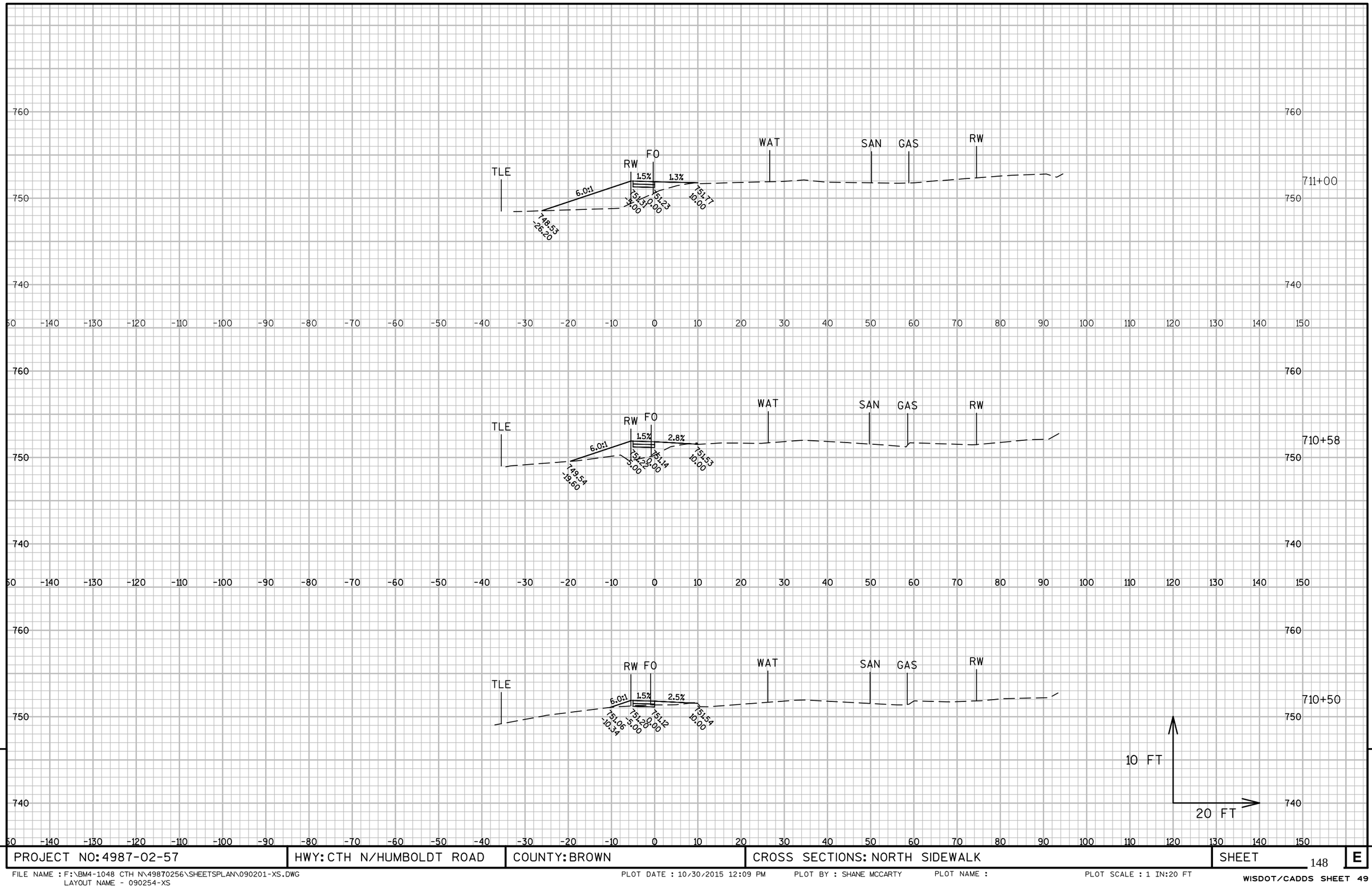

9

9

PROJECT NO: 4987-02-57	HWY: CTH N/HUMBOLDT ROAD	COUNTY: BROWN	CROSS SECTIONS: NORTH SIDEWALK	SHEET 148	E

FILE NAME : F:\BM4-1048 CTH N\49870256\SHEETSPLAN\090201-XS.DWG
LAYOUT NAME - 090254-XS

PLOT DATE : 10/30/2015 12:09 PM PLOT BY : SHANE MCCARTY PLOT NAME : PLOT SCALE : 1 IN:20 FT

WISDOT/CADDS SHEET 49

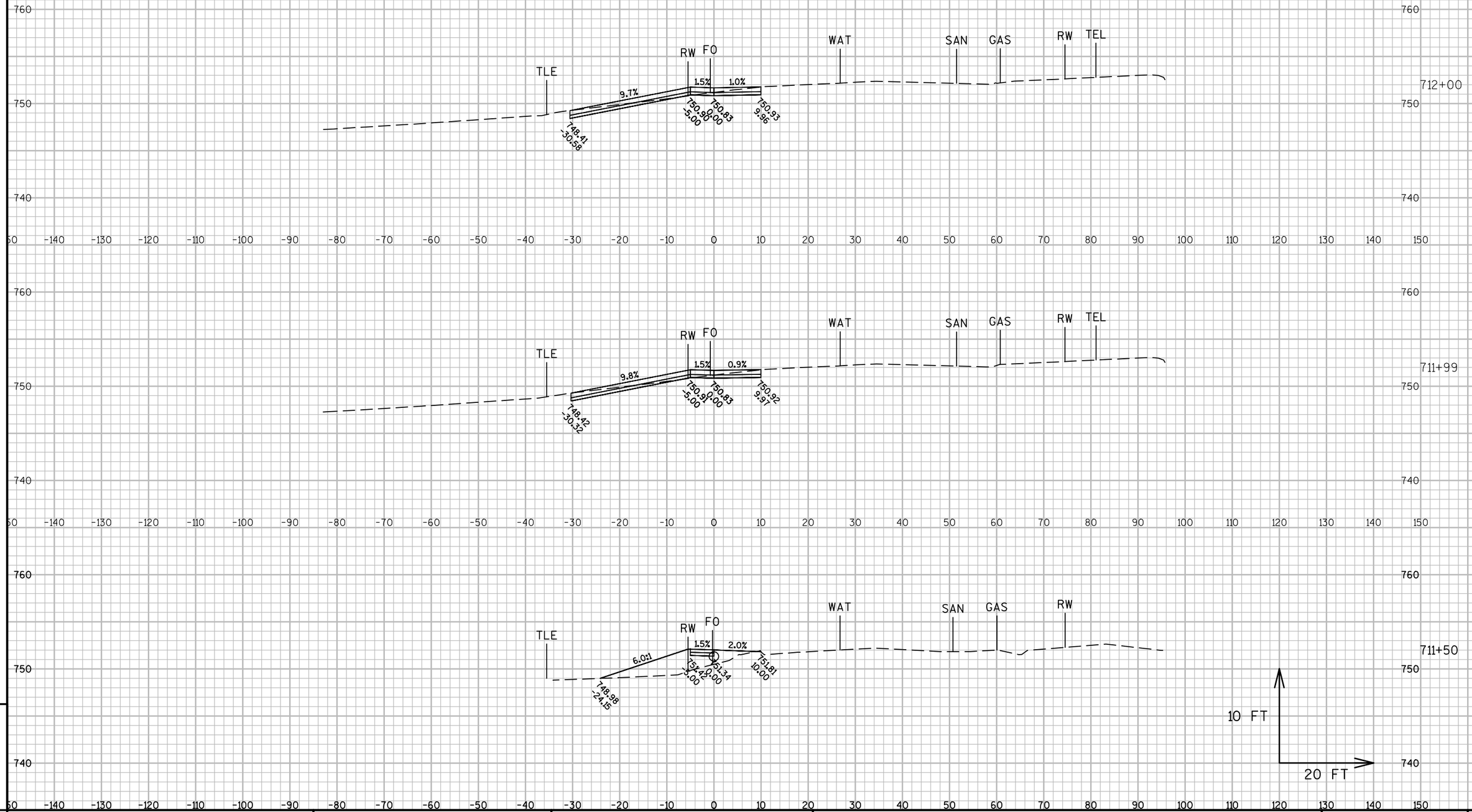

9

9

PROJECT NO: 4987-02-57	HWY: CTH N/HUMBOLDT ROAD	COUNTY: BROWN	CROSS SECTIONS: NORTH SIDEWALK	SHEET 149	E

FILE NAME : F:\BM4-1048 CTH N\49870256\SHEETSPLAN\090201-XS.DWG
LAYOUT NAME - 090255-XS

PLOT DATE : 10/30/2015 12:09 PM PLOT BY : SHANE MCCARTY PLOT NAME : PLOT SCALE : 1 IN:20 FT

WISDOT/CADDS SHEET 49

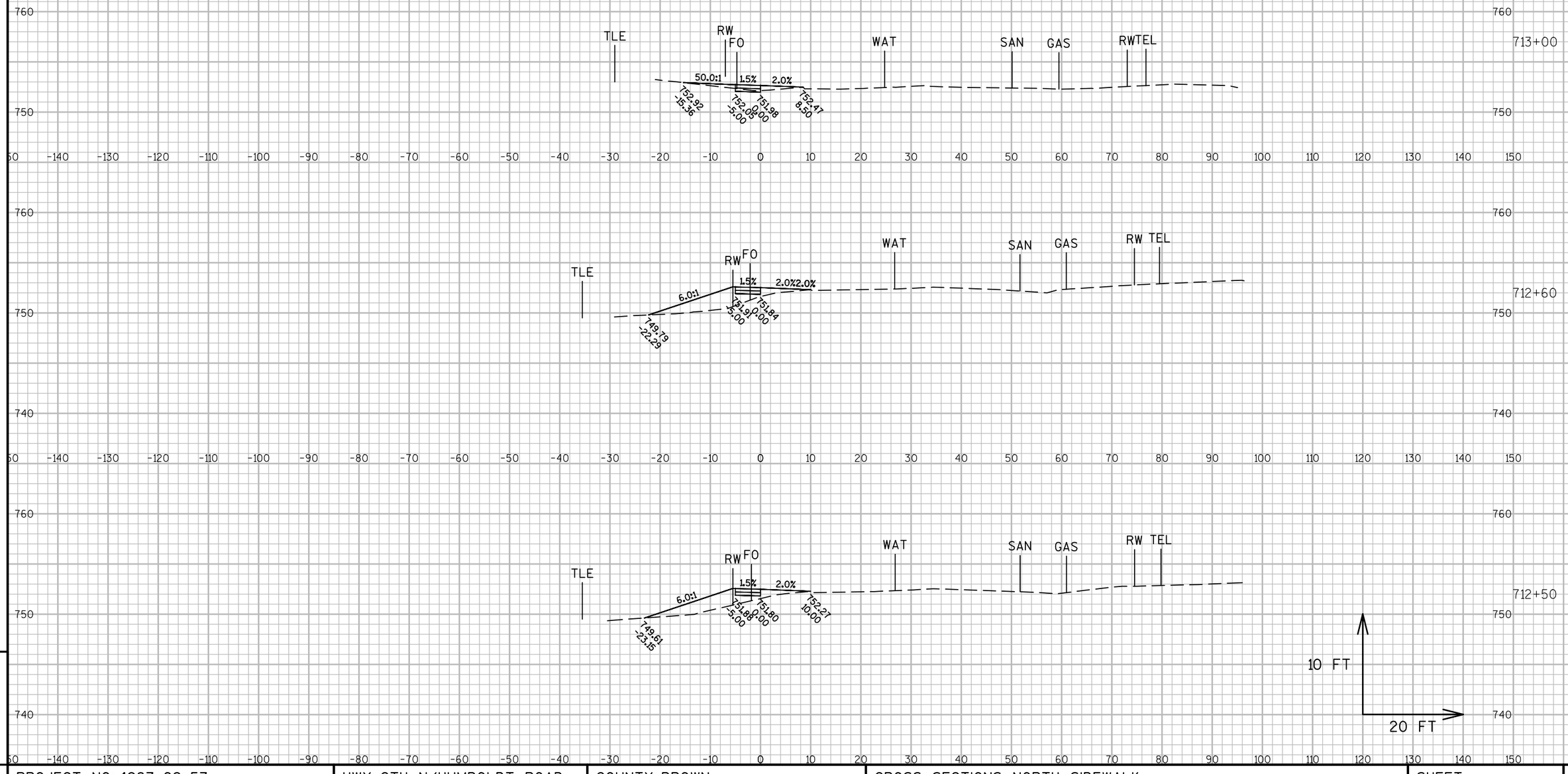

9

9

PROJECT NO: 4987-02-57	HWY: CTH N/HUMBOLDT ROAD	COUNTY: BROWN	CROSS SECTIONS: NORTH SIDEWALK	SHEET 150	E

FILE NAME : F:\BM4-1048 CTH N\49870256\SHEETSPLAN\090201-XS.DWG
LAYOUT NAME - 090256-XS

PLOT DATE : 10/30/2015 12:09 PM PLOT BY : SHANE MCCARTY PLOT NAME : PLOT SCALE : 1 IN:20 FT

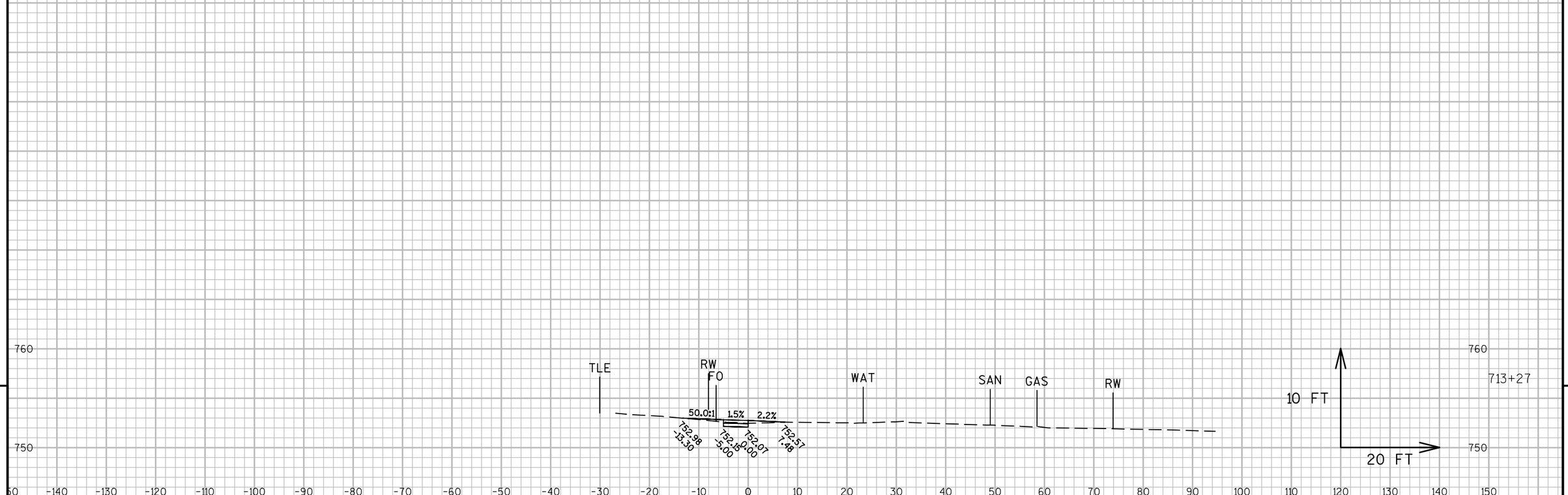

9

9

PROJECT NO: 4987-02-57	HWY: CTH N/HUMBOLDT ROAD	COUNTY: BROWN	CROSS SECTIONS: NORTH SIDEWALK	SHEET 151	E

FILE NAME : F:\BM4-1048 CTH N\49870256\SHEETSPLAN\090201-XS.DWG
LAYOUT NAME - 090257-XS

PLOT DATE : 10/30/2015 12:10 PM PLOT BY : SHANE MCCARTY PLOT NAME : PLOT SCALE : 1 IN:20 FT

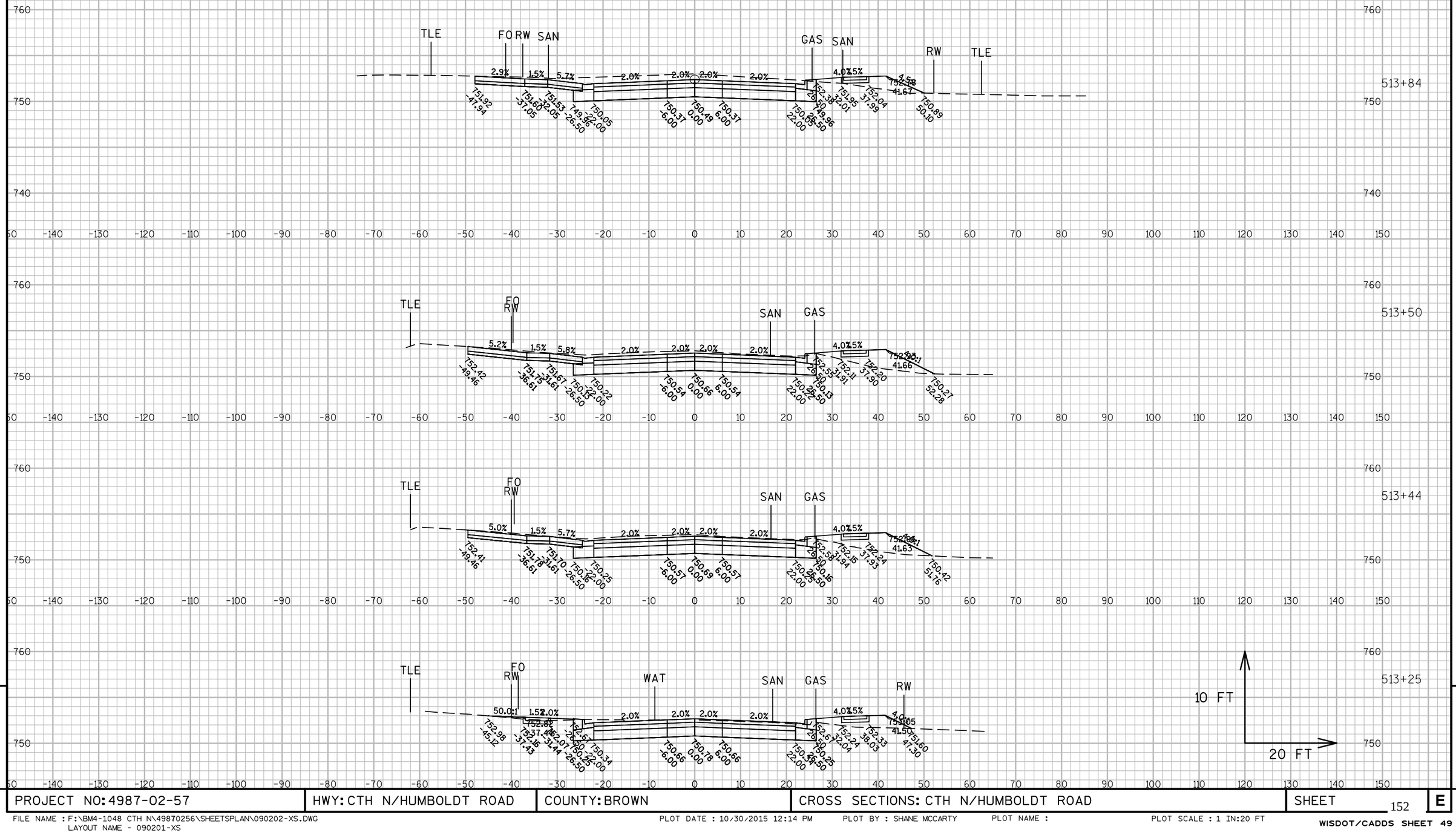

9

9

PROJECT NO: 4987-02-57	HWY: CTH N/HUMBOLDT ROAD	COUNTY: BROWN	CROSS SECTIONS: CTH N/HUMBOLDT ROAD	SHEET 152	E

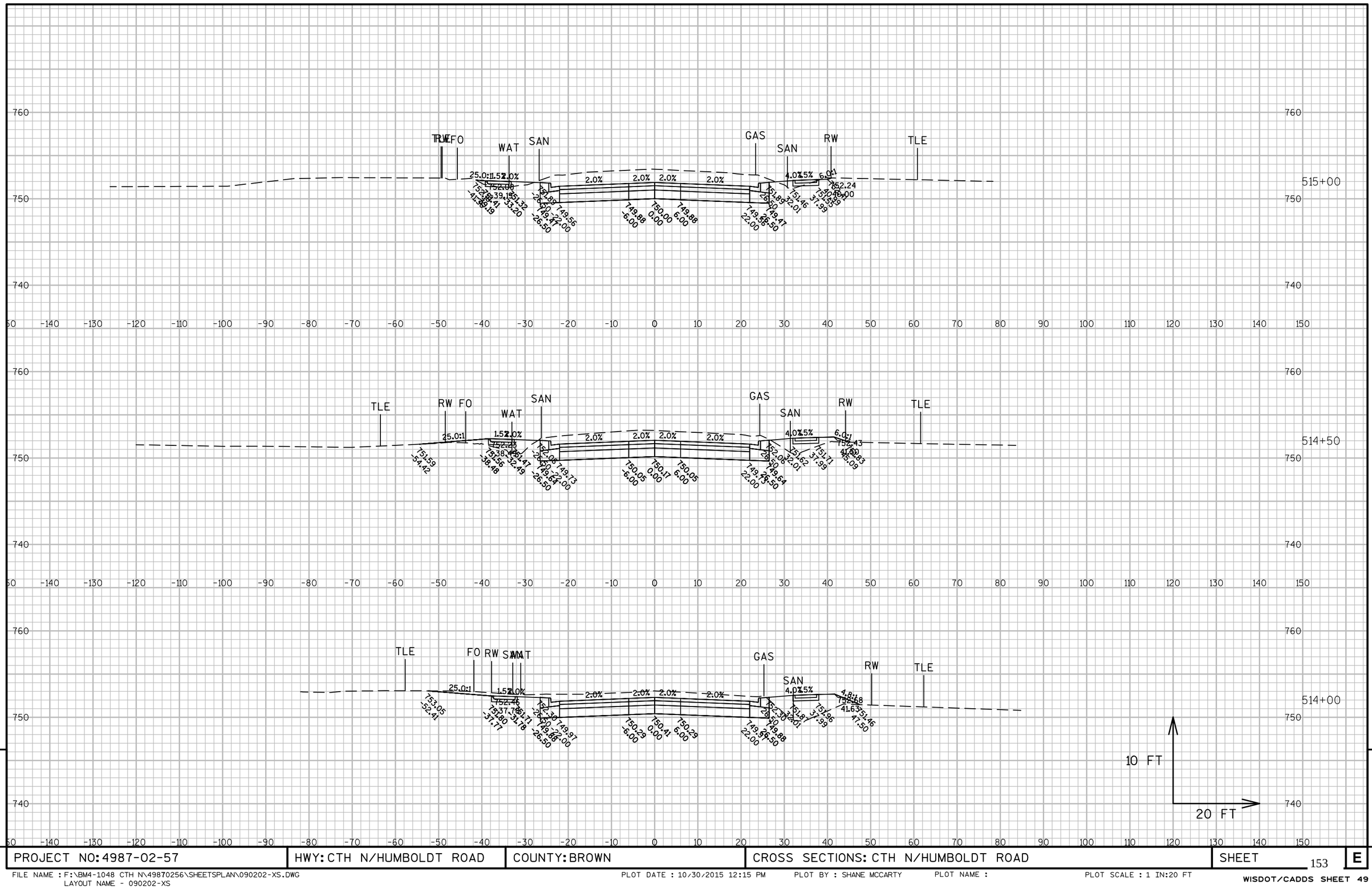

9

9

PROJECT NO: 4987-02-57	HWY: CTH N/HUMBOLDT ROAD	COUNTY: BROWN	CROSS SECTIONS: CTH N/HUMBOLDT ROAD	SHEET 153	E

FILE NAME : F:\BM4-1048 CTH N\49870256\SHEETSPLAN\090202-XS.DWG
LAYOUT NAME - 090202-XS
PLOT DATE : 10/30/2015 12:15 PM PLOT BY : SHANE MCCARTY PLOT NAME : PLOT SCALE : 1 IN:20 FT
WISDOT/CADDS SHEET 49

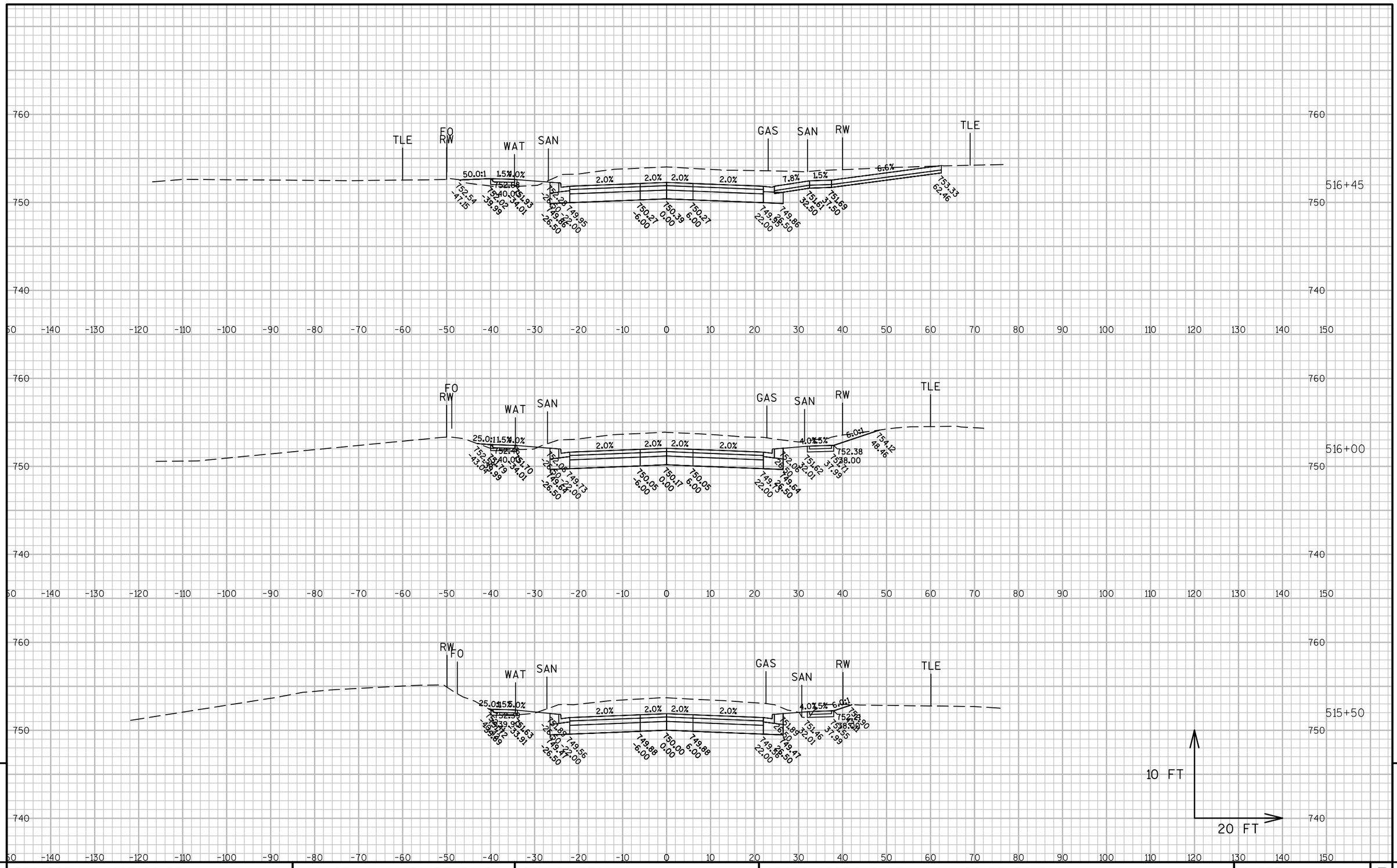

PROJECT NO: 4987-02-57	HWY: CTH N/HUMBOLDT ROAD	COUNTY: BROWN	CROSS SECTIONS: CTH N/HUMBOLDT ROAD	SHEET 154	E

FILE NAME : F:\BM4-1048 CTH N\49870256\SHEETSPLAN\090202-XS.DWG
LAYOUT NAME - 090203-XS
PLOT DATE : 10/30/2015 12:15 PM PLOT BY : SHANE MCCARTY PLOT NAME : PLOT SCALE : 1 IN:20 FT
WISDOT/CADDS SHEET 49

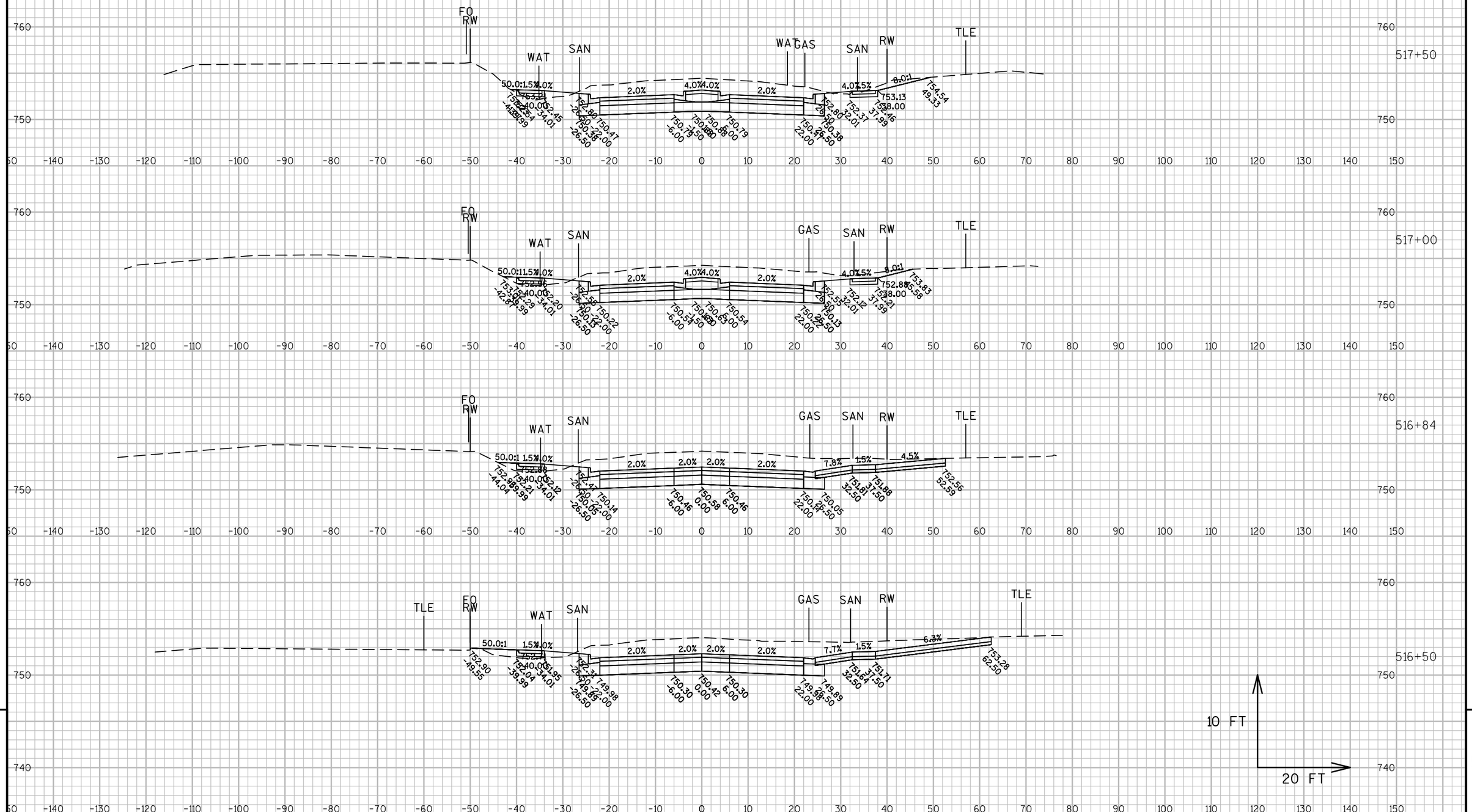
517+50
FO
RW
WAT
SAN
WAT
GAS
SAN
RW
TLE
50.0:1
1.5%
4.0%
2.0%
4.0%
4.0%
2.0%
4.5%
8.0:1
753.13
754.54
49.33
752.80
750.47
752.45
750.22
752.37
752.46
750.38
750.79
750.58
750.79
750.55
750.80
750.00
750.54
750.00
750.00
750.00

9

9

PROJECT NO: 4987-02-57	HWY: CTH N/HUMBOLDT ROAD	COUNTY: BROWN	CROSS SECTIONS: CTH N/HUMBOLDT ROAD	SHEET 156	E

PROJECT NO: 4987-02-57	HWY: CTH N/HUMBOLDT ROAD	COUNTY: BROWN	CROSS SECTIONS: CTH N/HUMBOLDT ROAD	SHEET 157	E

FILE NAME : F:\BM4-1048 CTH N\49870256\SHEETSPLAN\090202-XS.DWG
LAYOUT NAME - 090206-XS

PLOT DATE : 10/30/2015 12:16 PM PLOT BY : SHANE MCCARTY PLOT NAME : PLOT SCALE : 1 IN:20 FT

WISDOT/CADDS SHEET 49

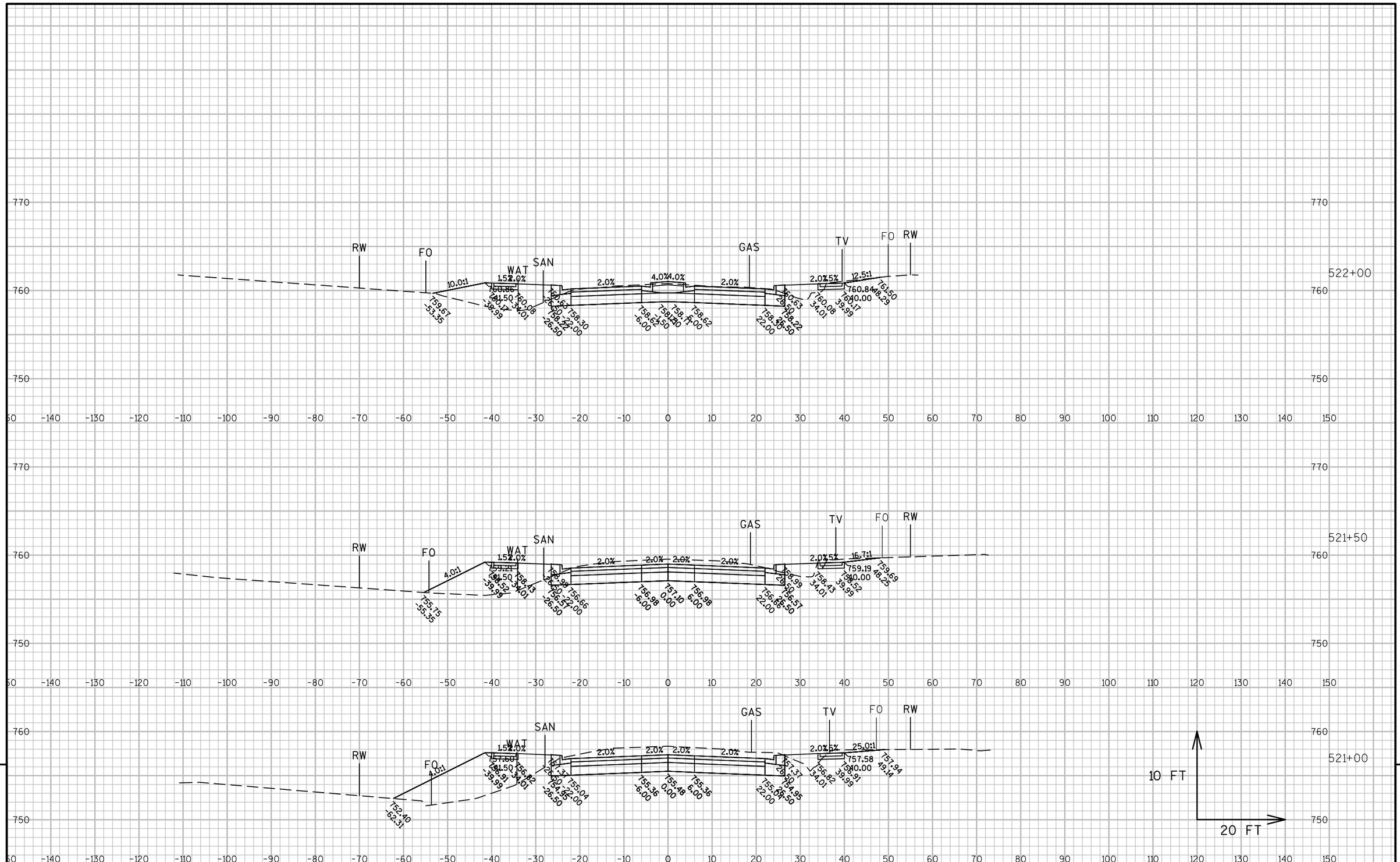

PROJECT NO: 4987-02-57	HWY: CTH N/HUMBOLDT ROAD	COUNTY: BROWN	CROSS SECTIONS: CTH N/HUMBOLDT ROAD	SHEET 158 E

FILE NAME : F:\BM4-1048 CTH N\49870256\SHEETSPLAN\090202-XS.DWG
LAYOUT NAME - 090207-XS

PLOT DATE : 10/30/2015 12:16 PM PLOT BY : SHANE MCCARTY PLOT NAME : PLOT SCALE : 1 IN:20 FT

WISDOT/CADDS SHEET 49

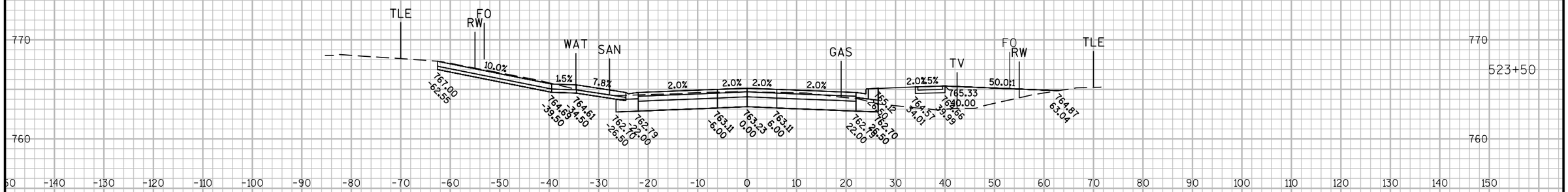

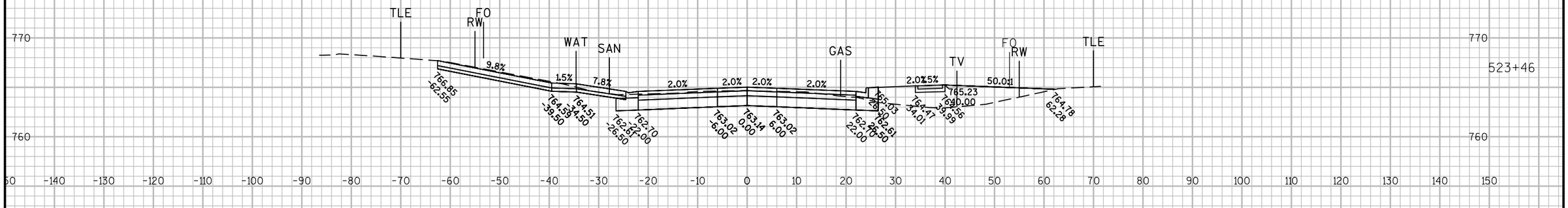

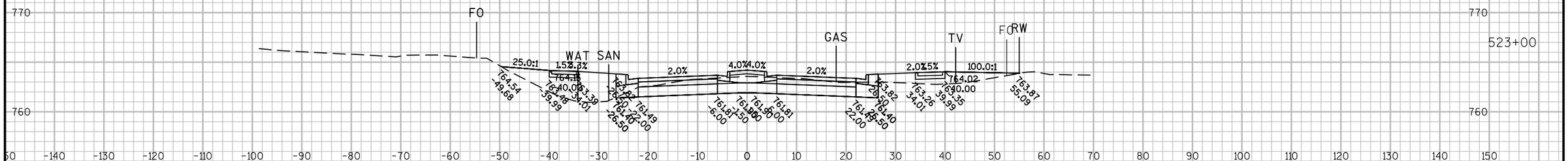

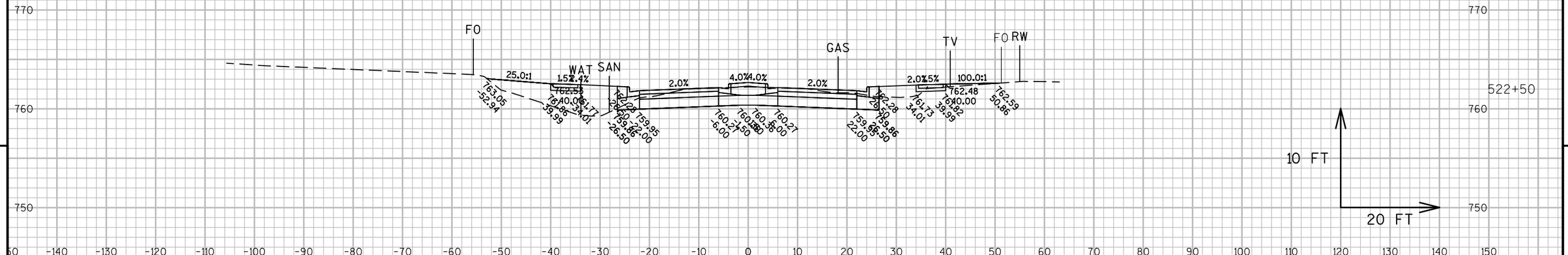

9

9

PROJECT NO: 4987-02-57	HWY: CTH N/HUMBOLDT ROAD	COUNTY: BROWN	CROSS SECTIONS: CTH N/HUMBOLDT ROAD	SHEET 159	E

FILE NAME : F:\BM4-1048 CTH N\49870256\SHEETSPLAN\090202-XS.DWG
LAYOUT NAME - 090208-XS

PLOT DATE : 10/30/2015 12:17 PM PLOT BY : SHANE MCCARTY PLOT NAME : PLOT SCALE : 1 IN:20 FT

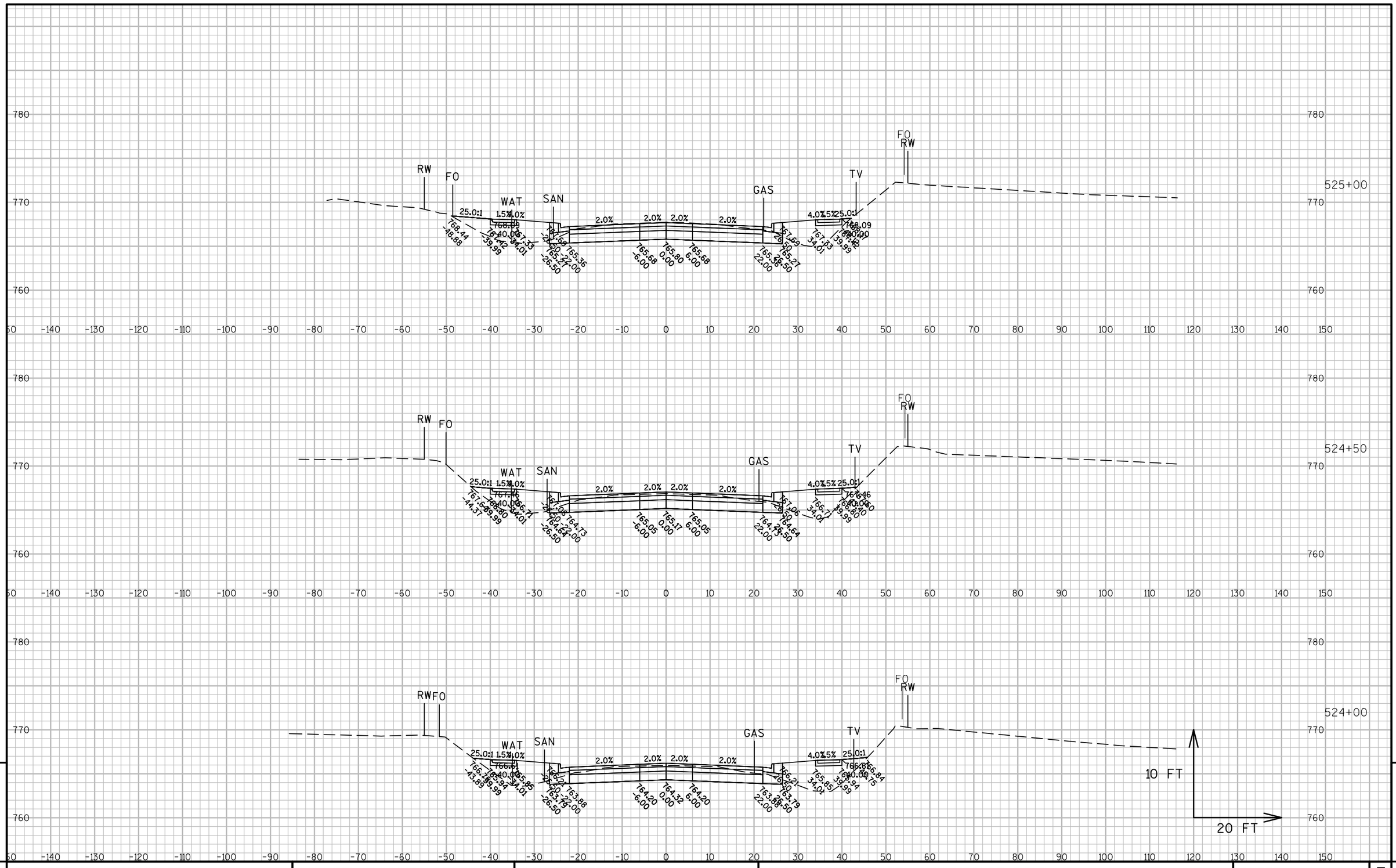

9

9

PROJECT NO: 4987-02-57	HWY: CTH N/HUMBOLDT ROAD	COUNTY: BROWN	CROSS SECTIONS: CTH N/HUMBOLDT ROAD	SHEET 160	E

FILE NAME : F:\BM4-1048 CTH N\49870256\SHEETSPLAN\090202-XS.DWG
LAYOUT NAME - 090209-XS

PLOT DATE : 10/30/2015 12:17 PM PLOT BY : SHANE MCCARTY PLOT NAME : PLOT SCALE : 1 IN:20 FT

9

9

PROJECT NO: 4987-02-57	HWY: CTH N/HUMBOLDT ROAD	COUNTY: BROWN	CROSS SECTIONS: CTH N/HUMBOLDT ROAD	SHEET	E

FILE NAME : F:\BM4-1048 CTH N\49870256\SHEETSPLAN\090202-XS.DWG
LAYOUT NAME - 090210-XS

PLOT DATE : 10/30/2015 12:17 PM PLOT BY : SHANE MCCARTY PLOT NAME : PLOT SCALE : 1 IN:20 FT

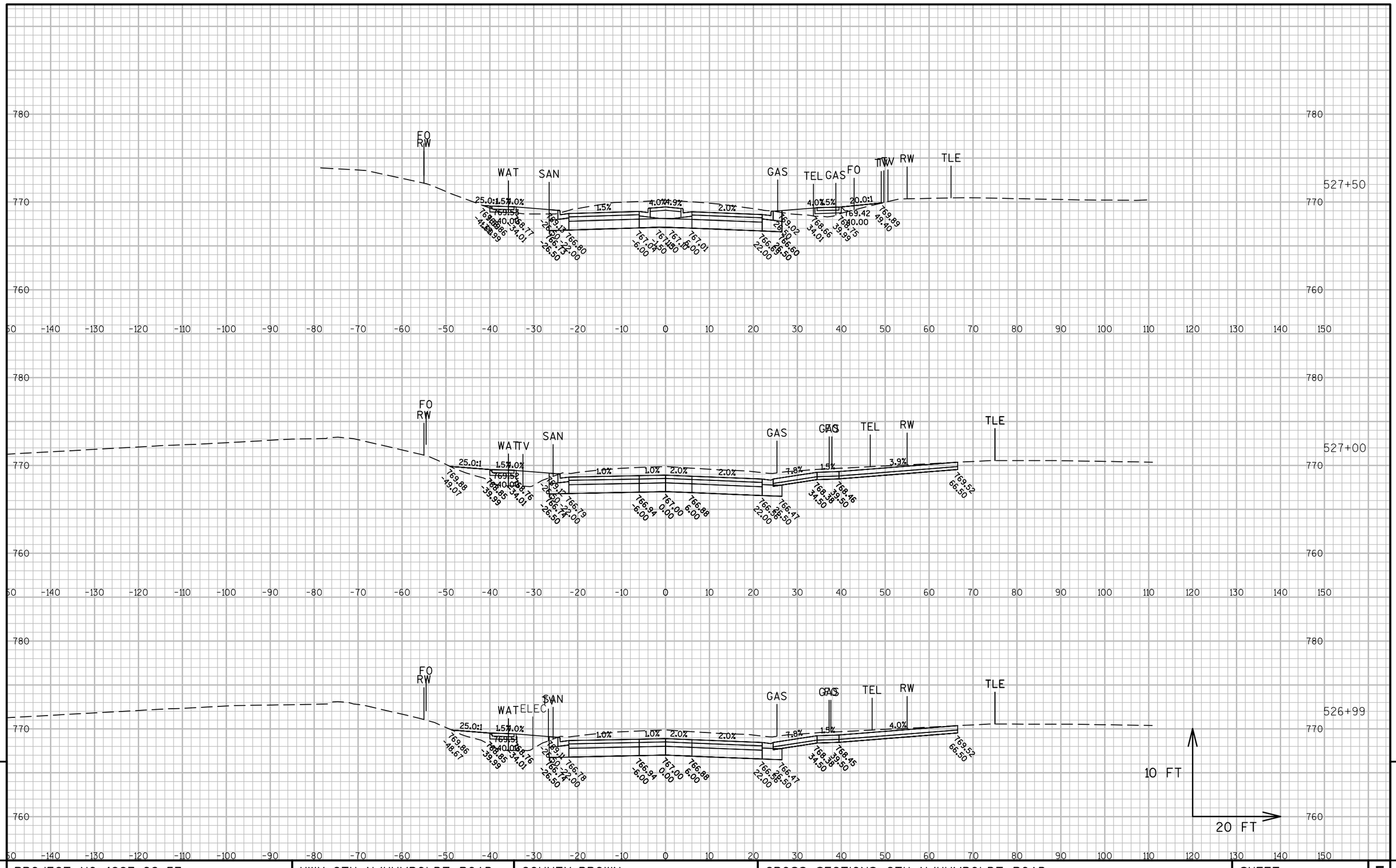

PROJECT NO: 4987-02-57	HWY: CTH N/HUMBOLDT ROAD	COUNTY: BROWN	CROSS SECTIONS: CTH N/HUMBOLDT ROAD	SHEET 162	E

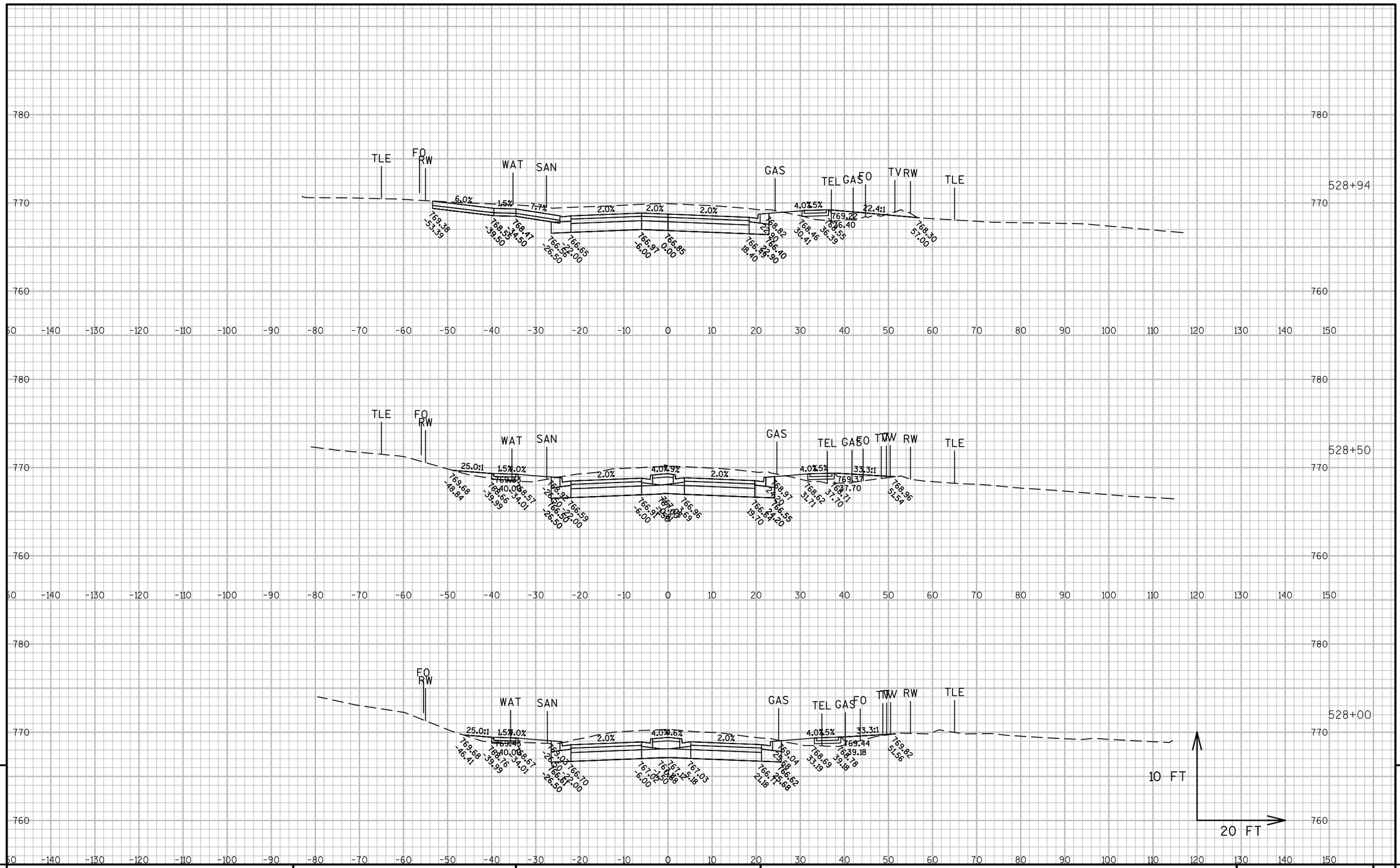

PROJECT NO: 4987-02-57	HWY: CTH N/HUMBOLDT ROAD	COUNTY: BROWN	CROSS SECTIONS: CTH N/HUMBOLDT ROAD	SHEET 163	E

FILE NAME : F:\BM4-1048 CTH N\49870256\SHEETSPLAN\090202-XS.DWG
LAYOUT NAME - 090212-XS
PLOT DATE : 10/30/2015 12:18 PM PLOT BY : SHANE MCCARTY PLOT NAME : PLOT SCALE : 1 IN:20 FT
WISDOT/CADDS SHEET 49

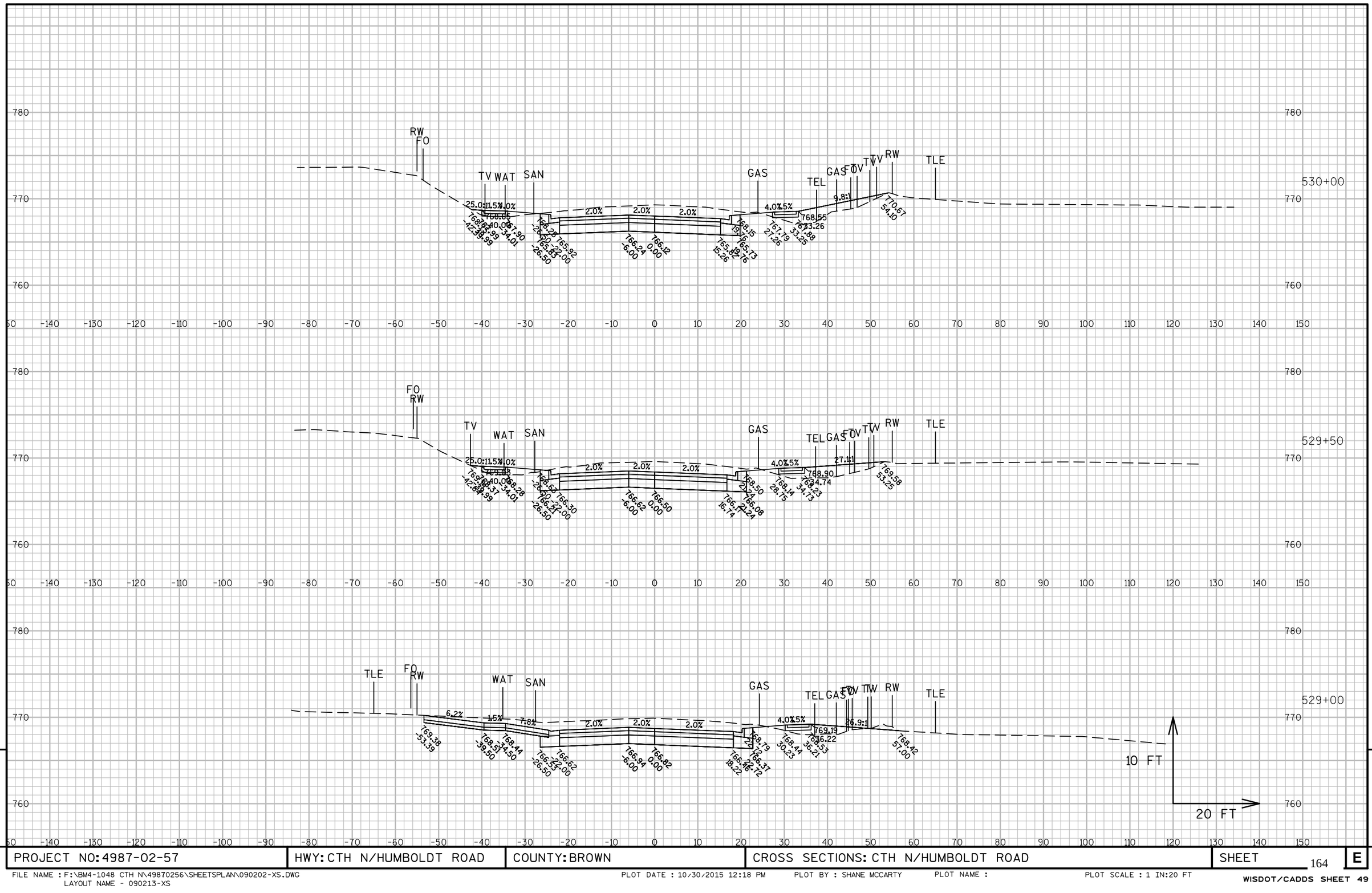

9

9

PROJECT NO: 4987-02-57	HWY: CTH N/HUMBOLDT ROAD	COUNTY: BROWN	CROSS SECTIONS: CTH N/HUMBOLDT ROAD	SHEET 164	E

FILE NAME : F:\BM4-1048 CTH N\49870256\SHEETSPLAN\090202-XS.DWG
LAYOUT NAME - 090213-XS

PLOT DATE : 10/30/2015 12:18 PM PLOT BY : SHANE MCCARTY PLOT NAME : PLOT SCALE : 1 IN:20 FT

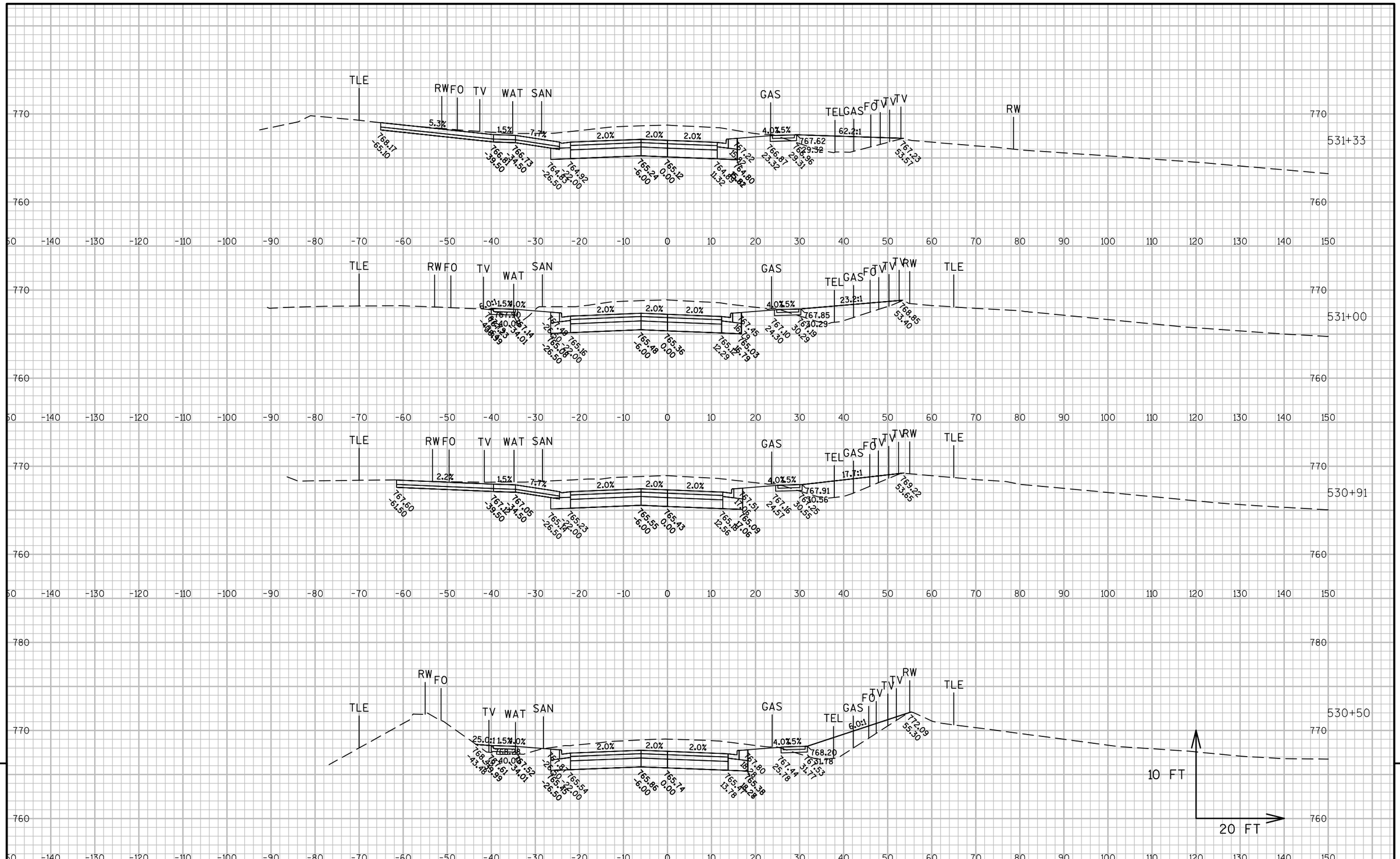

PROJECT NO: 4987-02-57	HWY: CTH N/HUMBOLDT ROAD	COUNTY: BROWN	CROSS SECTIONS: CTH N/HUMBOLDT ROAD	SHEET 165 E

PROJECT NO: 4987-02-57	HWY: CTH N/HUMBOLDT ROAD	COUNTY: BROWN	CROSS SECTIONS: CTH N/HUMBOLDT ROAD	SHEET 166	E

FILE NAME : F:\BM4-1048 CTH N\49870256\SHEETSPLAN\090202-XS.DWG
LAYOUT NAME - 090215-XS

PLOT DATE : 10/30/2015 12:19 PM PLOT BY : SHANE MCCARTY PLOT NAME : PLOT SCALE : 1 IN:20 FT

WISDOT/CADDS SHEET 49

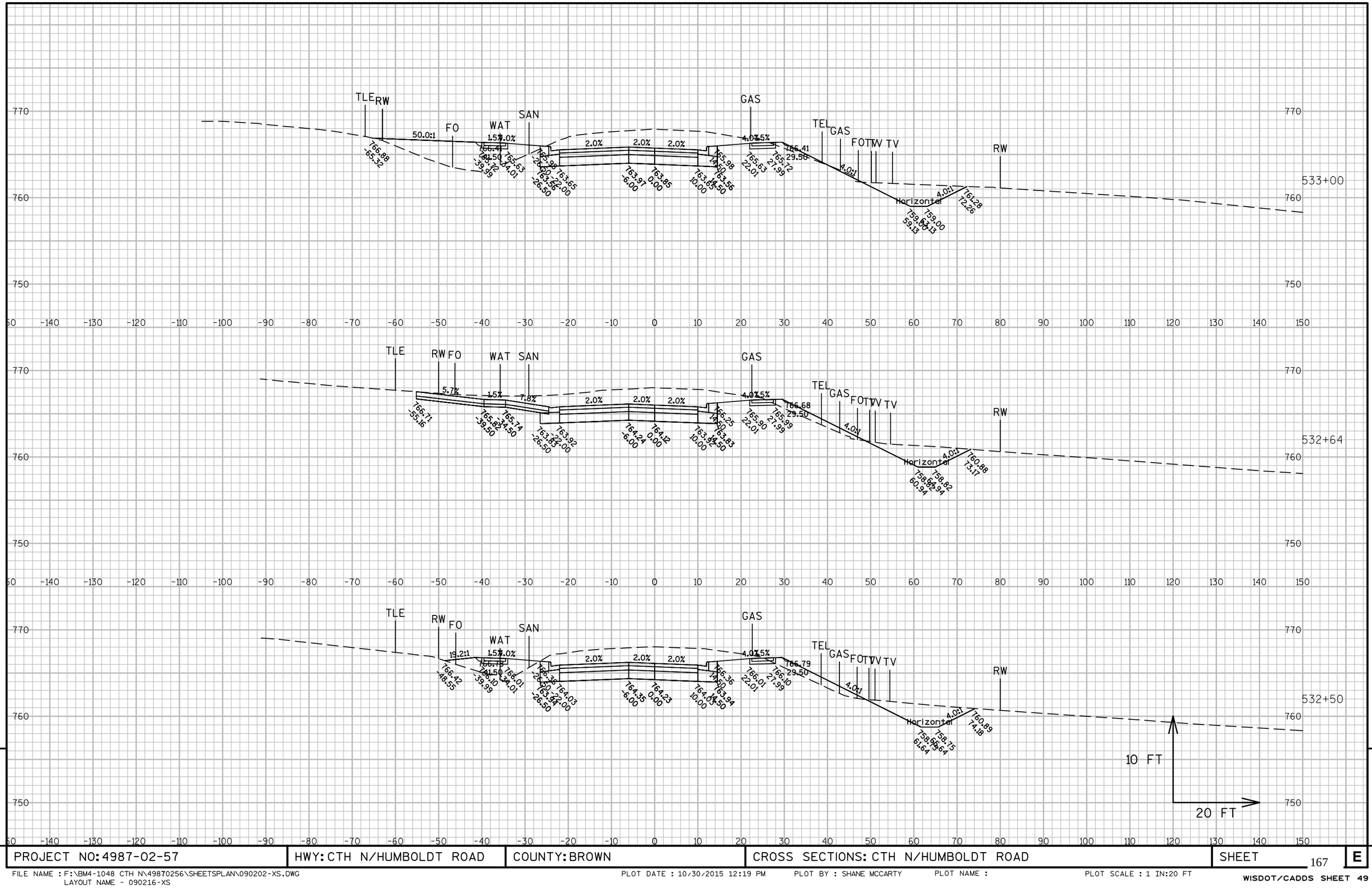

9

9

PROJECT NO: 4987-02-57	HWY: CTH N/HUMBOLDT ROAD	COUNTY: BROWN	CROSS SECTIONS: CTH N/HUMBOLDT ROAD	SHEET	E

FILE NAME : F:\BM4-1048 CTH N\49870256\SHEETSPLAN\090202-XS.DWG
LAYOUT NAME - 090216-XS

PLOT DATE : 10/30/2015 12:19 PM PLOT BY : SHANE MCCARTY PLOT NAME : PLOT SCALE : 1 IN:20 FT

WISDOT/CADDS SHEET 49

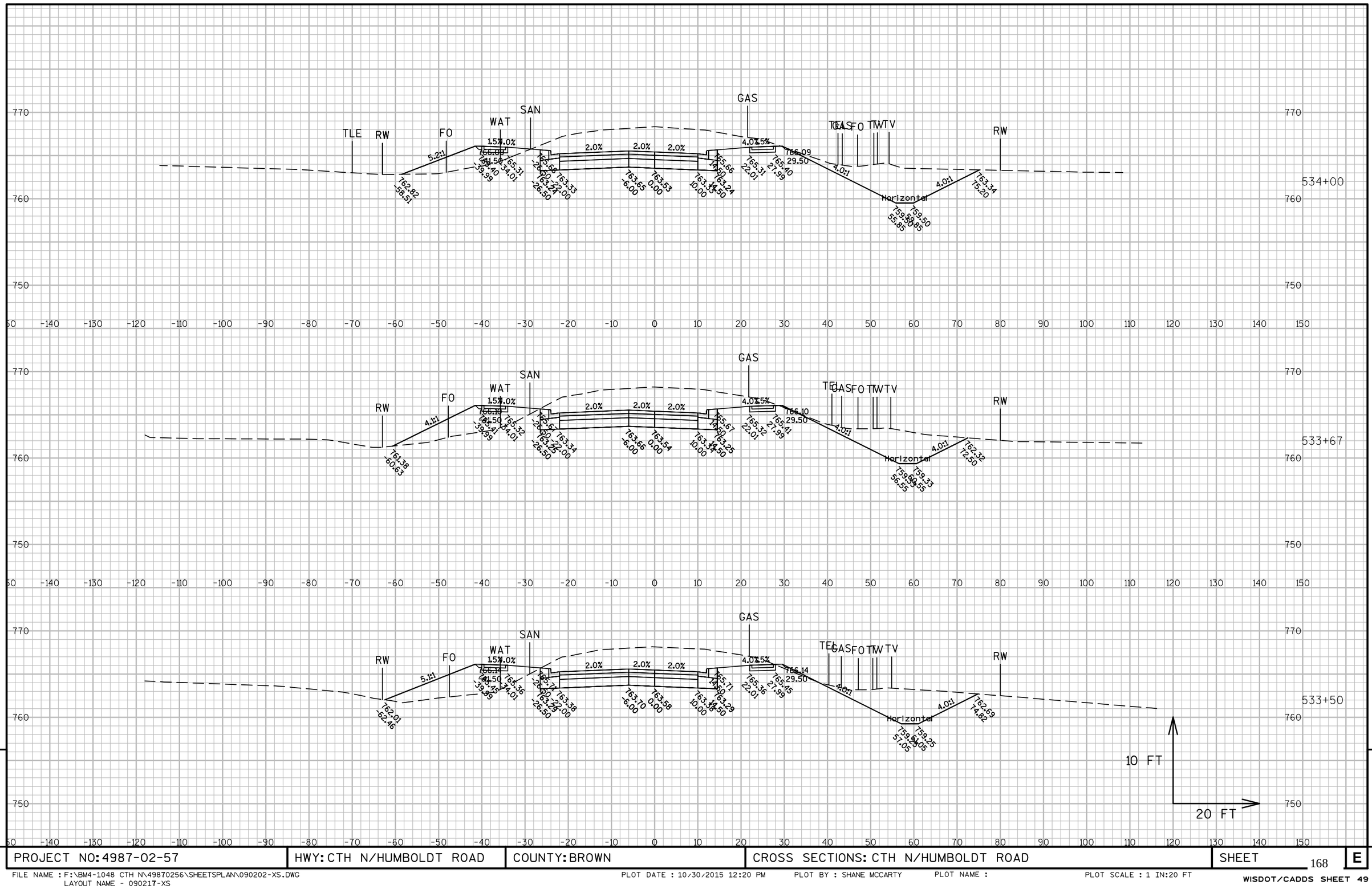

PROJECT NO: 4987-02-57	HWY: CTH N/HUMBOLDT ROAD	COUNTY: BROWN	CROSS SECTIONS: CTH N/HUMBOLDT ROAD	SHEET	E

FILE NAME : F:\BM4-1048 CTH N\49870256\SHEETSPLAN\090202-XS.DWG
LAYOUT NAME - 090217-XS

PLOT DATE : 10/30/2015 12:20 PM PLOT BY : SHANE MCCARTY PLOT NAME : PLOT SCALE : 1 IN:20 FT

WISDOT/CADDS SHEET 49

PROJECT NO: 4987-02-57	HWY: CTH N/HUMBOLDT ROAD	COUNTY: BROWN	CROSS SECTIONS: CTH N/HUMBOLDT ROAD	SHEET 169	E

FILE NAME : F:\BM4-1048 CTH N\49870256\SHEETSPLAN\090202-XS.DWG
LAYOUT NAME - 090218-XS

PLOT DATE : 10/30/2015 12:20 PM PLOT BY : SHANE MCCARTY PLOT NAME : PLOT SCALE : 1 IN:20 FT

WISDOT/CADDS SHEET 49

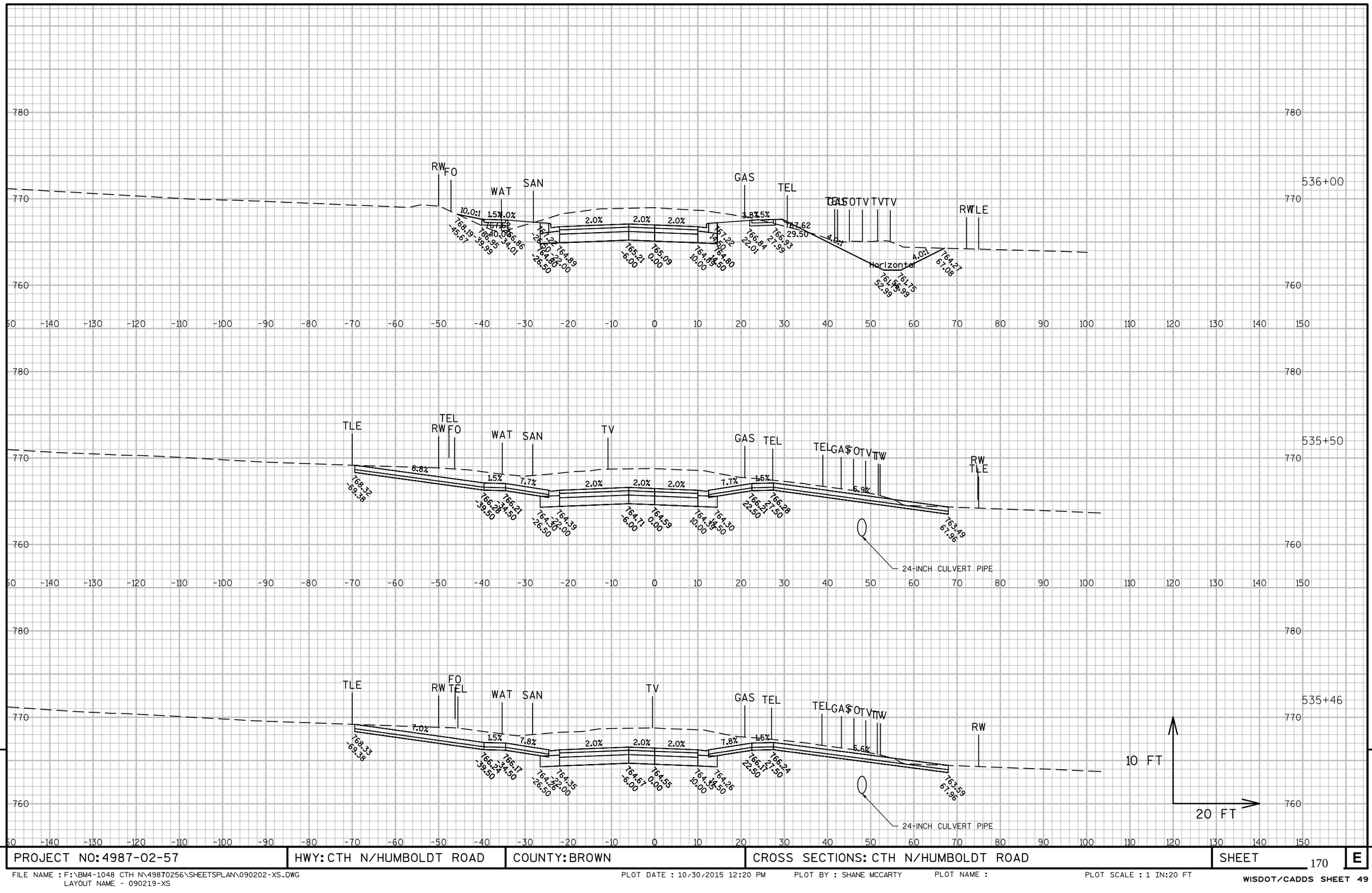

PROJECT NO: 4987-02-57	HWY: CTH N/HUMBOLDT ROAD	COUNTY: BROWN	CROSS SECTIONS: CTH N/HUMBOLDT ROAD	SHEET 170	E

FILE NAME : F:\BM4-1048 CTH N\49870256\SHEETSPLAN\090202-XS.DWG
LAYOUT NAME - 090219-XS

PLOT DATE : 10/30/2015 12:20 PM PLOT BY : SHANE MCCARTY PLOT NAME : PLOT SCALE : 1 IN:20 FT

WISDOT/CADDS SHEET 49

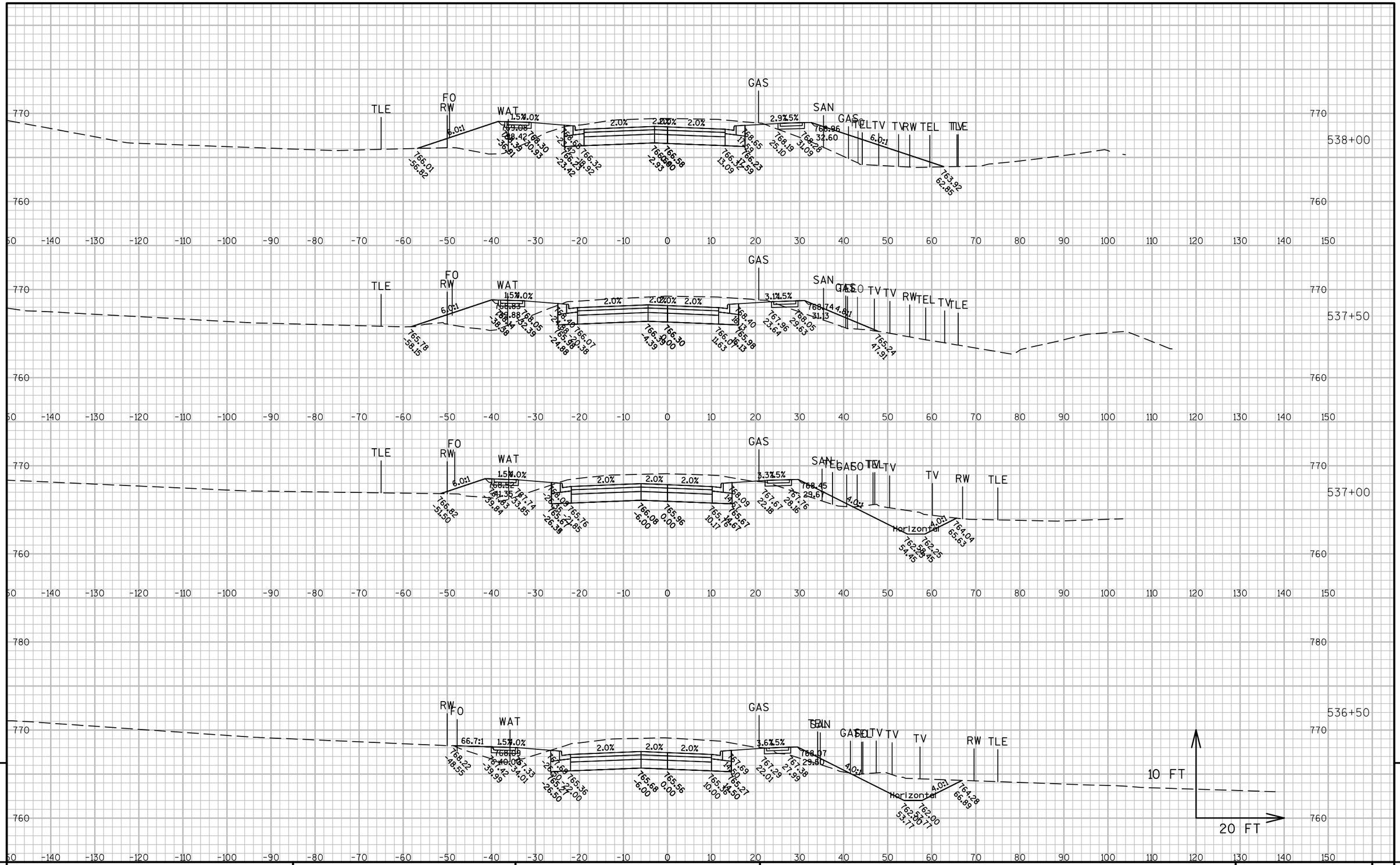

PROJECT NO: 4987-02-57	HWY: CTH N/HUMBOLDT ROAD	COUNTY: BROWN	CROSS SECTIONS: CTH N/HUMBOLDT ROAD	SHEET 171	E

FILE NAME : F:\BM4-1048 CTH N\49870256\SHEETSPLAN\090202-XS.DWG
LAYOUT NAME - 090220-XS

PLOT DATE : 10/30/2015 12:21 PM PLOT BY : SHANE MCCARTY PLOT NAME : PLOT SCALE : 1 IN:20 FT

WISDOT/CADDS SHEET 49

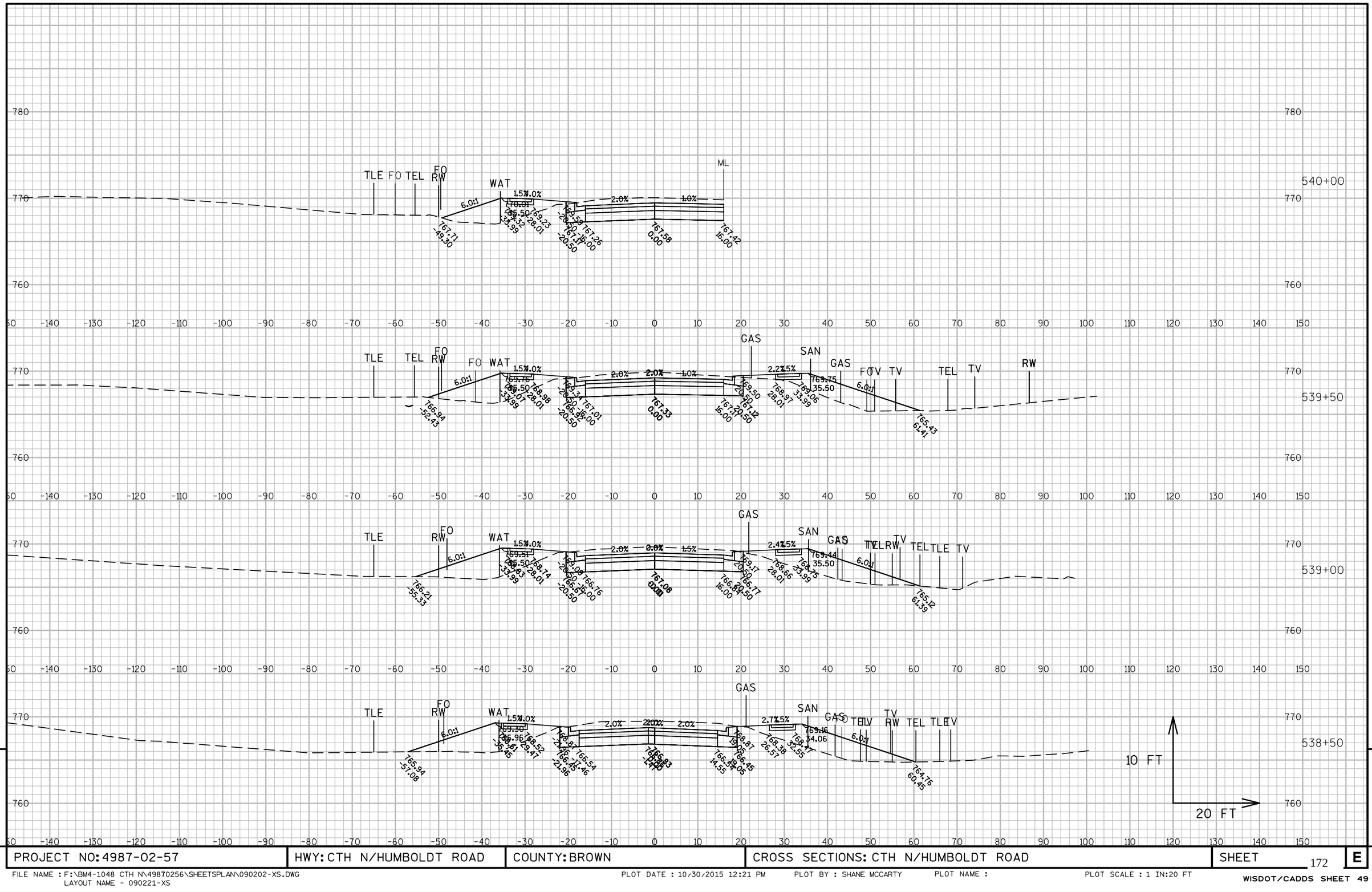

9

9

PROJECT NO: 4987-02-57	HWY: CTH N/HUMBOLDT ROAD	COUNTY: BROWN	CROSS SECTIONS: CTH N/HUMBOLDT ROAD	SHEET 172	E

FILE NAME : F:\BM4-1048 CTH N\49870256\SHEETSPLAN\090202-XS.DWG
LAYOUT NAME - 090221-XS

PLOT DATE : 10/30/2015 12:21 PM PLOT BY : SHANE MCCARTY PLOT NAME : PLOT SCALE : 1 IN:20 FT

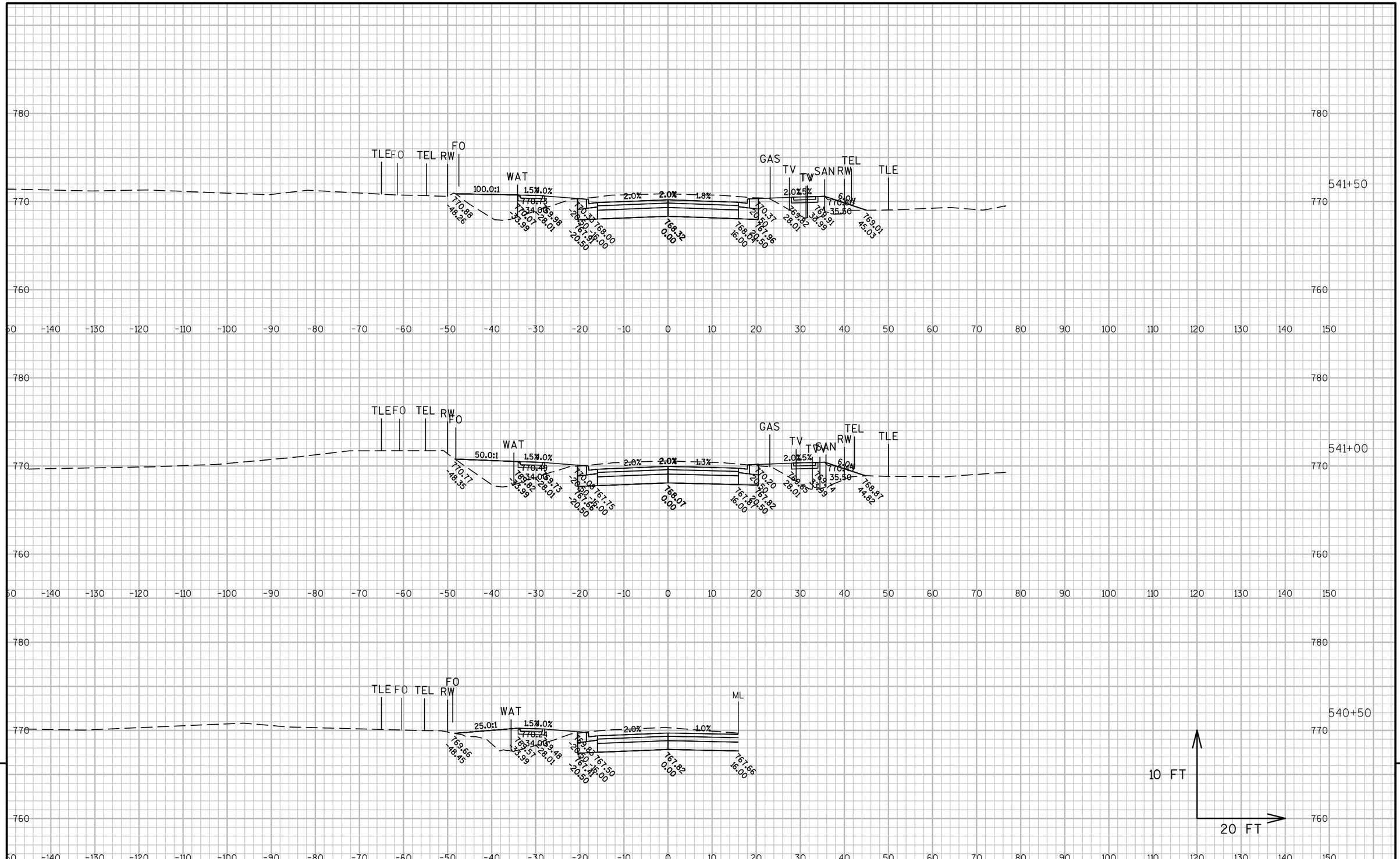

PROJECT NO: 4987-02-57	HWY: CTH N/HUMBOLDT ROAD	COUNTY: BROWN	CROSS SECTIONS: CTH N/HUMBOLDT ROAD	SHEET 173	E

FILE NAME : F:\BM4-1048 CTH N\49870256\SHEETSPLAN\090202-XS.DWG
LAYOUT NAME - 090222-XS

PLOT DATE : 10/30/2015 12:21 PM PLOT BY : SHANE MCCARTY PLOT NAME : PLOT SCALE : 1 IN:20 FT

WISDOT/CADDS SHEET 49

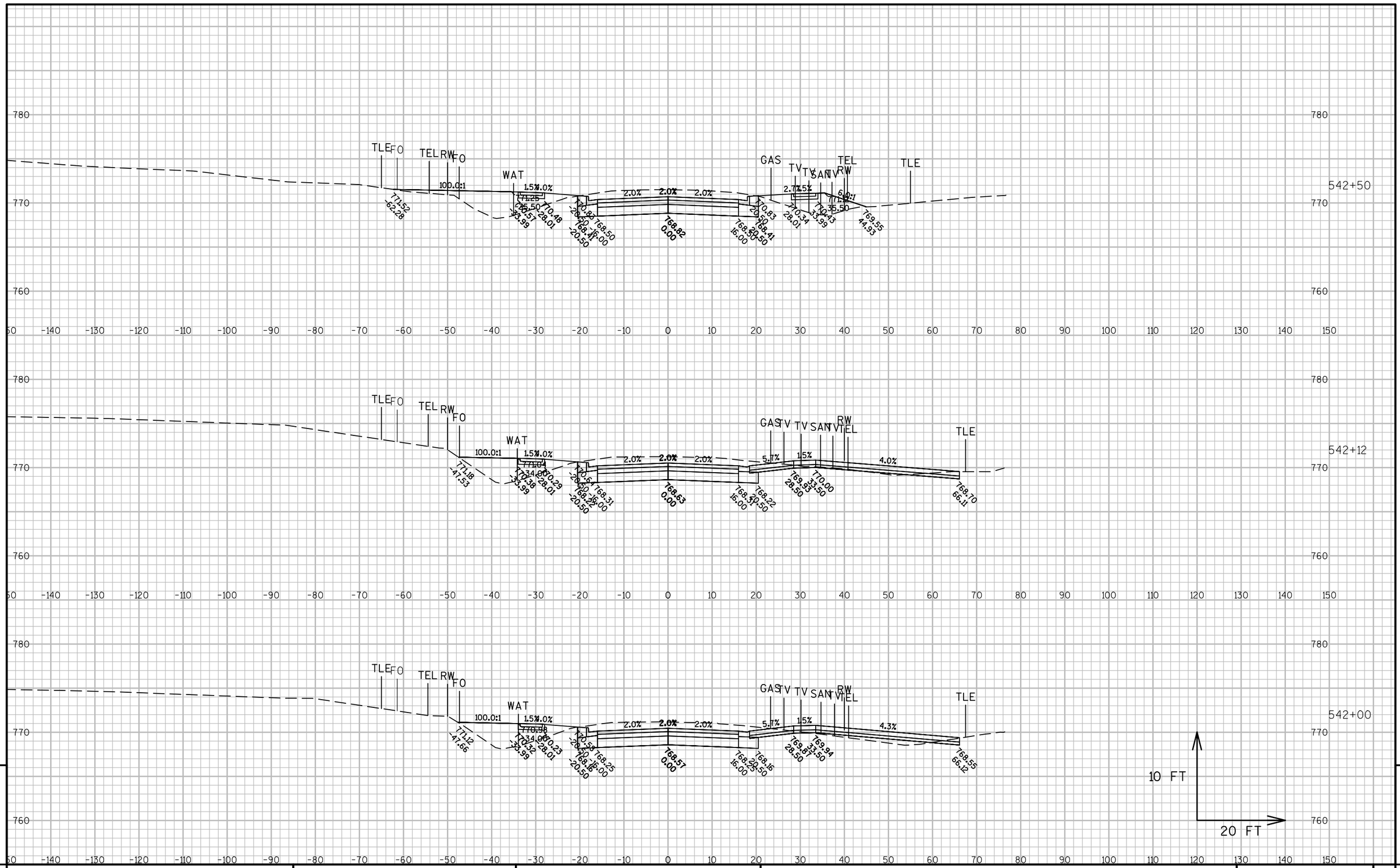

9

9

PROJECT NO: 4987-02-57	HWY: CTH N/HUMBOLDT ROAD	COUNTY: BROWN	CROSS SECTIONS: CTH N/HUMBOLDT ROAD	SHEET 174	E

FILE NAME : F:\BM4-1048 CTH N\49870256\SHEETSPLAN\090202-XS.DWG
LAYOUT NAME - 090223-XS
PLOT DATE : 10/30/2015 12:22 PM PLOT BY : SHANE MCCARTY PLOT NAME : PLOT SCALE : 1 IN:20 FT
WISDOT/CADDS SHEET 49

9

9

PROJECT NO: 4987-02-57	HWY: CTH N/HUMBOLDT ROAD	COUNTY: BROWN	CROSS SECTIONS: CTH N/HUMBOLDT ROAD	SHEET 175	E

FILE NAME : F:\BM4-1048 CTH N\49870256\SHEETSPLAN\090202-XS.DWG
LAYOUT NAME - 090224-XS

PLOT DATE : 10/30/2015 12:22 PM PLOT BY : SHANE MCCARTY PLOT NAME : PLOT SCALE : 1 IN:20 FT

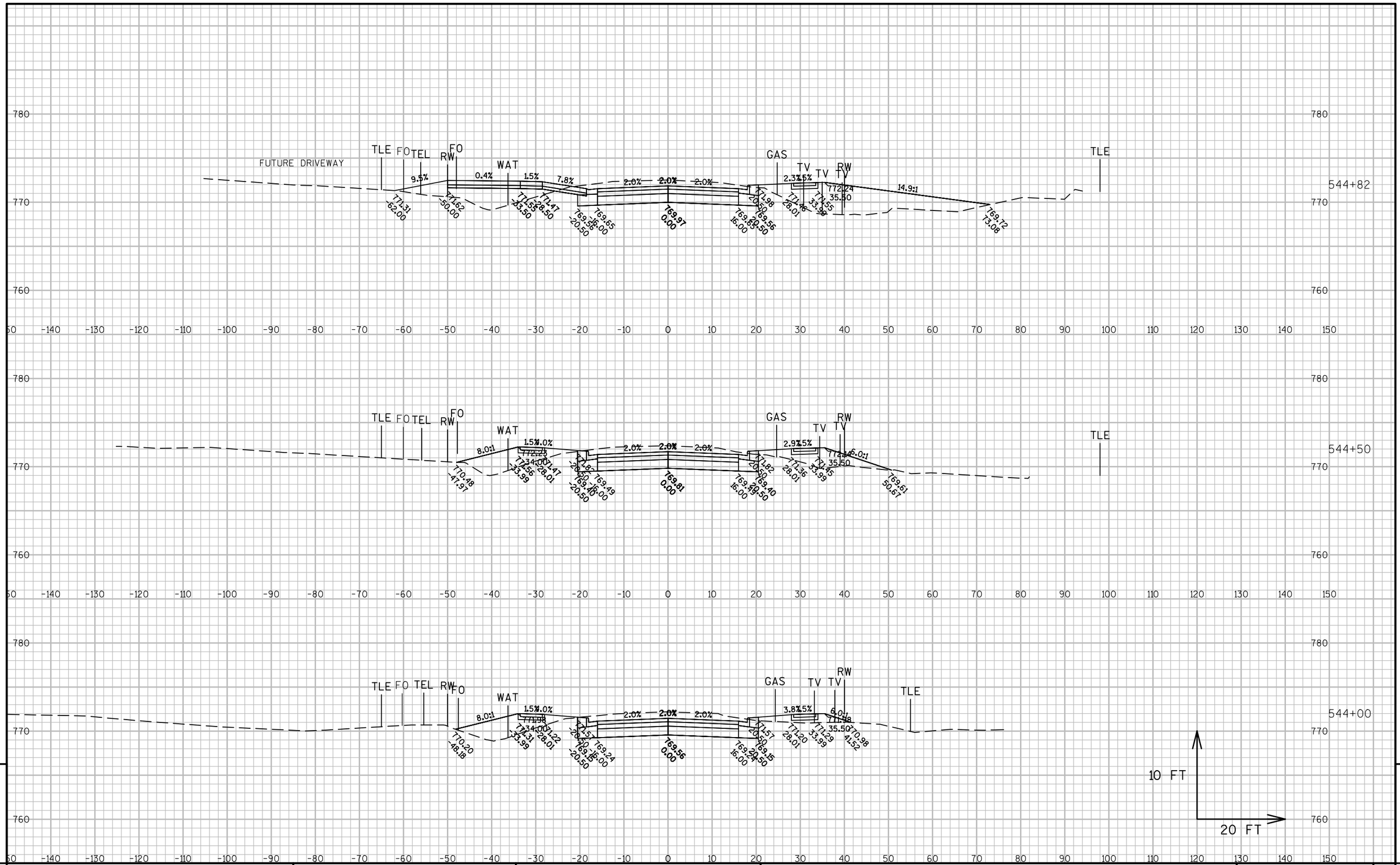

PROJECT NO: 4987-02-57	HWY: CTH N/HUMBOLDT ROAD	COUNTY: BROWN	CROSS SECTIONS: CTH N/HUMBOLDT ROAD	SHEET 176	E

FILE NAME : F:\BM4-1048 CTH N\49870256\SHEETSPLAN\090202-XS.DWG
LAYOUT NAME - 090225-XS

PLOT DATE : 10/30/2015 12:22 PM PLOT BY : SHANE MCCARTY PLOT NAME : PLOT SCALE : 1 IN:20 FT

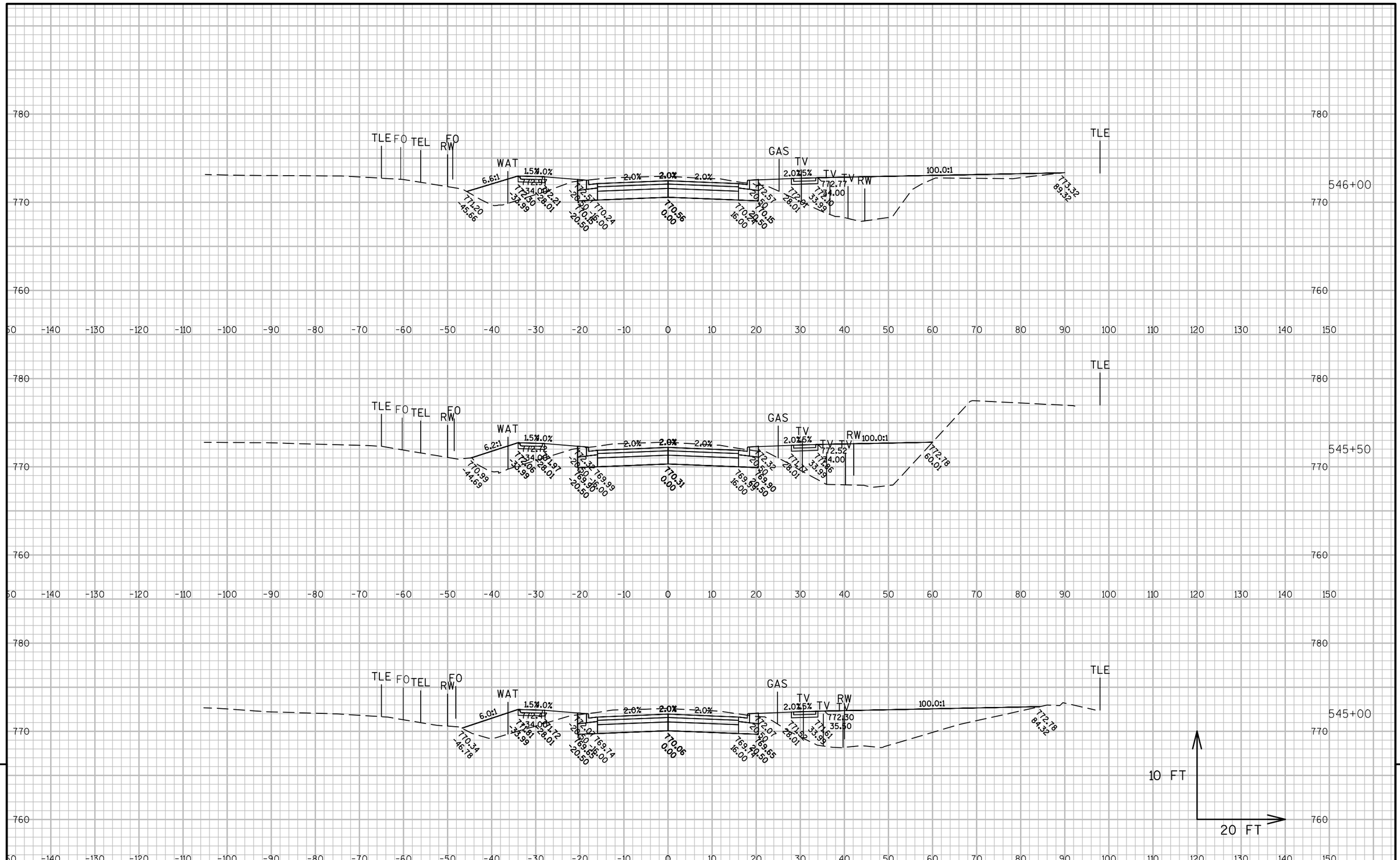

PROJECT NO: 4987-02-57	HWY: CTH N/HUMBOLDT ROAD	COUNTY: BROWN	CROSS SECTIONS: CTH N/HUMBOLDT ROAD	SHEET 177	E

FILE NAME : F:\BM4-1048 CTH N\49870256\SHEETSPLAN\090202-XS.DWG
LAYOUT NAME - 090226-XS

PLOT DATE : 10/30/2015 12:23 PM PLOT BY : SHANE MCCARTY PLOT NAME : PLOT SCALE : 1 IN:20 FT

WISDOT/CADDS SHEET 49

9

9

PROJECT NO: 4987-02-57	HWY: CTH N/HUMBOLDT ROAD	COUNTY: BROWN	CROSS SECTIONS: CTH N/HUMBOLDT ROAD	SHEET 178	E

FILE NAME : F:\BM4-1048 CTH N\49870256\SHEETSPLAN\090202-XS.DWG
LAYOUT NAME - 090227-XS

PLOT DATE : 10/30/2015 12:23 PM PLOT BY : SHANE MCCARTY PLOT NAME : PLOT SCALE : 1 IN:20 FT

WISDOT/CADDS SHEET 49

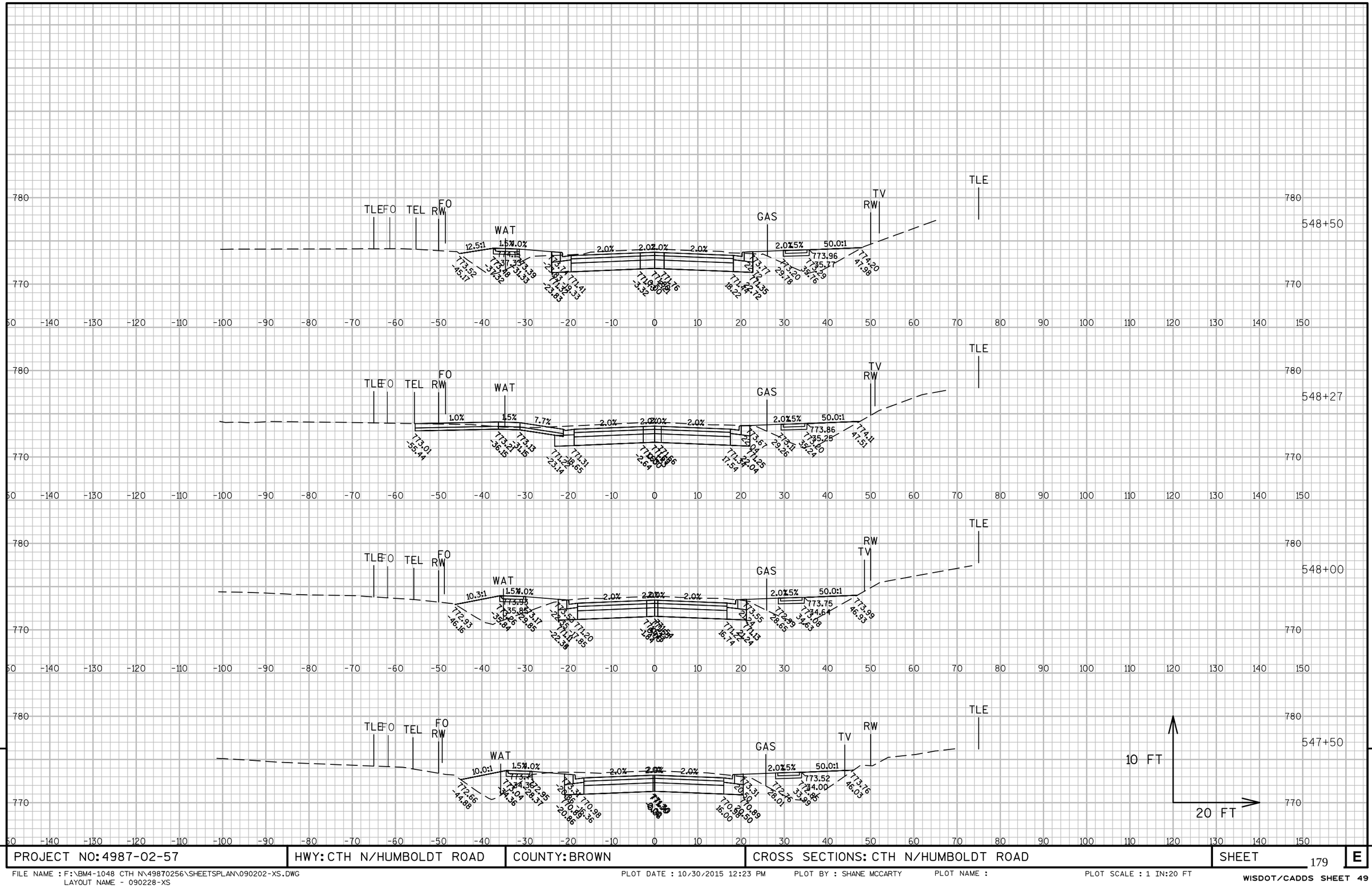

9

9

PROJECT NO: 4987-02-57	HWY: CTH N/HUMBOLDT ROAD	COUNTY: BROWN	CROSS SECTIONS: CTH N/HUMBOLDT ROAD	SHEET 179	E

FILE NAME : F:\BM4-1048 CTH N\49870256\SHEETSPLAN\090202-XS.DWG
LAYOUT NAME - 090228-XS

PLOT DATE : 10/30/2015 12:23 PM PLOT BY : SHANE MCCARTY PLOT NAME : PLOT SCALE : 1 IN:20 FT

WISDOT/CADDS SHEET 49

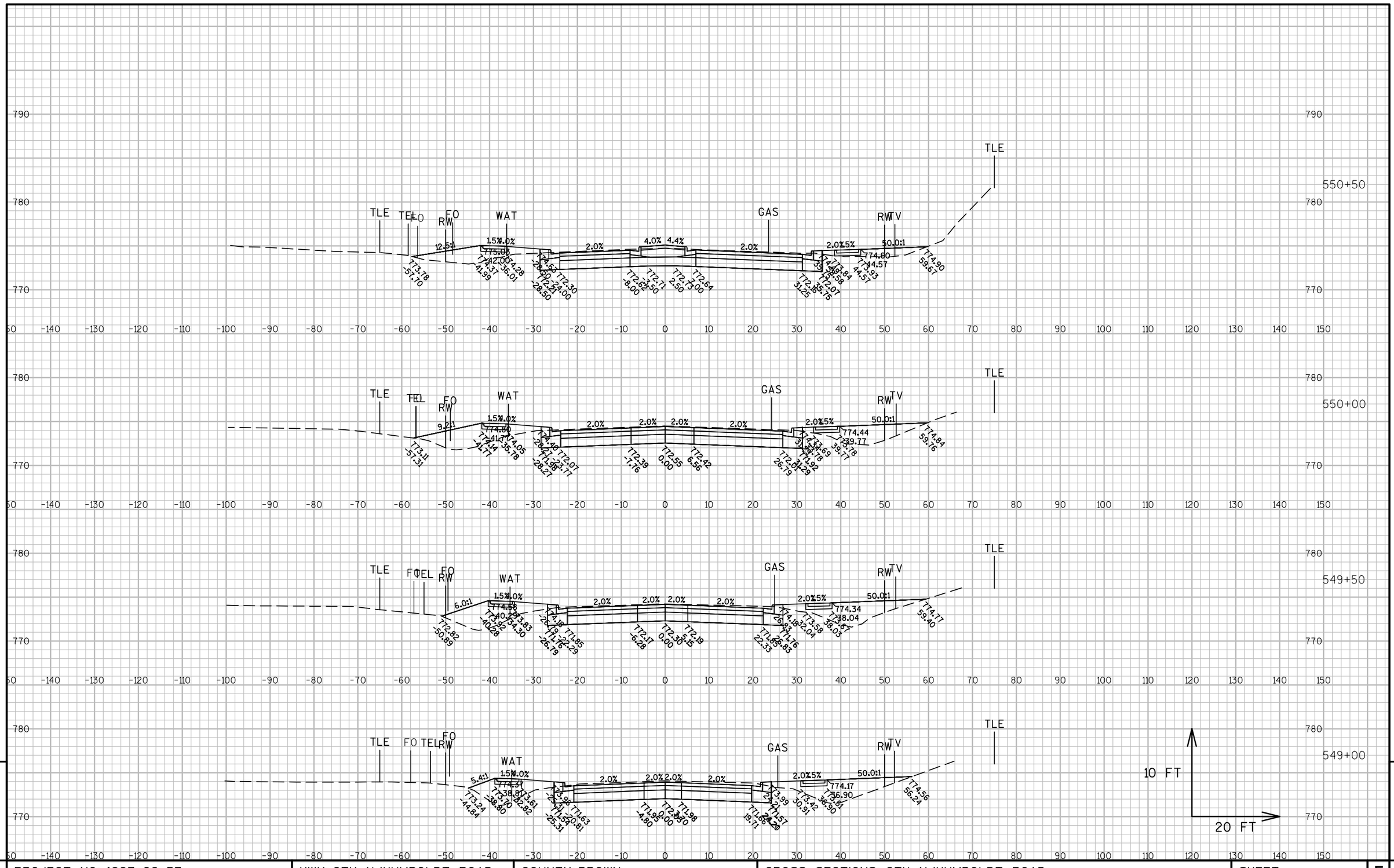

PROJECT NO: 4987-02-57	HWY: CTH N/HUMBOLDT ROAD	COUNTY: BROWN	CROSS SECTIONS: CTH N/HUMBOLDT ROAD	SHEET 180	E

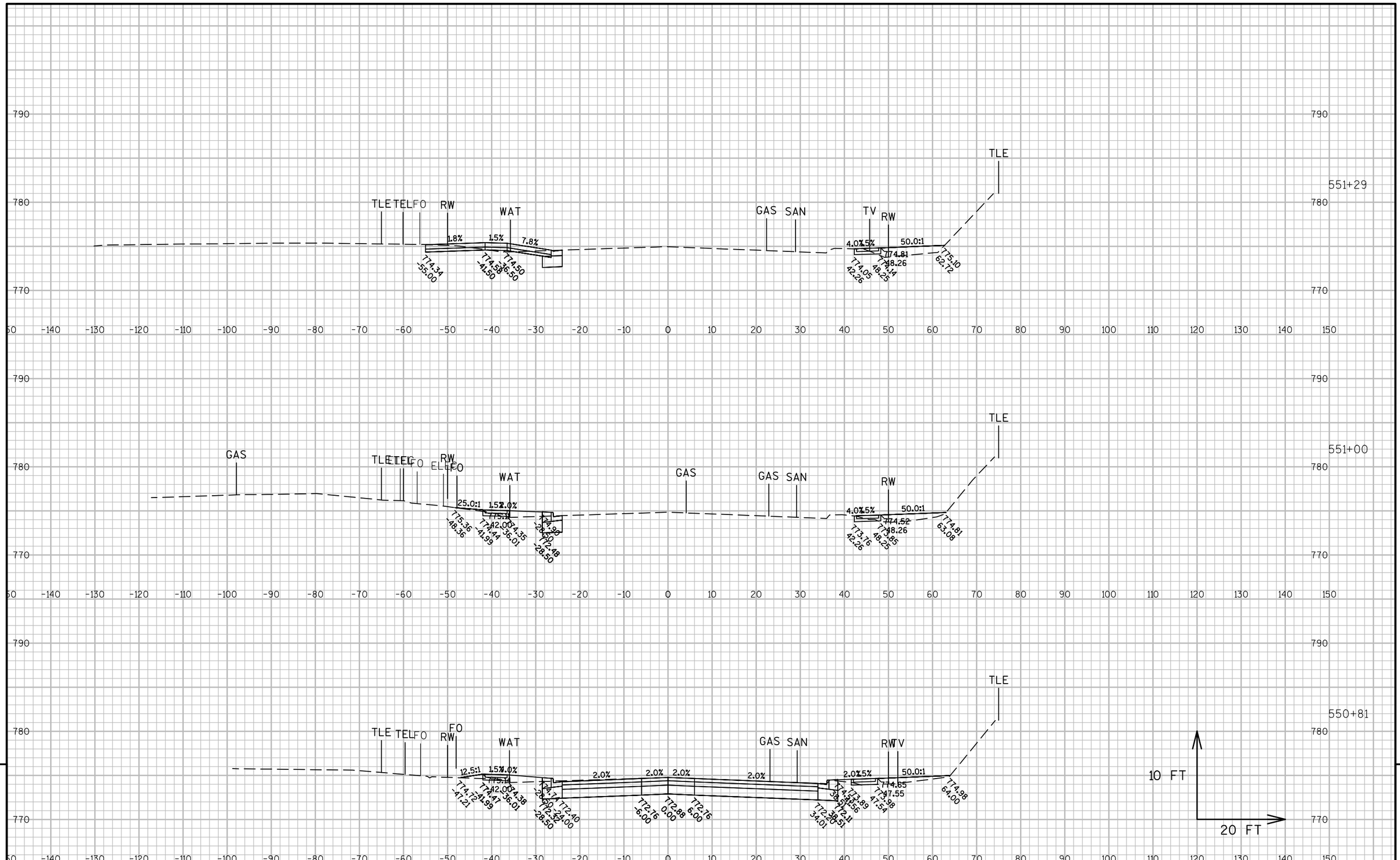

9

9

PROJECT NO: 4987-02-57	HWY: CTH N/HUMBOLDT ROAD	COUNTY: BROWN	CROSS SECTIONS: CTH N/HUMBOLDT ROAD	SHEET 181	E

FILE NAME : F:\BM4-1048 CTH N\49870256\SHEETSPLAN\090202-XS.DWG
LAYOUT NAME - 090230-XS

PLOT DATE : 10/30/2015 12:24 PM PLOT BY : SHANE MCCARTY PLOT NAME : PLOT SCALE : 1 IN:20 FT

WISDOT/CADDS SHEET 49

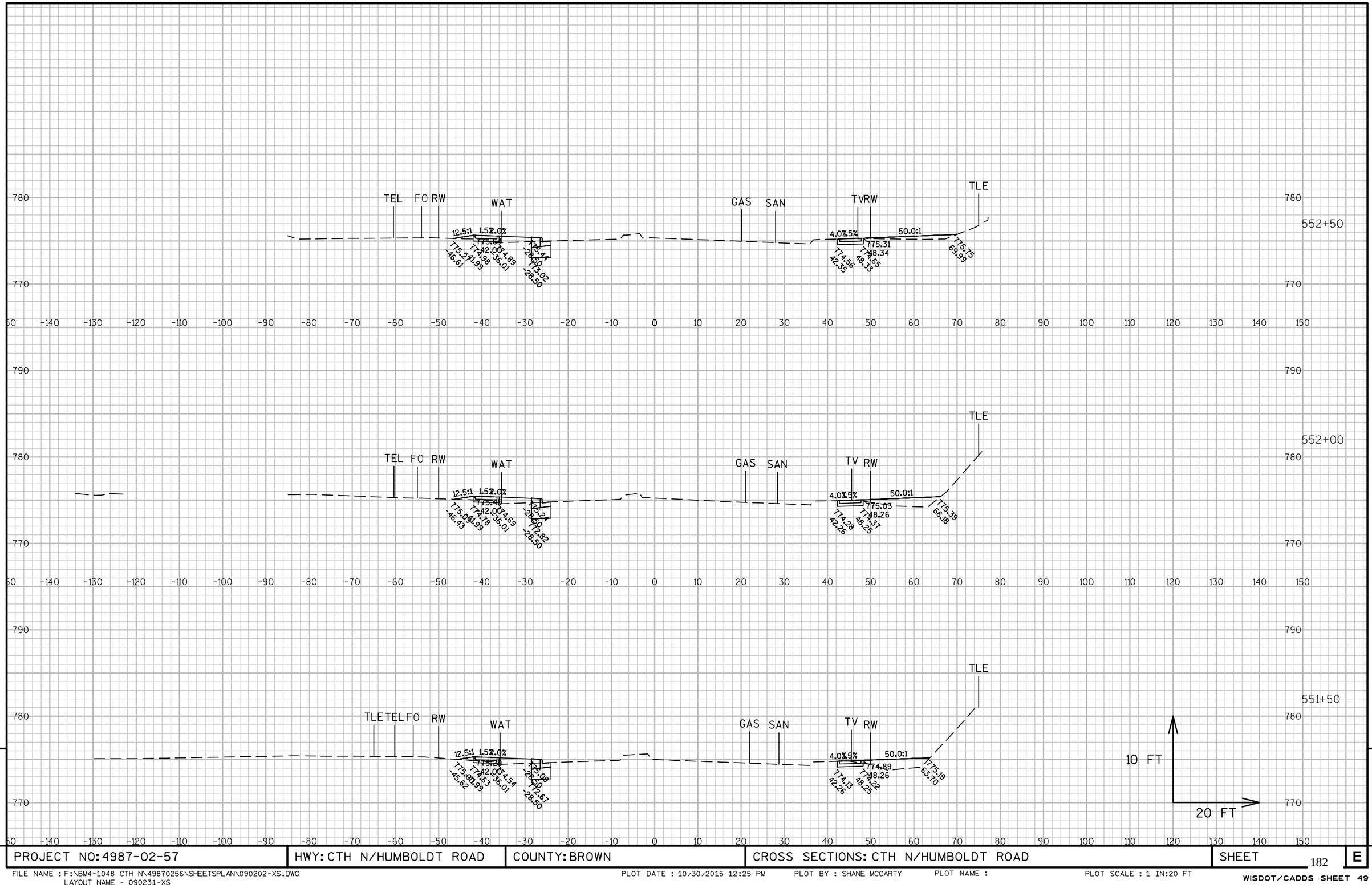

9

9

PROJECT NO: 4987-02-57	HWY: CTH N/HUMBOLDT ROAD	COUNTY: BROWN	CROSS SECTIONS: CTH N/HUMBOLDT ROAD	SHEET 182	E

FILE NAME : F:\BM4-1048 CTH N\49870256\SHEETSPLAN\090202-XS.DWG
LAYOUT NAME - 090231-XS

PLOT DATE : 10/30/2015 12:25 PM PLOT BY : SHANE MCCARTY PLOT NAME : PLOT SCALE : 1 IN:20 FT

WISDOT/CADDS SHEET 49

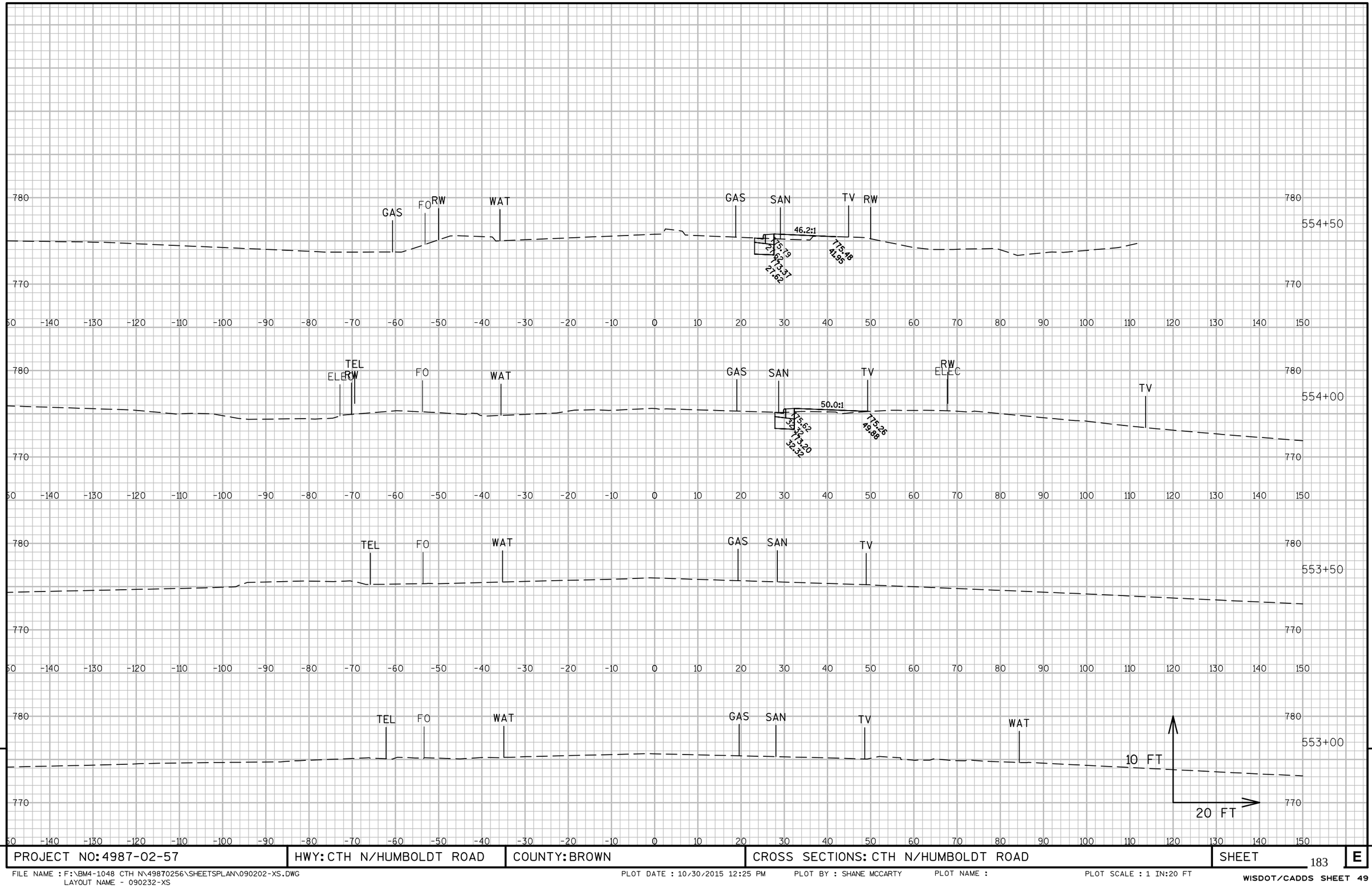

9

9

PROJECT NO: 4987-02-57	HWY: CTH N/HUMBOLDT ROAD	COUNTY: BROWN	CROSS SECTIONS: CTH N/HUMBOLDT ROAD	SHEET 183	E

FILE NAME : F:\BM4-1048 CTH N\49870256\SHEETSPLAN\090202-XS.DWG
LAYOUT NAME - 090232-XS

PLOT DATE : 10/30/2015 12:25 PM PLOT BY : SHANE MCCARTY PLOT NAME : PLOT SCALE : 1 IN:20 FT

WISDOT/CADDS SHEET 49

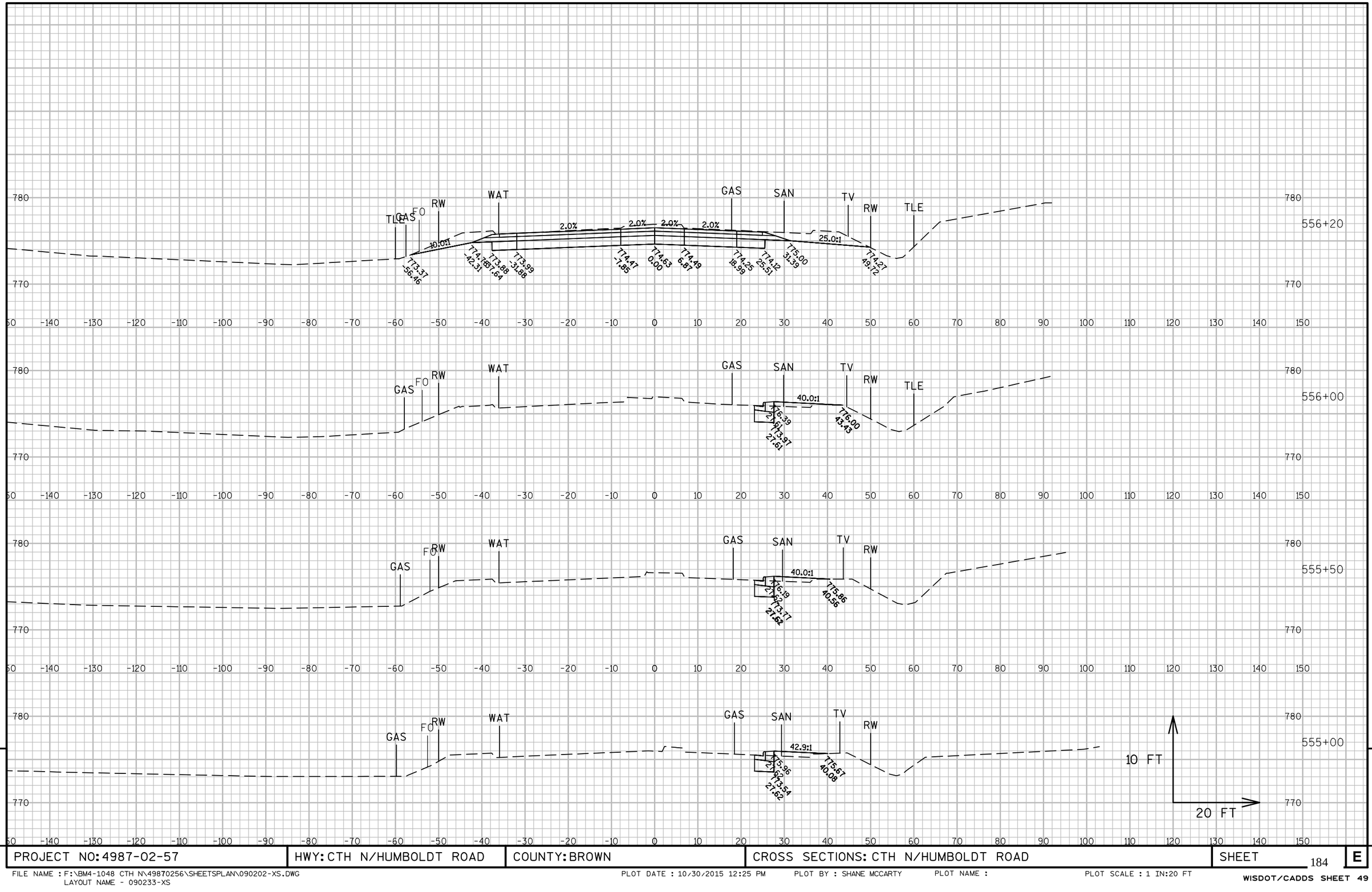

9

9

PROJECT NO: 4987-02-57	HWY: CTH N/HUMBOLDT ROAD	COUNTY: BROWN	CROSS SECTIONS: CTH N/HUMBOLDT ROAD	SHEET 184	E

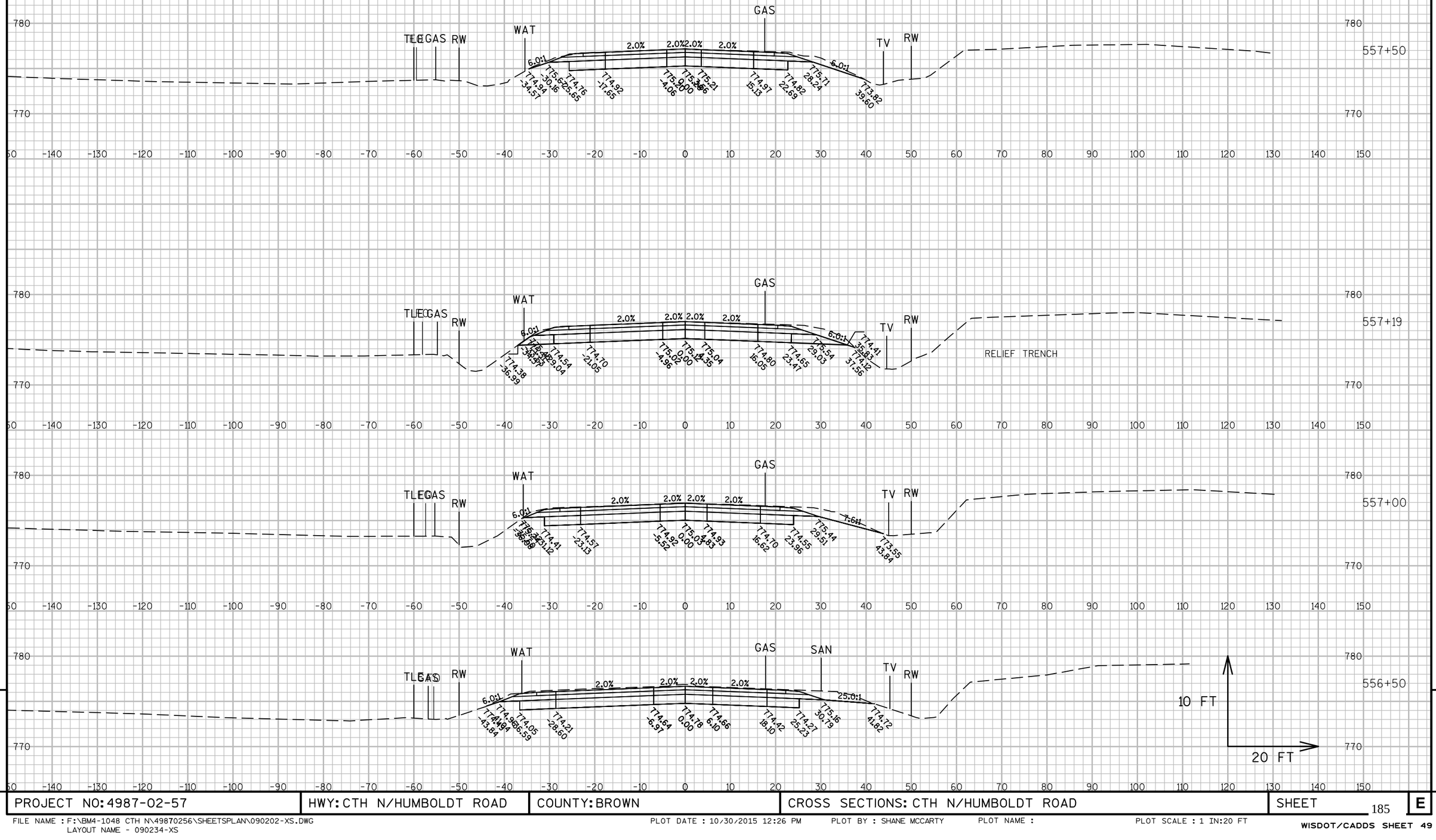

9

9

PROJECT NO: 4987-02-57	HWY: CTH N/HUMBOLDT ROAD	COUNTY: BROWN	CROSS SECTIONS: CTH N/HUMBOLDT ROAD	SHEET	E

FILE NAME : F:\BM4-1048 CTH N\49870256\SHEETSPLAN\090202-XS.DWG
LAYOUT NAME - 090234-XS

PLOT DATE : 10/30/2015 12:26 PM PLOT BY : SHANE MCCARTY PLOT NAME : PLOT SCALE : 1 IN:20 FT

WISDOT/CADDS SHEET 49

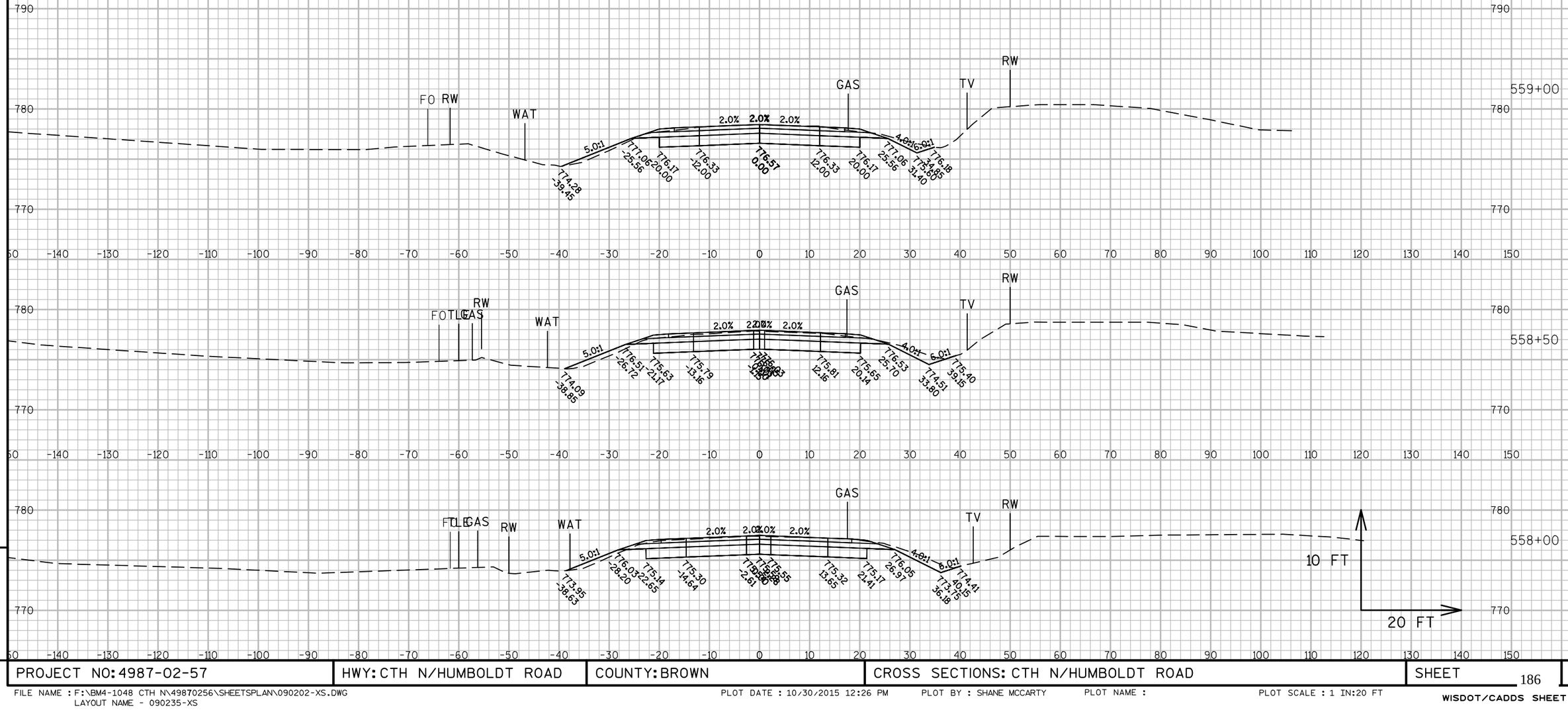

PROJECT NO: 4987-02-57	HWY: CTH N/HUMBOLDT ROAD	COUNTY: BROWN	CROSS SECTIONS: CTH N/HUMBOLDT ROAD	SHEET 186	E

FILE NAME : F:\BM4-1048 CTH N\49870256\SHEETSPLAN\090202-XS.DWG
LAYOUT NAME - 090235-XS

PLOT DATE : 10/30/2015 12:26 PM PLOT BY : SHANE MCCARTY PLOT NAME : PLOT SCALE : 1 IN:20 FT

WISDOT/CADDS SHEET 49

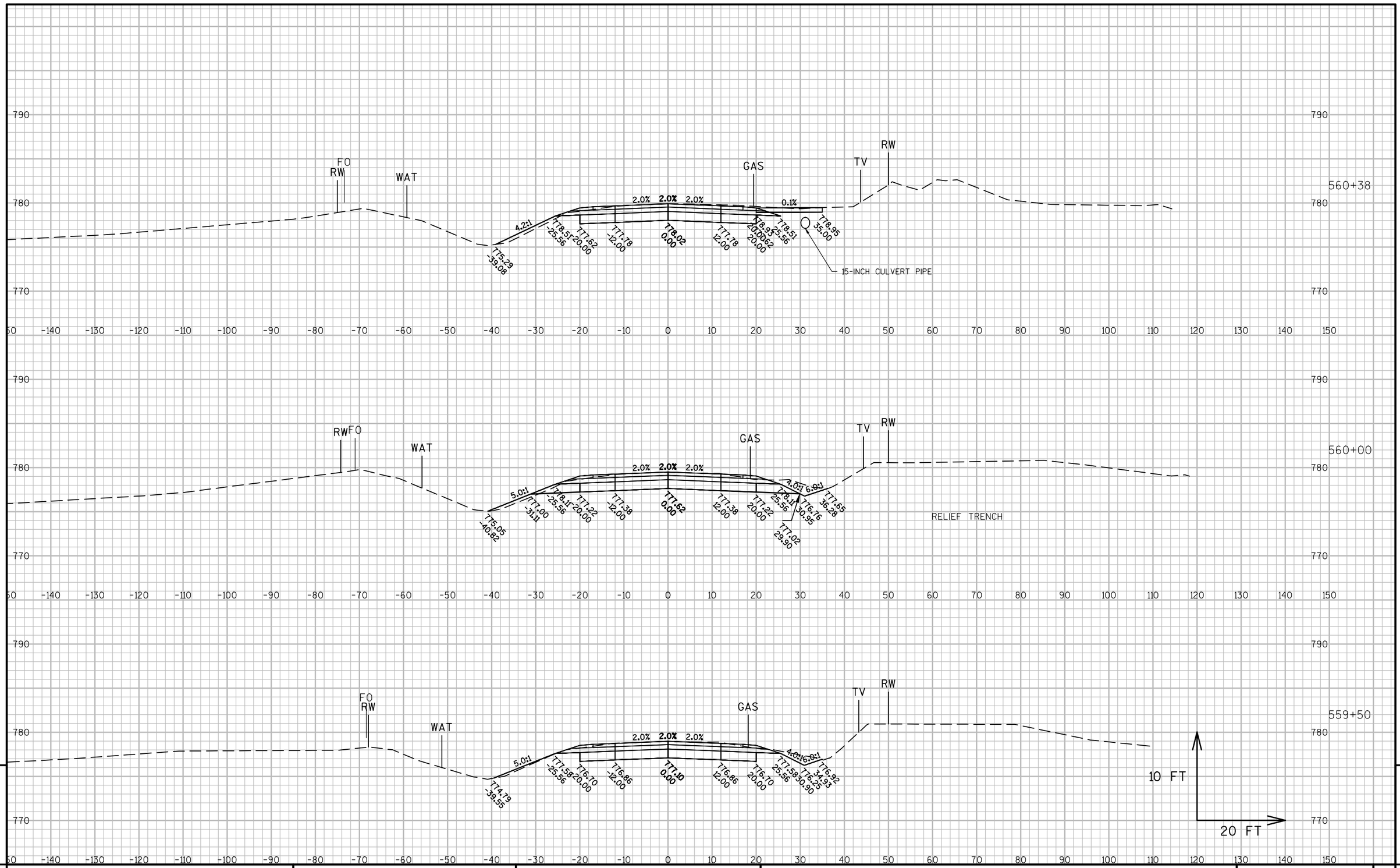

PROJECT NO: 4987-02-57	HWY: CTH N/HUMBOLDT ROAD	COUNTY: BROWN	CROSS SECTIONS: CTH N/HUMBOLDT ROAD	SHEET 187	E

FILE NAME : F:\BM4-1048 CTH N\49870256\SHEETSPLAN\090202-XS.DWG
LAYOUT NAME - 090236-XS

PLOT DATE : 10/30/2015 12:26 PM PLOT BY : SHANE MCCARTY PLOT NAME : PLOT SCALE : 1 IN:20 FT

WISDOT/CADDS SHEET 49

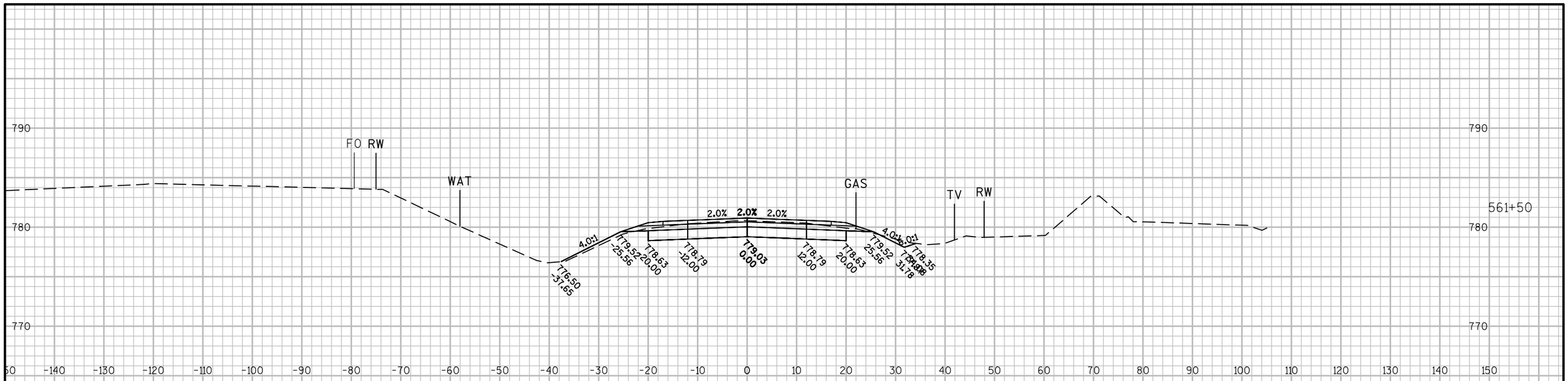

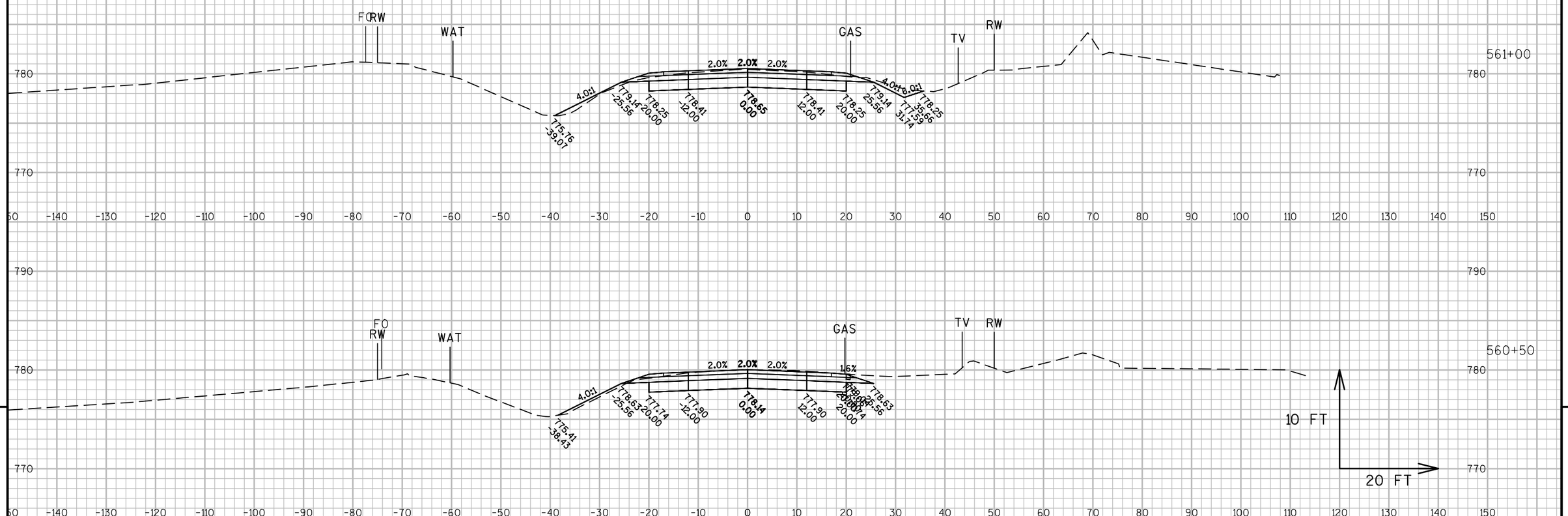

9

9

PROJECT NO: 4987-02-57	HWY: CTH N/HUMBOLDT ROAD	COUNTY: BROWN	CROSS SECTIONS: CTH N/HUMBOLDT ROAD	SHEET 188	E

FILE NAME : F:\BM4-1048 CTH N\49870256\SHEETSPLAN\090202-XS.DWG
LAYOUT NAME - 090237-XS

PLOT DATE : 10/30/2015 12:27 PM PLOT BY : SHANE MCCARTY PLOT NAME : PLOT SCALE : 1 IN:20 FT

9

9

PROJECT NO: 4987-02-57	HWY: CTH N/HUMBOLDT ROAD	COUNTY: BROWN	CROSS SECTIONS: CTH N/HUMBOLDT ROAD	SHEET 189	E

FILE NAME : F:\BM4-1048 CTH N\49870256\SHEETSPLAN\090202-XS.DWG
LAYOUT NAME - 090238-XS

PLOT DATE : 10/30/2015 12:27 PM PLOT BY : SHANE MCCARTY PLOT NAME : PLOT SCALE : 1 IN:20 FT

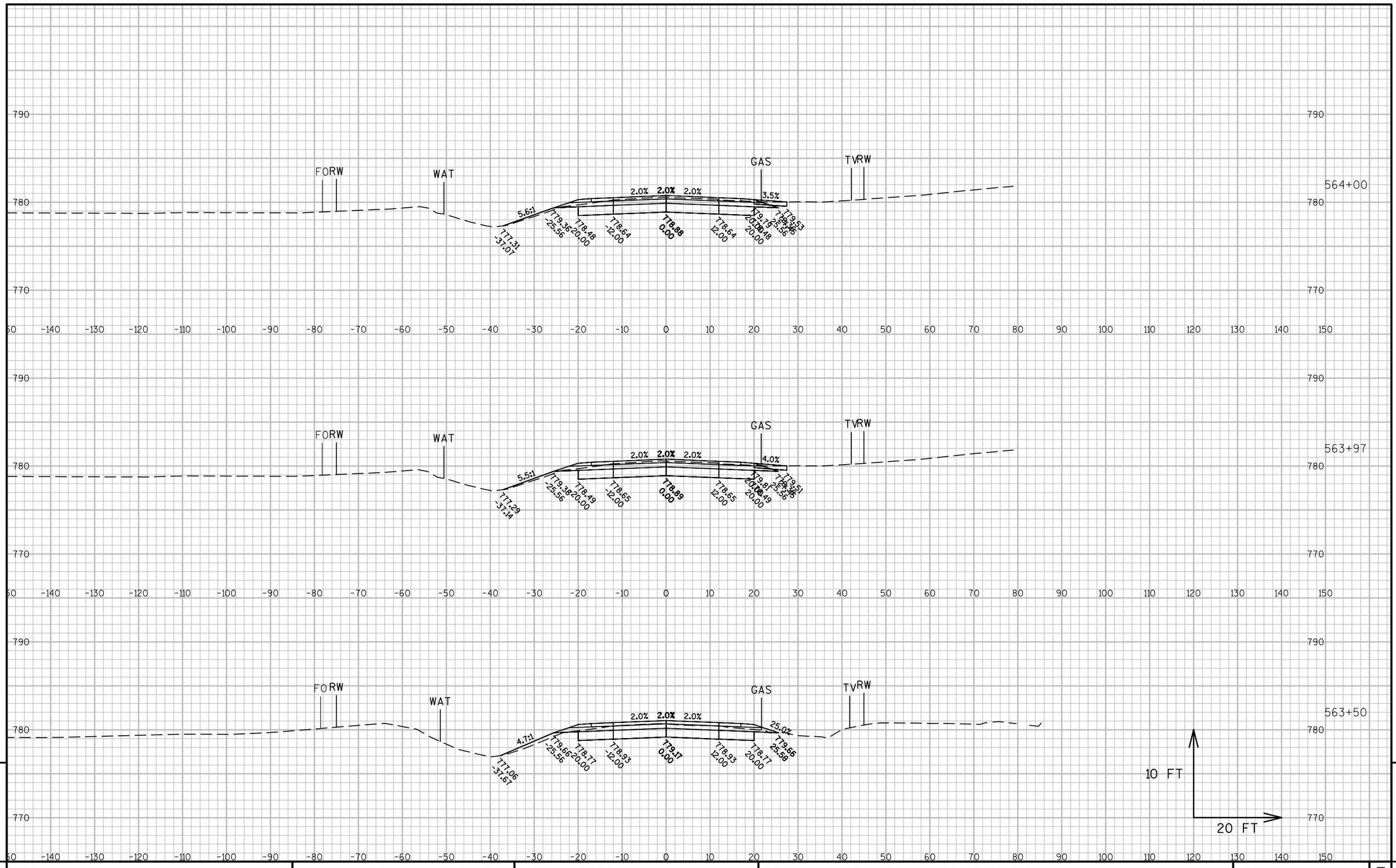

9

9

PROJECT NO: 4987-02-57	HWY: CTH N/HUMBOLDT ROAD	COUNTY: BROWN	CROSS SECTIONS: CTH N/HUMBOLDT ROAD	SHEET 190	E

FILE NAME : F:\BM4-1048 CTH N\49870256\SHEETSPLAN\090202-XS.DWG
LAYOUT NAME - 090239-XS

PLOT DATE : 10/30/2015 12:27 PM PLOT BY : SHANE MCCARTY PLOT NAME : PLOT SCALE : 1 IN:20 FT

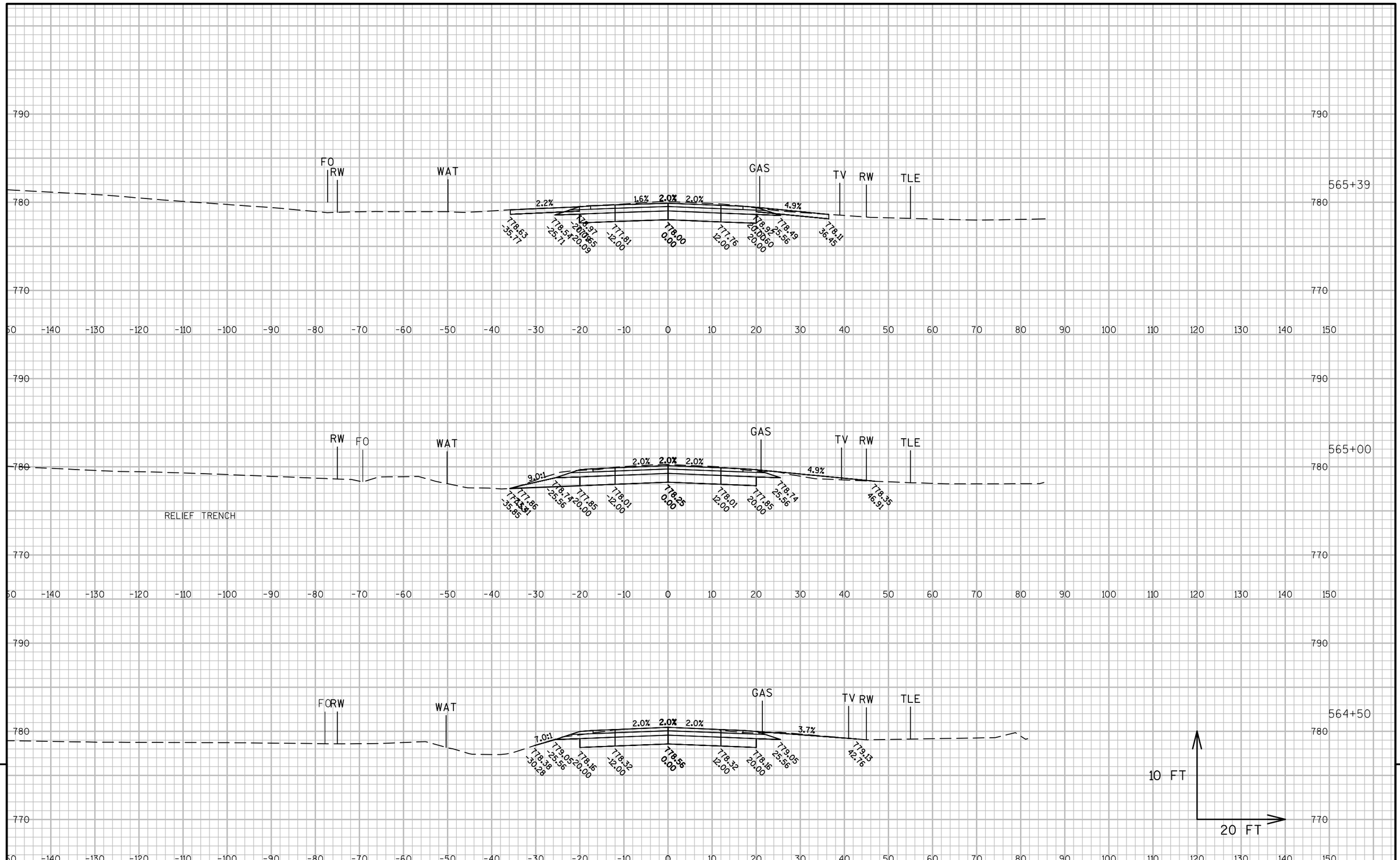

9

9

PROJECT NO: 4987-02-57	HWY: CTH N/HUMBOLDT ROAD	COUNTY: BROWN	CROSS SECTIONS: CTH N/HUMBOLDT ROAD	SHEET 191	E

FILE NAME : F:\BM4-1048 CTH N\49870256\SHEETSPLAN\090202-XS.DWG
LAYOUT NAME - 090240-XS

PLOT DATE : 10/30/2015 12:28 PM PLOT BY : SHANE MCCARTY PLOT NAME : PLOT SCALE : 1 IN:20 FT

WISDOT/CADDS SHEET 49

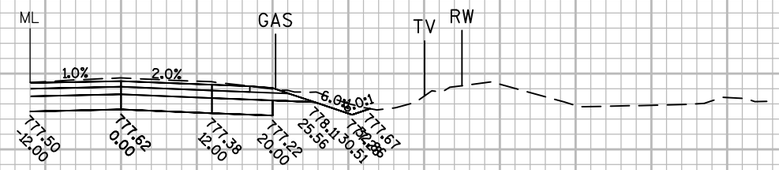

566+00

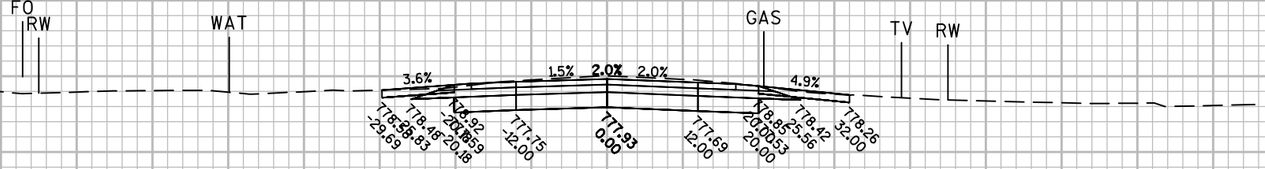

565+50

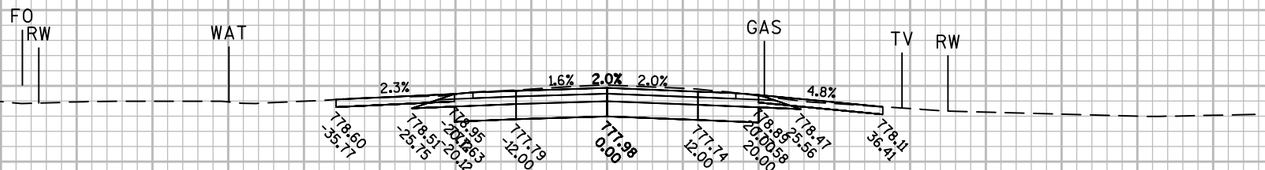

565+43

10 FT

20 FT

9

9

PROJECT NO: 4987-02-57	HWY: CTH N/HUMBOLDT ROAD	COUNTY: BROWN	CROSS SECTIONS: CTH N/HUMBOLDT ROAD	SHEET 192	E

FILE NAME : F:\BM4-1048 CTH N\49870256\SHEETSPLAN\090202-XS.DWG
LAYOUT NAME - 090241-XS

PLOT DATE : 10/30/2015 12:28 PM PLOT BY : SHANE MCCARTY PLOT NAME : PLOT SCALE : 1 IN:20 FT

WISDOT/CADDS SHEET 49

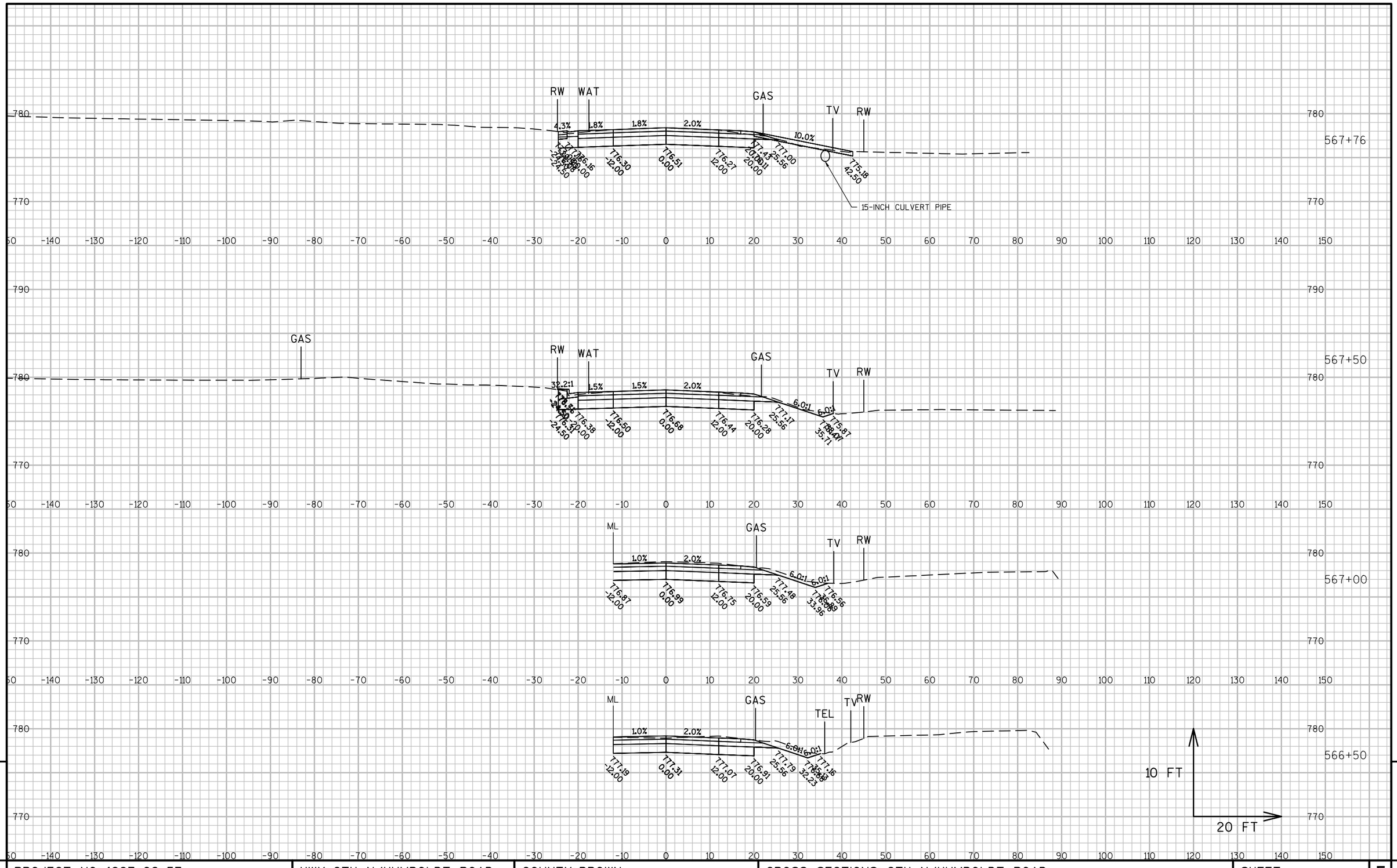

9

9

PROJECT NO: 4987-02-57	HWY: CTH N/HUMBOLDT ROAD	COUNTY: BROWN	CROSS SECTIONS: CTH N/HUMBOLDT ROAD	SHEET 193	E

FILE NAME : F:\BM4-1048 CTH N\49870256\SHEETSPLAN\090202-XS.DWG
LAYOUT NAME - 090242-XS

PLOT DATE : 10/30/2015 12:29 PM PLOT BY : SHANE MCCARTY PLOT NAME : PLOT SCALE : 1 IN:20 FT

WISDOT/CADDS SHEET 49

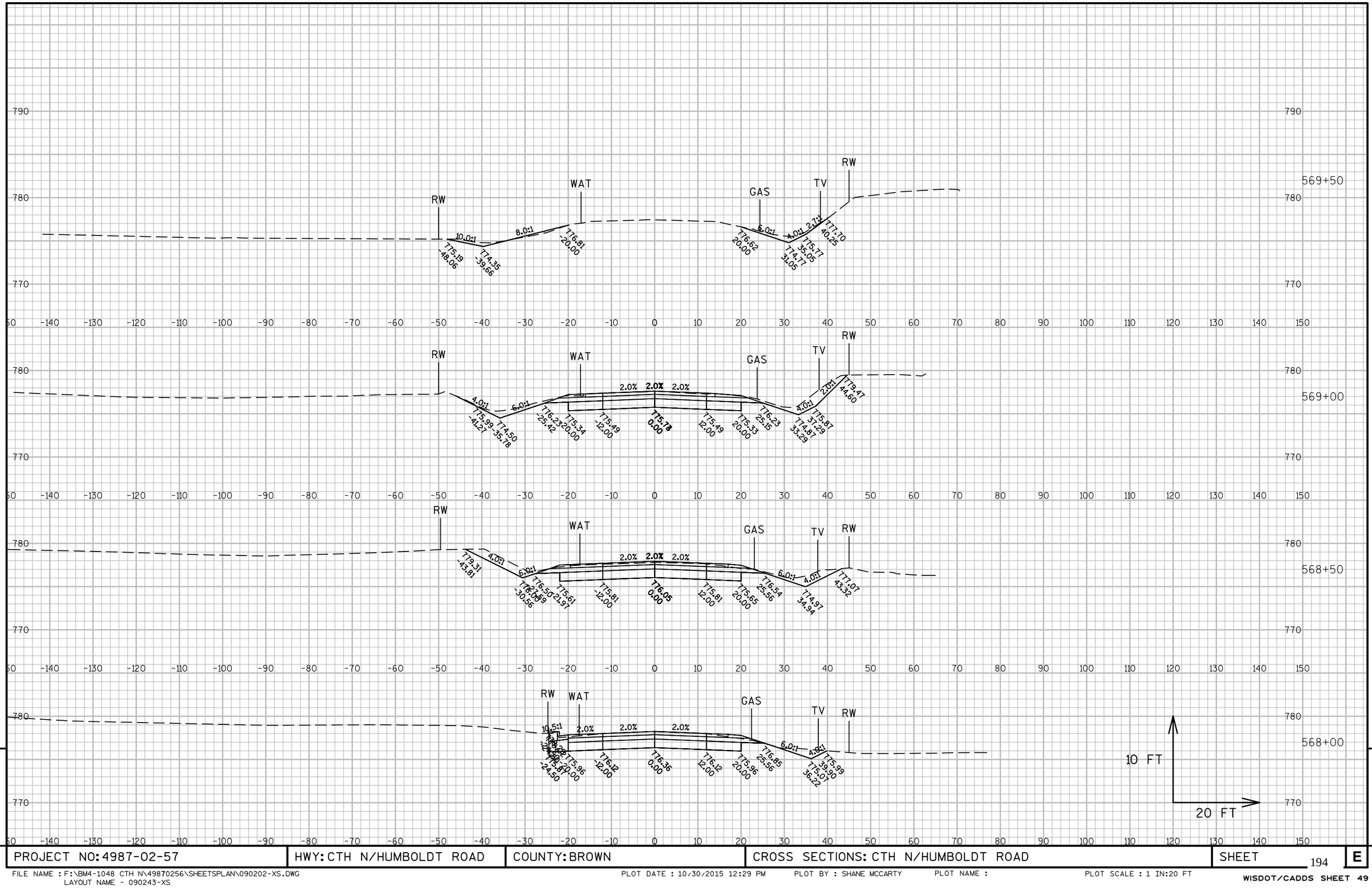

9

9

PROJECT NO: 4987-02-57	HWY: CTH N/HUMBOLDT ROAD	COUNTY: BROWN	CROSS SECTIONS: CTH N/HUMBOLDT ROAD	SHEET 194	E

FILE NAME : F:\BM4-1048 CTH N\49870256\SHEETSPLAN\090202-XS.DWG
LAYOUT NAME - 090243-XS

PLOT DATE : 10/30/2015 12:29 PM PLOT BY : SHANE MCCARTY PLOT NAME : PLOT SCALE : 1 IN:20 FT

WISDOT/CADDS SHEET 49

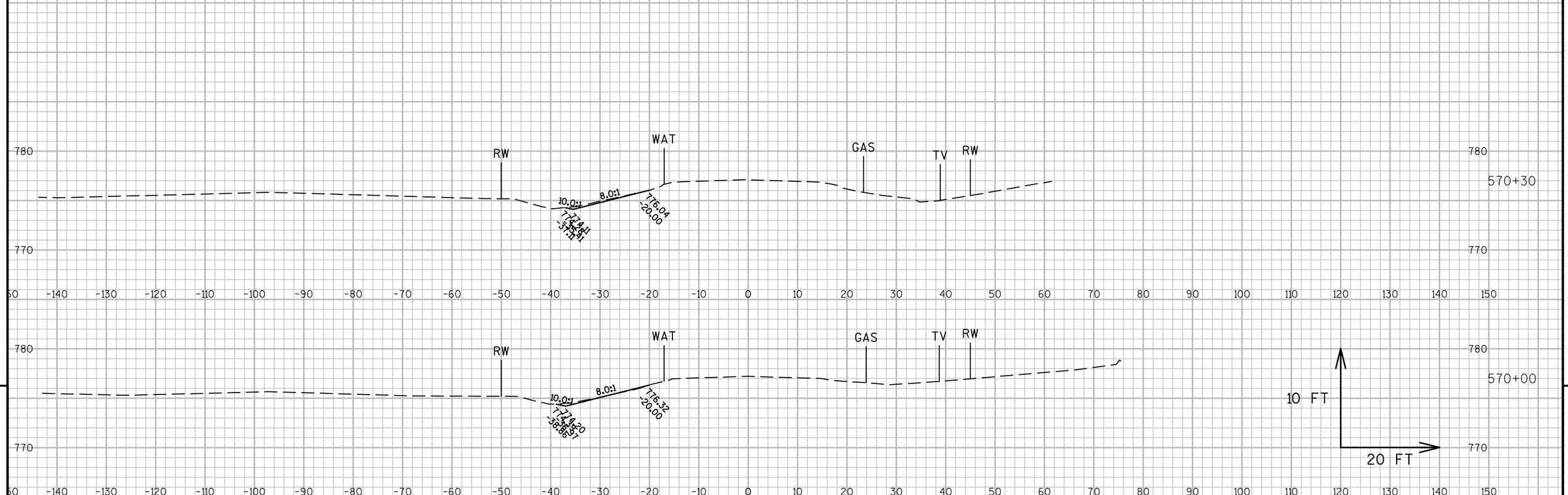

9

9

PROJECT NO: 4987-02-57	HWY: CTH N/HUMBOLDT ROAD	COUNTY: BROWN	CROSS SECTIONS: CTH N/HUMBOLDT ROAD	SHEET 195	E

FILE NAME : F:\BM4-1048 CTH N\49870256\SHEETSPLAN\090202-XS.DWG
LAYOUT NAME - 090244-XS

PLOT DATE : 10/30/2015 12:29 PM PLOT BY : SHANE MCCARTY PLOT NAME : PLOT SCALE : 1 IN:20 FT

WISDOT/CADDS SHEET 49

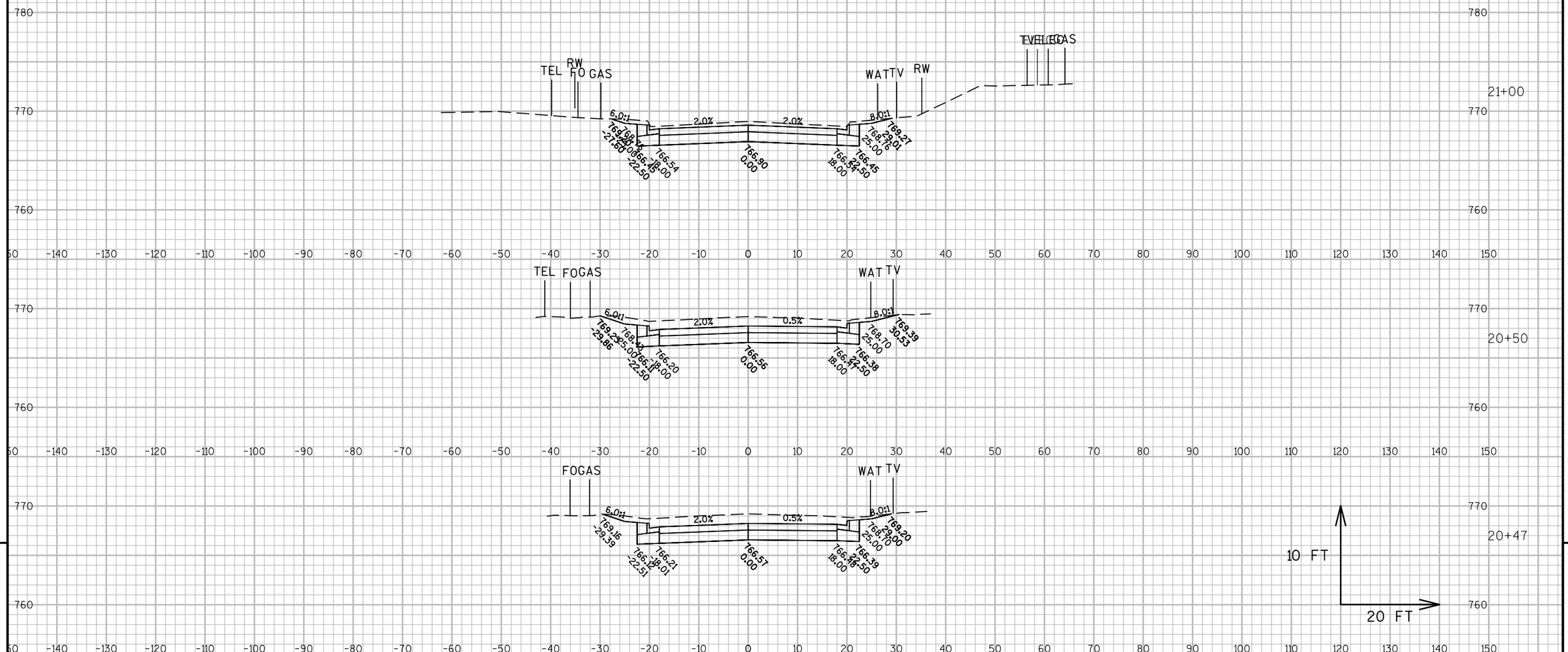

9

9

PROJECT NO: 4987-02-57	HWY: CTH N	COUNTY: BROWN	CROSS SECTIONS: LAKE LARGO DRIVE	SHEET 196	E

FILE NAME : F:\BM4-1048 CTH N\49870256\SHEETSPLAN\090203-XS.DWG
LAYOUT NAME - 090258-XS

PLOT DATE : 10/30/2015 12:41 PM PLOT BY : SHANE MCCARTY PLOT NAME : PLOT SCALE : 1 IN:20 FT

WISDOT/CADDS SHEET 49

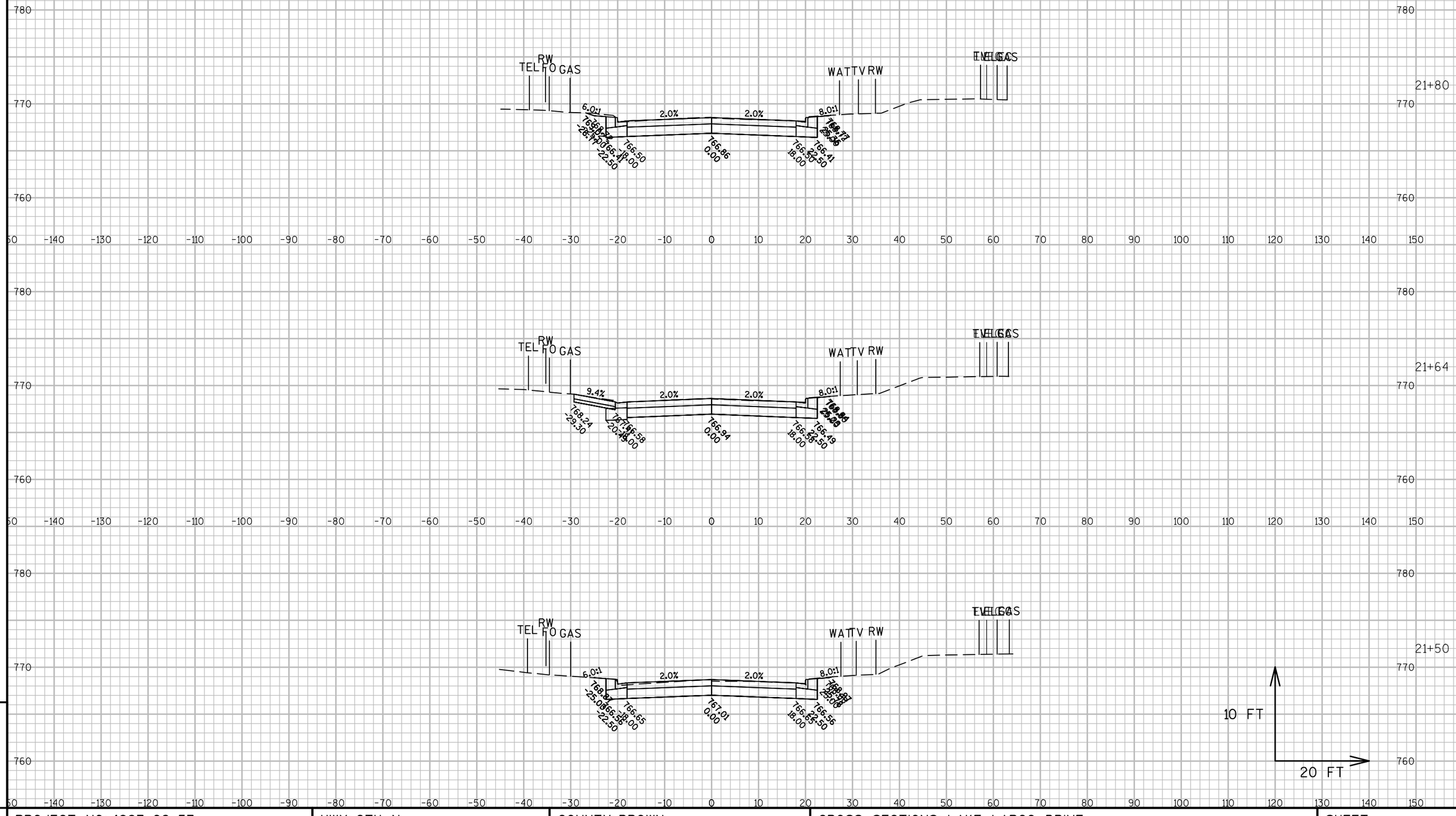

9

9

PROJECT NO: 4987-02-57	HWY: CTH N	COUNTY: BROWN	CROSS SECTIONS: LAKE LARGO DRIVE	SHEET 197	E

FILE NAME : F:\BM4-1048 CTH N\49870256\SHEETSPLAN\090203-XS.DWG
LAYOUT NAME - 090259-XS

PLOT DATE : 10/30/2015 12:41 PM PLOT BY : SHANE MCCARTY PLOT NAME : PLOT SCALE : 1 IN:20 FT

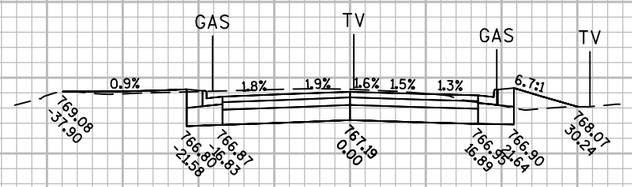

770

770

39+56

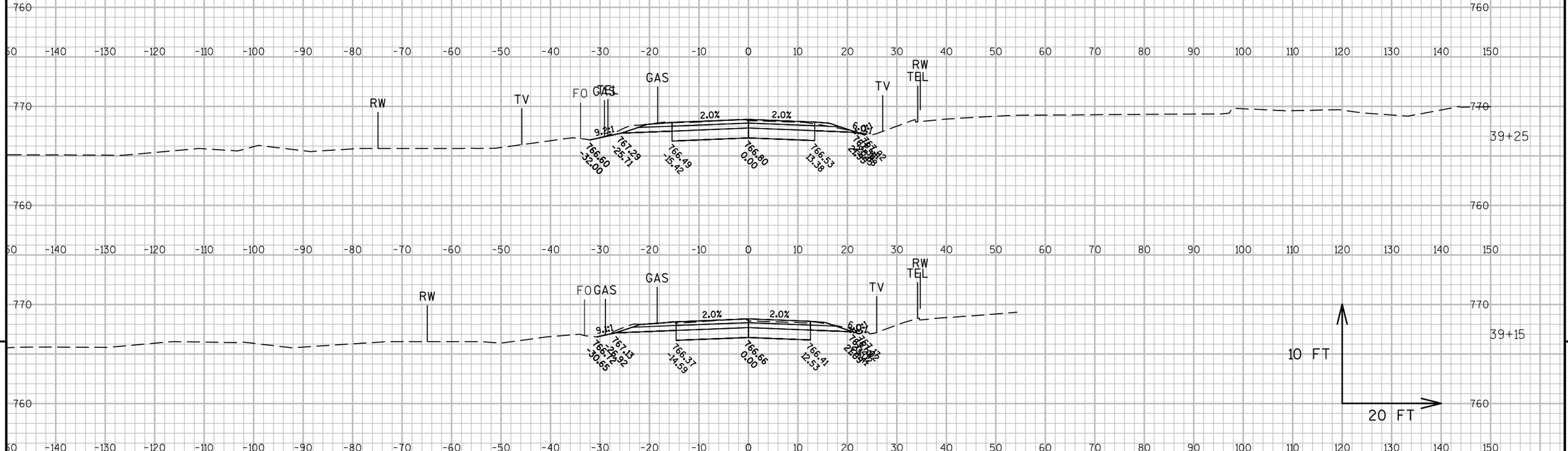

9

9

PROJECT NO: 4987-02-57	HWY: CTH N	COUNTY: BROWN	CROSS SECTIONS: WOODSIDE ROAD	SHEET 198	E

FILE NAME : F:\BM4-1048 CTH N\49870256\SHEETSPLAN\090203-XS.DWG
LAYOUT NAME - 090260-XS

PLOT DATE : 10/30/2015 12:42 PM PLOT BY : SHANE MCCARTY PLOT NAME : PLOT SCALE : 1 IN:20 FT

WISDOT/CADDS SHEET 49

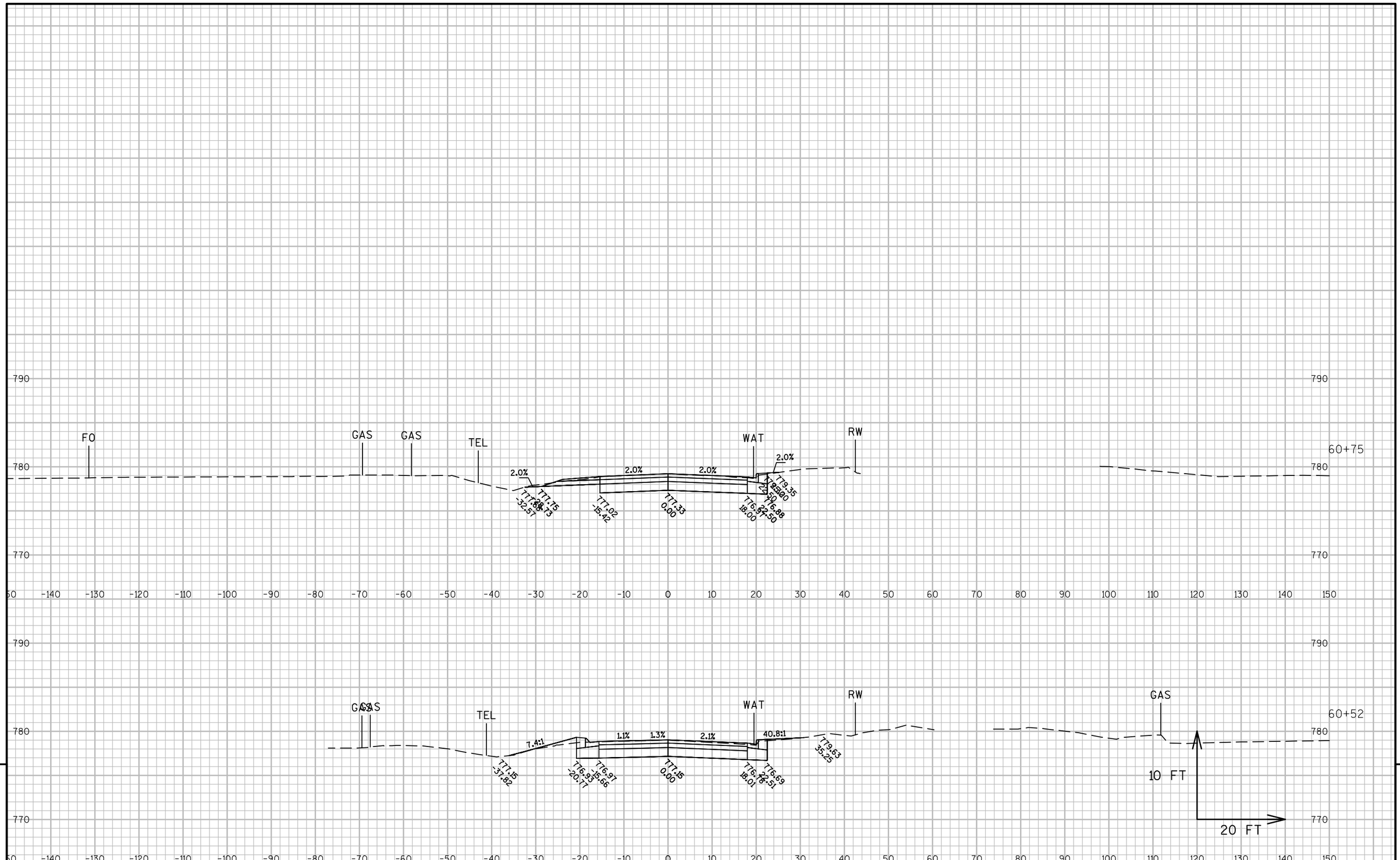

9

9

PROJECT NO: 4987-02-57	HWY: CTH N	COUNTY: BROWN	CROSS SECTIONS: SPARTAN ROAD	SHEET 199	E

FILE NAME : F:\BM4-1048 CTH N\49870256\SHEETSPLAN\090203-XS.DWG
LAYOUT NAME - 090261-XS

PLOT DATE : 10/30/2015 12:42 PM PLOT BY : SHANE MCCARTY PLOT NAME : PLOT SCALE : 1 IN:20 FT

WISDOT/CADDS SHEET 49

Wisconsin Department of Transportation

Dedicated people creating transportation solutions
through innovation and exceptional service.

http://www.dot.wisconsin.gov