EAU FEBRUARY 2016

PROJECT ID: 1020-01-88
WITH: N/A

COUNTY: ST. CROIX

STATE PROJECT	FEDERAL PROJECT	
	PROJECT	CONTRACT
1020-01-88	WISC 2016024	1

STATE OF WISCONSIN
DEPARTMENT OF TRANSPORTATION

PLAN OF PROPOSED IMPROVEMENT

BALDWIN - MENOMONIE

CTH BB BRIDGE B-55-0265

IH 94

ST. CROIX COUNTY

STATE PROJECT NUMBER
1020-01-88

ORDER OF SHEETS

Section No.	1	Title
Section No.	2	Typical Sections and Details (Includes Erosion Control Plans)
Section No.	3	Estimate of Quantities
Section No.	3	Miscellaneous Quantities
Section No.	4	Right of Way Plat
Section No.	5	Plan and Profile
Section No.	6	Standard Detail Drawings
Section No.	7	Sign Plates
Section No.	8	Structure Plans
Section No.	9	Computer Earthwork Data
Section No.	9	Cross Sections

TOTAL SHEETS = 154

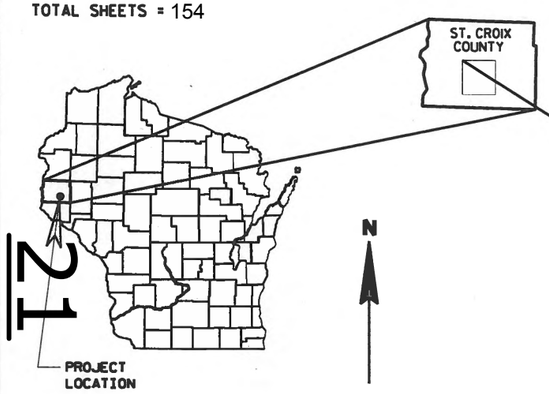

STRUCTURE B-55-0265

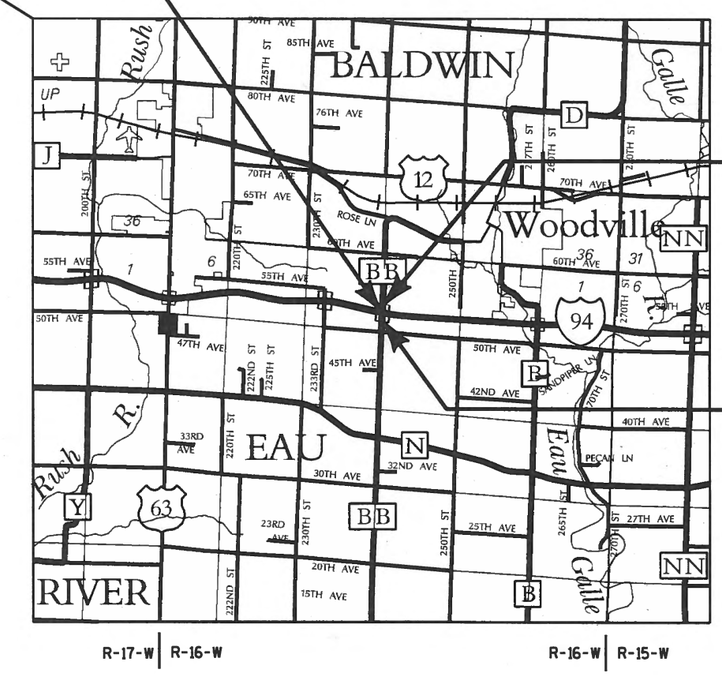

END PROJECT
STA. 89+00
Y = 329128.06
X = 624459.50

BEGIN PROJECT
STA. 70+00
Y = 327228.37
X = 624425.19

LAYOUT
SCALE 0 — 1 MI.

DESIGN DESIGNATION

		CTH BB	IH 94
A.D.T. (2016)	=	1,200	34,100
A.D.T. (2036)	=	1,500	39,800
D.H.V.	=	120	3,410
D.	=	60/40	58/42
T.	=	13.4%	25.9%
DESIGN SPEED	=	50 MPH	70 MPH
ESALS	=	452,600	N/A

CONVENTIONAL SYMBOLS

PLAN
- CORPORATE LIMITS
- PROPERTY LINE (PL + 58.1)
- LOT LINE
- LIMITED HIGHWAY EASEMENT
- EXISTING RIGHT OF WAY
- PROPOSED OR NEW R/W LINE
- SLOPE INTERCEPT
- REFERENCE LINE
- EXISTING CULVERT
- PROPOSED CULVERT (Box or Pipe)
- COMBUSTIBLE FLUIDS (CAUTION)
- HIGH VOLTAGE (CAUTION)
- MARSH AREA
- WOODED OR SHRUB AREA

PROFILE
- GRADE LINE
- ORIGINAL GROUND
- MARSH OR ROCK PROFILE (To be noted as such) (ROCK)
- SPECIAL DITCH (LABEL)
- GRADE ELEVATION (95.36)
- CULVERT (Profile View)

UTILITIES
- OVERHEAD — OH —
- ELECTRIC — E —
- FIBER OPTIC — FO —
- GAS — G —
- SANITARY SEWER — SAN —
- STORM SEWER — SS —
- TELEPHONE — T —
- WATER — W —
- UTILITY PEDESTAL
- POWER POLE
- TELEPHONE POLE

TOTAL NET LENGTH OF CENTERLINE = 0.360 MI.

COORDINATES ON THIS PLAN ARE REFERENCED TO THE WISCONSIN COUNTY COORDINATE SYSTEM (WCCS), ST. CROIX COUNTY

ORIGINAL PLANS PREPARED BY

AYRES ASSOCIATES
3433 Oakwood Hills Parkway
Eau Claire, WI 54701
www.AyresAssociates.com

WISCONSIN DANIEL N. SYDOW E-38363 WI PROFESSIONAL ENGINEER

DATE 7/31/2015

STATE OF WISCONSIN
DEPARTMENT OF TRANSPORTATION

PREPARED BY

Surveyor	AYRES ASSOCIATES INC
Designer	AYRES ASSOCIATES INC
Project Manager	STACIE LAMBELE
Regional Examiner	CHRISTINE KOSKI
Regional Supervisor	RICHARD SHERMO
C.O. Examiner	

APPROVED FOR THE DEPARTMENT
DATE: 7/30/15 Signature

E

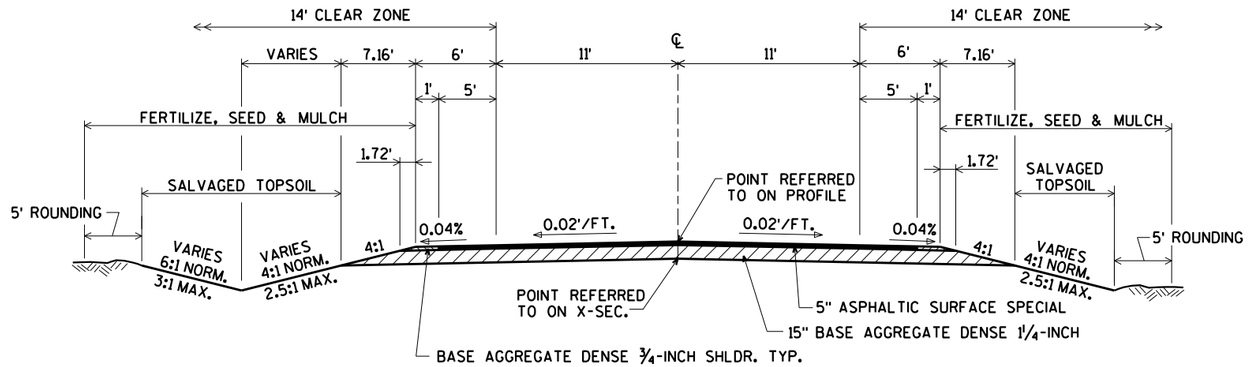

TYPICAL FINISHED SECTION

CTH BB
STA. 70+00 TO STA. 89+00

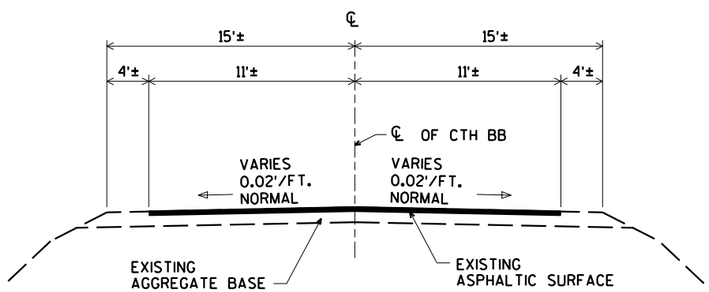

EXISTING TYPICAL SECTION

CTH BB
STA. 70+00 TO STA. 89+00

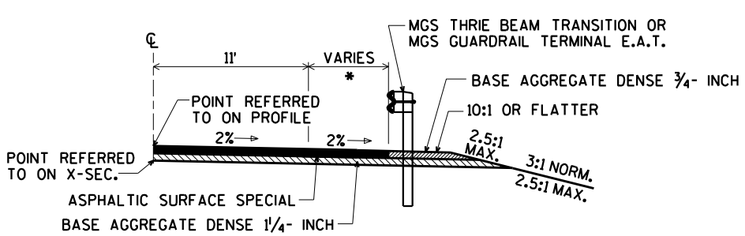

TYPICAL FINISHED HALF SECTION WITH BEAM GUARD

* 6' NORMAL
6' MIN. (AT END OF BRIDGE)
8' MAX. (AT END TERMINAL)

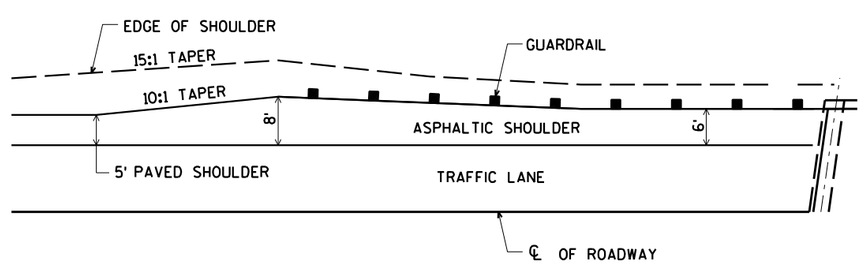

DETAIL FOR ASPHALTIC SHOULDER AT GUARDRAIL

GENERAL NOTES

EROSION CONTROL ITEMS TO BE PLACED AS SHOWN ON THE PLAN OR AS DIRECTED BY THE ENGINEER.

NO TREES AND/OR SHRUBS ARE TO BE REMOVED WITHOUT THE APPROVAL OF THE ENGINEER.

THE LOCATIONS OF EXISTING AND PROPOSED UTILITY INSTALLATIONS AS SHOWN ON THE PLANS ARE APPROXIMATE. THERE MAY BE OTHER UTILITY INSTALLATIONS WITHIN THE PROJECT AREA THAT ARE NOT SHOWN.

THE DEPARTMENT OF TRANSPORTATION WILL FURNISH THE CONTRACTOR WITH A MONUMENT TO BE INSTALLED BY THE CONTRACTOR AS DIRECTED BY THE ENGINEER.

DISTURBED AREAS WITHIN THE RIGHT-OF-WAY, EXCLUSIVE OF THE ROADBED, SHALL BE FERTILIZED, SEEDED, AND MULCHED AS DIRECTED BY THE ENGINEER.

SEED MIXTURE NO. 20 AND SEEDING TEMPORARY SHALL BE USED IN THE PROJECT AND SHALL BE PLACED AS SHOWN IN THE PLANS AND/OR AS DIRECTED BY THE ENGINEER.

ELEVATIONS SHOWN ON THIS PLAN ARE REFERENCED TO THE NORTH AMERICAN VERTICAL DATUM (NAVD) 1988.

ASPHALTIC SURFACE SPECIAL SHALL BE CONSTRUCTED WITH A 2" UPPER LAYER AND A 3" LOWER LAYER.

UTILITIES

AT&T WISCONSIN
304 S DEWEY STREET, 4TH FLOOR
EAU CLAIRE, WI 54701
ATTN: RICK PODOLAK
715-839-5565
715-410-0656 (cell)
rp4514@att.com

ST. CROIX ELECTRIC COOPERATIVE
1925 RIDGEWAY ST.
HAMMOND, WI 54015-5039
ATTN: ROB DOOLEY
715-796-5637
715-781-2295 (cell)
robdoo@scecnet.net

LEVEL 3 COMMUNICATIONS LLC
715 N 2nd STREET
MINNEAPOLIS, MN 55401
ATTN: BRAD MORSETH
608-343-3257
608-805-9479 (cell)
brad.morseth@level3.com

CENTURYLINK COMMUNICATIONS
1310 E. MARY STREET
OTTUMWA, IA 52501
ATTN: BOB SAMPSON
636-887-5367 (cell)
robert.sampson@centurylink.com

BALDWIN TELECOM, INC.
930 MAPLE STREET
BALDWIN, WI 54002
ATTN: KEN CARLSRUD
715-684-3346
ken.carlsrud@baldwin-telecom.net

AT&T LEGACY
P.O. BOX 244
LAKE MILLS, WI 53551
ATTN: WILLIAM KOENIG, JMC ENGINEERS
608-628-0575 (cell)
jmc140@frontier.com

** DENOTES UTILITIES THAT ARE NOT DIGGERS HOTLINE MEMBERS

DIGGERS HOTLINE
Dial 811 or (800)242-8511
www.DiggersHotline.com

WISCONSIN DEPARTMENT OF NATURAL RESOURCES CONTACT:
CHRIS WILLGER
1300 W. CLAIREMONT AVE.
EAU CLAIRE, WI. 54702
715-839-1609
ChristopherJ.Willger@wisconsin.gov

DESIGNER
AYRES ASSOCIATES
3433 OAKWOOD HILLS PARKWAY
EAU CLAIRE, WI 54701
ATTN: DANIEL N. SYDOW
715-834-3161
sydowd@AyresAssociates.com

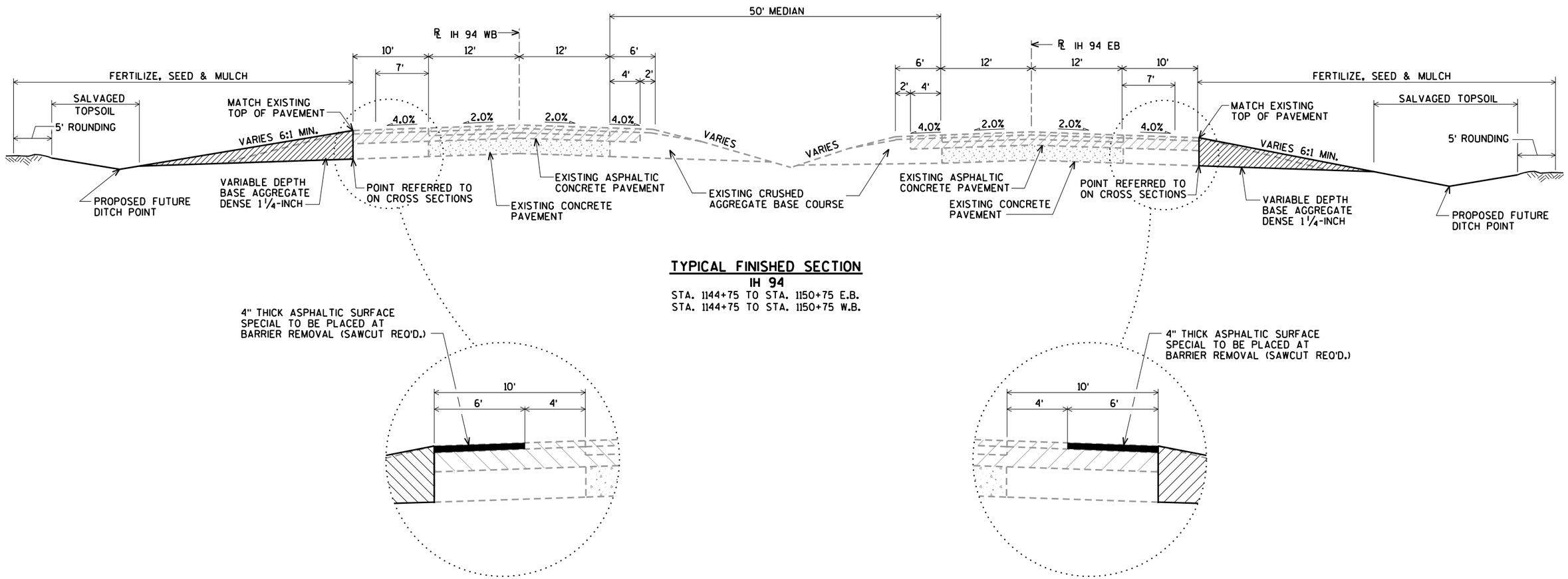

TYPICAL FINISHED SECTION
IH 94
STA. 1144+75 TO STA. 1150+75 E.B.
STA. 1144+75 TO STA. 1150+75 W.B.

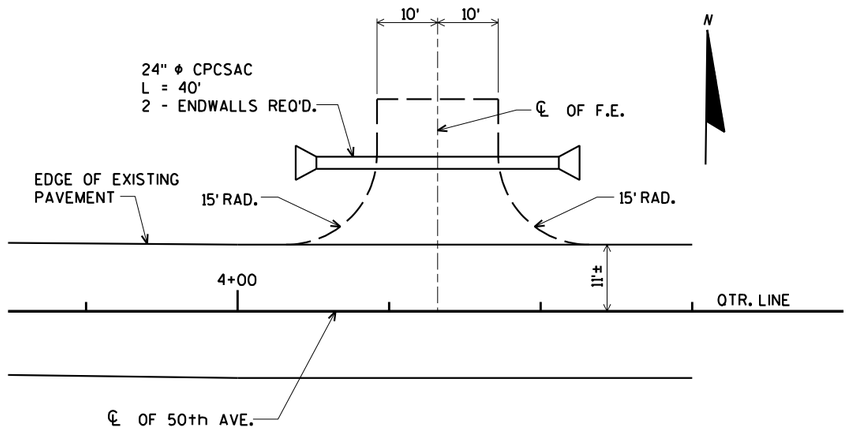

FIELD ENTRANCE PLAN

50th AVE. LT.
433' EAST OF CTH BB & 50th AVE. INTERSECTION
BASE AGGREGATE DENSE ¾-INCH

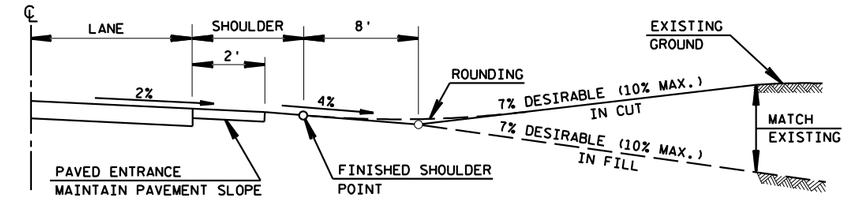

PROFILE VIEW

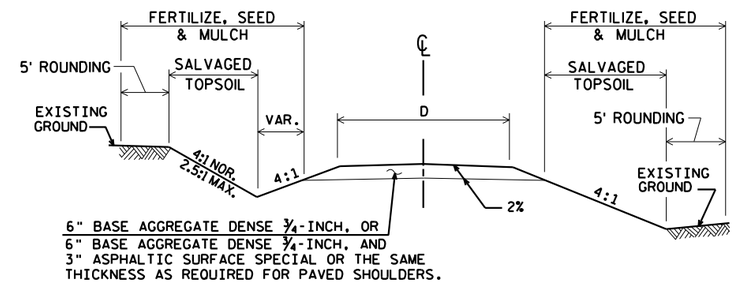

TYPICAL CROSS SECTION

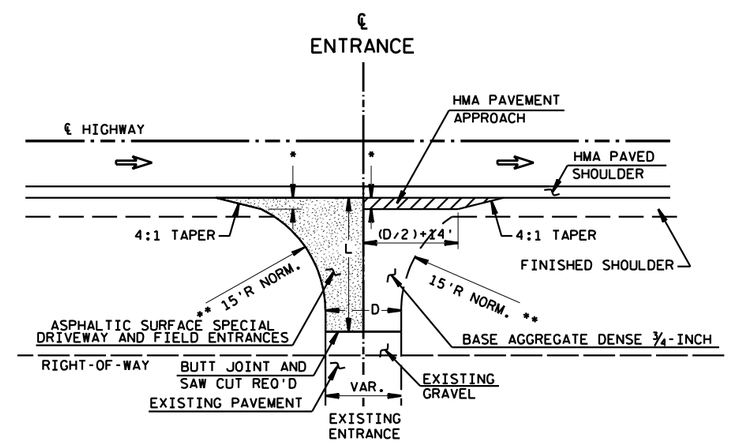

PLAN VIEW

D=DRIVEWAY WIDTH
D=20'TYP.(PE's & FE's) (16'MIN.-24'MAX.)
D=28'TYP.(CE's & FARM ENT.) (24'MIN.-35'MAX.)

L=VARIABLE, EXACT LENGTH TO BE DETERMINED IN THE FIELD BY THE ENGINEER. BLEND BACK ON THE ENTRANCE FAR ENOUGH TO GET A SMOOTH PROFILE.

** RADIUS IS TANGENT AT PAVED SHOULDER EDGE OR 5' MAX. OFF EDGE OF MAIN LINE PAVEMENT WHICH EVER IS LESS.

* 3' MAX. OR TO FINISHED SHOULDER WHICH EVER IS LESS.

RURAL DRIVEWAY INTERSECTION DETAIL

(PE's, FE's & CE'S)
(FOR NEW CONSTRUCTION)

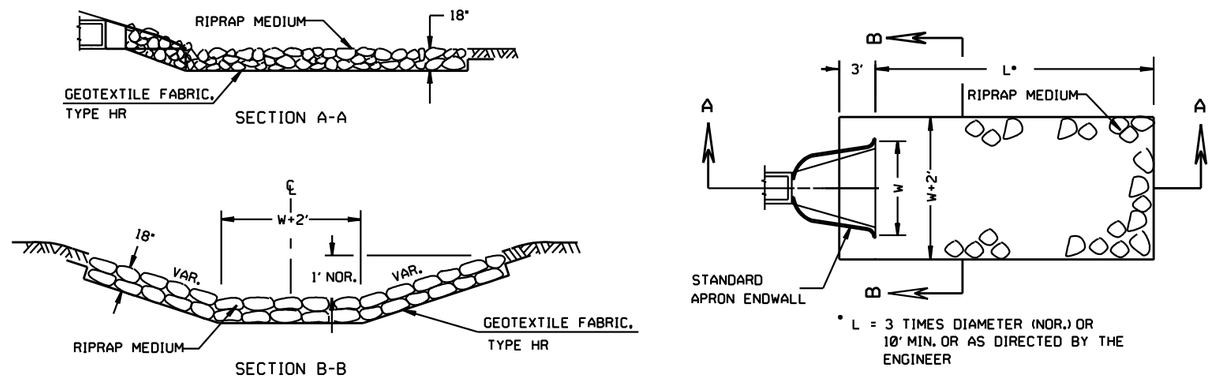

RIPRAP AND GEOTEXTILE FABRIC DETAIL

AT APRON ENDWALLS

ESTIMATED BAG SIZE = 18" x 12" x 6"	
PIPE SIZE	ESTIMATED NO. OF BAGS
12"	1
15"	2
18"	2
21"	3
14" x 23"	3
24"	3
27"	4
30"	5
19" x 30"	5
36"	7
24" x 38"	8
42"	8
29" x 45"	10
48"	10
34" x 53"	10
38" x 60"	13
60"	13
66"	15
53" x 83"	19

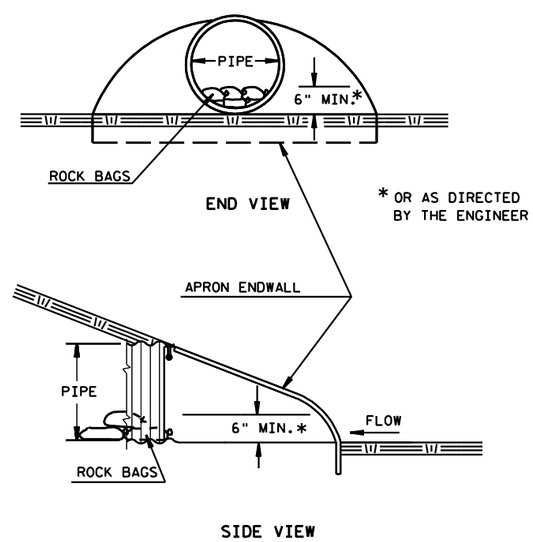

CULVERT PIPE DITCH CHECK

SEE EROSION CONTROL SHEETS FOR LOCATIONS

2

CURVE DATA - IH 94 EB

P.I. STA. 1151+60.46
Y = 328089.71
X = 624856.03
△ = 09°53'18"
D = 00°29'60"
R = 11,459.16'
T = 991.30'
L = 1,977.67'
E = 42.80'
S.E. = N.C.
P.C. STA. 1141+69.16
Y = 328092.76
X = 623885.75
P.T. STA. 1161+46.83
Y = 328056.31
X = 625846.76

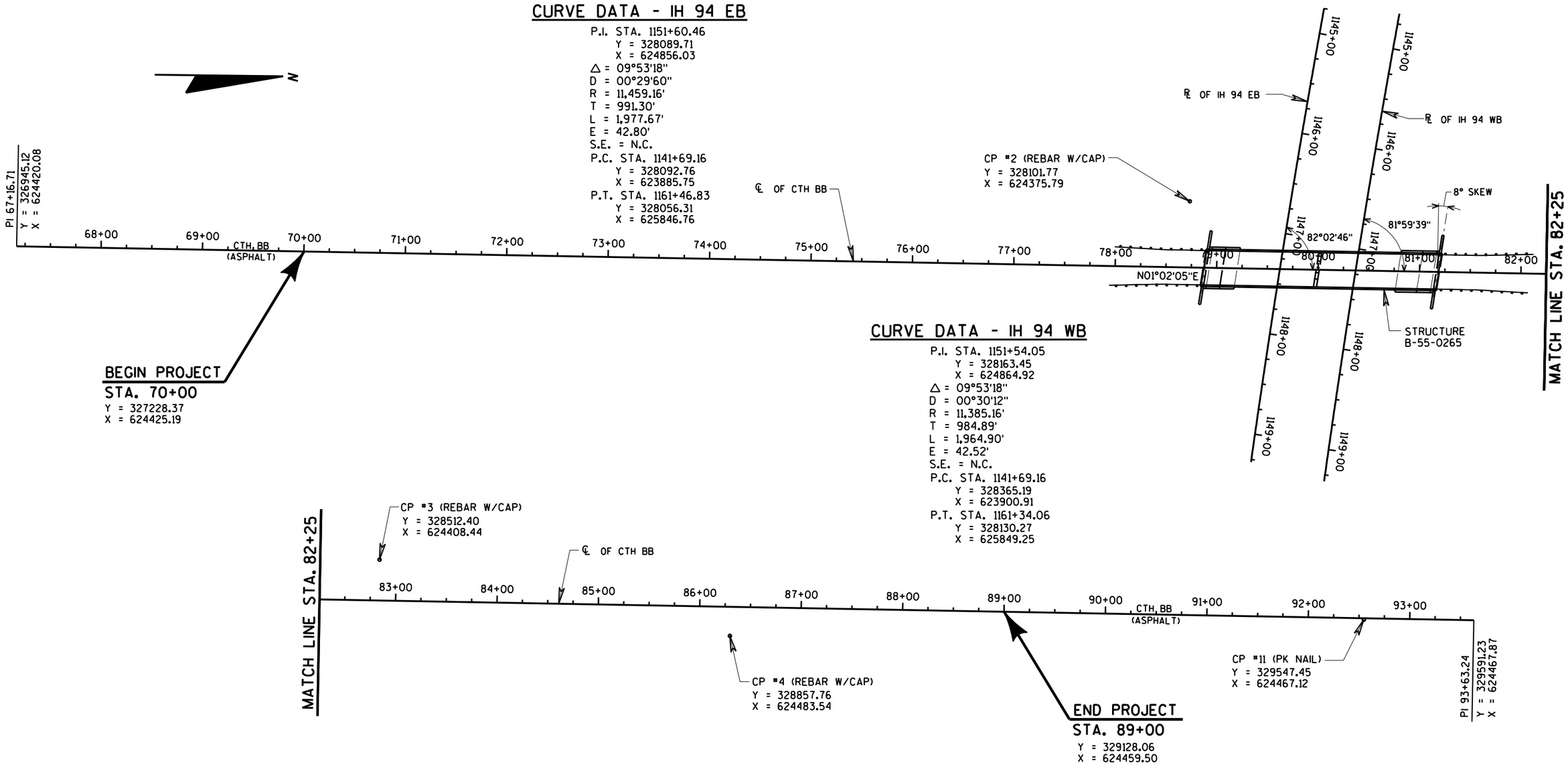

CURVE DATA - IH 94 WB

P.I. STA. 1151+54.05
Y = 328163.45
X = 624864.92
△ = 09°53'18"
D = 00°30'12"
R = 11,385.16'
T = 984.89'
L = 1,964.90'
E = 42.52'
S.E. = N.C.
P.C. STA. 1141+69.16
Y = 328365.19
X = 623900.91
P.T. STA. 1161+34.06
Y = 328130.27
X = 625849.25

ALIGNMENT CONTROLS

PROJECT NO: 1020-01-88	HWY: CTH BB	COUNTY: ST. CROIX	ALIGNMENT TIES	SCALE, FEET 0 50 100	SHEET 6	E

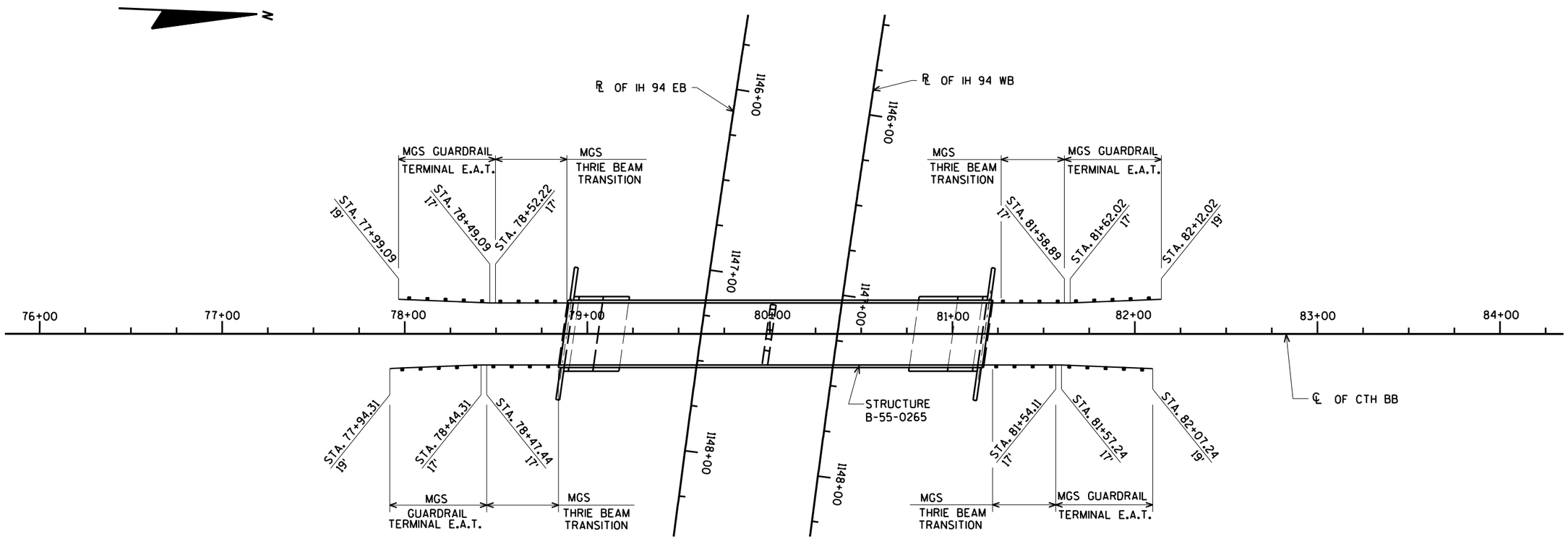
N
℄ OF IH 94 EB
℄ OF IH 94 WB
1146+00
1147+00
1148+00
MGS GUARDRAIL
TERMINAL E.A.T.
MGS
THRIE BEAM
TRANSITION
STA. 77+99.09
19'
STA. 78+49.09
17'
STA. 78+52.22
17'
STA. 81+58.89
17'
STA. 81+62.02
17'
STA. 82+12.02
19'
76+00
77+00
78+00
79+00
80+00
81+00
82+00
83+00
84+00
STRUCTURE
B-55-0265
℄ OF CTH BB
STA. 77+94.31
19'
STA. 78+44.31
17'
STA. 78+47.44
17'
STA. 81+54.11
17'
STA. 81+57.24
17'
STA. 82+07.24
19'

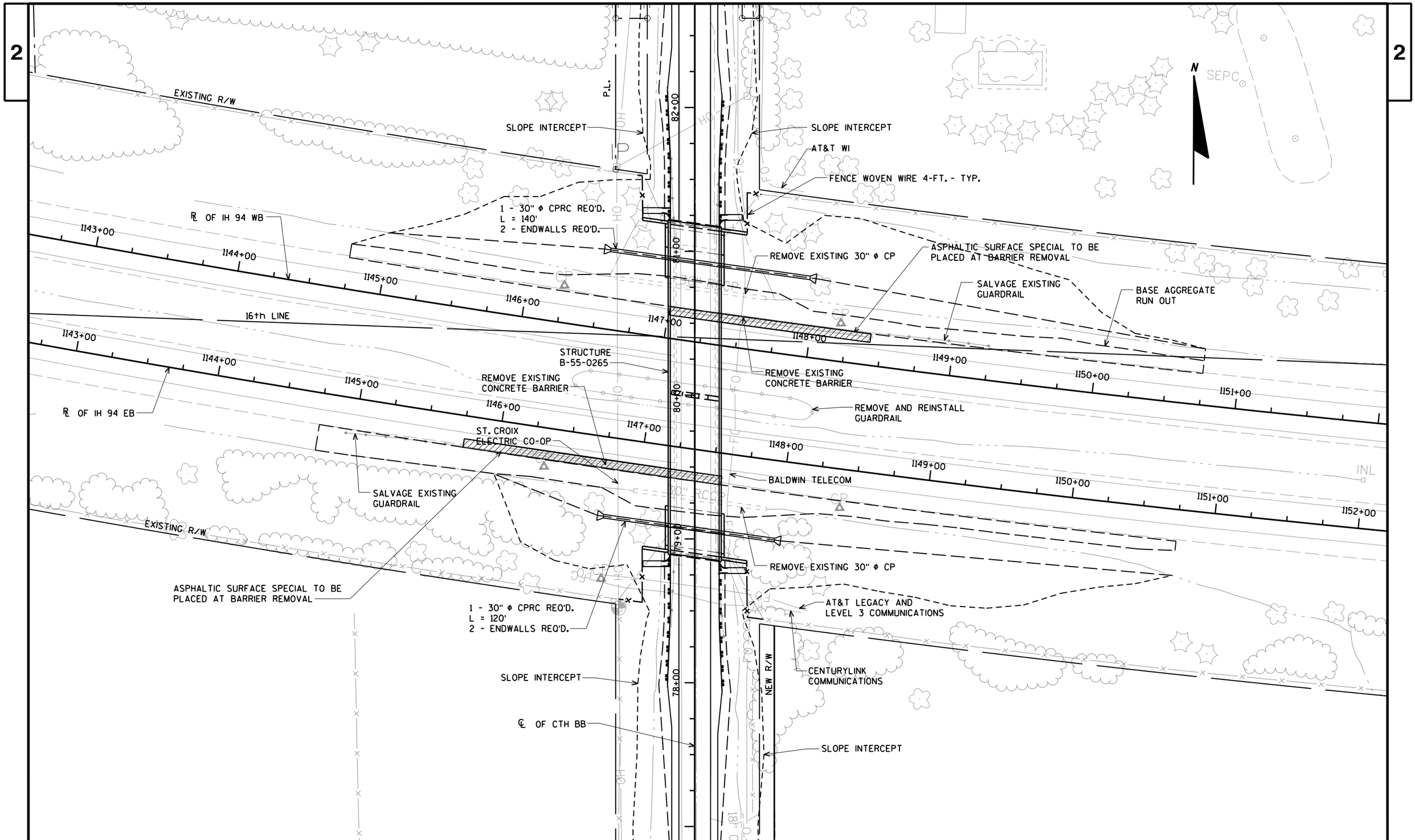

PROJECT NO: 1020-01-88	HWY: CTH BB	COUNTY: ST. CROIX	CONSTRUCTION DETAILS - IH 94	SCALE, FEET 0 30 60	SHEET 8	E

2

N

QTR. LINE

℄ OF 50th AVE.

CORN CRIB

CORN CRIB

SEPC

P.L.

FOUND

ST. CROIX ELECTRIC CO-OP

73'

100'

EXISTING R/W

SECTION LINE

68+00

69+00

70+00

71+00

72+00

73+00

74+00

75+00

76+00

77+00

78+00

79+00

80+00

81+00

82+00

CTH. BB (ASPHALT)

EXISTING R/W

P167+16.71

NEW R/W

TLE

℄ OF CTH BB

BALDWIN TELECOM

NEW R/W

SLOPE INTERCEPTS

CENTURYLINK COMMUNICATIONS

CP #2

STRUCTURE B-55-0265

AT&T LEGACY AND LEVEL 3 COMMUNICATIONS

EXISTING STRUCTURE B-55-0048 TO BE REMOVED

N01°02'05"E

78'

AT&T WI

MATCH LINE STA. 82+25

300' EXISTING R/W

℄ OF IH 94 EB

℄ OF IH 94 WB

16th LINE

1145+00

1146+00

1147+00

1148+00

1149+00

1150+00

1151+00

PI= 1151+60.46
N= 328089.711
E= 624856.028
R= 11459.16'
Delta= 09°53'18" LT

BEGIN PROJECT
STA. 70+00
Y = 327228.37
X = 624425.19

2

LEGEND

- EROSION MAT CLASS II TYPE B
- TEMPORARY DITCH CHECKS (UNDISTRIBUTED)
- SILT FENCE
- SURFACE WATER FLOW
- RIPRAP MEDIUM (WITH GEOTEXTILE FABRIC TYPE HR)
- CULVERT PIPE CHECK

PROJECT NO: 1020-01-88	HWY: CTH BB	COUNTY: ST. CROIX	EROSION CONTROL PLAN	SCALE, FEET 0 50 100	SHEET 9	E

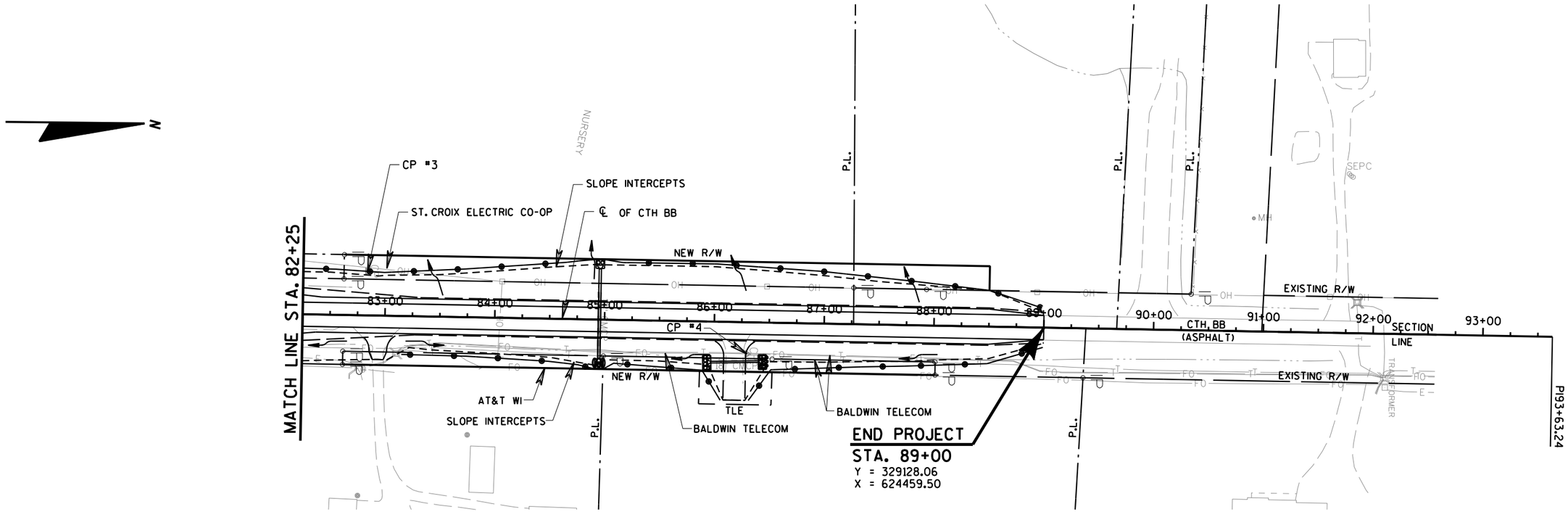

LEGEND

- EROSION MAT CLASS II TYPE B
- TEMPORARY DITCH CHECKS (UNDISTRIBUTED)
- SILT FENCE
- SURFACE WATER FLOW
- RIPRAP MEDIUM (WITH GEOTEXTILE FABRIC TYPE HR)
- CULVERT PIPE CHECK

PROJECT NO: 1020-01-88	HWY: CTH BB	COUNTY: ST. CROIX	EROSION CONTROL PLAN	SCALE, FEET 0 50 100	SHEET 10	E

2

NOTES:

"MO" IS THE SAME AS "M" AND "WO" IS THE SAME AS "W" EXCEPT THE BACKGROUND IS REFLECTIVE ORANGE.

THE CONTRACTOR SHALL COVER EXISTING SIGNS WITH THE PROPOSED ALTERNATE ROUTE DETOUR SIGNS OR REMOVE THE EXISTING SIGN AND REPLACE AFTER COMPLETION OF THE PROJECT.

ALL SIGNS PAID FOR AS TRAFFIC CONTROL SIGNS, OR TRAFFIC CONTROL SIGNS FIXED MESSAGE.

N

Hammond

Baldwin

M1-1 36"x36"
PERIODIC LANE CLOSURES
WATCH FOR
SLOW TRAFFIC
SPECIAL (FIXED MESSAGE) 180" X 48"

M1-1 36"x36"
ROAD WORK
8 MILES AHEAD
G20-55 84" x 24"

PCMS

* MESSAGE BOARD TO BE PROGRAMMED BY WI STATE PATROL AS NEEDED

SEE "DETOUR PLAN - IH 94" PLAN SHEET FOR CLOSURE OF IH 94 EB TRAFFIC CONTROL.

1/4 MILE

3/4 MILE

EXIT 19
Baldwin
Ellsworth
1 MILE

MB4-1 36"x18"
M1-1 36"x36"

EXIT 19
Baldwin
Ellsworth

EXIT 19

Woodville 4
Menomonie 23

233RD ST

** SEE QUANTITIY ESTIMATING CHART FOR WOOD & BREAKAWAY STEEL POSTS AND FOR NUMBER OF POSTS REQ'D.

LEGEND

- SIGN ON SINGLE POST
- SIGN ON MULTIPLE POSTS **
- (EXIST) TYPE I SIGN
- PCMS — T.C. SIGNS PORTABLE CHANGEABLE MESSAGE
- WORK ZONE
- COVERING SIGNS
- FLAGS, 16" x 16" MIN., ORANGE (INCIDENTAL TO TRAFFIC CONTROL)
- M1-1 (TRAFFIC CONTROL SIGNS) 36" x 36"
- IH 94 EASTBOUND ALT ROUTE
- IH 94 WESTBOUND ALT ROUTE
- WEST SOUTH 12 65 — EXISTING SIGNS TO REMAIN
- M05 OR M06 SIGNS 21" x 21"

MOUNTING DETAIL FOR TRAFFIC CONTROL FLAG ASSEMBLIES
FLAGS, 16" x 16" MIN., ORANGE
ERECT FLAG ASSEMBLY USING ENGINEER-APPROVED METHODS.

PROJECT NO:1020-01-88	HWY:CTH BB	COUNTY:ST. CROIX	TRAFFIC CONTROL - ALTERNATE ROUTE SIGNING - IH 94	SHEET 11	E

FILE NAME : V:\Structures-EC\42-0886.00 - St. Croix Co, I94 Overpasses x3\42-0886.01 B-55-48 CTH BB\RDWY\42088601 TC ALT ROUTE 1.dgnPLOT DATE : 7/30/2015 PLOT BY : AYRES-EC PLOT NAME : PLOT SCALE : 1:3500

WISDOT/CADDS SHEET 42

NOTES:

"MO" IS THE SAME AS "M" AND "WO" IS THE SAME AS "W" EXCEPT THE BACKGROUND IS REFLECTIVE ORANGE.

THE CONTRACTOR SHALL COVER EXISTING SIGNS WITH THE PROPOSED ALTERNATE ROUTE DETOUR SIGNS OR REMOVE THE EXISTING SIGN AND REPLACE AFTER COMPLETION OF THE PROJECT.

ALL SIGNS PAID FOR AS TRAFFIC CONTROL SIGNS, OR TRAFFIC CONTROL SIGNS FIXED MESSAGE.

** SEE QUANTITIY ESTIMATING CHART FOR WOOD & BREAKAWAY STEEL POSTS AND FOR NUMBER OF POSTS REQ'D.

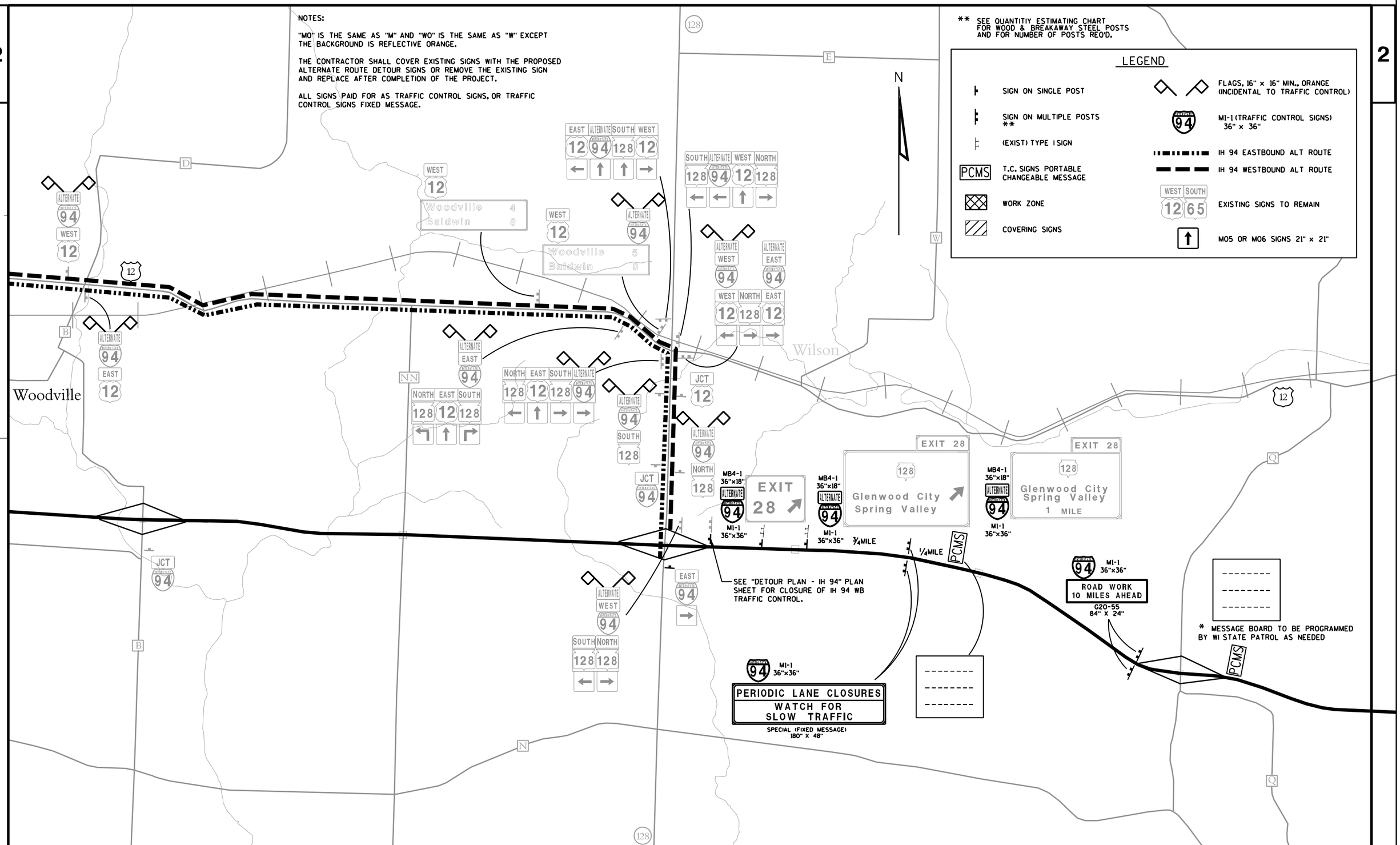

PROJECT NO:1020-01-88	HWY:CTH BB	COUNTY:ST. CROIX	TRAFFIC CONTROL - ALTERNATE ROUTE SIGNING - IH 94	SHEET 12	E

FILE NAME : V:\Structures-EC\42-0886.00 - St. Croix Co, I94 Overpasses x3\42-0886.01 B-55-48 CTH BB\RDWY\42088601 TC ALT ROUTE 2.dgnPLOT DATE : 7/30/2015 PLOT BY : AYRES-EC PLOT NAME : PLOT SCALE : 1:3500

WISDOT/CADDS SHEET 42

DETOUR PLAN

LANE DROP TO OFF RAMP

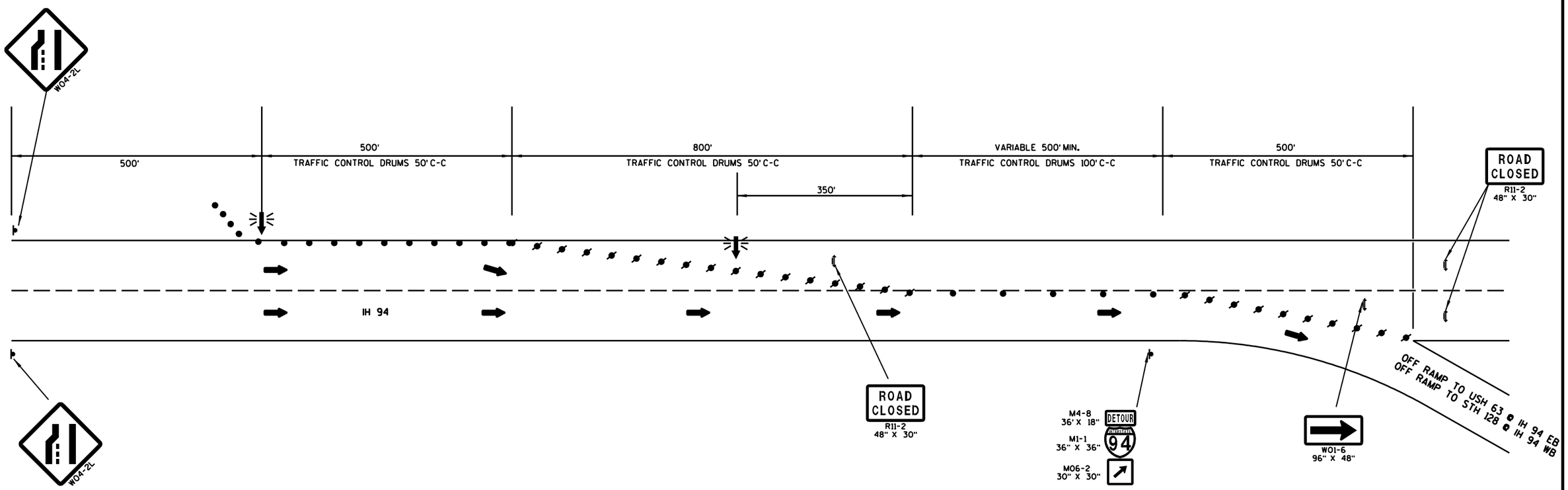

- TRAFFIC CONTROL DRUM
- TRAFFIC CONTROL DRUM WITH TYPE C WARNING LIGHT
- TYPE III BARACADE WITH SIGN
- POST MOUNTED SIGN OR TEMPORARY SIGN SUPPORT
- FLASHING ARROW BOARD
- TRAFFIC FLOW ARROW

NOTES:
FOR ADDITIONAL DETAIL SEE S.D.D. "TRAFFIC CONTROL, LANE CLOSURE".

REMOVAL OF PAVEMENT MARKINGS AND TEMPORARY PAVEMENT MARKINGS SHALL NOT BE USED BECAUSE DETOUR IS TO BE IN PLACE FOR LESS THAN 8 HOURS AT ANY TIME.

TRAFFIC CONTROL DEVICES SHOWN ON THIS SHEET ARE TO BE USED FOR EXISTING AND PROPOSED GIRDER WORK ON CTH BB OVERPASS STRUCTURE.

PROJECT NO:1020-01-88	HWY:CTH BB	COUNTY:ST. CROIX	DETOUR PLAN - IH 94	SHEET 13	E

2

SEE SDD "TRAFFIC CONTROL, LANE CLOSURE, SPEED REDUCTION"

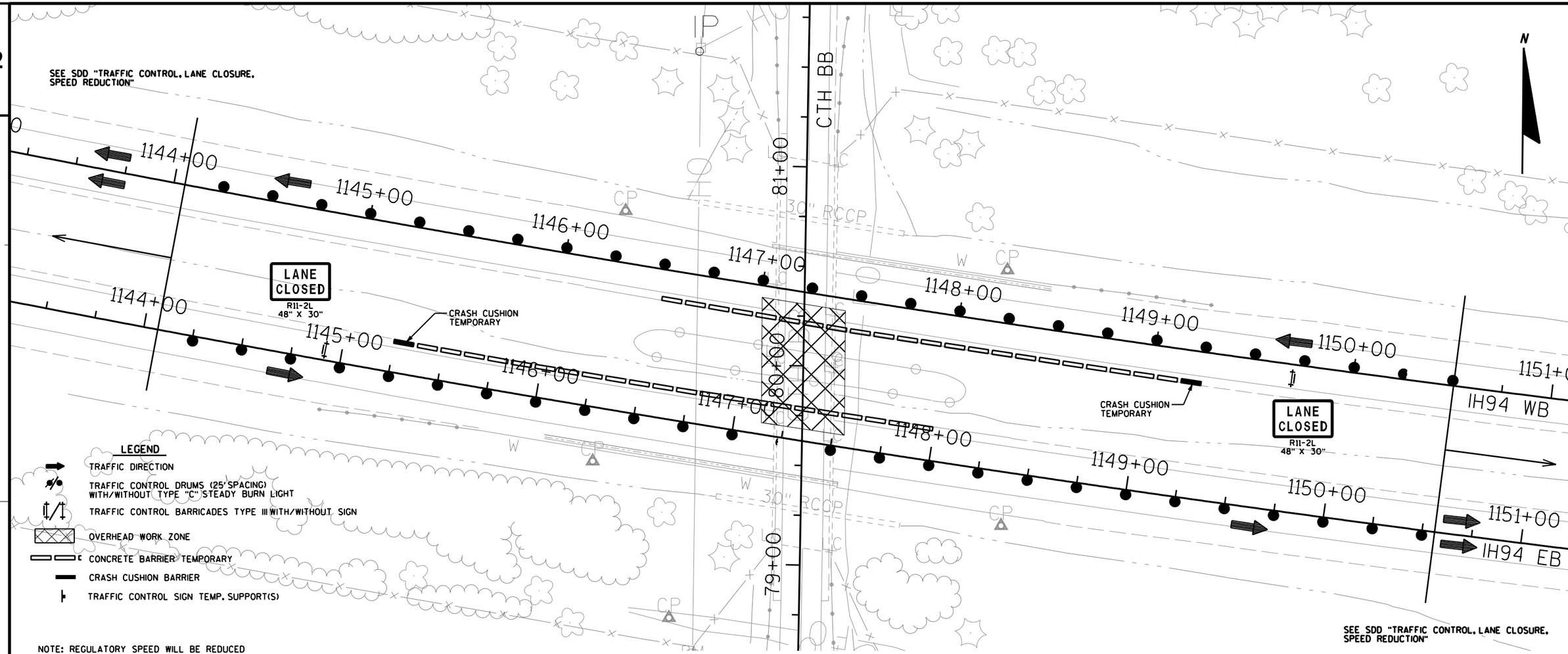

LEGEND

- TRAFFIC DIRECTION
- TRAFFIC CONTROL DRUMS (25' SPACING) WITH/WITHOUT TYPE "C" STEADY BURN LIGHT
- TRAFFIC CONTROL BARRICADES TYPE III WITH/WITHOUT SIGN
- OVERHEAD WORK ZONE
- CONCRETE BARRIER TEMPORARY
- CRASH CUSHION BARRIER
- TRAFFIC CONTROL SIGN TEMP. SUPPORT(S)

NOTE: REGULATORY SPEED WILL BE REDUCED TO 55 MPH WITHIN THE CONSTRUCTION ZONE DURING LANE CLOSURES.

SEE SDD "TRAFFIC CONTROL, LANE CLOSURE, SPEED REDUCTION"

STAGE 1 REMOVALS & AS NEEDED DURING CONSTRUCTION OF CENTER PIER

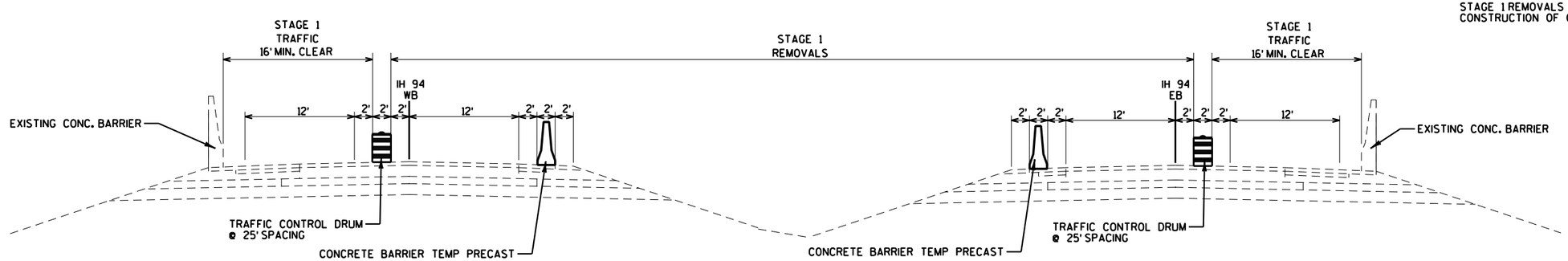

TYPICAL EXISTING SECTION - IH 94

** LANE CLOSURES OF IH 94 EB & WB DO NOT NEED TO BE CONCURRENT.

PROJECT NO:1020-01-88	HWY:CTH BB	COUNTY:ST.CROIX	TRAFFIC CONTROL - IH 94 SINGLE LANE FOR OVERHEAD WORK	SHEET 14	E

2

SEE SDD "TRAFFIC CONTROL, LANE CLOSURE, SPEED REDUCTION"

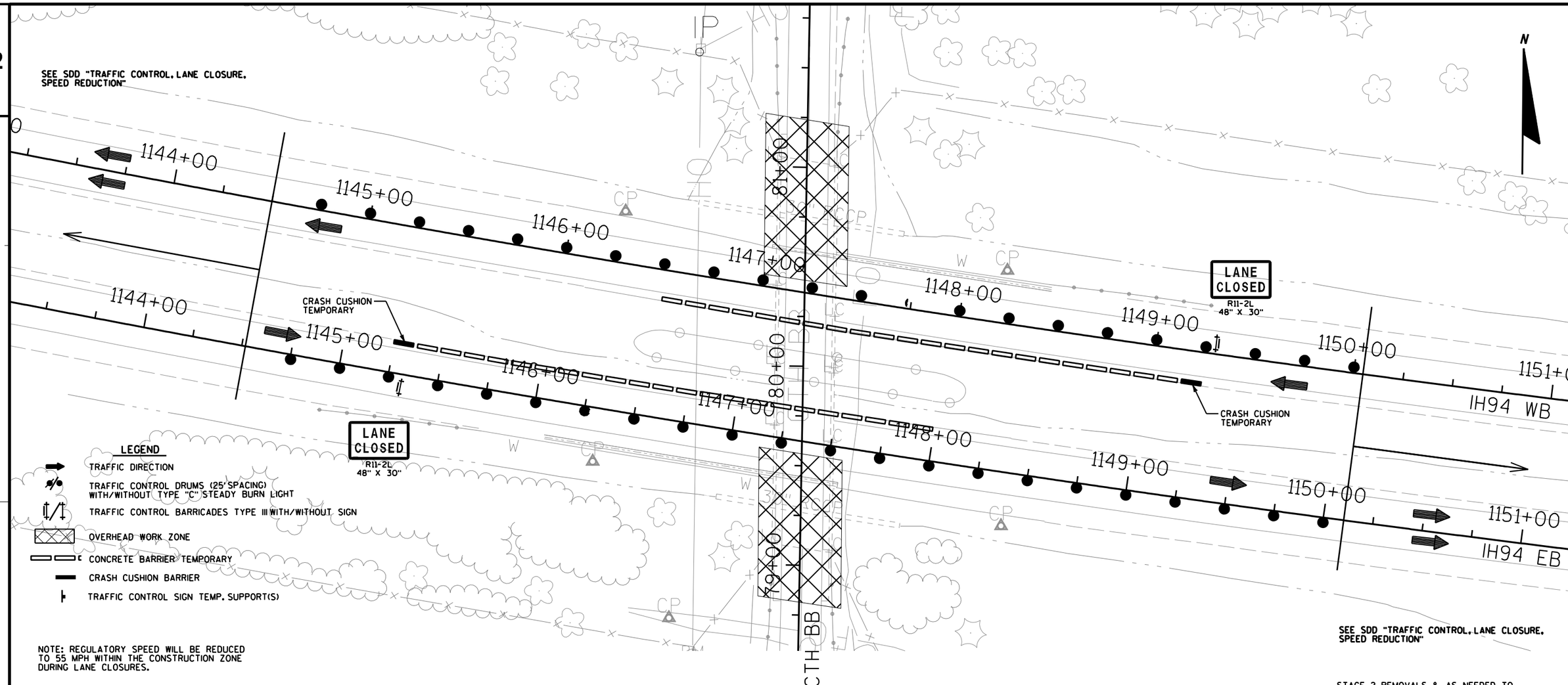

LEGEND

- TRAFFIC DIRECTION
- TRAFFIC CONTROL DRUMS (25' SPACING) WITH/WITHOUT TYPE "C" STEADY BURN LIGHT
- TRAFFIC CONTROL BARRICADES TYPE III WITH/WITHOUT SIGN
- OVERHEAD WORK ZONE
- CONCRETE BARRIER TEMPORARY
- CRASH CUSHION BARRIER
- TRAFFIC CONTROL SIGN TEMP. SUPPORT(S)

NOTE: REGULATORY SPEED WILL BE REDUCED TO 55 MPH WITHIN THE CONSTRUCTION ZONE DURING LANE CLOSURES.

SEE SDD "TRAFFIC CONTROL, LANE CLOSURE, SPEED REDUCTION"

STAGE 2 REMOVALS & AS NEEDED TO PROTECT CONSTRUCTION EQUIPMENT INSIDE CLEAR ZONE.

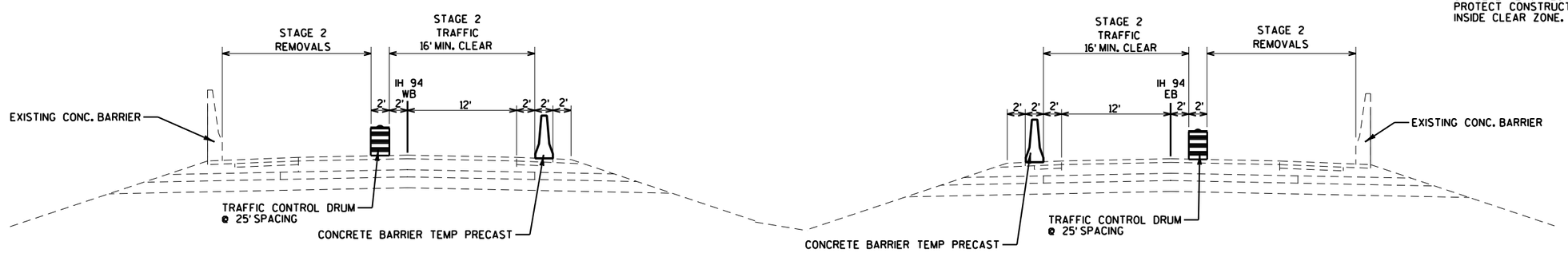

TYPICAL EXISTING SECTION - IH 94

** LANE CLOSURES OF IH 94 EB & WB DO NOT NEED TO BE CONCURRENT.

PROJECT NO:1020-01-88	HWY:CTH BB	COUNTY:ST.CROIX	TRAFFIC CONTROL - IH 94 SINGLE LANE FOR OVERHEAD WORK	SHEET 15	E

FILE NAME : U:\42-0886.00 - St. Croix Co. I94 Overpasses x3\42-0886.01 B-55-48 CTH BB\RDWY\42088601 TC STAGE 2 REMOVALS.dgn PLOT DATE : 11/11/2015 PLOT BY : AYRES-EC PLOT NAME : PLOT SCALE : 1:50

WISDOT/CADDS SHEET 42

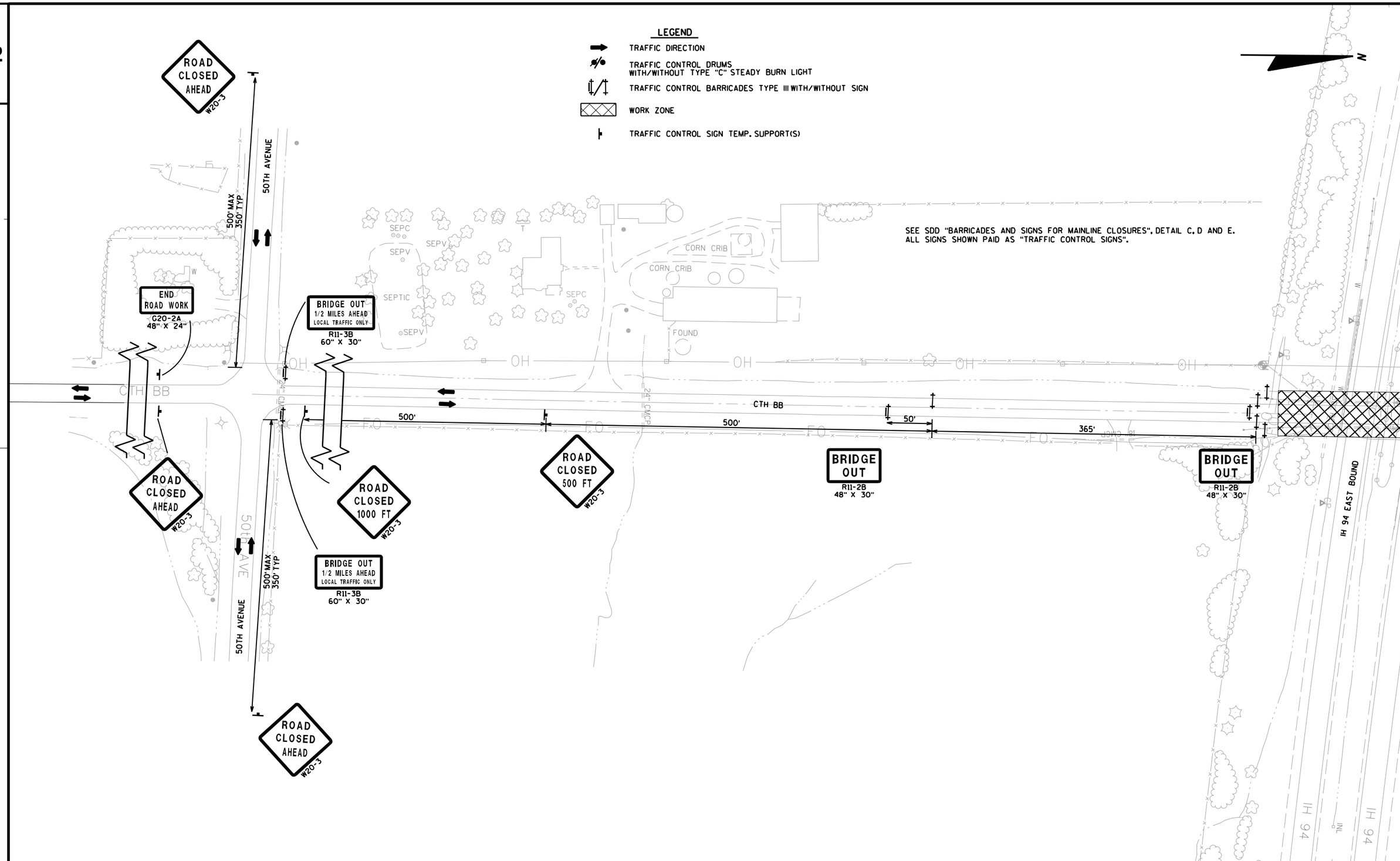

PROJECT NO:1020-01-88	HWY:CTH BB	COUNTY:ST.CROIX	TRAFFIC CONTROL - CTH BB SIGNING	SHEET 16	E

FILE NAME : V:\Structures-EC\42-0886.00 - St. Croix Co. I94 Overpasses x3\42-0886.01 B-55-48 CTH BB\RDWY\42088601 TC1 B 55-0265 CLOSED.dgn PLOT DATE : 7/14/2015 PLOT BY : AYRES-EC PLOT NAME : PLOT SCALE : 1:100 WISDOT/CADDS SHEET 42

2

LEGEND

- TRAFFIC DIRECTION
- TRAFFIC CONTROL DRUMS WITH/WITHOUT TYPE "C" STEADY BURN LIGHT
- TRAFFIC CONTROL BARRICADES TYPE III WITH/WITHOUT SIGN
- WORK ZONE
- TRAFFIC CONTROL SIGN TEMP. SUPPORT(S)

SEE SDD "BARRICADES AND SIGNS FOR MAINLINE CLOSURES", DETAIL C, D AND E.
ALL SIGNS SHOWN PAID AS "TRAFFIC CONTROL SIGNS".

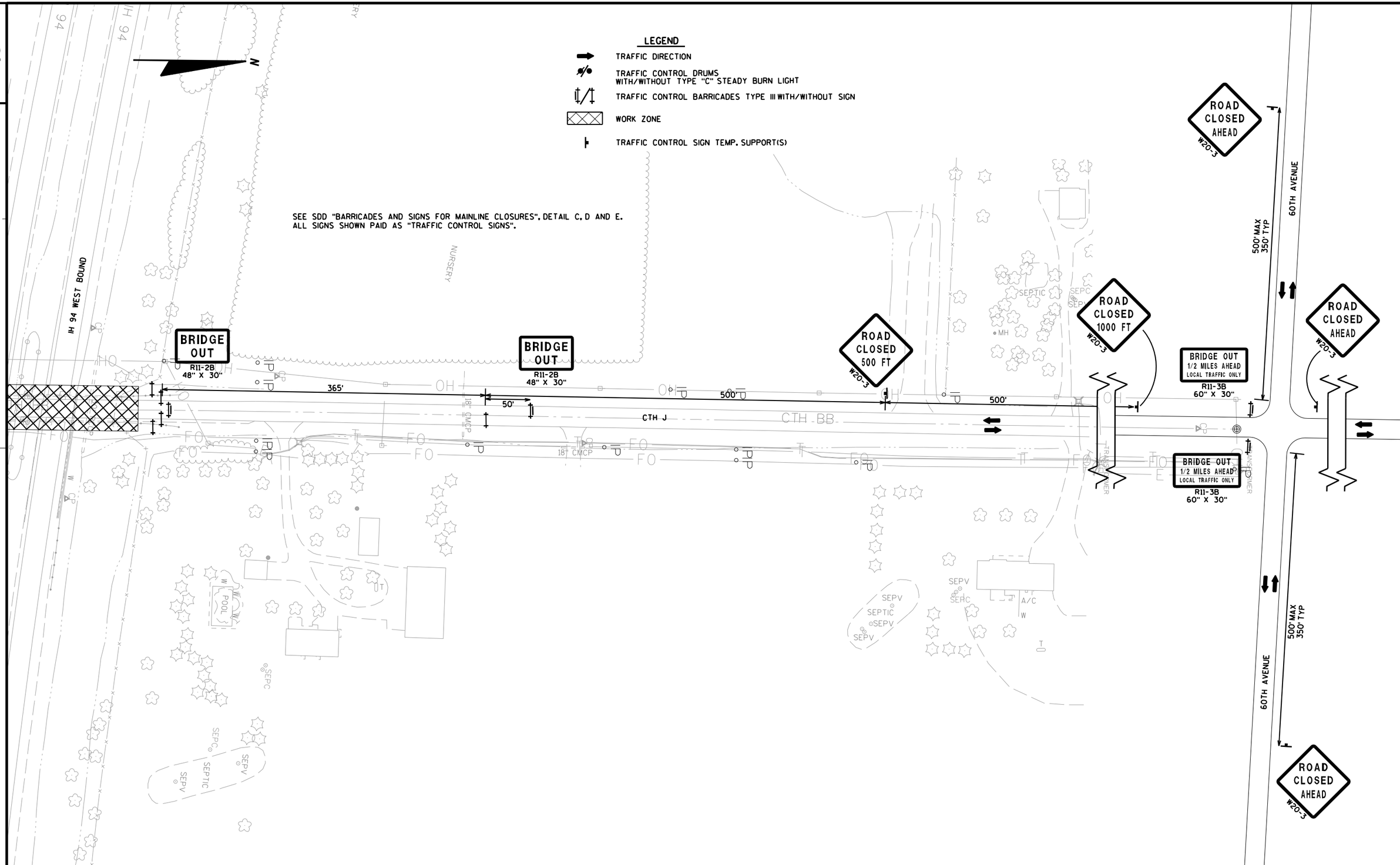

2

PROJECT NO:1020-01-88	HWY:CTH BB	COUNTY:ST.CROIX	TRAFFIC CONTROL - CTH BB SIGNING	SHEET 17	E

FILE NAME : V:\Structures-EC\42-0886.00 - St. Croix Co. I94 Overpasses x3\42-0886.01 B-55-48 CTH BB\RDWY\42088601 TC2 B 55-0265 CLOSED.dgn PLOT DATE : 7/14/2015 PLOT BY : AYRES-EC PLOT NAME : PLOT SCALE : 1:100

WISDOT/CADDS SHEET 42

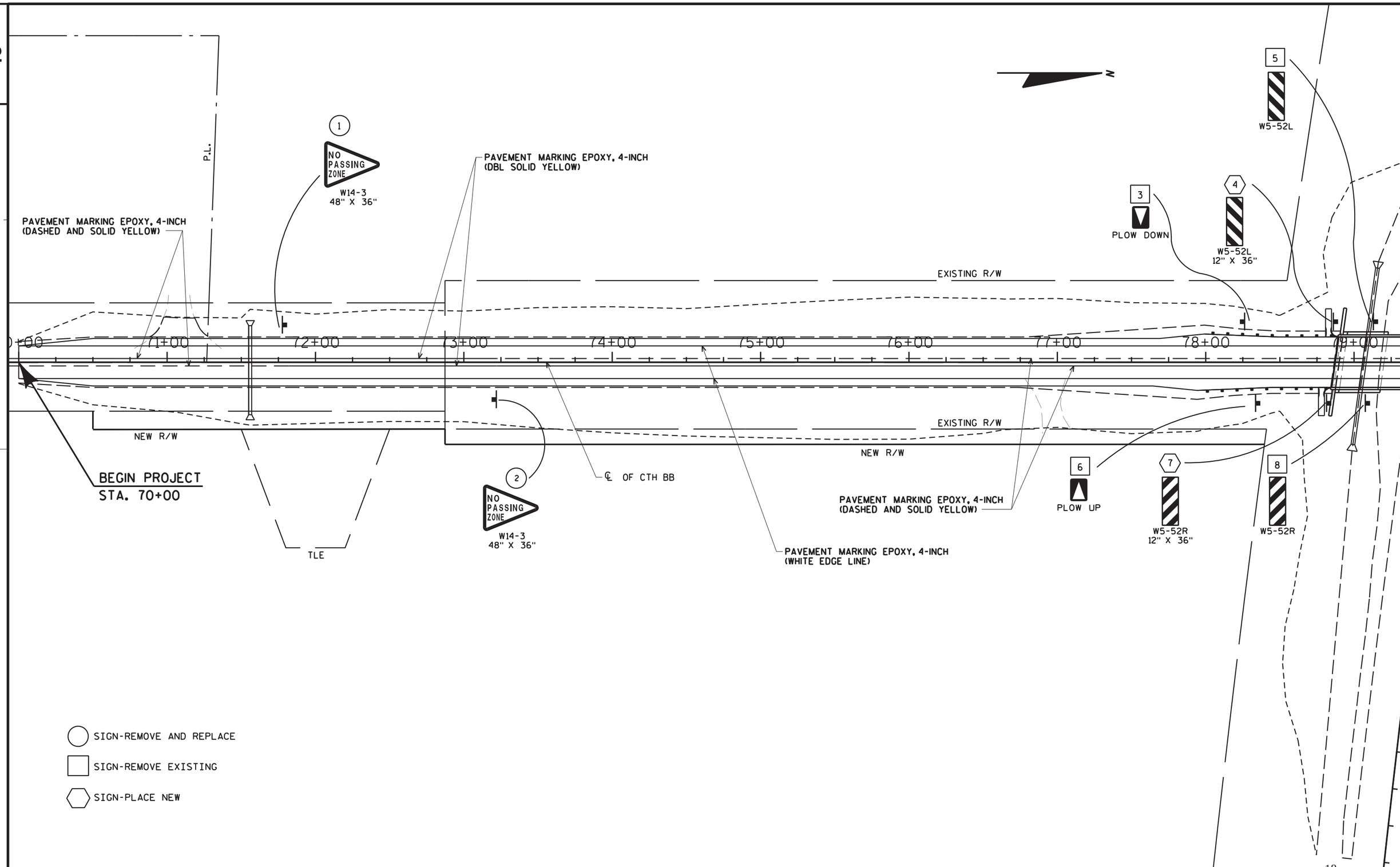

PROJECT NO: 1020-01-88	HWY: CTH BB	COUNTY: ST. CROIX	SIGNING AND PAVEMENT MARKING PLAN	SCALE, FEET 0 30 60	SHEET	E

FILE NAME : U:\42-0886.00 - St. Croix Co, I94 Overpasses x3\42-0886.01 B-55-48 CTH BB\RDWY\420886-01 TRAFFIC CONT - A.DGN PLOT DATE : 7/27/2015 PLOT BY : AYRES-EC PLOT NAME : PLOT SCALE : 1:58.4118

2

1145+00
1146+00
1147+00
1148+00
1149+00

12
W5-52R

13
W5-52R
12" X 36"

PAVEMENT MARKING EPOXY, 4-INCH
(DASHED AND SOLID YELLOW)

14
PLOW UP

NEW R/W

EXISTING R/W

P.L.

81+00 82+00 83+00 84+00 85+00 86+00 87+00 88+00 89+00

NEW R/W

EXISTING R/W

℄ OF CTH BB

TLE

PAVEMENT MARKING EPOXY, 4-INCH
(WHITE EDGELINE)

PAVEMENT MARKING EPOXY, 4-INCH
(DBL SOLID YELLOW)

9
W5-52L

10
W5-52L
12" X 36"

11
PLOW DOWN

END PROJECT
STA. 89+00

P.L.

P.L.

N

SIGN-REMOVE AND REPLACE

SIGN-REMOVE EXISTING

SIGN-PLACE NEW

2

PROJECT NO: 1020-01-88	HWY: CTH BB	COUNTY: ST. CROIX	SIGNING AND PAVEMENT MARKING PLAN	SCALE, FEET 0 30 60	SHEET	E

FILE NAME : U:\42-0886.00 - St. Croix Co, I94 Overpasses x3\42-0886.01 B-55-48 CTH BB\RDWY\420886-01 TRAFFIC CONT - B.DGN PLOT DATE : 7/27/2015 PLOT BY : AYRES-EC PLOT NAME : PLOT SCALE : 1:58.4118

3

DATE 30NOV15 E S T I M A T E O F Q U A N T I T I E S

LINE NUMBER	ITEM	ITEM DESCRIPTION	UNIT	TOTAL	1020-01-88 QUANTITY
0010	201.0105	Clearing	STA	5.000	5.000
0020	201.0205	Grubbing	STA	5.000	5.000
0030	203.0100	Removing Small Pipe Culverts	EACH	6.000	6.000
0040	203.0200	Removing Old Structure (station) 01. STA 80+00	LS	1.000	1.000
0050	203.0225.S	Debris Containment (structure) 01. B-55-265	LS	1.000	1.000
0060	204.0110	Removing Asphaltic Surface	SY	3,025.000	3,025.000
0070	204.0157	Removing Concrete Barrier	LF	322.000	322.000
0080	204.0170	Removing Fence	LF	221.000	221.000
0090	205.0100	Excavation Common	CY	6,805.000	6,805.000
0100	206.1000	Excavation for Structures Bridges (structure) 01. B-55-265	LS	1.000	1.000
0110	208.0100	Borrow	CY	3,880.000	3,880.000
0120	210.0100	Backfill Structure	CY	745.000	745.000
0130	213.0100	Finishing Roadway (project) 01. 1020-01-88	EACH	1.000	1.000
0140	305.0110	Base Aggregate Dense 3/4-Inch	TON	385.000	385.000
0150	305.0120	Base Aggregate Dense 1 1/4-Inch	TON	7,840.000	7,840.000
0160	455.0605	Tack Coat	GAL	315.000	315.000
0170	465.0315	Asphaltic Flumes	SY	38.000	38.000
0180	502.0100	Concrete Masonry Bridges	CY	565.000	565.000
0190	502.3200	Protective Surface Treatment	SY	875.000	875.000
0200	502.3210	Pigmented Surface Sealer	SY	195.000	195.000
0210	503.0146	Prestressed Girder Type I 45W-Inch	LF	1,379.000	1,379.000
0220	505.0400	Bar Steel Reinforcement HS Structures	LB	10,780.000	10,780.000
0230	505.0600	Bar Steel Reinforcement HS Coated Structures	LB	89,450.000	89,450.000
0240	506.2605	Bearing Pads Elastomeric Non-Laminated	EACH	24.000	24.000
0250	506.4000	Steel Diaphragms (structure) 01. B-55-265	EACH	20.000	20.000
0260	516.0500	Rubberized Membrane Waterproofing	SY	16.000	16.000
0270	521.1018	Apron Endwalls for Culvert Pipe Steel 18-Inch	EACH	2.000	2.000
0280	521.1024	Apron Endwalls for Culvert Pipe Steel 24-Inch	EACH	6.000	6.000
0290	522.0130	Culvert Pipe Reinforced Concrete Class III 30-Inch	LF	260.000	260.000
0300	522.1030	Apron Endwalls for Culvert Pipe Reinforced Concrete 30-Inch	EACH	4.000	4.000
0310	529.0118	Culvert Pipe Corrugated Steel Aluminum Coated 18-Inch	LF	44.000	44.000
0320	529.0124	Culvert Pipe Corrugated Steel Aluminum Coated 24-Inch	LF	178.000	178.000
0330	550.0500	Pile Points	EACH	55.000	55.000
0340	550.1120	Piling Steel HP 12-Inch X 53 Lb	LF	2,580.000	2,580.000
0350	603.8000	Concrete Barrier Temporary Precast Delivered	LF	550.000	550.000
0360	603.8125	Concrete Barrier Temporary Precast Installed	LF	550.000	550.000
0370	604.0500	Slope Paving Crushed Aggregate	SY	330.000	330.000
0380	606.0200	Riprap Medium	CY	75.000	75.000
0390	612.0406	Pipe Underdrain Wrapped 6-Inch	LF	190.000	190.000
0400	614.0150	Anchor Assemblies for Steel Plate Beam Guard	EACH	4.000	4.000
0410	614.0905	Crash Cushions Temporary	EACH	2.000	2.000

3

3

DATE 30NOV15 E S T I M A T E O F Q U A N T I T I E S

LINE NUMBER	ITEM	ITEM DESCRIPTION	UNIT	TOTAL	1020-01-88 QUANTITY
0420	614.0920	Salvaged Rail	LF	468.000	468.000
0430	614.2500	MGS Thrie Beam Transition	LF	160.000	160.000
0440	614.2610	MGS Guardrail Terminal EAT	EACH	4.000	4.000
0450	616.0100	Fence Woven Wire (height) 01. 4-FT	LF	180.000	180.000
0460	619.1000	Mobilization	EACH	1.000	1.000
0470	624.0100	Water	MGAL	120.000	120.000
0480	625.0500	Salvaged Topsoil	SY	11,205.000	11,205.000
0490	627.0200	Mulching	SY	13,190.000	13,190.000
0500	628.1504	Silt Fence	LF	4,120.000	4,120.000
0510	628.1520	Silt Fence Maintenance	LF	14,420.000	14,420.000
0520	628.1905	Mobilizations Erosion Control	EACH	4.000	4.000
0530	628.1910	Mobilizations Emergency Erosion Control	EACH	2.000	2.000
0540	628.2023	Erosion Mat Class II Type B	SY	4,665.000	4,665.000
0550	628.7005	Inlet Protection Type A	EACH	1.000	1.000
0560	628.7504	Temporary Ditch Checks	LF	175.000	175.000
0570	628.7555	Culvert Pipe Checks	EACH	18.000	18.000
0580	629.0210	Fertilizer Type B	CWT	13.500	13.500
0590	630.0120	Seeding Mixture No. 20	LB	570.000	570.000
0600	630.0200	Seeding Temporary	LB	445.000	445.000
0610	630.0300	Seeding Borrow Pit	LB	20.000	20.000
0620	633.5200	Markers Culvert End	EACH	8.000	8.000
0630	634.0612	Posts Wood 4x6-Inch X 12-FT	EACH	4.000	4.000
0640	634.0618	Posts Wood 4x6-Inch X 18-FT	EACH	2.000	2.000
0650	637.2230	Signs Type II Reflective F	SF	24.000	24.000
0660	638.2602	Removing Signs Type II	EACH	10.000	10.000
0670	638.3000	Removing Small Sign Supports	EACH	10.000	10.000
0680	642.5001	Field Office Type B	EACH	1.000	1.000
0690	643.0100	Traffic Control (project) 01. 1020-01-88	EACH	1.000	1.000
0700	643.0300	Traffic Control Drums	DAY	22,000.000	22,000.000
0710	643.0420	Traffic Control Barricades Type III	DAY	2,800.000	2,800.000
0720	643.0705	Traffic Control Warning Lights Type A	DAY	4,800.000	4,800.000
0730	643.0715	Traffic Control Warning Lights Type C	DAY	8,600.000	8,600.000
0740	643.0800	Traffic Control Arrow Boards	DAY	800.000	800.000
0750	643.0900	Traffic Control Signs	DAY	10,600.000	10,600.000
0760	643.0920	Traffic Control Covering Signs Type II	EACH	2.000	2.000
0770	643.1000	Traffic Control Signs Fixed Message	SF	240.000	240.000
0780	643.1050	Traffic Control Signs PCMS	DAY	200.000	200.000
0790	645.0120	Geotextile Fabric Type HR	SY	250.000	250.000
0800	646.0106	Pavement Marking Epoxy 4-Inch	LF	6,807.000	6,807.000
0810	648.0100	Locating No-Passing Zones	MI	0.360	0.360
0820	649.0506	Temporary Pavement Marking Removable Mask-Out Tape 6-Inch	LF	4,075.000	4,075.000
0830	650.4500	Construction Staking Subgrade	LF	2,667.000	2,667.000
0840	650.5000	Construction Staking Base	LF	1,667.000	1,667.000
0850	650.6000	Construction Staking Pipe Culverts	EACH	6.000	6.000
0860	650.6500	Construction Staking Structure Layout (structure) 01. B-55-265	LS	1.000	1.000
0870	650.9910	Construction Staking Supplemental Control (project) 01. 1020-01-88	LS	1.000	1.000
0880	650.9920	Construction Staking Slope Stakes	LF	2,667.000	2,667.000
0890	690.0150	Sawing Asphalt	LF	389.000	389.000
0900	715.0502	Incentive Strength Concrete Structures	DOL	3,390.000	3,390.000
0910	ASP.1T0A	On-the-Job Training Apprentice at $5. 00/HR	HRS	2,000.000	2,000.000

3

DATE 30NOV15 E S T I M A T E O F Q U A N T I T I E S

LINE NUMBER	ITEM	ITEM DESCRIPTION	UNIT	TOTAL	1020-01-88 QUANTITY
0920	ASP.1T0G	On-the-Job Training Graduate at $5.00/HR	HRS	630.000	630.000
0930	SPV.0045	Special 01. Portable Changeable Message Signs (PCMS) Cellular Communications	DAY	200.000	200.000
0940	SPV.0090	Special 01. Remove And Reinstall Guardrail	LF	349.000	349.000
0950	SPV.0090	Special 02. Fence Chain Link Polymer Coated 6-Ft	LF	465.000	465.000
0960	SPV.0195	Special 01. Asphaltic Surface Special	TON	1,770.000	1,770.000

3

3

3

CLEARING AND GRUBBING (CATEGORY 0010)

ROADWAY	STATION TO STATION	201.0105 CLEARING STA	201.0205 GRUBBING STA
CTH BB	STA. 77+25 TO STA. 79+50	3	3
	STA. 80+75 TO STA. 82+75	2	2
TOTAL		5	5

203.0100 REMOVING SMALL PIPE CULVERTS (CATEGORY 0010)

ROADWAY	STATION	LOCATION	DESCRIPTION	EACH
CTH BB	STA. 71+56	MAINLINE	24" CPCS	1
	FE STA. 76+96	RT	18" CPCS	1
	STA. 79+28	MAINLINE	30" CPRC	1
	STA. 80+74	MAINLINE	30" CPRC	1
	STA. 84+95	MAINLINE	18" CPCS	1
	PE STA. 86+18	RT	18" CPCS	1
TOTAL				6

204.0110 REMOVING ASPHALTIC SURFACE (CATEGORY 0010)

ROADWAY	STATION TO STATION	LOCATION	SY
CTH BB	STA. 72+50 TO STA. 78+87	MAINLINE	1,490
	STA. 81+19 TO STA. 87+00	MAINLINE	1,420
IH 94 EB	STA. 1145+76 TO STA. 1147+57	RT	65
IH 94 WB	STA. 1147+01 TO STA. 1148+42	LT	50
TOTAL			3,025

204.0157 REMOVING CONCRETE BARRIER (CATEGORY 0010)

ROADWAY	STATION TO STATION	LOCATION	LF
IH 94 EB	STA. 1145+76 TO STA. 1147+57	RT	181
IH 94 WB	STA. 1147+01 TO STA. 1148+42	LT	141
TOTAL			322

204.0170 REMOVING FENCE (CATEGORY 0010)

ROADWAY	STATION TO STATION	LOCATION	LF
IH 94 EB	STA. 1146+98 TO STA. 1147+27	RT	60
	STA. 1147+61 TO STA. 1147+98	RT	65
IH 94 WB	STA. 1146+65 TO STA. 1147+05	LT	51
	STA. 1147+28 TO STA. 1147+53	LT	45
TOTAL			221

213.0100 FINISHING ROADWAY (CATEGORY 0010)

LOCATION	EACH
PROJECT 1020-01-88	1

BASE AGGREGATE DENSE (CATEGORY 0010)

ROADWAY	STATION TO STATION	LOCATION	305.0110 3/4-INCH TON	305.0120 1 1/4-INCH TON
CTH BB	STA. 70+00 TO STA. 78+87	---	145	3,690
	PE STA. 71+08	LT	15	---
	STA. 81+19 TO STA. 89+00	---	135	3,270
	PE STA. 82+94	RT	15	---
	FE STA. 86+19	RT	50	---
50TH AVE.	FE 433' E. OF CTH BB	LT	25	---
IH 94 WB	STA. 1145+75 TO STA. 1150+75	LT	---	450
IH 94 EB	STA. 1145+75 TO STA. 1150+75	RT	---	430
TOTALS			385	7,840

3

EARTHWORK SUMMARY (CATEGORY 0010)

DIVISION	STATION TO STATION	ROADWAY	205.0100 EXCAVATION COMMON CUT (2) CY	205.0100 EXCAVATION COMMON EBS (3) CY	SALVAGED/ UNUSEABLE PAVEMENT MATERIAL (6) CY	AVAILABLE MATERIAL (7) CY	UNEXPANDED FILL CY	EXPANDED FILL (4) CY	MASS ORDINATE ±(5) CY	WASTE CY	208.0100 BORROW CY	COMMENTS:
1	STA. 70+00 TO STA. 89+00	CTH BB	594	0	332	262	7,877	10,240	-9,978	0	9,978	
2	STA. 1144+75 TO STA. 1150+75	IH 94	6,211	0	0	6,211	48	62	6,149	6149	-6,149	
3	FE 433' E. of CTH BB	50TH AVE.	0	0	0	0	39	51	-51	0	51	
	GRANDTOTAL		6,805	0	332	6,473	7,925	10,303	-3,880	6,149	3,880	

TOTAL EXCAVATION COMMON 6,805 CY

TOTAL BORROW 3,880 CY

NOTES:
1) EXCAVATION COMMON IS THE SUM OF THE CUT AND EBS EXCAVATION COLUMNS. ITEM NUMBER 205.0100
2) SALVAGED/UNUSEABLE PAVEMENT MATERIAL IS INCLUDED IN CUT.
3) EBS EXCAVATION TO BE BACKFILLED WITH BORROW MATERIAL.
4) EXPANDED FILL FACTOR = 1.30 EXPANDED FILL = UNEXPANDED FILL * FILL FACTOR
5) THE MASS ORDINATE ± QTY CALCUTATED FOR THE DIVISION.
PLUS (+) QUANTITY INDICATES AN EXCESS OF MATERIAL WITHIN THE DIVISION.
MINUS (-) QUANTITY INDICATES A SHORTAGE OF MATERIAL WITHIN THE DIVISION.
6) SALVAGED/ UNUSEABLE PAVEMENT MATERIAL
7) AVAILABLE MATERIAL = CUT - SALVAGED/UNUSEABLE PAVEMENT MATERIAL

ASPHALTIC ITEMS (CATEGORY 0010)

ROADWAY	STATION TO STATION	LOCATION	455.0605 TACK COAT GAL	SPV.0195.01 ASPHALTIC SURFACE SPECIAL TON	465.0315 ASPHALTIC FLUMES SY
CTH BB	STA. 70+00 TO STA. 78+87	---	160	910	---
	STA. 78+76 TO STA. 78+84	RT	---	---	10
	STA. 78+81 TO STA. 78+89	LT	---	---	10
	STA. 81+19 TO STA. 89+00	---	140	805	---
	STA. 81+17 TO STA. 81+25	RT	---	---	10
	STA. 81+22 TO STA. 81+30	LT	---	---	8
IH 94 EB	STA. 1145+76 TO STA. 1147+57	RT	10	30	---
IH 94 WB	STA. 1147+01 TO STA. 1148+42	LT	5	25	---
TOTALS			315	1,770	38

CULVERT PIPE (CATEGORY 0010)

ROADWAY	STATION	LOCATION	529.0118 CULVERT PIPE CORRUGATED STEEL ALUMINUM COATED 18-INCH (0.064" THICKNESS) LF	529.0124 CULVERT PIPE CORRUGATED STEEL ALUMINUM COATED 24-INCH (0.064" THICKNESS) LF	522.0130 CULVERT PIPE REINFORCED CONCRETE CLASS III 30-INCH LF	521.1018 APRON ENDWALLS FOR CULVERT PIPE STEEL 18-INCH EACH	521.1024 APRON ENDWALLS FOR CULVERT PIPE STEEL 24-INCH EACH	522.1030 APRON ENDWALLS FOR CULVERT PIPE REINFORCED CONCRETE 30-INCH EACH
CTH BB	STA. 71+56	---	---	60	---	---	2	---
	STA. 79+07	---	---	---	120	---	---	2
	STA. 80+93	---	---	---	140	---	---	2
	STA. 84+95	---	---	78	---	---	2	---
	FE STA. 86+19	RT	44	---	---	2	---	---
50TH AVE.	FE 433' E. OF CTH BB	LT	---	40	---	---	2	---
TOTAL			44	178	260	2	6	4

3

3

CONCRETE BARRIER TEMPORARY PRECAST (CATEGORY 0010)

ROADWAY	STATION TO STATION	603.8000 DELIVERED LF	603.8125 INSTALLED LF
IH 94 EB	STA. 1146+50 TO STA. 1149+25	275	275
IH 94 WB	STA. 1145+25 TO STA. 1148+00	275	275
TOTAL		550	550

RIPRAP ITEMS (CATEGORY 0010)

ROADWAY	STATION	LOCATION	606.0200 RIPRAP MEDIUM CY	645.0120 GEOTEXTILE FABRIC TYPE HR SY
CTH BB	STA. 71+56	LT	4	15
	STA. 71+56	RT	4	15
	STA. 78+78	RT	2	9
	STA. 78+83	LT	2	9
	STA. 78+99	RT	8	24
	STA. 79+16	LT	8	24
	STA. 80+81	RT	8	24
	STA. 81+02	LT	8	24
	STA. 81+21	RT	2	9
	STA. 81+25	LT	2	9
	STA. 84+95	LT	4	13
	STA. 84+95	RT	4	15
	STA. 85+94	RT	6	20
	STA. 86+44	RT	6	20
50TH AVE.	FE 433' E. OF CTH BB	LT	7	20
TOTAL			75	250

614.0905 CRASH CUSHION TEMPORARY (CATEGORY 0010)

ROADWAY	STATION	LOCATION	EACH
IH 94 EB	STA. 1145+25	LT	1
IH 94 WB	STA. 1149+25	RT	1
TOTAL			2

614.0920 SALVAGED RAIL (CATEGORY 0010)

ROADWAY	STATION TO STATION	LOCATION	LF
CTH BB	STA. 78+31 TO STA. 79+04	RT	78
	STA. 78+38 TO STA. 79+05	LT	72
	STA. 81+05 TO STA. 81+76	RT	76
	STA. 81+08 TO STA. 81+77	LT	74
IH 94 EB	STA. 1144+93 TO STA. 1145+76	RT	84
IH 94 WB	STA. 1148+42 TO STA. 1149+26	LT	84
TOTAL			468

GUARDRAIL (CATEGORY 0010)

ROADWAY	STATION TO STATION	LOCATION	614.2500 MGS THRIE BEAM TRANSITION LF	614.2610 MGS GUARDRAIL TERMINAL E.A.T. EACH
CTH BB	STA. 77+94 TO STA. 78+47	RT	---	1
	STA. 77+99 TO STA. 78+52	LT	---	1
	STA. 78+47 TO STA. 78+84	RT	40	---
	STA. 78+52 TO STA. 78+89	LT	40	---
	STA. 81+22 TO STA. 81+59	LT	40	---
	STA. 81+17 TO STA. 81+54	RT	40	---
	STA. 81+54 TO STA. 82+07	RT	---	1
	STA. 81+59 TO STA. 82+12	LT	---	1
TOTALS			160	4

616.0100 FENCE WOVEN WIRE 4-FT (CATEGORY 0010)

ROADWAY	STATION TO STATION	LOCATION	LF
CTH BB	STA. 785+87 TO STA. 89+83	LT	55
	STA. 78+44 TO STA. 78+84	RT	50
	STA. 81+13 TO STA. 81+40	RT	40
	STA. 81+22 TO STA. 81+53	LT	35
TOTAL			180

619.1000 MOBILIZATION

LOCATION	EACH
PROJECT 1020-01-88 (CATEGORY 0010)	0.4
PROJECT 1020-01-88 (CATEGORY 0020)	0.6
TOTAL	1

624.0100 WATER (CATEGORY 0010)

PURPOSE	MGAL
COMPACTION	90
DUST CONTROL	30
TOTAL	120

3

3

SALVAGED TOPSOIL, MULCHING, FERTILIZER, SEED & TEMPORARY SEED (CATEGORY 0010)

ROADWAY	STATION TO STATION	625.0500 SALVAGED TOPSOIL SY	627.0200 MULCHING SY	629.0210 FERTILIZER TYPE B CWT	630.0120 SEEDING NO. 20 LB	630.0200 SEEDING TEMPORARY LB	630.0300 SEEDING BORROW PIT LB
CTH BB	STA. 70+00 TO STA. 89+00	6,120	9,510	6.2	267	257	---
50TH AVE.	FE 433' E. OF CTH BB	30	35	0.1	1	1	---
IH 94	STA. 1144+75 TO STA. 1150+75	5,055	3,645	4.4	188	98	---
	BORROW PIT	---	---	---	---	---	15
	UNDISTRIBUTED	---	---	2.8	114	89	5
TOTALS		11,205	13,190	13.5	570	445	20

SILT FENCE & SILT FENCE MAINTENANCE (CATEGORY 0010)

ROADWAY	STATION TO STATION	LOCATION	628.1504 LF	628.1520 MAINTENANCE LF
CTH BB	STA. 70+00 TO STA. 76+90	RT	695	2,433
	STA. 77+17 TO STA. 78+60	RT	155	542
	STA. 78+17 TO STA. 78+76	LT	65	228
	STA. 81+25 TO STA. 81+56	RT	35	122
	STA. 81+53 TO STA. 89+00	LT	750	2,625
	STA. 83+15 TO STA. 86+07	RT	315	1,103
	STA. 86+32 TO STA. 89+00	RT	290	1,015
IH 94 EB	STA. 1145+97 TO STA. 1146+98	RT	130	455
	STA. 1148+03 TO STA. 1150+75	RT	285	997
IH 94 WB	STA. 1144+75 TO STA. 1146+70	LT	225	788
	STA. 1147+47 TO STA. 1150+75	LT	350	1,225
	UNDISTRIBUTED	---	825	2,887
TOTALS			4,120	14,420

MOBILIZATIONS EROSION CONTROL & EMERGENCY EROSION CONTROL (CATEGORY 0010)

LOCATION	628.1905 MOBILIZATIONS EROSION CONTROL EACH	628.1910 MOBILIZATIONS EMERGENCY EROSION CONTROL EACH
PROJECT 1020-01-88	4	2

628.2023 EROSION MAT CLASS II TYPE B (CATEGORY 0010)

ROADWAY	STATION TO STATION	LOCATION	SY
CTH BB	STA. 78+23 TO STA. 78+93	LT	120
	STA. 78+26 TO STA. 78+85	RT	110
	STA. 81+13 TO STA. 81+75	RT	85
	STA. 81+21 TO STA. 81+75	LT	85
IH 94 EB	STA. 1146+00 TO STA. 1147+25	RT	495
	STA. 1147+64 TO STA. 1150+75	RT	975
IH 94 WB	STA. 1145+00 TO STA. 1146+93	LT	680
	STA. 1147+34 TO STA. 1150+75	LT	1,185
	Undistributed		930
TOTAL			4,665

3

628.7005 INLET PROTECTION TYPE A (CATEGORY 0010)

ROADWAY	LOCATION	EACH
IH 94	MEDIAN	1

628.7504 TEMPORARY DITCH CHECKS (CATEGORY 0010)

ROADWAY	STATION TO STATION	LOCATION	LF
CTH BB	STA. 71+56 TO STA. 77+50	LT	120
	STA. 78+00 TO STA. 78+50	LT	20
	Undistributed	---	35
TOTAL			175

628.7555 CULVERT PIPE CHECKS (CATEGORY 0010)

ROADWAY	STATION	LOCATION	PIPE SIZE	EACH
CTH BB	STA. 71+56	LT	24"	3
	STA. 79+16	LT	30"	5
	STA. 81+02	LT	30"	5
	STA. 84+95	LT	24"	3
	STA. 88+22	RT	18"	2
TOTAL				18

633.5200 MARKERS CULVERT END (CATEGORY 0010)

ROADWAY	STATION	LOCATION	EACH
CTH BB	STA. 71+54	RT	1
	STA. 71+59	LT	1
	STA. 79+04	RT	1
	STA. 79+10	LT	1
	STA. 81+79	RT	1
	STA. 82+04	LT	1
	STA. 84+93	RT	1
	STA. 84+98	LT	1
TOTAL			8

POSTS WOOD 4X6-INCH (CATEGORY 0010)

ROADWAY	STATION	LOCATION	TYPE	634.0612 12-FT EACH	634.0618 18-FT EACH
CTH BB	STA. 71+82	LT	NO PASSING	---	1
	STA. 73+22	RT	NO PASSING	---	1
	STA. 78+83	RT	OBJECT MARKER	1	---
	STA. 78+88	LT	OBJECT MARKER	1	---
	STA. 81+18	RT	OBJECT MARKER	1	---
	STA. 81+23	LT	OBJECT MARKER	1	---
TOTAL				4	2

637.2230 SIGNS TYPE II REFLECTIVE F (CATEGORY 0010)

ROADWAY	STATION	LOCATION	TYPE	SIGN SIZE	SF
CTH BB	STA. 71+82	LT	W14-3	48' x 36"	6
	STA. 73+22	RT	W14-3	48' x 36"	6
	STA. 78+83	RT	W5-52R	12' x 36"	3
	STA. 78+88	LT	W5-52L	12' x 36"	3
	STA. 81+18	RT	W5-52L	12' x 36"	3
	STA. 81+23	LT	W5-52R	12' x 36"	3
TOTAL					24

SIGN REMOVALS (CATEGORY 0010)

ROADWAY	STATION	LOCATION	TYPE	638.2602 REMOVING SIGNS TYPE II EACH	638.3000 REMOVING SMALL SIGN SUPPORTS EACH
CTH BB	STA. 71+82	LT	NO PASSING	1	1
	STA. 73+22	RT	NO PASSING	1	1
	STA. 78+30	RT	PLOW UP	1	1
	STA. 78+37	LT	PLOW DOWN	1	1
	STA. 79+06	RT	W5-52R	1	1
	STA. 79+10	LT	W5-52L	1	1
	STA. 81+02	RT	W5-52L	1	1
	STA. 81+06	LT	W5-52R	1	1
	STA. 81+77	RT	PLOW DOWN	1	1
	STA. 81+78	LT	PLOW UP	1	1
TOTAL				10	10

642.5001 FIELD OFFICE TYPE B (CATEGORY 0010)

LOCATION	EACH
PROJECT 1020-01-88	1

TRAFFIC CONTROL (CATEGORY 0010)

LOCATION	643.0100 PROJECT 1020-01-88 EACH	643.0300 DRUMS DAYS	643.0420 BARRICADES TYPE III DAYS	643.0705 WARNING LIGHTS TYPE A DAYS	643.0715 WARNING LIGHTS TYPE C DAYS	643.0800 ARROW BOARDS DAYS	643.0900 SIGNS DAYS	643.0920 COVERING SIGNS TYPE II EACH	643.1000 SIGNS FIXED MESSAGE SF	643.1050 SIGNS PCMS DAYS
IH 94 WB	---	11,000	500	1,000	4,300	400	2,600	---	---	---
IH 94 EB	---	11,000	500	1,000	4,300	400	2,600	---	---	---
CTH BB	---	---	1,800	2,800	---	---	2,000	---	---	---
ALT. ROUTE/IH 94	---	---	---	---	---	---	3,400	2	240	200
TOTAL	1	22,000	2,800	4,800	8,600	800	10,600	2	240	200

3

646.0106 PAVEMENT MARKING EPOXY 4-INCH (CATEGORY 0010)

ROADWAY	LOCATION	DESCRIPTION	LF
CTH BB	STA. 70+00 TO STA. 89+00	WHITE EDGELINE	3,800
	STA. 70+00 TO STA. 71+82	SOLID & DASHED YELLOW CENTERLINE	232
	STA. 71+82 TO STA. 73+22	DOUBLE YELLOW CENTERLINE	280
	STA. 73+22 TO STA. 82+08	SOLID & DASHED YELLOW CENTERLINE	1,111
	STA. 82+08 TO STA. 89+00	DOUBLE YELLOW CENTERLINE	1,384
TOTAL			6,807

648.0100 LOCATING NO-PASSING ZONES (CATEGORY 0010)

LOCATION	MI
PROJECT 1020-01-88	0.36

3

649.0506 TEMPORARY PAVEMENT MARKING REMOVABLE MASK-OUT TAPE 6-INCH (CATEGORY 0010)

ROADWAY	DESCRIPTION	LF
IH 94 EB	WHITE CENTERLINE DASHED	212.5
	WHITE EDGELINE	1,825
IH 94 WB	WHITE CENTERLINE DASHED	212.5
	WHITE EDGELINE	1,825
TOTAL		4,075

CONSTRUCTION STAKING

CATEGORY	ROADWAY	STATION	LOCATION	650.4500 SUBGRADE LF	650.5000 BASE LF	650.6000 PIPE CULVERTS EACH	650.6500 STRUCTURE LAYOUT LS	650.9910 SUPPLEMENTARY CONTROL LS	650.9920 SLOPE STAKES LF
0010	CTH BB	STA. 70+00 TO STA. 89+00	MAINLINE	1,667	1,667	---	---	1	1,667
		STA. 71+56	---	---	---	1	---	---	---
		STA. 79+07	---	---	---	1	---	---	---
		STA. 80+93	---	---	---	1	---	---	---
		STA. 84+95	---	---	---	1	---	---	---
		FE STA. 86+19	RT	---	---	1	---	---	---
0010	50TH AVE.	FE 433' E. OF CTH BB	LT			1			
0010	IH 94	STA. 1145+75 TO STA. 1150+75	WB & EB	1,000	---	---	---	---	1,000
0020		B-55-265	---	---	---	---	1	---	---
TOTALS				2,667	1,667	6	1	1	2,667

3

690.0150 SAWING ASPHALT (CATEGORY 0010)

ROADWAY	STATION	LOCATION	LF
CTH BB	STA. 70+00	Mainline	21
	STA. 89+00	Mainline	22
IH 94 EB	STA. 1145+76 TO STA. 1147+57	RT	193
IH 94 WB	STA. 1147+01 TO STA. 1148+42	LT	153
TOTAL			389

SPV.0045.01 PORTABLE CHANGEABLE MESSAGE SIGNS (PCMS) CELLULAR COMMUNICATIONS (CATEGORY 0010)

ROADWAY	DAY
IH 94	200
TOTAL	200

SPV.0090.01 REMOVE AND REINSTALL GUARDRAIL (CATEGORY 0010)

ROADWAY	STATION TO STATION	LF
IH 94	STA. 1146+42 TO STA. 1148+11 (MEDIAN @ PIER)	349
TOTAL		349

3

TRANSPORTATION PROJECT PLAT NO: 1020-01-28-4.01

PART OF THE SOUTHWEST ¼ OF THE SOUTHWEST ¼ OF SECTION 3, TOWNSHIP 28 NORTH, RANGE 16 WEST, TOWN OF EAU GALLE, ST. CROIX COUNTY, WISCONSIN.

RELOCATION ORDER, IH 94, BALDWIN - MENOMONIE (CTH BB BRIDGE, B-55-0265)

TO PROPERLY ESTABLISH, LAY OUT, WIDEN, ENLARGE, EXTEND, CONSTRUCT, RECONSTRUCT, IMPROVE, OR MAINTAIN A PORTION OF THE HIGHWAY DESIGNATED ABOVE, THE STATE OF WISCONSIN DEPARTMENT OF TRANSPORTATION DEEMS IT NECESSARY TO RELOCATE OR CHANGE SAID HIGHWAY AND ACQUIRE CERTAIN LANDS AND INTERESTS OR RIGHTS IN LANDS FOR THE ABOVE NAMED PROJECT.

TO EFFECT THIS CHANGE, PURSUANT TO AUTHORITY GRANTED UNDER SUBSECTIONS 84.02(3), 84.09 AND 84.30, WISCONSIN STATUTES, THE DEPARTMENT HEREBY ORDERS THAT:
1. THAT PORTION OF SAID HIGHWAY AS SHOWN ON THIS PLAT IS LAID OUT AND ESTABLISHED TO THE LINES AND WIDTHS AS SO SHOWN FOR THE ABOVE NAMED PROJECT.
2. THE LANDS OR INTERESTS OR RIGHTS IN LANDS AS SHOWN ON THIS PLAT ARE REQUIRED BY THE DEPARTMENT FOR THE ABOVE PROJECT AND SHALL BE ACQUIRED IN THE NAME OF THE STATE OF WISCONSIN, PURSUANT TO THE PROVISIONS OF SUBSECTION 84.09 (1), WISCONSIN STATUTES.

1004744
BETH PABST
REGISTER OF DEEDS
ST. CROIX CO., WI
RECEIVED FOR RECORD
11/26/2014 08:48 AM
EXEMPT #
PAGES: 1

**The above recording information verifies that this document has been electronically recorded & returned to the submitter

RESERVED FOR REGISTER OF DEEDS
PROJECT NUMBER 1020-01-28-4.01
AMENDMENT NO:

SCHEDULE OF LANDS & INTERESTS REQUIRED

OWNER'S NAMES ARE SHOWN FOR REFERENCE PURPOSES ONLY AND ARE SUBJECT TO CHANGE PRIOR TO THE TRANSFER OF LAND INTERESTS TO THE DEPARTMENT.

PARCEL NUMBER	OWNER(S)	INTEREST REQUIRED	R/W NEW ACRES	R/W EXISTING ACRES	R/W TOTAL ACRES	TLE ACRES
1	MICHAEL W. & JOY OSTLIE	FEE & TLE	0.19	0.18	0.37	0.13

UTILITY EASEMENT INFORMATION		
UTILITY	RECORDING INFORMATION	PARCEL(S)
ALL	NO EASEMENTS OF RECORD	1

GN

SCALE, FEET
0 50 100

SOUTHWEST CORNER SECTION 3 FD. ALUM. CAP MONUMENT Y=326,945.12 X=624,420.08

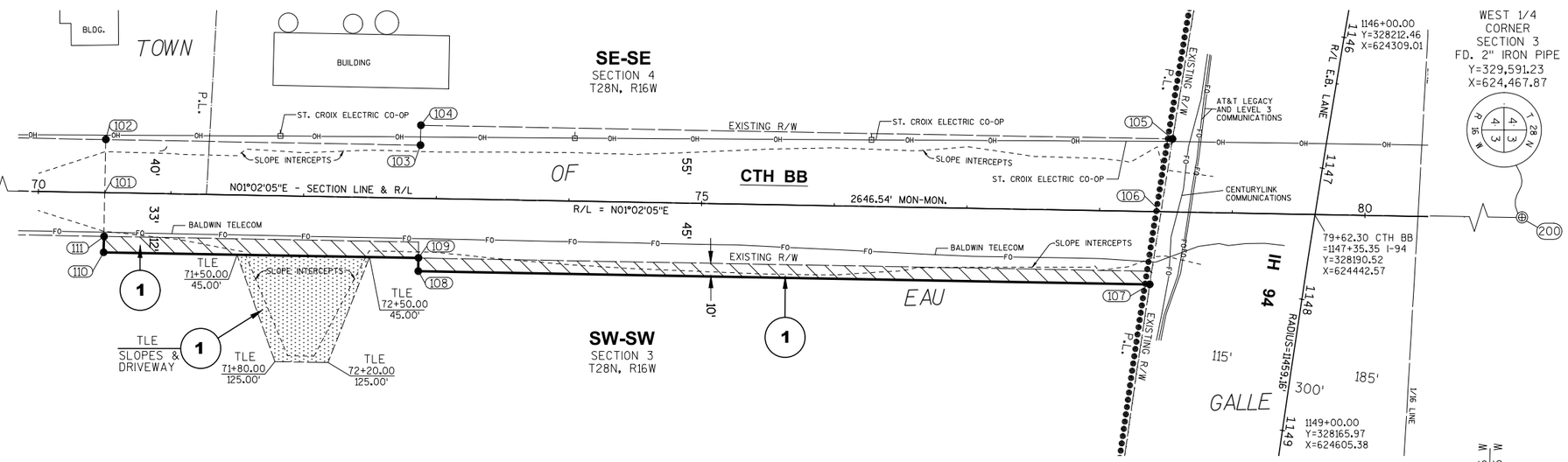

R/W COORDINATES - STATIONS & OFFSETS				
POINT	Y	X	STATION	OFFSET
100	326945.12	624420.08	SECTION CORNER	
101	327278.36	624426.10	70+50.00	0.00'
102	327279.09	624386.10	70+50.00	40.00' L
103	327516.34	624390.39	72+87.30	40.00' L
104	327516.62	624375.39	72+87.30	55.00' L
105	328083.17	624385.62	78+53.94	55.00' L
106	328074.43	624440.47	78+46.21	0.00'
107	328065.97	624495.33	78+38.73	55.00' R
108	327514.63	624485.37	72+87.30	55.00' R
109	327514.81	624475.37	72+87.30	45.00' R
110	327277.55	624471.09	70+50.00	45.00' R
111	327277.77	624459.09	70+50.00	33.00' R
200	329591.23	624467.87	QUARTER CORNER	

CURVE TABLE				
CURVE	RADIUS	DELTA	LENGTH	CHORD
105-107	11574.16'	0°32'59"	111.05'	S81°05'27"E 111.05'
105-106	11574.16'	0°16'30"	55.54'	S80°57'13"E 55.54'
106-107	11574.16'	0°16'29"	55.51'	S81°13'42"E 55.51'

CONVENTIONAL ABBREVIATIONS

ACCESS POINT/ DRIVEWAY CONNECTION	AP	RELEASE OF RIGHTS	ROR
ACCESS RIGHTS	AR	REMAINING	REM.
ACRES	AC.	RIGHT-OF-WAY	R/W
AND OTHERS	ET.AL.	SECTION	SEC.
CENTERLINE	C/L	STATION	STA.
CERTIFIED SURVEY MAP	CSM	TEMPORARY LIMITED EASEMENT	TLE
CORNER	COR.	VOLUME	V.
DOCUMENT	DOC.		
EASEMENT	EASE.		
HIGHWAY EASEMENT	H.E.		
LAND CONTRACT	LC		
MONUMENT	MON.		
PAGE	P.		
PERMANENT LIMITED EASEMENT	PLE		
PROPERTY LINE	PL		
RECORDED AS	(100')		
REFERENCE LINE	R/L		

CURVE DATA

LONG CHORD	LCH
LONG CHORD BEARING	LCB
RADIUS	R
DEGREE OF CURVE	D
CENTRAL ANGLE OR DELTA	DELTA
LENGTH OF CURVE	L
TANGENT	TAN

R/W COURSE TABLE		
LINE	BEARING	DISTANCE
100-101	N01°02'05"E	333.29'
101-102	N88°57'55"W	40.00'
102-103	N01°02'05"E	237.30'
103-104	N88°57'55"W	15.00'
104-105	N01°02'05"E	566.64'
107-108	S01°01'57"W	551.43'
108-109	N88°57'55"W	10.00'
109-110	S01°01'57"W	237.30'
110-111	N88°57'55"W	12.00'
111-101	N88°57'55"W	33.00'
101-106	N01°02'05"E	796.20'
106-200	N01°02'05"E	1517.05'

CONVENTIONAL SYMBOLS

FOUND IRON PIPE/PIN	LS (1" UNLESS NOTED)
R/W MONUMENT	○ ●(SET)
R/W STANDARD	△ ▲(SET)
SIGN	SIGN
SECTION CORNER MONUMENT	
SECTION CORNER SYMBOL	
FEE (HATCH VARIES)	
TEMPORARY LIMITED EASEMENT	
PERMANENT LIMITED EASEMENT	
R/W BOUNDARY POINT	RWB20
PARCEL NUMBER	102
UTILITY INTEREST	40
SIGN NUMBER (OFF PREMISE)	21
BUILDING	
PROPOSED R/W LINE	
EXISTING H.E. LINE	
PROPERTY LINE	
LOT & TIE LINES	
SLOPE INTERCEPTS (S.I.)	
CORPORATE LIMITS	
ACCESS RESTRICTED (BY PREVIOUS ACQUISITION/CONTROL)	
ACCESS RESTRICTED (BY ACQUISTION)	
NO ACCESS (BY STATUTORY AUTHORITY)	
SECTION LINE	
QUARTER LINE	
SIXTEENTH LINE	
EXISTING CENTERLINE	
PROPOSED REFERENCE LINE	
PARALLEL OFFSET	

CONVENTIONAL UTILITY SYMBOLS

WATER	W	
GAS	G	
TELEPHONE	T	
OVERHEAD TRANSMISSION LINES	OH	
ELECTRIC	E	
CABLE TELEVISION	TV	
FIBER OPTIC	FO	
SANITARY SEWER	SAN	
STORM SEWER	SS	
	NON COMPENSABLE	COMPENSABLE
POWER POLE		
TELEPHONE POLE		
TELEPHONE PEDESTAL		
ELECTRIC TOWER		

NOTES:

POSITIONS SHOWN ON THIS PLAT ARE WISCONSIN COORDINATES ST. CROIX COUNTY ZONE, NAD83 (2007) IN U.S. SURVEY FEET. VALUES SHOWN ARE GRID COORDINATES, GRID BEARINGS, AND GRID DISTANCES. GRID DISTANCES MAY BE USED AS GROUND DISTANCES

RIGHT-OF-WAY MONUMENTS ARE TYPE 2 (TYPICALLY 3/4" X 24" IRON REBAR) AND WILL BE PLACED PRIOR TO THE COMPLETION OF THE PROJECT.

RIGHT-OF-WAY BOUNDARIES ARE DEFINED WITH COURSES OF THE PERIMETER OF THE HIGHWAY LANDS REFERENCED TO THE U.S. PUBLIC LAND SURVEY SYSTEM OR OTHER "SURVEYS OF PUBLIC RECORD".

PROPERTY LINES SHOWN ON THIS PLAT ARE DRAWN FROM DATA DERIVED FROM MAPS AND DOCUMENTS OF PUBLIC RECORD AND/OR EXISTING OCCUPATIONAL LINES. THIS PLAT MAY NOT BE A TRUE REPRESENTATION OF EXISTING PROPERTY LINES, EXCLUDING RIGHT-OF-WAY LINES, AND SHOULD NOT BE USED AS A SUBSTITUTE FOR AN ACCURATE FIELD SURVEY.

EXISTING HIGHWAY RIGHT-OF-WAY SHOWN HEREIN IS BASED ON THE FOLLOWING POINTS OF REFERENCE:

THE DEED FOR HIGHWAY R/W RECORDED IN VOLUME 399 OF RECORDS ON PAGE 609 AS DOCUMENT NO. 274635, AT THE ST. CROIX COUNTY REGISTER OF DEEDS OFFICE - CTH BB.

THE DEED FOR HIGHWAY R/W RECORDED IN VOLUME 345 OF RECORDS ON PAGE 445 AS DOCUMENT NO. 253135, THE DEED FOR HIGHWAY R/W RECORDED IN VOLUME 345 OF RECORDS ON PAGE 474 AS DOCUMENT NO. 253181, AND THE DEED FOR HIGHWAY R/W RECORDED IN VOLUME 345 OF RECORDS ON PAGE 444 AS DOCUMENT NO. 253133, AT THE ST. CROIX COUNTY REGISTER OF DEEDS OFFICE - INTERSTATE 94 & CTH BB.

PLAT OF RIGHT-OF-WAY REQUIRED, PROJECT I-94-1(2).0. - SHEETS 4.22 AND 4.23 DATED 9/27/1957 (LAST REVISED 10/9/1987) ON FILE WITH THE WISCONSIN DEPARTMENT OF TRANSPORTATION. - INTERSTATE 94 & CTH BB.

EVIDENCE OF: EXISTING SURVEYS, FOUND MONUMENTS, R/W POSTS, PHYSICAL CENTERLINE, IMPROVEMENT LOCATIONS AND EVIDENCE OBTAINED FROM DEEDS IN THE PROJECT VICINITY.

A TEMPORARY LIMITED EASEMENT (TLE) IS A RIGHT FOR CONSTRUCTION PURPOSES, AS DEFINED HEREIN, INCLUDING THE RIGHT TO OPERATE NECESSARY EQUIPMENT THEREON AND THE RIGHT OF INGRESS AND EGRESS, AS LONG AS REQUIRED FOR SUCH PUBLIC PURPOSE, INCLUDING THE RIGHT TO PRESERVE, PROTECT, REMOVE, OR PLANT THEREON ANY VEGETATION THAT THE HIGHWAY AUTHORITIES MAY DEEM NECESSARY OR DESIRABLE. ALL TLES EXPIRE AT THE COMPLETION OF THE CONSTRUCTION PROJECT FOR WHICH THIS INSTRUMENT IS GIVEN.

RESTRICTED ACCESS TO INTERSTATE 94 SHOWN HEREON IS BASED ON: STATUTORY AUTHORITY PER CHAPTER 84.295(5) OF THE WISCONSIN STATUTES; THE FINDING, DETERMINATION AND ORDER APPROVED BY THE WISCONSIN STATE HIGHWAY COMMISSION ON NOVEMBER 2, 1955; AND THE PLAT OF RIGHT-OF-WAY REQUIRED FOR PROJECT I-94-1(2).0. - SHEET 4.22 AND 4.23 DATED 9/27/1957 (LAST REVISED 10/9/1987) ON FILE WITH THE WISCONSIN DEPT. OF TRANSPORTATION, THAT DENOTES NO ACCESS.

FOR CURRENT ACCESS/DRIVEWAY INFORMATION PLEASE CONTACT THE WISCONSIN DEPARTMENT OF TRANSPORTATION NORTHWEST REGIONAL OFFICE.

DIMENSIONING FOR THE NEW RIGHT-OF-WAY IS MEASURED ALONG AND PERPENDICULAR TO NEW REFERENCE LINES FEE TITLE TO ALL THOSE LANDS OF THE GRANTOR CURRENTLY USED FOR HIGHWAY PURPOSES, DESIGNATED AS EXISTING RIGHT-OF-WAY, WHETHER ACQUIRED BY SEPARATE CONVEYANCE OR OTHERWISE, BOUND BY THE TRAVERSE OF THE COURSE TABLE OF NEW RIGHT-OF-WAY AS SHOWN ON THE SAID TRANSPORTATION PLAT.

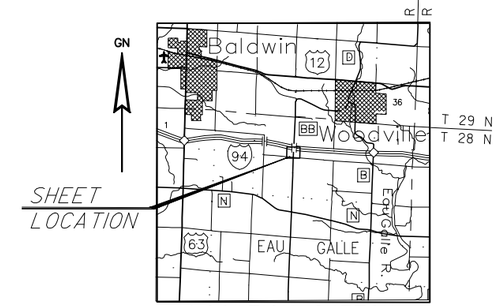

LOCATION SKETCH
NOT TO SCALE

AYRES ASSOCIATES
Engineers/Planners
Surveyors & Scientists
3433 Oakwood Hills Parkway
Eau Claire, WI 54701

I, MATTHEW E. HOGLUND, PROFESSIONAL LAND SURVEYOR, HEREBY CERTIFY THAT IN FULL COMPLIANCE WITH THE PROVISIONS OF SECTION 84.095 OF THE WISCONSIN STATUTES AND UNDER THE DIRECTION OF THE DEPARTMENT, I HAVE SURVEYED AND MAPPED TRANSPORTATION PROJECT PLAT 1020-01-28-4.01 AND THAT SUCH PLAT CORRECTLY REPRESENTS ALL EXTERIOR BOUNDARIES OF THE SURVEYED LAND.

WISCONSIN Matthew E. Hoglund S-1910 Fall River WI LAND SURVEYOR

SIGNATURE _____ DATE 11/13/2014
PRINTED NAME MATTHEW E.HOGLUND
REGISTRATION NUMBER S-1910

THIS PLAT AND RELOCATION ORDER ARE APPROVED FOR THE WISCONSIN DEPARTMENT OF TRANSPORTATION

SIGNATURE _____ DATE 11/24/2014
PRINTED NAME MICHAEL PI

TRANSPORTATION PROJECT PLAT NO: 1020-01-28-4.02 AMENDMENT NO. 1

AMENDS PARCEL 4 OF TPP 1020-01-28-4.02 RECORDED AS DOCUMENT 1004745 AND FILED IN VOLUME 1 OF TRANSPORTATION PROJECT PLATS ON PAGE 123.

PART OF LOTS 2 AND 3 OF THE CERTIFIED SURVEY MAP RECORDED IN VOLUME 16 OF CERTIFIED SURVEY MAPS, PAGE 4268, AS DOCUMENT NO. 674815, LOCATED IN THE NORTHWEST ¼ OF THE SOUTHWEST ¼ OF SECTION 3; PART OF LOT 1 OF THE CERTIFIED SURVEY MAP RECORDED IN VOLUME 19 OF CERTIFIED SURVEY MAPS, PAGE 4971, AS DOCUMENT NO. 792622 AND A PART OF LOT 1 OF THE COUNTY PLAT OF WOOD VIEW RIDGE RECORDED IN VOLUME 10 OF PLATS, PAGE 79, AS DOCUMENT NO. 806859, LOCATED IN THE NORTHEAST ¼ OF THE SOUTHEAST ¼ OF SECTION 4; ALL BEING LOCATED IN TOWNSHIP 28 NORTH, RANGE 16 WEST, TOWN OF EAU GALLE, ST. CROIX COUNTY, WISCONSIN.

RELOCATION ORDER, IH 94, BALDWIN-MENOMONIE (CTH BB BRIDGE, B-55-0265)

TO PROPERLY ESTABLISH, LAY OUT, WIDEN, ENLARGE, EXTEND, CONSTRUCT, RECONSTRUCT, IMPROVE, OR MAINTAIN A PORTION OF THE HIGHWAY DESIGNATED ABOVE, THE STATE OF WISCONSIN DEPARTMENT OF TRANSPORTATION DEEMS IT NECESSARY TO RELOCATE OR CHANGE SAID HIGHWAY AND ACQUIRE CERTAIN LANDS AND INTERESTS OR RIGHTS IN LANDS FOR THE ABOVE NAMED PROJECT.

TO EFFECT THIS CHANGE, PURSUANT TO AUTHORITY GRANTED UNDER SUBSECTIONS 84.02(3), 84.09 AND 84.30, WISCONSIN STATUTES, THE DEPARTMENT HEREBY ORDERS THAT:
1. THAT PORTION OF SAID HIGHWAY AS SHOWN ON THIS PLAT IS LAID OUT AND ESTABLISHED TO THE LINES AND WIDTHS AS SO SHOWN FOR THE ABOVE NAMED PROJECT.
2. THE LANDS OR INTERESTS OR RIGHTS IN LANDS AS SHOWN ON THIS PLAT ARE REQUIRED BY THE DEPARTMENT FOR THE ABOVE PROJECT AND SHALL BE ACQUIRED IN THE NAME OF THE STATE OF WISCONSIN, PURSUANT TO THE PROVISIONS OF SUBSECTION 84.09 (1), WISCONSIN STATUTES.

1015681
BETH PABST
REGISTER OF DEEDS
ST. CROIX CO., WI
RECEIVED FOR RECORD
07/20/2015 1:27 PM
EXEMPT #
PAGES: 1

**The above recording information verifies that this document has been electronically recorded & returned to the submitter

RESERVED FOR REGISTER OF DEEDS
PROJECT NUMBER 1020-01-28-4.02
AMENDMENT NO: 1

SCHEDULE OF LANDS & INTERESTS REQUIRED

OWNER'S NAMES ARE SHOWN FOR REFERENCE PURPOSES ONLY AND ARE SUBJECT TO CHANGE PRIOR TO THE TRANSFER OF LAND INTERESTS TO THE DEPARTMENT.

PARCEL NUMBER	OWNER(S)	INTEREST REQUIRED	R/W NEW ACRES	R/W EXISTING ACRES	R/W TOTAL ACRES	TLE ACRES
2	ELIZABETH CHRISTENSEN	FEE	0.23	0.35	0.58	----
3	ROBERT F. EDWARDS	FEE	0.06	0.09	0.15	----
4	RODEL REVOCABLE TRUST DATED 11/3/2000	FEE & TLE	0.08	0.28	0.36	0.05
5	BART HEEBINK & SARAH WANGEN	FEE	0.07	0.18	0.25	----

SCHEDULE OF UTILITIES & INTERESTS REQUIRED

PARCEL NO.	OWNER(S)	INTEREST REQUIRED
100	ST. CROIX ELECTRIC COOPERATIVE	RELEASE OF RIGHTS
101	BALDWIN TELECOM	RELEASE OF RIGHTS
102	WISCONSIN BELL, INC. D/B/A AT&T WISCONSIN	RELEASE OF RIGHTS

UTILITY EASEMENT INFORMATION		
UTILITY	RECORDING INFORMATION	PARCEL(S)
ST. CROIX ELECTRIC COOPERATIVE	NO EASEMENTS OF RECORD	2, 3 & 5
BALDWIN TELECOM	NO EASEMENTS OF RECORD	4 & 5
WISCONSIN BELL INC.	V.800, P.626, DOC. 433643	4 & 5

GN

SCALE, FEET
0 50 100

R/W COURSE TABLE		
LINE	BEARING	DISTANCE
100-114	N01°02'05" E	1432.43'
115-116	N01°02'05" E	104.93'
116-117	N01°02'05" E	587.99'
117-118	S88°57'55"E	22.00'
118-119	S88°57'55"E	33.00'
119-120	S88°57'55"E	45.00'
120-121	S01°02'05"W	48.40'
121-122	S01°02'05"W	539.50'
122-123	S01°02'05"W	119.26'
118-120	S88°57'55"E	78.00'
114-119	N01°02'05" E	700.87'
119-200	N01°02'05" E	513.24'

CURVE TABLE				
CURVE	RADIUS	DELTA	LENGTH	CHORD
123-115	11274.16'	0°30'48"	101.00'	N80°51'16"W 101.00'
114-115	11274.16'	0°16'57"	55.57'	N80°44'20"W 55.57'
123-114	11274.16'	0°13'51"	45.43'	N80°59'44"W 45.43'

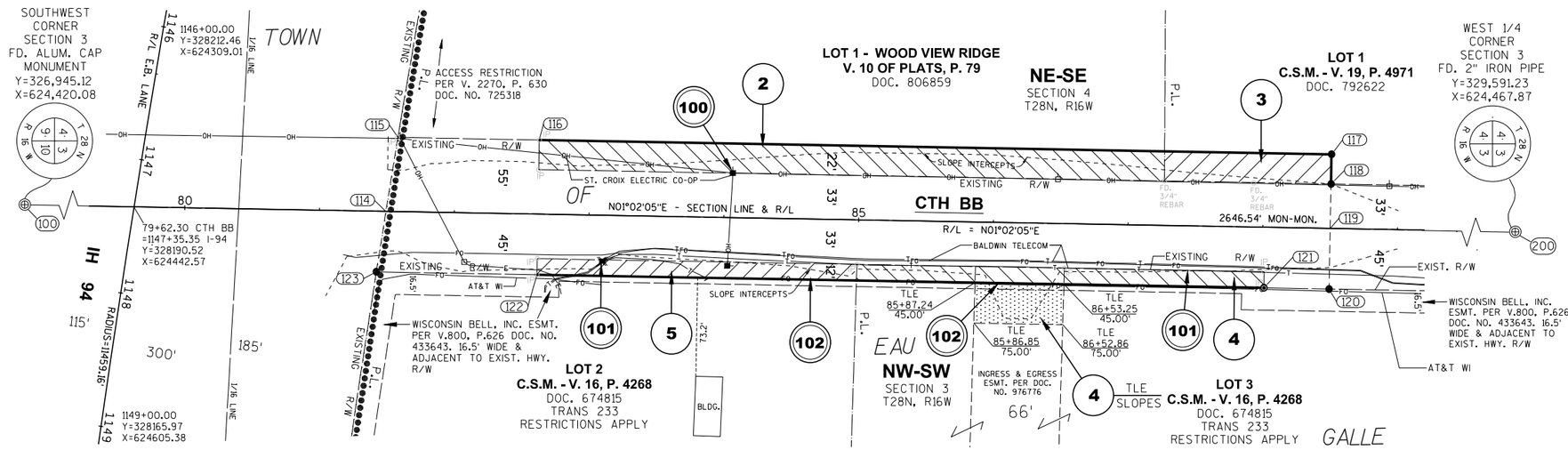

CONVENTIONAL ABBREVIATIONS

ACCESS POINT/ DRIVEWAY CONNECTION	AP	RELEASE OF RIGHTS	ROR
ACCESS RIGHTS	AR	REMAINING	REM.
ACRES	AC.	RIGHT-OF-WAY	R/W
AND OTHERS	ET.AL.	SECTION	SEC.
CENTERLINE	C/L	STATION	STA.
CERTIFIED SURVEY MAP	CSM	TEMPORARY LIMITED EASEMENT	TLE
CORNER	COR.	VOLUME	V.
DOCUMENT	DOC.		
EASEMENT	EASE.		
HIGHWAY EASEMENT	H.E.		
LAND CONTRACT	LC		
MONUMENT	MON.		
PAGE	P.		
PERMANENT LIMITED EASEMENT	PLE		
PROPERTY LINE	PL		
RECORDED AS	(100')		
REFERENCE LINE	R/L		

CURVE DATA

LONG CHORD	LCH
LONG CHORD BEARING	LCB
RADIUS	R
DEGREE OF CURVE	D
CENTRAL ANGLE OR DELTA	DELTA
LENGTH OF CURVE	L
TANGENT	TAN

CONVENTIONAL SYMBOLS

FOUND IRON PIPE/PIN	LS (1" UNLESS NOTED)
R/W MONUMENT	(SET)
R/W STANDARD	(SET)
SIGN	SIGN
SECTION CORNER MONUMENT	
SECTION CORNER SYMBOL	
FEE (HATCH VARIES)	
TEMPORARY LIMITED EASEMENT	
PERMANENT LIMITED EASEMENT	
R/W BOUNDARY POINT	RWB20
PARCEL NUMBER	102
UTILITY INTEREST	40
SIGN NUMBER (OFF PREMISE)	21-
BUILDING	
PROPOSED R/W LINE	
EXISTING H.E. LINE	
PROPERTY LINE	
LOT & TIE LINES	
SLOPE INTERCEPTS (S.I.)	
CORPORATE LIMITS	
ACCESS RESTRICTED (BY PREVIOUS ACQUISITION/CONTROL)	
ACCESS RESTRICTED (BY ACQUISTION)	
NO ACCESS (BY STATUTORY AUTHORITY)	
SECTION LINE	
QUARTER LINE	
SIXTEENTH LINE	
EXISTING CENTERLINE	
PROPOSED REFERENCE LINE	
PARALLEL OFFSET	

R/W COORDINATES - STATIONS & OFFSETS				
POINT	Y	X	STATION	OFFSET
100	326945.12	624420.08	SECTION CORNER	
114	328377.32	624445.94	81+49.13	0.00'
115	328386.26	624391.10	81+57.08	55.00' L
116	328491.17	624392.99	82+62.01	55.00' L
117	329079.06	624403.61	88+50.00	55.00' L
118	329078.67	624425.61	88+50.00	33.00' L
119	329078.07	624458.60	88+50.00	0.00'
120	329077.26	624503.59	88+50.00	45.00' R
121	329028.86	624502.72	88+01.60	45.00' R
122	328489.45	624492.98	88+62.10	45.00' R
123	328370.21	624490.82	81+42.83	45.00' R
200	329591.23	624467.87	QUARTER CORNER	

CONVENTIONAL UTILITY SYMBOLS

WATER	W
GAS	G
TELEPHONE	T
OVERHEAD	OH
TRANSMISSION LINES	
ELECTRIC	E
CABLE TELEVISION	TV
FIBER OPTIC	FO
SANITARY SEWER	SAN
STORM SEWER	SS

	NON COMPENSABLE	COMPENSABLE
POWER POLE		■
TELEPHONE POLE		●
TELEPHONE PEDESTAL		■
ELECTRIC TOWER	⊠	

NOTES:

POSITIONS SHOWN ON THIS PLAT ARE WISCONSIN COORDINATES ST. CROIX COUNTY ZONE, NAD83 (2007) IN U.S. SURVEY FEET. VALUES SHOWN ARE GRID COORDINATES. GRID BEARINGS, AND GRID DISTANCES. GRID DISTANCES MAY BE USED AS GROUND DISTANCES

RIGHT-OF-WAY MONUMENTS ARE TYPE 2 (TYPICALLY 3/4" X 24" IRON REBAR) AND WILL BE PLACED PRIOR TO THE COMPLETION OF THE PROJECT.

RIGHT-OF-WAY BOUNDARIES ARE DEFINED WITH COURSES OF THE PERIMETER OF THE HIGHWAY LANDS REFERENCED TO THE U.S. PUBLIC LAND SURVEY SYSTEM OR OTHER "SURVEYS OF PUBLIC RECORD".

PROPERTY LINES SHOWN ON THIS PLAT ARE DRAWN FROM DATA DERIVED FROM MAPS AND DOCUMENTS OF PUBLIC RECORD AND/OR EXISTING OCCUPATIONAL LINES. THIS PLAT MAY NOT BE A TRUE REPRESENTATION OF EXISTING PROPERTY LINES, EXCLUDING RIGHT-OF-WAY LINES, AND SHOULD NOT BE USED AS A SUBSTITUTE FOR AN ACCURATE FIELD SURVEY.

EXISTING HIGHWAY RIGHT-OF-WAY SHOWN HEREIN IS BASED ON THE FOLLOWING POINTS OF REFERENCE:

C.S.M. AS RECORDED IN VOLUME 19, PAGE 4971 AS DOCUMENT NO. 792622. C.S.M. AS RECORDED IN VOLUME 19, PAGE 4891 AS DOCUMENT NO. 782704. C.S.M. AS RECORDED IN VOLUME 17, PAGE 4593 AS DOCUMENT NO. 737586. THE DEED FOR HIGHWAY R/W RECORDED IN VOLUME 391 OF RECORDS ON PAGE 11 AS DOCUMENT NO. 271076 AND THE DEED FOR HIGHWAY R/W RECORDED IN VOLUME 399 OF RECORDS ON PAGE 609 AS DOCUMENT NO. 274635, AT THE ST. CROIX COUNTY REGISTER OF DEEDS OFFICE - CTH BB.

C.S.M. AS RECORDED IN VOLUME 16, PAGE 4268 AS DOCUMENT NO. 674815, COUNTY PLAT OF "WOOD VIEW RIDGE" AS RECORDED IN VOLUME 10 OF PLATS, PAGE 79 AS DOCUMENT NO. 806859. THE DEED FOR HIGHWAY R/W RECORDED IN VOLUME 345 OF RECORDS ON PAGE 445 AS DOCUMENT NO. 253135, THE DEED FOR HIGHWAY R/W RECORDED IN VOLUME 345 OF RECORDS ON PAGE 474 AS DOCUMENT NO. 253181, AND THE DEED FOR HIGHWAY R/W RECORDED IN VOLUME 345 OF RECORDS ON PAGE 444 AS DOCUMENT NO. 253133, AT THE ST. CROIX COUNTY REGISTER OF DEEDS OFFICE - INTERSTATE 94 & CTH BB.

PLAT OF RIGHT-OF-WAY REQUIRED, PROJECT I-94-1(2).0. - SHEETS 4.22 AND 4.23 DATED 9/27/1957 (LAST REVISED 10/9/1987) ON FILE WITH THE WISCONSIN DEPARTMENT OF TRANSPORTATION. - INTERSTATE 94 & CTH BB.

EVIDENCE OF: EXISTING SURVEYS, FOUND MONUMENTS, R/W POSTS, PHYSICAL CENTERLINE, IMPROVEMENT LOCATIONS AND EVIDENCE OBTAINED FROM DEEDS IN THE PROJECT VICINITY.

A TEMPORARY LIMITED EASEMENT (TLE) IS A RIGHT FOR CONSTRUCTION PURPOSES, AS DEFINED HEREIN, INCLUDING THE RIGHT TO OPERATE NECESSARY EQUIPMENT THEREON AND THE RIGHT OF INGRESS AND EGRESS, AS LONG AS REQUIRED FOR SUCH PUBLIC PURPOSE, INCLUDING THE RIGHT TO PRESERVE, PROTECT, REMOVE, OR PLANT THEREON ANY VEGETATION THAT THE HIGHWAY AUTHORITIES MAY DEEM NECESSARY OR DESIRABLE. ALL TLES EXPIRE AT THE COMPLETION OF THE CONSTRUCTION PROJECT FOR WHICH THIS INSTRUMENT IS GIVEN.

RESTRICTED ACCESS TO INTERSTATE 94 SHOWN HEREON IS BASED ON: STATUTORY AUTHORITY PER CHAPTER 84.295(5) OF THE WISCONSIN STATUTES; THE FINDING, DETERMINATION AND ORDER APPROVED BY THE WISCONSIN STATE HIGHWAY COMMISSION ON NOVEMBER 2, 1955; AND THE PLAT OF RIGHT-OF-WAY REQUIRED FOR PROJECT I-94-1(2).0. - SHEET 4.22 AND 4.23 DATED 9/27/1957 (LAST REVISED 10/9/1987) ON FILE WITH THE WISCONSIN DEPT. OF TRANSPORTATION. THAT DENOTES NO ACCESS.

FOR CURRENT ACCESS/DRIVEWAY INFORMATION PLEASE CONTACT THE WISCONSIN DEPARTMENT OF TRANSPORTATION NORTHWEST REGIONAL OFFICE.

DIMENSIONING FOR THE NEW RIGHT-OF-WAY IS MEASURED ALONG AND PERPENDICULAR TO NEW REFERENCE LINES FEE TITLE TO ALL THOSE LANDS OF THE GRANTOR CURRENTLY USED FOR HIGHWAY PURPOSES, DESIGNATED AS EXISTING RIGHT-OF-WAY, WHETHER ACQUIRED BY SEPARATE CONVEYANCE OR OTHERWISE, BOUND BY THE TRAVERSE OF THE COURSE TABLE OF NEW RIGHT-OF-WAY AS SHOWN ON THE SAID TRANSPORTATION PLAT.

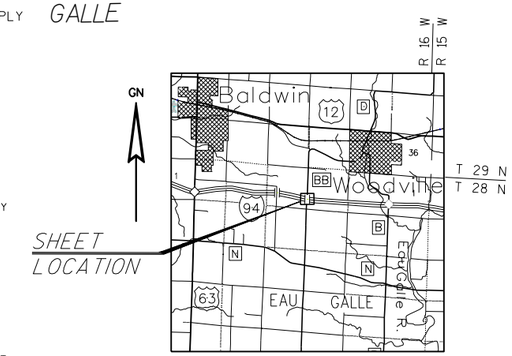

LOCATION SKETCH
NOT TO SCALE

AYRES ASSOCIATES
Engineers/Planners
Surveyors & Scientists
3433 Oakwood Hills Parkway
Eau Claire, WI 54701

I, MATTHEW E. HOGUND, PROFESSIONAL LAND SURVEYOR, HEREBY CERTIFY THAT IN FULL COMPLIANCE WITH THE PROVISIONS OF SECTION 84.095 OF THE WISCONSIN STATUTES AND UNDER THE DIRECTION OF THE DEPARTMENT, I HAVE SURVEYED AND MAPPED TRANSPORTATION PROJECT PLAT 1020-01-28-4.02 AND THAT SUCH PLAT CORRECTLY REPRESENTS ALL EXTERIOR BOUNDARIES OF THE SURVEYED LAND.

WISCONSIN Matthew E. Hoglund S-1910 Fall River WI LAND SURVEYOR

SIGNATURE _____ DATE 7/15/2015
PRINTED NAME MATTHEW E. HOGLUND
REGISTRATION NUMBER S-1910

THIS PLAT AND RELOCATION ORDER ARE APPROVED FOR THE WISCONSIN DEPARTMENT OF TRANSPORTATION
SIGNATURE _____ DATE 7/20/2015
PRINTED NAME MICHAEL P[illegible]

FILE NAME : V:\SURVEY\EC\0SURVEY\0DGN\420886_ST. CROIX COUNTY BRIDGES AND TPP\42-0886.01 CTH BB\RW PLAT\CTH BB TPP AMENDMENT.DWG PLOT DATE : 07/15/2015 1:00 PM PLOT BY : HOGLUND, MATTHEW PLOT NAME : PLOT SCALE : **********
APPRAISAL PLAT DATE : 07/15/2015

BENCH MARKS			
NO.	STA.	DESCRIPTION	ELEV.
1	78+52	SPK IN POWER POLE, 53' LT.	1241.78
2			

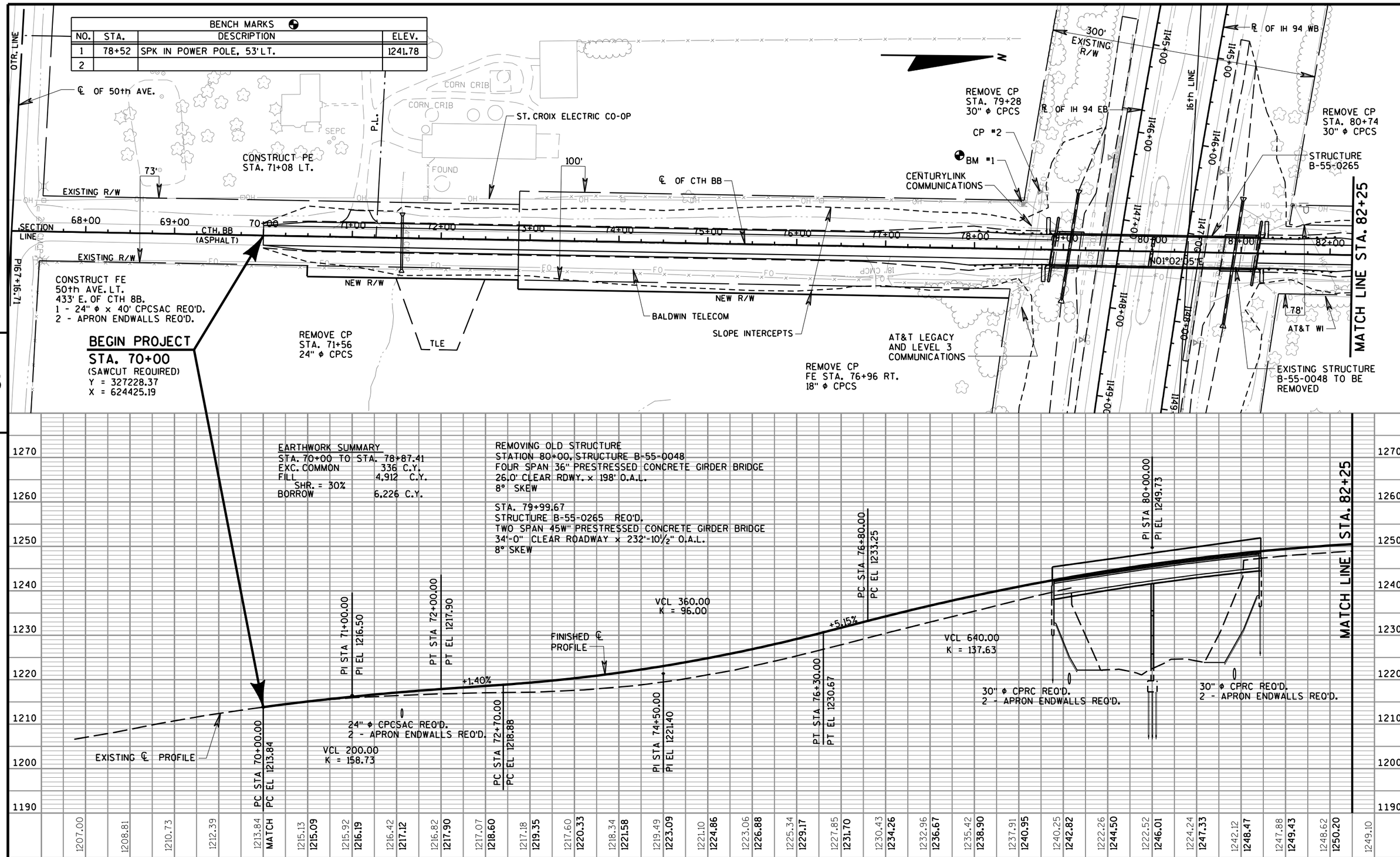

PROJECT NO: 1020-01-88	HWY: CTH BB	COUNTY: ST. CROIX	PLAN AND PROFILE	SCALE, FEET 0 50 100	SHEET 32	E

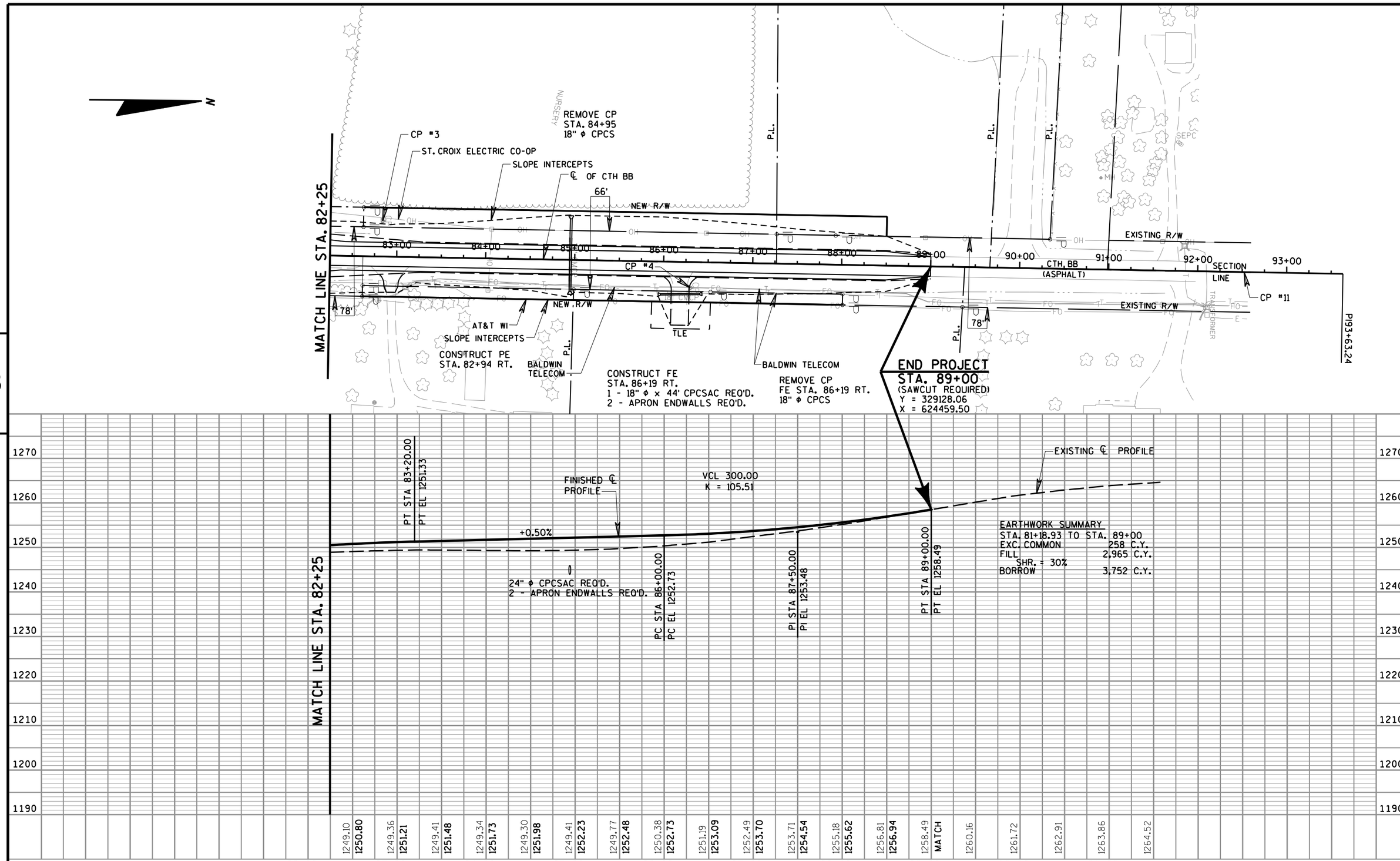

PROJECT NO: 1020-01-88	HWY: CTH BB	COUNTY: ST. CROIX	PLAN AND PROFILE	SCALE, FEET 0 50 100	SHEET 33	E

Standard Detail Drawing List

08D04-05	CONCRETE SURFACE DRAINS & ASPHALTIC FLUMES
08E08-03	TYPICAL INSTALLATIONS OF EROSION BALES / TEMPORARY DITCH CHECKS
08E09-06	SILT FENCE
08E10-02	INLET PROTECTION TYPE A, B, C AND D
08F01-11	APRON ENDWALLS FOR CULVERT PIPE
08F04-07	JOINT TIES FOR CONCRETE PIPE AND CONCRETE COLLAR DETAIL
12A03-10	NAME PLATE (STRUCTURES)
14B07-14A	CONCRETE BARRIER TEMPORARY PRECAST, 12'-6"
14B07-14B	CONCRETE BARRIER TEMPORARY PRECAST, 12'-6"
14B07-14C	CONCRETE BARRIER TEMPORARY PRECAST, 12'-6"
14B07-14D	CONCRETE BARRIER TEMPORARY PRECAST, 12'-6"
14B07-14E	CONCRETE BARRIER TEMPORARY PRECAST, 12'-6"
14B07-14F	CONCRETE BARRIER TEMPORARY PRECAST, 12'-6"
14B07-14G	CONCRETE BARRIER TEMPORARY PRECAST, 12'-6"
14B07-14H	CONCRETE BARRIER TEMPORARY PRECAST, 12'-6"
14B08-02A	CRASH CUSHION/SAND BARREL ARRAY AND OTHER TEMPORARY BARRIER LAYOUT DETAILS
14B08-02B	CRASH CUSHION/SAND BARREL ARRAY AND OTHER TEMPORARY BARRIER LAYOUT DETAILS
14B08-02C	CRASH CUSHION/SAND BARREL ARRAY AND OTHER TEMPORARY BARRIER LAYOUT DETAILS
14B08-02D	CRASH CUSHION/SAND BARREL ARRAY AND OTHER TEMPORARY BARRIER LAYOUT DETAILS
14B08-02E	CRASH CUSHION/SAND BARREL ARRAY AND OTHER TEMPORARY BARRIER LAYOUT DETAILS
14B42-03A	MIDWEST GUARDRAIL SYSTEM (MGS) GUARDRAIL
14B42-03B	MIDWEST GUARDRAIL SYSTEM (MGS) GUARDRAIL
14B42-03C	MIDWEST GUARDRAIL SYSTEM (MGS) GUARDRAIL
14B44-02A	MIDWEST GUARDRAIL SYSTEM ENERGY ABSORBING TERMINAL (MGS)
14B44-02B	MIDWEST GUARDRAIL SYSTEM ENERGY ABSORBING TERMINAL (MGS)
14B44-02C	MIDWEST GUARDRAIL SYSTEM ENERGY ABSORBING TERMINAL (MGS)
14B45-04A	MIDWEST GUARDRAIL SYSTEM THRIE BEAM TRANSITION (MGS)
14B45-04B	MIDWEST GUARDRAIL SYSTEM THRIE BEAM TRANSITION (MGS)
14B45-04C	MIDWEST GUARDRAIL SYSTEM THRIE BEAM TRANSITION (MGS)
14B45-04D	MIDWEST GUARDRAIL SYSTEM THRIE BEAM TRANSITION (MGS)
15A03-02A	FLEXIBLE MARKER POST FOR CULVERT END
15A03-02B	FLEXIBLE MARKER POST FOR CULVERT END
15B01-08A	FENCE WOVEN WIRE
15B01-08B	FENCE WOVEN WIRE
15C02-05A	BARRICADES AND SIGNS FOR MAINLINE CLOSURES
15C02-05B	BARRICADES AND SIGNS FOR MAINLINE CLOSURES
15C03-02	BARRICADES AND SIGNS FOR SIDEROAD CLOSURES
15C06-07	SIGNING & MARKING FOR TWO LANE BRIDGES
15C08-16A	PAVEMENT MARKING (MAINLINE)
15D12-05A	TRAFFIC CONTROL, LANE CLOSURE
15D12-05B	TRAFFIC CONTROL, LANE CLOSURE, SPEED REDUCTION
15D27-02	TRAFFIC CONTROL, SHOULDER CLOSURE ON DIVIDED ROADWAY, SPEEDS GREATER THAN 40 MPH
15D38-01A	TEMPORARY TRAFFIC CONTROL FIXED MESSAGE SIGNS
15D38-01B	ATTACHMENT OF SIGNS TO POSTS

6

6

GENERAL NOTES

DETAILS OF CONSTRUCTION, MATERIALS AND WORKMANSHIP NOT SHOWN ON THIS DRAWING SHALL CONFORM TO PERTINENT REQUIREMENTS OF THE STANDARD SPECIFICATIONS AND APPLICABLE SPECIAL PROVISIONS.

WELDED STEEL WIRE FABRIC SHALL BE IN ACCORDANCE WITH AASHTO SPECIFICATION M55.

① JOINTS SHALL BE 1/8 TO 1/4 INCH WIDE BY 1 1/2 INCHES DEEP AND SPACED AT UNIFORM INTERVALS OF APPROXIMATELY 4 FEET.

② GEOTEXTILE FABRIC TYPE "R" SHALL UNDERLAY THE FULL LENGTH AND WIDTH OF THE CONCRETE SURFACE DRAIN AND RIPRAP.

③ CONCRETE SURFACE DRAIN WITHOUT CURB AND GUTTER MAY BE USED ON BACKSLOPES WHEN SPECIFIED

ASPHALTIC FLUME

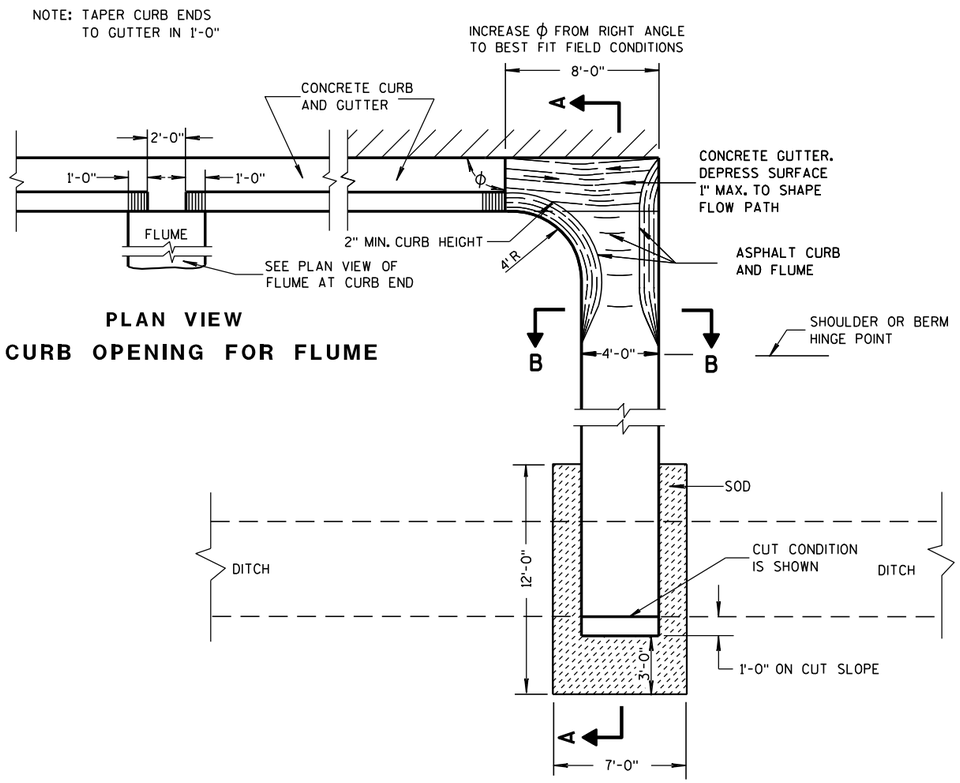

PLAN VIEW
CURB OPENING FOR FLUME

PLAN VIEW
FLUME AT CURB END

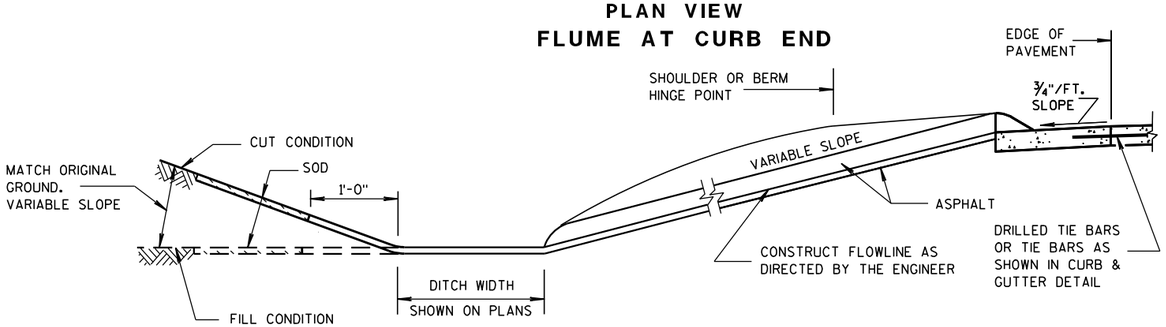

SECTION A-A

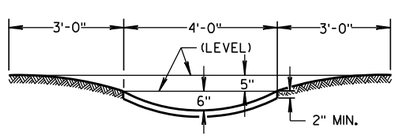

SECTION B-B

③ CONCRETE SURFACE DRAIN

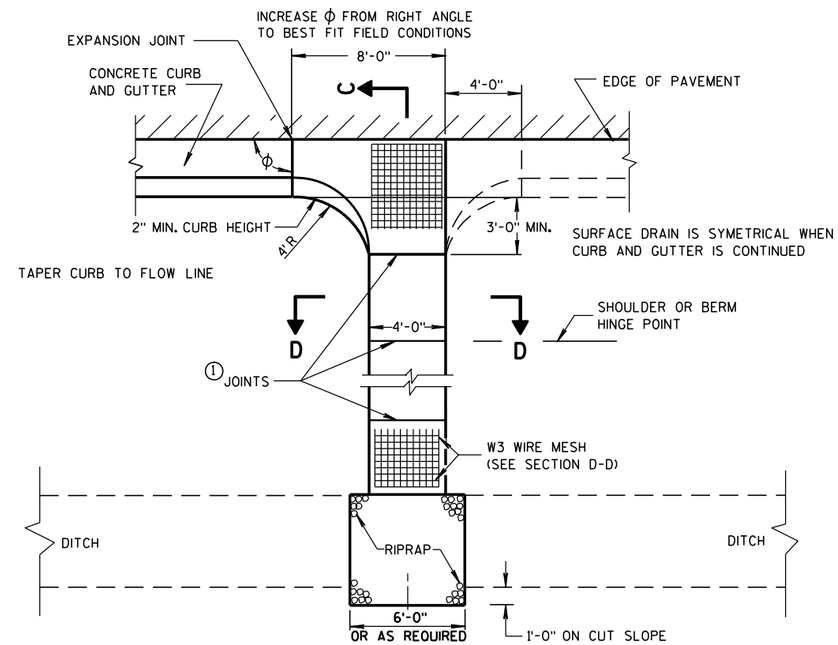

PLAN VIEW

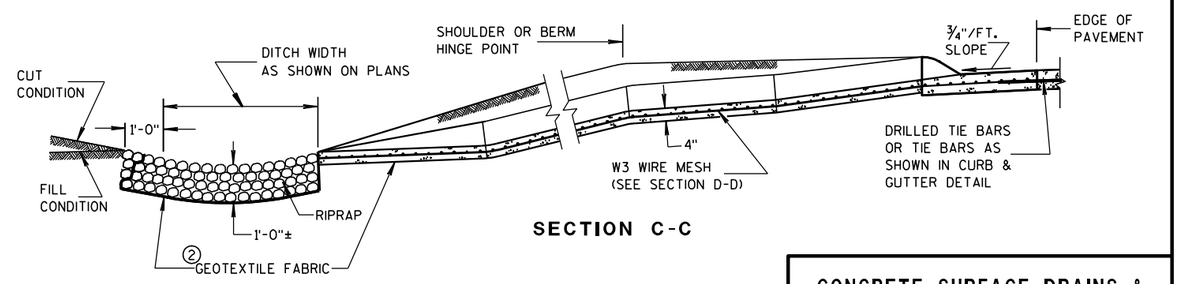

SECTION C-C

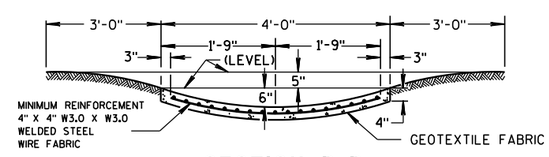

SECTION D-D

CONCRETE SURFACE DRAINS & ASPHALTIC FLUMES	
STATE OF WISCONSIN DEPARTMENT OF TRANSPORTATION	
APPROVED	
9-4-08 DATE	/S/ Jerry H. Zogg ROADWAY STANDARDS ENGINEER
FHWA	

6

S.D.D. 8 D 4-5

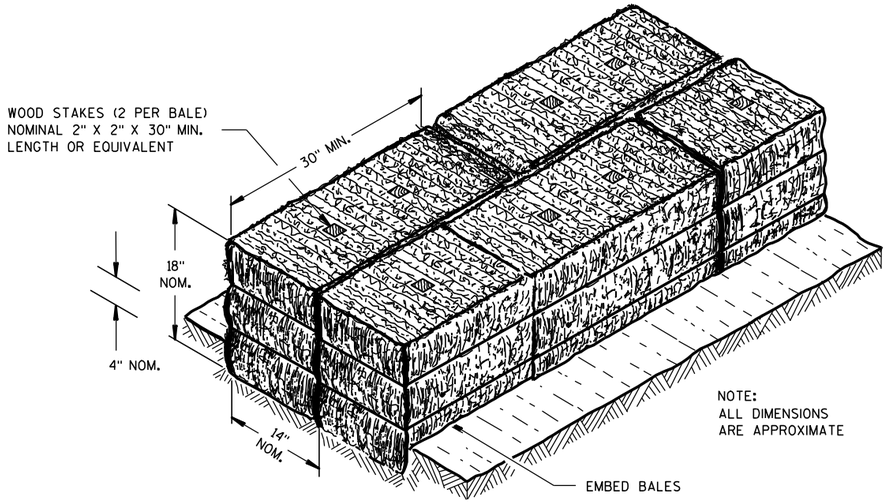

SECTION A-A

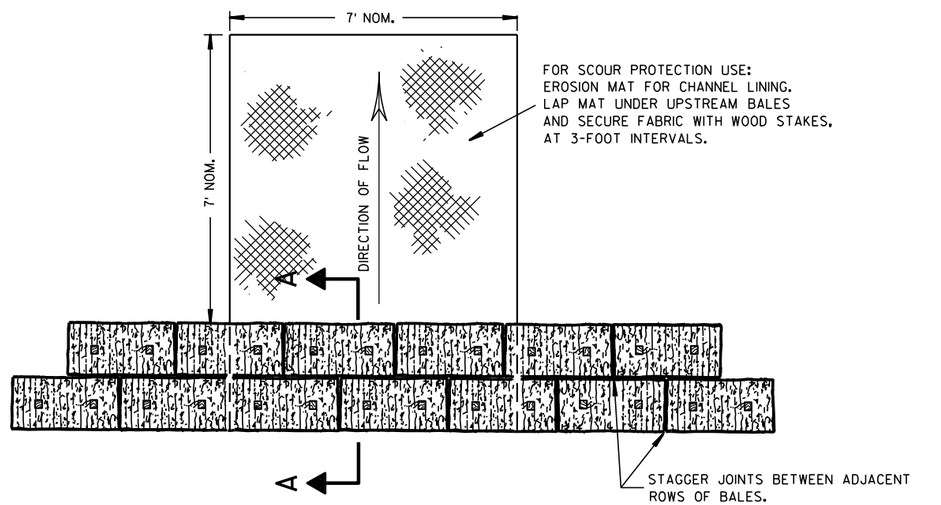

PLAN VIEW

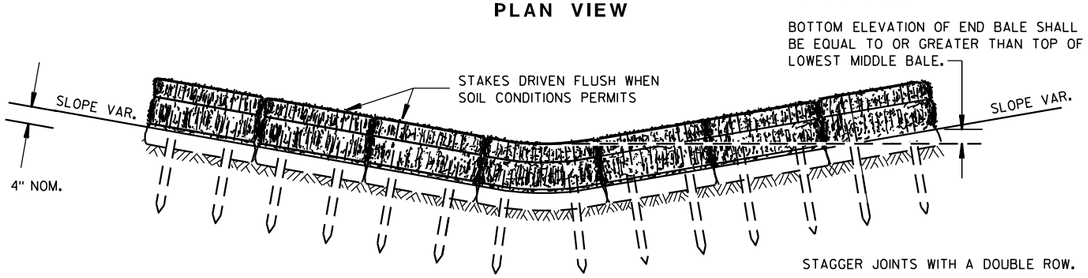

FRONT ELEVATION

TEMPORARY DITCH CHECK USING EROSION BALES ①

GENERAL NOTES

DETAILS OF CONSTRUCTION, MATERIALS AND WORKMANSHIP NOT SHOWN ON THIS DRAWING SHALL CONFORM TO THE PERTINENT REQUIREMENTS OF THE STANDARD SPECIFICATIONS AND THE APPLICABLE SPECIAL PROVISIONS.

① TEMPORARY DITCH CHECKS EITHER EROSION BALES OR MANUFACTURED SHALL BE PAID FOR UNDER THE BID ITEM OF TEMPORARY DITCH CHECK. THE DEPARTMENT WILL NOT PAY FOR TEMPORARY DITCH CHECKS CONSTRUCTED OF A SINGLE ROW OF EROSION BALES.

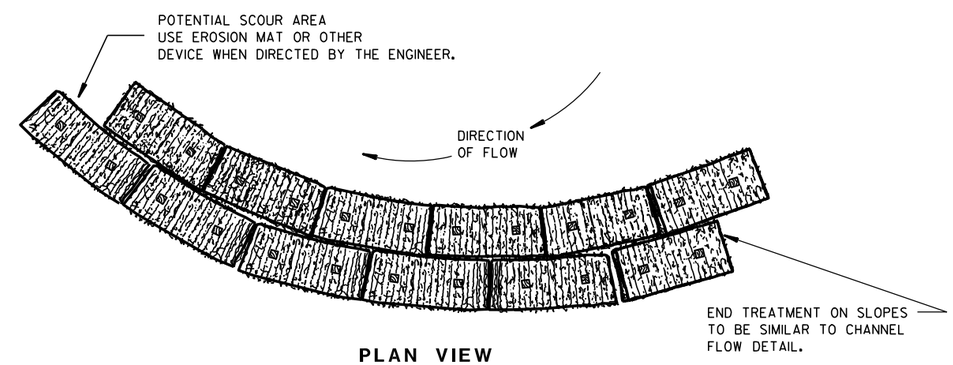

PLAN VIEW

WHEN ALTERING THE DIRECTION OF FLOW

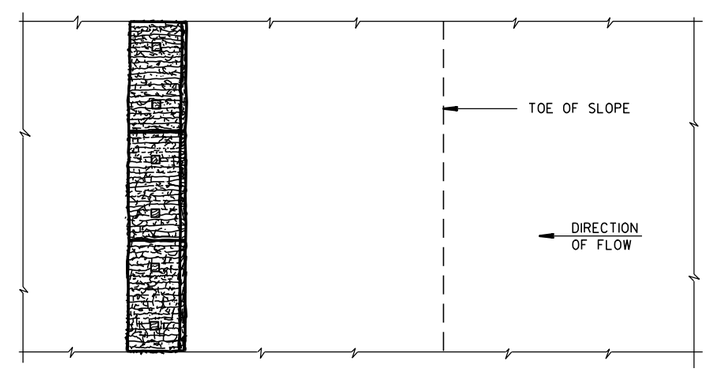

PLAN VIEW

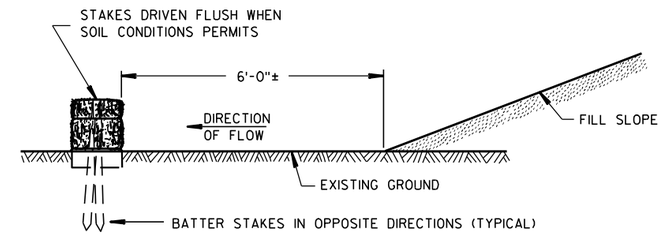

FRONT ELEVATION

WHEN EXISTING GROUND SLOPES AWAY FROM FILL SLOPE

EROSION BALES FOR SHEET FLOW

TYPICAL INSTALLATIONS OF EROSION BALES / TEMPORARY DITCH CHECKS

STATE OF WISCONSIN
DEPARTMENT OF TRANSPORTATION

APPROVED
6/04/02 — DATE
/S/ Beth Cann — CHIEF ROADWAY DEVELOPMENT ENGINEER
FHWA

6

6

S.D.D. 8 E 8-3

S.D.D. 8 E 8-3

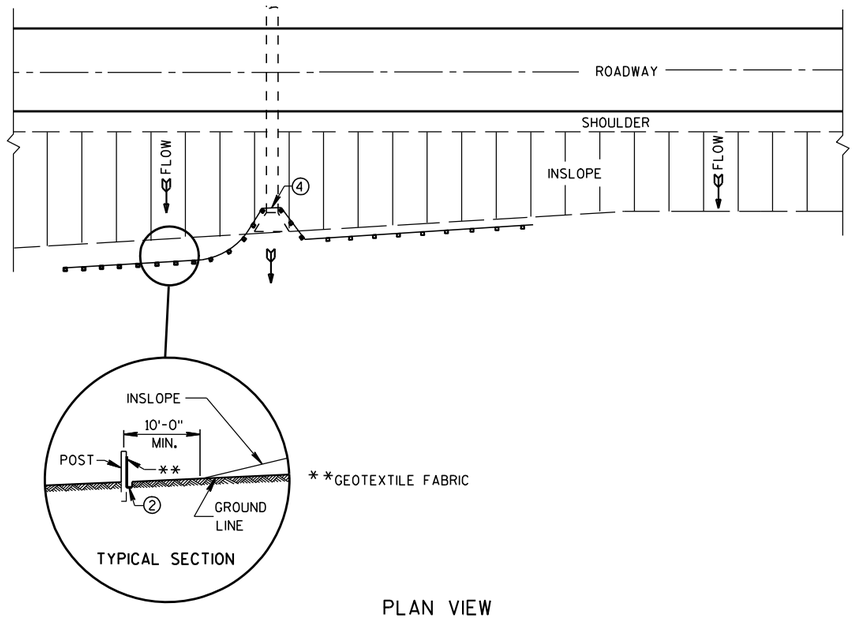

PLAN VIEW

TYPICAL APPLICATION OF SILT FENCE

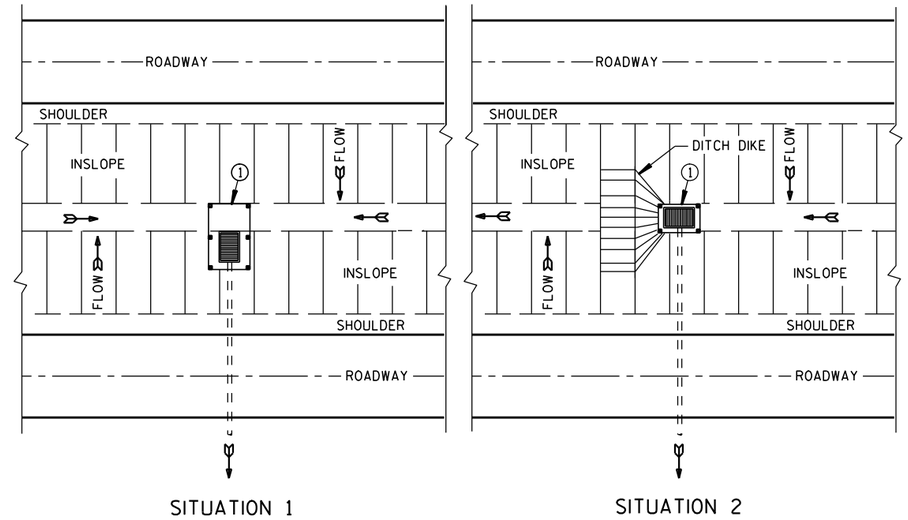

PLAN VIEW

SILT FENCE AT MEDIAN SURFACE DRAINS

GENERAL NOTES

DETAILS OF CONSTRUCTION NOT SHOWN ON THIS DRAWING SHALL CONFORM TO THE PERTINENT REQUIREMENTS OF THE STANDARD SPECIFICATIONS AND APPLICABLE SPECIAL PROVISIONS.

① HORIZONTAL BRACE REQUIRED WITH 2" X 4" WOODEN FRAME OR EQUIVALENT AT TOP OF POSTS.

② FOR MANUAL INSTALLATIONS THE TRENCH SHALL BE A MINIMUM OF 4" WIDE & 6" DEEP TO BURY AND ANCHOR THE GEOTEXTILE FABRIC. FOLD MATERIAL TO FIT TRENCH AND BACKFILL & COMPACT TRENCH WITH EXCAVATED SOIL.

③ WOOD POSTS SHALL BE A MINIMUM SIZE OF 1⅛" X 1⅛" OF OAK OR HICKORY.

④ SILT FENCE TO EXTEND ACROSS THE TOP OF THE PIPE.

⑤ CONSTRUCT SILT FENCE FROM A CONTINUOUS ROLL IF POSSIBLE BY CUTTING LENGTHS TO AVOID JOINTS. IF A JOINT IS NECESSARY USE ONE OF THE FOLLOWING TWO METHODS; A) OVERLAP THE END POSTS AND TWIST, OR ROTATE, AT LEAST 180 DEGREES. B) HOOK THE END OF EACH SILT FENCE LENGTH.

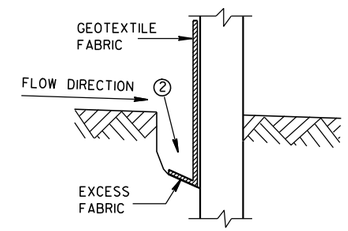

TRENCH DETAIL

NOTE: ADDITIONAL POST DEPTH OR TIE BACKS MAY BE REQUIRED IN UNSTABLE SOILS

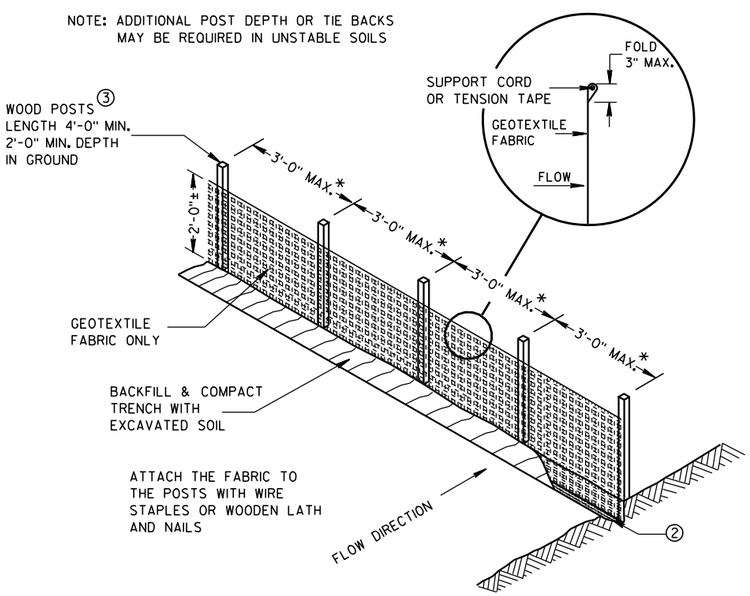

*NOTE: 8'-0" POST SPACING ALLOWED IF A WOVEN GEOTEXTILE FABRIC IS USED.

SILT FENCE

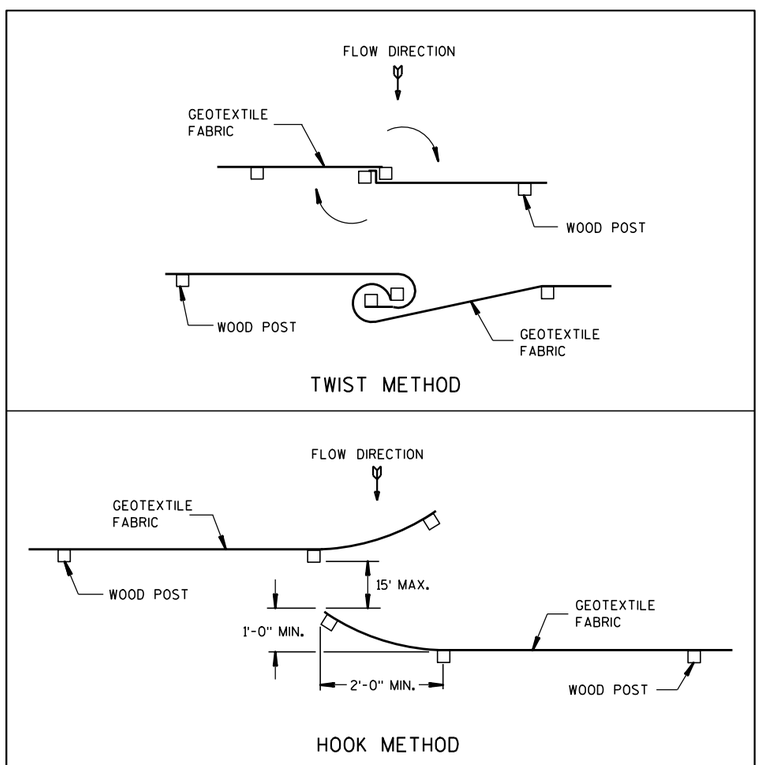

JOINING TWO LENGTHS OF SILT FENCE ⑤

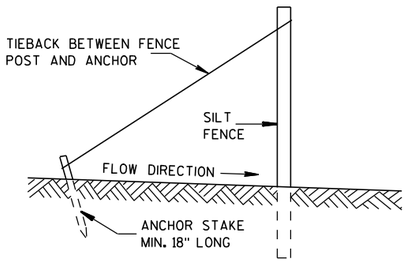

SILT FENCE TIE BACK

(WHEN REQUIRED BY THE ENGINEER)

SILT FENCE
STATE OF WISCONSIN DEPARTMENT OF TRANSPORTATION
APPROVED 4-29-05 /S/ Beth Cann----- DATE CHIEF ROADWAY DEVELOP ENGINEER FHWA

6

6

S.D.D. 8 E 9-6

S.D.D. 8 E 9-6

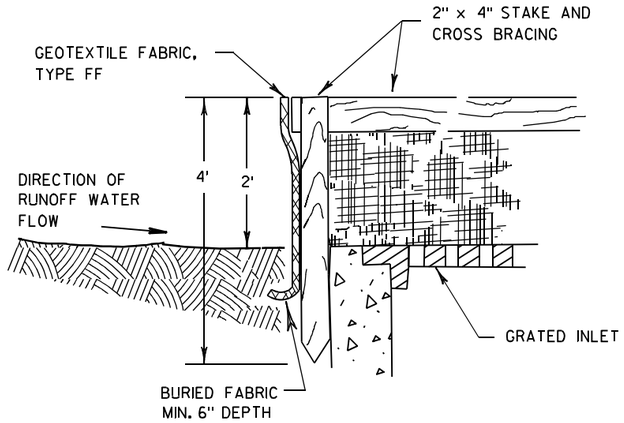

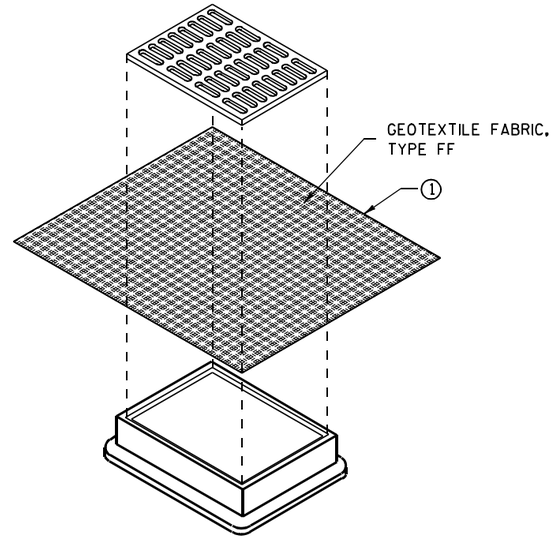

INLET PROTECTION, TYPE B
(WITHOUT CURB BOX)

(CAN BE INSTALLED IN ANY INLET WITHOUT A CURB BOX)

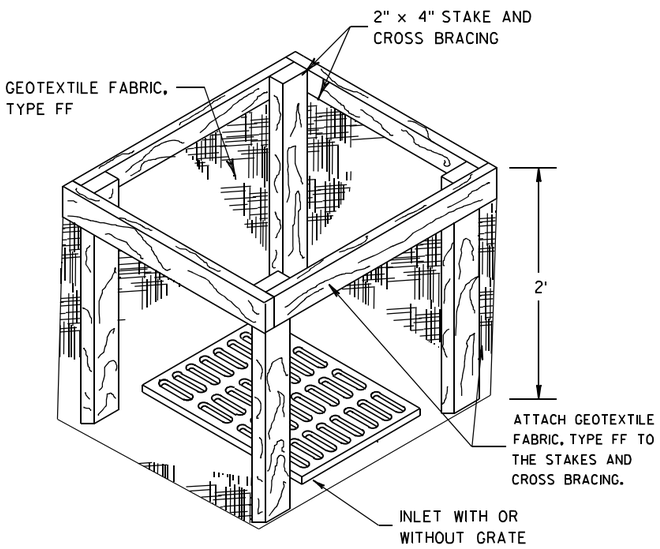

INLET PROTECTION, TYPE A

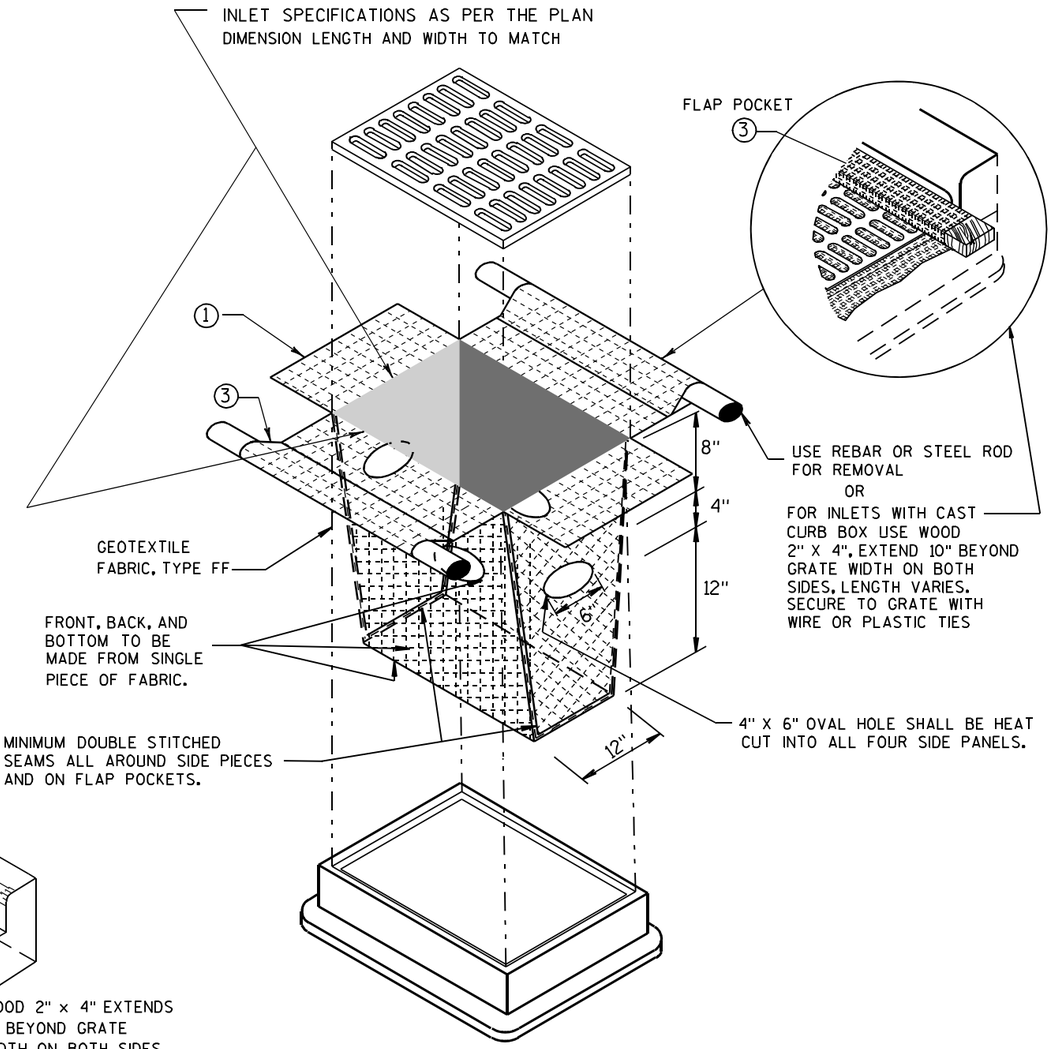

INLET PROTECTION, TYPE D

(CAN BE INSTALLED IN ANY INLET TYPE WITH
OR WITHOUT A CURB BOX AS PER NOTE ②)

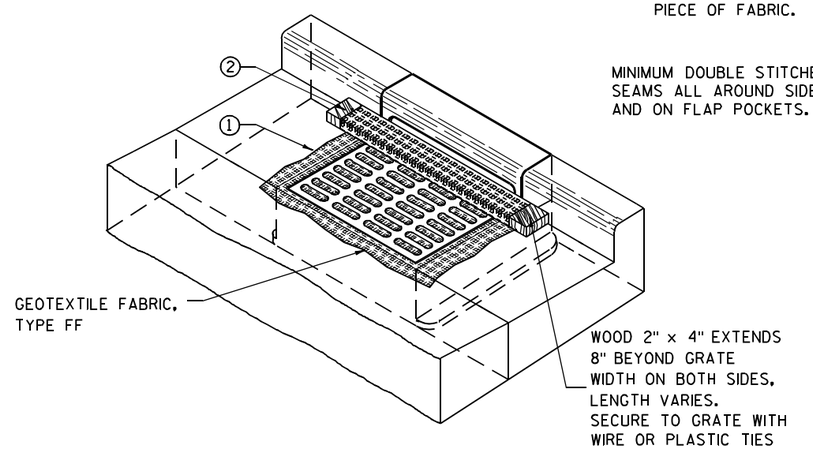

INLET PROTECTION, TYPE C (WITH CURB BOX)

GENERAL NOTES

INLET PROTECTION DEVICES SHALL BE MAINTAINED OR REPLACED AT THE DIRECTION OF THE ENGINEER.

MANUFACTURED ALTERNATIVES APPROVED AND LISTED ON THE DEPARTMENT'S EROSION CONTROL PRODUCT ACCEPTABILITY LIST MAY BE SUBSTITUTED.

WHEN REMOVING OR MAINTAINING INLET PROTECTION, CARE SHALL BE TAKEN SO THAT THE SEDIMENT TRAPPED ON THE GEOTEXTILE FABRIC DOES NOT FALL INTO THE INLET. ANY MATERIAL FALLING INTO THE INLET SHALL BE REMOVED IMMEDIATELY.

① FINISHED SIZE, INCLUDING FLAP POCKETS WHERE REQUIRED, SHALL EXTEND A MINIMUM OF 10" AROUND THE PERIMETER TO FACILITATE MAINTENANCE OR REMOVAL.

② FOR INLET PROTECTION, TYPE C (WITH CURB BOX), AN ADDITIONAL 18" OF FABRIC IS WRAPPED AROUND THE WOOD AND SECURED WITH STAPLES. THE WOOD SHALL NOT BLOCK THE ENTIRE HEIGHT OF THE CURB BOX OPENING.

③ FLAP POCKETS SHALL BE LARGE ENOUGH TO ACCEPT WOOD 2X4.

INSTALLATION NOTES

TYPE B & C

TRIM EXCESS FABRIC IN THE FLOW LINE TO WITHIN 3" OF THE GRATE.

THE CONTRACTOR SHALL DEMONSTRATE A METHOD OF MAINTENANCE, USING A SEWN FLAP, HAND HOLDS OR OTHER METHOD TO PREVENT ACCUMULATED SEDIMENT FROM ENTERING THE INLET.

TYPE D

DO NOT INSTALL INLET PROTECTION TYPE D IN INLETS SHALLOWER THAN 30", MEASURED FROM THE BOTTOM OF THE INLET TO THE TOP OF THE GRATE.

TRIM EXCESS FABRIC IN THE FLOW LINE TO WITHIN 3" OF THE GRATE.

THE INSTALLED BAG SHALL HAVE A MINIMUM SIDE CLEARANCE, BETWEEN THE INLET WALLS AND THE BAG, MEASURED AT THE BOTTOM OF THE OVERFLOW HOLES, OF 3". WHERE NECESSARY THE CONTRACTOR SHALL CINCH THE BAG, USING PLASTIC ZIP TIES, TO ACHIEVE THE 3" CLEARANCE. THE TIES SHALL BE PLACED AT A MAXIMUM OF 4" FROM THE BOTTOM OF THE BAG.

INLET PROTECTION
TYPE A, B, C, AND D

STATE OF WISCONSIN
DEPARTMENT OF TRANSPORTATION

APPROVED
10/16/02 — DATE
/S/ Beth Cann[illegible] — CHIEF ROADWAY DEVELOPM[illegible] ENGINEER
FHWA

6

S.D.D. 8 E 10-2

METAL APRON ENDWALLS

PIPE DIA. (IN.)	MIN. THICK. (Inches) STEEL	MIN. THICK. (Inches) ALUM.	DIMENSIONS (Inches) A (±1")	B (MAX.)	H (±1")	L (±1 1/2")	L1 ①	L2 ①	W (±2")	APPROX. SLOPE	BODY
12	.064	.060	6	6	6	21	12	17 1/2	24	2 1/2 to 1	1 Pc.
15	.064	.060	7	8	6	26	14	21 3/4	30	2 1/2 to 1	1 Pc.
18	.064	.060	8	10	6	31	15	28 1/4	36	2 1/2 to 1	1 Pc.
21	.064	.060	9	12	6	36	18	29 5/8	42	2 1/2 to 1	1 Pc.
24	.064	.075	10	13	6	41	18	37 1/4	48	2 1/2 to 1	1 Pc.
30	.079	.075	12	16	8	51	18	52 1/4	60	2 1/2 to 1	1 Pc.
36	.079	.105	14	19	9	60	24	59 3/4	72	2 1/2 to 1	2 Pc.
42	.109	.105	16	22	11	69	24	75 5/8	84	2 1/2 to 1	2 Pc.
48	.109	.105	18	27	12	78	24	81	90	2 1/4 to 1	3 Pc.
54	.109	.105	18	30	12	84	30	85 1/2	102	2 1/4 to 1	3 Pc.
60	.109×	.105×	18	33	12	87	—	—	114	2 to 1	3 Pc.
66	.109×	.105×	18	36	12	87	—	—	120	2 to 1	3 Pc.
72	.109×	.105×	18	39	12	87	—	—	126	2 to 1	3 Pc.
78	.109×	.105×	18	42	12	87	—	—	132	1 1/2 to 1	3 Pc.
84	.109×	.105×	18	45	12	87	—	—	138	1 1/2 to 1	3 Pc.
90	.109×	.105×	18	37	12	87	—	—	144	1 1/2 to 1	3 Pc.
96	.109×	.105×	18	35	12	87	—	—	150	1 1/2 to 1	3 Pc.

× EXCEPT CENTER PANEL
SEE GENERAL NOTES

REINFORCED CONCRETE APRON ENDWALLS

PIPE DIA. (IN.)	DIMENSIONS (Inches) T	A	B	C	D	E	G	APPROX. SLOPE
12	2	4	24	48 7/8	72 7/8	24	2	3 to 1
15	2 1/4	6	27	46	73	30	2 1/4	3 to 1
18	2 1/2	9	27	46	73	36	2 1/2	3 to 1
21	2 3/4	9	36	37 1/2	73 1/2	42	2 3/4	3 to 1
24	3	9 1/2	43 1/2	30	73 1/2	48	3	3 to 1
27	3 1/4	10 1/2	49 1/2	24	73 1/2	54	3 1/4	3 to 1
30	3 1/2	12	54	19 3/4	73 1/2	60	3 1/2	3 to 1
36	4	15	63	34 3/4	97 3/4	72	4	3 to 1
42	4 1/2	21	63	35	98	78	4 1/2	3 to 1
48	5	24	72	26	98	84	5	3 to 1
54	5 1/2	27	65	*33 1/4-**35	*98 1/4-**100	90	5 1/2	2 2/5 to 1
60	6	*30-**35	60	39	99	96	5	2 to 1
66	6 1/2	*24-**30	*72-**78	*21-**27	99	102	5 1/2	2 to 1
72	7	*24-**36	78	21	99	108	6	2 to 1
78	7 1/2	*24-**36	78	21	99	114	6 1/2	2 to 1
84	8	36	90 1/2	21	111 1/2	120	6 1/2	1 1/2 to 1
90	8 1/2	41	87 1/2	24	111 1/2	132	6 1/2	1 1/2 to 1

*MINIMUM
**MAXIMUM

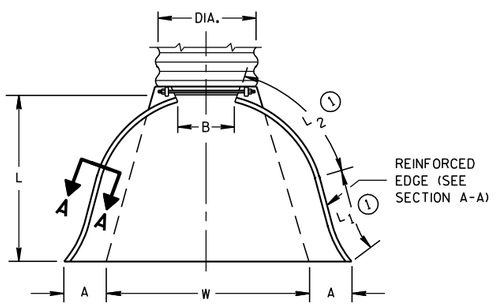

PLAN VIEW

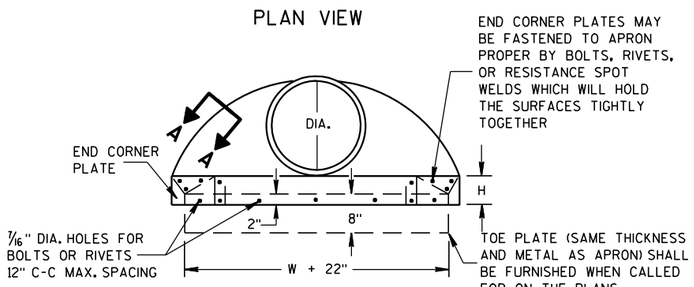

END VIEW

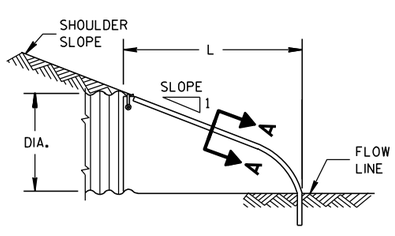

SIDE ELEVATION

METAL ENDWALLS

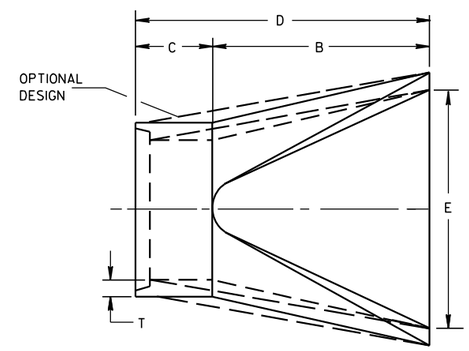

PLAN

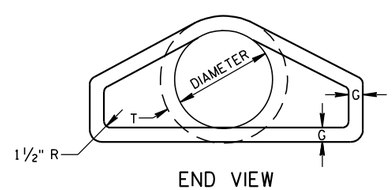

END VIEW

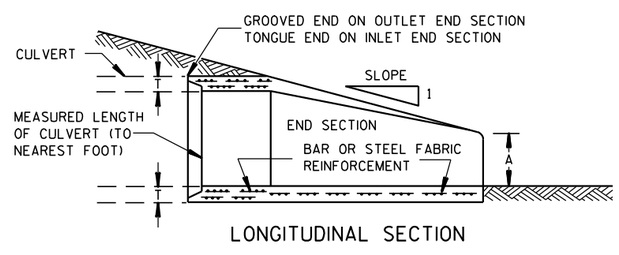

LONGITUDINAL SECTION

CONCRETE ENDWALLS

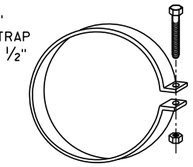

ALTERNATE FOR TYPE 1 CONNECTION

END SECTION CONNECTOR STRAP

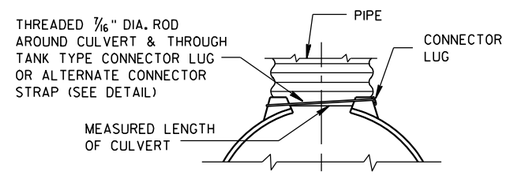

TYPE 1
FOR 12" THRU 24" CORR. PIPE

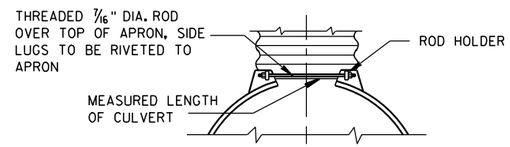

TYPE 2
FOR 30" THRU 96" CORR. PIPE

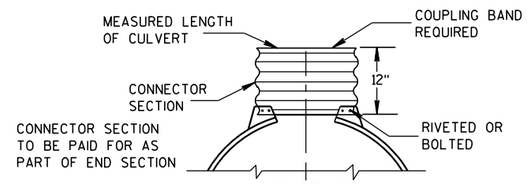

TYPE 3
FOR 42" THRU 96" CORR. PIPE

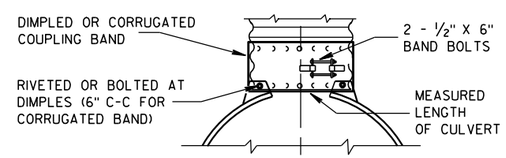

TYPE 5
ALTERNATE FOR:
ALL SIZES CORRUGATED CIRCULAR PIPE

NOTE: DIMPLED BAND FITS OVER OUTSIDE OF ENDWALL, AND CORRUGATED BAND FITS INSIDE ENDWALL. DIMPLED BAND MAY BE USED WITH HELICALLY CORRUGATED PIPE.

FOR CIRCUMFERENTIALLY CORRUGATED PIPE USE ENDWALL CONNECTION DETAILS 1, 2, 3 OR 5 AS APPLICABLE.

FOR HELICALLY CORRUGATED PIPE USE ENDWALL CONNECTION DETAILS 1, 2 OR 5.

FOR HELICALLY CORRUGATED PIPES WITH TWO CIRCUMFERENTIAL CORRUGATIONS AT EACH END USE ENDWALL CONNECTION DETAILS 1, 2 OR 3.

CONNECTION DETAILS

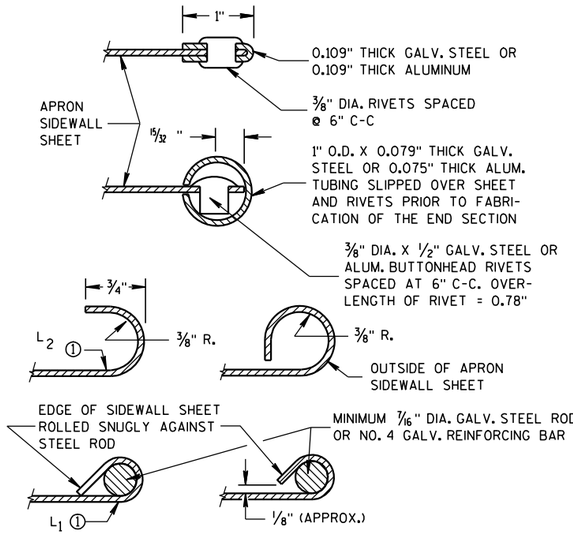

SECTION A-A

GENERAL NOTES

DETAILS OF CONSTRUCTION, MATERIALS AND WORKMANSHIP NOT SHOWN ON THIS DRAWING SHALL CONFORM TO THE PERTINENT REQUIREMENTS OF THE STANDARD SPECIFICATIONS AND THE APPLICABLE SPECIAL PROVISIONS.

CONCRETE CULVERT ENDWALLS MAY NOT BE USED WITH GALVANIZED STEEL OR ALUMINUM CULVERT PIPE OR VISE VERSA. GALVANIZED STEEL OR ALUMINUM ENDWALLS SHALL NORMALLY BE INSTALLED ON CULVERT PIPE OF THE SAME METAL.

ALL THREE PIECE STEEL APRON ENDWALLS FOR 60" DIAMETER PIPE AND LARGER SHALL HAVE 0.109" SIDES AND 0.138" CENTER PANELS. ALL THREE PIECE ALUMINUM APRON ENDWALLS FOR 60" DIAMETER PIPE AND LARGER SHALL HAVE 0.105" SIDES AND 0.134" CENTER PANELS. THE WIDTH OF CENTER PANELS SHALL BE GREATER THAN 20 PERCENT OF THE PIPE PERIMETER.

LAP SEAMS SHALL BE TIGHTLY JOINED BY GALVANIZED RIVETS OR BOLTS FOR STEEL UNITS AND ALUMINUM RIVETS AND BOLTS FOR ALUMINUM UNITS. FOR THE 60" THROUGH 96" DIAMETER APRON ENDWALL SIZES, THE REINFORCED EDGES AND CENTER PANEL SEAMS SHALL BE FURTHER REINFORCED WITH GALVANIZED STEEL OR ALUMINUM STIFFENER ANGLES. THE ANGLES SHALL BE ATTACHED BY GALVANIZED NUTS AND BOLTS FOR STEEL UNITS AND ALUMINUM NUTS AND BOLTS FOR ALUMINUM UNITS.

WHERE TWO OR MORE PIPES WITH APRON ENDWALLS ARE LAID ADJACENT TO EACH OTHER, THEY SHALL BE SEPARATED BY A DISTANCE SUFFICIENT TO PROVIDE A MINIMUM CLEARANCE OF 6 INCHES BETWEEN APRON ENDWALLS.

① FOR PIPE SIZES UP TO 60" DIAMETER, A 180° ROLLED EDGE MAY BE USED INSTEAD OF STEEL ROD REINFORCEMENT. SEE SECTION A-A.

APRON ENDWALLS FOR CULVERT PIPE

STATE OF WISCONSIN
DEPARTMENT OF TRANSPORTATION

APPROVED
11/30/94 — DATE
/S/ Rory L. Rhinesmith — CHIEF ROADWAY DEVELOPMENT ENGINEER
FHWA

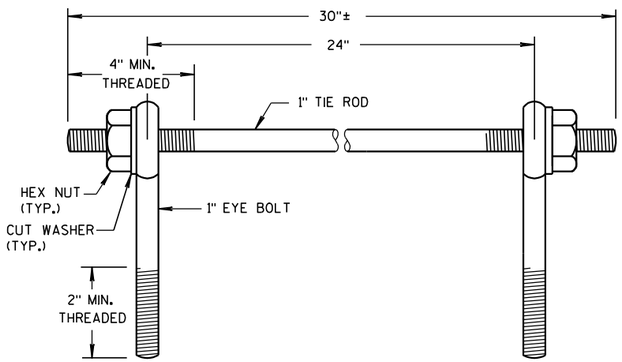

EYE BOLTS AND TIE ROD

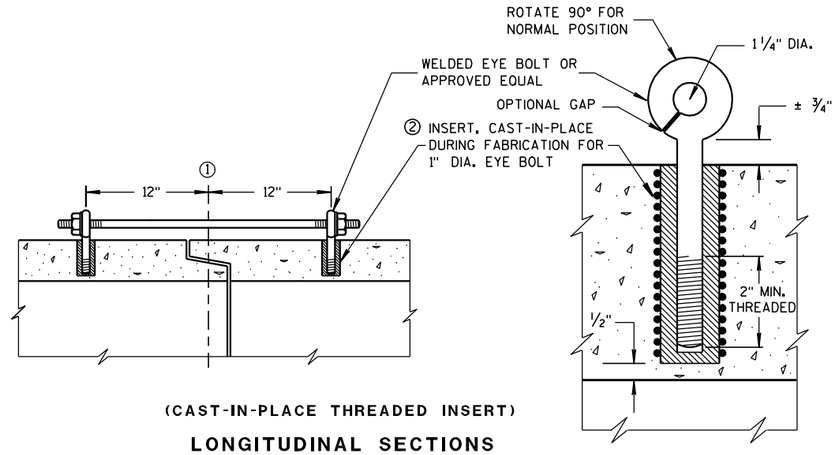

(CAST-IN-PLACE THREADED INSERT)

LONGITUDINAL SECTIONS

EYE BOLT AND TIE ROD ASSEMBLY (ALTERNATE NO. 1)

GENERAL NOTES

DETAILS OF CONSTRUCTION, MATERIALS, AND WORKMANSHIP NOT SHOWN ON THIS DRAWING SHALL CONFORM TO THE PERTINENT REQUIREMENTS OF THE STANDARD SPECIFICATIONS AND APPLICABLE SPECIAL PROVISIONS.

CONCRETE CULVERT AND STORM SEWER PIPE SHALL BE TIED TOGETHER IN THE MANNER ILLUSTRATED BY THIS DETAIL AT LOCATIONS DESIGNATED IN THE STANDARD SPECIFICATIONS AND THE PLAN. THE CONTRACTOR MAY USE EITHER ALTERNATE 1, 2 OR 3 FOR DRAINAGE STRUCTURES. ONLY ALTERNATE 1 AND 3 MAY BE USED FOR CATTLE PASSES, UNLESS OTHERWISE STATED IN THE CONTRACT. THE MATERIALS, FABRICATION AND WORK NECESSARY TO TIE THE PIPE BY THIS DETAIL WILL BE CONSIDERED INCIDENTAL TO THE PIPE AND APRON ENDWALLS IF REQUIRED.

DETAILED DRAWINGS FOR PROPOSED ALTERNATE DESIGNS FOR JOINT TIES SHALL BE SUBMITTED TO THE ENGINEER FOR APPROVAL.

JOINT TIES TO BE HOT-DIP GALVANIZED PER ASTM A 153.

① ℄ OF TONGUE AND GROOVE OR BELL AND SPIGOT JOINTS.

② THE INSIDE OF THE THREADED INSERTS SHALL BE CLEAN TO ALLOW THE INSERTION OF THREADED EYE BOLTS.

③ HOLES SHALL BE CAST-IN-PLACE OR DRILLED 12 INCHES FROM ℄ OF TONGUE AND GROOVE.

④ BOLT PROJECTION INSIDE OF PIPE SHALL NOT EXCEED 2 INCHES.

⑤ OPENING TO BE ROD DIAMETER PLUS 1 INCH.

⑥ LENGTH ADEQUATE TO EXTEND TO WITHIN 1/2 INCH OF THE INNER SURFACE OF THE PIPE.

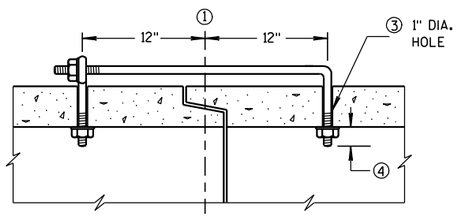

(TONGUE & GROOVE PIPE)

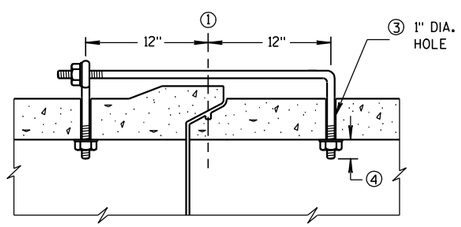

(MODIFIED BELL PIPE)

LONGITUDINAL SECTION

EYE BOLT DIMENSION TABLE

PIPE SIZE	L = LENGTH	
	TONGUE & GROOVE PIPE	MODIFIED BELL PIPE
18" TO 24"	4 1/2"	6 1/4"
30"	5"	7"
36"	5 1/2"	7"
42"	6"	
48"	6 1/2"	
60"	7 1/2"	
66"	8"	

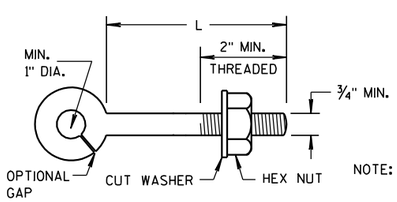

EYE BOLT

NOTE:

NOTE: TWO EYE BOLTS MAY BE USED WITH A 30" LONG THREADED ROD IN LIEU OF THE 90° BENT TIE ROD.

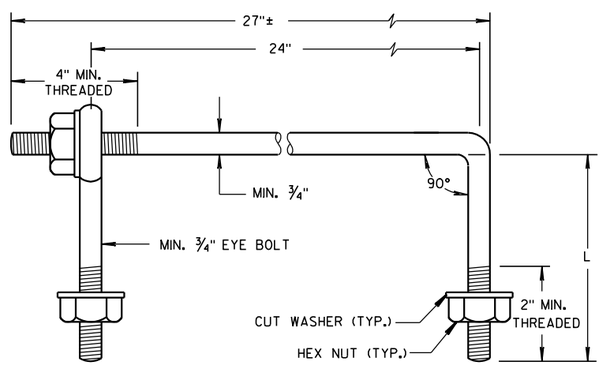

EYE BOLT AND TIE ROD

(JOINT TIES FOR 18" TO 66" DIA. CONCRETE PIPE)

EYE BOLT AND TIE ROD ASSEMBLY (ALTERNATE NO. 2)

ADJUSTABLE TIE ROD TABLE

PIPE DIAMETER	TIE ROD DIAMETER	D	L_1	N
12-60	5/8	5/8	5	1/2
66-84	3/4	3/4	5	1/2
90-108	1	1	7	1 7/16

DIMENSIONS SHOWN ARE IN INCHES

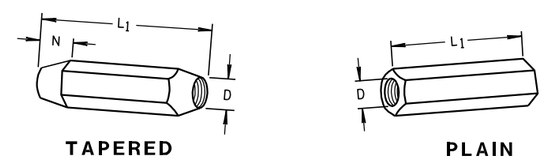

TAPERED PLAIN

RIGHT AND LEFT THREADS

SLEEVE NUTS

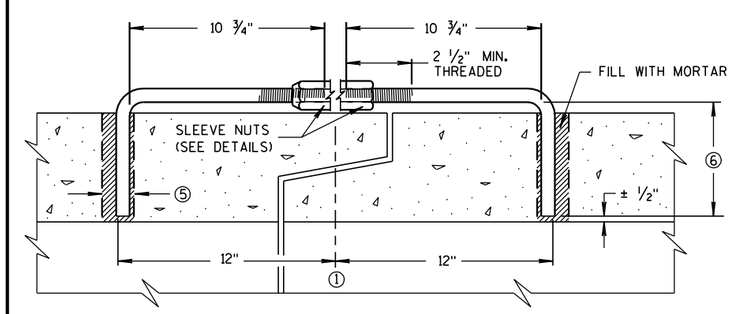

LONGITUDINAL SECTION

(JOINT TIES FOR 12" TO 108" DIA. CONCRETE PIPE)

ADJUSTABLE TIE ROD (ALTERNATE NO. 3)

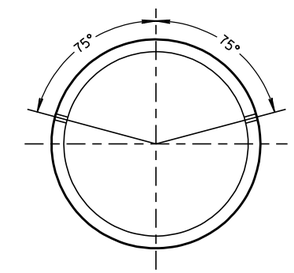

PLACEMENT OF (2) CAST-IN-PLACE INSERTS OR HOLES DURING FABRICATION FOR PIPE SECTIONS REQUIRING TIE RODS

TRANSVERSE SECTION

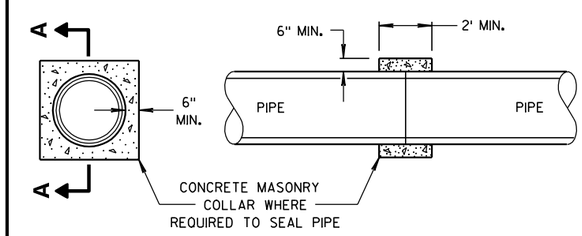

SECTION A-A

CONCRETE COLLAR DETAIL

JOINT TIES FOR CONCRETE PIPE AND CONCRETE COLLAR DETAIL

STATE OF WISCONSIN
DEPARTMENT OF TRANSPORTATION

APPROVED
6/5/2012 /S/ Jerry H. Zogg
DATE ROADWAY STANDARDS DEVELOPMENT ENGINEER
FHWA

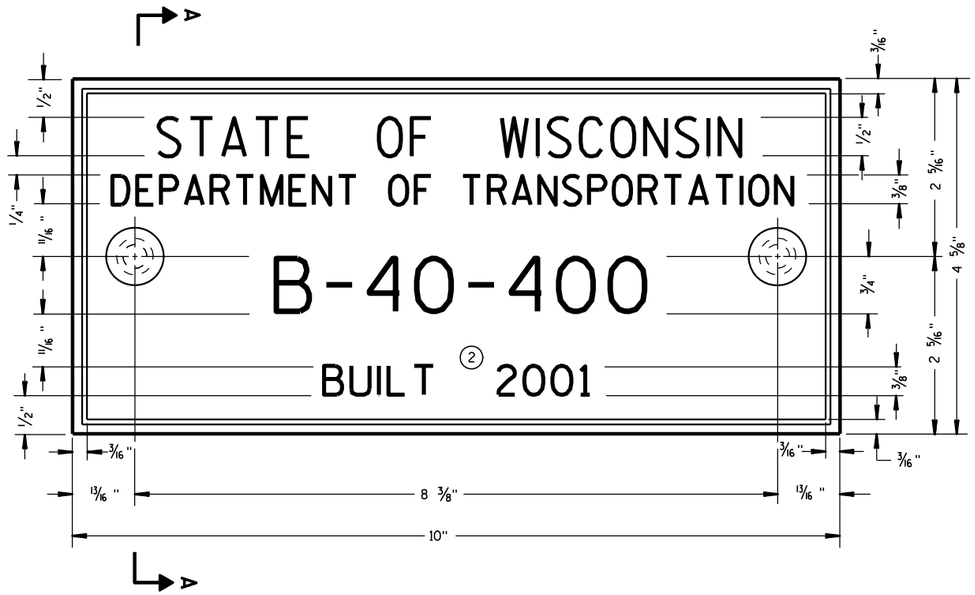

TYPICAL NAME PLATE

(BRIDGES, CULVERTS, AND RETAINING WALLS)

GENERAL NOTES

NAME PLATES TO BE INSTALLED ON BRIDGES, CULVERTS, AND RETAINING WALLS SHALL CONFORM TO THE REQUIREMENTS OF SECTION 502.3.11 OF THE STANDARD SPECIFICATIONS.

THE BRIDGE NUMBER AND YEAR BUILT SHOWN ON THIS DRAWING ARE EXAMPLES ONLY. SEE CONSTRUCTION PLANS FOR INDIVIDUAL NUMBERING AND YEAR BUILT.

① EPOXY RESIN SHALL BE FROM AN APPROVED MANUFACTURER AND USED IN ACCORDANCE WITH MANUFACTURER'S RECOMMENDATIONS.

② REHABILITATION OF AN EXISTING STRUCTURE SHOULD USE THE DATE OF ORIGINAL STRUCTURE CONSTRUCTION.

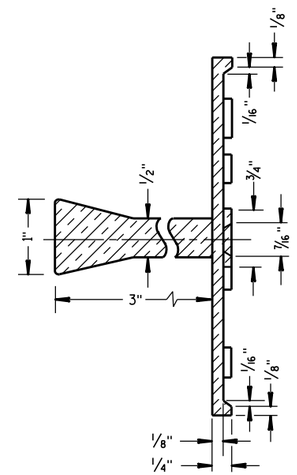

SECTION A-A

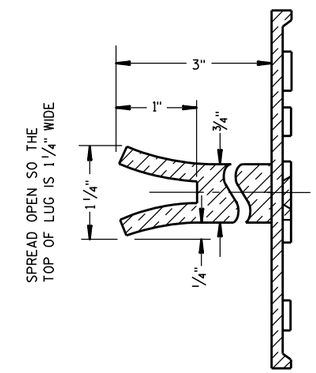

ALTERNATE LUG

6

FOR MULTI-UNIT STRUCTURES
LINE 3 ABOVE SHALL READ

B = BRIDGE
C = CULVERT
R = RETAINING WALL

COUNTY NO.

BRIDGE NO.

UNIT NO. FOR MULTIPLE
UNIT BRIDGE

B-40-400-1A

NUMBERING DESIGNATION
MULTI-UNIT STRUCTURES

① ADHERE ANCHOR LUG TO PRECAST RETAINING WALL WITH EPOXY RESIN.

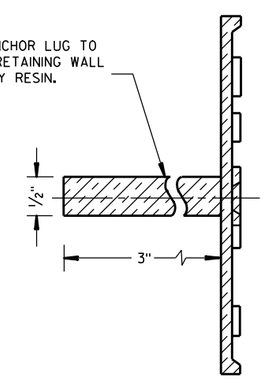

ALTERNATE LUG

(FOR ATTACHMENT TO PRECAST STRUCTURES)

6

NAME PLATE (STRUCTURES)		
STATE OF WISCONSIN DEPARTMENT OF TRANSPORTATION		
APPROVED		
3/26/10 DATE	/S/ Scot Beck CHIEF STRUCTURAL DEVELOPER	
FHWA		

S.D.D. 12 A 3-10

S.D.D. 12 A 3-10

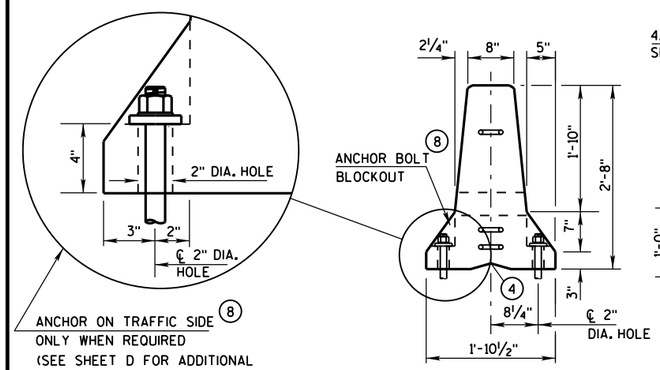

END VIEW

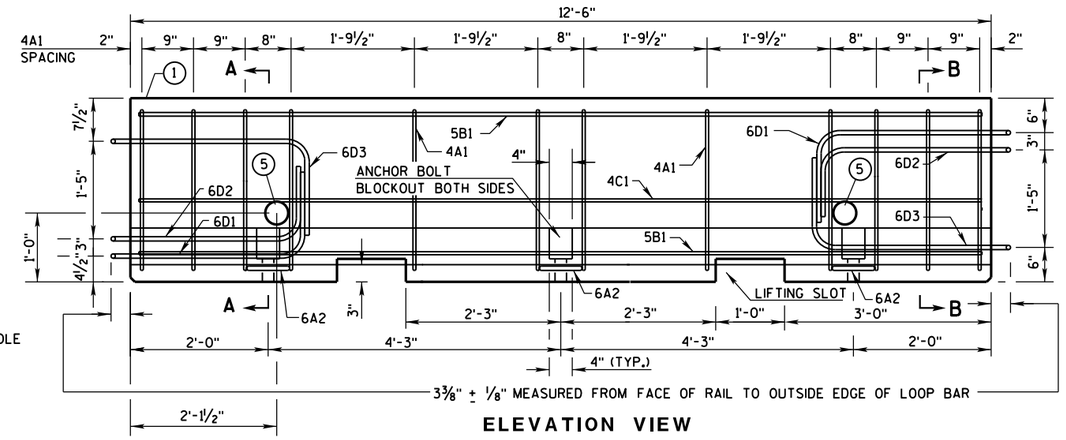

ELEVATION VIEW

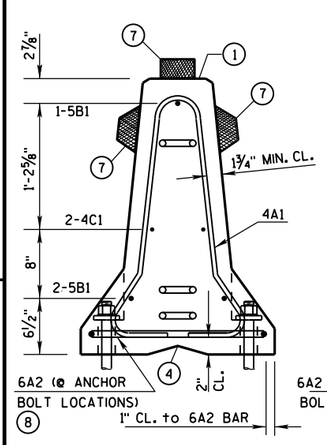

SECTION A-A
(STIRRUP PLACEMENT)

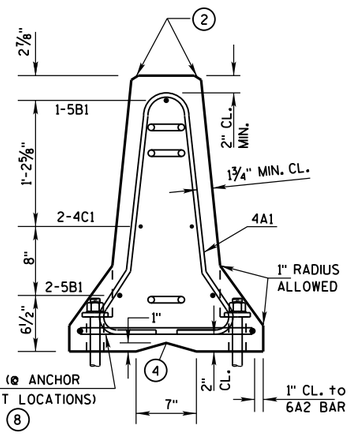

SECTION B-B
(STIRRUP PLACEMENT)

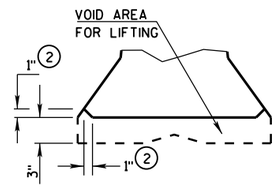

DETAIL "B"
LIFTING SLOT DETAIL

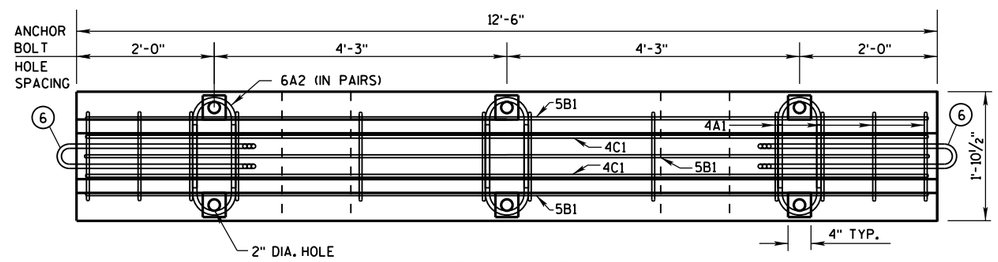

PLAN VIEW

DETAILS OF BARRIER SECTION

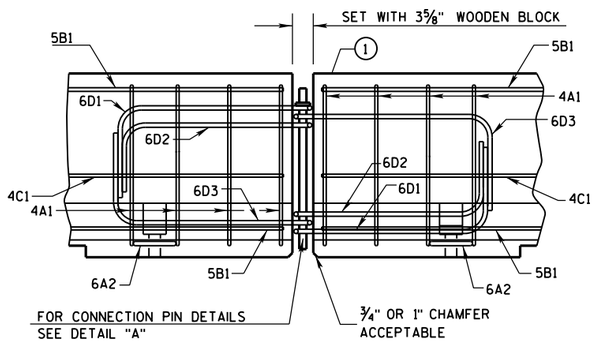

DETAILS OF BARRIER CONNECTION

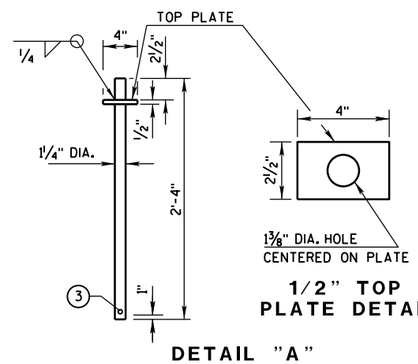

1/2" TOP PLATE DETAIL

DETAIL "A"
CONNECTION PIN
(A36 STEEL (10.9 LB EACH))

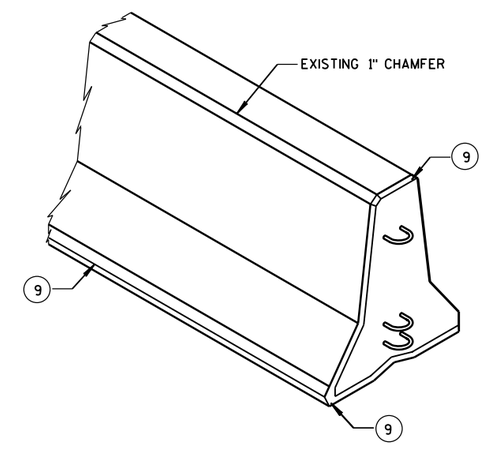

GENERAL NOTES

THESE GENERAL NOTES APPLY TO SHEETS 14B7-14(a) THRU 14B7-14(h).

DO NOT INTERMIX CONCRETE BARRIER TEMPORARY PRCAST, 12'-6" (CBTP12.5) WITH OTHER TEMPORARY CONCRETE BARRIERS.

USE ASTM A-615, GRADE 60, DEFORMED STEEL BARS FOR BARS 4A1, 6A2, 5B1 AND 4C1 IN THE BARRIER SECTION AND FOR 4V1, 4V2, 4V3, 4V4, 4V5, 4V6, 4F1, 4F2 AND 5F3 IN THE BARRIER TAPER SECTION.

LOOP BARS 6D1, 6D2 AND 6D3 SHALL BE ¾" SMOOTH STEEL BARS WITH A MINIMUM YIELD STRENGTH OF 60 KSI, A TENSILE STRENGTH OF NOT LESS THAN 1.25 TIMES THE YIELD STRENGTH BUT A MINIMUM OF 80 KSI, A MINIMUM 14% ELONGATION IN 8 INCHES AND PASSING A 180 DEGREE BEND TEST USING A 3-½" PIN BEND DIAMETER FOR BEND TESTS. THE LOOPS SHALL BE INSTALLED WITHIN ⅛" OF THE PLAN DIMENSION.

CONSTRUCT LIFTING SLOTS AS SPECIFIED ON THE PLANS TO FACILITATE THE DRAINAGE OF WATER AFTER INSTALLATION.

PLACE BARRIER ON A PAVED SURFACE. REMOVE ALL LOOSE DIRT AND SAND FROM THE ROADWAY SURFACE PRIOR TO PLACEMENT OF THE BARRIER.

INSTALL MECHANICAL OR ADHESIVE ANCHORS PER MANUFACTURER'S RECOMMENDATIONS. PROVIDE MANUFACTURER'S INFORMATION TO PROJECT ENGINEER.

(1) MARK ONE END OF EACH BARRIER PERMANENTLY BY FORMING INTO THE BARRIER THE FOLLOWING INFORMATION:
- a. TYPE: WI CBTP
- b. MANUFACTURER
- c. DATE MANUFACTURED (MONTH AND YEAR)

(2) 1" CHAMFER TO PREVENT SPALLING.

(3) A ⅜" HOLE IN THE CONNECTION PIN, AT THE LOCATION SHOWN, IS ACCEPTABLE, BUT NOT REQUIRED..

(4) "V" NOTCH IS OPTIONAL.

(5) THE 4" DIAMETER, 11 GAUGE STEEL, ROUND MECHANICAL TUBING SLEEVE FOR LIFTING (OPTIONAL).

(6) NEVER USE LOOP BARS (6D1, 6D2 OR 6D3) TO LIFT, MOVE OR REPOSITION THE BARRIER.

(7) USE DELINEATORS CONFORMING TO SECTION 633 OF THE STANDARD SPECIFICATIONS. CONTRACTOR MAY USE ALTERNATE SHAPES AND HOUSING. INSTALL DELINEATORS ACCORDING TO MANUFACTURES INSTRUCTION. INSTALL YELLOW REFLECTORS WHEN BARRIER IS LOCATED TO THE LEFT OF TRAFFIC AND WHITE REFLECTORS WHEN BARRIER IS LOCATED TO THE RIGHT OF TRAFFIC. SPACE DELINEATORS A MAXIMUM OF 25 FEET APART. PROVIDE TOP MOUNTED DELINEATORS IN ADDITION TO THE SIDE MOUNTED DELINEATORS ON ALL BARRIER INSTALLATIONS LOCATED ON A CURVED ALIGNMENT LONGER THAN 200 FEET AND ON BARRIERS USED TO SEPARATE OPPOSING TRAFFIC.

(8) SEE SHEET D FOR ANCHORING CRITERIA.

(9) 1" CHAMFER OPTIONAL.

CONCRETE BARRIER
TEMPORARY PRECAST, 12'-6"

STATE OF WISCONSIN
DEPARTMENT OF TRANSPOI

6

S.D.D. 14 B 7-14a

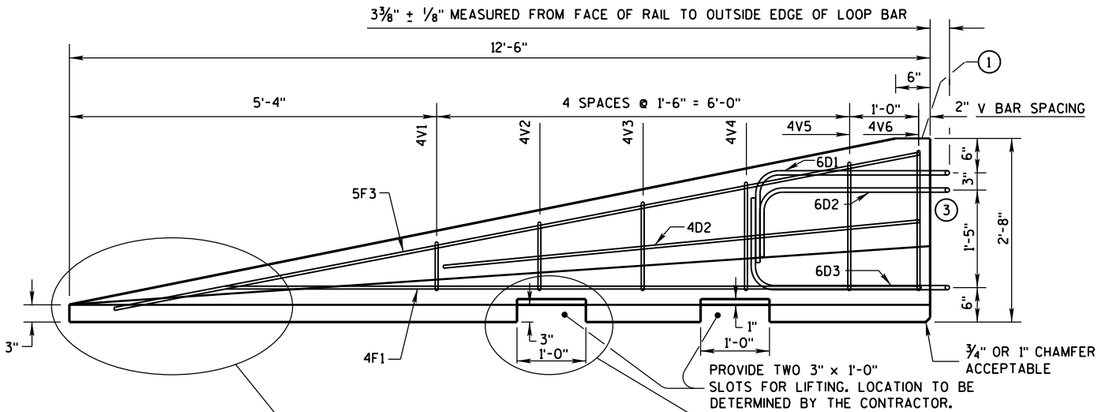

SIDE ELEVATION

(FOR CONNECTION TO LEFT END OF BARRIER)

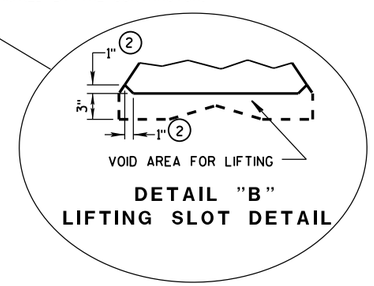

DETAIL "B"
LIFTING SLOT DETAIL

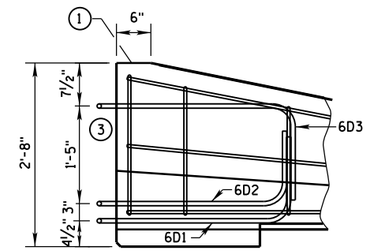

SIDE ELEVATION

LOOP BAR ASSEMBLY INVERTED
FOR OPPOSITE END.
(FOR CONNECTION TO RIGHT END OF BARRIER)

GENERAL NOTES

1. MARK ONE END OF EACH BARRIER PERMANENTLY BY FORMING INTO THE BARRIER THE FOLLOWING INFORMATION:
   a. TYPE WICBTP
   b. MANUFACTURER
   c. DATE MANUFACTURED (MONTH AND YEAR)
2. 1" CHAMFER TO PREVENT SPALLING.
3. NEVER USE LOOP BARS (6D1, 6D2 OR 6D3) TO LIFT, MOVE OR REPOSITION THE BARRIER.

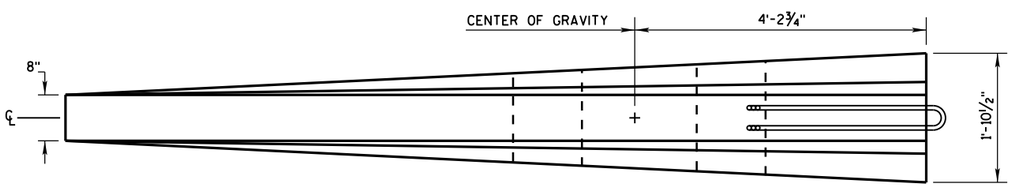

PLAN VIEW

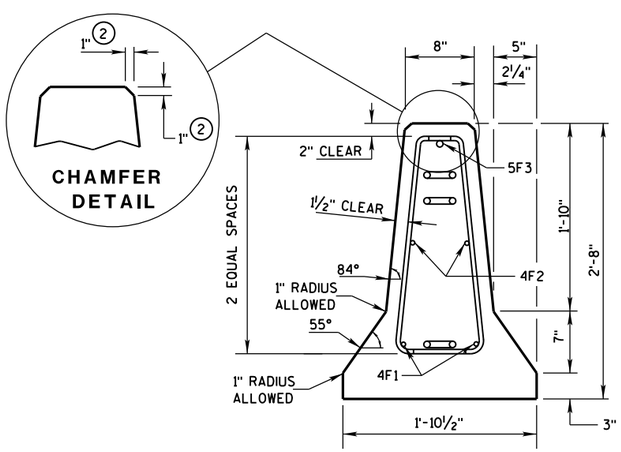

END SECTION

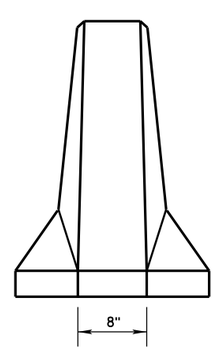

FRONT ELEVATION

DETAILS OF BARRIER TAPER SECTION

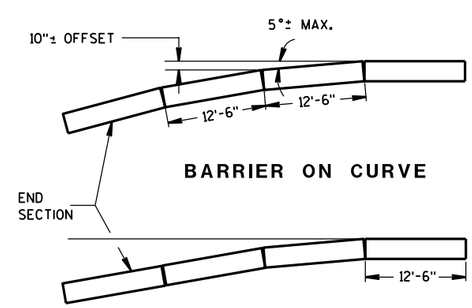

BARRIER ON CURVE

FLARE AT BARRIER END

POSTED SPEED, (MPH)	FLARE RATE
40 OR LESS	6:1
45 OR GREATER	8:1

CONCRETE BARRIER
TEMPORARY PRECAST, 12'-6"

STATE OF WISCONSIN
DEPARTMENT OF TRANSPORTATION

6

S.D.D. 14 B 7-14b

GENERAL NOTES

(1) NEVER USE LOOP BARS (6D1, 6D2 OR 6D3) TO LIFT, MOVE OR REPOSITION THE BARRIER.

BARRIER TAPER SECTION BILL OF MATERIALS

(PER 12'-6" BARRIER TAPER SECTION)

BAR	BAR SIZE	NO. OF BARS	LENGTH FT.
4V1	4	2	1'-11"
4V2	4	2	2'-2"
4V3	4	2	2'-6"
4V4	4	2	2'-9"
4V5	4	2	3'-2"
4V6	4	2	3'-4"
4F1	4	2	12'-0"
4F2	4	2	7'-6"
5F3	5	1	11'-9"
LOOP ASSEMBLY			
6D1	6	1	8'-5"
6D2	6	1	7'-7"
6D3	6	1	8'-6"

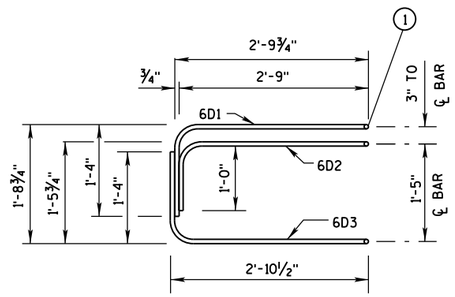

ELEVATION
LOOP BAR ASSEMBLY

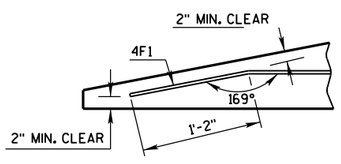

DETAIL "C"
BENT BAR DETAIL

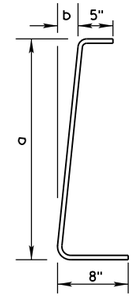

BAR	a	b
V1	10"	1"
V2	1'-1"	1¼"
V3	1'-5"	1⅝"
V4	1'-8"	1⅞"
V5	2'-0½"	2⅜"
V6	2'-3"	2¾"

4V BARS
2 AT EACH SIZE REQUIRED
FOR STIRRUP ASSEMBLY

TAPER BARRIER SECTION

BARRIER SECTION BILL OF MATERIALS

(PER 12'-6" BARRIER SECTION)

BAR	BAR SIZE	NO. OF BARS	LENGTH FT.
4A1	4	12	6'-0"
6A2	6	6	2'-11"
5B1	5	3	12'-2"
4C1	4	2	12'-2"
LOOP ASSEMBLY			
6D1	6	2	8'-5"
6D2	6	2	7'-7"
6D3	6	2	8'-6"

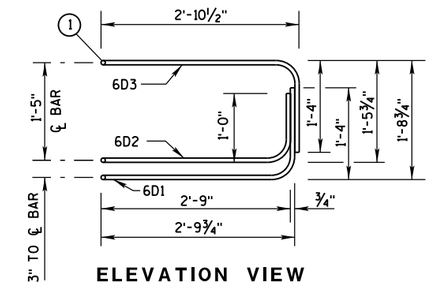

ELEVATION VIEW

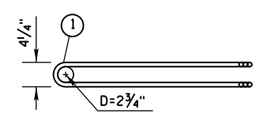

PLAN VIEW
LOOP BAR ASSEMBLY
(MARKED END SHOWN, INVERT FOR OTHER END)

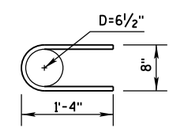

6A2

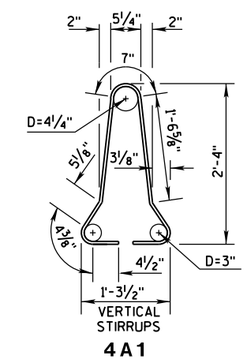

VERTICAL STIRRUPS
4A1

BARRIER SECTION

6

6

CONCRETE BARRIER
TEMPORARY PRECAST, 12'-6"

STATE OF WISCONSIN
DEPARTMENT OF TRANSPOR

S.D.D. 14 B 7-14c

S.D.D. 14 B 7-14c

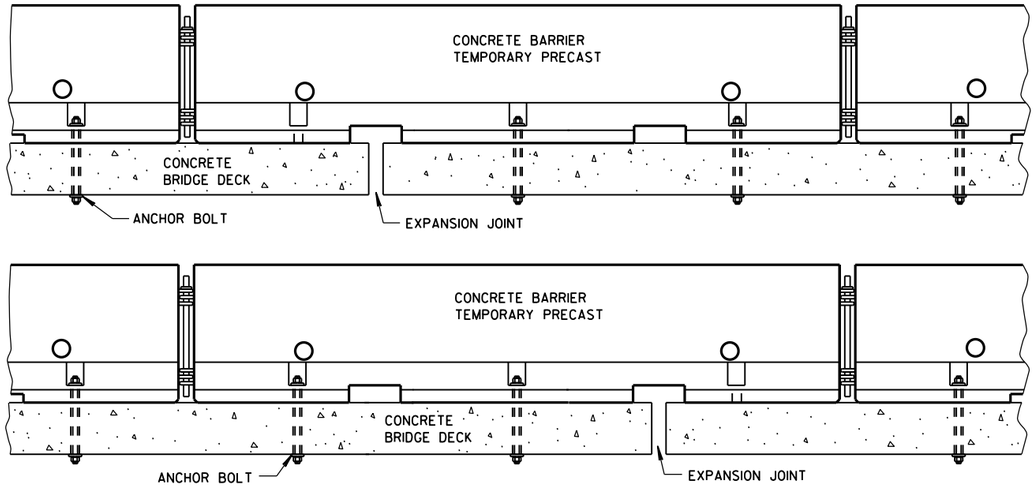

TREATMENT AT BRIDGE DECK EXPANSION JOINTS

(NO SINGLE CONCRETE BARRIER SECTION SHALL BE ANCHORED TO BOTH THE BRIDGE DECK AND THE APPROACH SLAB. ALL ANCHOR BOLT LOCATIONS SHALL BE ANCHORED TO THE DECK IN ACCORDANCE WITH THE DETAIL. NO MORE THAN ONE ANCHOR BOLT SHALL BE ELIMINATED FROM A BARRIER SECTION WHEN SPANNING AN EXPANSION JOINT.)

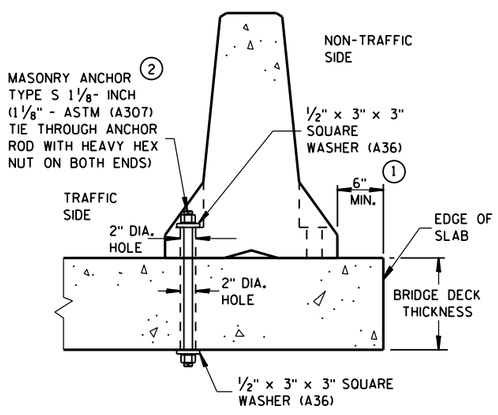

THROUGH BOLTED ANCHOR INSTALLATION ON BRIDGE DECK

(DO NOTUSE ON CONCRETE BRIDGE DECK WITH ASPHALT OVERLAY)

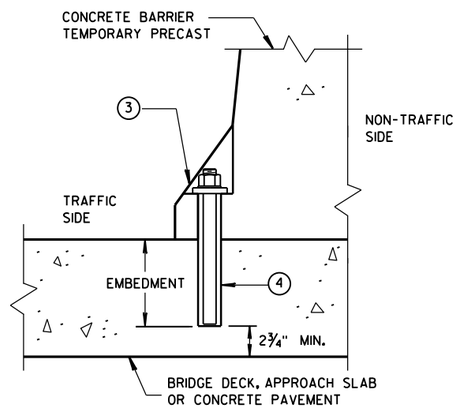

REMOVABLE ADHESIVE BONDED ANCHOR INSTALLATION ON CONCRETE BRIDGE DECK, CONCRETE APPROACH SLAB, OR CONCRETE PAVEMENT 2

(DO NOT USE ON CONCRETE WITH AN ASPHALTIC OVERLAY)

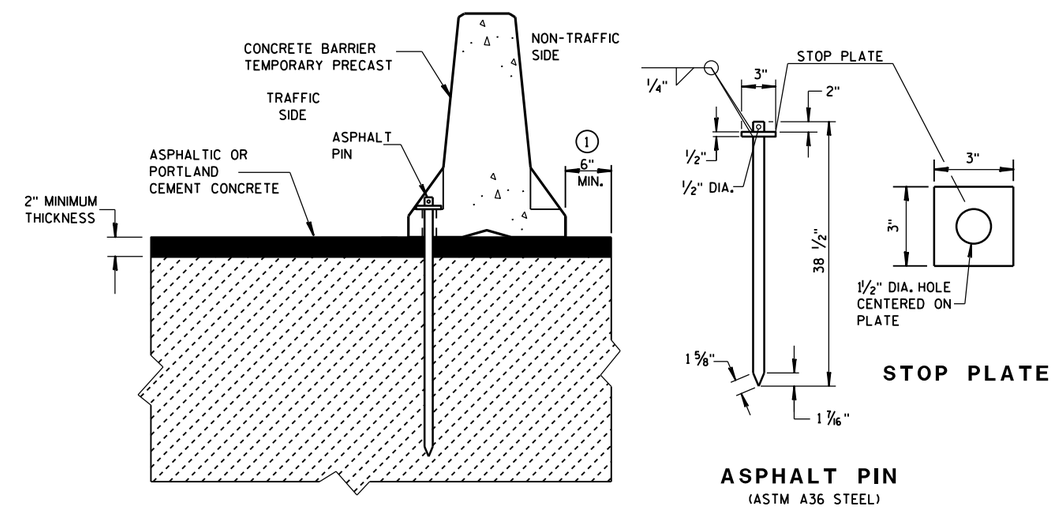

STAKE DOWN INSTALLATION FOR ASPHALTIC OR PORTLAND CEMENT CONCRETE SURFACE

(STAKING IS INCIDENTAL TO CONCRETE BARRIER TEMPORARY PRECAST)

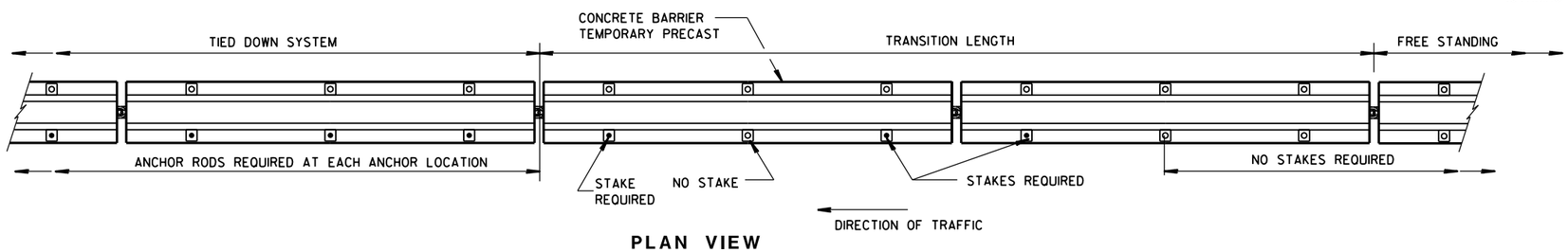

PLAN VIEW

FREE STANDING TRANSITION TO TIED-DOWN SYSTEM

(PLACE TRANSITION IN A TANGENT SECTION OF BARRIER PARALLEL TO THE ROADWAY. IF TRANSITION OCCURS ON STRUCTURAL SLAB, ANCHOR AS SHOWN.)

GENERAL NOTES

1. CONCRETE BARRIER TEMPORARY PRECAST, 12'-6" SHALL BE ANCHORED IF:
   THE DISTANCE TO A 2 FOOT OR GREATER DROPOFF THAT IS STEEPER THAN 3H : 1V, FOR EXAMPLE THE EDGE OF A BRIDGE DECK OR A DROPOFF AT THE EDGE OF PAVEMENT, IS LESS THAN 4 FEET FROM THE SIDE OF THE BARRIER CLOSEST TO THE DROPOFF AND THE POSTED SPEED IS 45 MPH OR GREATER, OR

   THE DISTANCE TO A 2 FOOT OR GREATER DROPOFF THAT IS STEEPER THAN 3H : 1V, FOR EXAMPLE THE EDGE OF A BRIDGE DECK OR A DROPOFF AT THE EDGE OF PAVEMENT, IS LESS THAN 2 FEET FROM THE SIDE OF THE BARRIER CLOSEST TO THE DROPOFF AND THE POSTED SPEED IS 40 MPH OR LESS.

2. ANCHORING IS INCIDENTAL TO CONCRETE BARRIER TEMPORARY PRECAST.

   WITH THE APPROVAL OF THE ENGINEER, REMOVABLE ADHESIVE BONDED ANCHOR BOLT INSTALLATION MAY BE USED IN LIEU OF THROUGH BOLTED ANCHOR INSTALLATION. THE ADHESIVE BONDED ANCHOR BOLT MUST BE REMOVABLE. USE ASTM (A307) MASONRY ANCHORS TYPE S 1 1/8-INCH, EMBEDDED TO A DEPTH SUFFICIENT TO DEVELOP THE ULTIMATE CAPACITY OF THE ANCHOR BOLT AND PROVIDE DOCUMENTATION TO CONFIRM THIS.

   UPON REMOVAL OR RELOCATION OF THE BARRIER UNITS, REMOVE ALL ANCHOR BOLTS AND COMPLETELY FILL IN THE REMAINING HOLES IN CONCRETE BRIDGE DECKS, CONCRETE APPROACH SLABS AND CONCRETE PAVEMENTS THAT ARE TO REMAIN, WITH A NON-SHRINK COMMERICAL GROUT OR MATERIAL IDENTIFIED ON THE CURRENT WISDOT APPROVED PRODUCTS LIST.

3. 1 1/8" DIAMENTER A307 THREADED ROD, 1/2" X 3" X 3" SQUARE PLATE WASHER WITH ASTM A36 STEEL, ASTM A563A HEAVY HEX NUT.

4. ADHESIVE ANCHORS WITH A MINIMUM BOND STRENGTH OF 1,800 PSI AND 5 1/4" EMBEDMENT. SEE 603.2 AND 603.3.1.2 OF THE WISCONSIN STANDARD SPECIFICATIONS FOR MORE INFORMATION ON ADHESIVE ANCHORS.

CONCRETE BARRIER TEMPORARY PRECAST, 12'-6"

STATE OF WISCONSIN
DEPARTMENT OF TRANSPOI

6

S.D.D. 14 B 7-14d

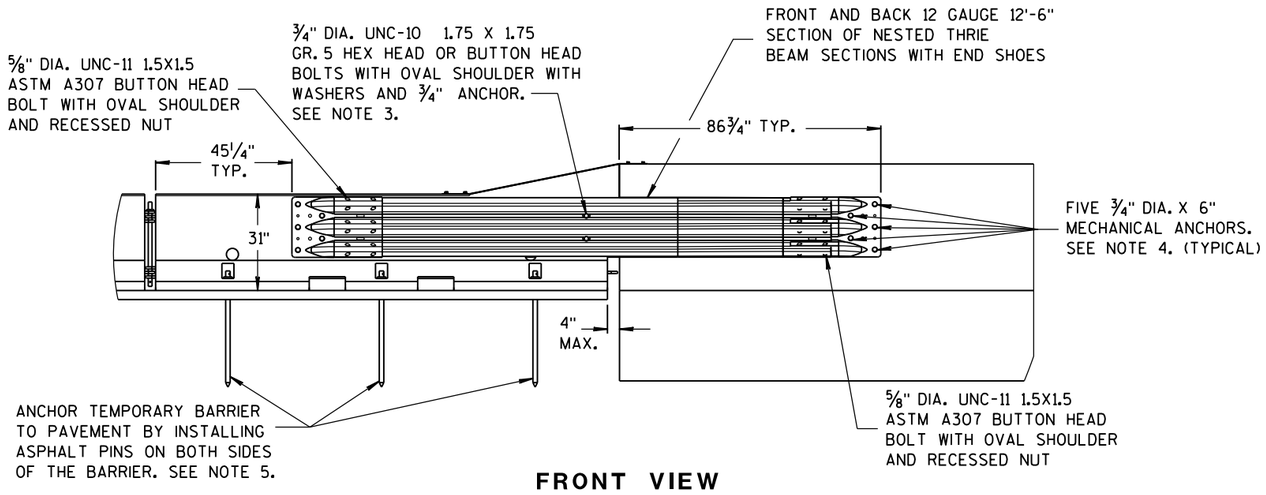

FRONT VIEW

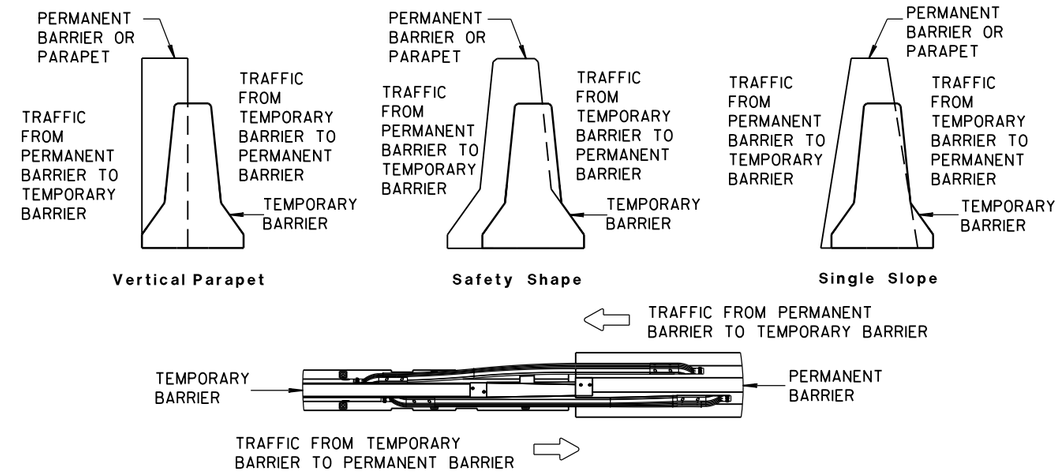

TEMPORARY BARRIER PLACEMENT FOR BI-DIRECTIONAL TRANSITION TO TIED-DOWN SYSTEM

NOTES

NESTED THRIE BEAM IS REQUIRED ON BOTH SIDES OF THE TEMPORARY BARRIER FOR ALL INSTALLATIONS.

1. CAP END PLATE PLACED FLUSH WITH UPSTREAM END OF PERMANENT BARRIER OR PARAPET.
2. THRIE BEAM PIECES ARE OFFSET 15 1/4" TO PREVENT INTERFERENCE FROM THE ANCHORS ON OPPOSING SIDES.
3. MINIMUM MECHANICAL OR ADHESIVE ANCHOR STRENGTH REQUIREMENTS: ULTIMATE TENSILE LOAD 9.48 KIPS AND ULTIMATE SHEAR LOAD 10.48 KIPS.
4. MINIMUM MECHANICAL OR ADHESIVE ANCHOR STRENGTH REQUIREMENTS: ULTIMATE TENSILE LOAD 17.9 KIPS AND ULTIMATE SHEAR LOAD 21.96 KIPS.
5. MAY BE USED ON CONCRETE OR ASPHALT PAVEMENTS. ASPHALT OPTION SHOWN. FOR CONCRETE OPTION SEE OTHER DETAILS.
6. MINIMUM MECHANICAL OR ADHESIVE ANCHOR STRENGTH REQUIREMENTS: ULTIMATE TENSILE LOAD 12.14 KIPS AND ULTIMATE SHEAR LOAD 17.5 KIPS.

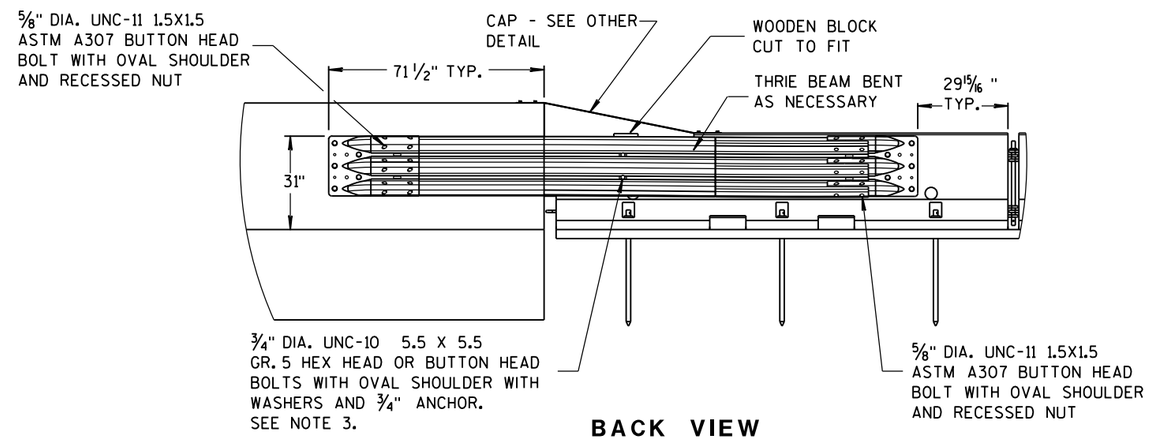

BACK VIEW

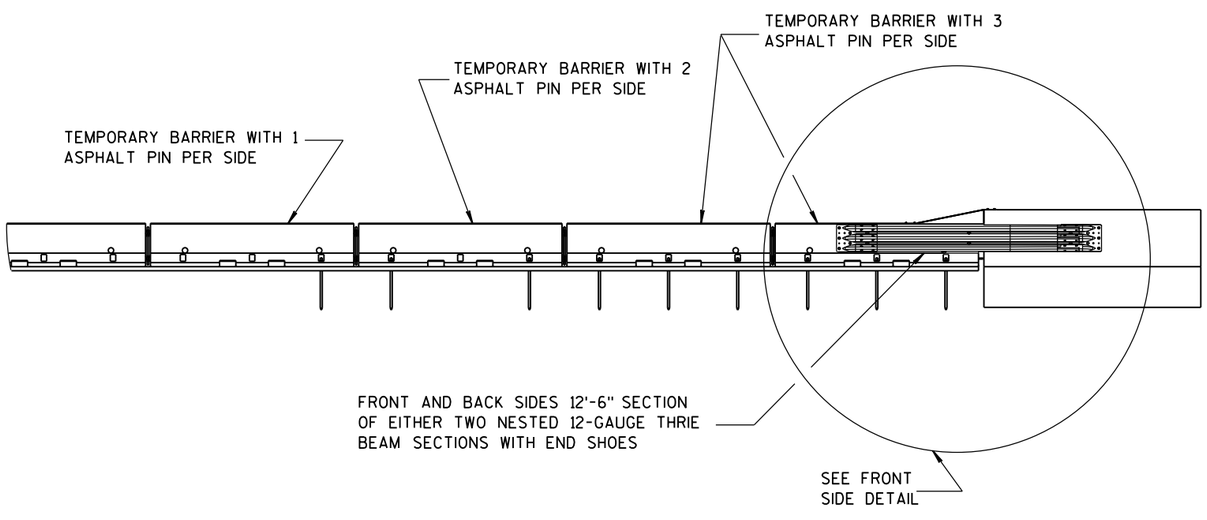

FRONT VIEW

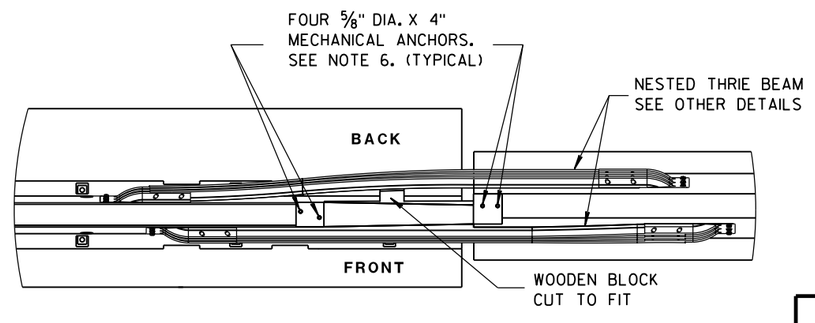

PLAN VIEW

BI-DIRECTIONAL TRANSITION TO TIED-DOWN SYSTEM

CONCRETE BARRIER
TEMPORARY PRECAST, 12'-6"

STATE OF WISCONSIN
DEPARTMENT OF TRANSPO

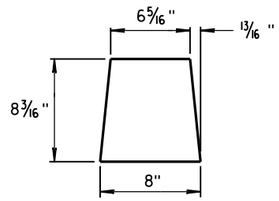

GUSSET 1

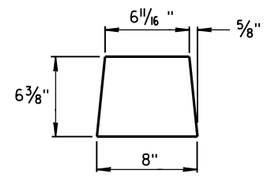

GUSSET 2

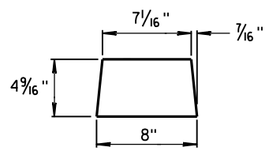

GUSSET 3

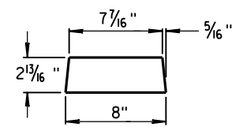

GUSSET 4

GUSSETS

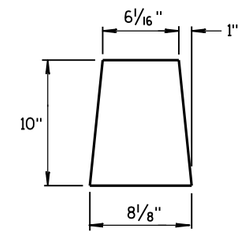

END PLATE

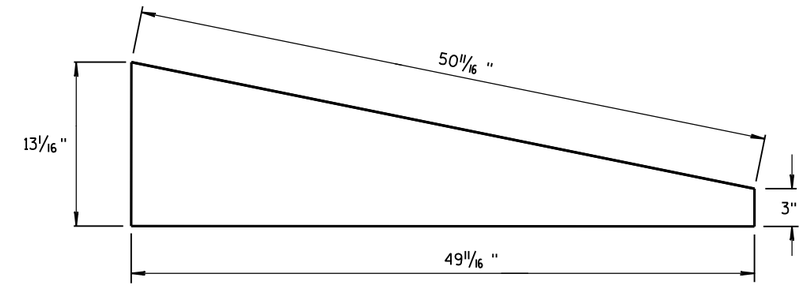

SIDE PLATE

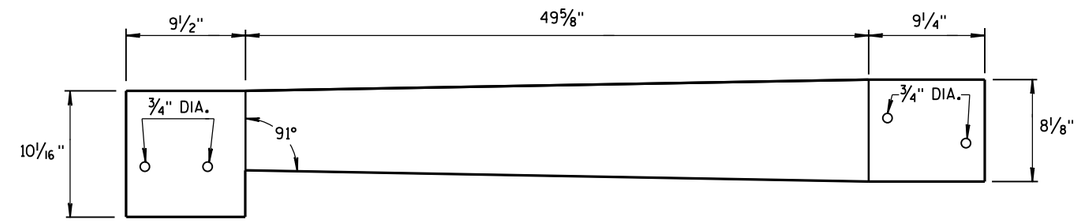

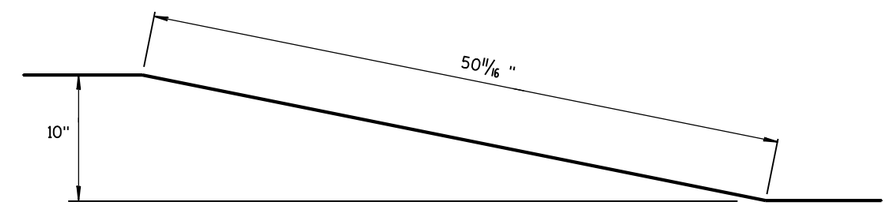

TOP PLATE

SIDE, TOP AND END PLATES FOR CAP FROM TEMPORARY CONCRETE BARRIER TO 42" PERMANENT CONCRETE BARRIER

SIDE PLATES, TOP PLATE, END PLATE AND GUSSETS ARE 12 GAUGE ASTM A36 GALVANIZED STEEL.

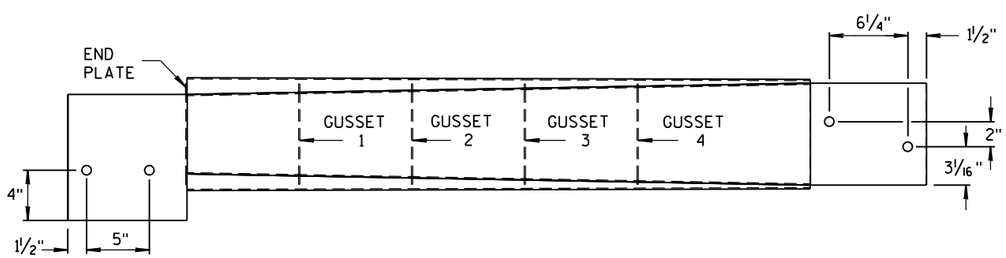

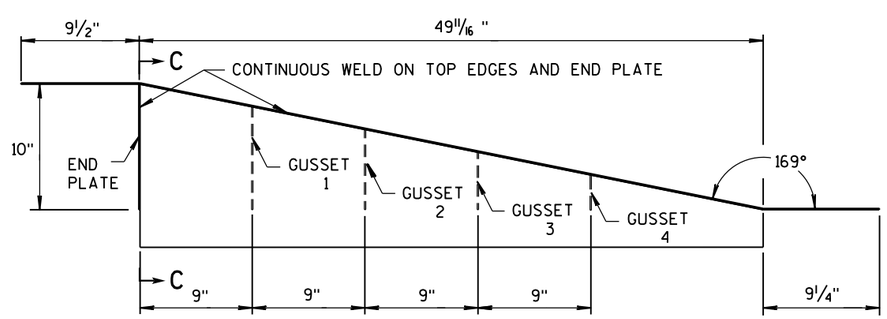

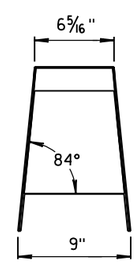

SECTION C-C

NOTES

1. FOUR GUSSETS AND END PLATE ARE STITCH WELDED ON THREE SIDES.
2. TWO TRIANGULAR SIDE PLATES ARE STITCH WELDED TO TOP PLATE, END PLATE, AND GUSSETS.

CAP DETAILS FOR TEMPORARY CONCRETE BARRIER TO 42" PERMANENT CONCRETE BARRIER

CONCRETE BARRIER
TEMPORARY PRECAST, 12'-6"

STATE OF WISCONSIN
DEPARTMENT OF TRANSPOR

6

S.D.D. 14 B 7-14f

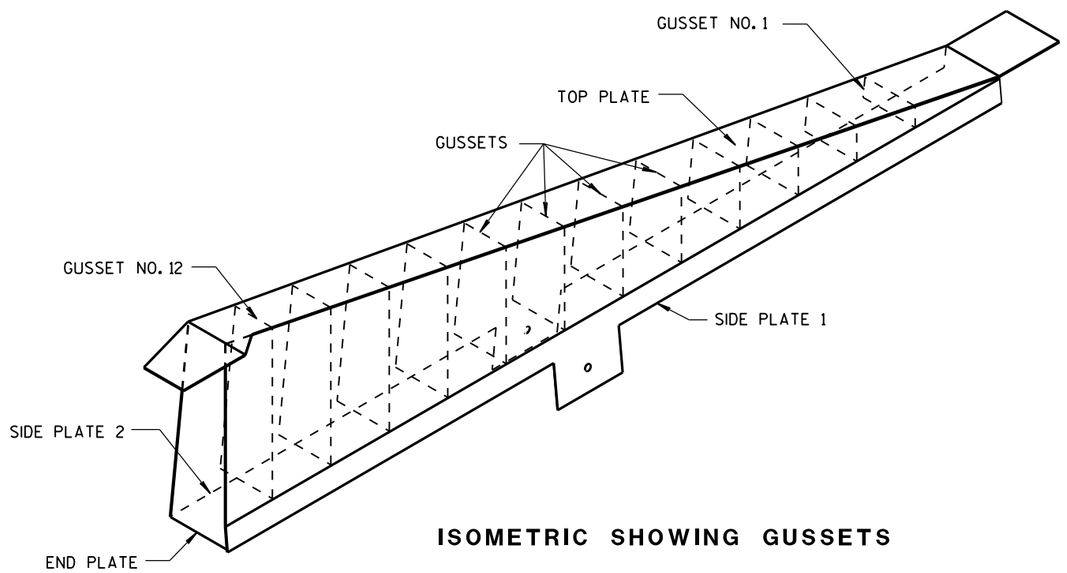

ISOMETRIC SHOWING GUSSETS

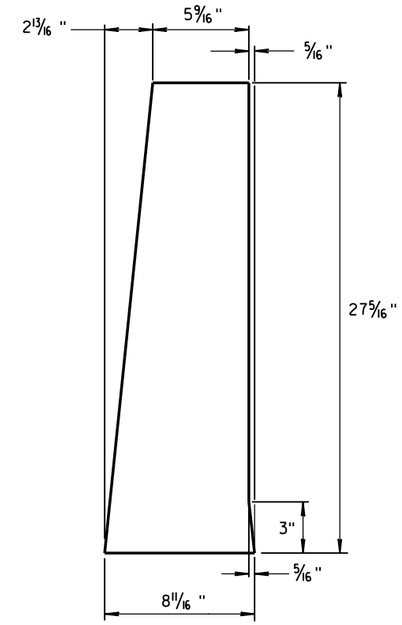

END PLATE

1/8" STEEL PLATE

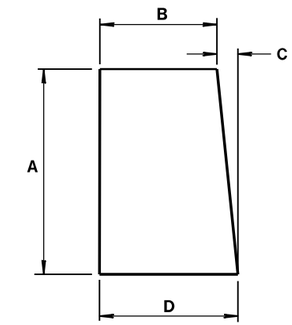

GUSSETS 1 - 12

ALL GUSSETS 1/8" STEEL PLATE

GUSSET DIMENSIONS				
GUSSET NO.	A	B	C	D
1	2 7/8"	7 3/4"	1/4"	8
2	4 11/16 "	7 9/16 "	1/2"	8
3	6 1/2"	7 3/8"	11/16 "	8 1/16 "
4	8 5/16 "	7 3/16 "	7/8"	8 1/16 "
5	10 1/8"	7"	1 1/16 "	8 1/16 "
6	11 15/16 "	6 13/16 "	1 1/4"	8 1/16 "
7	13 3/4"	6 5/8"	1 7/16 "	8 1/16 "
8	15 9/16 "	6 7/16 "	1 9/16 "	8 1/16 "
9	17 3/8"	6 1/4"	1 13/16 "	8 1/16 "
10	19 3/16 "	6 1/16 "	1 15/16 "	8 1/16 "
11	21"	5 7/8"	2 3/16 "	8 1/16 "
12	22 13/16 "	5 11/16 "	2 5/16 "	8 1/16 "

SIDE PLATES, TOP PLATE, END PLATE AND GUSSETS ARE 12 GAUGE ASTM A36 STEEL AND GALVANIZED.

GUSSETS AND END PLATE ARE STITCH WELDED ON 3 SIDES. TWO TRIANGULAR SIDE PLATES ARE STITCH WELDED TO TOP PLATE, END PLATE AND GUSSETS.

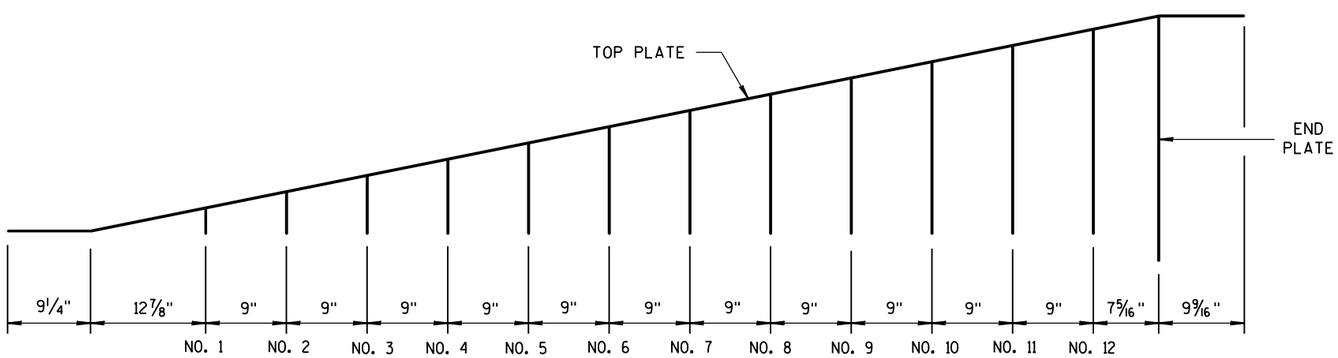

GUSSET LOCATION

CAP DETAILS FOR TEMPORARY CONCRETE BARRIER TO 56" PERMANENT CONCRETE BARRIER

CONCRETE BARRIER
TEMPORARY PRECAST, 12'-6"

STATE OF WISCONSIN
DEPARTMENT OF TRANSPOR

6

S.D.D. 14 B 7-14g

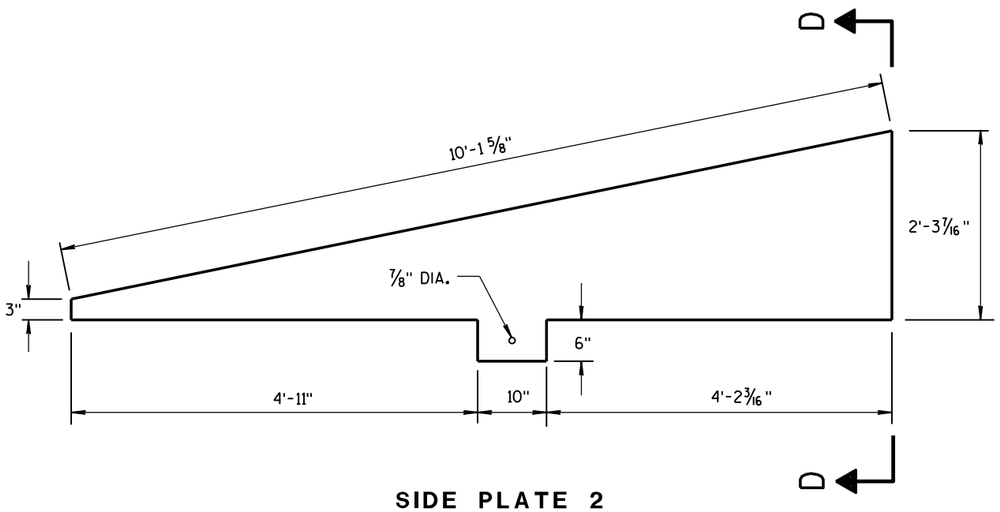

SIDE PLATE 2

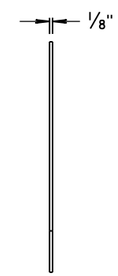

END VIEW

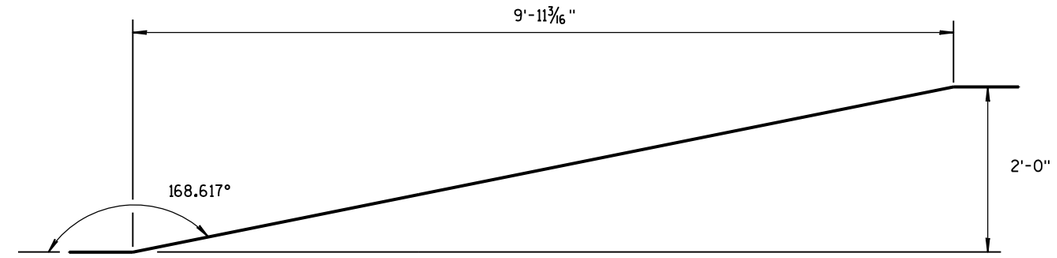

SIDE VIEW

TOP PLATE

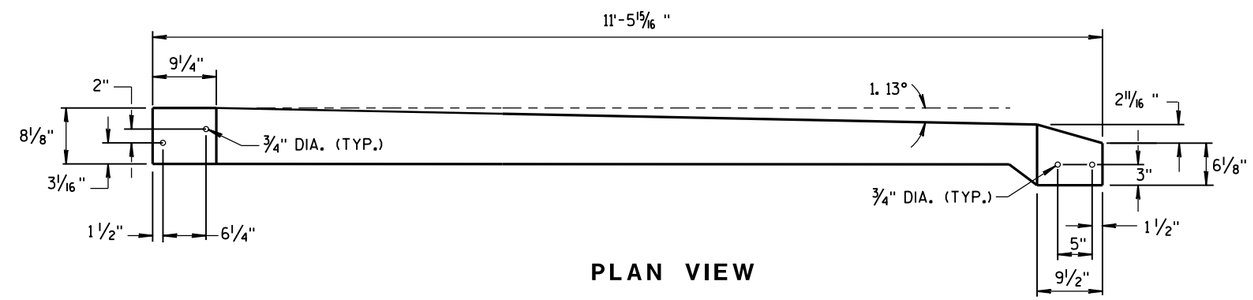

PLAN VIEW

TOP PLATE

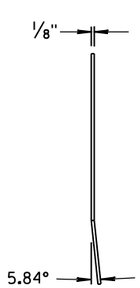

END VIEW

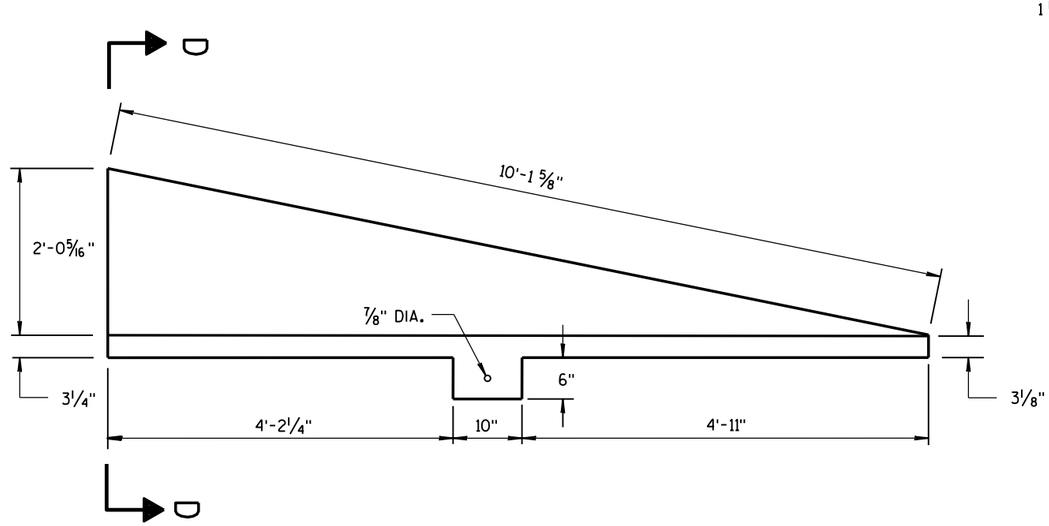

SIDE PLATE 1

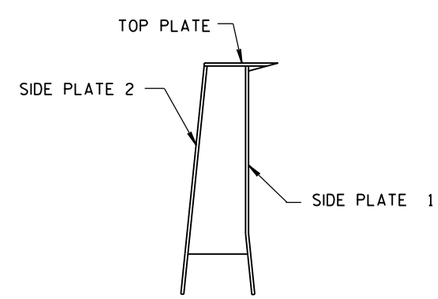

SECTION D-D

CAP DETAILS FOR TEMPORARY CONCRETE BARRIER TO 56" PERMANENT CONCRETE BARRIER

CONCRETE BARRIER
TEMPORARY PRECAST, 12'-6"

STATE OF WISCONSIN
DEPARTMENT OF TRANSPORTATION

APPROVED

June 2014 — DATE

/S/ Jerry H. Zogg — ROADWAY STANDARD DEVELOPMENT ENGINEER

FHWA

6

S.D.D. 14 B 7-14h

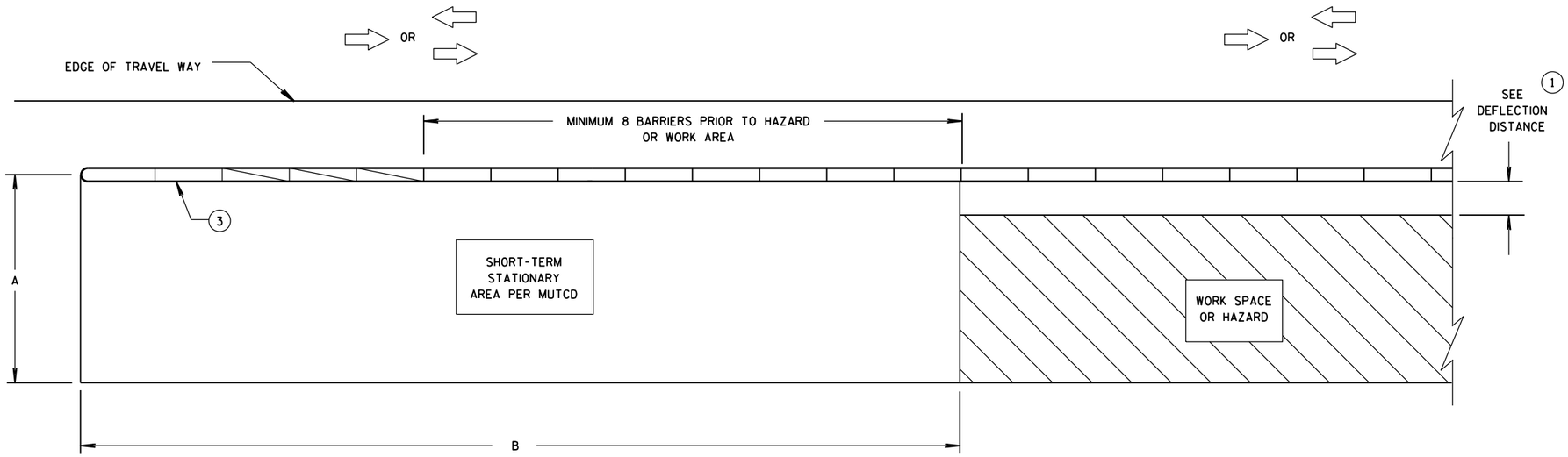

CRASH CUSHION/SAND BARREL ARRAY AND TEMPORARY BARRIER INSTALLATION FOR TRAFFIC ON ONE SIDE OF BARRIER

DIMENSION A TABLE (2)

FACILITY	POSTED SPEED MPH	DIMENSION A MIN. FT	DIMENSION A MAX. FT
FREEWAY/EXPRESSWAY	ALL	15	20
NON-FREEWAY/EXPRESSWAY	GREATER THAN OR EQUAL TO 45	10	15
NON-FREEWAY/EXPRESSWAY	LESS THAN 45	8	10
AADT LESS THAN 1,500	ALL	8	10

DIMENSION B TABLE (2)

POSTED SPEEDS MPH	DIMENSION B FT
20	115
25	155
30	200
35	250
40	305
45	360
50	425
55	495
60	570
65	645

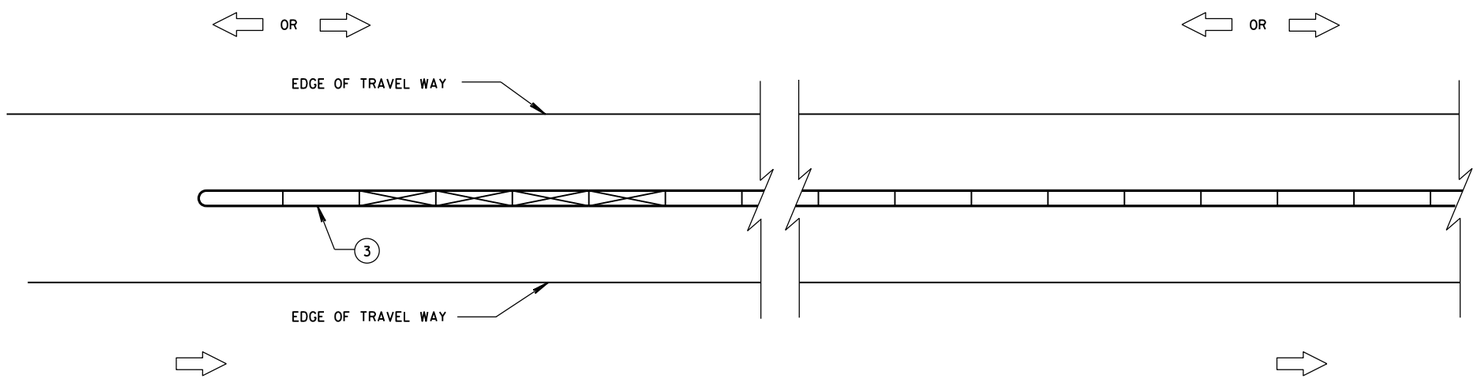

CRASH CUSHION/SAND BARREL ARRAY AND TEMPORARY BARRIER INSTALLATION FOR TRAFFIC ON BOTH SIDES OF BARRIER

LEGEND

- DIRECTION OF TRAVEL
- CRASH CUSHION OR SAND BARREL ARRAY
- SEE FREE STANDING TRANSITION TO TIED-DOWN SYSTEM DETAILS
- SEE BI-DIRECTIONAL TRANSITION TO TIED-DOWN SYSTEM DETAILS
- 3 PINS PLACED ON TRAFFIC SIDE OF BARRIER
- PERMANENT CONCRETE BARRIER OR CONCRETE PARAPET
- FREE STANDING TEMPORARY BARRIER

GENERAL NOTES

SEE STANDARD DETAIL DRAWING 14B7 FOR MORE INFORMATION.

DETAILS PROVIDE A GENERAL LAYOUT OF TEMPORARY CONCRETE BARRIER, CRASH CUSHIONS, SAND BARREL ARRAYS AND TIE DOWN TRANSITIONS. DETAILS PROVIDED MAY NOT FIT ALL POSSIBLE SITUATIONS OR SITE CONDITIONS. SEE OTHER SECTIONS OF THE CONTRACT OR PROJECT ENGINEER FOR MORE DETAILS.

ADDITIONAL TEMPORARY BARRIER MAY BE REQUIRED TO PROTECT TRAVELING PUBLIC FROM HAZARDS, CONTRACTOR'S OPERATIONS OR TO CONTROL TRAFFIC.

TEMPORARY BARRIER MAY BE REQUIRED TO BE ANCHORED TO PAVEMENT OR BRIDGE DECK.

FOR DETAILS ON CRASH CUSHION OR SAND BARREL ARRAYS SEE OTHER SECTIONS OF THE PLAN AND MANUFACTURE'S DETAILS.

SLOPES LEADING TO TEMPORARY BARRIER, CRASH CUSHION OR SAND BARREL ARRAY ARE 10:1 OR LESS.

(1) FOR DEFLECTION INFORMATION SEE STANDARD DETAIL DRAWING 14B7.

(2) VALUES PROVIDED MAY NOT FIT ALL POSSIBLE SITUATIONS OR SITE CONDITIONS. SEE OTHER SECTIONS OF THE CONTRACT OR PROJECT ENGINEER FOR MORE DETAILS.

(3) ANCHOR TEMPORARY BARRIER ACCORDING TO CRASH CUSHION OR SAND BARREL MANUFACTURER'S RECOMMENDATIONS. IF MANUFACTURER'S RECOMMENDATIONS ARE NOT PROVIDED, ANCHOR 3 PINS ON TRAFFIC SIDE.

CRASH CUSHION/SAND BARREL ARRAY AND OTHER TEMPORARY BARRIER LAYOUT DETAILS

STATE OF WISCONSIN
DEPARTMENT OF TRANSPOR

6

S.D.D. 14 B 8-2a

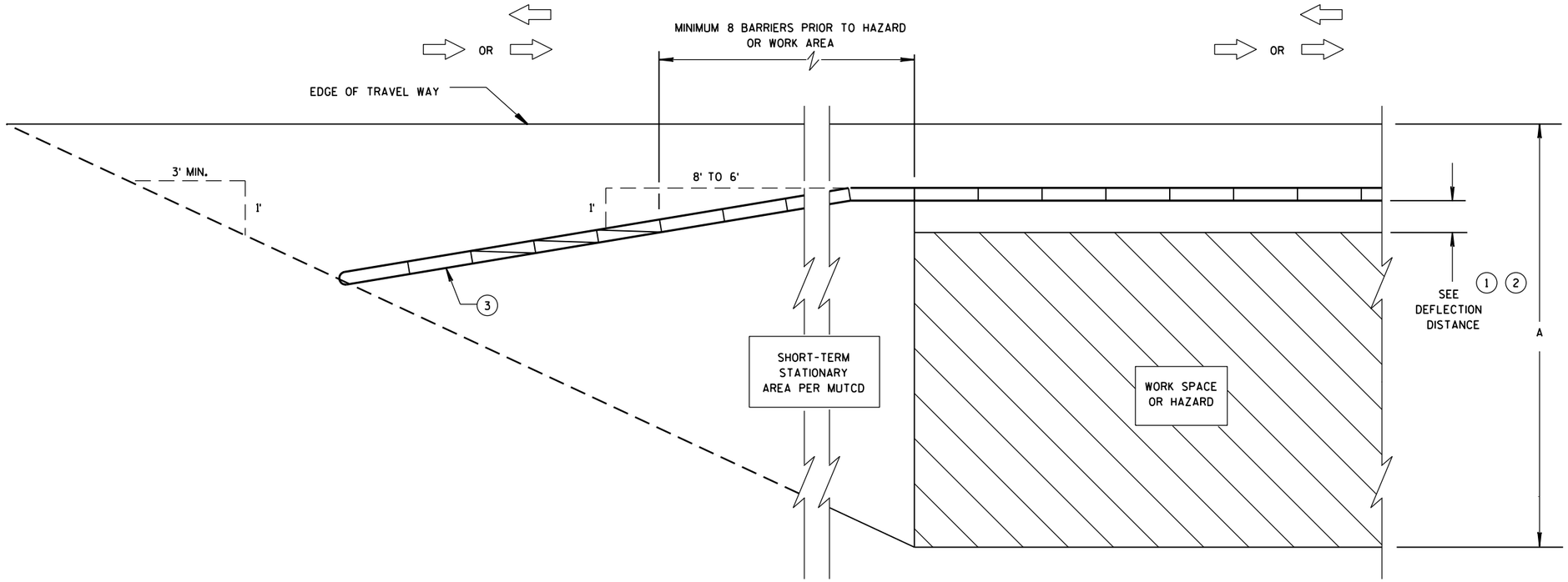

CRASH CUSHION/SAND BARREL ARRAY AND TEMPORARY BARRIER INSTALLATION FOR TRAFFIC ON ONE SIDE - FLARED INSTALLATION

6

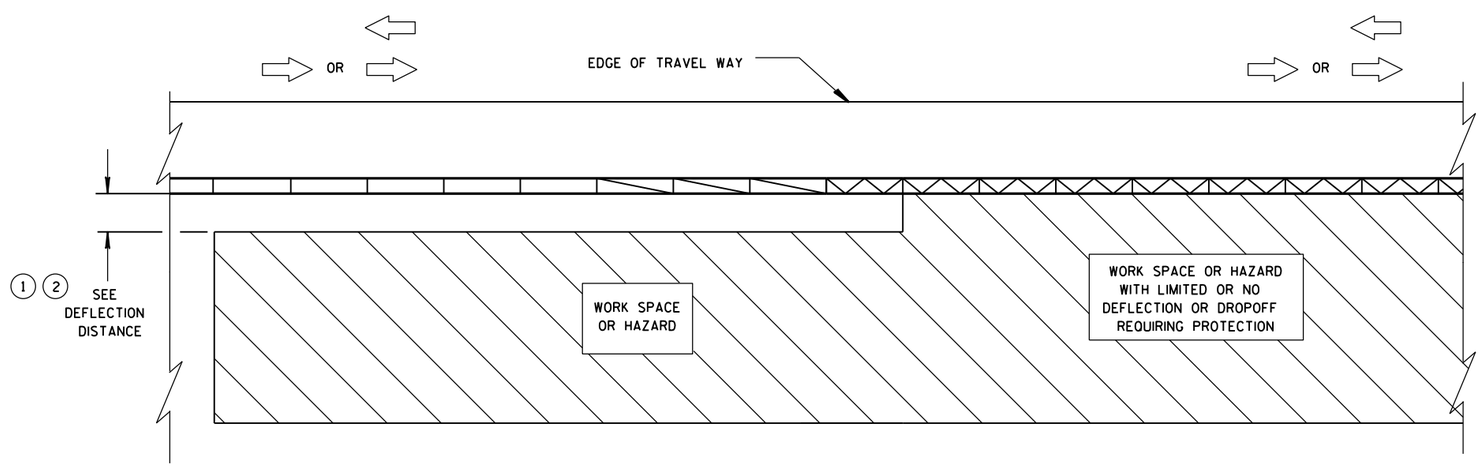

TRANSITION FROM FREE STANDING TEMPORARY BARRIER TO ANCHORED BARRIER

LEGEND

- DIRECTION OF TRAVEL
- CRASH CUSHION OR SAND BARREL ARRAY
- SEE FREE STANDING TRANSITION TO TIED-DOWN SYSTEM DETAILS
- SEE BI-DIRECTIONAL TRANSITION TO TIED-DOWN SYSTEM DETAILS
- 3 PINS PLACED ON TRAFFIC SIDE OF BARRIER
- PERMANENT CONCRETE BARRIER OR CONCRETE PARAPET
- FREE STANDING TEMPORARY BARRIER

CRASH CUSHION/SAND BARREL ARRAY AND OTHER TEMPORARY BARRIER LAYOUT DETAILS

STATE OF WISCONSIN
DEPARTMENT OF TRANSPOR

S.D.D. 14 B 8-2b

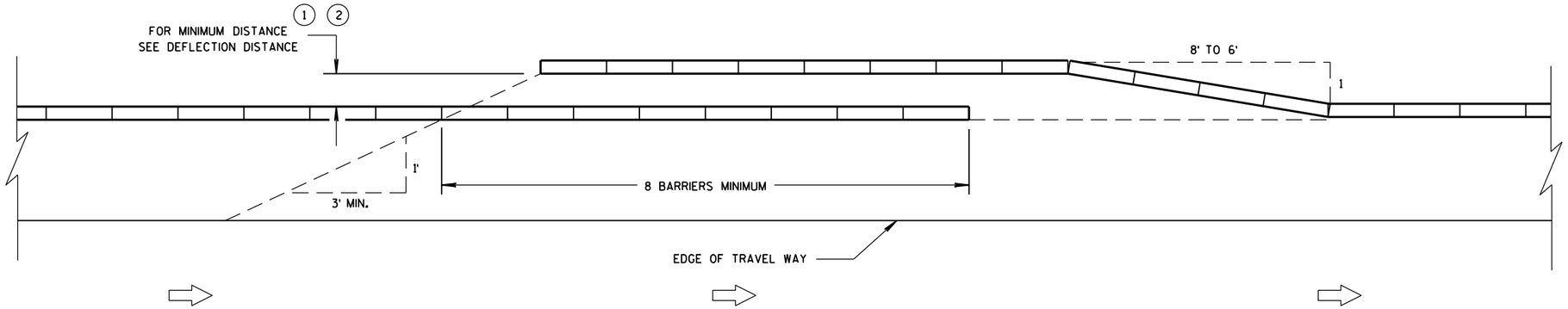

TEMPORARY BARRIER OVERLAP - ONE-WAY TRAFFIC

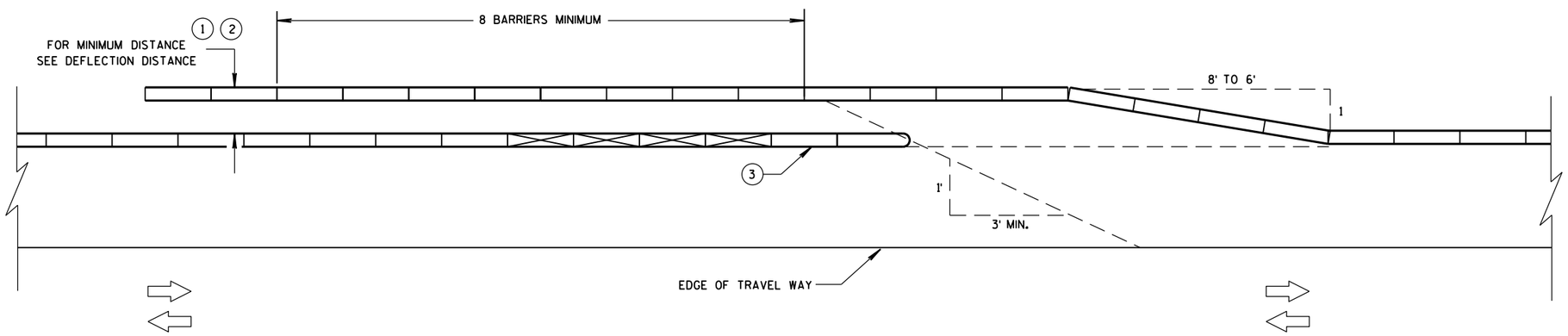

TEMPORARY BARRIER OVERLAP - TWO-WAY TRAFFIC

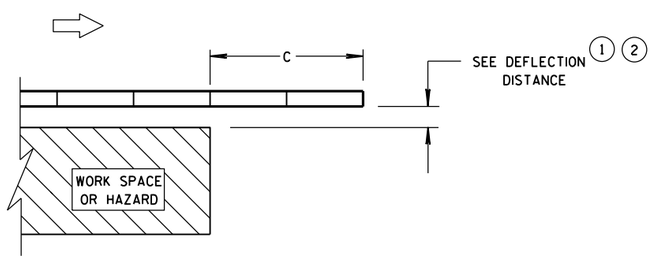

ENDING TEMPORARY BARRIER DOWNSTREAM - UNANCHORED

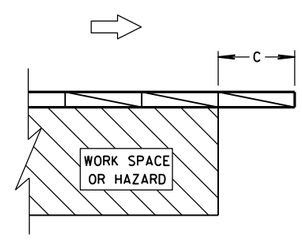

ENDING TEMPORARY BARRIER DOWNSTREAM - ANCHORED

LEGEND

- DIRECTION OF TRAVEL
- CRASH CUSHION OR SAND BARREL ARRAY
- SEE FREE STANDING TRANSITION TO TIED-DOWN SYSTEM DETAILS
- SEE BI-DIRECTIONAL TRANSITION TO TIED-DOWN SYSTEM DETAILS
- 3 PINS PLACED ON TRAFFIC SIDE OF BARRIER
- PERMANENT CONCRETE BARRIER OR CONCRETE PARAPET
- FREE STANDING TEMPORARY BARRIER

CRASH CUSHION/SAND BARREL ARRAY AND OTHER TEMPORARY BARRIER LAYOUT DETAILS

STATE OF WISCONSIN
DEPARTMENT OF TRANSPOI

6

6

S.D.D. 14 B 8-2c

S.D.D. 14 B 8-2c

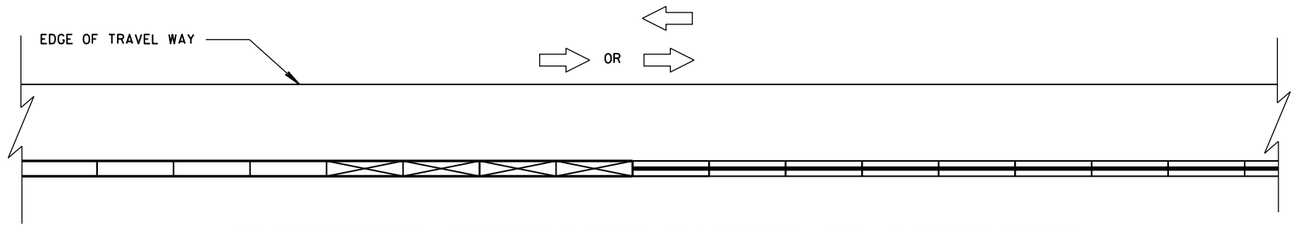

CONNECTING TEMPORARY BARRIER TO PERMANENT
CONCRETE BARRIER-TRAFFIC ON ONE SIDE

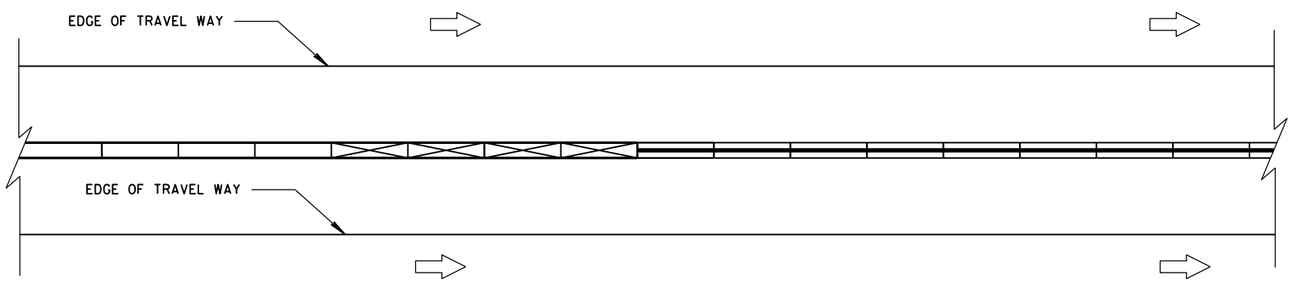

CONNECTING TEMPORARY BARRIER TO PERMANENT
CONCRETE BARRIER-TRAFFIC ON BOTH SIDES

LEGEND

DIRECTION OF TRAVEL

CRASH CUSHION OR
SAND BARREL ARRAY

SEE FREE STANDING TRANSITION
TO TIED-DOWN SYSTEM DETAILS

SEE BI-DIRECTIONAL TRANSITION
TO TIED-DOWN SYSTEM DETAILS

3 PINS PLACED ON
TRAFFIC SIDE OF BARRIER

PERMANENT CONCRETE BARRIER
OR CONCRETE PARAPET

FREE STANDING TEMPORARY
BARRIER

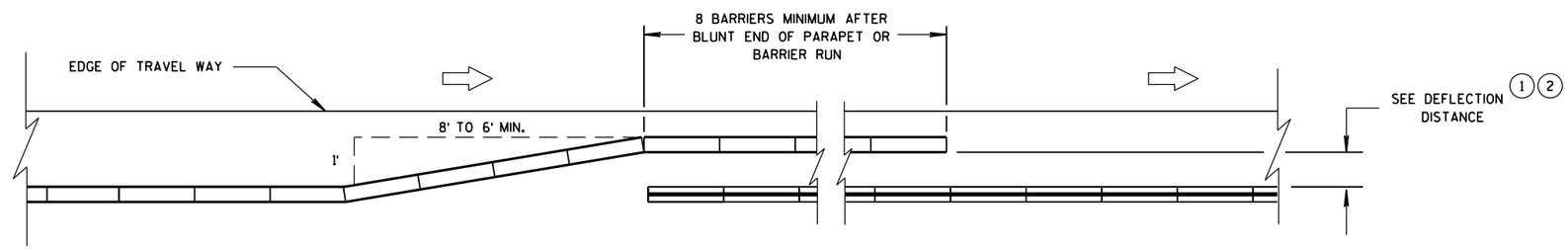

OVERLAPPING TEMPORARY BARRIER AND PERMANENT BARRIER -
ONE WAY TRAFFIC

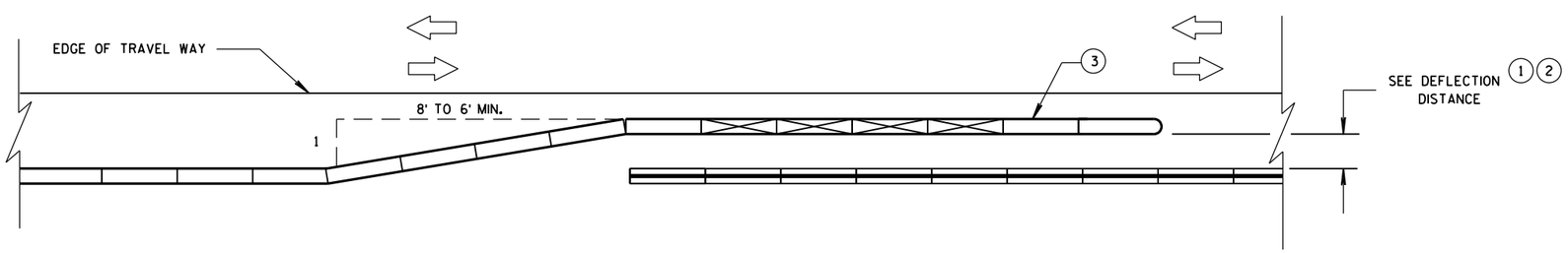

OVERLAPPING TEMPORARY BARRIER AND PERMANENT BARRIER -
TWO WAY TRAFFIC

CRASH CUSHION/SAND BARREL
ARRAY AND OTHER TEMPORARY
BARRIER LAYOUT DETAILS

STATE OF WISCONSIN
DEPARTMENT OF TRANSPOR

6

S.D.D. 14 B 8-2d

LEGEND

DIRECTION OF TRAVEL

CRASH CUSHION OR SAND BARREL ARRAY

SEE FREE STANDING TRANSITION TO TIED-DOWN SYSTEM DETAILS

SEE BI-DIRECTIONAL TRANSITION TO TIED-DOWN SYSTEM DETAILS

3 PINS PLACED ON TRAFFIC SIDE OF BARRIER

PERMANENT CONCRETE BARRIER OR CONCRETE PARAPET

FREE STANDING TEMPORARY BARRIER

DIMENSION C TABLE (2)

AVAILABLE DEFLECTION DISTANCE	MINIMUM LENGTH OF BARRIER BEYOND HAZARD FT
GREATER THAN 8'	12.5
LESS THAN OR EQUAL TO 8' BUT GREATER THAN 4'	50
LESS THAN OR EQUAL TO 4'	100

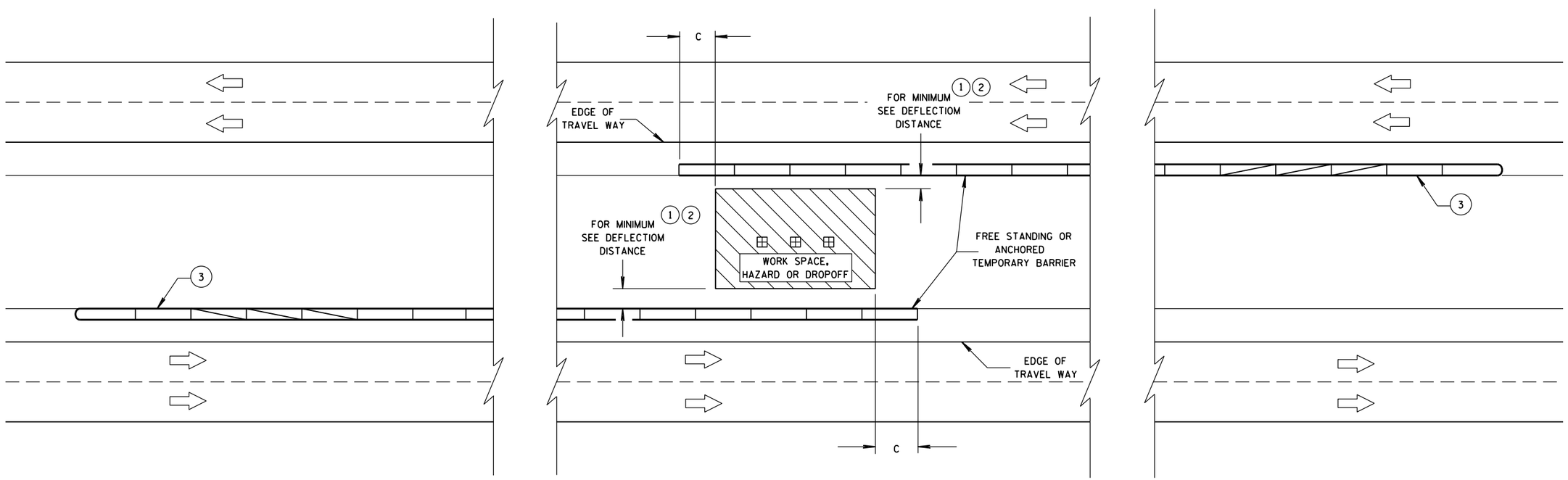

CRASH CUSHION/SAND BARREL ARRAY AND OTHER TEMPORARY BARRIER LAYOUT DETAILS

STATE OF WISCONSIN
DEPARTMENT OF TRANSPORTATION

APPROVED
June, 2015 — DATE
/S/ Jerry H. Zogg — ROADWAY STANDARDS DEVELOPMENT ENGINNER
FHWA

6

S.D.D. 14 B 8-2e

GENERAL NOTES

1. WOOD OR STEEL POSTS (w6X9 OR w6X8.5) MAY BE USED. DO NOT INTERMIX WOOD AND STEEL POSTS. INSTALL STEEL POSTS WITH HOLES ON APPROACHING TRAFFIC SIDE.

2. USE WOOD OR APPROVED PLASTIC BLOCKOUTS. WOOD BLOCKOUTS MAY BE CONSTRUCTED OUT OF TWO OR MORE WOOD BLOCKOUTS. SEE ALTERNATE WOOD BLOCKOUT DETAIL. DIMENSIONS OF APPROVED PLASTIC BLOCKOUTS MAY VARY.

3. IF ROCK IS ENCOUNTERED DURING EXCAVATION, PROVIDE A HOLE 12 INCHES IN DIAMETER EXTENDING 20 INCHES DEEP INTO THE ROCK. PLACE APPROXIMATELY 2½ INCHES OF GRANULAR MATERIAL IN THE BOTTOM OF THE HOLE. CUT THE POSTS THE TO LENGTH AMD INSTALL. BACKFILL WITH EXCAVATED MATERIAL AND COMPACT. BACKFILL IS TO BE FREE OF LARGE ROCKS.

4. WHEN THE DISTANCE FROM BACK OF POST TO SHOULDER HINGE POINT IS LESS THAN 2 FEET INSTALL LONGER POST AT HALF POST SPACING (K).

5. FOR NEW MGS INSTALLATION TOP OF W-BEAM RAIL TOLERANCE IS ± 1". FOR EXISTING MGS INSTALLATION TOP OF W-BEAM IS BETWEEN 27¾" TO 32".

6. WHEN USING STEEL POST AND WOOD BLOCKOUTS INSTALL FOUR 16D GALVANIZED NAILS. INSTALL NAILS AT THE BACK CORNERS OF THE BLOCK AND BEND THE NAILS OVER THE FLANGE OF THE STEEL POST.

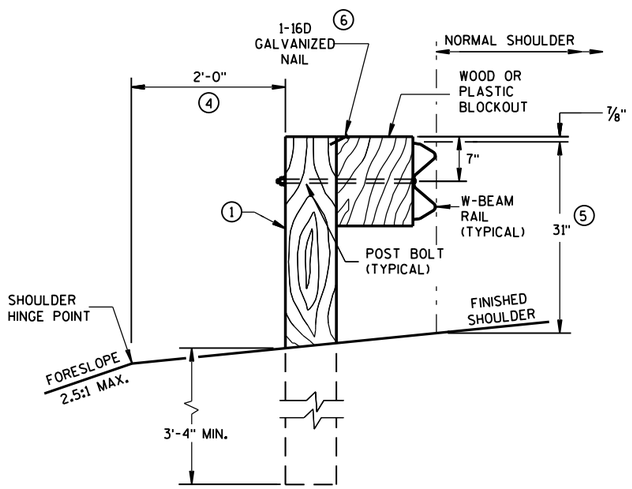

END VIEW

LOCATED ALONG A ROADWAY SHOULDER STANDARD INSTALLATION

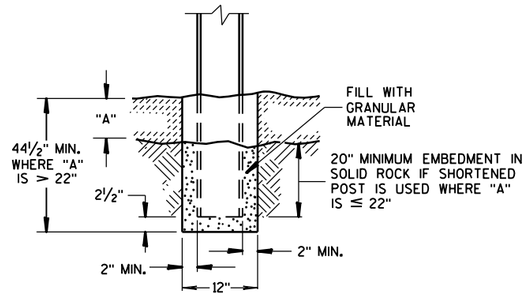

END VIEW

SETTING STEEL OR WOOD POST IN ROCK (3)

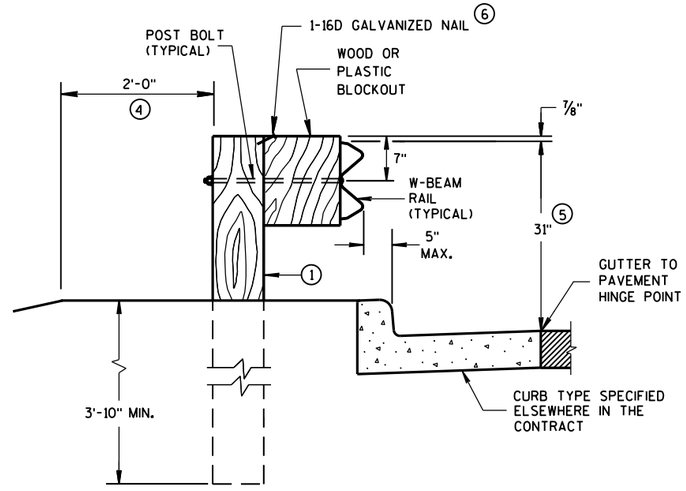

END VIEW

LOCATED ALONG A CURBED ROADWAY

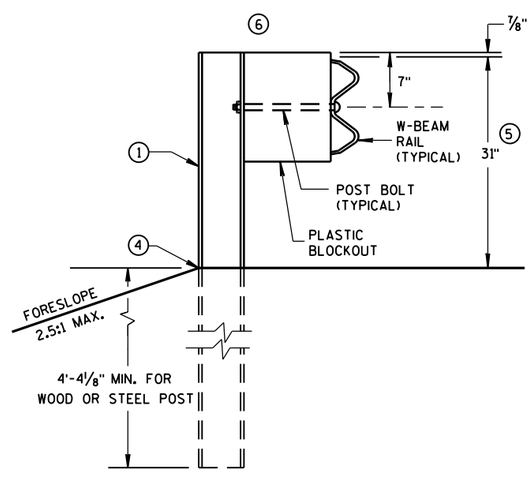

END VIEW

MGS LONGER POST AT HALFPOST SPACING W BEAM (K)

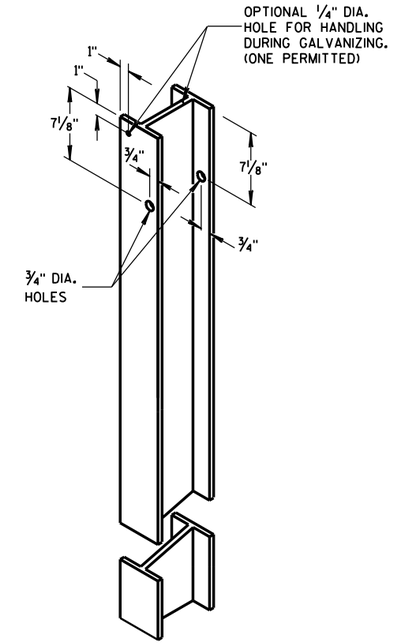

STEEL POST & HOLE PUNCHING DETAIL (w6X9) (1)

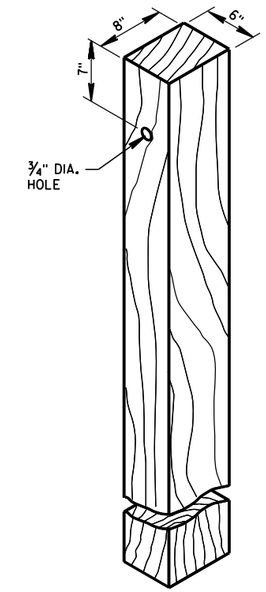

WOOD POST (6" X 8") NOMINAL (1)

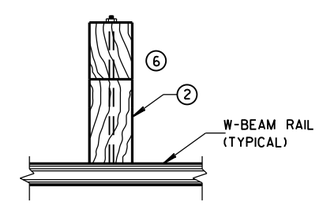

PLAN VIEW

WOOD POST, BLOCKOUT & BEAM

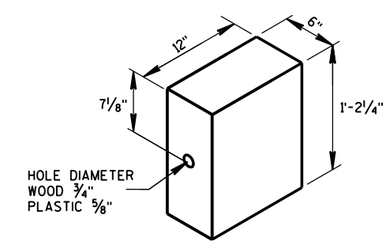

WOOD OR PLASTIC BLOCKOUT (2)

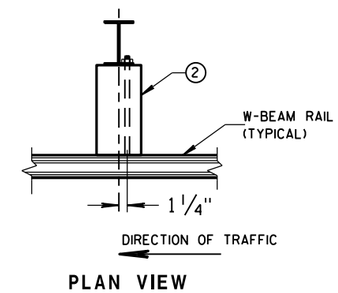

PLAN VIEW

STEEL POST, PLASTIC BLOCKOUT & BEAM

MIDWEST GUARDRAIL SYSTEM (MGS) GUARDRAIL

STATE OF WISCONSIN
DEPARTMENT OF TRANSPO

6

S.D.D. 14 B 42-3a

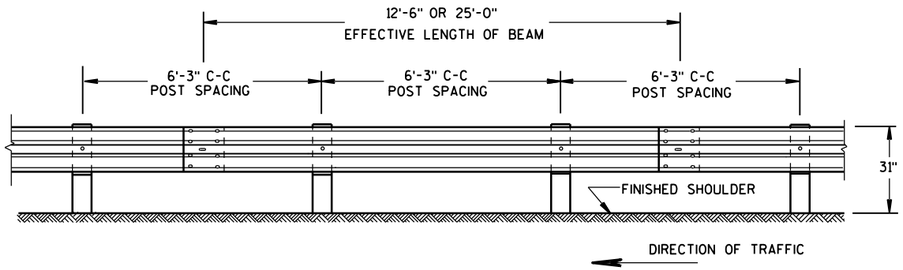

FRONT VIEW

POST SPACING STANDARD INSTALLATION

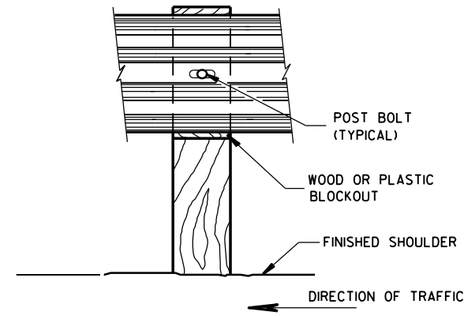

FRONT VIEW AT WOOD POST

GENERAL NOTES

(7) PROVIDE SILVER REFLECTIVE SHEETING ON ALL REFLECTORS EXCEPT THOSE LOCATED ALONG THE LEFT EDGE OF ONE-WAY ROADWAYS, WHICH SHALL BE PROVIDED WITH YELLOW REFLECTIVE SHEETING. SHEETING IS TYPE H. SEE STANDARD SPECIFICATION 637.

(8) DO NOT INSTALL REFLECTORS ON THE FIRST 50 FEET OF THE APPROACH END OF THE ENERGY ABSORBING TERMINAL. RAIL SPLICE LOCATIONS ARE THE ONLY ACCEPTABLE LOCATIONS FOR REFLECTORS.

(9) REVERSE EVERY OTHER REFLECTOR FOR 2-WAY VISIBILITY. THE CONTRACTOR MAY FURNISH TWO-SIDED REFLECTORS IN LIEU OF ONE-SIDED REFLECTORS.

(10) PROVIDE AN ANGLE OF BEND OF 90° ± 1° FOR TWO-SIDED REFLECTORS.

(11) 25 FEET OF HALF POST SPACING IS REQUIRED ON APPROACH AND DEPARTURE ENDS OF QUARTER POST SPACING.

POST BOLTS ARE A 5/8" DIAMETER ASTM A307 GUARDRAIL BOLT. A POST BOLT REQUIRES 5/8" DIAMETER A563A DOUBLE RECESSED (DR) HEAVY HEX NUT AND 5/8" DIAMETER F844 FLAT WASHER. POST BOLTS MAY BE LONGER IF MULTIPLE BLOCKOUTS ARE BEING USED.

GUARD RAIL SPLICE BOLTS ARE A 5/8" DIAMETER ASTM A307 GUARDRAIL HEAD BOLT. A GUARDRAIL SPLICE BOLT REQUIRES 5/8" DIAMETER A563A DOUBLE RECESSED (DR) HEAVY HEX NUT.

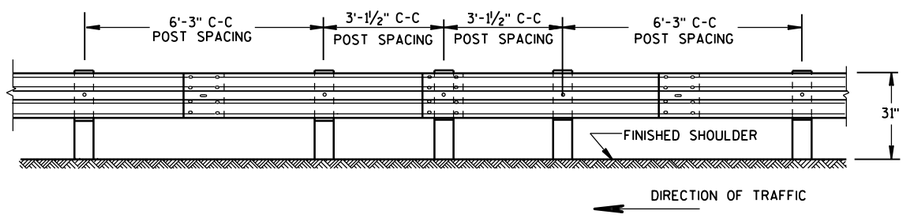

FRONT VIEW

HALF POST SPACING (HS) AND HALF POST SPACING WITH LONGER POSTS (K)

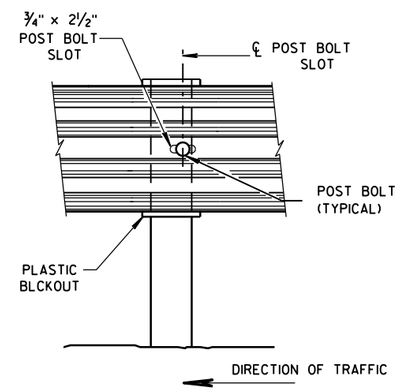

FRONT VIEW AT STEEL POST

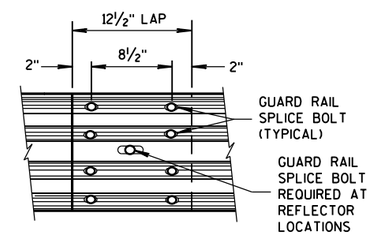

FRONT VIEW

MID-SPAN BEAM SPLICE

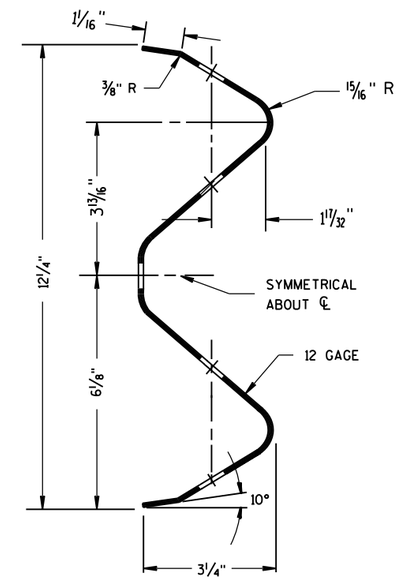

SECTION THRU W-BEAM RAIL

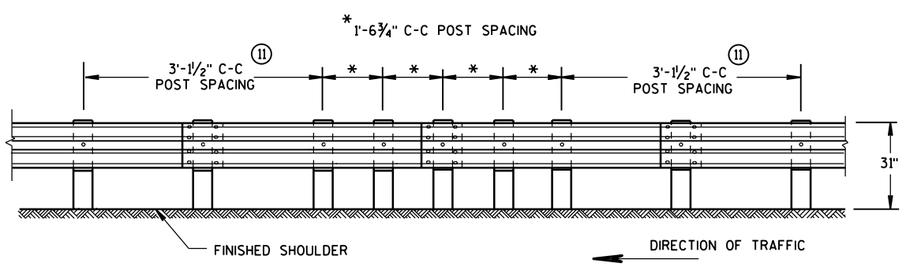

FRONT VIEW

QUARTER POST SPACING (QS)

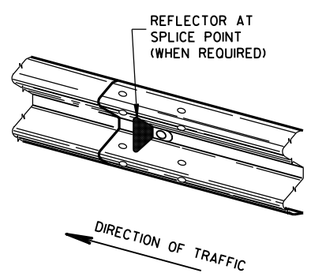

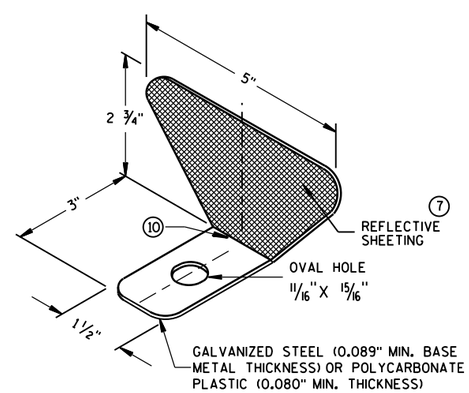

ONE SIDED REFLECTOR DETAIL AND TYPICAL INSTALLATION (7)

REFLECTOR SPACING (8)

	BEAM GUARD LENGTH	REFLECTOR SPACING	NO. SURFACES REFLECTORIZED	MIN. NO. REFLECTORS
ONE WAY TRAFFIC	< 200' > 200'	50' C-C 100' C-C	1 1	3
TWO WAY TRAFFIC	< 200' > 200'	25' C-C 50' C-C	1 (9) 1	6
TWO WAY TRAFFIC	< 200' > 200'	50' C-C 100' C-C	2 2 (10)	3

MIDWEST GUARDRAIL SYSTEM (MGS) GUARDRAIL

STATE OF WISCONSIN
DEPARTMENT OF TRANSPOR

6

S.D.D. 14 B 42-3b

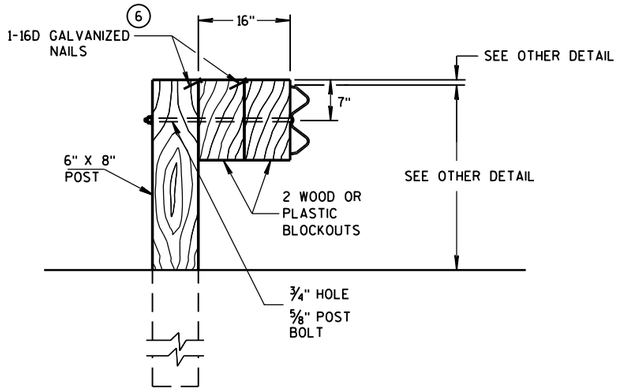

DETAIL FOR 16" BLOCKOUT DEPTH

IT IS ACCEPTABLE TO USE BLOCKOUTS UP TO 16" DEEP TO INCREASE THE POST OFFSET TO AVOID UNDERGROUND OBSTACLES. THERE IS NO LIMIT TO THE NUMBER OF POSTS THAT CAN HAVE ADDITIONAL BLOCKOUTS UP TO 16" DEEP.

NOTE: 1. ALL FILLETS SHALL HAVE A MINIMUM RADIUS OF 1/16".
2. IF THE BOLT EXTENDS MORE THAN 1/4" FROM THE NUT THE BOLT SHOULD BE TRIMMED BACK.

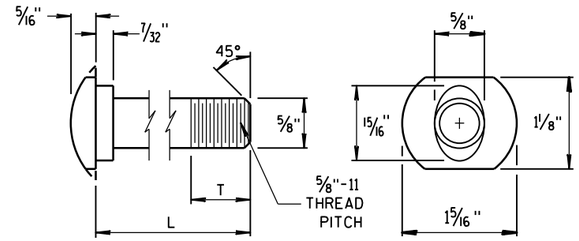

POST BOLT TABLE

L	T (MIN.)
1 1/4"	1 1/8"
2"	1 3/4"
10"	4"
14"	4 1/16"
18"	4"
21"	4 1/16"
25"	4"

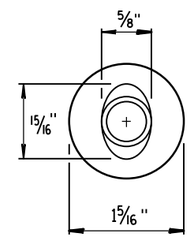

ALTERNATE BOLT HEAD

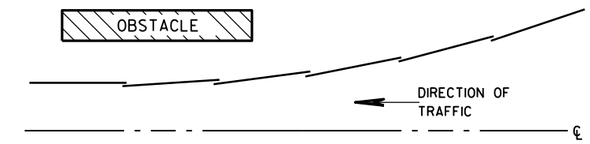

PLAN VIEW

BEAM LAPPING DETAIL

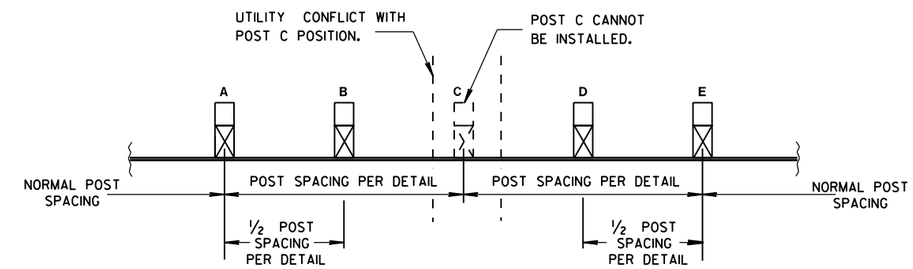

POST DRIVING FOR CONTINUOUS UNDERGROUND OBSTRUCTION

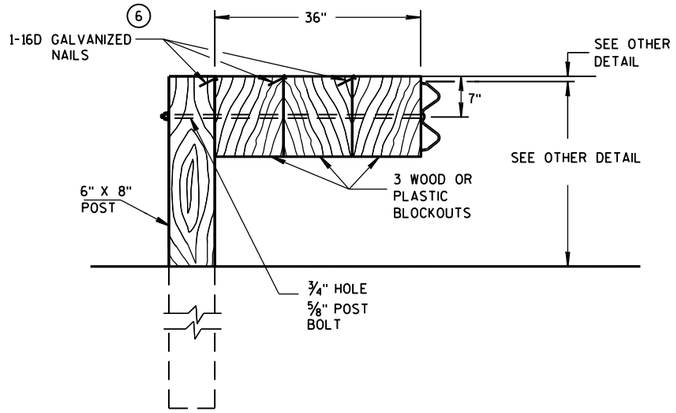

DETAIL FOR 36" BLOCKOUT DEPTH

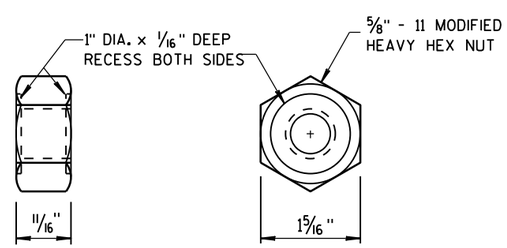

POST BOLT AND RECESS NUT

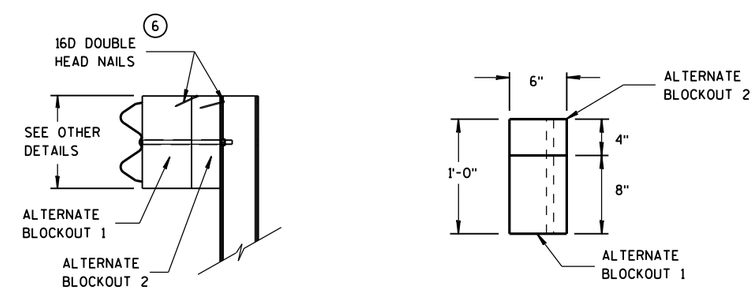

SIDE VIEW TOP VIEW

ALTERNATE WOOD BLOCKOUT DETAIL

NOTES: UNDER SPECIAL CIRCUMSTANCES, SUCH AS AVOIDING OBSTACLES THAT ARE NOT RELOCATED, IT IS ACCEPTABLE TO INSTALL ADDITIONAL BLOCKOUTS TO OBTAIN UP TO 36" DEPTH FOR ONE OR TWO POSTS IN A SECTION OF GUARDRAIL.

DO NOT USE 16" OR 36" BLOCKOUTS IF IT CAUSES THE POST TO BE DRIVEN BEYOND SHOULDER HINGE POINT OR CAUSES A FIXED OBJECT TO BE WITHIN THE DEFLECTION DISTANCE OF THE BARRIER.

MIDWEST GUARDRAIL SYSTEM (MGS) GUARDRAIL

STATE OF WISCONSIN
DEPARTMENT OF TRANSPORTATION

APPROVED
June 2014 — DATE
/S/ Jerry H. Zogg — ROADWAY STANDARDS DEVELOPMENT ENGINEER
FHWA

6

S.D.D. 14 B 42-3c

GENERAL NOTES

(A) THE SLOPE IN THE AREA BOUNDED BY THE GRADELINE, THE HINGE POINT LINE (HPL), AND THE CLEAR ZONE LIMITS (CZL) SHALL BE 4:1 OR FLATTER.

(B) AFTER FINAL ASSEMBLY, RECHECK CABLE TO BE SURE IT IS TAUT AND HAS NOT RELAXED.

(C) DIFFERENT MANUFACTURES REQUIRE DIFFERENT PERFORATED W-BEAM RAIL END PANELS. SEE MANUFACTURES INFORMATION.

(D) THE TOP OF THE STEEL TUBE ON POST 1 AND POST 2 SHALL NOT BE MORE THAN 3" ABOVE THE FINISH GROUND ELEVATION.

(F) ATTACH ALUMINUM SHEET TO E.A.T. HEAD USING 4 STAINLESS STEEL SELF-TAPPING SCREWS. ONE SCREW PER CORNER.

(G) 1/2" DIAMETER X 3" LONG LAG BOLT AND WASHER.

(H) HARDWARE VARIES BETWEEN DIFFERENT MANUFACTURES. SEE MANUFACTURE'S DRAWING FOR INFORMATION.

(I) DIMENSIONS MAY VARY. SEE MANUFACTURE'S INFORMATION.

SEE SDD 14B42 FOR MORE INFORMATION.

* DO NOT ATTACH BLOCKOUTS TO POSTS 1 AND 2.

DO NOT INSTALL REFLECTORS ON THE FIRST 50 FEET OF THE APPROACH END OF THE ENERGY ABSORBING TERMINAL.

W-BEAM RAIL SPLICES ARE LOCATED AT POST NUMBER 3, AND BETWEEN POST 5 AND 6, BETWEEN POSTS 7 AND 8, AND MIDDLE OF THE SPAN AFTER POST 9.

THE CENTER OF THE UPPER 3 1/2" DIAMETER HOLE ON POST NUMBER 3 THROUGH POST 9 IS TO BE FLUSH WITH THE GROUND LINE UP TO A MAXIMUM OF 2" ABOVE GROUND LINE.

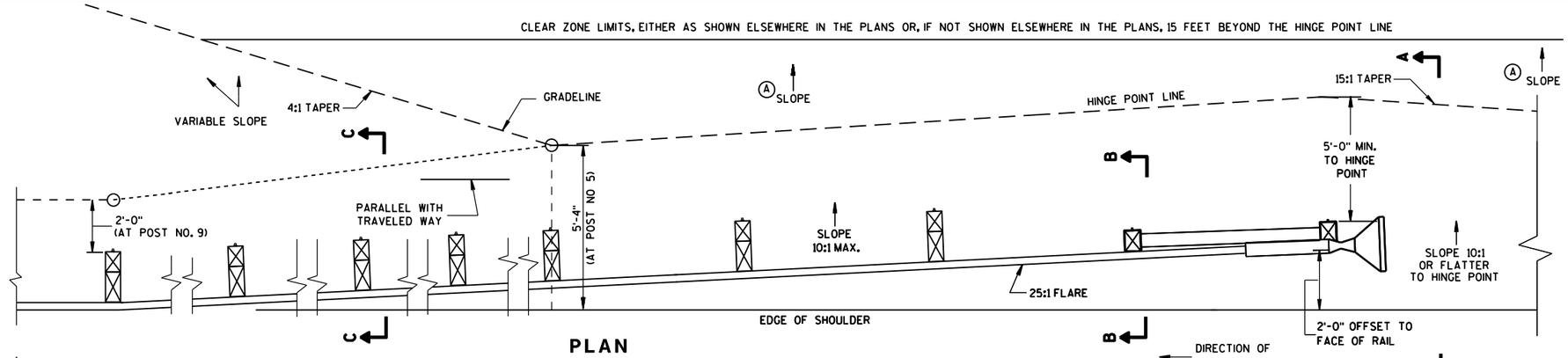

PLAN

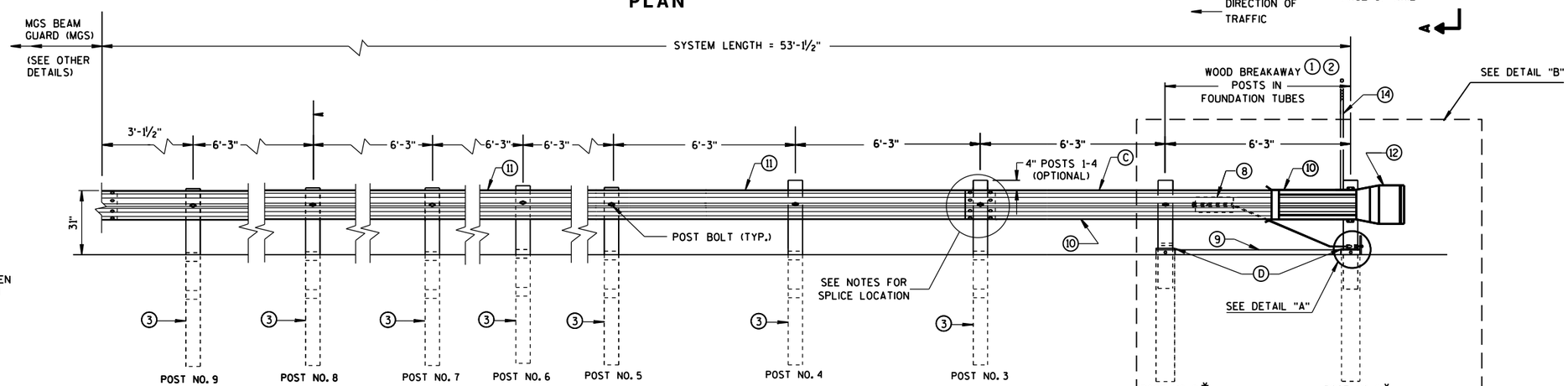

ELEVATION

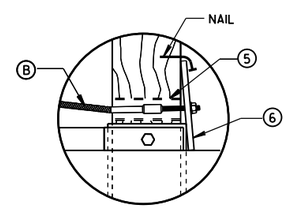

DETAIL "A"

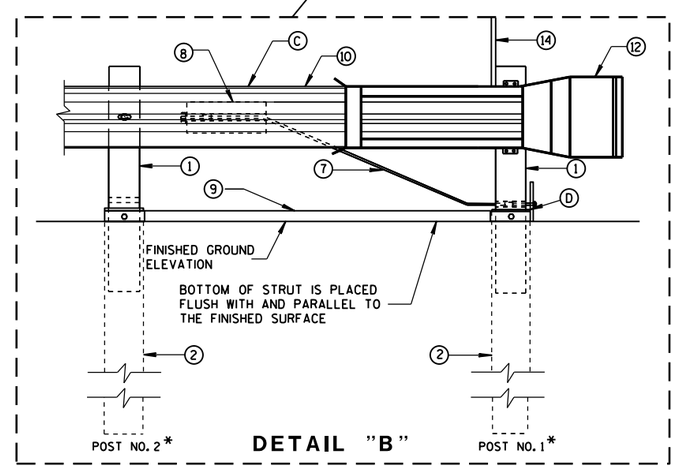

DETAIL "B"

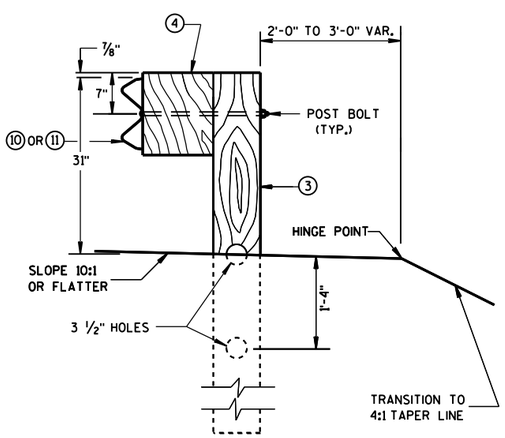

SECTION C-C
TYPICAL AT POST NOS. 3-9

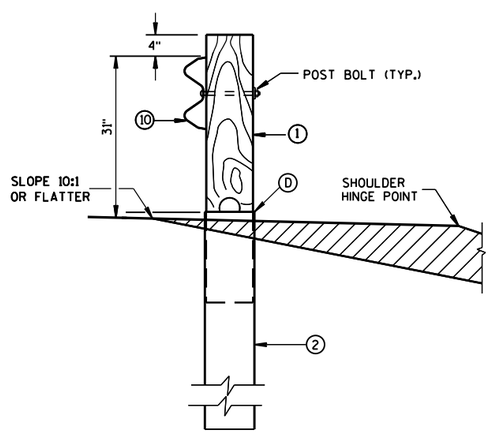

SECTION B-B
TYPICAL AT POST NO. 2*

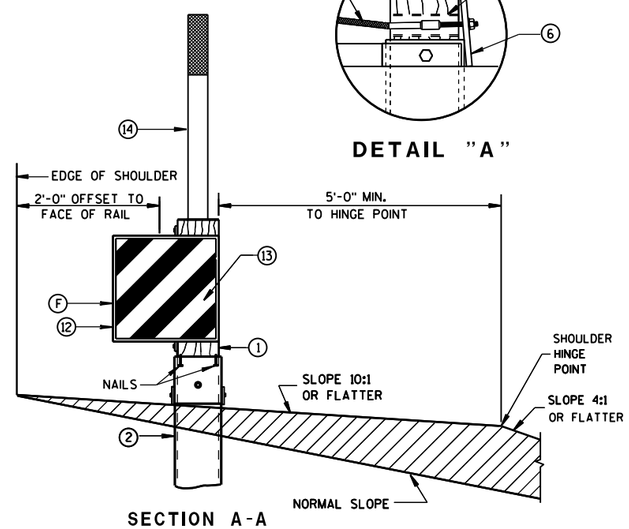

SECTION A-A
TYPICAL AT POST NO. 1*

MIDWEST GUARDRAIL SYSTEM ENERGY ABSORBING TERMINAL (MGS)

STATE OF WISCONSIN
DEPARTMENT OF TRANSPORTATION

6

6

S.D.D. 14 B 44-2a

S.D.D. 14 B 44-2a

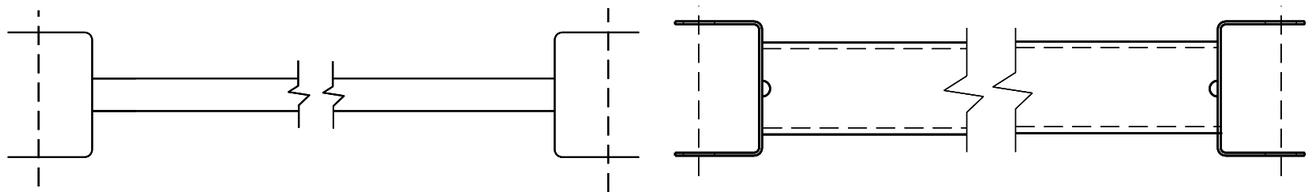

GENERIC GROUND STRUT (9) (H)

BILL OF MATERIALS

PART NO.	DESCRIPTION MATERIALS PROVIDED BY MGS EAT MANUFACTURER. SEE MANUFACTURER'S DETAILS FOR MORE INFORMATION.
1	WOOD BREAKAWAY POST
2	6" X 8" X 0.188", 6'-0" LONG FOUNDATION TUBE AT POSTS 1 AND 2
3	WOOD CRT
4	WOOD BLOCKOUT
5	PIPE SLEEVE
6	BEARING PLATE
7	BCT CABLE ASSEMBLY
8	ANCHOR CABLE BOX
9	GROUND STRUT
10	PERFORATED W-BEAM RAIL END PANEL, 12'-6" LONG.
11	STANDARD W-BEAM RAIL. MULTIPLE SECTIONS REQUIRED. SECTIONS VARY IN LENGTH.
12	END SECTION EAT
13	0.040" ALUMINUM SHEET WITH REFLECTIVE SHEETING TYPE F PER SECTION 637 OF THE STANDARD SPECIFICATIONS
14	EAT MARKER POST - YELLOW (SEE APPROVED PRODUCTS LIST)

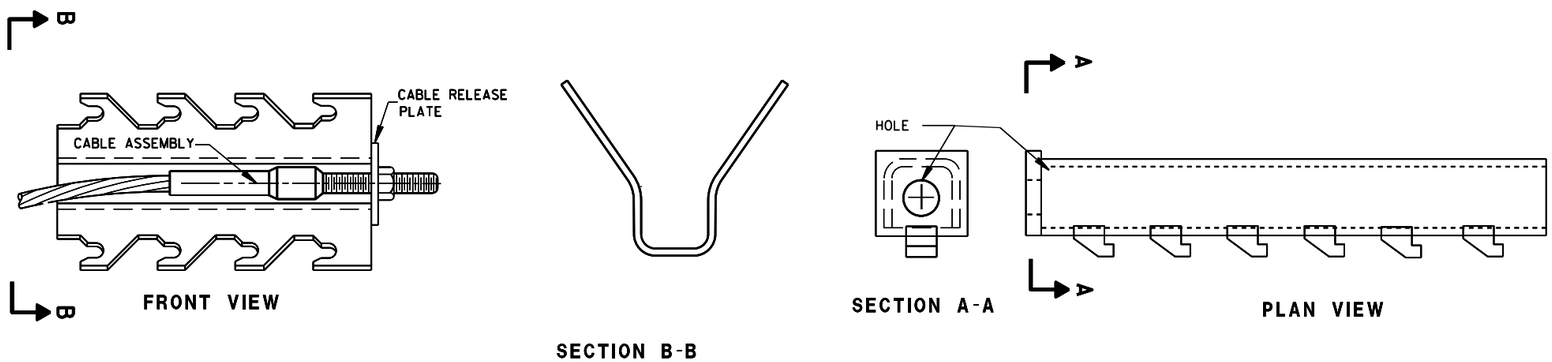

GENERIC ANCHOR CABLE BOX (8) (H)

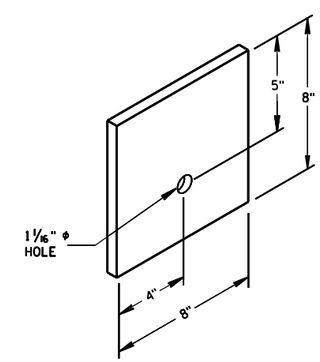

BEARING PLATE (6)

MIDWEST GUARDRAIL SYSTEM
ENERGY ABSORBING TERMINAL
(MGS)

STATE OF WISCONSIN
DEPARTMENT OF TRANSPOR

6
S.D.D. 14 B 44-2b

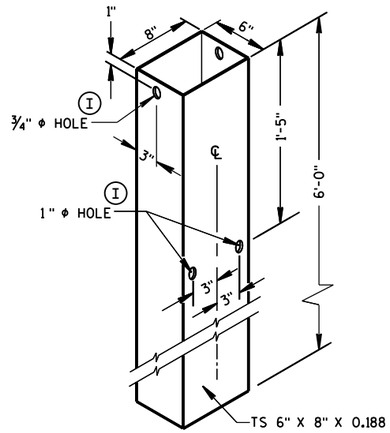

FOUNDATION TUBE (2)

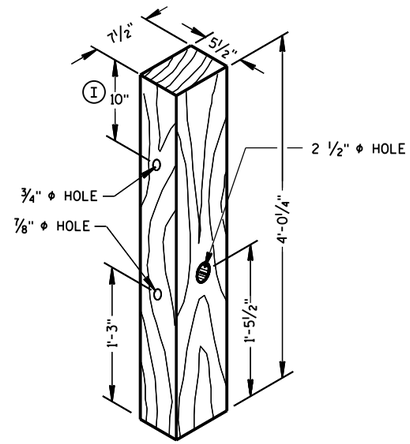

POSTS NUMBER 1 AND 2

WOOD BREAKAWAY POST (1)

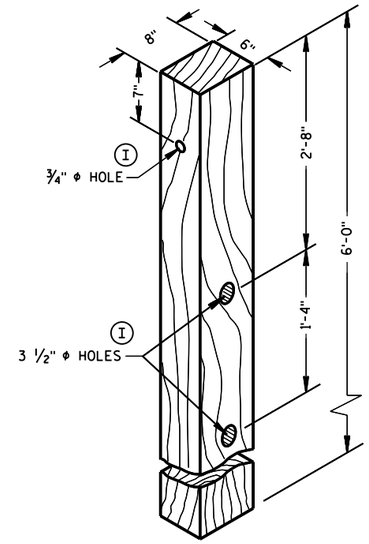

POSTS NUMBER 3-9

WOOD CRT POST (3)

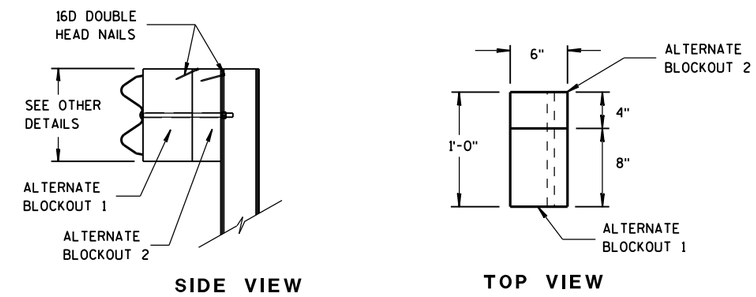

ALTERNATE WOOD BLOCKOUT DETAIL

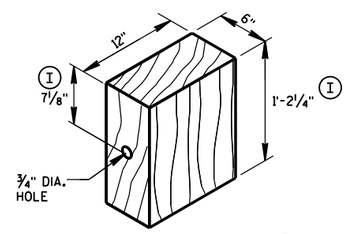

WOOD BLOCKOUT (4)

REQ'D. AT ALL POSTS EXCEPT POST NO'S 1 & 2

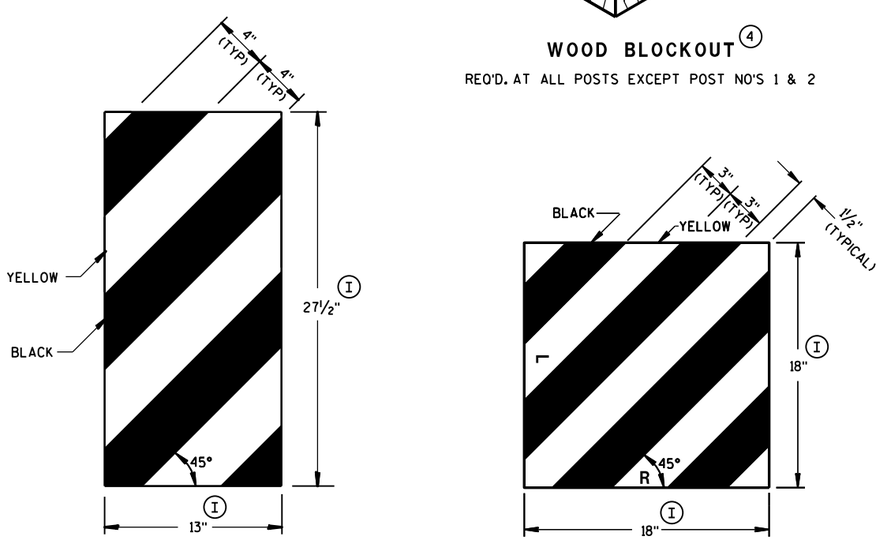

GENERIC REFLECTIVE SHEETING (13) (H)

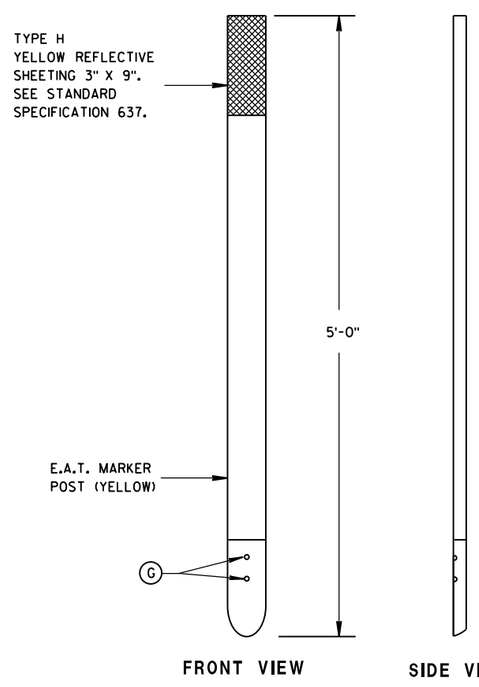

E.A.T. MARKER POST (14)

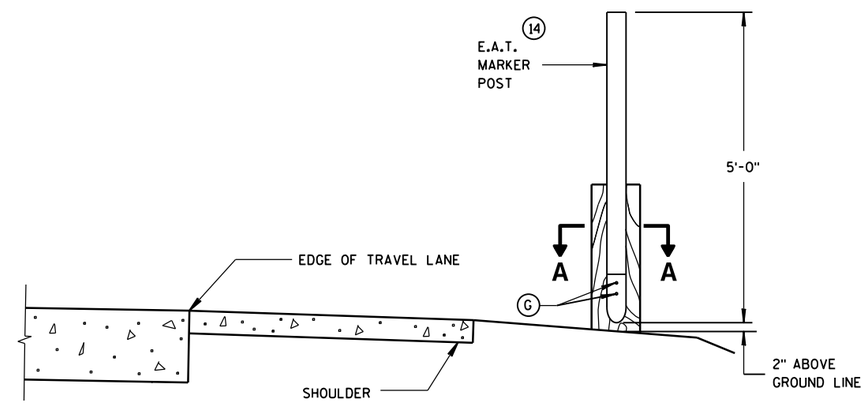

TYPICAL INSTALLATION OF E.A.T. MARKER POST BACKSIDE OF POST NO. 1

(E.A.T. AND RAIL REMOVED FOR CLARITY)

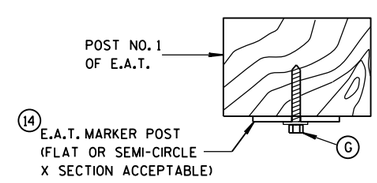

SECTION A-A

MIDWEST GUARDRAIL SYSTEM ENERGY ABSORBING TERMINAL (MGS)

STATE OF WISCONSIN
DEPARTMENT OF TRANSPORTATION

APPROVED
June 2014 — DATE
/S/ Jerry H. Zogg — ROADWAY STANDARDS DEVELOPMENT ENGINEER
FHWA

6

S.D.D. 14 B 44-2c

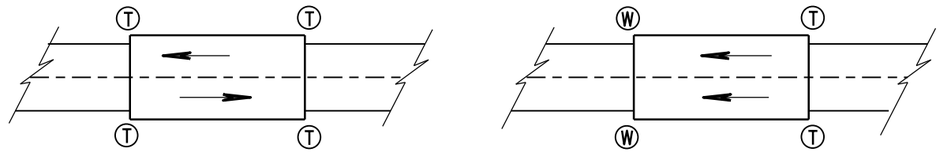

TWO WAY TRAFFIC

ONE WAY TRAFFIC

(T) THRIE BEAM CONNECTION

(W) W-BEAM CONNECTION WHEN REQUIRED

TYPICAL LOCATIONS OF THRIE BEAM AND W-BEAM CONNECTIONS TO BRIDGE

GENERAL NOTES

IF ROCK IS ENCOUNTERED, REMOVE ROCK TO FULL DEPTH OF POST PLUS 2½", AND 12" DIAMETER AROUND POST. SEE 14B42 FOR MORE DETAILS.

TRANSITION USES STEEL POSTS ONLY.

SEE STANDARD DETAIL DRAWING 14 B 42 FOR MORE INFORMATION.

(1) BRIDGE RAILING TYPE "W" DOES NOT REQUIRE A TERMINAL CONNECTOR.

(2) OPTIONAL CURB AND GUTTER OR DRAINAGE FEATURE SEE PLAN FOR INFORMATION.

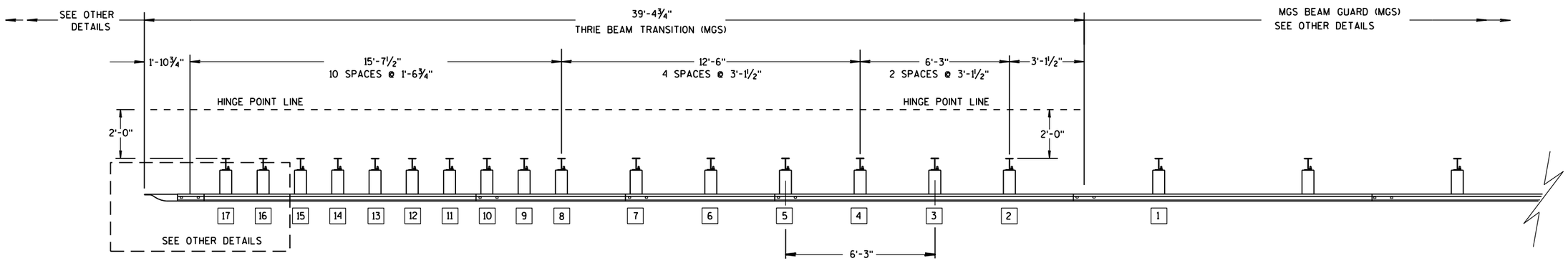

PLAN VIEW

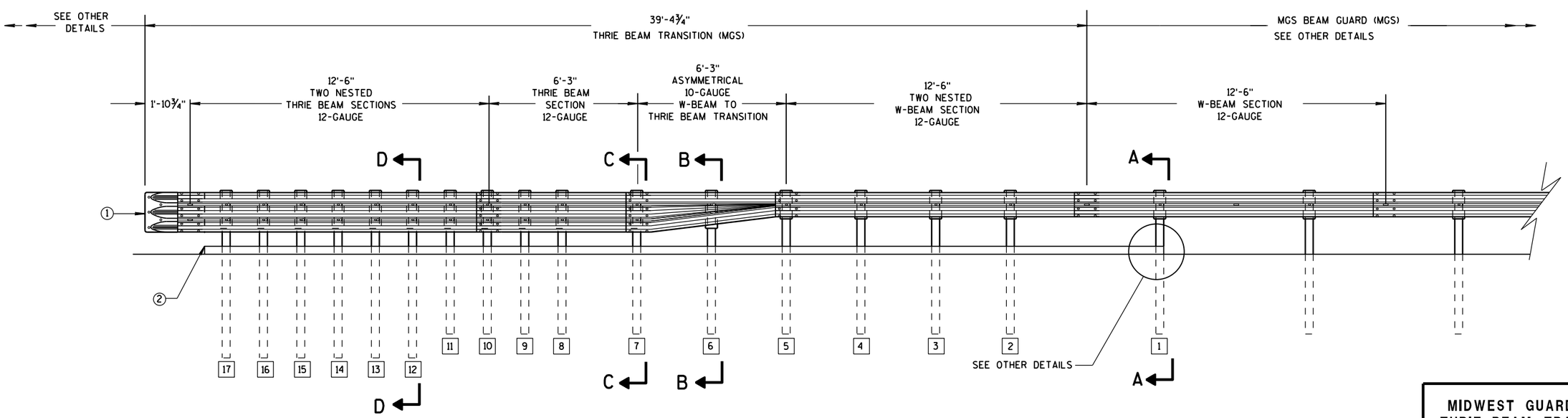

ELEVATION VIEW

MIDWEST GUARDRAIL SYSTEM THRIE BEAM TRANSITION

MIDWEST GUARDRAIL SYSTEM
THRIE BEAM TRANSITION (MGS)

STATE OF WISCONSIN
DEPARTMENT OF TRANSPORTATION

6

6

S.D.D. 14 B 45-4a

S.D.D. 14 B 45-4a

GENERAL NOTES

(2) OPTIONAL CURB AND GUTTER OR DRAINAGE_FEATURE SEE PLAN FOR INFORMATION.

(3) WHEN USING STEEL POSTS AND WOOD BLOCKOUTS INSTALL FOUR 10D GALVANIZED NAILS. INSTALL NAILS AT THE BACK CORNERS OF THE BLOCK AND BEND THE NAILS OVER THE FLANGE OF THE STEEL POST.

(4) TOLERANCE FOR TOP OF W-BEAM RAIL IS ± 1".

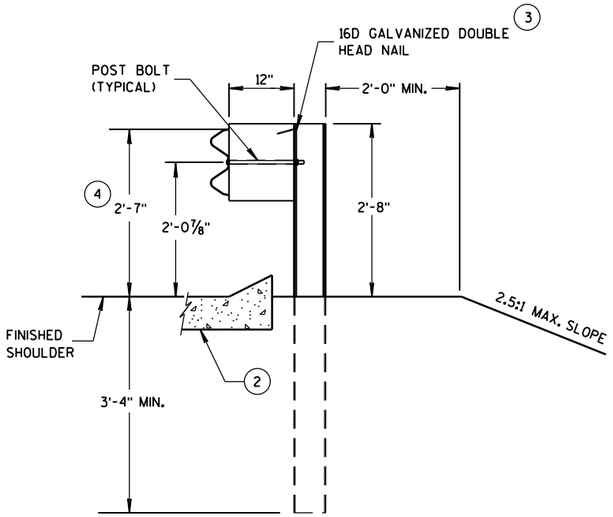

SECTION A-A
POSTS 1-5

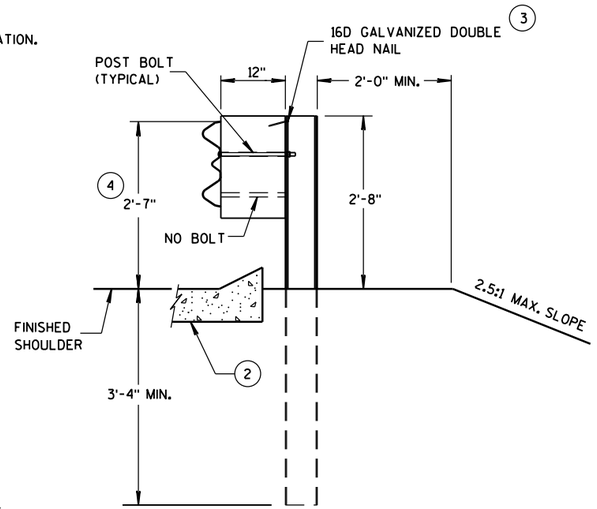

SECTION B-B
POST 6

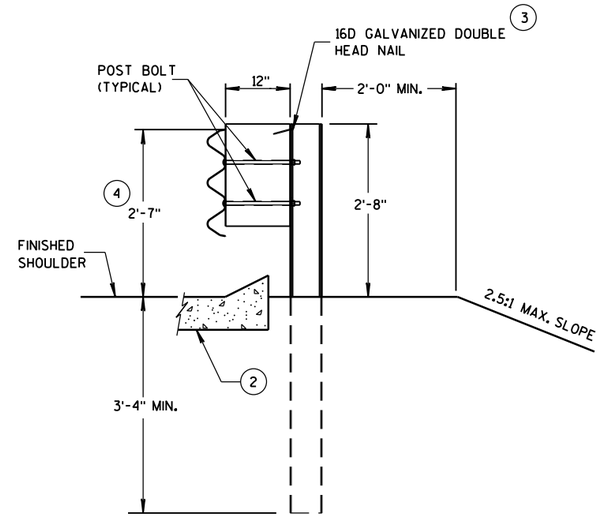

SECTION C-C
POSTS 7-11

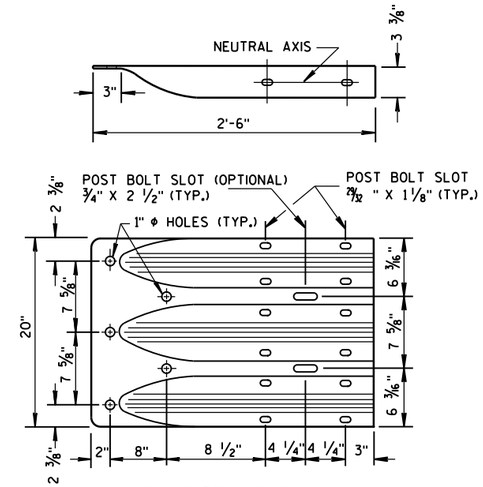

THRIE BEAM
TERMINAL CONNECTOR

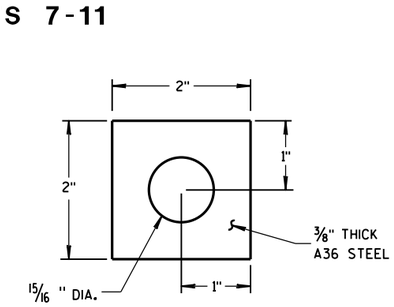

PLATE WASHER DETAIL

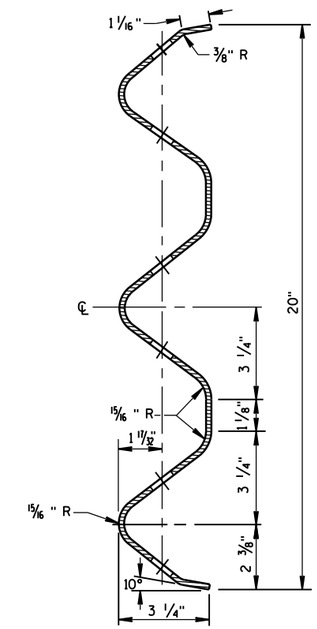

SECTION THRU THRIE
BEAM RAIL ELEMENT

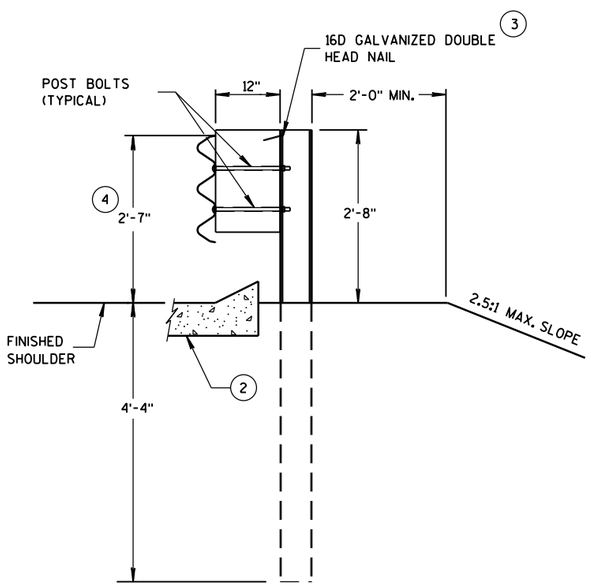

SECTION D-D
POSTS 12-17

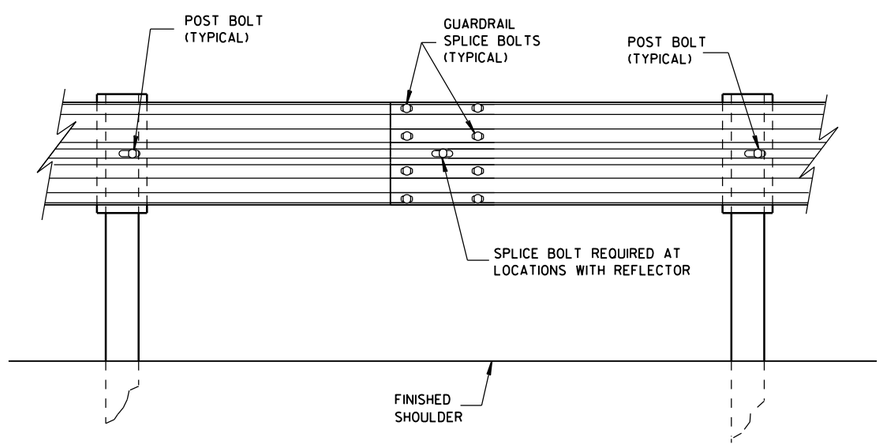

SPLICE DETAIL

MIDWEST GUARDRAIL SYSTEM
THRIE BEAM TRANSITION (MGS)

STATE OF WISCONSIN
DEPARTMENT OF TRANSPO

6

6

S.D.D. 14 B 45-4b

S.D.D. 14 B 45-4b

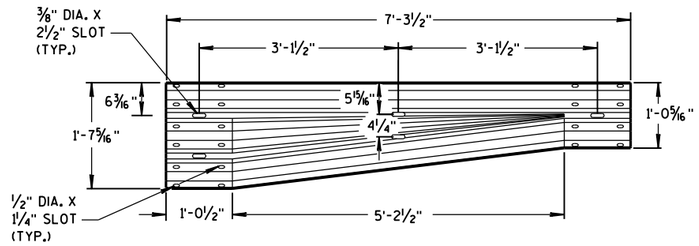

W-BEAM TO THRIE BEAM TRANSITION SECTION

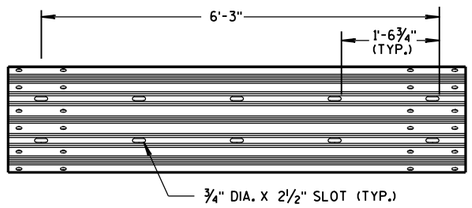

6'-3" THRIE BEAM SECTION

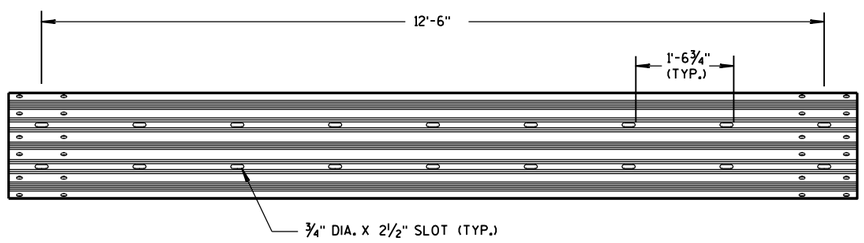

12'-6" THRIE BEAM SECTION

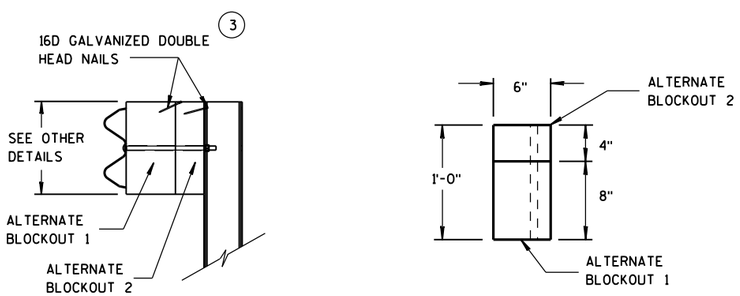

SIDE VIEW TOP VIEW

ALTERNATE WOOD BLOCKOUT DETAIL

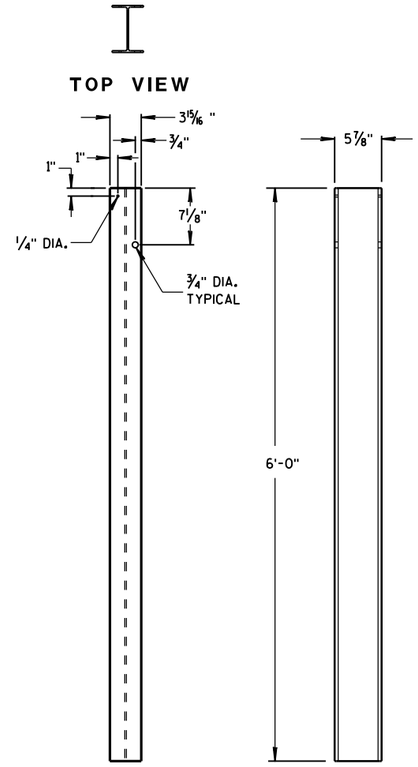

STEEL POSTS 1-5

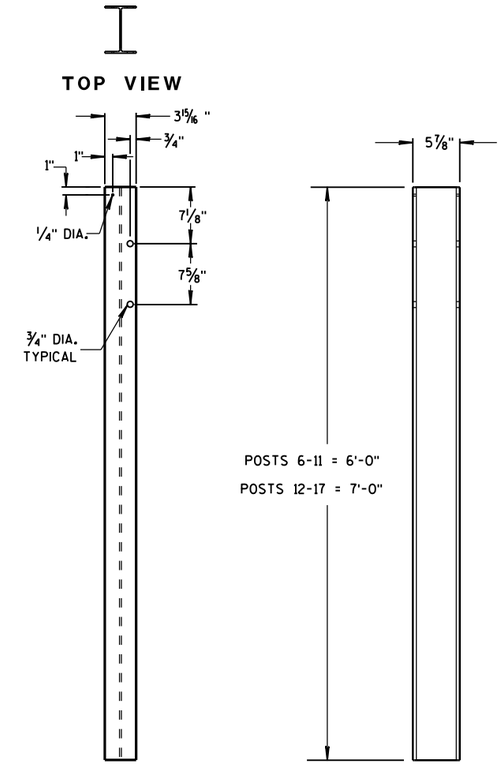

STEEL POSTS 6-17

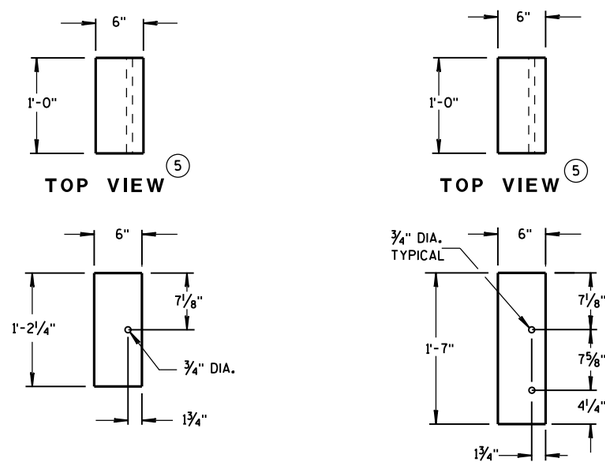

BLOCKOUT POSTS 1-5

BLOCKOUT POSTS 6-17

GENERAL NOTES

STEEL POSTS ARE W6X9 OR W6X8.5.

BOLT HOLES FOR POST ARE ON FRONT AND OF SIDE OF POST.

3 WHEN USING STEEL POSTS AND WOOD BLOCKOUTS INSTALL FOUR 16D GALVANIZED NAILS. INSTALL NAILS AT THE BACK CORNERS OF THE BLOCK AND BEND THE NAILS OVER THE FLANGE OF THE STEEL POST.

5 WOOD BLOCKS MAY BE CONSTRUCTED OUT OF 2 WOOD BLOCKS. SEE ALTERNATE WOOD BLOCK DETAIL.

MIDWEST GUARDRAIL SYSTEM
THRIE BEAM TRANSITION (MGS)

STATE OF WISCONSIN
DEPARTMENT OF TRANSPOR

6

S.D.D. 14 B 45-4c

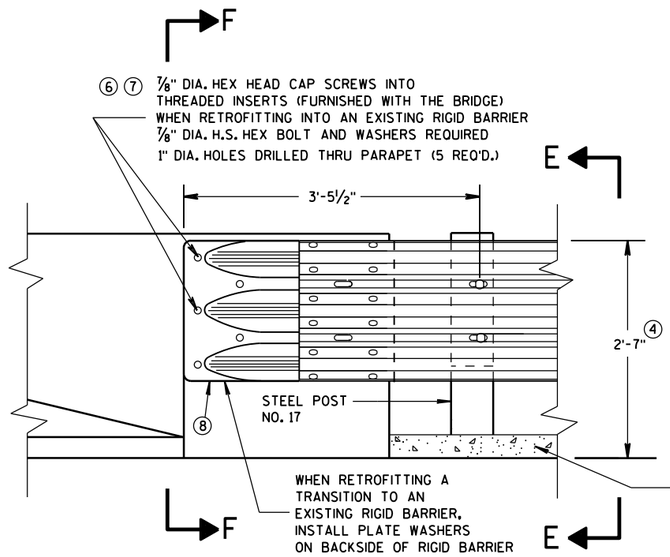

FRONT VIEW

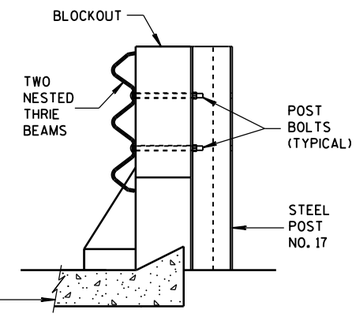

SECTION E-E

THRIE BEAM CONNECTION TO BRIDGE PARAPET WITH SQUARE ENDS

GENERAL NOTES

THESE ARE TYPICAL CONNECTION DETAILS. ADJUST THE POSTION OF CONNECTIONS TO EXISTING BRIDGES TO FIT THE ACTUAL BRIDGE AND SITE DIMENSIONS.

② OPTIONAL CURB AND GUTTER OR DRAINAGE FEATURE SEE PLAN FOR INFORMATION.

④ TOLERANCE FOR TOP OF BEAM IS ± 1".

⑥ DRILLING BOLT HOLES THROUGH THE PARAPET, BOLTS, NUTS, WASHERS AND REPAIRING DAMAGED CONCRETE ARE INCIDENTAL TO THE CONTRACT.

⑦ BOLTS MAY BE A325 BOLTS OR A449 BOLTS. BOLT LENGTH AND THREADING LENGTH ARE TO ALLOW FOR A TIGHT CONNECTION BETWEEN RIGID BARRIER AND THRIE BEAM CONNECTION PLATE. CONTRACTOR IS TO FIELD VERIFY BOLT LENGTH AND THREAD LENGTH. ONE ROUND WASHER REQUIRED BETWEEN BOLT HEAD AND THRIE BEAM CONNECTOR PLATE. BOLTS THAT EXTEND THROUGH THE PARAPET AND OUT THE BACK FACE REQUIRE A HARDENED ROUND STEEL WASHER THAT IS 2" O.D. X 5/8" THICK AND ONE PLATE WASHER. REPAIR ANY DAMAGED CONCRETE FROM BOLT INSTALLATION.

⑧ THE RECESS FOR A W-BEAM CONNECTION, WHICH EXISTS ON SOME PARAPETS OF THIS TYPE, SHALL BE FILLED WITH A TREATED TIMBER BLOCKOUT. BLOCKOUT SIZE IS 1'-6" X 2'-0" X 3 1/2".

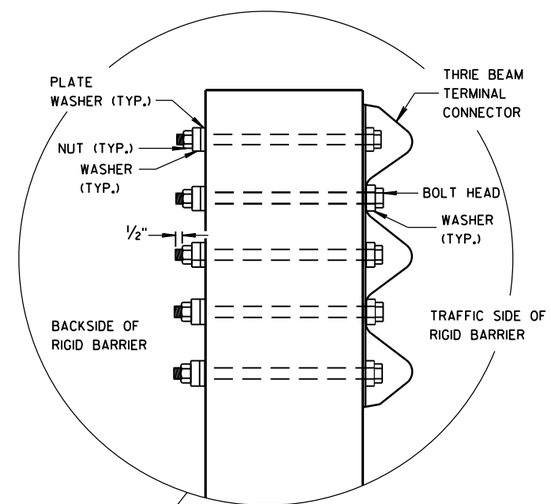

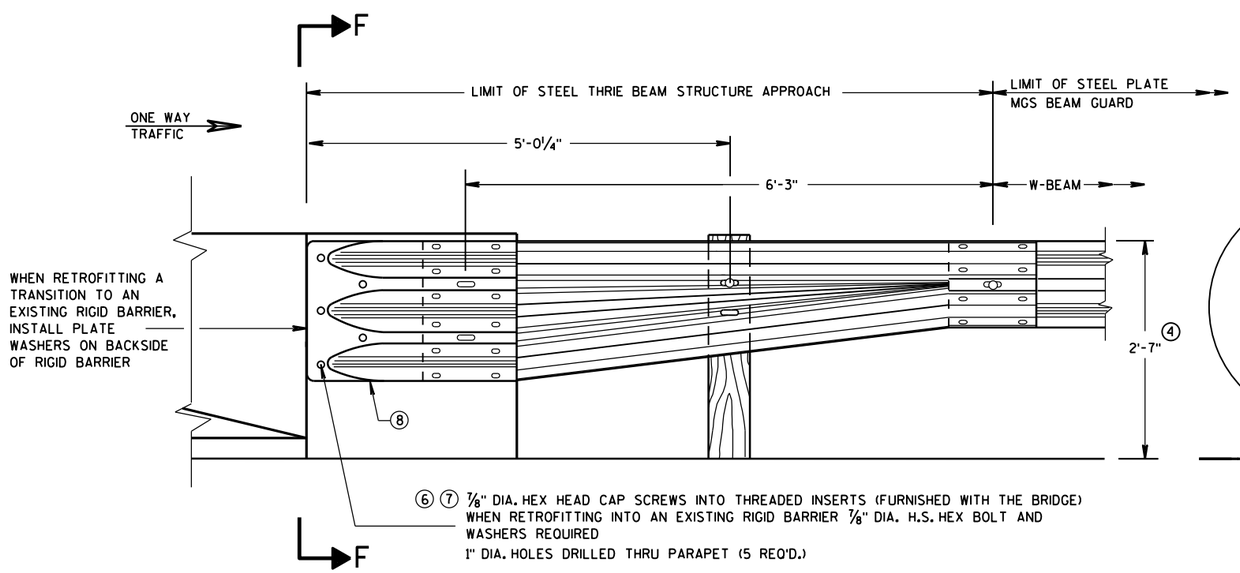

FRONT VIEW

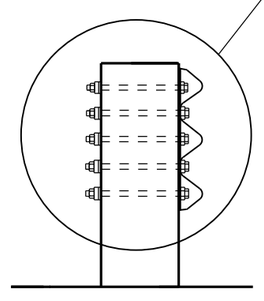

SECTION F-F

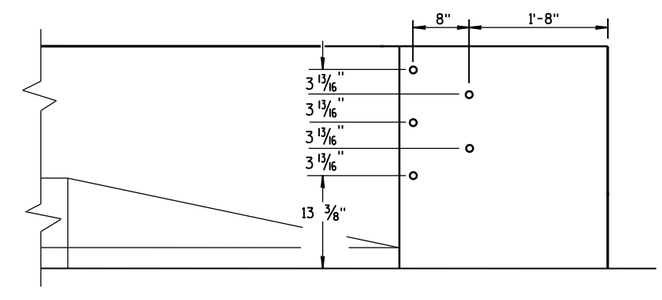

DRILL HOLE LOCATION

W BEAM TRANSITION AND CONNECTION TO BRIDGE PARAPETS WITH SQUARE ENDS

(USE ONLY ON THE TRAFFIC EXIT END OF ONE WAY BRIDGES)

MIDWEST GUARDRAIL SYSTEM
THRIE BEAM TRANSITION (MGS)

STATE OF WISCONSIN
DEPARTMENT OF TRANSPORTATION

APPROVED
June, 2015 — DATE
/S/ Jerry H. Zogg — ROADWAY STANDARDS DEVELOPMENT ENGINEER
FHWA
NT

6

S.D.D. 14 B 45-4d

GENERAL NOTES

DETAILS OF CONSTRUCTION, MATERIALS AND WORKMANSHIP NOT SHOWN ON THIS DRAWING SHALL CONFORM TO THE PERTINENT REQUIREMENTS OF THE STANDARD SPECIFICATIONS AND THE APPLICABLE SPECIAL PROVISIONS.

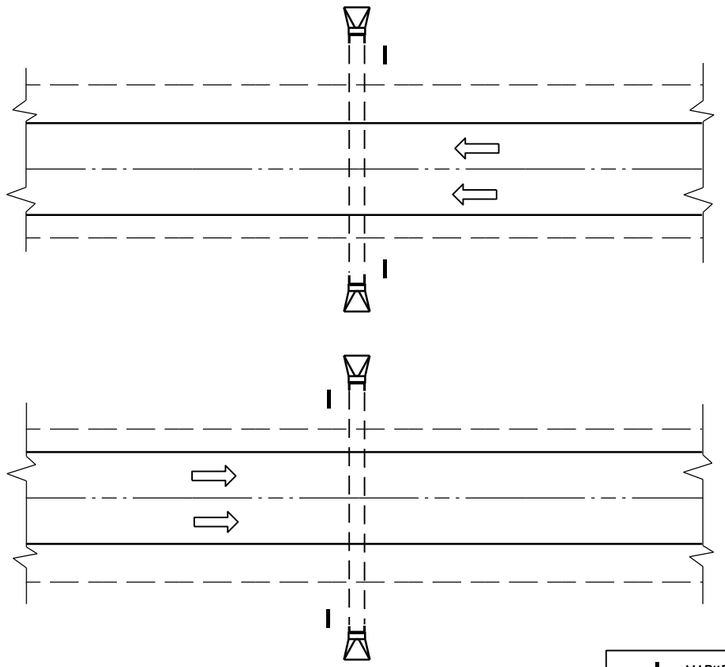

PLAN VIEW

DIVIDED HIGHWAY

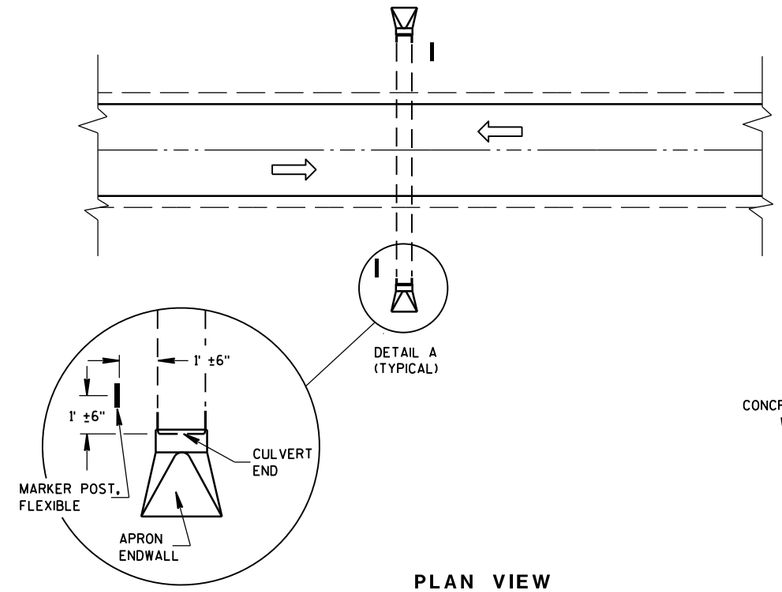

DETAIL A
(TYPICAL)

PLAN VIEW

UNDIVIDED HIGHWAY

MARKER POST, FLEXIBLE

DIRECTION OF TRAFFIC FLOW

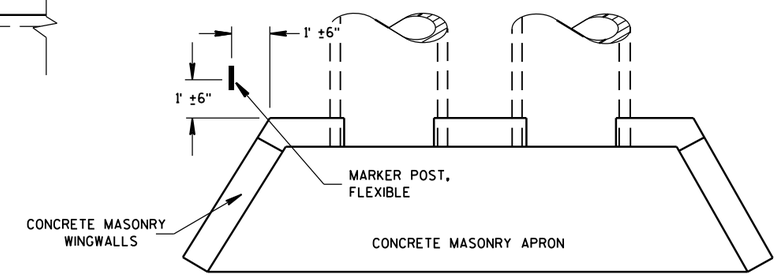

PLAN VIEW

CONCRETE MASONRY ENDWALLS FOR CULVERT PIPE AND PIPE ARCH

FLEXIBLE MARKER POST LOCATION

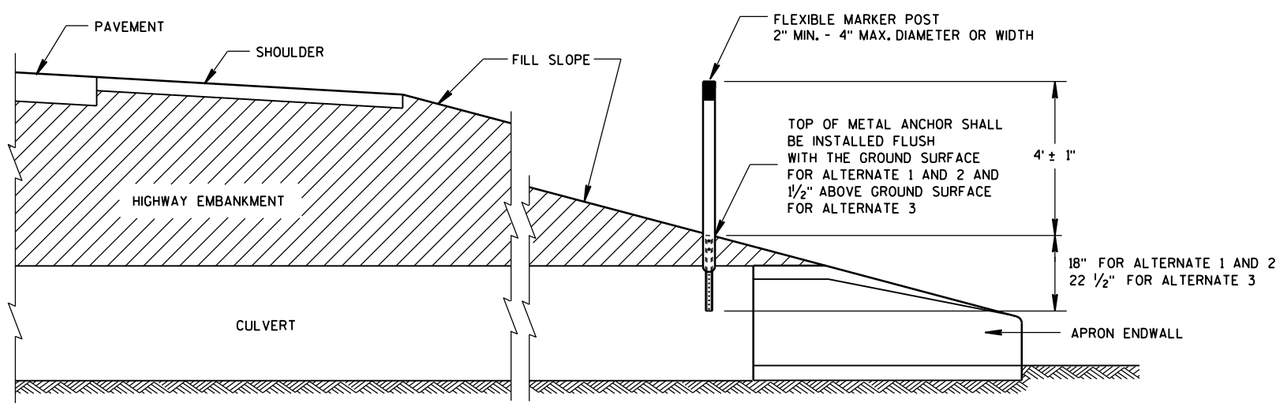

CROSS SECTION

FLEXIBLE MARKER POST

FLEXIBLE MARKER POST FOR CULVERT END

STATE OF WISCONSIN
DEPARTMENT OF TRANSPOR

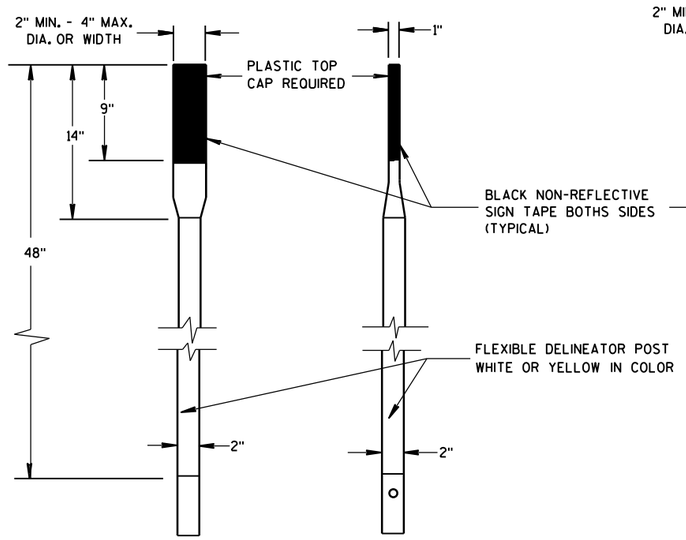

FRONT VIEW SIDE VIEW

ALTERNATE 1

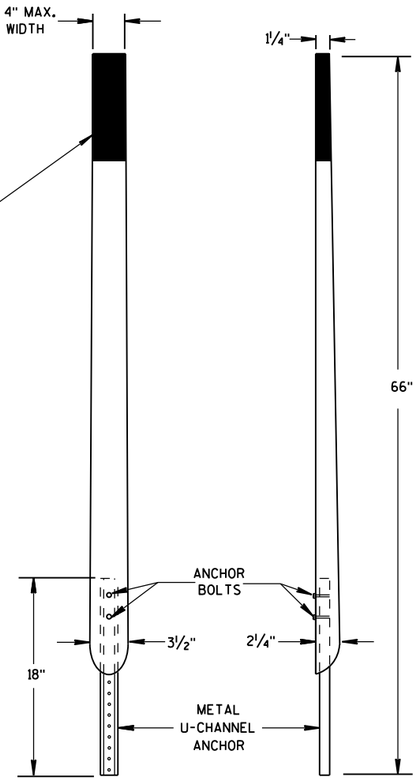

FRONT VIEW SIDE VIEW

ALTERNATE 2

FLEXIBLE MARKER POSTS

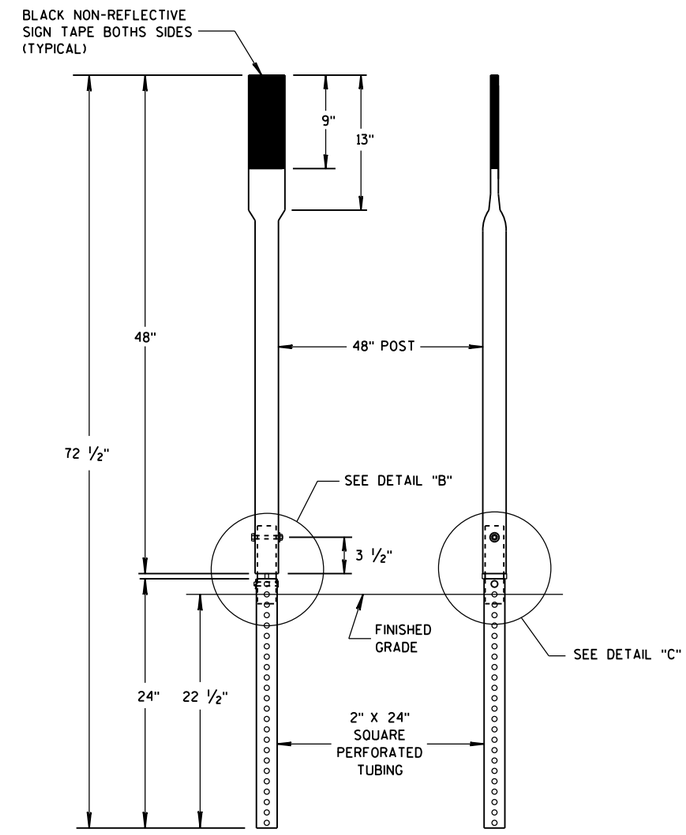

FRONT VIEW SIDE VIEW

ALTERNATE 3

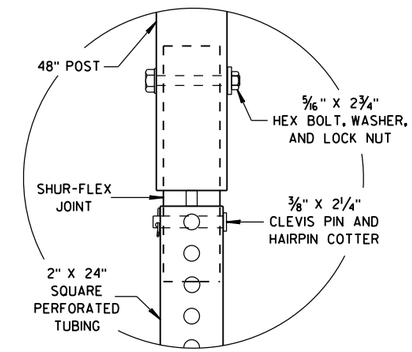

DETAIL B

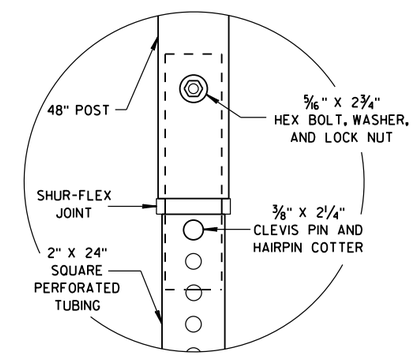

DETAIL C

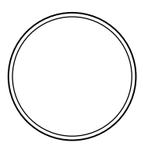

SECTION A-A

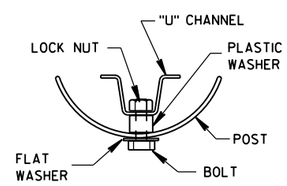

SECTION B-B

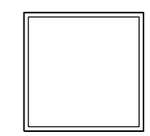

SECTION C-C

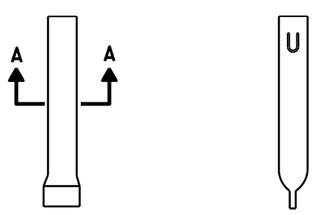

FRONT VIEW SIDE VIEW

ALTERNATE 1

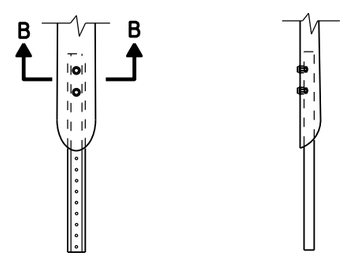

FRONT VIEW SIDE VIEW

ALTERNATE 2

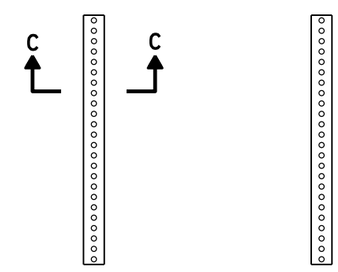

FRONT VIEW SIDE VIEW

ALTERNATE 3

FLEXIBLE MARKER POST ANCHORS

FLEXIBLE MARKER POST
FOR CULVERT END

STATE OF WISCONSIN
DEPARTMENT OF TRANSPORTATION

APPROVED
10/1/2012 /S/ Travis Feltes
DATE STATE TRAFFIC ENGINEER
FHWA

6

6

S.D.D. 15 A 3-2b

S.D.D. 15 A 3-2b

NOTE: PULL OR STRETCHER POST ASSEMBLIES SHALL BE PLACED MIDWAY BETWEEN END POSTS AND CORNER POSTS WHERE A RUN OF FENCE EXCEEDS 660' BUT IS LESS THAN 1,320'. FOR RUNS OF FENCE IN EXCESS OF 1,320' MAXIMUM SPACING OF PULL OR STRETCHER POST ASSEMBLIES SHALL BE 660'± C-C.

ILLUSTRATION SHOWS POSITION OF STANDARD STEEL BRACE, DOUBLE STRAND GALVANIZED WIRE, AND THE POST TO BE EMBEDDED IN CONCRETE WHEN WIRE FENCE IS INSTALLED FROM LEFT TO RIGHT. THE BRACES SHALL BE POSITIONED ON THE OPPOSITE DIAGONALS AND THE OPPOSITE POST SHALL BE EMBEDDED IN CONCRETE WHEN WIRE FENCE IS INSTALLED FROM RIGHT TO LEFT.

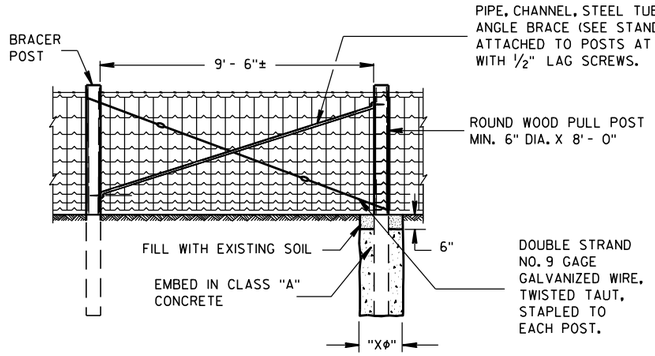

PULL OR STRETCHER POSTS ASSEMBLY

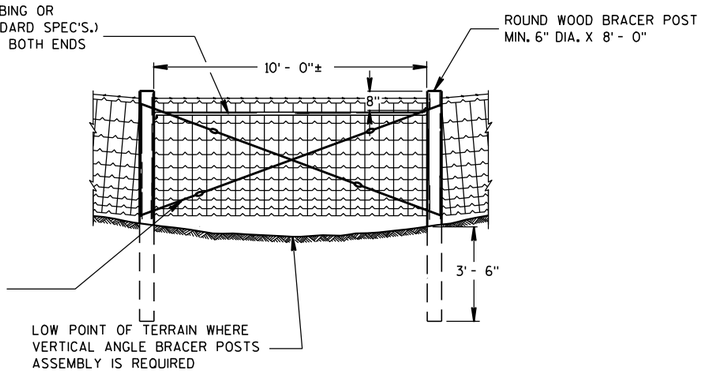

VERTICAL ANGLE BRACER POSTS ASSEMBLY

GENERAL NOTES

"XΦ" = DIAMETER OF THE POST PLUS 12".

FENCE STAPLES SHOULD NEVER BE DRIVEN VERTICALLY INTO WOOD POSTS (WITH BOTH LEGS PARALLEL WITH THE WOOD GRAIN). DOING SO CAN SEPARATE THE GRAIN AND SIGNIFICANTLY REDUCE THE HOLDING POWER. ROTATING THE STAPLES SLIGHTLY OFF VERTICAL STRADDLES THE GRAIN AND PROVIDES MORE RESISTANCE TO PULL-OUT.

DO NOT STAPLE WIRE TIGHT TO THE LINE POSTS. ALLOW MOVEMENT OF WIRE FOR EXPANSION AND CONTRACTION. STAPLE ARRANGEMENT SHALL BE THE SAME FOR ALL OTHER POSTS EXCEPT THAT THEY SHALL BE DRIVEN TIGHT TO POSTS. ALL STAPLES SHALL BE 2" X 9 GAGE AND SHALL BE MANUFACTURED FROM GALVANIZED WIRE OR HOT DIP GALVANIZED AFTER FORMING. STAPLES SHALL HAVE SLASH-CUT POINTS.

FENCE SHALL BE LOCATED 3'-0" INSIDE THE RIGHT OF WAY LINE UNLESS OTHERWISE INDICATED ON THE PLANS.

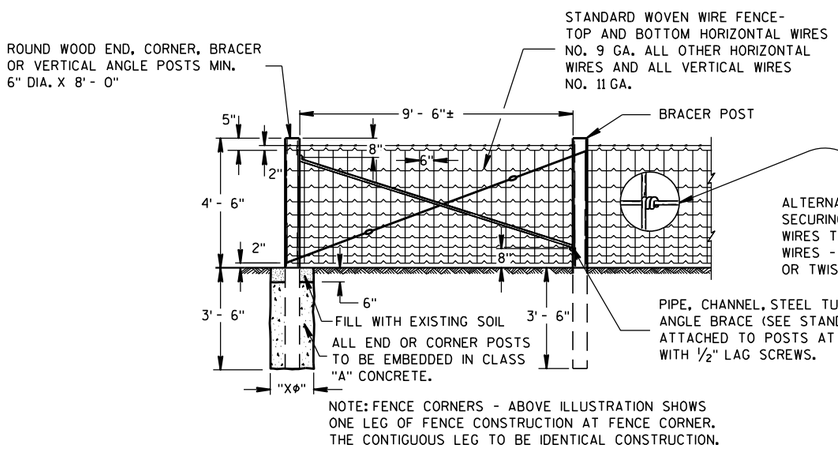

END OR CORNER POSTS ASSEMBLY

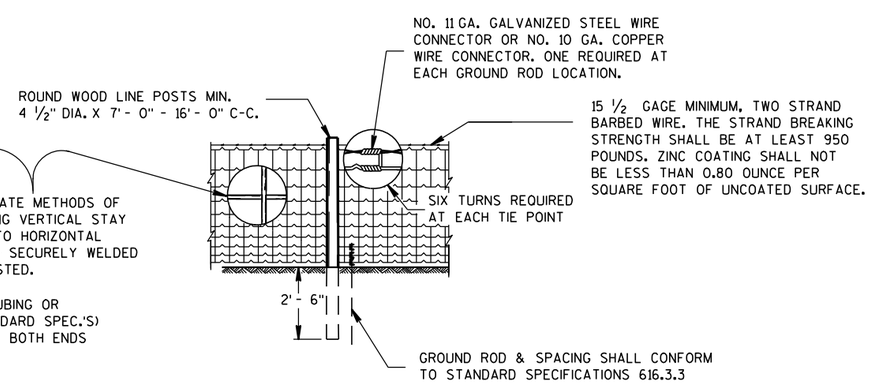

LINE FENCE CONSTRUCTION

GENERAL ROADSIDE VIEW OF WOVEN WIRE FENCE

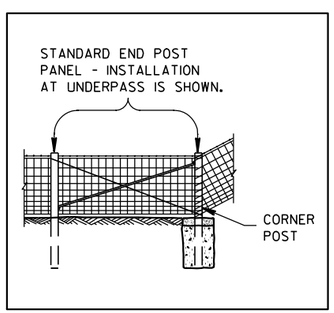

ALTERNATE FENCE DESIGN AT STRUCTURE

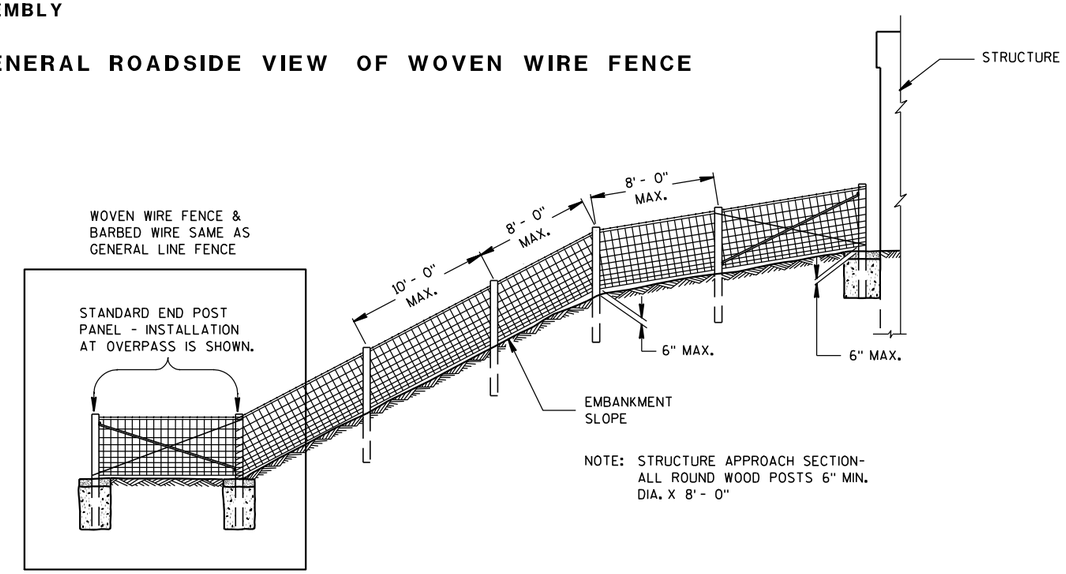

FENCE DESIGN AT STRUCTURE APPROACH

FENCE WOVEN WIRE

STATE OF WISCONSIN
DEPARTMENT OF TRANSPORTATION

6

6

S.D.D. 15 B 1-8a

S.D.D. 15 B 1-8a

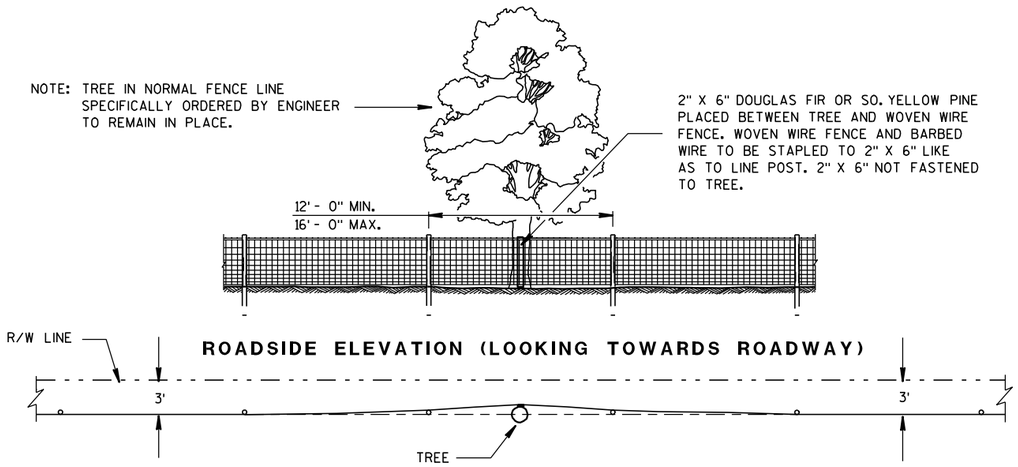

PLAN VIEW

FENCE DESIGN AT TREES REMAINING IN NORMAL FENCE LINE

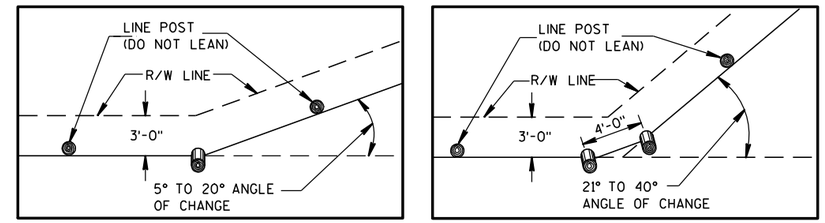

PLAN VIEW
SINGLE POST CORNER

PLAN VIEW
DOUBLE POST CORNER

RIGHT OF WAY LINE CHANGE 40° AND LESS

NOTE: SINGLE AND DOUBLE POSTS SHALL BE A MIN. 6" DIA. X 8'-0" WITH A LEAN OF 4" TOWARD THE OUTSIDE OF THE CURVE.

WHEN THE RIGHT OF WAY LINE CHANGE IS MORE THAN 40° USE THE CORNER OR STRETCHER POSTS ASSEMBLY.

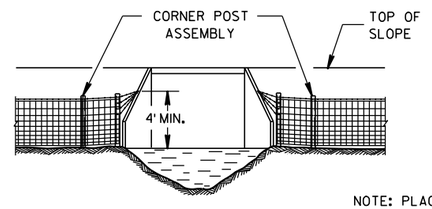

NOTE: PLACE A MINIMUM OF 4 STRANDS OF BARBED WIRE, 6" MAXIMUM CENTERS IN FAN SHAPE CONNECTED TO AN EYE BOLT ON WINGWALL OR SET A LONE POST WHEN NECESSARY TO CONNECT BARBED WIRE.

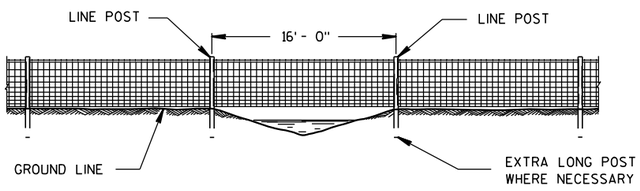

FENCE CONSTRUCTION OVER STREAM COURSES OF 15 FT. OR LESS IN WIDTH

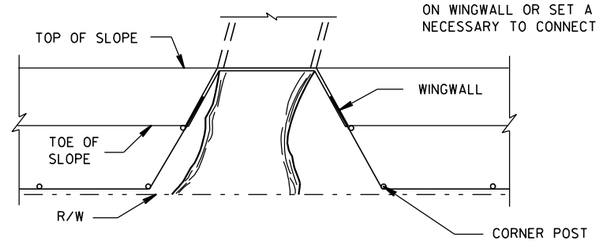

FENCE INSTALLATION TO WINGWALLS

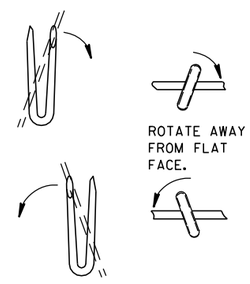

LINE POST

NOTE: WHEN POSTS ARE DRIVEN THE SMALL END SHALL BE DOWN.

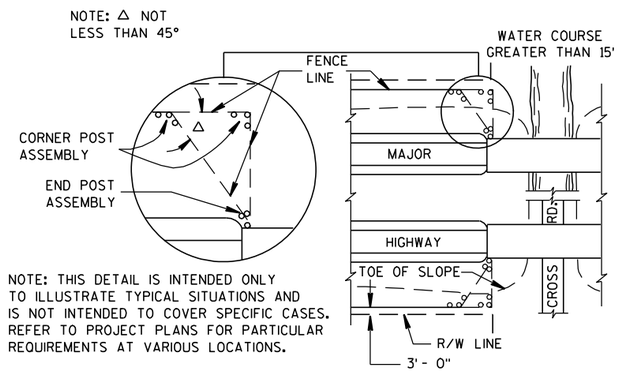

PLAN VIEW

MAJOR HIGHWAY OVERPASS OR STREAM COURSE CROSSING OF GREATER THAN 15 FT. IN WIDTH

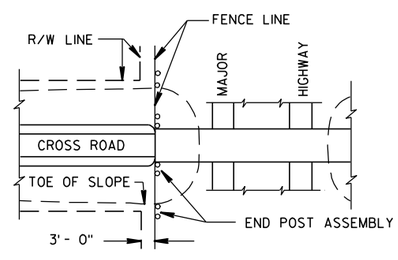

PLAN VIEW

MAJOR HIGHWAY UNDERPASS

FENCE LOCATION AT STRUCTURES

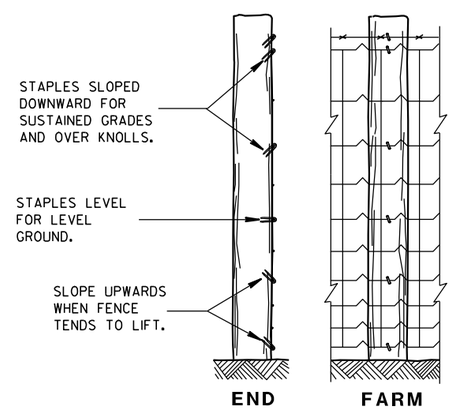

END ELEVATION

FARM SIDE ELEVATION

FENCE MOUNTING DETAIL

FENCE WOVEN WIRE

STATE OF WISCONSIN
DEPARTMENT OF TRANSPORTATION

APPROVED
4/4/2008 /S/ Jerry H. 7---
DATE ROADWAY STANDARDS DEVELOPMENT ENGINEER
FHWA

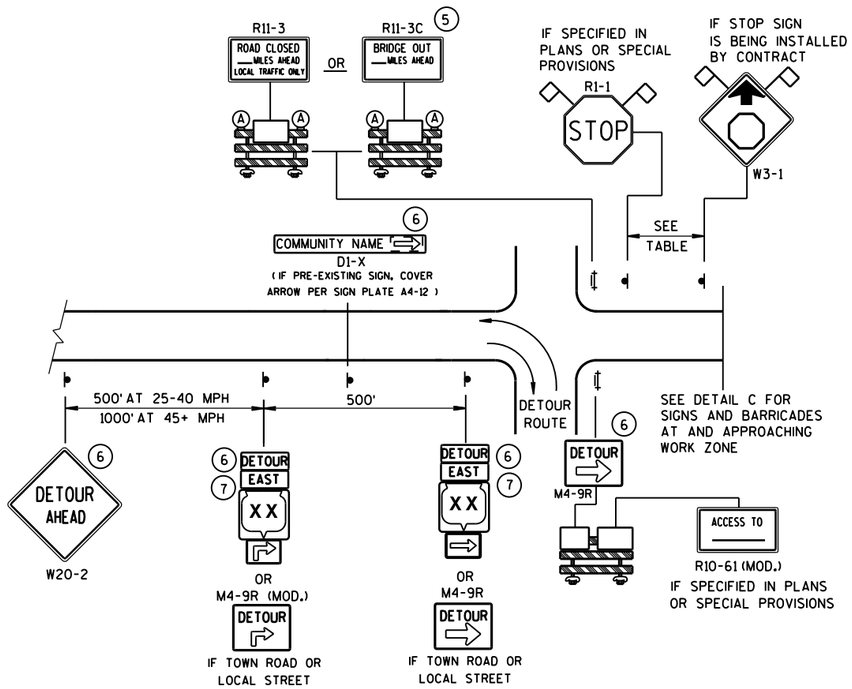

DETAIL A
MAINLINE CLOSURE WITH POSTED DETOUR

WORK ZONE GREATER THAN ½ MILE FROM DETOUR ROUTE (1000 FEET IF URBAN)

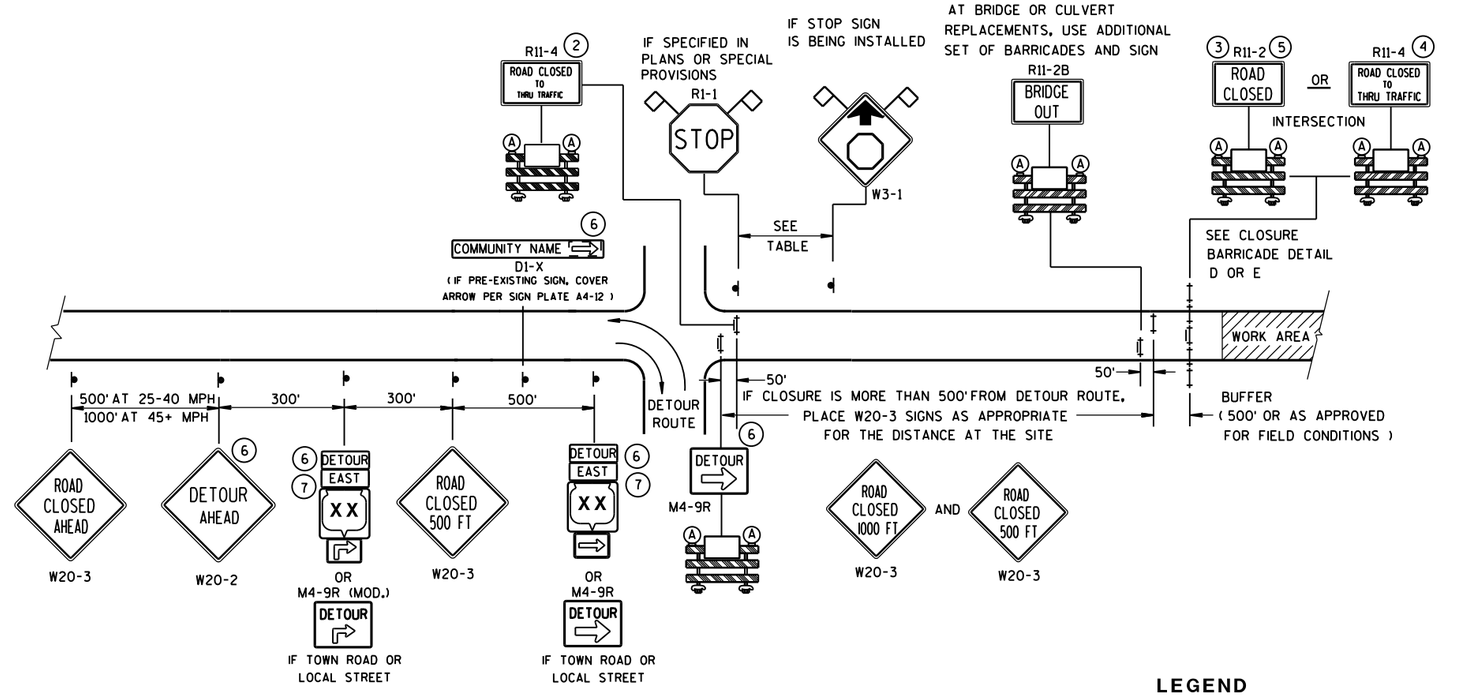

DETAIL B
MAINLINE CLOSURE WITH POSTED DETOUR

WORK ZONE LESS THAN ½ MILE FROM DETOUR ROUTE (1000 FEET IF URBAN)

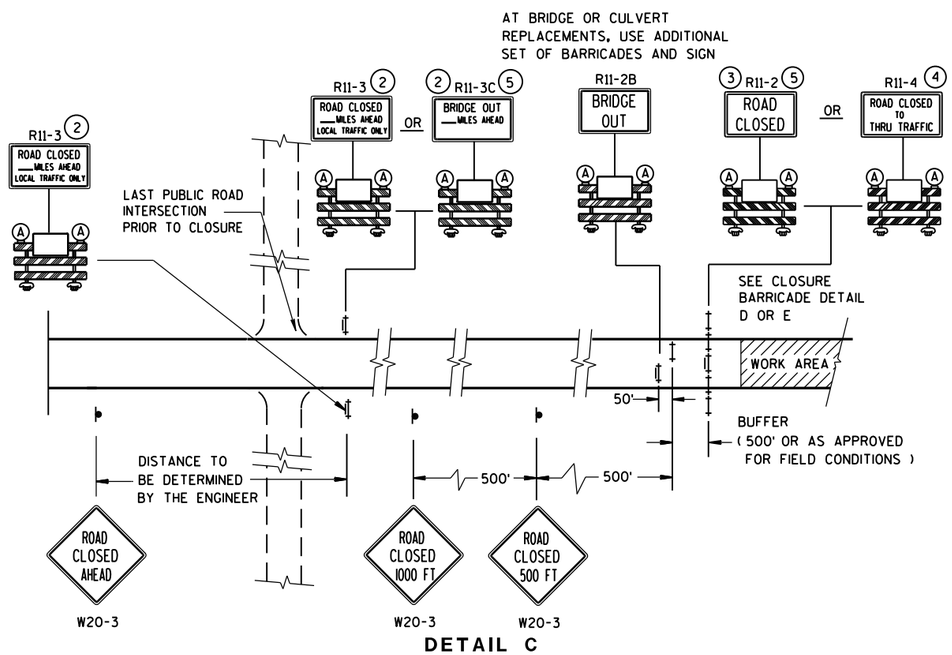

DETAIL C
MAINLINE CLOSURE, NO POSTED DETOUR

SPEED LIMIT (MPH)	"STOP AHEAD" ADVANCE WARNING DISTANCE (FT)
25	200
30	200
35	350
40	350
45	500
50	550
55	750

LEGEND

- SIGN ON PERMANENT SUPPORT
- TYPE III BARRICADE
- TYPE III BARRICADE WITH ATTACHED SIGN
- (A) TYPE "A" WARNING LIGHT (FLASHING)
- WORK AREA
- DETOUR EAST — M4-8, M3-X
- XX (M1-4) OR COUNTY XX (M1-5A) OR XX (M1-6)
- M05-1 OR M06-1
- FLAGS, 16" X 16" MIN., (ORANGE)

SEE SDD 15C2-SHEET "**b**" FOR GENERAL NOTES AND FOOTNOTES (1) THROUGH (7)

BARRICADES AND SIGNS FOR MAINLINE CLOSURES

STATE OF WISCONSIN
DEPARTMENT OF TRANSPORTATION

8/2013 — DATE
/S/ Travis Feltes — STATE TRAFFIC ENGINEER
DESIGN
FHWA

6

S.D.D. 15 C 2-5a

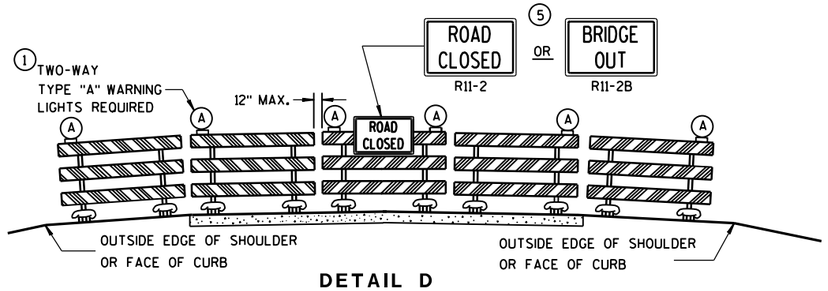

DETAIL D

ROAD CLOSURE BARRICADE DETAIL

APPROACH VIEW

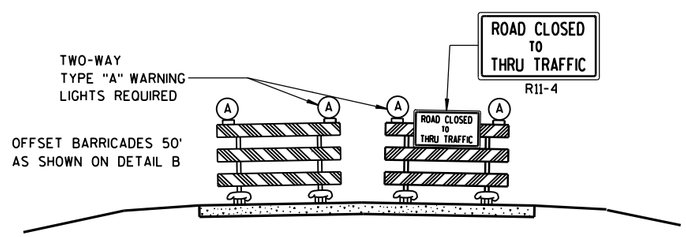

DETAIL E

LANE CLOSURE BARRICADE DETAIL

APPROACH VIEW

SEE SDD 15C2-SHEET "**a**" FOR LEGEND

GENERAL NOTES

THE EXACT NUMBER, LOCATION, AND SPACING OF ALL SIGNS AND BARRICADES SHALL BE ADJUSTED TO FIT FIELD CONDITIONS AS APPROVED BY THE ENGINEER.

ANY SIGNS TEMPORARY OR EXISTING, WHICH CONFLICT WITH TRAFFIC CONTROL "IN USE" SHALL BE REMOVED OR COVERED AS NEEDED AND AS APPROVED BY THE ENGINEER.

THE SPACING BETWEEN TRAFFIC CONTROL SIGNS SHOULD BE ADJUSTED TO NOT CONFLICT WITH AND SHOULD PROVIDE A DESIRABLE MINIMUM OF 200 FEET CLEARANCE TO EXISTING SIGNS THAT WILL REMAIN IN PLACE.

BARRICADES THAT MUST BE MOVED FOR A WORK OPERATION SHALL BE IMMEDIATELY RE-ESTABLISHED UPON COMPLETION OF THE OPERATION OR, FOR CONTINUING OPERATIONS, AT THE END OF EACH WORKING DAY.

SIGNS THAT WILL BE IN PLACE LESS THAN 7 CONTINUOUS DAYS AND NIGHTS MAY BE MOUNTED ON PORTABLE SUPPORTS.

ALL TYPE III BARRICADES SHALL HAVE RAILS REFLECTORIZED ON BOTH FACES. STRIPES SHALL BE PROPERLY SLOPED DOWN TOWARD THE TRAFFIC SIDE OR AS SHOWN IN THE ROAD CLOSURE BARRICADE DETAIL D FOR FULL ROAD CLOSURES.

TYPE "A" LOW-INTENSITY FLASHING WARNING LIGHTS SHALL BE VISIBLE ON BOTH SIDES OF THE BARRICADE.

THE R11-2, R11-3, M4-9, R11-4 AND R10-61 SIGNS PLACED ON BARRICADES SHALL COVER NO MORE THAN THE TOP RAIL. THE SIGNS SHALL NOT COVER ANY PORTION OF THE MIDDLE OR BOTTOM RAILS.

"WO AND "MO" SIGNS ARE THE SAME AS "W" AND "M" SIGNS EXCEPT THE BACKGROUND IS ORANGE.

ALL SIGNS SHALL BE 48" X 48" UNLESS OTHERWISE NOTED BELOW:

- R11-2 SHALL BE 48" X 30".
- R11-3, R11-4 AND R10-61 SHALL BE 60" X 30".
- M4-9 SHALL BE 30" X 24".
- M3-X SHALL BE 24" X 12". (36" X 18" IF NEEDED TO MATCH EXISTING SIGNS.)
- M4-8 SHALL BE 24" X 12". (30" X 15" IF NEEDED TO MATCH EXISTING SIGNS.)
- M1-4, M1-5A, AND M1-6 SHALL BE 24" X 24". (36" X 36" IF NEEDED TO MATCH EXISTING SIGNS.)
- M05-1 AND M06-1 SHALL BE 21" X 21". (30" X 30" IF NEEDED TO MATCH EXISTING SIGNS.)
- D1-X SHALL BE AS SHOWN ON SPECIFIC PROJECT SIGNING DETAIL SHEETS.
- R1-1 SHALL BE 36" X 36".

1. TWO WARNING LIGHTS SHALL BE PROVIDED ON THE CENTER BARRICADE AND A MINIMUM OF ONE WARNING LIGHT SHALL BE PROVIDED ON EACH OF THE OTHER BARRICADES WITHIN THE ROADWAY LIMITS. SPACING OF THE WARNING LIGHTS SHALL BE UNIFORM TO THE EDGE OF ROADWAY AS SHOWN (APPROX. 8-FOOT LIGHT SPACING).
2. THESE SIGNS AND BARRICADES ARE NOT REQUIRED IF ROAD CLOSURE BEGINS AT INTERSECTION.
3. FOR ROAD CLOSURE WITHOUT LOCAL ACCESS TO PROJECT, SEE ROAD CLOSURE BARRICADE DETAIL D.
4. FOR ROAD CLOSURE WITH LOCAL ACCESS TO PROJECT, SEE LANE CLOSURE BARRICADE DETAIL E.
5. FOR BRIDGE OR CULVERT REPLACEMENTS, SUBSTITUTE "BRIDGE OUT" INSTEAD OF "ROAD CLOSED" ON R11-2 AND R11-3 SIGNS.
6. INSTALL DETOUR AND COMMUNITY GUIDE SIGNS AND ARROWS ONLY IF SPECIFIED IN THE CONTRACT. IF THERE ARE EXISTING ROUTE MARKER ASSEMBLIES THAT WILL REMAIN IN PLACE, ADJUST THE LOCATION OF THE DETOUR ROUTE SIGNS TO CORRESPOND WITH THE EXISTING ASSEMBLIES. MODIFY EXISTING SIGNS WHERE POSSIBLE. SEE SPECIFIC PROJECT DETOUR SIGNING DETAIL SHEETS. IF DETOUR SIGNS ARE BEING INSTALLED BY OTHERS, PLACE THE CONTRACTED TRAFFIC CONTROL SIGNS TO ALLOW FOR PLACEMENT OF ALL WARNING, DETOUR AND GUIDE SIGNS AS SHOWN.
7. "EAST" CARDINAL DIRECTION MARKERS AND RIGHT TURN ARROWS ARE SHOWN. USE OTHER CARDINAL DIRECTIONS AND ARROWS AS APPROPRIATE.

BARRICADES AND SIGNS FOR MAINLINE CLOSURES

STATE OF WISCONSIN
DEPARTMENT OF TRANSPORTATION

8/2013 — DATE
/S/ Travis Feltes — STATE TRAFFIC ENGINEER
DESIGN
FHWA

6

S.D.D. 15 C 2-5b

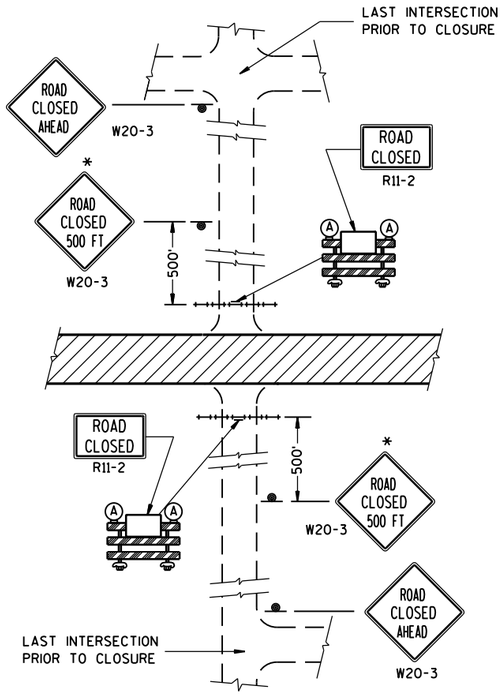

DETAIL 1

(NO ACCESS TO PROJECT)

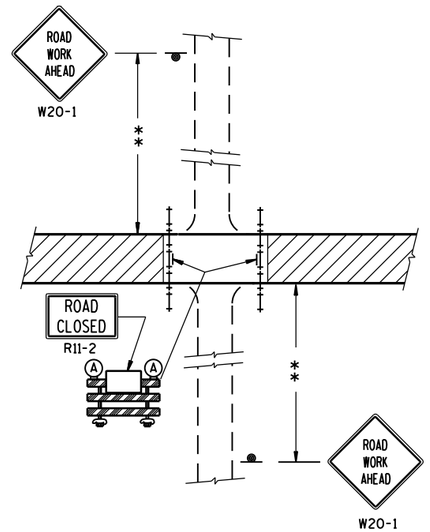

DETAIL 2

(PUBLIC CROSS-TRAFFIC MAINTAINED.
NO ACCESS TO PROJECT).

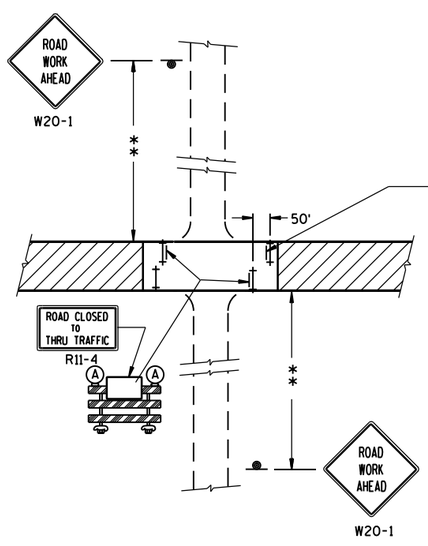

DETAIL 3

(PUBLIC CROSS-TRAFFIC MAINTAINED. CONTRACTOR,
LOCAL BUSINESS AND RESIDENT ACCESS).

FOR BRIDGE OR CULVERT
REPLACEMENT, USE ADDITIONAL
SIGN ON BARRICADE

BRIDGE OUT
XX MILES AHEAD
R11-3C

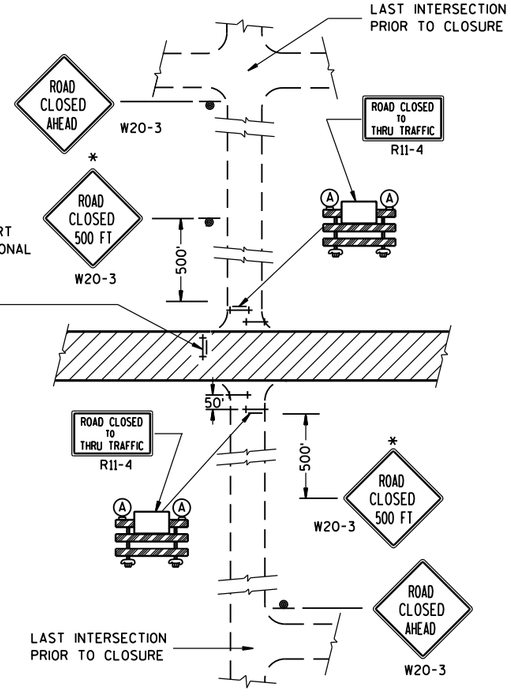

DETAIL 4

(CONTRACTOR, LOCAL BUSINESS AND
RESIDENT ACCESS TO PROJECT)

GENERAL NOTES

THE EXACT NUMBER, LOCATION, AND SPACING OF ALL SIGNS AND BARRICADES SHALL BE ADJUSTED TO FIT FIELD CONDITIONS AS APPROVED BY THE ENGINEER.

ANY SIGNS TEMPORARY OR EXISTING, WHICH CONFLICT WITH TRAFFIC CONTROL "IN USE" SHALL BE REMOVED OR COVERED AS NEEDED AND AS APPROVED BY THE ENGINEER.

THE SPACING BETWEEN TRAFFIC CONTROL SIGNS SHOULD BE ADJUSTED TO NOT CONFLICT WITH AND SHOULD PROVIDE A DESIRABLE MINIMUM OF 200 FEET CLEARANCE TO EXISTING SIGNS THAT WILL REMAIN IN PLACE.

IF A "STOP" SIGN MUST BE REMOVED FOR A WORK OPERATION, A TEMPORARY "STOP" SIGN SHALL BE PLACED PRIOR TO THE SIGN REMOVAL, OR A FLAGGER SHALL BE PROVIDED UNTIL THE SIGN IS RE-ESTABLISHED.

BARRICADES THAT MUST BE MOVED FOR A WORK OPERATION SHALL BE IMMEDIATELY RE-ESTABLISHED UPON COMPLETION OF THE OPERATION OR, FOR CONTINUING OPERATIONS, AT THE END OF EACH WORKING DAY.

SIGNS THAT WILL BE IN PLACE LESS THAN 7 CONTINUOUS DAYS AND NIGHTS MAY BE MOUNTED ON PORTABLE SUPPORTS.

ALL TYPE III BARRICADES SHALL HAVE RAILS REFLECTORIZED ON BOTH FACES. STRIPES SHALL BE PROPERLY SLOPED DOWN TOWARD THE TRAFFIC SIDE OR AS SHOWN IN THE ROAD CLOSURE BARRICADE DETAIL D FOR FULL ROAD CLOSURES.

TYPE "A" LOW-INTENSITY FLASHING WARNING LIGHTS SHALL BE VISIBLE ON BOTH SIDES OF THE BARRICADE.

THE R11-2, R11-3 AND R11-4 SIGNS PLACED ON BARRICADES SHALL COVER NO MORE THAN THE TOP RAIL. THE SIGNS SHALL NOT COVER ANY PORTION OF THE MIDDLE OR BOTTOM RAILS.

ALL SIGNS SHALL BE 48" X 48" UNLESS OTHERWISE NOTED BELOW:
R11-2 SHALL BE 48" X 30".
R11-4 AND R11-3 SHALL BE 60" X 30".

*OMIT THE "ROAD CLOSED 500 FT." SIGN IF THE LAST INTERSECTION IS 500 FT. OR LESS FROM THE WORK ZONE.

**500' MAX. OR AT LAST INTERSECTION WHICHEVER IS CLOSER.

LEGEND

- SIGN ON PERMANENT SUPPORT
- TYPE III BARRICADE
- TYPE III BARRICADE WITH ATTACHED SIGN
- (A) TYPE "A" WARNING LIGHT (FLASHING)
- WORK AREA

BARRICADES AND SIGNS FOR SIDEROAD CLOSURES

STATE OF WISCONSIN
DEPARTMENT OF TRANSPORTATION

APPROVED
8/2013 — DATE
/S/ Travis Feltes — STATE TRAFFIC ENGINEER
FHWA

6

S.D.D. 15 C 3-2

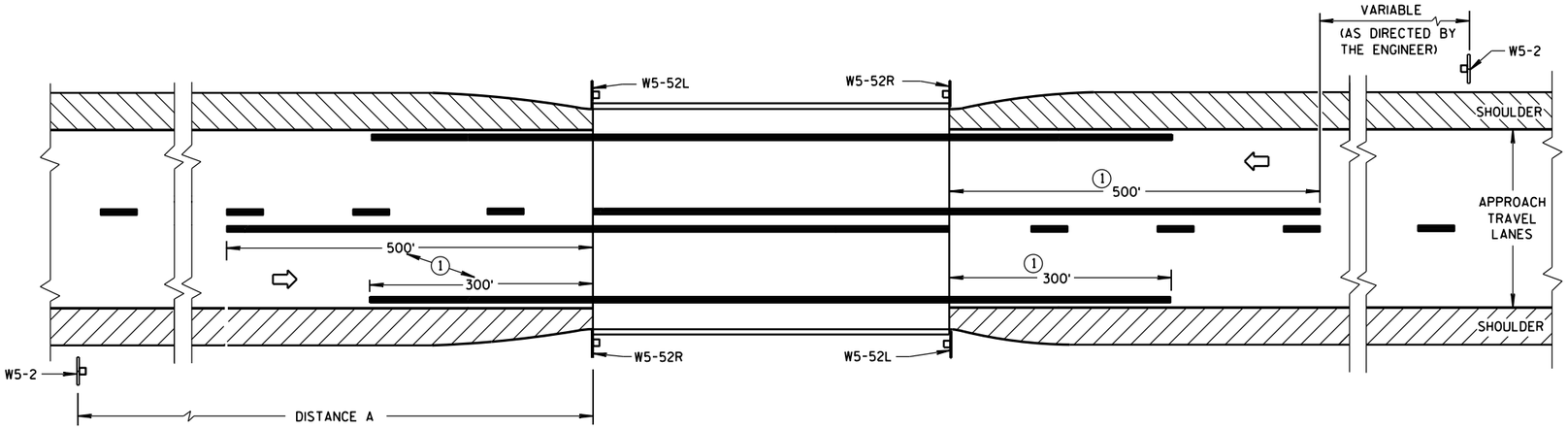

SITUATION 1

WARRANTING CRITERIA:

BRIDGE WIDTH IS AT LEAST 16 FEET BUT LESS THAN 24 FEET

GENERAL NOTES

DETAILS OF TRAFFIC CONTROL DEVICES AND INSTALLATION NOT SHOWN ON THIS DRAWING SHALL CONFORM TO THE PERTINENT REQUIREMENTS OF THE STANDARD SPECIFICATIONS, THE SPECIAL PROVISIONS, AND THE MANUAL ON UNIFORM TRAFFIC CONTROL DEVICES.

PAVEMENT MARKING SHOWN ON THIS DRAWING IS NOT REQUIRED UNLESS OTHERWISE SPECIFIED IN THE CONTRACT. WHEN SPECIFIED, PAVEMENT MARKING SHALL CONFORM TO THIS DRAWING AND OTHER CONTRACT REQUIREMENTS.

① MINIMUM DISTANCE UNLESS OTHERWISE SHOWN ON THE PLAN.

② FACE OF OBJECT MARKERS W5-52R, AND W5-52L SHALL BE COVERED WITH TYPE F REFLECTIVE SHEETING.

③ LOCATE OBJECT MARKER POST(S) BEHIND GUARDRAIL WHEN PRESENT.

DISTANCE TABLE

POSTED OR 85th PERCENTILE SPEED	DISTANCE "A"
25	150'
30	200'
35	250'
40	300'
45	400'
50	550'
55	750'

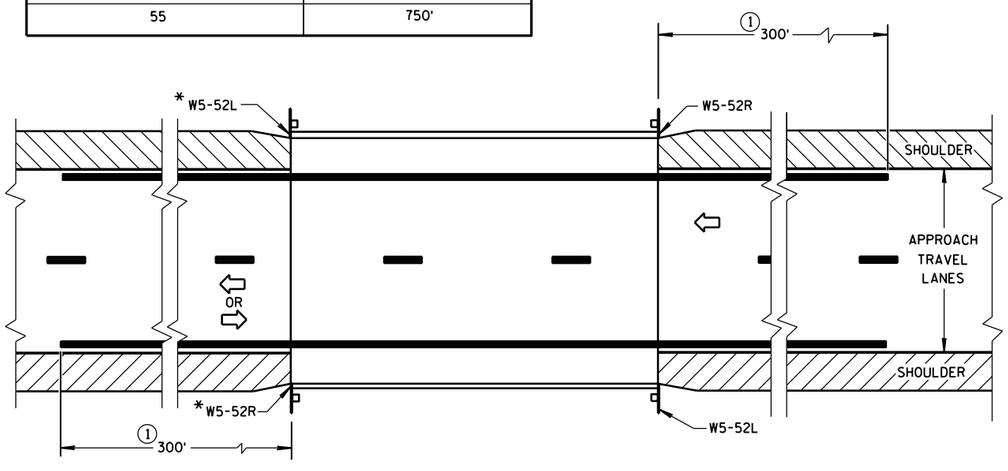

*OMIT ON ONE-WAY TRAVELLED WAYS

SITUATION 2

WARRANTING CRITERIA:

1. BRIDGE WIDTH IS AT LEAST 24 FEET AND
2. BRIDGE IS LESS THAN 6 FEET WIDER (ON EACH SIDE) THAN APPROACH TRAVEL LANES.

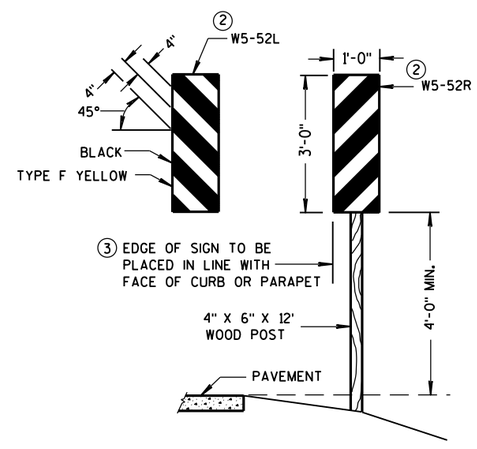

OBJECT MARKER PLACEMENT

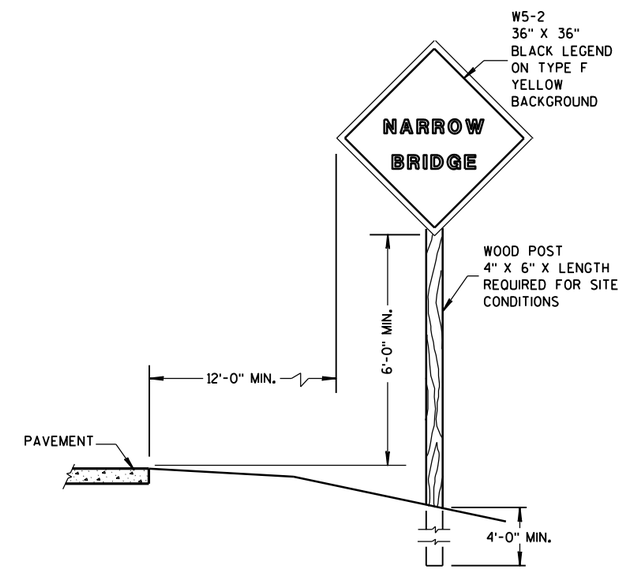

SIGN PLACEMENT

SIGNING & MARKING FOR TWO LANE BRIDGES

STATE OF WISCONSIN
DEPARTMENT OF TRANSPORTATION

APPROVED

3-2014 — DATE

/S/ Travis Feltes — STATE TRAFFIC ENGINEER

FHWA

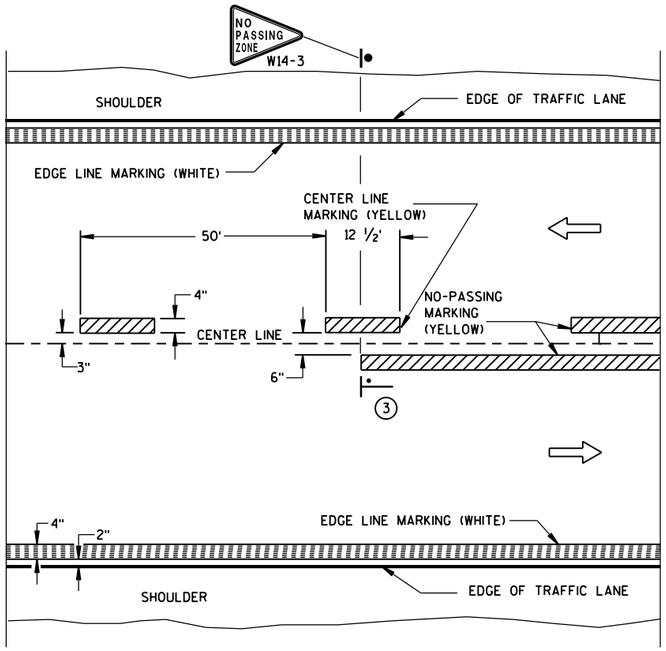

TWO WAY TRAFFIC

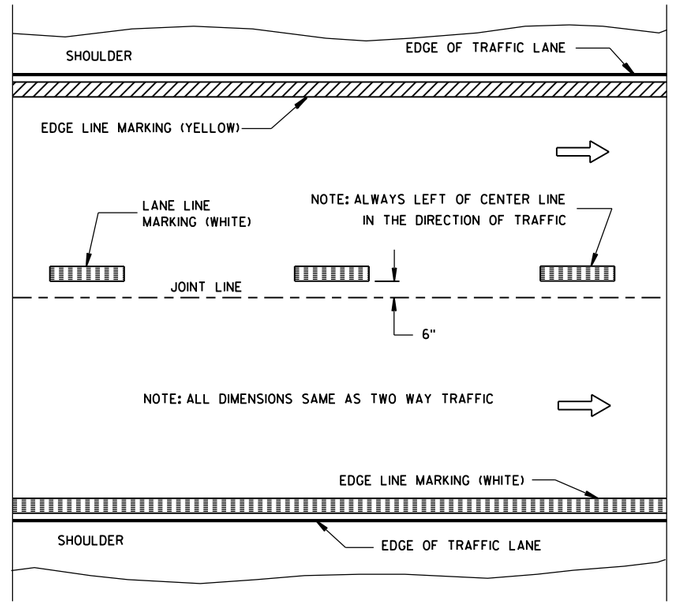

ONE WAY TRAFFIC

PERMANENT PAVEMENT MARKING

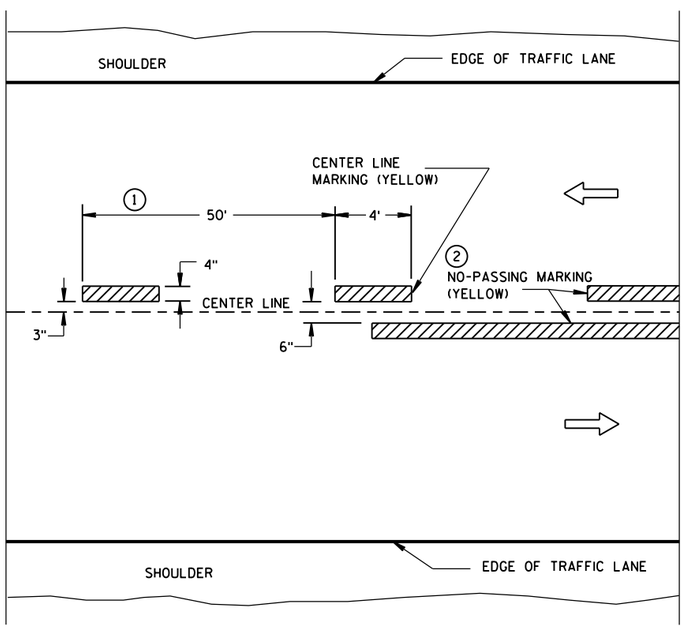

TWO WAY TRAFFIC

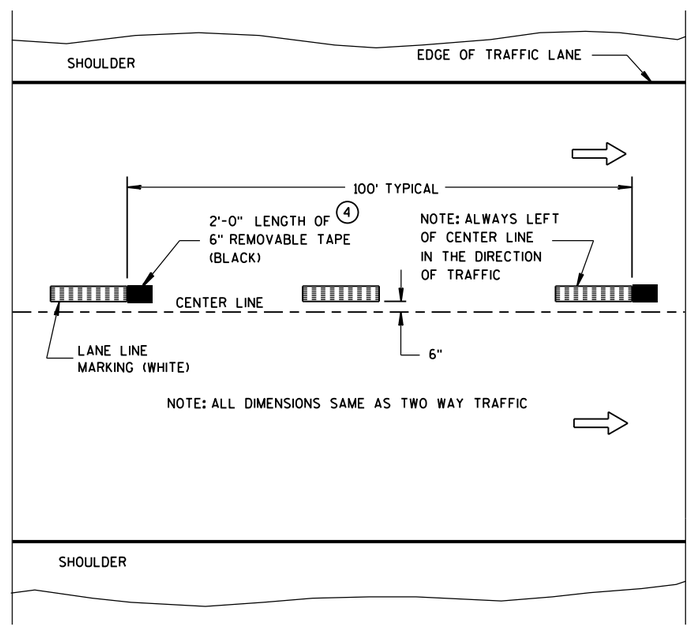

ONE WAY TRAFFIC

TEMPORARY (INTERMEDIATE) PAVEMENT MARKING

(SHOWS CYCLE FOR TEMPORARY CENTER LINE OR TEMPORARY LANE LINE MARKING)

GENERAL NOTES

DETAILS OF CONSTRUCTION NOT SHOWN ON THIS DRAWING SHALL CONFORM TO STANDARD SPECIFICATIONS AND SPECIAL PROVISIONS.

1. HALF CYCLE LENGTHS (25'±) WITH 2' MINIMUM STRIPE LENGTHS SHALL BE PROVIDED ON ROADWAYS (INCLUDING TEMPORARY TRAVELED WAYS) WITH REVERSE CURVATURE, CURVATURE OF OVER 5 DEGREES OR WHEN DIRECTED BY THE ENGINEER TO MARK UNUSUAL ALIGNMENT OF THE TRAVELED WAY.
2. NO PASSING ZONE TEMPORARY PAVEMENT MARKING IS REQUIRED TO BE PLACED, WHERE APPROPRIATE, ALONG WITH CENTERLINE TEMPORARY PAVEMENT MARKING WHEN A SAME DAY PERMANENT PAVEMENT MARKING ITEM IS INCLUDED IN THE CONTRACT.
3. NO PASSING ZONE MARKINGS ARE PLACED ACCORDING TO "T" MARKINGS. IF EXISTING NO PASSING ZONE W14-3 SIGNS ARE BEYOND 50 FEET IN EITHER DIRECTION, THE SIGNS SHALL BE MOVED TO THE "T" MARKINGS.
4. CONCRETE ONLY.

NOTE

ARROW SYMBOL (⇨) SHOWS DIRECTION OF TRAVEL

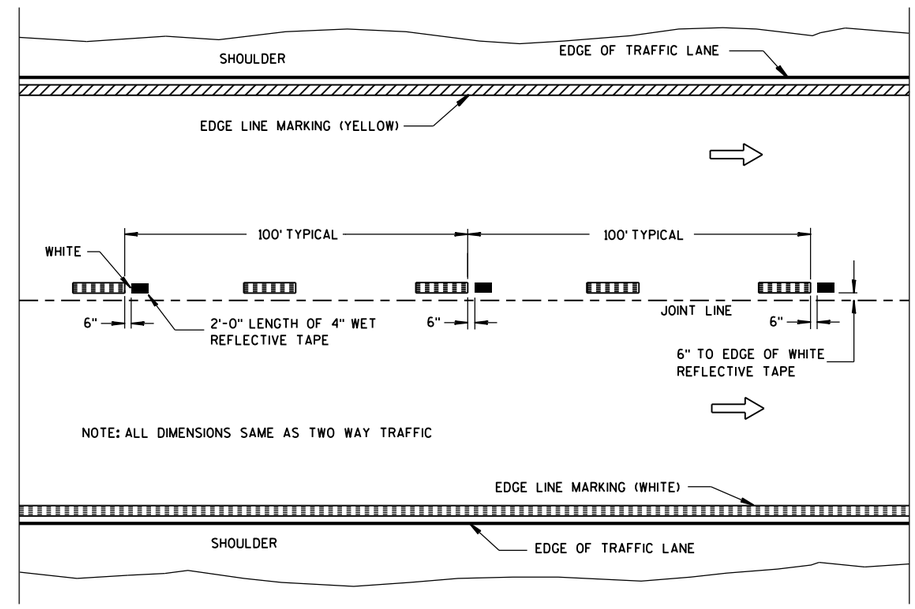

WET REFLECTIVE TAPE SUPPLEMENT TO SPRAYED OR NON WET REFLECTIVE TAPE LANE LINE

LEGEND

"T" MARKING

POST MOUNTED SIGN

PAVEMENT MARKING (MAINLINE)	
STATE OF WISCONSIN DEPARTMENT OF TRANSPORTATION	
APPROVED 5-13-2013 DATE	/S/ Travis Feltes STATE TRAFFIC E
FHWA	

6

6

S.D.D. 15 C 8-16a

S.D.D. 15 C 8-16a

LEGEND

- TYPE III BARRICADE WITH ATTACHED SIGN
- SIGN ON PERMENENT SUPPORT
- TRAFFIC CONTROL DRUM WITH TYPE "C" STEADY BURN LIGHT
- TRAFFIC CONTROL DRUM
- FLASHING ARROW BOARD
- TYPE "A" WARNING LIGHT (FLASHING)
- REMOVING PAVEMENT MARKING
- DIRECTION OF TRAFFIC
- WORK AREA

GENERAL NOTES

THE EXACT NUMBER, LOCATION, AND SPACING OF ALL SIGNS AND DEVICES SHALL BE ADJUSTED TO FIT FIELD CONDITIONS AS APPROVED BY THE ENGINEER.

THE SPACING BETWEEN SIGNS SHOULD BE ADJUSTED TO NOT CONFLICT WITH AND TO PROVIDE A MINIMUM OF 200 FEET, (500 FEET DESIREABLE) DISTANCE TO EXISTING SIGNS.

THIS LANE CLOSURE IS TYPICAL FOR CLOSING RIGHT LANE - REVERSE FOR CLOSING LEFT LANE.

ALL SIGNS ARE 48"×48" UNLESS OTHERWISE NOTED.

"WO" IS THE SAME AS "W" EXCEPT THE BACKGROUND IS ORANGE.

ANY SIGNS TEMPORARY OR EXISTING, WHICH CONFLICT WITH TRAFFIC CONTROL "IN USE" SHALL BE REMOVED OR COVERED AS NEEDED AND AS APPROVED BY THE ENGINEER. NO WARNING LIGHTS SHALL BE WORKING ON "COVERED" OR "DOWNED" SIGNS.

CONSIDER GEOMETRICS WHEN LOCATING SIGNS AND ARROW BOARD SO THE DRIVER HAS A CLEAR VIEW OF THE ARROW BOARD AND LANE CLOSURE DRUMS FOR A MINIMUM 1500 FEET IN FRONT OF DRUMS.

FOR A LANE CLOSURE THAT IS IN PLACE LESS THAN 7 CONTINUOUS DAYS AND NIGHTS, THE ADVANCED WARNING SIGNS MAY BE MOUNTED ON PORTABLE SUPPORTS.

REMOVE PAVEMENT MARKINGS IF LANE CLOSURE IS TO BE IN PLACE FOR LONGER THAN 4 OR MORE DAYS AND NIGHTS.

WARNING LIGHTS ARE NOT REQUIRED IF THE LANE CLOSURE IS A DAYTIME ONLY OPERATION.

IF THE HORIZONTAL ALIGNMENT IS SUCH THAT A CURVE MAY REQUIRE ADDITIONAL DELINEATION, THE DEVICE SPACING MAY BE DECREASED TO 50 FEET.

ADJUSTMENTS IN BUFFER SPACE NEED TO BE INCORPORATED WHEN THE LANE CLOSURE OCCURS NEAR AN INTERCHANGE EXIT OR ENTRANCE RAMP. THE LANE CLOSURE MUST MUST TAKE PLACE FAR ENOUGH IN ADVANCE OF AN EXIT OR ENTRANCE RAMP TO STILL ALLOW FOR ADEQUATE BUFFER SPACE. THE MINIMUM LENGTH OF THE BUFFER SPACE BEFORE AN EXIT RAMP SHOULD BE 1/2 THE LENGTH OF THE TRANSITION AREA. THE ENTRANCE RAMP SHOULD BE FOLLOWED BY THE ORIGINAL BUFFER SPACE LENGTH OF 800 FEET DESIRABLE PRIOR TO ANOTHER TRAFFIC CONTROL CHANGE SUCH AS A CROSSOVER MANEUVER.

* THE LEFT REVERSE CURVE SIGN (WO1-4L) IS ONLY REQUIRED WHEN THIS DETAIL IS USED IN COMBINATION WITH "SINGLE LANE CROSSOVER" DETAIL.

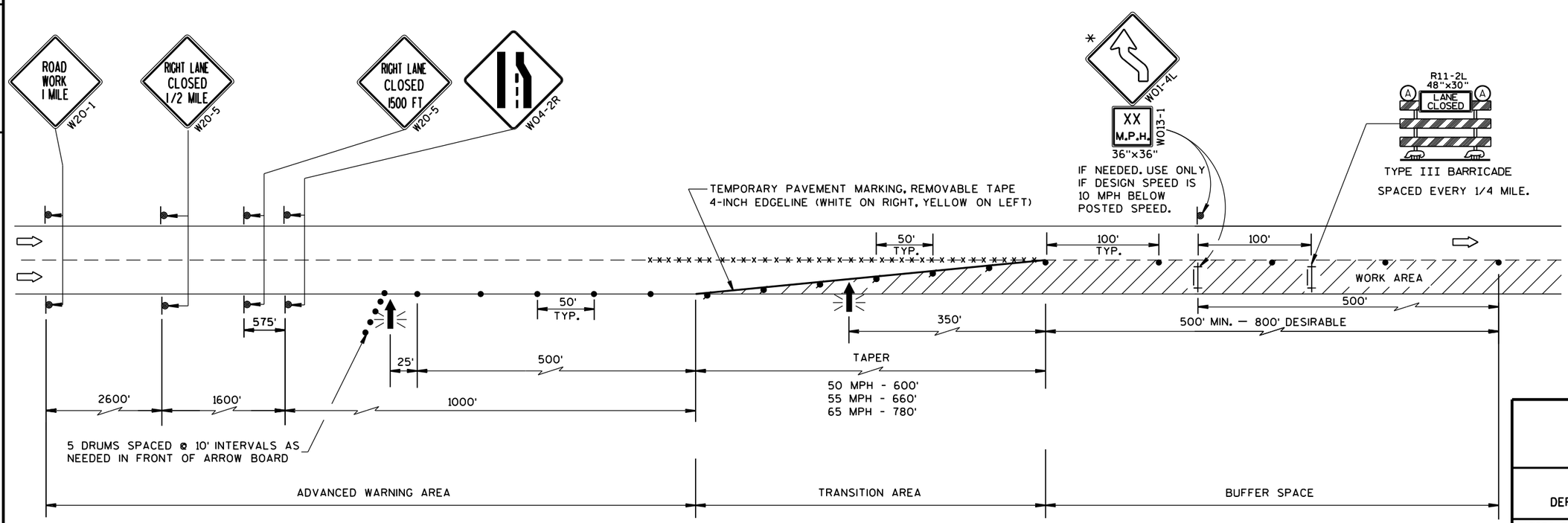

TRAFFIC CONTROL, LANE CLOSURE

STATE OF WISCONSIN
DEPARTMENT OF TRANSPORTATION

APPROVED
Feb. 2015 — DATE
/S/ Travis Feltes — STATE TRAFFIC ENGINEER
FHWA

6

S.D.D. 15 D 12-5a

LEGEND

- TYPE III BARRICADE WITH ATTACHED SIGN
- SIGN ON PERMENENT SUPPORT
- TRAFFIC CONTROL DRUM WITH TYPE "C" STEADY BURN LIGHT
- TRAFFIC CONTROL DRUM
- FLASHING ARROW BOARD
- TYPE "A" WARNING LIGHT (FLASHING)
- REMOVING PAVEMENT MARKING
- DIRECTION OF TRAFFIC
- WORK AREA

GENERAL NOTES

THE EXACT NUMBER, LOCATION, AND SPACING OF ALL SIGNS AND DEVICES SHALL BE ADJUSTED TO FIT FIELD CONDITIONS AS APPROVED BY THE ENGINEER.

THE SPACING BETWEEN SIGNS SHOULD BE ADJUSTED TO NOT CONFLICT WITH AND TO PROVIDE A MINIMUM OF 200 FEET, (500 FEET DESIREABLE) DISTANCE TO EXISTING SIGNS.

THIS LANE CLOSURE IS TYPICAL FOR CLOSING RIGHT LANE - REVERSE FOR CLOSING LEFT LANE.

ALL SIGNS ARE 48"×48" UNLESS OTHERWISE NOTED.

"WO" IS THE SAME AS "W" EXCEPT THE BACKGROUND IS ORANGE.

ANY SIGNS TEMPORARY OR EXISTING, WHICH CONFLICT WITH TRAFFIC CONTROL "IN USE" SHALL BE REMOVED OR COVERED AS NEEDED AND AS APPROVED BY THE ENGINEER. NO WARNING LIGHTS SHALL BE WORKING ON "COVERED" OR "DOWNED" SIGNS.

CONSIDER GEOMETRICS WHEN LOCATING SIGNS AND ARROW BOARD SO THE DRIVER HAS A CLEAR VIEW OF THE ARROW BOARD AND LANE CLOSURE DRUMS FOR A MINIMUM 1500 FEET IN FRONT OF DRUMS.

FOR A LANE CLOSURE THAT IS IN PLACE LESS THAN 7 CONTINUOUS DAYS AND NIGHTS, THE ADVANCED WARNING SIGNS MAY BE MOUNTED ON PORTABLE SUPPORTS.

REMOVE PAVEMENT MARKINGS IF LANE CLOSURE IS TO BE IN PLACE FOR LONGER THAN 4 OR MORE DAYS AND NIGHTS.

WARNING LIGHTS ARE NOT REQUIRED IF THE LANE CLOSURE IS A DAYTIME ONLY OPERATION.

IF THE HORIZONTAL ALIGNMENT IS SUCH THAT A CURVE MAY REQUIRE ADDITIONAL DELINEATION, THE DEVICE SPACING MAY BE DECREASED TO 50 FEET.

ADJUSTMENTS IN BUFFER SPACE NEED TO BE INCORPORATED WHEN THE LANE CLOSURE OCCURS NEAR AN INTERCHANGE EXIT OR ENTRANCE RAMP. THE LANE CLOSURE MUST MUST TAKE PLACE FAR ENOUGH IN ADVANCE OF AN EXIT OR ENTRANCE RAMP TO STILL ALLOW FOR ADEQUATE BUFFER SPACE. THE MINIMUM LENGTH OF THE BUFFER SPACE BEFORE AN EXIT RAMP SHOULD BE 1/2 THE LENGTH OF THE TRANSITION AREA. THE ENTRANCE RAMP SHOULD BE FOLLOWED BY THE ORIGINAL BUFFER SPACE LENGTH OF 800 FEET DESIRABLE PRIOR TO ANOTHER TRAFFIC CONTROL CHANGE SUCH AS A CROSSOVER MANEUVER.

* THE LEFT REVERSE CURVE SIGN (WO1-4L) IS ONLY REQUIRED WHEN THIS DETAIL IS USED IN COMBINATION WITH "SINGLE LANE CROSSOVER" DETAIL.

** A SPEED LIMIT SIGN SHALL BE LOCATED 1500 FEET BEYOND THE END OF THE ACCELERATION LANE OF EACH ENTRANCE RAMP. THERE SHOULD BE A SPEED LIMIT SIGN INCORPORATED A MINIMUM OF EVERY 2 OR 3 MILES. INCLUDE A 65 MPH RESUME SPEED LIMIT SIGN 200 FEET MINIMUM (500 FEET DESIREABLE) BEYOND THE "END OF ROADWORK" SIGN.

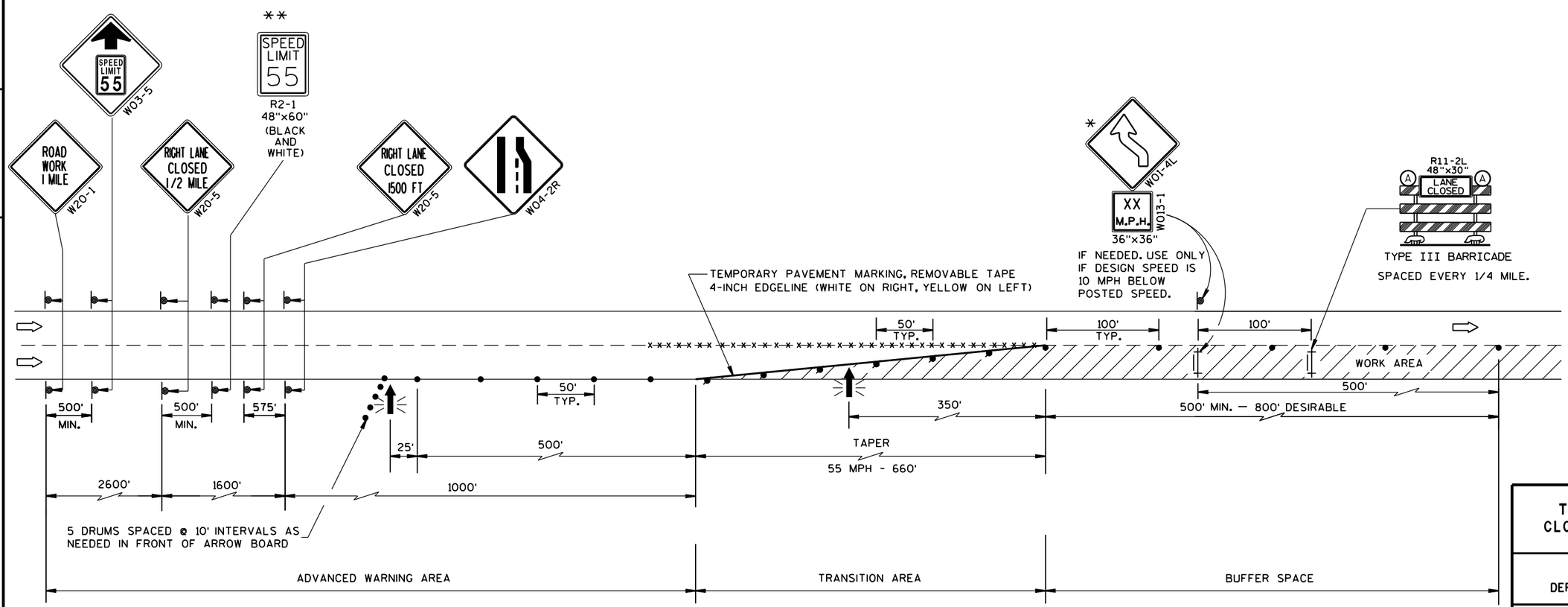

TRAFFIC CONTROL, LANE CLOSURE, SPEED REDUCTION

STATE OF WISCONSIN
DEPARTMENT OF TRANSPORTATION

APPROVED
Feb. 2015 — DATE
/S/ Travis Feltes — STATE TRAFFIC ENGINEER
FHWA

LEGEND

- TRAFFIC CONTROL DRUM
- SIGN ON PERMANENT SUPPORT
- DIRECTION OF TRAFFIC
- FLASHING ARROW BOARD
- WORK AREA

GENERAL NOTES

THIS DETAIL IS TYPICAL FOR CLOSING THE RIGHT SHOULDER. FOR CLOSING THE LEFT SHOULDER, REVERSE THE TRAFFIC CONTROL.

THIS DETAIL MAY BE USED FOR DIVIDED ROADWAYS WITH ANY NUMBER OF TRAVEL LANES.

THE EXACT NUMBER, LOCATION AND SPACING OF ALL SIGNS AND DEVICES SHALL BE ADJUSTED TO FIT FIELD CONDITIONS AS APPROVED BY THE ENGINEER.

ALL SIGNS ARE 48" X 48" UNLESS OTHERWISE NOTED.

SIGN LAYOUTS SHALL BE IN ACCORDANCE WITH THE FHWA'S MANUAL OF STANDARD HIGHWAY SIGNS OR THE WISCONSIN STANDARD SIGN PLATES.

SIGNS THAT WILL BE IN PLACE LESS THAN 7 CONTINUOUS DAYS AND NIGHTS MAY BE MOUNTED ON PORTABLE SUPPORTS.

ANY SIGNS TEMPORARY OR EXISTING, WHICH CONFLICT WITH TRAFFIC CONTROL "IN USE" SHALL BE REMOVED OR COVERED AS NEEDED AND AS APPROVED BY THE ENGINEER.

CHANNELIZING DEVICES PLACED ADJACENT TO THE WORK AREA SHALL BE PULLED BACK FROM THE TRAVEL LANE WHEN WORK IS NOT IN PROGRESS.

WHEN A RAMP INTERSECTS THE FACILITY ON WHICH THE WORK IS BEING PERFORMED, ADDITIONAL TRAFFIC CONTROLS SHALL BE PROVIDED AS SPECIFIED IN THE PLANS AND/OR THE SPECIAL PROVISIONS OR AS APPROVED BY THE ENGINEER.

*FOR SHORT DURATION SHOULDER WORK OF LESS THAN ONE HOUR, THE W21-5a SIGN MAY BE OMITTED.

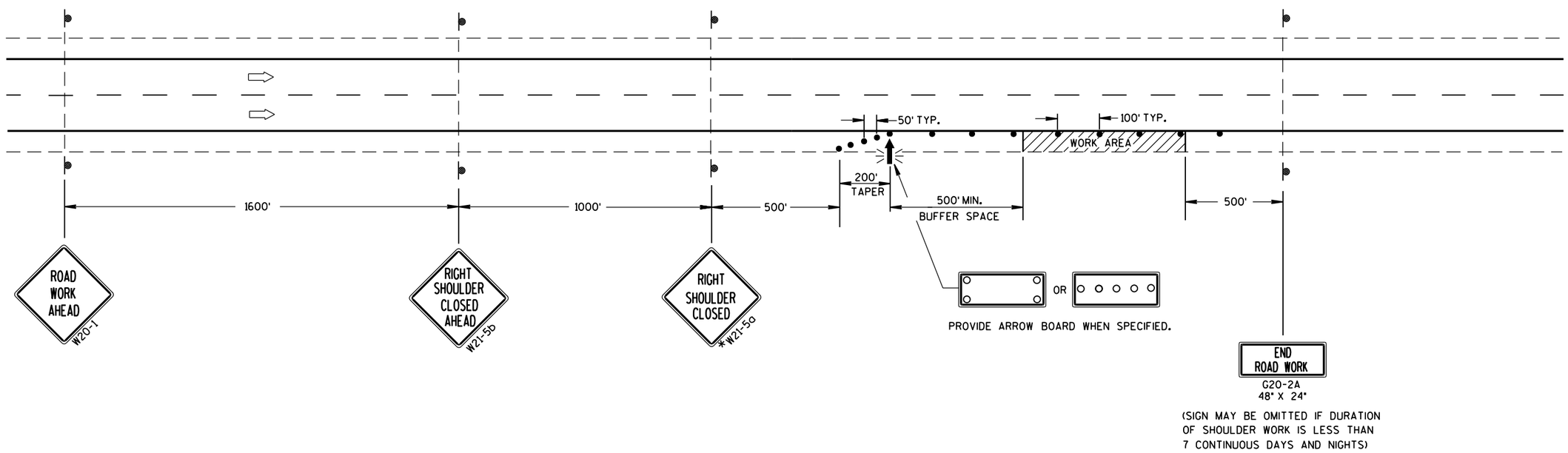

TRAFFIC CONTROL SHOULDER CLOSURE ON DIVIDED ROADWAY, SPEEDS GREATER THAN 40 MPH

STATE OF WISCONSIN
DEPARTMENT OF TRANSPORTATION

APPROVED

8/2013 — DATE

/S/ Travis Feltes — STATE TRAFFIC ENGINE ESIGN

FHWA

6

S.D.D. 15 D 27-2

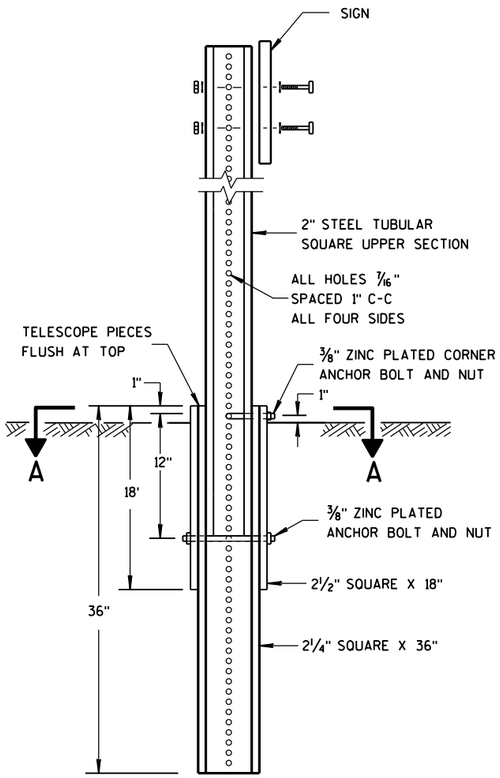

DETAIL OF TUBULAR STEEL SIGN POST

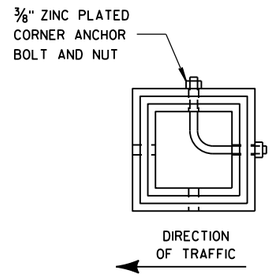

SECTION A-A

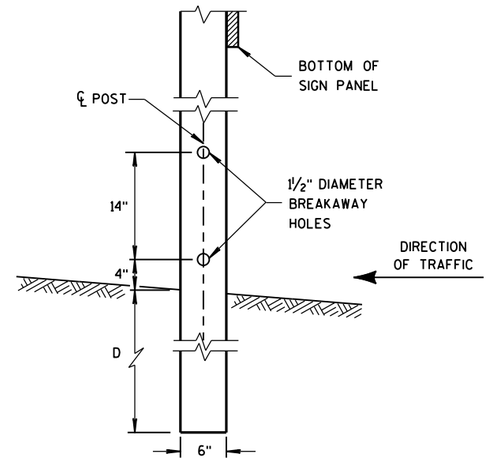

4"x6" WOOD POST MODIFICATION

GENERAL NOTES

1. 6 FEET FROM THE EDGE OF PAVEMENT (EDGE LINE LOCATION) UNLESS OTHERWISE DIRECTED BY THE PROJECT ENGINEER. LATERAL OFFSET SHOULD BE ADJUSTED TO AVOID THE DITCH FLOWLINE.
2. THE EXISTENCE OF CURB AND GUTTER DOES NOT IN ITSELF MANDATE THE VERTICAL CLEARANCE ILLUSTRATED. THAT HEIGHT IS TYPICALLY MEASURED WHERE THERE IS SIDEWALK ADJACENT TO THE ROADWAY OR PARKING IS PERMITTED. IN THE ABSENCE OF SIDEWALK, VERTICAL CLEARANCE IS MEASURED FROM THE TOP OF THE CURB. IF NO SIDEWALK AND NO PARKING, VERTICAL CLEARANCE MAY BE REDUCED TO 5 FOOT MINIMUM. OFFSET OF SIGNS IS MEASURED FROM THE CURB FLOWLINE.
3. FOR SIGNS REQUIRING 4 POSTS, SPACE INTERMEDIATE POSTS EVENLY.

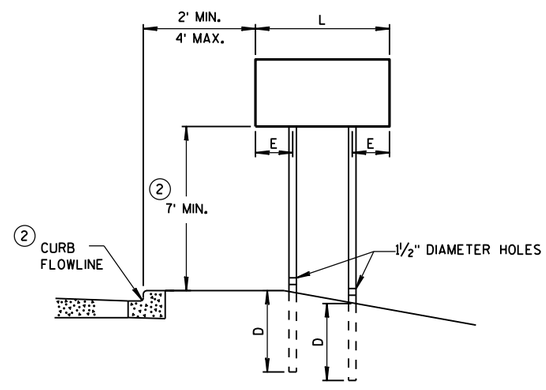

URBAN AREA

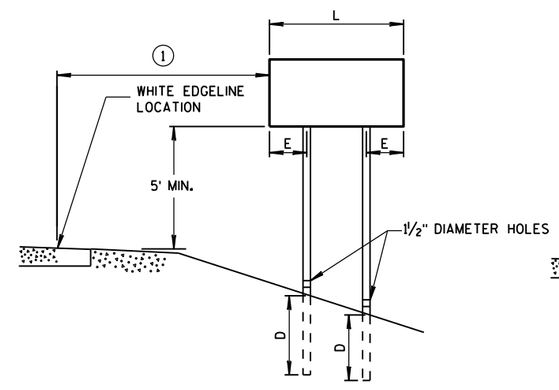

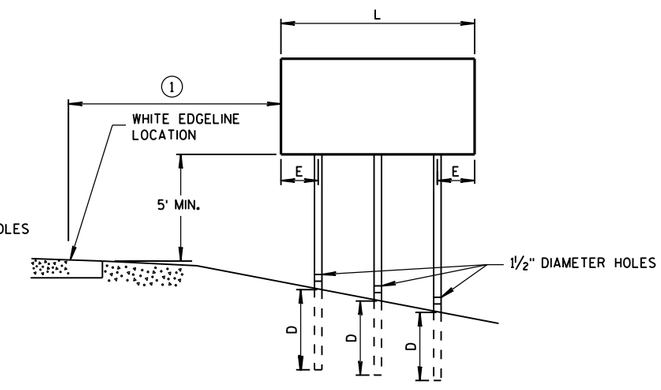

RURAL AREA

POST MOUNTING DETAIL FOR TEMPORARY TRAFFIC CONTROL FIXED MESSAGE SIGNS

TUBULAR STEEL POSTS

AREA OF SIGN INSTALLATION (SQ. FT.)	NUMBER OF REQUIRED TUBULAR STEEL POSTS
9 OR LESS	1
GREATER THAN 9 LESS THAN OR EQUAL TO 18	2
GREATER THAN 18 LESS THAN OR EQUAL TO 27	3

SIGNS WIDER THAN 3 FEET OR LARGER THAN 9 SQ. FT. SHALL BE MOUNTED ON MULTIPLE POSTS (SEE ABOVE TABLE).

SIGNS LARGER THAN 27 SQ. FT. SHALL NOT BE MOUNTED ON TUBULAR STEEL POSTS.

WOOD POST EMBEDMENT DEPTH

AREA OF SIGN INSTALLATION (SQ. FT.)	D (MIN)
20 OR LESS	4'
GREATER THAN 20	5'

4" X 6" WOOD POST

POST SPACING REQUIREMENTS		NUMBER OF WOOD POSTS REQUIRED
L	E	
48" OR LESS AND LESS THAN 20 SQ. FT.	-	1
LESS THAN 60"	12"	2
60" TO 120"	L/5	2
GREATER THAN 120" LESS THAN 168"	12"	3
168" AND GREATER	12"	4

SEE NOTE 3

TEMPORARY TRAFFIC CONTROL FIXED MESSAGE SIGNS

STATE OF WISCONSIN
DEPARTMENT OF TRANSPO

6

S.D.D. 15 D 38-1a

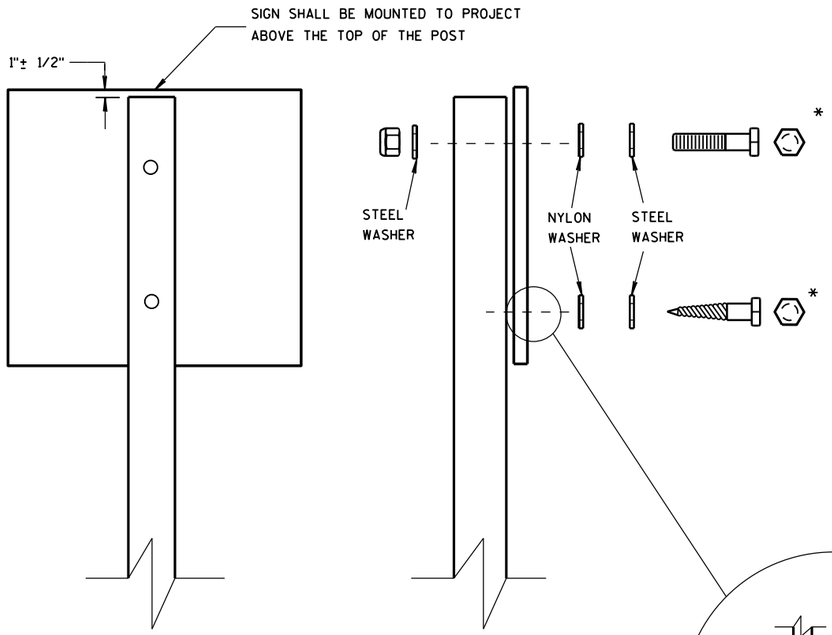

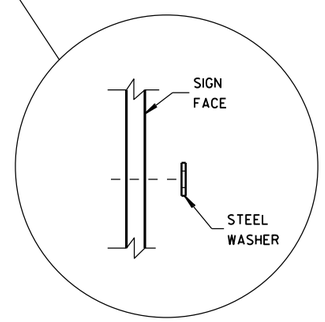

WASHER PLACEMENT WHEN SIGN HAS OTHER THAN TYPE H OR TYPE F FACE

NUTS, BOLTS AND LAGS USED FOR MOUNTING SIGNS SHALL HAVE HEXAGONAL HEADS AND SHALL BE EITHER:

A. HOT DIP GALVANIZED IN ACCORDANCE WITH ASTM DESIGNATION: A 153, CLASS D, OR SC 3

B. ELECTRO-GALVANIZED IN ACCORDANCE WITH ASTM DESIGNATION: B 633, TYPE III, SC 3

THREADS ON BOLTS AND NUTS SHALL BE MANUFACTURED WITH SUFFICIENT ALLOWANCE FOR THE CADMIUM PLATE OR GALVANIZED COATING TO PERMIT THE NUTS TO RUN FREELY ON THE BOLTS.

WOOD POSTS (4" x 4" or 4" x 6")

LAG SCREWS - 3/8" X 3"

MACHINE BOLTS - 5/16" X 6-1/2" OR 7" LENGTH W/ NUTS

SQUARE STEEL POSTS (2" x 2")

MACHINE BOLTS - 3/8" X 3-1/4" LENGTH W/ NUTS

RIVETS - 9/32" (6605-9-6) BULB-TITE, TRI-FOLD, ALUMINUM BODY/MANDREL O.D. FLANGE .720-.765 INCH, GRIP RANGE .042-.375 INCH

WASHERS (ALL POSTS) -

1-1/4" O.D. X 3/8" I.D. X 1/16" STEEL

1-1/4" O.D. X 3/8" I.D. X .080 NYLON FOR ALL TYPE H SIGNS

* TWO DIFFERENT FASTENING SYSTEMS ARE SHOWN FOR ILLUSTRATION PURPOSES. ON ANY INDIVIDUAL SIGN, EITHER ONE OR THE OTHER SYSTEM SHALL BE USED. ACTUAL NUMBER OF FASTENERS PER SIGN VARIES WITH THE SIGN AREA. FOR A SINGLE POST INSTALLATION, ALL SIGNS GREATER THAN 9 SQ. FT. REQUIRE THE USE OF 3 FASTENERS.

6

6

S.D.D. 15 D 38-1b

S.D.D. 15 D 38-1b

ATTACHMENT OF SIGNS TO POSTS

STATE OF WISCONSIN
DEPARTMENT OF TRANSPORTATION

APPROVED
Feb. 2015 /S/ Travis Feltes
DATE STATE TRAFFIC ENGINEER SIGN
FHWA

URBAN AREA

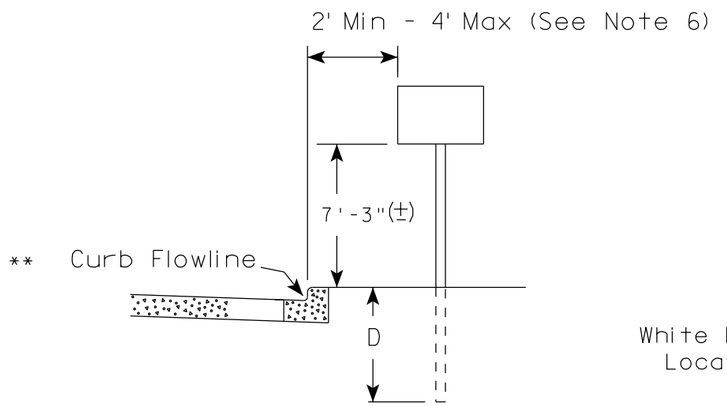

RURAL AREA (See Note 2)

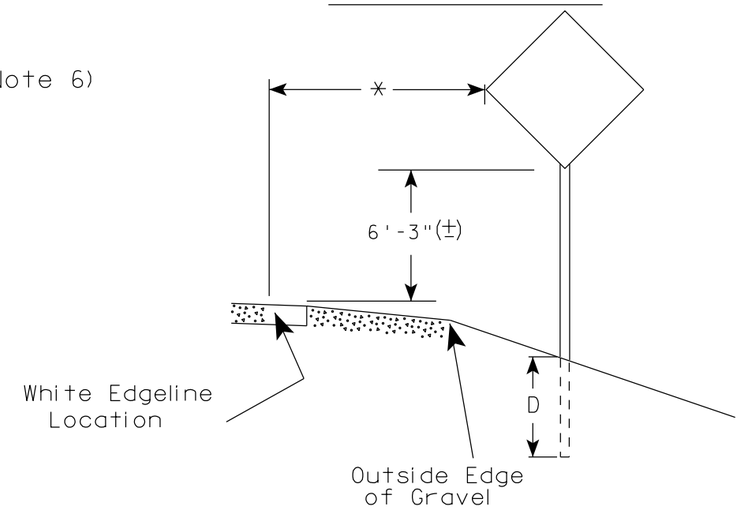

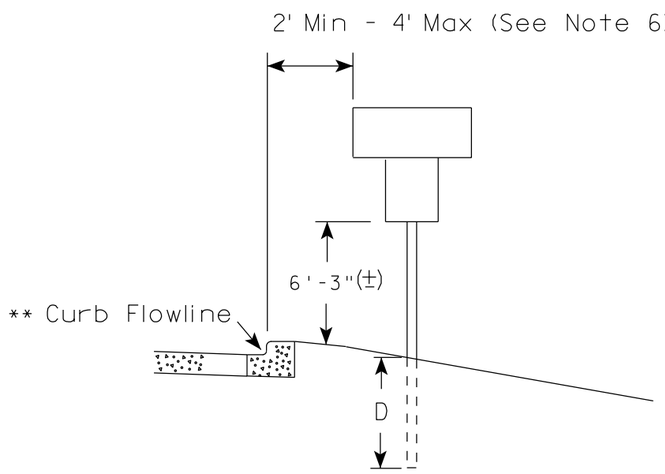

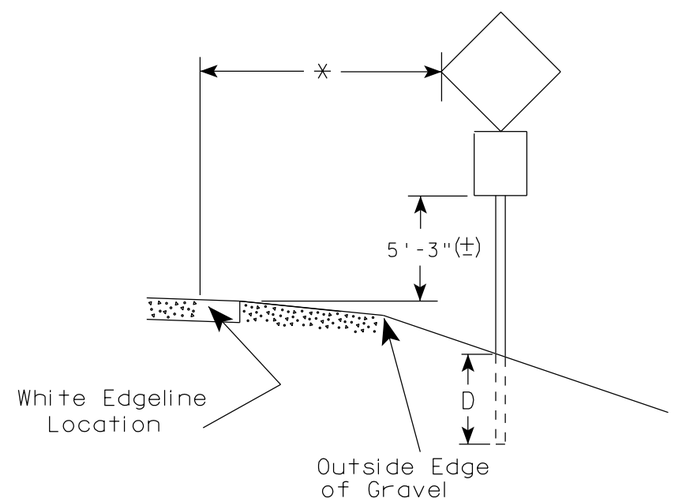

** The existence of curb and gutter does not in itself mandate the vertical clearance illustrated. That height is typically measured where there is sidewalk adjacent to the roadway or parking is permitted. In the absence of sidewalk vertical clearance is measured from the top of the curb. Offset of signs is measured from the flow line.

* 6 feet from edge of a paved shoulder or 12 feet from the edge of pavement (edge line location) or 2 feet from outside edge of gravel, whichever is greater unless directed by project engineer.

GENERAL NOTES

1. Signs wider than 4 feet or 20 sq.ft or larger, shall be mounted on multiple posts. Refer to plate A4-4.
2. If signs are mounted on barrier wall, see A4-10 sign plate.
3. For expressways and freeways, mounting height is 7'- 3" (±) or 6'-3" (±) depending upon existence of a sub-sign.
4. Minimum mounting height for J assemblies (A2-1S) is 7'-3" (±) or 6'-3" (±) per urban or rural detail respectively.
5. Minimum mounting height for signs mounted on traffic signal poles is 5'- 3" (±).
6. Offset distance shall be consistent with existing signs or consistent throughout length of project.
7. The (±) tolerance for mounting height is 3 inches.
8. Folding signs shall be mounted at a height of 5'-3" (±) or as directd by the Engineer.
9. The Double Arrow sign (W12-1) shall be mounted at a height of 2'-3" (±). The Chevron sign (W1-8), Roundabout Chevron panel (R6-4B), Enhanced Reference Markers, Clearance Markers (W5-52), Mile Markers (D10 series), In Road Object Markers (W5-54) & End of Road Markers (W5-56) shall be mounted at a height of 4'-3" (±).

POST EMBEDMENT DEPTH

Area of Sign Installation (Sq. Ft.)	D (Min)
20 or Less	4'
Greater than 20	5'

TYPICAL INSTALLATION OF PERMANENT TYPE II SIGNS ON SINGLE POSTS

WISCONSIN DEPT OF TRANSPORTATION

APPROVED Matthew R Rauch for State Traffic Engineer

DATE 7/23/15 PLATE NO. A4-3.20

PROJECT NO:	HWY:	COUNTY:		SHEET NO:	E

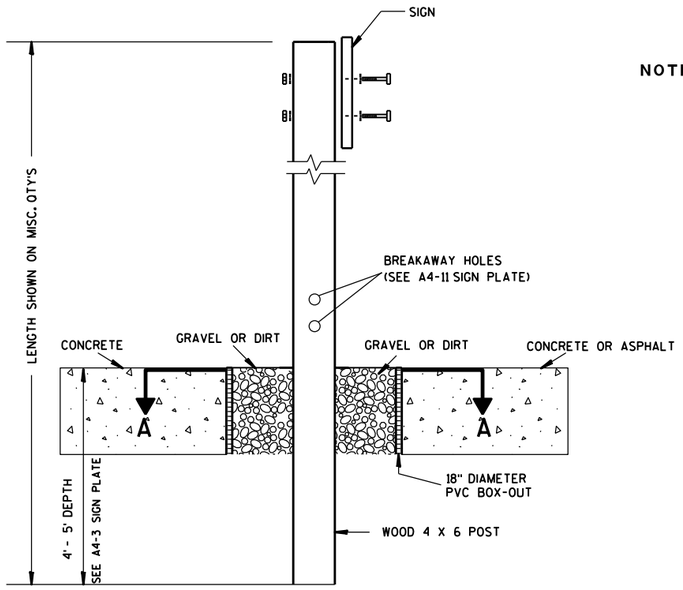

ELEVATION VIEW

DETAIL OF WOOD 4 X 6 SIGN POST IN BOX-OUT

NOTES:
1. ALL MATERIAL TO BE APPROVED BY ENGINEER PRIOR TO INSTALLATION
2. SEE SIGN PLATE A4-8 FOR SIGN HARDWARE REQUIREMENTS
3. 18 INCH X 18 INCH SQUARE BOX-OUTS MAY BE USED FOR INSTALLATIONS IN EXISTING CONCRETE OR ASPHALT LOCATIONS.

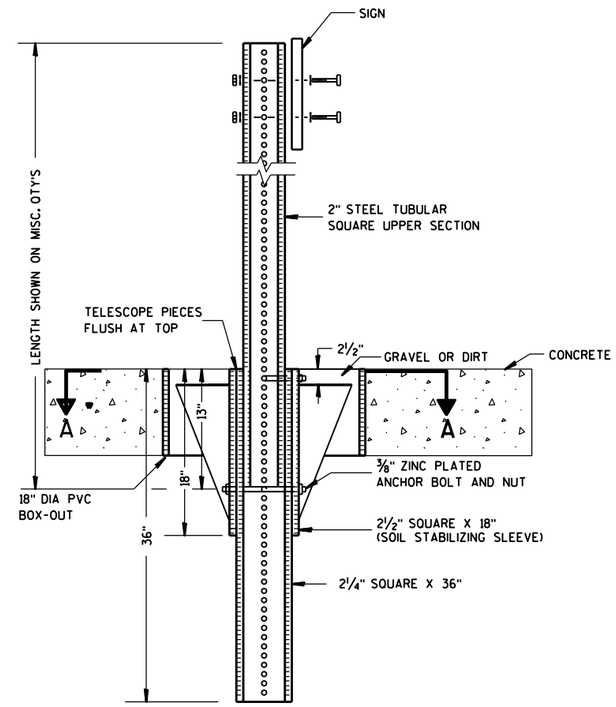

ELEVATION VIEW

DETAIL OF STEEL 2 X 2 SIGN POST IN BOX-OUT

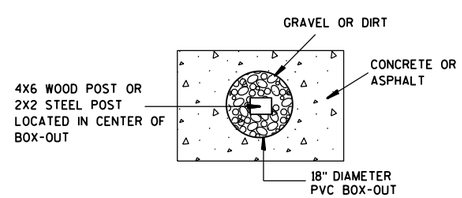

PLAN VIEW

FOR NEW CONCRETE/ASPHALT INSTALLATIONS

SIGN POST
BOX-OUTS
A4-3B

WISCONSIN DEPT OF TRANSPORTATION

APPROVED Matthew R Rauch
for State Traffic Engineer

DATE 1/27/14 PLATE NO. A4-3B.1

PROJECT NO:	HWY:	COUNTY:		SHEET NO:	E

URBAN AREA

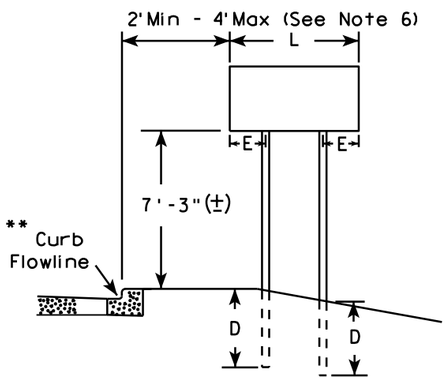

RURAL AREA (See Note 3)

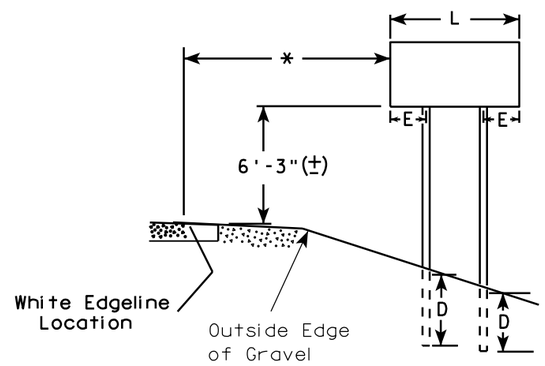

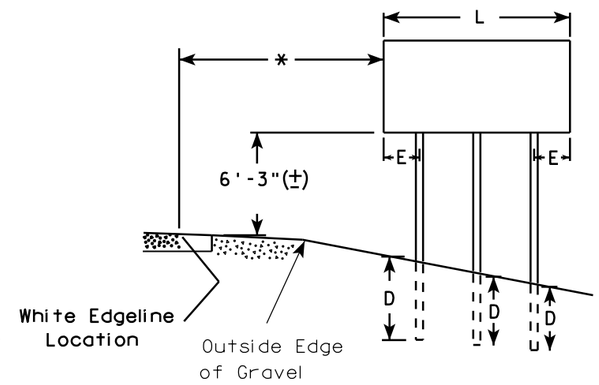

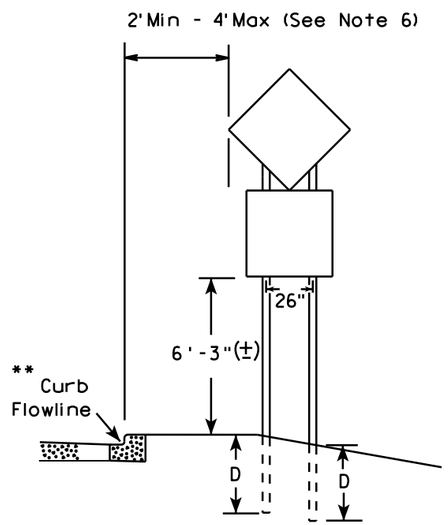

48" DIAMOND WARNING SIGN

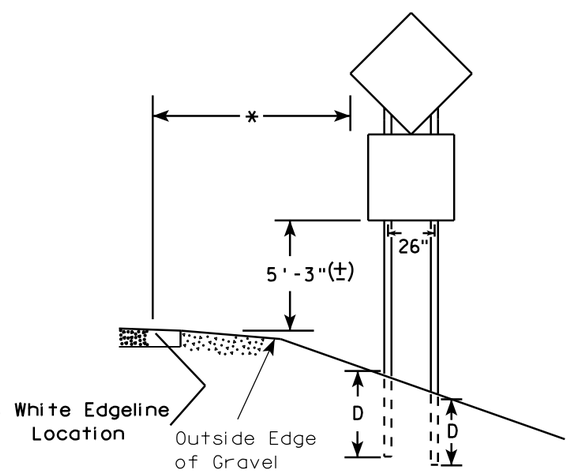

48" DIAMOND WARNING SIGN

GENERAL NOTES

1. For 3 or 4 post installations, individual post spacing shall be greater than 3'-6".
2. See tables below for required number of posts.
3. For expressways and freeways, mounting height is 7'-3" (±) or 6'-3" (±) depending upon existence of sub-sign.
4. The (±) tolerance for mounting height is 3 inches.
5. Minimum mounting height for J assemblies (A2-1S) is 7'-3" (±) or 6'-3" (±) per urban or rural detail respectively.
6. Offset distance shall be consistent with existing signs or consistent throughout length of project.
7. Folding signs shall be mounted at a height of 5'-3" (±) or as directed by the engineer.
8. The Double Arrow sign (W12-1) shall be mounted at a height of 2'-3" (±). The Chevron sign (W1-8), Roundabout Chevron panel (R6-4B), Clearance Markers (W5-52), Mile Markers (D10 series), In Road Object Markers (W5-54) & End of Road Markers (W5-56) shall be mounted at a height of 4"-3" (±).

* 6 feet from edge of a paved shoulder or 12 feet from the edge of pavement (edge line location) or 2 feet from outside edge of gravel, whichever is greater unless directed by project engineer.

** The existence of curb and gutter does not in itself mandate the vertical clearance illustrated. That height is typically measured where there is sidewalk adjacent to the roadway or parking is permitted. In the absence of sidewalk vertical clearance is measured from the top of the curb. Offset of signs is measured from the flow line.

*** See A4-3 sign plate for signs 4' or less in width and less than 20 S.F. in area.

SIGN SHAPE OTHER THAN DIAMOND (TWO POSTS REQUIRED)	
L	E
*** Greater than 48" Less than 60"	12"
60" to 120"	L/5

SIGN SHAPE OTHER THAN DIAMOND (THREE POSTS REQUIRED)	
L	E
Greater than 120" less than 168"	12"

SIGN SHAPE OTHER THAN DIAMOND (FOUR POSTS REQUIRED)	
L	E
168" and greater	12"

POST EMBEDMENT DEPTH

Area of Sign Installation (Sq. Ft.)	D (Min)
20 or Less	4'
Greater than 20	5'

TYPICAL INSTALLATION OF TYPE II SIGNS ON MULTIPLE POSTS

WISCONSIN DEPT OF TRANSPORTATION

APPROVED Matthew R Rauch
for State Traffic Engineer

DATE 7/23/15 PLATE NO. A4-4 14 81

PROJECT NO:	HWY:	COUNTY:		SHEET NO:	E

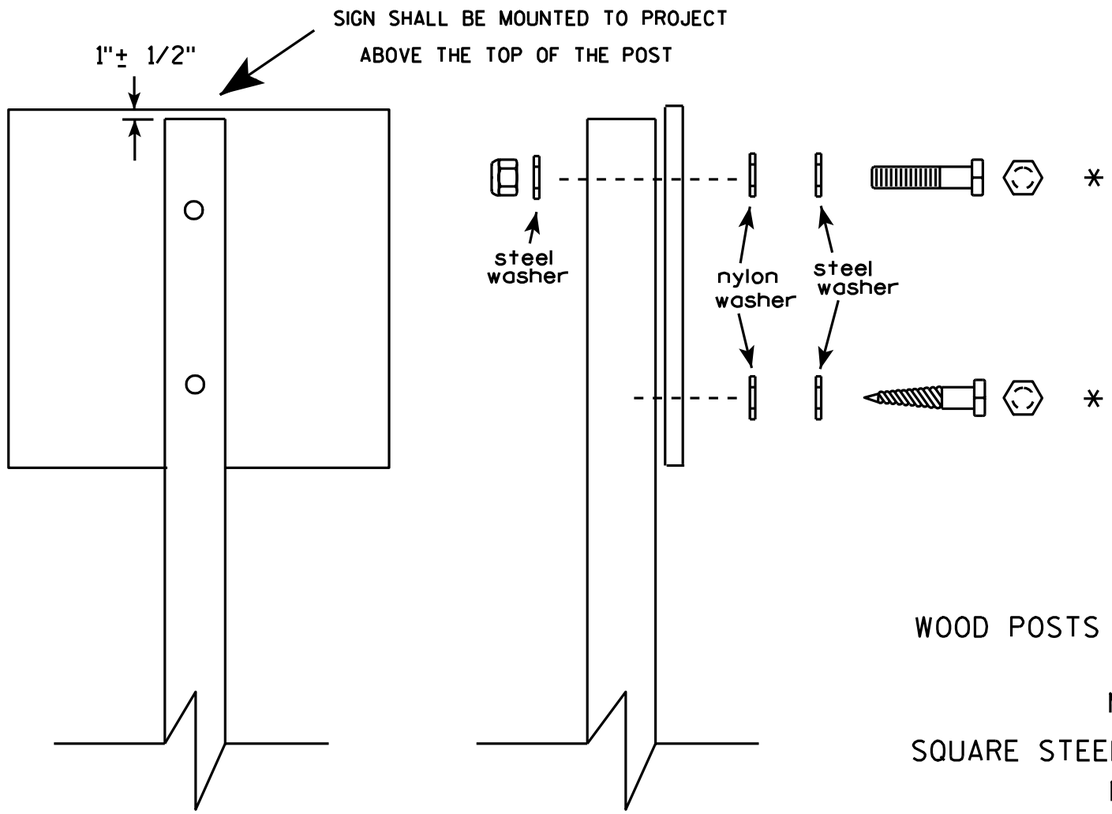

Nuts, bolts and lags used for mounting signs shall have hexagonal heads and shall be either :

a. Hot dip galvanized in accordance with ASTM Designation: A 153, Class D, or SC 3

b. Electro-galvanized in accordance with ASTM Designation : B 633, TYPE III, SC 3.

Threads on bolts and nuts shall be manufactured with sufficient allowance for the cadmium plate or galvanized coating to permit the nuts to run freely on the bolts.

WOOD POSTS (4" x 4" or 4" x 6")

LAG SCREWS - 3/8" X 3"

MACHINE BOLTS - 5/16" X 6-1/2" or 7" Length w/ nuts

SQUARE STEEL POSTS (2" x 2")

MACHINE BOLTS - 3/8" X 3-1/4" Length w/ nuts

RIVETS - 9/32 " (6605-9-6) BULB-TITE, TRI-FOLD, ALUMINUM BODY/MANDREL O.D. FLANGE .720-.765 INCH, GRIP RANGE .042-.375 INCH

WASHERS (ALL POSTS) -

1-1/4" O.D. X 3/8" I.D. X 1/16" STEEL

1-1/4" O.D. X 3/8" I.D. X .080 NYLON for all Type H signs.

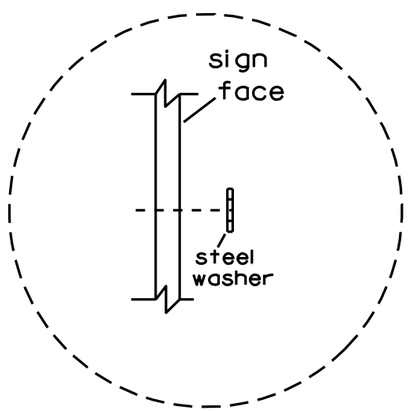

Washer Placement when Sign Has Other Than Type H or Type F Face

* Two different fastening systems are shown for illustration purposes. On any individual sign, either one or the other system shall be used. Actual number of fasteners per sign varies with the sign area, but normally there are two. For a single post installation, all signs greater than 9 sq. ft. require the use of 3 fasteners.

ATTACHMENT OF SIGNS TO POSTS

WISCONSIN DEPT OF TRANSPORTATION

APPROVED Matthew R Rauch
for State Traffic Engineer

DATE 3/23/10 PLATE NO. A4-8.7

TELESCOPIC TUBING ANCHORS
TWO PIECE SYSTEM

2 1/4 " SQUARE
12 GAUGE
PERFORATED
GALVANIZED FINISH

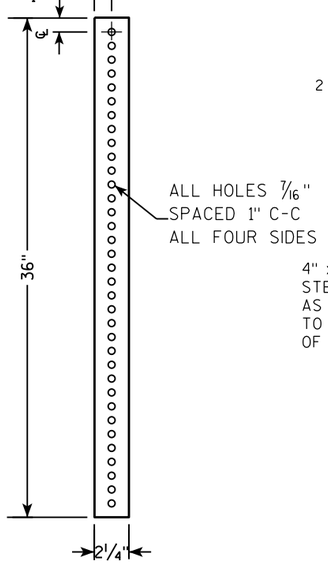

2 1/2 " SQUARE
12 GAUGE
OMNI-DIRECTIONAL
PERFORATED
SOIL STABILIZING SLEEVE
GALVANIZED FINISH

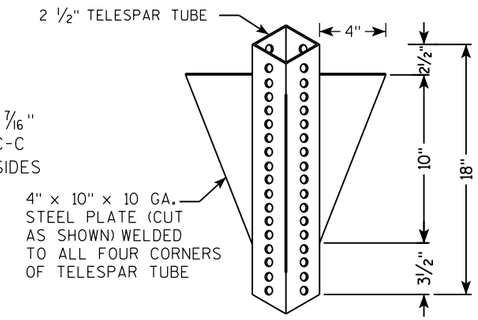

DETAIL OF TUBULAR STEEL SIGN POST
(IN POURED CONCRETE OR ASPHALT)

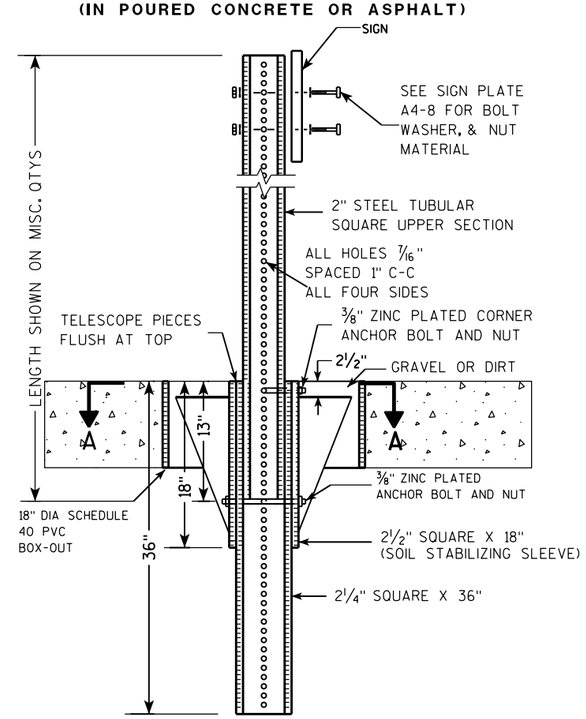

DETAIL OF TUBULAR STEEL SIGN POST
(IN LOCATIONS OTHER THAN POURED CONCRETE OR ASPHALT)

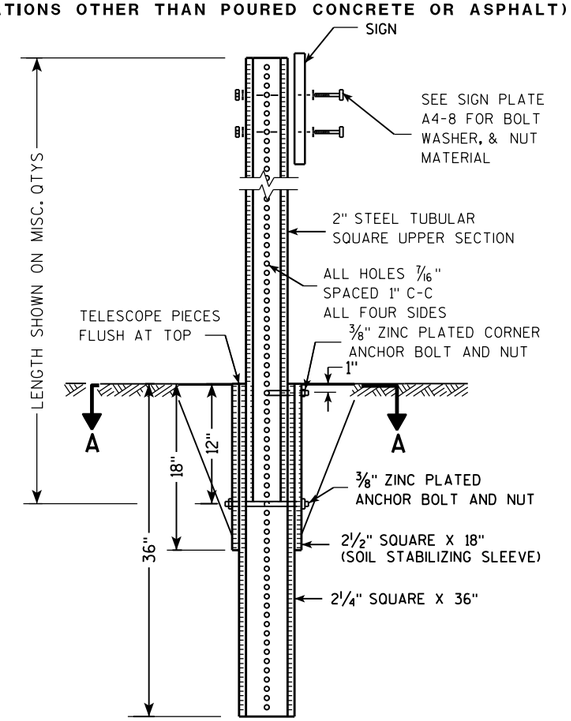

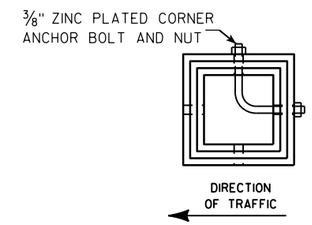

SECTION A-A

Area of Sign Installation (Sq. Ft.)	Number of Required Posts
9 or less	1
Greater than 9 less than or equal to 18	2
Greater than 18 less than or equal to 27	3

Signs wider than 3 feet or larger than 9 sq. ft shall be mounted on multiple posts (see above table).

TUBULAR STEEL
SIGN POST
A4-9

WISCONSIN DEPT OF TRANSPORTATION

APPROVED Matthew R Rauch
for State Traffic Engineer

DATE 2/05/15 PLATE A4-9.9

7 7

PROJECT NO:	HWY:	COUNTY:		SHEET NO:	E

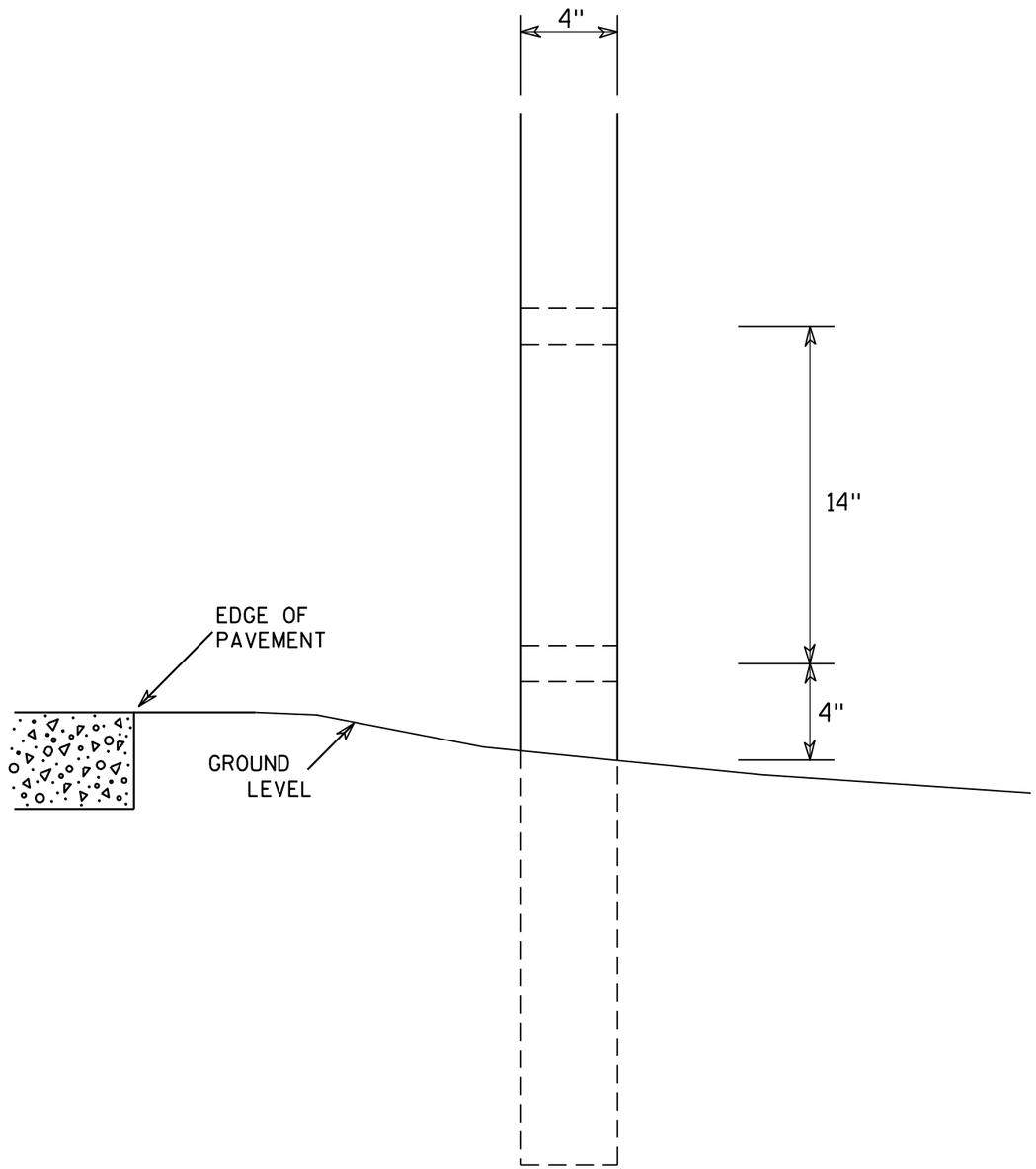

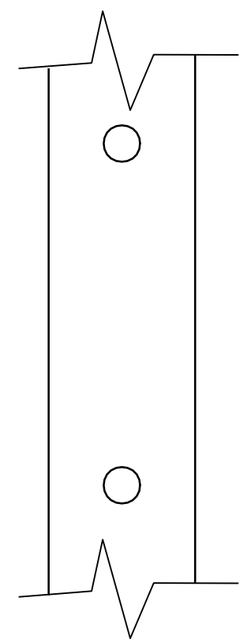

SIDE VIEW

GENERAL NOTES

1. All 4 x 6 Wood Posts shall be modified by having two 1½" diameter holes drilled perpendicular to the roadway centerline.

7

7

4 X 6 WOOD POST MODIFICATIONS

WISCONSIN DEPT OF TRANSPORTATION

APPROVED Chester J Spang for State Traffic Engineer

DATE 3/27/97 PLATE NO. A4-11.2

PROJECT NO:	HWY:	COUNTY:		SHEET NO: 84	E

NOTES

1. Sign is Type II - Type F Reflective - reference WIS DOT Standard Specification for HIGHWAY and STRUCTURE CONSTRUCTION latest edition.
2. Color:
   Background - Orange
   Message - Black
3. Message Series - D
4. Substitute appropriate numeral and adjust spacing to achieve proper balance.

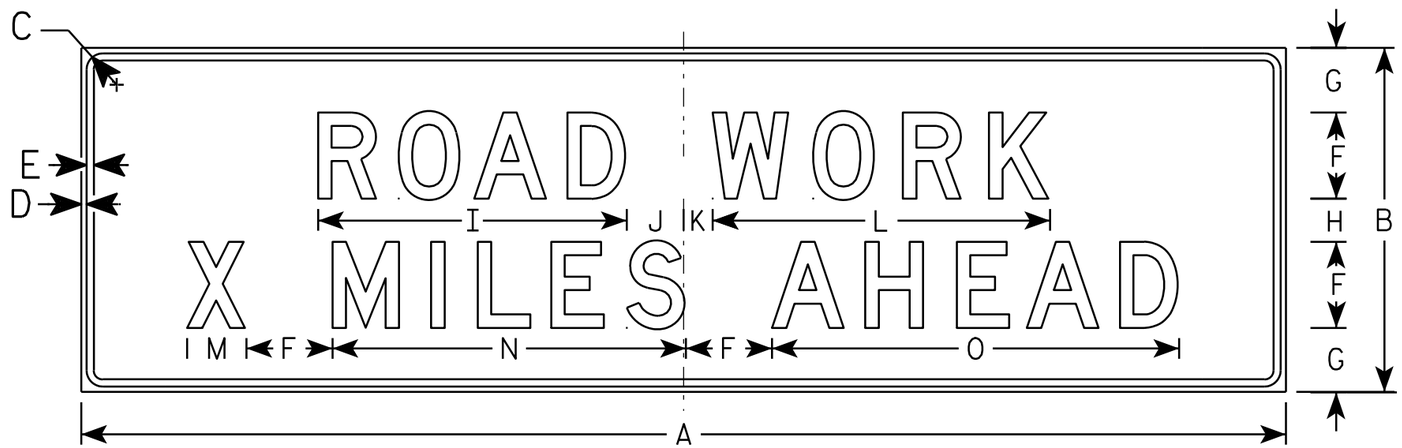

G20-55

7

Metric equivalent for this sign is:

SIZE	
1	
2	
3	
4	2550 mm X 900 mm
5	

SIZE	A	B	C	D	E	F	G	H	I	J	K	L	M	N	O	P	Q	R	S	T	U	V	W	X	Y	Z	Area sq. ft.	Area m2
1																												
2																												
3																												
4	84	24	1 1/8	3/8	1/2	6	4 1/2	3	21 1/2	4	2	23 1/2	4 1/8	24 5/8	28 3/8												25.5	2.30
5																												

STANDARD SIGN
G20-55

WISCONSIN DEPT OF TRANSPORTATION

APPROVED Matthew R Rauch
for State Traffic Engineer

DATE 9/30/09 PLATE NO. G20-55.2

PROJECT NO:	HWY:	COUNTY:		SHEET NO: 85	E

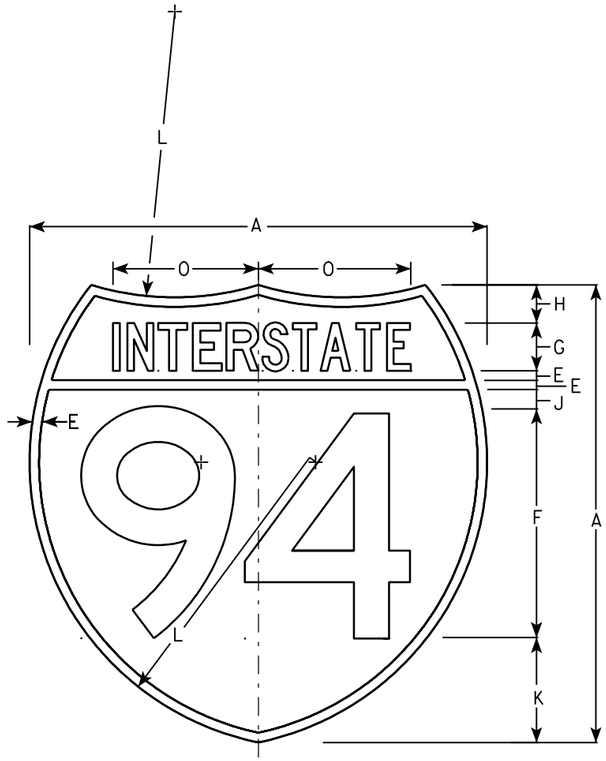

M1-1

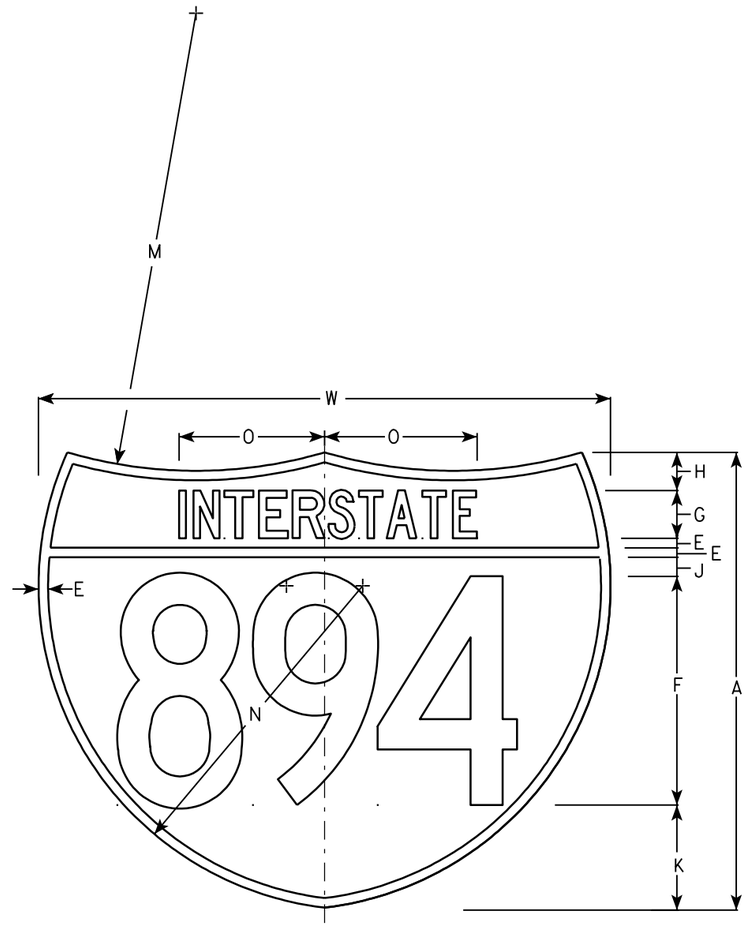

M1-1A

NOTES

1. Sign is Type II - See Note 6 - reference WIS DOT Standard Specification for HIGHWAY and STRUCTURE CONSTRUCTION latest edition.
2. Color:
   Background - Top Red - Bottom Blue (See Note 6)
   Message - White - See Note 6
3. Message Series - See note 5
4. Substitute appropriate numerals & ajust spacing as per plate A10-1.
5. M1-1 - Numerals - D
   Interstate - C
   M1-1A - All copy - C
6. Permanent Signs
   Message - Type H Reflective
   Detour or other temporary signs
   Background - Reflective
   Message - Reflective

Metric equivalent for these signs are:

SIZE	M1-1	SIZE	M1-1A
1			
2	600 mm X 600 mm	2	600 mm X 750 mm
3	900 mm X 900 mm	3	900 mm X 1125 mm
4	900 mm X 900 mm	4	900 mm X 1125 mm
5	900 mm X 900 mm	5	900 mm X 1125 mm

SIZE	A	B	C	D	E	F	G	H	I	J	K	L	M	N	O	P	Q	R	S	T	U	V	W	X	Y	M1-1 Area sq. ft.	M1-1A Area sq. ft.	M1-1 Area m2	M1-1A Area m2
1																													
2	24				1/2	12	2 1/2	2		1	5 1/2	15	24	17	7 7/8								30			3.13	3.91	.36	.46
3	36				3/4	18	3 3/4	3		1 1/2	8 1/4	22 1/2	36	25 1/2	11 3/4								45			7.03	8.79	.81	1.05
4	36				3/4	18	3 3/4	3		1 1/2	8 1/4	22 1/2	36	25 1/2	11 3/4								45			7.03	8.79	.81	1.05
5	36				3/4	18	3 3/4	3		1 1/2	8 1/4	22 1/2	36	25 1/2	11 3/4								45			7.03	8.79	.81	1.05

INTERSTATE ROUTE MARKER
M1-1 FOR ASSEMBLIES

WISCONSIN DEPT OF TRANSPORTATION

APPROVED Matthew R Rauch
for State Traffic Engineer

DATE 08/23/05 PLATE NO. M1-1.8

PROJECT NO:	HWY:	COUNTY:		SHEET NO: 86	E

M4 - 1
M04 - 1

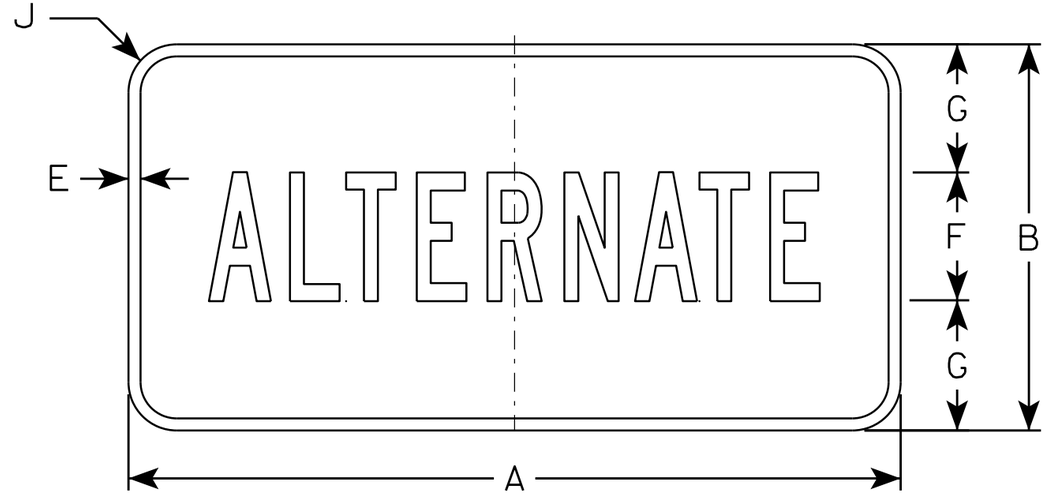

MB4 - 1

NOTES

1. Sign is Type II - Type H except as Shown
2. Color:
   Background - See Note 5
   Message - See note 5
3. Message Series - B
4. Corners may be square or rounded when base material is plywood but borders shall be rounded as shown. When base material is metal, the corners and borders shall be rounded.
5. M4-1 Background - White
   Message - Black

   MB4-1 Background - Blue
   Message - White

   M04-1 Background - Orange - Type F
   Message - Black

SIZE	A	B	C	D	E	F	G	H	I	J	K	L	M	N	O	P	Q	R	S	T	U	V	W	X	Y	Z	Area sq. ft.
1																											
2	24	12	1 1/8	3/8	3/8	4	4	9 3/4	9 1/2	1 1/2																	2.00
3	36	18	1 1/8	3/8	1/2	7	5 1/2	16 3/8	16 1/2	1 1/2																	4.5
4	36	18	1 1/8	3/8	1/2	7	5 1/2	16 3/8	16 1/2	1 1/2																	4.5
5	36	18	1 1/8	3/8	1/2	7	5 1/2	16 3/8	16 1/2	1 1/2																	4.5

STANDARD SIGN
M4 - 1

WISCONSIN DEPT OF TRANSPORTATION

APPROVED Matthew R Rauch
for State Traffic Engineer

DATE 6/30/14 PLATE 87 '14-1.8

PROJECT NO: | HWY: | COUNTY: | SHEET NO: | E

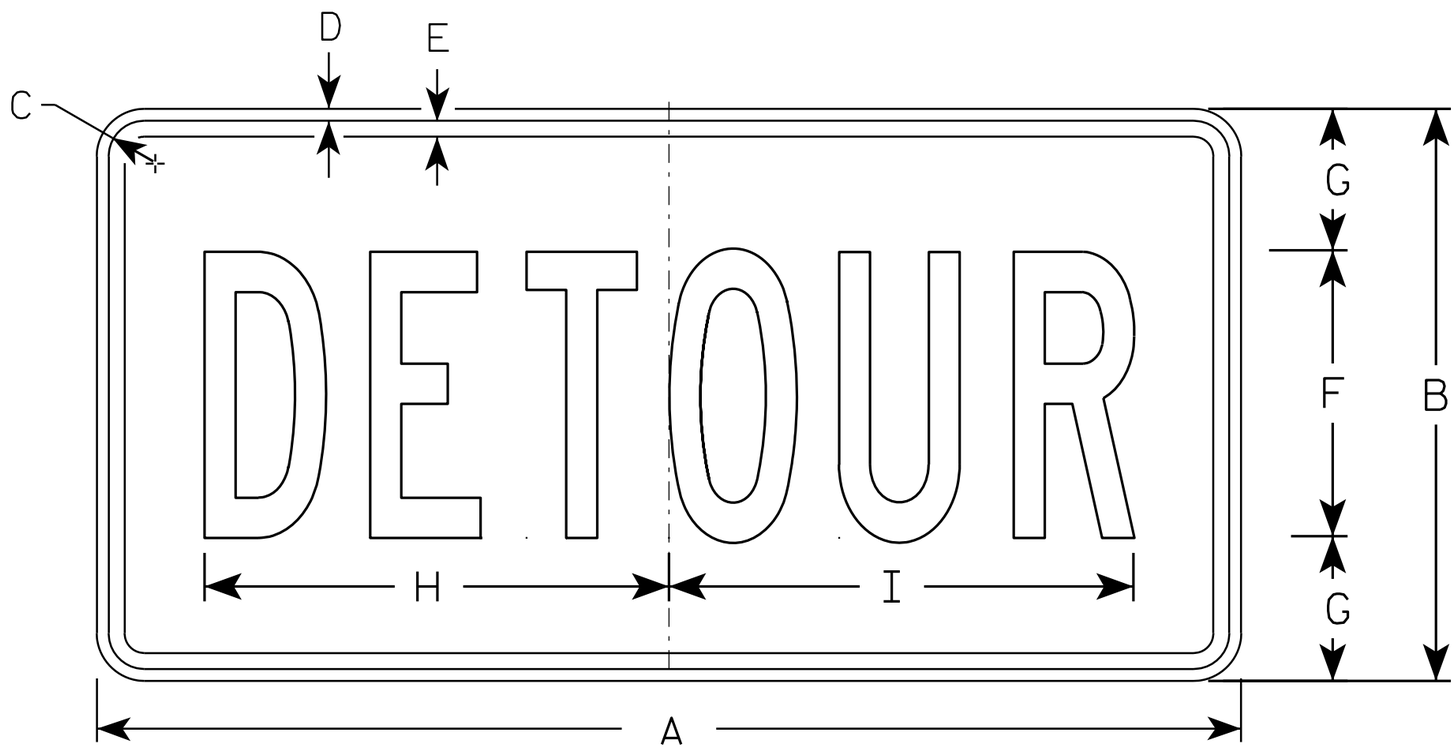

M4-8

NOTES

1. Sign is Type II - Type F Reflective - reference WIS DOT Standard Specification for HIGHWAY and STRUCTURE CONSTRUCTION latest edition.
2. Color:
   Background - Orange
   Message - Black
3. Message Series - B
4. Corners may be square or rounded when base material is plywood but borders shall be rounded as shown. When base material is metal, the corners and borders shall be rounded.

SIZE	A	B	C	D	E	F	G	H	I	J	K	L	M	N	O	P	Q	R	S	T	U	V	W	X	Y	Z	Area sq. ft.
1																											
2	24	12	1 1/8	3/8	3/8	6	3	10	10 1/4																		2.0
3	36	18	1 1/8	3/8	1/2	9	4 1/2	14 5/8	14 1/2																		4.5
4																											
5																											

STANDARD SIGN
M4-8

WISCONSIN DEPT OF TRANSPORTATION

APPROVED Matthew R Rauch
for State Traffic Engineer

DATE 11/10/10 PLATE NO. M4-8.2

PROJECT NO: | HWY: | COUNTY: | SHEET NO: 88 | E

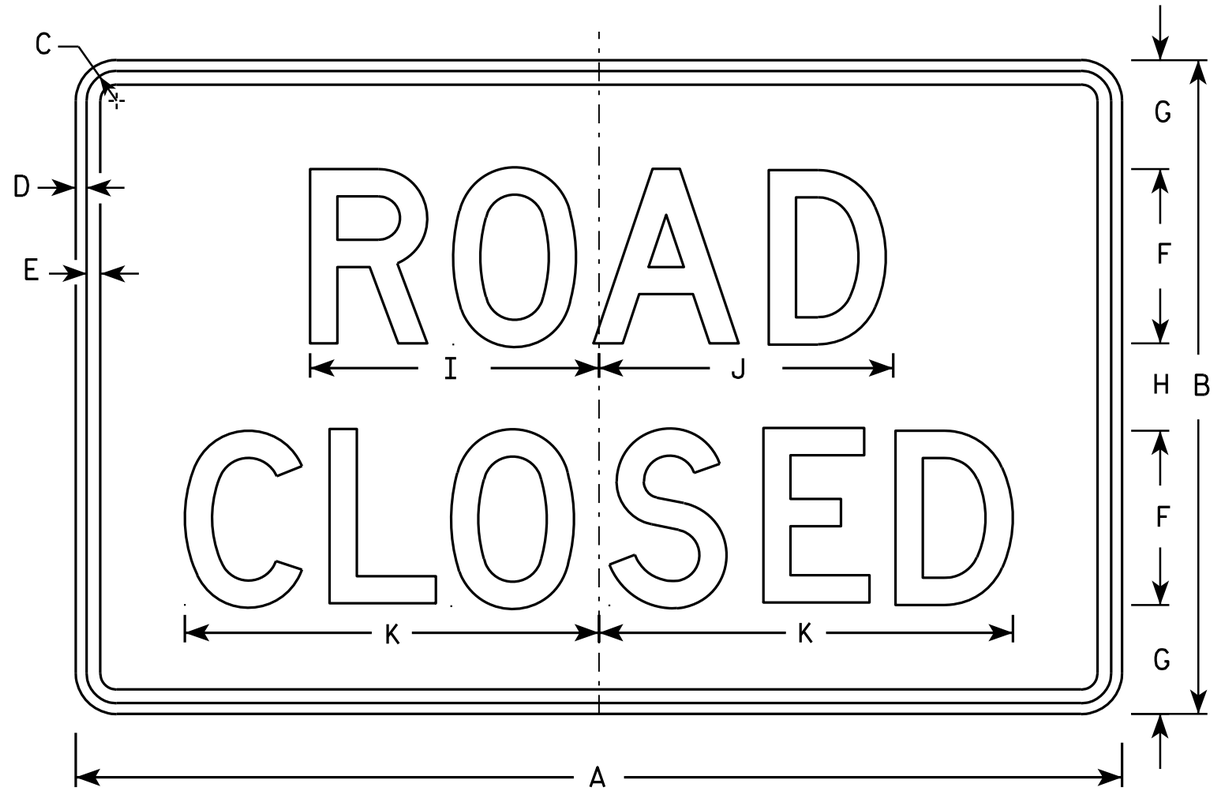

R11-2

NOTES

1. Sign is Type II - Type H Reflective - reference WIS DOT Standard Specification for HIGHWAY and STRUCTURE CONSTRUCTION latest edition.
2. Color:
   Background - White
   Message - Black
3. Message Series - D
4. Corners may be square or rounded when base material is plywood but borders shall be rounded as shown. When base material is metal, the corners and borders shall be rounded.
5. Modify the message as required.

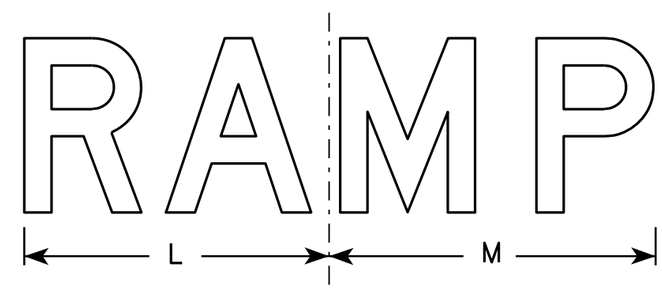

R11-2R

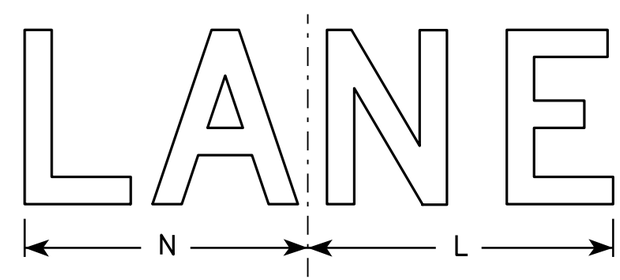

R11-2L

SIZE	A	B	C	D	E	F	G	H	I	J	K	L	M	N	O	P	Q	R	S	T	U	V	W	X	Y	Z	Area sq. ft.
1																											
2S	48	30	1 3/8	1/2	5/8	8	5	4	13 1/4	13 1/2	19	14	15	13													10.0
2M	48	30	1 3/8	1/2	5/8	8	5	4	13 1/4	13 1/2	19	14	15	13													10.0
3	48	30	1 3/8	1/2	5/8	8	5	4	13 1/4	13 1/2	19	14	15	13													10.0
4	48	30	1 3/8	1/2	5/8	8	5	4	13 1/4	13 1/2	19	14	15	13													10.0
5	48	30	1 3/8	1/2	5/8	8	5	4	13 1/4	13 1/2	19	14	15	13													10.0

STANDARD SIGN
R11-2

WISCONSIN DEPT OF TRANSPORTATION

APPROVED Matthew R Rauch
for State Traffic Engineer

DATE 4/1/11 PLATE NO. R11-2.10

PROJECT NO: | HWY: | COUNTY: | SHEET NO: 89 | E

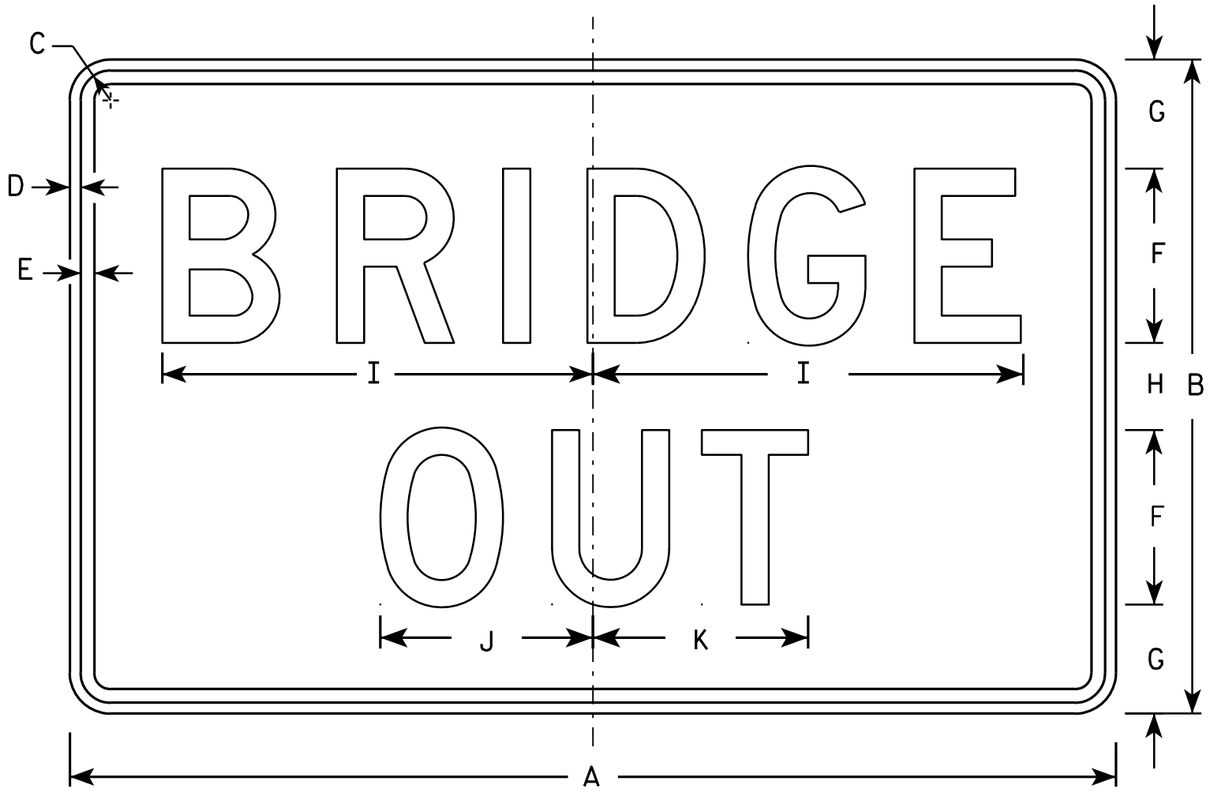

R11-2B

NOTES

1. Sign is Type II - Type H Reflective - reference WIS DOT Standard Specification for HIGHWAY and STRUCTURE CONSTRUCTION latest edition.
2. Color:
   Background - White
   Message - Black
3. Message Series - D
4. Corners may be square or rounded when base material is plywood but borders shall be rounded as shown. When base material is metal, the corners and borders shall be rounded.

SIZE	A	B	C	D	E	F	G	H	I	J	K	L	M	N	O	P	Q	R	S	T	U	V	W	X	Y	Z	Area sq. ft.
1																											
2S	48	30	1 3/8	1/2	5/8	8	5	4	19 3/4	9 3/4	9 7/8																10.0
2M	48	30	1 3/8	1/2	5/8	8	5	4	19 3/4	9 3/4	9 7/8																10.0
3	48	30	1 3/8	1/2	5/8	8	5	4	19 3/4	9 3/4	9 7/8																10.0
4	48	30	1 3/8	1/2	5/8	8	5	4	19 3/4	9 3/4	9 7/8																10.0
5	48	30	1 3/8	1/2	5/8	8	5	4	19 3/4	9 3/4	9 7/8																10.0

STANDARD SIGN
R11-2B

WISCONSIN DEPT OF TRANSPORTATION

APPROVED Matthew R Rauch
For State Traffic Engineer
DATE 4/1/11 PLATE NO. R11-2B.2

PROJECT NO:

SHEET NO: 90 E

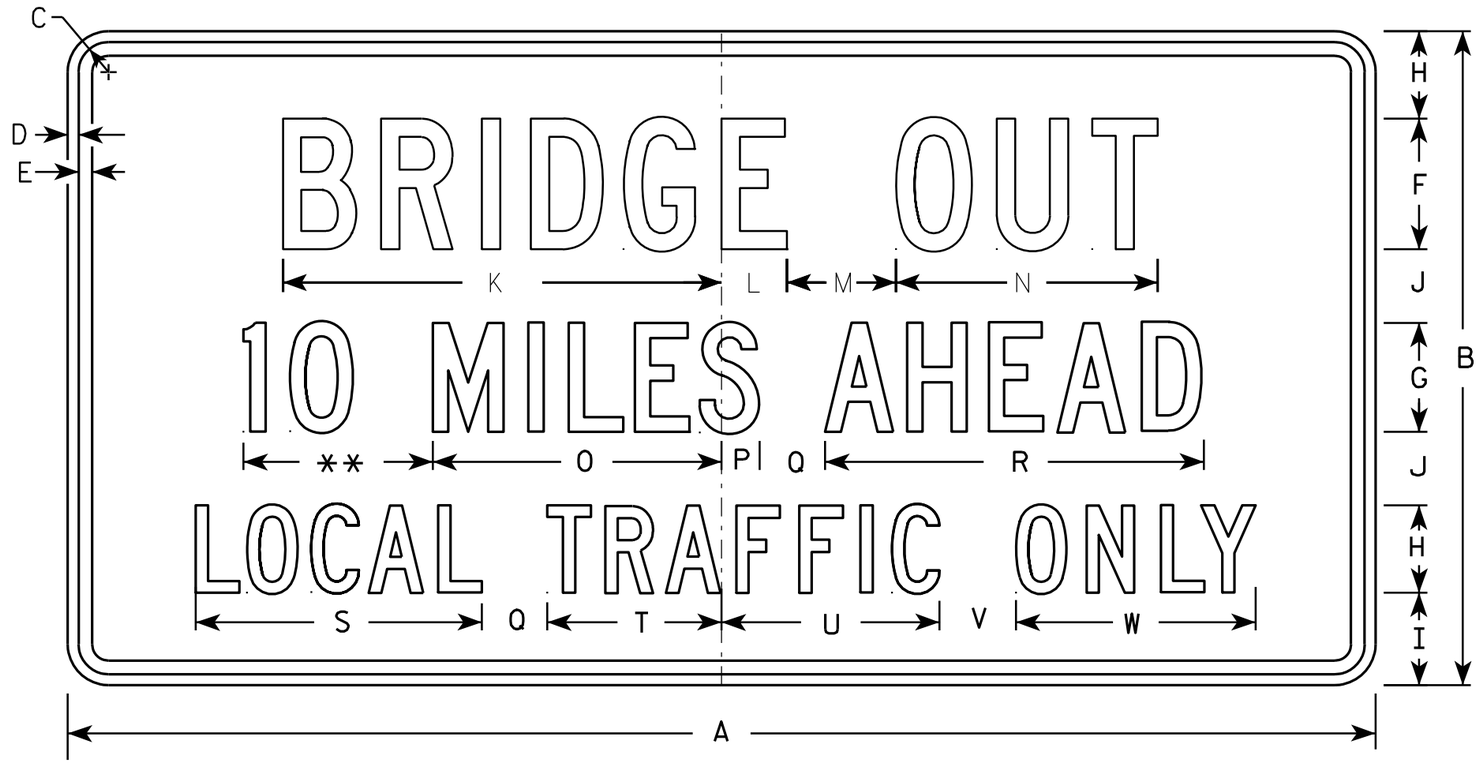

R11-3B

NOTES

1. Sign is Type II - Type H Reflective - reference WIS DOT Standard Specification for HIGHWAY and STRUCTURE CONSTRUCTION latest edition.
2. Color:
   Background - White
   Message - Black
3. Message Series - C
4. Corners may be square or rounded when base material is plywood but borders shall be rounded as shown. When base material is metal, the corners and borders shall be rounded.
5. Substitute appropriate numerals and optically adjust spacing to achieve proper balance.

** See Note 5

SIZE	A	B	C	D	E	F	G	H	I	J	K	L	M	N	O	P	Q	R	S	T	U	V	W	X	Y	Z	Area sq. ft.
1	36	18	1 3/8	1/2	5/8	4	3	2 1/2	2	2	13 1/4	2 1/4	3	8	8	1 1/2	2	10 3/4	8 3/8	4 3/4	6 1/2	2	6 3/4				4.5
2S	60	30	1 3/8	1/2	5/8	6	5	4	4 1/4	3 3/8	20 1/8	3	5	12	13 1/4	1 3/4	3	17 3/8	13 1/8	8	10	3 1/2	11				12.5
2M	60	30	1 3/8	1/2	5/8	6	5	4	4 1/4	3 3/8	20 1/8	3	5	12	13 1/4	1 3/4	3	17 3/8	13 1/8	8	10	3 1/2	11				12.5
3																											
4																											
5																											

STANDARD SIGN
R11-3B

WISCONSIN DEPT OF TRANSPORTATION

APPROVED Matthew R Rauch
for State Traffic Engineer

DATE 4/1/11 PLATE NO. R11-3B.2

PROJECT NO: | HWY: | COUNTY: | SHEET NO: 91 | E

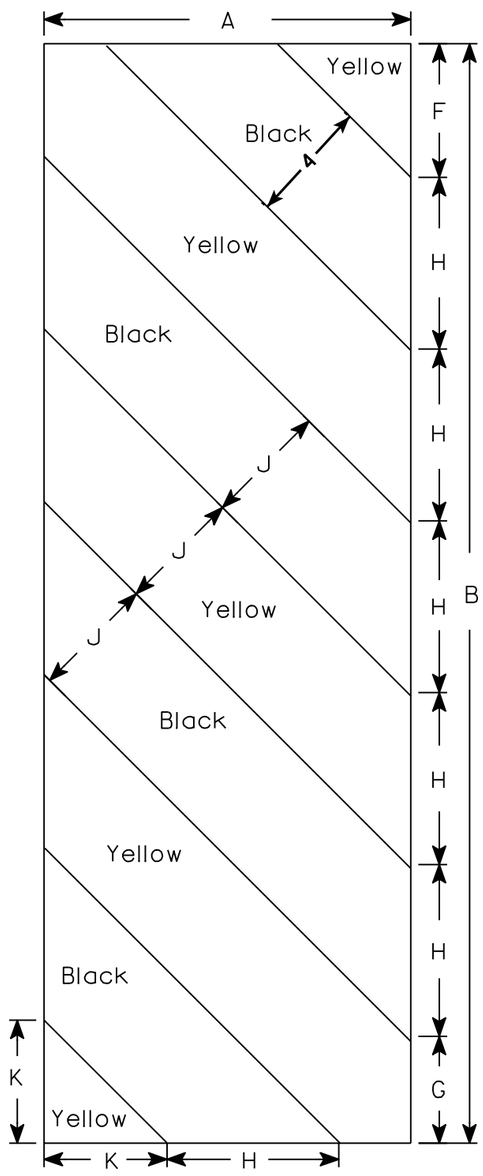

W5-52L

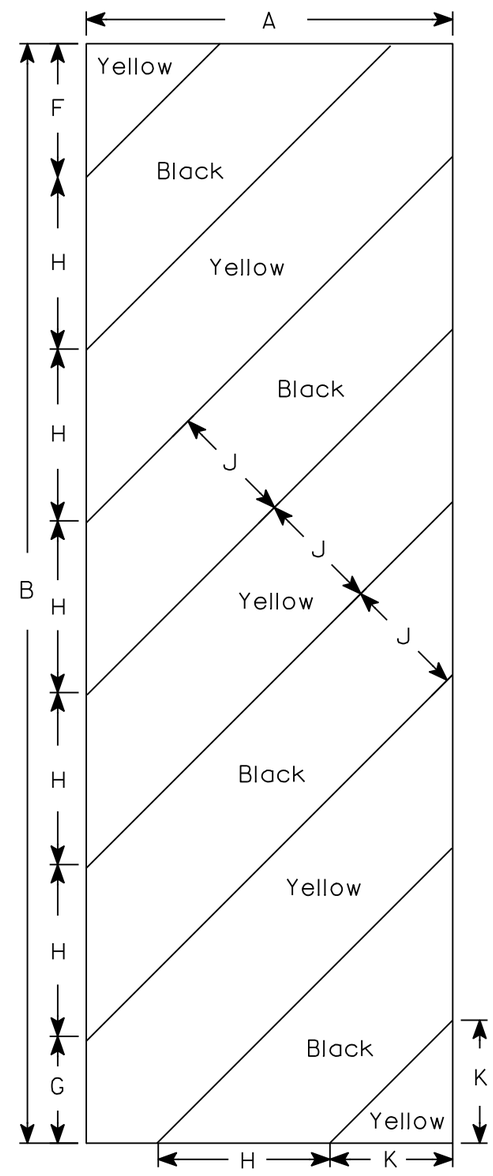

W5-52R

NOTES

1. Sign is Type II - Type F Reflective - reference WIS DOT Standard Specification for HIGHWAY and STRUCTURE CONSTRUCTION latest edition.
2. Color:
   Background - Yellow
   Message - Black
3. Corners may be square or rounded when base material is plywood but borders shall be rounded as shown. When base material is metal, the corners and borders shall be rounded.
4. Alternate colors of stripes as shown.

SIZE	A	B	C	D	E	F	G	H	I	J	K	L	M	N	O	P	Q	R	S	T	U	V	W	X	Y	Z	Area sq. ft.
1																											
2S	12	36				4 3/8	3 1/2	5 5/8	45°	4	4																3.0
2M	12	36				4 3/8	3 1/2	5 5/8	45°	4	4																3.0
3	18	54				6	5 1/2	8 1/2	45°	6	6 9/16																6.75
4																											
5																											

STANDARD SIGN
W5-52L & W5-52R

WISCONSIN DEPT OF TRANSPORTATION

APPROVED Matthew R Rauch
for State Traffic Engineer

DATE 5/29/12 PLATE NO. W5-52.9

PROJECT NO: | HWY: | COUNTY: | SHEET NO: 92 | E

NOTES

1. Sign is Type II - Type F Reflective - reference WIS DOT Standard Specification for HIGHWAY and STRUCTURE CONSTRUCTION latest edition.
2. Color:
   Background - Yellow
   Message - Black
3. Message Series - See note 5
4. Corners and borders shall be rounded on all base materials for this sign.
5. Lines 1 and 2 are Series D.
   Line 3 is series C.

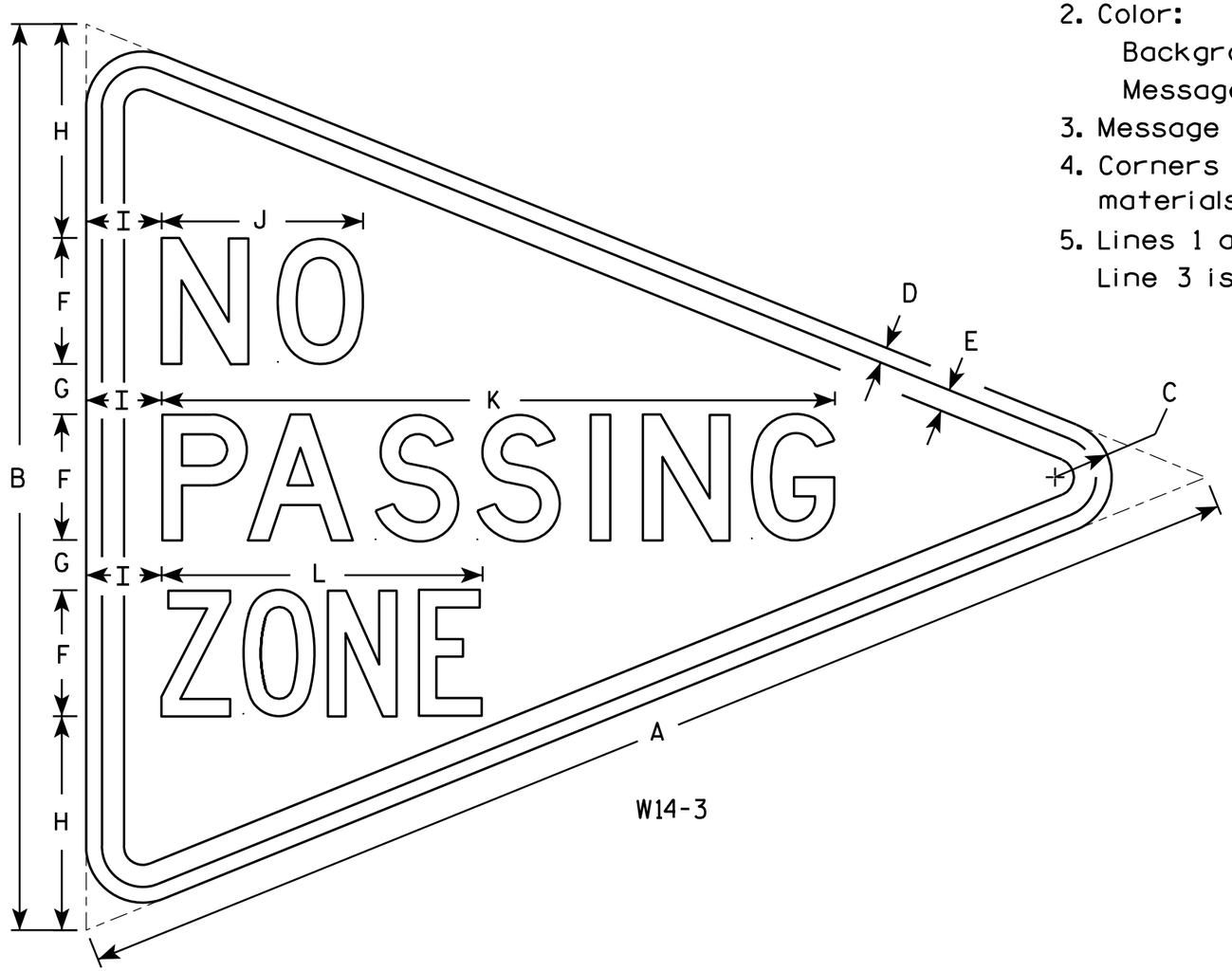

W14-3

SIZE	A	B	C	D	E	F	G	H	I	J	K	L	M	N	O	P	Q	R	S	T	U	V	W	X	Y	Z	Area sq. ft.
1																											
2S	48	36	2 1/4	5/8	7/8	5	2	8 1/2	3	8	26 3/4	12 3/4															6.0
2M	48	36	2 1/4	5/8	7/8	5	2	8 1/2	3	8	26 3/4	12 3/4															6.0
3	64	48	3	3/4	1 1/4	6	3	12	4	10 3/4	33 5/8	16 1/2															10.7
4																											
5																											

STANDARD SIGN
W14-3

WISCONSIN DEPT OF TRANSPORTATION

APPROVED Matthew R Rauch
for State Traffic Engineer
DATE 6/7/10 PLATE NO. W14-3.9

PROJECT NO:	HWY:	COUNTY:		SHEET NO: 93	E

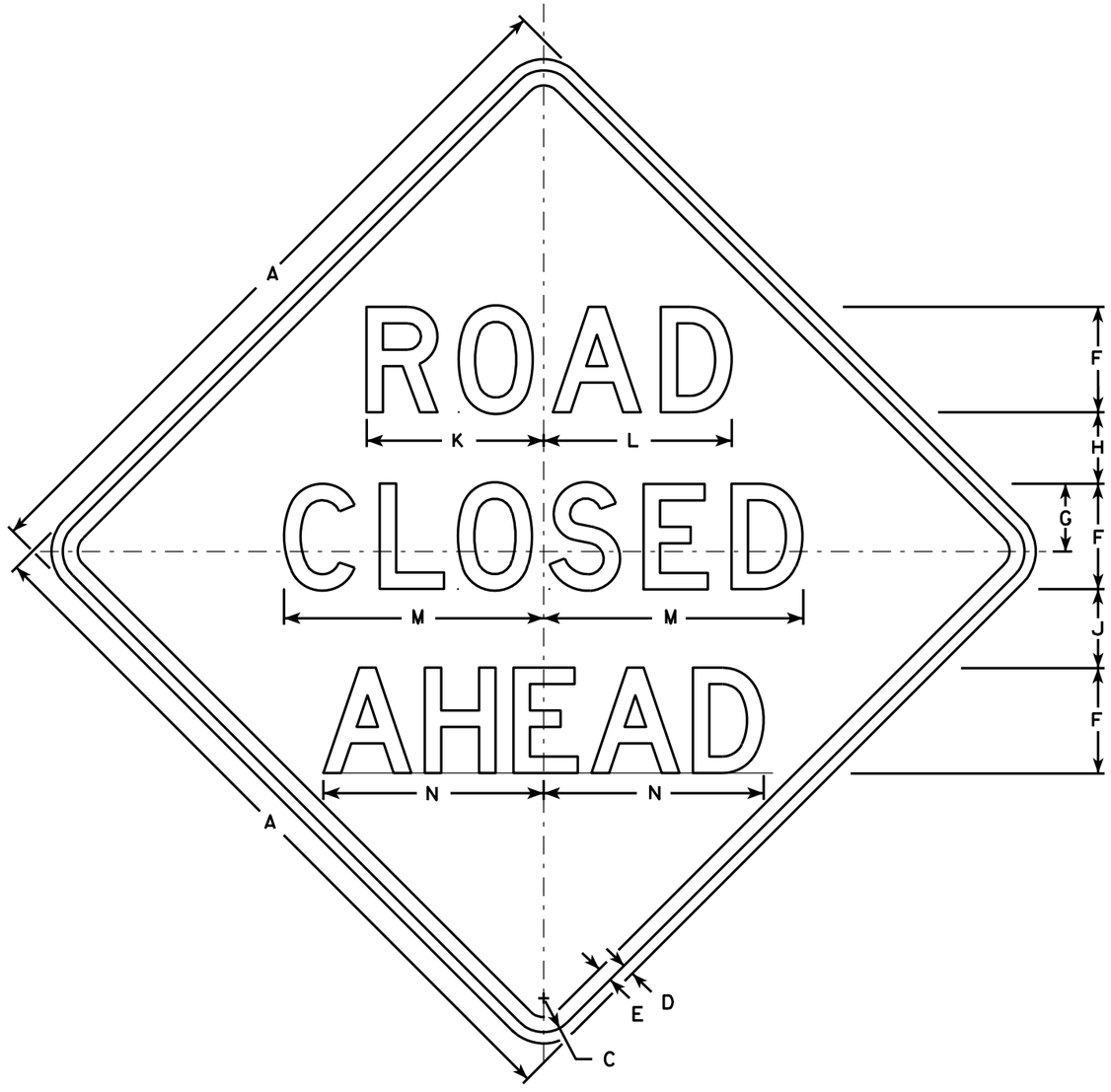

W20-3A

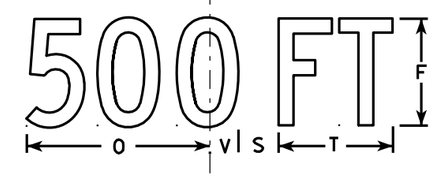

W20-3D

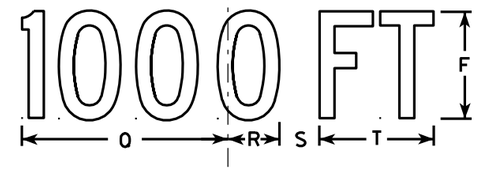

W20-3C

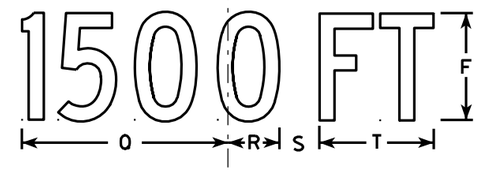

W20-3B

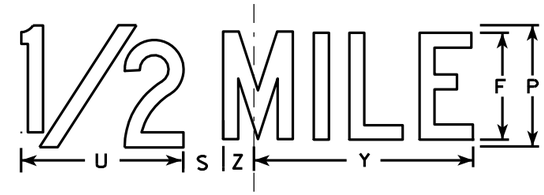

W20-3G

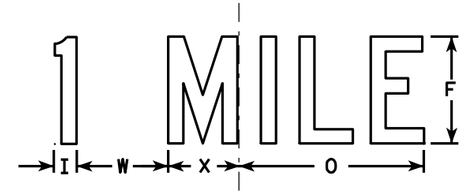

W20-3F

NOTES

1. Sign is Type II - Type F Reflective - reference WIS DOT Standard Specification for HIGHWAY and STRUCTURE CONSTRUCTION latest edition.
2. Color:
   Background - Orange
   Message - Black
3. Message Series - see note 5
4. Corners may be square or rounded when base material is plywood but borders shall be rounded as shown. When base material is metal, the corners and borders shall be rounded.
5. Lines 1 and 2 are Series D.
   Line 3 is Series D for AHEAD and Series C for all other distances.

SIZE	A	B	C	D	E	F	G	H	I	J	K	L	M	N	O	P	Q	R	S	T	U	V	W	X	Y	Z	Area sq. ft.
1	36		1 5/8	5/8	3/4	5	3 3/8	3 1/2	1 1/8	4	8 3/8	8 7/8	12 1/2	11	9	6	10 1/8	2 1/2	1 7/8	5 5/8	8	1 3/8	4 1/2	3 1/2	10 3/4	1 3/4	9.0
2S	48		2 1/4	3/4	1	7	4 1/2	4 3/4	1 1/2	5 1/4	11 3/4	12 1/2	17 1/4	14 5/8	12	8	13 1/2	3 3/8	2 5/8	7 1/2	10 5/8	1 7/8	6	4 5/8	14 3/8	2 3/8	16.0
2M	48		2 1/4	3/4	1	7	4 1/2	4 3/4	1 1/2	5 1/4	11 3/4	12 1/2	17 1/4	14 5/8	12	8	13 1/2	3 3/8	2 5/8	7 1/2	10 5/8	1 7/8	6	4 5/8	14 3/8	2 3/8	16.0
3	48		2 1/4	3/4	1	7	4 1/2	4 3/4	1 1/2	5 1/4	11 3/4	12 1/2	17 1/4	14 5/8	12	8	13 1/2	3 3/8	2 5/8	7 1/2	10 5/8	1 7/8	6	4 5/8	14 3/8	2 3/8	16.0
4	48		2 1/4	3/4	1	7	4 1/2	4 3/4	1 1/2	5 1/4	11 3/4	12 1/2	17 1/4	14 5/8	12	8	13 1/2	3 3/8	2 5/8	7 1/2	10 5/8	1 7/8	6	4 5/8	14 3/8	2 3/8	16.0
5	48		2 1/4	3/4	1	7	4 1/2	4 3/4	1 1/2	5 1/4	11 3/4	12 1/2	17 1/4	14 5/8	12	8	13 1/2	3 3/8	2 5/8	7 1/2	10 5/8	1 7/8	6	4 5/8	14 3/8	2 3/8	16.0

STANDARD SIGN
W20-3A, B, C, D, F & G

WISCONSIN DEPT OF TRANSPORTATION

APPROVED Matthew R Rauch
for State Traffic Engineer
DATE 3/18/11 PLATE NO. W20-3.7

7

7

PROJECT NO: | HWY: | COUNTY: | SHEET NO: 94 | E

NOTES

1. Sign is Type II - Type F Reflective - reference WIS DOT Standard Specification for HIGHWAY and STRUCTURE CONSTRUCTION latest edition.
2. Color:
   Background - Orange
   Message - Black
3. Corners may be square or rounded when base material is plywood but borders shall be rounded as shown. When base material is metal, the corners and borders shall be rounded.

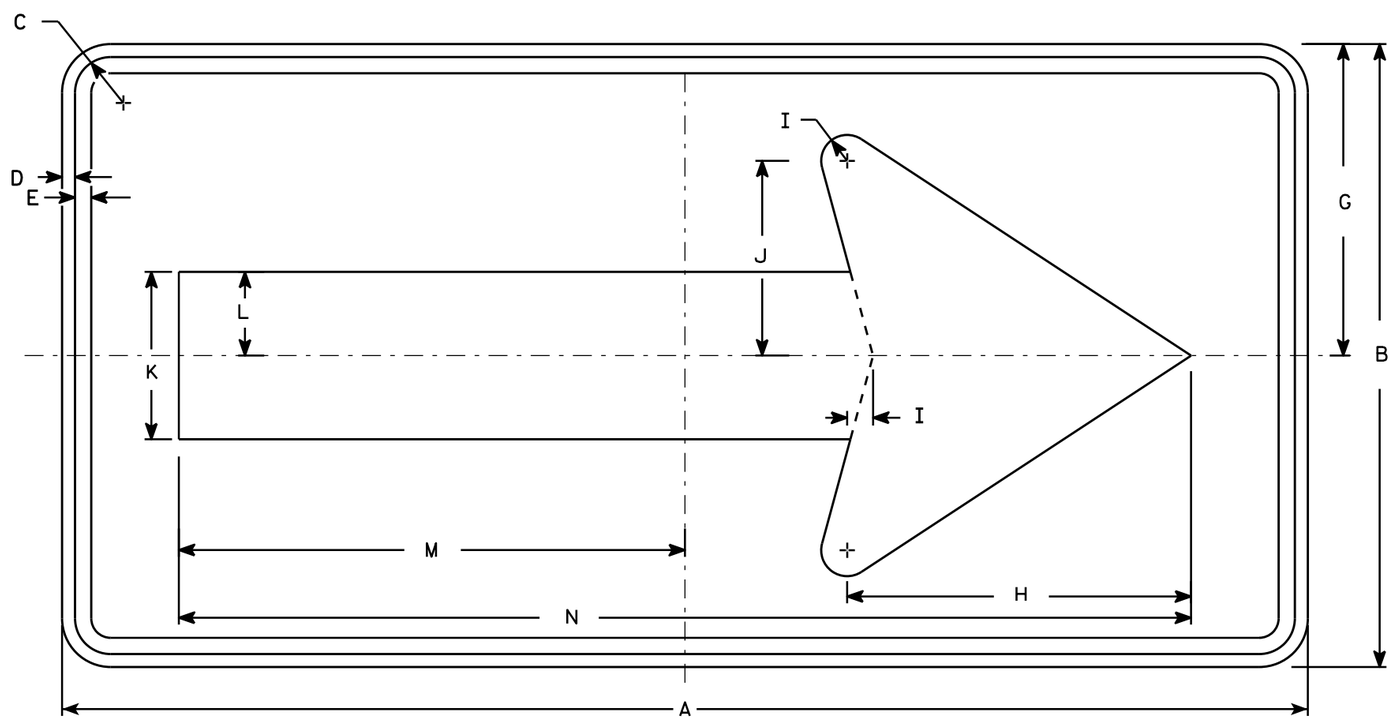

W01-6

SIZE	A	B	C	D	E	F	G	H	I	J	K	L	M	N	O	P	Q	R	S	T	U	V	W	X	Y	Z	Area sq. ft.
1																											
2S	48	24	1 3/8	1/2	5/8		12	13 1/4	1	7 1/2	6 1/2	3 1/4	19 1/2	39													8.0
2M	48	24	1 3/8	1/2	5/8		12	13 1/4	1	7 1/2	6 1/2	3 1/4	19 1/2	39													8.0
3	60	30	1 3/8	1/2	5/8		15	16 1/4	1 1/4	9 1/4	8	4	24 3/8	48 3/4													12.5
4	60	30	1 3/8	1/2	5/8		15	16 1/4	1 1/4	9 1/4	8	4	24 3/8	48 3/4													12.5
5	60	30	1 3/8	1/2	5/8		15	16 1/4	1 1/4	9 1/4	8	4	24 3/8	48 3/4													12.5

STANDARD SIGN
W01-6

WISCONSIN DEPT OF TRANSPORTATION

APPROVED Matthew R Rauch
for State Traffic Engineer

DATE 11/18/13 PLATE NO. W01-6.1

PROJECT NO: | HWY: | COUNTY: | SHEET NO: | E

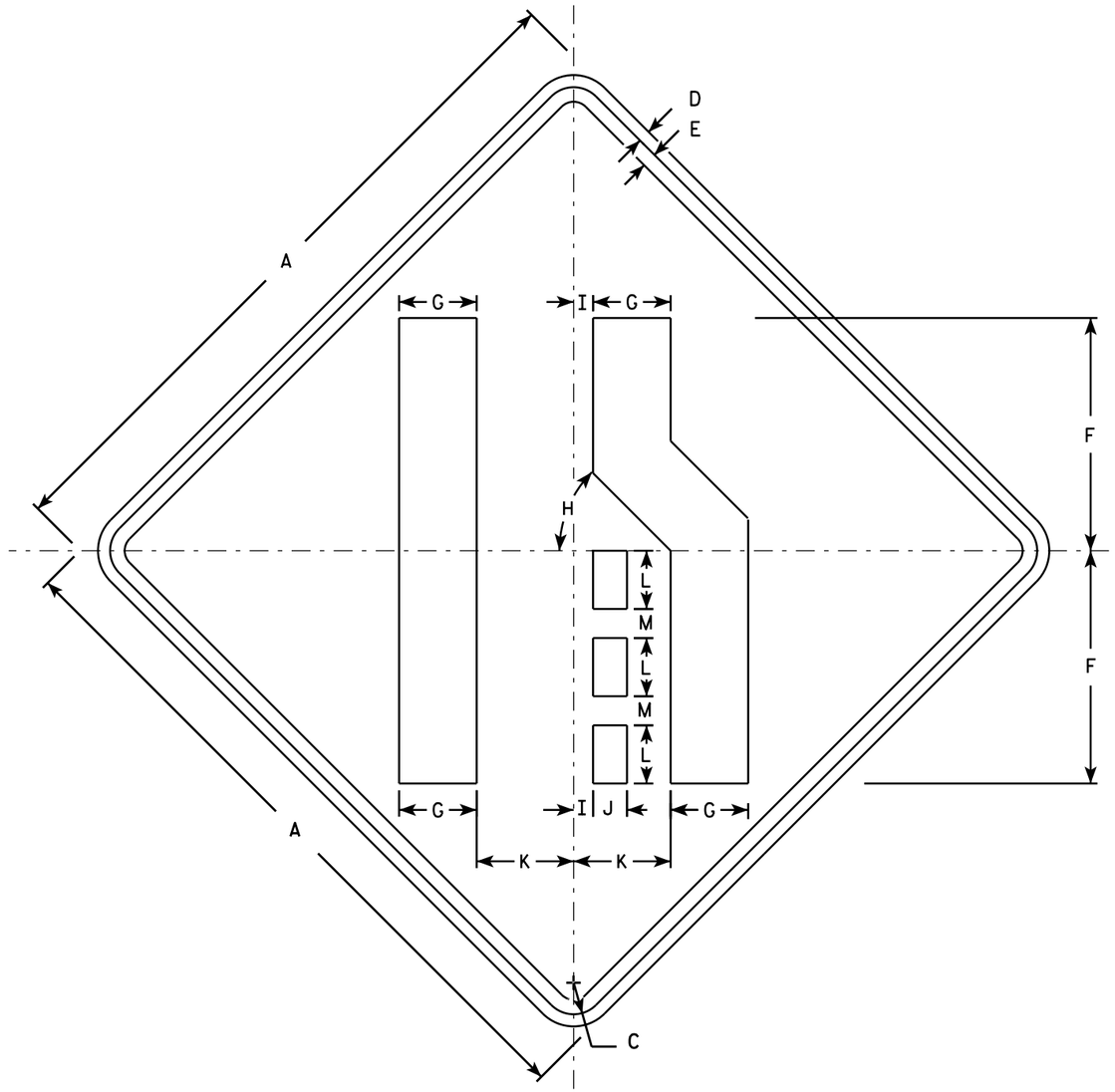

W04-2R

NOTES

1. Sign is Type II - Type F Reflective - reference WIS DOT Standard Specification for HIGHWAY and STRUCTURE CONSTRUCTION latest edition.
2. Color:
   Background - Orange
   Message - Black
3. Corners may be square or rounded when base material is plywood but borders shall be rounded as shown. When base material is metal, the corners and borders shall be rounded.
4. W04-2L is the same as W04-2R except the symbol is reversed along the vertical centerline.

SIZE	A	B	C	D	E	F	G	H	I	J	K	L	M	N	O	P	Q	R	S	T	U	V	W	X	Y	Z	Area sq. ft.
1	36		1 5/8	5/8	3/4	12	4	45°	1	1 3/4	5	3	1 1/2														9.0
2S	48		2 1/4	3/4	1	16	5 3/8	45°	1 1/4	2 3/8	6 3/4	4	2														16.0
2M	48		2 1/4	3/4	1	16	5 3/8	45°	1 1/4	2 3/8	6 3/4	4	2														16.0
3	48		2 1/4	3/4	1	16	5 3/8	45°	1 1/4	2 3/8	6 3/4	4	2														16.0
4	48		2 1/4	3/4	1	16	5 3/8	45°	1 1/4	2 3/8	6 3/4	4	2														16.0
5	48		2 1/4	3/4	1	16	5 3/8	45°	1 1/4	2 3/8	6 3/4	4	2														16.0

STANDARD SIGN
W04-2

WISCONSIN DEPT OF TRANSPORTATION

APPROVED Matthew R Rauch
for State Traffic Engineer

DATE 11/20/13 PLATE 96 W04-2.1

PROJECT NO:

SHEET NO: E

STATE PROJECT NUMBER

1020-01-88

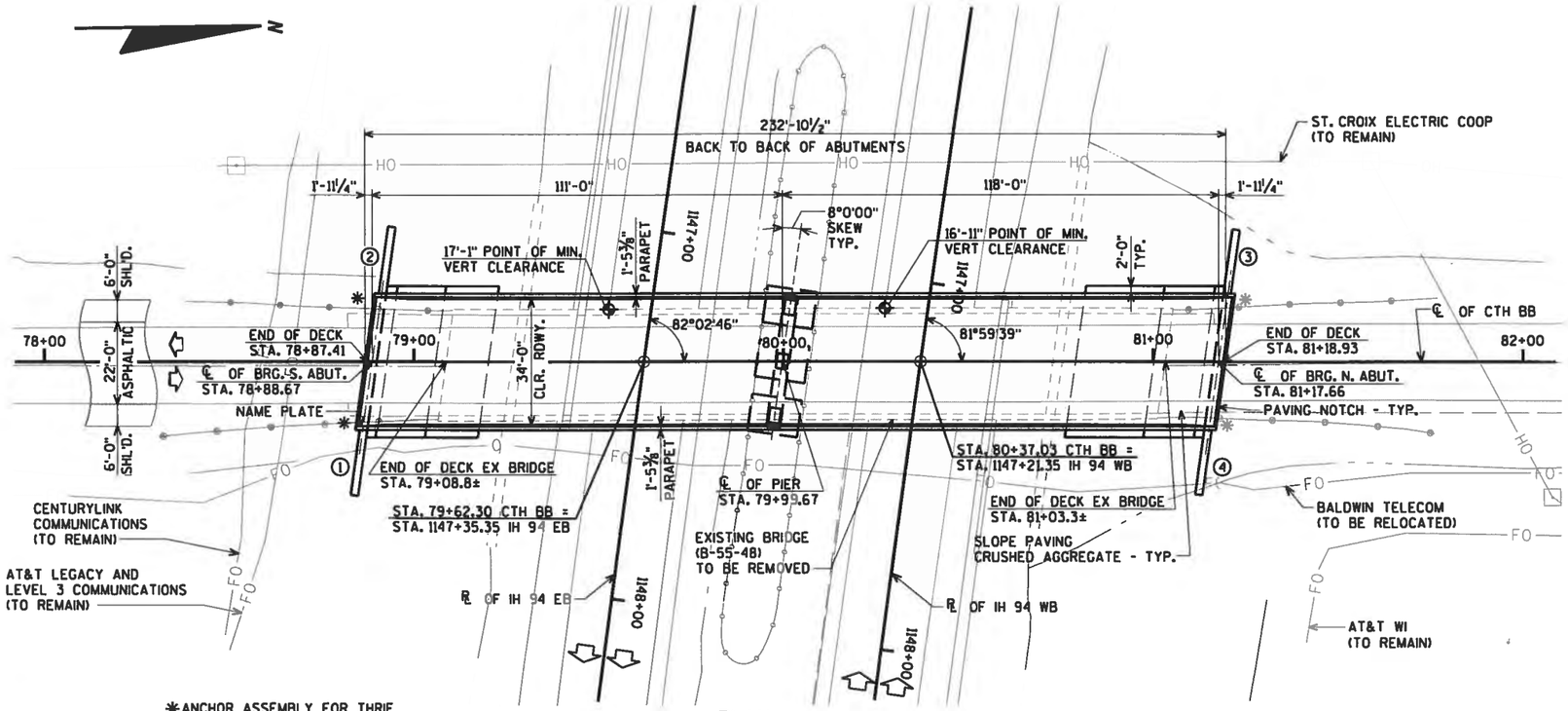

✱ANCHOR ASSEMBLY FOR THRIE BEAM TYPE GUARDRAIL.

◯ DENOTES WING NUMBER.

PLAN

TWO-SPAN 45W" PRESTRESSED CONCRETE GIRDER BRIDGE

COST OF EXCAVATION AND FILL IN THE HATCHED AREAS SHALL BE INCLUDED IN THE CONTRACT LUMP SUM PRICE FOR "EXCAVATION FOR STRUCTURES BRIDGES B-55-265".

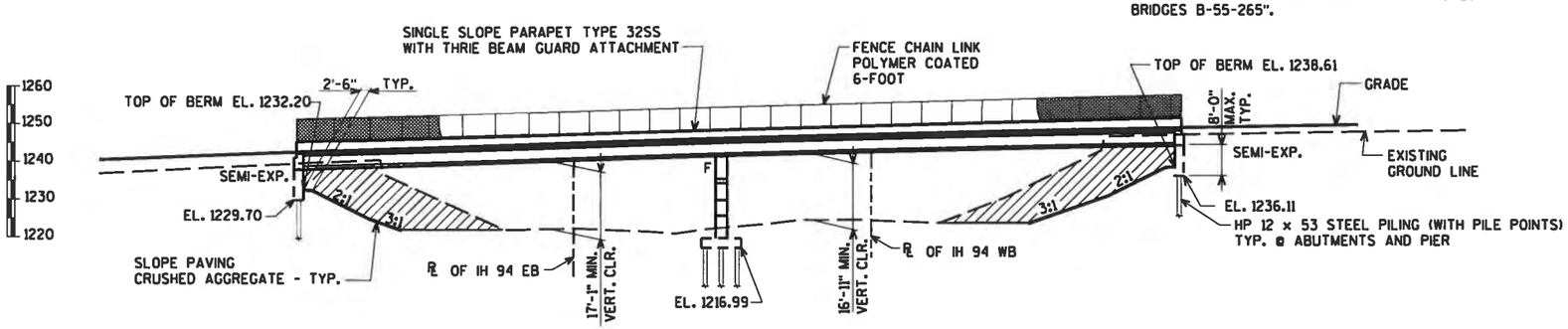

ELEVATION

(NORMAL TO IH 94)

DESIGN DATA

LIVE LOAD:

DESIGN LOADING: HL-93
INVENTORY RATING FACTOR: 1.17
OPERATING RATING FACTOR: 2.05
WISCONSIN STANDARD PERMIT VEHICLE (WIS-SPV) = 250 KIPS

STRUCTURE IS DESIGNED FOR A FUTURE WEARING SURFACE OF 20 #/S.F.

MATERIAL PROPERTIES:

CONCRETE MASONRY { SUPERSTRUCTURE ____ f'_c = 4,000 p.s.i.
CONCRETE MASONRY { ALL OTHER ____ f'_c = 3,500 p.s.i.
HIGH STRENGTH BAR STEEL REINFORCEMENT (GRADE 60) ____ f_y = 60,000 p.s.i.

45W" PRESTRESSED GIRDER
CONCRETE MASONRY ____ f'_c = 8,000 p.s.i.
STRANDS - 0.6" DIA. WITH ULTIMATE TENSILE STRENGTH ____ f'_u = 270,000 p.s.i.

FOUNDATION DATA:

ABUTMENTS TO BE SUPPORTED ON HP 12 x 53 STEEL PILING (WITH PILE POINTS) DRIVEN TO A REQUIRED DRIVING RESISTANCE OF 220 TONS ‡ PER PILE AT S. ABUT. AND 200 TONS ‡ PER PILE AT N. ABUT. AS DETERMINED BY THE MODIFIED GATES DYNAMIC FORMULA. ESTIMATED LENGTH 60'-0" FOR BOTH ABUTMENTS.

PIER TO BE SUPPORTED ON HP 12 x 53 STEEL PILING (WITH PILE POINTS) DRIVEN TO A REQUIRED DRIVING RESISTANCE OF 150 TONS ‡ PER PILE AS DETERMINED BY THE MODIFIED GATES DYNAMIC FORMULA. ESTIMATED LENGTH 40'-0".

‡THE FACTORED AXIAL RESISTANCE OF PILES IN COMPRESSION USED FOR DESIGN IS THE REQUIRED DRIVING RESISTANCE MULTIPLIED BY A RESISTANCE FACTOR OF 0.5 USING MODIFIED GATES TO DETERMINE DRIVEN PILE CAPACITY.

TRAFFIC DATA:

IH 94	CTH BB
A.D.T. = 34,100 (2016)	A.D.T. = 1,200 (2016)
A.D.T. = 39,800 (2036)	A.D.T. = 1,500 (2036)
R.D.S. = 70 M.P.H.	R.D.S. = 50 M.P.H.

FOR TYPICAL SECTION, BID ITEMS, AND GENERAL NOTES SEE SHEET 2

LIST OF DRAWINGS

1. GENERAL PLAN
2. QUANTITIES AND NOTES
3. TYPICAL SECTIONS & PROFILE GRADE LINES
4. SUBSURFACE EXPLORATION
5. SOUTH ABUTMENT
6. SOUTH ABUTMENT DETAILS
7. SOUTH ABUTMENT BILL OF BARS
8. NORTH ABUTMENT
9. NORTH ABUTMENT DETAILS
10. NORTH ABUTMENT BILL OF BARS
11. PIER
12. PIER DETAILS
13. 45W" PRESTRESSED GIRDER DETAILS
14. 45W" PRESTRESSED GIRDER DETAILS
15. INTERM. STEEL DIAPHS. DETAILS
16. SUPERSTRUCTURE
17. SUPERSTRUCTURE PLAN
18. SUPERSTRUCTURE DETAILS
19. SINGLE SLOPE PARAPET 32SS
20. FENCING DETAILS
21. SLOPE PAVING CRUSHED AGGREGATE

WISCONSIN PROFESSIONAL ENGINEER DANIEL N. SYDOW E-38363 WI
7/31/2015

BRIDGE OFFICE CONTACT:
WILLIAM DREHER
(608)-266-8489

CONSULTANT CONTACT:
DAN SYDOW
(715)-834-3161

NO.	DATE	REVISION	BY

ORIGINAL PLANS PREPARED BY
AYRES ASSOCIATES
3433 Oakwood Hills Parkway
Eau Claire, WI 54701
www.AyresAssociates.com

STATE OF WISCONSIN
DEPARTMENT OF TRANSPORTATION

ACCEPTED William C. Dreher SDR 08/05/15
CHIEF STRUCTURES DESIGN ENGINEER DATE

STRUCTURE B-55-265

CTH BB OVER IH 94

COUNTY ST. CROIX | TOWN/~~CITY/VILLAGE~~ EAU GALLE

DESIGN SPEC. AASHTO LRFD BRIDGE DESIGN SPECIFICATIONS

DESIGNED BY CJM | DESIGN CK'D. AEB | DRAWN BY CJM/CLS | PLANS CK'D. DNS

GENERAL PLAN

SHEET 1 OF 21
97

8

8

DATE:
DATE:
DATE:
CHECKED BY:
BACK CHECKED BY:
CORRECTED BY:

$PRFNAME$
U:\42-0886.00 - St. Croix Co, 94 Overpasses x3\42-0886.01B-55-48 CTH BB\BRIDGE\42088601.gp FINAL.c

STATE PROJECT NUMBER

1020-01-88

TOTAL ESTIMATED QUANTITIES

BID ITEM NUMBER	BID ITEMS	UNIT	S. ABUT.	PIER	N. ABUT.	SUPER.	TOTAL
203.0200	REMOVING OLD STRUCTURE STA. 80+00	LS	-----	-----	-----	-----	1
203.0225.S	DEBRIS CONTAINMENT B-55-265	LS	-----	-----	-----	-----	1
206.1000	EXCAVATION FOR STRUCTURES BRIDGES B-55-265	LS	-----	-----	-----	-----	1
210.0100	BACKFILL STRUCTURE	CY	370	-----	375	-----	745
502.0100	CONCRETE MASONRY BRIDGES	CY	60	90	60	355	565
502.3200	PROTECTIVE SURFACE TREATMENT	SY	-----	-----	-----	875	875
502.3210	PIGMENTED SURFACE SEALER	SY	-----	-----	-----	195	195
503.0146	PRESTRESSED GIRDER TYPE 145W-INCH	LF	-----	-----	-----	1,379	1,379
505.0400	BAR STEEL REINFORCEMENT HS STRUCTURES	LB	3,260	4,260	3,260	-----	10,780
505.0600	BAR STEEL REINFORCEMENT HS COATED STRUCTURES	LB	2,450	12,410	2,450	72,140	89,450
506.2605	BEARING PADS ELASTOMERIC NON-LAMINATED	EACH	6	12	6	-----	24
506.4000	STEEL DIAPHRAGMS B-55-265	EACH	-----	-----	-----	20	20
516.0500	RUBBERIZED MEMBRANE WATERPROOFING	SY	8	-----	8	-----	16
550.0500	PILE POINTS	EACH	9	36	10	-----	55
550.1120	PILING STEEL HP 12-INCH x 53 LB	LF	540	1,440	600	-----	2,580
604.0500	SLOPE PAVING CRUSHED AGGREGATE	SY	150	-----	180	-----	330
612.0406	PIPE UNDERDRAIN WRAPPED 6-INCH	LF	95	-----	95	-----	190
614.0150	ANCHOR ASSEMBLIES FOR STEEL PLATE BEAM GUARD	EACH	2	-----	2	-----	4
SPV.0090	FENCE CHAIN LINK POLYMER COATED 6-FT	LF	-----	-----	-----	465	465
	NON-BID ITEMS						
	FILLER	SIZE	-----	-----	-----	-----	1/2" & 3/4"

GENERAL NOTES

DRAWINGS SHALL NOT BE SCALED.

BAR STEEL REINFORCEMENT SHALL BE EMBEDDED 2" CLEAR UNLESS SHOWN OR NOTED OTHERWISE.

THE FIRST DIGIT OF A THREE DIGIT BAR NO. AND THE FIRST TWO DIGITS OF A FOUR DIGIT BAR NO. SIGNIFIES THE BAR SIZE.

JOINT FILLER SHALL CONFORM TO THE REQUIREMENTS OF A.A.S.H.T.O. DESIGNATION M 153, TYPE I, II OR III OR A.A.S.H.T.O. DESIGNATION M 213.

THE SLOPE OF THE FILL IN FRONT OF THE ABUTMENTS SHALL BE COVERED WITH SLOPE PAVING MATERIAL TO THE EXTENT SHOWN SHOWN ON THE GENERAL PLAN SHEET AND IN THE ABUTMENT DETAILS.

PROTECTIVE SURFACE TREATMENT AND PIGMENTED SURFACE SEALER TO BE APPLIED AS SHOWN ON THE DETAIL ON THIS SHEET.

ELASTOMERIC BEARING PADS NEED NOT BE INDIVIDUALLY MOLDED PROVIDED THE CUT EDGES ARE SMOOTH AND TRUE.

THE EXISTING GROUNDLINE SHALL BE THE UPPER LIMIT FOR EXCAVATION FOR STRUCTURES.

THE EXISTING STRUCTURE, B-55-48, TO BE REMOVED, IS A FOUR SPAN 36" PRESTRESSED CONCRETE GIRDER BRIDGE, 198 FT. LONG WITH A 27.3 FT. CLEAR ROADWAY WIDTH. STRUCTURE HAS THREE PIERS SUPPORTED ON SPREAD FOOTINGS AND TWO ABUTMENTS SUPPORTED ON TIMBER PILES.

AT BACKFACE OF ABUTMENTS ALL EXCAVATED VOLUME NOT OCCUPIED BY THE NEW STRUCTURE SHALL BE BACKFILLED WITH BACKFILL STRUCTURE.

THE HAUNCH QUANTITY IS BASED ON AN AVERAGE HAUNCH DEPTH SHOWN ON THE PRESTRESSED GIRDER DETAILS SHEETS, WHICH IS THE MAXIMUM HAUNCH QUANTITY FOR WHICH THE CONTRACTOR WILL BE PAID.

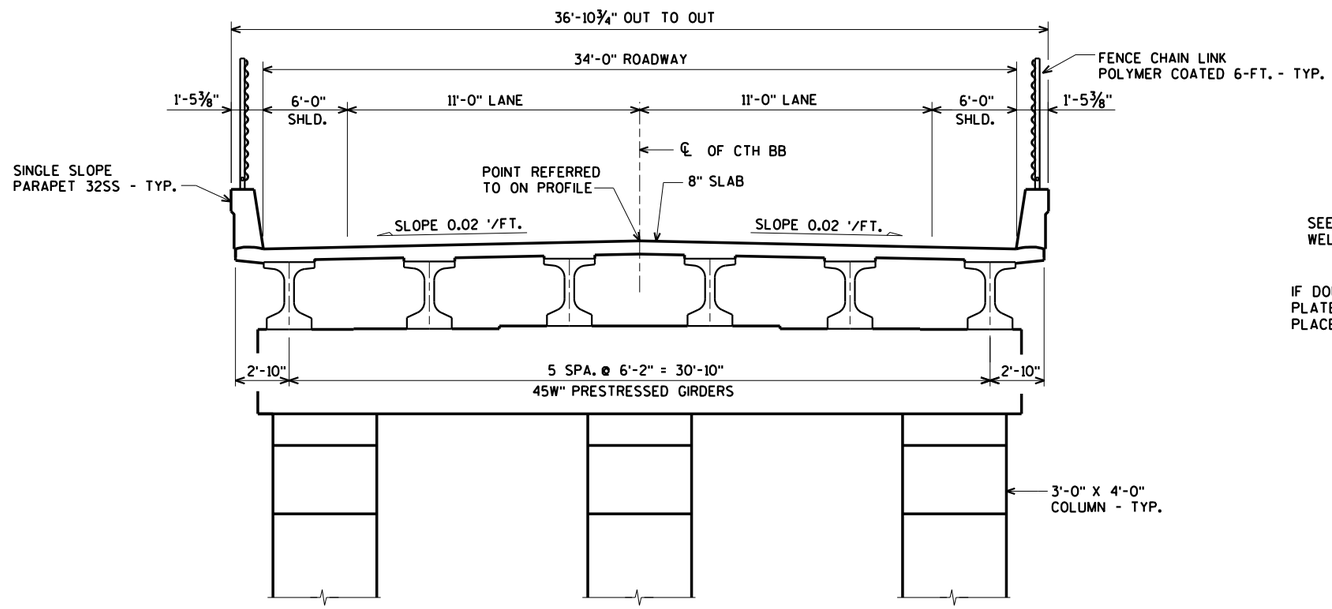

CROSS SECTION THRU BRIDGE
(LOOKING NORTH)

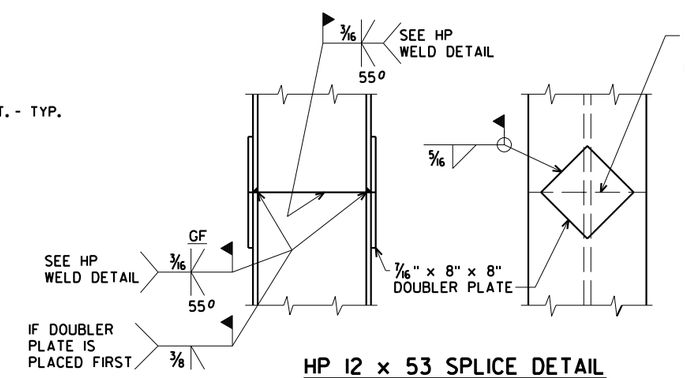

HP 12 x 53 SPLICE DETAIL

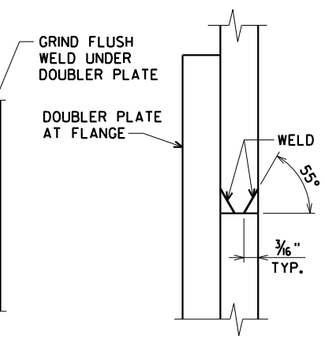

HP WELD DETAIL
FLANGE SHOWN, WEB SIMILAR

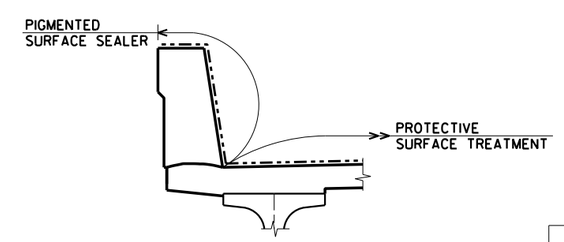

SURFACE TREATMENT DETAIL

NO.	DATE	REVISION	BY

STATE OF WISCONSIN
DEPARTMENT OF TRANSPORTATION

STRUCTURE B-55-265

DRAWN BY CJM/CLS | PLANS CK'D. CJM

QUANTITIES AND NOTES

SHEET 2 OF 21

98

ORIGINAL PLANS PREPARED BY
AYRES ASSOCIATES
3433 Oakwood Hills Parkway
Eau Claire, WI 54701
www.AyresAssociates.com

8

8

$PRFNAME$
U:\42-0886.00 - St. Croix Co.194 Overpasses x3\42-0886.01B-55-48 CTH BB\BRIDGE\42088601gpty.dgn

7/27/2015

PENTABLE:BReau_shd_util.tbl

STATE PROJECT NUMBER

1020-01-88

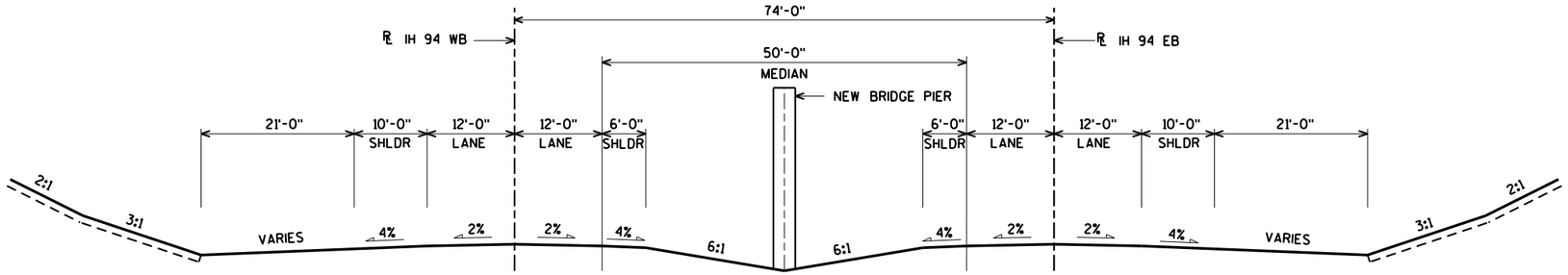

TYPICAL SECTION THRU IH 94

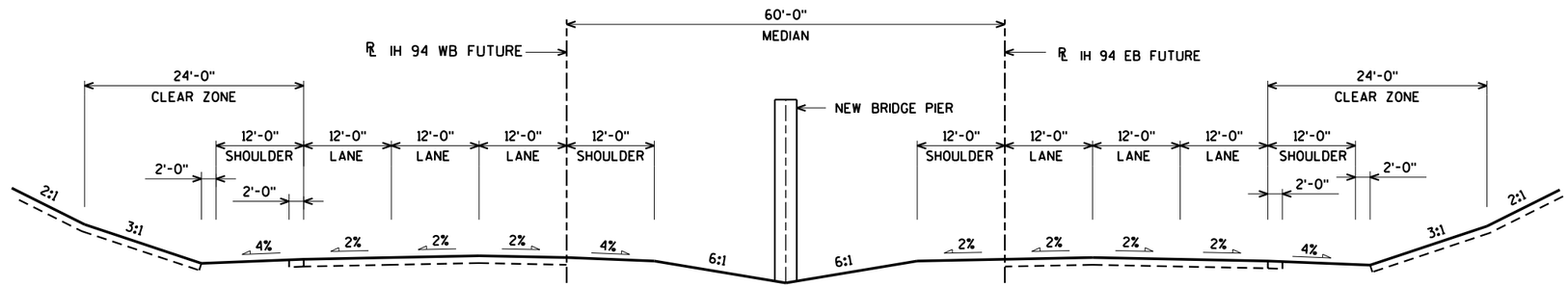

TYPICAL FUTURE SECTION THRU IH 94

(SECTION USED TO SIZE STRUCTURE)

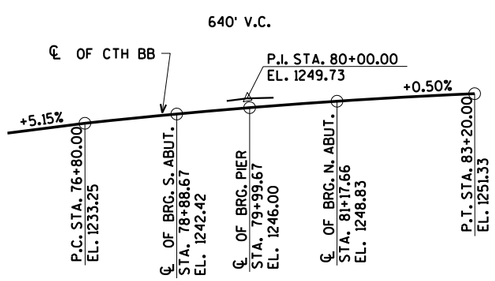

PROFILE GRADE LINE

(CTH BB)

BENCH MARK:

SPIKE IN POWER POLE
STA. 78+52, 53' LT.
EL. 1241.78

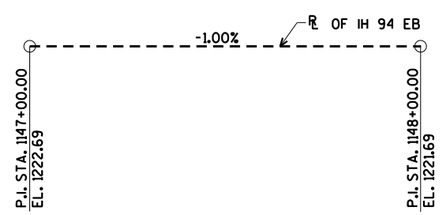

PROFILE GRADE LINE

(IH 94 EB)

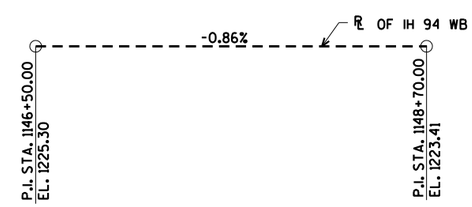

PROFILE GRADE LINE

(IH 94 WB)

NO.	DATE	REVISION	BY

STATE OF WISCONSIN
DEPARTMENT OF TRANSPORTATION

STRUCTURE B-55-265

DRAWN BY CJM | PLANS CK'D. CJM

TYPICAL SECTIONS & PROFILE GRADE LINES

SHEET 3 OF 21

99

ORIGINAL PLANS PREPARED BY

AYRES ASSOCIATES
3433 Oakwood Hills Parkway
Eau Claire, WI 54701
www.AyresAssociates.com

$PRFNAME$
U:±42-0886.00 - St. Croix Co.194 Overpasses x3±42-0886.01B-55-48 CTH BB±BRIDGE±42088601gpty.dgn

8

8

7/27/2015

PENTABLE:BReau_shd_util.tbl

$PRFNAME$
U:42-0886.00 - St. Croix Co. 194 Overpasses x3:42-0886.01B-55-48 CTH BB:BRIDGE:4208860l soils.dgn

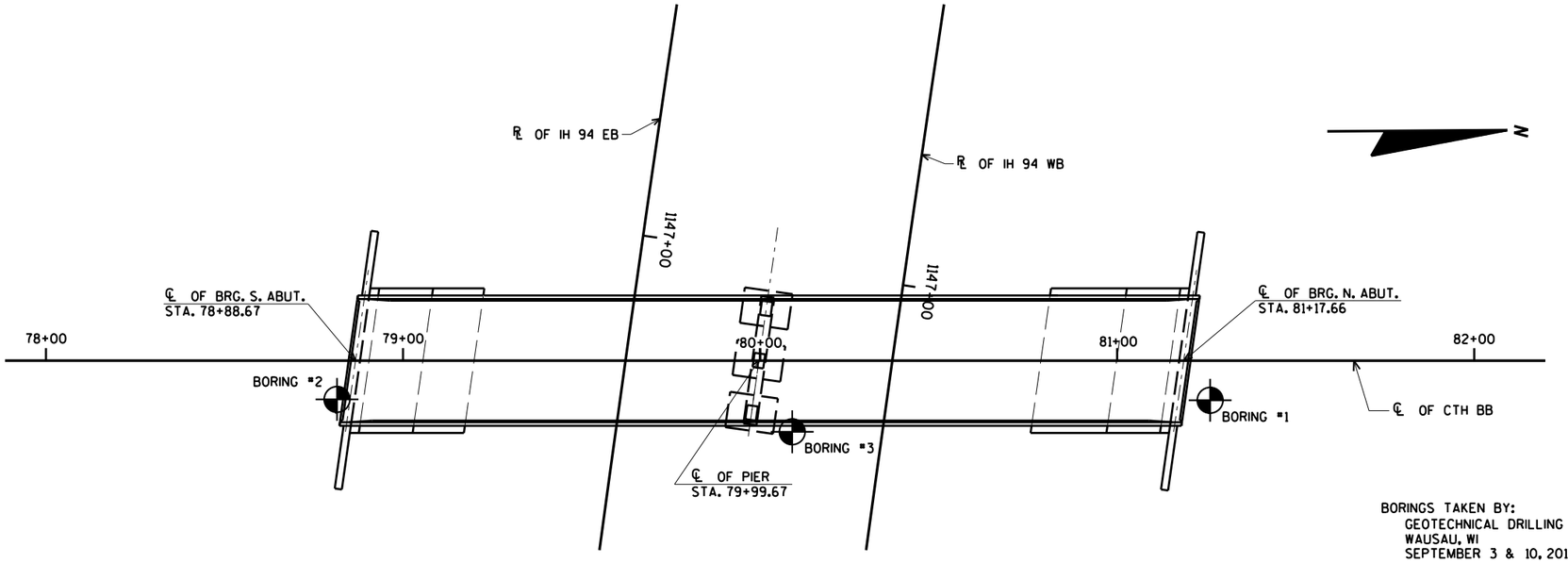

BORINGS TAKEN BY:
GEOTECHNICAL DRILLING CONTRACTORS, LLC
WAUSAU, WI
SEPTEMBER 3 & 10, 2013

GEOTECHNICAL REPORT BY:
RIVER VALLEY TESTING, INC.
NEENAH, WI
OCTOBER 18, 2013

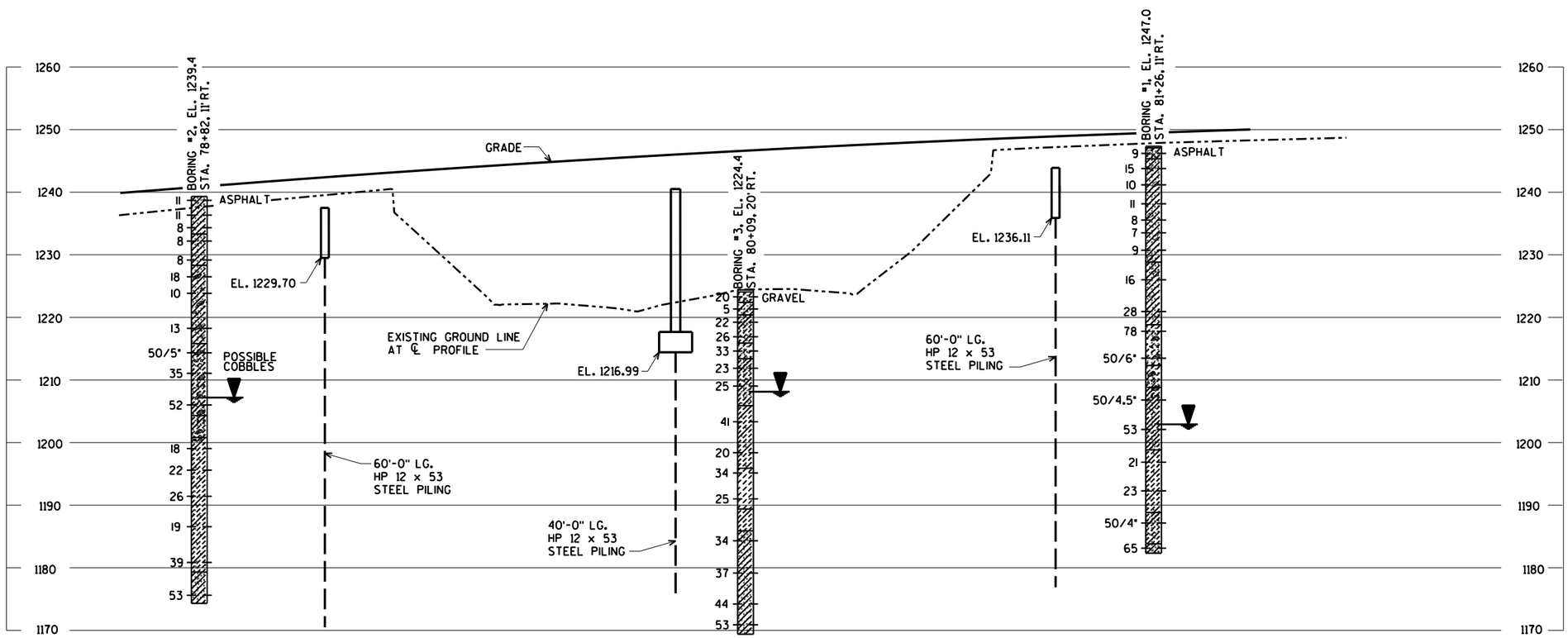

STATE PROJECT NUMBER

1020-01-88

ABBREVIATIONS

F — FINE M — MEDIUM C — COARSE
WS — WEATHERED SO — SOUND

MATERIAL SYMBOLS

TOPSOIL, SILT, SANDSTONE, SAND, PEAT, LIMESTONE, GRAVEL, CLAY, IGNEOUS ROCK

LEGEND OF PROBING

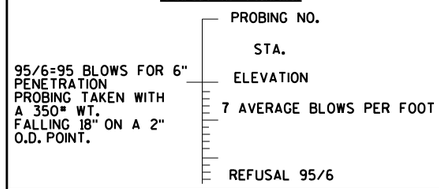

LEGEND OF BORING

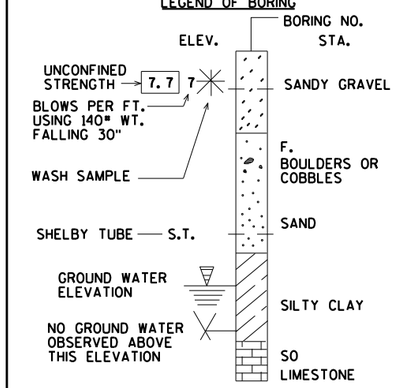

UNLESS OTHERWISE SPECIFIED, THE BLOWS PER FOOT AT THE LOCATIONS INDICATED ARE BASED ON DRIVING A 2" O.D. X 1.4" I.D. SPLIT SPOON SAMPLER WITH A 140# HAMMER HAVING A FREE FALL OF 30". THE BLOW COUNT IS TAKEN IN UNDISTURBED SOIL IMMEDIATELY BELOW A CASED OR OPEN HOLE ELIMINATING SIDE FRICTION ON THE DRIVE PIPE.

SUBSURFACE EXPLORATION FOR FOUNDATION DESIGN AND BIDDERS INFORMATION

TO OBTAIN RELATIVE DATA CONCERNING THE CHARACTER OF MATERIAL IN AND UPON WHICH THE FOUNDATION MIGHT BE BUILT, BORINGS AND/OR SOUNDINGS WERE MADE AT POINTS APPROXIMATELY AS INDICATED ON THIS DRAWING. THE DATA PRESENTED HEREIN REPRESENTS THE FINDINGS OF THE SUBSURFACE EXPLORATIONS MADE. HOWEVER, BECAUSE THE DEPTHS INVESTIGATED ARE LIMITED AND THE AREA OF THE BORINGS AND/OR SOUNDINGS IS VERY SMALL IN RELATION TO THE ENTIRE AREA, THE WISCONSIN DEPARTMENT OF TRANSPORTATION DOES NOT WARRANT CONDITIONS BELOW THE DEPTHS INVESTIGATED OR THAT THE CLASSIFICATION OF MATERIAL ENCOUNTERED IN THESE INVESTIGATIONS IS NECESSARILY TYPICAL OF THE ENTIRE SITE.

8

8

NO.	DATE	REVISION	BY

STATE OF WISCONSIN
DEPARTMENT OF TRANSPORTATION

STRUCTURE B-55-265

DRAWN BY CJM PLANS CK'D. CJM

SUBSURFACE EXPLORATION

SHEET 4 OF 21
100

NOTE: SEAL ALL EXPOSED HORIZONTAL AND VERTICAL SURFACES OF ½" FILLER WITH NON-STAINING GRAY NON-BITUMINOUS JOINT SEALER. (1" DEEP AND HOLD ⅛" BELOW SURFACE OF CONCRETE.)

STATE PROJECT NUMBER

1020-01-88

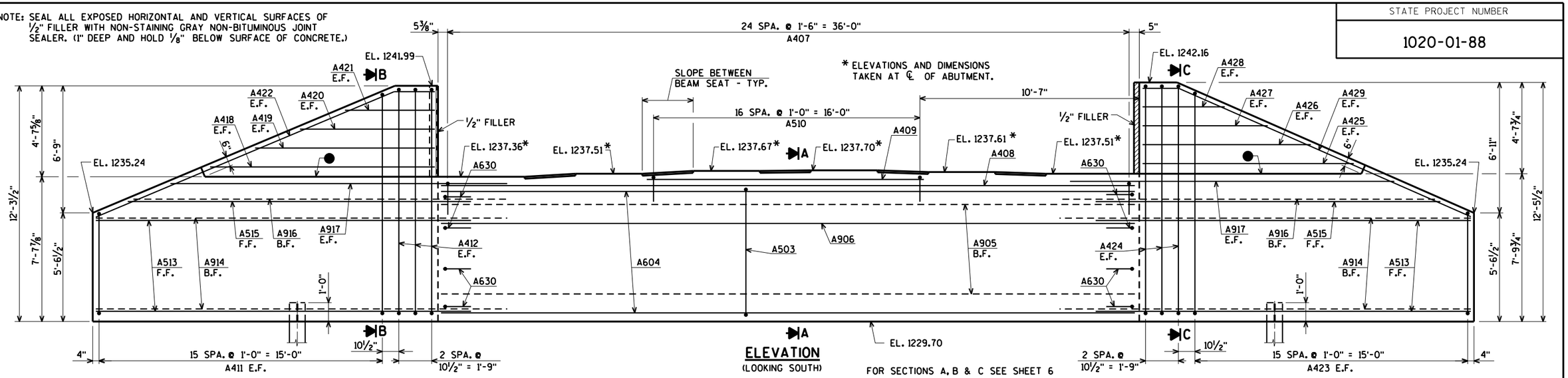

ELEVATION
(LOOKING SOUTH)

FOR SECTIONS A, B & C SEE SHEET 6

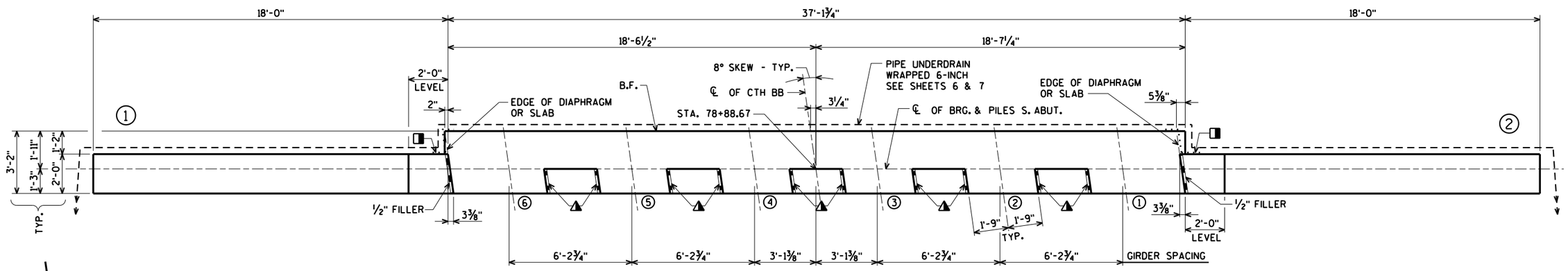

PLAN

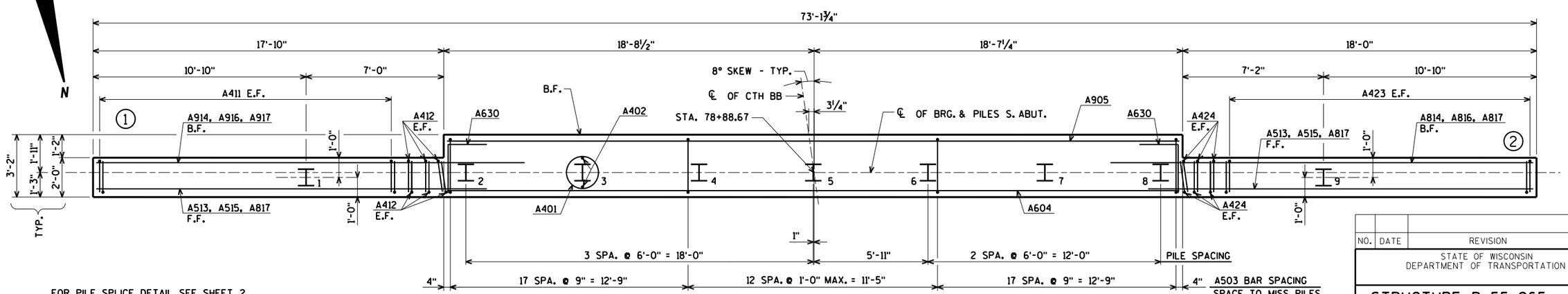

PILE LAYOUT

FOR PILE SPLICE DETAIL SEE SHEET 2.

◨ 18" RUBBERIZED MEMBRANE WATERPROOFING FROM BRIDGE SEAT TO TOP OF WING.

▲ ¾" CORK FILLER ON VERTICAL BEAM SEAT FACES THAT RUN PARALLEL WITH GIRDER.

F.F. DENOTES FRONT FACE

B.F. DENOTES BACK FACE

E.F. DENOTES EACH FACE

● OPT. KEYED CONST. JOINT - FORMED BY A SURFACED BEVELED 2" x 6" WITH RUBBERIZED MEMBRANE WATERPROOFING ON B.F. (COST IS INCIDENTAL TO BID ITEM "CONCRETE MASONRY BRIDGES".) AND ¾" "V" GROOVE ON F.F.

NO.	DATE	REVISION	BY

STATE OF WISCONSIN
DEPARTMENT OF TRANSPORTATION

STRUCTURE B-55-265

DRAWN BY CLS | PLANS CK'D. CJM

SOUTH ABUTMENT

SHEET 5 OF 21
101

ORIGINAL PLANS PREPARED BY
AYRES ASSOCIATES
3433 Oakwood Hills Parkway
Eau Claire, WI 54701
www.AyresAssociates.com

8

8

$PRFNAME$
U:±42-0886.00 - St. Croix Co. 194 Overpasses x3±42-0886.01 B-55-48 CTH BB±BRIDGE±42088601 sa.dgn

7/27/2015

PENTABLE:BReau_shd_util.tbl

STATE PROJECT NUMBER

1020-01-88

FOR LOCATIONS OF SECTIONS A, B & C SEE SHEET 5

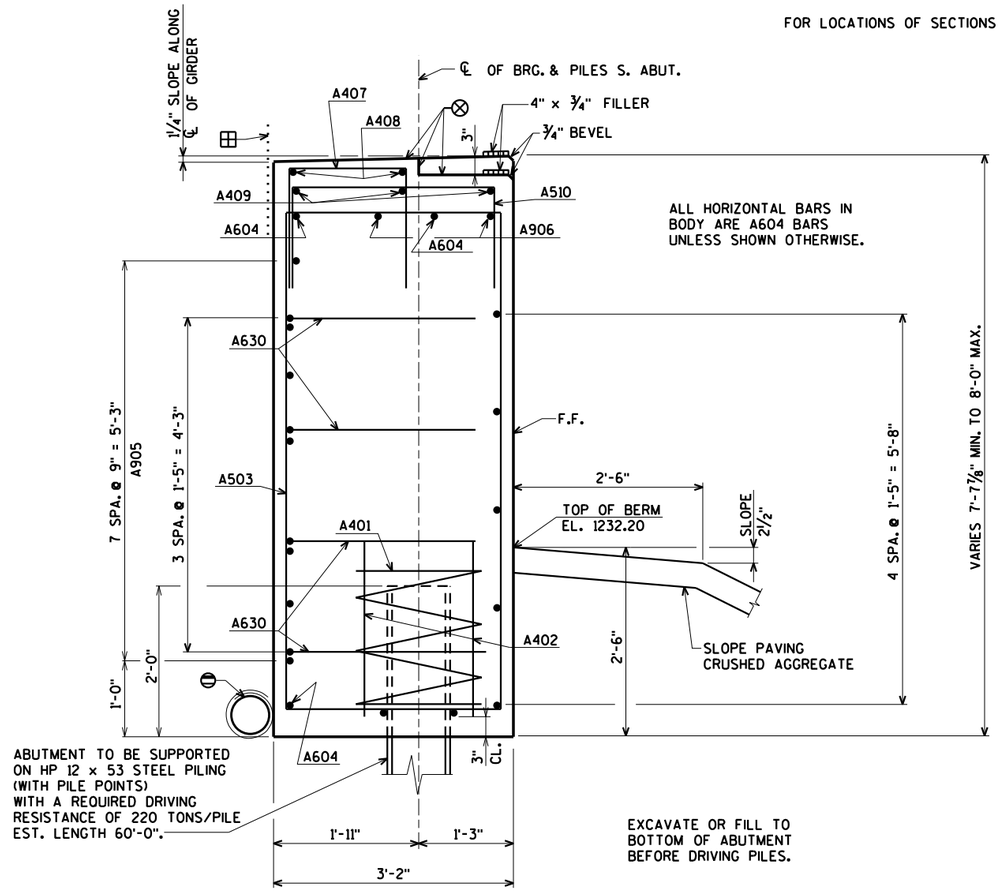

EXCAVATE OR FILL TO BOTTOM OF ABUTMENT BEFORE DRIVING PILES.

SECTION A

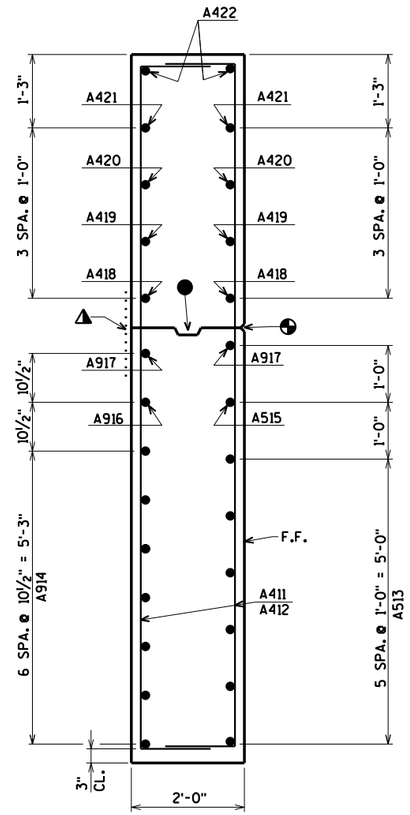

SECTION B

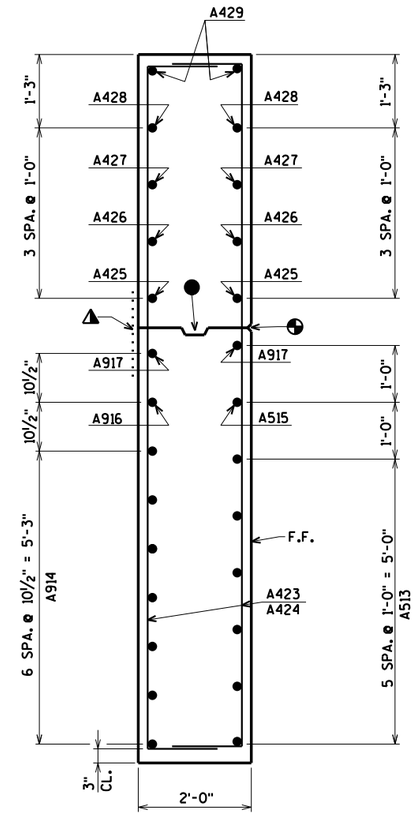

SECTION C

● OPT. KEYED CONST. JOINT - FORMED BY A SURFACED BEVELED 2" x 6".

◐ 3/4" 'V' GROOVE ON F.F. OF WING WALL NOT REQUIRED IF CONST. JT. IS NOT USED.

⊗ STEEL TROWEL TOP SURFACE OF ABUTMENT. PLACE MULTIPLE LAYERS OF POLYETHYLENE SHEETS OVER ENTIRE ABUTMENT TOP BEFORE PLACING BEARING AND/OR SUPERSTRUCTURE. TOTAL THICKNESS OF SHEETS SHALL BE AT LEAST 0.03".

▲ RUBBERIZED MEMBRANE WATERPROOFING IF CONST. JT. IS USED. COST INCIDENTAL TO BID ITEM "CONCRETE MASONRY BRIDGES".

⊖ PIPE UNDERDRAIN WRAPPED 6-INCH. SLOPE 0.5% MIN. TO SUITABLE DRAINAGE. ATTACH RODENT SHIELD AT ENDS OF PIPE UNDERDRAIN. FOR DETAILS SEE SHEET 7.

⊞ 18" RUBBERIZED MEMBRANE WATERPROOFING SEAL ALL HORIZONTAL AND VERTICAL JOINTS ON BACKFACE OF ABUTMENT.

FOR PILE SPLICE DETAIL SEE SHEET 2.

F.F. DENOTES FRONT FACE

NO.	DATE	REVISION	BY

STATE OF WISCONSIN
DEPARTMENT OF TRANSPORTATION

STRUCTURE B-55-265

DRAWN BY CLS | PLANS CK'D. CJM

SOUTH ABUTMENT DETAILS

SHEET 6 OF 21

102

ORIGINAL PLANS PREPARED BY
AYRES ASSOCIATES
3433 Oakwood Hills Parkway
Eau Claire, WI 54701
www.AyresAssociates.com

8

8

$PRFNAME$
U:±42-0886.00 - St. Croix Co.194 Overpasses x3±42-0886.01 B-55-48 CTH BB±BRIDGE±42088601 sa.dgn

7/27/2015

PENTABLE:BReau_shd_util.tbl

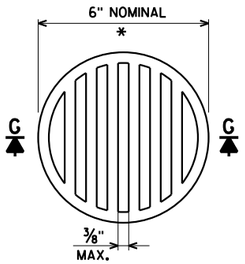

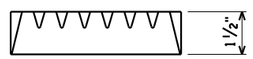

SECTION G-G

* DIMENSIONS ARE APPROXIMATE. THE GRATE IS SIZED TO FIT INTO A PIPE COUPLING. ORIENT SO SLOTS ARE VERTICAL.

THE RODENT SHIELD, PIPE COUPLING AND SCREWS SHALL BE CONSIDERED INCIDENTAL TO THE BID ITEM "PIPE UNDERDRAIN WRAPPED 6-INCH".

THE RODENT SHIELD SHALL BE A PVC GRATE SIMILAR TO THIS DETAIL. THE GRATE IS COMMERCIALLY AVAILABLE AS A FLOOR STRAINER. A PIPE COUPLING IS REQUIRED FOR THE ATTACHMENT OF THIS SHIELD TO THE EXPOSED END OF THE PIPE UNDERDRAIN. THE SHIELD SHALL BE FASTENED TO THE PIPE COUPLING WITH TWO OR MORE NO. 10 x 1-INCH STAINLESS STEEL SHEET METAL SCREWS.

RODENT SHIELD DETAIL

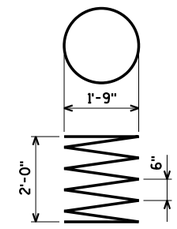

A401

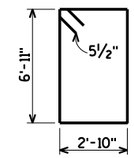

A503

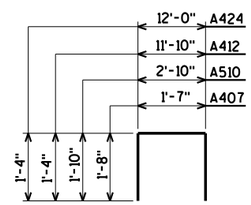

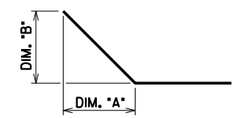

BAR NO.	DIM. "A"	DIM. "B"
A422	15'-10"	6'-9"
A429	15'-10"	6'-11"

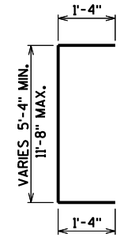

A411

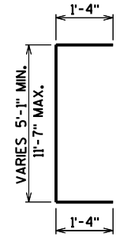

A423

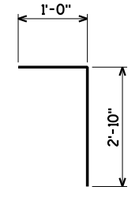

A630

BILL OF BARS

BAR. NO.	COATED BAR	NO. REQ'D.	LENGTH	BENT BAR	BUNDLED	BAR SERIES	3.260" UNCOATED 2.450" COATED LOCATION
A401		7	28-0	X			BODY @ PILES
A402		14	2-3				BODY @ PILES
A503		47	20-0	X			BODY VERT.
A604		10	36-11				BODY HORIZ.
A905		8	36-11				BODY HORIZ. B.F.
A906		2	36-11				BODY HORIZ.
A407		25	4-9	X			BODY VERT.
A408		2	36-9				BODY HORIZ.
A409		3	16-6				BODY HORIZ.
A510		17	6-3	X			BODY VERT.
A411	X	32	10-9	X		⊗	WING 1 VERT. E.F.
A412	X	6	14-4	X			WING 1 VERT. E.F.
A513	X	12	19-7				WING 1 & 2 HORIZ. F.F.
A914	X	14	22-5				WING 1 & 2 HORIZ. B.F.
A515	X	2	18-0				WING 1 & 2 HORIZ. F.F.
A916	X	2	20-6				WING 1 & 2 HORIZ. B.F.
A917	X	4	18-6				WING 1 & 2 HORIZ. E.F.
A418	X	2	11-7				WING 1 HORIZ. E.F.
A419	X	2	9-2				WING 1 HORIZ. E.F.
A420	X	2	6-9				WING 1 HORIZ. E.F.
A421	X	2	4-4				WING 1 HORIZ. E.F.
A422	X	2	18-10	X			WING 1 DIAG. E.F.
A423	X	32	10-10	X		⊗	WING 2 VERT. E.F.
A424	X	6	14-6	X			WING 2 VERT. E.F.
A425	X	2	11-3				WING 2 HORIZ. E.F.
A426	X	2	8-11				WING 2 HORIZ. E.F.
A427	X	2	6-7				WING 2 HORIZ. E.F.
A428	X	2	4-3				WING 2 HORIZ. E.F.
A429	X	2	18-11	X			WING 2 DIAG. E.F.
A630		8	3-8	X			BODY HORIZ. - ENDS

BENDING DIMENSIONS ARE OUT TO OUT OF BARS.

⊗ LENGTH SHOWN FOR BAR IS AN AVERAGE LENGTH AND SHOULD ONLY BE USED FOR BAR WEIGHT CALCULATIONS. SEE BAR SERIES TABLE FOR ACTUAL LENGTHS.

B.F. DENOTES BACK FACE

E.F. DENOTES EACH FACE

F.F. DENOTES FRONT FACE

BAR SERIES TABLE

BAR MARK	NO REQ'D.	LENGTH
A411	2 SERIES OF 16	7'-7" TO 13'-11"
A423	2 SERIES OF 16	7'-7" TO 14'-1"

BUNDLE AND TAG EACH SERIES SEPARATELY.

NO.	DATE	REVISION	BY

STATE OF WISCONSIN
DEPARTMENT OF TRANSPORTATION

STRUCTURE B-55-265

DRAWN BY CLS | PLANS CK'D. CJM

SOUTH ABUTMENT BILL OF BARS

ORIGINAL PLANS PREPARED BY
AYRES ASSOCIATES
3433 Oakwood Hills Parkway
Eau Claire, WI 54701
www.AyresAssociates.com

$PRFNAME$
U:±42-0886.00 - St. Croix Co.194 Overpasses x3±42-0886.01B-55-48 CTH BB±BRIDGE±42088601sa.dgn

NOTE: SEAL ALL EXPOSED HORIZONTAL AND VERTICAL SURFACES OF ½" FILLER WITH NON-STAINING GRAY NON-BITUMINOUS JOINT SEALER. (1" DEEP AND HOLD ⅛" BELOW SURFACE OF CONCRETE.)

STATE PROJECT NUMBER

1020-01-88

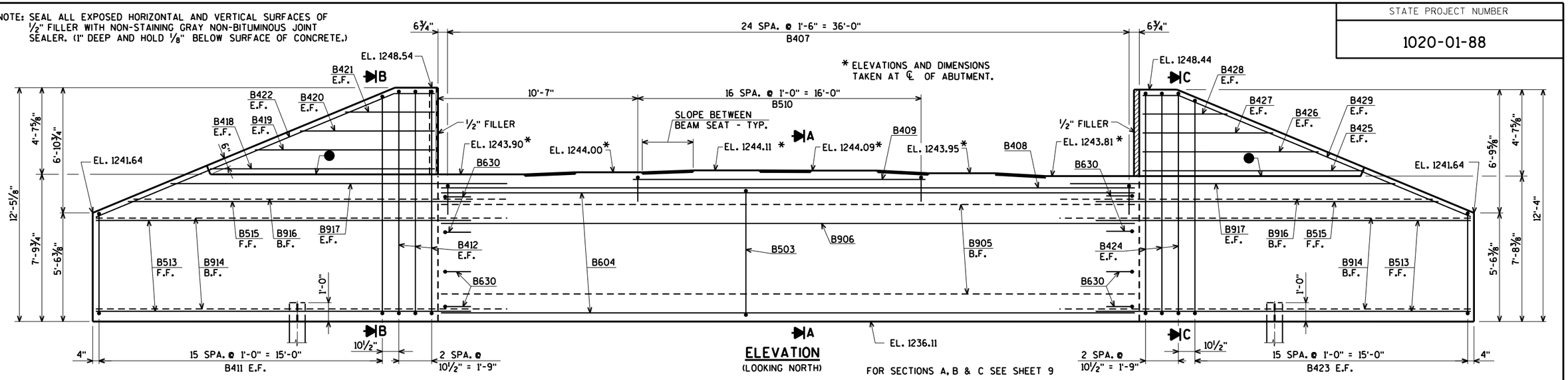

ELEVATION
(LOOKING NORTH)

FOR SECTIONS A, B & C SEE SHEET 9

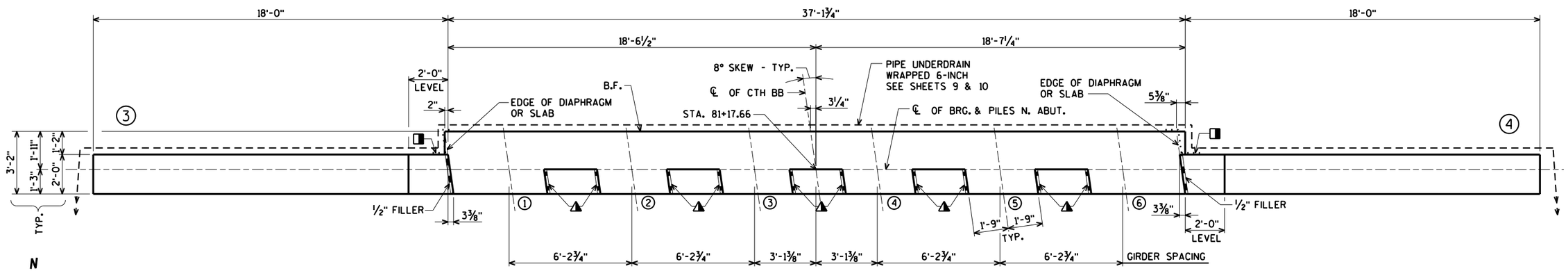

PLAN

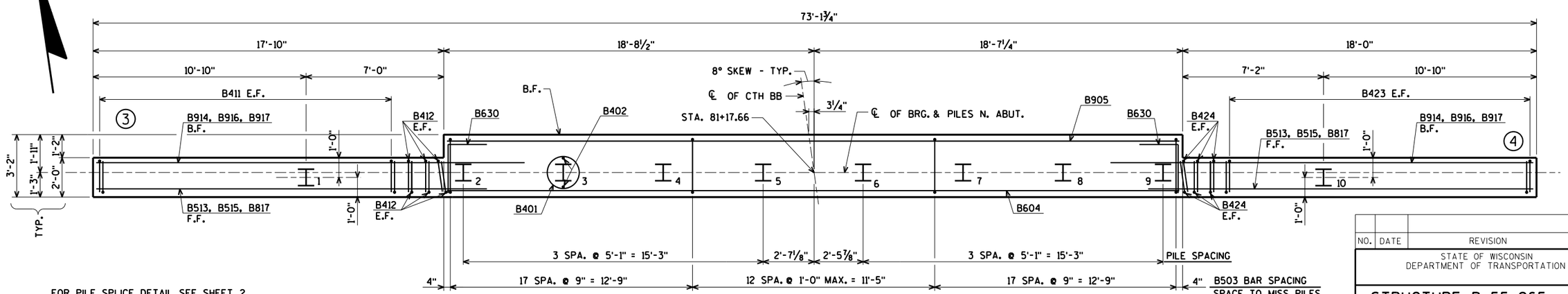

PILE LAYOUT

FOR PILE SPLICE DETAIL SEE SHEET 2.

18" RUBBERIZED MEMBRANE WATERPROOFING FROM BRIDGE SEAT TO TOP OF WING.

¾" CORK FILLER ON VERTICAL BEAM SEAT FACES THAT RUN PARALLEL WITH GIRDER.

F.F. DENOTES FRONT FACE

B.F. DENOTES BACK FACE

E.F. DENOTES EACH FACE

OPT. KEYED CONST. JOINT - FORMED BY A SURFACED BEVELED 2" x 6" WITH RUBBERIZED MEMBRANE WATERPROOFING ON B.F. (COST IS INCIDENTAL TO BID ITEM "CONCRETE MASONRY BRIDGES".) AND ¾" "V" GROOVE ON F.F.

NO.	DATE	REVISION	BY

STATE OF WISCONSIN
DEPARTMENT OF TRANSPORTATION

STRUCTURE B-55-265

DRAWN BY CLS | PLANS CK'D. CJM

NORTH ABUTMENT

SHEET 8 OF 21
104

ORIGINAL PLANS PREPARED BY
AYRES ASSOCIATES
3433 Oakwood Hills Parkway
Eau Claire, WI 54701
www.AyresAssociates.com

8

8

$PRFNAME$
U:±42-0886.00 - St. Croix Co. 194 Overpasses x3±42-0886.01 B-55-48 CTH BB±BRIDGE±42088601 na.dgn

7/27/2015

PENTABLE:BReau_shd_util.tbl

FOR LOCATIONS OF SECTIONS A, B & C SEE SHEET 8

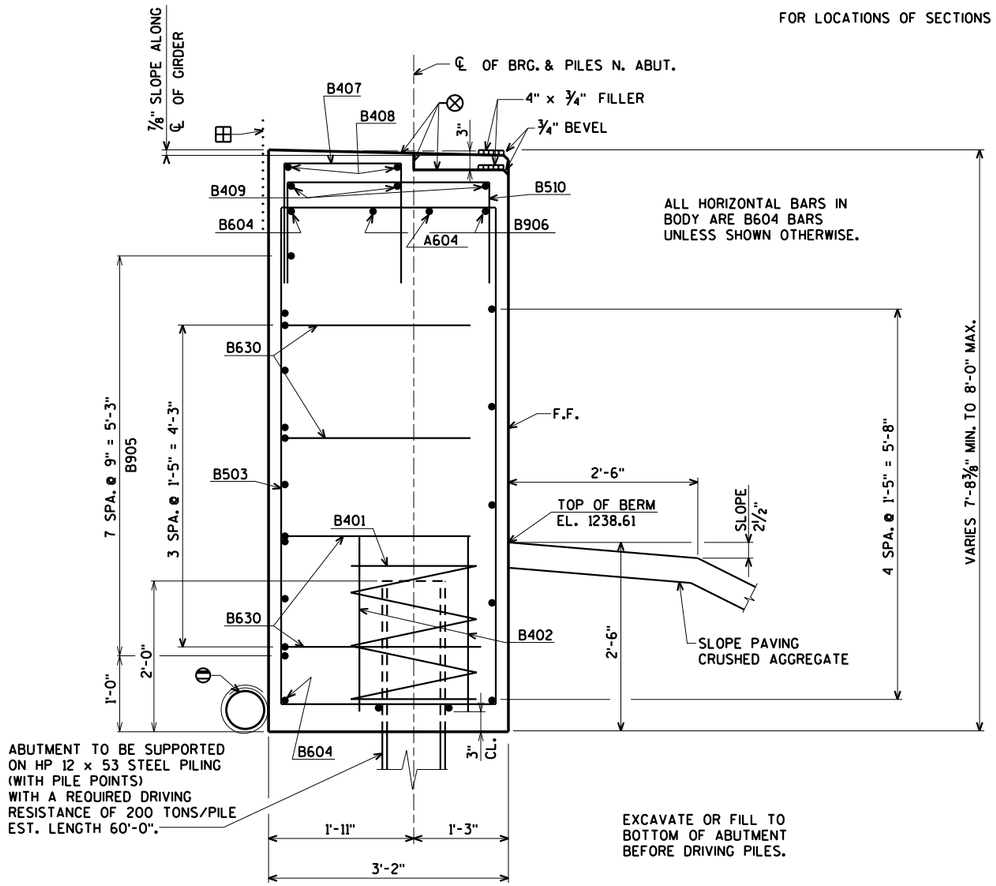

EXCAVATE OR FILL TO BOTTOM OF ABUTMENT BEFORE DRIVING PILES.

SECTION A

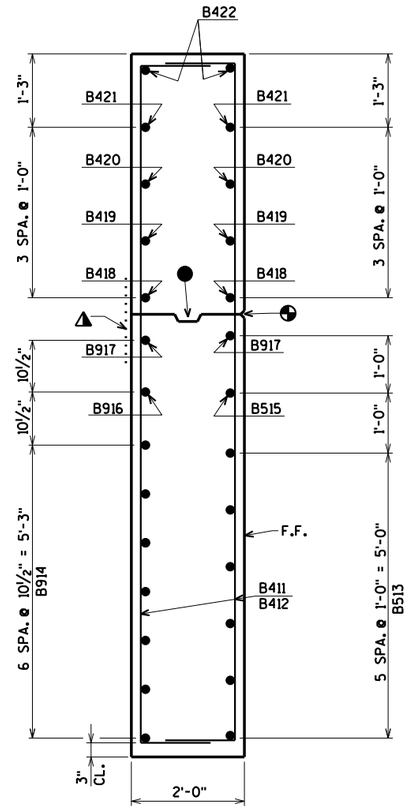

SECTION B

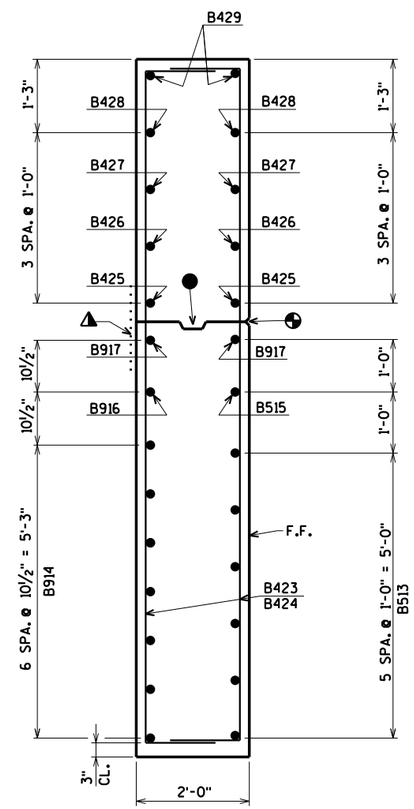

SECTION C

● OPT. KEYED CONST. JOINT - FORMED BY A SURFACED BEVELED 2" x 6".

◐ 3/4" 'V' GROOVE ON F.F. OF WING WALL NOT REQUIRED IF CONST. JT. IS NOT USED.

⊗ STEEL TROWEL TOP SURFACE OF ABUTMENT. PLACE MULTIPLE LAYERS OF POLYETHYLENE SHEETS OVER ENTIRE ABUTMENT TOP BEFORE PLACING BEARING AND/OR SUPERSTRUCTURE. TOTAL THICKNESS OF SHEETS SHALL BE AT LEAST 0.03".

▲ RUBBERIZED MEMBRANE WATERPROOFING IF CONST. JT. IS USED. COST INCIDENTAL TO BID ITEM "CONCRETE MASONRY BRIDGES".

⊖ PIPE UNDERDRAIN WRAPPED 6-INCH. SLOPE 0.5% MIN. TO SUITABLE DRAINAGE. ATTACH RODENT SHIELD AT ENDS OF PIPE UNDERDRAIN. FOR DETAILS SEE SHEET 10.

⊞ 18" RUBBERIZED MEMBRANE WATERPROOFING SEAL ALL HORIZONTAL AND VERTICAL JOINTS ON BACKFACE OF ABUTMENT.

FOR PILE SPLICE DETAIL SEE SHEET 2.

F.F. DENOTES FRONT FACE

NO.	DATE	REVISION	BY

STATE OF WISCONSIN
DEPARTMENT OF TRANSPORTATION

STRUCTURE B-55-265

DRAWN BY CLS | PLANS CK'D. CJM

NORTH ABUTMENT DETAILS

SHEET 9 OF 21
105

ORIGINAL PLANS PREPARED BY
AYRES ASSOCIATES
3433 Oakwood Hills Parkway
Eau Claire, WI 54701
www.AyresAssociates.com

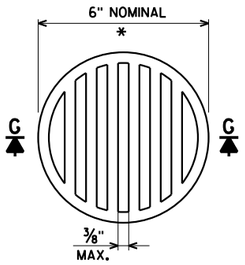

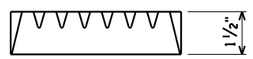

SECTION G-G

* DIMENSIONS ARE APPROXIMATE. THE GRATE IS SIZED TO FIT INTO A PIPE COUPLING. ORIENT SO SLOTS ARE VERTICAL.

THE RODENT SHIELD, PIPE COUPLING AND SCREWS SHALL BE CONSIDERED INCIDENTAL TO THE BID ITEM "PIPE UNDERDRAIN WRAPPED 6-INCH".

THE RODENT SHIELD SHALL BE A PVC GRATE SIMILAR TO THIS DETAIL. THE GRATE IS COMMERCIALLY AVAILABLE AS A FLOOR STRAINER. A PIPE COUPLING IS REQUIRED FOR THE ATTACHMENT OF THIS SHIELD TO THE EXPOSED END OF THE PIPE UNDERDRAIN. THE SHIELD SHALL BE FASTENED TO THE PIPE COUPLING WITH TWO OR MORE NO. 10 x 1-INCH STAINLESS STEEL SHEET METAL SCREWS.

RODENT SHIELD DETAIL

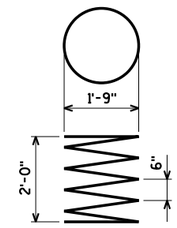

B401

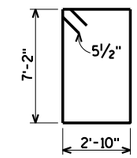

B503

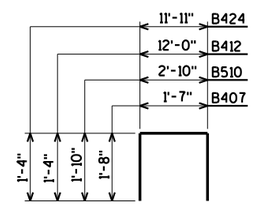

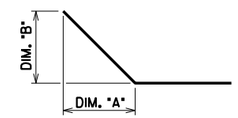

BAR NO.	DIM. "A"	DIM. "B"
B422	15'-10"	6'-11"
B429	15'-10"	6'-9"

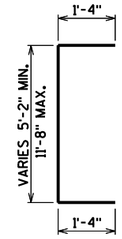

B411

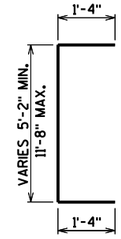

B423

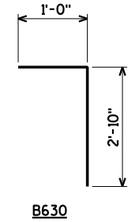

B630

BILL OF BARS

BAR. NO.	COATED BAR	NO. REQ'D.	LENGTH	BENT BAR	BUNDLED	BAR SERIES	3.260" UNCOATED 2.450" COATED LOCATION
B401		8	28-0	X			BODY @ PILES
B402		16	2-3				BODY @ PILES
B503		47	20-0	X			BODY VERT.
B604		10	36-11				BODY HORIZ.
B905		8	36-11				BODY HORIZ. B.F.
B906		2	36-11				BODY HORIZ.
B407		25	4-9	X			BODY VERT.
B408		2	36-9				BODY HORIZ.
B409		3	16-6				BODY HORIZ.
B510		17	6-3	X			BODY VERT.
B411	X	32	10-11	X		⊗	WING 3 VERT. E.F.
B412	X	6	14-6	X			WING 3 VERT. E.F.
B513	X	12	19-7				WING 3 & 4 HORIZ. F.F.
B914	X	14	22-5				WING 3 & 4 HORIZ. B.F.
B515	X	2	17-11				WING 3 & 4 HORIZ. F.F.
B916	X	2	20-6				WING 3 & 4 HORIZ. B.F.
B917	X	4	18-6				WING 3 & 4 HORIZ. E.F.
B418	X	2	10-10				WING 3 HORIZ. E.F.
B419	X	2	8-6				WING 3 HORIZ. E.F.
B420	X	2	6-2				WING 3 HORIZ. E.F.
B421	X	2	3-10				WING 3 HORIZ. E.F.
B422	X	2	18-11	X			WING 3 DIAG. E.F.
B423	X	32	10-11	X		⊗	WING 4 VERT. E.F.
B424	X	6	14-5	X			WING 4 VERT. E.F.
B425	X	2	11-5				WING 4 HORIZ. E.F.
B426	X	2	9-1				WING 4 HORIZ. E.F.
B427	X	2	6-9				WING 4 HORIZ. E.F.
B428	X	2	4-4				WING 4 HORIZ. E.F.
B429	X	2	18-10	X			WING 4 DIAG. E.F.
B630		4	3-8	X			BODY HORIZ. - ENDS

BENDING DIMENSIONS ARE OUT TO OUT OF BARS.

⊗ LENGTH SHOWN FOR BAR IS AN AVERAGE LENGTH AND SHOULD ONLY BE USED FOR BAR WEIGHT CALCULATIONS. SEE BAR SERIES TABLE FOR ACTUAL LENGTHS.

B.F. DENOTES BACK FACE

E.F. DENOTES EACH FACE

F.F. DENOTES FRONT FACE

BAR SERIES TABLE

BAR MARK	NO REQ'D.	LENGTH
B411	2 SERIES OF 16	7'-8" TO 14'-2"
B423	2 SERIES OF 16	7'-8" TO 14'-2"

BUNDLE AND TAG EACH SERIES SEPARATELY.

NO.	DATE	REVISION	BY

STATE OF WISCONSIN
DEPARTMENT OF TRANSPORTATION

STRUCTURE B-55-265

DRAWN BY CLS | PLANS CK'D. CJM

NORTH ABUTMENT BILL OF BARS

SHEET 10 OF 21
106

ORIGINAL PLANS PREPARED BY
AYRES ASSOCIATES
3433 Oakwood Hills Parkway
Eau Claire, WI 54701
www.AyresAssociates.com

$PRFNAME$
U:\42-0886.00 - St. Croix Co.194 Overpasses x3\42-0886.01B-55-48 CTH BB\BRIDGE\42088601nd.dgn

STATE PROJECT NUMBER

1020-01-88

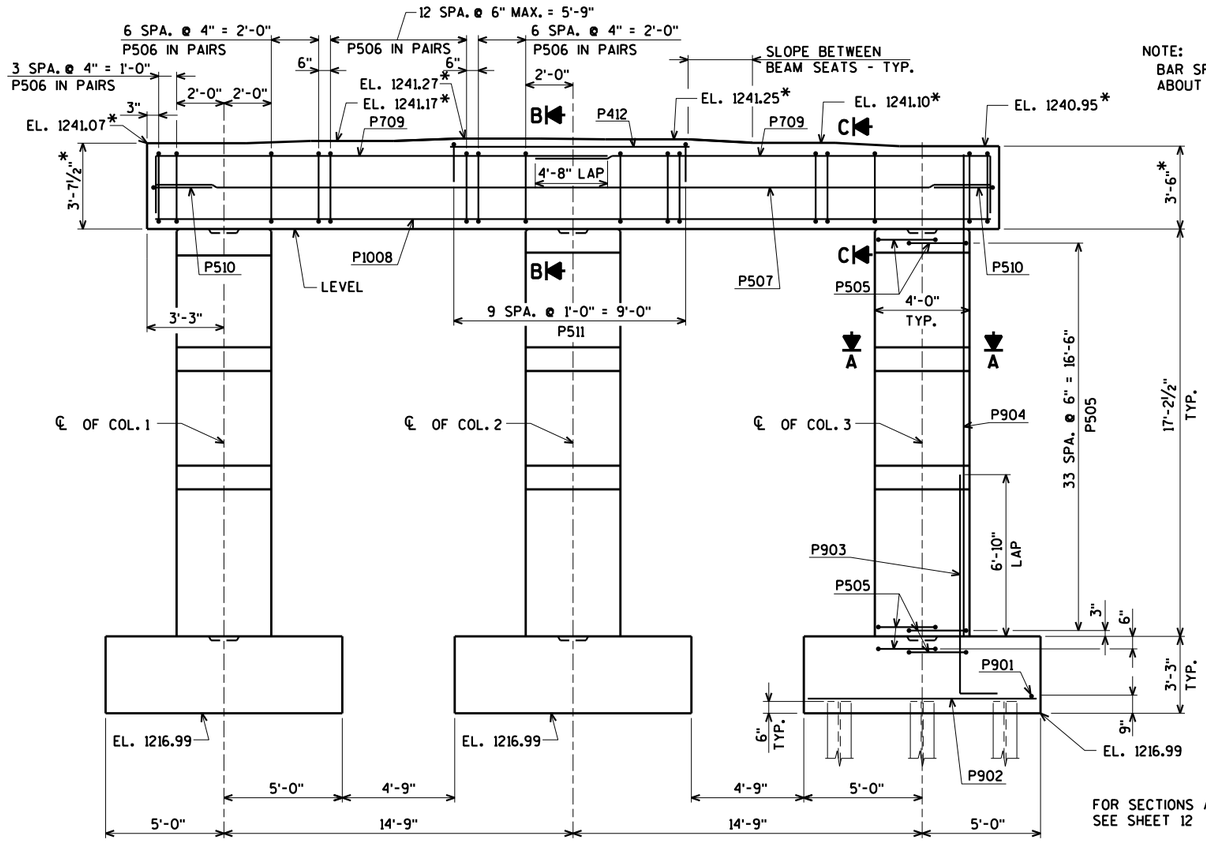

ELEVATION
(LOOKING NORTH)

NOTE:
BAR SPACING IS SYM. ABOUT ℄ OF COLUMN 2

FOR SECTIONS A, B, & C SEE SHEET 12

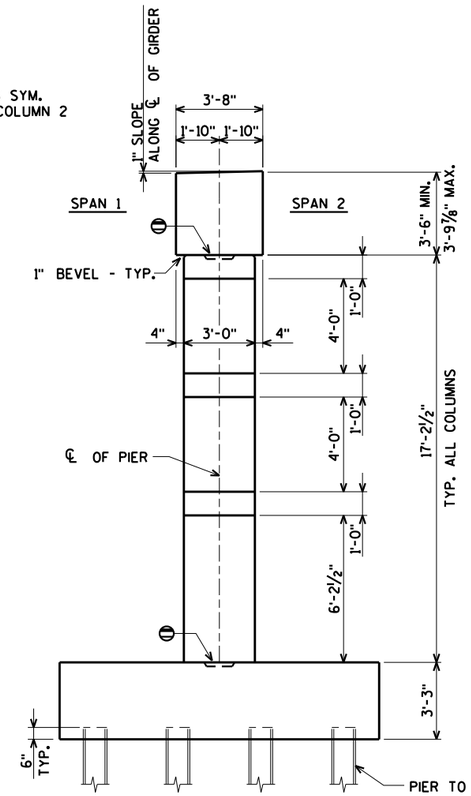

END VIEW
(LOOKING WEST)

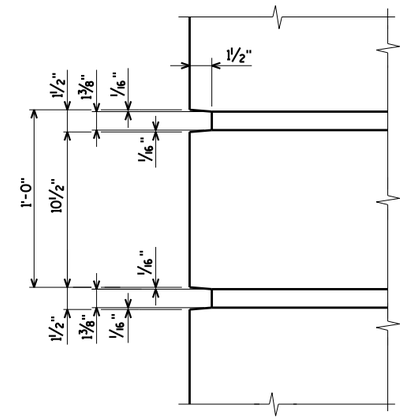

TYPICAL RUSTIFICATION DETAIL

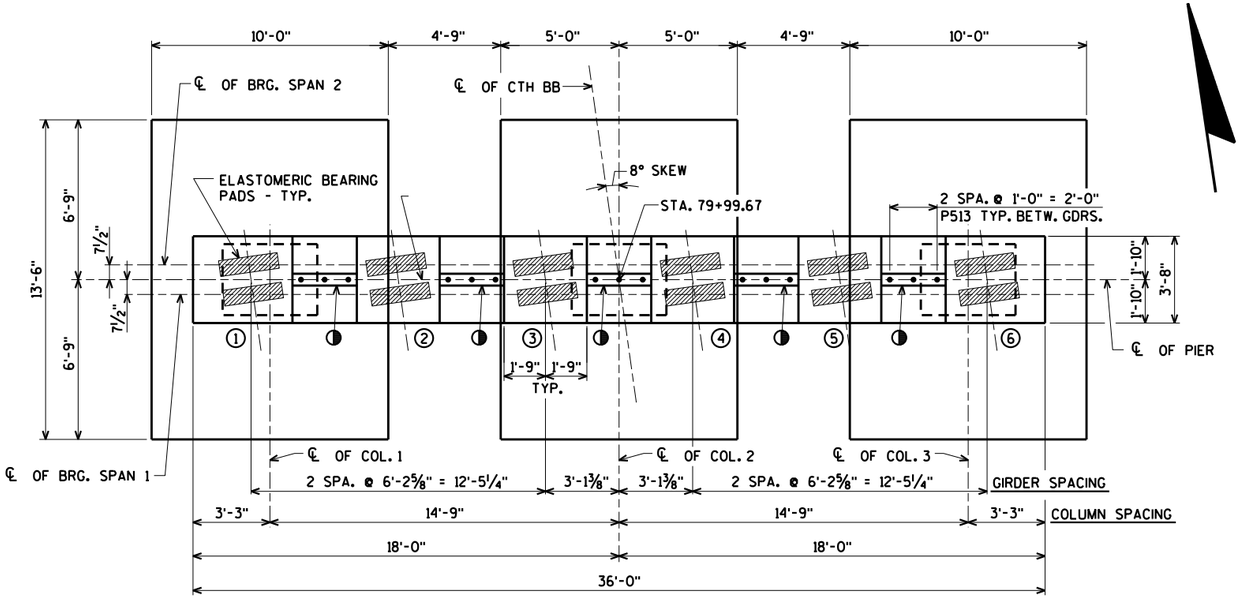

PLAN

N

*ELEVATIONS AND DIMENSIONS TAKEN AT ℄ OF PIER.

FOR PILE SPLICE DETAILS SEE SHEET 2.

◑ KEYED CONST. JOINT - FORMED BY A SURFACED BEVELED 2" x 6".

⊖ 1'-3" x 2'-0" x 4" CONST. JOINT FORMED BY BEVELED KEYWAY. TYPICAL ALL COLUMNS & FOOTINGS.

NO.	DATE	REVISION	BY

STATE OF WISCONSIN
DEPARTMENT OF TRANSPORTATION

STRUCTURE B-55-265

DRAWN BY CLS | PLANS CK'D. CJM

PIER

SHEET 11 OF 21
107

ORIGINAL PLANS PREPARED BY
AYRES ASSOCIATES
3433 Oakwood Hills Parkway
Eau Claire, WI 54701
www.AyresAssociates.com

8

8

$PRFNAME$
U:42-0886.00 - St. Croix Co.194 Overpasses x3:42-0886.01B-55-48 CTH BB:BRIDGE:42088601pier.dgn

7/27/2015

PENTABLE:BReau_shd_util.tbl

P513 BARS MAY BE PLACED AFTER PIER CAP IS POURED BUT BEFORE CONC. HAS SET. IMBED BARS 1'-0".

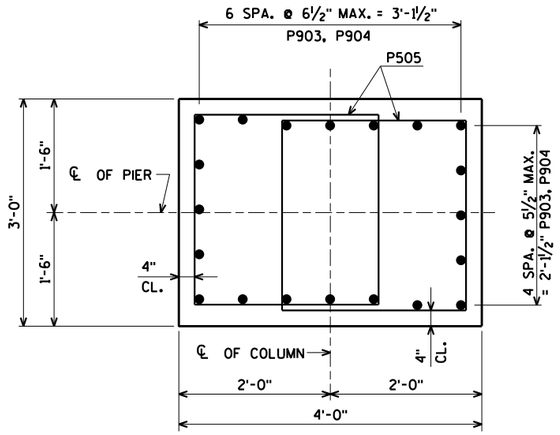

SECTION A

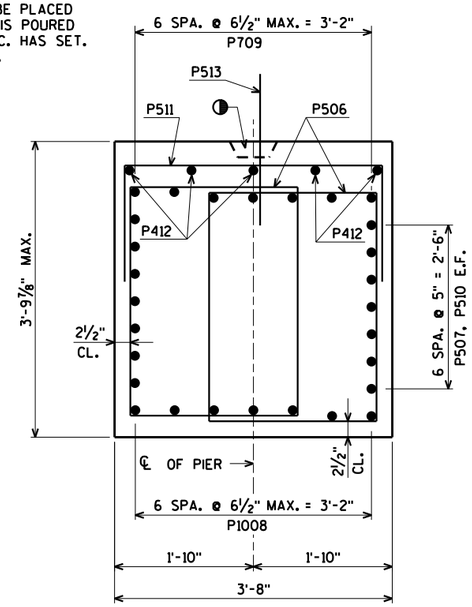

SECTION B

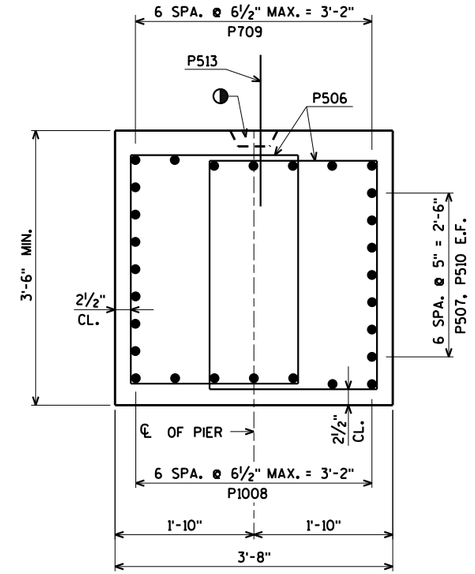

SECTION C

FOR LOCATION OF SECTIONS A, B, & C, SEE SHEET 11

BILL OF BARS

BAR. NO.	COATED BAR	NO. REQ'D.	LENGTH	BENT BAR	BUNDLED	BAR SERIES	12,410* COATED 4,260* UNCOATED LOCATION
P901		60	13-2				FOOTING BOTTOM
P902		48	9-8				FOOTING BOTTOM
P903	X	60	10-8	X			FOOTING DOWELS
P904	X	60	20-6				COLUMN VERT.
P505	X	210	9-10	X			FOOTING & COLUMN HORIZ. STIRRUPS
P506	X	124	10-10	X			CAP STIRRUPS
P507	X	14	35-8				CAP HORIZ. E.F.
P1008	X	7	35-8				CAP HORIZ. BOTTOM
P709	X	14	23-2	X			CAP HORIZ. TOP
P510	X	14	8-1	X			CAP HORIZ. SIDES
P511	X	10	5-11	X			CAP VERT.
P412	X	5	9-8				CAP HORIZ.
P513	X	15	2-0				CAP VERT.

BENDING DIMENSIONS ARE OUT TO OUT OF BARS.

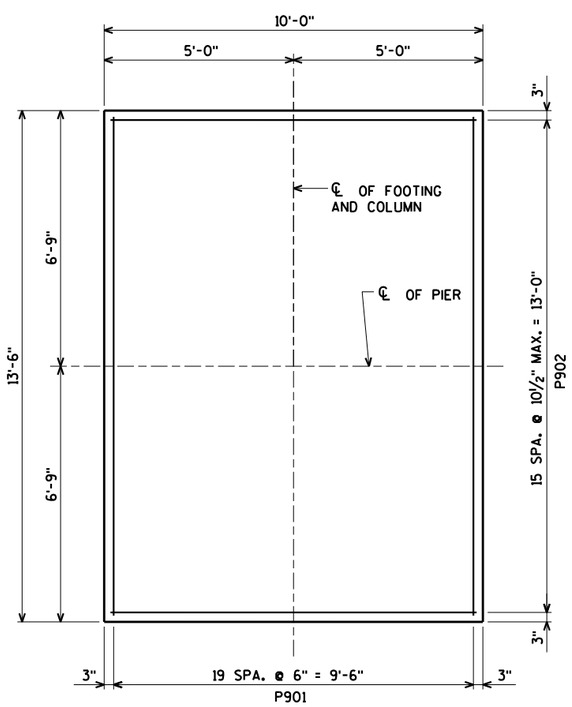

TYPICAL FOOTING REINFORCEMENT PLAN
(3 FOOTINGS REQUIRED)

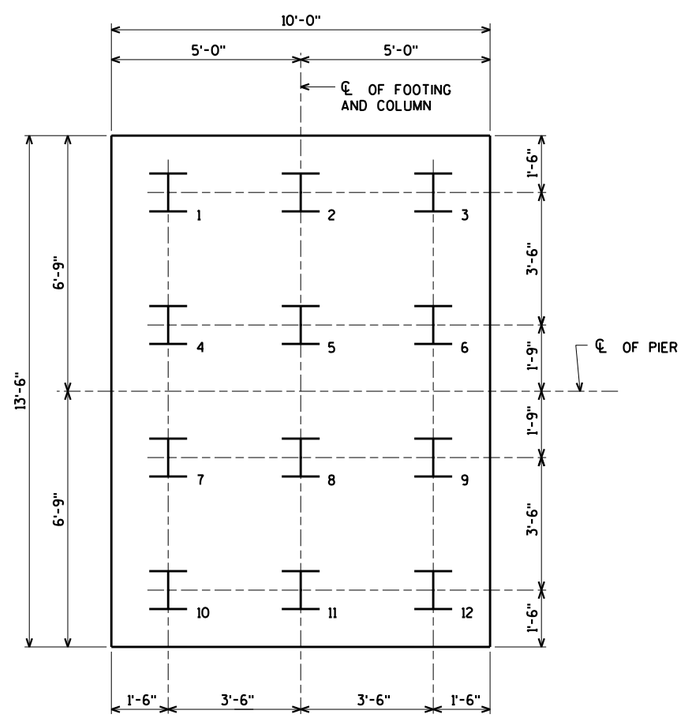

TYPICAL FOOTING PILE LAYOUT
(3 FOOTINGS REQUIRED)

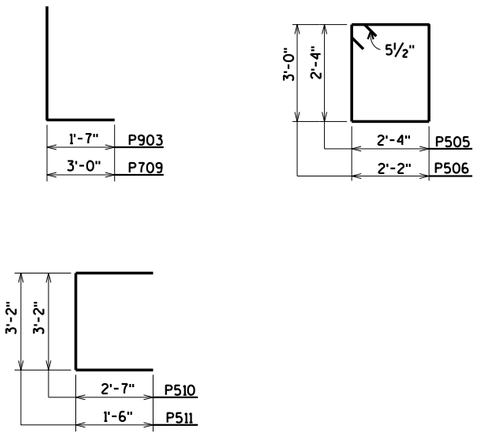

E.F. DENOTES EACH FACE

FOR PILE SPLICE DETAILS SEE SHEET 2.

◑ KEYED CONST. JOINT - FORMED BY A SURFACED BEVELED 2" x 6".

NO.	DATE	REVISION	BY

STATE OF WISCONSIN
DEPARTMENT OF TRANSPORTATION

STRUCTURE B-55-265

DRAWN BY CLS | PLANS CK'D. CJM

PIER DETAILS

SHEET 12 OF 21
108

ORIGINAL PLANS PREPARED BY
AYRES ASSOCIATES
3433 Oakwood Hills Parkway
Eau Claire, WI 54701
www.AyresAssociates.com

$PRFNAME$
U:±42-0886.00 - St. Croix Co.194 Overpasses x3±42-0886.01B-55-48 CTH BB±BRIDGE±42088601pier.dgn

STATE PROJECT NUMBER

1020-01-88

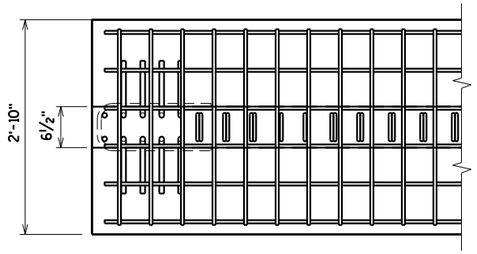

TOP FLANGE

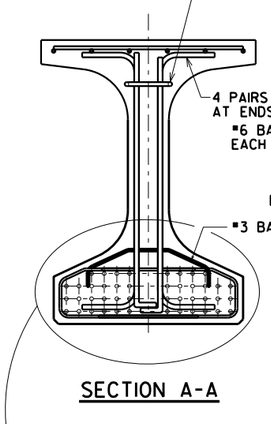

SECTION A-A

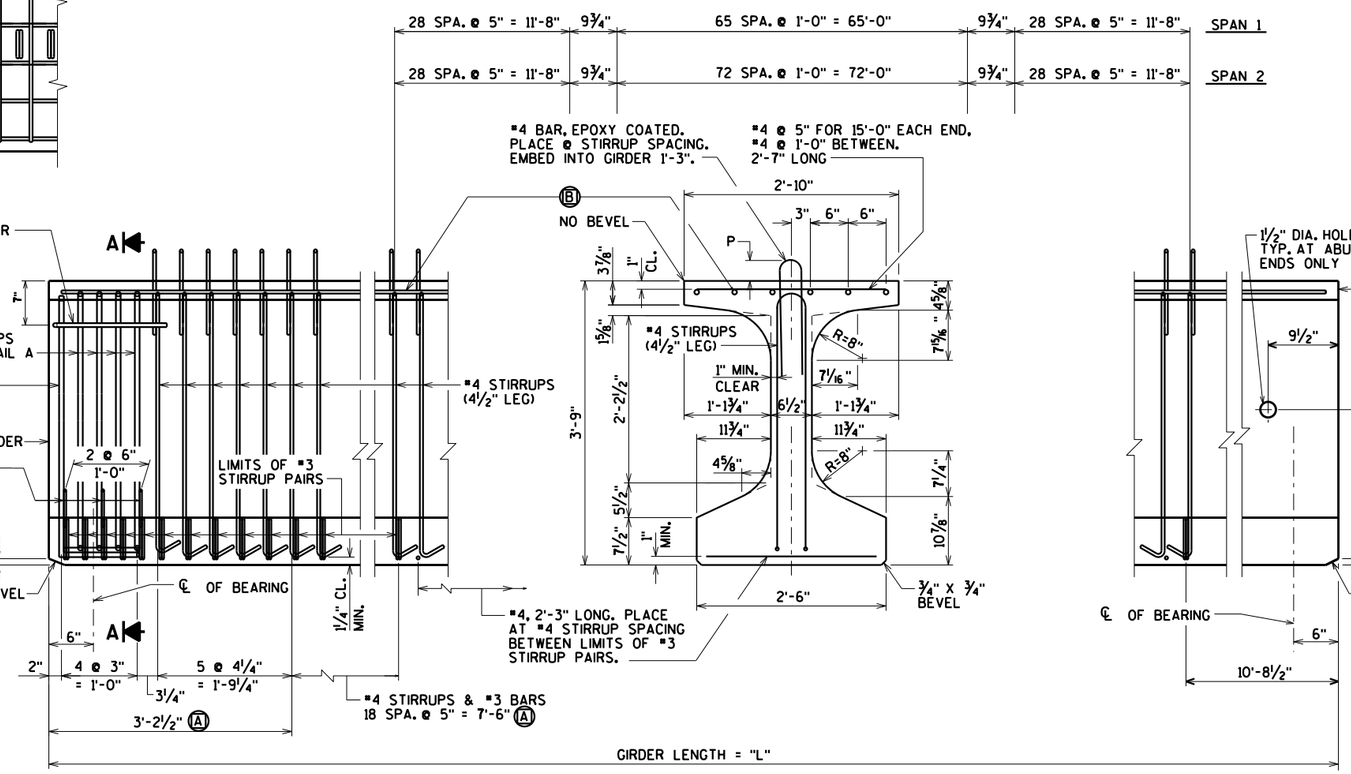

SIDE VIEW & TYP. SECTION IN SPAN

Ⓐ DETAIL TYP. AT EACH END

Ⓑ 6 #4 BARS, FULL LENGTH, MIN. LAP = 2'-11"

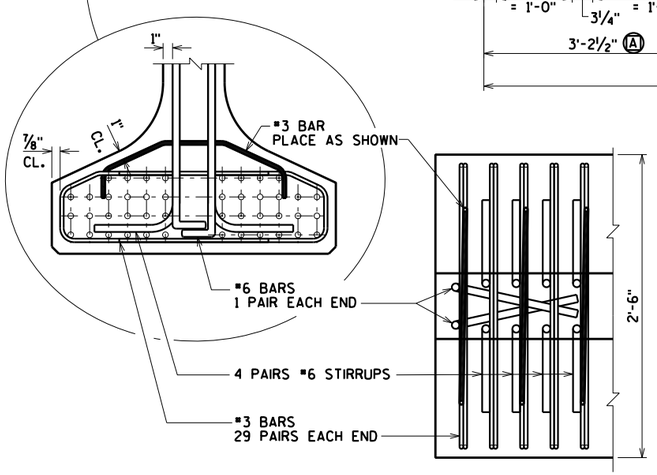

DETAIL A

BOTTOM FLANGE

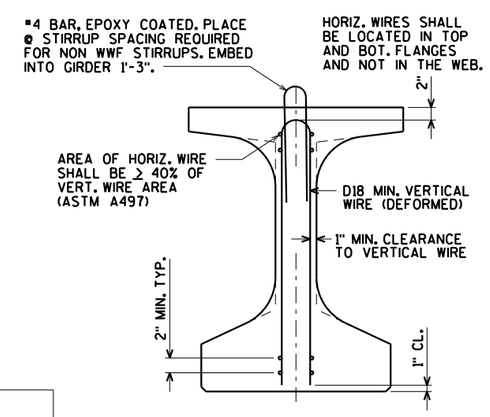

SECTION THRU GIRDER

SHOWING WELDED WIRE FABRIC (WWF) STIRRUPS ASTM A497 (FY = 70 KSI)

GIRDER NOTES

TOP OF GIRDER TO BE ROUGH FLOATED AND BROOMED TRANSVERSELY, EXCEPT THE OUTSIDE 8" OF GIRDER, WHICH SHALL RECEIVE A SMOOTH FINISH. AN APPROVED CONCRETE SEALER SHALL BE APPLIED TO ALL SMOOTH SURFACES INCLUDING THE OUTSIDE 8" OF THE TOP FLANGE.

DO NOT APPLY CONCRETE SEALER TO SURFACES RECEIVING APPLICATION OF CONCRETE STAINING.

THE GIRDERS SHALL BE PROVIDED WITH A SUITABLE LIFTING DEVICE FOR HANDLING AND ERECTING THE GIRDERS.

STRANDS SHALL BE FLUSH WITH THE END OF GIRDER. FOR GIRDER ENDS EMBEDDED COMPLETELY IN CONCRETE, ENDS OF STRANDS SHALL BE COATED WITH NON-BITUMINOUS JOINT SEALER. FOR GIRDER ENDS THAT ARE FINALLY EXPOSED, COAT THE GIRDER ENDS, EXPOSED STRAND ENDS AND ALL NON-BONDING SURFACES WITHIN 2 FEET OF THE GIRDER ENDS WITH A NON-PIGMENTED EPOXY CONFORMING TO AASHTO M-235 TYPE III, GRADE 2, CLASS B OR C. THE EPOXY SHALL BE APPLIED AT LEAST 3 DAYS AFTER MOIST CURING HAS CEASED AND PRIOR TO APPLICATION OF THE SEALER.

ALL GIRDERS SHALL BE CAST FULL LENGTH AS SHOWN.

SPACING SHOWN FOR #4 STIRRUPS IS FOR GRADE 60 REINFORCEMENT.

AN ALTERNATE EQUIVALENT OF WELDED WIRE FABRIC (WWF) ASTM A497 MAY BE SUBSTITUTED FOR THE STIRRUP REINFORCEMENT SHOWN, UPON APPROVAL OF THE STRUCTURES DEVELOPMENT SECTION.

PRESTRESSING STRANDS SHALL BE 0.6"Φ -7 WIRE LOW-RELAXATION STRANDS WITH AN ULTIMATE STRENGTH OF 270,000 psi.

FOR DIAPHRAGM INSERT & CONNECTION DETAILS SEE "STEEL DIAPHRAGM DETAILS" SHEET.

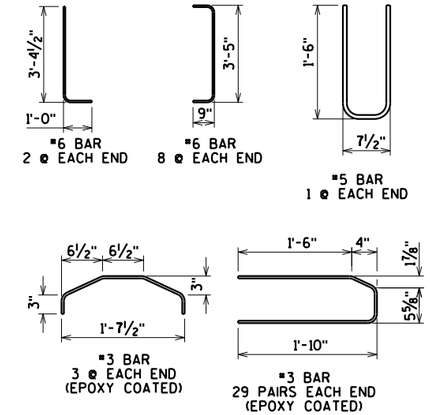

* MINIMUM CYLINDER STRENGTH OF CONCRETE @ TIME OF TRANSFER OF PRESTRESS FORCE.

GIRDER DATA

SPAN	GIRDER	GIRDER LENGTH "L"	DEAD LOAD DEFL. (IN.) 1/10	2/10	3/10	4/10	5/10	6/10	7/10	8/10	9/10	CONC. STRGTH. f'c (p.s.i.)	"P" 1ST 1/3 OF GIRDER	"P" MID 1/3 OF GIRDER	"P" END 1/3 OF GIRDER	DIA. OF STRAND (IN.)	DRAPED PATTERN TOTAL NO. OF STRANDS	f'ci (P.S.I.) *	(IN.) "A"	"B" MIN.	"B" MAX.	"C"	UNDRAPED PATTERN TOTAL NO. OF STRANDS	f'ci (P.S.I.) *
1	ALL	111'-4½"	0.8	1.5	2.0	2.3	2.5	2.3	2.0	1.5	0.8	8000	7"	7"	7"	0.60	36	6400	39	13.5	16.5	5		
2	ALL	118'-4½"	0.9	1.7	2.4	2.8	3.0	2.8	2.4	1.7	0.9	8000	7"	7"	7"	0.60	40	6400	39	13.5	16.5	5		

NO.	DATE	REVISION	BY

STATE OF WISCONSIN
DEPARTMENT OF TRANSPORTATION
STRUCTURES DESIGN SECTION

STRUCTURE B-55-265

DRAWN BY CLS | PLANS CK'D. CJM

45W" PRESTRESSED GIRDER DETAILS

SHEET 13 OF 21

109

ORIGINAL PLANS PREPARED BY
AYRES ASSOCIATES
3433 Oakwood Hills Parkway
Eau Claire, WI 54701
www.AyresAssociates.com

8

8

$PRFNAME$
U:±42-0886.00 - St. Croix Co, 194 Overpasses x3±42-0886.01B-55-48 CTH BB±BRIDGE±420886601 gdr45W.dgn

7/27/2015 PENTABLE:BReau_shd_util.tbl

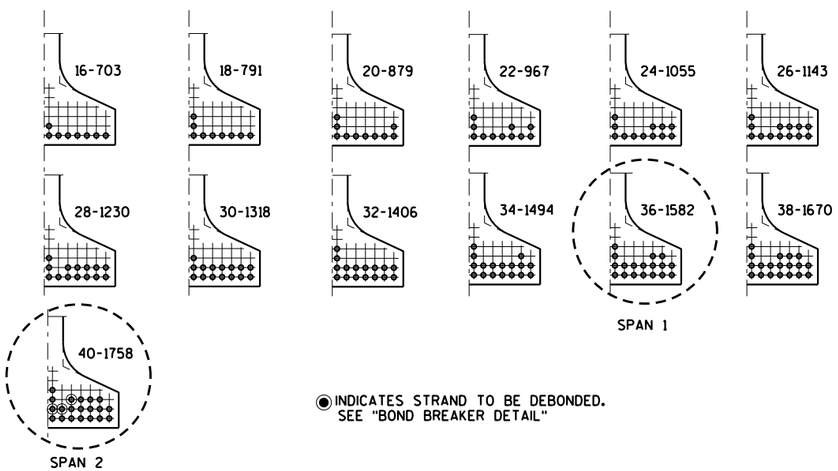

ARRANGEMENT AT ℄ SPAN - FOR GIRDERS WITH DRAPED STRANDS

0.6"Φ STRANDS

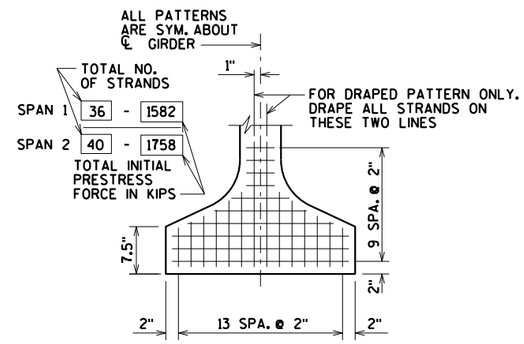

TYP. STRAND PATTERN

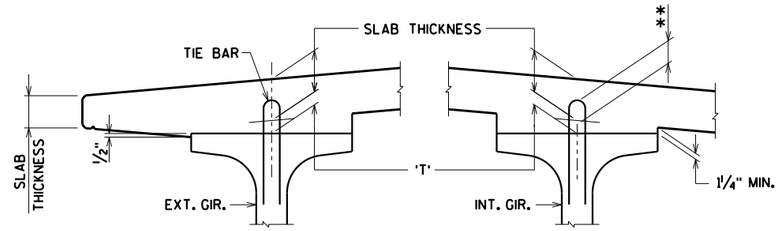

SLAB HAUNCH DETAIL

IF 1¼" MINIMUM HAUNCH HEIGHT AT EDGE OF GIRDER CANNOT BE MAINTAINED, THE GRADE LINE MAY BE REVISED BY THE ENGINEER AT THE OPTION OF THE CONTRACTOR. THE PLAN SLAB THICKNESS SHALL BE HELD. NOTIFY THE STRUCTURES SECTION IF THE GRADE LINE IS RAISED FROM THE PLAN PROFILE BY MORE THAN ½" OR,

** IF 3" MINIMUM DECK EMBEDMENT OF TIE BAR CANNOT BE OBTAINED.

TO DETERMINE 'T', ELEV. OF TOP OF GIR'S. AT ℄ OF SUBSTRUCTURE UNITS & AT 1/10 POINTS OF EACH SPAN SHALL BE TAKEN. THEN FOLLOW THIS PROCESS:

TOP OF DECK ELEV. AT FINAL GRADE
\- TOP OF GIRDER ELEVATION
\+ DEAD LOAD DEFLECTION
\- SLAB THICKNESS
= HAUNCH HEIGHT 'T'

NOTE: AN AVERAGE HAUNCH ('T') OF 2½" WAS USED IN THE QUANTITY "CONCRETE MASONRY BRIDGES".

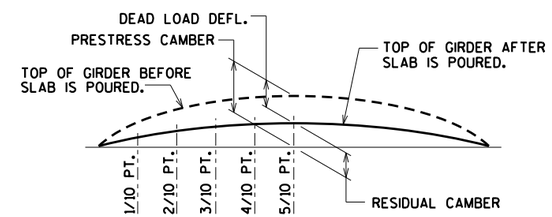

DEAD LOAD DEFLECTION DIAGRAM

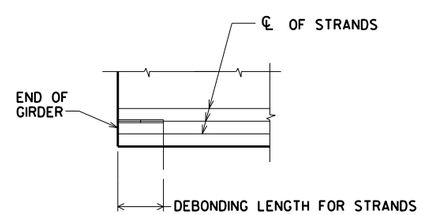

BOND BREAKER DETAIL

SHOWING LENGTHS OF DEBONDING FROM END OF GIRDER.

SYM.	HEIGHT	NO. OF STRANDS	DEBOND LENGTH
□	4"	4	6'
△	6"	2	5'

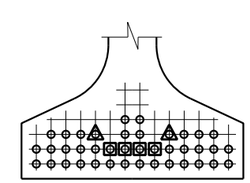

DEBONDING DETAIL - SPAN 2 ONLY

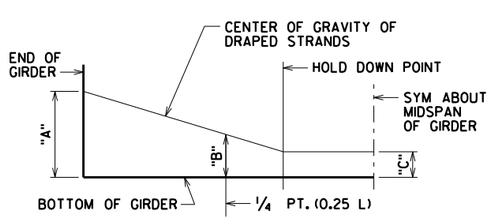

DRAPED STRAND PROFILE

THE THEORETICAL INITIAL CAMBER VALUE AT THE TIME OF STRAND RELEASE AT MIDSPAN

SPAN	CAMBER (IN.)
1	3.7
2	4.4

THESE VALUES ARE NOT TO BE USED IN DETERMINING 'T'. USE ACTUAL GIRDER SHOTS. THESE VALUES ARE FOR INFORMATIONAL PURPOSES ONLY.

NO.	DATE	REVISION	BY

STATE OF WISCONSIN
DEPARTMENT OF TRANSPORTATION
STRUCTURES DESIGN SECTION

STRUCTURE B-55-265

DRAWN BY CLS | PLANS CK'D. CJM

ORIGINAL PLANS PREPARED BY
AYRES ASSOCIATES
3433 Oakwood Hills Parkway
Eau Claire, WI 54701
www.AyresAssociates.com

45W" PRESTRESSED GIRDER DETAILS

SHEET 14 OF 21
110

8

8

$PRFNAME$
U:\42-0886.00 - St. Croix Co. 194 Overpasses x3\42-0886.01B-55-48 CTH BB\BRIDGE\42088601.gdr45W.dgn

TABLE

GIRDER HEIGHT	DIM. "A"	DIM. "B"	DIM. "L"	*DIM. "X"
45W"	1'-9⅛"	8⅞"	1'-0½"	2¾"

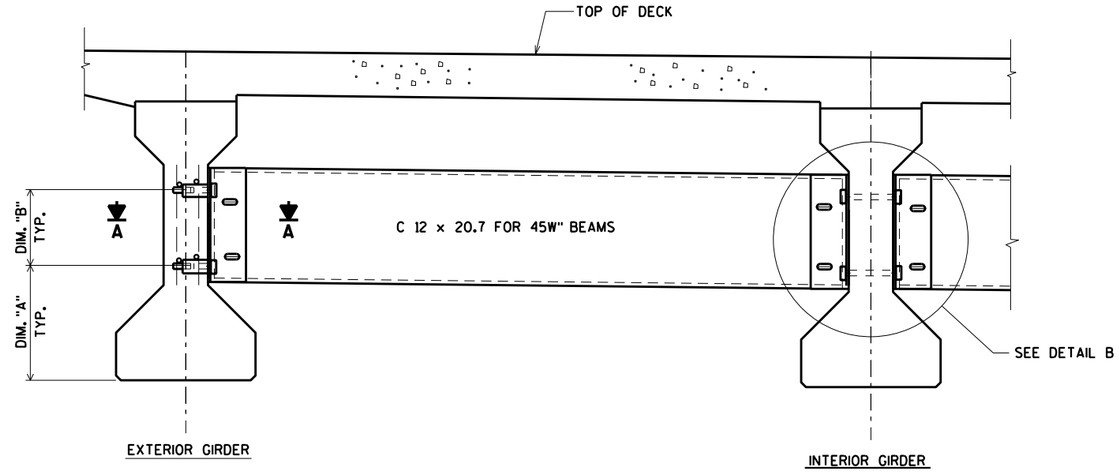

PART TRANSVERSE SECTION AT DIAPHRAGM

NOTES

ALL DIAPHRAGM MATERIAL NOT EMBEDDED IN THE CONCRETE GIRDER SHALL BE PAID FOR AT THE UNIT PRICE BID FOR "STEEL DIAPHRAGMS B-55-265", EACH.

EACH DIAPHRAGM BETWEEN GIRDERS SHALL CONSTITUTE ONE UNIT.

ALL DIAPHRAGM STRUCTURAL STEEL SHALL BE ASTM A709 GRADE 36. ALL BOLTS, NUTS AND WASHERS SHALL BE ASTM A325 TYPE 1.

ALL DIAPHRAGM STRUCTURAL STEEL SHOWN SHALL BE HOT-DIPPED GALVANIZED. ALL BOLTS, NUTS AND WASHERS SHALL BE HOT-DIPPED GALVANIZED IN ACCORDANCE WITH ASTM A153 CLASS C. GALVANIZED NUTS SHALL BE TAPPED OVERSIZE IN ACCORDANCE WITH THE REQUIREMENTS OF ASTM A563 AND SHALL MEET THE REQUIREMENTS OF SUPPLEMENTARY REQUIREMENT S1 OF ASTM A563, LUBRICANT AND TEST FOR COATED NUTS.

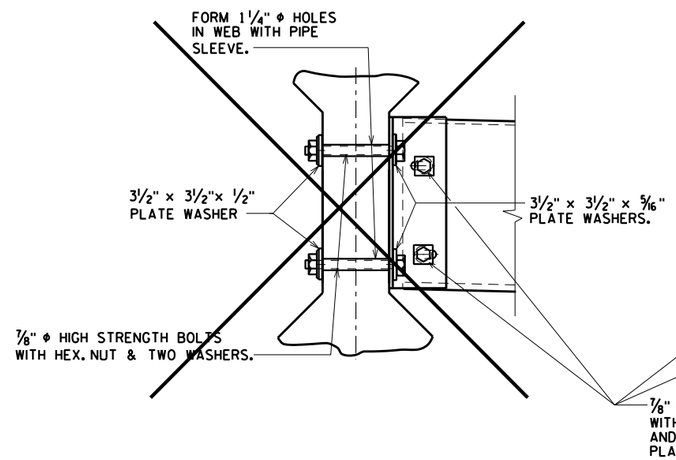

(FOR STAGGERED DIAPHRAGM)

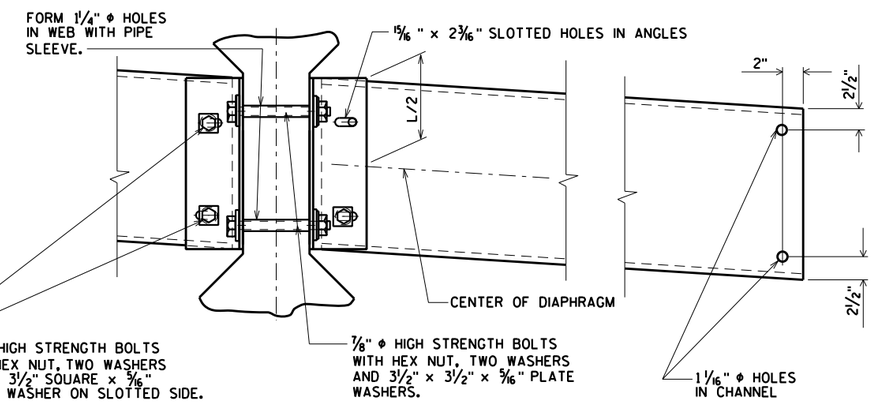

(FOR CONTINUOUS LINE OF DIAPHRAGMS)

DETAIL B

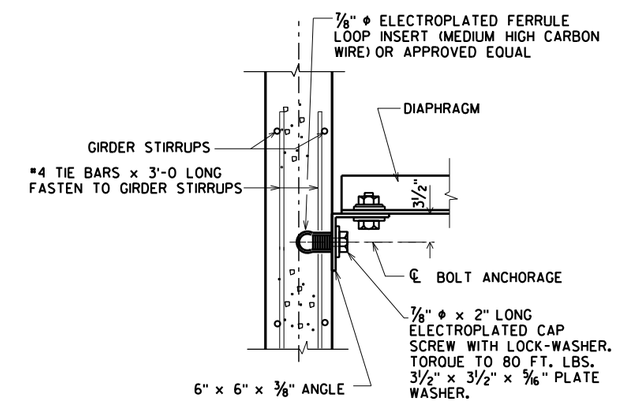

SECT. A-A

(FOR EXTERIOR ATTACHMENT)

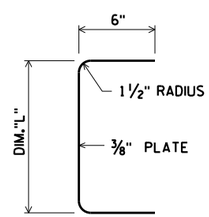

SECTION THRU ALTERNATE DIAPHRAGM

*DIM. "X" = 2½" FOR ALTERNATE PLATE DIAPHRAGM

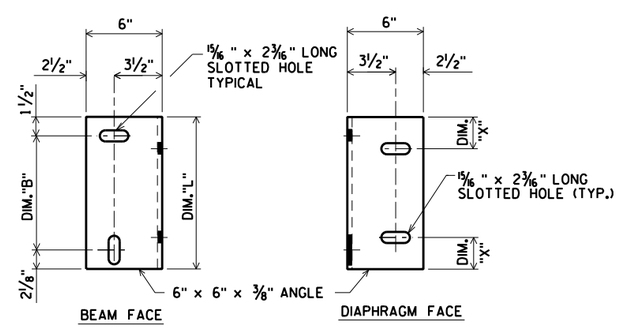

DIAPHRAGM SUPPORT

NO.	DATE	REVISION	BY

STATE OF WISCONSIN
DEPARTMENT OF TRANSPORTATION
STRUCTURES DESIGN SECTION

STRUCTURE B-55-265

DRAWN BY CLS | PLANS CK'D. CJM

INTERM. STEEL DIAPHS. DETAILS

SHEET 15 OF 21
111

ORIGINAL PLANS PREPARED BY
AYRES ASSOCIATES
3433 Oakwood Hills Parkway
Eau Claire, WI 54701
www.AyresAssociates.com

$PRFNAME$
U:±42-0886.00 - St. Croix Co. 194 Overpasses x3±42-0886.01B-55-48 CTH BB±BRIDGE±42088601.gdr45W.dgn
7/27/2015 PENTABLE:BReau_shd_util.tbl

8

8

STATE PROJECT NUMBER

1020-01-88

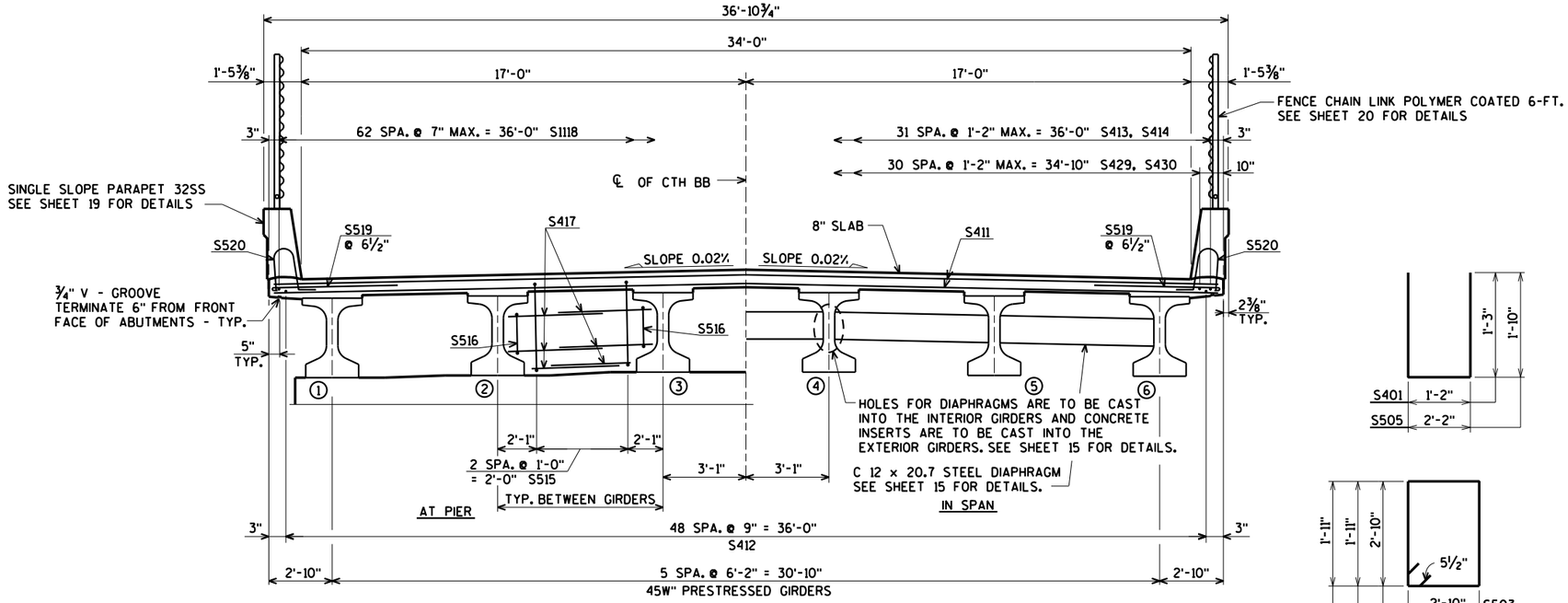

TYPICAL CROSS SECTION THRU DECK

(LOOKING NORTH)

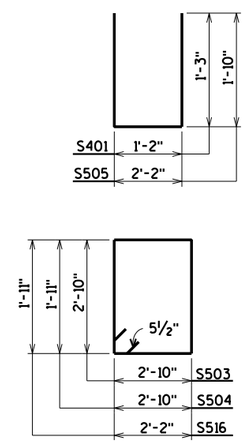

BILL OF BARS

BAR. NO.	COATED BAR	NO. REQ'D.	LENGTH	BENT BAR	BUNDLED	BAR SERIES	72,140# COATED LOCATION
S401	X	30	3-6	X			DIAPH. @ ABUT. VERT. @ NOTCH
S402	X	20	2-4				DIAPH. @ ABUT. HORIZ. @ NOTCH
S503	X	58	11-10	X			DIAPH. @ ABUT. VERT.
S504	X	24	10-0	X			DIAPH. @ ABUT. VERT.
S505	X	58	5-7	X			DIAPH. @ ABUT. VERT.
S606	X	12	36-6				DIAPH. @ ABUT. HORIZ.
S607	X	80	3-4				DIAPH. @ ABUT. HORIZ. BETW. GDRS.
S608	X	4	1-3				DIAPH. @ ABUT. HORIZ. @ EXT. GDRS.
S609	X	12	2-2				DIAPH. @ ABUT. HORIZ. @ EXT. GDRS.
S510	X	24	6-0				DIAPH. @ ABUT. HORIZ. THRU GDRS.
S411	X	855	36-6				SLAB TRANS. TOP & BOT.
S412	X	294	40-0				SLAB LONG. BOT.
S413	X	64	39-5				SLAB LONG. TOP SPAN 1
S414	X	64	42-11				SLAB LONG. TOP SPAN 2
S515	X	15	11-10	X			DIAPH. @ PIER VERT.
S516	X	10	8-8	X			DIAPH. @ PIER VERT.
S417	X	60	3-4				DIAPH. @ PIER HORIZ.
S1118	X	63	52-11				SLAB LONG. TOP @ PIER
S519	X	854	5-3	X			SLAB TRANS. TOP @ EDGES
S520	X	648	4-5	X			SLAB @ PARAPET VERT.
S521	X	648	5-0	X			PARAPET VERT.
S522	X	48	2-9	X			SLAB @ PARAPET VERT.
S523	X	64	4-4	X			SLAB @ PARAPET VERT.
S524	X	44	4-9	X			PARAPET VERT.
S525	X	24	4-10	X			PARAPET VERT.
S526	X	4	59-6	X			PARAPET HORIZ.
S527	X	44	59-6				PARAPET HORIZ.
S528	X	4	4-3	X			SLAB @ PARAPET VERT. @ ENDS OF DECK
S429	X	93	33-8				SLAB LONG. TOP SPAN 1
S430	X	93	36-0				SLAB LONG. TOP SPAN 2

BENDING DIMENSIONS ARE OUT TO OUT OF BARS.

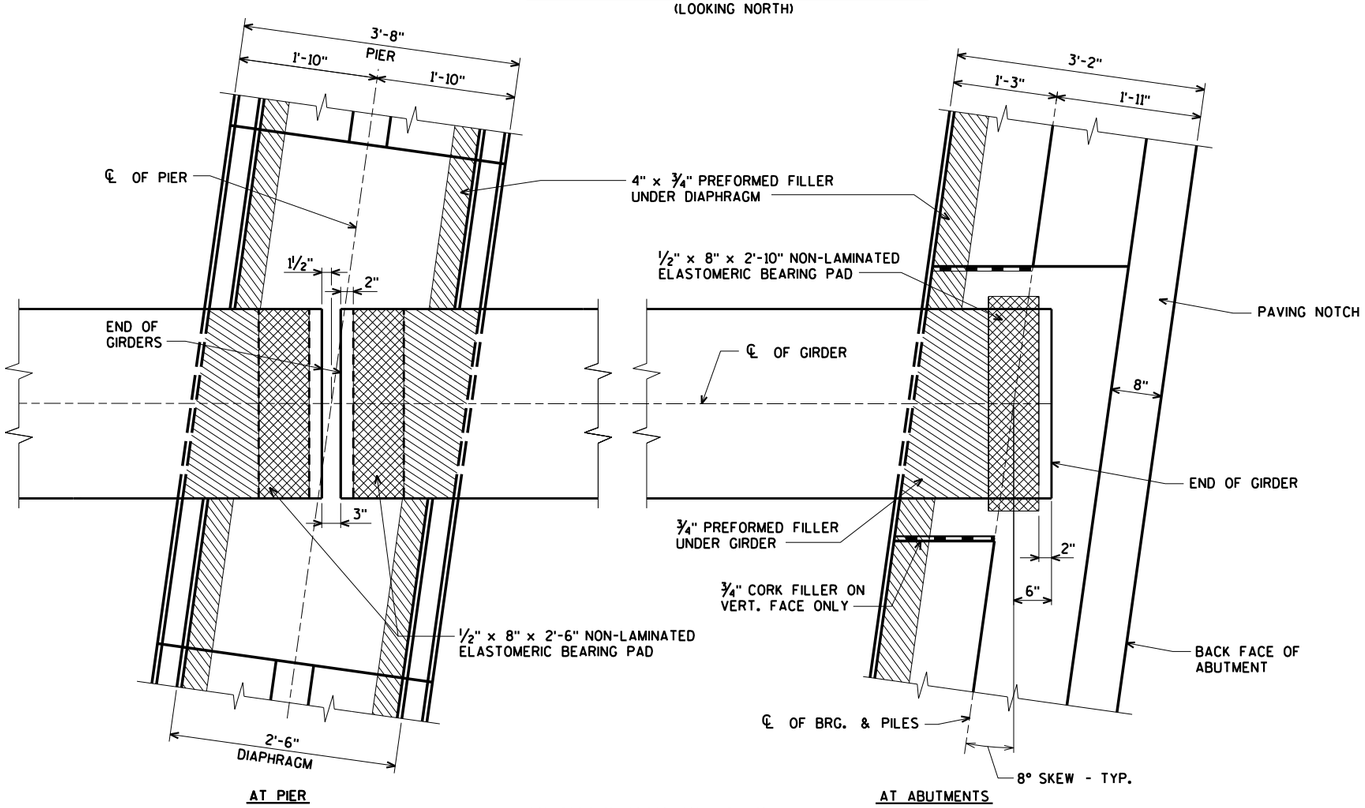

BEARING PAD DETAILS

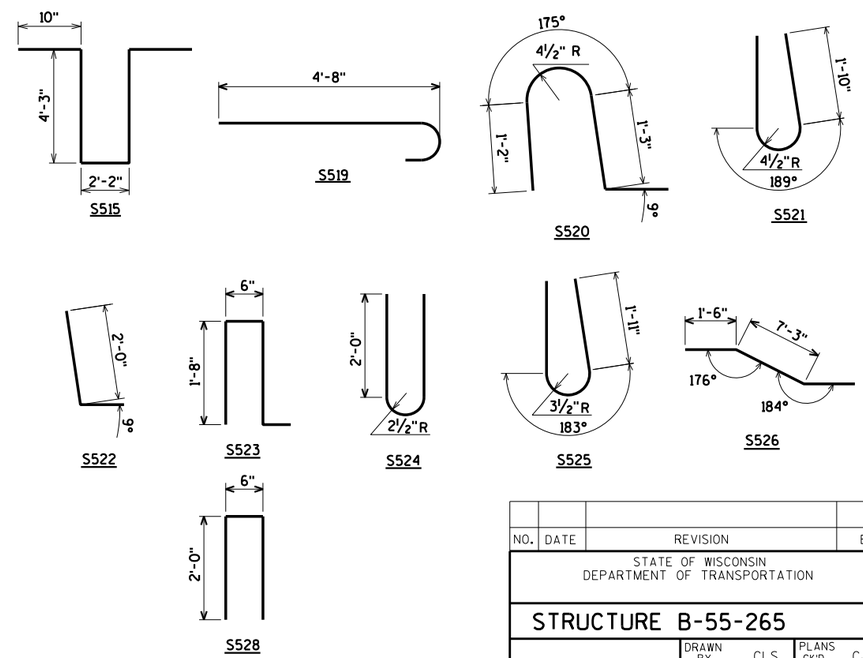

NO.	DATE	REVISION	BY

STATE OF WISCONSIN
DEPARTMENT OF TRANSPORTATION

STRUCTURE B-55-265

DRAWN BY CLS | PLANS CK'D. CJM

SUPERSTRUCTURE

SHEET 16 OF 21

112

ORIGINAL PLANS PREPARED BY
AYRES ASSOCIATES
3433 Oakwood Hills Parkway
Eau Claire, WI 54701
www.AyresAssociates.com

8

8

$PRFNAME$
U:±42-0886.00 - St. Croix Co.194 Overpasses x3±42-0886.01 B-55-48 CTH BB±BRIDGE±42088601 sup.dgn

7/27/2015

PENTABLE:BReau_shd_util.tbl

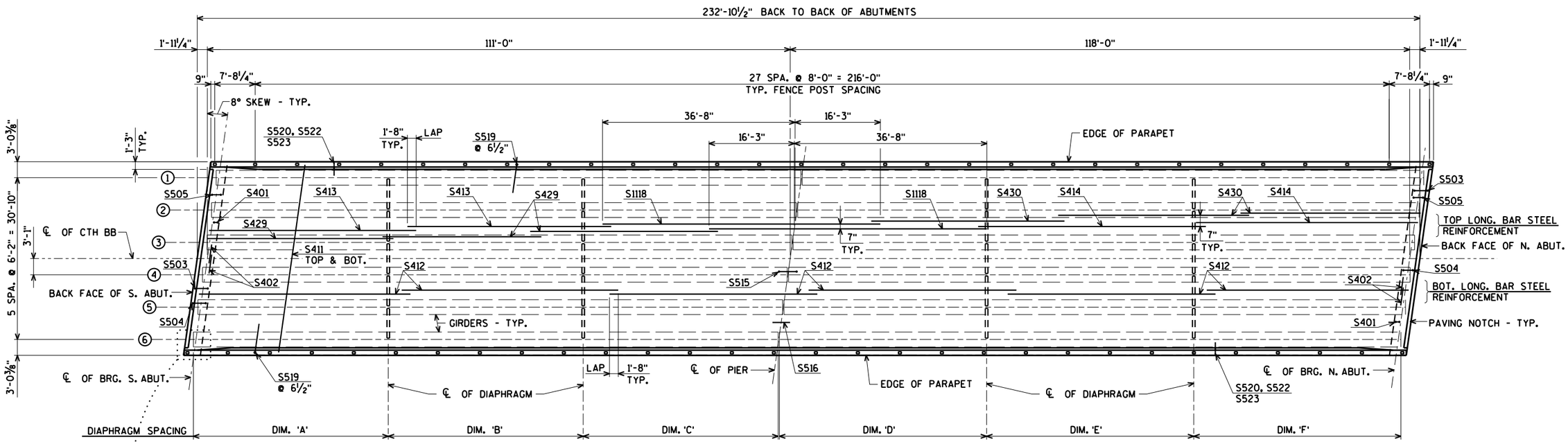

PLAN

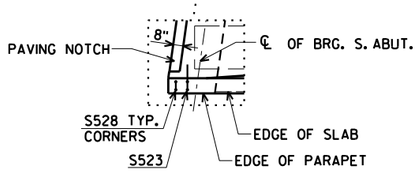

TOP OF DECK ELEVATIONS

	℄ OF BRG. S. ABUT.	0.1 PT.	0.2 PT.	0.3 PT.	0.4 PT.	0.5 PT.	0.6 PT.	0.7 PT.	0.8 PT.	0.9 PT.	℄ PIER	0.1 PT.	0.2 PT.	0.3 PT.	0.4 PT.	0.5 PT.	0.6 PT.	0.7 PT.	0.8 PT.	0.9 PT.	℄ OF BRG. N. ABUT.
W. EDGE OF DECK	1242.16	1242.56	1242.95	1243.33	1243.70	1244.06	1244.41	1244.75	1245.09	1245.41	1245.73	1246.05	1246.37	1246.68	1246.97	1247.26	1247.54	1247.80	1248.06	1248.30	1248.54
GIRDER 1	1242.18	1242.58	1242.97	1243.35	1243.72	1244.08	1244.43	1244.78	1245.11	1245.44	1245.75	1246.08	1246.40	1246.70	1247.00	1247.29	1247.56	1247.83	1248.08	1248.33	1248.57
GIRDER 2	1242.28	1242.67	1243.06	1243.44	1243.81	1244.18	1244.53	1244.87	1245.21	1245.54	1245.85	1246.18	1246.50	1246.80	1247.10	1247.39	1247.67	1247.93	1248.19	1248.44	1248.67
GIRDER 3	1242.37	1242.77	1243.16	1243.54	1243.91	1244.27	1244.63	1244.97	1245.31	1245.63	1245.95	1246.28	1246.60	1246.91	1247.20	1247.49	1247.77	1248.04	1248.29	1248.54	1248.78
℄ CTH BB	1242.41	1242.81	1243.20	1243.58	1243.96	1244.32	1244.67	1245.02	1245.36	1245.68	1246.00	1246.33	1246.65	1246.96	1247.25	1247.54	1247.82	1248.09	1248.35	1248.59	1248.83
GIRDER 4	1242.34	1242.74	1243.13	1243.51	1243.88	1244.24	1244.60	1244.94	1245.28	1245.61	1245.93	1246.26	1246.57	1246.88	1247.18	1247.47	1247.75	1248.02	1248.28	1248.52	1248.76
GIRDER 5	1242.18	1242.58	1242.97	1243.36	1243.73	1244.09	1244.45	1244.79	1245.13	1245.46	1245.78	1246.11	1246.43	1246.74	1247.04	1247.33	1247.61	1247.87	1248.13	1248.38	1248.62
GIRDER 6	1242.03	1242.43	1242.82	1243.20	1243.58	1243.94	1244.30	1244.64	1244.98	1245.31	1245.63	1245.96	1246.28	1246.59	1246.89	1247.18	1247.46	1247.73	1247.99	1248.24	1248.48
E. EDGE OF DECK	1241.99	1242.39	1242.78	1243.16	1243.54	1243.90	1244.26	1244.61	1244.94	1245.27	1245.59	1245.92	1246.24	1246.55	1246.85	1247.14	1247.42	1247.69	1247.95	1248.20	1248.44

TABLE OF DIAPHRAGM DIMENSIONS

	SPAN 1			SPAN 2		
GIRDER	DIM. 'A'	DIM. 'B'	DIM. 'C'	DIM. 'D'	DIM. 'E'	DIM. 'F'
1	34'-11½"	37'-1½"	39'-3½"	37'-3½"	39'-5½"	41'-7½"
2	35'-9⅞"	37'-1½"	38'-5⅛"	38'-1⅞"	39'-5½"	40'-9⅛"
3	36'-8¼"	37'-1½"	37'-6¾"	39'-0¼"	39'-5½"	39'-10¾"
4	37'-6¾"	37'-1½"	36'-8¼"	39'-10¾"	39'-5½"	39'-0¼"
5	38'-5⅛"	37'-1½"	35'-9⅞"	40'-9⅛"	39'-5½"	38'-1⅞"
6	39'-3½"	37'-1½"	34'-11½"	41'-7½"	39'-5½"	37'-3½"

NO.	DATE	REVISION	BY

STATE OF WISCONSIN
DEPARTMENT OF TRANSPORTATION

STRUCTURE B-55-265

DRAWN BY CLS | PLANS CK'D. CJM

SUPERSTRUCTURE PLAN

SHEET 17 OF 21
113

ORIGINAL PLANS PREPARED BY
AYRES ASSOCIATES
3433 Oakwood Hills Parkway
Eau Claire, WI 54701
www.AyresAssociates.com

$PRFNAME$
U:\42-0886.00 - St. Croix Co.194 Overpasses x3\42-0886.01 B-55-48 CTH BB\BRIDGE\42088601 sup.dgn
7/27/2015

STATE PROJECT NUMBER

1020-01-88

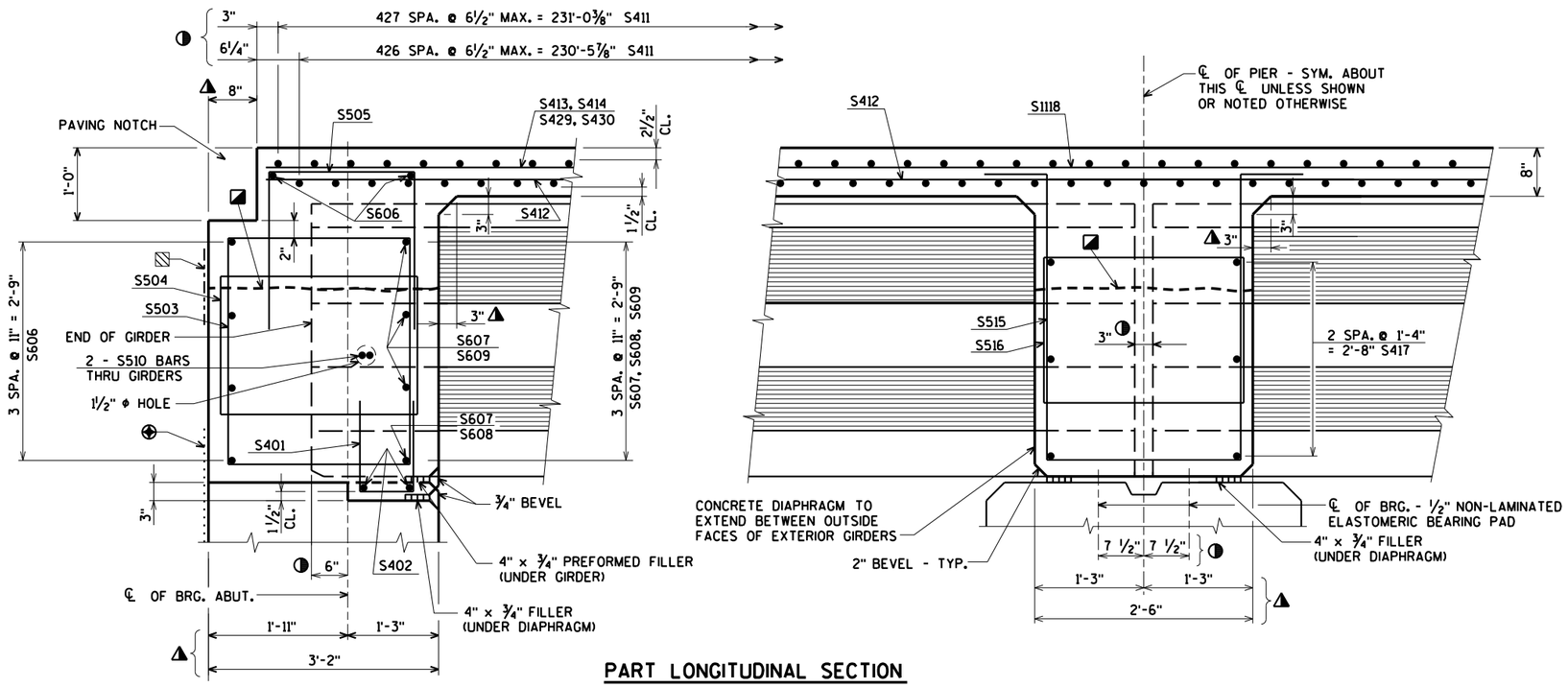

PART LONGITUDINAL SECTION

- ⊕ 18" RUBBERIZED MEMBRANE WATERPROOFING
- ◑ DIMENSIONS MEASURED ALONG ℄ OF GIRDER.
- ◭ DIMENSIONS MEASURED NORMAL TO ℄ OF SUBSTRUCTURE UNIT.
- ◪ OPTIONAL CONSTRUCTION JOINT 1'-2" BELOW TOP OF GIRDER. IF USED, DECK POUR MUST BE WITHIN 2 WEEKS FROM THE TIME OF THE DIAPHRAGM POUR.
- ▨ 18" RUBBERIZED MEMBRANE WATERPROOFING IF CONST. JT. IS USED. COST INCIDENTAL TO BID ITEM "CONCRETE MASONRY BRIDGES"

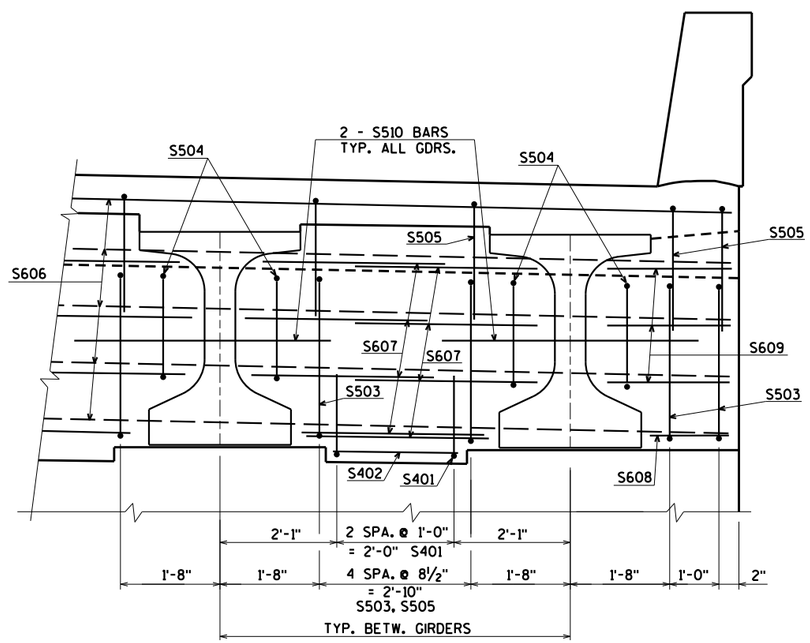

PART TRANSVERSE SECTION AT ABUTMENT DIAPHRAGM

NO.	DATE	REVISION	BY

STATE OF WISCONSIN
DEPARTMENT OF TRANSPORTATION

STRUCTURE B-55-265

DRAWN BY CLS | PLANS CK'D. CJM

SUPERSTRUCTURE DETAILS

SHEET 18 OF 21

114

ORIGINAL PLANS PREPARED BY
AYRES ASSOCIATES
3433 Oakwood Hills Parkway
Eau Claire, WI 54701
www.AyresAssociates.com

8

8

$PRFNAME$
U:±42-0886.00 - St. Croix Co.194 Overpasses x3±42-0886.01 B-55-48 CTH BB±BRIDGE±42088601 sup.dgn

7/27/2015

PENTABLE:BReau_shd_util.tbl

STATE PROJECT NUMBER

1020-01-88

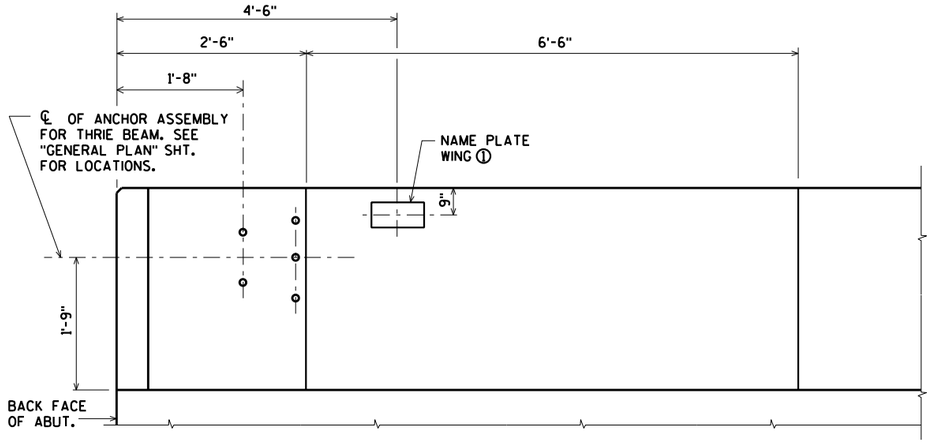

INSIDE ELEVATION

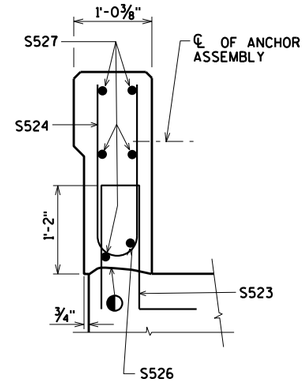

SECTION A

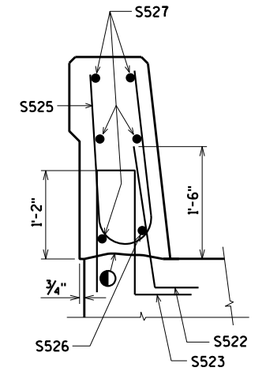

SECTION B

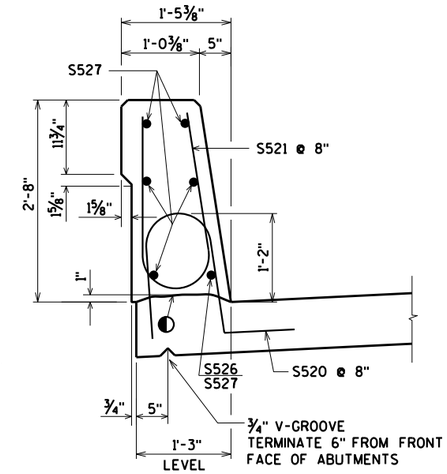

SECTION THRU PARAPET ON BRIDGE

SECTION C

◐ CONST. JOINT - STRIKE OFF AS SHOWN.

◪ S522 BARS MAY BE PLACED AFTER CONCRETE IS POURED BUT BEFORE INITIAL SET HAS TAKEN PLACE. USE CARE TO PLACE S522 BARS CORRECTLY ALONG TRANSITION OF PARAPET.

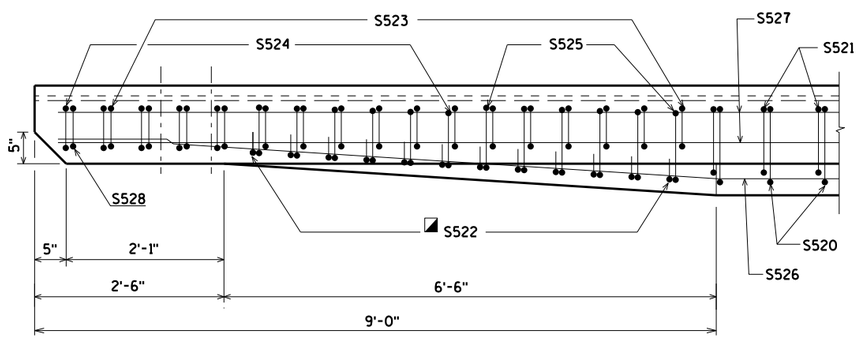

PLAN

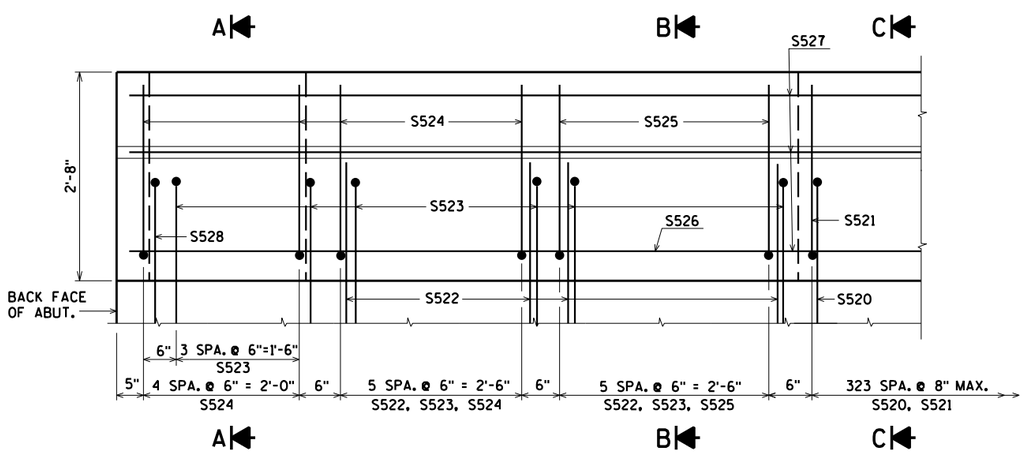

OUTSIDE ELEVATION

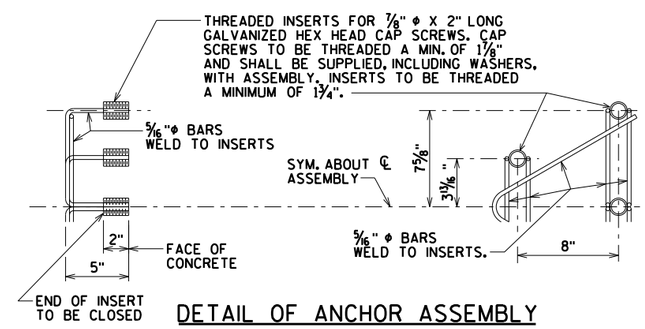

DETAIL OF ANCHOR ASSEMBLY

NOTE: HEX HEAD CAP SCREWS & WASHERS TO BE GALVANIZED IN ACCORDANCE WITH AASHTO M232 CLASS C.

ASSEMBLY SHALL BE BID ITEM "ANCHOR ASSEMBLIES FOR STEEL PLATE BEAM GUARD", EACH.

NO.	DATE	REVISION	BY

STATE OF WISCONSIN
DEPARTMENT OF TRANSPORTATION

STRUCTURE B-55-265

DRAWN BY CLS | PLANS CK'D. CJM

SINGLE SLOPE PARAPET 32SS

SHEET 19 OF 21
115

ORIGINAL PLANS PREPARED BY
AYRES ASSOCIATES
3433 Oakwood Hills Parkway
Eau Claire, WI 54701
www.AyresAssociates.com

8

8

$PRFNAME$
U:±42-0886.00 - St. Croix Co.194 Overpasses x3±42-0886.01B-55-48 CTH BB±BRIDGE±42088601 32ssPARA.dgn

1 2 3 4 7

7/27/2015

PENTABLE:BReau_shd_util.tbl

32SSDEC
1-14

FENCE MEMBER SIZE & WEIGHT

STEEL FENCE MEMBER	OUTSIDE DIAMETER (INCHES)	WEIGHT (LB/FT)
RAILS	1.660	2.27
END POST	2.875	5.80
OVERHANG POST	2.875	5.80
LINE POST	2.375	3.65
POST SLEEVE	4.000	9.12

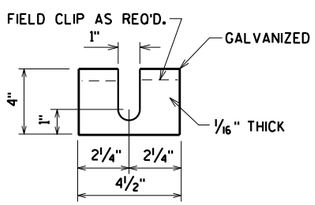

POST SHIM DETAILS

SHIMS REQUIRED ONLY WHEN END POSTS AND LINE POSTS ARE WELDED TO BASE PLATES. PROVIDE 4 SHIMS PER POST. USE WHERE REQUIRED FOR ALIGNMENT.

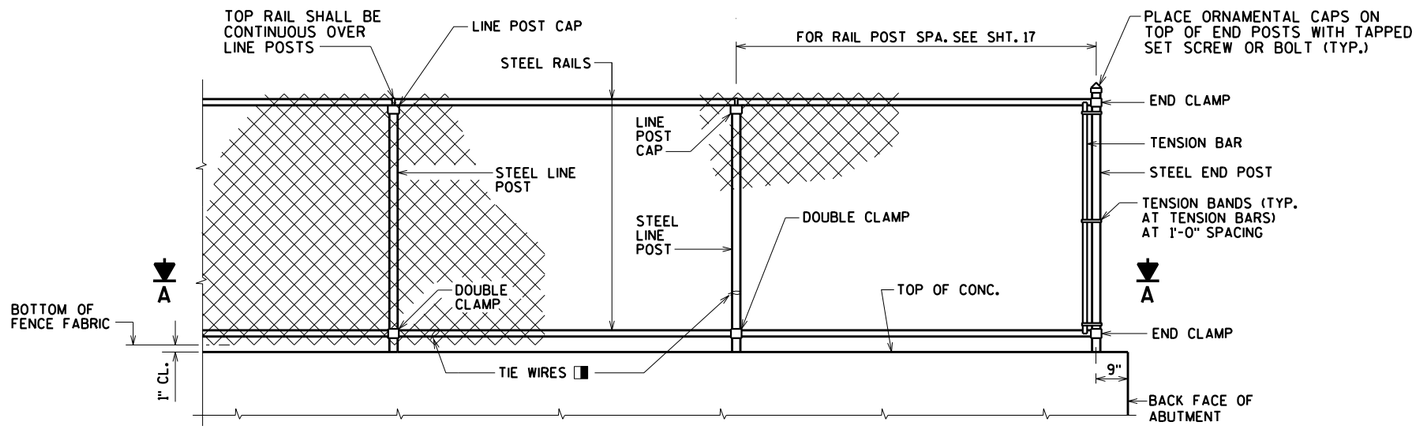

FENCE PART ELEVATION

VIEWING FABRIC SIDE

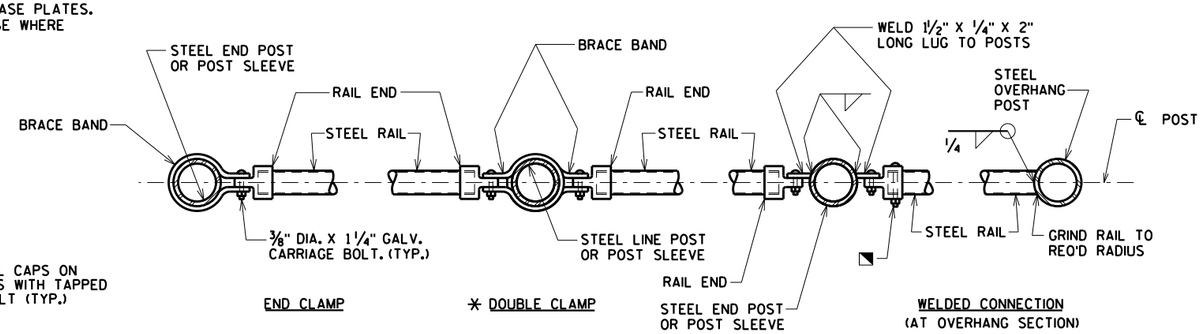

SECTION A-A

NOTE: PLACE ALL BOLT HEADS ON SIDE OF FENCE ADJACENT TO PEDESTRIANS

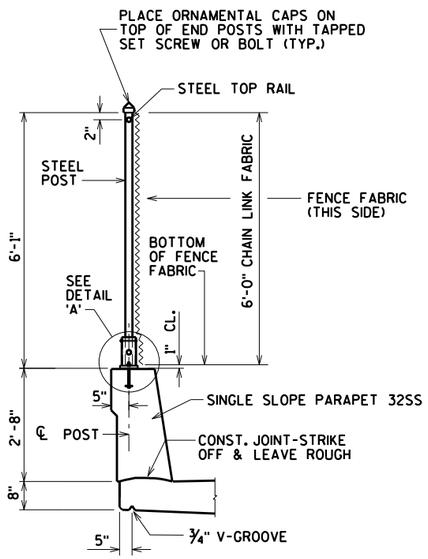

SECTION THRU FENCE

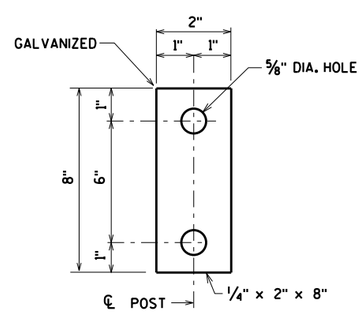

ANCHOR PLATE

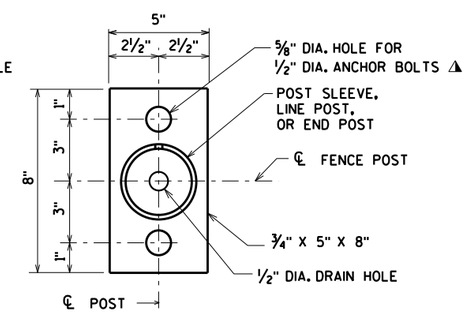

BASE PLATE

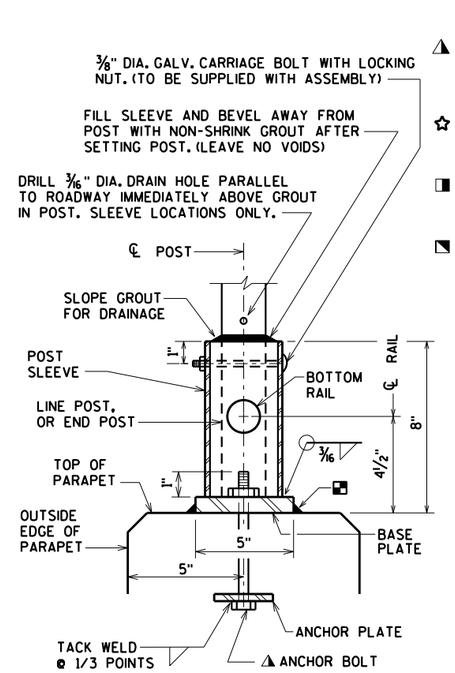

DETAIL 'A'

UNIT SHALL BE GALVANIZED AFTER FABRICATION

NOTE: IN LIEU OF USING THE POST SLEEVE, THE FENCE POST MAY BE WELDED TO THE BASE PLATE.

GENERAL NOTES

POSTS ARE TO BE SET VERTICAL.

ALL FENCE COMPONENTS SHALL BE GALVANIZED STEEL WITH A COLORED POLYMER-COATING ON THE OUTSIDE.

FABRIC SHALL CONFORM TO ASTM F668, CLASS 2B. STEEL RAILS, POSTS AND POST SLEEVES SHALL CONFORM TO ASTM F1083, STANDARD WEIGHT PIPE (SCHEDULE 40). FITTINGS SHALL CONFORM TO ASTM F626. SEE THE "BRIDGE SPECIAL PROVISIONS" FOR ADDITIONAL DETAILS.

THE COLOR OF POLYMER-COATING FOR THIS STRUCTURE SHALL BE BLACK IN ACCORDANCE WITH ASTM F934.

THE BID ITEM SHALL BE "FENCE CHAIN LINK POLYMER-COATED 6- FT.", LF.

COMPLETE ANY REQUIRED WELDING OF COMPONENTS BEFORE GALVANIZING.

POST BASE PLATES SHALL BE FLAT WITH ALL SURFACES SMOOTH AND FREE FROM WARP AND ALL EDGES SMOOTH, STRAIGHT AND VERTICAL. ALL PLATE CUTS SHALL BE MACHINE OR MACHINE FLAME CUT.

BASE PLATES, ANCHOR PLATES AND SHIMS SHALL BE ASTM A709, GRADE 36.

ALL POST SPACINGS ARE MEASURED HORIZONTALLY ALONG THE C/L OF THE POST.

◪ CAULK AROUND PERIMETER OF BASE PLATE AND FILL PORTION OF SLOTTED HOLE AROUND ANCHOR BOLT IN SHIM WITH NON-STAINING GRAY NON-BITUMINOUS JOINT SEALER.

✳ ALTERNATE TO DOUBLE CLAMP: USE LINE RAIL CLAMP (BOULEVARD) OR 180° BRACE BAND, WHICH MAY BE USED WHEN THE POSTS ARE EITHER BOLTED TO THE POST SLEEVES OR DIRECTLY WELDED TO THE BASE PLATE.

◭ 1/2" DIA. X 6 7/8" LONG GALVANIZED HEX BOLT WITH NUT & WASHER. TYPE "S". 1/2" DIA. CONCRETE MASONRY ANCHORS MAY BE SUBSTITUTED FOR 1/2" DIA. BOLTS. ANCHOR PLATE NOT REQUIRED WHEN TYPE "S" ANCHORS ARE USED. SEE ✿

✿ MASONRY ANCHOR TYPE S 1"2-INCH. EMBED 6" IN CONCRETE. ANCHOR, WASHER, AND NUT SHALL BE GALVANIZED.

◨ ATTACH FABRIC TO RAILS, AND TO POSTS WITHOUT TENSION BANDS, WITH TIE WIRES (ROUND, 9-GAGE) SPACED AT 1'-0".

◥ BOLT RAIL TO RAIL END TO SECURE OVERHANG SECTION. ALTERNATE IS TO WELD RAIL DIRECTLY TO END POST.

MINIMUM LENGTH OF TOP RAIL BETWEEN SPLICES SHALL BE 20'-0". LOCATE SPLICES NEAR 1/4 POINT OF POST SPACING.

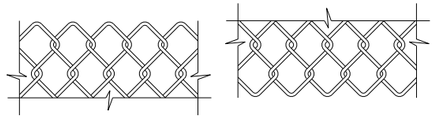

TOP DETAIL BOTTOM DETAIL

FENCE FABRIC

FENCE FABRIC WOVEN OF 9-GAGE WIRE IN 2" DIAMOND PATTERN MESH WITH BOTH THE TOP AND BOTTOM SELVAGES KNUCKLED.

NO.	DATE	REVISION	BY

STATE OF WISCONSIN
DEPARTMENT OF TRANSPORTATION

STRUCTURE B-55-265

DRAWN BY CLS | PLANS CK'D. CJM

FENCING DETAILS

SHEET 20 OF 21
116

ORIGINAL PLANS PREPARED BY
AYRES ASSOCIATES
3433 Oakwood Hills Parkway
Eau Claire, WI 54701
www.AyresAssociates.com

$PRFNAME$
U:±42-0886.00 - St. Croix Co.194 Overpasses x3±42-0886.01B-55-48 CTH BB±BRIDGE±42088601chainlink.dgn
7/27/2015
PENTABLE:BReau_shd_util.tbl
railchan
7-13

STATE PROJECT NUMBER

1020-01-88

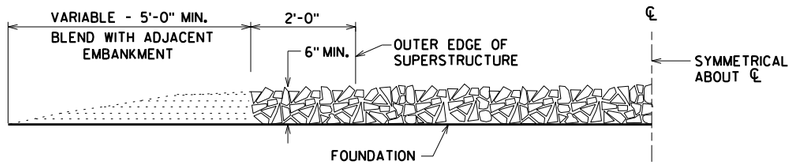

SECTION A

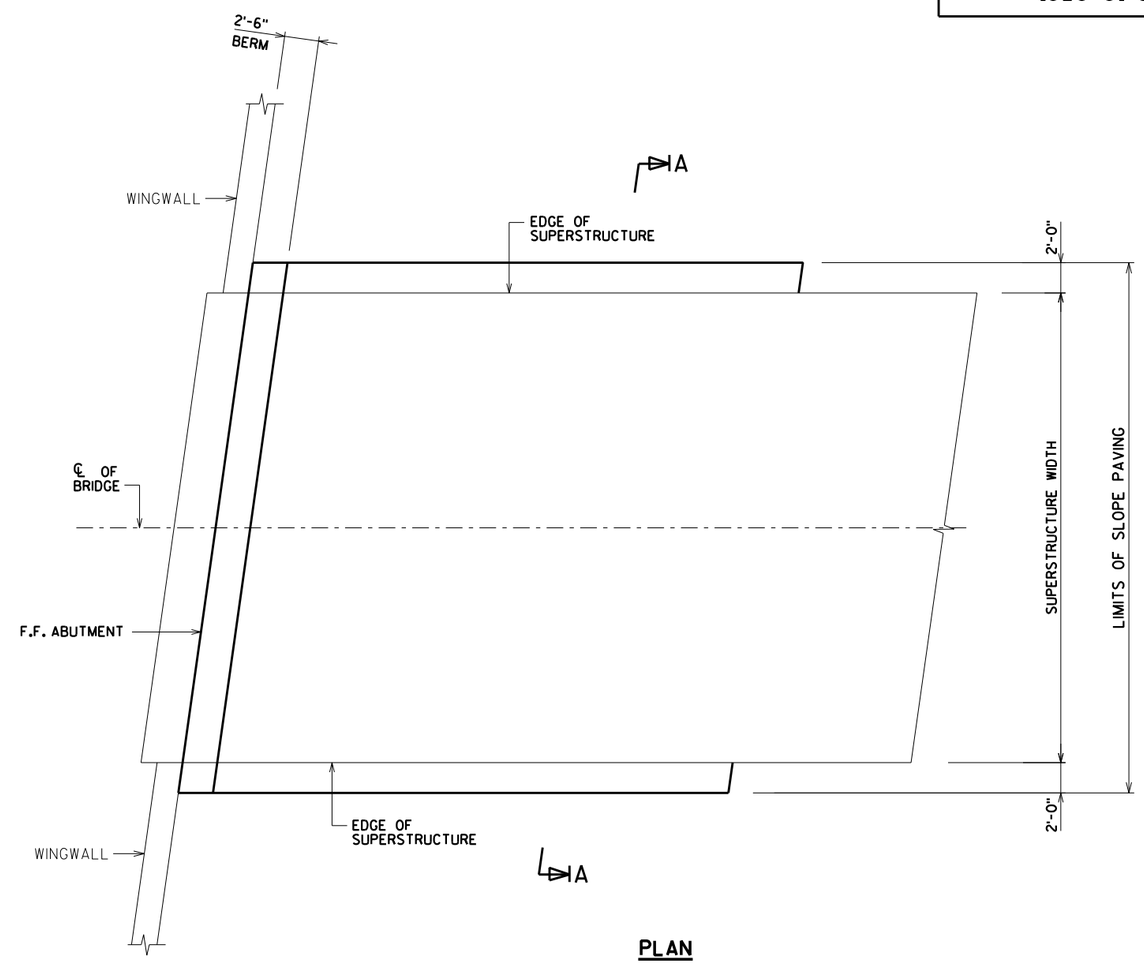

PLAN

GENERAL NOTES

DETAILS OF CONSTRUCTION, MATERIALS AND WORKMANSHIP NOT SHOWN ON THIS DRAWING SHALL CONFORM TO THE PERTINENT REQUIREMENTS OF THE STANDARD SPECIFICATIONS.

WOOD FORMS MAY BE LEFT IN PLACE WHEN OF A QUALITY ACCEPTABLE TO THE ENGINEER.

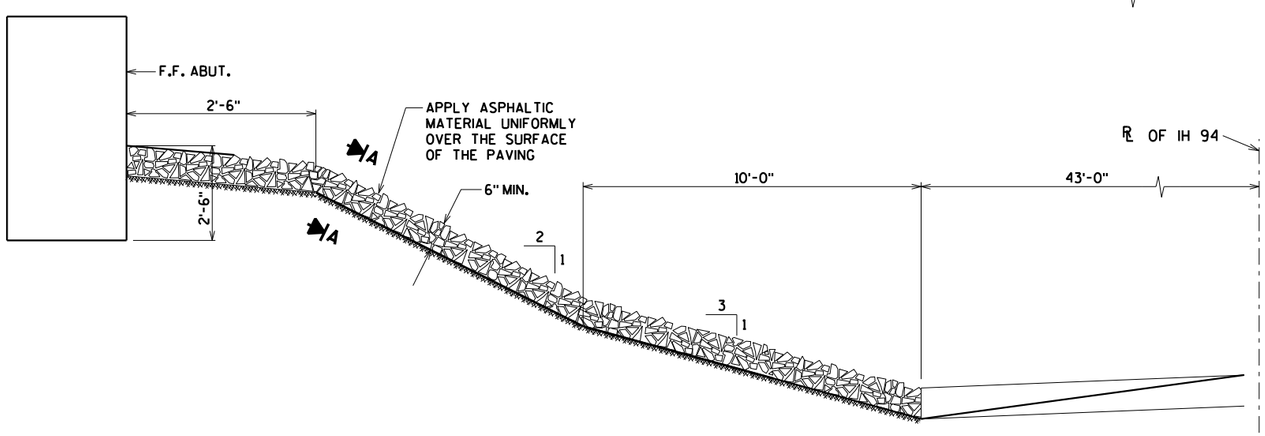

STANDARD CROSS SECTION

ROUND STONE WILL NOT BE ACCEPTED

NO.	DATE	REVISION	BY

STATE OF WISCONSIN
DEPARTMENT OF TRANSPORTATION
STRUCTURES DESIGN SECTION

STRUCTURE B-55-265

DRAWN BY CLS | PLANS CK'D. CJM

SLOPE PAVING CRUSHED AGGREGATE

SHEET 21 OF 21

117

ORIGINAL PLANS PREPARED BY
AYRES ASSOCIATES
3433 Oakwood Hills Parkway
Eau Claire, WI 54701
www.AyresAssociates.com

8

8

$PRFNAME$
U:42-0886.00 - St. Croix Co. 194 Overpasses x3:42-0886.01 B-55-48 CTH BB:BRIDGE:42088601 slopePAV.dgn

7/28/2015

PENTABLE:BReau_shd_util.tbl

EARTHWORK SUMMARY (CATEGORY 0010)

ROADWAY	STATION	AREA CUT SF	AREA FILL SF	INCREMENTAL VOLUME CUT (1) CY	INCREMENTAL VOLUME FILL (3) CY	CUMULATIVE VOLUME CUT (1) 1.00 CY	CUMULATIVE VOLUME EXPANDED FILL (4) 1.30 CY	CUMULATIVE VOLUME MASS ORDINATE ±(5) CY
CTH BB	70+00	55	0					
	70+50	56	4	103	4	103	5	98
	71+00	57	12	105	15	208	25	183
	71+08	54	14	16	8	224	35	189
	71+50	25	44	61	45	285	94	191
	71+56	24	59	5	12	290	109	181
	72+00	12	60	29	97	319	235	84
	72+50	2	57	13	108	332	376	-44
	73+00	0	87	2	134	334	550	-216
	73+50	1	123	1	195	335	803	-468
	74+00	0	159	1	262	336	1,144	-808
	74+50	0	201	0	334	336	1,578	-1,242
	75+00	0	227	0	396	336	2,093	-1,757
	75+50	0	255	0	446	336	2,673	-2,337
	76+00	0	273	0	489	336	3,309	-2,973
	76+50	0	266	0	498	336	3,956	-3,620
	76+59	0	259	0	91	336	4,074	-3,738
	76+64	0	256	0	46	336	4,134	-3,798
	77+00	0	238	0	329	336	4,562	-4,226
	77+50	0	263	0	464	336	5,165	-4,829
	77+94	0	230	0	405	336	5,691	-5,355
	77+99	0	222	0	40	336	5,743	-5,407
	78+00	0	220	0	7	336	5,753	-5,417
	78+19	0	187	0	145	336	5,941	-5,605
	78+24	0	176	0	32	336	5,983	-5,647
	78+44	0	135	0	117	336	6,135	-5,799
	78+49	0	121	0	23	336	6,165	-5,829
	78+50	0	120	0	4	336	6,170	-5,834
	78+87	0	120	0	166	336	6,386	-6,050
	STRUCTURE (B-55-0265)							
	81+19	2	31	2	36	2	47	-45
	81+50	2	31	0	8	2	57	-55
	81+57	1	27	0	5	2	64	-62
	81+62	1	28	1	25	3	96	-93
	81+82	1	39	0	7	3	105	-102
	81+87	1	39	0	16	3	126	-123
	82+00	1	28	0	9	3	138	-135
	82+07	1	42	0	7	3	147	-144
	82+12	1	43	0	61	3	226	-223
	82+50	0	44	5	68	8	315	-307
	82+94	7	40	1	12	9	330	-321
	83+00	5	32	4	92	13	450	-437
	83+42	0	86	0	16	13	471	-458
	83+47	0	90	0	10	13	484	-471
	83+50	0	93	0	217	13	766	-753
	84+00	0	142	0	310	13	1,169	-1,156
	84+50	0	193	0	343	13	1,615	-1,602
	84+94	0	228	0	50	13	1,680	-1,667
	85+00	0	218	0	387	13	2,183	-2,170
	85+50	0	200	0	357	13	2,647	-2,634
	86+00	0	185	5	114	18	2,795	-2,777
	86+19	14	140	8	268	26	3,143	-3,117
	86+50	0	142	7	223	33	3,433	-3,400
	87+00	8	99	23	151	56	3,630	-3,574
	87+50	18	64	43	94	99	3,752	-3,653
	88+00	29	38	64	57	163	3,826	-3,663
	88+50	40	24	95	22	258	3,855	-3,597
	89+00	62	0					
SUBTOTALS				594	7,877			

EARTHWORK SUMMARY (CATEGORY 0010), CONTINUED

ROADWAY	STATION	AREA CUT SF	AREA FILL SF	INCREMENTAL VOLUME CUT (1) CY	INCREMENTAL VOLUME FILL (3) CY	CUMULATIVE VOLUME CUT (1) 1.00 CY	CUMULATIVE VOLUME EXPANDED FILL (4) 1.30 CY	CUMULATIVE VOLUME MASS ORDINATE ±(5) CY
IH 94 EB	1144+75	13	0					
	1145+00	13	0	12	0	12	0	12
	1145+25	16	0	14	0	25	0	25
	1145+50	15	0	14	0	40	0	40
	1145+75	10	0	11	0	51	0	51
	1146+00	9	0	9	0	60	0	60
	1146+25	54	0	29	0	89	0	89
	1146+50	215	0	124	0	214	0	214
	1146+75	329	0	252	0	465	0	465
	1147+00	228	0	258	0	723	0	723
	1147+25	449	0	313	0	1,036	0	1,036
	1147+50	484	0	432	0	1,468	0	1,468
	1147+75	292	0	359	0	1,827	0	1,827
	1148+00	236	0	244	0	2,071	0	2,071
	1148+25	169	0	187	0	2,259	0	2,259
	1148+50	116	0	132	0	2,391	0	2,391
	1148+75	110	0	105	0	2,495	0	2,495
	1149+00	112	1	102	0	2,598	1	2,597
	1149+25	136	1	114	1	2,712	2	2,710
	1149+50	137	1	126	1	2,838	3	2,835
	1149+75	104	1	112	1	2,950	4	2,946
	1150+00	59	0	75	1	3,025	5	3,020
	1150+25	37	1	45	1	3,070	6	3,064
	1150+50	17	4	25	2	3,095	9	3,086
	1150+75	4	0	10	2	3,105	11	3,093
IH 94 WB	1144+75	8	0					
	1145+00	8	0	7	0	7	0	7
	1145+25	12	2	9	1	16	1	15
	1145+50	26	1	18	2	34	3	31
	1145+75	68	1	44	1	77	5	73
	1146+00	100	1	78	1	155	6	149
	1146+25	189	0	134	0	289	6	282
	1146+50	292	2	223	1	511	8	504
	1146+75	182	0	220	1	731	9	722
	1147+00	469	0	301	0	1,032	9	1,023
	1147+25	476	0	437	0	1,470	9	1,461
	1147+50	171	0	300	0	1,769	9	1,761
	1147+75	11	8	84	4	1,854	14	1,840
	1148+00	252	4	122	6	1,976	21	1,955
	1148+25	266	2	240	3	2,216	25	2,191
	1148+50	215	3	223	2	2,439	28	2,411
	1148+75	185	4	185	3	2,624	32	2,591
	1149+00	146	4	153	4	2,777	37	2,739
	1149+25	113	3	120	3	2,897	42	2,855
	1149+50	81	2	90	2	2,986	45	2,942
	1149+75	50	0	60	1	3,047	46	3,001
	1150+00	17	1	31	1	3,077	47	3,030
	1150+25	11	1	13	1	3,090	48	3,042
	1150+50	8	1	9	1	3,099	50	3,049
	1150+75	7	0	7	1	3,106	50	3,055
SUBTOTALS				6,210	47			

NOTES:
1) EXCAVATION COMMON IS THE SUM OF THE CUT COLUMN. ITEM NUMBER 205.0100
2) SALVAGED/UNUSEABLE PAVEMENT MATERIAL IS INCLUDED IN CUT.
3) DOES NOT INCLUDE UNUSABLE PAVEMENT EXCAVATION VOLUME.
4) EXPANDED FILL FACTOR = 1.30 EXPANDED FILL = UNEXPANDED FILL * FILL FACTOR
5) THE MASS ORDINATE ± QTY CALCULATED FOR THE DIVISION.

PLUS (+) QUANTITY INDICATES AN EXCESS OF MATERIAL WITHIN THE DIVISION.
MINUS (-) QUANTITY INDICATES A SHORTAGE OF MATERIAL WITHIN THE DIVISION.

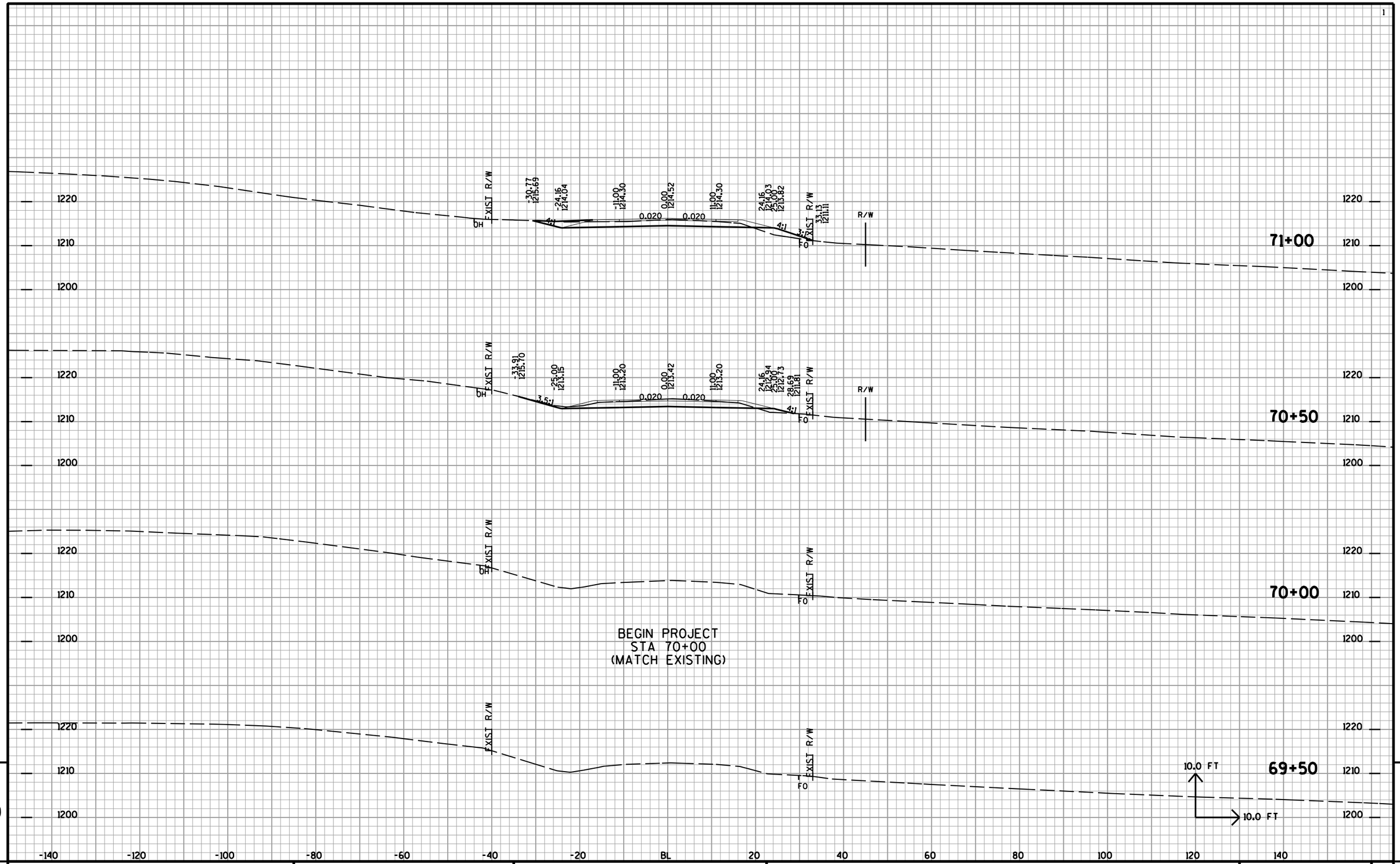

PROJECT NO: 1020-01-88	HWY: CTH BB	COUNTY: ST CROIX	CROSS SECTIONS	SHEET NO: 119	E

FILE NAME : U:\42-0886.00 - St. Croix Co. I94 Overpasses x3\42-0886.01 B-55-48 CTH BB\RDWY\42088601_JULREVXS-FINAL-BB.DGN PLOT DATE : 7/24/2015 PLOT BY : AYRES-EC equ_shd_util.tbl PLOT SCALE : 1:2

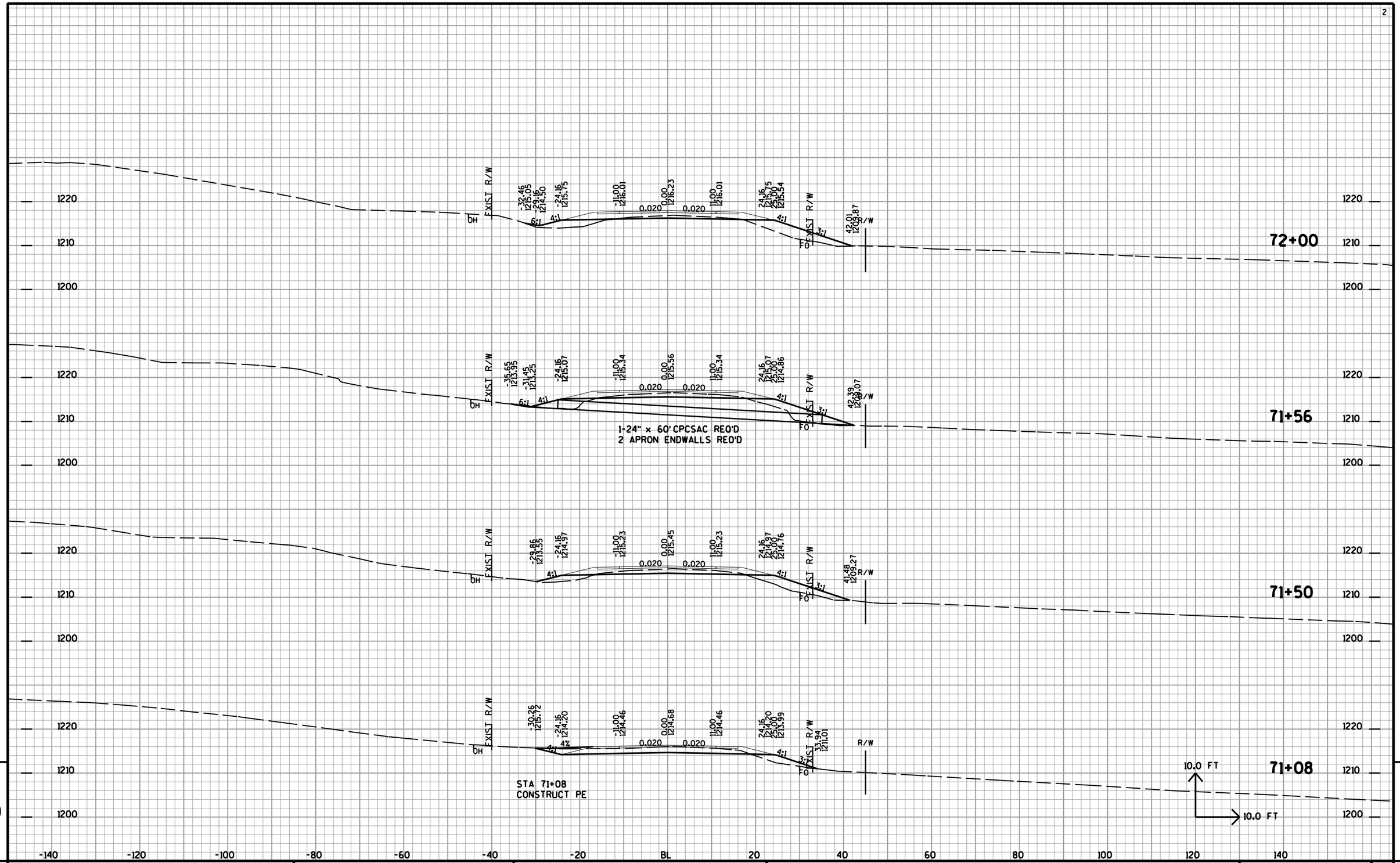

PROJECT NO: 1020-01-88	HWY: CTH BB	COUNTY: ST CROIX	CROSS SECTIONS	SHEET NO: 120	E

FILE NAME : U:\42-0886.00 - St. Croix Co. I94 Overpasses x3\42-0886.01 B-55-48 CTH BB\RDWY\42088601_JULREVXS-FINAL-BB.DGN PLOT DATE : 7/24/2015 PLOT BY : AYRES-EC equ_shd_util.tbl PLOT SCALE : 1:2

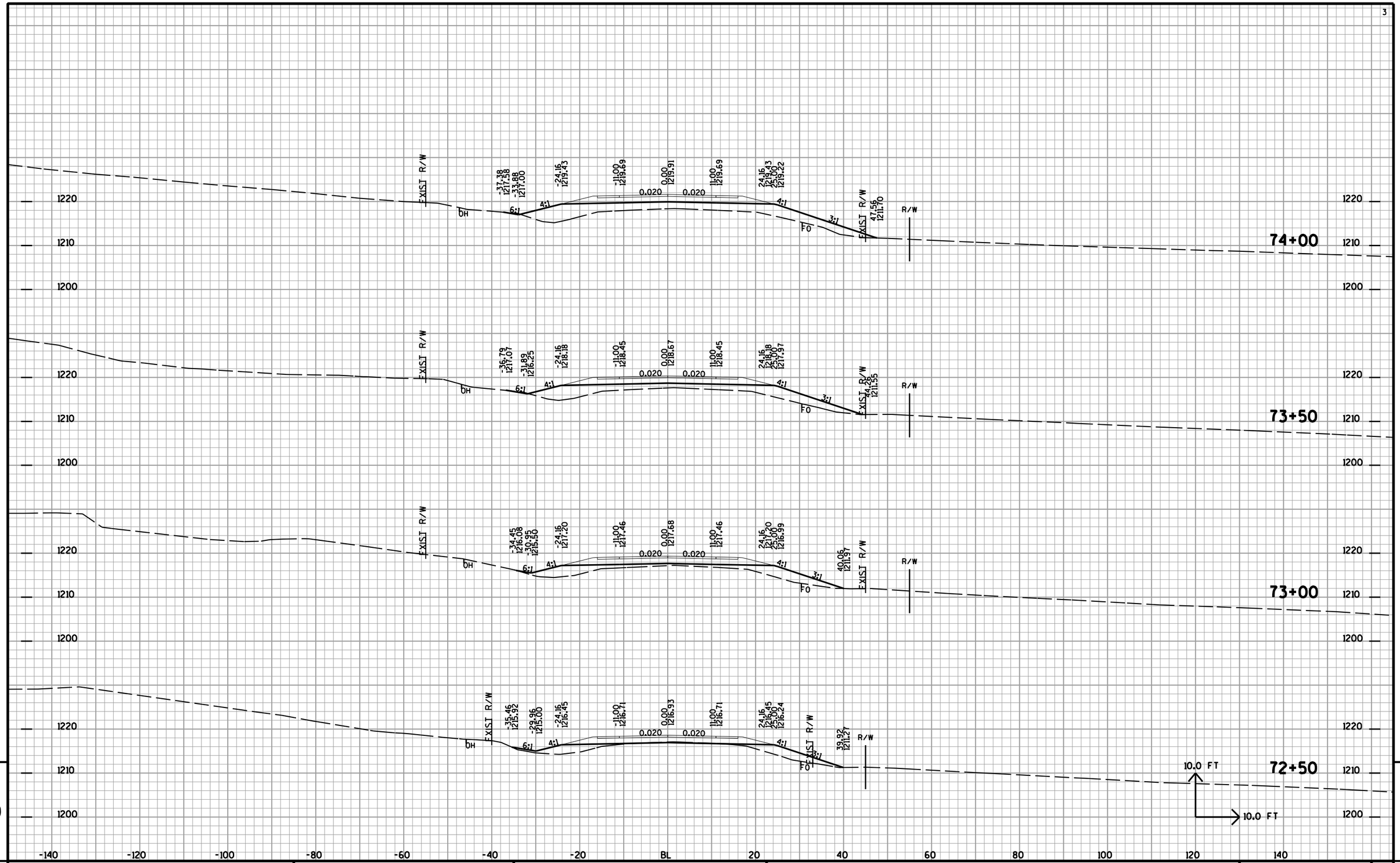

PROJECT NO: 1020-01-88	HWY: CTH BB	COUNTY: ST CROIX	CROSS SECTIONS	SHEET NO: 121	E

FILE NAME : U:\42-0886.00 - St. Croix Co. I94 Overpasses x3\42-0886.01 B-55-48 CTH BB\RDWY\42088601_JULREVXS-FINAL-BB.DGN PLOT DATE : 7/24/2015 PLOT BY : AYRES-EC equ_shd_util.tbl PLOT SCALE : 1:2

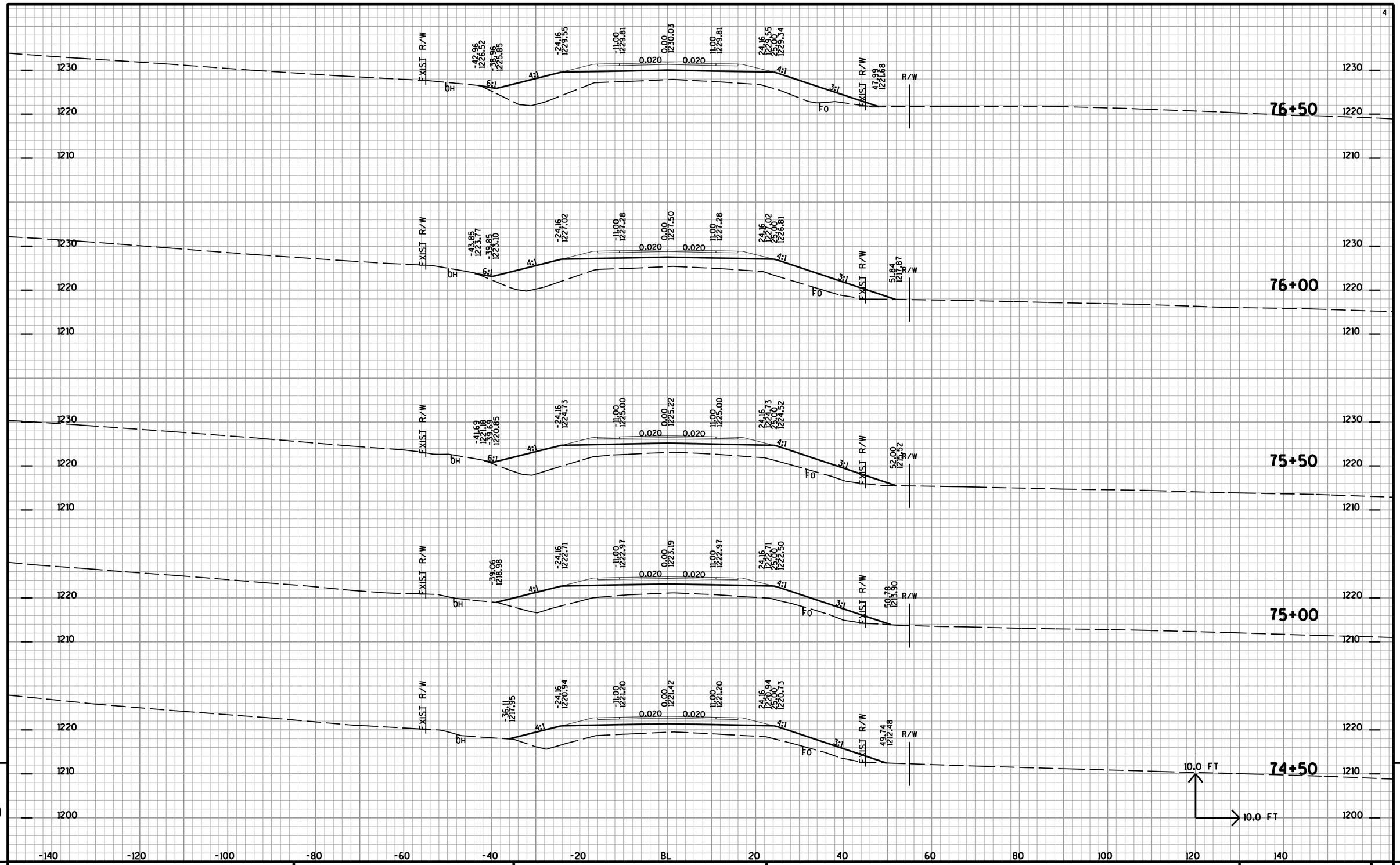

PROJECT NO: 1020-01-88	HWY: CTH BB	COUNTY: ST CROIX	CROSS SECTIONS	SHEET NO: 122	E

FILE NAME : U:\42-0886.00 - St. Croix Co. I94 Overpasses x3\42-0886.01 B-55-48 CTH BB\RDWY\42088601_JULREVXS-FINAL-BB.DGN PLOT DATE : 7/24/2015 PLOT BY : AYRES-EC equ_shd_util.tbl PLOT SCALE : 1:2

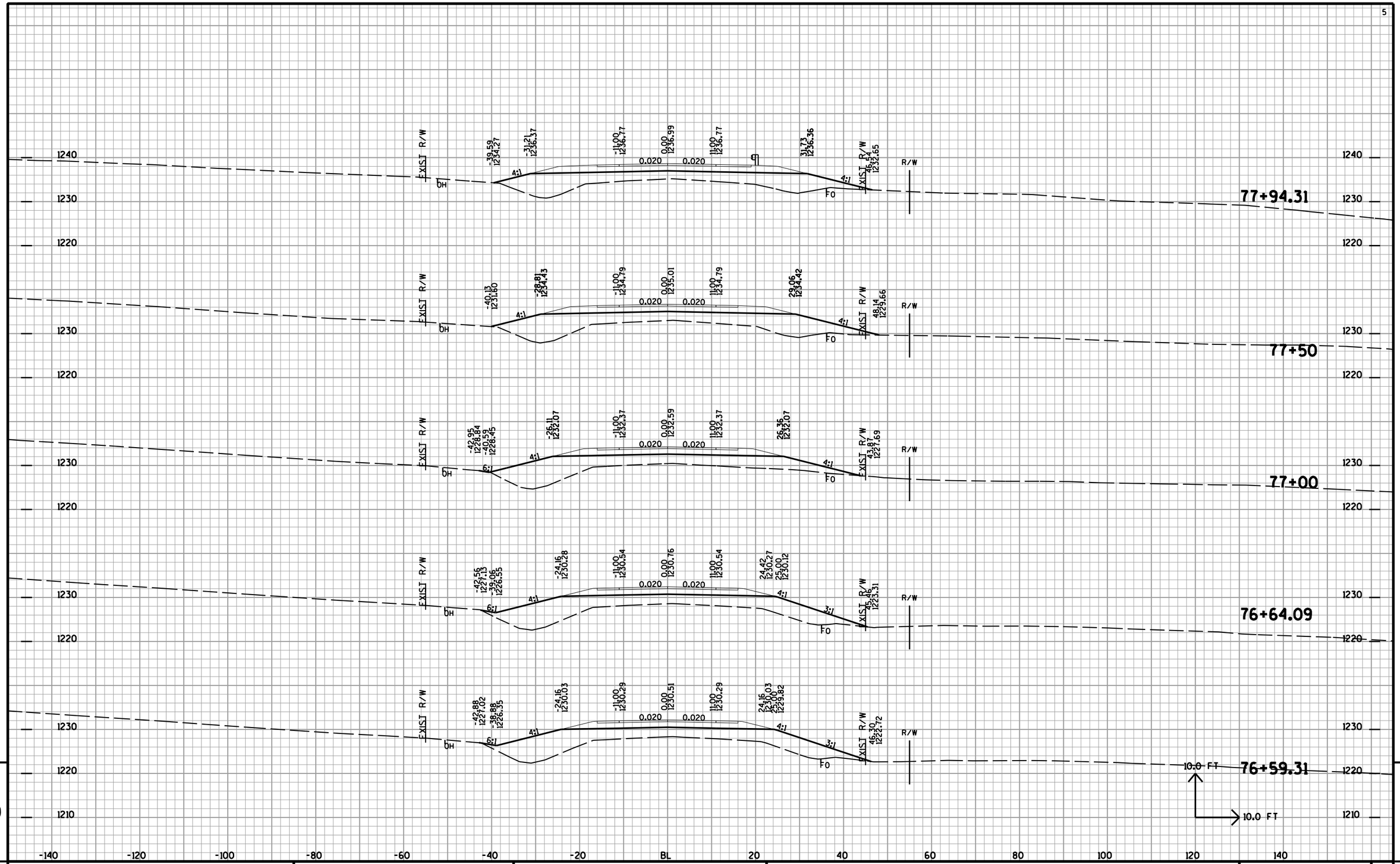

PROJECT NO: 1020-01-88	HWY: CTH BB	COUNTY: ST CROIX	CROSS SECTIONS	SHEET NO: 123	E

FILE NAME : U:\42-0886.00 - St. Croix Co, I94 Overpasses x3\42-0886.01 B-55-48 CTH BB\RDWY\42088601_JULREVXS-FINAL-BB.DGN PLOT DATE : 7/24/2015 PLOT BY : AYRES-EC eau_shd_util.tbl PLOT SCALE : 1:2

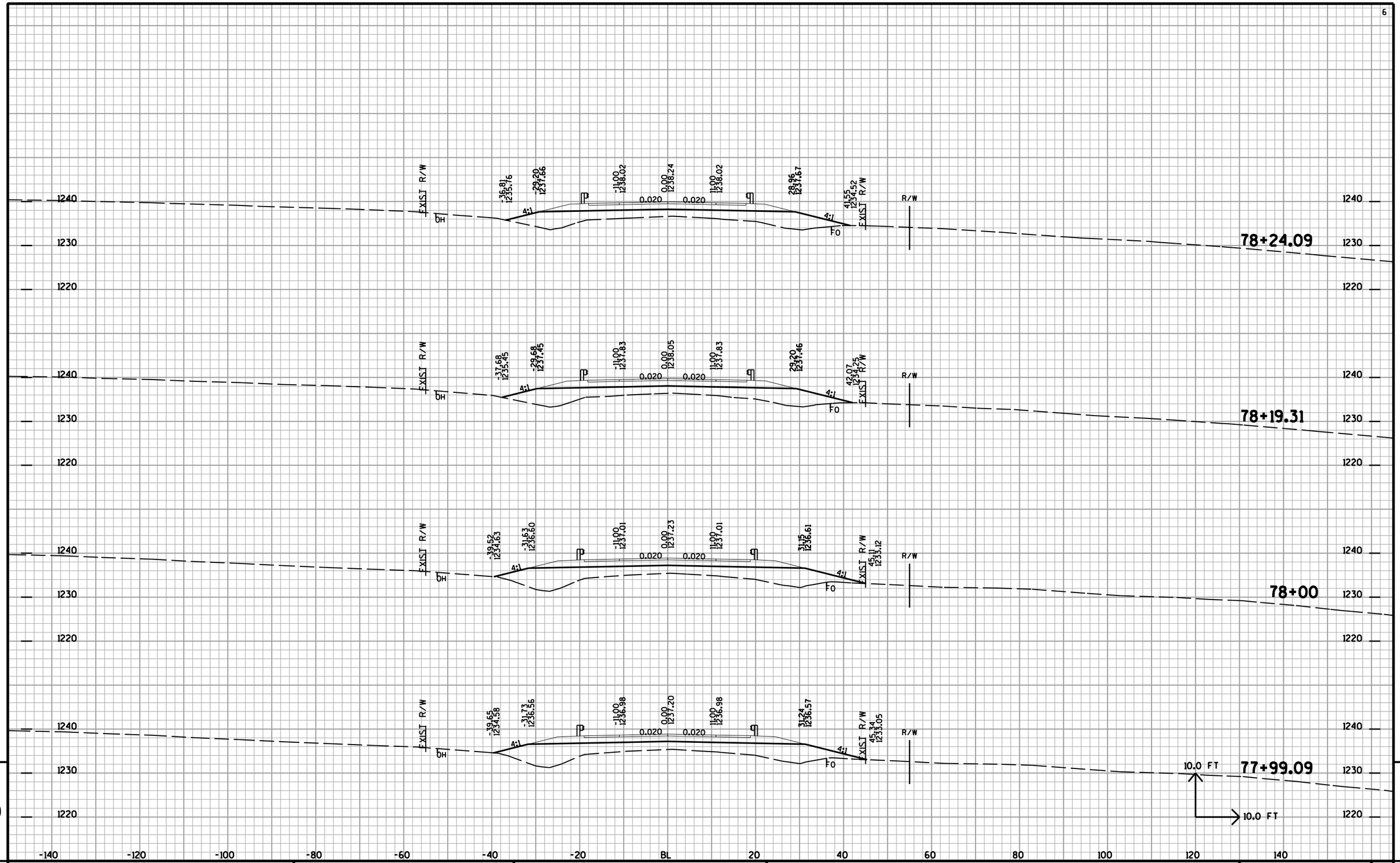

PROJECT NO: 1020-01-88	HWY: CTH BB	COUNTY: ST CROIX	CROSS SECTIONS	SHEET NO: 124	E

FILE NAME : U:\42-0886.00 - St. Croix Co. I94 Overpasses x3\42-0886.01 B-55-48 CTH BB\RDWY\42088601_JULREVXS-FINAL-BB.DGN PLOT DATE : 7/24/2015 PLOT BY : AYRES-EC equ_shd_util.tbl PLOT SCALE : 1:2

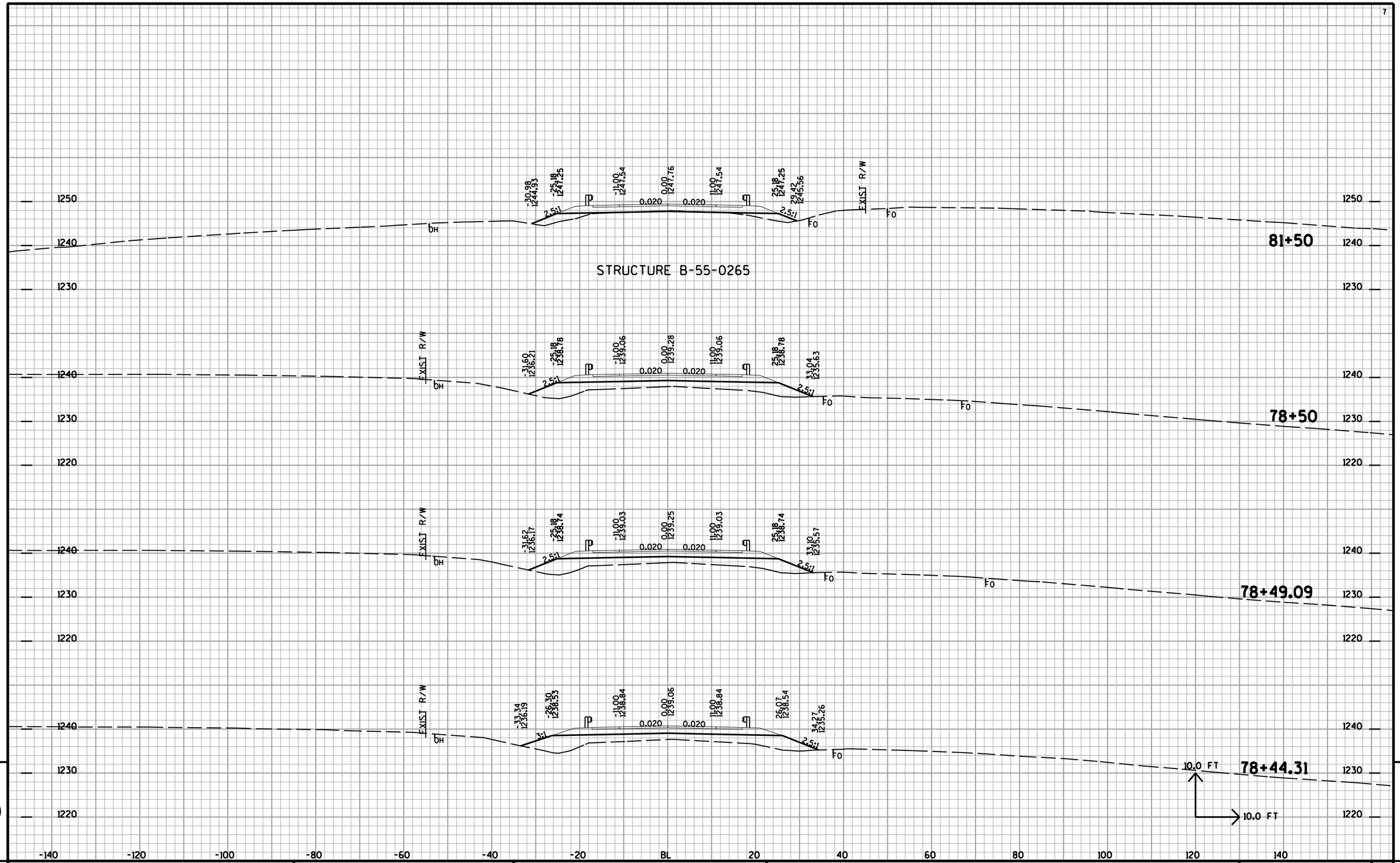

PROJECT NO: 1020-01-88	HWY: CTH BB	COUNTY: ST CROIX	CROSS SECTIONS	SHEET NO: 125	E

FILE NAME : U:\42-0886.00 - St. Croix Co. I94 Overpasses x3\42-0886.01 B-55-48 CTH BB\RDWY\42088601_JULREVXS-FINAL-BB.DGN PLOT DATE : 7/24/2015 PLOT BY : AYRES-EC equ_shd_util.tbl PLOT SCALE : 1:2

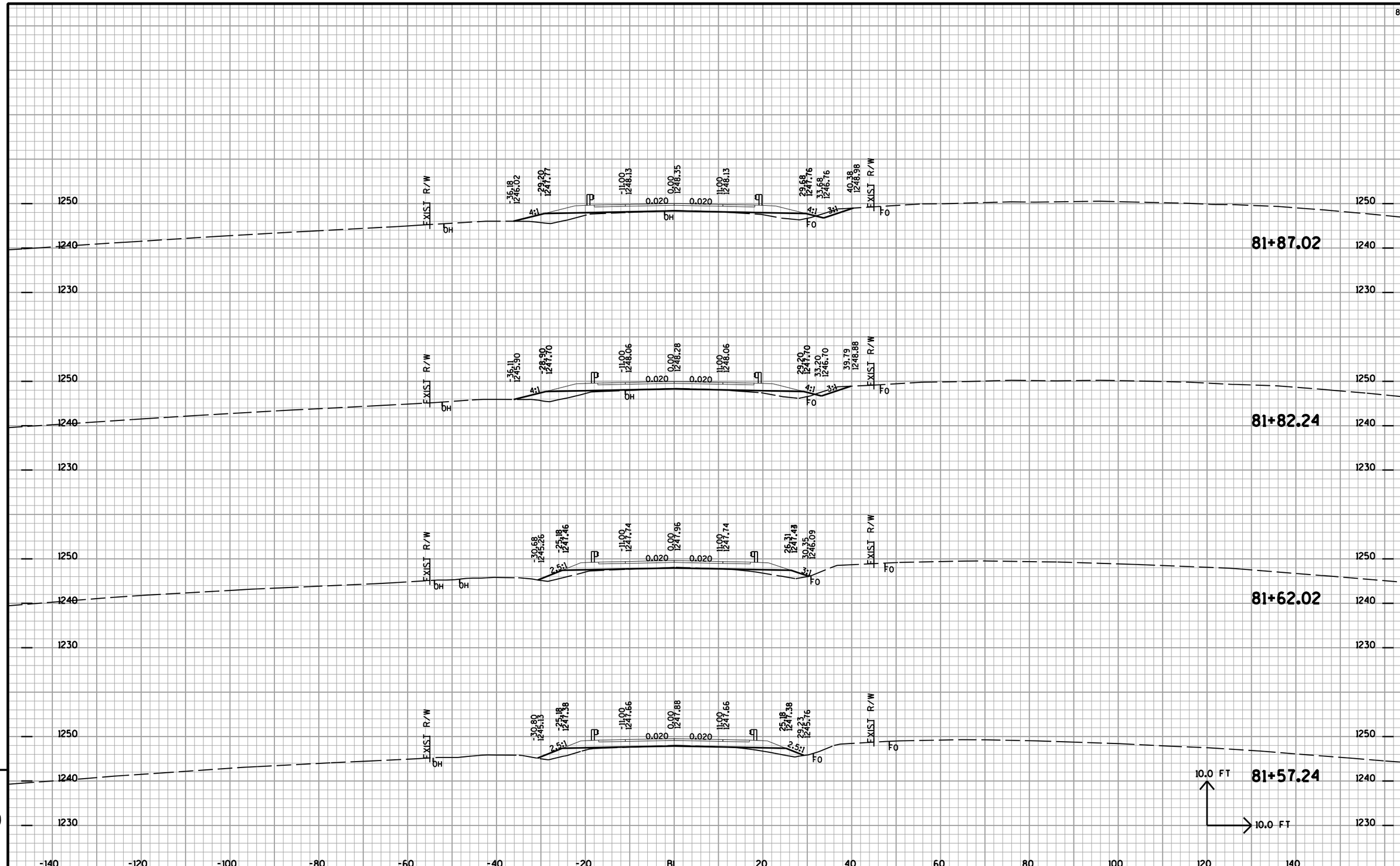

9

9

PROJECT NO: 1020-01-88	HWY: CTH BB	COUNTY: ST CROIX	CROSS SECTIONS	SHEET NO: E

FILE NAME : U:\42-0886.00 - St. Croix Co. I94 Overpasses x3\42-0886.01 B-55-48 CTH BB\RDWY\42088601_JULREVXS-FINAL-BB.DGN PLOT DATE : 7/24/2015 PLOT BY : AYRES-EC equ_shd_util.tbl PLOT SCALE : 1:2

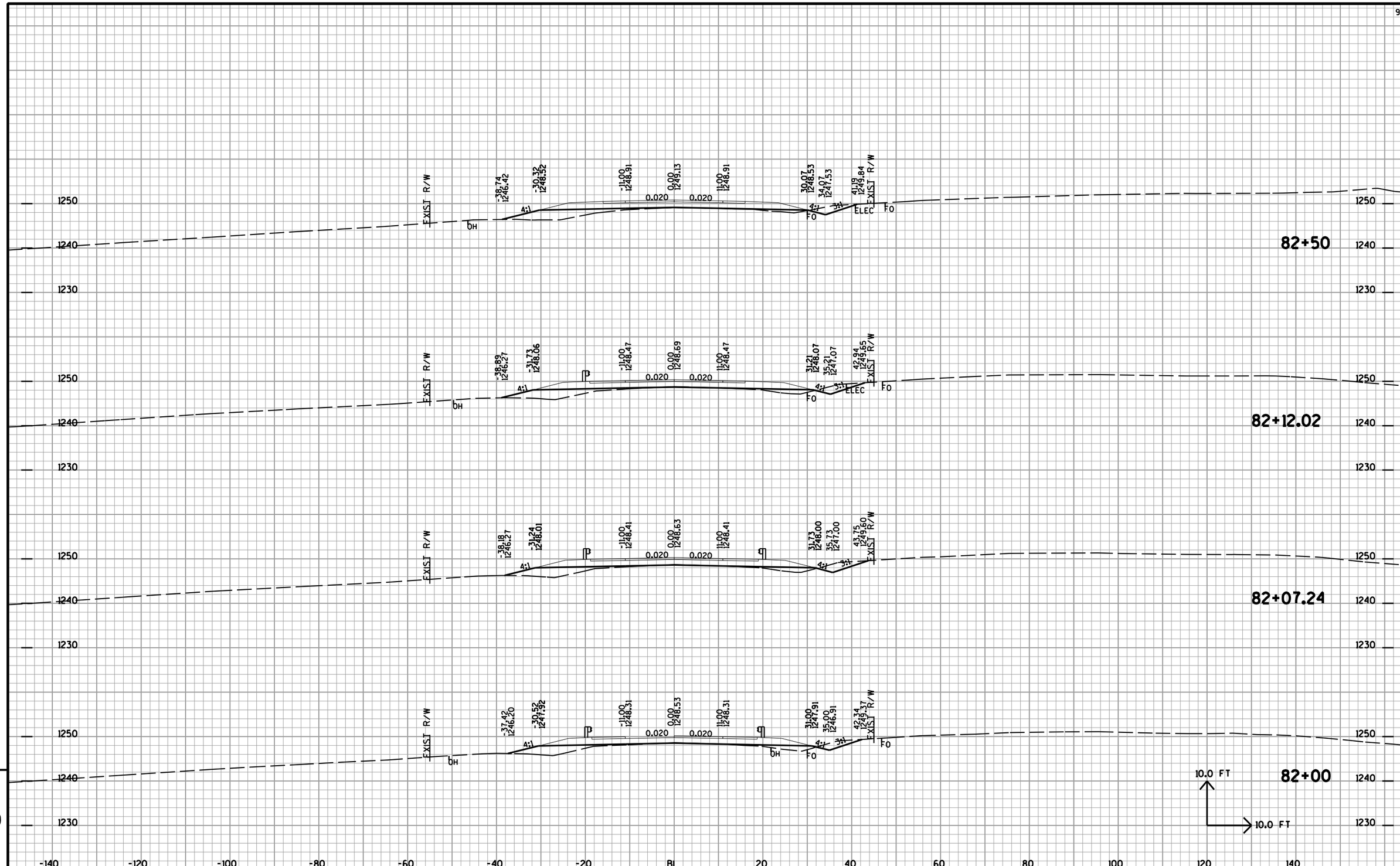

PROJECT NO: 1020-01-88	HWY: CTH BB	COUNTY: ST CROIX	CROSS SECTIONS	SHEET NO: 127	E

FILE NAME : U:\42-0886.00 - St. Croix Co. I94 Overpasses x3\42-0886.01 B-55-48 CTH BB\RDWY\42088601_JULREVXS-FINAL-BB.DGN PLOT DATE : 7/24/2015 PLOT BY : AYRES-EC equ_shd_util.tbl PLOT SCALE : 1:2

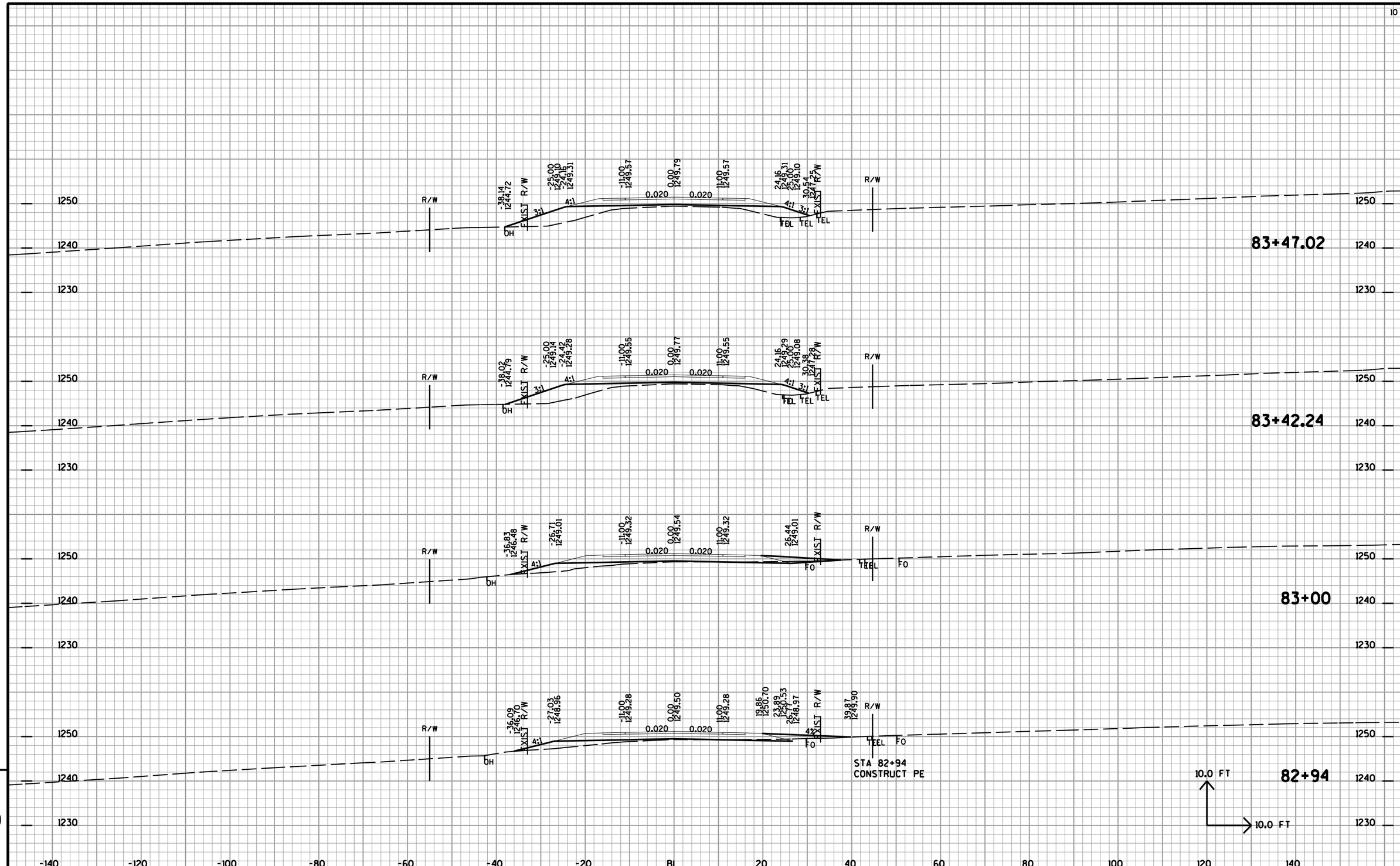

9

9

PROJECT NO: 1020-01-88	HWY: CTH BB	COUNTY: ST CROIX	CROSS SECTIONS	SHEET NO: 128	E

FILE NAME : U:\42-0886.00 - St. Croix Co. I94 Overpasses x3\42-0886.01 B-55-48 CTH BB\RDWY\42088601_JULREVXS-FINAL-BB.DGN PLOT DATE : 7/24/2015 PLOT BY : AYRES-EC equ_shd_util.tbl PLOT SCALE : 1:2

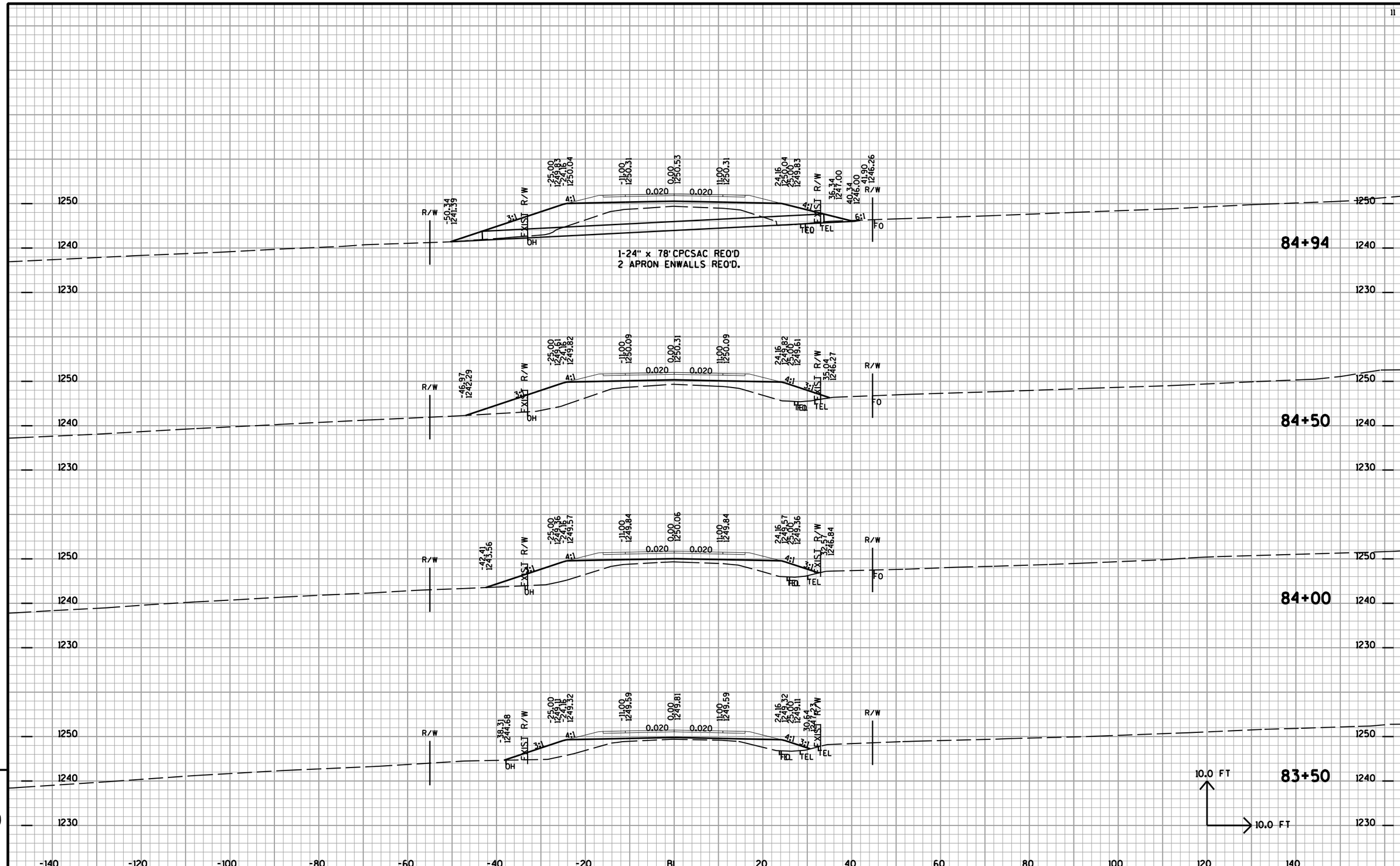

PROJECT NO: 1020-01-88	HWY: CTH BB	COUNTY: ST CROIX	CROSS SECTIONS	SHEET NO: 129	E

FILE NAME : U:\42-0886.00 - St. Croix Co. I94 Overpasses x3\42-0886.01 B-55-48 CTH BB\RDWY\42088601_JULREVXS-FINAL-BB.DGN PLOT DATE : 7/24/2015 PLOT BY : AYRES-EC edu_shd_util.tbl PLOT SCALE : 1:2

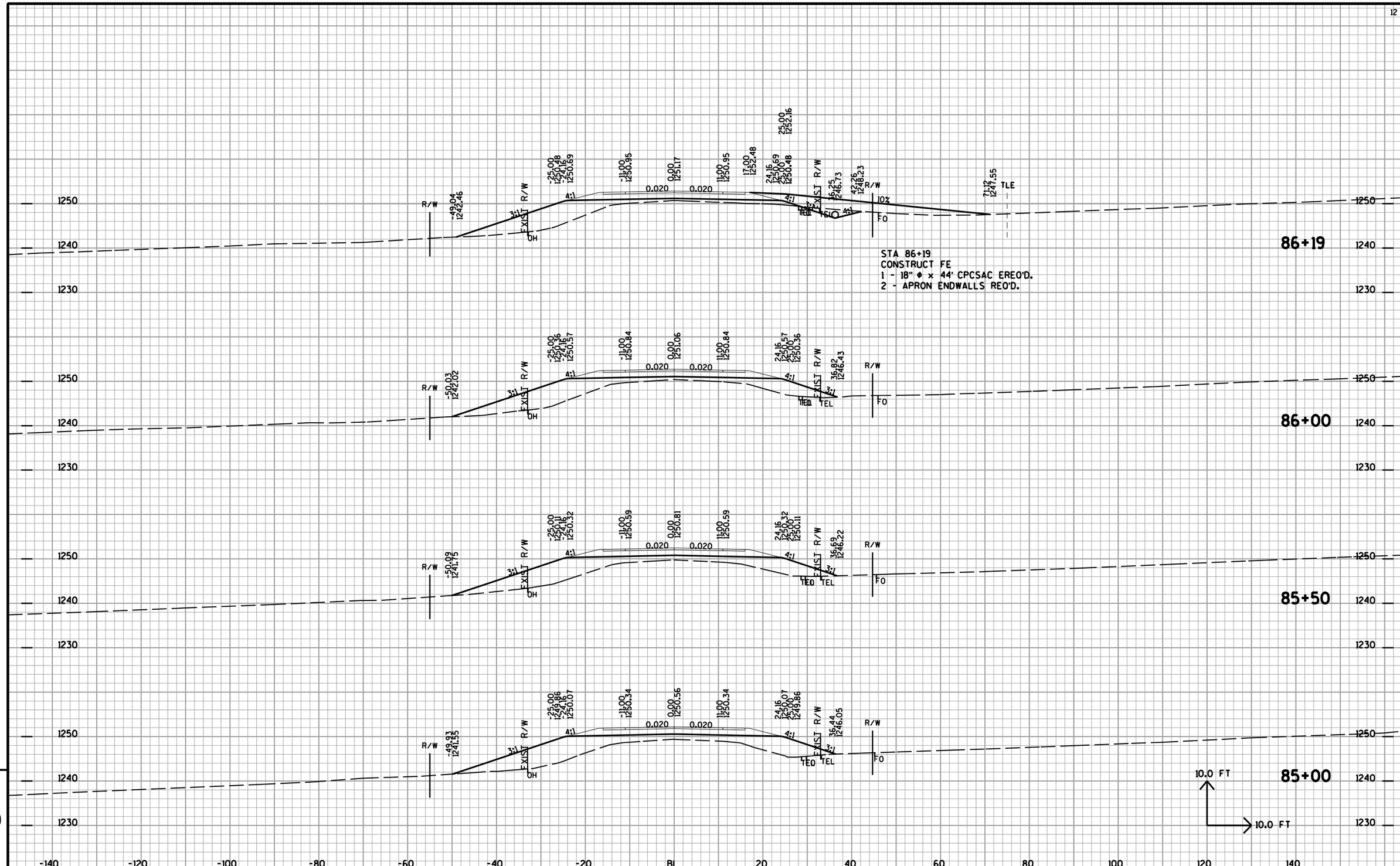

PROJECT NO: 1020-01-88	HWY: CTH BB	COUNTY: ST CROIX	CROSS SECTIONS	SHEET NO: 130	E

FILE NAME : U:\42-0886.00 - St. Croix Co. I94 Overpasses x3\42-0886.01 B-55-48 CTH BB\RDWY\42088601_JULREVXS-FINAL-BB.DGN PLOT DATE : 7/24/2015 PLOT BY : AYRES-EC equ_shd_util.tbl PLOT SCALE : 1:2

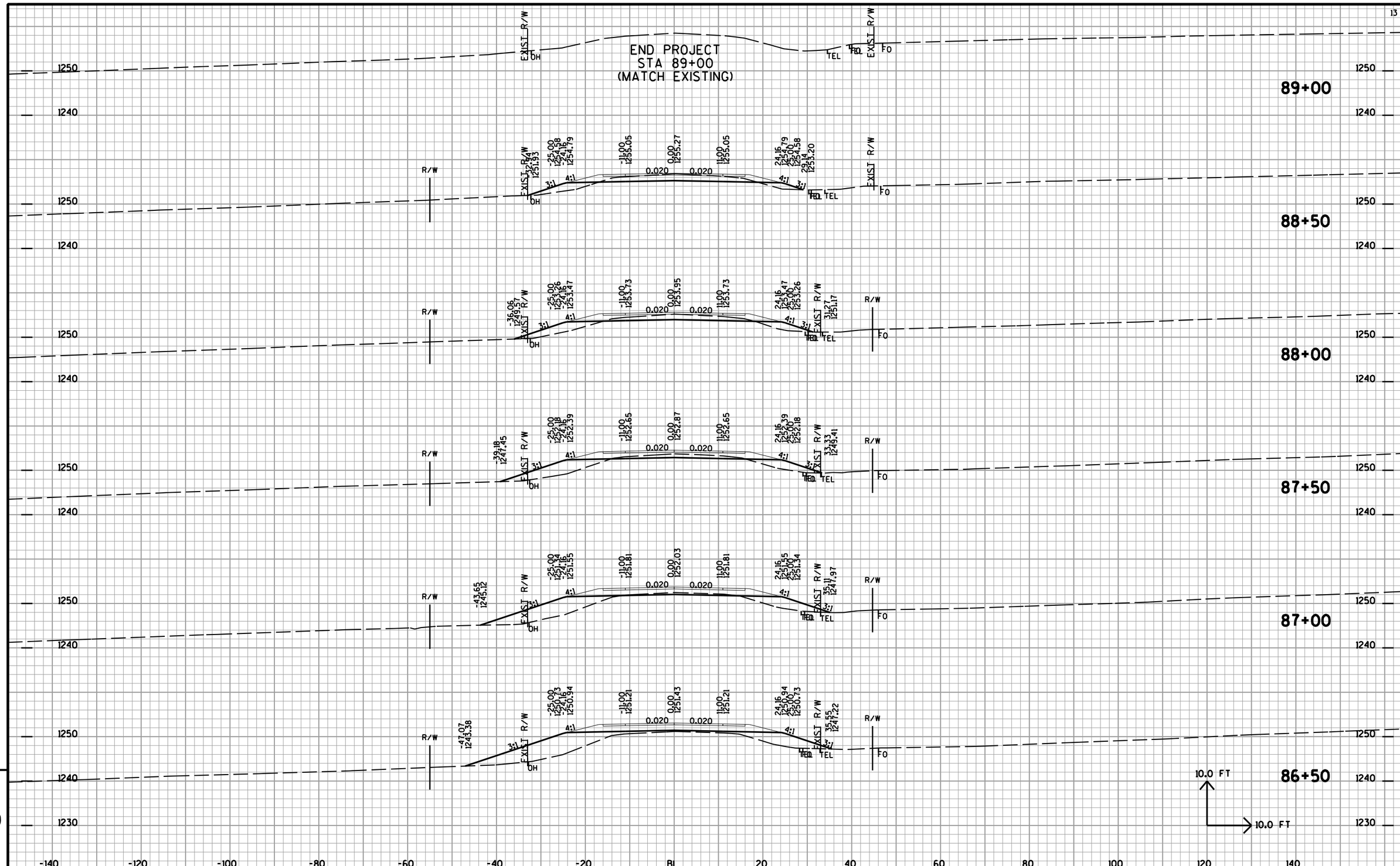

PROJECT NO: 1020-01-88	HWY: CTH BB	COUNTY: ST CROIX	CROSS SECTIONS	SHEET NO: 131	E

FILE NAME : U:\42-0886.00 - St. Croix Co, I94 Overpasses x3\42-0886.01 B-55-48 CTH BB\RDWY\42088601_JULREVXS-FINAL-BB.DGN PLOT DATE : 7/24/2015 PLOT BY : AYRES-EC equ_shd_util.tbl PLOT SCALE : 1:2

PROJECT NO: 1020-01-88	HWY: CTH BB	COUNTY: ST CROIX	CROSS SECTIONS	SHEET NO: 132	E

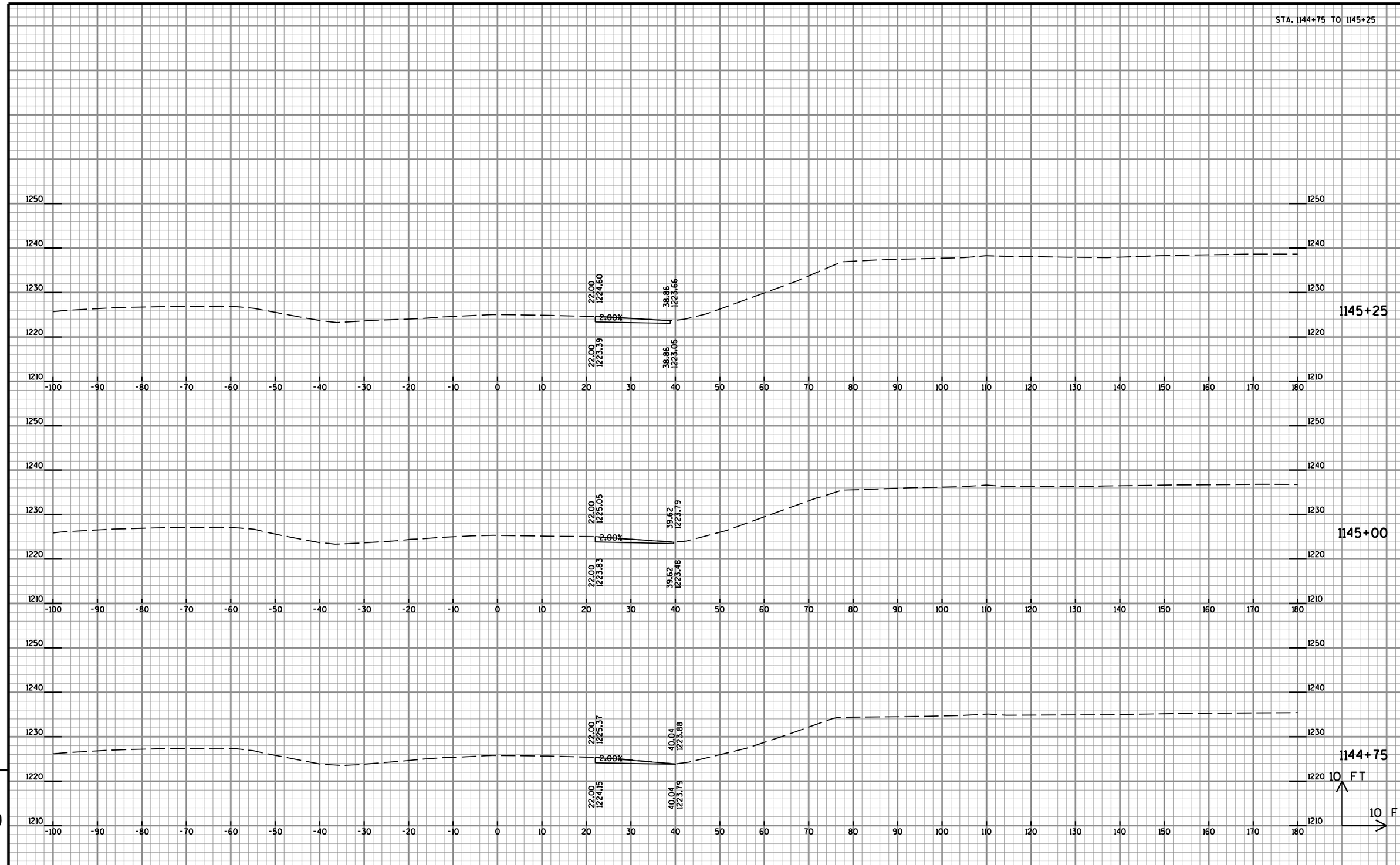

9

9

PROJECT NO: 1020-01-88	HWY: CTH BB	COUNTY: ST. CROIX	CROSS SECTIONS - IH 94 EB	SHEET 133	E

FILE NAME : U:\42-0886.00 - St. Croix Co. I94 Overpasses x3\42-0886.01 B-55-48 CTH BB\Inroads\IH 94 xs.dgn PLOT DATE : 7/24/2015 PLOT BY : AYRES-EC PLOT NAME : PLOT SCALE : 1:20

WISDOT/CADDS SHEET 21

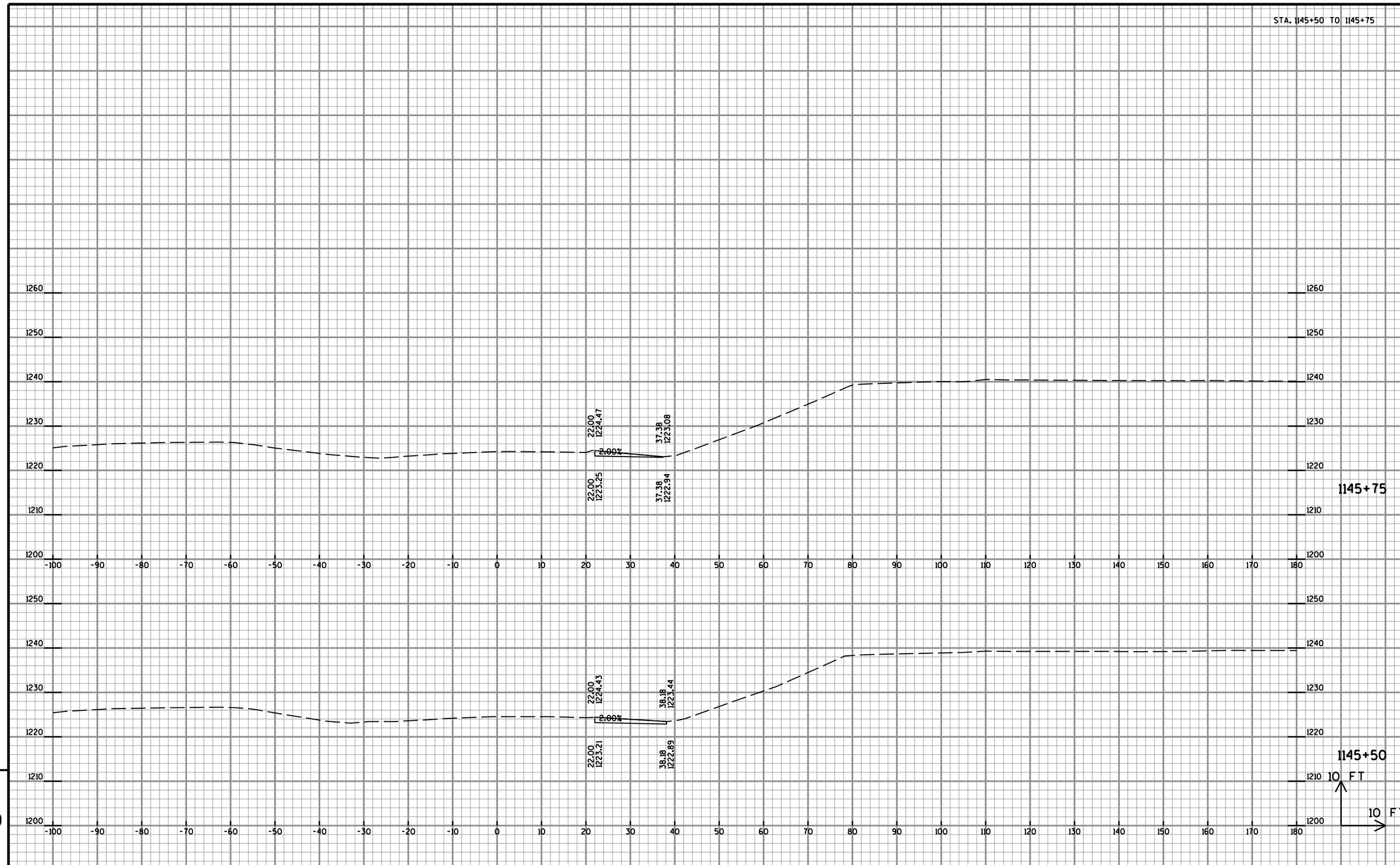

9

9

PROJECT NO: 1020-01-88	HWY: CTH BB	COUNTY: ST. CROIX	CROSS SECTIONS - IH 94 EB	SHEET 134	E

FILE NAME : U:\42-0886.00 - St. Croix Co. I94 Overpasses x3\42-0886.01 B-55-48 CTH BB\Inroads\IH 94 xs.dgn PLOT DATE : 7/24/2015 PLOT BY : AYRES-EC PLOT NAME : PLOT SCALE : 1:20

WISDOT/CADDS SHEET 21

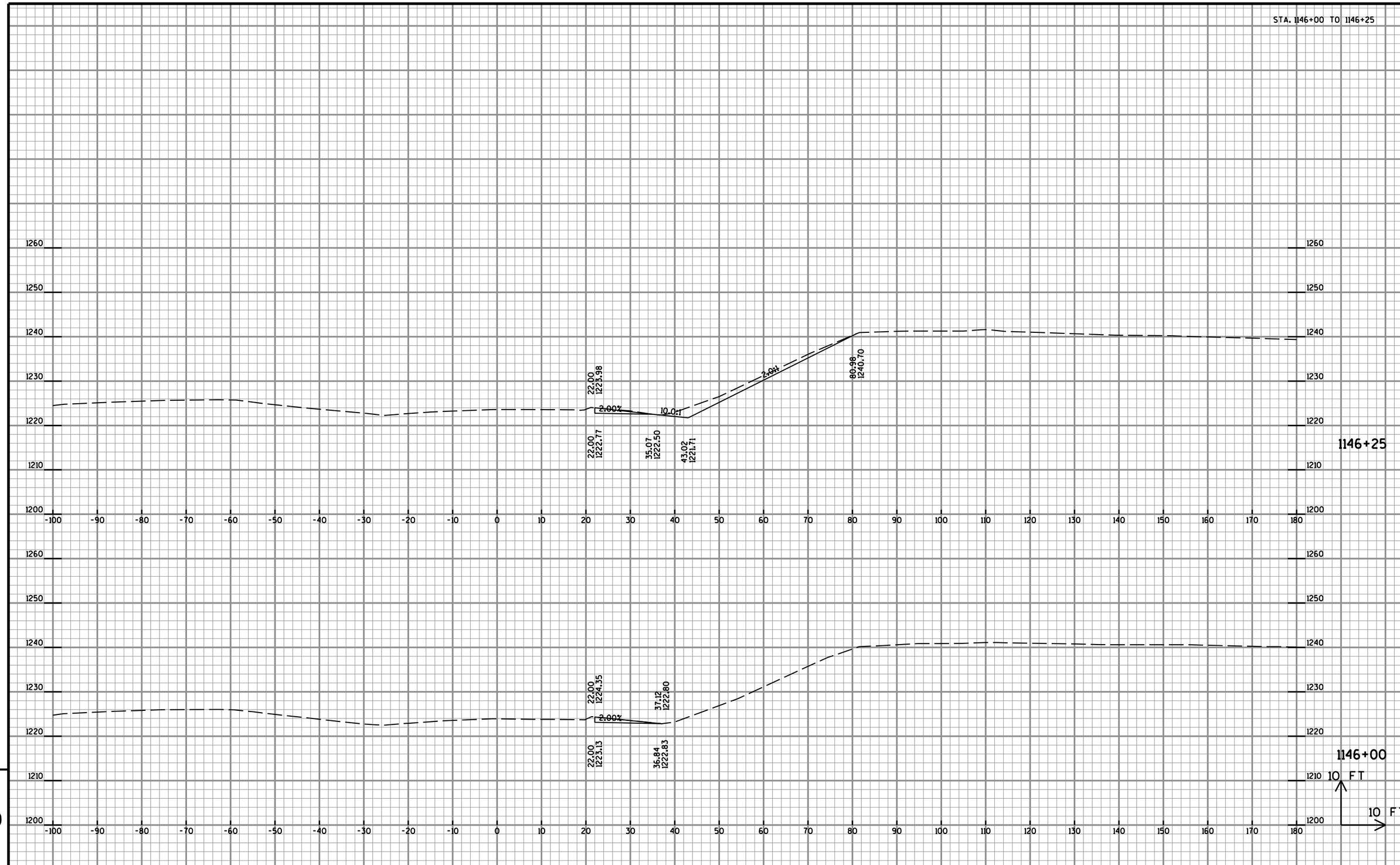

9

9

PROJECT NO: 1020-01-88	HWY: CTH BB	COUNTY: ST. CROIX	CROSS SECTIONS - IH 94 EB	SHEET	E

FILE NAME : U:\42-0886.00 - St. Croix Co. I94 Overpasses x3\42-0886.01 B-55-48 CTH BB\Inroads\IH 94 xs.dgn PLOT DATE : 7/24/2015 PLOT BY : AYRES-EC PLOT NAME : PLOT SCALE : 1:20

WISDOT/CADDS SHEET 21

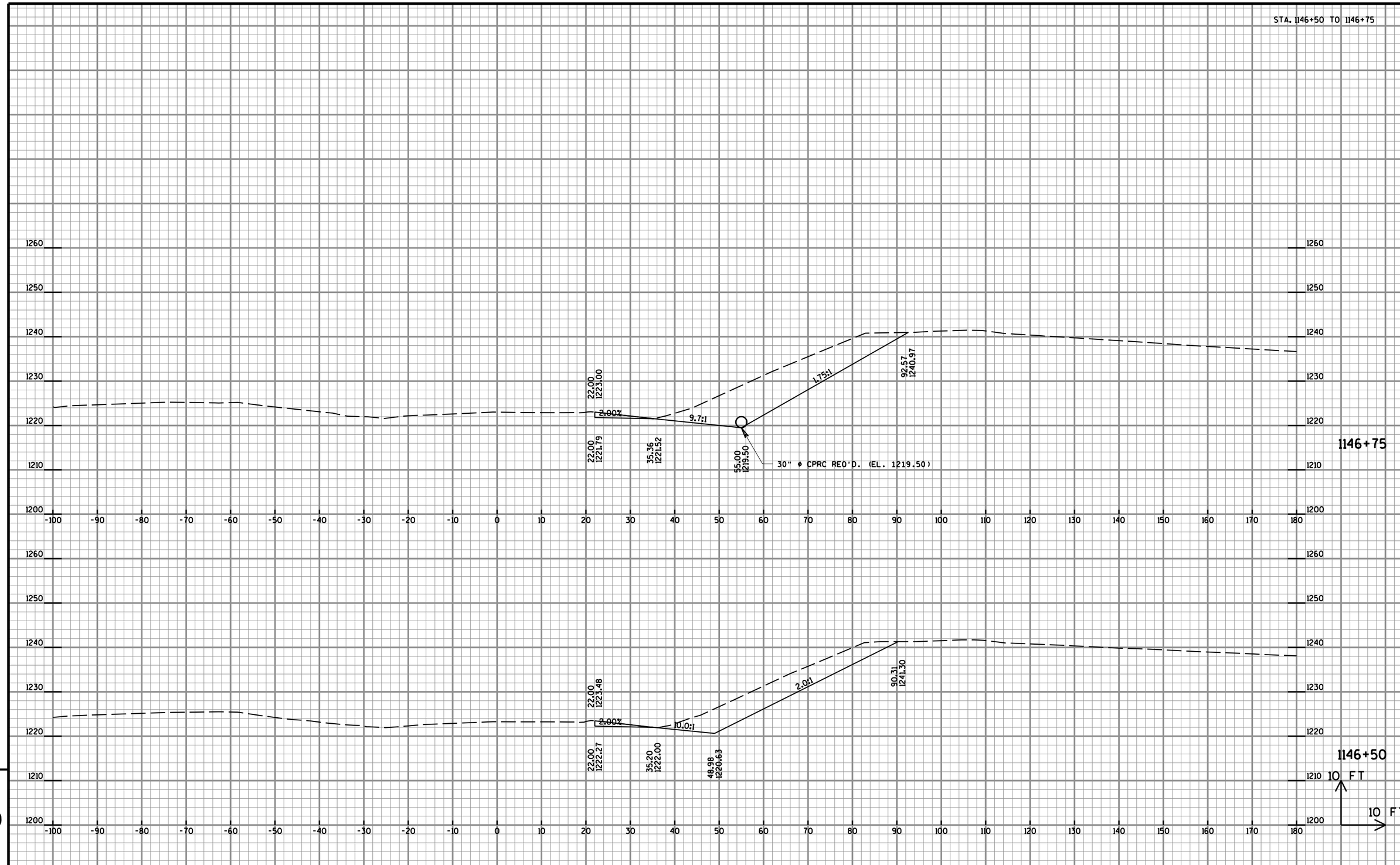

PROJECT NO: 1020-01-88	HWY: CTH BB	COUNTY: ST. CROIX	CROSS SECTIONS - IH 94 EB	SHEET	E

FILE NAME : U:\42-0886.00 - St. Croix Co. I94 Overpasses x3\42-0886.01 B-55-48 CTH BB\Inroads\IH 94 xs.dgn PLOT DATE : 7/24/2015 PLOT BY : AYRES-EC PLOT NAME : PLOT SCALE : 1:20

WISDOT/CADDS SHEET 21

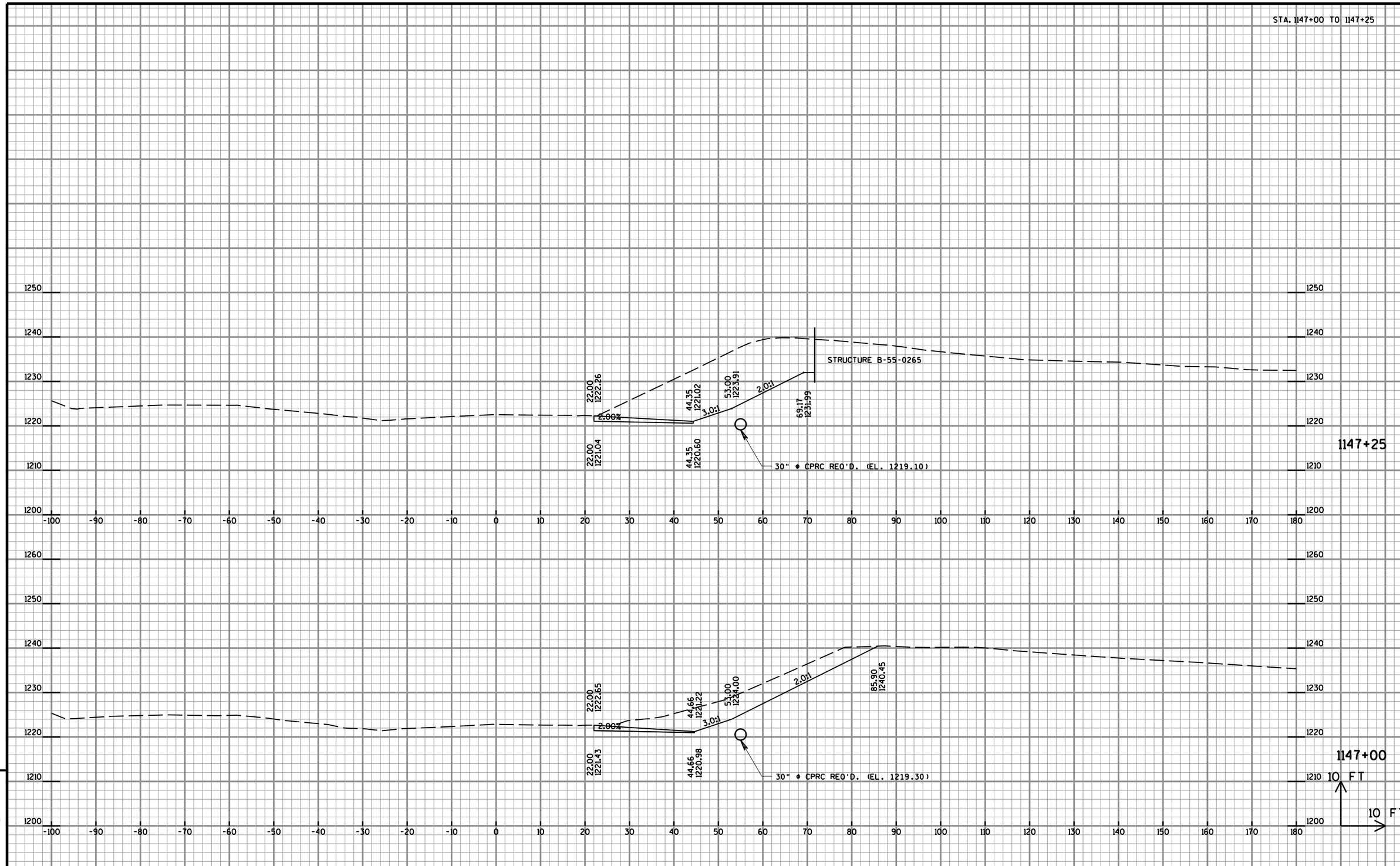

9

PROJECT NO: 1020-01-88	HWY: CTH BB	COUNTY: ST. CROIX	CROSS SECTIONS - IH 94 EB	SHEET 137	E

FILE NAME : U:\42-0886.00 - St. Croix Co. I94 Overpasses x3\42-0886.01 B-55-48 CTH BB\Inroads\IH 94 xs.dgn PLOT DATE : 7/30/2015 PLOT BY : AYRES-EC PLOT NAME : PLOT SCALE : 1:20

WISDOT/CADDS SHEET 21

9

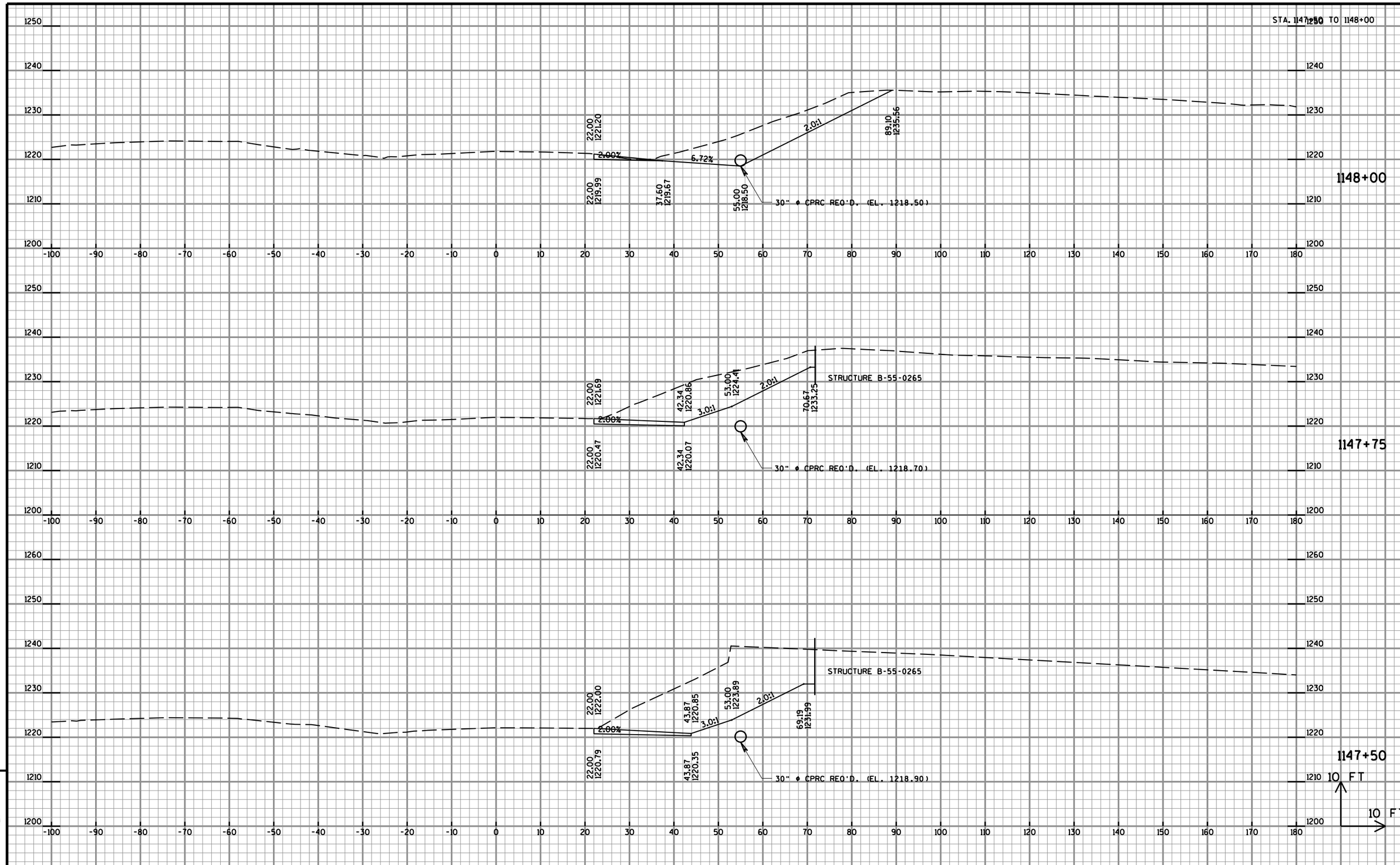

9

9

PROJECT NO: 1020-01-88	HWY: CTH BB	COUNTY: ST. CROIX	CROSS SECTIONS - IH 94 EB	SHEET 138	E

FILE NAME : U:\42-0886.00 - St. Croix Co, I94 Overpasses x3\42-0886.01 B-55-48 CTH BB\Inroads\IH 94 xs.dgn PLOT DATE : 7/30/2015 PLOT BY : AYRES-EC PLOT NAME : PLOT SCALE : 1:20

WISDOT/CADDS SHEET 21

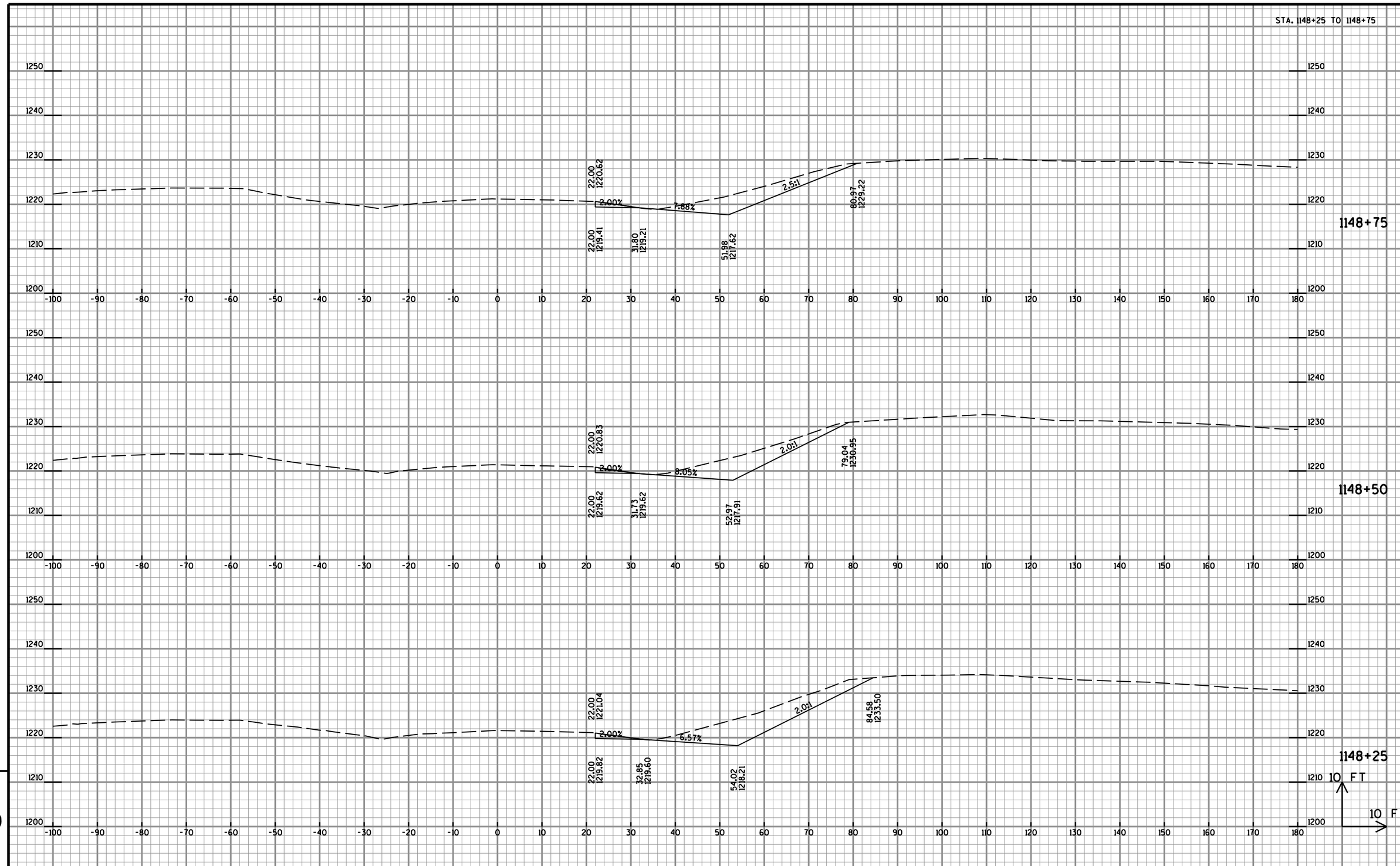

9

9

PROJECT NO: 1020-01-88	HWY: CTH BB	COUNTY: ST. CROIX	CROSS SECTIONS - IH 94 EB	SHEET	E

FILE NAME : U:\42-0886.00 - St. Croix Co. I94 Overpasses x3\42-0886.01 B-55-48 CTH BB\Inroads\IH 94 xs.dgn PLOT DATE : 7/24/2015 PLOT BY : AYRES-EC PLOT NAME : PLOT SCALE : 1:20

WISDOT/CADDS SHEET 21

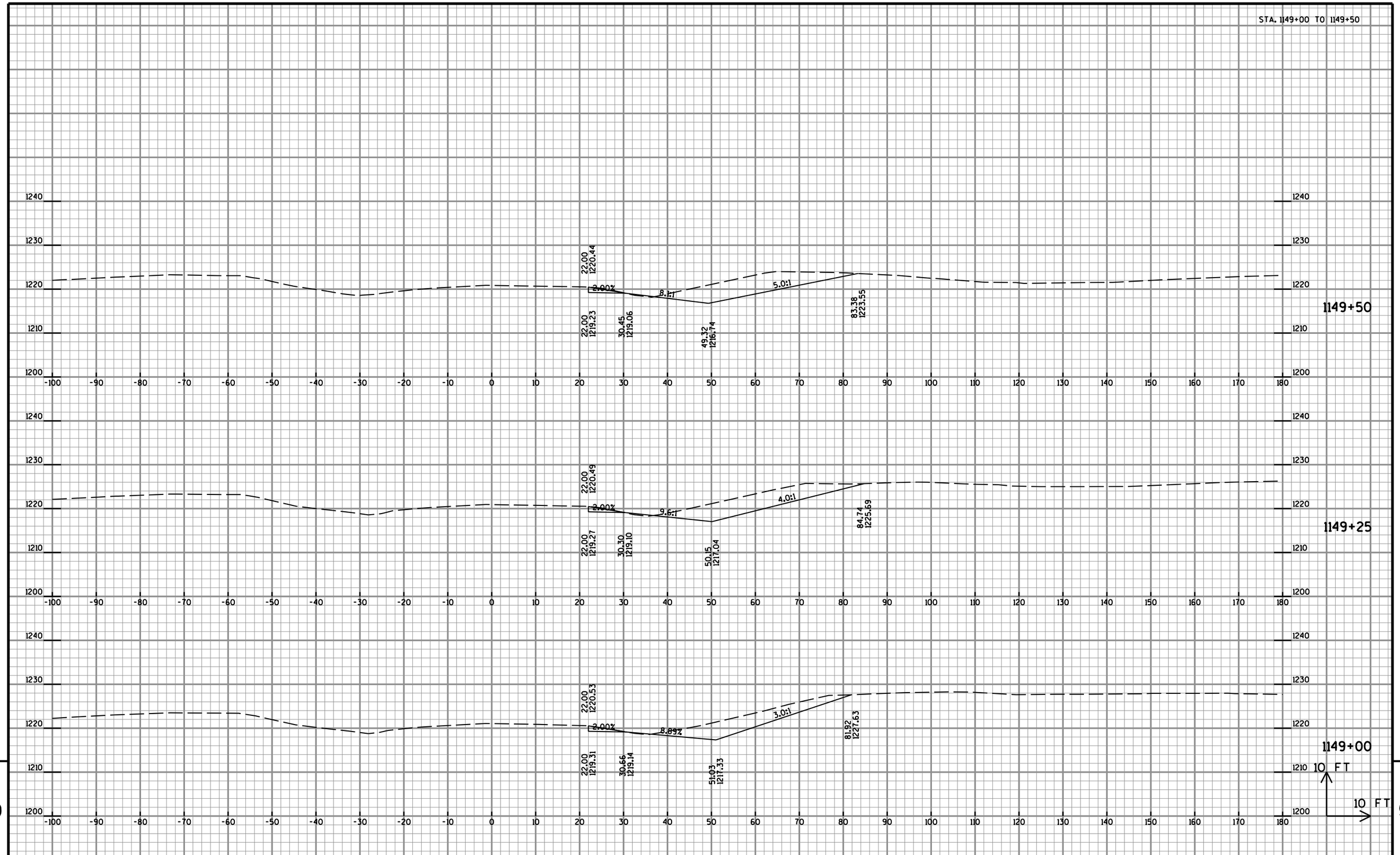

9

9

PROJECT NO: 1020-01-88	HWY: CTH BB	COUNTY: ST. CROIX	CROSS SECTIONS - IH 94 EB	SHEET 140	E

FILE NAME : U:\42-0886.00 - St. Croix Co. I94 Overpasses x3\42-0886.01 B-55-48 CTH BB\Inroads\IH 94 xs.dgn PLOT DATE : 7/24/2015 PLOT BY : AYRES-EC PLOT NAME : PLOT SCALE : 1:20

WISDOT/CADDS SHEET 21

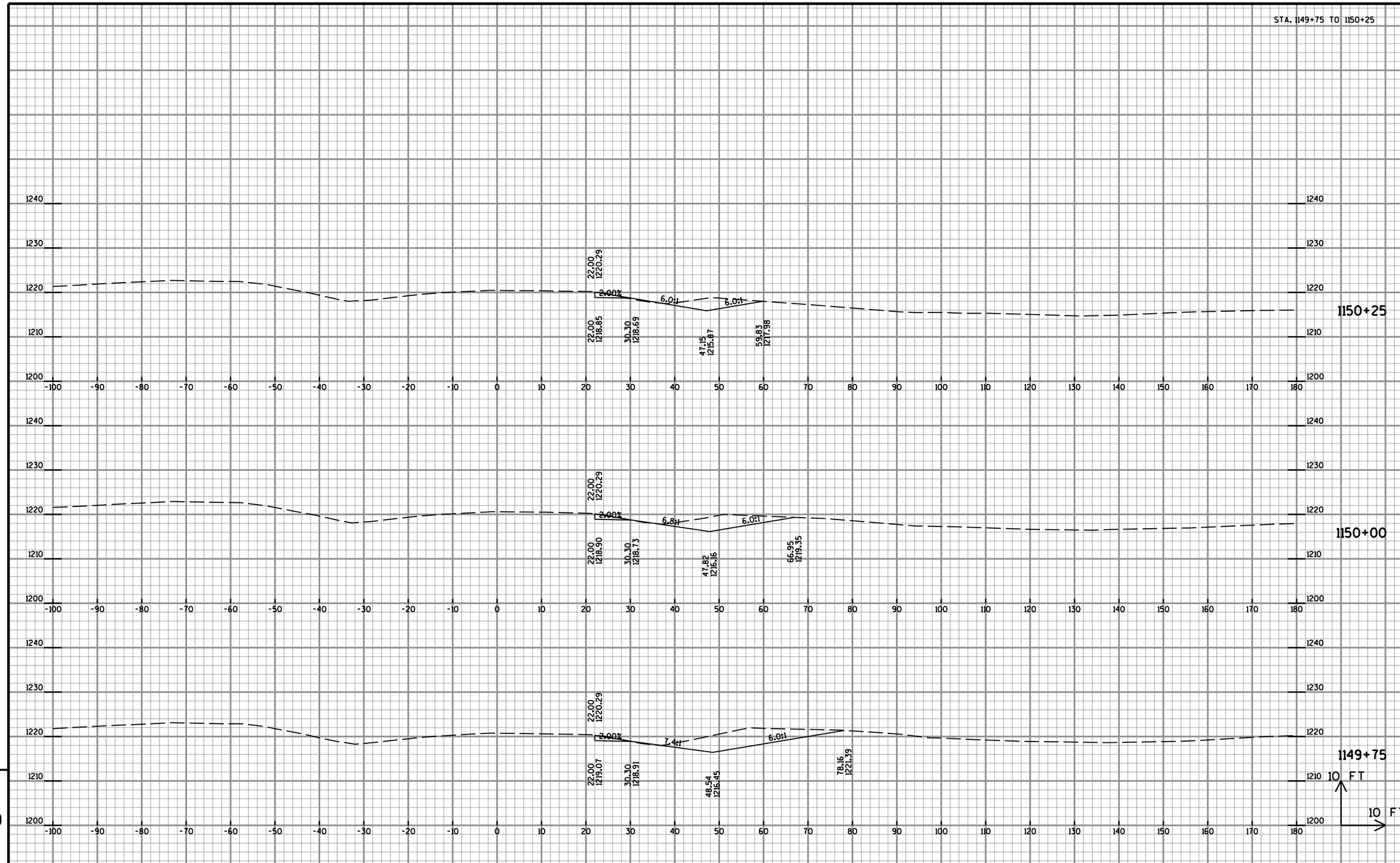

PROJECT NO: 1020-01-88	HWY: CTH BB	COUNTY: ST. CROIX	CROSS SECTIONS - IH 94 EB	SHEET 141	E

FILE NAME : U:\42-0886.00 - St. Croix Co. I94 Overpasses x3\42-0886.01 B-55-48 CTH BB\Inroads\IH 94 xs.dgn PLOT DATE : 7/24/2015 PLOT BY : AYRES-EC PLOT NAME : PLOT SCALE : 1:20

WISDOT/CADDS SHEET 21

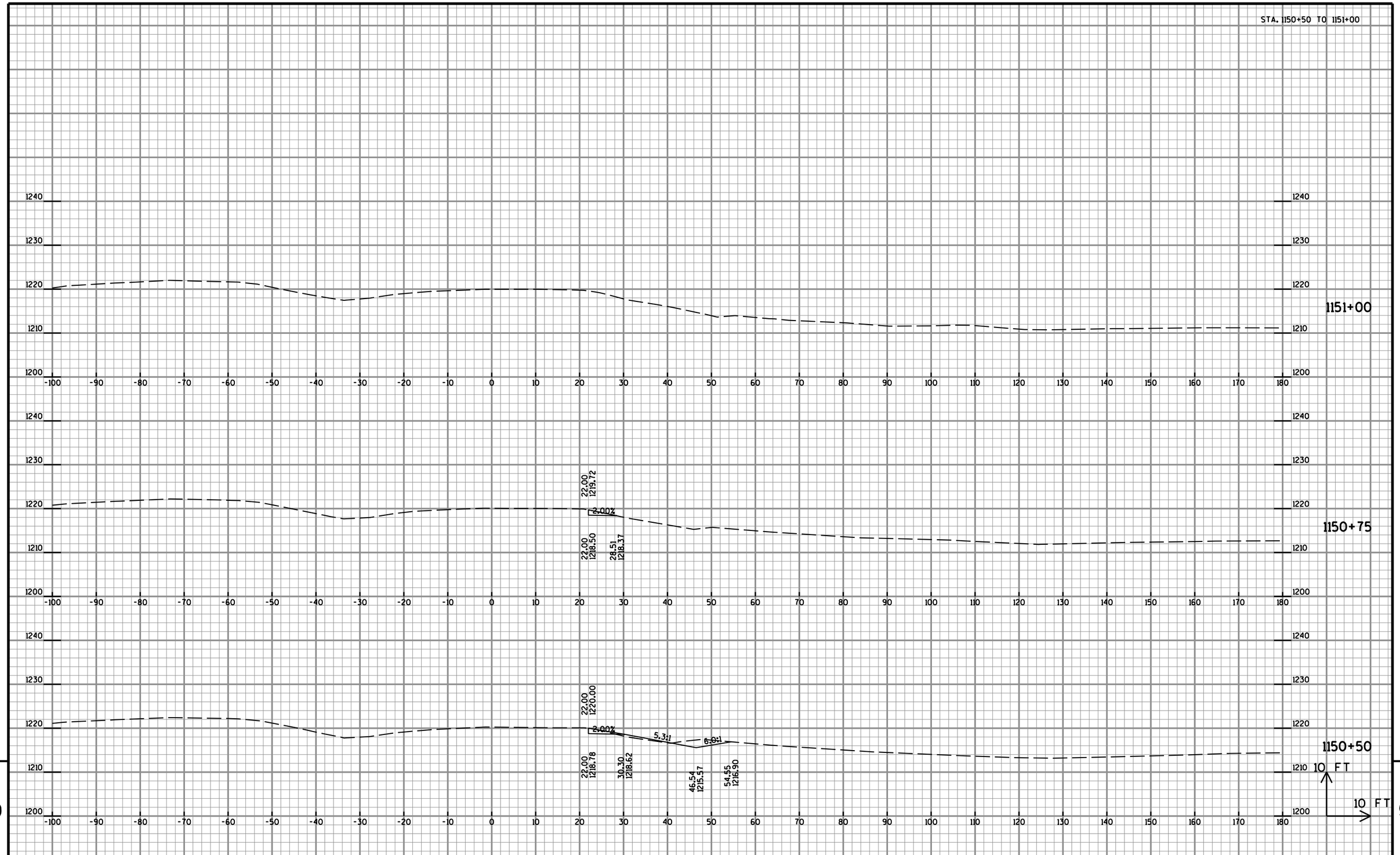

9

9

PROJECT NO: 1020-01-88	HWY: CTH BB	COUNTY: ST. CROIX	CROSS SECTIONS - IH 94 EB	SHEET	E

FILE NAME : U:\42-0886.00 - St. Croix Co. I94 Overpasses x3\42-0886.01 B-55-48 CTH BB\Inroads\IH 94 xs.dgn PLOT DATE : 7/24/2015 PLOT BY : AYRES-EC PLOT NAME : PLOT SCALE : 1:20

WISDOT/CADDS SHEET 21

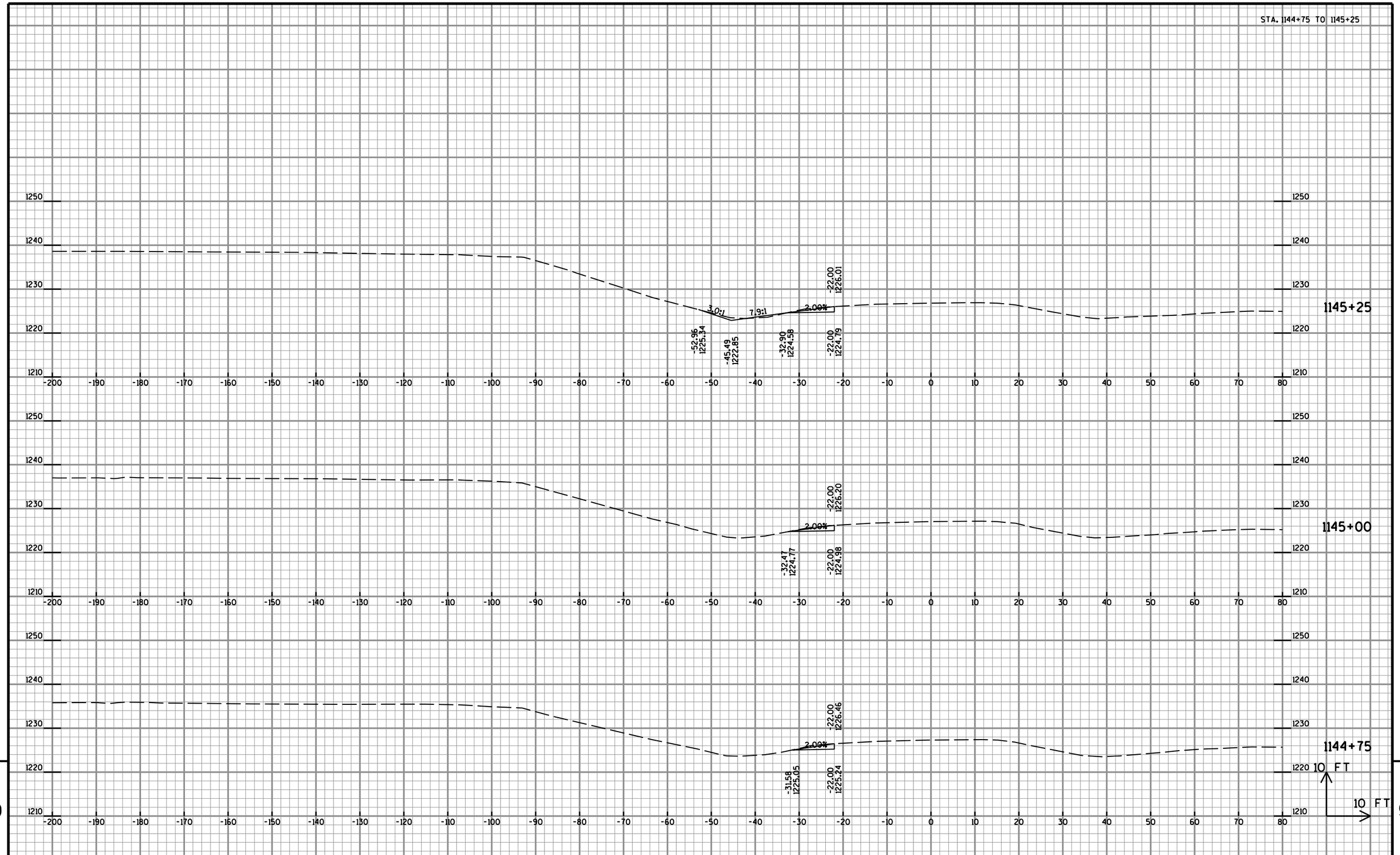

9

9

PROJECT NO: 1020-01-88	HWY: CTH BB	COUNTY: ST. CROIX	CROSS SECTIONS - IH 94 WB	SHEET 143	E

FILE NAME : U:\42-0886.00 - St. Croix Co. I94 Overpasses x3\42-0886.01 B-55-48 CTH BB\Inroads\IH 94 xs.dgn PLOT DATE : 7/24/2015 PLOT BY : AYRES-EC PLOT NAME : PLOT SCALE : 1:20

WISDOT/CADDS SHEET 21

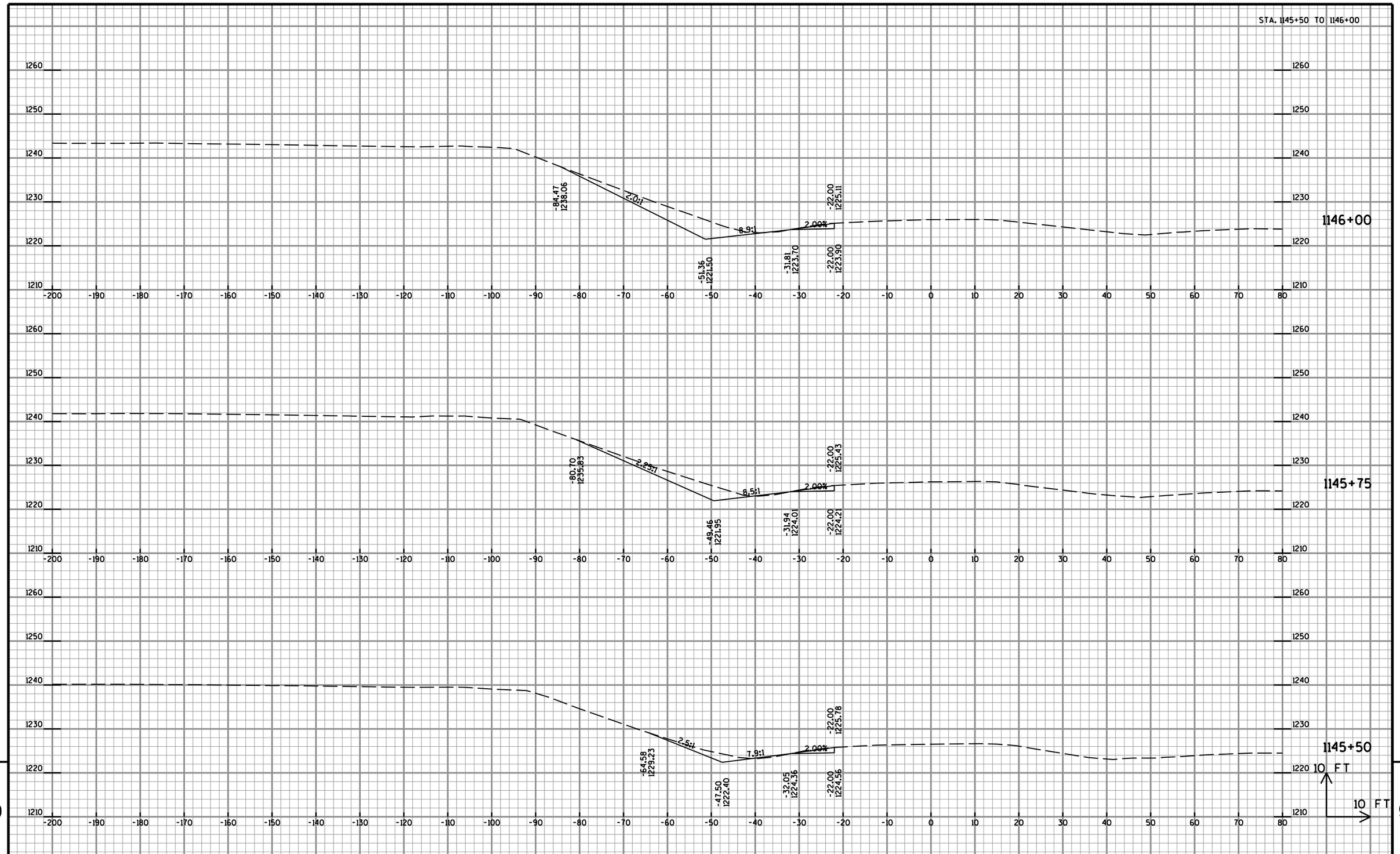

9

9

PROJECT NO: 1020-01-88	HWY: CTH BB	COUNTY: ST. CROIX	CROSS SECTIONS - IH 94 WB	SHEET 144	E

FILE NAME : U:\42-0886.00 - St. Croix Co. I94 Overpasses x3\42-0886.01 B-55-48 CTH BB\Inroads\IH 94 xs.dgn PLOT DATE : 7/24/2015 PLOT BY : AYRES-EC PLOT NAME : PLOT SCALE : 1:20

WISDOT/CADDS SHEET 21

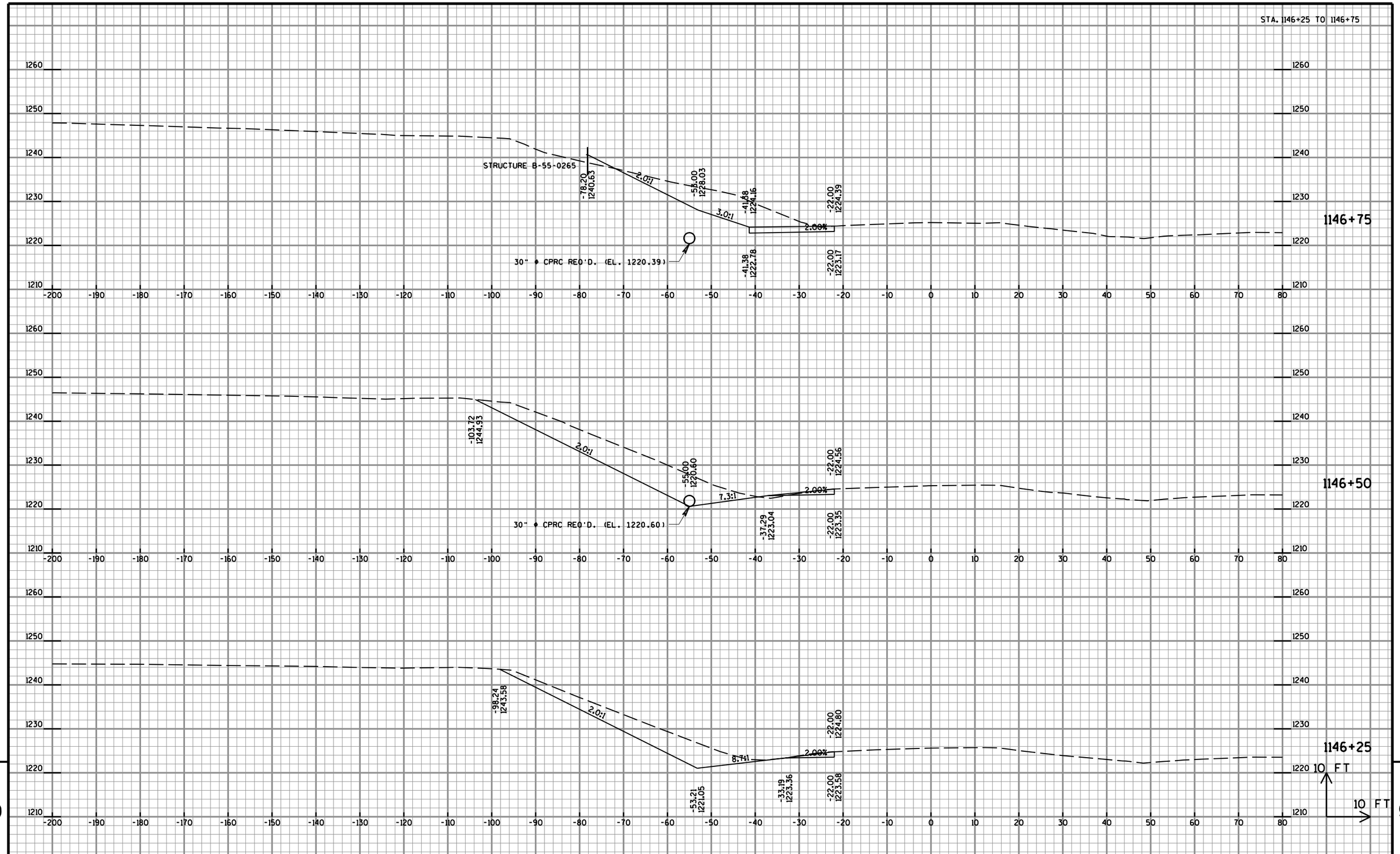

PROJECT NO: 1020-01-88	HWY: CTH BB	COUNTY: ST. CROIX	CROSS SECTIONS - IH 94 WB	SHEET 145	E

FILE NAME : U:\42-0886.00 - St. Croix Co. I94 Overpasses x3\42-0886.01 B-55-48 CTH BB\Inroads\IH 94 xs.dgn PLOT DATE : 7/24/2015 PLOT BY : AYRES-EC PLOT NAME : PLOT SCALE : 1:20

WISDOT/CADDS SHEET 21

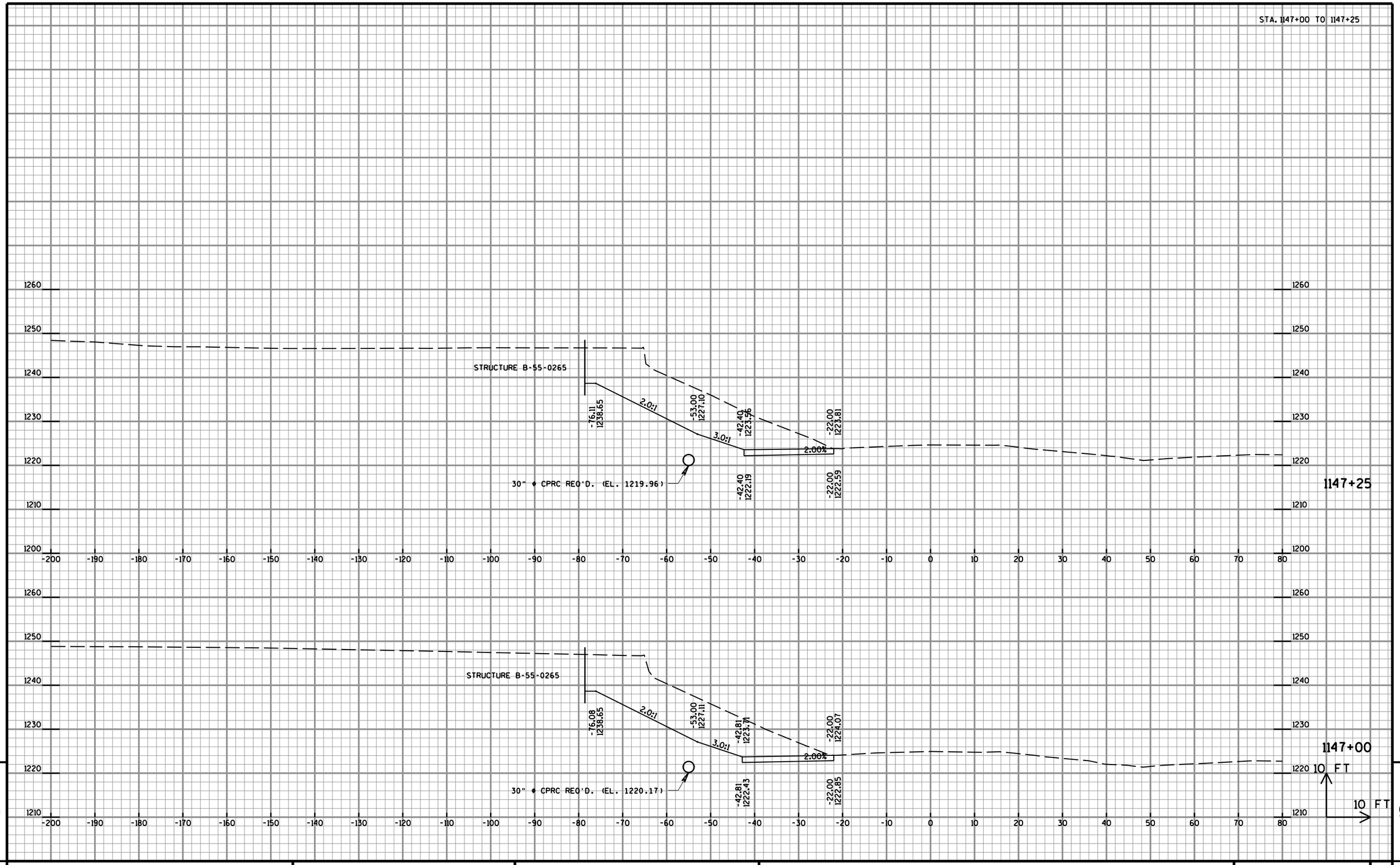

9

9

PROJECT NO: 1020-01-88	HWY: CTH BB	COUNTY: ST. CROIX	CROSS SECTIONS - IH 94 WB	SHEET	E

FILE NAME : U:\42-0886.00 - St. Croix Co. I94 Overpasses x3\42-0886.01 B-55-48 CTH BB\Inroads\IH 94 xs.dgn PLOT DATE : 7/30/2015 PLOT BY : AYRES-EC PLOT NAME : PLOT SCALE : 1:20

WISDOT/CADDS SHEET 21

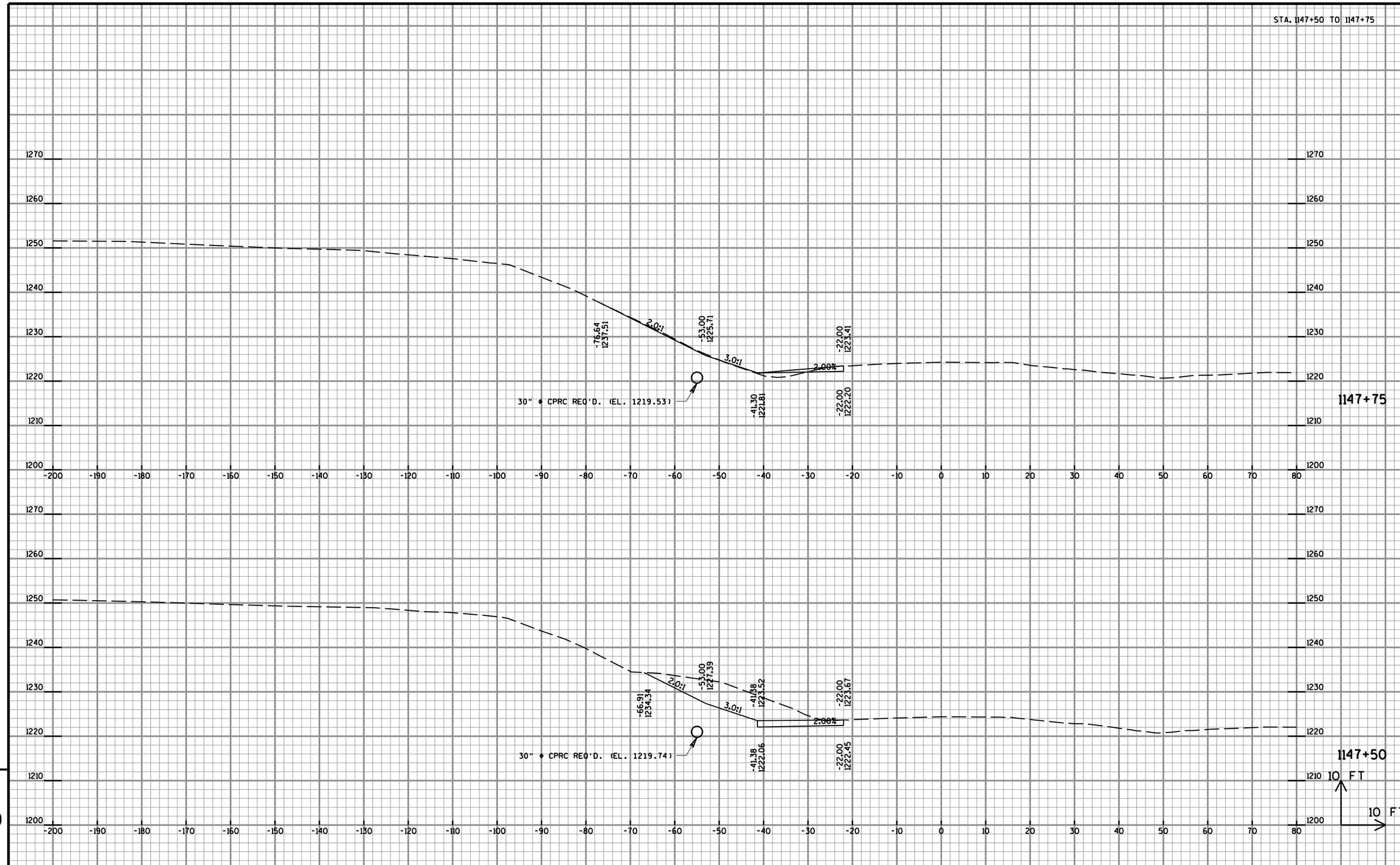

9

9

PROJECT NO: 1020-01-88	HWY: CTH BB	COUNTY: ST. CROIX	CROSS SECTIONS - IH 94 WB	SHEET 147	E

FILE NAME : U:\42-0886.00 - St. Croix Co. I94 Overpasses x3\42-0886.01 B-55-48 CTH BB\Inroads\IH 94 xs.dgn PLOT DATE : 7/24/2015 PLOT BY : AYRES-EC PLOT NAME : PLOT SCALE : 1:20

WISDOT/CADDS SHEET 21

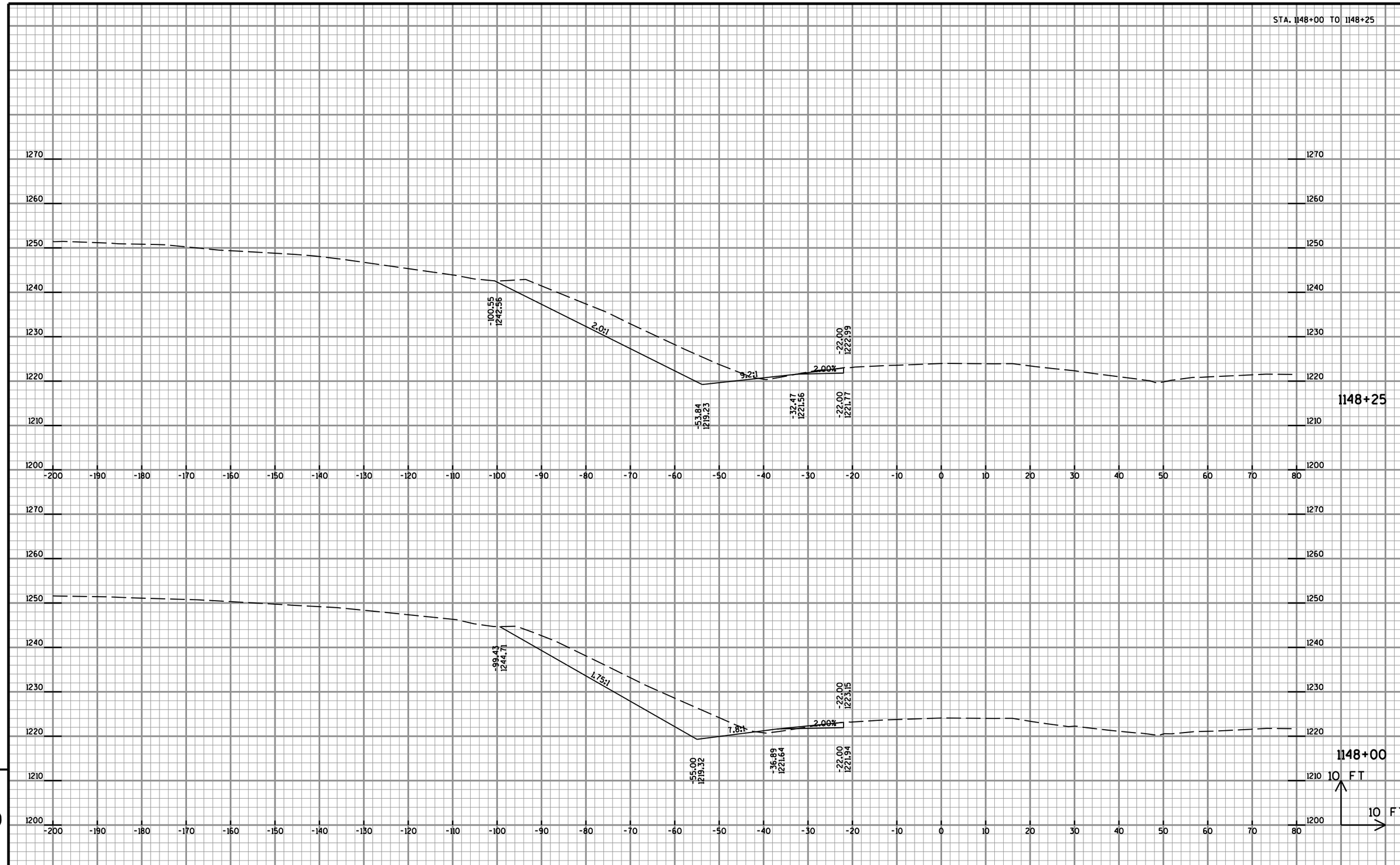

9

9

PROJECT NO: 1020-01-88	HWY: CTH BB	COUNTY: ST. CROIX	CROSS SECTIONS - IH 94 WB	SHEET	E

FILE NAME : U:\42-0886.00 - St. Croix Co. I94 Overpasses x3\42-0886.01 B-55-48 CTH BB\Inroads\IH 94 xs.dgn PLOT DATE : 7/24/2015 PLOT BY : AYRES-EC PLOT NAME : PLOT SCALE : 1:20

WISDOT/CADDS SHEET 21

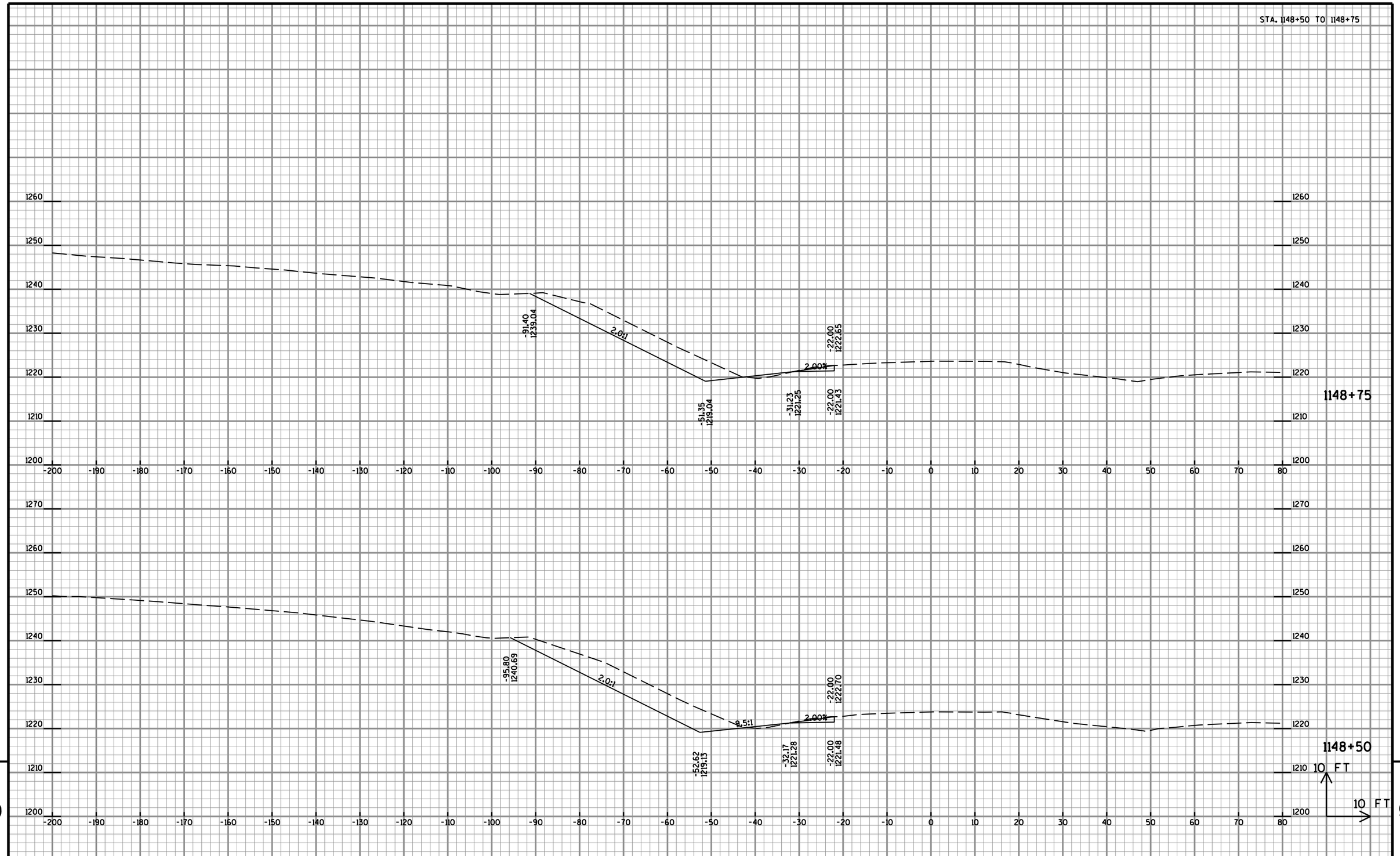

PROJECT NO: 1020-01-88	HWY: CTH BB	COUNTY: ST. CROIX	CROSS SECTIONS - IH 94 WB	SHEET 149	E

FILE NAME : U:\42-0886.00 - St. Croix Co. I94 Overpasses x3\42-0886.01 B-55-48 CTH BB\Inroads\IH 94 xs.dgn PLOT DATE : 7/24/2015 PLOT BY : AYRES-EC PLOT NAME : PLOT SCALE : 1:20

WISDOT/CADDS SHEET 21

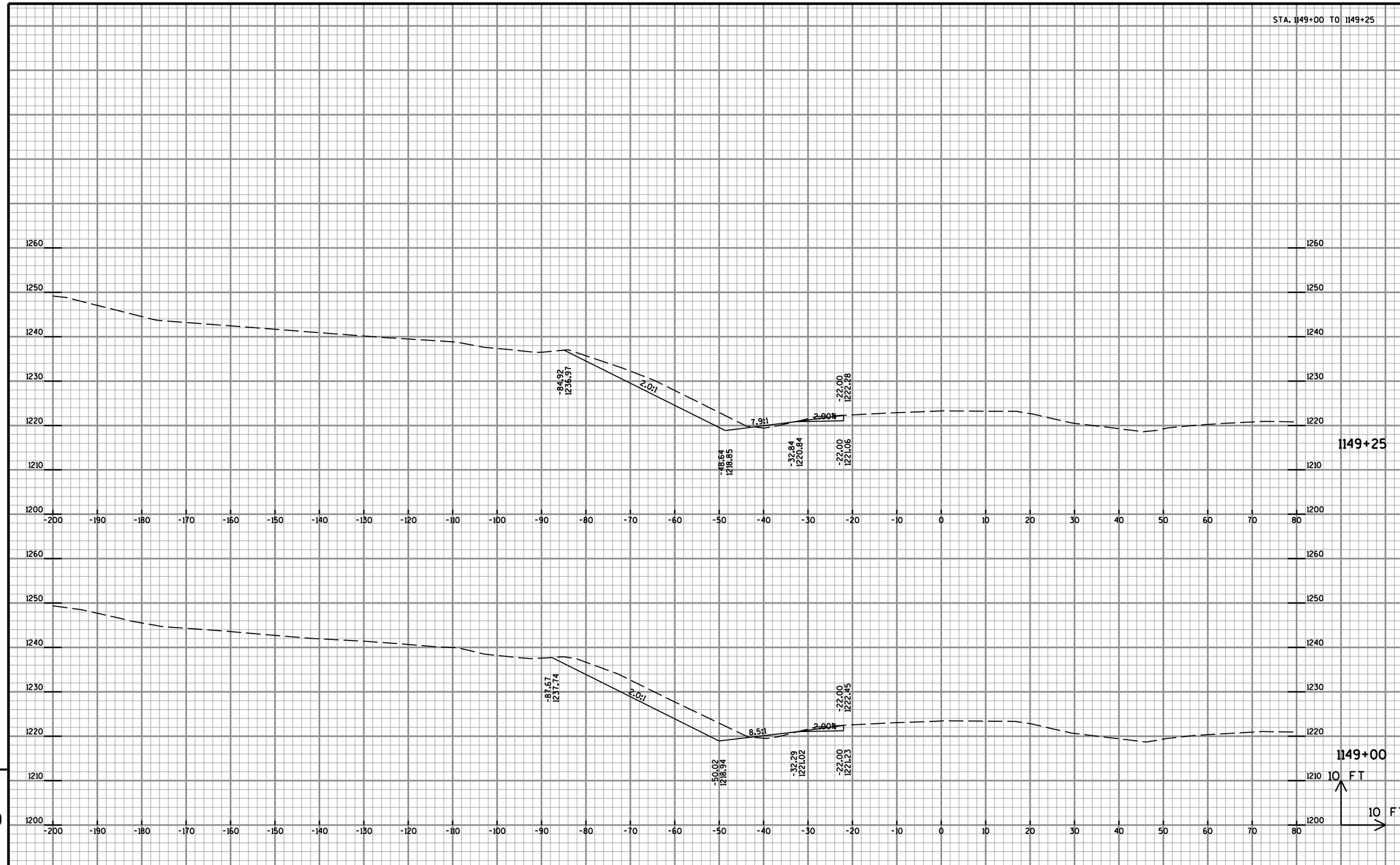

9

9

PROJECT NO: 1020-01-88	HWY: CTH BB	COUNTY: ST. CROIX	CROSS SECTIONS - IH 94 WB	SHEET 150	E

FILE NAME : U:\42-0886.00 - St. Croix Co. I94 Overpasses x3\42-0886.01 B-55-48 CTH BB\Inroads\IH 94 xs.dgn PLOT DATE : 7/24/2015 PLOT BY : AYRES-EC PLOT NAME : PLOT SCALE : 1:20

WISDOT/CADDS SHEET 21

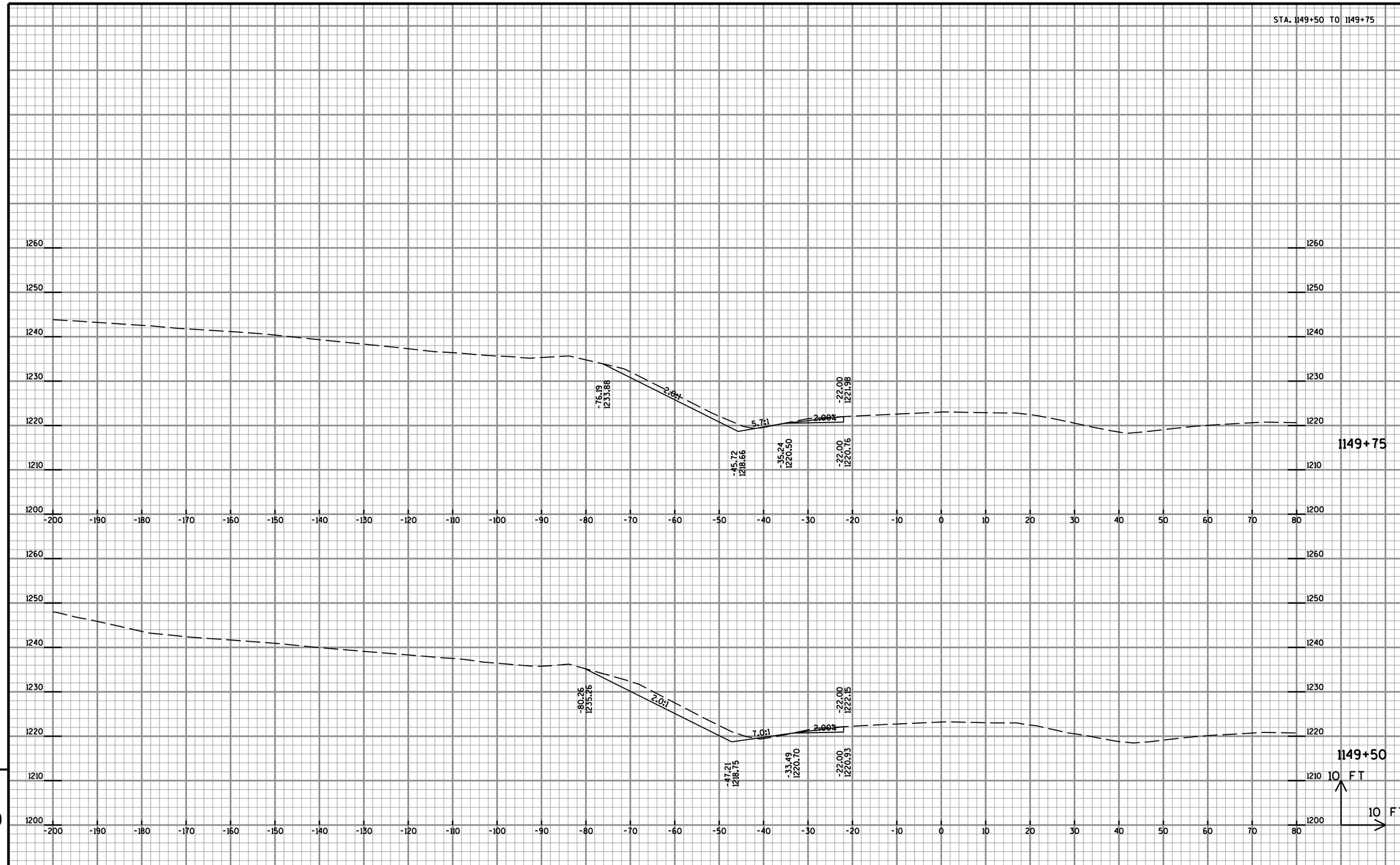

PROJECT NO: 1020-01-88	HWY: CTH BB	COUNTY: ST. CROIX	CROSS SECTIONS - IH 94 WB	SHEET 151	E

FILE NAME : U:\42-0886.00 - St. Croix Co. I94 Overpasses x3\42-0886.01 B-55-48 CTH BB\Inroads\IH 94 xs.dgn PLOT DATE : 7/24/2015 PLOT BY : AYRES-EC PLOT NAME : PLOT SCALE : 1:20

WISDOT/CADDS SHEET 21

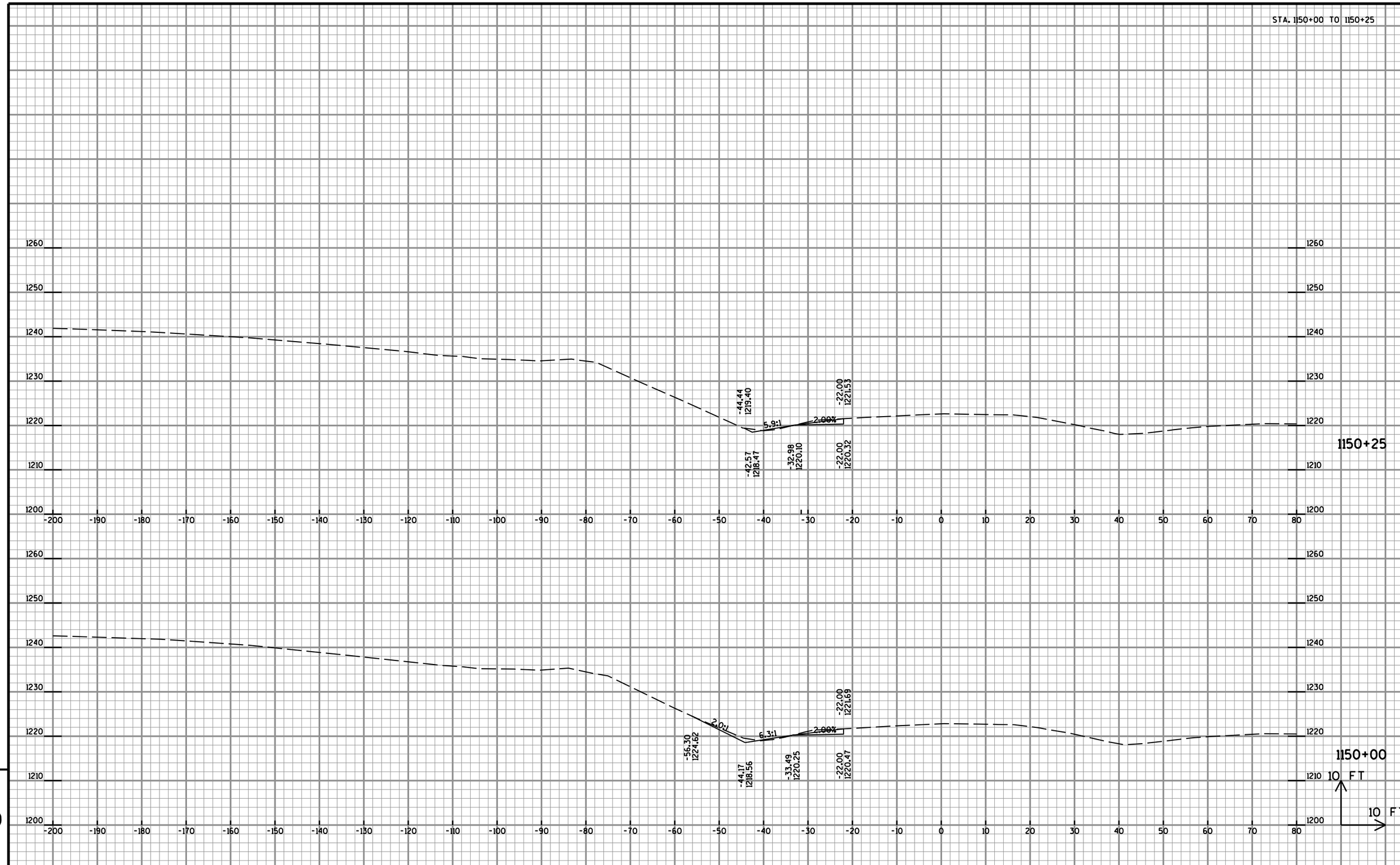

9

9

PROJECT NO: 1020-01-88	HWY: CTH BB	COUNTY: ST. CROIX	CROSS SECTIONS - IH 94 WB	SHEET 152	E

FILE NAME : U:\42-0886.00 - St. Croix Co. I94 Overpasses x3\42-0886.01 B-55-48 CTH BB\Inroads\IH 94 xs.dgn PLOT DATE : 7/24/2015 PLOT BY : AYRES-EC PLOT NAME : PLOT SCALE : 1:20

WISDOT/CADDS SHEET 21

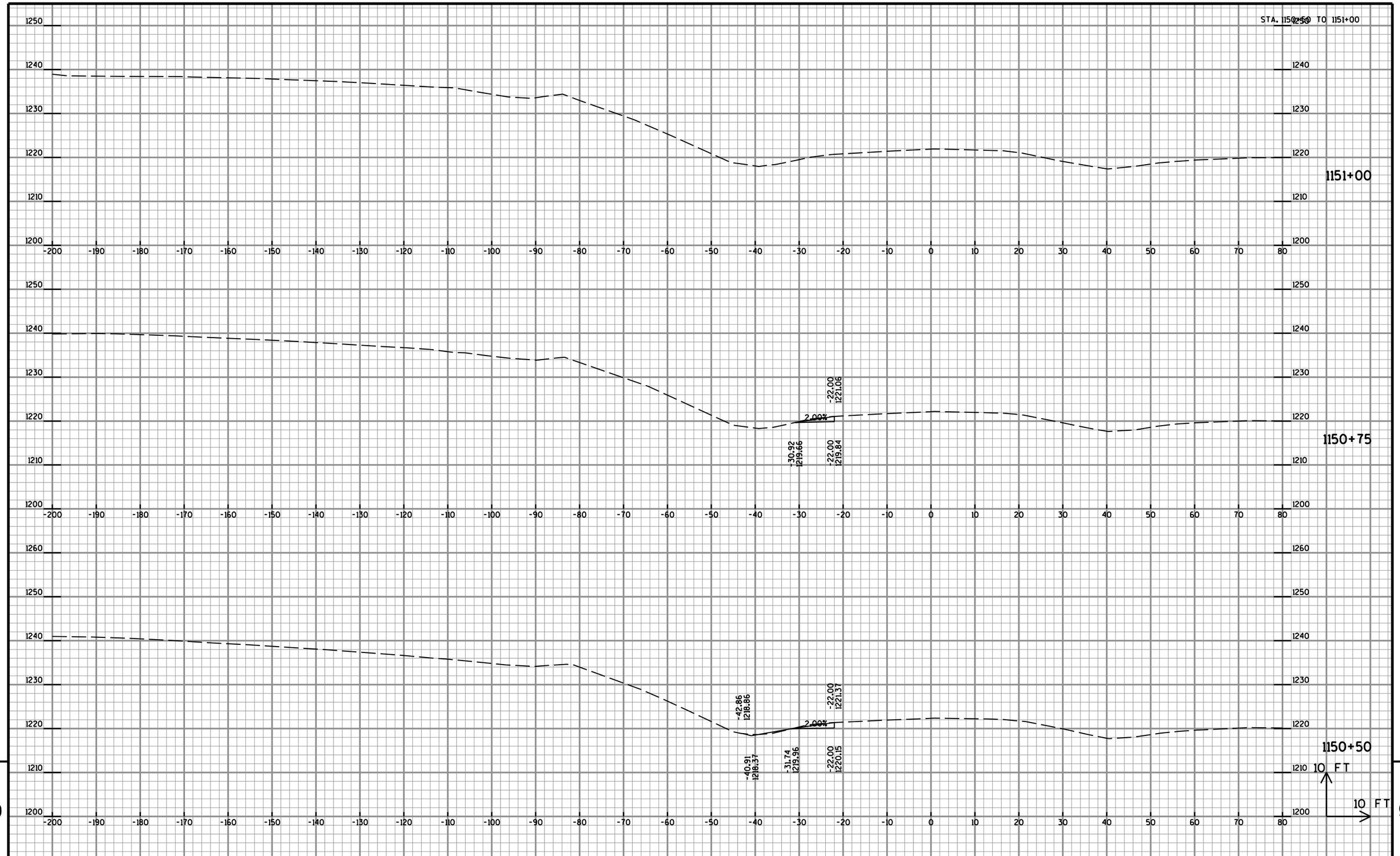

PROJECT NO: 1020-01-88	HWY: CTH BB	COUNTY: ST. CROIX	CROSS SECTIONS - IH 94 WB	SHEET 153	E

FILE NAME : U:\42-0886.00 - St. Croix Co. I94 Overpasses x3\42-0886.01 B-55-48 CTH BB\Inroads\IH 94 xs.dgn PLOT DATE : 7/24/2015 PLOT BY : AYRES-EC PLOT NAME : PLOT SCALE : 1:20

WISDOT/CADDS SHEET 21

Wisconsin Department of Transportation

Dedicated people creating transportation solutions through innovation and exceptional service.

http://www.dot.wisconsin.gov