WIS

PROJECT ID: 6414-00-78

WITH: 6414-00-88

COUNTY: PORTAGE

DEC 2015

ORDER OF SHEETS

TOTAL SHEETS = 462

STATE PROJECT	FEDERAL PROJECT	
	PROJECT	CONTRACT
6414-00-78	WISC 2015660	1

STATE OF WISCONSIN
DEPARTMENT OF TRANSPORTATION

PLAN OF PROPOSED IMPROVEMENT

VILLAGE OF PLOVER, POST ROAD

GREEN DRIVE TO SPRINGVILLE DRIVE

BUSINESS 51

PORTAGE COUNTY

STATE PROJECT NUMBER

6414-00-78

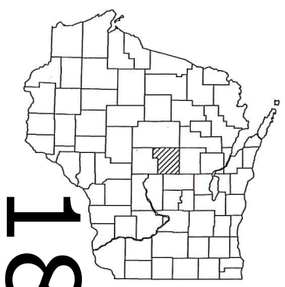

18

N

R 8 E

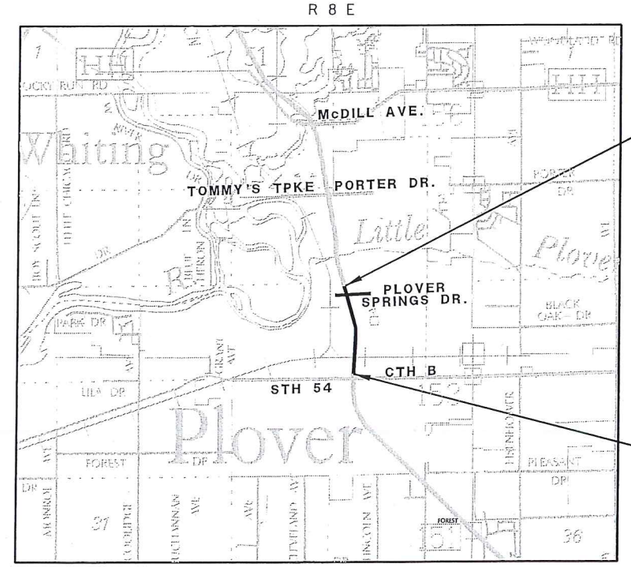

END PROJECT
STA 181+62.87

T 23 N

BEGIN PROJECT
STA 121+75.40

Y = 178118.367
X = 173533.775

DESIGN DESIGNATION

A.D.T.	2015	=	18,700
A.D.T.	2035	=	22,900
D.H.V.	2035	=	2420
D.		=	59/41%
T.		=	6.8% ADT
DESIGN SPEED		=	35/40 M.P.H.
ESALS		=	3,255,800

CONVENTIONAL SYMBOLS

COUNTY LINE
CORPORATE LIMITS
PROPERTY LINE — P.L. + 58.1
LOT LINE
LIMITED EASEMENT
EARTHWORK BALANCE POINT
EXISTING RIGHT OF WAY
PROPOSED OR NEW R/W LINE
SURVEY LINE
SLOPE INTERCEPT
ORIGINAL GROUND
MARSH OR ROCK PROFILE (To be noted as such) — ROCK
MARSH AREA
WOODED OR SHRUB AREA

COMBUSTIBLE FLUIDS — CAUTION
UNDERGROUND UTILITIES
GAS — G
ELECTRIC — E
TELEPHONE OR TELEGRAPH — T
TV/CABLE — TV
SERVICE PEDESTAL
POWER POLE
TELEPHONE POLE
RAILROAD
SANITARY SEWER — SAN
STORM SEWER — SS
WATER — W
EXISTING CULVERT
PROPOSED CULVERT (Box or Pipe)
CULVERT (Profile View)

LAYOUT
SCALE 0 — 1 MI.

TOTAL NET LENGTH OF CENTERLINE = 1.134 MI.

Coordinates on this plan are referenced to the Wisconsin County Coordinate System (WCCS), Portage County.

ORIGINAL PLANS PREPARED BY:
SHORT ELLIOTT HENDRICKSON INC.

WISCONSIN DANIEL A. PENZKOVER 30248 RICE LAKE, WI PROFESSIONAL ENGINEER 8/13/15

STATE OF WISCONSIN
DEPARTMENT OF TRANSPORTATION

PREPARED BY

Surveyor	SEH
Designer	SEH
Project Manager	JEFF STEWART
Regional Examiner	CHERYL SIMON
Regional Supervisor	MIKE KRETSCHMER
C.O. Examiner	

APPROVED FOR THE DEPARTMENT

DATE: 8/13/15 (Signature)

E

STANDARD ABBREVIATIONS

AECPRC	APRON ENDWALL FOR CULVERT PIPE REINFORCED CONCRETE
BM	BENCH MARK
CE	COMMERCIAL ENTRANCE
CL OR C/L OR ℄	CENTER LINE
DISCH	DISCHARGE
FE	FIELD ENTRANCE
FO	FIBER OPTIC
HDPE	HIGH DENSITY POLYTHENE PIPE
HYD	HYDRANT
INV	INVERT
IP	IRON PIPE ON PIN
L	LENGTH OF CURVE
LC	LONG CHORD OF CURVE
PE	PRIVATE ENTRANCE
R	RADIUS
R/L OR ℞	REFERENCE LINE
SSPRC	STORM SEWER PIPE REINFORCED CONCRETE

ORDER OF TYPICAL SECTION AND DETAIL SHEETS

GENERAL NOTES
PROJECT OVERVIEW
TYPICAL SECTIONS
CONSTRUCTION DETAILS
INTERSECTION DETAILS
EROSION CONTROL
STORM SEWER
PERMANENT SIGNING
PAVEMENT MARKING
LIGHTING DETAILS
LIGHTING
TRAFFIC SIGNAL PLAN
SEQUENCE OF OPERATIONS
TEMPORARY SIGNALS
TRAFFIC CONTROL
ALIGNMENT TIES
ALIGNMENT

GENERAL NOTES

WHEN THE QUANTITY OF BASE AGGREGATE IS MEASURED FOR PAYMENT BY THE TON OR CUBIC YARD, THE DEPTH OR THICKNESS OF THE LAYER SHOWN ON THE PLANS IS APPROXIMATE AND THE ACTUAL THICKNESS WILL DEPEND ON THE DISTRIBUTION OF THE MATERIAL AS DIRECTED BY THE ENGINEER.

THE LOCATION OF EXISTING AND PROPOSED UTILITY INSTALLATIONS AS SHOWN ON THE PLANS IS APPROXIMATE. THERE MAY BE OTHER UTILITY INSTALLATIONS WITHIN THE PROJECT AREA THAT ARE NOT SHOWN.

NO TREES OR SHRUBS ARE TO BE REMOVED WITHOUT THE APPROVAL OF THE ENGINEER.

ALL CURB AND GUTTER RADII, PAVEMENT DIMENSIONS AND STATIONS ARE SHOWN TO THE EDGE OF PAVEMENT UNLESS NOTED OTHERWISE.

CONSTRUCT INSIDE EDGE OF SIDEWALK ¼ INCH HIGHER THAN THE TOP OF CURB, WHEN THEY ARE ADJACENT TO EACH OTHER.

TOP OF CASTING ELEVATIONS SHOWN FOR INLETS REFER TO THE NORMAL GUTTER FLOWLINE.

ALL STORM SEWER INVERTS, ELEVATIONS, PIPE LENGTHS, AND GRADES ARE COMPUTED CENTER-TO-CENTER OF STRUCTURES.

HMA PAVEMENT TYPE E-3 SHALL BE CONSTRUCTED WITH THE FOLLOWING LAYER THICKNESSES:

PAVEMENT THICKNESS (INCH)	LOWER (INCH)	NOM AGG SIZE (MM)	MIDDLE (INCH)	NOM AGG SIZE (MM)	UPPER (INCH)	NOM AGG SIZE (MM)
6	2 1/4		2 1/4		1 1/2	
4	2 1/2				1 1/2	

CURB RAMP TYPES ARE SHOWN ON THE PLAN AND PROFILE SHEETS.

THE NORTHERN LONG EARED BAT IS A THREATENED SPECIES IN THE AREA. WORK WILL NOT BE ALLOWED IN AREAS THAT REQUIRE THE REMOVAL OF TREES AFTER MARCH 31, 2016. ALL TREES TO BE REMOVED WITH THE PROJECT MUST BE FELLED BY THE CONTRACTOR BEFORE MARCH 31, 2016.

UTILITY CONTACTS

RICH PODOLAK
AT&T WI DESIGN ENGINEERING
AT&T WISCONSIN-COMMUNICATION LINE
304 S. DEWEY ST- 4TH FLR.
EAU CLAIRE, WI 54701
(715) 839-5565
RP4514@ATT.COM

RUDI RUDIGER
CHARTER COMMUNICATIONS-COMMUNICATION LINE
5024 HEFFRON ST.
STEVENS POINT, WI 54481
(715) 204-5339
RUDI.RUDIGER@CHARTERCOM.COM

KEN RADKE
WISDOT NORTH CENTRAL- WI RAPIDS ELECTRICAL- WISCONSIN SIGNAL
1681 2ND AVE SOUTH
WISCONSIN RAPIDS, WI 54494
(715) 421-8007
KENNETH.RADKE@DOT.WI.GOV

RICH BODEN
VILLAGE OF PLOVER-SEWER
P.O. BOX 37
PLOVER, WI 54467
(715) 345-5259
RBODEN@PLOVERWI.GOV

BILL KONKOL
VILLAGE OF PLOVER-WATER
P.O. BOX 37
PLOVER, WI 54467
(715) 345-5257

DON LUTZOW
WISCONSIN PUBLIC SERVICE CORPORATION-ELECTRICITY
P.O. BOX 1166
WAUSAW, WI 54402
(715) 493-7802
DALUTZOW@WISCONSINPUBLICSERVICE.COM

MATT CURTIN
WISCONSIN PUBLIC SERVICE CORPORATION-GAS/PETROLEUM
2001 PLOVER ROAD
PLOVER, WI 54467
(715) 345-7582
MJCURTIN@WISCONSINPUBLICSERVICE.COM

DNR CONTACT

DNR
473 GRIFFITH AVENUE
WISCONSIN RAPIDS, WI 54494
TELEPHONE: 715.421.7867
ATTENTION: MARC J. HERSHFIELD

DIGGERS HOTLINE
Dial 811 or (800)242-8511
www.DiggersHotline.com

2

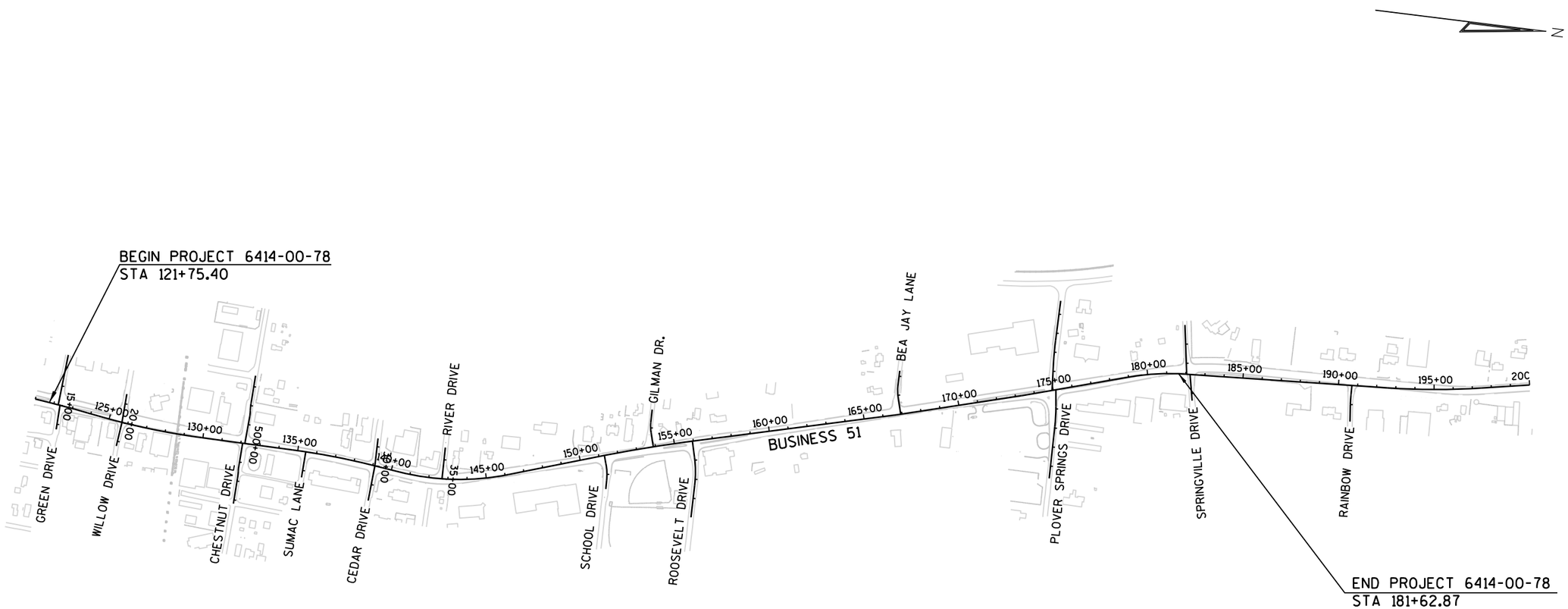

PROJECT NO:6414-00-78	HWY:BUSINESS 51	COUNTY:PORTAGE	PROJECT OVERVIEW	SHEET 3	E

FILE NAME : P:\UZ\W\Witnc\112545\5-final-dsgn\51-drawings\40-TransHwy\020201 po.dgn PLOT TIME : 2:00:06 PM PLOT DATE : 8/2/2015 PLOT BY : SEH PLOT NAME : PLOT SCALE : N/A

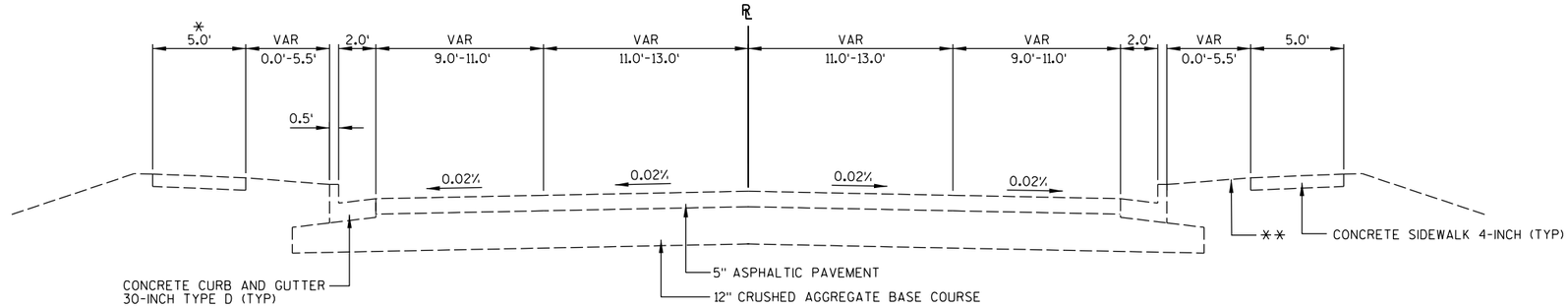

TYPICAL EXISTING SECTION

USH 51
STA 127+64.5 TO STA 154+40.80
STA 158+86.00 TO STA 170+79.40
STA 179+70.60 TO STA 181+62.87

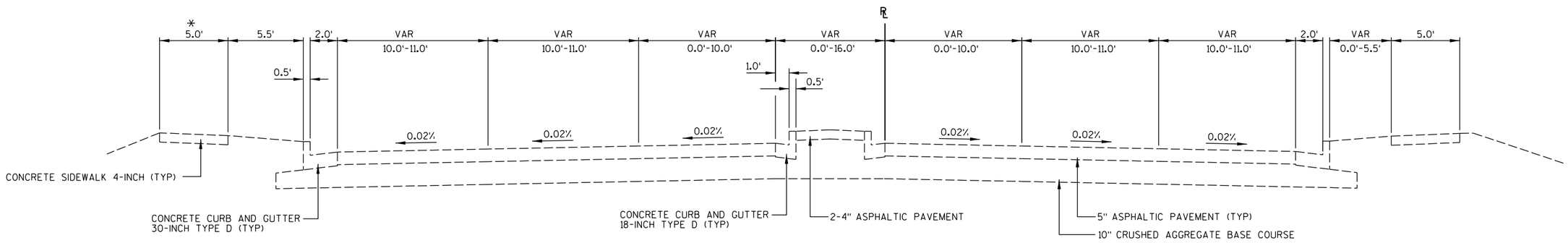

TYPICAL EXISTING SECTION

USH 51
STA 121+75.40 TO STA 127+65.50
STA 154+40.80 TO STA 158+86.00
STA 179+79.40 TO STA 179+70.60

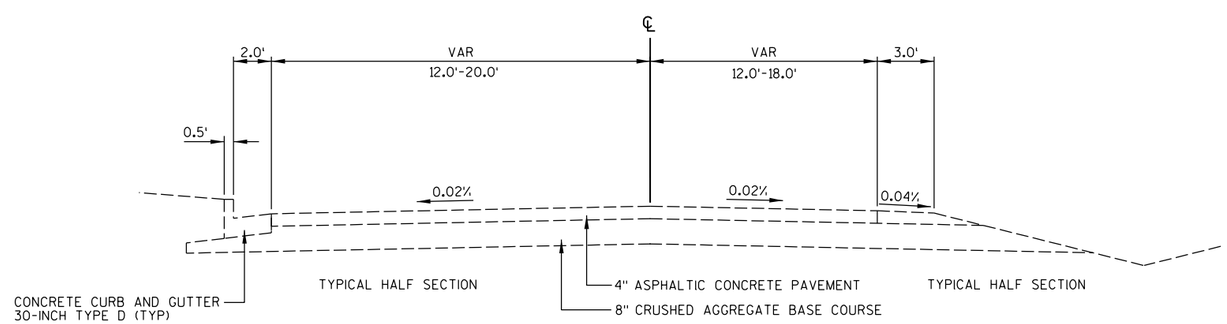

TYPICAL EXISTING SECTION

SIDEROAD

NOTES:

* SIDEWALK ON LT SIDE
EXISTS ONLY FROM
119+31 TO 178+08
214+49 TO 221+66
260+18 TO 262+56

** HARD SURFACE BRICK PAVERS
OR CONCRETE SIDEWALK
STA 122+67 TO STA 125+40 RT
STA 126+00 TO STA 128+55 RT
STA 139+44 TO STA 141+90 RT
STA 145+05 TO STA 150+78 RT
STA 151+78 TO STA 155+50 RT

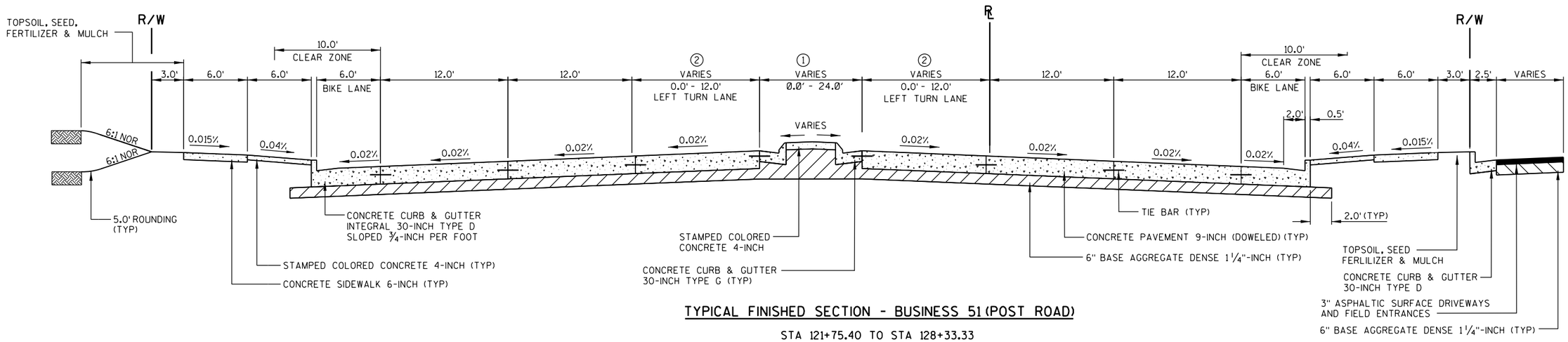

TYPICAL FINISHED SECTION - BUSINESS 51 (POST ROAD)

STA 121+75.40 TO STA 128+33.33
STA 128+93.38 TO STA 176+09.38

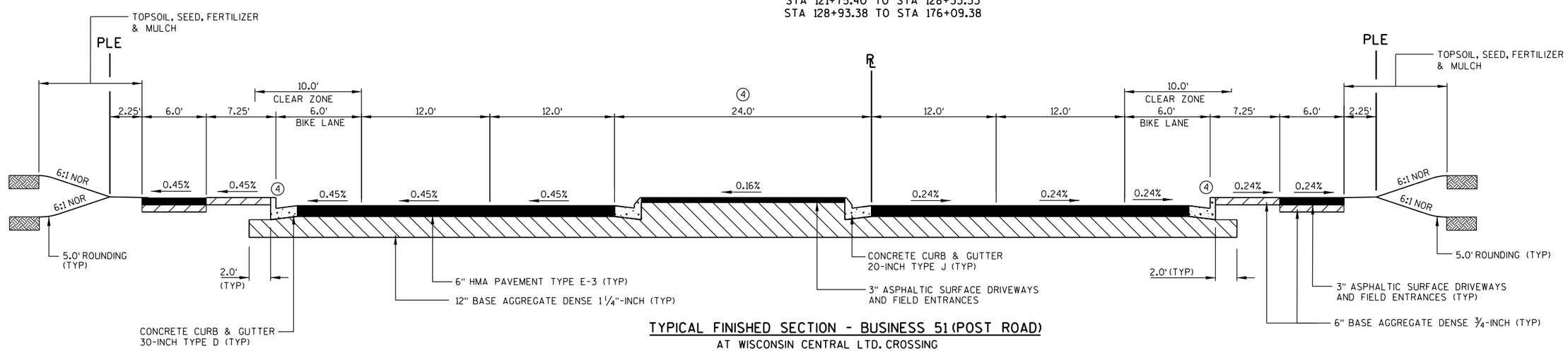

TYPICAL FINISHED SECTION - BUSINESS 51 (POST ROAD)

AT WISCONSIN CENTRAL LTD. CROSSING
STA 128+33.33 TO STA 128+93.38

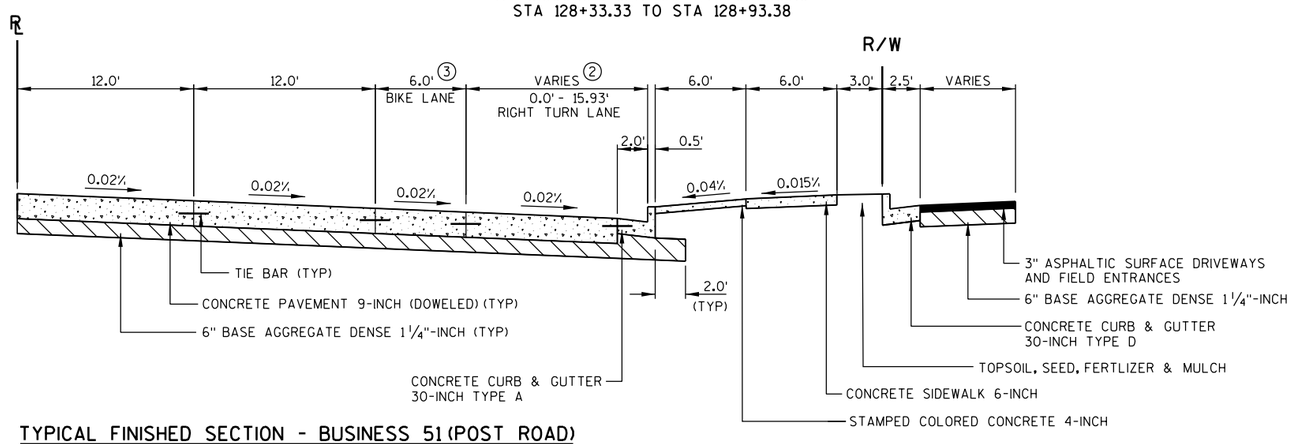

TYPICAL FINISHED SECTION - BUSINESS 51 (POST ROAD)

STA 171+92.10 RT TO STA 174+04.91 RT

NOTES:

1. REFER TO PLAN AND PROFILE SHEETS FOR RAISED MEDIAN LOCATIONS AND WIDTHS.
2. REFER TO PLAN AND PROFILE SHEETS FOR STATION LOCATIONS AND WIDTHS.
3. 4' BIKE LANE AT MCDILL AVE/CTH "HH".
4. REFER TO CONSTRUCTION DETAIL- WISCONSIN CENTRAL LTD. CROSSINGS FOR STATION LOCATIONS, TRANSITIONS, AND WIDTHS.

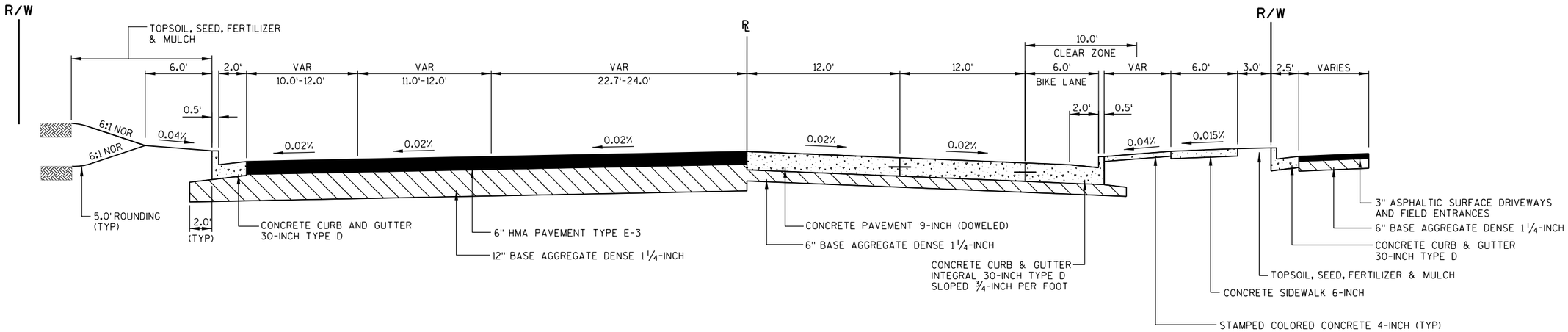

TYPICAL FINISHED SECTION

USH 51
STA 178+07.46 TO STA 179+00.00

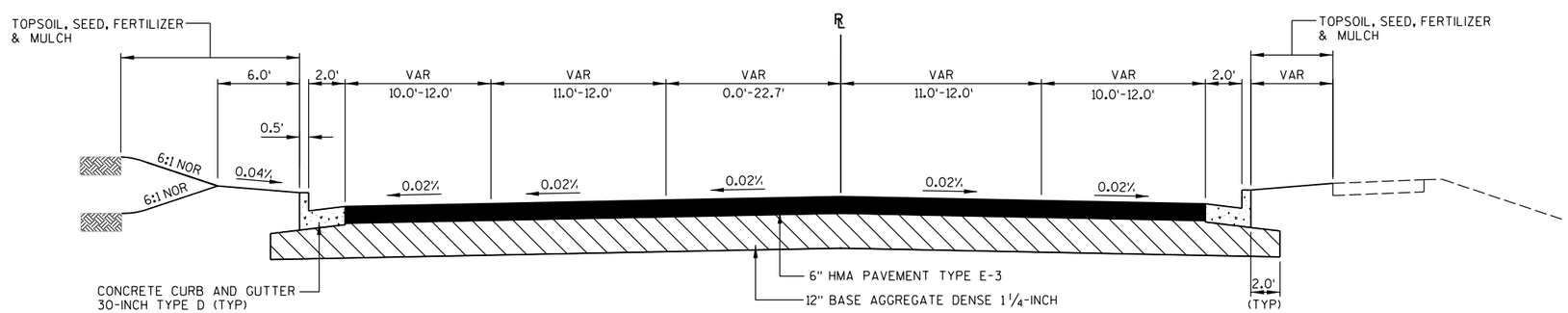

TYPICAL FINISHED SECTION

USH 51
STA 179+00.00 TO STA 181+62.87

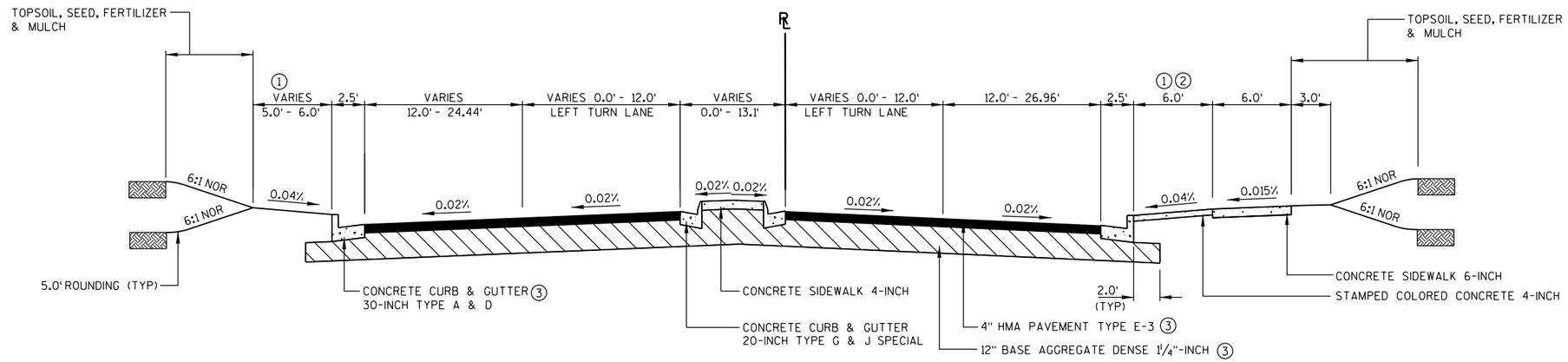

TYPICAL FINISHED SECTION - PLOVER SPRINGS DRIVE

STA 696+50.0 TO STA 699+44.64
STA 700+30.45 TO STA 703+73.75

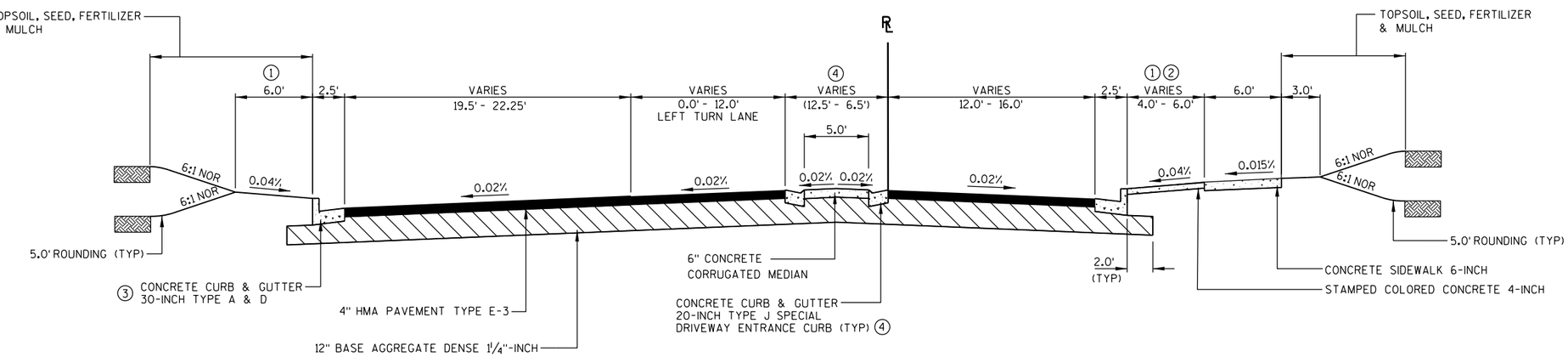

DRIVEWAY ENTRANCE CURB TYPICAL

STA 702+37.68 TO STA 702+74.64 (PLOVER SPRINGS DRIVE)

NOTES:

① TOPSOIL, SEED, FERTILIZER AND EROSION MAT URBAN CLASS I TYPE B.

② STAMPED COLORED CONCRETE 4-INCH.

③ CONCRETE PAVEMENT 9-INCH OVER 6" BASE AGGREGATE DENSE 1¼"-INCH SEE PLAN & PROFILES SHEETS FOR STATIONS & WIDTHS.

④ SEE PLAN & PROFILE SHEETS & DRIVEWAY ENTRANCE CURB TYPICAL FOR STATIONS & WIDTHS.

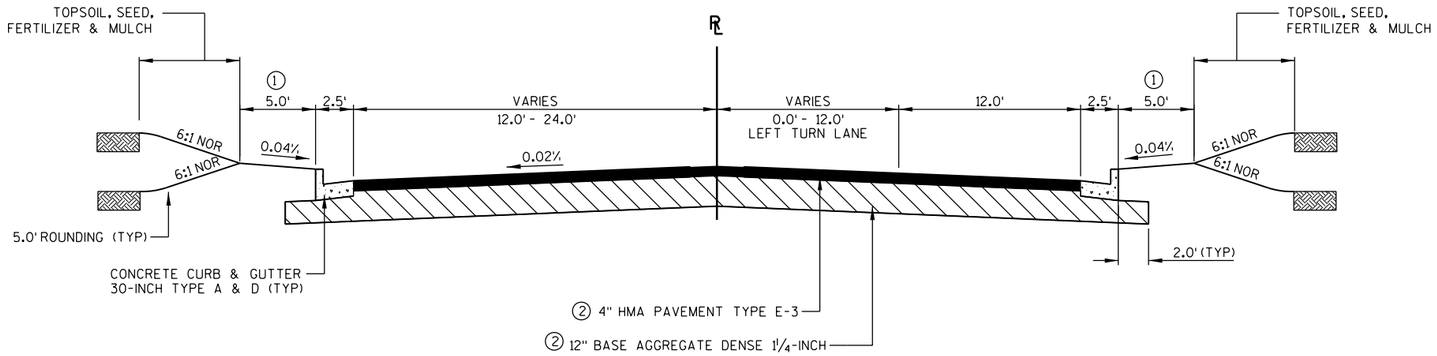

TYPICAL FINISHED SECTION

CHESTNUT DRIVE

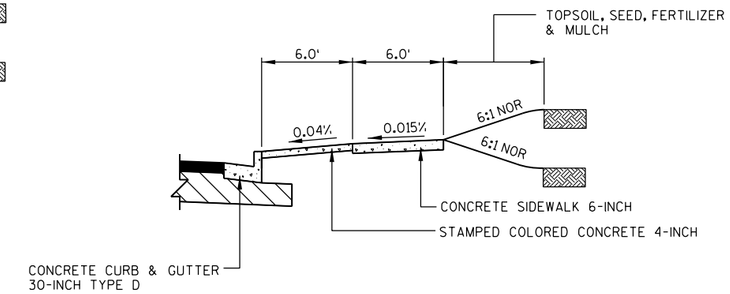

TYPICAL FINISHED SECTION

CHESTNUT DRIVE
EAST ONLY
STA 500+44.5 TO STA 501+03

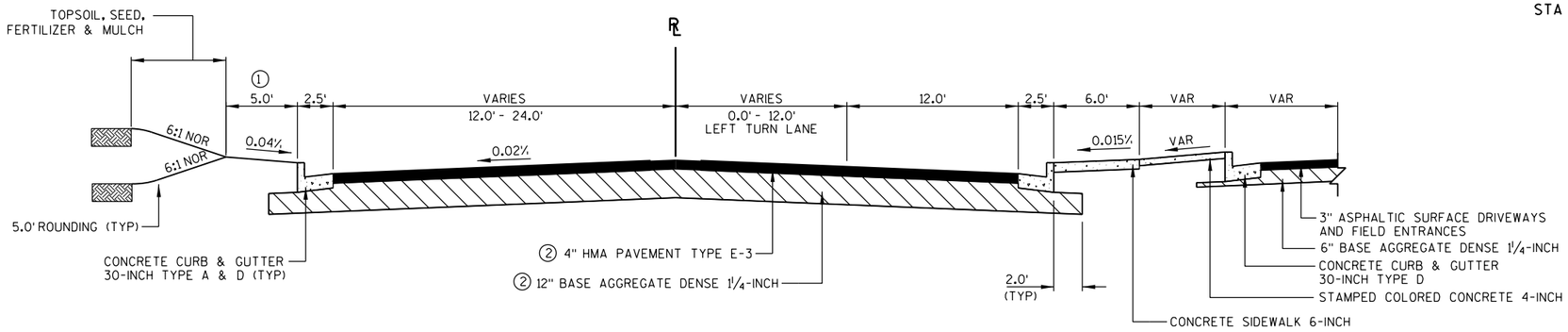

TYPICAL FINISHED SECTION

CHESTNUT DRIVE WEST

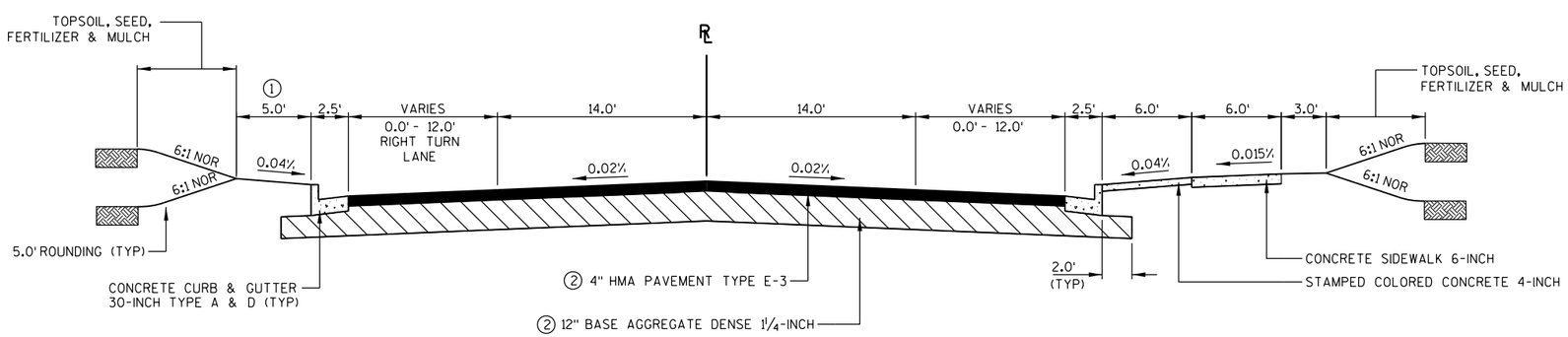

TYPICAL FINISHED SECTION

ROOSEVELT DRIVE

NOTES:

① TOPSOIL, SEED, FERTILIZER AND EROSION MAT URBAN CLASS I TYPE B.

② CONC. PAV'T 9-INCH OVER 6" BASE AGGREGATE DENSE 1¼-INCH SEE PLAN & PROFILE FOR STATIONS & WIDTH.

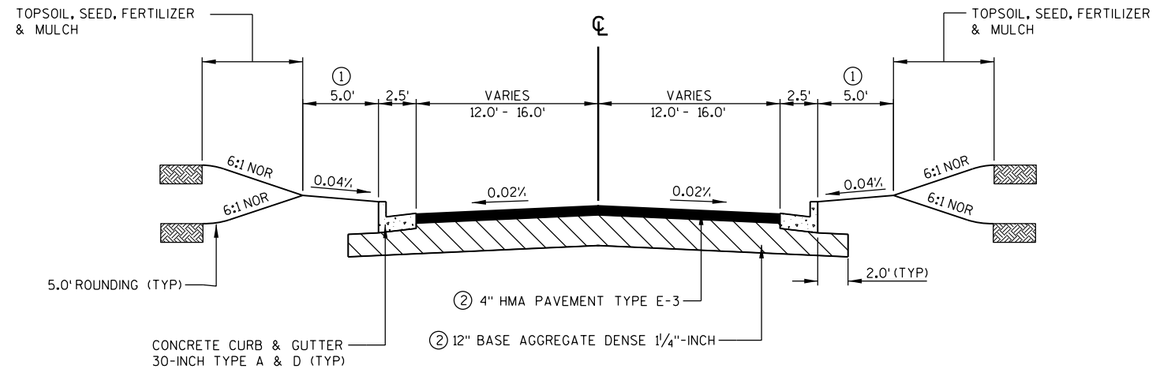

TYPICAL FINISHED SECTION

GREEN DR. WEST	RIVER DR.
WILLOW DR.	SERVICE ENTRANCE
SUMAC LN.	GILMAN DR.
CEDAR DR. WEST	BEA JAY LN.

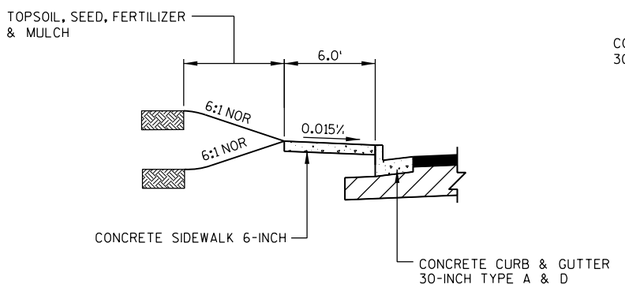

TYPICAL FINISHED SECTION

CEDAR DRIVE EAST

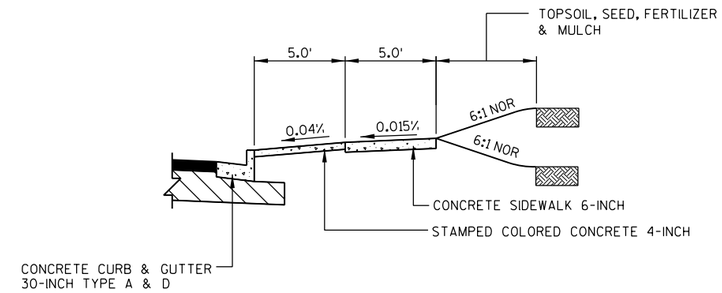

TYPICAL FINISHED SECTION

GREEN DRIVE EAST

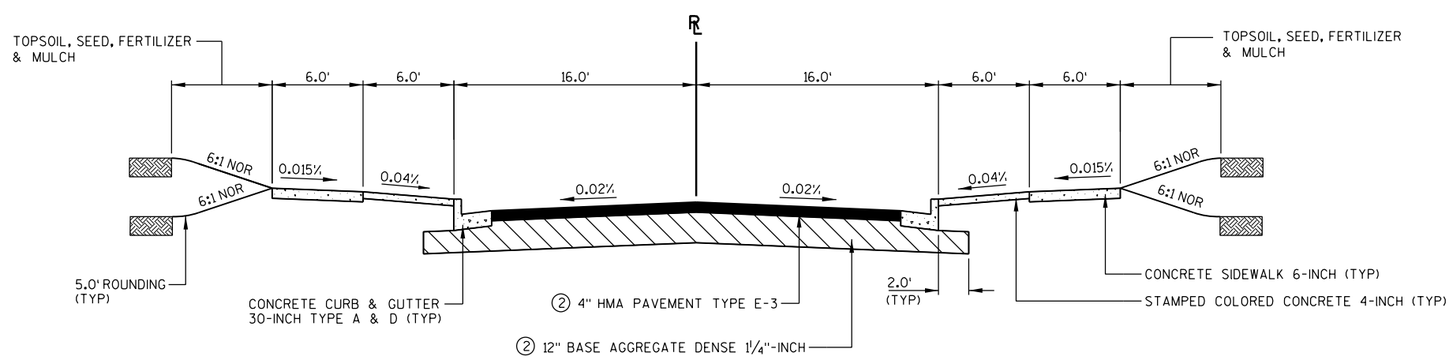

TYPICAL FINISHED SECTION

SCHOOL DRIVE

NOTES:

① TOPSOIL, SEED, FERTILIZER AND EROSION MAT URBAN CLASS I TYPE B.

② CONC. PAV'T 9-INCH OVER 6" BASE AGGREGATE DENSE 1¼"-INCH SEE PLAN & PROFILE FOR STATIONS & WIDTH.

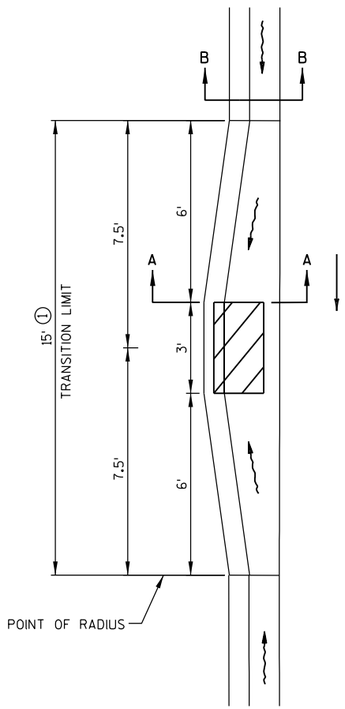

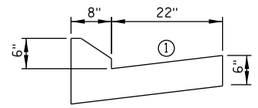

SECTION A-A

① USE TYPE 3 INLET WITH HM-GJ

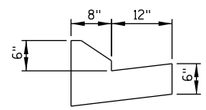

SECTION B-B

MEDIAN CURB & GUTTER AT INLETS

WITHIN SUPERELEVATIONS

NOTES:

① PAYMENT FOR TRANSITIONS SHALL BE PAID AS THE ITEM OF CONCRETE CURB AND GUTTER 6-INCH SLOPED 20-INCH TYPE G AND J SPECIAL.

② WHERE REVERSE SLOPE GUTTER IS REQUIRED, THE LOCATION WILL BE SHOWN ELSEWHERE IN THE PLANS.

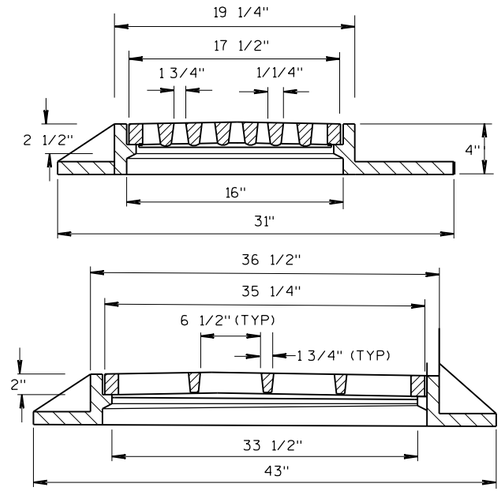

INLET COVER TYPE SPECIAL

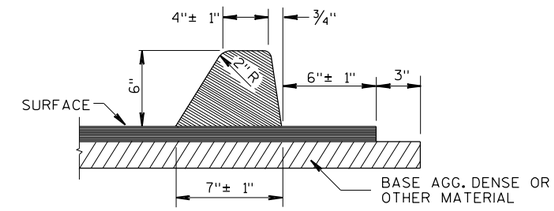

ASPHALTIC CURB DETAIL

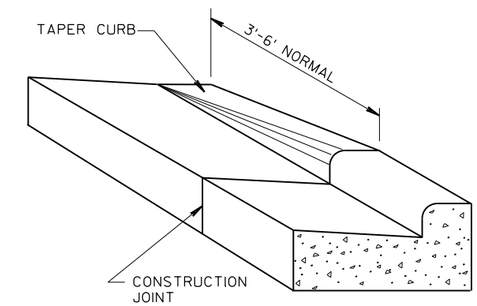

CURB & GUTTER TERMINI

RUNOFF COEFFICIENT TABLE

	HYDROLOGIC SOIL GROUP											
	A			B			C			D		
	SLOPE RANGE (PERCENT)			SLOPE RANGE (PERCENT)			SLOPE RANGE (PERCENT)			SLOPE RANGE (PERCENT)		
LAND USE:	0-2	2-6	6 & OVER	0-2	2-6	6 & OVER	0-2	2-6	6 & OVER	0-2	2-6	6 & OVER
ROW CROPS	.08 .22	.16 .30	.22 .38	.12 .26	.20 .34	.27 .44	.15 .30	.24 .37	.33 .50	.19 .34	.28 .41	.38 .56
MEDIAN STRIP-TURF	.19 .24	.20 .26	.24 .30	.19 .25	.22 .28	.26 .33	.20 .26	.23 .30	.30 .37	.20 .27	.25 .32	.30 .40
SIDE SLOPE-TURF			.25 .32			.27 .34			.28 .36			.30 .38
PAVEMENT:												
ASPHALT	.70 - .95											
CONCRETE	.80 - .95											
BRICK	.70 - .80											
DRIVES, WALKS	.75 - .85											
ROOFS	.75 - .95											
GRAVEL ROADS, SHOULDERS	.40 - .60											

TOTAL PROJECT AREA = ACRES
TOTAL AREA EXPECTED TO BE DISTURBED BY CONSTRUCTION ACTIVITIES = ACRES

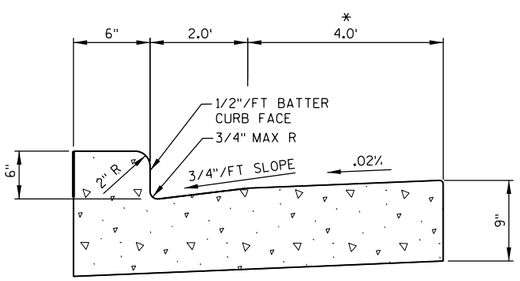

CONCRETE CURB & GUTTER INTEGRAL 30-INCH TYPE D

NOTE:

* BEING PAID FOR AS CONCRETE PAVEMENT 9-INCH

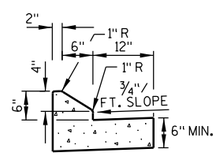

CONCRETE CURB AND GUTTER 6-INCH SLOPED 20-INCH TYPE G AND J SPECIAL

2

RADIUS POINT TABLE				
POINT	STATION	OFFSET	RADIUS	COORDINATES
CC1	130+02.25	60.00 LT	60.0'	Y = 178940.45 X = 173558.00
CC2	130+00.69	41.4 RT	60.0'	Y = 178938.16 X = 173659.38
CC3	128+80.21	60.00 LT	60.0'	Y = 178820.40 X = 173555.19
CC4	128+75.52	21.00 LT	3.0'	Y = 178814.19 X = 173593.97
CC5	128+76.22	3.00 LT	3.0'	Y = 178814.16 X = 173611.97
CC6	128+82.76	36.00 RT	60.0'	Y = 178819.16 X = 173651.21
CC7	129+93.27	3730.0 LT	3706.0'	Y = 178966.21 X = 169888.08
CC8	128+49.34	21.00 LT	3.0'	Y = 178788.19 X = 173592.81
CC9	128+50.18	3.00 LT	3.0'	Y = 178788.16 X = 173610.83
CC10	121+86.61	3739.6 LT	3767.6'	Y = 178595.45 X = 169824.71

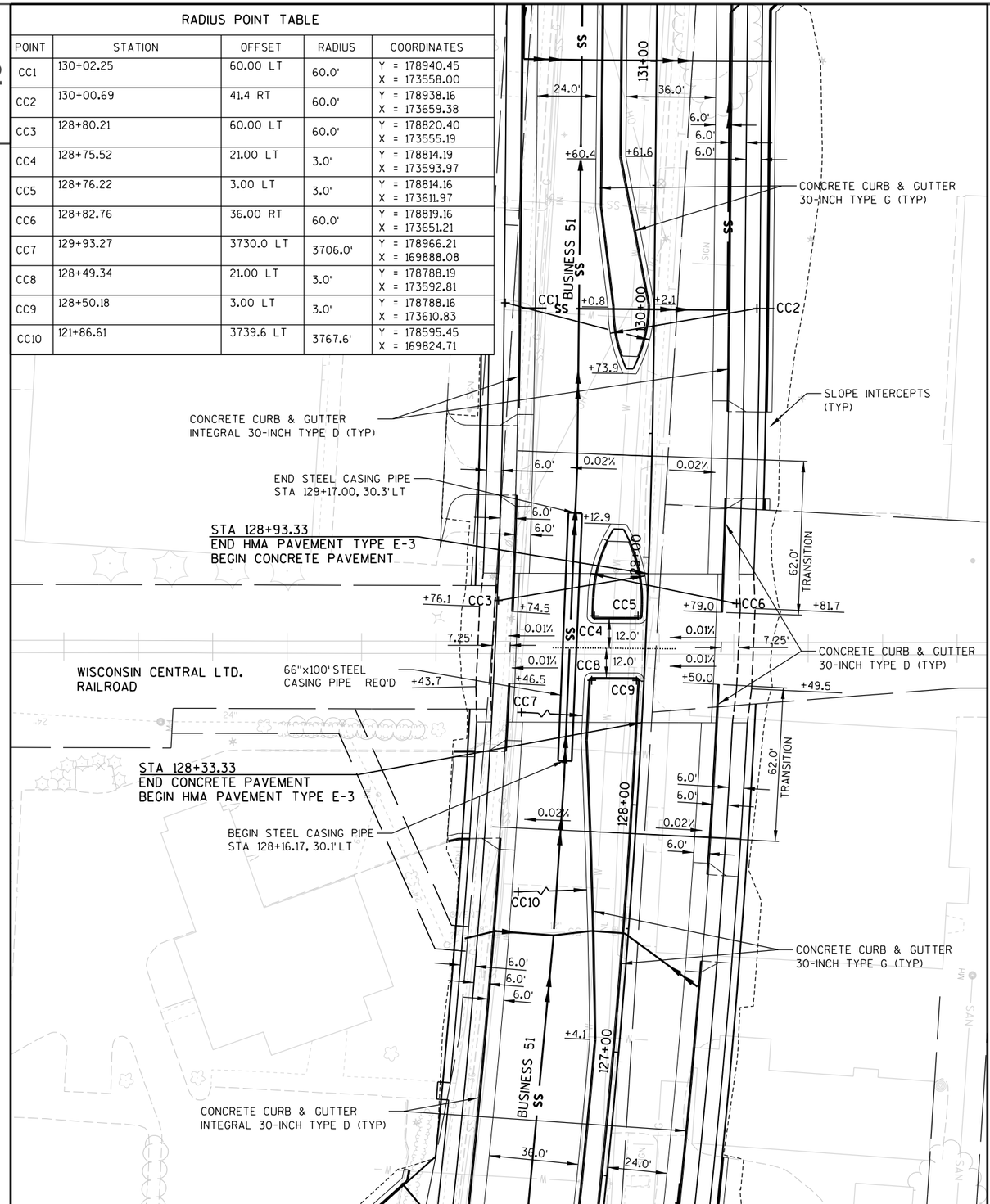

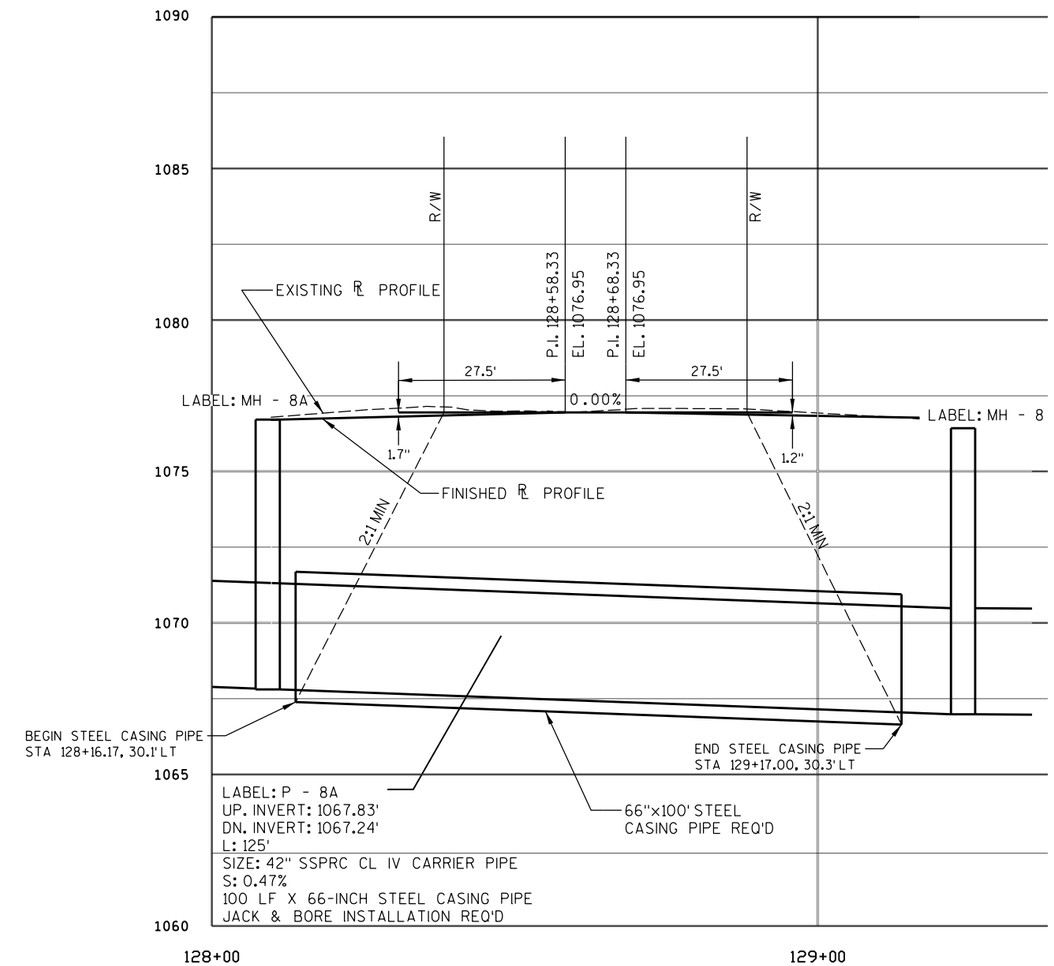

2

PROJECT NO: 6414-00-78	HWY: BUSINESS 51	COUNTY: PORTAGE	CONSTRUCTION DETAIL-RAILROAD CROSSING	SHEET 11	E

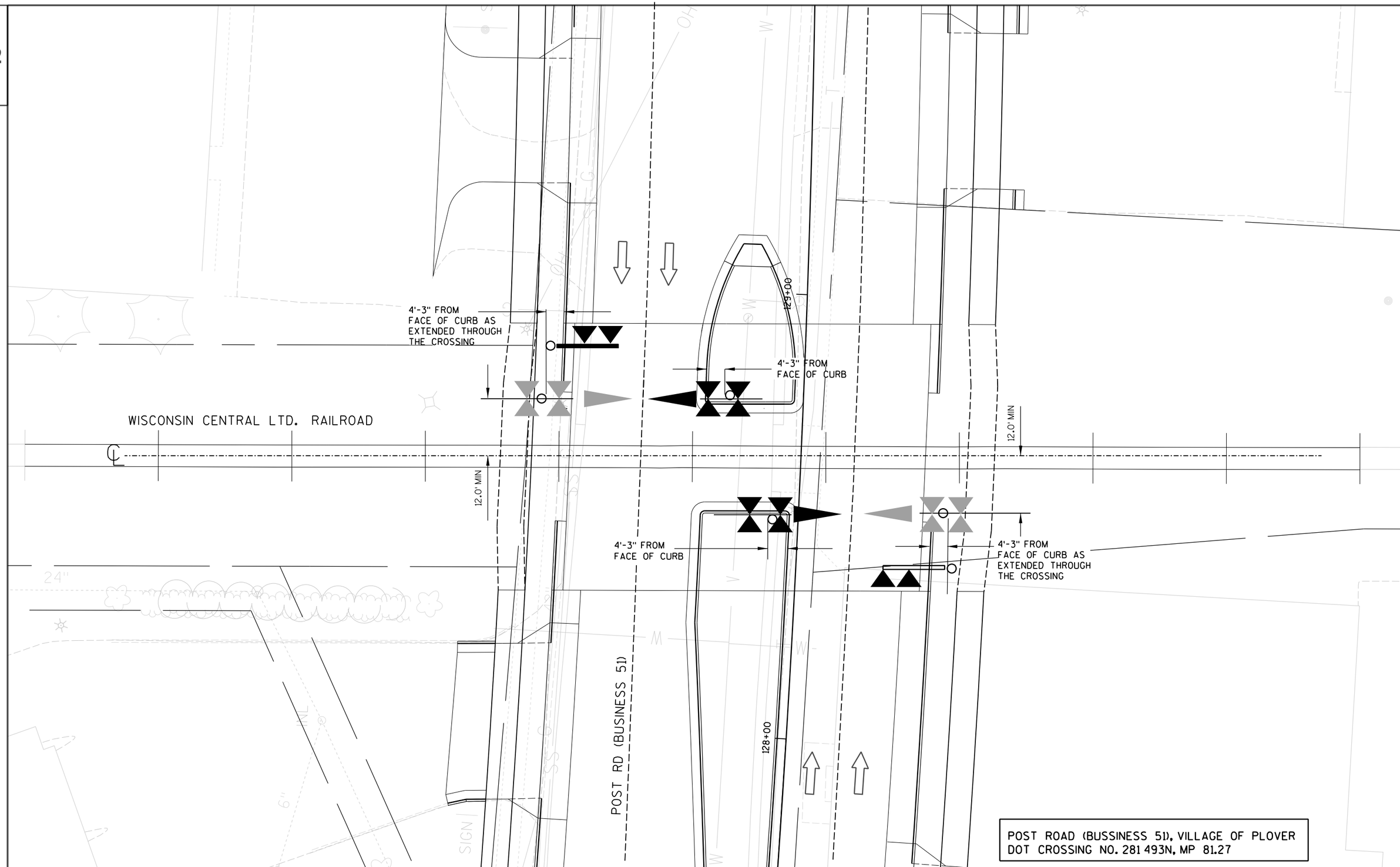

PROJECT NO:6414-00-78	HWY:BUSINESS 51	COUNTY:PORTAGE	CONSTRUCTION DETAIL-RR SIGNAL LOCATION DIAGRAM	SHEET 12	E

FILE NAME : P:\UZ\W\Witnc\112545\5-final-dsgn\51-drawings\40-TransHwy\021002A cd.dgn PLOT TIME : 2:00:15 PM PLOT DATE : 8/2/2015 PLOT BY : SEH PLOT NAME : PLOT SCALE : N/A

WISDOT/CADDS SHEET 42

DRIVEWAY ENTRANCE DETAIL WITH SIDEWALK, CURB & GUTTER

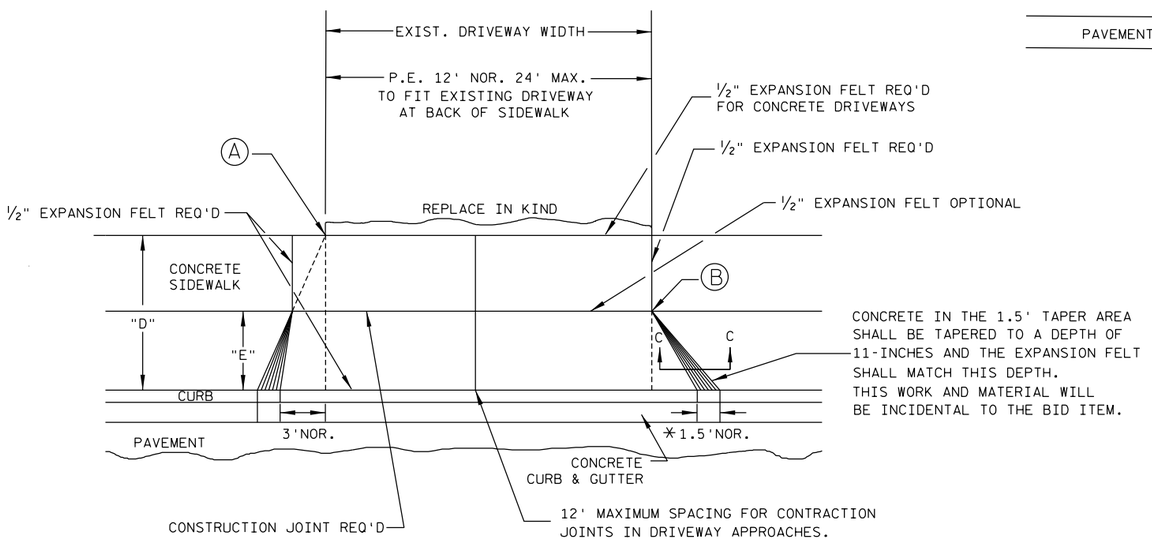

PLAN VIEW

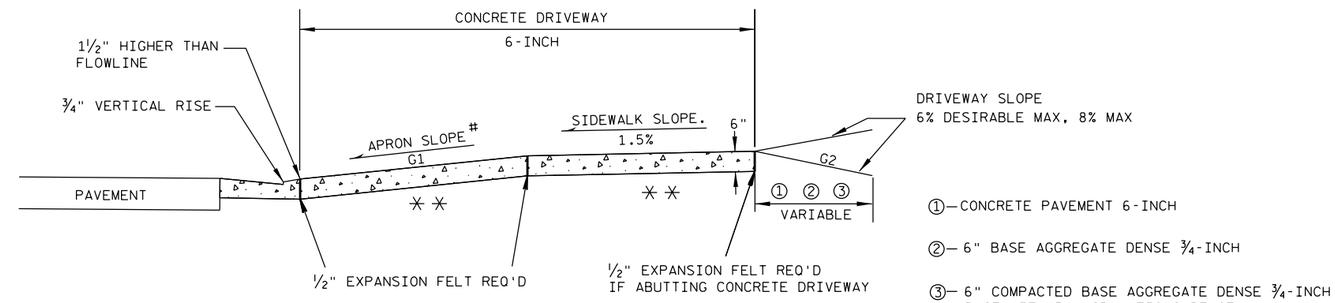

① — CONCRETE PAVEMENT 6-INCH

② — 6" BASE AGGREGATE DENSE ¾-INCH

③ — 6" COMPACTED BASE AGGREGATE DENSE ¾-INCH BASE WITH 3" ASPHALTIC SURFACE DRIVEWAYS AND FIELD ENTRANCES

✳✳ = 6" BASE AGGREGATE DENSE ¾-INCH REQ'D UNDER CONCRETE DRWY

TYPICAL SIDEWALK SECTION

#

TERRACE WIDTH	APRON SLOPE (G1) MIN %	DESIRABLE %	MAX %
3 FT	5.0	6.0	8.0
4 FT	5.0	6.0	8.0
5 FT	4.0	6.0	8.0
6 FT	4.0	6.0	8.0
7 FT	3.5	6.0	8.0
8 FT	3.0	6.0	8.0

NOTE: ALGEBRAIC DIFFERENCE BETWEEN TANGENT GRADES G1 & G2 TO NOT EXCEED 15%

DEPRESS SIDEWALK PROFILE IF DRIVEWAY APRON EXCEEDS MAX SLOPE

Ⓐ WHEN "D" IS 13' OR LESS, ALIGN TAPER WITH BACK OF SIDEWALK

Ⓑ WHEN "D" IS GREATER THAN 13', ALIGN TAPER WITH FRONT OF SIDEWALK

✳ WHEN "E" =0 MAKE CURB TAPER 5'

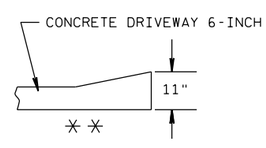

SECTION C-C

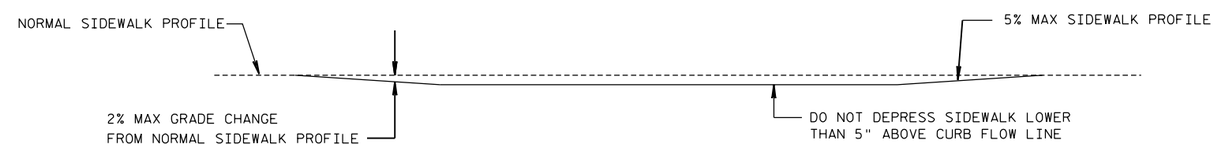

DEPRESSED SIDEWALK PROFILE

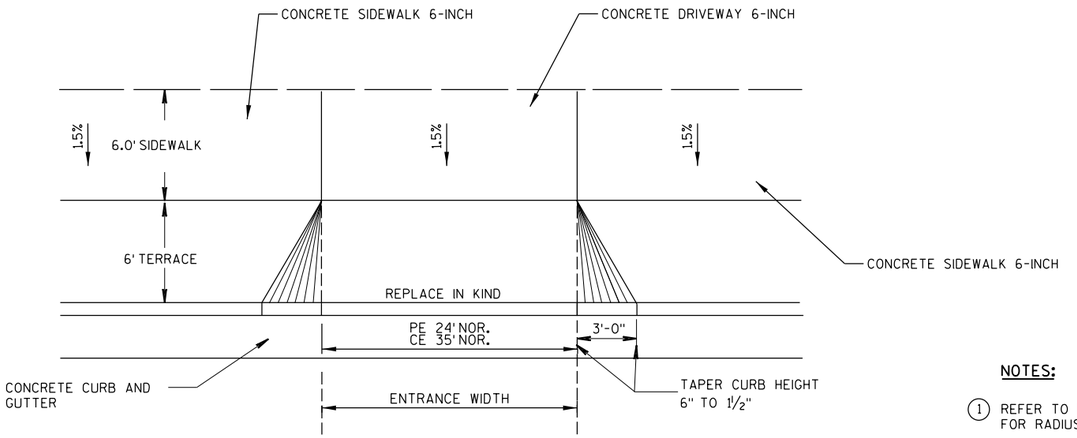

PRIVATE AND COMMERCIAL ENTRANCE TYPE 2

NOTES:

1. REFER TO PLAN AND PROFILE SHEETS FOR RADIUS INFORMATION.
2. TYPE 2 CURB RAMP.
3. SEE "DRIVEWAY ENTRANCE DETAIL WITH SIDEWALK, CURB AND GUTTER" FOR APRON SLOPE TABLE. REFER TO CROSS SECTIONS.
4. TAPER CURB HEIGHT DOWN IN 1.5' TO MATCH ELEVATION OF SIDEWALK.

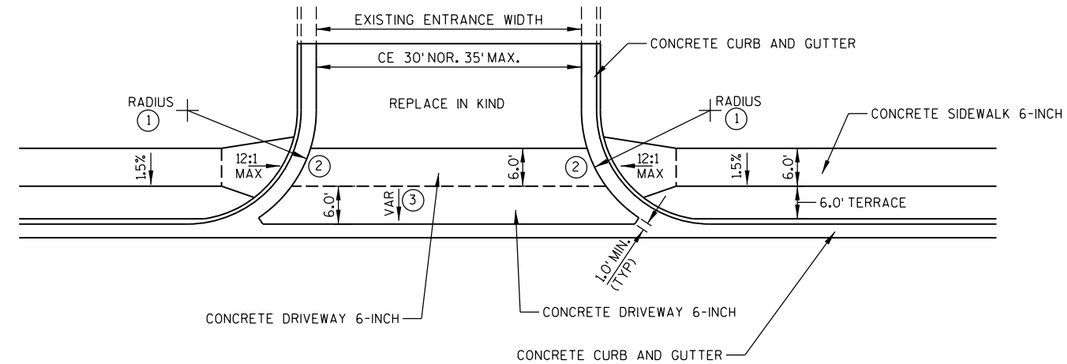

COMMERCIAL ENTRANCE TYPE 1

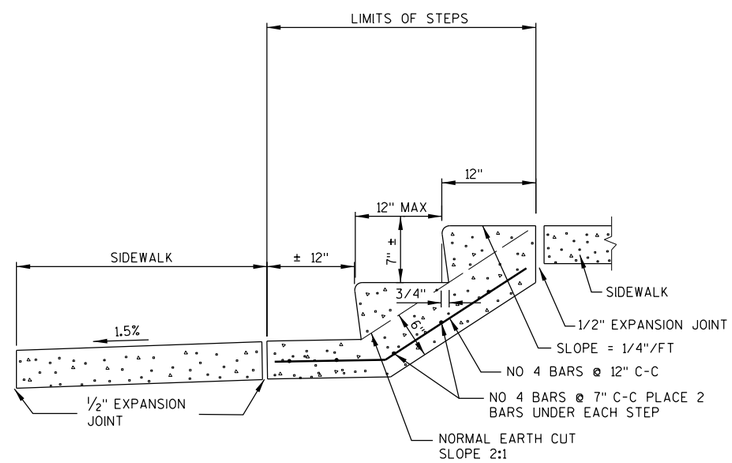

CONCRETE STEPS

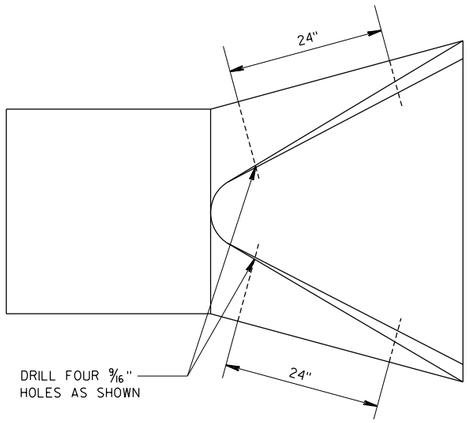

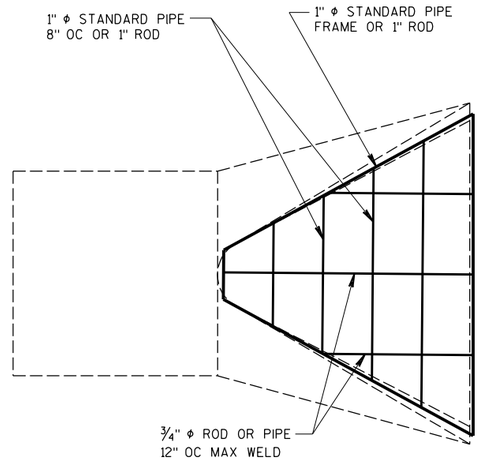

AT EACH PIPE

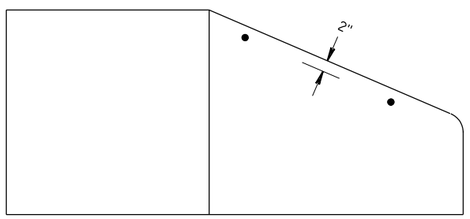

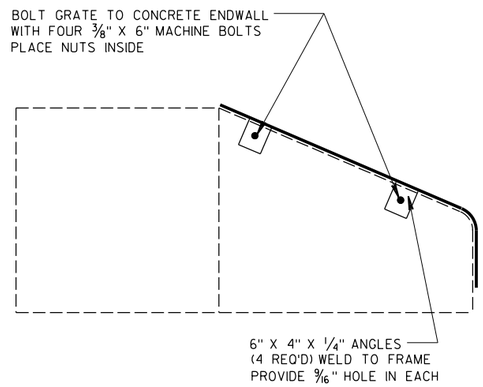

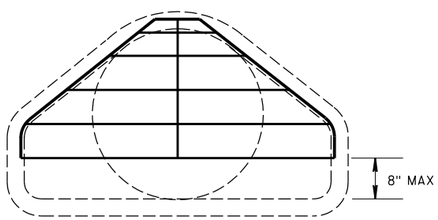

PIPE GRATE

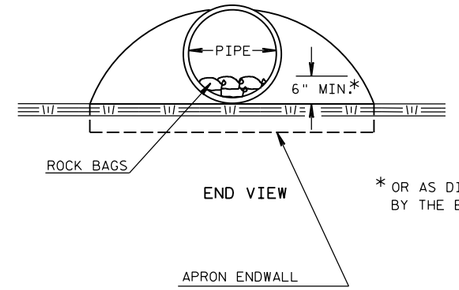

END VIEW

* OR AS DIRECTED BY THE ENGINEER

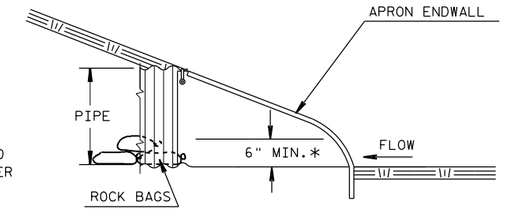

SIDE VIEW

CULVERT PIPE CHECKS

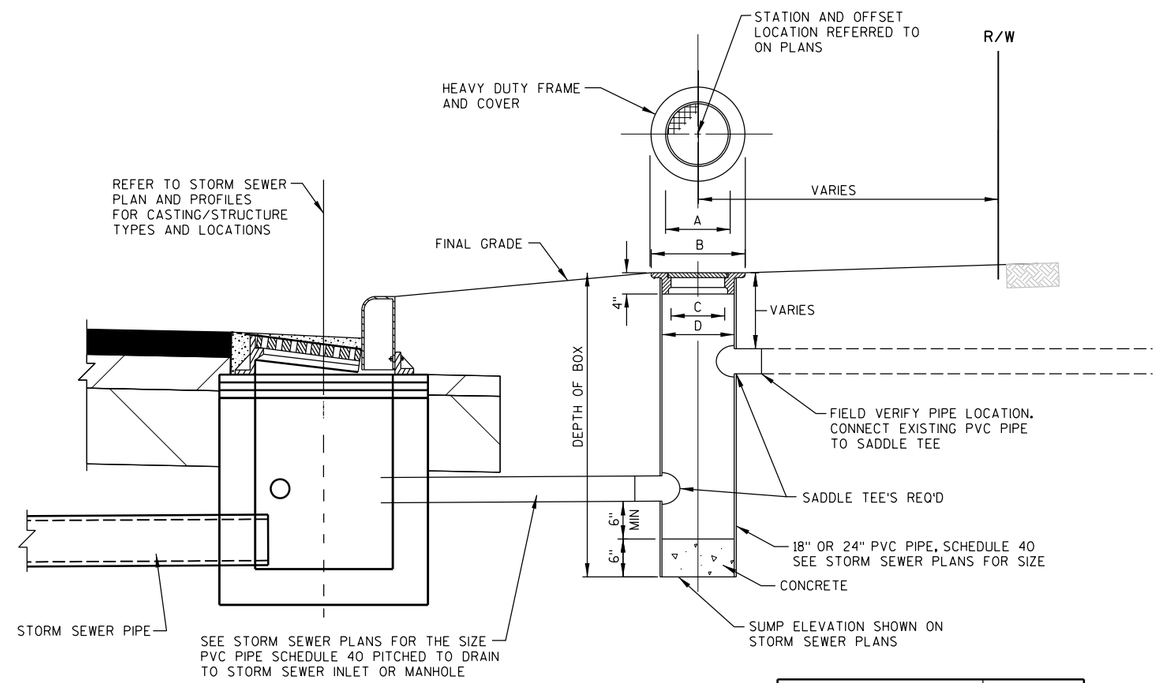

RESIDENTIAL MANHOLE
NOT TO SCALE

PIPE DIAMETER (INSIDE)	24 (INCHES)
A COVER	22 1/4
B FRAME	26 1/2
C FRAME	20 1/2
D FRAME	23 1/2
FRAME AND COVER *(LBS)	155

* THE ACTUAL WEIGHT OF THE MANHOLE FRAME AND COVER MAY VARY WITHIN 5% PLUS OR MINUS OF THE WEIGHT SHOWN

2

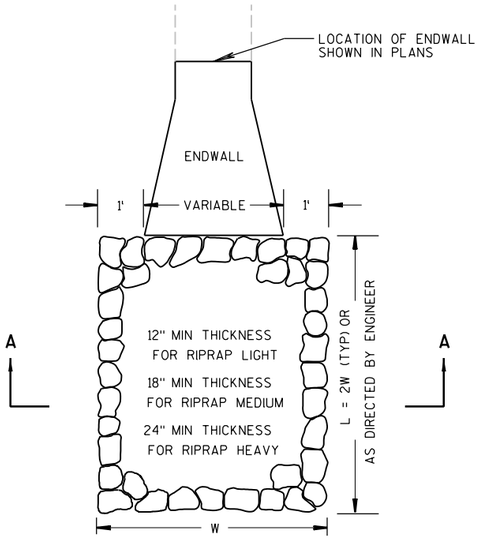

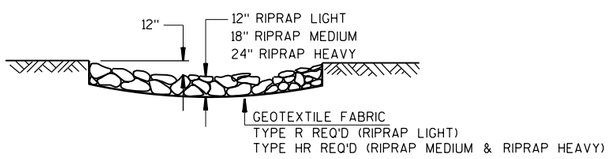

SECTION A-A

RIPRAP TREATMENT AT CULVERTS

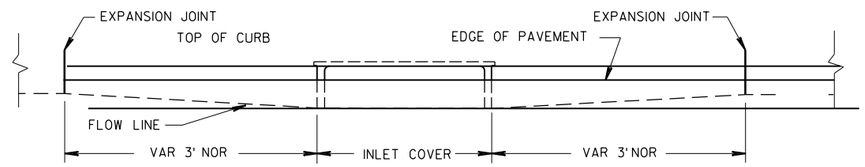

ELEVATION

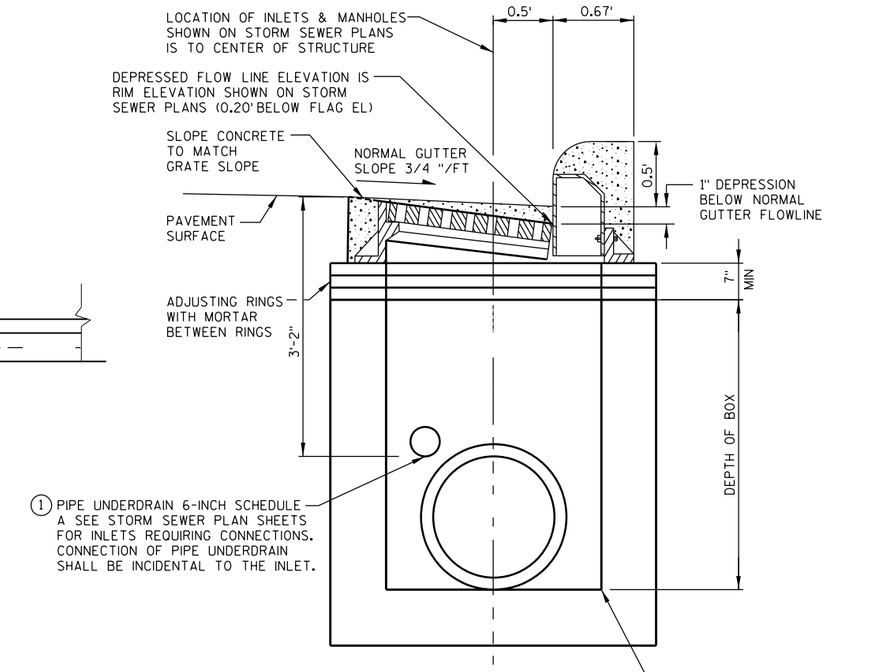

SECTION A-A

INLET

2

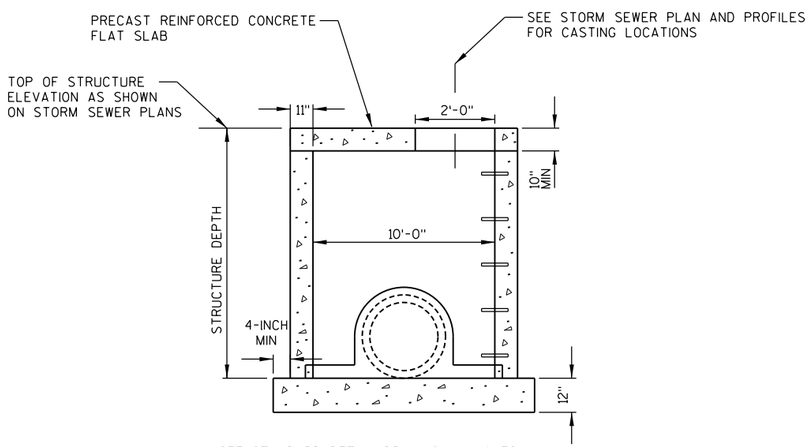

SEE STANDARD DETAIL DRAWING MANHOLES
3-FT, 4-FT, 5-FT, 6-FT, 7-FT & 8-FT DIAMETER
FOR ADDITIONAL STUCTURE INFORMATION
LOCATE MANHOLE TOP SO OPENING ALLOWS FOR EASY ACCESS
TO THE STEPS AND OUT OF TRAVEL WHEEL PATH.

MANHOLES 10-FT DIAMETER

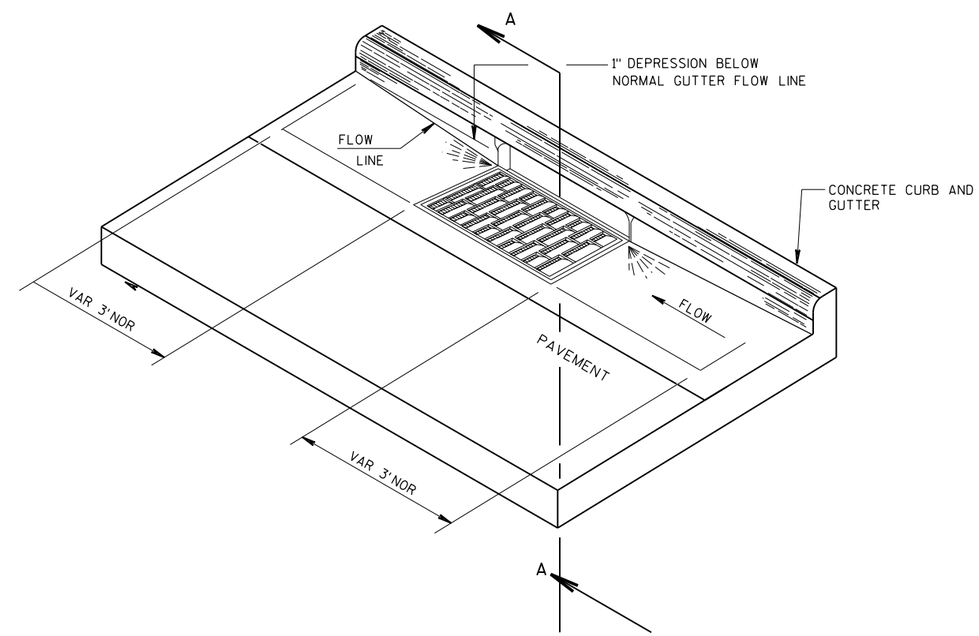

PROJECT NO:6414-00-78	HWY:BUSINESS 51	COUNTY:PORTAGE	CONSTRUCTION DETAILS	SHEET 16	E

2

INFILTRATION BASIN POINT TABLE

POINT	STATION	OFFSET	RADIUS	FINISHED EL	COORDINATES
IB1	133+89.51	48.5' RT		1076.00	Y=179326.811 X=173670.150
IB2	134+03.50	63.1' RT		1076.00	Y=179340.658 X=173684.921
IB3	133+99.97	140.4' RT		1076.00	Y=179336.398 X=173762.122
IB4	133+85.24	153.7' RT		1076.00	Y=179321.546 X=173775.324
IB5	133+60.20	90.5' RT	10.0'	1068.00	Y=179297.107 X=173711.872
IB6	133+60.20	80.5' RT		1068.00	Y=179297.201 X=173701.872
IB7	133+70.19	90.9' RT		1068.00	Y=179307.092 X=173712.423
IB8	133+59.30	110.3' RT	10.0'	1068.00	Y=179296.016 X=173731.646
IB9	133+69.29	110.7' RT		1068.00	Y=179306.001 X=173732.197
IB10	133+58.77	120.3' RT		1068.00	Y=179295.392 X=173741.627
IB11	133+39.13	157.3' RT	10.0'	1075.00	Y=179275.409 X=173778.452
IB12	133+39.66	147.3' RT		1075.00	Y=179276.033 X=173768.472
IB13	133+29.14	158.8' RT		1075.00	Y=179265.424 X=173777.909
IB14	133+40.72	127.3' RT		1070.00	Y=179277.280 X=173748.511
IB15	133+09.16	155.9' RT		1070.00	Y=179245.454 X=173776.823
IB16	132+95.82	140.9' RT	10.0'	1069.00	Y=179232.254 X=173761.729
IB17	132+72.94	124.7' RT	5.0'	1069.00	Y=179232.254 X=173745.279
IB18	132+72.53	105.7' RT	10.0'	1068.00	Y=179209.290 X=173726.227
IB19	132+73.00	90.5' RT	10.0'	1068.00	Y=179209.899 X=173711.050
IB20	132+73.00	80.5' RT		1068.00	Y=179209.993 X=173701.050
IB21	132+63.00	90.2' RT		1068.00	Y=179199.907 X=173710.649
IB22	132+45.84	52.5' RT		1075.00	Y=179183.104 X=173672.795
IB23	132+35.84	62.2' RT		1075.00	Y=179173.018 X=173682.394
IB24	132+34.15	275.8' RT	10.0'	1075.00	Y=179169.316 X=173895.958
IB25	132+24.19	274.9' RT		1075.00	Y=179159.366 X=173894.959
IB26	132+33.62	285.8' RT		1075.00	Y=179168.687 X=173905.938
IB27	132+64.00	253.3' RT	10.0'	1069.00	Y=179199.367 X=173873.804
IB28	132+54.00	253.0' RT		1069.00	Y=179189.375 X=173873.404
IB29	132+63.46	263.3' RT		1069.00	Y=179198.739 X=173883.785
IB30	132+90.71	254.8' RT	10.0'	1069.00	Y=179226.066 X=173875.487
IB31	132+90.17	264.8' RT		1069.00	Y=179225.437 X=173885.467
IB32	133+02.22	255.2' RT		1069.00	Y=179236.052 X=173876.030
IB33	133+13.06	290.0' RT		1075.00	Y=179248.087 X=173910.942
IB34	133+23.59	280.5' RT		1075.00	Y=179258.701 X=173901.505

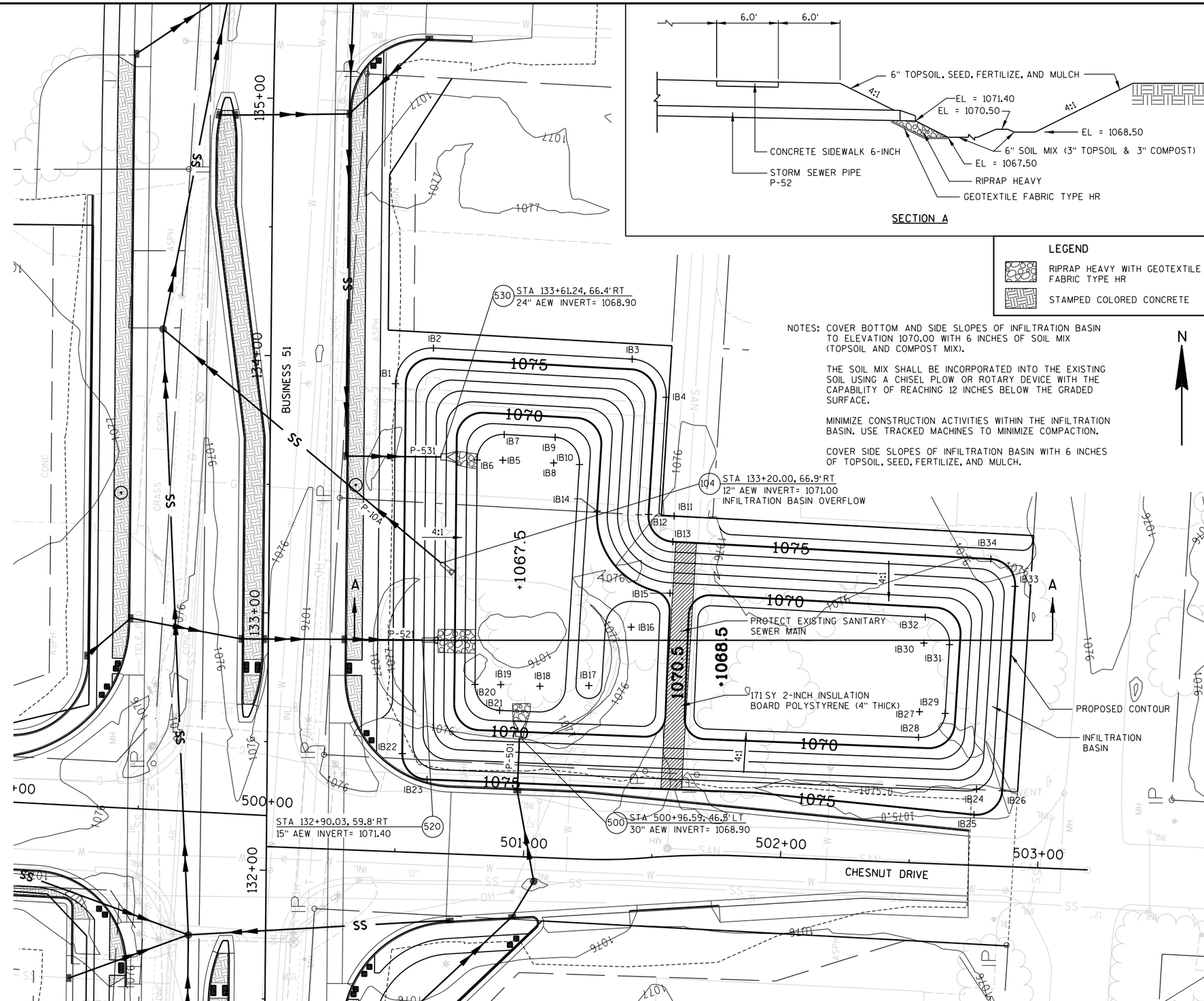

2

PROJECT NO:6414-00-78	HWY:BUSINESS 51	COUNTY:PORTAGE	CONSTRUCTION DETAILS	SHEET 17	E

2

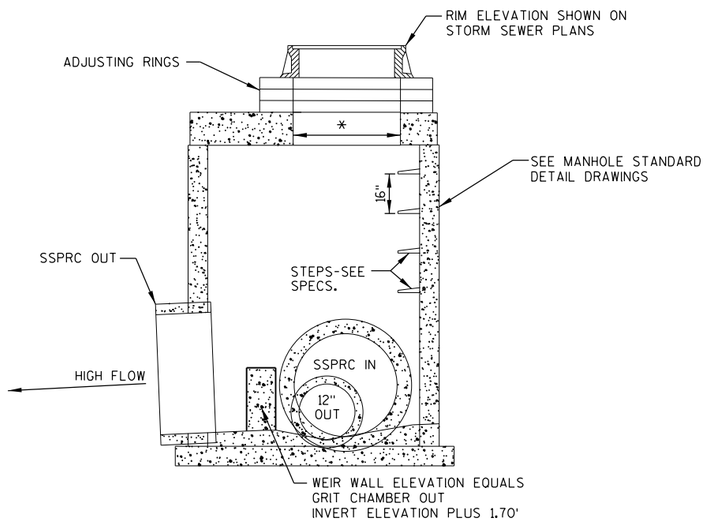

FRONT VIEW

*USE 2'-0" DIAMETER OPENING WITH TYPE "C", "L" AND "J" COVERS OR 3'-0" DIAMETER WITH TYPE "K" AND "M" COVERS

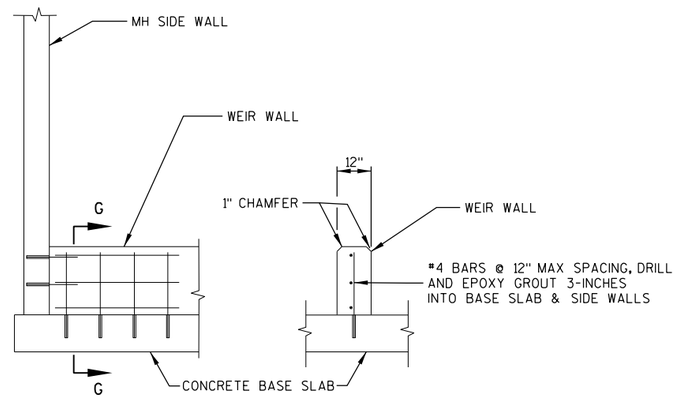

SECTION F - F SECTION G - G

CONCRETE WEIR WALL

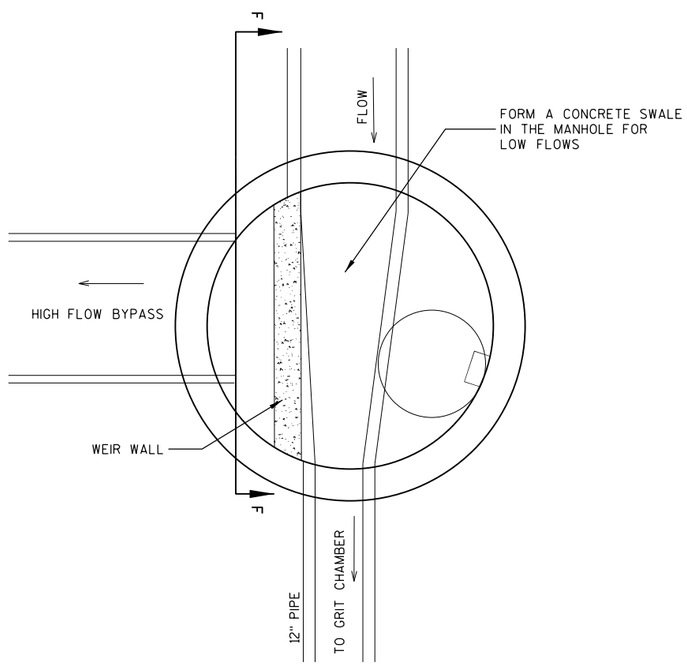

TOP VIEW

NOTES:

1. CORE-DRILL OR SAW-CUT ALL OPENINGS FOR SMOOTH SURFACES AND SHARP LINES

REINFORCEMENT NOTES:

1. SUBMIT SHOP DRAWING TO ENGINEER FOR REVIEW
2. MIN CONC COVER 1-1/2" FOR ALL BARS
3. SIDE WALLS REQUIRE #4 BARS 12" CC BOTH DIRECTIONS
4. BASE SLAB REQUIRES #4 BARS 6" CC BOTH DIRECTIONS
5. TOP SLAB REQUIRES #4 BARS 6" CC BOTH DIRECTIONS
6. BEND AND TIE ALL CORNERS

MANHOLE DIVERSION DETAILS

2

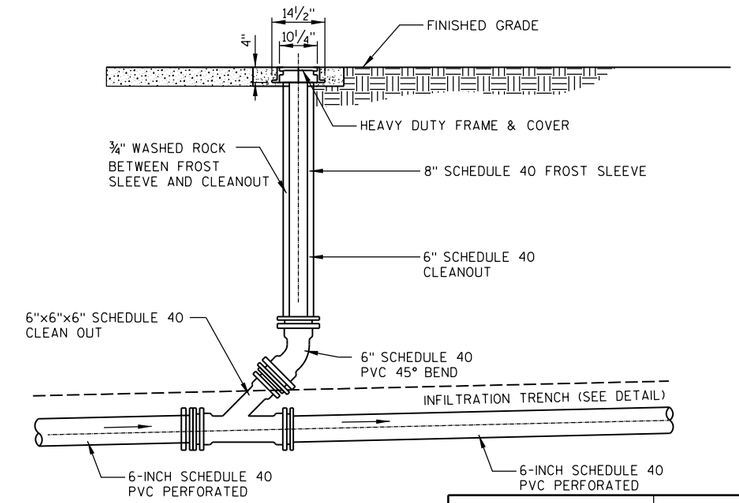

COVER DIAMETER	10¼"
COVER THICKNESS	1½"
FRAME DEPTH	4"
FRAME DIAMETER	14½"
FRAME AND COVER *(LBS)	52

*THE ACTUAL WEIGHT OF THE FRAME AND COVER MAY VARY WITHIN 5% PLUS OR MINUS OF THE WEIGHT SHOWN

CLEANOUT DETAIL

2

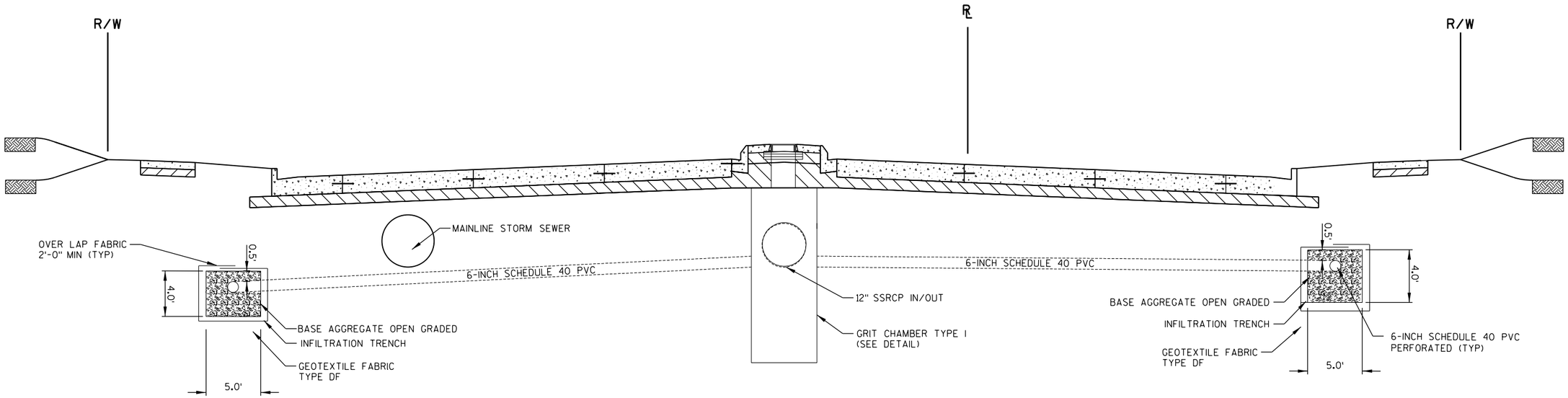

INFILTRATION TRENCH PROFILE VIEW

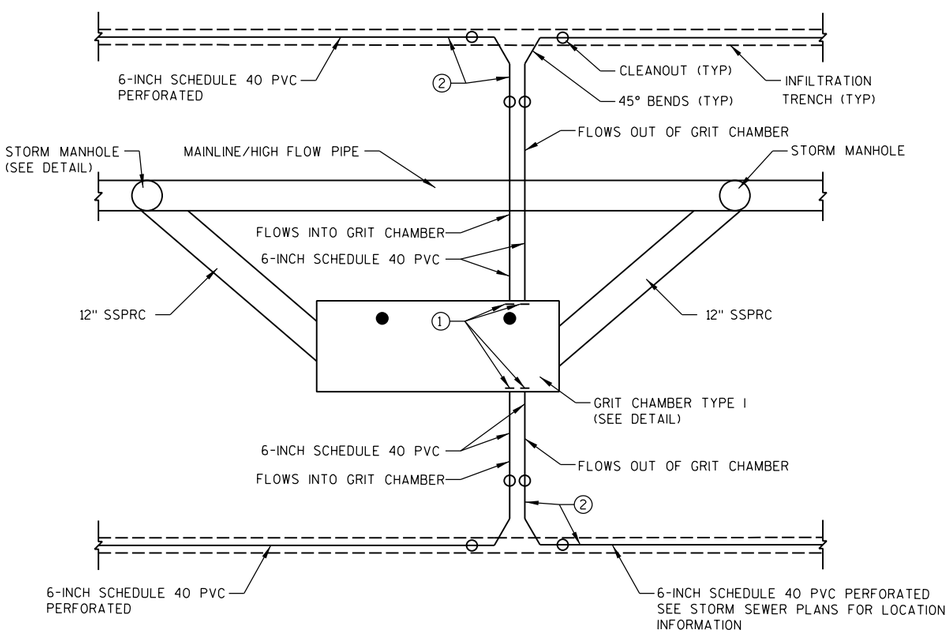

INFILTRATION TRENCH PLAN VIEW

STA 164+90.04, 6.4'LT
STA 170+14.75, 19.0'LT

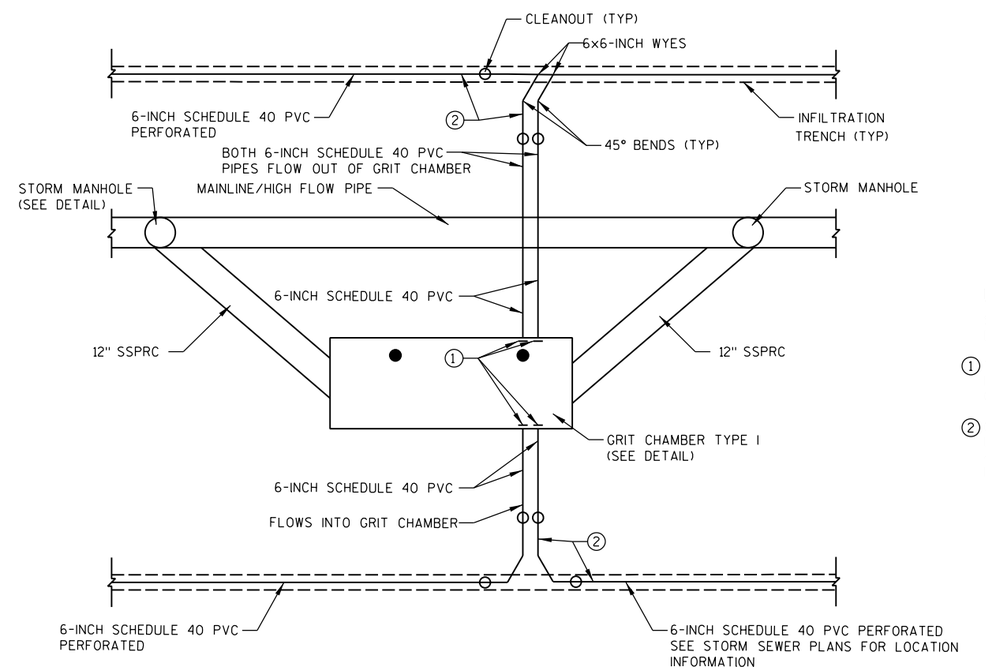

INFILTRATION TRENCH PLAN VIEW

STA 176+17.01, 6.5'LT

NOTES:

SEE STORM SEWER PLANS FOR INVERT ELEVATIONS AND PIPE SLOPE(S)

1. TEMPORARILY CAP 6-INCH SCHEDULE 40 PVC OUT/IN FLOWS IN GRIT CHAMBERS TYPE I. REMOVE CAPS, BY OTHERS.
2. 6-INCH SCHEDULE 40 PVC PERFORATED INSTALLED IN INFILTRATION TRENCH ONLY. 6-INCH SCHEDULE 40 PVC INSTALLED FROM GRIT CHAMBER TO INFILTRATION TRENCH.

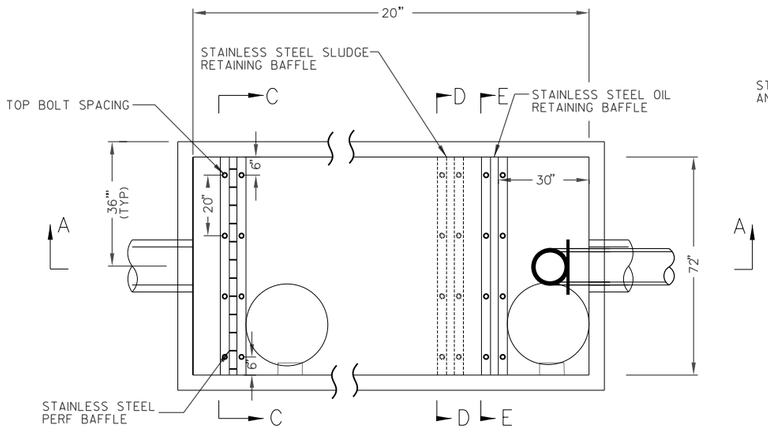

PLAN VIEW B - B

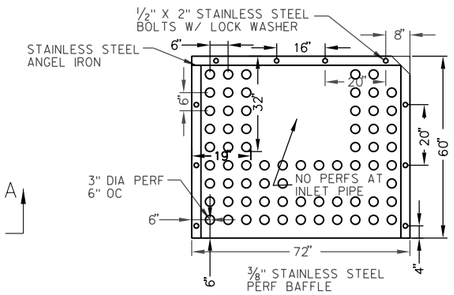

SECTION C - C

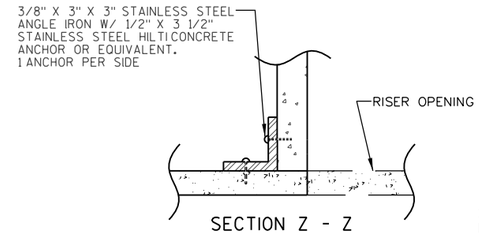

SECTION Z - Z

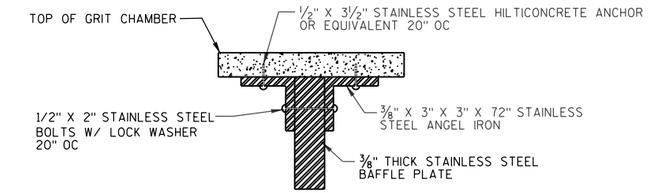

GRIT CHAMBER TOP BOLTING DETAIL

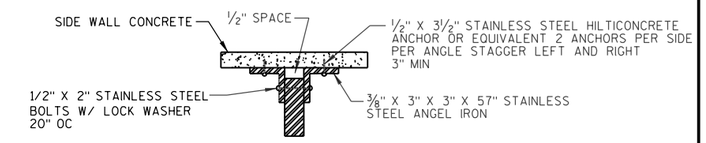

GRIT CHAMBER SIDE BOLTING DETAIL

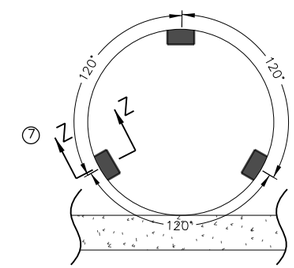

RISER CLIP DETAIL

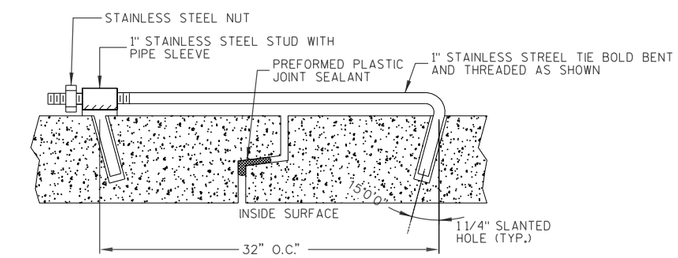

CONCEALED HOLE DESIGN JOINT TIE

TYPE "A" 20'-0" MANHOLE SPACING (2)
LOCATE FROM INSIDE INLET END OF GRIT CHAMBER TO CENTER OF MANHOLE: 8.5' AND 18.5'.

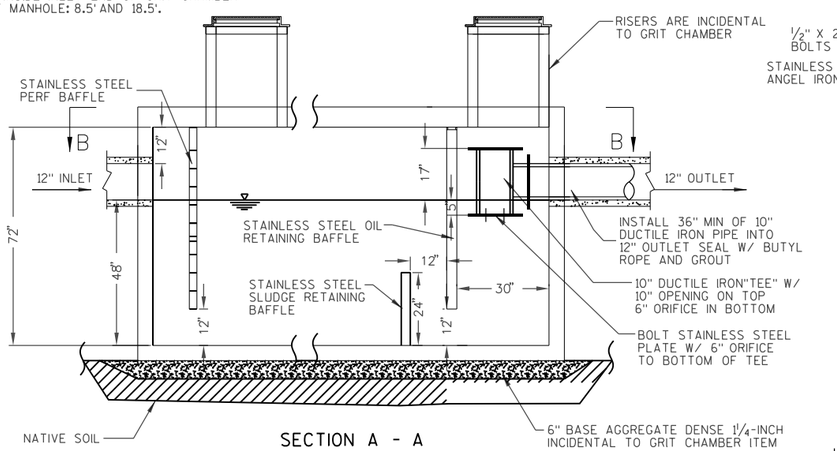

SECTION A - A

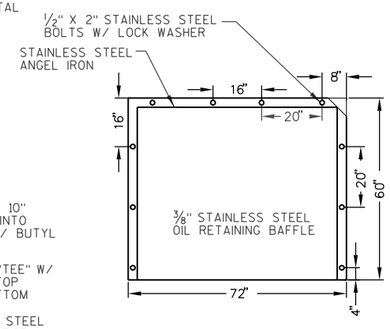

SECTION E - E

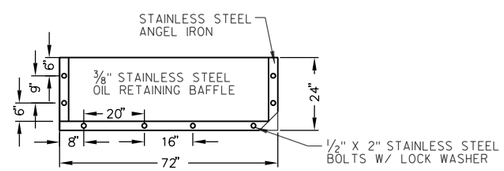

SECTION D - D

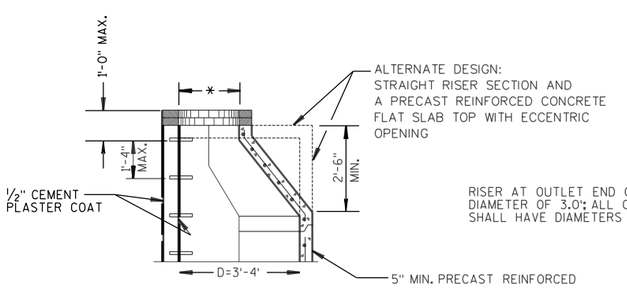

RISER AT OUTLET END OF GRIT CHAMBER SHALL HAVE A DIAMETER OF 3.0'; ALL OTHER RISERS OF GRIT CHAMBER SHALL HAVE DIAMETERS OF 4.0'.

NOTES:

DETAILS OF CONSTRUCTION, MATERIALS AND WORKMANSHIP NOT SHOWN ON THIS DRAWING SHALL CONFORM TO THE PERTINENT REQUIREMENTS OF THE STANDARD SPECIFICATIONS AND THE APPLICABLE SPECIAL PROVISIONS.

DETAILED DRAWINGS FOR PROPOSED ALTERNATE DESIGNS FOR UNDERGROUND DRAINAGE STRUCTURES SHALL BE SUBMITTED TO THE ENGINEER FOR APPROVAL PROVIDING THAT SUCH ALTERNATE DESIGNS MAKE PROVISION FOR EQUIVALENT CAPACITY AND STRENGTH.

PRECAST REINFORCED CONCRETE RISERS MAY BE PLACED WITH TONGUE UP OR DOWN.

STEPS SHALL BE INSTALLED IN THE STRUCTURE WITH THE FOLLOWING REQUIREMENTS: 16 INCH C-C MAXIMUM SPACING; PROJECT A MINIMUM CLEAR DISTANCE OF 4 INCHES FROM THE WALL AT THE POINT OF EMBEDMENT; MINIMUM LENGTH OF 10 INCHES; MINIMUM WALL EMBEDMENT OF 3 INCHES. FERROUS METAL STEPS NOT PAINTED OR TREATED TO RESIST CORROSION SHALL HAVE A MINIMUM CROSS SECTIONAL DIMENSION OF 1 INCH.

STEPS OF APPROVED POLYPROPYLENE PLASTIC COATED REINFORCEMENT BAR ARE ACCEPTABLE. REINFORCING BAR MUST BE A MINIMUM OF 1/2-INCH AND MEET THE REQUIREMENTS OF ASTM A615.

CERTIFICATION SHALL BE PROVIDED THAT INSTALLED STEPS WHEN TESTED IN ACCORDANCE WITH SECTION 10 OF AASHTO T280 CAN WITHSTAND A VERTICAL LOAD OF 800 LBS. AND A HORIZONTAL LOAD OF 400 LBS.

LOCATE RISERS TO PROVIDE AREA ON TOP OF GRIT CHAMBER TO SET RISER AND TO ALIGN RISER STEPS WITH GRIT CHAMBER STEPS.

* USE 2'-0" DIAMETER OPENING WITH TYPE "C", "L" AND "J" COVERS, OR 3'-0" DIAMETER WITH TYPE "K" AND "M" COVERS.

1. CORE-DRILL OR SAW-CUT ALL OPENINGS FOR SMOOTH SURFACES AND SHARP LINES.
2. SUBMIT SHOP DRAWING TO ENGINEER FOR REVIEW.
3. ALL JOINT SECTIONS SHALL BE GASKETED.
4. ALL JOINT SECTIONS SHALL BE TIED W/ TWO-CONCEALED HOLE TIES EVENLY SPACED ON VERTICAL WALLS.
5. BAFFEL WIDTHS ARE 7'-11" TO ALLOW FOR A 1/2" GAP FROM SIDE WALLS FOR EXPANSION.
6. LOCATE INSIDE DIAMETER OF RISER & ACCESS HOLE IN BOX FLUSH WITH INSIDE WALL OF GRIT CHAMBER.
7. SEE RISER CLIP DETAIL FOR RISER ATTACHMENT TO GRIT CHAMBER.

TYPE A GRIT CHAMBER

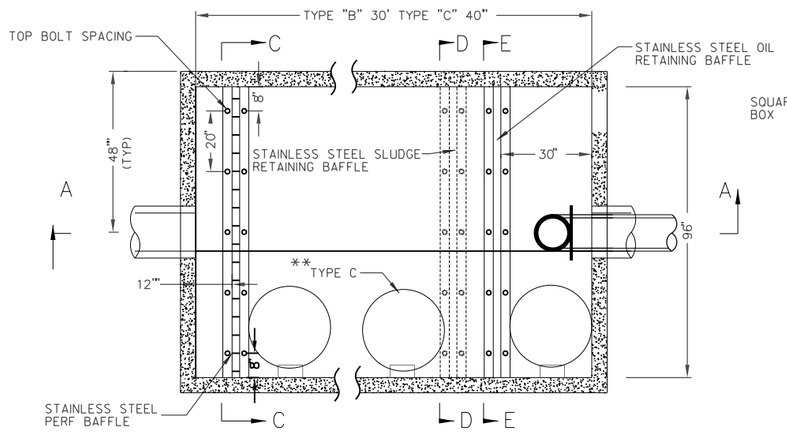

PLAN VIEW B - B

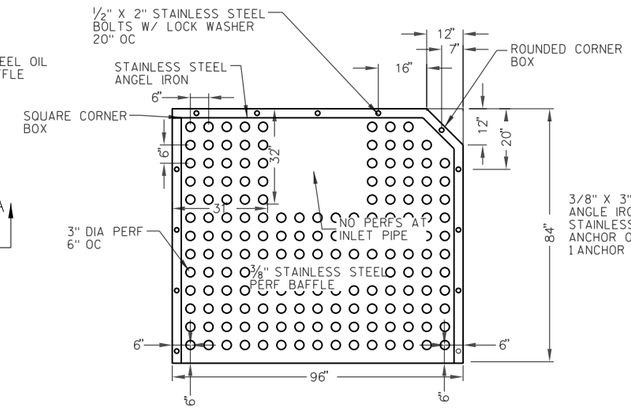

SECTION C - C

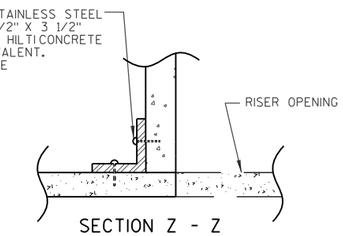

SECTION Z - Z

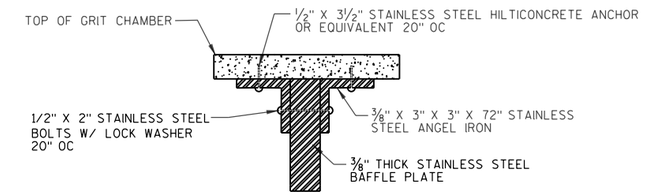

GRIT CHAMBER TOP BOLTING DETAIL

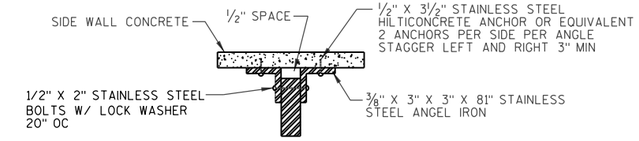

GRIT CHAMBER SIDE BOLTING DETAIL

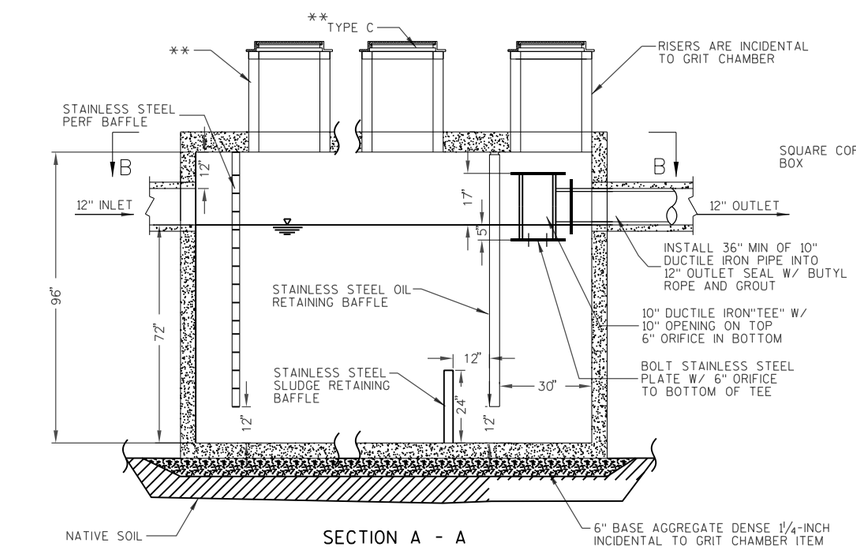

SECTION A - A

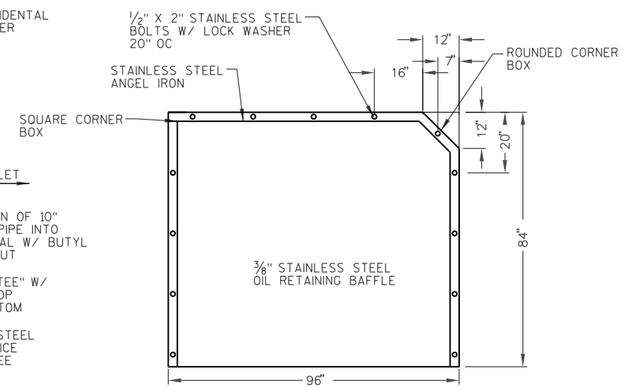

SECTION E - E

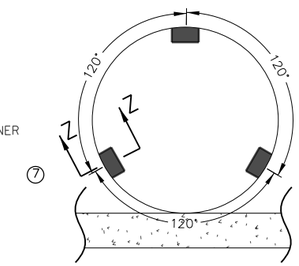

RISER CLIP DETAIL

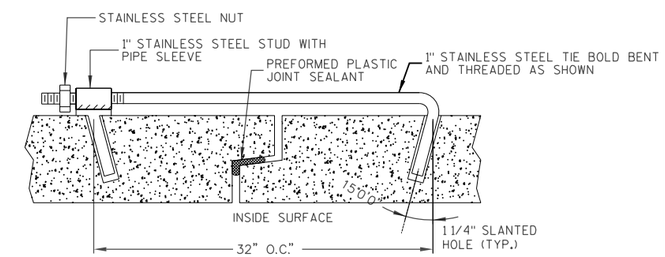

CONCEALED HOLE DESIGN JOINT TIE

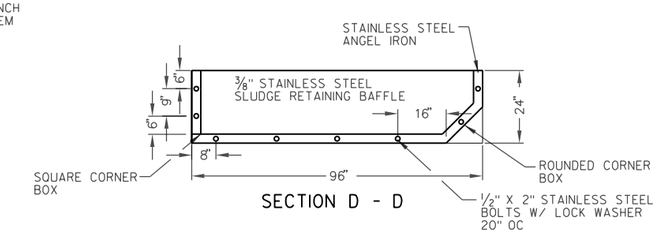

SECTION D - D

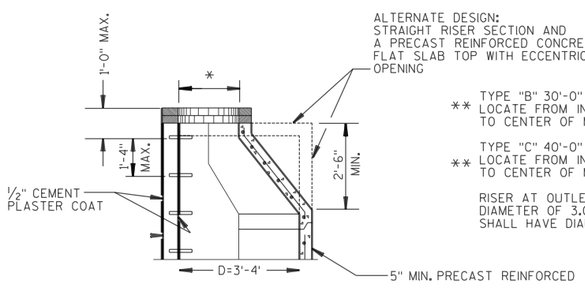

ALTERNATE DESIGN:
STRAIGHT RISER SECTION AND A PRECAST REINFORCED CONCRETE FLAT SLAB TOP WITH ECCENTRIC OPENING

** TYPE "B" 30'-0" MANHOLE SPACING (2) LOCATE FROM INSIDE INLET END OF GRIT CHAMBER TO CENTER OF MANHOLE: 8.5' AND 28.5'.

** TYPE "C" 40'-0" MANHOLE SPACING (4) LOCATE FROM INSIDE INLET END OF GRIT CHAMBER TO CENTER OF MANHOLE: 8.5', 23.5' AND 38.5'.

RISER AT OUTLET END OF GRIT CHAMBER SHALL HAVE A DIAMETER OF 3.0', ALL OTHER RISERS OF GRIT CHAMBER SHALL HAVE DIAMETERS OF 4.0'.

TYPE B AND TYPE C GRIT CHAMBERS

NOTES:

DETAILS OF CONSTRUCTION, MATERIALS AND WORKMANSHIP NOT SHOWN ON THIS DRAWING SHALL CONFORM TO THE PERTINENT REQUIREMENTS OF THE STANDARD SPECIFICATIONS AND THE APPLICABLE SPECIAL PROVISIONS.

DETAILED DRAWINGS FOR PROPOSED ALTERNATE DESIGNS FOR UNDERGROUND DRAINAGE STRUCTURES SHALL BE SUBMITTED TO THE ENGINEER FOR APPROVAL PROVIDING THAT SUCH ALTERNATE DESIGNS MAKE PROVISION FOR EQUIVALENT CAPACITY AND STRENGTH.

PRECAST REINFORCED CONCRETE RISERS MAY BE PLACED WITH TONGUE UP OR DOWN.

STEPS SHALL BE INSTALLED IN THE STRUCTURE WITH THE FOLLOWING REQUIREMENTS: 16 INCH C-C MAXIMUM SPACING; PROJECT A MINIMUM CLEAR DISTANCE OF 4 INCHES FROM THE WALL AT THE POINT OF EMBEDMENT; MINIMUM LENGTH OF 10 INCHES; MINIMUM WALL EMBEDMENT OF 3 INCHES. FERROUS METAL STEPS NOT PAINTED OR TREATED TO RESIST CORROSION SHALL HAVE A MINIMUM CROSS SECTIONAL DIMENSION OF 1 INCH.

STEPS OF APPROVED POLYPROPYLENE PLASTIC COATED REINFORCEMENT BAR ARE ACCEPTABLE. REINFORCING BAR MUST BE A MINIMUM OF 1/2-INCH AND MEET THE REQUIREMENTS OF ASTM A615.

CERTIFICATION SHALL BE PROVIDED THAT INSTALLED STEPS WHEN TESTED IN ACCORDANCE WITH SECTION 10 OF AASHTO T280 CAN WITHSTAND A VERTICAL LOAD OF 800 LBS. AND A HORIZONTAL LOAD OF 400 LBS.

LOCATE RISERS TO PROVIDE AREA ON TOP OF GRIT CHAMBER TO SET RISER AND TO ALIGN RISER STEPS WITH GRIT CHAMBER STEPS.

* USE 2'-0" DIAMETER OPENING WITH TYPE "C", "L" AND "J" COVERS, OR 3'-0" DIAMETER WITH TYPE "K" AND "M" COVERS.

1. CORE-DRILL OR SAW-CUT ALL OPENINGS FOR SMOOTH SURFACES AND SHARP LINES.
2. SUBMIT SHOP DRAWING TO ENGINEER FOR REVIEW.
3. ALL JOINT SECTIONS SHALL BE GASKETED.
4. ALL JOINT SECTIONS SHALL BE TIED W/ TWO-CONCEALED HOLE TIES EVENLY SPACED ON VERTICAL WALLS.
5. BAFFEL WIDTHS ARE 7'-11" TO ALLOW FOR A 1/2" GAP FROM SIDE WALLS FOR EXPANSION.
6. LOCATE INSIDE DIAMETER OF RISER & ACCESS HOLE IN BOX FLUSH WITH INSIDE WALL OF GRIT CHAMBER.
7. SEE RISER CLIP DETAIL FOR RISER ATTACHMENT TO GRIT CHAMBER.

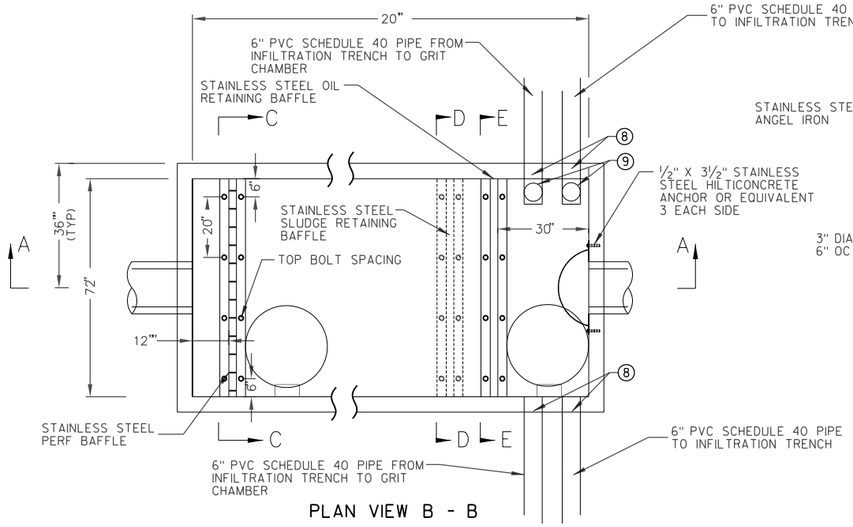

PLAN VIEW B - B

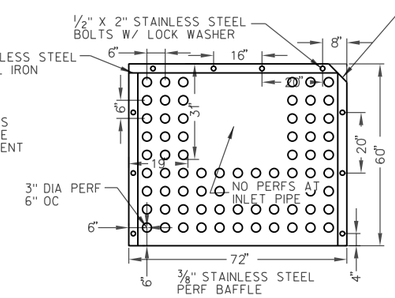

SECTION C - C

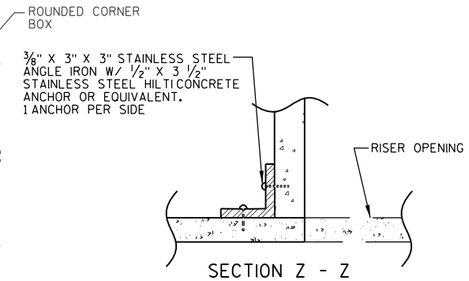

SECTION Z - Z

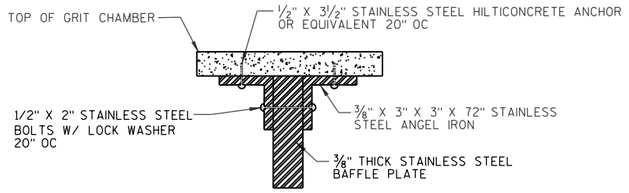

GRIT CHAMBER TOP BOLTING DETAIL

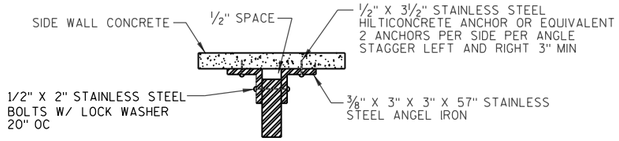

GRIT CHAMBER SIDE BOLTING DETAIL

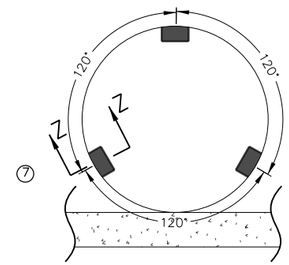

RISER CLIP DETAIL

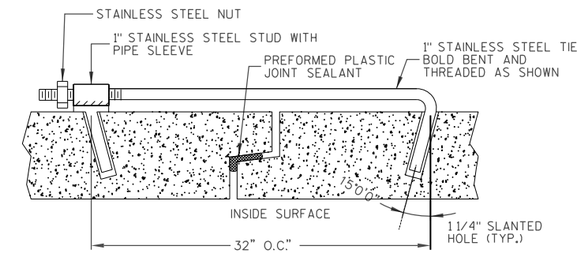

CONCEALED HOLE DESIGN JOINT TIE

TYPE "A" 20'-0" MANHOLE SPACING (2)
LOCATE FROM INSIDE INLET END OF GRIT CHAMBER TO CENTER OF MANHOLE: 8.5' and 18.5'.

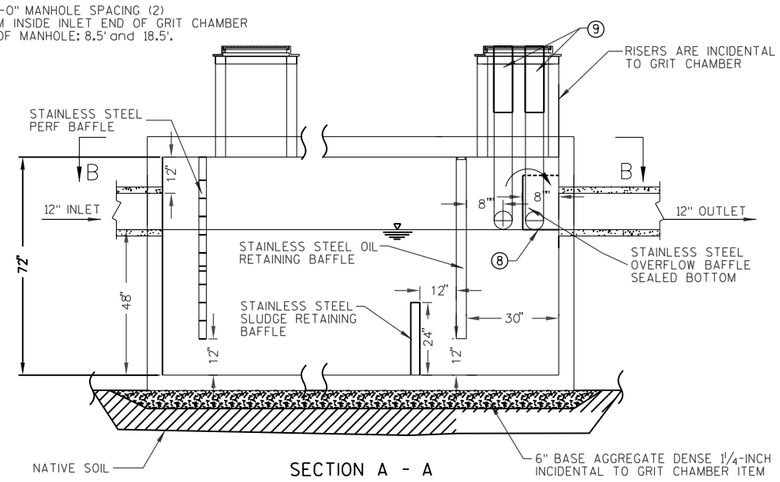

SECTION A - A

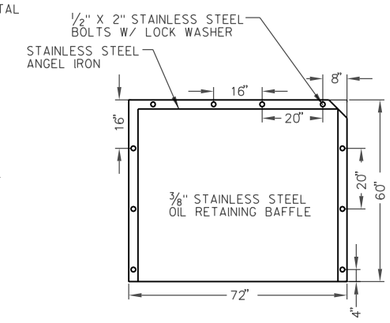

SECTION E - E

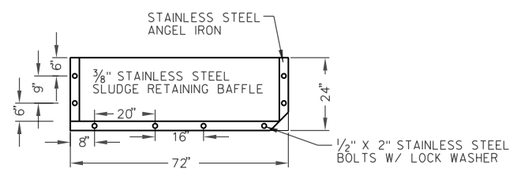

SECTION D - D

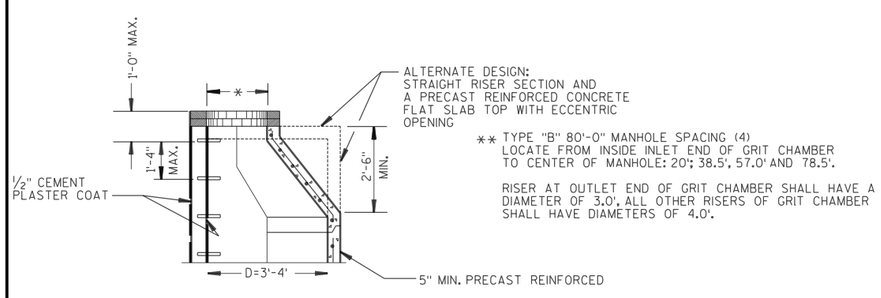

** TYPE "B" 80'-0" MANHOLE SPACING (4)
LOCATE FROM INSIDE INLET END OF GRIT CHAMBER TO CENTER OF MANHOLE: 20'; 38.5', 57.0' AND 78.5'.

RISER AT OUTLET END OF GRIT CHAMBER SHALL HAVE A DIAMETER OF 3.0'. ALL OTHER RISERS OF GRIT CHAMBER SHALL HAVE DIAMETERS OF 4.0'.

TYPE I GRIT CHAMBERS

INFILTRATION TRENCH PRETREATMENT

NOTES:

DETAILS OF CONSTRUCTION, MATERIALS AND WORKMANSHIP NOT SHOWN ON THIS DRAWING SHALL CONFORM TO THE PERTINENT REQUIREMENTS OF THE STANDARD SPECIFICATIONS AND THE APPLICABLE SPECIAL PROVISIONS.

DETAILED DRAWINGS FOR PROPOSED ALTERNATE DESIGNS FOR UNDERGROUND DRAINAGE STRUCTURES SHALL BE SUBMITTED TO THE ENGINEER FOR APPROVAL PROVIDING THAT SUCH ALTERNATE DESIGNS MAKE PROVISION FOR EQUIVALENT CAPACITY AND STRENGTH.

PRECAST REINFORCED CONCRETE RISERS MAY BE PLACED WITH TONGUE UP OR DOWN.

STEPS SHALL BE INSTALLED IN THE STRUCTURE WITH THE FOLLOWING REQUIREMENTS: 16 INCH C-C MAXIMUM SPACING; PROJECT A MINIMUM CLEAR DISTANCE OF 4 INCHES FROM THE WALL AT THE POINT OF EMBEDMENT; MINIMUM LENGTH OF 10 INCHES; MINIMUM WALL EMBEDMENT OF 3 INCHES. FERROUS METAL STEPS NOT PAINTED OR TREATED TO RESIST CORROSION SHALL HAVE A MINIMUM CROSS SECTIONAL DIMENSION OF 1 INCH.

STEPS OF APPROVED POLYPROPYLENE PLASTIC COATED REINFORCEMENT BAR ARE ACCEPTABLE. REINFORCING BAR MUST BE A MINIMUM OF ½-INCH AND MEET THE REQUIREMENTS OF ASTM A615.

CERTIFICATION SHALL BE PROVIDED THAT INSTALLED STEPS WHEN TESTED IN ACCORDANCE WITH SECTION 10 OF AASHTO T280 CAN WITHSTAND A VERTICAL LOAD OF 800 LBS. AND A HORIZONTAL LOAD OF 400 LBS.

LOCATE RISERS TO PROVIDE AREA ON TOP OF GRIT CHAMBER TO SET RISER AND TO ALIGN RISER STEPS WITH GRIT CHAMBER STEPS.

* USE 2'-0" DIAMETER OPENING WITH TYPE "C", "L" AND "J" COVERS, OR 3'-0" DIAMETER WITH TYPE "K" AND "M" COVERS.

① CORE-DRILL OR SAW-CUT ALL OPENINGS FOR SMOOTH SURFACES AND SHARP LINES.

② SUBMIT SHOP DRAWING TO ENGINEER FOR REVIEW.

③ ALL JOINT SECTIONS SHALL BE GASKETED.

④ ALL JOINT SECTIONS SHALL BE TIED W/ TWO-CONCEALED HOLE TIES EVENLY SPACED ON VERTICAL WALLS.

⑤ BAFFEL WIDTHS ARE 7'-11" TO ALLOW FOR A ½" GAP FROM SIDE WALLS FOR EXPANSION.

⑥ LOCATE INSIDE DIAMETER OF RISER & ACCESS HOLE IN BOX FLUSH WITH INSIDE WALL OF GRIT CHAMBER.

⑦ SEE RISER CLIP DETAIL FOR RISER ATTACHMENT TO GRIT CHAMBER.

⑧ TEMPORARILY CAP 6-INCH SCHEDULE 40 PVC IN/OUT FLOWS IN GRIT CHAMBERS TYPE I. REMOVE CAPS, BY OTHERS, ONCE ALL VEGETATION HAS BEEN ESTABLISHED, OR A MINIMUM OF 1 YEAR AFTER INSTALLATION, WHICH EVER IS LONGER.

⑨ INSTALL CLEAN OUTS ON INFILTRATION TRENCH PIPES. SEE CLEANOUT DETAIL FOR MORE INFORMATION. THE 8" DIAMETER FROST SLEEVE, WASHED ROCK, HEAVY DUTY FRAME AND COVER, 6"X6"X6" WYE, AND ALL REQUIRED MATERIALS, TOOLS, AND LABOR TO COMPLETE THE WORK ARE CONSIDERED INCIDENTAL TO THE BID ITEM SPV.0060.03 GRIT CHAMBER TYPE I.

2

NOTES: PLACE COVER PLATES TEMPORARY AT THESE LOCATIONS:
STA 130+40.60, 0.7' LT
STA 132+63.40, 11.1' RT
STA 148+22.20, 16.6' RT
OTHER LOCATIONS MAY BE REQ'D AS DIRECTED BY ENGINEER IN THE FIELD.

ENSURE SITE DRAINAGE TO EXISTING STORM STRUCTURES ONCE STAGE 1 WORK IS COMPLETE.

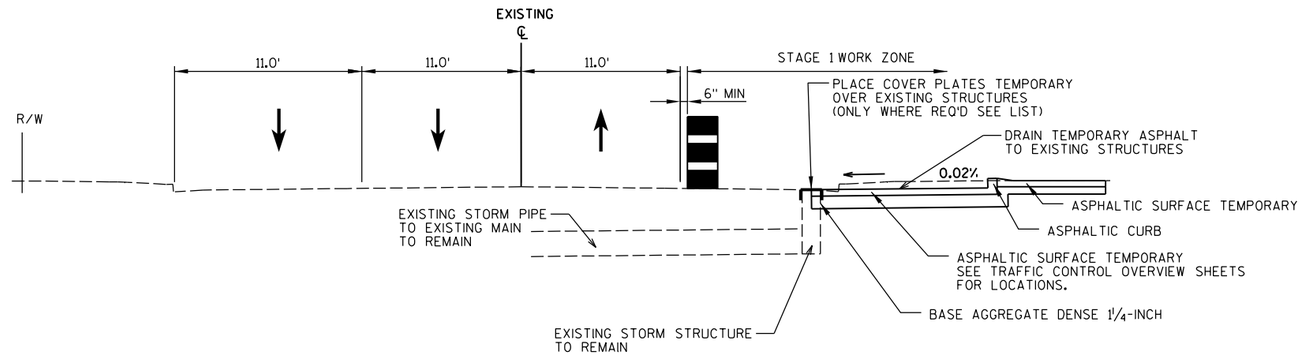

TYPICAL SECTION - STAGE 1

DRAWING NOT TO SCALE

NOTES: INSTALL STORM SEWER MAINLINE STRUCTURES SO CASTING IS CENTERED IN DRIVING LANE. THE STORM SEWER MAIN AND STRUCTURES MAY HAVE TO BE OFFSET FROM PLAN LOCATIONS, VERIFY WITH SHOP DRAWINGS.

ALL STATIONS AND OFFSETS SHOWN ON THE DRAWINGS ARE TO THE CENTER OF STRUCTURE.

TEMPORARY CONNECTION TO EXISTING STORM SEWER PIPE AND PROPOSED PIPES AT THESE LOCATIONS:
STA 124+02.70, 24.0' LT P-3A
STA 125+89.10, 12.3' LT P-5A
STA 127+48.00, 10.8' LT P-7B
STA 131+75.70, 13.4' LT P-9A
STA 135+44.10, 6.4' LT P-11A
STA 138+06.90, 17.6' LT P-12B
STA 140+81.10, 17.6' LT P-13A
STA 146+76.60, 23.8' LT P-17A
STA 152+15.70, 5.7' LT P-20B
STA 169+83.00, 21.4' LT P-33F
STA 174+32.90, 16.3' LT P-35B
STA 177+93.40, 4.9' LT P-38O
OTHER LOCATIONS MAY BE REQ'D AS DIRECTED BY ENGINEER IN THE FIELD.
FIELD VERIFY INVERT ELEVATIONS.

TEMPORARY CONNECTION TO STORM SEWER STRUCTURE AT THESE LOCATIONS:
STA 122+52.38, 30.0' LT MH2
STA 143+61.88, 10.5' LT MH15C
STA 153+71.08, 30.0' LT MH21
STA 166+34.30, 22.5 LT INL30A
OTHER LOCATIONS MAY BE REQ'D AS DIRECTED BY ENGINEER IN THE FIELD.
FIELD VERIFY INVERT ELEVATIONS.

AT STA 153+71.08, 30.0' LT CONNECT EXISTING 54" RCP TO PROPOSED MH 21. CONNECTION WILL HAVE TO BE MAINTAINED UNTIL ALL LEADS OFF OF THE EXISTING MAIN ARE PERMANENTLY OR TEMPORARILY TIED INTO THE PROPOSED STORM SEWER.

MAINTAIN TEMPORARY CONNECTION TO EXISTING STORM SEWER MAIN AT THE END OF EACH WORK DAY. TEMPORARY CONNECTION, MATERIALS, REMOVAL, AND MAINTENANCE SHALL BE CONSIDERED INCIDENTAL TO PROPOSED STORM SEWER PIPE.

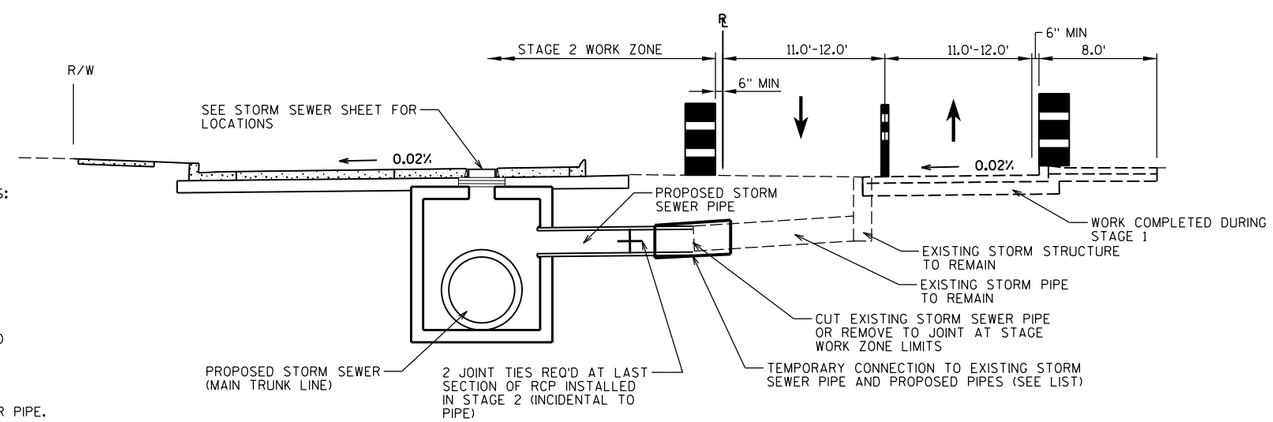

TYPICAL SECTION - STAGE 2

DRAWING NOT TO SCALE

2

PROJECT NO:6414-00-78	HWY:BUSINESS 51	COUNTY:PORTAGE	CONSTRUCTION DETAILS	SHEET 23	E

2

NOTES: ALL STATIONS AND OFFSETS SHOWN ON THE DRAWINGS ARE TO THE CENTER OF STRUCTURE.

PLACE COVER PLATES TEMPORARY AT THESE LOCATIONS:
STA 131+00.29, 22.5' LT INL507
STA 138+08.54, 22.5' LT INL12A
STA 150+70.00, 22.5' LT MH19A
STA 150+70.00, 15.8' LT MH19B
STA 154+34.92, 22.5' LT INL22A
STA 174+32.02, 22.5' LT MH35A
OTHER LOCATIONS MAY BE REQ'D AS DIRECTED BY ENGINEER IN THE FIELD.

TEMPORARY CONNECTION TO EXISTING STORM SEWER PIPE AT THESE LOCATIONS:
STA 124+04.63, 0.0' LT P-3A
STA 124+77.80, 0.0' LT P-4C
OTHER LOCATIONS MAY BE REQ'D AS DIRECTED BY ENGINEER IN THE FIELD.
FIELD VERIFY INVERT ELEVATIONS.

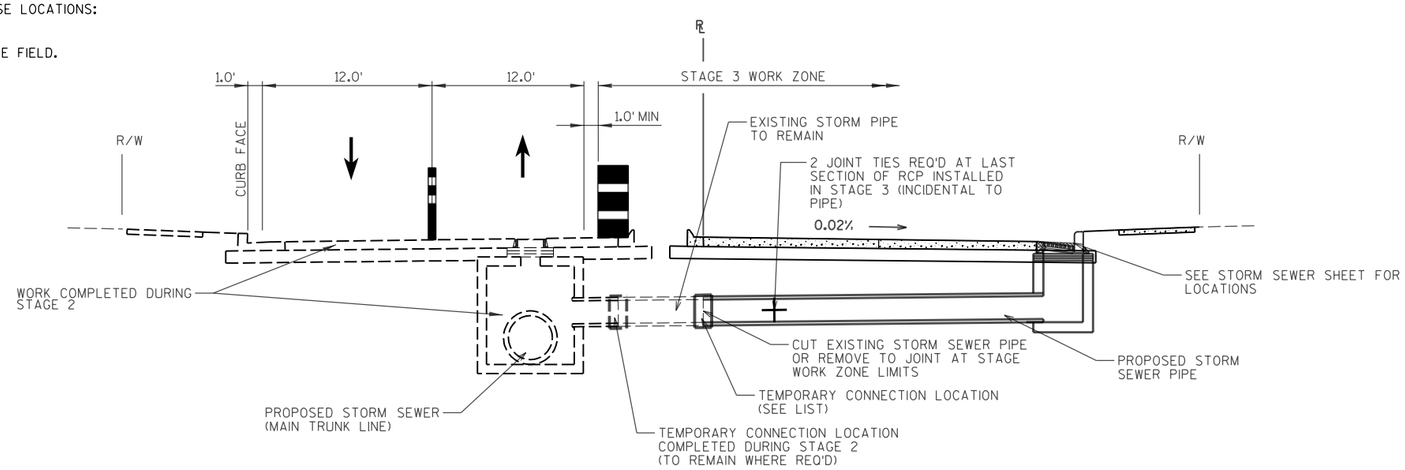

TYPICAL SECTION - STAGE 3

DRAWING NOT TO SCALE

NOTES: CULVERT PIPE CONCRETE COLLAR REQ'D AT THESE LOCATIONS:
STA 124+04.60, 0.0' LT P-3A
OTHER LOCATIONS MAY BE REQ'D AS DIRECTED BY ENGINEER IN THE FIELD.

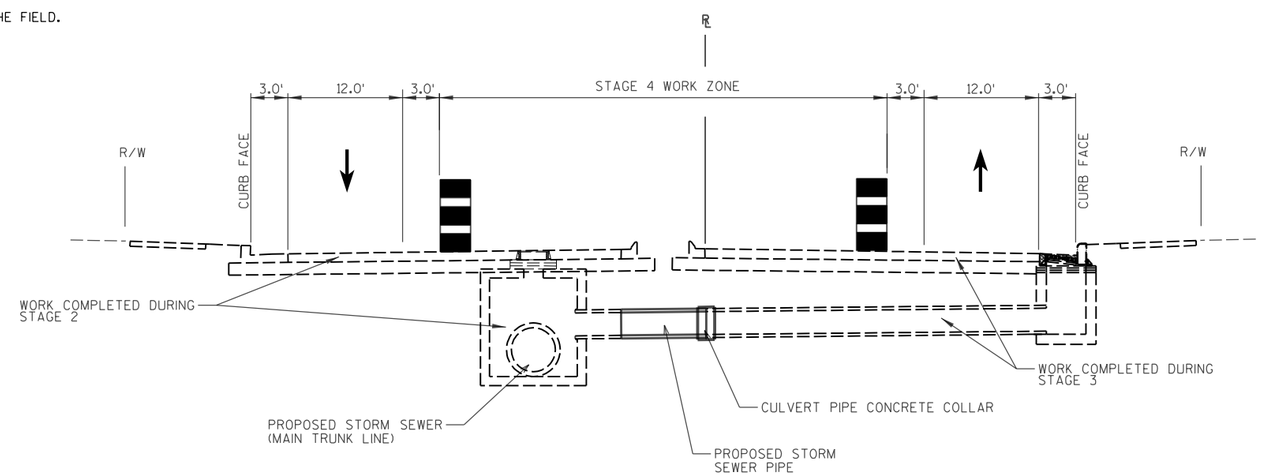

TYPICAL SECTION - STAGE 4

DRAWING NOT TO SCALE

2

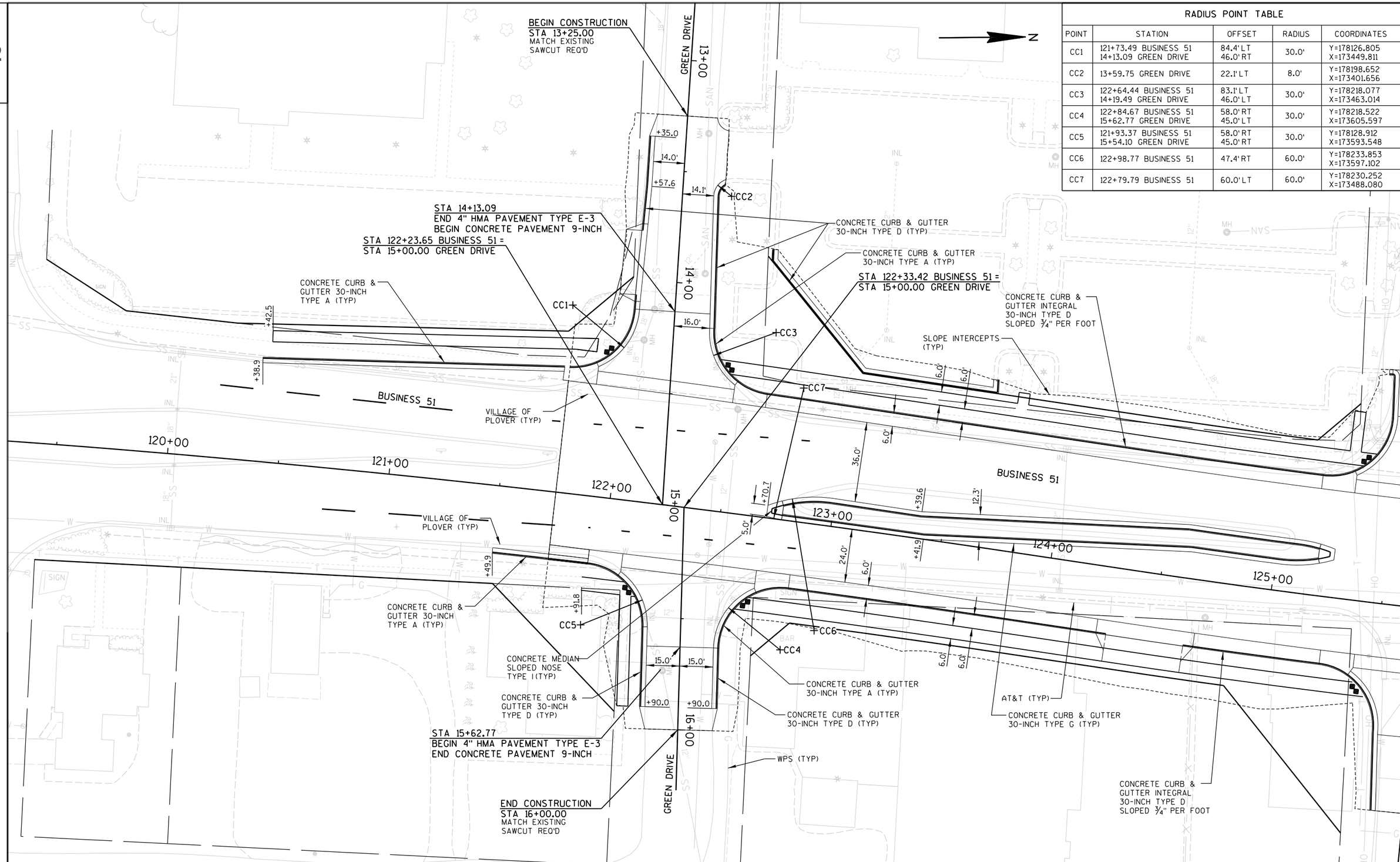

RADIUS POINT TABLE

POINT	STATION	OFFSET	RADIUS	COORDINATES
CC1	121+73.49 BUSINESS 51 14+13.09 GREEN DRIVE	84.4' LT 46.0' RT	30.0'	Y=178126.805 X=173449.811
CC2	13+59.75 GREEN DRIVE	22.1' LT	8.0'	Y=178198.652 X=173401.656
CC3	122+64.44 BUSINESS 51 14+19.49 GREEN DRIVE	83.1' LT 46.0' LT	30.0'	Y=178218.077 X=173463.014
CC4	122+84.67 BUSINESS 51 15+62.77 GREEN DRIVE	58.0' RT 45.0' LT	30.0'	Y=178218.522 X=173605.597
CC5	121+93.37 BUSINESS 51 15+54.10 GREEN DRIVE	58.0' RT 45.0' RT	30.0'	Y=178128.912 X=173593.548
CC6	122+98.77 BUSINESS 51	47.4' RT	60.0'	Y=178233.853 X=173597.102
CC7	122+79.79 BUSINESS 51	60.0' LT	60.0'	Y=178230.252 X=173488.080

2

PROJECT NO:6414-00-78	HWY:BUSINESS 51	COUNTY:PORTAGE	INTERSECTION DETAIL	SHEET 25	E

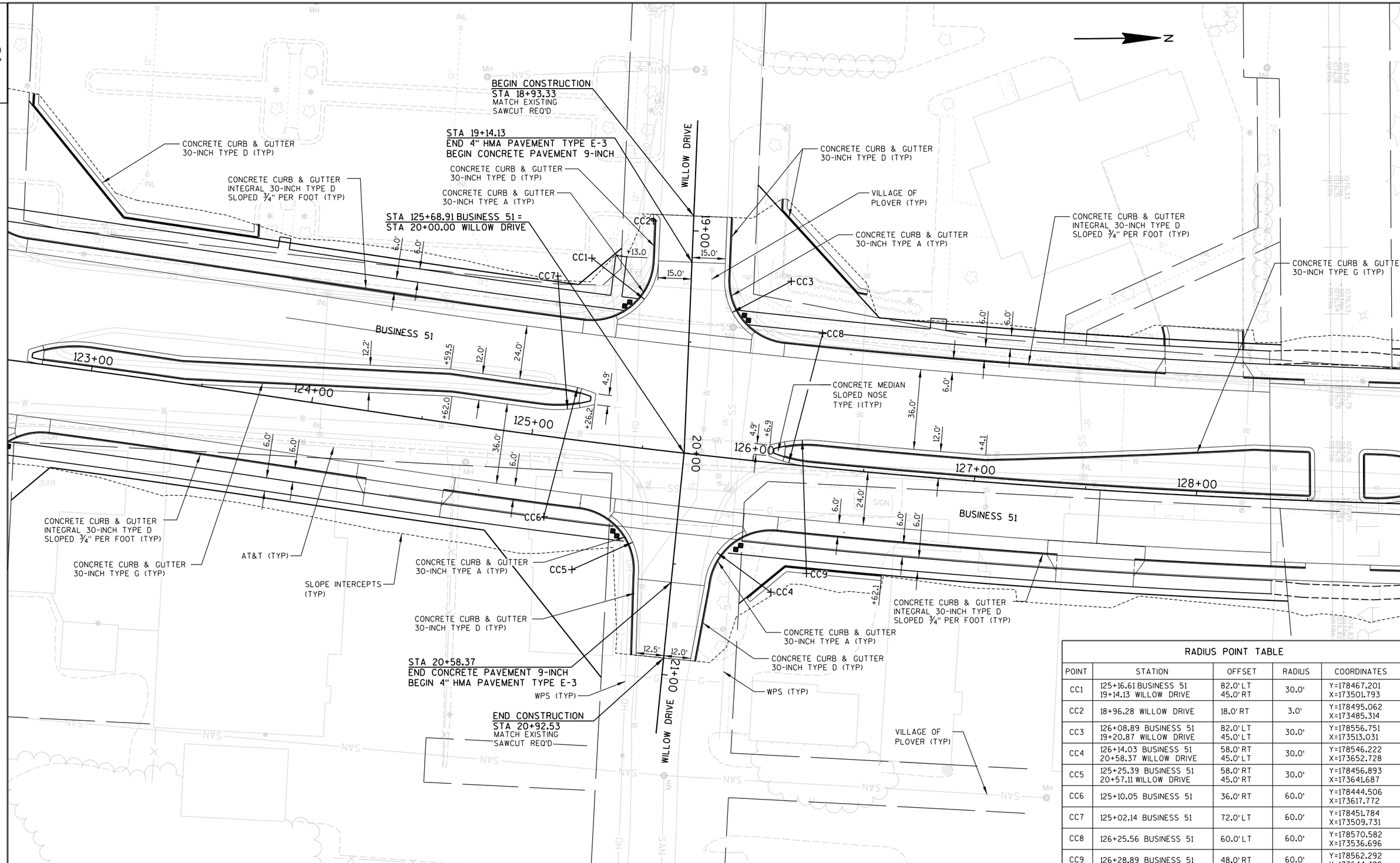

RADIUS POINT TABLE

POINT	STATION	OFFSET	RADIUS	COORDINATES
CC1	125+16.61 BUSINESS 51 19+14.13 WILLOW DRIVE	82.0' LT 45.0' RT	30.0'	Y=178467.201 X=173501.793
CC2	18+96.28 WILLOW DRIVE	18.0' RT	3.0'	Y=178495.062 X=173485.314
CC3	126+08.89 BUSINESS 51 19+20.87 WILLOW DRIVE	82.0' LT 45.0' LT	30.0'	Y=178556.751 X=173513.031
CC4	126+14.03 BUSINESS 51 20+58.37 WILLOW DRIVE	58.0' RT 45.0' LT	30.0'	Y=178546.222 X=173652.728
CC5	125+25.39 BUSINESS 51 20+57.11 WILLOW DRIVE	58.0' RT 45.0' RT	30.0'	Y=178456.893 X=173641.687
CC6	125+10.05 BUSINESS 51	36.0' RT	60.0'	Y=178444.506 X=173617.772
CC7	125+02.14 BUSINESS 51	72.0' LT	60.0'	Y=178451.784 X=173509.731
CC8	126+25.56 BUSINESS 51	60.0' LT	60.0'	Y=178570.582 X=173536.696
CC9	126+28.89 BUSINESS 51	48.0' RT	60.0'	Y=178562.292 X=173644.429

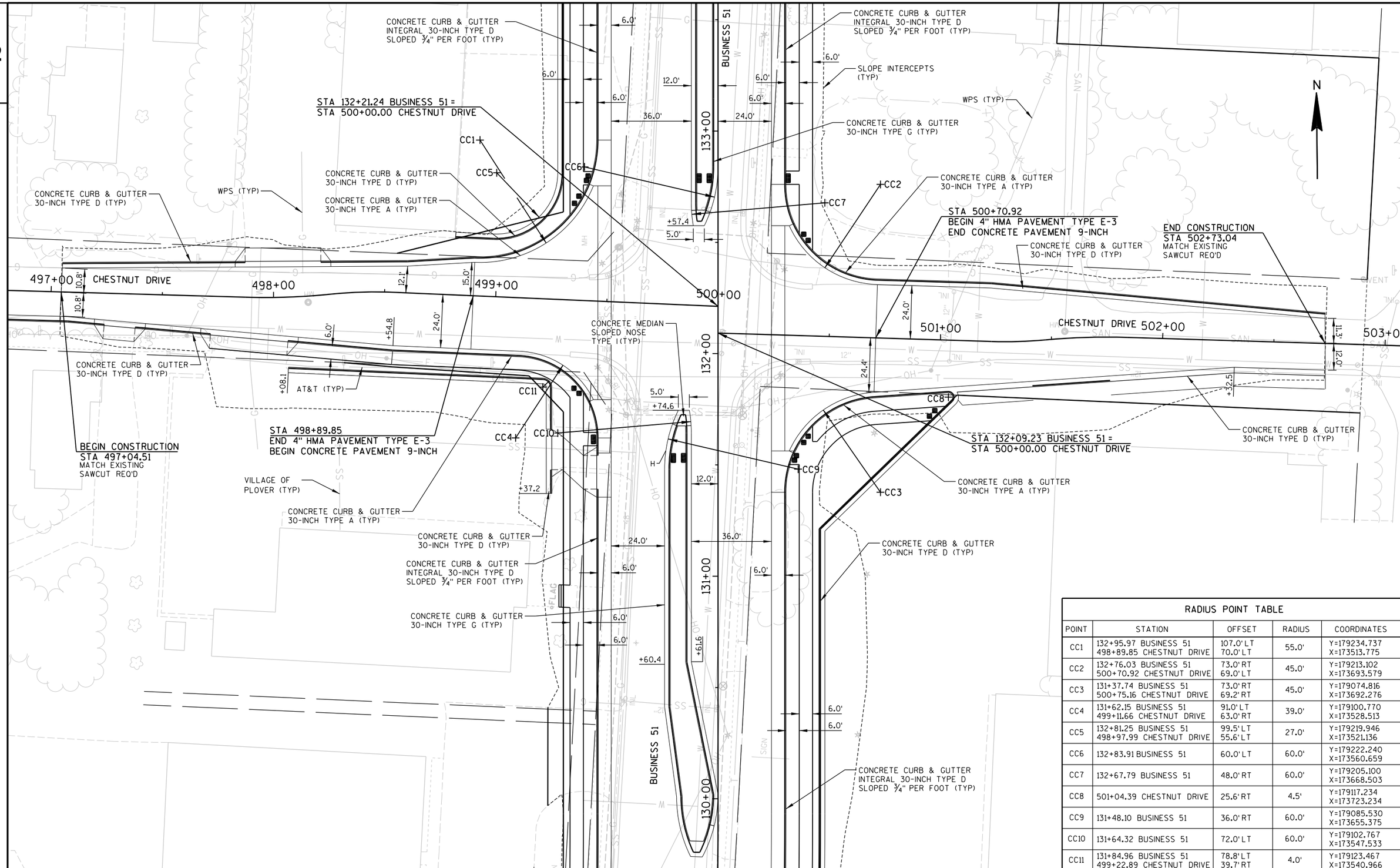

RADIUS POINT TABLE

POINT	STATION	OFFSET	RADIUS	COORDINATES
CC1	132+95.97 BUSINESS 51 498+89.85 CHESTNUT DRIVE	107.0' LT 70.0' LT	55.0'	Y=179234.737 X=173513.775
CC2	132+76.03 BUSINESS 51 500+70.92 CHESTNUT DRIVE	73.0' RT 69.0' LT	45.0'	Y=179213.102 X=173693.579
CC3	131+37.74 BUSINESS 51 500+75.16 CHESTNUT DRIVE	73.0' RT 69.2' RT	45.0'	Y=179074.816 X=173692.276
CC4	131+62.15 BUSINESS 51 499+11.66 CHESTNUT DRIVE	91.0' LT 63.0' RT	39.0'	Y=179100.770 X=173528.513
CC5	132+81.25 BUSINESS 51 498+97.99 CHESTNUT DRIVE	99.5' LT 55.6' LT	27.0'	Y=179219.946 X=173521.136
CC6	132+83.91 BUSINESS 51	60.0' LT	60.0'	Y=179222.240 X=173560.659
CC7	132+67.79 BUSINESS 51	48.0' RT	60.0'	Y=179205.100 X=173668.503
CC8	501+04.39 CHESTNUT DRIVE	25.6' RT	4.5'	Y=179117.234 X=173723.234
CC9	131+48.10 BUSINESS 51	36.0' RT	60.0'	Y=179085.530 X=173655.375
CC10	131+64.32 BUSINESS 51	72.0' LT	60.0'	Y=179102.767 X=173547.533
CC11	131+84.96 BUSINESS 51 499+22.89 CHESTNUT DRIVE	78.8' LT 39.7' RT	4.0'	Y=179123.467 X=173540.966

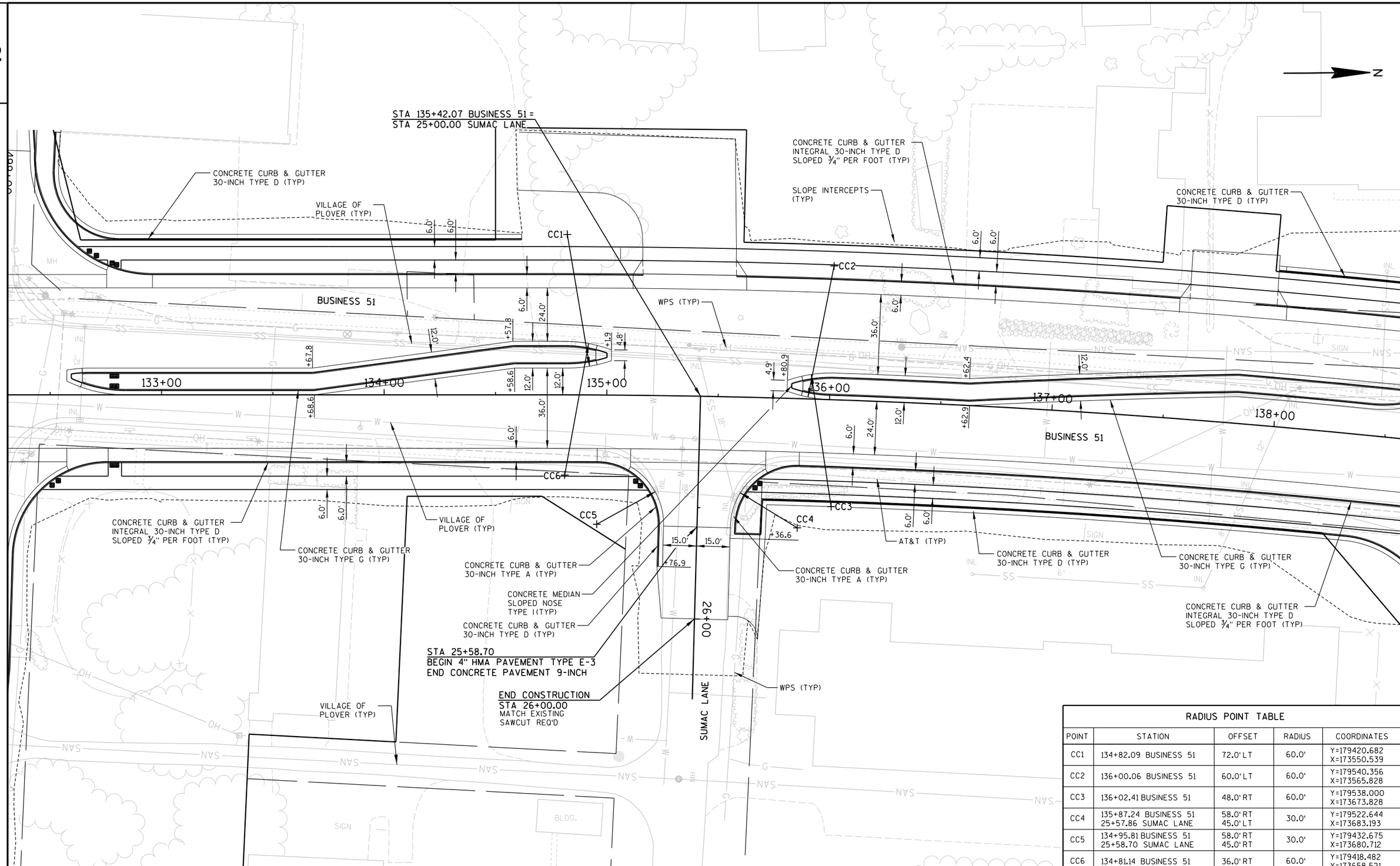

RADIUS POINT TABLE

POINT	STATION	OFFSET	RADIUS	COORDINATES
CC1	134+82.09 BUSINESS 51	72.0' LT	60.0'	Y=179420.682 X=173550.539
CC2	136+00.06 BUSINESS 51	60.0' LT	60.0'	Y=179540.356 X=173565.828
CC3	136+02.41 BUSINESS 51	48.0' RT	60.0'	Y=179538.000 X=173673.828
CC4	135+87.24 BUSINESS 51 25+57.86 SUMAC LANE	58.0' RT 45.0' LT	30.0'	Y=179522.644 X=173683.193
CC5	134+95.81 BUSINESS 51 25+58.70 SUMAC LANE	58.0' RT 45.0' RT	30.0'	Y=179432.675 X=173680.712
CC6	134+81.14 BUSINESS 51	36.0' RT	60.0'	Y=179418.482 X=173658.521

PROJECT NO:6414-00-78	HWY:BUSINESS 51	COUNTY:PORTAGE	INTERSECTION DETAL	SHEET 28	E

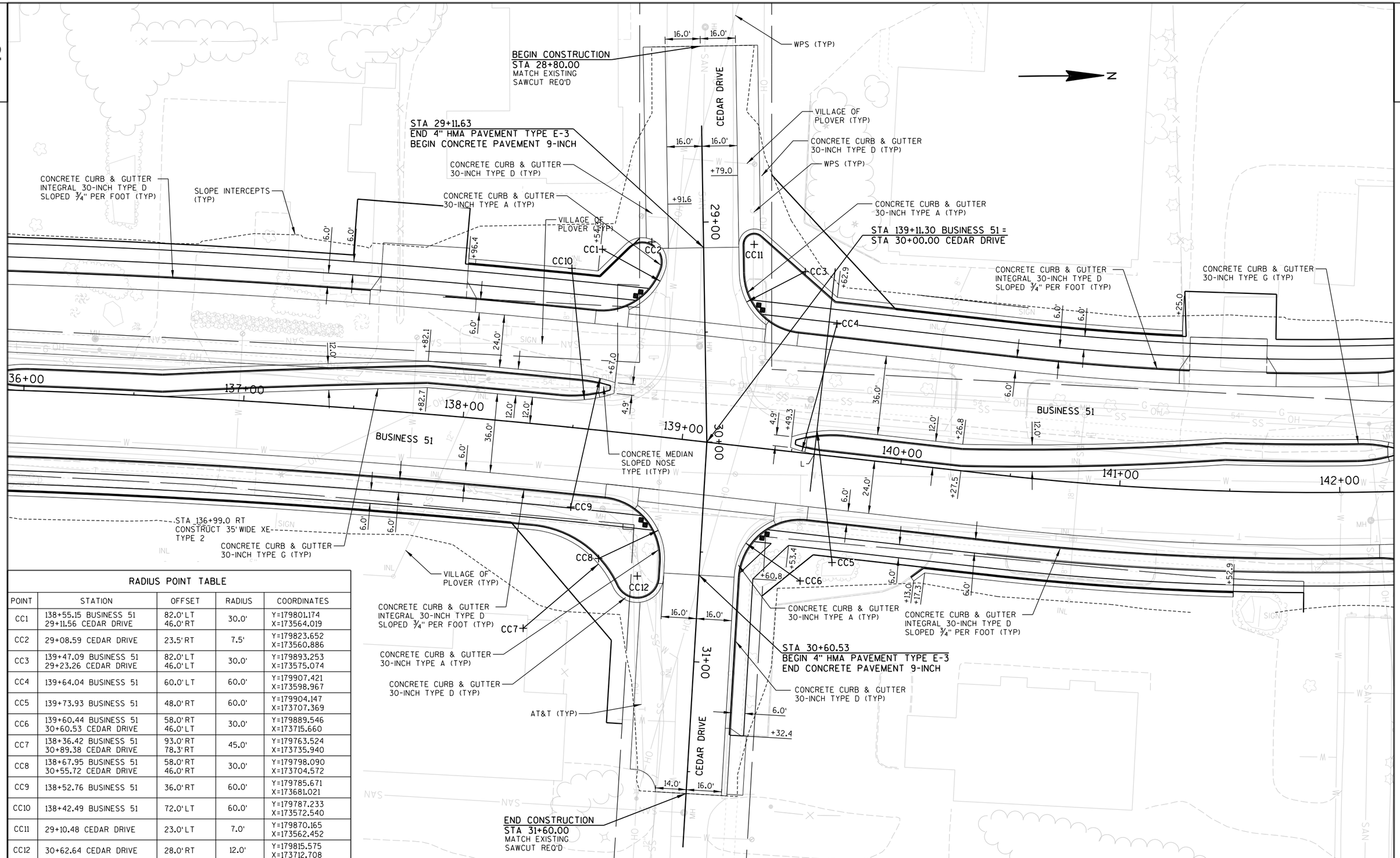

RADIUS POINT TABLE

POINT	STATION	OFFSET	RADIUS	COORDINATES
CC1	138+55.15 BUSINESS 51 29+11.56 CEDAR DRIVE	82.0' LT 46.0' RT	30.0'	Y=179801.174 X=173564.019
CC2	29+08.59 CEDAR DRIVE	23.5' RT	7.5'	Y=179823.652 X=173560.886
CC3	139+47.09 BUSINESS 51 29+23.26 CEDAR DRIVE	82.0' LT 46.0' LT	30.0'	Y=179893.253 X=173575.074
CC4	139+64.04 BUSINESS 51	60.0' LT	60.0'	Y=179907.421 X=173598.967
CC5	139+73.93 BUSINESS 51	48.0' RT	60.0'	Y=179904.147 X=173707.369
CC6	139+60.44 BUSINESS 51 30+60.53 CEDAR DRIVE	58.0' RT 46.0' LT	30.0'	Y=179889.546 X=173715.660
CC7	138+36.42 BUSINESS 51 30+89.38 CEDAR DRIVE	93.0' RT 78.3' RT	45.0'	Y=179763.524 X=173735.940
CC8	138+67.95 BUSINESS 51 30+55.72 CEDAR DRIVE	58.0' RT 46.0' RT	30.0'	Y=179798.090 X=173704.572
CC9	138+52.76 BUSINESS 51	36.0' RT	60.0'	Y=179785.671 X=173681.021
CC10	138+42.49 BUSINESS 51	72.0' LT	60.0'	Y=179787.233 X=173572.540
CC11	29+10.48 CEDAR DRIVE	23.0' LT	7.0'	Y=179870.165 X=173562.452
CC12	30+62.64 CEDAR DRIVE	28.0' RT	12.0'	Y=179815.575 X=173712.708

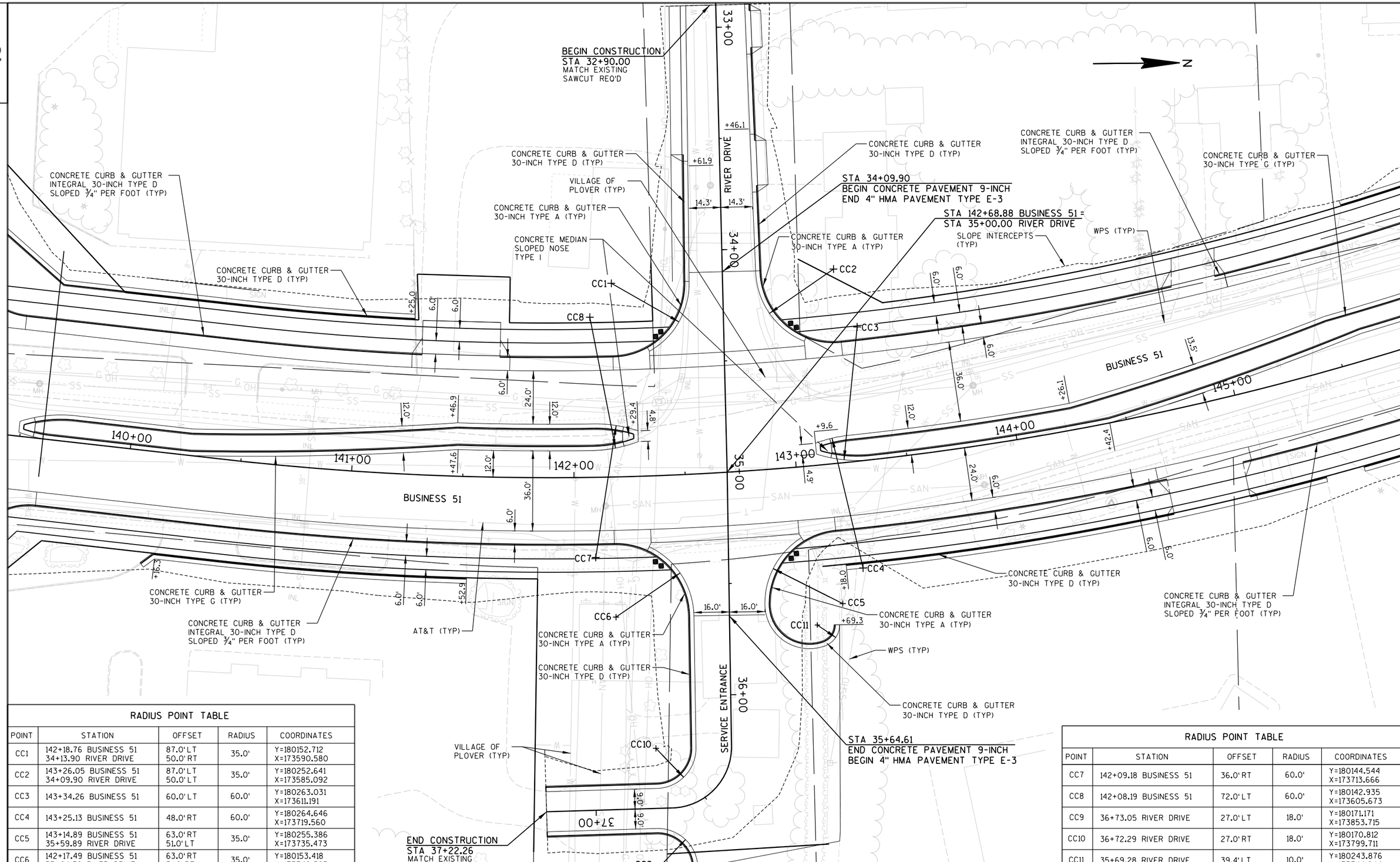

RADIUS POINT TABLE				
POINT	STATION	OFFSET	RADIUS	COORDINATES
CC1	142+18.76 BUSINESS 51 34+13.90 RIVER DRIVE	87.0' LT 50.0' RT	35.0'	Y=180152.712 X=173590.580
CC2	143+26.05 BUSINESS 51 34+09.90 RIVER DRIVE	87.0' LT 50.0' LT	35.0'	Y=180252.641 X=173585.092
CC3	143+34.26 BUSINESS 51	60.0' LT	60.0'	Y=180263.031 X=173611.191
CC4	143+25.13 BUSINESS 51	48.0' RT	60.0'	Y=180264.646 X=173719.560
CC5	143+14.89 BUSINESS 51 35+59.89 RIVER DRIVE	63.0' RT 51.0' LT	35.0'	Y=180255.386 X=173735.473
CC6	142+17.49 BUSINESS 51 35+64.32 RIVER DRIVE	63.0' RT 51.0' RT	35.0'	Y=180153.418 X=173740.583

RADIUS POINT TABLE				
POINT	STATION	OFFSET	RADIUS	COORDINATES
CC7	142+09.18 BUSINESS 51	36.0' RT	60.0'	Y=180144.544 X=173713.666
CC8	142+08.19 BUSINESS 51	72.0' LT	60.0'	Y=180142.935 X=173605.673
CC9	36+73.05 RIVER DRIVE	27.0' LT	18.0'	Y=180171.171 X=173853.715
CC10	36+72.29 RIVER DRIVE	27.0' RT	18.0'	Y=180170.812 X=173799.711
CC11	35+69.28 RIVER DRIVE	39.4' LT	10.0'	Y=180243.876 X=173744.944

PROJECT NO:6414-00-78	HWY:BUSINESS 51	COUNTY:PORTAGE	INTERSECTION DETAIL	SHEET 30	E

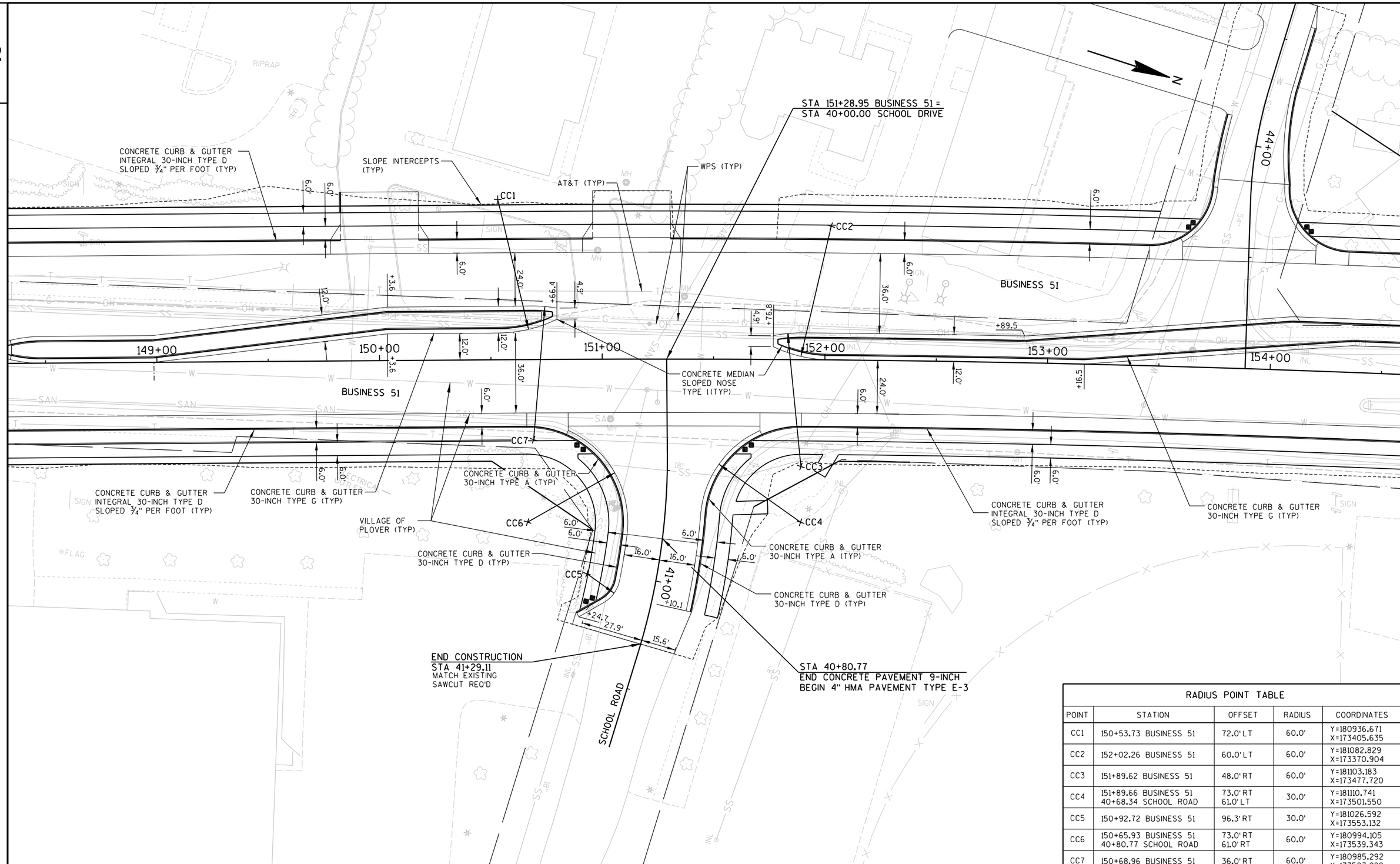

RADIUS POINT TABLE				
POINT	STATION	OFFSET	RADIUS	COORDINATES
CC1	150+53.73 BUSINESS 51	72.0' LT	60.0'	Y=180936.671 X=173405.635
CC2	152+02.26 BUSINESS 51	60.0' LT	60.0'	Y=181082.829 X=173370.904
CC3	151+89.62 BUSINESS 51	48.0' RT	60.0'	Y=181103.183 X=173477.720
CC4	151+89.66 BUSINESS 51 40+68.34 SCHOOL ROAD	73.0' RT 61.0' LT	30.0'	Y=181110.741 X=173501.550
CC5	150+92.72 BUSINESS 51	96.3' RT	30.0'	Y=181026.592 X=173553.132
CC6	150+65.93 BUSINESS 51 40+80.77 SCHOOL ROAD	73.0' RT 61.0' RT	60.0'	Y=180994.105 X=173539.343
CC7	150+68.96 BUSINESS 51	36.0' RT	60.0'	Y=180985.292 X=173503.282

PROJECT NO:6414-00-78	HWY:BUSINESS 51	COUNTY:PORTAGE	INTERSECTION DETAIL	SHEET 31	E

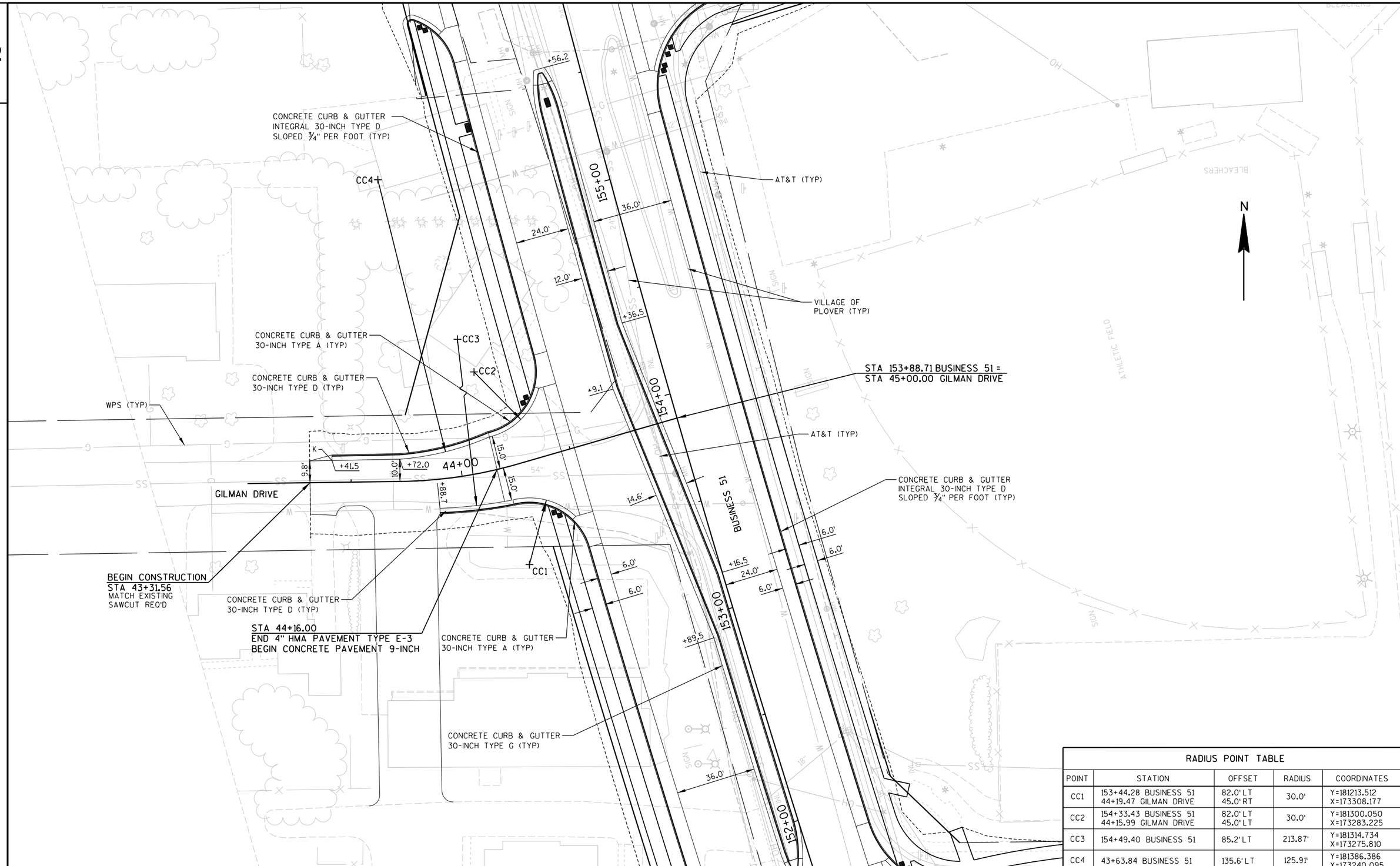

RADIUS POINT TABLE

POINT	STATION	OFFSET	RADIUS	COORDINATES
CC1	153+44.28 BUSINESS 51 44+19.47 GILMAN DRIVE	82.0' LT 45.0' RT	30.0'	Y=181213.512 X=173308.177
CC2	154+33.43 BUSINESS 51 44+15.99 GILMAN DRIVE	82.0' LT 45.0' LT	30.0'	Y=181300.050 X=173283.225
CC3	154+49.40 BUSINESS 51	85.2' LT	213.87'	Y=181314.734 X=173275.810
CC4	43+63.84 BUSINESS 51	135.6' LT	125.91'	Y=181386.386 X=173240.095

PROJECT NO:6414-00-78	HWY:BUSINESS 51	COUNTY:PORTAGE	INTERSECTION DETAIL	SHEET 32	E

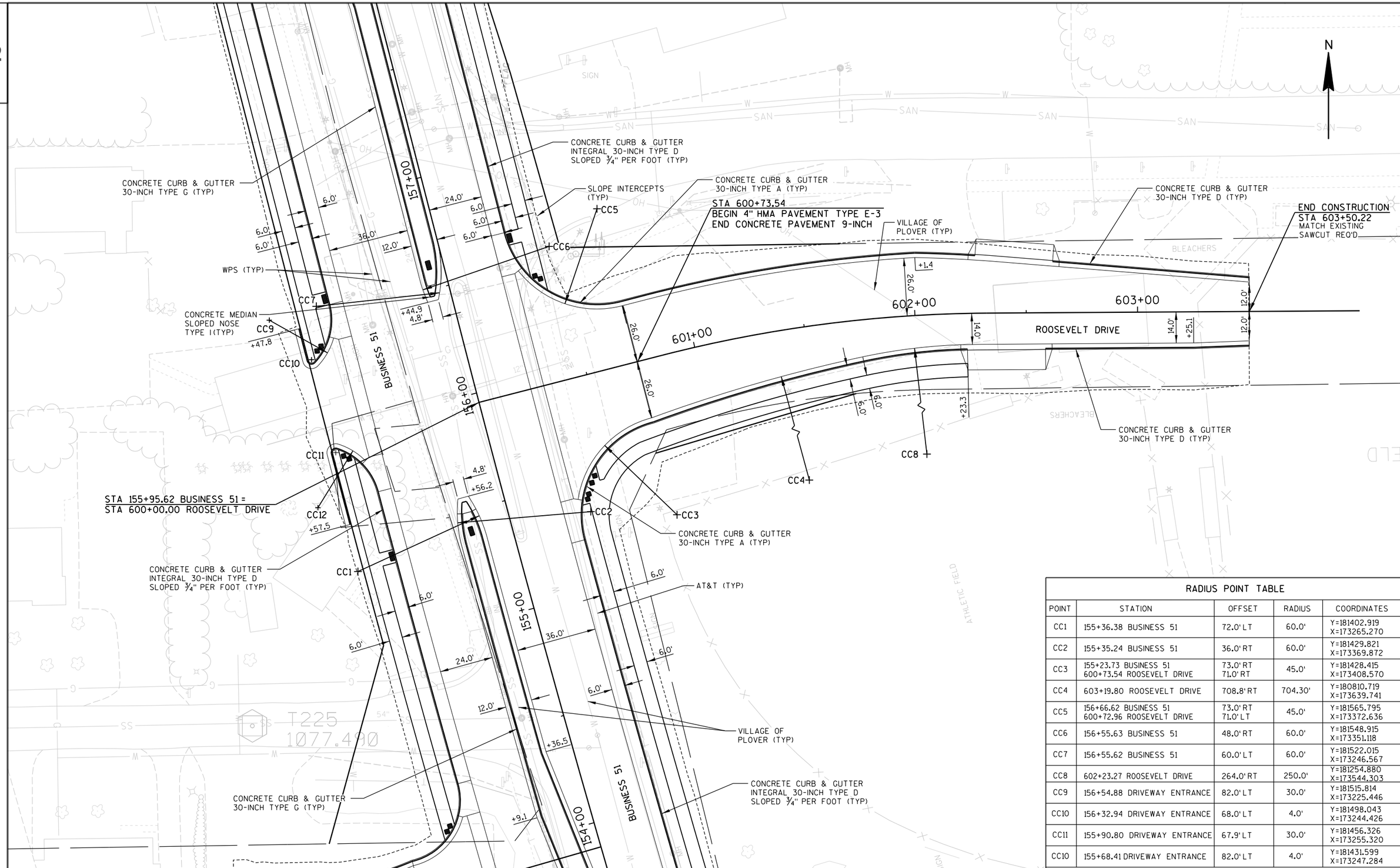

RADIUS POINT TABLE				
POINT	STATION	OFFSET	RADIUS	COORDINATES
CC1	155+36.38 BUSINESS 51	72.0' LT	60.0'	Y=181402.919 X=173265.270
CC2	155+35.24 BUSINESS 51	36.0' RT	60.0'	Y=181429.821 X=173369.872
CC3	155+23.73 BUSINESS 51 600+73.54 ROOSEVELT DRIVE	73.0' RT 71.0' RT	45.0'	Y=181428.415 X=173408.570
CC4	603+19.80 ROOSEVELT DRIVE	708.8' RT	704.30'	Y=180810.719 X=173639.741
CC5	156+66.62 BUSINESS 51 600+72.96 ROOSEVELT DRIVE	73.0' RT 71.0' LT	45.0'	Y=181565.795 X=173372.636
CC6	156+55.63 BUSINESS 51	48.0' RT	60.0'	Y=181548.915 X=173351.118
CC7	156+55.62 BUSINESS 51	60.0' LT	60.0'	Y=181522.015 X=173246.567
CC8	602+23.27 ROOSEVELT DRIVE	264.0' RT	250.0'	Y=181254.880 X=173544.303
CC9	156+54.88 DRIVEWAY ENTRANCE	82.0' LT	30.0'	Y=181515.814 X=173225.446
CC10	156+32.94 DRIVEWAY ENTRANCE	68.0' LT	4.0'	Y=181498.043 X=173244.426
CC11	155+90.80 DRIVEWAY ENTRANCE	67.9' LT	30.0'	Y=181456.326 X=173255.320
CC10	155+68.41 DRIVEWAY ENTRANCE	82.0' LT	4.0'	Y=181431.599 X=173247.284

PROJECT NO: 6414-00-78	HWY: BUSINESS 51	COUNTY: PORTAGE	INTERSECTION DETAIL	SHEET 33	E

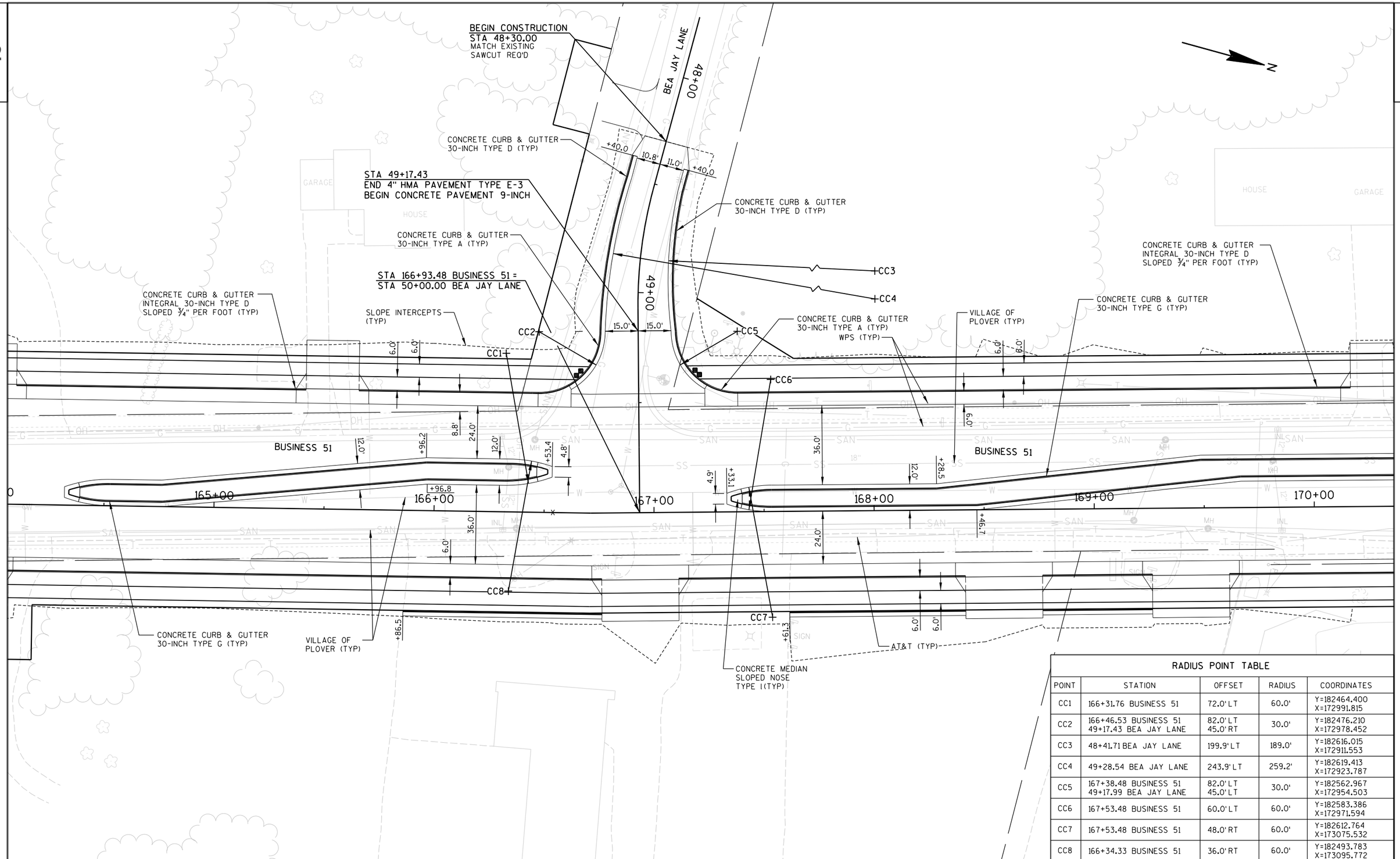

RADIUS POINT TABLE

POINT	STATION	OFFSET	RADIUS	COORDINATES
CC1	166+31.76 BUSINESS 51	72.0' LT	60.0'	Y=182464.400 X=172991.815
CC2	166+46.53 BUSINESS 51 49+17.43 BEA JAY LANE	82.0' LT 45.0' RT	30.0'	Y=182476.210 X=172978.452
CC3	48+41.71 BEA JAY LANE	199.9' LT	189.0'	Y=182616.015 X=172911.553
CC4	49+28.54 BEA JAY LANE	243.9' LT	259.2'	Y=182619.413 X=172923.787
CC5	167+38.48 BUSINESS 51 49+17.99 BEA JAY LANE	82.0' LT 45.0' LT	30.0'	Y=182562.967 X=172954.503
CC6	167+53.48 BUSINESS 51	60.0' LT	60.0'	Y=182583.386 X=172971.594
CC7	167+53.48 BUSINESS 51	48.0' RT	60.0'	Y=182612.764 X=173075.532
CC8	166+34.33 BUSINESS 51	36.0' RT	60.0'	Y=182493.783 X=173095.772

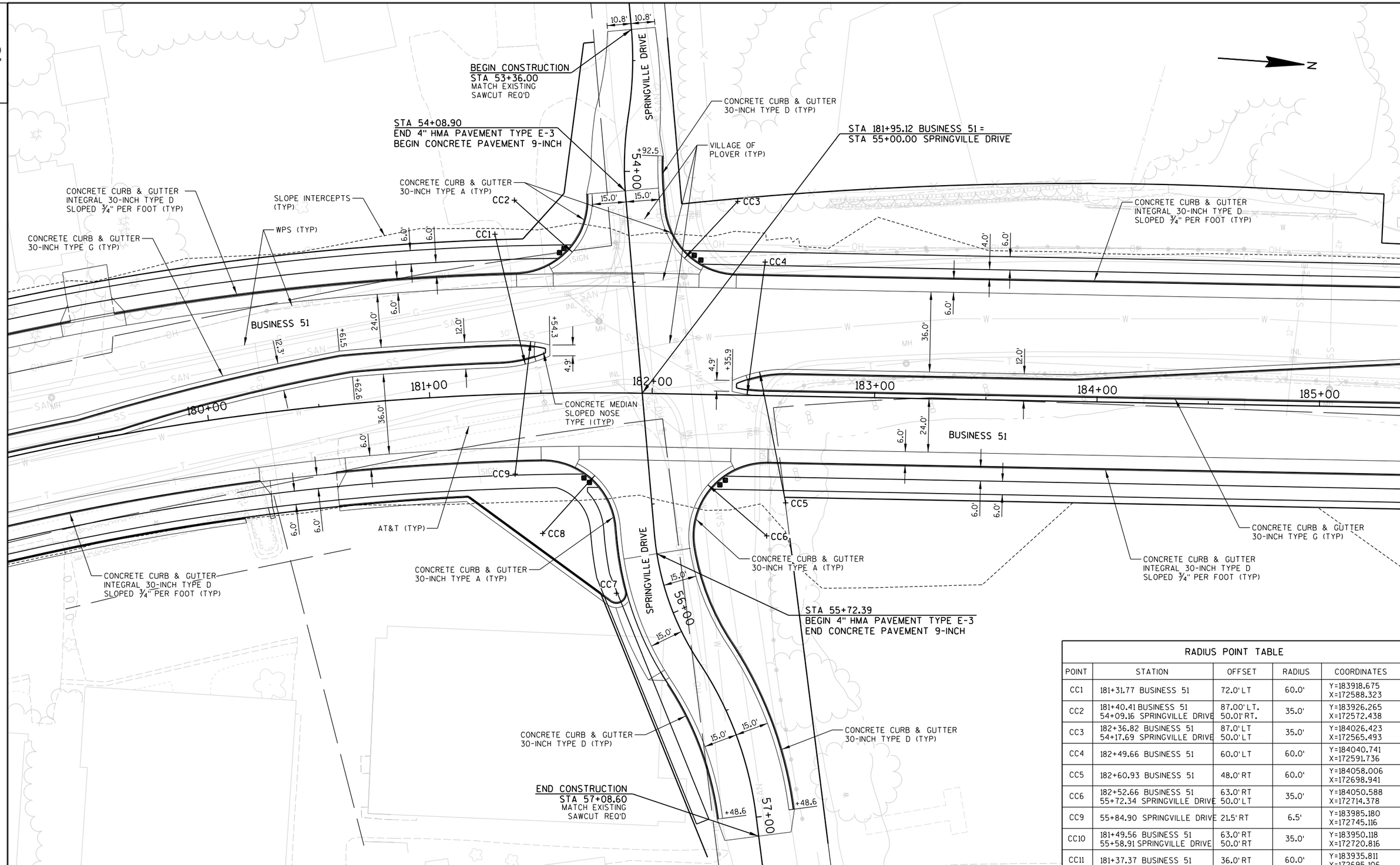

RADIUS POINT TABLE

POINT	STATION	OFFSET	RADIUS	COORDINATES
CC1	181+31.77 BUSINESS 51	72.0' LT	60.0'	Y=183918.675 X=172588.323
CC2	181+40.41 BUSINESS 51 54+09.16 SPRINGVILLE DRIVE	87.00' LT. 50.01' RT.	35.0'	Y=183926.265 X=172572.438
CC3	182+36.82 BUSINESS 51 54+17.69 SPRINGVILLE DRIVE	87.0' LT 50.0' LT	35.0'	Y=184026.423 X=172565.493
CC4	182+49.66 BUSINESS 51	60.0' LT	60.0'	Y=184040.741 X=172591.736
CC5	182+60.93 BUSINESS 51	48.0' RT	60.0'	Y=184058.006 X=172698.941
CC6	182+52.66 BUSINESS 51 55+72.34 SPRINGVILLE DRIVE	63.0' RT 50.0' LT	35.0'	Y=184050.588 X=172714.378
CC9	55+84.90 SPRINGVILLE DRIVE	21.5' RT	6.5'	Y=183985.180 X=172745.116
CC10	181+49.56 BUSINESS 51 55+58.91 SPRINGVILLE DRIVE	63.0' RT 50.0' RT	35.0'	Y=183950.118 X=172720.816
CC11	181+37.37 BUSINESS 51	36.0' RT	60.0'	Y=183935.811 X=172695.106

PROJECT NO:6414-00-78	HWY:BUSINESS 51	COUNTY:PORTAGE	INTERSECTION DETAIL	SHEET 35	E

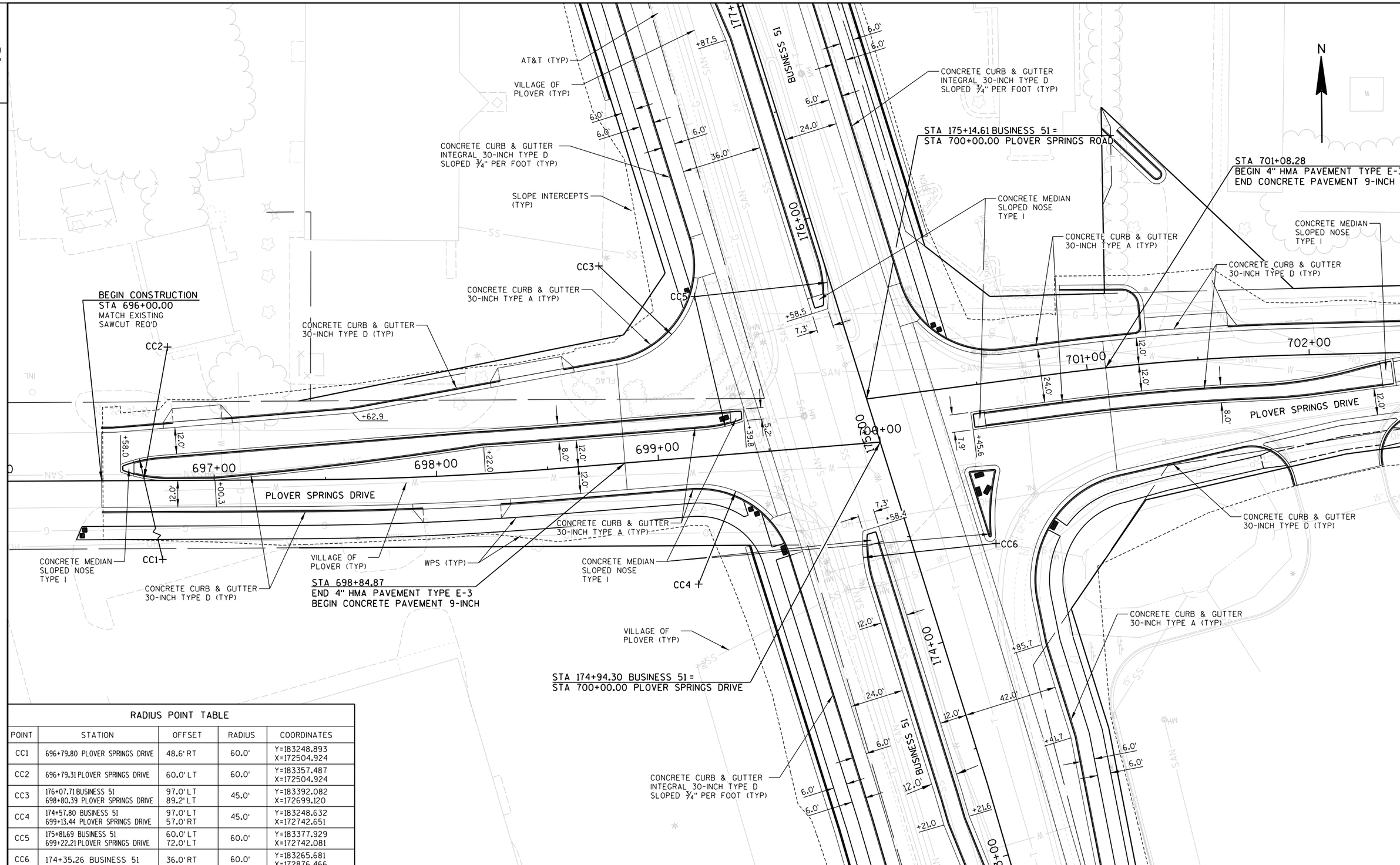

RADIUS POINT TABLE				
POINT	STATION	OFFSET	RADIUS	COORDINATES
CC1	696+79.80 PLOVER SPRINGS DRIVE	48.6' RT	60.0'	Y=183248.893 X=172504.924
CC2	696+79.31 PLOVER SPRINGS DRIVE	60.0' LT	60.0'	Y=183357.487 X=172504.924
CC3	176+07.71 BUSINESS 51 698+80.39 PLOVER SPRINGS DRIVE	97.0' LT 89.2' LT	45.0'	Y=183392.082 X=172699.120
CC4	174+57.80 BUSINESS 51 699+13.44 PLOVER SPRINGS DRIVE	97.0' LT 57.0' RT	45.0'	Y=183248.632 X=172742.651
CC5	175+81.69 BUSINESS 51 699+22.21 PLOVER SPRINGS DRIVE	60.0' LT 72.0' LT	60.0'	Y=183377.929 X=172742.081
CC6	174+35.26 BUSINESS 51	36.0' RT	60.0'	Y=183265.681 X=172876.466

PROJECT NO: 6414-00-78	HWY: BUSINESS 51	COUNTY: PORTAGE	INTERSECTION DETAIL	SHEET 36	E

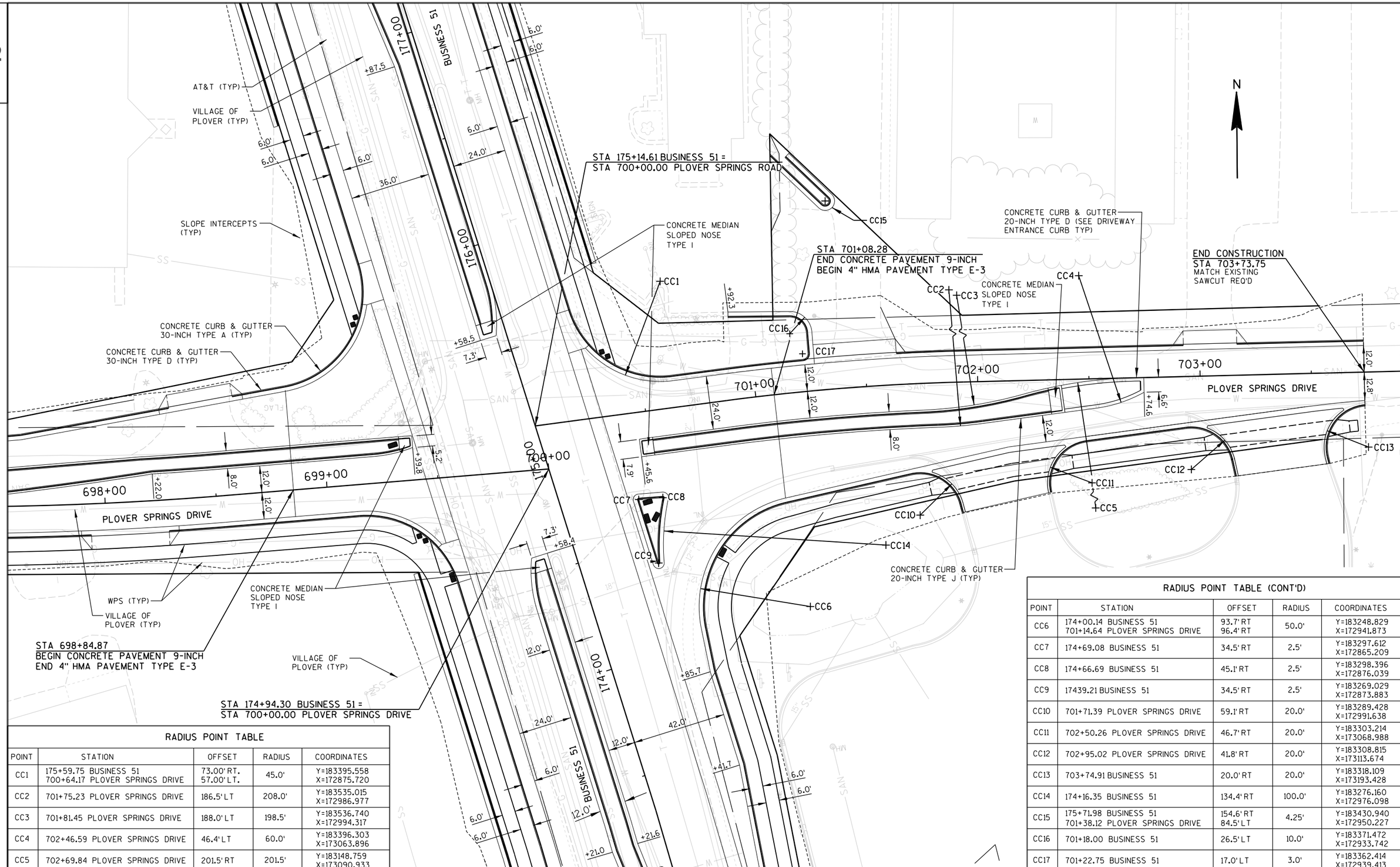

RADIUS POINT TABLE

POINT	STATION	OFFSET	RADIUS	COORDINATES
CC1	175+59.75 BUSINESS 51 700+64.17 PLOVER SPRINGS DRIVE	73.00' RT. 57.00' LT.	45.0'	Y=183395.558 X=172875.720
CC2	701+75.23 PLOVER SPRINGS DRIVE	186.5' LT	208.0'	Y=183535.015 X=172986.977
CC3	701+81.45 PLOVER SPRINGS DRIVE	188.0' LT	198.5'	Y=183536.740 X=172994.317
CC4	702+46.59 PLOVER SPRINGS DRIVE	46.4' LT	60.0'	Y=183396.303 X=173063.896
CC5	702+69.84 PLOVER SPRINGS DRIVE	201.5' RT	201.5'	Y=183148.759 X=173090.933

RADIUS POINT TABLE (CONT'D)

POINT	STATION	OFFSET	RADIUS	COORDINATES
CC6	174+00.14 BUSINESS 51 701+14.64 PLOVER SPRINGS DRIVE	93.7' RT 96.4' RT	50.0'	Y=183248.829 X=172941.873
CC7	174+69.08 BUSINESS 51	34.5' RT	2.5'	Y=183297.612 X=172865.209
CC8	174+66.69 BUSINESS 51	45.1' RT	2.5'	Y=183298.396 X=172876.039
CC9	17439.21 BUSINESS 51	34.5' RT	2.5'	Y=183269.029 X=172873.883
CC10	701+71.39 PLOVER SPRINGS DRIVE	59.1' RT	20.0'	Y=183289.428 X=172991.638
CC11	702+50.26 PLOVER SPRINGS DRIVE	46.7' RT	20.0'	Y=183303.214 X=173068.988
CC12	702+95.02 PLOVER SPRINGS DRIVE	41.8' RT	20.0'	Y=183308.815 X=173113.674
CC13	703+74.91 BUSINESS 51	20.0' RT	20.0'	Y=183318.109 X=173193.428
CC14	174+16.35 BUSINESS 51	134.4' RT	100.0'	Y=183276.160 X=172976.098
CC15	175+71.98 BUSINESS 51 701+38.12 PLOVER SPRINGS DRIVE	154.6' RT 84.5' LT	4.25'	Y=183430.940 X=172950.227
CC16	701+18.00 BUSINESS 51	26.5' LT	10.0'	Y=183371.472 X=172933.742
CC17	701+22.75 BUSINESS 51	17.0' LT	3.0'	Y=183362.414 X=172939.413

PROJECT NO:6414-00-78	HWY:BUSINESS 51	COUNTY:PORTAGE	INTERSECTION DETAIL	SHEET 37	E

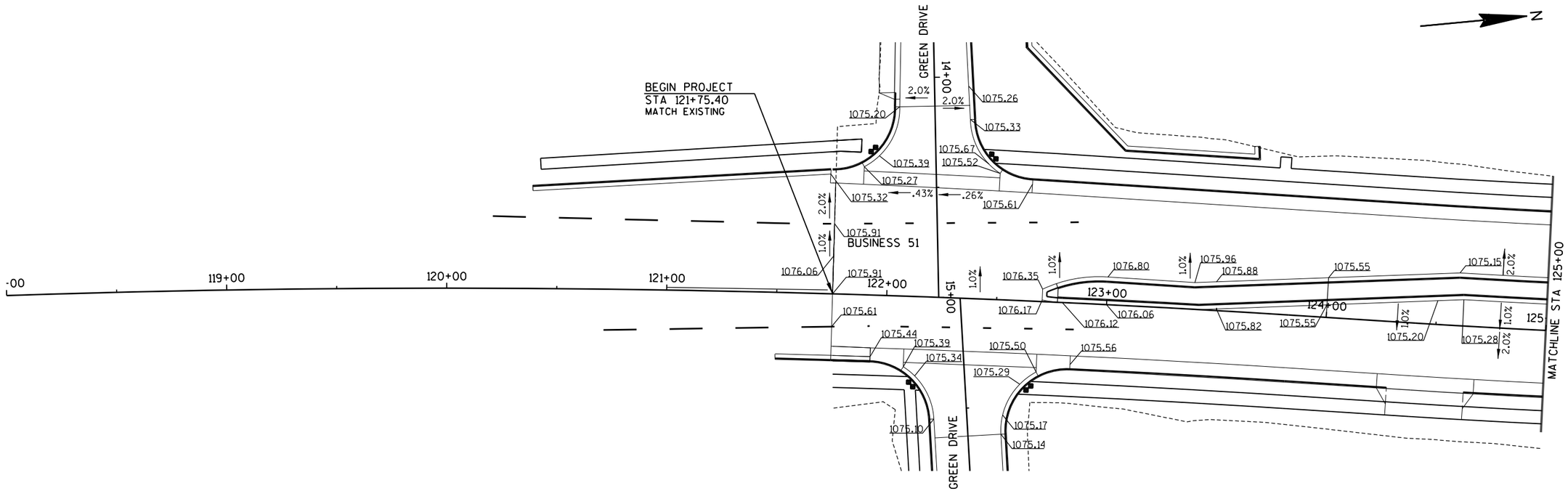
N
BEGIN PROJECT
STA 121+75.40
MATCH EXISTING
GREEN DRIVE
14+00
15+00
BUSINESS 51
119+00
120+00
121+00
122+00
123+00
124+00
125+00
MATCHLINE STA 125+00
1075.20
1075.26
1075.33
1075.67
1075.52
1075.39
1075.27
1075.32
.43%
.26%
1075.61
1075.91
1076.06
1076.35
1076.80
1075.96
1075.88
1075.55
1075.15
1076.17
1076.12
1076.06
1075.82
1075.20
1075.28
1075.61
1075.44
1075.39
1075.34
1075.50
1075.56
1075.29
1075.10
1075.17
1075.14

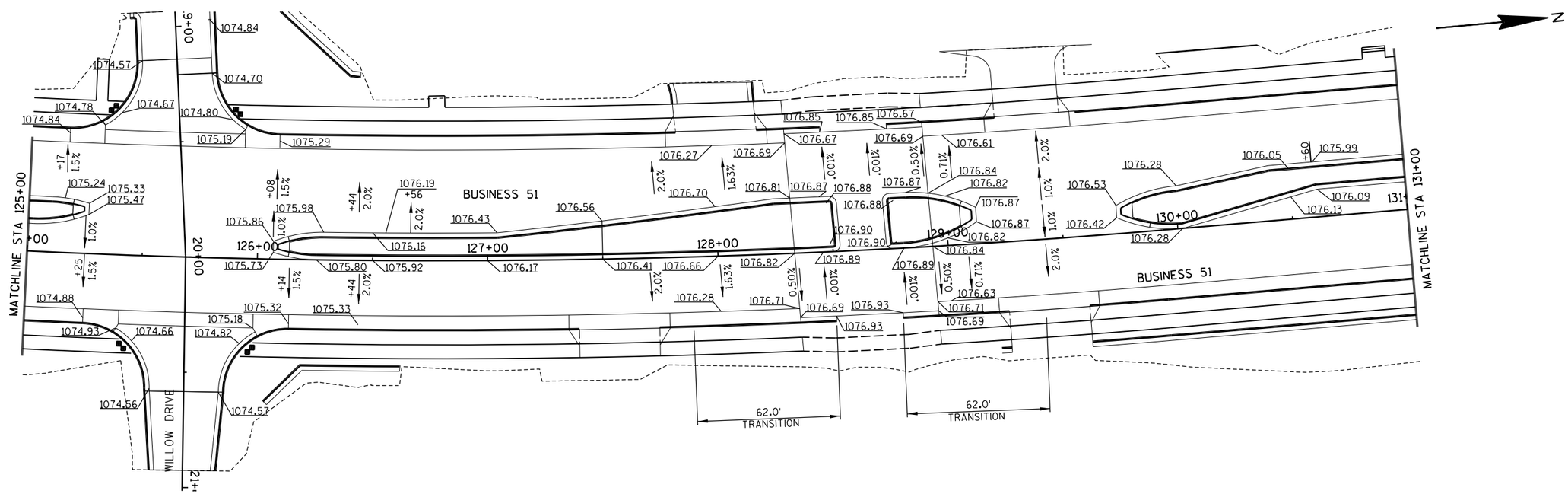
N
MATCHLINE STA 125+00
MATCHLINE STA 131+00
WILLOW DRIVE
BUSINESS 51
126+00
127+00
128+00
129+00
130+00
1074.84
1074.57
1074.70
1074.78
1074.67
1074.80
1075.19
1075.29
1075.24
1075.33
1075.47
1075.86
1075.98
1076.19
1076.43
1076.56
1076.16
1075.73
1075.80
1075.92
1076.17
1076.41
1076.66
1076.82
1076.28
1076.71
1076.69
1076.93
1076.85
1076.67
1076.27
1076.70
1076.81
1076.87
1076.88
1076.90
1076.89
1076.84
1076.61
1076.63
1076.53
1076.42
1076.05
1075.99
1076.09
1076.13
1074.88
1074.93
1074.66
1075.32
1075.18
1075.33
1074.82
1074.56
1074.57
62.0'
TRANSITION
62.0'
TRANSITION

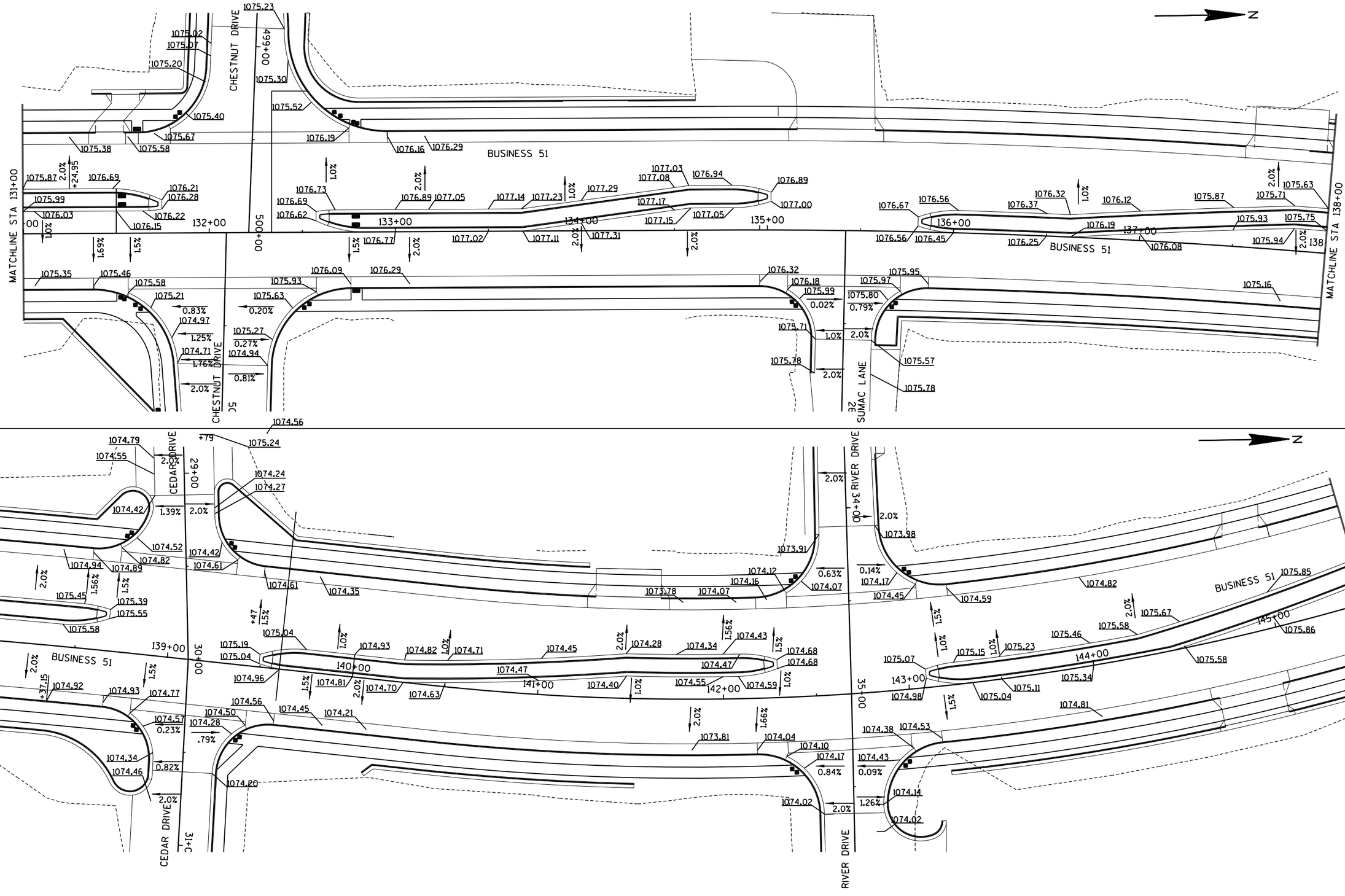

PROJECT NO:6414-00-78	HWY:BUSINESS 51	COUNTY:PORTAGE	PLAN DETAIL	SHEET 39	E

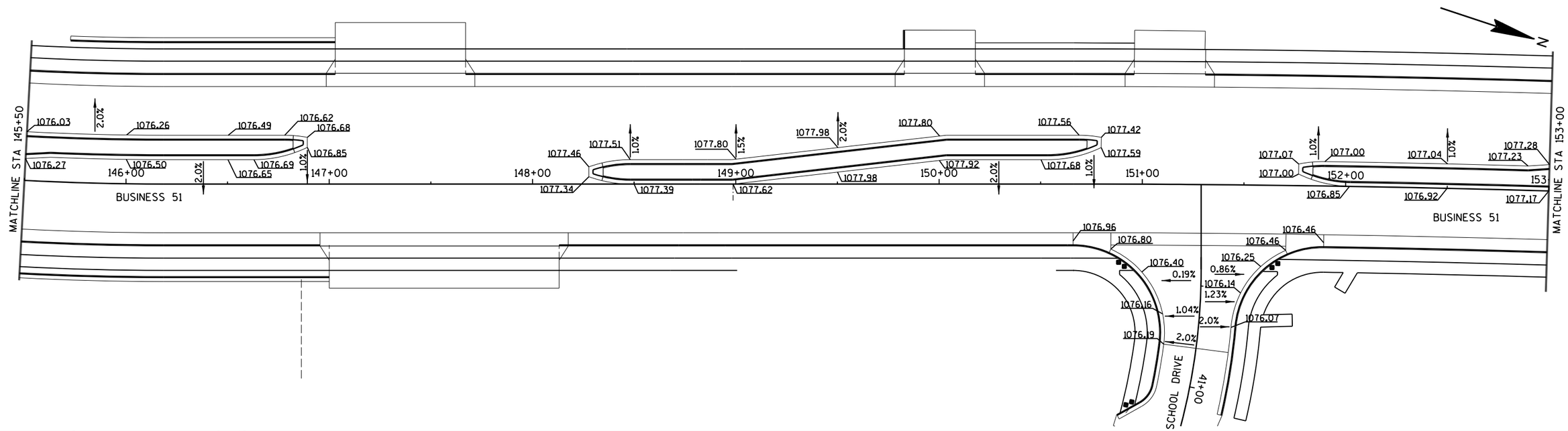

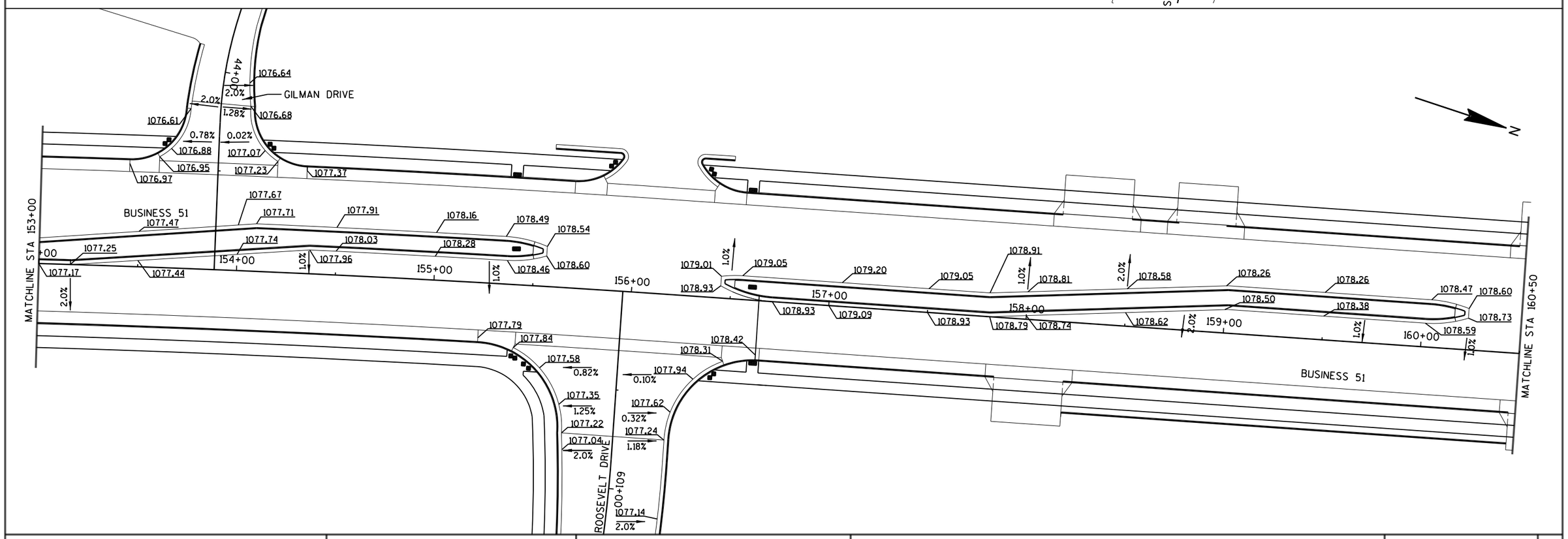

PROJECT NO:6414-00-78	HWY:BUSINESS 51	COUNTY:PORTAGE	PLAN DETAIL	SHEET 40	E

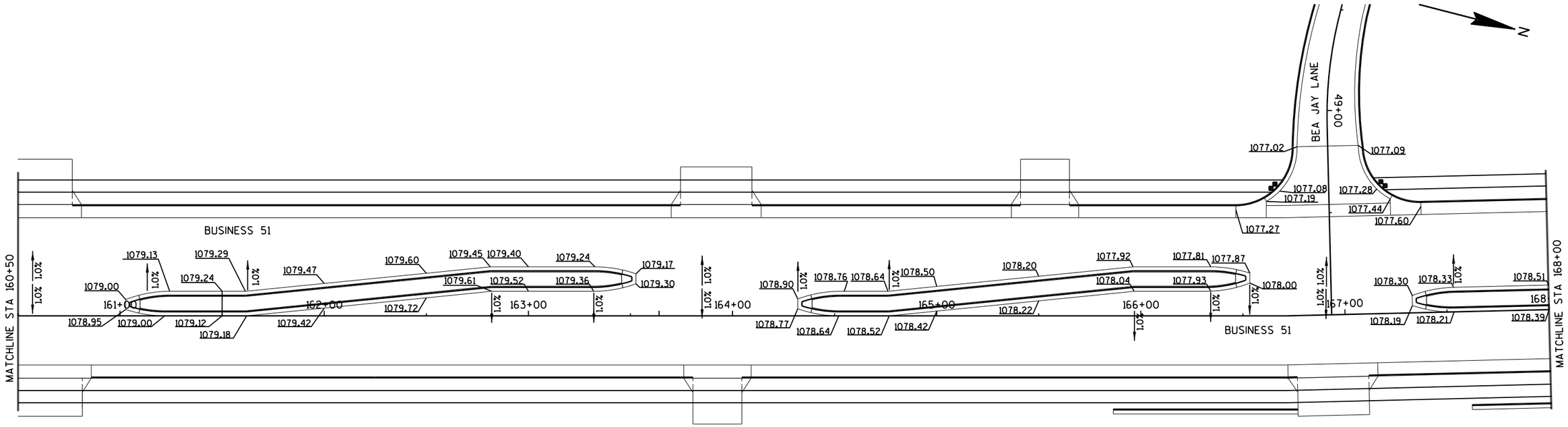

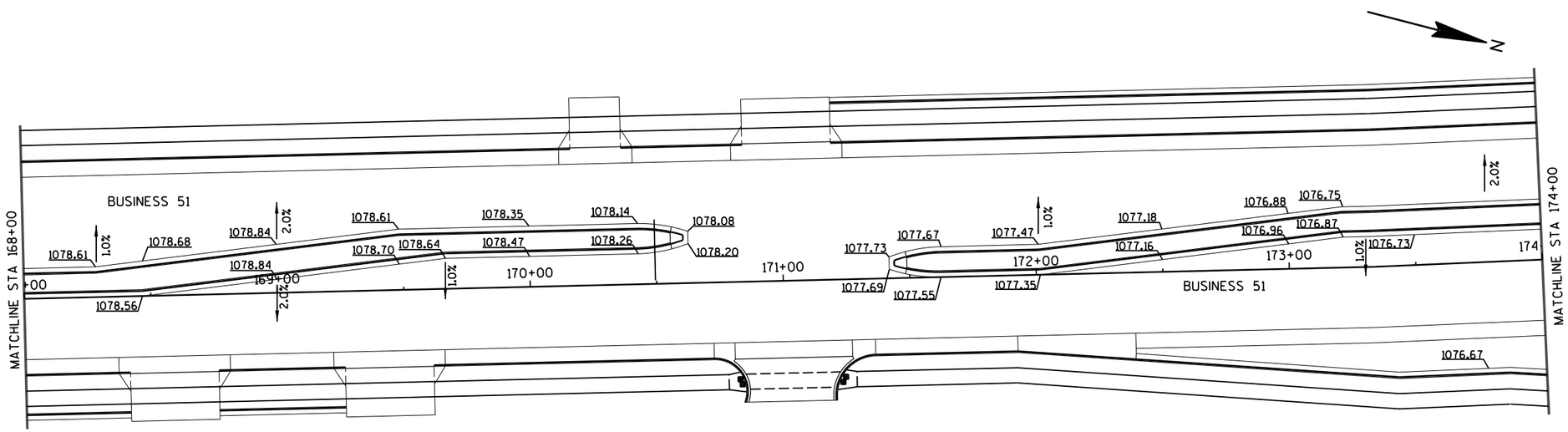

PROJECT NO:6414-00-78	HWY:BUSINESS 51	COUNTY:PORTAGE	PLAN DETAIL	SHEET 41	E

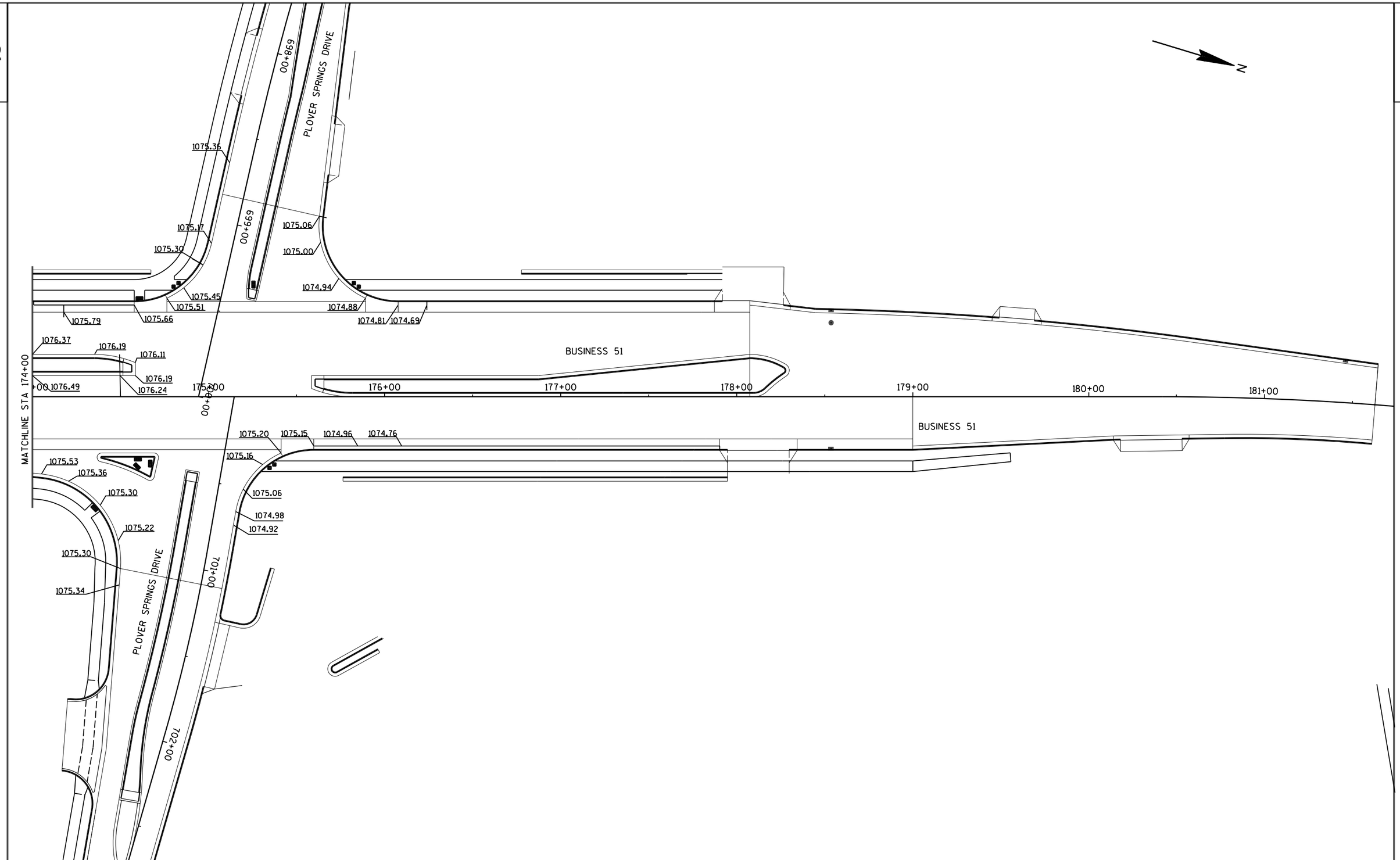
N
PLOVER SPRINGS DRIVE
00+869
00+669
1075.36
1075.17
1075.30
1075.06
1075.00
1074.94
1075.45
1075.51
1074.88
1075.79
1075.66
1074.81
1074.69
1076.37
1076.19
1076.11
1076.19
1076.24
1076.49
MATCHLINE STA 174+00
BUSINESS 51
175+00
176+00
177+00
178+00
179+00
180+00
181+00
00+00
BUSINESS 51
1075.20
1075.15
1074.96
1074.76
1075.16
1075.53
1075.36
1075.30
1075.06
1074.98
1074.92
1075.22
1075.30
1075.34
PLOVER SPRINGS DRIVE
701+00
702+00

2

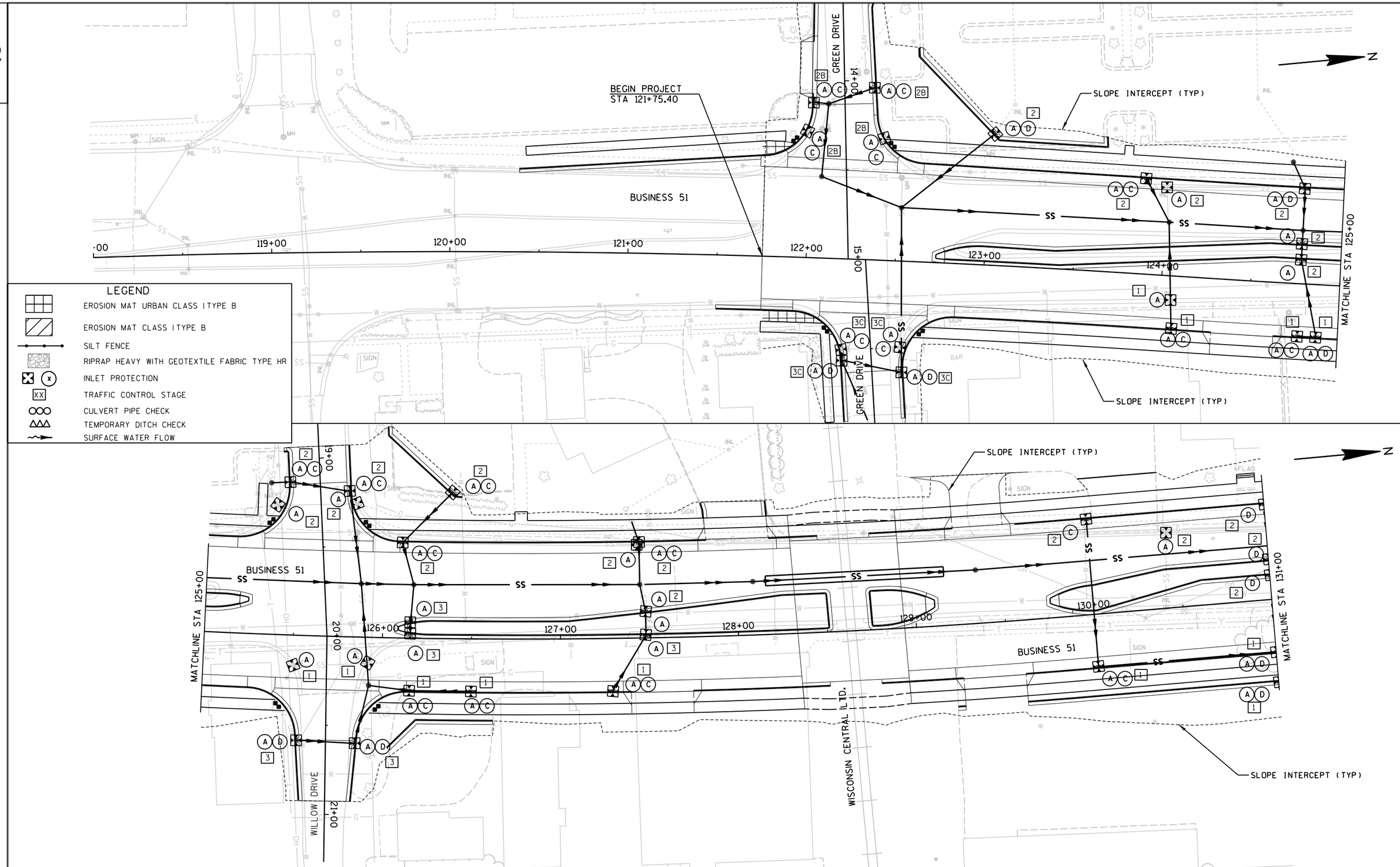

2

PROJECT NO:6414-00-78	HWY:BUSINESS 51	COUNTY:PORTAGE	EROSION CONTROL	SHEET 43	E

FILE NAME : P:\UZ\W\Witnc\112545\5-final-dsgn\51-drawings\40-TransHwy\022001 ec.dgn PLOT TIME : 2:00:40 PM PLOT DATE : 8/2/2015 PLOT BY : SEH PLOT NAME : PLOT SCALE : N/A

2

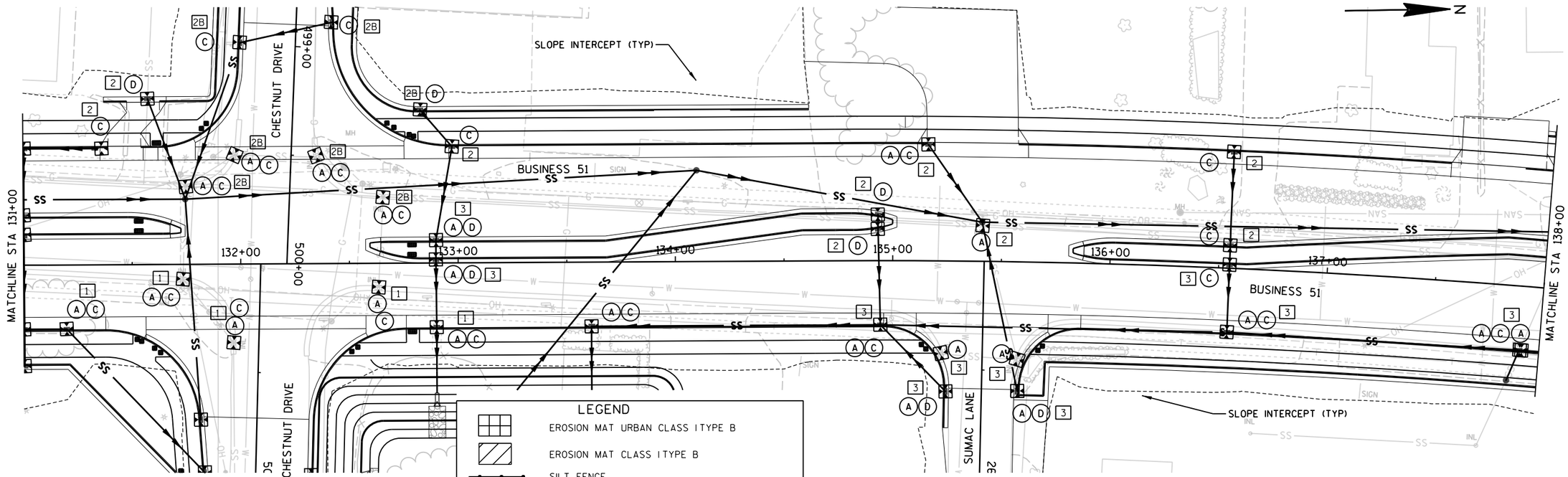

2

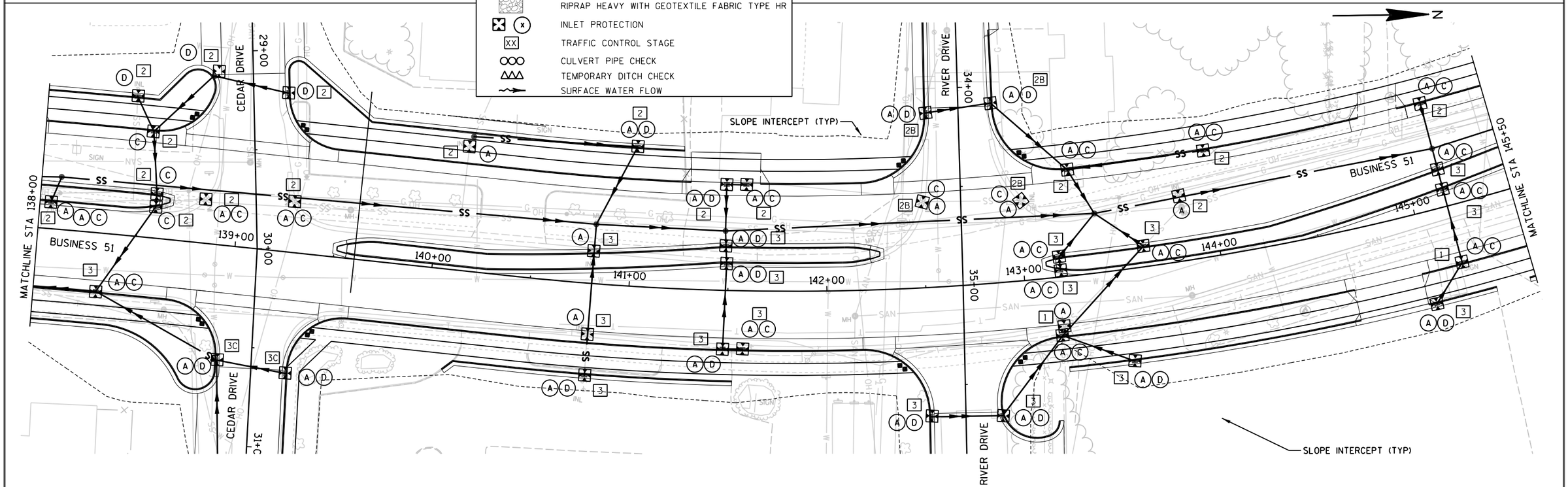

PROJECT NO:6414-00-78	HWY:BUSINESS 51	COUNTY:PORTAGE	EROSION CONTROL	SHEET 44	E

FILE NAME : P:\UZ\W\Witnc\112545\5-final-dsgn\51-drawings\40-TransHwy\022002 ec.dgn PLOT TIME : 2:00:42 PM PLOT DATE : 8/2/2015 PLOT BY : SEH PLOT NAME : PLOT SCALE : N/A

2

SLOPE INTERCEPT (TYP)

BUSINESS 51

MATCHLINE STA 145+50

146+00 147+00 148+00 149+00 150+00 151+00 152+00

BUSINESS 51

MATCHLINE STA 153+00

SLOPE INTERCEPT (TYP)

SCHOOL DRIVE

41+00

LEGEND

- EROSION MAT URBAN CLASS I TYPE B
- EROSION MAT CLASS I TYPE B
- SILT FENCE
- RIPRAP HEAVY WITH GEOTEXTILE FABRIC TYPE HR
- INLET PROTECTION
- TRAFFIC CONTROL STAGE
- CULVERT PIPE CHECK
- TEMPORARY DITCH CHECK
- SURFACE WATER FLOW

GILMAN DRIVE

BUSINESS 51

MATCHLINE STA 153+00

154+00 155+00 156+00 157+00 158+00 159+00 160+00

BUSINESS 51

MATCHLINE STA 160+50

SLOPE INTERCEPT (TYP)

ROOSEVELT DRIVE

60+00

SLOPE INTERCEPT (TYP)

2

PROJECT NO:6414-00-78	HWY:BUSINESS 51	COUNTY:PORTAGE	EROSION CONTROL	SHEET 45	E

FILE NAME : P:\UZ\W\Witnc\112545\5-final-dsgn\51-drawings\40-TransHwy\022003 ec.dgn PLOT TIME : 2:00:43 PM PLOT DATE : 8/2/2015 PLOT BY : SEH PLOT NAME : PLOT SCALE : N/A

WISDOT/CADDS SHEET 42

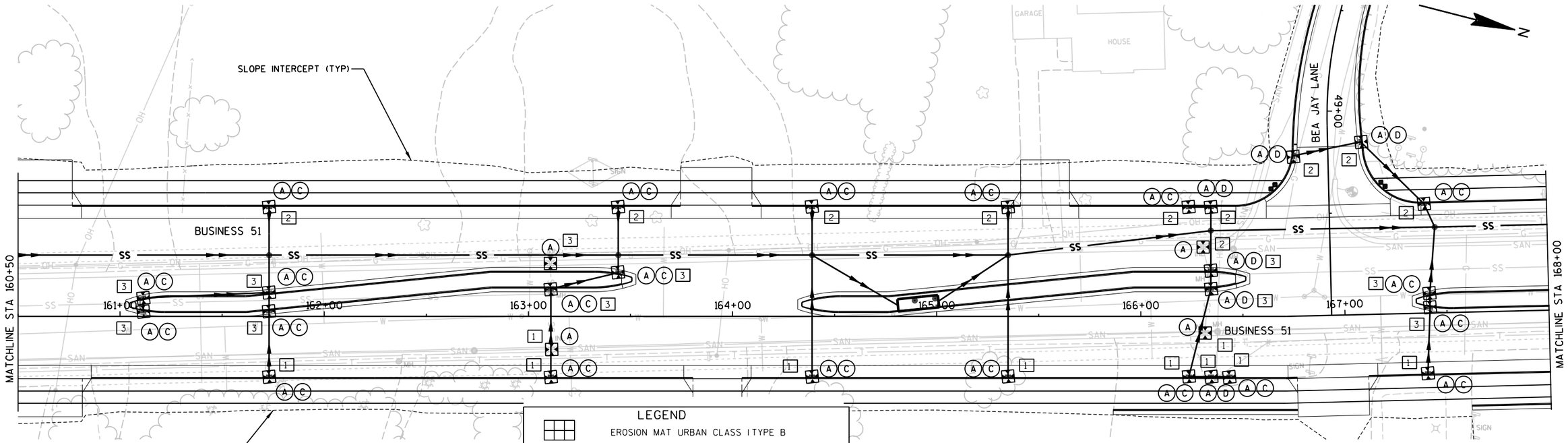

LEGEND

- EROSION MAT URBAN CLASS I TYPE B
- EROSION MAT CLASS I TYPE B
- SILT FENCE
- RIPRAP HEAVY WITH GEOTEXTILE FABRIC TYPE HR
- INLET PROTECTION
- TRAFFIC CONTROL STAGE
- CULVERT PIPE CHECK
- TEMPORARY DITCH CHECK
- SURFACE WATER FLOW

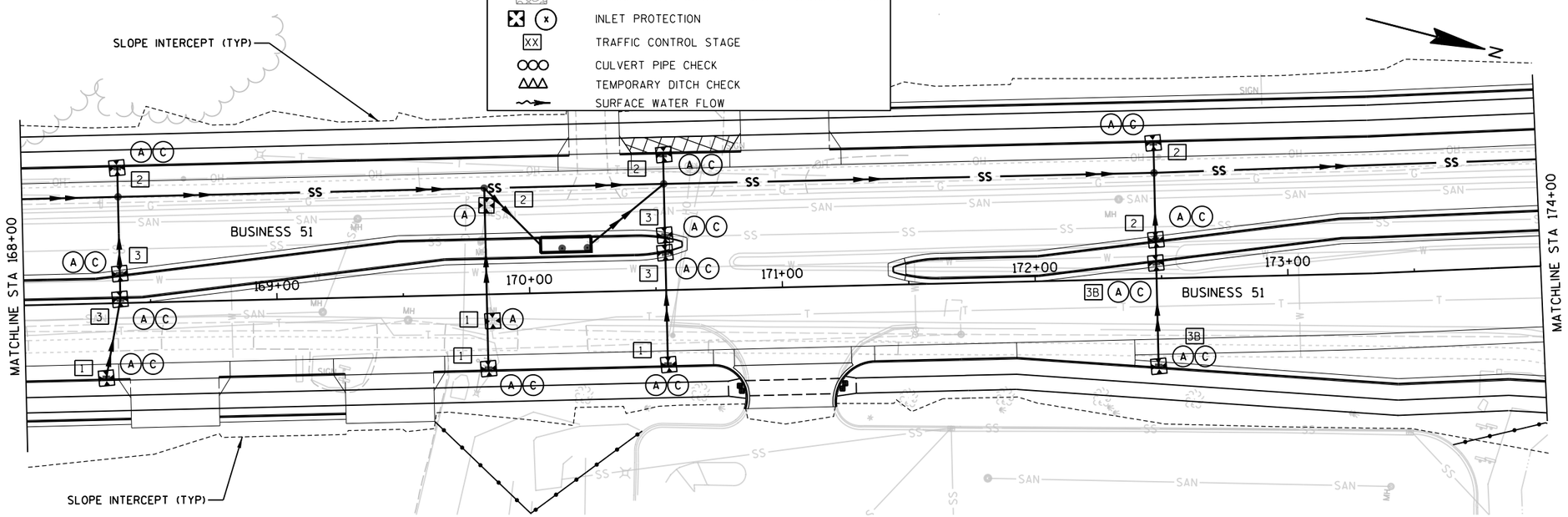

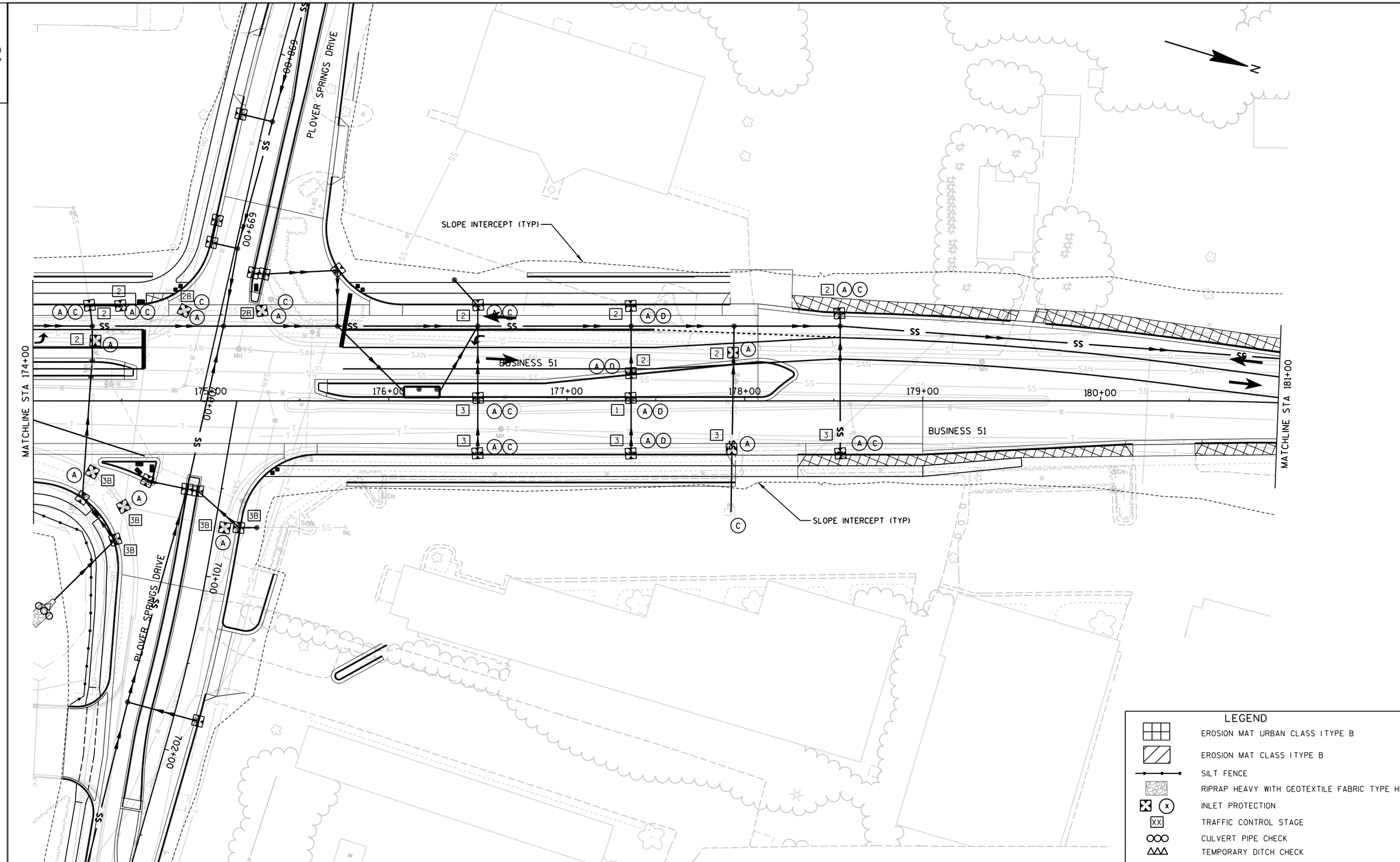

PROJECT NO:6414-00-78	HWY:BUSINESS 51	COUNTY:PORTAGE	EROSION CONTROL	SHEET 47	E

FILE NAME : P:\UZ\W\Witnc\112545\5-final-dsgn\51-drawings\40-TransHwy\022005 ec.dgn PLOT TIME : 2:00:46 PM PLOT DATE : 8/2/2015 PLOT BY : SEH PLOT NAME : PLOT SCALE : N/A

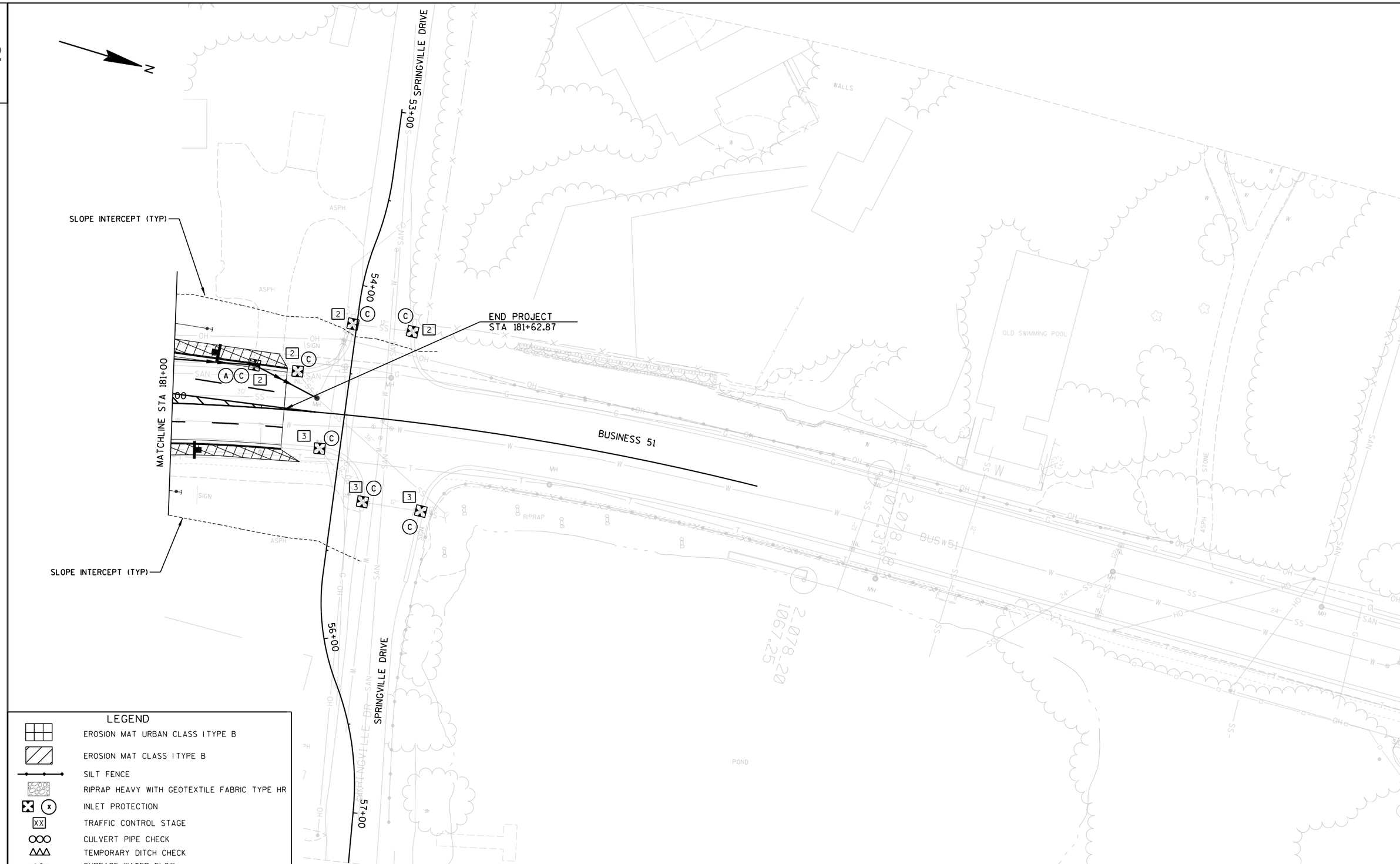

PROJECT NO:6414-00-78	HWY:BUSINESS 51	COUNTY:PORTAGE	EROSION CONTROL	SHEET 48	E

FILE NAME : P:\UZ\W\Witnc\112545\5-final-dsgn\51-drawings\40-TransHwy\022006 ec.dgn PLOT TIME : 2:00:46 PM PLOT DATE : 8/2/2015 PLOT BY : SEH PLOT NAME : PLOT SCALE : N/A

2

N

SLOPE INTERCEPT (TYP)

BUSINESS 51

134+00

133+00

132+00

131+00

130+00

497+00

498+00

499+00

500+00

501+00

502+00

503+00

CHESTNUT DRIVE

CHESTNUT DRIVE

INFILTRATION BASIN
SEE CONSTRUCTION DETAILS

1070.5

1068.5

SLOPE INTERCEPT (TYP)

SS

LEGEND

- EROSION MAT URBAN CLASS I TYPE B
- EROSION MAT CLASS I TYPE B
- SILT FENCE
- RIPRAP HEAVY WITH GEOTEXTILE FABRIC TYPE HR
- INLET PROTECTION
- TRAFFIC CONTROL STAGE
- CULVERT PIPE CHECK
- TEMPORARY DITCH CHECK
- SURFACE WATER FLOW

2

PROJECT NO:6414-00-78	HWY:BUSINESS 51	COUNTY:PORTAGE	EROSION CONTROL	SHEET 49	E

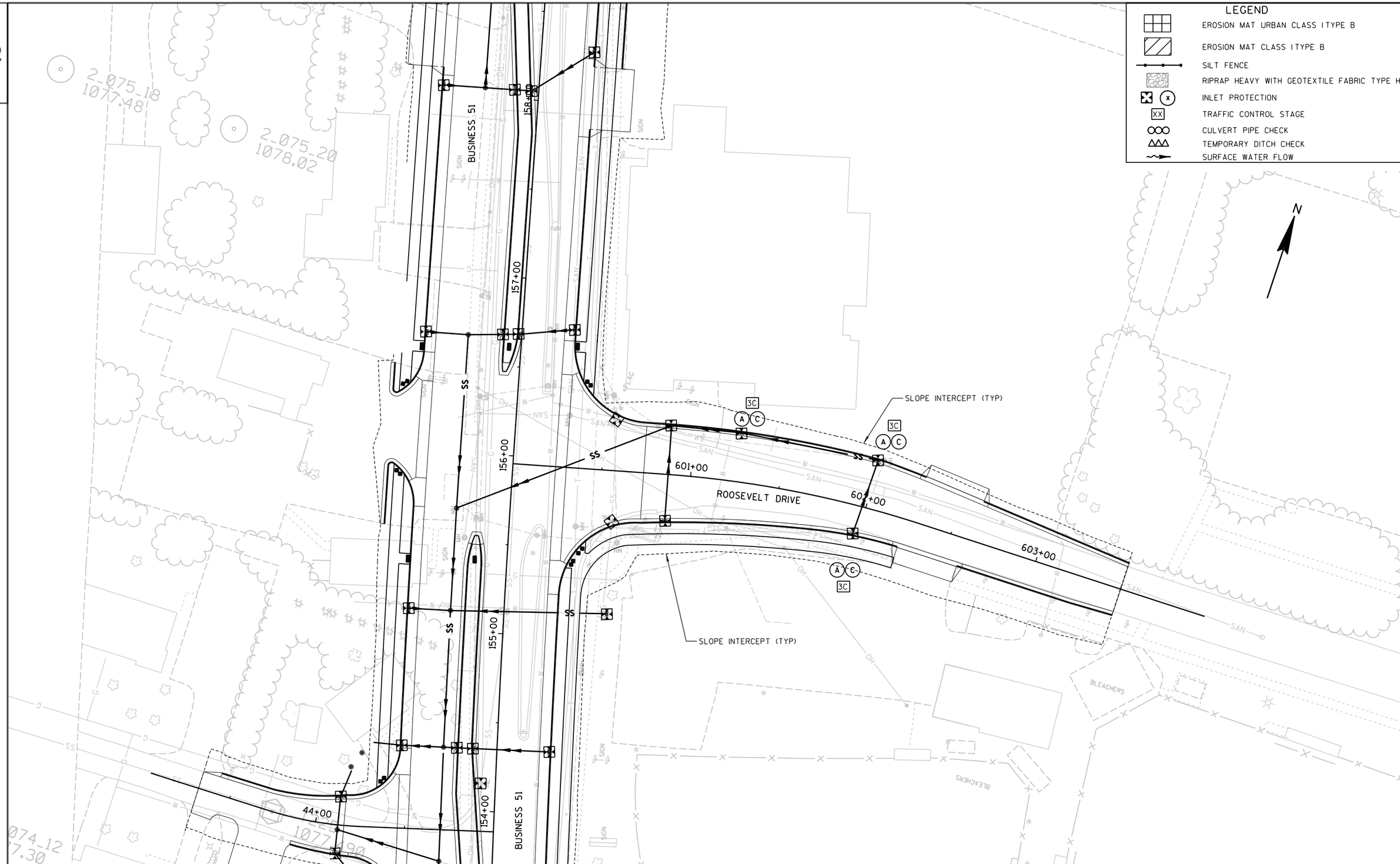

2

PROJECT NO:6414-00-78	HWY:BUSINESS 51	COUNTY:PORTAGE	EROSION CONTROL	SHEET 50	E

FILE NAME : P:\UZ\W\Witnc\112545\5-final-dsgn\51-drawings\40-TransHwy\022008 ec.dgn PLOT TIME : 2:00:48 PM PLOT DATE : 8/2/2015 PLOT BY : SEH PLOT NAME : PLOT SCALE : N/A

2

LEGEND

- EROSION MAT URBAN CLASS I TYPE B
- EROSION MAT CLASS I TYPE B
- SILT FENCE
- RIPRAP HEAVY WITH GEOTEXTILE FABRIC TYPE HR
- INLET PROTECTION
- TRAFFIC CONTROL STAGE
- CULVERT PIPE CHECK
- TEMPORARY DITCH CHECK
- SURFACE WATER FLOW

N

PLOVER SPRINGS DRIVE

696+00

697+00

698+00

699+00

700+00

701+00

702+00

703+00

177+00

176+00

175+00

174+00

173+00

BUSINESS 51

SLOPE INTERCEPT (TYP)

SLOPE INTERCEPT (TYP)

PLOVER SPRINGS DRIVE

2

PROJECT NO:6414-00-78	HWY:BUSINESS 51	COUNTY:PORTAGE	EROSION CONTROL	SHEET 51	E

FILE NAME : P:\UZ\W\Witnc\112545\5-final-dsgn\51-drawings\40-TransHwy\022009 ec.dgn PLOT TIME : 2:00:49 PM PLOT DATE : 8/2/2015 PLOT BY : SEH PLOT NAME : PLOT SCALE : N/A

WISDOT/CADDS SHEET 42

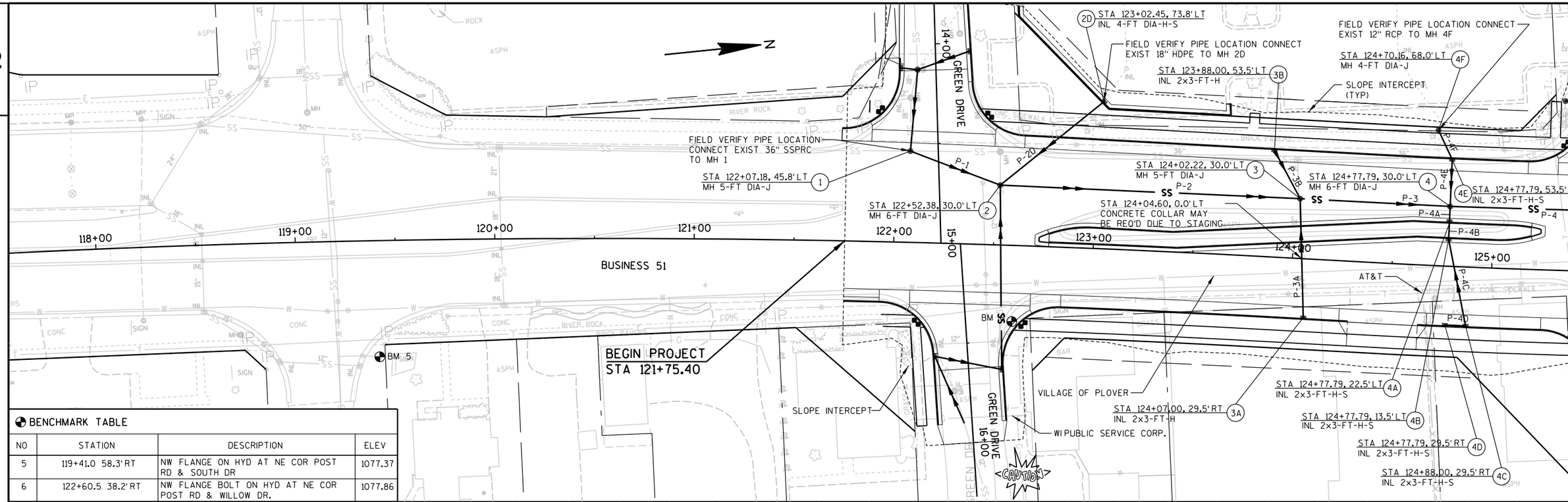

BENCHMARK TABLE

NO	STATION	DESCRIPTION	ELEV
5	119+41.0 58.3'RT	NW FLANGE ON HYD AT NE COR POST RD & SOUTH DR	1077.37
6	122+60.5 38.2'RT	NW FLANGE BOLT ON HYD AT NE COR POST RD & WILLOW DR.	1077.86

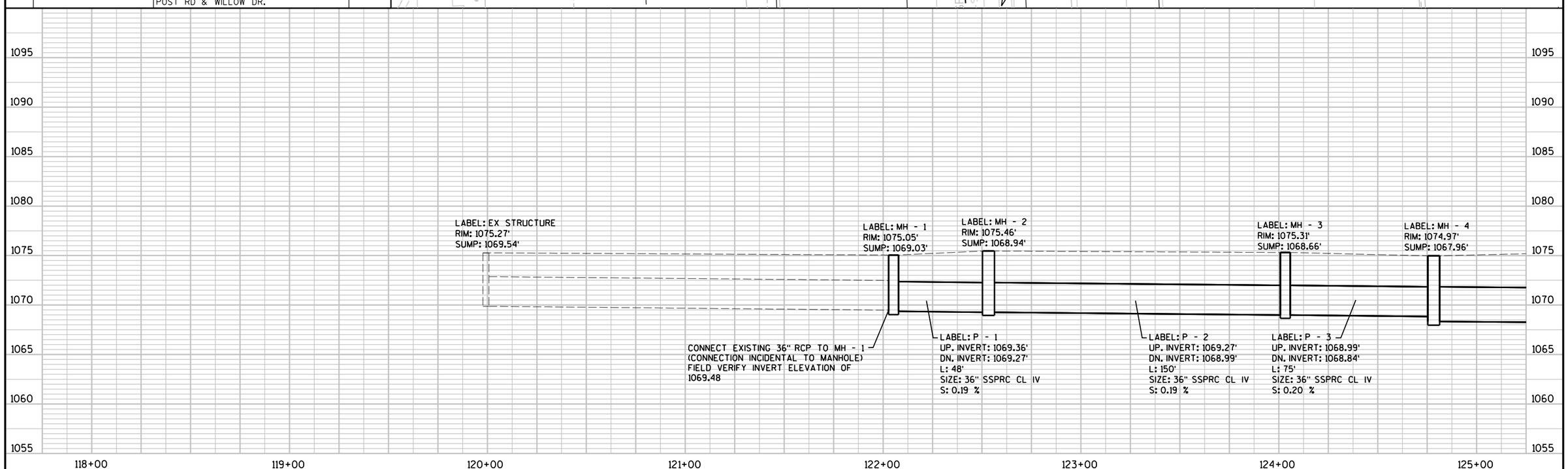

PROJECT NO:6414-00-78	HWY:BUSINESS 51	COUNTY:PORTAGE	STORM SEWER	SHEET 52	E

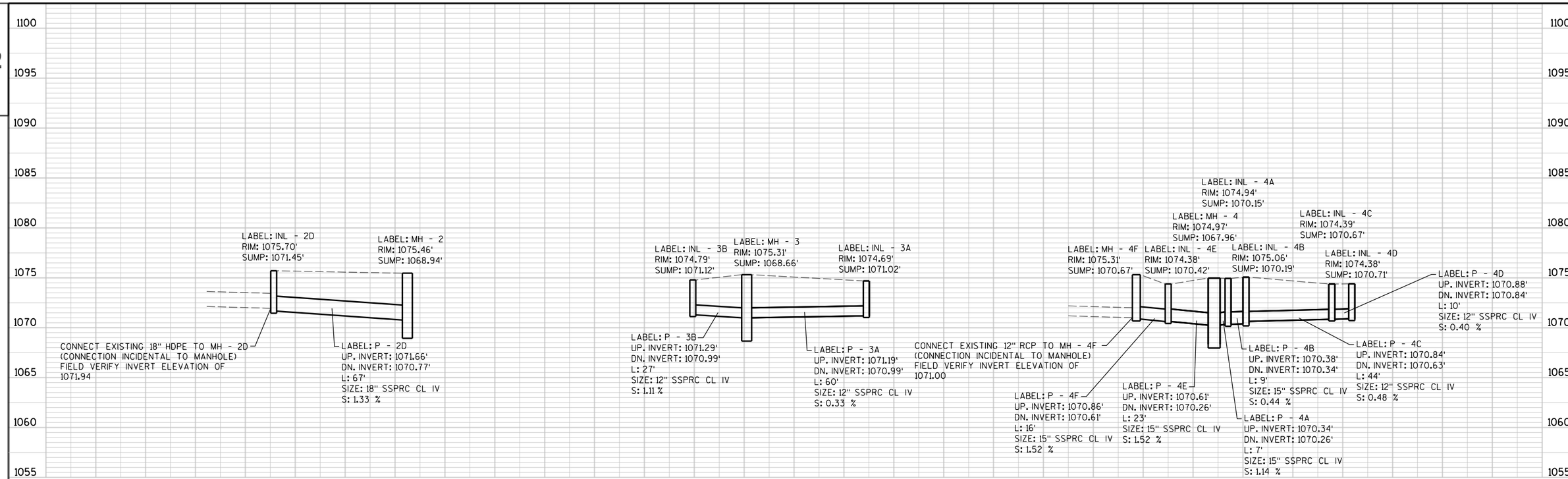

STA 118+00.00 - STA 125+00.00			PAY				FLOW			DISCHARGE PIPE					
STRUCT NO	STATION	LOCATION	LENGTH C-C FT	TO STRUCT NO	INLET OR MANHOLE	TYPE	LINE/ RIM ELEV	TOP OF STRUCT ELEV	STRUCT DEPTH FT	INLET ELEV	OUTLET ELEV	SIZE IN	INSTALL LENGTH FT	SLOPE %	REMARKS
1	122+07.18	45.8' LT	48	2	MH	5-FT DIA-J	1075.05	1073.72	4.69	1069.36	1069.27	36	48	0.19	CONNECT EXIST 36" RCP TO MH 1 INV EL = 1069.48
2	122+52.38	30.0' LT	150	3	MH	6-FT DIA-J	1075.46	1074.13	5.19	1069.27	1068.99	36	150	0.19	
2D	123+02.45	73.8' LT	67	2	INL	4-FT DIA-H-S	1075.70	1074.78	3.33	1071.66	1070.77	18	67	1.33	CONNECT EXIST 18" HDPE TO MH 2D INV EL = 1071.94
3	124+02.22	30.0' LT	75	4	MH	5-FT DIA-J	1075.31	1073.98	5.32	1068.99	1068.84	36	75	0.20	
-	-	-	-	-	-	-	-	-	-	-	-	-	-	-	CONCRETE COLLAR MAY BE REQ'D ON P-3A DUE TO STAGING
3A	124+07.00	29.5' RT	60	3	INL	2x3-FT-H	1074.69	1073.77	2.75	1071.19	1070.99	12	60	0.33	
3B	123+88.00	53.5' LT	27	3	INL	2x3-FT-H	1074.79	1073.87	2.75	1071.29	1070.99	12	27	1.11	
4	124+77.79	30.0' LT	109	5	MH	6-FT DIA-J	1074.97	1073.64	5.68	1068.34	1068.18	42	109	0.15	
4A	124+77.79	22.5' LT	7	4	INL	2x3-FT-H-S	1074.94	1074.02	3.87	1070.34	1070.26	15	7	1.14	
4B	124+77.79	13.5' LT	9	4A	INL	2x3-FT-H-S	1075.06	1074.14	3.95	1070.38	1070.34	15	9	0.44	
4D	124+77.79	29.5' RT	10	4C	INL	2x3-FT-H-S	1074.38	1073.46	2.75	1070.88	1070.84	12	10	0.40	
4C	124+88.00	29.5' RT	44	4B	INL	2x3-FT-H-S	1074.39	1073.47	2.80	1070.84	1070.63	12	44	0.48	
4E	124+77.79	53.5' LT	23	4	INL	2x3-FT-H-S	1074.38	1073.46	3.04	1070.61	1070.26	15	23	1.52	
4F	124+70.16	68.0' LT	16	4E	MH	4-FT DIA-J	1075.31	1073.98	3.31	1070.86	1070.61	15	16	1.52	CONNECT EXIST 12" RCP TO MH 4F INV EL = 1071.00

MANHOLES			INLETS		MANHOLE COVERS	INLET COVERS		SSPRC C-C CLASS IV					CONCRETE COLLAR
4-FT DIA	5-FT DIA	6-FT DIA	4-FT DIA	2x3-FT	TYPE J	TYPE H	TYPE H-S	12-INCH	15-INCH	18-INCH	36-INCH	42-INCH	EACH
1	2	2	1	7	5	2	6	141	55	67	273	109	1

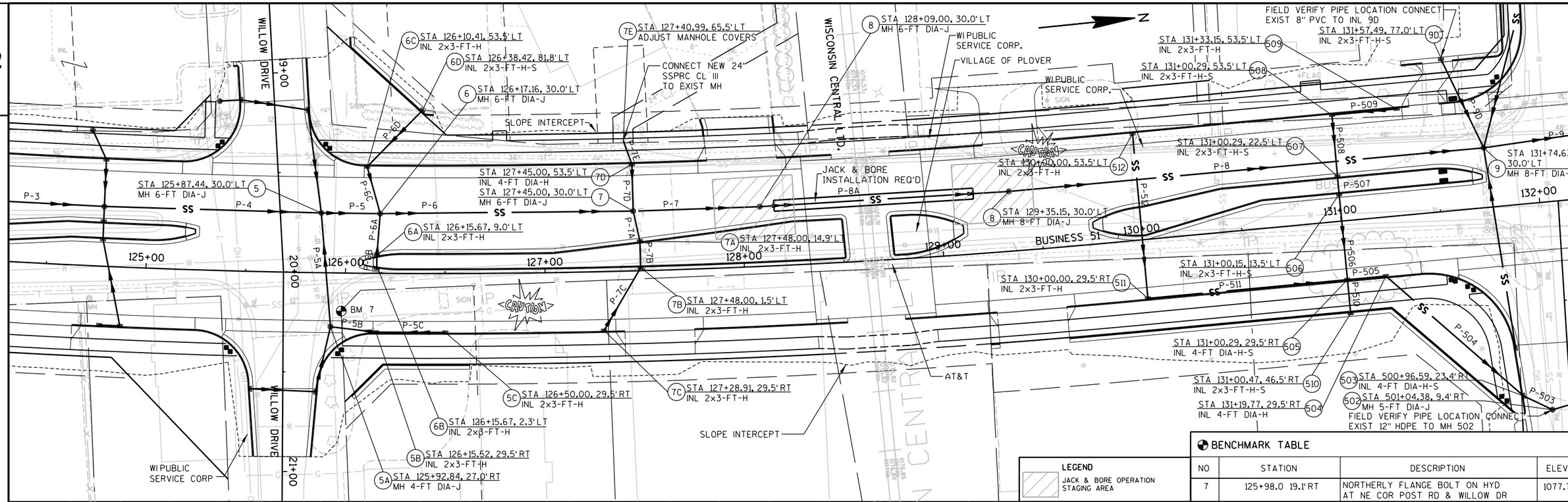

BENCHMARK TABLE

NO	STATION	DESCRIPTION	ELEV
7	125+98.0 19.1'RT	NORTHERLY FLANGE BOLT ON HYD AT NE COR POST RD & WILLOW DR	1077.72

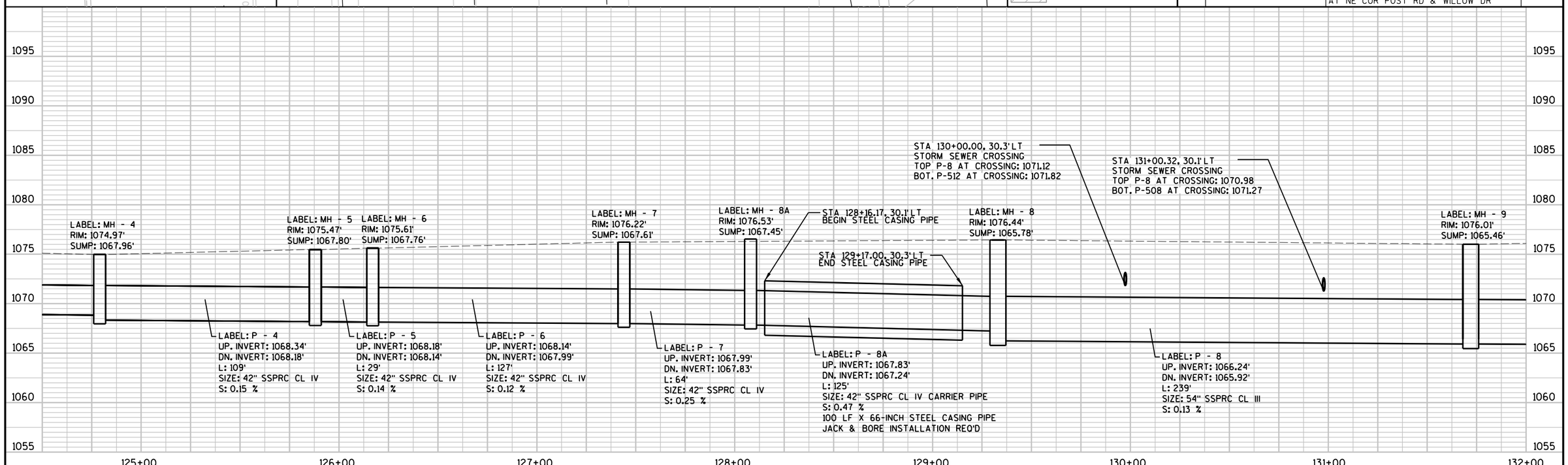

PROJECT NO:6414-00-78	HWY:BUSINESS 51	COUNTY:PORTAGE	STORM SEWER	SHEET 54	E

2

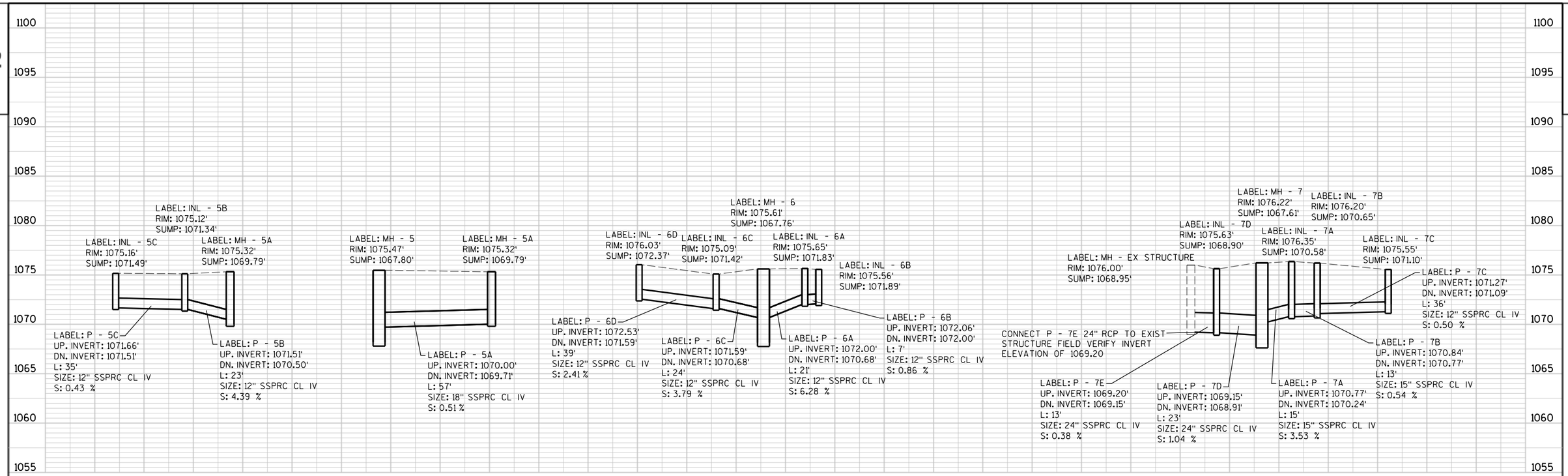

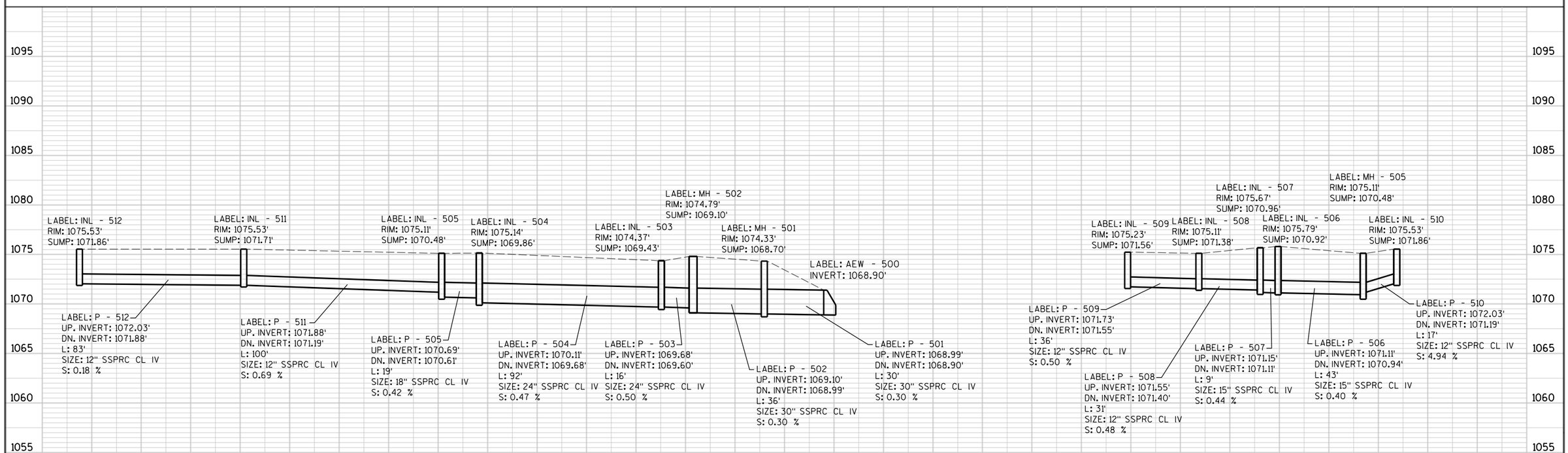

PROJECT NO: 6414-00-78	HWY: BUSINESS 51	COUNTY: PORTAGE	STORM SEWER	SHEET 55	E

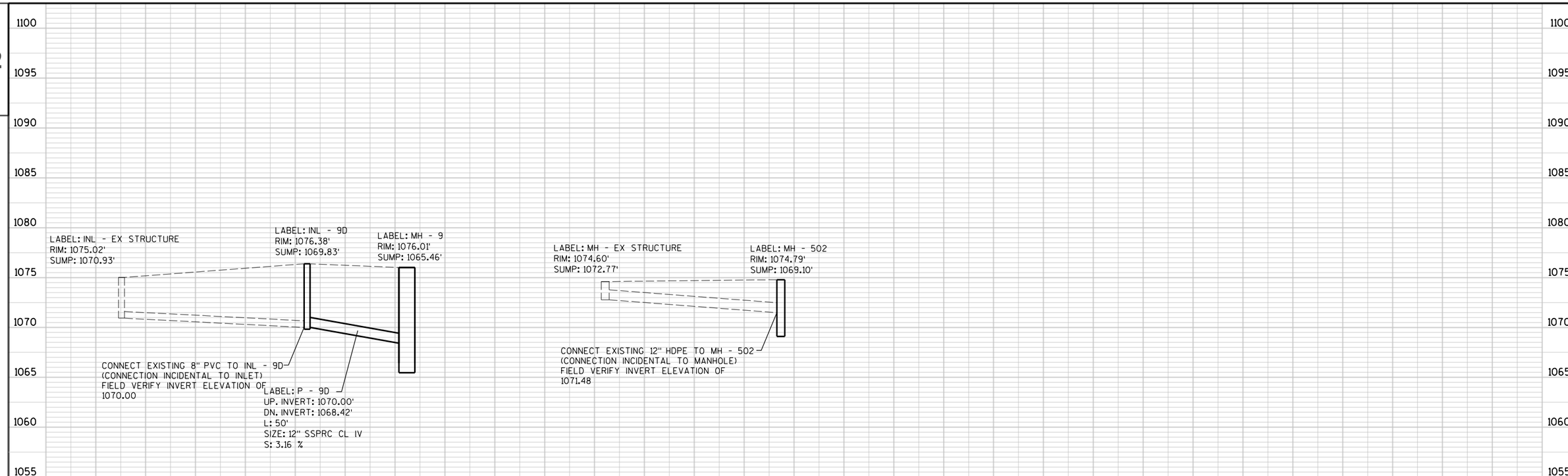

STA 125+00.00 - STA 132+00

STRUCT NO	STATION	LOCATION	PAY LENGTH C-C FT	TO STRUCT NO	INLET OR MANHOLE	TYPE	FLOW LINE/ RIM ELEV	TOP OF STRUCT ELEV	STRUCT DEPTH FT	DISCHARGE PIPE INLET ELEV	DISCHARGE PIPE OUTLET ELEV	DISCHARGE PIPE SIZE IN	DISCHARGE PIPE INSTALL LENGTH FT	DISCHARGE PIPE SLOPE %	REMARKS
5	125+87.44	30.0' LT	29	6	MH	6-FT DIA-J	1075.47	1074.14	6.34	1068.18	1068.14	42	29	0.14	
5A	125+92.84	27.0' RT	57	5	MH	4-FT DIA-J	1075.32	1073.99	4.20	1070.00	1069.71	18	57	0.51	
5B	126+15.52	29.5' RT	23	5A	INL	2x3-FT-H	1075.12	1074.20	2.86	1071.51	1070.50	12	23	4.39	
5C	126+50.00	29.5' RT	35	5B	INL	2x3-FT-H	1075.16	1074.24	2.75	1071.66	1071.51	12	35	0.43	
6	126+17.16	30.0' LT	127	7	MH	6-FT DIA-J	1075.61	1074.28	6.52	1068.14	1067.99	42	127	0.12	
6A	126+15.67	9.0' LT	21	6	INL	2x3-FT-H	1075.65	1074.40	2.57	1072.00	1070.68	12	21	6.28	
6B	126+15.67	2.3' LT	7	6A	INL	2x3-FT-H	1075.56	1074.64	2.75	1072.06	1072.00	12	7	0.86	
6C	126+10.41	53.5' LT	24	6	INL	2x3-FT-H	1075.09	1074.17	2.75	1071.59	1070.68	12	24	3.79	
6D	126+38.42	81.8' LT	39	6C	INL	2x3-FT-H-S	1076.03	1075.11	2.74	1072.53	1071.59	12	39	2.41	
7	127+45.00	30.0' LT	64	8A	MH	6-FT DIA-J	1076.22	1074.89	7.28	1067.99	1067.83	42	64	0.25	
7A	127+48.00	14.9' LT	15	7	INL	2x3-FT-H	1076.35	1075.43	4.85	1070.77	1070.24	15	15	3.53	
7B	127+48.00	1.5' LT	13	7A	INL	2x3-FT-H	1076.20	1075.28	4.63	1070.84	1070.77	15	13	0.54	
7C	127+28.91	29.5' RT	36	7B	INL	2x3-FT-H	1075.55	1074.63	3.53	1071.27	1071.09	12	36	0.50	
7D	127+45.00	53.5' LT	23	7	INL	4-FT DIA-H	1075.63	1074.30	5.40	1069.15	1068.91	24	23	1.04	
7E	127+40.99	65.5' LT	13	7D	MH	ADJUST	1076.00	N/A	N/A	1069.20	1069.15	24	13	0.38	ADJUST MANHOLE CASTING CONNECTION TO EXISTING MANHOLE
8A	128+09.00	30.0' LT	125	8	MH	6-FT DIA-J	1076.53	1075.20	7.75	1067.83	1067.24	42	125	0.47	JACK AND BORE INSTALLATION, 100' STEEL CASING PIPE
8	129+35.15	30.0' LT	239	9	MH	8-FT DIA-J	1076.44	1075.11	9.33	1066.24	1065.92	54	239	0.13	
9	131+74.63	30.0' LT	236	10	MH	8-FT DIA-J	1076.01	1074.68	9.22	1065.92	1065.69	54	236	0.10	
9D	131+57.49	77.0' LT	50	9	INL	2x3-FT-H-S	1076.38	1075.46	5.63	1070.00	1068.42	12	50	3.16	CONNECT EXIST 8" PVC TO INL 9D INV EL = 1070.00
512	130+00.00	53.5' LT	83	511	INL	2x3-FT-H	1075.53	1074.61	2.75	1072.03	1071.88	12	83	0.18	
511	130+00.00	29.5' RT	100	505	INL	2x3-FT-H	1075.53	1074.61	2.90	1071.88	1071.19	12	100	0.69	
510	131+00.47	46.5' RT	17	505	INL	2x3-FT-H-S	1075.53	1074.61	2.75	1072.03	1071.19	12	17	4.94	
509	131+33.15	53.5' LT	36	508	INL	2x3-FT-H	1075.23	1074.31	2.75	1071.73	1071.55	12	36	0.50	
508	131+00.29	53.5' LT	31	507	INL	2x3-FT-H-S	1075.11	1074.19	2.81	1071.55	1071.40	12	31	0.48	
507	131+00.29	22.5' LT	9	506	INL	2x3-FT-H-S	1075.67	1074.75	3.79	1071.15	1071.11	15	9	0.44	
506	131+00.15	13.5' LT	43	505	INL	2x3-FT-H-S	1075.79	1074.87	3.95	1071.11	1070.94	15	43	0.40	
505	131+00.29	29.5' RT	19	504	INL	4-FT DIA-H-S	1075.11	1074.19	3.71	1070.69	1070.61	18	19	0.42	
504	131+19.77	29.5' RT	92	503	INL	4-FT DIA-H	1075.14	1074.22	4.36	1070.11	1069.68	24	92	0.47	
503	500+96.59	23.4' RT	16	502	INL	4-FT DIA-H-S	1074.37	1073.45	4.02	1069.68	1069.60	24	16	0.50	
502	501+04.38	9.4' RT	36	501	MH	5-FT DIA-J	1074.79	1073.46	4.36	1069.10	1068.99	30	36	0.31	CONNECT EXIST 12" HDPE TO MH 502 INV EL = 1071.48

MANHOLES				INLETS		ADJUST MANHOLE COVERS	MANHOLE COVERS	INLET COVERS		SSPRC C-C CLASS IV						SSPRC C-C CLASS III	SSPRC C-C CLASS IV CARRIER PIPE	STEEL CASING PIPE	CONNECTION TO EXISTING INLETS OR MANHOLES
4-FT DIA	5-FT DIA	6-FT DIA	8-FT DIA	4-FT DIA	2x3-FT	COVERS	TYPE J	TYPE H	TYPE H-S	12-INCH	15-INCH	18-INCH	24-INCH	30-INCH	42-INCH	54-INCH	42-INCH	66-INCH	EACH
1	1	4	2	4	17	1	8	13	8	502	80	76	144	36	220	475	125	100	1

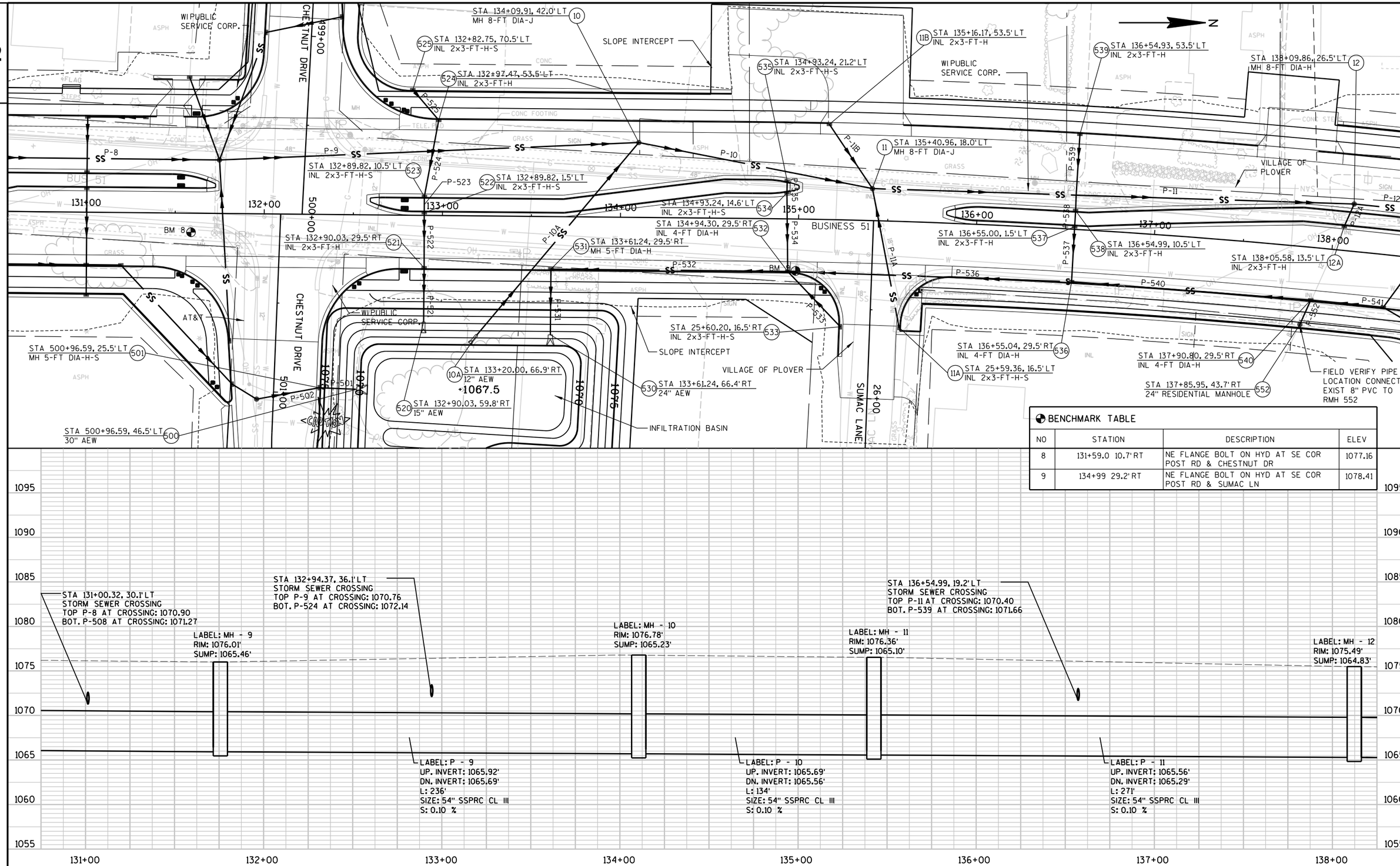

BENCHMARK TABLE

NO	STATION	DESCRIPTION	ELEV
8	131+59.0 10.7' RT	NE FLANGE BOLT ON HYD AT SE COR POST RD & CHESTNUT DR	1077.16
9	134+99 29.2' RT	NE FLANGE BOLT ON HYD AT SE COR POST RD & SUMAC LN	1078.41

PROJECT NO: 6414-00-78	HWY: BUSINESS 51	COUNTY: PORTAGE	STORM SEWER	SHEET 57	E

FILE NAME : P:\UZ\W\Witnc\112545\5-final-dsgn\51-drawings\40-TransHwy\022503_ss.dgn PLOT TIME : 2:01:05 PM PLOT DATE : 8/2/2015 PLOT BY : SEH PLOT NAME : PLOT SCALE : N/A

WISDOT/CADDS SHEET 40

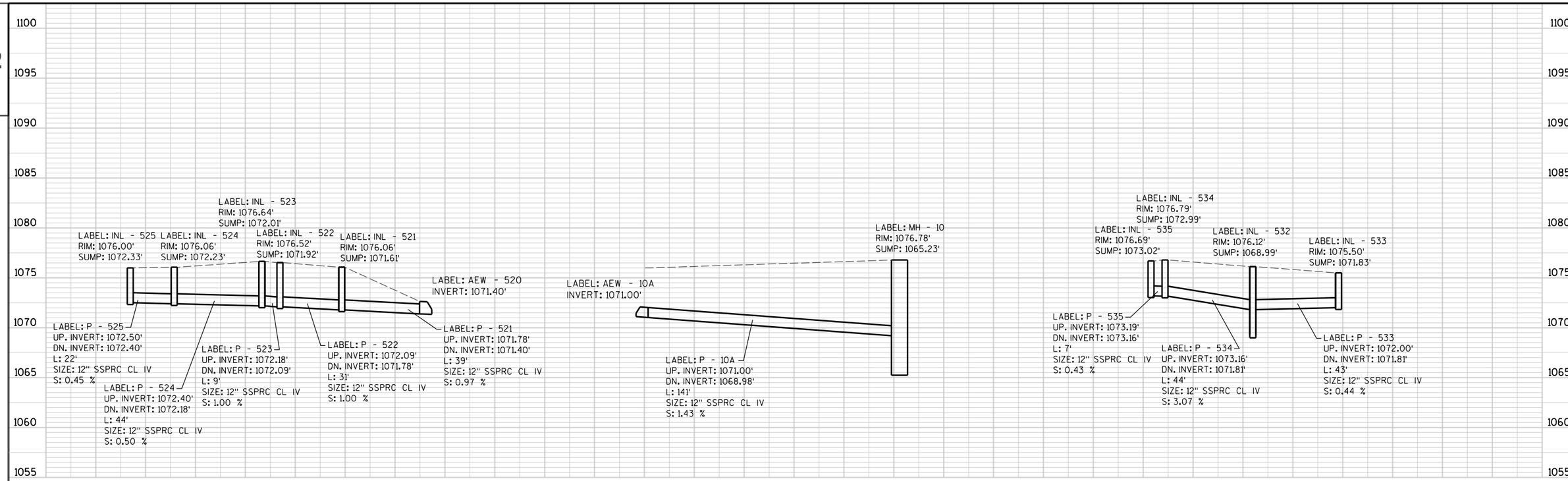
1100
1095
1090
1085
1080
1075
1070
1065
1060
1055
LABEL: INL - 525
RIM: 1076.00'
SUMP: 1072.33'
LABEL: INL - 524
RIM: 1076.06'
SUMP: 1072.23'
LABEL: INL - 523
RIM: 1076.64'
SUMP: 1072.01'
LABEL: INL - 522
RIM: 1076.52'
SUMP: 1071.92'
LABEL: INL - 521
RIM: 1076.06'
SUMP: 1071.61'
LABEL: AEW - 520
INVERT: 1071.40'
LABEL: P - 525
UP. INVERT: 1072.50'
DN. INVERT: 1072.40'
L: 22'
SIZE: 12" SSPRC CL IV
S: 0.45 %
LABEL: P - 524
UP. INVERT: 1072.40'
DN. INVERT: 1072.18'
L: 44'
SIZE: 12" SSPRC CL IV
S: 0.50 %
LABEL: P - 523
UP. INVERT: 1072.18'
DN. INVERT: 1072.09'
L: 9'
SIZE: 12" SSPRC CL IV
S: 1.00 %
LABEL: P - 522
UP. INVERT: 1072.09'
DN. INVERT: 1071.78'
L: 31'
SIZE: 12" SSPRC CL IV
S: 1.00 %
LABEL: P - 521
UP. INVERT: 1071.78'
DN. INVERT: 1071.40'
L: 39'
SIZE: 12" SSPRC CL IV
S: 0.97 %
LABEL: AEW - 10A
INVERT: 1071.00'
LABEL: MH - 10
RIM: 1076.78'
SUMP: 1065.23'
LABEL: P - 10A
UP. INVERT: 1071.00'
DN. INVERT: 1068.98'
L: 141'
SIZE: 12" SSPRC CL IV
S: 1.43 %
LABEL: INL - 534
RIM: 1076.79'
SUMP: 1072.99'
LABEL: INL - 535
RIM: 1076.69'
SUMP: 1073.02'
LABEL: INL - 532
RIM: 1076.12'
SUMP: 1068.99'
LABEL: INL - 533
RIM: 1075.50'
SUMP: 1071.83'
LABEL: P - 535
UP. INVERT: 1073.19'
DN. INVERT: 1073.16'
L: 7'
SIZE: 12" SSPRC CL IV
S: 0.43 %
LABEL: P - 534
UP. INVERT: 1073.16'
DN. INVERT: 1071.81'
L: 44'
SIZE: 12" SSPRC CL IV
S: 3.07 %
LABEL: P - 533
UP. INVERT: 1072.00'
DN. INVERT: 1071.81'
L: 43'
SIZE: 12" SSPRC CL IV
S: 0.44 %
1095
1090
1085
1080
1075
1070
1065
1060
1055
LABEL: INL - 11B
RIM: 1076.03'
SUMP: 1072.36'
LABEL: MH - 11
RIM: 1076.36'
SUMP: 1065.10'
LABEL: INL - 11A
RIM: 1075.36'
SUMP: 1072.19'
LABEL: P - 11B
UP. INVERT: 1072.53'
DN. INVERT: 1072.10'
L: 43'
SIZE: 12" SSPRC CL IV
S: 1.00 %
LABEL: P - 11A
UP. INVERT: 1072.36'
DN. INVERT: 1071.53'
L: 79'
SIZE: 12" SSPRC CL IV
S: 1.05 %
LABEL: INL - 539
RIM: 1075.47'
SUMP: 1071.80'
LABEL: INL - 537
RIM: 1076.03'
SUMP: 1071.56'
LABEL: INL - 538
RIM: 1076.15'
SUMP: 1071.61'
LABEL: INL - 536
RIM: 1075.47'
SUMP: 1069.31'
LABEL: P - 539
UP. INVERT: 1071.97'
DN. INVERT: 1071.78'
L: 43'
SIZE: 12" SSPRC CL IV
S: 0.44 %
LABEL: P - 538
UP. INVERT: 1071.78'
DN. INVERT: 1071.73'
L: 9'
SIZE: 12" SSPRC CL IV
S: 0.56 %
LABEL: P - 537
UP. INVERT: 1071.73'
DN. INVERT: 1071.42'
L: 31'
SIZE: 12" SSPRC CL IV
S: 1.00 %
CONNECT EXISTING 8" PVC TO RMH - 552
(CONNECTION INCIDENTAL TO MANHOLE)
FIELD VERIFY INVERT ELEVATION OF
1072.62
LABEL: RMH - 552
RIM: 1075.85'
SUMP: 1071.62'
LABEL: INL - 540
RIM: 1074.94'
SUMP: 1069.58'
LABEL: P - 552
UP. INVERT: 1072.62'
DN. INVERT: 1071.51'
L: 15'
SIZE: 8" PVC
S: 0.73 %
LABEL: MH - 12
RIM: 1075.49'
SUMP: 1064.83'
LABEL: INL - 12A
RIM: 1075.53'
SUMP: 1071.86'
LABEL: P - 12A
UP. INVERT: 1072.03'
DN. INVERT: 1071.85'
L: 14'
SIZE: 12" SSPRC CL IV
S: 1.30 %

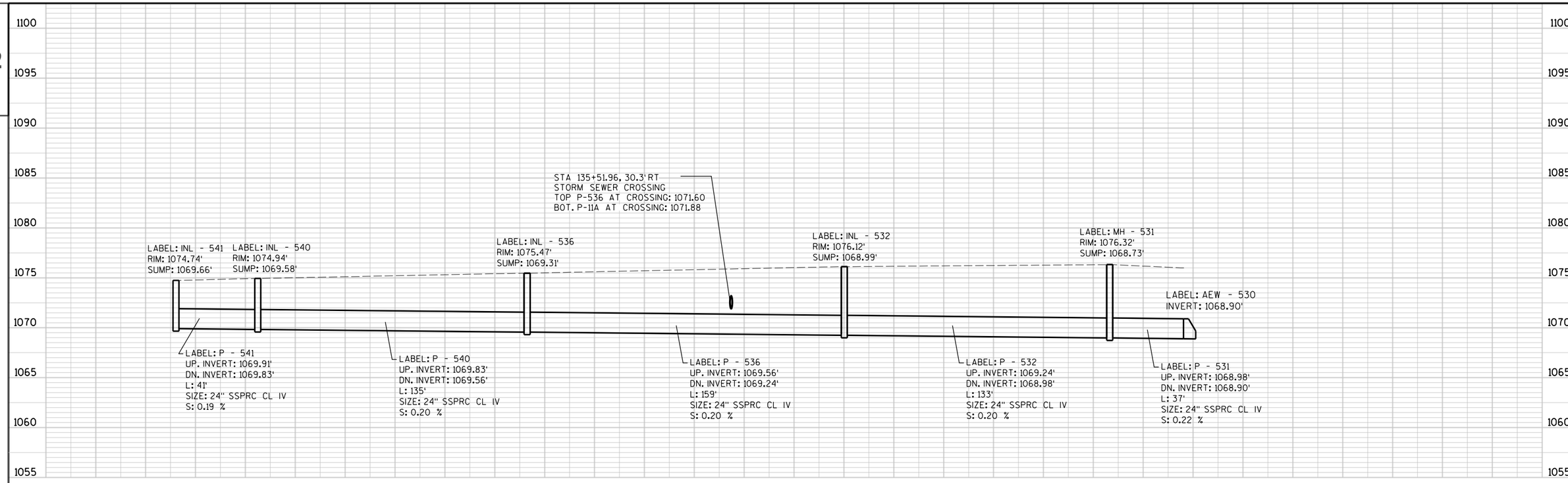

STA 131+00.00 - STA 138+00.00

STRUCT NO	STATION	LOCATION	PAY LENGTH C-C FT	TO STRUCT NO	INLET OR MANHOLE	TYPE	FLOW LINE/ RIM ELEV	TOP OF STRUCT ELEV	STRUCT DEPTH FT	DISCHARGE PIPE INLET ELEV	DISCHARGE PIPE OUTLET ELEV	DISCHARGE PIPE SIZE IN	DISCHARGE PIPE INSTALL LENGTH FT	DISCHARGE PIPE SLOPE %	REMARKS
501	500+96.59	25.5' LT	21	500	MH	5-FT DIA-H-S	1074.33	1073.41	4.71	1068.99	1068.90	30	21	0.30	
500	500+96.59	46.5' LT	-	-	AEW	-	-	-	-	-	-	-	-	-	30" AEW
520	132+90.03	59.8' RT	-	-	AEW	-	-	-	-	-	-	-	-	-	15" AEW
521	132+90.03	29.5' RT	30	520	INL	2x3-FT-H	1076.06	1075.14	3.53	1071.78	1071.40	12	30	1.27	
522	132+89.82	1.5' LT	31	521	INL	2x3-FT-H-S	1076.52	1075.60	3.68	1072.09	1071.78	12	31	1.00	
523	132+89.82	10.5' LT	9	522	INL	2x3-FT-H-S	1076.64	1075.72	3.71	1072.18	1072.09	12	9	1.00	
524	132+97.47	53.5' LT	44	523	INL	2x3-FT-H	1076.06	1075.14	2.91	1072.40	1072.18	12	44	0.50	
525	132+82.75	70.5' LT	22	524	INL	2x3-FT-H-S	1076.00	1075.08	2.75	1072.50	1072.40	12	22	0.45	
10A	133+20.00	66.9' RT	141	10	AEW	-	-	-	-	1071.00	1068.98	12	141	1.43	12" AEW
10	134+09.91	42.0' LT	134	11	MH	8-FT DIA-J	1076.78	1075.45	10.22	1065.69	1065.56	54	134	0.10	
530	133+61.24	66.4' RT	-	-	AEW	-	-	-	-	-	-	-	-	-	24" AEW
531	133+61.24	29.5' RT	37	530	MH	5-FT DIA-H	1076.32	1075.40	6.67	1068.98	1068.90	24	37	0.22	
532	134+94.30	29.5' RT	133	531	MH	4-FT DIA-H	1076.12	1075.20	6.21	1069.24	1068.98	24	133	0.20	
533	25+60.20	16.5' RT	43	532	INL	2x3-FT-H-S	1075.50	1074.58	2.75	1072.00	1071.81	12	43	0.44	
534	134+93.24	14.6' LT	44	532	INL	2x3-FT-H-S	1076.79	1075.87	2.88	1073.16	1071.81	12	44	3.07	
535	134+93.24	21.2' LT	7	534	INL	2x3-FT-H-S	1076.69	1075.77	2.75	1073.19	1073.16	12	7	0.43	
11	135+40.96	18.0' LT	271	12	MH	8-FT DIA-J	1076.36	1075.03	9.93	1065.56	1065.29	54	271	0.10	
11A	25+59.36	16.5' LT	79	11	INL	2x3-FT-H-S	1075.36	1074.44	2.25	1072.36	1071.53	12	79	1.05	
11B	135+16.17	53.5' LT	43	11	INL	2x3-FT-H	1076.03	1075.11	2.75	1072.53	1072.10	12	43	1.00	
539	136+54.93	53.5' LT	43	538	INL	2x3-FT-H	1075.47	1074.55	2.75	1071.97	1071.78	12	43	0.44	
538	136+54.99	10.5' LT	9	537	INL	2x3-FT-H	1076.15	1075.23	3.62	1071.78	1071.73	12	9	0.56	
537	136+55.00	1.5' LT	31	536	INL	2x3-FT-H	1076.03	1075.11	3.55	1071.73	1071.42	12	31	1.00	
536	136+55.04	29.5' RT	159	532	MH	4-FT DIA-H	1075.47	1074.55	5.24	1069.56	1069.24	24	159	0.20	
540	137+90.80	29.5' RT	135	536	MH	4-FT DIA-H	1074.94	1074.02	4.44	1069.83	1069.56	24	135	0.20	
552	137+85.95	43.7' RT	15	540	24" RMH	RESIDENTIAL	1075.85	1075.52	3.90	1072.62	1071.51	8	15	7.40	CONNECT EXIST 8" PVC TO RMH 552 INVERT EL = 1072.62
12	138+09.86	26.5' LT	271	13	MH	8-FT DIA-H	1075.49	1074.57	9.74	1065.29	1065.02	54	271	0.10	
12A	138+05.58	13.5' LT	14	12	INL	2x3-FT-H	1075.53	1074.61	2.75	1072.03	1071.90	12	14	0.93	

MANHOLES		INLETS		RESIDENTIAL MANHOLE	AEWS				MANHOLE COVERS	INLET COVERS		PVC SCH 40	SSPRC C-C CLASS IV			SSPRC C-C CLASS III
5-FT DIA	8-FT DIA	4-FT DIA	2x3-FT	24-INCH	12-INCH	15-INCH	24-INCH	30-INCH	TYPE J	TYPE H	TYPE H-S	8-INCH	12-INCH	24-INCH	30-INCH	54-INCH
2	3	3	14	1	1	1	1	1	2	12	8	15	590	464	21	676

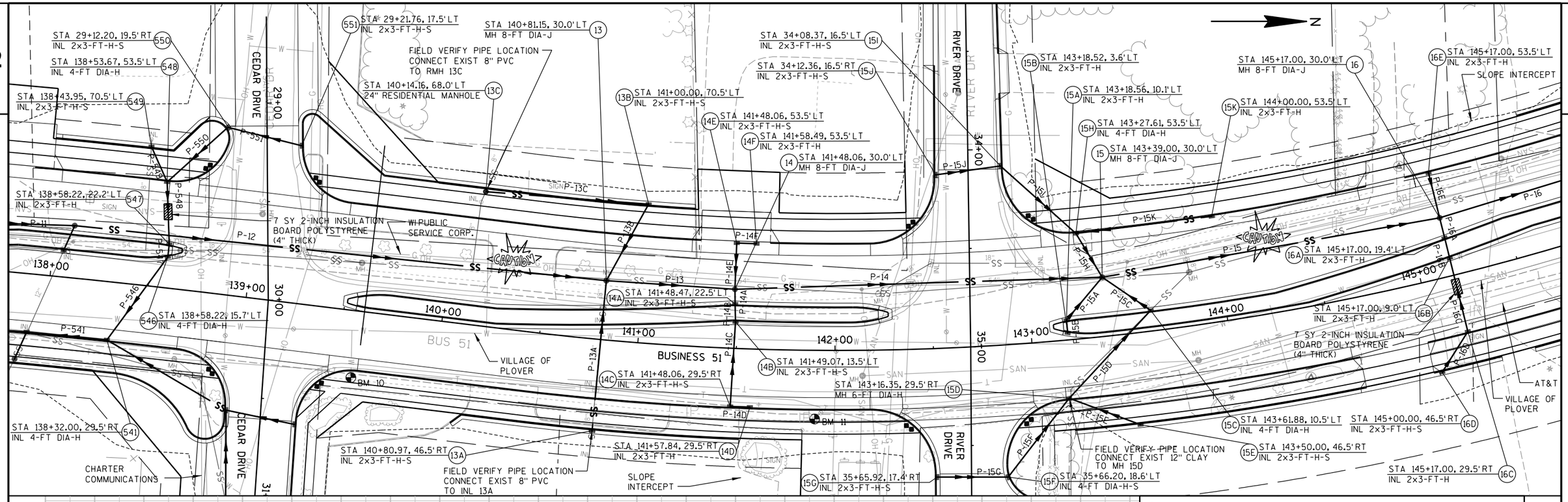

BENCHMARK TABLE

NO	STATION	DESCRIPTION	ELEV
10	139+57.5 34.0' RT	NE FLANGE BOLT ON HYD AT NE COR POST RD & CEDAR DR	1077.98
11	141+89.5 34.9' RT	NE FLANGE BOLT ON HYD AT NE COR POST RD & CEDAR DR	1077.44

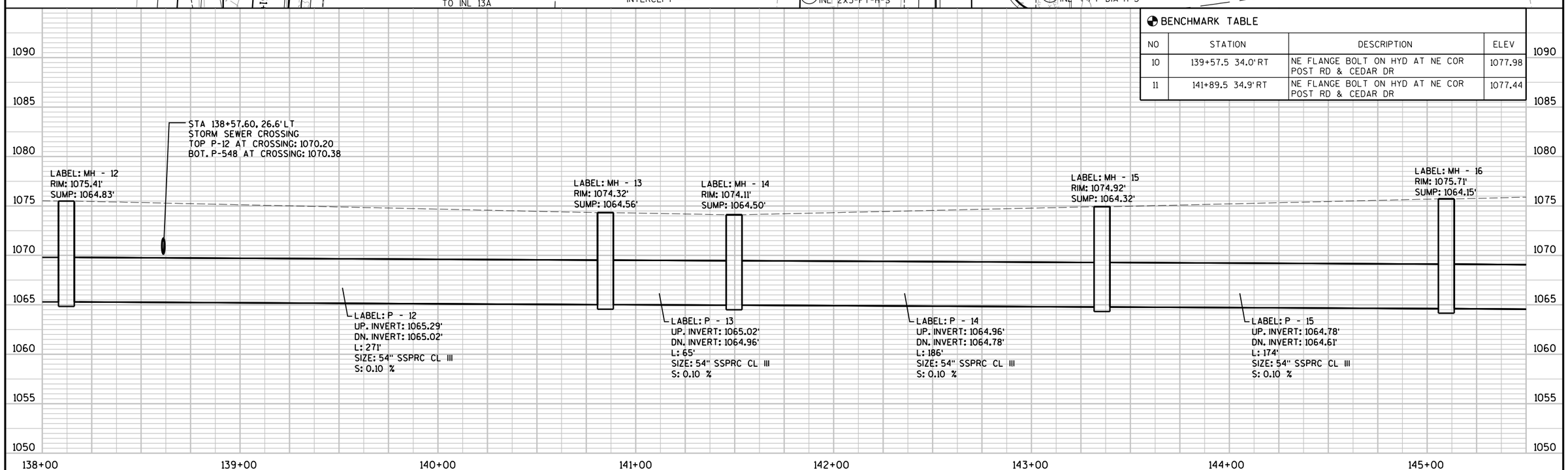

PROJECT NO: 6414-00-78	HWY: BUSINESS 51	COUNTY: PORTAGE	STORM SEWER	SHEET 60	E

2

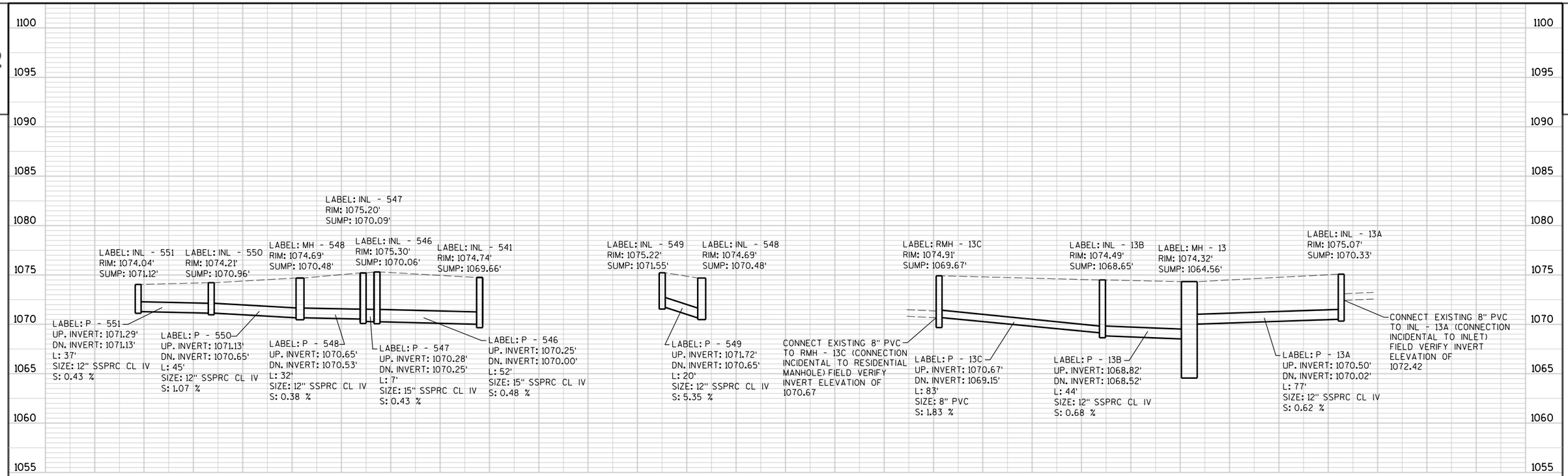

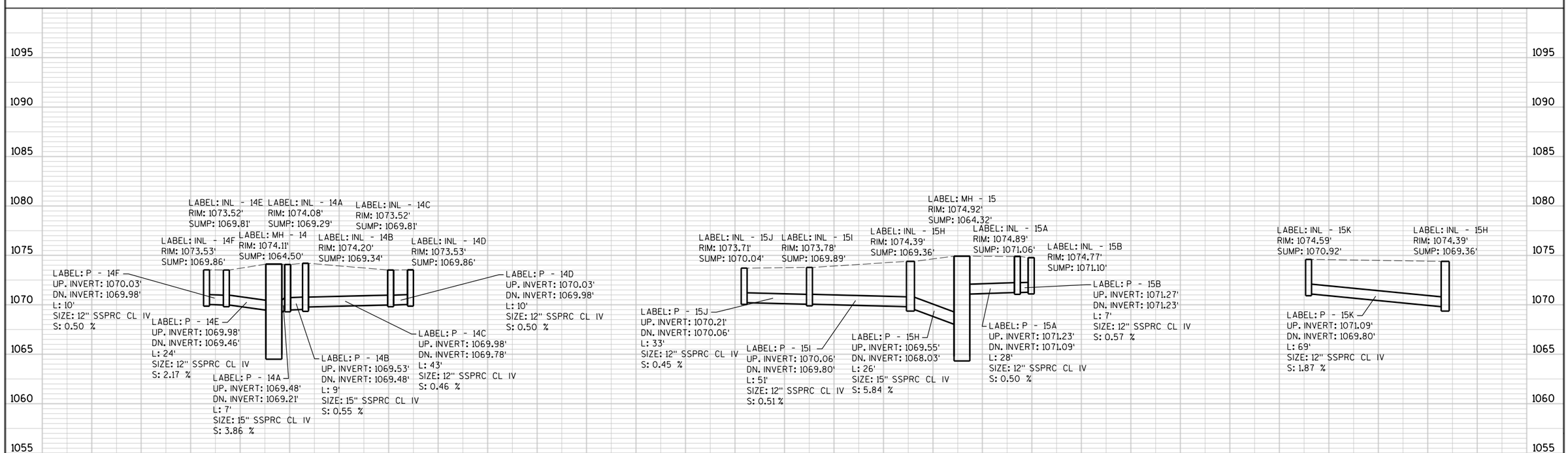

PROJECT NO:6414-00-78	HWY:BUSINESS 51	COUNTY:PORTAGE	STORM SEWER	SHEET 61	E

2

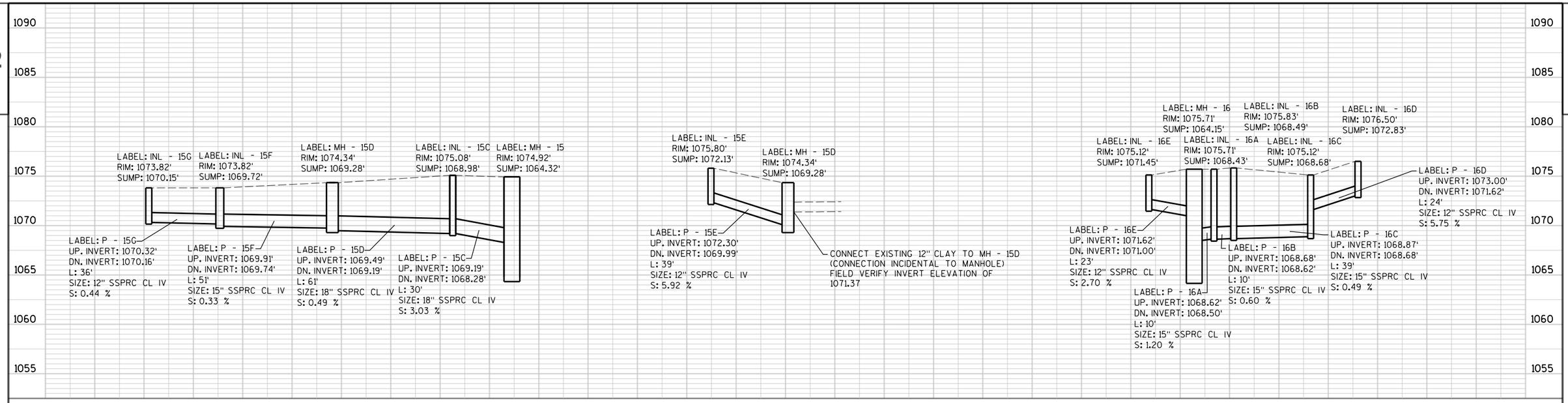

2

STA 138+00.00 - STA 146+00.00

STRUCT NO	STATION	LOCATION	PAY LENGTH C-C FT	TO STRUCT NO	INLET OR MANHOLE	TYPE	FLOW LINE/ RIM ELEV	TOP OF STRUCT ELEV	STRUCT DEPTH FT	DISCHARGE PIPE INLET ELEV	OUTLET ELEV	SIZE IN	INSTALL LENGTH FT	SLOPE %	REMARKS
541	138+32.00	29.5' RT	41	540	INL	4-FT DIA-H	1074.74	1073.82	4.16	1069.91	1069.83	24	41	0.20	
546	138+58.22	15.7' LT	52	541	INL	4-FT DIA-H	1075.30	1075.30	5.24	1070.25	1070.00	15	52	0.48	
547	138+58.22	22.2' LT	7	546	INL	2x3-FT-H	1075.20	1074.28	4.19	1070.28	1070.25	15	7	0.43	
548	138+53.67	53.5' LT	32	547	INL	4-FT DIA-H	1074.69	1073.36	2.88	1070.65	1070.53	12	32	0.38	
549	138+43.95	70.5' LT	20	548	INL	2x3-FT-H-S	1075.22	1074.30	2.75	1071.72	1070.65	12	20	5.35	
550	29+16.60	17.5' RT	45	548	INL	2x3-FT-H-S	1074.21	1073.29	2.33	1071.13	1070.65	12	45	1.07	
551	29+21.76	17.5' LT	37	550	INL	2x3-FT-H-S	1074.04	1073.12	2.00	1071.29	1071.13	12	37	0.43	
13	140+81.15	30.0' LT	65	14	MH	8-FT DIA-J	1074.32	1072.99	8.43	1065.02	1064.96	54	65	0.09	
13A	140+80.97	46.5' RT	77	13	INL	2x3-FT-H-S	1075.07	1074.15	3.82	1070.50	1070.02	12	77	0.62	CONNECT EXIST 8" PVC TO INL 13A INVERT EL = 1072.42
13B	141+00.00	70.5' LT	44	13	INL	2x3-FT-H-S	1074.49	1073.57	4.92	1068.82	1068.52	12	44	0.68	
13C	140+14.16	68.0' LT	83	13B	24" RMH	RESIDENTIAL	1074.91	1074.58	4.91	1070.67	1069.15	8	83	1.83	CONNECT EXIST 8" PVC TO RMH 13C INVERT EL = 1070.67
14	141+48.06	30.0' LT	186	15	MH	8-FT DIA-J	1074.11	1072.78	8.28	1064.96	1064.78	54	186	0.10	
14A	141+48.47	22.5' LT	7	14	INL	2x3-FT-H-S	1074.08	1073.16	3.87	1069.48	1069.21	15	7	3.86	
14B	141+49.07	13.5' LT	9	14A	INL	2x3-FT-H-S	1074.20	1073.28	3.94	1069.53	1069.48	15	9	0.56	
14C	141+48.06	29.5' RT	43	14B	INL	2x3-FT-H-S	1073.52	1072.60	2.79	1069.98	1069.78	12	43	0.47	
14D	141+57.84	29.5' RT	10	14C	INL	2x3-FT-H	1073.53	1072.61	2.75	1070.03	1069.98	12	10	0.50	
14E	141+48.06	53.5' LT	24	14	INL	2x3-FT-H-S	1073.52	1072.60	2.79	1069.98	1069.46	12	24	2.17	
14F	141+58.49	53.5' LT	10	14E	INL	2x3-FT-H	1073.53	1072.61	2.75	1070.03	1069.98	12	10	0.50	
15	143+39.00	30.0' LT	174	16	MH	8-FT DIA-J	1074.92	1073.59	9.27	1064.78	1064.61	54	174	0.10	
15A	143+18.56	10.1' LT	28	15	INL	2x3-FT-H	1074.89	1073.97	2.91	1071.23	1071.09	12	28	0.50	
15B	143+18.52	3.6' LT	7	15A	INL	2x3-FT-H	1074.77	1073.85	2.75	1071.27	1071.23	12	7	0.57	
15C	143+61.88	10.5' LT	30	15	INL	4-FT DIA-H	1075.08	1074.16	5.18	1069.19	1068.28	18	30	3.03	
15D	143+16.35	29.5' RT	61	15C	MH	6-FT DIA-H	1074.34	1073.42	4.14	1069.49	1069.19	18	61	0.49	CONNECT EXIST 12" CLAY TO MH 15D INVERT EL = 1071.37
15E	143+50.00	46.5' RT	39	15D	INL	2x3-FT-H-S	1075.80	1074.88	2.75	1072.30	1069.99	12	39	5.92	
15F	35+66.20	18.6' LT	51	15D	INL	4-FT DIA-H-S	1073.82	1072.90	3.18	1069.91	1069.74	15	51	0.33	
15G	35+65.92	17.4' RT	36	15F	INL	2x3-FT-H-S	1073.82	1072.90	2.75	1070.32	1070.16	12	36	0.44	
15H	143+27.61	53.5' LT	26	15	INL	4-FT DIA-H	1074.39	1073.47	4.11	1069.55	1068.03	15	26	5.85	
15I	34+08.37	16.5' LT	51	15H	INL	2x3-FT-H-S	1073.78	1072.86	2.97	1070.06	1069.80	12	51	0.51	
15J	34+12.36	16.5' RT	33	15I	INL	2x3-FT-H-S	1073.71	1072.79	2.75	1070.21	1070.06	12	33	0.45	
15K	144+00.00	53.5' LT	69	15H	INL	2x3-FT-H	1074.59	1073.67	2.75	1071.09	1069.80	12	69	1.87	
16	145+17.00	30.0' LT	158	17	MH	8-FT DIA-J	1075.71	1074.79	10.64	1064.61	1064.39	54	158	0.14	
16A	145+17.00	19.4' LT	10	16	INL	2x3-FT-H	1075.71	1074.79	6.36	1068.62	1068.50	15	10	1.20	
16B	145+17.00	9.0' LT	10	16A	INL	2x3-FT-H	1075.83	1074.91	6.42	1068.68	1068.62	15	10	0.60	
16C	145+17.00	29.5' RT	39	16B	INL	2x3-FT-H	1075.12	1074.20	5.52	1068.87	1068.68	15	39	0.49	
16D	145+00.00	46.5' RT	24	16C	INL	2x3-FT-H-S	1076.50	1075.58	2.75	1073.00	1071.62	12	24	5.75	
16E	145+17.00	53.5' LT	23	16	INL	2x3-FT-H	1075.12	1074.20	2.75	1071.62	1071.00	12	23	2.70	

MANHOLES		INLETS		RESIDENTIAL MANHOLE	MANHOLE COVERS	INLET COVERS		PVC SCH 40	SSPRC C-C CLASS IV				SSPRC C-C CLASS III
6-FT DIA	8-FT DIA	4-FT DIA	2x3-FT	24-INCH	TYPE J	TYPE H	TYPE H-S	8-INCH	12-INCH	15-INCH	18-INCH	24-INCH	54-INCH
1	4	6	24	1	4	16	15	83	652	211	91	41	583

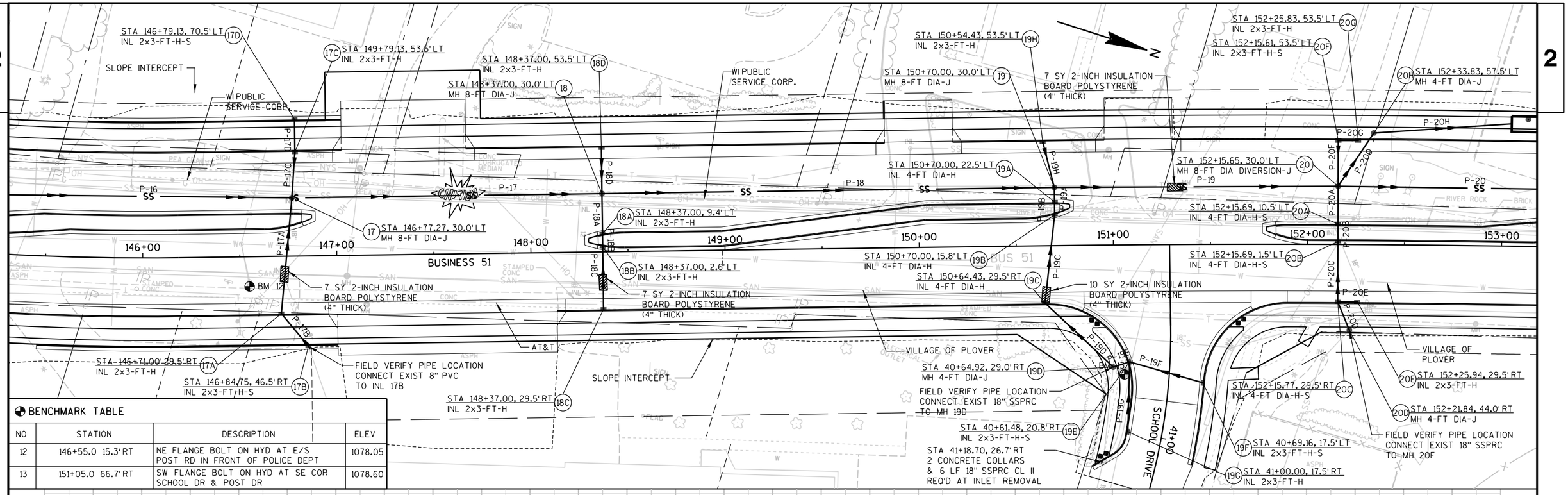

BENCHMARK TABLE

NO	STATION	DESCRIPTION	ELEV
12	146+55.0 15.3'RT	NE FLANGE BOLT ON HYD AT E/S POST RD IN FRONT OF POLICE DEPT	1078.05
13	151+05.0 66.7'RT	SW FLANGE BOLT ON HYD AT SE COR SCHOOL DR & POST DR	1078.60

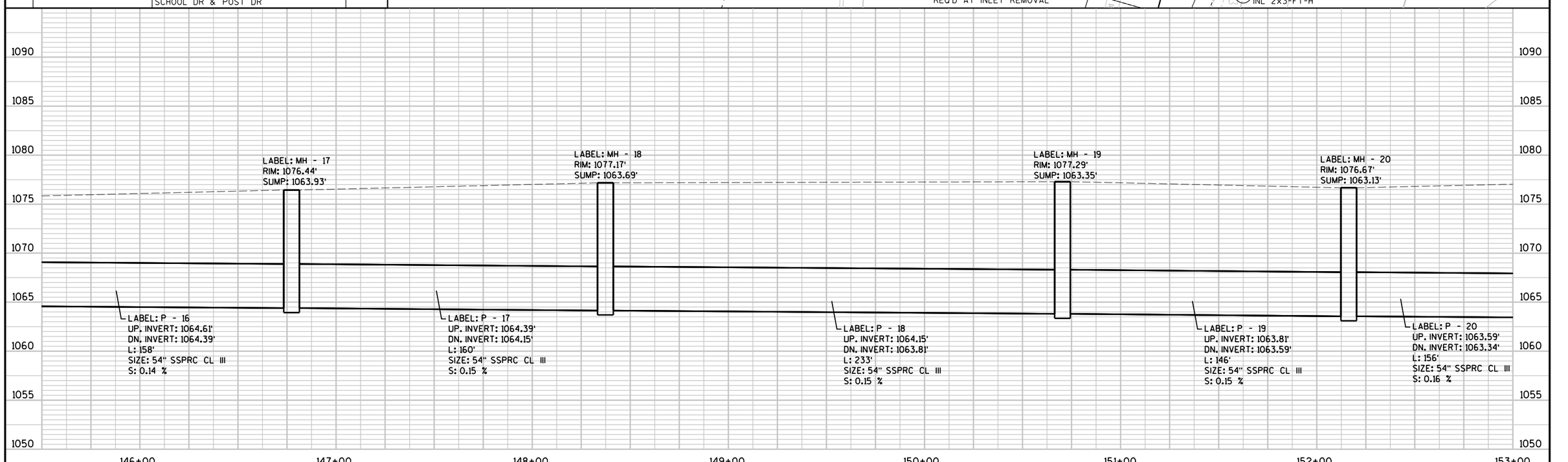

PROJECT NO:6414-00-78	HWY:BUSINESS 51	COUNTY:PORTAGE	STORM SEWER	SHEET 63	E

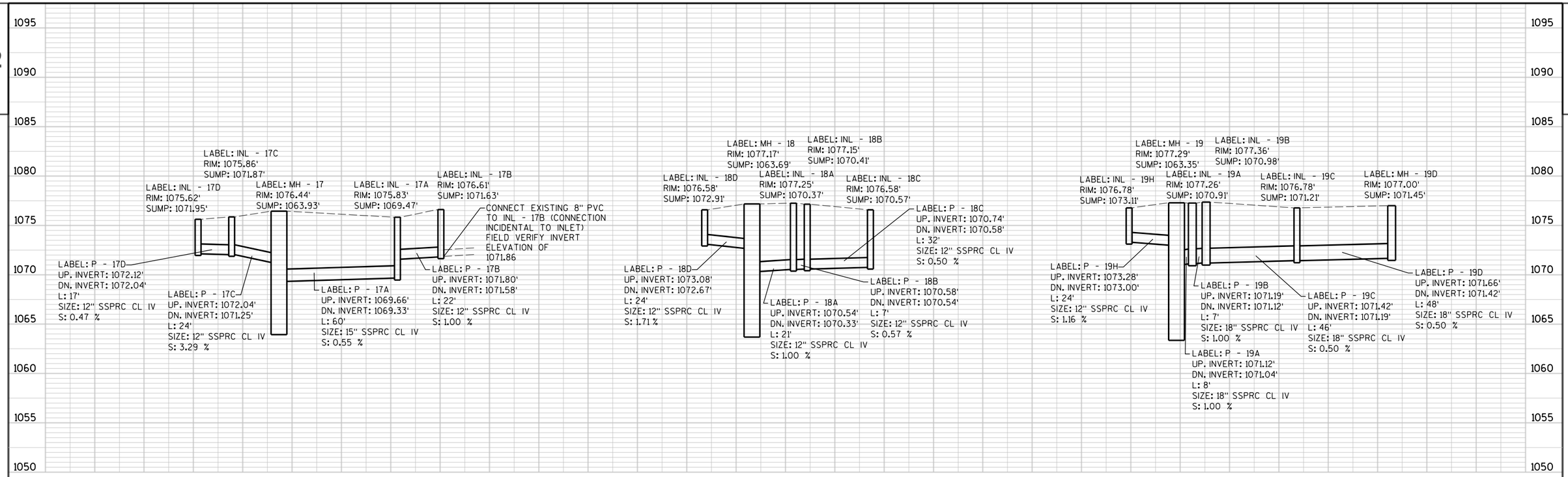

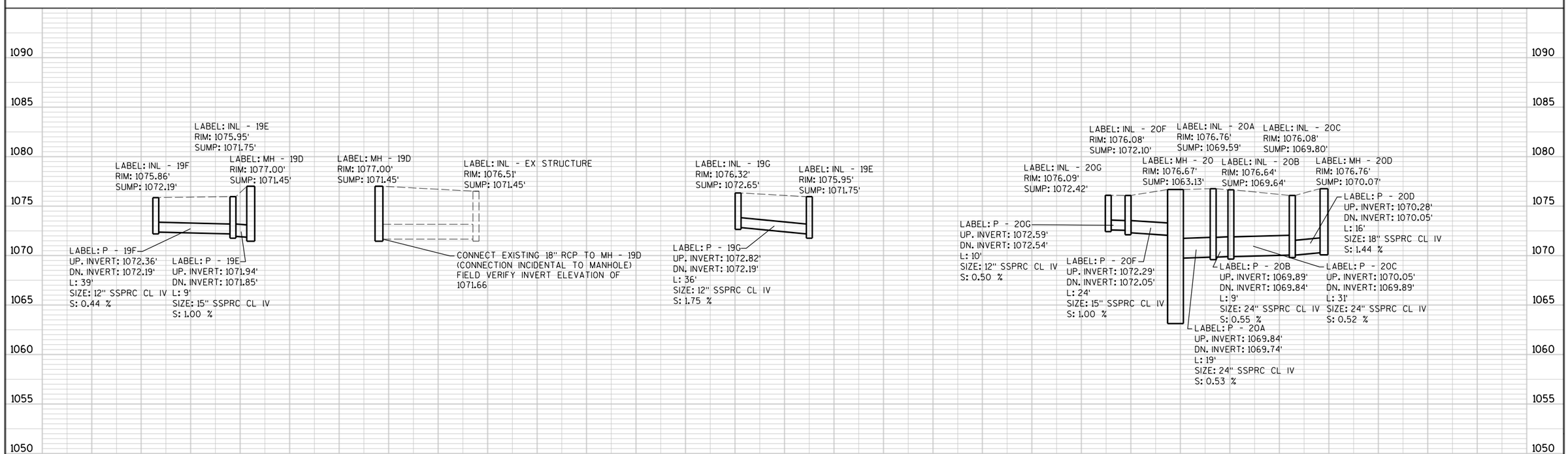

PROJECT NO:6414-00-78	HWY:BUSINESS 51	COUNTY:PORTAGE	STORM SEWER	SHEET 64	E

STA 146+00.00 - STA 153+00.00

STRUCT NO	STATION	LOCATION	PAY LENGTH C-C FT	TO STRUCT NO	INLET OR MANHOLE	TYPE	FLOW LINE/ RIM ELEV	TOP OF STRUCT ELEV	STRUCT DEPTH FT	DISCHARGE PIPE INLET ELEV	DISCHARGE PIPE OUTLET ELEV	DISCHARGE PIPE SIZE IN	DISCHARGE PIPE INSTALL LENGTH FT	DISCHARGE PIPE SLOPE %	REMARKS
17	146+77.27	30.0' LT	160	18	MH	8-FT DIA-J	1076.44	1075.11	11.18	1064.39	1064.15	54	160	0.15	
17A	146+71.00	29.5' RT	60	17	INL	2x3-FT-H	1075.83	1074.91	5.44	1069.66	1069.33	15	60	0.55	
17B	146+84.75	46.5' RT	22	17A	INL	2x3-FT-H-S	1076.61	1075.69	4.06	1071.80	1071.58	12	22	1.00	CONNECT EXIST 8" PVC TO INL 17B INVERT EL = 1071.86
17C	149+79.13	53.5' LT	24	17	INL	2x3-FT-H	1075.86	1074.94	3.07	1072.04	1071.25	12	24	3.29	
17D	146+79.13	70.5' LT	17	17C	INL	2x3-FT-H-S	1075.62	1074.70	2.75	1072.12	1072.04	12	17	0.47	
18	148+37.00	30.0' LT	233	19	MH	8-FT DIA-J	1077.17	1075.84	12.15	1064.15	1063.81	54	233	0.15	
18A	148+37.00	9.4' LT	21	18	INL	2x3-FT-H	1077.25	1076.33	5.96	1070.54	1070.33	12	21	1.00	
18B	148+37.00	2.6' LT	7	18A	INL	2x3-FT-H	1077.15	1076.23	5.82	1070.58	1070.54	12	7	0.57	
18C	148+37.00	29.5' RT	32	18B	INL	2x3-FT-H	1076.58	1075.66	5.09	1070.74	1070.58	12	32	0.50	
18D	148+37.00	53.5' LT	24	18	INL	2x3-FT-H	1076.58	1075.66	2.75	1073.08	1072.67	12	24	1.71	
19	150+70.00	30.0' LT	146	20	MH	8-FT DIA-J	1077.29	1075.96	12.61	1063.81	1063.59	54	146	0.15	
19A	150+70.00	22.5' LT	8	19	INL	4-FT DIA-H	1077.26	1076.34	5.43	1071.12	1071.04	18	8	1.00	
19B	150+70.00	15.8' LT	7	19A	INL	4-FT DIA-H	1077.36	1076.44	5.46	1071.19	1071.12	18	7	1.00	
19C	150+64.43	29.5' RT	46	19B	INL	4-FT DIA-H	1076.78	1075.86	4.65	1071.42	1071.19	18	46	0.50	
19D	40+64.92	29.0' RT	48	19C	MH	4-FT DIA-J	1077.00	1075.67	4.22	1071.66	1071.42	18	48	0.50	
19E	40+61.48	20.8' RT	9	19D	INL	2x3-FT-H-S	1075.95	1075.03	3.28	1071.94	1071.85	15	9	1.00	
19F	40+69.16	17.5' LT	39	19E	INL	2x3-FT-H-S	1075.86	1074.94	2.75	1072.36	1072.19	12	39	0.44	
19G	41+00.00	17.5' RT	36	19E	INL	2x3-FT-H	1076.32	1075.40	2.75	1072.82	1072.19	12	36	1.75	
19H	150+54.43	53.5' LT	24	19	INL	2x3-FT-H	1076.78	1075.86	2.75	1073.28	1073.00	12	24	1.17	
-	41+18.70	26.7' RT	-	-	-	-	-	-	-	-	-	18	6	-	CONCRETE COLLARS REQ'D AT INLET REMOVAL
20	152+15.65	30.0' LT	156	21	MH	8-FT DIA DIV-J	1076.67	1075.34	12.21	1063.59	1063.34	54	156	0.16	DIVERSION MANHOLE ALSO FLOWS TO PIPE - 200
20A	152+15.69	10.5' LT	19	20	INL	4-FT DIA-H-S	1076.76	1075.84	6.25	1069.84	1069.74	24	19	0.53	
20B	152+15.69	1.5' LT	9	20A	INL	4-FT DIA-H-S	1076.64	1075.72	6.08	1069.89	1069.84	24	9	0.56	
20C	152+15.77	29.5' RT	31	20B	INL	4-FT DIA-H-S	1076.08	1075.16	5.36	1070.05	1069.89	24	31	0.52	
20D	152+21.84	44.0' RT	16	20C	MH	4-FT DIA-J	1076.76	1075.43	5.36	1070.28	1070.05	18	16	1.44	
20E	152+25.94	29.5' RT	10	20C	INL	2x3-FT-H	1076.09	1075.17	2.75	1072.59	1072.00	12	10	5.90	
20F	152+15.61	53.5' LT	24	20	INL	2x3-FT-H-S	1076.08	1075.16	3.06	1072.29	1072.05	15	24	1.00	
20G	152+25.83	53.5' LT	10	20F	INL	2x3-FT-H	1076.09	1075.17	2.75	1072.59	1072.54	12	10	0.50	
20H	152+33.83	57.5' LT	72	GRIT	MH	4-FT DIA-J	1076.55	1075.22	11.87	1063.52	1063.38	12	72	0.19	FLOWS TO GRIT CHAMBER
20	-	-	33	20H	DIVERSION	-	-	-	-	1063.59	1063.52	12	33	0.21	PIPE - 200

MANHOLES			INLETS		MANHOLE COVERS	INLET COVERS		SSPRC C-C CLASS IV				SSPRC C-C CLASS III
4-FT DIA	8-FT -DIA	DIVERSION 8-FT	4-FT DIA	2x3-FT	TYPE J	TYPE H	TYPE H-S	12-INCH	15-INCH	18-INCH	24-INCH	54-INCH
3	4	1	6	15	7	13	8	371	93	131	59	695

PROJECT NO:6414-00-78 | HWY:BUSINESS 51 | COUNTY:PORTAGE | STORM SEWER | SHEET 65 | E

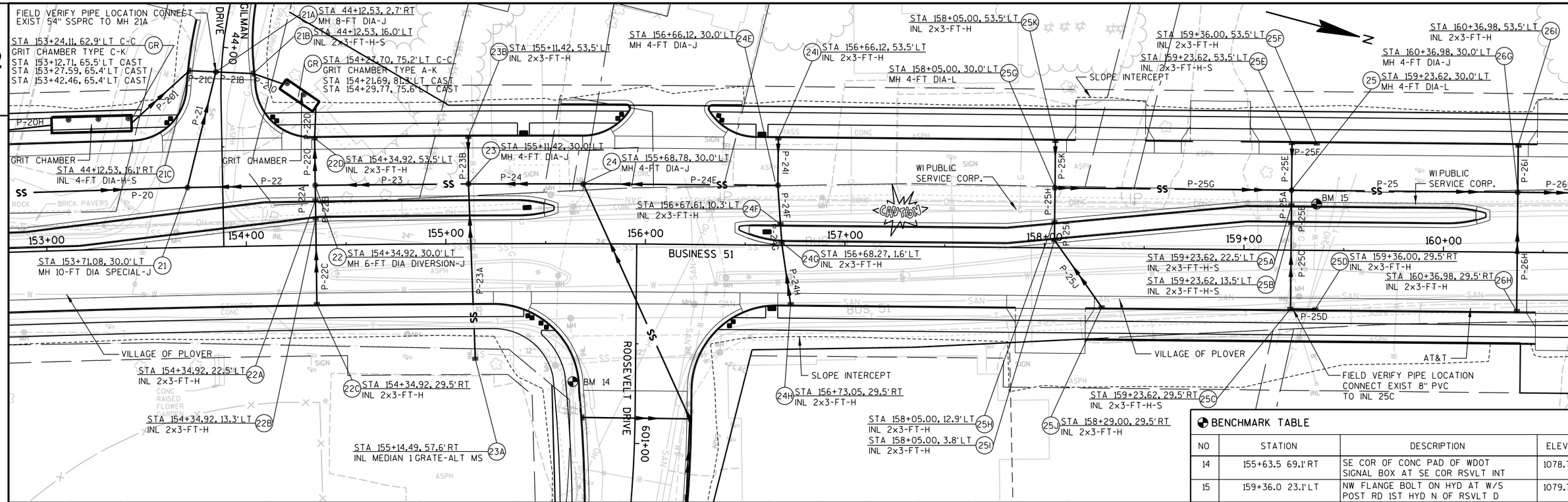

BENCHMARK TABLE

NO	STATION	DESCRIPTION	ELEV
14	155+63.5 69.1'RT	SE COR OF CONC PAD OF WDOT SIGNAL BOX AT SE COR RSVLT INT	1078.79
15	159+36.0 23.1'LT	NW FLANGE BOLT ON HYD AT W/S POST RD 1ST HYD N OF RSVLT D	1079.76

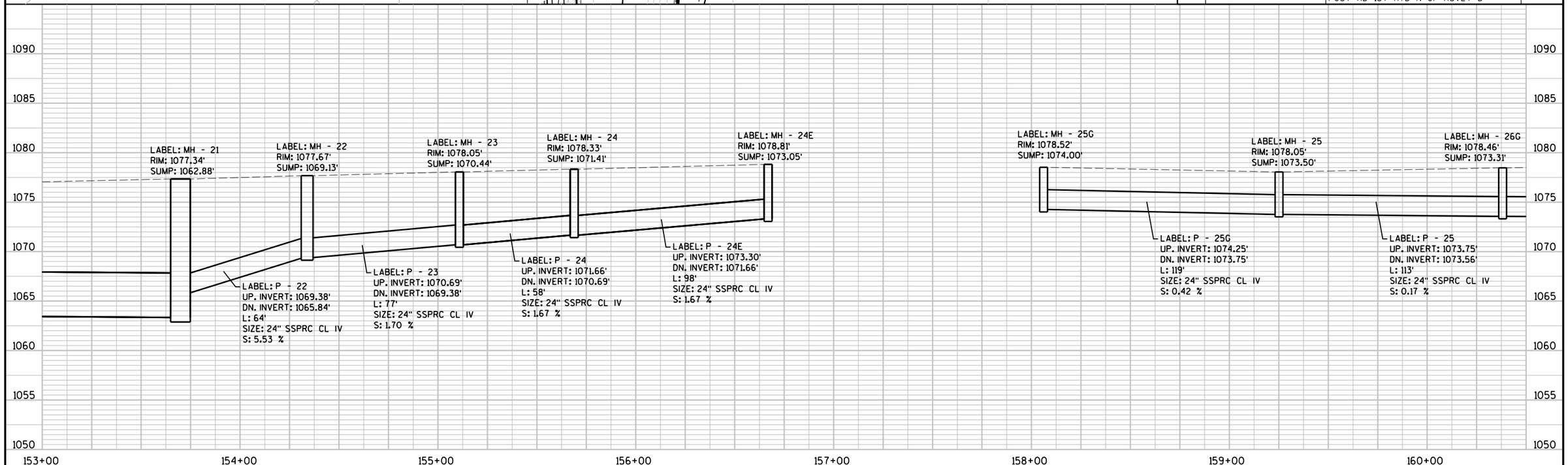

PROJECT NO:6414-00-78	HWY:BUSINESS 51	COUNTY:PORTAGE	STORM SEWER	SHEET 66	E

FILE NAME : P:\UZ\W\Witnc\112545\5-final-dsgn\51-drawings\40-TransHwy\022506_ss.dgn PLOT TIME : 2:01:31 PM PLOT DATE : 8/2/2015 PLOT BY : SEH PLOT NAME : PLOT SCALE : N/A

WISDOT/CADDS SHEET 40

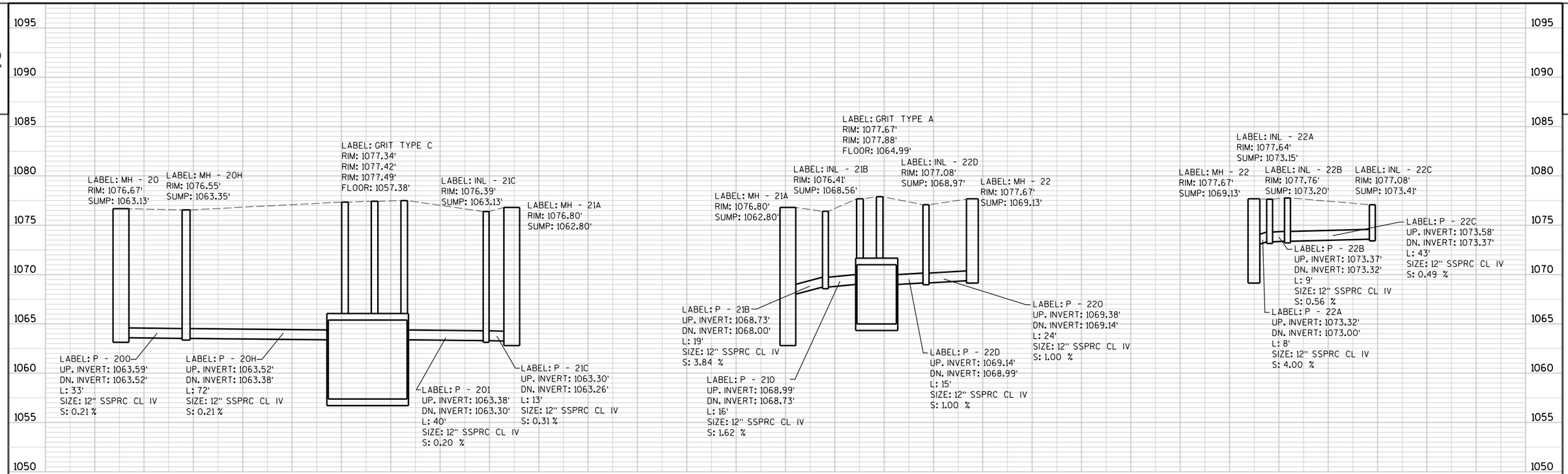

PROJECT NO:6414-00-78	HWY:BUSINESS 51	COUNTY:PORTAGE	STORM SEWER	SHEET 67	E

2

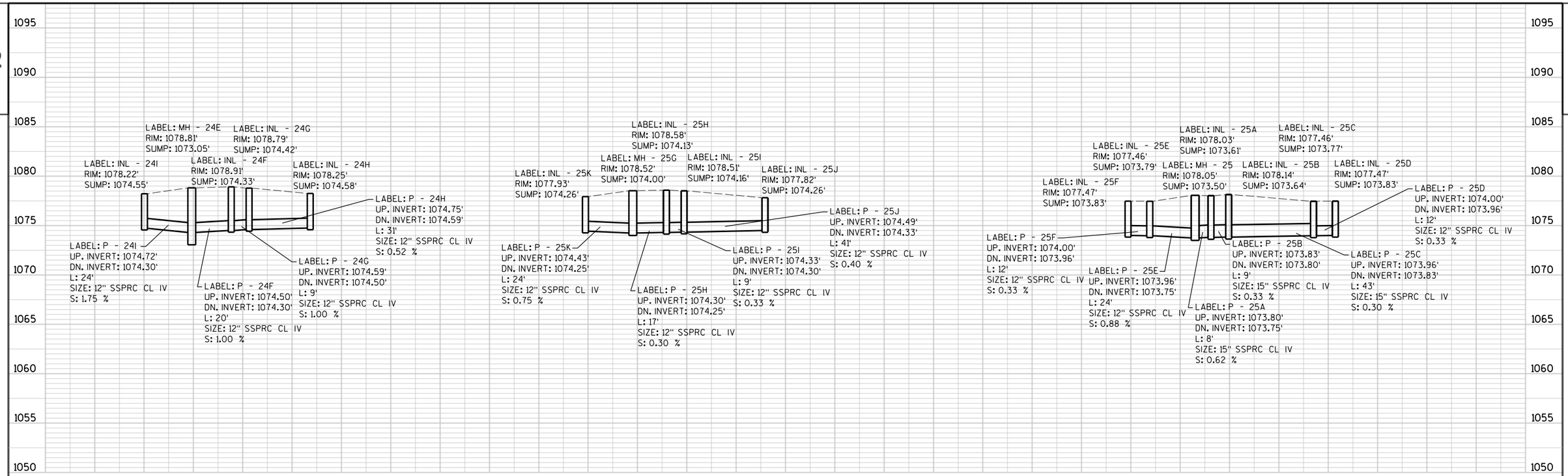

PROJECT NO:6414-00-78	HWY:BUSINESS 51	COUNTY:PORTAGE	STORM SEWER	SHEET 68	E

STA 153+00 - STA 160+50

STRUCT NO	STATION	LOCATION	PAY LENGTH C-C FT	TO STRUCT NO	INLET OR MANHOLE	TYPE	FLOW LINE/ RIM ELEV	TOP OF STRUCT ELEV	STRUCT DEPTH FT	DISCHARGE PIPE INLET ELEV	DISCHARGE PIPE OUTLET ELEV	DISCHARGE PIPE SIZE IN	DISCHARGE PIPE INSTALL LENGTH FT	DISCHARGE PIPE SLOPE %	REMARKS
21	153+71.08	30.0' LT	60	21A	MH	10-FT DIA-J	1077.34	1076.42	13.54	1063.34	1063.26	54	60	0.13	
21A	44+12.53	2.7' RT	-	-	MH	8-FT DIA-J	1076.80	1075.47	12.67	1063.26	-	-	-	-	CONNECT EXIST 54" RCP TO MH 21A INVERT EL=1063.26
21B	44+12.53	16.0' LT	19	21A	INL	2X3-FT-H-S	1076.41	1075.49	6.93	1068.73	1068.00	12	19	3.84	
GRIT	153+12.71	65.5' LT	40	21C	GRIT	C-K	1077.34	1076.76	19.38	1063.38	1063.30	12	40	0.2	PIPE - 201
	153+27.59	65.4' LT	-	-	-	C-K	1077.42	1076.84	19.46	-	-	-	-	-	
	153+42.46	65.4' LT	-	-	-	C-K	1077.49	1076.91	19.53	-	-	-	-	-	
21C	44+12.53	16.1' RT	13	21A	INL	4-FT DIA-H-S	1076.39	1075.47	12.34	1063.30	1063.26	12	13	0.31	
GRIT	154+21.69	81.3' LT	16	21B	GRIT	A-K	1077.67	1077.09	12.10	1068.99	1068.73	12	16	1.62	PIPE - 210
	154+29.77	75.6' LT	-	-	-	A-K	1077.88	1077.30	12.31	-	-	-	-	-	
22	154+34.92	30.0' LT	64	21	MH	6-FT DIA DIV-J	1077.67	1076.34	7.21	1069.38	1065.84	24	64	5.53	DIVERSION MANHOLE ALSO FLOWS TO PIPE - 220
22	-	-	24	22D	DIVERSION	-	-	-	-	1069.38	1069.14	12	24	1.00	PIPE - 220
22A	154+34.92	22.5' LT	8	22	INL	2X3-FT-H	1077.64	1076.72	3.57	1073.32	1073.00	12	8	4.00	
22B	154+34.92	13.3' LT	9	22A	INL	2X3-FT-H	1077.76	1076.84	3.64	1073.37	1073.32	12	9	0.56	
22C	154+34.92	29.5' RT	43	22B	INL	2X3-FT-H	1077.08	1076.16	2.75	1073.58	1073.37	12	43	0.49	
22D	154+34.92	53.5' LT	15	GRIT	INL	2X3-FT-H	1077.08	1076.16	7.19	1069.14	1068.99	12	15	1.00	
23	155+11.42	30.0' LT	77	22	MH	4-FT DIA-J	1078.05	1076.72	6.28	1070.69	1069.38	24	77	1.70	
23A	155+14.49	57.6' RT	88	23	INL	INL MED 1 GRATE-MS-A	1076.80	1076.80	4.19	1072.80	1072.00	15	88	0.91	
23B	155+11.42	53.5' LT	23	23	INL	2X3-FT-H	1077.46	1076.13	2.34	1073.96	1073.72	12	23	1.04	
24	155+68.78	30.0' LT	58	23	MH	4-FT DIA-J	1078.33	1077.00	5.59	1071.66	1070.69	24	58	1.67	
24E	156+66.12	30.0' LT	98	24	MH	4-FT DIA-J	1078.81	1077.48	4.43	1073.30	1071.66	24	98	1.67	
24F	156+67.61	10.3' LT	20	24E	INL	2X3-FT-H	1078.91	1077.99	3.66	1074.50	1074.30	12	20	1.00	
24G	156+68.27	1.6' LT	9	24F	INL	2X3-FT-H	1078.79	1077.46	3.04	1074.59	1074.50	12	9	1.00	
24H	156+73.05	29.5' RT	31	24G	INL	2X3-FT-H	1078.25	1077.33	2.75	1074.75	1074.59	12	31	0.52	
24I	156+66.12	53.5' LT	24	24E	INL	2X3-FT-H	1078.22	1077.30	2.75	1074.72	1074.30	12	24	1.75	
25	159+23.62	30.0' LT	113	26G	MH	4-FT DIA-L	1078.05	1076.72	3.22	1073.75	1073.56	24	113	0.17	
25A	159+23.62	22.5' LT	8	25	INL	2X3-FT-H-S	1078.03	1077.11	3.50	1073.80	1073.75	15	8	0.62	
25B	159+23.62	13.5' LT	9	25A	INL	2X3-FT-H-S	1078.14	1077.22	3.58	1073.83	1073.80	15	9	0.33	
25C	159+23.62	29.5' RT	43	25B	INL	2X3-FT-H-S	1077.46	1076.54	2.77	1073.96	1073.83	15	43	0.30	CONNECT EXIST 8" PVC TO INL 25C INVERT EL = 1074.86
25D	159+36.00	29.5' RT	12	25C	INL	2X3-FT-H	1077.47	1076.55	2.72	1074.00	1073.96	12	12	0.36	
25E	159+23.62	53.5' LT	24	25	INL	2X3-FT-H-S	1077.46	1076.54	2.75	1073.96	1073.75	12	24	0.91	
25F	159+36.00	53.5' LT	12	25E	INL	2X3-FT-H	1077.47	1076.55	2.72	1074.00	1073.96	12	12	0.36	
25G	158+05.00	30.0' LT	119	25	MH	4-FT DIA-L	1078.52	1077.19	3.19	1074.25	1073.75	24	119	0.42	
25H	158+05.00	12.9' LT	17	25G	INL	2X3-FT-H	1078.58	1077.66	3.53	1074.30	1074.25	12	17	0.30	
25I	158+05.00	3.8' LT	9	25H	INL	2X3-FT-H	1078.51	1077.59	3.43	1074.33	1074.30	12	9	0.33	
25J	158+29.00	29.5' RT	41	25I	INL	2X3-FT-H	1077.82	1076.90	2.58	1074.49	1074.33	12	41	0.40	
25K	158+05.00	53.5' LT	24	25G	INL	2X3-FT-H	1077.93	1077.01	2.75	1074.43	1074.25	12	24	0.75	
26G	160+36.98	30.0' LT	136	26	MH	4-FT DIA-J	1078.46	1077.13	3.82	1073.56	1073.32	24	136	0.18	
26H	160+36.98	29.5' RT	60	26G	INL	2X3-FT-H	1077.87	1076.95	2.75	1074.37	1074.00	12	60	0.62	
26I	160+36.98	53.5' LT	23	26G	INL	2X3-FT-H	1077.87	1076.95	2.75	1074.37	1074.00	12	23	1.61	

MANHOLES					INLETS			MANHOLE COVERS			INLET COVERS			SSPRC C-C CLASS IV			SSPRC C-C CLASS III	GRIT CHAMBER	
4-FT DIA	6-FT DIA	8-FT DIA	10-FT DIA	DIVERSION 6-FT	4-FT DIA	2X3-FT	EDIAN 1 GRA	TYPE J	TYPE K	TYPE L	TYPE H	TYPE H-S	TYPE MS-A	12-INCH	15-INCH	24-INCH	54-INCH	TYPE A	TYPE C
6	1	1	1	1	1	22	1	7	5	2	17	6	1	516	148	665	60	1	1

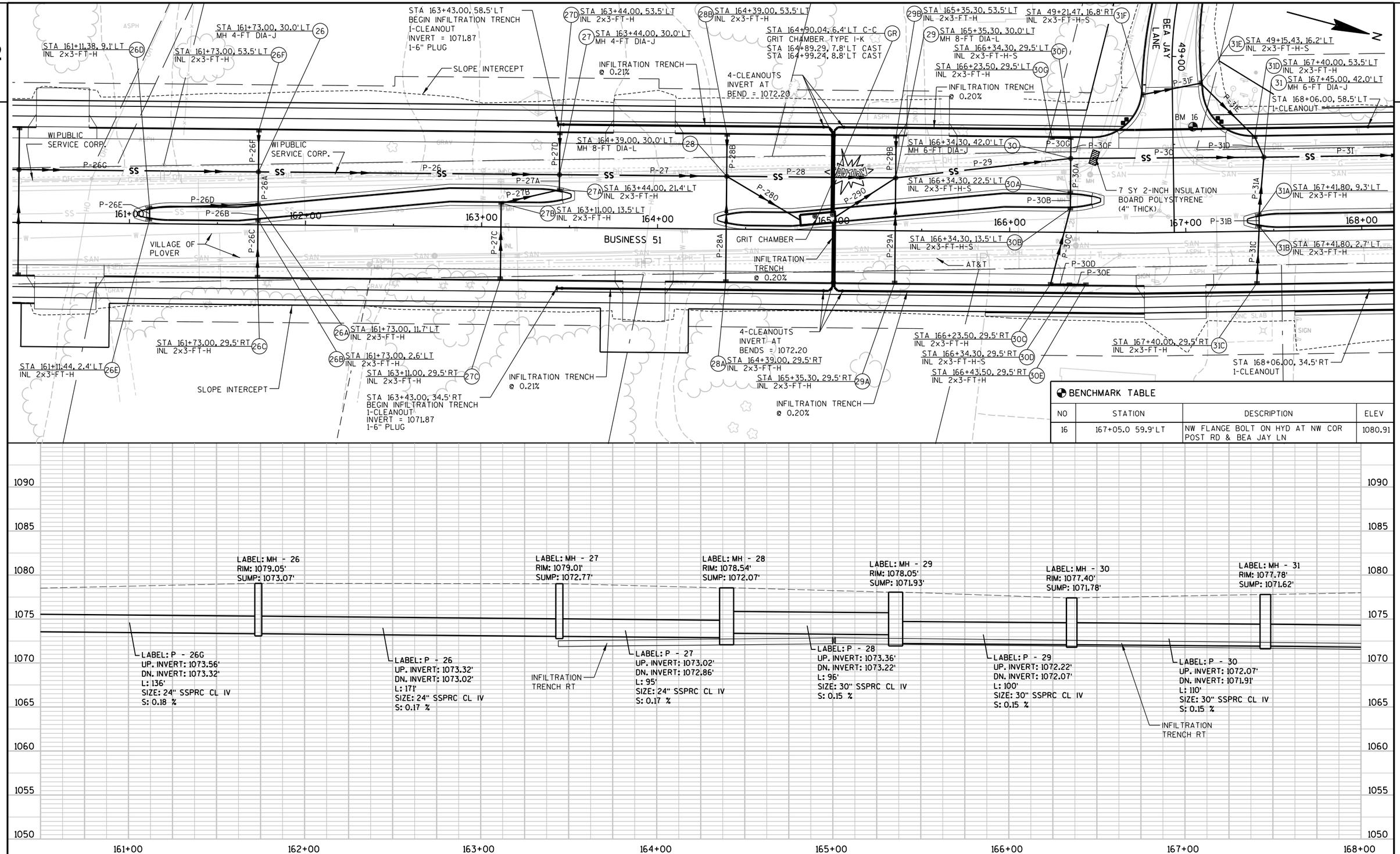

PROJECT NO:6414-00-78	HWY:BUSINESS 51	COUNTY:PORTAGE	STORM SEWER	SHEET 70	E

FILE NAME : P:\UZ\W\Witnc\112545\5-final-dsgn\51-drawings\40-TransHwy\022507_ss.dgn PLOT TIME : 2:01:41 PM PLOT DATE : 8/2/2015 PLOT BY : SEH PLOT NAME : PLOT SCALE : N/A

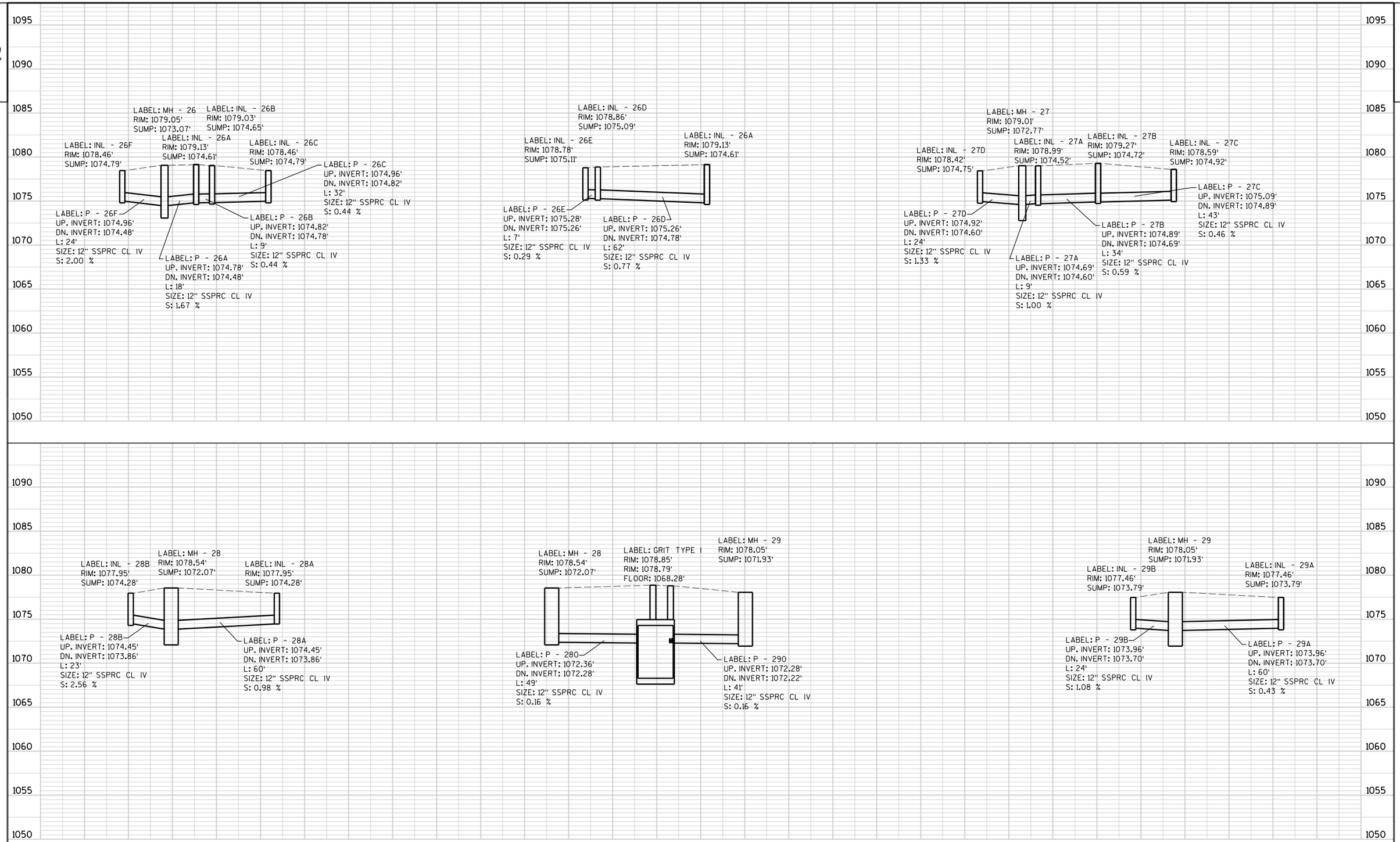

PROJECT NO:6414-00-78	HWY:BUSINESS 51	COUNTY:PORTAGE	STORM SEWER	SHEET 71	E

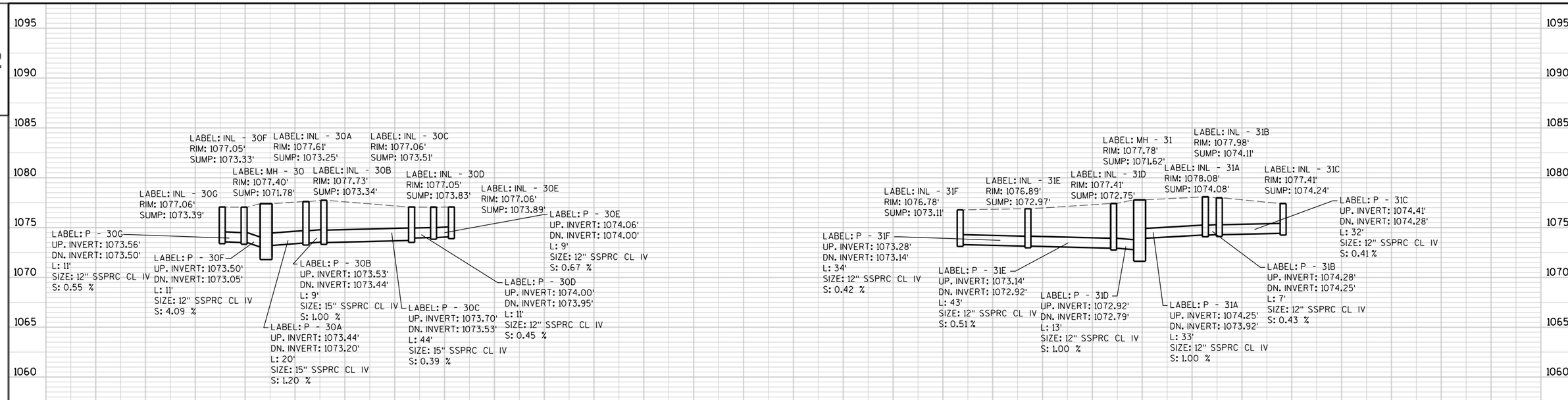

STA 160+50 - 168+00

STRUCT NO	STATION	LOCATION	PAY LENGTH C-C FT	TO STRUCT NO	INLET OR MANHOLE	TYPE	FLOW LINE/ RIM ELEV	TOP OF STRUCT ELEV	STRUCT DEPTH FT	DISCHARGE PIPE INLET ELEV	OUTLET ELEV	SIZE IN	INSTALL LENGTH FT	SLOPE %	REMARKS
26	161+73.00	30.0' LT	171	27	MH	4-FT DIA-J	1079.05	1077.72	4.65	1073.32	1073.02	24	171	0.17	
26A	161+73.00	11.7' LT	18	26	INL	2X3-FT-H	1079.13	1078.21	3.60	1074.78	1074.48	12	18	1.67	
26B	161+73.00	2.6' LT	9	26A	INL	2X3-FT-H	1079.03	1078.11	3.46	1074.82	1074.78	12	9	0.44	
26C	161+73.00	29.5' RT	32	26B	INL	2X3-FT-H	1078.46	1077.54	2.75	1074.96	1074.82	12	32	0.44	
26D	161+11.38	9.1' LT	62	26A	INL	2X3-FT-H	1078.86	1077.94	2.85	1075.26	1074.78	12	62	0.77	
26E	161+11.44	2.4' LT	7	26D	INL	2X3-FT-H	1078.78	1077.86	2.75	1075.28	1075.26	12	7	0.29	
26F	161+73.00	53.5' LT	24	26	INL	2X3-FT-H	1078.46	1077.54	2.75	1074.96	1074.48	12	24	2.00	
27	163+44.00	30.0' LT	95	28	MH	4-FT DIA-J	1079.01	1077.68	4.91	1073.02	1072.86	24	95	0.17	
27A	163+44.00	21.4' LT	9	27	INL	2X3-FT-H	1078.99	1078.07	3.55	1074.69	1074.60	12	9	1.00	
27B	163+11.00	13.5' LT	34	27A	INL	2X3-FT-H	1079.27	1078.35	3.63	1074.89	1074.69	12	34	0.59	
27C	163+11.00	29.5' RT	43	27B	INL	2X3-FT-H	1078.59	1077.67	2.75	1075.09	1074.89	12	43	0.46	
27D	163+44.00	53.5' LT	24	27	INL	2X3-FT-H	1078.42	1077.50	2.75	1074.92	1074.60	12	24	1.33	
28	164+39.00	30.0' LT	96	29	MH	8-FT DIA-L	1078.54	1077.21	5.14	1073.36	1073.22	30	96	0.15	ALSO FLOWS TO PIPE - 280
28A	164+39.00	29.5' RT	60	28	INL	2X3-FT-H	1077.95	1077.03	2.75	1074.45	1073.86	12	60	0.98	
28B	164+39.00	53.5' LT	23	28	INL	2X3-FT-H	1077.95	1077.03	2.75	1074.45	1073.86	12	23	2.56	
28	-	-	49	GRIT	DIVERSION	-	-	-	-	1072.36	1072.28	12	49	0.16	PIPE - 280
GRIT	164+89.29	7.8' LT	41	29	GRIT	I-K	1078.85	1078.27	9.99	1072.28	1072.22	12	41	0.16	PIPE- 290
	164+99.24	8.8' LT	-	-	-	I-K	1078.79	1078.21	9.93	-	-	-	-	-	
29	165+35.30	30.0' LT	100	30	MH	8-FT DIA-L	1078.05	1076.72	4.79	1072.22	1072.07	30	100	0.15	
29A	165+35.30	29.5' RT	60	29	INL	2X3-FT-H	1077.46	1076.54	2.75	1073.96	1073.70	12	60	0.43	
29B	165+35.30	53.5' LT	24	29	INL	2X3-FT-H	1077.46	1076.54	2.75	1073.96	1073.70	12	24	1.08	
30	166+34.30	42.0' LT	110	31	MH	6-FT DIA-J	1077.40	1076.07	4.29	1072.07	1071.91	30	110	0.15	
30A	166+34.30	22.5' LT	20	30	INL	2X3-FT-H-S	1077.61	1076.69	3.44	1073.44	1073.20	15	20	1.20	
30B	166+34.30	13.5' LT	9	30A	INL	2X3-FT-H-S	1077.73	1076.81	3.47	1073.53	1073.44	15	9	1.00	
30C	166+23.50	29.5' RT	44	30B	INL	2X3-FT-H	1077.06	1076.14	2.63	1073.70	1073.53	15	44	0.39	
30D	166+34.30	29.5' RT	11	30C	INL	2X3-FT-H-S	1077.05	1076.13	2.30	1074.00	1073.95	12	11	0.45	
30E	166+43.50	29.5' RT	9	30D	INL	2X3-FT-H	1077.06	1076.14	2.25	1074.06	1074.00	12	9	0.67	
30F	166+34.30	29.5' LT	11	30	INL	2X3-FT-H-S	1077.05	1076.13	2.80	1073.50	1073.05	12	11	4.09	
30G	166+23.50	29.5' LT	11	30F	INL	2X3-FT-H	1077.06	1076.14	2.75	1073.56	1073.50	12	11	0.55	
31	167+45.00	42.0' LT	93	32	MH	6-FT DIA-J	1077.78	1076.45	4.83	1071.91	1071.72	30	93	0.20	
31A	167+41.80	9.3' LT	33	31	INL	2X3-FT-H	1078.08	1077.16	3.08	1074.25	1073.92	12	33	1.00	
31B	167+41.80	2.7' LT	7	31A	INL	2X3-FT-H	1077.98	1077.06	2.95	1074.28	1074.25	12	7	0.43	
31C	167+40.00	29.5' RT	32	31B	INL	2X3-FT-H	1077.41	1076.49	2.25	1074.41	1074.28	12	32	0.41	
31D	167+40.00	53.5' LT	13	31	INL	2X3-FT-H	1077.41	1076.49	3.74	1072.92	1072.79	12	13	1.00	
31E	49+15.43	16.2' LT	43	31D	INL	2X3-FT-H-S	1076.89	1075.97	3.00	1073.14	1072.92	12	43	0.51	
31F	49+21.47	16.8' RT	34	31E	INL	2X3-FT-H-S	1076.78	1075.86	2.75	1073.28	1073.14	12	34	0.42	

MANHOLES 4-FT DIA	MANHOLES 6-FT DIA	MANHOLES 8-FT DIA	INLETS 2X3-FT	MANHOLE COVERS TYPE J	MANHOLE COVERS TYPE K	MANHOLE COVERS TYPE L	INLET COVERS TYPE H	INLET COVERS TYPE H-S	SSPRC C-C CLASS IV 12-INCH	15-INCH	24-INCH	30-INCH	GRIT CHAMBER TYPE I	INFILTRATION TRENCH CLEANOUT	6-INCH	6-INCH PERF	6-INCH PLUG
2	2	2	27	4	2	2	21	6	723	73	266	399	1	12	268	1345	2

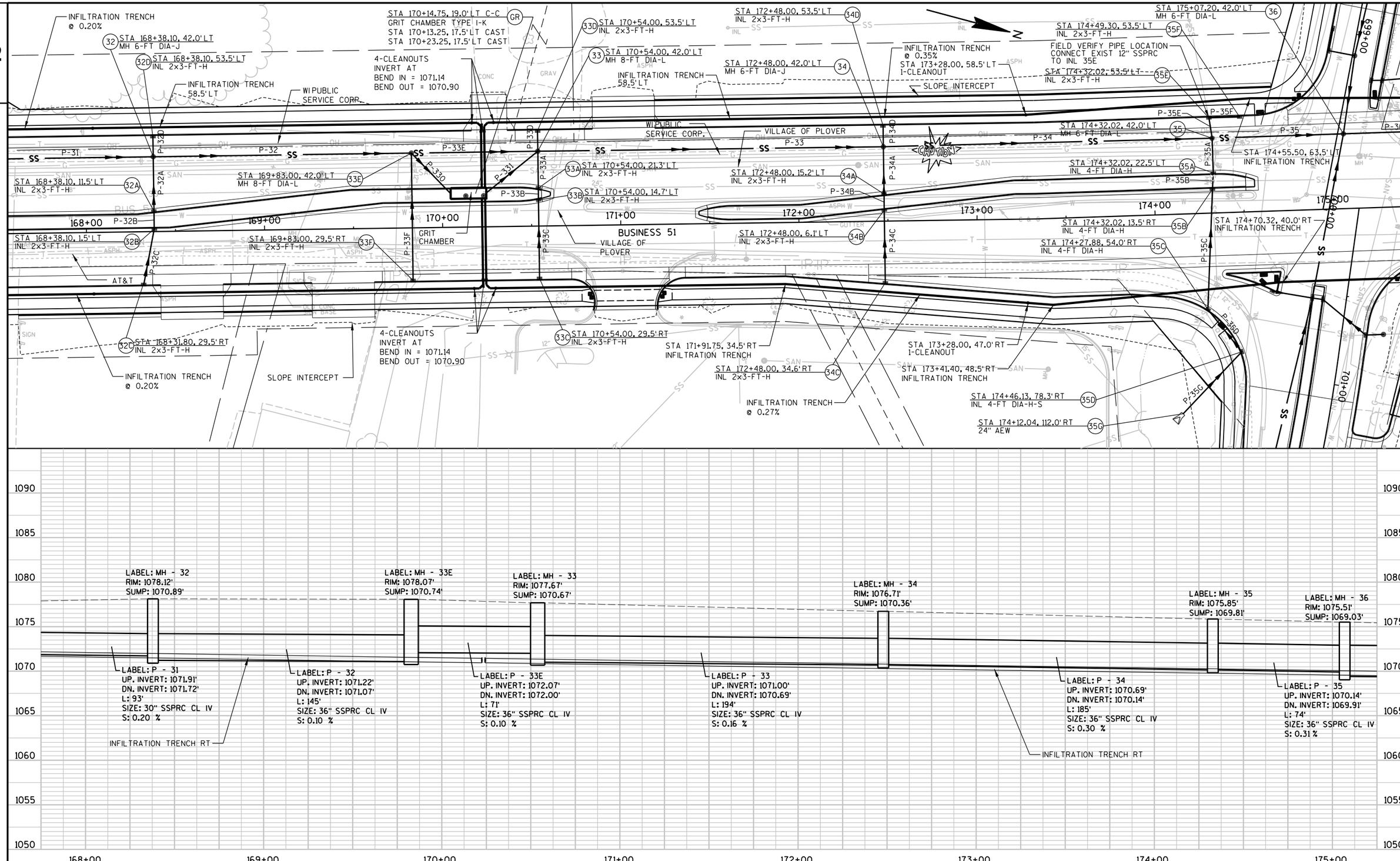

PROJECT NO:6414-00-78	HWY:BUSINESS 51	COUNTY:PORTAGE	STORM SEWER	SHEET 73	E

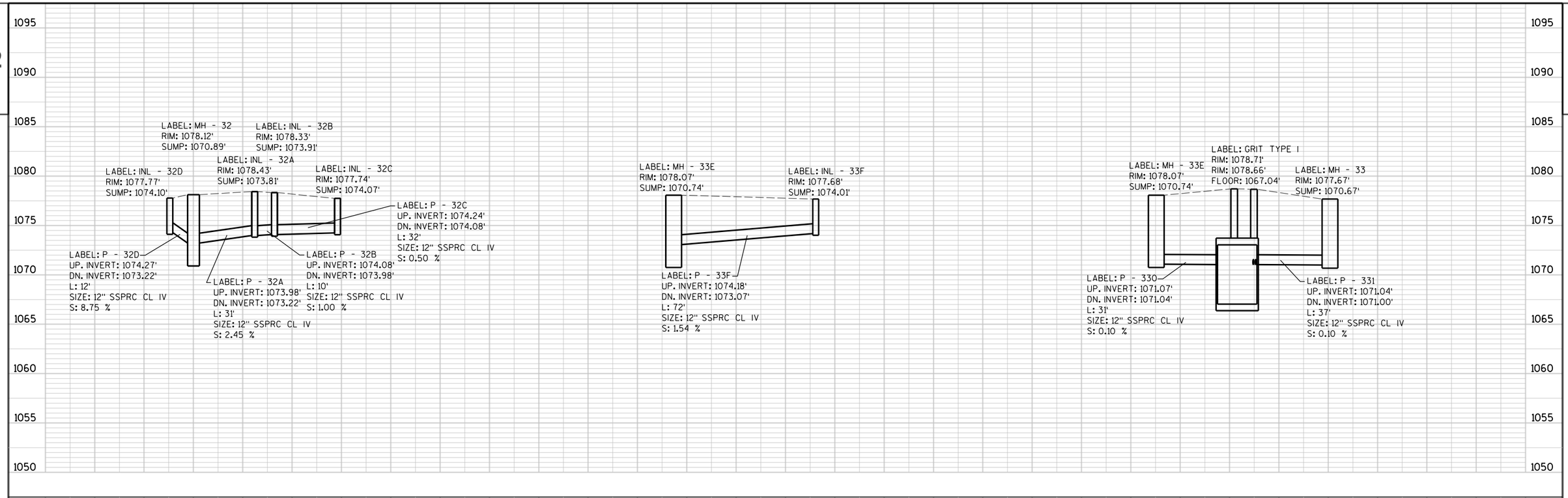

PROJECT NO:6414-00-78	HWY:BUSINESS 51	COUNTY:PORTAGE	STORM SEWER	SHEET 74	E

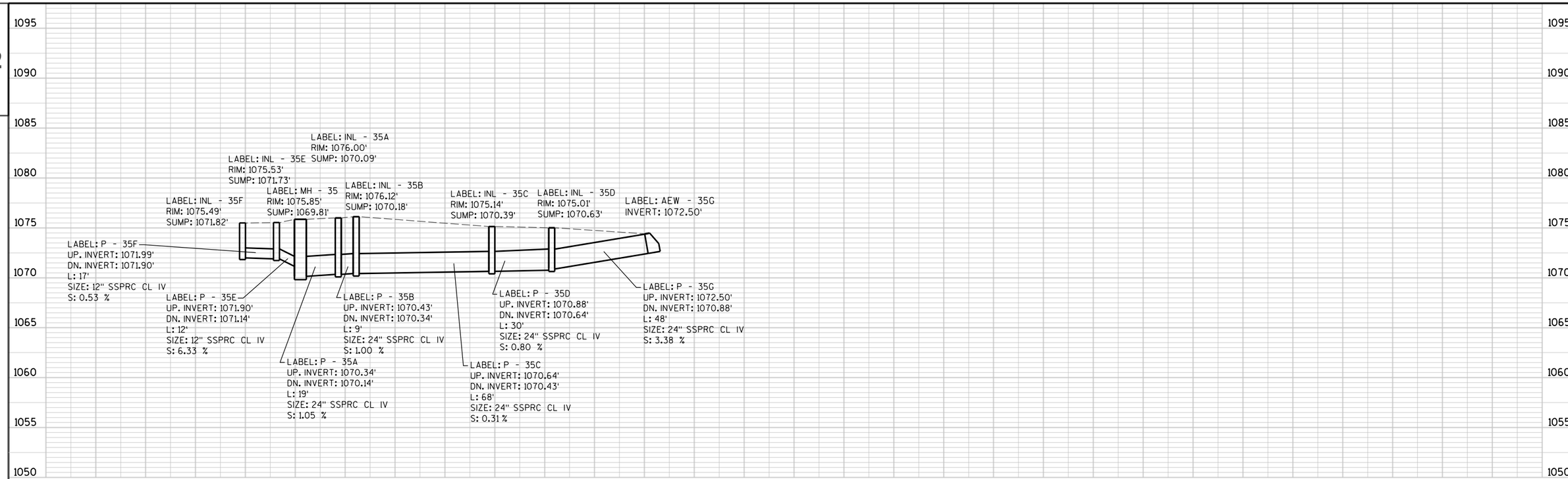

STA 168+00 - 175+00

STRUCT NO	STATION	LOCATION	PAY LENGTH C-C FT	TO STRUCT NO	INLET OR MANHOLE	TYPE	FLOW LINE/ RIM ELEV	TOP OF STRUCT ELEV	STRUCT DEPTH FT	DISCHARGE PIPE INLET ELEV	OUTLET ELEV	SIZE IN	INSTALL LENGTH FT	SLOPE %	REMARKS
32	168+38.10	42.0' LT	145	33E	MH	6-FT DIA-J	1078.12	1076.79	5.90	1071.22	1071.07	36	145	0.10	
32A	168+38.10	11.5' LT	31	32	INL	2X3-FT-H	1078.43	1077.51	3.70	1073.98	1073.22	12	31	2.45	
32B	168+38.10	1.5' LT	10	32A	INL	2X3-FT-H	1078.33	1077.41	3.50	1074.08	1073.98	12	10	1.00	
32C	168+31.80	29.5' RT	32	32B	INL	2X3-FT-H	1077.74	1076.82	2.75	1074.24	1074.08	12	32	0.50	
32D	168+38.10	53.5' LT	12	32	INL	2X3-FT-H	1077.77	1076.85	2.75	1074.27	1073.22	12	12	8.75	
33	170+54.00	42.0' LT	194	34	MH	8-FT DIA-L	1077.67	1076.34	5.67	1071.00	1070.69	36	194	0.16	
33A	170+54.00	21.3' LT	21	33	INL	2X3-FT-H	1077.89	1076.97	3.56	1073.58	1073.31	12	21	1.28	
33B	170+54.00	14.7' LT	7	33A	INL	2X3-FT-H	1077.99	1077.07	3.62	1073.62	1073.58	12	7	0.57	
33C	170+54.00	29.5' RT	44	33B	INL	2X3-FT-H	1077.32	1076.40	2.75	1073.82	1073.62	12	44	0.45	
33D	170+54.00	53.5' LT	12	33	INL	2X3-FT-H	1077.32	1076.40	2.75	1073.82	1073.31	12	12	4.25	
33E	169+83.00	42.0' LT	71	33	MH	8-FT DIA-L	1078.07	1076.74	6.00	1072.07	1072.00	36	71	0.10	ALSO FLOWS TO PIPE - 330
33F	169+83.00	29.5' RT	72	33E	INL	2X3-FT-H	1077.68	1076.76	2.75	1074.18	1073.07	12	72	1.54	
33E	-	-	31	GRIT	DIVERSION	-	-	-	-	1071.07	1071.04	12	31	0.10	PIPE - 330
GRIT	170+13.25	17.5' LT	37	37	GRIT	I-K	1078.71	1078.13	11.09	1071.04	1071.00	12	37	0.10	PIPE - 331
	170+23.25	17.5' LT	-	-	-	I-K	1078.66	1078.08	11.04	-	-	-	-	-	
34	172+48.00	42.0' LT	185	35	MH	6-FT DIA-J	1076.71	1075.38	5.02	1070.69	1070.14	36	185	0.30	
34A	172+48.00	15.2' LT	27	34	INL	2X3-FT-H	1076.99	1076.07	3.74	1072.50	1072.23	12	27	1.00	
34B	172+48.00	6.1' LT	9	34A	INL	2X3-FT-H	1076.97	1076.05	3.67	1072.55	1072.50	12	9	0.55	
34C	172+48.00	34.6' RT	41	34B	INL	2X3-FT-H	1076.23	1075.31	2.93	1072.73	1072.55	12	41	0.44	
34D	172+48.00	53.5' LT	12	34	INL	2X3-FT-H	1076.32	1075.40	2.71	1072.86	1072.23	12	12	5.25	
35	174+32.02	42.0' LT	74	36	MH	6-FT DIA-L	1075.85	1074.52	4.71	1070.14	1069.91	36	74	0.31	
35A	174+32.02	22.5' LT	19	35	INL	4-FT DIA-H	1076.00	1075.08	4.99	1070.34	1070.14	24	19	1.05	
35B	174+32.02	13.5' RT	9	35A	INL	4-FT DIA-H	1076.12	1075.20	5.02	1070.43	1070.34	24	9	1.00	
35C	174+27.88	54.0' RT	68	35B	INL	4-FT DIA-H	1075.14	1074.22	3.83	1070.64	1070.43	24	68	0.31	
35D	174+46.13	78.3' RT	30	35C	INL	4-FT DIA-H-S	1075.01	1074.09	3.46	1070.88	1070.64	24	30	0.80	
35E	174+32.02	53.5' LT	12	35	INL	2X3-FT-H	1075.53	1074.61	2.88	1071.90	1071.14	12	12	6.33	
35F	174+49.30	53.5' LT	17	35E	INL	2X3-FT-H	1075.49	1074.57	2.75	1071.99	1071.90	12	17	0.53	
35G	174+12.04	112.0' RT	48	35D	INL	AEW	-	-	-	1072.50	1070.88	24	48	3.38	24" AEW
36	175+07.02	42.0' LT	64	36U	MH	6-FT DIA-L	1075.51	1074.18	5.15	1069.41	1069.28	42	64	0.20	

MANHOLES		AEWS	INLETS		MANHOLE COVERS			INLET COVERS		SSPRC C-C CLASS IV				GRIT CHAMBER	INFILTRATION TRENCH		
6-FT DIA	8-FT DIA	24-INCH	4-FT DIA	2X3-FT	TYPE J	TYPE K	TYPE L	TYPE H	TYPE H-S	12-INCH	24-INCH	36-INCH	42-INCH	TYPE I	CLEANOUT	6-INCH	6-INCH PERF
4	2	1	4	15	2	2	4	18	1	427	174	669	64	1	10	180	1197

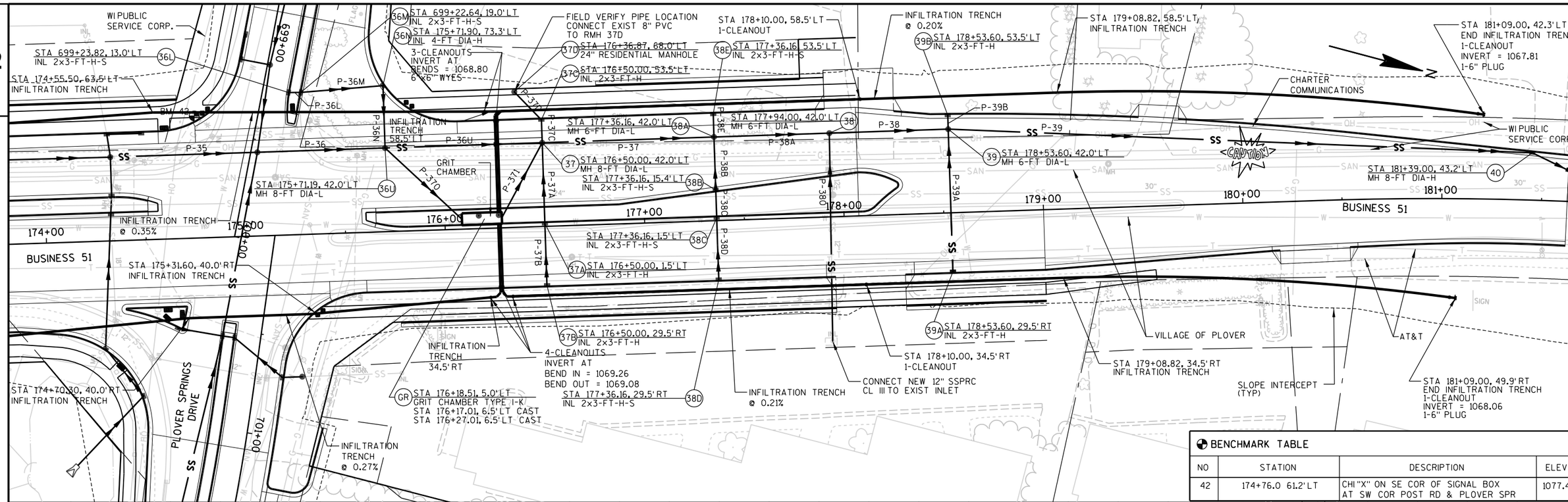

BENCHMARK TABLE

NO	STATION	DESCRIPTION	ELEV
42	174+76.0 61.2'LT	CHI "X" ON SE COR OF SIGNAL BOX AT SW COR POST RD & PLOVER SPR	1077.49

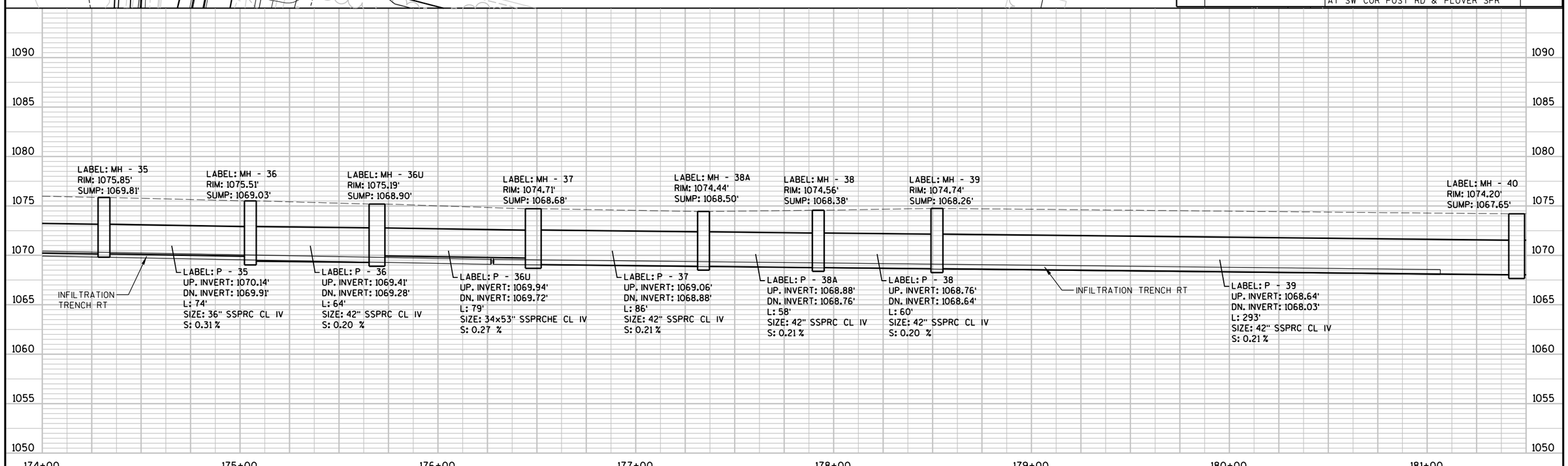

PROJECT NO:6414-00-78	HWY:BUSINESS 51	COUNTY:PORTAGE	STORM SEWER	SHEET 76	E

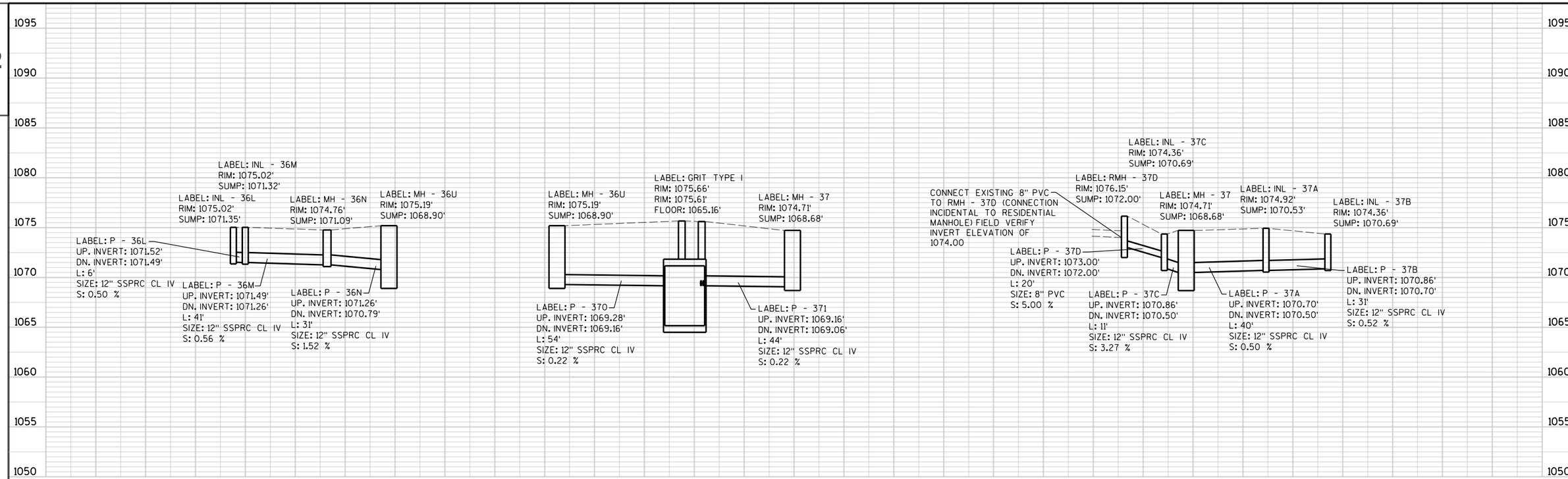

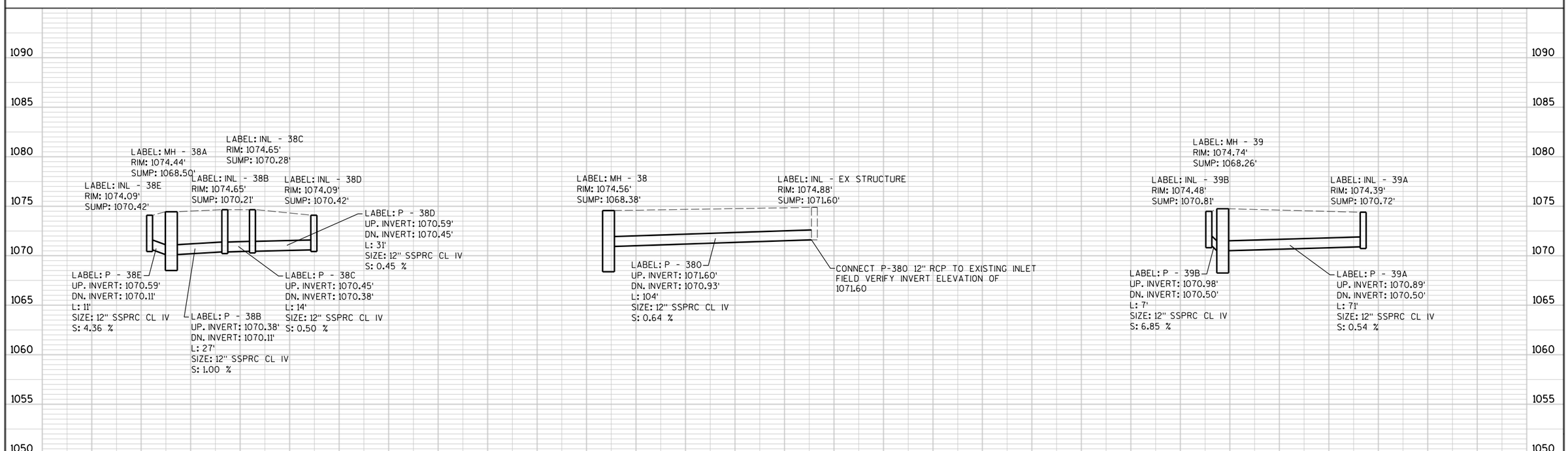

PROJECT NO:6414-00-78	HWY:BUSINESS 51	COUNTY:PORTAGE	STORM SEWER	SHEET 77	E

STA 175+00 - STA 181+50

STRUCT NO	STATION	LOCATION	PAY LENGTH C-C FT	TO STRUCT NO	INLET OR MANHOLE	TYPE	FLOW LINE/ RIM ELEV	TOP OF STRUCT ELEV	STRUCT DEPTH FT	DISCHARGE PIPE INLET ELEV	DISCHARGE PIPE OUTLET ELEV	DISCHARGE PIPE SIZE IN	DISCHARGE PIPE INSTALL LENGTH FT	DISCHARGE PIPE SLOPE %	REMARKS
36L	699+23.82	13.0' LT	6	36M	INL	2X3-FT-H-S	1075.02	1074.10	2.75	1071.52	1071.49	12	6	0.5	
36M	699+22.64	19.0' LT	41	36N	INL	2X3-FT-H-S	1075.02	1074.10	2.78	1071.49	1071.26	12	41	0.56	
36N	175+71.90	73.3' LT	31	36U	INL	4-FT DIA-H	1074.76	1073.84	2.75	1071.26	1070.79	12	31	1.52	
36U	175+71.19	42.0' LT	79	37	MH	8-FT DIA-L	1075.19	1073.86	4.96	1069.94	1069.72	34x53	79	0.27	ALSO FLOWS TO PIPE - 370
36U	-	-	54	GRIT	DIVERSION	-	-	-	-	1069.28	1069.16	12	54	0.22	PIPE - 370
GRIT	176+17.01	6.5' LT	44	37	GRIT	I-K	1075.66	1075.08	9.92	1069.16	1069.06	12	44	0.22	PIPE - 371
	176+27.01	6.5' LT	-	-	-	I-K	1075.61	1075.03	9.87	-	-	-	-	-	
37	176+50.00	42.0' LT	86	38A	MH	8-FT DIA-L	1074.71	1073.38	4.70	1069.06	1068.88	42	86	0.21	
37A	176+50.00	1.5' LT	40	37	INL	2X3-FT-H	1074.92	1074.00	3.47	1070.70	1070.50	12	40	0.50	
37B	176+50.00	29.5' RT	31	37A	INL	2X3-FT-H	1074.36	1073.44	2.75	1070.86	1070.70	12	31	0.52	
37C	176+50.00	53.5' LT	11	37	INL	2X3-FT-H	1074.36	1073.44	2.75	1070.86	1070.50	12	11	3.27	
37D	176+36.87	68.0' LT	20	37C	24" RMH	RESIDENTIAL	1076.15	1075.82	3.82	1073.00	1072.00	8" PVC	20	5.00	CONNECT EXISTING PVC TO RMH 37D INVERT EL=1074.00
38	177+94.00	42.0' LT	60	39	MH	6-FT DIA-L	1074.56	1073.23	4.85	1068.76	1068.64	42	60	0.20	
INL - EX STR	-	-	104	38	EX INL	-	1074.88	-	-	1071.60	1070.93	12	104	0.64	CONNECT PIPE - 380 TO EXISTING INLET, INVERT EL=1071.60
38A	177+36.16	42.0' LT	58	38	MH	6-FT DIA-L	1074.44	1073.11	4.61	1068.88	1068.76	42	58	0.21	
38B	177+36.16	15.4' LT	27	38A	INL	2X3-FT-H-S	1074.65	1073.73	3.52	1070.38	1070.11	12	27	1.00	
38C	177+36.16	1.5' LT	14	38B	INL	2X3-FT-H-S	1074.65	1073.73	3.45	1070.45	1070.38	12	14	0.50	
38D	177+36.16	29.5' RT	31	38C	INL	2X3-FT-H-S	1074.09	1073.17	2.75	1070.59	1070.45	12	31	0.45	
38E	177+36.16	53.5' LT	11	38A	INL	2X3-FT-H-S	1074.09	1073.17	2.75	1070.59	1070.11	12	11	4.36	
39	178+53.60	42.0' LT	293	40	MH	6-FT DIA-J	1074.74	1073.41	5.15	1068.64	1068.03	42	293	0.21	
39A	178+53.60	29.5' RT	71	39	INL	2X3-FT-H	1074.39	1073.47	2.75	1070.89	1070.50	12	71	0.54	
39B	178+53.60	53.5' LT	7	39	INL	2X3-FT-H	1074.48	1073.56	2.75	1070.98	1070.50	12	7	6.85	
40	181+39.00	43.2' LT	40	41	MH	8-FT DIA-H	1074.20	1072.87	5.22	1068.03	1067.95	42	40	0.20	DIVERSION MANHOLE ALSO FLOWS TO PIPE - 43

MANHOLES		INLETS		RESIDENTIAL MANHOLE	MANHOLE COVERS			INLET COVERS		SSPRC C-C CLASS IV		SSPRCHE CLASS HE-IV	PVC	GRIT CHAMBER	INFILTRATION TRENCH				CONNECTION TO EXISTING INLETS OR MANHOLES
6-FT DIA	8-FT DIA	4-FT DIA	2X3-FT	24-INCH	TYPE J	TYPE K	TYPE L	TYPE H	TYPE H-S	12-INCH	42-INCH	34x53-INCH	8"	TYPE I	CLEANOUT	6-INCH	6-INCH PERF	6-INCH PLUG	EACH
3	3	1	11	1	1	2	4	7	6	523	537	79	20	1	11	90	970	2	1

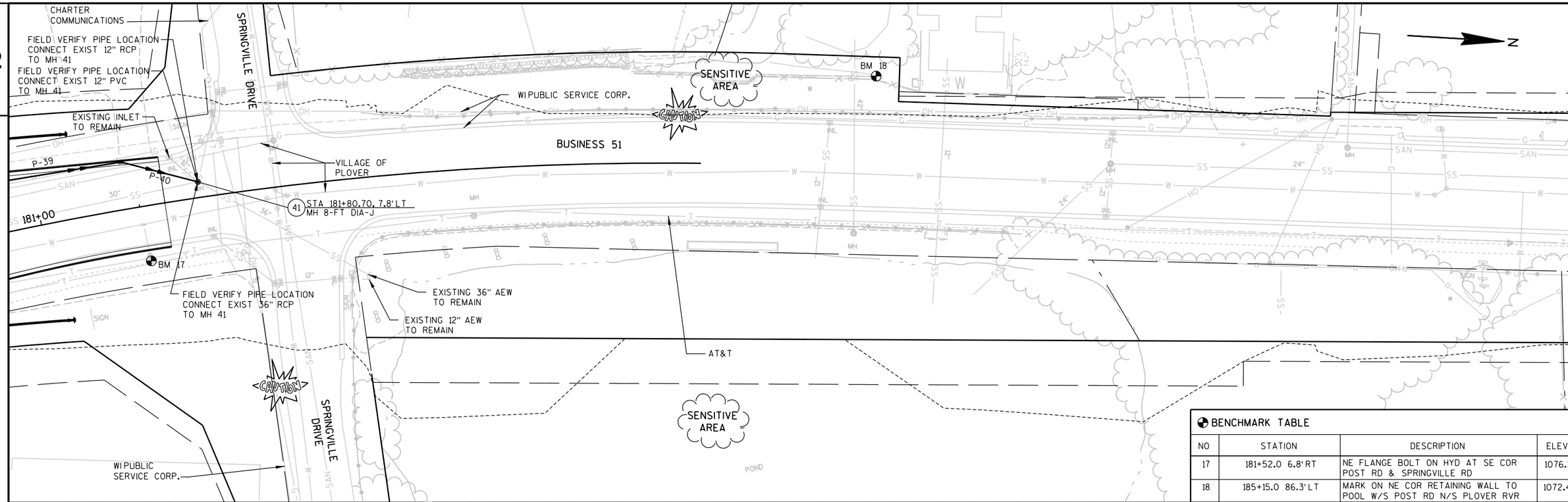

BENCHMARK TABLE

NO	STATION	DESCRIPTION	ELEV
17	181+52.0 6.8' RT	NE FLANGE BOLT ON HYD AT SE COR POST RD & SPRINGVILLE RD	1076.15
18	185+15.0 86.3' LT	MARK ON NE COR RETAINING WALL TO POOL W/S POST RD N/S PLOVER RVR	1072.45

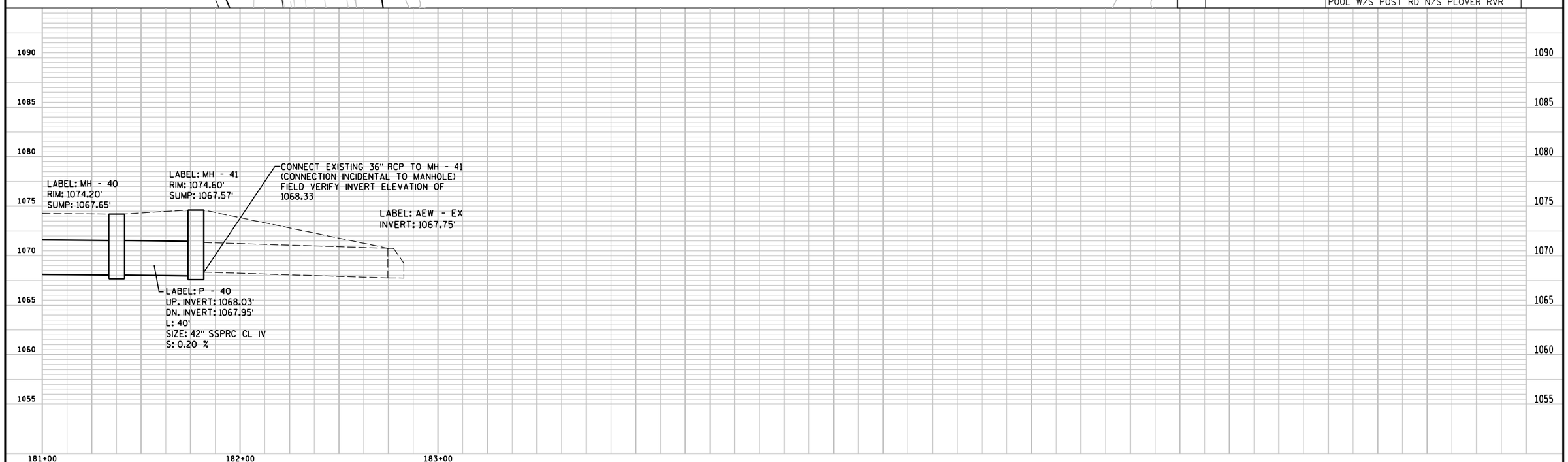

PROJECT NO: 6414-00-78	HWY: BUSINESS 51	COUNTY: PORTAGE	STORM SEWER	SHEET 79	E

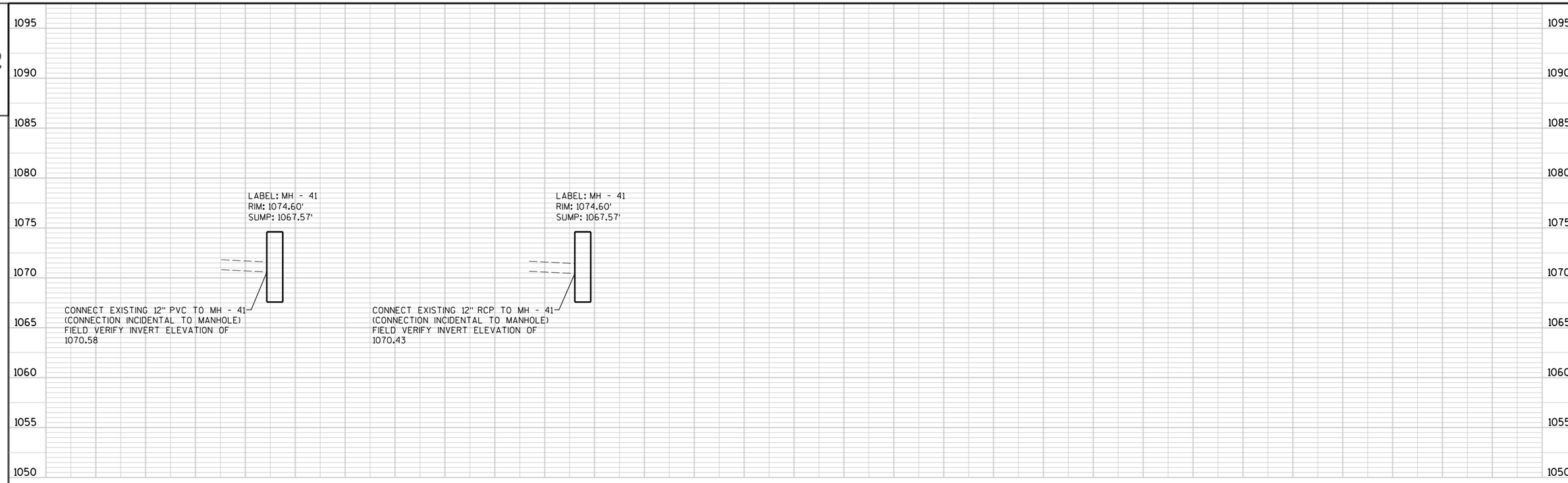

STA 181+50 - STA 183+00

STRUCT NO	STATION	LOCATION	PAY LENGTH C-C FT	TO STRUCT NO	INLET OR MANHOLE	TYPE	FLOW LINE/ RIM ELEV	TOP OF STRUCT ELEV	STRUCT DEPTH FT	DISCHARGE PIPE INLET ELEV	DISCHARGE PIPE OUTLET ELEV	DISCHARGE PIPE SIZE IN	DISCHARGE PIPE INSTALL LENGTH FT	DISCHARGE PIPE SLOPE %	REMARKS
41	181+80.70	7.8' LT			MH	8-FT DIA-J	1074.60	1073.27	1073.27						CONNECT EXISTING 12" PVC, 36" RCP AND 12" RCP TO MH 41

MANHOLES	MANHOLE COVERS
8-FT DIA	TYPE J
1	1

2

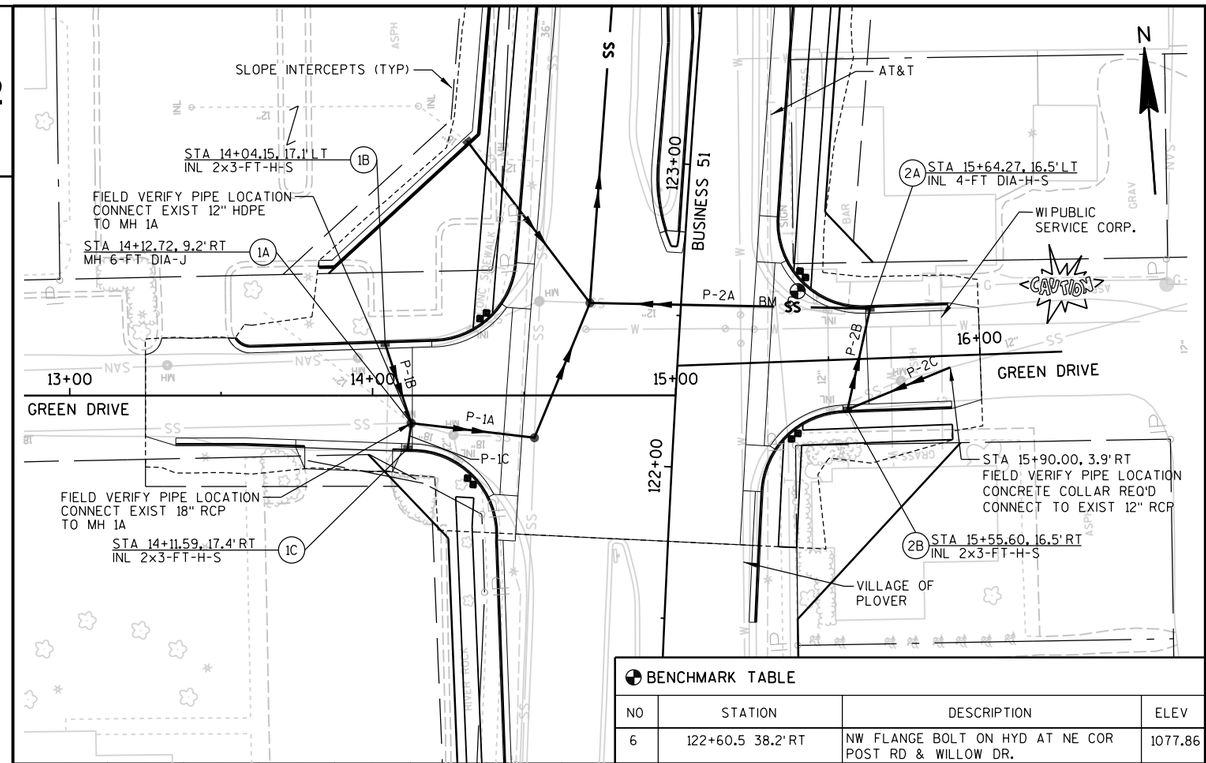

BENCHMARK TABLE			
NO	STATION	DESCRIPTION	ELEV
6	122+60.5 38.2' RT	NW FLANGE BOLT ON HYD AT NE COR POST RD & WILLOW DR.	1077.86

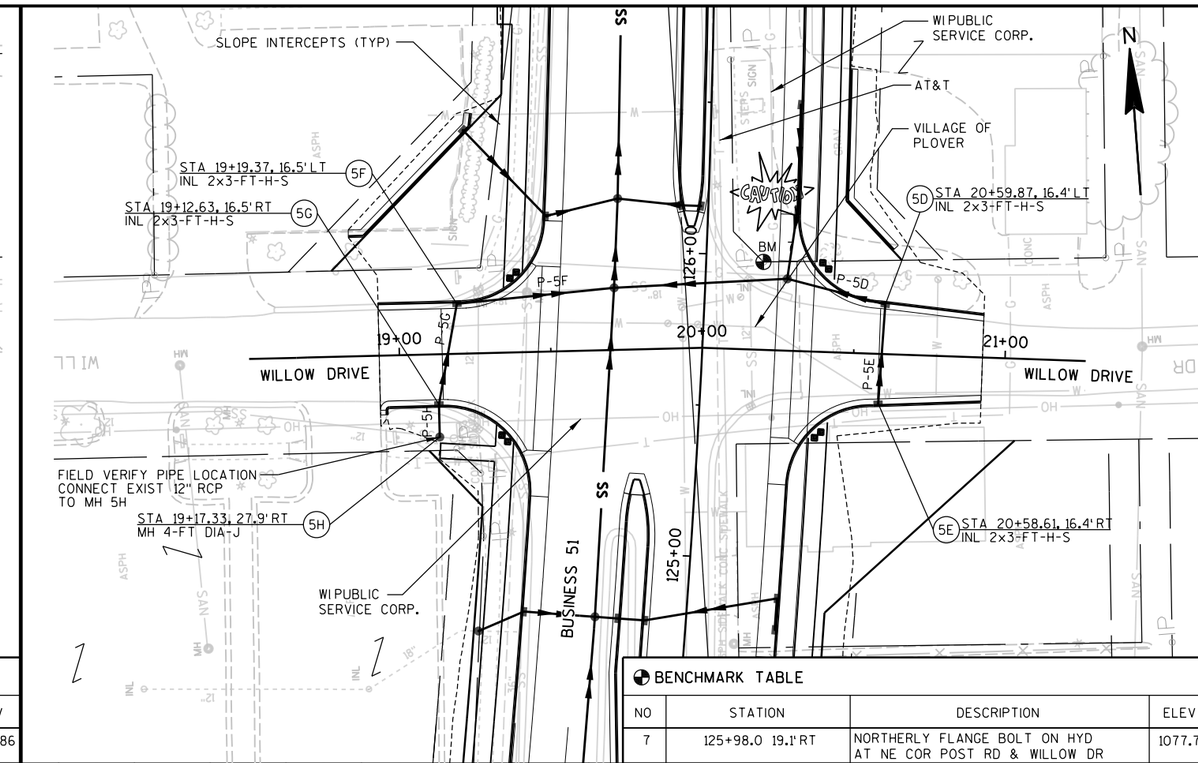

BENCHMARK TABLE			
NO	STATION	DESCRIPTION	ELEV
7	125+98.0 19.1' RT	NORTHERLY FLANGE BOLT ON HYD AT NE COR POST RD & WILLOW DR	1077.72

2

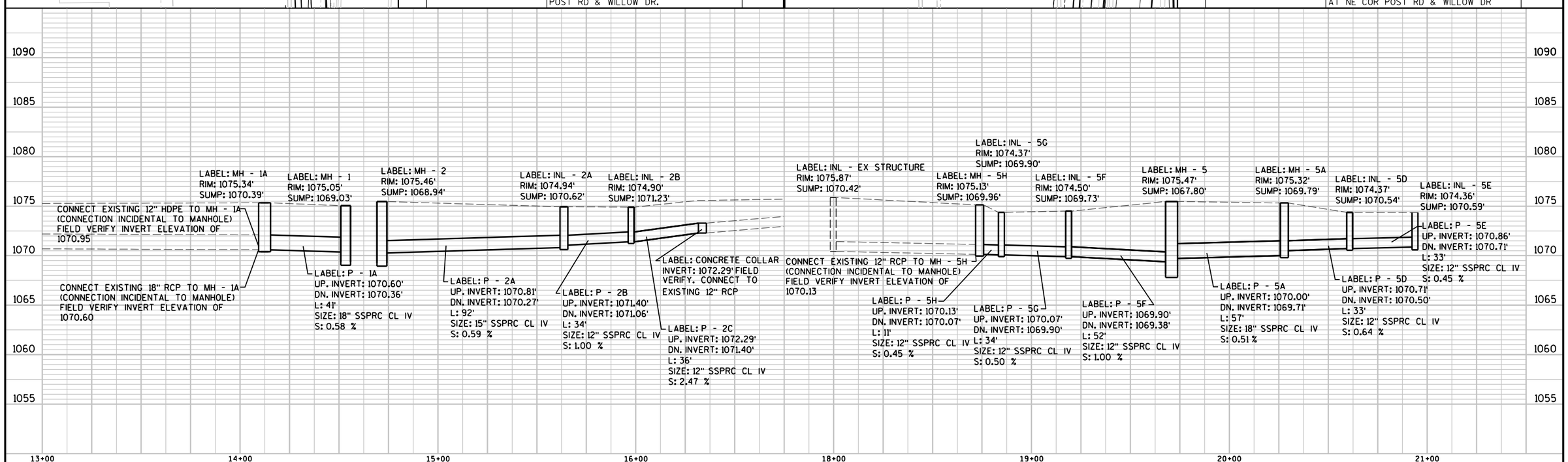

PROJECT NO: 6414-00-78	HWY: BUSINESS 51	COUNTY: PORTAGE	STORM SEWER	SHEET 81	E

STA 13+00 - STA 16+00 GREEN DR
STA 19+00 - STA 21+00 WILLOW DR

STRUCT NO	STATION	LOCATION	PAY LENGTH C-C FT	TO STRUCT NO	INLET OR MANHOLE	TYPE	FLOW LINE/ RIM ELEV	TOP OF STRUCT ELEV	STRUCT DEPTH FT	DISCHARGE PIPE INLET ELEV	OUTLET ELEV	SIZE IN	INSTALL LENGTH FT	SLOPE %	REMARKS
1A	14+12.72	9.2' RT	41	1	MH	6-FT DIA-J	1075.34	1074.01	3.62	1070.60	1070.36	18	41	0.58	CONNECT EXIST 12" HDPE & 18" RCP TO MH 1A
1B	14+04.15	17.1' LT	28	1A	INL	2X3-FT-H-S	1075.06	1074.14	2.75	1071.56	1071.10	12	28	1.64	
1C	14+11.59	17.4' RT	8	1A	INL	2X3-FT-H-S	1075.00	1074.08	2.75	1071.50	1071.10	12	8	5.00	
2A	15+64.27	16.5' LT	92	2	INL	4-FT DIA-H-S	1074.94	1074.02	3.40	1070.81	1070.27	15	92	0.59	
2B	15+55.60	16.5' RT	34	2A	INL	2X3-FT-H-S	1074.90	1073.98	2.75	1071.40	1071.06	12	34	1.00	
-	-	-	36	2B	-	-	-	-	-	1072.29	1071.40	12	36	2.47	CONNECT TO EXIST 12" RCP, CONCRETE COLLAR REQ
5D	20+59.87	16.4' LT	33	5A	INL	2X3-FT-H-S	1074.37	1073.45	2.91	1070.71	1070.50	12	33	0.64	
5E	20+58.61	16.4' RT	33	5D	INL	2X3-FT-H-S	1074.36	1073.44	2.85	1070.86	1070.71	12	33	0.45	
5F	19+19.37	16.5' LT	52	5	INL	2X3-FT-H-S	1074.50	1073.58	3.85	1069.90	1069.38	12	52	1.00	
5G	19+12.63	16.5' RT	34	5F	INL	2X3-FT-H-S	1074.37	1073.45	3.55	1070.07	1069.90	12	34	0.50	
5H	19+17.33	27.9' RT	11	5G	MH	4-FT DIA-J	1075.13	1073.80	3.84	1070.13	1070.07	12	11	0.45	CONNECT EXIST 12" RCP TO MH 5H INVERT EL=1070.13

MANHOLES		INLETS		MANHOLE COVERS	INLET COVERS	SSPRC C-C CLASS IV			CONCRETE COLLAR
4-FT DIA	6-FT DIA	4-FT DIA	2X3-FT	TYPE J	TYPE H-S	12-INCH	15-INCH	18-INCH	EACH
1	1	1	7	2	8	269	92	41	1

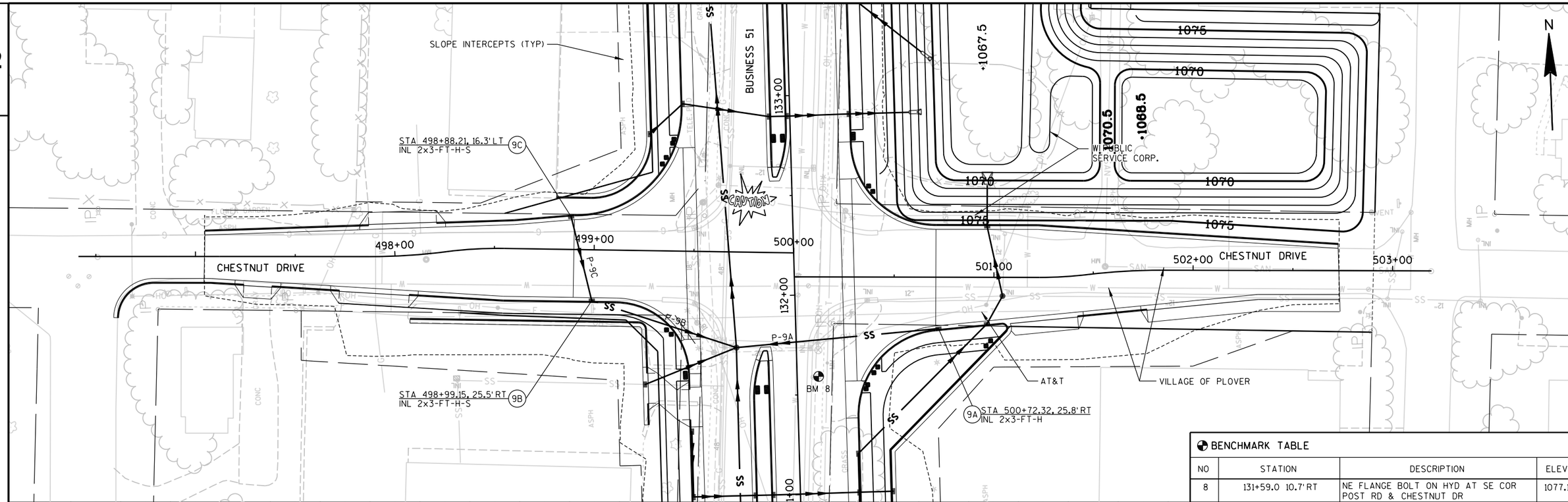

BENCHMARK TABLE

NO	STATION	DESCRIPTION	ELEV
8	131+59.0 10.7' RT	NE FLANGE BOLT ON HYD AT SE COR POST RD & CHESTNUT DR	1077.16

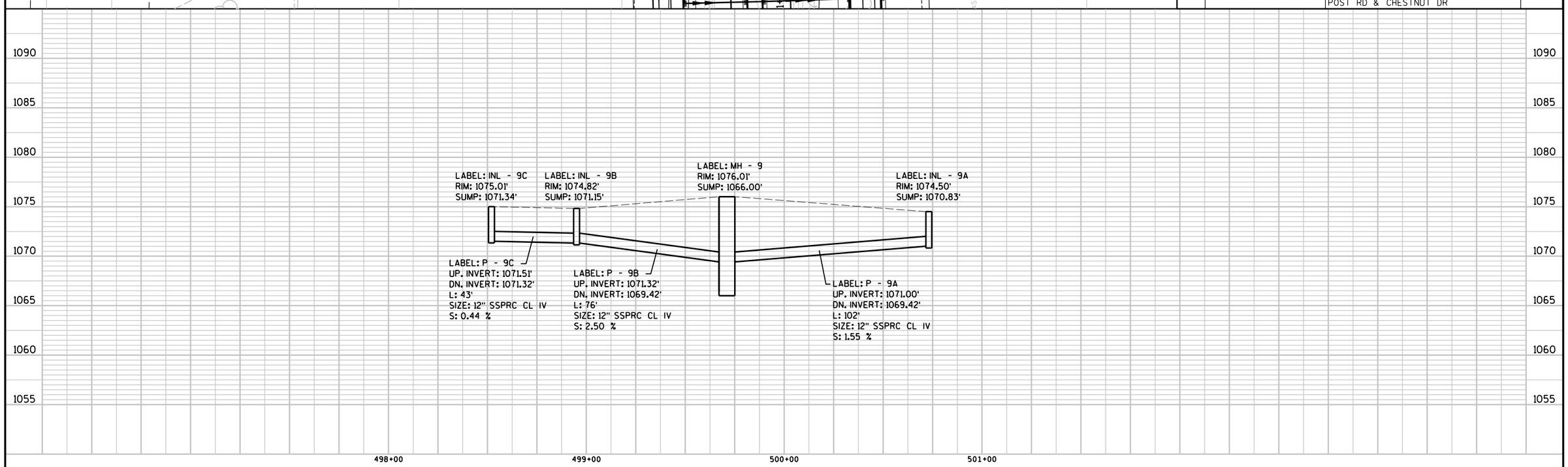

PROJECT NO:6414-00-78	HWY:BUSINESS 51	COUNTY:PORTAGE	STORM SEWER	SHEET 83	E

STA 497+00 - STA 503+00			PAY				FLOW			DISCHARGE PIPE					
STRUCT NO	STATION	LOCATION	LENGTH C-C FT	TO STRUCT NO	INLET OR MANHOLE	TYPE	LINE/ RIM ELEV	TOP OF STRUCT ELEV	STRUCT DEPTH FT	INLET ELEV	OUTLET ELEV	SIZE IN	INSTALL LENGTH FT	SLOPE %	REMARKS
9B	498+99.15	25.5' RT	76	9	INL	2X3-FT-H-S	1074.82	1073.90	2.75	1071.32	1069.42	12	76	2.50	
9C	498+88.21	16.3' LT	43	9B	INL	2X3-FT-H-S	1075.01	1074.09	2.75	1071.51	1071.32	12	43	0.44	
9A	500+72.32	25.8' RT	102	9	INL	2X3-FT-H	1074.50	1073.58	2.75	1071.00	1069.42	12	102	1.55	

INLETS	INLET COVERS		SSPRC C-C CLASS IV
2X3-FT	TYPE H	TYPE H-S	12-INCH
3	1	2	221

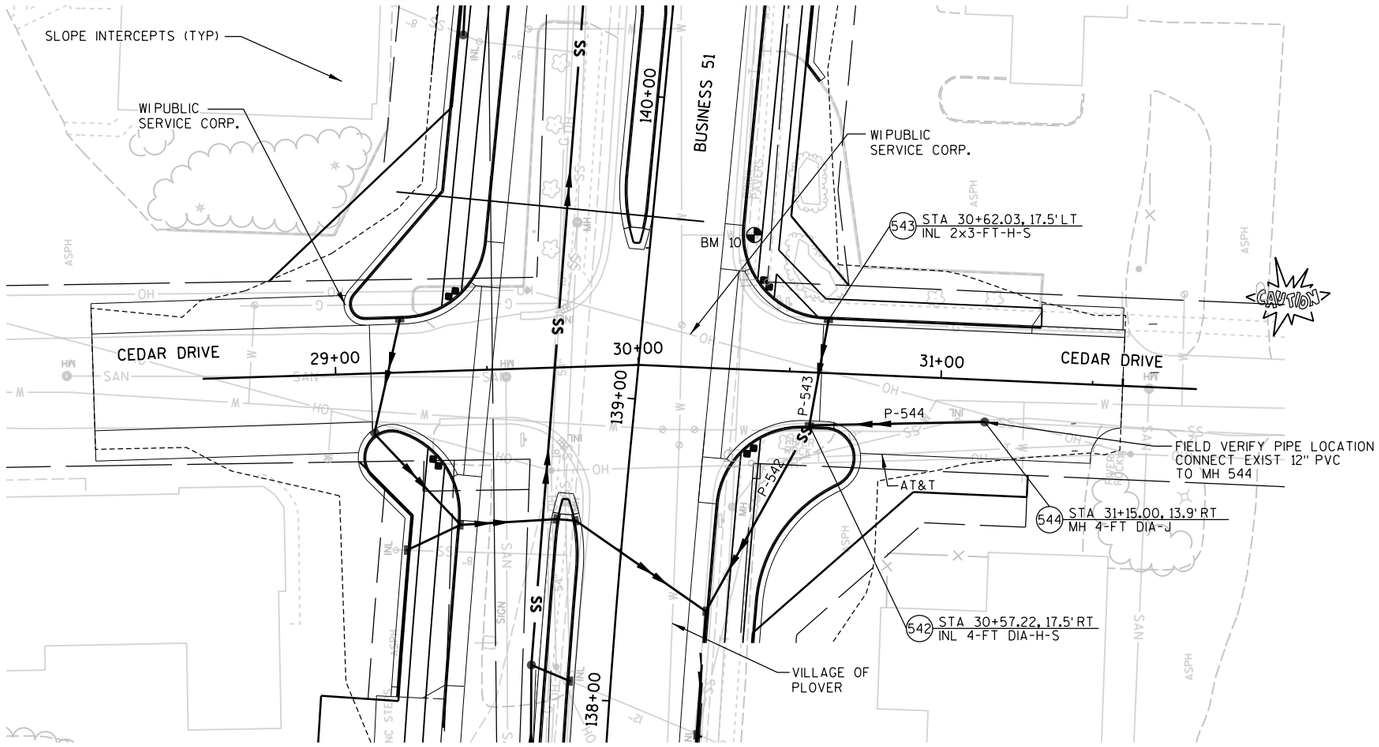

BENCHMARK TABLE

NO	STATION	DESCRIPTION	ELEV
10	139+57.5 34.0' RT	NE FLANGE BOLT ON HYD AT NE COR POST RD & CEDAR DR	1077.98

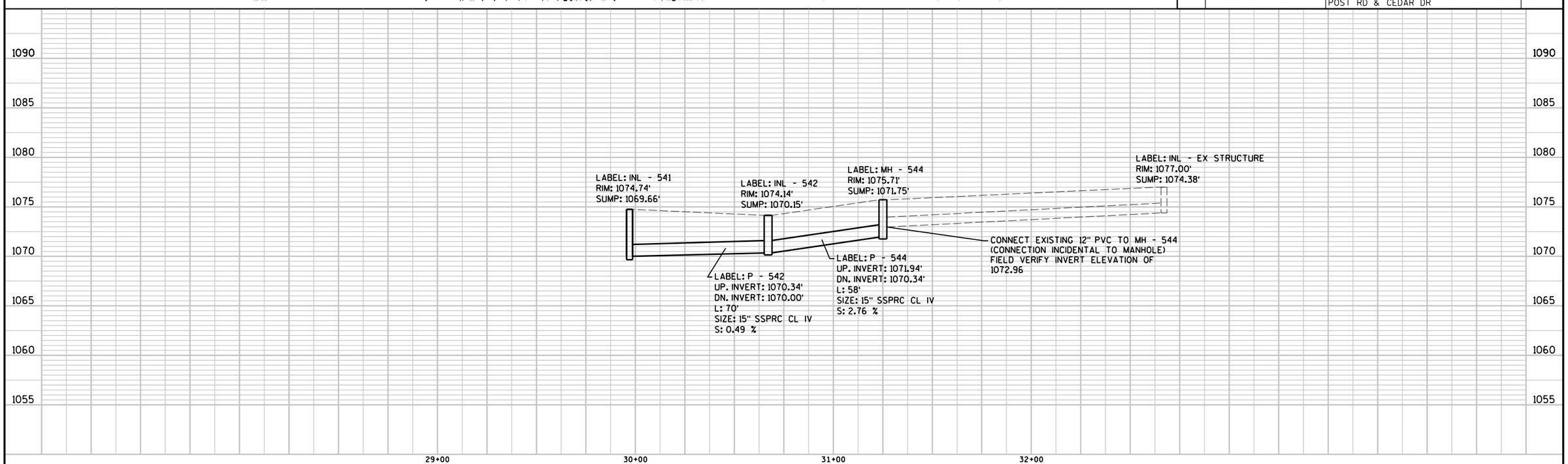

PROJECT NO:6414-00-78	HWY:BUSINESS 51	COUNTY:PORTAGE	STORM SEWER	SHEET 85	E

STA 29+00 - STA 31+50

STRUCT NO	STATION	LOCATION	PAY LENGTH C-C FT	TO STRUCT NO	INLET OR MANHOLE	TYPE	FLOW LINE/ RIM ELEV	TOP OF STRUCT ELEV	STRUCT DEPTH FT	DISCHARGE PIPE INLET ELEV	OUTLET ELEV	SIZE IN	INSTALL LENGTH FT	SLOPE %	REMARKS
542	30+57.22	17.5' RT	70	541	INL	4-FT DIA-H-S	1074.14	1073.22	3.07	1070.34	1070.00	15	70	0.49	
543	30+62.03	17.5' LT	35	542	INL	2X3-FT-H-S	1073.99	1073.07	2.75	1070.49	1070.34	12	35	0.43	
544	31+15.00	13.9' RT	58	542	MH	4-FT DIA-J	1075.71	1074.38	2.63	1071.94	1070.34	15	58	2.76	CONNECT EXIST 12" PVC TO MH 544 INVERT EL=1072.96

MANHOLES	INLETS		MANHOLE COVERS	INLET COVERS	SSPRC C-C CLASS IV	
4-FT DIA	4-FT DIA	2X3-FT	TYPE J	TYPE H-S	12-INCH	15-INCH
1	1	1	1	2	35	128

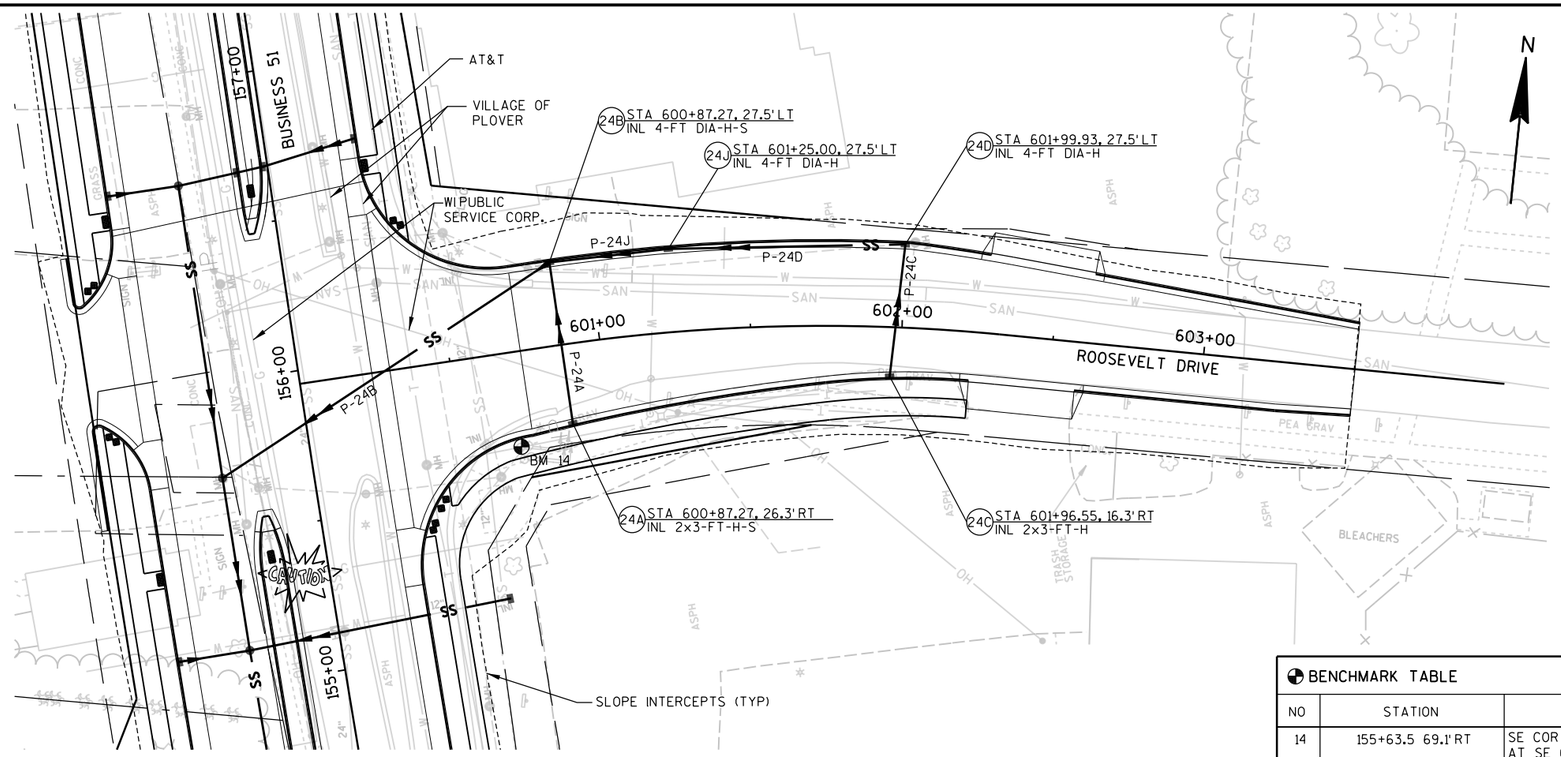

BENCHMARK TABLE

NO	STATION	DESCRIPTION	ELEV
14	155+63.5 69.1' RT	SE COR OF PAD OF WDOT SIGNAL BOX AT SE COR POST RD & ROOSEVELT DR	1078.79

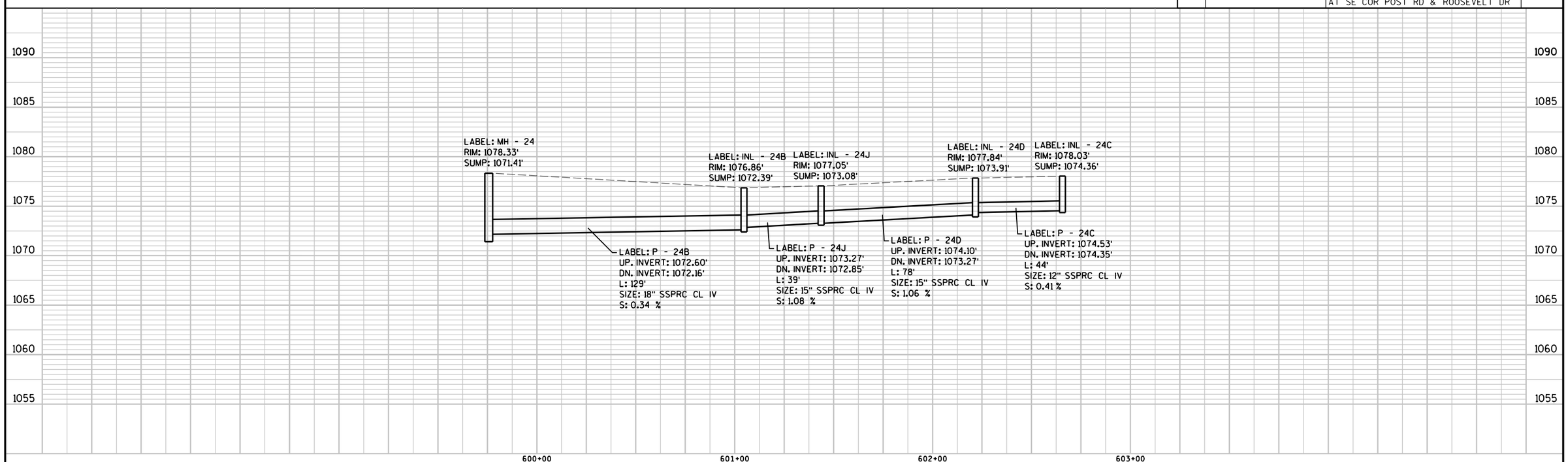

STA 600+00 - STA 603+00

STRUCT NO	STATION	LOCATION	PAY LENGTH C-C FT	TO STRUCT NO	INLET OR MANHOLE	TYPE	FLOW LINE/ RIM ELEV	TOP OF STRUCT ELEV	STRUCT DEPTH FT	DISCHARGE PIPE INLET ELEV	OUTLET ELEV	SIZE IN	INSTALL LENGTH FT	SLOPE %	REMARKS
24A	600+87.27	26.3' RT	54	24B	INL	2X3-FT-H-S	1076.82	1075.90	2.75	1073.32	1073.10	12	54	0.41	
24B	600+87.27	27.5' LT	129	24	INL	4-FT DIA-H-S	1076.86	1075.94	3.55	1072.60	1072.16	18	129	0.34	
24C	601+96.55	16.3' RT	44	24D	INL	2X3-FT-H	1078.03	1077.11	2.75	1074.53	1074.35	12	44	0.41	
24D	601+99.93	27.5' LT	78	24J	INL	4-FT DIA-H	1077.84	1076.92	3.01	1074.10	1073.27	15	78	1.06	
24J	601+25.00	27.5' LT	39	24B	INL	4-FT DIA-H	1077.05	1076.13	3.05	1073.27	1072.85	15	39	1.08	

INLETS		INLET COVERS		SSPRC C-C CLASS IV		
4-FT DIA	2X3-FT	TYPE H	TYPE H-S	12-INCH	15-INCH	18-INCH
3	2	3	2	98	117	129

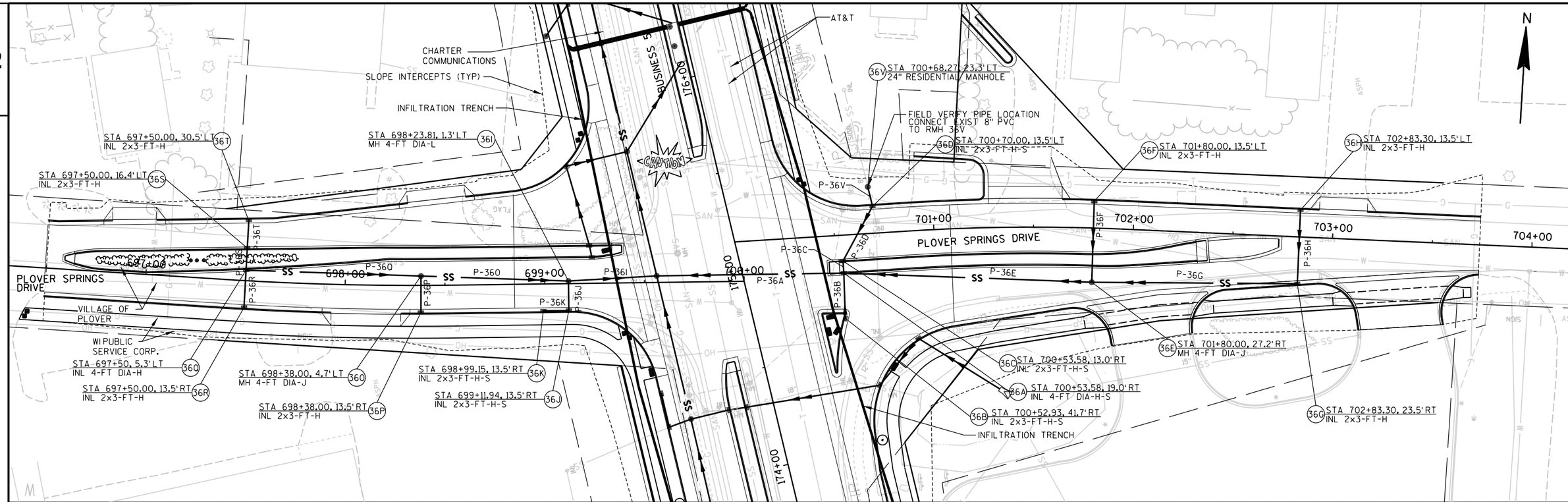

PROJECT NO:6414-00-78	HWY:BUSINESS 51	COUNTY:PORTAGE	STORM SEWER	SHEET 89	E

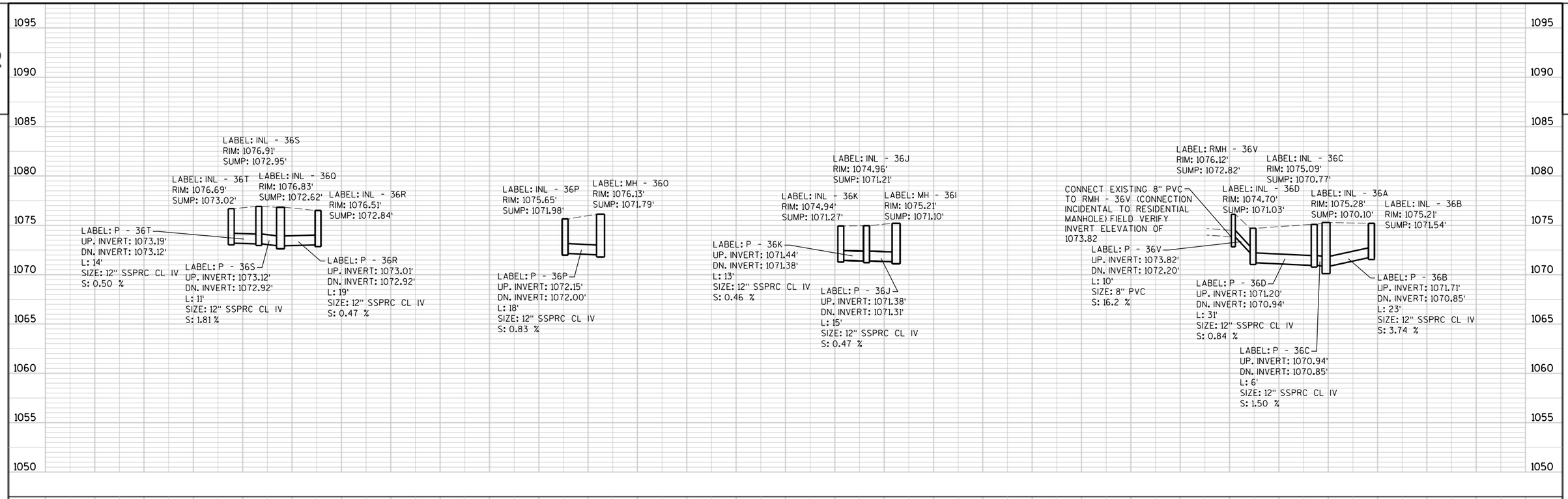
1095
1090
1085
1080
1075
1070
1065
1060
1055
1050
LABEL: INL - 36S
RIM: 1076.91'
SUMP: 1072.95'
LABEL: INL - 36T
RIM: 1076.69'
SUMP: 1073.02'
LABEL: INL - 36O
RIM: 1076.83'
SUMP: 1072.62'
LABEL: INL - 36R
RIM: 1076.51'
SUMP: 1072.84'
LABEL: P - 36T
UP. INVERT: 1073.19'
DN. INVERT: 1073.12'
L: 14'
SIZE: 12" SSPRC CL IV
S: 0.50 %
LABEL: P - 36S
UP. INVERT: 1073.12'
DN. INVERT: 1072.92'
L: 11'
SIZE: 12" SSPRC CL IV
S: 1.81 %
LABEL: P - 36R
UP. INVERT: 1073.01'
DN. INVERT: 1072.92'
L: 19'
SIZE: 12" SSPRC CL IV
S: 0.47 %
LABEL: INL - 36P
RIM: 1075.65'
SUMP: 1071.98'
LABEL: MH - 36O
RIM: 1076.13'
SUMP: 1071.79'
LABEL: P - 36P
UP. INVERT: 1072.15'
DN. INVERT: 1072.00'
L: 18'
SIZE: 12" SSPRC CL IV
S: 0.83 %
LABEL: INL - 36J
RIM: 1074.96'
SUMP: 1071.21'
LABEL: INL - 36K
RIM: 1074.94'
SUMP: 1071.27'
LABEL: MH - 36I
RIM: 1075.21'
SUMP: 1071.10'
LABEL: P - 36K
UP. INVERT: 1071.44'
DN. INVERT: 1071.38'
L: 13'
SIZE: 12" SSPRC CL IV
S: 0.46 %
LABEL: P - 36J
UP. INVERT: 1071.38'
DN. INVERT: 1071.31'
L: 15'
SIZE: 12" SSPRC CL IV
S: 0.47 %
LABEL: RMH - 36V
RIM: 1076.12'
SUMP: 1072.82'
LABEL: INL - 36C
RIM: 1075.09'
SUMP: 1070.77'
CONNECT EXISTING 8" PVC TO RMH - 36V (CONNECTION INCIDENTAL TO RESIDENTIAL MANHOLE) FIELD VERIFY INVERT ELEVATION OF 1073.82
LABEL: INL - 36D
RIM: 1074.70'
SUMP: 1071.03'
LABEL: INL - 36A
RIM: 1075.28'
SUMP: 1070.10'
LABEL: INL - 36B
RIM: 1075.21'
SUMP: 1071.54'
LABEL: P - 36V
UP. INVERT: 1073.82'
DN. INVERT: 1072.20'
L: 10'
SIZE: 8" PVC
S: 16.2 %
LABEL: P - 36D
UP. INVERT: 1071.20'
DN. INVERT: 1070.94'
L: 31'
SIZE: 12" SSPRC CL IV
S: 0.84 %
LABEL: P - 36B
UP. INVERT: 1071.71'
DN. INVERT: 1070.85'
L: 23'
SIZE: 12" SSPRC CL IV
S: 3.74 %
LABEL: P - 36C
UP. INVERT: 1070.94'
DN. INVERT: 1070.85'
L: 6'
SIZE: 12" SSPRC CL IV
S: 1.50 %
LABEL: INL - 36F
RIM: 1075.42'
SUMP: 1071.75'
LABEL: MH - 36E
RIM: 1075.86'
SUMP: 1071.01'
LABEL: P - 36F
UP. INVERT: 1071.92'
DN. INVERT: 1071.72'
L: 41'
SIZE: 12" SSPRC CL IV
S: 0.49 %
LABEL: INL - 36H
RIM: 1076.22'
SUMP: 1072.55'
LABEL: INL - 36G
RIM: 1076.19'
SUMP: 1072.39'
LABEL: P - 36H
UP. INVERT: 1072.72'
DN. INVERT: 1072.56'
L: 37'
SIZE: 12" SSPRC CL IV
S: 0.43 %

STA 696+50 - STA 704+00

STRUCT NO	STATION	LOCATION	PAY LENGTH C-C FT	TO STRUCT NO	INLET OR MANHOLE	TYPE	FLOW LINE/ RIM ELEV	TOP OF STRUCT ELEV	STRUCT DEPTH FT	DISCHARGE PIPE INLET ELEV	DISCHARGE PIPE OUTLET ELEV	DISCHARGE PIPE SIZE IN	DISCHARGE PIPE INSTALL LENGTH FT	DISCHARGE PIPE SLOPE %	REMARKS
36A	700+53.58	19.0' RT	94	36	INL	4-FT DIA-H-S	1075.28	1074.36	4.26	1070.35	1069.91	24	94	0.47	
36B	700+52.93	41.7' RT	23	36A	INL	2X3-FT-H-S	1075.21	1074.29	2.75	1071.71	1070.85	12	23	3.74	
36C	700+53.58	13.0' RT	6	36A	INL	2X3-FT-H-S	1075.09	1074.17	3.40	1070.94	1070.85	12	6	1.50	
36D	700+70.00	13.5' LT	31	36C	INL	2X3-FT-H-S	1074.70	1073.78	2.75	1071.20	1070.94	12	31	0.84	
36E	701+80.00	27.2' RT	124	36A	MH	4-FT DIA-J	1075.86	1074.53	3.52	1071.22	1070.85	18	124	0.30	
36F	701+80.00	13.5' LT	41	36E	INL	2X3-FT-H	1075.42	1074.50	2.75	1071.92	1071.72	12	41	0.49	
36G	702+83.30	23.5' RT	103	36E	INL	2X3-FT-H	1076.19	1075.27	2.88	1072.56	1071.72	12	103	0.81	
36H	702+83.30	13.5' LT	37	36G	INL	2X3-FT-H	1076.22	1075.30	2.75	1072.72	1072.56	12	37	0.43	
36I	698+23.81	1.3' LT	44	36	MH	4-FT DIA-L	1075.21	1073.88	2.78	1071.31	1071.09	18	44	0.50	
36J	699+11.94	13.5' RT	15	36I	INL	2X3-FT-H-S	1074.96	1074.04	2.83	1071.38	1071.31	12	15	0.47	
36K	698+99.15	13.5' RT	13	36J	INL	2X3-FT-H-S	1074.94	1074.02	2.75	1071.44	1071.38	12	13	0.46	
36O	698+38.00	4.7' LT	74	36I	MH	4-FT DIA-J	1076.13	1074.80	3.01	1072.00	1071.31	18	74	0.93	
36P	698+38.00	13.5' RT	18	36O	INL	2X3-FT-H	1075.65	1074.73	2.75	1072.15	1072.00	12	18	0.83	
36Q	697+50.00	5.3' LT	88	36O	INL	4-FT DIA-H	1076.83	1075.91	3.29	1072.83	1072.00	18	88	0.94	
36R	697+50.00	13.5' RT	19	36Q	INL	2X3-FT-H	1076.51	1075.59	2.75	1073.01	1072.92	12	19	0.47	
36S	697+50.00	16.4' LT	11	36S	INL	2X3-FT-H	1076.91	1075.99	3.04	1073.12	1072.92	12	11	1.81	
36T	697+50.00	30.5' LT	14	36T	INL	2X3-FT-H	1076.69	1075.77	2.75	1073.19	1073.12	12	14	0.50	
36V	700+68.27	23.3' LT	10	36D	24" RMH	RESIDENTIAL	1076.12	1075.79	2.97	1073.82	1072.20	8" PVC	10	16.20	CONNECT EXIST 8" PVC TO RMH 36V INVERT EL=1073.82

MANHOLES	INLETS		RESIDENTIAL MANHOLE	MANHOLE COVERS		INLET COVERS		SSPRC C-C CLASS IV			PVC
4-FT DIA	4-FT DIA	2X3-FT	24-INCH	TYPE J	TYPE L	TYPE H	TYPE H-S	12-INCH	18-INCH	24-INCH	8"
3	2	12	1	2	1	8	6	331	330	94	10

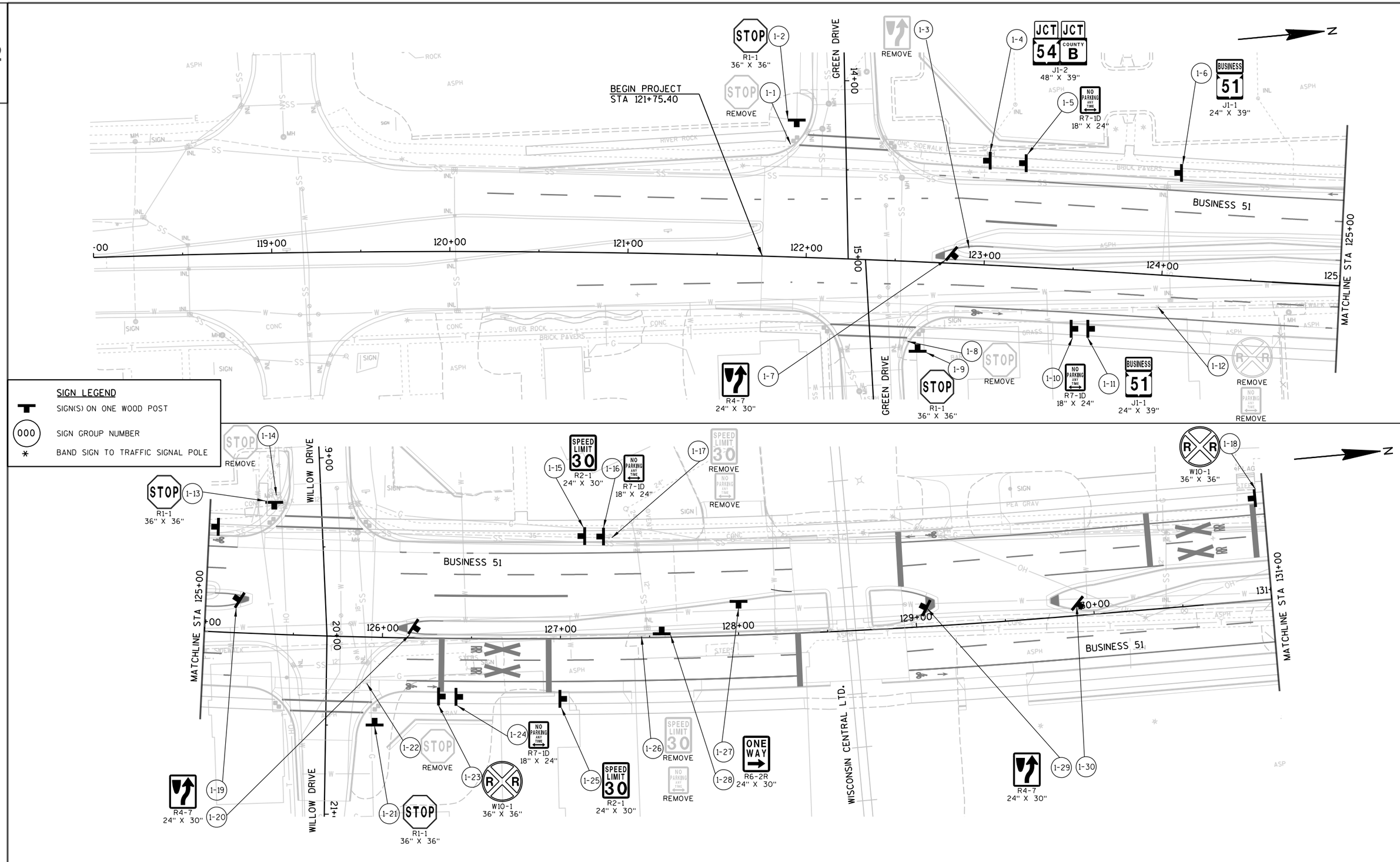

PROJECT NO:6414-00-78	HWY:BUSINESS 51	COUNTY:PORTAGE	PERMANENT SIGNING	SHEET 92	E

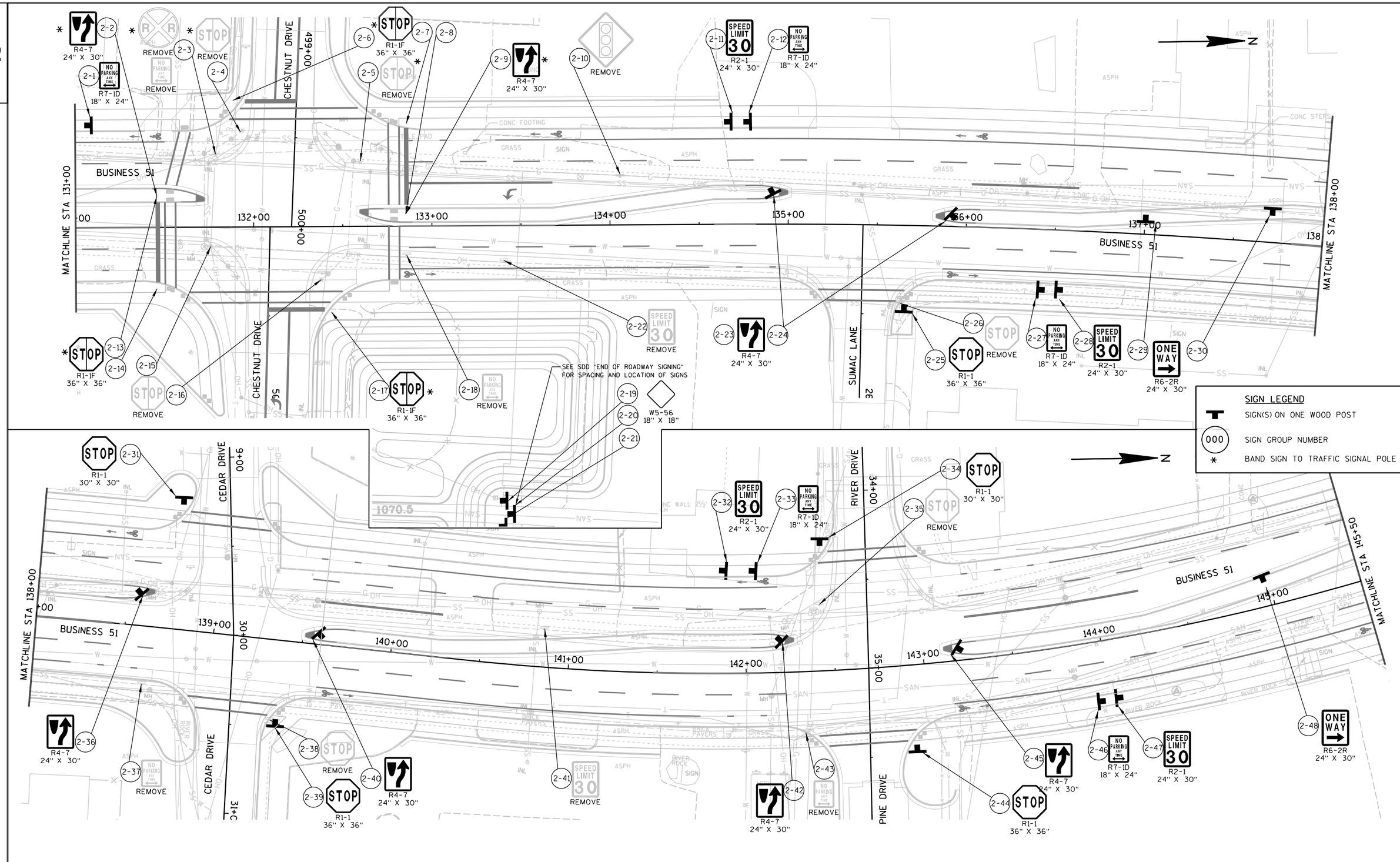

PROJECT NO:6414-00-78	HWY:BUSINESS 51	COUNTY:PORTAGE	PERMANENT SIGNING	SHEET 93	E

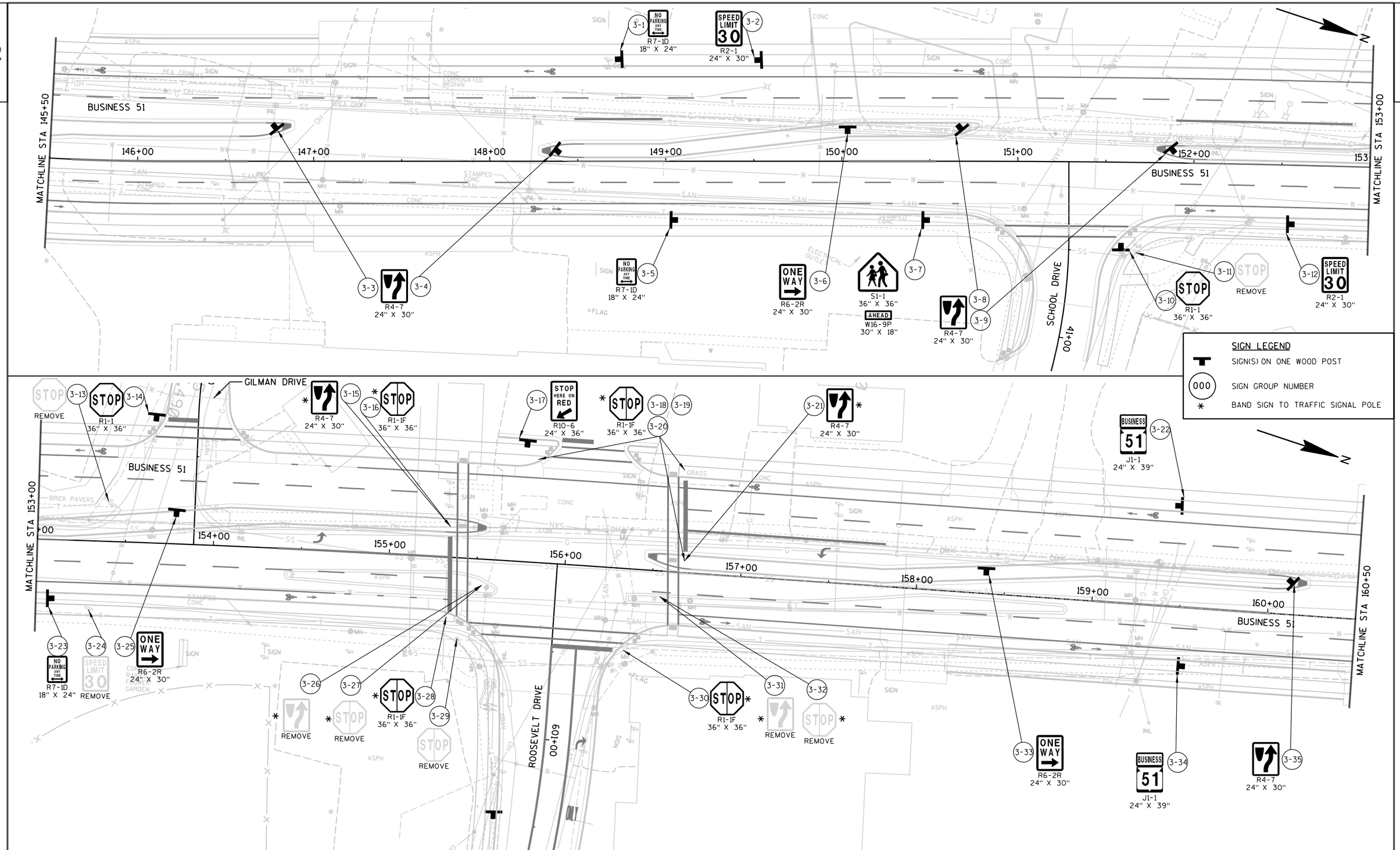

PROJECT NO:6414-00-78	HWY:BUSINESS 51	COUNTY:PORTAGE	PERMANENT SIGNING	SHEET 94	E

FILE NAME : P:\UZ\W\Witnc\112545\5-final-dsgn\51-drawings\40-TransHwy\023203 ps SEG 1.dgn PLOT TIME : 2:02:39 PM PLOT DATE : 8/2/2015 PLOT BY : SEH PLOT NAME : PLOT SCALE : N/A

WISDOT/CADDS SHEET 42

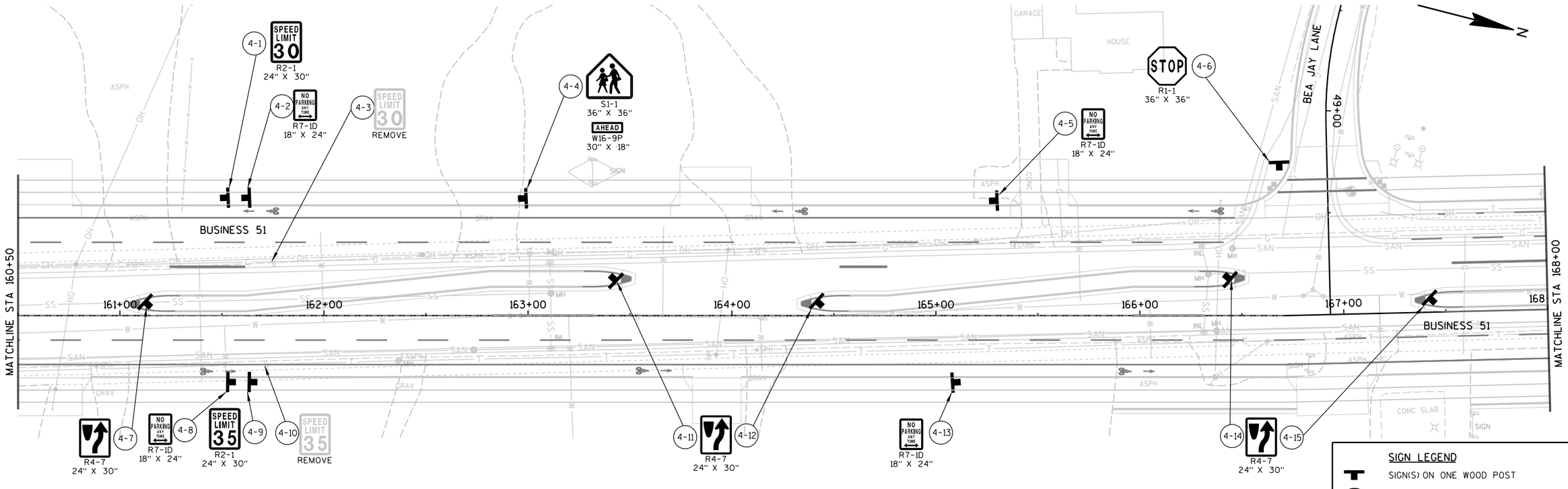

SIGN LEGEND

- SIGN(S) ON ONE WOOD POST
- (000) SIGN GROUP NUMBER
- * BAND SIGN TO TRAFFIC SIGNAL POLE

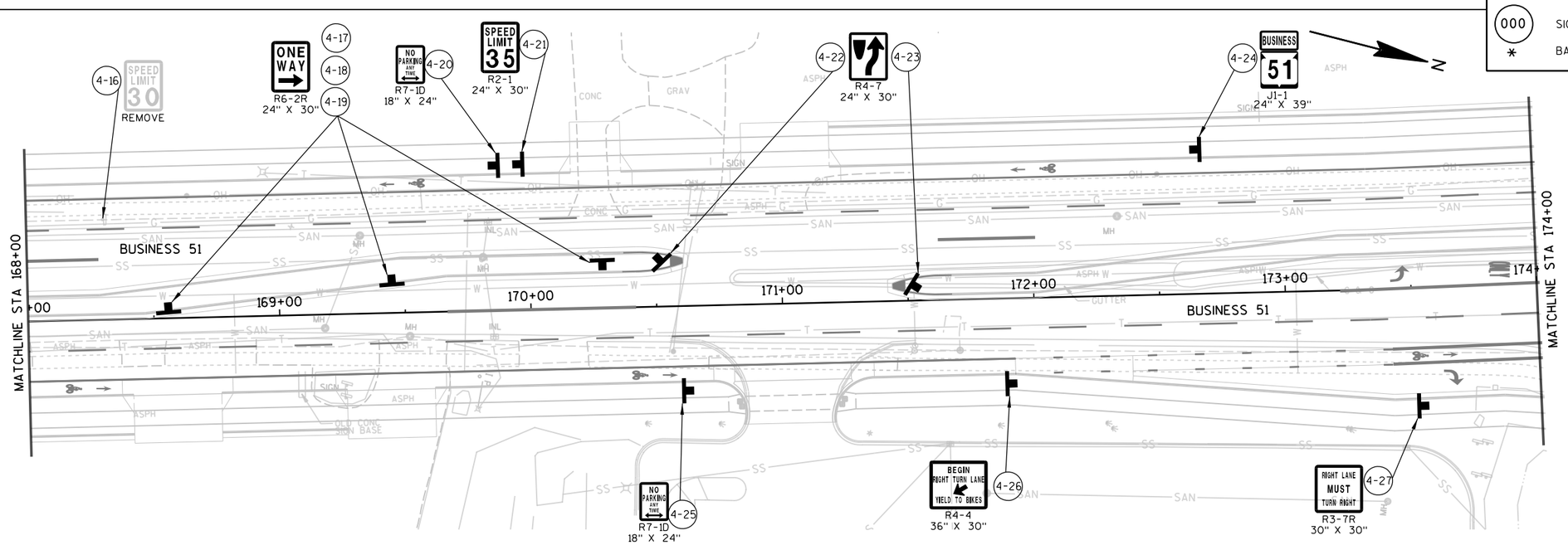

PROJECT NO:6414-00-78	HWY:BUSINESS 51	COUNTY:PORTAGE	PERMANENT SIGNING	SHEET 95	E

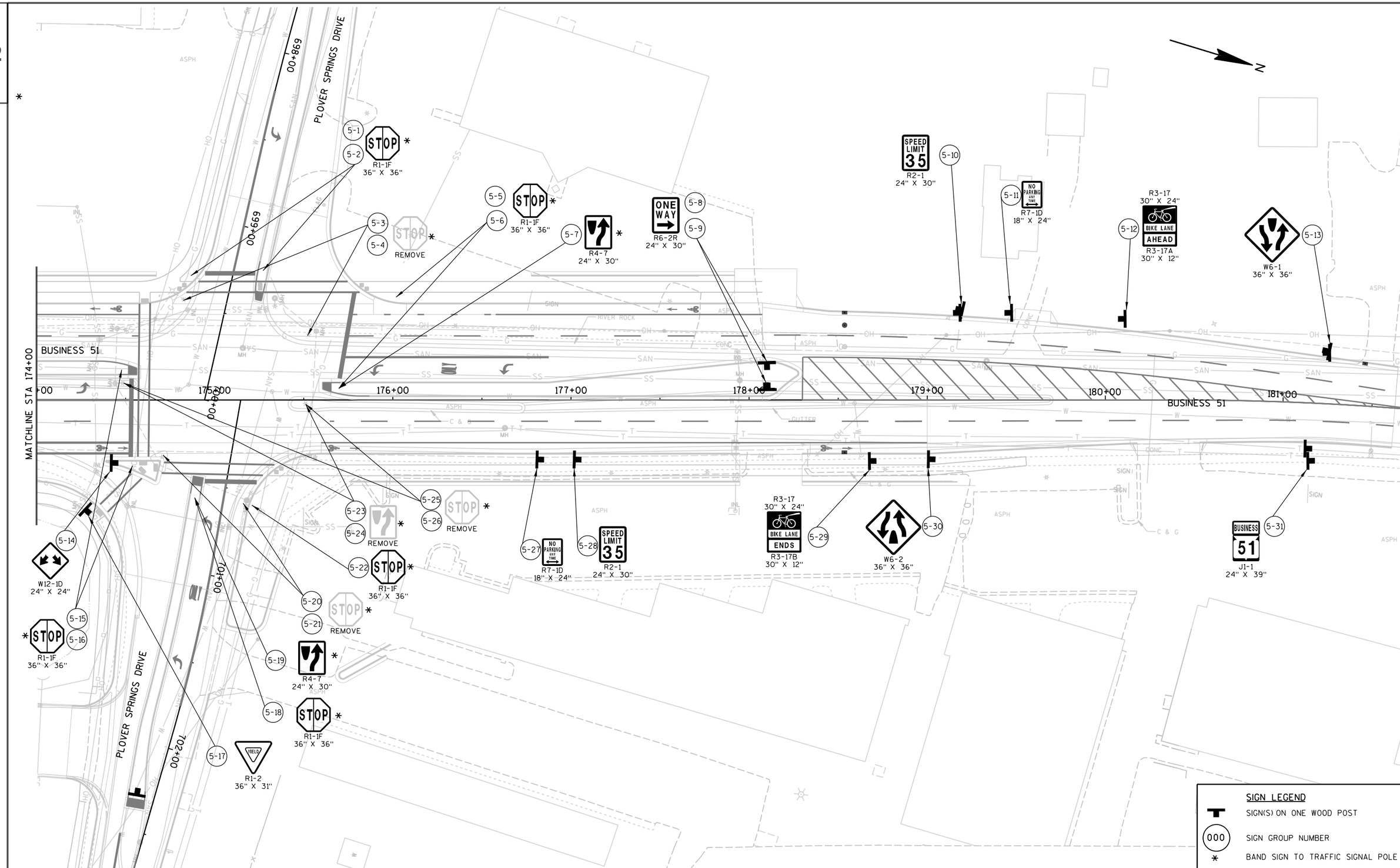

PROJECT NO:6414-00-78	HWY:BUSINESS 51	COUNTY:PORTAGE	PERMANENT SIGNING	SHEET 96	E

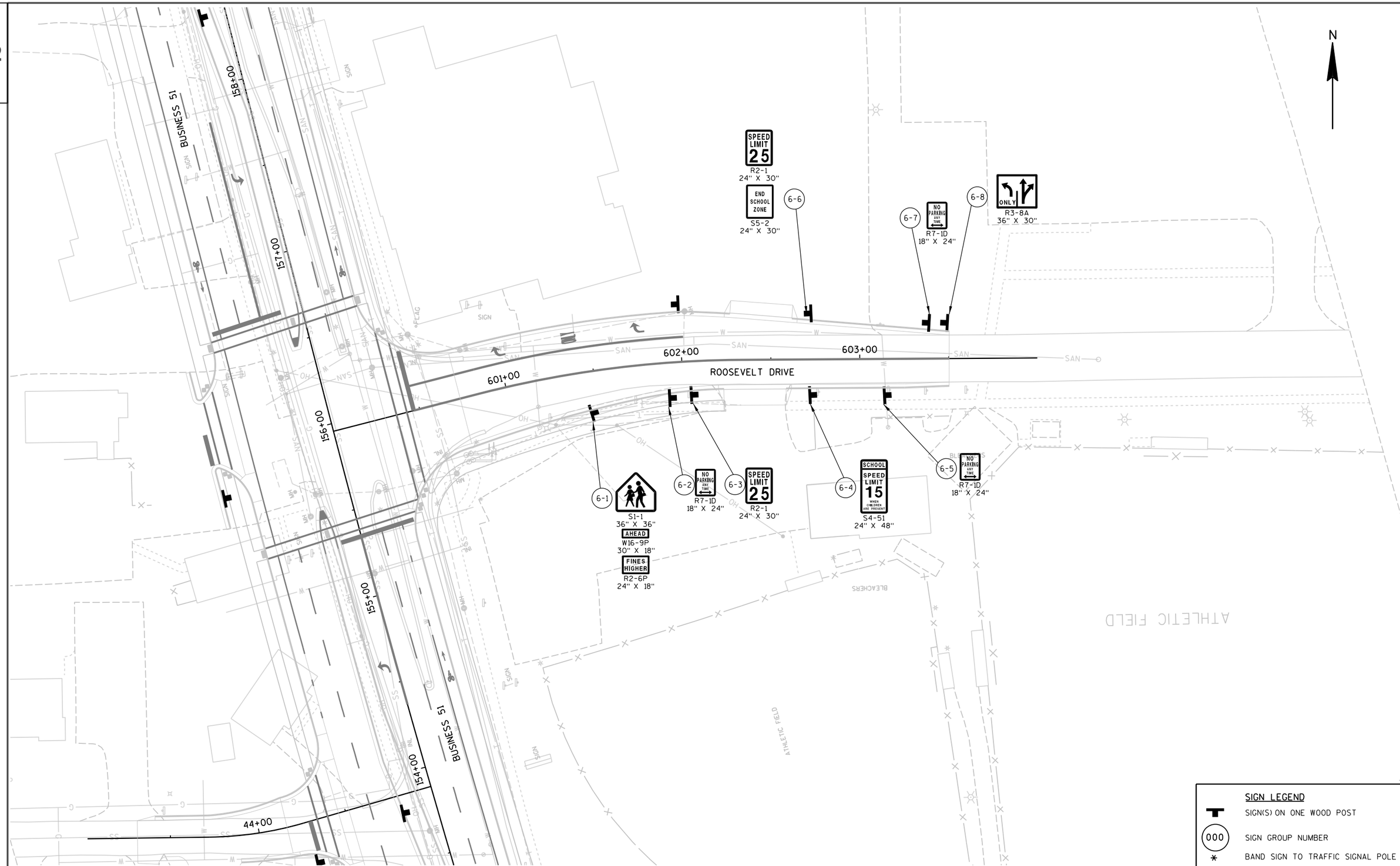
N
BUSINESS 51
158+00
157+00
156+00
155+00
154+00
44+00
601+00
602+00
603+00
ROOSEVELT DRIVE
6-1
S1-1
36" X 36"
AHEAD
W16-9P
30" X 18"
FINES HIGHER
R2-6P
24" X 18"
6-2
NO PARKING ANY TIME
R7-1D
18" X 24"
6-3
SPEED LIMIT 25
R2-1
24" X 30"
6-4
SCHOOL SPEED LIMIT 15 WHEN CHILDREN ARE PRESENT
S4-51
24" X 48"
6-5
NO PARKING ANY TIME
R7-1D
18" X 24"
6-6
SPEED LIMIT 25
R2-1
24" X 30"
END SCHOOL ZONE
S5-2
24" X 30"
6-7
NO PARKING ANY TIME
R7-1D
18" X 24"
6-8
ONLY
R3-8A
36" X 30"
ATHLETIC FIELD
BLEACHERS
SIGN LEGEND
SIGN(S) ON ONE WOOD POST
000
SIGN GROUP NUMBER
*
BAND SIGN TO TRAFFIC SIGNAL POLE

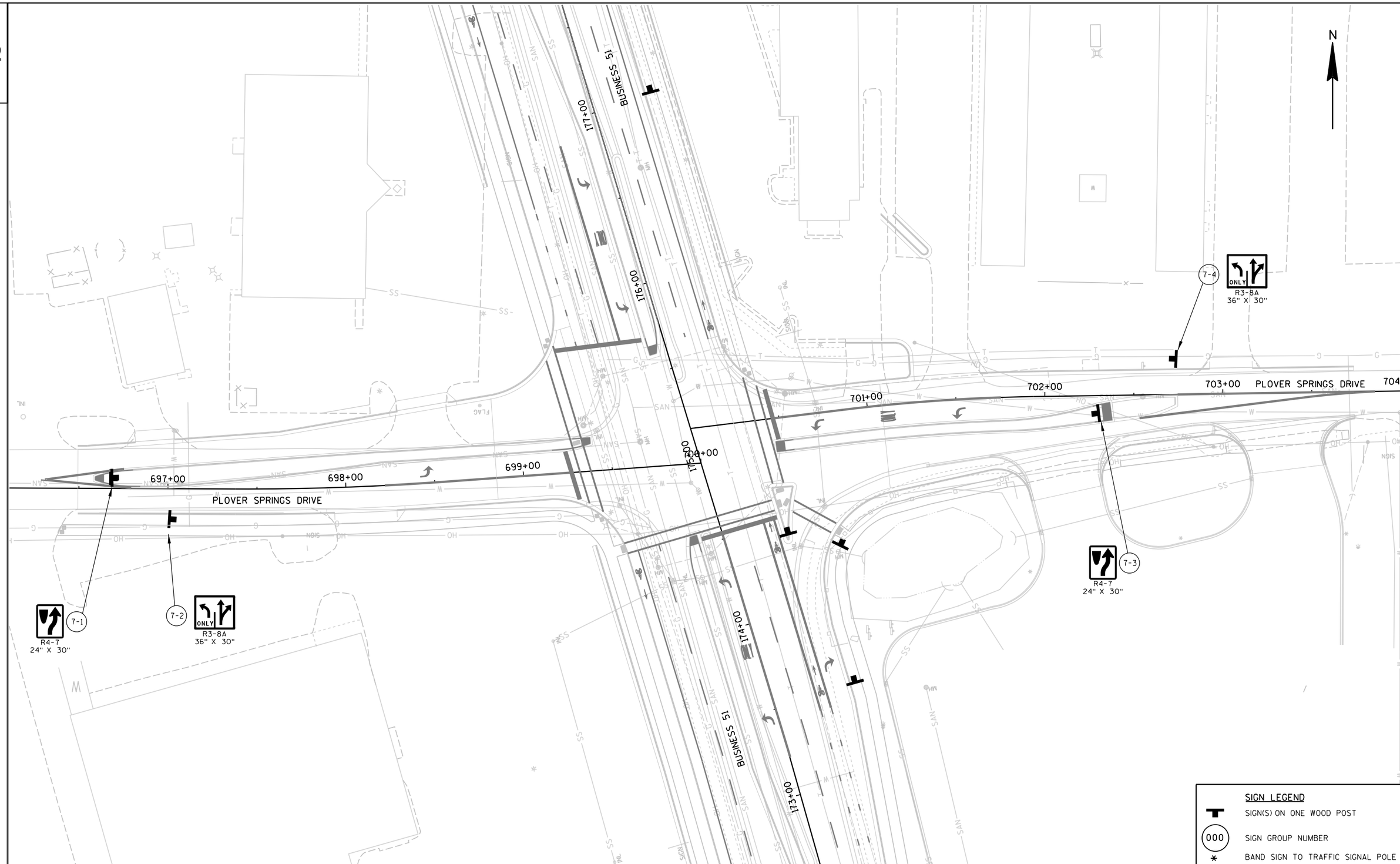
N
BUSINESS 51
177+00
176+00
175+00
174+00
173+00
697+00
698+00
699+00
700+00
701+00
702+00
703+00
PLOVER SPRINGS DRIVE
PLOVER SPRINGS DRIVE
7-1
R4-7
24" X 30"
7-2
ONLY
R3-8A
36" X 30"
7-3
R4-7
24" X 30"
7-4
ONLY
R3-8A
36" X 30"
SIGN LEGEND
SIGN(S) ON ONE WOOD POST
000
SIGN GROUP NUMBER
*
BAND SIGN TO TRAFFIC SIGNAL POLE

2

STREET LIGHTING PLANS PREPARED BY

7/16/2015
(DATE) (SIGNATURE)

2

LIGHTING PLAN LEGEND

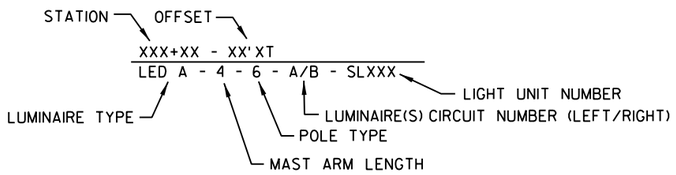

LIGHTING UNIT

LIGHTING CONTROL CABINET

POLY BOX NON-CONDUCTIVE (24"X42")

CONDUIT RIGID NONMETALLIC SCHEDULE 40

SALVAGE LIGHTING UNIT

CONDUIT/CONDUCTOR LEGEND

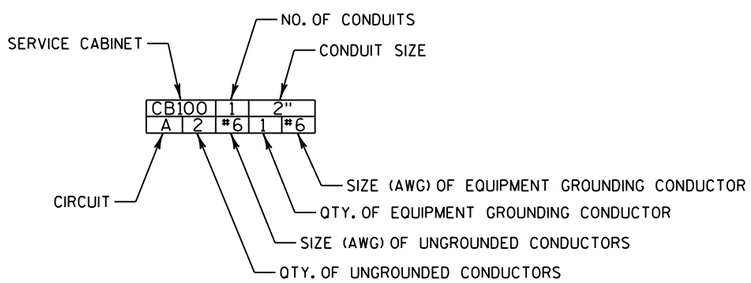

TWO = TRACER WIRE ONLY (INSTALL 6 AWG WIRE)

GENERAL STREET LIGHTING NOTES:

1) THE ENGINEER SHALL APPROVE THE FINAL LOCATION FOR ALL CONCRETE BASES IN THE FIELD PRIOR TO CONSTRUCTION.

2) PITCH ALL CONDUITS TOWARD PULLBOXES. INSTALL A 2" DRAIN DUCT TO DITCH OR STORM SEWER AS REQUIRED FOR DRAINAGE. THIS 2" DRAIN DUCT IS INCIDENTAL TO THE PULL BOX BID ITEM. DRAIN DUCT IS NOT SHOWN.

3) THE LOCATION OF EXISTING AND PROPOSED UTILITIES AS SHOWN ON THE PLANS ARE APPROXIMATE. IN ADDITION, THERE MAY BE OTHER UTILITIES WITHIN THE PROJECT AREA WHICH ARE NOT SHOWN. THE CONTRACTOR SHALL VERIFY THE LOCATIONS OF ALL UTILITIES PRIOR TO CONSTRUCTION.

4. CHECK FOR OVERHEAD UTILITY CONFLICTS PRIOR TO CONSTRUCTING CONCRETE BASES.

5. REFER TO STREETSCAPE DETAILS FOR ADDITIONAL INFORMATION FOR LOCATING BASES IN PAVED TERRACE AREAS.

6. STUB OUT CONDUIT FOR FUTURE USE IN STREET LIGHT BASES WHERE CIRCUIT RUNS END.

SHEET 1 OF 10

2

N

13+00

14+00

15+00

16+00

19+00

20+00

21+00

119+00

120+00

121+00

122+00

123+00

124+00

125+00

126

MATCH LINE STA. 126+00

BUS 51 / POST RD

SOUTH DR

GREEN DR

WILLOW DR

R/W (TYP)

124+66 - 18.0' LT
LED A(2) - 4(2) - 6 - B/A - SL102

121+51 - 14.0' LT
LED A(2) - 4(2) - 6 - B/A - SL100
*SEE NOTE 6

122+91 - 6.1' LT
LED A(2) - 4(2) - 6 - A/B - SL101

X

A

A =

CB100	1	2"	
A	2	#6	1 #6
B	2	#6	-- --

CONDUCTOR COLOR LEGEND

A - BLACK
B - RED
C - BLUE
D - BROWN

240V PHASE TO PHASE

SHEET 2 OF 10

2

PROJECT NO: 6414-00-78	HWY: BUSINESS 51	COUNTY: PORTAGE	LIGHTING PLANS	SHEET 100	E

FILE NAME : G:\SEH\10026-001_002\DGN\SHEETS\6414-07-78\023603_lp.dgn PLOT DATE : 7/16/2015 PLOT BY : KL Engineering PLOT NAME : PLOT SCALE :

WISDOT/CADDS SHEET 42

2

126+41 - 6.0' LT
LED A(2) - 4(2) - 6 - A/B - SL103

128+13 - 11.4' LT
LED A(2) - 4(2) - 6 - B/A - SL104

REFER TO SPECIAL PROVISIONS FOR INFORMATION REGARDING CONDUIT INSTALLATION BELOW THE WCL RR

130+11 - 11.1' LT
LED A(2) - 4(2) - 6 - A/B - SL105

131+09 - 18.0' LT - PB102

SEE SIGNAL PLAN FOR LAYOUT OF TRAFFIC SIGNAL ITEMS

133+05 - 6.0' LT - PB107

MATCH LINE STA. 126+00

MATCH LINE STA. 133+50

BUS 51 / POST RD

R/W (TYP)

128+17 - 11.5' LT - PB100

128+96 - 12.4' LT - PB101

AVOID PLACING CONDUIT IN CONFLICT WITH WCL RR GATE POLES & BASES

WISCONSIN CENTRAL LTD

CHESTNUT DR

131+09 - 34.5' RT - PB103

131+52 - 52.8' RT - CB100

500+72 - 30.8' RT - PB104

133+05 - 34.5' LT - PB106

500+72 - 29.5' LT - PB105

CONDUCTOR COLOR LEGEND

A - BLACK
B - RED
C - BLUE
D - BROWN

240V PHASE TO PHASE

A =

CB100	1	2"		
A	2	#6	1	#6
B	2	#6	--	--

B =

CB100	1	3"		
A	2	#6	1	#6
B	2	#6	--	--

C =

CB100	1	2"		
C	2	#6	1	#6
D	2	#6	--	--

D =

CB100	1	3"		
C	2	#6	1	#6
D	2	#6	--	--

SHEET 3 OF 10

PROJECT NO: 6414-00-78	HWY: BUSINESS 51	COUNTY: PORTAGE	LIGHTING PLANS	SHEET 101	E

2

134+42 - 15.8' LT
LED A(2) - 4(2) - 6 - C/D - SL106

136+13 - 6.0' LT
LED A(2) - 4(2) - 6 - D/C - SL107

137+87 - 18.0' LT
LED A(2) - 4(2) - 6 - C/D - SL108

139+63 - 5.4' LT
LED A(2) - 4(2) - 6 - D/C - SL109

MATCH LINE STA. 133+50

134+00

135+00

136+00

137+00

138+00

139+00

140+00

141

MATCH LINE STA. 141+00

BUS 51 / POST RD

R/W (TYP)

SUMAC LN 26+00

CEDAR DR 31+00

29+00

30+00

BLDG.

SLAB

C =	CB100	1		2"
C	2	#6	1	#6
D	2	#6	--	--

CONDUCTOR COLOR LEGEND

A - BLACK
B - RED
C - BLUE
D - BROWN

240V PHASE TO PHASE

SHEET 4 OF 10

PROJECT NO: 6414-00-78	HWY: BUSINESS 51	COUNTY: PORTAGE	LIGHTING PLANS	SHEET 102	E

FILE NAME : G:\SEH\10026-001_002\DGN\SHEETS\6414-07-78\023605_lp.dgn PLOT DATE : 7/16/2015 PLOT BY : KL Engineering PLOT NAME : PLOT SCALE :

WISDOT/CADDS SHEET 42

141+40 - 17.3' LT
LED A(2) - 4(2) - 6 - C/D - SL110

143+23 - 6.5' LT
LED A(2) - 4(2) - 6 - D/C - SL111

144+98 - 12.4' LT
LED A(2) - 4(2) - 6 - C/D - SL112

146+72 - 18.3' LT
LED A(2) - 4(2) - 6 - D/C - SL113

MATCH LINE STA. 141+00

MATCH LINE STA. 148+00

BUS 51 / POST RD

RIVER DR

PINE DR

R/W (TYP)

142+00 143+00 144+00 145+00 146+00 147+00 148

34+00 35+00 36+00 37+00

C =

CB100	1	2"		
C	2	#6	1	#6
D	2	#6	--	--

CONDUCTOR COLOR LEGEND

A - BLACK
B - RED
C - BLUE
D - BROWN

240V PHASE TO PHASE

SHEET 5 OF 10

PROJECT NO: 6414-00-78	HWY: BUSINESS 51	COUNTY: PORTAGE	LIGHTING PLANS	SHEET	E

FILE NAME : G:\SEH\10026-001_002\DGN\SHEETS\6414-07-78\023606_lp.dgn PLOT DATE : 7/16/2015 PLOT BY : KL Engineering PLOT NAME : PLOT SCALE :

WISDOT/CADDS SHEET 42

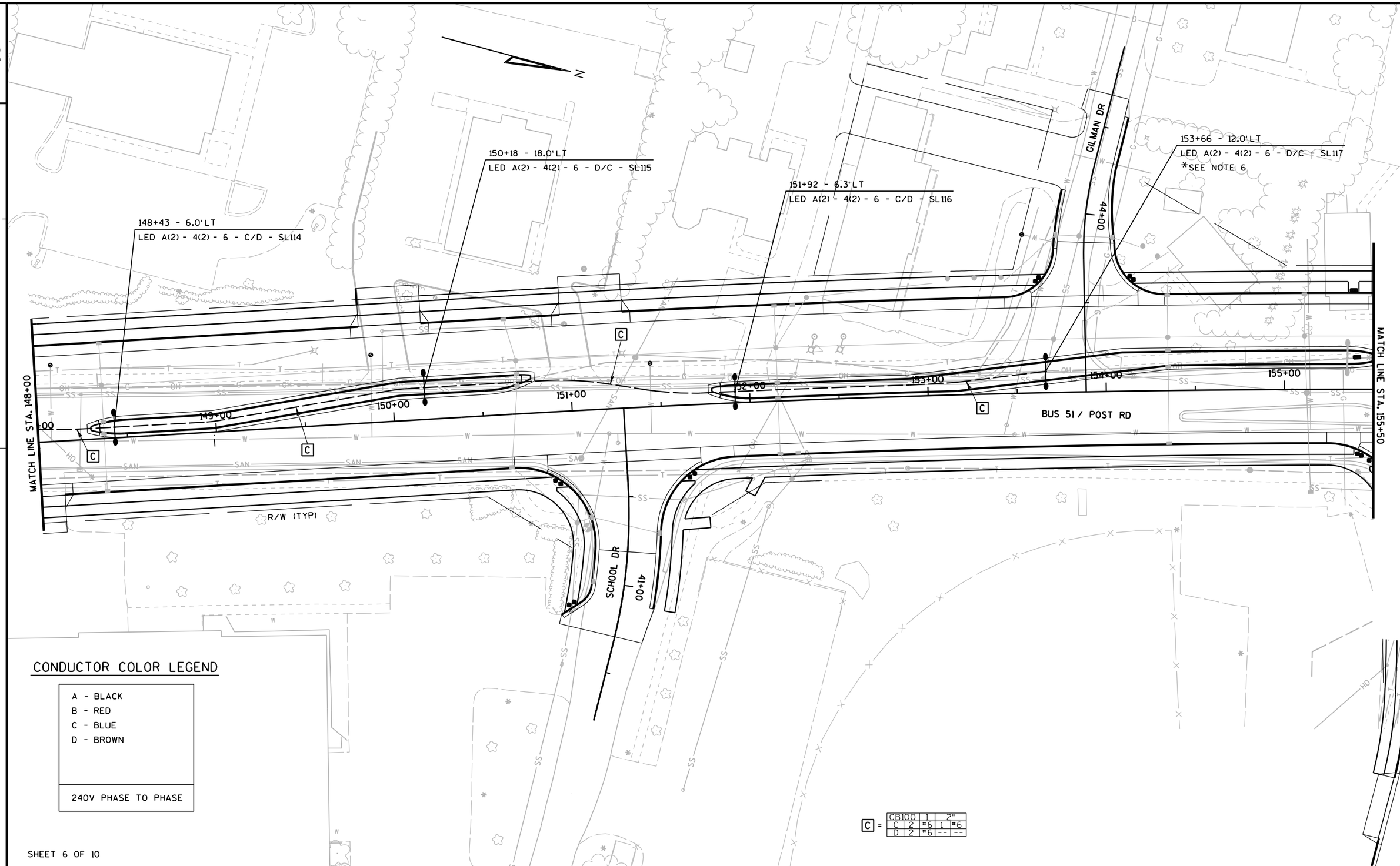

PROJECT NO: 6414-00-78	HWY: BUSINESS 51	COUNTY: PORTAGE	LIGHTING PLANS	SHEET 104	E

2

SEE SIGNAL PLAN FOR LAYOUT
OF TRAFFIC SIGNAL ITEMS

158+16 - 9.4' LT
LED A(2) - 4(2) - 6 - A/B - SL200
*SEE NOTE 6

159+78 - 18.0' LT
LED A(2) - 4(2) - 6 - B/A - SL201

161+35 - 6.0' LT
LED A(2) - 4(2) - 6 - A/B - SL202

MATCH LINE STA. 155+50

156+00 157+00 158+00 159+00 160+00 161+00 162+00 163

MATCH LINE STA. 163+00

BUS 51 / POST RD

R/W (TYP)

601+00

ROOSEVELT DR

602+00

N

E =

CB200	1		2"	
A	2	#6	1	#6
B	2	#6	--	--

CONDUCTOR COLOR LEGEND

A/E - BLACK
B/F - RED
C/G - BLUE
D/H - BROWN

240V PHASE TO PHASE

SHEET 7 OF 10

2

PROJECT NO: 6414-00-78	HWY: BUSINESS 51	COUNTY: PORTAGE	LIGHTING PLANS	SHEET 105	E

FILE NAME : G:\SEH\10026-001_002\DGN\SHEETS\6414-07-78\023608_lp.dgn PLOT DATE : 7/16/2015 PLOT BY : KL Engineering PLOT NAME : PLOT SCALE :

WISDOT/CADDS SHEET 42

2

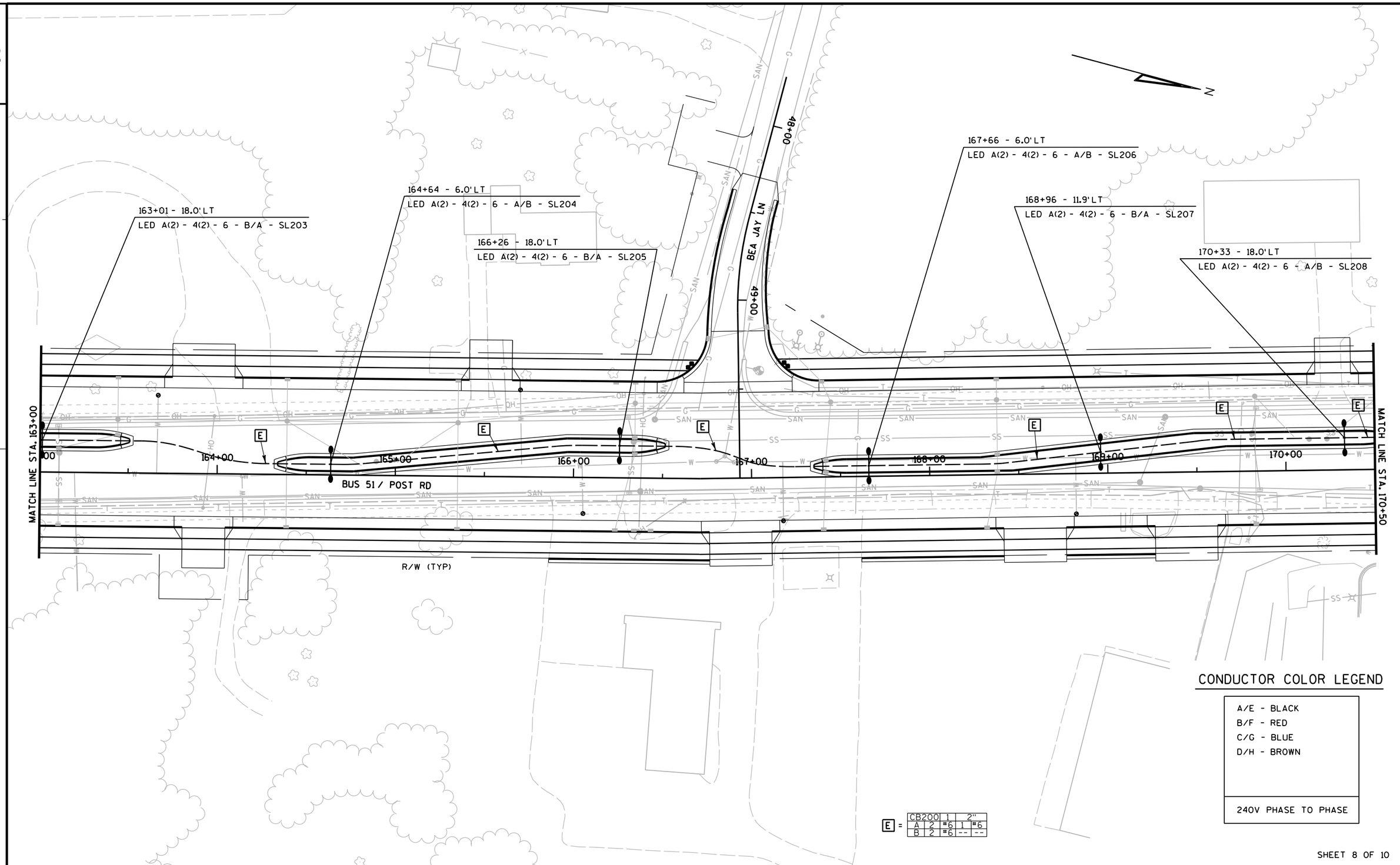

SHEET 8 OF 10

PROJECT NO:6414-00-78	HWY:BUSINESS 51	COUNTY:PORTAGE	LIGHTING PLANS	SHEET 106	E

FILE NAME : G:\SEH\10026-001_002\DGN\SHEETS\6414-07-78\023609_lp.dgn PLOT DATE : 7/16/2015 PLOT BY : KL Engineering PLOT NAME : PLOT SCALE :

WISDOT/CADDS SHEET 42

697+62 - 12.1' LT
LED A(2) - 4(2) - 6 - E/F - SL213
*SEE NOTE 6

CB200	1		2"	
E	2	#6	1	#6
F	2	#6	--	--

697+72 - 17.5' RT - PB206

698+98 - 17.5' RT - PB205

CB200	1		2"	
E	2	#6	1	#6
F	2	#6	--	--

697+72- 12.1' LT - PB207

174+73 - 80.0' LT - CB200

698+98 - 53.7' LT - PB208

174+15 - 57.5' LT - PB204

176+56 - 57.5' LT - PB209

171+68 - 6.0' LT
LED A(2) - 4(2) - 6 - B/A - SL209

174+15 - 18.0' LT - PB203

173+08 - 16.7' LT
LED A(2) - 4(2) - 6 - A/B - SL210

177+31 - 8.2' LT
LED A(2) - 4(2) - 6 - G/H - SL212

MATCH LINE STA. 170+50

MATCH LINE STA. 178+00

171+00 172+00 173+00 174+00 175+00 176+00 177+00 178

BUS 51 / POST RD

TWO

R/W (TYP)

SEE SIGNAL PLAN FOR LAYOUT
OF TRAFFIC SIGNAL ITEMS

176+56 - 6.0' LT - PB210

702+18 - 11.6' RT
LED A(2) - 4(2) - 6 - D/C - SL214

173+92 - 48.1' RT
LED A - 4 - 6 - C - SL211

CB200	1		3"	
C	4	#6	2	#6
D	4	#6	--	--

174+15 - 51.8' RT - PB202

CB200	1		2"	
C	2	#6	1	#6
D	2	#6	--	--

702+40 - 8.5' RT - PB200

702+43 - 31.9' RT - PB201

PLOVER SPRINGS DR

697+00 698+00 699+00 700+00 701+00 702+00

CONDUCTOR COLOR LEGEND

A/E - BLACK
B/F - RED
C/G - BLUE
D/H - BROWN

240V PHASE TO PHASE

E =

CB200	1		2"	
A	2	#6	1	#6
B	2	#6	--	--

H =

CB200	1		3"	
G	2	#6	1	#6
H	2	#6	--	--

K =

CB200	1		3"	
E	2	#6	1	#6
F	2	#6	--	--

F =

CB200	1		3"	
A	2	#6	1	#6
B	2	#6	--	--
C	2	#6	1	#6
D	2	#6	--	--

I =

CB200	1		3"	
E	2	#6	1	#6
F	2	#6	--	--
G	2	#6	1	#6
H	2	#6	--	--

G =

CB200	1		3"	
C	2	#6	1	#6
D	2	#6	--	--

J =

CB200	1		2"	
G	2	#6	1	#6
H	2	#6	--	--

SHEET 9 OF 10

PROJECT NO:6414-00-78	HWY:BUSINESS 51	COUNTY:PORTAGE	LIGHTING PLANS	SHEET 107	E

2

N

R/W (TYP)

MATCH LINE STA. 178+00

179+00

180+00

181+00

182+00

183+00

184+00

185+00

53+00

54+00

56+00

57+00

PWO

BUS 51 / POST RD

SPRINGVILLE DR

STUB AND
CAP CONDUIT

WALLS

CONDUCTOR COLOR LEGEND

A/E - BLACK
B/F - RED
C/G - BLUE
D/H - BROWN
240V PHASE TO PHASE

SHEET 10 OF 10

PROJECT NO:6414-00-78	HWY:BUSINESS 51	COUNTY:PORTAGE	LIGHTING PLANS	SHEET 108	E

FILE NAME : G:\SEH\10026-001_002\DGN\SHEETS\6414-07-78\0236011_lp.dgn PLOT DATE : 7/16/2015 PLOT BY : KL Engineering PLOT NAME : PLOT SCALE :

WISDOT/CADDS SHEET 42

2

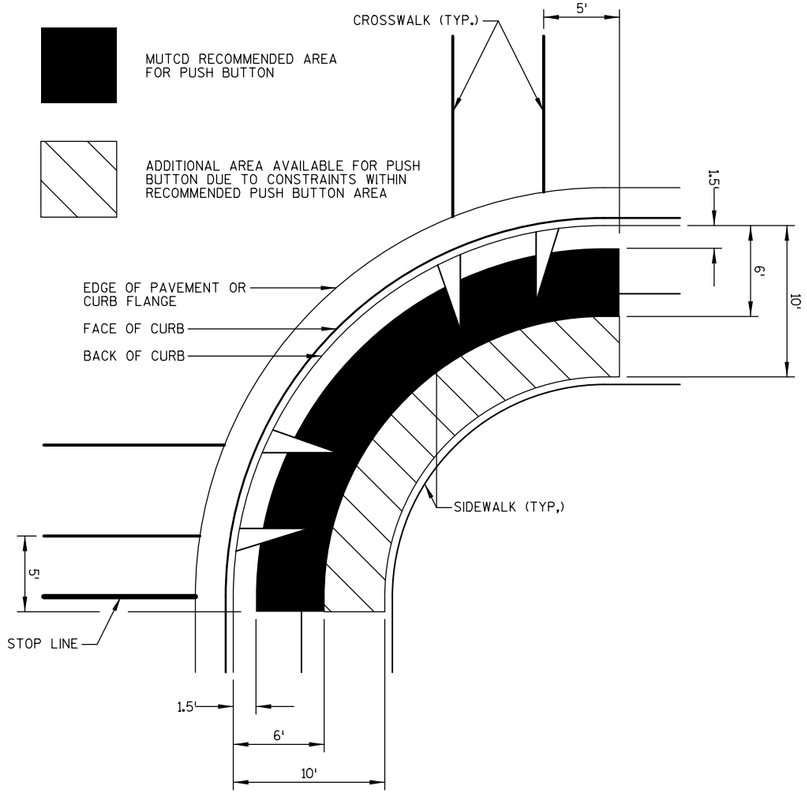

PUSH BUTTON LOCATION NOTES:

1. PUSHBUTTONS SHOULD BE CAPABLE OF EASY ACTIVATION AND CONVENIENTLY LOCATED NEAR EACH END OF CROSSWALK OR CROSSING AREA.
2. PUSHBUTTONS SHOULD BE PLACED UNOBSTRUCTED AND ADJACENT TO A LEVEL ALL-WEATHER SURFACE TO PROVIDE ACCESS FROM A WHEELCHAIR.
3. PUSHBUTTONS SHOULD BE PLACED WHERE THERE IS AN ALL-WEATHER SURFACE, A WHEELCHAIR ACCESSIBLE ROUTE FROM THE PUSHBUTTON TO THE RAMP.
4. PUSHBUTTONS SHOULD BE PLACED BETWEEN THE EDGE OF THE CROSSWALK LINE (EXTENDED) FARTHEST FROM THE CENTER OF THE INTERSECTION AND THE SIDE OF A CURB RAMP (IF PRESENT), BUT NOT GREATER THAN 5-FEET FROM SAID CROSSWALK LINE.
5. PUSHBUTTONS SHOULD BE PLACED BETWEEN 1.5-FEET AND 6-FEET FROM THE EDGE OF THE CURB, SHOULDER, OR PAVEMENT. IF THERE ARE PHYSICAL CONSTRAINTS THAT MAKE IT IMPRACTICAL TO PLACE THE PEDESTRIAN PUSHBUTTON BETWEEN 1.5-FEET AND 6-FEET FORM THE EDGE OF THE CURB, SHOULDER, OR PAVEMENT, IT SHOULD NOT BE FARTHER THAN 10-FEET FROM THE EDGE OF CURB, SHOULDER, OR PAVEMENT.
6. PUSHBUTTONS SHOULD BE PLACED WITH THE FACE OF THE PUSH BUTTON PARALLEL TO THE CROSSWALK TO BE USED.
7. PUSHBUTTONS ON THE SAME CORNER OF AN INTERSECTION SHOULD BE SEPARATED BY A DISTANCE OF AT LEAST 10-FEET. WHERE THERE ARE PHYSICAL CONSTRAINTS ON A PARTICULAR CORNER THAN MAKE IT IMPRACTICAL TO PROVIDE THE 10-FOOT SEPARATION BETWEEN THE TWO PEDESTRIAN PUSHBUTTONS, THE PUSHBUTTONS MAY BE PLACED CLOSER TOGETHER OR ON THE SAME POLE.
8. PUSHBUTTON POLES SHALL BE PLACED SO THAT ALL EQUIPMENT ATTACHED TO THE POLE (PEDESTRIAN SIGNAL HEAD, PUSHBUTTON, SIGN, ETC.) IS OUTSIDE THE MINIMUM LATERAL CLEARANCE DISTANCE OF 2-FEET FROM FACE OF CURB OR EDGE OF TRAVELED WAY.
9. PUSHBUTTONS SHOULD BE PLACED SO THE THE REACH DISTANCE FROM THE EDGE OF THE FLAT SURFACE ADJACENT TO THE PUSHBUTTON DOES NOT EXCEED THE MAXIMUM ADA REACH DISTANCE OF 2-FEET.

TEMPORARY PEDESTRIAN SIGNAL AREA

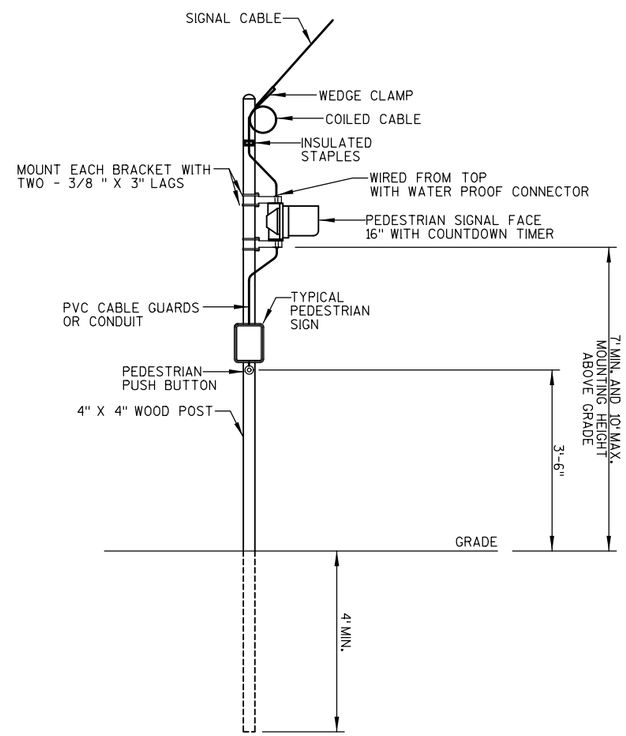

WOOD POST

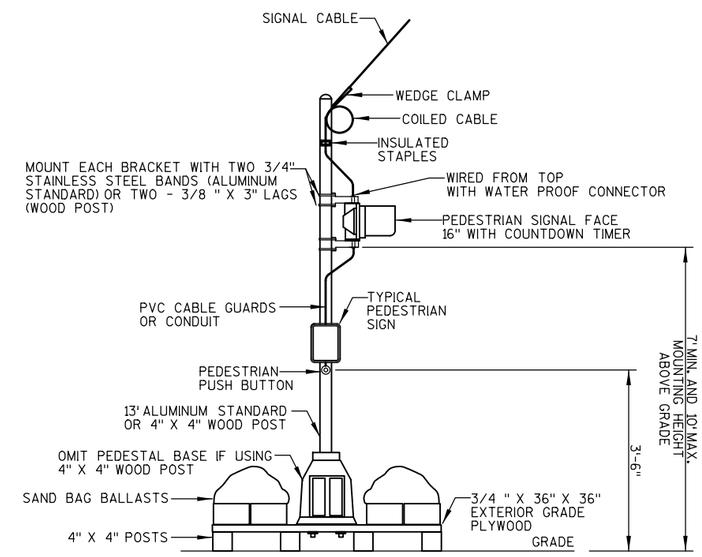

SKID TYPE

TEMPORARY PEDESTRIAN SIGNAL NOTES:

1. SIGNAL DROP CABLES SHALL BE PLACED A MINIMUM OF 12-FEET ABOVE GROUND NOT SUBJECT TO VEHICULAR TRAFFIC.
2. SIGNAL DROP CABLES SHALL BE PLACED A MINIMUM OF 17-FEET ABOVE GROUND SUBJECT TO VEHICULAR TRAFFIC, INCLUDING CONSTRUCTION VEHICLES.
3. SKID TYPE TEMPORARY MAY BE USED FOR PEDESTRIAN PUSH BUTTONS AS LONG AS THE REACH DISTANCE FROM THE EDGE OF THE SKID TO THE PUSH BUTTON DOES NOT EXCEED THE MAXIMUM ADA REACH DISTANCE OF 2-FEET.
4. PUSHBUTTONS SHOULD BE PLACED AT A MOUNTING HEIGHT OF 3.5-FEET ABOVE THE WALKING SURFACE.
5. MAINTAIN ADA ACCESSIBLE ROUTE AND PEDESTRIAN ACCESSIBILITY REQUIREMENTS FOR ALL ACTIVE PEDESTRIAN SIGNAL INDICATION CROSSING AREAS.
6. MAINTAIN TEMPORARY PEDESTRIAN SIGNALS THROUGHOUT CONSTRUCTION TO ENSURE THAT THE PLACEMENT OF THE TEMPORARY PEDESTRIAN SIGNALS COMPLIES WITH ALL APPLICABLE ADA AND MUTCD SIGNAL PLACEMENT REQUIREMENTS.

TEMPORARY PEDESTRIAN SIGNAL

2

LEGEND

- WORK AREA
- SIGNAL HEAD, OVERHEAD MOUNT
- PEDESTRIAN SIGNAL HEAD WITH PUSH BUTTON
- CLASS 4 WOOD POLE
- SKID TYPE PEDESTRIAN MOUNT
- CABLE - OVERHEAD
- TEMPORARY LUMINAIRE 250W HPS
- APPROXIMATE DETECTION ZONE
- SIGNAL HEAD NUMBER
- (R) RED CIRCULAR INDICATOR
- (Y) YELLOW CIRCULAR INDICATOR
- (G) GREEN CIRCULAR INDICATOR
- (R) RED ARROW (LEFT)
- (Y) YELLOW ARROW (LEFT)
- (FY) FLASHING YELLOW ARROW (LEFT)
- (G) GREEN ARROW (LEFT)
- WALK/DON'T WALK INDICATOR 16" (COUNTDOWN TIMER)
- TRAFFIC SIGNAL HEAD TO BE COVERED AND DE-ENERGIZED
- * COVER AND DE-ENERGIZE PEDESTRIAN TRAFFIC SIGNAL FACE(S) IF PEDESTRIAN ACCESS IS NOT ALLOWED WITHIN THE WORKZONE AND/OR SIDEWALK IS CLOSED.
- LANE DESIGNATION (FOR REFERENCE ONLY)

NOTES: ALL LENSES ARE 12-INCH, GRAYSHADE REPRESENTS EXISTING

CONSTRUCTION NOTES:

1. FINAL LOCATION OF SIGNAL POLES, SPAN WIRE, CONTROLLER, AND HEADS SHALL BE APPROVED BY THE ENGINEER. BAG ALL UNUSED HEADS.
2. GUYING OF POLES SHALL BE AS APPROVED BY THE ENGINEER.
3. THE LOCATIONS OF EXISTING AND PROPOSED UTILITY INSTALLATIONS ARE APPROXIMATE. THERE MAY BE OTHER UTILITY INSTALLATIONS WITHIN THE PROJECT WHICH ARE NOT SHOWN.
4. ALL TEMPORARY TRAFFIC SIGNAL INSTALLATIONS, MATERIALS, AND OPERATIONS SHALL BE IN ACCORDANCE WITH STANDARD DESIGN DETAILS FOR "SPAN WIRE TEMPORARY TRAFFIC SIGNAL".
5. CONTRACTOR TO PROVIDE TEMPORARY DETECTION SYSTEM WHICH WILL DETECT TRAFFIC AT THE TEMPORARY STOP BAR AND OTHER LOCATIONS AS INDICATED ON THE PLANS AND AS DIRECTED BY THE ENGINEER. THE INDIVIDUAL DETECTION ZONE LOCATIONS SHALL BE ADJUSTED TO REFLECT ACTUAL FIELD CONDIDITONS

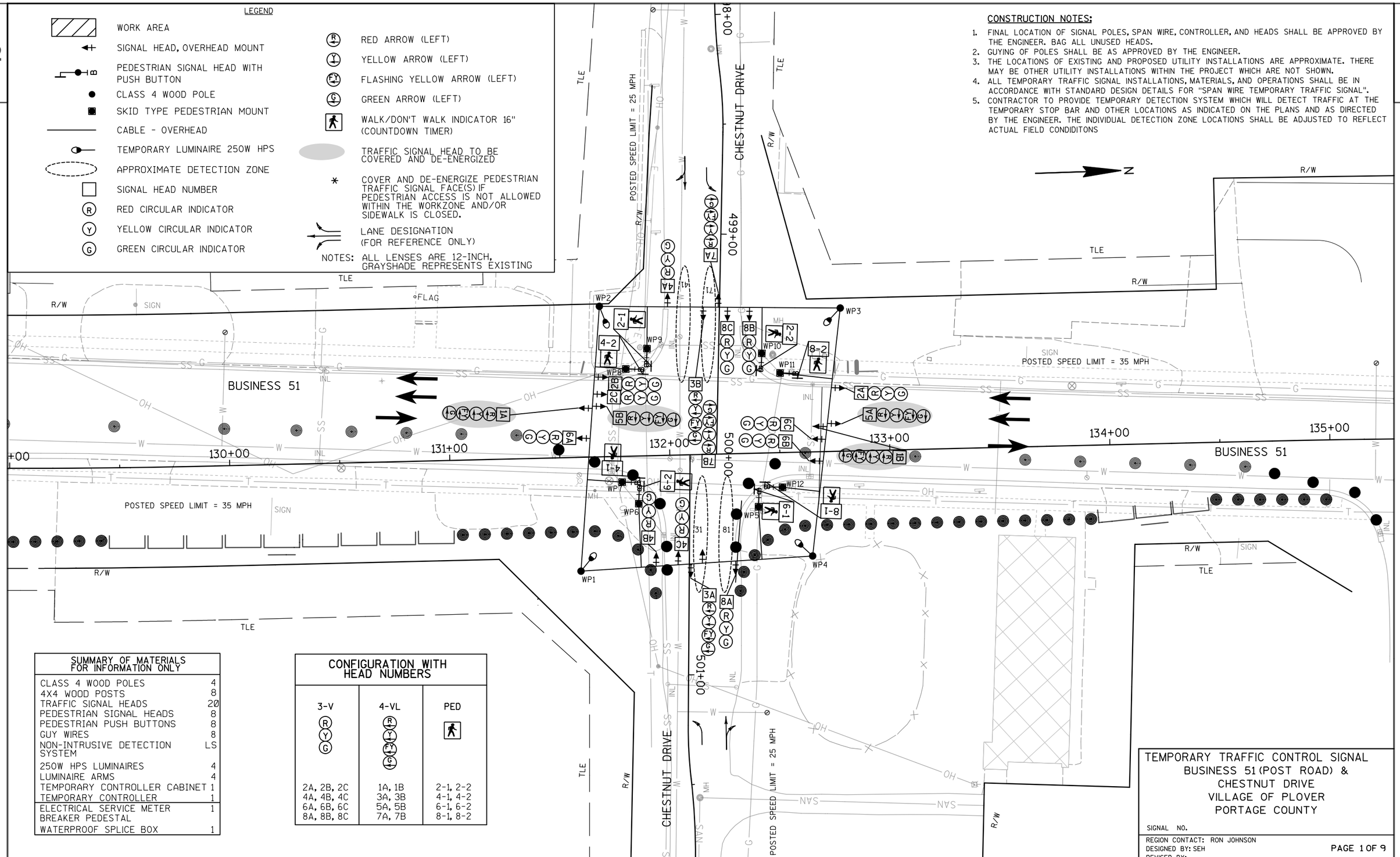

SUMMARY OF MATERIALS FOR INFORMATION ONLY	
CLASS 4 WOOD POLES	4
4X4 WOOD POSTS	8
TRAFFIC SIGNAL HEADS	20
PEDESTRIAN SIGNAL HEADS	8
PEDESTRIAN PUSH BUTTONS	8
GUY WIRES	8
NON-INTRUSIVE DETECTION SYSTEM	LS
250W HPS LUMINAIRES	4
LUMINAIRE ARMS	4
TEMPORARY CONTROLLER CABINET	1
TEMPORARY CONTROLLER	1
ELECTRICAL SERVICE METER BREAKER PEDESTAL	1
WATERPROOF SPLICE BOX	1

CONFIGURATION WITH HEAD NUMBERS		
3-V	4-VL	PED
2A, 2B, 2C	1A, 1B	2-1, 2-2
4A, 4B, 4C	3A, 3B	4-1, 4-2
6A, 6B, 6C	5A, 5B	6-1, 6-2
8A, 8B, 8C	7A, 7B	8-1, 8-2

TEMPORARY TRAFFIC CONTROL SIGNAL
BUSINESS 51 (POST ROAD) &
CHESTNUT DRIVE
VILLAGE OF PLOVER
PORTAGE COUNTY

SIGNAL NO.

REGION CONTACT: RON JOHNSON
DESIGNED BY: SEH
REVISED BY:

PAGE 1 OF 9

PROJECT NO: 6414-00-78	HWY: BUSINESS 51	COUNTY: PORTAGE	TEMPORARY TRAFFIC SIGNAL PLAN - STAGE 1A	SHEET 110	E

2

LEGEND

- WORK AREA
- SIGNAL HEAD, OVERHEAD MOUNT
- PEDESTRIAN SIGNAL HEAD WITH PUSH BUTTON
- CLASS 4 WOOD POLE
- SKID TYPE PEDESTRIAN MOUNT
- CABLE - OVERHEAD
- TEMPORARY LUMINAIRE 250W HPS
- APPROXIMATE DETECTION ZONE
- SIGNAL HEAD NUMBER
- (R) RED CIRCULAR INDICATOR
- (Y) YELLOW CIRCULAR INDICATOR
- (G) GREEN CIRCULAR INDICATOR
- (R) RED ARROW (LEFT)
- (Y) YELLOW ARROW (LEFT)
- (FY) FLASHING YELLOW ARROW (LEFT)
- (G) GREEN ARROW (LEFT)
- WALK/DON'T WALK INDICATOR 16" (COUNTDOWN TIMER)
- TRAFFIC SIGNAL HEAD TO BE COVERED AND DE-ENERGIZED
- * COVER AND DE-ENERGIZE PEDESTRIAN TRAFFIC SIGNAL FACE(S) IF PEDESTRIAN ACCESS IS NOT ALLOWED WITHIN THE WORKZONE AND/OR SIDEWALK IS CLOSED.
- LANE DESIGNATION (FOR REFERENCE ONLY)

NOTES: ALL LENSES ARE 12-INCH, GRAYSHADE REPRESENTS EXISTING

CONSTRUCTION NOTES:

1. FINAL LOCATION OF SIGNAL POLES, SPAN WIRE, CONTROLLER, AND HEADS SHALL BE APPROVED BY THE ENGINEER. BAG ALL UNUSED HEADS.
2. GUYING OF POLES SHALL BE AS APPROVED BY THE ENGINEER.
3. THE LOCATIONS OF EXISTING AND PROPOSED UTILITY INSTALLATIONS ARE APPROXIMATE. THERE MAY BE OTHER UTILITY INSTALLATIONS WITHIN THE PROJECT WHICH ARE NOT SHOWN.
4. ALL TEMPORARY TRAFFIC SIGNAL INSTALLATIONS, MATERIALS, AND OPERATIONS SHALL BE IN ACCORDANCE WITH STANDARD DESIGN DETAILS FOR "SPAN WIRE TEMPORARY TRAFFIC SIGNAL".
5. CONTRACTOR TO PROVIDE TEMPORARY DETECTION SYSTEM WHICH WILL DETECT TRAFFIC AT THE TEMPORARY STOP BAR AND OTHER LOCATIONS AS INDICATED ON THE PLANS AND AS DIRECTED BY THE ENGINEER. THE INDIVIDUAL DETECTION ZONE LOCATIONS SHALL BE ADJUSTED TO REFLECT ACTUAL FIELD CONDIDITONS

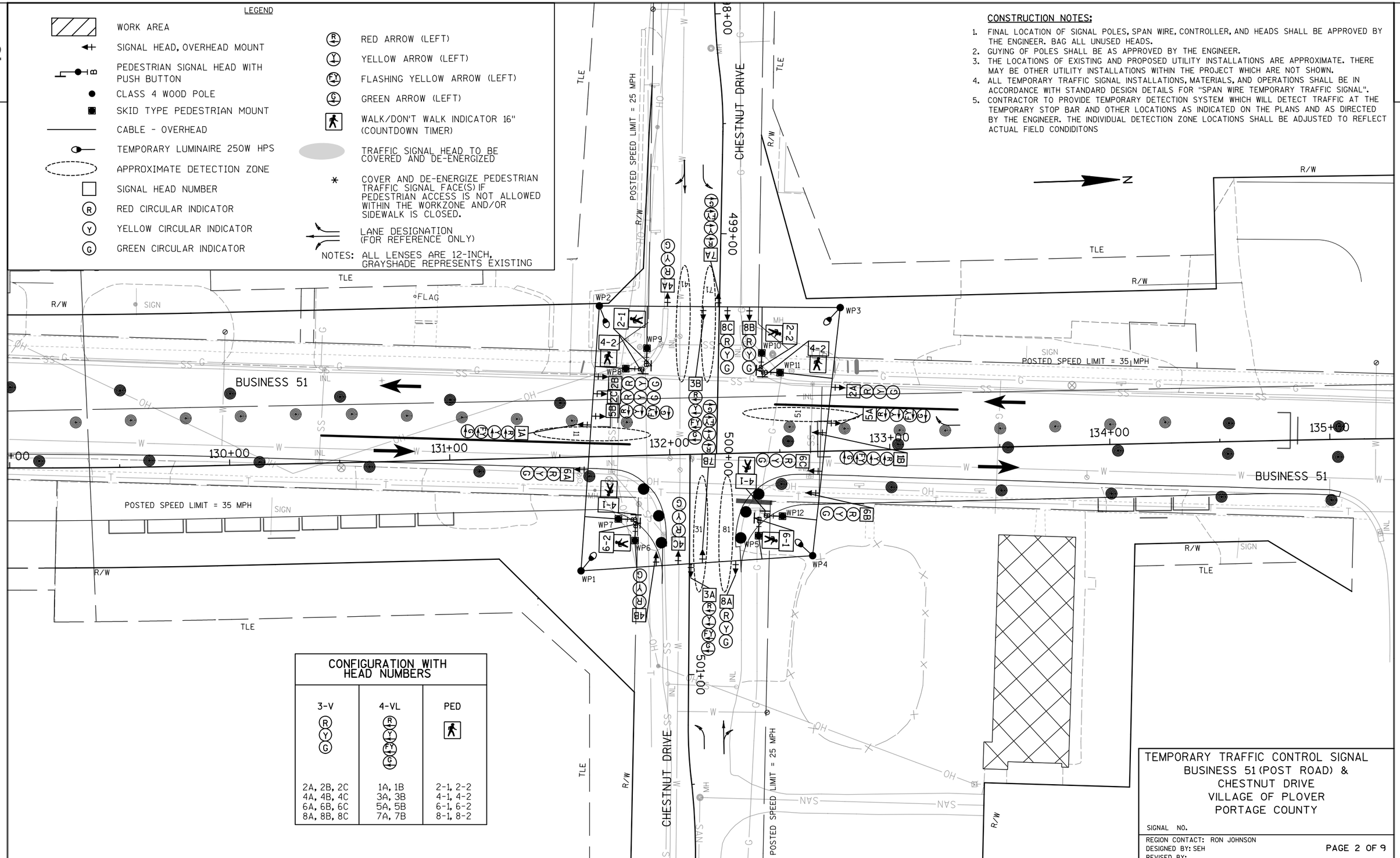

CONFIGURATION WITH HEAD NUMBERS

3-V	4-VL	PED
(R) (Y) (G)	(R) (1) (Y) (1) (G)	
2A, 2B, 2C	1A, 1B	2-1, 2-2
4A, 4B, 4C	3A, 3B	4-1, 4-2
6A, 6B, 6C	5A, 5B	6-1, 6-2
8A, 8B, 8C	7A, 7B	8-1, 8-2

TEMPORARY TRAFFIC CONTROL SIGNAL
BUSINESS 51 (POST ROAD) &
CHESTNUT DRIVE
VILLAGE OF PLOVER
PORTAGE COUNTY

SIGNAL NO.

REGION CONTACT: RON JOHNSON
DESIGNED BY: SEH
REVISED BY:

PAGE 2 OF 9

PROJECT NO: 6414-00-78	HWY: BUSINESS 51	COUNTY: PORTAGE	TEMPORARY TRAFFIC SIGNAL PLAN - STAGE 1B	SHEET 111	E

2

LEGEND

- WORK AREA
- SIGNAL HEAD, OVERHEAD MOUNT
- PEDESTRIAN SIGNAL HEAD WITH PUSH BUTTON
- CLASS 4 WOOD POLE
- SKID TYPE PEDESTRIAN MOUNT
- CABLE - OVERHEAD
- TEMPORARY LUMINAIRE 250W HPS
- APPROXIMATE DETECTION ZONE
- SIGNAL HEAD NUMBER
- (R) RED CIRCULAR INDICATOR
- (Y) YELLOW CIRCULAR INDICATOR
- (G) GREEN CIRCULAR INDICATOR
- (R) RED ARROW (LEFT)
- (Y) YELLOW ARROW (LEFT)
- (FY) FLASHING YELLOW ARROW (LEFT)
- (G) GREEN ARROW (LEFT)
- WALK/DON'T WALK INDICATOR 16" (COUNTDOWN TIMER)
- TRAFFIC SIGNAL HEAD TO BE COVERED AND DE-ENERGIZED
- * COVER AND DE-ENERGIZE PEDESTRIAN TRAFFIC SIGNAL FACE(S) IF PEDESTRIAN ACCESS IS NOT ALLOWED WITHIN THE WORKZONE AND/OR SIDEWALK IS CLOSED.
- LANE DESIGNATION (FOR REFERENCE ONLY)

NOTES: ALL LENSES ARE 12-INCH, GRAYSHADE REPRESENTS EXISTING

CONSTRUCTION NOTES:

1. FINAL LOCATION OF SIGNAL POLES, SPAN WIRE, CONTROLLER, AND HEADS SHALL BE APPROVED BY THE ENGINEER. BAG ALL UNUSED HEADS.
2. GUYING OF POLES SHALL BE AS APPROVED BY THE ENGINEER.
3. THE LOCATIONS OF EXISTING AND PROPOSED UTILITY INSTALLATIONS ARE APPROXIMATE. THERE MAY BE OTHER UTILITY INSTALLATIONS WITHIN THE PROJECT WHICH ARE NOT SHOWN.
4. ALL TEMPORARY TRAFFIC SIGNAL INSTALLATIONS, MATERIALS, AND OPERATIONS SHALL BE IN ACCORDANCE WITH STANDARD DESIGN DETAILS FOR "SPAN WIRE TEMPORARY TRAFFIC SIGNAL".
5. CONTRACTOR TO PROVIDE TEMPORARY DETECTION SYSTEM WHICH WILL DETECT TRAFFIC AT THE TEMPORARY STOP BAR AND OTHER LOCATIONS AS INDICATED ON THE PLANS AND AS DIRECTED BY THE ENGINEER. THE INDIVIDUAL DETECTION ZONE LOCATIONS SHALL BE ADJUSTED TO REFLECT ACTUAL FIELD CONDIDITONS

2

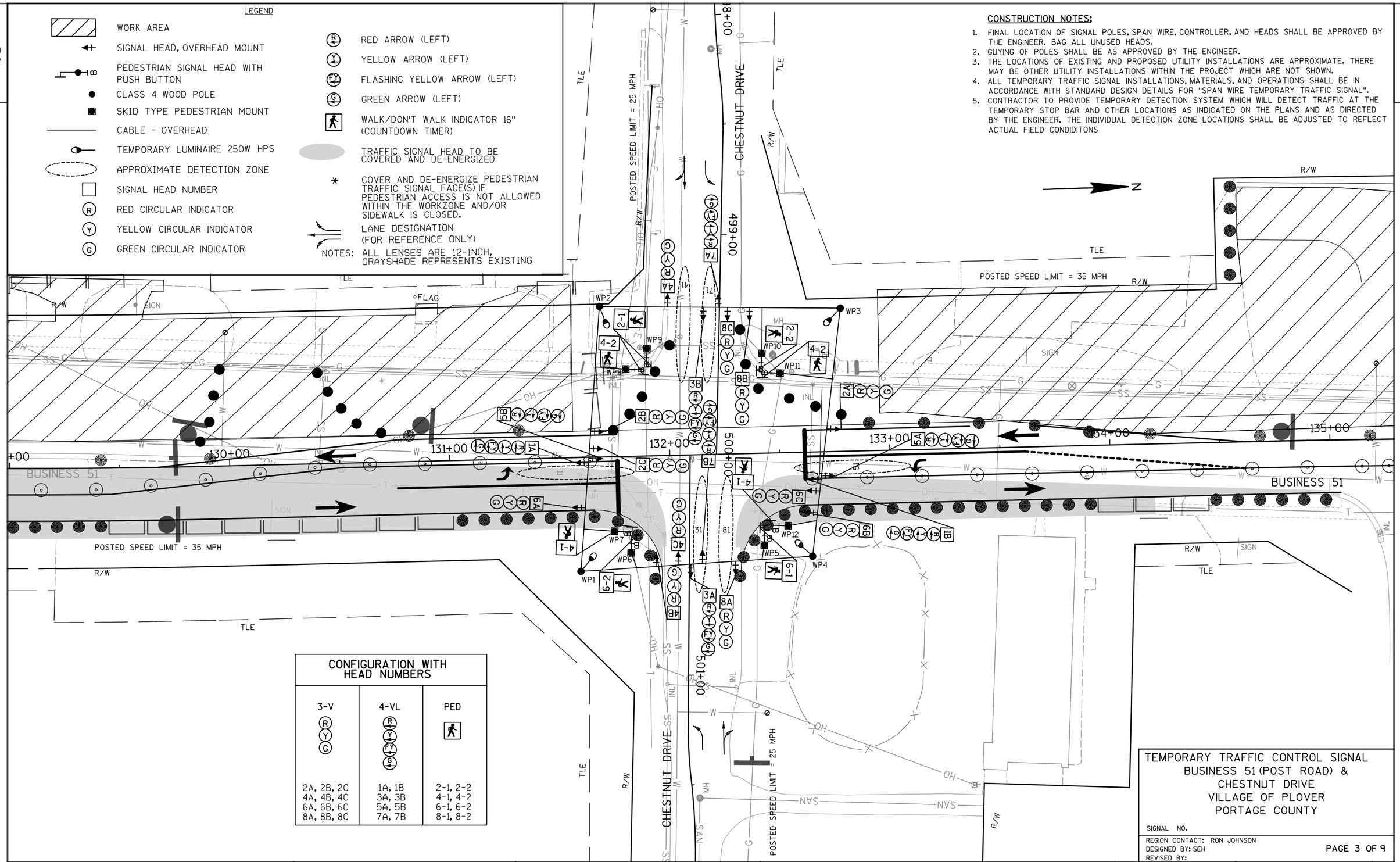

CONFIGURATION WITH HEAD NUMBERS		
3-V	4-VL	PED
(R) (Y) (G)	(R) (Y) (FY) (G)	
2A, 2B, 2C 4A, 4B, 4C 6A, 6B, 6C 8A, 8B, 8C	1A, 1B 3A, 3B 5A, 5B 7A, 7B	2-1, 2-2 4-1, 4-2 6-1, 6-2 8-1, 8-2

TEMPORARY TRAFFIC CONTROL SIGNAL
BUSINESS 51 (POST ROAD) &
CHESTNUT DRIVE
VILLAGE OF PLOVER
PORTAGE COUNTY

SIGNAL NO.

REGION CONTACT: RON JOHNSON
DESIGNED BY: SEH
REVISED BY:

PAGE 3 OF 9

PROJECT NO: 6414-00-78	HWY: BUSINESS 51	COUNTY: PORTAGE	TEMPORARY TRAFFIC SIGNAL PLAN - STAGE 2A	SHEET 112	E

2

LEGEND

- WORK AREA
- SIGNAL HEAD, OVERHEAD MOUNT
- PEDESTRIAN SIGNAL HEAD WITH PUSH BUTTON
- CLASS 4 WOOD POLE
- SKID TYPE PEDESTRIAN MOUNT
- CABLE - OVERHEAD
- TEMPORARY LUMINAIRE 250W HPS
- APPROXIMATE DETECTION ZONE
- SIGNAL HEAD NUMBER
- (R) RED CIRCULAR INDICATOR
- (Y) YELLOW CIRCULAR INDICATOR
- (G) GREEN CIRCULAR INDICATOR
- (R) RED ARROW (LEFT)
- (Y) YELLOW ARROW (LEFT)
- (FY) FLASHING YELLOW ARROW (LEFT)
- (G) GREEN ARROW (LEFT)
- WALK/DON'T WALK INDICATOR 16" (COUNTDOWN TIMER)
- TRAFFIC SIGNAL HEAD TO BE COVERED AND DE-ENERGIZED
- * COVER AND DE-ENERGIZE PEDESTRIAN TRAFFIC SIGNAL FACE(S) IF PEDESTRIAN ACCESS IS NOT ALLOWED WITHIN THE WORKZONE AND/OR SIDEWALK IS CLOSED.
- LANE DESIGNATION (FOR REFERENCE ONLY)

NOTES: ALL LENSES ARE 12-INCH, GRAYSHADE REPRESENTS EXISTING

CONSTRUCTION NOTES:

1. FINAL LOCATION OF SIGNAL POLES, SPAN WIRE, CONTROLLER, AND HEADS SHALL BE APPROVED BY THE ENGINEER. BAG ALL UNUSED HEADS.
2. GUYING OF POLES SHALL BE AS APPROVED BY THE ENGINEER.
3. THE LOCATIONS OF EXISTING AND PROPOSED UTILITY INSTALLATIONS ARE APPROXIMATE. THERE MAY BE OTHER UTILITY INSTALLATIONS WITHIN THE PROJECT WHICH ARE NOT SHOWN.
4. ALL TEMPORARY TRAFFIC SIGNAL INSTALLATIONS, MATERIALS, AND OPERATIONS SHALL BE IN ACCORDANCE WITH STANDARD DESIGN DETAILS FOR "SPAN WIRE TEMPORARY TRAFFIC SIGNAL".
5. CONTRACTOR TO PROVIDE TEMPORARY DETECTION SYSTEM WHICH WILL DETECT TRAFFIC AT THE TEMPORARY STOP BAR AND OTHER LOCATIONS AS INDICATED ON THE PLANS AND AS DIRECTED BY THE ENGINEER. THE INDIVIDUAL DETECTION ZONE LOCATIONS SHALL BE ADJUSTED TO REFLECT ACTUAL FIELD CONDIDITONS

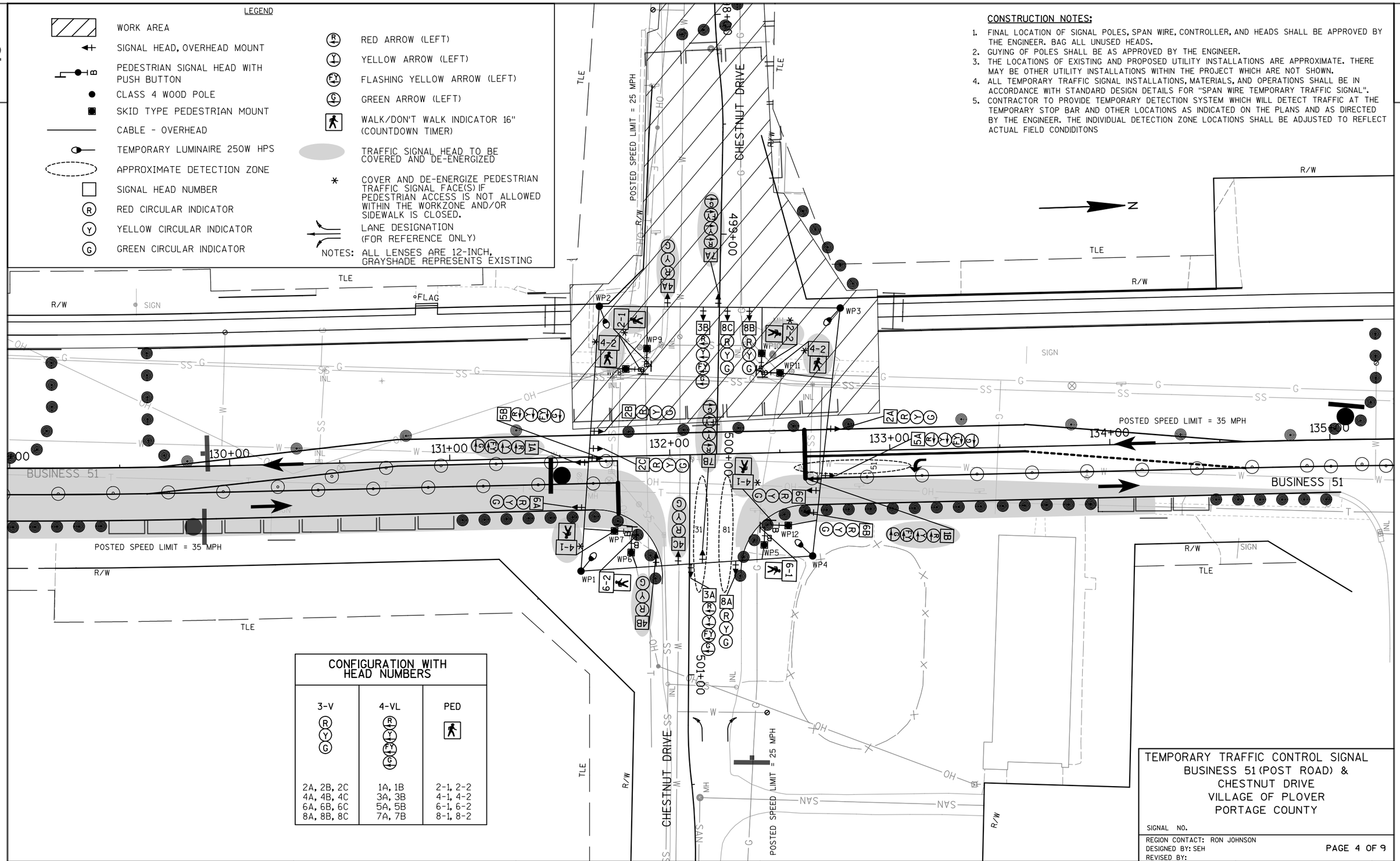

PROJECT NO: 6414-00-78	HWY: BUSINESS 51	COUNTY: PORTAGE	TEMPORARY TRAFFIC SIGNAL PLAN - STAGE 2B	SHEET 113	E

2

LEGEND

- WORK AREA
- SIGNAL HEAD, OVERHEAD MOUNT
- PEDESTRIAN SIGNAL HEAD WITH PUSH BUTTON
- CLASS 4 WOOD POLE
- SKID TYPE PEDESTRIAN MOUNT
- CABLE - OVERHEAD
- TEMPORARY LUMINAIRE 250W HPS
- APPROXIMATE DETECTION ZONE
- SIGNAL HEAD NUMBER
- (R) RED CIRCULAR INDICATOR
- (Y) YELLOW CIRCULAR INDICATOR
- (G) GREEN CIRCULAR INDICATOR
- (R) RED ARROW (LEFT)
- (Y) YELLOW ARROW (LEFT)
- (FY) FLASHING YELLOW ARROW (LEFT)
- (G) GREEN ARROW (LEFT)
- WALK/DON'T WALK INDICATOR 16" (COUNTDOWN TIMER)
- TRAFFIC SIGNAL HEAD TO BE COVERED AND DE-ENERGIZED
- * COVER AND DE-ENERGIZE PEDESTRIAN TRAFFIC SIGNAL FACE(S) IF PEDESTRIAN ACCESS IS NOT ALLOWED WITHIN THE WORKZONE AND/OR SIDEWALK IS CLOSED.
- LANE DESIGNATION (FOR REFERENCE ONLY)

NOTES: ALL LENSES ARE 12-INCH, GRAYSHADE REPRESENTS EXISTING

CONSTRUCTION NOTES:

1. FINAL LOCATION OF SIGNAL POLES, SPAN WIRE, CONTROLLER, AND HEADS SHALL BE APPROVED BY THE ENGINEER. BAG ALL UNUSED HEADS.
2. GUYING OF POLES SHALL BE AS APPROVED BY THE ENGINEER.
3. THE LOCATIONS OF EXISTING AND PROPOSED UTILITY INSTALLATIONS ARE APPROXIMATE. THERE MAY BE OTHER UTILITY INSTALLATIONS WITHIN THE PROJECT WHICH ARE NOT SHOWN.
4. ALL TEMPORARY TRAFFIC SIGNAL INSTALLATIONS, MATERIALS, AND OPERATIONS SHALL BE IN ACCORDANCE WITH STANDARD DESIGN DETAILS FOR "SPAN WIRE TEMPORARY TRAFFIC SIGNAL".
5. CONTRACTOR TO PROVIDE TEMPORARY DETECTION SYSTEM WHICH WILL DETECT TRAFFIC AT THE TEMPORARY STOP BAR AND OTHER LOCATIONS AS INDICATED ON THE PLANS AND AS DIRECTED BY THE ENGINEER. THE INDIVIDUAL DETECTION ZONE LOCATIONS SHALL BE ADJUSTED TO REFLECT ACTUAL FIELD CONDIDITONS

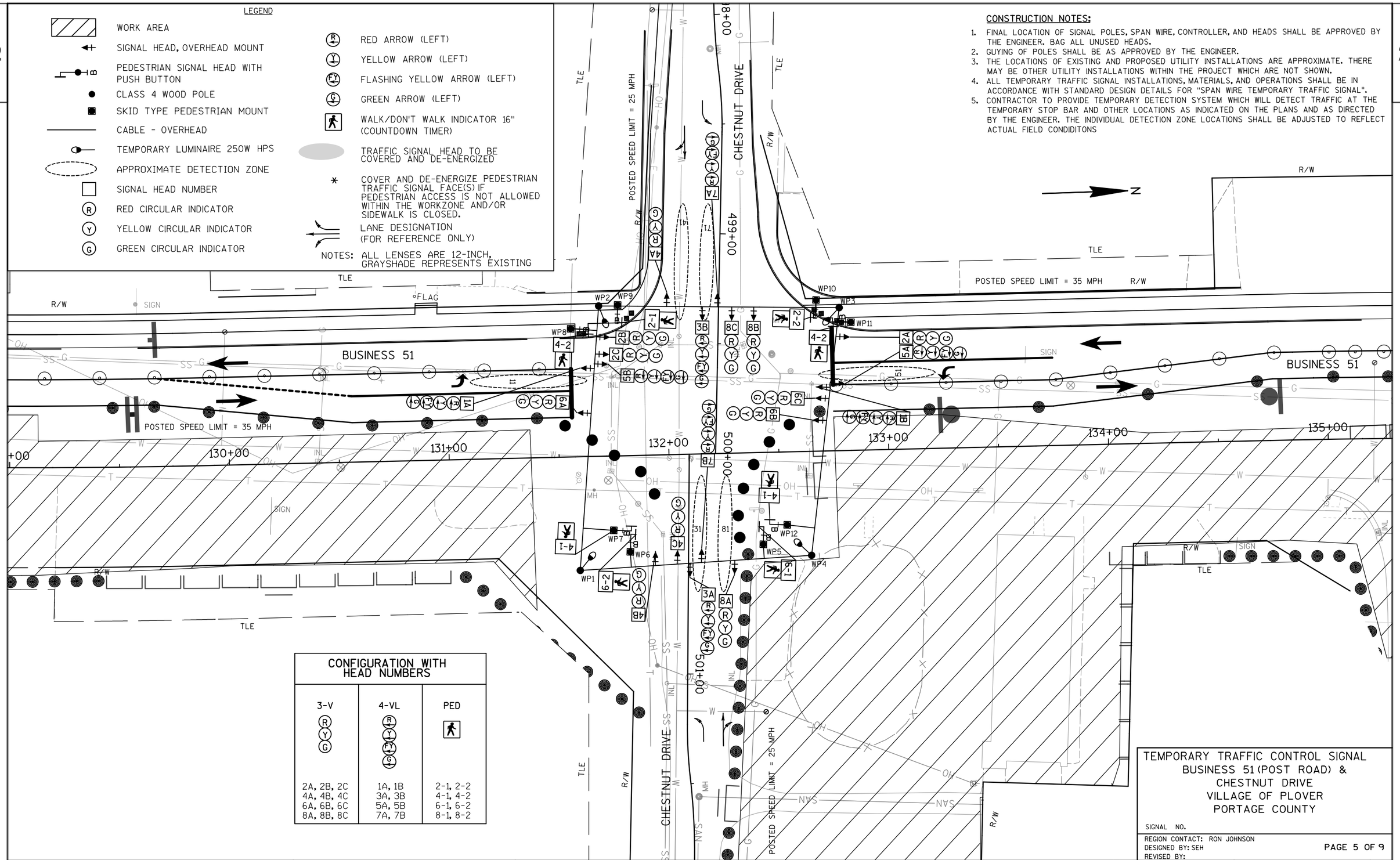

TEMPORARY TRAFFIC CONTROL SIGNAL
BUSINESS 51 (POST ROAD) &
CHESTNUT DRIVE
VILLAGE OF PLOVER
PORTAGE COUNTY

SIGNAL NO.

REGION CONTACT: RON JOHNSON
DESIGNED BY: SEH
REVISED BY:

PAGE 5 OF 9

PROJECT NO: 6414-00-78	HWY: BUSINESS 51	COUNTY: PORTAGE	TEMPORARY TRAFFIC SIGNAL PLAN - STAGE 3A	SHEET 114	E

2

LEGEND

- WORK AREA
- SIGNAL HEAD, OVERHEAD MOUNT
- PEDESTRIAN SIGNAL HEAD WITH PUSH BUTTON
- CLASS 4 WOOD POLE
- SKID TYPE PEDESTRIAN MOUNT
- CABLE - OVERHEAD
- TEMPORARY LUMINAIRE 250W HPS
- APPROXIMATE DETECTION ZONE
- SIGNAL HEAD NUMBER
- (R) RED CIRCULAR INDICATOR
- (Y) YELLOW CIRCULAR INDICATOR
- (G) GREEN CIRCULAR INDICATOR
- (R) RED ARROW (LEFT)
- (Y) YELLOW ARROW (LEFT)
- (FY) FLASHING YELLOW ARROW (LEFT)
- (G) GREEN ARROW (LEFT)
- WALK/DON'T WALK INDICATOR 16" (COUNTDOWN TIMER)
- TRAFFIC SIGNAL HEAD TO BE COVERED AND DE-ENERGIZED
- * COVER AND DE-ENERGIZE PEDESTRIAN TRAFFIC SIGNAL FACE(S) IF PEDESTRIAN ACCESS IS NOT ALLOWED WITHIN THE WORKZONE AND/OR SIDEWALK IS CLOSED.
- LANE DESIGNATION (FOR REFERENCE ONLY)

NOTES: ALL LENSES ARE 12-INCH, GRAYSHADE REPRESENTS EXISTING

CONSTRUCTION NOTES:

1. FINAL LOCATION OF SIGNAL POLES, SPAN WIRE, CONTROLLER, AND HEADS SHALL BE APPROVED BY THE ENGINEER. BAG ALL UNUSED HEADS.
2. GUYING OF POLES SHALL BE AS APPROVED BY THE ENGINEER.
3. THE LOCATIONS OF EXISTING AND PROPOSED UTILITY INSTALLATIONS ARE APPROXIMATE. THERE MAY BE OTHER UTILITY INSTALLATIONS WITHIN THE PROJECT WHICH ARE NOT SHOWN.
4. ALL TEMPORARY TRAFFIC SIGNAL INSTALLATIONS, MATERIALS, AND OPERATIONS SHALL BE IN ACCORDANCE WITH STANDARD DESIGN DETAILS FOR "SPAN WIRE TEMPORARY TRAFFIC SIGNAL".
5. CONTRACTOR TO PROVIDE TEMPORARY DETECTION SYSTEM WHICH WILL DETECT TRAFFIC AT THE TEMPORARY STOP BAR AND OTHER LOCATIONS AS INDICATED ON THE PLANS AND AS DIRECTED BY THE ENGINEER. THE INDIVIDUAL DETECTION ZONE LOCATIONS SHALL BE ADJUSTED TO REFLECT ACTUAL FIELD CONDIDITONS

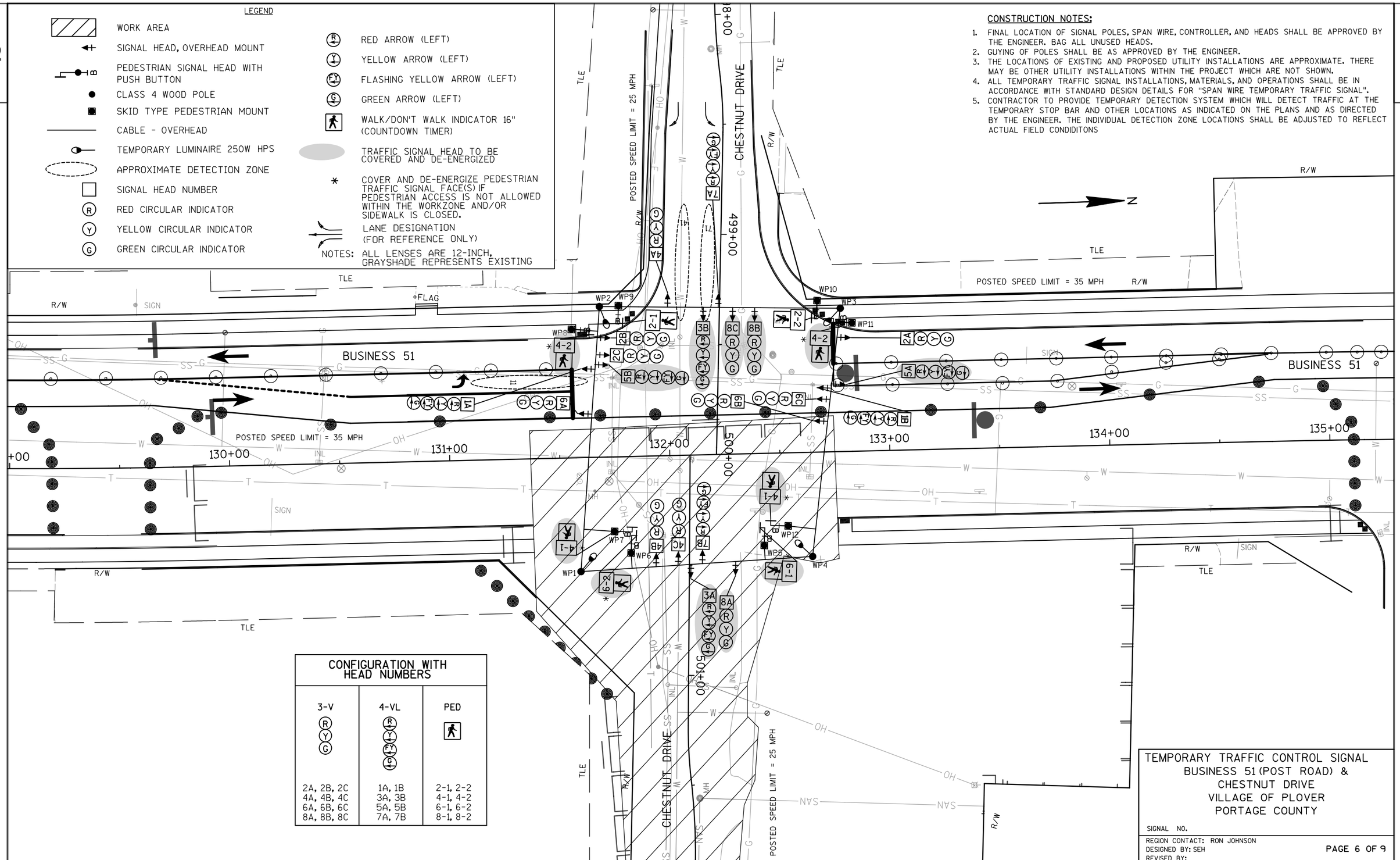

CONFIGURATION WITH HEAD NUMBERS

3-V	4-VL	PED
(R) (Y) (G)	(R) (1-Y) (FY) (G)	
2A, 2B, 2C 4A, 4B, 4C 6A, 6B, 6C 8A, 8B, 8C	1A, 1B 3A, 3B 5A, 5B 7A, 7B	2-1, 2-2 4-1, 4-2 6-1, 6-2 8-1, 8-2

TEMPORARY TRAFFIC CONTROL SIGNAL
BUSINESS 51 (POST ROAD) &
CHESTNUT DRIVE
VILLAGE OF PLOVER
PORTAGE COUNTY

SIGNAL NO.

REGION CONTACT: RON JOHNSON
DESIGNED BY: SEH
REVISED BY:

PAGE 6 OF 9

PROJECT NO: 6414-00-78	HWY: BUSINESS 51	COUNTY: PORTAGE	TEMPORARY TRAFFIC SIGNAL PLAN - STAGE 3B	SHEET 115	E

2

LEGEND

- WORK AREA
- SIGNAL HEAD, OVERHEAD MOUNT
- PEDESTRIAN SIGNAL HEAD WITH PUSH BUTTON
- CLASS 4 WOOD POLE
- SKID TYPE PEDESTRIAN MOUNT
- CABLE - OVERHEAD
- TEMPORARY LUMINAIRE 250W HPS
- APPROXIMATE DETECTION ZONE
- SIGNAL HEAD NUMBER
- (R) RED CIRCULAR INDICATOR
- (Y) YELLOW CIRCULAR INDICATOR
- (G) GREEN CIRCULAR INDICATOR
- (R) RED ARROW (LEFT)
- (Y) YELLOW ARROW (LEFT)
- (FY) FLASHING YELLOW ARROW (LEFT)
- (G) GREEN ARROW (LEFT)
- WALK/DON'T WALK INDICATOR 16" (COUNTDOWN TIMER)
- TRAFFIC SIGNAL HEAD TO BE COVERED AND DE-ENERGIZED
- * COVER AND DE-ENERGIZE PEDESTRIAN TRAFFIC SIGNAL FACE(S) IF PEDESTRIAN ACCESS IS NOT ALLOWED WITHIN THE WORKZONE AND/OR SIDEWALK IS CLOSED.
- LANE DESIGNATION (FOR REFERENCE ONLY)

NOTES: ALL LENSES ARE 12-INCH, GRAYSHADE REPRESENTS EXISTING

CONSTRUCTION NOTES:

1. FINAL LOCATION OF SIGNAL POLES, SPAN WIRE, CONTROLLER, AND HEADS SHALL BE APPROVED BY THE ENGINEER. BAG ALL UNUSED HEADS.
2. GUYING OF POLES SHALL BE AS APPROVED BY THE ENGINEER.
3. THE LOCATIONS OF EXISTING AND PROPOSED UTILITY INSTALLATIONS ARE APPROXIMATE. THERE MAY BE OTHER UTILITY INSTALLATIONS WITHIN THE PROJECT WHICH ARE NOT SHOWN.
4. ALL TEMPORARY TRAFFIC SIGNAL INSTALLATIONS, MATERIALS, AND OPERATIONS SHALL BE IN ACCORDANCE WITH STANDARD DESIGN DETAILS FOR "SPAN WIRE TEMPORARY TRAFFIC SIGNAL".
5. CONTRACTOR TO PROVIDE TEMPORARY DETECTION SYSTEM WHICH WILL DETECT TRAFFIC AT THE TEMPORARY STOP BAR AND OTHER LOCATIONS AS INDICATED ON THE PLANS AND AS DIRECTED BY THE ENGINEER. THE INDIVIDUAL DETECTION ZONE LOCATIONS SHALL BE ADJUSTED TO REFLECT ACTUAL FIELD CONDIDITONS

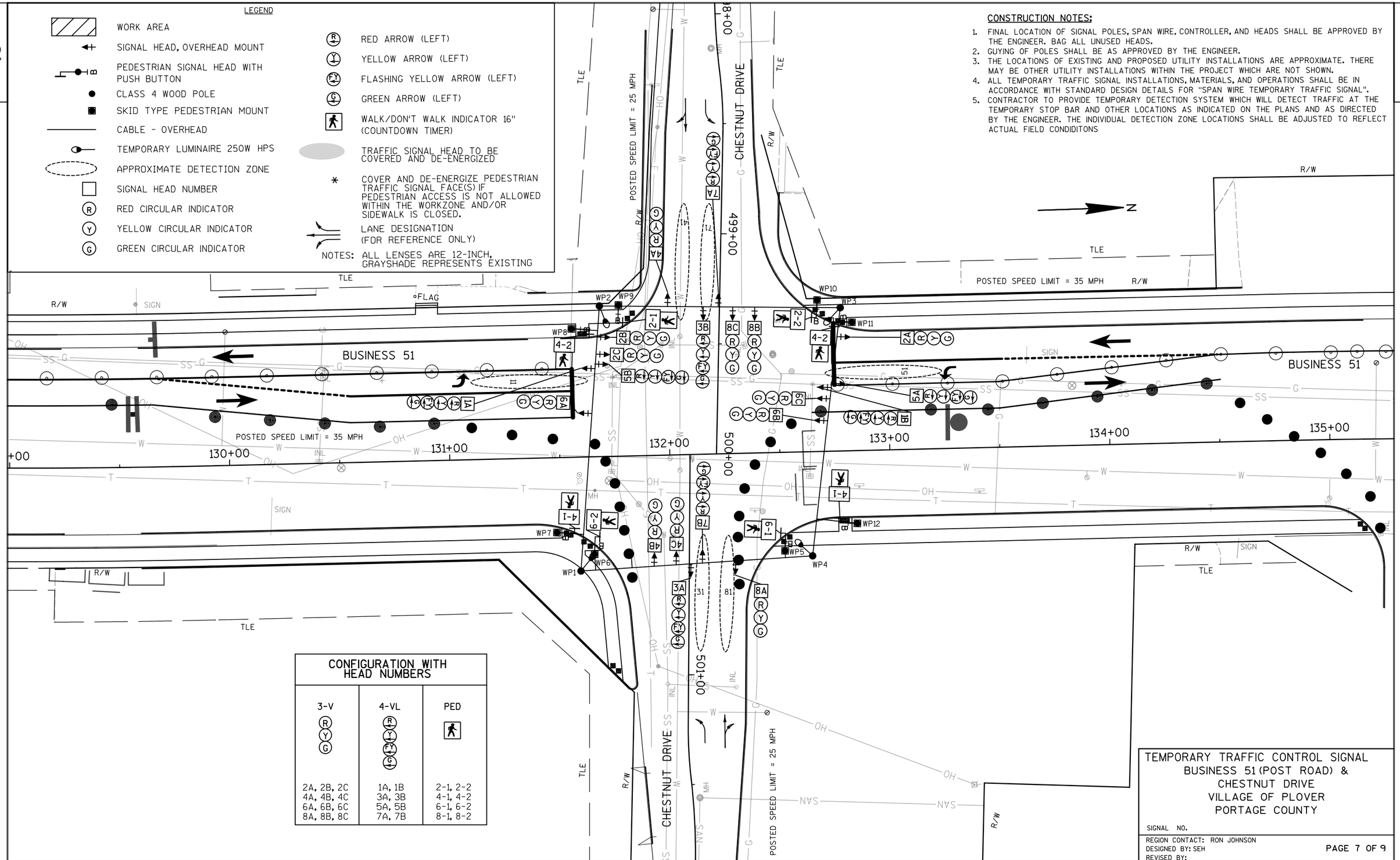

CONFIGURATION WITH HEAD NUMBERS

3-V	4-VL	PED
(R) (Y) (G)	(R) (Y) (FY) (G)	
2A, 2B, 2C 4A, 4B, 4C 6A, 6B, 6C 8A, 8B, 8C	1A, 1B 3A, 3B 5A, 5B 7A, 7B	2-1, 2-2 4-1, 4-2 6-1, 6-2 8-1, 8-2

TEMPORARY TRAFFIC CONTROL SIGNAL
BUSINESS 51 (POST ROAD) &
CHESTNUT DRIVE
VILLAGE OF PLOVER
PORTAGE COUNTY

SIGNAL NO.

REGION CONTACT: RON JOHNSON
DESIGNED BY: SEH
REVISED BY:

PAGE 7 OF 9

PROJECT NO: 6414-00-78	HWY: BUSINESS 51	COUNTY: PORTAGE	TEMPORARY TRAFFIC SIGNAL PLAN - STAGE 3C	SHEET 116	E

2

LEGEND

- WORK AREA
- SIGNAL HEAD, OVERHEAD MOUNT
- PEDESTRIAN SIGNAL HEAD WITH PUSH BUTTON
- CLASS 4 WOOD POLE
- SKID TYPE PEDESTRIAN MOUNT
- CABLE - OVERHEAD
- TEMPORARY LUMINAIRE 250W HPS
- APPROXIMATE DETECTION ZONE
- SIGNAL HEAD NUMBER
- (R) RED CIRCULAR INDICATOR
- (Y) YELLOW CIRCULAR INDICATOR
- (G) GREEN CIRCULAR INDICATOR
- (R) RED ARROW (LEFT)
- (Y) YELLOW ARROW (LEFT)
- (FY) FLASHING YELLOW ARROW (LEFT)
- (G) GREEN ARROW (LEFT)
- WALK/DON'T WALK INDICATOR 16" (COUNTDOWN TIMER)
- TRAFFIC SIGNAL HEAD TO BE COVERED AND DE-ENERGIZED
- * COVER AND DE-ENERGIZE PEDESTRIAN TRAFFIC SIGNAL FACE(S) IF PEDESTRIAN ACCESS IS NOT ALLOWED WITHIN THE WORKZONE AND/OR SIDEWALK IS CLOSED.
- LANE DESIGNATION (FOR REFERENCE ONLY)

NOTES: ALL LENSES ARE 12-INCH, GRAYSHADE REPRESENTS EXISTING

CONSTRUCTION NOTES:

1. FINAL LOCATION OF SIGNAL POLES, SPAN WIRE, CONTROLLER, AND HEADS SHALL BE APPROVED BY THE ENGINEER. BAG ALL UNUSED HEADS.
2. GUYING OF POLES SHALL BE AS APPROVED BY THE ENGINEER.
3. THE LOCATIONS OF EXISTING AND PROPOSED UTILITY INSTALLATIONS ARE APPROXIMATE. THERE MAY BE OTHER UTILITY INSTALLATIONS WITHIN THE PROJECT WHICH ARE NOT SHOWN.
4. ALL TEMPORARY TRAFFIC SIGNAL INSTALLATIONS, MATERIALS, AND OPERATIONS SHALL BE IN ACCORDANCE WITH STANDARD DESIGN DETAILS FOR "SPAN WIRE TEMPORARY TRAFFIC SIGNAL".
5. CONTRACTOR TO PROVIDE TEMPORARY DETECTION SYSTEM WHICH WILL DETECT TRAFFIC AT THE TEMPORARY STOP BAR AND OTHER LOCATIONS AS INDICATED ON THE PLANS AND AS DIRECTED BY THE ENGINEER. THE INDIVIDUAL DETECTION ZONE LOCATIONS SHALL BE ADJUSTED TO REFLECT ACTUAL FIELD CONDIDITONS

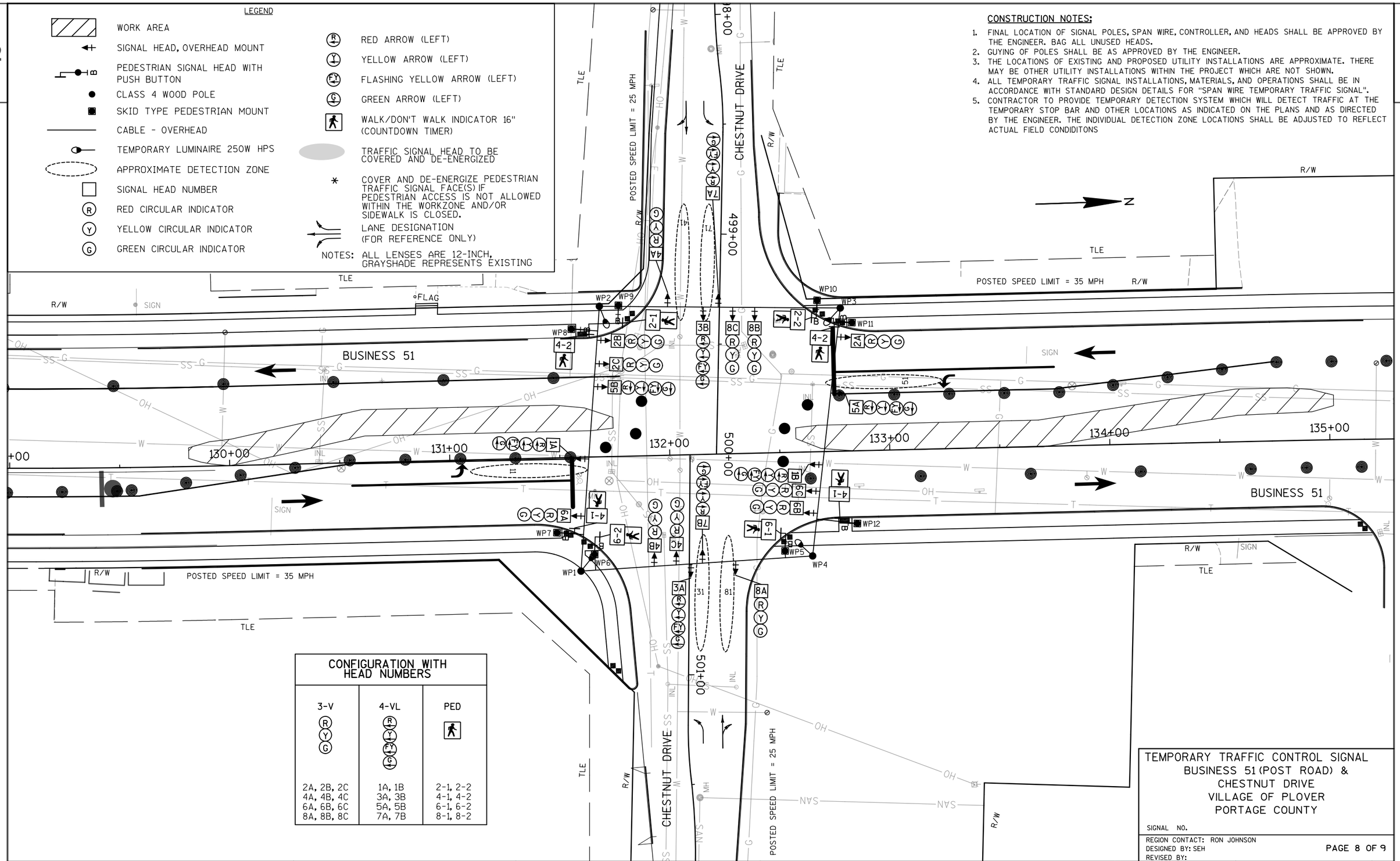

CONFIGURATION WITH HEAD NUMBERS

3-V	4-VL	PED
(R) (Y) (G)	(R) (1-Y) (FY) (G)	
2A, 2B, 2C 4A, 4B, 4C 6A, 6B, 6C 8A, 8B, 8C	1A, 1B 3A, 3B 5A, 5B 7A, 7B	2-1, 2-2 4-1, 4-2 6-1, 6-2 8-1, 8-2

TEMPORARY TRAFFIC CONTROL SIGNAL
BUSINESS 51 (POST ROAD) &
CHESTNUT DRIVE
VILLAGE OF PLOVER
PORTAGE COUNTY

SIGNAL NO.

REGION CONTACT: RON JOHNSON
DESIGNED BY: SEH
REVISED BY:

PAGE 8 OF 9

PROJECT NO: 6414-00-78	HWY: BUSINESS 51	COUNTY: PORTAGE	TEMPORARY TRAFFIC SIGNAL PLAN - STAGE 4	SHEET 117	E

SEQUENCE OF OPERATION

RING 1

	HEAD NUMBERS	Ø1 R/W	Ø1 CLEAR TO **		Ø2 R/W	Ø2 CLEAR TO **		Ø3 R/W	Ø3 CLEAR TO **		Ø4 R/W	Ø4 CLEAR TO **		FLASH
Ø1	1A,1B,1C	G	-	-	-	-	-	-	-	-	-	-	-	-
Ø2	2A,2B,2C	R	R	R	G	Y	R	R	R	R	R	R	R	R
Ø3	3A,3B	-	-	-	-	-	-	G	-	-	-	-	-	-
Ø4	4A,4B,4C	R	R	R	R	R	R	R	R	R	G	Y	R	R
Ø5	5A,5B,5C	-	-	-	-	-	-	-	-	-	-	-	-	-
Ø6	6A,6B,6C	R	R	R	R	R	R	R	R	R	R	R	R	R
Ø7	7A,7B	-	-	-	-	-	-	-	-	-	-	-	-	-
Ø8	8A,8B,8C	R	R	R	R	R	R	R	R	R	R	R	R	R
OLA	1A,1B,1C	-	Y	R	FY	Y	R	R	R	R	R	R	R	R
OLB	3A,3B	R	R	R	R	R	R	-	Y	R	FY	Y	R	R
OLC	5A,5B,5C	R	R	R	R	R	R	R	R	R	R	R	R	R
OLD	7A,7B	R	R	R	R	R	R	R	R	R	R	R	R	R
Ø2P	2-1,2-2	DW	DW	DW	*	DW	DW	DW	DW	DW	DW	DW	DW	
Ø4P	4-1,4-2	DW	DW	DW	DW	DW	DW	DW	DW	DW	*	DW	DW	
Ø6P	6-1,6-2	DW	DW	DW	DW	DW	DW	DW	DW	DW	DW	DW	DW	
Ø8P	8-1,8-2	DW	DW	DW	DW	DW	DW	DW	DW	DW	DW	DW	DW	

RING 2

	HEAD NUMBERS	Ø5 R/W	Ø5 CLEAR TO **		Ø6 R/W	Ø6 CLEAR TO **		Ø7 R/W	Ø7 CLEAR TO **		Ø8 R/W	Ø8 CLEAR TO **	
Ø1	1A,1B,1C	-	-	-	-	-	-	-	-	-	-	-	-
Ø2	2A,2B,2C	R	R	R	R	R	R	R	R	R	R	R	R
Ø3	3A,3B	R	R	R	-	-	-	-	-	-	-	-	-
Ø4	4A,4B,4C	R	R	R	R	R	R	R	R	R	R	R	R
Ø5	5A,5B,5C	G	-	-	-	-	-	-	-	-	-	-	-
Ø6	6A,6B,6C	R	R	R	G	Y	R	R	R	R	R	R	R
Ø7	7A,7B	-	-	-	-	-	-	G	-	-	-	-	-
Ø8	8A,8B,8C	R	R	R	R	R	R	R	R	R	G	Y	R
OLA	1A,1B,1C	R	R	R	R	R	R	R	R	R	R	R	R
OLB	3A,3B	R	R	R	R	R	R	R	R	R	R	R	R
OLC	5A,5B,5C	-	Y	R	FY	Y	R	R	R	R	R	R	R
OLD	7A,7B	R	R	R	R	R	R	-	Y	R	FY	Y	R
Ø2P	2-1,2-2	DW	DW	DW	DW	DW	DW	DW	DW	DW	DW	DW	DW
Ø4P	4-1,4-2	DW	DW	DW	DW	DW	DW	DW	DW	DW	DW	DW	DW
Ø6P	6-1,6-2	DW	DW	DW	*	DW	DW	DW	DW	DW	DW	DW	DW
Ø8P	8-1,8-2	DW	DW	DW	DW	DW	DW	DW	DW	DW	*	DW	DW

FY=FLASHING YELLOW

BARRIER

DETECTOR LOGIC

DETECTOR NUMBER	AMPLIFIER CHANNEL NUMBER	DETECTOR OPERATION: CALLS AND EXTENDS	CALLS ONLY	EXTENDS ONLY	PHASE CALLED	PHASE EXTENDED	DETECTOR DISCONNECT PHASE	CALLING DELAY	EXTENSION STRETCH
11		X			1	1			
31		X			3	3			
41		X			4	4			
51		X			5	5			
71		X			7	7			
81		X			8	8			

CONTROLLER LOGIC

PHASE NUMBER	PHASE LOCKING	DUAL ENTRY W / Ø	PHASE RECALL	PHASE ACTIVE
1		6		X
2		6	MAX.	X
3		8		X
4		8		X
5		2		X
6		2	MAX.	X
7		4		X
8		4		X

SPECIAL OVERLAPS

	PROTECTED	PERMISSIVE
OLA	1	2
OLB	3	4
OLC	5	6
OLD	7	8

N

TYPE OF INTERCONNECT COMMUNICATION	
NONE	X
TBC	
CLOSED LOOP TWISTED PAIR*	
CLOSED LOOP FIBER OPTIC*	
FIBER OPTIC (ETHERNET)	
RADIO	
LOCATION OF MASTER CONTROLLER NO:	
SIGNAL SYSTEM #:	

TYPE OF PRE-EMPT	
NONE	X
RAILROAD	
EMERGENCY VEHICLE	
3M	
TOMAR	
HARDWIRE	
OTHER	
QUEUE DETECTOR	
LIFT BRIDGE	

TYPE OF LIGHTING	
BY OTHER AGENCY	
IN TRAFFIC SIGNAL CABINET	X
IN SEPARATE DOT LIGHTING CABINET	

CHART 1

PHASE ON	NONCONFLICTING PHASE ALLOWED TO TIME CONCURRENTLY	PHASES IN CONFLICT WITH PHASE ON
1	5 OR 6,OLC	2,3,4,7,8,OLB,OLD
2	5 OR 6,OLA,OLC	1,3,4,7,8,OLB,OLD
3	7 OR 8,OLD	1,2,4,5,6,OLA,OLC
4	7 OR 8,OLB,OLD	1,2,3,5,6,OLA,OLC
5	1 OR 2,OLA	3,4,6,7,8,OLB,OLD
6	1 OR 2,OLA,OLC	3,4,5,7,8,OLB,OLD
7	3 OR 4,OLB	1,2,5,6,8,OLA,OLC
8	3 OR 4,OLB,OLD	1,2,5,6,7,OLA,OLC

GENERAL NOTES:

1. ANY ACTUATED PHASE FOR WHICH THERE IS NO CALL SHALL BE SKIPPED.
2. WHEN ONE PHASE IS ON ALONE, ANY NONCONFLICTING PHASE MAY START TIMING CONCURRENTLY WITHOUT A CLEARANCE INTERVAL. (SEE CHART 1 AT LEFT.)
3. WHEN OPPOSING THRU PHASES ARE TIMING CONCURRENTLY THEY SHALL TERMINATE TOGETHER DUE TO PERMISSIVE LEFT TURN CONFLICT.

** CLEARANCE TO A PHASE IN CONFLICT WITH THIS PHASE ON (SEE CHART 1)

BUSINESS 51 (POST ROAD) &
CHESTNUT DRIVE
VILLAGE OF PLOVER
PORTAGE COUNTY

SIGNAL NO.

CONTROLLER TYPE: TEMP

DATE Ø7/15

PAGE NO. 9 OF 9

2

LEGEND

- WORK AREA
- SIGNAL HEAD, OVERHEAD MOUNT
- PEDESTRIAN SIGNAL HEAD WITH PUSH BUTTON
- CLASS 4 WOOD POLE
- 4x4 WOOD POST
- CABLE - OVERHEAD
- TEMPORARY LUMINAIRE 250W HPS
- APPROXIMATE DETECTION ZONE
- SIGNAL HEAD NUMBER
- (R) RED CIRCULAR INDICATOR
- (Y) YELLOW CIRCULAR INDICATOR
- (G) GREEN CIRCULAR INDICATOR
- (R) RED ARROW (LEFT)
- (Y) YELLOW ARROW (LEFT)
- (FY) FLASHING YELLOW ARROW (LEFT)
- (G) GREEN ARROW (LEFT)
- WALK/DON'T WALK INDICATOR 16" (COUNTDOWN TIMER)
- TRAFFIC SIGNAL HEAD TO BE COVERED AND DE-ENERGIZED
- * COVER AND DE-ENERGIZE PEDESTRIAN TRAFFIC SIGNAL FACE(S) IF PEDESTRIAN ACCESS IS NOT ALLOWED WITHIN THE WORKZONE AND/OR SIDEWALK IS CLOSED.
- LANE DESIGNATION (FOR REFERENCE ONLY)

NOTES: ALL LENSES ARE 12-INCH, GRAYSHADE REPRESENTS EXISTING

CONSTRUCTION NOTES:

1. FINAL LOCATION OF SIGNAL POLES, SPAN WIRE, CONTROLLER, AND HEADS SHALL BE APPROVED BY THE ENGINEER. BAG ALL UNUSED HEADS.
2. GUYING OF POLES SHALL BE AS APPROVED BY THE ENGINEER.
3. THE LOCATIONS OF EXISTING AND PROPOSED UTILITY INSTALLATIONS ARE APPROXIMATE. THERE MAY BE OTHER UTILITY INSTALLATIONS WITHIN THE PROJECT WHICH ARE NOT SHOWN.
4. ALL TEMPORARY TRAFFIC SIGNAL INSTALLATIONS, MATERIALS, AND OPERATIONS SHALL BE IN ACCORDANCE WITH STANDARD DESIGN DETAILS FOR "SPAN WIRE TEMPORARY TRAFFIC SIGNAL".
5. CONTRACTOR TO PROVIDE TEMPORARY DETECTION SYSTEM WHICH WILL DETECT TRAFFIC AT THE TEMPORARY STOP BAR AND OTHER LOCATIONS AS INDICATED ON THE PLANS AND AS DIRECTED BY THE ENGINEER. THE INDIVIDUAL DETECTION ZONE LOCATIONS SHALL BE ADJUSTED TO REFLECT ACTUAL FIELD CONDIDITONS

2

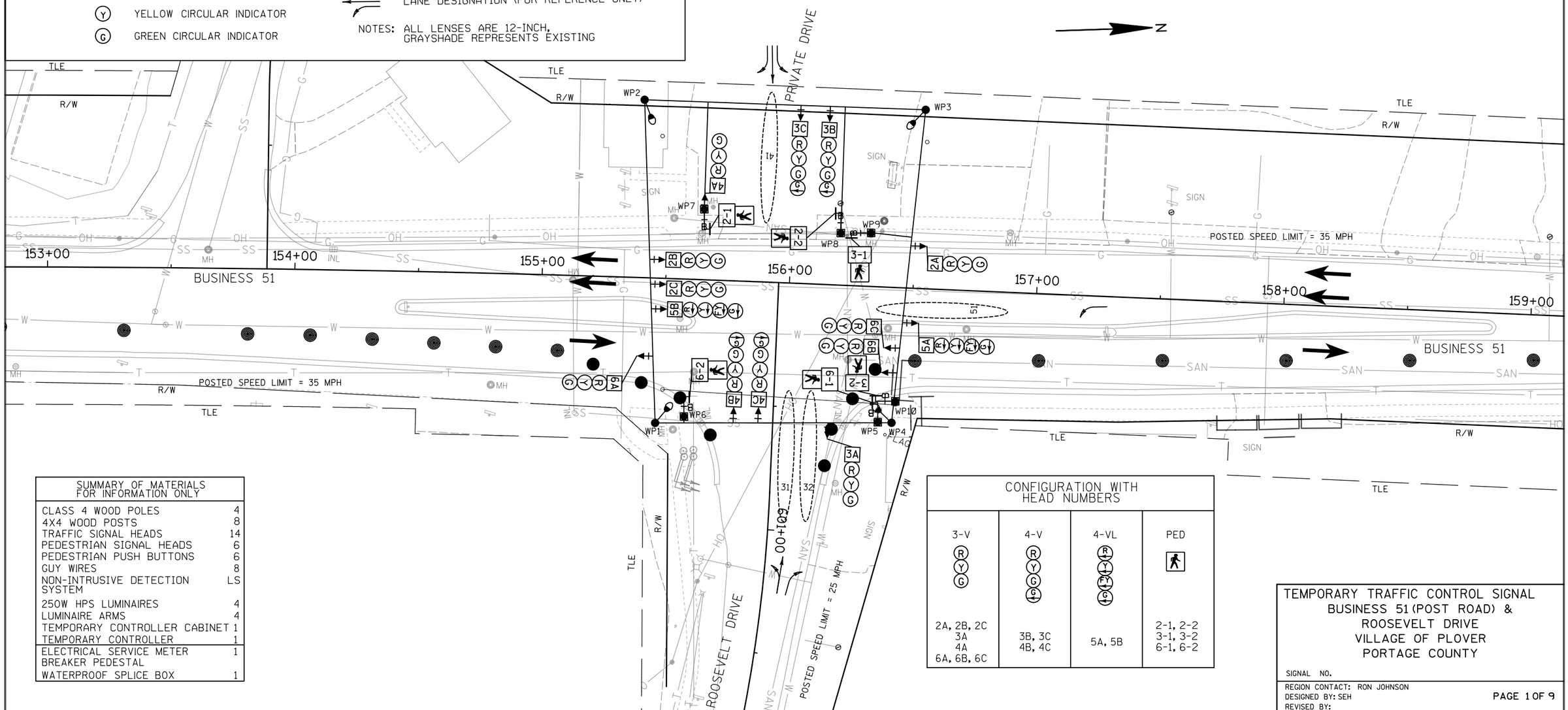

SUMMARY OF MATERIALS FOR INFORMATION ONLY	
CLASS 4 WOOD POLES	4
4X4 WOOD POSTS	8
TRAFFIC SIGNAL HEADS	14
PEDESTRIAN SIGNAL HEADS	6
PEDESTRIAN PUSH BUTTONS	6
GUY WIRES	8
NON-INTRUSIVE DETECTION SYSTEM	LS
250W HPS LUMINAIRES	4
LUMINAIRE ARMS	4
TEMPORARY CONTROLLER CABINET	1
TEMPORARY CONTROLLER	1
ELECTRICAL SERVICE METER BREAKER PEDESTAL	1
WATERPROOF SPLICE BOX	1

CONFIGURATION WITH HEAD NUMBERS			
3-V	4-V	4-VL	PED
(R) (Y) (G)	(R) (Y) (G) (G)	(R) (Y) (Y) (G) (G)	
2A, 2B, 2C 3A 4A 6A, 6B, 6C	3B, 3C 4B, 4C	5A, 5B	2-1, 2-2 3-1, 3-2 6-1, 6-2

TEMPORARY TRAFFIC CONTROL SIGNAL
BUSINESS 51 (POST ROAD) &
ROOSEVELT DRIVE
VILLAGE OF PLOVER
PORTAGE COUNTY

SIGNAL NO.

REGION CONTACT: RON JOHNSON
DESIGNED BY: SEH
REVISED BY:

PAGE 1 OF 9

PROJECT NO: 6414-00-78	HWY: BUSINESS 51	COUNTY: PORTAGE	TEMPORARY TRAFFIC SIGNAL PLAN - STAGE 1A	SHEET 119	E

2

LEGEND

- WORK AREA
- SIGNAL HEAD, OVERHEAD MOUNT
- PEDESTRIAN SIGNAL HEAD WITH PUSH BUTTON
- CLASS 4 WOOD POLE
- 4x4 WOOD POST
- CABLE - OVERHEAD
- TEMPORARY LUMINAIRE 250W HPS
- APPROXIMATE DETECTION ZONE
- SIGNAL HEAD NUMBER
- (R) RED CIRCULAR INDICATOR
- (Y) YELLOW CIRCULAR INDICATOR
- (G) GREEN CIRCULAR INDICATOR
- (R) RED ARROW (LEFT)
- (Y) YELLOW ARROW (LEFT)
- (FY) FLASHING YELLOW ARROW (LEFT)
- (G) GREEN ARROW (LEFT)
- WALK/DON'T WALK INDICATOR 16" (COUNTDOWN TIMER)
- TRAFFIC SIGNAL HEAD TO BE COVERED AND DE-ENERGIZED
- * COVER AND DE-ENERGIZE PEDESTRIAN TRAFFIC SIGNAL FACE(S) IF PEDESTRIAN ACCESS IS NOT ALLOWED WITHIN THE WORKZONE AND/OR SIDEWALK IS CLOSED.
- LANE DESIGNATION (FOR REFERENCE ONLY)

NOTES: ALL LENSES ARE 12-INCH, GRAYSHADE REPRESENTS EXISTING

CONSTRUCTION NOTES:

1. FINAL LOCATION OF SIGNAL POLES, SPAN WIRE, CONTROLLER, AND HEADS SHALL BE APPROVED BY THE ENGINEER. BAG ALL UNUSED HEADS.
2. GUYING OF POLES SHALL BE AS APPROVED BY THE ENGINEER.
3. THE LOCATIONS OF EXISTING AND PROPOSED UTILITY INSTALLATIONS ARE APPROXIMATE. THERE MAY BE OTHER UTILITY INSTALLATIONS WITHIN THE PROJECT WHICH ARE NOT SHOWN.
4. ALL TEMPORARY TRAFFIC SIGNAL INSTALLATIONS, MATERIALS, AND OPERATIONS SHALL BE IN ACCORDANCE WITH STANDARD DESIGN DETAILS FOR "SPAN WIRE TEMPORARY TRAFFIC SIGNAL".
5. CONTRACTOR TO PROVIDE TEMPORARY DETECTION SYSTEM WHICH WILL DETECT TRAFFIC AT THE TEMPORARY STOP BAR AND OTHER LOCATIONS AS INDICATED ON THE PLANS AND AS DIRECTED BY THE ENGINEER. THE INDIVIDUAL DETECTION ZONE LOCATIONS SHALL BE ADJUSTED TO REFLECT ACTUAL FIELD CONDIDITONS

2

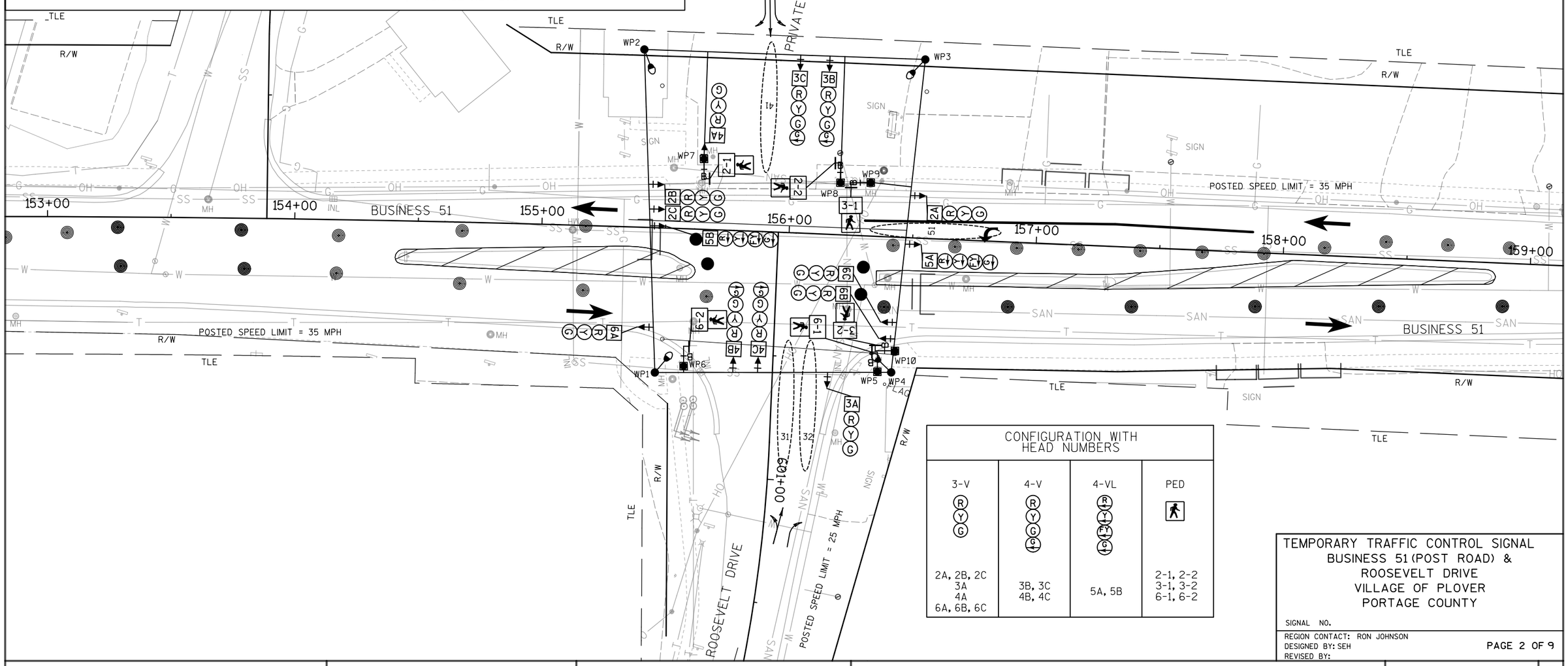

CONFIGURATION WITH HEAD NUMBERS

3-V	4-V	4-VL	PED
(R) (Y) (G)	(R) (Y) (G) (G)	(R) (Y) (Y) (G) (G)	
2A, 2B, 2C 3A 4A 6A, 6B, 6C	3B, 3C 4B, 4C	5A, 5B	2-1, 2-2 3-1, 3-2 6-1, 6-2

TEMPORARY TRAFFIC CONTROL SIGNAL
BUSINESS 51 (POST ROAD) &
ROOSEVELT DRIVE
VILLAGE OF PLOVER
PORTAGE COUNTY

SIGNAL NO.

REGION CONTACT: RON JOHNSON
DESIGNED BY: SEH
REVISED BY:

PAGE 2 OF 9

PROJECT NO: 6414-00-78	HWY: BUSINESS 51	COUNTY: PORTAGE	TEMPORARY TRAFFIC SIGNAL PLAN - STAGE 1B	SHEET 120	E

2

LEGEND

- WORK AREA
- SIGNAL HEAD, OVERHEAD MOUNT
- PEDESTRIAN SIGNAL HEAD WITH PUSH BUTTON
- CLASS 4 WOOD POLE
- 4x4 WOOD POST
- CABLE - OVERHEAD
- TEMPORARY LUMINAIRE 250W HPS
- APPROXIMATE DETECTION ZONE
- SIGNAL HEAD NUMBER
- (R) RED CIRCULAR INDICATOR
- (Y) YELLOW CIRCULAR INDICATOR
- (G) GREEN CIRCULAR INDICATOR
- (R) RED ARROW (LEFT)
- (Y) YELLOW ARROW (LEFT)
- (FY) FLASHING YELLOW ARROW (LEFT)
- (G) GREEN ARROW (LEFT)
- WALK/DON'T WALK INDICATOR 16" (COUNTDOWN TIMER)
- TRAFFIC SIGNAL HEAD TO BE COVERED AND DE-ENERGIZED
- * COVER AND DE-ENERGIZE PEDESTRIAN TRAFFIC SIGNAL FACE(S) IF PEDESTRIAN ACCESS IS NOT ALLOWED WITHIN THE WORKZONE AND/OR SIDEWALK IS CLOSED.
- LANE DESIGNATION (FOR REFERENCE ONLY)

NOTES: ALL LENSES ARE 12-INCH, GRAYSHADE REPRESENTS EXISTING

CONSTRUCTION NOTES:

1. FINAL LOCATION OF SIGNAL POLES, SPAN WIRE, CONTROLLER, AND HEADS SHALL BE APPROVED BY THE ENGINEER. BAG ALL UNUSED HEADS.
2. GUYING OF POLES SHALL BE AS APPROVED BY THE ENGINEER.
3. THE LOCATIONS OF EXISTING AND PROPOSED UTILITY INSTALLATIONS ARE APPROXIMATE. THERE MAY BE OTHER UTILITY INSTALLATIONS WITHIN THE PROJECT WHICH ARE NOT SHOWN.
4. ALL TEMPORARY TRAFFIC SIGNAL INSTALLATIONS, MATERIALS, AND OPERATIONS SHALL BE IN ACCORDANCE WITH STANDARD DESIGN DETAILS FOR "SPAN WIRE TEMPORARY TRAFFIC SIGNAL".
5. CONTRACTOR TO PROVIDE TEMPORARY DETECTION SYSTEM WHICH WILL DETECT TRAFFIC AT THE TEMPORARY STOP BAR AND OTHER LOCATIONS AS INDICATED ON THE PLANS AND AS DIRECTED BY THE ENGINEER. THE INDIVIDUAL DETECTION ZONE LOCATIONS SHALL BE ADJUSTED TO REFLECT ACTUAL FIELD CONDIDITONS

2

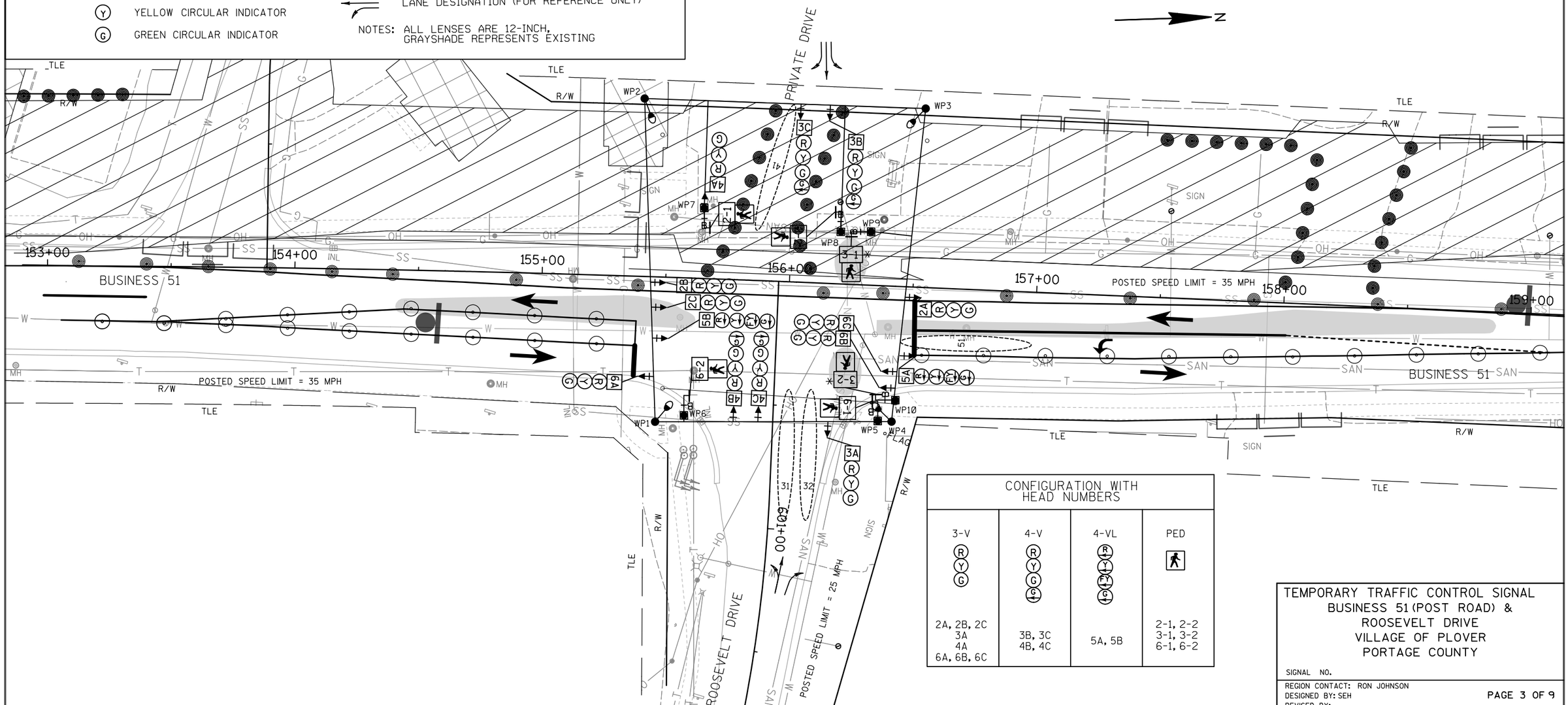

CONFIGURATION WITH HEAD NUMBERS

3-V	4-V	4-VL	PED
(R) (Y) (G)	(R) (Y) (G) (G)	(R) (Y) (FY) (G)	
2A, 2B, 2C 3A 4A 6A, 6B, 6C	3B, 3C 4B, 4C	5A, 5B	2-1, 2-2 3-1, 3-2 6-1, 6-2

TEMPORARY TRAFFIC CONTROL SIGNAL
BUSINESS 51 (POST ROAD) &
ROOSEVELT DRIVE
VILLAGE OF PLOVER
PORTAGE COUNTY

SIGNAL NO.

REGION CONTACT: RON JOHNSON
DESIGNED BY: SEH
REVISED BY:

PAGE 3 OF 9

PROJECT NO: 6414-00-78	HWY: BUSINESS 51	COUNTY: PORTAGE	TEMPORARY TRAFFIC SIGNAL PLAN - STAGE 2A	SHEET 121	E

2

LEGEND

- WORK AREA
- SIGNAL HEAD, OVERHEAD MOUNT
- PEDESTRIAN SIGNAL HEAD WITH PUSH BUTTON
- CLASS 4 WOOD POLE
- 4x4 WOOD POST
- CABLE - OVERHEAD
- TEMPORARY LUMINAIRE 250W HPS
- APPROXIMATE DETECTION ZONE
- SIGNAL HEAD NUMBER
- (R) RED CIRCULAR INDICATOR
- (Y) YELLOW CIRCULAR INDICATOR
- (G) GREEN CIRCULAR INDICATOR
- (R) RED ARROW (LEFT)
- (Y) YELLOW ARROW (LEFT)
- (FY) FLASHING YELLOW ARROW (LEFT)
- (G) GREEN ARROW (LEFT)
- WALK/DON'T WALK INDICATOR 16" (COUNTDOWN TIMER)
- TRAFFIC SIGNAL HEAD TO BE COVERED AND DE-ENERGIZED
- * COVER AND DE-ENERGIZE PEDESTRIAN TRAFFIC SIGNAL FACE(S) IF PEDESTRIAN ACCESS IS NOT ALLOWED WITHIN THE WORKZONE AND/OR SIDEWALK IS CLOSED.
- LANE DESIGNATION (FOR REFERENCE ONLY)

NOTES: ALL LENSES ARE 12-INCH, GRAYSHADE REPRESENTS EXISTING

CONSTRUCTION NOTES:

1. FINAL LOCATION OF SIGNAL POLES, SPAN WIRE, CONTROLLER, AND HEADS SHALL BE APPROVED BY THE ENGINEER. BAG ALL UNUSED HEADS.
2. GUYING OF POLES SHALL BE AS APPROVED BY THE ENGINEER.
3. THE LOCATIONS OF EXISTING AND PROPOSED UTILITY INSTALLATIONS ARE APPROXIMATE. THERE MAY BE OTHER UTILITY INSTALLATIONS WITHIN THE PROJECT WHICH ARE NOT SHOWN.
4. ALL TEMPORARY TRAFFIC SIGNAL INSTALLATIONS, MATERIALS, AND OPERATIONS SHALL BE IN ACCORDANCE WITH STANDARD DESIGN DETAILS FOR "SPAN WIRE TEMPORARY TRAFFIC SIGNAL".
5. CONTRACTOR TO PROVIDE TEMPORARY DETECTION SYSTEM WHICH WILL DETECT TRAFFIC AT THE TEMPORARY STOP BAR AND OTHER LOCATIONS AS INDICATED ON THE PLANS AND AS DIRECTED BY THE ENGINEER. THE INDIVIDUAL DETECTION ZONE LOCATIONS SHALL BE ADJUSTED TO REFLECT ACTUAL FIELD CONDIDITONS

2

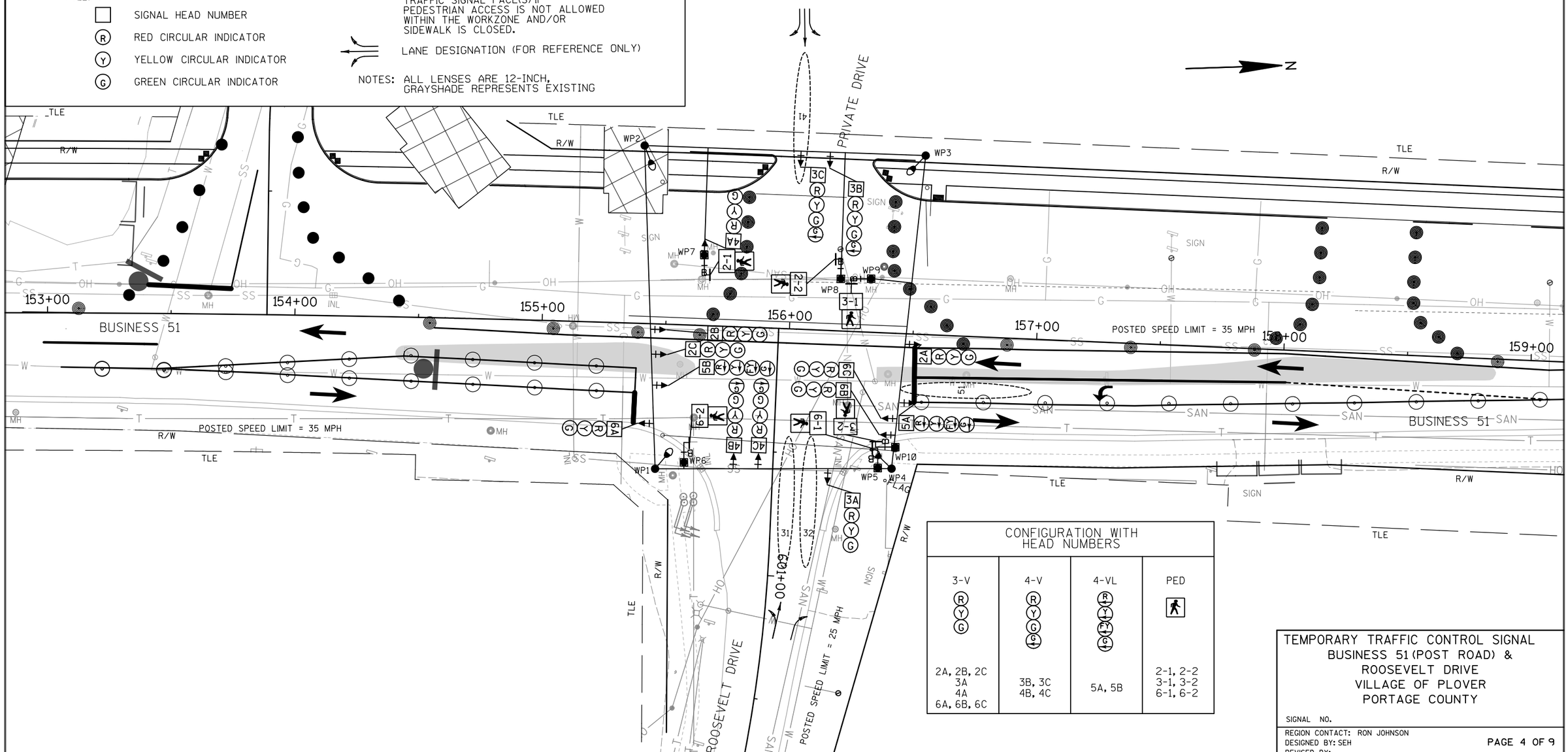

CONFIGURATION WITH HEAD NUMBERS

3-V	4-V	4-VL	PED
(R) (Y) (G)	(R) (Y) (G) (G)	(R) (Y) (FY) (G)	
2A, 2B, 2C 3A 4A 6A, 6B, 6C	3B, 3C 4B, 4C	5A, 5B	2-1, 2-2 3-1, 3-2 6-1, 6-2

TEMPORARY TRAFFIC CONTROL SIGNAL
BUSINESS 51 (POST ROAD) &
ROOSEVELT DRIVE
VILLAGE OF PLOVER
PORTAGE COUNTY

SIGNAL NO.

REGION CONTACT: RON JOHNSON
DESIGNED BY: SEH
REVISED BY:

PAGE 4 OF 9

PROJECT NO: 6414-00-78	HWY: BUSINESS 51	COUNTY: PORTAGE	TEMPORARY TRAFFIC SIGNAL PLAN - STAGE 2B	SHEET 122	E

2

LEGEND

- WORK AREA
- SIGNAL HEAD, OVERHEAD MOUNT
- PEDESTRIAN SIGNAL HEAD WITH PUSH BUTTON
- CLASS 4 WOOD POLE
- 4x4 WOOD POST
- CABLE - OVERHEAD
- TEMPORARY LUMINAIRE 250W HPS
- APPROXIMATE DETECTION ZONE
- SIGNAL HEAD NUMBER
- (R) RED CIRCULAR INDICATOR
- (Y) YELLOW CIRCULAR INDICATOR
- (G) GREEN CIRCULAR INDICATOR
- (R) RED ARROW (LEFT)
- (Y) YELLOW ARROW (LEFT)
- (FY) FLASHING YELLOW ARROW (LEFT)
- (G) GREEN ARROW (LEFT)
- WALK/DON'T WALK INDICATOR 16" (COUNTDOWN TIMER)
- TRAFFIC SIGNAL HEAD TO BE COVERED AND DE-ENERGIZED
- * COVER AND DE-ENERGIZE PEDESTRIAN TRAFFIC SIGNAL FACE(S) IF PEDESTRIAN ACCESS IS NOT ALLOWED WITHIN THE WORKZONE AND/OR SIDEWALK IS CLOSED.
- LANE DESIGNATION (FOR REFERENCE ONLY)

NOTES: ALL LENSES ARE 12-INCH, GRAYSHADE REPRESENTS EXISTING

CONSTRUCTION NOTES:

1. FINAL LOCATION OF SIGNAL POLES, SPAN WIRE, CONTROLLER, AND HEADS SHALL BE APPROVED BY THE ENGINEER. BAG ALL UNUSED HEADS.
2. GUYING OF POLES SHALL BE AS APPROVED BY THE ENGINEER.
3. THE LOCATIONS OF EXISTING AND PROPOSED UTILITY INSTALLATIONS ARE APPROXIMATE. THERE MAY BE OTHER UTILITY INSTALLATIONS WITHIN THE PROJECT WHICH ARE NOT SHOWN.
4. ALL TEMPORARY TRAFFIC SIGNAL INSTALLATIONS, MATERIALS, AND OPERATIONS SHALL BE IN ACCORDANCE WITH STANDARD DESIGN DETAILS FOR "SPAN WIRE TEMPORARY TRAFFIC SIGNAL".
5. CONTRACTOR TO PROVIDE TEMPORARY DETECTION SYSTEM WHICH WILL DETECT TRAFFIC AT THE TEMPORARY STOP BAR AND OTHER LOCATIONS AS INDICATED ON THE PLANS AND AS DIRECTED BY THE ENGINEER. THE INDIVIDUAL DETECTION ZONE LOCATIONS SHALL BE ADJUSTED TO REFLECT ACTUAL FIELD CONDIDITONS

2

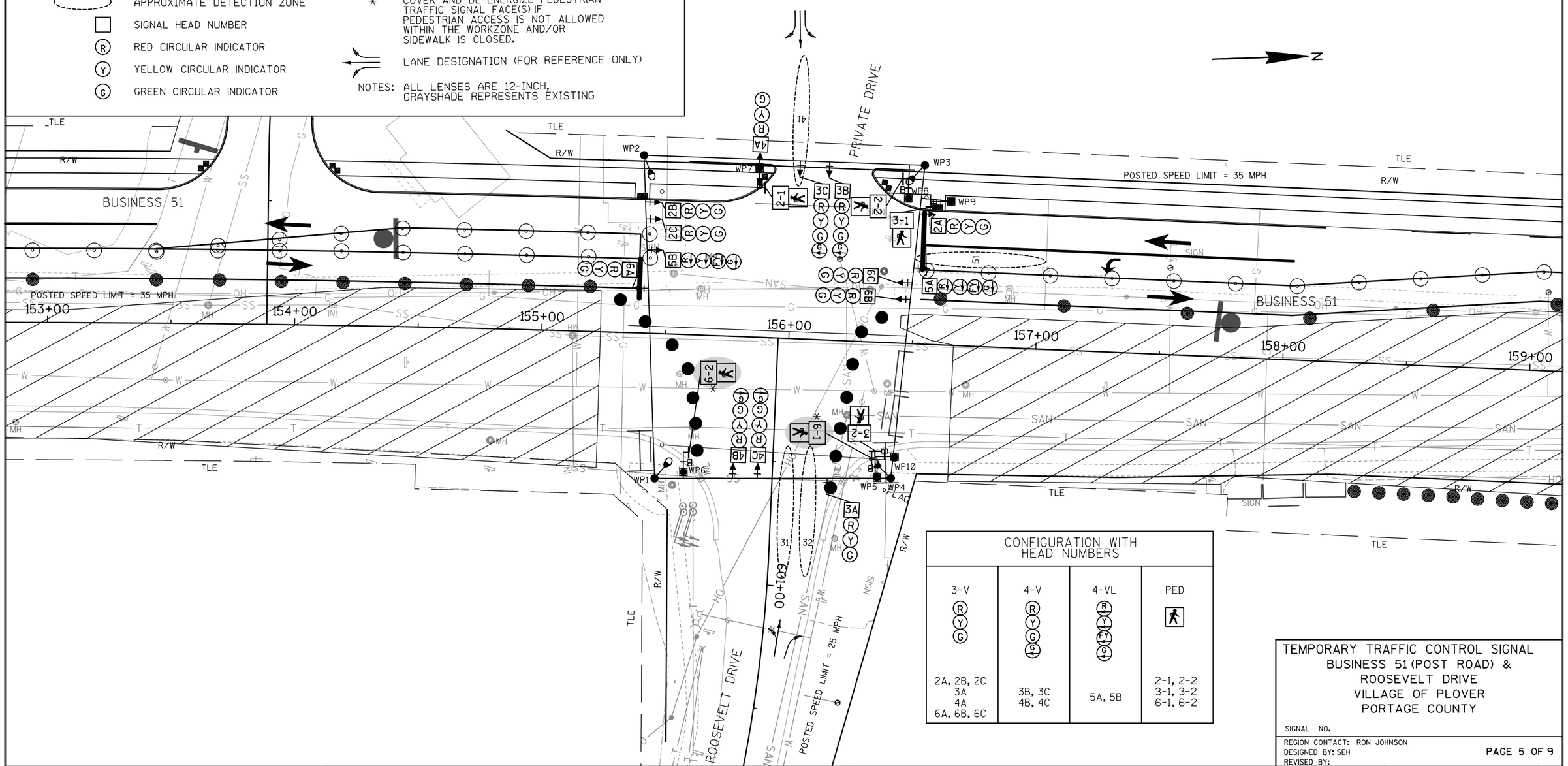

CONFIGURATION WITH HEAD NUMBERS			
3-V	4-V	4-VL	PED
(R) (Y) (G)	(R) (Y) (G) (G)	(R) (Y) (FY) (G)	
2A, 2B, 2C 3A 4A 6A, 6B, 6C	3B, 3C 4B, 4C	5A, 5B	2-1, 2-2 3-1, 3-2 6-1, 6-2

TEMPORARY TRAFFIC CONTROL SIGNAL
BUSINESS 51 (POST ROAD) &
ROOSEVELT DRIVE
VILLAGE OF PLOVER
PORTAGE COUNTY

SIGNAL NO.

REGION CONTACT: RON JOHNSON
DESIGNED BY: SEH
REVISED BY:

PAGE 5 OF 9

PROJECT NO: 6414-00-78	HWY: BUSINESS 51	COUNTY: PORTAGE	TEMPORARY TRAFFIC SIGNAL PLAN - STAGE 3A	SHEET 123	E

2

LEGEND

- WORK AREA
- SIGNAL HEAD, OVERHEAD MOUNT
- PEDESTRIAN SIGNAL HEAD WITH PUSH BUTTON
- CLASS 4 WOOD POLE
- 4x4 WOOD POST
- CABLE - OVERHEAD
- TEMPORARY LUMINAIRE 250W HPS
- APPROXIMATE DETECTION ZONE
- SIGNAL HEAD NUMBER
- (R) RED CIRCULAR INDICATOR
- (Y) YELLOW CIRCULAR INDICATOR
- (G) GREEN CIRCULAR INDICATOR
- (R) RED ARROW (LEFT)
- (Y) YELLOW ARROW (LEFT)
- (FY) FLASHING YELLOW ARROW (LEFT)
- (G) GREEN ARROW (LEFT)
- WALK/DON'T WALK INDICATOR 16" (COUNTDOWN TIMER)
- TRAFFIC SIGNAL HEAD TO BE COVERED AND DE-ENERGIZED
- * COVER AND DE-ENERGIZE PEDESTRIAN TRAFFIC SIGNAL FACE(S) IF PEDESTRIAN ACCESS IS NOT ALLOWED WITHIN THE WORKZONE AND/OR SIDEWALK IS CLOSED.
- LANE DESIGNATION (FOR REFERENCE ONLY)

NOTES: ALL LENSES ARE 12-INCH, GRAYSHADE REPRESENTS EXISTING

CONSTRUCTION NOTES:

1. FINAL LOCATION OF SIGNAL POLES, SPAN WIRE, CONTROLLER, AND HEADS SHALL BE APPROVED BY THE ENGINEER. BAG ALL UNUSED HEADS.
2. GUYING OF POLES SHALL BE AS APPROVED BY THE ENGINEER.
3. THE LOCATIONS OF EXISTING AND PROPOSED UTILITY INSTALLATIONS ARE APPROXIMATE. THERE MAY BE OTHER UTILITY INSTALLATIONS WITHIN THE PROJECT WHICH ARE NOT SHOWN.
4. ALL TEMPORARY TRAFFIC SIGNAL INSTALLATIONS, MATERIALS, AND OPERATIONS SHALL BE IN ACCORDANCE WITH STANDARD DESIGN DETAILS FOR "SPAN WIRE TEMPORARY TRAFFIC SIGNAL".
5. CONTRACTOR TO PROVIDE TEMPORARY DETECTION SYSTEM WHICH WILL DETECT TRAFFIC AT THE TEMPORARY STOP BAR AND OTHER LOCATIONS AS INDICATED ON THE PLANS AND AS DIRECTED BY THE ENGINEER. THE INDIVIDUAL DETECTION ZONE LOCATIONS SHALL BE ADJUSTED TO REFLECT ACTUAL FIELD CONDIDITONS

2

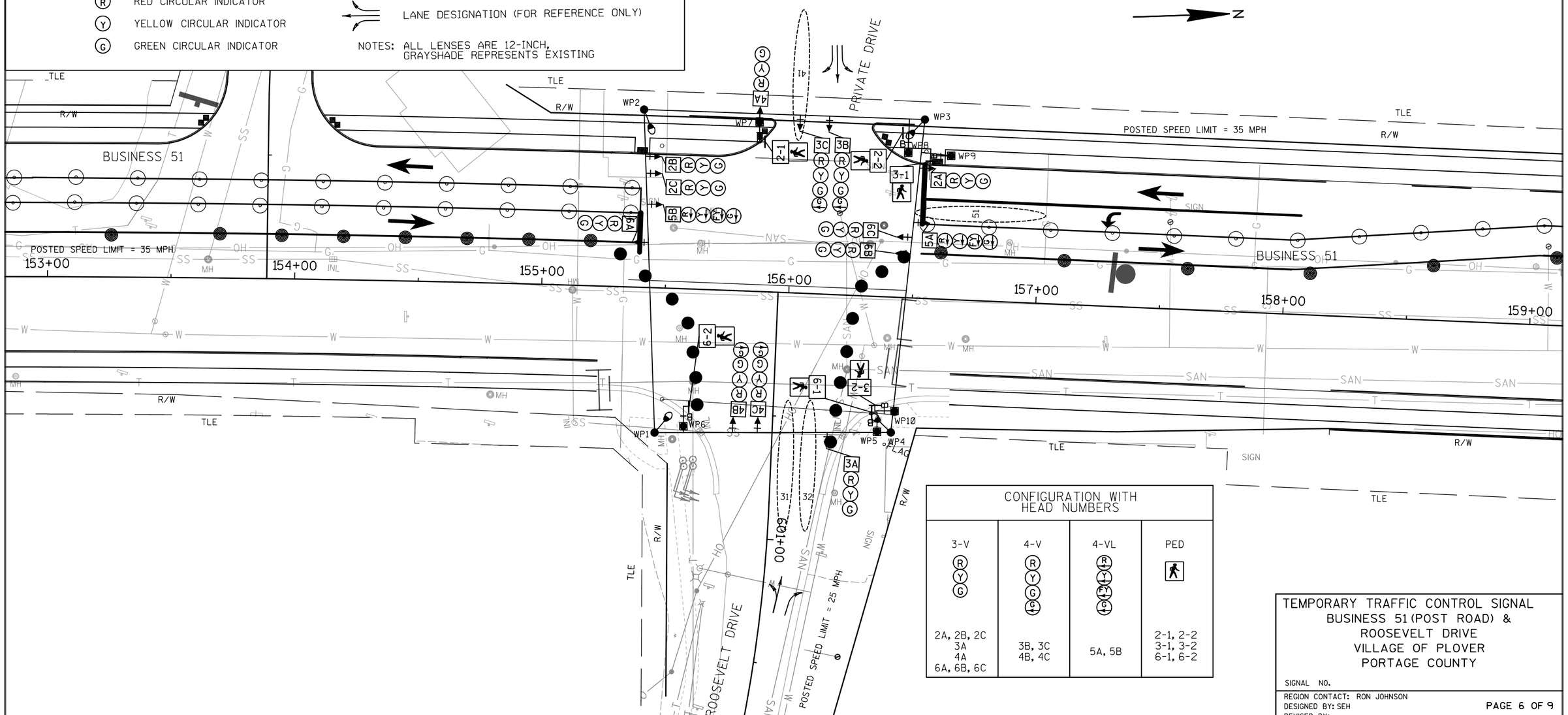

CONFIGURATION WITH HEAD NUMBERS			
3-V	4-V	4-VL	PED
(R) (Y) (G)	(R) (Y) (G) (G)	(R) (Y) (FY) (G)	
2A, 2B, 2C 3A 4A 6A, 6B, 6C	3B, 3C 4B, 4C	5A, 5B	2-1, 2-2 3-1, 3-2 6-1, 6-2

TEMPORARY TRAFFIC CONTROL SIGNAL
BUSINESS 51 (POST ROAD) &
ROOSEVELT DRIVE
VILLAGE OF PLOVER
PORTAGE COUNTY

SIGNAL NO.

REGION CONTACT: RON JOHNSON
DESIGNED BY: SEH
REVISED BY:

PAGE 6 OF 9

PROJECT NO: 6414-00-78	HWY: BUSINESS 51	COUNTY: PORTAGE	TEMPORARY TRAFFIC SIGNAL PLAN - STAGE 3B	SHEET 124	E

2

LEGEND

- WORK AREA
- SIGNAL HEAD, OVERHEAD MOUNT
- PEDESTRIAN SIGNAL HEAD WITH PUSH BUTTON
- CLASS 4 WOOD POLE
- 4x4 WOOD POST
- CABLE - OVERHEAD
- TEMPORARY LUMINAIRE 250W HPS
- APPROXIMATE DETECTION ZONE
- SIGNAL HEAD NUMBER
- (R) RED CIRCULAR INDICATOR
- (Y) YELLOW CIRCULAR INDICATOR
- (G) GREEN CIRCULAR INDICATOR
- (R) RED ARROW (LEFT)
- (Y) YELLOW ARROW (LEFT)
- (FY) FLASHING YELLOW ARROW (LEFT)
- (G) GREEN ARROW (LEFT)
- WALK/DON'T WALK INDICATOR 16" (COUNTDOWN TIMER)
- TRAFFIC SIGNAL HEAD TO BE COVERED AND DE-ENERGIZED
- * COVER AND DE-ENERGIZE PEDESTRIAN TRAFFIC SIGNAL FACE(S) IF PEDESTRIAN ACCESS IS NOT ALLOWED WITHIN THE WORKZONE AND/OR SIDEWALK IS CLOSED.
- LANE DESIGNATION (FOR REFERENCE ONLY)

NOTES: ALL LENSES ARE 12-INCH, GRAYSHADE REPRESENTS EXISTING

CONSTRUCTION NOTES:

1. FINAL LOCATION OF SIGNAL POLES, SPAN WIRE, CONTROLLER, AND HEADS SHALL BE APPROVED BY THE ENGINEER. BAG ALL UNUSED HEADS.
2. GUYING OF POLES SHALL BE AS APPROVED BY THE ENGINEER.
3. THE LOCATIONS OF EXISTING AND PROPOSED UTILITY INSTALLATIONS ARE APPROXIMATE. THERE MAY BE OTHER UTILITY INSTALLATIONS WITHIN THE PROJECT WHICH ARE NOT SHOWN.
4. ALL TEMPORARY TRAFFIC SIGNAL INSTALLATIONS, MATERIALS, AND OPERATIONS SHALL BE IN ACCORDANCE WITH STANDARD DESIGN DETAILS FOR "SPAN WIRE TEMPORARY TRAFFIC SIGNAL".
5. CONTRACTOR TO PROVIDE TEMPORARY DETECTION SYSTEM WHICH WILL DETECT TRAFFIC AT THE TEMPORARY STOP BAR AND OTHER LOCATIONS AS INDICATED ON THE PLANS AND AS DIRECTED BY THE ENGINEER. THE INDIVIDUAL DETECTION ZONE LOCATIONS SHALL BE ADJUSTED TO REFLECT ACTUAL FIELD CONDIDITONS

2

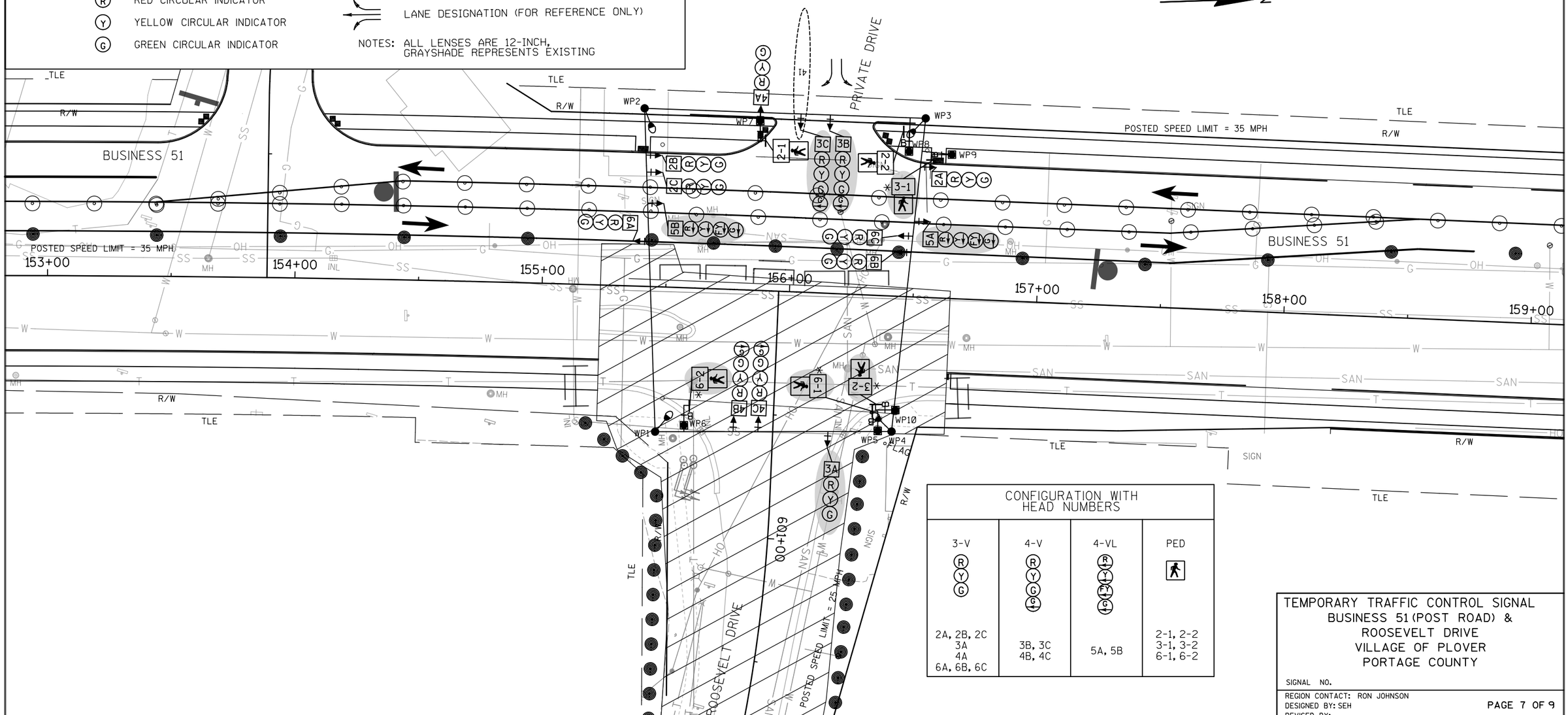

CONFIGURATION WITH HEAD NUMBERS			
3-V	4-V	4-VL	PED
(R) (Y) (G)	(R) (Y) (G) (G)	(R) (Y) (FY) (G)	
2A, 2B, 2C 3A 4A 6A, 6B, 6C	3B, 3C 4B, 4C	5A, 5B	2-1, 2-2 3-1, 3-2 6-1, 6-2

TEMPORARY TRAFFIC CONTROL SIGNAL
BUSINESS 51 (POST ROAD) &
ROOSEVELT DRIVE
VILLAGE OF PLOVER
PORTAGE COUNTY

SIGNAL NO.

REGION CONTACT: RON JOHNSON
DESIGNED BY: SEH
REVISED BY:

PAGE 7 OF 9

PROJECT NO: 6414-00-78	HWY: BUSINESS 51	COUNTY: PORTAGE	TEMPORARY TRAFFIC SIGNAL PLAN - STAGE 3C	SHEET 125	E

2

LEGEND

- WORK AREA
- SIGNAL HEAD, OVERHEAD MOUNT
- PEDESTRIAN SIGNAL HEAD WITH PUSH BUTTON
- CLASS 4 WOOD POLE
- 4x4 WOOD POST
- CABLE - OVERHEAD
- TEMPORARY LUMINAIRE 250W HPS
- APPROXIMATE DETECTION ZONE
- SIGNAL HEAD NUMBER
- (R) RED CIRCULAR INDICATOR
- (Y) YELLOW CIRCULAR INDICATOR
- (G) GREEN CIRCULAR INDICATOR
- (R) RED ARROW (LEFT)
- (Y) YELLOW ARROW (LEFT)
- (FY) FLASHING YELLOW ARROW (LEFT)
- (G) GREEN ARROW (LEFT)
- WALK/DON'T WALK INDICATOR 16" (COUNTDOWN TIMER)
- TRAFFIC SIGNAL HEAD TO BE COVERED AND DE-ENERGIZED
- * COVER AND DE-ENERGIZE PEDESTRIAN TRAFFIC SIGNAL FACE(S) IF PEDESTRIAN ACCESS IS NOT ALLOWED WITHIN THE WORKZONE AND/OR SIDEWALK IS CLOSED.
- LANE DESIGNATION (FOR REFERENCE ONLY)

NOTES: ALL LENSES ARE 12-INCH, GRAYSHADE REPRESENTS EXISTING

CONSTRUCTION NOTES:

1. FINAL LOCATION OF SIGNAL POLES, SPAN WIRE, CONTROLLER, AND HEADS SHALL BE APPROVED BY THE ENGINEER. BAG ALL UNUSED HEADS.
2. GUYING OF POLES SHALL BE AS APPROVED BY THE ENGINEER.
3. THE LOCATIONS OF EXISTING AND PROPOSED UTILITY INSTALLATIONS ARE APPROXIMATE. THERE MAY BE OTHER UTILITY INSTALLATIONS WITHIN THE PROJECT WHICH ARE NOT SHOWN.
4. ALL TEMPORARY TRAFFIC SIGNAL INSTALLATIONS, MATERIALS, AND OPERATIONS SHALL BE IN ACCORDANCE WITH STANDARD DESIGN DETAILS FOR "SPAN WIRE TEMPORARY TRAFFIC SIGNAL".
5. CONTRACTOR TO PROVIDE TEMPORARY DETECTION SYSTEM WHICH WILL DETECT TRAFFIC AT THE TEMPORARY STOP BAR AND OTHER LOCATIONS AS INDICATED ON THE PLANS AND AS DIRECTED BY THE ENGINEER. THE INDIVIDUAL DETECTION ZONE LOCATIONS SHALL BE ADJUSTED TO REFLECT ACTUAL FIELD CONDIDITONS

2

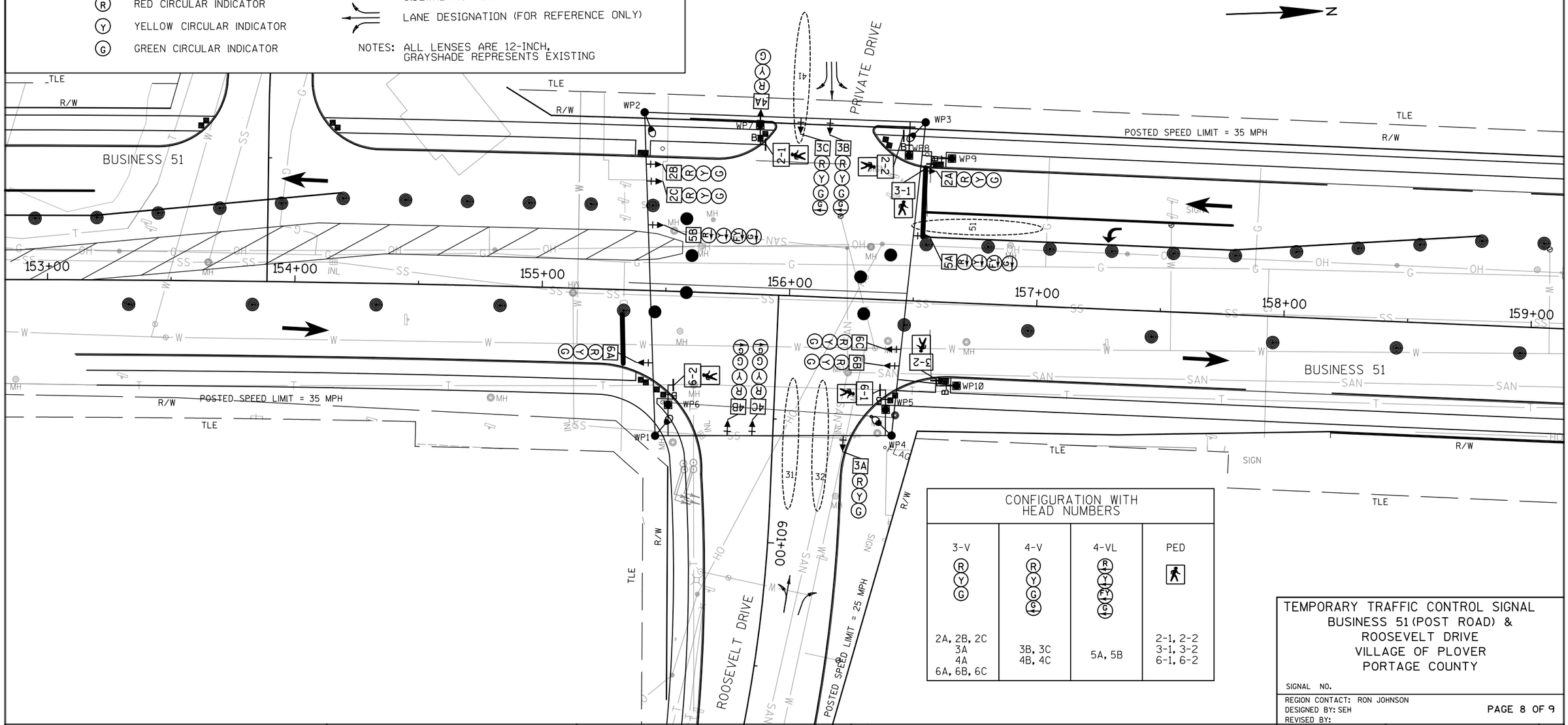

TEMPORARY TRAFFIC CONTROL SIGNAL
BUSINESS 51 (POST ROAD) &
ROOSEVELT DRIVE
VILLAGE OF PLOVER
PORTAGE COUNTY

SIGNAL NO.

REGION CONTACT: RON JOHNSON
DESIGNED BY: SEH
REVISED BY:

PAGE 8 OF 9

PROJECT NO: 6414-00-78	HWY: BUSINESS 51	COUNTY: PORTAGE	TEMPORARY TRAFFIC SIGNAL PLAN - STAGE 4	SHEET 126	E

SEQUENCE OF OPERATION

RING 1

	HEAD NUMBERS	Ø1 R/W	Ø1 CLEAR TO **	Ø2 R/W	Ø2 CLEAR TO **	Ø3 R/W	Ø3 CLEAR TO **	Ø4 R/W	Ø4 CLEAR TO **	FLASH
Ø1										-
Ø2	2A,2B,2C			G	Y R	R	R R	R	R R	R
Ø3	3A,3B,3C			R	R R	G,G	Y R	R	R R	R
Ø4	4A,4B,4C			R	R R	R	R R	G,G	Y R	R
Ø5	5A,5B			-	- -	-	- -	-	- -	-
Ø6	6A,6B,6C			R	R R	R	R R	R	R R	R
Ø7										
Ø8										
OLA										
OLB										
OLC	5A,5B			R	R R	R	R R	R	R R	R
OLD										
Ø2P	2-1,2-2			*	DW DW	DW	DW DW	DW	DW DW	
Ø3P	3-1,3-2			DW	DW DW	*	DW DW	DW	DW DW	
Ø4P										
Ø6P	6-1,6-2			DW	DW DW	DW	DW DW	DW	DW DW	

RING 2

	HEAD NUMBERS	Ø5 R/W	Ø5 CLEAR TO **	Ø6 R/W	Ø6 CLEAR TO **	Ø7 R/W	Ø7 CLEAR TO **	Ø8 R/W	Ø8 CLEAR TO **
Ø1									
Ø2	2A,2B,2C	R	R R	R	R R				
Ø3	3A,3B,3C	R	R R	R	R R				
Ø4	4A,4B,4C	R	R R	R	R R				
Ø5	5A,5B	G	- -	-	- -				
Ø6	6A,6B,6C,6D	R	R R	G	Y R				
Ø7									
Ø8									
OLA									
OLB									
OLC	5A,5B	-	Y R	FY	Y R				
OLD									
Ø2P	2-1,2-2	DW	DW DW	DW	DW DW				
Ø3P	3-1,3-2	DW	DW DW	DW	DW DW				
Ø4P									
Ø6P	6-1,6-2	DW	DW DW	*	DW DW				

FY=FLASHING YELLOW

BARRIER

DETECTOR LOGIC

DETECTOR NUMBER	AMPLIFIER CHANNEL NUMBER	DETECTOR OPERATION: CALLS AND EXTENDS	DETECTOR OPERATION: CALLS ONLY	DETECTOR OPERATION: EXTENDS ONLY	PHASE CALLED	PHASE EXTENDED	DETECTOR DISCONNECT PHASE	CALLING DELAY	EXTENSION STRETCH
31		X			3	3			
32		X			3	3		X	
41		X			4	4			
51		X			5	5			

CONTROLLER LOGIC

PHASE NUMBER	PHASE LOCKING	DUAL ENTRY W / Ø	PHASE RECALL	PHASE ACTIVE
1				
2		6	MAX.	X
3				X
4				X
5		2		X
6		2	MAX.	X
7				
8				

SPECIAL OVERLAPS

	PROTECTED	PERMISSIVE
OLA		
OLB		
OLC	5	6
OLD		

N

TYPE OF INTERCONNECT COMMUNICATION	
NONE	X
TBC	
CLOSED LOOP TWISTED PAIR*	
CLOSED LOOP FIBER OPTIC*	
FIBER OPTIC (ETHERNET)	
RADIO	
LOCATION OF MASTER CONTROLLER NO:	
SIGNAL SYSTEM #:	

TYPE OF PRE-EMPT	
NONE	X
RAILROAD	
EMERGENCY VEHICLE	
3M	
TOMAR	
HARDWIRE	
OTHER	
QUEUE DETECTOR	
LIFT BRIDGE	

TYPE OF LIGHTING	
BY OTHER AGENCY	
IN TRAFFIC SIGNAL CABINET	X
IN SEPARATE DOT LIGHTING CABINET	

CHART 1

PHASE ON	NONCONFLICTING PHASE ALLOWED TO TIME CONCURRENTLY	PHASES IN CONFLICT WITH PHASE ON
1		
2	5 OR 6,OLC	3,4
3	NONE	2,4,5,6,OLC
4	NONE	2,3,5,6,OLC
5	2	3,4,6
6	2,OLC	3,4,5
7		
8		

GENERAL NOTES:

1. ANY ACTUATED PHASE FOR WHICH THERE IS NO CALL SHALL BE SKIPPED.
2. WHEN ONE PHASE IS ON ALONE, ANY NONCONFLICTING PHASE MAY START TIMING CONCURRENTLY WITHOUT A CLEARANCE INTERVAL. (SEE CHART 1 AT LEFT.)
3. WHEN OPPOSING THRU PHASES ARE TIMING CONCURRENTLY THEY SHALL TERMINATE TOGETHER DUE TO PERMISSIVE LEFT TURN CONFLICT.

** CLEARANCE TO A PHASE IN CONFLICT WITH THIS PHASE ON (SEE CHART 1)

BUSINESS 51 (POST ROAD) &
ROOSEVELT ROAD
VILLAGE OF PLOVER
PORTAGE COUNTY

SIGNAL NO.

CONTROLLER TYPE: TEMP

DATE Ø7/15

PAGE NO. 9 OF 9

2

LEGEND

- WORK AREA
- SIGNAL HEAD, OVERHEAD MOUNT
- PEDESTRIAN SIGNAL HEAD WITH PUSH BUTTON
- CLASS 4 WOOD POLE
- 4x4 WOOD POST
- CABLE - OVERHEAD
- TEMPORARY LUMINAIRE 250W HPS
- APPROXIMATE DETECTION ZONE
- SIGNAL HEAD NUMBER
- (R) RED CIRCULAR INDICATOR
- (Y) YELLOW CIRCULAR INDICATOR
- (G) GREEN CIRCULAR INDICATOR
- (R) RED ARROW (LEFT)
- (Y) YELLOW ARROW (LEFT)
- (FY) FLASHING YELLOW ARROW (LEFT)
- (G) GREEN ARROW (LEFT)
- WALK/DON'T WALK INDICATOR 16" (COUNTDOWN TIMER)
- TRAFFIC SIGNAL HEAD TO BE COVERED AND DE-ENERGIZED
- * COVER AND DE-ENERGIZE PEDESTRIAN TRAFFIC SIGNAL FACE(S) IF PEDESTRIAN ACCESS IS NOT ALLOWED WITHIN THE WORKZONE AND/OR SIDEWALK IS CLOSED.
- LANE DESIGNATION (FOR REFERENCE ONLY)

NOTES: ALL LENSES ARE 12-INCH, GRAYSHADE REPRESENTS EXISTING

CONSTRUCTION NOTES:

1. FINAL LOCATION OF SIGNAL POLES, SPAN WIRE, CONTROLLER, AND HEADS SHALL BE APPROVED BY THE ENGINEER. BAG ALL UNUSED HEADS.
2. GUYING OF POLES SHALL BE AS APPROVED BY THE ENGINEER.
3. THE LOCATIONS OF EXISTING AND PROPOSED UTILITY INSTALLATIONS ARE APPROXIMATE. THERE MAY BE OTHER UTILITY INSTALLATIONS WITHIN THE PROJECT WHICH ARE NOT SHOWN.
4. ALL TEMPORARY TRAFFIC SIGNAL INSTALLATIONS, MATERIALS, AND OPERATIONS SHALL BE IN ACCORDANCE WITH STANDARD DESIGN DETAILS FOR "SPAN WIRE TEMPORARY TRAFFIC SIGNAL".
5. CONTRACTOR TO PROVIDE TEMPORARY DETECTION SYSTEM WHICH WILL DETECT TRAFFIC AT THE TEMPORARY STOP BAR AND OTHER LOCATIONS AS INDICATED ON THE PLANS AND AS DIRECTED BY THE ENGINEER. THE INDIVIDUAL DETECTION ZONE LOCATIONS SHALL BE ADJUSTED TO REFLECT ACTUAL FIELD CONDIDITONS

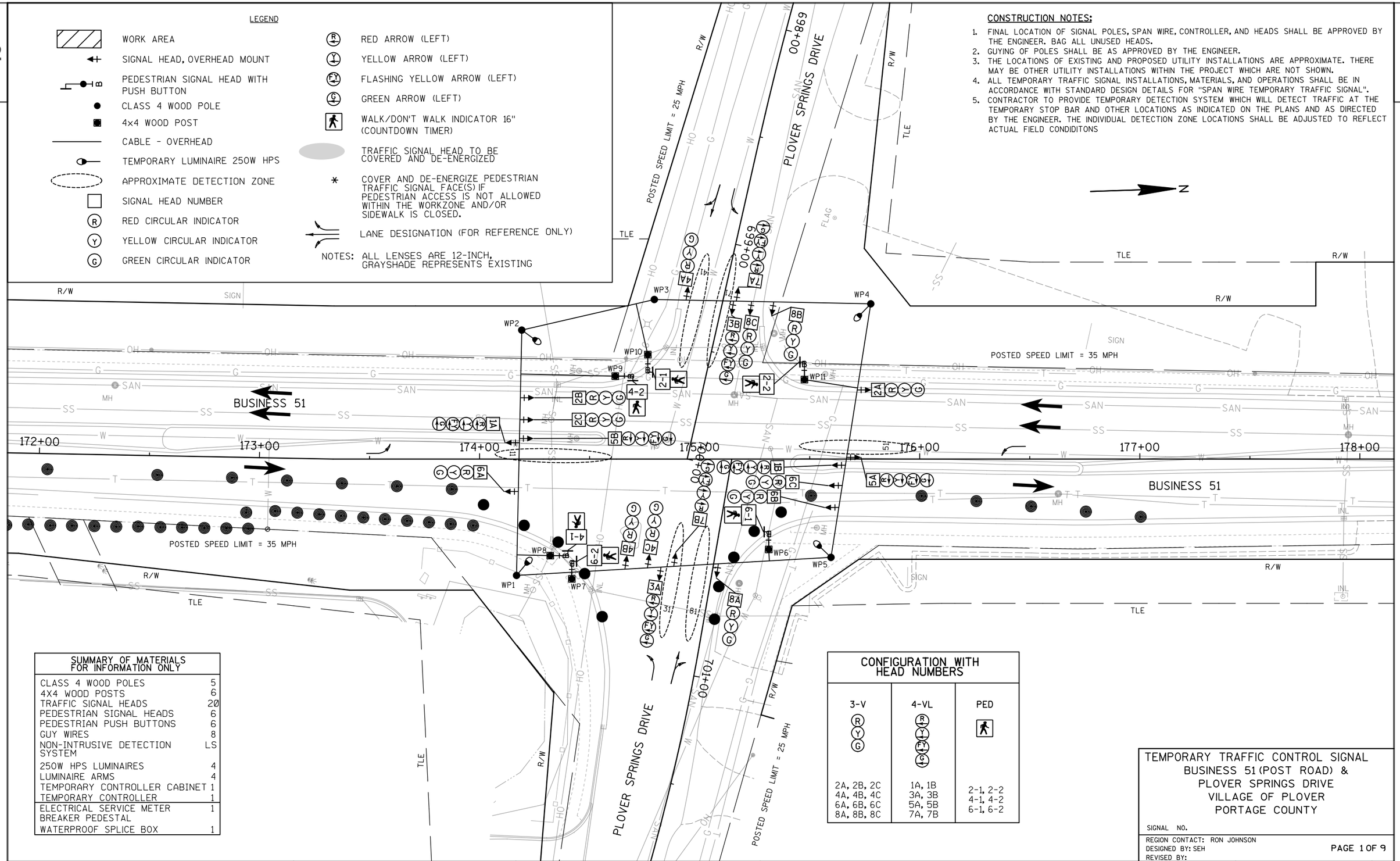

SUMMARY OF MATERIALS FOR INFORMATION ONLY	
CLASS 4 WOOD POLES	5
4X4 WOOD POSTS	6
TRAFFIC SIGNAL HEADS	20
PEDESTRIAN SIGNAL HEADS	6
PEDESTRIAN PUSH BUTTONS	6
GUY WIRES	8
NON-INTRUSIVE DETECTION SYSTEM	LS
250W HPS LUMINAIRES	4
LUMINAIRE ARMS	4
TEMPORARY CONTROLLER CABINET	1
TEMPORARY CONTROLLER	1
ELECTRICAL SERVICE METER BREAKER PEDESTAL	1
WATERPROOF SPLICE BOX	1

CONFIGURATION WITH HEAD NUMBERS		
3-V	4-VL	PED
2A, 2B, 2C 4A, 4B, 4C 6A, 6B, 6C 8A, 8B, 8C	1A, 1B 3A, 3B 5A, 5B 7A, 7B	2-1, 2-2 4-1, 4-2 6-1, 6-2

TEMPORARY TRAFFIC CONTROL SIGNAL
BUSINESS 51 (POST ROAD) &
PLOVER SPRINGS DRIVE
VILLAGE OF PLOVER
PORTAGE COUNTY

SIGNAL NO.

REGION CONTACT: RON JOHNSON
DESIGNED BY: SEH
REVISED BY:

PAGE 1 OF 9

PROJECT NO: 6414-00-78	HWY: BUSINESS 51	COUNTY: PORTAGE	TEMPORARY TRAFFIC SIGNAL PLAN - STAGE 1A	SHEET 128	E

2

LEGEND

- WORK AREA
- SIGNAL HEAD, OVERHEAD MOUNT
- PEDESTRIAN SIGNAL HEAD WITH PUSH BUTTON
- CLASS 4 WOOD POLE
- 4x4 WOOD POST
- CABLE - OVERHEAD
- TEMPORARY LUMINAIRE 250W HPS
- APPROXIMATE DETECTION ZONE
- SIGNAL HEAD NUMBER
- (R) RED CIRCULAR INDICATOR
- (Y) YELLOW CIRCULAR INDICATOR
- (G) GREEN CIRCULAR INDICATOR
- (R) RED ARROW (LEFT)
- (Y) YELLOW ARROW (LEFT)
- (FY) FLASHING YELLOW ARROW (LEFT)
- (G) GREEN ARROW (LEFT)
- WALK/DON'T WALK INDICATOR 16" (COUNTDOWN TIMER)
- TRAFFIC SIGNAL HEAD TO BE COVERED AND DE-ENERGIZED
- * COVER AND DE-ENERGIZE PEDESTRIAN TRAFFIC SIGNAL FACE(S) IF PEDESTRIAN ACCESS IS NOT ALLOWED WITHIN THE WORKZONE AND/OR SIDEWALK IS CLOSED.
- LANE DESIGNATION (FOR REFERENCE ONLY)

NOTES: ALL LENSES ARE 12-INCH, GRAYSHADE REPRESENTS EXISTING

CONSTRUCTION NOTES:

1. FINAL LOCATION OF SIGNAL POLES, SPAN WIRE, CONTROLLER, AND HEADS SHALL BE APPROVED BY THE ENGINEER. BAG ALL UNUSED HEADS.
2. GUYING OF POLES SHALL BE AS APPROVED BY THE ENGINEER.
3. THE LOCATIONS OF EXISTING AND PROPOSED UTILITY INSTALLATIONS ARE APPROXIMATE. THERE MAY BE OTHER UTILITY INSTALLATIONS WITHIN THE PROJECT WHICH ARE NOT SHOWN.
4. ALL TEMPORARY TRAFFIC SIGNAL INSTALLATIONS, MATERIALS, AND OPERATIONS SHALL BE IN ACCORDANCE WITH STANDARD DESIGN DETAILS FOR "SPAN WIRE TEMPORARY TRAFFIC SIGNAL".
5. CONTRACTOR TO PROVIDE TEMPORARY DETECTION SYSTEM WHICH WILL DETECT TRAFFIC AT THE TEMPORARY STOP BAR AND OTHER LOCATIONS AS INDICATED ON THE PLANS AND AS DIRECTED BY THE ENGINEER. THE INDIVIDUAL DETECTION ZONE LOCATIONS SHALL BE ADJUSTED TO REFLECT ACTUAL FIELD CONDIDITONS

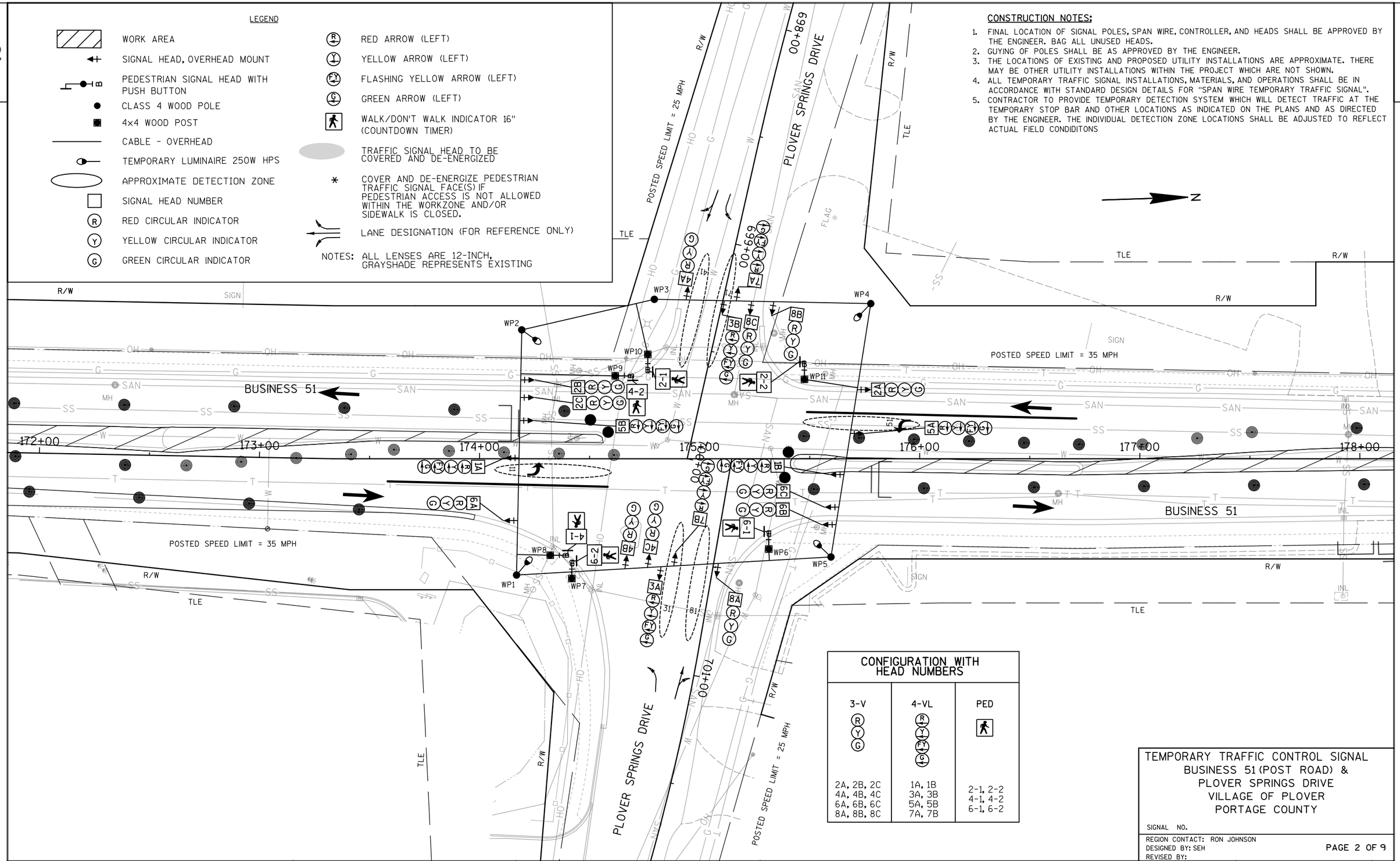

CONFIGURATION WITH HEAD NUMBERS		
3-V	4-VL	PED
(R) (Y) (G)	(R) (Y) (FY) (G)	
2A, 2B, 2C 4A, 4B, 4C 6A, 6B, 6C 8A, 8B, 8C	1A, 1B 3A, 3B 5A, 5B 7A, 7B	2-1, 2-2 4-1, 4-2 6-1, 6-2

TEMPORARY TRAFFIC CONTROL SIGNAL
BUSINESS 51 (POST ROAD) &
PLOVER SPRINGS DRIVE
VILLAGE OF PLOVER
PORTAGE COUNTY

SIGNAL NO.

REGION CONTACT: RON JOHNSON
DESIGNED BY: SEH
REVISED BY:

PAGE 2 OF 9

PROJECT NO: 6414-00-78	HWY: BUSINESS 51	COUNTY: PORTAGE	TEMPORARY TRAFFIC SIGNAL PLAN - STAGE 1B	SHEET 129	E

2

LEGEND

- WORK AREA
- SIGNAL HEAD, OVERHEAD MOUNT
- PEDESTRIAN SIGNAL HEAD WITH PUSH BUTTON
- CLASS 4 WOOD POLE
- 4x4 WOOD POST
- CABLE - OVERHEAD
- TEMPORARY LUMINAIRE 250W HPS
- APPROXIMATE DETECTION ZONE
- SIGNAL HEAD NUMBER
- (R) RED CIRCULAR INDICATOR
- (Y) YELLOW CIRCULAR INDICATOR
- (G) GREEN CIRCULAR INDICATOR
- (R) RED ARROW (LEFT)
- (Y) YELLOW ARROW (LEFT)
- (FY) FLASHING YELLOW ARROW (LEFT)
- (G) GREEN ARROW (LEFT)
- WALK/DON'T WALK INDICATOR 16" (COUNTDOWN TIMER)
- TRAFFIC SIGNAL HEAD TO BE COVERED AND DE-ENERGIZED
- * COVER AND DE-ENERGIZE PEDESTRIAN TRAFFIC SIGNAL FACE(S) IF PEDESTRIAN ACCESS IS NOT ALLOWED WITHIN THE WORKZONE AND/OR SIDEWALK IS CLOSED.
- LANE DESIGNATION (FOR REFERENCE ONLY)

NOTES: ALL LENSES ARE 12-INCH, GRAYSHADE REPRESENTS EXISTING

CONSTRUCTION NOTES:

1. FINAL LOCATION OF SIGNAL POLES, SPAN WIRE, CONTROLLER, AND HEADS SHALL BE APPROVED BY THE ENGINEER. BAG ALL UNUSED HEADS.
2. GUYING OF POLES SHALL BE AS APPROVED BY THE ENGINEER.
3. THE LOCATIONS OF EXISTING AND PROPOSED UTILITY INSTALLATIONS ARE APPROXIMATE. THERE MAY BE OTHER UTILITY INSTALLATIONS WITHIN THE PROJECT WHICH ARE NOT SHOWN.
4. ALL TEMPORARY TRAFFIC SIGNAL INSTALLATIONS, MATERIALS, AND OPERATIONS SHALL BE IN ACCORDANCE WITH STANDARD DESIGN DETAILS FOR "SPAN WIRE TEMPORARY TRAFFIC SIGNAL".
5. CONTRACTOR TO PROVIDE TEMPORARY DETECTION SYSTEM WHICH WILL DETECT TRAFFIC AT THE TEMPORARY STOP BAR AND OTHER LOCATIONS AS INDICATED ON THE PLANS AND AS DIRECTED BY THE ENGINEER. THE INDIVIDUAL DETECTION ZONE LOCATIONS SHALL BE ADJUSTED TO REFLECT ACTUAL FIELD CONDIDITONS

2

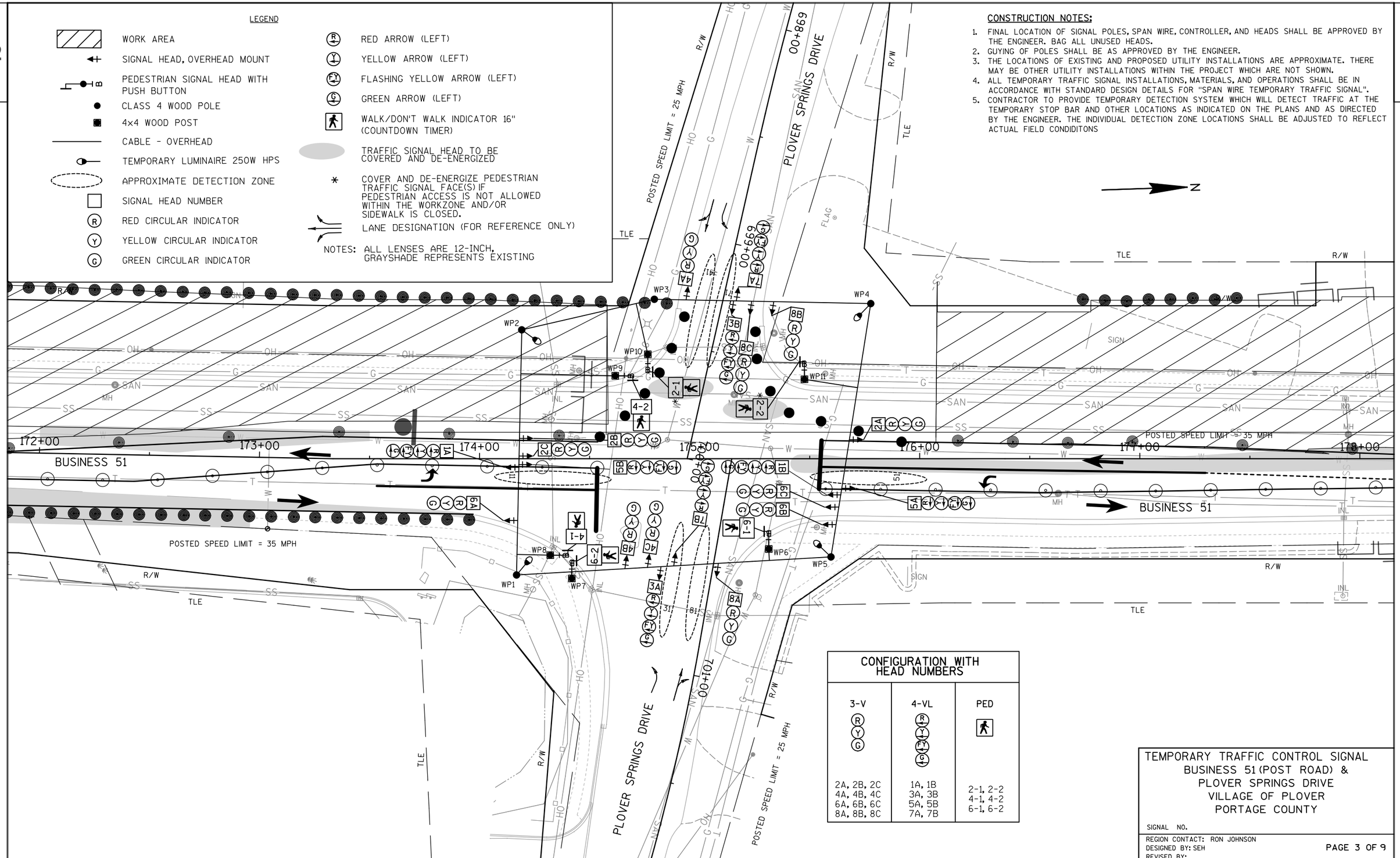

CONFIGURATION WITH HEAD NUMBERS

3-V	4-VL	PED
(R) (Y) (G)	(FY) (Y) (FY) (G)	
2A, 2B, 2C 4A, 4B, 4C 6A, 6B, 6C 8A, 8B, 8C	1A, 1B 3A, 3B 5A, 5B 7A, 7B	2-1, 2-2 4-1, 4-2 6-1, 6-2

TEMPORARY TRAFFIC CONTROL SIGNAL
BUSINESS 51 (POST ROAD) &
PLOVER SPRINGS DRIVE
VILLAGE OF PLOVER
PORTAGE COUNTY

SIGNAL NO.

REGION CONTACT: RON JOHNSON
DESIGNED BY: SEH
REVISED BY:

PAGE 3 OF 9

PROJECT NO: 6414-00-78	HWY: BUSINESS 51	COUNTY: PORTAGE	TEMPORARY TRAFFIC SIGNAL PLAN - STAGE 2A	SHEET 130	E

2

LEGEND

- WORK AREA
- SIGNAL HEAD, OVERHEAD MOUNT
- PEDESTRIAN SIGNAL HEAD WITH PUSH BUTTON
- CLASS 4 WOOD POLE
- 4x4 WOOD POST
- CABLE - OVERHEAD
- TEMPORARY LUMINAIRE 250W HPS
- APPROXIMATE DETECTION ZONE
- SIGNAL HEAD NUMBER
- (R) RED CIRCULAR INDICATOR
- (Y) YELLOW CIRCULAR INDICATOR
- (G) GREEN CIRCULAR INDICATOR
- (R) RED ARROW (LEFT)
- (Y) YELLOW ARROW (LEFT)
- (FY) FLASHING YELLOW ARROW (LEFT)
- (G) GREEN ARROW (LEFT)
- WALK/DON'T WALK INDICATOR 16" (COUNTDOWN TIMER)
- TRAFFIC SIGNAL HEAD TO BE COVERED AND DE-ENERGIZED
- * COVER AND DE-ENERGIZE PEDESTRIAN TRAFFIC SIGNAL FACE(S) IF PEDESTRIAN ACCESS IS NOT ALLOWED WITHIN THE WORKZONE AND/OR SIDEWALK IS CLOSED.
- LANE DESIGNATION (FOR REFERENCE ONLY)

NOTES: ALL LENSES ARE 12-INCH, GRAYSHADE REPRESENTS EXISTING

CONSTRUCTION NOTES:

1. FINAL LOCATION OF SIGNAL POLES, SPAN WIRE, CONTROLLER, AND HEADS SHALL BE APPROVED BY THE ENGINEER. BAG ALL UNUSED HEADS.
2. GUYING OF POLES SHALL BE AS APPROVED BY THE ENGINEER.
3. THE LOCATIONS OF EXISTING AND PROPOSED UTILITY INSTALLATIONS ARE APPROXIMATE. THERE MAY BE OTHER UTILITY INSTALLATIONS WITHIN THE PROJECT WHICH ARE NOT SHOWN.
4. ALL TEMPORARY TRAFFIC SIGNAL INSTALLATIONS, MATERIALS, AND OPERATIONS SHALL BE IN ACCORDANCE WITH STANDARD DESIGN DETAILS FOR "SPAN WIRE TEMPORARY TRAFFIC SIGNAL".
5. CONTRACTOR TO PROVIDE TEMPORARY DETECTION SYSTEM WHICH WILL DETECT TRAFFIC AT THE TEMPORARY STOP BAR AND OTHER LOCATIONS AS INDICATED ON THE PLANS AND AS DIRECTED BY THE ENGINEER. THE INDIVIDUAL DETECTION ZONE LOCATIONS SHALL BE ADJUSTED TO REFLECT ACTUAL FIELD CONDIDITONS

2

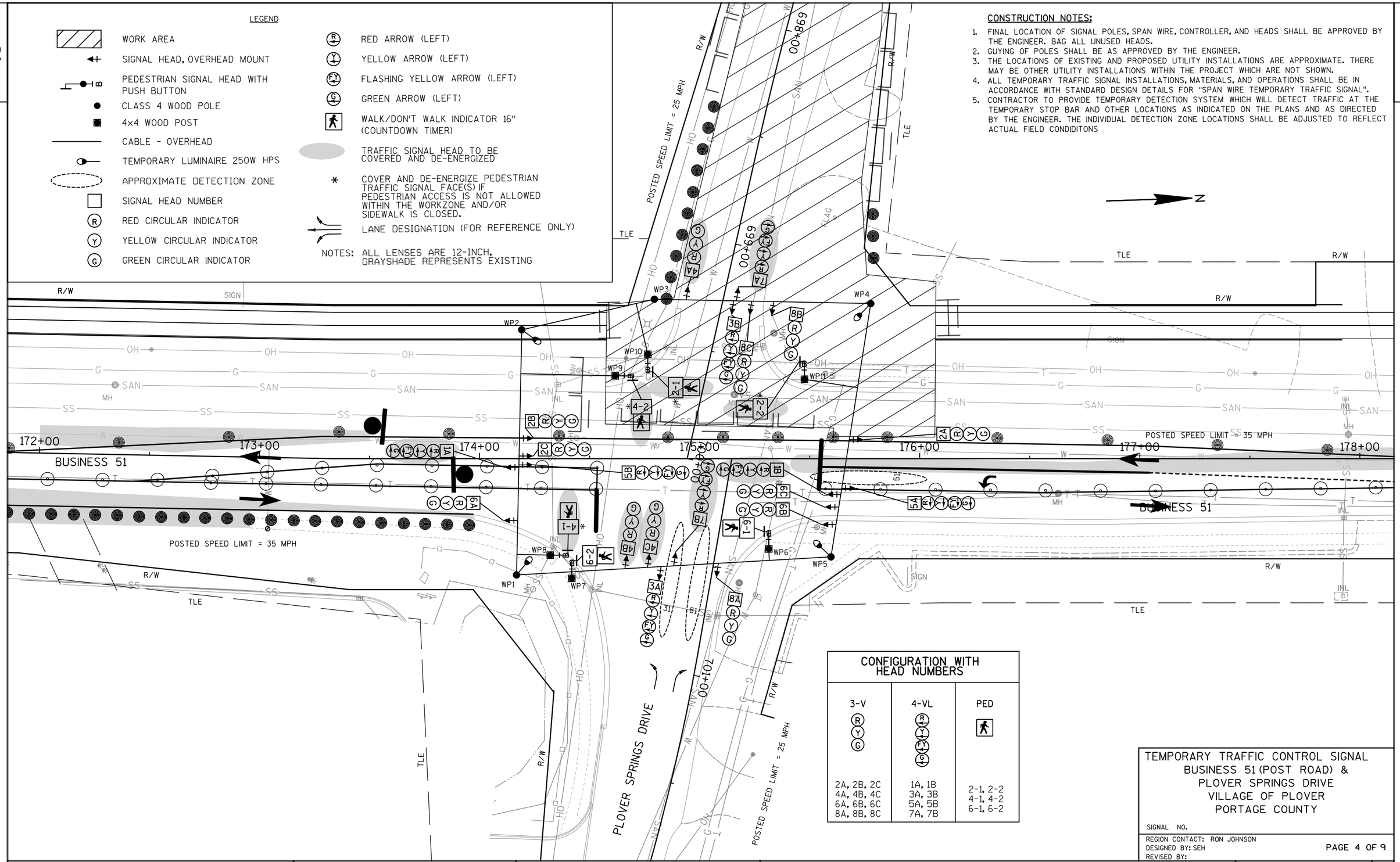

CONFIGURATION WITH HEAD NUMBERS

3-V	4-VL	PED
(R) (Y) (G)	(R) (Y) (FY) (G)	
2A, 2B, 2C 4A, 4B, 4C 6A, 6B, 6C 8A, 8B, 8C	1A, 1B 3A, 3B 5A, 5B 7A, 7B	2-1, 2-2 4-1, 4-2 6-1, 6-2

TEMPORARY TRAFFIC CONTROL SIGNAL
BUSINESS 51 (POST ROAD) &
PLOVER SPRINGS DRIVE
VILLAGE OF PLOVER
PORTAGE COUNTY

SIGNAL NO.

REGION CONTACT: RON JOHNSON
DESIGNED BY: SEH
REVISED BY:

PAGE 4 OF 9

PROJECT NO: 6414-00-78	HWY: BUSINESS 51	COUNTY: PORTAGE	TEMPORARY TRAFFIC SIGNAL PLAN - STAGE 2B	SHEET 131	E

2

LEGEND

- WORK AREA
- SIGNAL HEAD, OVERHEAD MOUNT
- PEDESTRIAN SIGNAL HEAD WITH PUSH BUTTON
- CLASS 4 WOOD POLE
- 4x4 WOOD POST
- CABLE - OVERHEAD
- TEMPORARY LUMINAIRE 250W HPS
- APPROXIMATE DETECTION ZONE
- SIGNAL HEAD NUMBER
- (R) RED CIRCULAR INDICATOR
- (Y) YELLOW CIRCULAR INDICATOR
- (G) GREEN CIRCULAR INDICATOR
- (R) RED ARROW (LEFT)
- (Y) YELLOW ARROW (LEFT)
- (FY) FLASHING YELLOW ARROW (LEFT)
- (G) GREEN ARROW (LEFT)
- WALK/DON'T WALK INDICATOR 16" (COUNTDOWN TIMER)
- (S) TEMPORARY STOP SIGN
- TRAFFIC SIGNAL HEAD TO BE COVERED AND DE-ENERGIZED
- * COVER AND DE-ENERGIZE PEDESTRIAN TRAFFIC SIGNAL FACE(S) IF PEDESTRIAN ACCESS IS NOT ALLOWED WITHIN THE WORKZONE AND/OR SIDEWALK IS CLOSED.
- LANE DESIGNATION (FOR REFERENCE ONLY)

NOTES: ALL LENSES ARE 12-INCH, GRAYSHADE REPRESENTS EXISTING

CONSTRUCTION NOTES:

1. FINAL LOCATION OF SIGNAL POLES, SPAN WIRE, CONTROLLER, AND HEADS SHALL BE APPROVED BY THE ENGINEER. BAG ALL UNUSED HEADS.
2. GUYING OF POLES SHALL BE AS APPROVED BY THE ENGINEER.
3. THE LOCATIONS OF EXISTING AND PROPOSED UTILITY INSTALLATIONS ARE APPROXIMATE. THERE MAY BE OTHER UTILITY INSTALLATIONS WITHIN THE PROJECT WHICH ARE NOT SHOWN.
4. ALL TEMPORARY TRAFFIC SIGNAL INSTALLATIONS, MATERIALS, AND OPERATIONS SHALL BE IN ACCORDANCE WITH STANDARD DESIGN DETAILS FOR "SPAN WIRE TEMPORARY TRAFFIC SIGNAL".
5. CONTRACTOR TO PROVIDE TEMPORARY DETECTION SYSTEM WHICH WILL DETECT TRAFFIC AT THE TEMPORARY STOP BAR AND OTHER LOCATIONS AS INDICATED ON THE PLANS AND AS DIRECTED BY THE ENGINEER. THE INDIVIDUAL DETECTION ZONE LOCATIONS SHALL BE ADJUSTED TO REFLECT ACTUAL FIELD CONDIDITONS

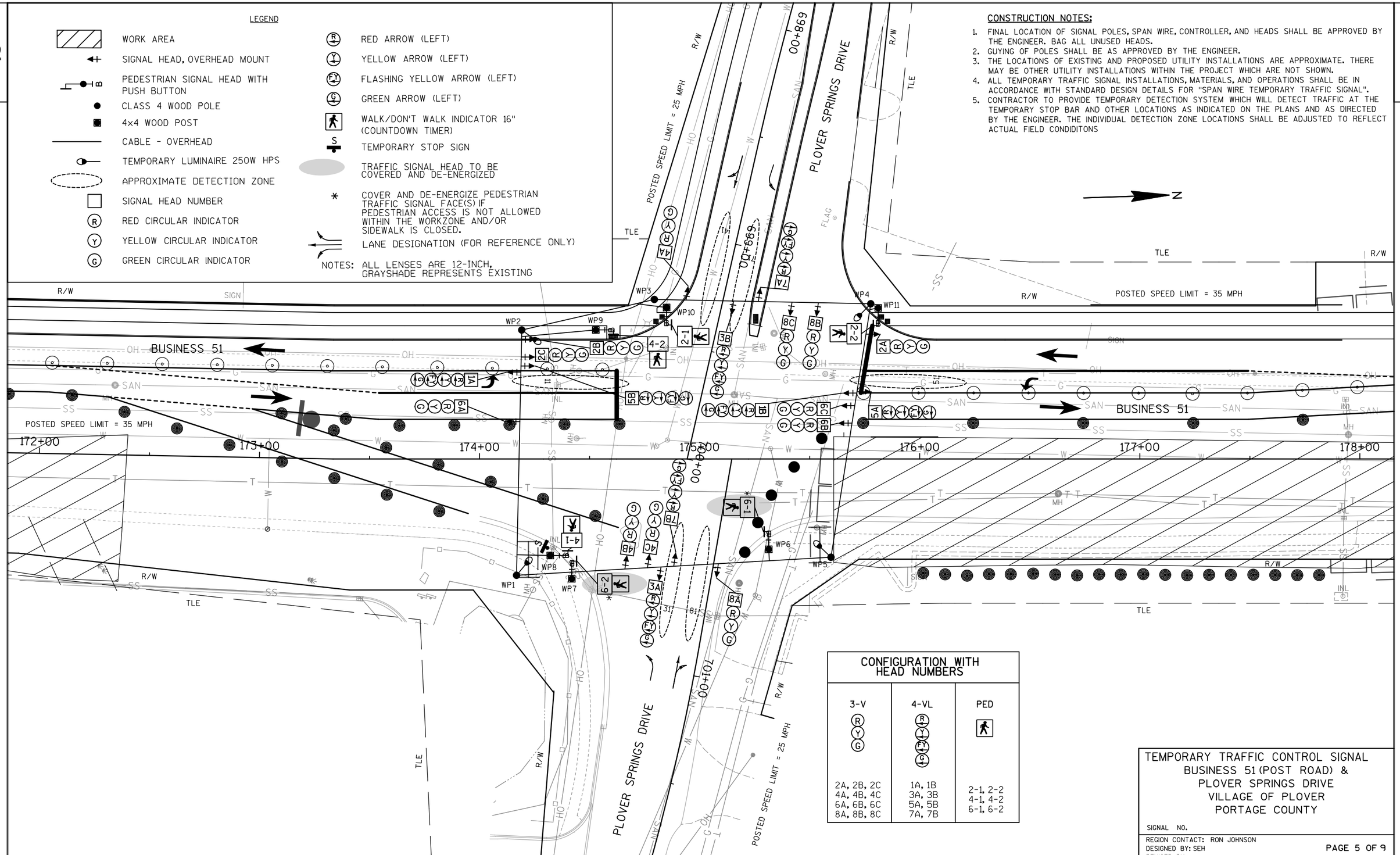

CONFIGURATION WITH HEAD NUMBERS		
3-V	4-VL	PED
(R) (Y) (G)	(R) (Y) (FY) (G)	
2A, 2B, 2C 4A, 4B, 4C 6A, 6B, 6C 8A, 8B, 8C	1A, 1B 3A, 3B 5A, 5B 7A, 7B	2-1, 2-2 4-1, 4-2 6-1, 6-2

TEMPORARY TRAFFIC CONTROL SIGNAL
BUSINESS 51 (POST ROAD) &
PLOVER SPRINGS DRIVE
VILLAGE OF PLOVER
PORTAGE COUNTY

SIGNAL NO.

REGION CONTACT: RON JOHNSON
DESIGNED BY: SEH
REVISED BY:

PAGE 5 OF 9

PROJECT NO: 6414-00-78	HWY: BUSINESS 51	COUNTY: PORTAGE	TEMPORARY TRAFFIC SIGNAL PLAN - STAGE 3A	SHEET 132	E

FILE NAME : H:\UZ\W\Witnc\112545\5-final-dsgn\51-drawings\40-TransHwy\023933a_sp_tmp.dgn PLOT TIME : 6:14:02 AM PLOT DATE : 7/31/2015 PLOT BY : SEH INC PLOT NAME : PLOT SCALE : Invalid expression

WISDOT/CADDS SHEET 42

2

LEGEND

- WORK AREA
- SIGNAL HEAD, OVERHEAD MOUNT
- PEDESTRIAN SIGNAL HEAD WITH PUSH BUTTON
- CLASS 4 WOOD POLE
- 4x4 WOOD POST
- CABLE - OVERHEAD
- TEMPORARY LUMINAIRE 250W HPS
- APPROXIMATE DETECTION ZONE
- SIGNAL HEAD NUMBER
- (R) RED CIRCULAR INDICATOR
- (Y) YELLOW CIRCULAR INDICATOR
- (G) GREEN CIRCULAR INDICATOR
- (R) RED ARROW (LEFT)
- (Y) YELLOW ARROW (LEFT)
- (FY) FLASHING YELLOW ARROW (LEFT)
- (G) GREEN ARROW (LEFT)
- WALK/DON'T WALK INDICATOR 16" (COUNTDOWN TIMER)
- TRAFFIC SIGNAL HEAD TO BE COVERED AND DE-ENERGIZED
- * COVER AND DE-ENERGIZE PEDESTRIAN TRAFFIC SIGNAL FACE(S) IF PEDESTRIAN ACCESS IS NOT ALLOWED WITHIN THE WORKZONE AND/OR SIDEWALK IS CLOSED.
- LANE DESIGNATION (FOR REFERENCE ONLY)

NOTES: ALL LENSES ARE 12-INCH, GRAYSHADE REPRESENTS EXISTING

CONSTRUCTION NOTES:

1. FINAL LOCATION OF SIGNAL POLES, SPAN WIRE, CONTROLLER, AND HEADS SHALL BE APPROVED BY THE ENGINEER. BAG ALL UNUSED HEADS.
2. GUYING OF POLES SHALL BE AS APPROVED BY THE ENGINEER.
3. THE LOCATIONS OF EXISTING AND PROPOSED UTILITY INSTALLATIONS ARE APPROXIMATE. THERE MAY BE OTHER UTILITY INSTALLATIONS WITHIN THE PROJECT WHICH ARE NOT SHOWN.
4. ALL TEMPORARY TRAFFIC SIGNAL INSTALLATIONS, MATERIALS, AND OPERATIONS SHALL BE IN ACCORDANCE WITH STANDARD DESIGN DETAILS FOR "SPAN WIRE TEMPORARY TRAFFIC SIGNAL".
5. CONTRACTOR TO PROVIDE TEMPORARY DETECTION SYSTEM WHICH WILL DETECT TRAFFIC AT THE TEMPORARY STOP BAR AND OTHER LOCATIONS AS INDICATED ON THE PLANS AND AS DIRECTED BY THE ENGINEER. THE INDIVIDUAL DETECTION ZONE LOCATIONS SHALL BE ADJUSTED TO REFLECT ACTUAL FIELD CONDIDITONS

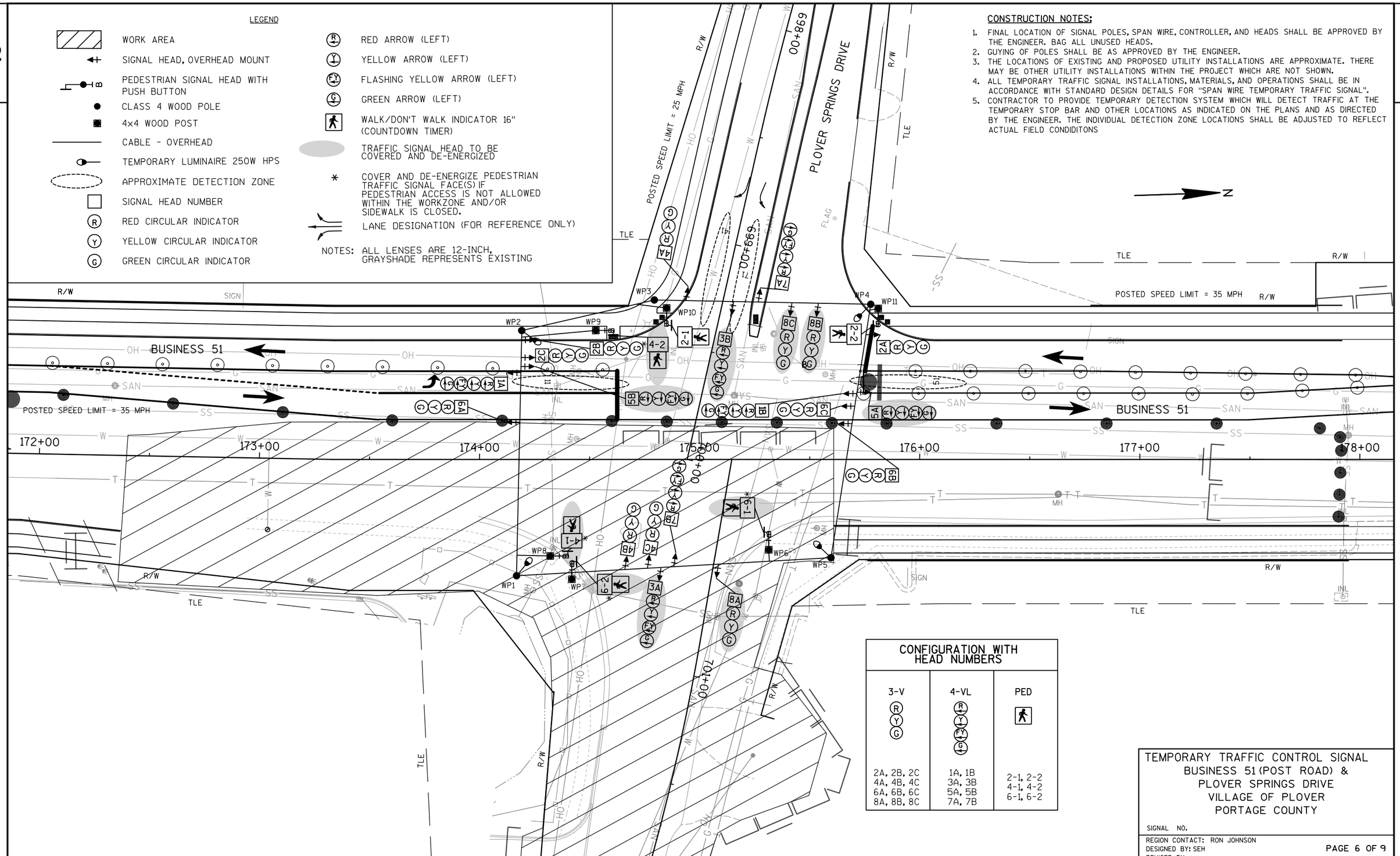

CONFIGURATION WITH HEAD NUMBERS

3-V	4-VL	PED
(R) (Y) (G)	(R) (Y) (FY) (G)	
2A, 2B, 2C 4A, 4B, 4C 6A, 6B, 6C 8A, 8B, 8C	1A, 1B 3A, 3B 5A, 5B 7A, 7B	2-1, 2-2 4-1, 4-2 6-1, 6-2

TEMPORARY TRAFFIC CONTROL SIGNAL
BUSINESS 51 (POST ROAD) &
PLOVER SPRINGS DRIVE
VILLAGE OF PLOVER
PORTAGE COUNTY

SIGNAL NO.

REGION CONTACT: RON JOHNSON
DESIGNED BY: SEH
REVISED BY:

PAGE 6 OF 9

PROJECT NO: 6414-00-78	HWY: BUSINESS 51	COUNTY: PORTAGE	TEMPORARY TRAFFIC SIGNAL PLAN - STAGE 3B	SHEET 133	E

2

LEGEND

- WORK AREA
- SIGNAL HEAD, OVERHEAD MOUNT
- PEDESTRIAN SIGNAL HEAD WITH PUSH BUTTON
- CLASS 4 WOOD POLE
- 4x4 WOOD POST
- CABLE - OVERHEAD
- TEMPORARY LUMINAIRE 250W HPS
- APPROXIMATE DETECTION ZONE
- SIGNAL HEAD NUMBER
- (R) RED CIRCULAR INDICATOR
- (Y) YELLOW CIRCULAR INDICATOR
- (G) GREEN CIRCULAR INDICATOR
- (R) RED ARROW (LEFT)
- (Y) YELLOW ARROW (LEFT)
- (FY) FLASHING YELLOW ARROW (LEFT)
- (G) GREEN ARROW (LEFT)
- WALK/DON'T WALK INDICATOR 16" (COUNTDOWN TIMER)
- TRAFFIC SIGNAL HEAD TO BE COVERED AND DE-ENERGIZED
- * COVER AND DE-ENERGIZE PEDESTRIAN TRAFFIC SIGNAL FACE(S) IF PEDESTRIAN ACCESS IS NOT ALLOWED WITHIN THE WORKZONE AND/OR SIDEWALK IS CLOSED.
- LANE DESIGNATION (FOR REFERENCE ONLY)

NOTES: ALL LENSES ARE 12-INCH, GRAYSHADE REPRESENTS EXISTING

CONSTRUCTION NOTES:

1. FINAL LOCATION OF SIGNAL POLES, SPAN WIRE, CONTROLLER, AND HEADS SHALL BE APPROVED BY THE ENGINEER. BAG ALL UNUSED HEADS.
2. GUYING OF POLES SHALL BE AS APPROVED BY THE ENGINEER.
3. THE LOCATIONS OF EXISTING AND PROPOSED UTILITY INSTALLATIONS ARE APPROXIMATE. THERE MAY BE OTHER UTILITY INSTALLATIONS WITHIN THE PROJECT WHICH ARE NOT SHOWN.
4. ALL TEMPORARY TRAFFIC SIGNAL INSTALLATIONS, MATERIALS, AND OPERATIONS SHALL BE IN ACCORDANCE WITH STANDARD DESIGN DETAILS FOR "SPAN WIRE TEMPORARY TRAFFIC SIGNAL".
5. CONTRACTOR TO PROVIDE TEMPORARY DETECTION SYSTEM WHICH WILL DETECT TRAFFIC AT THE TEMPORARY STOP BAR AND OTHER LOCATIONS AS INDICATED ON THE PLANS AND AS DIRECTED BY THE ENGINEER. THE INDIVIDUAL DETECTION ZONE LOCATIONS SHALL BE ADJUSTED TO REFLECT ACTUAL FIELD CONDIDITONS

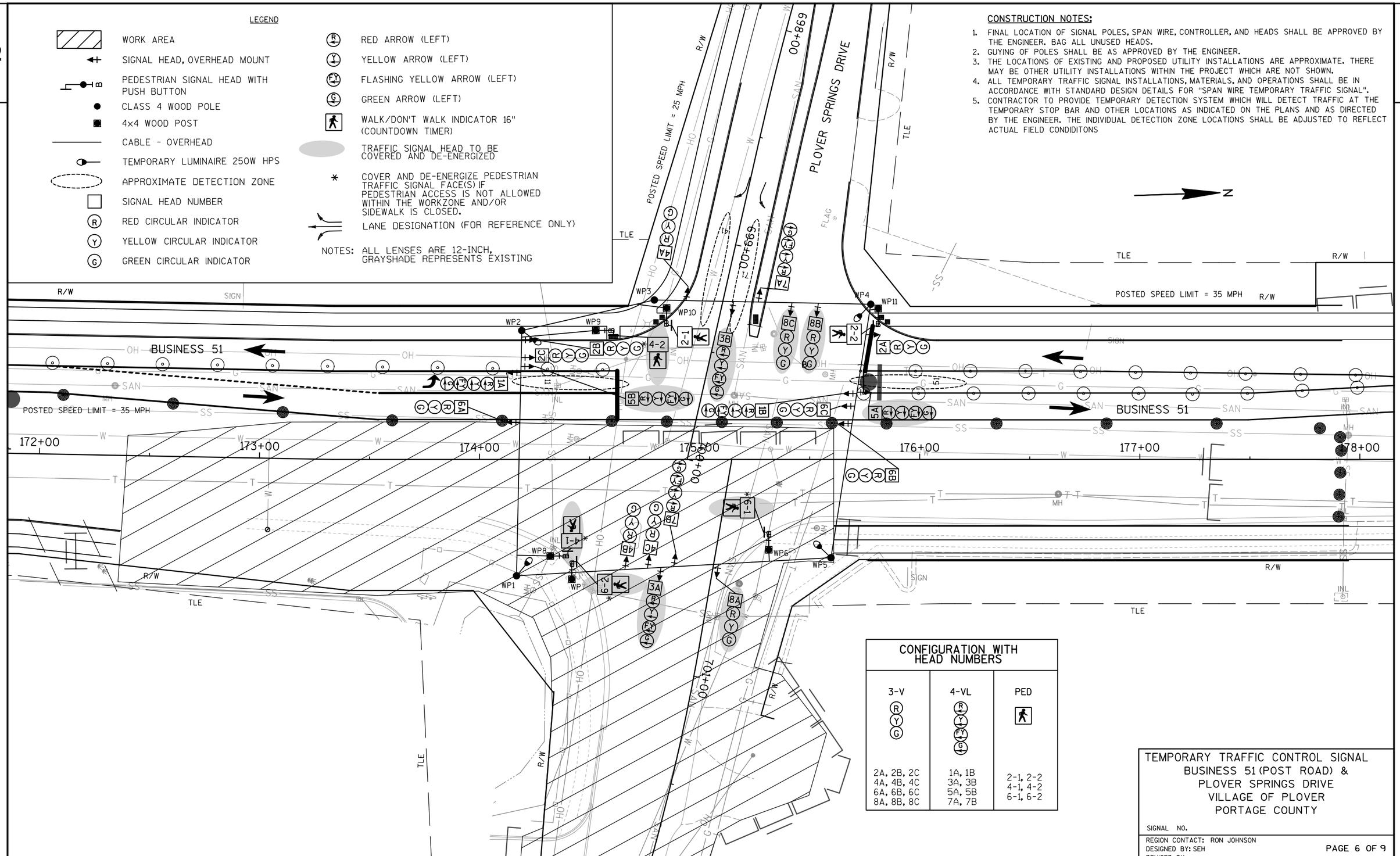

CONFIGURATION WITH HEAD NUMBERS

3-V	4-VL	PED
(R) (Y) (G)	(R) (Y) (FY) (G)	
2A, 2B, 2C 4A, 4B, 4C 6A, 6B, 6C 8A, 8B, 8C	1A, 1B 3A, 3B 5A, 5B 7A, 7B	2-1, 2-2 4-1, 4-2 6-1, 6-2

TEMPORARY TRAFFIC CONTROL SIGNAL
BUSINESS 51 (POST ROAD) &
PLOVER SPRINGS DRIVE
VILLAGE OF PLOVER
PORTAGE COUNTY

SIGNAL NO.

REGION CONTACT: RON JOHNSON
DESIGNED BY: SEH
REVISED BY:

PAGE 6 OF 9

PROJECT NO: 6414-00-78	HWY: BUSINESS 51	COUNTY: PORTAGE	TEMPORARY TRAFFIC SIGNAL PLAN - STAGE 3B	SHEET 134	E

2

LEGEND

- WORK AREA
- SIGNAL HEAD, OVERHEAD MOUNT
- PEDESTRIAN SIGNAL HEAD WITH PUSH BUTTON
- CLASS 4 WOOD POLE
- 4x4 WOOD POST
- CABLE - OVERHEAD
- TEMPORARY LUMINAIRE 250W HPS
- APPROXIMATE DETECTION ZONE
- SIGNAL HEAD NUMBER
- RED CIRCULAR INDICATOR
- YELLOW CIRCULAR INDICATOR
- GREEN CIRCULAR INDICATOR
- RED ARROW (LEFT)
- YELLOW ARROW (LEFT)
- FLASHING YELLOW ARROW (LEFT)
- GREEN ARROW (LEFT)
- WALK/DON'T WALK INDICATOR 16" (COUNTDOWN TIMER)
- TEMPORARY STOP SIGN
- TRAFFIC SIGNAL HEAD TO BE COVERED AND DE-ENERGIZED
- * COVER AND DE-ENERGIZE PEDESTRIAN TRAFFIC SIGNAL FACE(S) IF PEDESTRIAN ACCESS IS NOT ALLOWED WITHIN THE WORKZONE AND/OR SIDEWALK IS CLOSED.
- LANE DESIGNATION (FOR REFERENCE ONLY)

NOTES: ALL LENSES ARE 12-INCH, GRAYSHADE REPRESENTS EXISTING

CONSTRUCTION NOTES:

1. FINAL LOCATION OF SIGNAL POLES, SPAN WIRE, CONTROLLER, AND HEADS SHALL BE APPROVED BY THE ENGINEER. BAG ALL UNUSED HEADS.
2. GUYING OF POLES SHALL BE AS APPROVED BY THE ENGINEER.
3. THE LOCATIONS OF EXISTING AND PROPOSED UTILITY INSTALLATIONS ARE APPROXIMATE. THERE MAY BE OTHER UTILITY INSTALLATIONS WITHIN THE PROJECT WHICH ARE NOT SHOWN.
4. ALL TEMPORARY TRAFFIC SIGNAL INSTALLATIONS, MATERIALS, AND OPERATIONS SHALL BE IN ACCORDANCE WITH STANDARD DESIGN DETAILS FOR "SPAN WIRE TEMPORARY TRAFFIC SIGNAL".
5. CONTRACTOR TO PROVIDE TEMPORARY DETECTION SYSTEM WHICH WILL DETECT TRAFFIC AT THE TEMPORARY STOP BAR AND OTHER LOCATIONS AS INDICATED ON THE PLANS AND AS DIRECTED BY THE ENGINEER. THE INDIVIDUAL DETECTION ZONE LOCATIONS SHALL BE ADJUSTED TO REFLECT ACTUAL FIELD CONDIDITONS

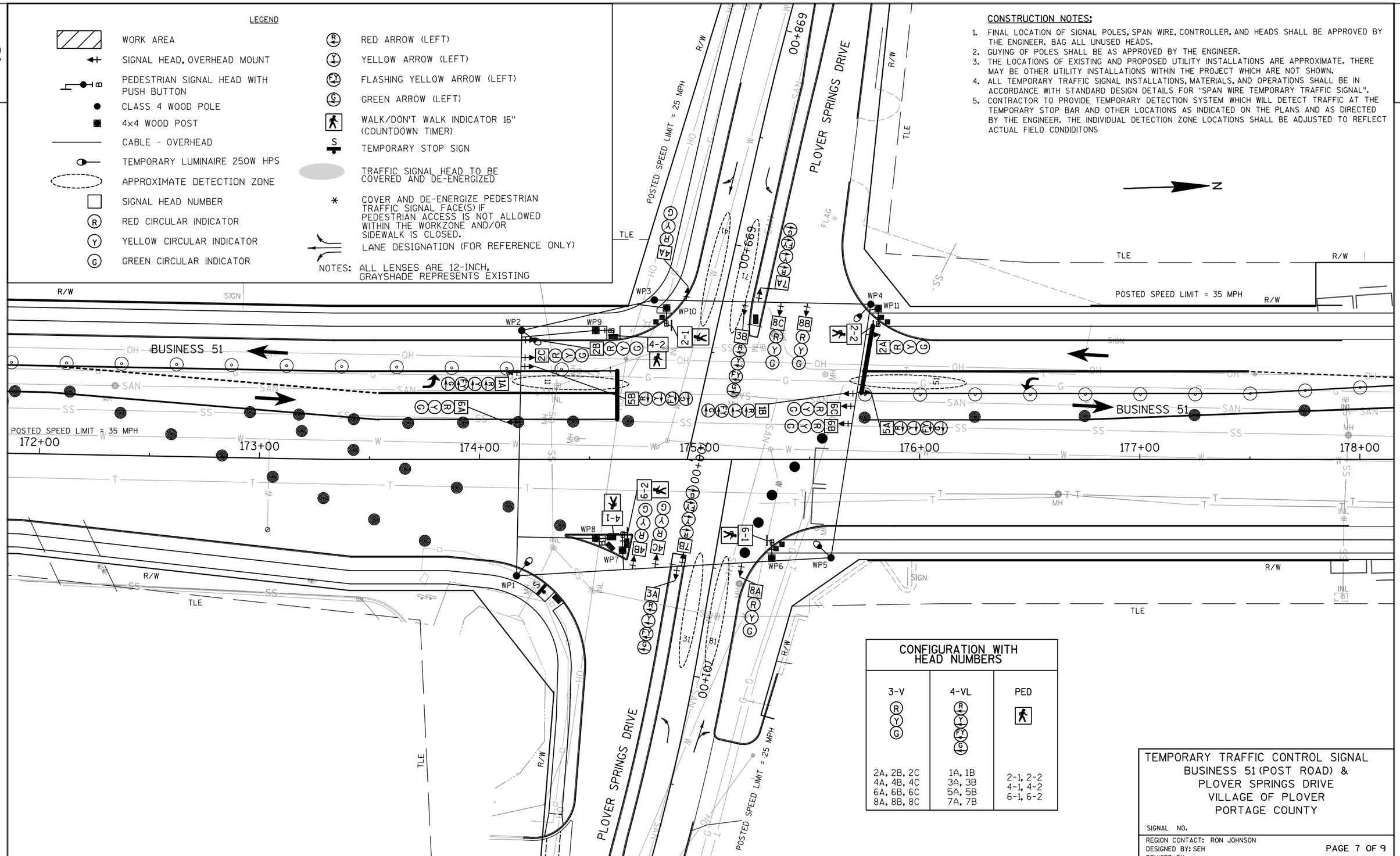

CONFIGURATION WITH HEAD NUMBERS

3-V	4-VL	PED
R Y G	R Y FY G	
2A, 2B, 2C 4A, 4B, 4C 6A, 6B, 6C 8A, 8B, 8C	1A, 1B 3A, 3B 5A, 5B 7A, 7B	2-1, 2-2 4-1, 4-2 6-1, 6-2

TEMPORARY TRAFFIC CONTROL SIGNAL
BUSINESS 51 (POST ROAD) &
PLOVER SPRINGS DRIVE
VILLAGE OF PLOVER
PORTAGE COUNTY

SIGNAL NO.

REGION CONTACT: RON JOHNSON
DESIGNED BY: SEH
REVISED BY:

PAGE 7 OF 9

PROJECT NO: 6414-00-78	HWY: BUSINESS 51	COUNTY: PORTAGE	TEMPORARY TRAFFIC SIGNAL PLAN - STAGE 3C	SHEET 135	E

2

LEGEND

- WORK AREA
- SIGNAL HEAD, OVERHEAD MOUNT
- PEDESTRIAN SIGNAL HEAD WITH PUSH BUTTON
- CLASS 4 WOOD POLE
- 4x4 WOOD POST
- CABLE - OVERHEAD
- TEMPORARY LUMINAIRE 250W HPS
- APPROXIMATE DETECTION ZONE
- SIGNAL HEAD NUMBER
- RED CIRCULAR INDICATOR
- YELLOW CIRCULAR INDICATOR
- GREEN CIRCULAR INDICATOR
- RED ARROW (LEFT)
- YELLOW ARROW (LEFT)
- FLASHING YELLOW ARROW (LEFT)
- GREEN ARROW (LEFT)
- WALK/DON'T WALK INDICATOR 16" (COUNTDOWN TIMER)
- TEMPORARY STOP SIGN
- TRAFFIC SIGNAL HEAD TO BE COVERED AND DE-ENERGIZED
- * COVER AND DE-ENERGIZE PEDESTRIAN TRAFFIC SIGNAL FACE(S) IF PEDESTRIAN ACCESS IS NOT ALLOWED WITHIN THE WORKZONE AND/OR SIDEWALK IS CLOSED.
- LANE DESIGNATION (FOR REFERENCE ONLY)

NOTES: ALL LENSES ARE 12-INCH, GRAYSHADE REPRESENTS EXISTING

CONSTRUCTION NOTES:

1. FINAL LOCATION OF SIGNAL POLES, SPAN WIRE, CONTROLLER, AND HEADS SHALL BE APPROVED BY THE ENGINEER. BAG ALL UNUSED HEADS.
2. GUYING OF POLES SHALL BE AS APPROVED BY THE ENGINEER.
3. THE LOCATIONS OF EXISTING AND PROPOSED UTILITY INSTALLATIONS ARE APPROXIMATE. THERE MAY BE OTHER UTILITY INSTALLATIONS WITHIN THE PROJECT WHICH ARE NOT SHOWN.
4. ALL TEMPORARY TRAFFIC SIGNAL INSTALLATIONS, MATERIALS, AND OPERATIONS SHALL BE IN ACCORDANCE WITH STANDARD DESIGN DETAILS FOR "SPAN WIRE TEMPORARY TRAFFIC SIGNAL".
5. CONTRACTOR TO PROVIDE TEMPORARY DETECTION SYSTEM WHICH WILL DETECT TRAFFIC AT THE TEMPORARY STOP BAR AND OTHER LOCATIONS AS INDICATED ON THE PLANS AND AS DIRECTED BY THE ENGINEER. THE INDIVIDUAL DETECTION ZONE LOCATIONS SHALL BE ADJUSTED TO REFLECT ACTUAL FIELD CONDIDITONS

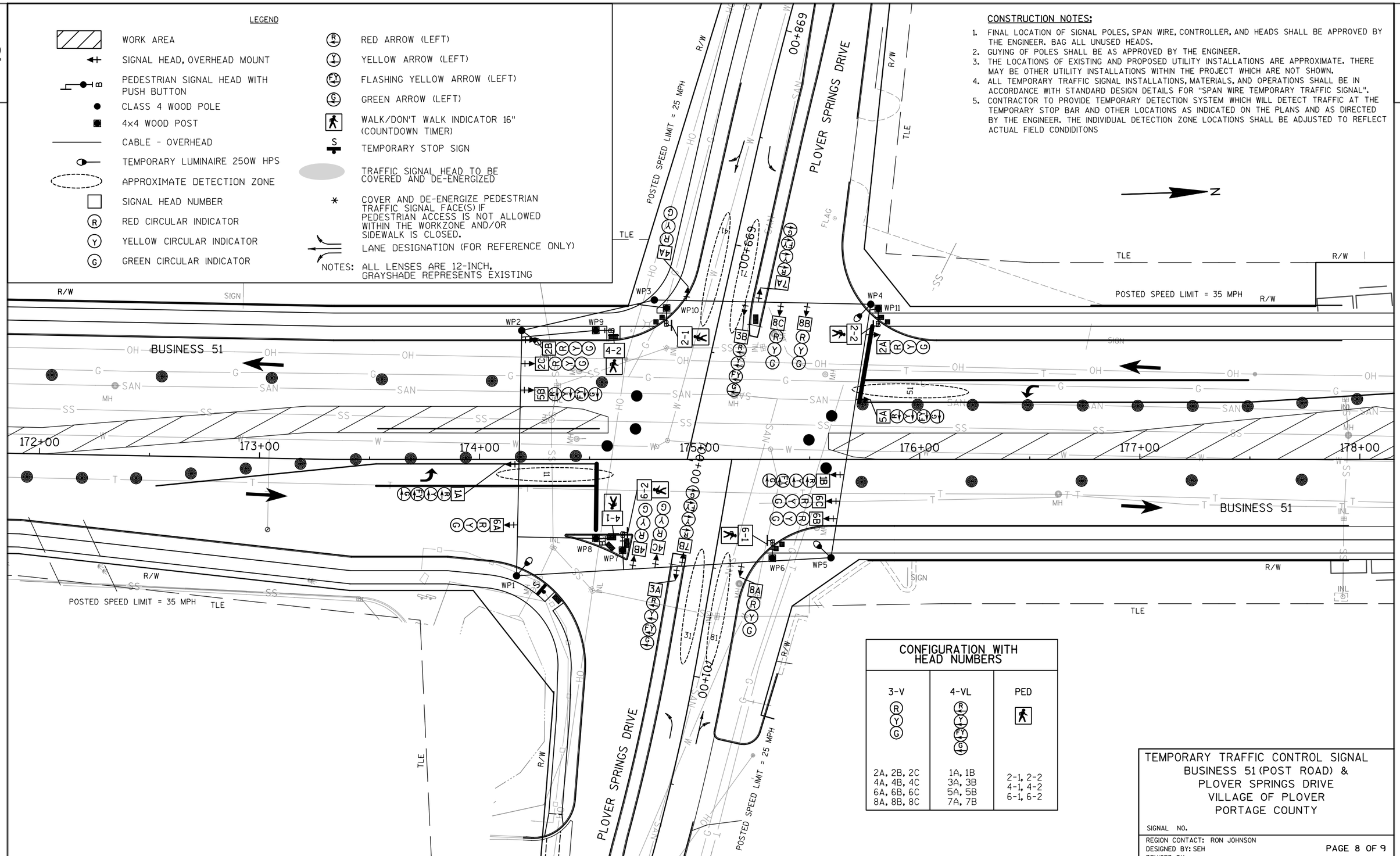

CONFIGURATION WITH HEAD NUMBERS

3-V	4-VL	PED
R Y G	R Y FY G	
2A, 2B, 2C 4A, 4B, 4C 6A, 6B, 6C 8A, 8B, 8C	1A, 1B 3A, 3B 5A, 5B 7A, 7B	2-1, 2-2 4-1, 4-2 6-1, 6-2

TEMPORARY TRAFFIC CONTROL SIGNAL
BUSINESS 51 (POST ROAD) &
PLOVER SPRINGS DRIVE
VILLAGE OF PLOVER
PORTAGE COUNTY

SIGNAL NO.

REGION CONTACT: RON JOHNSON
DESIGNED BY: SEH
REVISED BY:

PAGE 8 OF 9

PROJECT NO: 6414-00-78	HWY: BUSINESS 51	COUNTY: PORTAGE	TEMPORARY TRAFFIC SIGNAL PLAN - STAGE 4	SHEET 136	E

SEQUENCE OF OPERATION

RING 1

	HEAD NUMBERS	Ø1 R/W	Ø1 CLEAR TO **					Ø2 R/W	Ø2 CLEAR TO **					Ø3 R/W	Ø3 CLEAR TO **					Ø4 R/W	Ø4 CLEAR TO **					FLASH
Ø1	1A,1B,1C	G	-	-				-	-	-				-	-	-				-	-	-				-
Ø2	2A,2B,2C	R	R	R				G	Y	R				R	R	R				R	R	R				R
Ø3	3A,3B	-	-	-				-	-	-				G	-	-				-	-	-				-
Ø4	4A,4B,4C	R	R	R				R	R	R				R	R	R				G	Y	R				R
Ø5	5A,5B,5C	-	-	-				-	-	-				-	-	-				-	-	-				-
Ø6	6A,6B,6C	R	R	R				R	R	R				R	R	R				R	R	R				R
Ø7	7A,7B	-	-	-				-	-	-				-	-	-				-	-	-				-
Ø8	8A,8B,8C	R	R	R				R	R	R				R	R	R				R	R	R				R
OLA	1A,1B,1C	-	Y	R				FY	Y	R				R	R	R				R	R	R				R
OLB	3A,3B	R	R	R				R	R	R				-	Y	R				FY	Y	R				R
OLC	5A,5B,5C	R	R	R				R	R	R				R	R	R				R	R	R				R
OLD	7A,7B	R	R	R				R	R	R				R	R	R				R	R	R				R
Ø2P	2-1,2-2	DW	DW	DW				*	DW	DW				DW	DW	DW				DW	DW	DW				
Ø4P	4-1,4-2	DW	DW	DW				DW	DW	DW				DW	DW	DW				*	DW	DW				
Ø6P	6-1,6-2	DW	DW	DW				DW	DW	DW				DW	DW	DW				DW	DW	DW				
Ø8P																										

RING 2

	HEAD NUMBERS	Ø5 R/W	Ø5 CLEAR TO **					Ø6 R/W	Ø6 CLEAR TO **					Ø7 R/W	Ø7 CLEAR TO **					Ø8 R/W	Ø8 CLEAR TO **				
Ø1	1A,1B,1C	-	-	-				-	-	-				-	-	-				-	-	-			
Ø2	2A,2B,2C	R	R	R				R	R	R				R	R	R				R	R	R			
Ø3	3A,3B	R	R	R				-	-	-				-	-	-				-	-	-			
Ø4	4A,4B,4C	R	R	R				R	R	R				R	R	R				R	R	R			
Ø5	5A,5B,5C	G	-	-				-	-	-				-	-	-				-	-	-			
Ø6	6A,6B,6C	R	R	R				G	Y	R				R	R	R				R	R	R			
Ø7	7A,7B	-	-	-				-	-	-				G	-	-				-	-	-			
Ø8	8A,8B,8C	R	R	R				R	R	R				R	R	R				G	Y	R			
OLA	1A,1B,1C	R	R	R				R	R	R				R	R	R				R	R	R			
OLB	3A,3B	R	R	R				R	R	R				R	R	R				R	R	R			
OLC	5A,5B,5C	-	Y	R				FY	Y	R				R	R	R				R	R	R			
OLD	7A,7B	R	R	R				R	R	R				-	Y	R				FY	Y	R			
Ø2P	2-1,2-2	DW	DW	DW				DW	DW	DW				DW	DW	DW				DW	DW	DW			
Ø4P	4-1,4-2	DW	DW	DW				DW	DW	DW				DW	DW	DW				DW	DW	DW			
Ø6P	6-1,6-2	DW	DW	DW				*	DW	DW				DW	DW	DW				DW	DW	DW			
Ø8P																									

FY=FLASHING YELLOW

BARRIER

DETECTOR LOGIC

DETECTOR NUMBER	AMPLIFIER CHANNEL NUMBER	DETECTOR OPERATION: CALLS AND EXTENDS	CALLS ONLY	EXTENDS ONLY	PHASE CALLED	PHASE EXTENDED	DETECTOR DISCONNECT PHASE	CALLING DELAY	EXTENSION STRETCH
11		X			1	1			
31		X			3	3			
41		X			4	4			
51		X			5	5			
71		X			7	7			
81		X			8	8			

CONTROLLER LOGIC

PHASE NUMBER	PHASE LOCKING	DUAL ENTRY W / Ø	PHASE RECALL	PHASE ACTIVE
1		6		X
2		6	MAX.	X
3		8		X
4		8		X
5		2		X
6		2	MAX.	X
7		4		X
8		4		X

SPECIAL OVERLAPS

	PROTECTED	PERMISSIVE
OLA	1	2
OLB	3	4
OLC	5	6
OLD	7	8

N

TYPE OF INTERCONNECT COMMUNICATION	
NONE	X
TBC	
CLOSED LOOP TWISTED PAIR*	
CLOSED LOOP FIBER OPTIC*	
FIBER OPTIC (ETHERNET)	
RADIO	
LOCATION OF MASTER CONTROLLER NO:	
SIGNAL SYSTEM #:	

TYPE OF PRE-EMPT	
NONE	X
RAILROAD	
EMERGENCY VEHICLE	
3M	
TOMAR	
HARDWIRE	
OTHER	
QUEUE DETECTOR	
LIFT BRIDGE	

TYPE OF LIGHTING	
BY OTHER AGENCY	
IN TRAFFIC SIGNAL CABINET	X
IN SEPARATE DOT LIGHTING CABINET	

CHART 1

PHASE ON	NONCONFLICTING PHASE ALLOWED TO TIME CONCURRENTLY	PHASES IN CONFLICT WITH PHASE ON
1	5 OR 6,OLC	2,3,4,7,8,OLB,OLD
2	5 OR 6,OLA,OLC	1,3,4,7,8,OLB,OLD
3	7 OR 8,OLD	1,2,4,5,6,OLA,OLC
4	7 OR 8,OLB,OLD	1,2,3,5,6,OLA,OLC
5	1 OR 2,OLA	3,4,6,7,8,OLB,OLD
6	1 OR 2,OLA,OLC	3,4,5,7,8,OLB,OLD
7	3 OR 4,OLB	1,2,5,6,8,OLA,OLC
8	3 OR 4,OLB,OLD	1,2,5,6,7,OLA,OLC

GENERAL NOTES:

1. ANY ACTUATED PHASE FOR WHICH THERE IS NO CALL SHALL BE SKIPPED.
2. WHEN ONE PHASE IS ON ALONE, ANY NONCONFLICTING PHASE MAY START TIMING CONCURRENTLY WITHOUT A CLEARANCE INTERVAL. (SEE CHART 1 AT LEFT.)
3. WHEN OPPOSING THRU PHASES ARE TIMING CONCURRENTLY THEY SHALL TERMINATE TOGETHER DUE TO PERMISSIVE LEFT TURN CONFLICT.

** CLEARANCE TO A PHASE IN CONFLICT WITH THIS PHASE ON (SEE CHART 1)

BUSINESS 51 (POST ROAD) &
PLOVER SPRINGS ROAD
VILLAGE OF PLOVER
PORTAGE COUNTY

SIGNAL NO.

CONTROLLER TYPE: TEMP

DATE Ø7/15

PAGE NO. 9 OF 9

BUSINESS 51 & CHESTNUT DRIVE								
	1	2	3	4	5	6	7	8
MIN GREEN	7	10	10	10	7	10	7	10
EXTENSION	3.0	6.0	3.0	4.0	3.0	6.0	3.0	4.0
YELLOW	4.0	4.0	3.5	3.0	4.0	4.0	3.5	3.0
RED	0.5	2.0	1.0	2.0	0.5	2.0	1.0	2.0
MAX	15	40	15	25	15	40	15	25
TBR								
TTR								
MIN GAP								
COORD PHASE								
WALK		7.0		7.0		7.0		7.0
FLASHING DON'T WALK		25.0		26.0		25.0		26.0

BUSINESS 51 & ROOSEVELT DRIVE								
	1	2	3	4	5	6	7	8
MIN GREEN		10	10	10	7	10		
EXTENSION		6.0	4.0	4.0	3.0	6.0		
YELLOW		4.0	3.0	3.0	3.5	4.0		
RED		2.0	2.5	2.5	1.0	2.0		
MAX		40	25	25	15	40		
TBR								
TTR								
MIN GAP								
COORD PHASE								
WALK		7.0	7.0			7.0		
FLASHING DON'T WALK		14.0	25.0			26.0		

BUSINESS 51 & PLOVER SPRINGS DRIVE								
	1	2	3	4	5	6	7	8
MIN GREEN	7	10	10	10	7	10	7	10
EXTENSION	3.0	6.0	3.0	4.0	3.0	6.0	3.0	4.0
YELLOW	4.0	4.0	4.0	3.0	4.0	4.0	4.0	3.0
RED	0.5	2.5	0.5	2.5	0.5	2.5	0.5	2.5
MAX	15	40	15	25	15	40	15	25
TBR								
TTR								
MIN GAP								
COORD PHASE								
WALK		7.0		7.0		7.0		
FLASHING DON'T WALK		29.0		26.0		20.0		

ALL INTERSECTIONS RUN FREE FOR DURATION OF CONSTRUCTION

2

TABLE OF NOMINAL DIMENSIONS AND WEIGHTS

DIMENSION IN INCHES		NON-CONDUCTIVE PULL BOX	
BOX DIAMETER ** (INSIDE)	A	24	24
BOX DIAMETER ** (OUTSIDE)	B	25	25
BOX LENGTH	C	36	42
COVER	D	25 1/2	25 1/2
FRAME	E	27	27
FRAME	F	25 3/4	25 3/4
FRAME	G	22 1/2	22 1/2
WEIGHT IN POUNDS *			
COVER		50	50

* THE ACTUAL WEIGHT OF THE MANHOLE COVER MAY VARY NOT TO EXCEED 100 LBS.

** DIAMETER VARIES FROM TOP TO BOTTOM WITH THE DIAMETER LARGER AT THE BOTTOM TO PREVENT FROST HEAVE

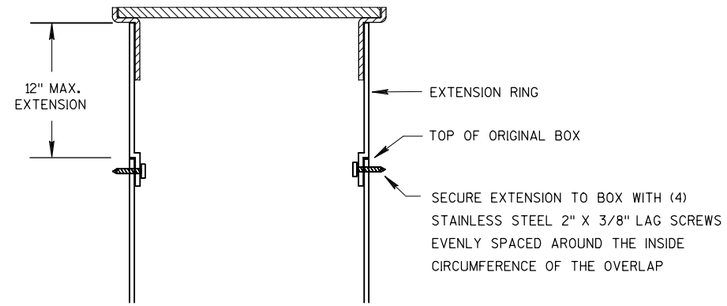

BOX EXTENSION

INSTALLED IN SOD OR CRUSHED AGGREGATE

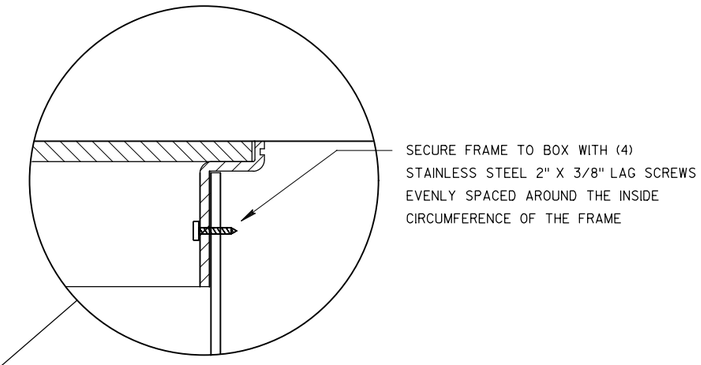

INSTALLED IN SIDEWALK

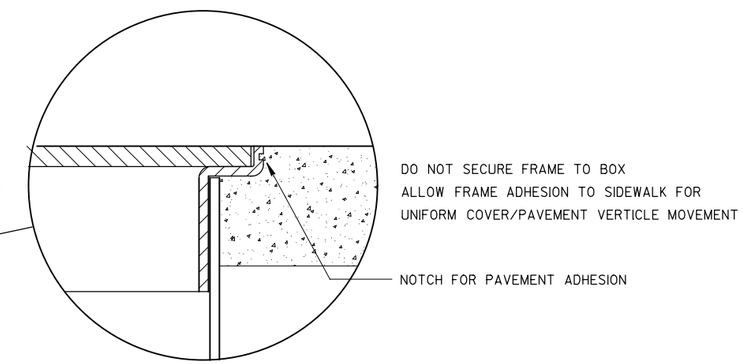

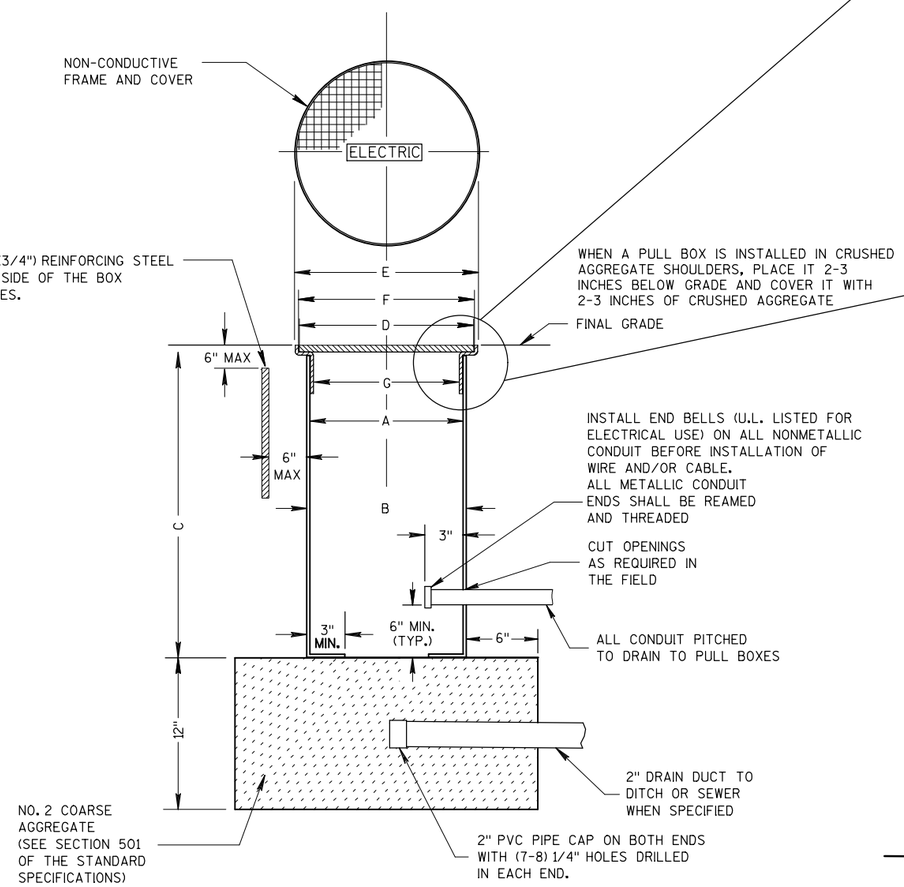

NON-CONDUCTIVE PULL BOX

GENERAL NOTES

DETAILS OF CONSTRUCTION, MATERIALS AND WORKMANSHIP NOT SHOWN ON THIS DRAWING SHALL CONFORM TO THE PERTINENT REQUIREMENTS OF THE CONTRACT.

ALL BOXES, FRAMES AND COVERS SHALL BE SUITABLE FOR TIER 15 LOADING AS SPECIFIED IN ANSI/SCTE 77.

PROVIDE AN OPENING FOR TOOL ASSISTED COVER REMOVAL NOT LARGE ENOUGH TO PERMIT PASSAGE OF A SPHERE MORE THAN 1/2" DIAMETER

ENSURE COVER SURFACE IS SKID RESISTANT WITH A COEFFICIENT OF FRICTION OF AT LEAST 0.5 AND VERTICAL SURFACE DICONTINUITIES LESS THAN 1/4".

BOXES AND EXTENSIONS ARE TRIMMABLE FOR CUSTOM LENGTHS. TRIMMED PIECES SHALL MAINTAIN A UNIFORM LENGTH.

ENTRANCE HOLES INTO PULL BOXES SHALL BE CUT WITH A CIRCULAR HOLE SAW OR HYDRAULIC CONDUIT PUNCH. HOLE SIZE SHALL BE THE OUTSIDE DIAMETER OF THE CONDUIT THAT IS TO FIT IN THE OPENING PLUS NO MORE THAN 1/4".

THE CONTRACTOR SHALL NOT INSTALL WIRE IN ANY PULL BOX UNTIL ITS INSTALLATION HAS BEEN INSPECTED AND ACCEPTED BY THE ENGINEER.

ALL METALLIC CONDUIT IN WHICH WIRE AND/OR CABLE IS TO BE INSTALLED, SHALL BE BUSHED BEFORE INSTALLATION OF THE WIRE AND/OR CABLE.

ENTIRE BOX MUST BE CONSTRUCTED OF NON-CONDUCTIVE MATERIALS WITH THE EXCEPTION OF STAINLESS STEEL FASTENERS.

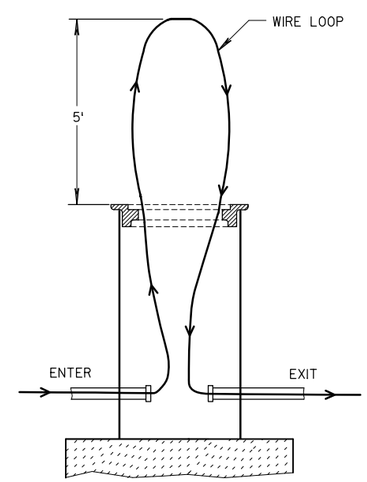

MEASUREMENT DETAIL FOR WIRE/CABLE IN THE PULL BOX

2

CONSTRUCTION NOTES:

1. CONTACT THE DEPARTMENTS ELECTRICIAN REGARDING REMOVAL OF THE EXISTING SIGNAL CABINET AND CONTROLLER. WISDOT WILL BE RESPONSIBLE FOR THE REMOVAL.
2. ALL EXISTING EQUIPMENT TO BE REMOVED, SALVAGED, OR ABANDONED. SEE SPECIAL PROVISIONS REGARDING WISDOT SIGNAL AND LIGHTING EQUIPMENT.
3. ALL EXISTING CONDUIT AND PULL BOXES TO BE REMOVED OR ABANDONED. EXISTING CABLE AND WIRE SHALL BECOME THE CONTRACTORS PROPERTY AFTER REMOVAL. PULL BOX RIMS AND COVERS SHALL BE RETAINED BY WISDOT PER SALVAGING PROVISIONS.

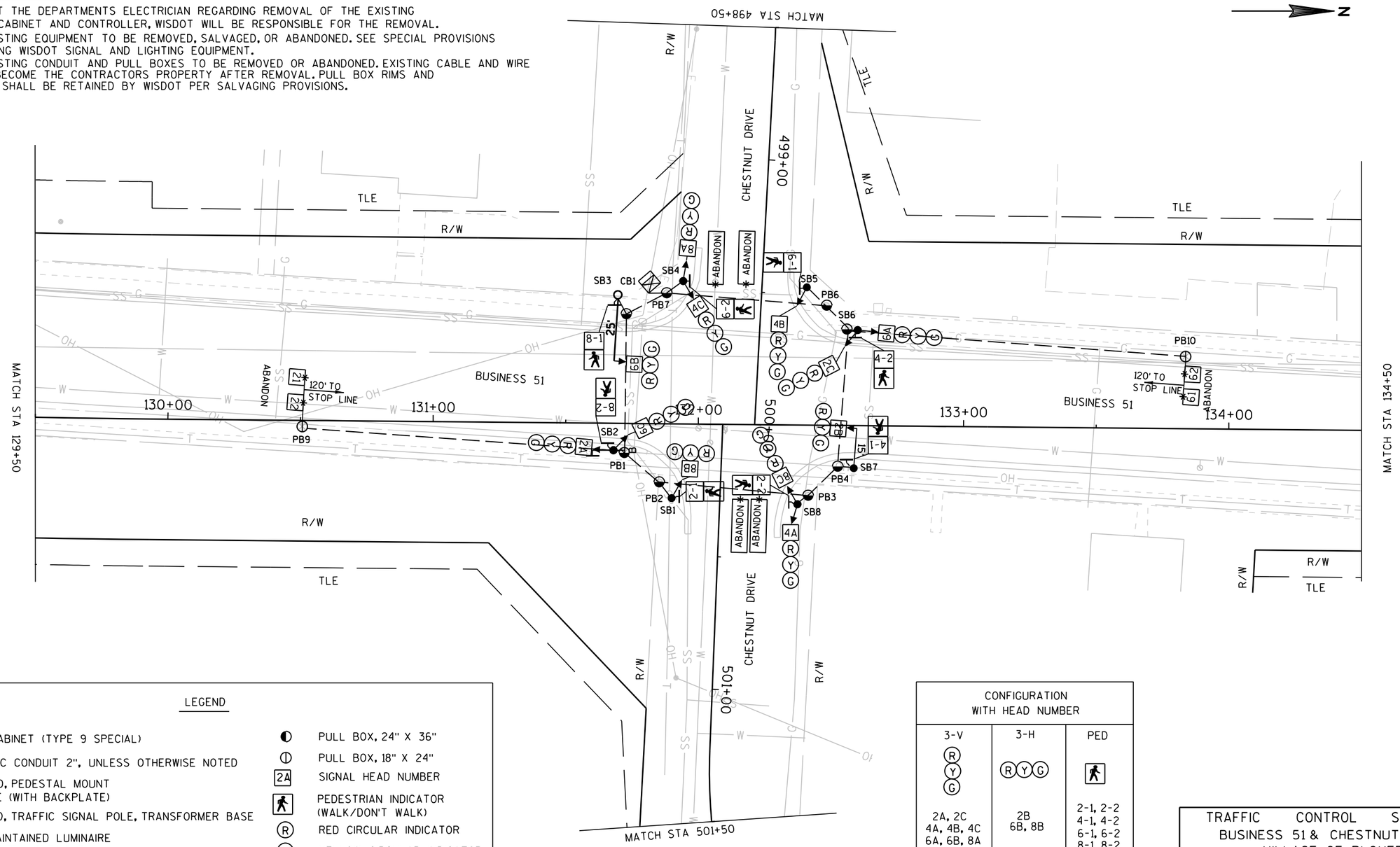

LEGEND

- CONTROL CABINET (TYPE 9 SPECIAL)
- NONMETALLIC CONDUIT 2", UNLESS OTHERWISE NOTED
- SIGNAL HEAD, PEDESTAL MOUNT TYPE 1 BASE (WITH BACKPLATE)
- (XX) SIGNAL HEAD, TRAFFIC SIGNAL POLE, TRANSFORMER BASE
- LOCALLY MAINTAINED LUMINAIRE (SEE SEPERATE LIGHTING PLAN FOR DETAILS)
- B PEDESTRIAN HEAD WITH PUSH BUTTON
- LOOP DETECTOR IN 1" NONMETALLIC CONDUIT
- SIDE PULL LOOP DETECTOR INSTALLED IN BASE COURSE WITH PULL BOX OFF ROADWAY (OPTION 2)
- PULL BOX, 24" X 36"
- PULL BOX, 18" X 24"
- 2A SIGNAL HEAD NUMBER
- PEDESTRIAN INDICATOR (WALK/DON'T WALK)
- R RED CIRCULAR INDICATOR
- Y YELLOW CIRCULAR INDICATOR
- G GREEN CIRCULAR INDICATOR

NOTE: GRAYSHADE REPRESENTS EXISTING TO REMAIN. BOLD REPRESNTS EXISTING TO BE REMOVED.

CONFIGURATION WITH HEAD NUMBER		
3-V	3-H	PED
R Y G	R Y G	
2A, 2C 4A, 4B, 4C 6A, 6B, 8A 8C	2B 6B, 8B	2-1, 2-2 4-1, 4-2 6-1, 6-2 8-1, 8-2

TRAFFIC CONTROL SIGNAL
BUSINESS 51 & CHESTNUT DRIVE
VILLAGE OF PLOVER
PORTAGE COUNTY

SIGNAL NO. S0565

REGION CONTACT: RON JOHNSON
DESIGNED BY: KSA
REVISED BY:

PAGE 1 OF 1

PROJECT NO: 6414-00-78	HWY: BUSINESS 51	COUNTY: PORTAGE	TRAFFIC SIGNAL REMOVAL PLAN	SHEET 140	E

CONFIGURATION WITH HEAD NUMBER		
3-V	3-VL	PED
R Y G	R Y FY	
2A,2B,2C 4A,4B,4C 6A,6B,6C 8A,8B,8C	2D,2E,2F 6D,6E,6F	2-1,2-2 4-1,4-2,4-3,4-4 6-1,4-2 8-1,8-2,8-3,8-4

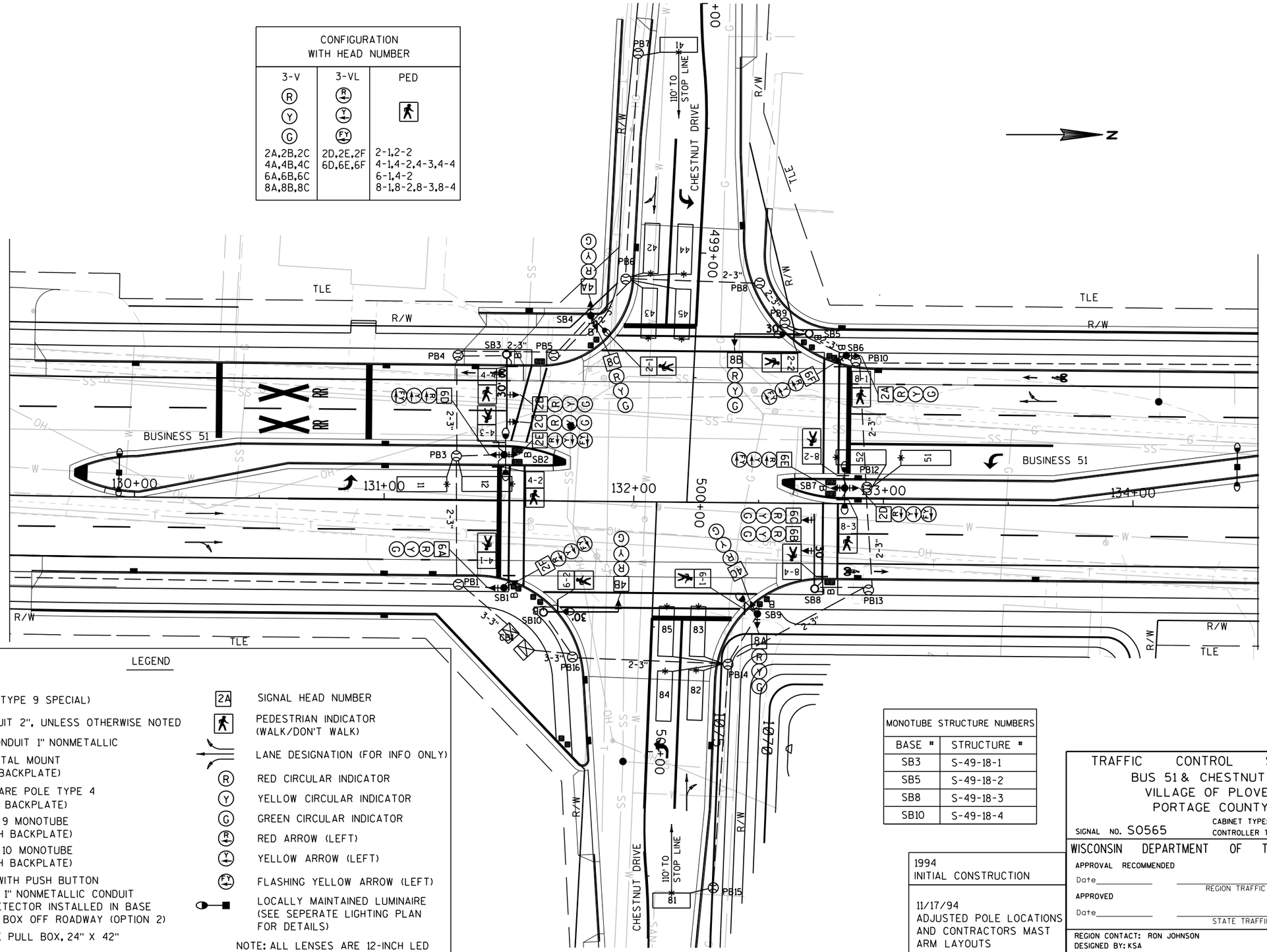

LEGEND

- CONTROL CABINET (TYPE 9 SPECIAL)
- NONMETALLIC CONDUIT 2", UNLESS OTHERWISE NOTED
- LOOP DETECTOR CONDUIT 1" NONMETALLIC
- SIGNAL HEAD, PEDESTAL MOUNT TYPE 1 BASE (WITH BACKPLATE)
- SIGNAL HEAD/LUMINARE POLE TYPE 4 TYPE 2 BASE (WITH BACKPLATE)
- 30' MAX — SIGNAL HEAD, TYPE 9 MONOTUBE TYPE 10 BASE (WITH BACKPLATE)
- 30' MAX — SIGNAL HEAD, TYPE 10 MONOTUBE TYPE 10 BASE (WITH BACKPLATE)
- PEDESTRIAN HEAD WITH PUSH BUTTON
- LOOP DETECTOR IN 1" NONMETALLIC CONDUIT SIDE PULL LOOP DETECTOR INSTALLED IN BASE COURSE WITH PULL BOX OFF ROADWAY (OPTION 2)
- POLYMER CONCRETE PULL BOX, 24" X 42"
- 2A — SIGNAL HEAD NUMBER
- PEDESTRIAN INDICATOR (WALK/DON'T WALK)
- LANE DESIGNATION (FOR INFO ONLY)
- R — RED CIRCULAR INDICATOR
- Y — YELLOW CIRCULAR INDICATOR
- G — GREEN CIRCULAR INDICATOR
- R — RED ARROW (LEFT)
- Y — YELLOW ARROW (LEFT)
- FY — FLASHING YELLOW ARROW (LEFT)
- LOCALLY MAINTAINED LUMINAIRE (SEE SEPERATE LIGHTING PLAN FOR DETAILS)

NOTE: ALL LENSES ARE 12-INCH LED

MONOTUBE STRUCTURE NUMBERS	
BASE #	STRUCTURE #
SB3	S-49-18-1
SB5	S-49-18-2
SB8	S-49-18-3
SB10	S-49-18-4

1994
INITIAL CONSTRUCTION

11/17/94
ADJUSTED POLE LOCATIONS AND CONTRACTORS MAST ARM LAYOUTS

TRAFFIC CONTROL SIGNAL
BUS 51 & CHESTNUT DR
VILLAGE OF PLOVER
PORTAGE COUNTY

SIGNAL NO. S0565
CABINET TYPE: TS-2
CONTROLLER TYPE: EPAC M51

WISCONSIN DEPARTMENT OF TRANSPORTATION

APPROVAL RECOMMENDED
Date_____ REGION TRAFFIC ENGINEER
APPROVED
Date_____ STATE TRAFFIC ENGINEER

REGION CONTACT: RON JOHNSON
DESIGNED BY: KSA
REVISED BY:

PAGE 1 OF 3

PROJECT NO: 6414-00-78	HWY: BUSINESS 51	COUNTY: PORTAGE	TRAFFIC SIGNAL PLAN	SHEET 141	E

2

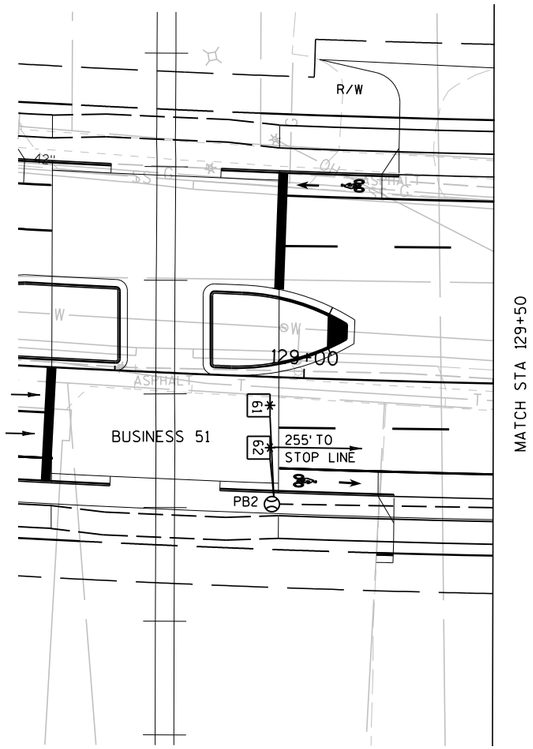

CONSTRUCTION NOTES:

1. * LOCATION IS TO FRONT CENTER OF THE DETECTOR LOOP. LOOP SHALL BE CENTERED IN TRAFFIC LANE. INSTALL LOOPS IN THE AGGREGATE BASE COURSE. DISTANCE BETWEEN MULTIPLE STOP BAR LOOPS SHALL BE 8 FEET.
2. ALL SIGNAL EQUIPMENT SHALL BE INSTALLED WITH A 2-FOOT MINIMUM, 3-FOOT DESIRABLE CLEARANCE TO THE FACE OF CURB UNLESS DIRECTED OTHERWISE BY THE ENGINEER.
3. THE CONTRACTOR SHALL HAVE THE PULL BOXES AND CONDUIT RUNS INSPECTED BEFORE PLACING SIGNAL CABLE INTO THE SYSTEM.
4. ALL WISDOT LUMINARES SHOWN ARE 120 VOLT, CATEGORY C LED, MOUNTED ON A 30 FOOT POLE (LUMINAIRE ARM LENGTHS ARE LISTED IN QUANTITIES).
5. BOND ALL METAL PULL BOXES AND ASSOCIATED COVERS THAT CONTAIN CONDUCTORS CARRYING 50 VOLTS OR MORE.
6. TERMINATION OF BONDING JUMPERS IN PULL BOXES TO BE LUG AND BOLT CONNECTIONS AND CALKED (SILICONE) AFTER INSTALLATION.
7. EACH LOOP DETECTOR SHALL HAVE A SEPARATE LEAD-IN CABLE TO THE CONTROL CABINET.
8. FURNISH AND INSTALL FOLDING STOP SIGNS (36"X36") ON SIGNAL BASES SB1, SB2, SB4, SB6, SB7, AND SB9.
9. THE LOCATIONS OF EXISTING AND PROPOSED UTILITY INSTALLATIONS ARE APPROXIMATE. THERE MAY BE OTHER UTILITY INSTALLATIONS WITHIN THE PROJECT WHICH ARE NOT SHOWN.
10. THE ENGINEER WILL ADJUST THE LOCATIONS OF ITEMS UNDER THIS CONTRACT TO AVOID CONFLICT WITH EXISTING UTILITY FACILITIES.
11. ALL CONDUIT RUNS SHALL HAVE EXTRA PULL WIRE INSTALLED TO PULL FUTURE CABLE, COST SHALL BE INCIDENTAL TO TRAFFIC SIGNAL CABLE, NO. 14.
12. INSTALL 13-FT SIGNAL STANDARDS AT (SB1, SB-6)
    INSTALL TYPE 4 (30-FOOT) POLES AT (SB2, SB4, SB7, SB9)
    INSTALL TYPE 9 MONOTUBE, 30-FOOT ARM AT (SB3, SB8)
    INSTALL TYPE 10 MONOTUBE, 30-FOOT ARM/15-FOOT LUMINARE AT (SB5, SB10)
13. INSTALL PUSH BUTTON SIGNS (SIGN CODE R10-3E, 6"X10") WITH ARROWS POINTING TO THE CROSSWALK ASSOCIATED WITH THE PUSH BUTTONS, SIGNS ARE INCIDENTAL TO THE PED PUSH BUTTONS.
14. LOOP DETECTORS 11, 12, 51, AND 52 ARE BEING INSTALLED FOR FUTURE USE. INSTALL LOOP DETECTOR CONDUIT, LEAD-IN CABLE, AND DETECTOR WIRE. THE LEAD-IN CABLE SHALL BE PROPERLY TERMINATED IN THE CABINET AND AVAILBALE FOR FUTURE CONNECTION.

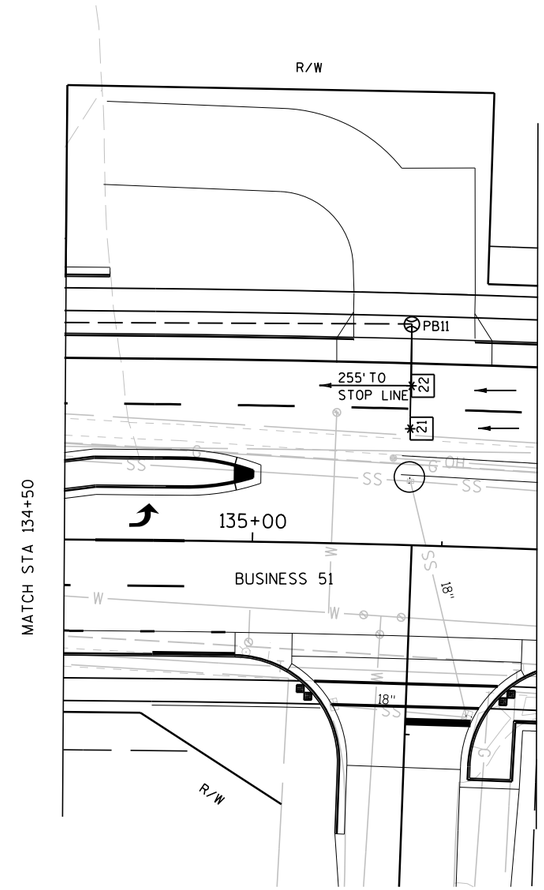

TRAFFIC CONTROL SIGNAL
BUS 51 & CHESTNUT DRIVE
VILLAGE OF PLOVER
PORTAGE COUNTY

SIGNAL NO. S0565 CONTROLLER TYPE: EPAC M51

REGION CONTACT: RON JOHNSON
DESIGNED BY: KSA
REVISED BY:

PAGE 2 OF 3

PROJECT NO: 6414-00-78	HWY: BUSINESS 51	COUNTY: PORTAGE	TRAFFIC SIGNAL PLAN	SHEET 142	E

SEQUENCE OF OPERATION

RING 1

	HEAD NUMBERS	Ø1 R/W	Ø1 CLEAR TO **	Ø2 R/W	Ø2 CLEAR TO **	Ø3 R/W	Ø3 CLEAR TO **	Ø4 R/W	Ø4 CLEAR TO **	FLASH
		NOT USED		OL'A'		NOT USED				
Ø1										
Ø2	2A,2B,2C			G Y R				R R R		R
Ø3										
Ø4	4A,4B,4C			R R R				G Y R		R
Ø5										
Ø6	6A,6B,6C			R R R				R R R		R
Ø7										
Ø8	8A,8B,8C			R R R				R R R		R
OLA	6D,6E,6F			FY Y R				R R R		R
OLC	2D,2E,2F			R R R				R R R		R
Ø2P	2-1,2-2			* DW DW				DW DW DW		
Ø4P	4-1,4-2,4-3,4-4			DW DW DW				* DW DW		
Ø6P	6-1,6-2			DW DW DW				DW DW DW		
Ø8P	8-1,8-2,8-3,8-4			DW DW DW				DW DW DW		

RING 2

	HEAD NUMBERS	Ø5 R/W	Ø5 CLEAR TO **	Ø6 R/W	Ø6 CLEAR TO **	Ø7 R/W	Ø7 CLEAR TO **	Ø8 R/W	Ø8 CLEAR TO **
		NOT USED		OL'C'		NOT USED			
Ø1									
Ø2	2A,2B,2C			R R R				R R R	
Ø3									
Ø4	4A,4B,4C			R R R				R R R	
Ø5									
Ø6	6A,6B,6C			G Y R				R R R	
Ø7									
Ø8	8A,8B,8C			R R R				G Y R	
OLA	6D,6E,6F			R R R				R R R	
OLC	2D,2E,2F			FY Y R				R R R	
Ø2P	2-1,2-2			DW DW DW				DW DW DW	
Ø4P	4-1,4-2,4-3,4-4			DW DW DW				DW DW DW	
Ø6P	6-1,6-2			* DW DW				DW DW DW	
Ø8P	8-1,8-2,8-3,8-4			DW DW DW				* DW DW	

BARRIER

FY - FLASHING YELLOW

** CLEARANCE TO A PHASE IN CONFLICT WITH THIS PHASE ON (SEE CHART 1)

* WHEN CALLED, TIMED STEADY WALK, THEN FLASHING DON'T WALK, THEN GOES TO STEADY DON'T WALK

DETECTOR LOGIC

Detector Input	3	1	7	5	11	9	15	13	19	17	23	21	27	25	31	29
Detector #(s)	61	*11	21	*51	41	42	44	81	82	84						
Calls & Extends	X	X	X	X		X	X		X	X						
Calls Only																
Extends Only					X			X								
Phase Called	6	1	2	5		4	4		8	8						
Phase Extended	6	1	2	5	4	4	4	8	8	8						
Disconnect Phase																
Calling Delay						X	X		X	X						
Extension Stretch					X			X								
Size	6x6	6x20	6x6	6x20	6x15	6x20	6x20	6x15	6x20	6x20						
Number of Turns	4	3	4	3	3	3	3	3	3	3						
Detector Input	**4**	**2**	**8**	**6**	**12**	**10**	**16**	**14**	**20**	**18**	**24**	**22**	**28**	**26**	**32**	**30**
Detector #(s)	62	*12	22	*52		43	45		83	85						
Calls & Extends	X	X	X	X		X	X		X	X						
Calls Only																
Extends Only																
Phase Called	6	1	2	5		4	4		8	8						
Phase Extended	6	1	2	5		4	4		8	8						
Disconnect Phase																
Calling Delay						X	X		X	X						
Extension Stretch																
Size	6x6	6x20	6x6	6x20		6x20	6x20		6x20	6x20						
Number of Turns	4	3	4	3		3	3		3	3						

* DETECTORS INSTALLED FOR FUTURE USE (11, 12, 51, 52)

CONTROLLER LOGIC

PHASE NUMBER	PHASE LOCKING	DUAL ENTRY W / Ø	PHASE RECALL
1			
2	X	W/6	MIN.
3			
4		8	
5			
6	X	W/2	MIN.
7			
8		4	

SPECIAL OVERLAPS

	PROTECTED	PERMITTED
O.L. "A"		2
O.L. "B"		
O.L. "C"		6
O.L. "D"		

CHART 1

PHASE ON	NONCONFLICTING PHASE ALLOWED TO TIME CONCURRENTLY	PHASES IN CONFLICT WITH PHASE ON
1		
2	6, OLA, OLC	4,8
3		
4	8	2,6,OLA,OLC
5		
6	2,OLA,OLC	4,8
7		
8	4	2,6,OLA,OLC

TYPE OF INTERCONNECT COMMUNICATION	
NONE	X
TBC	
CLOSED LOOP TWISTED PAIR*	
CLOSED LOOP FIBER OPTIC*	
FIBER OPTIC	
RADIO	
*LOCATION OF MASTER CONTROLLER NO: S-	
SIGNAL SYSTEM #: SS- -	

TYPE OF PRE-EMPT	
NONE	X
RAILROAD	
EMERGENCY VEHICLE	
3M	
TOMAR	
HARDWIRE	
OTHER	
LIFT BRIDGE	
QUEUE DETECTOR	

TYPE OF LIGHTING	
BY OTHER AGENCY	
IN TRAFFIC SIGNAL CABINET	X
IN SEPARATE DOT LIGHTING CABINET	

GENERAL NOTES:

1. ANY ACTUATED PHASE FOR WHICH THERE IS NO CALL SHALL BE SKIPPED.
2. WHEN ONE PHASE IS ON ALONE, ANY NONCONFLICTING PHASE MAY START TIMING CONCURRENTLY WITHOUT A CLEARANCE INTERVAL. (SEE CHART 1 AT LEFT.)
3. WHEN OPPOSING THRU PHASES ARE TIMING CONCURRENTLY. THEY SHALL TERMINATE TOGETHER DUE TO PERMISSIVE LEFT TURN CONFLICT.

TRAFFIC CONTROL SIGNAL
BUS 51 & CHESTNUT DRIVE
VILLAGE OF PLOVER
PORTAGE COUNTY

SIGNAL NO. S0565 CONTROLLER TYPE: EPAC M51

REGION CONTACT: RON JOHNSON
DESIGNED BY: KSA
REVISED BY:

PAGE 3 OF 3

PROJECT NO: 6414-00-07	HWY: BUSINESS 51	COUNTY: PORTAGE	SEQUENCE OF OPERATIONS	SHEET 143	E

2

PROJECT ID:	6414-00-07/78
INTERSECTION:	B51 & CHESTNUT DR., S#0565

Signal Wire Color Coding	BLK - black	RED - red	green
	WHT - white	BLU - blue	orange

CB1 TO	JUMPER	AWG 14 # OF COND.	HEAD NO.	PHASE	SIGNAL INDICATION WIRE COLOR								Walk	Ped Button
					RED	YELLOW	GREEN	<RED>	<YELLOW>	<GREEN>	Flashing Yellow	D/Walk		
SB1		12	2F	OLC				RED/BLK	ORG/BLK		GRN/BLK			
			6A	6	RED	ORG	GRN							
			4-1	PED 4								BLK	BLU	WHT/BLK
SB2		9	2E	OLC				RED/BLK	ORG/BLK		GRN/BLK			
			6D	OLA				RED	ORG		GRN			
			4-2, 4-3	PED 4								BLK	BLU	WHT/BLK
SB3		9	2B, 2C	2	RED	ORG	GRN							
			4-4	PED 4								BLK	BLU	WHT/BLK
SB4		12	4A	4	RED	ORG	GRN							
			8C	8	RED/BLK	ORG/BLK	GRN/BLK							
			2-1	PED 2								BLK	BLU	WHT/BLK
SB5		7	8B	8	RED	ORG	GRN							
			2-2	PED 2								BLK	BLU	WHT/BLK
SB6		12	2A	2	RED/BLK	ORG/BLK	GRN/BLK							
			6F	OLA				RED	ORG		GRN			
			8-1	PED 8								BLK	BLU	WHT/BLK
SB7		9	2D	OLC				RED/BLK	ORG/BLK		GRN/BLK			
			6E	OLA				RED	ORG		GRN			
			8-2, 8-3	PED 8								BLK	BLU	WHT/BLK
SB8		7	6B, 6C	6	RED	ORG	GRN							
			8-4	PED 8								BLK	BLU	WHT/BLK
SB9		12	4C	4	RED	ORG	GRN							
			8A	8	RED/BLK	ORG/BLK	GRN/BLK							
			6-1	PED 6								BLK	BLU	WHT/BLK
SB10		7	4B	4	RED	ORG	GRN							WHT/BLK
			6-2	PED 6								BLK	BLU	WHT/BLK

Equipment grounding conductor 10 AWG Green XLP	
From	To
CB1	SB1
SB1	SB2
SB2	SB3
SB3	SB4
SB4	SB5
SB5	SB6
SB6	SB7
SB7	SB8
SB8	SB9
SB9	SB10
SB10	CB1

Pull Box Bonding Jumper 10 AWG Green	
From	To

Lighting UF #12/2 w/ground	
From	To
CB1	SB2
CB1	SB4
CB1	SB7
CB1	SB9
CB1	SB10

Emergency Vehicle Preemption	
From	To

*Use the white conductor in the cable assembly as the grounded conductor for all traffic signal indications
*Ensure the grounded conductor in the feeder cable and the pole cables are both 12" longer than the ungrounded conductors.
*At the signal bases, connect one terminal from the pedestrian push buttons to the color indicated in the chart. Connect the other terminal to the grounded conductor.
"Other" column may include shadow box sign

2

CONSTRUCTION NOTES:

1. CONTACT THE DEPARTMENTS ELECTRICIAN REGARDING REMOVAL OF THE EXISTING SIGNAL CABINET AND CONTROLLER, WISDOT WILL BE RESPONSIBLE FOR THE REMOVAL.
2. ALL EXISTING EQUIPMENT TO BE REMOVED, SALVAGED, OR ABANDONED. SEE SPECIAL PROVISIONS REGARDING WISDOT SIGNAL AND LIGHTING EQUIPMENT.
3. ALL EXISTING CONDUIT AND PULL BOXES TO BE REMOVED OR ABANDONED. EXISTING CABLE AND WIRE SHALL BECOME THE CONTRACTORS PROPERTY AFTER REMOVAL. PULL BOX RIMS AND COVERS SHALL BE RETAINED BY WISDOT PER SALVAGING PROVISIONS.

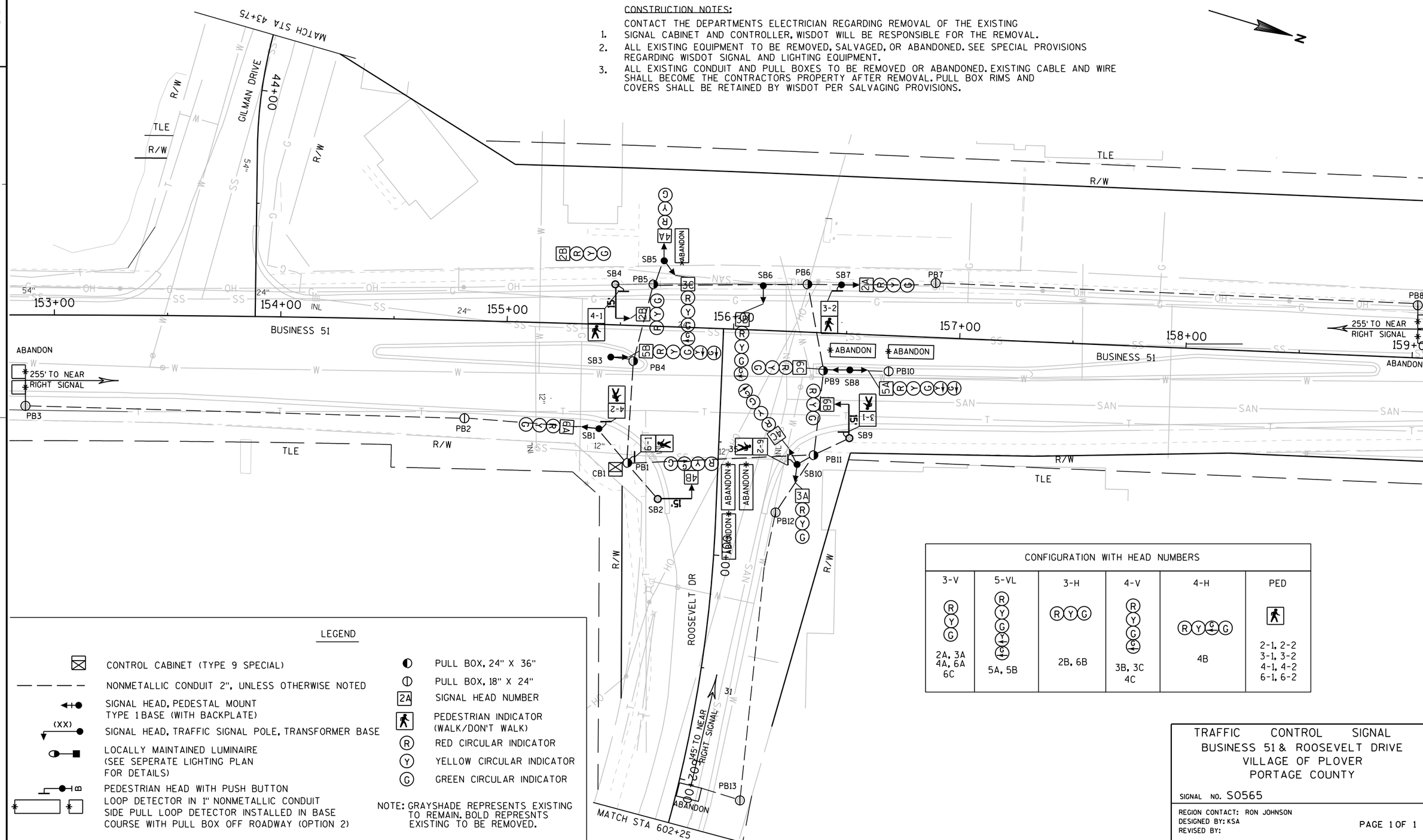

CONFIGURATION WITH HEAD NUMBERS					
3-V	5-VL	3-H	4-V	4-H	PED
R Y G	R Y G 1 6	R Y G	R Y G 1 6	R Y 6 1 G	
2A, 3A 4A, 6A 6C	5A, 5B	2B, 6B	3B, 3C 4C	4B	2-1, 2-2 3-1, 3-2 4-1, 4-2 6-1, 6-2

LEGEND

- CONTROL CABINET (TYPE 9 SPECIAL)
- NONMETALLIC CONDUIT 2", UNLESS OTHERWISE NOTED
- SIGNAL HEAD, PEDESTAL MOUNT TYPE 1 BASE (WITH BACKPLATE)
- (XX) SIGNAL HEAD, TRAFFIC SIGNAL POLE, TRANSFORMER BASE
- LOCALLY MAINTAINED LUMINAIRE (SEE SEPERATE LIGHTING PLAN FOR DETAILS)
- PEDESTRIAN HEAD WITH PUSH BUTTON LOOP DETECTOR IN 1" NONMETALLIC CONDUIT SIDE PULL LOOP DETECTOR INSTALLED IN BASE COURSE WITH PULL BOX OFF ROADWAY (OPTION 2)
- PULL BOX, 24" X 36"
- PULL BOX, 18" X 24"
- 2A SIGNAL HEAD NUMBER
- PEDESTRIAN INDICATOR (WALK/DON'T WALK)
- R RED CIRCULAR INDICATOR
- Y YELLOW CIRCULAR INDICATOR
- G GREEN CIRCULAR INDICATOR

NOTE: GRAYSHADE REPRESENTS EXISTING TO REMAIN. BOLD REPRESNTS EXISTING TO BE REMOVED.

TRAFFIC CONTROL SIGNAL
BUSINESS 51 & ROOSEVELT DRIVE
VILLAGE OF PLOVER
PORTAGE COUNTY

SIGNAL NO. S0565

REGION CONTACT: RON JOHNSON
DESIGNED BY: KSA
REVISED BY:

PAGE 1 OF 1

PROJECT NO: 6414-00-78	HWY: BUSINESS 51	COUNTY: PORTAGE	TRAFFIC SIGNAL REMOVAL PLAN	SHEET 145	E

2

CONFIGURATION WITH HEAD NUMBER			
3-V	3-VL	4-V	PED
R Y G	R Y FY	R Y G G	
2A,2B,2C 3A 4A 6A,6B,6C	2D,2E,2F 6D,6E,6F	3B,3C 4B,4C	2-1,2-2 3-1,3-2,3-3,3-4 4-1,4-2,4-3,4-4 6-1,6-2

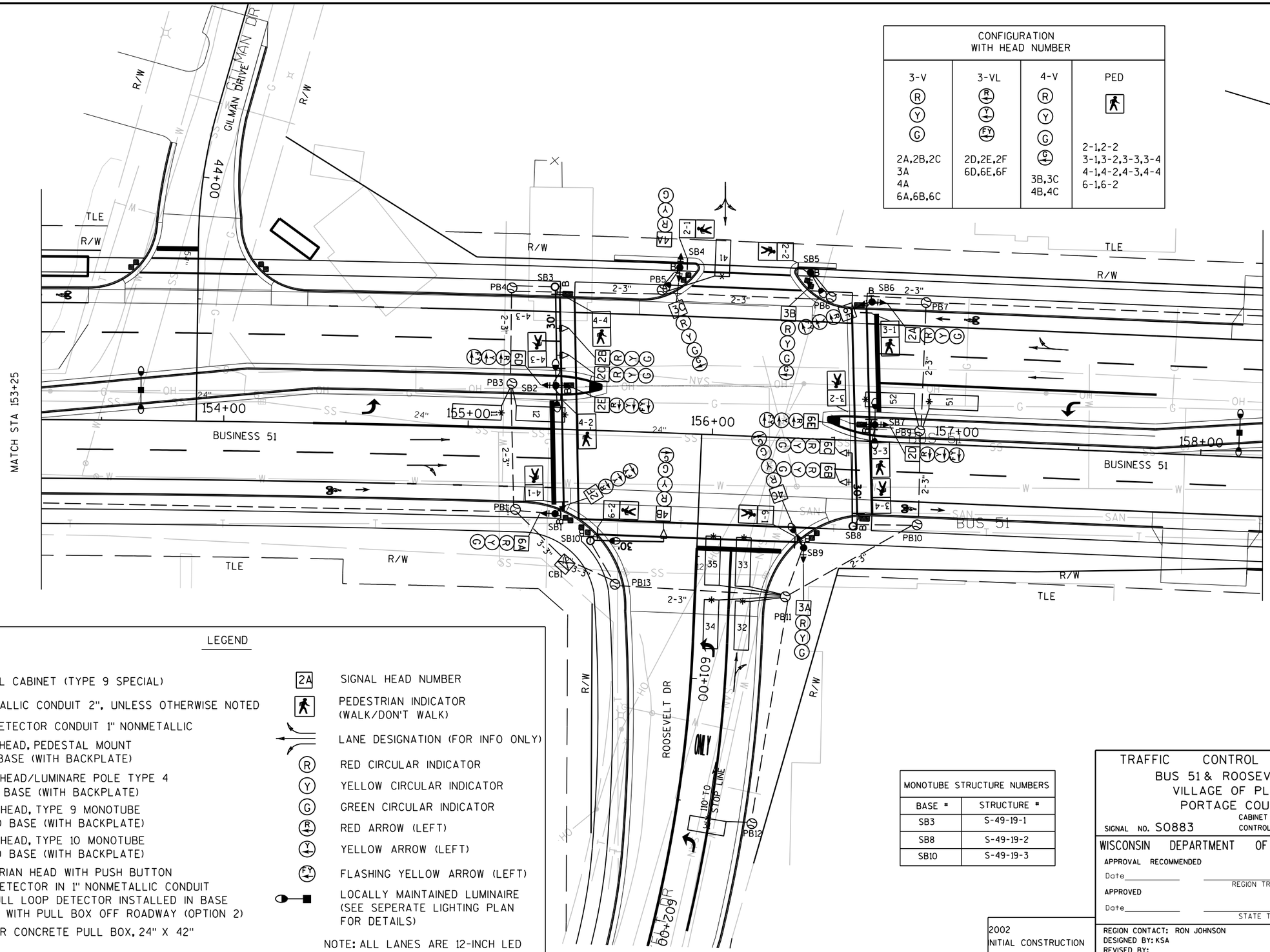

LEGEND

- CONTROL CABINET (TYPE 9 SPECIAL)
- NONMETALLIC CONDUIT 2", UNLESS OTHERWISE NOTED
- LOOP DETECTOR CONDUIT 1" NONMETALLIC
- SIGNAL HEAD, PEDESTAL MOUNT TYPE 1 BASE (WITH BACKPLATE)
- SIGNAL HEAD/LUMINARE POLE TYPE 4 TYPE 2 BASE (WITH BACKPLATE)
- 30' MAX — SIGNAL HEAD, TYPE 9 MONOTUBE TYPE 10 BASE (WITH BACKPLATE)
- 30' MAX — SIGNAL HEAD, TYPE 10 MONOTUBE TYPE 10 BASE (WITH BACKPLATE)
- PEDESTRIAN HEAD WITH PUSH BUTTON
- LOOP DETECTOR IN 1" NONMETALLIC CONDUIT SIDE PULL LOOP DETECTOR INSTALLED IN BASE COURSE WITH PULL BOX OFF ROADWAY (OPTION 2)
- POLYMER CONCRETE PULL BOX, 24" X 42"
- 2A — SIGNAL HEAD NUMBER
- PEDESTRIAN INDICATOR (WALK/DON'T WALK)
- LANE DESIGNATION (FOR INFO ONLY)
- R — RED CIRCULAR INDICATOR
- Y — YELLOW CIRCULAR INDICATOR
- G — GREEN CIRCULAR INDICATOR
- R — RED ARROW (LEFT)
- Y — YELLOW ARROW (LEFT)
- FY — FLASHING YELLOW ARROW (LEFT)
- LOCALLY MAINTAINED LUMINAIRE (SEE SEPERATE LIGHTING PLAN FOR DETAILS)

NOTE: ALL LANES ARE 12-INCH LED

MONOTUBE STRUCTURE NUMBERS	
BASE #	STRUCTURE #
SB3	S-49-19-1
SB8	S-49-19-2
SB10	S-49-19-3

2002
NITIAL CONSTRUCTION

TRAFFIC CONTROL SIGNAL
BUS 51 & ROOSEVELT DR
VILLAGE OF PLOVER
PORTAGE COUNTY

SIGNAL NO. S0883
CABINET TYPE: TS-2
CONTROLLER TYPE: EPAC M51

WISCONSIN DEPARTMENT OF TRANSPORTATION

APPROVAL RECOMMENDED
Date_____ REGION TRAFFIC ENGINEER
APPROVED
Date_____ STATE TRAFFIC ENGINEER

REGION CONTACT: RON JOHNSON
DESIGNED BY: KSA
REVISED BY:

PAGE 1 OF 3

PROJECT NO: 6414-00-78	HWY: BUSINESS 51	COUNTY: PORTAGE	TRAFFIC SIGNAL PLAN	SHEET 146	E

FILE NAME : P:\8339 USH51Signal Design\Outbox\6414-00-78_Roosevelt_20150714\024001_sp_Roosevelt.dgn PLOT DATE : 07/14/2015 PLOT BY : Mukesh Jain PLOT NAME : PLOT SCALE : 40.0021 sf / in.

WISDOT/CADDS SHEET 42

2

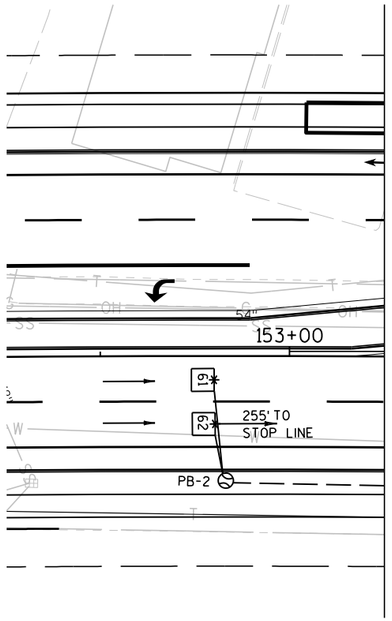

CONSTRUCTION NOTES:

1. * LOCATION IS TO FRONT CENTER OF THE DETECTOR LOOP. LOOP SHALL BE CENTERED IN TRAFFIC LANE. INSTALL LOOPS IN THE AGGREGATE BASE COURSE. DISTANCE BETWEEN MULTIPLE STOP BAR LOOPS SHALL BE 8 FEET.
2. ALL SIGNAL EQUIPMENT SHALL BE INSTALLED WITH A 2-FOOT MINIMUM, 3-FOOT DESIRABLE CLEARANCE TO THE FACE OF CURB UNLESS DIRECTED OTHERWISE BY THE ENGINEER.
3. THE CONTRACTOR SHALL HAVE THE PULL BOXES AND CONDUIT RUNS INSPECTED BEFORE PLACING SIGNAL CABLE INTO THE SYSTEM.
4. ALL WISDOT LUMINARES SHOWN ARE 120 VOLT, CATEGORY C LED, MOUNTED ON A 30 FOOT POLE (LUMINAIRE ARM LENGTHS ARE LISTED IN QUANTITIES).
5. BOND ALL METAL PULL BOXES AND ASSOCIATED COVERS THAT CONTAIN CONDUCTORS CARRYING 50 VOLTS OR MORE.
6. TERMINATION OF BONDING JUMPERS IN PULL BOXES TO BE LUG AND BOLT CONNECTIONS AND CALKED (SILICONE) AFTER INSTALLATION.
7. EACH LOOP DETECTOR SHALL HAVE A SEPARATE LEAD-IN CABLE TO THE CONTROL CABINET.
8. FURNISH AND INSTALL FOLDING STOP SIGNS (36"X36") ON SIGNAL BASES SB1, SB2, SB4, SB6, SB7, AND SB9.
9. THE LOCATIONS OF EXISTING AND PROPOSED UTILITY INSTALLATIONS ARE APPROXIMATE. THERE MAY BE OTHER UTILITY INSTALLATIONS WITHIN THE PROJECT WHICH ARE NOT SHOWN.
10. THE ENGINEER WILL ADJUST THE LOCATIONS OF ITEMS UNDER THIS CONTRACT TO AVOID CONFLICT WITH EXISTING UTILITY FACILITIES.
11. ALL CONDUIT RUNS SHALL HAVE EXTRA PULL WIRE INSTALLED TO PULL FUTURE CABLE. COST SHALL BE INCIDENTAL TO TRAFFIC SIGNAL CABLE, NO. 14.
12. INSTALL 13-FT SIGNAL STANDARDS AT (SB1, SB6)
    INSTALL TYPE 4 (30-FOOT) POLES AT (SB2, SB4, SB5, SB7, SB9)
    INSTALL TYPE 9 MONOTUBE, 30-FOOT ARM AT (SB3, SB8)
    INSTALL TYPE 10 MONOTUBE, 30-FOOT ARM/15-FOOT LUMINARE AT (SB10)
13. INSTALL PUSH BUTTON SIGNS (SIGN CODE R10-3E, 6"X10") WITH ARROWS POINTING TO THE CROSSWALK ASSOCIATED WITH THE PUSH BUTTONS. SIGNS ARE INCIDENTAL TO THE PED PUSH BUTTONS.
14. LOOP DETECTORS 11, 12, 51, AND 52 ARE BEING INSTALLED FOR FUTURE USE.
    INSTALL LOOP DETECTOR CONDUIT, LEAD-IN CABLE, AND DETECTOR WIRE.
    THE LEAD-IN CABLE SHALL BE PROPERLY TERMINATED IN THE CABINET AND AVAILBALE FOR FUTURE CONNECTION.

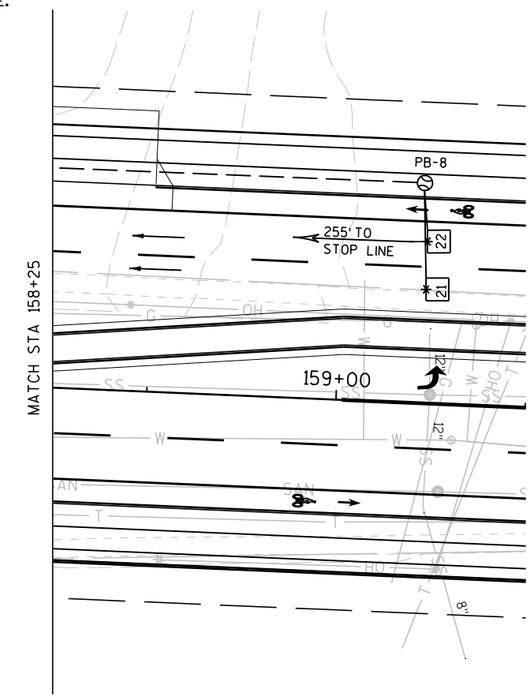

TRAFFIC CONTROL SIGNAL
BUS 51 & ROOSEVELT DR
VILLAGE OF PLOVER
POTAGE COUNTY

SIGNAL NO. S0883 CONTROLLER TYPE: EPAC M51

REGION CONTACT: RON JOHNSON
DESIGNED BY: KSA
REVISED BY:

PAGE 2 OF 3

PROJECT NO: 6414-00-78	HWY: BUSINESS 51	COUNTY: PORTAGE	TRAFFIC SIGNAL PLAN	SHEET 147	E

SEQUENCE OF OPERATION

RING 1

	HEAD NUMBERS	Ø1 R/W	Ø1 CLEAR TO **	Ø2 R/W	Ø2 CLEAR TO **	Ø3 R/W	Ø3 CLEAR TO **	Ø4 R/W	Ø4 CLEAR TO **	FLASH
		NOT USED		OL'A'						
Ø1										
Ø2	2A,2B,2C			G	Y R	R	R R	R	R R	R
Ø3	3A,3B,3C			R	R R	G G	Y R	R	R R	R
Ø4	4A,4B,4C			R	R R	R	R R	G G	Y R	R
Ø5										
Ø6	6A,6B,6C			R	R R	R	R R	R	R R	R
Ø7										
Ø8										
OLA	6D,6E,6F			FY	Y R	R	R R	R	R R	R
OLC	2D,2E,2F			R	R R	R	R R	R	R R	R
Ø2P	2-1,2-2			*	DW DW	DW	DW DW	DW	DW DW	
Ø3P	3-1,3-2,3-3,3-4			DW	DW DW	*	DW DW	DW	DW DW	
Ø4P	4-1,4-2,4-3,4-4			DW	DW DW	DW	DW DW	*	DW DW	
Ø6P	6-1,6-2			DW	DW DW	DW	DW DW	DW	DW DW	

RING 2

	HEAD NUMBERS	Ø5 R/W	Ø5 CLEAR TO **	Ø6 R/W	Ø6 CLEAR TO **	Ø7 R/W	Ø7 CLEAR TO **	Ø8 R/W	Ø8 CLEAR TO **
		NOT USED		OL'C'		NOT USED		NOT USED	
Ø1									
Ø2	2A,2B,2C			R	R R				
Ø3	3A,3B,3C			R	R R				
Ø4	4A,4B,4C			R	R R				
Ø5									
Ø6	6A,6B,6C			G	Y R				
Ø7									
Ø8									
OLA	6D,6E,6F			R	R R				
OLC	2D,2E,2F			FY	Y R				
Ø2P	2-1,2-2			DW	DW DW				
Ø3P	3-1,3-2,3-3,3-4			DW	DW DW				
Ø4P	4-1,4-2,4-3,4-4			DW	DW DW				
Ø6P	6-1,6-2			*	DW DW				

BARRIER

FY - FLASHING YELLOW

** CLEARANCE TO A PHASE IN CONFLICT WITH THIS PHASE ON (SEE CHART 1)

* WHEN CALLED, TIMED STEADY WALK, THEN FLASHING DON'T WALK, THEN GOES TO STEADY DON'T WALK

DETECTOR LOGIC

Detector Input	3	1	7	5	11	9	15	13
Detector #(s)	61	*11	21	*51	31	32	34	41
Calls & Extends	X	X	X	X		X	X	X
Calls Only								
Extends Only					X			
Phase Called	6	1	2	5		3	3	4
Phase Extended	6	1	2	5	3	3	3	4
Disconnect Phase								
Calling Delay						X	X	X
Extension Stretch					X			
Size	6x6	6x20	6x6	6x20	6x16	6x20	6x20	6x20
Number of Turns	4	3	4	3	3	3	3	3

Detector Input	4	2	8	6	12	10	16	14
Detector #(s)	62	*12	22	*52		33	35	
Calls & Extends	X	X	X	X		X	X	
Calls Only								
Extends Only								
Phase Called	6	1	2	5		3	3	
Phase Extended	6	1	2	5		3	3	
Disconnect Phase								
Calling Delay						X	X	
Extension Stretch								
Size	6x6	6x20	6x6	6x20		6x20	6x20	
Number of Turns	4	3	4	3		3	3	

* DETECTORS INSTALLED FOR FUTURE USE (11, 12, 51, 52)

19	17	23	21	27	25	31	29

20	18	24	22	28	26	32	30

CONTROLLER LOGIC

PHASE NUMBER	PHASE LOCKING	DUAL ENTRY W / Ø	PHASE RECALL
1			
2	X	W/6	MIN.
3			
4			
5			
6	X	W/2	MIN.
7			
8			

SPECIAL OVERLAPS

	PROTECTED	PERMITTED
O.L. "A"		2
O.L. "B"		
O.L. "C"		6
O.L. "D"		

CHART 1

PHASE ON	NONCONFLICTING PHASE ALLOWED TO TIME CONCURRENTLY	PHASES IN CONFLICT WITH PHASE ON
1		
2	6, OLA, OLC	3,4
3	NONE	2,4,6,OLA,OLC
4	NONE	2,3,6,OLA,OLC
5		
6	2,OLA,OLC	3,4
7		
8		

TYPE OF INTERCONNECT COMMUNICATION	
NONE	X
TBC	
CLOSED LOOP TWISTED PAIR*	
CLOSED LOOP FIBER OPTIC*	
FIBER OPTIC	
RADIO	
*LOCATION OF MASTER CONTROLLER NO: S-	
SIGNAL SYSTEM #: SS- -	

TYPE OF PRE-EMPT	
NONE	X
RAILROAD	
EMERGENCY VEHICLE	
3M	
TOMAR	
HARDWIRE	
OTHER	
LIFT BRIDGE	
QUEUE DETECTOR	

TYPE OF LIGHTING	
BY OTHER AGENCY	
IN TRAFFIC SIGNAL CABINET	X
IN SEPARATE DOT LIGHTING CABINET	

GENERAL NOTES:

1. ANY ACTUATED PHASE FOR WHICH THERE IS NO CALL SHALL BE SKIPPED.
2. WHEN ONE PHASE IS ON ALONE, ANY NONCONFLICTING PHASE MAY START TIMING CONCURRENTLY WITHOUT A CLEARANCE INTERVAL. (SEE CHART 1 AT LEFT.)
3. WHEN OPPOSING THRU PHASES ARE TIMING CONCURRENTLY. THEY SHALL TERMINATE TOGETHER DUE TO PERMISSIVE LEFT TURN CONFLICT.

TRAFFIC CONTROL SIGNAL
BUS 51 & ROOSEVELT DRIVE
VILLAGE OF PLOVER
PORTAGE COUNTY

SIGNAL NO. S0883 CONTROLLER TYPE: EPAC M51

REGION CONTACT: RON JOHNSON
DESIGNED BY: KSA
REVISED BY:

PAGE 3 OF 3

PROJECT NO: 6414-00-07	HWY: BUSINESS 51	COUNTY: PORTAGE	SEQUENCE OF OPERATIONS	SHEET 148	E

2

PROJECT ID:	6414-00-07/78
INTERSECTION:	B51@ROOSEVELT DR., S#0883

Signal Wire Color Coding	BLK - black	RED - red	green
	WHT - white	BLU - blue	orange

CB1 TO	JUMPER	AWG 14 # OF COND.	HEAD NO.	PHASE	SIGNAL INDICATION WIRE COLOR								Walk	Ped Button
					RED	YELLOW	GREEN	<RED>	<YELLOW>	<GREEN>	Flashing Yellow	D/Walk		
SB1		9	2F	OLC				RED/BLK	ORG/BLK		GRN/BLK			
			6A	6	RED	ORG	GRN							
			4-1	PED 4								BLK	BLU	WHT/BLK
SB2		12	2E	OLC				RED/BLK	ORG/BLK		GRN/BLK			
			6D	OLA				RED	ORG		GRN			
			4-2, 4-3	PED 4								BLK	BLU	WHT/BLK
SB3		9	2B, 2C	2	RED	ORG	GRN							
			4-4	PED 4								BLK	BLU	WHT/BLK
SB4		12	3C	3	RED/BLK	ORG/BLK	GRN/BLK			GRN/BLK				
			4A	4	RED	ORG	GRN							
			2-1	PED 2								BLK	BLU	WHT/BLK
SB5		9	3B	3	RED	ORG	GRN			GRN				
			2-2	PED 2								BLK	BLU	WHT/BLK
SB6		12	2A	2	RED/BLK	ORG/BLK	GRN/BLK							
			6F	OLA				RED	ORG		GRN			
			3-1	PED 3								BLK	BLU	WHT/BLK
SB7		12	2D	OLC				RED/BLK	ORG/BLK		GRN/BLK			
			6E	OLA				RED	ORG		GRN			
			3-2, 3-3	PED 3								BLK	BLU	WHT/BLK
SB8		9	6B, 6C	6	RED	ORG	GRN							
			3-4	PED 3								BLK	BLU	WHT/BLK
SB9		12	3A	3	RED/BLK	ORG/BLK	GRN/BLK							
			4C	4	RED	ORG	GRN			GRN				
			6-1	PED 6								BLK	BLU	WHT/BLK
SB10		9	4B	4	RED	ORG	GRN			GRN				
			6-2	PED 6								BLK	BLU	WHT/BLK

Equipment grounding conductor 10 AWG Green XLP	
From	To
CB1	SB1
SB1	SB2
SB2	SB3
SB3	SB4
SB4	SB5
SB5	SB6
SB6	SB7
SB7	SB8
SB8	SB9
SB9	SB10
SB10	CB1

Pull Box Bonding Jumper 10 AWG Green XLP	
From	To

Lighting UF #12/2 w/ground	
From	To
CB1	SB2
CB1	SB5
CB1	SB7
CB1	SB9
CB1	SB10

Emergency Vehicle Preemption	
From	To

*Use the white conductor in the cable assembly as the grounded conductor for all traffic signal indications
*Ensure the grounded conductor in the feeder cable and the pole cables are both 12" longer than the ungrounded conductors.
*At the signal bases, connect one terminal from the pedestrian push buttons to the color indicated in the chart. Connect the other terminal to the grounded conductor.
"Other" column may include shadow box sign

2

LEGEND

- CONTROL CABINET (TYPE 9 SPECIAL)
- NONMETALLIC CONDUIT 2", UNLESS OTHERWISE NOTED
- SIGNAL HEAD, PEDESTAL MOUNT TYPE 1 BASE (WITH BACKPLATE)
- (XX) SIGNAL HEAD, MAST ARM MOUNT TYPE 2 BASE (WITH BACKPLATE)
- LOCALLY MAINTAINED LUMINAIRE (SEE SEPERATE LIGHTING REMOVAL PLAN FOR DETAILS)
- B PEDESTRIAN HEAD WITH PUSH BUTTON
- LOOP DETECTOR IN 1" NONMETALLIC CONDUIT SIDE PULL LOOP DETECTOR INSTALLED IN BASE COURSE WITH PULL BOX OFF ROADWAY (OPTION 2)
- PULL BOX, 12" X 24"
- PULL BOX, STEEL, 24" X 36"
- 2A SIGNAL HEAD NUMBER
- PED INDICATOR (WALK/DON'T WALK)
- (R) RED CIRCULAR INDICATOR
- (Y) YELLOW CIRCULAR INDICATOR
- (G) GREEN CIRCULAR INDICATOR

NOTE: GRAYSHADE REPRESENTS EXISTING TO REMAIN. BOLD REPRESENTS EXISTING TO BE REMOVED.

CONSTRUCTION NOTES:

1. CONTACT THE DEPARTMENTS ELECTRICIAN REGARDING REMOVAL OF THE EXISTING SIGNAL CABINET AND CONTROLLER. WISDOT WILL BE RESPONSIBLE FOR THIS REMOVAL.
2. ALL EXISTING EQUIPMENT TO BE REMOVED, SALVAGED, OR ABANDONED. SEE SPECIAL PROVISIONS REGARDING SALVAGING WISDOT SIGNAL AND LIGHTING EQUIPMENT.
3. ALL EXISTING CONDUIT AND PULL BOXES TO BE REMOVED OR ABANDONED. EXISTING CABLE AND WIRE SHALL BECOME THE CONTRACTORS PROPERTY AFTER REMOVAL. PULL BOX RIMS AND COVERS SHALL BE RETAINED BY WISDOT PER SALVAGING PROVISIONS.

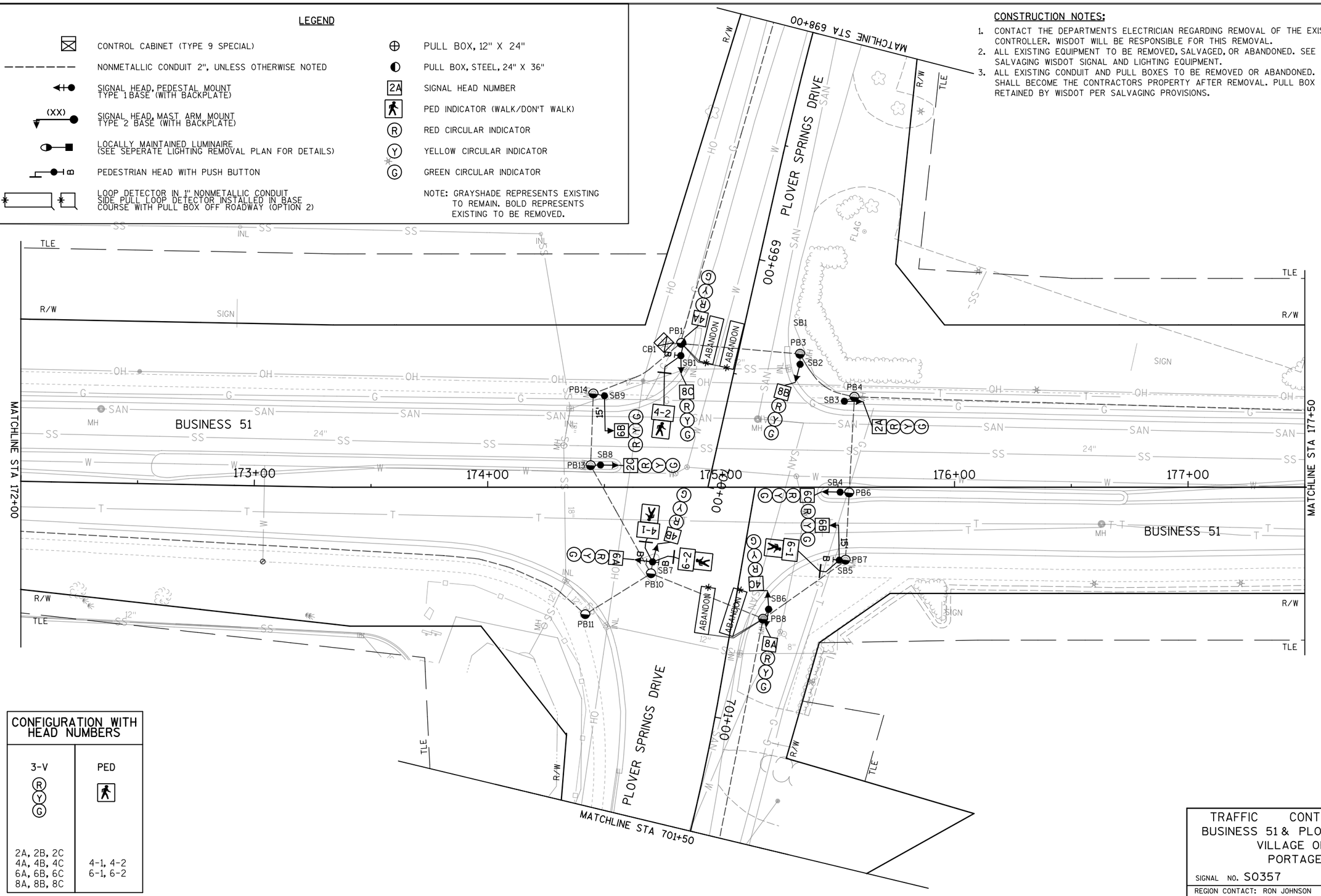

CONFIGURATION WITH HEAD NUMBERS	
3-V (R) (Y) (G)	PED
2A, 2B, 2C 4A, 4B, 4C 6A, 6B, 6C 8A, 8B, 8C	4-1, 4-2 6-1, 6-2

TRAFFIC CONTROL SIGNAL
BUSINESS 51 & PLOVER SPRINGS DRIVE
VILLAGE OF PLOVER
PORTAGE COUNTY

SIGNAL NO. S0357

REGION CONTACT: RON JOHNSON
DESIGNED BY: SEH
REVISED BY:

PAGE 1 OF 2

PROJECT NO: 6414-00-78	HWY: BUSINESS 51	COUNTY: PORTAGE	TRAFFIC SIGNAL REMOVAL PLAN	SHEET 150	E

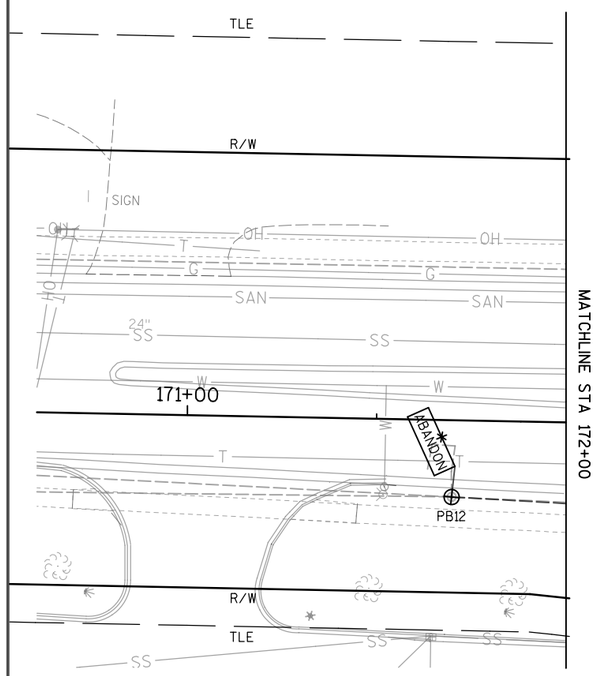

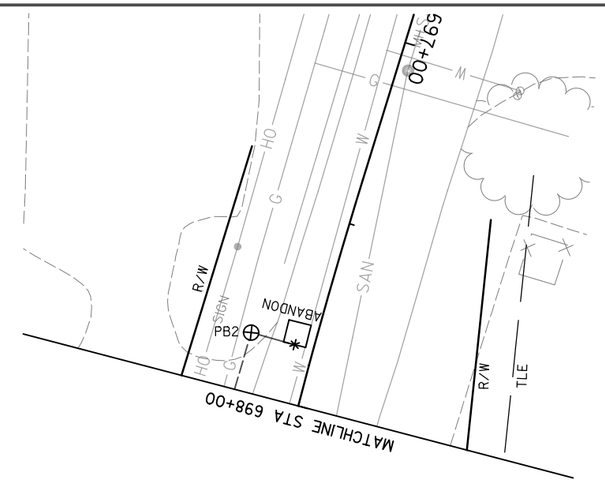

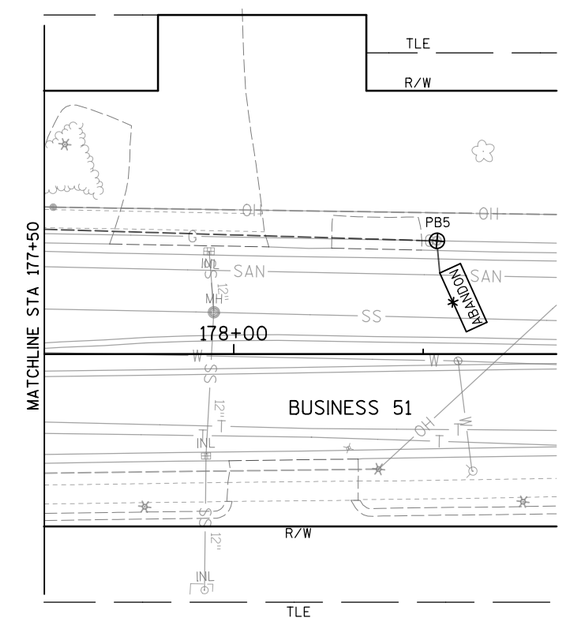

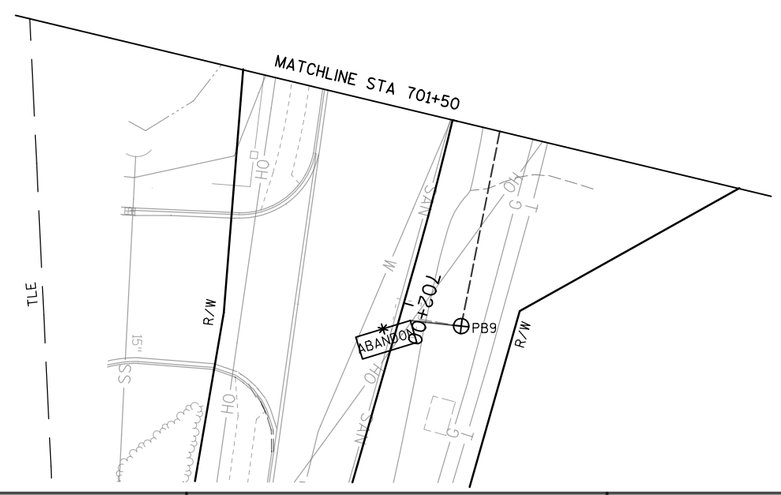

TRAFFIC CONTROL SIGNAL
BUSINESS 51 & PLOVER SPRINGS DRIVE
VILLAGE OF PLOVER
PORTAGE COUNTY

SIGNAL NO. S0357

REGION CONTACT: RON JOHNSON
DESIGNED BY: SEH
REVISED BY:

PAGE 2 OF 2

PROJECT NO:6414-00-78	HWY:BUSINESS 51	COUNTY:PORTAGE	TRAFFIC SIGNAL REMOVAL PLAN	SHEET 151	E

2

LEGEND

- CONTROL CABINET (TYPE 9 SPECIAL)
- NONMETALLIC CONDUIT 2", UNLESS OTHERWISE NOTED
- SIGNAL HEAD, PEDESTAL MOUNT TYPE 1 BASE (WITH BACKPLATE)
- SIGNAL HEAD/LUMINAIRE POLE TYPE 4 TYPE 2 BASE (WITH BACKPLATE)
- 30' MAX — SIGNAL HEAD, TYPE 9 MONOTUBE TYPE 10 BASE (WITH BACKPLATE)
- WISDOT LUMINAIRE OUT OF SIGNAL CABINET TYPE 4 POLE FOR FUTURE SIGNALS TYPE 2 BASE
- LOCALLY MAINTAINED LUMINAIRE (SEE SEPERATE LIGHTING PLAN FOR DETAILS)
- PEDESTRIAN HEAD WITH PUSH BUTTON
- LOOP DETECTOR IN 1" NONMETALLIC CONDUIT SIDE PULL LOOP DETECTOR INSTALLED IN BASE COURSE WITH PULL BOX OFF ROADWAY (OPTION 2)
- POLYMER CONCRETE PULLBOX 24" X 42"
- 2A — SIGNAL HEAD NUMBER
- PED INDICATOR (WALK/DON'T WALK)
- R — RED CIRCULAR INDICATOR
- Y — YELLOW CIRCULAR INDICATOR
- G — GREEN CIRCULAR INDICATOR
- R — RED ARROW (LEFT)
- Y — YELLOW ARROW (LEFT)
- FY — FLASHING YELLOW ARROW (LEFT)
- G — GREEN ARROW (LEFT)
- Y — YIELD SIGN
- LANE DESIGNATION (FOR REFERENCE ONLY)
- NOTE: ALL LENSES ARE 12-INCH LED

CONSTRUCTION NOTES:

1. * LOCATION IS TO FRONT CENTER OF THE DETECTOR LOOP. LOOP SHALL BE CENTERED IN TRAFFIC LANE. INSTALL LOOPS IN THE AGGREGATE BASE COURSE. DISTANCE BETWEEN MULTIPLE STOP BAR LOOPS SHALL BE 8 FEET.
2. ALL SIGNAL EQUIPMENT SHALL BE INSTALLED WITH A 2-FOOT MINIMUM, 3-FOOT DESIRABLE CLEARANCE TO THE FACE OF THE CURB UNLESS DIRECTED OTHERWISE BY THE ENGINEER.
3. THE CONTRACTOR SHALL HAVE THE PULL BOXES AND CONDUIT RUNS INSPECTED BEFORE PLACING SIGNAL CABLE INTO THE SYSTEM.
4. ALL WISDOT LUMINAIRES SHOWN ARE 120 VOLT, CATEGORY C LED, MOUNTED ON A 30 FOOT POLE (LUMINAIRE ARM LENGTHS ARE LISTED IN QUANTITIES).
5. BOND ALL METAL PULL BOXES AND ASSOCIATED COVERS THAT CONTAIN CONDUCTORS CARRYING 50 VOLTS OR MORE.
6. TERMINATION OF BONDING JUMPERS IN PULL BOXES TO BE LUG AND BOLT CONNECTIONS AND CALKED (SILICONE) AFTER INSTALLATION.
7. EACH LOOP DETECTOR SHALL HAVE A SEPERATE LEAD-IN CABLE TO THE CONTROL CABINET.
8. FURNISH AND INSTALL FOLDING STOP SIGNS (36"X36") ON SIGNAL BASES SB1, SB3, SB4, SB6, SB7, SB9, SB10, AND SB12.
9. THE LOCATIONS OF EXISTING AND PROPOSED UTILITY INSTALLATIONS ARE APPROXIMATE. THERE MAY BE OTHER UTILITY INSTALLATIONS WITHIN THE PROJECT WHICH ARE NOT SHOWN.
10. THE ENGINEER WILL ADJUST THE LOCATIONS OF ITEMS UNDER THIS CONTRACT TO AVOID CONFLICT WITH EXISTING UTILITY FACILITIES.
11. ALL CONDUIT RUNS SHALL HAVE EXTRA PULL WIRE INSTALLED TO PULL FUTURE CABLE. COST SHALL BE INCIDENTAL TO TRAFFIC SIGNAL CABLE, NO. 14.

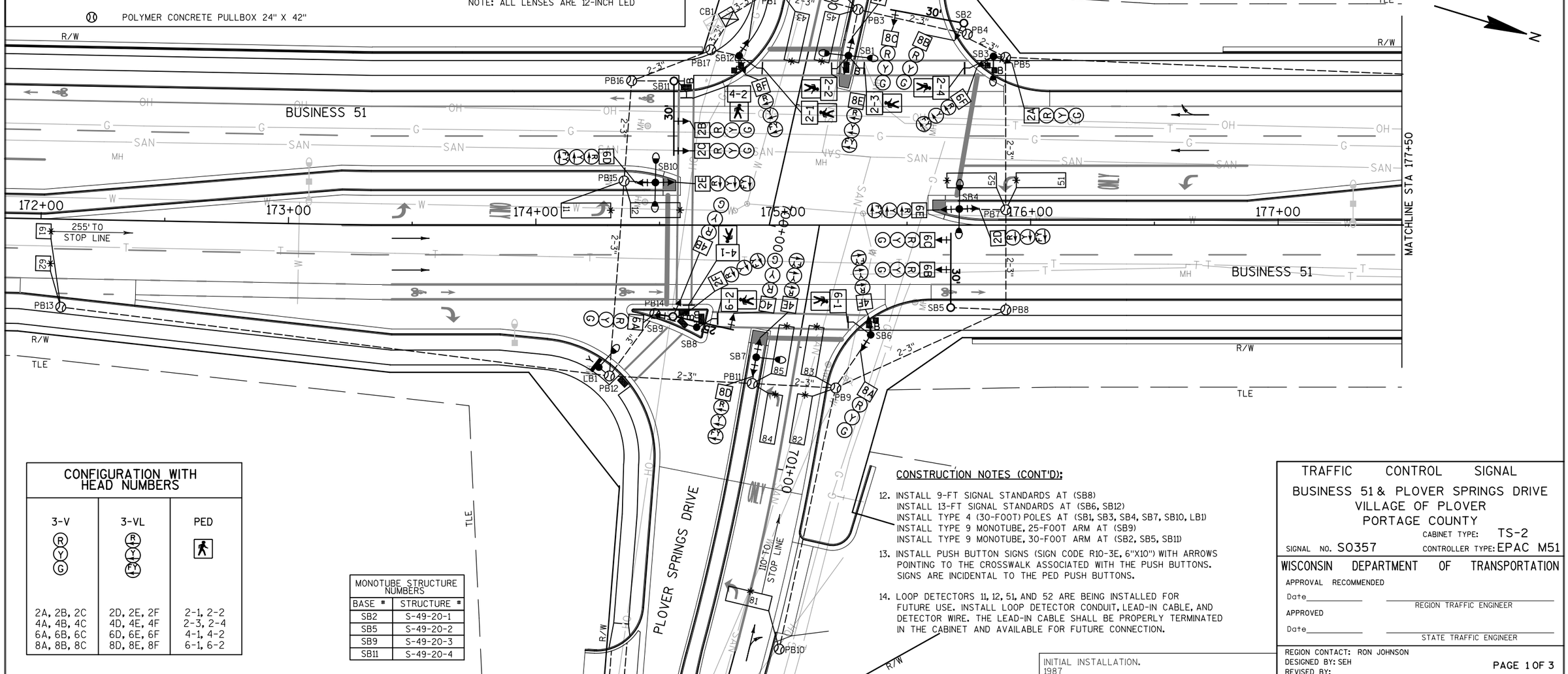

CONFIGURATION WITH HEAD NUMBERS

3-V	3-VL	PED
R Y G	R Y FY	
2A, 2B, 2C	2D, 2E, 2F	2-1, 2-2
4A, 4B, 4C	4D, 4E, 4F	2-3, 2-4
6A, 6B, 6C	6D, 6E, 6F	4-1, 4-2
8A, 8B, 8C	8D, 8E, 8F	6-1, 6-2

MONOTUBE STRUCTURE NUMBERS	
BASE #	STRUCTURE #
SB2	S-49-20-1
SB5	S-49-20-2
SB9	S-49-20-3
SB11	S-49-20-4

CONSTRUCTION NOTES (CONT'D):

12. INSTALL 9-FT SIGNAL STANDARDS AT (SB8)
    INSTALL 13-FT SIGNAL STANDARDS AT (SB6, SB12)
    INSTALL TYPE 4 (30-FOOT) POLES AT (SB1, SB3, SB4, SB7, SB10, LB1)
    INSTALL TYPE 9 MONOTUBE, 25-FOOT ARM AT (SB9)
    INSTALL TYPE 9 MONOTUBE, 30-FOOT ARM AT (SB2, SB5, SB11)
13. INSTALL PUSH BUTTON SIGNS (SIGN CODE R10-3E, 6"X10") WITH ARROWS POINTING TO THE CROSSWALK ASSOCIATED WITH THE PUSH BUTTONS. SIGNS ARE INCIDENTAL TO THE PED PUSH BUTTONS.
14. LOOP DETECTORS 11, 12, 51, AND 52 ARE BEING INSTALLED FOR FUTURE USE. INSTALL LOOP DETECTOR CONDUIT, LEAD-IN CABLE, AND DETECTOR WIRE. THE LEAD-IN CABLE SHALL BE PROPERLY TERMINATED IN THE CABINET AND AVAILABLE FOR FUTURE CONNECTION.

INITIAL INSTALLATION.
1987

TRAFFIC CONTROL SIGNAL
BUSINESS 51 & PLOVER SPRINGS DRIVE
VILLAGE OF PLOVER
PORTAGE COUNTY

CABINET TYPE: TS-2
SIGNAL NO. S0357 CONTROLLER TYPE: EPAC M51

WISCONSIN DEPARTMENT OF TRANSPORTATION

APPROVAL RECOMMENDED
Date_____ REGION TRAFFIC ENGINEER
APPROVED
Date_____ STATE TRAFFIC ENGINEER

REGION CONTACT: RON JOHNSON
DESIGNED BY: SEH
REVISED BY:

PAGE 1 OF 3

PROJECT NO: 6414-00-78	HWY: BUSINESS 51	COUNTY: PORTAGE	TRAFFIC SIGNAL PLAN	SHEET 152	E

2

SEE "LEGEND AND CONSTRUCTION NOTES"
ON MAIN PLAN SHEET

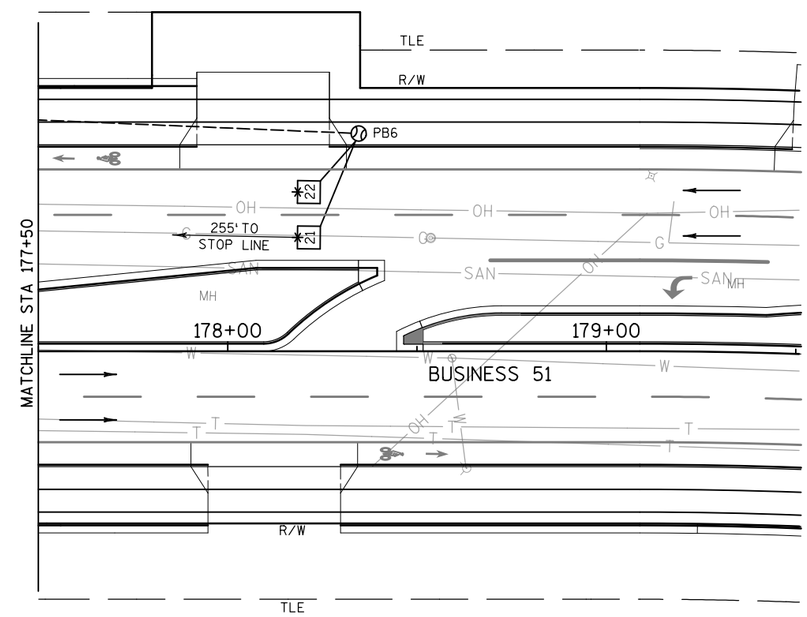

TRAFFIC CONTROL SIGNAL

BUSINESS 51 & PLOVER SPRINGS DRIVE
VILLAGE OF PLOVER
PORTAGE COUNTY

CABINET TYPE: TS-2

SIGNAL NO. S0357

CONTROLLER TYPE: EPAC M51

REGION CONTACT: RON JOHNSON
DESIGNED BY: SEH
REVISED BY:

PAGE 2 OF 3

PROJECT NO: 6414-00-78	HWY: BUSINESS 51	COUNTY: PORTAGE	TRAFFIC SIGNAL PLAN	SHEET 153	E

SEQUENCE OF OPERATION

RING 1

	HEAD NUMBERS	Ø1 R/W	Ø1 CLEAR TO **	Ø2 R/W	Ø2 CLEAR TO **	Ø3 R/W	Ø3 CLEAR TO **	Ø4 R/W	Ø4 CLEAR TO **	FLASH
		NOT USED		OLA		NOT USED		OLB		
Ø1										
Ø2	2A,2B,2C			G Y R				R R R		R
Ø3										
Ø4	4A,4B,4C			R R R				G Y R		R
Ø5										
Ø6	6A,6B,6C			R R R				R R R		R
Ø7										
Ø8	8A,8B,8C			R R R				R R R		R
OLA	6D,6E,6F			FY Y R				R R R		R
OLB	8D,8E,8F			R R R				FY Y R		R
OLC	2D,2E,2F			R R R				R R R		R
OLD	4D,4E,4F			R R R				R R R		R
Ø2P	2-1,2-2,2-3,2-4			* DW DW				DW DW DW		
Ø4P	4-1,4-2			DW DW DW				* DW DW		
Ø6P	6-1,6-2			DW DW DW				DW DW DW		
Ø8P										

RING 2

	HEAD NUMBERS	Ø5 R/W	Ø5 CLEAR TO **	Ø6 R/W	Ø6 CLEAR TO **	Ø7 R/W	Ø7 CLEAR TO **	Ø8 R/W	Ø8 CLEAR TO **
		NOT USED		OLC		NOT USED		OLD	
Ø1									
Ø2	2A,2B,2C			R R R				R R R	
Ø3									
Ø4	4A,4B,4C			R R R				R R R	
Ø5									
Ø6	6A,6B,6C			G Y R				R R R	
Ø7									
Ø8	8A,8B,8C			R R R				G Y R	
OLA	6D,6E,6F			R R R				R R R	
OLB	8D,8E,8F			R R R				R R R	
OLC	2D,2E,2F			FY Y R				R R R	
OLD	4D,4E,4F			R R R				FY Y R	
Ø2P	2-1,2-2,2-3,2-4			DW DW DW				DW DW DW	
Ø4P	4-1,4-2			DW DW DW				DW DW DW	
Ø6P	6-1,6-2			* DW DW				DW DW DW	
Ø8P									

FY=FLASHING YELLOW

BARRIER

DETECTOR LOGIC

DETECTOR INPUT	3	1	7	5	11	9	15	13	19	17	23	21	27	25	31	29
DETECTOR #(S)	61	*11	21	*51	41	42	44	81	82	84						
CALLS & EXTENDS	X	X	X	X		X	X		X	X						
CALLS ONLY																
EXTENDS ONLY					X			X								
PHASE CALLED	6	1	2	5		4	4		8	8						
PHASE EXTENDED	6	1	2	5	4	4	4	8	8	8						
DISCONNECT PHASE																
CALLING DELAY						X			X							
EXTENSION STRETCH					X			X								
SIZE	6x6	6x20	6x6	6x20	6x16	6x20	6x20	6x18	6x20	6x20						
NUMBER OF TURNS	4	3	4	3	3	3	3	3	3	3						
DETECTOR INPUT	4	2	8	6	12	10	16	14	20	18	24	22	28	26	32	30
DETECTOR #(S)	62	*12	22	*52		43	45		83	85						
CALLS & EXTENDS	X	X	X	X		X	X		X	X						
CALLS ONLY																
EXTENDS ONLY																
PHASE CALLED	6	1	2	5		4	4		8	8						
PHASE EXTENDED	6	1	2	5		4	4		8	8						
DISCONNECT PHASE																
CALLING DELAY						X			X							
EXTENSION STRETCH																
SIZE	6x6	6x20	6x6	6x20		6x20	6x20		6x20	6x20						
NUMBER OF TURNS	4	3	4	3		3	3		3	3						

* DETECTORS INSTALLED FOR FUTURE USE (11, 12, 51, 52)

TYPE OF INTERCONNECT COMMUNICATION	
NONE	X
TBC	
CLOSED LOOP TWISTED PAIR*	
CLOSED LOOP FIBER OPTIC*	
RADIO	
*LOCATION OF MASTER CONTROLLER NO: S-	
SIGNAL SYSTEM #: SS- -	

TYPE OF PRE-EMPT	
NONE	X
RAILROAD	
EMERGENCY VEHICLE	
3M	
TOMAR	
HARDWIRE	
OTHER	
LIFT BRIDGE	
QUEUE DETECTOR	

TYPE OF LIGHTING	
BY OTHER AGENCY	
IN TRAFFIC SIGNAL CABINET	X
IN SEPARATE DOT LIGHTING CABINET	

SPECIAL OVERLAPS

	PROTECTED	PERMISSIVE
OLA		2
OLB		4
OLC		6
OLD		8

CONTROLLER LOGIC

PHASE NUMBER	PHASE LOCKING	DUAL ENTRY W / Ø	PHASE RECALL
1			
2	X	6	MIN.
3			
4		8	
5			
6	X	2	MIN.
7			
8		4	

N

CHART 1

PHASE ON	NONCONFLICTING PHASE ALLOWED TO TIME CONCURRENTLY	PHASES IN CONFLICT WITH PHASE ON
1		
2	6,OLA,OLC	4,8,OLB,OLD
3		
4	8,OLB,OLD	2,6,OLA,OLC
5		
6	2,OLA,OLC	4,8,OLB,OLD
7		
8	4,OLB,OLD	2,6,OLA,OLC

** CLEARANCE TO A PHASE IN CONFLICT WITH THIS PHASE ON (SEE CHART 1)

* WHEN CALLED, TIMED STEADY WALK, THEN FLASHING DON'T WALK, THEN GOES TO STEADY DON'T WALK

GENERAL NOTES:

1. ANY ACTUATED PHASE FOR WHICH THERE IS NO CALL SHALL BE SKIPPED.
2. WHEN ONE PHASE IS ON ALONE, ANY NONCONFLICTING PHASE MAY START TIMING CONCURRENTLY WITHOUT A CLEARANCE INTERVAL. (SEE CHART 1 AT LEFT.)
3. WHEN OPPOSING THRU PHASES ARE TIMING CONCURRENTLY THEY SHALL TERMINATE TOGETHER DUE TO PERMISSIVE LEFT TURN CONFLICT.

TRAFFIC CONTROL SIGNAL
BUSINESS 51 & PLOVER SPRINGS DRIVE
VILLAGE OF PLOVER
PORTAGE COUNTY

SIGNAL NO. S0357

CONTROLLER TYPE: EPAC M51

DATE 04/13 PAGE NO. 3 OF 3

PROJECT ID:	6414-00-07/78
INTERSECTION:	B51@PLOVER SPRINGS DR., S#0357

Signal Wire Color Coding	BLK - BLACK	RED - RED	GRN - GREEN
	WHT - WHITE	BLU - BLUE	ORG - ORANGE

CB1 TO	JUMPER	AWG 14 # OF COND.	HEAD NO.	PHASE	SIGNAL INDICATION WIRE COLOR								Walk	Ped Button
					RED	YELLOW	GREEN	<RED>	<YELLOW>	<GREEN>	Flashing Yellow	D/Walk		
SB1		12	4D	OLD				RED	ORG		GRN			
			8E	OLB				RED/BLK	ORG/BLK		GRN/BLK			
			2-2, 2-3	PED 2								BLK	BLU	WHT/BLK
SB2		5	8B, 8C	8	RED	ORG	GRN							
SB3		9	2A	2	RED/BLK	ORG/BLK	GRN/BLK							
			6F	OLA				RED	ORG		GRN/BLK			
			2-4	PED 2								BLK	BLU	WHT/BLK
SB4		9	2D	OLC				RED/BLK	ORG/BLK		GRN/BLK			
			6E	OLA				RED	ORG		GRN			
SB5		5	6B, 6C	6	RED	ORG	GRN							
SB6		12	4F	OLD				RED	ORG		GRN			
			8A	8	RED/BLK	ORG/BLK	GRN/BLK							
			6-1	PED 6								BLK	BLU	WHT/BLK
SB7		9	4E	OLD				RED	ORG		GRN			
			8D	OLB				RED/BLK	ORG/BLK		GRN/BLK			
SB8		12	2F	OLC				RED	ORG		GRN			
			4C	4	RED/BLK	ORG/BLK	GRN/BLK							
			6-2	PED 6								BLK	BLU	WHT/BLK
SB9		12	4B	4	RED/BLK	ORG/BLK	GRN/BLK							
			6A	6	RED	ORG	GRN							
			4-1	PED 4								BLK	BLU	WHT/BLK
SB10		9	2E	OLC				RED	ORG		GRN			
			6D	OLA				RED/BLK	ORG/BLK		GRN/BLK			
SB11		5	2B, 2C	2	RED	ORG	GRN							
			PED 4											WHT/BLK
SB12		12	4A	4	RED	ORG	GRN							
			8F	OLB				RED/BLK	ORG/BLK		GRN/BLK			
			2-1	PED 2								BLK/WHT	BLU/BLK	WHT/BLK
			4-2	PED 4								BLK	BLU	

Equipment grounding conductor 10 AWG Green XLP	
From	To
CB1	SB1
SB1	SB2
SB2	SB3
SB3	SB4
SB4	SB5
SB5	SB6
SB6	SB7
SB7	SB8
SB8	SB9
SB9	LB1
LB1	SB10
SB10	SB11
SB11	SB12
SB12	CB1

Pull Box Bonding Jumper 10 AWG Green XLP	
From	To

Lighting UF #12/2 w/ground	
From	To
CB1	SB1
CB1	SB3
CB1	SB4
CB1	SB7
CB1	LB10
CB1	SB10

Emergency Vehicle Preemption	
From	To

*Use the white conductor in the cable assembly as the grounded conductor for all traffic signal indications
*Ensure the grounded conductor in the feeder cable and the pole cables are both 12" longer than the ungrounded conductors.
*At the signal bases, connect one terminal from the pedestrian push buttons to the color indicated in the chart. Connect the other terminal to the grounded conductor.
"Other" column may include shadow box sign

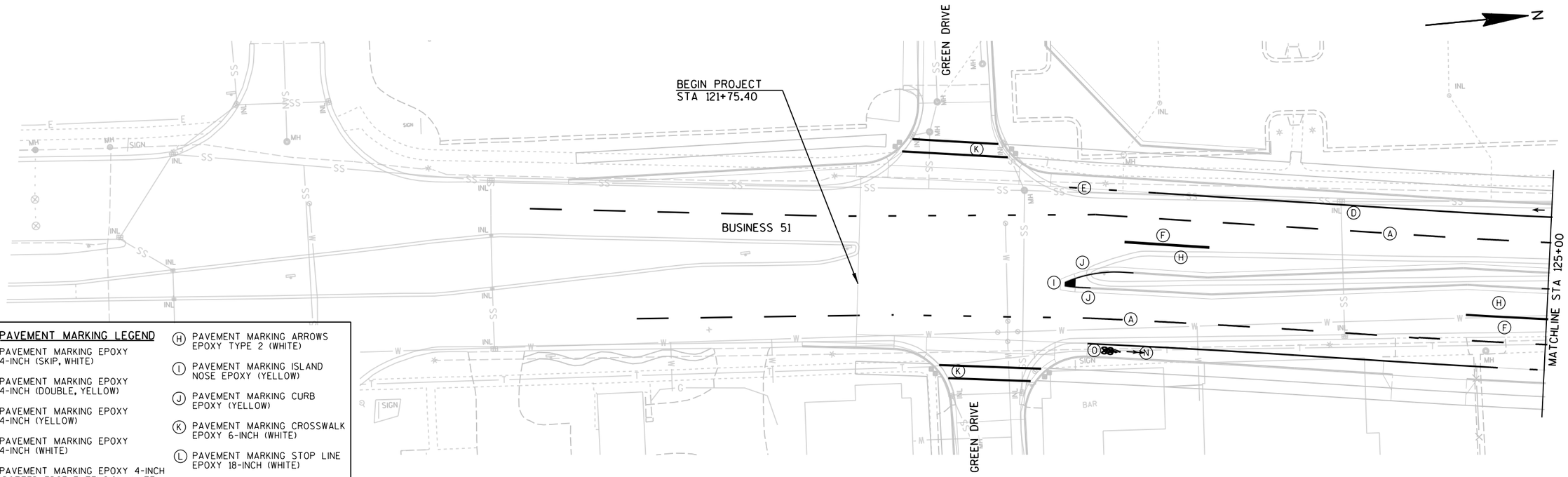

PAVEMENT MARKING LEGEND

- (A) PAVEMENT MARKING EPOXY 4-INCH (SKIP, WHITE)
- (B) PAVEMENT MARKING EPOXY 4-INCH (DOUBLE, YELLOW)
- (C) PAVEMENT MARKING EPOXY 4-INCH (YELLOW)
- (D) PAVEMENT MARKING EPOXY 4-INCH (WHITE)
- (E) PAVEMENT MARKING EPOXY 4-INCH (DOTTED EDGE EXTENSION, WHITE)
- (F) PAVEMENT MARKING EPOXY 8-INCH (WHITE)
- (G) PAVEMENT MARKING WORDS EPOXY (WHITE)
- (H) PAVEMENT MARKING ARROWS EPOXY TYPE 2 (WHITE)
- (I) PAVEMENT MARKING ISLAND NOSE EPOXY (YELLOW)
- (J) PAVEMENT MARKING CURB EPOXY (YELLOW)
- (K) PAVEMENT MARKING CROSSWALK EPOXY 6-INCH (WHITE)
- (L) PAVEMENT MARKING STOP LINE EPOXY 18-INCH (WHITE)
- (M) PAVEMENT MARKING RAILROAD CROSSING EPOXY (WHITE)
- (N) PAVEMENT MARKING ARROWS BIKE LANE EPOXY (WHITE)
- (O) PAVEMENT MARKING SYMBOLS BIKE LANE EPOXY (WHITE)

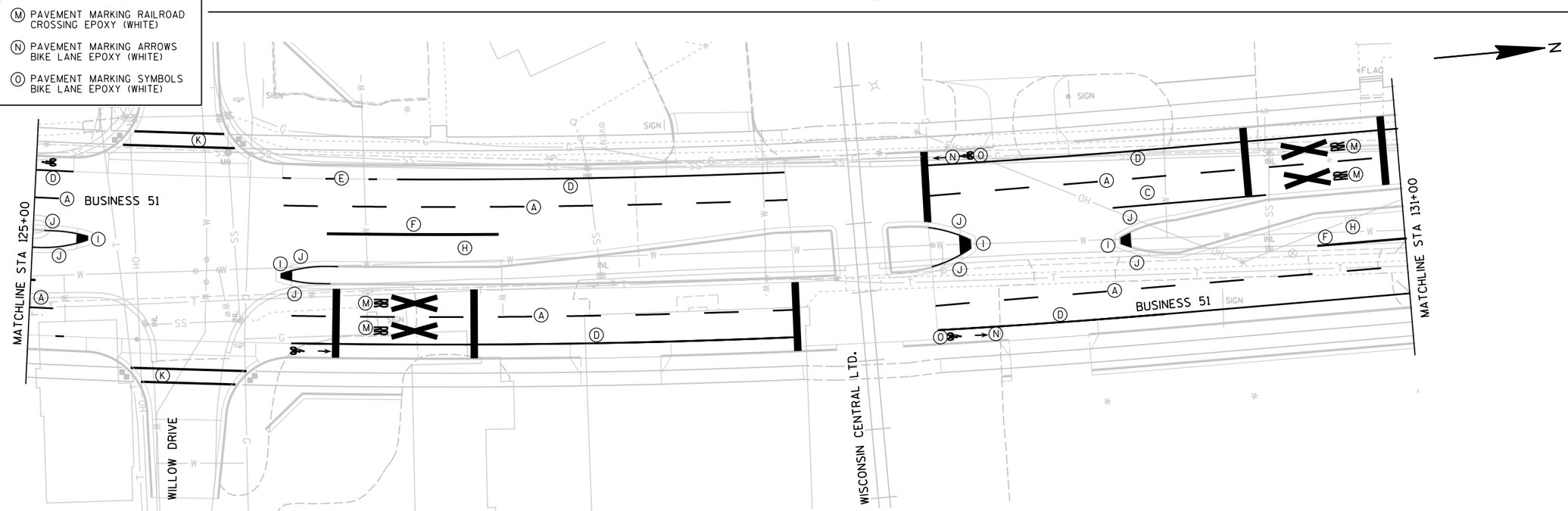

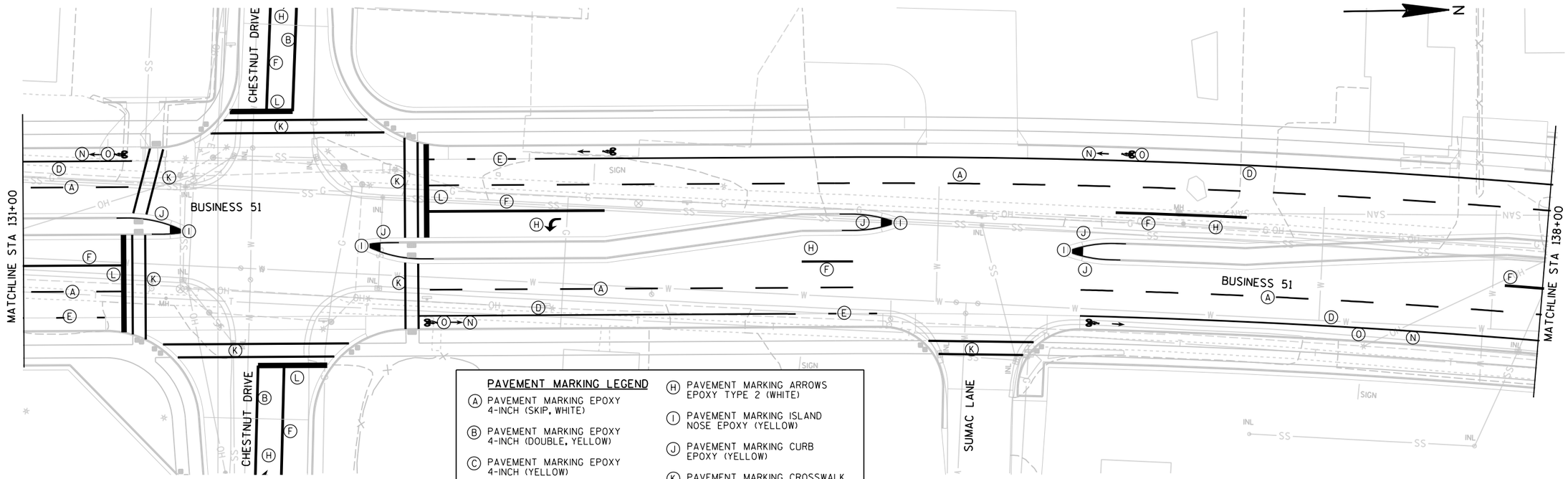

PAVEMENT MARKING LEGEND

- (A) PAVEMENT MARKING EPOXY 4-INCH (SKIP, WHITE)
- (B) PAVEMENT MARKING EPOXY 4-INCH (DOUBLE, YELLOW)
- (C) PAVEMENT MARKING EPOXY 4-INCH (YELLOW)
- (D) PAVEMENT MARKING EPOXY 4-INCH (WHITE)
- (E) PAVEMENT MARKING EPOXY 4-INCH (DOTTED EDGE EXTENSION, WHITE)
- (F) PAVEMENT MARKING EPOXY 8-INCH (WHITE)
- (G) PAVEMENT MARKING WORDS EPOXY (WHITE)
- (H) PAVEMENT MARKING ARROWS EPOXY TYPE 2 (WHITE)
- (I) PAVEMENT MARKING ISLAND NOSE EPOXY (YELLOW)
- (J) PAVEMENT MARKING CURB EPOXY (YELLOW)
- (K) PAVEMENT MARKING CROSSWALK EPOXY 6-INCH (WHITE)
- (L) PAVEMENT MARKING STOP LINE EPOXY 18-INCH (WHITE)
- (M) PAVEMENT MARKING RAILROAD CROSSING EPOXY (WHITE)
- (N) PAVEMENT MARKING ARROWS BIKE LANE EPOXY (WHITE)
- (O) PAVEMENT MARKING SYMBOLS BIKE LANE EPOXY (WHITE)

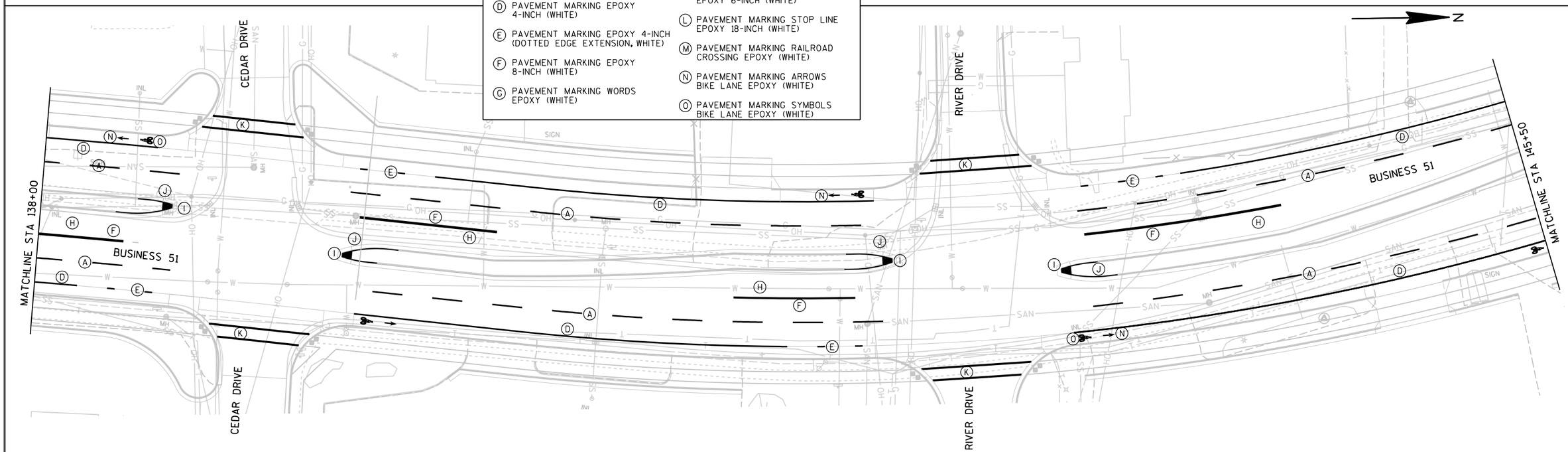

2

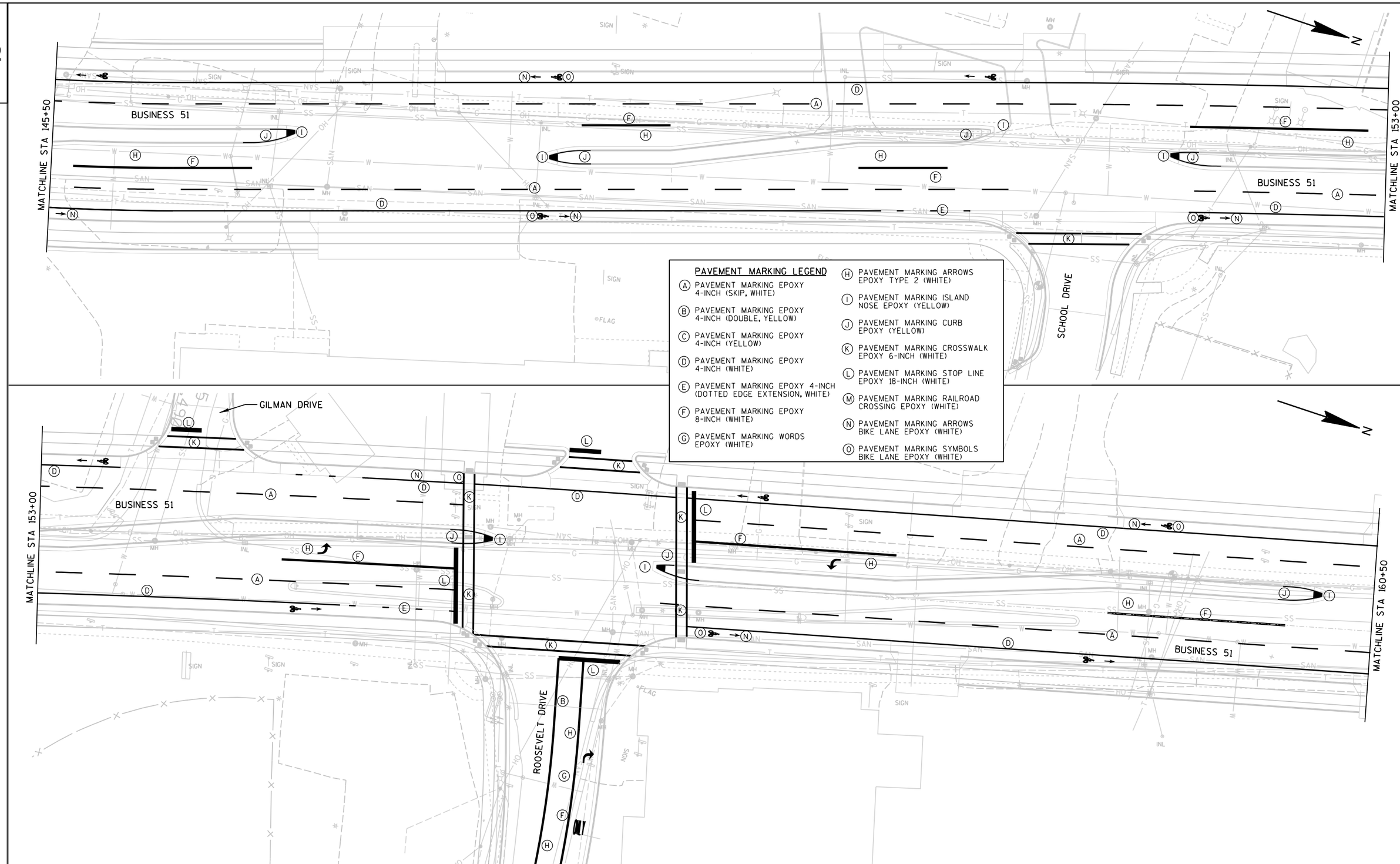

PAVEMENT MARKING LEGEND

- (A) PAVEMENT MARKING EPOXY 4-INCH (SKIP, WHITE)
- (B) PAVEMENT MARKING EPOXY 4-INCH (DOUBLE, YELLOW)
- (C) PAVEMENT MARKING EPOXY 4-INCH (YELLOW)
- (D) PAVEMENT MARKING EPOXY 4-INCH (WHITE)
- (E) PAVEMENT MARKING EPOXY 4-INCH (DOTTED EDGE EXTENSION, WHITE)
- (F) PAVEMENT MARKING EPOXY 8-INCH (WHITE)
- (G) PAVEMENT MARKING WORDS EPOXY (WHITE)
- (H) PAVEMENT MARKING ARROWS EPOXY TYPE 2 (WHITE)
- (I) PAVEMENT MARKING ISLAND NOSE EPOXY (YELLOW)
- (J) PAVEMENT MARKING CURB EPOXY (YELLOW)
- (K) PAVEMENT MARKING CROSSWALK EPOXY 6-INCH (WHITE)
- (L) PAVEMENT MARKING STOP LINE EPOXY 18-INCH (WHITE)
- (M) PAVEMENT MARKING RAILROAD CROSSING EPOXY (WHITE)
- (N) PAVEMENT MARKING ARROWS BIKE LANE EPOXY (WHITE)
- (O) PAVEMENT MARKING SYMBOLS BIKE LANE EPOXY (WHITE)

PROJECT NO:6414-00-78	HWY:BUSINESS 51	COUNTY:PORTAGE	PAVEMENT MARKING	SHEET 158	E

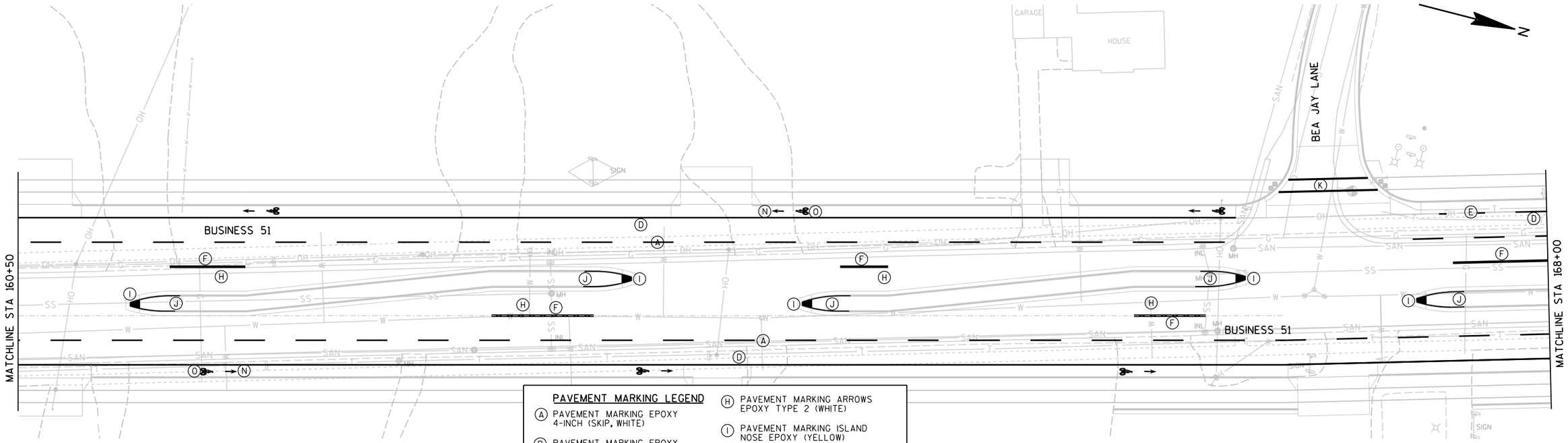

PAVEMENT MARKING LEGEND

- (A) PAVEMENT MARKING EPOXY 4-INCH (SKIP, WHITE)
- (B) PAVEMENT MARKING EPOXY 4-INCH (DOUBLE, YELLOW)
- (C) PAVEMENT MARKING EPOXY 4-INCH (YELLOW)
- (D) PAVEMENT MARKING EPOXY 4-INCH (WHITE)
- (E) PAVEMENT MARKING EPOXY 4-INCH (DOTTED EDGE EXTENSION, WHITE)
- (F) PAVEMENT MARKING EPOXY 8-INCH (WHITE)
- (G) PAVEMENT MARKING WORDS EPOXY (WHITE)
- (H) PAVEMENT MARKING ARROWS EPOXY TYPE 2 (WHITE)
- (I) PAVEMENT MARKING ISLAND NOSE EPOXY (YELLOW)
- (J) PAVEMENT MARKING CURB EPOXY (YELLOW)
- (K) PAVEMENT MARKING CROSSWALK EPOXY 6-INCH (WHITE)
- (L) PAVEMENT MARKING STOP LINE EPOXY 18-INCH (WHITE)
- (M) PAVEMENT MARKING RAILROAD CROSSING EPOXY (WHITE)
- (N) PAVEMENT MARKING ARROWS BIKE LANE EPOXY (WHITE)
- (O) PAVEMENT MARKING SYMBOLS BIKE LANE EPOXY (WHITE)

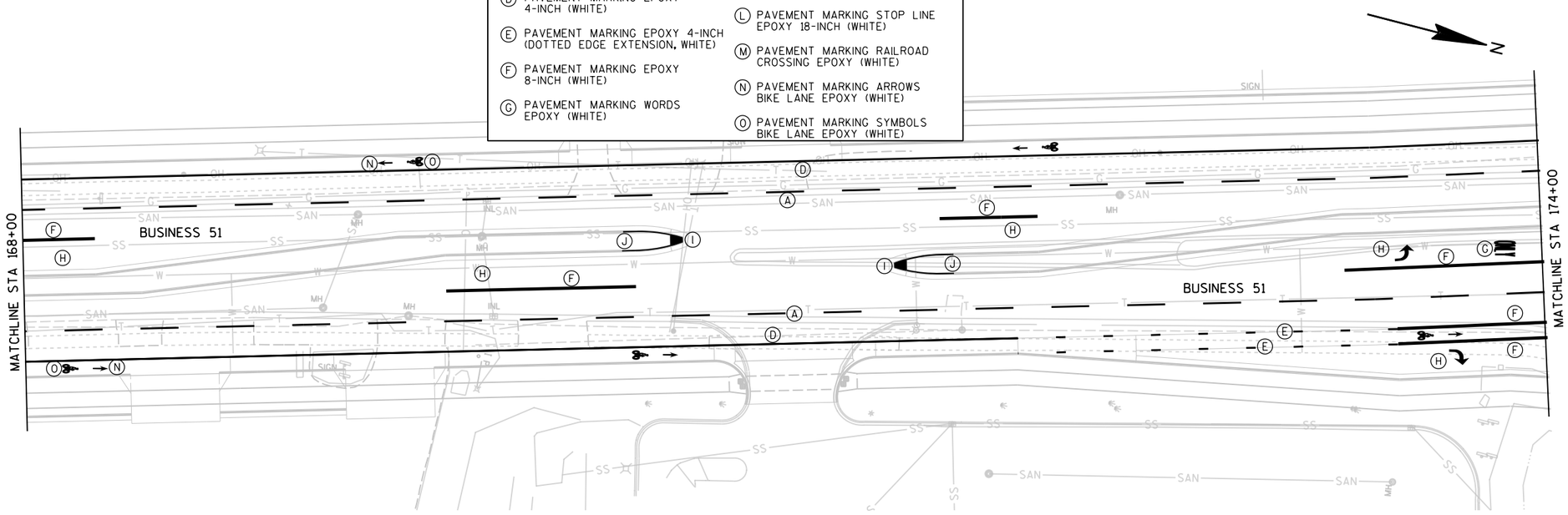

PROJECT NO:6414-00-78	HWY:BUSINESS 51	COUNTY:PORTAGE	PAVEMENT MARKING	SHEET 159	E

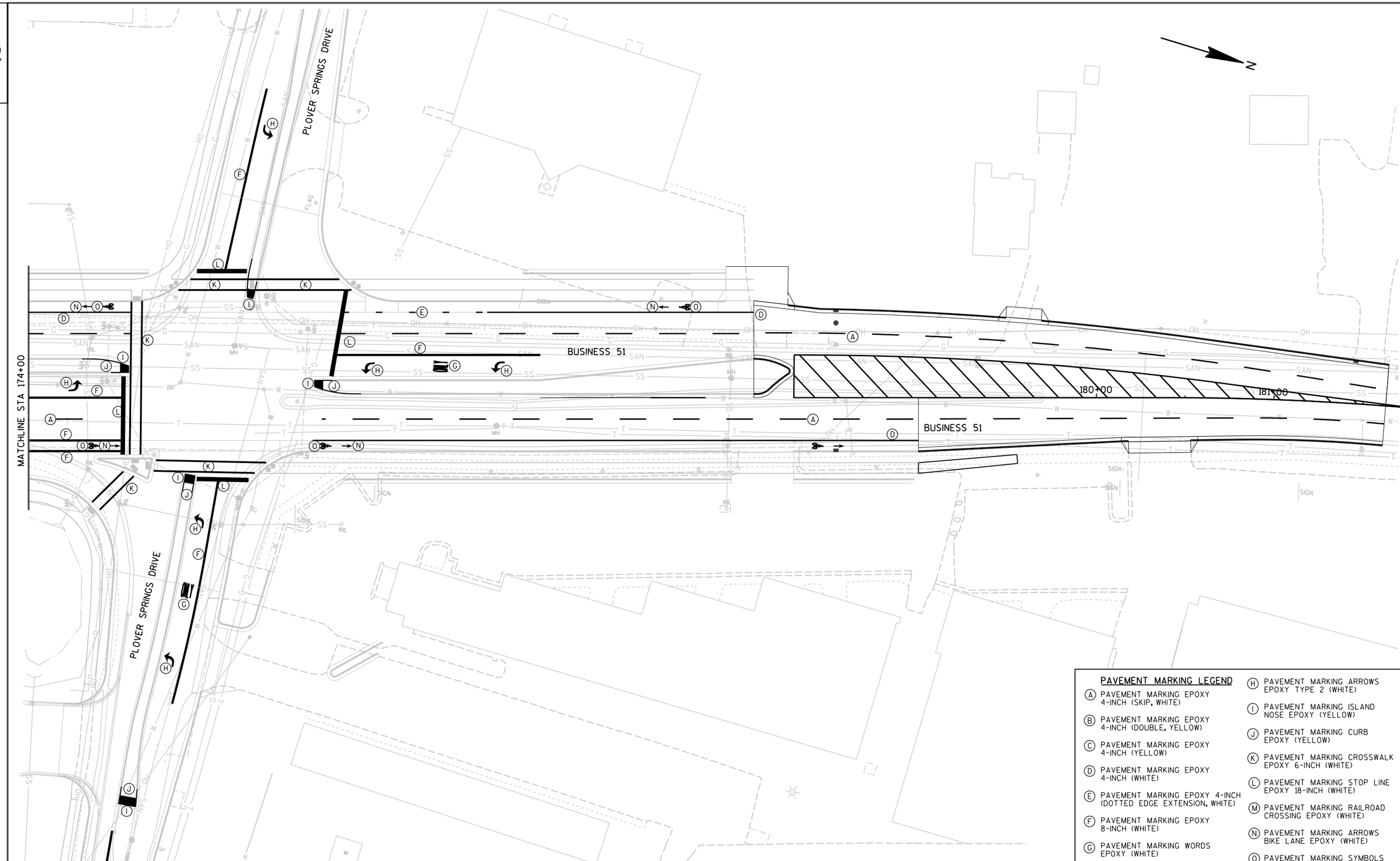

PAVEMENT MARKING LEGEND

- (A) PAVEMENT MARKING EPOXY 4-INCH (SKIP, WHITE)
- (B) PAVEMENT MARKING EPOXY 4-INCH (DOUBLE, YELLOW)
- (C) PAVEMENT MARKING EPOXY 4-INCH (YELLOW)
- (D) PAVEMENT MARKING EPOXY 4-INCH (WHITE)
- (E) PAVEMENT MARKING EPOXY 4-INCH (DOTTED EDGE EXTENSION, WHITE)
- (F) PAVEMENT MARKING EPOXY 8-INCH (WHITE)
- (G) PAVEMENT MARKING WORDS EPOXY (WHITE)
- (H) PAVEMENT MARKING ARROWS EPOXY TYPE 2 (WHITE)
- (I) PAVEMENT MARKING ISLAND NOSE EPOXY (YELLOW)
- (J) PAVEMENT MARKING CURB EPOXY (YELLOW)
- (K) PAVEMENT MARKING CROSSWALK EPOXY 6-INCH (WHITE)
- (L) PAVEMENT MARKING STOP LINE EPOXY 18-INCH (WHITE)
- (M) PAVEMENT MARKING RAILROAD CROSSING EPOXY (WHITE)
- (N) PAVEMENT MARKING ARROWS BIKE LANE EPOXY (WHITE)
- (O) PAVEMENT MARKING SYMBOLS BIKE LANE EPOXY (WHITE)

PROJECT NO:6414-00-78	HWY:BUSINESS 51	COUNTY:PORTAGE	PAVEMENT MARKING	SHEET 160	E

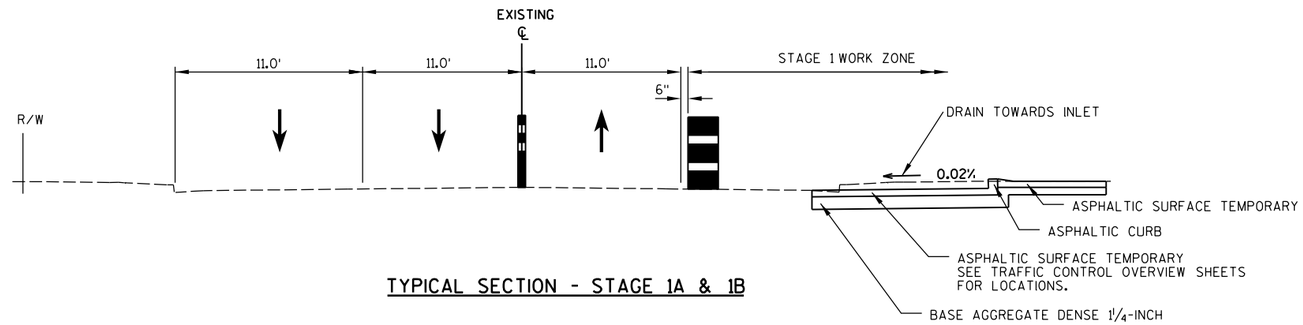

TYPICAL SECTION - STAGE 1A & 1B

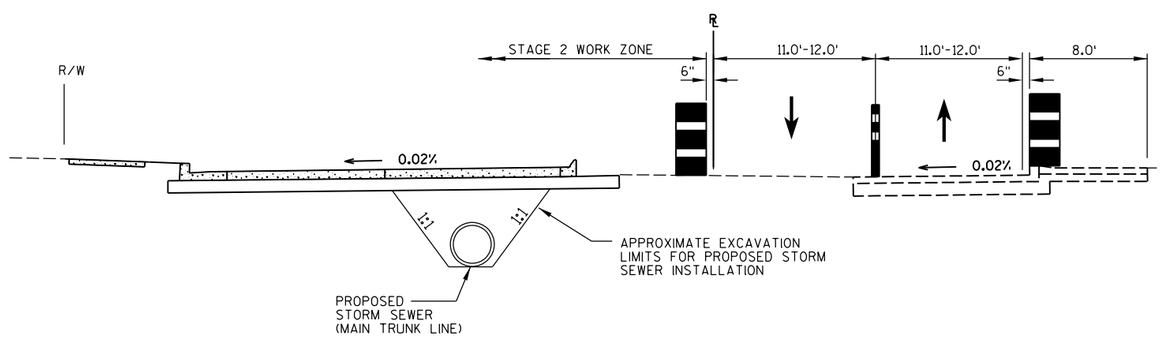

TYPICAL SECTION - STAGE 2A & 2B

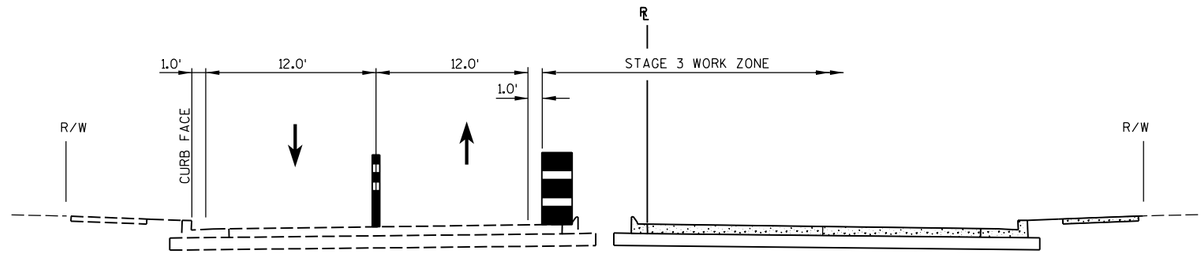

TYPICAL SECTION - STAGE 3A & 3B

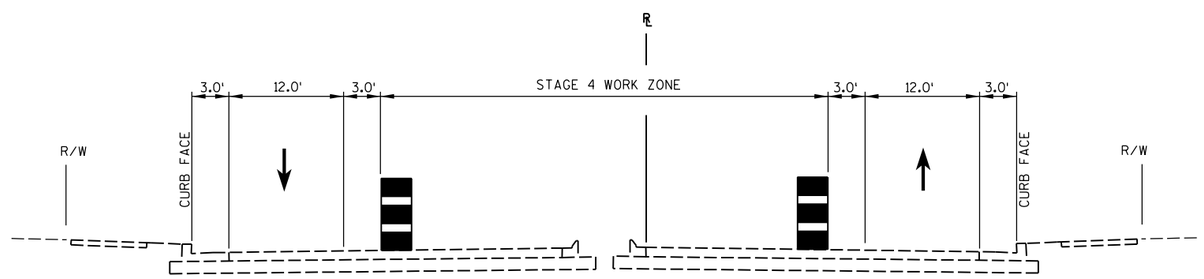

TYPICAL SECTION - STAGE 4

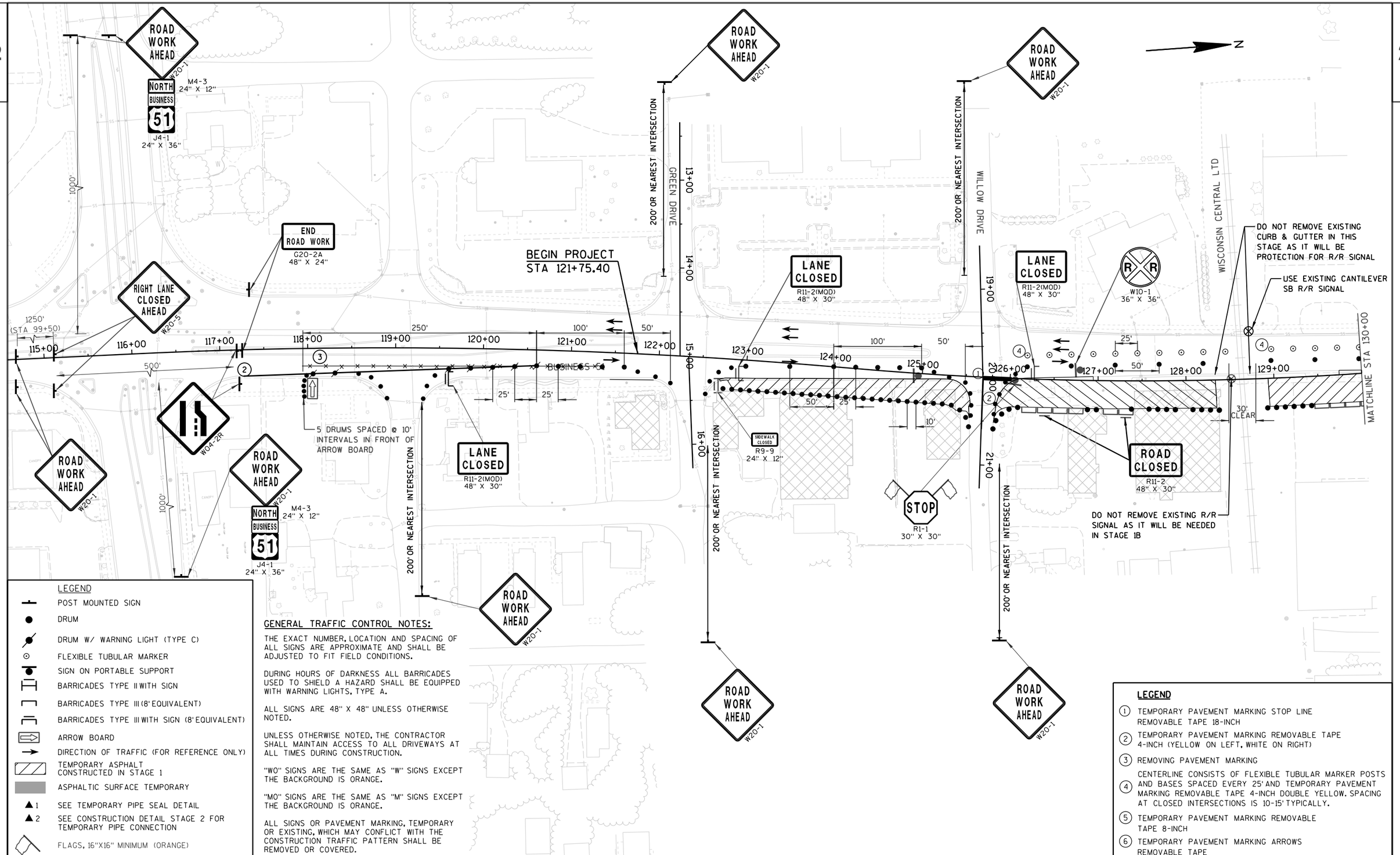

LEGEND

- POST MOUNTED SIGN
- DRUM
- DRUM W/ WARNING LIGHT (TYPE C)
- FLEXIBLE TUBULAR MARKER
- SIGN ON PORTABLE SUPPORT
- BARRICADES TYPE II WITH SIGN
- BARRICADES TYPE III (8' EQUIVALENT)
- BARRICADES TYPE III WITH SIGN (8' EQUIVALENT)
- ARROW BOARD
- DIRECTION OF TRAFFIC (FOR REFERENCE ONLY)
- TEMPORARY ASPHALT CONSTRUCTED IN STAGE 1
- ASPHALTIC SURFACE TEMPORARY
- ▲1 SEE TEMPORARY PIPE SEAL DETAIL
- ▲2 SEE CONSTRUCTION DETAIL STAGE 2 FOR TEMPORARY PIPE CONNECTION
- FLAGS, 16"X16" MINIMUM (ORANGE)

GENERAL TRAFFIC CONTROL NOTES:

THE EXACT NUMBER, LOCATION AND SPACING OF ALL SIGNS ARE APPROXIMATE AND SHALL BE ADJUSTED TO FIT FIELD CONDITIONS.

DURING HOURS OF DARKNESS ALL BARRICADES USED TO SHIELD A HAZARD SHALL BE EQUIPPED WITH WARNING LIGHTS, TYPE A.

ALL SIGNS ARE 48" X 48" UNLESS OTHERWISE NOTED.

UNLESS OTHERWISE NOTED, THE CONTRACTOR SHALL MAINTAIN ACCESS TO ALL DRIVEWAYS AT ALL TIMES DURING CONSTRUCTION.

"WO" SIGNS ARE THE SAME AS "W" SIGNS EXCEPT THE BACKGROUND IS ORANGE.

"MO" SIGNS ARE THE SAME AS "M" SIGNS EXCEPT THE BACKGROUND IS ORANGE.

ALL SIGNS OR PAVEMENT MARKING, TEMPORARY OR EXISTING, WHICH MAY CONFLICT WITH THE CONSTRUCTION TRAFFIC PATTERN SHALL BE REMOVED OR COVERED.

LEGEND

1. TEMPORARY PAVEMENT MARKING STOP LINE REMOVABLE TAPE 18-INCH
2. TEMPORARY PAVEMENT MARKING REMOVABLE TAPE 4-INCH (YELLOW ON LEFT, WHITE ON RIGHT)
3. REMOVING PAVEMENT MARKING
4. CENTERLINE CONSISTS OF FLEXIBLE TUBULAR MARKER POSTS AND BASES SPACED EVERY 25' AND TEMPORARY PAVEMENT MARKING REMOVABLE TAPE 4-INCH DOUBLE YELLOW. SPACING AT CLOSED INTERSECTIONS IS 10-15' TYPICALLY.
5. TEMPORARY PAVEMENT MARKING REMOVABLE TAPE 8-INCH
6. TEMPORARY PAVEMENT MARKING ARROWS REMOVABLE TAPE

PROJECT NO: 6414-00-78	HWY: BUSINESS 51	COUNTY: PORTAGE	TRAFFIC CONTROL OVERVIEW-STAGE 1A	SHEET 163	E

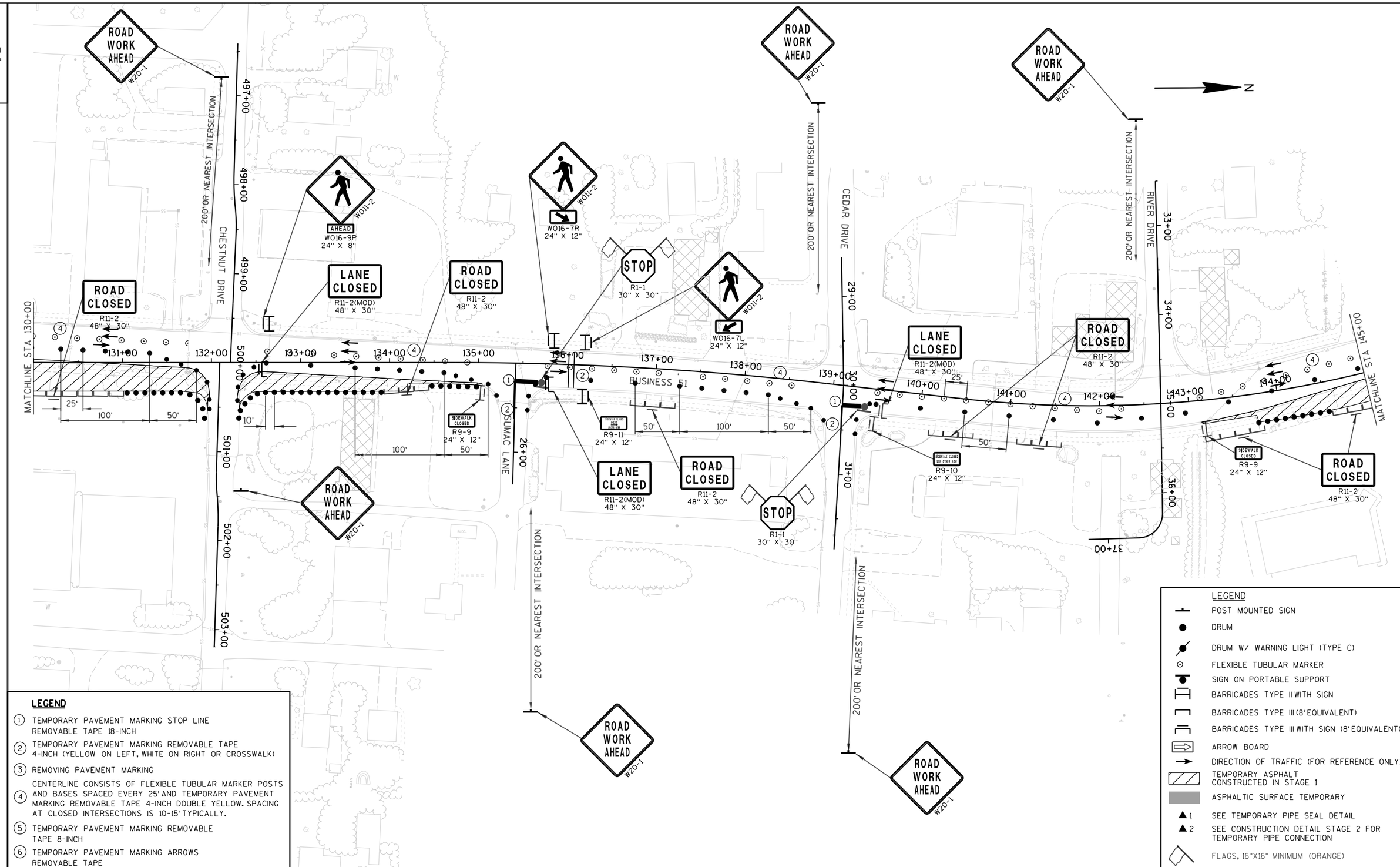

LEGEND

1. TEMPORARY PAVEMENT MARKING STOP LINE REMOVABLE TAPE 18-INCH
2. TEMPORARY PAVEMENT MARKING REMOVABLE TAPE 4-INCH (YELLOW ON LEFT, WHITE ON RIGHT OR CROSSWALK)
3. REMOVING PAVEMENT MARKING
4. CENTERLINE CONSISTS OF FLEXIBLE TUBULAR MARKER POSTS AND BASES SPACED EVERY 25' AND TEMPORARY PAVEMENT MARKING REMOVABLE TAPE 4-INCH DOUBLE YELLOW. SPACING AT CLOSED INTERSECTIONS IS 10-15' TYPICALLY.
5. TEMPORARY PAVEMENT MARKING REMOVABLE TAPE 8-INCH
6. TEMPORARY PAVEMENT MARKING ARROWS REMOVABLE TAPE

PROJECT NO: 6414-00-78	HWY: BUSINESS 51	COUNTY: PORTAGE	TRAFFIC CONTROL OVERVIEW-STAGE 1A	SHEET 164	E

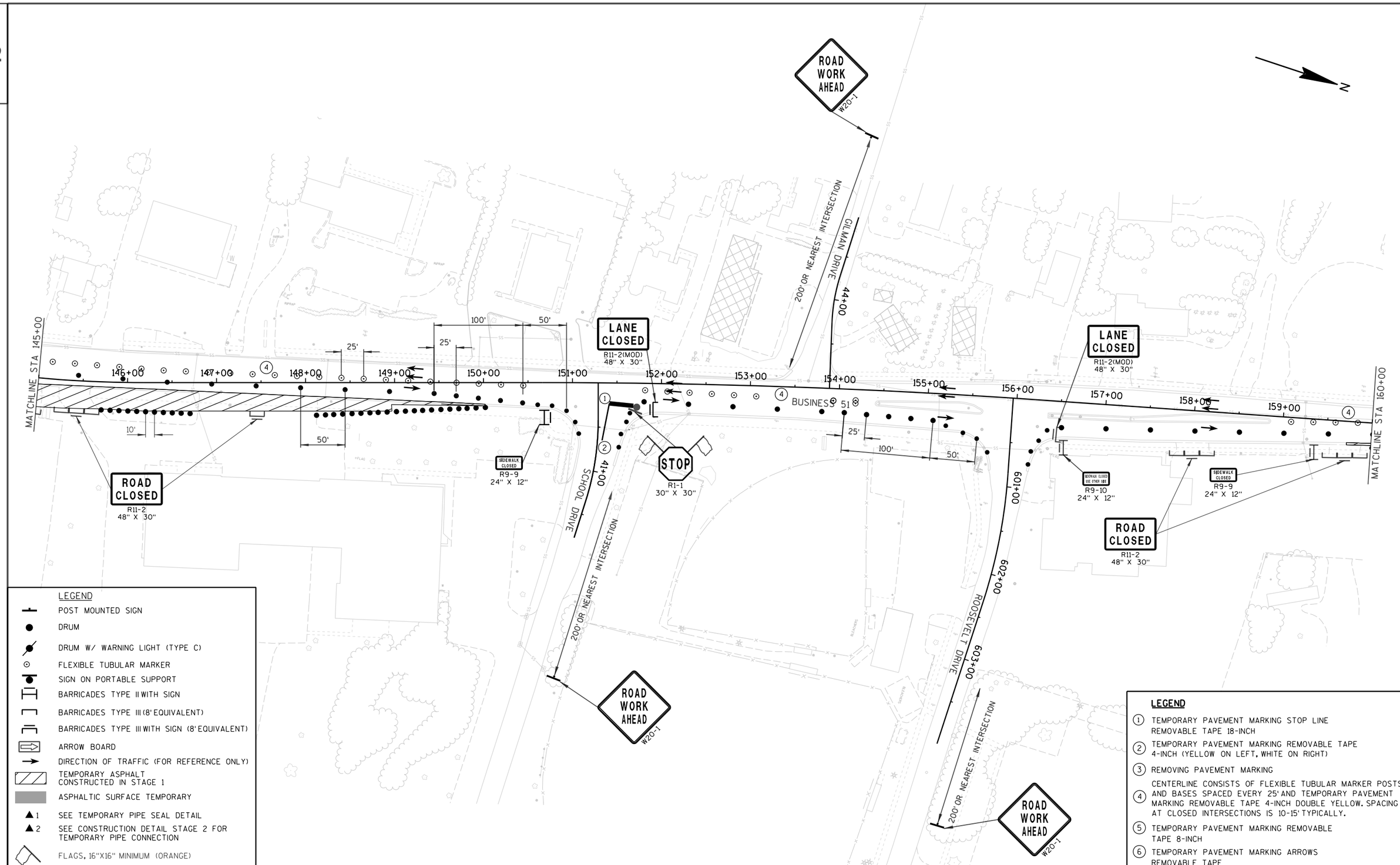

PROJECT NO:6414-00-78	HWY:BUSINESS 51	COUNTY:PORTAGE	TRAFFIC CONTROL OVERVIEW-STAGE 1A	SHEET 165	E

FILE NAME : P:\UZ\W\Witnc\112545\5-final-dsgn\51-drawings\40-TransHwy\026003 s1.dgn PLOT TIME : 2:04:03 PM PLOT DATE : 8/2/2015 PLOT BY : SEH PLOT NAME : PLOT SCALE : N/A

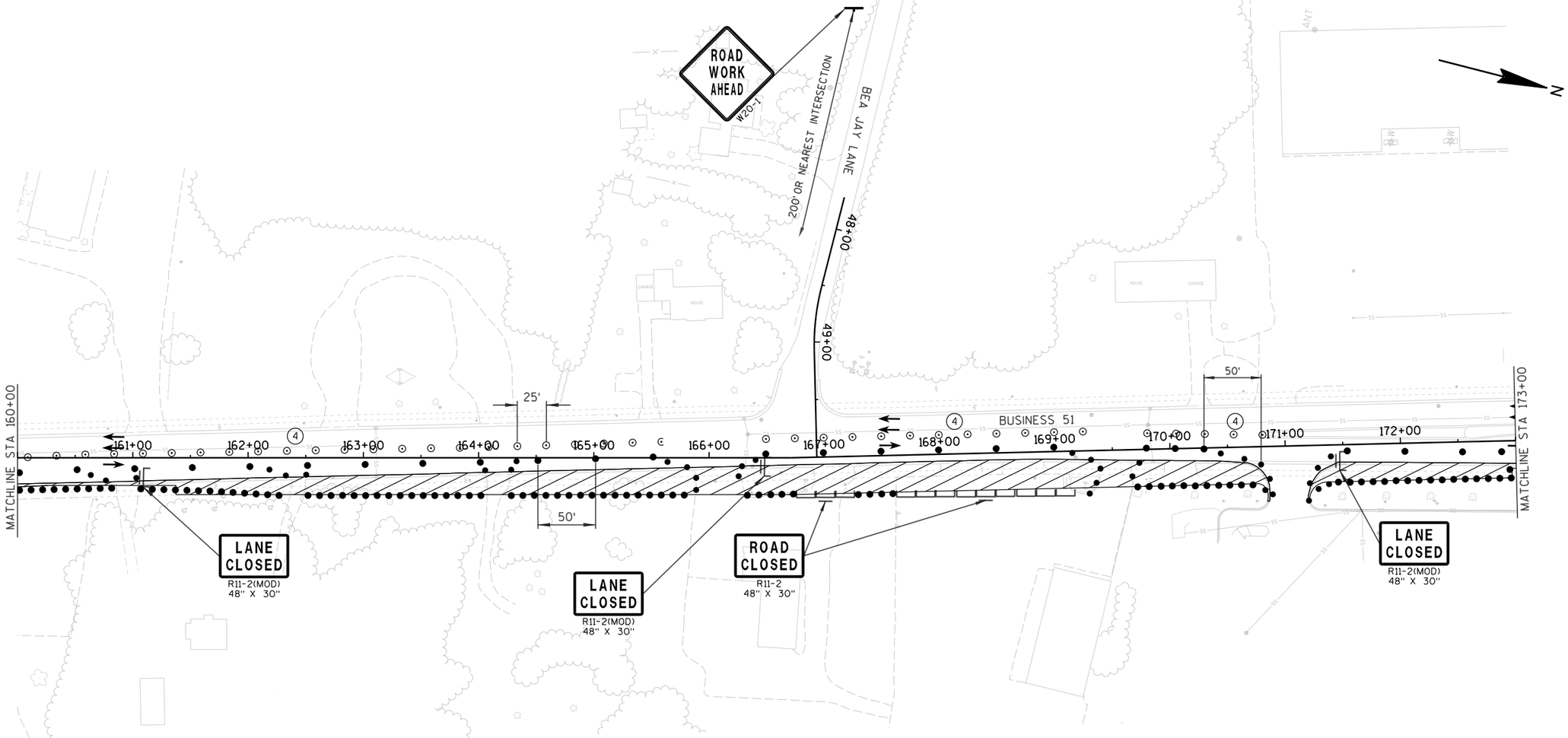

LEGEND

- POST MOUNTED SIGN
- DRUM
- DRUM W/ WARNING LIGHT (TYPE C)
- FLEXIBLE TUBULAR MARKER
- SIGN ON PORTABLE SUPPORT
- BARRICADES TYPE II WITH SIGN
- BARRICADES TYPE III (8' EQUIVALENT)
- BARRICADES TYPE III WITH SIGN (8' EQUIVALENT)
- ARROW BOARD
- DIRECTION OF TRAFFIC (FOR REFERENCE ONLY)
- TEMPORARY ASPHALT CONSTRUCTED IN STAGE 1
- ASPHALTIC SURFACE TEMPORARY
- ▲1 SEE TEMPORARY PIPE SEAL DETAIL
- ▲2 SEE CONSTRUCTION DETAIL STAGE 2 FOR TEMPORARY PIPE CONNECTION
- FLAGS, 16"X16" MINIMUM (ORANGE)

LEGEND

1. TEMPORARY PAVEMENT MARKING STOP LINE REMOVABLE TAPE 18-INCH
2. TEMPORARY PAVEMENT MARKING REMOVABLE TAPE 4-INCH (YELLOW ON LEFT, WHITE ON RIGHT)
3. REMOVING PAVEMENT MARKING
4. CENTERLINE CONSISTS OF FLEXIBLE TUBULAR MARKER POSTS AND BASES SPACED EVERY 25' AND TEMPORARY PAVEMENT MARKING REMOVABLE TAPE 4-INCH DOUBLE YELLOW. SPACING AT CLOSED INTERSECTIONS IS 10-15' TYPICALLY.
5. TEMPORARY PAVEMENT MARKING REMOVABLE TAPE 8-INCH
6. TEMPORARY PAVEMENT MARKING ARROWS REMOVABLE TAPE

PROJECT NO:6414-00-78	HWY:BUSINESS 51	COUNTY:PORTAGE	TRAFFIC CONTROL OVERVIEW-STAGE 1A	SHEET 166	E

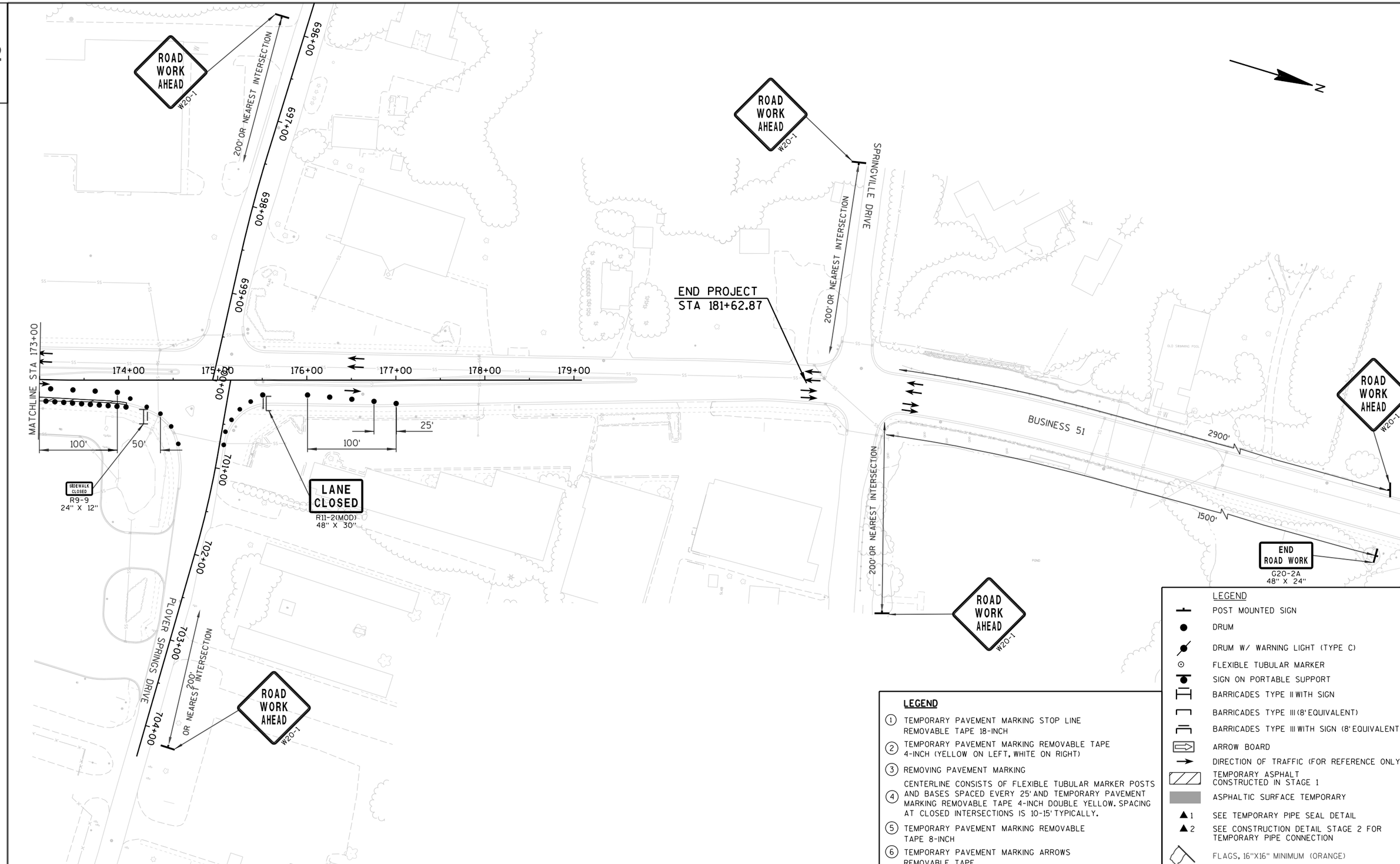

LEGEND

1. TEMPORARY PAVEMENT MARKING STOP LINE REMOVABLE TAPE 18-INCH
2. TEMPORARY PAVEMENT MARKING REMOVABLE TAPE 4-INCH (YELLOW ON LEFT, WHITE ON RIGHT)
3. REMOVING PAVEMENT MARKING
4. CENTERLINE CONSISTS OF FLEXIBLE TUBULAR MARKER POSTS AND BASES SPACED EVERY 25' AND TEMPORARY PAVEMENT MARKING REMOVABLE TAPE 4-INCH DOUBLE YELLOW. SPACING AT CLOSED INTERSECTIONS IS 10-15' TYPICALLY.
5. TEMPORARY PAVEMENT MARKING REMOVABLE TAPE 8-INCH
6. TEMPORARY PAVEMENT MARKING ARROWS REMOVABLE TAPE

LEGEND

- POST MOUNTED SIGN
- DRUM
- DRUM W/ WARNING LIGHT (TYPE C)
- FLEXIBLE TUBULAR MARKER
- SIGN ON PORTABLE SUPPORT
- BARRICADES TYPE II WITH SIGN
- BARRICADES TYPE III (8' EQUIVALENT)
- BARRICADES TYPE III WITH SIGN (8' EQUIVALENT)
- ARROW BOARD
- DIRECTION OF TRAFFIC (FOR REFERENCE ONLY)
- TEMPORARY ASPHALT CONSTRUCTED IN STAGE 1
- ASPHALTIC SURFACE TEMPORARY
- ▲1 SEE TEMPORARY PIPE SEAL DETAIL
- ▲2 SEE CONSTRUCTION DETAIL STAGE 2 FOR TEMPORARY PIPE CONNECTION
- FLAGS, 16"X16" MINIMUM (ORANGE)

PROJECT NO:6414-00-78	HWY:BUSINESS 51	COUNTY:PORTAGE	TRAFFIC CONTROL OVERVIEW-STAGE 1A	SHEET 167	E

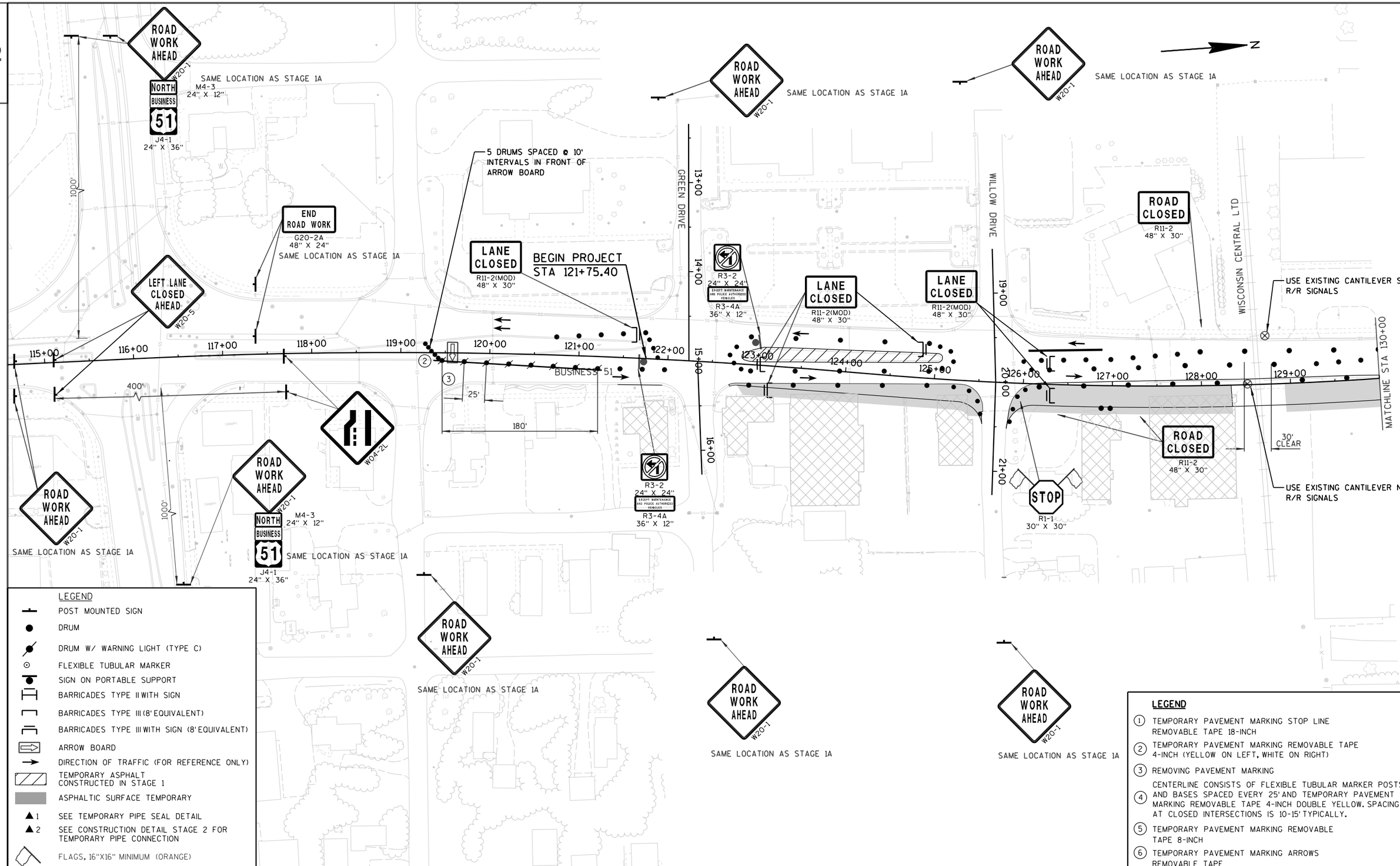

LEGEND

- POST MOUNTED SIGN
- DRUM
- DRUM W/ WARNING LIGHT (TYPE C)
- FLEXIBLE TUBULAR MARKER
- SIGN ON PORTABLE SUPPORT
- BARRICADES TYPE II WITH SIGN
- BARRICADES TYPE III (8' EQUIVALENT)
- BARRICADES TYPE III WITH SIGN (8' EQUIVALENT)
- ARROW BOARD
- DIRECTION OF TRAFFIC (FOR REFERENCE ONLY)
- TEMPORARY ASPHALT CONSTRUCTED IN STAGE 1
- ASPHALTIC SURFACE TEMPORARY
- ▲1 SEE TEMPORARY PIPE SEAL DETAIL
- ▲2 SEE CONSTRUCTION DETAIL STAGE 2 FOR TEMPORARY PIPE CONNECTION
- FLAGS, 16"X16" MINIMUM (ORANGE)

LEGEND

1. TEMPORARY PAVEMENT MARKING STOP LINE REMOVABLE TAPE 18-INCH
2. TEMPORARY PAVEMENT MARKING REMOVABLE TAPE 4-INCH (YELLOW ON LEFT, WHITE ON RIGHT)
3. REMOVING PAVEMENT MARKING
4. CENTERLINE CONSISTS OF FLEXIBLE TUBULAR MARKER POSTS AND BASES SPACED EVERY 25' AND TEMPORARY PAVEMENT MARKING REMOVABLE TAPE 4-INCH DOUBLE YELLOW. SPACING AT CLOSED INTERSECTIONS IS 10-15' TYPICALLY.
5. TEMPORARY PAVEMENT MARKING REMOVABLE TAPE 8-INCH
6. TEMPORARY PAVEMENT MARKING ARROWS REMOVABLE TAPE

PROJECT NO: 6414-00-78	HWY: BUSINESS 51	COUNTY: PORTAGE	TRAFFIC CONTROL OVERVIEW-STAGE 1B	SHEET 168	E

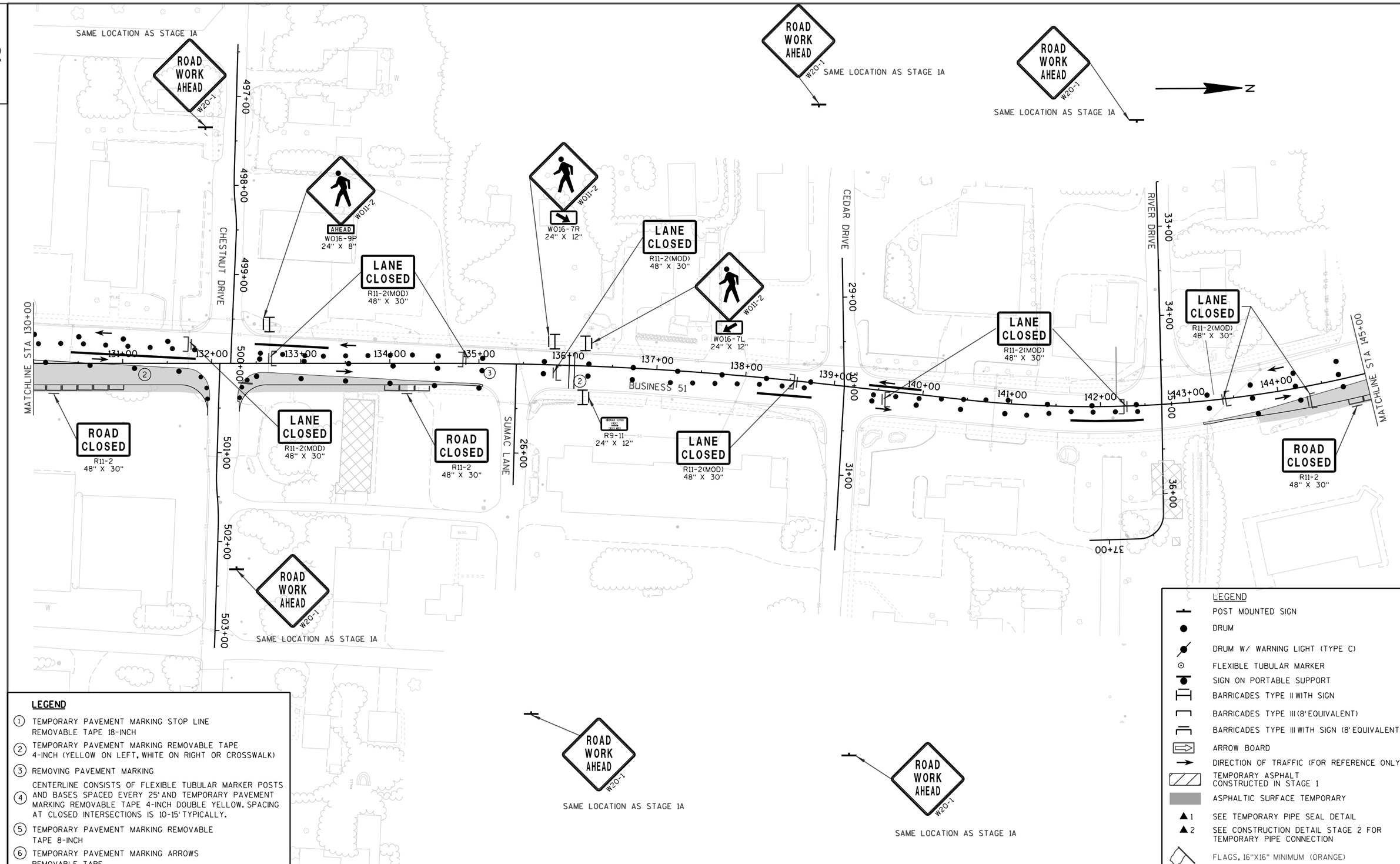

LEGEND

1. TEMPORARY PAVEMENT MARKING STOP LINE REMOVABLE TAPE 18-INCH
2. TEMPORARY PAVEMENT MARKING REMOVABLE TAPE 4-INCH (YELLOW ON LEFT, WHITE ON RIGHT OR CROSSWALK)
3. REMOVING PAVEMENT MARKING
4. CENTERLINE CONSISTS OF FLEXIBLE TUBULAR MARKER POSTS AND BASES SPACED EVERY 25' AND TEMPORARY PAVEMENT MARKING REMOVABLE TAPE 4-INCH DOUBLE YELLOW. SPACING AT CLOSED INTERSECTIONS IS 10-15' TYPICALLY.
5. TEMPORARY PAVEMENT MARKING REMOVABLE TAPE 8-INCH
6. TEMPORARY PAVEMENT MARKING ARROWS REMOVABLE TAPE

PROJECT NO:6414-00-78	HWY:BUSINESS 51	COUNTY:PORTAGE	TRAFFIC CONTROL OVERVIEW-STAGE 1B	SHEET 169	E

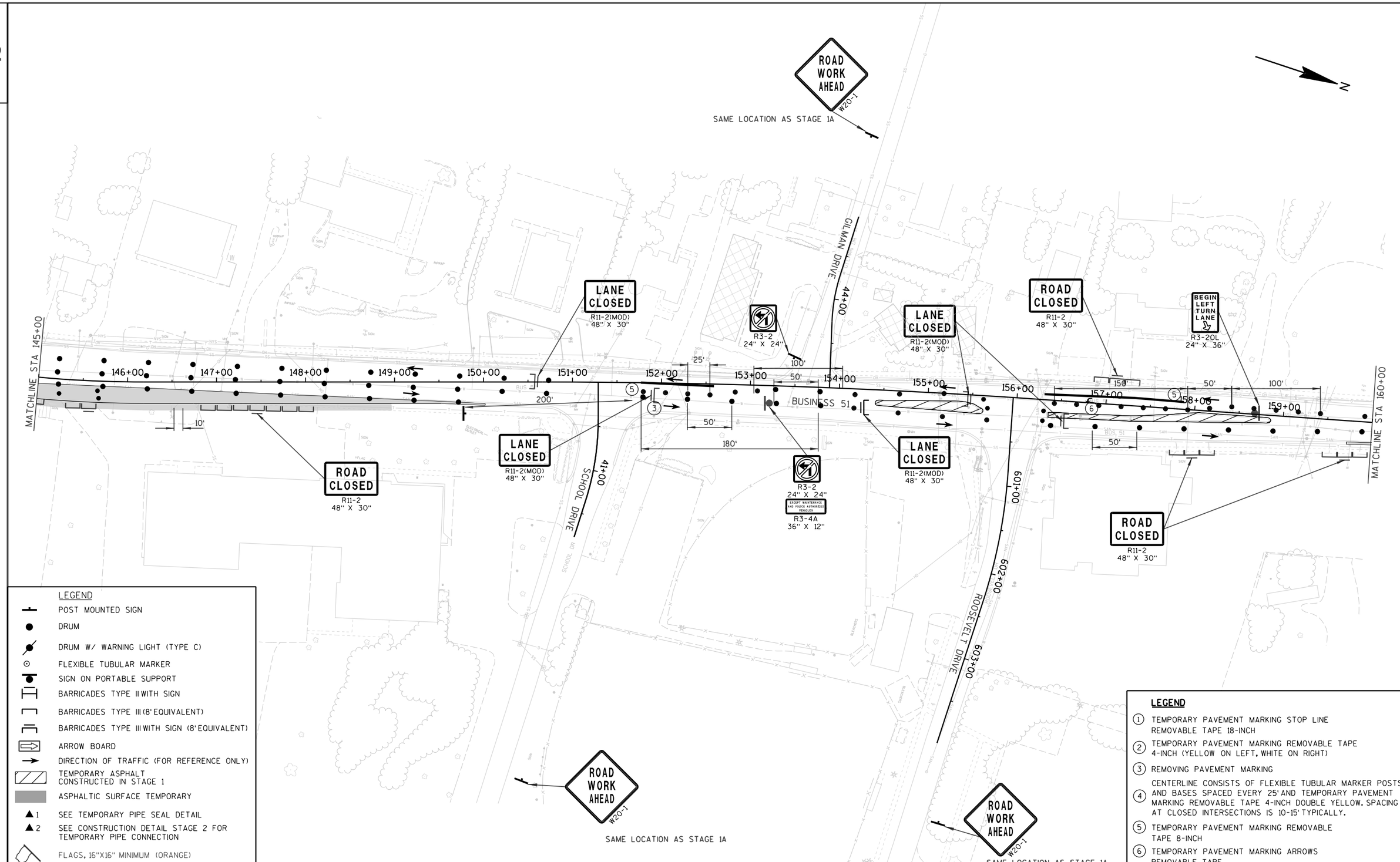

PROJECT NO:6414-00-78	HWY:BUSINESS 51	COUNTY:PORTAGE	TRAFFIC CONTROL OVERVIEW-STAGE 1B	SHEET 170	E

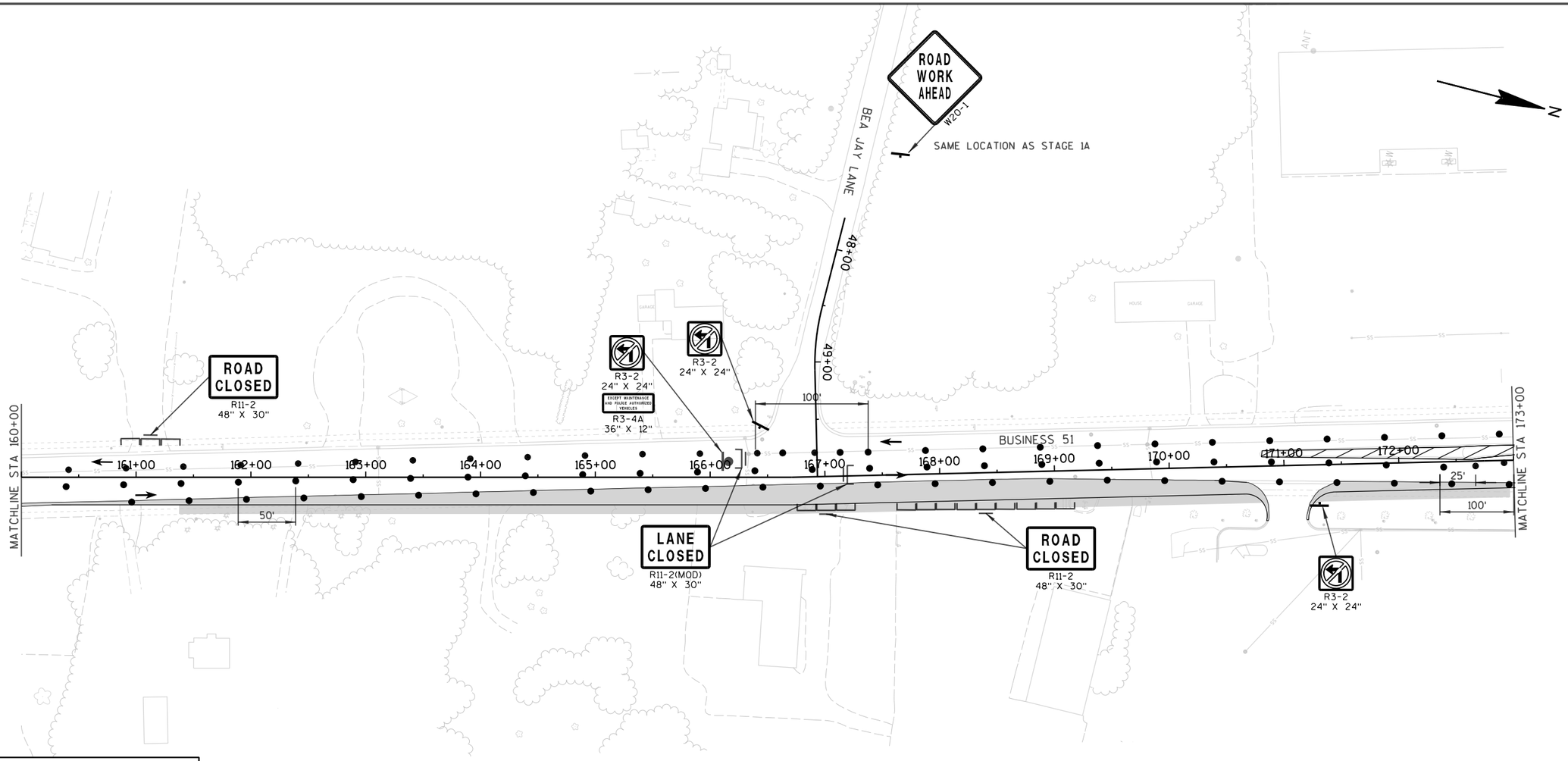

LEGEND

- POST MOUNTED SIGN
- DRUM
- DRUM W/ WARNING LIGHT (TYPE C)
- FLEXIBLE TUBULAR MARKER
- SIGN ON PORTABLE SUPPORT
- BARRICADES TYPE II WITH SIGN
- BARRICADES TYPE III (8' EQUIVALENT)
- BARRICADES TYPE III WITH SIGN (8' EQUIVALENT)
- ARROW BOARD
- DIRECTION OF TRAFFIC (FOR REFERENCE ONLY)
- TEMPORARY ASPHALT CONSTRUCTED IN STAGE 1
- ASPHALTIC SURFACE TEMPORARY
- ▲1 SEE TEMPORARY PIPE SEAL DETAIL
- ▲2 SEE CONSTRUCTION DETAIL STAGE 2 FOR TEMPORARY PIPE CONNECTION
- FLAGS, 16"X16" MINIMUM (ORANGE)

LEGEND

1. TEMPORARY PAVEMENT MARKING STOP LINE REMOVABLE TAPE 18-INCH
2. TEMPORARY PAVEMENT MARKING REMOVABLE TAPE 4-INCH (YELLOW ON LEFT, WHITE ON RIGHT)
3. REMOVING PAVEMENT MARKING
4. CENTERLINE CONSISTS OF FLEXIBLE TUBULAR MARKER POSTS AND BASES SPACED EVERY 25' AND TEMPORARY PAVEMENT MARKING REMOVABLE TAPE 4-INCH DOUBLE YELLOW. SPACING AT CLOSED INTERSECTIONS IS 10-15' TYPICALLY.
5. TEMPORARY PAVEMENT MARKING REMOVABLE TAPE 8-INCH
6. TEMPORARY PAVEMENT MARKING ARROWS REMOVABLE TAPE

PROJECT NO: 6414-00-78	HWY: BUSINESS 51	COUNTY: PORTAGE	TRAFFIC CONTROL OVERVIEW-STAGE 1B	SHEET 171	E

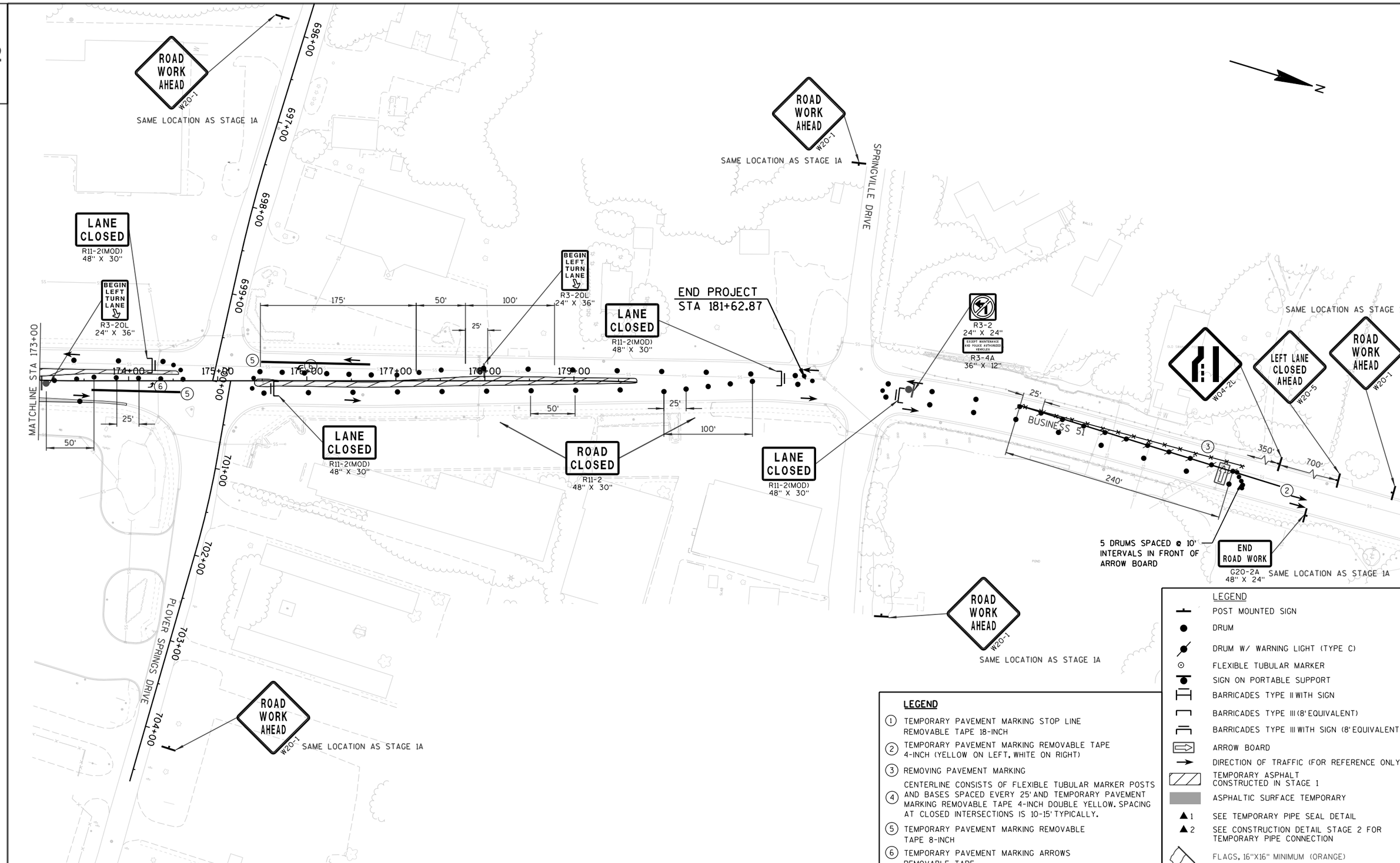

LEGEND

1. TEMPORARY PAVEMENT MARKING STOP LINE REMOVABLE TAPE 18-INCH
2. TEMPORARY PAVEMENT MARKING REMOVABLE TAPE 4-INCH (YELLOW ON LEFT, WHITE ON RIGHT)
3. REMOVING PAVEMENT MARKING
4. CENTERLINE CONSISTS OF FLEXIBLE TUBULAR MARKER POSTS AND BASES SPACED EVERY 25' AND TEMPORARY PAVEMENT MARKING REMOVABLE TAPE 4-INCH DOUBLE YELLOW. SPACING AT CLOSED INTERSECTIONS IS 10-15' TYPICALLY.
5. TEMPORARY PAVEMENT MARKING REMOVABLE TAPE 8-INCH
6. TEMPORARY PAVEMENT MARKING ARROWS REMOVABLE TAPE

LEGEND

- POST MOUNTED SIGN
- DRUM
- DRUM W/ WARNING LIGHT (TYPE C)
- FLEXIBLE TUBULAR MARKER
- SIGN ON PORTABLE SUPPORT
- BARRICADES TYPE II WITH SIGN
- BARRICADES TYPE III (8' EQUIVALENT)
- BARRICADES TYPE III WITH SIGN (8' EQUIVALENT)
- ARROW BOARD
- DIRECTION OF TRAFFIC (FOR REFERENCE ONLY)
- TEMPORARY ASPHALT CONSTRUCTED IN STAGE 1
- ASPHALTIC SURFACE TEMPORARY
- ▲1 SEE TEMPORARY PIPE SEAL DETAIL
- ▲2 SEE CONSTRUCTION DETAIL STAGE 2 FOR TEMPORARY PIPE CONNECTION
- FLAGS, 16"X16" MINIMUM (ORANGE)

PROJECT NO:6414-00-78	HWY:BUSINESS 51	COUNTY:PORTAGE	TRAFFIC CONTROL OVERVIEW-STAGE 1B	SHEET 172	E

2

LEGEND

- ROUTE FOR DETOURED TRAFFIC
- POST MOUNTED SIGN
- BARRICADES TYPE III WITHOUT, WITH SIGN (8' EQUIVALENT)
- BARRICADES TYPE II WITHOUT, WITH SIGN

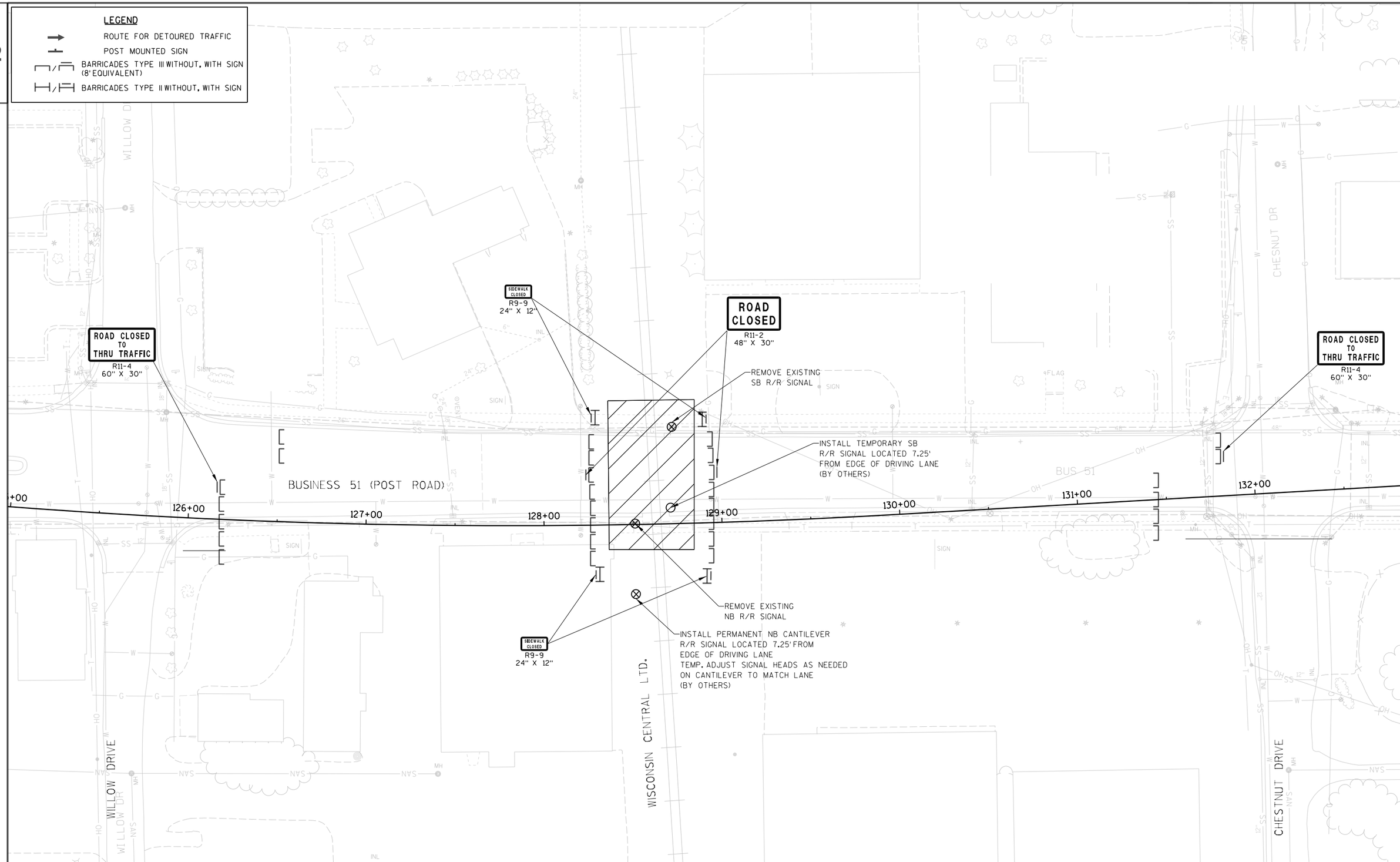

2

PROJECT NO:6414-00-78	HWY:BUSINESS 51	COUNTY:PORTAGE	TRAFFIC CONTROL ROAD CLOSED, 5 DAYS-STAGE 1C	SHEET 173	E

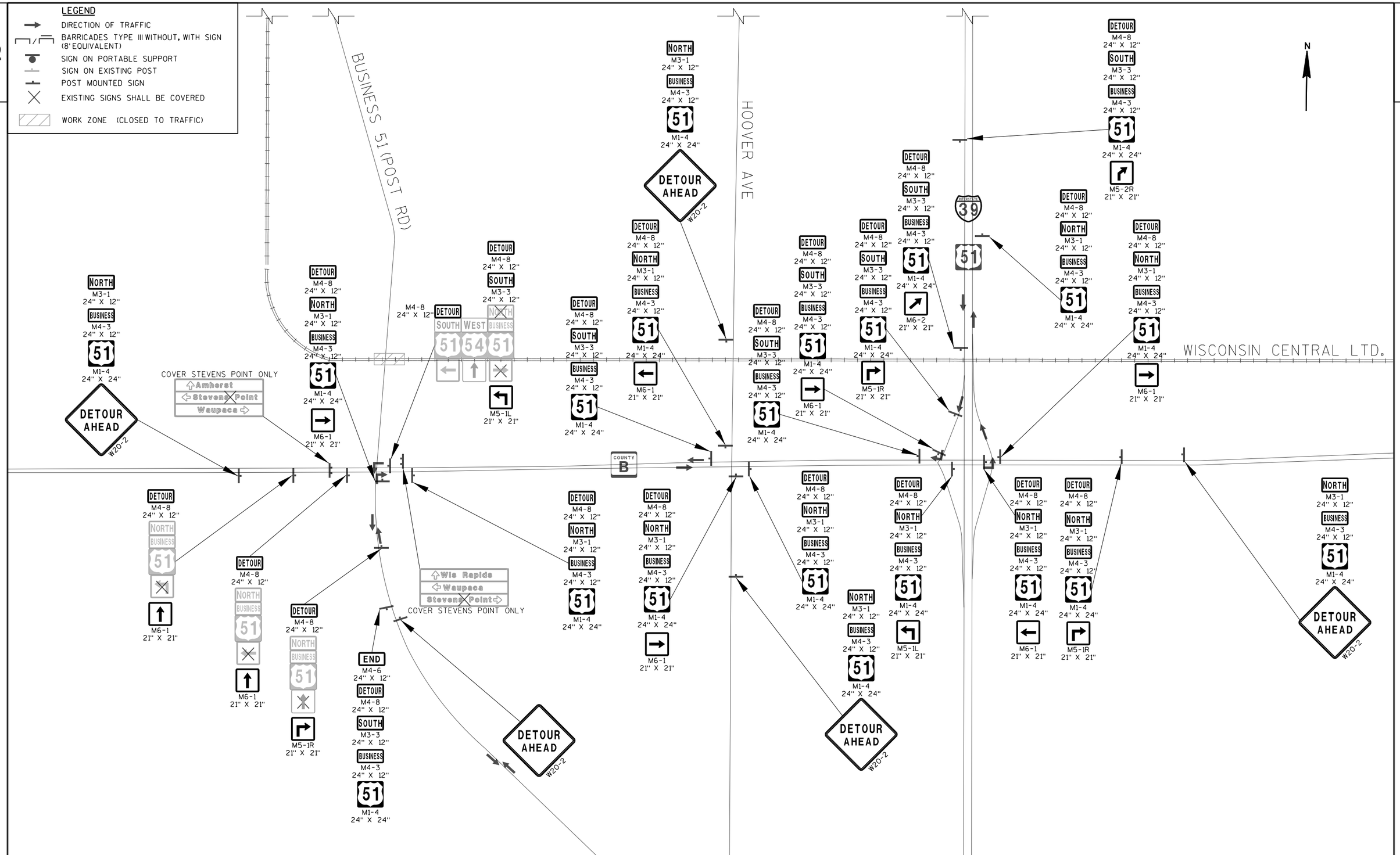

PROJECT NO: 6414-00-78	HWY: BUSINESS 51	COUNTY: PORTAGE	TRAFFIC CONTROL DETOUR ROUTE, 5 DAYS-STAGE 1C	SHEET 174	E

FILE NAME : P:\UZ\W\Witnc\112545\5-final-dsgn\51-drawings\40-TransHwy\026010A_s1C.dgn PLOT TIME : 2:04:13 PM PLOT DATE : 8/2/2015 PLOT BY : SEH PLOT NAME : PLOT SCALE : N/A

WISDOT/CADDS SHEET 42

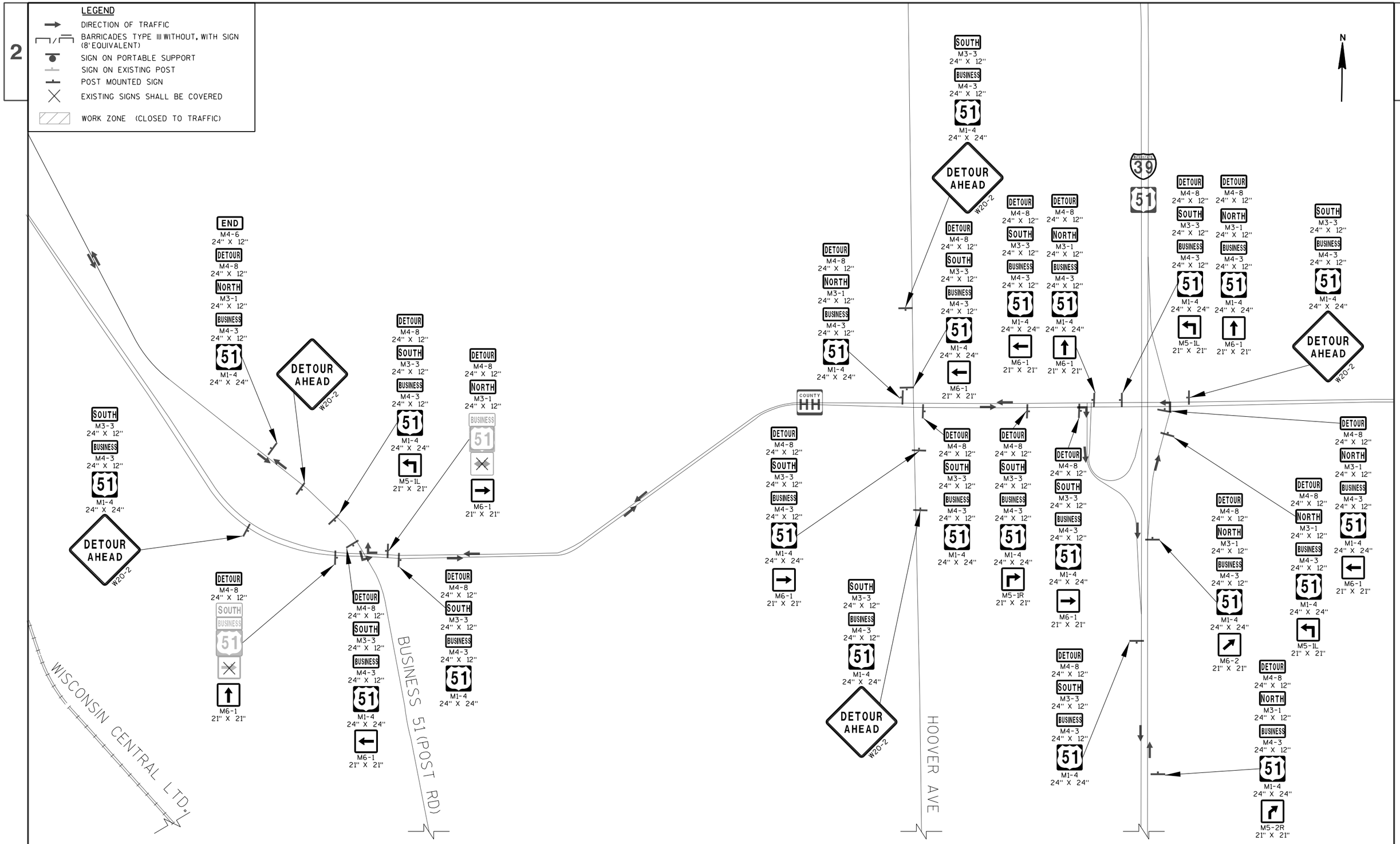

PROJECT NO: 6414-00-78	HWY: BUSINESS 51	COUNTY: PORTAGE	TRAFFIC CONTROL DETOUR ROUTE, 5 DAYS-STAGE 1C	SHEET 175	E

FILE NAME : P:\UZ\W\Witnc\112545\5-final-dsgn\51-drawings\40-TransHwy\026010B_s1C.dgn PLOT TIME : 2:04:14 PM PLOT DATE : 8/2/2015 PLOT BY : SEH PLOT NAME : PLOT SCALE : N/A

WISDOT/CADDS SHEET 42

ROAD WORK AHEAD W20-1
SAME LOCATION AS STAGE 1A
NORTH BUSINESS 51 M4-3 24" X 12"
J4-1 24" X 36"
1000'
LEFT LANE CLOSED AHEAD W20-5
SAME LOCATION AS STAGE 1A
END ROAD WORK G20-2A 48" X 24"
3 DRUMS SPACED AT 10' INTERVALS IN FRONT OF ARROW BOARD
SIDEWALK CLOSED R9-9 24" X 12"
LANE CLOSED R11-2(MOD) 48" X 30"
BEGIN PROJECT STA 121+75.40
GREEN DRIVE
13+00
14+00
15+00
16+00
115+00
116+00
117+00
118+00
119+00
120+00
121+00
122+00
123+00
124+00
125+00
126+00
127+00
128+00
129+00
400'
BUSINESS 51
180'
50'
BEGIN LEFT TURN LANE R3-20L 24" X 36"
ROAD WORK AHEAD W20-1
W04-2L
NORTH BUSINESS 51 M4-3 24" X 12"
J4-1 24" X 36"
SAME LOCATION AS STAGE 1A
ROAD WORK AHEAD W20-1
SAME LOCATION AS STAGE 1A
ROAD WORK AHEAD W20-1
SAME LOCATION AS STAGE 1A
ROAD CLOSED AHEAD W20-3
SAME LOCATION AS STAGE 1A
LANE CLOSED R11-2(MOD) 48" X 30"
SIDEWALK CLOSED R9-9 24" X 12"
25'
WILLOW DRIVE
21+00
ROAD CLOSED R11-2 48" X 30"
W01-4R
ROAD CLOSED R11-2 48" X 30"
USE TEMPORARY POST MOUNTED SB R/R SIGNAL
WISCONSIN CENTRAL LTD
INSTALL PERMANENT SB CANTILEVER R/R SIGNAL LOCATED 7.25' FROM EDGE OF DRIVING LANE (BY OTHERS)
ROAD CLOSED R11-2 48" X 30"
MATCHLINE STA 130+00
R3-2 24" X 24"
W1-6 48" X 24"
STOP R1-1 30" X 30"
R3-2 24" X 24"
W10-1 36" X 36"
USE NB CANTILEVER R/R SIGNAL
30' CLEAR
W10-1 36" X 36"
R3-2 24" X 24"
W06-3
CONSTRUCT MEDIAN CLOSURE
W06-1
ROAD WORK AHEAD W20-1
SAME LOCATION AS STAGE 1A
ROAD WORK AHEAD W20-1
SAME LOCATION AS STAGE 1A
N

LEGEND

- POST MOUNTED SIGN
- DRUM
- DRUM W/ WARNING LIGHT (TYPE C)
- FLEXIBLE TUBULAR MARKER
- SIGN ON PORTABLE SUPPORT
- BARRICADES TYPE II WITH SIGN
- BARRICADES TYPE III (8' EQUIVALENT)
- BARRICADES TYPE III WITH SIGN (8' EQUIVALENT)
- ARROW BOARD
- DIRECTION OF TRAFFIC (FOR REFERENCE ONLY)
- TEMPORARY ASPHALT CONSTRUCTED IN STAGE 1
- ASPHALTIC SURFACE TEMPORARY
- ▲1 SEE TEMPORARY PIPE SEAL DETAIL
- ▲2 SEE CONSTRUCTION DETAIL STAGE 2 FOR TEMPORARY PIPE CONNECTION
- FLAGS, 16"X16" MINIMUM (ORANGE)

TYPICAL MEDIAN CLOSURE

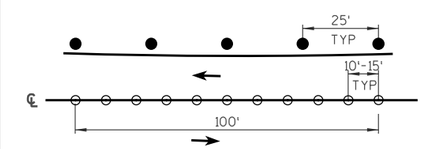

LEGEND

1. TEMPORARY PAVEMENT MARKING STOP LINE REMOVABLE TAPE 18-INCH
2. TEMPORARY PAVEMENT MARKING REMOVABLE TAPE 4-INCH (YELLOW ON LEFT, WHITE ON RIGHT)
3. REMOVING PAVEMENT MARKING
4. CENTERLINE CONSISTS OF FLEXIBLE TUBULAR MARKER POSTS AND BASES SPACED EVERY 25' AND TEMPORARY PAVEMENT MARKING REMOVABLE TAPE 4-INCH DOUBLE YELLOW. SPACING AT CLOSED INTERSECTIONS IS 10-15' TYPICALLY.
5. TEMPORARY PAVEMENT MARKING REMOVABLE TAPE 8-INCH
6. TEMPORARY PAVEMENT MARKING ARROWS REMOVABLE TAPE

PROJECT NO: 6414-00-78	HWY: BUSINESS 51	COUNTY: PORTAGE	TRAFFIC CONTROL OVERVIEW-STAGE 2A	SHEET 176	E

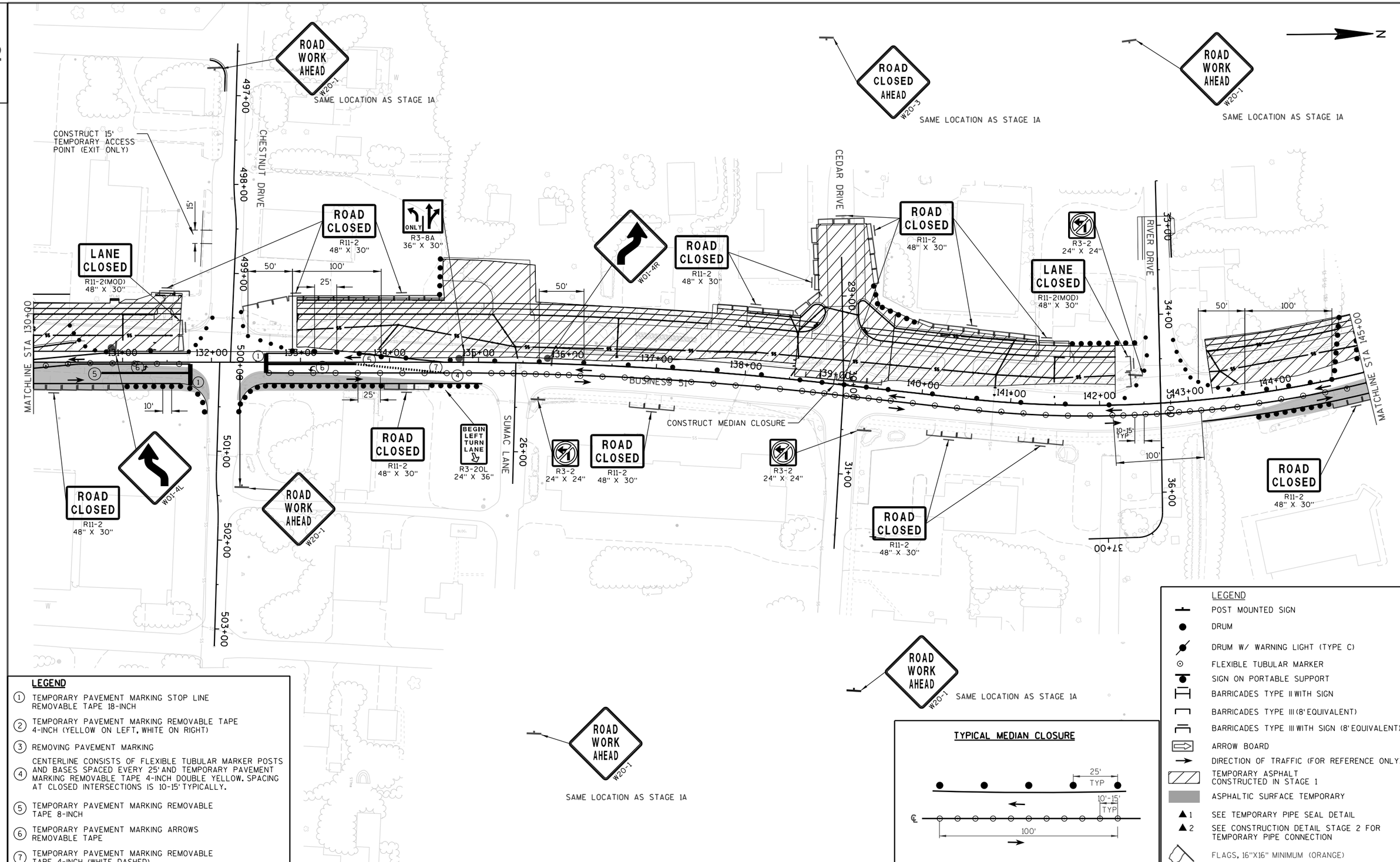

LEGEND

1. TEMPORARY PAVEMENT MARKING STOP LINE REMOVABLE TAPE 18-INCH
2. TEMPORARY PAVEMENT MARKING REMOVABLE TAPE 4-INCH (YELLOW ON LEFT, WHITE ON RIGHT)
3. REMOVING PAVEMENT MARKING
4. CENTERLINE CONSISTS OF FLEXIBLE TUBULAR MARKER POSTS AND BASES SPACED EVERY 25' AND TEMPORARY PAVEMENT MARKING REMOVABLE TAPE 4-INCH DOUBLE YELLOW. SPACING AT CLOSED INTERSECTIONS IS 10-15' TYPICALLY.
5. TEMPORARY PAVEMENT MARKING REMOVABLE TAPE 8-INCH
6. TEMPORARY PAVEMENT MARKING ARROWS REMOVABLE TAPE
7. TEMPORARY PAVEMENT MARKING REMOVABLE TAPE 4-INCH (WHITE DASHED)

PROJECT NO:6414-00-78	HWY:BUSINESS 51	COUNTY:PORTAGE	TRAFFIC CONTROL OVERVIEW-STAGE 2A	SHEET 177	E

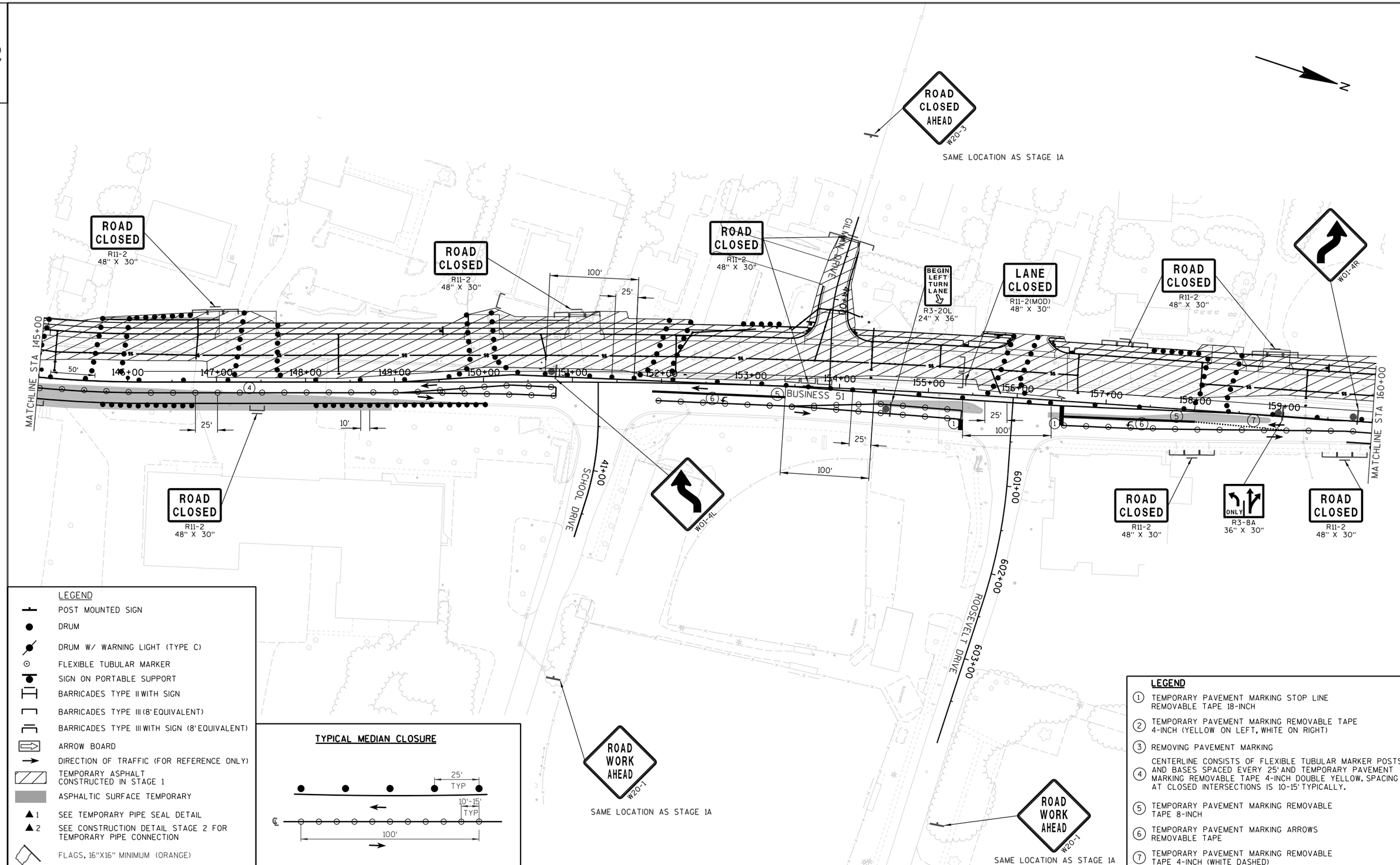

LEGEND

- POST MOUNTED SIGN
- DRUM
- DRUM W/ WARNING LIGHT (TYPE C)
- FLEXIBLE TUBULAR MARKER
- SIGN ON PORTABLE SUPPORT
- BARRICADES TYPE II WITH SIGN
- BARRICADES TYPE III (8' EQUIVALENT)
- BARRICADES TYPE III WITH SIGN (8' EQUIVALENT)
- ARROW BOARD
- DIRECTION OF TRAFFIC (FOR REFERENCE ONLY)
- TEMPORARY ASPHALT CONSTRUCTED IN STAGE 1
- ASPHALTIC SURFACE TEMPORARY
- ▲1 SEE TEMPORARY PIPE SEAL DETAIL
- ▲2 SEE CONSTRUCTION DETAIL STAGE 2 FOR TEMPORARY PIPE CONNECTION
- FLAGS, 16"X16" MINIMUM (ORANGE)

TYPICAL MEDIAN CLOSURE

LEGEND

1. TEMPORARY PAVEMENT MARKING STOP LINE REMOVABLE TAPE 18-INCH
2. TEMPORARY PAVEMENT MARKING REMOVABLE TAPE 4-INCH (YELLOW ON LEFT, WHITE ON RIGHT)
3. REMOVING PAVEMENT MARKING
4. CENTERLINE CONSISTS OF FLEXIBLE TUBULAR MARKER POSTS AND BASES SPACED EVERY 25' AND TEMPORARY PAVEMENT MARKING REMOVABLE TAPE 4-INCH DOUBLE YELLOW. SPACING AT CLOSED INTERSECTIONS IS 10-15' TYPICALLY.
5. TEMPORARY PAVEMENT MARKING REMOVABLE TAPE 8-INCH
6. TEMPORARY PAVEMENT MARKING ARROWS REMOVABLE TAPE
7. TEMPORARY PAVEMENT MARKING REMOVABLE TAPE 4-INCH (WHITE DASHED)

PROJECT NO:6414-00-78	HWY:BUSINESS 51	COUNTY:PORTAGE	TRAFFIC CONTROL OVERVIEW-STAGE 2A	SHEET 178	E

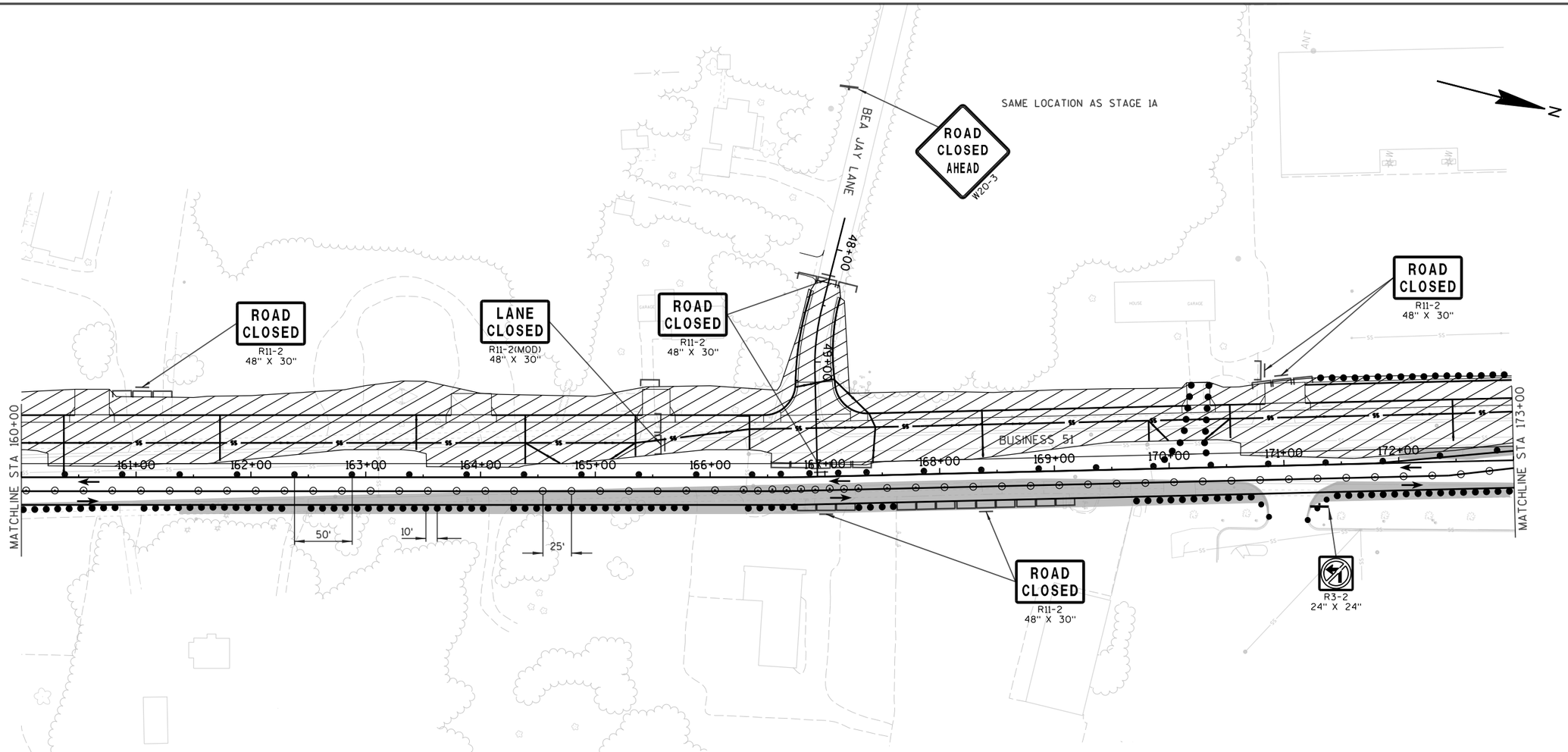

LEGEND

- POST MOUNTED SIGN
- DRUM
- DRUM W/ WARNING LIGHT (TYPE C)
- FLEXIBLE TUBULAR MARKER
- SIGN ON PORTABLE SUPPORT
- BARRICADES TYPE II WITH SIGN
- BARRICADES TYPE III (8' EQUIVALENT)
- BARRICADES TYPE III WITH SIGN (8' EQUIVALENT)
- ARROW BOARD
- DIRECTION OF TRAFFIC (FOR REFERENCE ONLY)
- TEMPORARY ASPHALT CONSTRUCTED IN STAGE 1
- ASPHALTIC SURFACE TEMPORARY
- ▲1 SEE TEMPORARY PIPE SEAL DETAIL
- ▲2 SEE CONSTRUCTION DETAIL STAGE 2 FOR TEMPORARY PIPE CONNECTION
- FLAGS, 16"X16" MINIMUM (ORANGE)

TYPICAL MEDIAN CLOSURE

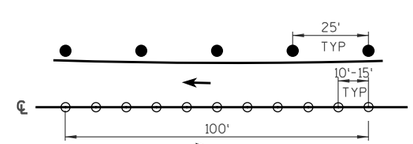

LEGEND

1. TEMPORARY PAVEMENT MARKING STOP LINE REMOVABLE TAPE 18-INCH
2. TEMPORARY PAVEMENT MARKING REMOVABLE TAPE 4-INCH (YELLOW ON LEFT, WHITE ON RIGHT)
3. REMOVING PAVEMENT MARKING
4. CENTERLINE CONSISTS OF FLEXIBLE TUBULAR MARKER POSTS AND BASES SPACED EVERY 25' AND TEMPORARY PAVEMENT MARKING REMOVABLE TAPE 4-INCH DOUBLE YELLOW. SPACING AT CLOSED INTERSECTIONS IS 10-15' TYPICALLY.
5. TEMPORARY PAVEMENT MARKING REMOVABLE TAPE 8-INCH
6. TEMPORARY PAVEMENT MARKING ARROWS REMOVABLE TAPE
7. TEMPORARY PAVEMENT MARKING REMOVABLE TAPE 4-INCH (WHITE DASHED)

PROJECT NO:6414-00-78	HWY:BUSINESS 51	COUNTY:PORTAGE	TRAFFIC CONTROL OVERVIEW-STAGE 2A	SHEET 179	E

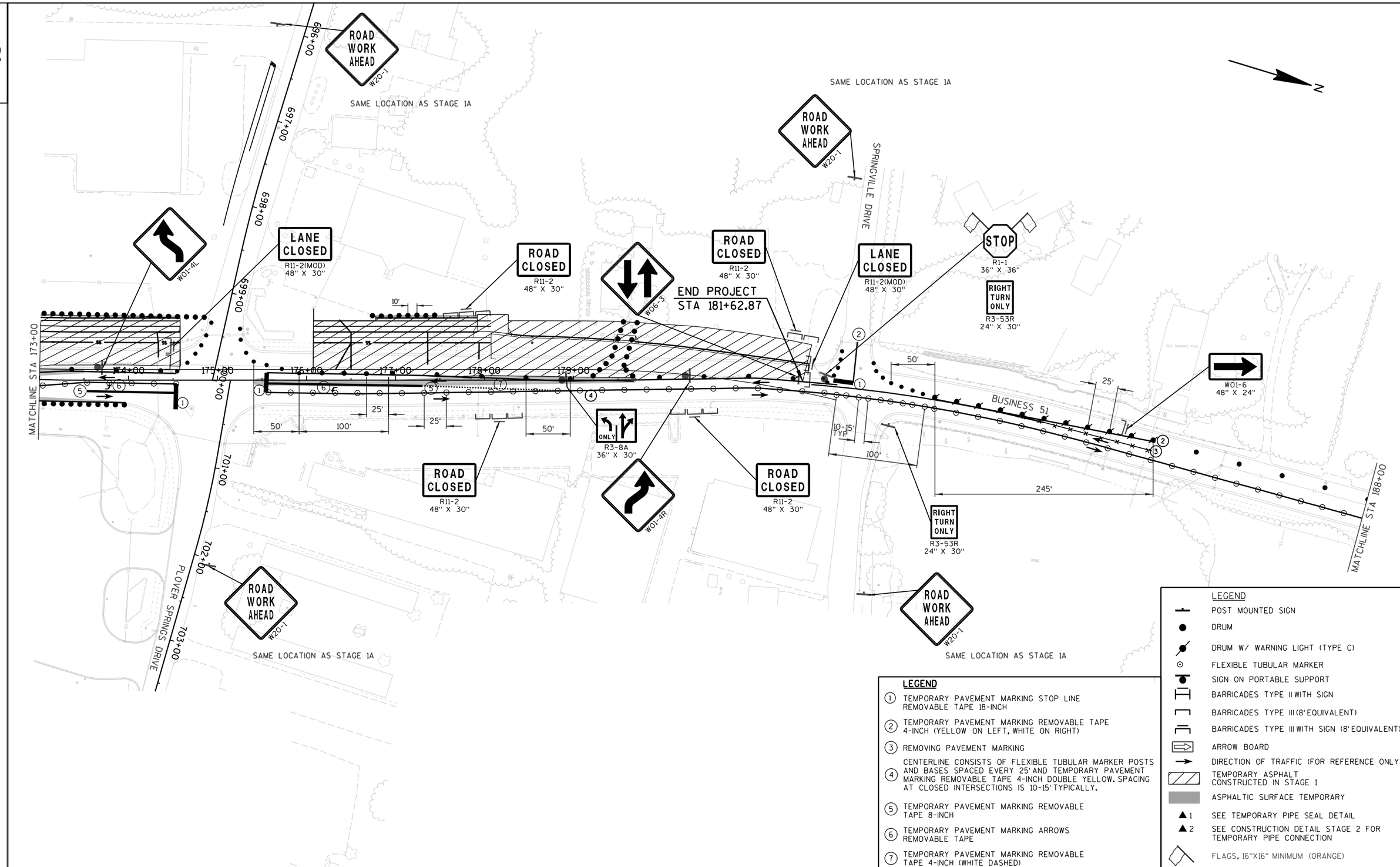

LEGEND

1. TEMPORARY PAVEMENT MARKING STOP LINE REMOVABLE TAPE 18-INCH
2. TEMPORARY PAVEMENT MARKING REMOVABLE TAPE 4-INCH (YELLOW ON LEFT, WHITE ON RIGHT)
3. REMOVING PAVEMENT MARKING
4. CENTERLINE CONSISTS OF FLEXIBLE TUBULAR MARKER POSTS AND BASES SPACED EVERY 25' AND TEMPORARY PAVEMENT MARKING REMOVABLE TAPE 4-INCH DOUBLE YELLOW. SPACING AT CLOSED INTERSECTIONS IS 10-15' TYPICALLY.
5. TEMPORARY PAVEMENT MARKING REMOVABLE TAPE 8-INCH
6. TEMPORARY PAVEMENT MARKING ARROWS REMOVABLE TAPE
7. TEMPORARY PAVEMENT MARKING REMOVABLE TAPE 4-INCH (WHITE DASHED)

LEGEND

- POST MOUNTED SIGN
- DRUM
- DRUM W/ WARNING LIGHT (TYPE C)
- FLEXIBLE TUBULAR MARKER
- SIGN ON PORTABLE SUPPORT
- BARRICADES TYPE II WITH SIGN
- BARRICADES TYPE III (8' EQUIVALENT)
- BARRICADES TYPE III WITH SIGN (8' EQUIVALENT)
- ARROW BOARD
- DIRECTION OF TRAFFIC (FOR REFERENCE ONLY)
- TEMPORARY ASPHALT CONSTRUCTED IN STAGE 1
- ASPHALTIC SURFACE TEMPORARY
- ▲1 SEE TEMPORARY PIPE SEAL DETAIL
- ▲2 SEE CONSTRUCTION DETAIL STAGE 2 FOR TEMPORARY PIPE CONNECTION
- FLAGS, 16"X16" MINIMUM (ORANGE)

PROJECT NO:6414-00-78	HWY:BUSINESS 51	COUNTY:PORTAGE	TRAFFIC CONTROL OVERVIEW-STAGE 2A	SHEET 180	E

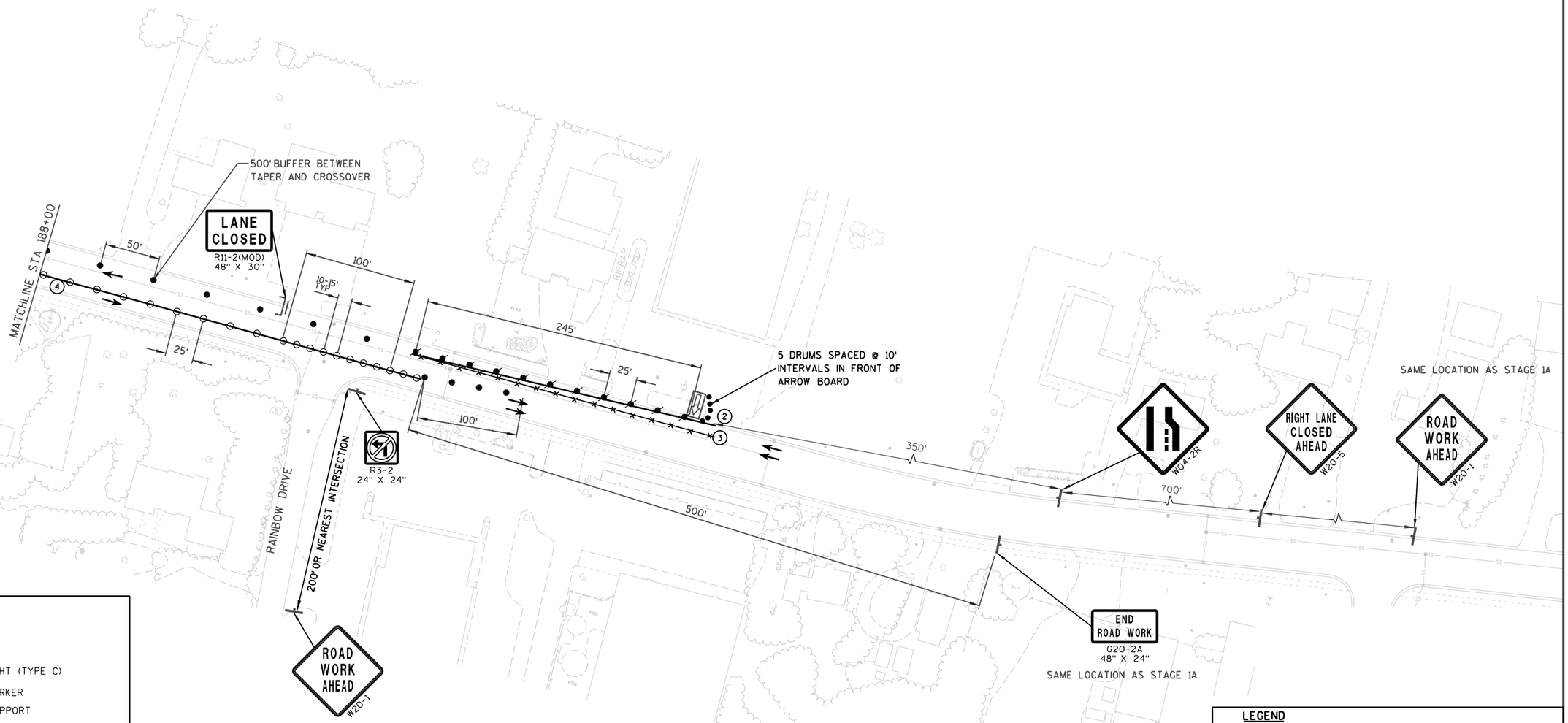

LEGEND

- POST MOUNTED SIGN
- DRUM
- DRUM W/ WARNING LIGHT (TYPE C)
- FLEXIBLE TUBULAR MARKER
- SIGN ON PORTABLE SUPPORT
- BARRICADES TYPE II WITH SIGN
- BARRICADES TYPE III (8' EQUIVALENT)
- BARRICADES TYPE III WITH SIGN (8' EQUIVALENT)
- ARROW BOARD
- DIRECTION OF TRAFFIC (FOR REFERENCE ONLY)
- TEMPORARY ASPHALT CONSTRUCTED IN STAGE 1
- ASPHALTIC SURFACE TEMPORARY
- ▲1 SEE TEMPORARY PIPE SEAL DETAIL
- ▲2 SEE CONSTRUCTION DETAIL STAGE 2 FOR TEMPORARY PIPE CONNECTION
- FLAGS, 16"X16" MINIMUM (ORANGE)

LEGEND

1. TEMPORARY PAVEMENT MARKING STOP LINE REMOVABLE TAPE 18-INCH
2. TEMPORARY PAVEMENT MARKING REMOVABLE TAPE 4-INCH (YELLOW ON LEFT, WHITE ON RIGHT)
3. REMOVING PAVEMENT MARKING
4. CENTERLINE CONSISTS OF FLEXIBLE TUBULAR MARKER POSTS AND BASES SPACED EVERY 25' AND TEMPORARY PAVEMENT MARKING REMOVABLE TAPE 4-INCH DOUBLE YELLOW. SPACING AT CLOSED INTERSECTIONS IS 10-15' TYPICALLY.
5. TEMPORARY PAVEMENT MARKING REMOVABLE TAPE 8-INCH
6. TEMPORARY PAVEMENT MARKING ARROWS REMOVABLE TAPE
7. TEMPORARY PAVEMENT MARKING REMOVABLE TAPE 4-INCH (WHITE DASHED)

PROJECT NO:6414-00-78	HWY:BUSINESS 51	COUNTY:PORTAGE	TRAFFIC CONTROL OVERVIEW-STAGE 2A	SHEET 181	E

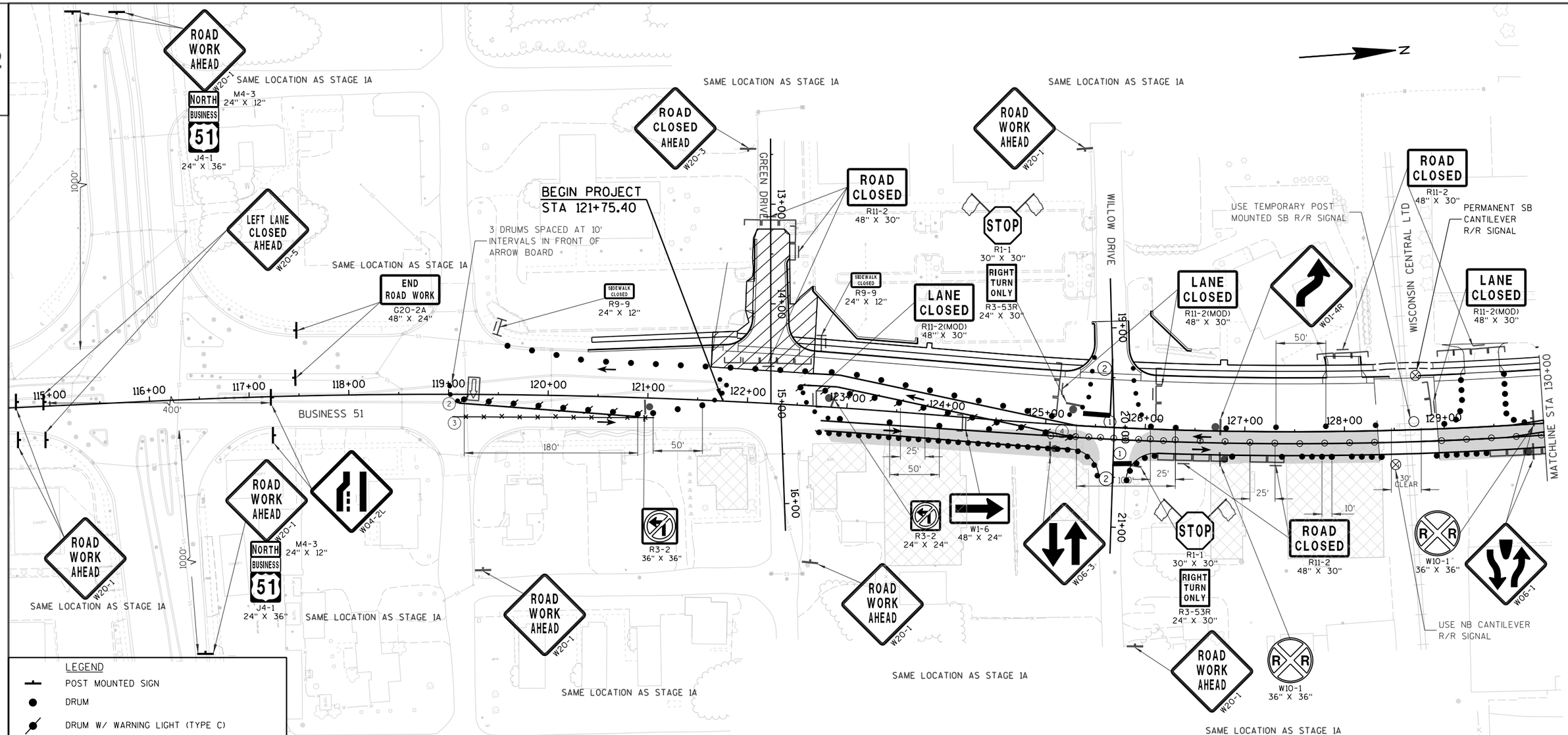

LEGEND

- POST MOUNTED SIGN
- DRUM
- DRUM W/ WARNING LIGHT (TYPE C)
- FLEXIBLE TUBULAR MARKER
- SIGN ON PORTABLE SUPPORT
- BARRICADES TYPE II WITH SIGN
- BARRICADES TYPE III (8' EQUIVALENT)
- BARRICADES TYPE III WITH SIGN (8' EQUIVALENT)
- ARROW BOARD
- DIRECTION OF TRAFFIC (FOR REFERENCE ONLY)
- TEMPORARY ASPHALT CONSTRUCTED IN STAGE 1
- ASPHALTIC SURFACE TEMPORARY
- ▲1 SEE TEMPORARY PIPE SEAL DETAIL
- ▲2 SEE CONSTRUCTION DETAIL STAGE 2 FOR TEMPORARY PIPE CONNECTION
- FLAGS, 16"X16" MINIMUM (ORANGE)

TYPICAL MEDIAN CLOSURE

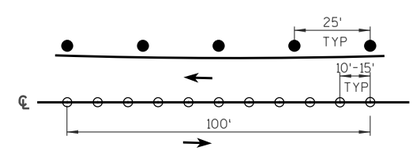

LEGEND

1. TEMPORARY PAVEMENT MARKING STOP LINE REMOVABLE TAPE 18-INCH
2. TEMPORARY PAVEMENT MARKING REMOVABLE TAPE 4-INCH (YELLOW ON LEFT, WHITE ON RIGHT)
3. REMOVING PAVEMENT MARKING
4. CENTERLINE CONSISTS OF FLEXIBLE TUBULAR MARKER POSTS AND BASES SPACED EVERY 25' AND TEMPORARY PAVEMENT MARKING REMOVABLE TAPE 4-INCH DOUBLE YELLOW. SPACING AT CLOSED INTERSECTIONS IS 10-15' TYPICALLY.
5. TEMPORARY PAVEMENT MARKING REMOVABLE TAPE 8-INCH
6. TEMPORARY PAVEMENT MARKING ARROWS REMOVABLE TAPE
7. TEMPORARY PAVEMENT MARKING REMOVABLE TAPE 4-INCH (WHITE DASHED)

PROJECT NO: 6414-00-78	HWY: BUSINESS 51	COUNTY: PORTAGE	TRAFFIC CONTROL OVERVIEW-STAGE 2B	SHEET 182	E

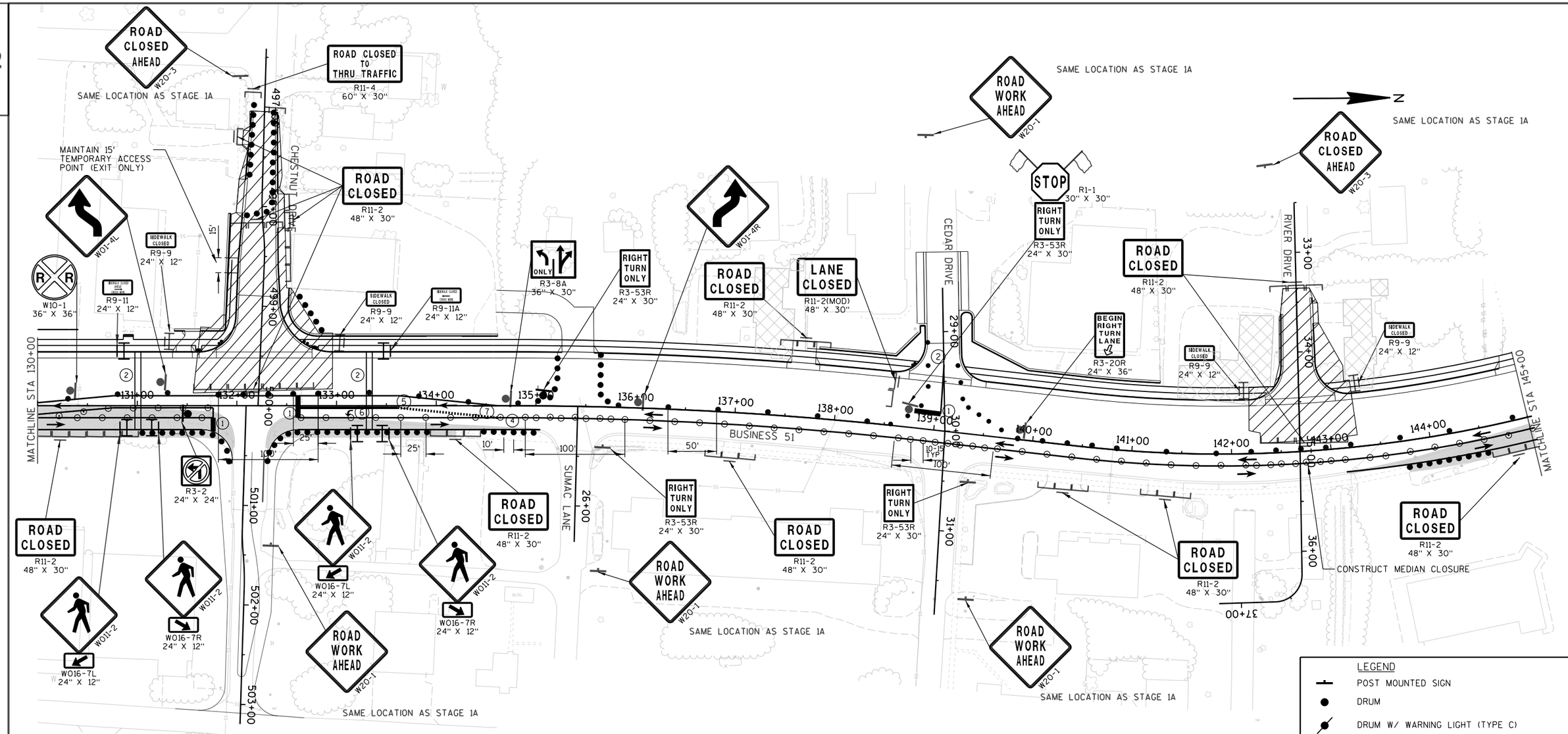

LEGEND

1. TEMPORARY PAVEMENT MARKING STOP LINE REMOVABLE TAPE 18-INCH
2. TEMPORARY PAVEMENT MARKING REMOVABLE TAPE 4-INCH (YELLOW ON LEFT, WHITE ON RIGHT OR CROSSWALK)
3. REMOVING PAVEMENT MARKING
4. CENTERLINE CONSISTS OF FLEXIBLE TUBULAR MARKER POSTS AND BASES SPACED EVERY 25' AND TEMPORARY PAVEMENT MARKING REMOVABLE TAPE 4-INCH DOUBLE YELLOW. SPACING AT CLOSED INTERSECTIONS IS 10-15' TYPICALLY.
5. TEMPORARY PAVEMENT MARKING REMOVABLE TAPE 8-INCH
6. TEMPORARY PAVEMENT MARKING ARROWS REMOVABLE TAPE
7. TEMPORARY PAVEMENT MARKING REMOVABLE TAPE 4-INCH (WHITE DASHED)

TYPICAL MEDIAN CLOSURE

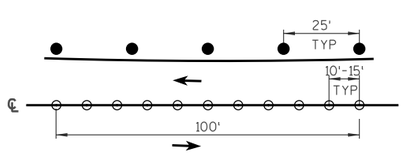

LEGEND

- POST MOUNTED SIGN
- DRUM
- DRUM W/ WARNING LIGHT (TYPE C)
- FLEXIBLE TUBULAR MARKER
- SIGN ON PORTABLE SUPPORT
- BARRICADES TYPE II WITH SIGN
- BARRICADES TYPE III (8' EQUIVALENT)
- BARRICADES TYPE III WITH SIGN (8' EQUIVALENT)
- ARROW BOARD
- DIRECTION OF TRAFFIC (FOR REFERENCE ONLY)
- TEMPORARY ASPHALT CONSTRUCTED IN STAGE 1
- ASPHALTIC SURFACE TEMPORARY
- ▲1 SEE TEMPORARY PIPE SEAL DETAIL
- ▲2 SEE CONSTRUCTION DETAIL STAGE 2 FOR TEMPORARY PIPE CONNECTION
- FLAGS, 16"X16" MINIMUM (ORANGE)

PROJECT NO:6414-00-78	HWY:BUSINESS 51	COUNTY:PORTAGE	TRAFFIC CONTROL OVERVIEW-STAGE 2B	SHEET 183	E

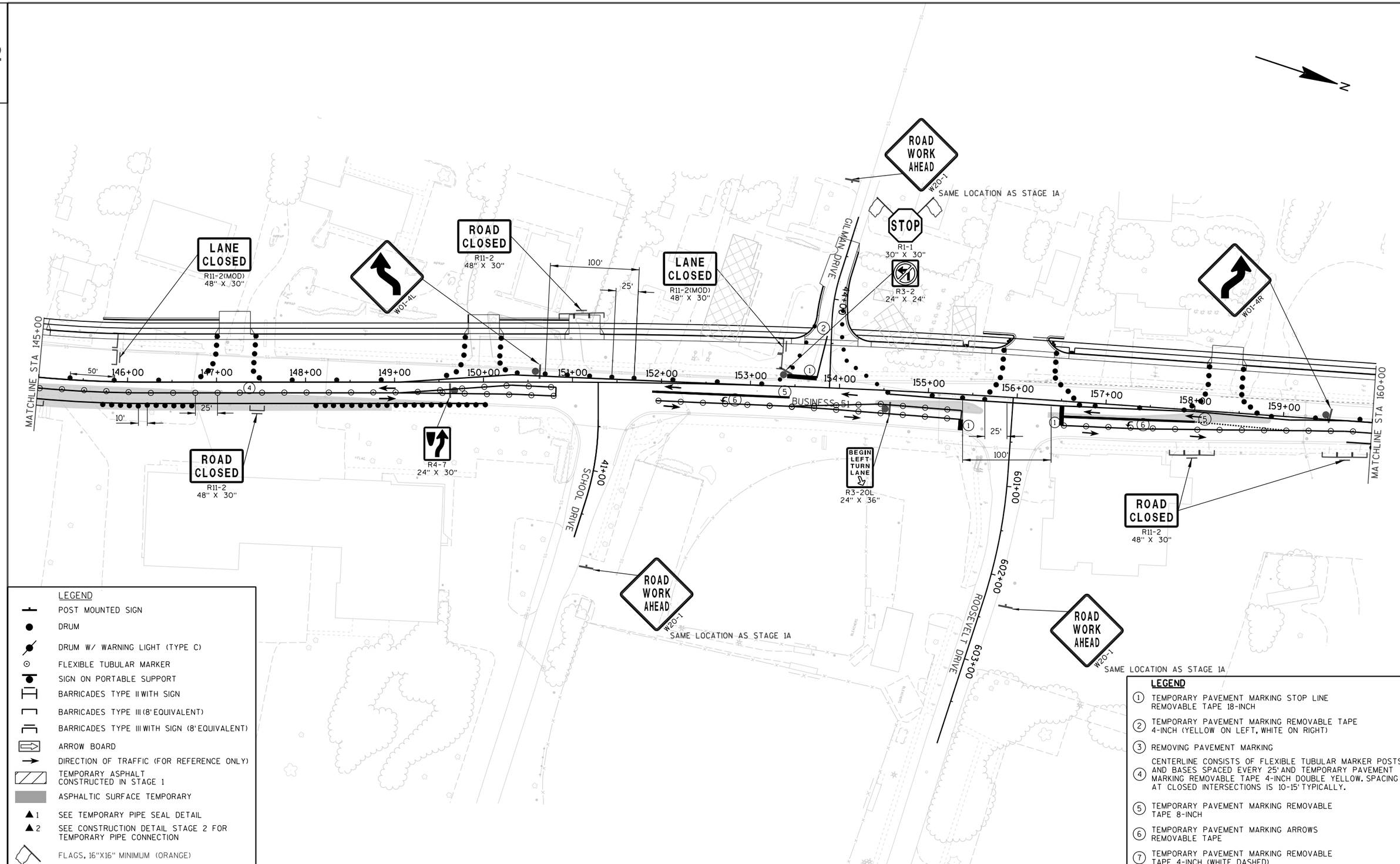

PROJECT NO:6414-00-78	HWY:BUSINESS 51	COUNTY:PORTAGE	TRAFFIC CONTROL OVERVIEW-STAGE 2B	SHEET 184	E

FILE NAME : P:\UZ\W\Witnc\112545\5-final-dsgn\51-drawings\40-TransHwy\026019 s2B.dgn PLOT TIME : 2:04:30 PM PLOT DATE : 8/2/2015 PLOT BY : SEH PLOT NAME : PLOT SCALE : N/A

WISDOT/CADDS SHEET 42

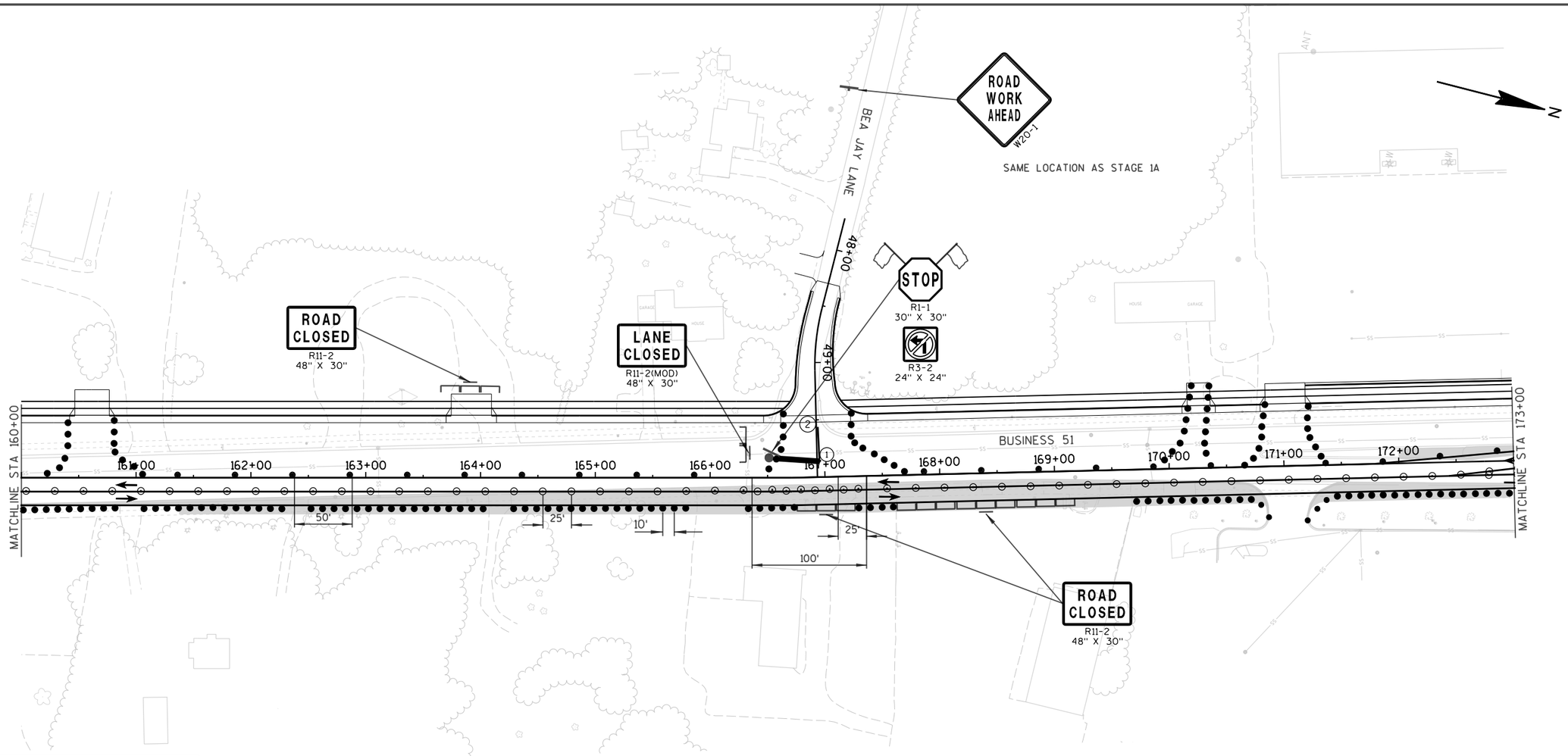

LEGEND

- POST MOUNTED SIGN
- DRUM
- DRUM W/ WARNING LIGHT (TYPE C)
- FLEXIBLE TUBULAR MARKER
- SIGN ON PORTABLE SUPPORT
- BARRICADES TYPE II WITH SIGN
- BARRICADES TYPE III (8' EQUIVALENT)
- BARRICADES TYPE III WITH SIGN (8' EQUIVALENT)
- ARROW BOARD
- DIRECTION OF TRAFFIC (FOR REFERENCE ONLY)
- TEMPORARY ASPHALT CONSTRUCTED IN STAGE 1
- ASPHALTIC SURFACE TEMPORARY
- ▲1 SEE TEMPORARY PIPE SEAL DETAIL
- ▲2 SEE CONSTRUCTION DETAIL STAGE 2 FOR TEMPORARY PIPE CONNECTION
- FLAGS, 16"X16" MINIMUM (ORANGE)

LEGEND

1. TEMPORARY PAVEMENT MARKING STOP LINE REMOVABLE TAPE 18-INCH
2. TEMPORARY PAVEMENT MARKING REMOVABLE TAPE 4-INCH (YELLOW ON LEFT, WHITE ON RIGHT)
3. REMOVING PAVEMENT MARKING
4. CENTERLINE CONSISTS OF FLEXIBLE TUBULAR MARKER POSTS AND BASES SPACED EVERY 25' AND TEMPORARY PAVEMENT MARKING REMOVABLE TAPE 4-INCH DOUBLE YELLOW. SPACING AT CLOSED INTERSECTIONS IS 10-15' TYPICALLY.
5. TEMPORARY PAVEMENT MARKING REMOVABLE TAPE 8-INCH
6. TEMPORARY PAVEMENT MARKING ARROWS REMOVABLE TAPE
7. TEMPORARY PAVEMENT MARKING REMOVABLE TAPE 4-INCH (WHITE DASHED)

PROJECT NO:6414-00-78	HWY:BUSINESS 51	COUNTY:PORTAGE	TRAFFIC CONTROL OVERVIEW-STAGE 2B	SHEET 185	E

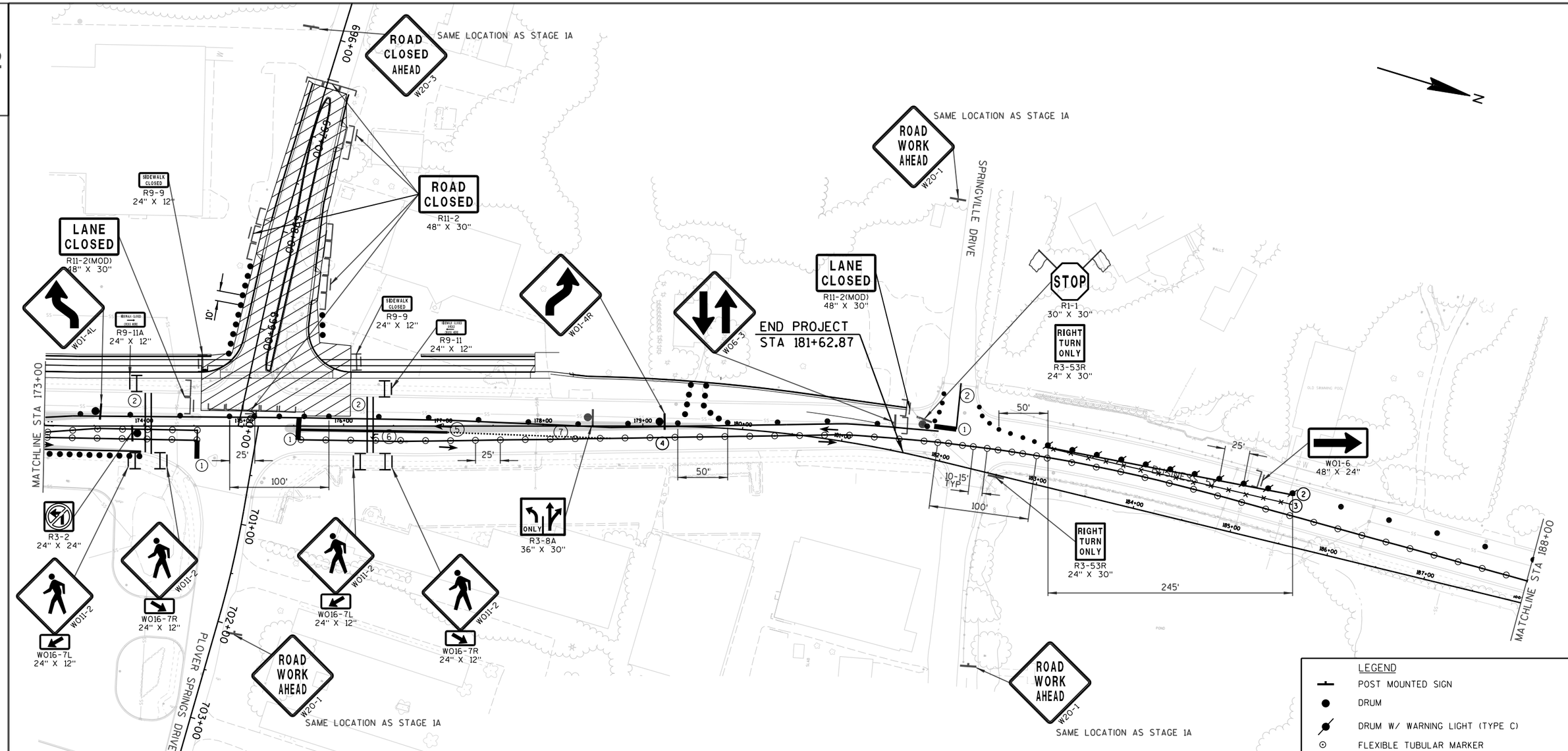

LEGEND

1. TEMPORARY PAVEMENT MARKING STOP LINE REMOVABLE TAPE 18-INCH
2. TEMPORARY PAVEMENT MARKING REMOVABLE TAPE 4-INCH (YELLOW ON LEFT, WHITE ON RIGHT OR CROSSWALK)
3. REMOVING PAVEMENT MARKING
4. CENTERLINE CONSISTS OF FLEXIBLE TUBULAR MARKER POSTS AND BASES SPACED EVERY 25' AND TEMPORARY PAVEMENT MARKING REMOVABLE TAPE 4-INCH DOUBLE YELLOW. SPACING AT CLOSED INTERSECTIONS IS 10-15' TYPICALLY.
5. TEMPORARY PAVEMENT MARKING REMOVABLE TAPE 8-INCH
6. TEMPORARY PAVEMENT MARKING ARROWS REMOVABLE TAPE
7. TEMPORARY PAVEMENT MARKING REMOVABLE TAPE 4-INCH (WHITE DASHED)

LEGEND

- POST MOUNTED SIGN
- DRUM
- DRUM W/ WARNING LIGHT (TYPE C)
- FLEXIBLE TUBULAR MARKER
- SIGN ON PORTABLE SUPPORT
- BARRICADES TYPE II WITH SIGN
- BARRICADES TYPE III (8' EQUIVALENT)
- BARRICADES TYPE III WITH SIGN (8' EQUIVALENT)
- ARROW BOARD
- DIRECTION OF TRAFFIC (FOR REFERENCE ONLY)
- TEMPORARY ASPHALT CONSTRUCTED IN STAGE 1
- ASPHALTIC SURFACE TEMPORARY
- ▲1 SEE TEMPORARY PIPE SEAL DETAIL
- ▲2 SEE CONSTRUCTION DETAIL STAGE 2 FOR TEMPORARY PIPE CONNECTION
- FLAGS, 16"X16" MINIMUM (ORANGE)

PROJECT NO:6414-00-78	HWY:BUSINESS 51	COUNTY:PORTAGE	TRAFFIC CONTROL OVERVIEW-STAGE 2B	SHEET 186	E

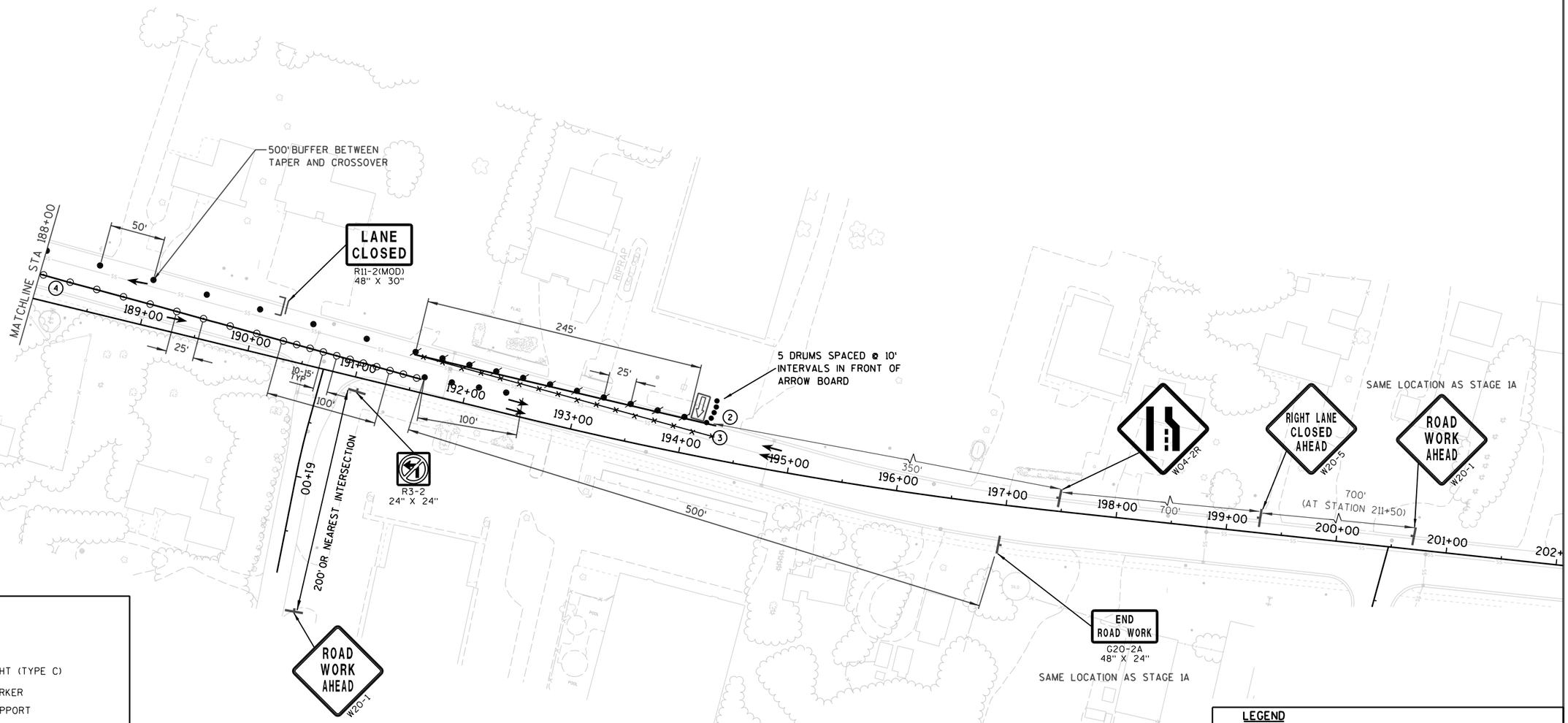

LEGEND

- POST MOUNTED SIGN
- DRUM
- DRUM W/ WARNING LIGHT (TYPE C)
- FLEXIBLE TUBULAR MARKER
- SIGN ON PORTABLE SUPPORT
- BARRICADES TYPE II WITH SIGN
- BARRICADES TYPE III (8' EQUIVALENT)
- BARRICADES TYPE III WITH SIGN (8' EQUIVALENT)
- ARROW BOARD
- DIRECTION OF TRAFFIC (FOR REFERENCE ONLY)
- TEMPORARY ASPHALT CONSTRUCTED IN STAGE 1
- ASPHALTIC SURFACE TEMPORARY
- ▲1 SEE TEMPORARY PIPE SEAL DETAIL
- ▲2 SEE CONSTRUCTION DETAIL STAGE 2 FOR TEMPORARY PIPE CONNECTION
- FLAGS, 16"X16" MINIMUM (ORANGE)

LEGEND

1. TEMPORARY PAVEMENT MARKING STOP LINE REMOVABLE TAPE 18-INCH
2. TEMPORARY PAVEMENT MARKING REMOVABLE TAPE 4-INCH (YELLOW ON LEFT, WHITE ON RIGHT)
3. REMOVING PAVEMENT MARKING
4. CENTERLINE CONSISTS OF FLEXIBLE TUBULAR MARKER POSTS AND BASES SPACED EVERY 25' AND TEMPORARY PAVEMENT MARKING REMOVABLE TAPE 4-INCH DOUBLE YELLOW. SPACING AT CLOSED INTERSECTIONS IS 10-15' TYPICALLY.
5. TEMPORARY PAVEMENT MARKING REMOVABLE TAPE 8-INCH
6. TEMPORARY PAVEMENT MARKING ARROWS REMOVABLE TAPE
7. TEMPORARY PAVEMENT MARKING REMOVABLE TAPE 4-INCH (WHITE DASHED)

PROJECT NO:6414-00-78	HWY:BUSINESS 51	COUNTY:PORTAGE	TRAFFIC CONTROL OVERVIEW-STAGE 2B	SHEET 187	E

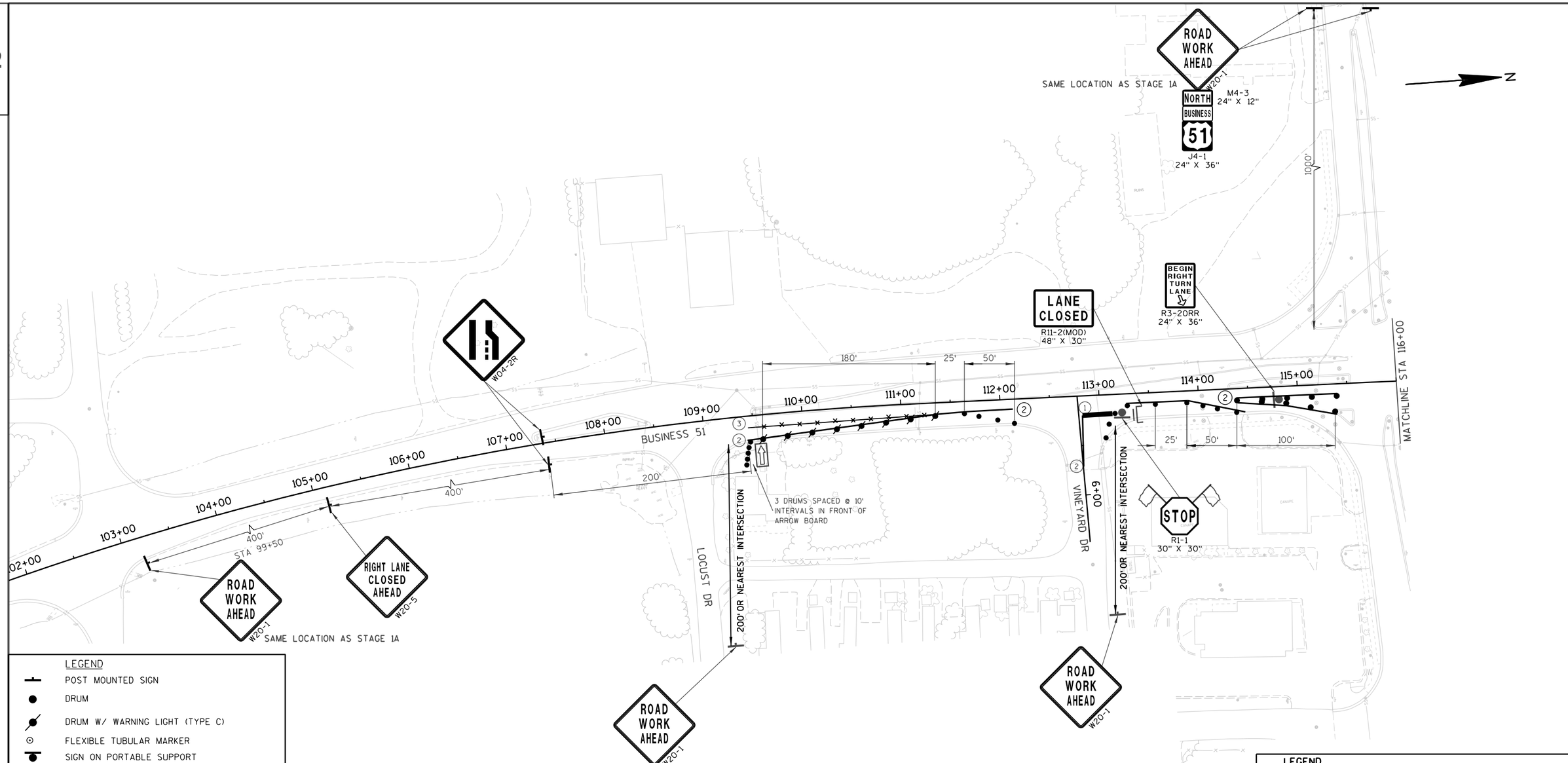

LEGEND

- POST MOUNTED SIGN
- DRUM
- DRUM W/ WARNING LIGHT (TYPE C)
- FLEXIBLE TUBULAR MARKER
- SIGN ON PORTABLE SUPPORT
- BARRICADES TYPE II WITH SIGN
- BARRICADES TYPE III (8' EQUIVALENT)
- BARRICADES TYPE III WITH SIGN (8' EQUIVALENT)
- ARROW BOARD
- DIRECTION OF TRAFFIC (FOR REFERENCE ONLY)
- TEMPORARY ASPHALT CONSTRUCTED IN STAGE 1
- ASPHALTIC SURFACE TEMPORARY
- ▲1 SEE TEMPORARY PIPE SEAL DETAIL
- ▲2 SEE CONSTRUCTION DETAIL STAGE 2 FOR TEMPORARY PIPE CONNECTION
- FLAGS, 16"X16" MINIMUM (ORANGE)

LEGEND

1. TEMPORARY PAVEMENT MARKING STOP LINE REMOVABLE TAPE 18-INCH
2. TEMPORARY PAVEMENT MARKING REMOVABLE TAPE 4-INCH (YELLOW ON LEFT, WHITE ON RIGHT)
3. REMOVING PAVEMENT MARKING
4. CENTERLINE CONSISTS OF FLEXIBLE TUBULAR MARKER POSTS AND BASES SPACED EVERY 25' AND TEMPORARY PAVEMENT MARKING REMOVABLE TAPE 4-INCH DOUBLE YELLOW. SPACING AT CLOSED INTERSECTIONS IS 10-15' TYPICALLY.
5. TEMPORARY PAVEMENT MARKING REMOVABLE TAPE 8-INCH
6. TEMPORARY PAVEMENT MARKING ARROWS REMOVABLE TAPE
7. TEMPORARY PAVEMENT MARKING REMOVABLE TAPE 4-INCH (WHITE DASHED)

PROJECT NO: 6414-00-78	HWY: BUSINESS 51	COUNTY: PORTAGE	TRAFFIC CONTROL OVERVIEW-STAGE 3A	SHEET 188	E

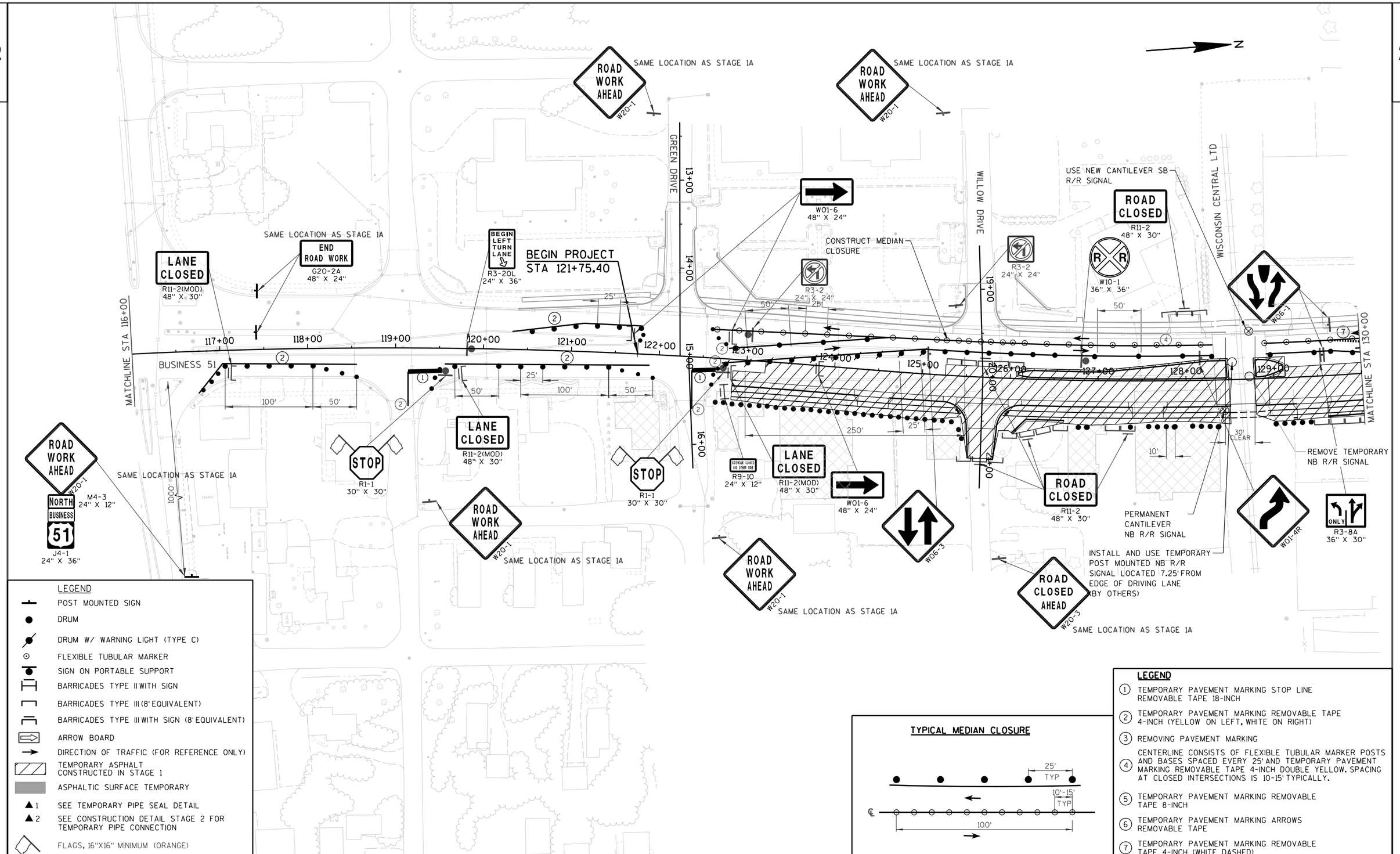

PROJECT NO:6414-00-78	HWY:BUSINESS 51	COUNTY:PORTAGE	TRAFFIC CONTROL OVERVIEW-STAGE 3A	SHEET 189	E

SAME LOCATION AS STAGE 1A

ROAD WORK AHEAD W20-1

LANE CLOSED R11-2(MOD) 48" X 30"

CHESTNUT DRIVE

CONSTRUCT MEDIAN CLOSURE

W01-4L

BEGIN LEFT TURN LANE R3-20L 24" X 36"

W01-4R

ROAD CLOSED R11-2 48" X 30"

CEDAR DRIVE

STOP R1-1 30" X 30"

R3-2 24" X 24"

RIVER DRIVE

MATCHLINE STA 130+00

MATCHLINE STA 145+00

BUSINESS 51

SUMAC LANE

SIDEWALK CLOSED R9-9 24" X 12"

ROAD CLOSED AHEAD W20-3

N

LEGEND

1. TEMPORARY PAVEMENT MARKING STOP LINE REMOVABLE TAPE 18-INCH
2. TEMPORARY PAVEMENT MARKING REMOVABLE TAPE 4-INCH (YELLOW ON LEFT, WHITE ON RIGHT)
3. REMOVING PAVEMENT MARKING
4. CENTERLINE CONSISTS OF FLEXIBLE TUBULAR MARKER POSTS AND BASES SPACED EVERY 25' AND TEMPORARY PAVEMENT MARKING REMOVABLE TAPE 4-INCH DOUBLE YELLOW. SPACING AT CLOSED INTERSECTIONS IS 10-15' TYPICALLY.
5. TEMPORARY PAVEMENT MARKING REMOVABLE TAPE 8-INCH
6. TEMPORARY PAVEMENT MARKING ARROWS REMOVABLE TAPE
7. TEMPORARY PAVEMENT MARKING REMOVABLE TAPE 4-INCH (WHITE DASHED)

TYPICAL MEDIAN CLOSURE

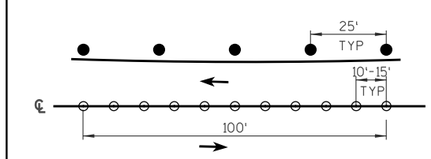

LEGEND

- POST MOUNTED SIGN
- DRUM
- DRUM W/ WARNING LIGHT (TYPE C)
- FLEXIBLE TUBULAR MARKER
- SIGN ON PORTABLE SUPPORT
- BARRICADES TYPE II WITH SIGN
- BARRICADES TYPE III (8' EQUIVALENT)
- BARRICADES TYPE III WITH SIGN (8' EQUIVALENT)
- ARROW BOARD
- DIRECTION OF TRAFFIC (FOR REFERENCE ONLY)
- TEMPORARY ASPHALT CONSTRUCTED IN STAGE 1
- ASPHALTIC SURFACE TEMPORARY
- ▲1 SEE TEMPORARY PIPE SEAL DETAIL
- ▲2 SEE CONSTRUCTION DETAIL STAGE 2 FOR TEMPORARY PIPE CONNECTION
- FLAGS, 16"X16" MINIMUM (ORANGE)

PROJECT NO:6414-00-78	HWY:BUSINESS 51	COUNTY:PORTAGE	TRAFFIC CONTROL OVERVIEW-STAGE 3A	SHEET 190	E

2

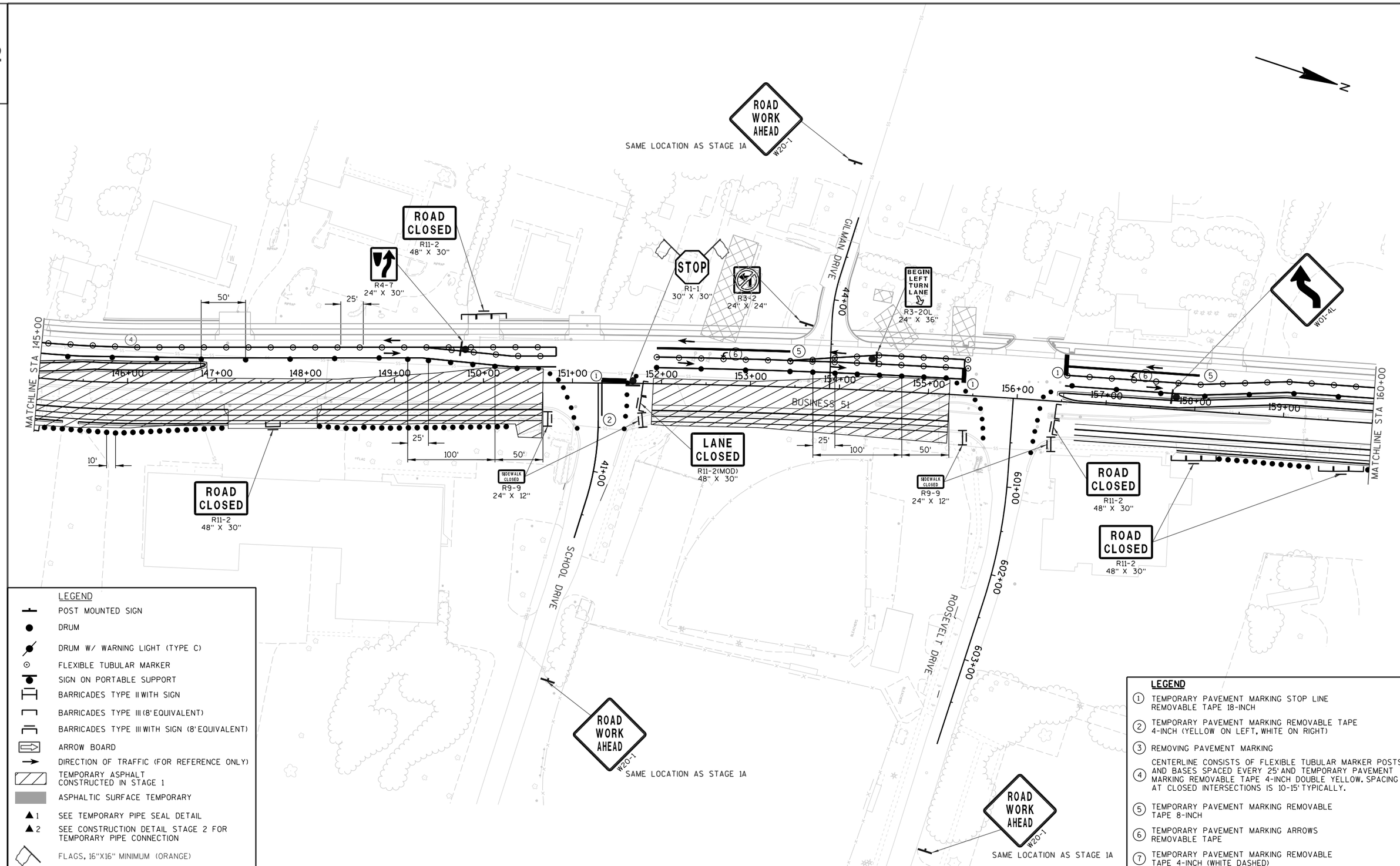

LEGEND

- POST MOUNTED SIGN
- DRUM
- DRUM W/ WARNING LIGHT (TYPE C)
- FLEXIBLE TUBULAR MARKER
- SIGN ON PORTABLE SUPPORT
- BARRICADES TYPE II WITH SIGN
- BARRICADES TYPE III (8' EQUIVALENT)
- BARRICADES TYPE III WITH SIGN (8' EQUIVALENT)
- ARROW BOARD
- DIRECTION OF TRAFFIC (FOR REFERENCE ONLY)
- TEMPORARY ASPHALT CONSTRUCTED IN STAGE 1
- ASPHALTIC SURFACE TEMPORARY
- ▲1 SEE TEMPORARY PIPE SEAL DETAIL
- ▲2 SEE CONSTRUCTION DETAIL STAGE 2 FOR TEMPORARY PIPE CONNECTION
- FLAGS, 16"X16" MINIMUM (ORANGE)

LEGEND

1. TEMPORARY PAVEMENT MARKING STOP LINE REMOVABLE TAPE 18-INCH
2. TEMPORARY PAVEMENT MARKING REMOVABLE TAPE 4-INCH (YELLOW ON LEFT, WHITE ON RIGHT)
3. REMOVING PAVEMENT MARKING
4. CENTERLINE CONSISTS OF FLEXIBLE TUBULAR MARKER POSTS AND BASES SPACED EVERY 25' AND TEMPORARY PAVEMENT MARKING REMOVABLE TAPE 4-INCH DOUBLE YELLOW. SPACING AT CLOSED INTERSECTIONS IS 10-15' TYPICALLY.
5. TEMPORARY PAVEMENT MARKING REMOVABLE TAPE 8-INCH
6. TEMPORARY PAVEMENT MARKING ARROWS REMOVABLE TAPE
7. TEMPORARY PAVEMENT MARKING REMOVABLE TAPE 4-INCH (WHITE DASHED)

PROJECT NO: 6414-00-78	HWY: BUSINESS 51	COUNTY: PORTAGE	TRAFFIC CONTROL OVERVIEW-STAGE 3A	SHEET 191	E

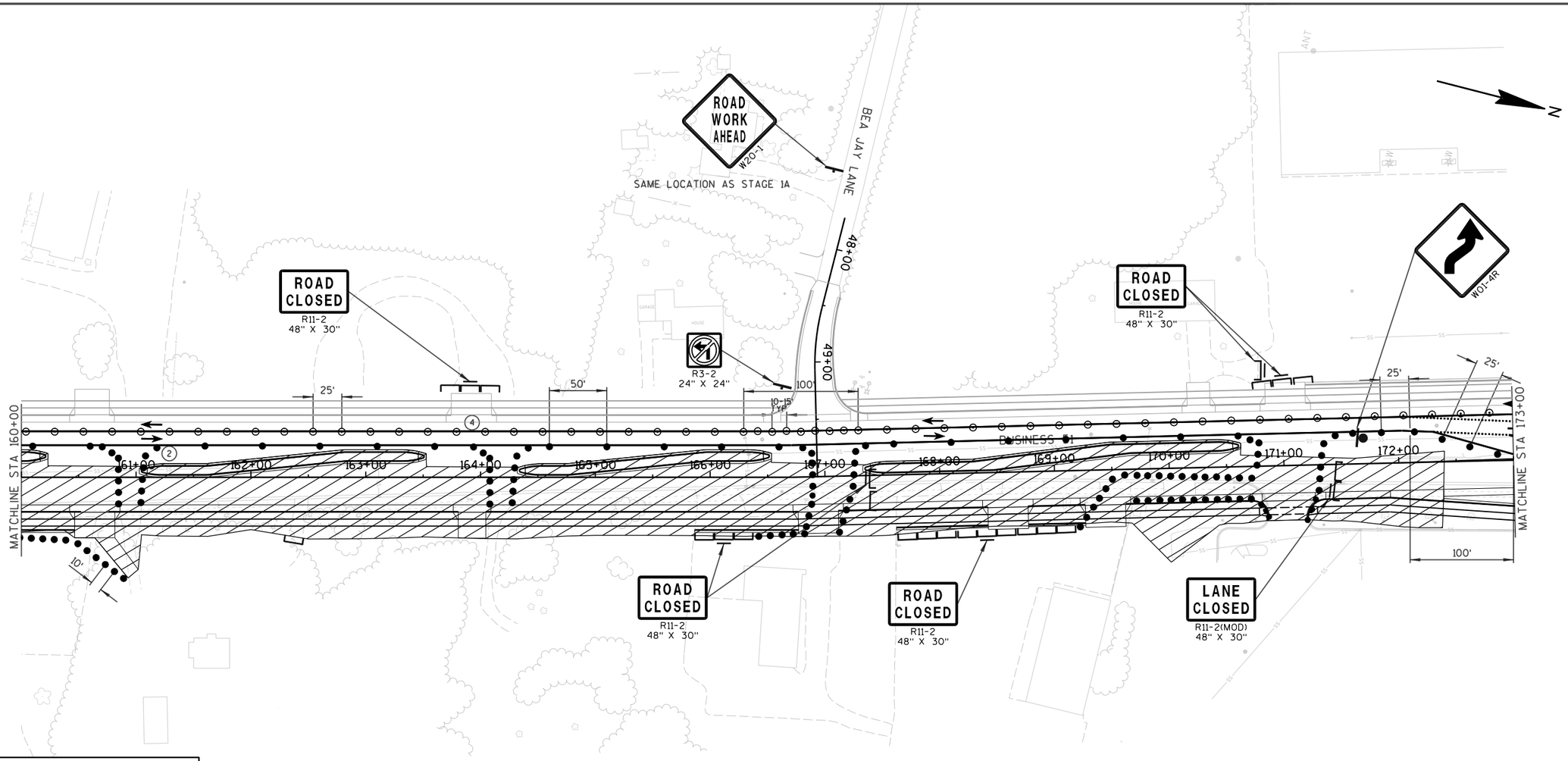

LEGEND

- POST MOUNTED SIGN
- DRUM
- DRUM W/ WARNING LIGHT (TYPE C)
- FLEXIBLE TUBULAR MARKER
- SIGN ON PORTABLE SUPPORT
- BARRICADES TYPE II WITH SIGN
- BARRICADES TYPE III (8' EQUIVALENT)
- BARRICADES TYPE III WITH SIGN (8' EQUIVALENT)
- ARROW BOARD
- DIRECTION OF TRAFFIC (FOR REFERENCE ONLY)
- TEMPORARY ASPHALT CONSTRUCTED IN STAGE 1
- ASPHALTIC SURFACE TEMPORARY
- ▲1 SEE TEMPORARY PIPE SEAL DETAIL
- ▲2 SEE CONSTRUCTION DETAIL STAGE 2 FOR TEMPORARY PIPE CONNECTION
- FLAGS, 16"X16" MINIMUM (ORANGE)

LEGEND

1. TEMPORARY PAVEMENT MARKING STOP LINE REMOVABLE TAPE 18-INCH
2. TEMPORARY PAVEMENT MARKING REMOVABLE TAPE 4-INCH (YELLOW ON LEFT, WHITE ON RIGHT)
3. REMOVING PAVEMENT MARKING
4. CENTERLINE CONSISTS OF FLEXIBLE TUBULAR MARKER POSTS AND BASES SPACED EVERY 25' AND TEMPORARY PAVEMENT MARKING REMOVABLE TAPE 4-INCH DOUBLE YELLOW. SPACING AT CLOSED INTERSECTIONS IS 10-15' TYPICALLY.
5. TEMPORARY PAVEMENT MARKING REMOVABLE TAPE 8-INCH
6. TEMPORARY PAVEMENT MARKING ARROWS REMOVABLE TAPE
7. TEMPORARY PAVEMENT MARKING REMOVABLE TAPE 4-INCH (WHITE DASHED)

PROJECT NO:6414-00-78	HWY:BUSINESS 51	COUNTY:PORTAGE	TRAFFIC CONTROL OVERVIEW-STAGE 3A	SHEET 192	E

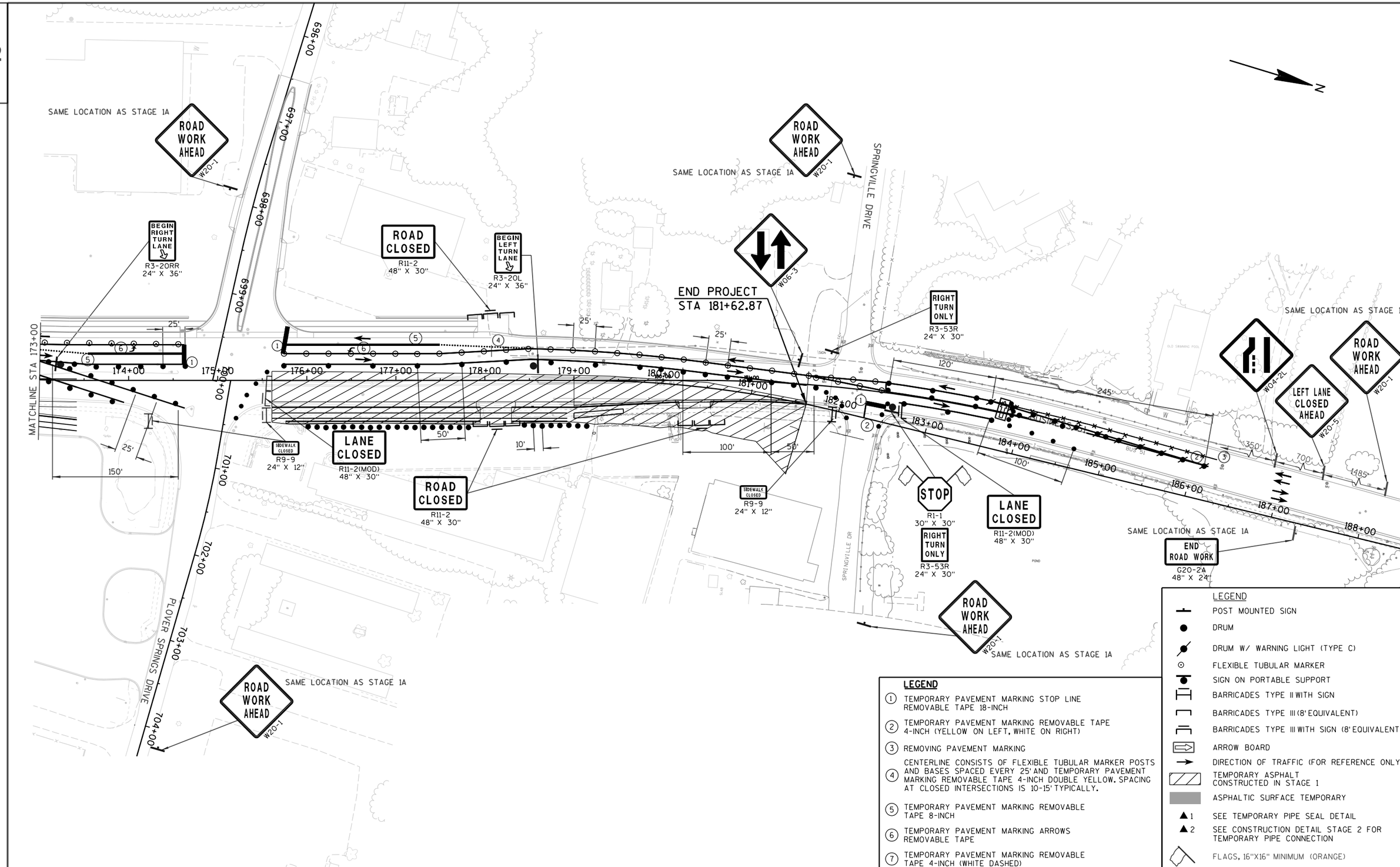

LEGEND

1. TEMPORARY PAVEMENT MARKING STOP LINE REMOVABLE TAPE 18-INCH
2. TEMPORARY PAVEMENT MARKING REMOVABLE TAPE 4-INCH (YELLOW ON LEFT, WHITE ON RIGHT)
3. REMOVING PAVEMENT MARKING
4. CENTERLINE CONSISTS OF FLEXIBLE TUBULAR MARKER POSTS AND BASES SPACED EVERY 25' AND TEMPORARY PAVEMENT MARKING REMOVABLE TAPE 4-INCH DOUBLE YELLOW. SPACING AT CLOSED INTERSECTIONS IS 10-15' TYPICALLY.
5. TEMPORARY PAVEMENT MARKING REMOVABLE TAPE 8-INCH
6. TEMPORARY PAVEMENT MARKING ARROWS REMOVABLE TAPE
7. TEMPORARY PAVEMENT MARKING REMOVABLE TAPE 4-INCH (WHITE DASHED)

LEGEND

- POST MOUNTED SIGN
- DRUM
- DRUM W/ WARNING LIGHT (TYPE C)
- FLEXIBLE TUBULAR MARKER
- SIGN ON PORTABLE SUPPORT
- BARRICADES TYPE II WITH SIGN
- BARRICADES TYPE III (8' EQUIVALENT)
- BARRICADES TYPE III WITH SIGN (8' EQUIVALENT)
- ARROW BOARD
- DIRECTION OF TRAFFIC (FOR REFERENCE ONLY)
- TEMPORARY ASPHALT CONSTRUCTED IN STAGE 1
- ASPHALTIC SURFACE TEMPORARY
- ▲1 SEE TEMPORARY PIPE SEAL DETAIL
- ▲2 SEE CONSTRUCTION DETAIL STAGE 2 FOR TEMPORARY PIPE CONNECTION
- FLAGS, 16"X16" MINIMUM (ORANGE)

PROJECT NO:6414-00-78	HWY:BUSINESS 51	COUNTY:PORTAGE	TRAFFIC CONTROL OVERVIEW-STAGE 3A	SHEET 193	E

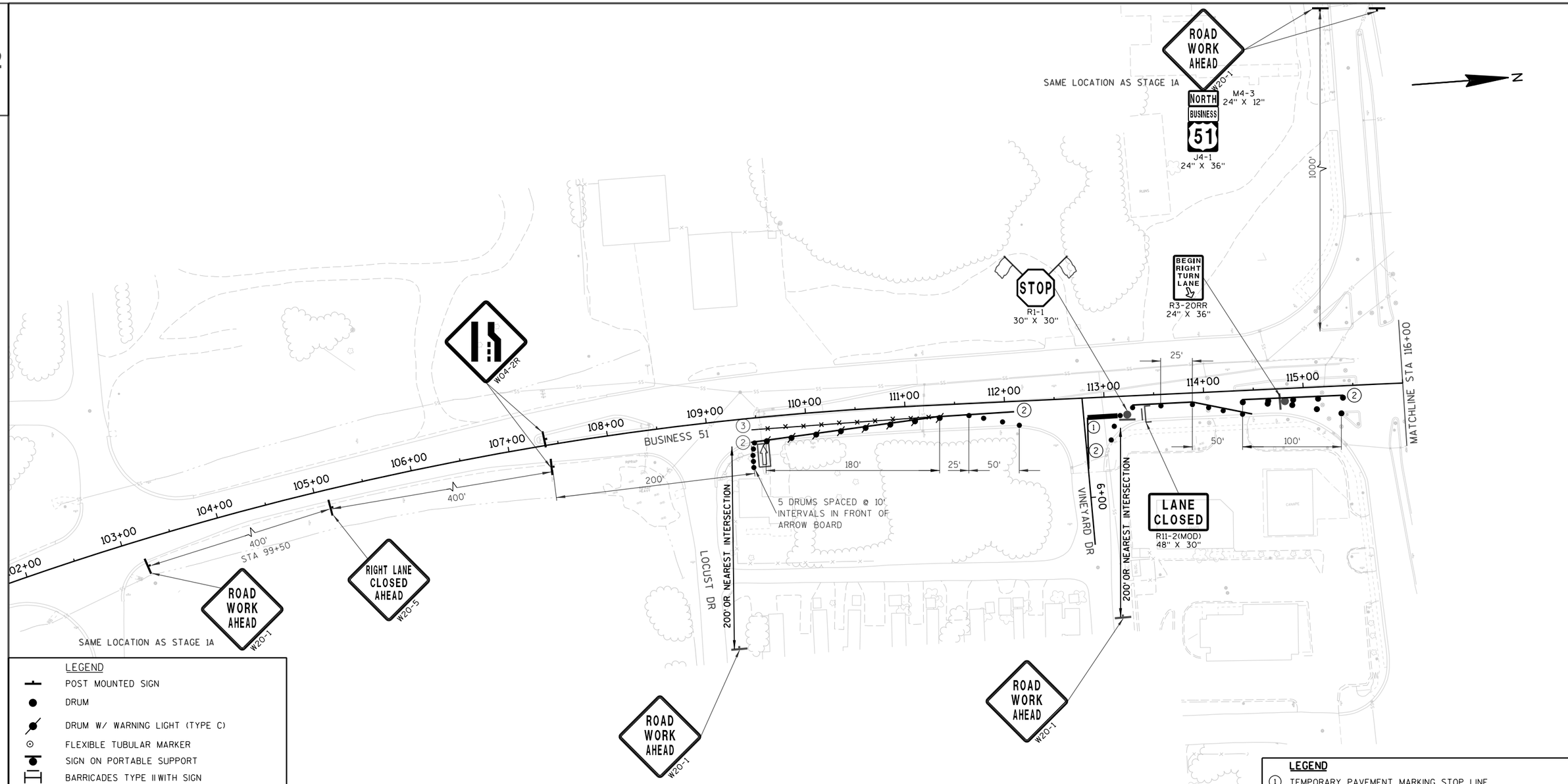

LEGEND

- POST MOUNTED SIGN
- DRUM
- DRUM W/ WARNING LIGHT (TYPE C)
- FLEXIBLE TUBULAR MARKER
- SIGN ON PORTABLE SUPPORT
- BARRICADES TYPE II WITH SIGN
- BARRICADES TYPE III (8' EQUIVALENT)
- BARRICADES TYPE III WITH SIGN (8' EQUIVALENT)
- ARROW BOARD
- DIRECTION OF TRAFFIC (FOR REFERENCE ONLY)
- TEMPORARY ASPHALT CONSTRUCTED IN STAGE 1
- ASPHALTIC SURFACE TEMPORARY
- ▲1 SEE TEMPORARY PIPE SEAL DETAIL
- ▲2 SEE CONSTRUCTION DETAIL STAGE 2 FOR TEMPORARY PIPE CONNECTION
- FLAGS, 16"X16" MINIMUM (ORANGE)

LEGEND

1. TEMPORARY PAVEMENT MARKING STOP LINE REMOVABLE TAPE 18-INCH
2. TEMPORARY PAVEMENT MARKING REMOVABLE TAPE 4-INCH (YELLOW ON LEFT, WHITE ON RIGHT)
3. REMOVING PAVEMENT MARKING
4. CENTERLINE CONSISTS OF FLEXIBLE TUBULAR MARKER POSTS AND BASES SPACED EVERY 25' AND TEMPORARY PAVEMENT MARKING REMOVABLE TAPE 4-INCH DOUBLE YELLOW. SPACING AT CLOSED INTERSECTIONS IS 10-15' TYPICALLY.
5. TEMPORARY PAVEMENT MARKING REMOVABLE TAPE 8-INCH
6. TEMPORARY PAVEMENT MARKING ARROWS REMOVABLE TAPE
7. TEMPORARY PAVEMENT MARKING REMOVABLE TAPE 4-INCH (WHITE DASHED)

PROJECT NO: 6414-00-78	HWY: BUSINESS 51	COUNTY: PORTAGE	TRAFFIC CONTROL OVERVIEW-STAGE 3B	SHEET 194	E

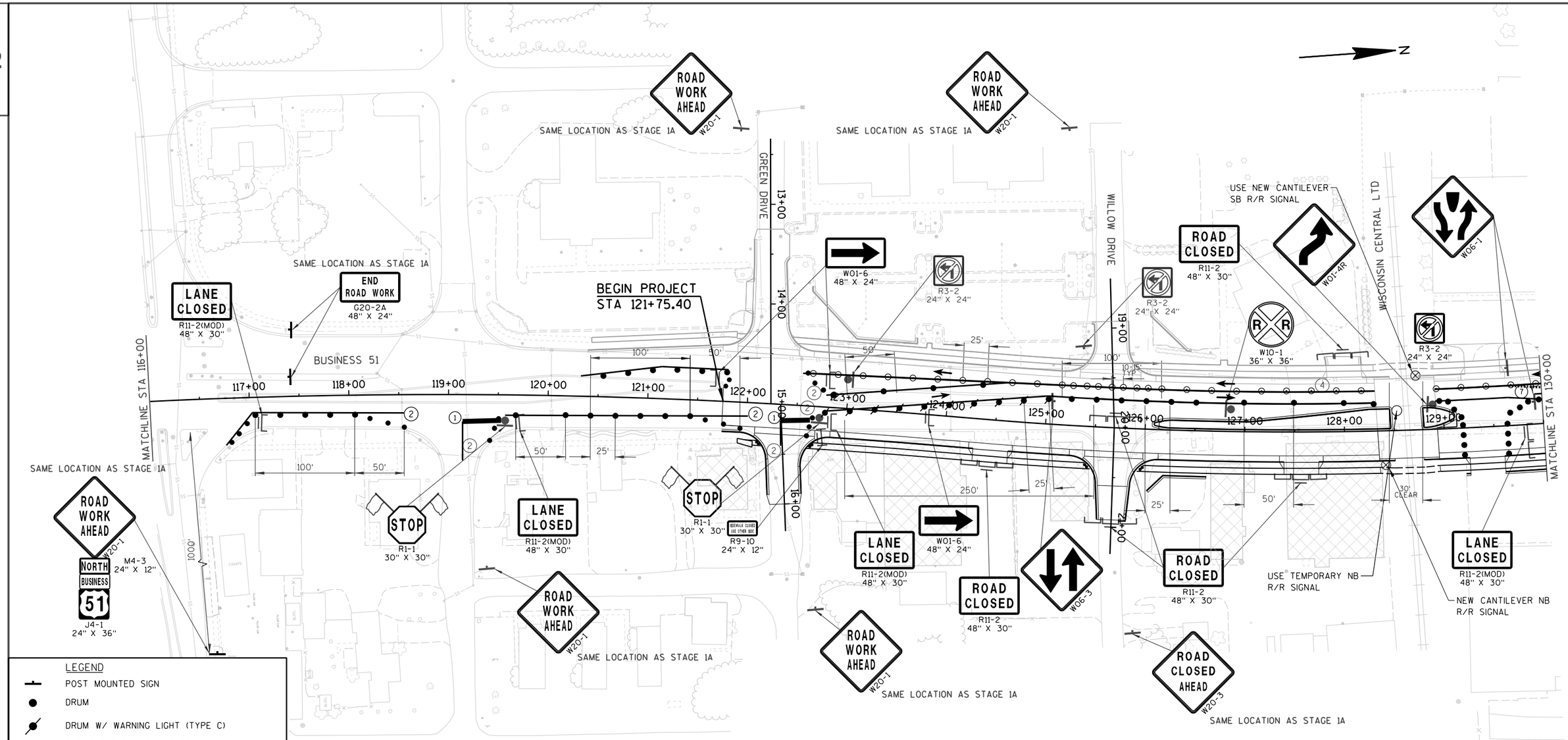

LEGEND

- POST MOUNTED SIGN
- DRUM
- DRUM W/ WARNING LIGHT (TYPE C)
- FLEXIBLE TUBULAR MARKER
- SIGN ON PORTABLE SUPPORT
- BARRICADES TYPE II WITH SIGN
- BARRICADES TYPE III (8' EQUIVALENT)
- BARRICADES TYPE III WITH SIGN (8' EQUIVALENT)
- ARROW BOARD
- DIRECTION OF TRAFFIC (FOR REFERENCE ONLY)
- TEMPORARY ASPHALT CONSTRUCTED IN STAGE 1
- ASPHALTIC SURFACE TEMPORARY
- ▲1 SEE TEMPORARY PIPE SEAL DETAIL
- ▲2 SEE CONSTRUCTION DETAIL STAGE 2 FOR TEMPORARY PIPE CONNECTION
- FLAGS, 16"X16" MINIMUM (ORANGE)

LEGEND

1. TEMPORARY PAVEMENT MARKING STOP LINE REMOVABLE TAPE 18-INCH
2. TEMPORARY PAVEMENT MARKING REMOVABLE TAPE 4-INCH (YELLOW ON LEFT, WHITE ON RIGHT)
3. REMOVING PAVEMENT MARKING
4. CENTERLINE CONSISTS OF FLEXIBLE TUBULAR MARKER POSTS AND BASES SPACED EVERY 25' AND TEMPORARY PAVEMENT MARKING REMOVABLE TAPE 4-INCH DOUBLE YELLOW. SPACING AT CLOSED INTERSECTIONS IS 10-15' TYPICALLY.
5. TEMPORARY PAVEMENT MARKING REMOVABLE TAPE 8-INCH
6. TEMPORARY PAVEMENT MARKING ARROWS REMOVABLE TAPE
7. TEMPORARY PAVEMENT MARKING REMOVABLE TAPE 4-INCH (WHITE DASHED)

PROJECT NO:6414-00-78	HWY:BUSINESS 51	COUNTY:PORTAGE	TRAFFIC CONTROL OVERVIEW-STAGE 3B	SHEET 195	E

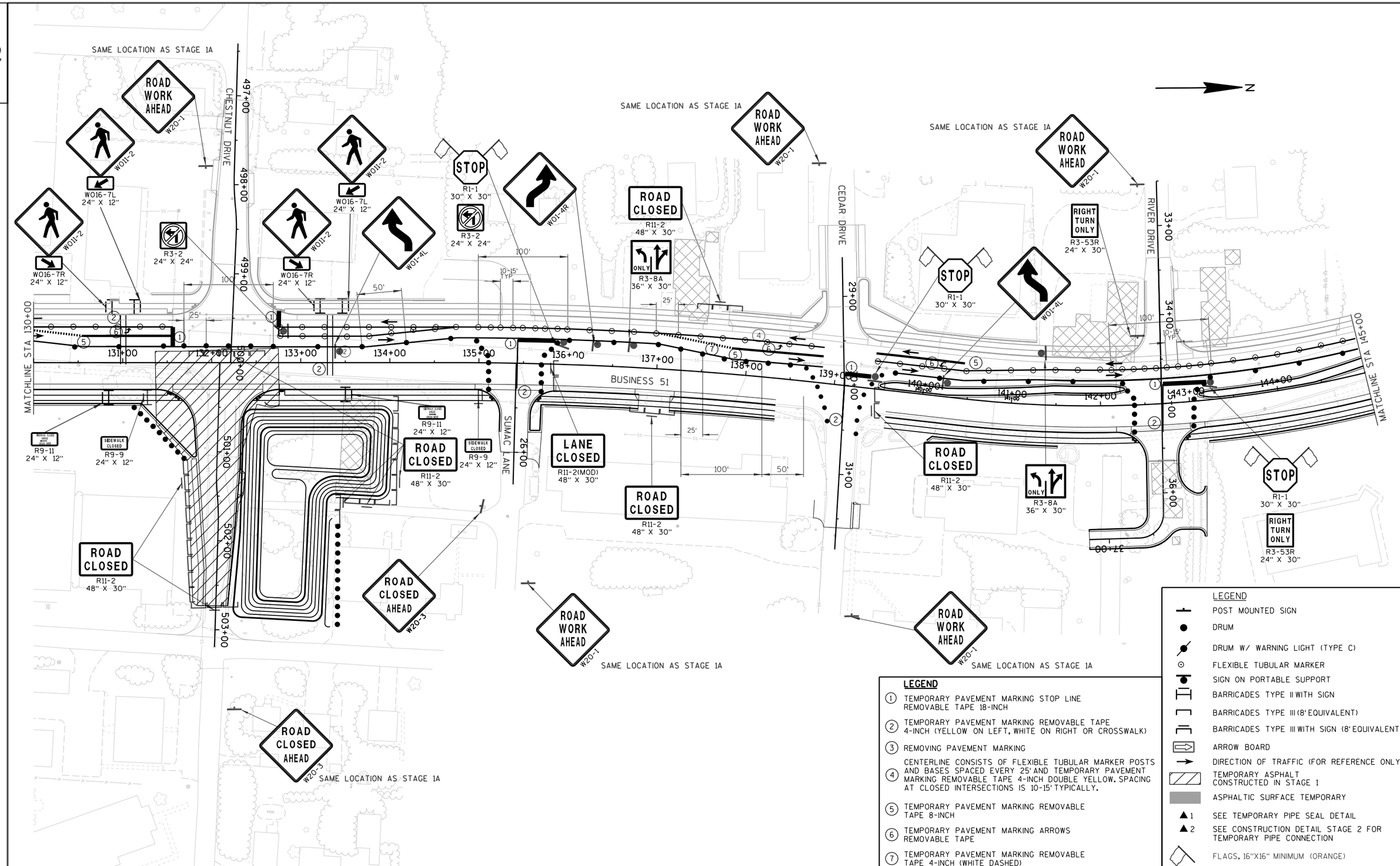

LEGEND

1. TEMPORARY PAVEMENT MARKING STOP LINE REMOVABLE TAPE 18-INCH
2. TEMPORARY PAVEMENT MARKING REMOVABLE TAPE 4-INCH (YELLOW ON LEFT, WHITE ON RIGHT OR CROSSWALK)
3. REMOVING PAVEMENT MARKING
4. CENTERLINE CONSISTS OF FLEXIBLE TUBULAR MARKER POSTS AND BASES SPACED EVERY 25' AND TEMPORARY PAVEMENT MARKING REMOVABLE TAPE 4-INCH DOUBLE YELLOW. SPACING AT CLOSED INTERSECTIONS IS 10-15' TYPICALLY.
5. TEMPORARY PAVEMENT MARKING REMOVABLE TAPE 8-INCH
6. TEMPORARY PAVEMENT MARKING ARROWS REMOVABLE TAPE
7. TEMPORARY PAVEMENT MARKING REMOVABLE TAPE 4-INCH (WHITE DASHED)

LEGEND

- POST MOUNTED SIGN
- DRUM
- DRUM W/ WARNING LIGHT (TYPE C)
- FLEXIBLE TUBULAR MARKER
- SIGN ON PORTABLE SUPPORT
- BARRICADES TYPE II WITH SIGN
- BARRICADES TYPE III (8' EQUIVALENT)
- BARRICADES TYPE III WITH SIGN (8' EQUIVALENT)
- ARROW BOARD
- DIRECTION OF TRAFFIC (FOR REFERENCE ONLY)
- TEMPORARY ASPHALT CONSTRUCTED IN STAGE 1
- ASPHALTIC SURFACE TEMPORARY
- ▲1 SEE TEMPORARY PIPE SEAL DETAIL
- ▲2 SEE CONSTRUCTION DETAIL STAGE 2 FOR TEMPORARY PIPE CONNECTION
- FLAGS, 16"X16" MINIMUM (ORANGE)

PROJECT NO:6414-00-78	HWY:BUSINESS 51	COUNTY:PORTAGE	TRAFFIC CONTROL OVERVIEW-STAGE 3B	SHEET 196	E

2

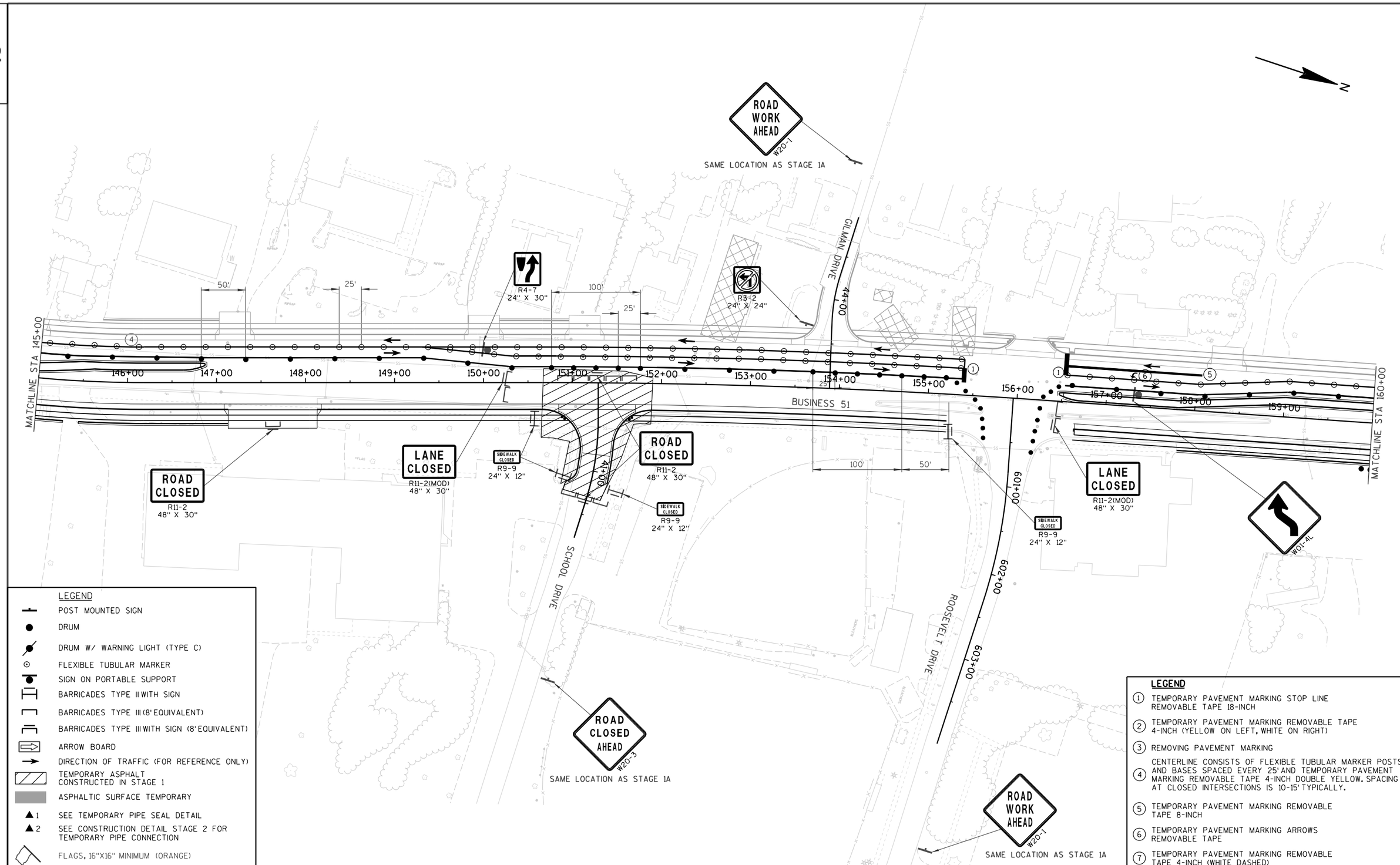

PROJECT NO:6414-00-78	HWY:BUSINESS 51	COUNTY:PORTAGE	TRAFFIC CONTROL OVERVIEW-STAGE 3B	SHEET 197	E

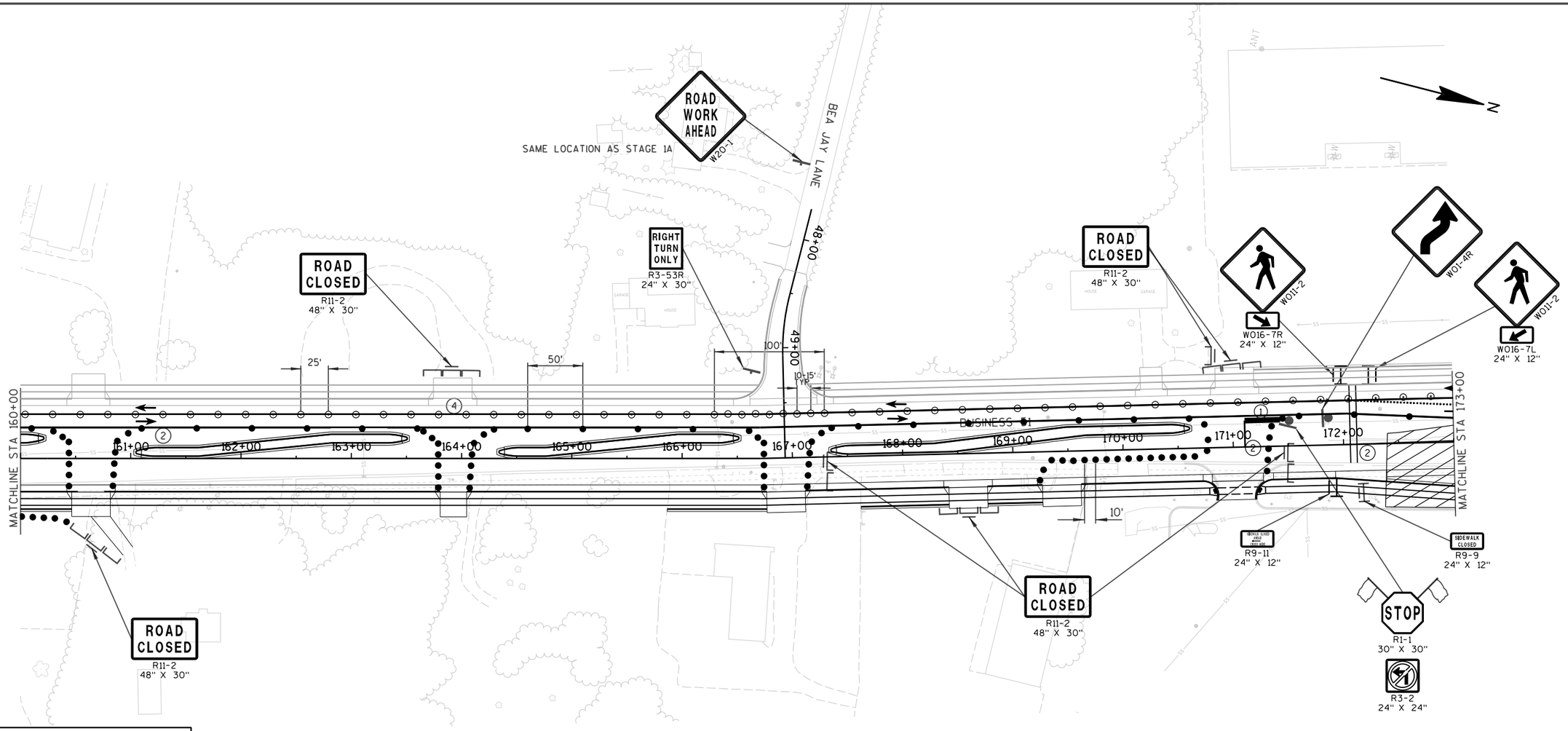

LEGEND

- POST MOUNTED SIGN
- DRUM
- DRUM W/ WARNING LIGHT (TYPE C)
- FLEXIBLE TUBULAR MARKER
- SIGN ON PORTABLE SUPPORT
- BARRICADES TYPE II WITH SIGN
- BARRICADES TYPE III (8' EQUIVALENT)
- BARRICADES TYPE III WITH SIGN (8' EQUIVALENT)
- ARROW BOARD
- DIRECTION OF TRAFFIC (FOR REFERENCE ONLY)
- TEMPORARY ASPHALT CONSTRUCTED IN STAGE 1
- ASPHALTIC SURFACE TEMPORARY
- ▲1 SEE TEMPORARY PIPE SEAL DETAIL
- ▲2 SEE CONSTRUCTION DETAIL STAGE 2 FOR TEMPORARY PIPE CONNECTION
- FLAGS, 16"X16" MINIMUM (ORANGE)

LEGEND

1. TEMPORARY PAVEMENT MARKING STOP LINE REMOVABLE TAPE 18-INCH
2. TEMPORARY PAVEMENT MARKING REMOVABLE TAPE 4-INCH (YELLOW ON LEFT, WHITE ON RIGHT OR CROSSWALK)
3. REMOVING PAVEMENT MARKING
4. CENTERLINE CONSISTS OF FLEXIBLE TUBULAR MARKER POSTS AND BASES SPACED EVERY 25' AND TEMPORARY PAVEMENT MARKING REMOVABLE TAPE 4-INCH DOUBLE YELLOW. SPACING AT CLOSED INTERSECTIONS IS 10-15' TYPICALLY.
5. TEMPORARY PAVEMENT MARKING REMOVABLE TAPE 8-INCH
6. TEMPORARY PAVEMENT MARKING ARROWS REMOVABLE TAPE
7. TEMPORARY PAVEMENT MARKING REMOVABLE TAPE 4-INCH (WHITE DASHED)

PROJECT NO: 6414-00-78	HWY: BUSINESS 51	COUNTY: PORTAGE	TRAFFIC CONTROL OVERVIEW-STAGE 3B	SHEET 198	E

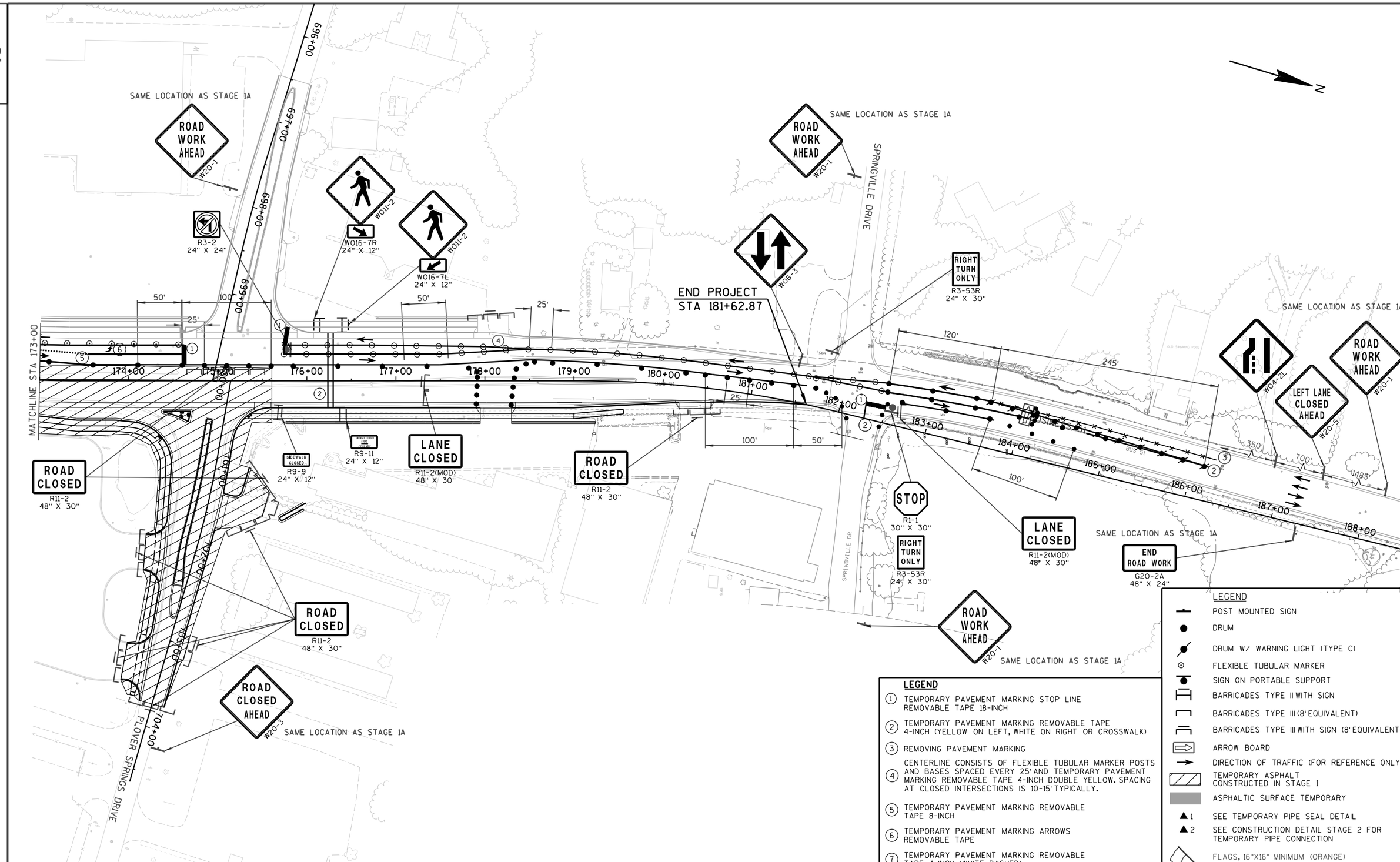

LEGEND

1. TEMPORARY PAVEMENT MARKING STOP LINE REMOVABLE TAPE 18-INCH
2. TEMPORARY PAVEMENT MARKING REMOVABLE TAPE 4-INCH (YELLOW ON LEFT, WHITE ON RIGHT OR CROSSWALK)
3. REMOVING PAVEMENT MARKING
4. CENTERLINE CONSISTS OF FLEXIBLE TUBULAR MARKER POSTS AND BASES SPACED EVERY 25' AND TEMPORARY PAVEMENT MARKING REMOVABLE TAPE 4-INCH DOUBLE YELLOW. SPACING AT CLOSED INTERSECTIONS IS 10-15' TYPICALLY.
5. TEMPORARY PAVEMENT MARKING REMOVABLE TAPE 8-INCH
6. TEMPORARY PAVEMENT MARKING ARROWS REMOVABLE TAPE
7. TEMPORARY PAVEMENT MARKING REMOVABLE TAPE 4-INCH (WHITE DASHED)

LEGEND

- POST MOUNTED SIGN
- DRUM
- DRUM W/ WARNING LIGHT (TYPE C)
- FLEXIBLE TUBULAR MARKER
- SIGN ON PORTABLE SUPPORT
- BARRICADES TYPE II WITH SIGN
- BARRICADES TYPE III (8' EQUIVALENT)
- BARRICADES TYPE III WITH SIGN (8' EQUIVALENT)
- ARROW BOARD
- DIRECTION OF TRAFFIC (FOR REFERENCE ONLY)
- TEMPORARY ASPHALT CONSTRUCTED IN STAGE 1
- ASPHALTIC SURFACE TEMPORARY
- ▲1 SEE TEMPORARY PIPE SEAL DETAIL
- ▲2 SEE CONSTRUCTION DETAIL STAGE 2 FOR TEMPORARY PIPE CONNECTION
- FLAGS, 16"X16" MINIMUM (ORANGE)

PROJECT NO:6414-00-78	HWY:BUSINESS 51	COUNTY:PORTAGE	TRAFFIC CONTROL OVERVIEW-STAGE 3B	SHEET 199	E

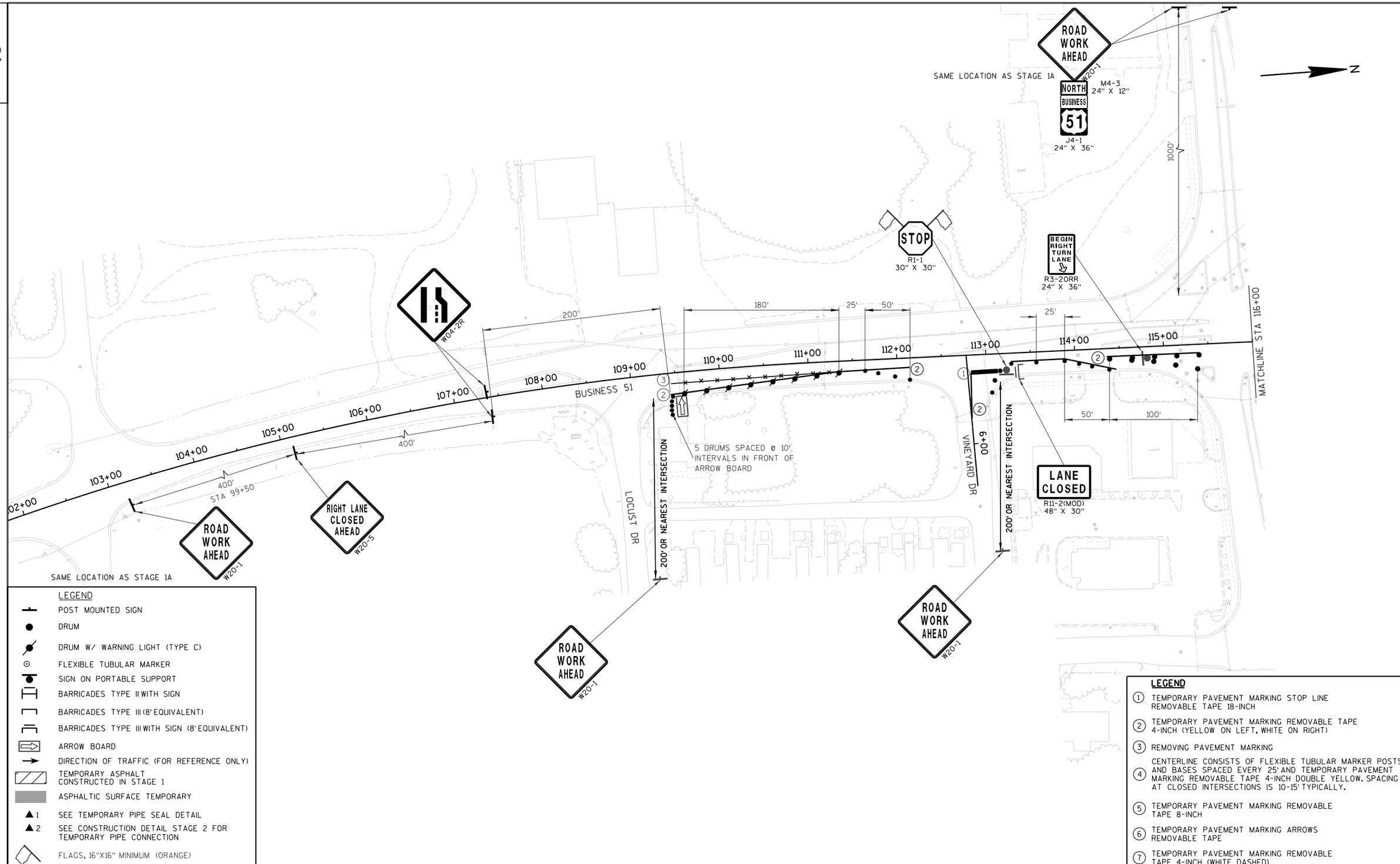

LEGEND

- POST MOUNTED SIGN
- DRUM
- DRUM W/ WARNING LIGHT (TYPE C)
- FLEXIBLE TUBULAR MARKER
- SIGN ON PORTABLE SUPPORT
- BARRICADES TYPE II WITH SIGN
- BARRICADES TYPE III (8' EQUIVALENT)
- BARRICADES TYPE III WITH SIGN (8' EQUIVALENT)
- ARROW BOARD
- DIRECTION OF TRAFFIC (FOR REFERENCE ONLY)
- TEMPORARY ASPHALT CONSTRUCTED IN STAGE 1
- ASPHALTIC SURFACE TEMPORARY
- ▲1 SEE TEMPORARY PIPE SEAL DETAIL
- ▲2 SEE CONSTRUCTION DETAIL STAGE 2 FOR TEMPORARY PIPE CONNECTION
- FLAGS, 16"X16" MINIMUM (ORANGE)

LEGEND

1. TEMPORARY PAVEMENT MARKING STOP LINE REMOVABLE TAPE 18-INCH
2. TEMPORARY PAVEMENT MARKING REMOVABLE TAPE 4-INCH (YELLOW ON LEFT, WHITE ON RIGHT)
3. REMOVING PAVEMENT MARKING
4. CENTERLINE CONSISTS OF FLEXIBLE TUBULAR MARKER POSTS AND BASES SPACED EVERY 25' AND TEMPORARY PAVEMENT MARKING REMOVABLE TAPE 4-INCH DOUBLE YELLOW. SPACING AT CLOSED INTERSECTIONS IS 10-15' TYPICALLY.
5. TEMPORARY PAVEMENT MARKING REMOVABLE TAPE 8-INCH
6. TEMPORARY PAVEMENT MARKING ARROWS REMOVABLE TAPE
7. TEMPORARY PAVEMENT MARKING REMOVABLE TAPE 4-INCH (WHITE DASHED)

PROJECT NO:6414-00-78	HWY:BUSINESS 51	COUNTY:PORTAGE	TRAFFIC CONTROL OVERVIEW-STAGE 3C	SHEET 200	E

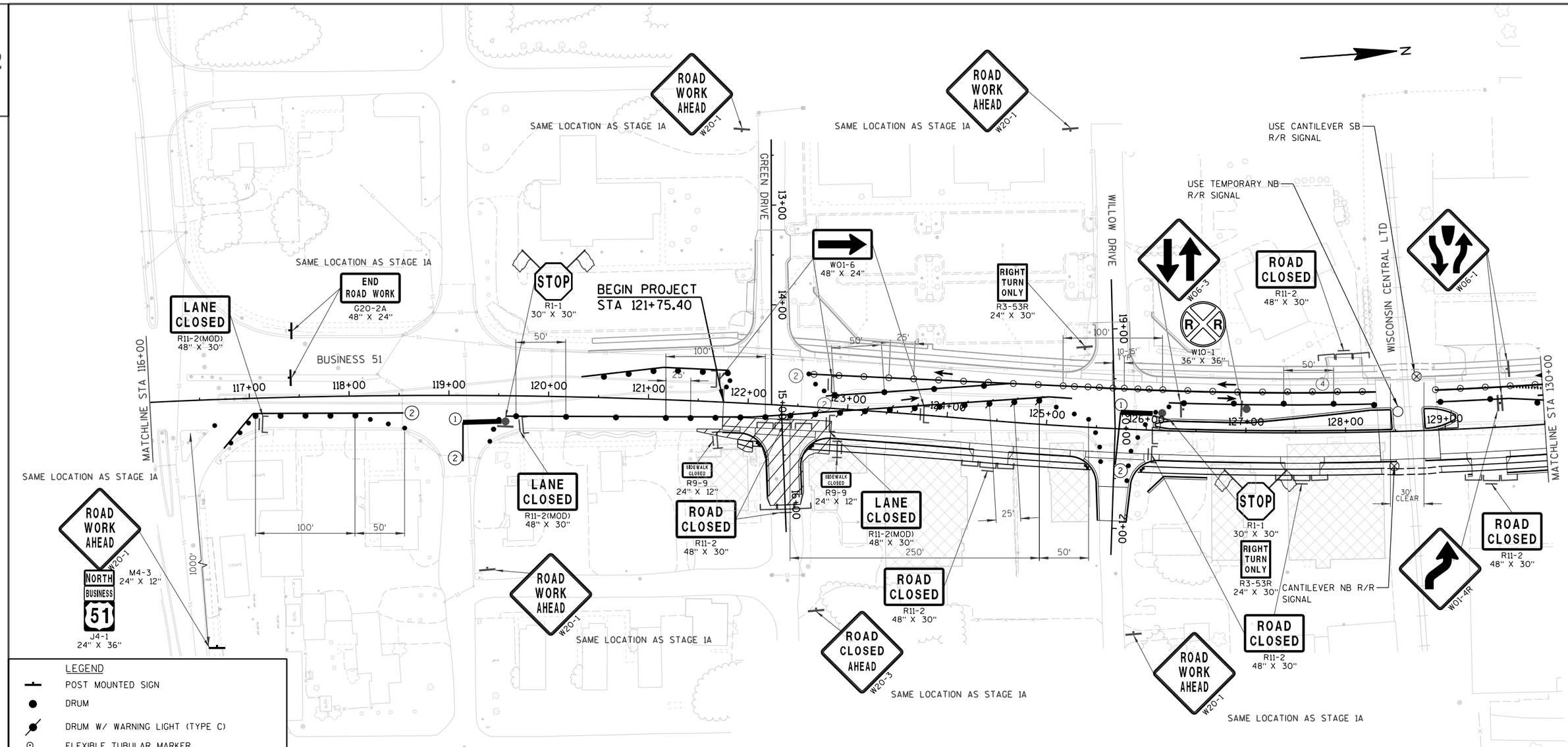

LEGEND

- POST MOUNTED SIGN
- DRUM
- DRUM W/ WARNING LIGHT (TYPE C)
- FLEXIBLE TUBULAR MARKER
- SIGN ON PORTABLE SUPPORT
- BARRICADES TYPE II WITH SIGN
- BARRICADES TYPE III (8' EQUIVALENT)
- BARRICADES TYPE III WITH SIGN (8' EQUIVALENT)
- ARROW BOARD
- DIRECTION OF TRAFFIC (FOR REFERENCE ONLY)
- TEMPORARY ASPHALT CONSTRUCTED IN STAGE 1
- ASPHALTIC SURFACE TEMPORARY
- ▲1 SEE TEMPORARY PIPE SEAL DETAIL
- ▲2 SEE CONSTRUCTION DETAIL STAGE 2 FOR TEMPORARY PIPE CONNECTION
- FLAGS, 16"X16" MINIMUM (ORANGE)

LEGEND

1. TEMPORARY PAVEMENT MARKING STOP LINE REMOVABLE TAPE 18-INCH
2. TEMPORARY PAVEMENT MARKING REMOVABLE TAPE 4-INCH (YELLOW ON LEFT, WHITE ON RIGHT)
3. REMOVING PAVEMENT MARKING
4. CENTERLINE CONSISTS OF FLEXIBLE TUBULAR MARKER POSTS AND BASES SPACED EVERY 25' AND TEMPORARY PAVEMENT MARKING REMOVABLE TAPE 4-INCH DOUBLE YELLOW. SPACING AT CLOSED INTERSECTIONS IS 10-15' TYPICALLY.
5. TEMPORARY PAVEMENT MARKING REMOVABLE TAPE 8-INCH
6. TEMPORARY PAVEMENT MARKING ARROWS REMOVABLE TAPE
7. TEMPORARY PAVEMENT MARKING REMOVABLE TAPE 4-INCH (WHITE DASHED)

PROJECT NO:6414-00-78	HWY:BUSINESS 51	COUNTY:PORTAGE	TRAFFIC CONTROL OVERVIEW-STAGE 3C	SHEET 201	E

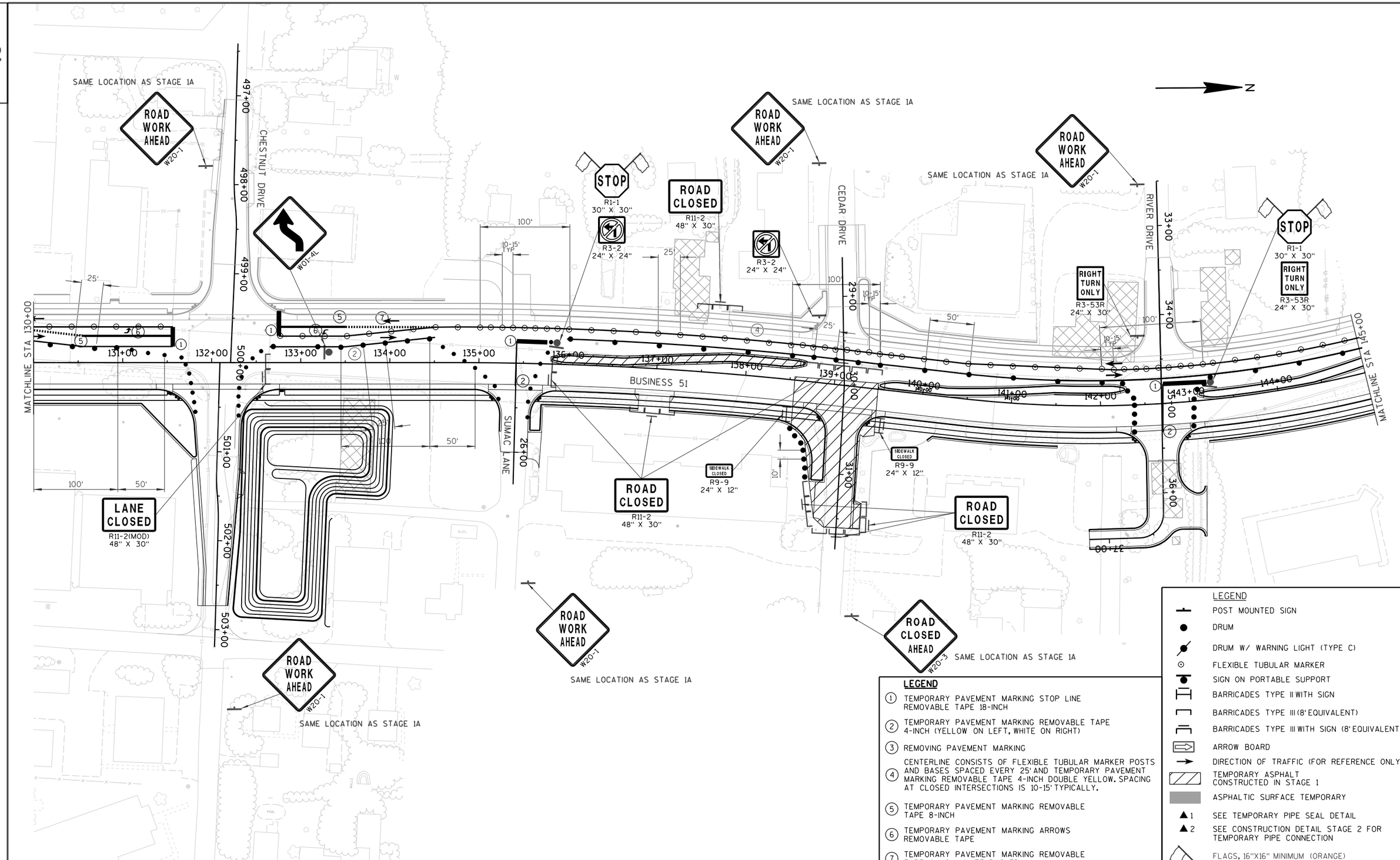

LEGEND

1. TEMPORARY PAVEMENT MARKING STOP LINE REMOVABLE TAPE 18-INCH
2. TEMPORARY PAVEMENT MARKING REMOVABLE TAPE 4-INCH (YELLOW ON LEFT, WHITE ON RIGHT)
3. REMOVING PAVEMENT MARKING
4. CENTERLINE CONSISTS OF FLEXIBLE TUBULAR MARKER POSTS AND BASES SPACED EVERY 25' AND TEMPORARY PAVEMENT MARKING REMOVABLE TAPE 4-INCH DOUBLE YELLOW. SPACING AT CLOSED INTERSECTIONS IS 10-15' TYPICALLY.
5. TEMPORARY PAVEMENT MARKING REMOVABLE TAPE 8-INCH
6. TEMPORARY PAVEMENT MARKING ARROWS REMOVABLE TAPE
7. TEMPORARY PAVEMENT MARKING REMOVABLE TAPE 4-INCH (WHITE DASHED)

PROJECT NO:6414-00-78	HWY:BUSINESS 51	COUNTY:PORTAGE	TRAFFIC CONTROL OVERVIEW-STAGE 3C	SHEET 202	E

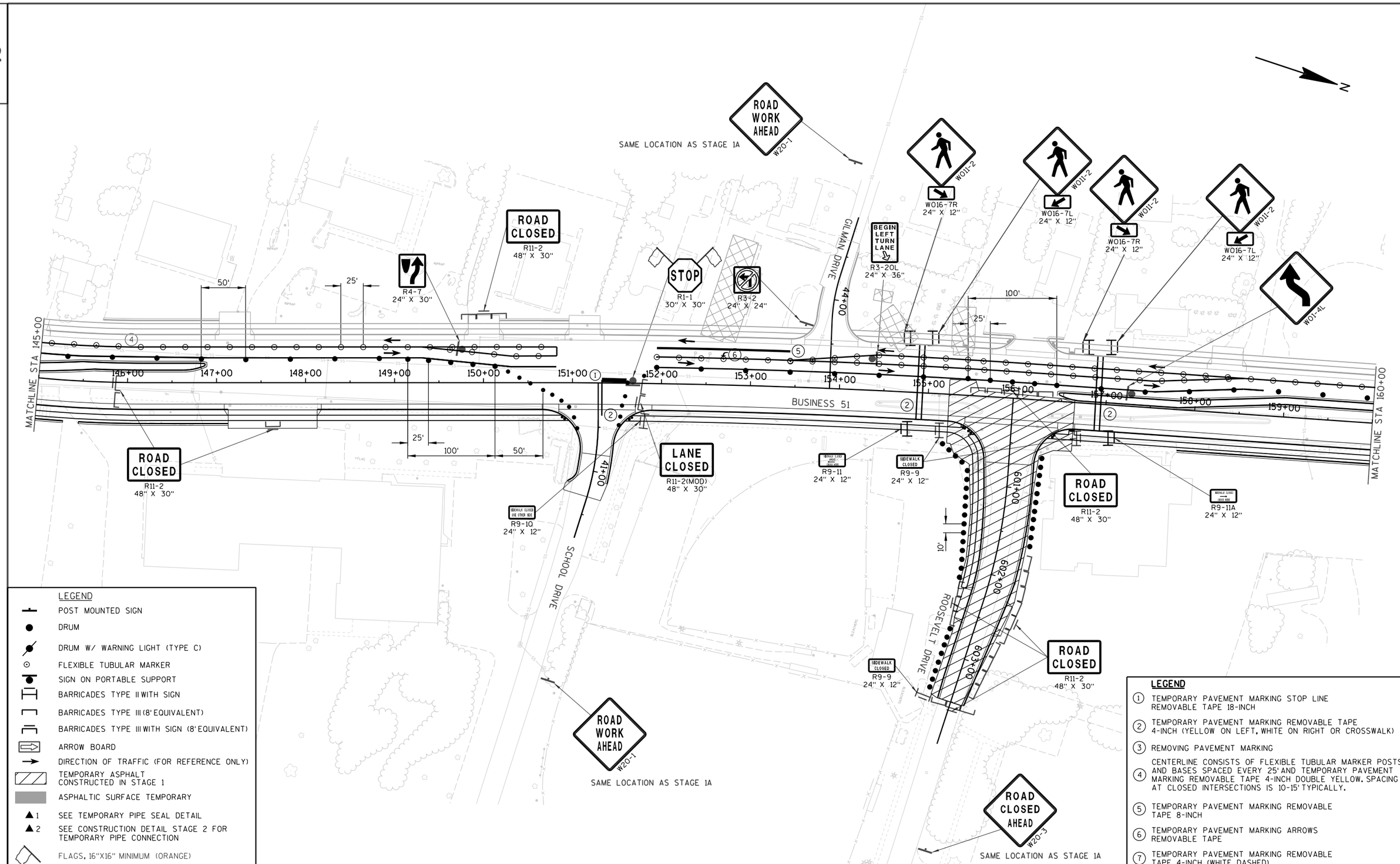

PROJECT NO:6414-00-78	HWY:BUSINESS 51	COUNTY:PORTAGE	TRAFFIC CONTROL OVERVIEW-STAGE 3C	SHEET 203	E

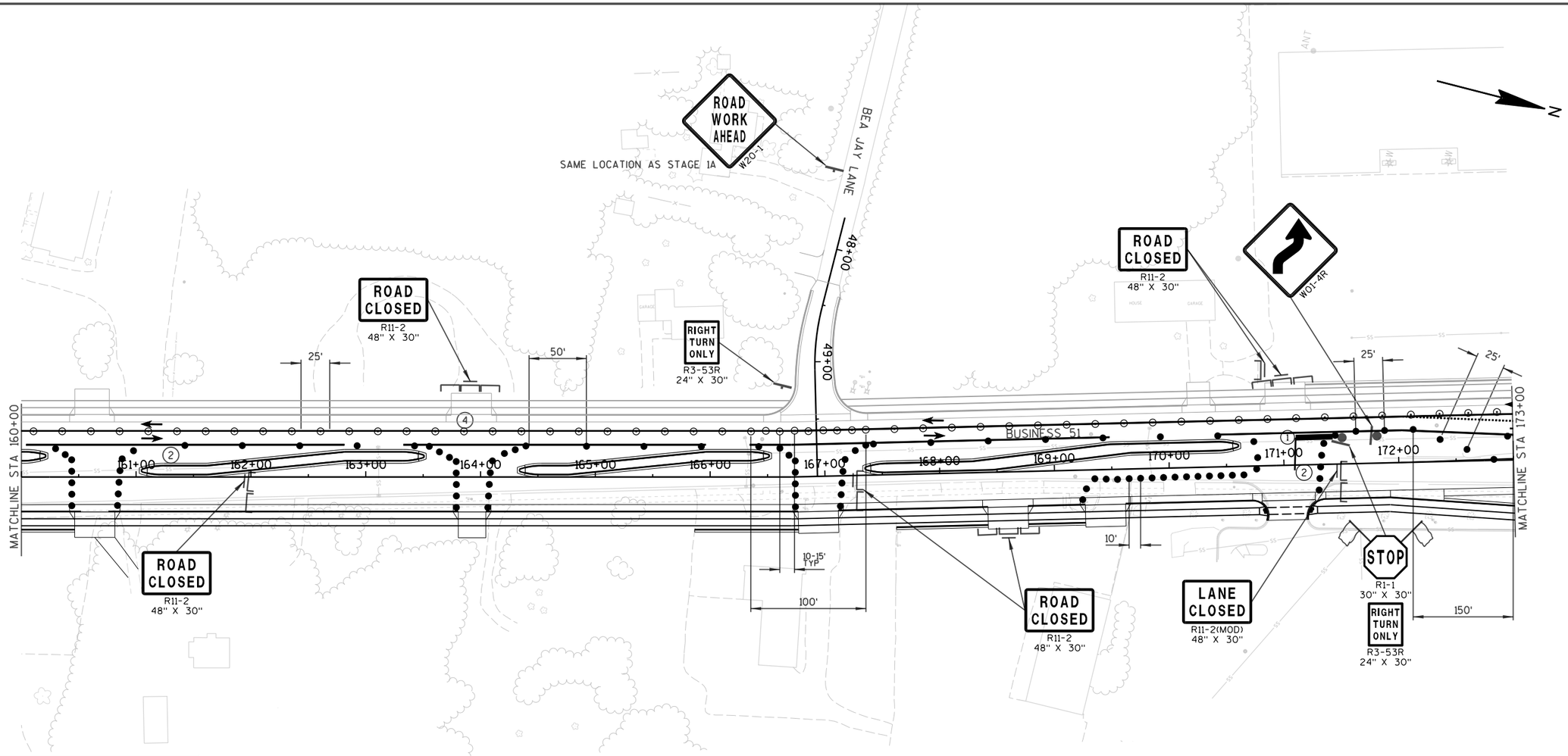

LEGEND

- POST MOUNTED SIGN
- DRUM
- DRUM W/ WARNING LIGHT (TYPE C)
- FLEXIBLE TUBULAR MARKER
- SIGN ON PORTABLE SUPPORT
- BARRICADES TYPE II WITH SIGN
- BARRICADES TYPE III (8' EQUIVALENT)
- BARRICADES TYPE III WITH SIGN (8' EQUIVALENT)
- ARROW BOARD
- DIRECTION OF TRAFFIC (FOR REFERENCE ONLY)
- TEMPORARY ASPHALT CONSTRUCTED IN STAGE 1
- ASPHALTIC SURFACE TEMPORARY
- ▲1 SEE TEMPORARY PIPE SEAL DETAIL
- ▲2 SEE CONSTRUCTION DETAIL STAGE 2 FOR TEMPORARY PIPE CONNECTION
- FLAGS, 16"X16" MINIMUM (ORANGE)

LEGEND

1. TEMPORARY PAVEMENT MARKING STOP LINE REMOVABLE TAPE 18-INCH
2. TEMPORARY PAVEMENT MARKING REMOVABLE TAPE 4-INCH (YELLOW ON LEFT, WHITE ON RIGHT)
3. REMOVING PAVEMENT MARKING
4. CENTERLINE CONSISTS OF FLEXIBLE TUBULAR MARKER POSTS AND BASES SPACED EVERY 25' AND TEMPORARY PAVEMENT MARKING REMOVABLE TAPE 4-INCH DOUBLE YELLOW. SPACING AT CLOSED INTERSECTIONS IS 10-15' TYPICALLY.
5. TEMPORARY PAVEMENT MARKING REMOVABLE TAPE 8-INCH
6. TEMPORARY PAVEMENT MARKING ARROWS REMOVABLE TAPE
7. TEMPORARY PAVEMENT MARKING REMOVABLE TAPE 4-INCH (WHITE DASHED)

PROJECT NO:6414-00-78	HWY:BUSINESS 51	COUNTY:PORTAGE	TRAFFIC CONTROL OVERVIEW-STAGE 3C	SHEET 204	E

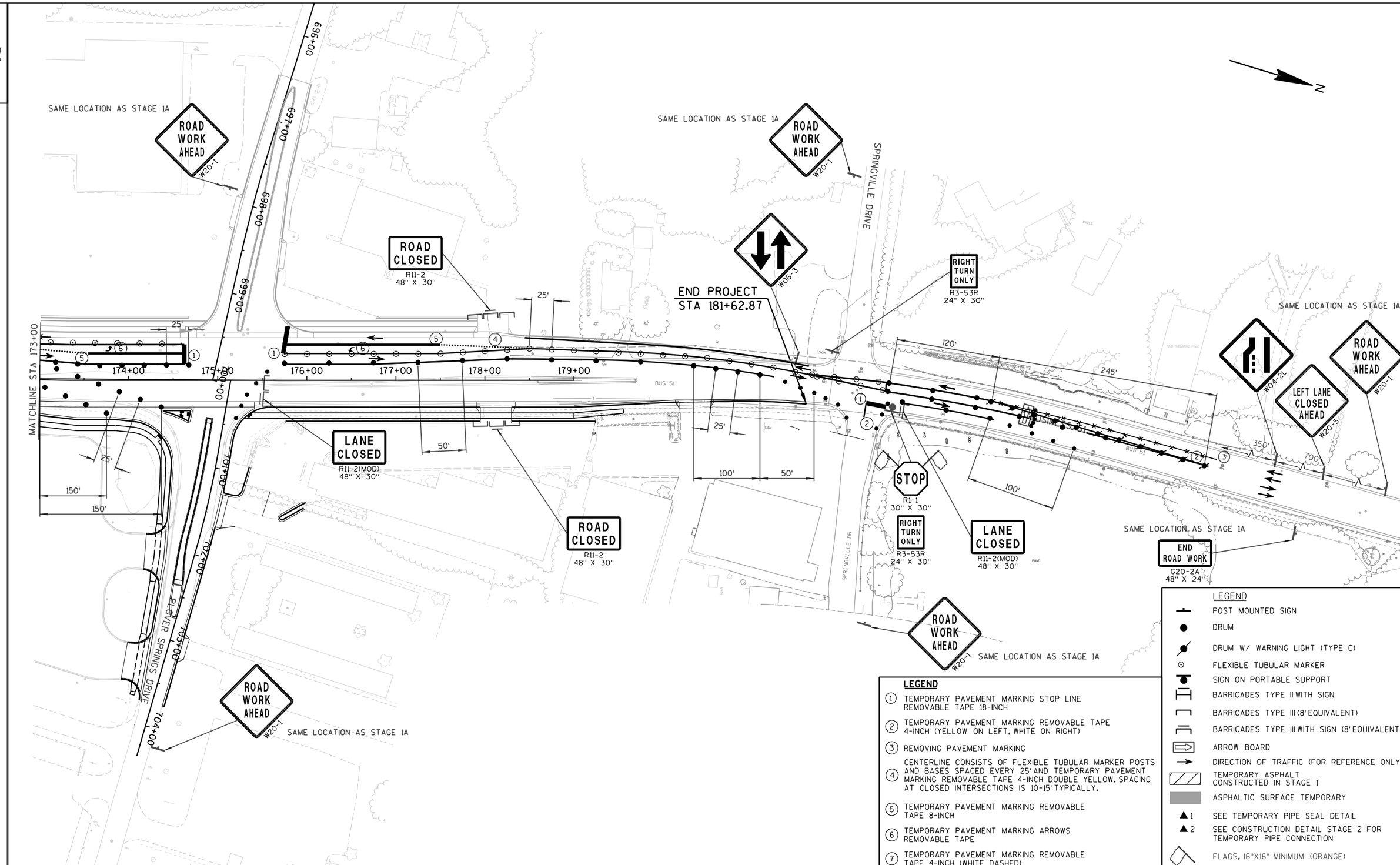

LEGEND

1. TEMPORARY PAVEMENT MARKING STOP LINE REMOVABLE TAPE 18-INCH
2. TEMPORARY PAVEMENT MARKING REMOVABLE TAPE 4-INCH (YELLOW ON LEFT, WHITE ON RIGHT)
3. REMOVING PAVEMENT MARKING
4. CENTERLINE CONSISTS OF FLEXIBLE TUBULAR MARKER POSTS AND BASES SPACED EVERY 25' AND TEMPORARY PAVEMENT MARKING REMOVABLE TAPE 4-INCH DOUBLE YELLOW. SPACING AT CLOSED INTERSECTIONS IS 10-15' TYPICALLY.
5. TEMPORARY PAVEMENT MARKING REMOVABLE TAPE 8-INCH
6. TEMPORARY PAVEMENT MARKING ARROWS REMOVABLE TAPE
7. TEMPORARY PAVEMENT MARKING REMOVABLE TAPE 4-INCH (WHITE DASHED)

LEGEND

- POST MOUNTED SIGN
- DRUM
- DRUM W/ WARNING LIGHT (TYPE C)
- FLEXIBLE TUBULAR MARKER
- SIGN ON PORTABLE SUPPORT
- BARRICADES TYPE II WITH SIGN
- BARRICADES TYPE III (8' EQUIVALENT)
- BARRICADES TYPE III WITH SIGN (8' EQUIVALENT)
- ARROW BOARD
- DIRECTION OF TRAFFIC (FOR REFERENCE ONLY)
- TEMPORARY ASPHALT CONSTRUCTED IN STAGE 1
- ASPHALTIC SURFACE TEMPORARY
- ▲1 SEE TEMPORARY PIPE SEAL DETAIL
- ▲2 SEE CONSTRUCTION DETAIL STAGE 2 FOR TEMPORARY PIPE CONNECTION
- FLAGS, 16"X16" MINIMUM (ORANGE)

PROJECT NO:6414-00-78	HWY:BUSINESS 51	COUNTY:PORTAGE	TRAFFIC CONTROL OVERVIEW-STAGE 3C	SHEET 205	E

2

SAME LOCATION AS STAGE 1A

ROAD WORK AHEAD W20-1

NORTH BUSINESS 51 J4-1 24" X 36"

M4-3 24" X 12"

1000'

W04-2L

END ROAD WORK G20-2A 48" X 24"

BUSINESS 51

LANE CLOSED R11-2(MOD) 48" X 30"

BEGIN PROJECT STA 121+75.40

GREEN DRIVE

WILLOW DRIVE

WISCONSIN CENTRAL LTD

115+00 116+00 117+00 118+00 119+00 120+00 121+00 122+00 123+00 124+00 125+00 126+00 127+00 128+00 129+00 130+00

400' 400' 180' 100' 25' 50' 30' CLEAR

13+00 14+00 15+00 16+00 19+00 20+00 21+00

RIGHT TURN ONLY R3-53R 24" X 30"

BEGIN LEFT TURN LANE R3-20L 24" X 36"

LEFT LANE CLOSED AHEAD W20-5

W01-6 48" X 24"

ROAD CLOSED R11-2 48" X 30"

INSTALL MEDIAN SIGNAL AND GATES ON NEW SB R/R SIGNAL

REMOVE TEMPORARY NB R/R SIGNAL

INSTALL MEDIAN SIGNAL AND GATES ON NEW NB R/R SIGNAL

MATCHLINE STA 130+00

LEGEND

- POST MOUNTED SIGN
- DRUM
- DRUM W/ WARNING LIGHT (TYPE C)
- FLEXIBLE TUBULAR MARKER
- SIGN ON PORTABLE SUPPORT
- BARRICADES TYPE II WITH SIGN
- BARRICADES TYPE III (8' EQUIVALENT)
- BARRICADES TYPE III WITH SIGN (8' EQUIVALENT)
- ARROW BOARD
- DIRECTION OF TRAFFIC (FOR REFERENCE ONLY)
- TEMPORARY ASPHALT CONSTRUCTED IN STAGE 1
- ASPHALTIC SURFACE TEMPORARY
- ▲1 SEE TEMPORARY PIPE SEAL DETAIL
- ▲2 SEE CONSTRUCTION DETAIL STAGE 2 FOR TEMPORARY PIPE CONNECTION
- FLAGS, 16"X16" MINIMUM (ORANGE)

LEGEND

1. TEMPORARY PAVEMENT MARKING STOP LINE REMOVABLE TAPE 18-INCH
2. TEMPORARY PAVEMENT MARKING REMOVABLE TAPE 4-INCH (YELLOW ON LEFT, WHITE ON RIGHT)
3. REMOVING PAVEMENT MARKING
4. CENTERLINE CONSISTS OF FLEXIBLE TUBULAR MARKER POSTS AND BASES SPACED EVERY 25' AND TEMPORARY PAVEMENT MARKING REMOVABLE TAPE 4-INCH DOUBLE YELLOW. SPACING AT CLOSED INTERSECTIONS IS 10-15' TYPICALLY.
5. TEMPORARY PAVEMENT MARKING REMOVABLE TAPE 8-INCH
6. TEMPORARY PAVEMENT MARKING ARROWS REMOVABLE TAPE
7. TEMPORARY PAVEMENT MARKING REMOVABLE TAPE 4-INCH (WHITE DASHED)

PROJECT NO:6414-00-78	HWY:BUSINESS 51	COUNTY:PORTAGE	TRAFFIC CONTROL OVERVIEW-STAGE 4	SHEET 206	E

2

SAME LOCATION AS STAGE 1A

ROAD WORK AHEAD W20-1

CHESTNUT DRIVE

497+00 498+00 499+00 500+00 501+00 502+00 503+00

MATCHLINE STA 130+00

131+00 132+00 133+00 134+00 135+00 136+00 137+00 138+00 139+00 140+00 141+00 142+00 143+00 144+00

MATCHLINE STA 145+00

BUSINESS 51

SUMAC LANE

26+00

CEDAR DRIVE

29+00 30+00 31+00

RIVER DRIVE

33+00 34+00 35+00 36+00 37+00

100' 100' 100' 100' 100' 100' 100' 100'

25' 25' 25' 25' 25' 25'

50' 50'

W01-6 48" X 24"

BEGIN LEFT TURN LANE

R3-20L 24" X 36"

R3-2 24" X 24"

EXCEPT MAINTENANCE AND POLICE AUTHORIZED VEHICLES

R3-4A 36" X 12"

ROAD CLOSED R11-2 48" X 30"

N

LEGEND

1. TEMPORARY PAVEMENT MARKING STOP LINE REMOVABLE TAPE 18-INCH
2. TEMPORARY PAVEMENT MARKING REMOVABLE TAPE 4-INCH (YELLOW ON LEFT, WHITE ON RIGHT)
3. REMOVING PAVEMENT MARKING
4. CENTERLINE CONSISTS OF FLEXIBLE TUBULAR MARKER POSTS AND BASES SPACED EVERY 25' AND TEMPORARY PAVEMENT MARKING REMOVABLE TAPE 4-INCH DOUBLE YELLOW. SPACING AT CLOSED INTERSECTIONS IS 10-15' TYPICALLY.
5. TEMPORARY PAVEMENT MARKING REMOVABLE TAPE 8-INCH
6. TEMPORARY PAVEMENT MARKING ARROWS REMOVABLE TAPE
7. TEMPORARY PAVEMENT MARKING REMOVABLE TAPE 4-INCH (WHITE DASHED)

LEGEND

- POST MOUNTED SIGN
- DRUM
- DRUM W/ WARNING LIGHT (TYPE C)
- FLEXIBLE TUBULAR MARKER
- SIGN ON PORTABLE SUPPORT
- BARRICADES TYPE II WITH SIGN
- BARRICADES TYPE III (8' EQUIVALENT)
- BARRICADES TYPE III WITH SIGN (8' EQUIVALENT)
- ARROW BOARD
- DIRECTION OF TRAFFIC (FOR REFERENCE ONLY)
- TEMPORARY ASPHALT CONSTRUCTED IN STAGE 1
- ASPHALTIC SURFACE TEMPORARY
- ▲1 SEE TEMPORARY PIPE SEAL DETAIL
- ▲2 SEE CONSTRUCTION DETAIL STAGE 2 FOR TEMPORARY PIPE CONNECTION
- FLAGS, 16"X16" MINIMUM (ORANGE)

PROJECT NO:6414-00-78	HWY:BUSINESS 51	COUNTY:PORTAGE	TRAFFIC CONTROL OVERVIEW-STAGE 4	SHEET 207	E

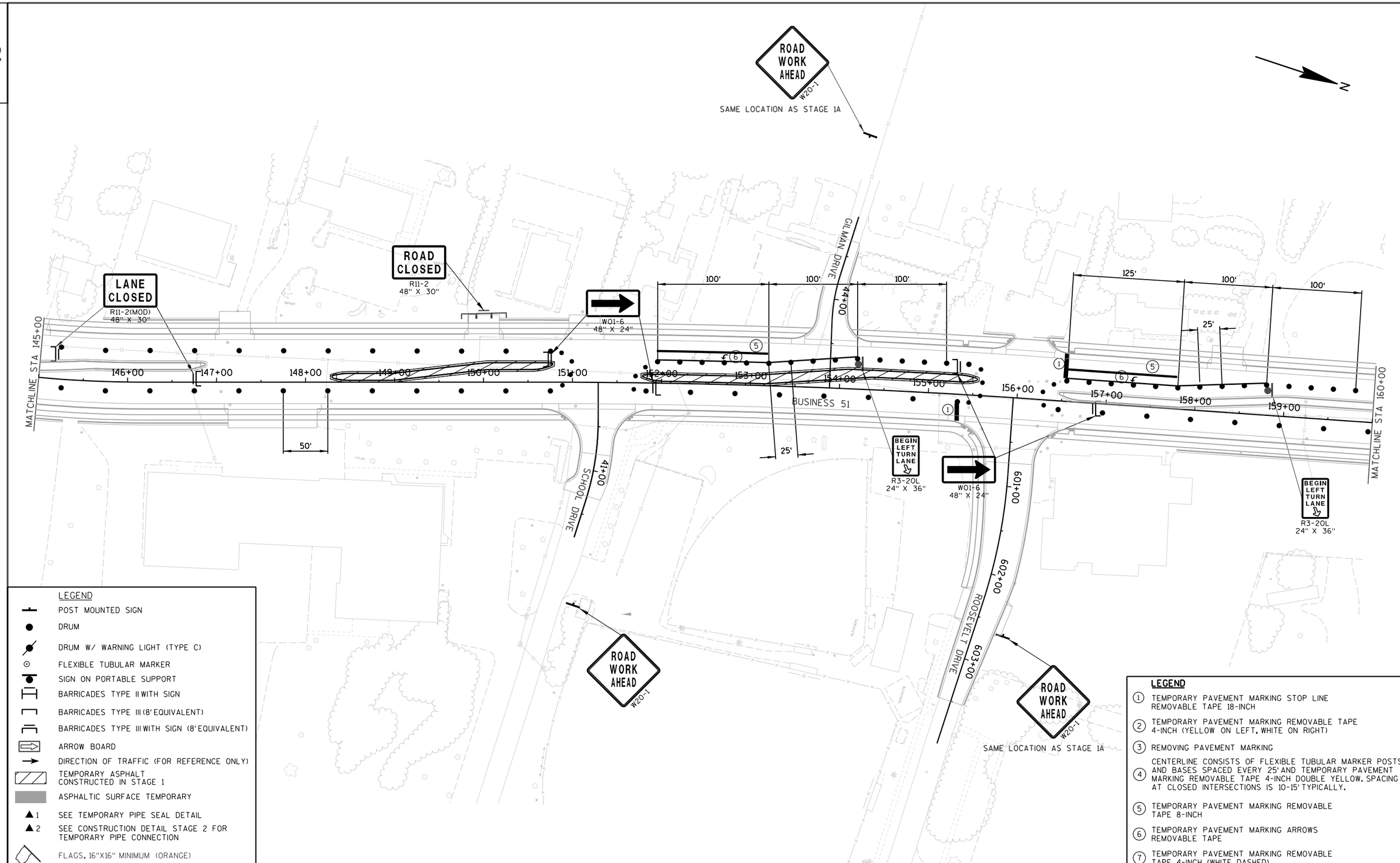

LEGEND

- POST MOUNTED SIGN
- DRUM
- DRUM W/ WARNING LIGHT (TYPE C)
- FLEXIBLE TUBULAR MARKER
- SIGN ON PORTABLE SUPPORT
- BARRICADES TYPE II WITH SIGN
- BARRICADES TYPE III (8' EQUIVALENT)
- BARRICADES TYPE III WITH SIGN (8' EQUIVALENT)
- ARROW BOARD
- DIRECTION OF TRAFFIC (FOR REFERENCE ONLY)
- TEMPORARY ASPHALT CONSTRUCTED IN STAGE 1
- ASPHALTIC SURFACE TEMPORARY
- ▲1 SEE TEMPORARY PIPE SEAL DETAIL
- ▲2 SEE CONSTRUCTION DETAIL STAGE 2 FOR TEMPORARY PIPE CONNECTION
- FLAGS, 16"X16" MINIMUM (ORANGE)

LEGEND

1. TEMPORARY PAVEMENT MARKING STOP LINE REMOVABLE TAPE 18-INCH
2. TEMPORARY PAVEMENT MARKING REMOVABLE TAPE 4-INCH (YELLOW ON LEFT, WHITE ON RIGHT)
3. REMOVING PAVEMENT MARKING
4. CENTERLINE CONSISTS OF FLEXIBLE TUBULAR MARKER POSTS AND BASES SPACED EVERY 25' AND TEMPORARY PAVEMENT MARKING REMOVABLE TAPE 4-INCH DOUBLE YELLOW. SPACING AT CLOSED INTERSECTIONS IS 10-15' TYPICALLY.
5. TEMPORARY PAVEMENT MARKING REMOVABLE TAPE 8-INCH
6. TEMPORARY PAVEMENT MARKING ARROWS REMOVABLE TAPE
7. TEMPORARY PAVEMENT MARKING REMOVABLE TAPE 4-INCH (WHITE DASHED)

PROJECT NO:6414-00-78	HWY:BUSINESS 51	COUNTY:PORTAGE	TRAFFIC CONTROL OVERVIEW-STAGE 4	SHEET 208	E

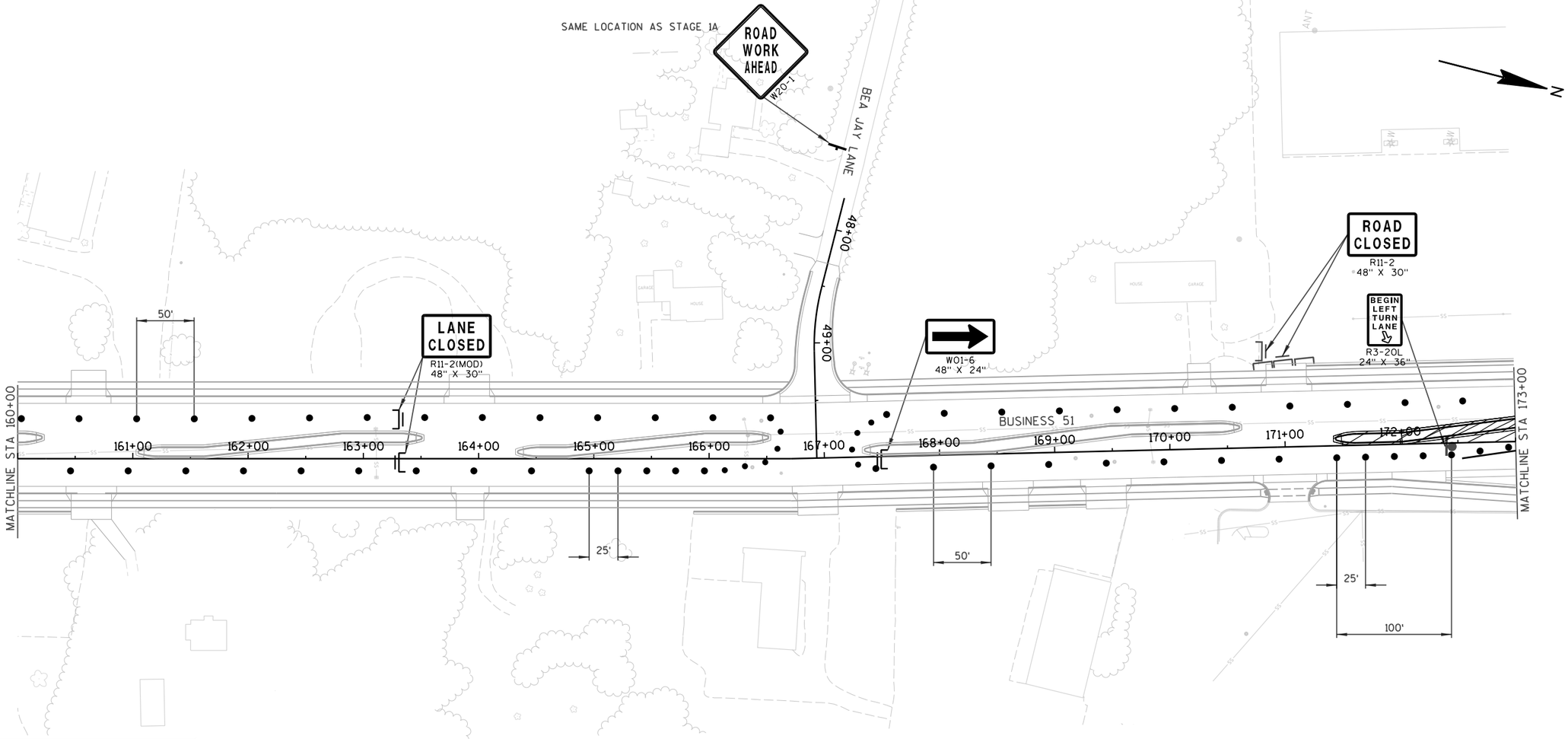

LEGEND

- POST MOUNTED SIGN
- DRUM
- DRUM W/ WARNING LIGHT (TYPE C)
- FLEXIBLE TUBULAR MARKER
- SIGN ON PORTABLE SUPPORT
- BARRICADES TYPE II WITH SIGN
- BARRICADES TYPE III (8' EQUIVALENT)
- BARRICADES TYPE III WITH SIGN (8' EQUIVALENT)
- ARROW BOARD
- DIRECTION OF TRAFFIC (FOR REFERENCE ONLY)
- TEMPORARY ASPHALT CONSTRUCTED IN STAGE 1
- ASPHALTIC SURFACE TEMPORARY
- ▲1 SEE TEMPORARY PIPE SEAL DETAIL
- ▲2 SEE CONSTRUCTION DETAIL STAGE 2 FOR TEMPORARY PIPE CONNECTION
- FLAGS, 16"X16" MINIMUM (ORANGE)

LEGEND

1. TEMPORARY PAVEMENT MARKING STOP LINE REMOVABLE TAPE 18-INCH
2. TEMPORARY PAVEMENT MARKING REMOVABLE TAPE 4-INCH (YELLOW ON LEFT, WHITE ON RIGHT)
3. REMOVING PAVEMENT MARKING
4. CENTERLINE CONSISTS OF FLEXIBLE TUBULAR MARKER POSTS AND BASES SPACED EVERY 25' AND TEMPORARY PAVEMENT MARKING REMOVABLE TAPE 4-INCH DOUBLE YELLOW. SPACING AT CLOSED INTERSECTIONS IS 10-15' TYPICALLY.
5. TEMPORARY PAVEMENT MARKING REMOVABLE TAPE 8-INCH
6. TEMPORARY PAVEMENT MARKING ARROWS REMOVABLE TAPE
7. TEMPORARY PAVEMENT MARKING REMOVABLE TAPE 4-INCH (WHITE DASHED)

PROJECT NO:6414-00-78	HWY:BUSINESS 51	COUNTY:PORTAGE	TRAFFIC CONTROL OVERVIEW-STAGE 4	SHEET 209	E

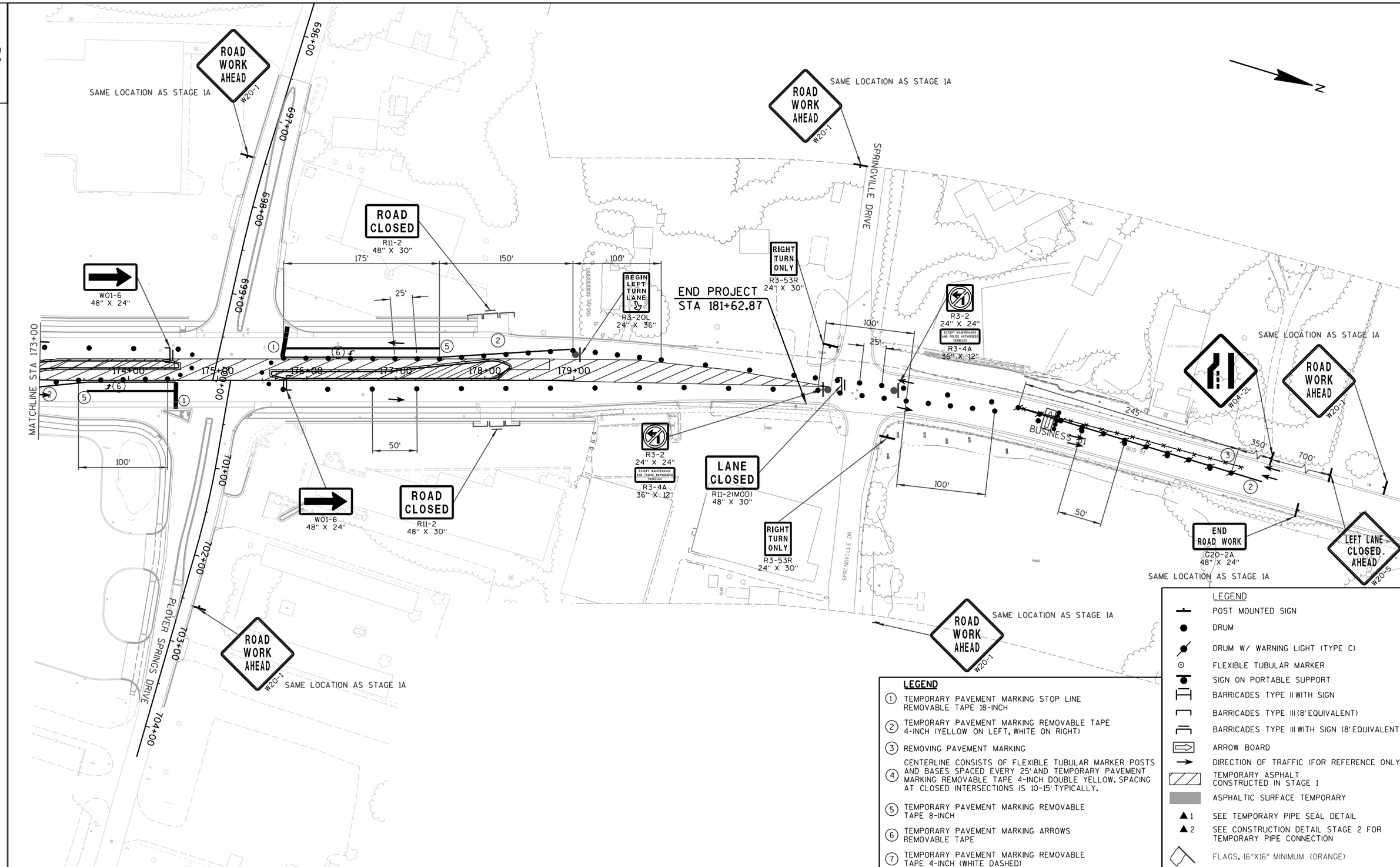

LEGEND

1. TEMPORARY PAVEMENT MARKING STOP LINE REMOVABLE TAPE 18-INCH
2. TEMPORARY PAVEMENT MARKING REMOVABLE TAPE 4-INCH (YELLOW ON LEFT, WHITE ON RIGHT)
3. REMOVING PAVEMENT MARKING
4. CENTERLINE CONSISTS OF FLEXIBLE TUBULAR MARKER POSTS AND BASES SPACED EVERY 25' AND TEMPORARY PAVEMENT MARKING REMOVABLE TAPE 4-INCH DOUBLE YELLOW. SPACING AT CLOSED INTERSECTIONS IS 10-15' TYPICALLY.
5. TEMPORARY PAVEMENT MARKING REMOVABLE TAPE 8-INCH
6. TEMPORARY PAVEMENT MARKING ARROWS REMOVABLE TAPE
7. TEMPORARY PAVEMENT MARKING REMOVABLE TAPE 4-INCH (WHITE DASHED)

LEGEND

- POST MOUNTED SIGN
- DRUM
- DRUM W/ WARNING LIGHT (TYPE C)
- FLEXIBLE TUBULAR MARKER
- SIGN ON PORTABLE SUPPORT
- BARRICADES TYPE II WITH SIGN
- BARRICADES TYPE III (8' EQUIVALENT)
- BARRICADES TYPE III WITH SIGN (8' EQUIVALENT)
- ARROW BOARD
- DIRECTION OF TRAFFIC (FOR REFERENCE ONLY)
- TEMPORARY ASPHALT CONSTRUCTED IN STAGE 1
- ASPHALTIC SURFACE TEMPORARY
- ▲1 SEE TEMPORARY PIPE SEAL DETAIL
- ▲2 SEE CONSTRUCTION DETAIL STAGE 2 FOR TEMPORARY PIPE CONNECTION
- FLAGS, 16"X16" MINIMUM (ORANGE)

PROJECT NO:6414-00-78	HWY:BUSINESS 51	COUNTY:PORTAGE	TRAFFIC CONTROL OVERVIEW-STAGE 4	SHEET 210	E

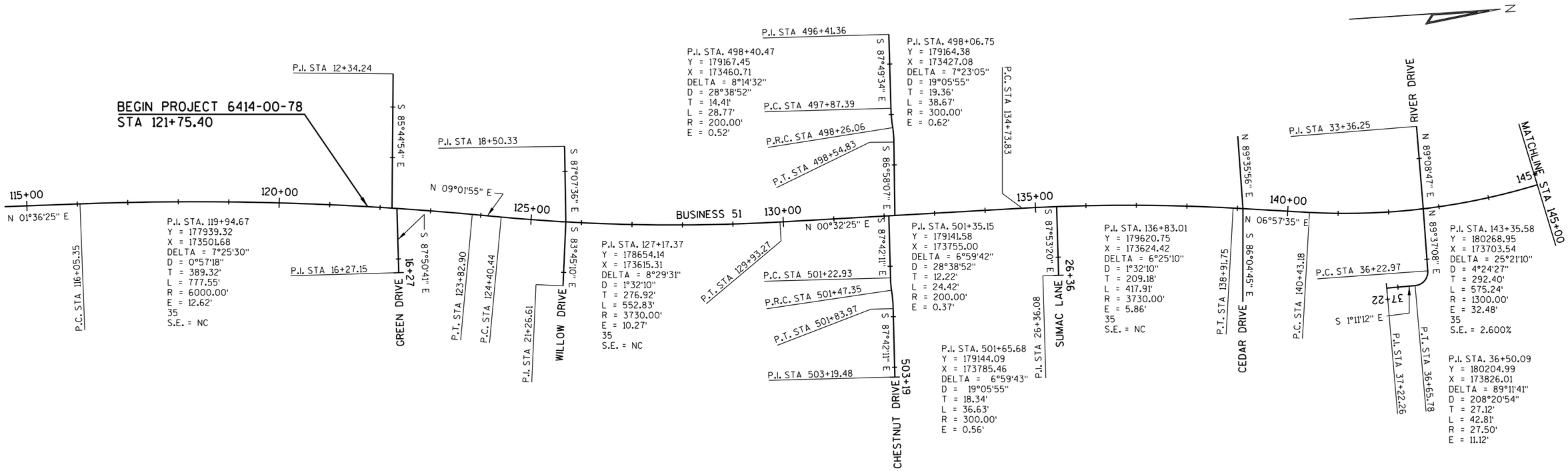
BEGIN PROJECT 6414-00-78
STA 121+75.40
115+00
120+00
125+00
130+00
135+00
140+00
145
MATCHLINE STA 145+00
N 01°36'25" E
P.C. STA 116+05.35
P.I. STA 119+94.67
Y = 177939.32
X = 173501.68
DELTA = 7°25'30"
D = 0°57'18"
T = 389.32'
L = 777.55'
R = 6000.00'
E = 12.62'
35
S.E. = NC
P.I. STA 12+34.24
S 85°44'54" E
P.I. STA 16+27.15
16+27
GREEN DRIVE
S 87°0'41" E
P.I. STA 18+50.33
N 09°01'55" E
P.T. STA 123+82.90
P.C. STA 124+40.44
P.I. STA 21+26.61
S 87°07'36" E
WILLOW DRIVE
S 83°45'10" E
P.I. STA 127+17.37
Y = 178654.14
X = 173615.31
DELTA = 8°29'31"
D = 1°32'10"
T = 276.92'
L = 552.83'
R = 3730.00'
E = 10.27'
35
S.E. = NC
BUSINESS 51
N 00°32'25" E
P.T. STA 129+93.27
P.I. STA 496+41.36
P.I. STA. 498+40.47
Y = 179167.45
X = 173460.71
DELTA = 8°14'32"
D = 28°38'52"
T = 14.41'
L = 28.77'
R = 200.00'
E = 0.52'
S 87°49'34" E
P.C. STA 497+87.39
P.R.C. STA 498+26.06
P.T. STA 498+54.83
S 86°58'07" E
P.I. STA. 498+06.75
Y = 179164.38
X = 173427.08
DELTA = 7°23'05"
D = 19°05'55"
T = 19.36'
L = 38.67'
R = 300.00'
E = 0.62'
P.C. STA 134+73.83
P.I. STA. 501+35.15
Y = 179141.58
X = 173755.00
DELTA = 6°59'42"
D = 28°38'52"
T = 12.22'
L = 24.42'
R = 200.00'
E = 0.37'
S 87°42'11" E
P.C. STA 501+22.93
P.R.C. STA 501+47.35
P.T. STA 501+83.97
S 87°42'11" E
P.I. STA 503+19.48
503+19
CHESTNUT DRIVE
P.I. STA. 501+65.68
Y = 179144.09
X = 173785.46
DELTA = 6°59'43"
D = 19°05'55"
T = 18.34'
L = 36.63'
R = 300.00'
E = 0.56'
P.I. STA 26+36.08
S 87°53'20" E
26+36
SUMAC LANE
P.I. STA. 136+83.01
Y = 179620.75
X = 173624.42
DELTA = 6°25'10"
D = 1°32'10"
T = 209.18'
L = 417.91'
R = 3730.00'
E = 5.86'
35
S.E. = NC
N 89°35'56" E
P.T. STA 138+91.75
N 06°57'35" E
S 86°04'45" E
CEDAR DRIVE
P.C. STA 140+43.18
P.I. STA 33+36.25
RIVER DRIVE
N 89°08'47" E
N 89°37'08" E
P.I. STA. 143+35.58
Y = 180268.95
X = 173703.54
DELTA = 25°21'10"
D = 4°24'27"
T = 292.40'
L = 575.24'
R = 1300.00'
E = 32.48'
35
S.E. = 2.600%
P.C. STA 36+22.97
37+22
S 1°11'12" E
P.I. STA 37+22.26
P.T. STA 36+65.78
P.I. STA. 36+50.09
Y = 180204.99
X = 173826.01
DELTA = 89°11'41"
D = 208°20'54"
T = 27.12'
L = 42.81'
R = 27.50'
E = 11.12'
MATCHLINE STA 145+00
N

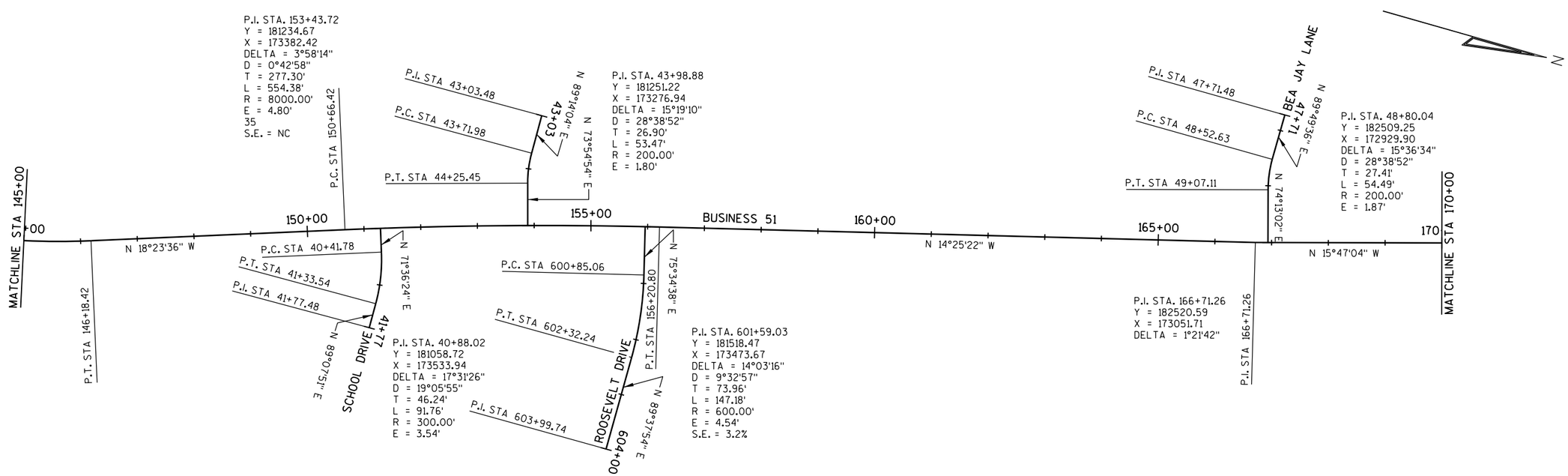
MATCHLINE STA 145+00
+00
N 18°23'36" W
P.T. STA 146+18.42
150+00
P.I. STA. 153+43.72
Y = 181234.67
X = 173382.42
DELTA = 3°58'14"
D = 0°42'58"
T = 277.30'
L = 554.38'
R = 8000.00'
E = 4.80'
35
S.E. = NC
P.C. STA 150+66.42
P.C. STA 40+41.78
P.T. STA 41+33.54
P.I. STA 41+77.48
41+77
N 71°36'24" E
N 89°07'51" E
SCHOOL DRIVE
P.I. STA. 40+88.02
Y = 181058.72
X = 173533.94
DELTA = 17°31'26"
D = 19°05'55"
T = 46.24'
L = 91.76'
R = 300.00'
E = 3.54'
P.I. STA 43+03.48
P.C. STA 43+71.98
43+03
N 89°14'04" E
N 73°45'54" E
P.T. STA 44+25.45
P.I. STA. 43+98.88
Y = 181251.22
X = 173276.94
DELTA = 15°19'10"
D = 28°38'52"
T = 26.90'
L = 53.47'
R = 200.00'
E = 1.80'
155+00
BUSINESS 51
160+00
N 14°25'22" W
P.C. STA 600+85.06
P.T. STA 602+32.24
P.I. STA 603+99.74
ROOSEVELT DRIVE
604+00
N 89°37'54" E
P.T. STA 156+20.80
N 75°34'38" E
P.I. STA. 601+59.03
Y = 181518.47
X = 173473.67
DELTA = 14°03'16"
D = 9°32'57"
T = 73.96'
L = 147.18'
R = 600.00'
E = 4.54'
S.E. = 3.2%
P.I. STA 47+71.48
P.C. STA 48+52.63
47+71
N 89°49'36" E
BEA JAY LANE
P.T. STA 49+07.11
N 74°13'02" E
P.I. STA. 48+80.04
Y = 182509.25
X = 172929.90
DELTA = 15°36'34"
D = 28°38'52"
T = 27.41'
L = 54.49'
R = 200.00'
E = 1.87'
165+00
N 15°47'04" W
170
MATCHLINE STA 170+00
P.I. STA. 166+71.26
Y = 182520.59
X = 173051.71
DELTA = 1°21'42"
P.I. STA 166+71.26
N

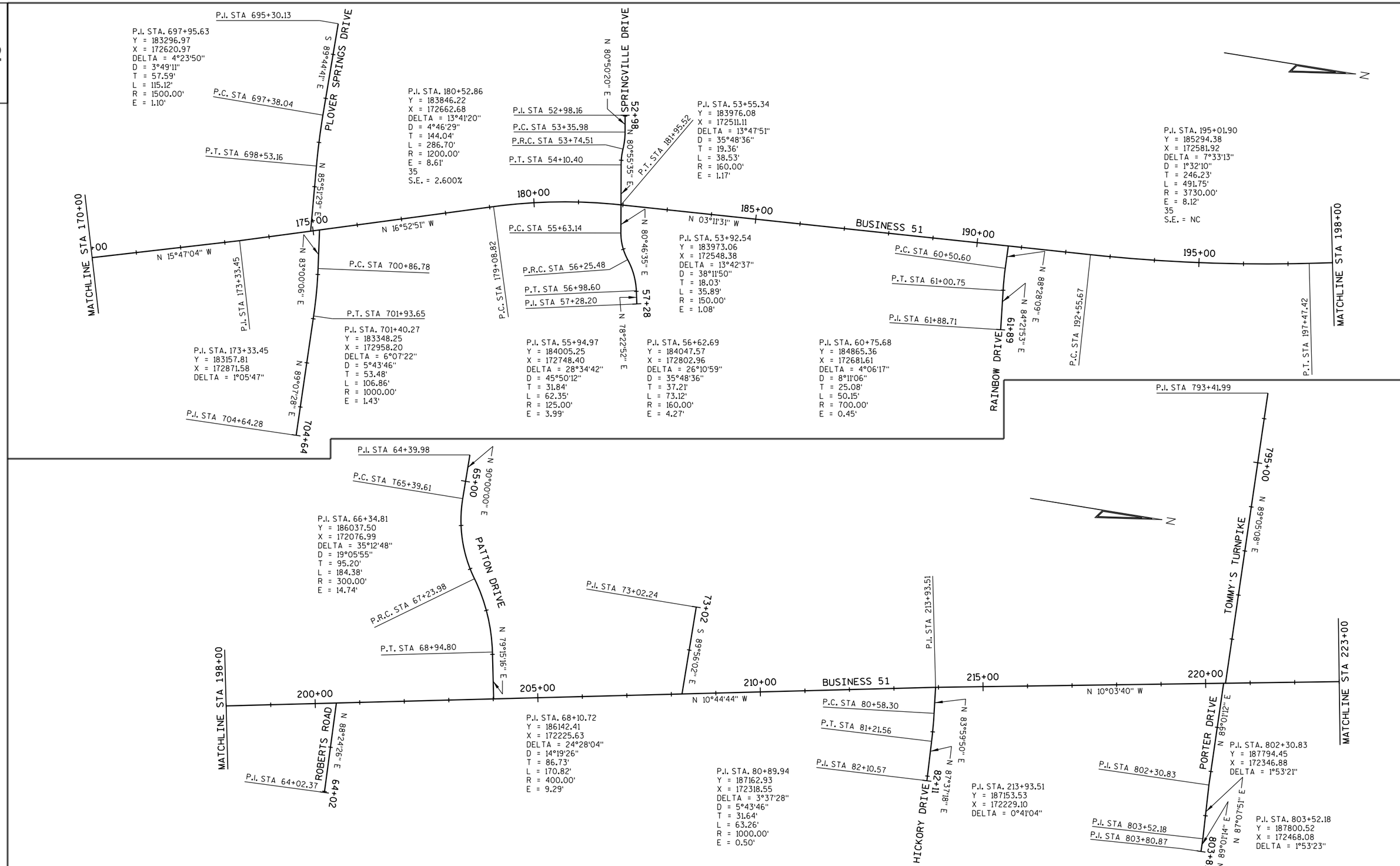
P.I. STA 695+30.13
P.I. STA. 697+95.63
Y = 183296.97
X = 172620.97
DELTA = 4°23'50"
D = 3°49'11"
T = 57.59'
L = 115.12'
R = 1500.00'
E = 1.10'
P.C. STA 697+38.04
P.T. STA 698+53.16
PLOVER SPRINGS DRIVE
S 89°44'41" E
N 85°51'29" E
P.I. STA. 180+52.86
Y = 183846.22
X = 172662.68
DELTA = 13°41'20"
D = 4°46'29"
T = 144.04'
L = 286.70'
R = 1200.00'
E = 8.61'
35
S.E. = 2.600%
P.I. STA 52+98.16
P.C. STA 53+35.98
P.R.C. STA 53+74.51
P.T. STA 54+10.40
SPRINGVILLE DRIVE
N 80°50'02" E
52+98
N 80°55'35" E
P.T. STA 181+95.52
P.I. STA. 53+55.34
Y = 183976.08
X = 172511.11
DELTA = 13°47'51"
D = 35°48'36"
T = 19.36'
L = 38.53'
R = 160.00'
E = 1.17'
P.I. STA. 195+01.90
Y = 185294.38
X = 172581.92
DELTA = 7°33'13"
D = 1°32'10"
T = 246.23'
L = 491.75'
R = 3730.00'
E = 8.12'
35
S.E. = NC
N
MATCHLINE STA 170+00
+00
N 15°47'04" W
175+00
N 16°52'51" W
180+00
185+00
N 03°11'31" W
BUSINESS 51
190+00
195+00
MATCHLINE STA 198+00
P.C. STA 55+63.14
N 80°46'35" E
P.I. STA. 53+92.54
Y = 183973.06
X = 172548.38
DELTA = 13°42'37"
D = 38°11'50"
T = 18.03'
L = 35.89'
R = 150.00'
E = 1.08'
P.C. STA 60+50.60
P.T. STA 61+00.75
P.I. STA 61+88.71
N 88°28'09" E
N 84°21'53" E
RAINBOW DRIVE
68+19
P.C. STA 192+55.67
P.T. STA 197+47.42
P.I. STA 173+33.45
N 83°00'09" E
P.C. STA 700+86.78
P.T. STA 701+93.65
P.C. STA 179+08.82
P.R.C. STA 56+25.48
P.T. STA 56+98.60
P.I. STA 57+28.20
57+28
N 78°22'52" E
P.I. STA. 173+33.45
Y = 183157.81
X = 172871.58
DELTA = 1°05'47"
P.I. STA. 701+40.27
Y = 183348.25
X = 172958.20
DELTA = 6°07'22"
D = 5°43'46"
T = 53.48'
L = 106.86'
R = 1000.00'
E = 1.43'
P.I. STA. 55+94.97
Y = 184005.25
X = 172748.40
DELTA = 28°34'42"
D = 45°50'12"
T = 31.84'
L = 62.35'
R = 125.00'
E = 3.99'
P.I. STA. 56+62.69
Y = 184047.57
X = 172802.96
DELTA = 26°10'59"
D = 35°48'36"
T = 37.21'
L = 73.12'
R = 160.00'
E = 4.27'
P.I. STA. 60+75.68
Y = 184865.36
X = 172681.61
DELTA = 4°06'17"
D = 8°11'06"
T = 25.08'
L = 50.15'
R = 700.00'
E = 0.45'
N 89°07'28" E
P.I. STA 704+64.28
704+64
P.I. STA 793+41.99
795+00
N 89°50'08" E
TOMMY'S TURNPIKE
P.I. STA 64+39.98
N 90°00'00" E
65+00
P.C. STA T65+39.61
P.I. STA. 66+34.81
Y = 186037.50
X = 172076.99
DELTA = 35°12'48"
D = 19°05'55"
T = 95.20'
L = 184.38'
R = 300.00'
E = 14.74'
PATTON DRIVE
P.R.C. STA 67+23.98
P.T. STA 68+94.80
N 79°15'16" E
P.I. STA 73+02.24
73+02
S 89°56'02" E
P.I. STA 213+93.51
N
MATCHLINE STA 198+00
200+00
ROBERTS ROAD
N 88°24'26" E
P.I. STA 64+02.37
64+02
205+00
P.I. STA. 68+10.72
Y = 186142.41
X = 172225.63
DELTA = 24°28'04"
D = 14°19'26"
T = 86.73'
L = 170.82'
R = 400.00'
E = 9.29'
210+00
N 10°44'44" W
BUSINESS 51
P.C. STA 80+58.30
P.T. STA 81+21.56
P.I. STA 82+10.57
N 83°59'50" E
N 82°37'18" E
82+11
HICKORY DRIVE
P.I. STA. 80+89.94
Y = 187162.93
X = 172318.55
DELTA = 3°37'28"
D = 5°43'46"
T = 31.64'
L = 63.26'
R = 1000.00'
E = 0.50'
P.I. STA. 213+93.51
Y = 187153.53
X = 172229.10
DELTA = 0°41'04"
215+00
220+00
N 10°03'40" W
MATCHLINE STA 223+00
PORTER DRIVE
N 89°01'12" E
P.I. STA 802+30.83
P.I. STA 803+52.18
P.I. STA 803+80.87
N 87°07'51" E
N 89°01'14" E
803+81
P.I. STA. 802+30.83
Y = 187794.45
X = 172346.88
DELTA = 1°53'21"
P.I. STA. 803+52.18
Y = 187800.52
X = 172468.08
DELTA = 1°53'23"

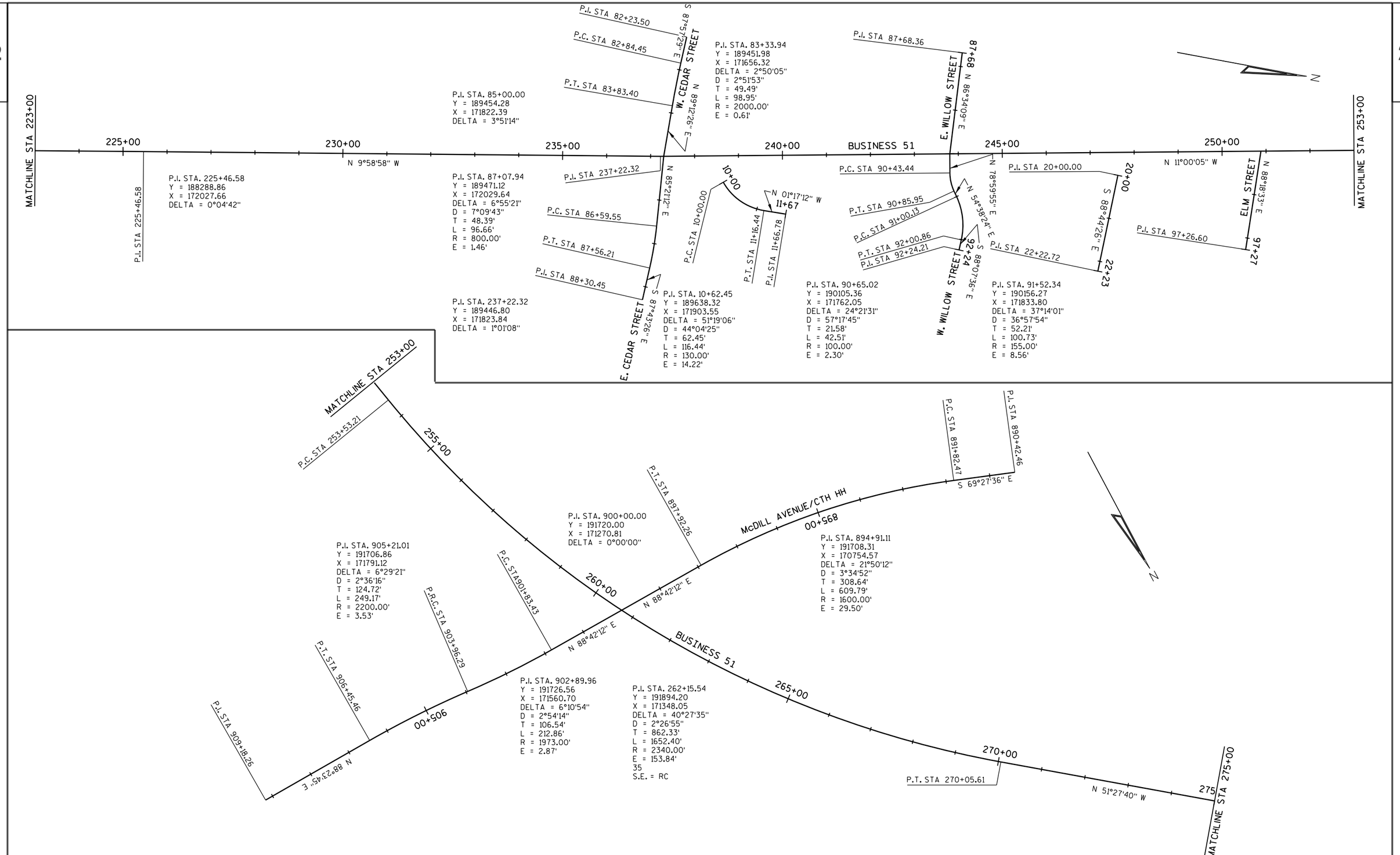
MATCHLINE STA 223+00
225+00
230+00
235+00
240+00
BUSINESS 51
245+00
250+00
MATCHLINE STA 253+00
N 9°58'58" W
N 11°00'05" W
P.I. STA 225+46.58
P.I. STA. 225+46.58
Y = 188288.86
X = 172027.66
DELTA = 0°04'42"
P.I. STA. 85+00.00
Y = 189454.28
X = 171822.39
DELTA = 3°51'14"
P.I. STA. 87+07.94
Y = 189471.12
X = 172029.64
DELTA = 6°55'21"
D = 7°09'43"
T = 48.39'
L = 96.66'
R = 800.00'
E = 1.46'
P.I. STA. 237+22.32
Y = 189446.80
X = 171823.84
DELTA = 1°01'08"
P.I. STA. 83+33.94
Y = 189451.98
X = 171656.32
DELTA = 2°50'05"
D = 2°51'53"
T = 49.49'
L = 98.95'
R = 2000.00'
E = 0.61'
P.I. STA. 10+62.45
Y = 189638.32
X = 171903.55
DELTA = 51°19'06"
D = 44°04'25"
T = 62.45'
L = 116.44'
R = 130.00'
E = 14.22'
P.I. STA. 90+65.02
Y = 190105.36
X = 171762.05
DELTA = 24°21'31"
D = 57°17'45"
T = 21.58'
L = 42.51'
R = 100.00'
E = 2.30'
P.I. STA. 91+52.34
Y = 190156.27
X = 171833.80
DELTA = 37°14'01"
D = 36°57'54"
T = 52.21'
L = 100.73'
R = 155.00'
E = 8.56'
P.I. STA 225+46.58
P.I. STA 237+22.32
P.C. STA 86+59.55
P.T. STA 87+56.21
P.I. STA 88+30.45
P.I. STA 82+23.50
P.C. STA 82+84.45
P.T. STA 83+83.40
P.C. STA 10+00.00
P.T. STA 11+16.44
P.I. STA 11+66.78
11+67
P.C. STA 90+43.44
P.T. STA 90+85.95
P.C. STA 91+00.13
P.T. STA 92+00.86
P.I. STA 92+24.21
P.I. STA 87+68.36
P.I. STA 20+00.00
P.I. STA 22+22.72
P.I. STA 97+26.60
W. CEDAR STREET
E. CEDAR STREET
E. WILLOW STREET
W. WILLOW STREET
ELM STREET
N 89°12'26" E
N 85°21'12" E
S 87°43'26" E
S 87°57'29" E
N 86°34'09" E
N 78°59'55" E
N 54°38'24" E
S 88°07'36" E
S 88°44'26" E
N 88°18'33" E
N
MATCHLINE STA 253+00
P.C. STA 253+53.21
255+00
260+00
265+00
270+00
275
MATCHLINE STA 275+00
P.I. STA 905+21.01
Y = 191706.86
X = 171791.12
DELTA = 6°29'21"
D = 2°36'16"
T = 124.72'
L = 249.17'
R = 2200.00'
E = 3.53'
P.I. STA. 900+00.00
Y = 191720.00
X = 171270.81
DELTA = 0°00'00"
P.I. STA. 902+89.96
Y = 191726.56
X = 171560.70
DELTA = 6°10'54"
D = 2°54'14"
T = 106.54'
L = 212.86'
R = 1973.00'
E = 2.87'
P.I. STA. 262+15.54
Y = 191894.20
X = 171348.05
DELTA = 40°27'35"
D = 2°26'55"
T = 862.33'
L = 1652.40'
R = 2340.00'
E = 153.84'
35
S.E. = RC
P.I. STA. 894+91.11
Y = 191708.31
X = 170754.57
DELTA = 21°50'12"
D = 3°34'52"
T = 308.64'
L = 609.79'
R = 1600.00'
E = 29.50'
P.I. STA 909+18.26
P.T. STA 906+45.46
P.R.C. STA 903+96.29
P.C. STA 901+83.43
P.I. STA 897+92.26
P.C. STA 891+82.47
P.I. STA 890+42.46
P.T. STA 270+05.61
McDILL AVENUE/CTH HH
00+568
N 88°42'12" E
N 88°42'12" E
N 88°23'45" E
S 69°27'36" E
N 51°27'40" W
N

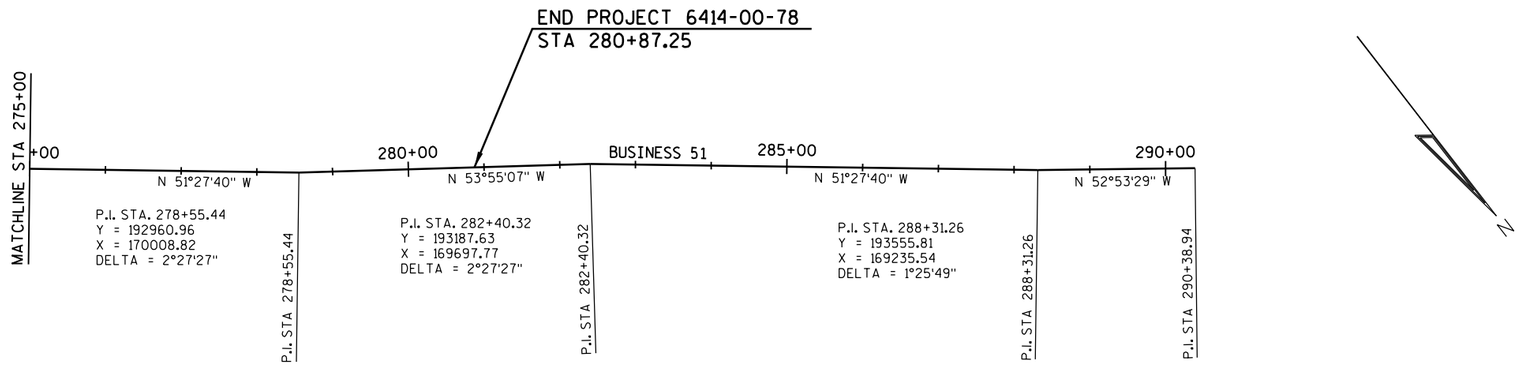

PROJECT NO:6414-00-78	HWY:BUSINESS 51	COUNTY:PORTAGE	ALIGNMENT DIAGRAM	SHEET 214	E

3

DATE 01OCT15 E S T I M A T E O F Q U A N T I T I E S

LINE NUMBER	ITEM	ITEM DESCRIPTION	UNIT	TOTAL	6414-00-78 QUANTITY
0010	201.0110	Clearing	SY	5,701.000	5,701.000
0020	201.0210	Grubbing	SY	5,701.000	5,701.000
0030	204.0100	Removing Pavement	SY	6,888.000	6,888.000
0040	204.0130	Removing Curb	LF	606.000	606.000
0050	204.0140	Removing Gutter	LF	1,268.000	1,268.000
0060	204.0150	Removing Curb & Gutter	LF	14,643.000	14,643.000
0070	204.0155	Removing Concrete Sidewalk	SY	6,710.000	6,710.000
0080	204.0170	Removing Fence	LF	540.000	540.000
0090	204.0195	Removing Concrete Bases	EACH	58.000	58.000
0100	204.0210	Removing Manholes	EACH	47.000	47.000
0110	204.0220	Removing Inlets	EACH	46.000	46.000
0120	204.0230	Removing Building (station) 01. Sta 128+00	LS	1.000	1.000
0130	204.0235	Removing Buildings (parcel) 01. Parcel 13	LS	1.000	1.000
0140	204.0245	Removing Storm Sewer (size) 01. 8-Inch	LF	233.000	233.000
0150	204.0245	Removing Storm Sewer (size) 02. 12-Inch	LF	1,772.000	1,772.000
0160	204.0245	Removing Storm Sewer (size) 03. 18-Inch	LF	1,657.000	1,657.000
0170	204.0245	Removing Storm Sewer (size) 04. 24-Inch	LF	1,375.000	1,375.000
0180	204.0245	Removing Storm Sewer (size) 05. 30-Inch	LF	386.000	386.000
0190	204.0245	Removing Storm Sewer (size) 06. 36-Inch	LF	534.000	534.000
0200	204.0245	Removing Storm Sewer (size) 07. 42-Inch	LF	197.000	197.000
0210	204.0245	Removing Storm Sewer (size) 08. 48-Inch	LF	498.000	498.000
0220	204.0245	Removing Storm Sewer (size) 09. 54-Inch	LF	1,896.000	1,896.000
0230	204.0280	Sealing Pipes	EACH	2.000	2.000
0240	205.0100	Excavation Common	CY	40,450.000	40,450.000
0250	213.0100	Finishing Roadway (project) 01. 6414-00-78	EACH	1.000	1.000
0260	305.0110	Base Aggregate Dense 3/4-Inch	TON	3,621.000	3,621.000
0270	305.0120	Base Aggregate Dense 1 1/4-Inch	TON	30,275.000	30,275.000
0280	310.0110	Base Aggregate Open Graded	TON	6,020.000	6,020.000
0290	371.1000.S	QMP Base Aggregate Dense 1 1/4-Inch Compaction	TON	30,275.000	30,275.000
0300	415.0090	Concrete Pavement 9-Inch	SY	36,130.000	36,130.000
0310	415.0210	Concrete Pavement Gaps	EACH	24.000	24.000
0320	415.1090	Concrete Pavement HES 9-Inch	SY	9,587.000	9,587.000
0330	416.0260	Concrete Driveway HES 6-Inch	SY	1,490.000	1,490.000
0340	416.0610	Drilled Tie Bars	EACH	62.000	62.000
0350	440.4410	Incentive IRI Ride	DOL	8,400.000	8,400.000
0360	455.0120	Asphaltic Material PG64-28	TON	155.000	155.000
0370	455.0605	Tack Coat	GAL	1,984.000	1,984.000
0380	460.1103	HMA Pavement Type E-3	TON	2,785.000	2,785.000
0390	460.2000	Incentive Density HMA Pavement	DOL	1,800.000	1,800.000
0400	465.0120	Asphaltic Surface Driveways and Field Entrances	TON	1,099.000	1,099.000
0410	465.0125	Asphaltic Surface Temporary	TON	1,190.000	1,190.000
0420	465.0310	Asphaltic Curb	LF	2,627.000	2,627.000
0430	520.8000	Concrete Collars for Pipe	EACH	4.000	4.000
0440	522.1012	Apron Endwalls for Culvert Pipe Reinforced Concrete 12-Inch	EACH	1.000	1.000
0450	522.1015	Apron Endwalls for Culvert Pipe Reinforced Concrete 15-Inch	EACH	1.000	1.000
0460	522.1024	Apron Endwalls for Culvert Pipe Reinforced Concrete 24-Inch	EACH	2.000	2.000

3

3

DATE 01OCT15 E S T I M A T E O F Q U A N T I T I E S

LINE NUMBER	ITEM	ITEM DESCRIPTION	UNIT	TOTAL	6414-00-78 QUANTITY
0470	522.1030	Apron Endwalls for Culvert Pipe Reinforced Concrete 30-Inch	EACH	1.000	1.000
0480	601.0409	Concrete Curb & Gutter 30-Inch Type A	LF	1,674.000	1,674.000
0490	601.0411	Concrete Curb & Gutter 30-Inch Type D	LF	7,920.000	7,920.000
0500	601.0413	Concrete Curb & Gutter 6-Inch Sloped 30-Inch Type G	LF	8,306.000	8,306.000
0510	601.0452	Concrete Curb & Gutter Integral 30-Inch Type D	LF	9,845.000	9,845.000
0520	602.0415	Concrete Sidewalk 6-Inch	SF	68,086.000	68,086.000
0530	602.0505	Curb Ramp Detectable Warning Field Yellow	SF	480.000	480.000
0540	602.1500	Concrete Steps	SF	20.000	20.000
0550	602.2400	Concrete Safety Islands	SF	332.000	332.000
0560	606.0300	Riprap Heavy	CY	25.000	25.000
0570	608.0354	Storm Sewer Pipe Reinforced Concrete Class III 54-Inch	LF	2,489.000	2,489.000
0580	608.0412	Storm Sewer Pipe Reinforced Concrete Class IV 12-Inch	LF	5,399.000	5,399.000
0590	608.0415	Storm Sewer Pipe Reinforced Concrete Class IV 15-Inch	LF	997.000	997.000
0600	608.0418	Storm Sewer Pipe Reinforced Concrete Class IV 18-Inch	LF	865.000	865.000
0610	608.0424	Storm Sewer Pipe Reinforced Concrete Class IV 24-Inch	LF	1,907.000	1,907.000
0620	608.0430	Storm Sewer Pipe Reinforced Concrete Class IV 30-Inch	LF	456.000	456.000
0630	608.0436	Storm Sewer Pipe Reinforced Concrete Class IV 36-Inch	LF	942.000	942.000
0640	608.0442	Storm Sewer Pipe Reinforced Concrete Class IV 42-Inch	LF	930.000	930.000
0650	610.0434	Storm Sewer Pipe Reinforced Concrete Horizontal Elliptical Class HE-IV 34x53-Inch	LF	79.000	79.000
0660	611.0530	Manhole Covers Type J	EACH	46.000	46.000
0670	611.0540	Manhole Covers Type K	EACH	11.000	11.000
0680	611.0545	Manhole Covers Type L	EACH	13.000	13.000
0690	611.0624	Inlet Covers Type H	EACH	131.000	131.000
0700	611.0639	Inlet Covers Type H-S	EACH	84.000	84.000
0710	611.0645	Inlet Covers Type MS-A	EACH	1.000	1.000
0720	611.2004	Manholes 4-FT Diameter	EACH	18.000	18.000
0730	611.2005	Manholes 5-FT Diameter	EACH	5.000	5.000
0740	611.2006	Manholes 6-FT Diameter	EACH	18.000	18.000
0750	611.2008	Manholes 8-FT Diameter	EACH	22.000	22.000
0760	611.3004	Inlets 4-FT Diameter	EACH	33.000	33.000
0770	611.3230	Inlets 2x3-FT	EACH	177.000	177.000
0780	611.3901	Inlets Median 1 Grate	EACH	1.000	1.000
0790	611.8110	Adjusting Manhole Covers	EACH	1.000	1.000
0800	611.8115	Adjusting Inlet Covers	EACH	12.000	12.000
0810	611.8120.S	Cover Plates Temporary	EACH	9.000	9.000
0820	611.9800.S	Pipe Grates	EACH	5.000	5.000
0830	612.0902.S	Insulation Board Polystyrene (inch) 01. 2-Inch	SY	300.000	300.000
0840	619.1000	Mobilization	EACH	0.900	0.900
0850	620.0100	Concrete Corrugated Median	SF	295.000	295.000
0860	620.0300	Concrete Median Sloped Nose	SF	635.000	635.000
0870	623.0200	Dust Control Surface Treatment	SY	78,655.000	78,655.000

3

3

DATE 01OCT15 E S T I M A T E O F Q U A N T I T I E S

LINE NUMBER	ITEM	ITEM DESCRIPTION	UNIT	TOTAL	6414-00-78 QUANTITY
0880	624.0100	Water	MGAL	500.000	500.000
0890	625.0100	Topsoil	SY	20,446.000	20,446.000
0900	627.0200	Mulching	SY	71,748.000	71,748.000
0910	628.1504	Silt Fence	LF	1,400.000	1,400.000
0920	628.1520	Silt Fence Maintenance	LF	1,400.000	1,400.000
0930	628.1905	Mobilizations Erosion Control	EACH	10.000	10.000
0940	628.1910	Mobilizations Emergency Erosion Control	EACH	10.000	10.000
0950	628.2008	Erosion Mat Urban Class I Type B	SY	775.000	775.000
0960	628.7005	Inlet Protection Type A	EACH	258.000	258.000
0970	628.7010	Inlet Protection Type B	EACH	1.000	1.000
0980	628.7015	Inlet Protection Type C	EACH	162.000	162.000
0990	628.7020	Inlet Protection Type D	EACH	77.000	77.000
1000	628.7504	Temporary Ditch Checks	LF	100.000	100.000
1010	628.7555	Culvert Pipe Checks	EACH	16.000	16.000
1020	630.0120	Seeding Mixture No. 20	LB	226.000	226.000
1030	630.0140	Seeding Mixture No. 40	LB	330.000	330.000
1040	630.0200	Seeding Temporary	LB	330.000	330.000
1050	630.0300	Seeding Borrow Pit	LB	675.000	675.000
1060	633.5200	Markers Culvert End	EACH	5.000	5.000
1070	634.0614	Posts Wood 4x6-Inch X 14-FT	EACH	109.000	109.000
1080	634.0616	Posts Wood 4x6-Inch X 16-FT	EACH	7.000	7.000
1090	637.2210	Signs Type II Reflective H	SF	621.500	621.500
1100	637.2230	Signs Type II Reflective F	SF	96.500	96.500
1110	637.2235	Signs Type II Reflective F Folding	SF	180.000	180.000
1120	638.2602	Removing Signs Type II	EACH	33.000	33.000
1130	638.3000	Removing Small Sign Supports	EACH	23.000	23.000
1140	642.5201	Field Office Type C	EACH	1.000	1.000
1150	643.0200	Traffic Control Surveillance and Maintenance (project) 01. 6414-00-78	DAY	275.000	275.000
1160	643.0300	Traffic Control Drums	DAY	158,917.000	158,917.000
1170	643.0410	Traffic Control Barricades Type II	DAY	1,165.000	1,165.000
1180	643.0420	Traffic Control Barricades Type III	DAY	29,172.000	29,172.000
1190	643.0500	Traffic Control Flexible Tubular Marker Posts	EACH	1,526.000	1,526.000
1200	643.0600	Traffic Control Flexible Tubular Marker Bases	EACH	1,526.000	1,526.000
1210	643.0705	Traffic Control Warning Lights Type A	DAY	165.000	165.000
1220	643.0715	Traffic Control Warning Lights Type C	DAY	8,221.000	8,221.000
1230	643.0800	Traffic Control Arrow Boards	DAY	505.000	505.000
1240	643.0900	Traffic Control Signs	DAY	31,641.000	31,641.000
1250	643.0920	Traffic Control Covering Signs Type II	EACH	17.000	17.000
1260	643.2000	Traffic Control Detour (project) 01. 6414-00-78	EACH	1.000	1.000
1270	643.3000	Traffic Control Detour Signs	DAY	1,040.000	1,040.000
1280	645.0113	Geotextile Fabric Type DF Schedule C	SY	9,000.000	9,000.000
1290	645.0120	Geotextile Fabric Type HR	SY	55.000	55.000
1300	646.0106	Pavement Marking Epoxy 4-Inch	LF	12,030.000	12,030.000
1310	646.0126	Pavement Marking Epoxy 8-Inch	LF	2,482.000	2,482.000
1320	646.0600	Removing Pavement Markings	LF	3,691.000	3,691.000
1330	647.0110	Pavement Marking Railroad Crossings Epoxy	EACH	4.000	4.000
1340	647.0166	Pavement Marking Arrows Epoxy Type 2	EACH	37.000	37.000
1350	647.0206	Pavement Marking Arrows Bike Lane Epoxy	EACH	41.000	41.000
1360	647.0306	Pavement Marking Symbols Bike Lane Epoxy	EACH	41.000	41.000

3

3

DATE 01OCT15 E S T I M A T E O F Q U A N T I T I E S

LINE NUMBER	ITEM	ITEM DESCRIPTION	UNIT	TOTAL	6414-00-78 QUANTITY
1370	647.0356	Pavement Marking Words Epoxy	EACH	4.000	4.000
1380	647.0456	Pavement Marking Curb Epoxy	LF	1,346.000	1,346.000
1390	647.0566	Pavement Marking Stop Line Epoxy 18-Inch	LF	628.000	628.000
1400	647.0606	Pavement Marking Island Nose Epoxy	EACH	32.000	32.000
1410	647.0766	Pavement Marking Crosswalk Epoxy 6-Inch	LF	2,725.000	2,725.000
1420	649.0400	Temporary Pavement Marking Removable Tape 4-Inch	LF	30,045.000	30,045.000
1430	649.0402	Temporary Pavement Marking Paint 4-Inch	LF	18,902.000	18,902.000
1440	649.0801	Temporary Pavement Marking Removable Tape 8-Inch	LF	2,935.000	2,935.000
1450	649.0802	Temporary Pavement Marking Paint 8-Inch	LF	994.000	994.000
1460	649.1100	Temporary Pavement Marking Stop Line 18-Inch	LF	153.000	153.000
1470	649.1200	Temporary Pavement Marking Stop Line Removable Tape 18-Inch	LF	1,002.000	1,002.000
1480	649.1800	Temporary Pavement Marking Arrows Removable Tape	EACH	20.000	20.000
1490	649.2002	Temporary Pavement Marking Words Paint	EACH	4.000	4.000
1500	650.4000	Construction Staking Storm Sewer	EACH	302.000	302.000
1510	650.4500	Construction Staking Subgrade	LF	14,450.000	14,450.000
1520	650.5000	Construction Staking Base	LF	6,500.000	6,500.000
1530	650.5500	Construction Staking Curb Gutter and Curb & Gutter	LF	5,142.000	5,142.000
1540	650.7000	Construction Staking Concrete Pavement	LF	11,550.000	11,550.000
1550	650.8500	Construction Staking Electrical Installations (project) 01. 6414-00-78	LS	1.000	1.000
1560	650.9910	Construction Staking Supplemental Control (project) 01. 6414-00-78	LS	1.000	1.000
1570	650.9920	Construction Staking Slope Stakes	LF	7,775.000	7,775.000
1580	652.0225	Conduit Rigid Nonmetallic Schedule 40 2-Inch	LF	7,663.000	7,663.000
1590	652.0235	Conduit Rigid Nonmetallic Schedule 40 3-Inch	LF	4,303.000	4,303.000
1600	652.0800	Conduit Loop Detector	LF	3,682.000	3,682.000
1610	653.0905	Removing Pull Boxes	EACH	45.000	45.000
1620	654.0101	Concrete Bases Type 1	EACH	7.000	7.000
1630	654.0102	Concrete Bases Type 2	EACH	15.000	15.000
1640	654.0106	Concrete Bases Type 6	EACH	33.000	33.000
1650	654.0110	Concrete Bases Type 10	EACH	11.000	11.000
1660	654.0217	Concrete Control Cabinet Bases Type 9 Special	EACH	3.000	3.000
1670	654.0230	Concrete Control Cabinet Bases Type L30	EACH	2.000	2.000
1680	655.0230	Cable Traffic Signal 5-14 AWG	LF	2,817.000	2,817.000
1690	655.0240	Cable Traffic Signal 7-14 AWG	LF	610.000	610.000
1700	655.0250	Cable Traffic Signal 9-14 AWG	LF	2,102.000	2,102.000
1710	655.0260	Cable Traffic Signal 12-14 AWG	LF	2,656.000	2,656.000
1720	655.0320	Cable Type UF 2-10 AWG Grounded	LF	2,992.000	2,992.000
1730	655.0515	Electrical Wire Traffic Signals 10 AWG	LF	3,301.000	3,301.000
1740	655.0610	Electrical Wire Lighting 12 AWG	LF	8,775.000	8,775.000
1750	655.0615	Electrical Wire Lighting 10 AWG	LF	3,519.000	3,519.000
1760	655.0625	Electrical Wire Lighting 6 AWG	LF	34,805.000	34,805.000
1770	655.0700	Loop Detector Lead In Cable	LF	12,338.000	12,338.000
1780	655.0800	Loop Detector Wire	LF	13,328.000	13,328.000
1790	656.0200	Electrical Service Meter Breaker Pedestal (location) 01. Business 51 and Chestnut Drive	LS	1.000	1.000

3

3

DATE 01OCT15 E S T I M A T E O F Q U A N T I T I E S

LINE NUMBER	ITEM	ITEM DESCRIPTION	UNIT	TOTAL	6414-00-78 QUANTITY
1800	656.0200	Electrical Service Meter Breaker Pedestal (location) 02. Business 51 and Roosevelt Drive	LS	1.000	1.000
1810	656.0200	Electrical Service Meter Breaker Pedestal (location) 03. Business 51 and Plover Springs Drive	LS	1.000	1.000
1820	656.0200	Electrical Service Meter Breaker Pedestal (location) 04. Sta 131+52	LS	1.000	1.000
1830	656.0200	Electrical Service Meter Breaker Pedestal (location) 05. Sta 174+73	LS	1.000	1.000
1840	657.0100	Pedestal Bases	EACH	7.000	7.000
1850	657.0255	Transformer Bases Breakaway 11 1/2-Inch Bolt Circle	EACH	48.000	48.000
1860	657.0315	Poles Type 4	EACH	15.000	15.000
1870	657.0327	Poles Type 6-Aluminum	EACH	33.000	33.000
1880	657.0410	Traffic Signal Standards Aluminum 9-FT	EACH	1.000	1.000
1890	657.0420	Traffic Signal Standards Aluminum 13-FT	EACH	6.000	6.000
1900	657.0605	Luminaire Arms Single Member 4 1/2-Inch Clamp 4-FT	EACH	65.000	65.000
1910	657.0609	Luminaire Arms Single Member 4-Inch Clamp 6-FT	EACH	22.000	22.000
1920	657.1345	Install Poles Type 9	EACH	8.000	8.000
1930	657.1350	Install Poles Type 10	EACH	3.000	3.000
1940	657.1525	Install Monotube Arms 25-FT	EACH	1.000	1.000
1950	657.1530	Install Monotube Arms 30-FT	EACH	10.000	10.000
1960	657.1808	Install Luminaire Arms Steel 8-FT	EACH	3.000	3.000
1970	658.0110	Traffic Signal Face 3-12 Inch Vertical	EACH	56.000	56.000
1980	658.0115	Traffic Signal Face 4-12 Inch Vertical	EACH	4.000	4.000
1990	658.0215	Backplates Signal Face 3 Section 12-Inch	EACH	56.000	56.000
2000	658.0220	Backplates Signal Face 4 Section 12-Inch	EACH	4.000	4.000
2010	658.0416	Pedestrian Signal Face 16-Inch	EACH	32.000	32.000
2020	658.0500	Pedestrian Push Buttons	EACH	30.000	30.000
2030	658.0600	Led Modules 12-Inch Red Ball	EACH	36.000	36.000
2040	658.0605	Led Modules 12-Inch Yellow Ball	EACH	36.000	36.000
2050	658.0610	Led Modules 12-Inch Green Ball	EACH	36.000	36.000
2060	658.0615	Led Modules 12-Inch Red Arrow	EACH	24.000	24.000
2070	658.0620	Led Modules 12-Inch Yellow Arrow	EACH	48.000	48.000
2080	658.0625	Led Modules 12-Inch Green Arrow	EACH	4.000	4.000
2090	658.0635	Led Modules Pedestrian Countdown Timer 16-Inch	EACH	32.000	32.000
2100	658.5069	Signal Mounting Hardware (location) 01. Business 51 and Chestnut Drive	LS	1.000	1.000
2110	658.5069	Signal Mounting Hardware (location) 02. Business 51 and Roosevelt Drive	LS	1.000	1.000
2120	658.5069	Signal Mounting Hardware (location) 03. Business 51 and Plover Springs Drive	LS	1.000	1.000
2130	659.1115	Luminaires Utility LED A	EACH	90.000	90.000
2140	659.2130	Lighting Control Cabinets 120/240 30-Inch	EACH	2.000	2.000
2150	661.0200	Temporary Traffic Signals for Intersections (location) 01. Business 51 and Chestnut Drive	LS	1.000	1.000
2160	661.0200	Temporary Traffic Signals for Intersections (location) 02. Business 51 and Roosevelt Drive	LS	1.000	1.000

3

DATE 01OCT15 E S T I M A T E O F Q U A N T I T I E S

LINE NUMBER	ITEM	ITEM DESCRIPTION	UNIT	TOTAL	6414-00-78 QUANTITY
2170	661.0200	Temporary Traffic Signals for Intersections (location) 03. Business 51 and Plover Springs Drive	LS	1.000	1.000
2180	661.0300	Generators	DAY	6.000	6.000
2190	690.0150	Sawing Asphalt	LF	4,377.000	4,377.000
2200	690.0250	Sawing Concrete	LF	733.000	733.000
2210	715.0415	Incentive Strength Concrete Pavement	DOL	3,430.000	3,430.000
2220	999.1500.S	Crack and Damage Survey	LS	1.000	1.000
2230	ASP.1T0A	On-the-Job Training Apprentice at $5.00/HR	HRS	2,000.000	2,000.000
2240	ASP.1T0G	On-the-Job Training Graduate at $5.00/HR	HRS	1,260.000	1,260.000
2250	SPV.0030	Special 01. Fertilizer for Lawn Type Turf	CWT	14.000	14.000
2260	SPV.0035	Special 01. Flowable Fill Existing Pipe	CY	36.000	36.000
2270	SPV.0060	Special 01. Grit Chamber Type A	EACH	1.000	1.000
2280	SPV.0060	Special 02. Grit Chamber Type C	EACH	1.000	1.000
2290	SPV.0060	Special 03. Grit Chamber Type I	EACH	3.000	3.000
2300	SPV.0060	Special 04. Inlet Covers Type Special	EACH	12.000	12.000
2310	SPV.0060	Special 05. Manhole Diversion 6-foot	EACH	1.000	1.000
2320	SPV.0060	Special 06. Manhole Diversion 8-foot	EACH	1.000	1.000
2330	SPV.0060	Special 07. Manholes 10-ft Diameter	EACH	1.000	1.000
2340	SPV.0060	Special 08. Manhole Residential 24-inch	EACH	4.000	4.000
2350	SPV.0060	Special 09. Temporary Connection to Existing Storm Sewer Pipe	EACH	14.000	14.000
2360	SPV.0060	Special 10. Temporary Connection to Storm Sewer Structure	EACH	4.000	4.000
2370	SPV.0060	Special 11. Connection to Existing Inlets or Manholes	EACH	2.000	2.000
2380	SPV.0060	Special 12. Cleanout	EACH	33.000	33.000
2390	SPV.0060	Special 13. 6-inch PVC Plug	EACH	4.000	4.000
2400	SPV.0060	Special 14. Pull Box Non-Conductive 24x42-Inch	EACH	65.000	65.000
2410	SPV.0060	Special 15. Salvage Lighting Unit	EACH	6.000	6.000
2740	SPV.0090	Special 01. Concrete Curb and Gutter 6-inch Sloped 20-inch Type G	LF	185.000	185.000
2750	SPV.0090	Special 02. Concrete Curb and Gutter 6-inch Sloped 20-inch Type J	LF	911.000	911.000
2760	SPV.0090	Special 03. PVC Pipe 8-Inch	LF	128.000	128.000
2770	SPV.0090	Special 04. Schedule 40 PVC 6-inch	LF	538.000	538.000
2780	SPV.0090	Special 05. Schedule 40 PVC Perforated 6-inch	LF	3,512.000	3,512.000
2790	SPV.0090	Special 06. Storm Sewer Pipe Reinforced Concrete Class IV Carrier Pipe 42-inch	LF	125.000	125.000
2800	SPV.0090	Special 07. Steel Casing Pipe 66-inch	LF	100.000	100.000
2810	SPV.0090	Special 08. Concrete Curb and Gutter Cure & Seal Treatment	LF	28,815.000	28,815.000
2930	SPV.0105	Special 01. Construction Staking Infiltration Basin	LS	1.000	1.000
2940	SPV.0105	Special 02. Construction Staking Infiltration Trench	LS	1.000	1.000
2950	SPV.0105	Special 03. Remove and Salvage Existing Traffic Signals Business 51 and Chestnut Drive	LS	1.000	1.000
2960	SPV.0105	Special 04. Remove and Salvage Existing Traffic Signals Business 51 and Roosevelt Dr.	LS	1.000	1.000

3

DATE 01OCT15 E S T I M A T E O F Q U A N T I T I E S

LINE NUMBER	ITEM	ITEM DESCRIPTION	UNIT	TOTAL	6414-00-78 QUANTITY
2970	SPV.0105	Special 05. Remove and Salvage Existing Traffic Signals Business 51 and Plover Springs	LS	1.000	1.000
2980	SPV.0105	Special 06. Transport Dept Furnished Traffic Signal Monotube Equipment Chestnut	LS	1.000	1.000
2990	SPV.0105	Special 07. Transport Dept Furnished Traffic Signal Monotube Equipment Roosevelt	LS	1.000	1.000
3000	SPV.0105	Special 08. Transport Dept Furnished Traffic Signal Monotube Equipment Plover Springs	LS	1.000	1.000
3010	SPV.0105	Special 09. Temorary Vehicle Detection Business 51 and Chestnut Drive	LS	1.000	1.000
3020	SPV.0105	Special 10. Temporary Vehicle Detection Business 51 and Roosevelt Drive	LS	1.000	1.000
3030	SPV.0105	Special 11. Temporary Vehicle Detection Business 51 and Plover Springs Drive	LS	1.000	1.000
3040	SPV.0105	Special 12. Concrete Pavement Joint Layout	LS	1.000	1.000
3050	SPV.0120	Special 01. Water for Seeded Areas	MGAL	506.000	506.000
3060	SPV.0165	Special 01. Stamped Colored Concrete 4-Inch	SF	81,002.000	81,002.000
3070	SPV.0165	Special 02. Concrete Cure and Seal Treatment	SF	163,780.000	163,780.000
3080	SPV.0165	Special 03. Salvaged Brick Pavers	SF	389.000	389.000
3090	SPV.0180	Special 01. Preparing Topsoil for Lawn Type Turf	SY	22,509.000	22,509.000
3100	SPV.0180	Special 02. Infiltration Basin Soil Mix	SY	1,650.000	1,650.000

3

3

3

CLEARING AND GRUBBING

STATION	LOCATION	201.0110 CLEARING SY	201.0210 GRUBBING SY
BUSINESS 51			
STAGE 1			
124+25 - 165+50	RT	200	200
131+00	RT	75	75
146+00 - 146+50	RT	100	100
161+25 - 163+00	RT	260	260
170+25 - 173+00	RT	260	260
STAGE 1 SUBTOTAL		895	895
BUSINESS 51			
STAGE 2			
121+50 - 122+00	LT	58	58
131+00 - 131+50	LT	80	80
134+50 - 135+25	LT	510	510
136+75 - 137+50	LT	170	170
139+75 - 141+25	LT	250	250
143+50 - 144+75	LT	475	475
151+25	LT	100	100
154+50 - 155+25	LT	300	300
158+50	LT	30	30
159+00	LT	30	30
162+50	LT	30	30
163+50	LT	60	60
167+25 - 168+25	LT	500	500
PLOVER SPRINGS			
698+50 - 699+50	LT	333	333
STAGE 2 SUBTOTAL		2926	2926
BUSINESS 51			
STAGE 3			
135+50 - 136+00	RT	46	46
139+50	RT	30	30
142+50 - 143+20	RT	1570	1570
143+80 - 144+20	RT	35	35
150+50 - 151+00	RT	170	170
176+00		14	14
CEDAR DRIVE			
31+00 - 31+20	LT	15	15
STAGE 3 SUBTOTAL		1880	1880
ITEM TOTALS		5701	5701

REMOVING PAVEMENT

STATION	LOCATION	204.0100 SY	COMMENT
BUSINESS 51			
STAGE 1			
129+30	RT	24	DRIVEWAY APRON
134+15	RT	24	DRIVEWAY APRON
147+50	RT	155	DRIVEWAY APRON
167+17 - 167+48	40.0' RT	79	CONCRETE SLAB
171+00	RT	65	DRIVEWAY APRON
STAGE 1 SUBTOTAL		347	
BUSINESS 51			
STAGE 2			
122+65 - 127+65	LT	1937	
128+00	LT	25	DRIVEWAY APRON
131+50	LT	14	DRIVEWAY APRON
133+00	LT	22	DRIVEWAY APRON
133+38 - 134+37	LT	228	PARKING LOT
134+50	LT	22	DRIVEWAY APRON
136+65	LT	21	DRIVEWAY APRON
147+54	LT	10	CORROGATE DRIVEWAY MEDIAN
150+00 - 151+00	LT	347	CONC DRIVEWAYS
152+00	LT	181	CONC DRIVEWAYS
156+00	LT	465	PARK LOT
157+10	LT	140	CONC DRIVEWAYS
158+20	LT	18	DRIVEWAY APRON
158+80	LT	19	DRIVEWAY APRON
165+50	LT	48	CONC DRIVEWAYS
170+25	LT	55	CONC DRIVEWAYS
179+50	LT	39	CONC DRIVEWAYS
GREEN DR			
14+05 - 14+67	LT & RT	409	
STAGE 2 SUBTOTAL		4000	
BUSINESS 51			
STAGE 3			
121+75.40 - 127+65	RT	2085	
180+35	RT	31	DRIVEWAY APRON
PLOVER SPRINGS DR			
702+00	RT	200	
703+25	RT	225	
STAGE 3 SUBTOTAL		2541	
ITEM TOTALS		6888	

REMOVING CURB

STATION	LOCATION	204.0130 LF	COMMENTS
BUSINESS 51			
STAGE 2			
139+20 - 140+25	LT	228	PARKING LOT
150+00 - 151+00	LT	288	DRIVEWAY/PARKING LOT
STAGE 2 SUBTOTAL		516	
BUSINESS 51			
STAGE 3			
140+10 - 141+18	RT	90	PARKING LOT
STAGE 3 SUBTOTAL		90	
ITEM TOTAL		606	

REMOVING GUTTER

STATION	LOCATION	204.0140 LF
BUSINESS 51		
STAGE 1		
157+32 - 158+86	MEDIAN	312
170+80 - 172+55	MEDIAN	356
174+56 - 179+68	MEDIAN	600
STAGE 1 SUBTOTAL		1268
ITEM TOTAL		1268

NOTE: ALL ITEMS AND QUANTITIES ON THIS SHEET ARE FOR ENGINEER ESTIMATE CATEGORY 0010, UNLESS OTHERWISE NOTED.

3

REMOVING CURB AND GUTTER

STATION	LOCATION	204.0150 LF	COMMENT
BUSINESS 51			
STAGE 1			
122+50 - 125+50	RT	303	
122+83 - 125+07	MEDIAN	462	
125+87 - 126+94	RT	123	
129+94 - 131+95	RT	255	
132+30 - 135+05	RT	250	
143+12 - 150+00	RT	692	
154+41 - 155+62	MEDIAN	240	
156+36 - 157+32	MEDIAN	200	
159+73 - 173+00	RT	1407	
172+55 - 174+56	MEDIAN	411	
STAGE 1 SUBTOTAL		4343	
BUSINESS 51			
STAGE 2			
120+40 - 121+62	LT	124	
122+64 - 125+46	LT	292	
122+50 - 128+00	LT	223	PARKING LOT
125+76 - 128+53	LT	286	
128+68 - 131+75	LT	305	
131+47	LT	36	PARKING LOT
133+00 - 138+90	LT	637	
139+20 - 142+18	LT	308	
143+25 - 153+46	LT	1017	
153+88 - 166+60	LT	1318	
166+94 - 174+56	LT	781	
176+07 - 181+63	LT	558	
WILLOW DR			
8+93 - 9+14	LT & RT	42	
GREEN DR			
13+50 - 14+50	LT & RT	190	
CHESTNUT DR			
498+07 - 499+26	RT	140	PARKING LOT
499+35 - 499+67	LT & RT	130	
RIVER DR			
34+27 - 34+87	LT & RT	145	
PLOVER SPRINGS DR			
699+34 - 699+57	LT & RT	150	
STAGE 2 SUBTOTAL		6682	
BUSINESS 51			
STAGE 3			
126+94 - 128+55	RT	161	
128+20 - 129+74	RT	104	
135+05 - 135+23	RT	8	
135+50 - 138+94	RT	385	
139+30 - 143+12	RT	402	
150+00 - 151+09	RT	133	
151+57 - 155+74	RT	451	
156+16 - 159+73	RT	378	
174+00 - 174+57	RT		
175+07 - 181+62.87	RT	692	
175+76 - 179+20	RT	336	PARKING LOT
CEDAR DR			
30+50 - 31+11	LT & RT	108	
SCHOOL DR			
40+73 - 41+18	LT & RT	47	
PLOVER SPRINGS DR			
701+00 - 703+75	RT	413	
STAGE 3 SUBTOTAL		3618	
ITEM TOTAL		14643	

REMOVING CONCRETE SIDEWALK

STATION	LOCATION	204.0155 SY
BUSINESS 51		
STAGE 1		
122+50 - 125+40	RT	290
125+90 - 128+57	RT	317
128+94 - 131+95	RT	300
132+40 - 134+20	RT	104
143+75 - 149+00	RT	555
161+37 - 173+00	RT	260
STAGE 1 SUBTOTAL		1826
BUSINESS 51		
STAGE 2		
120+40 - 121+89	LT	82
122+50 - 122+62	LT	65
125+20 - 125+33	LT	180
125+90 - 128+50	LT	145
128+68 - 131+65	LT	168
131+65 - 131+92	LT	20
132+42 - 133+00	LT	29
133+00 - 138+79	LT	302
139+37 - 142+20	LT	139
143+12 - 152+87	LT	408
154+00 - 166+48	LT	693
167+00 - 174+58	LT	421
175+36 - 176+08	LT	39
176+08 - 178+08	LT	111
STAGE 2 SUBTOTAL		2802
BUSINESS 51		
STAGE 3		
134+20 - 135+14	RT	52
135+66 - 138+87	RT	177
139+37 - 143+75	RT	247
149+00 - 150+88	RT	212
151+77 - 155+05	RT	412
156+38 - 161+37	RT	277
173+00 - 174+39	RT	77
175+34 - 179+56	RT	235
CEDAR DR		
30+42 - 31+61	LT	66
SCHOOL DR		
40+43 - 41+18	RT	65
40+43 - 41+11	LT	44
ROOSEVELT DR		
600+50 - 602+23	RT	107
PLOVER SPRINGS DR		
700+65 - 703+64	RT	111
STAGE 3 SUBTOTAL		2082
ITEM TOTAL		6710

REMOVING FENCE

STATION	LOCATION	204.0170 LF
BUSINESS 51		
STAGE 2		
137+68	43.0' LT	40
144+27	52.0' LT	60
161+30	50.0' LT	20
STAGE 2 SUBTOTAL		120
BUSINESS 51		
STAGE 3		
133+00	RT	260
143+00	RT	160
STAGE 3 SUBTOTAL		420
ITEM TOTALS		540

REMOVING CONCRETE BASES

EXISTING BASE NUMBER	204.0195 EACH
BUS 51 & CHESTNUT DR	
SB1	1
SB2	1
SB3	1
SB4	1
SB5	1
SB6	1
SB7	1
SB8	1
CB1	1
INTERSECTION SUBTOTAL	9
BUS 51 & ROOSEVELT DR	
SB1	1
SB2	1
SB3	1
SB4	1
SB5	1
SB6	1
SB7	1
SB8	1
SB9	1
SB10	1
CB1	1
INTERSECTION SUBTOTAL	11
BUS 51 & PLOVER SPRINGS DRIVE	
SB1	1
SB2	1
SB3	1
SB4	1
SB5	1
SB6	1
SB7	1
SB8	1
SB9	1
SB10	1
SB11	1
SB12	1
SB13	1
SB14	1
SB15	1
INTERSECTION SUBTOTAL	15
BUSINESS 51	
STAGE 1	
130+00 - 131+00, RT.	2
169+08, 26.0' RT	1
180+25, RT	1
STAGE 1 SUBTOTAL	4
STAGE 2	
129+00, LT.	1
132+75 134+75 LT.	6
138+25, LT	1
156+40, 40.0' LT	1
147+00, LT.	1
STAGE 2 SUBTOTAL	10
ITEM TOTAL	49

NOTE: ALL ITEMS AND QUANTITIES ON THIS SHEET ARE FOR ENGINEER ESTIMATE CATEGORY 0010, UNLESS OTHERWISE NOTED.

3

REMOVING MANHOLES

STATION	LOCATION	204.0210 EACH
STAGE 2A		
BUSINESS 51		
122+97.40	65.6' LT	1
123+99.90	49.5' LT	1
125+34.26	80.2' LT	1
125+84.11	74.7' LT	1
125+84.66	58.6' LT	1
127+40.99	65.5' LT	1
127+43.69	52.3' LT	1
130+44.02	42.4' LT	1
135+41.26	16.9' LT	1
138+05.60	13.4' LT	1
138+64.22	19.8' LT	1
139+56.13	24.5' LT	1
140+81.49	31.0' LT	1
143+84.07	27.1' LT	1
146+78.46	31.6' LT	1
148+25.35	25.3' LT	1
152+13.86	9.2' LT	1
153+65.01	7.4' LT	1
169+81.42	21.3' LT	1
174+32.61	17.9' LT	1
177+94.74	11.0' LT	1
181+80.74	7.8' LT	1
STAGE 2A SUBTOTAL		22
STAGE 2B		
BUSINESS 51		
122+06.70	72.4' LT	1
122+09.70	86.6' LT	1
122+52.00	46.6' LT	1
131+74.82	35.9' LT	1
131+97.35	50.1' LT	1
132+65.64	30.6' LT	1
142+22.30	28.5' LT	1
142+50.40	43.4' LT	1
STAGE 2B SUBTOTAL		8
STAGE 3A		
BUSINESS 51		
125+91.69	14.7' RT	1
135+58.01	45.0' RT	1
140+80.88	25.5' RT	1
143+17.67	25.1' RT	1
152+31.11	33.4' RT	1
154+15.47	8.3' LT	1
155+12.53	1.9' RT	1
159+24.69	2.3' LT	1
163+11.31	10.9' LT	1
166+33.66	20.4' LT	1
STAGE 3A SUBTOTAL		10
STAGE 3B		
BUSINESS 51		
151+01.18	47.2' RT	1
151+60.68	53.2' RT	1
174+24.28	59.4' RT	1
174+33.47	40.0' RT	1
STAGE 3B SUBTOTAL		4
STAGE 3C		
BUSINESS 51		
122+32.79	74.0' RT	1
138+81.80	44.3' RT	1
139+03.06	106.5' RT	1
STAGE 3C SUBTOTAL		3
ITEM TOTAL		47

REMOVING INLETS

STATION	LOCATION	204.0220 EACH
STAGE 2A		
BUSINESS 51		
125+38.19	72.5' LT	1
138+43.76	74.2' LT	1
138+83.49	22.0' LT	1
139+27.32	25.2' LT	1
140+12.44	62.5' LT	1
140+80.83	17.9' LT	1
143+83.58	33.3' LT	1
149+96.11	51.1' LT	1
150+98.11	48.9' LT	1
163+10.79	25.8' LT	1
166+30.33	34.1' LT	1
169+83.69	35.1' LT	1
174+35.35	33.6' LT	1
177+93.47	27.1' LT	1
STAGE 2A SUBTOTAL		14
STAGE 2B		
BUSINESS 51		
121+98.60	70.5' LT	1
122+41.30	68.4' LT	1
132+35.10	49.0' LT	1
143+01.49	40.5' LT	1
174+84.85	50.6' LT	1
175+28.72	50.8' LT	1
STAGE 2B SUBTOTAL		6
STAGE 3A		
BUSINESS 51		
124+05.68	13.6' RT	1
125+49.83	17.5' RT	1
127+48.79	5.5' LT	1
130+40.58	0.7' LT	1
135+21.44	42.8' RT	1
137+91.06	29.7' RT	1
146+72.89	10.6' RT	1
148+22.18	16.6' RT	1
155+14.41	55.1' RT	1
159+23.96	18.3' LT	1
159+24.11	27.3' RT	1
163+11.22	16.8' RT	1
166+31.38	8.0' RT	1
169+85.26	10.4' RT	1
177+92.69	26.9' RT	1
STAGE 3A SUBTOTAL		15
STAGE 3B		
BUSINESS 51		
131+73.42	6.8' RT	1
131+96.49	36.2' RT	1
132+27.67	106.1' RT	1
132+63.37	11.1' RT	1
174+51.13	59.3' RT	1
175+07.91	71.3' RT	1
SCHOOL DRIVE		
41+18.70	26.7' RT	1
STAGE 3B SUBTOTAL		7
STAGE 3C		
BUSINESS 51		
122+21.42	50.9' RT	1
122+54.74	48.4' RT	1
155+66.42	57.5' RT	1
156+24.32	56.6' RT	1
STAGE 3C SUBTOTAL		4
ITEM TOTAL		46

REMOVING STORM SEWER

STATION	LOCATION	204.0245.01 8-INCH LF	204.0245.02 12-INCH LF	204.0245.03 18-INCH LF	204.0245.04 24-INCH LF	204.0245.05 30-INCH LF	204.0245.06 36-INCH LF	204.0245.07 42-INCH LF	204.0245.08 48-INCH LF	204.0245.09 54-INCH LF	COMMENT
STAGE 2A											
BUSINESS 51											
122+64.10 - 123+99.90	LT						137				
122+97.40 - 122+97.90	LT		19								
122+97.40 - 123+02.40	LT			10							
123+99.90 - 124+02.20	LT		26								
123+99.90 - 125+84.66	LT						183				
124+70.16 - 124+70.93	LT		14								
125+34.26 - 125+34.53	LT		5								
125+34.26 - 125+38.19	LT		9								
125+38.19 - 125+84.11	LT		45								
125+84.11 - 125+84.66	LT			16							
125+84.66 - 125+89.12	LT			47							
125+84.66 - 127+43.69	LT						157				
127+40.99 - 127+43.69	LT			13							
127+43.69 - 127+48.05	LT		40								
127+43.69 - 130+44.02	LT							197			GROUT FILL UNDER RR TRACKS
130+41.54 - 130+44.02	LT		30								
130+44.02 - 131+56.32	LT								112		
132+95.85 - 135+41.26	LT								246		
135+41.26 - 135+44.05	LT			11							
135+41.26 - 138+05.60	LT									265	
138+05.60 - 138+64.22	LT									59	
138+43.76 - 138+46.72	LT	57									
138+64.22 - 138+83.49	LT			20							
138+64.22 - 139+56.13	LT									92	
139+27.32 - 139+56.13	LT			29							
139+56.13 - 140+81.49	LT									125	
140+12.00 - 140+12.44	LT	35									
140+12.44 - 140+14.16	LT	6									
140+80.83 - 140+81.49	LT			13							
140+81.49 - 142+18.24	LT									134	
143+27.04 - 143+84.07	LT									56	
143+65.06 - 143+84.07	LT			24							
143+83.58 - 143+84.07	LT			6							
143+84.07 - 146+78.46	LT									289	
146+77.43 - 146+78.46	LT			8							
146+78.46 - 148+25.35	LT									147	
148+23.75 - 148+25.35	LT		21								
148+25.35 - 152+13.86	LT									389	
149+94.60 - 149+96.11	LT		33								
149+96.11 - 150+98.11	LT		102								
152+13.86 - 152+15.29	LT			4							
152+13.86 - 153+65.01	LT									151	
153+65.01 - 153+86.44	LT									83	
163+10.79 - 163+10.85	LT		2								
166+30.33 - 166+32.77	LT		10								
166+53.41 - 169+81.42	LT			328							
169+81.42 - 169+83.69	LT		14								
169+81.42 - 174+32.61	LT				451						
174+32.02 - 174+35.35	LT		20								
174+32.61 - 174+35.35	LT			16							
174+32.61 - 174+58.41	LT				26						
174+32.61 - 174+32.63	LT			2							
174+35.35 - 174+58.17	LT		24								
176+06.88 - 177+94.74	LT				188						
177+93.47 - 177+94.74	LT		16								
177+94.41 - 177+94.74	LT		6								
177+94.74 - 181+80.74	LT					386					
STAGE 2A SUBTOTALS		98	436	547	665	386	477	197	358	1790	

NOTE: ALL ITEMS AND QUANTITIES ON THIS SHEET ARE FOR ENGINEER ESTIMATE CATEGORY 0010, UNLESS OTHERWISE NOTED.

3

REMOVING STORM SEWER (CONT'D)

STATION	LOCATION	204.0245.01 8-INCH LF	204.0245.02 12-INCH LF	204.0245.03 18-INCH LF	204.0245.04 24-INCH LF	204.0245.05 30-INCH LF	204.0245.06 36-INCH LF	204.0245.07 42-INCH LF	204.0245.08 48-INCH LF	204.0245.09 54-INCH LF	COMMENT
STAGE 2B											
BUSINESS 51											
121+98.60 - 122+06.70	LT		9								
122+06.70 - 122+09.70	LT			15							
122+06.70 - 122+07.20	LT			27							
122+07.70 - 122+52.00	LT						45				
122+41.30 - 122+52.00	LT		24								
122+52.00 - 122+52.30	LT		14								
122+52.00 - 122+64.10	LT						12				
131+56.32 - 131+57.49	LT	40									
131+56.32 - 131+74.82	LT								19		
131+74.08 - 131+74.82	LT		23								
131+74.82 - 131+97.35	LT			27							
131+74.82 - 132+65.64	LT								91		
131+97.35 - 132+35.10	LT			38							
132+64.84 - 132+65.64	LT		15								
132+65.64 - 132+95.85	LT								30		
142+18.24 - 142+22.30	LT									4	
142+22.30 - 142+50.40	LT			31							
142+22.30 - 143+27.04	LT									102	
142+50.40 - 143+01.49	LT			50							
174+58.17 - 174+84.85	LT		28								
174+58.41 - 176+06.88	LT				149						
174+84.85 - 175+28.72	LT		44								
STAGE 2B SUBTOTALS		40	157	188	149	0	57	0	140	106	
STAGE 3A											
BUSINESS 51											
124+04.43 - 124+05.68	RT		14								
125+49.83 - 125+91.69	RT		42								
125+89.13 - 125+91.69	LT & RT			27							
127+48.05 - 127+48.79	LT		7								
130+40.58 - 130+41.54	LT		12								
135+21.44 - 135+58.01	RT			36							
135+44.05 - 135+58.01	LT & RT			53							
137+91.06 - 138+05.60	LT & RT		45								
137+85.95 - 137+91.06	RT	15									
137+91.06 - 138+56.18	RT		65								
140+80.83 - 140+80.88	LT & RT			43							
140+80.88 - 140+80.97	RT	21									
143+16.35 - 143+17.67	RT		5								
143+17.67 - 143+65.06	LT & RT			61							
146+72.89 - 146+77.43	LT & RT			35							
146+72.89 - 146+84.75	RT	38									
148+22.18 - 148+23.75	LT & RT		21								
151+88.68 - 152+31.11	RT			44							
152+15.29 - 152+31.11	LT & RT			42							
152+21.84 - 152+31.11	RT			14							
153+65.04 - 154+15.47	LT				51						
154+15.47 - 155+12.53	LT & RT				98						
155+12.53 - 155+14.41	RT		53								
155+12.53 - 155+53.73	RT				11						
156+64.94 - 159+24.69	LT & RT				260						
159+23.96 - 159+24.69	LT		16								
159+24.11 - 159+24.69	LT & RT		30								
159+24.11 - 159+25.40	RT	3									
159+24.69 - 163+11.31	LT			387							
163+10.85 - 163+11.31	LT		13								
163+11.22 - 163+11.31	LT & RT		28								
166+31.38 - 166+33.66	LT & RT		29								
166+32.78 - 166+33.66	LT		4								
166+33.66 - 166+53.41	LT			20							
169+81.42 - 169+85.26	LT & RT		32								
177+92.25 - 177+92.69	RT		36								
177+92.69 - 177+94.41	LT & RT		32								
STAGE 3A SUBTOTALS		77	484	762	420	0	0	0	0	0	

NOTE: ALL ITEMS AND QUANTITIES ON THIS SHEET ARE FOR ENGINEER ESTIMATE CATEGORY 0010, UNLESS OTHERWISE NOTED.

REMOVING STORM SEWER (CONT'D)

STATION	LOCATION	204.0245.01 8-INCH LF	204.0245.02 12-INCH LF	204.0245.03 18-INCH LF	204.0245.04 24-INCH LF	204.0245.05 30-INCH LF	204.0245.06 36-INCH LF	204.0245.07 42-INCH LF	204.0245.08 48-INCH LF	204.0245.09 54-INCH LF	COMMENT
STAGE 3B											
BUSINESS 51											
131+73.42 - 131+74.08	LT & RT		20								
131+73.42 - 131+96.49	RT		37								
131+96.49 - 131+96.68	RT		68								
131+96.68 - 132+27.67	RT		31								
132+63.37 - 132+64.84	LT & RT		27								
150+99.37 - 151+01.18	RT			16							
151+01.18 - 151+60.68	RT			59							
151+60.68 - 151+88.68	RT			29							
174+17.80 - 174+24.28	RT		14								
174+24.28 - 174+33.47	RT		22								
174+32.63 - 174+33.47	LT & RT			56							
174+33.47 - 174+51.13	RT		26								
174+51.13 - 175+07.91	RT		58								
175+07.91 - 175+25.90	RT	18									
STAGE 3B SUBTOTALS		18	303	160	0	0	0	0	0	0	
STAGE 3C											
BUSINESS 51											
122+21.42 - 122+32.79	RT		26								
122+21.42 - 122+54.74	RT		33								
122+32.79 - 122+38.17	RT		17								
122+53.71 - 122+54.74	RT		35								
138+56.18 - 138+81.80	RT		26								
138+81.80 - 139+03.06	RT		66								
139+03.06 - 139+03.53	RT		9								
155+14.41 - 155+66.42	RT		52								
155+23.73 - 156+64.94	RT				141						
155+66.42 - 156+24.32	RT		58								
STAGE 3C SUBTOTALS		0	322	0	141	0	0	0	0	0	
STAGE 4											
BUSINESS 51											
122+52.36 - 122+53.71	LT & RT		46								
124+02.22 - 124+04.43	LT		24								
STAGE 4 SUBTOTALS		0	70	0	0	0	0	0	0	0	
ITEM TOTALS		233	1772	1657	1375	386	534	197	498	1896	

SEALING PIPES

STATION	LOCATION	204.0280 EACH
STAGE 2A		
BUSINESS 51		
128+16	52' LT	1
129+17	49' LT	1
STAGE 2A SUBTOTAL		2
ITEM TOTAL		2

NOTE: ALL ITEMS AND QUANTITIES ON THIS SHEET ARE FOR ENGINEER ESTIMATE CATEGORY 0010, UNLESS OTHERWISE NOTED.

Division	From/To Station	Location	205.0100 Common Excavation (1) Cut (2)	Salvaged/Unusable Pavement Material (4) (Concrete & Asphalt)	Available Material (5)	Unexpanded Fill	Expanded Fill (13) Factor 1.30	Mass Ordinate +/- (14)	Waste	Comment:
10	122+00 to 181+71	Bus 51	4239	250	3989	65	85	3905		
Stage 1 Subtotal			**4239**	**250**	**3989**	**65**	**85**	**3905**	**3905**	
10	122+00 to 181+71	Bus 51	15763	2308	13455	285	371	13085		
10	13+00 to 14+00	Green Dr	170	37	133	12	16	117		
10	18+50.33 to 19+50	Willow Dr	104	37	67	0	0	67		
10	497+00 to 499+00	Chestnut Dr	534	74	460	13	17	443		
10	28+80 to 29+50	Cedar Dr	248	26	222	0	0	222		
10	32+90 to 34+09	River Dr	377	44	333	10	13	320		
10	43+32 to 44+16	Gilman Dr	167	31	136	15	20	117		
10	48+30 to 49+17	Blue Jay Ln	246	32	214	7	9	205		
10	696+00 to 698+85	Plover Springs Dr	709	106	603	39	51	552		
Stage 2 Subtotal			**18318**	**2695**	**15623**	**270**	**495**	**15128**	**15128**	
10	122+00 to 181+71	Bus 51	12488	2059	10429	194	252	10177		
10	15+50 to 16+27.15	Green Dr	144	29	115	1	1	114		
10	20+50 to 21+00	Willow Dr	77	19	58	0	0	58		
10	500+50 to 503+19	Chestnut Dr	607	100	507	25	33	475		
10	25+00 to 26+36	Sumac Ln	227	50	177	3	4	173		
10	30+50 to 31+60	Cedar Dr	445	38	407	8	10	397		
10	35+64 to 37+22	Service Entrance	599	59	540	3	4	536		
10	40+50 to 41+29	School Dr	218	29	189	6	8	181		
10	600+74 to 603+50	Roosevelt Dr	882	102	780	25	33	748		
10	701+00 to 703+73	Plover Springs Dr	963	101	862	45	59	804		
Stage 3 Subtotal			**16650**	**2586**	**14064**	**310**	**403**	**13661**	**13661**	
10	122+00 to 181+71	Bus 51	1243	0	1243	39	51	1192		
Stage 4 Subtotal			**1243**	**0**	**1243**	**39**	**51**	**1192**	**1192**	
Grand Total			**40450**	**5531**	**34919**	**684**	**1034**	**33886**	**33886**	
			Total Common Exc							

1) Common Excavation is the sum of the Cut and EBS Excavation columns. Item number 205.0100
2) Salvaged/Unsuable Pavement Material is included in Cut.
3) EBS Excavation to be backfilled with Select Borrow material. Note: this is designers choice, can be backfilled with Borrow, or Cut as well.
4) Salvaged/Unusable Pavement Material
5) Available Material = Cut - Salvaged/Unusuable Pavement Material
6) Marsh Excavation - to be backfilled with Select Borrow Material. Note: this is designers choice, can be backfilled with Borrow, or Cut as well. Item number 205.0500
7) Rock Excavation item number 205.0200
8) Reduced Marsh in Fill - Excavated Marsh material is usuable in Fills outside the 1:1 slope. Marsh in Fill Reduction factor = 0.6
9) Reduced EBS in Fill - Excavated EBS material is usuable in Fills outside the 1:1 slope. EBS in Fill Reduction factor = 0.8
10) Expanded Marsh Backfill - This is to be filled with Select Borrow material. Marsh Backfill Factor = 1.5. Item number 208.11
11) Expanded EBS Backfill - This is to be filled with Select Borrow material. EBS Backfill Factor = 1.3. Item number 208.11
12) Expanded Rock - Factor = 1.1.
13) Expanded Fill. Factor = 1.3

Depending on selections:

Expanded Fill = (Unexpanded Fill - Rock* Rock Factor - Reduced Marsh - Reduced EBS) * Fill Factor

Or Expanded Fill = (Unexpanded Fill - Rock* Rock Factor - Reduced EBS) * Fill Factor

Or Expanded Fill = (Unexpanded Fill - Rock* Rock Factor - Reduced Marsh) * Fill Factor

Or Expanded Fill = (Unexpanded Fill - Rock* Rock Factor) * Fill Factor

14) The Mass Ordinate + or - Qty calculated for the Division. Plus quantity indicates an excess of material within the Division. Minus indicates a shortage of material within the Division.

NOTE: ALL ITEMS AND QUANTITIES ON THIS SHEET ARE FOR ENGINEER ESTIMATE CATEGORY 0010, UNLESS OTHERWISE NOTED.

3

BASE AGGREGATE

STATION - STATION	LOCATION	305.0110 BASE AGGREGATE DENSE 3/4-INCH TON	LOCATION	305.0120 BASE AGGREGATE DENSE 1 1/4-INCH TON	623.0200 DUST CONTROL SURFACE TREATMENT SY
STAGE 1A					
122+84-128+30.55	SIDEWALK	84	MAINLINE	228	1025
128+90.21-131+37	SIDEWALK	43	MAINLINE	171	770
132+76-138+55	SIDEWALK	26	MAINLINE	56	250
139+50-150+66	SIDEWALK	79	MAINLINE	177	795
156+67-170+84	SIDEWALK	141	MAINLINE	323	1555
171+19-173+98	SIDEWALK	27	MAINLINE	35	160
SUB-TOTAL		400		990	4555
STAGE 1B					
152+90-155+24			MAINLINE	27	125
156+67-158+86			MAINLINE	44	200
172+00-173+50			MAINLINE	33	150
175+41-179+70			MAINLINE	80	360
SUB-TOTAL		0		184	835
STAGE 1C					
128+30.55-128+90.21			RAILROAD	73	175
SUB-TOTAL		0		73	175
STAGE 2A					
120+40-121+62			MAINLINE	40	120
122+64-128+30.55	DRIVEWAYS / PARKING LOTS	73	MAINLINE	845	2535
128+90.21-131+56	DRIVEWAYS / PARKING LOTS	41	MAINLINE	410	1230
133+00-142+18	DRIVEWAYS / PARKING LOTS	425	MAINLINE	1532	4600
143+28-174+58	DRIVEWAYS / PARKING LOTS	433	MAINLINE	4861	14585
176+07-178+07	DRIVEWAYS / PARKING LOTS	124	MAINLINE	333	1000
178+07-181+62.87	DRIVEWAYS / PARKING LOTS	6	MAINLINE	1210	1815
18+93-19+14			WILLOW DR	59	90
28+80-29+12	DRIVEWAYS / PARKING LOTS	50	CEDAR DR.	280	420
43+32-44+16	DRIVEWAYS / PARKING LOTS	18	GILMAN DR.	189	285
48+30-49+17	DRIVEWAYS / PARKING LOTS	15	BEA JAY LN.	203	305
SUB-TOTAL		1184		9962	26985
STAGE 2B					
121+62-122+64			MAINLINE	148	445
131+56-133+00			MAINLINE	341	1020
142+18-143+28			MAINLINE	240	720
174+58-176+07			MAINLINE	398	1195
13+25-14+13			GREEN DR.	244	365
497+05-498+90	DRIVEWAYS / PARKING LOTS	153	CHESTNUT DR.	534	800
32+90-34+10	DRIVEWAYS / PARKING LOTS	28	RIVER DR.	335	505
696+00-698+85	DRIVEWAYS / PARKING LOTS	29	PLOVER SPRINGS DR.	907	1360
SUB-TOTAL		210		3148	6410
STAGE 3A					
122+84-128+30.55	DRIVEWAYS / PARKING LOTS	27	MAINLINE	795	2385
128+90.21-131+37	DRIVEWAYS / PARKING LOTS	93	MAINLINE	429	1285
132+76-138+55	DRIVEWAYS / PARKING LOTS	108	MAINLINE	938	2815
139+50-150+66	DRIVEWAYS / PARKING LOTS	696	MAINLINE	1981	5945
152+90-155+24			MAINLINE	512	1535
156+67-172+39	DRIVEWAYS / PARKING LOTS	375	MAINLINE	2796	8390
175+61-179+00	DRIVEWAYS / PARKING LOTS	238	MAINLINE	889	1335
179+00-181+62.87	DRIVEWAYS / PARKING LOTS	7	MAINLINE	426	640
20+58-20+93			WILLOW DR	86	130
25+59-26+00	DRIVEWAYS / PARKING LOTS	21	SUMAC LN.	112	170
35+65-37+22			SERVICE ENTRANCE	575	860
SUB-TOTAL		1565		9538	25490
STAGE 3B					
131+37-132+76			MAINLINE	348	1045
150+66-152+90			MAINLINE	316	950
172+39-175+61			MAINLINE	867	2600
500+71-502+73			CHESTNUT DR.	669	1005
40+81-41+29			SCHOOL DR.	150	225
701+08-703+74	DRIVEWAYS / PARKING LOTS	221	PLOVER SPRINGS DR.	999	1450
SUB-TOTAL		221		3349	7275
STAGE 3C					
121+75-122+84			MAINLINE	131	395
138+55-139+50			MAINLINE	185	555
155+24-156+67			MAINLINE	324	970
15+63-16+00			GREEN DR.	103	155
30+61-31+60	DRIVEWAYS / PARKING LOTS	23	CEDAR DR.	347	520
600+74-603+50	DRIVEWAYS / PARKING LOTS	18	ROOSEVELT DR.	992	1490
SUB-TOTAL		41		2082	4085
STAGE 4					
121+75-125+26	DRIVEWAYS / PARKING LOTS		MAINLINE	948	2845
ITEM TOTAL		3621		30275	78655

BASE AGGREGATE OPEN GRADED

STATION	LOCATION	310.0110 TON	COMMENT
STAGE 2A			
BUSINESS 51			
163+43.00 - 164+99.34	58.5' LT	284	INFILTRATION TRENCH
164+99.34 - 170+23.16	58.5' LT	931	INFILTRATION TRENCH
170+23.16 - 174+58.00	58.5' - 63.6' LT	765	INFILTRATION TRENCH
176+07.75 - 176+27.26	59.0' - 58.5' LT	42	INFILTRATION TRENCH
176+27.26 - 181+09.00	58.5' LT	878	INFILTRATION TRENCH
STAGE 2A SUBTOTAL		2900	
STAGE 2B			
BUSINESS 51			
174+58.00 - 176+07.75	63.6' - 59.0' LT	270	INFILTRATION TRENCH
STAGE 2B SUBTOTAL		270	
STAGE 3A			
BUSINESS 51			
163+43.00 - 165+00.13	34.5' RT	284	INFILTRATION TRENCH
165+00.13 - 170+23.16	34.5' RT	932	INFILTRATION TRENCH
170+23.16 - 172+37.85	34.5' - 38.7' RT	375	INFILTRATION TRENCH
175+60.92 - 176+27.26	38.3' - 34.5' RT	122	INFILTRATION TRENCH
176+27.26 - 181+09.00	34.5' - 49.9' RT	847	INFILTRATION TRENCH
STAGE 3A SUBTOTAL		2560	
STAGE 3A			
BUSINESS 51			
172+37.85 - 175+60.92	38.3' - 48.5' RT	290	INFILTRATION TRENCH
STAGE 3A SUBTOTAL		290	
ITEM TOTAL		6020	

CONCRETE PAVEMENT

STATION - STATION	LOCATION	415.0090 9-INCH SY	415.1090 HES 9-INCH SY
STAGE 2A			
120+40-121+62	MAINLINE	69	
122+64-128+30.55	MAINLINE	2050	
128+90.21-131+56	MAINLINE	1048	
133+00-142+18	MAINLINE	3935	
143+28-174+58	MAINLINE	12096	
176+07-178+07	MAINLINE	950	
SUB-TOTAL		20148	0
STAGE 2B			
121+62-122+64	GREEN DR. INTERSECTION		410
131+56-133+00	CHESTNUT DR. INTERSECTION		534
142+18-143+28	RIVER DR. INTERSECTION		671
174+58-176+07	PLOVER SPRINGS INTERSECTION		1124
SUB-TOTAL		0	2739
STAGE 3A			
122+84-128+30.55	MAINLINE	1720	
128+90.21-131+37	MAINLINE	900	
132+76-138+55	MAINLINE	2035	
139+50-150+66	MAINLINE	3994	
152+90-155+24	MAINLINE	1086	
156+67-172+39	MAINLINE	5340	
175+61-179+00	MAINLINE	907	
SUB-TOTAL		15982	0
STAGE 3B			
131+37-132+76	CHESTNUT DR. INTERSECTION		963
150+66-152+90	SCHOOL DR. INTERSECTION		851
172+39-175+61	PLOVER SPRINGS INTERSECTION		2255
SUB-TOTAL		0	4069
STAGE 3C			
121+75-122+84	GREEN DR. INTERSECTION		340
138+55-139+50	CEDAR DR. INTERSECTION		505
155+24-156+67	ROOSEVELT DR. INTERSECTION		907
SUB-TOTAL		0	1752
STAGE 4			
121+75-125+26	MAINLINE		1027
ITEM TOTAL		36130	9587

NOTE: ALL ITEMS AND QUANTITIES ON THIS SHEET ARE FOR ENGINEER ESTIMATE CATEGORY 0010, UNLESS OTHERWISE NOTED.

3

3

CONCRETE PAVEMENT GAPS

STATION - STATION	LOCATION	415.0210 EACH
STAGE 2A		
120+40-128+30.55	MAINLINE	1
128+90.21-133+00	MAINLINE	2
133+00-143+28	MAINLINE	1
143+28-176+07	MAINLINE	9
SUB-TOTAL		13
STAGE 2B		
131+56-133+00	CHESTNUT DR. INTER	1
SUB-TOTAL		1
STAGE 3A		
128+90.21-132+76	MAINLINE	1
132+76-139+50	MAINLINE	1
139+50-152+90	MAINLINE	2
152+90-156+67	MAINLINE	1
156+67-175+61	MAINLINE	5
SUB-TOTAL		10
ITEM TOTAL		24

CONCRETE DRIVEWAY HES

STATION	LOCATION	416.0260 6-INCH SY	SPV.0165.02* CONCRETE CURE & SEAL TREATMENT SF
STAGE 2			
128+00	LT	19	171
129+42	LT	19	171
135+40	LT	20	180
137+70	LT	21	189
141+45	LT	21	189
145+00	LT	35	315
150+00	LT	21	189
151+15	LT	18	162
158+33	LT	19	171
160+62	LT	17	153
163+92	LT	21	189
165+55	LT	15	135
170+27	LT	13	117
171+00	LT	20	180
178+10	LT	19	171
CEDAR DR			
28+65	LT & RT	136	1224
SUBTOTAL		434	3906
STAGE 2B			
GREEN DR.			
13+93	RT	19	171
CHESTNUT DR			
497+30	RT	10	90
497+90	RT	18	162
498+00	LT	17	153
RIVER DR			
33+00	LT	8	72
33+25	RT	37	333
33+60	LT	10	90
PLOVER SPRINGS DR			
696+90	LT	17	153
698+10	RT	25	225
698+50	LT	21	189
SUBTOTAL		182	1638
STAGE 3			
124+47	RT	25	225
127+57	RT	25	225
129+42	RT	25	225
144+80	RT	25	225
147+50	RT	71	639
158+00	RT	25	225
160+75	RT	38	342
163+92	RT	18	162
166+92	RT	25	225
168+58	RT	25	225
169+44	RT	25	225
171+00	RT	70	630
178+15	RT	25	225
180+35	RT	28	252
SUBTOTAL		450	4050
STAGE 3B			
CHESTNUT DR			
501+25	RT	24	216
502+25	RT	67	603
PLOVER SPRINGS DR			
701+50	LT	26	234
702+00	RT	107	963
703+05		10	90
703+30		100	900
SUBTOTAL		334	3006
STAGE 3C			
CEDAR DR			
31+45	LT	24	216
ROOSEVELT DR			
602+40	RT	37	333
602+40	LT	29	261
SUBTOTAL		90	810
ITEM TOTAL		1490	13410

*QUANTITIES SHOWN ELSEWHERE IN PLAN

DRILLED TIE BARS

STATION	LOCATION	416.0610 EACH
STAGE 2A		
120+39-121+62	44' LT	62
ITEM TOTAL		62

ASPHALTIC ITEMS

STATION - STATION	LOCATION	455.0605 TACK COAT GAL	460.1103 HMA PAVEMENT TYPE E-3 TON	455.0120 ASPHALTIC MATERIAL PG64-28 TON	465.0120 DRIVEWAYS AND FIELD ENTRANCES TON	465.0125 ASPHALTIC SURFACE TEMPORARY TON	465.031 ASPHALTIC CURB LF
STAGE 1A							
122+84-128+30.55	MAINLINE	72				230	324
122+84-128+30.55	SIDEWALK	35				55	
128+90.21-131+37	MAINLINE	54				175	100
128+90.21-131+37	SIDEWALK	18				30	
132+76-138+55	MAINLINE	18				55	349
132+76-138+55	SIDEWALK	11				55	
139+50-150+66	MAINLINE	56				15	752
139+50-150+66	SIDEWALK	33				180	
156+67-170+84	MAINLINE	102				55	978
156+67-170+84	SIDEWALK	59				95	
171+19-173+98	MAINLINE	11				35	124
171+19-173+98	SIDEWALK	11				20	
SUB-TOTAL		480	0	0	0	1000	2627
STAGE 1B							
152+90-155+24	MAINLINE	9				30	
156+67-158+86	MAINLINE	14				45	
172+00-173+50	MAINLINE	10				35	
175+41-179+70	MAINLINE	25				80	
SUB-TOTAL		58	0	0	0	190	0
STAGE 1C							
128+30.55-128+90.21	RAILROAD	36	85	5			
SUB-TOTAL		36	85	5	0	0	0
STAGE 2A							
122+64-128+30.55		6			20		
128+90.21-131+56		5			15		
133+00-142+18		66			160		
143+28-174+58		50			120		
176+07-178+07		20			50		
178+07-181+62.87	MAINLINE	256	610	34	4		
18+93-19+14	WILLOW DR	5	15	1			
28+80-29+12	CEDAR DR.	38	75	4	40		
43+32-44+16	GILMAN DR.	16	55	3			
48+30-49+17	BEA JAY LN.	57	55	3	10		
SUB-TOTAL		519	810	45	419	0	0
STAGE 2B							
13+25-14+13	GREEN DR.	21	70	4			
497+05-498+90	CHESTNUT DR.	70	140	8	65		
32+90-34+10	RIVER DR.	30	85	5	10		
696+00-698+85	PLOVER SPRINGS DR.	82	255	14	5		
SUB-TOTAL		203	550	31	80	0	0
STAGE 3A							
122+84-128+30.55		2			5		
128+90.21-131+37		3			5		
132+76-138+55		24			55		
139+50-150+66		111			265		
156+67-172+39		47			115		
175+61-179+00		39			95		
179+00-181+62.87	MAINLINE	90	215	12			
20+58-20+93	WILLOW DR	7	25	1			
25+59-26+00	SUMAC LN.	10	35	2			
35+65-37+22	SERVICE ENTRANCE	53	170	9			
SUB-TOTAL		386	445	24	540	0	0
STAGE 3B							
500+71-502+73	CHESTNUT DR.	55	180	10			
40+81-41+29	SCHOOL DR.	14	45	2			
701+08-703+74	PLOVER SPRINGS DR.	107	265	15	60		
SUB-TOTAL		176	490	27	60	0	0
STAGE 3C							
15+63-16+00	GREEN DR.	9	30	2			
30+61-31+60	CEDAR DR.	32	100	6			
600+74-603+50	ROOSEVELT DR.	85	275	15			
SUB-TOTAL		126	405	23	0	0	0
ITEM TOTAL		1984	2785	155	1099	1190	2627

CONCRETE COLLAR FOR PIPE

STATION	LOCATION	520.8000 EACH
STAGE 3B		
SCHOOL DRIVE		
41+18.70	26.7' RT	2
STAGE 3C SUBTOTAL		2
STAGE 3C		
GREEN DRIVE		
15+90.00	3.9' RT	1
STAGE 3C SUBTOTAL		1
STAGE 4		
BUSINESS 51		
124+04.60	0.0' LT	1
STAGE 4 SUBTOTAL		1
ITEM TOTAL		4

3

NOTE: ALL ITEMS AND QUANTITIES ON THIS SHEET ARE FOR ENGINEER ESTIMATE CATEGORY 0010, UNLESS OTHERWISE NOTED.

3

CONCRETE CURB & GUTTER

STATION	LOCATION	601.0409 30-INCH TYPE A LF	601.0411 30-INCH TYPE D LF	601.0413 6-INCH SLOPED 30-INCH TYPE G LF	601.0452 INTEGRAL 30-INCH TYPE D LF	SPV.0090.01 6-INCH SLOPED 20-INCH TYPE G LF	SPV.0090.02 6-INCH SLOPED 20-INCH TYPE J LF	SPV.0090.08 CURE & SEAL TREATMENT LF
BUSINESS 51								
STAGE 2								
120+38.87 - 121+73.08	LT		136					136
121+73.08 - 121+87.00	LT				15			15
122+50.28 - 125+30.85	LT				282			282
122+58.76 - 123+64.87	LT		136					136
125+94.65 - 128+33.33	LT				234			234
126+28.88 - 128+45.76	MEDIAN			231				231
127+82.05	LT		10					10
128+17.75	LT		9					9
128+33.33 - 128+45.76	LT		16					16
128+45.76 - 128+93.38	LT		15					15
128+45.76 - 129+06.13	MEDIAN			42				42
128+93.38 - 131+78.53	LT				287			287
129+81.00 - 131+67.73	MEDIAN			188				188
132+52.52 - 134+61.72	LT		245					245
132+76.13 - 138+68.86	LT				600			600
133+67.92 - 134+95.08	MEDIAN			128				128
135+87.74 - 138+60.13	MEDIAN			280				280
137+90.15 - 138+55.17	LT		66					66
139+33.12 - 142+35.00	LT				295			295
139+62.24 - 140+25.17	LT		159					159
143+09.81 - 153+58.12	LT				1041			1041
145+70.15 - 147+03.01	LT		131					131
148+34.64 - 150+72.80	MEDIAN			239				239
149+82.91	LT		9					9
151+83.76 - 155+49.31	MEDIAN			367				367
154+19.58 - 155+82.26	LT				166			166
155+57.5 - 155+82.26	LT		50					50
156+40.91 - 166+60.50	LT				1021			1021
156+40.91 - 156+47.5	LT		32					32
167+24.51 - 174+75.52	LT				751			751
171+19.86 - 174+67.30	LT		346					346
171+48.84 - 174+51.42	MEDIAN			304				304
175+65.52 - 178+26.93	MEDIAN			282				282
175+89.99 - 178+07.46	LT				202			202
176+77.75 - 177+91.84	LT		114					114
178+07.46 - 181+62.56			373					373
GREEN DR								
13+35 - 14+13.09	LT & RT		138					138
14+13.09 - 14+42.61	LT & RT	64						64
WILLOW DR								
18+84.08 - 19+25.23	LT & RT		60					60
18+93.33 - 19+14.13	LT & RT		43					43
19+14.13 - 19+44.18	LT & RT	81						81
CHESTNUT DR								
496+60.98 - 498+89.85	LT & RT		424					424
498+89.85 - 499+39.82	LT & RT	127						127
498+05.64 - 499+28.53	RT		168					168
CEDAR DR								
29+11.63 - 29+54.54	LT & RT	71						71
29+11.63 - 29+23.48	RT		44					44
29+11.63 - 29+37.11	LT		58					58
RIVER DR								
32+90.00 - 34+09.90	LT & RT		157					157
34+09.90 - 34+43.05	LT & RT	78						78
GILMAN DR								
43+41.55 - 44+16.00	LT & RT		101					101
44+16.00 - 44+42.33	LT & RT	59						59
BEA JAY LANE								
48+40.00 - 49+12.43	LT & RT		156					156
49+17.43 - 49+42.25	LT & RT	59						59
PLOVER SPRINGS DR								
696+00.00 - 698+84.87	LT & RT		471					471
696+63.98 - 699+33.84	MEDIAN						541	541
698+84.87 - 699+47.75	LT & RT	123						123
STAGE 2 SUBTOTAL		662	3667	2061	4894	0	541	11825

NOTE: ALL ITEMS AND QUANTITIES ON THIS SHEET ARE FOR ENGINEER ESTIMATE CATEGORY 0010, UNLESS OTHERWISE NOTED.

CONCRETE CURB & GUTTER (CONT'D)

STATION	LOCATION	601.0409 30-INCH TYPE A LF	601.0411 30-INCH TYPE D LF	601.0413 6-INCH SLOPED 30-INCH TYPE G LF	601.0452 INTEGRAL 30-INCH TYPE D LF	SPV.0090.01 6-INCH SLOPED 20-INCH TYPE G LF	SPV.0090.02 6-INCH SLOPED 20-INCH TYPE J LF	SPV.0090.08 CURE & SEAL TREATMENT LF
BUSINESS 51								
STAGE 3								
121+50.00 - 121+93.37	RT		43					43
121+93.37 - 122+07.61	RT				15			15
122+70.44 - 125+38.72	RT				270			270
126+00.70 - 128+34.80	RT				236			236
126+03.84 - 126+61.99	RT		65		253			318
126+13.78 - 128+51.18	MEDIAN			494				494
128+34.80 - 128+50.24	RT		16					16
128+33.33 - 128+93.38	MEDIAN					110		84
128+79.00 - 128+94.37	RT		15					15
128+94.37 - 131+55.46	RT				262			262
129+20.47 - 131+21.44	RT		162					162
129+81.00 - 130+61.42	MEDIAN			82				82
132+58.31 - 135+09.96	RT				253			253
132+64.47 - 133+67.92	MEDIAN			208				208
135+73.09 - 138+82.02	RT				308			308
135+58.78 - 138+77.83	RT		339					339
135+87.74 - 138+60.13	MEDIAN			275				275
139+46.47 - 142+31.82	RT		149		291			440
139+56.34 - 142+22.31	MEDIAN			529				529
143+01.12 - 150+83.77	RT		375		792			1167
143+16.65 - 146+82.20	MEDIAN			729				729
148+34.64 - 150+72.80	MEDIAN			240				240
151+71.82 - 155+41.21	RT				369			369
151+83.76 - 155+49.31	MEDIAN			367				367
156+49.26 - 172+38.54	RT		482		1544			2026
156+51.88 - 160+16.14	MEDIAN			731				731
161+09.74 - 163+45.69	MEDIAN			474				474
164+38.96 - 166+46.41	MEDIAN			418				418
167+40.10 - 170+55.71	MEDIAN			632				632
171+48.84 - 174+51.42	MEDIAN			304				304
172+38.54 - 174+04.91	RT	214						214
175+42.03 - 181+62.55	RT		260		358			618
175+65.52 - 178+26.93				256				256
CEDAR DR								
15+37.28 - 15+62.77	LT & RT	68						68
15+62.77 - 15+90.00	LT & RT		54					54
WILLOW DR								
20+33.78 - 20+58.37	LT & RT	60						60
20+58.37 - 20+92.53	LT & RT		68					68
CHESTNUT DR								
500+35.45 - 500+70.92	LT & RT	95						95
500+48.41 - 502+73.04	LT & RT		490					490
SUMAC LANE								
25+34.16 - 25+58.70	LT & RT	60						60
25+58.70 - 25+76.90	LT & RT		21					21
CEDAR DR								
30+35.55 - 30+60.53	LT & RT	63						63
30+60.53 - 31+32.40	LT & RT		129					129
SERVICE ENTRANCE								
35+31.63 - 35+64.61	LT & RT	76						76
35+64.61 - 37+22.26	LT & RT		248					248
SCHOOL RD								
40+33.60 - 40+80.77	LT & RT	115						115
40+80.77 - 41+24.70	LT & RT		75					75
ROOSEVELT DR								
600+33.62 - 600+73.54	LT & RT	100						100
600+73.54 - 603+50.22	LT & RT		557					557
PLOVER SPRINGS DR								
700+28.61 - 701+08.28	LT & RT	161						161
700+51.58 - 702+74.60	MEDIAN					75	370	445
701+08.28 - 703+73.75	LT & RT		705					705
STAGE 3 SUBTOTAL		1012	4253	5739	4951	185	370	16484
BUSINESS 51								
STAGE 4								
122+77.62 - 125+19.17	MEDIAN			506				506
STAGE 4 SUBTOTAL		0	0	506	0	0	0	506
ITEM TOTALS		1674	7920	8306	9845	185	911	28815

3

3

CONCRETE SIDEWALK

STATION - STATION	LOCATION	602.0415 6-INCH SF	SPV.0165.02* CONCRETE CURE & SEAL TREATMENT SF
STAGE 2A			
120+40-121+62	MAINLINE	735	735
122+64-128+30.55	MAINLINE	3336	3336
128+90.21-131+56	MAINLINE	1860	1860
133+00-142+18	MAINLINE	5538	5538
143+28-174+58	MAINLINE	18283	18283
176+07-178+07	MAINLINE	1261	1261
SUB-TOTAL		31013	31013
STAGE 2B			
497+05-498+90	CHESTNUT DR.	827	827
696+00-698+85	PLOVER SPRINGS DR.	1883	1883
SUB-TOTAL		2710	2710
STAGE 3A			
122+84-128+30.55	MAINLINE	3133	3133
128+90.21-131+37	MAINLINE	1719	1719
132+76-138+55	MAINLINE	3596	3596
139+50-150+66	MAINLINE	6667	6667
152+90-155+24	MAINLINE	2389	2389
156+67-174+58	MAINLINE	10676	10676
175+61-179+00	MAINLINE	1566	1566
SUB-TOTAL		29746	29746
STAGE 3B			
500+71-502+73	CHESTNUT DR.	359	359
40+81-41+29	SCHOOL DR.	1056	1056
701+08-703+74	PLOVER SPRINGS DR.	1073	1073
SUB-TOTAL		2488	2488
STAGE 3C			
121+75-122+84	MAINLINE	476	476
30+61-31+60	CEDAR DR.	556	556
600+74-603+50	ROOSEVELT DR.	1097	1097
SUB-TOTAL		2129	2129
ITEM TOTALS		68086	68086

*QUANTITIES SHOWN ELSEWHERE IN PLAN

CURB RAMP DETECTABLE WARNING FIELD YELLOW

STATION - STATION	LOCATION	602.0505 SF
STAGE 2A		
120+40-121+62	MAINLINE	8
122+64-128+30.55	MAINLINE	24
128+90.21-131+56	MAINLINE	16
133+00-142+18	MAINLINE	40
143+28-174+58	MAINLINE	96
176+07-178+07	MAINLINE	8
SUB-TOTAL		192
STAGE 2B		
696+00-698+85	PLOVER SPRINGS DR.	16
SUB-TOTAL		16
STAGE 3A		
122+84-128+30.55	MAINLINE	24
128+90.21-131+37	MAINLINE	32
132+76-138+55	MAINLINE	56
139+50-150+66	MAINLINE	32
152+90-155+24	MAINLINE	24
156+67-174+58	MAINLINE	72
175+61-179+00	MAINLINE	8
SUB-TOTAL		248
STAGE 3B		
500+71-502+73	CHESTNUT DR.	8
40+81-41+29	SCHOOL DR.	8
SUB-TOTAL		16
STAGE 3C		
121+75-122+84	MAINLINE	8
SUB-TOTAL		8
ITEM TOTAL		480

CONCRETE ITEMS

STATION - STATION	LOCATION	602.1500 STEPS SF	602.2400 SAFETY ISLANDS SF	620.0100 CORRUGATED MEDIAN SF	620.0300 MEDIAN SLOPED NOSE SF	SPV.0165.02* CONCRETE CURE & SEAL TREATMENT SF
STAGE 2A						
128+90.21-131+56	MAINLINE	20				20
143+28-174+58	MAINLINE				111	111
SUB-TOTAL		20	0	0	111	131
STAGE 2B						
696+00-698+85	PLOVER SPRINGS DR.				40	40
SUB-TOTAL		0	0	0	40	40
STAGE 3A						
122+84-128+30.55	MAINLINE				17	17
128+90.21-131+37	MAINLINE				76	76
132+76-138+55	MAINLINE				52	52
139+50-150+66	MAINLINE				69	69
156+67-174+58	MAINLINE				139	139
SUB-TOTAL		0	0	0	353	353
STAGE 3B						
131+37-132+76	MAINLINE				17	17
701+08-703+74	PLOVER SPRINGS DR.		332	295	80	707
SUB-TOTAL		0	332	295	97	724
STAGE 4						
121+75-125+26	MAINLINE				34	34
SUB-TOTAL		0	0	0	34	34
ITEM TOTAL		20	332	295	635	1282

NOTE: ALL ITEMS AND QUANTITIES ON THIS SHEET ARE FOR ENGINEER ESTIMATE CATEGORY 0010, UNLESS OTHERWISE NOTED.

3

RIPRAP HEAVY

STATION	LOCATION	606.0300 CY
STAGE 3A		
BUSINESS 51		
132+90.03	RT	5
133+61.24	RT	7
CHESTNUT DRIVE		
500+96.59	LT	8
STAGE 3A SUBTOTALS		20
STAGE 3B		
BUSINESS 51		
174+12.04	RT	5
STAGE 3B SUBTOTALS		5
ITEM TOTAL		25

ADJUSTING INLET COVERS

STATION	LOCATION	611.8115 EACH
STAGE 1A		
124+05	13' RT	1
125+50	17' RT	1
125+93	15' RT	1
131+73	6' RT	1
131+96	36' RT	1
130+40	RL	1
132+63	11' RT	1
148+22	16' RT	1
146+83	10' RT	1
163+11	16' RT	1
166+31	9' RT	1
169+85	10' RT	1
ITEM TOTAL		12

STORM SEWER PIPE REINFORCED CONCRETE

STATION	LOCATION	608.0412 SSPRC CLASS IV 12-INCH LF	608.0415 SSPRC CLASS IV 15-INCH LF	608.0418 SSPRC CLASS IV 18-INCH LF	608.0424 SSPRC CLASS IV 24-INCH LF	608.0430 SSPRC CLASS IV 30-INCH LF	608.0436 SSPRC CLASS IV 36-INCH LF	608.0442 SSPRC CLASS IV 42-INCH LF	SPV.0090.06 SSPRC CLASS IV CARRIER PIPE 42-INCH LF	SPV.0090.07 STEEL CASING PIPE 66-INCH LF	608.0354 SSPRC CLASS III 54-INCH LF	610.0434 SSPRCHE CLASS HE-IV 34x53-INCH LF	* JOINT TIES EACH
STAGE 2A													
BUSINESS 51													
122+00.00 - 132+00.00	LT	222	73	69	36		225	311	125	100	239		8
132+00.00 - 157+00.00	LT	945	93	72	321						2023		10
157+00.00 - 175+50.00	LT	701	28		659	399	620						4
175+50.00 - 183+00.00	LT	239						537				43	2
WILLOW DRIVE													
18+93.32 -19+87.63	LT & RT	97											
STAGE 2A SUBTOTALS		2204	194	141	1016	399	845	848	125	100	2262	43	24
STAGE 2B													
BUSINESS 51													
122+00.00 - 132+00.00	LT	50		16			48	18			25		
132+00.00 - 157+00.00	LT	155									202		
157+00.00 - 175+50.00	LT	26					49	43					
175+50.00 - 183+00.00	LT	106						21				36	
GREEN DRIVE													
13+25.00 - 14+67.22	LT & RT	36		41									
CHESTNUT DRIVE													
497+04.45 - 499+85.30	LT & RT	136											
PLOVER SPRINGS DRIVE													
697+50.00 - 699+83.89	LT & RT	90		206	28								
STAGE 2B SUBTOTALS		599	0	263	28	0	97	82	0	0	227	36	0
STAGE 3A													
BUSINESS 51													
122+00.00 - 132+00.00	LT & RT	333	53	58	26								
132+00.00 - 157+00.00	LT & RT	732	290	77	540	21							12
157+00.00 - 175+50.00	LT & RT	626	105										
175+50.00 - 183+00.00	LT & RT	152											3
WILLOW DRIVE													
19+87.63 - 20+92.53	LT & RT	66											
STAGE 3A SUBTOTALS		1909	448	135	566	21	0	0	0	0	0	0	15
STAGE 3B													
BUSINESS 51													
122+00.00 - 132+00.00	LT & RT				82								4
132+00.00 - 157+00.00	LT & RT	75	9	100		36							
157+00.00 - 175+50.00	LT & RT	45			149								3
175+50.00 - 183+00.00	RT												
CHESTNUT DRIVE													
499+85.30 - 502+73.03	LT & RT	85											
PLOVER SPRINGS DRIVE													
699+83.89 - 702+83.30	LT & RT	241		124	66								
STAGE 3B SUBTOTALS		446	9	224	297	36	0	0	0	0	0	0	7
STAGE 3C													
BUSINESS 51													
122+00.00 - 132+00.00	RT												
132+00.00 - 157+00.00	RT		26										
157+00.00 - 175+50.00	RT												
175+50.00 - 183+00.00	RT												
GREEN DRIVE													
15+14.08 - 16+00.00	LT & RT	70	48										
CEDAR DRIVE													
29+89.85 - 31+15.00	LT & RT	35	102										
ROOSEVELT DRIVE													
600+00.00 - 601+99.93	LT & RT	98	117	102									
STAGE 3C SUBTOTALS		203	293	102	0	0	0	0	0	0	0	0	0
STAGE 4													
BUSINESS 51													
122+00.00 - 132+00.00	LT & RT	38	9										
132+00.00 - 157+00.00	RT												
157+00.00 - 175+50.00	RT												
175+50.00 - 183+00.00	RT												
GREEN DRIVE													
14+67.22 - 15+14.08	LT & RT		44										
STAGE 4 SUBTOTALS		38	53	0	0	0	0	0	0	0	0	0	0
ITEM TOTALS		5399	997	865	1907	456	942	930	125	100	2489	79	46

* SEE JOINT TIE LOCATION DETAIL AND TRAFFIC CONTROL PLANS FOR LOCATIONS REQUIRING JOINT TIES.
ALL JOINT TIES ARE INCIDENTAL.

NOTE: ALL ITEMS AND QUANTITIES ON THIS SHEET ARE FOR ENGINEER ESTIMATE CATEGORY 0010, UNLESS OTHERWISE NOTED.

3

STORM SEWER STRUCTURE ITEMS

STATION	LOCATION	611.0530 MANHOLE COVERS TYPE J EACH	611.0540 MANHOLE COVERS TYPE K EACH	611.0545 MANHOLE COVERS TYPE L EACH	611.0624 INLET COVERS TYPE H EACH	611.0639 INLET COVERS TYPE H-S EACH	611.0645 INLET COVERS TYPE MS-A EACH	611.8120.S COVER PLATES TEMPORARY EACH
STAGE 1								
BUSINESS 51								
130+40.60	0.7' LT							1
132+63.40	11.1' RT							1
148+22.20	16.6' RT							1
STAGE 1 SUBTOTALS		0	0	0	0	0	0	3
STAGE 2A								
BUSINESS 51								
122+00.00 - 132+00.00	LT	9			6	7		
132+00.00 - 157+00.00	LT	17	5		27	13		
157+00.00 - 175+50.00	LT	7		7	22	6		
175+50.00 - 183+00.00	LT	1	2	4	3	2		
WILLOW DRIVE								
18+93.32 - 19+87.63	LT & RT	1				2		
STAGE 2A SUBTOTALS		35	7	11	58	30	0	0
STAGE 2B								
BUSINESS 51								
122+00.00 - 132+00.00	LT	2				1		
132+00.00 - 157+00.00	LT				2	3		
157+00.00 - 175+50.00	LT			1		2		
175+50.00 - 183+00.00	LT			1	1			
GREEN DRIVE								
13+25.00 - 14+67.22	LT & RT	1				2		
CHESTNUT DRIVE								
497+04.45 - 499+85.30	LT & RT					2		
PLOVER SPRINGS DRIVE								
697+50.00 - 699+83.89	LT & RT	2			5	2		
STAGE 2B SUBTOTALS		5	0	2	8	12	0	0
STAGE 3A								
BUSINESS 51								
122+00.00 - 132+00.00	LT & RT	1			9	4		1
132+00.00 - 157+00.00	LT & RT	1			18	14	1	4
157+00.00 - 175+50.00	LT & RT		4		21	4		1
175+50.00 - 183+00.00	LT & RT				3	2		
WILLOW DRIVE								
19+87.63 - 20+92.53	LT & RT					2		
STAGE 3A SUBTOTALS		2	4	0	51	26	1	6
STAGE 3B								
BUSINESS 51								
122+00.00 - 132+00.00	LT & RT	1				1		
132+00.00 - 157+00.00	LT & RT	1			2	3		
157+00.00 - 175+50.00	LT & RT				4	1		
175+50.00 - 183+00.00	LT & RT							
CHESTNUT DRIVE								
499+85.30 - 502+73.03	LT & RT				1			
PLOVER SPRINGS DRIVE								
699+83.89 - 702+83.30	LT & RT	1			3	4		
STAGE 3B SUBTOTALS		3	0	0	10	9	0	0
STAGE 3C								
BUSINESS 51								
122+00.00 - 132+00.00	RT							
132+00.00 - 157+00.00	RT				1			
157+00.00 - 175+50.00	RT							
175+50.00 - 183+00.00	RT							
GREEN DRIVE								
15+14.08 - 16+00.00	LT & RT					2		
CEDAR DRIVE								
29+89.85 - 31+15.00	LT & RT	1				2		
ROOSEVELT DRIVE								
600+00.00 - 601+99.93	LT & RT				3	2		
STAGE 3C SUBTOTALS		1	0	0	4	6	0	0
STAGE 4								
BUSINESS 51								
122+00.00 - 132+00.00	LT & RT					1		
132+00.00 - 157+00.00	LT							
157+00.00 - 175+50.00	LT							
175+50.00 - 183+00.00	LT							
GREEN DRIVE								
14+67.22 - 15+14.08	LT & RT							
STAGE 4 SUBTOTALS		0	0	0	0	1	0	0
ITEM TOTALS		46	11	13	131	84	1	9

NOTE: ALL ITEMS AND QUANTITIES ON THIS SHEET ARE FOR ENGINEER ESTIMATE CATEGORY 0010, UNLESS OTHERWISE NOTED.

3

STORM SEWER STRUCTURE ITEMS

STATION	LOCATION	611.2004	611.2005	611.2006	611.2008	SPV.0060.07	SPV.0060.05	SPV.0060.06	SPV.0060.08	SPV.0060.01	SPV.0060.02	SPV.0060.03	611.3004	611.3230	611.3901
		MANHOLES								GRIT CHAMBERS			INLETS		
		4-FT DIA	5-FT DIA	6-FT DIA	8-FT DIA	10-FT DIA	DIVERSION	6-FT DIVERSION	8-FT RESIDENTIAL 24-INCH	TYPE A	TYPE C	TYPE I	4-FT DIA	2x3-FT	MED 1 GRATE
		EACH	EACH	EACH	EACH	EACH	EACH	EACH	EACH	EACH	EACH	EACH	EACH	EACH	EACH
STAGE 2A															
BUSINESS 51															
122+00.00 - 132+00.00	LT	1	1	6	1								2	11	
132+00.00 - 157+00.00	LT	4		1	12	1	1	1	1	1	1		7	32	
157+00.00 - 175+50.00	LT	4		5	4								1	27	
175+50.00 - 183+00.00	LT			3	3				1			1		4	
WILLOW DRIVE															
18+93.32 - 19+87.63	LT & RT	1												2	
STAGE 2A SUBTOTALS		10	1	15	20	1	1	1	2	1	1	1	10	76	0
STAGE 2B															
BUSINESS 51															
122+00.00 - 132+00.00	LT		1		1									1	
132+00.00 - 157+00.00	LT													5	
157+00.00 - 175+50.00	LT			1										2	
175+50.00 - 183+00.00	LT				1								1		
GREEN DRIVE															
13+25.00 - 14+67.22	LT & RT			1										2	
CHESTNUT DRIVE															
497+04.45 - 499+85.30	LT & RT													2	
PLOVER SPRINGS DRIVE															
697+50.00 - 699+83.89	LT & RT	2											1	6	
STAGE 2B SUBTOTALS		2	1	2	2	0	0	0	0	0	0	0	2	18	0
STAGE 3A															
BUSINESS 51															
122+00.00 - 132+00.00	LT & RT	1											2	11	
132+00.00 - 157+00.00	LT & RT		1	1					1				9	24	1
157+00.00 - 175+50.00	LT & RT											2		25	
175+50.00 - 183+00.00	LT & RT													5	
WILLOW DRIVE															
19+87.63 - 20+92.53	LT & RT													2	
STAGE 3A SUBTOTALS		1	1	1	0	0	0	0	1	0	0	2	11	67	1
STAGE 3B															
BUSINESS 51															
122+00.00 - 132+00.00	LT & RT		1										1		
132+00.00 - 157+00.00	LT & RT	2	1											3	
157+00.00 - 175+50.00	LT & RT												3	2	
175+50.00 - 183+00.00	LT & RT														
CHESTNUT DRIVE															
499+85.30 - 502+73.03	LT & RT													1	
PLOVER SPRINGS DRIVE															
699+83.89 - 702+83.30	LT & RT	1							1				1	6	
STAGE 3B SUBTOTALS		3	2	0	0	0	0	0	1	0	0	0	5	12	0
STAGE 3C															
BUSINESS 51															
122+00.00 - 132+00.00	RT														
132+00.00 - 157+00.00	RT	1													
157+00.00 - 175+50.00	RT														
175+50.00 - 183+00.00	RT														
GREEN DRIVE															
15+14.08 - 16+00.00	LT & RT												1	1	
CEDAR DRIVE															
29+89.85 - 31+15.00	LT & RT	1											1		
ROOSEVELT DRIVE															
600+00.00 - 601+99.93	LT & RT												3	2	
STAGE 3C SUBTOTALS		2	0	0	0	0	0	0	0	0	0	0	5	3	0
STAGE 4															
BUSINESS 51															
122+00.00 - 132+00.00	LT & RT													1	
132+00.00 - 157+00.00	LT														
157+00.00 - 175+50.00	LT														
175+50.00 - 183+00.00	LT														
GREEN DRIVE															
14+67.22 - 15+14.08	LT & RT														
STAGE 4 SUBTOTALS		0	0	0	0	0	0	0	0	0	0	0	0	1	0
ITEM TOTALS		18	5	18	22	1	1	1	4	1	1	3	33	177	1

NOTE: ALL ITEMS AND QUANTITIES ON THIS SHEET ARE FOR ENGINEER ESTIMATE CATEGORY 0010, UNLESS OTHERWISE NOTED.

3

ADJUSTING MANHOLE COVERS

STATION	LOCATION	611.8110 EACH	COMMENT
STAGE 2A			
BUSINESS 51			
127+40.99	65.5' LT	1	
STAGE 2A SUBTOTAL		1	
ITEM TOTAL		1	

PIPE GRATES

STATION	LOCATION	611.9800.S EACH	COMMENT
STAGE 3A			
BUSINESS 51			
132+90.03	68.3' RT	1	15-INCH
133+20.00	66.9' RT	1	12-INCH
133+61.24	66.4' RT	1	24-INCH
CHESTNUT DRIVE			
500+96.59	55.7' LT	1	30-INCH
STAGE 3A SUBTOTALS		4	
STAGE 3B			
BUSINESS 51			
174+12.04	112.0' RT	1	24-INCH
STAGE 3B SUBTOTALS		1	
ITEM TOTAL		5	

INSULATION BOARD POLYSTYRENE, 2-INCH

STATION	LOCATION	612.0902.S SY	COMMENT
STAGE 2A			
BUSINESS 51			
138+56	38.4' LT	7	STORM & SANITARY CROSSING
151+31	29.6' LT	7	STORM & SANITARY CROSSING
166+48	42.2' LT	7	STORM & SANITARY CROSSING
STAGE 2A SUBTOTALS		21	
STAGE 3A			
BUSINESS 51			
132+33 - 133+29	160' RT	171	INFILTRATION BASIN & SANITARY
145+17	6.1' RT	7	STORM & SANITARY CROSSING
146+73	9.4' RT	7	STORM & SANITARY CROSSING
148+37	15.6' RT	7	STORM & SANITARY CROSSING
150+65	25.5' RT	10	STORM & SANITARY CROSSING
STAGE 3A SUBTOTALS		202	
UNDISTRIBUTED	LT & RT	77	
ITEM TOTAL		300	

NOTE: ALL ITEMS AND QUANTITIES ON THIS SHEET ARE FOR ENGINEER ESTIMATE CATEGORY 0010, UNLESS OTHERWISE NOTED.

TURF ESTABLISHMENT

STATION	LOCATION	625.0100 TOPSOIL SY	627.0200 MULCHING SY	630.0120 SEEDING MIXTURE NO. 20 LB	630.0140 SEEDING MIXTURE NO. 40 LB	630.0200 SEEDING TEMPORARY LB	630.0300 SEEDING BORROW PIT LB	SPV.0030.01 FERTILIZER FOR LAWN TYPE TURF CWT	SPV.0120.01 WATER FOR SEEDED AREAS MGAL	SPV.0180.01 PREPARING TOPSOIL FOR LAWN TYPE TURF SY	COMMENTS
STAGE 1A											
BUSINESS 51											
122+50 - 132+00	LT	455	355		8.0	8.0		0.3	10.0	455	
132+00 - 157+00	LT	1135	1135		20.0	20.0		0.7	26.0	1135	
157+00 - 174+00	LT	840	840		15.0	15.0		0.5	19.0	840	
STAGE 1A SUBTOTALS		2430	2330	0	43.0	43.0	0	1.5	55.0	2430	
STAGE 2A											
BUSINESS 51											
120+39 - 132+00	LT	1087	1087		20.0	20.0		0.7	24.0	1087	
132+00 - 157+00	LT	1438	1438		26.0	26.0		0.9	33.0	1438	
157+00 - 175+50	LT	1079	1079		19.0	19.0		0.7	24.0	1079	
175+50 - 182+00	LT	1300	1040		24.0	24.0		0.8	30.0	1300	
STAGE 2A SUBTOTALS		4904	4644	0	89.0	89.0	0	3.1	111.0	4904	
STAGE 2B											
GREEN DRIVE											
13+25 - 14+41	LT & RT	204	184		4.0	4.0		0.1	5.0	204	
CHESTNUT DRIVE											
497+04 - 499+36	LT & RT	249	249		4.0	4.0		0.2	6.0	249	
RIVER DRIVE											
33+36 - 34+34	LT & RT	262	262		5.0	5.0		0.2	6.0	262	
PLOVER SPRINGS DRIVE											
696+50 - 699+43	LT & RT	330	330		5.0	5.0		0.2	7.0	330	
STAGE 2B SUBTOTALS		1045	1025	0	18.0	18.0	0	0.7	24.0	1045	
STAGE 3A											
BUSINESS 51											
122+85 - 132+00	RT	578	578		10.0	10.0		0.4	13.0	578	
132+24.19 - 134+03.50	RT	1700	3350	181				2.1	75.0	3350	INFILTRATION BASIN
132+00 - 157+00	RT	2370	2370		43.0	43.0		1.5	53.0	2370	
157+00 - 175+50	RT	613	613		11.0	11.0		0.4	14.0	613	
175+50 - 181+53	RT	429	241		8.0	8.0		0.3	10.0	429	
STAGE 3A SUBTOTALS		5690	7152	181	72.0	72.0	0	5	165.0	7340	
STAGE 3B											
BUSINESS 51											
172+40 - 175+61	RT	260	260		5.0	5.0		0.2	6.0	260	
CHESTNUT DRIVE											
500+41 - 502+73	LT & RT	258	258		5.0	5.0		0.2	6.0	258	
SCHOOL DRIVE											
40+42 - 41+29	LT & RT	224	224		4.0	4.0		0.1	5.0	224	
PLOVER SPRINGS DRIVE											
700+50 - 703+74	LT & RT	636	636		11.0	11.0		0.4	14.0	636	
STAGE 3B SUBTOTALS		1378	1378	0	25.0	25.0	0	0.9	31.0	1378	
STAGE 3C											
BUSINESS 51											
121+50 - 122+11	RT	66	25		1.0	1.0		0.1	1.0	66	
GREEN DRIVE											
15+40 - 16+00	LT & RT	110	110		2.0	2.0		0.1	2.0	110	
CEDAR DRIVE											
30+41 - 31+60	LT & RT	197	197		4.0	4.0		0.1	4.0	197	
ROOSEVELT DRIVE											
600+43 - 603+50	LT & RT	537	537		10.0	10.0		0.3	12.0	537	
STAGE 3C SUBTOTALS		910	869	0	17.0	17.0	0	0.6	19.0	910	
BORROW / WASTE SITE			40000				540				
UNDISTRIBUTED (25%)		4089	14350	45	66	66	135	3	101	4502	
ITEM TOTALS		20446	71748	226	330	330	675	14	506	22509	

*ALL TURF ESTABLISHMENT ITEMS IN THIS TABLE INCLUDED 25% UNDISTRIBUTED

3

3

APRON ENDWALLS FOR CULVERT PIPE REINFORCED CONCRETE

STATION	LOCATION	522.1012 12-INCH EACH	522.1015 15-INCH EACH	522.1024 24-INCH EACH	522.1030 30-INCH EACH
STAGE 3A					
BUSINESS 51					
122+00.00 - 132+00.00	RT				
132+00.00 - 157+00.00	RT	1	1	1	1
157+00.00 - 175+50.00	RT				
175+50.00 - 183+00.00	RT				
STAGE 3A SUBTOTALS		1	1	1	1
STAGE 3B					
BUSINESS 51					
122+00.00 - 132+00.00	RT				
132+00.00 - 157+00.00	RT				
157+00.00 - 175+50.00	RT			1	
175+50.00 - 183+00.00	RT				
STAGE 3B SUBTOTALS		0	0	1	0
ITEM TOTALS		1	1	2	1

SILT FENCE

STATION	LOCATION	628.1504 LF	628.1520 MAINTENANCE LF
STAGE 2A			
BUSINESS 51			
UNDISTRIBUTED	LT	200	200
STAGE 2A SUBTOTALS		200	200
STAGE 3A			
BUSINESS 51			
UNDISTRIBUTED	RT	200	200
STAGE 3A SUBTOTALS		200	200
BORROW/WASTE SITE		1000	1000
ITEM TOTALS		1400	1400

WATER

STATION	LOCATION	624.0100 MGAL
STAGE 2		
BUSINESS 51		
121+75.40 - 181+62.87	LT	200
STAGE 2 SUBTOTAL		200
STAGE 3		
BUSINESS 51		
121+75.40 - 181+62.87	RT	300
STAGE 3 SUBTOTAL		300
ITEM TOTAL		500

EROSION CONTROL ITEMS

	628.1905 MOBILIZATIONS EROSION CONTROL EACH	628.1910 MOBILIZATIONS EMERGENCY EROSION CONTROL EACH
STAGE 1A	1	1
STAGE 2A	4	4
STAGE 3A	4	4
UNDISTRIBUTED	1	1
ITEM TOTALS	10	10

FLOWABLE FILL EXISTING PIPE

STATION - STATION	LOCATION	SPV.0035.01 CY	COMMENT
STAGE 2A			
BUSINESS 51			
128+16 - 129+17	LT	36	EXISTING 42" STORM SEWER
STAGE 2A SUBTOTAL		36	
ITEM TOTAL		36	

MOBILIZATION

STATION	PROJECT	619.1000 EACH
BUSINESS 51	6414-00-78	0.9
BUSINESS 51	6414-00-88	0.1
ITEM TOTAL		1

EROSION MAT

STATION	LOCATION	628.2008 URBAN CLASS I TYPE B SY
STAGE 2A		
BUSINESS 51		
120+38 - 121+62	LT	100
178+27 - 181+63	LT	260
STAGE 2A SUBTOTALS		360
STAGE 2B		
GREEN DRIVE		
14+33 - 14+41	RT	20
STAGE 3A SUBTOTALS		20
STAGE 3A		
BUSINESS 51		
178+30 - 181+63	RT	200
STAGE 3A SUBTOTALS		200
STAGE 3C		
BUSINESS 51		
121+50 - 122+11	RT	40
STAGE 3C SUBTOTALS		40
UNDISTRIBUTED (25%)		155
ITEM TOTAL		775

FINISHING ROADWAY

STATION	LOCATION	213.0100 LS
BUSINESS 51		
01. 6414-00-78	LT & RT	1
ITEM TOTAL		1

NOTE: ALL ITEMS AND QUANTITIES ON THIS SHEET ARE FOR ENGINEER ESTIMATE CATEGORY 0010, UNLESS OTHERWISE NOTED.

3

3

INLET PROTECTION

STATION	LOCATION	628.7005 TYPE A EACH	628.7010 TYPE B EACH	628.7015 TYPE C EACH	628.7020 TYPE D EACH
STAGE 1A					
BUSINESS 51					
121+98.60	LT			1	
122+41.30	LT			1	
123+02.45	LT	1			1
123+88.00	LT	1		1	
123+99.90	LT	1			
124+77.79	LT	1			1
125+38.19	LT	1			
125+84.66	LT	1			
126+10.41	LT	1		1	
126+38.42	LT	1		1	
127+43.69	LT	1			
127+45.00	LT	1		1	
127+48.00	LT	1			
130+00.00	LT			1	
130+44.02	LT	1			
131+00.15	LT				1
131+00.29	LT				2
131+36.15	LT			1	
131+74.82	LT			1	
131+97.35	LT			1	
132+35.10	LT			1	
132+65.64	LT			1	
134+93.24	LT				2
135+16.17	LT	1		1	
135+41.26	LT	1			
136+54.93	LT			1	
136+54.99	LT			1	
138+43.95	LT				1
138+53.67	LT			1	
138+58.22	LT			2	
138+83.49	LT	1		1	
139+27.32	LT	1		1	
140+12.44	LT	1			
140+80.83	LT	1			
141+00.00	LT	1			1
141+48.06	LT	1			1
141+48.47	LT	1			1
141+58.49	LT	1		1	
142+50.40	LT			1	
143+01.49	LT			1	
143+27.61	LT	1		1	
143+61.88	LT	1		1	
143+83.58	LT	1			
144+00.00	LT	1		1	
145+17.00	LT	3		3	
146+78.46	LT	1			
146+79.13	LT	2		1	1
148+25.35	LT	1			
148+37.00	LT	3		3	
149+96.11	LT	1			
150+54.43	LT	1		1	
150+70.00	LT	2		2	
150+98.11	LT	1			
152+13.86	LT	1			
152+15.61	LT	1			1
152+15.69	LT	1			1
152+25.83	LT	1		1	
154+34.92	LT	3		3	
155+11.42	LT	1		1	
156+66.12	LT	1		1	
156+67.61	LT	1		1	
158+05.00	LT	2		2	
159+23.62	LT	2			2
159+36.00	LT	1		1	
160+36.98	LT	1		1	
161+11.38	LT	1		1	
161+73.00	LT	2		2	
163+10.79	LT	1			
163+44.00	LT	2		2	
164+39.00	LT	1		1	
165+35.30	LT	1		1	
166+23.50	LT	1		1	
166+30.33	LT	1			
166+34.30	LT	2			2
167+40.00	LT	1		1	

INLET PROTECTION (CONT'D)

STATION	LOCATION	628.7005 TYPE A EACH	628.7010 TYPE B EACH	628.7015 TYPE C EACH	628.7020 TYPE D EACH
168+38.10	LT	2		2	
169+83.69	LT	1			
170+54.00	LT	2		2	
172+48.00	LT	2		2	
174+32.02	LT	1		1	
174+35.35	LT	1			
174+49.30	LT	1		1	
174+84.85	LT			1	
175+28.72	LT			1	
176+50.00	LT	1		1	
177+36.16	LT	3			3
177+93.47	LT	1			
178+53.60	LT	1		1	
181+39.00	LT	1		1	
181+68.50	LT			1	
WILLOW DRIVE					
19+12.63	RT	1		1	
19+19.37	LT	1		1	
CEDAR DRIVE					
29+10.06	RT				1
29+21.76	LT				1
GILMAN DRIVE					
44+12.53	LT & RT	2			2
BEA JAY LANE					
49+15.43	LT	1			1
49+21.47	RT	1			1
SPRINGVILLE DRIVE					
54+22.00	LT & RT				2
STAGE 2A SUBTOTALS		93	0	72	29
STAGE 2B					
BUSINESS 51					
121+98.60	LT	1			
122+41.30	LT	1			
131+57.49	LT				1
131+74.82	LT	1			
131+97.35	LT	1			
132+35.10	LT	1			
132+65.64	LT	1			
132+82.75	LT				1
132+97.47	LT			1	
142+50.40	LT	1			
143+01.49	LT	1			
143+18.56	LT	1		1	
174+84.85	LT	1			
175+28.72	LT	1			
175+71.90	LT	1		1	
GREEN DRIVE					
14+04.15	LT	1		1	
14+11.59	LT	1		1	
CHESTNUT DRIVE					
498+88.21	LT			1	
498+99.15	LT			1	
RIVER DRIVE					
34+08.37	LT	1			1
34+12.36	RT	1			1
PLOVER SPRINGS DRIVE					
697+50.00	LT & RT	4		4	
698+38.00	RT	1		1	
698+99.15	RT	1			1
699+11.94	RT	1			1
699+22.64	LT	1			1
699+23.82	LT	1			1
STAGE 2B SUBTOTALS		25	0	12	8

INLET PROTECTION (CONT'D)

STATION	LOCATION	628.7005 TYPE A EACH	628.7010 TYPE B EACH	628.7015 TYPE C EACH	628.7020 TYPE D EACH
STAGE 3A					
BUSINESS 51					
122+21.42	RT			1	
122+54.74	RT			1	
124+05.68	RT	1			
124+07.00	RT	1		1	
124+77.79	RT	1		1	
124+88.00	RT	1			1
125+49.83	RT	1			
125+91.69	RT	1			
126+15.52	RT	1		1	
126+15.67	LT	2			
126+50.00	RT	1		1	
127+28.91	RT	1		1	
127+48.00	LT	1			
127+48.79	LT	1			
130+00.00	RT	1		1	
131+00.29	RT	1			1
131+00.47	RT	1			1
131+19.77	RT	1		1	
131+73.42	RT			1	
131+96.49	RT			1	
132+63.37	RT			1	
132+89.82	LT	2			2
132+90.03	RT	1			1
133+61.24	RT	1		1	
134+94.30	RT	1		1	
135+21.44	RT	1			
135+58.01	RT	1			
136+55.00	LT			1	
136+55.04	RT	1		1	
137+90.80	RT	1		1	
137+91.06	RT	1			
138+05.60	LT	2		1	
138+32.00	RT	1		1	
140+80.88	RT	1			
140+80.97	RT	1			1
141+48.06	RT	1			1
141+49.07	LT	1			1
141+57.84	RT	1		1	
143+17.67	RT	1			
143+16.35	RT	1		1	
143+18.52	LT	1		1	
143+50.00	RT	1			1
145+00.00	RT	1			1
145+17.00	RT	1		1	
146+71.00	RT	1		1	
146+72.89	RT	1			
146+84.75	RT	1			1
148.22.18	RT	1			
148+37.00	RT	1		1	
150+64.43	RT	1		1	
151+01.18	RT			1	
151+60.68	RT			1	
152+15.69	LT	1			1
152+15.77	RT	1			1
152+25.94	RT	1		1	
152+31.11	RT	1			
154+15.47	RT	1			
154+34.92	RT	1		1	
155+14.49	RT	1	1		
155+66.42	RT			1	
156+24.32	RT			1	
156+68.27	LT	1		1	
156+73.05	RT	1		1	
158+05.00	LT	1		1	
158+29.00	RT	1		1	
159+23.62	LT & RT	2			2
159+23.96	LT	1			
159+24.11	RT	1			
159+36.00	RT	1		1	
160+36.98	RT	1		1	

NOTE: ALL ITEMS AND QUANTITIES ON THIS SHEET ARE FOR ENGINEER ESTIMATE CATEGORY 0010, UNLESS OTHERWISE NOTED.

3

3

INLET PROTECTION (CONT'D)

STATION	LOCATION	628.7005 TYPE A EACH	628.7010 TYPE B EACH	628.7015 TYPE C EACH	628.7020 TYPE D EACH
161+11.44	LT	1		1	
161+73.00	LT & RT	2		2	
163+11.00	LT & RT	2		2	
163+11.22	RT	1			
164+39.00	RT	1		1	
165+35.30	RT	1		1	
166+23.50	RT	1		1	
166+31.38	RT	1			
166+34.30	LT & RT	2			2
166+43.50	RT	1		1	
167+40.00	RT	1		1	
167+41.80	LT	2		2	
168+31.80	RT	1		1	
168+38.10	LT	1		1	
169+83.00	RT	1		1	
169+85.26	RT	1			
170+54.00	LT & RT	2		2	
174+33.47	RT			1	
174+51.13	RT			1	
175+07.91	RT			1	
176+50.00	LT & RT	2		2	
177+36.16	RT	1			1
177+92.69	RT	1			
177+94.00	RT			1	
178+53.60	RT	1		1	
181+84.00	RT			1	
182+13.00	RT			1	
182+46.00	RT			1	
WILLOW DRIVE					
20+58.61	RT	1			1
20+59.87	LT	1			1
SUMAC LANE	RT				
25+59.36	LT	1			1
25+60.20	RT	1			1
RIVER DRIVE					
35+65.92	RT	1			1
35+66.20	LT	1			1
STAGE 3A SUBTOTALS		97	1	65	25
STAGE 3B					
BUSINESS 51					
131+73.42	RT	1			
131+96.49	RT	1			
132+63.37	RT	1			
151+01.18	RT	1			
151+60.68	RT	1			
172+48.00	LT & RT	2		2	
174+27.88	RT	1			1
174+33.47	RT	1			
174+46.13	RT	1		1	
174+51.13	RT	1			
175+07.91	RT	1			
CHESTNUT DRIVE					
500+72.32	RT	1		1	
500+96.59	LT & RT	2			2
501+05.00	LT & RT	2		2	
SCHOOL DRIVE					
40+61.48	RT	1			1
40+69.16	LT	1			1
41+00.00	RT	1		1	
41+18.70	RT	1			
PLOVER SPRINGS DRIVE					
700+52.93	RT	1			1
700+53.58	RT	2			2
700+70.00	LT	1			1
701+80.00	LT	1		1	
702+83.30	LT & RT	2		2	
STAGE 3B SUBTOTALS		28	0	10	9

INLET PROTECTION (CONT'D)

STATION	LOCATION	628.7005 TYPE A EACH	628.7010 TYPE B EACH	628.7015 TYPE C EACH	628.7020 TYPE D EACH
STAGE 3C					
BUSINESS 51					
122+21.42	LT	1			
122+54.74	LT	1			
155+66.42	RT	1			
156+24.32	RT	1			
GREEN DRIVE					
15+55.60	RT	1			1
15+64.27	LT	1			1
CEDAR DRIVE					
30+57.22	RT	1			1
30+62.03	LT	1			1
ROOSEVELT DRIVE					
600+87.27	LT & RT	2			2
601+25.00	LT	1		1	
601+96.55	RT	1		1	
601+99.93	LT	1		1	
STAGE 3C SUBTOTALS		13	0	3	6
STAGE 4					
BUSINESS 51					
124+77.79	LT	2			
STAGE 4 SUBTOTALS		2	0	0	0
ITEM TOTALS		258	1	162	77

TEMPORARY DITCH CHECKS

STATION	LOCATION	628.7504 LF
STAGE 2A		
BUSINESS 51		
121+75.40 - 181+62.87	LT	50
STAGE 2A SUBTOTAL		50
STAGE 3A		
BUSINESS 51		
121+75.40 - 181+62.87	RT	50
STAGE 3A SUBTOTAL		50
ITEM TOTAL		100

CULVERT PIPE CHECKS

STATION	LOCATION	628.7555 EACH
STAGE 3A		
BUSINESS 51		
133+20.00	RT	6
STAGE 3A SUBTOTAL		6
STAGE 3B		
BUSINESS 51		
174+12.04	RT	6
STAGE 3B SUBTOTAL		6
UNDISTRIBUTED		4
ITEM TOTAL		16

MARKERS CULVERT END

STATION	LOCATION	633.5200 EACH
STAGE 3A		
BUSINESS 51		
132+90.03	RT	1
133+20.00	RT	1
133+61.24	RT	1
CHESTNUT DRIVE		
500+96.59	LT	1
STAGE 3A SUBTOTALS		4
STAGE 3B		
BUSINESS 51		
174+12.04	RT	1
STAGE 3B SUBTOTALS		1
ITEM TOTAL		5

NOTE: ALL ITEMS AND QUANTITIES ON THIS SHEET ARE FOR ENGINEER ESTIMATE CATEGORY 0010, UNLESS OTHERWISE NOTED.

SIGNING ITEMS

SIGN GROUP NUMBER	SIGN CODE	SIGN MESSAGE	SIGN SIZE X H (INCHE	637.0101 SIGNS TYPE I SF	637.2210 SIGNS REFLECTIVE H TYPE II SF	637.2230 SIGNS REFLECTIVE F TYPE II SF	637.2215 SIGNS REFLECTIVE H FOLDING TYPE II SF	634.0614 POSTS WOOD 4X6-INCH X 14-FT EACH	634.0616 POSTS WOOD 4X6-INCH X 16-FT EACH	634.0618 POSTS WOOD 4X6-INCH X 18-FT EACH	638.2601 POSTS WOOD 4X6-INCH X 18-FT EACH	634.0620 POSTS WOOD 4X6-INCH X 20-FT EACH	638.2102 MOVING SIGNS TYPE II EACH	638.2602 REMOVING SIGNS TYPE II EACH	638.3000 REMOVING SMALL SIGN SUPPORTS EACH	REMARKS
1-1	R1-1	STOP	36 X 36	30	9									1	1	REMOVE
1-2	R1-1	STOP	36 X 36	30	9			1								INSTALL
1-3	R4-7	KEEP RIGHT	24 X 30											1	1	REMOVE
1-4	J1-2	JUNCTION ASSEMBLY	48 X 39		13				1							INSTALL
1-5	R7-1D	NO PARKING ANY TIME	18 X 24		3			1								INSTALL
1-6	J1-1	ROUTE TURN ASSEMBLY	24 X 39		6.5				1							INSTALL
1-7	R4-7	KEEP RIGHT	24 X 30		5			1								INSTALL
1-8	R1-1	STOP	36 X 36											1	1	REMOVE
1-9	R1-1	STOP	36 X 36		9			1								INSTALL
1-10	R7-1D	NO PARKING ANY TIME	18 X 24		3			1								INSTALL
1-11	J1-1	ROUTE TURN ASSEMBLY	24 X 39		6.5				1							INSTALL
1-12	W10-1	RAILROAD CROSSING	36 X 36											1	1	REMOVE
		NO PARKING ANY TIME	18 X 24													REMOVE
1-13	R1-1	STOP	36 X 36		9			1								INSTALL
1-14	R1-1	STOP	36 X 36											1	1	REMOVE
1-15	R2-1	SPEED LIMIT	24 X 30		5			1								INSTALL
1-16	R7-1D	NO PARKING ANY TIME	18 X 24		3			1								INSTALL
1-17	R2-1	SPEED LIMIT	24 X 30											1	1	REMOVE
	R7-1D	NO PARKING ANY TIME	18 X 24													REMOVE
1-18	W10-1	RAILROAD CROSSING	36 X 36			9		1								INSTALL
1-19	R4-7	KEEP RIGHT	24 X 30		5			1								INSTALL
1-20	R4-7	KEEP RIGHT	24 X 30		5			1								INSTALL
1-21	R1-1	STOP	36 X 36		9			1								INSTALL
1-22	R1-1	STOP	36 X 36											1	1	REMOVE
1-23	W10-1	RAILROAD CROSSING	36 X 36			9		1								INSTALL
1-24	R7-1D	NO PARKING ANY TIME	18 X 24		3			1								INSTALL
1-25	R2-1	SPEED LIMIT	24 X 30		5			1								INSTALL
1-26	R2-1	SPEED LIMIT	24 X 30											1	1	REMOVE
	R7-1D	NO PARKING ANY TIME	18 X 24													REMOVE
1-27	R6-2R	ONE WAY	24 X 30		5			1								INSTALL
1-28	R6-2R	ONE WAY	24 X 30		5			1								INSTALL
1-29	R4-7	KEEP RIGHT	24 x 30		5			1								INSTALL
1-30	R4-7	KEEP RIGHT	24 x 30		5			1								INSTALL
2-1	R7-1D	NO PARKING ANY TIME	18 X 24		3			1								INSTALL
2-2	R4-7	KEEP RIGHT	24 x 30		5											BAND ON NEW SIGNAL POST
2-3	W10-1	RAILROAD CROSSING	36 X 36											1		REMOVE
	R7-1D	NO PARKING ANY TIME	18 X 34													REMOVE
2-4	R1-1F	STOP	36 X 36											1		REMOVE
2-5	R1-1F	STOP	36 X 36											1		REMOVE
2-6	R1-1F	STOP	36 X 36				9									BAND ON NEW SIGNAL POST
2-7	R1-1F	STOP	36 X 36				9									BAND ON NEW SIGNAL POST
2-8	R1-1F	STOP	36 X 36				9									BAND ON NEW SIGNAL POST
2-9	R4-7	KEEP RIGHT	24 X 30		5											BAND ON NEW SIGNAL POST
2-10	W3-3	SIGNAL AHEAD	36 X 36											1	1	ROMOVE
2-11	R2-1	SPEED LIMIT	24 X 30		5			1								INSTALL
2-12	R7-1D	NO PARKING ANY TIME	18 X 24		3			1								INSTALL
2-13	R1-1F	STOP	36 X 36				9									BAND ON NEW SIGNAL POST
2-14	R1-1F	STOP	36 X 36				9									BAND ON NEW SIGNAL POST
2-15	R1-1F	STOP	36 X 36											1		REMOVE
2-16	R1-1F	STOP	36 X 36											1		REMOVE
2-17	R1-1F	STOP	36 X 36				9									BAND ON NEW SIGNAL POST
2-18	R7-1D	NO PARKING ANY TIME	18 X 24											1	1	REMOVE
2-19	W5-56	END OF ROAD MARKER	18 X 18			2.25		1								INSTALL
2-20	W5-56	END OF ROAD MARKER	18 X 18			2.25		1								INSTALL
2-21	W5-56	END OF ROAD MARKER	18 X 18			2.25		1								INSTALL
2-22	R2-1	SPEED LIMIT	24 X 30											1	1	REMOVE
2-23	R4-7	KEEP RIGHT	24 X 30		5			1								INSTALL
2-24	R4-7	KEEP RIGHT	24 X 30		5			1								INSTALL
2-25	R1-1	STOP	36 X 36		9			1								INSTALL
2-26	R1-1	STOP	36 X 36											1	1	REMOVE
2-27	R7-1D	NO PARKING ANY TIME	18 X 24		3											INSTALL
2-28	R2-1	SPEED LIMIT	24 X 30		5			1								INSTALL
2-29	R6-2R	ONE WAY	24 X 30		5			1								INSTALL
2-30	R6-2R	ONE WAY	24 X 30		5			1								INSTALL
2-31	R1-1	STOP	36 X 36		9			1								INSTALL
2-32	R2-1	SPEED LIMIT	24 X 30		5			1								INSTALL
2-33	R7-1D	NO PARKING ANY TIME	18 X 24		3			1								INSTALL
2-34	R1-1	STOP	36 X 36		9			1								INSTALL
2-35	R1-1	STOP	36 X 36											1	1	REMOVE
2-36	R4-7	KEEP RIGHT	24 X 30		5			1								INSTALL
2-37	R7-1D	NO PARKING ANY TIME	18 X 24											1	1	REMOVE
2-38	R1-1	STOP	36 X 36											1	1	REMOVE
2-39	R1-1	STOP	36 X 36		9			1								INSTALL
2-40	R4-7	KEEP RIGHT	24 X 30		5			1								INSTALL
2-41	R2-1	SPEED LIMIT	24 X 36											1	1	REMOVE
2-42	R4-7	KEEP RIGHT	24 X 30		5			1								INSTALL
2-43	R7-1D	NO PARKING ANY TIME	18 X 24											1	1	REMOVE
2-44	R1-1	STOP	36 X 36		9			1								INSTALL
2-45	R4-7	KEEP RIGHT	24 X 30		5			1								INSTALL
2-46	R7-1D	NO PARKING ANY TIME	18 X 24		3			1								INSTALL
2-47	R2-1	SPEED LIMIT	24 X 30		5			1								INSTALL
2-48	R6-2R	ONE WAY	24 X 30		5			1								INSTALL
SHEET SUBTOTALS					263	24.75	54	44	3	0	0	0	0	22	17	

NOTE: ALL ITEMS AND QUANTITIES ON THIS SHEET ARE FOR ENGINEER ESTIMATE CATEGORY 0010, UNLESS OTHERWISE NOTED.

3

SIGNING ITEMS CONT.

SIGN GROUP NUMBER	SIGN CODE	SIGN MESSAGE	SIGN SIZE X H (INCHE	637.0101 SIGNS TYPE I SF	637.2210 SIGNS REFLECTIVE H TYPE II SF	637.2230 SIGNS REFLECTIVE F TYPE II SF	637.2215 SIGNS REFLECTIVE H FOLDING TYPE II SF	634.0614 POSTS WOOD 4X6-INCH X 14-FT EACH	634.0616 POSTS WOOD 4X6-INCH X 16-FT EACH	634.0618 POSTS WOOD 4X6-INCH X 18-FT EACH	638.2601 REMOVING SIGNS TYPE I EACH	634.0620 POSTS WOOD 4X6-INCH X 20-FT EACH	638.2102 MOVING SIGNS TYPE II EACH	638.2602 REMOVING SIGNS TYPE II EACH	638.3000 REMOVING SMALL SIGN SUPPORTS EACH	REMARKS
3-1	R7-1D	NO PARKING ANY TIME	18 X 24		3			1								INSTALL
3-2	R2-1	SPEED LIMIT	24 X 30		5			1								INSTALL
3-3	R4-7	KEEP RIGHT	24 X 30		5			1								INSTALL
3-4	R4-7	KEEP RIGHT	24 X 30		5			1								INSTALL
3-5	R7-1D	NO PARKING ANY TIME	18 X 24		3			1								INSTALL
3-6	R6-2R	ONE WAY	24 X 30		5			1								INSTALL
3-7	S1-1	SCHOOL ADVANCE	36 X 36			9		1								INSTALL
	W16-9P	AHEAD	30 X 18			3.75										INSTALL ON SAME POST ABOVE
3-8	R4-7	KEEP RIGHT	24 X 30		5			1								INSTALL
3-9	R4-7	KEEP RIGHT	24 X 30		5			1								INSTALL
3-10	R1-1	STOP	36 X 36		9			1								INSTALL
3-11	R1-1	STOP	36 X 36											1	1	REMOVE
3-12	R2-1	SPEED LIMIT	24 X 30		5			1								INSTALL
3-13	R1-1	STOP	36 X 36		9									1	1	REMOVE
3-14	R1-1	STOP	36 X 36		9			1								INSTALL
3-15	R4-7	KEEP RIGHT	24 X 30		5											BAND TO NEW SIGNAL
3-16	R1-1F	STOP	36 X 36				9									BAND TO NEW SIGNAL
3-17	R10-6	STOP HERE ON RED	24 X 36		6			1								INSTALL
3-18	R1-1F	STOP	36 X 36				9									BAND TO NEW SIGNAL
3-19	R1-1F	STOP	36 X 36				9									BAND TO NEW SIGNAL
3-20	R1-1F	STOP	36 X 36				9									BAND TO NEW SIGNAL
3-21	R4-7	KEEP RIGHT	24 X 30		5											BAND TO NEW SIGNAL
3-22	J1-1	ROUTE TURN ASSEMBLY	24 X 39		6.5				1							INSTALL
3-23	R7-1D	NO PARKING ANY TIME	18 X 24		3			1								INSTALL
3-24	R2-1	SPEED LIMIT	24 X 30		5									1	1	REMOVE
3-25	R6-2R	ONE WAY	24 X 30		5			1								INSTALL
3-26	R4-7	KEEP RIGHT	24 X 30													REMOVE
3-27	R1-1F	STOP	36 X 36													REMOVE
3-28	R1-1F	STOP	36 X 36				9									BAND TO NEW SIGNAL
3-29	R1-1F	STOP	36 X 36											1		REMOVE
3-30	R1-1F	STOP	36 X 36				9									BAND TO NEW SIGNAL
3-31	R4-7	KEEP RIGHT	24 X 30											1		REMOVE
3-32	R1-1F	STOP	30 X 30													REMOVE
3-33	R6-2R	ONE WAY	24 X 30		5			1								INSTALL
3-34	J1-1	ROUTE TURN ASSEMBLY	24 X 39		6.5				1							INSTALL
3-35	R4-7	KEEP RIGHT	24 X 30		5			1						1		INSTALL
4-1	R2-1	SPEED LIMIT	24 X 30		5			1								INSTALL
4-2	R71D	NO PARKING ANY TIME	18 X 24		3			1								INSTALL
4-3	R2-1	SPEED LIMIT	24 X 30											1	1	REMOVE
4-4	S1-1	SCHOOL ADVANCE	36 X 36			9		1								INSTALL
	W16-9P	AHEAD	30 X 18			3.75										INSTALL ON SAME POST ABOVE
4-5	R7-1D	NO PARKING ANY TIME	18 X 24		3			1								INSTALL
4-6	R1-1	STOP	36 X 36		9			1								INSTALL
4-7	R4-7	KEEP RIGHT	24 X 30		5			1								INSTALL
4-8	R7-1D	NO PARKING ANY TIME	18 X 24		3			1								INSTALL
4-9	R2-1	SPEED LIMIT	24 X 30		5			1								INSTALL
4-10	R2-1	SPEED LIMIT	24 X 30											1	1	REMOVE
4-11	R4-7	KEEP RIGHT	24 X 30		5			1								INSTALL
4-12	R4-7	KEEP RIGHT	24 X 30		5			1								INSTALL
4-13	R7-1D	NO PARKING ANY TIME	18 X 24		3			1								INSTALL
4-14	R4-7	KEEP RIGHT	24 X 30		5			1								INSTALL
4-15	R4-7	KEEP RIGHT	24 X 30		5			1								INSTALL
4-16	R2-1	SPEED LIMIT	24 X 30		5									1	1	REMOVE
4-17	R6-2R	ONE WAY	24 X 30		5			1								INSTALL
4-18	R6-2R	ONE WAY	24 X 30		5			1								INSTALL
4-19	R6-2R	ONE WAY	24 X 30		5			1								INSTALL
4-20	R7-1D	NO PARKING ANY TIME	18 X 24		3			1								INSTALL
4-21	R2-1	SPEED LIMIT	24 X 30		5			1								INSTALL
4-22	R4-7	KEEP RIGHT	24 X 30		5			1								INSTALL
4-23	R4-7	KEEP RIGHT	24 X 30		5			1								INSTALL
4-24	J1-1	ROUTE TURN ASSEMBLY	24 X 39		6.5				1							INSTALL
4-25	R7-1D	NO PARKING ANY TIME	18 X 24		3			1								INSTALL
4-26	R4-4	BIKE SIGN	36 X 30		7.5			1								INSTALL
4-27	R3-7R	RIGHT TURN	30 X 30		6.25			1								INSTALL
5-1	R1-1F	STOP	36 X 36				9									BAND TO NEW SIGNAL
5-2	R1-1F	STOP	36 X 36				9									BAND TO NEW SIGNAL
5-3	R1-1F	STOP	36 X 36													REMOVE
5-4	R1-1F	STOP	36 X 36													REMOVE
5-5	R1-1F	STOP	36 X 36				9									BAND TO NEW SIGNAL
5-6	R1-1F	STOP	36 X 36				9									BAND TO NEW SIGNAL
5-7	R4-7	KEEP RIGHT	24 X 30		5											BAND TO NEW SIGNAL
5-8	R6-2R	ONE WAY	24 X 30		5			1								INSTALL
5-9	R6-2R	ONE WAY	24 X 30		5			1								INSTALL
5-10	R2-1	SPEED LIMIT	24 X 30		5			1								INSTALL
5-11	R71D	NO PARKING ANY TIME	18 X 24		3			1								INSTALL
SHEET SUBTOTALS					260.25	25.50	90	44	3	0	0	0	0	9	6	

NOTE: ALL ITEMS AND QUANTITIES ON THIS SHEET ARE FOR ENGINEER ESTIMATE CATEGORY 0010, UNLESS OTHERWISE NOTED.

SIGNING ITEMS CONT.

SIGN GROUP NUMBER	SIGN CODE	SIGN MESSAGE	SIGN SIZE X H (INCHE	637.0101 SIGNS TYPE I SF	637.2210 SIGNS REFLECTIVE H TYPE II SF	637.2230 SIGNS REFLECTIVE F TYPE II SF	637.2215 SIGNS REFLECTIVE H FOLDING TYPE II SF	634.0614 POSTS WOOD 4X6-INCH X 14-FT EACH	634.0616 POSTS WOOD 4X6-INCH X 16-FT EACH	634.0618 POSTS WOOD 4X6-INCH X 18-FT EACH	638.2601 REMOVING SIGNS TYPE I EACH	634.0620 POSTS WOOD 4X6-INCH X 20-FT EACH	638.2102 MOVING SIGNS TYPE II EACH	638.2602 REMOVING SIGNS TYPE II EACH	638.3000 REMOVING SMALL SIGN SUPPORTS EACH	REMARKS
5-12	R3-17	BIKE LANE	24 X 30		5			1								INSTALL
	R3-17A	AHEAD	30 X 12		2.5											INSTALL ON SAME POST ABOVE
5-13	W6-1	DIVIDED HIGHWAY AHEAD	36 X 36			9		1								INSTALL
5-14	W12-1D	DOUBLE DOWN ARROW	24 X 24			4		1								INSTALL
5-15	R1-1F	STOP	36 X 36				9									BAND TO NEW SIGNAL
5-16	R1-1F	STOP	36 X 36				9									BAND TO NEW SIGNAL
5-17	R1-2	YIELD	36 X 31		7.75			1								INSTALL
5-18	R1-1F	STOP	36 X 36				9									BAND TO NEW SIGNAL
5-19	R4-7	KEEP RIGHT	24 X 30		5			1								INSTALL
5-20	R1-1F	STOP	36 X 36													REMOVE
5-21	R1-1F	STOP	36 X 36													REMOVE
5-22	R1-1F	STOP	36 X 36				9									BAND TO NEW SIGNAL
5-23	R4-7	KEEP RIGHT	24 X 30											1		REMOVE
5-24	R4-7	KEEP RIGHT	24 X 30											1		REMOVE
5-25	R1-1F	STOP	36 X 36													REMOVE
5-26	R1-1F	STOP	36 X 36													REMOVE
5-27	R7-1D	NO PARKING ANY TIME	18 X 24		3			1								INSTALL
5-28	R2-1	SPEED LIMIT	24 X 30		5			1								INSTALL
5-29	R3-17	BIKE LANE	30 X 24		5			1								INSTALL
	R3-17B	ENDS	30 X 12		2.5											INSTALL ON SAME POST ABOVE
5-30	W6-2	DIVIDED HIGHWAY ENDS	36 X 36			9		1								INSTALL
5-31	J1-1	ROUTE TURN ASSEMBLY	24 X 39			6.5			1							INSTALL
6-1	S1-1	SCHOOL ADVANCE	36 X 36			9		1								INSTALL
	W16-9P	AHEAD	30 X 18			3.75										INSTALL ON SAME POST ABOVE
	R2-6P	FINES HIGHER	24 X 18		3											INSTALL ON SAME POST ABOVE
6-2	R7-1D	NO PARKING ANY TIME	18 X 24		3			1								INSTALL
6-3	R2-1	SPEED LIMIT	24 X 30		5			1								INSTALL
6-4	S4-51	SCHOOL SPEED LIMIT 15	24 X 48		8			1								INSTALL
6-5	R7-1D	NO PARKING ANY TIME	18 X 24		3			1								INSTALL
6-6	R2-1	SPEED LIMIT	24 X 30		5			1								INSTALL
	S5-2	END SCHOOL ZONE	24 X 30			5										INSTALL ON SAME POST ABOVE
6-7	R7-1D	NO PARKING ANY TIME	18 X 24		3			1								INSTALL
6-8	R3-8A	LANE DESIGNATION	36 X 30		7.5			1								INSTALL
7-1	R4-7	KEEP RIGHT	24 X 30		5			1								INSTALL
7-2	R3-8A	LANE DESIGNATION	36 X 30		7.5			1								INSTALL
7-3	R4-7	KEEP RIGHT	24 X 30		5			1								INSTALL
7-4	R3-8A	LANE DESIGNATION	36 X 30		7.5			1								INSTALL
SHEET SUBTOTALS					98.25	46.25	36	21	1	0	0	0	0	2	0	
ITEM TOTALS					621.50	96.50	180.00	109.00	7.00	0.00	0.00	0.00	0.00	33.00	23.00	

FIELD OFFICE TYPE C

STATION	LOCATION	642.5201 EACH
BUSINESS 51		1
ITEM TOTAL		1

NOTE: ALL ITEMS AND QUANTITIES ON THIS SHEET ARE FOR ENGINEER ESTIMATE CATEGORY 0010, UNLESS OTHERWISE NOTED.

3

TRAFFIC CONTROL

LOCATION	643.0300 DRUMS DAYS	643.0410 BARRICADES TYPE II DAYS	643.0420 BARRICADES TYPE III DAYS	643.0500 FLEXIBLE TUBLAR MARKER POSTS DAYS	643.0600 FLEXIBLE TUBLAR MARKER BASES DAYS	643.0705 WARNING LIGHTS TYPE A DAYS	643.0715 WARNING LIGHTS TYPE C DAYS	643.0800 ARROW BOARDS DAYS	643.0900 SIGNS DAYS	643.0920 COVERING SIGNS TYPE II EACH	643.3000 DETOUR SIGNS DAYS
BUSINESS 51											
STAGE 1A	4662	18	531	142	142	0	63	9	1035		0
STAGE 1B	3780	0	729			0	171	18	855		0
STAGE 1C	0	20	145			165	0	0	90	17	1040
STAGE 2A	68727	186	13857	275	275	0	3999	186	12462		0
STAGE 2B	4445	42	938	291	291	0	420	14	924		0
STAGE 3A	53118	780	10062	254	254	0	2262	156	10218		0
STAGE 3B	2961	63	854	287	287	0	203	14	938		0
STAGE 3C	3129	56	693	277	277	0	210	14	889		0
STAGE 4	18095	0	1363			0	893	94	4230		0
ITEM TOTALS	158917	1165	29172	1526	1526	165	8221	505	31641	17	1040

TRAFFIC CONTROL SURVEILLANCE AND MAINTENANCE (6414-00-78)

STATION	LOCATION	643.0200 DAYS
BUSINESS 51		275
ITEM TOTAL		275

TRAFFIC CONTROL DETOUR (6414-00-78)

STATION	LOCATION	643.2000 EACH
BUSINESS 51		1
ITEM TOTAL		1

GEOTEXTILE FABRIC TYPE HR

STATION	LOCATION	645.0120 SY
STAGE 3A		
BUSINESS 51		
132+90.03	RT	10
133+61.24	RT	13
CHESTNUT DRIVE		
500+96.59	LT	22
STAGE 3A SUBTOTALS		45
STAGE 3B		
BUSINESS 51		
174+12.04	RT	10
STAGE 3B SUBTOTALS		10
ITEM TOTAL		55

GEOTEXTILE FABRIC TYPE DF SCHEDULE C

STATION	LOCATION	645.0113 SY	COMMENT
STAGE 2A			
BUSINESS 51			
163+43.00 - 164+99.34	58.5' LT	400	INFILTRATION TRENCH
164+99.34 - 170+23.16	58.5' LT	1325	INFILTRATION TRENCH
170+23.16 - 174+58.00	58.5' - 63.6' LT	1100	INFILTRATION TRENCH
176+07.75 - 176+27.26	59.0' - 58.5' LT	45	INFILTRATION TRENCH
176+27.26 - 181+09.00	58.5' LT	1260	INFILTRATION TRENCH
STAGE 2A SUBTOTAL		4130	
STAGE 2B			
BUSINESS 51			
174+58.00 - 176+07.75	63.6' - 59.0' LT	385	INFILTRATION TRENCH
STAGE 2B SUBTOTAL		385	
STAGE 3A			
BUSINESS 51			
163+43.00 - 165+00.13	34.5' RT	400	INFILTRATION TRENCH
165+00.13 - 170+23.16	34.5' RT	1330	INFILTRATION TRENCH
170+23.16 - 172+37.85	34.5' - 38.7' RT	540	INFILTRATION TRENCH
175+60.92 - 176+27.26	38.3' - 34.5' RT	165	INFILTRATION TRENCH
176+27.26 - 181+09.00	34.5' - 49.9' RT	1220	INFILTRATION TRENCH
STAGE 3A SUBTOTAL		3655	
STAGE 3A			
BUSINESS 51			
172+37.85 - 175+60.92	38.3' - 48.5' RT	830	INFILTRATION TRENCH
STAGE 3A SUBTOTAL		830	
ITEM TOTAL		9000	

PAVEMENT MARKING ITEMS

STATION	LOCATION	646.0106 (CENTER) EPOXY 4-INCH (YELLOW) LF	646.0106 (SKIP WHITE) EPOXY 4-INCH (WHITE) LF	646.0106 (REGULAR) EPOXY 4-INCH (WHITE) LF	646.0106 (DOTTED) EPOXY 4-INCH (WHITE) LF	646.0106 EPOXY 4-INCH TOTAL LF	646.0126 EPOXY 8-INCH (WHITE) LF	647.0110 RAILROAD CROSSING EPOXY (WHITE) EACH	647.0166 ARROWS EPOXY TYPE 2 (WHITE) EACH	647.0206 ARROWS BIKE LANE EPOXY (WHITE) EACH	647.0306 SYMBOLS BIKE LANE EPOXY (WHITE) EACH	647.0356 WORDS EPOXY (WHITE) EACH	647.0456 CURB EPOXY (YELLOW) LF	647.0566 STOP LINE EPOXY 18-INCH (WHITE) LF	647.0606 ISLAND NOSE EPOXY (YELLOW) EACH	647.0766 CROSSWALK EPOXY 6-INCH (WHITE) LF
121+75.40 - 131+00	BUSINESS 51		320	1175	35	1530	130	4	4	5	5		166		5	---
	GREEN DRIVE													37		177
	WILLOW DRIVE													19		90
131+00 - 145+50	BUSINESS 51		545	1825	60	2430	440		7	8	9		290	88	8	306
	CHESTNUT DRIVE	500				500	150		2					61		304
	SUMAC LANE													17		88
	CEDAR DRIVE													39		182
	RIVER DRIVE													38		200
145+50 - 160+50	BUSINESS 51		654	2545	50	3249	515		7	12	11		242	85	7	346
	SCHOOL DRIVE													24		127
	GILMAN DRIVE													17		86
	ROOSEVELT DRIVE	600				600	150		2			1		35		259
160+50 - 174+00	BUSINESS 51		653	2350	88	3091	532		9	11	11	1	530		7	
	BEA JAY LANE													18		88
174+00 - 178+10	BUSINESS 51		150	460	20	630	335		3	5	5	1	98	93	2	172
	PLOVER SPRINGS DR						230		3			1	20	57	3	300
PROJECT TOTAL						12030	2482	4	37	41	41	4	1346	628	32	2725

NOTE: ALL ITEMS AND QUANTITIES ON THIS SHEET ARE FOR ENGINEER ESTIMATE CATEGORY 0010, UNLESS OTHERWISE NOTED.

TEMPORARY PAVEMENT MARKING

STATION	LOCATION	646.0600 REMOVING PAVEMENT MARKINGS LF	649.0400 TAPE 4-INCH WHITE LF	649.0400 TAPE 4-INCH YELLOW LF	649.0402 PAINT 4-INCH WHITE LF	649.0402 PAINT 4-INCH YELLOW LF	649.0801 REMOVABLE TAPE 8-INCH LF	649.0802 PAINT 8-INCH LF	649.1100 STOP LINE 18-INCH LF	649.1200 STOP LINE REMOVABLE TAPE 18-INCH LF	649.1800 ARROWS REMOVABLE TAPE EACH	649.2002 ARROWS PAINT EACH
STAGE 1A												
117+00-128+30.55	MAINLINE	184	333	870						32		
20+00-20+93	WILLOW DR.			116						32		
25+20-26+00	SUMAC LN.			84						26		
30+22-31+60	CEDAR DR.	22		85						22		
40+23-41+29	SCHOOL DR.			85						27		
SUB-TOTAL		206	1573		0		0	0	0	139	0	0
STAGE 1B												
117+00-128+30.55	MAINLINE			189				83				
128+90.21-132+00	MAINLINE						140					
132+00-139+00	MAINLINE						62	83				
139+00-151+25	MAINLINE						82	60				
151+25-180+00	MAINLINE						462					
180+00-187+00	MAINLINE	66		308								
SUB-TOTAL		66	497		0		746	226	0	0	0	0
STAGE 2A												
117+00-128+30.55	MAINLINE		123	118	987	1093	40				1	
128+90.21-132+00	MAINLINE	300	61	29	555	626		100		24	1	
132+00-139+00	MAINLINE	400	45		838	1258		125	22			1
139+00-151+25	MAINLINE	1250	88		964	2748						
151+25-180+00	MAINLINE	350	319	45	3989	5396	100	543	85		1	3
180+00-194+50	MAINLINE	400	732	1162								
20+00-20+93	WILLOW DR.								19			
54+15-54+68	SPRINGVILLE DR.			92						22		
SUB-TOTAL		2700	2814		18454		140	768	126	46	3	4
STAGE 2B												
128+90.21-132+00	MAINLINE		27			448						
132+00-139+00	MAINLINE		92									
139+00-151+25	MAINLINE		151									
151+25-180+00	MAINLINE		145									
20+00-20+93	WILLOW DR.											
29+33-29+82	CEDAR DR.			114					27			
44+43-44+89	GILMAN DR.			100						27		
49+56-49+86	BEA JAY LN.			60						35		
SUB-TOTAL		0	689		448		0	0	27	62	0	0
STAGE 3A												
109+44-122+84	MAINLINE	47	1018	330						69		
122+84-128+30.55	MAINLINE		560	1120								
128+90.21-132+00	MAINLINE		264	527			122			22	1	
132+00-139+00	MAINLINE		613	1230			221			26	2	
139+00-151+25	MAINLINE		1127	2405			125				1	
151+25-180+00	MAINLINE		2918	5235			647			92	4	
180+00-186+25	MAINLINE	514	214	1147								
15+15-15+59	GREEN DR.			88						27		
29+42-30+50	CEDAR DR.	20		110						30		
40+00-41+29	SCHOOL DR.			80						28		
54+83-55+00	SPRINGVILLE DR.			32						23		
SUB-TOTAL		534	19018		0		1115	0	0	317	8	0
STAGE 3B												
128+90.21-132+00	MAINLINE		44							35		
132+00-139+00	MAINLINE		74	210								
139+00-151+25	MAINLINE		43									
151+25-180+00	MAINLINE		94	333						32		
25+00-26+00	SUMAC LN.			110						43		
34+79-35+35	RIVER DR.			108						49		
49+78-50+00	BEA JAY LN.									27		
40+81-41+29	SCHOOL DR.											
701+08-703+74	PLOVER SPRINGS DR.											
SUB-TOTAL		0	1016		0		0	0	0	186	0	0
STAGE 3C												
109+44-122+84	MAINLINE		133									
132+00-139+00	MAINLINE		204	40			75			26	1	
139+00-151+25	MAINLINE		226	620								
151+25-180+00	MAINLINE		114	681			351			31	2	
19+82-20+36	WILLOW DR.			106						32		
40+00-41+29	SCHOOL DR.			80						28		
SUB-TOTAL		0	2071		0		426	0	0	117	3	0
STAGE 4												
117+39-122+00	MAINLINE	185		332								
122+84-128+30.55	MAINLINE			1086			108				2	
128+90.21-132+00	MAINLINE			548			100			22	1	
151+25-179+00	MAINLINE			401			300			113	3	
SUB-TOTAL		185	2367		0		508	0	0	135	6	0
ITEM TOTAL		3691	30045		18902		2935	994	153	1002	20	4

NOTE: ALL ITEMS AND QUANTITIES ON THIS SHEET ARE FOR ENGINEER ESTIMATE CATEGORY 0010, UNLESS OTHERWISE NOTED.

3

CONSTRUCTION STAKING STORM SEWER SYSTEM

STATION	LOCATION	650.4000 EACH	COMMENT
STAGE 2A			
BUSINESS 51			
122+00.00 - 132+00.00	LT & RT	28	STAKING OF 4 ADDITIONAL STRUCTURES DUE TO STAGING
132+00.00 - 157+00.00	LT	65	STAKING OF 5 ADDITIONAL STRUCTURES DUE TO STAGING
157+00.00 - 175+50.00	LT	43	STAKING OF 1 ADDITIONAL STRUCTURE DUE TO STAGING
175+50.00 - 183+00.00	LT	12	
WILLOW DRIVE			
18+93.32 - 19+87.63	LT & RT	3	
STAGE 2A SUBTOTALS		151	
STAGE 2B			
BUSINESS 51			
122+00.00 - 132+00.00	LT	3	
132+00.00 - 157+00.00	LT	5	
157+00.00 - 175+50.00	LT	3	
175+50.00 - 183+00.00	LT	2	
GREEN DRIVE			
13+25.00 - 14+67.22	LT & RT	3	
CHESTNUT DRIVE			
497+04.45 - 499+85.30	LT & RT	2	
PLOVER SPRINGS DRIVE			
697+50.00 - 699+83.89	LT & RT	9	
STAGE 2B SUBTOTALS		27	
STAGE 3A			
BUSINESS 51			
122+00.00 - 132+00.00	LT & RT	14	
132+00.00 - 157+00.00	LT & RT	39	
157+00.00 - 175+50.00	LT & RT	27	
175+50.00 - 183+00.00	LT & RT	5	
WILLOW DRIVE			
19+87.63 - 20+92.53	LT & RT	2	
STAGE 3A SUBTOTALS		87	
STAGE 3B			
BUSINESS 51			
122+00.00 - 132+00.00	RT	2	
132+00.00 - 157+00.00	RT	6	
157+00.00 - 175+50.00	LT & RT	6	
175+50.00 - 183+00.00	RT		
CHESTNUT DRIVE			
499+85.30 - 502+73.03	LT & RT	1	
PLOVER SPRINGS DRIVE			
699+83.89 - 702+83.30	LT & RT	9	
STAGE 3B SUBTOTALS		24	
STAGE 3C			
BUSINESS 51			
122+00.00 - 132+00.00	RT		
132+00.00 - 157+00.00	RT	1	
157+00.00 - 175+50.00	RT		
175+50.00 - 183+00.00	RT		
GREEN DRIVE			
15+14.08 - 16+00.00	LT & RT	2	
CEDAR DRIVE			
29+89.85 - 31+15.00	LT & RT	4	
ROOSEVELT DRIVE			
600+00.00 - 601+99.93	LT & RT	5	
STAGE 3C SUBTOTALS		12	
STAGE 4			
BUSINESS 51			
122+00.00 - 132+00.00	LT	1	
132+00.00 - 157+00.00	LT		
157+00.00 - 175+50.00	LT		
175+50.00 - 183+00.00	LT		
STAGE 4 SUBTOTALS		1	
ITEM TOTAL		302	

CONSTRUCTION STAKING

STATION - STATION	LOCATION	650.4500 SUBGRADE LF	650.5000 BASE LF	650.5500 CURB GUTTER AND CURB & GUTTER LF	650.7000 CONCRETE PAVEMENT LF
STAGE 1A					
122+84-128+30.55	MAINLINE		850		
128+90.21-131+37	MAINLINE		300		
132+76-138+55	MAINLINE		250		
139+50-150+66	MAINLINE		700		
156+67-170+84	MAINLINE		1150		
171+19-173+98	MAINLINE		250		
SUB-TOTAL		0	3500	0	0
STAGE 1C					
128+30.55-128+90.21	RAILROAD		50		
SUB-TOTAL		0	50	0	0
STAGE 2A					
120+40-121+62	MAINLINE	150			150
122+64-128+30.55	MAINLINE	550			550
128+90.21-131+56	MAINLINE	250			250
133+00-142+18	MAINLINE	950			950
143+28-174+58	MAINLINE	3150			3150
176+07-178+07	MAINLINE	200			200
178+07-181+62.87	MAINLINE	350	350	359	
18+93-19+14	WILLOW DR	50	50	43	
28+80-29+12	CEDAR DR.	50	100	183	
43+32-44+16	GILMAN DR.	100	100	101	
48+30-49+17	BEA JAY LN.	100	100	161	
SUB-TOTAL		5900	700	847	5250
STAGE 2B					
121+62-122+64	MAINLINE	100			100
131+56-133+00	MAINLINE	150			150
142+18-143+28	MAINLINE	100			100
174+58-176+07	MAINLINE	150			150
13+25-14+13	GREEN DR.	100	100	141	
497+05-498+90	CHESTNUT DR.	200	200	426	
32+90-34+10	RIVER DR.	150	150	240	
696+00-698+85	PLOVER SPRINGS DR.	300	300	882	
SUB-TOTAL		1250	750	1689	500
STAGE 3A					
122+84-128+30.55	MAINLINE	550			550
128+90.21-131+37	MAINLINE	250			250
132+76-138+55	MAINLINE	600			600
139+50-150+66	MAINLINE	1100			1100
152+90-155+24	MAINLINE	250			250
156+67-172+39	MAINLINE	1600			1600
175+61-179+00	MAINLINE	350			350
179+00-181+62.87	MAINLINE	250	250	260	
20+58-20+93	WILLOW DR	50	50	68	
25+59-26+00	SUMAC LN.	50	50	23	
35+65-37+22	SERVICE ENTRANCE	150	150	261	
SUB-TOTAL		5200	500	612	4700
STAGE 3B					
131+37-132+76	MAINLINE	150			150
150+66-152+90	MAINLINE	250			250
172+39-175+61	MAINLINE	350			350
500+71-502+73	CHESTNUT DR.	200	200	405	
40+81-41+29	SCHOOL DR.	50	50	77	
701+08-703+74	PLOVER SPRINGS DR.	300	300	783	
SUB-TOTAL		1300	550	1265	750
STAGE 3C					
121+75-122+84	MAINLINE	100			100
138+55-139+50	MAINLINE	100			100
155+24-156+67	MAINLINE	150			150
15+63-16+00	GREEN DR.	50	50	55	
30+61-31+60	CEDAR DR.	100	100	118	
600+74-603+50	ROOSEVELT DR.	300	300	556	
SUB-TOTAL		800	450	729	350
ITEM TOTAL		14450	6500	5142	11550

NOTE: ALL ITEMS AND QUANTITIES ON THIS SHEET ARE FOR ENGINEER ESTIMATE CATEGORY 0010, UNLESS OTHERWISE NOTED.

3

3

CONSTRUCTION STAKING

STATION - STATION	LOCATION	650.8500.01 ELECTRICAL INSTALLATIONS (6414-00-78) LS	650.9910 SUPPLEMENTAL CONTROL (6414-00-78) LS
BUSINESS 51			
120+40-181+63	LT & RT	1	1
ITEM TOTAL		**1**	**1**

CONSTRUCTION STAKING SLOPE STAKES

STATION - STATION	LOCATION	650.9920 LF
120+40-179+00	MAINLINE	5860
13+25-16+00	GREEN DR.	125
18+93-20+93	WILLOW DR.	56
497+05-502+73	CHESTNUT DR.	387
25+59-26+00	SUMAC LN.	41
28+80-31+60	CEDAR DR.	67
32+90-34+10	RIVER DR.	120
35+65-37+22	SERVICE ENTRANCE	157
40+81-41+29	SCHOOL DR.	48
600+74-603+50	ROOSEVELT DR.	276
48+30-49+17	BEA JAY LN.	87
696+00-703+74	PLOVER SPRINGS DR.	551
ITEM TOTAL		7775

CONDUIT

FROM	TO	652.0225 CONDUIT RIGID NONMETALLIC SCHEDULE 40 2-INCH LF	652.0235 CONDUIT RIGID NONMETALLIC SCHEDULE 40 3-INCH LF
BUS 51 & CHESTNUT DRIVE			
CB1	PB1	--	111
PB1	PB2	248	--
PB1	PB3	--	102
PB3	PB4	--	80
PB4	PB5	--	76
PB5	PB6	--	84
PB6	PB7	90	--
PB6	PB8	--	108
PB8	PB9	--	38
PB9	PB10	--	64
PB10	PB11	241	--
PB10	PB12	--	102
PB12	PB13	--	82
PB13	PB14	--	128
PB14	PB15	90	--
PB14	PB16	--	124
PB16	CB1	--	57
PB1	SB1	18	--
PB3	SB2	18	--
PB4	SB3	19	--
PB5	SB4	22	--
PB9	SB5	11	--
PB10	SB6	4	--
PB12	SB7	9	--
PB13	SB8	21	--
PB14	SB9	23	--
PB16	SB10	21	--
INTERSECTION SUBTOTAL		835	1156
BUS 51 & ROOSEVELT DRIVE			
CB1	PB1	--	90
PB1	PB2	229	--
PB1	PB3	--	102
PB3	PB4	--	78
PB4	PB5	--	122
PB5	PB6	--	138
PB6	PB7	--	76
PB7	PB8	235	--
PB8	PB9	--	104
PB9	PB10	--	76
PB10	PB11	--	122
PB11	PB12	94	--
PB11	PB13	--	140
PB13	CB1	--	66
PB1	SB1	16	--
PB3	SB2	18	--
PB4	SB3	18	--
PB5	SB4	12	--
PB6	SB5	13	--
PB7	SB6	22	--
PB9	SB7	29	--
PB10	SB8	26	--
PB11	SB9	21	--
PB13	SB10	20	--
INTERSECTION SUBTOTAL		753	1114

CONDUIT (CONT'D)

FROM	TO	652.0225 CONDUIT RIGID NONMETALLIC SCHEDULE 40 2-INCH LF	652.0235 CONDUIT RIGID NONMETALLIC SCHEDULE 40 3-INCH LF
BUS 51 51 & PLOVER SPRINGS DRIVE			
CB1	PB1	--	69
PB1	PB2	71	--
PB1	PB3	--	68
PB3	PB4	--	90
PB4	PB5	--	36
PB5	PB6	245	--
PB5	PB7	--	122
PB7	PB8	--	80
PB8	PB9	--	152
PB9	PB10	108	--
PB9	PB11	--	68
PB11	PB12	--	116
PB12	PB13	223	--
PB12	PB14	--	31
PB12	PB15	--	158
PB15	PB16	--	82
PB16	PB17	--	68
PB17	CB1	--	48
PB3	SB1	19	--
PB4	SB2	5	--
PB5	SB3	5	--
PB7	SB4	18	--
PB8	SB5	22	--
PB9	SB6	26	--
PB11	SB7	11	--
PB14	SB8	18	--
PB14	SB9	7	--
PB15	SB10	13	--
PB16	SB11	17	--
PB17	SB12	12	--
INTERSECTON SUBTOTAL		820	1188
***ITEM TOTAL		2408	3458

NOTE: ALL ITEMS AND QUANTITIES ON THIS SHEET ARE FOR ENGINEER ESTIMATE CATEGORY 0010, UNLESS OTHERWISE NOTED.

3

3

LOOP DETECTOR SCHEDULE

LOOP NUMBER	HOME RUN PB	STATION	LOCATION	SIZE (FT)X(FT)	NO. OF TURNS	PAVEMENT TYPE	SDD INSTALLATION REFERENCE	652.0800 CONDUIT LOOP DETECTOR LF	655.0700 LOOP DETECTOR LEAD IN CABLE LF	655.0800 LOOP DETECTOR WIRE LF
BUS 51 & CHESTNUT DR										
11	PB3	131+25.1	6.0' LT	6X20	3	CONCRETE	LOOP DETECTOR INSTALLED IN BASE COURSE WITH PULL (SPLICE) BOX OFF ROADWAY (OPTION 2)	70	88	228
12	PB3	131+51.1	6.0' LT	6X20	3	CONCRETE	LOOP DETECTOR INSTALLED IN BASE COURSE WITH PULL (SPLICE) BOX OFF ROADWAY (OPTION 2)	68	88	220
21	PB11	135+41.0	30.0' LT	6X6	4	CONCRETE	LOOP DETECTOR INSTALLED IN BASE COURSE WITH PULL (SPLICE) BOX OFF ROADWAY (OPTION 1)	80	554	376
22	PB11	135+41.0	42.0' LT	6X6	4	CONCRETE	LOOP DETECTOR INSTALLED IN BASE COURSE WITH PULL (SPLICE) BOX OFF ROADWAY (OPTION 1)	56	554	256
41	PB7	498+19.0	10.0 RT	6X15	3	ASPHALT	LOOP DETECTOR INSTALLED IN BASE COURSE WITH PULL (SPLICE) BOX OFF ROADWAY (OPTION 2)	60	298	198
42	PB6	499+9.0	18.0 RT	6X20	3	ASPHALT	LOOP DETECTOR INSTALLED IN BASE COURSE WITH PULL (SPLICE) BOX OFF ROADWAY (OPTION 1)	66	208	212
43	PB6	499+35.0	18.0 RT	6X20	3	ASPHALT	LOOP DETECTOR INSTALLED IN BASE COURSE WITH PULL (SPLICE) BOX OFF ROADWAY (OPTION 1)	66	208	212
44	PB6	499+9.0	6.0 RT	6X20	3	ASPHALT	LOOP DETECTOR INSTALLED IN BASE COURSE WITH PULL (SPLICE) BOX OFF ROADWAY (OPTION 2)	92	208	316
45	PB6	499+35.0	6.0 RT	6X20	3	ASPHALT	LOOP DETECTOR INSTALLED IN BASE COURSE WITH PULL (SPLICE) BOX OFF ROADWAY (OPTION 2)	92	208	316
51	PB12	133+7.0	18.0' LT	6X20	3	CONCRETE	LOOP DETECTOR INSTALLED IN BASE COURSE WITH PULL (SPLICE) BOX OFF ROADWAY (OPTION 1)	84	186	284
52	PB12	132+81.0	18.0' LT	6X20	3	CONCRETE	LOOP DETECTOR INSTALLED IN BASE COURSE WITH PULL (SPLICE) BOX OFF ROADWAY (OPTION 1)	76	186	252
61	PB2	128+91	7.0' RT	6X6	4	CONCRETE	LOOP DETECTOR INSTALLED IN BASE COURSE WITH PULL (SPLICE) BOX OFF ROADWAY (OPTION 2)	76	285	356
62	PB2	128+92	18.0' RT	6X6	4	CONCRETE	LOOP DETECTOR INSTALLED IN BASE COURSE WITH PULL (SPLICE) BOX OFF ROADWAY (OPTION 2)	50	285	226
81	PB15	501+57.0	10' LT	6X15	3	ASPHALT	LOOP DETECTOR INSTALLED IN BASE COURSE WITH PULL (SPLICE) BOX OFF ROADWAY (OPTION 2)	62	171	206
82	PB14	500+68.0	18' LT	6X20	3	ASPHALT	LOOP DETECTOR INSTALLED IN BASE COURSE WITH PULL (SPLICE) BOX OFF ROADWAY (OPTION 1)	72	81	236
83	PB14	500+42.0	18' LT	6X20	3	ASPHALT	LOOP DETECTOR INSTALLED IN BASE COURSE WITH PULL (SPLICE) BOX OFF ROADWAY (OPTION 1)	72	81	236
84	PB14	500+68.0	6.0' LT	6X20	3	ASPHALT	LOOP DETECTOR INSTALLED IN BASE COURSE WITH PULL (SPLICE) BOX OFF ROADWAY (OPTION 2)	96	81	332
85	PB14	500+42.0	6.0' LT	6X20	3	ASPHALT	LOOP DETECTOR INSTALLED IN BASE COURSE WITH PULL (SPLICE) BOX OFF ROADWAY (OPTION 2)	96	81	332
							INTERSECTION SUBTOTAL	1334	3851	4794
BUS 51 & ROOSEVELT DRIVE										
11	PB3	155+13.5	6.0' LT	6X20	3	CONCRETE	LOOP DETECTOR INSTALLED IN BASE COURSE WITH PULL (SPLICE) BOX OFF ROADWAY (OPTION 1)	72	81	236
12	PB3	155+39.5	6.0' LT	6X20	3	CONCRETE	LOOP DETECTOR INSTALLED IN BASE COURSE WITH PULL (SPLICE) BOX OFF ROADWAY (OPTION 1)	70	81	228
21	PB8	159+21.0	30.0' LT	6X6	4	CONCRETE	LOOP DETECTOR INSTALLED IN BASE COURSE WITH PULL (SPLICE) BOX OFF ROADWAY (OPTION 2)	74	478	346
22	PB8	159+21.0	42.0' LT	6X6	4	CONCRETE	LOOP DETECTOR INSTALLED IN BASE COURSE WITH PULL (SPLICE) BOX OFF ROADWAY (OPTION 2)	50	478	226
31	PB12	600+55.6	31.5' LT	6X15	3	ASPHALT	LOOP DETECTOR INSTALLED IN BASE COURSE WITH PULL (SPLICE) BOX OFF ROADWAY (OPTION 2)	62	186	206
32	PB11	600+67.5	19.0' LT	6X20	3	ASPHALT	LOOP DETECTOR INSTALLED IN BASE COURSE WITH PULL (SPLICE) BOX OFF ROADWAY (OPTION 1)	82	92	276
33	PB11	600+41.5	19.0' LT	6X20	3	ASPHALT	LOOP DETECTOR INSTALLED IN BASE COURSE WITH PULL (SPLICE) BOX OFF ROADWAY (OPTION 1)	82	92	276
34	PB11	600+67.5	7.0 LT	6X20	3	ASPHALT	LOOP DETECTOR INSTALLED IN BASE COURSE WITH PULL (SPLICE) BOX OFF ROADWAY (OPTION 2)	106	92	372
35	PB11	600+41.5	7.0' LT	6X20	3	ASPHALT	LOOP DETECTOR INSTALLED IN BASE COURSE WITH PULL (SPLICE) BOX OFF ROADWAY (OPTION 2)	106	92	372
41	PB5	156+1.0	64.9' LT	6X15	3	CONCRETE	LOOP DETECTOR INSTALLED IN BASE COURSE WITH PULL (SPLICE) BOX OFF ROADWAY (OPTION 2)	86	181	302
51	PB9	156+62.0	17.0' LT	6X20	3	CONCRETE	LOOP DETECTOR INSTALLED IN BASE COURSE WITH PULL (SPLICE) BOX OFF ROADWAY (OPTION 1)	70	191	228
52	PB9	156+88.0	17.0' LT	6X20	3	CONCRETE	LOOP DETECTOR INSTALLED IN BASE COURSE WITH PULL (SPLICE) BOX OFF ROADWAY (OPTION 1)	70	191	228
61	PB2	152+83.2	6.0 LT	6X6	4	CONCRETE	LOOP DETECTOR INSTALLED IN BASE COURSE WITH PULL (SPLICE) BOX OFF ROADWAY (OPTION 2)	72	259	336
62	PB2	152+83.2	18.0 RT	6X6	4	CONCRETE	LOOP DETECTOR INSTALLED IN BASE COURSE WITH PULL (SPLICE) BOX OFF ROADWAY (OPTION 2)	48	259	216
							INTERSECTION SUBTOTAL	1050	2753	3848
BUS 51 & PLOVER SPRINGS DRIVE										
11	PB15	174+30.3	6.0' LT	6X20	3	CONCRETE	LOOP DETECTOR INSTALLED IN BASE COURSE WITH PULL (SPLICE) BOX OFF ROADWAY (OPTION 1)	106	346	328
12	PB15	174+58.3	6.0' LT	6X20	3	CONCRETE	LOOP DETECTOR INSTALLED IN BASE COURSE WITH PULL (SPLICE) BOX OFF ROADWAY (OPTION 1)	70	346	220
21	PB6	178+18.4	30.1' LT	6X6	5	CONCRETE	LOOP DETECTOR INSTALLED IN BASE COURSE WITH PULL (SPLICE) BOX OFF ROADWAY (OPTION 2)	56	346	290
22	PB6	178+18.4	42.0' LT	6X6	5	CONCRETE	LOOP DETECTOR INSTALLED IN BASE COURSE WITH PULL (SPLICE) BOX OFF ROADWAY (OPTION 2)	76	346	390
41	PB2	698+23.1	0.0'	6X16	3	CONCRETE	LOOP DETECTOR INSTALLED IN BASE COURSE WITH PULL (SPLICE) BOX OFF ROADWAY (OPTION 2)	72	558	226
42	PB1	175+09.4	93.4' LT	6X20	3	CONCRETE	LOOP DETECTOR INSTALLED IN BASE COURSE WITH PULL (SPLICE) BOX OFF ROADWAY (OPTION 1)	70	408	220
43	PB1	175+03.3	66.2' LT	6X20	3	CONCRETE	LOOP DETECTOR INSTALLED IN BASE COURSE WITH PULL (SPLICE) BOX OFF ROADWAY (OPTION 1)	76	130	238
44	PB3	175+21.6	93.5' LT	6X20	3	CONCRETE	LOOP DETECTOR INSTALLED IN BASE COURSE WITH PULL (SPLICE) BOX OFF ROADWAY (OPTION 1)	68	130	214
45	PB3	175+15.5	66.2' LT	6X20	3	CONCRETE	LOOP DETECTOR INSTALLED IN BASE COURSE WITH PULL (SPLICE) BOX OFF ROADWAY (OPTION 1)	68	161	214
51	PB7	175+94.2	18.1' LT	6X20	3	CONCRETE	LOOP DETECTOR INSTALLED IN BASE COURSE WITH PULL (SPLICE) BOX OFF ROADWAY (OPTION 1)	72	161	226
52	PB7	175+66.2	18.0' LT	6X20	3	CONCRETE	LOOP DETECTOR INSTALLED IN BASE COURSE WITH PULL (SPLICE) BOX OFF ROADWAY (OPTION 1)	72	670	226
61	PB13	172+04.2	5.0' RT	6X6	5	CONCRETE	LOOP DETECTOR INSTALLED IN BASE COURSE WITH PULL (SPLICE) BOX OFF ROADWAY (OPTION 2)	80	424	410
62	PB13	172+04.2	18.0' RT	6X6	5	CONCRETE	LOOP DETECTOR INSTALLED IN BASE COURSE WITH PULL (SPLICE) BOX OFF ROADWAY (OPTION 2)	54	424	290
81	PB10	701+50.6	0.0'	6X18	4	CONCRETE	LOOP DETECTOR INSTALLED IN BASE COURSE WITH PULL (SPLICE) BOX OFF ROADWAY (OPTION 2)	80	424	330
82	PB9	175+08.8	68.7' RT	6X20	3	CONCRETE	LOOP DETECTOR INSTALLED IN BASE COURSE WITH PULL (SPLICE) BOX OFF ROADWAY (OPTION 1)	72	424	226
83	PB9	175+13.5	41.1' RT	6X20	3	CONCRETE	LOOP DETECTOR INSTALLED IN BASE COURSE WITH PULL (SPLICE) BOX OFF ROADWAY (OPTION 1)	70	157	220
84	PB11	174+96.7	68.4' RT	6X20	3	CONCRETE	LOOP DETECTOR INSTALLED IN BASE COURSE WITH PULL (SPLICE) BOX OFF ROADWAY (OPTION 1)	66	157	208
85	PB11	175+01.4	40.8' RT	6X20	3	CONCRETE	LOOP DETECTOR INSTALLED IN BASE COURSE WITH PULL (SPLICE) BOX OFF ROADWAY (OPTION 1)	70	122	220
							INTERSECTION SUBTOTAL	1298	5734	4686
							ITEM TOTAL	3682	12338	13328

NOTE: ALL ITEMS AND QUANTITIES ON THIS SHEET ARE FOR ENGINEER ESTIMATE CATEGORY 0010, UNLESS OTHERWISE NOTED.

3

3

PULL BOX

PULL BOX NUMBER	STATION	LOCATION	SPV.0060.14 NON-CONDUCTIVE 24 X 42 - INCH EACH
BUS 51 & CHESTNUT DRIVE			
PB1	131+30.1	33.8' RT	1
PB2	129+7.2	33.6' RT	1
PB3	131+28.8	17.7' LT	1
PB4	131+29.1	58.0' LT	1
PB5	131+67.4	58.3' LT	1
PB6	499+12.1	29.1' RT	1
PB7	498+18.3	26.0' RT	1
PB8	499+10.9,	24.5 LT	1
PB9	132+59.9	72.3' LT	1
PB10	132+88.5	57.2' LT	1
PB11	135+41.0	58.4' LT	1
PB12	132+93.5	6.7' LT	1
PB13	132+94.4	34.5' RT	1
PB14	500+63.8	31.1' LT	1
PB15	501+56.0	26.5' LT	1
PB16	500+63.4	31.3' RT	1
INTERSECTION SUBTOTAL			16
BUS 51 & ROOSEVELT DRIVE			
PB1	155+20.4	33.4' RT	1
PB2	152+83.2	32.9' RT	1
PB3	155+17.4	18.1' LT	1
PB4	155+16.3	57.3' LT	1
PB5	155+77.3	58.3' LT	1
PB6	156+46.2	58.3' LT	1
PB7	156+85.1	57.7' LT	1
PB8	159+21.0	58.2' LT	1
PB9	156+84.7	5.1' LT	1
PB10	156+85.3	33.4' LT	1
PB11	600+65.0	37.0' LT	1
PB12	601+54.9	31.5' LT	1
PB13	600+62.9	32.8' RT	1
INTERSECTION SUBTOTAL			13
BUS 51 & PLOVER SPRINGS DRIVE			
PB1	174+97.4	96.3' LT	1
PB2	698+34.2	17.2' RT	1
PB3	175+30.2	87.2' LT	1
PB4	175+74.4	77.2' LT	1
PB5	175+89.9	67.8' LT	1
PB6	178+34.6	57.5' LT	1
PB7	175+89.9	6.2' LT	1
PB8	175+89.9	34.2' RT	1
PB9	175+21.2	65.8' RT	1
PB10	701+70.3	17.0' LT	1
PB11	174+87.4	64.0' RT	1
PB12	174+29.7	61.0' RT	1
PB13	172+08.6	35.5' RT	1
PB14	174+48.1	35.7' RT	1
PB15	174+35.7	17.9' LT	1
PB16	174+38.7	58.3' LT	1
PB17	174+70.7	70.9' LT	1
INTERSECTION SUBTOTAL			17
***ITEM TOTAL			46

***ADDITIONAL QUANTITIES SHOWN ELSEWHERE

REMOVING PULL BOXES

EXISTING PULL BOX NUMBER	653.0905 EACH
BUS 51 & CHESTNUT DRIVE	
PB1	1
PB2	1
PB3	1
PB4	1
PB5	1
PB6	1
PB7	1
PB8	1
PB9	1
PB10	1
INTERSECTION SUBTOTAL	10
BUS 51 & ROOSEVELT DRIVE	
PB1	1
PB2	1
PB3	1
PB4	1
PB5	1
PB6	1
PB7	1
PB8	1
PB9	1
PB10	1
PB11	1
PB12	1
PB13	1
INTERSECTION SUBTOTAL	13
BUS 51 & PLOVER SPRINGS DRIVE	
PB1	1
PB2	1
PB3	1
PB4	1
PB5	1
PB6	1
PB7	1
PB8	1
PB9	1
PB10	1
PB11	1
PB12	1
PB13	1
PB14	1
PB15	1
PB16	1
PB17	1
PB18	1
PB19	1
PB20	1
PB21	1
PB22	1
INTERSECTION SUBTOTAL	22
ITEM TOTAL	45

CONCRETE BASES

BASE NUMBER	STATION	LOCATION	654.0101 TYPE 1 EACH	654.0102 TYPE 2 EACH	654.0110 TYPE 10 EACH	654.0217 CONCRETE CONTROL CABINET BASES TYPE 9 SPECIAL EACH
BUS 51 & CHESTNUT DRIVE						
SB1	131+48.4	34.9' RT	1	--	--	--
SB2	131+47.9	18.4' LT	--	1	--	--
SB3	131+48.5	48.6' LT	--	--	1	--
SB4	131+82.1	74.4' LT	--	1	--	--
SB5	132+69.7	68.1' LT	--	--	1	--
SB6	132+84.6	59.4' LT	1	--	--	--
SB7	132+84.5	6.3' LT	--	1	--	--
SB8	132+72.9	34.1' RT	--	--	1	--
SB9	132+50.0	44.4' RT	--	1	--	--
SB10	131+63.9	44.6' RT	--	--	1	--
CB1	131+57.4	59.0' RT	--	--	--	1
INTERSECTION SUBTOTAL			2	4	4	1
BUS 51 & ROOSEVELT DRIVE						
SB1	155+36.7	34.7' RT	1	--	--	--
SB2	155+35.4	17.9' LT	--	1	--	--
SB3	155+33.8	58.3' LT	--	--	1	--
SB4	155+84.1	67.8' LT	--	1	--	--
SB5	156+37.4	68.0' LT	--	1	--	--
SB6	156+63.0	57.0' LT	1	--	--	--
SB7	156+66.3	6.6' LT	--	1	--	--
SB8	156+59.0	35.0' RT	--	--	1	--
SB9	156+43.6	44.7' RT	--	1	--	--
SB10	155+51.6	45.2' RT	--	--	1	--
CB1	155+42.0	54.4' RT	--	--	--	1
INTERSECTION SUBTOTAL			2	5	3	1
BUS 51 & PLOVER SPRINGS DRIVE						
SB1	175+26.3	68.5' LT	--	1	--	--
SB2	175+72.9	81.7' LT	--	--	1	--
SB3	175+85.0	68.2' LT	--	1	--	--
SB4	175+71.1	6.5' LT	--	1	--	--
SB5	175+67.7	33.4' RT	--	--	1	--
SB6	175+35.3	44.4' RT	1	--	--	--
SB7	174+89.1	53.4' RT	--	1	--	--
SB8	174+64.9	41.3' RT	1	--	--	--
SB9	174+55.4	36.9' RT	--	--	1	--
SB10	174+48.3	17.2' LT	--	1	--	--
SB11	174+55.8	58.3' LT	--	--	1	--
SB12	174+82.2	68.4' LT	1	--	--	--
LB1	174+25.5	57.5' RT	--	1	--	--
CB1	174+78.3	83.3' LT	--	--	--	1
INTERSECTION SUBTOTAL			3	6	4	1
***ITEM TOTAL			7	15	11	3

***ADDITIONAL QUANTITIES SHOWN ELSEWHERE

NOTE: ALL ITEMS AND QUANTITIES ON THIS SHEET ARE FOR ENGINEER ESTIMATE CATEGORY 0010, UNLESS OTHERWISE NOTED.

3

TRAFFIC SIGNAL CABLE NO. 14 (ABOVE GROUND)

FROM	TO	655.0230* CABLE TRAFFIC SIGNAL 5 - 14 AWG LF	655.0240* CABLE TRAFFIC SIGNAL 7 - 14 AWG LF
BUS 51 & CHESTNUT DRIVE			
SB1	HEAD 6A	19	—
SB1	HEAD 2F	19	—
SB1	HEAD 4-1	15	—
SB2	HEAD 6D	19	—
SB2	HEAD 2E	19	—
SB2	HEAD 4-2	15	—
SB2	HEAD 4-3	15	—
SB3	HEAD 2B	41	—
SB3	HEAD 2C	52	—
SB3	HEAD 4-4	15	—
SB4	HEAD 4A	19	—
SB4	HEAD 8C	19	—
SB4	HEAD 2-1	15	—
SB5	HEAD 8B	55	—
SB5	HEAD 2-2	15	—
SB6	HEAD 2A	19	—
SB6	HEAD 6F	19	—
SB6	HEAD 8-1	15	—
SB7	HEAD 2D	19	—
SB7	HEAD 6E	19	—
SB7	HEAD 8-2	15	—
SB7	HEAD 8-3	15	—
SB8	HEAD 6B	41	—
SB8	HEAD 6C	53	—
SB8	HEAD 8-4	15	—
SB9	HEAD 4C	19	—
SB9	HEAD 8A	19	—
SB9	HEAD 6-1	15	—
SB10	HEAD 4B	55	—
SB10	HEAD 6-2	15	—
INTERSECTION SUBTOTAL		705	0
BUS 51 & ROOSEVELT DRIVE			
SB1	HEAD 6A	19	—
SB1	HEAD 2F	19	—
SB1	HEAD 4-1	15	—
SB2	HEAD 6D	19	—
SB2	HEAD 2E	19	—
SB2	HEAD 4-1	15	—
SB2	HEAD 4-2	15	—
SB3	HEAD 2B	42	—
SB3	HEAD 2C	53	—
SB3	HEAD 4-4	15	—
SB4	HEAD 4A	19	—
SB4	HEAD 3C	—	19
SB4	HEAD 2-1	15	—
SB5	HEAD 3B	—	19
SB5	HEAD 2-2	15	—
SB6	HEAD 2A	19	—
SB6	HEAD 6F	19	—
SB6	HEAD 3-1	15	—
SB7	HEAD 2D	19	—
SB7	HEAD 6E	19	—
SB7	HEAD 3-2	15	—
SB7	HEAD 3-3	15	—
SB8	HEAD 6B	43	—
SB8	HEAD 6C	55	—
SB8	HEAD 3-4	15	—
SB9	HEAD 3A	19	—
SB9	HEAD 4C	—	19
SB9	HEAD 6-1	15	—
SB10	HEAD 4B	—	55
SB10	HEAD 6-2	15	—
INTERSECTION SUBTOTAL		563	112

TRAFFIC SIGNAL CABLE NO. 14 (ABOVE GROUND) (CONT'D)

FROM	TO	655.0230* CABLE TRAFFIC SIGNAL 5 - 14 AWG LF	655.0240* CABLE TRAFFIC SIGNAL 7 - 14 AWG LF
BUS 51 & PLOVER SPRINGS DRIVE			
SB1	HEAD 4D	28	—
SB1	HEAD 8E	28	—
SB1	HEAD 2-2	14	—
SB1	HEAD 2-3	14	—
SB2	HEAD 8B	28	—
SB2	HEAD 8C	56	—
SB3	HEAD 2A	28	—
SB3	HEAD 6F	28	—
SB3	HEAD 2-4	14	—
SB4	HEAD 2D	28	—
SB4	HEAD 6E	28	—
SB5	HEAD 6B	43	—
SB5	HEAD 6C	55	—
SB6	HEAD 4F	28	—
SB6	HEAD 8A	28	—
SB6	HEAD 6-1	14	—
SB7	HEAD 4E	28	—
SB7	HEAD 8D	28	—
SB8	HEAD 6-2	14	—
SB9	HEAD 2F	28	—
SB9	HEAD 4B	28	—
SB9	HEAD 4C	52	—
SB9	HEAD 6A	28	—
SB9	HEAD 4-1	14	—
SB10	HEAD 2E	28	—
SB10	HEAD 6D	28	—
SB11	HEAD 2B	44	—
SB11	HEAD 2C	56	—
SB11	HEAD 4-2	14	—
SB12	HEAD 4A	28	—
SB12	HEAD 8F	28	—
SB12	HEAD 2-1	14	—
INTERSECTION SUBTOTAL		922	0
ITEM TOTAL		2190	112

*ADDITIONAL QUANTITIES SHOWN ELSEWHERE

TRAFFIC SIGNAL CABLE NO. 14 (BELOW GROUND)

FROM	TO	655.0230* CABLE TRAFFIC SIGNAL 5 - 14 AWG LF	655.0240* CABLE TRAFFIC SIGNAL 7 - 14 AWG LF	655.0250 CABLE TRAFFIC SIGNAL 9 - 14 AWG LF	655.0260 CABLE TRAFFIC SIGNAL 12 - 14 AWG LF
BUS 51 & CHESTNUT DRIVE					
CB1	SB1	--	--	--	55
CB1	SB2	--	--	107	--
CB1	SB3	--	--	147	--
CB1	SB4	--	--	--	188
CB1	SB5	--	292	--	--
CB1	SB6	--	--	--	241
CB1	SB7	--	--	195	--
CB1	SB8	--	166	--	--
CB1	SB9	--	--	--	104
CB1	SB10	--	40	--	--
INTERSECTION SUBTOTAL		0	498	449	588
BUS 51 & ROOSEVELT DRIVE					
CB1	SB1	--	--	46	--
CB1	SB2	--	--	--	99
CB1	SB3	--	--	138	--
CB1	SB4	--	--	--	193
CB1	SB5	--	--	263	--
CB1	SB6	--	--	--	265
CB1	SB7	--	--	--	220
CB1	SB8	--	--	179	--
CB1	SB9	--	--	--	113
CB1	SB10	--	--	42	--
INTERSECTION SUBTOTAL		0	0	668	890
BUS 51 & PLOVER SPRINGS DRIVE					
CB1	SB1	--	--	--	119
CB1	SB2	166	--	--	--
CB1	SB3	--	--	200	--
CB1	SB4	--	--	292	--
CB1	SB5	351	--	--	--
CB1	SB6	--	--	--	395
CB1	SB7	--	--	330	--
CB1	SB8	--	--	--	299
CB1	SB9	--	--	--	310
CB1	SB10	--	--	163	--
CB1	SB11	110	--	--	--
CB1	SB12	--	--	--	55
INTERSECTION SUBTOTAL		627	0	985	1178
ITEM TOTAL		627	498	2102	2656

*ADDITIONAL QUANTITIES SHOWN ELSEWHERE

NOTE: ALL ITEMS AND QUANTITIES ON THIS SHEET ARE FOR ENGINEER ESTIMATE CATEGORY 0010, UNLESS OTHERWISE NOTED.

3

3

LIGHTING WIRE

FROM	TO	655.0320 CABLE TYPE UF 2 - 10 AWG GROUNDED LF	655.0615 ELECTRICAL WIRE LIGHTING 10 AWG LF
BUS 51 & CHESTNUT DRIVE			
CB1	SB2	107	--
SB2	LUMIN	--	288
CB1	SB4	188	--
SB4	LUMIN	--	144
CB1	SB5	292	--
SB5	LUMIN	--	144
CB1	SB10	40	--
SB10	LUMIN	--	144
CB1	SB9	104	--
SB9	LUMIN	--	144
CB1	SB7	195	--
SB7	LUMIN	--	288
INTERSECTION SUBTOTAL		926	1152
BUS 51 & ROOSEVELT DRIVE			
CB1	SB2	99	--
SB2	LUMIN	--	288
CB1	SB4	193	--
SB4	LUMIN	--	144
CB1	SB5	163	--
SB5	LUMIN	--	144
CB1	SB10	42	--
SB10	LUMIN	--	144
CB1	SB9	113	--
SB9	LUMIN	--	144
CB1	SB7	220	--
SB7	LUMIN	--	288
INTERSECTION SUBTOTAL		830	1152
BUS 51 & PLOVER SPRINGS DRIVE			
CB1	SB1	119	--
SB1	LUMIN	--	288
CB1	SB3	200	--
SB3	LUMIN	--	117
CB1	SB4	292	--
SB4	LUMIN	--	288
CB1	SB7	330	--
SB7	LUMIN	--	117
CB1	SB10	163	--
SB10	LUMIN	--	288
CB1	LB1	251	--
LB1	LUMIN	--	117
INTERSECTION SUBTOTAL		1236	1215
ITEM TOTAL		2992	3519

ELECTRIC WIRE TRAFFIC SIGNALS, NO. 10

FROM	TO	655.0515 ELECTRICAL WIRE TRAFFIC SIGNALS 10 AWG LF
BUS 51 & CHESTNUT DRIVE		
CB1	SB1	55
SB1	SB2	88
SB2	SB3	78
SB3	SB4	79
SB4	SB5	148
SB5	SB6	47
SB6	SB7	64
SB7	SB8	71
SB8	SB9	108
SB9	SB10	106
SB10	CB1	40
INTERSECTION SUBTOTAL		884
BUS 51 & ROOSEVELT DRIVE		
CB1	SB1	46
SB1	SB2	85
SB2	SB3	75
SB3	SB4	91
SB4	SB5	94
SB5	SB6	73
SB6	SB7	103
SB7	SB8	93
SB8	SB9	108
SB9	SB10	111
SB10	CB1	42
INTERSECTION SUBTOTAL		921
BUS 51 & PLOVER SPRINGS DRIVE		
CB1	SB1	119
SB1	SB2	109
SB2	SB3	68
SB3	SB4	126
SB4	SB5	121
SB5	SB6	164
SB6	SB7	111
SB7	SB8	174
SB8	SB9	49
SB9	SB10	186
SB10	SB11	111
SB11	SB12	103
SB12	CB1	55
INTERSECTION SUBTOTAL		1496
ITEM TOTAL		3301

ELECTRICAL SERVICE METER BREAKER PEDESTAL

BASE NUMBER	656.0200.01 ELECTRICAL SERVICE METER BREAKER PEDESTAL LS	656.0200.02 ELECTRICAL SERVICE METER BREAKER PEDESTAL LS	656.0200.03 ELECTRICAL SERVICE METER BREAKER PEDESTAL LS
BUS 51 & CHESTNUT DRIVE	1	--	--
BUS 51 & ROOSEVELT DRIVE	--	1	--
BUS 51 & PLOVER SPRINGS DRIVE	--	--	1
TOTAL	1	1	1

NOTE: ALL ITEMS AND QUANTITIES ON THIS SHEET ARE FOR ENGINEER ESTIMATE CATEGORY 0010, UNLESS OTHERWISE NOTED.

3

CAST BASES, POLES, MONOTUBE ARMS, PUSH BUTTONS, AND LUMINAIRES

SIGNAL BASE NUMBER	657.0100 PEDESTAL BASES EACH	657.0255* TRANSFORMER BASES BREAKAWAY 11 1/2 INCH BOLT CIRCLE EACH	657.0315 POLES TYPE 4 EACH	657.0410 TRAFFIC SIGNAL STANDARDS ALUMINUM 9 - FT EACH	657.0420 TRAFFIC SIGNAL STANDARDS ALUMINUM 13 - FT EACH	657.0609 LUMINAIRE ARMS SINGLE MEMBER 4-INCH CLAMP 6-FOOT EACH	657.1345 INSTALL POLES TYPE 9 EACH	657.1350 INSTALL POLES TYPE 10 EACH	657.1525 INSTALL MONOTUBE ARMS 25-FT EACH	657.1530 INSTALL MONOTUBE ARMS 30-FT EACH	657.1808 INSTALL LUMINAIRE ARMS STEEL 8-FOOT EACH	658.0500 PEDESTRIAN PUSH BUTTONS EACH	659.1115* LUMINAIRES UTILITY LED A EACH
BUS 51 & CHESTNUT DRIVE													
SB1	1	--	--	--	1	--	--	--	--	--	--	1	--
SB2	--	1	1	--	--	2	--	--	--	--	--	2	2
SB3	--	--	--	--	--	--	1	--	--	1	--	1	--
SB4	--	1	1	--	--	1	--	--	--	--	--	1	1
SB5	--	--	--	--	--	--	--	1	--	1	1	1	1
SB6	1	--	--	--	1	--	--	--	--	--	--	1	--
SB7	--	1	1	--	--	2	--	--	--	--	--	2	2
SB8	--	--	--	--	--	--	1	--	--	1	--	1	--
SB9	--	1	1	--	--	1	--	--	--	--	--	1	1
SB10	--	--	--	--	--	--	--	1	--	1	1	1	1
INTERSECTION SUBTOTAL	2	4	4	0	2	6	2	2	0	4	2	12	8
BUS 51 & ROOSEVELT DRIVE													
SB1	1	--	--	--	1	--	--	--	--	--	--	1	--
SB2	--	1	1	--	--	2	--	--	--	--	--	2	2
SB3	--	--	--	--	--	--	1	--	--	1	--	1	--
SB4	--	1	1	--	--	1	--	--	--	--	--	1	1
SB5	--	1	1	--	--	1	--	--	--	--	--	1	1
SB6	1	--	--	--	1	--	--	--	--	--	--	1	--
SB7	--	1	1	--	--	2	--	--	--	--	--	2	2
SB8	--	--	--	--	--	--	1	--	--	1	--	1	--
SB9	--	1	1	--	--	1	--	--	--	--	--	1	1
SB10	--	--	--	--	--	--	--	1	--	1	1	1	1
INTERSECTION SUBTOTAL	2	5	5	0	2	7	2	1	0	3	1	12	8
BUS 51 & PLOVER SPRINGS DRIVE													
SB1	--	1	1	--	--	2	--	--	--	--	--	1	2
SB2	--	--	--	--	--	--	1	--	--	1	--	--	--
SB3	--	1	1	--	--	1	--	--	--	--	--	1	1
SB4	--	1	1	--	--	2	--	--	--	--	--	--	2
SB5	--	--	--	--	--	--	1	--	--	1	--	--	--
SB6	1	--	--	--	1	--	--	--	--	--	--	1	--
SB7	--	1	1	--	--	1	--	--	--	--	--	--	1
SB8	1	--	--	1	--	--	--	--	--	--	--	1	--
SB9	--	--	--	--	--	--	1	--	1	--	--	--	--
SB10	--	1	1	--	--	2	--	--	--	--	--	--	2
SB11	--	--	--	--	--	--	1	--	--	1	--	1	--
SB12	1	--	--	--	1	--	--	--	--	--	--	1	--
LB1	--	1	1	--	--	1	--	--	--	--	--	--	1
INTERSECTION SUBTOTAL	3	6	6	1	2	9	4	0	1	3	0	6	9
ITEM TOTAL	7	15	15	1	6	22	8	3	1	10	3	30	25

*ADDITIONAL QUANTITIES SHOWN ELSEWHERE

NOTE: ALL ITEMS AND QUANTITIES ON THIS SHEET ARE FOR ENGINEER ESTIMATE CATEGORY 0010, UNLESS OTHERWISE NOTED.

3

TRAFFIC SIGNAL AND PEDESTRIAN FACES, AND BACKPLATES

SIGNAL HEAD NUMBER	SIGNAL BASE NUMBER	658.0110 TRAFFIC SIGNAL FACE 3-12 INCH VERTICAL EACH	658.0115 TRAFFIC SIGNAL FACE 4-12 INCH VERTICAL EACH	658.0215 BACKPLATES SIGNAL FACE 3 SECTION 12-INCH EACH	658.0220 BACKPLATES SIGNAL FACE 4 SECTION 12-INCH EACH	658.0416 PEDESTRIAN SIGNAL FACE 16-INCH EACH	658.0600 LED MODULES 12-INCH RED BALL EACH	658.0605 LED MODULES 12-INCH YELLOW BALL EACH	658.0610 LED MODULES 12-INCH GREEN BALL EACH	658.0615 LED MODULES 12-INCH RED ARROW EACH	658.0620 LED MODULES 12-INCH YELLOW ARROW EACH	658.0625 LED MODULES 12-INCH GREEN ARROW EACH	658.0635 LED MODULES PEDESTRIAN COUNTDOWN TIMER 16-INCH EACH
BUS 51 & CHESTNUT DRIVE													
2A	SB6	1	--	1	--	--	1	1	1	--	--	--	--
2B	SB3	1	--	1	--	--	1	1	1	--	--	--	--
2C	SB3	1	--	1	--	--	1	1	1	--	--	--	--
2D	SB7	1	--	1	--	--	--	--	--	1	2	--	--
2E	SB2	1	--	1	--	--	--	--	--	1	2	--	--
2F	SB1	1	--	1	--	--	--	--	--	1	2	--	--
4A	SB4	1	--	1	--	--	1	1	1	--	--	--	--
4B	SB10	1	--	1	--	--	1	1	1	--	--	--	--
4C	SB9	1	--	1	--	--	1	1	1	--	--	--	--
6A	SB1	1	--	1	--	--	1	1	1	--	--	--	--
6B	SB8	1	--	1	--	--	1	1	1	--	--	--	--
6C	SB8	1	--	1	--	--	1	1	1	--	--	--	--
6D	SB2	1	--	1	--	--	--	--	--	1	2	--	--
6E	SB7	1	--	1	--	--	--	--	--	1	2	--	--
6F	SB6	1	--	1	--	--	--	--	--	1	2	--	--
8A	SB9	1	--	1	--	--	1	1	1	--	--	--	--
8B	SB5	1	--	1	--	--	1	1	1	--	--	--	--
8C	SB4	1	--	1	--	--	1	1	1	--	--	--	--
2-1	SB4	--	--	--	--	1	--	--	--	--	--	--	1
2-2	SB5	--	--	--	--	1	--	--	--	--	--	--	1
4-1	SB1	--	--	--	--	1	--	--	--	--	--	--	1
4-2	SB2	--	--	--	--	1	--	--	--	--	--	--	1
4-3	SB2	--	--	--	--	1	--	--	--	--	--	--	1
4-4	SB3	--	--	--	--	1	--	--	--	--	--	--	1
6-1	SB9	--	--	--	--	1	--	--	--	--	--	--	1
6-2	SB10	--	--	--	--	1	--	--	--	--	--	--	1
8-1	SB6	--	--	--	--	1	--	--	--	--	--	--	1
8-2	SB7	--	--	--	--	1	--	--	--	--	--	--	1
8-3	SB7	--	--	--	--	1	--	--	--	--	--	--	1
8-4	SB8	--	--	--	--	1	--	--	--	--	--	--	1
INTERSECTION SUBTOTAL		18	0	18	0	12	12	12	12	6	12	0	12
BUS 51 & ROOSEVELT DRIVE													
2A	SB6	1	--	1	--	--	1	1	1	--	--	--	--
2B	SB3	1	--	1	--	--	1	1	1	--	--	--	--
2C	SB3	1	--	1	--	--	1	1	1	--	--	--	--
2D	SB7	1	--	1	--	--	--	--	--	1	2	--	--
2E	SB2	1	--	1	--	--	--	--	--	1	2	--	--
2F	SB1	1	--	1	--	--	--	--	--	1	2	--	--
3A	SB9	1	--	1	--	--	1	1	1	--	--	--	--
3B	SB5	--	1	--	1	--	1	1	1	--	--	1	--
3C	SB4	--	1	--	1	--	1	1	1	--	--	1	--
4A	SB4	1	--	1	--	--	1	1	1	--	--	--	--
4B	SB10	--	1	--	1	--	1	1	1	--	--	1	--
4C	SB9	--	1	--	1	--	1	1	1	--	--	1	--
6A	SB1	1	--	1	--	--	--	--	--	1	2	--	--
6B	SB8	1	--	1	--	--	--	--	--	1	2	--	--
6C	SB8	1	--	1	--	--	--	--	--	1	2	--	--
6D	SB2	1	--	1	--	--	1	1	1	--	--	--	--
6E	SB7	1	--	1	--	--	1	1	1	--	--	--	--
6F	SB6	1	--	1	--	--	1	1	1	--	--	--	--
2-1	SB4	--	--	--	--	1	--	--	--	--	--	--	1
2-2	SB5	--	--	--	--	1	--	--	--	--	--	--	1
3-1	SB6	--	--	--	--	1	--	--	--	--	--	--	1
3-2	SB7	--	--	--	--	1	--	--	--	--	--	--	1
3-3	SB7	--	--	--	--	1	--	--	--	--	--	--	1
3-4	SB8	--	--	--	--	1	--	--	--	--	--	--	1
4-1	SB1	--	--	--	--	1	--	--	--	--	--	--	1
4-2	SB2	--	--	--	--	1	--	--	--	--	--	--	1
4-3	SB2	--	--	--	--	1	--	--	--	--	--	--	1
4-4	SB3	--	--	--	--	1	--	--	--	--	--	--	1
6-1	SB9	--	--	--	--	1	--	--	--	--	--	--	1
6-2	SB10	--	--	--	--	1	--	--	--	--	--	--	1
INTERSECTION SUBTOTAL		14	4	14	4	12	12	12	12	6	12	4	12

NOTE: ALL ITEMS AND QUANTITIES ON THIS SHEET ARE FOR ENGINEER ESTIMATE CATEGORY 0010, UNLESS OTHERWISE NOTED.

3

TRAFFIC SIGNAL AND PEDESTRIAN FACES, AND BACKPLATES (CONT'D)

SIGNAL HEAD NUMBER	SIGNAL BASE NUMBER	658.0110 TRAFFIC SIGNAL FACE 3-12 INCH VERTICAL EACH	658.0115 TRAFFIC SIGNAL FACE 4-12 INCH VERTICAL EACH	658.0215 BACKPLATES SIGNAL FACE 3 SECTION 12-INCH EACH	658.0220 BACKPLATES SIGNAL FACE 4 SECTION 12-INCH EACH	658.0416 PEDESTRIAN SIGNAL FACE 16-INCH EACH	658.0600 LED MODULES 12-INCH RED BALL EACH	658.0605 LED MODULES 12-INCH YELLOW BALL EACH	658.0610 LED MODULES 12-INCH GREEN BALL EACH	658.0615 LED MODULES 12-INCH RED ARROW EACH	658.0620 LED MODULES 12-INCH YELLOW ARROW EACH	658.0625 LED MODULES 12-INCH GREEN ARROW EACH	658.0635 LED MODULES PEDESTRIAN COUNTDOWN TIMER 16-INCH EACH
BUS 51 & PLOVER SPRINGS DRIVE													
2A	SB3	1	--	1	--	--	1	1	1	--	--	--	--
2B	SB11	1	--	1	--	--	1	1	1	--	--	--	--
2C	SB11	1	--	1	--	--	1	1	1	--	--	--	--
2D	SB4	1	--	1	--	--	--	--	--	1	2	--	--
2E	SB10	1	--	1	--	--	--	--	--	1	2	--	--
2F	SB9	1	--	1	--	--	--	--	--	1	2	--	--
4A	SB12	1	--	1	--	--	1	1	1	--	--	--	--
4B	SB8	1	--	1	--	--	1	1	1	--	--	--	--
4C	SB8	1	--	1	--	--	1	1	1	--	--	--	--
4D	SB1	1	--	1	--	--	--	--	--	1	2	--	--
4E	SB7	1	--	1	--	--	--	--	--	1	2	--	--
4F	SB6	1	--	1	--	--	--	--	--	1	2	--	--
6A	SB9	1	--	1	--	--	1	1	1	---	---	--	--
6B	SB5	1	--	1	--	--	1	1	1	---	---	--	--
6C	SB5	1	--	1	--	--	1	1	1	---	---	--	--
6D	SB10	1	--	1	--	--	--	--	--	1	2	--	--
6E	SB4	1	--	1	--	--	--	--	--	1	2	--	--
6F	SB3	1	--	1	--	--	--	--	--	1	2	--	--
8A	SB6	1	--	1	--	--	1	1	1	--	--	--	--
8B	SB2	1	--	1	--	--	1	1	1	--	--	--	--
8C	SB2	1	--	1	--	--	1	1	1	--	--	--	--
8D	SB7	1	--	1	--	--	--	--	--	1	2	--	--
8E	SB1	1	--	1	--	--	--	--	--	1	2	--	--
8F	SB12	1	--	1	--	--	--	--	--	1	2	--	--
2-1	SB12	--	--	--	--	1	--	--	--	--	--	--	1
2-2	SB1	--	--	--	--	1	--	--	--	--	--	--	1
2-3	SB1	--	--	--	--	1	--	--	--	--	--	--	1
2-4	SB3	--	--	--	--	1	--	--	--	--	--	--	1
4-1	SB9	--	--	--	--	1	--	--	--	--	--	--	1
4-2	SB11	--	--	--	--	1	--	--	--	--	--	--	1
6-1	SB6	--	--	--	--	1	--	--	--	--	--	--	1
6-2	SB8	--	--	--	--	1	--	--	--	--	--	--	1
INTERSECTION SUBTOTAL		24	0	24	0	8	12	12	12	12	24	0	8
ITEM TOTAL		56	4	56	4	32	36	36	36	24	48	4	32

SIGNAL MOUNTING HARDWARE

LOCATION	658.5069.01 SIGNAL MOUNTING HARDWARE LS	658.5069.02 SIGNAL MOUNTING HARDWARE LS	658.5069.03 SIGNAL MOUNTING HARDWARE LS
BUS 51 & CHESTNUT DRIVE	1	--	--
BUS 51 & ROOSEVELT DRIVE	--	1	--
BUS 51 & PLOVER SPRINGS D	--	--	1
ITEM TOTAL	1	1	1

TEMPORARY TRAFFIC SIGNALS FOR INTERSECTIONS

LOCATION	661.0200.01 TEMPORARY TRAFFIC SIGNALS FOR INTERSECTIONS LS	661.0200.02 TEMPORARY TRAFFIC SIGNALS FOR INTERSECTIONS LS	661.0200.03 TEMPORARY TRAFFIC SIGNALS FOR INTERSECTIONS LS	661.0300 GENERATORS DAY
BUS 51 & CHESTNUT DRIVE	1	--	--	2
BUS 51 & ROOSEVELT DRIVE	--	1	--	2
BUS 51 & PLOVER SPRINGS DRIVE	--	--	1	2
ITEM TOTAL	1	1	1	6

NOTE: ALL ITEMS AND QUANTITIES ON THIS SHEET ARE FOR ENGINEER ESTIMATE CATEGORY 0010, UNLESS OTHERWISE NOTED.

3

LIGHTING CONDUIT AND WIRE

FROM	-	TO	652.0225* CONDUIT RIGID NONMETALLIC SCHEDULE 40 2-INCH LF	652.0235* CONDUIT RIGID NONMETALLIC SCHEDULE 40 3-INCH LF	655.0625 ELECTRICAL WIRE LIGHTING 6 AWG LF	REMARKS
ALL ITEMS ARE CATEGORY 0010						
SL 100	-	SL 101	135	--	725	--
SL 101	-	SL 102	175	--	925	--
SL 102	-	SL 103	175	--	925	--
SL 103	-	SL 104	175	--	925	--
SL 104	-	PB 100	5	--	80	--
PB 100	-	PB 101	--	80	460	--
PB 101	-	SL 105	115	--	630	--
SL 105	-	PB 102	95	--	530	--
PB 102	-	PB 103	--	50	310	--
PB 103	-	CB 100	--	45	305	--
CB 100	-	PB 104	--	30	230	--
PB 104	-	PB 105	--	60	360	--
PB 105	-	PB 106	--	85	485	--
PB 106	-	PB 107	--	40	260	--
PB 107	-	SL 106	140	--	755	--
SL 106	-	SL 107	175	--	925	--
SL 107	-	SL 108	175	--	925	--
SL 108	-	SL 109	180	--	950	--
SL 109	-	SL 110	175	--	925	--
SL 110	-	SL 111	185	--	975	--
SL 111	-	SL 112	175	--	925	--
SL 112	-	SL 113	175	--	925	--
SL 113	-	SL 114	175	--	925	--
SL 114	-	SL 115	165	--	875	--
SL 115	-	SL 116	175	--	925	--
SL 116	-	SL 117	175	--	925	--
SL 200	-	SL 201	165	--	875	--
SL 201	-	SL 202	165	--	875	--
SL 202	-	SL 203	165	--	875	--
SL 203	-	SL 204	165	--	875	--
SL 204	-	SL 205	165	--	875	--
SL 205	-	SL 206	140	--	750	--
SL 206	-	SL 207	135	--	725	--
SL 207	-	SL 208	140	--	750	--
SL 208	-	SL 209	140	--	750	--
SL 209	-	SL 210	140	--	750	--
SL 210	-	PB 203	105	--	580	--
PB 203	-	PB 202	--	70	410	--
PB 202	-	SL 211	--	25	360	--
PB 202	-	PB 201	195	--	1,035	--
PB 201	-	PB 200	--	25	185	--
PB 200	-	SL 214	--	25	180	--
PB 203	-	PB 204	--	40	520	--
PB 204	-	CB 200	--	70	860	--
CB 200	-	PB 205	--	40	560	--
PB 205	-	PB 206	130	--	1,420	--
PB 206	-	PB 207	--	35	470	--
PB 207	-	SL 213	10	--	105	--
PB 205	-	PB 208	--	75	435	--
PB 208	-	PB 209	100	--	560	--
PB 209	-	PB 210	--	50	310	--
PB 210	-	SL 212	75	--	430	--
SL 212	-	STUB	175	--	180	TRACER WIRE ONLY
PROJECT TOTALS			5255	845	34805	

* ADDITIONAL QUANTITIES LISTED ELSEWHERE

3

LIGHTING PULLBOXES

PULLBOX NUMBER	STATION	OFFSET	R/L	SPV.0060.14* PULL BOX NON-CONDUCTIVE 24X42 -INCH EACH
ALL ITEMS ARE CATEGORY 0010				
PB 100	128+17	11.5'	LT	1
PB 101	128+96	12.4'	LT	1
PB 102	131+09	18.0'	LT	1
PB 103	131+09	34.5'	RT	1
PB 104	500+72	30.8'	RT	1
PB 105	500+72	29.5'	LT	1
PB 106	133+05	34.5'	LT	1
PB 107	133+05	6.0'	LT	1
PB 200	702+40	8.5'	RT	1
PB 201	702+43	31.9'	RT	1
PB 202	174+15	51.8'	RT	1
PB 203	174+15	18.0'	LT	1
PB 204	174+15	57.5'	LT	1
PB 205	698+98	17.5'	RT	1
PB 206	697+72	17.5'	RT	1
PB 207	697+72	12.7'	LT	1
PB 208	698+98	53.7'	LT	1
PB 209	176+56	57.5'	LT	1
PB 210	176+56	6.0'	LT	1
PROJECT TOTALS				19

* ADDITIONAL QUANTITIES LISTED ELSEWHERE

STREET LIGHTING REMOVALS

	STATION	R/L	SPV.0060.15 SALVAGE LIGHTING UNIT EACH
ALL ITEMS CATEGORY 0010			
	121+60	LT	1
	121+60	RT	1
	122+90	LT	1
	124+00	RT	1
	125+00	LT	1
	126+20	RT	1
PROJECT TOTALS			6

3

STREET LIGHTS

LIGHT NUMBER	STATION	OFFSET	R/L	654.0106 CONCRETE BASES TYPE 6 EACH	657.0255* TRANSFORMER BASES BREAKAWAY 11 1/2-INCH BOLT CIRCLE EACH	657.0327 POLES TYPE 6 ALUMINUM EACH	657.0605 LUMINAIRE ARMS SINGLE MEMBER 4 1/2-INCH CLAMP 4-FT EACH	659.1115* LUMINAIRES UTILITY LED A EACH	655.0610 ELECTRICAL WIRE LIGHTING 12 AWG LF
ALL ITEMS ARE CATEGORY 0010									
SL 100	121+51	14.0'	LT	1	1	1	2	2	270
SL 101	122+91	6.1'	LT	1	1	1	2	2	270
SL 102	124+66	18.0'	LT	1	1	1	2	2	270
SL 103	126+41	6.0'	LT	1	1	1	2	2	270
SL 104	128+13	11.4'	LT	1	1	1	2	2	270
SL 105	130+11	11.1'	LT	1	1	1	2	2	270
SL 106	134+42	15.8'	LT	1	1	1	2	2	270
SL 107	136+13	6.0'	LT	1	1	1	2	2	270
SL 108	137+87	18.0'	LT	1	1	1	2	2	270
SL 109	139+63	5.4'	LT	1	1	1	2	2	270
SL 110	141+40	17.3'	LT	1	1	1	2	2	270
SL 111	143+23	6.5'	LT	1	1	1	2	2	270
SL 112	144+98	12.4'	LT	1	1	1	2	2	270
SL 113	146+72	18.3'	LT	1	1	1	2	2	270
SL 114	148+43	6.0'	LT	1	1	1	2	2	270
SL 115	150+18	18.0'	LT	1	1	1	2	2	270
SL 116	151+92	6.3'	LT	1	1	1	2	2	270
SL 117	153+66	12.0'	LT	1	1	1	2	2	270
SL 200	158+16	9.4'	LT	1	1	1	2	2	270
SL 201	159+78	18.0'	LT	1	1	1	2	2	270
SL 202	161+35	6.0'	LT	1	1	1	2	2	270
SL 203	163+01	18.0'	LT	1	1	1	2	2	270
SL 204	164+64	6.0'	LT	1	1	1	2	2	270
SL 205	166+26	18.0'	LT	1	1	1	2	2	270
SL 206	167+66	6.0'	LT	1	1	1	2	2	270
SL 207	168+96	11.9'	LT	1	1	1	2	2	270
SL 208	170+33	18.0'	LT	1	1	1	2	2	270
SL 209	171+68	6.0'	LT	1	1	1	2	2	270
SL 210	173+08	16.7'	LT	1	1	1	2	2	270
SL 211	173+92	48.1'	RT	1	1	1	1	1	135
SL 212	177+31	8.2'	LT	1	1	1	2	2	270
SL 213	697+62	12.1'	LT	1	1	1	2	2	270
SL 214	702+18	11.6'	RT	1	1	1	2	2	270
PROJECT TOTALS				33	33	33	65	65	8775

* ADDITIONAL QUANTITIES LISTED ELSEWHERE

LIGHTING CONTROL

CABINET NUMBER	STATION	OFFSET	R/L	654.0230 CONCRETE CONTROL CABINET BASES TYPE L30 EACH	656.0200.04 ELECTRICAL SERVICE METER BREAKER PEDESTAL (LOCATION) EACH	656.0200.05 ELECTRICAL SERVICE METER BREAKER PEDESTAL (LOCATION) EACH	659.2130 LIGHTING CONTROL CABINETS 120/240 30-INCH EACH
ALL ITEMS ARE CATEGORY 0010							
CB100	131+52	52.8	RT	1	1	--	1
CB200	174+73	80.0'	LT	1	--	1	1
PROJECT TOTALS				2	1	1	2

3

SAWING ASPHALT

STATION	LOCATION	690.0150 LF	COMMENT
BUSINESS 51			
STAGE 2			
122+50- 126+43	LT	181	PARKING LOT
128+00	LT	34	DRIVEWAY
129+42	LT	65	DRIVEWAY
131+56	LT	28	DRIVEWAY
133+00 - 133+38	LT	38	PARKING LOT
137+69 - 138+72	LT	116	PARKING LOT
139+17 - 141+24	LT	210	PARKING LOT
146+70 - 147+67	LT	180	PARKING LOT/DRIVEWAY
158+38	LT	18	DRIVEWAY
158+87	LT	29	DRIVEWAY
161+10	LT	32	DRIVEWAY
170+78 - 174+50	LT	372	PARKING LOT
176+78 - 178+03	LT	125	PARKING LOT
181+62.87	LT & RT	18	
WILLOW DR			
18+93	LT & RT	30	
CEDAR DR			
28+80 - 29+00	LT & RT	166	PARKING LOT
28+80	LT & RT	32	
GILMAN DR			
43+31	LT & RT	34	
43+37	LT & RT	12	DRIVEWAY
BEA JAY LANE			
48+30	LT & RT	20	
STAGE 2 SUBTOTAL		1740	
BUSINESS 51			
STAGE 3			
129+20 - 131+77	RT	287	PARKING LOT
135+75 - 139+00	RT	325	PARKING LOT
140+09 - 141+55	RT	145	PARKING LOT
143+19 - 145+31	RT	212	PARKING LOT
145+50 - 148+45	RT	295	PARKING LOT
176+00 - 179+24	RT	324	PARKING LOT
GREEN DR	RT	30	
16+00			
WILLOW DR	RT	25	
20+93			
CHESTNUT DR	RT	163	
501+10 - 502+73	RT	32	
502+73			
SUMAC LN	LT	50	PARKING LOT
25+50 - 26+00	LT	30	
26+00			
CEDAR DR	RT	75	PARKING LOT
30+75 - 31+50		28	DRIVEWAY
31+45		30	
31+60			
SERVICE ENTRANCE		93	PARKING LOT
35+70 - 36+63		18	
37+22			
SCHOOL RD		47	
41+29			
ROOSEVELT DR			
601+15 - 603+00	LT	198	PARKING LOT
602+40	RT	34	PARK DRIVEWAY
PLOVER SPRINGS DR			
701+50	LT	150	PARKING LOT/SHARED ACCESS
703+00	LT	21	DRIVEWAY
703+74		25	
STAGE 3 SUBTOTAL		2637	
ITEM TOTAL		4377	

SAWING CONCRETE

STATION	LOCATION	690.0250 LF	COMMENT
BUSINESS 51			
STAGE 2			
120+43	LT	5	SIDEWALK
120+43 - 121+62	43.0' LT	123	CURB & GUTTER
125+30	43.0' LT	5	CURB & GUTTER
130+90	43.0' LT	10	CURB & GUTTER
133+38 - 134+62	LT	128	PARKING LOT
149+82 - 151+07	LT	125	DRIVEWAY
152+16	LT	18	DRIVEWAY
155+57 - 156+48	LT	90	PARKING LOT
165+46	LT	10	DRIVEWAY
170+27	LT	14	DRIVEWAY
STAGE 2 SUBTOTAL		528	
BUSINESS 51			
STAGE 3			
121+75.40	RT	60	
121+75.40	RT	5	SIDEWALK
151+73 - 157+97	RT	12	SIDEWALK
171+00	RT	35	DRIVEWAY
GREEN DR			
15+90	RT	5	SIDEWALK
CEDAR DR			
31+60	LT	5	SIDEWALK
SCHOOL RD			
41+11	LT	5	SIDEWALK
PLOVER SPRINGS DR			
702+00	RT	38	DRIVEWAY
703+25	RT	40	DRIVEWAY
STAGE 3 SUBTOTAL		205	
ITEM TOTAL		733	

CRACK AND DAMAGE SURVEY

STATION	LOCATION	999.1500.S LS
BUSINESS 51		1
ITEM TOTAL		1

INLET COVERS TYPE SPECIAL

STATION	LOCATION	SPV.0060.04 EACH
STAGE 1A		
124+05	13' RT	1
125+50	17' RT	1
125+93	15' RT	1
131+73	6' RT	1
131+96	36' RT	1
130+40	RL	1
132+63	11' RT	1
148+22	16' RT	1
146+83	10' RT	1
163+11	16' RT	1
166+31	9' RT	1
169+85	10' RT	1
ITEM TOTAL		12

TEMPORARY CONNECTION TO EXISTING STORM SEWER PIPE

STATION	LOCATION	SPV.0060.09 EACH	COMMENT
STAGE 2A			
BUSINESS 51			
122+00.00 - 132+00.00	LT	4	
132+00.00 - 157+00.00	LT	5	
157+00.00 - 175+50.00	LT	2	
175+50.00 - 183+00.00	LT	1	
STAGE 2A SUBTOTAL		12	
STAGE 3A			
BUSINESS 51			
124+04.63	LT	1	
124+77.80	LT	1	
STAGE 3A SUBTOTAL		2	
ITEM TOTAL		14	

SALVAGED BRICK PAVERS

STATION	LOCATION	SPV.0165.03 SF	COMMENT
BUSINESS 51			
STAGE 2			
122+62 - 125+20	LT	149	SIDEWALK
153+42	LT	122	SIDEWALK
STAGE 2 SUBTOTAL		271	
BUSINESS 51			
STAGE 3	RT	46	
139+45 - 140+18	RT	41	
140+52 - 141+18	RT	31	
141+52 - 142+00			
STAGE 3 SUBTOTAL		118	
ITEM TOTALS		389	

NOTE: ALL ITEMS AND QUANTITIES ON THIS SHEET ARE FOR ENGINEER ESTIMATE CATEGORY 0010, UNLESS OTHERWISE NOTED.

3

3

TEMPORARY CONNECTION TO STORM SEWER STRUCTURE

STATION	LOCATION	SPV.0060.10 EACH	COMMENT
STAGE 2A			
BUSINESS 51			
122+52.38	30.0' LT	1	MH 2
143+61.88	10.5' LT	1	MH 15C
153+71.08	30.0' LT	1	MH 21
166+34.30	22.5' LT	1	INL 30A
STAGE 2A SUBTOTAL		4	
ITEM TOTAL		4	

CONNECTION TO EXISTING INLETS OR MANHOLES

STATION	LOCATION	SPV.0060.11 EACH	COMMENT
STAGE 2A			
BUSINESS 51			
127+40.99	65.5' LT	1	
STAGE 2A SUBTOTAL		1	
STAGE 3A			
BUSINESS 51			
177+92.25	62.4' RT	1	
STAGE 3A SUBTOTAL		1	
ITEM TOTAL		2	

CLEANOUT

STATION	LOCATION	SPV.0060.12 EACH	COMMENT
STAGE 2A			
BUSINESS 51			
163+43.00	58.5' LT	1	
164+90.04	58.5' LT	4	
168+06.00	58.5' LT	1	
170+14.75	58.5' LT	4	
173+28.00	58.5' LT	1	
176+18.51	58.5' LT	3	
178+10.00	58.5' LT	1	
181+09.00	42.3' LT	1	
STAGE 2A SUBTOTAL		16	
STAGE 3A			
BUSINESS 51			
163+43.00	34.5' RT	1	
164+90.04	34.5' RT	4	
168+06.00	34.5' RT	1	
170+14.75	34.5' RT	4	
176+18.51	34.5' RT	4	
178+10.00	34.5' RT	1	
181+09.00	49.9' RT	1	
STAGE 3A SUBTOTAL		16	
STAGE 3B			
BUSINESS 51			
173+28.00	47.0' RT	1	
STAGE 3B SUBTOTAL		1	
ITEM TOTAL		33	

6-INCH PVC PLUG

STATION	LOCATION	SPV.0060.13 EACH	COMMENT
STAGE 2A			
BUSINESS 51			
163+43.00	58.5' LT	1	
181+09.00	42.3' LT	1	
STAGE 2A SUBTOTAL		2	
STAGE 3A			
BUSINESS 51			
163+43.00	34.5' RT	1	
181+09.00	49.9' RT	1	
STAGE 3A SUBTOTAL		2	
ITEM TOTAL		4	

PVC PIPE

STATION	LOCATION	SPV.0090.03 8-INCH LF
STAGE 2A		
BUSINESS 51		
122+00.00 - 132+00.00	LT	
132+00.00 - 157+00.00	LT	83
157+00.00 - 175+50.00	LT	
175+50.00 - 183+00.00	LT	20
STAGE 2A SUBTOTALS		103
STAGE 2B		
BUSINESS 51		
122+00.00 - 132+00.00	LT	
132+00.00 - 157+00.00	LT	
157+00.00 - 175+50.00	LT	
175+50.00 - 183+00.00	LT	
STAGE 2B SUBTOTALS		0
STAGE 3A		
BUSINESS 51		
122+00.00 - 132+00.00	LT & RT	
132+00.00 - 157+00.00	LT & RT	15
157+00.00 - 175+50.00	LT & RT	
175+50.00 - 183+00.00	LT & RT	
STAGE 3A SUBTOTALS		15
STAGE 3B		
BUSINESS 51		
122+00.00 - 132+00.00	LT & RT	
132+00.00 - 157+00.00	LT & RT	
157+00.00 - 175+50.00	LT & RT	
175+50.00 - 183+00.00	LT & RT	
PLOVER SPRINGS DRIVE		
699+83.89 - 702+83.30	LT & RT	10
STAGE 3B SUBTOTALS		10
STAGE 3C		
BUSINESS 51		
122+00.00 - 132+00.00	RT	
132+00.00 - 157+00.00	RT	
157+00.00 - 175+50.00	RT	
175+50.00 - 183+00.00	RT	
STAGE 3C SUBTOTALS		0
STAGE 4		
BUSINESS 51		
122+00.00 - 132+00.00	LT & RT	
132+00.00 - 157+00.00	RT	
157+00.00 - 175+50.00	RT	
175+50.00 - 183+00.00	RT	
STAGE 4 SUBTOTALS		0
ITEM TOTAL		128

NOTE: ALL ITEMS AND QUANTITIES ON THIS SHEET ARE FOR ENGINEER ESTIMATE CATEGORY 0010, UNLESS OTHERWISE NOTED.

3

SCHEDULE 40 PVC 6-INCH

STATION	LOCATION	SPV.0090.04 LF	COMMENT
STAGE 2A			
BUSINESS 51			
164+99.34	10.3' -58.5' LT	98	INCLUDES 45° BENDS
170+23.16	22.0' - 58.5' LT	76	INCLUDES 45° BENDS
176+27.26	8.0' - 58.5' LT	104	INCLUDES 45° BENDS
STAGE 2A SUBTOTAL		278	
STAGE 3A			
BUSINESS 51			
165+00.13	4.3' LT - 34.5' RT	80	INCLUDES 45° BENDS
170+23.16	16.0' LT - 34.5' RT	104	INCLUDES 45° BENDS
176+27.26	2.0' LT - 34.5' RT	76	INCLUDES 45° BENDS
STAGE 3A SUBTOTAL		260	
ITEM TOTAL		538	

SCHEDULE 40 PVC PERFORATED 6-INCH

STATION	LOCATION	SPV.0090.05 LF	COMMENT
STAGE 2A			
BUSINESS 51			
163+43.00 - 164+99.34	58.5' LT	154	
164+99.34 - 170+23.16	58.5' LT	517	
170+23.16 - 174+58.00	58.5' - 63.6' LT	430	
176+07.75 - 176+27.26	59.0' - 58.5' LT	17	
176+27.26 - 181+09.00	58.5' LT	493	
STAGE 2A SUBTOTAL		1611	
STAGE 2B			
BUSINESS 51			
174+58.00 - 176+07.75	63.6' - 59.0' LT	150	
STAGE 2B SUBTOTAL		150	
STAGE 3A			
BUSINESS 51			
163+43.00 - 165+00.13	34.5' RT	155	
165+00.13 - 170+23.16	34.5' RT	519	
170+23.16 - 172+37.85	34.5' - 38.7' RT	211	
175+60.92 - 176+27.26	38.3' - 34.5' RT	64	
176+27.26 - 181+09.00	34.5' - 49.9' RT	477	
STAGE 3A SUBTOTAL		1426	
STAGE 3A			
BUSINESS 51			
172+37.85 - 175+60.92	38.3' - 48.5' RT	325	
STAGE 3A SUBTOTAL		325	
ITEM TOTAL		3512	

CONSTRUCTION STAKING INFILTRATION BASIN

STATION	LOCATION	SPV.0105.01 LS	COMMENT
STAGE 3A			
BUSINESS 51			
132+24.19 - 134+03.50	RT	1	
STAGE 3A SUBTOTAL		1	
ITEM TOTAL		1	

CONSTRUCTION STAKING INFILTRATION TRENCH

STATION	LOCATION	SPV.0105.02 LS	COMMENT
STAGE 2A, 3A, & 3B			
BUSINESS 51			
163+43.00 - 181+09.00	LT & RT	1	
STAGE 3A SUBTOTAL		1	
ITEM TOTAL		1	

INFILTRATION BASIN SOIL MIX

STATION	LOCATION	SPV.0180.02 SY	COMMENT
STAGE 3A			
BUSINESS 51			
132+24.19 - 134+03.50	RT	1650	
STAGE 3A SUBTOTAL		1650	
ITEM TOTAL		1650	

REMOVE TRAFFIC SIGNALS

LOCATION	SPV.0105.03 REMOVE AND SALVAGE EXISTING TRAFFIC SIGNALS LS	SPV.0105.04 REMOVE AND SALVAGE EXISTING TRAFFIC SIGNALS LS	SPV.0105.05 REMOVE AND SALVAGE EXISTING TRAFFIC SIGNALS LS
BUS 51 & CHESTNUT DRIVE	1	--	--
BUS 51 & ROOSEVELT DRIVE	--	1	--
BUS 51 & PLOVER SPRINGS DRIVE	--	--	1
ITEM TOTAL	1	1	1

TEMPORARY VEHICLE DETECTION

	SPV.0105.09 TEMPORARY VEHICLE DETECTION LS	SPV.0105.10 TEMPORARY VEHICLE DETECTION LS	SPV.0105.11 TEMPORARY VEHICLE DETECTION LS
BUS 51 & CHESTNUT DRIVE	1	--	--
BUS 51 & ROOSEVELT DRIVE	--	1	--
BUS 51 & PLOVER SPRINGS DRIVE	--	--	1
ITEM TOTAL	1	1	1

TRANSPORTING SIGNAL AND LIGHTING MATERIALS

	SPV.0105.06 TRANSPORT DEPARTMENT FURNISHED TRAFFIC SIGNAL MONOTUBE EQUIPMENT LS	SPV.0105.07 TRANSPORT DEPARTMENT FURNISHED TRAFFIC SIGNAL MONOTUBE EQUIPMENT LS	SPV.0105.08 TRANSPORT DEPARTMENT FURNISHED TRAFFIC SIGNAL MONOTUBE EQUIPMENT LS
BUS 51 & CHESTNUT DRIVE	1	--	--
BUS 51 & ROSEVELT DRIVE	--	1	--
BUS 51 & PLOVER SPRINGS DRIVE	--	--	1
ITEM TOTAL	1	1	1

CONCRETE PAVEMENT JOINT LAYOUT

STATION	LOCATION	SPV.0105.12 LS
BUSINESS 51	GREEN DR. TO SPRINGVILLE DR	1
ITEM TOTAL		1

NOTE: ALL ITEMS AND QUANTITIES ON THIS SHEET ARE FOR ENGINEER ESTIMATE CATEGORY 0010, UNLESS OTHERWISE NOTED.

3

STAMPED COLORED CONCRETE 4-INCH, CAT 0020

STATION - STATION	LOCATION	SPV.0165.01 SF	SPV.0165.02* CONCRETE CURE & SEAL SEAL TREATMENT SF
CATEGORY 0030			
STAGE 2A			
122+64-128+30.55	MAINLINE	1140	1140
128+90.21-131+56	MAINLINE	1418	1418
133+00-142+18	MAINLINE	4564	4564
143+28-174+58	MAINLINE	21403	21403
176+07-178+07	MAINLINE	1053	1053
SUB-TOTAL		29578	29578
STAGE 2B			
497+05-498+90	CHESTNUT DR.	444	444
696+00-698+85	PLOVER SPRINGS DR.	3384	3384
SUB-TOTAL		3828	3828
STAGE 3A			
122+84-128+30.55	MAINLINE	3706	3706
128+90.21-131+37	MAINLINE	2791	2791
132+76-138+55	MAINLINE	6619	6619
139+50-150+66	MAINLINE	9675	9675
152+90-155+24	MAINLINE	2174	2174
156+67-174+58	MAINLINE	16500	16500
175+61-179+00	MAINLINE	1482	1482
SUB-TOTAL		42947	42947
STAGE 3B			
131+37-132+76	MAINLINE	59	59
701+08-703+74	PLOVER SPRINGS DR.	1820	1820
SUB-TOTAL		1879	1879
STAGE 3C			
600+74-603+50	ROOSEVELT DR.	1061	1061
SUB-TOTAL		1061	1061
STAGE 4			
121+75-125+26	MAINLINE	1709	1709
SUB-TOTAL		1709	1709
ITEM TOTAL		81002	81002

*QUANTITIES SHOWN ELSEWHERE IN PLAN

REMOVING BUILDING (STATION) CAT. 0030

STATION	LOCATION	204.0230 LS	COMMENT
BUSINESS 51			
128+00	RT	1	PARCEL 25 REMOVE 1 BUILDING
ITEM TOTAL		1	

REMOVING BUILDINGS CAT. 0030

STATION	LOCATION	204.0235 LS	COMMENT
BUSINESS 51			
123+40 - 124+60	RT	1	PARCEL 13 REMOVE 2 BUILDINGS
ITEM TOTAL		1	

TRANSPORTATION PROJECT PLAT NO: 6414-00-25 - 4.01 AMENDMENT NO. 2

AMENDS UTILITY NO. 200 AND PROVIDES CLARIFICATION OF ALL UTILITY LOCATIONS TO TRANSPORTATION PROJECT PLAT NO. 6414-00-25-4.01 AMENDMENT NO. 1 RECORDED AS DOCUMENT NO. 786948

BUS. 51 VILLAGE OF PLOVER & WHITING, (STH 54 - MINNESOTA AVE.)

PART OF LOT 1, CSM NO. 6847, PART OF LOT 2, CSM NO. 6843, AND PART OF LOT 13, PLOVER ASSESSOR'S PLAT NO. 2 LOCATED IN AND INCLUDING PART OF THE SW 1/4 OF THE SW 1/4; PART OF LOTS 6, 8, & 13 OF PLOVER ASSESSOR'S PLAT NO. 2, AND PART OF LOT 1, CSM NO. 10059, LOCATED IN AND INCLUDING PART OF THE SE 1/4 OF THE SW 1/4; ALL IN SECTION 22, T23N, R8E, VILLAGE OF PLOVER, PORTAGE COUNTY WISCONSIN.

RELOCATION ORDER BUS. 51 PORTAGE COUNTY

TO PROPERLY ESTABLISH, LAY OUT, WIDEN, ENLARGE, EXTEND, CONSTRUCT, RECONSTRUCT, IMPROVE, OR MAINTAIN A PORTION OF THE HIGHWAY DESIGNATED ABOVE, THE STATE OF WISCONSIN DEPARTMENT OF TRANSPORTATION DEEMS IT NECESSARY TO RELOCATE OR CHANGE SAID HIGHWAY AND ACQUIRE CERTAIN LANDS AND INTERESTS OR RIGHTS IN LANDS FOR THE ABOVE PROJECT.

TO EFFECT THIS CHANGE, PURSUANT TO AUTHORITY GRANTED UNDER SECTION 84.02 (3) AND 84.09, WISCONSIN STATUTES, THE DEPARTMENT OF TRANSPORTATION HEREBY ORDERS THAT:
1. THAT PORTION OF SAID HIGHWAY AS SHOWN ON THIS PLAT IS LAID OUT AND ESTABLISHED TO THE LINES AND WIDTHS AS SO SHOWN FOR THE ABOVE PROJECT.
2. THE LANDS OR INTERESTS OR RIGHTS IN LANDS AS SHOWN ON THIS PLAT ARE REQUIRED BY THE DEPARTMENT FOR THE ABOVE PROJECT AND SHALL BE ACQUIRED IN THE NAME OF THE STATE OF WISCONSIN, PURSUANT TO THE PROVISIONS OF SECTION 84.09 (1) OR (2), WISCONSIN STATUTES.

RECOVERED MONUMENTS

Point	Y	X	Description	Point	Y	X	Description
953	177624.26	173378.97	1" IRON PIPE	2101	178198.98	173704.77	1" IRON PIPE
954	177716.21	173408.74	1" IRON PIPE	2110	178534.65	173612.22	1" IRON PIPE
955	177814.98	173418.75	1" IRON PIPE	2145	177841.35	173220.62	4"X4" CONC. MON.
957	177817.33	173372.36	1" IRON PIPE	2146	177709.55	173212.53	1" IRON PIPE
1001	178458.67	173864.50	4"X4" CONC. MON.	2147	177603.82	173332.79	1" IRON PIPE
1002	178518.51	173868.20	4"X4" CONC. MON.	2148	177603.86	173336.56	1" IRON PIPE
1004	178527.59	173724.85	1" IRON PIPE	2149	177630.76	173392.39	1" IRON PIPE
1005	178191.01	173849.78	4"X4" CONC. MON.	2150	177694.74	173420.75	1" IRON PIPE
1006	178131.19	173846.33	4"X4" CONC. MON.	2151	177815.03	173427.36	1" IRON PIPE
1007	177868.00	173830.82	4"X4" CONC. MON.	2152	177831.00	173416.47	1" IRON PIPE
1008	177808.16	173827.28	4"X4" CONC. MON.	2153	177890.51	173426.91	1" IRON PIPE
2080	177692.39	173550.50	1" IRON PIPE	2156	177924.97	173450.40	1" IRON PIPE
2081	177814.28	173557.77	1" IRON PIPE	2157	178106.11	173472.16	1" IRON PIPE
2082	177823.30	173568.22	1" IRON PIPE	2158	178131.83	173473.21	1" IRON PIPE
2083	177815.90	173692.52	SURVEY NAIL	2164	178219.28	173340.03	CHISELED X
2085	177676.30	173819.76	1" IRON PIPE	2165	178212.17	173482.34	1" IRON PIPE
2086	177610.24	173815.88	1" IRON PIPE	2167	178228.52	173486.46	1" IRON PIPE
2087	177599.99	173805.42	DRILL HOLE	2168	178451.31	173513.14	1" IRON PIPE
2088	177597.21	173582.73	DRILL HOLE	2169	178472.03	173513.77	1" IRON PIPE
2091	177875.42	173706.16	1" IRON PIPE	2171	178480.73	173506.53	DRILL HOLE
2092	177876.62	173686.30	PK NAIL	2172	178488.21	173356.33	1" IRON PIPE
2094	177883.84	173561.88	1" IRON PIPE	2173	178492.74	173260.49	4"X4" CONC. MON.
2095	178080.91	173573.99	1" IRON PIPE	2176	178545.26	173411.28	1" IRON PIPE
2096	178146.79	173578.09	DRILL HOLE	2177	178539.62	173518.50	1" IRON PIPE
2097	178139.56	173701.73	1" IRON PIPE	2691	178399.36	173737.21	1" IRON PIPE
2098	178138.44	173721.64	1" IRON PIPE				

UTILITY INTEREST TABLE

UTILITY NUMBER	PARCEL	INTEREST DESCRIPTION	RECORDING INFORMATION
200	3	EASEMENT	DOC. # 367991
	4	EASEMENT	DOC. #368011
	4	EASEMENT	DOC. # 368272
	4	EASEMENT	DOC. # 368273
	13	EASEMENT	DOC. # 367998
	14	EASEMENT	VOL. 440 PG. 506
210	14	EASEMENT	VOL. 144 PG. 497

BASIS OF R/W

INSTRUMENT	YEAR
PLOVER ASSESSOR'S PLAT NO. 4	1981
PLOVER ASSESSOR'S PLAT NO. 2	1980
CSM NO. 8788	2005
CSM NO. 6847	1998
CSM NO. 6843	1998
CSM NO. 10059	2010
CSM NO. 6846	1998
R/W PLAT NO. 1526-02-24	1994

PI STA 119+94.67
PI Y =177,939.323
PI X =173,501.682
DELTA =07°25'30"(RT)
R =6000.00'
D =00°57'18"
T =389.32'
L =777.55'

PI STA 127+17.37
PI Y =178,654.137
PI X =173,615.307
DELTA =08°29'31"(LT)
R =3730.00'
D =01°32'10"
T =276.92'
L =552.83'

SCHEDULE OF LANDS & INTERESTS REQUIRED

OWNER'S NAMES ARE SHOWN FOR REFERENCE PURPOSES ONLY AND ARE SUBJECT TO CHANGE PRIOR TO THE TRANSFER OF LAND INTERESTS TO THE DEPARTMENT

PARCEL NUMBER	OWNER (S)	INTEREST REQUIRED	R/W S.F. REQUIRED NEW	EXISTING	TOTAL	TLE S.F.
3	M&I MID-STATE BANK NA	FEE/AR/TLE	1245	-	1245	1525
4	VILLAGE OF PLOVER	FEE/TLE	2405	-	2405	2795
11	JASA VENTURES LLC	FEE/AR	1565	-	1565	-
12	SANDY'S BAR LLC.	FEE/AR/TLE	955	-	955	570
13	JOHN M. FAHRNER, JEROLD P FAHRNER, ETAL.	FEE/AR/TLE	2860	-	2860	1370
14	JOHN D. & THERESA K. CARPONTER	FEE/AR/TLE	3690	-	3690	160

794550

ACCEPTED FOR RECORDING AND FILING IN THE OFFICE OF THE REGISTER OF DEEDS IN Portage COUNTY, WISCONSIN AT 9:06AM ON April 8, 2014 AS DOCUMENT # 794550 AND FILED IN Rev. # 50

SIGNATURE OF REGISTER OF DEEDS

RESERVED FOR REGISTER OF DEEDS
PROJECT NUMBER 6414-00-25-4.01
AMENDMENT NO. 2

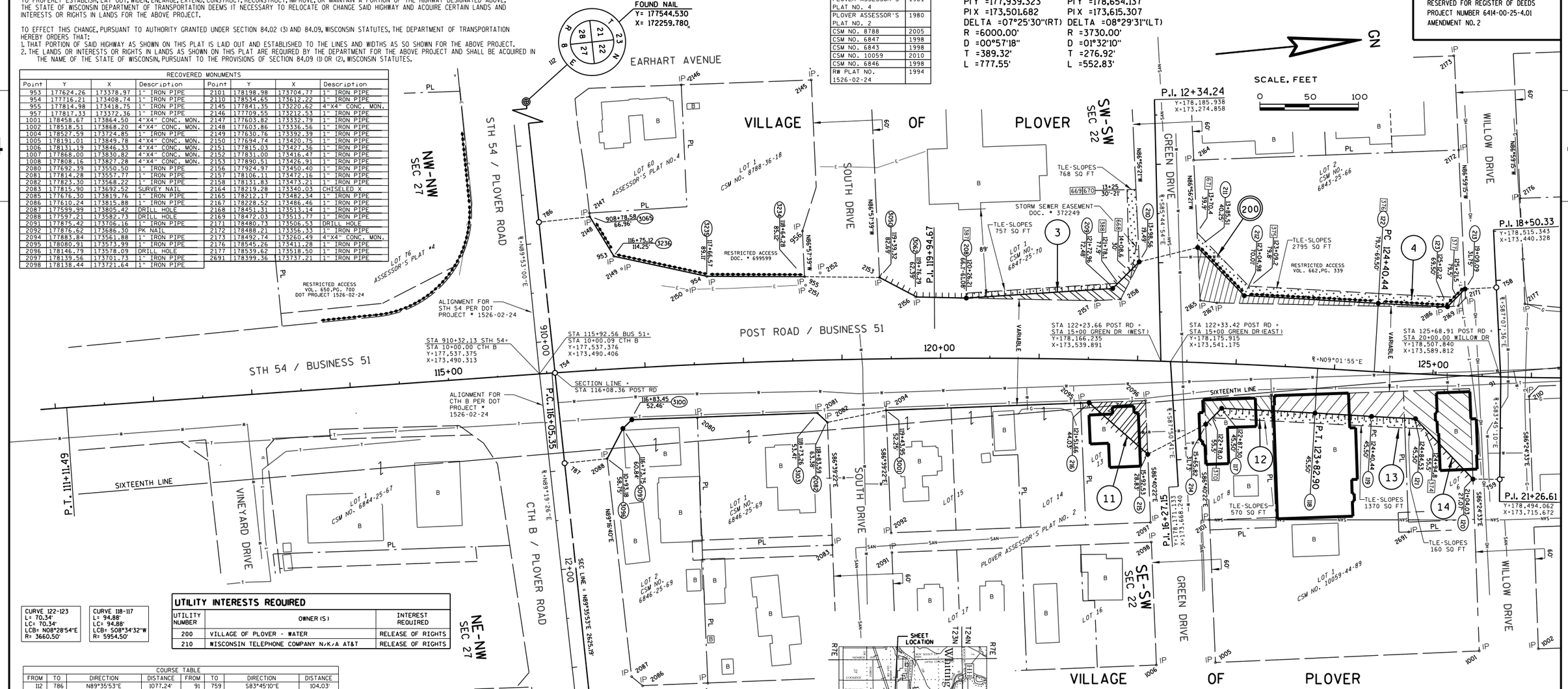

CURVE 122-123
L= 70.34'
LC= 70.34'
LCB= N08°28'54"E
R= 3660.50'

CURVE 118-117
L= 94.88'
LC= 94.88'
LCB= S08°34'32"W
R= 5954.50'

UTILITY INTERESTS REQUIRED

UTILITY NUMBER	OWNER (S)	INTEREST REQUIRED
200	VILLAGE OF PLOVER - WATER	RELEASE OF RIGHTS
210	WISCONSIN TELEPHONE COMPANY N/K/A AT&T	RELEASE OF RIGHTS

COURSE TABLE

FROM	TO	DIRECTION	DISTANCE	FROM	TO	DIRECTION	DISTANCE
112	786	N89°35'53"E	1077.24'	91	759	S83°45'10"E	104.03'
786	3065	N00°24'07"W	51.93'	759	120	S06°14'50"W	27.07'
3065	3236	N64°16'42"E	47.00'	120	121	S52°05'26"W	84.62'
3236	3235	N17°50'00"E	96.33'	121	119	S08°41'36"W	44.62'
3235	3234	N05°55'15"E	99.21'	119	118	S09°01'55"W	57.54'
3234	3050	N06°16'00"E	76.13'	117	214	S39°24'23"E	22.93'
3050	3062	N33°27'22"E	42.57'	214	215	S21°38'34"E	66.19'
3062	208	N06°52'06"E	50.45'	215	216	S46°59'10"W	79.23'
208	209	N01°56'08"E	148.82'	216	3001	S03°32'52"W	206.20'
209	210	N39°25'58"W	38.19'	3001	2082	S06°00'06"E	60.81'
210	211	N08°04'15"W	61.15'	2082	3103	S48°28'35"W	14.29'
211	212	N51°38'31"E	67.70'	3103	3100	S03°32'52"W	188.13'
212	122	N09°01'55"E	136.37'	3100	3097	S38°46'17"E	12.75'
123	213	N39°32'06"W	25.37'	3097	3096	S56°50'23"E	34.55'
213	758	N02°52'24"E	31.75'	3096	787	S00°24'07"E	43.41'
758	91	S87°07'36"E	90.91'	787	754	S89°35'53"W	92.25'
				754	786	S89°35'53"W	153.86'

FOR ADDITIONAL INFORMATION REFER TO THE TITLE SHEET. RECORDED IN THE OFFICE OF THE REGISTER OF DEEDS, IN PORTAGE COUNTY AS SHEET 2 OF 2 OF DOCUMENT NUMBER 765584.

SEH

I HEREBY CERTIFY THAT THIS PLAT MEETS ALL REQUIREMENTS OF SECTION 84.095, WISCONSIN STATUTES. THIS PLAT WAS PREPARED BY OR UNDER THE DIRECTION OF

JASON L. CANCE		3-17-2014
PRINTED NAME	SIGNATURE	DATE

THIS PLAT AND RELOCATION ORDER ARE APPROVED FOR THE WISCONSIN DEPARTMENT OF TRANSPORTATION

BRENT L. STELLA		3-25-14
PRINTED NAME	SIGNATURE	DATE

WISCONSIN JASON L. CANCE S-2688 CHIPPEWA FALLS WI LAND SURVEYOR

FILE NAME : P:\UZ\W\Witnc\112545\5-final-dsgn\51-drawings\40-TransHwy\040102 RP.dgn
PLOT DATE : 3/17/2014 PLOT BY : SEH PLOT NAME : PLOT SCALE : N/A
APPRAISAL PLAT DATE :

4

STATE OF WISCONSIN
DEPARTMENT OF TRANSPORTATION

765584

TRANSPORTATION PROJECT PLAT TITLE SHEET

PROJECT NO. 6414-00-25
BUSINESS 51, VILLAGE OF PLOVER & WHITING
(STH 54 TO MINNESOTA AVENUE)
PORTAGE COUNTY

ACCEPTED FOR RECORDING AND FILING IN THE OFFICE OF THE REGISTER OF DEEDS IN Portage COUNTY, WISCONSIN AT 9:15AM ON December 20, 2011 AS DOCUMENT # 765584 AND FILED IN _____

Cynthia Albrecht

SIGNATURE OF REGISTER OF DEEDS

env. $50 $26.00

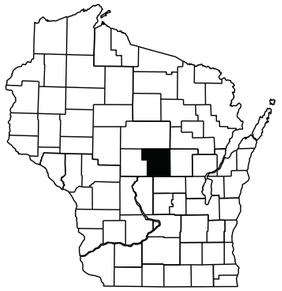

R 8 E

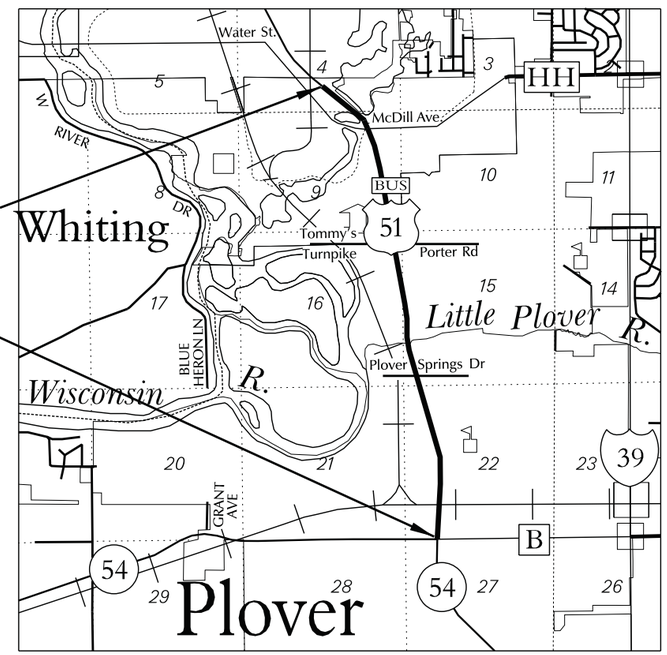

T 23 N

N

LAYOUT
SCALE 0 .5 MI.

CONVENTIONAL ABBREVIATIONS

ACCESS POINT/ DRIVEWAY CONNECTION	AP	REFERENCE LINE	R/L
ACCESS RIGHTS	AR	RELEASE OF RIGHTS	ROR
ACRES	AC.	REMAINING	REM.
AND OTHERS	ET.AL.	RIGHT-OF-WAY	R/W
CENTERLINE	C/L	SECTION	SEC.
CERTIFIED SURVEY MAP	CSM	STATION	STA.
CORNER	COR.	TEMPORARY LIMITED EASEMENT	TLE
DOCUMENT	DOC.	VOLUME	V.
EASEMENT	EASE.	**CURVE DATA**	
HIGHWAY EASEMENT	H.E.	LONG CHORD	LCH
LAND CONTRACT	LC	LONG CHORD BEARING	LCB
MONUMENT	MON.	RADIUS	R
PAGE	P.	DEGREE OF CURVE	D
PERMANENT LIMITED EASEMENT	PLE	CENTRAL ANGLE OR DELTA	DELTA
PROPERTY LINE	PL	LENGTH OF CURVE	L
RECORDED AS	(100')	TANGENT	TAN

CONVENTIONAL SYMBOLS

FOUND IRON PIPE/PIN	LP (1" UNLESS NOTED)	PROPOSED R/W LINE
R/W MONUMENT	•(SET)	EXISTING H.E. LINE
R/W STANDARD	▲(SET)	PROPERTY LINE
SIGN	SIGN	LOT & TIE LINES
SECTION CORNER MONUMENT		SLOPE INTERCEPTS
SECTION CORNER SYMBOL		CORPORATE LIMITS
FEE (HATCH VARIES)		ACCESS RESTRICTION (BY PREVIOUS ACQUISITION/CONTROL)
TEMPORARY LIMITED EASEMENT		ACCESS RESTRICTION (BY ACQUISTION)
PERMANENT LIMITED EASEMENT		ACCESS RESTRICTION (BY STATUTORY AUTHORITY)
R/W BOUNDARY POINT	RWB20	SECTION LINE
PARCEL NUMBER	103	QUARTER LINE
UTILITY PARCEL NUMBER	92	SIXTEENTH LINE
SIGN NUMBER (OFF PREMISE)	21	EXISTING CENTERLINE
BUILDING		PROPOSED REFERENCE LINE
		PARALLEL OFFSET

CONVENTIONAL UTILITY SYMBOLS

WATER	W	
GAS	G	
TELEPHONE	T	
OVERHEAD TRANSMISSION LINES	OH	
ELECTRIC	E	
CABLE TELEVISION	TV	
FIBER OPTIC	FO	
SANITARY SEWER	SAN	
STORM SEWER	SS	
	NON COMPENSABLE	COMPENSABLE
POWER POLE		
TELEPHONE POLE		
TELEPHONE PEDESTAL		
ELECTRIC TOWER		

NOTES:

COORDINATES AND BEARINGS SHOWN ON THIS PLAT ARE REFERENCED TO THE WISCONSIN COUNTY COORDINATE SYSTEM, PORTAGE COUNTY ZONE, NAD83 (2007) ADJUSTMENT. THE COORDINATES SHOWN ARE GRID COORDINATES AND ARE TO BE USED AS GRID OR GROUND VALUES ON THIS PLAT.

RIGHT-OF-WAY MONUMENTS ARE TYPE 2 AND WILL BE PLACED PRIOR TO THE COMPLETION OF THE PROJECT. (TYPICALLY 3/4"X24" RE-BAR)

RIGHT-OF-WAY BOUNDARIES ARE DEFINED WITH COURSES OF THE PERIMETER OF THE HIGHWAY LANDS REFERENCED TO THE U.S. PUBLIC LAND SURVEY SYSTEM OR OTHER "SURVEYS OF PUBLIC RECORD".

PROPERTY LINES SHOWN ON THIS PLAT ARE DRAWN FROM DATA DERIVED FROM MAPS AND DOCUMENTS OF PUBLIC RECORD AND/OR EXISTING OCCUPATIONAL LINES. THIS PLAT MAY NOT BE A TRUE REPRESENTATION OF EXISTING PROPERTY LINES, EXCLUDING RIGHT-OF-WAY LINES, AND SHOULD NOT BE USED AS A SUBSTITUTE FOR AN ACCURATE FIELD SURVEY.

EXISTING HIGHWAY RIGHT-OF-WAY SHOWN HEREIN IS BASED ON THE FOLLOWING POINTS OF REFERENCE: EXISTING HIGHWAY RIGHT-OF-WAY FOR BUS 51 ESTABLISHED FROM PREVIOUS PROJECTS 1526-02-24, 6998-01-21, F05-3(34), 6998-01-21, 6414-01-71, 6414-00-21, 6998-01-16, 6413-01-21 AND EXISTING HIGHWAY RIGHT-OF-WAY FOR SIDE ROADS ESTABLISHED FROM CENTERLINE OF EXISTING PAVEMENTS. EXISTING ACCESS CONTROL ALONG BUS 51 ESTABLISHED FROM PREVIOUS PROJECTS 1526-02-24.

A **TEMPORARY LIMITED EASEMENT** (TLE) IS A RIGHT FOR CONSTRUCTION PURPOSES, AS DEFINED HEREIN, INCLUDING THE RIGHT TO OPERATE NECESSARY EQUIPMENT THEREON AND THE RIGHT OF INGRESS AND EGRESS, AS LONG AS REQUIRED FOR SUCH PUBLIC PURPOSE, INCLUDING THE RIGHT TO PRESERVE, PROTECT, REMOVE, OR PLANT THEREON ANY VEGETATION THAT THE HIGHWAY AUTHORITIES MAY DEEM NECESSARY OR DESIRABLE. ALL TLES EXPIRE AT THE COMPLETION OF THE CONSTRUCTION PROJECT FOR WHICH THIS INSTRUMENT IS GIVEN.

A **PERMANENT LIMITED EASEMENT** (PLE) IS A RIGHT FOR CONSTRUCTION AND MAINTENANCE PURPOSES, AS DEFINED HEREIN, INCLUDING THE RIGHT TO OPERATE NECESSARY EQUIPMENT THEREON AND THE RIGHT OF INGRESS AND EGRESS, AS LONG AS REQUIRED FOR SUCH PUBLIC PURPOSE, INCLUDING THE RIGHT TO PRESERVE, PROTECT, REMOVE, OR PLANT THEREON ANY VEGETATION THAT THE HIGHWAY AUTHORITIES MAY DEEM NECESSARY OR DESIRABLE. BUT WITHOUT PREJUDICE TO THE OWNER'S RIGHT TO MAKE OR CONSTRUCT IMPROVEMENT ON SAID LANDS OR TO FLATTEN THE SLOPES, PROVIDING SAID ACTIVITIES WILL NOT IMPAIR OR OTHERWISE ADVERSELY AFFECT THE HIGHWAY FACILITIES.

A **HIGHWAY EASEMENT** (HE) IS AN EASEMENT FOR HIGHWAY PURPOSES, AS LONG AS SO USED, INCLUDING THE RIGHT TO PRESERVE, PROTECT, REMOVE OR PLANT THEREON ANY VEGETATION THAT THE HIGHWAY AUTHORITIES MAY DEEM NECESSARY OR DESIRABLE.

DIMENSIONING FOR THE NEW RIGHT-OF-WAY IS MEASURED ALONG AND PERPENDICULAR TO NEW REFERENCE LINES.

DISTANCES SHOWN TO BUILDINGS ARE APPROXIMATE.

EXISTING RIGHT OF WAY COMPUTATIONS AND EXISTING MONUMENT COORDINATES VALUES PROVIDED BY AECOM UNDER THE DIRECTION OF THE WISCONSIN DEPARTMENT OF TRANSPORTATION NORTH CENTRAL REGION.

SEH
401 FRENETTE DRIVE
CHIPPEWA FALLS, WI 54729

RESERVED FOR REGISTER OF DEEDS
PROJECT NUMBER 6414-00-25 - 4.01
SHEET 2 OF 2
AMENDMENT NO:

FILE NAME : P:\UZ\W\Witnc\112424\CAD\040101 RP.dgn PLOT DATE : 12/8/2011 PLOT BY : SEH PLOT NAME : PLOT SCALE : N/A
APPRAISAL PLAT DATE :

4.

TRANSPORTATION PROJECT PLAT NO: 6414-00-25 - 4.02 AMENDMENT NO. 2

AMENDS UTILITY NO. 200 AND PROVIDES CLARIFICATION OF ALL UTILITY LOCATIONS TO TRANSPORTATION PROJECT PLAT NO. 6414-00-25 AMENDMENT NO. 1 RECORDED AS DOCUMENT NO. 786949.

BUS. 51, VILLAGE OF PLOVER & WHITING (STH 54 - MINNESOTA AVE.)

PART OF LOTS 1, 2, & OUTLOT 1 OF PLOVER ASSESSOR'S PLAT NO. 2, PART OF OUTLOT 1 & LOT 67 PLOVER ASSESSOR'S PLAT NO. 3, PART OF LOT 1, CSM NO. 6792, LOCATED IN AND INCLUDING PART OF THE SE 1/4 OF THE SW 1/4, PART OF LOTS 38, 39, 42, 66, 67 & OUTLOT 1 OF PLOVER ASSESSOR'S PLAT NO. 3, PART OF LOTS 56, 58, & 59 OF PLOVER ASSESSOR'S PLAT NO. 5, PART OF LOTS 1 & 2 OF CSM NO. 3672, LOCATED IN AND INCLUDING PART OF THE NE 1/4 OF THE SW 1/4; PART OF OUTLOT 2 OF PLOVER ASSESSOR'S PLAT NO. 4, PART OF OUTLOT 2 OF PLOVER ASSESSOR'S PLAT NO. 5 AND PART OF LOT 1, CSM NO. 6843, PART OF POST ROAD PROPERTIES CONDOMINIUM, LOCATED IN AND INCLUDING PART OF THE SW 1/4 OF THE SW 1/4; PART OF LOTS 56, 58 THRU 59, 61, & OUTLOT 2 OF ASSESSOR'S PLAT NO. 5, PART OF POST ROAD PROPERTIES CONDOMINIUM, PART OF LOT 79.1, CSM NO. 2950, LOCATED IN AND INCLUDING PART OF THE NW 1/4 OF THE SW 1/4; ALL IN SECTION 22, T23N, R8E, VILLAGE OF PLOVER, PORTAGE COUNTY, WISCONSIN

RELOCATION ORDER BUS 51 PORTAGE COUNTY

TO PROPERLY ESTABLISH, LAY OUT, WIDEN, ENLARGE, EXTEND, CONSTRUCT, RECONSTRUCT, IMPROVE, OR MAINTAIN A PORTION OF THE HIGHWAY DESIGNATED ABOVE, THE STATE OF WISCONSIN DEPARTMENT OF TRANSPORTATION DEEMS IT NECESSARY TO RELOCATE OR CHANGE SAID HIGHWAY AND ACQUIRE CERTAIN LANDS AND INTERESTS OR RIGHTS IN LANDS FOR THE ABOVE PROJECT.

TO EFFECT THIS CHANGE, PURSUANT TO AUTHORITY GRANTED UNDER SECTION 84.02 (3) AND 84.09, WISCONSIN STATUTES, THE DEPARTMENT OF TRANSPORTATION HEREBY ORDERS THAT:
1. THAT PORTION OF SAID HIGHWAY AS SHOWN ON THIS PLAT IS LAID OUT AND ESTABLISHED TO THE LINES AND WIDTHS AS SO SHOWN FOR THE ABOVE PROJECT.
2. THE LANDS OR INTERESTS OR RIGHTS IN LANDS AS SHOWN ON THIS PLAT ARE REQUIRED BY THE DEPARTMENT FOR THE ABOVE PROJECT AND SHALL BE ACQUIRED IN THE NAME OF THE STATE OF WISCONSIN, PURSUANT TO THE PROVISIONS OF SECTION 84.09 (1) OR (2), WISCONSIN STATUTES.

UTILITY INTEREST TABLE

UTILITY NUMBER	PARCEL	INTEREST DESCRIPTION	RECORDING INFORMATION
200	16	EASEMENT	DOC. # 367999
	16	EASEMENT	DOC. # 368000
	16	EASEMENT	DOC. # 368131
	16	EASEMENT	DOC. # 368021
	16	EASEMENT	DOC. # 368023
	18	EASEMENT	DOC. # 367996
	20	EASEMENT	DOC. # 368002
	21	EASEMENT	DOC. # 367997
	22	EASEMENT	DOC. # 368140
	23	EASEMENT	DOC. # 368142
	23	EASEMENT	DOC. # 367993
	24	EASEMENT	DOC. # 368014
	25	EASEMENT	DOC. # 368012
	29	EASEMENT	DOC. # 368025
201	22	NO EASEMENT OF RECORD	
	23	EASEMENT	DOC. # 452907
	28	NO EASEMENT OF RECORD	
210	18	EASEMENT	DOC. # 387220
	19	NO EASEMENT OF RECORD	
	23	EASEMENT	DOC. # 231281
	23	CON. OF RIGHTS	DOC. # 367100
	23	NO EASEMENT OF RECORD	
	26	EASEMENT	DOC. # 230558
	27	EASEMENT	DOC. # 230558
220	16	NO EASEMENT OF RECORD	
221	18	NO EASEMENT OF RECORD	
	18	EASEMENT	DOC. # 387220
	28	NO EASEMENT OF RECORD	

SCHEDULE OF LANDS & INTERESTS REQUIRED

OWNER'S NAMES ARE SHOWN FOR REFERENCE PURPOSES ONLY AND ARE SUBJECT TO CHANGE PRIOR TO THE TRANSFER OF LAND INTERESTS TO THE DEPARTMENT

PARCEL NUMBER	OWNER (S)	INTEREST REQUIRED	R/W S.F. REQUIRED NEW	EXISTING	TOTAL	HE S.F.	TLE S.F.
16	ASSOCIATED BANK, NATIONAL ASSOCIATION	FEE/AR/TLE	2270	-	2270	-	2625
17	WISCONSIN CENTRAL LTD.	HE/TLE	-	-	-	3685	1275
18	BEST INVESTMENT PROPERTIES LLC.	FEE/AR/TLE	1775	-	1775	-	2500
19	THEODORE WILLER	FEE/AR/TLE	2910	-	2910	-	6525
20	WOW COMMERCIAL VENTURES LLC.	FEE/AR/TLE	8990	-	8990	-	4080
21	MAYNARD & JUDITH A. KLOSINSKI	FEE/AR/TLE	11815	-	11815	-	880
22	DANIEL L. & MARY A. KOWALSKI	FEE/AR/TLE	5565	-	5565	-	1005
23	JMK DEVELOPMENT LLC.	FEE/AR/TLE	8790	-	8790	-	5865
24	EMERANCE D. & MARION DANIELSKI	FEE/AR/TLE	5375	-	5375	-	1415
25	KENNETH L. LEPACK (VENDOR) ST. VINCENT DEPAUL COMMUNITY CENTER OF PORTAGE COUNTY INC. (PURCHASER)	FEE/AR/TLE	4585	-	4585	-	1140
26	COMMUNITY FIRST BANK	FEE/AR/TLE	4830	-	4830	-	3215
27	SCOTT DONALD SHURPIT	FEE/AR/TLE	5950	-	5950	-	4775
28	DENNIS J. & NANCY S. FREUND	FEE	26915	-	26915	-	-
29	BRUCE WICHALSKI	FEE/AR/TLE	9920	-	9920	-	685

794551

ACCEPTED FOR RECORDING AND FILING IN THE OFFICE OF THE REGISTER OF DEEDS IN Portage COUNTY, WISCONSIN AT 9:06 AM ON April 2, 2014 AS DOCUMENT # 794551 AND FILED IN Envl. $50

SIGNATURE OF REGISTER OF DEEDS $25.00

RESERVED FOR REGISTER OF DEEDS
PROJECT NUMBER 6414-00-25-4.02
AMENDMENT NO. 2

UTILITY INTERESTS REQUIRED

UTILITY NUMBER	OWNER (S)	INTEREST REQUIRED
200	VILLAGE OF PLOVER - WATER	RELEASE OF RIGHTS
201	VILLAGE OF PLOVER - SANITARY SEWER	RELEASE OF RIGHTS
210	WISCONSIN TELEPHONE COMPANY N/K/A AT&T	RELEASE OF RIGHTS
220	WISCONSIN PUBLIC SERVICE - GAS	RELEASE OF RIGHTS
221	WISCONSIN PUBLIC SERVICE - ELECTRIC	RELEASE OF RIGHTS

PI STA 498+06.75
PI Y =179,164.382
PI X =173,427.078
DELTA =07°23'05"(LT)
R =300.00'
D =19°05'55"
T =19.36'
L =38.67'

PI STA 498+40.47
PI Y =179,167.449
PI X =173,460.709
DELTA =08°14'32"(RT)
R =200.00'
D =28°38'52"
T =14.41'
L =28.77'

CURVE 809-895
L= 188.44'
LC= 188.42'
LCB= N03°17'04"E
R= 3799.50'

CURVE 898-224
L= 61.52'
LC= 61.52'
LCB= N05°56'14"E
R= 3799.50'

PI STA 136+83.01
PI Y =179,620.751
PI X =173,624.418
DELTA =06°25'10"(RT)
R =3730.00'
D =01°32'10"
T =209.18'
L =417.92'

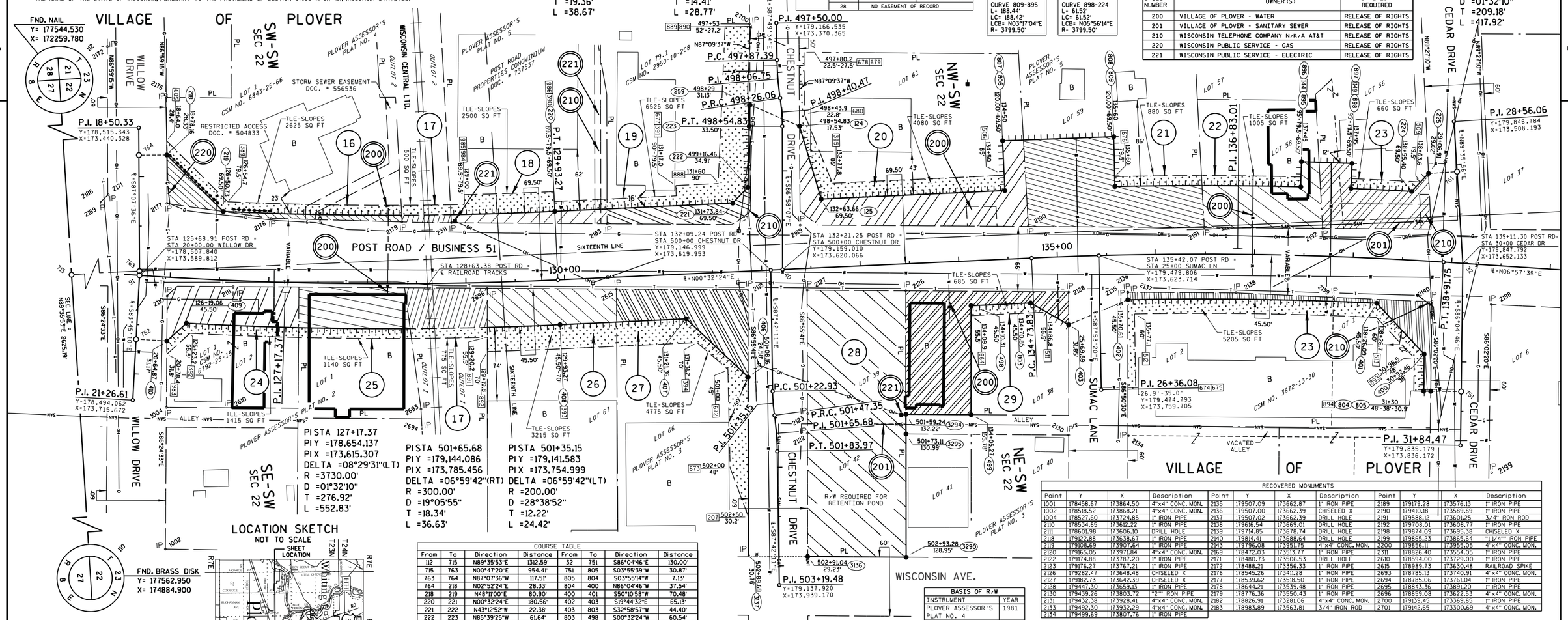

LOCATION SKETCH
NOT TO SCALE

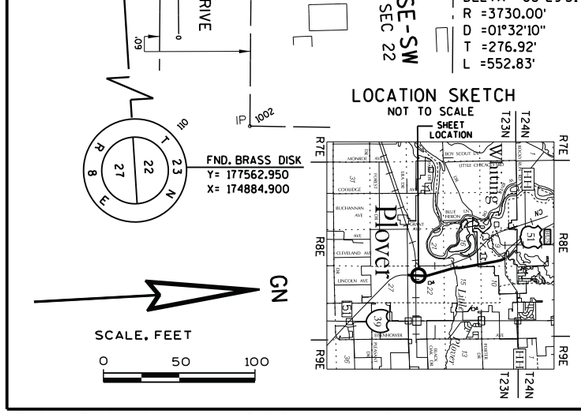

COURSE TABLE

From	To	Direction	Distance	From	To	Direction	Distance
112	715	N89°35'53"E	1312.59'	32	751	S86°04'46"E	130.00'
715	763	N00°47'20"E	954.41'	751	805	S03°55'39"W	30.87'
763	764	N87°07'36"W	117.51'	805	804	S03°55'14"W	7.13'
764	218	N02°52'24"E	28.33'	804	400	N86°04'46"W	37.54'
218	219	N48°11'00"E	80.90'	400	401	S50°10'58"W	70.48'
220	221	N00°32'24"E	180.56'	402	403	S19°44'32"E	65.13'
221	222	N43°12'52"W	22.38'	403	803	S32°58'57"W	44.40'
222	223	N85°39'25"W	61.64'	803	498	S00°32'24"W	60.54'
223	259	N84°26'09"W	21.77'	498	499	S86°50'31"E	110.40'
259	124	N26°30'36"E	54.59'	499	3294	S03°34'32"W	66.26'
124	125	N76°34'59"E	77.04'	3294	3295	S87°35'11"E	20.00'
125	806	N00°32'24"E	186.34'	3295	3290	S86°53'50"E	124.92'
806	807	N89°27'36"W	50.50'	3290	3136	S03°35'08"W	99.75'
807	808	N01°03'43"E	112.77'	3136	3137	S03°35'10"W	60.00'
808	809	S88°08'11"E	50.50'	3137	406	N86°55'41"W	181.39'
895	896	N85°17'40"W	25.50'	406	407	S46°25'07"W	86.17'
896	897	N05°05'22"E	51.27'	407	408	S00°32'24"W	128.08'
897	898	S84°31'35"E	25.50'	409	410	S38°49'51"E	26.83'
224	225	N43°35'20"W	24.98'	410	762	S06°14'51"W	31.17'
225	761	N00°24'04"W	29.02'	762	91	N83°45'10"W	64.87'
761	32	N89°35'55"E	93.09'	91	763	N87°07'36"W	4.34'

BASIS OF R/W

INSTRUMENT	YEAR
PLOVER ASSESSOR'S PLAT NO. 4	1981
PLOVER ASSESSOR'S PLAT NO. 2	1980
PLOVER ASSESSOR'S PLAT NO. 3	1981
PLOVER ASSESSOR'S PLAT NO. 5	1981
CSM NO. 6843	1998
CSM NO. 2950	1983
CSM NO. 6792	1998
CSM NO. 3672	1986
RW PLAT NO. 1526-02-24	1994
RW PLAT NO. 6998-01-21	1981

FOR ADDITIONAL INFORMATION REFER TO THE TITLE SHEET. RECORDED IN THE OFFICE OF THE REGISTER OF DEEDS, IN PORTAGE COUNTY AS SHEET 2 OF 2 OF DOCUMENT NUMBER 765584.

RECOVERED MONUMENTS

Point	Y	X	Description	Point	Y	X	Description	Point	Y	X	Description
1001	178458.67	173864.50	4"x4" CONC. MON.	2135	179507.09	173662.87	1" IRON PIPE	2189	179179.28	173576.13	1" IRON PIPE
1002	178518.52	173868.21	4"x4" CONC. MON.	2136	179507.00	173662.39	CHISELED X	2190	179410.18	173589.89	1" IRON PIPE
1004	178527.60	173724.85	1" IRON PIPE	2137	179507.02	173662.39	DRILL HOLE	2191	179588.12	173601.25	3/4" IRON ROD
2110	178534.65	173612.22	1" IRON PIPE	2138	179616.54	173669.01	DRILL HOLE	2192	179708.01	173608.77	1" IRON PIPE
2111	178601.98	173606.10	DRILL HOLE	2139	179714.85	173678.74	DRILL HOLE	2198	179874.09	173695.38	CHISELED X
2118	179122.88	173638.67	1" IRON PIPE	2140	179814.41	173688.64	DRILL HOLE	2199	179865.23	173865.64	"1/4"" IRON PIPE
2119	179108.69	173907.64	1" IRON PIPE	2143	179796.08	173951.75	4"x4" CONC. MON.	2200	179856.11	173955.05	4"x4" CONC. MON.
2120	179165.05	173971.84	4"x4" CONC. MON.	2169	178472.03	173511.77	1" IRON PIPE	2311	178826.40	173554.05	1" IRON PIPE
2122	179174.88	173787.20	1" IRON PIPE	2171	178480.73	173506.53	DRILL HOLE	2610	178594.00	173729.00	1" IRON PIPE
2123	179176.27	173767.21	1" IRON PIPE	2172	178488.21	173356.33	1" IRON PIPE	2615	178989.73	173630.48	RAILROAD SPIKE
2126	179282.47	173648.48	CHISELED X	2176	178545.26	173411.28	1" IRON PIPE	2693	178785.13	173740.91	4"x4" CONC. MON.
2127	179182.73	173642.39	CHISELED X	2177	178539.62	173518.50	1" IRON PIPE	2694	178785.06	173761.04	1" IRON PIPE
2128	179447.30	173659.13	1" IRON PIPE	2178	178644.21	173539.48	1" IRON PIPE	2695	178843.36	173891.20	1" IRON PIPE
2130	179439.26	173803.72	"2"" IRON PIPE	2179	178776.36	173550.43	1" IRON PIPE	2696	178859.08	173622.53	4"x4" CONC. MON.
2131	179432.38	173928.41	4"x4" CONC. MON.	2182	178826.91	173281.06	4"x4" CONC. MON.	2700	179139.45	173369.85	1" IRON PIPE
2133	179492.30	173932.29	4"x4" CONC. MON.	2183	178983.89	173563.81	3/4" IRON ROD	2701	179142.65	173300.69	4"x4" CONC. MON.
2134	179499.69	173807.76	1" IRON PIPE								

SEH
421 FRENETTE DRIVE
CHIPPEWA FALLS, WI 54729

I HEREBY CERTIFY THAT THIS PLAT MEETS ALL REQUIREMENTS OF SECTION 84.095, WISCONSIN STATUTES. THIS PLAT WAS PREPARED BY OR UNDER THE DIRECTION OF

PRINTED NAME	SIGNATURE	DATE
JASON L. CANCE	Jason L. Cance	3-17-2014

THIS PLAT AND RELOCATION ORDER ARE APPROVED FOR THE WISCONSIN DEPARTMENT OF TRANSPORTATION

PRINTED NAME	SIGNATURE	DATE
BRENT L. STELLA	Brent L. Stella	3-25-14

WISCONSIN JASON L. CANCE S-2888 CHIPPEWA FALLS WI LAND SURVEYOR

FILE NAME : P:\UZ\W\Witnc\112545\5-final-dsgn\51-drawings\40-TransHwy\040103 RP.dgn
PLOT DATE : 3/17/2014 PLOT BY : SEH PLOT NAME : PLOT SCALE : N/A
APPRAISAL PLAT DATE :

TRANSPORTATION PROJECT PLAT NO: 6414-00-25 - 4.03 AMENDMENT NO. 3

AMENDS PARCEL 41 OF TRANSPORTATION PROJECT PLAT 6414-00-25-4.03 RECORDED AS DOCUMENT NO. 765973 AND AMENDS UTILITY NO. 200 OF TRANSPORTATION PROJECT PLAT NO. 6414-00-25-4.03 AMENDMENT NO. 2 RECORDED AS DOCUMENT NO. 794552

BUS. 51, VILLAGE OF PLOVER AND WHITING (STH 54 - MINNESOTA AVE.)

PART OF LOTS 9, & 12 THRU 18 OF PLOVER ASSESSOR'S PLAT NO. 5, PART OF LOT 1 OF PLOVER ASSESSOR'S PLAT NO. 3 AND PART OF LOT 1 CSM NO. 7075, LOCATED IN AND INCLUDING PART OF THE SW 1/4 OF THE NW 1/4; PART OF LOTS 36 & 37 OF PLOVER ASSESSOR'S PLAT NO. 5 LOCATED IN AND INCLUDING PART OF THE NW 1/4 OF THE SW 1/4; PART OF LOT 4 OF PLOVER ASSESSOR'S PLAT NO. 3, PART OF LOT 18 OF PLOVER ASSESSOR'S PLAT NO. 5, PART OF LOT 1 & OUTLOT 1 OF CSM NO. 7075, PART OF LOTS 1 & 2 OF CSM NO. 4243, LOCATED IN AND INCLUDING PART OF THE SE 1/4 OF THE NW 1/4; AND PART OF LOT 1 CSM NO. 9197, PART OF LOTS 36 & 37 OF PLOVER ASSESSOR'S PLAT NO. 5, PART OF LOT 4 OF PLOVER ASSESSOR'S PLAT NO. 3, LOCATED IN AND INCLUDING PART OF THE NE 1/4 OF THE SW 1/4; ALL IN SECTION 22, T23N, R8E, VILLAGE OF PLOVER, PORTAGE COUNTY, WISCONSIN

RELOCATION ORDER BUS 51 PORTAGE COUNTY

TO PROPERLY ESTABLISH, LAY OUT, WIDEN, ENLARGE, EXTEND, CONSTRUCT, RECONSTRUCT, IMPROVE, OR MAINTAIN A PORTION OF THE HIGHWAY DESIGNATED ABOVE, THE STATE OF WISCONSIN DEPARTMENT OF TRANSPORTATION DEEMS IT NECESSARY TO RELOCATE OR CHANGE SAID HIGHWAY AND ACQUIRE CERTAIN LANDS AND INTERESTS OR RIGHTS IN LANDS FOR THE ABOVE PROJECT.

TO EFFECT THIS CHANGE, PURSUANT TO AUTHORITY GRANTED UNDER SECTION 84.02 (3) AND 84.09, WISCONSIN STATUTES, THE DEPARTMENT OF TRANSPORTATION HEREBY ORDERS THAT:
1. THAT PORTION OF SAID HIGHWAY AS SHOWN ON THIS PLAT IS LAID OUT AND ESTABLISHED TO THE LINES AND WIDTHS AS SO SHOWN FOR THE ABOVE PROJECT.
2. THE LANDS OR INTERESTS OR RIGHTS IN LANDS AS SHOWN ON THIS PLAT ARE REQUIRED BY THE DEPARTMENT FOR THE ABOVE PROJECT AND SHALL BE ACQUIRED IN THE NAME OF THE STATE OF WISCONSIN, PURSUANT TO THE PROVISIONS OF SECTION 84.09 (1) OR (2), WISCONSIN STATUTES.

UTILITY INTEREST TABLE			
UTILITY NUMBER	PARCEL	INTEREST DESCRIPTION	RECORDING INFORMATION
200	35	EASEMENT	DOC. # 368146
	38	EASEMENT	DOC. # 366890
	38	EASEMENT	DOC. # 368010
	39	EASEMENT	DOC. # 366892
	39	EASEMENT	DOC. # 367994
	41	EASEMENT	DOC. # 366889
	42	EASEMENT	DOC. # 366893
	42	EASEMENT	DOC. # 368147
	43	EASEMENT	DOC. # 368141
	47	EASEMENT	DOC. # 368016
201	36	NO EASEMENT OF RECORD	
	38	EASEMENT	DOC. # 366890
	39	EASEMENT	DOC. # 366892
	41	EASEMENT	DOC. # 366889
	42	EASEMENT	DOC. # 366893
	42	NO EASEMENT OF RECORD	
210	41	EASEMENT	DOC. # 231271
	42	NO EASEMENT OF RECORD	
	43	NO EASEMENT OF RECORD	
	44	NO EASEMENT OF RECORD	
	45	EASEMENT	DOC. # 230552
	46	EASEMENT	DOC. # 117274
	46	EASEMENT	DOC. # 230551
	47	EASEMENT	DOC. # 117274
	47	EASEMENT	DOC. # 229401
	47	EASEMENT	DOC. # 230553
	48	EASEMENT	DOC. # 230555
220	41	EASEMENT	DOC. # 674069
	41	EASEMENT	DOC. # 743853
221	41	EASEMENT	DOC. # 674069
	41	EASEMENT	DOC. # 743853

SCHEDULE OF LANDS & INTERESTS REQUIRED

OWNER'S NAMES ARE SHOWN FOR REFERENCE PURPOSES ONLY AND ARE SUBJECT TO CHANGE PRIOR TO THE TRANSFER OF LAND INTERESTS TO THE DEPARTMENT

PARCEL NUMBER	OWNER (S)	INTEREST REQUIRED	R/W S.F. REQUIRED			TLE S.F.
			NEW	EXISTING	TOTAL	
35	DANIEL L. & MARY A. KOWALSKI	FEE/AR/TLE	6890	-	6890	2925
36	ANGELA G. ZDROIK	FEE/AR/TLE	3650	-	3650	1310
37	JERAMY E. LUKASAVAGE & EDWARD M. LUKASAVAGE	FEE/AR/TLE	3680	-	3680	1235
38	BEVERLY L. MATKE	FEE/AR/TLE	1490	-	1490	850
39	JACK & SARA STOSKOPF	FEE/AR/TLE	4570	-	4570	1310
41	POINT PLUS CREDIT UNION	FEE/AR/TLE	9100	-	9100	1915
42	CNL APF PARTNERS LP	FEE/AR/TLE	7270	-	7270	1735
43	O'BRIEN PLOVER PROPERTIES LLC	FEE/AR/TLE	4760	-	4760	1015
44	DELLA L DIESBURG	FEE/AR/TLE	5565	-	5565	1120
45	PORTAGE COUNTY BANK	FEE/AR/TLE	1925	-	1925	3440
46	HELEN G. ADAMS	FEE/AR	9230	-	9230	-
47	PLOVER 2440 POST ROAD WI LLC	FEE/AR/TLE	4030	-	4030	11820
48	VILLAGE OF PLOVER	FEE/AR/TLE	6355	-	6355	20520

805890

ACCEPTED FOR RECORDING AND FILING IN THE OFFICE OF THE REGISTER OF DEEDS IN Portage COUNTY, WISCONSIN AT 3:05PM ON April 21, 2015 AS DOCUMENT # 805890 AND FILED IN Conv. #50

Cynthia Richmond
SIGNATURE OF REGISTER OF DEEDS

$21.00

RESERVED FOR REGISTER OF DEEDS
PROJECT NUMBER 6414-00-25-4.03
AMENDMENT NO. 3

UTILITY INTERESTS REQUIRED

UTILITY NUMBER	OWNER (S)	INTEREST REQUIRED
200	VILLAGE OF PLOVER - WATER	RELEASE OF RIGHTS
201	VILLAGE OF PLOVER - SANITARY SEWER	RELEASE OF RIGHTS
210	WISCONSIN TELEPHONE COMPANY N/K/A AT&T	RELEASE OF RIGHTS
220	WISCONSIN PUBLIC SERVICE - GAS	RELEASE OF RIGHTS
221	WISCONSIN PUBLIC SERVICE - ELECTRIC	RELEASE OF RIGHTS

PI STA 153+43.72
PI Y =181,234.673
PI X =173,382.418
DELTA =03°58'14"(RT)
R =8000.00'
D =00°42'58"
T =277.30'
L =554.38'

PI STA 43+98.88
PI Y =181,251.223
PI X =173,276.938
DELTA =15°19'10"(LT)
R =200.00'
D =28°38'52"
T =26.90'
L =53.48'

CURVE 802-132
L= 256.47'
LC= 256.01'
LCB= N12°25'20"W
R= 1230.50'

CURVE 133-134
L= 285.13'
LC= 285.11'
LCB= N17°22'52"W
R= 8069.50'

CURVE 193-194
L= 321.58'
LC= 320.81'
LCB= S11°32'47"E
R= 1345.50'

CURVE 198-199
L= 145.55'
LC= 145.48'
LCB= S03°51'38"W
R= 1345.50'

CURVE 205-156
L= 79.23'
LC= 79.22'
LCB= N05°06'53"E
R= 1230.50'

CURVE 176-206
L= 64.38'
LC= 64.37'
LCB= N00°07'44"W
R= 1230.50'

BASIS OF R/W	
INSTRUMENT	YEAR
PLOVER ASSESSOR'S PLAT NO. 3	1981
PLOVER ASSESSOR'S PLAT NO. 5	1981
CSM NO. 4760	1991
CSM NO. 9197	2006
CSM NO. 4243	1989
CSM NO. 7075	1999
RW PLAT NO. F05-3 (34)	1958
RW PLAT NO. 6998-01-21	1981

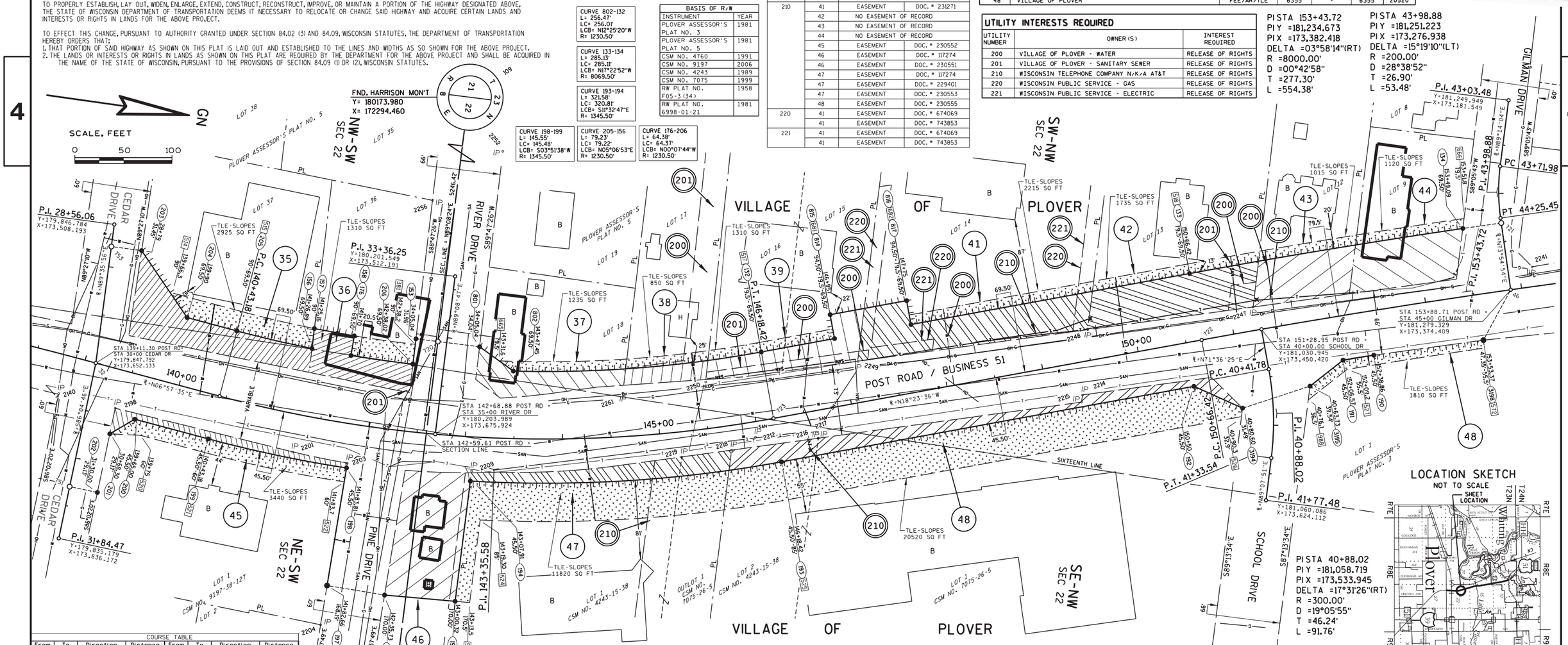

PI STA 40+88.02
PI Y =181,058.719
PI X =173,533.945
DELTA =17°31'26"(RT)
R =300.00'
D =19°05'55"
T =46.24'
L =91.76'

PI STA 143+35.58
PI Y =180,268.953
PI X =173,703.544
DELTA =25°21'10"(LT)
R =1300.00'
D =04°24'26"
T =292.41'
L =575.24'

COURSE TABLE							
From	To	Direction	Distance	From	To	Direction	Distance
109	720	N89°08'24"E	1286.80'	195	196	S02°56'53"E	72.91'
720	801	N00°15'36"W	43.33'	196	197	S01°22'11"W	60.00'
801	802	N27°46'06"E	42.79'	197	198	N88°37'49"W	122.70'
132	814	N18°23'36"W	76.58'	199	200	S06°57'34"W	78.18'
814	815	S71°36'24"W	25.00'	200	201	S38°19'25"E	29.77'
815	816	N18°23'36"W	80.00'	201	202	S86°02'20"E	61.70'
816	817	N71°36'24"E	25.00'	202	751	S03°54'48"W	29.13'
817	133	N18°23'36"W	291.42'	751	32	N86°04'46"W	130.00'
134	721	N16°15'37"W	39.96'	32	753	S89°35'55"W	121.00'
721	46	N73°54'54"E	69.50'	753	203	N00°24'05"W	31.45'
46	3198	S69°33'17"E	59.02'	203	204	N47°50'03"E	83.34'
3198	190	S15°49'11"E	113.86'	204	205	N06°57'34"E	53.18'
190	191	S17°16'26"E	32.11'	156	157	S88°47'11"W	20.56'
191	3195	S46°10'51"E	43.16'	157	158	N02°21'29"E	41.73'
3195	3194	S26°07'43"E	73.04'	158	176	S88°37'48"E	20.50'
3194	192	S16°11'39"W	54.91'	206	153	S88°47'28"W	26.24'
192	193	S18°23'36"E	431.58'	153	720	N00°51'36"W	22.68'
194	195	N89°11'40"E	124.76'				

RECOVERED MONUMENTS							
POINT	Y	X	DESCRIPTION	POINT	Y	X	DESCRIPTION
2140	179814.41	173688.64	DRILL HOLE	2217	180594.89	173625.12	3/4" IRON ROD
2198	179874.09	173695.38	CHISELED X	2218	180508.25	173649.71	1 1/4" IRON PIPE
2199	179865.23	173865.64	1 1/4" IRON PIPE	2219	180458.52	173663.81	3/4" IRON ROD
2200	179856.11	173955.05	4"X4" CONC. MON.	2241	181297.89	173348.10	4"X4" CONC. MON.
2201	180061.18	173714.58	CHISELED X	2247	181019.18	173428.78	1 1/4" IRON PIPE
2203	180118.46	173718.18	CHISELED X	2248	180853.95	173475.67	1" IRON PIPE
2204	180114.45	173886.66	1" IRON PIPE	2249	180624.39	173541.04	1" IRON PIPE
2205	180112.41	173971.22	4"X4" CONC. MON.	2250	180472.13	173583.88	CHISELED X
2209	180246.31	173708.32	CHISELED X	2252	180232.24	173377.84	1" IRON PIPE
2212	180530.74	173633.06	CHISELED X	2256	180167.87	173437.96	1" IRON PIPE
2214	180858.00	173543.23	1" IRON PIPE	2257	179880.31	173320.84	1" IRON PIPE
2215	180858.07	173550.53	4"X4" CONC. MON.	2261	180389.31	173607.36	1" IRON PIPE
2216	180594.76	173625.19	1" IRON PIPE				

FOR ADDITIONAL INFORMATION REFER TO THE TITLE SHEET. RECORDED IN THE OFFICE OF THE REGISTER OF DEEDS, IN PORTAGE COUNTY AS SHEET 2 OF 2 OF DOCUMENT NUMBER 765584.

SEH
421 FRENETTE DRIVE
CHIPPEWA FALLS, WI 54729

I HEREBY CERTIFY THAT THIS PLAT MEETS ALL REQUIREMENTS OF SECTION 84.095, WISCONSIN STATUTES. THIS PLAT WAS PREPARED BY OR UNDER THE DIRECTION OF

JASON L. CANCE	Jason L. Cance	4-14-15
PRINTED NAME	SIGNATURE	DATE

THIS PLAT AND RELOCATION ORDER ARE APPROVED FOR THE WISCONSIN DEPARTMENT OF TRANSPORTATION

BRENT L. STELLA	Brent L. Stella	4-14-15
PRINTED NAME	SIGNATURE	DATE

WISCONSIN JASON L. CANCE S-2688 CHIPPEWA FALLS WI LAND SURVEYOR

FILE NAME : P:\UZ\W\Witnc\112545\5-final-dsgn\51-drawings\40-TransHwy\040104 RP.dgn
PLOT DATE : 4/14/2015 PLOT BY : SEH PLOT NAME : PLOT SCALE : N/A
APPRAISAL PLAT DATE :

TRANSPORTATION PROJECT PLAT NO: 6414-00-25 - 4.04 AMENDMENT NO. 2

AMENDS UTILITY NO. 200 AND PROVIDES CLARIFICATION OF ALL UTILITY LOCATIONS TO TRANSPORATION PROJECT PLAT 6414-00-25-4.04 AMENDMENT NO. 1 RECORDED AS DOCUMENT NO. 786951

BUS 51, VILLAGE OF PLOVER & WHITING (STH 54 - MINNESOTA AVE.)

PART OF LOT 60 OF PLOVER ASSESSOR'S PLAT NO. 6, PART OF LOT 1, CSM NO. 300, PART OF LOT 1, CSM NO. 8711, PART OF LOT 1, CSM NO. 2615, PART OF LOT 1, CSM NO. 549, PART OF LOTS 1 & 2 OF CSM NO. 94, LOCATED IN AND INCLUDING PART OF THE NW 1/4 OF THE NW 1/4, PART OF LOTS 60 THRU 62 OF PLOVER ASSESSOR'S PLAT NO. 6, PART OF LOT 1 OF PLOVER ASSESSOR'S PLAT NO. 3 LOCATED IN AND INCLUDING PART OF THE SW 1/4 OF THE NW 1/4, ALL IN SECTION 22, T23N, R8E, VILLAGE OF PLOVER, PORTAGE COUNTY, WISCONSIN

RELOCATION ORDER BUS 51 PORTAGE COUNTY

TO PROPERLY ESTABLISH, LAY OUT, WIDEN, ENLARGE, EXTEND, CONSTRUCT, RECONSTRUCT, IMPROVE, OR MAINTAIN A PORTION OF THE HIGHWAY DESIGNATED ABOVE, THE STATE OF WISCONSIN DEPARTMENT OF TRANSPORTATION DEEMS IT NECESSARY TO RELOCATE OR CHANGE SAID HIGHWAY AND ACQUIRE CERTAIN LANDS AND INTERESTS OR RIGHTS IN LANDS FOR THE ABOVE PROJECT.

TO EFFECT THIS CHANGE, PURSUANT TO AUTHORITY GRANTED UNDER SECTION 84.02 (3) AND 84.09, WISCONSIN STATUTES, THE DEPARTMENT OF TRANSPORTATION HEREBY ORDERS THAT:
1. THAT PORTION OF SAID HIGHWAY AS SHOWN ON THIS PLAT IS LAID OUT AND ESTABLISHED TO THE LINES AND WIDTHS AS SO SHOWN FOR THE ABOVE PROJECT.
2. THE LANDS OR INTERESTS OR RIGHTS IN LANDS AS SHOWN ON THIS PLAT ARE REQUIRED BY THE DEPARTMENT FOR THE ABOVE PROJECT AND SHALL BE ACQUIRED IN THE NAME OF THE STATE OF WISCONSIN, PURSUANT TO THE PROVISIONS OF SECTION 84.09 (1) OR (2), WISCONSIN STATUTES.

SCHEDULE OF LANDS & INTERESTS REQUIRED

OWNER'S NAMES ARE SHOWN FOR REFERENCE PURPOSES ONLY AND ARE SUBJECT TO CHANGE PRIOR TO THE TRANSFER OF LAND INTERESTS TO THE DEPARTMENT

PARCEL NUMBER	OWNER (S)	INTEREST REQUIRED	R/W S.F. REQUIRED			TLE S.F.
			NEW	EXISTING	TOTAL	
48	VILLAGE OF PLOVER	FEE/ARTLE	530	-	530	3125
53	JOHN A. ORLOWSKI	FEE/ARTLE	6320	-	6320	70
54	THOMAS J. & LISA R. JAKUSZ	FEE/ARTLE	3535	-	3535	770
55	DARYL A. & GWEN J. MOREY	FEE/ARTLE	2970	-	2970	740
56	DORR E. & IRENE H. O'BRIEN	FEE/ARTLE	7975	-	7975	2055
57	DAVID PANG SII & NANCY SII	FEE/ARTLE	10640	-	10640	2740
58	EUGENE J. KATZ & BENNETT C. KATZ, D/B/A KATZ AND KATZ	FEE/ARTLE	11065	-	11065	4265
59	TERRANCE A. ZDZIEBLOWSKI ETAL.	FEE/ARTLE	4010	-	4010	1540
60	DONALD LEE COTE & JANICE M. SINGER & EUGENE WILLIS COTE	FEE/ARTLE	1105	-	1105	180
61	SKY CLUB INC.	FEE/ARTLE	315	-	315	4050
62	FREUND RENTALS LLC.	FEE/ARTLE	2405	-	2405	2925
63	MARKOVICH PROPERTIES INC.	FEE/ARTLE	5535	-	5535	2790
64	MARKOVICH INVESTMENT CO.	FEE/ARTLE	4890	-	4890	1580
65	THONG D. LEE & NENG LEE, ZONG YANG & PADEE YANG	FEE/ARTLE	2300	-	2300	2295

794553

ACCEPTED FOR RECORDING AND FILING IN THE OFFICE OF THE REGISTER OF DEEDS IN Portage COUNTY, WISCONSIN AT 9:05AM ON April 8, 2014 AS DOCUMENT # 794553 AND FILED IN Env. # 50

Diane Stahl-Derx
SIGNATURE OF REGISTER OF DEEDS $25.00

RESERVED FOR REGISTER OF DEEDS
PROJECT NUMBER 6414-00-25-4.04
AMENDMENT NO. 2

UTILITY INTERESTS REQUIRED

UTILITY NUMBER	OWNER (S)	INTEREST REQUIRED
200	VILLAGE OF PLOVER - WATER	RELEASE OF RIGHTS
201	VILLAGE OF PLOVER - SANITARY SEWER	RELEASE OF RIGHTS
210	WISCONSIN TELEPHONE COMPANY N/K/A AT&T	RELEASE OF RIGHTS
220	WISCONSIN PUBLIC SERVICE - GAS	RELEASE OF RIGHTS
221	WISCONSIN PUBLIC SERVICE - ELECTRIC	RELEASE OF RIGHTS

RECOVERED MONUMENTS

POINT	Y	X	DESCRIPTION
2225	181467.53	173408.23	1" IRON PIPE
2234	182256.89	173146.44	1 1/4" IRON PIPE
2236	182440.18	173094.45	1" IRON ROD
2237	182459.30	173020.49	1 1/4" IRON PIPE
2238	181977.70	173156.88	3/4" IRON ROD
2239	181712.50	173227.88	1" IRON PIPE
2240	181513.55	173280.24	SURVEY NAIL
2241	181297.89	173348.10	4"x4" CONC. MON.
2262	182473.88	172845.76	1 1/4" IRON PIPE
2268	182542.10	172996.94	4"x4" CONC. MON.

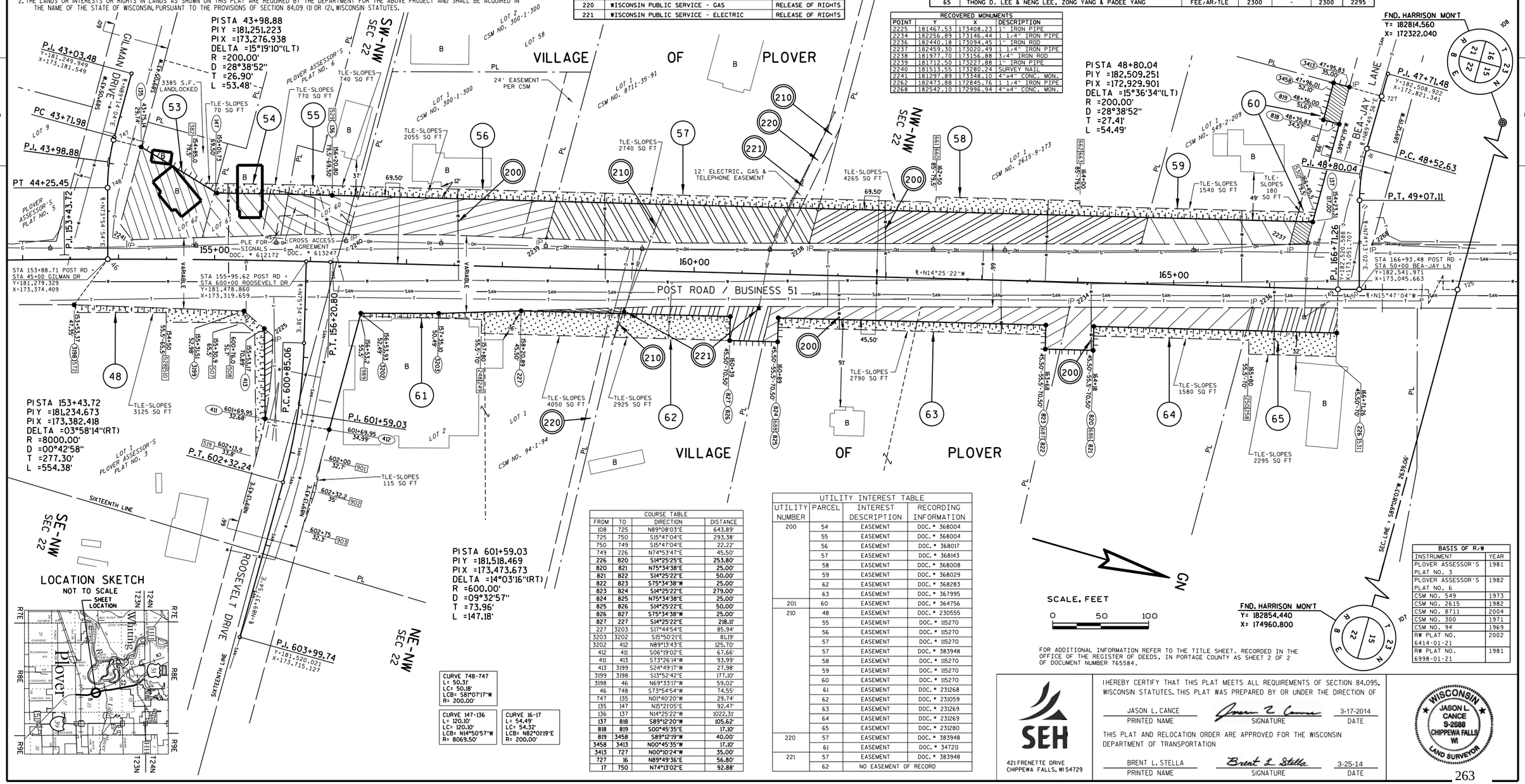

COURSE TABLE			
FROM	TO	DIRECTION	DISTANCE
108	725	N89°08'03"E	643.89'
725	750	S15°47'04"E	293.38'
750	749	S15°47'04"E	22.22'
749	226	N74°53'47"E	45.50'
226	820	S14°25'25"E	253.80'
820	821	N75°34'38"E	25.00'
821	822	S14°25'22"E	50.00'
822	823	S75°34'38"W	25.00'
823	824	S14°25'22"E	279.00'
824	825	N75°34'38"E	25.00'
825	826	S14°25'22"E	50.00'
826	827	S75°34'38"W	25.00'
827	227	S14°25'22"E	218.11'
227	3203	S17°44'54"E	85.94'
3203	3202	S15°50'21"E	81.19'
3202	412	N89°13'43"E	125.70'
412	411	S06°19'02"E	67.66'
411	413	S73°26'14"W	93.99'
413	3199	S24°49'17"W	27.98'
3199	3198	S13°52'42"E	177.10'
3198	46	N69°33'17"W	59.02'
46	748	S73°54'54"W	74.55'
747	135	N01°40'20"W	29.74'
135	147	N15°21'05"E	92.47'
136	137	N14°25'22"W	1022.31'
137	818	S89°12'20"W	105.62'
818	819	S00°45'35"E	17.10'
819	3458	S89°12'19"W	40.00'
3458	3413	N00°45'35"W	17.10'
3413	727	N00°10'24"W	35.00'
727	16	N89°49'36"E	56.80'
17	750	N74°13'02"E	92.88'

CURVE 748-747
L= 50.31'
LC= 50.18'
LCB= S81°07'17"W
R= 200.00'

CURVE 147-136
L= 120.10'
LC= 120.10'
LCB= N14°50'57"W
R= 8069.50'

CURVE 16-17
L= 54.49'
LC= 54.32'
LCB= N82°01'19"E
R= 200.00'

UTILITY INTEREST TABLE			
UTILITY NUMBER	PARCEL	INTEREST DESCRIPTION	RECORDING INFORMATION
200	54	EASEMENT	DOC. # 368004
	55	EASEMENT	DOC. # 368004
	56	EASEMENT	DOC. # 368017
	57	EASEMENT	DOC. # 368143
	58	EASEMENT	DOC. # 368008
	59	EASEMENT	DOC. # 368029
	62	EASEMENT	DOC. # 368283
	63	EASEMENT	DOC. # 367995
201	60	EASEMENT	DOC. # 364756
210	48	EASEMENT	DOC. # 230555
	55	EASEMENT	DOC. # 115270
	56	EASEMENT	DOC. # 115270
	57	EASEMENT	DOC. # 115270
	57	EASEMENT	DOC. # 383948
	58	EASEMENT	DOC. # 115270
	59	EASEMENT	DOC. # 115270
	60	EASEMENT	DOC. # 115270
	61	EASEMENT	DOC. # 231268
	62	EASEMENT	DOC. # 231059
	63	EASEMENT	DOC. # 231269
	64	EASEMENT	DOC. # 231269
	65	EASEMENT	DOC. # 231280
220	57	EASEMENT	DOC. # 383948
	61	EASEMENT	DOC. # 347211
221	57	EASEMENT	DOC. # 383948
	62	NO EASEMENT OF RECORD	

BASIS OF R/W	
INSTRUMENT	YEAR
PLOVER ASSESSOR'S PLAT NO. 3	1981
PLOVER ASSESSOR'S PLAT NO. 6	1982
CSM NO. 549	1973
CSM NO. 2615	1982
CSM NO. 8711	2004
CSM NO. 300	1971
CSM NO. 94	1969
RW PLAT NO. 6414-01-21	2002
RW PLAT NO. 6998-01-21	1981

FOR ADDITIONAL INFORMATION REFER TO THE TITLE SHEET. RECORDED IN THE OFFICE OF THE REGISTER OF DEEDS, IN PORTAGE COUNTY AS SHEET 2 OF 2 OF DOCUMENT NUMBER 765584.

SEH
421 FRENETTE DRIVE
CHIPPEWA FALLS, WI 54729

I HEREBY CERTIFY THAT THIS PLAT MEETS ALL REQUIREMENTS OF SECTION 84.095, WISCONSIN STATUTES. THIS PLAT WAS PREPARED BY OR UNDER THE DIRECTION OF

PRINTED NAME	SIGNATURE	DATE
JASON L. CANCE	Jason L. Cance	3-17-2014

THIS PLAT AND RELOCATION ORDER ARE APPROVED FOR THE WISCONSIN DEPARTMENT OF TRANSPORTATION

PRINTED NAME	SIGNATURE	DATE
BRENT L. STELLA	Brent L. Stella	3-25-14

WISCONSIN JASON L. CANCE S-2688 CHIPPEWA FALLS WI LAND SURVEYOR

FILE NAME : P:\UZ\W\Witnc\112545\5-final-dsgn\51-drawings\40-TransHwy\040105 RP.dgn
PLOT DATE : 3/17/2014 PLOT BY : SEH PLOT NAME : PLOT SCALE : N/A
APPRAISAL PLAT DATE :

TRANSPORTATION PROJECT PLAT NO: 6414-00-25 - 4.05 AMENDMENT NO. 3

AMENDS PARCEL 80 AND UTILITY NO. 210 AND REMOVES UTILITY NO. 250 OF TRANSPORATION PROJECT PLAT NO. 6414-00-25-4.05 AMENDMENT NO. 1 RECORDED AS DOCUMENT NO. 786952 AND AMENDS UTILITY NO. 200 OF TRANSPORTATION PROJECT PLAT NO. 6414-00-25-4.05 AMENDMENT NO. 2 RECORDED AS DOCUMENT NO. 794554

BUS. 51, VILLAGE OF PLOVER AND WHITING (STH 54 - MINNESOTA AVE.)

THAT PART OF LOTS 46 THRU 49 OF PLOVER ASSESOR'S PLAT NO. 6, PART OF LOTS 1 & 4 OF CSM NO. 2871, PART OF LOT 1 CSM NO. 6446, PART OF LOTS 1 & 2 OF CSM NO. 4179, PART OF LOT 1 CSM NO. 4831, PART OF LOTS 1 & 2 OF CSM NO. 3039, LOCATED IN AND INCLUDING PART OF THE SW 1/4 OF THE SW 1/4, OF SECTION 15; PART OF LOT 4 OF CSM NO. 2871, PART OF LOT 1 OF CSM NO. 1706, LOCATED IN AND INCLUDING PART OF THE NW 1/4 OF THE NW 1/4 OF SECTION 22; ALL IN T23N, R8E, VILLAGE OF PLOVER, PORTAGE COUNTY, WISCONSIN

RELOCATION ORDER BUS 51 PORTAGE COUNTY

TO PROPERLY ESTABLISH, LAY OUT, WIDEN, ENLARGE, EXTEND, CONSTRUCT, RECONSTRUCT, IMPROVE, OR MAINTAIN A PORTION OF THE HIGHWAY DESIGNATED ABOVE, THE STATE OF WISCONSIN DEPARTMENT OF TRANSPORTATION DEEMS IT NECESSARY TO RELOCATE OR CHANGE SAID HIGHWAY AND ACQUIRE CERTAIN LANDS AND INTERESTS OR RIGHTS IN LANDS FOR THE ABOVE PROJECT.

TO EFFECT THIS CHANGE, PURSUANT TO AUTHORITY GRANTED UNDER SECTION 84.02 (3) AND 84.09, WISCONSIN STATUTES, THE DEPARTMENT OF TRANSPORTATION HEREBY ORDERS THAT:
1. THAT PORTION OF SAID HIGHWAY AS SHOWN ON THIS PLAT IS LAID OUT AND ESTABLISHED TO THE LINES AND WIDTHS AS SO SHOWN FOR THE ABOVE PROJECT.
2. THE LANDS OR INTERESTS OR RIGHTS IN LANDS AS SHOWN ON THIS PLAT ARE REQUIRED BY THE DEPARTMENT FOR THE ABOVE PROJECT AND SHALL BE ACQUIRED IN THE NAME OF THE STATE OF WISCONSIN, PURSUANT TO THE PROVISIONS OF SECTION 84.09 (1) OR (2), WISCONSIN STATUTES.

BASIS OF R/W	
INSTRUMENT	YEAR
PLOVER ASSESSOR'S PLAT NO. 6	1982
CSM NO. 2871	1983
CSM NO. 6488	1997
CSM NO. 1706	1978
CSM NO. 3039	1984
CSM NO. 1870	1979
CSM NO. 4831	1991
CSM NO. 4179	1988
CSM NO. 6446	1997
CSM NO. 2419	1981
CSM NO. 1906	1979
RW PLAT NO. F05-3 (34)	1957

RECOVERED MONUMENTS			
POINT	Y	X	DESCRIPTION
285	183632.31	172767.48	CHISELED X
293	183299.93	172954.04	1" IRON PIPE
294	183210.90	172892.75	CHISELED X
295	183045.13	172933.90	CHISELED X
296	183042.19	172934.60	CHISELED X
297	182823.86	172993.08	1" IRON PIPE
712	183750.92	172654.37	4"X4" CONC. MON.
713	183750.88	172646.87	4"X4" CONC. MON.
2237	182459.30	173020.49	1 1/4" IRON PIPE
2268	182542.10	172996.94	4"X4" CONC. MON.
2275	183601.17	172696.46	1" IRON PIPE
2276	183702.85	172667.67	1" IRON PIPE
2278	182908.07	172894.93	2" IRON PIPE
2593	182940.88	172959.73	CHISELED X
2594	183737.00	172733.90	CHISELED X
2595	183406.42	172837.10	UNKNOWN
2596	183376.73	172874.79	UNKNOWN

805891

ACCEPTED FOR RECORDING AND FILING IN THE OFFICE OF THE REGISTER OF DEEDS IN Portage COUNTY, WISCONSIN AT 3:05PM ON April 29, 2015 AS DOCUMENT # 805891 AND FILED IN Conv. #50

Cynthia A. Wilusz
SIGNATURE OF REGISTER OF DEEDS
Fee: $25.00

RESERVED FOR REGISTER OF DEEDS
PROJECT NUMBER 6414-00-25-4.05
AMENDMENT NO. 3

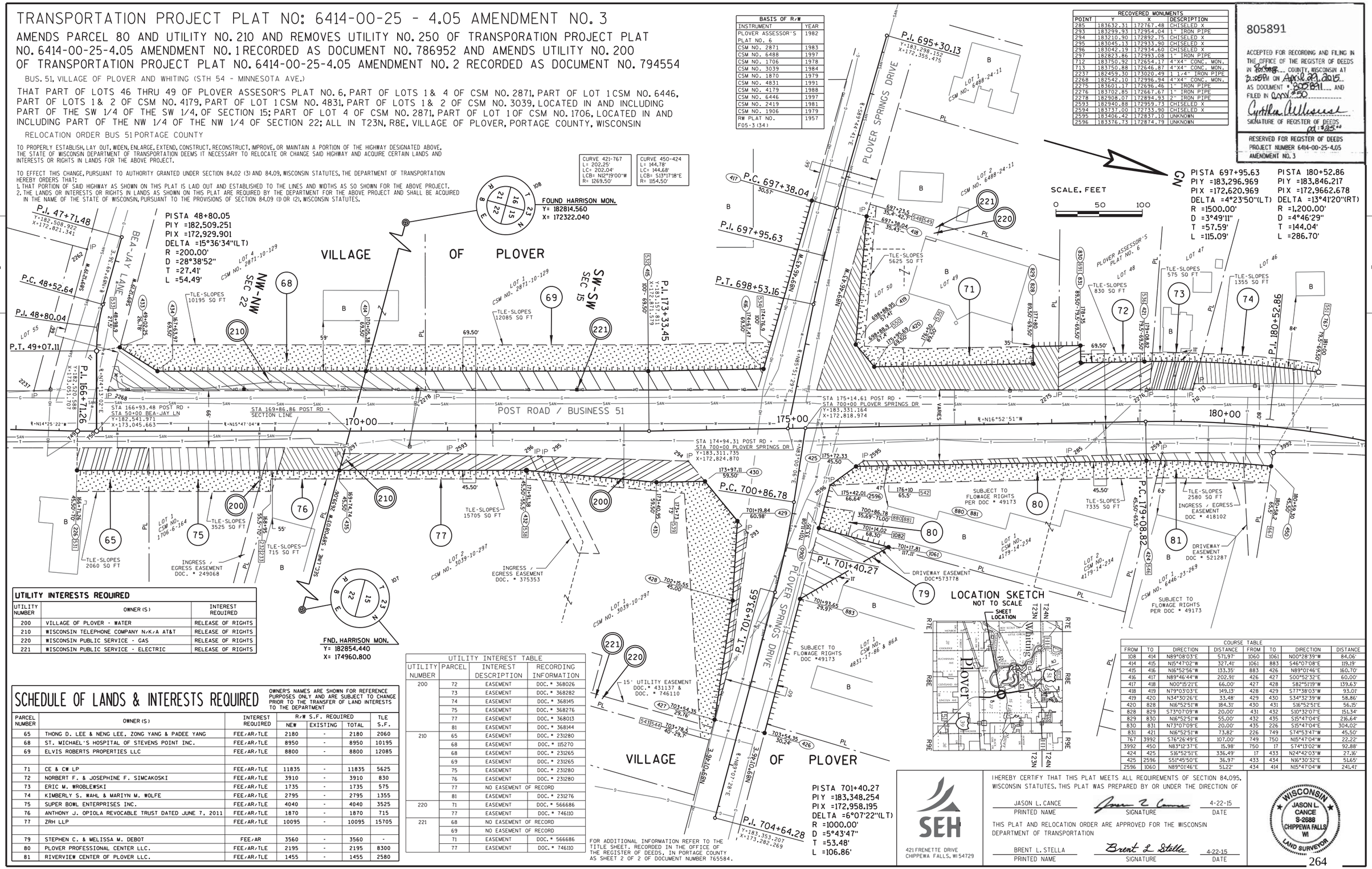

UTILITY INTERESTS REQUIRED		
UTILITY NUMBER	OWNER (S)	INTEREST REQUIRED
200	VILLAGE OF PLOVER - WATER	RELEASE OF RIGHTS
210	WISCONSIN TELEPHONE COMPANY N/K/A AT&T	RELEASE OF RIGHTS
220	WISCONSIN PUBLIC SERVICE - GAS	RELEASE OF RIGHTS
221	WISCONSIN PUBLIC SERVICE - ELECTRIC	RELEASE OF RIGHTS

SCHEDULE OF LANDS & INTERESTS REQUIRED

OWNER'S NAMES ARE SHOWN FOR REFERENCE PURPOSES ONLY AND ARE SUBJECT TO CHANGE PRIOR TO THE TRANSFER OF LAND INTERESTS TO THE DEPARTMENT

PARCEL NUMBER	OWNER (S)	INTEREST REQUIRED	R/W S.F. REQUIRED			TLE S.F.
			NEW	EXISTING	TOTAL	
65	THONG D. LEE & NENG LEE, ZONG YANG & PADEE YANG	FEE/AR/TLE	2180	-	2180	2060
68	ST. MICHAEL'S HOSPITAL OF STEVENS POINT INC.	FEE/AR/TLE	8950	-	8950	10195
69	ELVIS ROBERTS PROPERTIES LLC	FEE/AR/TLE	8800	-	8800	12085
71	CE & CW LP	FEE/AR/TLE	11835	-	11835	5625
72	NORBERT F. & JOSEPHINE F. SIMCAKOSKI	FEE/AR/TLE	3910	-	3910	830
73	ERIC M. WROBLEWSKI	FEE/AR/TLE	1735	-	1735	575
74	KIMBERLY S. WAHL & MARIYN M. WOLFE	FEE/AR/TLE	2795	-	2795	1355
75	SUPER BOWL ENTERPRISES INC.	FEE/AR/TLE	4040	-	4040	3525
76	ANTHONY J. OPIOLA REVOCABLE TRUST DATED JUNE 7, 2011	FEE/AR/TLE	1870	-	1870	715
77	ZRH LLP	FEE/AR/TLE	10095	-	10095	15705
79	STEPHEN C. & MELISSA M. DEBOT	FEE/AR	3560	-	3560	-
80	PLOVER PROFESSIONAL CENTER LLC.	FEE/AR/TLE	2195	-	2195	8300
81	RIVERVIEW CENTER OF PLOVER LLC.	FEE/AR/TLE	1455	-	1455	2580

UTILITY INTEREST TABLE			
UTILITY NUMBER	PARCEL	INTEREST DESCRIPTION	RECORDING INFORMATION
200	72	EASEMENT	DOC. # 368026
	73	EASEMENT	DOC. # 368282
	74	EASEMENT	DOC. # 368145
	75	EASEMENT	DOC. # 368276
	77	EASEMENT	DOC. # 368013
	81	EASEMENT	DOC. # 368144
210	65	EASEMENT	DOC. # 231280
	68	EASEMENT	DOC. # 115270
	68	EASEMENT	DOC. # 231265
	69	EASEMENT	DOC. # 231265
	75	EASEMENT	DOC. # 231280
	76	EASEMENT	DOC. # 231280
	77	NO EASEMENT OF RECORD	
	81	EASEMENT	DOC. # 231276
220	71	EASEMENT	DOC. # 566686
	77	EASEMENT	DOC. # 746110
221	68	NO EASEMENT OF RECORD	
	69	NO EASEMENT OF RECORD	
	71	EASEMENT	DOC. # 566686
	77	EASEMENT	DOC. # 746110

FOR ADDITIONAL INFORMATION REFER TO THE TITLE SHEET. RECORDED IN THE OFFICE OF THE REGISTER OF DEEDS, IN PORTAGE COUNTY AS SHEET 2 OF 2 OF DOCUMENT NUMBER 765584.

COURSE TABLE							
FROM	TO	DIRECTION	DISTANCE	FROM	TO	DIRECTION	DISTANCE
108	414	N89°08'03"E	571.97'	1060	1061	N00°28'39"W	84.06'
414	415	N15°47'02"W	327.41'	1061	883	S46°07'08"E	119.19'
415	416	N16°52'56"W	133.35'	883	426	N89°01'46"E	160.70'
416	417	N89°46'44"W	202.91'	426	427	S00°52'32"E	60.00'
417	418	N00°15'21"E	66.00'	427	428	S82°51'19"W	139.63'
418	419	N79°03'03"W	149.13'	428	429	S77°38'03"W	93.01'
419	420	N34°30'26"E	33.48'	429	430	S34°32'39"W	58.86'
420	828	N16°52'51"W	184.31'	430	431	S16°52'51"E	56.15'
828	829	S73°07'09"W	20.00'	431	432	S10°32'07"E	151.34'
829	830	N16°52'51"W	55.00'	432	435	S15°47'04"E	216.64'
830	831	N73°07'09"E	20.00'	435	226	S15°47'04"E	304.02'
831	421	N16°52'51"W	73.82'	226	749	S74°53'47"W	45.50'
767	3992	S76°26'49"E	107.00'	749	750	N15°47'04"W	22.22'
3992	450	N83°12'37"E	15.98'	750	17	S74°13'02"W	92.88'
424	425	S16°52'51"E	336.49'	17	433	N24°42'03"W	27.16'
425	2596	S51°45'50"E	36.97'	433	434	N16°30'32"E	51.65'
2596	1060	N89°01'46"E	51.22'	434	414	N15°47'04"W	241.41'

SEH
421 FRENETTE DRIVE
CHIPPEWA FALLS, WI 54729

I HEREBY CERTIFY THAT THIS PLAT MEETS ALL REQUIREMENTS OF SECTION 84.095, WISCONSIN STATUTES. THIS PLAT WAS PREPARED BY OR UNDER THE DIRECTION OF

JASON L. CANCE — PRINTED NAME
SIGNATURE — 4-22-15 DATE

THIS PLAT AND RELOCATION ORDER ARE APPROVED FOR THE WISCONSIN DEPARTMENT OF TRANSPORTATION

BRENT L. STELLA — PRINTED NAME
SIGNATURE — 4-22-15 DATE

WISCONSIN JASON L. CANCE S-2688 CHIPPEWA FALLS WI LAND SURVEYOR

FILE NAME : P:\UZ\W\Witnc\112545\5-final-dsgn\51-drawings\40-TransHwy\040106 RP.dgn
PLOT DATE : 4/22/2015 PLOT BY : SEH PLOT NAME : PLOT SCALE : N/A
APPRAISAL PLAT DATE :

TRANSPORTATION PROJECT PLAT NO: 6414-00-25 - 4.06 AMENDMENT NO. 2

AMENDS UTILITY NO. 200 AND PROVIDES CLARIFICATION OF ALL UTILITY LOCATIONS TO TRANSPORTATION PROJECT PLAT NO. 6414-00-25-4.06 RECORDED AS DOCUMENT NO. 786953

BUS 51, VILLAGE OF PLOVER AND WHITING (STH 54 - MINNESOTA AVE.)

PART OF LOTS 40 THRU 43 OF PLOVER ASSESSOR'S PLAT NO. 6, PART OF LOT 2 CSM NO. 9547, PART OF OUTLOT 1 CSM NO. 5965, PART OF LOT 1 CSM NO. 5090, PART OF LOT 1 CSM NO. 4652, PART OF LOT 2 CSM NO. 4927, PART OF OUTLOT 1 SPRINGVILLE POND SUBDIVISION, PART OF LOTS 1 & 2 OF CSM NO. 6285, PART OF LOT 18 OF HALLIDAY'S SURVEY OF 1888, LOCATED IN AND INCLUDING PART OF THE NW 1/4 OF THE SW 1/4; PART OF LOT 46 OF PLOVER ASSESSOR'S PLAT NO. 6, PART OF LOT 2 CSM NO. 9547, PART OF OUTLOT 1 SPRINGVILLE POND SUBDIVISION, PART OF LOT 1 CSM NO. 2419, LOCATED IN AND INCLUDING PART OF THE SW 1/4 OF THE SW 1/4; ALL IN SECTION 15, T23N, R8E, VILLAGE OF PLOVER, PORTAGE COUNTY, WISCONSIN

RELOCATION ORDER BUS 51 PORTAGE COUNTY

TO PROPERLY ESTABLISH, LAY OUT, WIDEN, ENLARGE, EXTEND, CONSTRUCT, RECONSTRUCT, IMPROVE, OR MAINTAIN A PORTION OF THE HIGHWAY DESIGNATED ABOVE, THE STATE OF WISCONSIN DEPARTMENT OF TRANSPORTATION DEEMS IT NECESSARY TO RELOCATE OR CHANGE SAID HIGHWAY AND ACQUIRE CERTAIN LANDS AND INTERESTS OR RIGHTS IN LANDS FOR THE ABOVE PROJECT.

TO EFFECT THIS CHANGE, PURSUANT TO AUTHORITY GRANTED UNDER SECTION 84.02 (3) AND 84.09, WISCONSIN STATUTES, THE DEPARTMENT OF TRANSPORTATION HEREBY ORDERS THAT:
1. THAT PORTION OF SAID HIGHWAY AS SHOWN ON THIS PLAT IS LAID OUT AND ESTABLISHED TO THE LINES AND WIDTHS AS SO SHOWN FOR THE ABOVE PROJECT.
2. THE LANDS OR INTERESTS OR RIGHTS IN LANDS AS SHOWN ON THIS PLAT ARE REQUIRED BY THE DEPARTMENT FOR THE ABOVE PROJECT AND SHALL BE ACQUIRED IN THE NAME OF THE STATE OF WISCONSIN, PURSUANT TO THE PROVISIONS OF SECTION 84.09 (1) OR (2), WISCONSIN STATUTES.

UTILITY INTEREST TABLE							
UTILITY NUMBER	PARCEL	INTEREST DESCRIPTION	RECORDING INFORMATION	UTILITY NUMBER	PARCEL	INTEREST DESCRIPTION	RECORDING INFORMATION
200	74	EASEMENT	DOC. # 368145	210	86	EASEMENT	DOC. # 231019
	85	EASEMENT	DOC. # 325813		89	EASEMENT	DOC. # 231276
	85	EASEMENT	DOC. # 368132		89	NO EASEMENT OF RECORD	
	86	EASEMENT	DOC. # 368134		91	EASEMENT	DOC. # 115272
	86	EASEMENT	DOC. # 368133		92	EASEMENT	DOC. # 115272
	87	EASEMENT	DOC. # 368023		93	EASEMENT	DOC. # 115272
	88	EASEMENT	DOC. # 368281		93	EASEMENT	DOC. # 231277
	89	EASEMENT	DOC. # 368144		94	EASEMENT	DOC. # 115272
	90	EASEMENT	DOC. # 368005		94	EASEMENT	DOC. # 231278
	92	EASEMENT	DOC. # 368449		95	EASEMENT	DOC. # 231270
	93	EASEMENT	DOC. # 368018		95	EASEMENT	DOC. # 115278
	94	EASEMENT	DOC. # 368018		95	EASEMENT	DOC. # 231278
	95	EASEMENT	DOC. # 368018	220	85	EASEMENT	V. 229, P. 617
	95	EASEMENT	DOC. # 368030		89	NO EASEMENT OF RECORD	
	95	EASEMENT	DOC. # 368138	221	89	EASEMENT	DOC. # 145000
201	85	EASEMENT	DOC. # 325813		91	NO EASEMENT OF RECORD	
	85	EASEMENT	DOC. # 708528		92	NO EASEMENT OF RECORD	
					93	NO EASEMENT OF RECORD	
					94	NO EASEMENT OF RECORD	

794555

ACCEPTED FOR RECORDING AND FILING IN THE OFFICE OF THE REGISTER OF DEEDS IN Portage COUNTY, WISCONSIN AT 9:05 AM ON April 2, 2014 AS DOCUMENT # 794555 AND FILED IN Cov. 450

SIGNATURE OF REGISTER OF DEEDS $ 25.00

RESERVED FOR REGISTER OF DEEDS
PROJECT NUMBER 6414-00-25-4.06
AMENDMENT NO. 2

CURVE 442-772	CURVE 767-422	CURVE 3926-3924	CURVE 451-443
L= 337.91'	L= 46.10'	L= 258.77'	L= 355.06'
LC= 337.79'	LC= 46.10'	LC= 258.52'	LC= 354.93'
LCB= N05°50'11"W	LCB= N06°42'44"W	LCB= N05°52'59"W	LCB= S05°53'10"E
R= 3660.50'	R= 1269.50'	R= 1691.55'	R= 3775.50'

CURVE 448-450
L= 54.34'
LC= 54.33'
LCB= S08°20'51"E
R= 1154.50'

SCALE, FEET 0 50 100

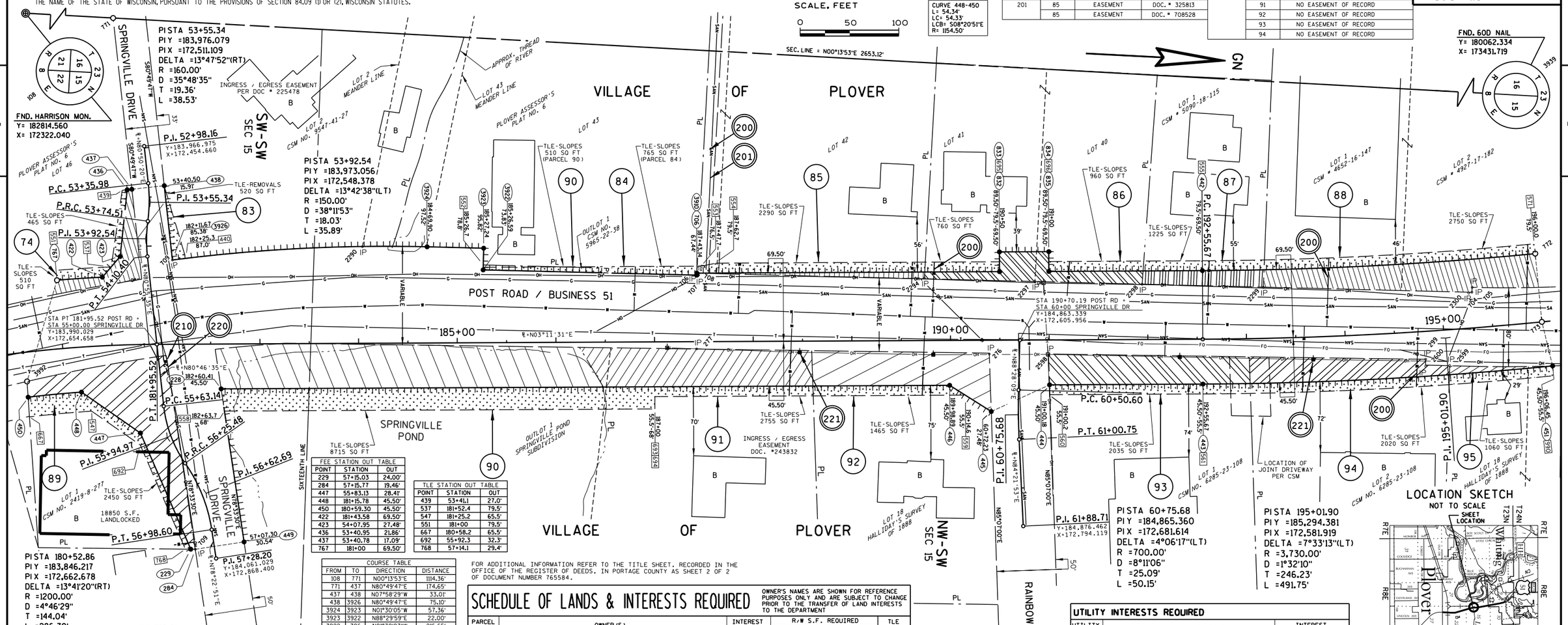

FEE STATION OUT TABLE		
POINT	STATION	OUT
229	57+15.03	24.00'
284	57+15.77	19.46'
447	55+83.13	28.41'
448	181+15.78	45.50'
450	180+59.30	45.50'
422	181+43.58	69.50'
423	54+07.95	27.48'
436	53+40.95	21.86'
437	53+40.78	17.09'
767	181+00	69.50'

TLE STATION OUT TABLE		
POINT	STATION	OUT
439	53+41.1	27.0'
537	181+52.4	79.5'
547	181+25.2	65.5'
551	181+00	79.5'
667	180+58.2	65.5'
692	55+92.3	32.3'
768	57+14.1	29.4'

RECOVERED MONUMENTS			
POINT	Y	X	DESCRIPTION
272	184858.93	172920.00	1" IRON PIPE
276	184833.20	172621.61	1" IRON PIPE
277	184536.60	172631.47	1" IRON PIPE
289	185275.27	172604.40	1" IRON PIPE
704	185318.65	172534.25	1" IRON PIPE
705	185318.60	172529.26	4"X4" CONC. MON.
706	184533.05	172556.83	4"X4" CONC. MON.
707	184534.80	172556.74	1" IRON PIPE
708	184534.79	172554.77	1" IRON PIPE
709	184001.40	172568.54	RAILROAD SPIKE
2294	184763.58	172548.09	1 1/4" IRON PIPE
2297	184875.50	172545.75	1" IRON PIPE
2298	184984.30	172543.12	1" IRON PIPE
2299	185107.19	172539.99	1" IRON PIPE
2300	185315.45	172535.26	1" IRON ROD
2598	184893.40	172619.44	2" IRON PIPE
2599	185299.82	172609.50	1" IRON PIPE
2600	185275.65	172611.46	1" IRON PIPE

COURSE TABLE			
FROM	TO	DIRECTION	DISTANCE
108	771	N00°13'53"E	1114.36'
771	437	N80°49'47"E	174.65'
437	438	N07°58'29"W	33.01'
438	3926	N80°49'47"E	75.10'
3924	3923	N01°30'05"W	57.36'
3923	3922	N88°29'59"E	22.00'
3922	706	N01°30'03"W	216.65'
706	3910	S88°30'36"W	2.00'
3910	832	N03°11'56"W	306.80'
832	833	S86°48'29"W	20.02'
833	834	N03°11'31"W	50.00'
834	835	N86°48'29"E	20.00'
835	442	N03°11'31"W	155.67'
772	773	N81°31'08"E	69.50'
773	451	N73°20'57"E	45.96'
443	444	S03°11'31"E	155.49'
444	445	S27°30'10"E	65.00'
445	446	S29°16'31"W	49.85'
446	228	S03°11'31"E	738.48'
228	449	N78°33'30"E	156.71'
449	284	S11°37'08"E	50.00'
284	229	S02°21'20"E	4.59'
229	447	S63°40'07"W	128.31'
447	448	S31°52'53"W	72.77'
450	3992	S83°12'37"W	15.98'
3992	767	N76°26'49"W	107.00'
422	423	N52°13'11"W	27.66'
423	436	N86°52'20"W	68.03'
436	437	N09°12'57"W	4.77'

FOR ADDITIONAL INFORMATION REFER TO THE TITLE SHEET, RECORDED IN THE OFFICE OF THE REGISTER OF DEEDS, IN PORTAGE COUNTY AS SHEET 2 OF 2 OF DOCUMENT NUMBER 765584.

SCHEDULE OF LANDS & INTERESTS REQUIRED

OWNER'S NAMES ARE SHOWN FOR REFERENCE PURPOSES ONLY AND ARE SUBJECT TO CHANGE PRIOR TO THE TRANSFER OF LAND INTERESTS TO THE DEPARTMENT

PARCEL NUMBER	OWNER (S)	INTEREST REQUIRED	R/W S.F. REQUIRED NEW	EXISTING	TOTAL	TLE S.F.
74	KIMBERLY S. WAHL & MARILYN M. WOLFE	FEE/AR/TLE	2200	-	2200	975
83	BETTY JANE IBER	AR/TLE	-	-	-	520
84	BETTY JANE KONOPANCKY SURVIVORS TRUST DATED 10/5/2008	AR/TLE	-	-	-	765
85	RANDAL T. AND LISA A. WOYAK	FEE/AR/TLE	790	-	790	2290
86	BANK ONE TRUST COMPANY N/K/A JP MORGAN CHASE BANK, AS TRUSTEE OF THE FAMILY TRUST CREATED UNDER THE LAST WILL AND TESTAMENT OF WILLIAM ADAMS DATED NOVEMBER 10, 1977	FEE/AR/TLE	3240	-	3240	1720
87	DAVID R. & MARY A. BOYLES	FEE/AR/TLE	1880	-	1880	1225
88	LOTZER JOINT REVOCABLE TRUST U/A DTD 11-17-92	FEE/AR/TLE	7250	-	7250	2750
89	PINE ROCK PROPERTIES, LLC	FEE/AR/TLE	8955	-	8955	2450
90	VILLAGE OF PLOVER	FEE/AR/TLE	16320	-	16320	9225
91	TAD C. MEIER & LISA A. MEIER, OR THEIR SUCESSOR AS TRUSTEES OF THE TAD C. MEIER AND LISA A. MEIER JOINT REVOCABLE TRUST DATED APRIL 13, 2007	FEE/AR/TLE	8495	-	8495	2755
92	THOMAS J. & KATHERINE A. DAVIES	FEE/AR/TLE	6695	-	6695	1465
93	G.F.P. LLC	FEE/AR/TLE	5965	-	5965	2035
94	RITA M. PLACEWAY	FEE/AR/TLE	4330	-	4330	2020
95	OKRAY ENTERPRISES, INC.	FEE/AR/TLE	445	-	445	1060

BASIS OF R/W	
INSTRUMENT	YEAR
PLOVER ASSESSOR'S PLAT NO. 6	1982
SPRINGVILLE POND SUBDIVISION	1973
CSM NO. 9547	2008
CSM NO. 5090	1992
CSM NO. 4927	1991
CSM NO. 2419	1981
CSM NO. 6285	1996
RW PLAT NO. F05-3 (34)	1957

UTILITY INTERESTS REQUIRED

UTILITY NUMBER	OWNER (S)	INTEREST REQUIRED
200	VILLAGE OF PLOVER - WATER	RELEASE OF RIGHTS
201	VILLAGE OF PLOVER - SANITARY SEWER	RELEASE OF RIGHTS
210	WISCONSIN TELEPHONE COMPANY N/K/A AT&T	RELEASE OF RIGHTS
220	WISCONSIN PUBLIC SERVICE - GAS	RELEASE OF RIGHTS
221	WISCONSIN PUBLIC SERVICE - ELECTRIC	RELEASE OF RIGHTS

SEH
421 FRENETTE DRIVE
CHIPPEWA FALLS, WI 54729

I HEREBY CERTIFY THAT THIS PLAT MEETS ALL REQUIREMENTS OF SECTION 84.095, WISCONSIN STATUTES. THIS PLAT WAS PREPARED BY OR UNDER THE DIRECTION OF

JASON L. CANCE — PRINTED NAME
SIGNATURE — 3-17-2014 DATE

THIS PLAT AND RELOCATION ORDER ARE APPROVED FOR THE WISCONSIN DEPARTMENT OF TRANSPORTATION

BRENT L. STELLA — PRINTED NAME
Brent L. Stella — SIGNATURE — 3-25-14 DATE

WISCONSIN JASON L. CANCE S-2688 CHIPPEWA FALLS WI LAND SURVEYOR

FILE NAME : P:\UZ\W\Witnc\112545\5-final-dsgn\51-drawings\40-TransHwy\040107 RP.dgn
PLOT DATE : 3/17/2014 PLOT BY : SEH PLOT NAME : PLOT SCALE : N/A
APPRAISAL PLAT DATE :

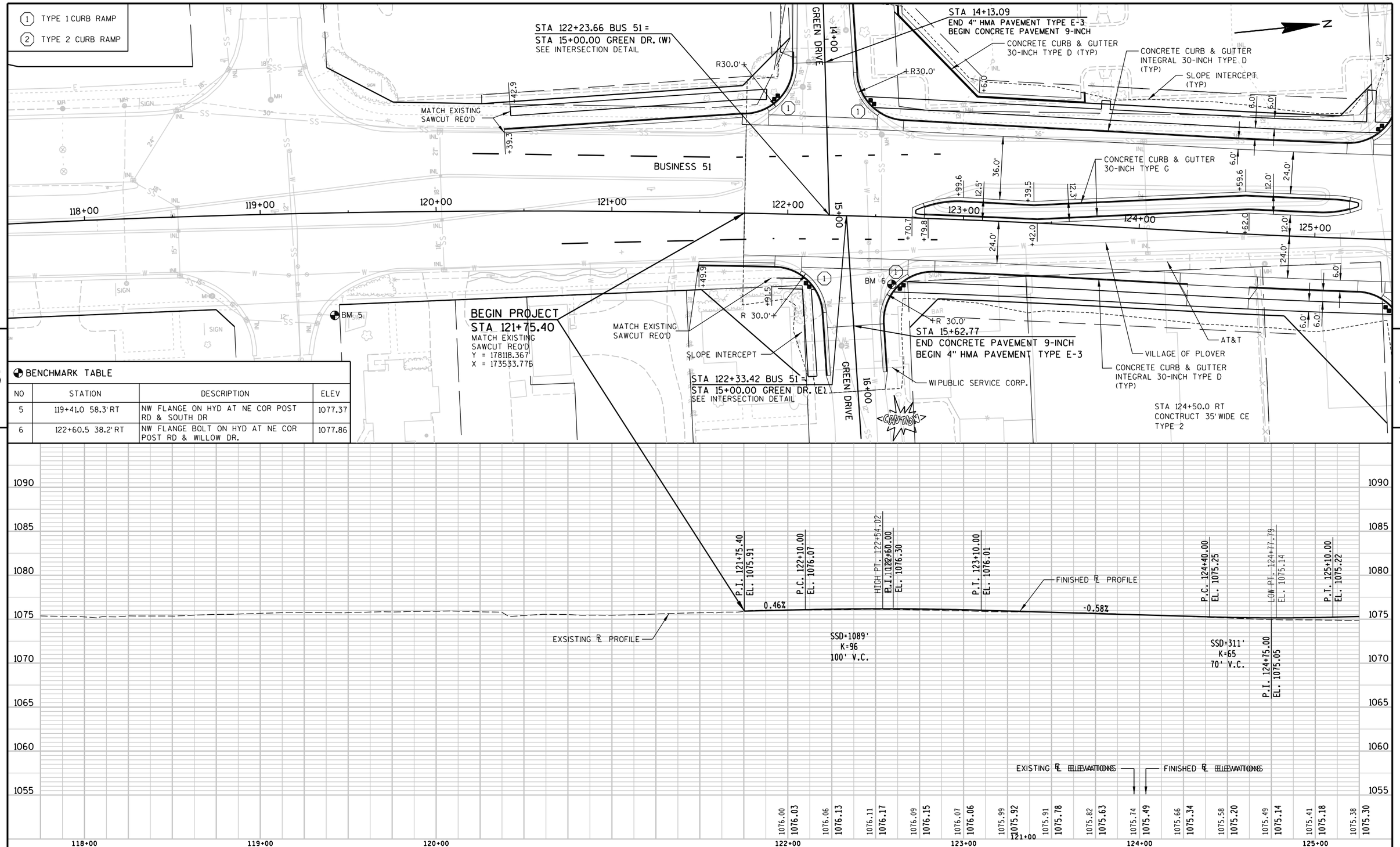

5

BENCHMARK TABLE

NO	STATION	DESCRIPTION	ELEV
5	119+41.0 58.3' RT	NW FLANGE ON HYD AT NE COR POST RD & SOUTH DR	1077.37
6	122+60.5 38.2' RT	NW FLANGE BOLT ON HYD AT NE COR POST RD & WILLOW DR.	1077.86

5

PROJECT NO: 6414-00-78	HWY: BUSSINESS 51	COUNTY: PORTAGE	PLAN AND PROFILE - BUSSENESS 51	SHEET 266	E

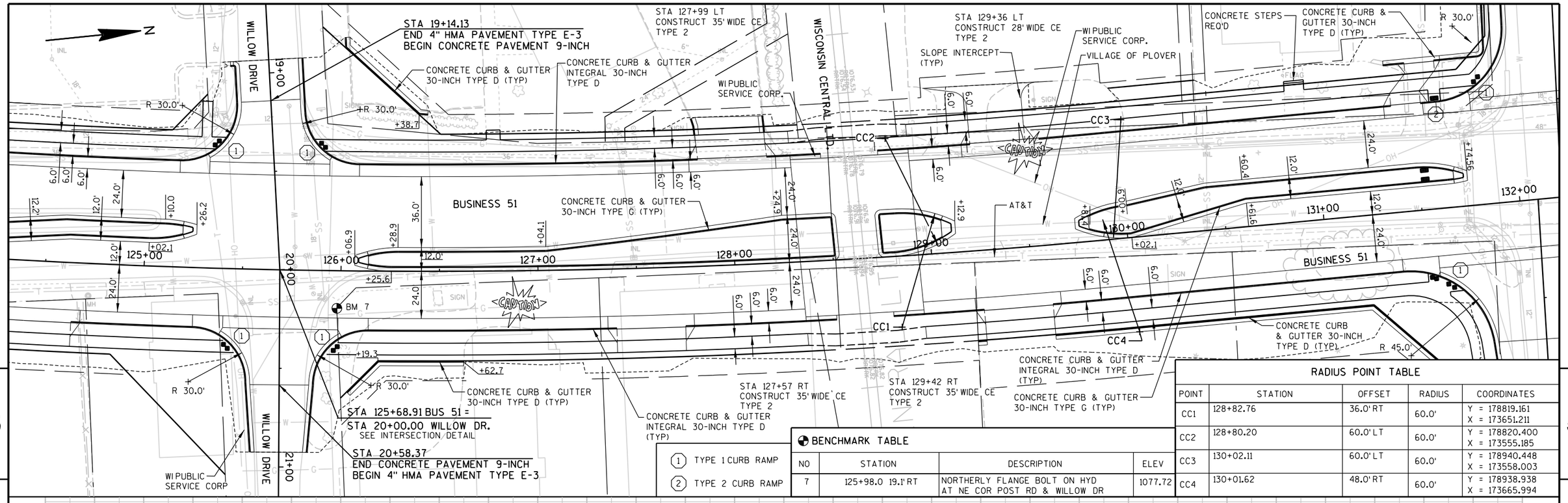

5

5

1 TYPE 1 CURB RAMP

2 TYPE 2 CURB RAMP

BENCHMARK TABLE

NO	STATION	DESCRIPTION	ELEV
7	125+98.0 19.1' RT	NORTHERLY FLANGE BOLT ON HYD AT NE COR POST RD & WILLOW DR	1077.72

RADIUS POINT TABLE

POINT	STATION	OFFSET	RADIUS	COORDINATES
CC1	128+82.76	36.0' RT	60.0'	Y = 178819.161 X = 173651.211
CC2	128+80.20	60.0' LT	60.0'	Y = 178820.400 X = 173555.185
CC3	130+02.11	60.0' LT	60.0'	Y = 178940.448 X = 173558.003
CC4	130+01.62	48.0' RT	60.0'	Y = 178938.938 X = 173665.994

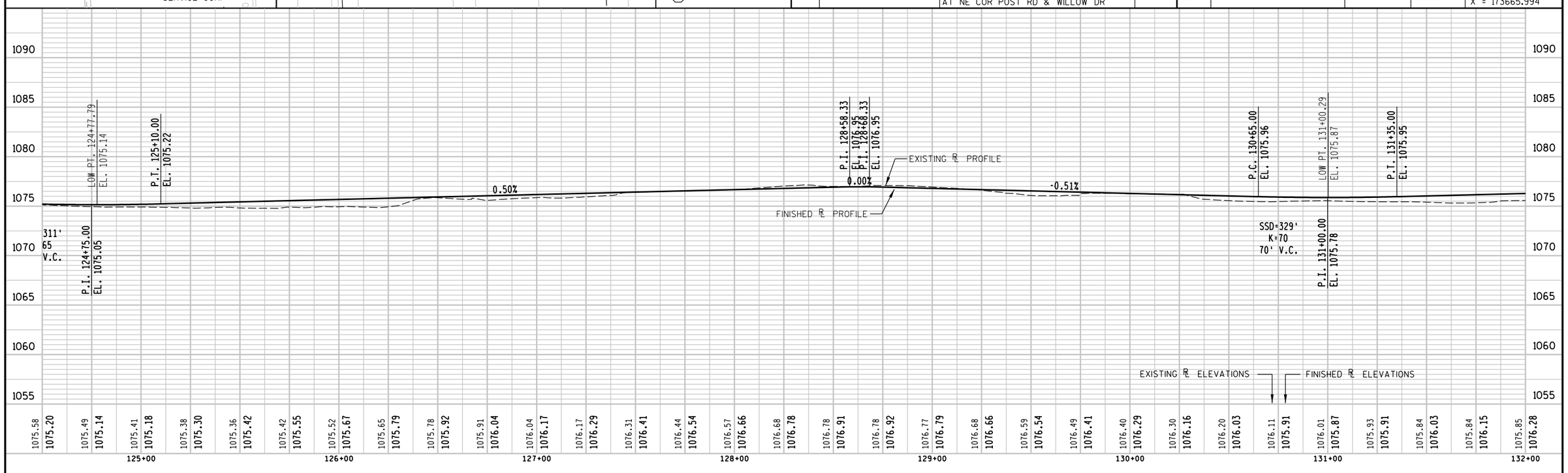

PROJECT NO:6414-00-78	HWY:BUSINESS 51	COUNTY:PORTAGE	PLAN AND PROFILE - BUSINESS 51	SHEET 267	E

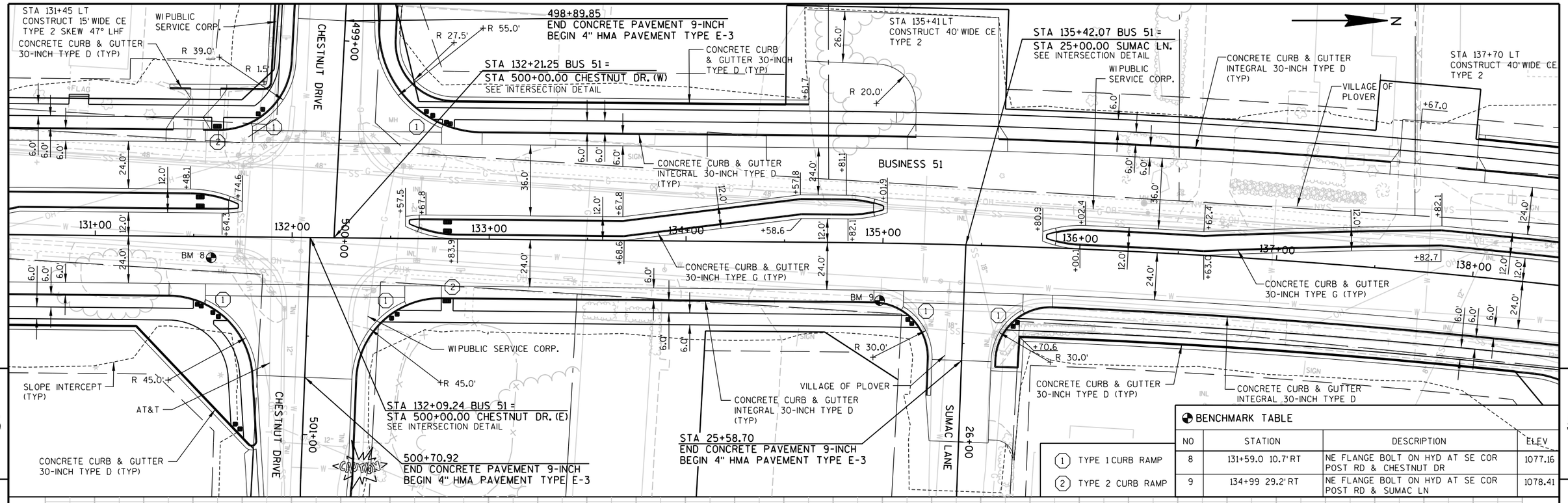

5

5

1 TYPE 1 CURB RAMP

2 TYPE 2 CURB RAMP

BENCHMARK TABLE

NO	STATION	DESCRIPTION	ELEV
8	131+59.0 10.7' RT	NE FLANGE BOLT ON HYD AT SE COR POST RD & CHESTNUT DR	1077.16
9	134+99 29.2' RT	NE FLANGE BOLT ON HYD AT SE COR POST RD & SUMAC LN	1078.41

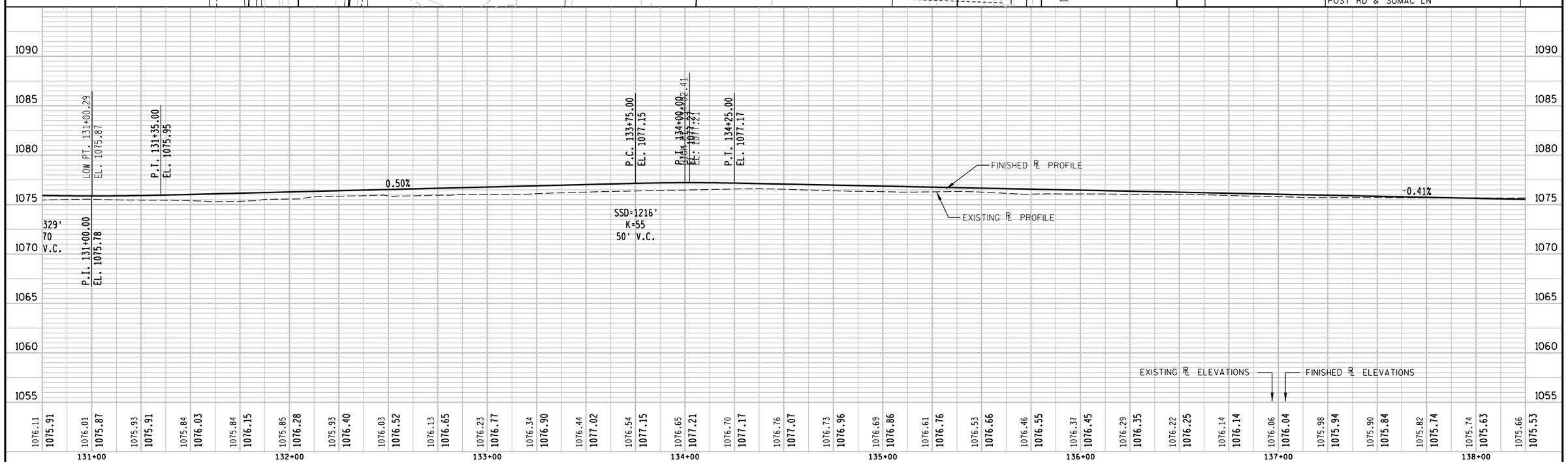

PROJECT NO:6414-00-78	HWY:BUSINESS 51	COUNTY:PORTAGE	PLAN AND PROFILE - BUSINESS 51	SHEET 268	E

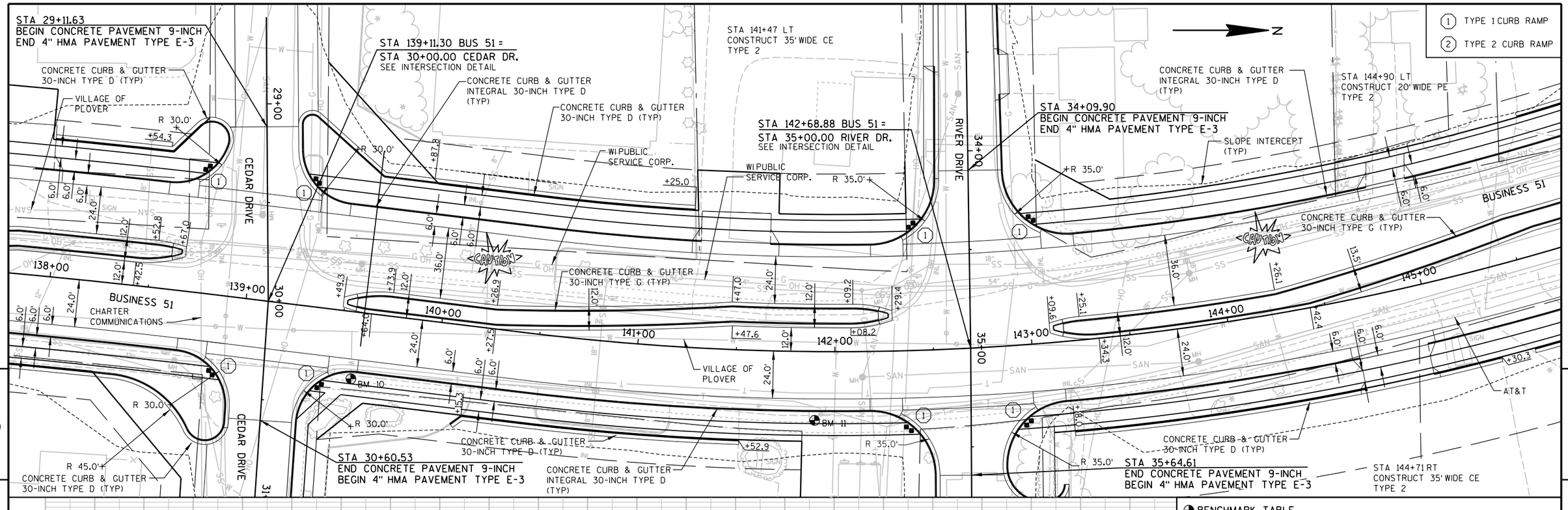

BENCHMARK TABLE

NO	STATION	DESCRIPTION	ELEV
10	131+57.5 34.0' RT	NE FLANGE BOLT ON HYD AT NE COR POST RD & CEDAR DR	1077.98
11	141+89.5 34.9' RT	NE FLANGE BOLT ON HYD AT NE COR POST RD & CEDAR DR	1077.44

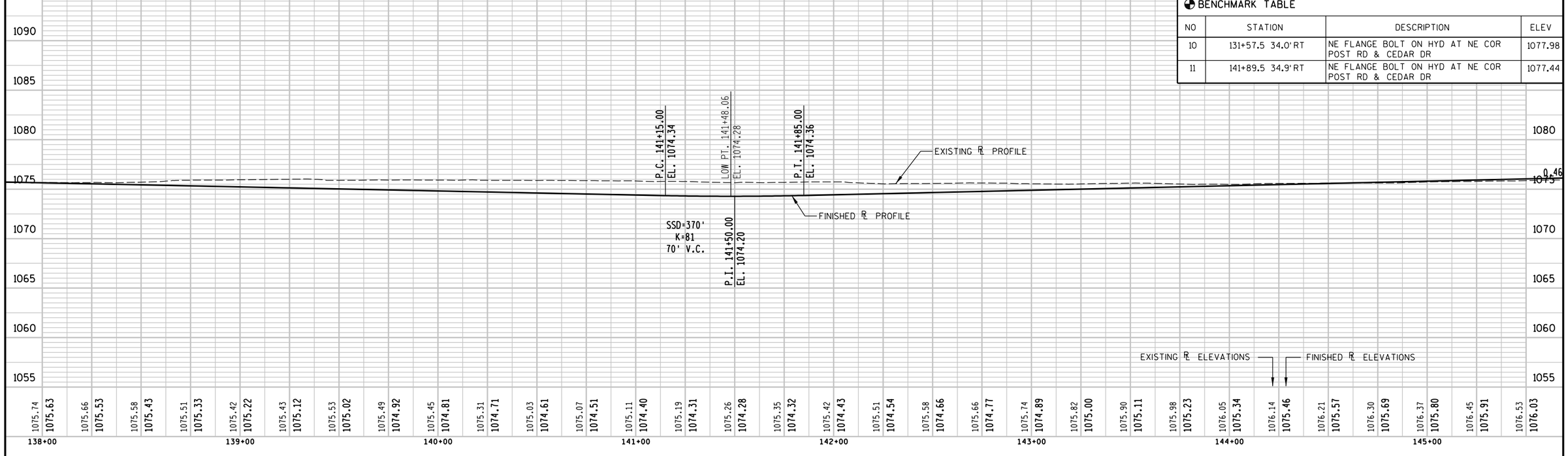

PROJECT NO:6414-00-78	HWY:BUSINESS 51	COUNTY:PORTAGE	PLAN AND PROFILE - BUSINESS 51	SHEET 269	E

BENCHMARK TABLE

NO	STATION	DESCRIPTION	ELEV
12	146+55.0 15.3' RT	NE FLANGE BOLT ON HYD AT E/S POST RD IN FRONT OF POLICE DEPT	1078.05
13	151+05.0 66.7' RT	SW FLANGE BOLT ON HYD AT SE COR SCHOOL DR & POST DR	1078.60

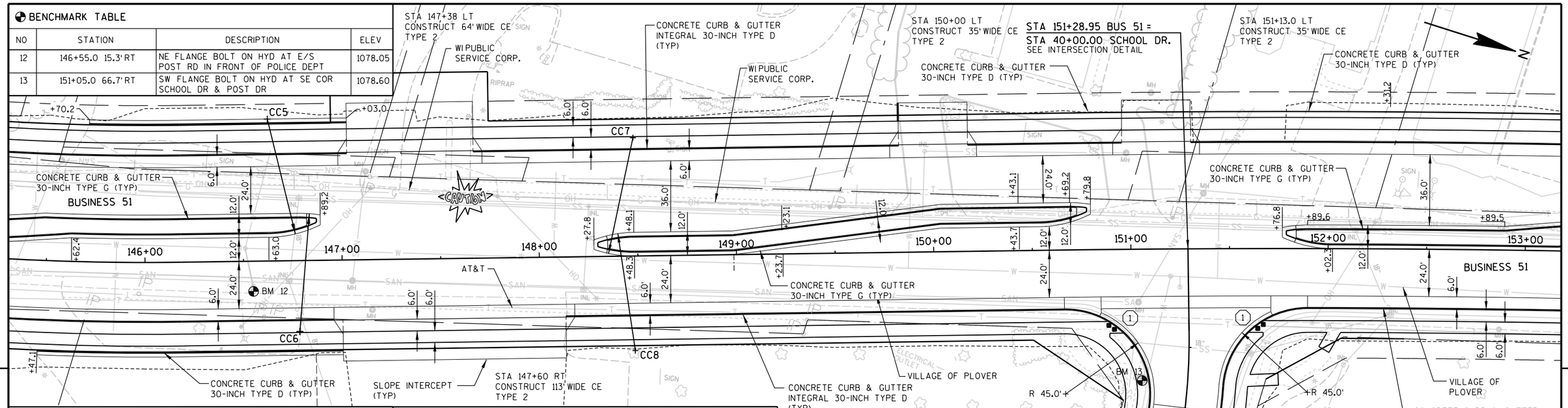

5

RADIUS POINT TABLE

POINT	STATION	OFFSET	RADIUS	COORDINATES
CC5	146+63.00	72.0' LT	60.0'	Y = 180566.009 X = 173528.889
CC6	146+78.09	36.0' RT	60.0'	Y = 180614.408 X = 173626.610

RADIUS POINT TABLE

POINT	STATION	OFFSET	RADIUS	COORDINATES
CC7	148+48.26	60.0' LT	60.0'	Y = 180745.592 X = 173481.819
CC8	148+48.07	48.0' RT	60.0'	Y = 180779.489 X = 173584.362

(1) TYPE 1 CURB RAMP

(2) TYPE 2 CURB RAMP

5

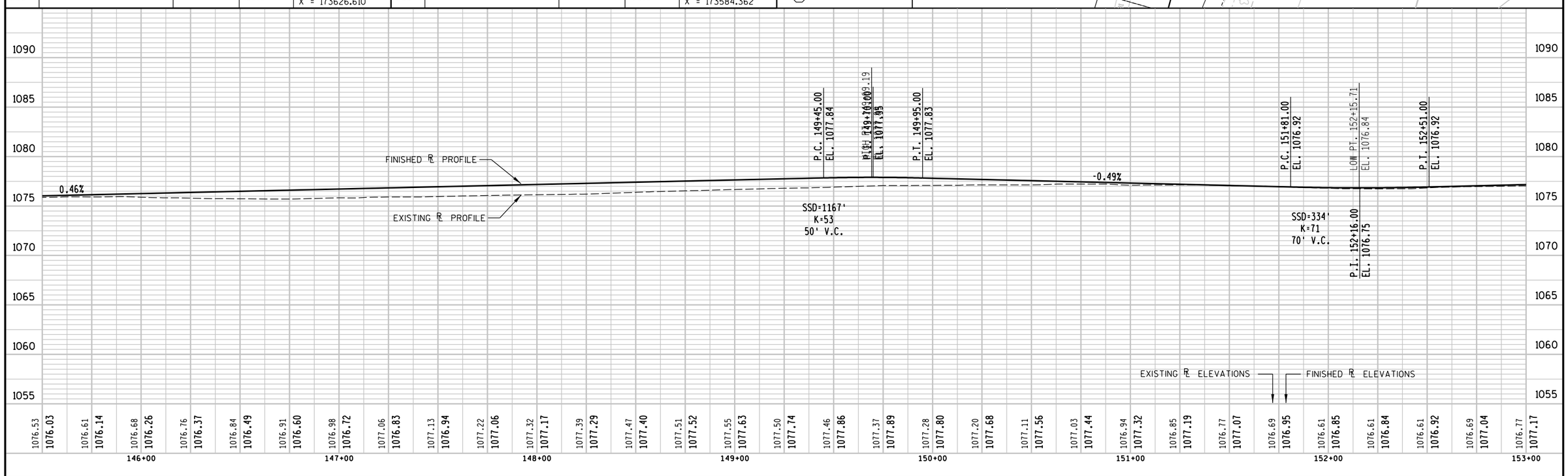

PROJECT NO:6414-00-78	HWY:BUSINESS 51	COUNTY:PORTAGE	PLAN AND PROFILE - BUSINESS 51	SHEET 270	E

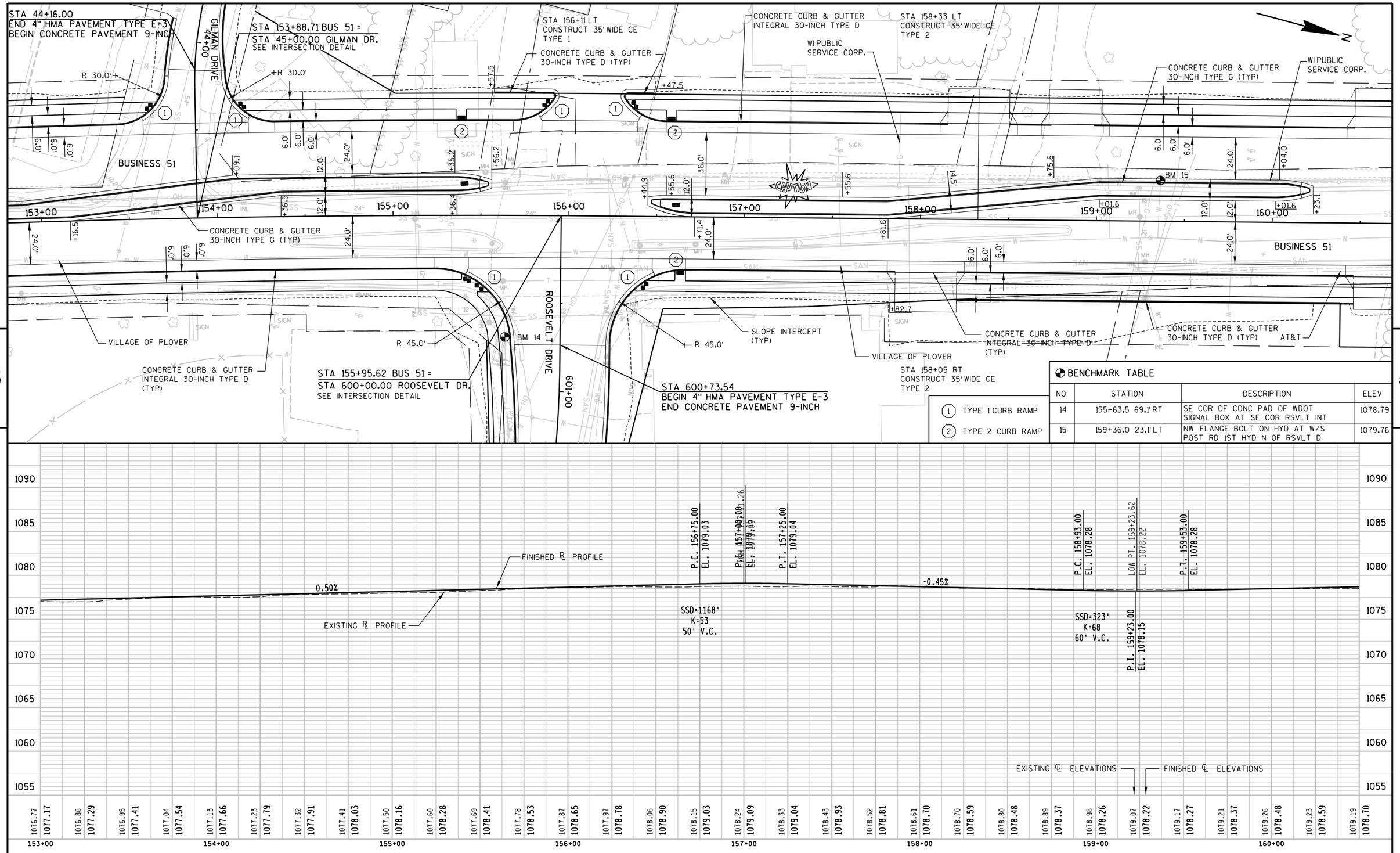

5

5

BENCHMARK TABLE

NO	STATION	DESCRIPTION	ELEV
14	155+63.5 69.1' RT	SE COR OF CONC PAD OF WDOT SIGNAL BOX AT SE COR RSVLT INT	1078.79
15	159+36.0 23.1' LT	NW FLANGE BOLT ON HYD AT W/S POST RD 1ST HYD N OF RSVLT D	1079.76

PROJECT NO:6414-00-78	HWY:BUSSINESS 51	COUNTY:PORTAGE	PLAN AND PROFILE - BUSSENESS 51	SHEET 271	E

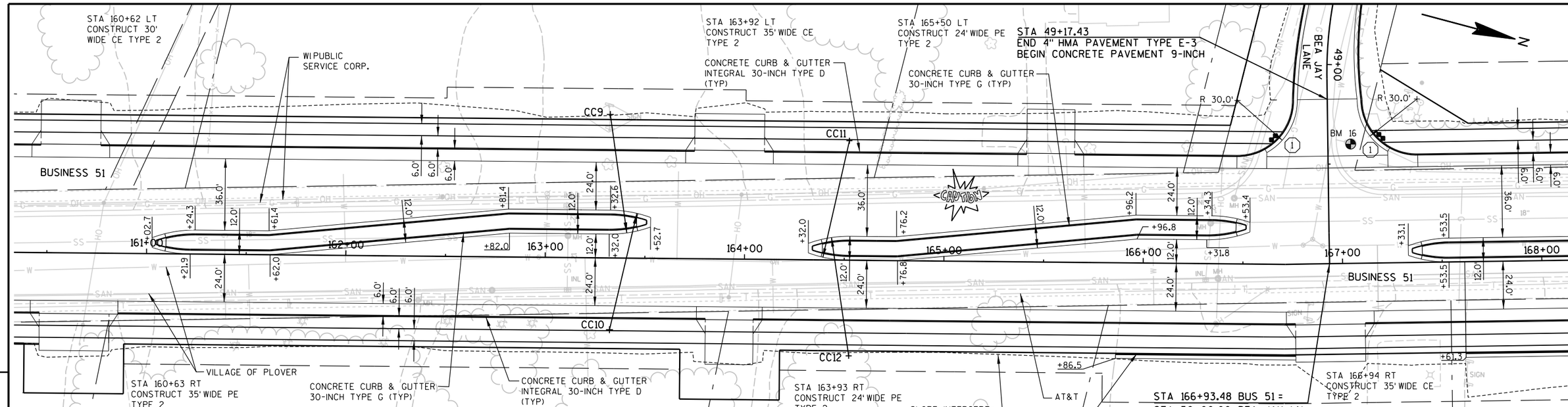

5

RADIUS POINT TABLE				
POINT	STATION	OFFSET	RADIUS	COORDINATES
CC9	163+31.98	72.0' LT	60.0'	Y = 182174.065 X = 173066.483
CC10	163+32.62	36.0' RT	60.0'	Y = 182201.583 X = 173170.920

RADIUS POINT TABLE				
POINT	STATION	OFFSET	RADIUS	COORDINATES
CC11	164+52.05	60.0' LT	60.0'	Y = 182293.343 X = 173048.197
CC12	164+52.69	48.0' RT	60.0'	Y = 182320.861 X = 173152.635

1 TYPE 1 CURB RAMP

2 TYPE 2 CURB RAMP

BENCHMARK TABLE			
NO	STATION	DESCRIPTION	ELEV
16	167+05.0 59.9' LT	NW FLANGE BOLT ON HYD AT NW COR POST RD & BEA JAY LN	1080.91

5

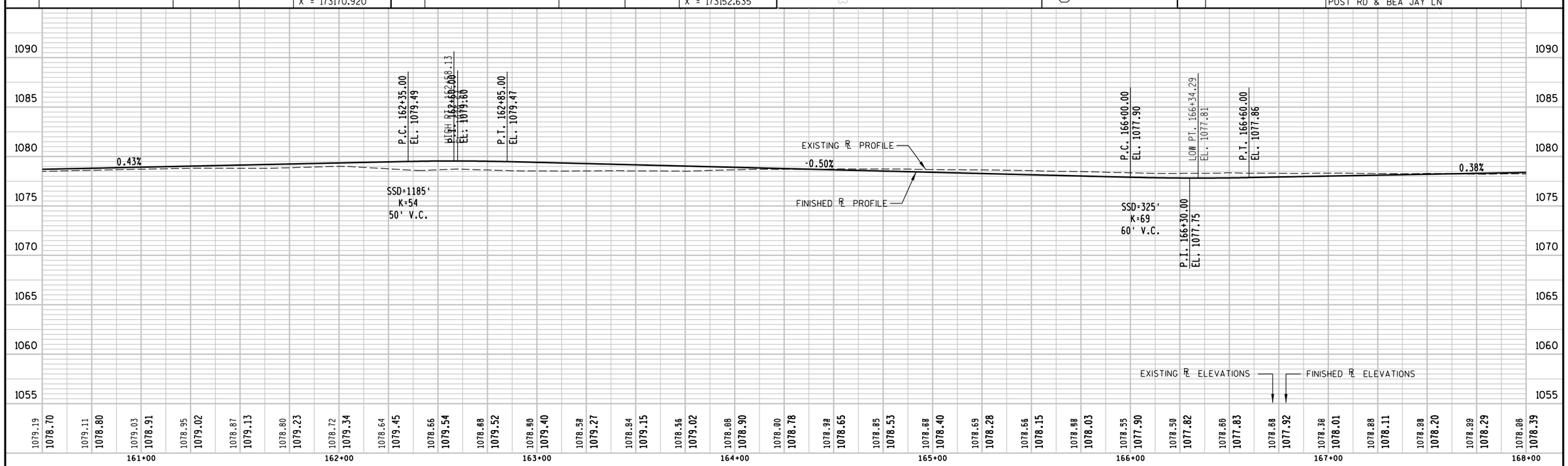

PROJECT NO:6414-00-78	HWY:BUSINESS 51	COUNTY:PORTAGE	PLAN AND PROFILE - BUSINESS 51	SHEET 272	E

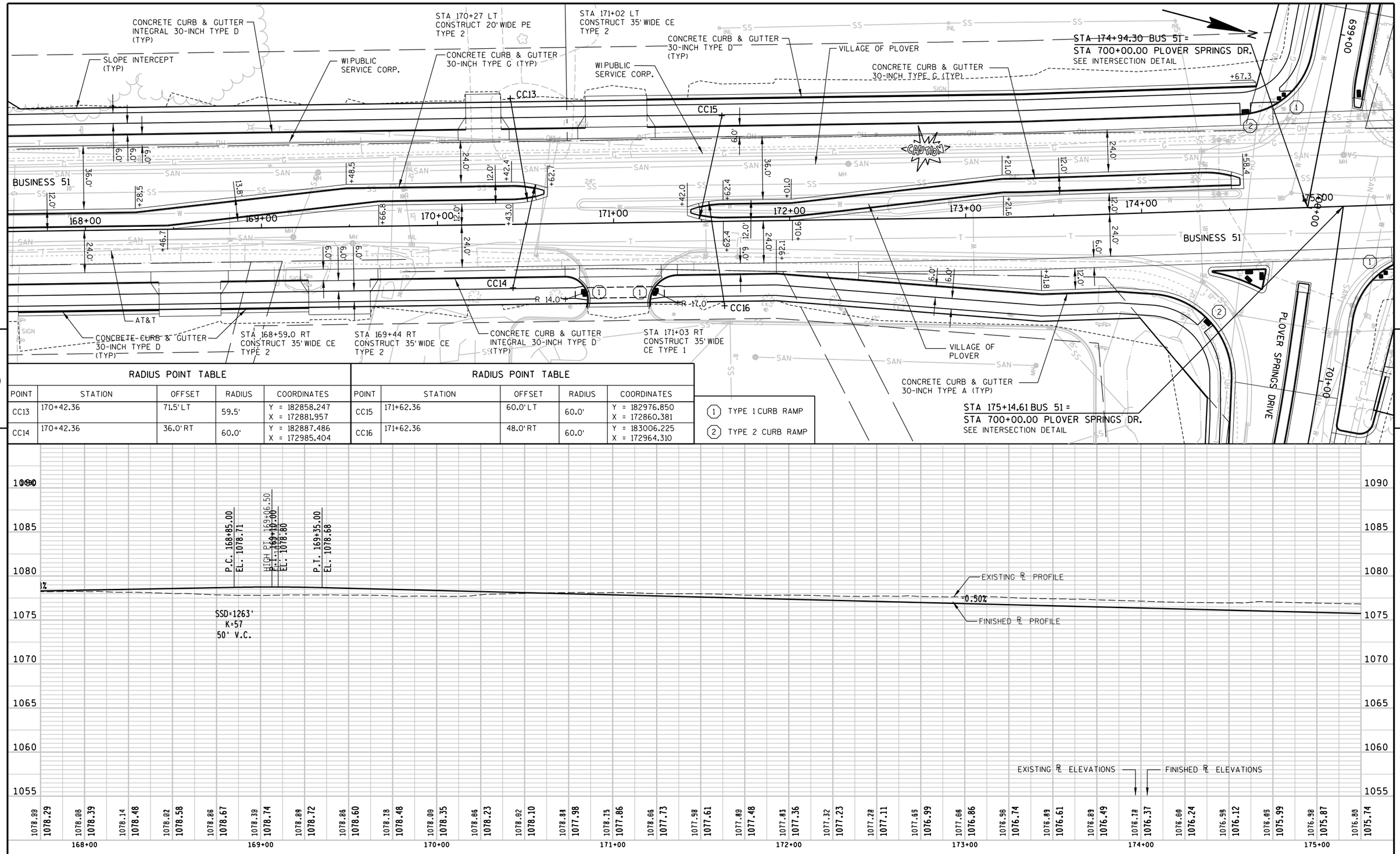

5

RADIUS POINT TABLE				
POINT	STATION	OFFSET	RADIUS	COORDINATES
CC13	170+42.36	71.5' LT	59.5'	Y = 182858.247 X = 172881.957
CC14	170+42.36	36.0' RT	60.0'	Y = 182887.486 X = 172985.404

RADIUS POINT TABLE				
POINT	STATION	OFFSET	RADIUS	COORDINATES
CC15	171+62.36	60.0' LT	60.0'	Y = 182976.850 X = 172860.381
CC16	171+62.36	48.0' RT	60.0'	Y = 183006.225 X = 172964.310

5

PROJECT NO:6414-00-78	HWY:BUSINESS 51	COUNTY:PORTAGE	PLAN AND PROFILE - BUSINESS 51	SHEET 273	E

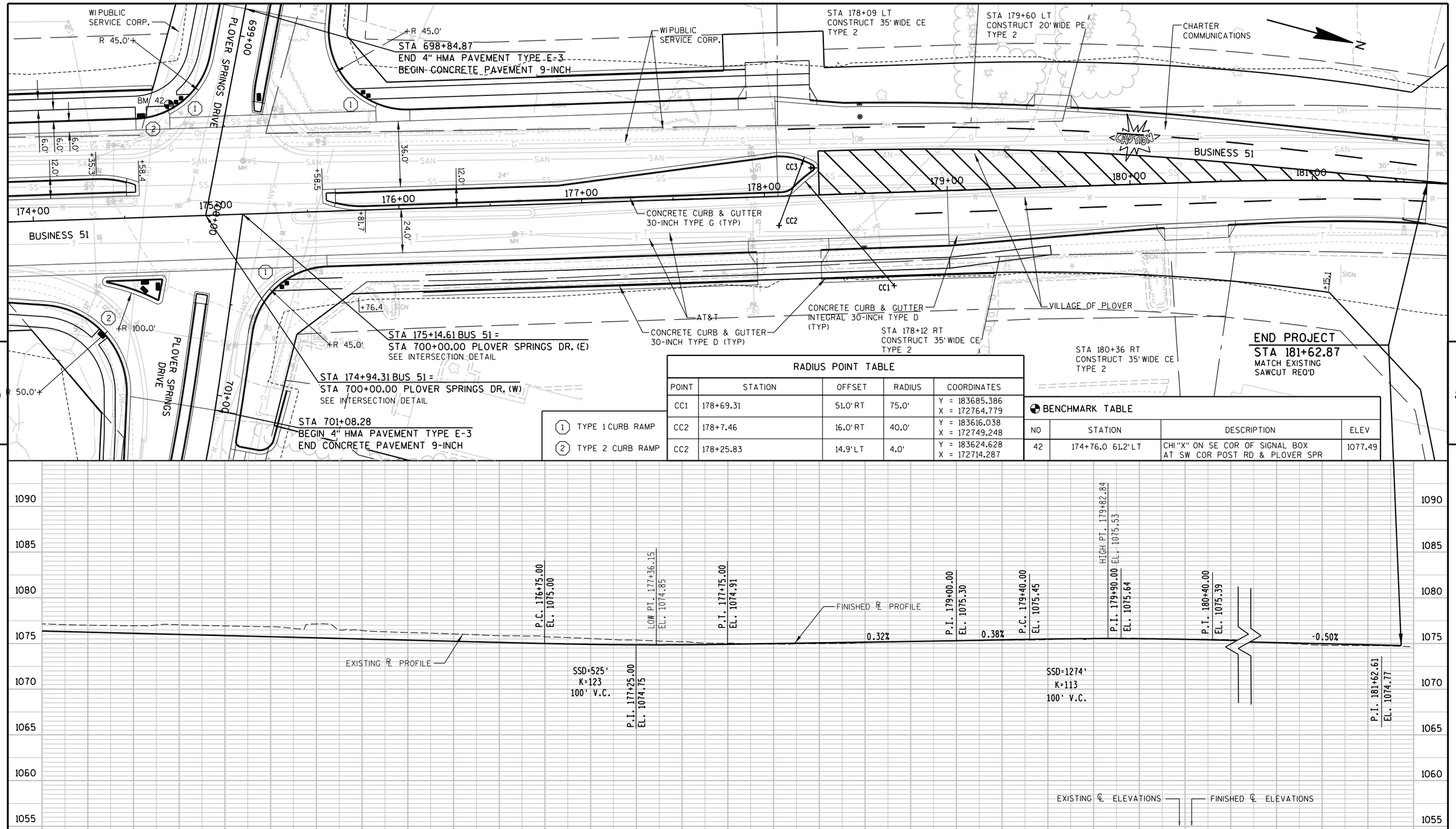

5

5

RADIUS POINT TABLE

POINT	STATION	OFFSET	RADIUS	COORDINATES
CC1	178+69.31	51.0' RT	75.0'	Y = 183685.386 X = 172764.779
CC2	178+7.46	16.0' RT	40.0'	Y = 183616.038 X = 172749.248
CC2	178+25.83	14.9' LT	4.0'	Y = 183624.628 X = 172714.287

BENCHMARK TABLE

NO	STATION	DESCRIPTION	ELEV
42	174+76.0 61.2' LT	CHI "X" ON SE COR OF SIGNAL BOX AT SW COR POST RD & PLOVER SPR	1077.49

PROJECT NO:6414-00-78	HWY:BUSSINESS 51	COUNTY:PORTAGE	PLAN AND PROFILE - BUSSENESS 51	SHEET 274	E

FILE NAME : P:\UZ\W\Witnc\112545\5-final-dsgn\51-drawings\40-TransHwy\050109 pp.dgn PLOT TIME : 2:10:11 PM PLOT DATE : 8/2/2015 PLOT BY : SEH PLOT NAME : PLOT SCALE : N/A

WISDOT/CADDS SHEET 40

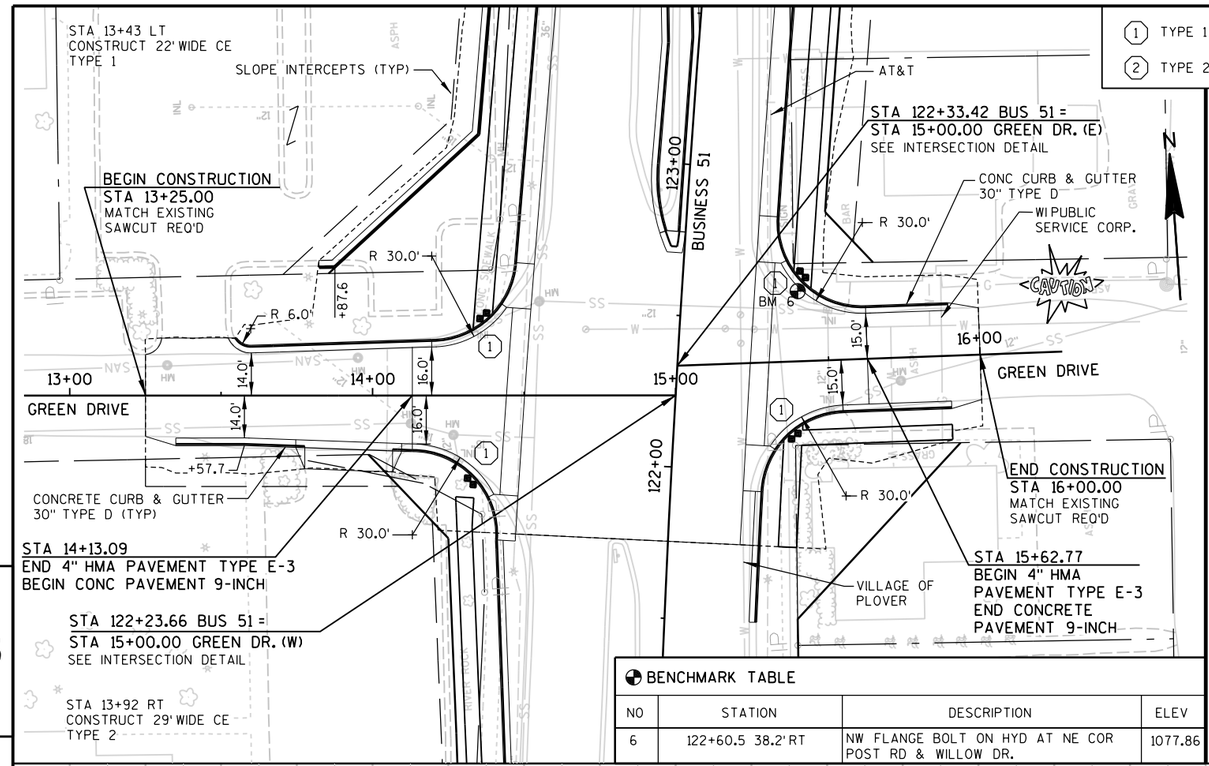

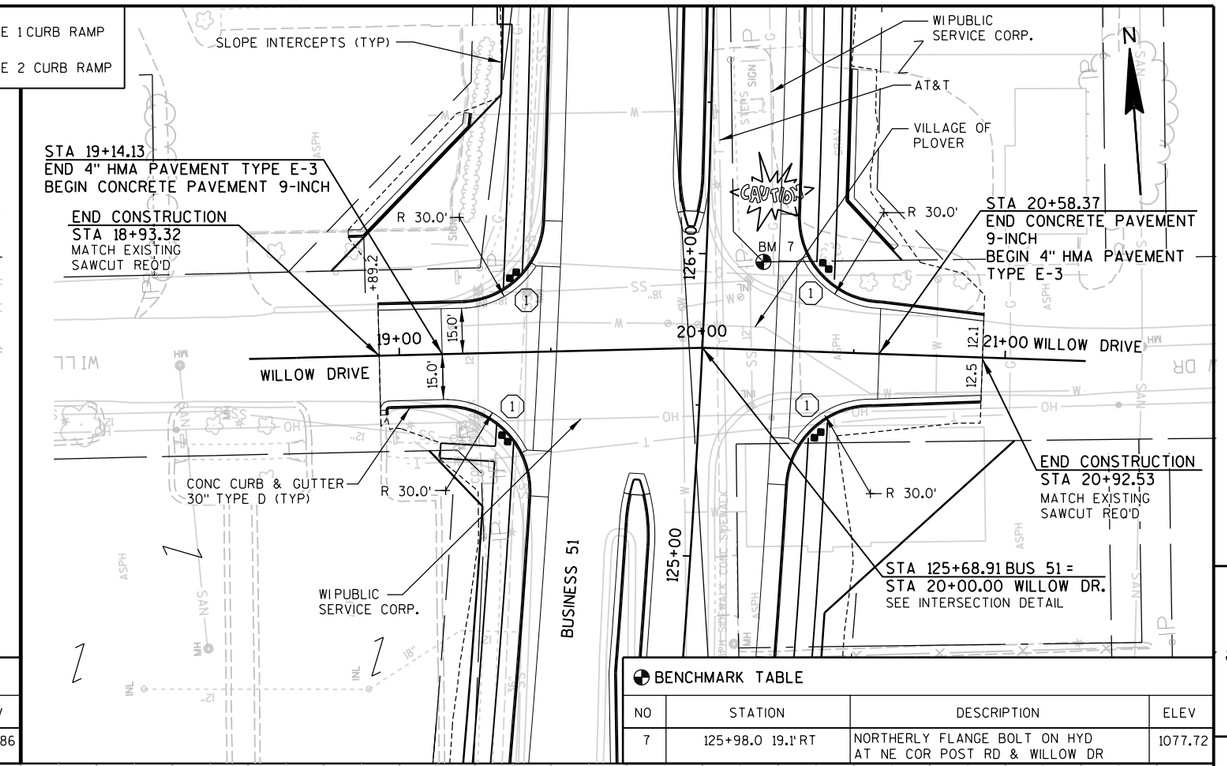

5

BENCHMARK TABLE

NO	STATION	DESCRIPTION	ELEV
6	122+60.5 38.2' RT	NW FLANGE BOLT ON HYD AT NE COR POST RD & WILLOW DR.	1077.86

BENCHMARK TABLE

NO	STATION	DESCRIPTION	ELEV
7	125+98.0 19.1' RT	NORTHERLY FLANGE BOLT ON HYD AT NE COR POST RD & WILLOW DR	1077.72

5

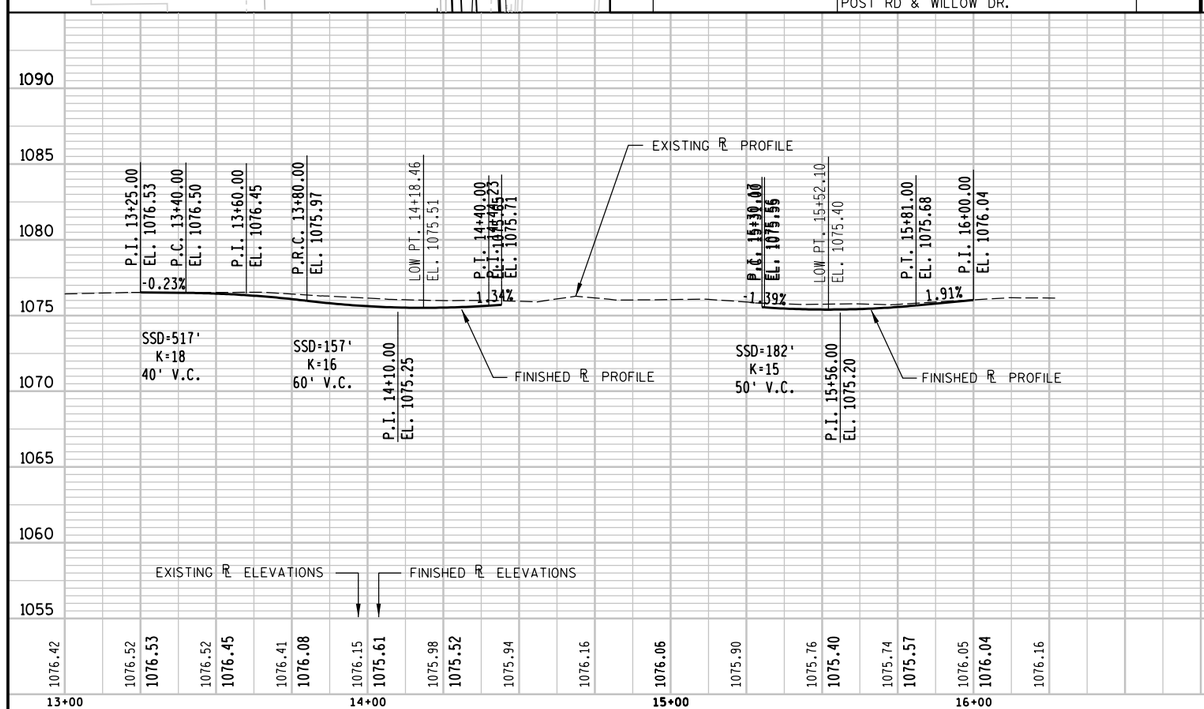

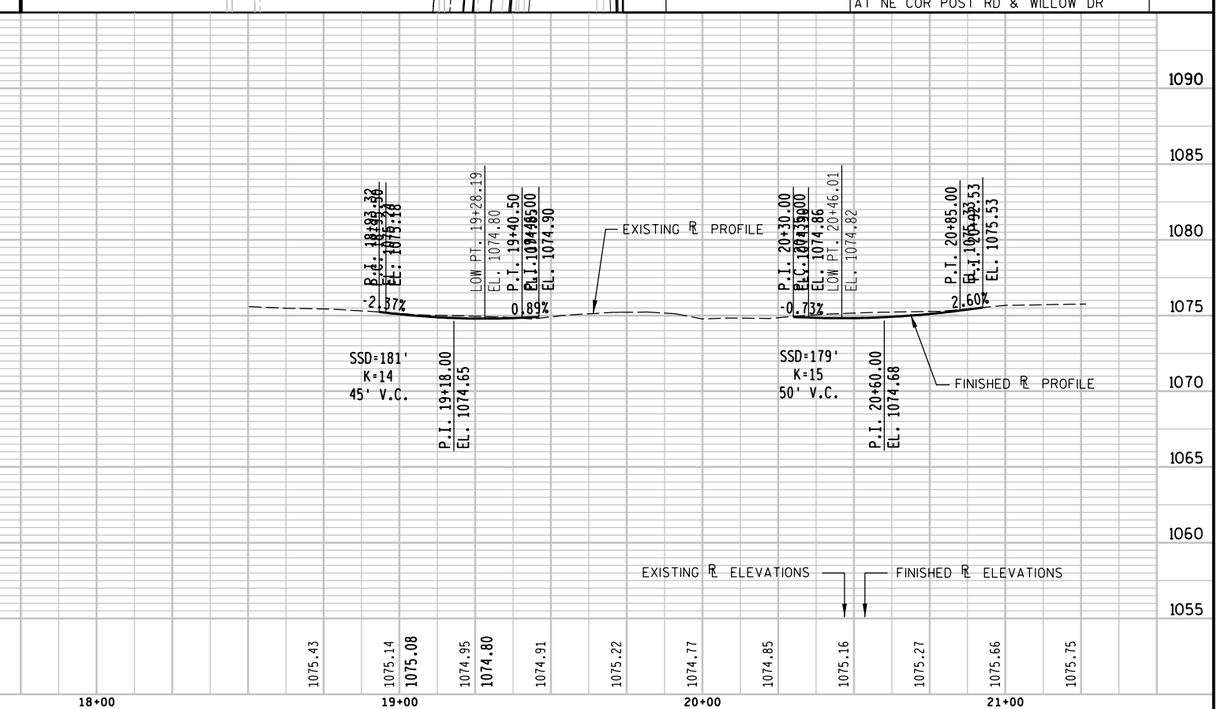

PROJECT NO:6414-00-78	HWY:BUSINESS 51	COUNTY:PORTAGE	PLAN AND PROFILE - GREEN DRIVE & WILLOW DRIVE	SHEET 275	E

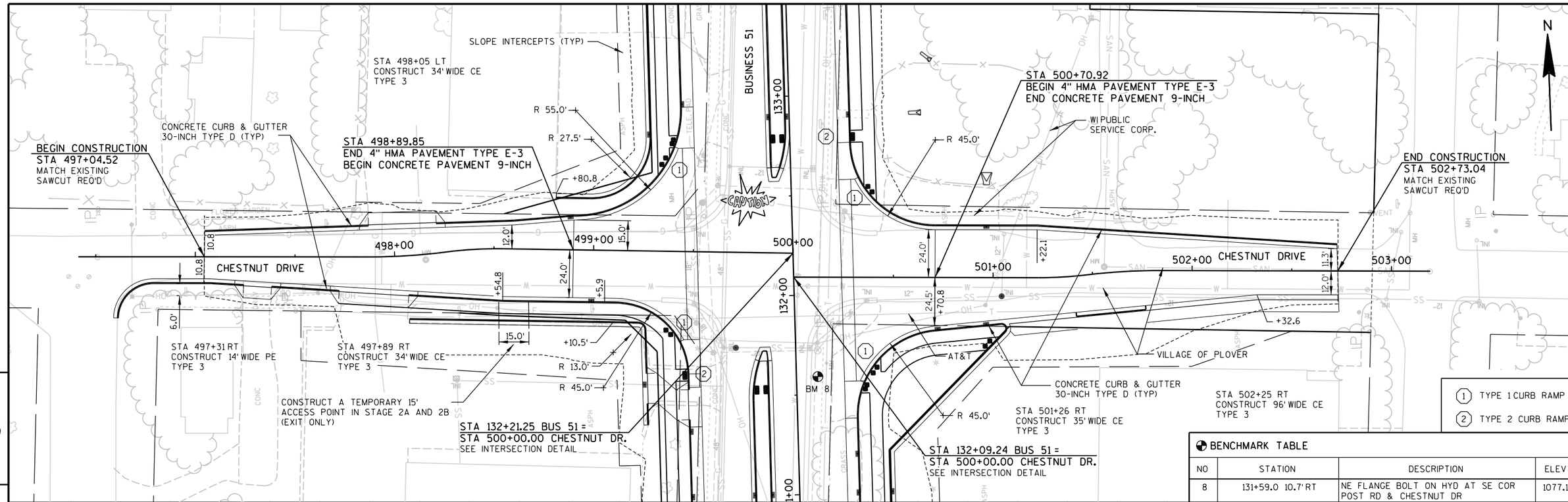

5

5

BENCHMARK TABLE

NO	STATION	DESCRIPTION	ELEV
8	131+59.0 10.7' RT	NE FLANGE BOLT ON HYD AT SE COR POST RD & CHESTNUT DR	1077.16

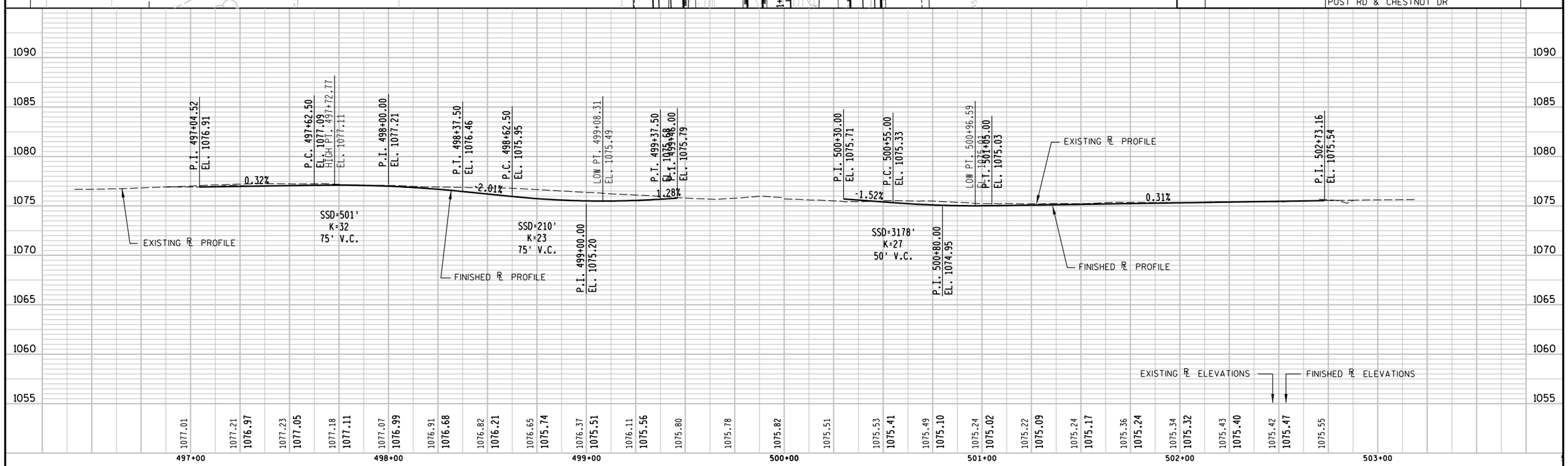

PROJECT NO:6414-00-78	HWY:BUSINESS 51	COUNTY:PORTAGE	PLAN AND PROFILE - CHESTNUT DRIVE	SHEET 276	E

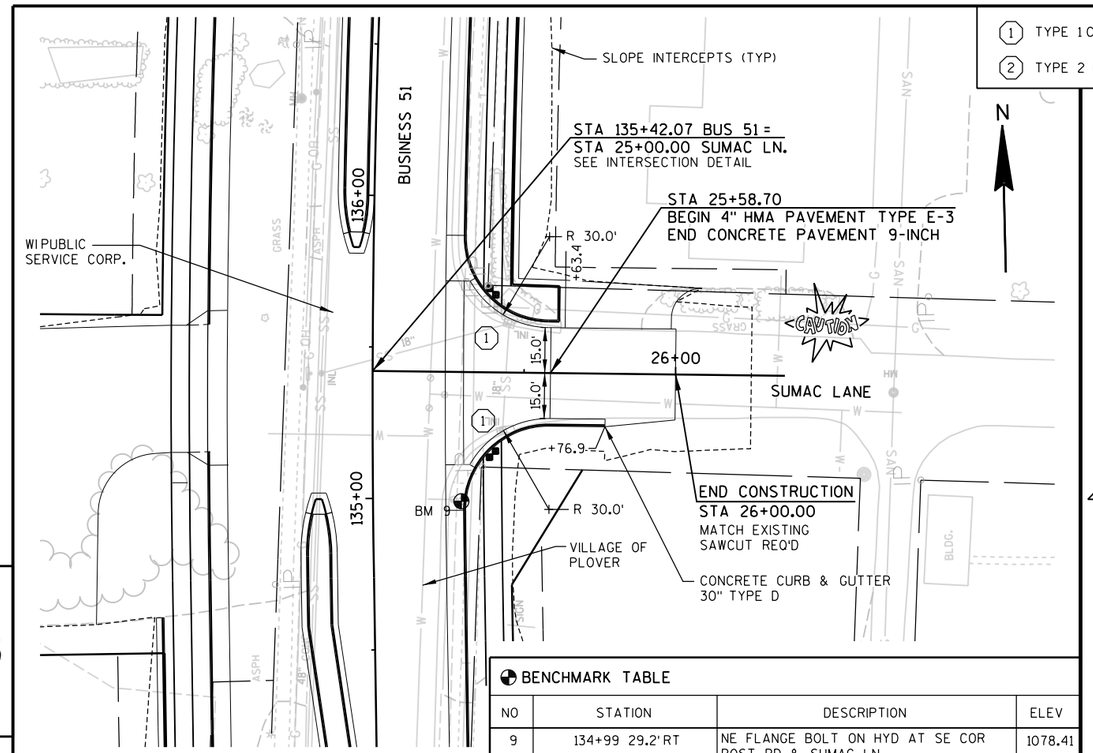

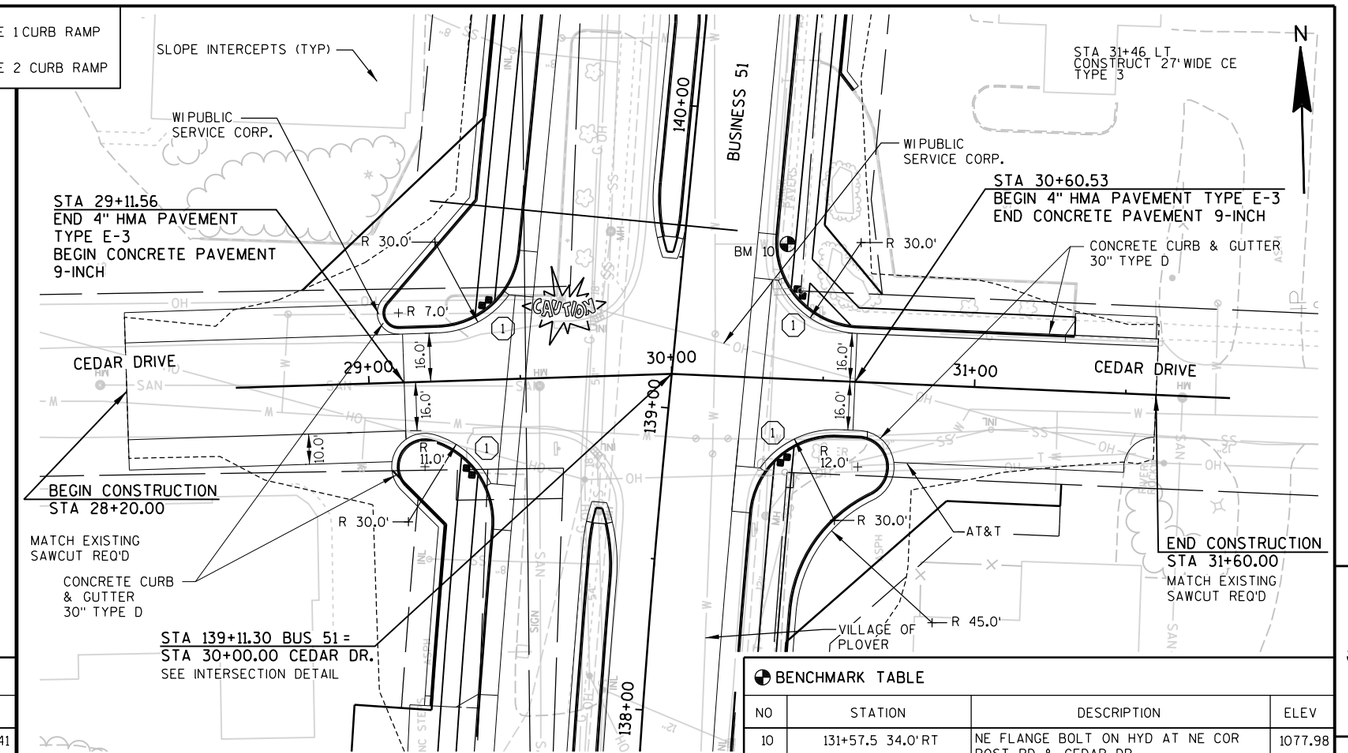

5

5

BENCHMARK TABLE

NO	STATION	DESCRIPTION	ELEV
9	134+99 29.2' RT	NE FLANGE BOLT ON HYD AT SE COR POST RD & SUMAC LN	1078.41

BENCHMARK TABLE

NO	STATION	DESCRIPTION	ELEV
10	131+57.5 34.0' RT	NE FLANGE BOLT ON HYD AT NE COR POST RD & CEDAR DR	1077.98

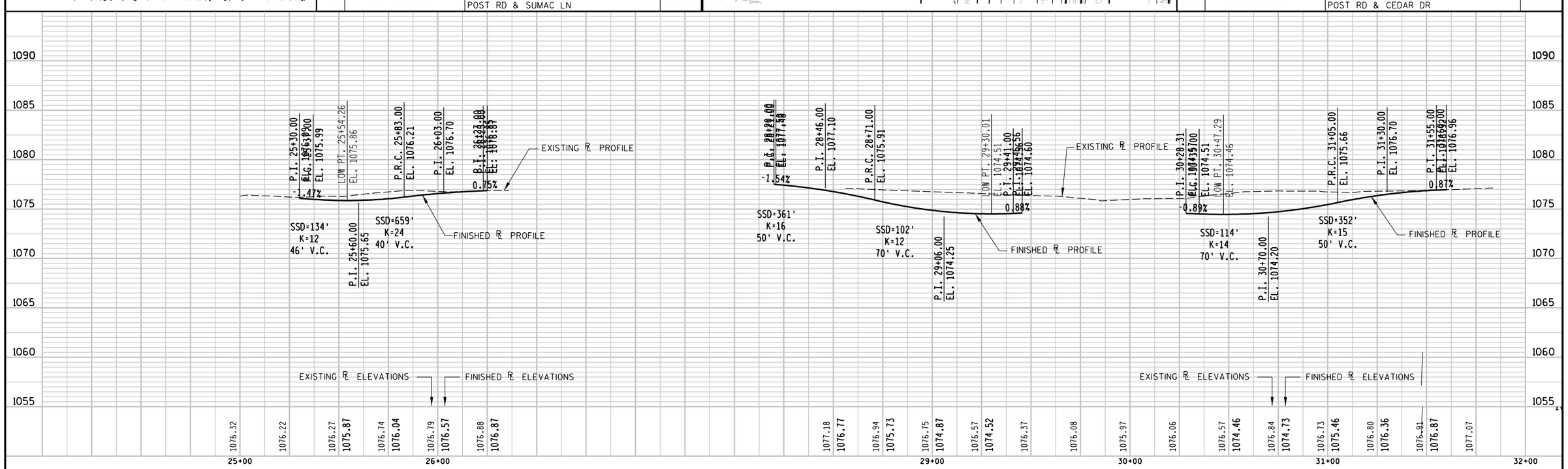

PROJECT NO:6414-00-78	HWY:BUSINESS 51	COUNTY:PORTAGE	PLAN AND PROFILE - SUMAC LANE AND CEDAR DRIVE	SHEET 277	E

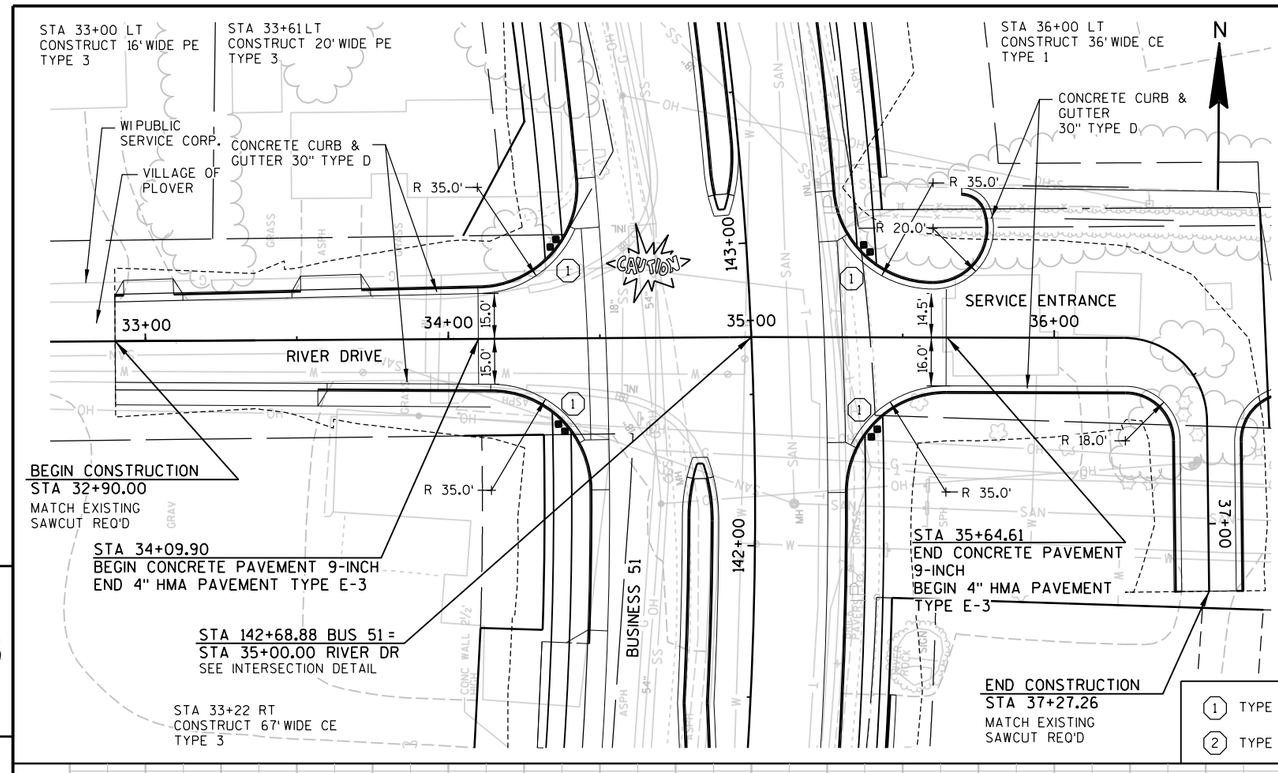

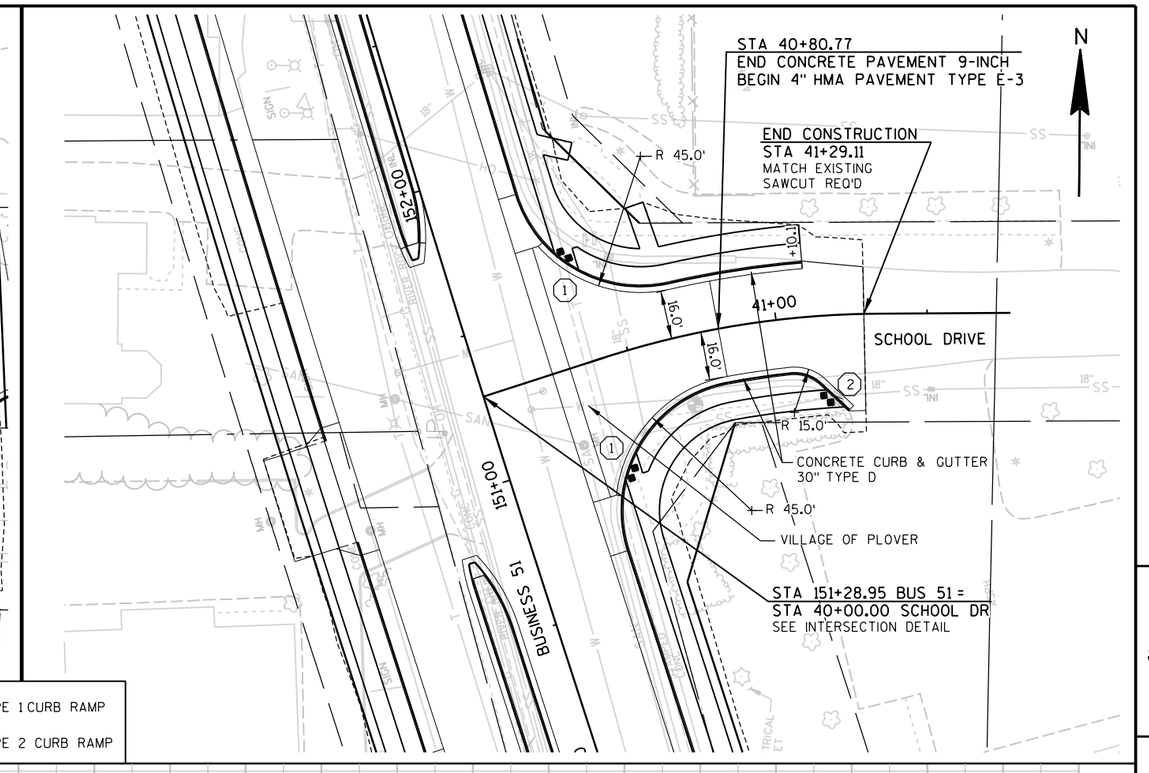

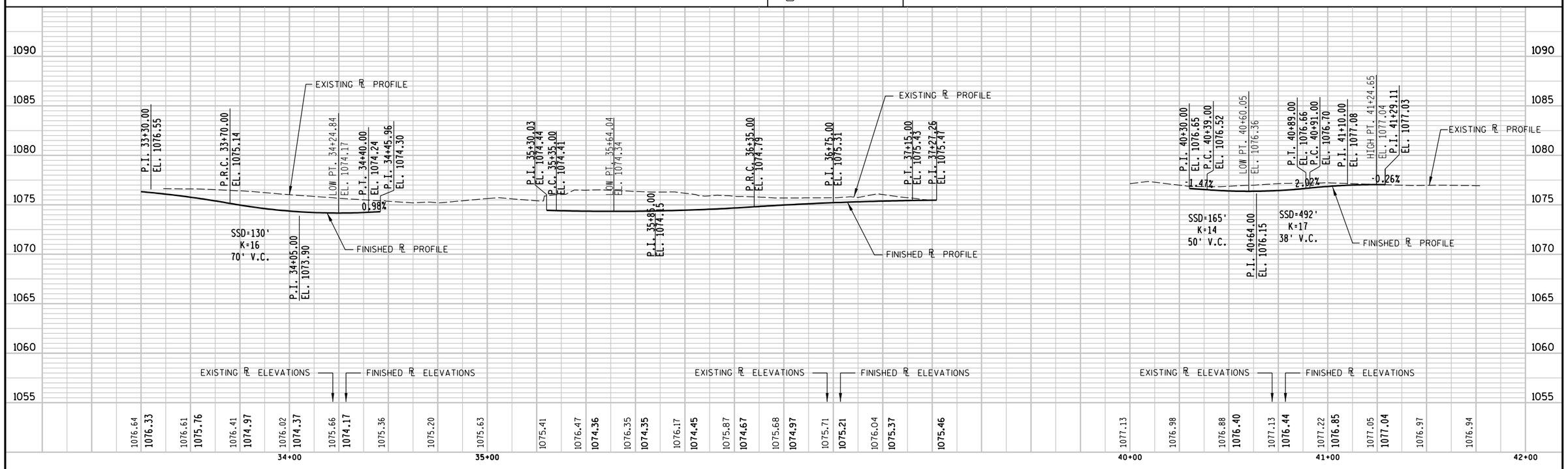

PROJECT NO:6414-00-78	HWY:BUSINESS 51	COUNTY:PORTAGE	PLAN AND PROFILE - RIVER DRIVE & SCHOOL DRIVE	SHEET 278	E

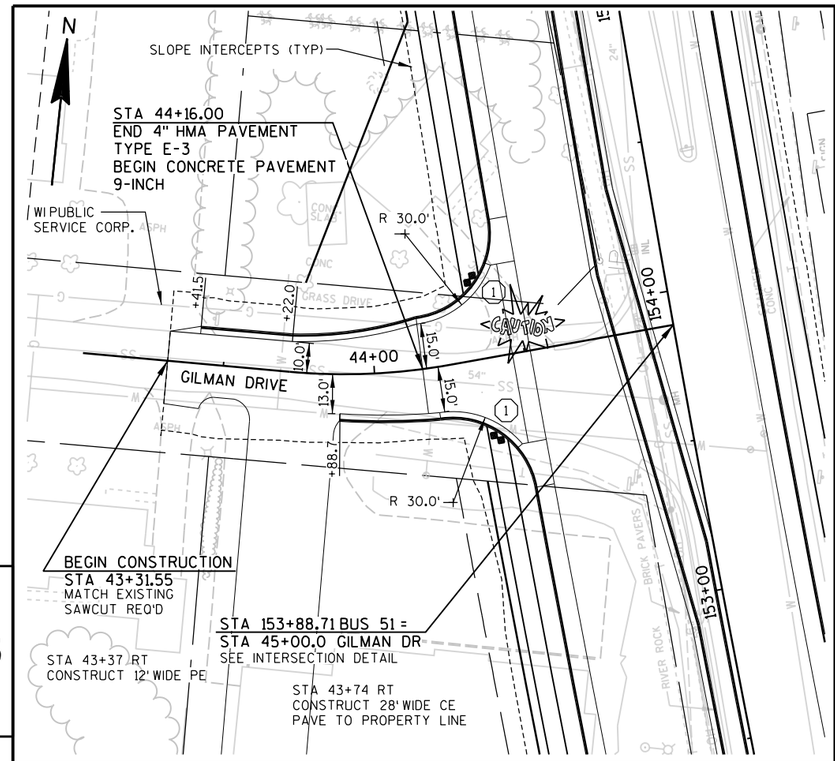

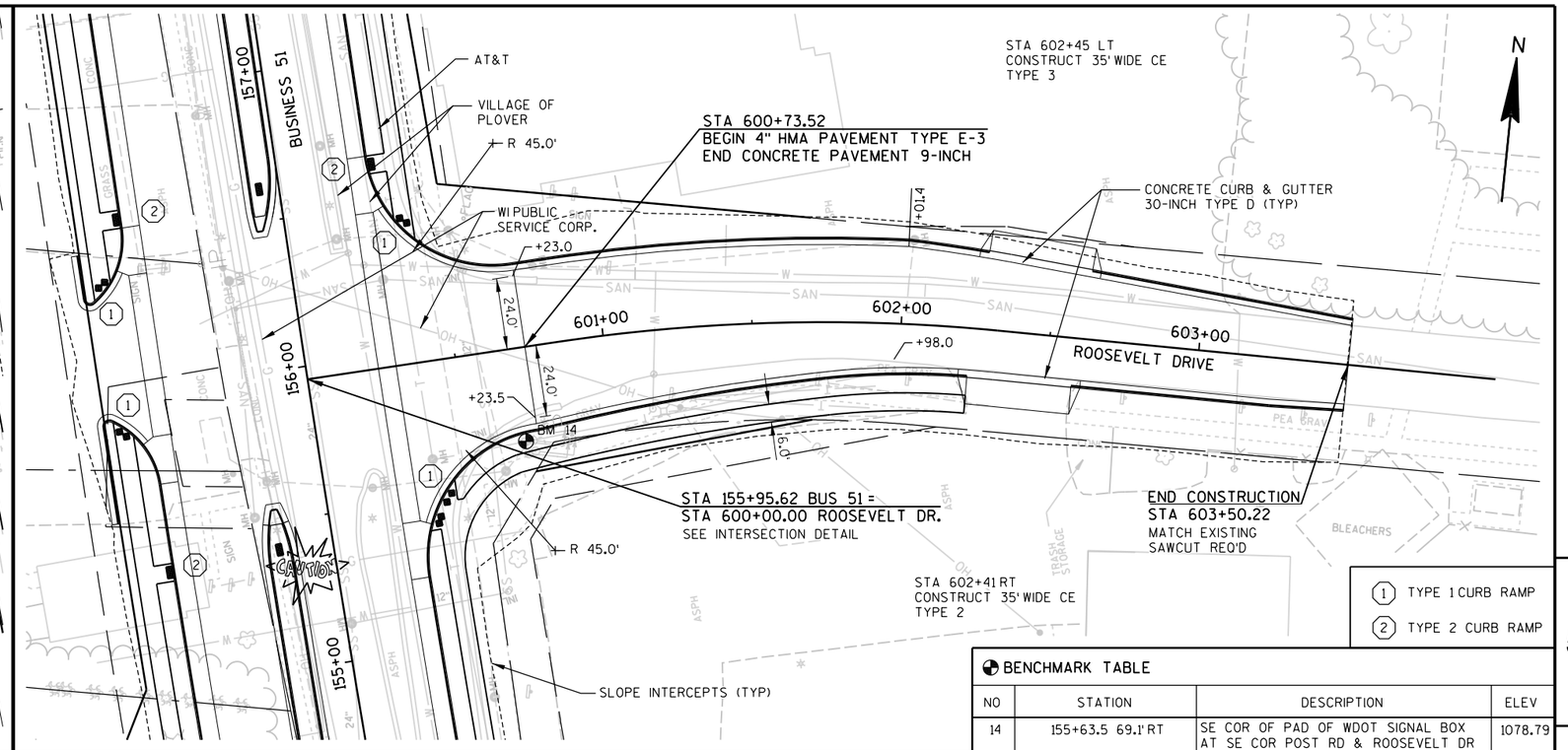

1 TYPE 1 CURB RAMP

2 TYPE 2 CURB RAMP

BENCHMARK TABLE

NO	STATION	DESCRIPTION	ELEV
14	155+63.5 69.1' RT	SE COR OF PAD OF WDOT SIGNAL BOX AT SE COR POST RD & ROOSEVELT DR	1078.79

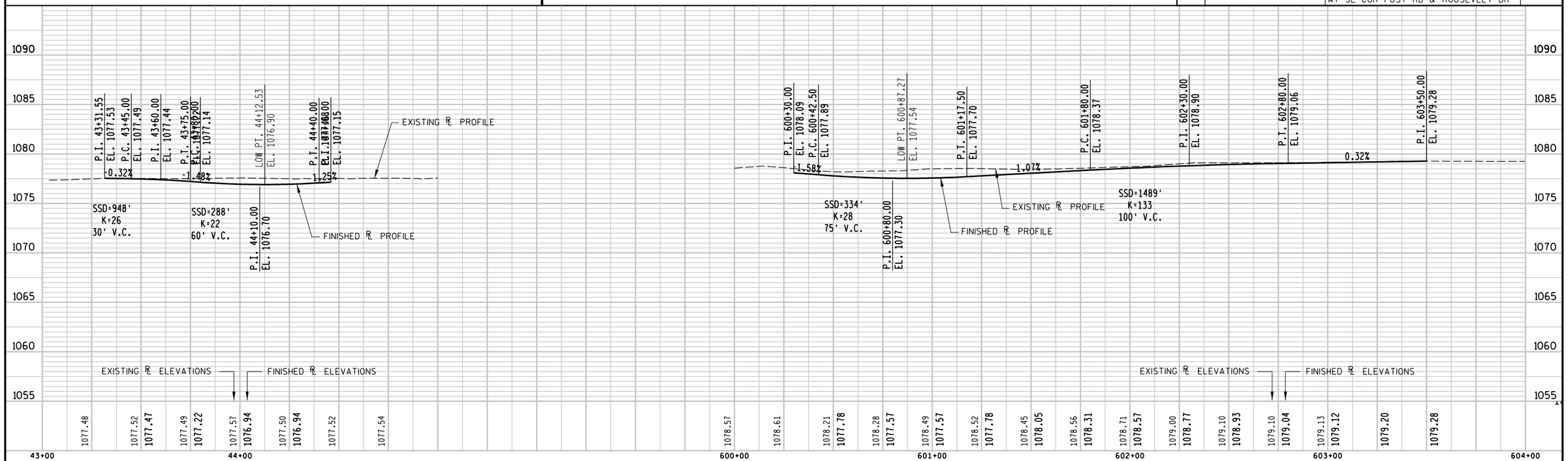

PROJECT NO:6414-00-78	HWY:BUSINESS 51	COUNTY:PORTAGE	PLAN AND PROFILE - GILMAN DRIVE & ROOSEVELT DRIVE	SHEET 279	E

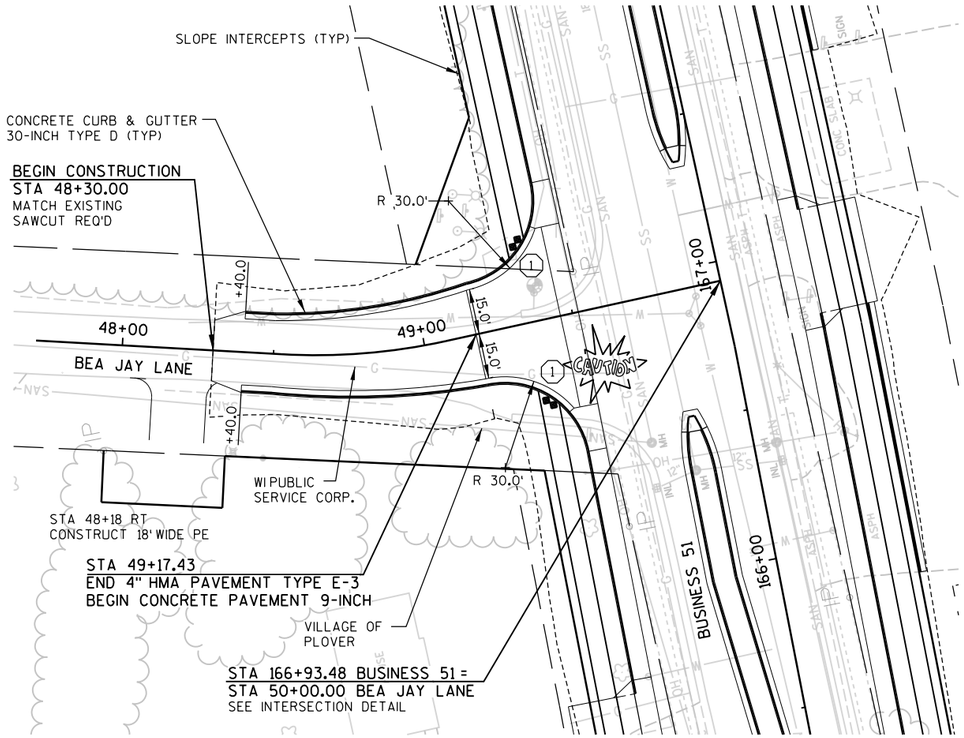

N

1 TYPE 1 CURB RAMP

2 TYPE 2 CURB RAMP

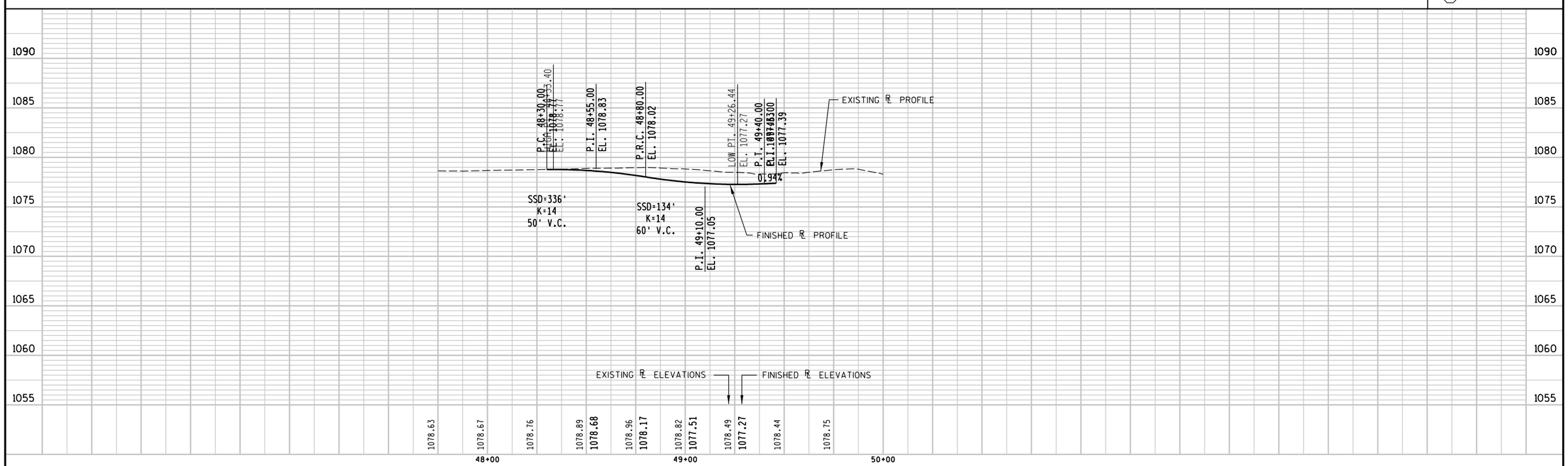

PROJECT NO:6414-00-78	HWY:BUSINESS 51	COUNTY:PORTAGE	PLAN AND PROFILE - BEA JAY LANE & PLOVER SPRINGS DRIVE	SHEET 280	E

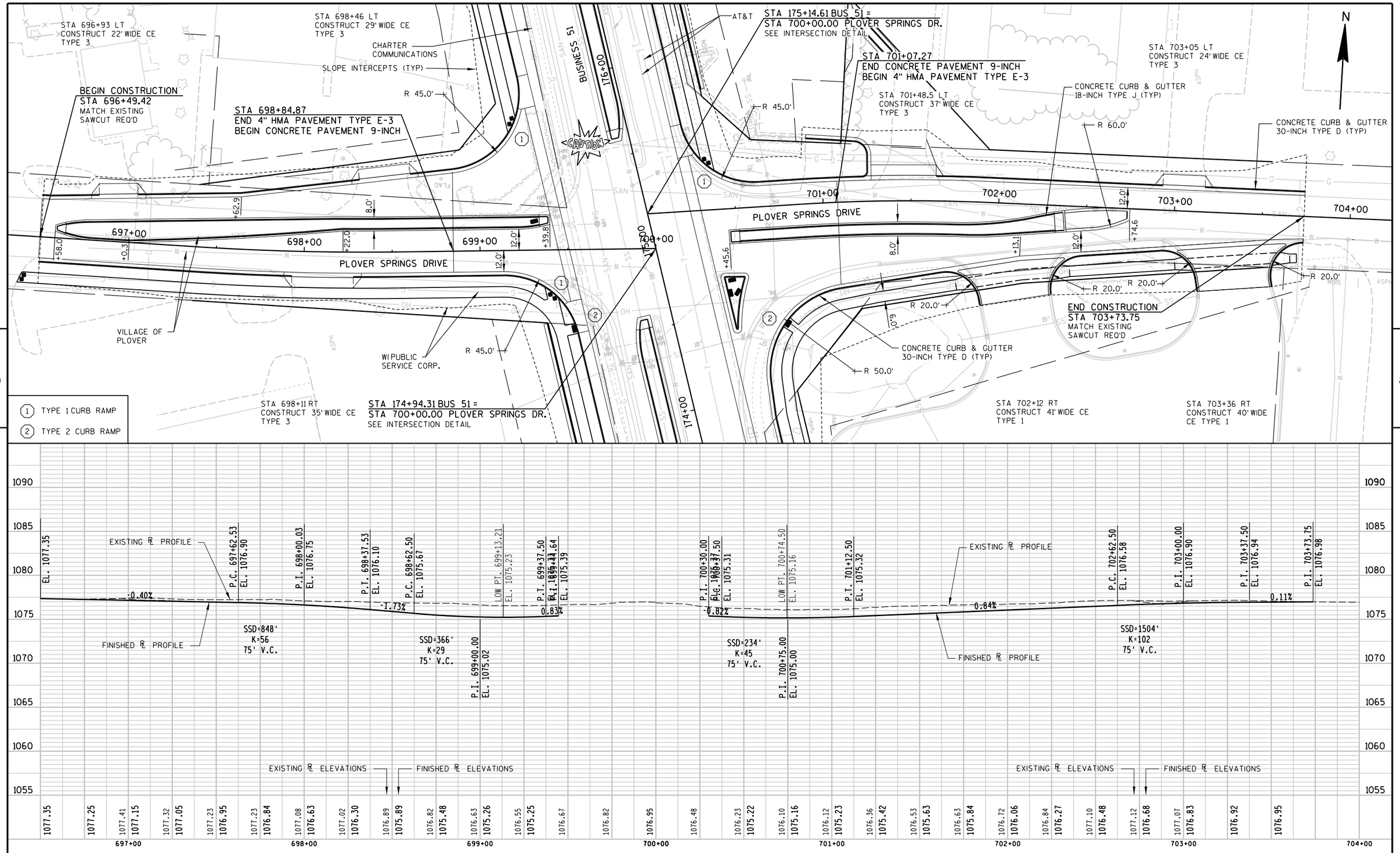

5

5

PROJECT NO:6414-00-78	HWY:BUSINESS 51	COUNTY:PORTAGE	PLAN AND PROFILE - PLOVER SPRINGS DRIVE	SHEET 281	E

Standard Detail Drawing List

08A05-19A	INLET COVERS TYPE A, H, A-S, H-S & Z
08A05-19B	INLET COVERS TYPE B, B-A, C, MS, MS-A, & WM
08A05-19D	INLET COVER TYPE BW, MANHOLE COVERS, TYPE K, J, J-S, L & M
08B09-01	MANHOLES 3-FT, 4-FT, 5-FT, 6-FT, 7-FT AND 8-FT DIAMETER
08C06-01	INLETS 3-FT AND 4-FT DIAMETER
08C07-01	INLETS 2X2-FT, 2X2.5-FT, 2X3-FT AND 2.5X3-FT
08C08-01	INLETS MEDIAN 1 AND 2 GRATE
08D01-18	CONCRETE CURB, CONCRETE CURB AND GUTTER AND TIES
08D05-16A	CURB RAMPS TYPES 1 AND 1-A
08D05-16B	CURB RAMPS TYPES 2 AND 3
08D05-16C	CURB RAMPS TYPES 4A AND 4A1
08D05-16D	CURB RAMPS TYPE 4B AND 4B1
08D05-16E	CURB RAMPS TYPES 5, 6, 7A, 7B & 8
08E09-06	SILT FENCE
08E10-02	INLET PROTECTION TYPE A, B, C AND D
08F01-11	APRON ENDWALLS FOR CULVERT PIPE
08F04-07	JOINT TIES FOR CONCRETE PIPE AND CONCRETE COLLAR DETAIL
08F05-01	CLASS "B" BEDDING FOR CULVERT PIPE OR STORM SEWER
09B02-09	CONDUIT
09B04-11	PULL BOX
09C02-07	CONCRETE BASES, TYPES 1, 2, 5, & 6
09C03-04	TRANSFORMER/PEDESTAL BASES
09C05-09	CONCRETE CONTROL CABINET BASES
09C06-07	CONCRETE CONTROL CABINET BASE, TYPE 9, SPECIAL
09C11-07	CONCRETE BASE TYPE 10
09C13-02	CONCRETE BASE TYPE 10 & TYPE 13 EXTENSION
09C14-02	CONCRETE CONTROL CABINET BASE, TYPE L
09D01-05	CABINET SERVICE INSTALLATION (METER BREAKER PEDESTAL)
09D02-03	SIGNAL CONTROL CABINET
09D04-01	LIGHTING CONTROL CABINET
09E01-14C	POLE MOUNTINGS FOR TRAFFIC SIGNALS AND LIGHTING UNITS, TYPE 4
09E03-05	NON-FREEWAY LIGHTING UNIT POLE WIRING
09E06-05	TRAFFIC SIGNAL STANDARD POLY BRACKET MOUNTINGS (TYPICAL) 13 FT. OR 15 FT.
09E07-05	TRAFFIC SIGNAL STANDARD PEDESTRIAN AND FLASHER TYPICAL MOUNTING DETAILS
09E08-07A	TYPE 9 POLE 15'-30' MONOTUBE ARM
09E08-07B	TYPE 10 POLE 15'-30' MONOTUBE ARM
09E08-07E	GENERAL NOTES AND HARDWARE DETAILS FOR TYPE 9, 10, 12 & 13 POLES WITH MONOTUBE ARMS
09F15-04A	LOOP DETECTOR INSTALLED IN BASE COURSE WITH PULL (SPLICE) BOX OFF ROADWAY (OPTION 1)
09F15-04B	LOOP DETECTOR INSTALLED IN BASE COURSE WITH PULL (SPLICE) BOX OFF ROADWAY (OPTION 2)
09G01-04A	SPAN WIRE TEMPORARY TRAFFIC SIGNAL
09G01-04B	SPAN WIRE TEMPORARY TRAFFIC SIGNAL
09G01-04C	SPAN WIRE TEMPORARY TRAFFIC SIGNAL
09G01-04D	SPAN WIRE TEMPORARY TRAFFIC SIGNAL
09G01-04E	SPAN WIRE TEMPORARY TRAFFIC SIGNAL
09G01-04F	SPAN WIRE TEMPORARY TRAFFIC SIGNAL
09G01-04G	SPAN WIRE TEMPORARY TRAFFIC SIGNAL
11B01-05	CONCRETE CORRUGATED MEDIAN
11B02-02	CONCRETE MEDIAN NOSE
13C01-18	CONCRETE PAVEMENT LONGITUDINAL JOINTS AND TIES
13C13-08	URBAN DOWELED CONCRETE PAVEMENT
13C18-03A	CONCRETE PAVEMENT JOINTING
13C18-03C	CONCRETE PAVEMENT JOINT TIES
15A03-02A	FLEXIBLE MARKER POST FOR CULVERT END
15A03-02B	FLEXIBLE MARKER POST FOR CULVERT END
15C02-05A	BARRICADES AND SIGNS FOR MAINLINE CLOSURES
15C02-05B	BARRICADES AND SIGNS FOR MAINLINE CLOSURES
15C02-05C	DETOUR SIGNING FOR MAINLINE CLOSURES
15C03-02	BARRICADES AND SIGNS FOR SIDEROAD CLOSURES
15C05-02	TRAFFIC CONTROL, ADVANCE WARNING SIGNS 40 M.P.H. OR LESS
15C07-12A	PAVEMENT MARKING SYMBOLS
15C07-12B	PAVEMENT MARKING WORDS
15C07-12C	PAVEMENT MARKING ARROWS
15C08-16A	PAVEMENT MARKING (MAINLINE)
15C08-16B	PAVEMENT MARKING (INTERSECTIONS)
15C08-16E	PAVEMENT MARKING (LEFT TURN LANE)
15C08-16F	PAVEMENT MARKING (ISLANDS)
15C09-09A	SIGNING AND PAVEMENT MARKING DETAILS FOR RAILROAD-HIGHWAY GRADE CROSSINGS
15C11-06	FLEXIBLE TUBULAR MARKER POST

6

Standard Detail Drawing List

15C18-03	MEDIAN ISLAND MARKING
15C29-03A	BICYCLE LANE MARKING
15C29-03B	BICYCLE LANE MARKING
15C29-03C	URBAN BICYCLE LANE MARKING
15C29-03D	URBAN BICYCLE LANE MARKING
15C29-03E	PAVEMENT MARKING FOR BIKE LANES
15C33-01	STOP LINE AND CROSSWALK PAVEMENT MARKING
15D11-05	TRAFFIC CONTROL, SINGLE LANE CROSSOVER
15D12-05B	TRAFFIC CONTROL, LANE CLOSURE, SPEED REDUCTION
15D21-03	TRAFFIC CONTROL, INTERSECTION WITHIN SINGLE LANE CLOSURE
15D30-02A	TRAFFIC CONTROL, PEDESTRIAN ACCOMMODATION
15D30-02B	TRAFFIC CONTROL, TEMPORARY ADA COMPLIANT PEDESTRIAN ACCOMMODATION
15D30-02C	TRAFFIC CONTROL, PEDESTRIAN ACCOMMODATION

6

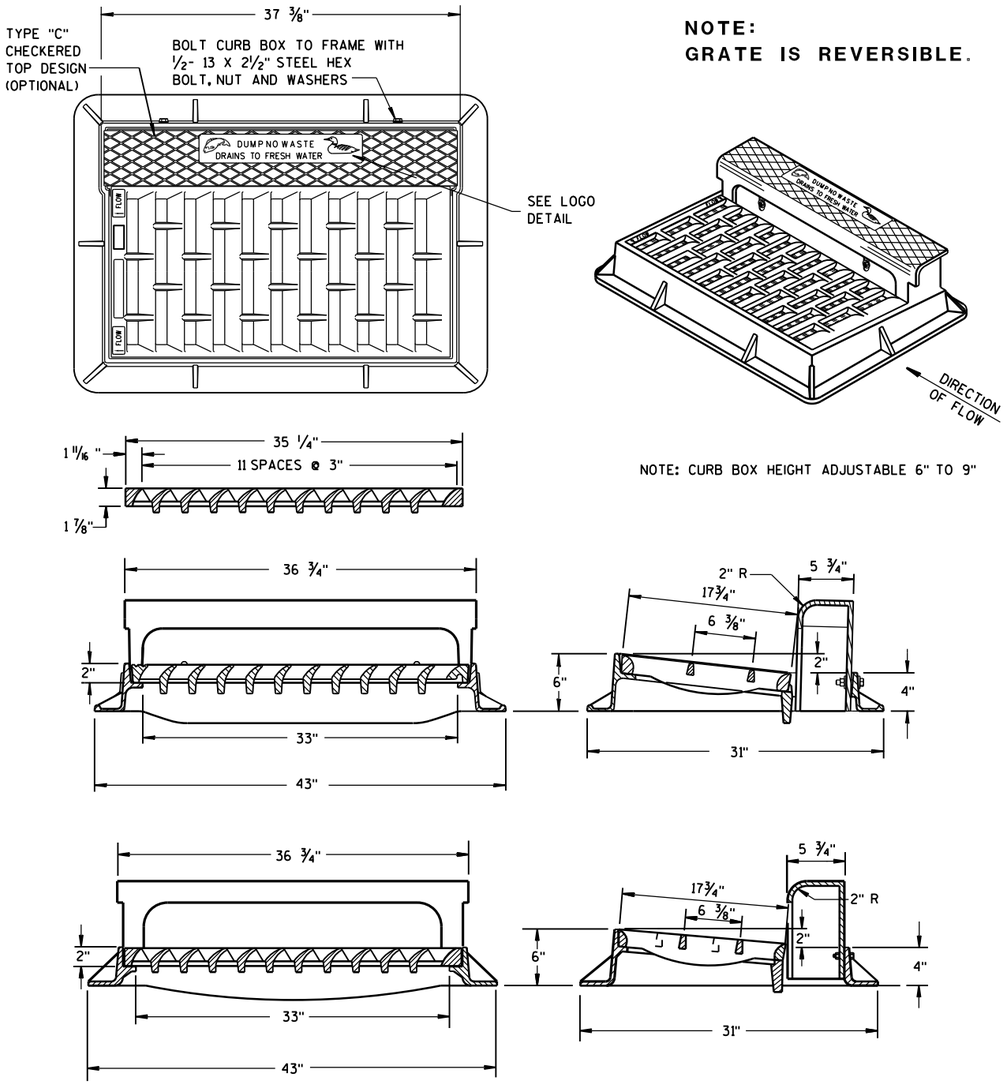

NOTE:
GRATE IS REVERSIBLE.

NOTE: CURB BOX HEIGHT ADJUSTABLE 6" TO 9"

TYPE "H"

NOTE: EITHER CASTING IS ACCEPTABLE

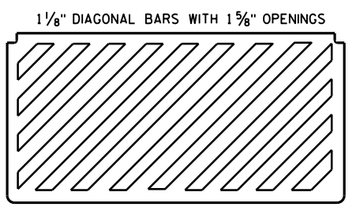

SPECIAL GRATE FOR TYPE "H" COVER

(MEASURES 35 1/4" X 17 3/4" X 2")

(NOTED AS TYPE H-S ON DRAINAGE TABLE)

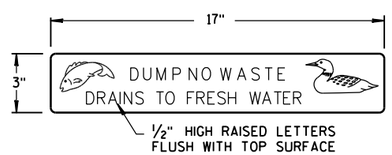

LOGO DETAIL

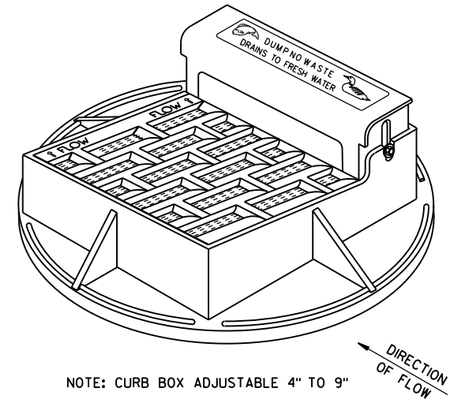

NOTE: CURB BOX ADJUSTABLE 4" TO 9"

NOTE:
GRATE IS REVERSIBLE.

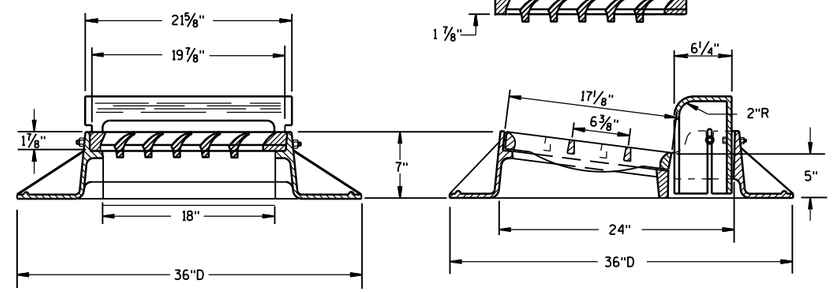

TYPE "A"

GENERAL NOTES

DETAILS OF CONSTRUCTION, MATERIALS AND WORKMANSHIP NOT SHOWN ON THIS DRAWING SHALL CONFORM TO THE PERTINENT REQUIREMENTS OF THE STANDARD SPECIFICATIONS AND THE APPLICABLE SPECIAL PROVISIONS.

DETAIL DRAWINGS FOR PROPOSED ALTERNATE DESIGNS FOR CATCH BASIN, MANHOLE AND INLET COVERS SHALL BE SUBMITTED TO THE ENGINEER FOR APPROVAL PROVIDING THAT SUCH ALTERNATE DESIGNS MAKE PROVISION FOR EQUIVALENT CAPACITY AND STRENGTH.

ROUND FRAMES AND COVERS SHALL HAVE CONTINUOUSLY MACHINED BEARING SURFACES TO PREVENT ROCKING AND RATTLING.

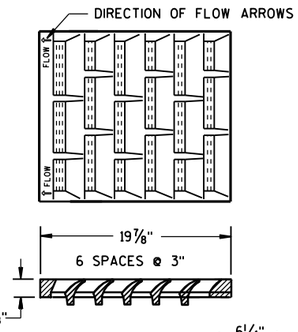

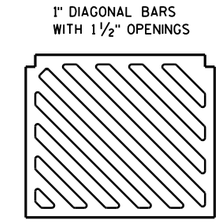

SPECIAL GRATE FOR TYPE "A" COVER

(MEASURES 19 3/4" X 17" X 1 7/8")

(NOTED AS TYPE A-S ON DRAINAGE TABLE)

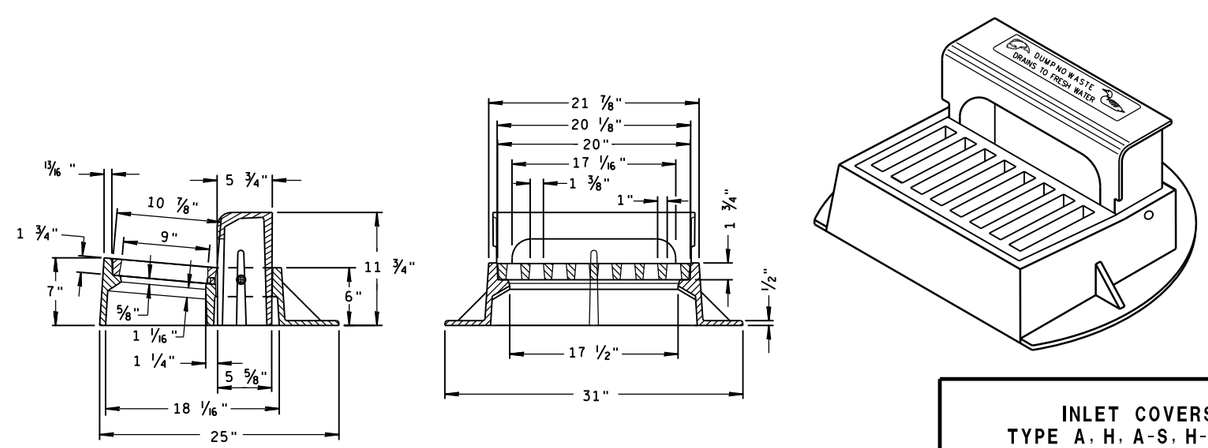

TYPE "Z"

INLET COVERS
TYPE A, H, A-S, H-S & Z

STATE OF WISCONSIN
DEPARTMENT OF TRANSPORTATION

APPROVED
11-27-13 /S/ Jerry H. Zogg
DATE ROADWAY STANDARDS DEVELOPMENT ENGINEER
FHWA

6

S.D.D. 8 A 5-19a

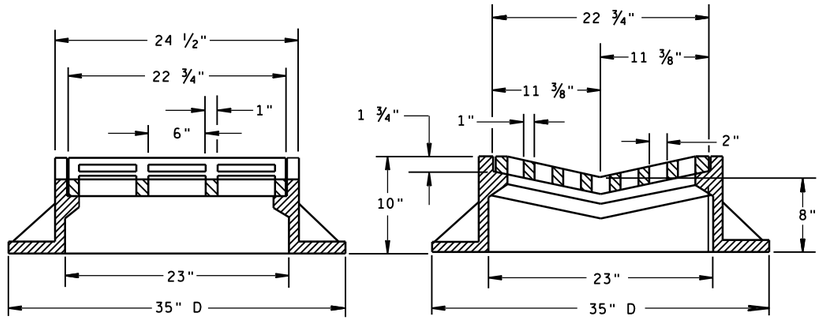

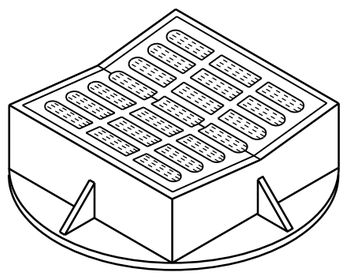

TYPE "B"

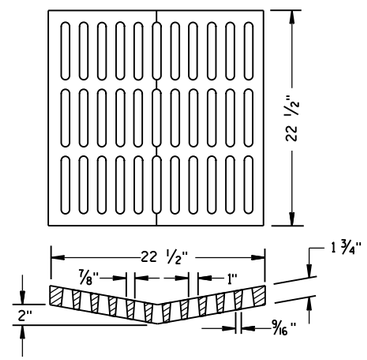

ALTERNATIVE GRATE FOR TYPE "B" COVER

USE WHERE PEDESTRIAN OR BICYCLE TRAFFIC IS POSSIBLE.

NOTED AS TYPE B-A ON THE DRAINAGE TABLE

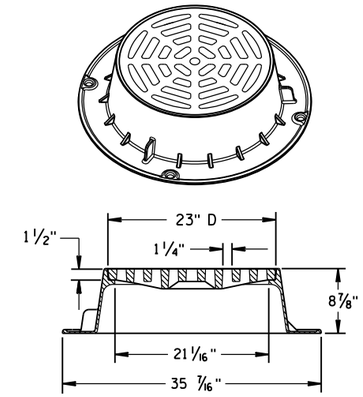

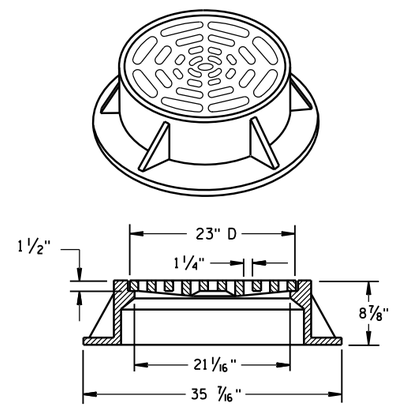

TYPE "C"

NOTE: EITHER CASTING IS ACCEPTABLE

GENERAL NOTES

DETAILS OF CONSTRUCTION, MATERIALS AND WORKMANSHIP NOT SHOWN ON THIS DRAWING SHALL CONFORM TO THE PERTINENT REQUIREMENTS OF THE STANDARD SPECIFICATIONS AND THE APPLICABLE SPECIAL PROVISIONS.

DETAIL DRAWINGS FOR PROPOSED ALTERNATE DESIGNS FOR CATCH BASIN, MANHOLE AND INLET COVERS SHALL BE SUBMITTED TO THE ENGINEER FOR APPROVAL PROVIDING THAT SUCH ALTERNATE DESIGNS MAKE PROVISION FOR EQUIVALENT CAPACITY AND STRENGTH.

ROUND FRAMES AND COVERS SHALL HAVE CONTINUOUSLY MACHINED BEARING SURFACES TO PREVENT ROCKING AND RATTLING.

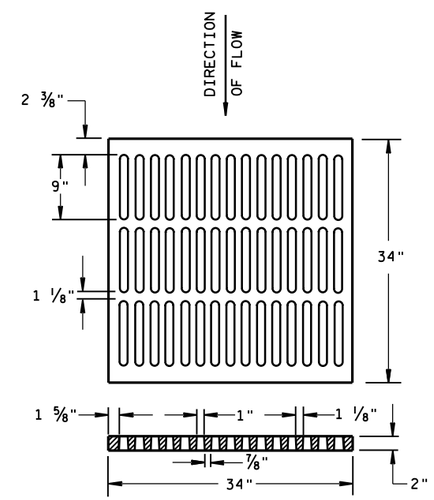

ALTERNATIVE TYPE "MS"

USE WHERE PEDESTRIAN OR BICYCLE TRAFFIC IS PERMITTED

NOTED AS TYPE MS-A ON THE DRAINAGE TABLE

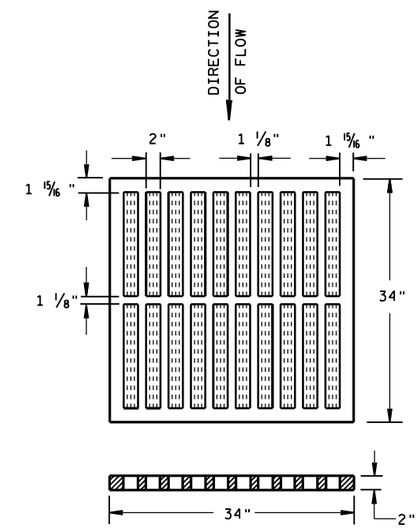

TYPE "MS"

USE ON FREEWAYS AND EXPRESSWAYS

NOTED AS TYPE MS ON DRAINAGE TABLE

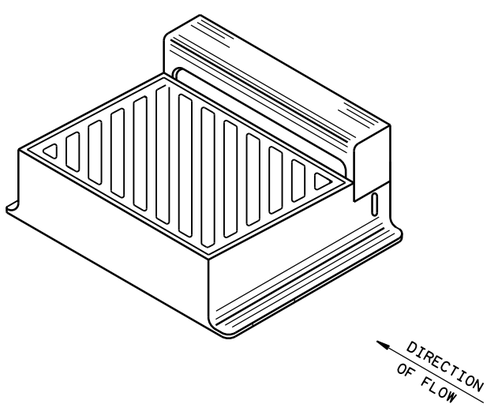

DIAGONAL SLOTS, SHALL BE ORIENTED TO THE DIRECTION OF FLOW AS ILLUSTRATED. GRATES ARE MANUFACTURED TO BE REVERSIBLE.

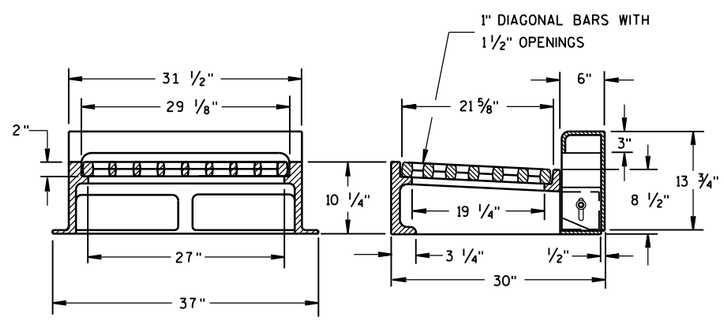

NOTE: CURB BOX HEIGHT ADJUSTABLE 6" TO 9"

TYPE "WM"

6

6

S.D.D. 8 A 5-19b

S.D.D. 8 A 5-19b

INLET COVERS
TYPE B, B-A, C, MS, MS-A, & WM

STATE OF WISCONSIN
DEPARTMENT OF TRANSPORTATION

APPROVED

11/27/2013 — DATE

/S/ Jerry H. Zogg — ROADWAY STANDARDS DEVELOPMENT ENGINEER

FHWA

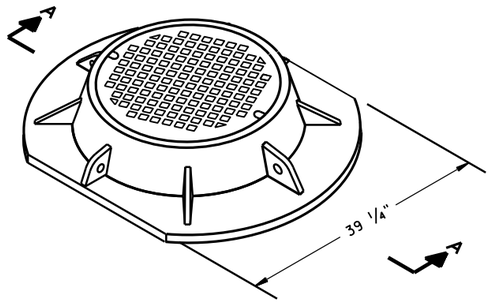

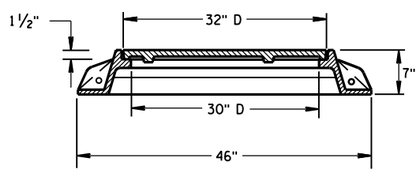

SECTION A-A
TYPE "K"

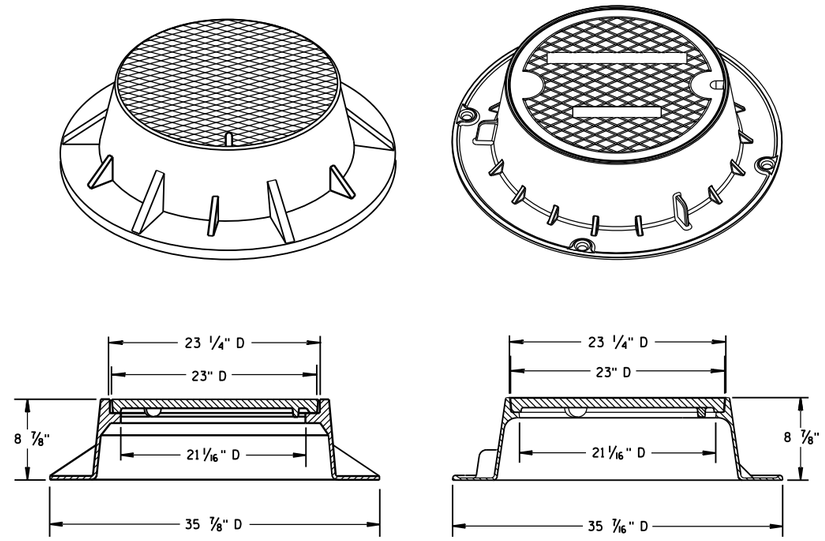

TYPE "J"
NOTE: EITHER CASTING IS ACCEPTABLE

GENERAL NOTES

DETAILS OF CONSTRUCTION, MATERIALS AND WORKMANSHIP NOT SHOWN ON THIS DRAWING SHALL CONFORM TO THE PERTINENT REQUIREMENTS OF THE STANDARD SPECIFICATIONS AND THE APPLICABLE SPECIAL PROVISIONS.

DETAIL DRAWINGS FOR PROPOSED ALTERNATE DESIGNS FOR MANHOLE COVERS SHALL BE SUBMITTED TO THE ENGINEER FOR APPROVAL PROVIDING THAT SUCH ALTERNATE DESIGNS MAKE PROVISION FOR EQUIVALENT CAPACITY AND STRENGTH.

ROUND FRAMES AND COVERS SHALL HAVE CONTINUOUSLY MACHINED BEARING SURFACES TO PREVENT ROCKING AND RATTLING.

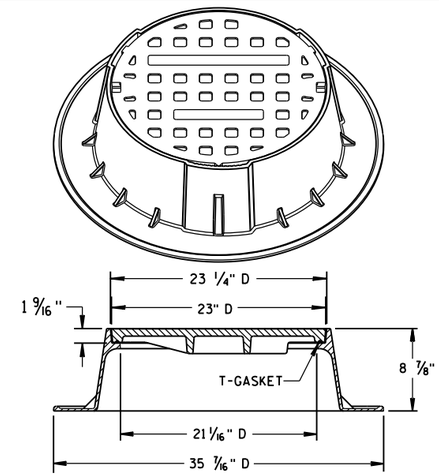

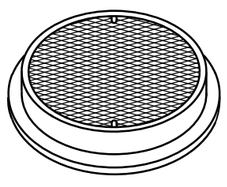

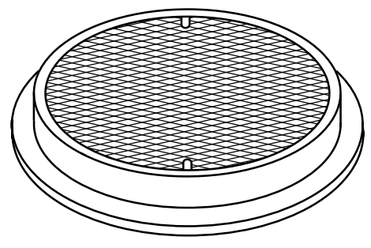

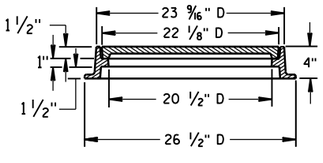

TYPE "L"

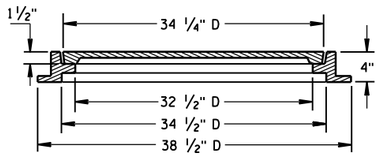

TYPE "M"

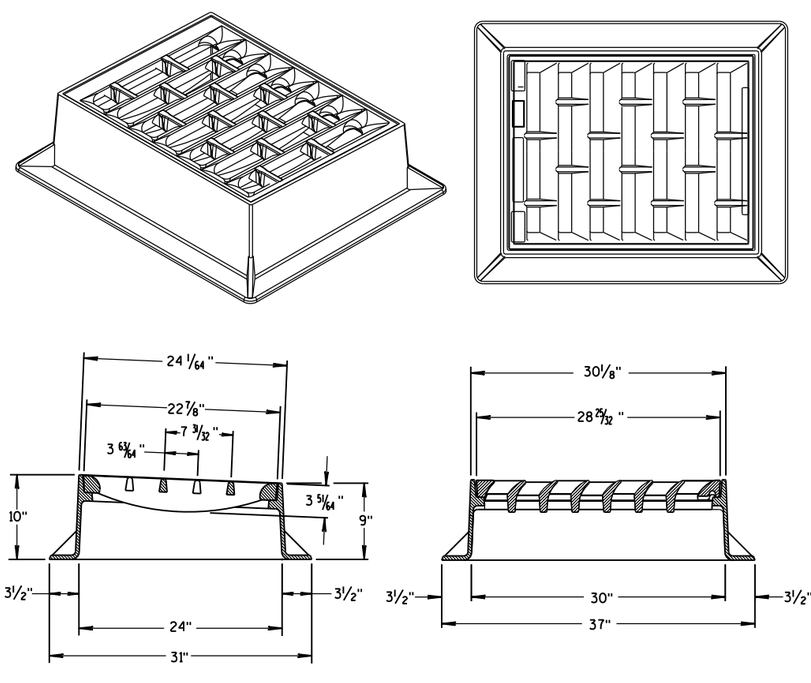

INLET COVER TYPE "BW"

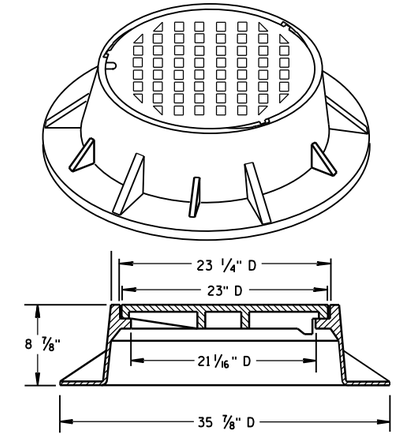

TYPE "J" SPECIAL
TYPE "B" NON-ROCKING SELF-SEAL LID
(NOTED AS TYPE J-S ON THE DRAINAGE TABLE)
NOTE: EITHER CASTING IS ACCEPTABLE

INLET COVER TYPE BW MANHOLE COVERS, TYPE K, J, J-S, L & M	
STATE OF WISCONSIN DEPARTMENT OF TRANSPORTATION	
APPROVED 11/27/2013 DATE FHWA	/S/ Jerry H. Zogg ROADWAY STANDARDS DEVELOPMENT ENGINEER

6

S.D.D. 8 A 5-19d

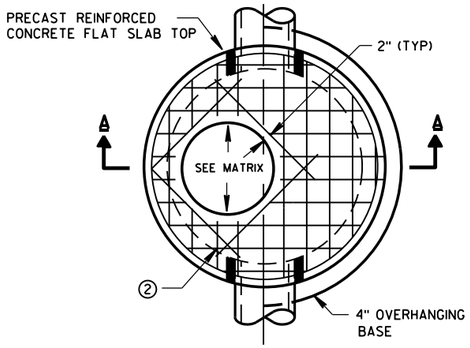

PLAN VIEW CIRCULAR OPENING

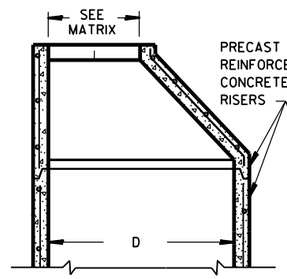

OPTIONAL PRECAST REINFORCED CONCRETE ECCENTRIC TOP

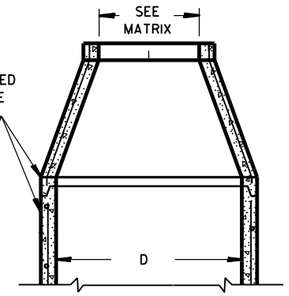

OPTIONAL PRECAST REINFORCED CONCRETE CONCENTRIC TOP

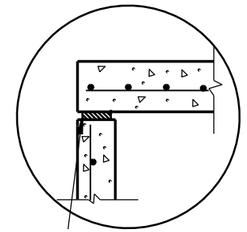

TOP WITH PLAIN END JOINT

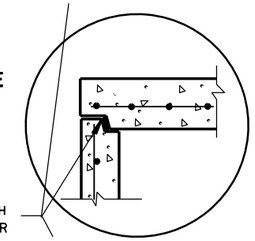

JOINTS TO BE SEALED WITH A BUTYL RUBBER SEAL PER SEALANT MANUFACTURERS RECOMMENDATIONS CONFORMING TO ASTM C990 (TYP)

TOP WITH TONGUE AND GROOVE JOINT

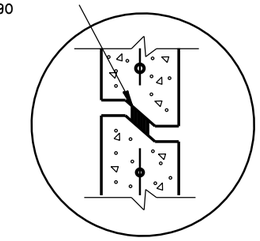

RISER WITH TONGUE AND GROOVE JOINT

DETAIL "B"

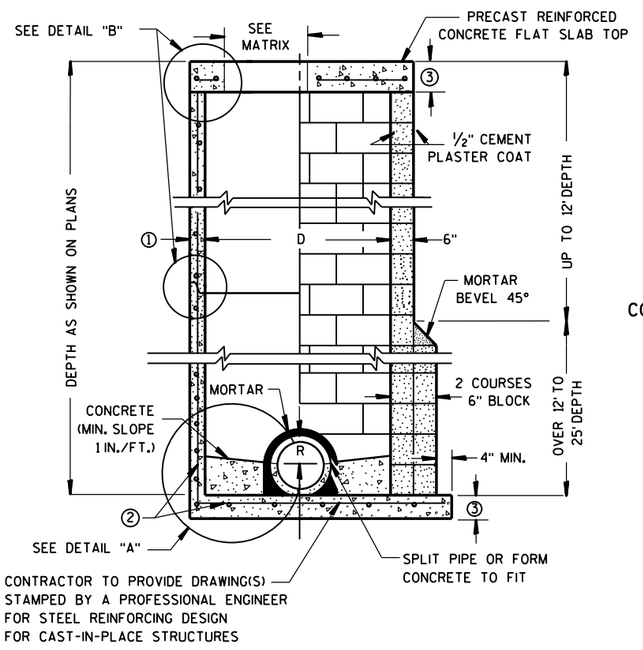

PRECAST REINFORCED CONCRETE WITH MONOLITHIC BASE

CONCRETE BLOCK WITH CAST-IN-PLACE OR PRECAST REINFORCED CONCRETE BASE ②

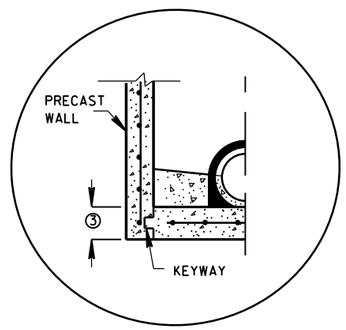

PRECAST REINFORCED CONCRETE WITH INTEGRAL BASE OPTION

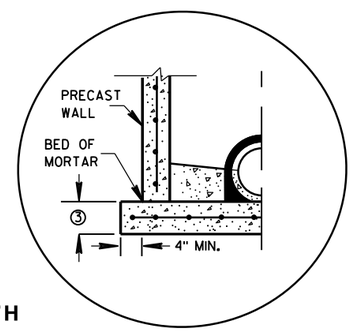

SEPARATE PRECAST REINFORCED CONCRETE BASE OPTION

DETAIL "A"

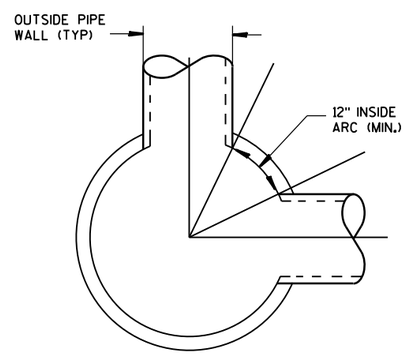

DETAIL "C"

GENERAL NOTES

DETAILS OF CONSTRUCTION, MATERIALS AND WORKMANSHIP NOT SHOWN ON THIS DRAWING SHALL CONFORM TO THE PERTINENT REQUIREMENTS OF THE STANDARD SPECIFICATIONS AND THE APPLICABLE SPECIAL PROVISIONS.

UNLESS OTHERWISE AUTHORIZED IN WRITING BY THE ENGINEER, THE CONTRACTOR SHALL NOT ORDER AND DELIVER PRECAST MANHOLE UNITS REQUIRED FOR THE PROJECT UNTIL A LIST OF SIZES IS FURNISHED BY THE ENGINEER.

DETAILED DRAWINGS FOR PROPOSED ALTERNATE DESIGNS FOR UNDERGROUND DRAINAGE STRUCTURES SHALL BE SUBMITTED TO THE ENGINEER FOR APPROVAL PROVIDING THAT SUCH ALTERNATE DESIGNS MAKE PROVISION FOR EQUIVALENT CAPACITY AND STRENGTH.

ALL DRAINAGE STRUCTURES ARE DESIGNATED ON THE PLANS AS "MANHOLES 3X3-L", "CATCH BASINS 4-B", "INLETS 2X3-H", ETC. THE FIRST NUMBERS DESIGNATE THE SIZE OF THE STRUCTURE, AND THE FOLLOWING LETTER DESIGNATES THE TYPE OF COVER TO BE USED TO COMPRISE THE COMPLETE UNIT.

BASES SHALL BE PLACED ON A BED OF MATERIAL AT LEAST 6 INCHES IN DEPTH, WHICH MEETS THE REQUIREMENTS OF GRANULAR BACKFILL. THIS BEDDING SHALL BE COMPACTED AND PROVIDE UNIFORM SUPPORT FOR THE ENTIRE AREA OF THE BASE.

PRECAST REINFORCED CONE TOPS (ECCENTRIC OR CONCENTRIC) OR PRECAST REINFORCED FLAT SLAB TOPS MAY BE USED ON CONCRETE BLOCK STRUCTURES. THE CONE TOPS SHALL BE INSTALLED ON A BED OF MORTAR.

ECCENTRIC CONE TOPS MAY BE USED ON ALL STRUCTURES, AND CONCENTRIC CONE TOPS SHALL BE USED ONLY ON STRUCTURES 5 FEET OR LESS IN DEPTH, UNLESS OTHERWISE DIRECTED BY THE ENGINEER.

STEPS MEETING AASHTO M199 AND THE FOLLOWING REQUIREMENTS SHALL BE INSTALLED IN ALL STRUCTURES OVER 5 FEET IN DEPTH: 16 INCH C-C MAXIMUM SPACING; PROJECT A MINIMUM CLEAR DISTANCE OF 4 INCHES FROM THE WALL AT THE POINT OF EMBEDMENT; MINIMUM LENGTH OF 10 INCHES; MINIMUM WALL EMBEDMENT OF 3 INCHES. FERROUS METAL STEPS NOT PAINTED OR TREATED TO RESIST CORROSION SHALL HAVE A MINIMUM CROSS SECTIONAL DIMENSION OF 1 INCH.

STEPS OF APPROVED POLYPROPYLENE PLASTIC COATED REINFORCEMENT BAR ARE ACCEPTABLE. REINFORCING BAR MUST BE A MINIMUM OF ½" AND MEET THE REQUIREMENTS OF ASTM A615.

CERTIFICATION SHALL BE PROVIDED THAT INSTALLED STEPS WHEN TESTED IN ACCORDANCE WITH SECTION 10 OF AASHTO T280 CAN WITHSTAND A VERTICAL LOAD OF 800 LBS. AND A HORIZONTAL LOAD OF 400 LBS.

ALL BAR STEEL REINFORCEMENT SHALL BE EMBEDDED 2 INCHES CLEAR UNLESS OTHERWISE SHOWN OR NOTED.

CONCRETE BLOCK WILL NOT BE PERMITED FOR STRUCTURES GREATER THAN 4 FEET IN DIAMETER.

PRECAST REINFORCED RISERS SHALL HAVE A TONGUE AND GROOVE JOINT WITH TONGUE UP OR DOWN.

ALL PRECAST MANHOLE UNITS SHALL CONFORM TO THE PERTINENT REQUIREMENTS OF AASHTO DESIGNATION M 199.

4" OVERHANGING BASES ARE REQUIRED FOR ALL CONCRETE BLOCK INSTALLATIONS. 4" OVERHANG IS REQUIRED WHEN SEPARATE PRECAST BASE IS PROVIDED. OVERHANG IS NOT REQUIRED ON PRECAST STRUCTURES WITH AN INTEGRAL OR MONOLITHIC BASE.

FOR ADDITIONAL CONFIGURATIONS, MAINTAIN A MINIMUM OF 12 INCHES AS MEASURED FROM THE INSIDE OF THE STRUCTURE WALL BETWEEN THE OUTSIDE PIPE WALLS OF ADJACENT PIPES. SEE DETAIL "C".

① MINIMUM WALL THICKNESS SHALL BE 4 INCHES FOR 3-FT, 5 INCHES FOR 4-FT, 6 INCHES FOR 5-FT, 7 INCHES FOR 6-FT, 8 INCHES FOR 7-FT AND 9 INCHES FOR 8-FT DIAMETER PRECAST MANHOLES.

② FOR PRECAST MANHOLES PROVIDE REINFORCING STEEL IN ACCORDANCE TO AASHTO M199.

③ PRECAST FLAT SLAB TOPS AND BASES WITH A DIAMETER OF 48" AND LESS SHALL HAVE A MINIMUM THICKNESS OF 6". PRECAST FLAT SLAB TOPS AND BASES WITH A DIAMETER LARGER THAN 48" SHALL HAVE A MINIMUM THICKNESS OF 8".

MANHOLE COVER OPENING MATRIX

MANHOLE COVER TYPE	C	ALL J'S	K	L	M
OPENING SIZE (FT)					
2 DIA.	X	X		X	
3 DIA.			X		X

PIPE MATRIX

MANHOLE SIZE	MAXIMUM INSIDE PIPE DIAMETER FOR TWO PIPES	
	180° SEPARATION (IN)	90° SEPARATION (IN)
3-FT	15	12
4-FT	24	18
5-FT	36	24
6-FT	42	36
7-FT	48	36
8-FT	60	42

MANHOLES 3-FT, 4-FT, 5-FT, 6-FT, 7-FT AND 8-FT DIAMETER

STATE OF WISCONSIN
DEPARTMENT OF TRANSPORTATION

APPROVED
6/5/2012 — DATE
/S/ Jerry H. Zogg
ROADWAY STANDARDS DEVELOPMENT ENGINEER
FHWA

MANHOLES 3-FT, 4-FT, 5-FT, 6-FT, 7-FT AND 8-FT DIAMETER

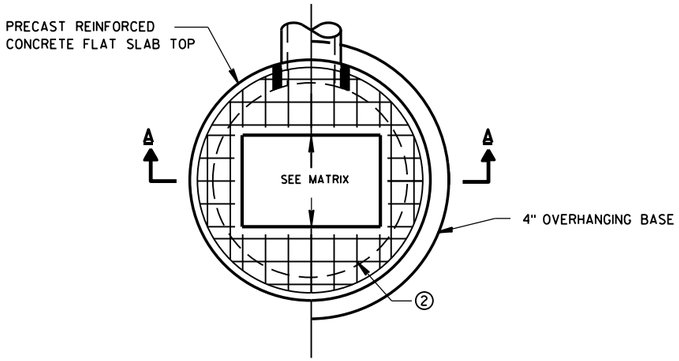

PLAN VIEW RECTANGULAR OPENING

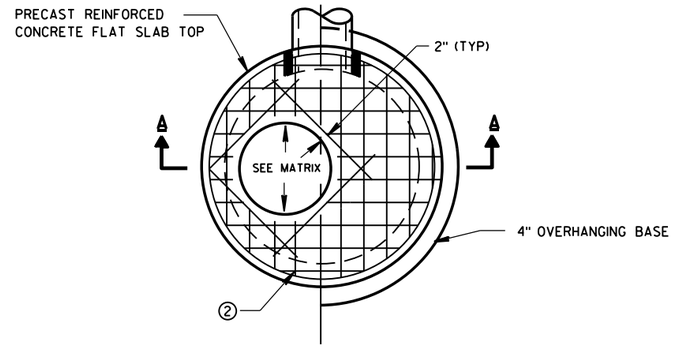

PLAN VIEW CIRCULAR OPENING

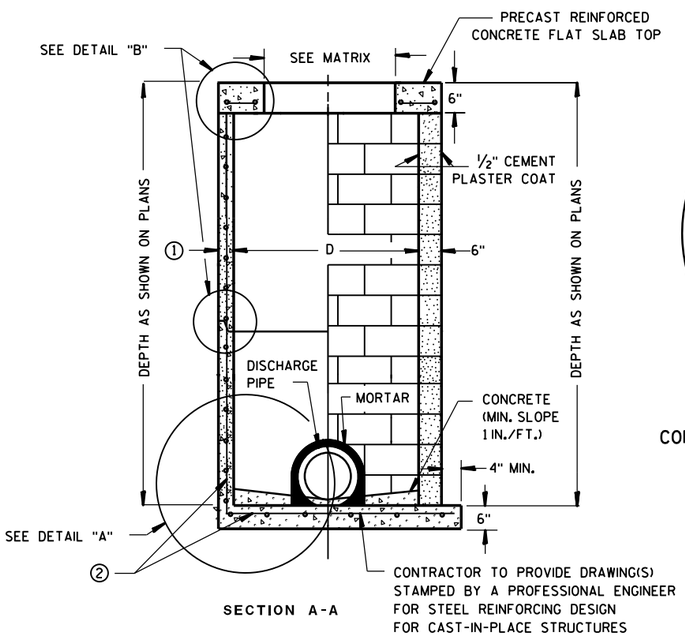

SECTION A-A

PRECAST REINFORCED CONCRETE WITH MONOLITHIC BASE

CONCRETE BLOCK WITH CAST-IN-PLACE OR PRECAST REINFORCED CONCRETE BASE 2

CIRCULAR INLETS W/ FLAT TOP

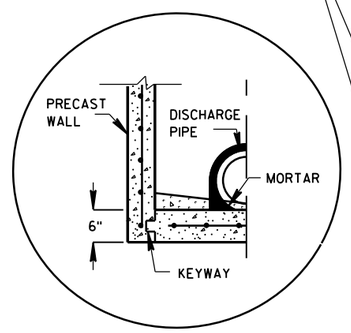

PRECAST REINFORCED CONCRETE WITH INTEGRAL BASE OPTION

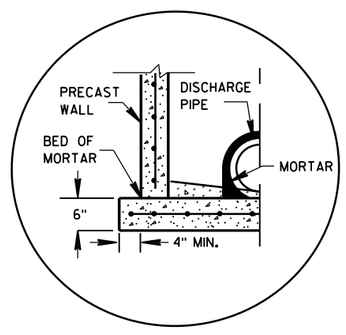

SEPARATE PRECAST REINFORCED CONCRETE BASE OPTION

DETAIL "A"

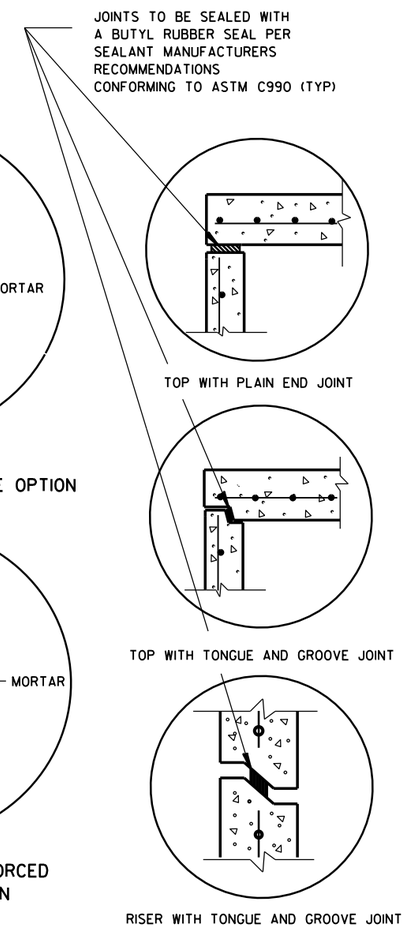

DETAIL "B"

GENERAL NOTES

DETAILS OF CONSTRUCTION, MATERIALS AND WORKMANSHIP NOT SHOWN ON THIS DRAWING SHALL CONFORM TO THE PERTINENT REQUIREMENTS OF THE STANDARD SPECIFICATIONS AND THE APPLICABLE SPECIAL PROVISIONS.

UNLESS OTHERWISE AUTHORIZED IN WRITING BY THE ENGINEER, THE CONTRACTOR SHALL NOT ORDER AND DELIVER PRECAST INLET UNITS REQUIRED FOR THE PROJECT UNTIL A LIST OF SIZES IS FURNISHED BY THE ENGINEER.

DETAILED DRAWINGS FOR PROPOSED ALTERNATE DESIGNS FOR UNDERGROUND DRAINAGE STRUCTURES SHALL BE SUBMITTED TO THE ENGINEER FOR APPROVAL PROVIDING THAT SUCH ALTERNATE DESIGNS MAKE PROVISION FOR EQUIVALENT CAPACITY AND STRENGTH.

ALL DRAINAGE STRUCTURES ARE DESIGNATED ON THE PLANS AS "MANHOLES 3X3-L", "CATCH BASINS 4-B", "INLETS 2X3-H", ETC. THE FIRST NUMBERS DESIGNATE THE SIZE OF THE STRUCTURE, AND THE FOLLOWING LETTER DESIGNATES THE TYPE OF COVER TO BE USED TO COMPRISE THE COMPLETE UNIT.

BASES SHALL BE PLACED ON A BED OF MATERIAL AT LEAST 6 INCHES IN DEPTH, WHICH MEETS THE REQUIREMENTS OF GRANULAR BACKFILL. THIS BEDDING SHALL BE COMPACTED AND PROVIDE UNIFORM SUPPORT FOR THE ENTIRE AREA OF THE BASE.

ALL BAR STEEL REINFORCEMENT SHALL BE EMBEDDED 2 INCHES CLEAR UNLESS OTHERWISE SHOWN OR NOTED.

ALL PRECAST INLET UNITS SHALL CONFORM TO THE PERTINENT REQUIREMENTS OF AASHTO DESIGNATION M199.

PRECAST REINFORCED RISERS SHALL HAVE A TONGUE AND GROOVE JOINT WITH TONGUE UP OR DOWN.

4" OVERHANGING BASES ARE REQUIRED FOR ALL CONCRETE BLOCK INSTALLATIONS. 4" OVERHANG IS REQUIRED WHEN SEPARATE PRECAST BASE IS PROVIDED. OVERHANG IS NOT REQUIRED ON PRECAST STRUCTURES WITH AN INTEGRAL OR MONOLITHIC BASE.

FOR ADDITIONAL CONFIGURATIONS, MAINTAIN A MINIMUM OF 12 INCHES AS MEASURED FROM THE INSIDE OF THE STRUCTURE WALL BETWEEN THE OUTSIDE PIPE WALLS OF ADJACENT PIPES. SEE DETAIL "C".

1 MINIMUM WALL THICKNESS SHALL BE 4-IN FOR 3-FT DIAMETER AND 5-IN FOR 4-FT DIAMETER PRECAST INLETS.

2 FOR PRECAST CATCH BASINS PROVIDE REINFORCING STEEL IN ACCORDANCE TO AASHTO M199.

INLET COVER OPENING MATRIX

	INLET COVER TYPE	ALL A'S	ALL B'S	BW	C	F	ALL H'S	S	T	V	WM	Z
INLET SIZE	OPENING SIZE (FT)											
3-FT	2 DIA.				X							X
	2X2	X	X					X		X		
4-FT	2 DIA.				X							X
	2X2	X	X					X		X		
	2X2.5			X				X	X	X	X	
	2X3						X					
	2.5X3					X						

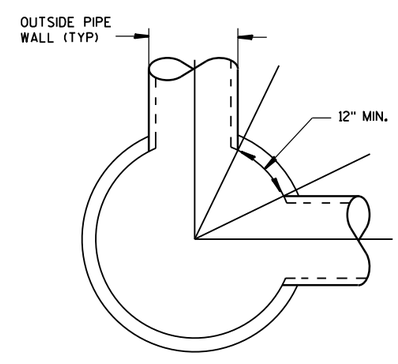

DETAIL "C"

PIPE MATRIX

INLET SIZE	MAXIMUM INSIDE PIPE DIAMETER FOR TWO PIPES	
	180° SEPARATION (IN)	90° SEPARATION (IN)
3-FT	15	12
4-FT	24	18

INLETS 3-FT AND 4-FT DIAMETER

INLETS 3-FT AND 4-FT DIAMETER

STATE OF WISCONSIN
DEPARTMENT OF TRANSPORTATION

APPROVED
6/5/2012 — DATE
/S/ Jerry H. Zogg — ROADWAY STANDARDS DEVELOPMENT ENGINEER
FHWA

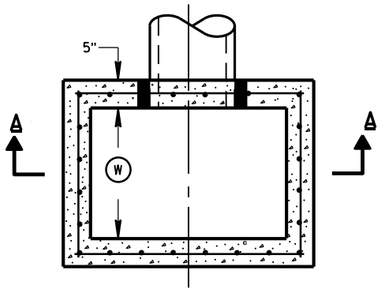

PLAN VIEW

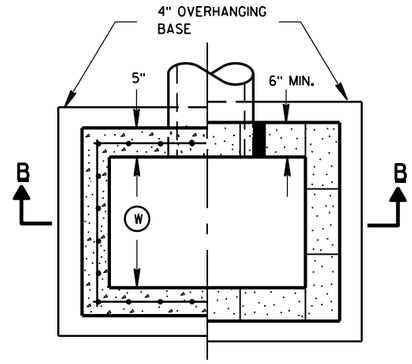

PLAN VIEW

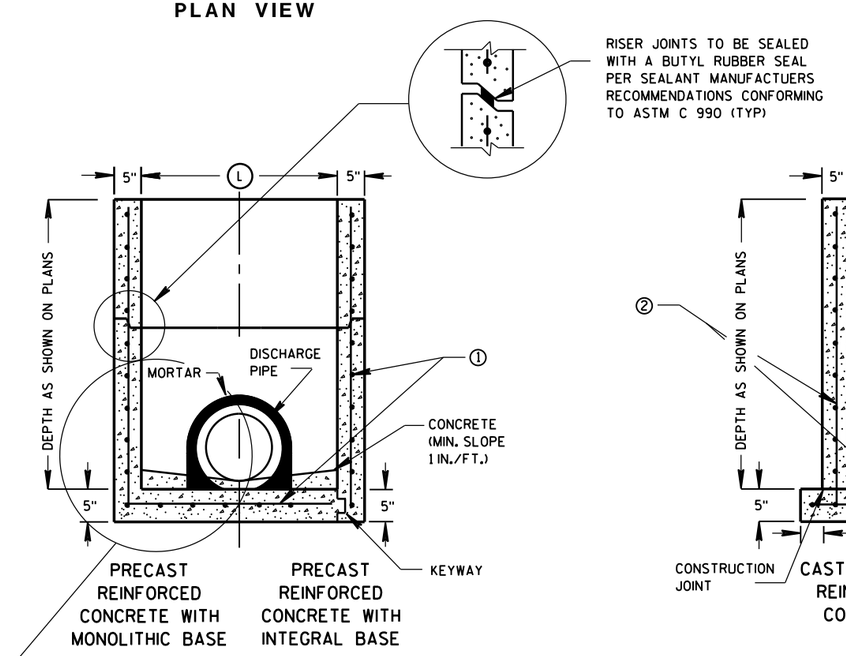

SECTION A-A

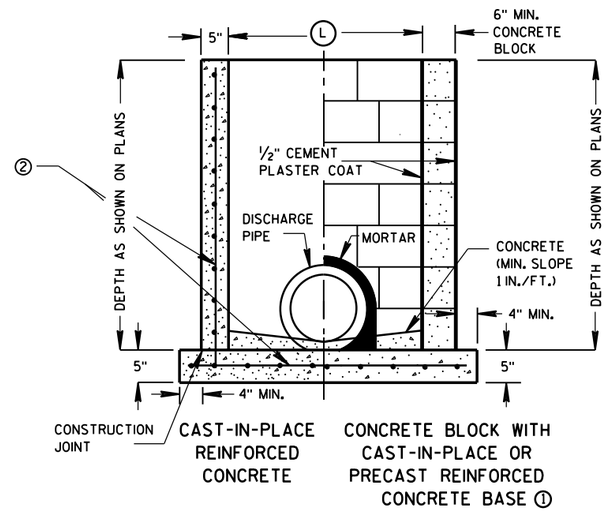

SECTION B-B

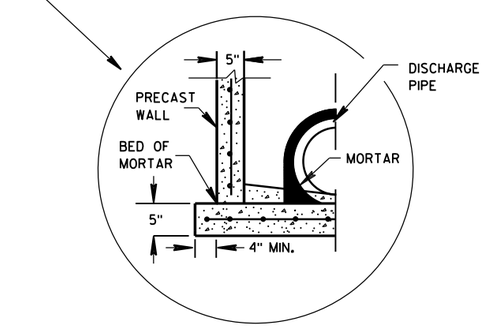

SEPARATE PRECAST REINFORCED CONCRETE BASE OPTION

GENERAL NOTES

DETAILS OF CONSTRUCTION, MATERIALS AND WORKMANSHIP NOT SHOWN ON THIS DRAWING SHALL CONFORM TO THE PERTINENT REQUIREMENTS OF THE STANDARD SPECIFICATIONS AND THE APPLICABLE SPECIAL PROVISIONS.

UNLESS OTHERWISE AUTHORIZED IN WRITING BY THE ENGINEER, THE CONTRACTOR SHALL NOT ORDER AND DELIVER PRECAST INLET UNITS REQUIRED FOR THE PROJECT UNTIL A LIST OF SIZES IS FURNISHED BY THE ENGINEER.

DETAILED DRAWINGS FOR PROPOSED ALTERNATE DESIGNS FOR UNDERGROUND DRAINAGE STRUCTURES SHALL BE SUBMITTED TO THE ENGINEER FOR APPROVAL PROVIDING THAT SUCH ALTERNATE DESIGNS MAKE PROVISION FOR EQUIVALENT CAPACITY AND STRENGTH.

ALL PRECAST INLET UNITS SHALL CONFORM TO THE PERTINENT REQUIREMENTS OF ASTM C 913.

ALL DRAINAGE STRUCTURES ARE DESIGNATED ON THE PLANS AS "MANHOLES 3X3-L", "CATCH BASINS 4-B", "INLETS 2X3-H", ETC. THE FIRST NUMBERS DESIGNATES THE SIZE OF THE STRUCTURE, AND THE FOLLOWING LETTER DESIGNATES THE TYPE OF COVER TO BE USED TO COMPRISE THE COMPLETE UNIT.

BASES SHALL BE PLACED ON A BED OF MATERIAL AT LEAST 6 INCHES IN DEPTH, WHICH MEETS THE REQUIREMENTS OF GRANULAR BACKFILL. THIS BEDDING SHALL BE COMPACTED AND PROVIDE UNIFORM SUPPORT FOR THE ENTIRE AREA OF THE BASE.

ALL BAR STEEL REINFORCEMENT SHALL BE EMBEDDED 2 INCHES CLEAR UNLESS OTHERWISE SHOWN OR NOTED.

PRECAST REINFORCED RISERS SHALL HAVE A TONGUE AND GROOVE JOINT WITH TONGUE UP OR DOWN.

4" OVERHANGING BASES ARE REQUIRED FOR CAST-IN-PLACE REINFORCED CONCRETE AND CONCRETE BLOCK INSTALLATIONS.
4" OVERHANG IS REQUIRED WHEN SEPARATE PRECAST BASE IS PROVIDED.
OVERHANG IS NOT REQUIRED ON PRECAST STRUCTURES WITH AN INTEGRAL OR MONOLITHIC BASE.

MAXIMUM INSIDE PIPE DIAMETER DETERMINED BY 3 INCH CLEARANCE ON EACH SIDE OF THE OUTSIDE WALL OF THE PIPE. SEE DETAIL "A". ASSUMES PIPE ENTERS PERPENDICULAR TO THE STRUCTURE.

① FOR PRECAST INLETS PROVIDE REINFORCING STEEL IN ACCORDANCE TO ASTM C 913.

② CONTRACTOR TO PROVIDE DRAWING(S) STAMPED BY A PROFESSIONAL ENGINEER FOR STEEL REINFORCING DESIGN FOR CAST-IN-PLACE STRUCTURES.

INLET COVER MATRIX

INLET SIZE		INLET COVER TYPE	ALL A'S	ALL B'S	BW	F	ALL H'S	S	T	V	WM
	WIDTH (W) (FT)	LENGTH (L) (FT)									
2X2-FT	2	2	X	X				X		X	
2X2.5-FT	2	2.5			X			X	X	X	X
2X3-FT	2	3					X				
2.5X3-FT	2.5	3				X					

PIPE MATRIX

INLET SIZE	MAXIMUM INSIDE PIPE DIAMETER	
	WIDTH (IN)	LENGTH (IN)
2X2-FT	12	12
2X2.5-FT	12	18
2X3-FT	12	24
2.5X3-FT	18	24

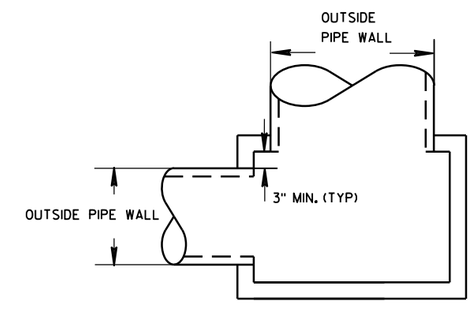

DETAIL "A"

INLETS 2X2-FT, 2X2.5-FT, 2X3-FT AND 2.5X3-FT

INLETS 2X2-FT, 2X2.5-FT, 2X3-FT AND 2.5X3-FT

STATE OF WISCONSIN
DEPARTMENT OF TRANSPORTATION

APPROVED
6/5/2012 — DATE
/S/ Jerry H. Zogg — ROADWAY STANDARDS DE ENGINEER
FHWA

6

S.D.D. 8 C 7-1

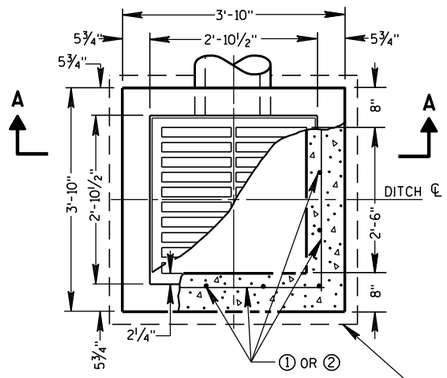

PLAN VIEW

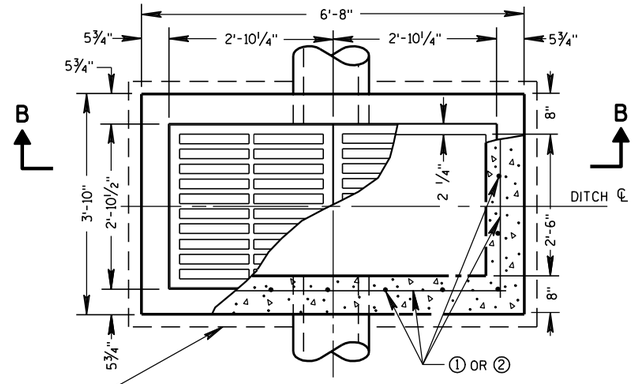

PLAN VIEW

4" OVERHANGING BASE ON REINFORCED CAST-IN-PLACE CONCRETE INLETS

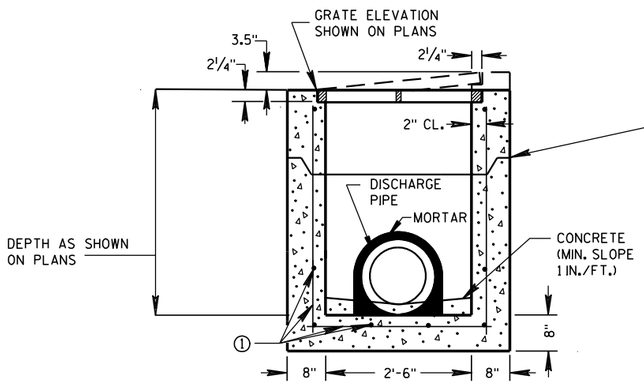

PRECAST REINFORCED CONCRETE SECTION A-A

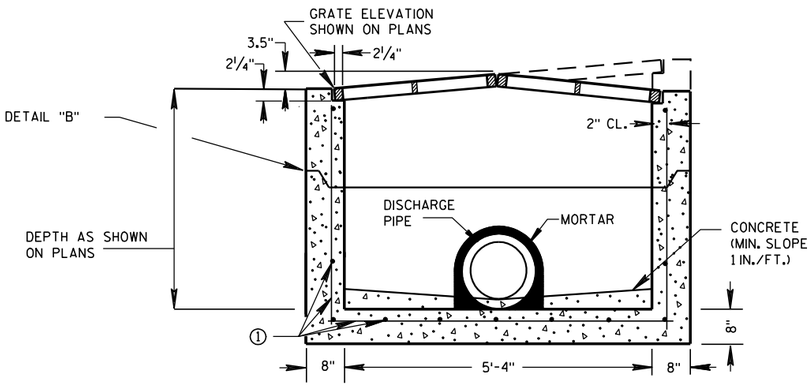

PRECAST REINFORCED CONCRETE SECTION B-B

GENERAL NOTES

DETAILS OF CONSTRUCTION, MATERIALS AND WORKMANSHIP NOT SHOWN ON THIS DRAWING SHALL CONFORM TO THE PERTINENT REQUIREMENTS OF THE STANDARD SPECIFICATIONS AND THE APPLICABLE SPECIAL PROVISIONS.

UNLESS OTHERWISE AUTHORIZED IN WRITING BY THE ENGINEER, THE CONTRACTOR SHALL NOT ORDER AND DELIVER PRECAST INLET UNITS REQUIRED FOR THE PROJECT UNTIL A LIST OF SIZES IS FURNISHED BY THE ENGINEER.

DETAILED DRAWINGS FOR PROPOSED ALTERNATE DESIGNS FOR INLETS WHICH MAY INCLUDE PRECAST REINFORCED CONCRETE INLETS, SHALL BE SUBMITTED TO THE ENGINEER FOR APPROVAL PROVIDING THAT SUCH ALTERNATE DESIGNS MAKE PROVISION FOR EQUIVALENT CAPACITY AND STRENGTH.

ALL MEDIAN INLETS ARE DESIGNATED ON THE PLANS AS "INLETS, 1G-MS", ETC. THE FIRST NUMBER AND LETTER DESIGNATE THE TYPE OF STRUCTURE, AND THE FOLLOWING LETTERS DESIGNATE THE TYPE OF COVER TO BE USED TO COMPRISE THE COMPLETE UNIT.

ALL BAR STEEL REINFORCEMENT SHALL BE EMBEDDED 2 INCHES CLEAR UNLESS OTHERWISE SHOWN OR NOTED.

PRECAST REINFORCED RISERS SHALL HAVE A TONGUE AND GROOVE JOINT WITH TONGUE UP OR DOWN.

ALL PRECAST INLET UNITS SHALL CONFORM TO THE PERTINENT REQUIREMENTS OF ASTM C 913.

MAXIMUM INSIDE PIPE DIAMETER DETERMINED BY 3" CLEARANCE ON EACH SIDE OF THE OUTSIDE WALL OF THE PIPE. SEE DETAIL "A". ASSUMES PIPE ENTERS PERPENDICULAR TO THE STRUCTURE.

① FOR PRECAST INLETS PROVIDE REINFORCING STEEL IN ACCORDANCE TO ASTM C 913.

② CONTRACTOR TO PROVIDE DRAWING(S) STAMPED BY A PROFESSIONAL ENGINEER FOR STEEL REINFORCING DESIGN FOR CAST-IN-PLACE STRUCTURES.

PIPE MATRIX

	MAXIMUM INSIDE PIPE DIAMETER	
INLET SIZE	WIDTH (IN)	LENGTH (IN)
1 GRATE	18	18
2 GRATE	18	42

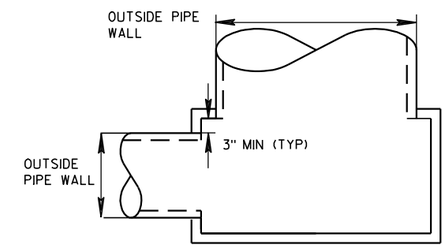

DETAIL "A"

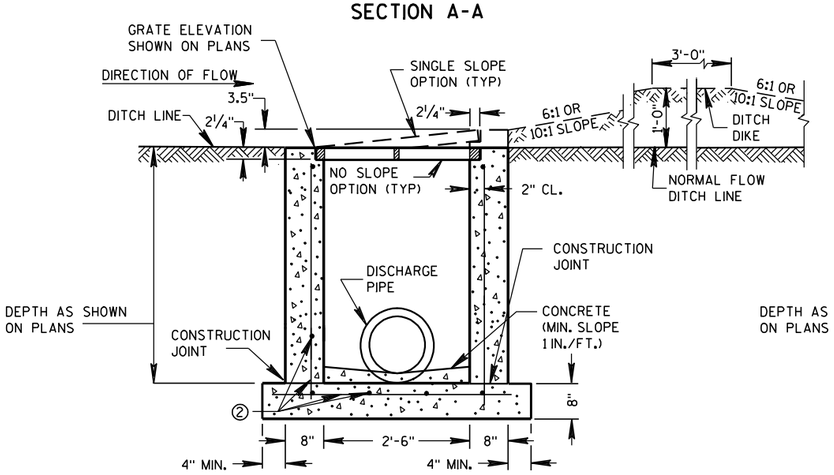

REINFORCED CAST-IN-PLACE CONCRETE SECTION A-A

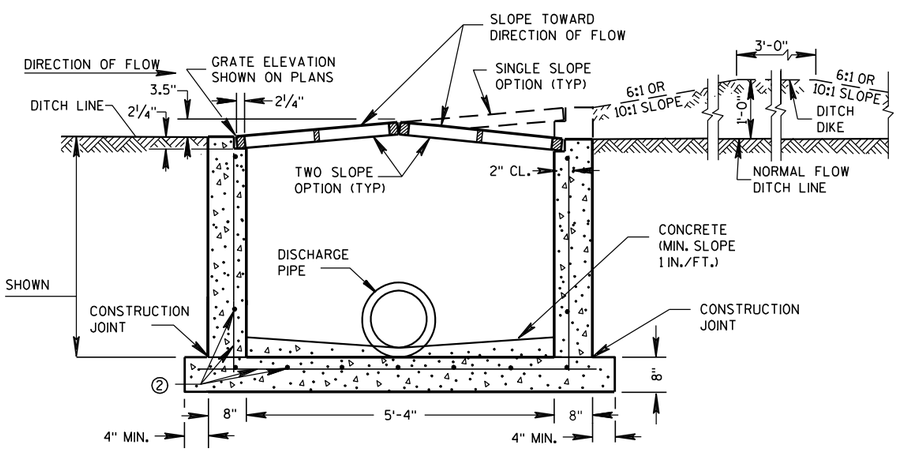

REINFORCED CAST-IN-PLACE CONCRETE SECTION B-B

JOINTS TO BE SEALED WITH A BUTYL RUBBER SEAL PER SEALANT MANUFACTURERS RECOMMENDATIONS CONFORMING TO ASTM C 990 (TYP)

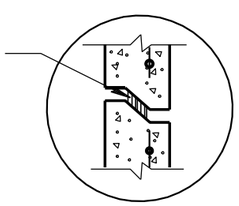

DETAIL "B"

INLETS MEDIAN 1 GRATE

INLETS MEDIAN 2 GRATE

INLETS MEDIAN 1 AND 2 GRATE

STATE OF WISCONSIN
DEPARTMENT OF TRANSPORTATION

APPROVED
6/5/2012 — DATE
/S/ Jerry H. Zogg — ROADWAY STANDARDS DEVELOPMENT ENGINEER
FHWA

6

S.D.D. 8 C 8-1

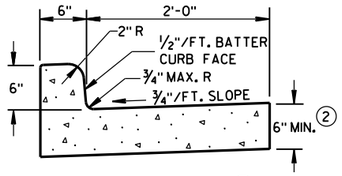

TYPES A & D ①

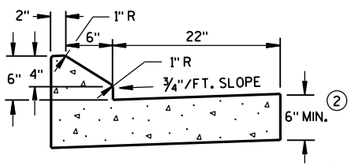

6" SLOPED CURB TYPES G & J ①

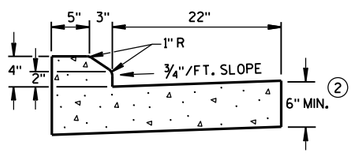

4" SLOPED CURB TYPES G & J ①

CONCRETE CURB & GUTTER 30"

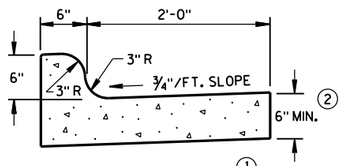

TYPES K & L ①

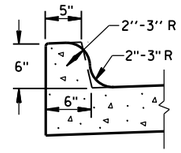

OPTIONAL CURB SHAPE
FOR TYPES K & L ①

CONCRETE CURB & GUTTER 30"

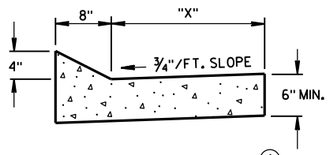

TYPES TBT & TBTT ①

CONCRETE CURB & GUTTER

TBT & TBTT	"X"
30"	22"
36"	28"

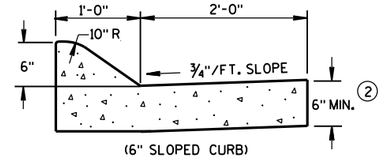

(6" SLOPED CURB)

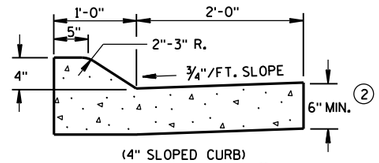

(4" SLOPED CURB)

TYPES A & D ①

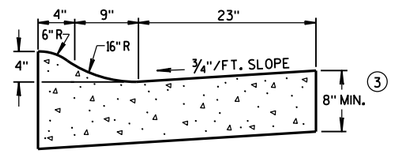

4" SLOPED CURB TYPES R & T ① ④

CONCRETE CURB & GUTTER 36"

GENERAL NOTES

DETAILS OF CONSTRUCTION, MATERIALS AND WORKMANSHIP NOT SHOWN ON THIS DRAWING SHALL CONFORM TO THE PERTINENT REQUIREMENTS OF THE CONTRACT.

PAVEMENT TIES AND TIE BARS SHALL BE EPOXY COATED IN CONFORMANCE WITH SUBSECTION 505.2.6.2 OF THE STANDARD SPECIFICATIONS.

INTEGRAL CURB & GUTTER SHALL CONFORM TO THE DETAILS SHOWN FOR CONCRETE CURB & GUTTER INCLUDING THE TRANSVERSE GUTTER SLOPE. A LONGITUDINAL CONSTRUCTION JOINT IS NOT REQUIRED WITH INTEGRAL CURB AND GUTTER.

WHERE THE TRANSVERSE JOINTS IN THE PAVEMENT ARE REQUIRED TO BE SEALED, THE JOINTS IN THE INTEGRAL CURB AND GUTTER SHALL BE SEALED TO THE FACE OF CURB WITH THE SAME TYPE OF SEALANT. THE COST OF FURNISHING AND INSTALLING THIS SEALANT SHALL BE INCIDENTAL TO THE ITEM CONCRETE CURB AND GUTTER.

UNLESS OTHERWISE SHOWN ON THE TYPICAL CROSS SECTIONS, THE BASE AGGREGATE AND COMMON EXCAVATION LIMITS ARE 2'-0" BEHIND THE BACK OF CURBS.

① TIE BARS ARE REQUIRED FOR CURB AND GUTTER TYPES A, G, K, R AND TBTT.

② THE BOTTOM OF CURB AND GUTTER MAY BE CONSTRUCTED EITHER LEVEL OR PARALLEL TO THE SLOPE OF THE SUBGRADE OR BASE AGGREGATE PROVIDED A 6" MINIMUM GUTTER THICKNESS IS MAINTAINED.

③ THE BOTTOM OF CURB AND GUTTER MAY BE CONSTRUCTED EITHER LEVEL OR PARALLEL TO THE SLOPE OF THE SUBGRADE OR BASE AGGREGATE PROVIDED A 8" MINIMUM GUTTER THICKNESS IS MAINTAINED.

④ THE FACE OF CURB IS 6" FROM THE BACK OF CURB.

⑤ WHEN REVERSE SLOPE GUTTER IS REQUIRED, THE LOCATION(S) WILL BE SHOWN ELSEWHERE IN THE PLAN.

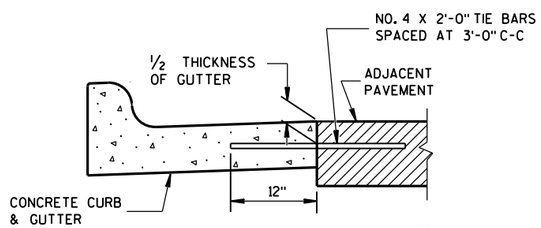

TYPICAL TIE BAR LOCATION ①

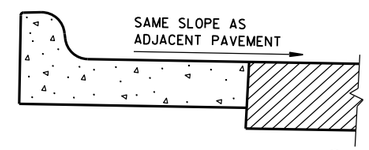

REVERSE SLOPE GUTTER ⑤
(TYPICAL FOR ALL CURB & GUTTER TYPES)

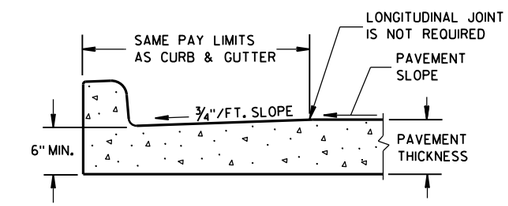

PARTIAL SECTION OF PAVEMENT
WITH INTEGRAL CURB & GUTTER

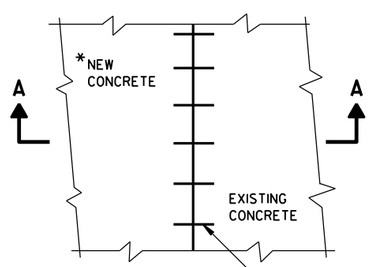

*NEW CURB & GUTTER, SURFACE DRAINS, CONCRETE PAVEMENT OR OTHER NEW CONCRETE.

PLAN VIEW

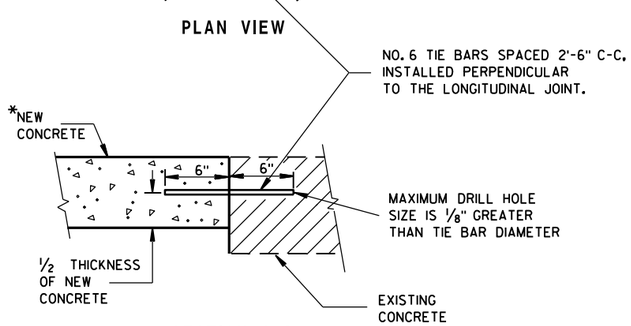

SECTION A-A

TIE BARS DRILLED
INTO EXISTING PAVEMENT

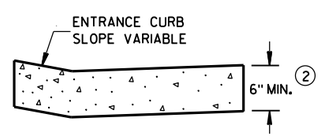

DRIVEWAY ENTRANCE CURB
(WHEN DIRECTED BY THE ENGINEER)

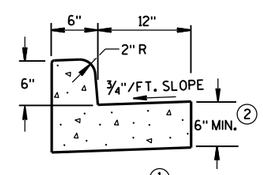

① TYPES A & D

CONCRETE CURB & GUTTER 18"

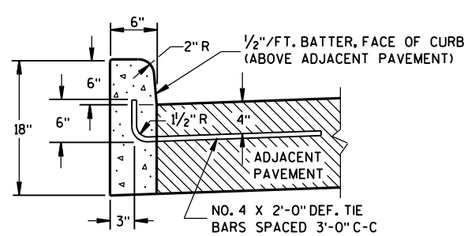

① TYPES A & D

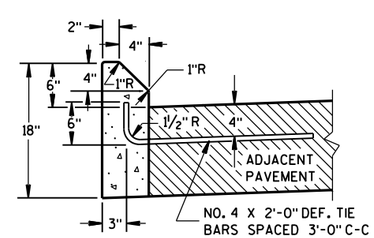

① TYPES G & J

CONCRETE CURB

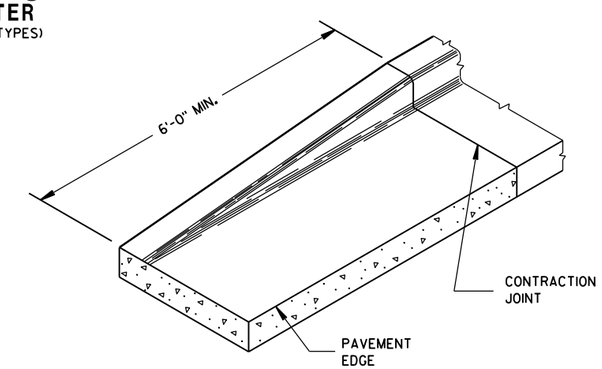

END SECTION CURB & GUTTER

CONCRETE CURB, CONCRETE CURB & GUTTER AND TIES

STATE OF WISCONSIN
DEPARTMENT OF TRANSPORTATION

APPROVED
June, 2015 — DATE
/S/ Jerry H. Zogg — ROADWAY STANDARDS DEVELOPMENT ENGINEER
FHWA

6

6

S.D.D. 8 D 1-18

S.D.D. 8 D 1-18

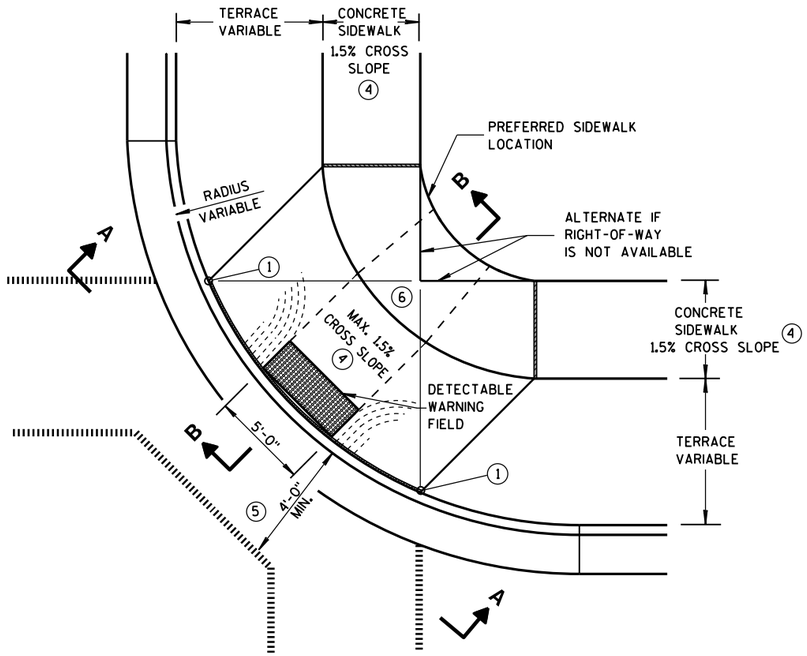

PLAN VIEW

TYPE 1 RAMP

(CENTER OF CORNER RADIUS)

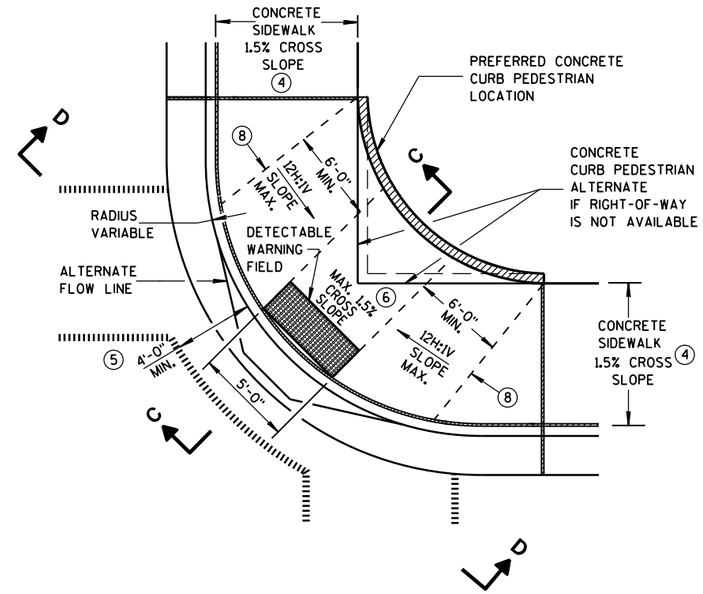

PLAN VIEW

TYPE 1-A RAMP

(NO TERRACE)

GENERAL NOTES

DETAILS OF CONSTRUCTION, MATERIALS AND WORKMANSHIP NOT SHOWN ON THIS DRAWING SHALL CONFORM TO THE PERTINENT REQUIREMENTS OF THE STANDARD SPECIFICATIONS AND THE APPLICABLE SPECIAL PROVISIONS.

WHEN NECESSARY, THE SIDEWALK ELEVATION MAY BE LOWERED TO MEET THE HIGH POINT ON THE RAMP.

TYPE 1 RAMPS SHALL HAVE A NORMAL SIDEWALK APRON AND CURB ON BOTH SIDES OF RAMP.

DETECTABLE WARNING FIELD SHALL BE MEASURED AND PAID BY THE SQUARE FOOT AS "CURB RAMP DETECTABLE WARNING FIELD". THE CONCRETE PEDESTRIAN CURB, IF NEEDED, SHALL BE MEASURED AND PAID BY THE LINEAL FOOT AS "CONCRETE CURB PEDESTRIAN". CONCRETE SIDEWALK IN THE CURB RAMP AREA SHALL BE MEASURED AND PAID BY THE SQUARE FOOT AS CONCRETE SIDEWALK, INCLUDING THE AREA UNDER THE DETECTABLE WARNING FIELD.

SELECT CURB RAMP DETECTABLE WARNING FIELD MATERIALS AND DEVICES FROM THE DEPARTMENT'S APPROVED MATERIALS LIST. THE COLOR OF THE DETECTABLE WARNING FIELD IS SPECIFIED ELSEWHERE AND IS INCIDENTAL TO THE BID ITEM OF "CURB RAMP DETECTABLE WARNING FIELD".

DETECTABLE WARNING FIELDS THAT ARE INSTALLED AS A GROUP OR SIDE BY SIDE, SHALL BE FROM THE SAME MANUFACTURER.

SURFACE TEXTURE OF THE RAMP SHALL BE OBTAINED BY COARSE BROOMING TRANSVERSE TO THE SLOPE OF THE RAMP.

1. THIS POINT IS AN EXTENSION OF OUTSIDE EDGE OF APPROACHING SIDEWALK WHERE IT MEETS THE BACK OF CONCRETE CURB.
2. GRADE CHANGE BETWEEN GUTTER FLAG SLOPE AND THE CURB RAMP SLOPE SHALL NOT EXCEED 11%. MAXIMUM GUTTER FLAG SLOPE IS 4%. PROVIDE DRAINAGE AWAY FROM CURB RAMP AT GUTTER FLAG INTERFACE. NO VERTICAL LIPS OR DISCONTINUITIES GREATER THAN 1/4-INCH ARE ALLOWED.
3. ABSOLUTE MAXIMUM 12H:1V (8.33%) CURB RAMP SLOPE IS ALLOWABLE WITH FLATTENED GUTTER FLAG SLOPE AND NOT TO EXCEED 11% GRADE CHANGE.
4. ±0.5% CONSTRUCTION TOLERANCE IN SIDEWALK CROSS SLOPE. THE SIDEWALK CROSS SLOPE SHALL NOT EXCEED 2% WITHOUT PRIOR APPROVAL FROM THE ENGINEER.
5. PROVIDE A LEVEL LANDING IN THE STREET AND GUTTER AREA. (2% MAXIMUM SLOPE IN ANY DIRECTION). WHEN THE GUTTER SLOPE EXCEEDS 2%, CONSTRUCT THE LEVEL LANDING IN THE STREET AREA.
6. PROVIDE A LEVEL LANDING (MAXIMUM 2% SLOPE) IN ANY DIRECTION OF PEDESTRIAN TRAVEL. STANDARD LANDING SIZE IS 5 FEET X 5 FEET (MINIMUM 4 FEET X 4 FEET).
8. PROVIDE GRADE BREAK PERPENDICULAR TO DIRECTION OF WHEELCHAIR TRAVEL.

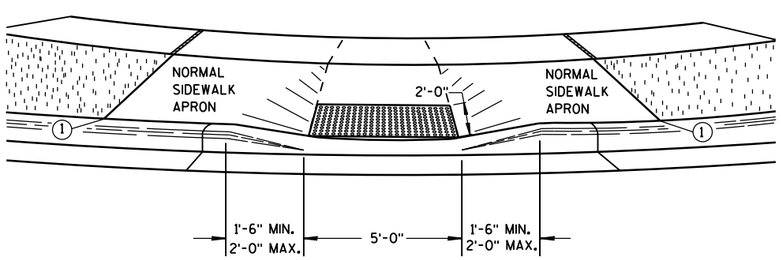

VIEW A-A

** WIDTH SHOWN ELSEWHERE IN THE PLANS

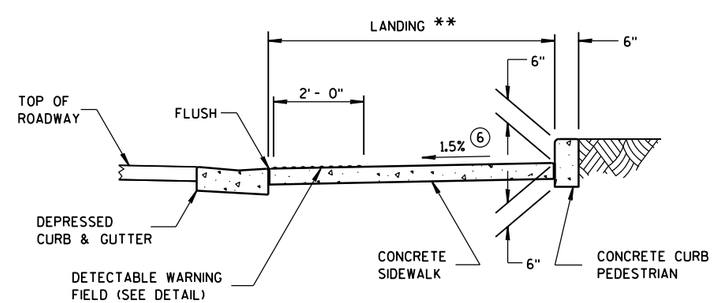

SECTION C-C

LEGEND

- 1/2" EXPANSION JOINT-SIDEWALK
- CONTRACTION JOINT FIELD LOCATED
- PAVEMENT MARKING CROSSWALK (WHITE)
- ALTERNATIVE LAYOUT

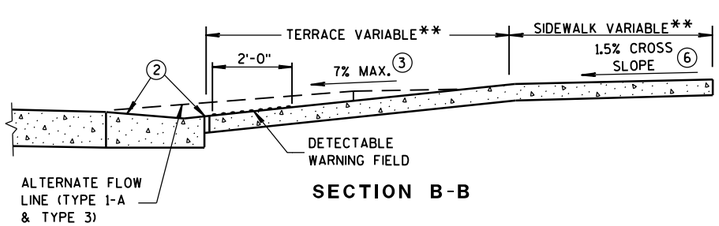

SECTION B-B

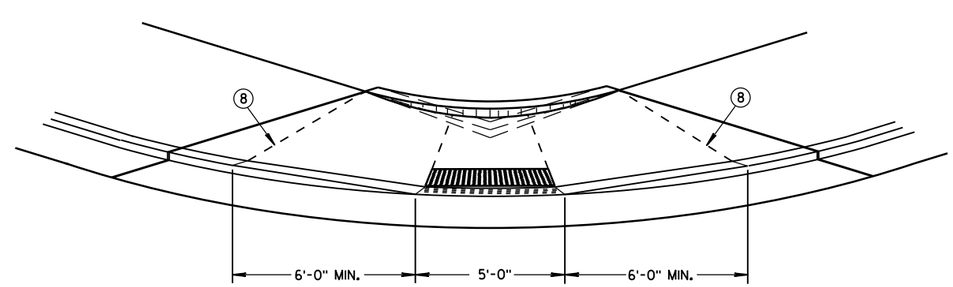

VIEW D-D

CURB RAMPS
TYPES 1 AND 1-A

STATE OF WISCONSIN
DEPARTMENT OF TRANSPOR

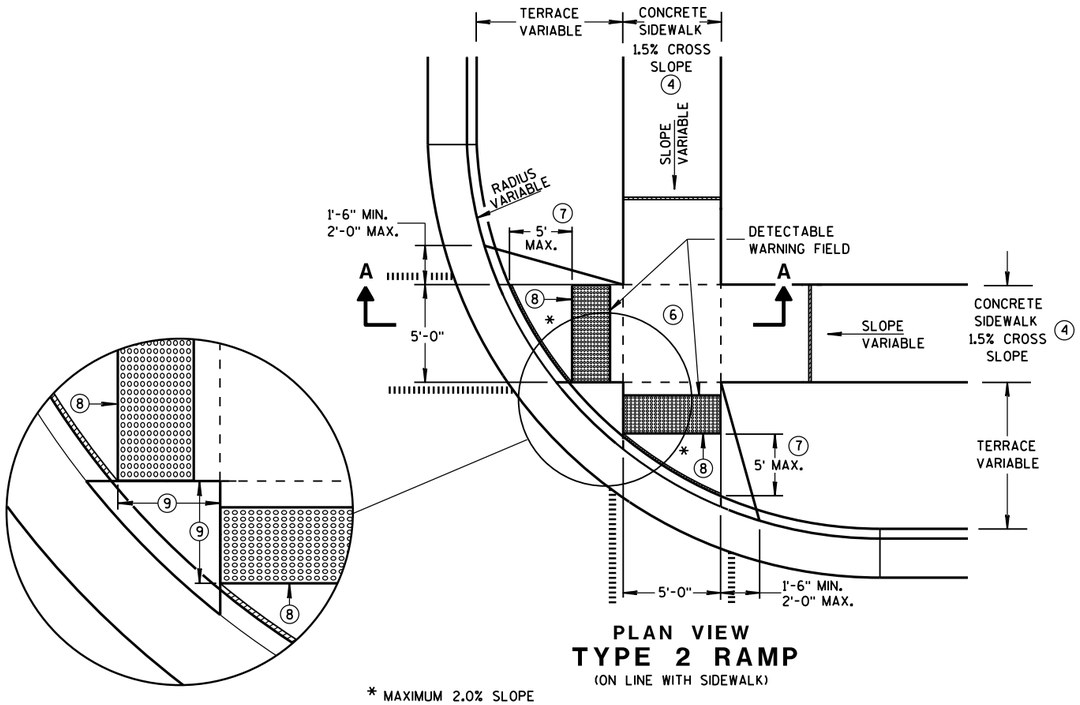

PLAN VIEW
TYPE 2 RAMP
(ON LINE WITH SIDEWALK)

* MAXIMUM 2.0% SLOPE IN ALL DIRECTIONS IN FRONT OF GRADE BREAK

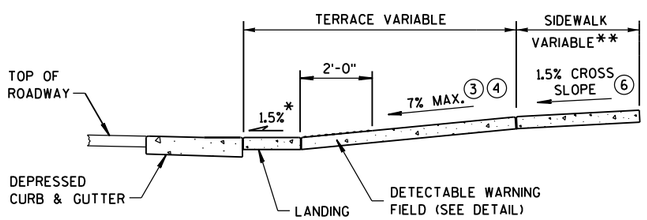

SECTION A-A

** WIDTH SHOWN ELSEWHERE IN THE PLANS

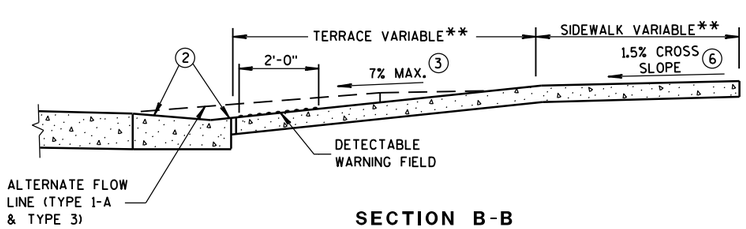

SECTION B-B

GENERAL NOTES

USE THE TYPE 3 RAMP ONLY WHEN A TYPE 1 OR TYPE 2 CANNOT BE ACHIEVED BECAUSE OF FIELD CONDITIONS.

DETECTABLE WARNING FIELDS THAT ARE INSTALLED AS A GROUP OR SIDE BY SIDE, SHALL BE FROM THE SAME MANUFACTURER.

(2) GRADE CHANGE BETWEEN GUTTER FLAG SLOPE AND THE CURB RAMP SLOPE SHALL NOT EXCEED 11%. MAXIMUM GUTTER FLAG SLOPE IS 4%. PROVIDE DRAINAGE AWAY FROM CURB RAMP AT GUTTER FLAG INTERFACE. NO VERTICAL LIPS OR DISCONTINUITIES GREATER THAN 1/4-INCH ARE ALLOWED.

(3) ABSOLUTE MAXIMUM 12H:1V (8.33%) CURB RAMP SLOPE IS ALLOWABLE WITH FLATTENED GUTTER FLAG SLOPE AND NOT TO EXCEED 11% GRADE CHANGE.

(4) ±0.5% CONSTRUCTION TOLERANCE IN SIDEWALK CROSS SLOPE. THE SIDEWALK CROSS SLOPE SHALL NOT EXCEED 2% WITHOUT PRIOR APPROVAL FROM THE ENGINEER.

(6) PROVIDE A LEVEL LANDING (MAXIMUM 2% SLOPE) IN ANY DIRECTION OF PEDESTRIAN TRAVEL. STANDARD LANDING SIZE IS 5 FEET X 5 FEET (MINIMUM 4 FEET X 4 FEET).

(7) WHEN THIS DISTANCE EXCEEDS 5 FEET, USE MULTIPLE DETECTABLE WARNING PANELS ACROSS THE RAMP AND STAGGER ADDITIONAL DETECTABLE WARNING PANEL(S) FORWARD TO REDUCE THIS DISTANCE.

(8) PROVIDE GRADE BREAK PERPENDICULAR TO DIRECTION OF WHEELCHAIR TRAVEL.

(9) WHEN THIS DISTANCE IS LESS THAN 6'-0", IT MAY BE DIFFICULT TO ACHIEVE A 7% SLOPE OR FLATTER ALONG THE RAMP. REDUCE CURB HEIGHT IN TRIANGLE AREA TO ACHIEVE 7% SLOPE OR FLATTER ON RAMP. 2" MINIMUM CURB HEIGHT.

LEGEND

- 1/2" EXPANSION JOINT-SIDEWALK
- CONTRACTION JOINT FIELD LOCATED
- PAVEMENT MARKING CROSSWALK (WHITE)
- ALTERNATIVE LAYOUT

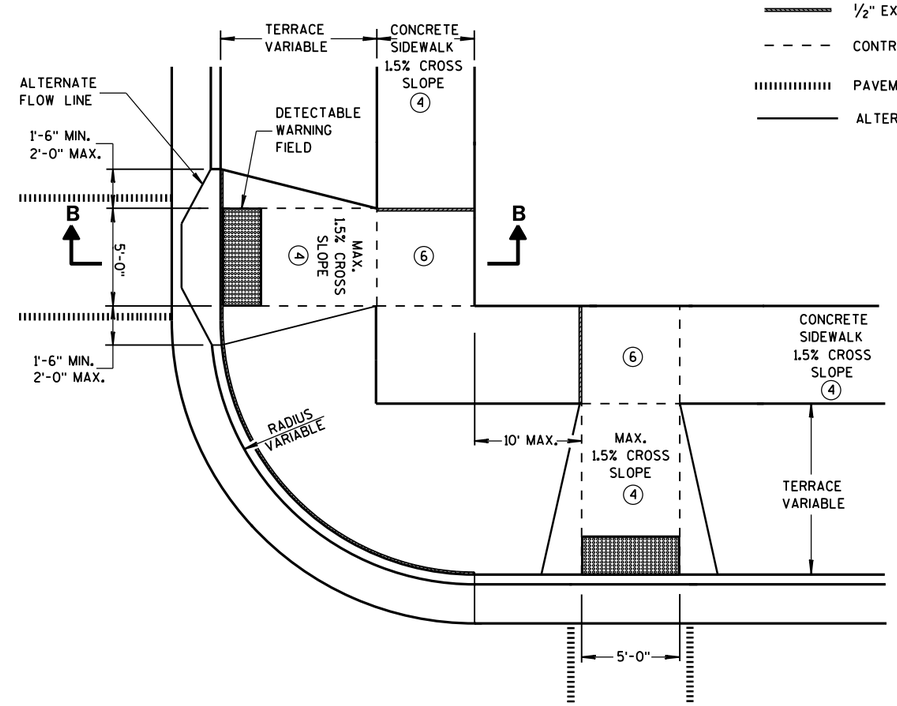

PLAN VIEW
TYPE 3 RAMP
(OUTSIDE OF CROSSWALK AREA)

CURB RAMPS TYPES 2 AND 3

STATE OF WISCONSIN
DEPARTMENT OF TRANSPORTATION

6

S.D.D. 8 D 5-16b

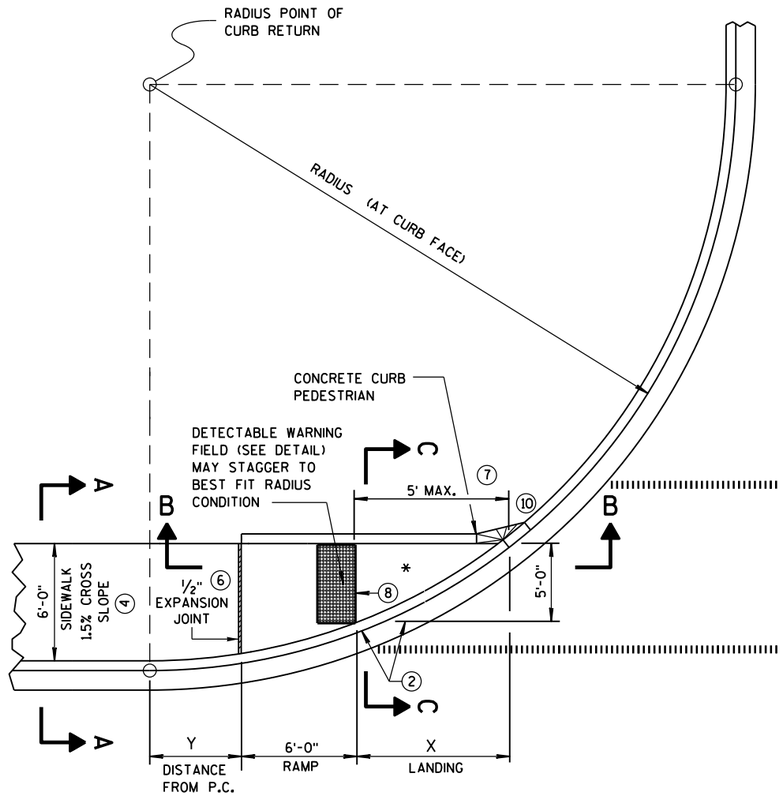

CURB RAMP TYPE 4A

PLAN VIEW

RADIUS (AT CURB FACE)	X	Y
20 FEET	6'-1¾"	2'-7¼"
30 FEET	7'-11¾"	4'-8¼"
40 FEET	9'-5¼"	6'-5"
50 FEET	10'-8¾"	7'-11¼"
60 FEET	11'-10¼"	9'-3½"

INTERMEDIATE RADII CAN BE INTERPOLATED

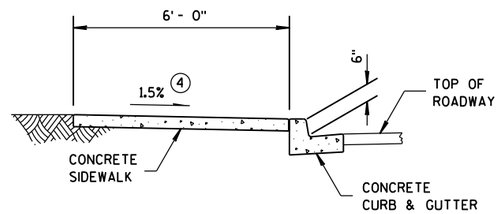

SECTION A-A FOR TYPE 4A

GENERAL NOTES

AVOID PLACING DRAINAGE STRUCTURES, JUNCTION BOXES OR OTHER OBSTRUCTIONS IN FRONT OF RAMP ACCESS AREAS.

DETECTABLE WARNING FIELDS THAT ARE INSTALLED AS A GROUP OR SIDE BY SIDE, SHALL BE FROM THE SAME MANUFACTURER.

(2) GRADE CHANGE BETWEEN GUTTER FLAG SLOPE AND THE CURB RAMP SLOPE SHALL NOT EXCEED 11%. MAXIMUM GUTTER FLAG SLOPE IS 4%. PROVIDE DRAINAGE AWAY FROM CURB RAMP AT GUTTER FLAG INTERFACE. NO VERTICAL LIPS OR DISCONTINUITIES GREATER THAN ¼-INCH ARE ALLOWED.

(3) ABSOLUTE MAXIMUM 12H:1V (8.33%) CURB RAMP SLOPE IS ALLOWABLE WITH FLATTENED GUTTER FLAG SLOPE AND NOT TO EXCEED 11% GRADE CHANGE.

(4) ±0.5% CONSTRUCTION TOLERANCE IN SIDEWALK CROSS SLOPE. THE SIDEWALK CROSS SLOPE SHALL NOT EXCEED 2% WITHOUT PRIOR APPROVAL FROM THE ENGINEER.

(6) PROVIDE A LEVEL LANDING (MAXIMUM 2% SLOPE) IN ANY DIRECTION OF PEDESTRIAN TRAVEL. STANDARD LANDING SIZE IS 5 FEET X 5 FEET (MINIMUM 4 FEET X 4 FEET).

(7) WHEN THIS DISTANCE EXCEEDS 5 FEET, USE MULTIPLE DETECTABLE WARNING PANELS ACROSS THE RAMP AND STAGGER ADDITIONAL DETECTABLE WARNING PANEL(S) FORWARD TO REDUCE THIS DISTANCE.

(8) PROVIDE GRADE BREAK PERPENDICULAR TO DIRECTION OF WHEELCHAIR TRAVEL.

(10) INSTALL TRANSITION NOSE. (INCIDENTAL TO OTHER PAY ITEMS). DO NOT MARK TRANSITION NOSE.

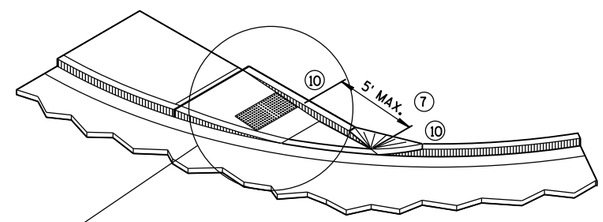

ISOMETRIC VIEW FOR TYPE 4A

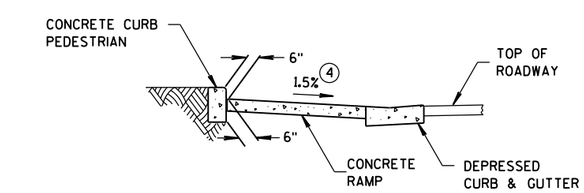

SECTION C-C FOR TYPE 4A

* MAXIMUM 2.0% SLOPE IN ALL DIRECTIONS IN FRONT OF GRADE BREAK

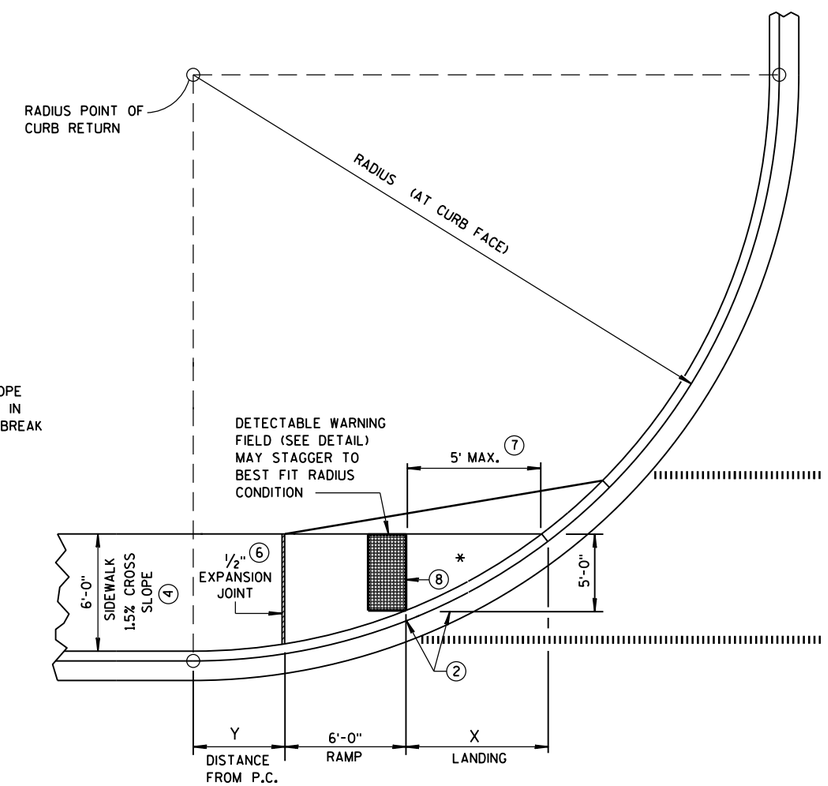

CURB RAMP TYPE 4A1

PLAN VIEW

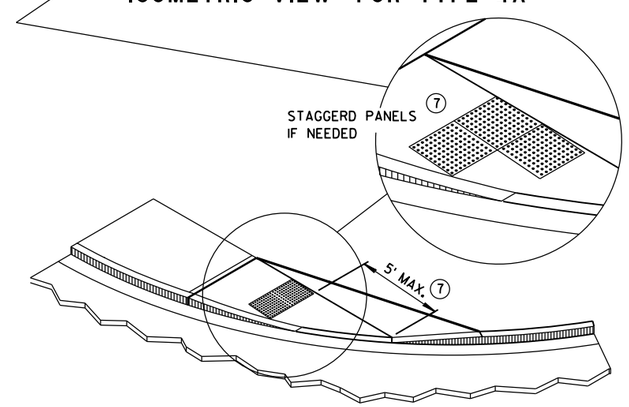

ISOMETRIC VIEW FOR TYPE 4A1

LEGEND

- ½" EXPANSION JOINT-SIDEWALK
- CONTRACTION JOINT FIELD LOCATED
- PAVEMENT MARKING CROSSWALK (WHITE)

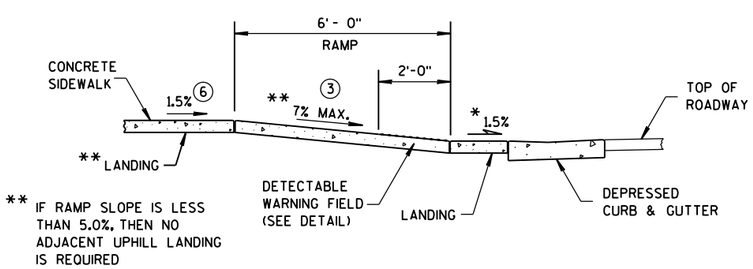

** IF RAMP SLOPE IS LESS THAN 5.0%, THEN NO ADJACENT UPHILL LANDING IS REQUIRED

SECTION B-B FOR TYPE 4A

CURB RAMPS
TYPES 4A AND 4A1

STATE OF WISCONSIN
DEPARTMENT OF TRANSPO

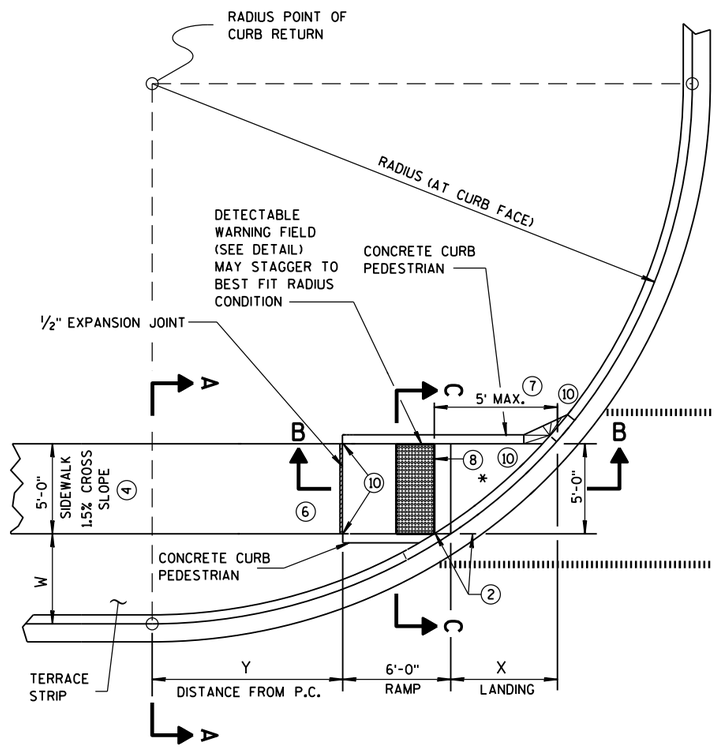

CURB RAMP TYPE 4B
PLAN VIEW

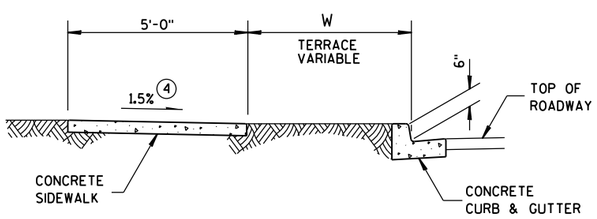

SECTION A-A FOR TYPE 4B

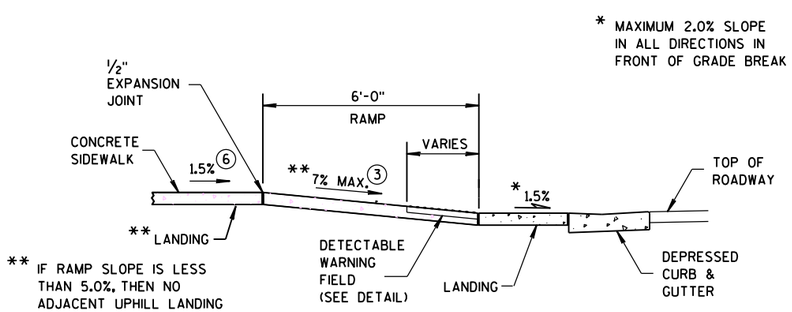

SECTION B-B FOR TYPE 4B

LEGEND

- ½" EXPANSION JOINT-SIDEWALK
- CONTRACTION JOINT FIELD LOCATED
- PAVEMENT MARKING CROSSWALK (WHITE)

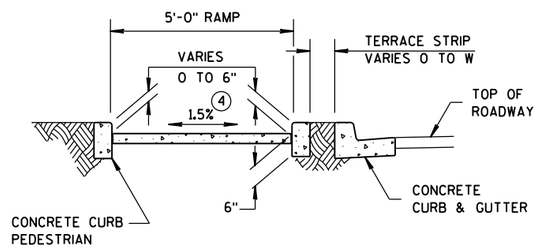

SECTION C-C FOR TYPE 4B

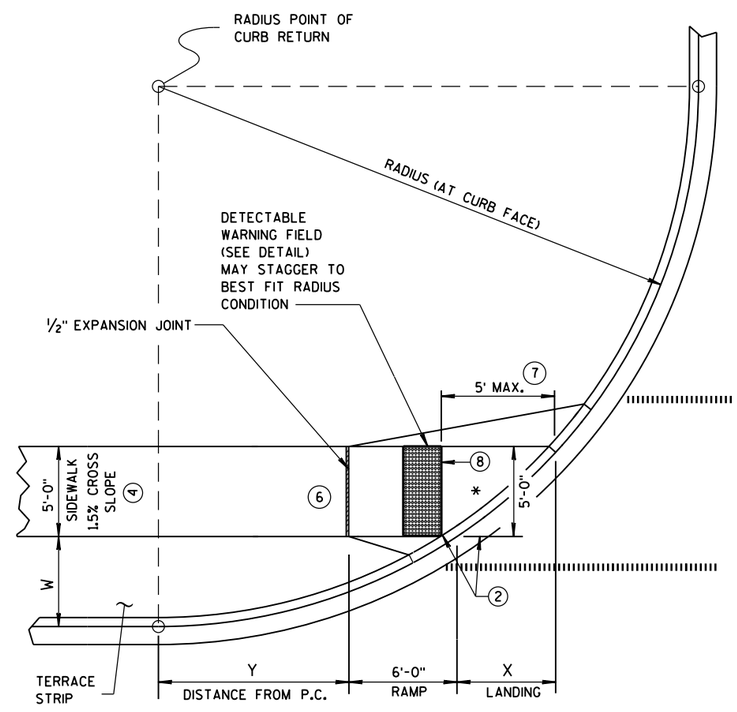

CURB RAMP TYPE 4B1
PLAN VIEW

RADIUS (AT CURB FACE)	W = 3' - 0"		W = 4' - 0"		W = 5' - 0"		W = 6' - 0"		W = 7' - 0"	
	X	Y	X	Y	X	Y	X	Y	X	Y
20 FEET	5'-5½"	4'-6½"	4'-8½"	6'-0"	4'-1"	7'-2¾"	3'-7"	8'-3½"	3'-1½"	9'-2½"
30 FEET	7'-3¾"	7'-1"	6'-5½"	8'-11½"	5'-9¼"	10'-7"	5'-2½"	12'-0"	4'-8¾"	13'-3¼"
40 FEET	8'-9½"	9'-2½"	7'-10"	11'-5¼"	7'-1"	13'-4½"	6'-5¾"	15'-¾"	5'-11½"	16'-7¼"
50 FEET	10'-¾"	11'-¾"	9'-¼"	13'-7¼"	8'-2½"	15'-9½"	7'-6½"	17'-9"	6'-11¾"	19'-6¼"
60 FEET	11'-2½"	12'-8¾"	10'-¾"	15'-6½"	9'-2¼"	17'-11¾"	8'-5¾"	20'-1¾"	7'-10½"	22'-1½"

INTERMEDIATE RADII CAN BE INTERPOLATED

GENERAL NOTES

AVOID PLACING DRAINAGE STRUCTURES, JUNCTION BOXES OR OTHER OBSTRUCTIONS IN FRONT OF RAMP ACCESS AREAS.

DETECTABLE WARNING FIELDS THAT ARE INSTALLED AS A GROUP OR SIDE BY SIDE, SHALL BE FROM THE SAME MANUFACTURER.

(2) GRADE CHANGE BETWEEN GUTTER FLAG SLOPE AND THE CURB RAMP SLOPE SHALL NOT EXCEED 11%. MAXIMUM GUTTER FLAG SLOPE IS 4%. PROVIDE DRAINAGE AWAY FROM CURB RAMP AT GUTTER FLAG INTERFACE. NO VERTICAL LIPS OR DISCONTINUITIES GREATER THAN ¼-INCH ARE ALLOWED.

(3) ABSOLUTE MAXIMUM 12H:1V (8.33%) CURB RAMP SLOPE IS ALLOWABLE WITH FLATTENED GUTTER FLAG SLOPE AND NOT TO EXCEED 11% GRADE CHANGE.

(4) ±0.5% CONSTRUCTION TOLERANCE IN SIDEWALK CROSS SLOPE. THE SIDEWALK CROSS SLOPE SHALL NOT EXCEED 2% WITHOUT PRIOR APPROVAL FROM THE ENGINEER.

(6) PROVIDE A LEVEL LANDING (MAXIMUM 2% SLOPE) IN ANY DIRECTION OF PEDESTRIAN TRAVEL. STANDARD LANDING SIZE IS 5 FEET X 5 FEET (MINIMUM 4 FEET X 4 FEET).

(7) WHEN THIS DISTANCE EXCEEDS 5 FEET, USE MULTIPLE DETECTABLE WARNING PANELS ACROSS THE RAMP AND STAGGER ADDITIONAL DETECTABLE WARNING PANEL(S) FORWARD TO REDUCE THIS DISTANCE.

(8) PROVIDE GRADE BREAK PERPENDICULAR TO DIRECTION OF WHEELCHAIR TRAVEL.

(10) INSTALL TRANSITION NOSE. (INCIDENTAL TO OTHER PAY ITEMS). DO NOT MARK TRANSITION NOSE.

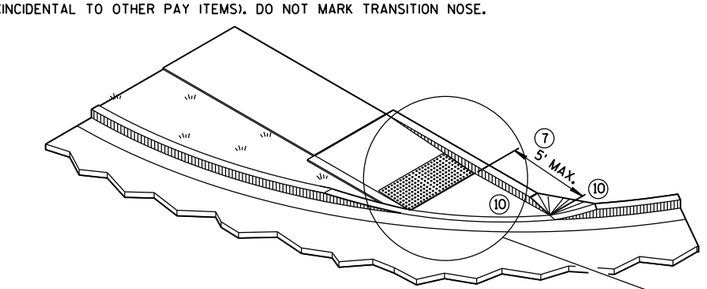

ISOMETRIC VIEW FOR TYPE 4B

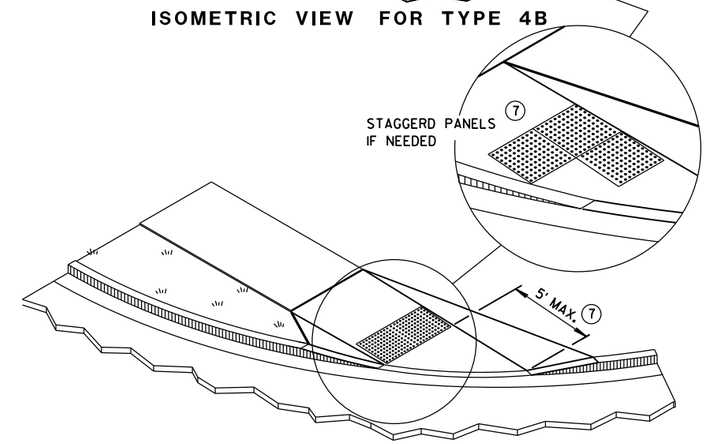

ISOMETRIC VIEW FOR TYPE 4B1

CURB RAMPS
TYPE 4B AND 4B1

STATE OF WISCONSIN
DEPARTMENT OF TRANSPO

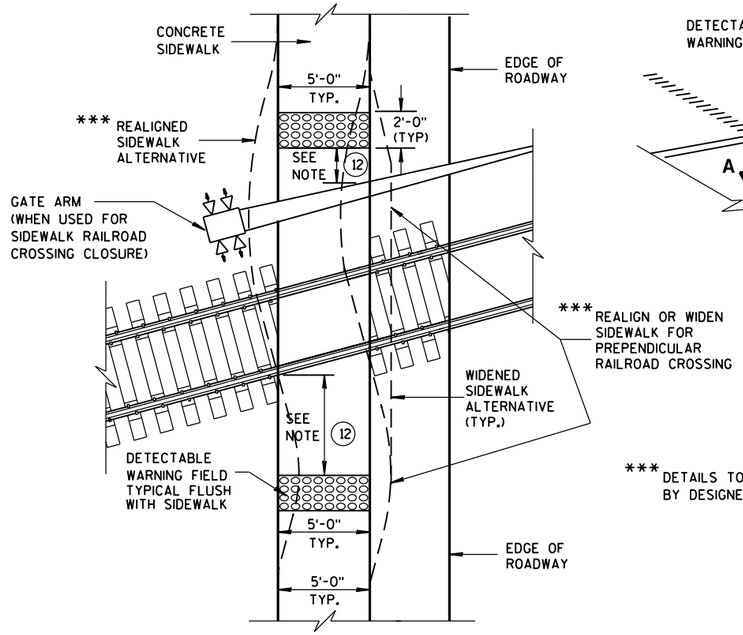

TYPE 8
DETECTABLE WARNINGS AT RAILROAD CROSSING

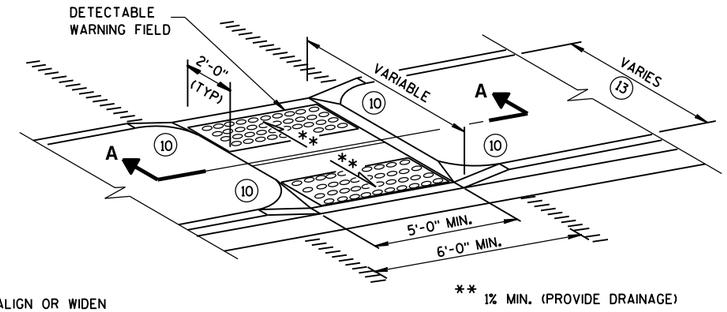

*** DETAILS TO BE DETERMINED BY DESIGNER

MEDIAN ISLAND NON-ELEVATED CROSSING
TYPE 5

GENERAL NOTES

SIDEWALK CROSS SLOPE SHALL NOT EXCEED 2%.

DETECTABLE WARNING FIELDS THAT ARE INSTALLED AS A GROUP OR SIDE BY SIDE, SHALL BE FROM THE SAME MANUFACTURER.

(2) GRADE CHANGE BETWEEN GUTTER FLAG SLOPE AND THE CURB RAMP SLOPE SHALL NOT EXCEED 11%. MAXIMUM GUTTER FLAG SLOPE IS 4%. PROVIDE DRAINAGE AWAY FROM CURB RAMP AT GUTTER FLAG INTERFACE. NO VERTICAL LIPS OR DISCONTINUITIES GREATER THAN 1/4-INCH ARE ALLOWED.

(3) ABSOLUTE MAXIMUM 12H:1V (8.33%) CURB RAMP SLOPE IS ALLOWABLE WITH FLATTENED GUTTER FLAG SLOPE AND NOT TO EXCEED 11% GRADE CHANGE.

(4) ±0.5% CONSTRUCTION TOLERANCE IN SIDEWALK CROSS SLOPE. THE SIDEWALK CROSS SLOPE SHALL NOT EXCEED 2% WITHOUT PRIOR APPROVAL FROM THE ENGINEER.

(6) PROVIDE A LEVEL LANDING (MAXIMUM 2% SLOPE) IN ANY DIRECTION OF PEDESTRIAN TRAVEL. STANDARD LANDING SIZE IS 5 FEET X 5 FEET (MINIMUM 4 FEET X 4 FEET).

(10) INSTALL TRANSITION NOSE. (INCIDENTAL TO OTHER PAY ITEMS). DO NOT MARK TRANSITION NOSE.

(11) SLOPE SIDEWALK TOWARD LANDING AS SHOWN WHERE THERE IS NO TERRACE OR WHERE THE TERRACE WIDTH IS LESS THAN 6 FEET WIDE.

(12) THE EDGE OF THE DETECTABLE WARNING FIELD NEAREST TO A RAILROAD CROSSING SHALL BE 1.5 FEET ± 0.1' FROM THE FACE OF THE GATE ARM IF THE GATE ARM EXTENDS ACROSS THE SIDEWALK. WHERE THERE IS NO PEDESTRIAN GATE, THE EDGE OF THE DETECTABLE WARNING FIELD NEAREST TO THE RAILROAD CROSSING SHALL BE 15 FEET FROM THE NEAREST RAIL.

(13) DO NOT INSTALL DETECTABLE WARNING FIELDS IF MEDIAN WIDTH BETWEEN BACK OF CURBS IS LESS THAN 6 FEET.

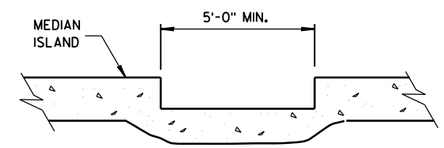

SECTION A-A

	MIN.	MAX.
A	1.6"	2.4"
B	0.65"	1.5"
C	*	*
D	0.9"	1.4"

* THE C DIMENSION IS 50% TO 65% OF THE D DIMENSION.

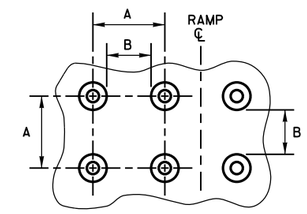

PLAN VIEW

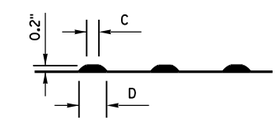

ELEVATION VIEW
TRUNCATED DOMES
DETECTABLE WARNING PATTERN DETAIL

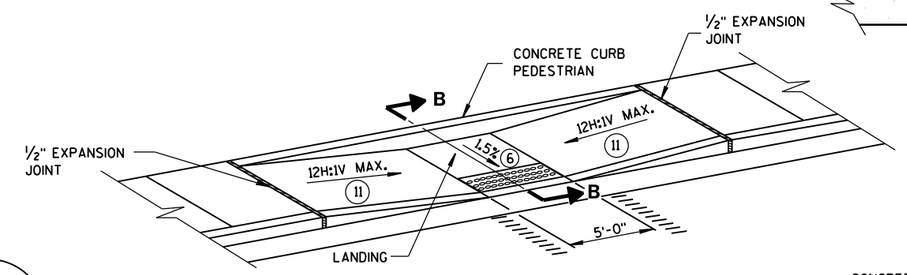

MID-BLOCK CROSSING
TYPE 7A

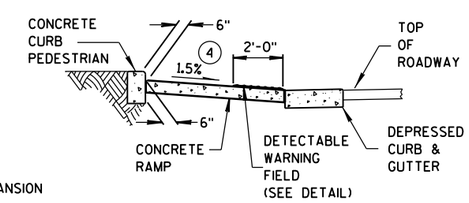

SECTION B-B

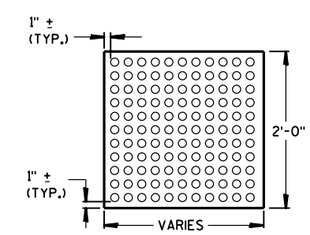

PLAN VIEW
DETECTABLE WARNING FIELD (TYPICAL)

REFER TO GENERAL NOTES (2) AND (3) FOR ALL ISLAND CURB RAMPS

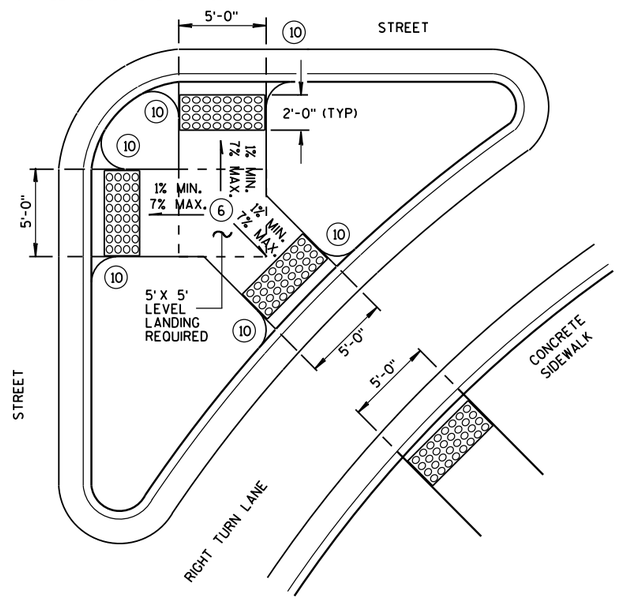

TYPE 6
DETECTABLE WARNING AT ISLANDS

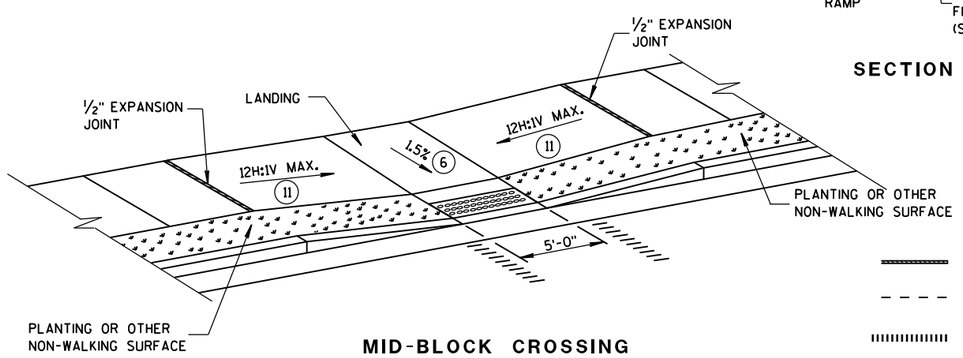

MID-BLOCK CROSSING
TYPE 7B

NOTE: THESE PARALLEL AND PARALLEL/PERPENDICULAR CURB RAMPS MAY BE USED AT INTERSECTIONS AND MID BLOCK LOCATIONS.

LEGEND

- 1/2" EXPANSION JOINT-SIDEWALK
- CONTRACTION JOINT FIELD LOCATED
- PAVEMENT MARKING CROSSWALK (WHITE)

CURB RAMPS
TYPES 5, 6, 7A, 7B & 8

STATE OF WISCONSIN
DEPARTMENT OF TRANSPORTATION

APPROVED
June, 2015 — DATE
/S/ Jerry H. Zogg — ROADWAY STANDARDS DEVELOPMENT ENGINEER
FHWA

6

6

S.D.D. 8 D 5-16e

S.D.D. 8 D 5-16e

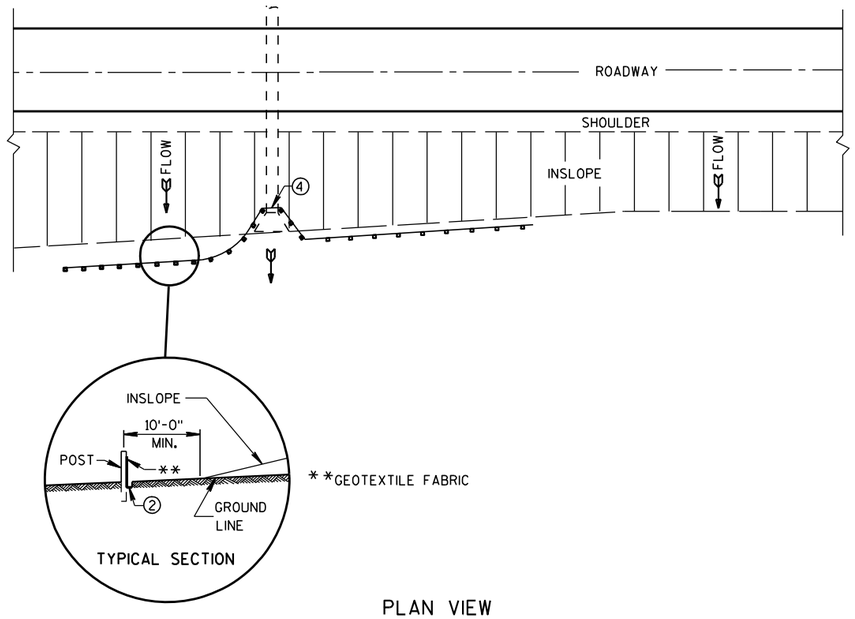

PLAN VIEW

TYPICAL APPLICATION OF SILT FENCE

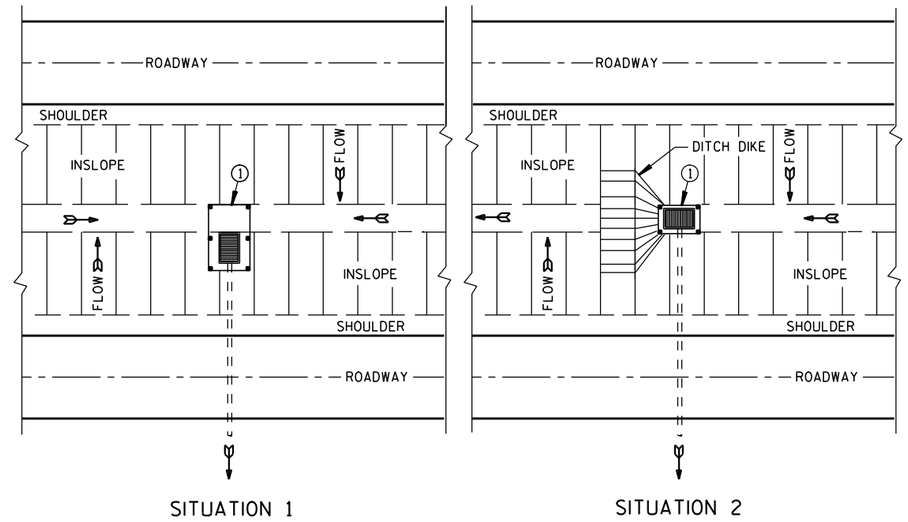

PLAN VIEW

SILT FENCE AT MEDIAN SURFACE DRAINS

GENERAL NOTES

DETAILS OF CONSTRUCTION NOT SHOWN ON THIS DRAWING SHALL CONFORM TO THE PERTINENT REQUIREMENTS OF THE STANDARD SPECIFICATIONS AND APPLICABLE SPECIAL PROVISIONS.

① HORIZONTAL BRACE REQUIRED WITH 2" X 4" WOODEN FRAME OR EQUIVALENT AT TOP OF POSTS.

② FOR MANUAL INSTALLATIONS THE TRENCH SHALL BE A MINIMUM OF 4" WIDE & 6" DEEP TO BURY AND ANCHOR THE GEOTEXTILE FABRIC. FOLD MATERIAL TO FIT TRENCH AND BACKFILL & COMPACT TRENCH WITH EXCAVATED SOIL.

③ WOOD POSTS SHALL BE A MINIMUM SIZE OF 1⅛" X 1⅛" OF OAK OR HICKORY.

④ SILT FENCE TO EXTEND ACROSS THE TOP OF THE PIPE.

⑤ CONSTRUCT SILT FENCE FROM A CONTINUOUS ROLL IF POSSIBLE BY CUTTING LENGTHS TO AVOID JOINTS. IF A JOINT IS NECESSARY USE ONE OF THE FOLLOWING TWO METHODS; A) OVERLAP THE END POSTS AND TWIST, OR ROTATE, AT LEAST 180 DEGREES. B) HOOK THE END OF EACH SILT FENCE LENGTH.

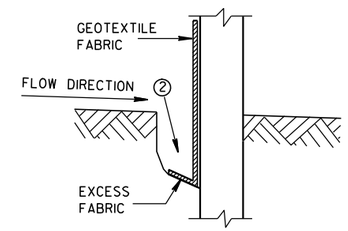

TRENCH DETAIL

NOTE: ADDITIONAL POST DEPTH OR TIE BACKS MAY BE REQUIRED IN UNSTABLE SOILS

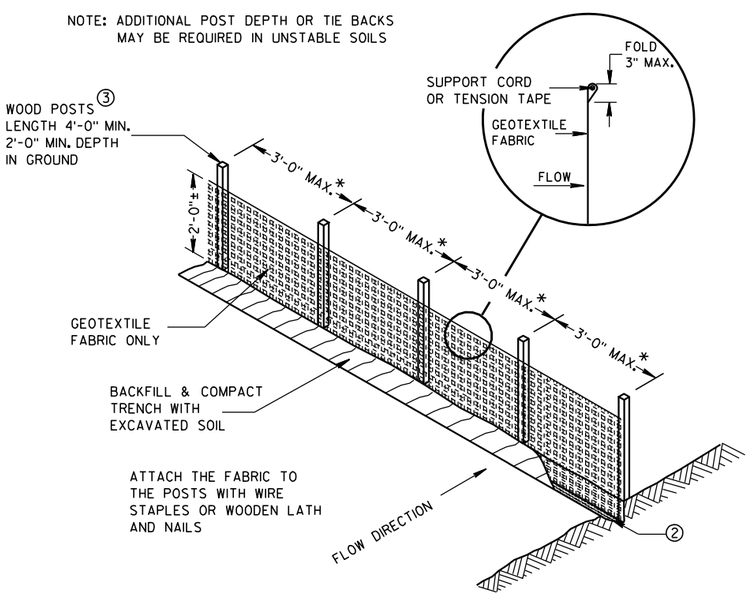

*NOTE: 8'-0" POST SPACING ALLOWED IF A WOVEN GEOTEXTILE FABRIC IS USED.

SILT FENCE

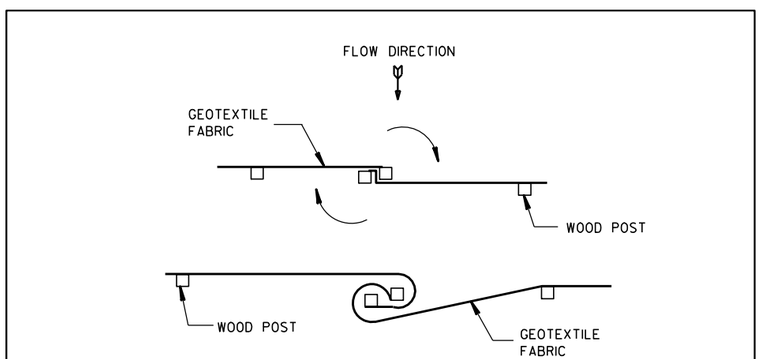

TWIST METHOD

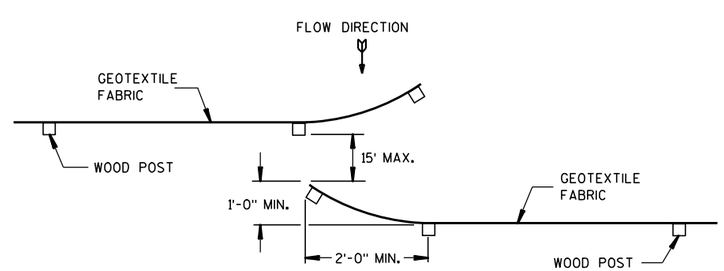

HOOK METHOD

JOINING TWO LENGTHS OF SILT FENCE ⑤

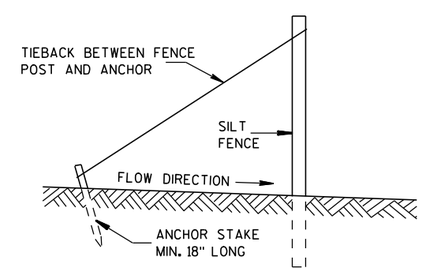

SILT FENCE TIE BACK

(WHEN REQUIRED BY THE ENGINEER)

SILT FENCE
STATE OF WISCONSIN DEPARTMENT OF TRANSPORTATION
APPROVED 4-29-05 /S/ Beth Cann----- DATE CHIEF ROADWAY DEVELOP ENGINEER FHWA

6

6

S.D.D. 8 E 9-6

S.D.D. 8 E 9-6

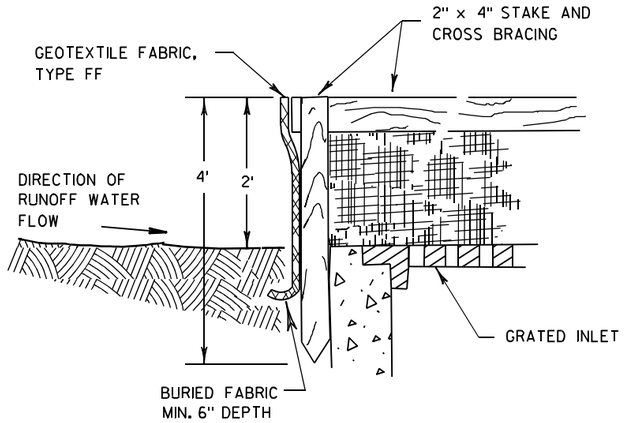

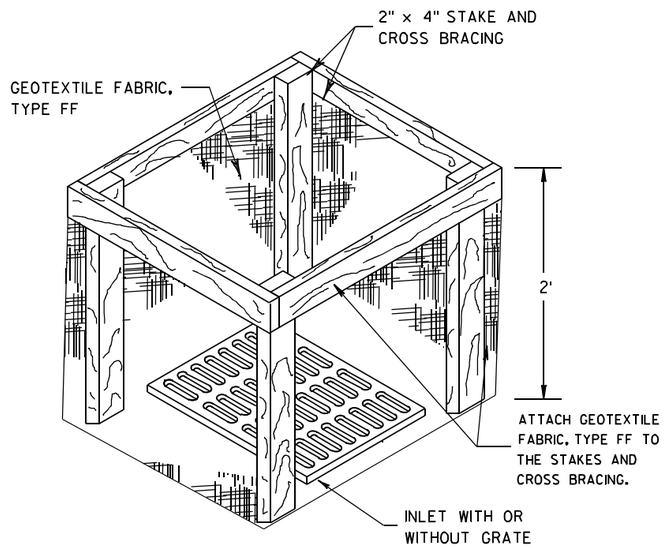

INLET PROTECTION, TYPE A

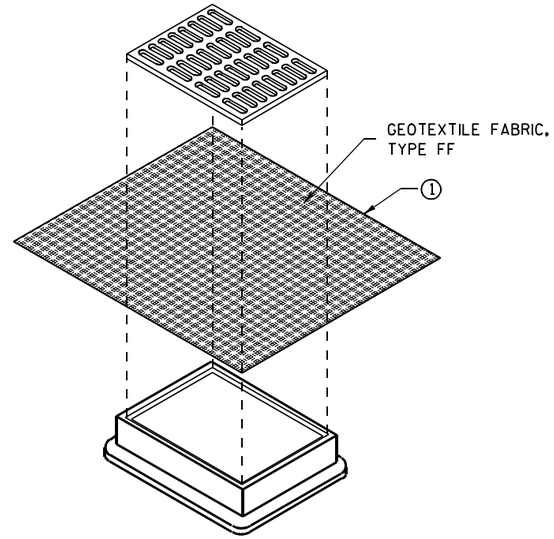

INLET PROTECTION, TYPE B (WITHOUT CURB BOX)

(CAN BE INSTALLED IN ANY INLET WITHOUT A CURB BOX)

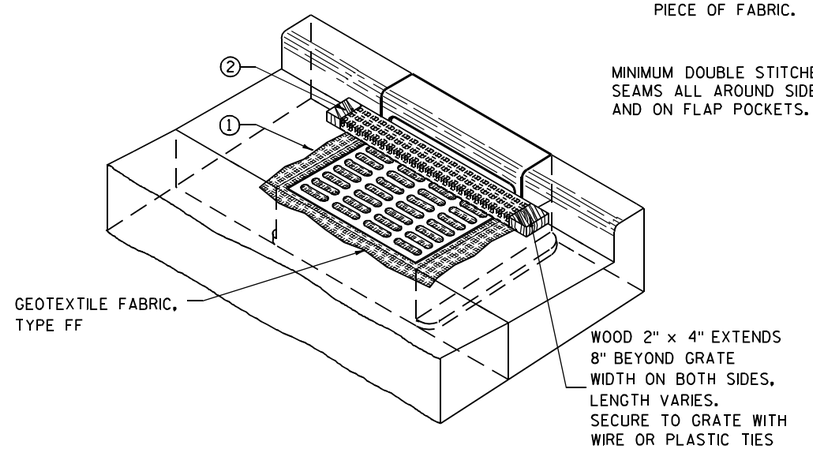

INLET PROTECTION, TYPE C (WITH CURB BOX)

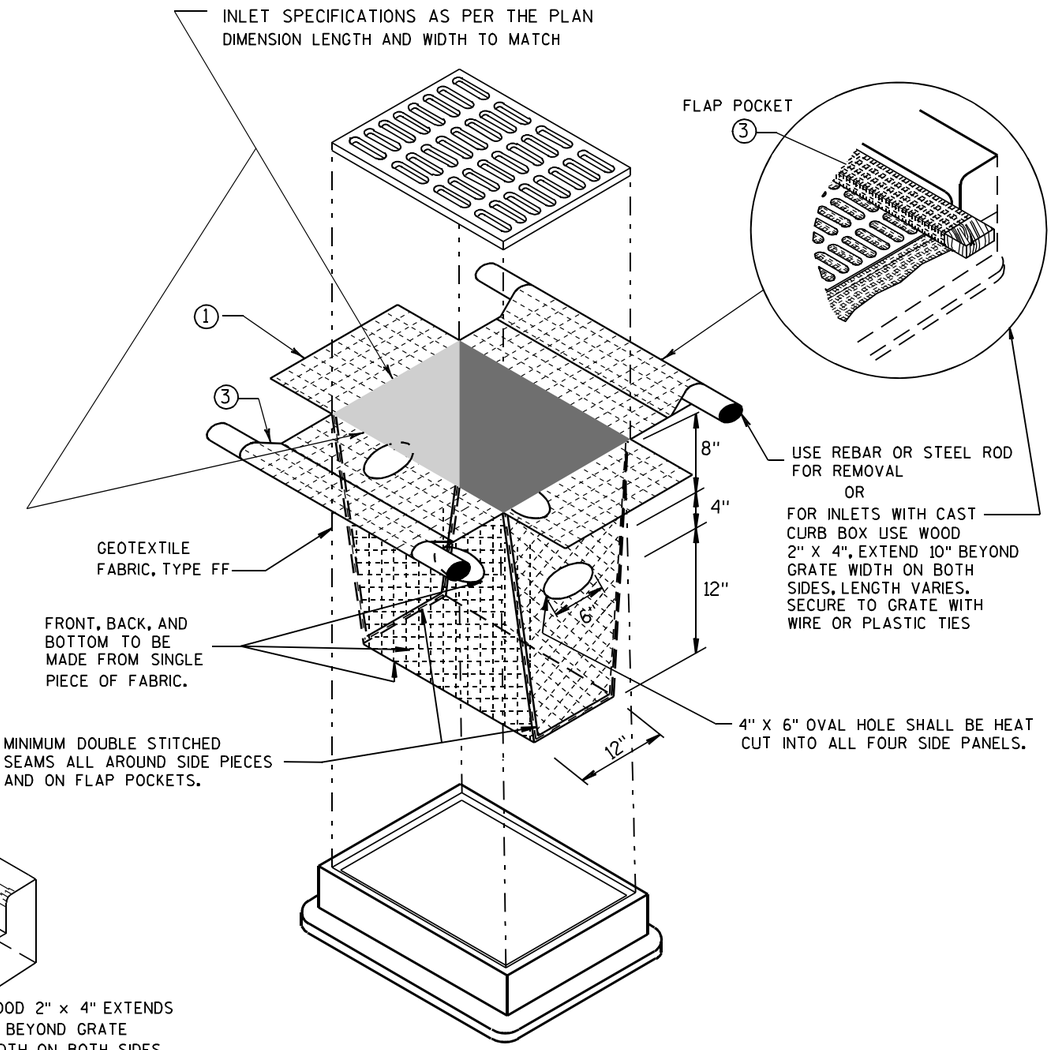

INLET PROTECTION, TYPE D

(CAN BE INSTALLED IN ANY INLET TYPE WITH OR WITHOUT A CURB BOX AS PER NOTE 2)

GENERAL NOTES

INLET PROTECTION DEVICES SHALL BE MAINTAINED OR REPLACED AT THE DIRECTION OF THE ENGINEER.

MANUFACTURED ALTERNATIVES APPROVED AND LISTED ON THE DEPARTMENT'S EROSION CONTROL PRODUCT ACCEPTABILITY LIST MAY BE SUBSTITUTED.

WHEN REMOVING OR MAINTAINING INLET PROTECTION, CARE SHALL BE TAKEN SO THAT THE SEDIMENT TRAPPED ON THE GEOTEXTILE FABRIC DOES NOT FALL INTO THE INLET. ANY MATERIAL FALLING INTO THE INLET SHALL BE REMOVED IMMEDIATELY.

1 FINISHED SIZE, INCLUDING FLAP POCKETS WHERE REQUIRED, SHALL EXTEND A MINIMUM OF 10" AROUND THE PERIMETER TO FACILITATE MAINTENANCE OR REMOVAL.

2 FOR INLET PROTECTION, TYPE C (WITH CURB BOX), AN ADDITIONAL 18" OF FABRIC IS WRAPPED AROUND THE WOOD AND SECURED WITH STAPLES. THE WOOD SHALL NOT BLOCK THE ENTIRE HEIGHT OF THE CURB BOX OPENING.

3 FLAP POCKETS SHALL BE LARGE ENOUGH TO ACCEPT WOOD 2X4.

INSTALLATION NOTES

TYPE B & C

TRIM EXCESS FABRIC IN THE FLOW LINE TO WITHIN 3" OF THE GRATE.

THE CONTRACTOR SHALL DEMONSTRATE A METHOD OF MAINTENANCE, USING A SEWN FLAP, HAND HOLDS OR OTHER METHOD TO PREVENT ACCUMULATED SEDIMENT FROM ENTERING THE INLET.

TYPE D

DO NOT INSTALL INLET PROTECTION TYPE D IN INLETS SHALLOWER THAN 30", MEASURED FROM THE BOTTOM OF THE INLET TO THE TOP OF THE GRATE.

TRIM EXCESS FABRIC IN THE FLOW LINE TO WITHIN 3" OF THE GRATE.

THE INSTALLED BAG SHALL HAVE A MINIMUM SIDE CLEARANCE, BETWEEN THE INLET WALLS AND THE BAG, MEASURED AT THE BOTTOM OF THE OVERFLOW HOLES, OF 3". WHERE NECESSARY THE CONTRACTOR SHALL CINCH THE BAG, USING PLASTIC ZIP TIES, TO ACHIEVE THE 3" CLEARANCE. THE TIES SHALL BE PLACED AT A MAXIMUM OF 4" FROM THE BOTTOM OF THE BAG.

INLET PROTECTION TYPE A, B, C, AND D

STATE OF WISCONSIN
DEPARTMENT OF TRANSPORTATION

APPROVED
10/16/02 — DATE
/S/ Beth Cannestra — CHIEF ROADWAY DEVELOPMENT ENGINEER
FHWA

6

S.D.D. 8 E 10-2

METAL APRON ENDWALLS

PIPE DIA. (IN.)	MIN. THICK. (Inches) STEEL	MIN. THICK. (Inches) ALUM.	DIMENSIONS (Inches) A (±1")	B (MAX.)	H (±1")	L (±1 1/2")	L1 ①	L2 ①	W (±2")	APPROX. SLOPE	BODY
12	.064	.060	6	6	6	21	12	17 1/2	24	2 1/2 to 1	1 Pc.
15	.064	.060	7	8	6	26	14	21 3/4	30	2 1/2 to 1	1 Pc.
18	.064	.060	8	10	6	31	15	28 1/4	36	2 1/2 to 1	1 Pc.
21	.064	.060	9	12	6	36	18	29 5/8	42	2 1/2 to 1	1 Pc.
24	.064	.075	10	13	6	41	18	37 1/4	48	2 1/2 to 1	1 Pc.
30	.079	.075	12	16	8	51	18	52 1/4	60	2 1/2 to 1	1 Pc.
36	.079	.105	14	19	9	60	24	59 3/4	72	2 1/2 to 1	2 Pc.
42	.109	.105	16	22	11	69	24	75 5/8	84	2 1/2 to 1	2 Pc.
48	.109	.105	18	27	12	78	24	81	90	2 1/4 to 1	3 Pc.
54	.109	.105	18	30	12	84	30	85 1/2	102	2 1/4 to 1	3 Pc.
60	.109×	.105×	18	33	12	87	—	—	114	2 to 1	3 Pc.
66	.109×	.105×	18	36	12	87	—	—	120	2 to 1	3 Pc.
72	.109×	.105×	18	39	12	87	—	—	126	2 to 1	3 Pc.
78	.109×	.105×	18	42	12	87	—	—	132	1 1/2 to 1	3 Pc.
84	.109×	.105×	18	45	12	87	—	—	138	1 1/2 to 1	3 Pc.
90	.109×	.105×	18	37	12	87	—	—	144	1 1/2 to 1	3 Pc.
96	.109×	.105×	18	35	12	87	—	—	150	1 1/2 to 1	3 Pc.

× EXCEPT CENTER PANEL
SEE GENERAL NOTES

REINFORCED CONCRETE APRON ENDWALLS

PIPE DIA. (IN.)	DIMENSIONS (Inches) T	A	B	C	D	E	G	APPROX. SLOPE
12	2	4	24	48 7/8	72 7/8	24	2	3 to 1
15	2 1/4	6	27	46	73	30	2 1/4	3 to 1
18	2 1/2	9	27	46	73	36	2 1/2	3 to 1
21	2 3/4	9	36	37 1/2	73 1/2	42	2 3/4	3 to 1
24	3	9 1/2	43 1/2	30	73 1/2	48	3	3 to 1
27	3 1/4	10 1/2	49 1/2	24	73 1/2	54	3 1/4	3 to 1
30	3 1/2	12	54	19 3/4	73 1/2	60	3 1/2	3 to 1
36	4	15	63	34 3/4	97 3/4	72	4	3 to 1
42	4 1/2	21	63	35	98	78	4 1/2	3 to 1
48	5	24	72	26	98	84	5	3 to 1
54	5 1/2	27	65	*33 1/4-**35	*98 1/4-**100	90	5 1/2	2 2/5 to 1
60	6	*30-**35	60	39	99	96	5	2 to 1
66	6 1/2	*24-**30	*72-**78	*21-**27	99	102	5 1/2	2 to 1
72	7	*24-**36	78	21	99	108	6	2 to 1
78	7 1/2	*24-**36	78	21	99	114	6 1/2	2 to 1
84	8	36	90 1/2	21	111 1/2	120	6 1/2	1 1/2 to 1
90	8 1/2	41	87 1/2	24	111 1/2	132	6 1/2	1 1/2 to 1

*MINIMUM
**MAXIMUM

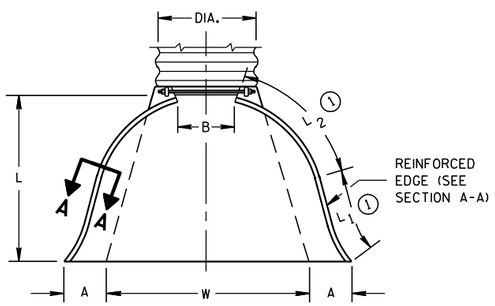

PLAN VIEW

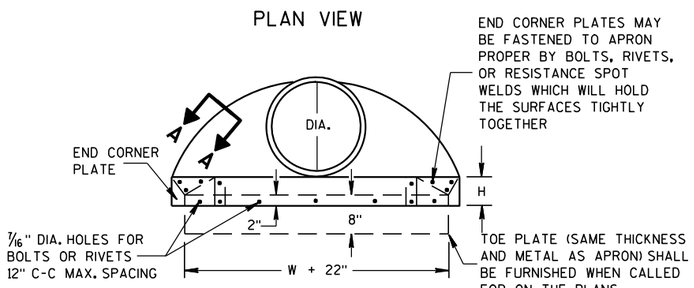

END VIEW

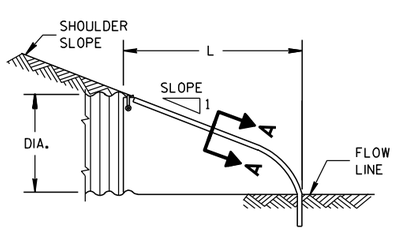

SIDE ELEVATION

METAL ENDWALLS

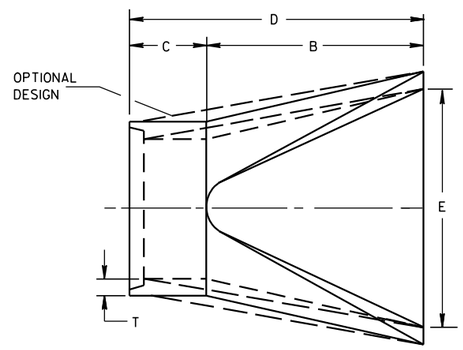

PLAN

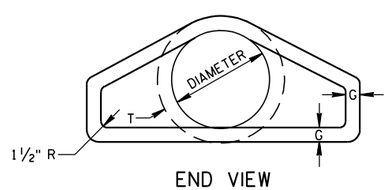

END VIEW

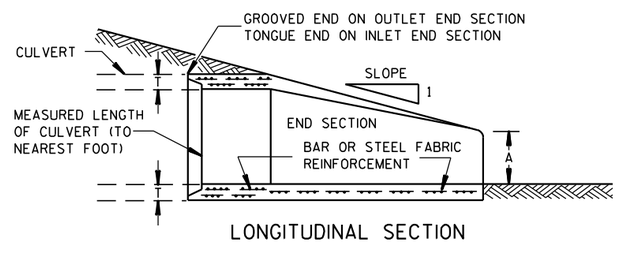

LONGITUDINAL SECTION

CONCRETE ENDWALLS

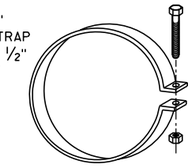

ALTERNATE FOR TYPE 1 CONNECTION

END SECTION CONNECTOR STRAP

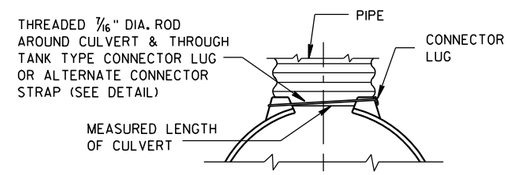

TYPE 1
FOR 12" THRU 24" CORR. PIPE

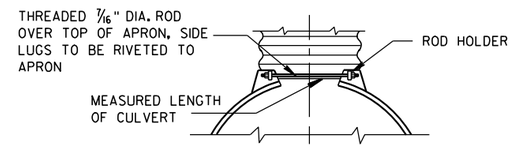

TYPE 2
FOR 30" THRU 96" CORR. PIPE

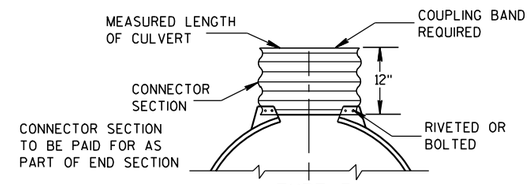

TYPE 3
FOR 42" THRU 96" CORR. PIPE

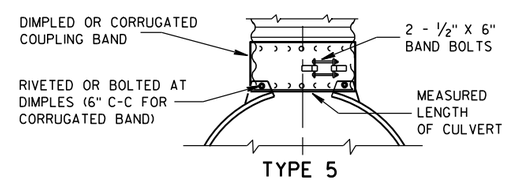

TYPE 5
ALTERNATE FOR:
ALL SIZES CORRUGATED CIRCULAR PIPE

NOTE: DIMPLED BAND FITS OVER OUTSIDE OF ENDWALL, AND CORRUGATED BAND FITS INSIDE ENDWALL. DIMPLED BAND MAY BE USED WITH HELICALLY CORRUGATED PIPE.

FOR CIRCUMFERENTIALLY CORRUGATED PIPE USE ENDWALL CONNECTION DETAILS 1, 2, 3 OR 5 AS APPLICABLE.

FOR HELICALLY CORRUGATED PIPE USE ENDWALL CONNECTION DETAILS 1, 2 OR 5.

FOR HELICALLY CORRUGATED PIPES WITH TWO CIRCUMFERENTIAL CORRUGATIONS AT EACH END USE ENDWALL CONNECTION DETAILS 1, 2 OR 3.

CONNECTION DETAILS

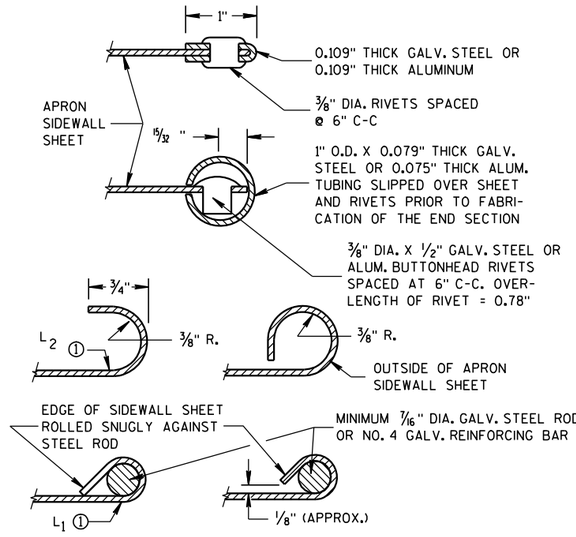

SECTION A-A

GENERAL NOTES

DETAILS OF CONSTRUCTION, MATERIALS AND WORKMANSHIP NOT SHOWN ON THIS DRAWING SHALL CONFORM TO THE PERTINENT REQUIREMENTS OF THE STANDARD SPECIFICATIONS AND THE APPLICABLE SPECIAL PROVISIONS.

CONCRETE CULVERT ENDWALLS MAY NOT BE USED WITH GALVANIZED STEEL OR ALUMINUM CULVERT PIPE OR VISE VERSA. GALVANIZED STEEL OR ALUMINUM ENDWALLS SHALL NORMALLY BE INSTALLED ON CULVERT PIPE OF THE SAME METAL.

ALL THREE PIECE STEEL APRON ENDWALLS FOR 60" DIAMETER PIPE AND LARGER SHALL HAVE 0.109" SIDES AND 0.138" CENTER PANELS. ALL THREE PIECE ALUMINUM APRON ENDWALLS FOR 60" DIAMETER PIPE AND LARGER SHALL HAVE 0.105" SIDES AND 0.134" CENTER PANELS. THE WIDTH OF CENTER PANELS SHALL BE GREATER THAN 20 PERCENT OF THE PIPE PERIMETER.

LAP SEAMS SHALL BE TIGHTLY JOINED BY GALVANIZED RIVETS OR BOLTS FOR STEEL UNITS AND ALUMINUM RIVETS AND BOLTS FOR ALUMINUM UNITS. FOR THE 60" THROUGH 96" DIAMETER APRON ENDWALL SIZES, THE REINFORCED EDGES AND CENTER PANEL SEAMS SHALL BE FURTHER REINFORCED WITH GALVANIZED STEEL OR ALUMINUM STIFFENER ANGLES. THE ANGLES SHALL BE ATTACHED BY GALVANIZED NUTS AND BOLTS FOR STEEL UNITS AND ALUMINUM NUTS AND BOLTS FOR ALUMINUM UNITS.

WHERE TWO OR MORE PIPES WITH APRON ENDWALLS ARE LAID ADJACENT TO EACH OTHER, THEY SHALL BE SEPARATED BY A DISTANCE SUFFICIENT TO PROVIDE A MINIMUM CLEARANCE OF 6 INCHES BETWEEN APRON ENDWALLS.

① FOR PIPE SIZES UP TO 60" DIAMETER, A 180° ROLLED EDGE MAY BE USED INSTEAD OF STEEL ROD REINFORCEMENT. SEE SECTION A-A.

APRON ENDWALLS FOR CULVERT PIPE

STATE OF WISCONSIN
DEPARTMENT OF TRANSPORTATION

APPROVED
11/30/94 — DATE
/S/ Rory L. Rhinesmith — CHIEF ROADWAY DEVELOPMENT ENGINEER
FHWA

6
S.D.D. 8 F 1-11

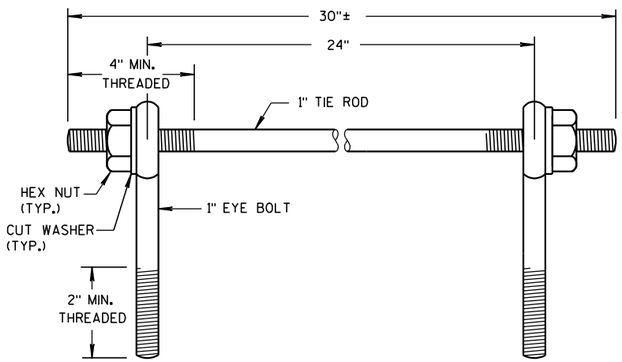

EYE BOLTS AND TIE ROD

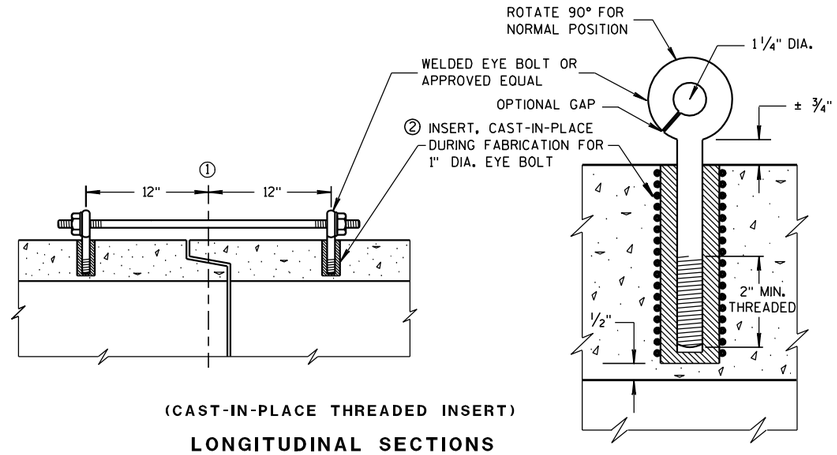

(CAST-IN-PLACE THREADED INSERT)

LONGITUDINAL SECTIONS

EYE BOLT AND TIE ROD ASSEMBLY (ALTERNATE NO. 1)

GENERAL NOTES

DETAILS OF CONSTRUCTION, MATERIALS, AND WORKMANSHIP NOT SHOWN ON THIS DRAWING SHALL CONFORM TO THE PERTINENT REQUIREMENTS OF THE STANDARD SPECIFICATIONS AND APPLICABLE SPECIAL PROVISIONS.

CONCRETE CULVERT AND STORM SEWER PIPE SHALL BE TIED TOGETHER IN THE MANNER ILLUSTRATED BY THIS DETAIL AT LOCATIONS DESIGNATED IN THE STANDARD SPECIFICATIONS AND THE PLAN. THE CONTRACTOR MAY USE EITHER ALTERNATE 1, 2 OR 3 FOR DRAINAGE STRUCTURES. ONLY ALTERNATE 1 AND 3 MAY BE USED FOR CATTLE PASSES, UNLESS OTHERWISE STATED IN THE CONTRACT. THE MATERIALS, FABRICATION AND WORK NECESSARY TO TIE THE PIPE BY THIS DETAIL WILL BE CONSIDERED INCIDENTAL TO THE PIPE AND APRON ENDWALLS IF REQUIRED.

DETAILED DRAWINGS FOR PROPOSED ALTERNATE DESIGNS FOR JOINT TIES SHALL BE SUBMITTED TO THE ENGINEER FOR APPROVAL.

JOINT TIES TO BE HOT-DIP GALVANIZED PER ASTM A 153.

① ℄ OF TONGUE AND GROOVE OR BELL AND SPIGOT JOINTS.

② THE INSIDE OF THE THREADED INSERTS SHALL BE CLEAN TO ALLOW THE INSERTION OF THREADED EYE BOLTS.

③ HOLES SHALL BE CAST-IN-PLACE OR DRILLED 12 INCHES FROM ℄ OF TONGUE AND GROOVE.

④ BOLT PROJECTION INSIDE OF PIPE SHALL NOT EXCEED 2 INCHES.

⑤ OPENING TO BE ROD DIAMETER PLUS 1 INCH.

⑥ LENGTH ADEQUATE TO EXTEND TO WITHIN 1/2 INCH OF THE INNER SURFACE OF THE PIPE.

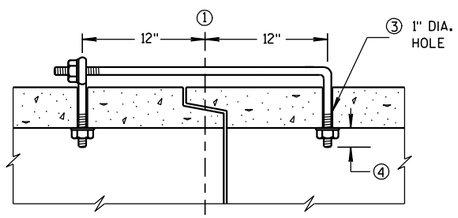

(TONGUE & GROOVE PIPE)

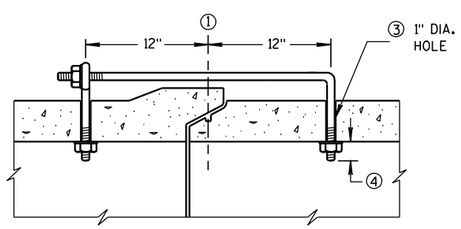

(MODIFIED BELL PIPE)

LONGITUDINAL SECTION

EYE BOLT DIMENSION TABLE

PIPE SIZE	L = LENGTH	
	TONGUE & GROOVE PIPE	MODIFIED BELL PIPE
18" TO 24"	4 1/2"	6 1/4"
30"	5"	7"
36"	5 1/2"	7"
42"	6"	
48"	6 1/2"	
60"	7 1/2"	
66"	8"	

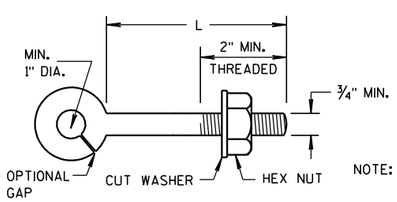

EYE BOLT

NOTE:

NOTE: TWO EYE BOLTS MAY BE USED WITH A 30" LONG THREADED ROD IN LIEU OF THE 90° BENT TIE ROD.

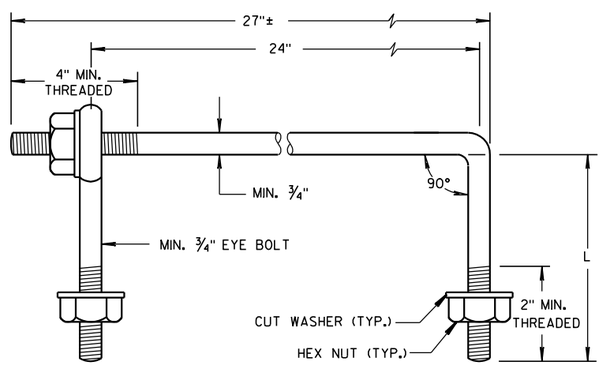

EYE BOLT AND TIE ROD

(JOINT TIES FOR 18" TO 66" DIA. CONCRETE PIPE)

EYE BOLT AND TIE ROD ASSEMBLY (ALTERNATE NO. 2)

ADJUSTABLE TIE ROD TABLE

PIPE DIAMETER	TIE ROD DIAMETER	D	L_1	N
12-60	5/8	5/8	5	1/2
66-84	3/4	3/4	5	1/2
90-108	1	1	7	1 7/16

DIMENSIONS SHOWN ARE IN INCHES

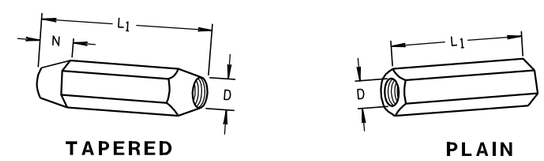

TAPERED PLAIN

RIGHT AND LEFT THREADS

SLEEVE NUTS

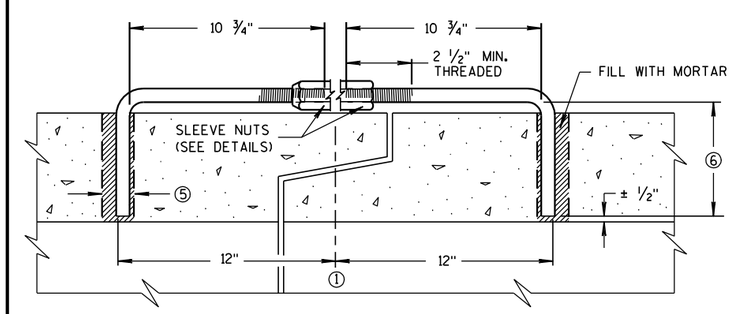

LONGITUDINAL SECTION

(JOINT TIES FOR 12" TO 108" DIA. CONCRETE PIPE)

ADJUSTABLE TIE ROD (ALTERNATE NO. 3)

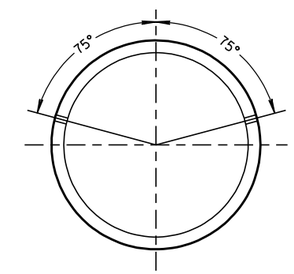

PLACEMENT OF (2) CAST-IN-PLACE INSERTS OR HOLES DURING FABRICATION FOR PIPE SECTIONS REQUIRING TIE RODS

TRANSVERSE SECTION

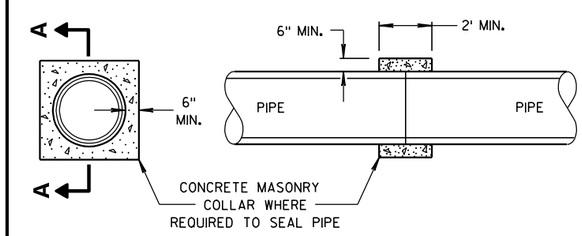

SECTION A-A

CONCRETE COLLAR DETAIL

JOINT TIES FOR CONCRETE PIPE AND CONCRETE COLLAR DETAIL

STATE OF WISCONSIN
DEPARTMENT OF TRANSPORTATION

APPROVED
6/5/2012 /S/ Jerry H. Zogg
DATE ROADWAY STANDARDS DEVELOPMENT ENGINEER
FHWA

6

6

S.D.D. 8 F 4-7

S.D.D. 8 F 4-7

GENERAL NOTES

DETAILS OF CONSTRUCTION, MATERIALS AND WORKMANSHIP NOT SHOWN ON THIS DRAWING SHALL CONFORM TO THE STANDARD SPECIFICATIONS AND THE APPLICABLE SPECIAL PROVISIONS.

THE SHAPED SUBGRADE WITH GRANULAR FOUNDATION IS AN EQUAL ALTERNATE TO THE GRANULAR FOUNDATION EXCEPT WHERE ROCK IS ENCOUNTERED.

① WHERE ROCK, HARD PAN OR FRAGMENTED MATERIAL IS ENCOUNTERED, THE TRENCH SHALL BE EXCAVATED BELOW THE BOTTOM OF THE PIPE AN AMOUNT EQUAL TO ½ INCH PER FOOT OF PROPOSED EMBANKMENT ABOVE THE TOP OF THE PIPE, BUT NOT LESS THAN 6 INCHES.

② TRENCH SHALL BE BACKFILLED AS REQUIRED BY STANDARD SPECIFICATIONS; SECTION 520 FOR PIPE CULVERTS AND SECTION 607 FOR STORM SEWERS.

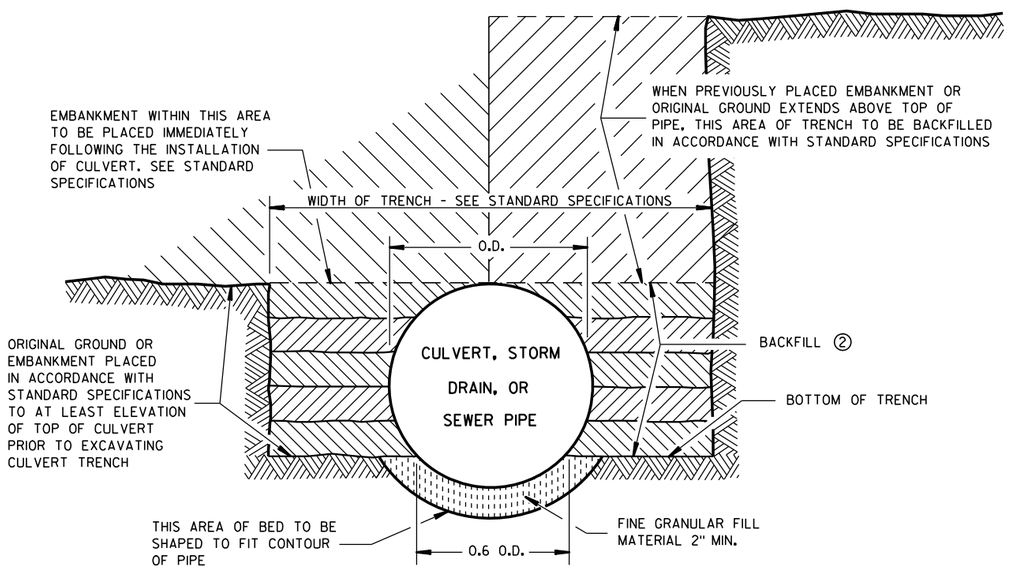

SHAPED SUBGRADE WITH GRANULAR FOUNDATION

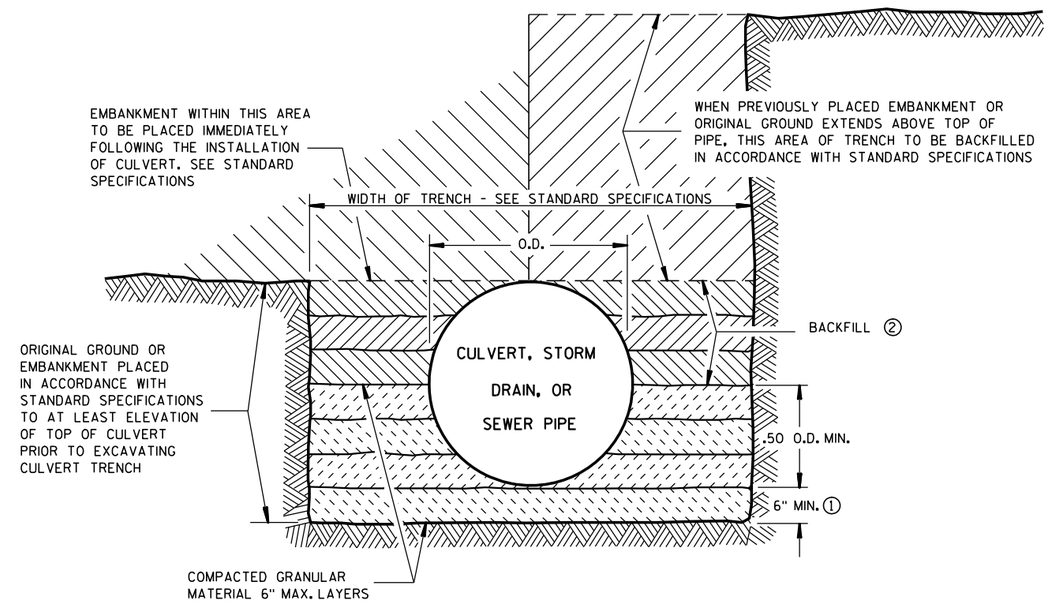

GRANULAR FOUNDATION

CLASS "B" BEDDING

CLASS "B" BEDDING FOR CULVERT PIPE OR STORM SEWER	
STATE OF WISCONSIN DEPARTMENT OF TRANSPORTATION	
APPROVED	
4/7/83 DATE	/S/ D. L. Str--- STATE DESIGN ENGINE 301 HWYS
FHWA	

6

S.D.D. 8 F 5-1

6

S.D.D. 8 F 5-1

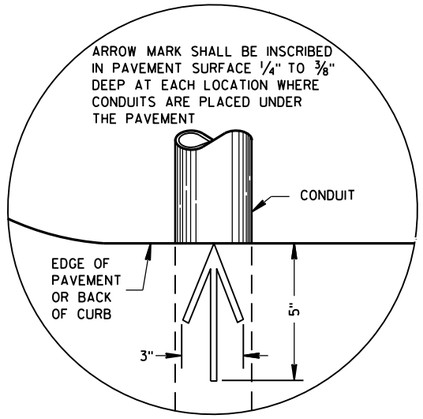

PLAN VIEW

ARROW MARK

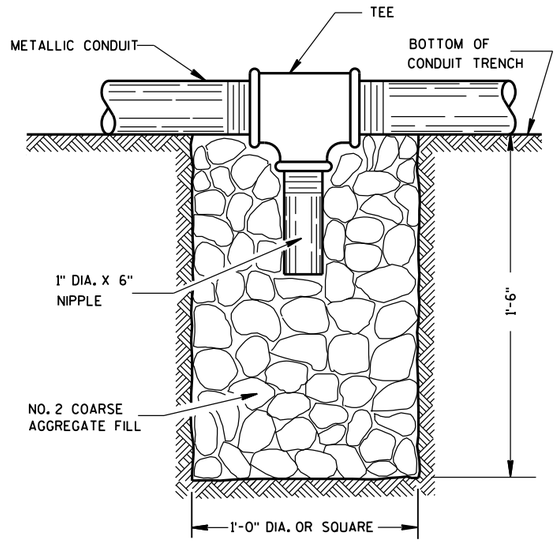

NOTE: INSTALL AT LOCATIONS WHERE METALLIC CONDUITS CANNOT BE PITCHED TO DRAIN INTO A PULL BOX.

DRAIN SUMP FOR METALLIC CONDUIT

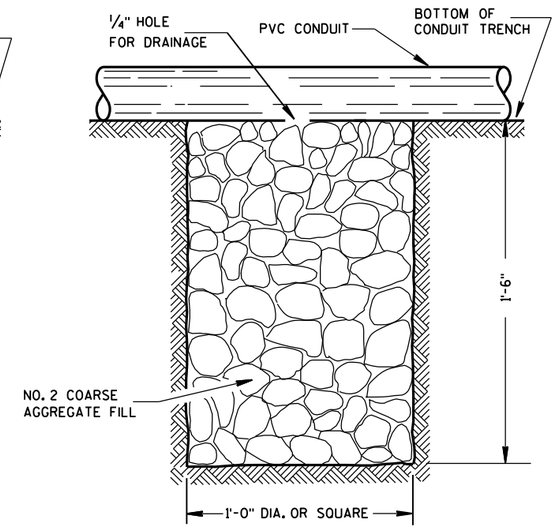

NOTE: INSTALL AT LOCATIONS WHERE PVC CONDUITS CANNOT BE PITCHED TO DRAIN INTO A PULL BOX.

DRAIN SUMP FOR PVC CONDUIT

GENERAL NOTES

DETAILS OF CONSTRUCTION, MATERIALS AND WORKMANSHIP NOT SHOWN ON THIS DRAWING SHALL CONFORM TO THE PERTINENT REQUIREMENTS OF THE CONTRACT.

METALLIC (STANDARD SPECIFICATION 652.2.2) OR NONMETALLIC (STANDARD SPECIFICATION 652.2.3) CONDUIT SHALL BE FURNISHED AND PLACED AS SHOWN.

DEPTH OF CONDUIT INSTALLED BELOW THE TRAVELED WAY SHALL BE 24 INCHES MINIMUM AND 36 INCHES MAXIMUM.

DEPTH OF CONDUIT INSTALLED THAT IS NOT BELOW THE TRAVELED WAY SHALL BE 18 INCHES MINIMUM AND 36 INCHES MAXIMUM.

ANY EXCEPTION TO THE MAXIMUM DEPTH SHALL BE ONLY WITH THE WRITTEN APPROVAL OF THE ENGINEER.

THE TRENCH SHALL NOT BE BACKFILLED PRIOR TO INSPECTION OF THE CONDUIT.

ALL METALLIC CONDUIT RACEWAY ENDS SHALL BE REAMED AND THREADED.

ALL METALLIC CONDUIT IN WHICH WIRE OR CABLE IS TO BE INSTALLED SHALL BE BUSHED WITH APPROVED THREADED BUSHINGS BEFORE INSTALLATION OF THE WIRE OR CABLE.

ALL METALLIC CONDUITS IN WHICH WIRE OR CABLE IS NOT TO BE INSTALLED SHALL BE CAPPED WITH THREADED PROTECTIVE CAPS, AS APPROVED BY THE ENGINEER.

ALL NONMETALLIC CONDUIT SHALL BE CAPPED OR PLUGGED IMMEDIATELY AFTER INSTALLATION AND SHALL REMAIN CAPPED OR PLUGGED UNTIL WIRE/CABLES ARE INSTALLED.

NONMETALLIC CONDUITS IN WHICH WIRE OR CABLE IS NOT BEING INSTALLED SHALL REMAIN CAPPED OR PLUGGED.

BENDING OF PVC ELECTRICAL CONDUIT SHALL BE ACCOMPLISHED BY USING A BLANKET OR EMERSION TYPE TANK DESIGNED FOR THE PURPOSE OF BENDING PVC ELECTRICAL CONDUIT.

ALL CUT ENDS SHALL BE TRIMMED INSIDE AND OUTSIDE TO REMOVE ALL ROUGH EDGES ON NONMETALLIC CONDUIT. (SEE NEC 347.5)

WHEN REQUIRED TO CONNECT NONMETALLIC CONDUIT TO METALLIC CONDUIT, ONLY U.L. LISTED ADAPTER FITTINGS SHALL BE USED.

PRIOR TO CONDUIT ACCEPTANCE, CONDUIT CAPS OR PLUGS SHALL BE REMOVED, AND THE CAPS, PLUGS AND CONDUIT ENDS SHALL BE THOROUGHLY CLEANED AND THEN THE CAPS OR PLUGS REINSTALLED TO ENSURE THAT THE CAPS OR PLUGS CAN BE EASILY REMOVED IN THE FUTURE.

ALL CONDUIT BEING FURNISHED AND INSTALLED SHALL HAVE THE U.L. LABEL FIRMLY ATTACHED.

CONDUIT RUNS SHALL BE THE SAME SIZE OF CONDUIT FROM ONE END TO THE OTHER (FROM PULL BOX TO PULL BOX-OR-JUNCTION BOX TO JUNCTION BOX-OR-BASE TO BASE, ETC.).

TRACER WIRE SHALL BE INSTALLED AS STATED IN THE STANDARD SPECIFICATION, ITEM 652.3.1.1.

ALL CONDUIT RUNS SHALL BE STRAIGHT (WITHOUT BENDS) FROM PULL BOX TO PULL BOX, PULL BOX TO BASE AND BASE TO BASE AS SHOWN ON THE PLANS.

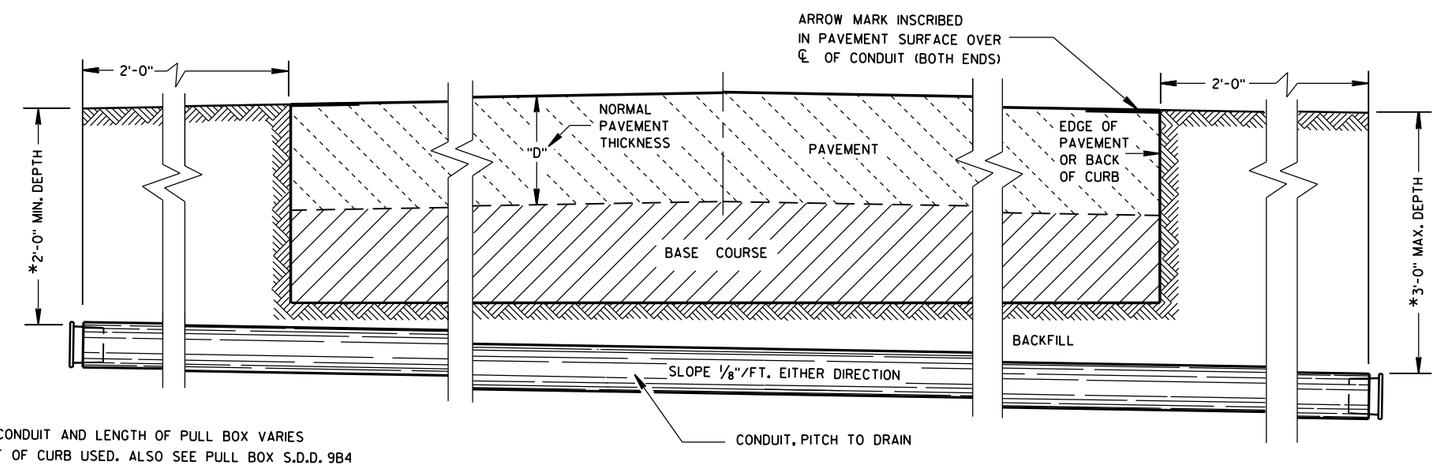

*DEPTH OF CONDUIT AND LENGTH OF PULL BOX VARIES WITH HEIGHT OF CURB USED. ALSO SEE PULL BOX S.D.D. 9B4

SIDE ELEVATION

DETAIL FOR CONDUIT UNDER PAVED HIGHWAYS

6

6

S.D.D. 9 B 2-9

S.D.D. 9 B 2-9

CONDUIT

STATE OF WISCONSIN
DEPARTMENT OF TRANSPORTATION

APPROVED
June, 2015 — DATE
/S/ Ahmet Demirbilek — STATE ELECTRICAL
FHWA

TABLE OF NOMINAL DIMENSIONS AND WEIGHTS

DIMENSION IN INCHES		CORRUGATED STEEL PIPE								
PIPE DIAMETER (INSIDE)	A	12	12	12	18	18	18	24	24	24
PIPE LENGTH **	B	24	30	36	24	30	36	36	42	48
WALL THICKNESS	C	0.064	0.064	0.064	0.064	0.064	0.064	0.064	0.064	0.064
COVER	D	10 1/4	10 1/4	10 1/4	16 1/4	16 1/4	16 1/4	22 1/4	22 1/4	22 1/4
FRAME	E	14 1/2	14 1/2	14 1/2	20 1/2	20 1/2	20 1/2	26 1/2	26 1/2	26 1/2
FRAME	F	8 1/2	8 1/2	8 1/2	14 1/2	14 1/2	14 1/2	20 1/2	20 1/2	20 1/2
FRAME	G	11 1/2	11 1/2	11 1/2	17 1/2	17 1/2	17 1/2	23 1/2	23 1/2	23 1/2
WEIGHT IN POUNDS *										
FRAME AND COVER		60	60	60	110	110	110	155	155	155

* THE ACTUAL WEIGHT OF THE MANHOLE FRAME AND COVER MAY VARY WITHIN 5 PERCENT PLUS OR MINUS OF THE WEIGHTS SHOWN.

** NORMALLY USED LENGTHS. THE PROJECT ENGINEER SHALL DETERMINE IF PIPE LENGTHS, OTHER THAN THOSE SPECIFIED, SHALL BE USED, TO A MAXIMUM OF 48" (CONTINUOUS LENGTH, NON-SPLICED). THE ADDITIONAL LENGTH SHALL BE INCIDENTAL TO THE PULL BOX BID PRICE.

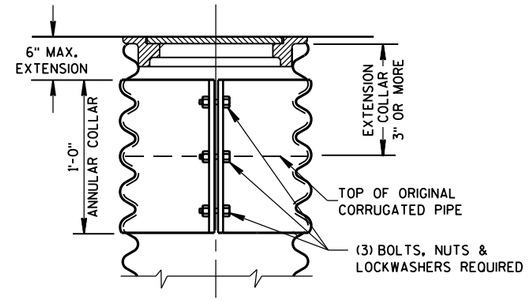

CORRUGATED PIPE EXTENDER

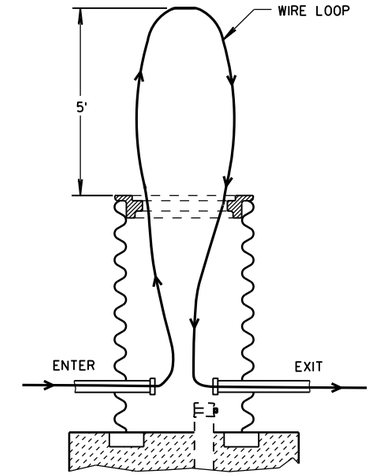

MEASUREMENT DETAIL FOR WIRE/CABLE IN THE PULL BOX

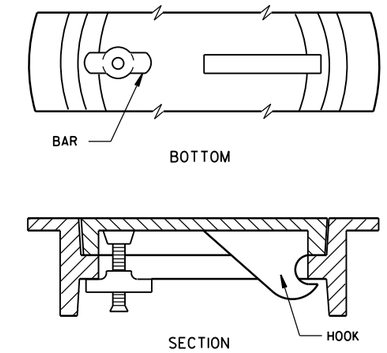

ALTERNATE COVER (LOCKING)

TIGHTENING BAR TYPE

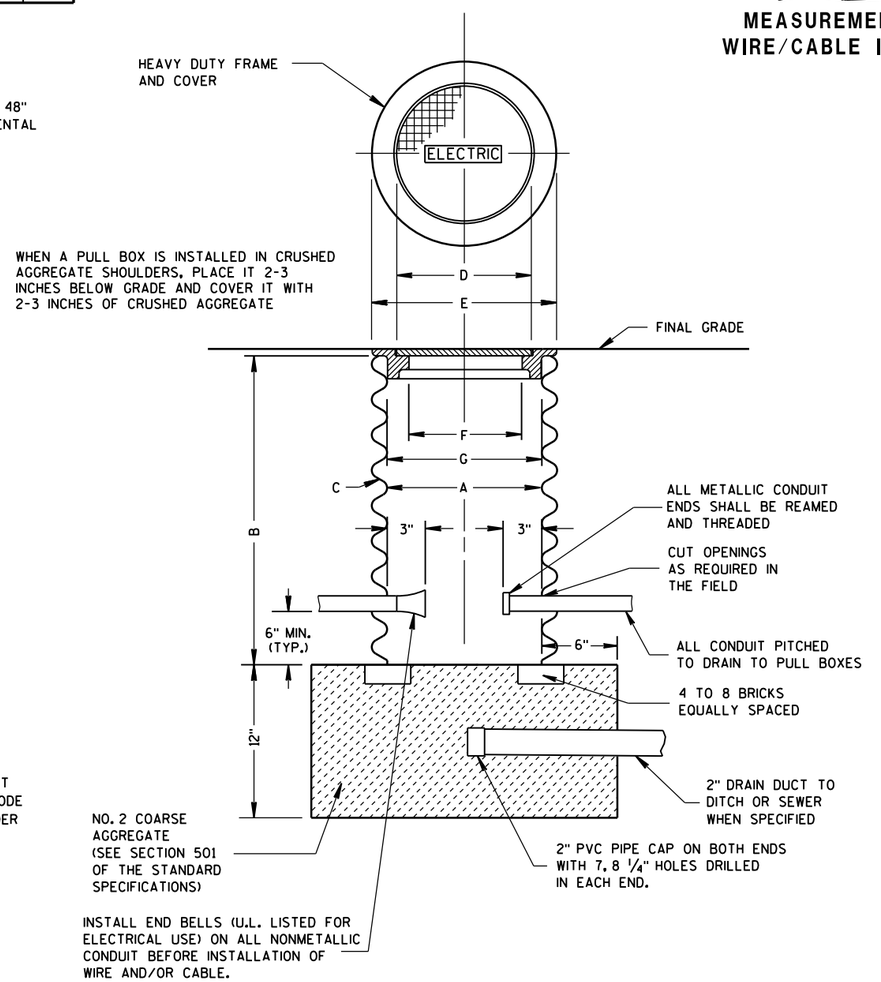

PULL BOX

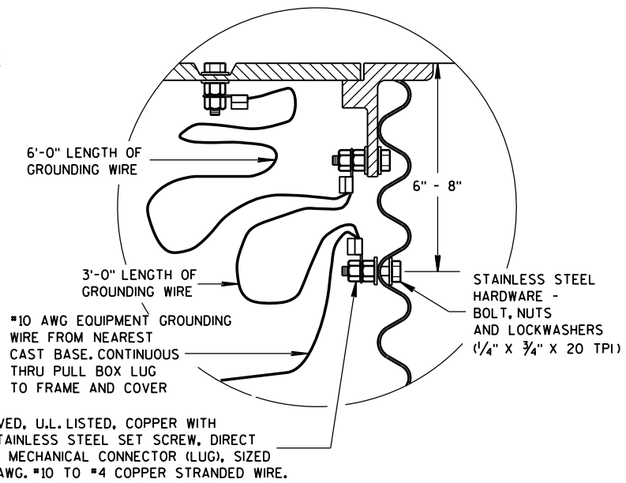

EQUIPMENT GROUNDING LUG AND LOCATION IN STEEL PULL BOXES

GENERAL NOTES

DETAILS OF CONSTRUCTION, MATERIALS AND WORKMANSHIP NOT SHOWN ON THIS DRAWING SHALL CONFORM TO THE PERTINENT REQUIREMENTS OF THE CONTRACT.

ALL FRAMES AND COVERS SHALL BE HEAVY DUTY TYPE, SUITABLE FOR VEHICULAR TRAFFIC LOADS.

PULL BOXES LOCATED IN THE ROADWAYS SHALL HAVE LOCKING COVERS.

ENTRANCE HOLES INTO PULL BOXES SHALL BE CUT WITH A CIRCULAR HOLE SAW OR HYDRAULIC CONDUIT PUNCH. HOLE SIZE SHALL BE THE OUTSIDE DIAMETER OF THE CONDUIT THAT IS TO FIT IN THE OPENING PLUS NO MORE THAN 1/4".

THE CONTRACTOR SHALL NOT INSTALL WIRE IN ANY PULL BOX UNTIL ITS INSTALLATION HAS BEEN INSPECTED AND ACCEPTED BY THE ENGINEER.

GROUNDING LUGS (MECHANICAL CONNECTORS) SHALL BE U.L. LISTED AND APPROVED FOR USE WITH COPPER WIRE.

ALL METALLIC CONDUIT IN WHICH WIRE AND/OR CABLE IS TO BE INSTALLED, SHALL BE BUSHED BEFORE INSTALLATION OF THE WIRE AND/OR CABLE.

WHEN PULL BOXES ARE INSTALLED FOR FUTURE USE, DO NOT INSTALL THE EQUIPMENT GROUNDING LUG. THE EQUIPMENT GROUNDING LUG, THE EQUIPMENT GROUNDING ELECTRODE AND THE EQUIPMENT GROUNDING CONDUCTOR SHALL BE REQUIRED AND INSTALLED UNDER A FUTURE WIRING CONTRACT.

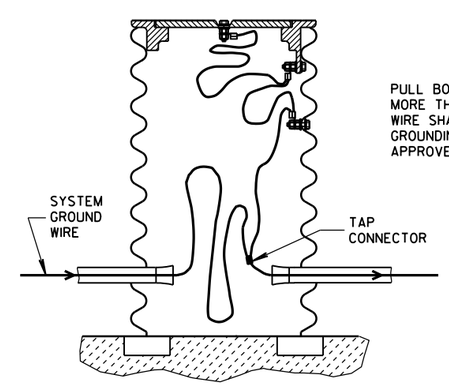

EQUIPMENT GROUNDING LUG AND LOCATION IN STEEL PULL BOXES

PULL BOX

STATE OF WISCONSIN
DEPARTMENT OF TRANSPORTATION

APPROVED
Sept. 2014 — DATE
/S/ Ahmet Demirbilek — STATE ELECTRICAL
FHWA

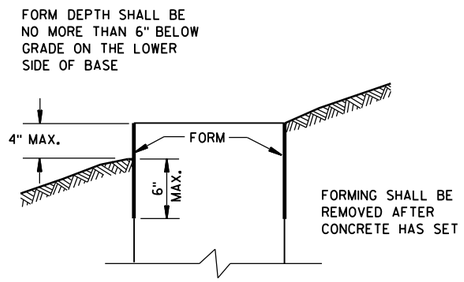

FORMING DETAIL

QUANTITY REQUIREMENTS	CONCRETE BASE TYPE		
	1	2	5 & 6
APPROX. CUBIC YARDS OF CONCRETE	0.40	0.57	0.40
LBS. OF HOOP BAR STEEL	NONE	23	16
LBS. OF VERTICAL BAR STEEL	NONE	60	18

GENERAL NOTES

DETAILS OF CONSTRUCTION, MATERIALS AND WORKMANSHIP NOT SHOWN ON THIS DRAWING SHALL CONFORM TO THE PERTINENT REQUIREMENTS OF THE CONTRACT.

BASES SHALL BE EXCAVATED BY USE OF A CIRCULAR AUGER.

TOP SURFACES OF CONCRETE BASES SHALL BE TROWEL FINISHED SMOOTH AND LEVEL.

CONDUIT SIZES AND LOCATIONS SHALL BE AS SHOWN ON THE PLANS.

THE FINAL OR TERMINATING CONCRETE BASE IN A CONDUIT RUN SHALL HAVE A 6" EXIT STUB INSTALLED FOR FUTURE CABLING USE. THE EXIT STUB SHALL BE SIZED AS USED THROUGHOUT THE CONDUIT RUN AS SHOWN AT THE ENTRANCE OF THE BASE.

MINIMUM BENDING RADIUS OF CONDUIT IS EQUAL TO 6 X THE DIAMETER.

CONDUIT HEIGHT ABOVE CONCRETE BASES SHALL BE 1 INCH. ALL METALLIC CONDUIT ENDS SHALL BE REAMED AND THREADED.

ALL CONDUIT ENDS AT THE TOP OF CONCRETE BASES SHALL BE CAPPED IF METALLIC OR PLUGGED IF NONMETALLIC IMMEDIATELY AFTER PLACEMENT AND BEFORE CONCRETE IS POURED. CONDUITS IN WHICH WIRE OR CABLE IS NOT INSTALLED SHALL REMAIN CAPPED OR PLUGGED.

GENERAL NOTES (CONTINUED)

BELL ENDS SHALL BE INSTALLED ON ALL PVC CONDUIT EXPOSED AT THE TOP OF CONCRETE BASES BEFORE INSTALLATION OF CABLE OR WIRE.

ENDS OF CONDUIT INSTALLED BELOW GRADE FOR FUTURE USE SHALL BE CAPPED IF METALLIC OR PLUGGED IF NONMETALLIC.

WHEN REQUIRED TO CONNECT NONMETALLIC CONDUIT TO METALLIC CONDUIT, ONLY ADAPTER FITTINGS, U.L. LISTED FOR ELECTRICAL USE, SHALL BE USED.

IF A BASE REQUIRES A DEEP FORM BECAUSE OF LOOSE DIRT OR FILL, THE FORM SHALL BE REMOVED BEFORE BACKFILLING AROUND THE BASE. BACKFILL SHALL BE TAMPED TIGHT AGAINST THE BARE CONCRETE BASE IN LAYERS OF 1 FOOT OR LESS.

A NO. 4 AWG, STRANDED COPPER EQUIPMENT GROUNDING CONDUCTOR SHALL BE EXOTHERMICALLY WELDED TO THE EQUIPMENT GROUNDING ELECTRODE (GROUND ROD) FOR TYPE 1, TYPE 2, TYPE 5, AND TYPE 6 BASES.

THE EQUIPMENT GROUNDING CONDUCTOR SHALL BE FURNISHED AND INSTALLED TO ENTER THE BASE OF THE TYPE 2 AND TYPE 5 BASES THROUGH A 1 INCH CONDUIT INSTALLED FOR GROUNDING PURPOSES, LEAVING A 4 FOOT COIL OF WIRE ABOVE THE CONCRETE BASE. THE EQUIPMENT GROUNDING CONDUCTOR SHALL BE NEATLY COILED AND THE COILS TIED TOGETHER.

ANCHOR RODS SHALL BE THREADED 12" IN LENGTH ON EACH END OF THE ROD. ANCHOR RODS SHALL BE MANUFACTURED IN ACCORDANCE WITH SECTION 654.2.1 OF THE STANDARD SPECIFICATIONS.

WASHERS AND LOCK WASHERS ARE REQUIRED ON ALL ANCHOR RODS.

WHEN ANCHOR RODS USING THE ALTERNATE "L" BEND ARE FURNISHED, THE 4" "L" BEND SHALL BE IN ADDITION TO THE SPECIFIED ANCHOR ROD BAR LENGTH. THE "L" BEND END SHALL NOT BE THREADED.

ANCHOR RODS SHALL BE INSTALLED WITH MISALIGNMENTS OF LESS THAN 1:40 FROM VERTICAL.

WELDING OF THE ANCHOR RODS TO THE CAGE IS UNACCEPTABLE. TIE WIRES SHALL BE USED.

BAR STEEL REINFORCEMENT SHALL BE COATED WITH POWDERED EPOXY RESIN IN ACCORDANCE WITH SECTION 505 OF THE STANDARD SPECIFICATIONS (LATEST EDITION).

(1) THE MINIMUM DEPTH OF CONDUIT EXITING THE CONCRETE BASE AND INSTALLED BELOW THE TRAVELED WAY SHALL BE 24 INCHES. THE MINIMUM DEPTH OF CONDUIT EXITING THE CONCRETE BASE THAT IS NOT INSTALLED BELOW THE TRAVELED WAY SHALL BE 18 INCHES. THE MAXIMUM DEPTH OF ALL CONDUIT SHALL BE 36 INCHES EXCEPT WITH WRITTEN APPROVAL BY THE ENGINEER.

(2) (4) 1" DIA. X 3'-6" ANCHOR RODS.

(3) (4) 1" DIA. X 5'-0" ANCHOR RODS.

(4) (6) NO. 6 X 6'-8" BAR STEEL REINFORCEMENT.

(5) (7) NO. 4 X 5'-1" BAR STEEL REINFORCEMENT @ 1'-0" C-C.

(6) (4) 1" DIA. X 3'-6" ANCHOR RODS.

(7) (6) NO.4 X 4'-8" BAR STEEL REINFORCEMENT.

(8) (5) NO. 4 X 5'-1" BAR STEEL REINFORCEMENT @ 1'-0" C-C.

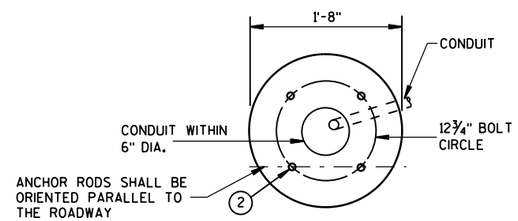

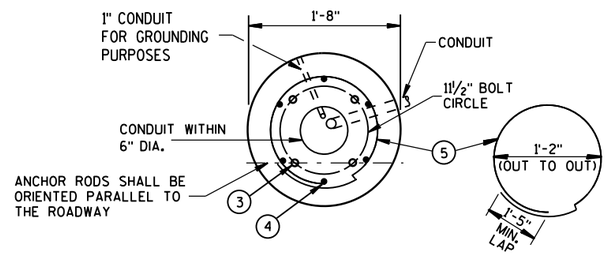

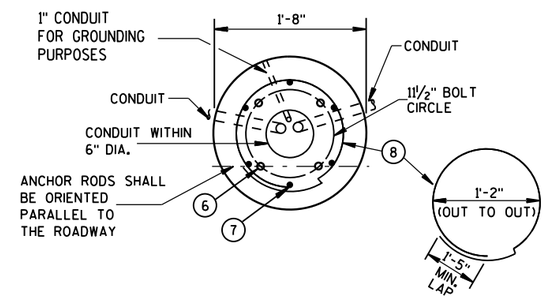

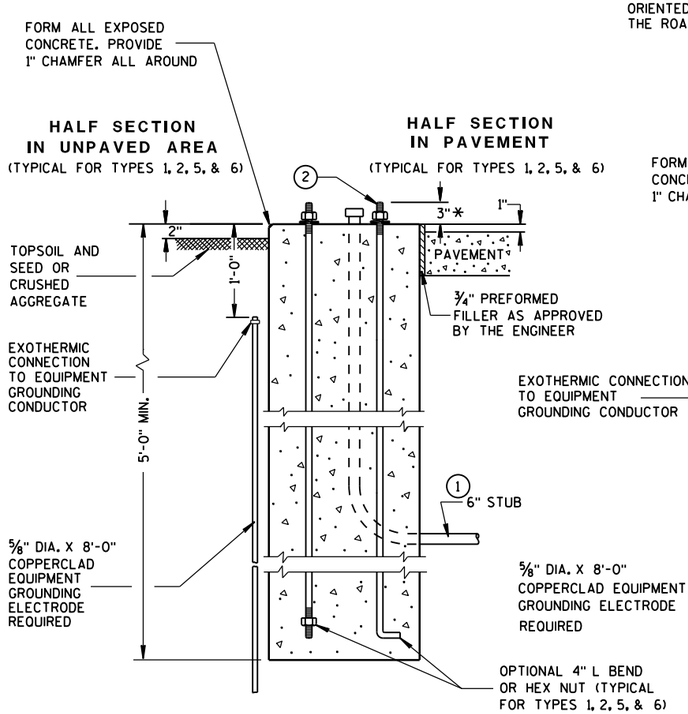

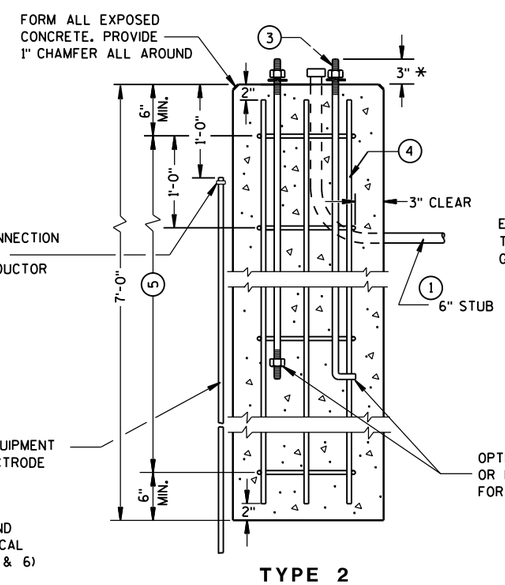

TYPE 2

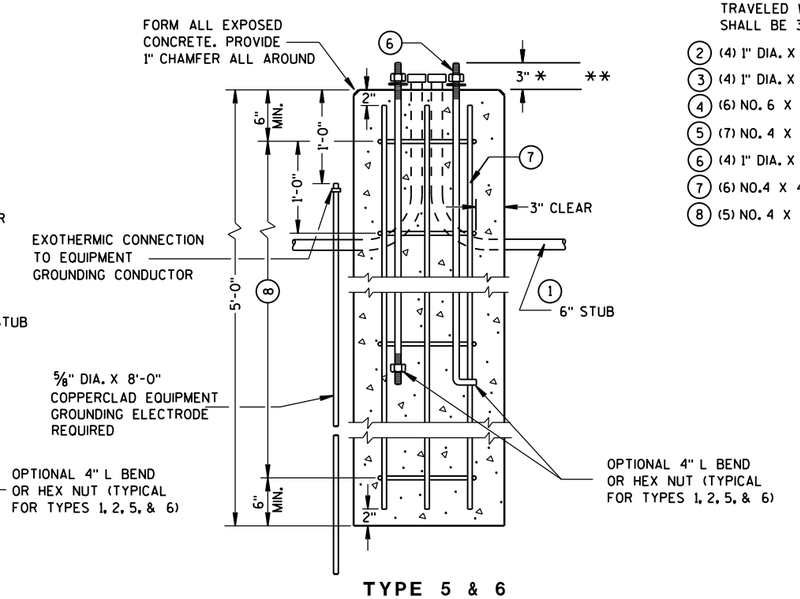

TYPE 5 & 6

CONCRETE BASES

* ANY ANCHOR ROD PROJECTION SHORTER THAN 2¾" OR LONGER THAN 3¼" SHALL REQUIRE THE BASE TO BE REMOVED AND REPLACED AT THE CONTRACTORS EXPENSE.

** FOR NONBREAKAWAY INSTALLATIONS, 4½" ± ANCHOR ROD PROJECTION WITH THE USE OF LEVELING NUTS. RODENT SCREEN REQUIRED.

CONCRETE BASES, TYPES 1, 2, 5, & 6

STATE OF WISCONSIN
DEPARTMENT OF TRANSPORTATION

APPROVED
Sept. 2014 — DATE
/S/ Ahmet Demirbilek — STATE ELECTRICAL 304
FHWA

6

S.D.D. 9 C 2-7

6

S.D.D. 9 C 2-7

GENERAL NOTES

DETAILS OF CONSTRUCTION, MATERIALS AND WORKMANSHIP NOT SHOWN ON THIS DRAWING SHALL CONFORM TO THE PERTINENT REQUIREMENTS OF THE CONTRACT.

FOUR (4) BOLTS SHALL BE FURNISHED WITH EACH TRANSFORMER BASE. BOLTS SHALL BE 1" DIAMETER, 4" IN LENGTH, WITH WASHERS, LOCK WASHERS AND NUTS. BOLTS, NUTS AND WASHERS SHALL BE MANUFACTURED IN ACCORDANCE WITH SECTION 641.2.2 OF THE STANDARD SPECIFICATIONS.

LEVELING SHIMS, IF NEEDED, SHALL BE DESIGNED FOR THE PURPOSE AND USED UNDER CAST BASES WHEN PLUMBING POLES OR STANDARDS DURING INSTALLATION. THE USE OF WASHERS IN LIEU OF PROPER LEVELING SHIMS IS NOT ACCEPTABLE.

SHIM LENGTH SHALL BE LONG ENOUGH TO COMPLETELY COVER THE AREA UNDER THE LENGTH AND WIDTH OF THE BASE MOUNTING FLANGE.

DOUBLE NUTTING IS NOT ACCEPTABLE FOR LEVELING OR MOUNTING PURPOSES.

A NEMA APPROVED, U.L. LISTED, COPPER WITH BRASS OR STAINLESS STEEL SET SCREW, DIRECT BURY RATED, MECHANICAL CONNECTOR (LUG), SIZED TO ACCEPT AWG. #10 TO #4 COPPER STRANDED WIRE SHALL BE FURNISHED AND INSTALLED IN THE PEDESTAL AND TRANSFORMER BASES.

THE MECHANICAL CONNECTOR SHALL BE INSTALLED USING A 1/4" - 20 (TPI) STAINLESS STEEL HEX HEAD BOLT OF SUFFICIENT LENGTH TO FIRMLY ATTACH THE LUG TO THE BASE.

SHOULD THE MANNER OF ATTACHMENT OF THE LUG REQUIRE WASHERS, HEX NUTS, LOCK WASHER - THEY SHALL BE STAINLESS STEEL AS IS THE BOLT. THE MANNER OF ATTACHMENT SHALL NOT BLOCK ACCESSIBILITY TO WIRE PLACEMENT IN THE CONNECTOR.

PEDESTAL BASE COLLAR THREADING SHALL BE TAPERED AND IN ACCORDANCE WITH NATIONAL PIPE THREADING DIMENSIONS.

BASE COLLAR THREADING SHALL EXTEND INTO THE BASE COLLAR WITH SUFFICIENT DEPTH TO ACCEPT THE INSTALLATION OF TRAFFIC SIGNAL STANDARDS TO A DEPTH OF 1 1/2", THEN TIGHTENING TO A POINT OF BEING IMMOVABLE.

THE ACCESS DOOR SHALL BE OF THE SAME MATERIAL AS THE BASE.

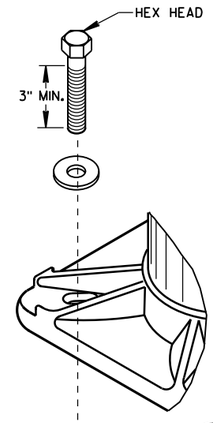

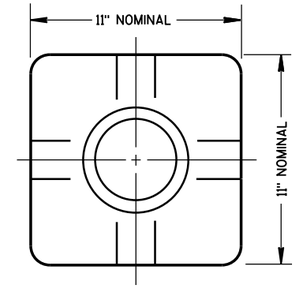

TOP VIEW
(PEDESTAL BASE)

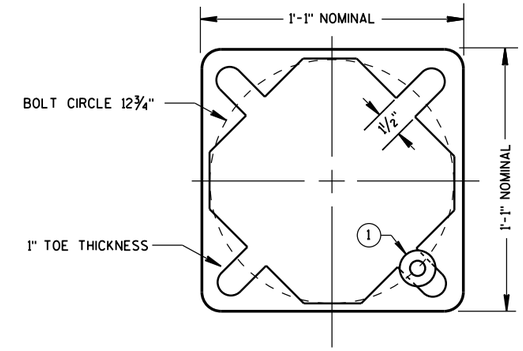

BOTTOM VIEW
(PEDESTAL BASE)

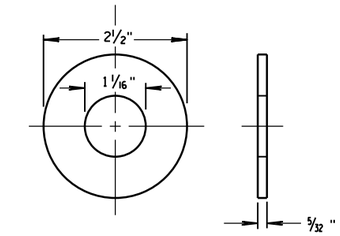

ZINC COATED STEEL WASHER
TO BE PROVIDED BY THE CONTRACTOR

PEDESTAL BASE WASHER (1)

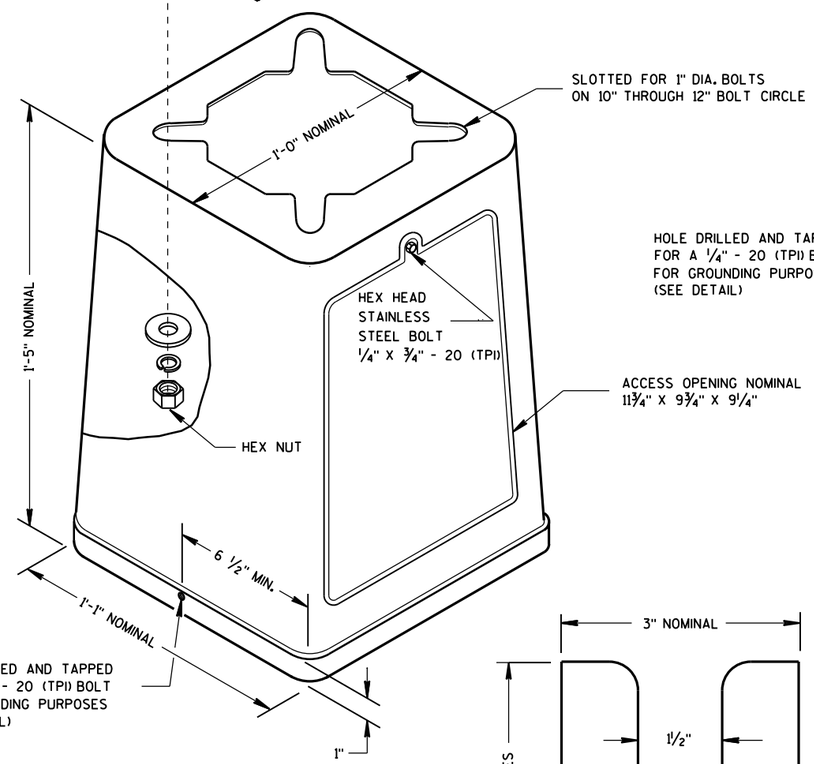

ISOMETRIC VIEW

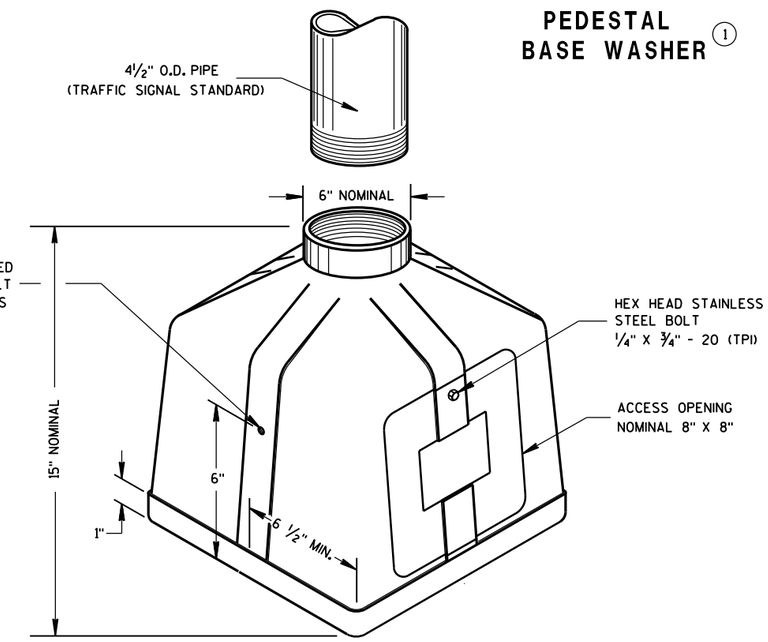

ISOMETRIC VIEW
PEDESTAL BASE

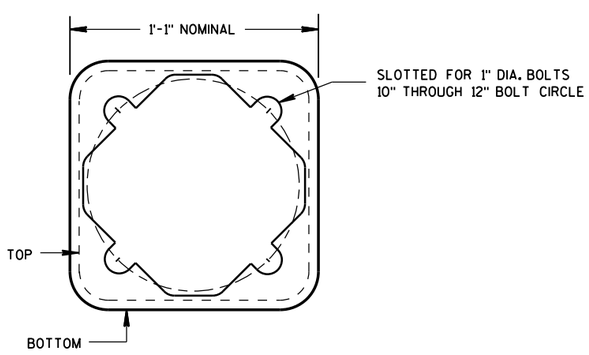

BOTTOM VIEW
(TRANSFORMER BASE)

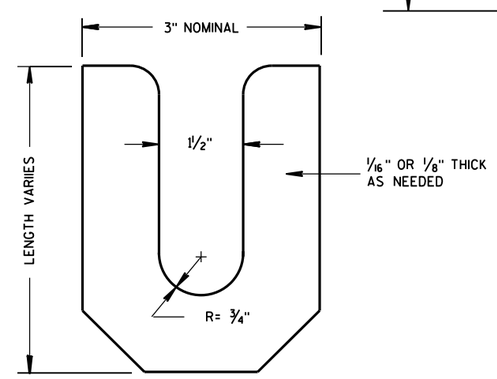

LEVELING SHIM

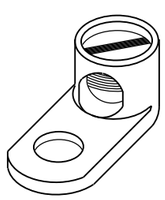

TYPICAL MECHANICAL CONNECTOR LUG

TO BE FURNISHED WITH EACH BASE

TRANSFORMER BASE

INTENDED FOR USE WITH TYPE 2, 3, 4, 5 & 6 POLES

TRANSFORMER/PEDESTAL BASES	
STATE OF WISCONSIN DEPARTMENT OF TRANSPORTATION	
APPROVED Sept. 2014 DATE	/S/ Ahmet Demirbilek STATE ELECTRICAL
FHWA	

CONTROL CABINET BASE TYPE	DIMENSIONS				C.Y. CONCRETE (APPROX.)
	H	I	J	K	
TYPE 6 - 30" CABINET	34"	60"	10"	17"	.64
TYPE 7 - 38" CABINET	42"	60"	10"	21"	.93
TYPE 8 - 38" CABINET	42"	72"	12"	21"	1.29
TYPE 9 - VARIABLE	54"	72"	14"	27"	1.56
TYPE 10 - POST MOUNT	AS SHOWN				.65 *

* INCLUDES MAINTENANCE PLATFORM.

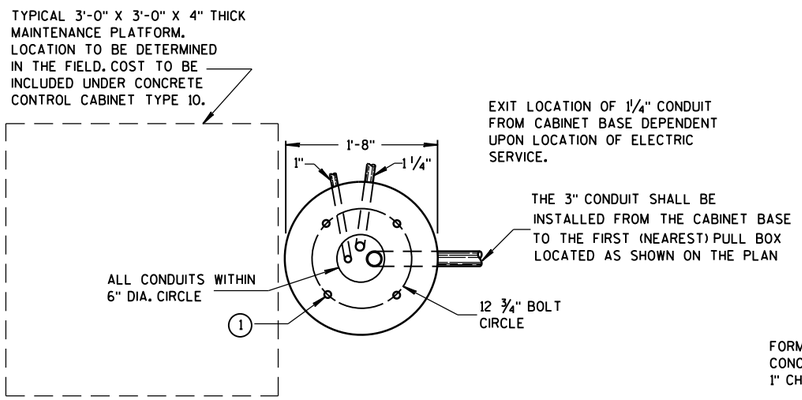

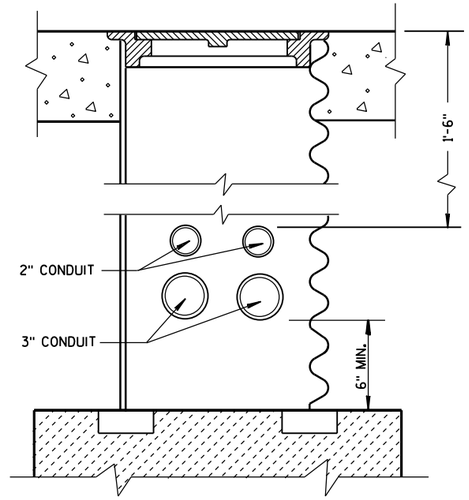

CONDUIT LOCATIONS IN 24" X 36" PULL BOX

(LEADING TO CONTROLLER CABINET BASE TYPE 6, 7, 8 AND 9)

GENERAL NOTES

DETAILS OF CONSTRUCTION, MATERIALS AND WORKMANSHIP NOT SHOWN ON THIS DRAWING SHALL CONFORM TO THE PERTINENT REQUIREMENTS OF THE CONTRACT.

INSTALL FOUR ½ INCH MINIMUM DIAMETER X 4 INCH MINIMUM LENGTH APPROVED CONCRETE MASONRY ANCHORS WITH A PULLOUT STRENGTH OF 9,000 LBS. TO ANCHOR THE CABINET TO TYPE 6, 7, 8, AND 9 BASES. THE ANCHOR STUDS SHALL BE LOCATED AS DIRECTED BY THE ENGINEER TO PROPERLY ANCHOR THE CONTROL CABINET TO THE BASE.

WHEN REQUIRED TO CONNECT NONMETALLIC CONDUIT TO METALLIC CONDUIT, ONLY ADAPTER FITTINGS, U.L. LISTED FOR ELECTRICAL USE, SHALL BE USED.

CONDUIT HEIGHT ABOVE THE CONCRETE BASE SHALL BE 1 INCH.

DEPTH OF CONDUIT INSTALLED BELOW THE TRAVELED WAY SHALL BE 24 INCHES MINIMUM AND 36 INCHES MAXIMUM.

DEPTH OF CONDUIT INSTALLED THAT IS NOT BELOW THE TRAVELED WAY SHALL BE 18 INCHES MINIMUM AND 36 INCHES MAXIMUM.

ANY EXCEPTION TO THE MAXIMUM DEPTH SHALL BE ONLY WITH THE WRITTEN APPROVAL OF THE ENGINEER.

CONTROL CABINET BASE TOP SURFACES SHALL BE TROWEL FINISHED SMOOTH AND LEVEL.

WHEN A TYPE 10 CONTROL CABINET BASE IS USED TO POST MOUNT A CONTROL CABINET, A 36" SQUARE 4" THICK CONCRETE MAINTENANCE PLATFORM SHALL BE REQUIRED ON THE DOOR SIDE OF THE CABINET. THE TOP 1 INCH SHALL BE ABOVE FINISHED GRADE AND BE BROOM FINISHED AND LEVEL.

MAINTENANCE PLATFORMS ARE NOT REQUIRED WHEN THE SURROUNDING AREA IS PAVED.

MINIMUM BENDING RADIUS OF CONDUIT = 6 X THE DIAMETER.

ALL METALLIC CONDUIT ENDS SHALL BE REAMED AND THREADED.

ALL CONDUIT ENDS AT THE TOP OF CONCRETE BASES SHALL BE CAPPED IF METALLIC OR PLUGGED IF NONMETALLIC IMMEDIATELY AFTER PLACEMENT AND BEFORE CONCRETE IS POURED. CONDUITS IN WHICH WIRE OR CABLE IS NOT BEING INSTALLED SHALL REMAIN CAPPED OR PLUGGED.

ALL FOUR (TWO INCH AND THREE INCH) CONDUIT SHALL BE INSTALLED FROM THE CABINET BASE TO THE FIRST (NEAREST PULL BOX LOCATED AS SHOWN ON THE PLANS.

BELL ENDS SHALL BE INSTALLED ON ALL PVC CONDUIT EXPOSED AT THE TOP OF THE CONCRETE BASE BEFORE INSTALLATION OF CABLE OR WIRE.

CONCRETE FORM DEPTH BELOW FINISHED GRADE SHALL BE 6" MAXIMUM. CONCRETE FORMS SHALL BE REMOVED AFTER CONCRETE HAS SET.

WHEN ANCHOR RODS USING THE ALTERNATE L BEND ARE FURNISHED FOR THE TYPE 10 BASE, THE 4" L BEND SHALL BE IN ADDITION TO THE SPECIFIED ANCHOR ROD BAR LENGTH.

THE "L" BEND SHALL NOT BE THREADED.

STRAIGHT ANCHOR RODS SHALL BE THREADED 12" IN LENGTH ON EACH END OF THE ROD.

ANCHOR RODS SHALL BE INSTALLED WITH MISALIGNMENTS OF LESS THAN 1:40 FROM VERTICAL.

(1) FOUR (4) ANCHOR RODS, 1" DIA. X 3'-6".
ANCHOR RODS SHALL BE MANUFACTURED IN ACCORDANCE WITH SECTION 654.2.1 OF THE STANDARD SPECIFICATIONS.

HALF SECTION IN UNPAVED AREA

HALF SECTION IN PAVED AREA

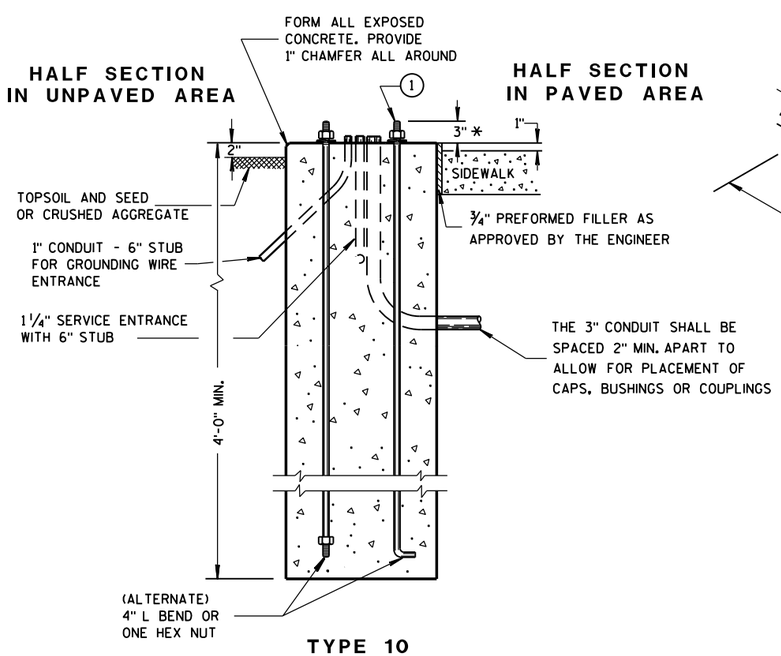

TYPE 10

* ANY ANCHOR ROD PROJECTION SHORTER THAN 2¾" OR LONGER THAN 3¼" SHALL REQUIRE THE BASE TO BE REMOVED AND REPLACED AT THE CONTRACTORS EXPENSE.

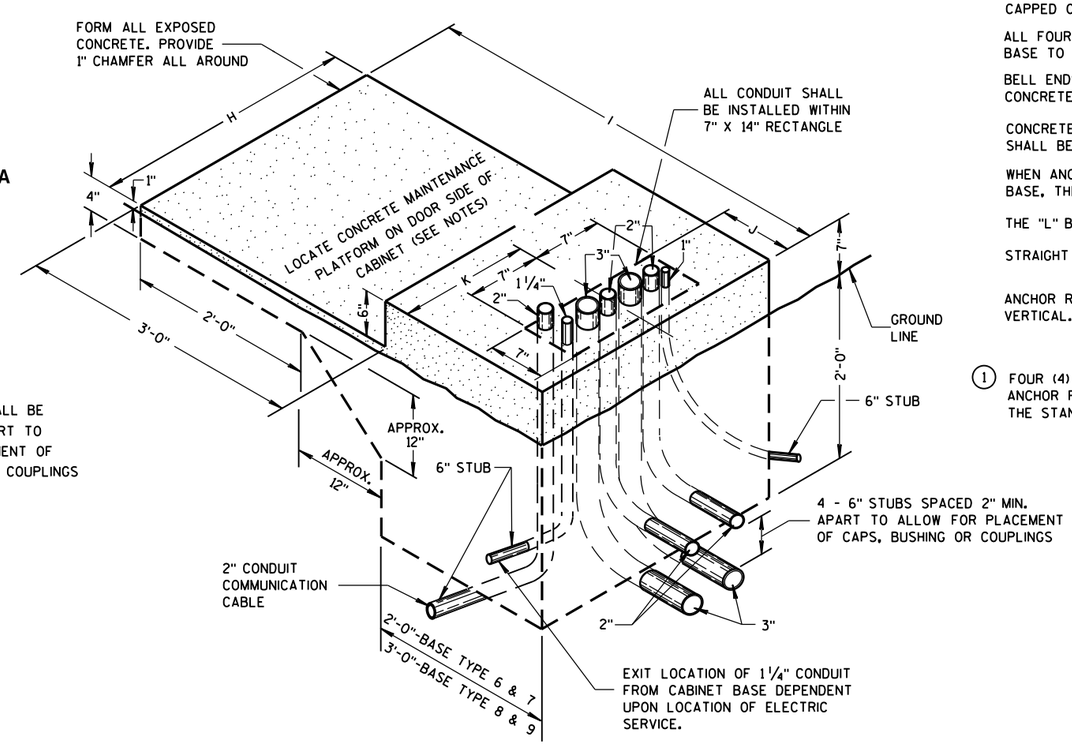

TYPE 6,7,8 AND 9
(ISOMETRIC VIEW)

CONCRETE CONTROL CABINET BASES

CONCRETE CONTROL CABINET BASES

STATE OF WISCONSIN
DEPARTMENT OF TRANSPORTATION

APPROVED
Sept. 2014 — DATE
/S/ Ahmet Demirbilek — STATE ELECTRICAL
FHWA

6

S.D.D. 9 C 5-9

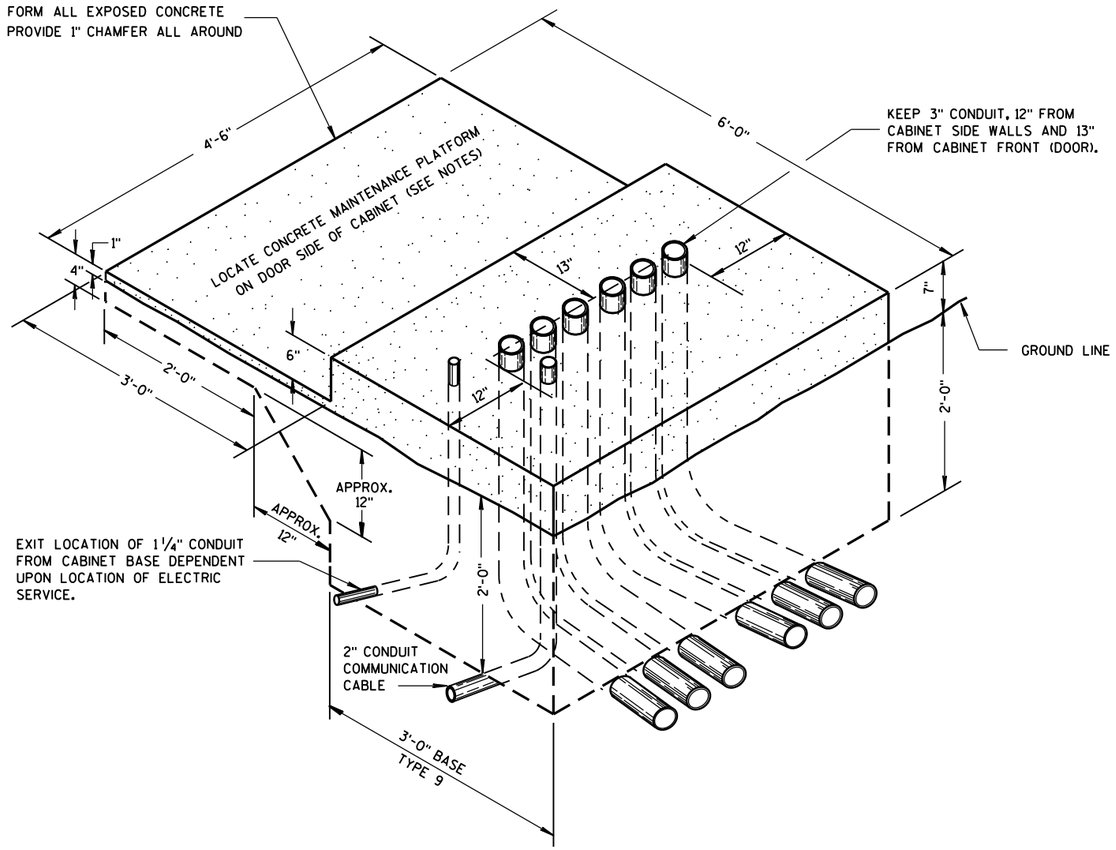

ISOMETRIC VIEW

TYPE 9, SPECIAL

(C.Y. CONCRETE = APPROX. 1.56)

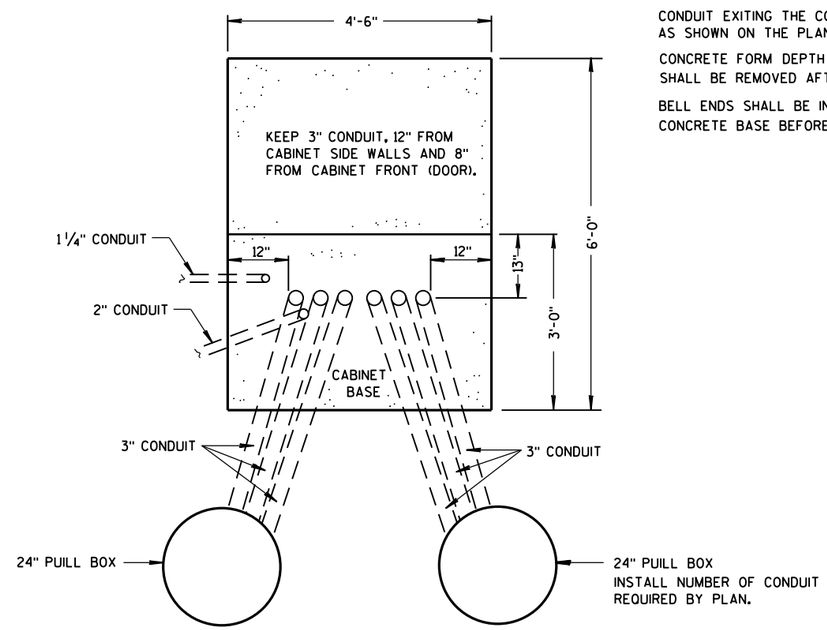

PLAN VIEW

CONCRETE CONTROL CABINET BASE, TYPE 9, SPECIAL

GENERAL NOTES

DETAILS OF CONSTRUCTION, MATERIALS AND WORKMANSHIP NOT SHOWN ON THIS DRAWING SHALL CONFORM TO THE PERTINENT REQUIREMENTS OF THE CONTRACT.

INSTALL FOUR 1/2 INCH MINIMUM DIAMETER X 4 INCH MINIMUM LENGTH STAINLESS STEEL APPROVED CONCRETE MASONRY ANCHORS WITH A PULLOUT STRENGTH OF 9,000 LBS. TO ANCHOR THE CABINET TO TYPE 6, 7, 8, AND 9 BASES. THE ANCHOR STUDS SHALL BE LOCATED AS DIRECTED BY THE ENGINEER TO PROPERLY ANCHOR THE CONTROL CABINET TO THE BASE.

WHEN REQUIRED TO CONNECT NONMETALLIC CONDUIT TO METALLIC CONDUIT, ONLY ADAPTER FITTINGS, U.L. LISTED FOR ELECTRICAL USE, SHALL BE USED.

CONDUIT HEIGHT ABOVE THE CONCRETE BASE SHALL BE 1 INCH.

DEPTH OF CONDUIT INSTALLED BELOW THE TRAVELED WAY SHALL BE 24 INCHES MINIMUM AND 36 INCHES MAXIMUM.

DEPTH OF CONDUIT INSTALLED THAT IS NOT BELOW THE TRAVELED WAY SHALL BE 18 INCHES MINIMUM AND 36 INCHES MAXIMUM.

ANY EXCEPTION TO THE MAXIMUM DEPTH SHALL BE ONLY WITH THE WRITTEN APPROVAL OF THE ENGINEER.

CONTROL CABINET BASE TOP SURFACE SHALL BE TROWEL FINISHED SMOOTH AND LEVEL.

MAINTENANCE PLATFORM SHALL BE FLOAT OR BROOM FINISHED AND BE LEVEL.

MAINTENANCE PLATFORMS ARE NOT REQUIRED WHEN THE SURROUNDING AREA IS PAVED.

MINIMUM BENDING RADIUS OF CONDUIT = 6 X THE DIAMETER.

ALL METALLIC CONDUIT ENDS SHALL BE REAMED AND THREADED.

CAP ALL BELOW GRADE METALLIC CONDUIT ENDS IN WHICH WIRE OR CABLE IS NOT BEING INSTALLED.

PLUG ALL BELOW GRADE NONMETALLIC CONDUIT ENDS IN WHICH WIRE OR CABLE IS NOT BEING INSTALLED.

ALL CONDUIT ENDS AT THE TOP OF CONCRETE BASES SHALL BE CAPPED IF METALLIC OR PLUGGED IF NONMETALLIC IMMEDIATELY AFTER PLACEMENT AND BEFORE CONCRETE IS POURED. CONDUITS IN WHICH WIRE OR CABLE IS NOT BEING INSTALLED SHALL REMAIN CAPPED OR PLUGGED.

CONDUIT EXITING THE CONCRETE BASE (SIX THREE INCH) SHALL TERMINATE IN PULL BOXES AS SHOWN ON THE PLANS.

CONCRETE FORM DEPTH BELOW FINISHED GRADE SHALL BE 6" MAXIMUM. CONCRETE FORMS SHALL BE REMOVED AFTER CONCRETE HAS SET.

BELL ENDS SHALL BE INSTALLED ON ALL PVC CONDUIT EXPOSED AT THE TOP OF THE CONCRETE BASE BEFORE INSTALLATION OF CABLE OR WIRE.

CONCRETE CONTROL CABINET BASE, TYPE 9, SPECIAL

STATE OF WISCONSIN
DEPARTMENT OF TRANSPORTATION

APPROVED
Sept. 2014 — /S/ Ahmet Demirbilek
DATE — STATE ELECTRICAL
FHWA

GENERAL NOTES

DETAILS OF CONSTRUCTION, MATERIALS AND WORKMANSHIP NOT SHOWN ON THIS DRAWING SHALL CONFORM TO THE PERTINENT REQUIREMENTS OF THE CONTRACT.

BASES SHALL BE EXCAVATED BY USE OF A CIRCULAR AUGER.

TOP SURFACES OF CONCRETE BASES SHALL BE TROWEL FINISHED AND LEVEL.

CONDUIT SIZES AND LOCATIONS SHALL BE AS SHOWN ON THE PLANS.

THE FINAL OR TERMINATING CONCRETE BASE IN A CONDUIT RUN SHALL HAVE A 6" EXIT STUB INSTALLED FOR FUTURE CABLING USE. THE EXIT STUB SHALL BE SIZED AS USED THROUGHOUT THE CONDUIT RUN AS SHOWN AT THE ENTRANCE OF THE BASE.

MINIMUM BENDING RADIUS OF CONDUIT IS EQUAL TO 6 X THE DIAMETER.

CONDUIT HEIGHT ABOVE CONCRETE BASES SHALL BE 4 INCHES. ALL METALLIC CONDUIT ENDS SHALL BE REAMED AND THREADED. NONMETALLIC CONDUIT SHALL HAVE BELL END INSTALLED. ALL CONDUIT SHALL BE SLOPED TO PULL BOX.

ALL CONDUIT ENDS AT THE TOP OF CONCRETE BASES SHALL BE CAPPED IF METALLIC OR PLUGGED IF NONMETALLIC IMMEDIATELY AFTER PLACEMENT AND BEFORE CONCRETE IS POURED. CONDUIT IN WHICH WIRE OR CABLE IS NOT INSTALLED SHALL REMAIN CAPPED OR PLUGGED.

BELL ENDS SHALL BE INSTALLED ON ALL PVC CONDUIT EXPOSED AT THE TOP OF CONCRETE BASES BEFORE INSTALLATION OF CABLE OR WIRE.

ENDS OF CONDUIT INSTALLED BELOW GRADE FOR FUTURE USE SHALL BE CAPPED IF METALLIC OR PLUGGED IF NONMETALLIC.

WHEN REQUIRED TO CONNECT NONMETALLIC CONDUIT TO METALLIC CONDUIT, ONLY ADAPTER FITTINGS, U.L. LISTED FOR ELECTRICAL USE, SHALL BE USED.

IF A BASE REQUIRES A DEEP FORM BECAUSE OF LOOSE DIRT OR FILL, THE FORM SHALL BE REMOVED BEFORE BACKFILLING AROUND THE BASE. BACKFILL SHALL BE TAMPED TIGHT AGAINST THE BARE CONCRETE BASE IN LAYERS OF 1 FOOT OR LESS.

A NO. 4 AWG, STRANDED COPPER EQUIPMENT GROUNDING CONDUCTOR SHALL BE EXOTHERMICALLY WELDED TO THE EQUIPMENT GROUNDING ELECTRODE (GROUND ROD).

THE EQUIPMENT GROUNDING CONDUCTOR SHALL ENTER THE BASE THROUGH A 1 INCH CONDUIT INSTALLED FOR GROUNDING PURPOSES, LEAVING A 4 FOOT COIL OF WIRE ABOVE THE CONCRETE BASE. THE EQUIPMENT GROUNDING CONDUCTOR SHALL BE NEATLY COILED AND THE COILS TIED TOGETHER.

WELDING OF THE ANCHOR RODS TO THE CAGE IS UNACCEPTABLE. TEMPLATES SHALL BE USED.

BAR STEEL REINFORCEMENT SHALL BE COATED WITH POWDERED EPOXY RESIN IN ACCORDANCE WITH SECTION 505 OF THE STANDARD SPECIFICATIONS (LATEST EDITION).

ANCHOR RODS SHALL BE INSTALLED WITH MISALIGNMENTS OF LESS THAN 1:40 FROM VERTICAL.

(1) THE MINIMUM DEPTH OF CONDUIT EXITING THE CONCRETE BASE AND INSTALLED BELOW THE TRAVELED WAY SHALL BE 24 INCHES. THE MINIMUM DEPTH OF CONDUIT EXITING THE CONCRETE BASE THAT IS NOT INSTALLED BELOW THE TRAVELED WAY SHALL BE 18 INCHES. THE MAXIMUM DEPTH OF ALL CONDUIT SHALL BE 36 INCHES, (GREATER THAN 36 INCHES IF INSTALLED IN BREAKER-RUN), EXCEPT WITH WRITTEN APPROVAL BY THE ENGINEER.

(2) (6) NO. 6 X 13'-7" BAR STEEL REINFORCEMENT.

(3) (15) NO. 4 X 7'-4" BAR STEEL REINFORCEMENT @ 1'-0" MAX. C-C.

CONCRETE MASONRY	fc=3,500 p.s.i.
HIGH STRENGTH BAR STEEL REINFORCEMENT, GRADE 60	fy=60,000 p.s.i.
ANCHOR RODS, AASHTO M314 GRADE 55	fy=55,000 p.s.i.
TEMPLATES, ASTM, A709 GRADE 36	fy=36,000 p.s.i.

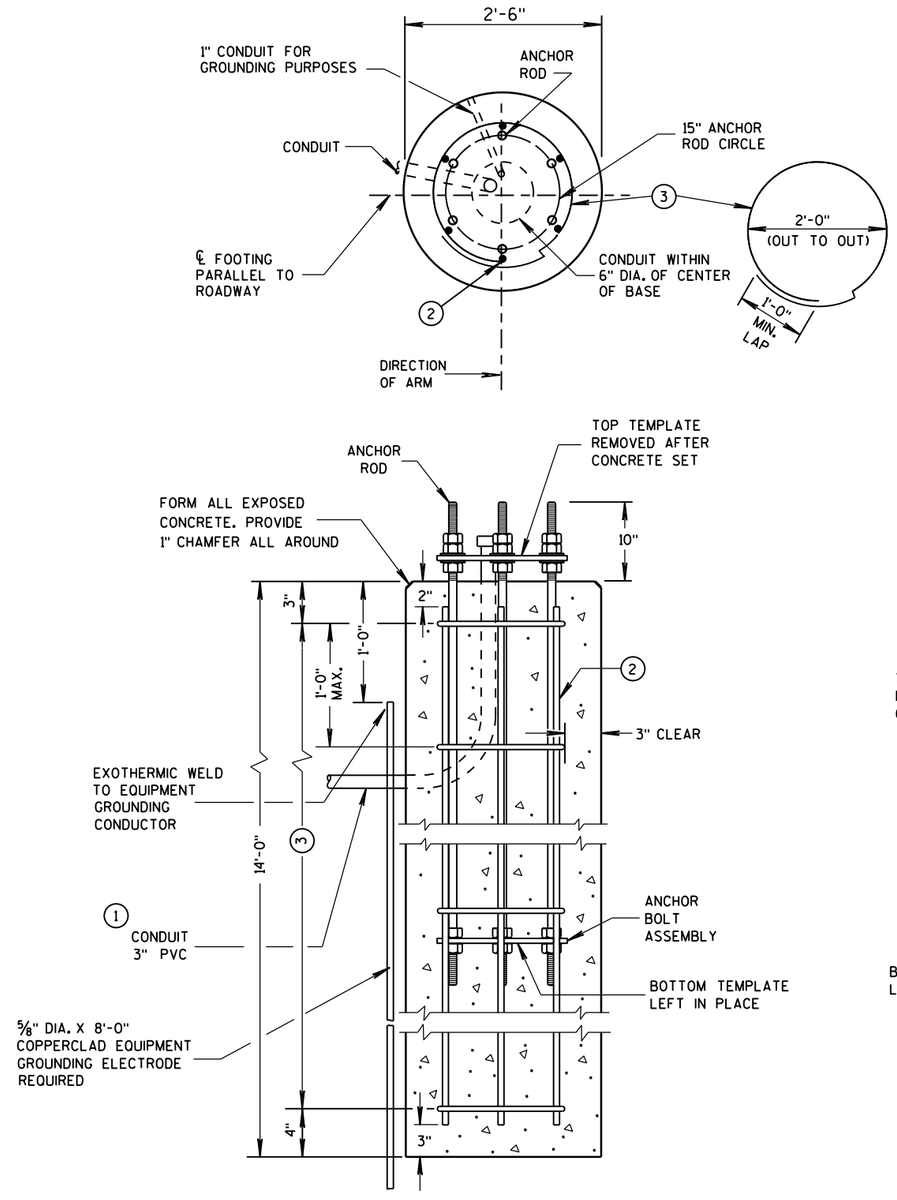

CONCRETE BASE TYPE 10
(FOR TYPE 9 & 10 POLES)

TO BE USED WHEN GROUND ELEVATION AT BASE EQUALS OR IS GREATER THAN HIGH POINT OF ROADWAY ELEVATION. SEE S.D.D. 9C13-2 WHEN GROUND ELEVATION AT BASE IS LOWER THAN HIGH POINT OF ROADWAY ELEVATION.

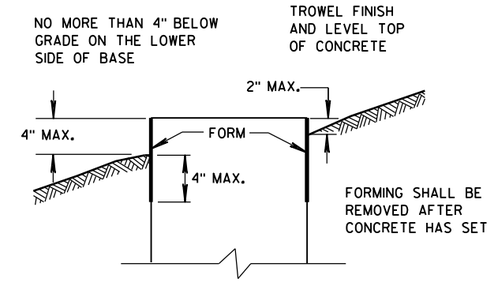

FORMING DETAIL

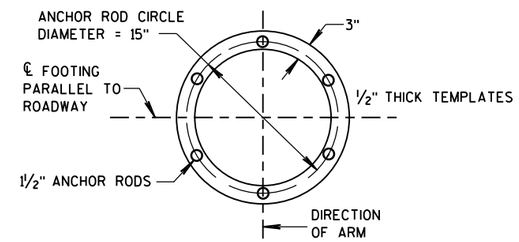

TOP AND BOTTOM TEMPLATES

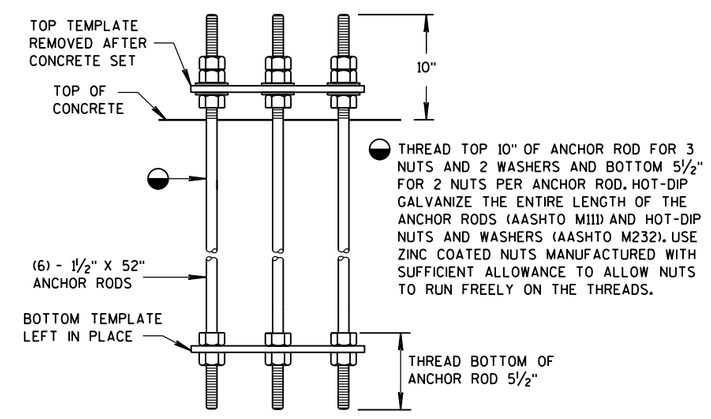

ANCHOR BOLT ASSEMBLY DETAIL

CONCRETE BASE TYPE 10
ANCHOR ASSEMBLY

QUANTITY REQUIREMENTS	
APPROX. CUBIC YARDS OF CONCRETE	2.5
LBS. OF HOOP BAR STEEL	69
LBS. OF VERTICAL BAR STEEL	122

CONCRETE BASE TYPE 10

STATE OF WISCONSIN
DEPARTMENT OF TRANSPORTATION

APPROVED
June, 2015 — DATE
/S/ Ahmet Demirbilek — STATE ELECTRICAL
FHWA

6

S.D.D. 9 C 11-7

REINFORCEMENT AND CONCRETE QUANTITIES ADJUSTED FOR EXTENDED TYPE 10 CONCRETE BASE

HEIGHT INCREASE REQUIRED	* HEIGHT ABOVE GROUND SURFACE ON LOW SIDE (MAXIMUM)	SHAFT LENGTH	LENGTH OF #6 VERTICAL REINF.	NO. OF #4 HOOPS	C.Y. OF CONCRETE	LBS. OF HOOP BAR STEEL	LBS. OF VERTICAL BAR STEEL
>0" TO 6"	10"	14'-6"	14'-1"	16	2.6	78	127
>6" TO 1'-0"	1'-4"	15'-0"	14'-7"	16	2.7	78	131
>1'-0" TO 1'-6"	1'-10"	15'-6"	15'-1"	17	2.8	83	136
>1'-6" TO 2'-0"	2'-4"	16'-0"	15'-7"	17	2.9	83	141

REINFORCEMENT AND CONCRETE QUANTITIES ADJUSTED FOR EXTENDED TYPE 13 CONCRETE BASE

HEIGHT INCREASE REQUIRED	* HEIGHT ABOVE GROUND SURFACE ON LOW SIDE (MAXIMUM)	SHAFT LENGTH	LENGTH OF #6 VERTICAL REINF.	NO. OF #4 HOOPS	C.Y. OF CONCRETE	LBS. OF H.S. BAR STEEL
>0" TO 6"	10"	15'-0"	14'-7"	16	6.5	447
>6" TO 1'-0"	1'-4"	15'-6"	15'-1"	16	6.6	454
>1'-0" TO 1'-6"	1'-10"	16'-0"	15'-7"	17	6.8	469
>1'-6" TO 2'-0"	2'-4"	16'-6"	16'-1"	17	7.0	476

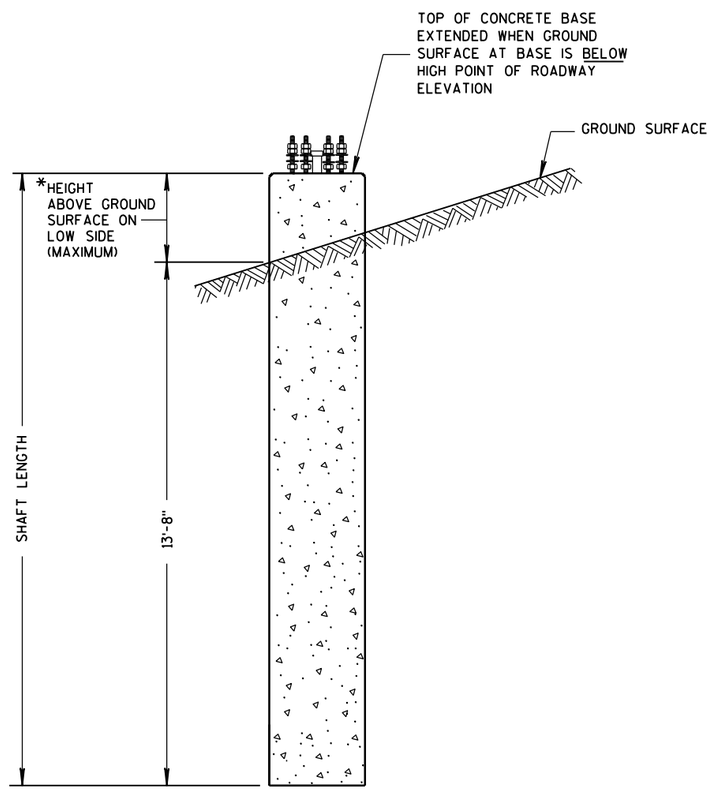

CONCRETE BASE TYPE 10 (EXTENDED)

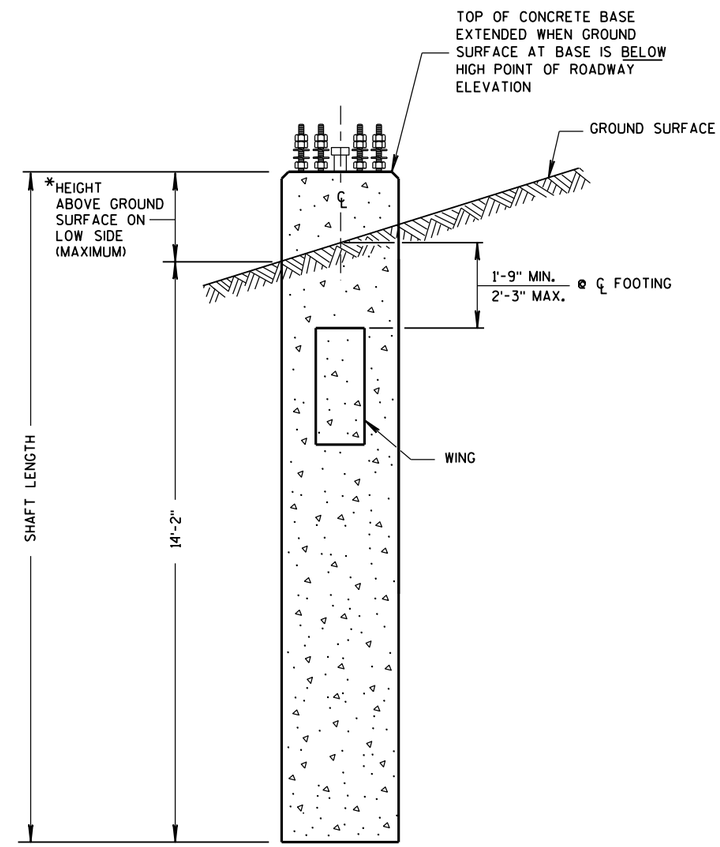

CONCRETE BASE TYPE 13 (EXTENDED)

CONCRETE BASE
TYPE 10 & TYPE 13 EXTENSION

STATE OF WISCONSIN
DEPARTMENT OF TRANSPORTATION

APPROVED
11-26-2013 — DATE
/S/ Ahmet Demirbilek — STATE ELECTRICAL
FHWA

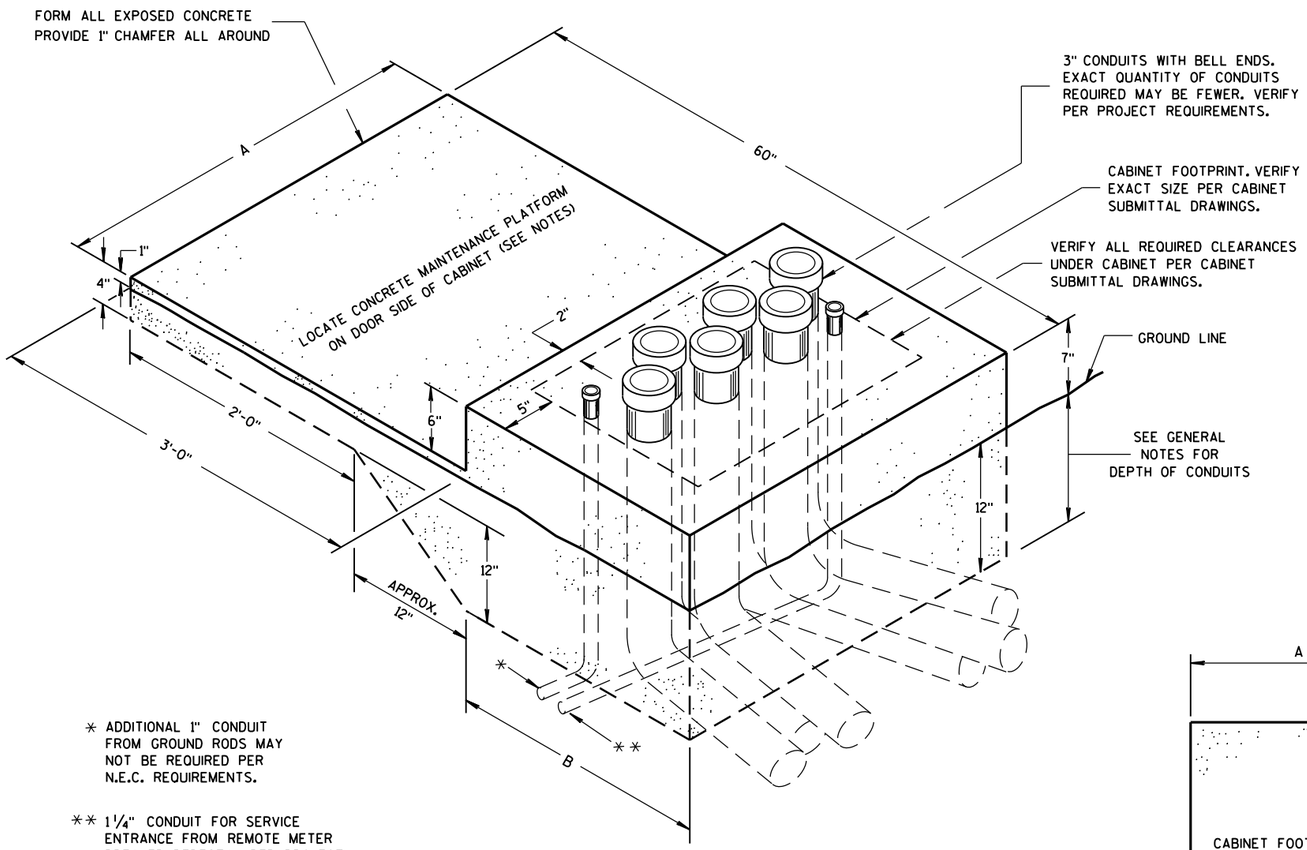

* ADDITIONAL 1" CONDUIT FROM GROUND RODS MAY NOT BE REQUIRED PER N.E.C. REQUIREMENTS.

** 1¼" CONDUIT FOR SERVICE ENTRANCE FROM REMOTE METER BREAKER PEDESTAL PER PROJECT REQUIREMENTS. VERIFY LOCATION OF CONDUIT DEPENDENT UPON LOCATION OF INCOMING FEEDER AND FOR EASE OF CONNECTION TO LOAD CENTER.

ISOMETRIC VIEW

CONCRETE CONTROL CABINET BASE, TYPE L

(C.Y. CONCRETE = APPROX. 0.4)

CONCRETE BASE TYPE	CABINET WIDTH	DIMENSIONS		MAXIMUM 3" CONDUITS
		A	B	
L24	24"	34"	24"	4
L30	30"	40"	24"	6

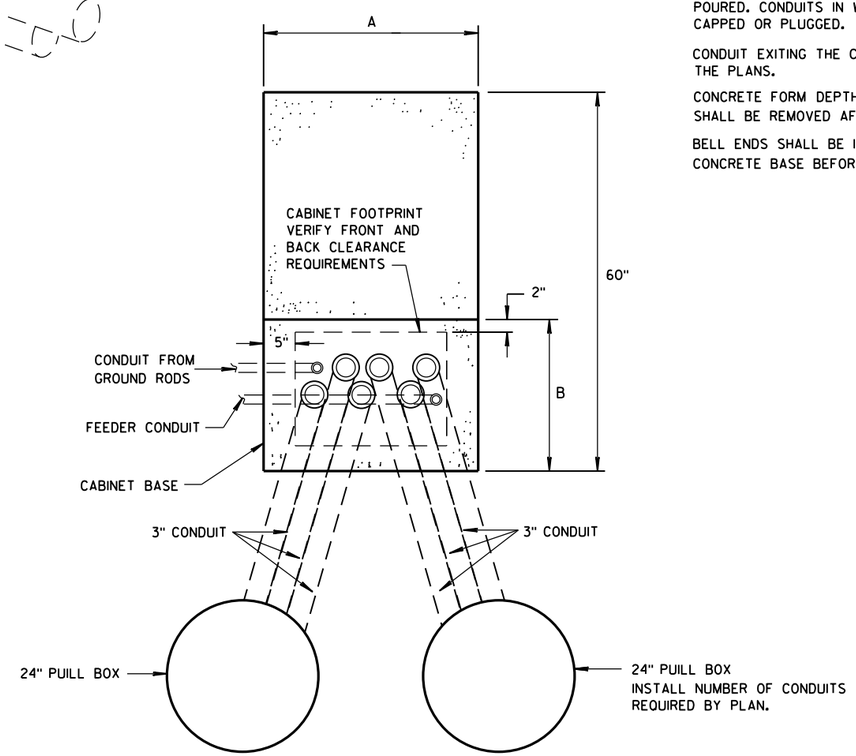

PLAN VIEW

CONCRETE CONTROL CABINET BASE, TYPE L

GENERAL NOTES

DETAILS OF CONSTRUCTION, MATERIALS AND WORKMANSHIP NOT SHOWN ON THIS DRAWING SHALL CONFORM TO THE PERTINENT REQUIREMENTS OF THE CONTRACT.

INSTALL FOUR STAINLESS STEEL APPROVED CONCRETE MASONRY ANCHORS TO ANCHOR THE CABINET BASES. THE ANCHORS SHALL BE LOCATED AS DIRECTED BY THE ENGINEER TO PROPERLY ANCHOR THE CONTROL CABINET TO THE BASE.

WHEN REQUIRED TO CONNECT NONMETALLIC CONDUIT TO METALLIC CONDUIT, ONLY ADAPTER FITTINGS, U.L. LISTED FOR ELECTRICAL USE, SHALL BE USED.

CONDUIT HEIGHT ABOVE THE CONCRETE BASE SHALL BE 1 INCH.

DEPTH OF CONDUIT INSTALLED BELOW THE TRAVELED WAY SHALL BE 24 INCHES MINIMUM AND 36 INCHES MAXIMUM.

DEPTH OF CONDUIT INSTALLED THAT IS NOT BELOW THE TRAVELED WAY SHALL BE 18 INCHES MINIMUM AND 36 INCHES MAXIMUM.

ANY EXCEPTION TO THE MAXIMUM DEPTH SHALL BE ONLY WITH THE WRITTEN APPROVAL OF THE ENGINEER.

CONTROL CABINET BASE TOP SURFACE SHALL BE TROWEL FINISHED SMOOTH AND LEVEL.

MAINTENANCE PLATFORM SHALL BE FLOAT OR BROOM FINISHED AND BE LEVEL.

MAINTENANCE PLATFORMS ARE NOT REQUIRED WHEN THE SURROUNDING AREA IS PAVED.

MINIMUM BENDING RADIUS OF CONDUIT = 6 X THE DIAMETER.

ALL METALLIC CONDUIT ENDS SHALL BE REAMED AND THREADED.

CAP ALL BELOW GRADE METALLIC CONDUIT ENDS IN WHICH WIRE OR CABLE IS NOT BEING INSTALLED.

PLUG ALL BELOW GRADE NONMETALLIC CONDUIT ENDS IN WHICH WIRE OR CABLE IS NOT BEING INSTALLED.

ALL CONDUIT ENDS AT THE TOP OF CONCRETE BASES SHALL BE CAPPED IF METALLIC OR PLUGGED IF NONMETALLIC IMMEDIATELY AFTER PLACEMENT AND BEFORE CONCRETE IS POURED. CONDUITS IN WHICH WIRE OR CABLE IS NOT BEING INSTALLED SHALL REMAIN CAPPED OR PLUGGED.

CONDUIT EXITING THE CONCRETE BASE SHALL TERMINATE IN PULL BOXES AS SHOWN ON THE PLANS.

CONCRETE FORM DEPTH BELOW FINISHED GRADE SHALL BE 6" MAXIMUM. CONCRETE FORMS SHALL BE REMOVED AFTER CONCRETE HAS SET.

BELL ENDS SHALL BE INSTALLED ON ALL PVC CONDUIT EXPOSED AT THE TOP OF THE CONCRETE BASE BEFORE INSTALLATION OF CABLE OR WIRE.

CONCRETE CONTROL CABINET BASE, TYPE L

STATE OF WISCONSIN
DEPARTMENT OF TRANSPORTATION

APPROVED
Nov. 2014 — DATE
/S/ Thomas Gonring — STATE LIGHTING ENGINE
FHWA — WYS

6

S.D.D. 9 C 14-2

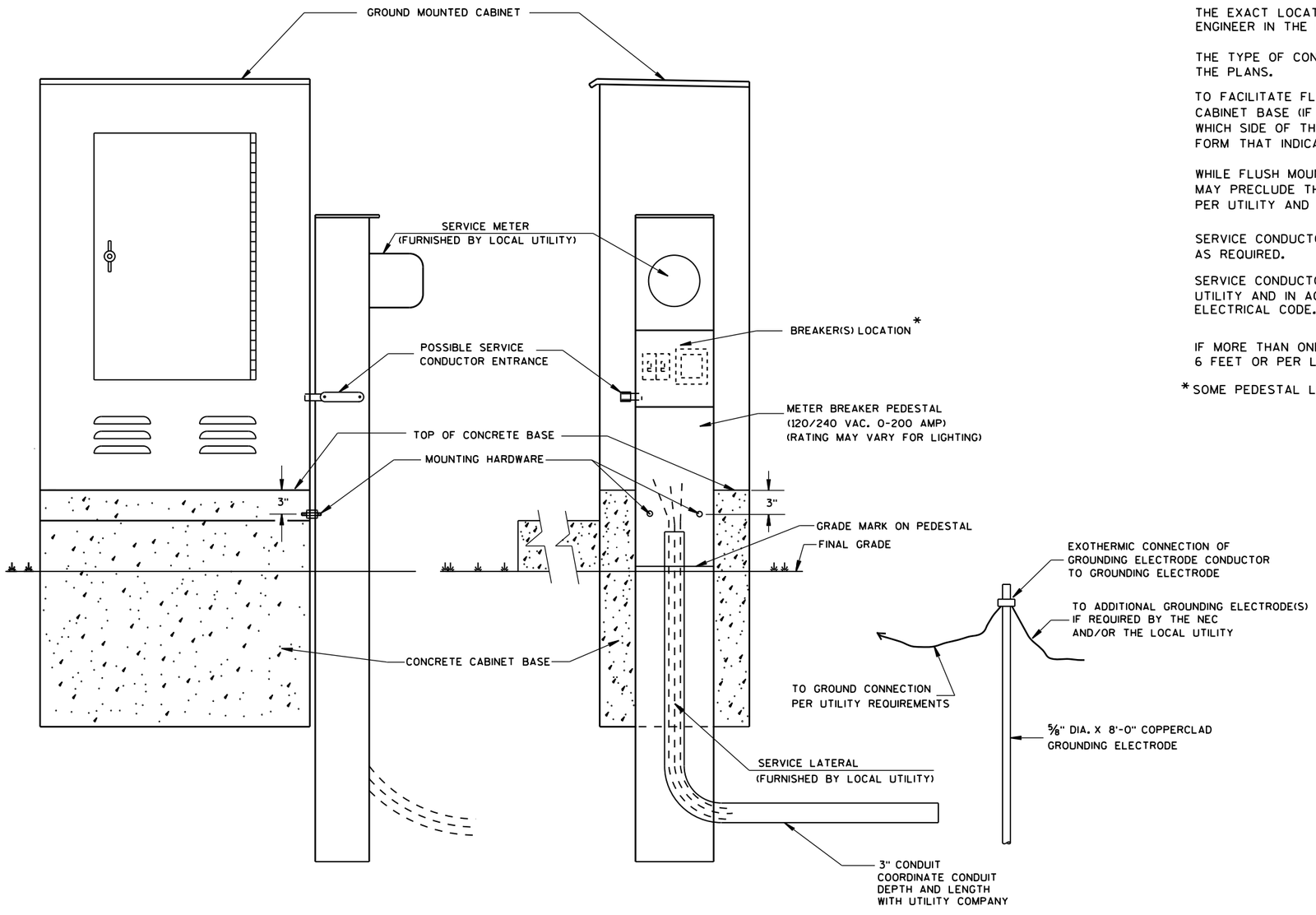

TYPICAL CABINET SERVICE INSTALLATION

GENERAL NOTES

DETAILS OF CONSTRUCTION, MATERIALS AND WORKMANSHIP NOT SHOWN ON THIS DRAWING SHALL CONFORM TO THE PERTINENT REQUIREMENTS OF THE CONTRACT.

THE EXACT LOCATION OF THE METER BREAKER PEDESTAL SHALL BE DETERMINED BY THE ENGINEER IN THE FIELD.

THE TYPE OF CONCRETE CABINET BASE TO BE INSTALLED SHALL BE AS CALLED FOR IN THE PLANS.

TO FACILITATE FLUSH MOUNTING OF THE METER BREAKER PEDESTAL AGAINST THE SIDE OF THE CABINET BASE (IF FLUSH MOUNTING POSSIBLE. CONFER WITH THE LOCAL UTILITY TO DETERMINE WHICH SIDE OF THE CONCRETE BASE THE ELECTRICAL SERVICE LATERAL WILL APPROACH. THEN FORM THAT INDICATED SIDE FOR FULL SIDE DEPTH.

WHILE FLUSH MOUNTING IS THE MOST DESIRABLE MOUNTING CONFIGURATION UTILITY REQUIREMENTS MAY PRECLUDE THIS OPTION. CONTRACTOR MUST PROVIDE UTILITY APPROVED PEDESTAL AND INSTALL PER UTILITY AND MANUFACTURERS REQUIREMENTS.

SERVICE CONDUCTOR ENTRANCES SHALL BE RIGID METALLIC CONDUIT, NIPPLES AND/OR CONDULETS AS REQUIRED.

SERVICE CONDUCTOR ENTRANCES SHALL BE SIZED AND LOCATED AS REQUIRED BY THE LOCAL UTILITY AND IN ACCORDANCE WITH APPROPRIATE ARTICLES OF THE LATEST ACCEPTED NATIONAL ELECTRICAL CODE.

IF MORE THAN ONE GROUNDING ELECTRODE IS REQUIRED, THE DISTANCE APART SHALL BE 6 FEET OR PER LOCAL UTILITY REGULATIONS.

*SOME PEDESTAL LIGHTING PLANS SHOW MAIN LUGS ONLY.

CABINET SERVICE INSTALLATION (METER BREAKER PEDESTAL)
STATE OF WISCONSIN DEPARTMENT OF TRANSPORTATION
APPROVED Sept. 2014 DATE — /S/ Ahmet Demirbilek STATE ELECTRICAL — FHWA

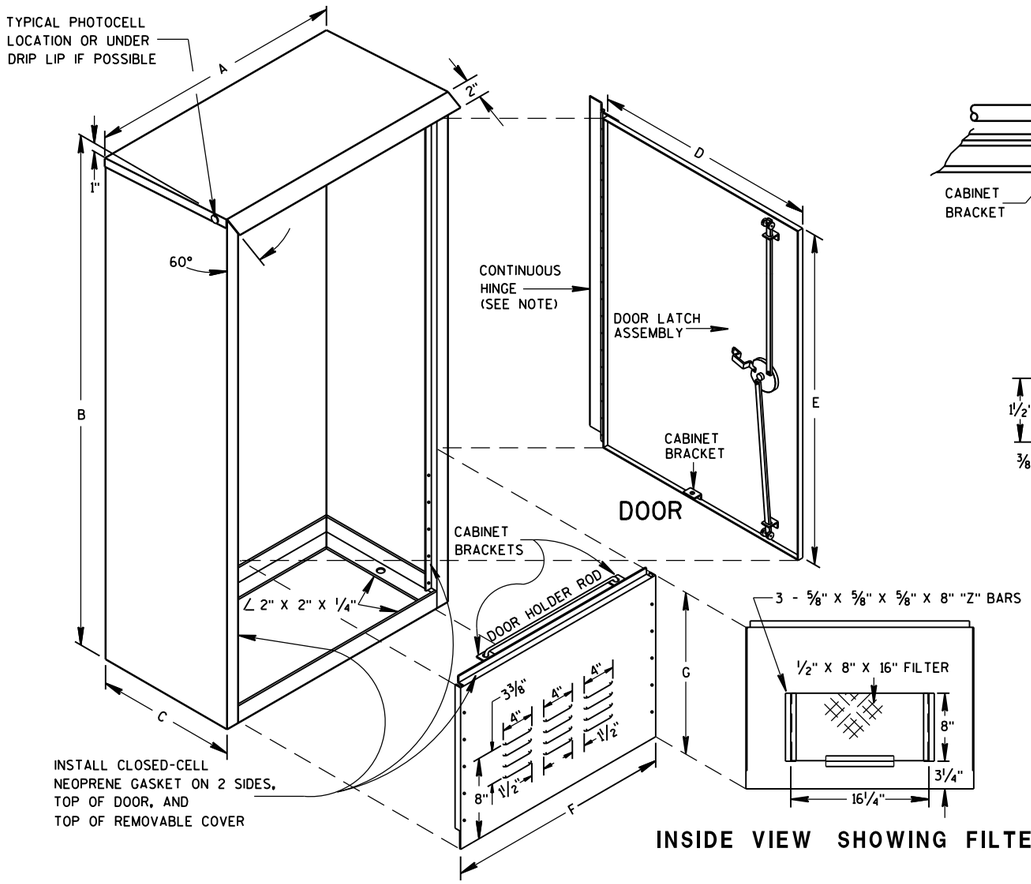

REMOVABLE COVER

INSIDE VIEW SHOWING FILTER

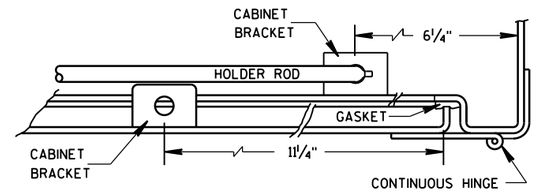

HINGE & DOOR HOLDER

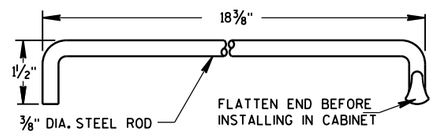

HOLDER ROD

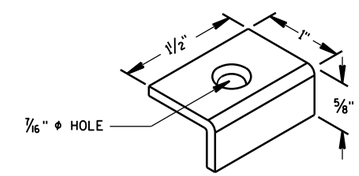

CABINET BRACKET

GENERAL NOTES

DETAILS OF CONSTRUCTION, MATERIALS AND WORKMANSHIP NOT SHOWN ON THIS DRAWING SHALL CONFORM TO THE PERTINENT REQUIREMENTS OF THE STANDARD SPECIFICATIONS AND APPLICABLE SPECIAL PROVISIONS.

PRIME WITH PHOSPHATE TREATMENT AND PRIMER.

FINISH EXTERIOR SURFACES WITH RUSTOLEUM #906 SILVER GRAY OR APPROVED EQUAL.

FINISH INTERIOR WITH RUSTOLEUM #2766 HIGH GLOSS WHITE ENAMEL OR APPROVED EQUAL.

ALL SHEET METAL PARTS SHALL BE .125 INCH THICK ALUMINUM.

ALL SEAMS SHALL BE CONTINUOUSLY WELDED.

ALUMINUM SHALL BE TYPE 5052-H32.

CONTINUOUS HINGE SHALL BE HEAVY GAUGE ALUMINUM WITH 1/4" DIAMETER STAINLESS STEEL HINGE PIN. HINGE IS SECURED WITH 1/4" X 20 TPI STAINLESS STEEL CARRIAGE BOLTS AND STAINLESS STEEL NYLOCK NUTS.

A SINGLE PHOTOCELL SHALL BE LOCATED ON THE NORTH-NORTHEAST SIDE OF THE CABINET UNLESS OTHERWISE CALLED FOR IN THE SPECIAL PROVISIONS. THE PHOTOCELL SHALL BE PLACED AS SHOWN AND SHALL BE LISTED ON THE DEPARTMENTS APPROVED PRODUCTS LIST.

DOOR LATCH ASSEMBLY TO BE PROVIDED WITH THREE-POINT LOCKING MECHANISM.

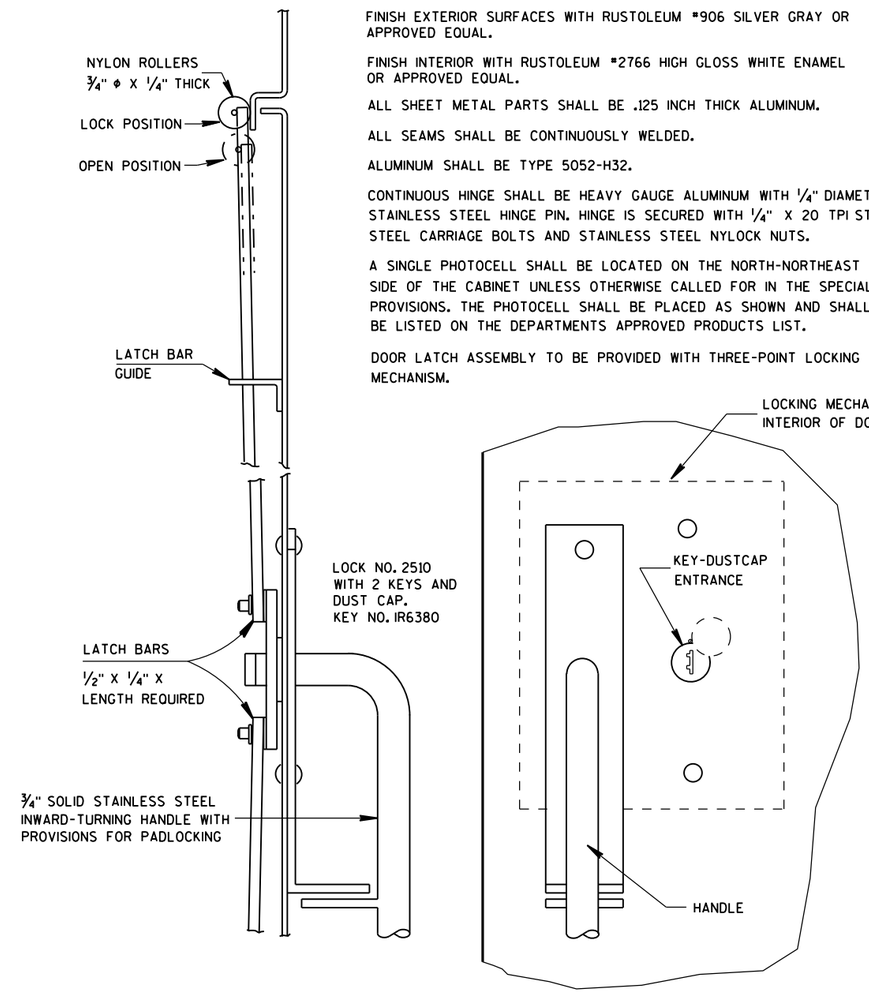

SIDE VIEW

FRONT VIEW

LATCH ASSEMBLY

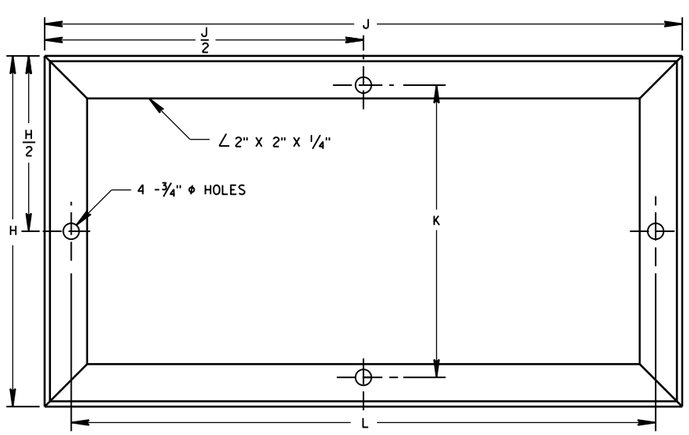

MOUNTING BASE

TABLE OF DIMENSIONS (INCHES)

MARK	CABINET TYPE		
	3060	3860	3866
A	30	38	38
B	60	60	66
C	16 1/2	16 1/2	24
D	26 1/2	34 3/4	33 3/4
E	38 3/4	38 3/4	38 3/4
F	26 1/2	34 3/4	33 3/4
G	19	19	25
H	16 1/2	16 1/2	24
H/2	8 1/4	8 1/4	12
J	30	38	38
J/2	15	19	19
K	13 3/4	13 3/4	21 1/4
L	27 1/2	35 1/2	35 1/2

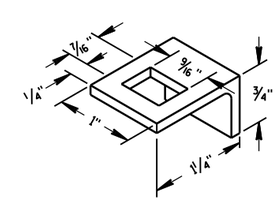

LATCH BAR GUIDE

SIGNAL CONTROL CABINET

STATE OF WISCONSIN
DEPARTMENT OF TRANSPORTATION

APPROVED
Sept. 2014
DATE
/S/ Ahmet Demirbilek
STATE ELECTRICAL
FHWA

6

6

S.D.D. 9 D 2-3

S.D.D. 9 D 2-3

GENERAL NOTES

DETAILS OF CONSTRUCTION, MATERIALS AND WORKMANSHIP NOT SHOWN ON THIS DRAWING SHALL CONFORM TO THE PERTINENT REQUIREMENTS OF THE STANDARD SPECIFICATIONS AND APPLICABLE SPECIAL PROVISIONS.

ALL INTERNAL ELECTRICAL COMPONENTS WILL BE PRE-WIRED BY THE CABINET FABRICATOR.

ALL CONDUIT ENTRIES SHALL BE SEALED WITH AN APPROPRIATE DUCT SEALING COMPOUND.

ORIENT PHOTOCELL AWAY FROM AMBIENT LIGHT SOURCES AND ONCOMING TRAFFIC HEADLIGHTS.

THE CONTRACTOR SHALL TOUCH UP ANY DAMAGE TO THE ANODIZED FINISH CAUSED BY THE INSTALLATION PROCESS. COLOR MATCH PAINT SHALL BE USED.

A COMPLETE LIGHTING OR ELECTRICAL PLAN SHALL BE SECURELY PLACED IN THE DOCUMENT HOLDER ATTACHED TO THE DOOR.

FRONT INTERIOR ELEVATION

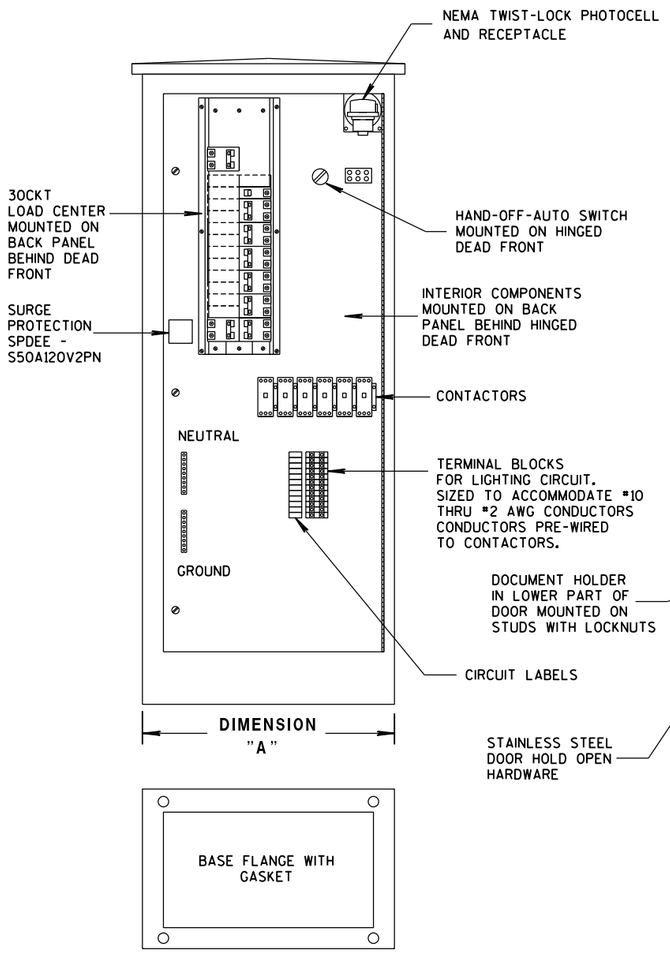

SIDE VIEW

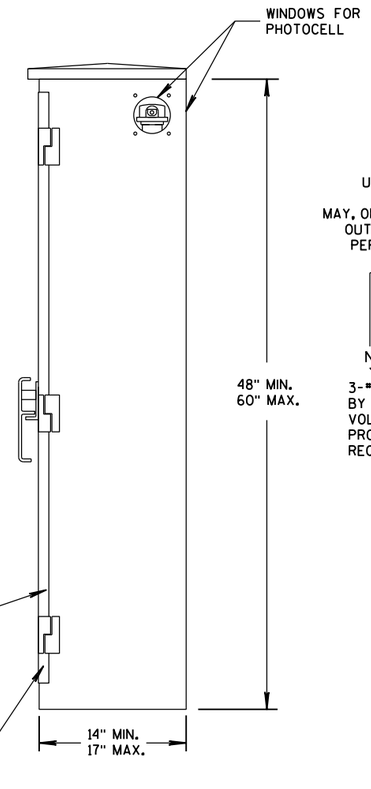

TABLE OF DIMENSIONS (INCHES)

CONCRETE BASE TYPE	CABINET WIDTH	DIMENSION "A"
L24	24"	24"
L30	30"	30"

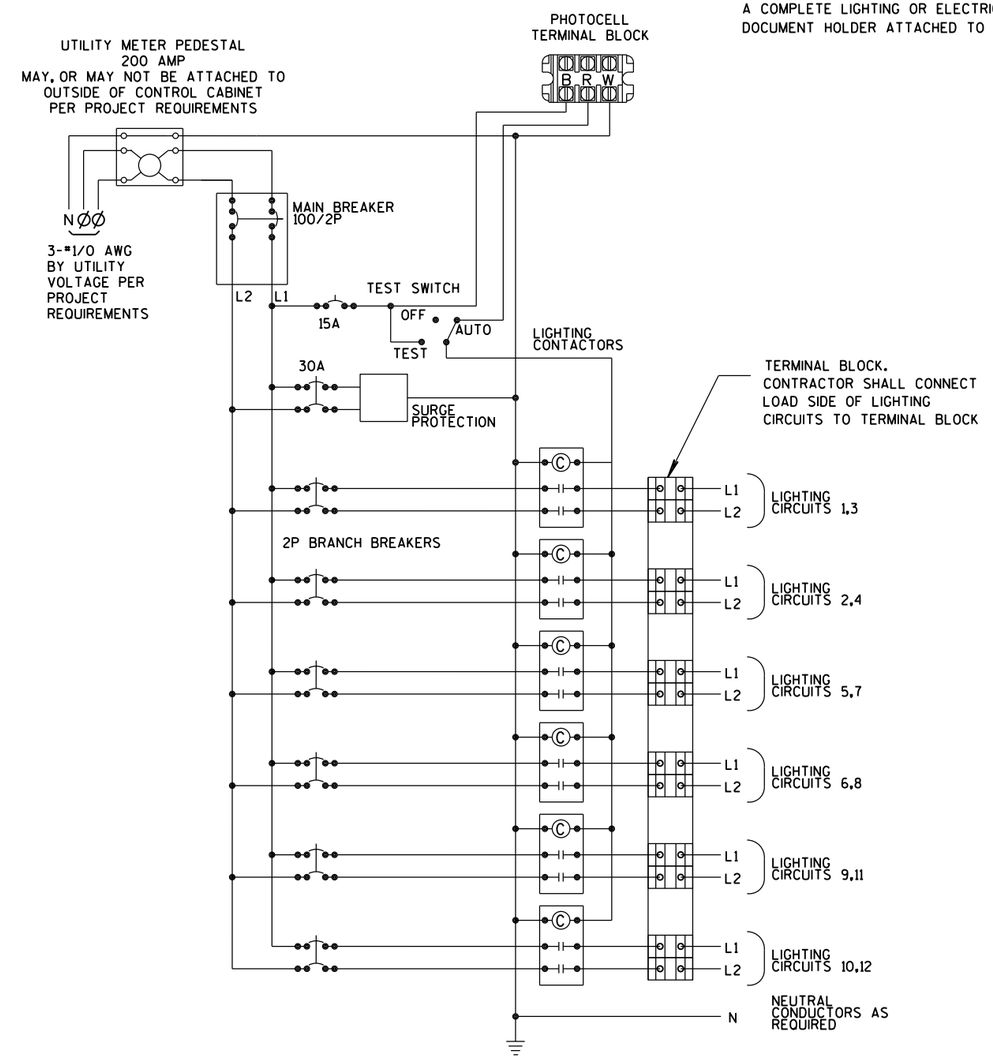

CONTROL CABINET SCHEMATIC

LIGHTING CONTROL CABINET

LIGHTING CONTROL CABINET	
STATE OF WISCONSIN DEPARTMENT OF TRANSPORTATION	
APPROVED June 2014 DATE	/S/ Thomas Gonring STATE LIGHTING ENGINEER
FHWA	WYS.

6

S.D.D. 9 D 4-1

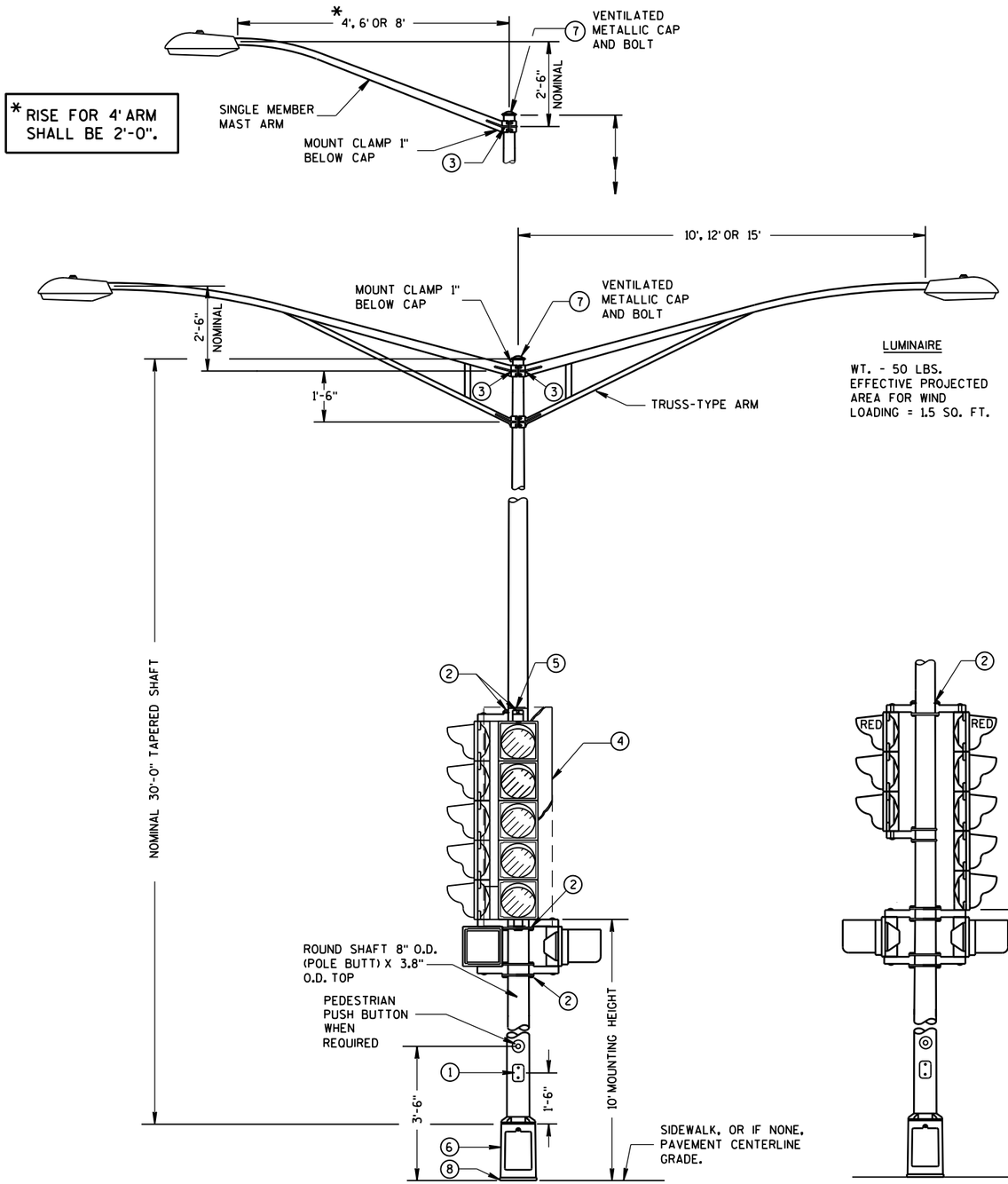

(MAXIMUM LOAD)

TYPICAL MOUNTING OF BACK TO BACK 3 AND 5 SECTION SIGNAL FACES

TYPICAL MOUNTING OF 3 SECTION SIGNAL FACE

TYPE 4 POLE MOUNTING CONFIGURATION

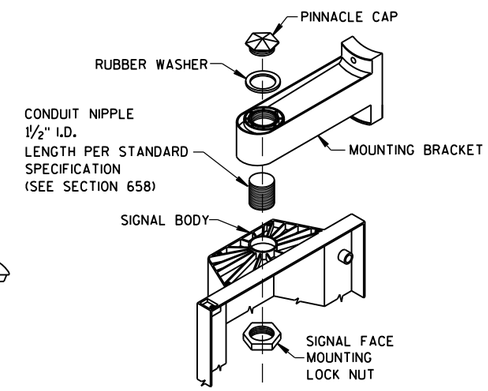

SIGNAL FACE MOUNTING DETAIL

(BANDED)

GENERAL NOTES

DETAILS OF CONSTRUCTION, MATERIALS AND WORKMANSHIP NOT SHOWN ON THIS DRAWING SHALL CONFORM TO THE PERTINENT REQUIREMENTS OF THE CONTRACT.

ALL TYPE 4 POLE MOUNTINGS SHALL BE DESIGNED TO INCLUDE TWIN 15' ARMS WITH LUMINAIRES.

POLES SHALL BE GALVANIZED STEEL WITH A MINIMUM WALL THICKNESS OF U.S. STANDARD 11 GAGE (.1196").

SECTION 657, POLES, OF THE STANDARD SPECIFICATIONS SHALL APPLY TO THIS DRAWING.

THE SLIPFITTER END OF THE LUMINAIRE MAST ARM SHALL BE A NOMINAL 2⅜ INCHES IN OUTSIDE DIAMETER. THE STRAIGHT PORTION OF THE SLIPFITTER END OF THE LUMINAIRE MAST ARM SHALL BE A NOMINAL 12 INCHES IN LENGTH.

WHEN TRANSFORMER BASES ARE USED, CONNECTIONS SHALL BE MADE IN THE TRANSFORMER BASE.

1. 4" X 6" REINFORCED HANDHOLE & COVER ASSEMBLY WITH 2 (TWO) ¼" X ¾" - 20 TPI HEX HEAD STAINLESS STEEL BOLTS.
2. SIGNAL FACE MOUNTING BRACKETS, MOUNT WITH CAP SCREWS AND BANDING. (SEE STANDARD SPECIFICATIONS - SEC. 658).
3. GROMMETS, 1" CHASE NIPPLES OR 1" CLOSE CONDUIT NIPPLES WITH BUSHINGS SHALL BE PROVIDED FOR 1⅜" HOLE IN POLE SHAFT FOR WIRING.
4. SECURELY MOUNT DULL BLACK POLYCARBONATE BACKPLATES, PROJECTING 5" BEYOND ALL SIDES OF THE SIGNAL FACE HOUSING, PER MANUFACTURER'S RECOMMENDATIONS.
5. POLE MOUNTED SIGNAL FACES SHALL REQUIRE 1 OR MORE MOUNTING SPACERS UNDER THE TOP MOUNTING BRACKET(S) AS REQUIRED, TO PLUMB THE SIGNAL FACE.
6. CAST ALUMINUM TRANSFORMER BASE, WHEN REQUIRED.
7. FURNISH AND INSTALL VENTILATED, CAST, METALLIC (ALUMINUM ALLOY) CAPS. FASTEN CAPS WITH ONE (1) ¼" X ¾" - 20 TPI STAINLESS STEEL, HEX HEAD BOLT.
8. SHIMMING, IF NEEDED, SHALL BE LOCATED BETWEEN THE CONCRETE FOUNDATION AND THE TRANSFORMER BASE.

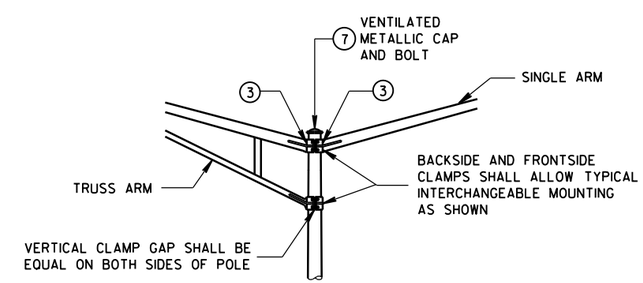

INTERCHANGEABLE MOUNTING DETAIL

POLE MOUNTINGS FOR TRAFFIC SIGNALS AND LIGHTING UNITS, TYPE 4

STATE OF WISCONSIN
DEPARTMENT OF TRANSPOR

6

S.D.D. 9 E 1-14c

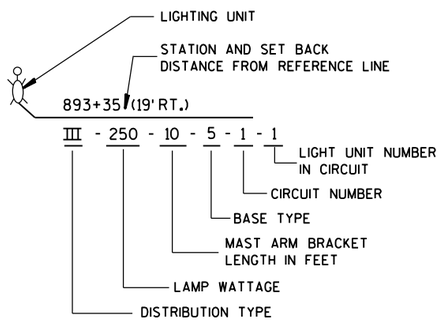

LIGHTING UNIT CODE
(TYPICAL)

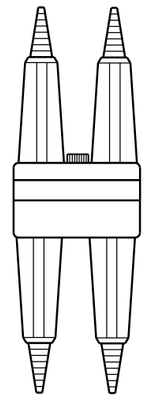

DETAIL "A"
BREAKAWY DOUBLE POLE WITH WATERPROOF INSULATING BOOT

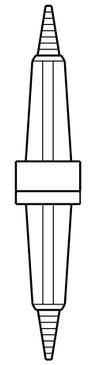

DETAIL "B"
BREAKAWY SINGLE POLE WITH WATERPROOF INSULATING BOOT

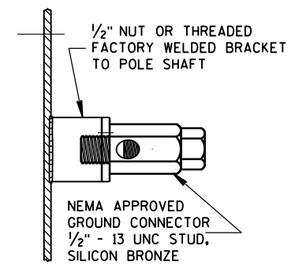

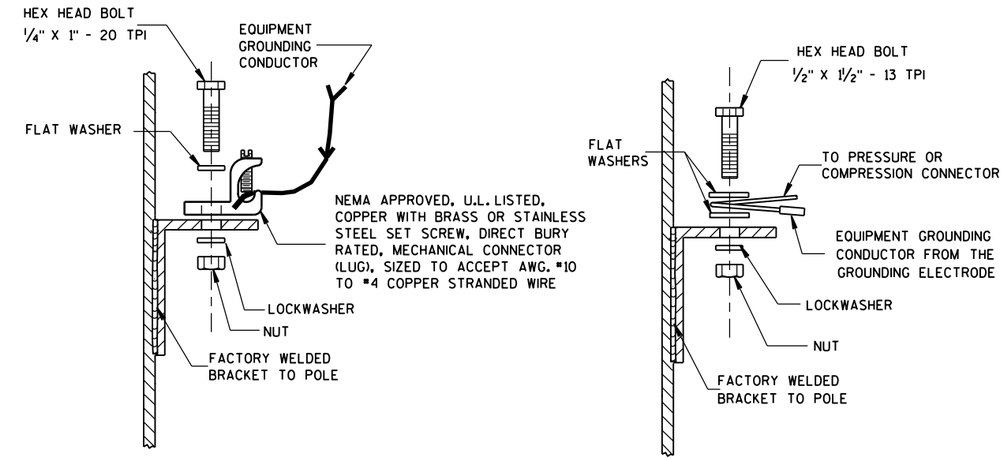

TYPICAL GROUNDING CONNECTIONS
NUT, BOLT, WASHERS AND LOCKWASHERS SHALL BE STAINLESS STEEL

GENERAL NOTES
DETAILS OF CONSTRUCTION, MATERIALS AND WORKMANSHIP NOT SHOWN ON THIS DRAWING SHALL CONFORM TO THE PERTINENT REQUIREMENTS OF THE CONTRACT.

THE EQUIPMENT GROUNDING CONNECTOR SHALL BE TAPED WITH 3 WRAPS (MINIMUM) OF APPROVED RUBBER TAPE AND THEN 3 WRAPS (MINIMUM) OF APPROVED VINYL TAPE TO COVER SHARP WIRE ENDS AFTER THE CONNECTION IS COMPLETED.

WHEN TRANSFORMER BASES ARE USED, ALL WIRING CONNECTIONS SHALL OCCUR WITHIN THE TRANSFORMER BASES.

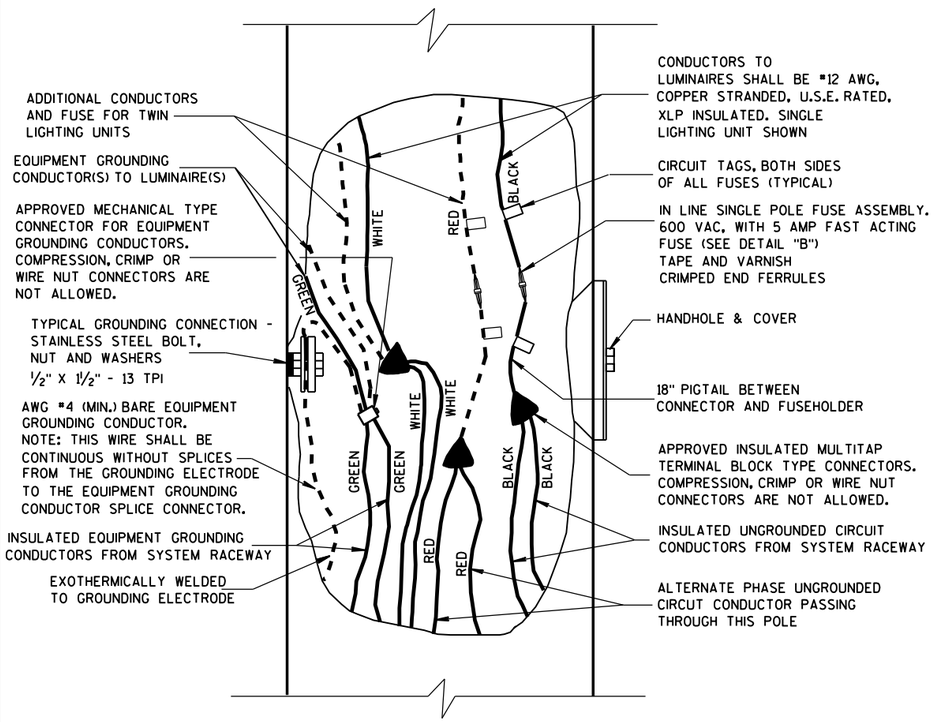

3 WIRE - 120, 240 OR 480 VAC (UNGROUNDED CONDUCTOR) WITH GROUNDED CONDUCTOR AND WITH EQUIPMENT GROUNDING CONDUCTOR

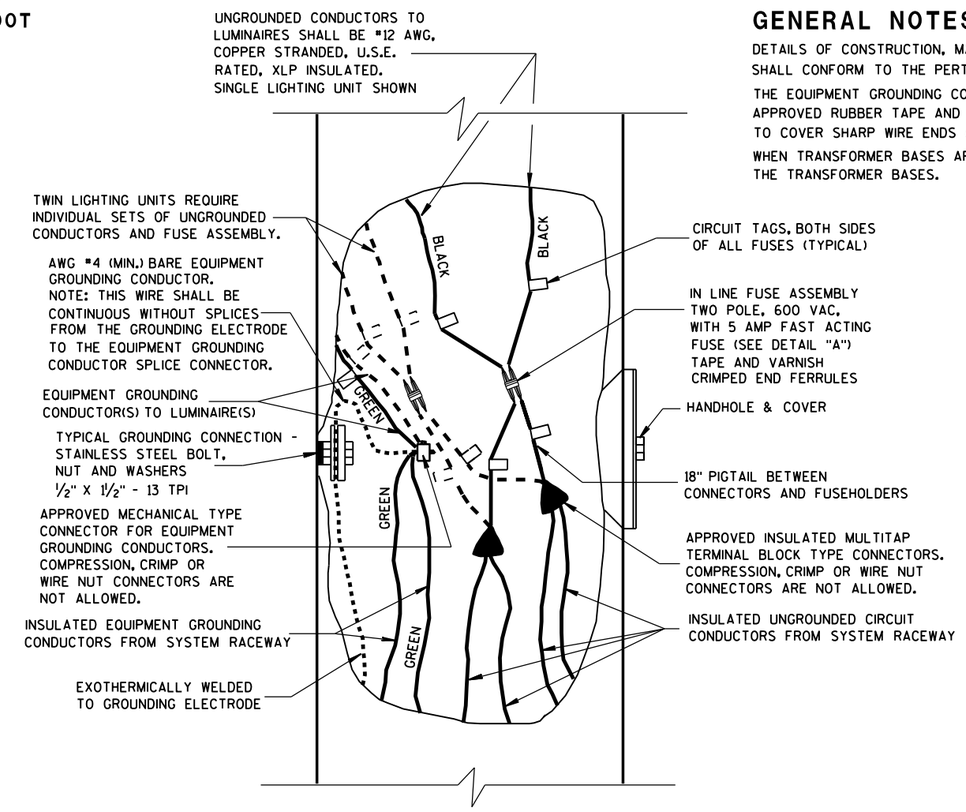

2 WIRE - 240 OR 480 VAC (UNGROUNDED CONDUCTORS) WITH EQUIPMENT GROUNDING CONDUCTOR

NON-FREEWAY LIGHTING UNIT POLE WIRING	
STATE OF WISCONSIN DEPARTMENT OF TRANSPORTATION	
APPROVED Sept. 2014 DATE	/S/ Ahmet Demirbilek STATE ELECTRICAL
FHWA	

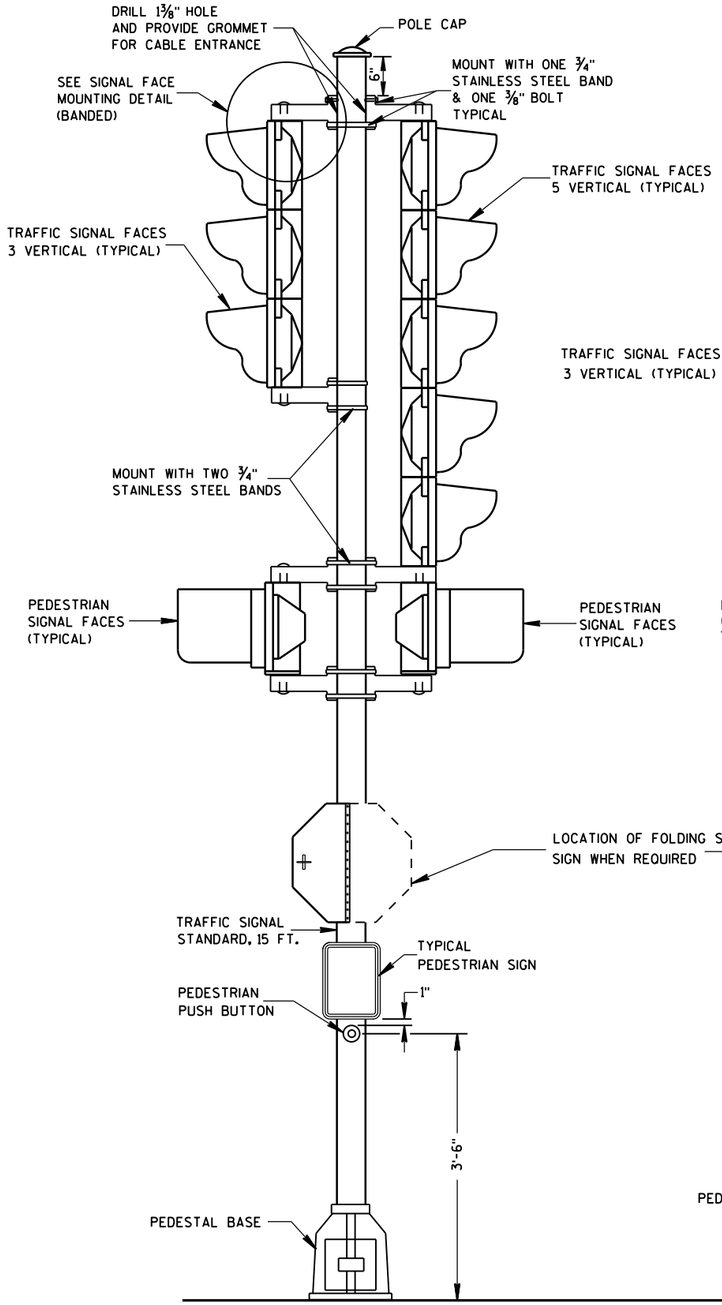

TRAFFIC SIGNAL STANDARD-15 FT.

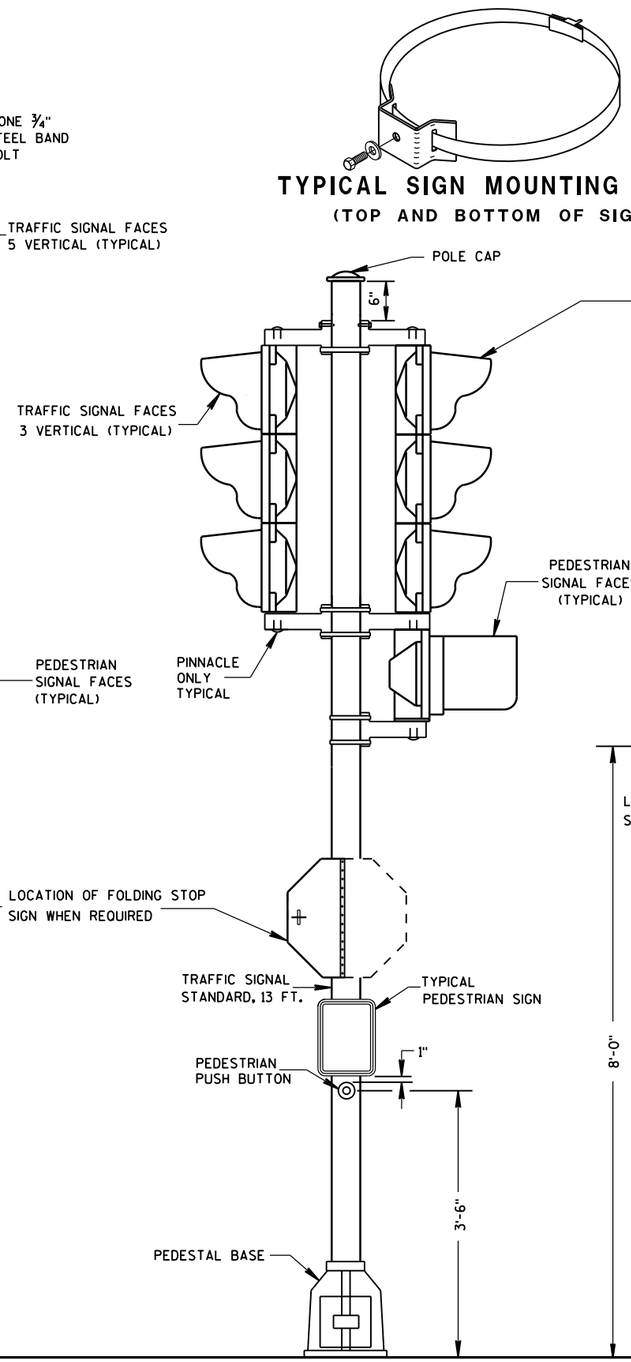

TRAFFIC SIGNAL STANDARD-13 FT.

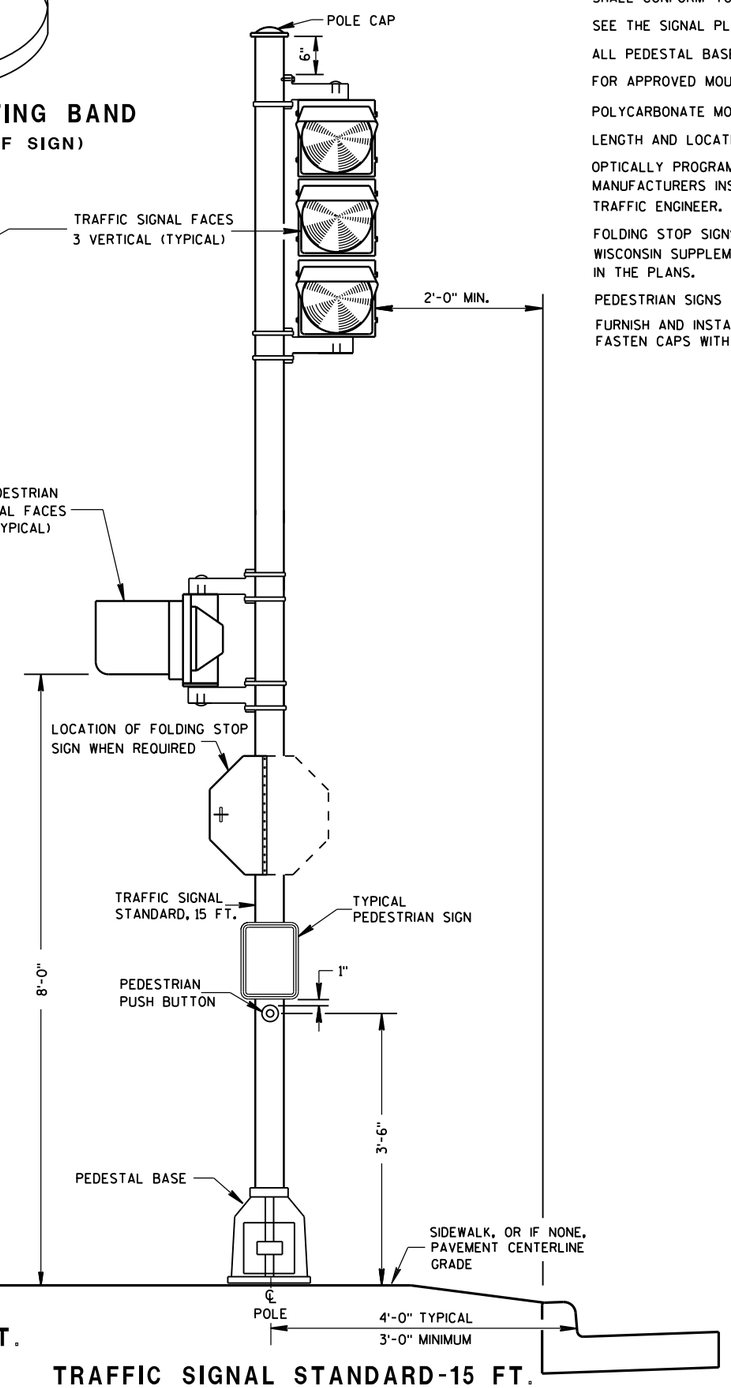

TRAFFIC SIGNAL STANDARD-15 FT.
3M MOUNTING (TYPICAL)

GENERAL NOTES

DETAILS OF CONSTRUCTION, MATERIALS AND WORKMANSHIP NOT SHOWN ON THIS DRAWING SHALL CONFORM TO THE PERTINENT REQUIREMENTS OF THE CONTRACT.

SEE THE SIGNAL PLAN FOR REQUIRED SIGNAL FACE SIZES.

ALL PEDESTAL BASES SHALL BE MOUNTED ON CONCRETE BASE - TYPE 1.

FOR APPROVED MOUNTING HARDWARE, SEE THE CONTRACT SPECIAL PROVISIONS.

POLYCARBONATE MOUNTING BRACKETS SHALL BE USED.

LENGTH AND LOCATION OF TRAFFIC SIGNAL STANDARDS SHALL BE AS SHOWN ON THE PLANS.

OPTICALLY PROGRAMMED SIGNAL FACES SHALL BE MASKED IN ACCORDANCE WITH MANUFACTURERS INSTRUCTIONS, AND UNDER THE DIRECTIONS OF THE REGION TRAFFIC ENGINEER.

FOLDING STOP SIGNS SHALL BE IN ACCORDANCE WITH THE MUTCD AND/OR THE LATEST WISCONSIN SUPPLEMENT. THE SIGNS SHALL BE SIZED AND LOCATED AS CALLED FOR IN IN THE PLANS.

PEDESTRIAN SIGNS SHALL BE AS DESIGNATED IN THE PLANS.

FURNISH AND INSTALL VENTILATED, CAST, METALLIC (ALUMINUM ALLOY) CAPS. FASTEN CAPS WITH ONE (1) ¼" X ¾" - 20 TPI STAINLESS STEEL, HEX HEAD BOLT.

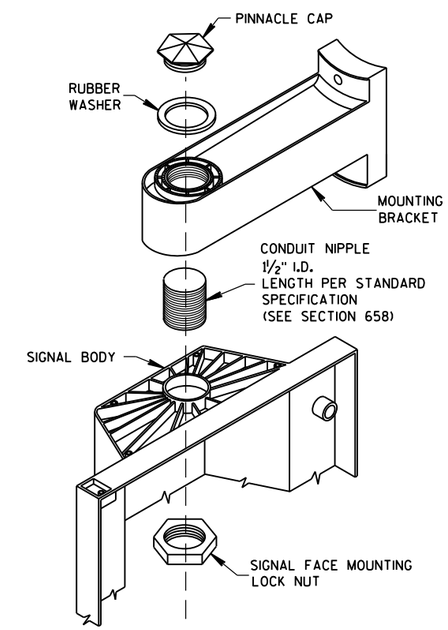

SIGNAL FACE MOUNTING DETAIL
(BANDED)

TRAFFIC SIGNAL STANDARD POLY BRACKET MOUNTINGS (TYPICAL) 13 FT. OR 15 FT.	
STATE OF WISCONSIN DEPARTMENT OF TRANSPORTATION	
APPROVED 2/28/2013 DATE	/S/ Ahmet Demirbilek STATE ELECTRICAL
FHWA	

6

S.D.D. 9 E 6-5

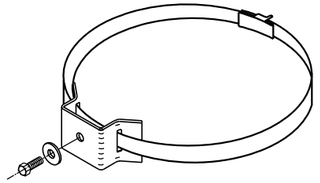

TYPICAL SIGN MOUNTING BAND

(TOP AND BOTTOM OF SIGN)

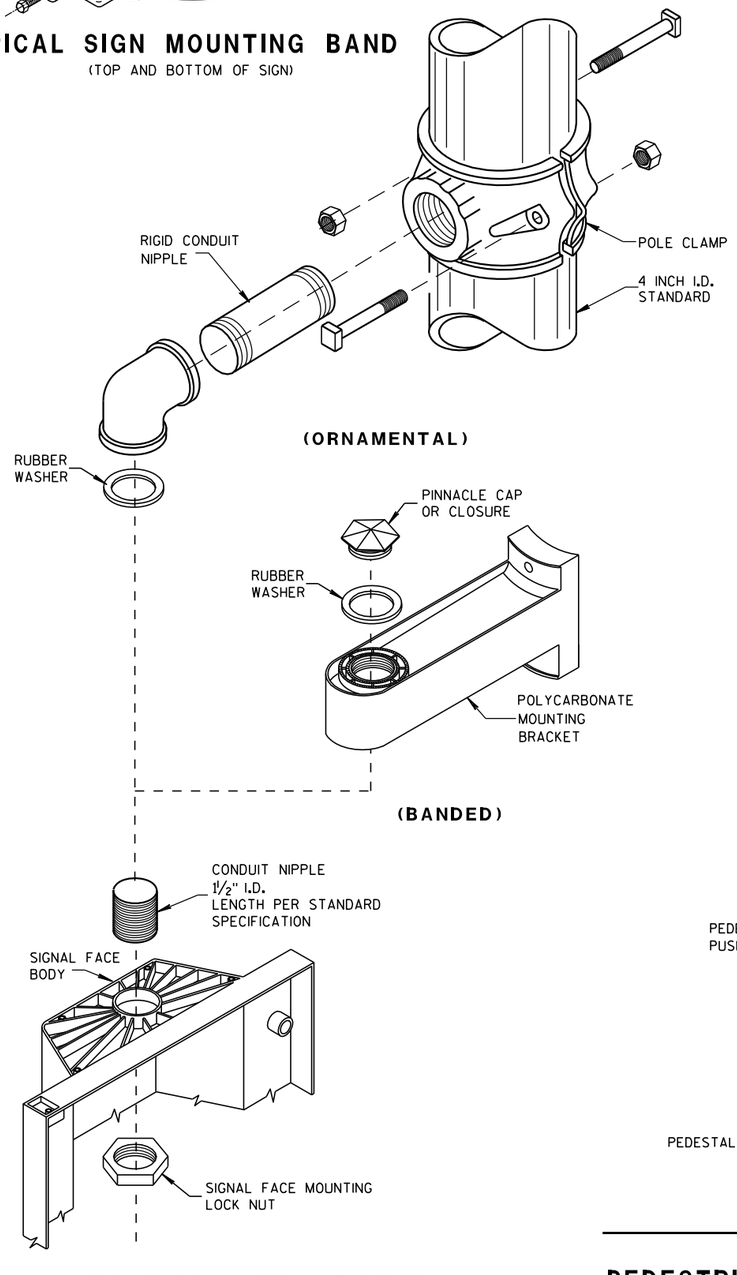

SIGNAL FACE MOUNTING DETAILS

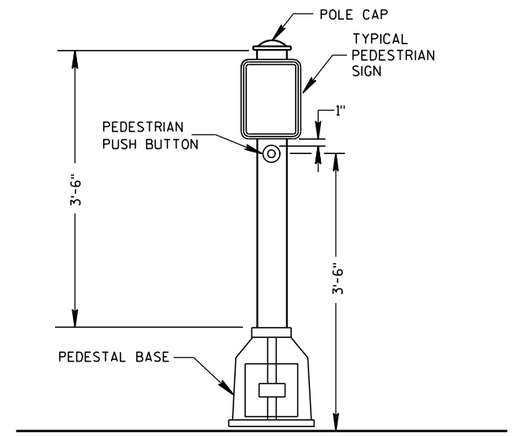

PEDESTRIAN PUSH BUTTON TYPICAL MOUNTING

GENERAL NOTES

DETAILS OF CONSTRUCTION, MATERIALS AND WORKMANSHIP NOT SHOWN ON THIS DRAWING SHALL CONFORM TO THE PERTINENT REQUIREMENTS OF THE CONTRACT.

SEE THE SIGNAL PLAN FOR REQUIRED SIGNAL FACE SIZES.

LOCATIONS SHALL BE AS SHOWN ON THE PLANS.

ALL PEDESTAL BASES SHALL BE MOUNTED ON CONCRETE BASE - TYPE 1.

FOR APPROVED MOUNTING HARDWARE, SEE THE CONTRACT SPECIFICATIONS.

POLYCARBONATE SIGNAL FACE MOUNTING BRACKETS SHALL BE USED UNLESS ORNAMENTAL POLE CLAMPS ARE SPECIFIED.

LENGTH OF TRAFFIC STANDARDS SHALL BE AS SHOWN ON THE PLANS.

MOUNTINGS AND BRACKETS SHALL BE AS SHOWN ON THE PLANS OR DESCRIBED IN THE SPECIAL PROVISIONS (BY THE DISTRICT TRAFFIC ENGINEER).

PEDESTRIAN SIGNS SHALL BE AS DESIGNATED IN THE PLANS.

FURNISH AND INSTALL VENTILATED, CAST, METALLIC (ALUMINUM ALLOY) CAPS. FASTEN CAPS WITH ONE (1) ¼" X ¾" - 20 TPI STAINLESS STEEL, HEX HEAD BOLT.

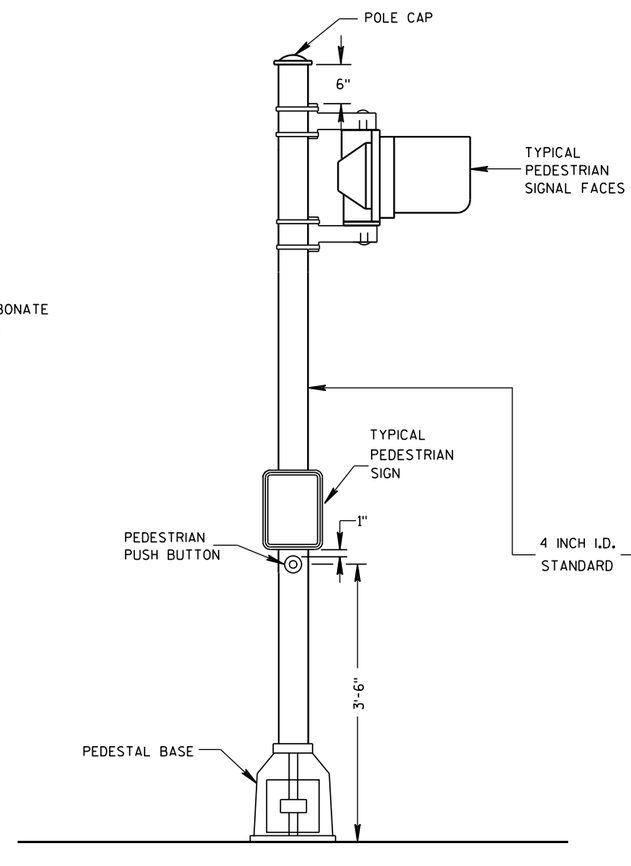

PEDESTRIAN FACE STANDARD-10 FT.

(WALK-DON'T WALK)

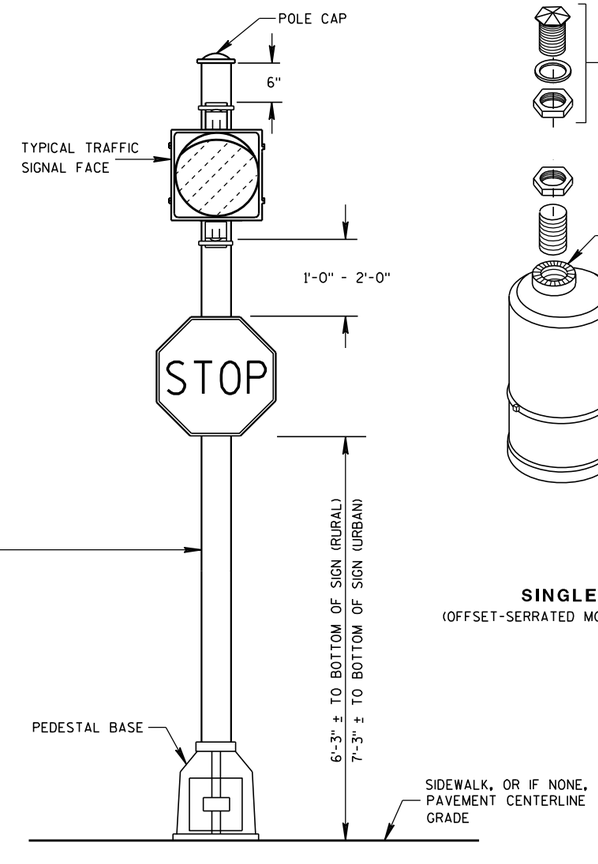

STANDARD FLASHER.

10 FOOT, 13 FOOT OR 15 FOOT AS REQUIRED

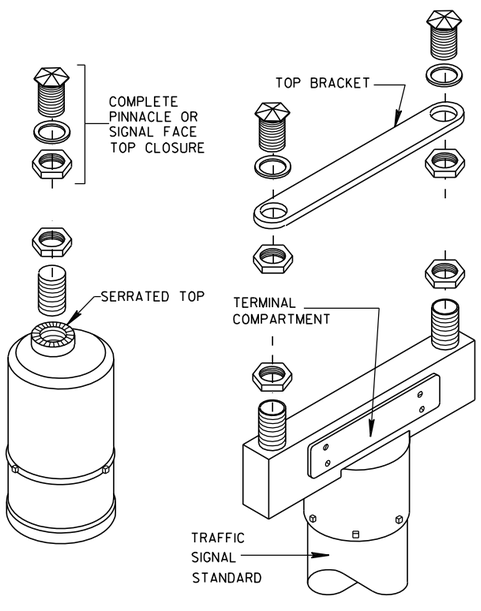

SINGLE
(OFFSET-SERRATED MOUNTING)

DOUBLE
(SERRATED MOUNTING)

SLIPFITTERS

TRAFFIC SIGNAL STANDARD PEDESTRIAN AND FLASHER TYPICAL MOUNTING DETAILS

STATE OF WISCONSIN
DEPARTMENT OF TRANSPORTATION

APPROVED

5/11/10 — DATE
/S/ John Corbin — STATE ELECTRICAL ENGI
HWYS
FHWA

6

S.D.D. 9 E 7-5

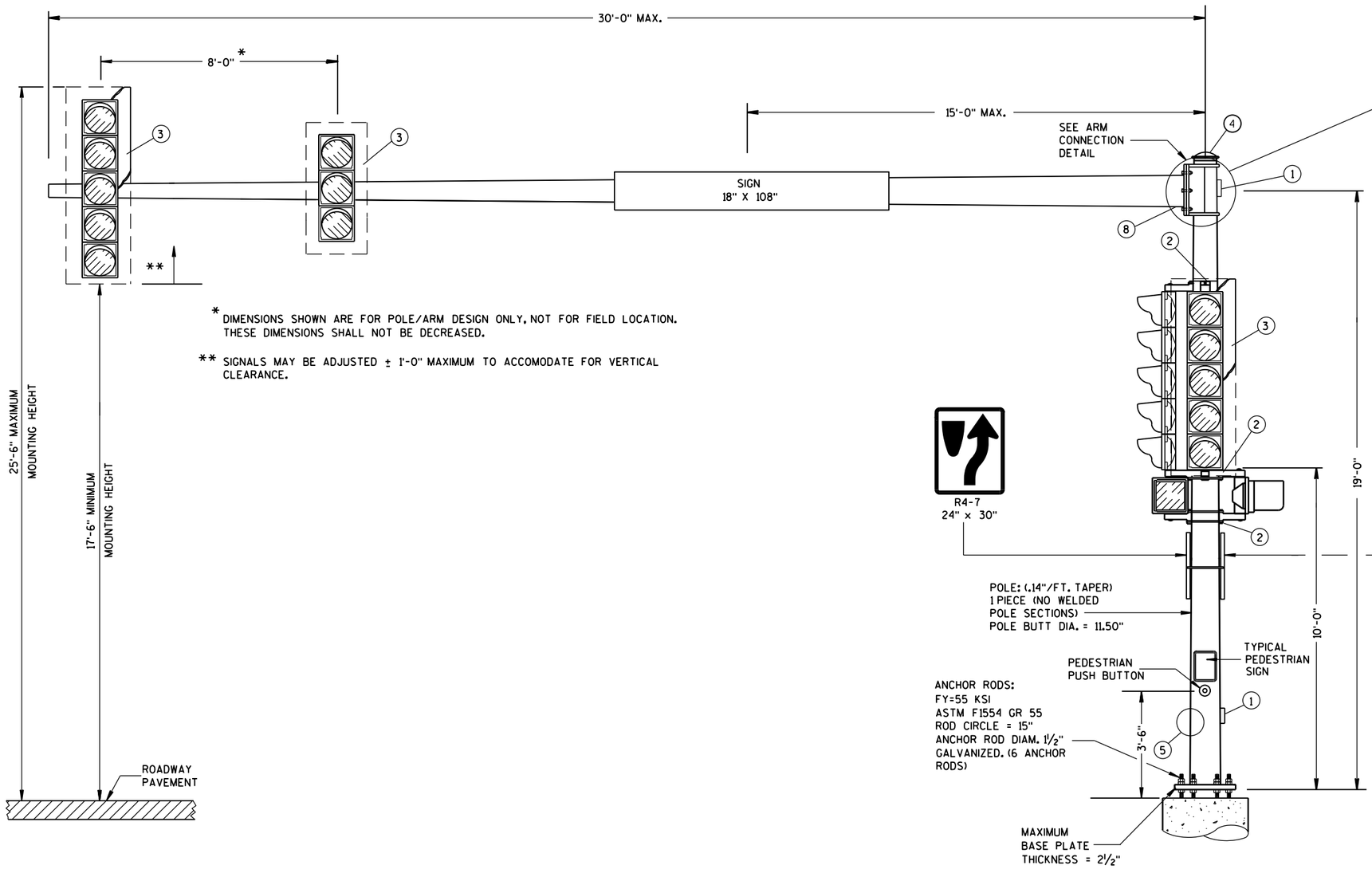

* DIMENSIONS SHOWN ARE FOR POLE/ARM DESIGN ONLY, NOT FOR FIELD LOCATION. THESE DIMENSIONS SHALL NOT BE DECREASED.

** SIGNALS MAY BE ADJUSTED ± 1'-0" MAXIMUM TO ACCOMODATE FOR VERTICAL CLEARANCE.

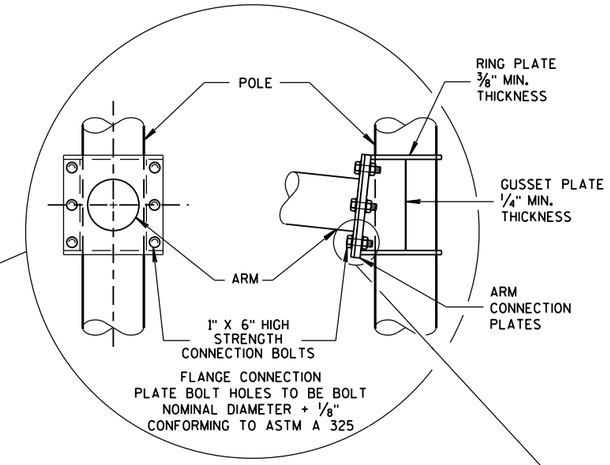

6 BOLT ARM CONNECTION DETAIL

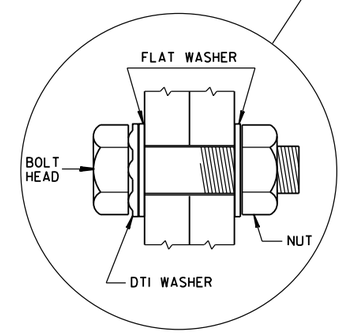

RECOMMENDED BOLT ASSEMBLY DETAIL

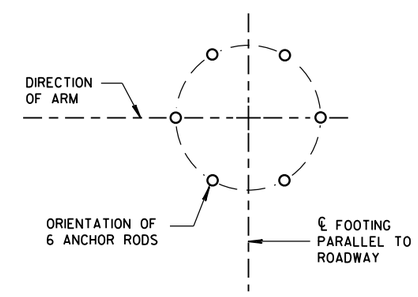

ANCHOR ROD LOCATION

(MAXIMUM LOAD)

TYPE 9 POLE 15'- 30' MONOTUBE ARM

TYPE 9 POLE 15' - 30' MONOTUBE ARM	
STATE OF WISCONSIN DEPARTMENT OF TRANSPORTATION	
APPROVED June, 2015 DATE	/S/ Ahmet Demirbilek STATE ELECTRICAL
FHWA	

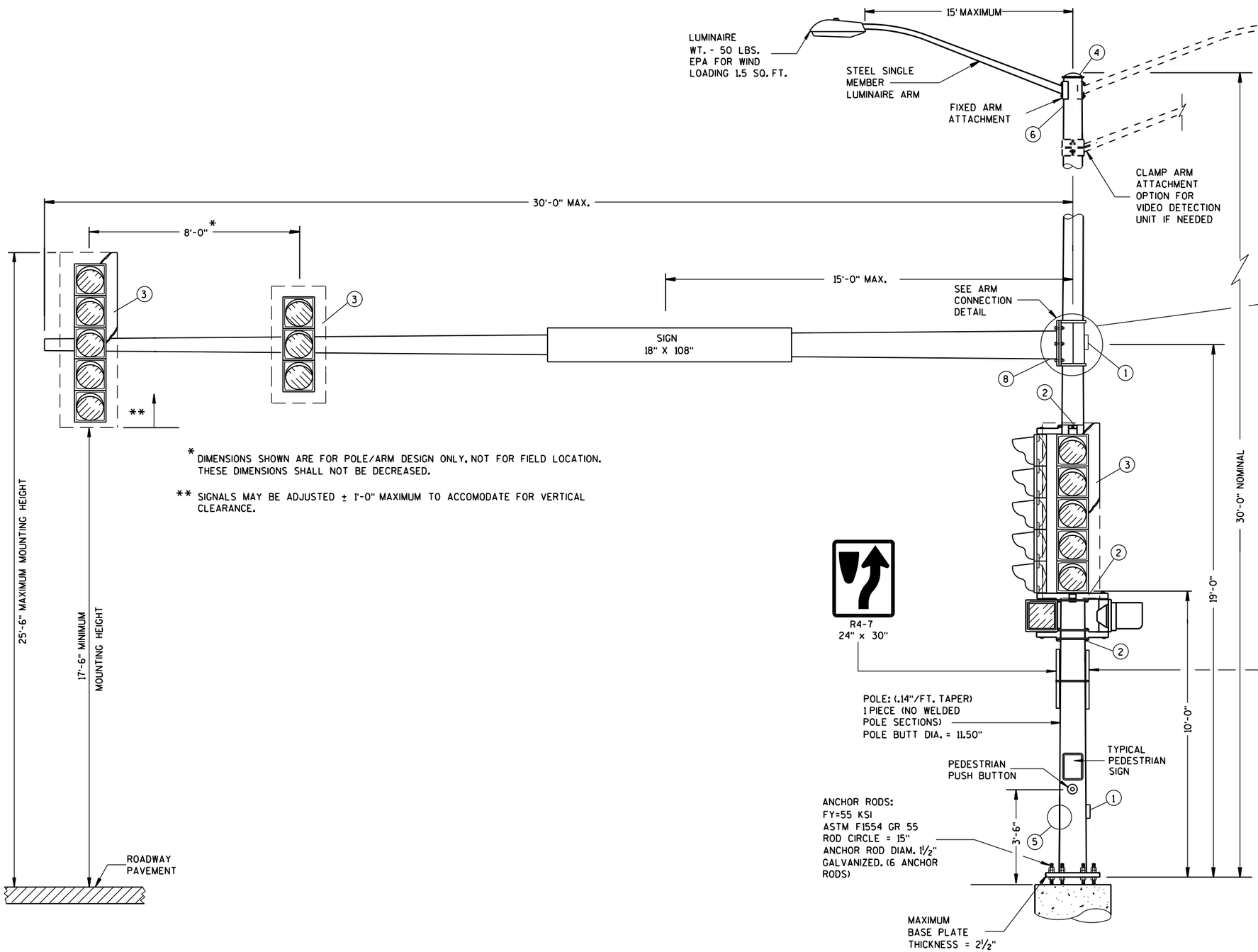

* DIMENSIONS SHOWN ARE FOR POLE/ARM DESIGN ONLY, NOT FOR FIELD LOCATION. THESE DIMENSIONS SHALL NOT BE DECREASED.

** SIGNALS MAY BE ADJUSTED ± 1'-0" MAXIMUM TO ACCOMODATE FOR VERTICAL CLEARANCE.

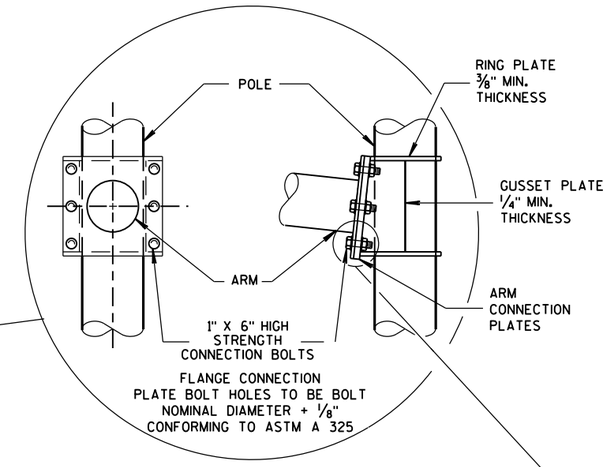

6 BOLT ARM CONNECTION DETAIL

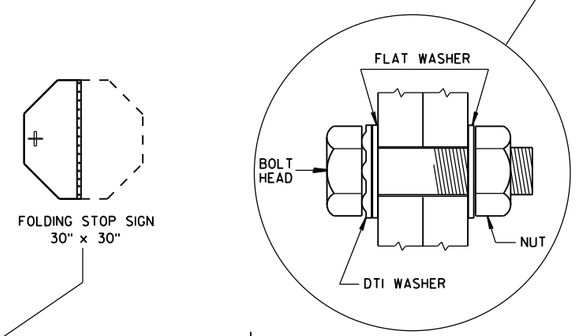

RECOMMENDED
BOLT ASSEMBLY
DETAIL

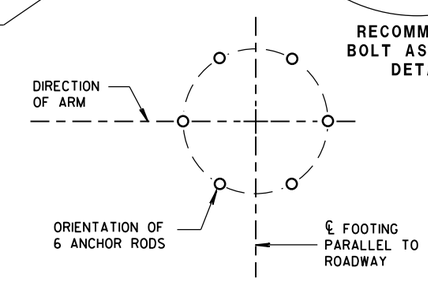

ANCHOR ROD LOCATION

(MAXIMUM LOAD)

TYPE 10 POLE
15'- 30' MONOTUBE ARM

TYPE 10 POLE 15' - 30' MONOTUBE ARM
STATE OF WISCONSIN DEPARTMENT OF TRANSPORTATION
APPROVED June, 2015 — DATE /S/ Ahmet Demirbilek — STATE ELECTRICAL FHWA

6

6

S.D.D. 9 E 8-7b

S.D.D. 9 E 8-7b

GENERAL NOTES

DETAILS OF CONSTRUCTION, MATERIALS AND WORKMANSHIP NOT SHOWN ON THIS DRAWING SHALL CONFORM TO THE PERTINENT REQUIREMENTS OF THE CONTRACT.

POLE TYPES 9 AND 10 ARE FOR ARM LENGTHS 15-FOOT TO 30-FOOT.

POLE TYPES 12 AND 13 ARE FOR ARM LENGTHS 35-FOOT TO 55-FOOT.

MONOTUBE POLE AND ARM SHALL BE GALVANIZED STEEL.

RING-STIFFENED BUILT-UP BOX TYPE OF ATTACHMENT FOR TRAFFIC SIGNAL ARM.

ONE (1) PIECE POLE CONSTRUCTION (NO WELDED POLE SECTIONS).

STANDARD STRAIGHT ARM DESIGN (3 % ± RISE).

SECTION 657, POLES OF THE STANDARD SPECIFICATIONS SHALL APPLY TO THIS DRAWING.

PROVIDE WIREWAY THRU POLE WALL AND ARM CONNECTION PLATES. PROVIDE ROUND, SMOOTH INSIDE SURFACE.

MANUFACTURER'S SUBMITTED POLE DESIGNS AND DRAWINGS SHALL BE SIGNED AND STAMPED BY A REGISTERED PROFESSIONAL ENGINEER AND CERTIFIED AS BEING IN COMPLIANCE WITH THE AASHTO 2013 6TH EDITION AND ALL PERTINENT WISDOT SPECIFICATIONS AND DRAWINGS FOR TRAFFIC AND LIGHTING STRUCTURES AND AS FOLLOWS:

- CATEGORY III FATIGUE LOADS OF GALLOPING, TRUCK GUSTS (AT 45 MPH VEHICLE VELOCITY) AND NATURAL WIND GUSTS FOR DESIGN OF TYPE 9 AND TYPE 10 STRUCTURES.
- CATEGORY II FATIGUE LOADS OF GALLOPING, TRUCK GUSTS (AT 45 MPH VEHICLE VELOCITY) AND NATURAL WIND GUSTS FOR DESIGN OF TYPE 12 AND TYPE 13 STRUCTURES.
- 90 MPH (3-SECOND GUST) WIND SPEED AND A 50 YEAR DESIGN LIFE.

SECURE THE OPENING BELOW THE BASE PLATE WITH STAINLESS STEEL OR GALVANIZED STEEL MESH AND SECURE THE MESH WITH ¾" S.S. BANDING AROUND THE LEVELING NUTS.

INDENT PRINT (NOMINAL ½" HIGH) THE POLE LENGTH AND FIRST TWO LETTERS OF THE MANUFACTURERS NAME ON TWO SIDES OF THE BASE PLATE 180 DEGREES APART, BEFORE GALVANIZING. THE ARM SHALL BE IDENTIFIED WITH THE SAME INFORMATION BY INDENT PRINT.

SIGNAL FACE SHALL BE MOUNTED 6 INCHES (NOMINAL) FROM THE END OF THE MONOTUBE ARM OR AS SHOWN ON THE PLAN CONSTRUCTION DETAIL OR AS DIRECTED BY THE PROJECT ENGINEER/ELECTRICAL OPERATIONS PERSONNEL. MOUNT ALL LIKE HEADS AT SAME ELEVATION.

SIGN MOUNTING BRACKETS SHALL BE FURNISHED IN ACCORDANCE WITH SECTION 637 OF THE STANDARD SPECIFICATIONS FOR HIGHWAY AND STRUCTURE CONSTRUCTION.

(1) DESIGN FOR MAXIMUM ALLOWABLE HANDHOLE WITH COVER ASSEMBLY WITH TWO ¼" X ¾" - 20 TPI STAINLESS STEEL HEX HEAD BOLTS.

(2) SIGNAL MOUNTING BRACKETS FOR POLE MOUNTING, MOUNT WITH CAP SCREW AND BANDING. (SEE SPECIFICATIONS SEC. 658).

(3) SECURELY MOUNT BACKPLATES, PROJECTING 5" BEYOND ALL SIDES OF THE SIGNAL FACE HOUSING, PER MANUFACTURERS RECOMMENDATIONS.

(4) THE TOP OF THE POLE SHAFT AND THE END OF THE MONOTUBE ARM SHALL BE EQUIPPED WITH A REMOVABLE, VENTILATED CAP HELD SECURELY IN PLACE WITH SET SCREWS.

(5) FACTORY-WELDED BRACKET FOR GROUNDING LUG, OPPOSITE HANDHOLE. (LUG AND HARDWARE PAID UNDER SEPARATE ITEM). PROVIDE HOLE IN BRACKET FOR ¼" X ¾" - 20 TPI STAINLESS STEEL HEX HEAD BOLT.

(6) FACTORY-WELDED "J" HOOK FOR STRAIN RELIEF FOR POLE LUMINAIRE WIRE.

(7) INSTALL STRUCTURAL IDENTIFICATION PLAQUES.

STRUCTURAL IDENTIFICATION PLAQUES SHALL BE PLACED ON THE POLES IN THE SAME DIRECTION AS THE ARM.

MOUNTING HEIGHT SHALL BE 6'-0" ABOVE THE CURB OR SHOULDER. ADJUST IF IT IS KNOWN THAT REQUIRED TRAFFIC SIGNS WILL BE OBSTRUCTED.

(8) FACTORY DRILLED ½" DRAIN HOLE 2" FROM FLANGE CONNECTION PLATE.

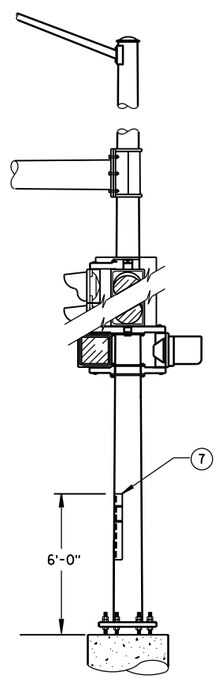

STRUCTURAL IDENTIFICATION PLAQUE PLACEMENT

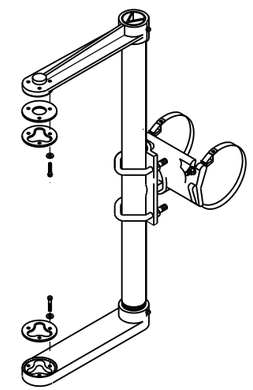

SIGNAL FACE MOUNTING BRACKET DETAIL FOR MONOTUBE ARM

(MOUNT PER MANUFACTURER'S RECOMMENDATION)

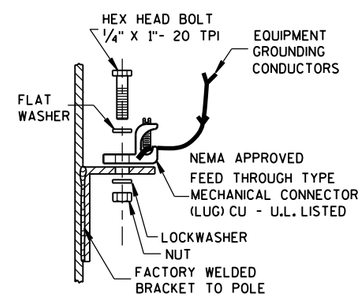

TYPICAL GROUNDING CONNECTIONS (5)

NUT, BOLT AND WASHERS SHALL BE STAINLESS STEEL

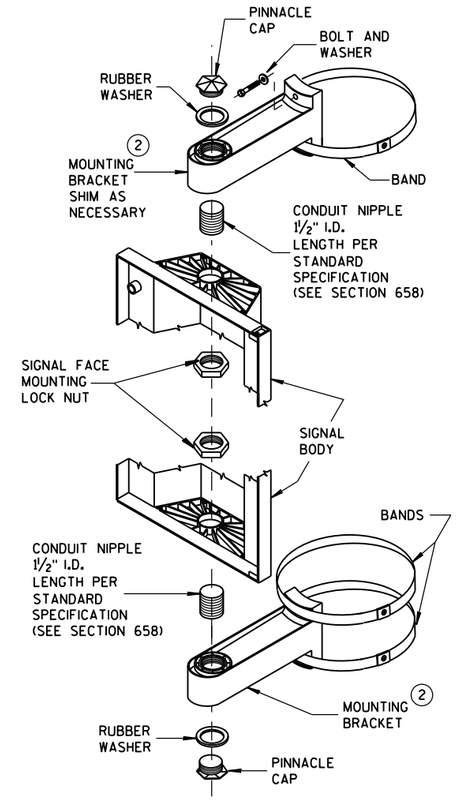

SIGNAL FACE VERTICAL MOUNTING DETAIL

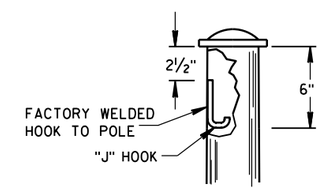

"J" HOOK WIRE SUPPORT (6)

GENERAL NOTES AND HARDWARE DETAILS FOR TYPE 9, 10, 12 & 13 POLES WITH MONOTUBE ARMS

STATE OF WISCONSIN
DEPARTMENT OF TRANSPORTATION

APPROVED
June, 2015 — DATE
/S/ Ahmet Demirbilek — STATE ELECTRICAL
FHWA

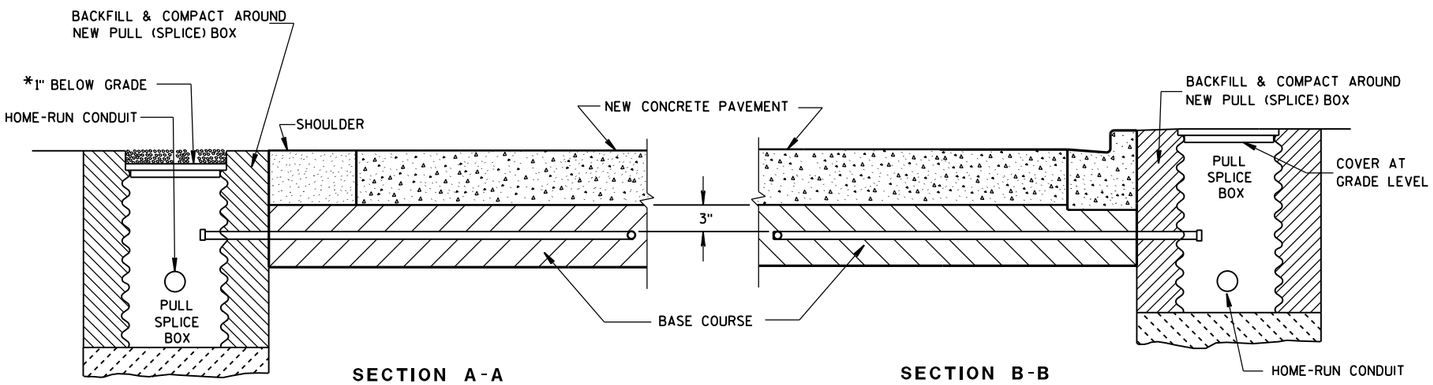

SECTION A-A
NO CURB & GUTTER

SECTION B-B
CURB & GUTTER

*RECESS PULL (SPLICE) BOX SO THAT THE COVER IS 3" BELOW GRADE IN SHOULDER AREAS OF CRUSHED AGGREGATE. BACKFILL OVER COVER WITH THE CRUSHED AGGREGATE TO BRING THE AREA TO GRADE LEVEL.

LOOP DETECTOR INSTALLATION DETAIL

GENERAL NOTES

DETAILS OF CONSTRUCTION, MATERIALS AND WORKMANSHIP NOT SHOWN ON THIS DRAWING SHALL CONFORM TO THE PERTINENT REQUIREMENTS OF THE CONTRACT.

LOOP SIZE, CONFIGURATION LOCATION, NUMBER OF TURNS OF WIRE AND ASSOCIATED SIGNAL PHASE SHALL BE AS SHOWN ON THE PLANS.

PITCH LEAD OUT CONDUIT TO DRAIN TO ROADSIDE PULL (SPLICE) BOX.

SPLICES SHALL BE INSTALLED BY USING CAST IN PLACE SPLICE KITS LISTED ON THE DEPARTMENTS APPROVED PRODUCTS LIST OR AN ENGINEER APPROVED EQUAL. NON-INSULATED BUTT SPLICES TO FIT #12 AWG STRANDED WIRE SHALL BE USED. SPLICES SHALL BE SOLDERED AND INSULATED FROM EACH OTHER AS PER INSTRUCTIONS INCLUDED IN THE SPLICE KIT.

MEASURE GROUND RESISTANCE USING A MEGGER. REPLACE LOOP WIRE NOT ATTAINING A READING OF INFINITY TO GROUND.

AFTER SPLICING THE LOOP WIRE TO THE LOOP LEAD-IN CABLE, THE CONTRACTOR SHALL MEASURE INDUCTANCE, GROUND RESISTANCE AND WIRE RESISTANCE AT THE CABINET END OF THE LEAD-IN CABLE AND FURNISH A COPY OF THE READINGS TO THE PROJECT ENGINEER FOR EVALUATION.

LOOP DETECTOR LEADS SHALL BE IDENTIFIED WITH THEIR ASSOCIATED LOOP BY USE OF WATERPROOF TAGS AT BOTH ENDS OF THE CABLE. A LISTING OF THE CABLE IDENTIFICATION PER INDIVIDUAL LOOP LEAD-IN SHALL BE PLACED IN THE CABINET.

THE #12 AWG. LOOP WIRE IN THE PULL (SPLICE) BOX SHALL BE HAND TWISTED AT LEAST 3 TWISTS PER FOOT BEFORE BEING SPLICED TO THE LOOP LEAD-IN CABLE.

SPLICES OF LOOP WIRE TO LEAD-IN CABLE SHALL BE MADE ONLY IN PULL (SPLICE) BOXES AT THE SIDE OF THE ROAD.

THE #12 AWG LOOP WIRE SHALL BE INSTALLED FROM THE ROADSIDE PULL (SPLICE) BOX THROUGH THE LOOP CONDUIT, BACK TO THE ROADSIDE PULL (SPLICE) BOX, AND BE INSTALLED IN ONE, NON-SPLICE CONTINUOUS LENGTH.

PROTECTION OF THE CONDUIT IN THE BASE COURSE, SHALL BE REQUIRED AFTER INSTALLATION AND BEFORE NEW PAVEMENT IS INSTALLED.

SHOULD INSTALLATION REPAIR BE REQUIRED, IT SHALL BE DONE UNDER THE DIRECTION OF THE PROJECT ENGINEER.

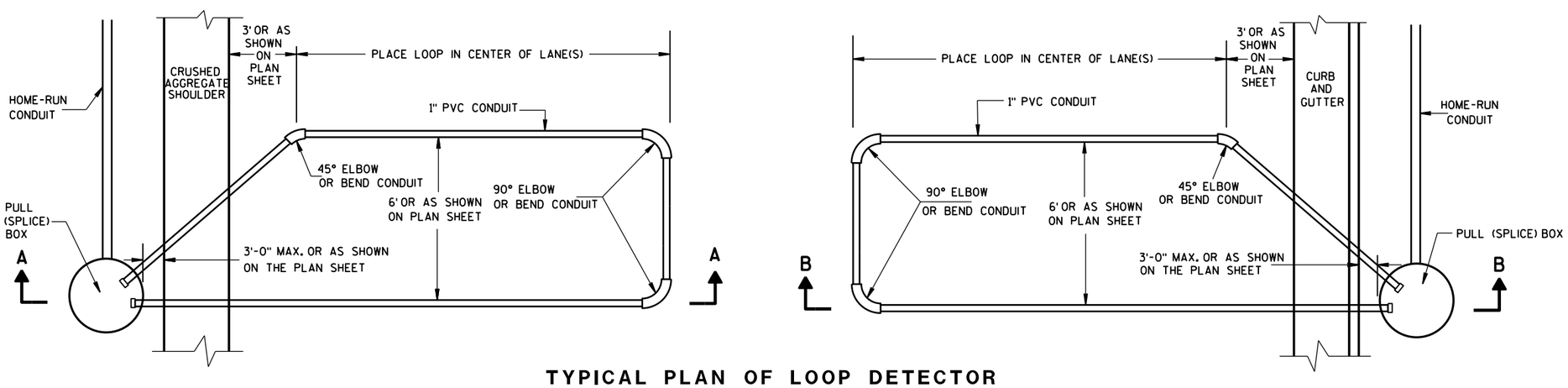

TYPICAL PLAN OF LOOP DETECTOR WITH 18" OR 24" PULL (SPLICE) BOX

LOOP DETECTOR INSTALLED IN BASE COURSE WITH PULL (SPLICE) BOX OFF ROADWAY (OPTION 1)
STATE OF WISCONSIN DEPARTMENT OF TRANSPORTATION
APPROVED Sept. 2014 DATE — /S/ Ahmet Demirbilek STATE ELECTRICAL — FHWA

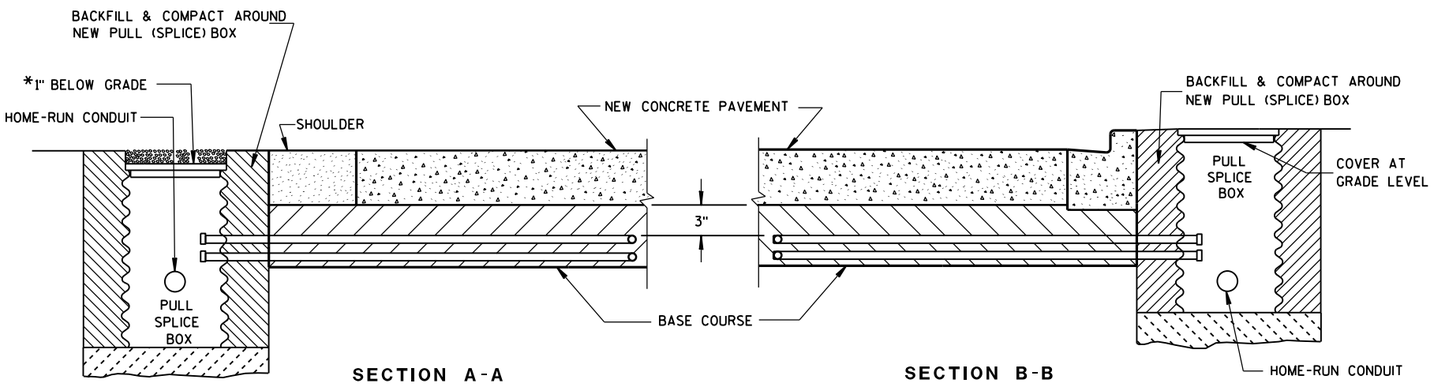

SECTION A-A
NO CURB & GUTTER

SECTION B-B
CURB & GUTTER

*RECESS PULL (SPLICE) BOX SO THAT THE COVER IS 3" BELOW GRADE IN SHOULDER AREAS OF CRUSHED AGGREGATE. BACKFILL OVER COVER WITH THE CRUSHED AGGREGATE TO BRING THE AREA TO GRADE LEVEL.

LOOP DETECTOR INSTALLATION DETAIL

GENERAL NOTES

DETAILS OF CONSTRUCTION, MATERIALS AND WORKMANSHIP NOT SHOWN ON THIS DRAWING SHALL CONFORM TO THE PERTINENT REQUIREMENTS OF THE CONTRACT.

LOOP SIZE, CONFIGURATION LOCATION, NUMBER OF TURNS OF WIRE AND ASSOCIATED SIGNAL PHASE SHALL BE AS SHOWN ON THE PLANS.

PITCH LEAD OUT CONDUIT TO DRAIN TO ROADSIDE PULL (SPLICE) BOX.

SPLICES SHALL BE INSTALLED BY USING CAST IN PLACE SPLICE KITS LISTED ON THE DEPARTMENTS APPROVED PRODUCTS LIST OR AN ENGINEER APPROVED EQUAL. NON-INSULATED BUTT SPLICES TO FIT #12 AWG STRANDED WIRE SHALL BE USED. SPLICES SHALL BE SOLDERED AND INSULATED FROM EACH OTHER AS PER INSTRUCTIONS INCLUDED IN THE SPLICE KIT.

MEASURE GROUND RESISTANCE USING A MEGGER. REPLACE LOOP WIRE NOT ATTAINING A READING OF INFINITY TO GROUND.

AFTER SPLICING THE LOOP WIRE TO THE LOOP LEAD-IN CABLE, THE CONTRACTOR SHALL MEASURE INDUCTANCE, GROUND RESISTANCE AND WIRE RESISTANCE AT THE CABINET END OF THE LEAD-IN CABLE AND FURNISH A COPY OF THE READINGS TO THE PROJECT ENGINEER FOR EVALUATION.

LOOP DETECTOR LEADS SHALL BE IDENTIFIED WITH THEIR ASSOCIATED LOOP BY USE OF WATERPROOF TAGS AT BOTH ENDS OF THE CABLE. A LISTING OF THE CABLE IDENTIFICATION PER INDIVIDUAL LOOP LEAD-IN SHALL BE PLACED IN THE CABINET.

THE #12 AWG. LOOP WIRE IN THE PULL (SPLICE) BOX SHALL BE HAND TWISTED AT LEAST 3 TWISTS PER FOOT BEFORE BEING SPLICED TO THE LOOP LEAD-IN CABLE.

SPLICES OF LOOP WIRE TO LEAD-IN CABLE SHALL BE MADE ONLY IN PULL (SPLICE) BOXES AT THE SIDE OF THE ROAD.

THE #12 AWG LOOP WIRE SHALL BE INSTALLED FROM THE ROADSIDE PULL (SPLICE) BOX, THROUGH THE LOOP CONDUIT, BACK TO THE ROADSIDE PULL (SPLICE) BOX, AND BE INSTALLED IN ONE, NON-SPLICED CONTINUOUS LENGTH.

PROTECTION OF THE CONDUITS IN THE BASE COURSE SHALL BE REQUIRED AFTER INSTALLATION AND BEFORE NEW PAVEMENT IS INSTALLED.

SHOULD INSTALLATION REPAIR BE REQUIRED, IT SHALL BE DONE UNDER THE DIRECTION OF THE PROJECT ENGINEER.

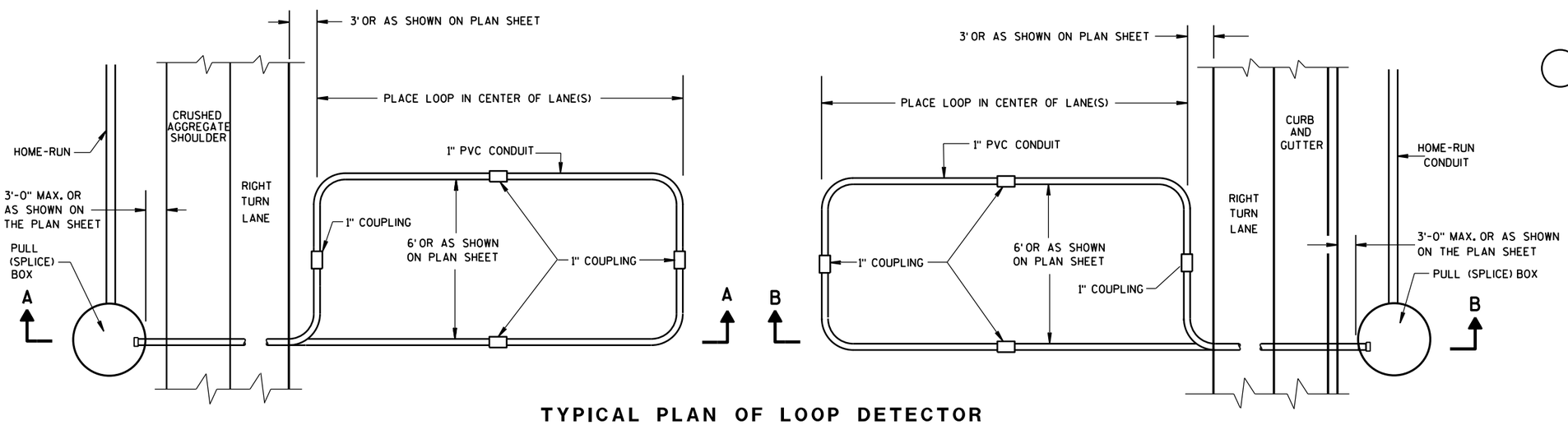

TYPICAL PLAN OF LOOP DETECTOR WITH 24" PULL (SPLICE) BOX

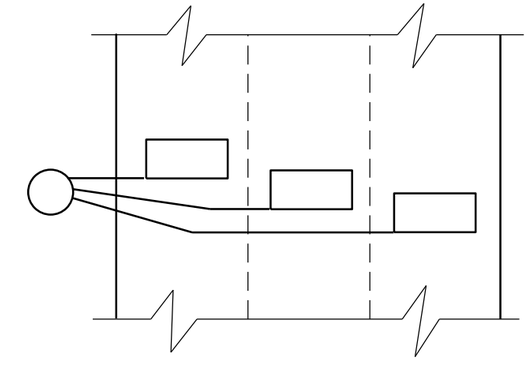

MULTI-LANE INSTALLATION

LOOP DETECTOR INSTALLED IN BASE COURSE WITH PULL (SPLICE) BOX OFF ROADWAY (OPTION 2)
STATE OF WISCONSIN DEPARTMENT OF TRANSPORTATION
APPROVED Sept. 2014 DATE — /S/ Ahmet Demirbilek STATE ELECTRICAL — FHWA

6

S.D.D. 9 F 15-4b

GENERAL NOTES

DETAILS OF CONSTRUCTION, MATERIALS AND WORKMANSHIP NOT SHOWN ON THIS DRAWING SHALL CONFORM TO THE PERTINENT REQUIREMENTS OF THE CONTRACT.

1. WOOD POLES SHALL BE CLASS 4. LENGTH DETERMINED BY SIGNAL PLAN.

2. SIGNAL FACES:
   A. ALL SECTIONS SHALL BE 12" AND POLYCARBONATE.
   B. EACH SHALL CONTAIN A 5" WIDE DULL BLACK POLYCARBONATE BACKPLATE.
   C. EACH SHALL BE WIRED FROM THE TOP SIGNAL MOUNTING BRACKET.
   D. NEAR RIGHT SIGNAL FACE SUSPENDED ON THE TETHER (NO BACKPLATE) SHALL NOT BE OVER THE TRAVELED WAY. IF THE POLE IS WITHIN 5 FEET OF THE TRAVELED WAY MOUNT THE SIGNAL FACE ON THE WOOD POLE WITH BACKPLATE.

3. SPAN WIRE:
   A. EACH SPAN WIRE SHALL BE INDIVIDUALLY DOWN GUYED.
   B. SIGNAL AND LIGHTING CABLES SHALL ONLY BE ATTACHED TO THE UPPER SPAN WIRE.
   C. THE SIGNAL ASSEMBY SHALL HAVE A 17' MIN. HEIGHT ABOVE THE ROADWAY. THIS SHALL BE MEASURED AFTER THE SPAN WIRE INSTALLATION IS COMPLETED WITH ALL CABLES AND SIGNAL FACES IN PLACE. MAINTAIN MINIMUM AND MAXIMUM HEIGHTS AS ROADWAY WORK PROGRESSES.

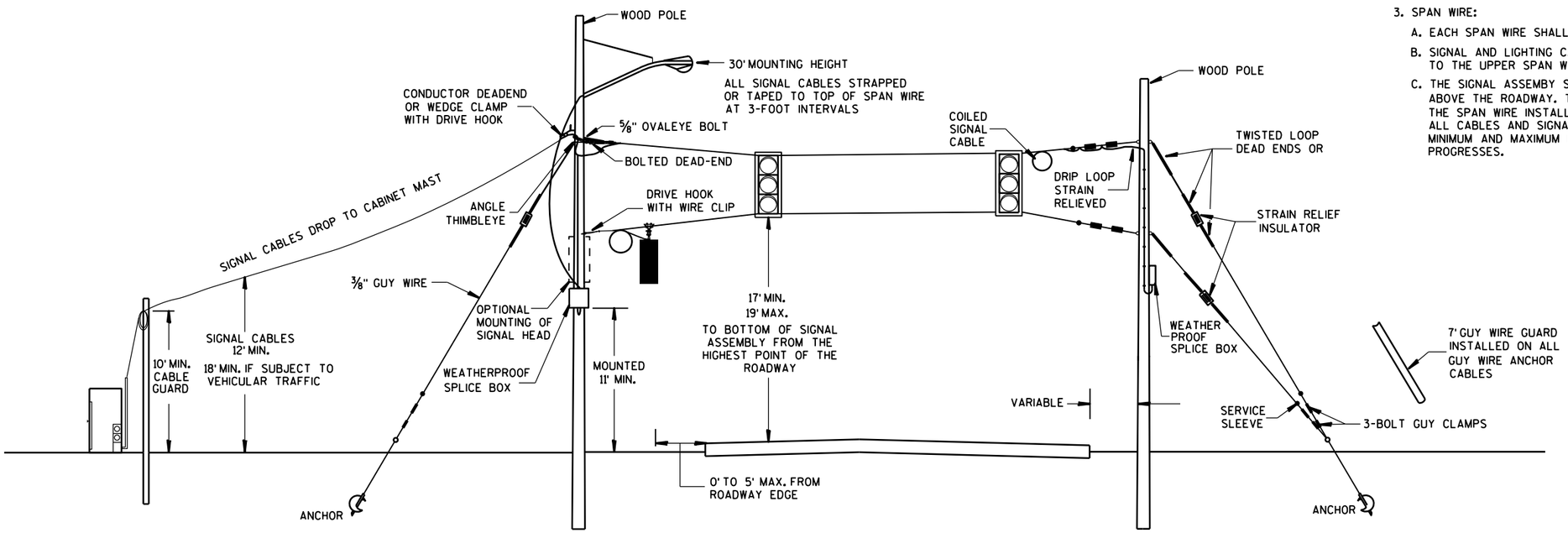

SPAN WIRE
TEMPORARY SIGNALS

MINIMUM POLE LENGTHS	POLE BURIEL DEPTHS
25'	5'
30'	6'
35'	7'
40'	8'
45'	9'

SPAN WIRE
TEMPORARY TRAFFIC SIGNAL

STATE OF WISCONSIN
DEPARTMENT OF TRANSPORTATION

APPROVED
June, 2015 — DATE
/S/ Ahmet Demirbilek — STATE ELECTRICAL
FHWA

6

S.D.D. 9 G 1-4a

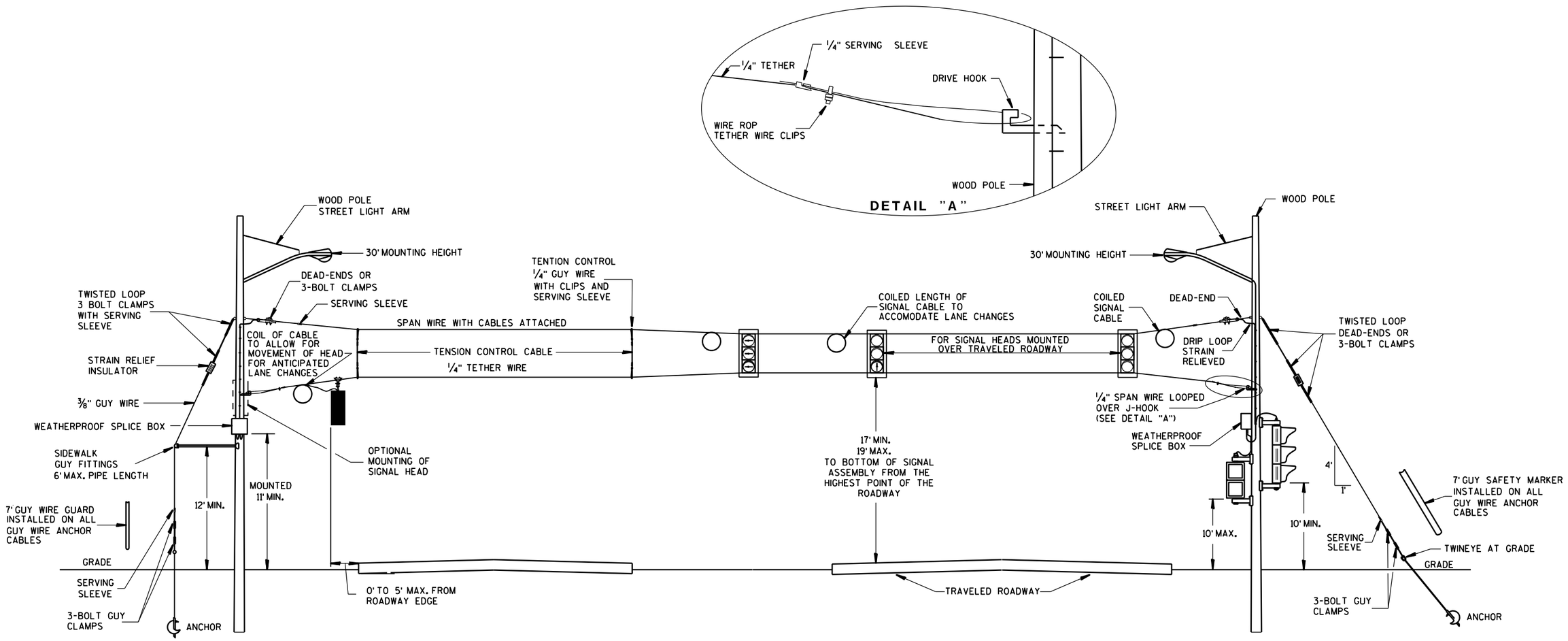

GENERAL NOTES

DETAILS OF CONSTRUCTION, MATERIALS AND WORKMANSHIP NOT SHOWN ON THIS DRAWING SHALL CONFORM TO THE PERTINENT REQUIREMENTS OF THE CONTRACT.

1. WOOD POLES SHALL BE CLASS 4. LENGTH DETERMINED BY SIGNAL PLAN.
2. SIGNAL FACES:
   - A. ALL SECTIONS SHALL BE 12" AND POLYCARBONATE.
   - B. EACH SHALL CONTAIN A 5" WIDE DULL BLACK POLYCARBONATE BACKPLATE.
   - C. EACH SHALL BE WIRED FROM THE TOP SIGNAL MOUNTING BRACKET.
   - D. NEAR RIGHT SIGNAL FACE SUSPENDED ON THE TETHER (NO BACKPLATE) SHALL NOT BE OVER THE TRAVELED WAY. IF THE POLE IS WITHIN 5 FEET OF THE TRAVELED WAY MOUNT THE SIGNAL FACE ON THE WOOD POLE WITH BACKPLATE.
   - E. FAR INDICATION SHALL BE MAINTAINED OVER CENTER OF TRAFFIC LANE.
3. SPAN WIRE:
   - A. EACH SPAN WIRE SHALL BE INDIVIDUALLY DOWN GUYED.
   - B. SIGNAL AND LIGHTING CABLES SHALL ONLY BE ATTACHED TO THE UPPER SPAN WIRE.
   - C. THE SIGNAL ASSEMBY SHALL HAVE A 17' MIN. HEIGHT ABOVE THE ROADWAY. THIS SHALL BE MEASURED AFTER THE SPAN WIRE INSTALLATION IS COMPLETED WITH ALL CABLES AND SIGNAL FACES IN PLACE. MAINTAIN MINIMUM AND MAXIMUM HEIGHTS AS ROADWAY WORK PROGRESSES.

SPAN WIRE
TEMPORARY SIGNALS
4 LANE ROADWAYS

MINIMUM POLE LENGTHS	CLASS	MIN. BURIAL DEPTHS
25'	V	5'
30'	V	6'
35'	IV	7'
40'	IV	8'
45'	IV	9'

SPAN WIRE
TEMPORARY TRAFFIC SIGNAL

STATE OF WISCONSIN
DEPARTMENT OF TRANSPORTATION

APPROVED
June, 2015 — DATE
/S/ Ahmet Demirbilek — STATE ELECTRICAL
FHWA

6

S.D.D. 9 G 1-4b

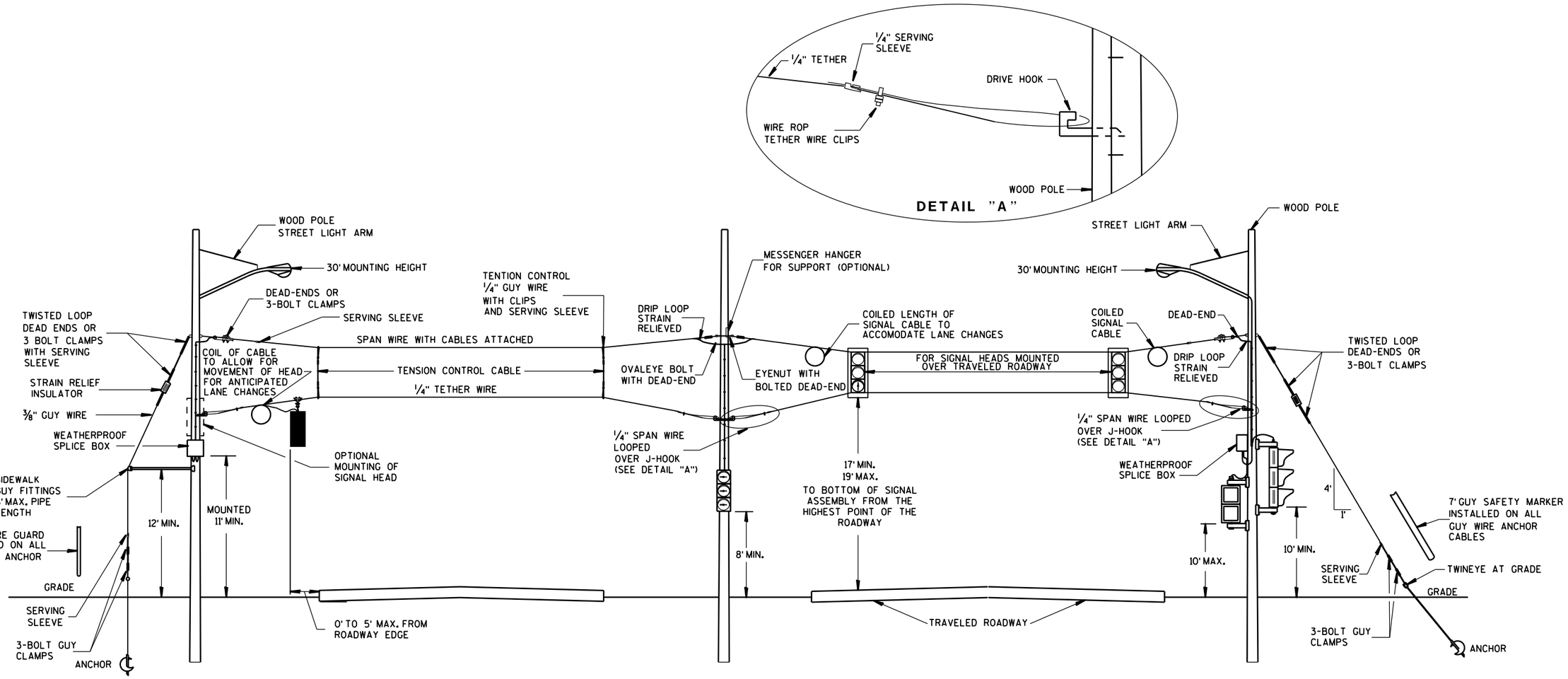

SPAN WIRE
TEMPORARY SIGNALS
4 LANE ROADWAYS

GENERAL NOTES

DETAILS OF CONSTRUCTION, MATERIALS AND WORKMANSHIP NOT SHOWN ON THIS DRAWING SHALL CONFORM TO THE PERTINENT REQUIREMENTS OF THE CONTRACT.

1. WOOD POLES SHALL BE CLASS 4. LENGTH DETERMINED BY SIGNAL PLAN.

2. SIGNAL FACES:
   A. ALL SECTIONS SHALL BE 12" AND POLYCARBONATE.
   B. EACH SHALL CONTAIN A 5" WIDE DULL BLACK POLYCARBONATE BACKPLATE.
   C. EACH SHALL BE WIRED FROM THE TOP SIGNAL MOUNTING BRACKET.
   D. NEAR RIGHT SIGNAL FACE SUSPENDED ON THE TETHER (NO BACKPLATE) SHALL NOT BE OVER THE TRAVELED WAY. IF THE POLE IS WITHIN 5 FEET OF THE TRAVELED WAY MOUNT THE SIGNAL FACE ON THE WOOD POLE WITH BACKPLATE.
   E. FAR INDICATION SHALL BE MAINTAINED OVER CENTER OF TRAFFIC LANE.

3. SPAN WIRE:
   A. EACH SPAN WIRE SHALL BE INDIVIDUALLY DOWN GUYED.
   B. SIGNAL AND LIGHTING CABLES SHALL ONLY BE ATTACHED TO THE UPPER SPAN WIRE.
   C. THE SIGNAL ASSEMBY SHALL HAVE A 17' MIN. HEIGHT ABOVE THE ROADWAY. THIS SHALL BE MEASURED AFTER THE SPAN WIRE INSTALLATION IS COMPLETED WITH ALL CABLES AND SIGNAL FACES IN PLACE. MAINTAIN MINIMUM AND MAXIMUM HEIGHTS AS ROADWAY WORK PROGRESSES.

MINIMUM POLE LENGTHS	CLASS	MIN. BURIAL DEPTHS
25'	V	5'
30'	V	6'
35'	IV	7'
40'	IV	8'
45'	IV	9'

SPAN WIRE
TEMPORARY TRAFFIC SIGNAL

STATE OF WISCONSIN
DEPARTMENT OF TRANSPORTATION

APPROVED
June, 2015 — DATE
/S/ Ahmet Demirbilek — STATE ELECTRICAL
FHWA

6

S.D.D. 9 G 1-4c

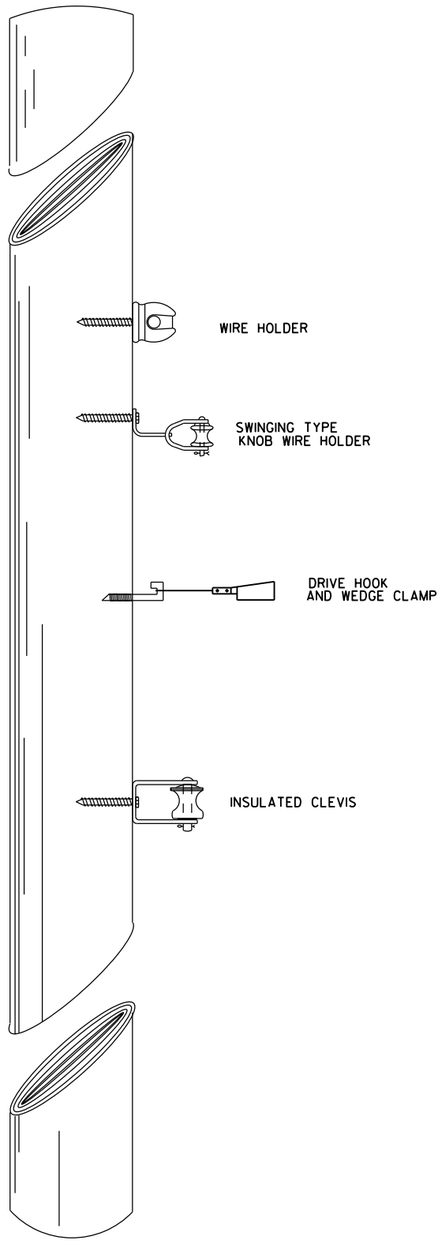

TYPICAL CABLE HANGERS

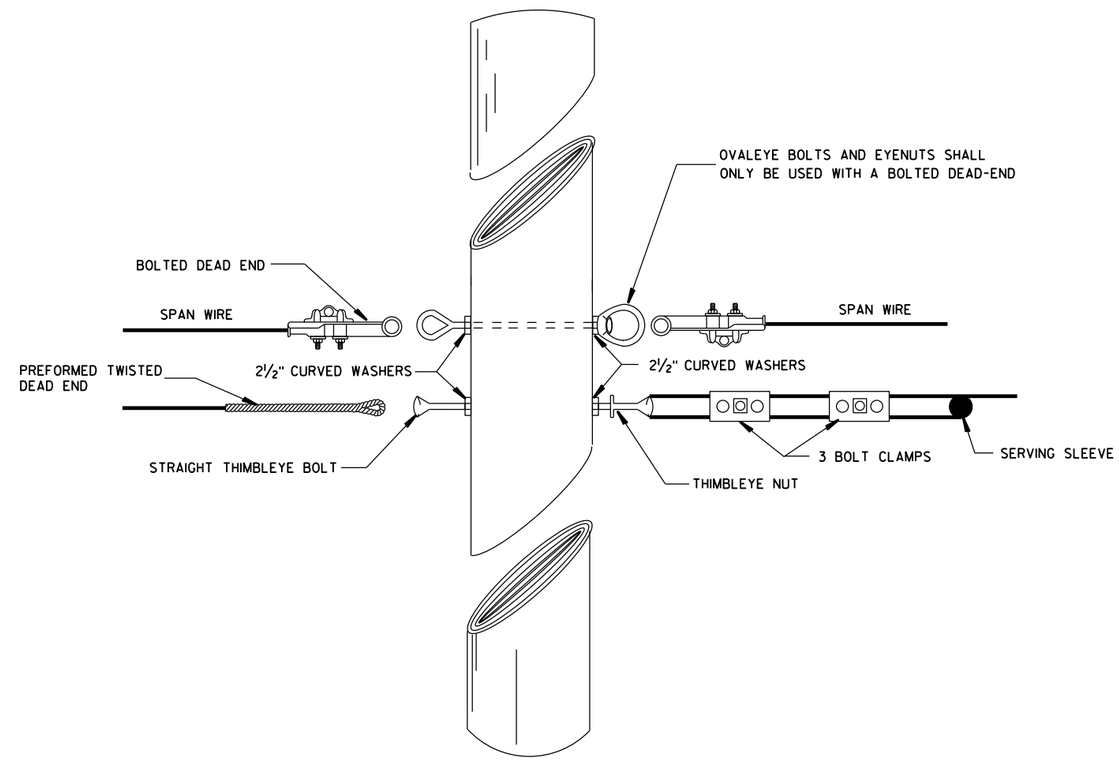

TYPICAL DEAD-ENDING

6

6

SPAN WIRE
TEMPORARY TRAFFIC SIGNAL

STATE OF WISCONSIN
DEPARTMENT OF TRANSPORTATION

APPROVED
June, 2015 — DATE
/S/ Ahmet Demirbilek — STATE ELECTRICAL
FHWA

S.D.D. 9 G 1-4d

S.D.D. 9 G 1-4d

GENERAL NOTES

1. USE ¾" DRILL IN WOOD POLE TO PROVIDE HOLE FOR ⅝" BOLTS.
2. SAFTY LOOP REQUIRED ON EACH END OF ALL SPAN WIRES.

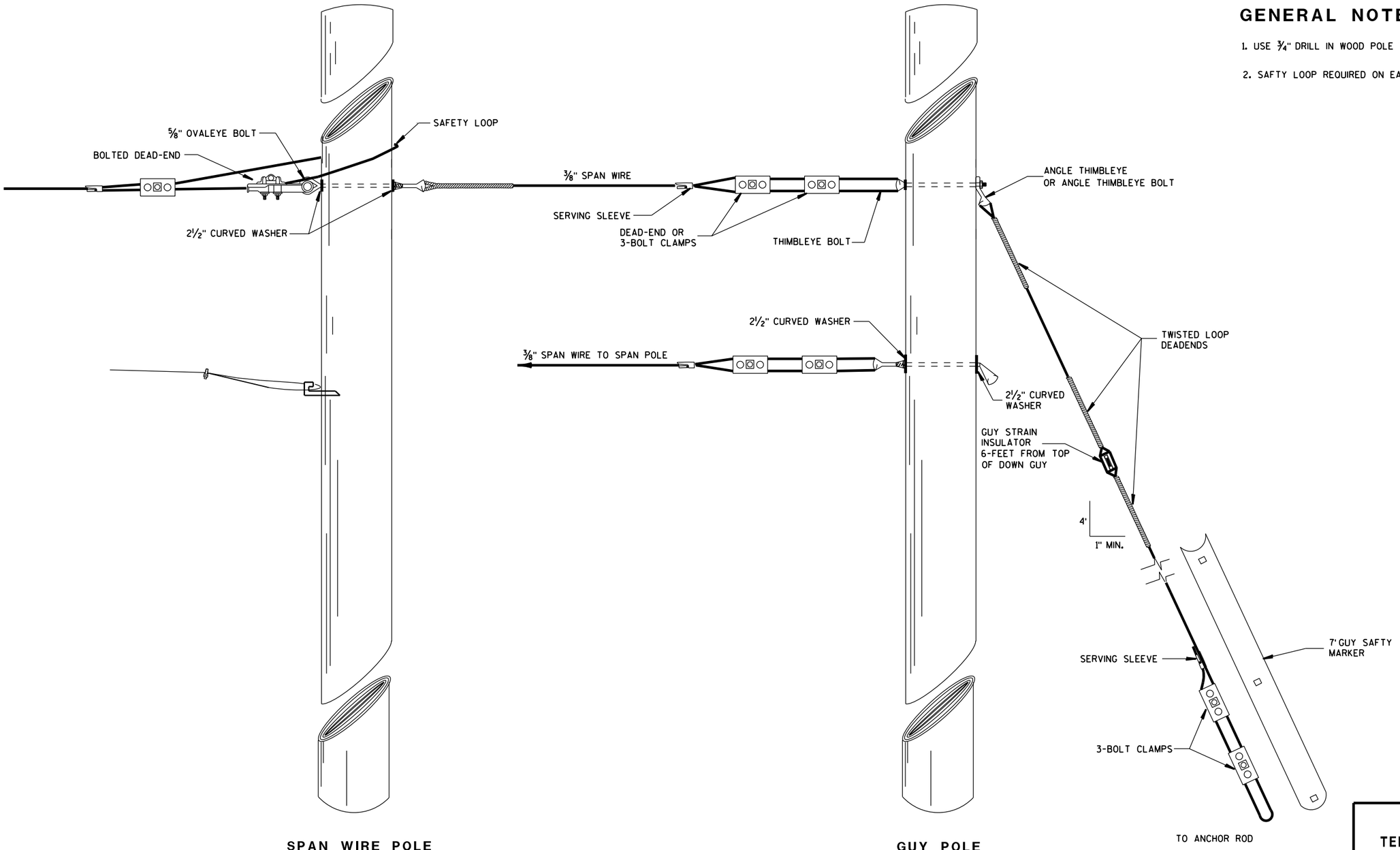

TYPICAL DEAD-ENDINGS OR GUYING

SPAN WIRE TEMPORARY TRAFFIC SIGNAL	
STATE OF WISCONSIN DEPARTMENT OF TRANSPORTATION	
APPROVED June, 2015 DATE	/S/ Ahmet Demirbilek STATE ELECTRICAL
FHWA	

6
S.D.D. 9 G 1-4e

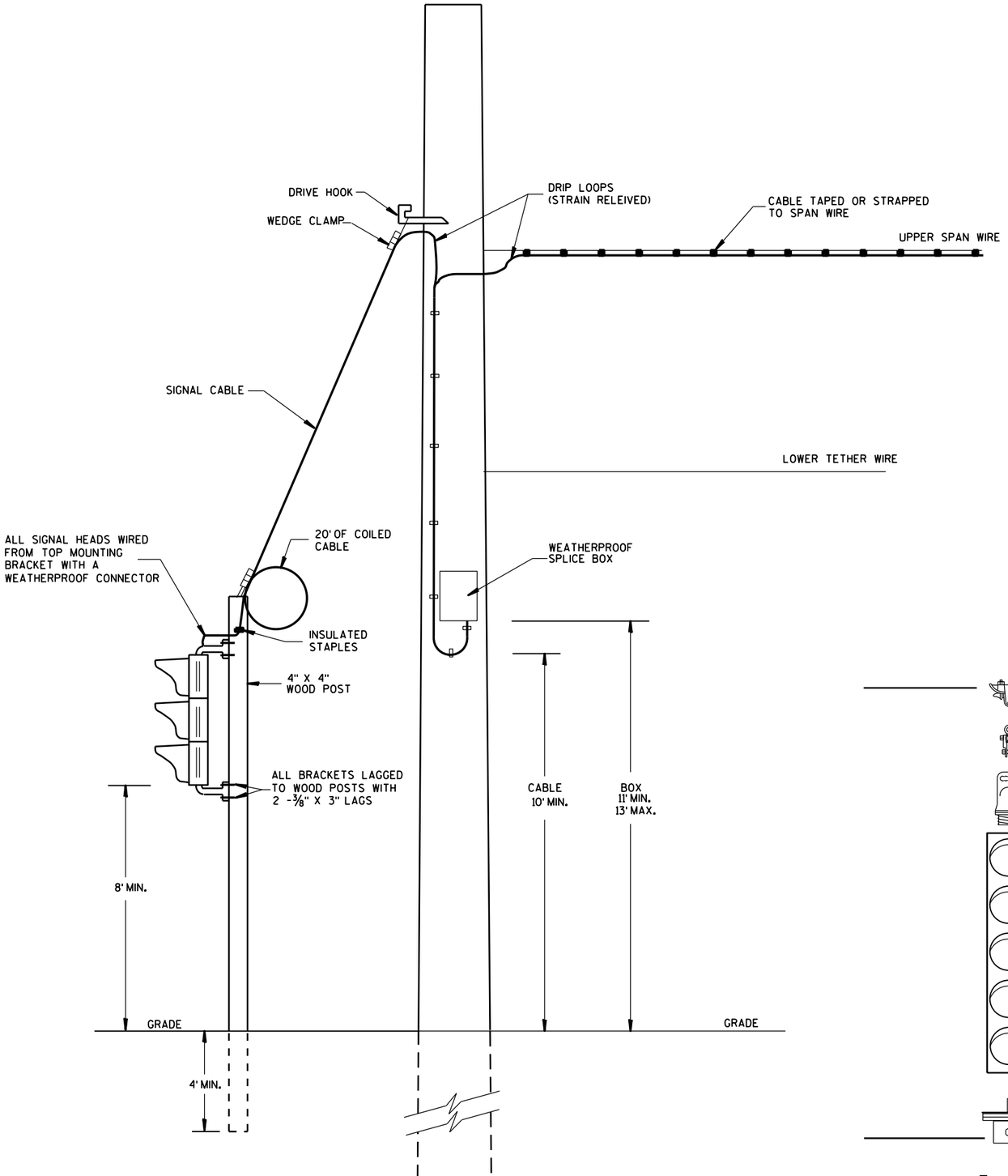

TYPICAL DROP TO TEMPORARY MOVEABLE SIGNAL

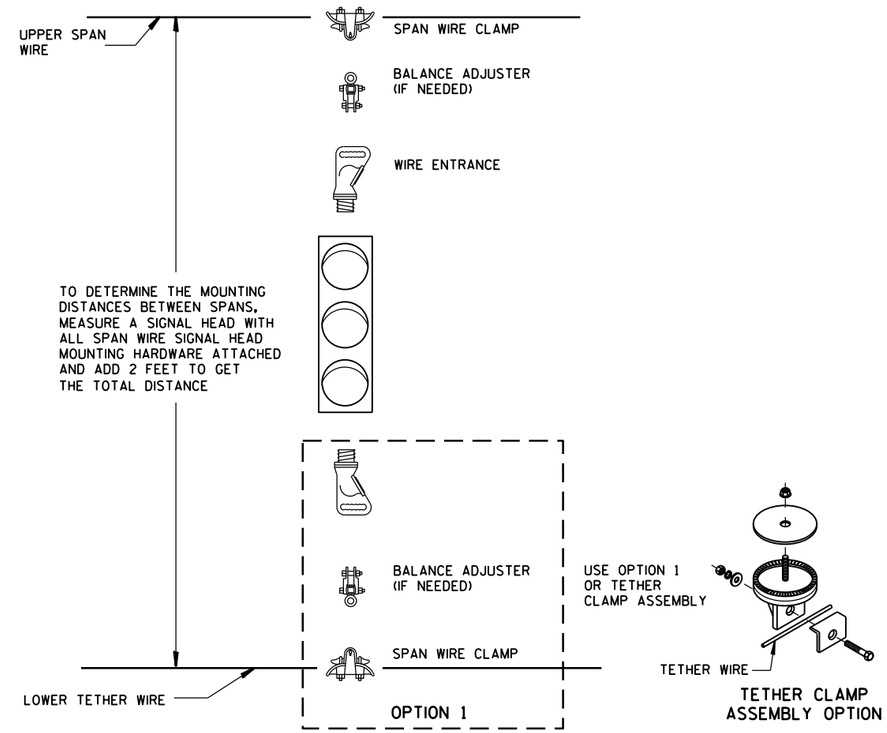

TYPICAL SPAN WIRE MOUNTING HARDWARE

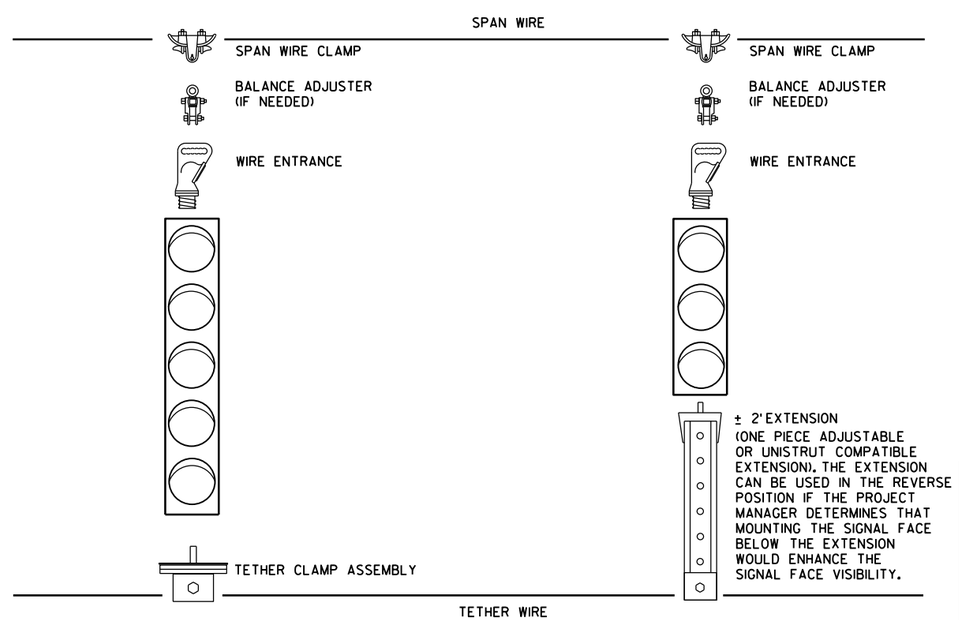

5 SECTION VERTICAL WITH 3 SECTION VERTICAL ON ONE SPAN WIRE

SPAN WIRE
TEMPORARY TRAFFIC SIGNAL

STATE OF WISCONSIN
DEPARTMENT OF TRANSPORTATION

APPROVED
June, 2015 — DATE
/S/ Ahmet Demirbilek — STATE ELECTRICAL
FHWA

6

S.D.D. 9 G 1-4f

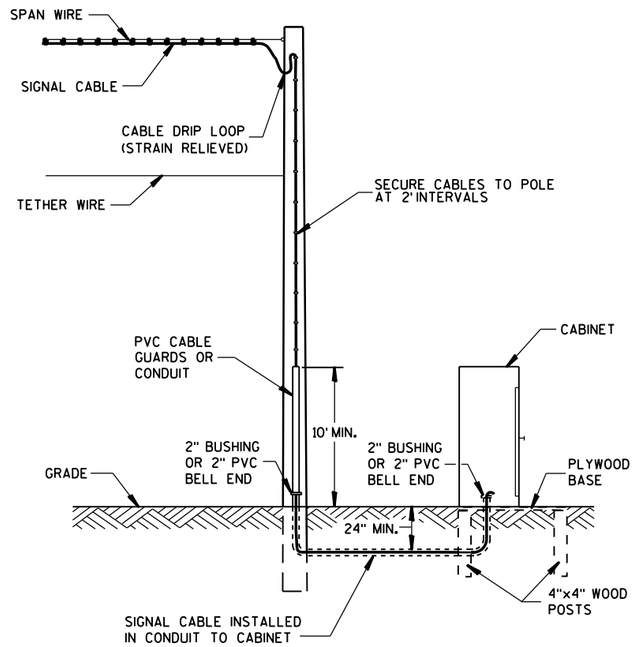

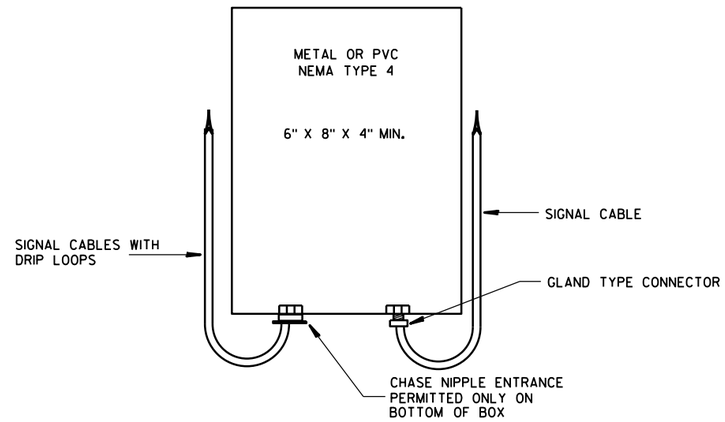

SPLICE BOX

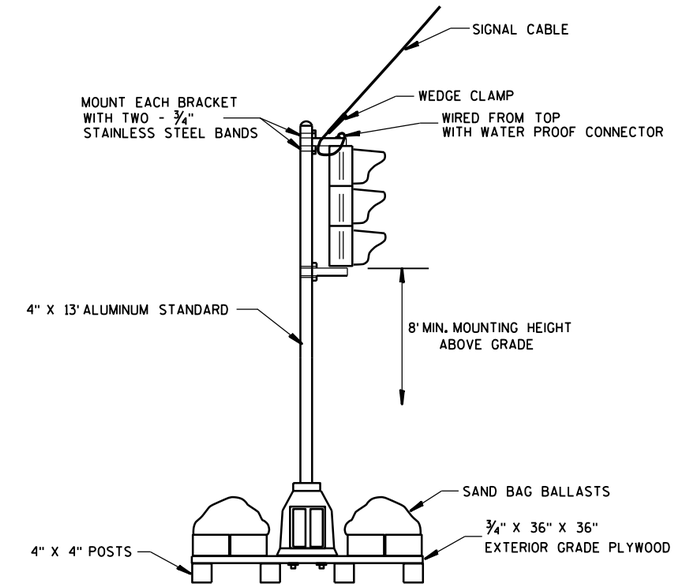

TYPICAL SKID TYPE TEMPORARY

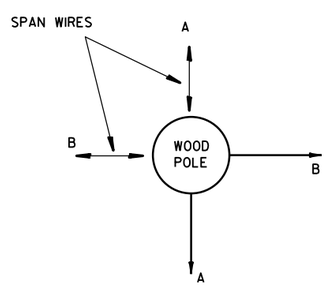

ALL DOWN OR SIDEWALK GUYS SHALL BE INSTALLED IN THE OPPOSITE DIRECTION OF THE STRAIN OF THE SPAN WIRE

CORNER POLES

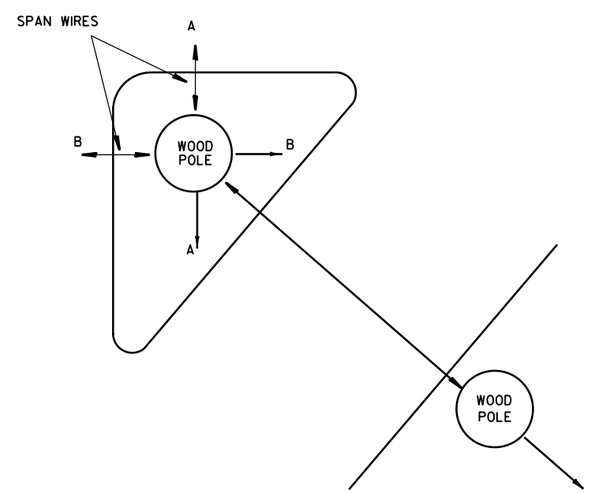

ISLAND POLES

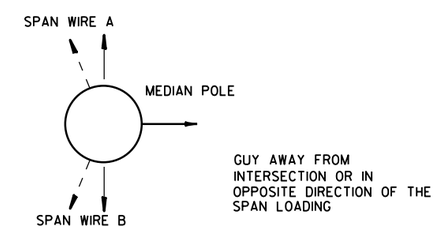

MEDIAN POLES

SPAN WIRE
TEMPORARY TRAFFIC SIGNAL

STATE OF WISCONSIN
DEPARTMENT OF TRANSPORTATION

APPROVED
June, 2015 — /S/ Ahmet Demirbilek
DATE — STATE ELECTRICAL
FHWA

6

6

S.D.D. 9 G 1-4g

S.D.D. 9 G 1-4g

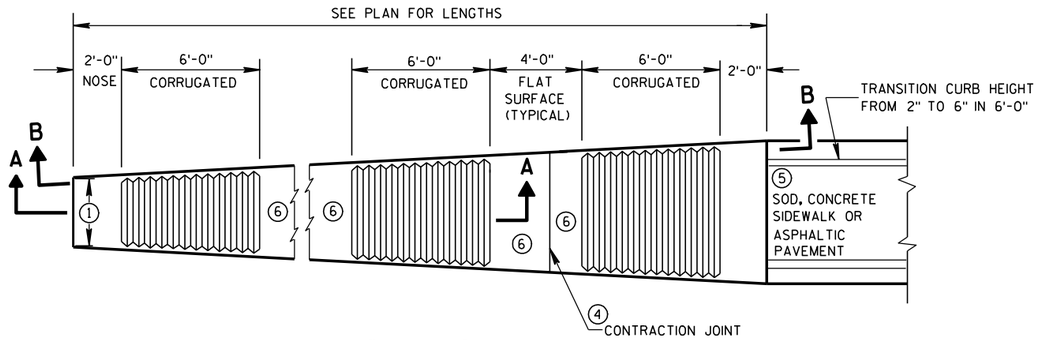

PLAN VIEW

VARIABLE WIDTH CONCRETE CORRUGATED MEDIAN

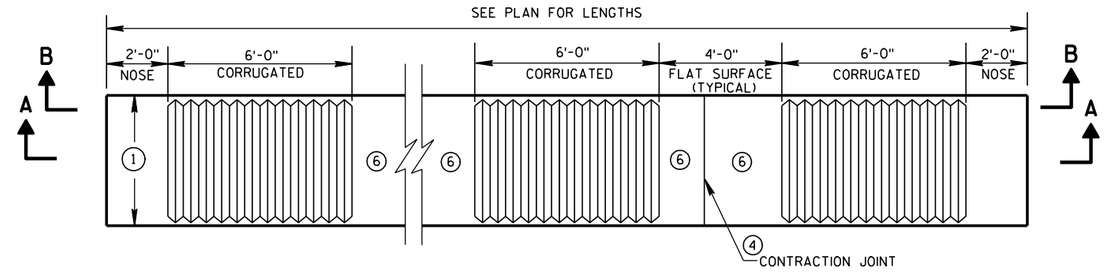

PLAN VIEW

UNIFORM WIDTH CONCRETE CORRUGATED MEDIAN

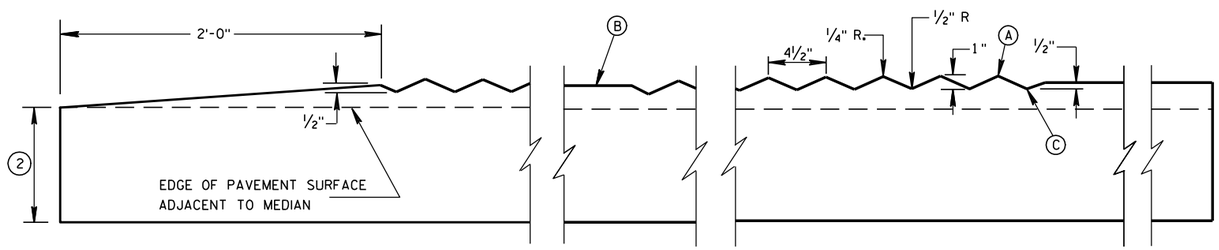

SECTION A-A

LONGITUDINAL SECTION

GENERAL NOTES

1. SEE PLANS FOR CONSTANT OR VARIABLE WIDTH.
2. THE DEPTH OF THE CONCRETE CORRUGATED MEDIAN SHALL BE 9-INCHES UNLESS SHOWN OTHERWISE IN THE PLAN.
   ADJACENT PAVEMENT STRUCTURE DETAILS ARE SHOWN IN THE PLAN. TYPICAL OPTIONS ARE:
   (1) NEW OR EXISTING CONCRETE PAVEMENT.
   (2) ASPHALTIC CONCRETE OVER NEW OR EXISTING CONCRETE BASE COURSE, OR PAVEMENT.
   (3) ASPHALTIC PAVEMENT OVER BASE AGGREGATE DENSE.
3. TIE BARS OR PAVEMENT TIES REQUIRED IN NEW CONCRETE PAVEMENT OR CONCRETE BASE COURSE. TIE BARS SHALL BE NO. 4 X 2'-0" SPACED AT 2'-0" C-C.
   INSTALL TIE BARS TO MAINTAIN A MINIMUM OF 3-INCHES OF COVER BETWEEN THE TIE BAR AND THE CONCRETE SURFACE (BOTTOM AND TOP).
   PAVEMENT TIES REQUIRED IN EXISTING CONCRETE PAVEMENT OR CONCRETE BASE COURSE, PAVEMENT TIES SHALL BE NO. 6 X 1'-0" SPACED AT 3'-0" C-C INSTALLED ON A HORIZONTAL SKEW OF 6:1. THE DIRECTION OF SKEW SHALL ALTERNATE AFTER EVERY ONE OR TWO BARS.
4. CONCRETE CORRUGATED MEDIAN CONTRACTION JOINTS SHALL BE CONSTRUCTED TO MATCH THE JOINTS IN ADJACENT CONCRETE PAVEMENT. WHERE ADJACENT PAVEMENT IS ASPHALT WITH BASE AGGREGATE DENSE. TRANSVERSE CONTRACTION JOINTS SHALL BE PROVIDED AT 20 FOOT INTERVALS.
5. SURFACE TYPE AND DETAILS ARE DEFINED ELSEWHERE IN THE PLAN.
6. YELLOW MARKING ON FLAT SURFACE WHEN MEDIAN SEPARATES OPPOSING TRAFFIC.

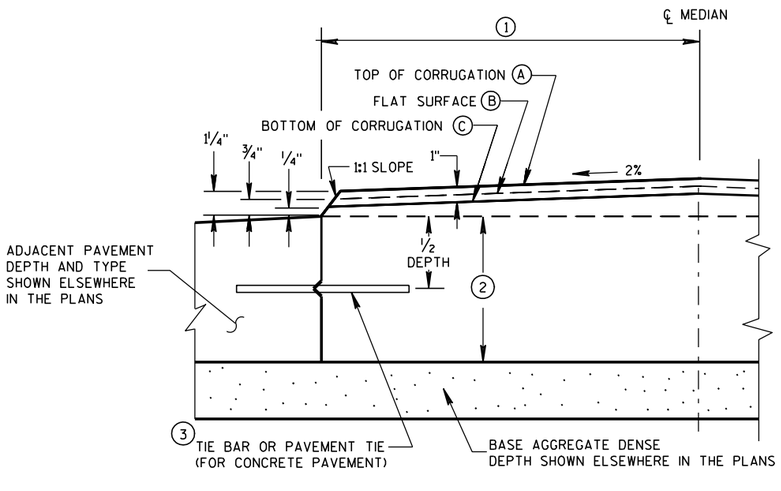

HALF CROSS SECTION

CONCRETE CORRUGATED MEDIAN AND ADJACENT PAVEMENT

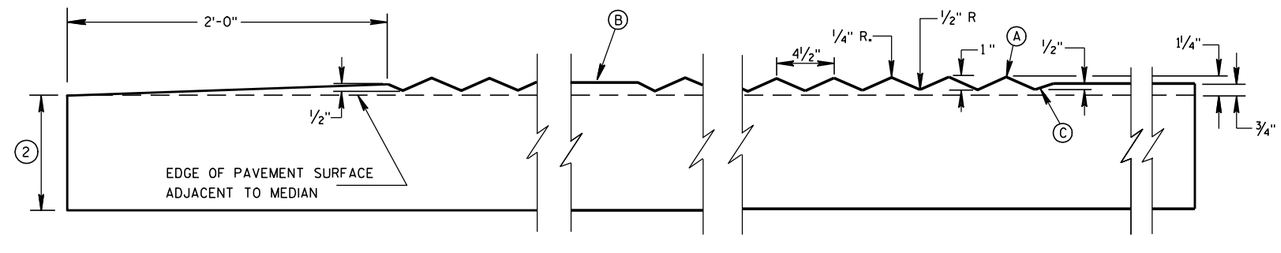

SECTION B-B

LONGITUDINAL SECTION

CONCRETE CORRUGATED MEDIAN

STATE OF WISCONSIN
DEPARTMENT OF TRANSPORTATION

APPROVED

12/17/07 — DATE

/S/ Jerry H. Zogg — ROADWAY STANDARDS DEVELOPMENT ENGINEER

FHWA

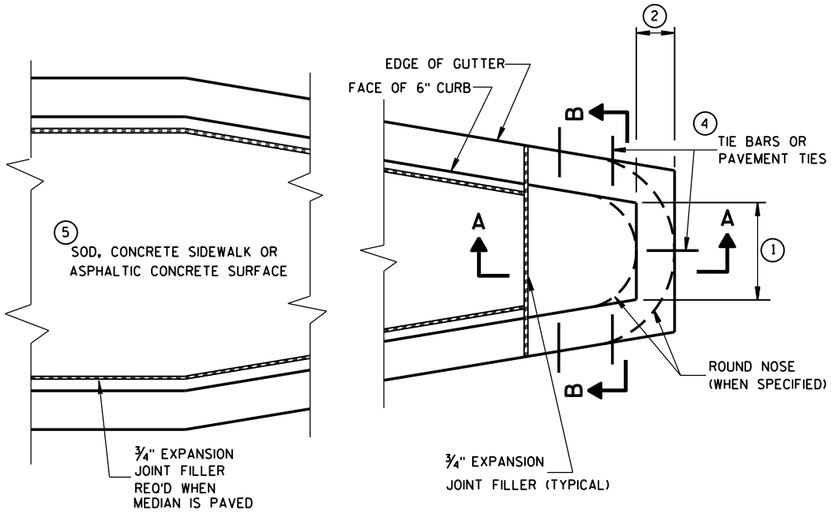

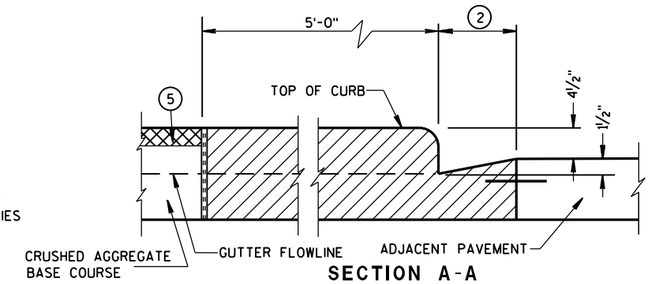

SECTION A-A

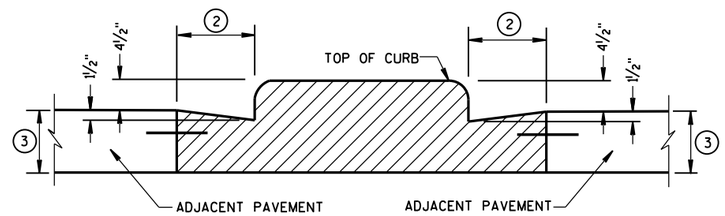

SECTION B-B

CONCRETE MEDIAN BLUNT NOSE DETAIL

GENERAL NOTES

DETAILS OF CONSTRUCTION, MATERIALS AND WORKMANSHIP NOT SHOWN ON THIS DRAWING SHALL CONFORM TO THE PERTINENT REQUIREMENTS OF THE STANDARD SPECIFICATIONS AND THE APPLICABLE SPECIAL PROVISIONS.

1. SEE PLAN FOR MEDIAN NOSE WIDTH AND RADIUS (FOR ROUND NOSE ALTERNATE).
2. WIDTH OF GUTTER TO MATCH EXISTING ADJACENT GUTTER OR AS SPECIFIED ELSEWHERE IN THE PLAN.
3. DEPTH EQUAL TO ADJACENT PAVEMENT. ADJACENT PAVEMENT STRUCTURE DETAILS ARE SHOWN ON THE PLAN. TYPICAL OPTIONS ARE:
   (1) NEW OR EXISTING CONCRETE PAVEMENT.
   (2) ASPHALTIC CONCRETE PAVEMENT OVER NEW OR EXISTING CONCRETE BASE COURSE.
   (3) ASPHALTIC CONCRETE PAVEMENT OVER CRUSHED AGGREGATE BASE COURSE.
4. TIE BARS OR PAVEMENT TIES REQUIRED IN NEW CONCRETE PAVEMENT OR CONCRETE BASE COURSE. TIE BARS SHALL BE NO. 4 X 2'-0" SPACED AT 2'-0" C-C.

   PAVEMENT TIES REQUIRED IN EXISTING CONCRETE BASE COURSE. PAVEMENT TIES SHALL BE NO. 6 X 1'-0" SPACED AT 3'-0" C-C INSTALLED ON A HORIZONTAL SKEW OF 6:1. THE DIRECTION OF SKEW SHALL ALTERNATE AFTER EVERY ONE OR TWO BARS.
5. SURFACE TYPE AND DETAILS ARE SHOWN ELSEWHERE IN THE PLAN.

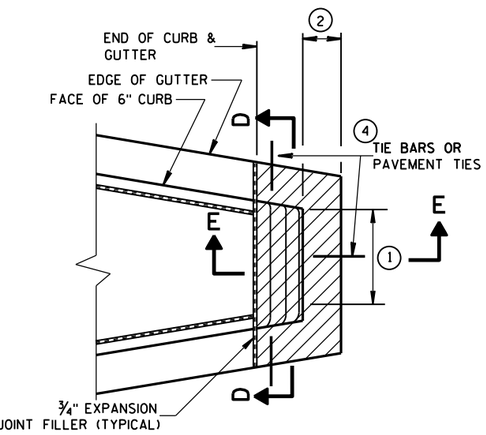

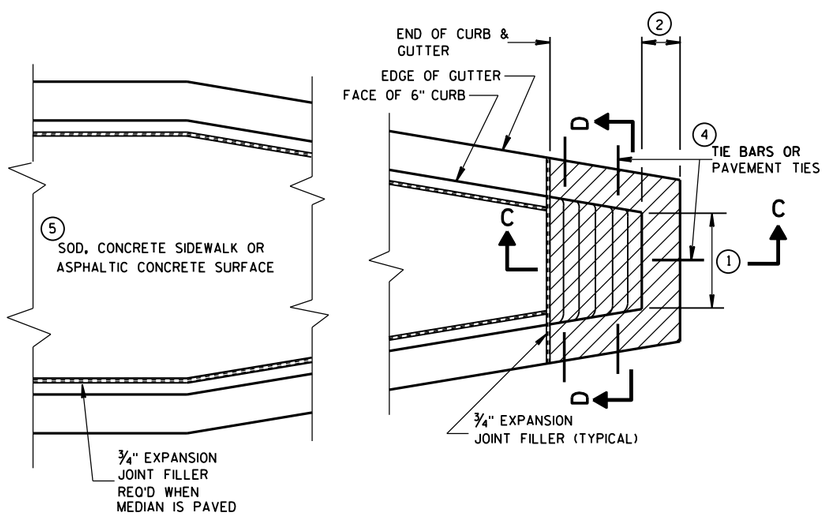

CONCRETE MEDIAN SLOPED NOSE TYPE 1

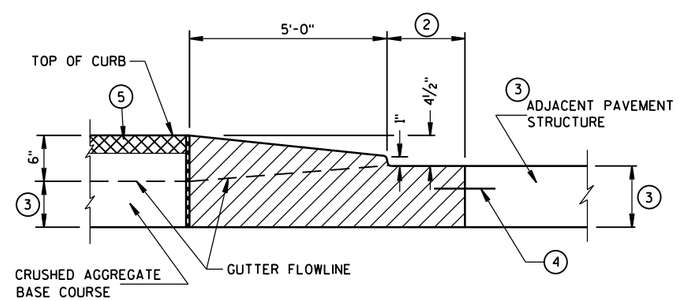

SECTION C-C

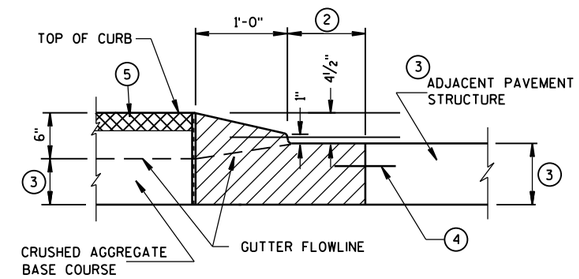

SECTION E-E

CONCRETE MEDIAN SLOPED NOSE TYPE 2

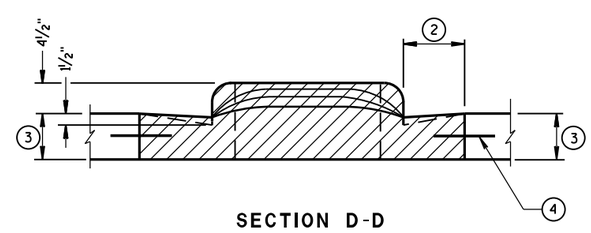

SECTION D-D

CONCRETE MEDIAN NOSE
STATE OF WISCONSIN DEPARTMENT OF TRANSPORTATION
APPROVED 6/8/2006 — DATE /S/ Jerry H. Zogg — ROADWAY STANDARDS DEVELOPMENT ENGINEER FHWA

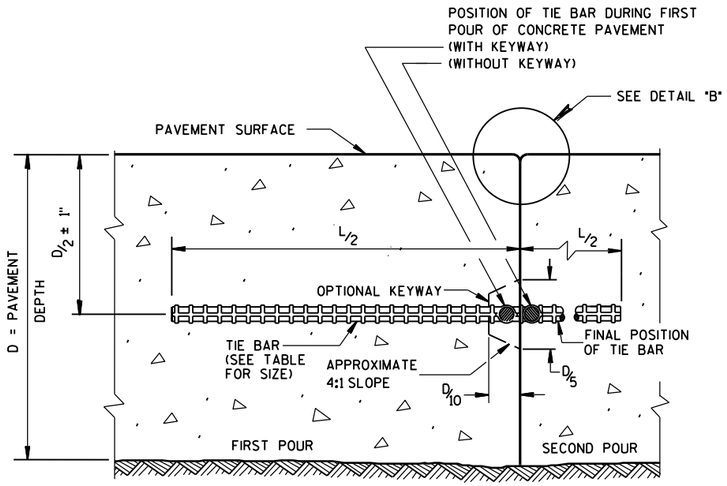

CONSTRUCTION JOINT

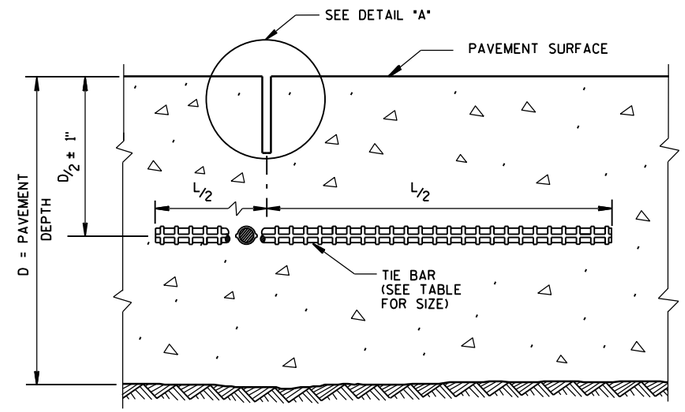

SAWED JOINT

GENERAL NOTES

DO NOT SEAL OR FILL LONGITUDINAL JOINTS.

CREATE A LONGITUDINAL JOINT FOR PAVEMENT WIDTHS GREATER THAN 15 FEET.

CORRELATE LONGITUDINAL JOINTS WITH LANE LINES WHEN POSSIBLE.

(1) ANCHOR TIE BARS INTO DRILLED HOLES WITH AN EPOXY.

(2) PAVEMENT THAT WAS IN PLACE PRIOR TO THE CONTRACT.

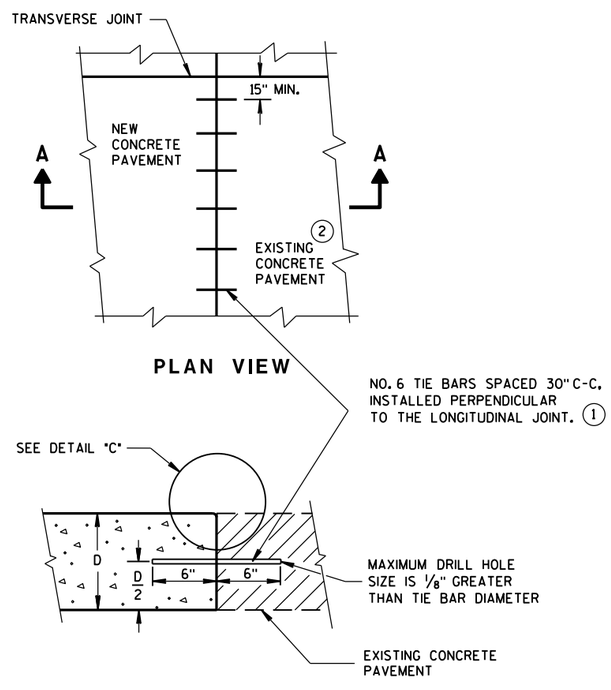

PLAN VIEW

SECTION A-A
LONGITUDINAL CONSTRUCTION JOINT TIE BARS ANCHORED INTO EXISTING PAVEMENT

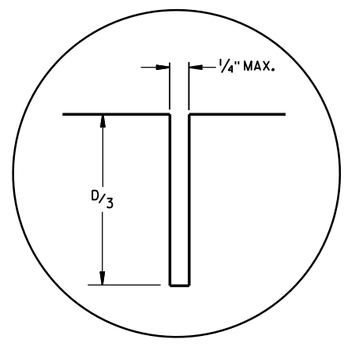

DETAIL "A"

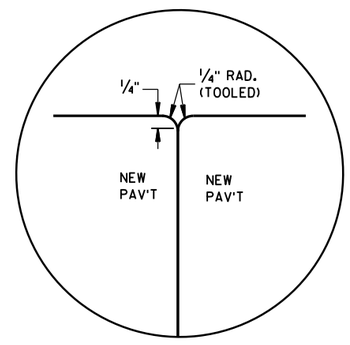

DETAIL "B"

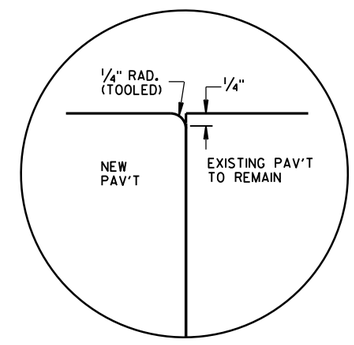

DETAIL "C"

TIE BAR TABLE

PAVEMENT DEPTH (D)	TIE BAR SIZE	TIE BAR LENGTH (L)	MAX. TIE BAR SPACING
< 10 1/2"	NO. 4	30"	36"
≥ 10 1/2"	NO. 5	36"	36"
	NO. 4 *	30"	24" **

* SUBSTITUTE BENT BARS AT LONGITUDINAL JOINTS WHEN EQUIPMENT LIMITATIONS DURING CONSTRUCTION WARRANT (e.g. AUXILIARY LANES OR TURN LANES)

** CONFORM TO 15" MINUMUM SPACING FROM TRANSVERSE JOINTS; SPACING BETWEEN TIE BARS WILL BE 30" AT TRANSVERSE JOINTS.

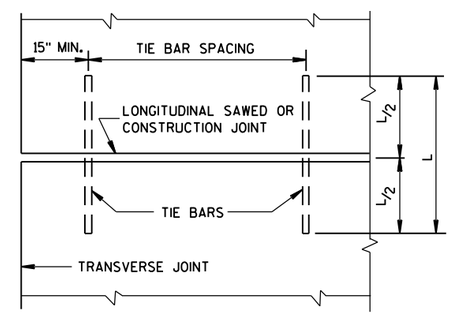

PLAN VIEW
SHOWING LOCATION OF TIE BARS

CONCRETE PAVEMENT
LONGITUDINAL JOINTS AND TIES

STATE OF WISCONSIN
DEPARTMENT OF TRANSPORTATION

APPROVED
June, 2015 — DATE
/S/ Peter Kemp, P.E. — PAVEMENT SUPER
FHWA

6

S.D.D. 13 C 1-18

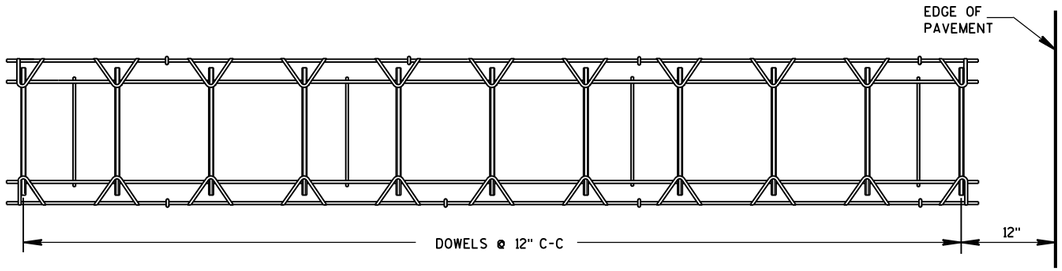

PLAN VIEW

SIDE VIEW

CONTRACTION JOINT DOWEL ASSEMBLY ①

PAVEMENT DEPTH, DOWEL BAR SIZE AND JOINT SPACING TABLE

PAVEMENT DEPTH (D)	DOWEL BAR DIAMETER	CONTRACTION JOINT SPACING
5 ½", 6", 6 ½"	NONE	12'
7", 7 ½"	1"	14'
8", 8 ½"	1 ¼"	15'
9", 9 ½"	1 ¼"	15'
10" & ABOVE	1 ½"	15'

GENERAL NOTES

CONTRACTION JOINTS

CONSTRUCT TRANSVERSE CONTRACTION JOINTS NORMAL TO THE CENTERLINE. SHOW THE LOCATION OF CONTRACTION JOINTS THROUGH INTERSECTIONS ON THE PLANS OR AS DIRECTED BY THE ENGINEER.

DO NOT SEAL OR FILL CONTRACTION JOINTS.

INSTALL DOWEL BARS PARALLEL TO THE PAVEMENT CENTERLINE AND PAVEMENT SURFACE.

FOR PAVEMENT SLABS OF VARYING WIDTHS, LOCATE THE OUTER MOST DOWEL BAR SO THAT THE CENTER OF THE BAR IS A MINIMUM OF 6 INCHES AND A MAXIMUM OF 18 INCHES FROM THE LONGITUDINAL JOINT AND THE FREE EDGE OF PAVEMENT.

CONSTRUCTION JOINTS

LOCATE CONSTRUCTION JOINTS A MINIMUM OF 6 FEET FROM THE NEAREST CONTRACTION JOINT AND ALIGN PARALLEL TO CONTRACTION JOINTS.

① OBTAIN THE ENGINEER'S APPROVAL FOR THE USE OF ALTERNATIVE DESIGNS OF THE DOWEL ASSEMBLY. USE MECHANICAL DOWEL BAR INSERTERS OR DOWEL ASSEMBLIES WHEN CONSTRUCTING CONTRACTION JOINTS.

② SECURE BASKETS WITH ANCHORS TO HOLD DOWEL BARS IN THE CORRECT POSITION AND ALIGNMENT. TYPE, LOCATION, NUMBER AND LENGTH OF ANCHORS ARE DEPENDENT UPON FIELD CONDITIONS.

③ FORM OR SAW CONSTRUCTION JOINTS. PROVIDE A ¼-INCH RADIUS AT FORMED JOINTS.

④ PROVIDE A SMOOTH VERTICAL FACE FOR THE ENTIRE DEPTH OF THE PAVEMENT WHEN FORMING CONSTRUCTION JOINTS.

⑤ INSTALL DOWEL BARS AT CONSTRUCTION JOINTS BY FORMING OR DRILLING. INSTALL FORMED DOWEL BARS 12 INCHES C-C AND 12 INCHES FROM PAVEMENT EDGE. REMOVE EXCESS CONCRETE FROM THE FREE END OF THE DOWEL BAR IF DOWEL BARS ARE FORMED THROUGH A HEADER BOARD. INSTALL DRILLED DOWEL BARS ACCORDING TO *DRILLED DOWEL BAR CONSTRUCTION JOINT* DETAIL.

⑥ APPLY A THIN UNIFORM COATING OF SURFACE TREATMENT TO THE FREE END OF DOWEL BARS TO PREVENT BONDING.

⑦ ANCHOR DOWEL BARS INTO DRILLED HOLES WITH AN EPOXY. MAXIMUM DRILLED HOLE SIZE IS ⅛-INCH GREATER THAN DOWEL BAR DIAMETER, 9 INCHES IN LENGTH.

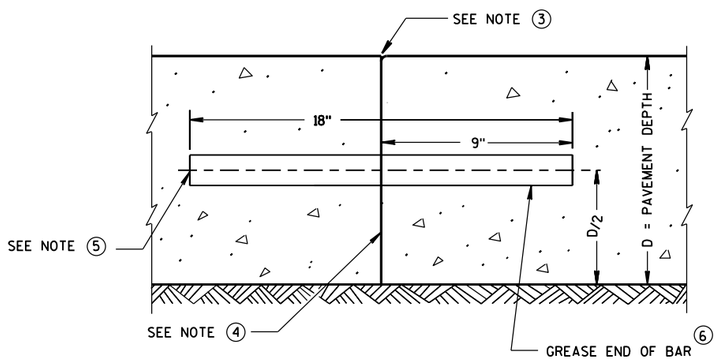

TRANSVERSE CONSTRUCTION JOINT

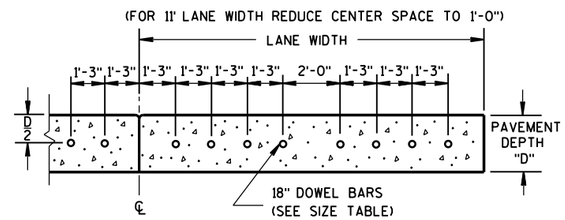

DRILLED DOWEL BAR CONSTRUCTION JOINT ⑦

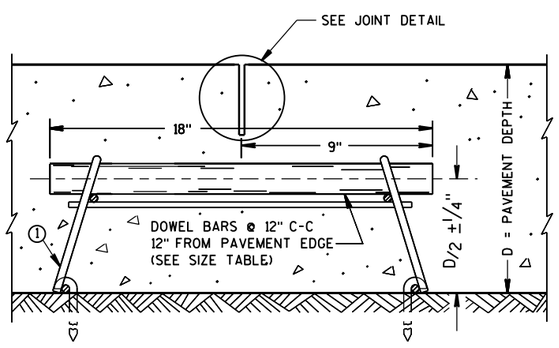

DOWELED CONTRACTION JOINT

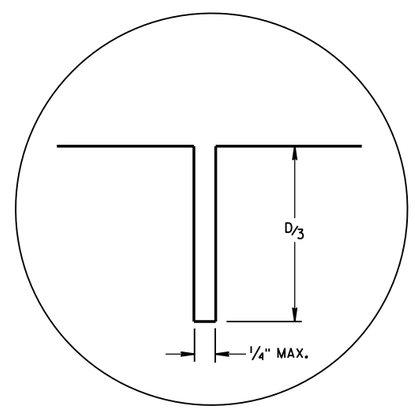

JOINT DETAIL

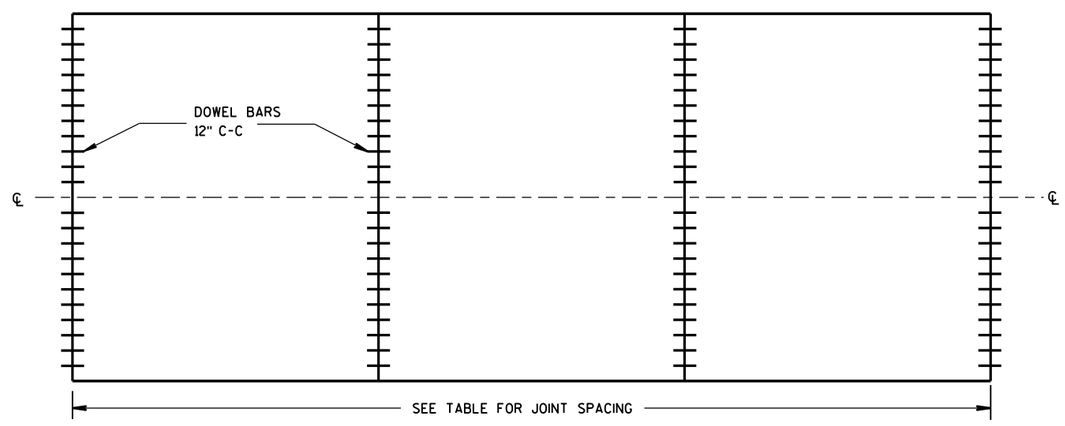

CONTRACTION JOINT LOCATIONS

URBAN DOWELED CONCRETE PAVEMENT

STATE OF WISCONSIN
DEPARTMENT OF TRANSPORTATION

APPROVED

5/3/2013 — DATE

/S/ Deb Bischoff — PAVEMENT POLICY & DE ... NEER

FHWA

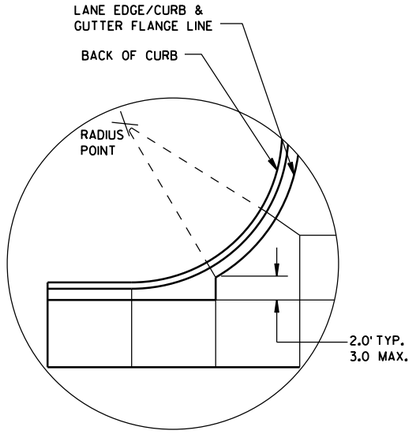

DETAIL "A"

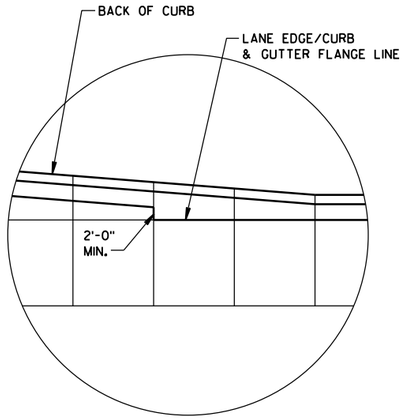

DETAIL "B"

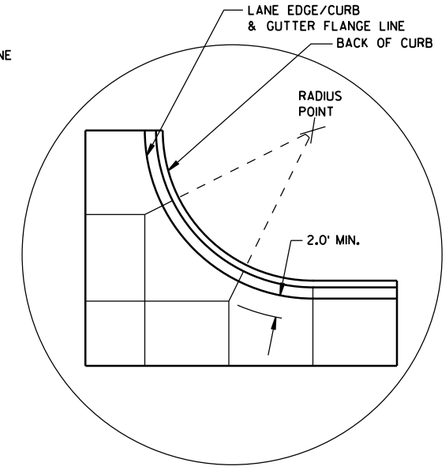

DETAIL "C"

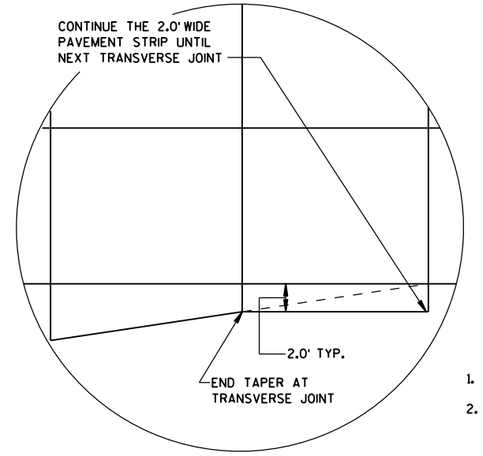

DETAIL "D"

GENERAL NOTES

THE PRIMARY ROADWAY CONTROLS THE TRANSVERSE JOINT PATTERN.

ALIGN NEW JOINTS WITH EXISTING JOINTS OR CRACKS.

CONSTRUCT TRANSVERSE JOINTS PERPENDICULAR TO THE ROADWAY.

ADJUST TRANSVERSE JOINTS TO ALIGN WITH UTILITY FIXTURES (E.G. MANHOLES AND INLETS) IN THE PAVEMENT STRUCTURE WHEN POSSIBLE. WATER VALVES DO NOT REQUIRE JOINT ADJUSTMENT.

AVOID SLABS LESS THAN 2 FEET WIDE OR GREATER THAN 15 FEET WIDE.

SEE TABLE FOR TRANSVERSE JOINT SPACING. JOINT SPACING SPECIFIED IS MAXIMUM AND ACTUAL SPACING CAN BE ADJUSTED TO ACCOMMODATE INTERSECTIONS.

AVOID ANGLES LESS THAN 60° BY DOGLEGGING JOINTS THROUGH CURVE RADIUS POINTS. USE 90° ANGLES WHEN POSSIBLE.

CORRELATE LONGITUDINAL JOINTS WITH LANE LINES WHEN POSSIBLE.

1. PROVIDE TRANSVERSE JOINTS AT ALL PAVEMENT WIDTH CHANGES.
2. CONSTRUCT DOWELED EXPANSION JOINT ON THE SIDE ROAD OF AN INTERSECTION IF THE SIDE ROAD IS CONCRETE PAVEMENT AND GREATER THAN 300 FEET IN LENGTH. ALIGN EXPANSION JOINT WITH EDGE OF RADIUS.
3. THE ENGINEER MAY APPROVE SLIGHT VARIATIONS FROM THESE JOINTING DETAILS.

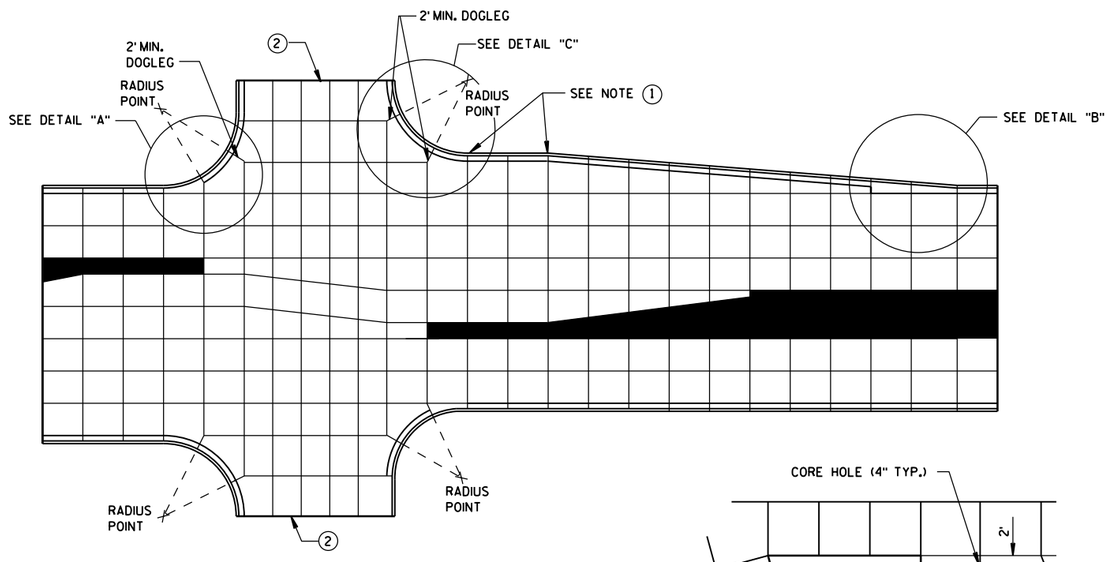

STANDARD INTERSECTION

PAVEMENT DEPTH AND JOINT SPACING TABLE

PAVEMENT DEPTH (D)	CONTRACTION JOINT SPACING
6", 6½"	12'
7", 7½"	14'
8" & ABOVE	15'

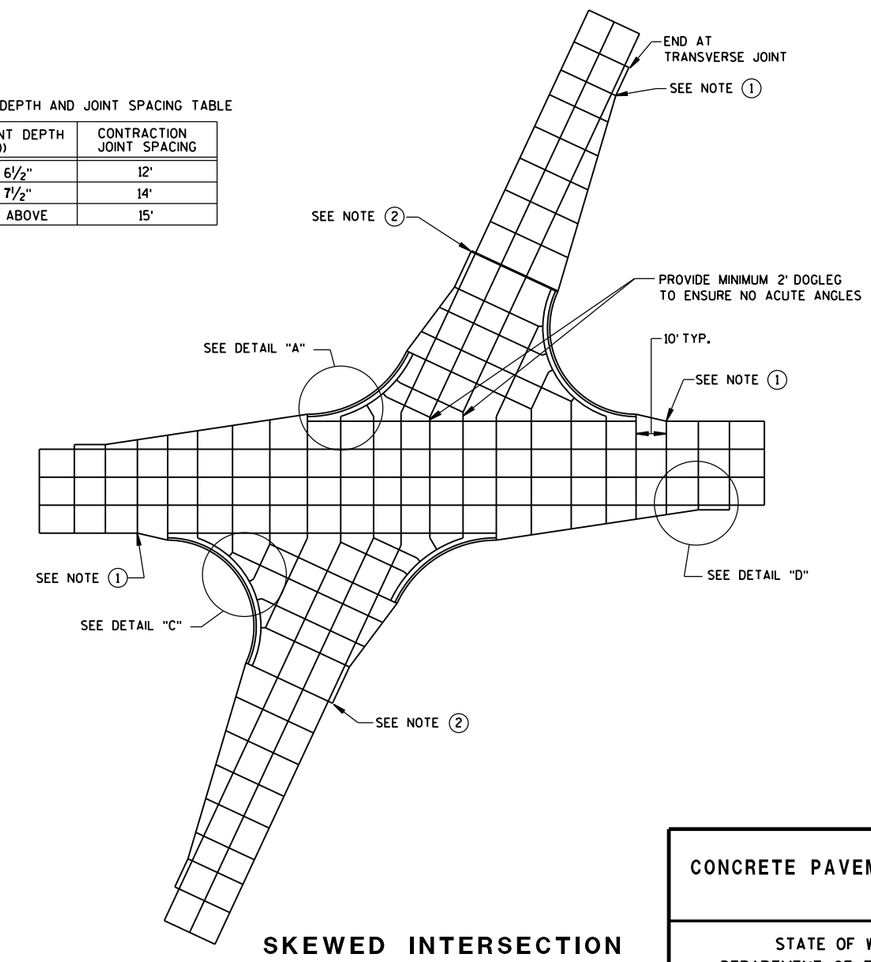

SKEWED INTERSECTION

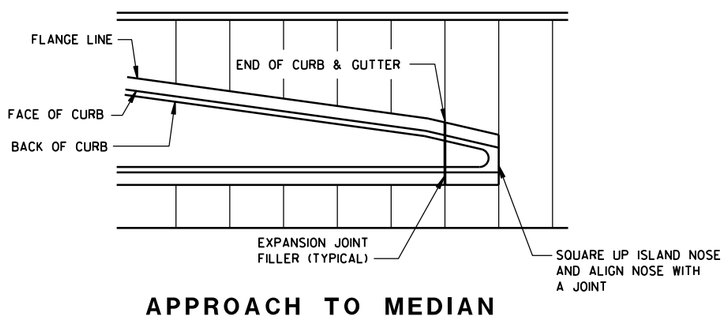

APPROACH TO MEDIAN

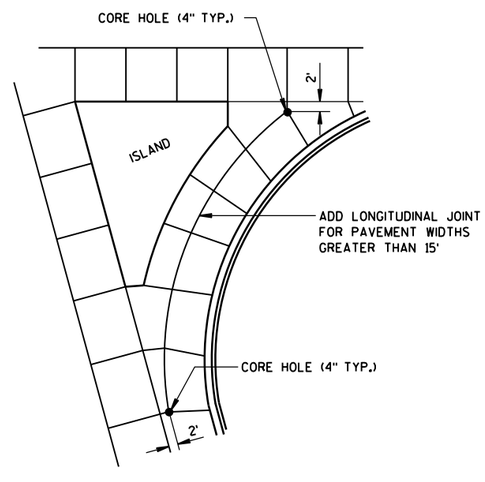

LARGE RIGHT TURN

CONCRETE PAVEMENT JOINTING

STATE OF WISCONSIN
DEPARTMENT OF TRANSPORTATION

6

S.D.D. 13 C 18-3a

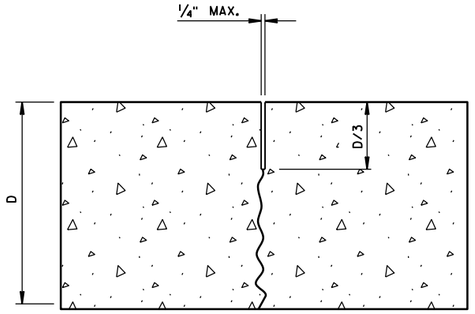

UNDOWELED-TRANSVERSE

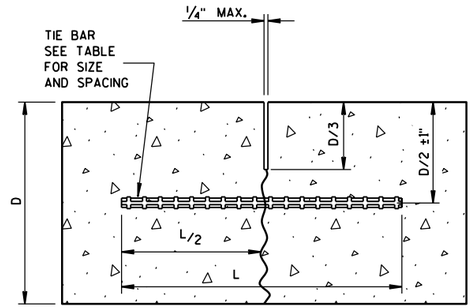

TIED LONGITUDINAL

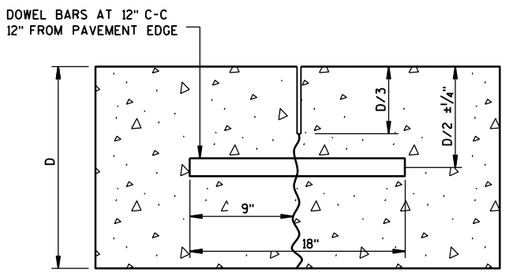

DOWELED-TRANSVERSE

CONTRACTION JOINTS

SEE NOTE (2)

TIE BAR TABLE

PAVEMENT DEPTH (D)	TIE BAR SIZE	TIE BAR LENGTH (L)	MAX. TIE BAR SPACING
< 10 1/2"	NO. 4	30"	36"
≥ 10 1/2"	NO. 5	36"	36"
	NO. 4*	30"	24"**

* SUBSTITUTE BENT BARS AT LONGITUDINAL JOINTS WHEN EQUIPMENT LIMITATIONS DURING CONSTRUCTION WARRANT (e.g. AUXILIARY LANES OR TURN LANES)

** CONFORM TO 15" MINUMUM SPACING FROM TRANSVERSE JOINTS; SPACING BETWEEN TIE BARS WILL BE 30" AT TRANSVERSE JOINTS.

GENERAL NOTES

1. USE DOWELED EXPANSION JOINTS ON SIDE ROADS AT INTERSECTIONS (TO ISOLATE THE SIDE ROAD FROM THE THROUGH STREET) IF THE SIDE ROAD IS CONCRETE PAVEMENT AND GREATER THAN 300 FEET IN LENGTH.
2. SPACE CONTRACTION JOINTS IN ACCORDANCE WITH 13C4, 13C11 OR 13C13.
3. LOCATE CONSTRUCTION JOINTS A MINIMUM OF 6 FEET FROM THE NEAREST CONTRACTION JOINT AND ALIGN PARALLEL TO CONTRACTION JOINTS.
4. CONSTRUCTION JOINTS CAN BE FORMED OR SAWED.
5. IF JOINT IS FORMED, PROVIDE A 1/4-INCH RADIUS.
6. ANCHOR TIE BARS INTO DRILLED HOLES WITH AN EPOXY.

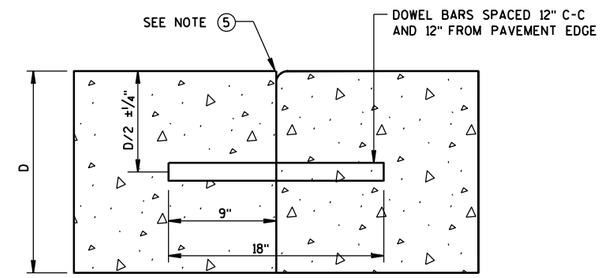

DOWELED TRANSVERSE (3)

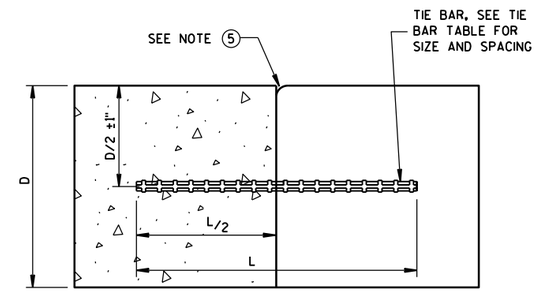

TIED LONGITUDINAL

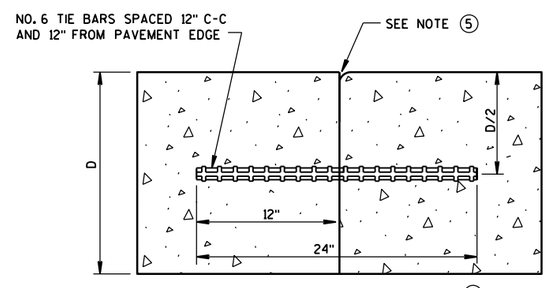

TIED TRANSVERSE (3)

(FOR USE ON NON-DOWELED PAVEMENTS ONLY)

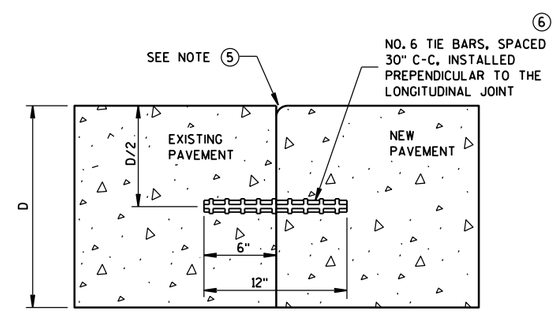

TIED LONGITUDINAL TO EXISTING

CONSTRUCTION JOINTS

SEE NOTE (4)

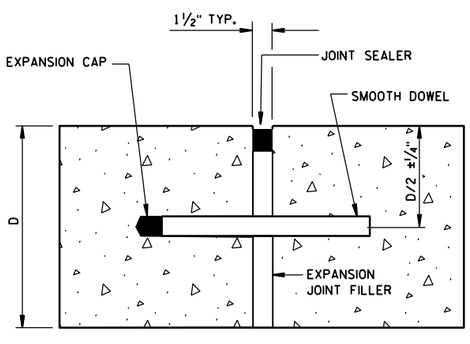

DOWELED-TRANSVERSE

SEE NOTE (1)

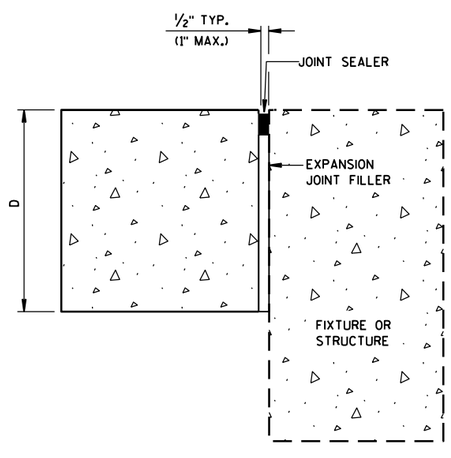

UNTIED-LONGITUDINAL

EXPANSION JOINTS

CONCRETE PAVEMENT
JOINT TYPES

STATE OF WISCONSIN
DEPARTMENT OF TRANSPOR

6

S.D.D. 13 C 18-3c

GENERAL NOTES

DETAILS OF CONSTRUCTION, MATERIALS AND WORKMANSHIP NOT SHOWN ON THIS DRAWING SHALL CONFORM TO THE PERTINENT REQUIREMENTS OF THE STANDARD SPECIFICATIONS AND THE APPLICABLE SPECIAL PROVISIONS.

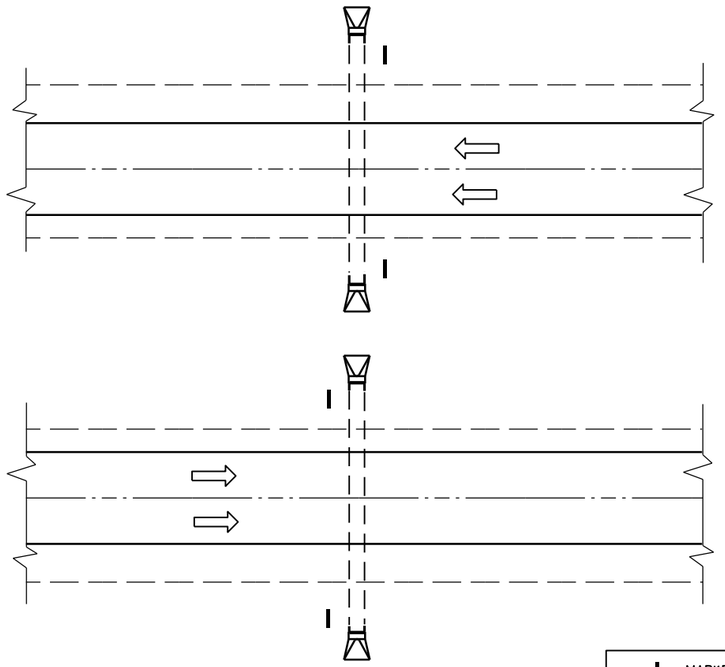

PLAN VIEW

DIVIDED HIGHWAY

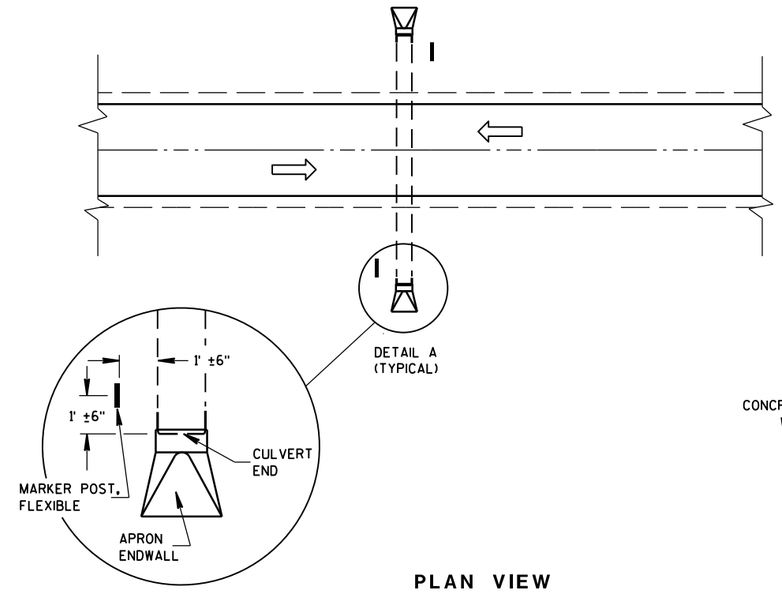

DETAIL A
(TYPICAL)

PLAN VIEW

UNDIVIDED HIGHWAY

MARKER POST, FLEXIBLE

DIRECTION OF TRAFFIC FLOW

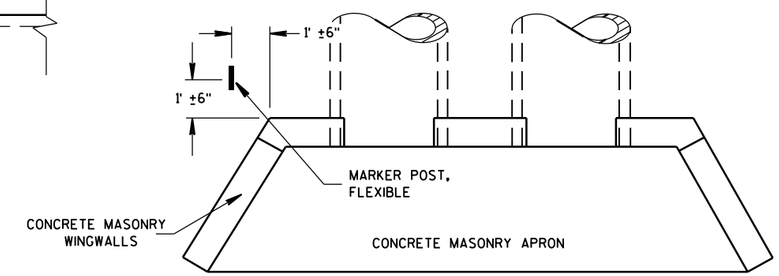

PLAN VIEW

CONCRETE MASONRY ENDWALLS FOR CULVERT PIPE AND PIPE ARCH

FLEXIBLE MARKER POST LOCATION

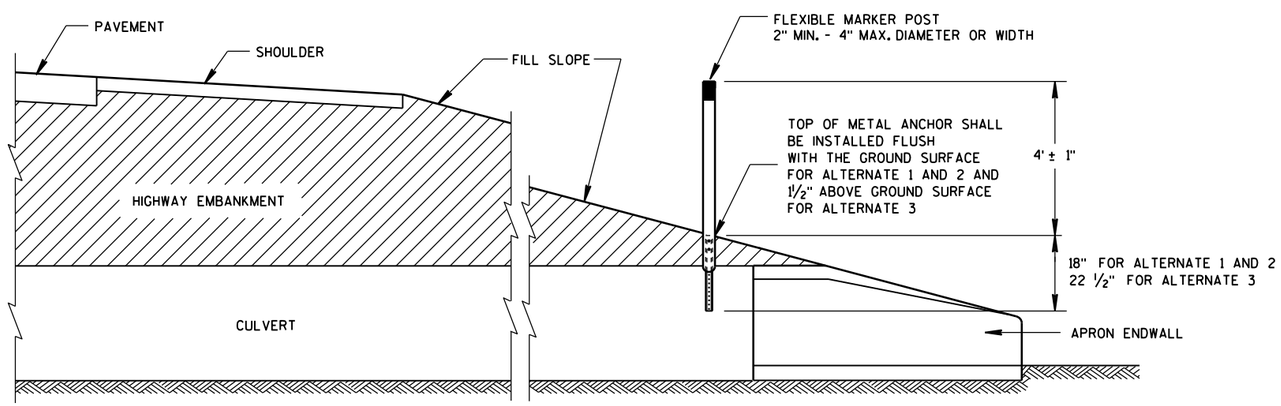

CROSS SECTION

FLEXIBLE MARKER POST

FLEXIBLE MARKER POST FOR CULVERT END

STATE OF WISCONSIN
DEPARTMENT OF TRANSPOR

6

6

S.D.D. 15 A 3-2a

S.D.D. 15 A 3-2a

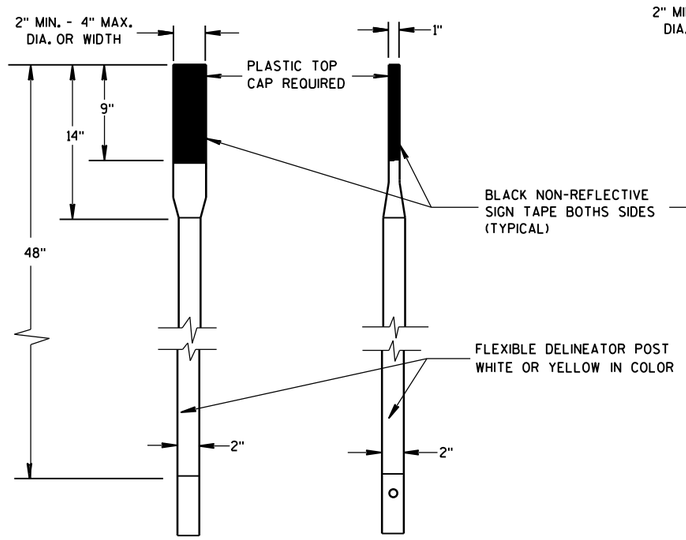

FRONT VIEW SIDE VIEW

ALTERNATE 1

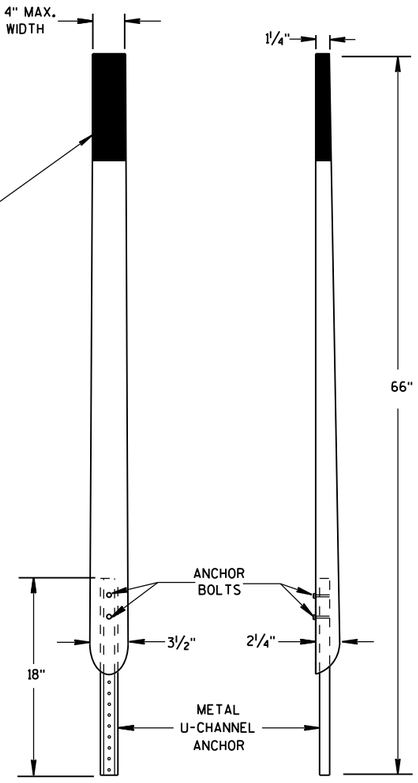

FRONT VIEW SIDE VIEW

ALTERNATE 2

FLEXIBLE MARKER POSTS

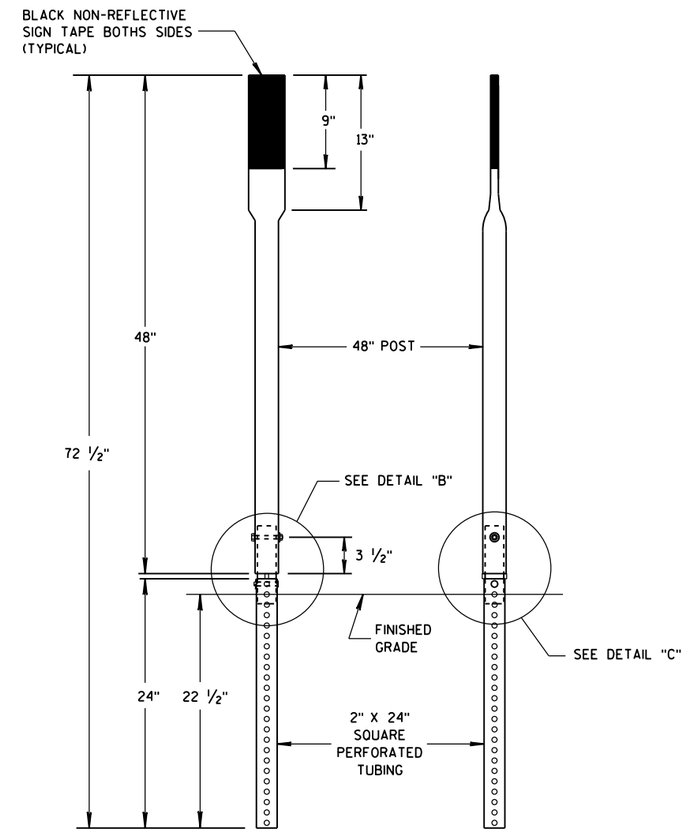

FRONT VIEW SIDE VIEW

ALTERNATE 3

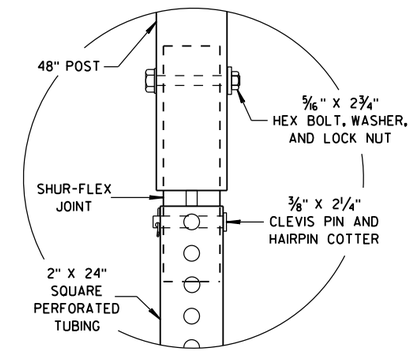

DETAIL B

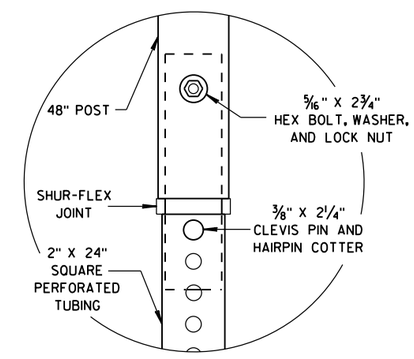

DETAIL C

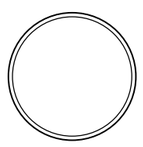

SECTION A-A

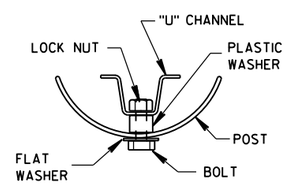

SECTION B-B

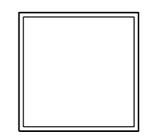

SECTION C-C

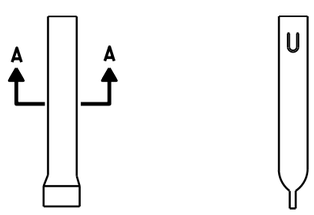

FRONT VIEW SIDE VIEW

ALTERNATE 1

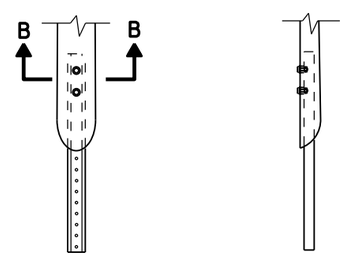

FRONT VIEW SIDE VIEW

ALTERNATE 2

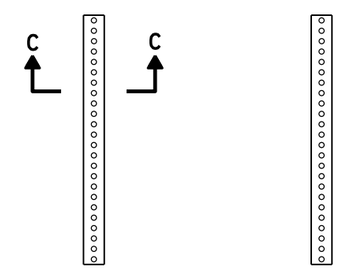

FRONT VIEW SIDE VIEW

ALTERNATE 3

FLEXIBLE MARKER POST ANCHORS

FLEXIBLE MARKER POST
FOR CULVERT END

STATE OF WISCONSIN
DEPARTMENT OF TRANSPORTATION

APPROVED
10/1/2012 /S/ Travis Feltes
DATE STATE TRAFFIC ENGINEER
FHWA

6

6

S.D.D. 15 A 3-2b

S.D.D. 15 A 3-2b

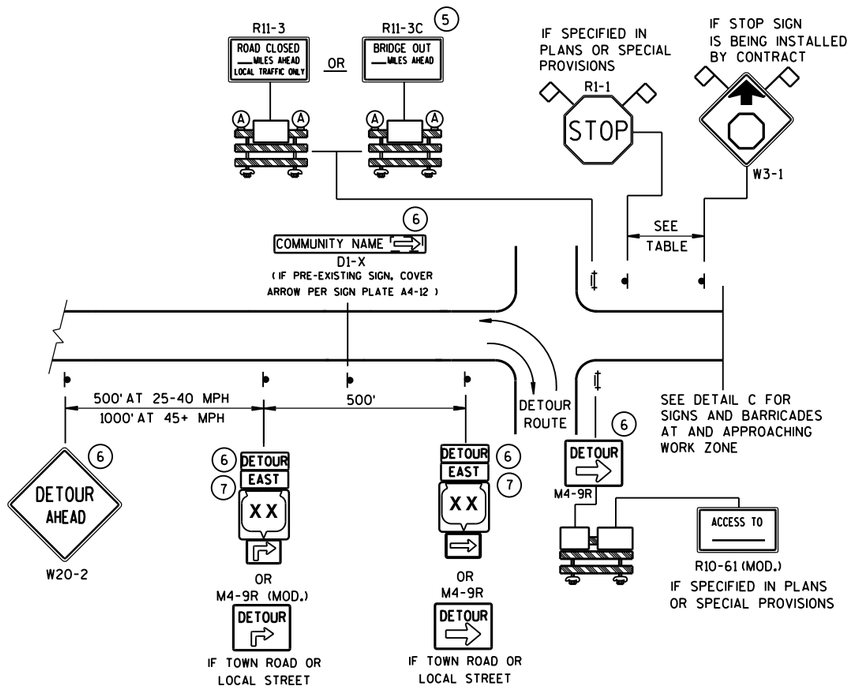

DETAIL A
MAINLINE CLOSURE WITH POSTED DETOUR

WORK ZONE GREATER THAN ½ MILE FROM DETOUR ROUTE (1000 FEET IF URBAN)

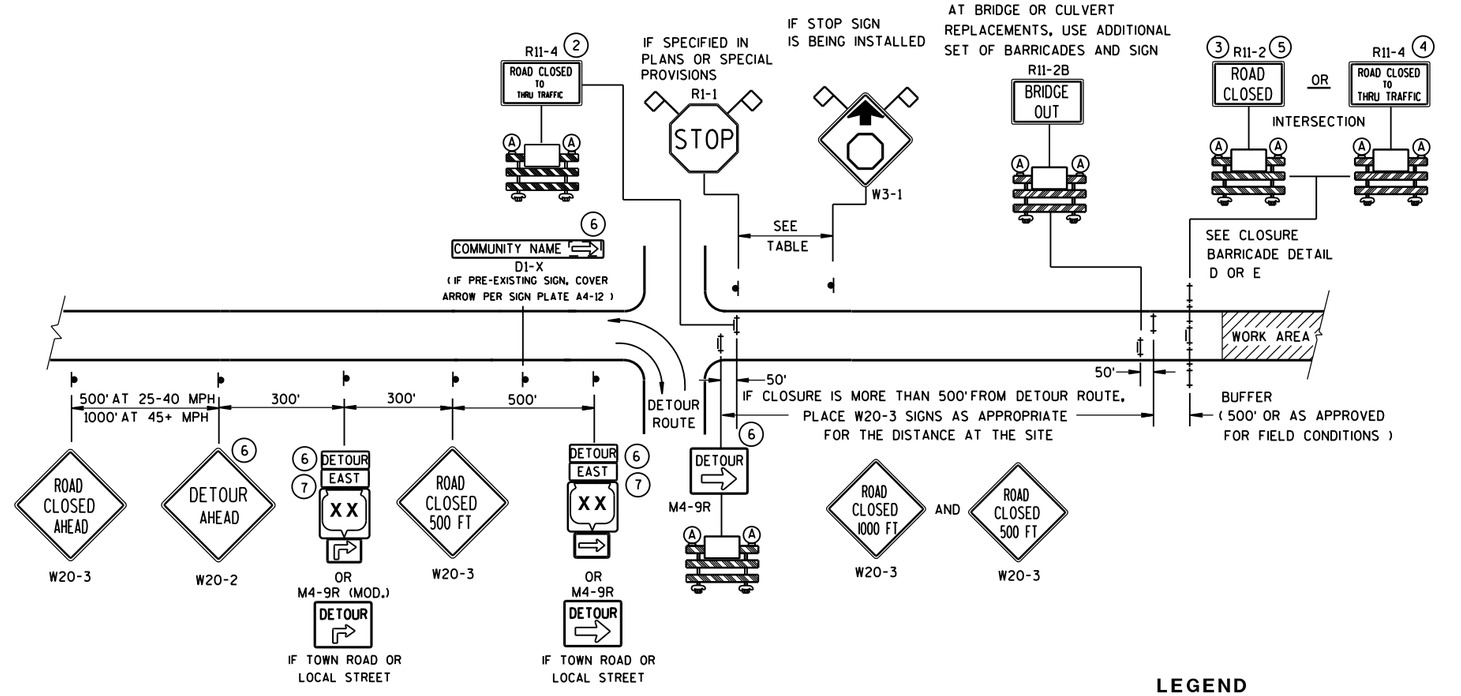

DETAIL B
MAINLINE CLOSURE WITH POSTED DETOUR

WORK ZONE LESS THAN ½ MILE FROM DETOUR ROUTE (1000 FEET IF URBAN)

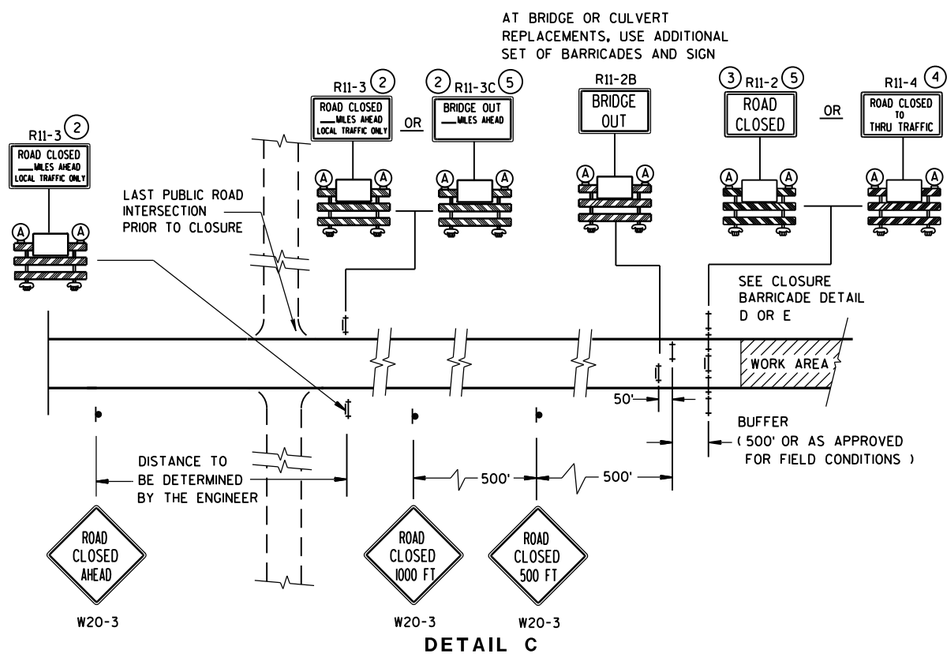

DETAIL C
MAINLINE CLOSURE, NO POSTED DETOUR

SPEED LIMIT (MPH)	"STOP AHEAD" ADVANCE WARNING DISTANCE (FT)
25	200
30	200
35	350
40	350
45	500
50	550
55	750

LEGEND

- SIGN ON PERMANENT SUPPORT
- TYPE III BARRICADE
- TYPE III BARRICADE WITH ATTACHED SIGN
- (A) TYPE "A" WARNING LIGHT (FLASHING)
- WORK AREA
- DETOUR EAST — M4-8, M3-X
- XX (M1-4) OR COUNTY XX (M1-5A) OR XX (M1-6)
- M05-1 OR M06-1
- FLAGS, 16" X 16" MIN., (ORANGE)

SEE SDD 15C2-SHEET "**b**" FOR GENERAL NOTES AND FOOTNOTES (1) THROUGH (7)

BARRICADES AND SIGNS FOR MAINLINE CLOSURES

STATE OF WISCONSIN
DEPARTMENT OF TRANSPORTATION

8/2013 — DATE
/S/ Travis Feltes — STATE TRAFFIC ENGINEER
FHWA

6

S.D.D. 15 C 2-5a

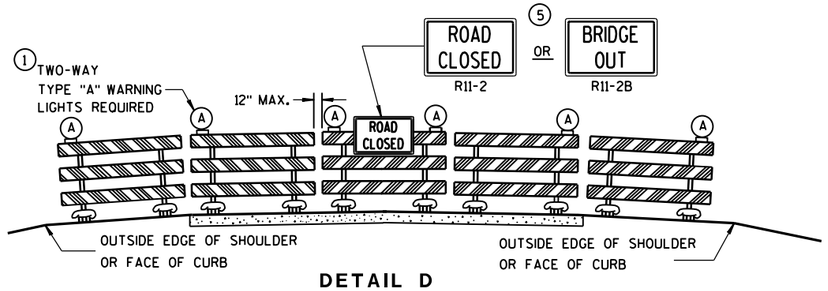

DETAIL D

ROAD CLOSURE BARRICADE DETAIL

APPROACH VIEW

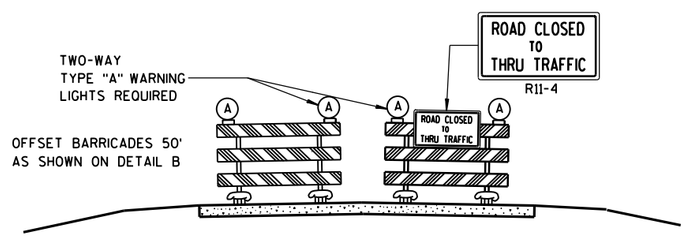

DETAIL E

LANE CLOSURE BARRICADE DETAIL

APPROACH VIEW

SEE SDD 15C2-SHEET "**a**" FOR LEGEND

GENERAL NOTES

THE EXACT NUMBER, LOCATION, AND SPACING OF ALL SIGNS AND BARRICADES SHALL BE ADJUSTED TO FIT FIELD CONDITIONS AS APPROVED BY THE ENGINEER.

ANY SIGNS TEMPORARY OR EXISTING, WHICH CONFLICT WITH TRAFFIC CONTROL "IN USE" SHALL BE REMOVED OR COVERED AS NEEDED AND AS APPROVED BY THE ENGINEER.

THE SPACING BETWEEN TRAFFIC CONTROL SIGNS SHOULD BE ADJUSTED TO NOT CONFLICT WITH AND SHOULD PROVIDE A DESIRABLE MINIMUM OF 200 FEET CLEARANCE TO EXISTING SIGNS THAT WILL REMAIN IN PLACE.

BARRICADES THAT MUST BE MOVED FOR A WORK OPERATION SHALL BE IMMEDIATELY RE-ESTABLISHED UPON COMPLETION OF THE OPERATION OR, FOR CONTINUING OPERATIONS, AT THE END OF EACH WORKING DAY.

SIGNS THAT WILL BE IN PLACE LESS THAN 7 CONTINUOUS DAYS AND NIGHTS MAY BE MOUNTED ON PORTABLE SUPPORTS.

ALL TYPE III BARRICADES SHALL HAVE RAILS REFLECTORIZED ON BOTH FACES. STRIPES SHALL BE PROPERLY SLOPED DOWN TOWARD THE TRAFFIC SIDE OR AS SHOWN IN THE ROAD CLOSURE BARRICADE DETAIL D FOR FULL ROAD CLOSURES.

TYPE "A" LOW-INTENSITY FLASHING WARNING LIGHTS SHALL BE VISIBLE ON BOTH SIDES OF THE BARRICADE.

THE R11-2, R11-3, M4-9, R11-4 AND R10-61 SIGNS PLACED ON BARRICADES SHALL COVER NO MORE THAN THE TOP RAIL. THE SIGNS SHALL NOT COVER ANY PORTION OF THE MIDDLE OR BOTTOM RAILS.

"WO AND "MO" SIGNS ARE THE SAME AS "W" AND "M" SIGNS EXCEPT THE BACKGROUND IS ORANGE.

ALL SIGNS SHALL BE 48" X 48" UNLESS OTHERWISE NOTED BELOW:

R11-2 SHALL BE 48" X 30".
R11-3, R11-4 AND R10-61 SHALL BE 60" X 30".
M4-9 SHALL BE 30" X 24".
M3-X SHALL BE 24" X 12". (36" X 18" IF NEEDED TO MATCH EXISTING SIGNS.)
M4-8 SHALL BE 24" X 12". (30" X 15" IF NEEDED TO MATCH EXISTING SIGNS.)
M1-4, M1-5A, AND M1-6 SHALL BE 24" X 24". (36" X 36" IF NEEDED TO MATCH EXISTING SIGNS.)
M05-1 AND M06-1 SHALL BE 21" X 21". (30" X 30" IF NEEDED TO MATCH EXISTING SIGNS.)
D1-X SHALL BE AS SHOWN ON SPECIFIC PROJECT SIGNING DETAIL SHEETS.
R1-1 SHALL BE 36" X 36".

1. TWO WARNING LIGHTS SHALL BE PROVIDED ON THE CENTER BARRICADE AND A MINIMUM OF ONE WARNING LIGHT SHALL BE PROVIDED ON EACH OF THE OTHER BARRICADES WITHIN THE ROADWAY LIMITS. SPACING OF THE WARNING LIGHTS SHALL BE UNIFORM TO THE EDGE OF ROADWAY AS SHOWN (APPROX. 8-FOOT LIGHT SPACING).
2. THESE SIGNS AND BARRICADES ARE NOT REQUIRED IF ROAD CLOSURE BEGINS AT INTERSECTION.
3. FOR ROAD CLOSURE WITHOUT LOCAL ACCESS TO PROJECT, SEE ROAD CLOSURE BARRICADE DETAIL D.
4. FOR ROAD CLOSURE WITH LOCAL ACCESS TO PROJECT, SEE LANE CLOSURE BARRICADE DETAIL E.
5. FOR BRIDGE OR CULVERT REPLACEMENTS, SUBSTITUTE "BRIDGE OUT" INSTEAD OF "ROAD CLOSED" ON R11-2 AND R11-3 SIGNS.
6. INSTALL DETOUR AND COMMUNITY GUIDE SIGNS AND ARROWS ONLY IF SPECIFIED IN THE CONTRACT. IF THERE ARE EXISTING ROUTE MARKER ASSEMBLIES THAT WILL REMAIN IN PLACE, ADJUST THE LOCATION OF THE DETOUR ROUTE SIGNS TO CORRESPOND WITH THE EXISTING ASSEMBLIES. MODIFY EXISTING SIGNS WHERE POSSIBLE. SEE SPECIFIC PROJECT DETOUR SIGNING DETAIL SHEETS. IF DETOUR SIGNS ARE BEING INSTALLED BY OTHERS, PLACE THE CONTRACTED TRAFFIC CONTROL SIGNS TO ALLOW FOR PLACEMENT OF ALL WARNING, DETOUR AND GUIDE SIGNS AS SHOWN.
7. "EAST" CARDINAL DIRECTION MARKERS AND RIGHT TURN ARROWS ARE SHOWN. USE OTHER CARDINAL DIRECTIONS AND ARROWS AS APPROPRIATE.

BARRICADES AND SIGNS FOR MAINLINE CLOSURES

STATE OF WISCONSIN
DEPARTMENT OF TRANSPORTATION

8/2013 — DATE
/S/ Travis Feltes — STATE TRAFFIC ENGINEER
FHWA

THIS DRAWING PROVIDES GENERAL GUIDANCE ON TYPICAL DETOUR SIGN LAYOUT AND SPACING. SEE PROJECT DETOUR SIGNING SHEETS FOR SPECIFIC DETAILS FOR EACH PROJECT.

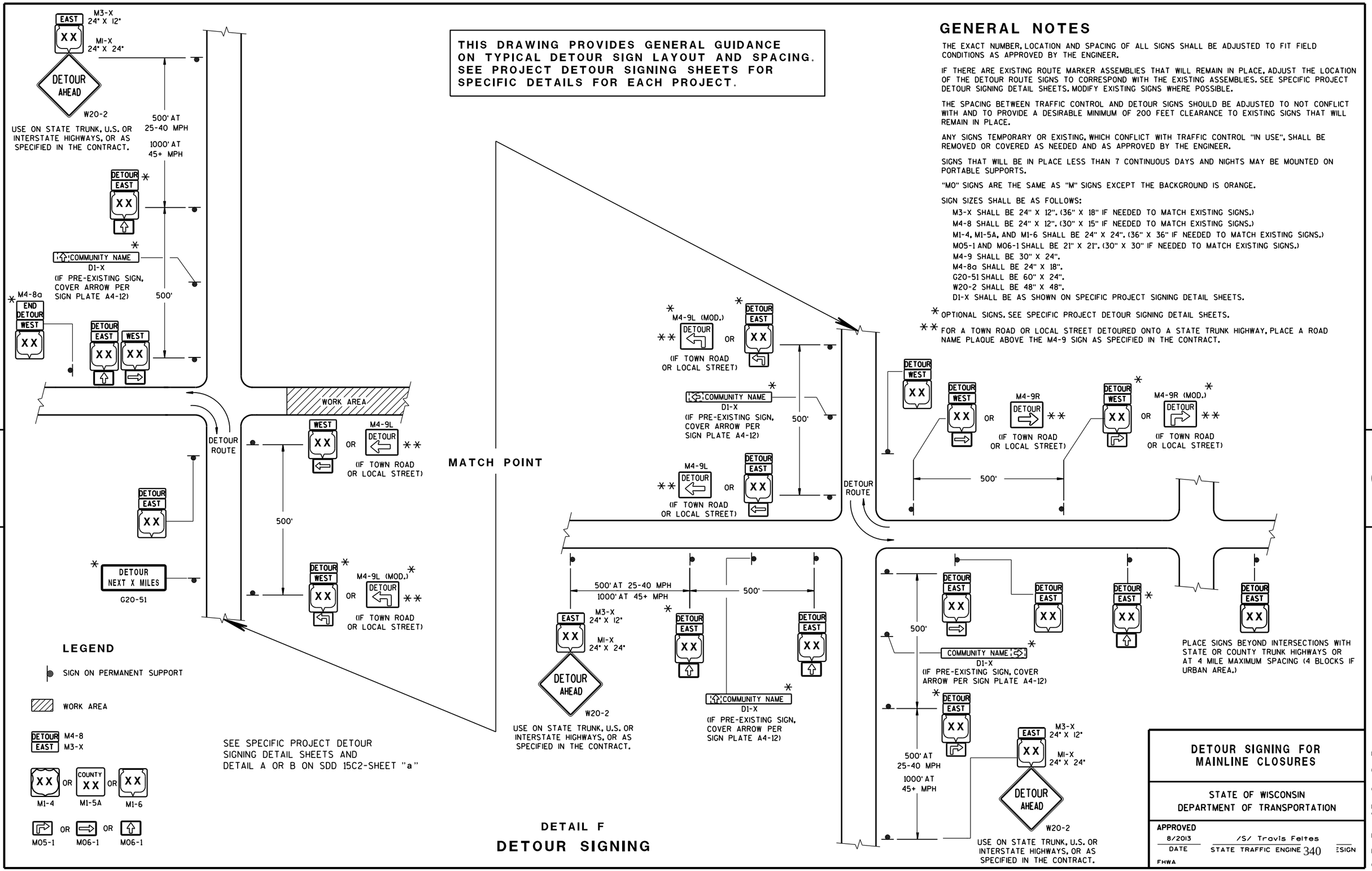

DETAIL F

DETOUR SIGNING

GENERAL NOTES

THE EXACT NUMBER, LOCATION AND SPACING OF ALL SIGNS SHALL BE ADJUSTED TO FIT FIELD CONDITIONS AS APPROVED BY THE ENGINEER.

IF THERE ARE EXISTING ROUTE MARKER ASSEMBLIES THAT WILL REMAIN IN PLACE, ADJUST THE LOCATION OF THE DETOUR ROUTE SIGNS TO CORRESPOND WITH THE EXISTING ASSEMBLIES. SEE SPECIFIC PROJECT DETOUR SIGNING DETAIL SHEETS. MODIFY EXISTING SIGNS WHERE POSSIBLE.

THE SPACING BETWEEN TRAFFIC CONTROL AND DETOUR SIGNS SHOULD BE ADJUSTED TO NOT CONFLICT WITH AND TO PROVIDE A DESIRABLE MINIMUM OF 200 FEET CLEARANCE TO EXISTING SIGNS THAT WILL REMAIN IN PLACE.

ANY SIGNS TEMPORARY OR EXISTING, WHICH CONFLICT WITH TRAFFIC CONTROL "IN USE", SHALL BE REMOVED OR COVERED AS NEEDED AND AS APPROVED BY THE ENGINEER.

SIGNS THAT WILL BE IN PLACE LESS THAN 7 CONTINUOUS DAYS AND NIGHTS MAY BE MOUNTED ON PORTABLE SUPPORTS.

"MO" SIGNS ARE THE SAME AS "M" SIGNS EXCEPT THE BACKGROUND IS ORANGE.

SIGN SIZES SHALL BE AS FOLLOWS:

- M3-X SHALL BE 24" X 12". (36" X 18" IF NEEDED TO MATCH EXISTING SIGNS.)
- M4-8 SHALL BE 24" X 12". (30" X 15" IF NEEDED TO MATCH EXISTING SIGNS.)
- M1-4, M1-5A, AND M1-6 SHALL BE 24" X 24". (36" X 36" IF NEEDED TO MATCH EXISTING SIGNS.)
- M05-1 AND M06-1 SHALL BE 21" X 21". (30" X 30" IF NEEDED TO MATCH EXISTING SIGNS.)
- M4-9 SHALL BE 30" X 24".
- M4-8a SHALL BE 24" X 18".
- G20-51 SHALL BE 60" X 24".
- W20-2 SHALL BE 48" X 48".
- D1-X SHALL BE AS SHOWN ON SPECIFIC PROJECT SIGNING DETAIL SHEETS.

* OPTIONAL SIGNS. SEE SPECIFIC PROJECT DETOUR SIGNING DETAIL SHEETS.

** FOR A TOWN ROAD OR LOCAL STREET DETOURED ONTO A STATE TRUNK HIGHWAY, PLACE A ROAD NAME PLAQUE ABOVE THE M4-9 SIGN AS SPECIFIED IN THE CONTRACT.

DETOUR SIGNING FOR MAINLINE CLOSURES

STATE OF WISCONSIN
DEPARTMENT OF TRANSPORTATION

APPROVED
8/2013 /S/ Travis Feltes
DATE STATE TRAFFIC ENGINE ESIGN
FHWA

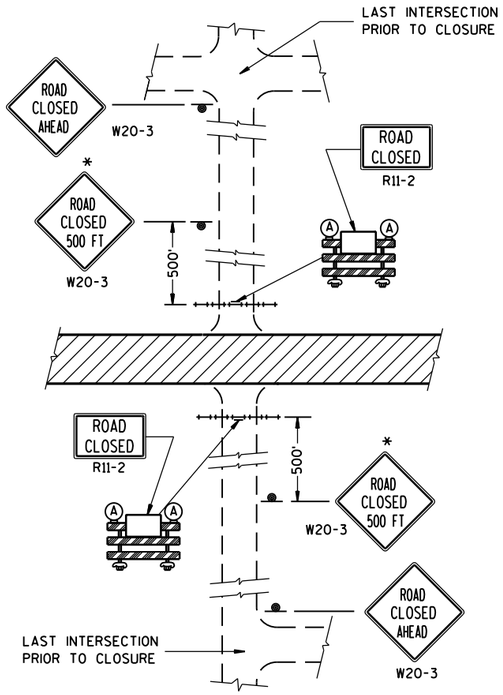

DETAIL 1

(NO ACCESS TO PROJECT)

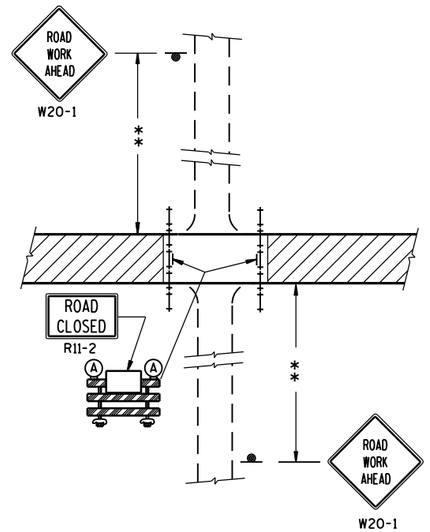

DETAIL 2

(PUBLIC CROSS-TRAFFIC MAINTAINED.
NO ACCESS TO PROJECT).

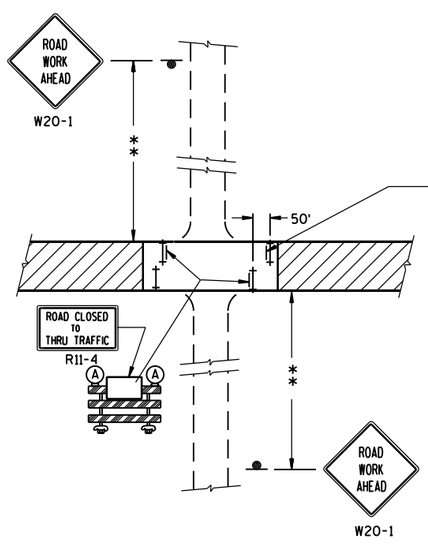

DETAIL 3

(PUBLIC CROSS-TRAFFIC MAINTAINED. CONTRACTOR,
LOCAL BUSINESS AND RESIDENT ACCESS).

FOR BRIDGE OR CULVERT
REPLACEMENT, USE ADDITIONAL
SIGN ON BARRICADE

BRIDGE OUT
XX MILES AHEAD
R11-3C

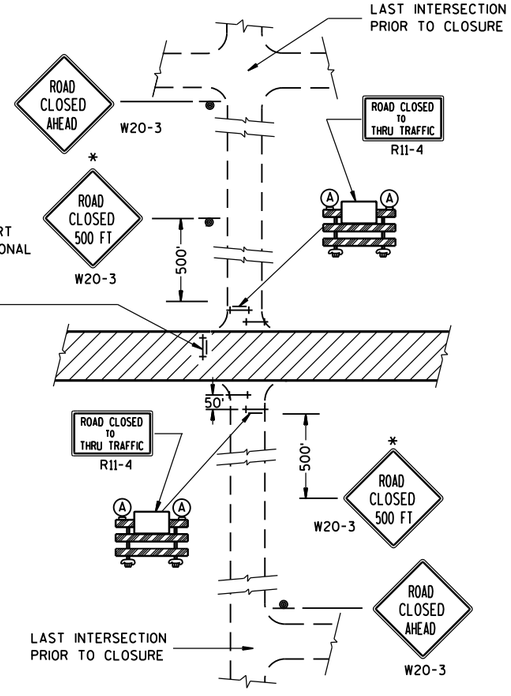

DETAIL 4

(CONTRACTOR, LOCAL BUSINESS AND
RESIDENT ACCESS TO PROJECT)

GENERAL NOTES

THE EXACT NUMBER, LOCATION, AND SPACING OF ALL SIGNS AND BARRICADES SHALL BE ADJUSTED TO FIT FIELD CONDITIONS AS APPROVED BY THE ENGINEER.

ANY SIGNS TEMPORARY OR EXISTING, WHICH CONFLICT WITH TRAFFIC CONTROL "IN USE" SHALL BE REMOVED OR COVERED AS NEEDED AND AS APPROVED BY THE ENGINEER.

THE SPACING BETWEEN TRAFFIC CONTROL SIGNS SHOULD BE ADJUSTED TO NOT CONFLICT WITH AND SHOULD PROVIDE A DESIRABLE MINIMUM OF 200 FEET CLEARANCE TO EXISTING SIGNS THAT WILL REMAIN IN PLACE.

IF A "STOP" SIGN MUST BE REMOVED FOR A WORK OPERATION, A TEMPORARY "STOP" SIGN SHALL BE PLACED PRIOR TO THE SIGN REMOVAL, OR A FLAGGER SHALL BE PROVIDED UNTIL THE SIGN IS RE-ESTABLISHED.

BARRICADES THAT MUST BE MOVED FOR A WORK OPERATION SHALL BE IMMEDIATELY RE-ESTABLISHED UPON COMPLETION OF THE OPERATION OR, FOR CONTINUING OPERATIONS, AT THE END OF EACH WORKING DAY.

SIGNS THAT WILL BE IN PLACE LESS THAN 7 CONTINUOUS DAYS AND NIGHTS MAY BE MOUNTED ON PORTABLE SUPPORTS.

ALL TYPE III BARRICADES SHALL HAVE RAILS REFLECTORIZED ON BOTH FACES. STRIPES SHALL BE PROPERLY SLOPED DOWN TOWARD THE TRAFFIC SIDE OR AS SHOWN IN THE ROAD CLOSURE BARRICADE DETAIL D FOR FULL ROAD CLOSURES.

TYPE "A" LOW-INTENSITY FLASHING WARNING LIGHTS SHALL BE VISIBLE ON BOTH SIDES OF THE BARRICADE.

THE R11-2, R11-3 AND R11-4 SIGNS PLACED ON BARRICADES SHALL COVER NO MORE THAN THE TOP RAIL. THE SIGNS SHALL NOT COVER ANY PORTION OF THE MIDDLE OR BOTTOM RAILS.

ALL SIGNS SHALL BE 48" X 48" UNLESS OTHERWISE NOTED BELOW:
R11-2 SHALL BE 48" X 30".
R11-4 AND R11-3 SHALL BE 60" X 30".

*OMIT THE "ROAD CLOSED 500 FT." SIGN IF THE LAST INTERSECTION IS 500 FT. OR LESS FROM THE WORK ZONE.

**500' MAX. OR AT LAST INTERSECTION WHICHEVER IS CLOSER.

LEGEND

- SIGN ON PERMANENT SUPPORT
- TYPE III BARRICADE
- TYPE III BARRICADE WITH ATTACHED SIGN
- (A) TYPE "A" WARNING LIGHT (FLASHING)
- WORK AREA

BARRICADES AND SIGNS FOR SIDEROAD CLOSURES

STATE OF WISCONSIN
DEPARTMENT OF TRANSPORTATION

APPROVED
8/2013 — DATE
/S/ Travis Feltes — STATE TRAFFIC ENGINEER
FHWA

6

S.D.D. 15 C 3-2

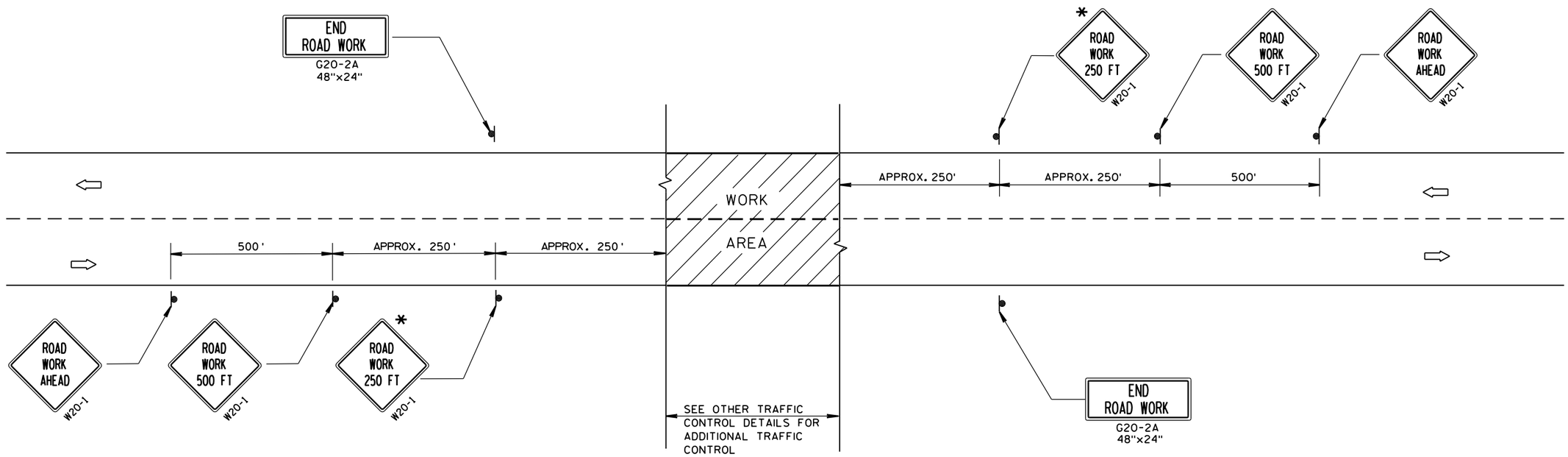

TYPICAL SIDEROAD APPROACH WARNING SIGN DETAIL

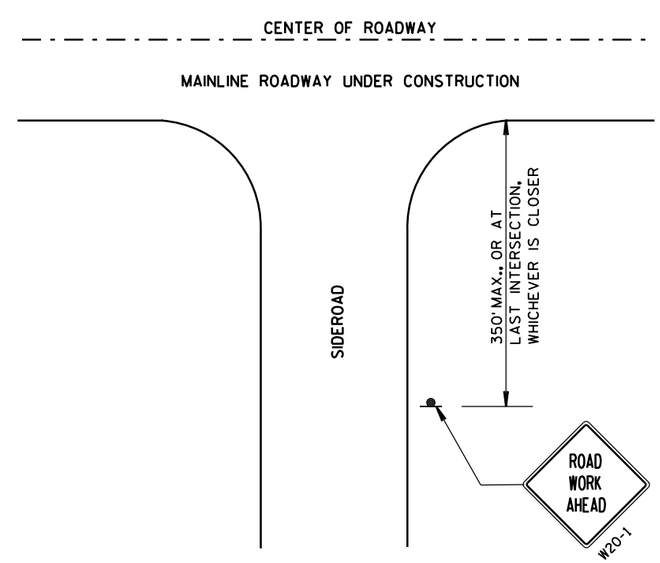

LEGEND

- SIGN ON PERMANENT SUPPORT
- DIRECTION OF TRAFFIC
- WORK AREA

GENERAL NOTES

THE EXACT NUMBER, LOCATION, AND SPACING OF ALL SIGNS AND DEVICES SHALL BE ADJUSTED TO FIT FIELD CONDITIONS.

THE SPACING BETWEEN TRAFFIC CONTROL SIGNS SHOULD BE ADJUSTED TO NOT CONFLICT WITH AND SHOULD PROVIDE A DESIRABLE MINIMUM OF 200 FEET CLEARANCE TO EXISTING SIGNS THAT WILL REMAIN IN PLACE.

ALL SIGNS ARE 48"x48" UNLESS OTHERWISE NOTED. IF NECESSARY DUE TO SPACE CONSTRAINTS, 36"x36" SIGNS MAY BE USED INSTEAD OF 48"x48" SIGNS.

SIGNS THAT WILL BE IN PLACE LESS THAN 7 CONTINUOUS DAYS AND NIGHTS MAY BE MOUNTED ON PORTABLE SUPPORTS.

IF A "STOP" SIGN MUST BE REMOVED FOR A WORK OPERATION, A TEMPORARY "STOP" SIGN SHALL BE PLACED PRIOR TO THE SIGN REMOVAL, OR A FLAGGER SHALL BE PROVIDED UNTIL THE SIGN IS RE-ESTABLISHED.

* THE THIRD W20-1 SIGN IS REQUIRED ONLY IF THERE IS AN INTERSECTION BETWEEN THE "ROAD WORK 500 FT" SIGN AND THE WORK ZONE. ADJUST THE PLACEMENT OF THIS SIGN BASED ON INTERSECTION LOCATION AND OTHER FIELD CONDITIONS.

TRAFFIC CONTROL, ADVANCE WARNING SIGNS 40 M.P.H. OR LESS TWO-WAY UNDIVIDED ROAD OPEN TO TRAFFIC
STATE OF WISCONSIN DEPARTMENT OF TRANSPORTATION
APPROVED 8/2013 DATE — /S/ Travis Feltes STATE TRAFFIC ENGINEER — SIGN
FHWA

6

S.D.D. 15 C 5-2

GENERAL NOTES

DETAILS OF INSTALLATION, MATERIALS AND WORKMANSHIP NOT SHOWN ON THIS DRAWING SHALL CONFORM TO THE PERTINENT REQUIREMENTS OF THE STANDARD SPECIFICATIONS AND APPLICABLE SPECIAL PROVISIONS.

ALL LETTERS, ARROWS AND SYMBOLS SHALL BE IN CONFORMANCE WITH REQUIREMENTS INCLUDED IN "STANDARD ALPHABETS FOR HIGHWAY SIGNS AND PAVEMENT MARKING" BOOK BY THE FEDERAL HIGHWAY ADMINISTRATION. ALL LETTERS, ARROWS AND SYMBOLS SHALL BE WHITE AND REFLECTORIZED. SMALL DIFFERENCES IN DIMENSIONS WITHIN THE TOLERANCES OF THAT BOOK ARE ACCEPTABLE.

A DETAILED DRAWING OF THE HANDICAPPED PARKING SYMBOL IS ILLUSTRATED IN THE "STANDARD HIGHWAY SIGNS MANUAL" BY THE FEDERAL HIGHWAY ADMINISTRATION.

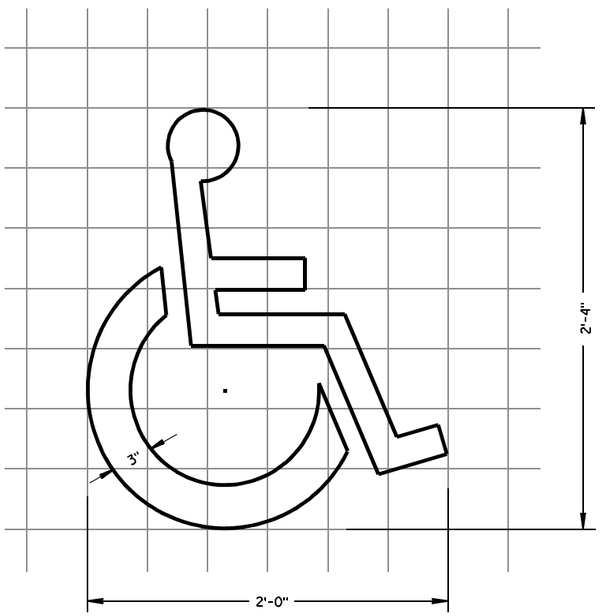

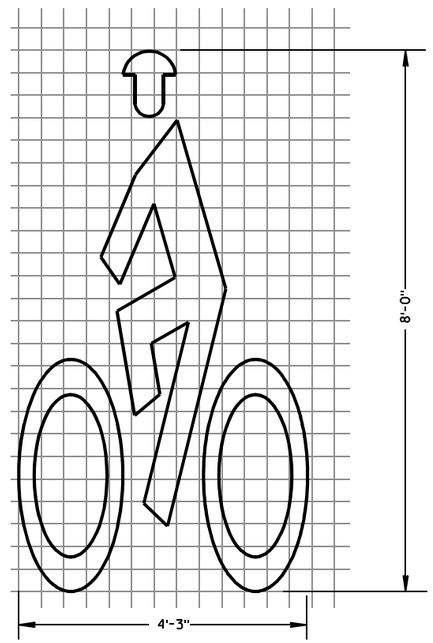

BIKE CROSSING SYMBOL

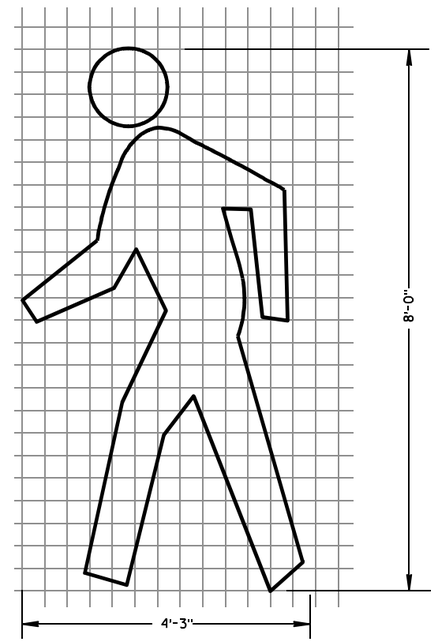

PEDESTRIAN SYMBOL

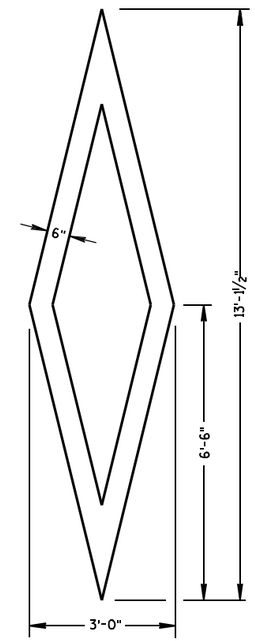

PREFERENTIAL LANE SYMBOL

6

6

S.D.D. 15 C 7-12a

S.D.D. 15 C 7-12a

PAVEMENT MARKING SYMBOLS

STATE OF WISCONSIN
DEPARTMENT OF TRANSPORTATION

APPROVED

7/1/11 — DATE

/S/ Thomas N Nathan — STATE TRAFFIC ENGINEER

FHWA

GENERAL NOTES

DETAILS OF INSTALLATION, MATERIALS AND WORKMANSHIP NOT SHOWN ON THIS DRAWING SHALL CONFORM TO THE PERTINENT REQUIREMENTS OF THE STANDARD SPECIFICATIONS AND APPLICABLE SPECIAL PROVISIONS.

ALL LETTERS, ARROWS AND SYMBOLS SHALL BE IN CONFORMANCE WITH REQUIREMENTS INCLUDED IN "STANDARD ALPHABETS FOR HIGHWAY SIGNS AND PAVEMENT MARKING" BOOK BY THE FEDERAL HIGHWAY ADMINISTRATION. ALL LETTERS, ARROWS AND SYMBOLS SHALL BE WHITE AND REFLECTORIZED. SMALL DIFFERENCES IN DIMENSIONS WITHIN THE TOLERANCES OF THAT BOOK ARE ACCEPTABLE.

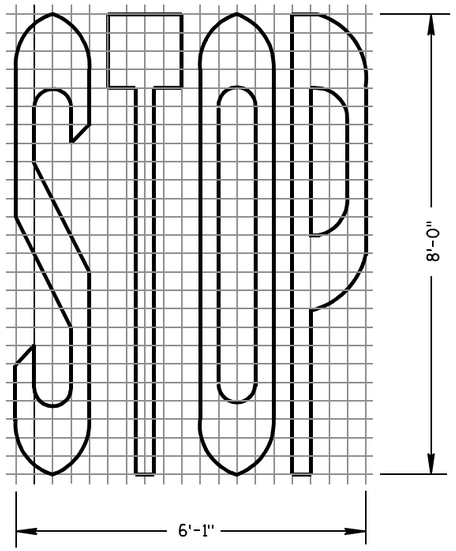

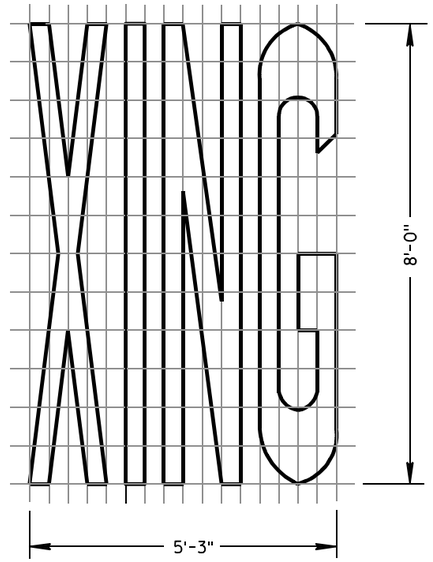

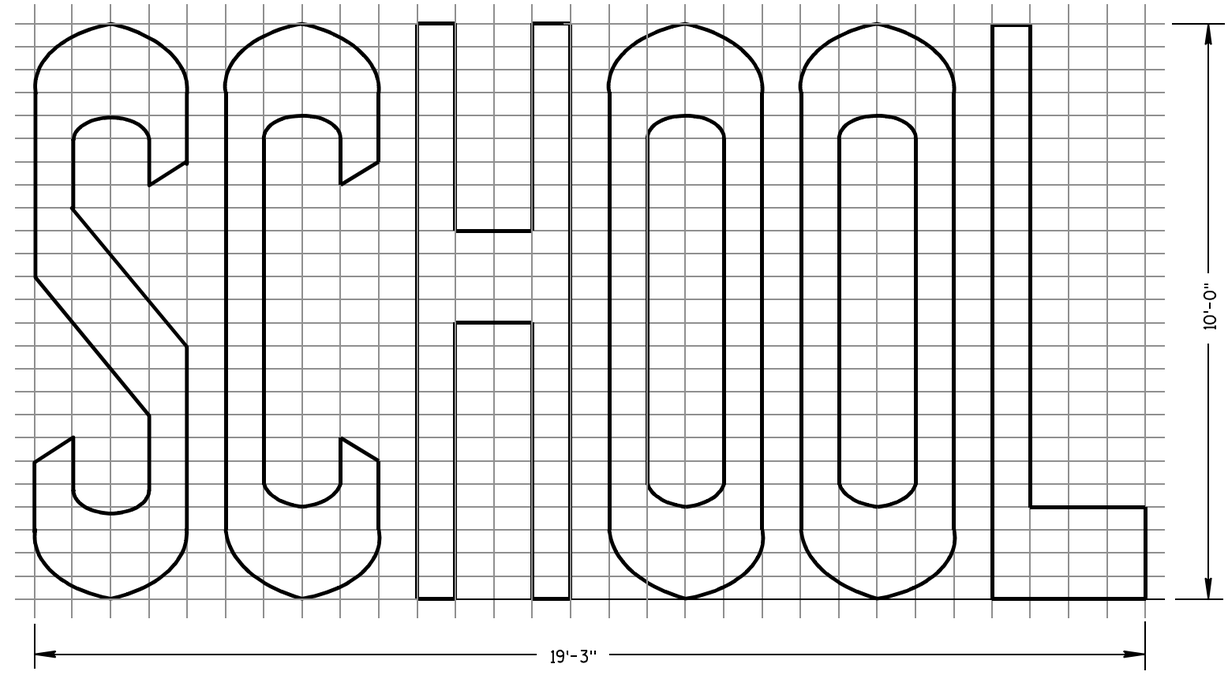

TWO-LANE

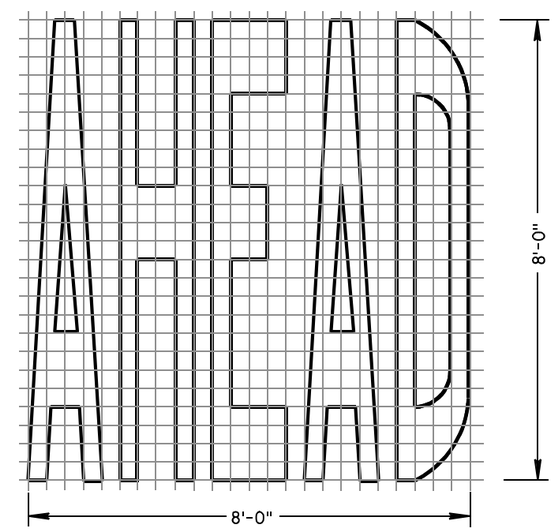

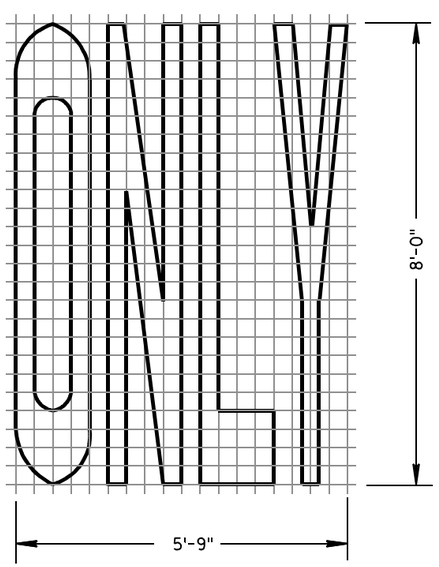

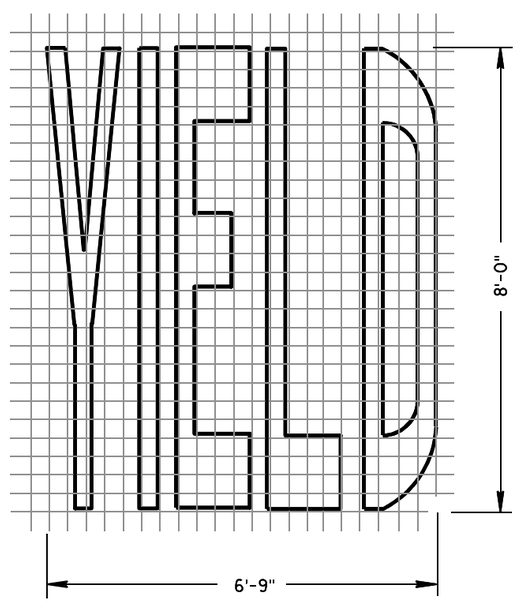

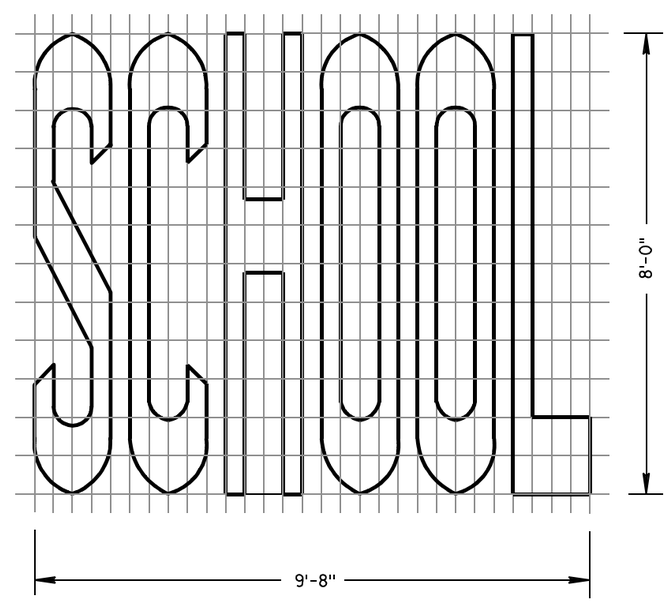

SINGLE-LANE

6

6

S.D.D. 15 C 7-12b

S.D.D. 15 C 7-12b

PAVEMENT MARKING WORDS

STATE OF WISCONSIN
DEPARTMENT OF TRANSPORTATION

APPROVED

7-1-11 — DATE

/S/ Thomas N. Notbohm — STATE TRAFFIC ENGINEER

FHWA

GENERAL NOTES

DETAILS OF INSTALLATION, MATERIALS AND WORKMANSHIP NOT SHOWN ON THIS DRAWING SHALL CONFORM TO THE PERTINENT REQUIREMENTS OF THE STANDARD SPECIFICATIONS AND APPLICABLE SPECIAL PROVISIONS.

ALL LETTERS, ARROWS AND SYMBOLS SHALL BE IN CONFORMANCE WITH REQUIREMENTS INCLUDED IN "STANDARD ALPHABETS FOR HIGHWAY SIGNS AND PAVEMENT MARKING" BOOK BY THE FEDERAL HIGHWAY ADMINISTRATION. ALL LETTERS, ARROWS AND SYMBOLS SHALL BE WHITE AND REFLECTORIZED. SMALL DIFFERENCES IN DIMENSIONS WITHIN THE TOLERANCES OF THAT BOOK ARE ACCEPTABLE.

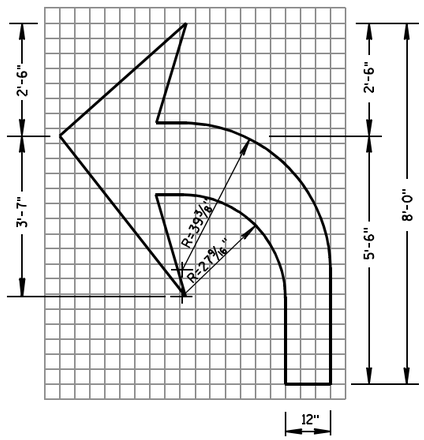

TYPE 2

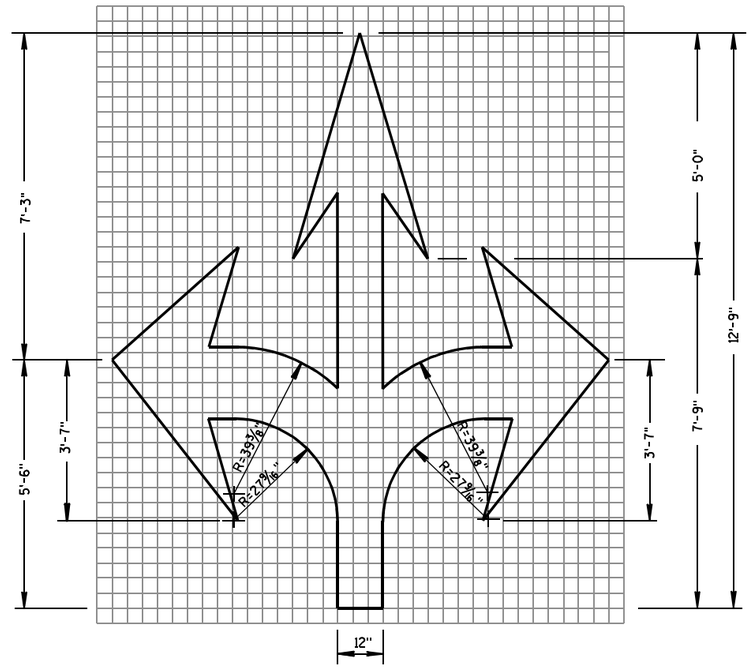

TYPE 6

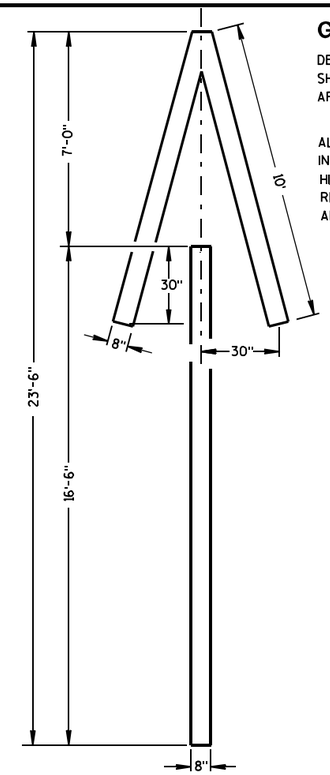

TYPE 4

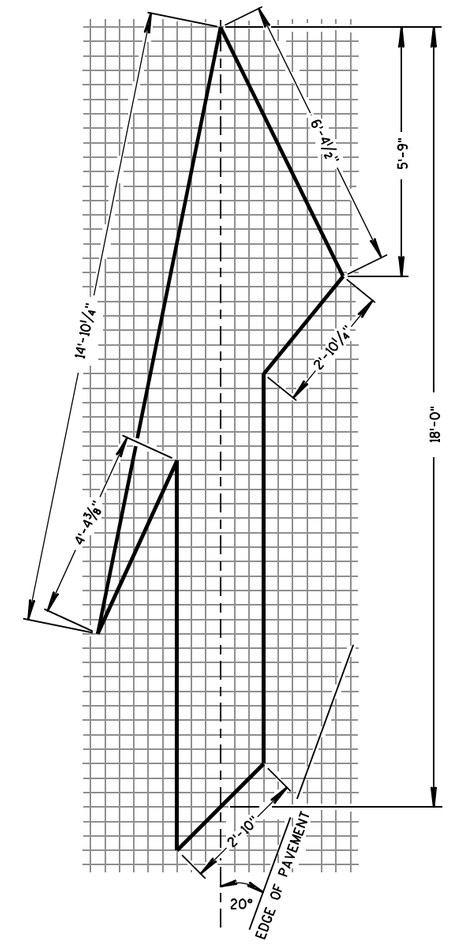

TYPE 5 LANE DROP ARROW

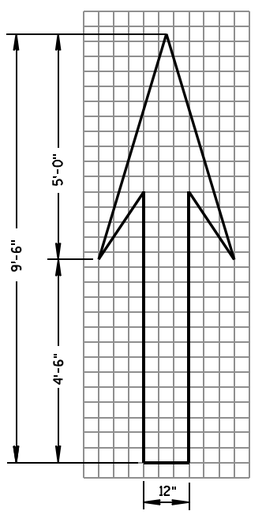

TYPE 1

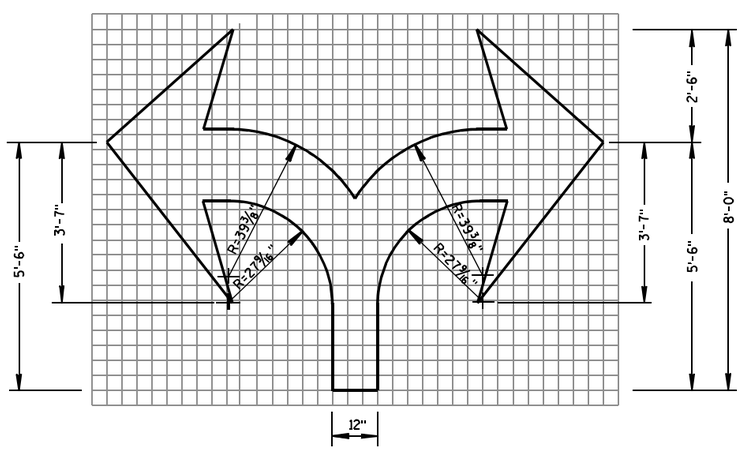

TYPE 7

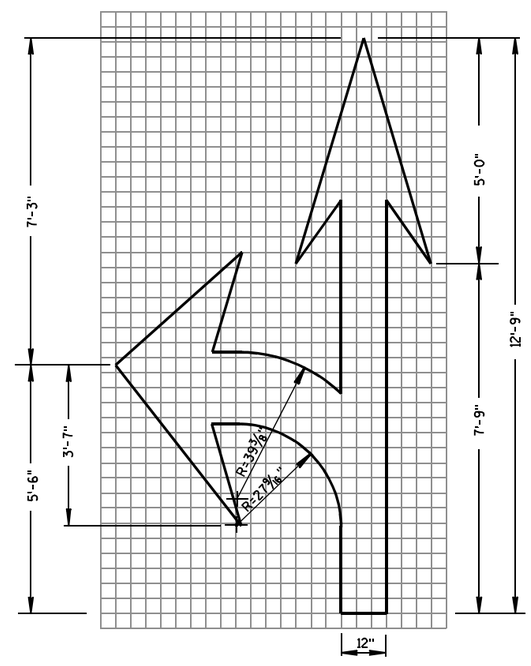

TYPE 3

6

6

PAVEMENT MARKING ARROWS

STATE OF WISCONSIN
DEPARTMENT OF TRANSPORTATION

APPROVED

7/1/11 — DATE

/S/ Thomas N. Nothohm — STATE TRAFFIC ENGINEER

FHWA

S.D.D. 15 C 7-12c

S.D.D. 15 C 7-12c

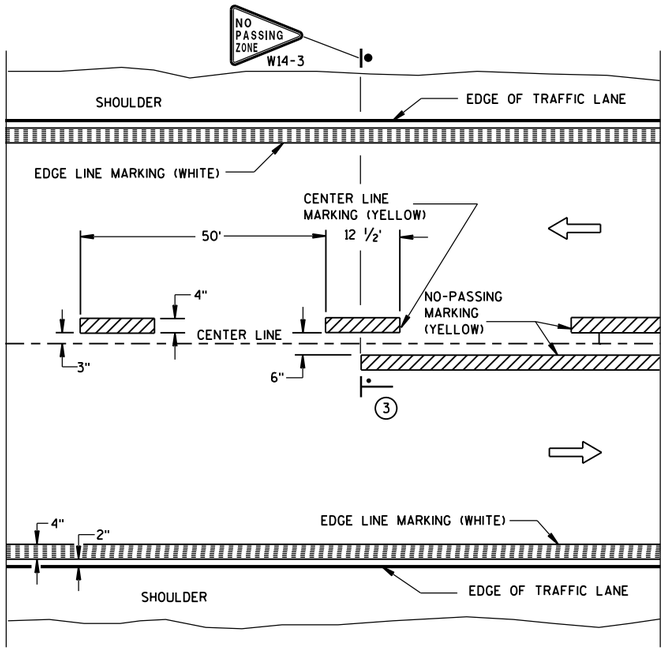

TWO WAY TRAFFIC

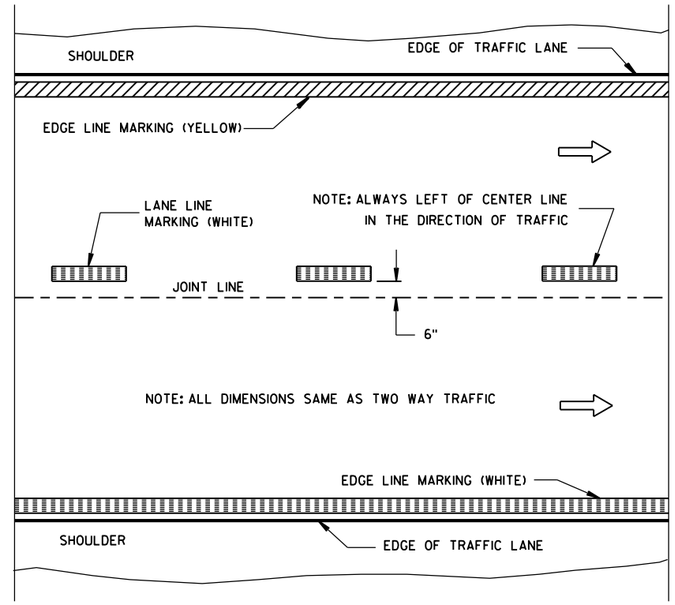

ONE WAY TRAFFIC

PERMANENT PAVEMENT MARKING

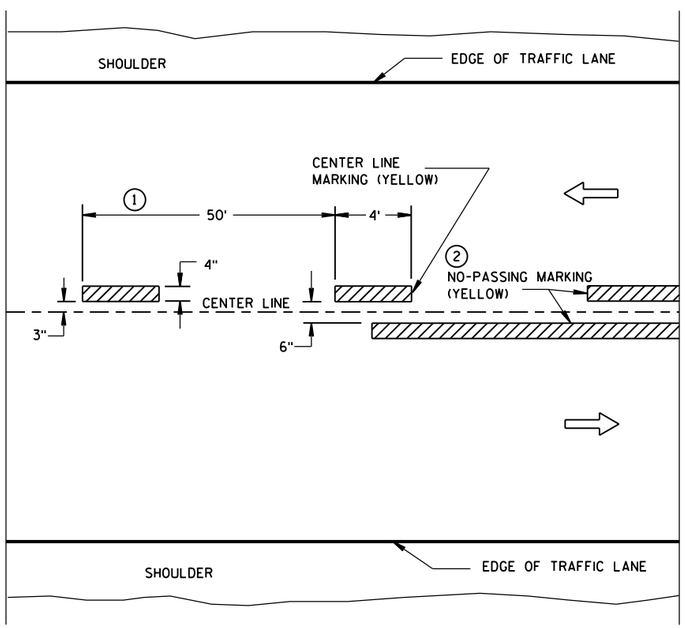

TWO WAY TRAFFIC

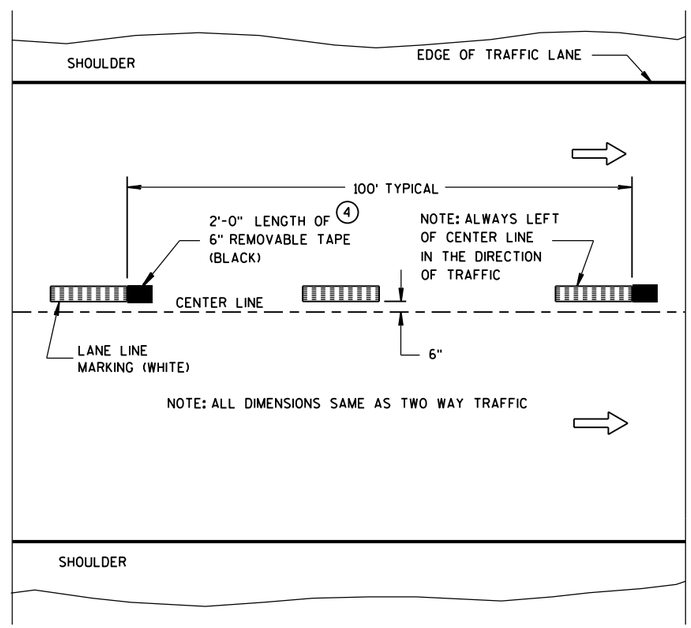

ONE WAY TRAFFIC

TEMPORARY (INTERMEDIATE) PAVEMENT MARKING

(SHOWS CYCLE FOR TEMPORARY CENTER LINE OR TEMPORARY LANE LINE MARKING)

GENERAL NOTES

DETAILS OF CONSTRUCTION NOT SHOWN ON THIS DRAWING SHALL CONFORM TO STANDARD SPECIFICATIONS AND SPECIAL PROVISIONS.

1. HALF CYCLE LENGTHS (25'±) WITH 2' MINIMUM STRIPE LENGTHS SHALL BE PROVIDED ON ROADWAYS (INCLUDING TEMPORARY TRAVELED WAYS) WITH REVERSE CURVATURE, CURVATURE OF OVER 5 DEGREES OR WHEN DIRECTED BY THE ENGINEER TO MARK UNUSUAL ALIGNMENT OF THE TRAVELED WAY.
2. NO PASSING ZONE TEMPORARY PAVEMENT MARKING IS REQUIRED TO BE PLACED, WHERE APPROPRIATE, ALONG WITH CENTERLINE TEMPORARY PAVEMENT MARKING WHEN A SAME DAY PERMANENT PAVEMENT MARKING ITEM IS INCLUDED IN THE CONTRACT.
3. NO PASSING ZONE MARKINGS ARE PLACED ACCORDING TO "T" MARKINGS. IF EXISTING NO PASSING ZONE W14-3 SIGNS ARE BEYOND 50 FEET IN EITHER DIRECTION, THE SIGNS SHALL BE MOVED TO THE "T" MARKINGS.
4. CONCRETE ONLY.

NOTE

ARROW SYMBOL (⇨) SHOWS DIRECTION OF TRAVEL

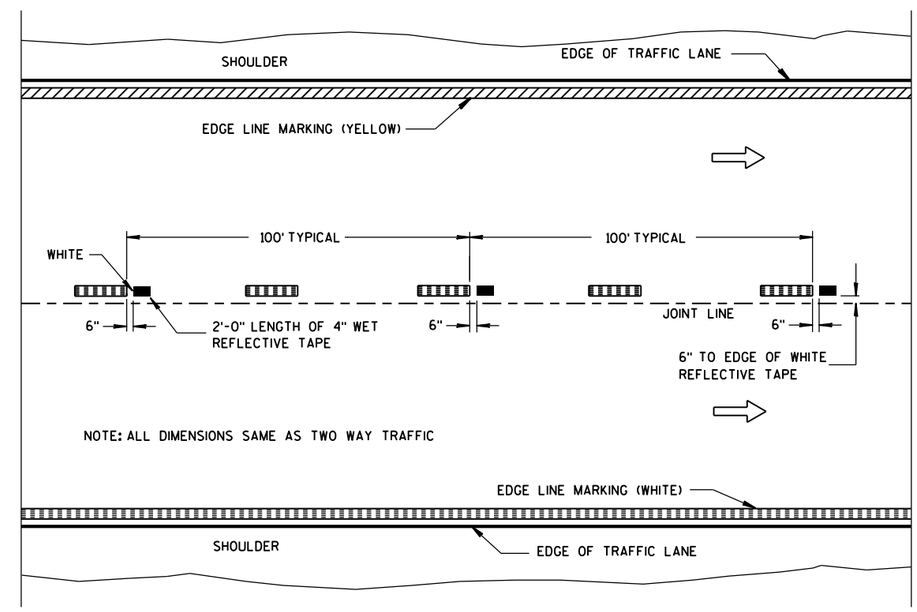

WET REFLECTIVE TAPE SUPPLEMENT TO SPRAYED OR NON WET REFLECTIVE TAPE LANE LINE

LEGEND

"T" MARKING

POST MOUNTED SIGN

PAVEMENT MARKING (MAINLINE)

STATE OF WISCONSIN
DEPARTMENT OF TRANSPORTATION

APPROVED
5-13-2013 — DATE
/S/ Travis Feltes — STATE TRAFFIC E
FHWA

6

S.D.D. 15 C 8-16a

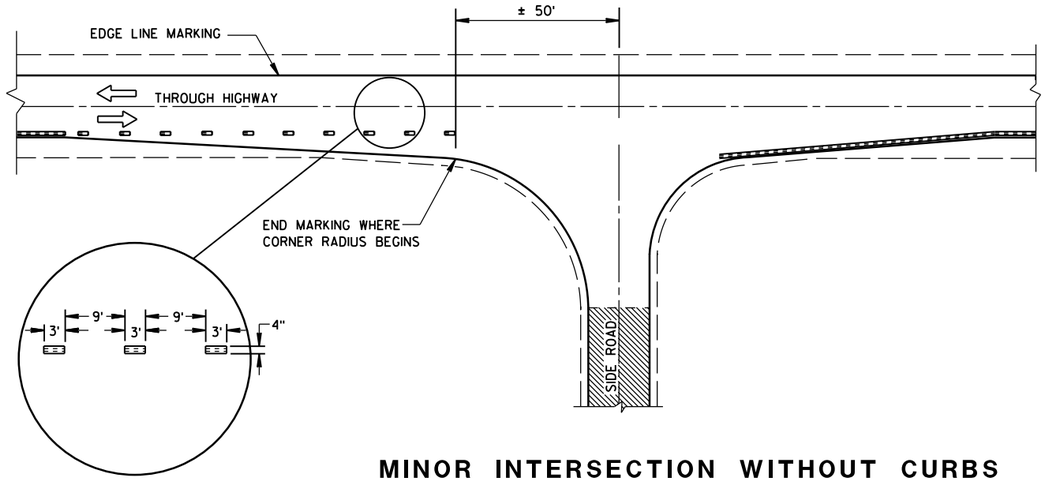

MINOR INTERSECTION WITHOUT CURBS

GENERAL NOTES

EDGE LINES SHALL BE OMITTED THROUGH INTERSECTIONS. EDGE LINES SHALL BE CONTINUED THROUGH DRIVEWAYS.

1. WHEN DISTANCE "A" IS LESS THAN 250 FEET, OMIT LANE LINE.
2. WHEN DISTANCE "B" IS LESS THAN 100 FEET, OMIT CHANNELIZING LANE LINE.
3. ALTERNATIVE MARKING SHALL BE PROVIDED WHEN SPECIFIED IN THE CONTRACT. TYPICAL SITUATIONS WHERE THIS MARKING MAY BE REQUIRED ARE WHERE THE INTERSECTION IS ON A SHARP HORIZONTAL CURVE OR CREST VERTICAL CURVE IN AN UNLIGHTED AREA SUCH THAT THE EDGE LINE MAY BE MISLEADING TO THE MOTORIST OR DISAPPEAR FROM SIGHT.
4. THE EDGE LINE IN THE TAPER AREAS OF THE BYPASS LANE AND THE BYPASS LANE SHALL BE LOCATED 1-FOOT FROM EDGE OF PAVEMENT TO THE OUTSIDE EDGE OF EDGE LINE.
5. BARRIER LINE ENDS AT SIDE ROAD PAVEMENT/SURFACE EDGE EXTENSION.
6. BARRIER LINE STARTS 500 FEET PRIOR TO THE BYPASS TAPER.
7. IF THE DISTANCE BETWEEN 2 SUCCESSIVE NO-PASSING ZONES IS LESS THAN THE MINIMUM DISTANCE BETWEEN ZONES, CONNECT THE 2 ZONES.
8. 3' LINE 9' GAP, EXCEPT RETRACE THE EXISTING LINE - GAP PATTERN WHERE EXISTING MARKINGS ARE IN PLACE.

ARROW SYMBOL (⇨) SHOWS DIRECTION OF TRAVEL

(7)

POSTED SPEED (MPH)	MINIMUM DISTANCE BETWEEN ZONES (FEET)
25 - 30	528
35 - 40	528
45 - 50	686
55	792

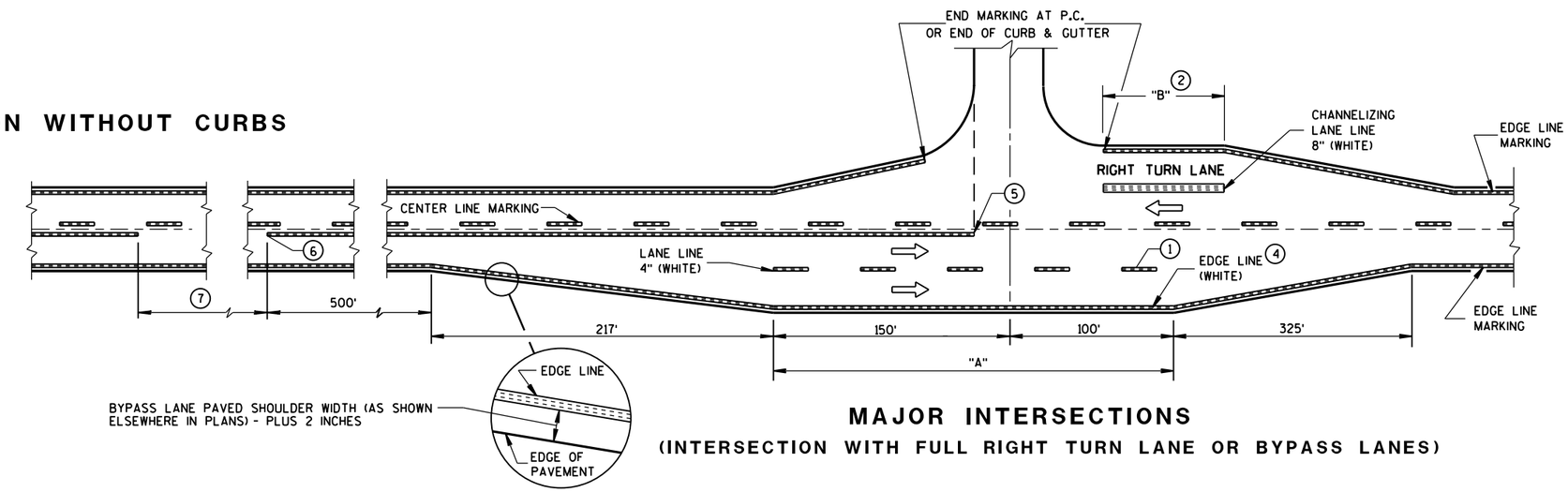

MAJOR INTERSECTIONS

(INTERSECTION WITH FULL RIGHT TURN LANE OR BYPASS LANES)

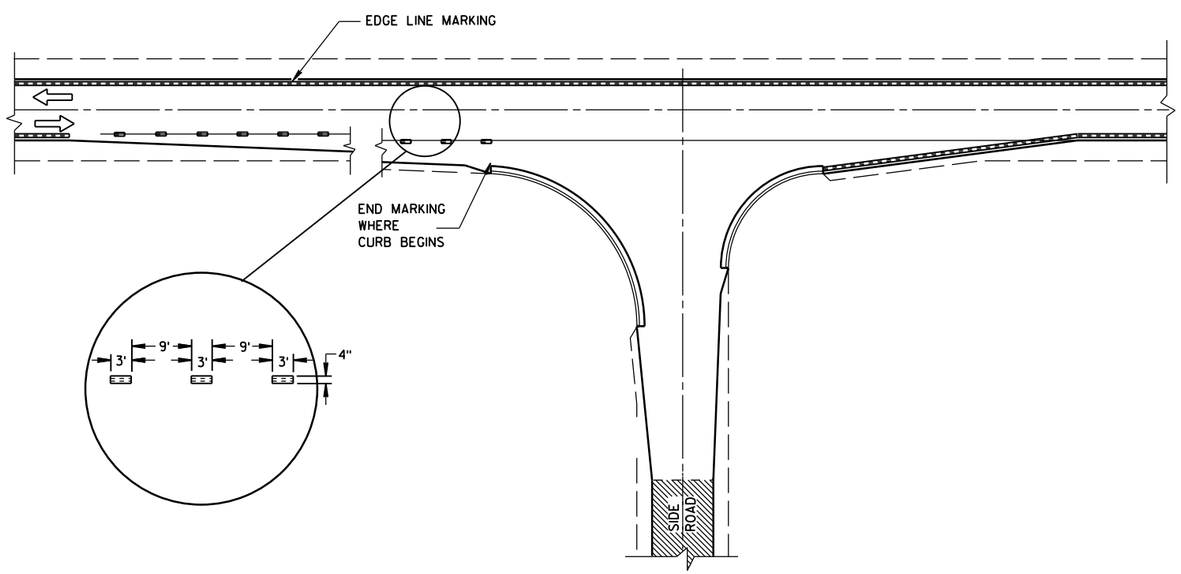

MINOR INTERSECTION WITH CURBS

(TYPICAL MARKING)

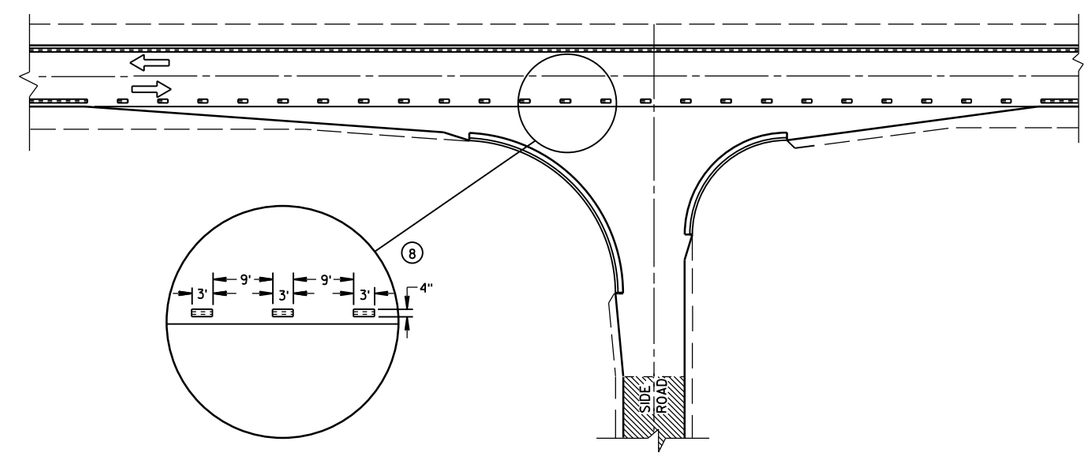

MINOR INTERSECTION WITH CURBS

(3) (FOR SPECIAL CONDITIONS AS SPECIFIED)

PAVEMENT MARKING
(INTERSECTIONS)

STATE OF WISCONSIN
DEPARTMENT OF TRANSPO

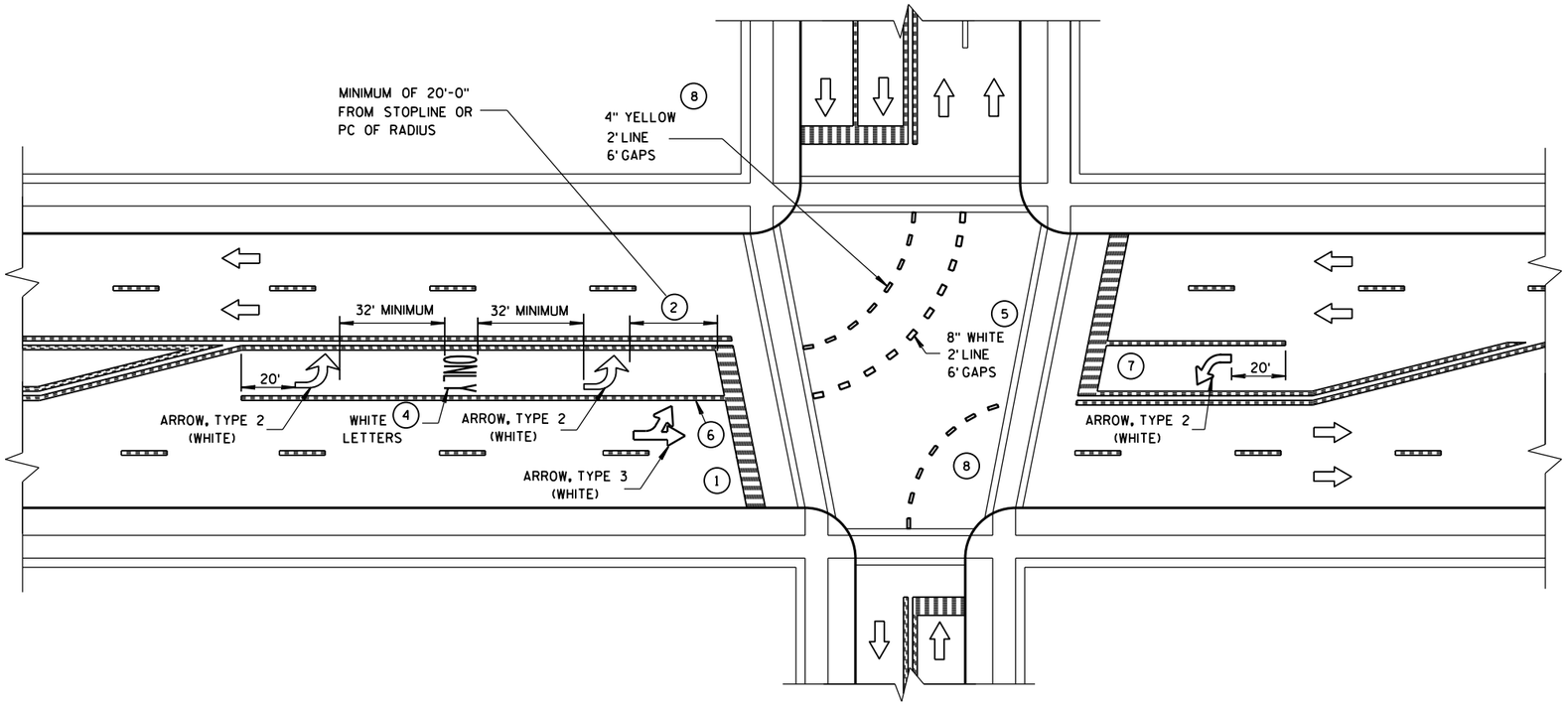

GENERAL NOTES

1. STOP BAR IS REQUIRED ONLY WHEN SPECIFIED IN THE CONTRACT.
2. DISTANCE MAY BE ADJUSTED TO ACCOMODATE SHORT LEFT TURN LANES. AS APPROVED BY THE ENGINEER.
3. A SET OF ARROWS IS REQUIRED EVERY 400 FEET OR NEAR INTERSECTIONS OR DRIVEWAYS WITH TURNING TRAFFIC.
4. ADD EXTRA SETS OF ONE ARROW AND ONE ONLY PER 160 FEET OR WHEN ON A CURVE.
5. 8" WHITE WITH 2' LINE 6' GAPS FOR DUAL TURN LANE.
6. 8" WHITE
7. ADD SECOND ARROW WHEN TURN BAY IS GREATER THAN OR EQUAL TO 108 FEET.
8. REQUIRED ONLY WHEN SPECIFIED IN THE CONTRACT.

NOTE:
ARROW SYMBOL (⇨)
SHOWS DIRECTION OF TRAVEL

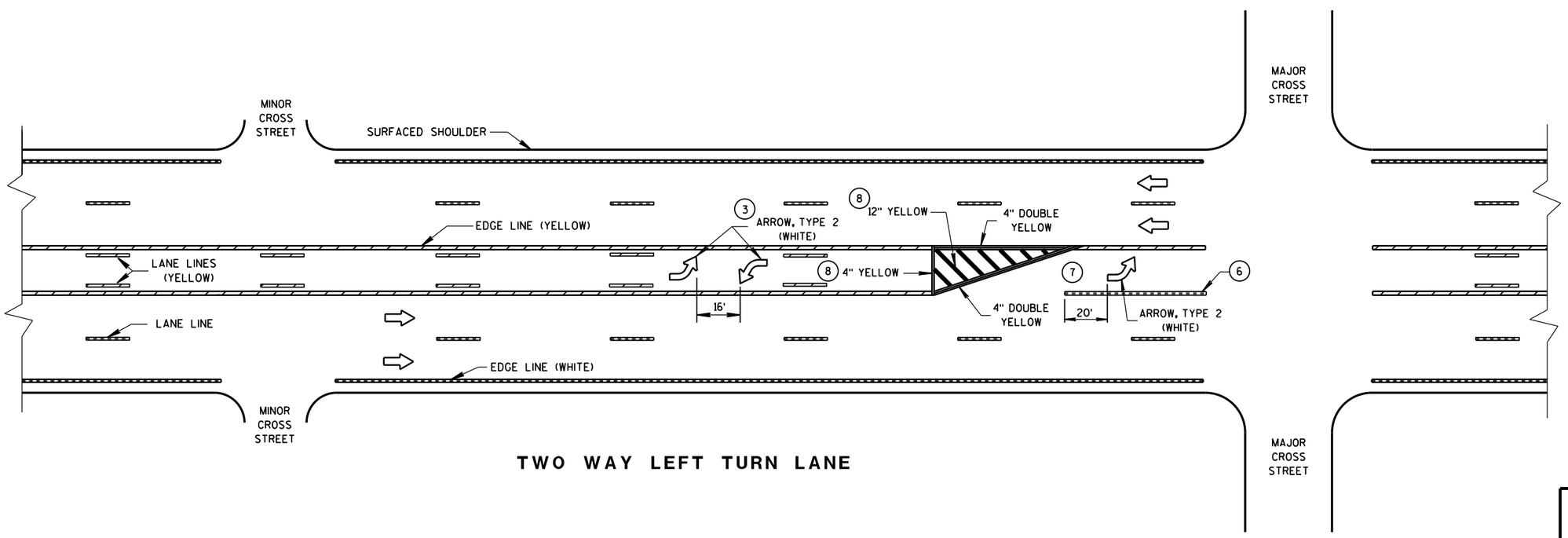

TWO WAY LEFT TURN LANE

PAVEMENT MARKING
(LEFT TURN LANE)

STATE OF WISCONSIN
DEPARTMENT OF TRANSPORTATION

6

S.D.D. 15 C 8-16e

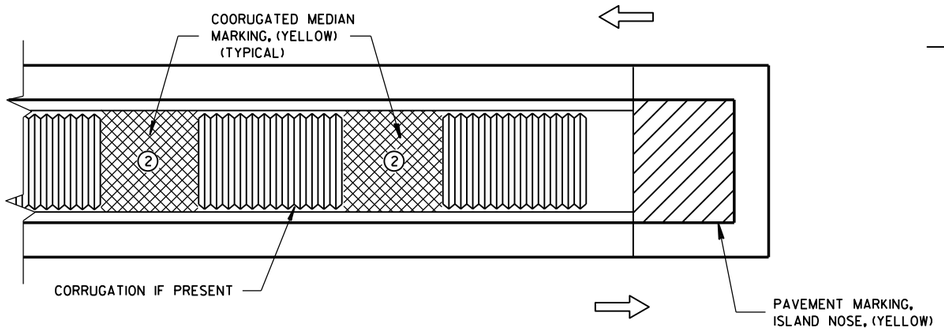

MEDIAN ISLAND WITH SQUARE BLUNT NOSE

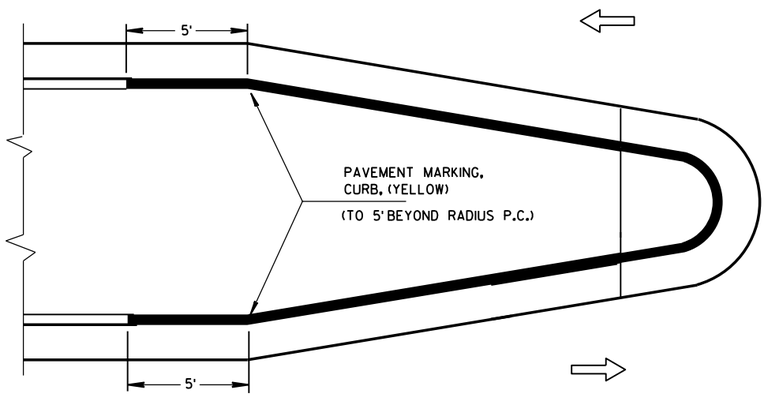

MEDIAN ISLAND WITH ROUND BLUNT NOSE

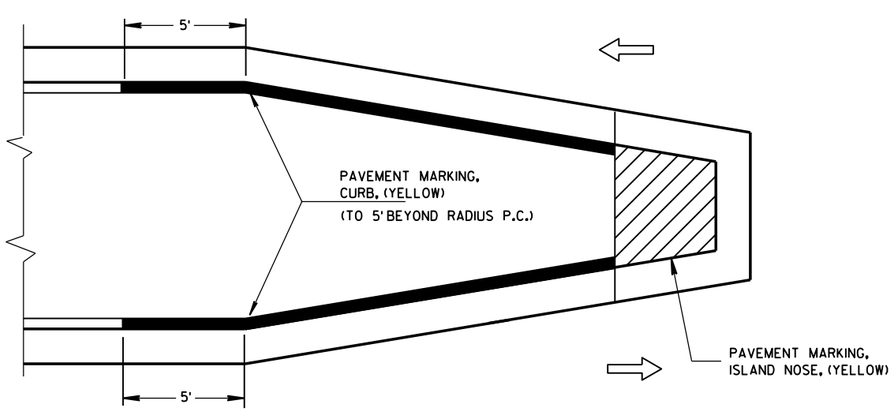

MEDIAN ISLAND WITH SLOPED NOSE

TYPICAL PLACEMENT OF PAVEMENT MARKING ON MEDIAN ISLANDS

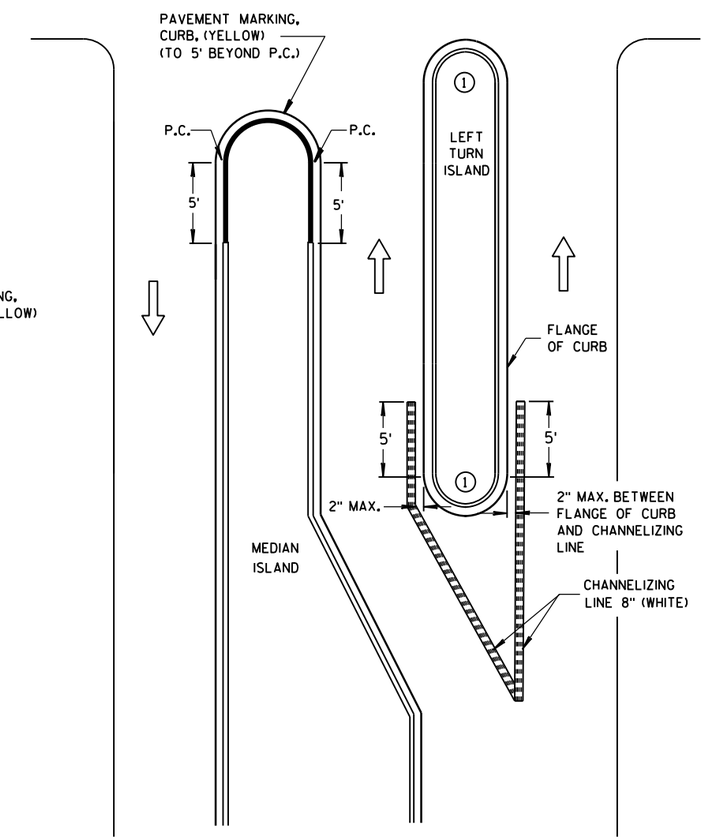

LEFT TURN & MEDIAN ISLAND

GENERAL NOTES

1. DO NOT MARK CURB NOSES THAT SEPARATE LANES OF TRAFFIC TRAVELING IN THE SAME DIRECTION.

2. WHEN CONCRETE CORRUGATED MEDIAN IS CONSTRUCTED TO SEPARATE TRAFFIC OPERATING IN THE OPPOSING DIRECTION YELLOW PAVEMENT MARKING SHALL BE APPLIED TO THE FLAT PORTION OF THE CONCRETE CORRUGATED MEDIAN. THE ITEM OF PAVEMENT MARKING, CONCRETE CORRUGATED MEDIAN, WILL BE MEASURED IN PLACE AND AND ACCEPTED IN ACCORDANCE WITH THE CONTRACT AND PAID FOR AT THE CONTRACT UNIT PRICE PER SQUARE FOOT.

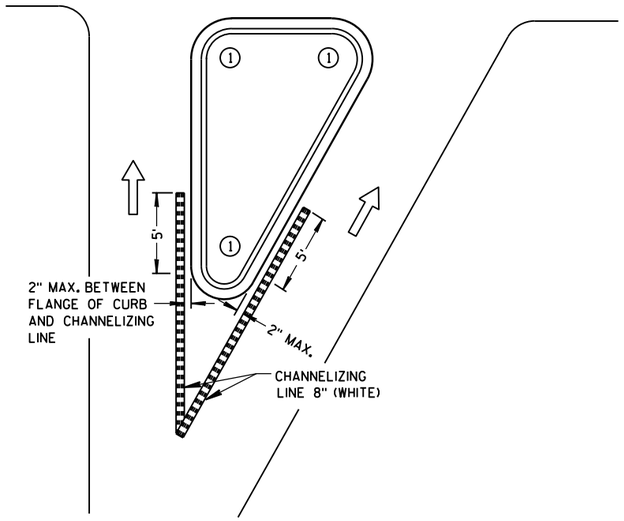

RIGHT TURN ISLAND

LEGEND

- ISLAND NOSE MARKING
- CURB MARKING
- CORRUGATED MEDIAN MARKING
- DIRECTION OF TRAVEL

PAVEMENT MARKING (ISLANDS)

STATE OF WISCONSIN
DEPARTMENT OF TRANSPOI

6

6

S.D.D. 15 C 8-16f

S.D.D. 15 C 8-16f

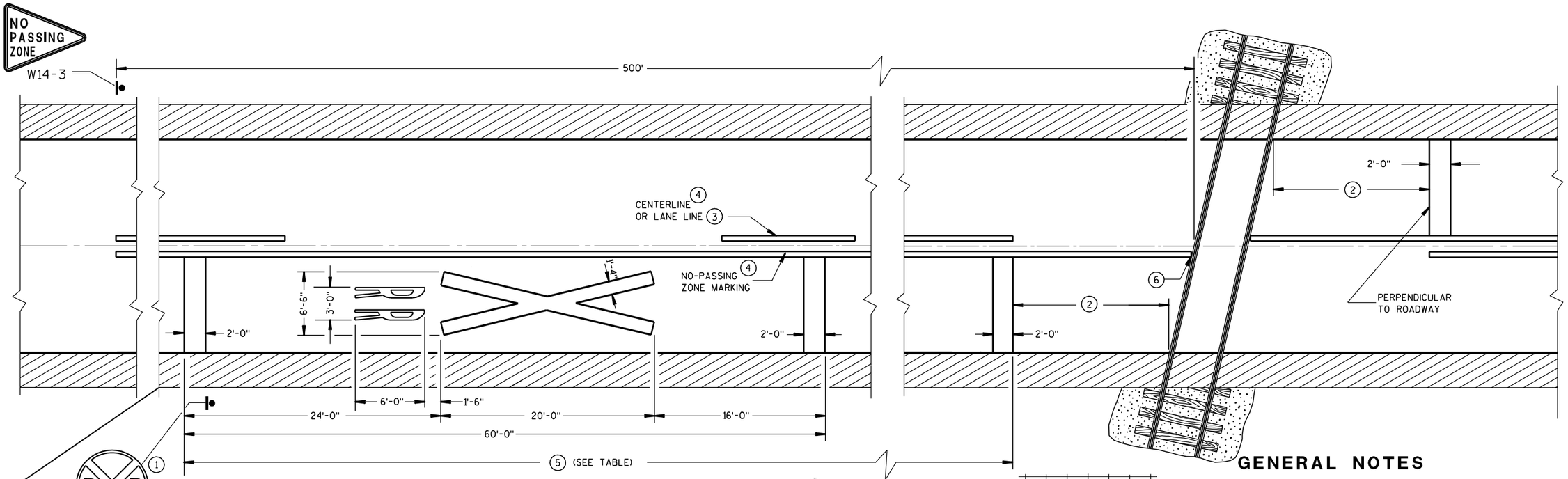

PREFERRED PAVEMENT MARKING 3

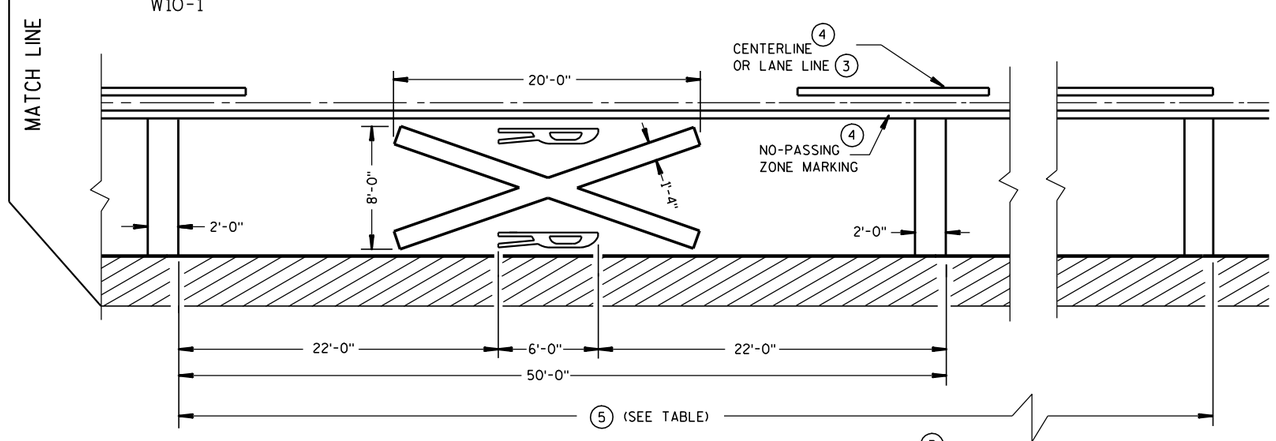

ALTERNATE PAVEMENT MARKING 3

5

Posted Speed (M.P.H.)	Dimension Range (Feet)
25	150*- 250
30	200*- 300
35	250*- 450
40	300*- 500
45	400*- 650
50	550*- 800
55	750*- 1000
60	1000*- 1250
65	1000*- 1250

* THE MINIMUM DISTANCES IN THE TABLE ARE DESIRABLE AND SHOULD BE USED. THE DISTANCES MAY BE INCREASED UP TO THE MAXIMUM TO ALLOW FOR FIELD CONDITIONS SUCH AS THE CLOSE PROXIMITY OF DRIVEWAYS, BRIDGES, SIDEROADS OR OTHER FEATURES THAT WOULD PROHIBIT THE MINIMUM DISTANCES FROM BEING USED.

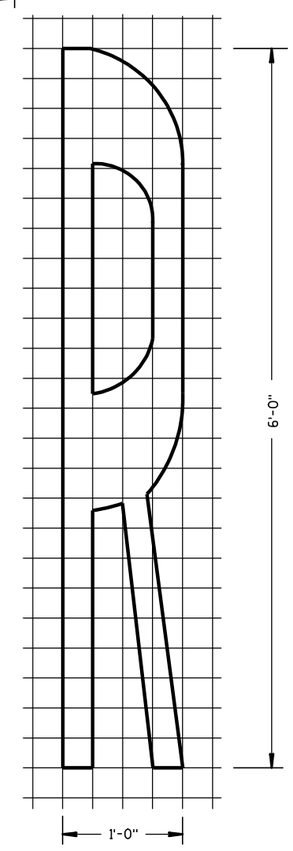

GENERAL NOTES

DETAILS OF CONSTRUCTION, MATERIALS, AND WORKMANSHIP NOT SHOWN ON THIS DRAWING SHALL CONFORM TO THE PERTINENT REQUIREMENTS OF THE STANDARD SPECIFICATIONS AND THE APPLICABLE SPECIAL PROVISIONS.

A THREE-LANE ROADWAY SHOULD BE MARKED WITH A CENTERLINE FOR TWO-LANE APPROACH OPERATION ON THE APPROACH TO A CROSSING.

ON MULTI-LANE ROADS THE TRANSVERSE BANDS SHOULD EXTEND ACROSS ALL APPROACH LANES, AND INDIVIDUAL R X R SYMBOLS SHOULD BE USED IN EACH APPROACH LANE. ALL LETTERS AND SYMBOLS SHALL BE IN CONFORMANCE WITH THE "STANDARD ALPHABETS FOR HIGHWAY SIGNS AND PAVEMENT MARKINGS" (ADOPTED BY THE FEDERAL HIGHWAY ADMINISTRATION).

CENTER OR LANE LINES AND NO-PASSING ZONE MARKINGS SHOWN ON THIS DRAWING ARE REQUIRED AND PAID FOR UNDER OTHER ITEMS IN THE CONTRACT.

1. A PORTION OF THE PAVEMENT MARKING SYMBOL SHOULD BE DIRECTLY OPPOSITE THE ADVANCE WARNING SIGN (W10-1).
2. MINIMUM 8' FROM ANY RAILROAD WARNING DEVICES (SIGNALS, GATES, ETC.) OR 25' FROM THE NEAREST RAIL, WHICHEVER DISTANCE IS GREATER.
3. REFLECTIVE WHITE.
4. REFLECTIVE YELLOW 500' MINIMUM. MARKING LIMITS MAY BE EXTENDED AS DIRECTED BY THE ENGINEER TO MEET ADJACENT NO-PASSING ZONE MARKINGS.
5. TABLE BASED UPON 2C-4 WISCONSIN SUPPLEMENT OF MANUAL ON UNIFORM TRAFFIC CONTROL DEVICES.
6. FOR MULTIPLE TRACK CROSSINGS, THE BARRIER LINE SHALL EXTEND TO THE NEAR RAIL OF THE FURTHEST TRACK IN THE DIRECTION OF HIGHWAY TRAVEL.

SIGNING AND PAVEMENT MARKING DETAILS FOR RAILROAD-HIGHWAY GRADE CROSSINGS

STATE OF WISCONSIN
DEPARTMENT OF TRANSPORTATION

APPROVED

1-9-2012 — DATE

/S/ Thomas N. [illegible] — STATE TRAFFIC ENGINEER

FHWA

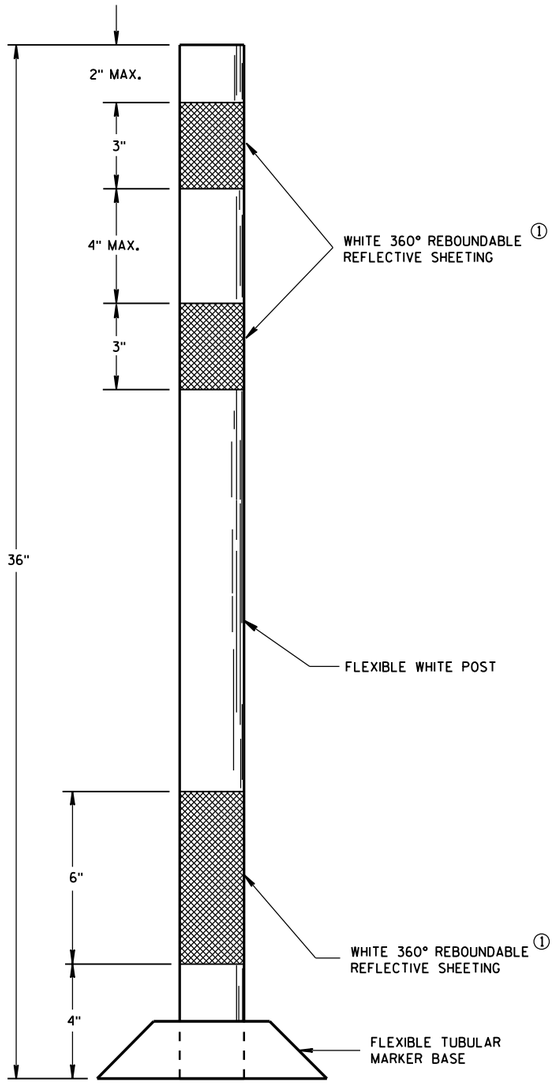

FLEXIBLE TUBULAR MARKER POST PERMANENT CROSSOVER

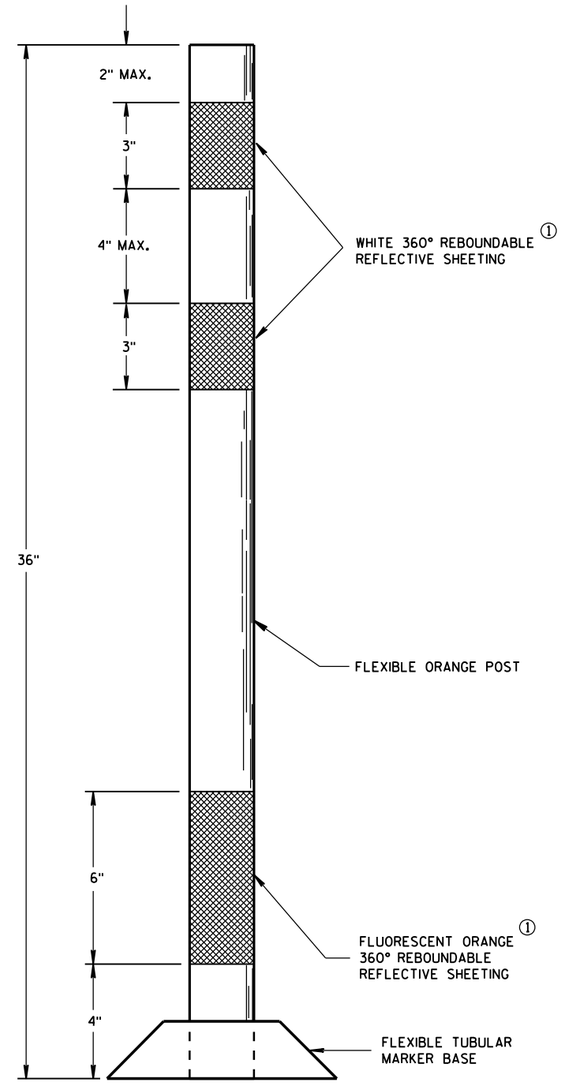

FLEXIBLE TUBULAR MARKER POST WORK ZONE

GENERAL NOTES

DETAILS OF CONSTRUCTION NOT SHOWN ON THIS DRAWING SHALL CONFORM TO THE PERTINENT REQUIREMENTS OF THE STANDARD SPECIFICATIONS AND APPLICABLE SPECIAL PROVISIONS.

SURFACE MOUNTED BASES SHALL BE FURNISHED IN ACCORDANCE WITH MANUFACTURERS RECOMMENDATIONS TO BE COMPATIBLE WITH FLEXIBLE TUBULAR MARKER POSTS TO A SIZE AND SHAPE THAT WILL PROVIDE A STABLE POST FOUNDATION WHEN SECURED TO THE PAVEMENT.

THE ASPHALTIC ADHESIVE OR BUTYL PAD FURNISHED SHALL BE IN ACCORDANCE WITH MANUFACTURERS RECOMMENDATIONS.

① REFLECTIVE SHEETING SHALL FOLLOW THE REQUIREMENTS IN THE APPROVED PRODUCTS LISTING FOR SIGN SHEETING.

6

6

S.D.D. 15 C 11-6

S.D.D. 15 C 11-6

FLEXIBLE TUBULAR MARKER POST

STATE OF WISCONSIN
DEPARTMENT OF TRANSPORTATION

APPROVED

10-16-2015
DATE

/S/ Peter Amakobe Atepe
STATEWIDE WORK ZONE SAFETY ENGINEER

FHWA

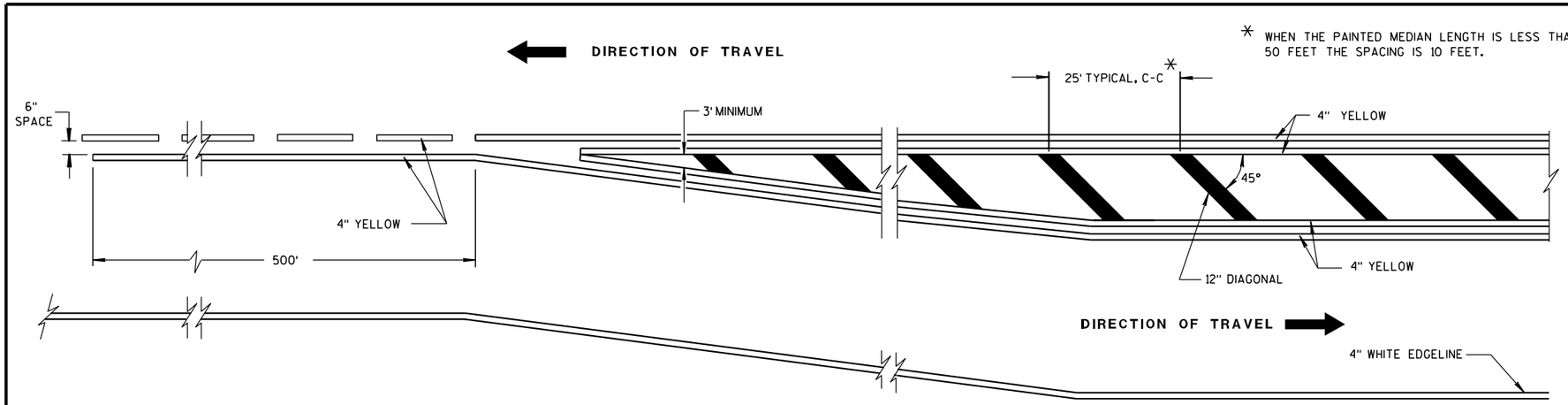

MEDIAN ISLAND DETAIL

GENERAL NOTE

DIAGONALS ARE OPTIONAL WHEN PAINTED ISLAND IS LESS THAN 6 FEET AT WIDEST POINT.

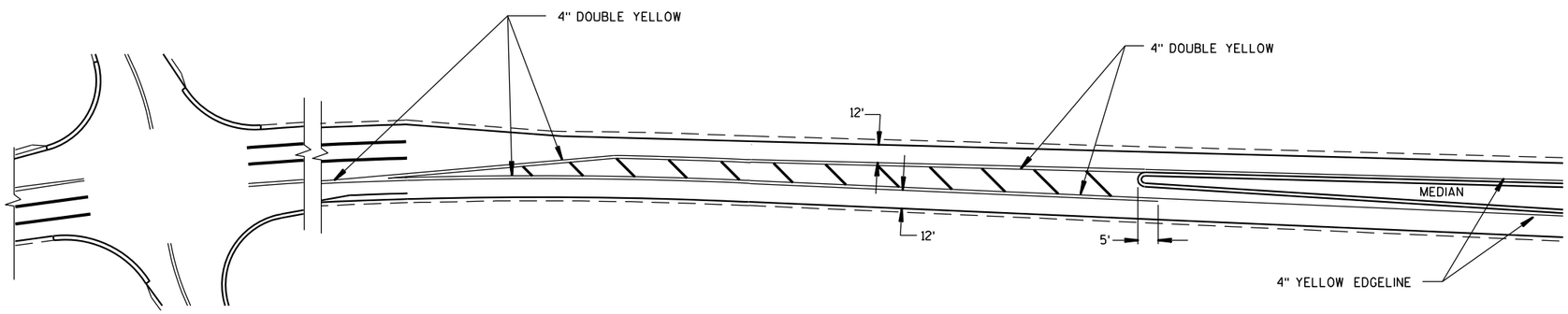

APPROACH MARKINGS FOR OTHER MEDIAN TYPES

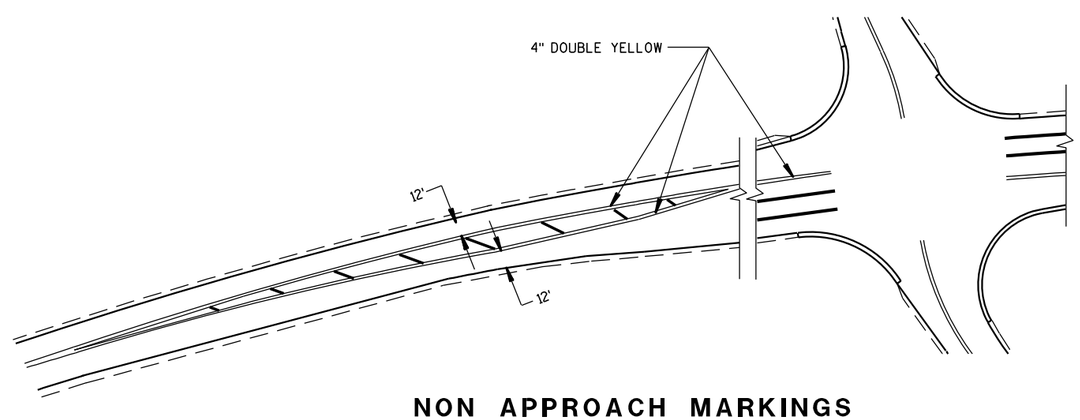

NON APPROACH MARKINGS

6

6

S.D.D. 15 C 18-3

S.D.D. 15 C 18-3

MEDIAN ISLAND MARKING

STATE OF WISCONSIN
DEPARTMENT OF TRANSPORTATION

APPROVED

2-5-09	/S/ Thomas N. Nothohm
DATE	STATE TRAFFIC ENGINEER

FHWA

352 IGN

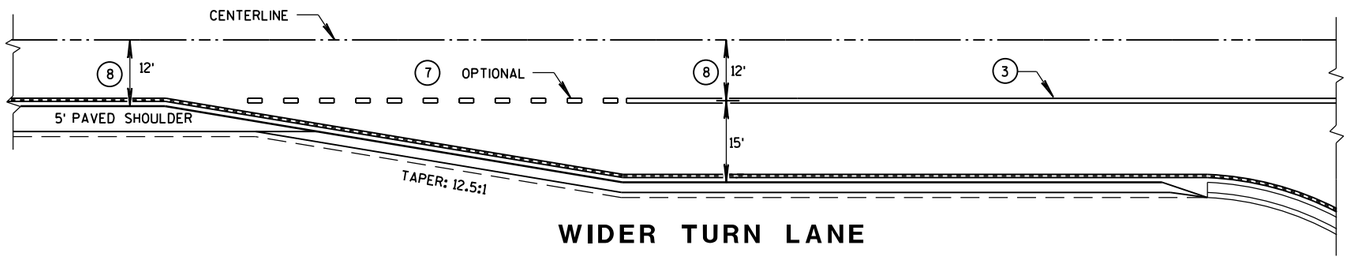

WIDER TURN LANE

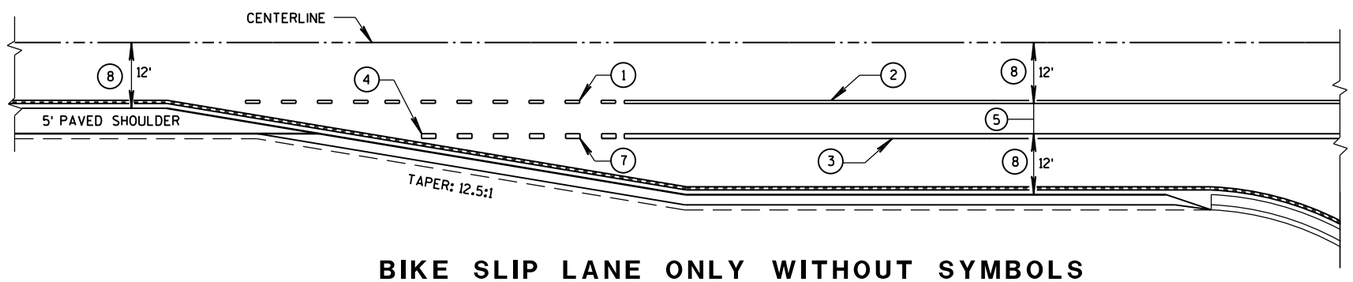

BIKE SLIP LANE ONLY WITHOUT SYMBOLS

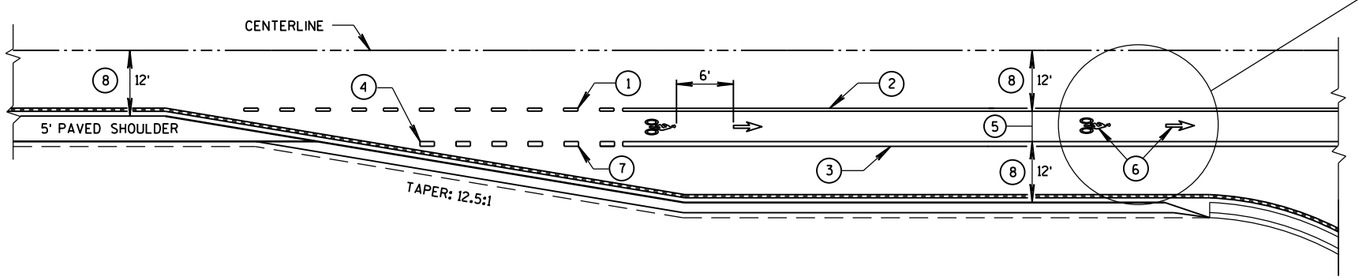

BIKE LANE WITH SYMBOLS

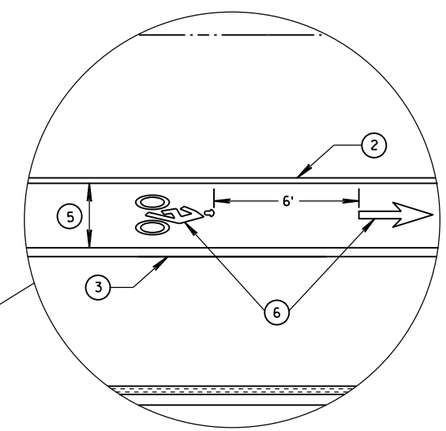

GENERAL NOTES

1. 3' LINE, 9' GAP - 4-INCH WIDE, WHITE.
2. 4-INCH, WHITE.
3. 8-INCH, WHITE.
4. IF SIGNED AND/OR MARKED AS A BICYCLE FACILITY INCLUDE SECOND LINE OF LINE-SPACE MARKING, OTHERWISE DO NOT.
5. BIKE ACCOMMODATION FOR CONCRETE PAVEMENT IS 5' WIDE. BIKE ACCOMMODATION FOR ASPHALT PAVEMENT IS A MINIMUM OF 4', 5' AT ≥ 45 MPH.
6. REQUIRED ONLY WHEN SPECIFIED IN THE CONTRACT.
7. 3' LINE, 9' GAP - 8-INCH WIDE, WHITE.
8. REFER TO CONTRACT PLANS.

BICYCLE LANE MARKING

STATE OF WISCONSIN
DEPARTMENT OF TRANSPORTATION

APPROVED

4/30/2013 — DATE

/S/ Travis Feltes — STATE TRAFFIC E

FHWA

GENERAL NOTES

1. 3' LINE, 9' GAP - 4-INCH WIDE, WHITE.
2. 4-INCH, WHITE.
3. 8-INCH, WHITE.
4. IF SIGNED AND/OR MARKED AS A BICYCLE FACILITY INCLUDE SECOND LINE OF LINE-SPACE MARKING, OTHERWISE DO NOT.
5. 5' TYPICAL.
6. REQUIRED ONLY WHEN SPECIFIED IN THE CONTRACT.
7. 3' LINE, 9' GAP - 8-INCH WIDE, WHITE.
8. REFER TO CONTRACT PLANS.

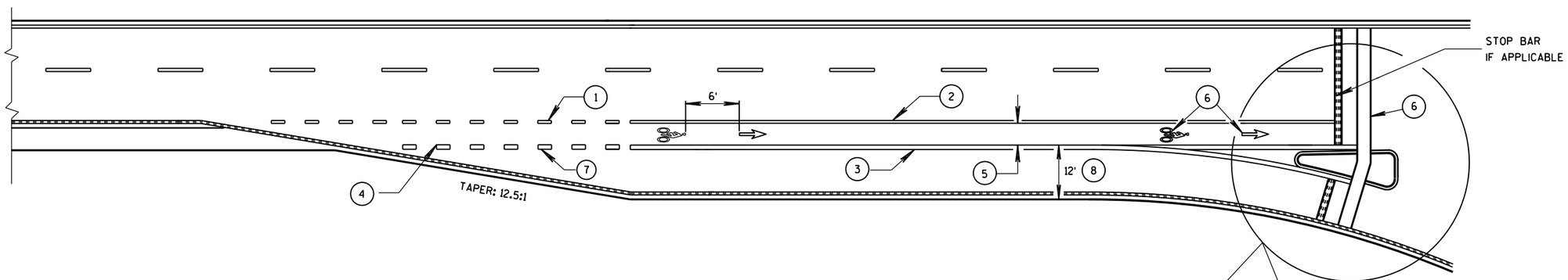

BIKE LANE - 4-LANE DIVIDED WITH RIGHT TURN LANE

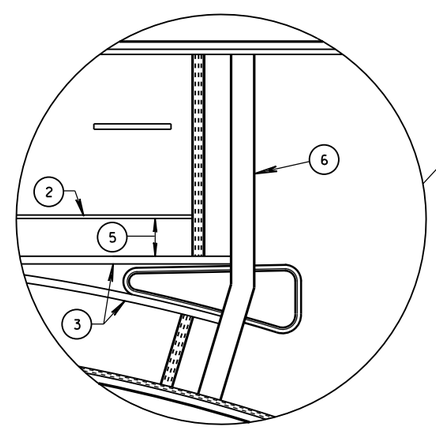

4 LANE DIVIDED WITH ISLAND

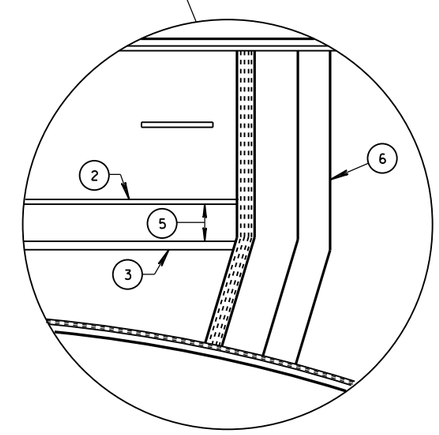

4 LANE DIVIDED WITHOUT ISLAND

BICYCLE LANE MARKING

STATE OF WISCONSIN
DEPARTMENT OF TRANSPORTATION

APPROVED
4/30/2013 — DATE
/S/ Travis Feltes — STATE TRAFFIC E
FHWA

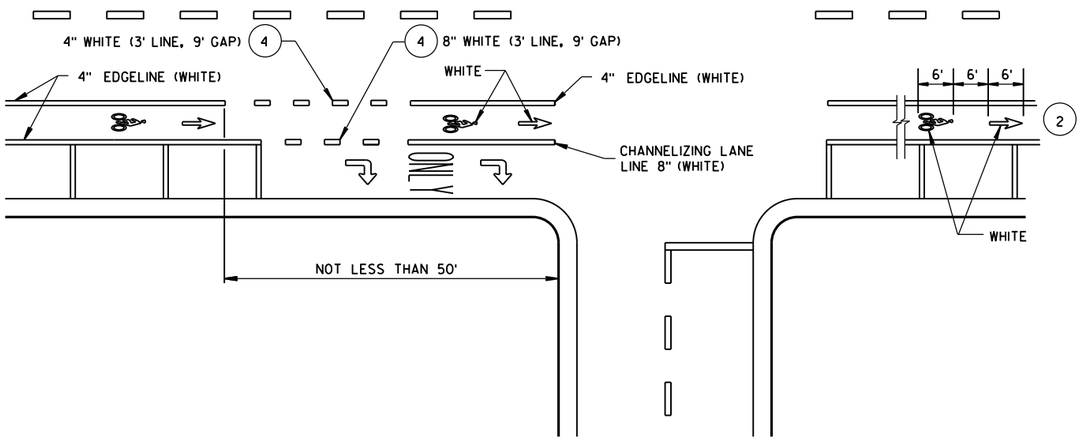

DESIGNATED BICYCLE LANE

GENERAL NOTES

1. DETAILS OF CONSTRUCTION NOT SHOWN ON THIS DRAWING SHALL CONFORM TO STANDARD SPECIFICATIONS AND SPECIAL PROVISIONS.
2. THE SERIES OF PAVEMENT MARKING SYMBOLS SHALL BE REPEATED AFTER INTERSECTIONS AND SPACED A MAXIMUM OF 250'. NO PAVEMENT MARKING WILL TAKE PLACE IN THE CROSSWALK.
3. DOTTED LINES SHOULD BE USED 50' TO 200' IN ADVANCE OF AN INTERSECTION WHERE THERE IS NO RIGHT TURN ONLY LANE AND THERE IS HEAVY RIGHT TURN TRAFFIC OR THERE IS A NEAR-SIDE BUS STOP. AT OTHER INTERSECTIONS WHERE RIGHT TURN TRAFFIC IS LIGHT TO MODERATE, A SOLID LINE CAN BE USED UP TO THE INTERSECTION.
4. WHEN SPECIFIED IN THE CONTRACT.

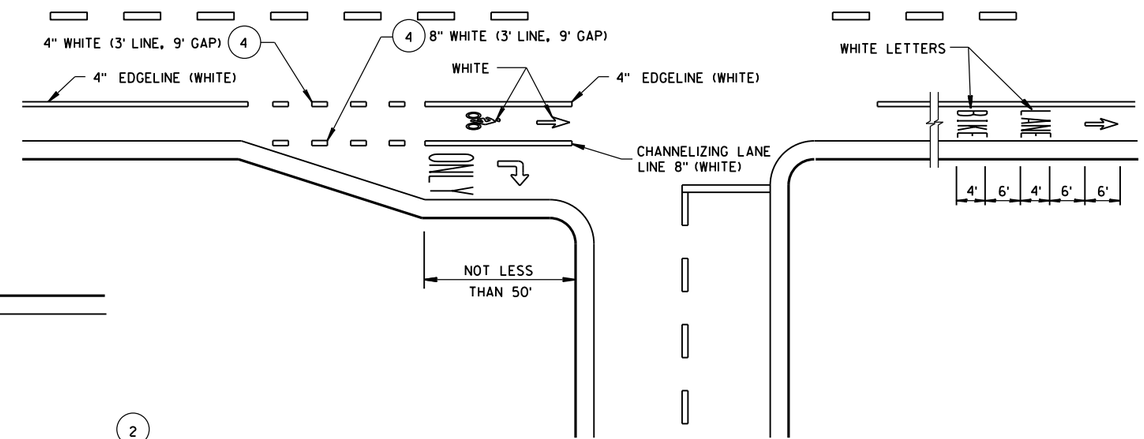

DESIGNATED BICYCLE LANE
NO PARKING, RIGHT TURN LANE

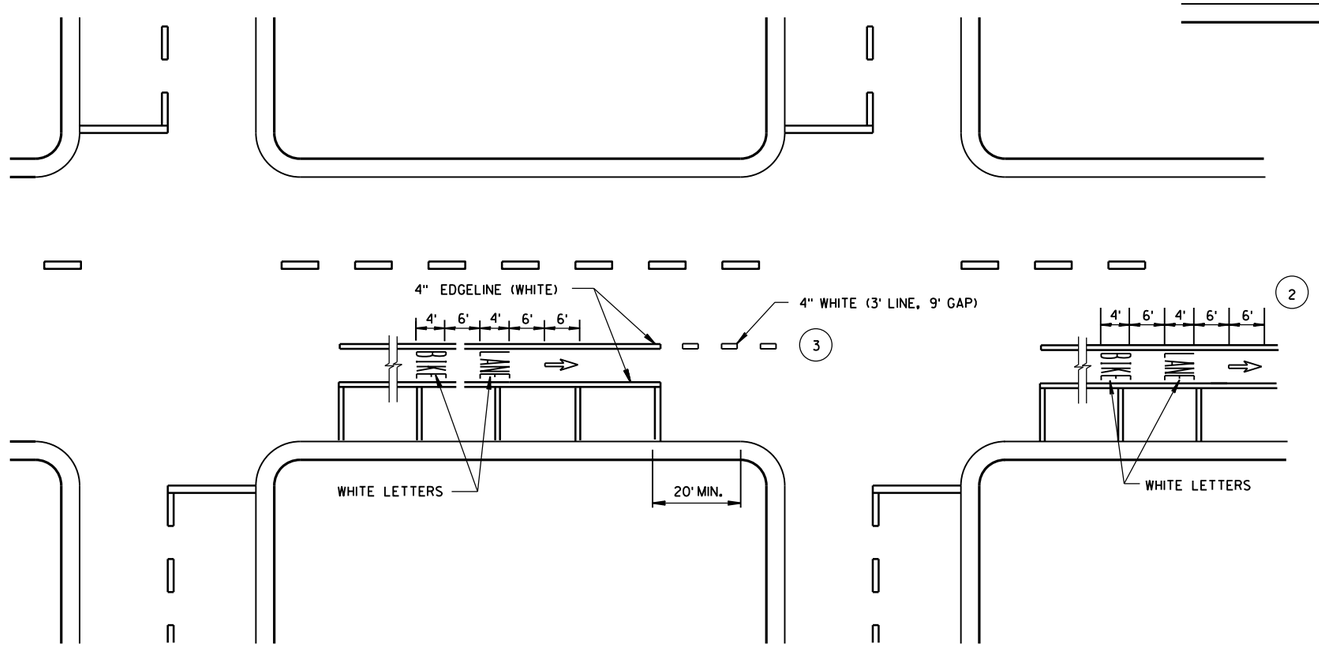

DESIGNATED BICYCLE LANE
WITH PARKING, NO RIGHT TURN LANE

URBAN BICYCLE LANE MARKING
STATE OF WISCONSIN DEPARTMENT OF TRANSPORTATION
APPROVED 4/30/2013 DATE — /S/ Travis Feltes, STATE TRAFFIC E 355 FHWA

6

6

S.D.D. 15 C 29-3c

S.D.D. 15 C 29-3c

GENERAL NOTES

1. DETAILS OF CONSTRUCTION NOT SHOWN ON THIS DRAWING SHALL CONFORM TO STANDARD SPECIFICATIONS AND SPECIAL PROVISIONS.
2. THE SERIES OF PAVEMENT MARKING SYMBOLS SHALL BE REPEATED AFTER INTERSECTIONS AND SPACED A MAXIMUM OF 250'. NO PAVEMENT MARKING WILL TAKE PLACE IN THE CROSSWALK.
3. DOTTED LINES SHOULD BE USED 50' TO 200' IN ADVANCE OF AN INTERSECTION WHERE THERE IS NO RIGHT TURN ONLY LANE AND THERE IS HEAVY RIGHT TURN TRAFFIC OR THERE IS A NEAR-SIDE BUS STOP. AT OTHER INTERSECTIONS WHERE RIGHT TURN TRAFFIC IS LIGHT TO MODERATE, A SOLID LINE CAN BE USED UP TO THE INTERSECTION.
4. 3' LINE, 9' GAP - 4" WIDE, WHITE.

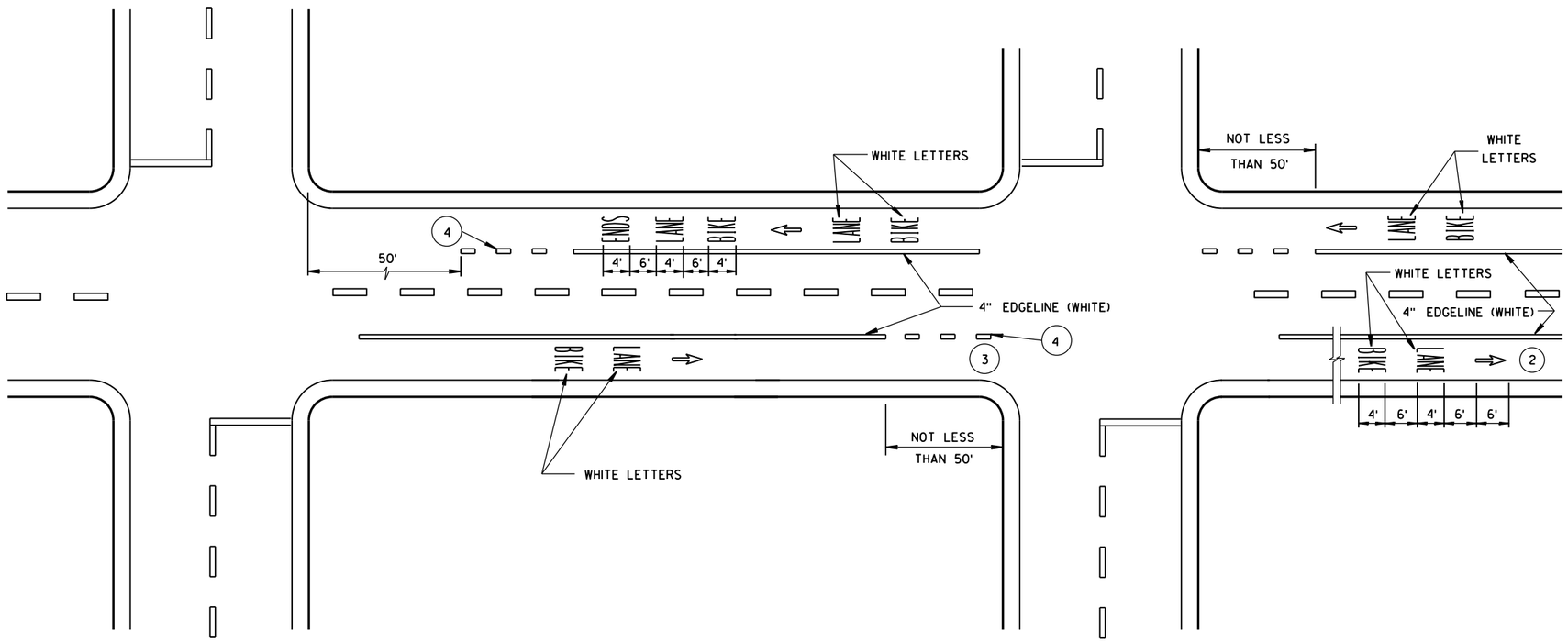

DESIGNATED BICYCLE LANE
NO PARKING

URBAN BICYCLE LANE MARKING
STATE OF WISCONSIN DEPARTMENT OF TRANSPORTATION
APPROVED 4/30/2013 DATE — /S/ Travis Feltes STATE TRAFFIC EN — FHWA

6
S.D.D. 15 C 29-3d

GENERAL NOTES

DETAILS OF INSTALLATION, MATERIALS AND WORKMANSHIP NOT SHOWN ON THIS DRAWING SHALL CONFORM TO THE PERTINENT REQUIREMENTS OF THE STANDARD SPECIFICATIONS AND APPLICABLE SPECIAL PROVISIONS.

ALL LETTERS, ARROWS AND SYMBOLS SHALL BE IN CONFORMANCE WITH REQUIREMENTS INCLUDED IN "STANDARD ALPHABETS FOR HIGHWAY SIGNS AND PAVEMENT MARKING" BOOK BY THE FEDERAL HIGHWAY ADMINISTRATION. ALL LETTERS, ARROWS AND SYMBOLS SHALL BE WHITE AND REFLECTORIZED. SMALL DIFFERENCES IN DIMENSIONS WITHIN THE TOLERANCES OF THAT BOOK ARE ACCEPTABLE.

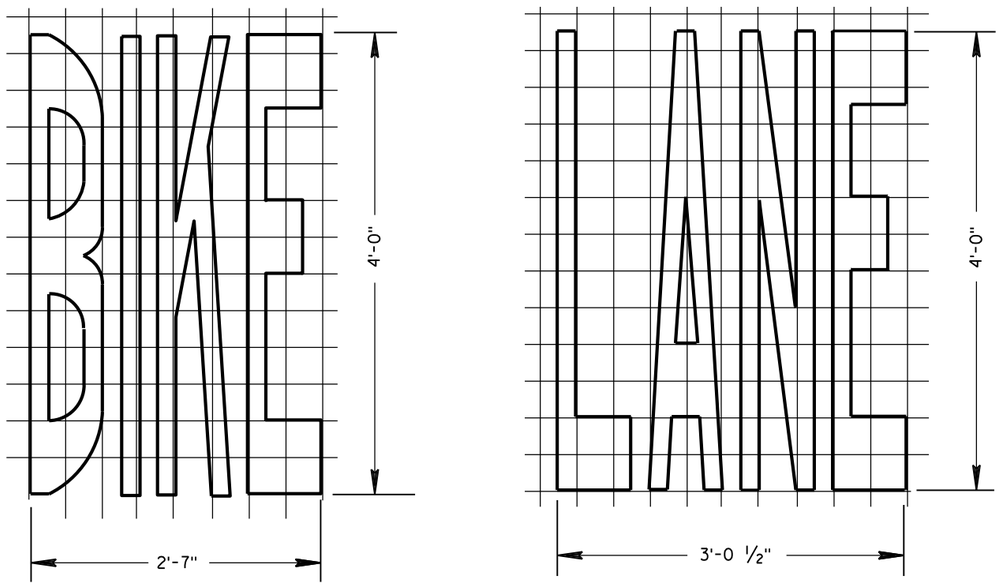

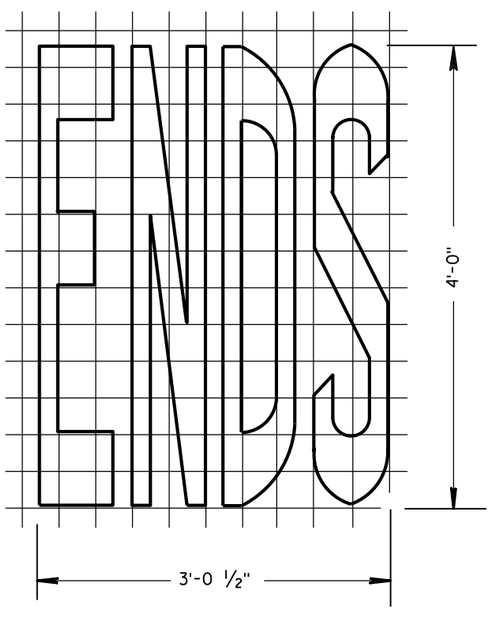

BIKE LANE WORDS

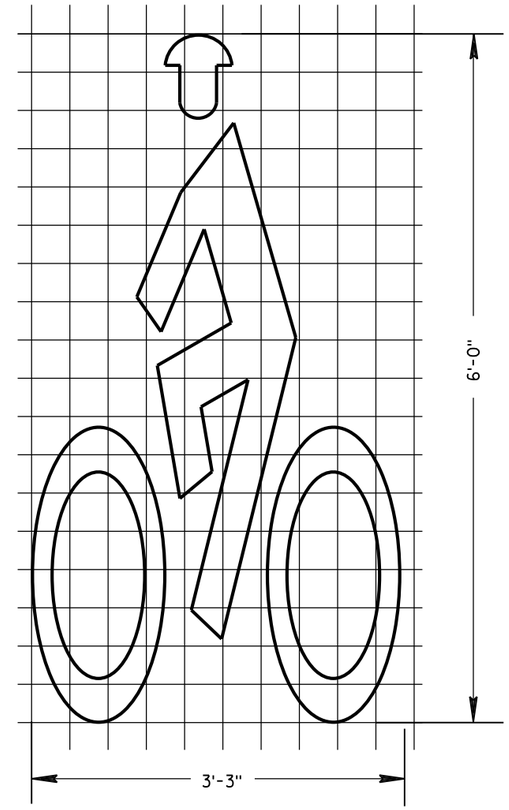

BIKE LANE SYMBOL

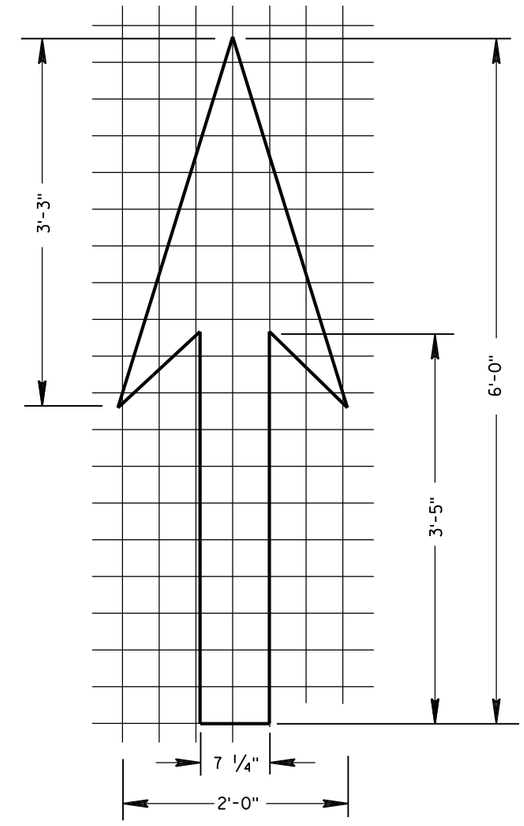

BIKE LANE ARROW

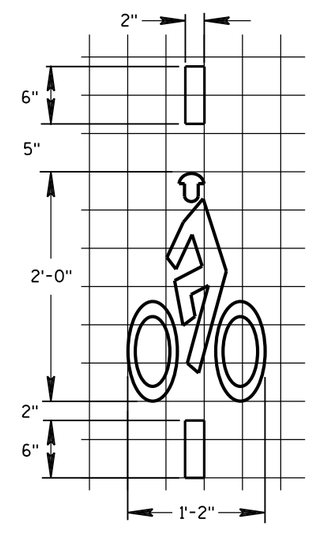

BICYCLE DETECTOR PAVEMENT MARKING

PAVEMENT MARKING FOR BIKE LANES
STATE OF WISCONSIN DEPARTMENT OF TRANSPORTATION
APPROVED 4-30-2013 DATE — /S/ Travis Feltes STATE TRAFFIC EN — FHWA

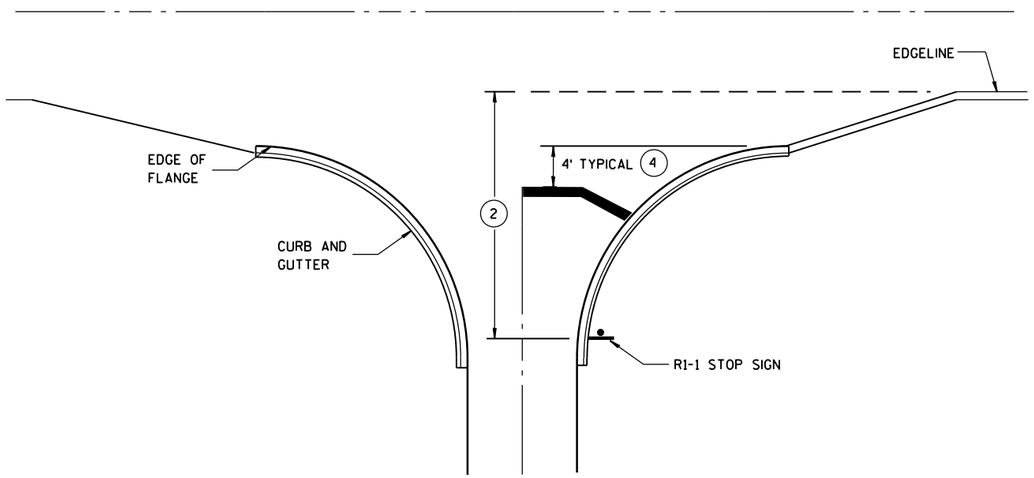

TYPICAL STOP LINE PAVEMENT MARKING WITH CURB AND GUTTER

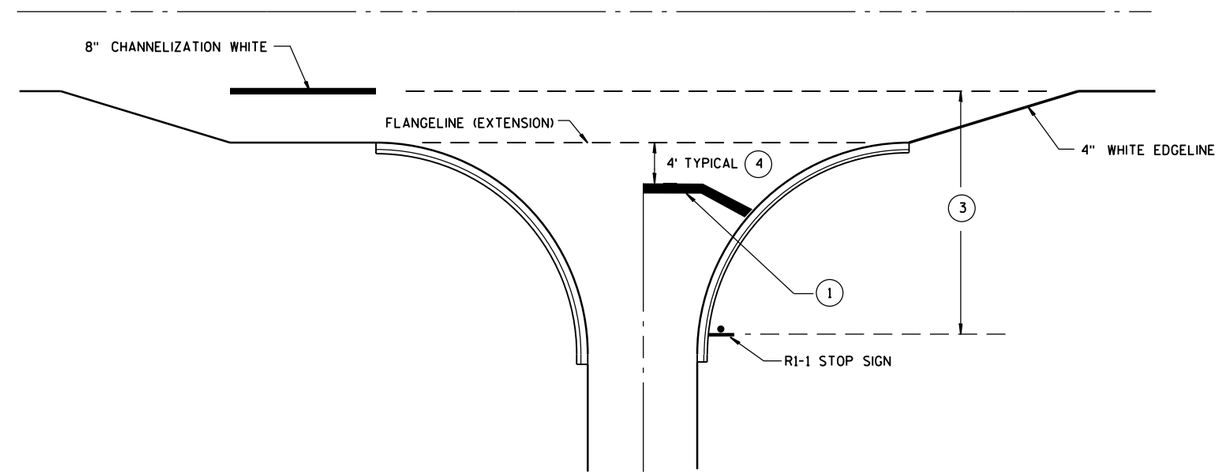

TYPICAL STOP LINE PAVEMENT MARKING FOR SIDEROADS WITH RIGHT TURN LANE

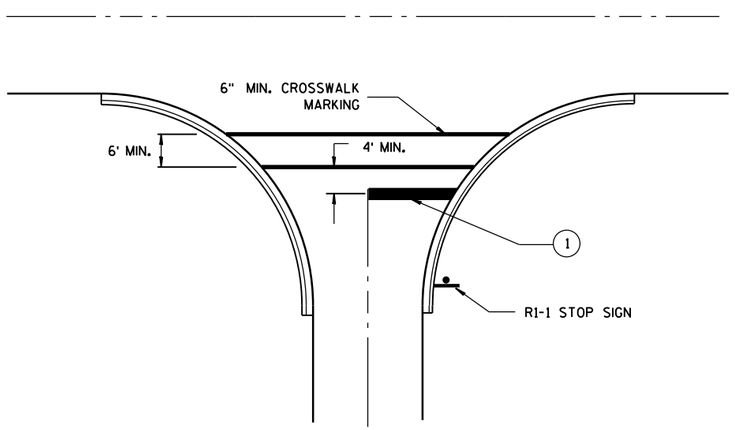

TYPICAL STOP LINE PAVEMENT MARKING FOR SIDEROADS WITH CROSSWALK MARKING

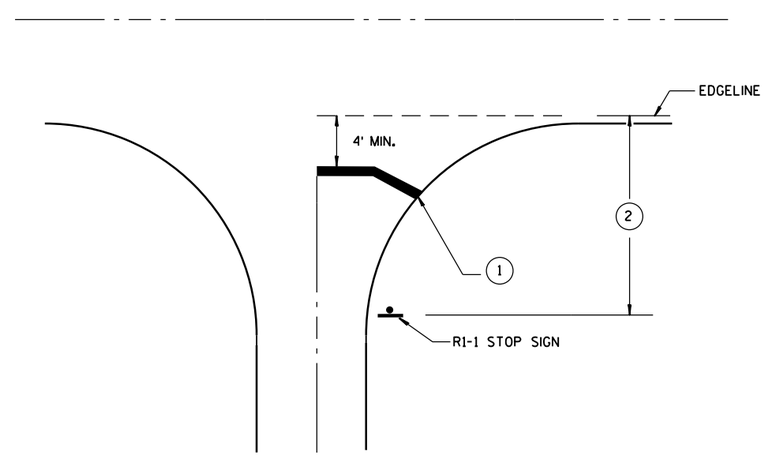

TYPICAL STOP LINE PAVEMENT MARKING WITHOUT CURB AND GUTTER

GENERAL NOTES

1. 18-INCH STOP LINES MAY BE DELETED OR ADDED BY THE PROJECT ENGINEER BASED ON VISIBILITY AND SIGHT LINES.
2. IF STOP SIGN IS LESS THAN OR EQUAL TO 40 FEET FROM THE EDGELINE THAN NO STOP LINE IS REQUIRED.
3. IF STOP SIGN IS LESS THAN OR EQUAL TO 30 FEET FROM THE FLANGELINE EXTENSION THAN NO STOP LINE IS REQUIRED.
4. MOVE CLOSER TO EDGE OF TRAVEL LANE AS NEEDED FOR VISIBILITY AND SIGHT LINES.

STOP LINE AND CROSSWALK PAVEMENT MARKING

STATE OF WISCONSIN
DEPARTMENT OF TRANSPORTATION

APPROVED
4/30/2013 — DATE
/S/ Travis Feltes — STATE TRAFFIC E
FHWA

6

S.D.D. 15 C 33-1

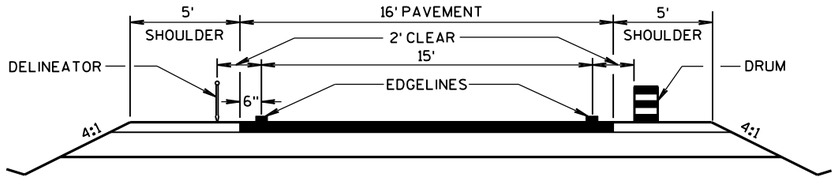

TYPICAL TEMPORARY CROSSOVER ROADWAY DIMENSIONS

(SEE PLANS FOR ROADWAY DESIGN ELEMENTS)

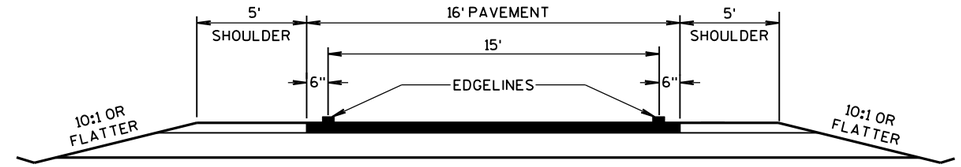

TYPICAL CROSSOVER TO REMAIN IN PLACE ROADWAY DIMENSIONS

(SEE PLANS FOR ROADWAY DESIGN ELEMENTS)

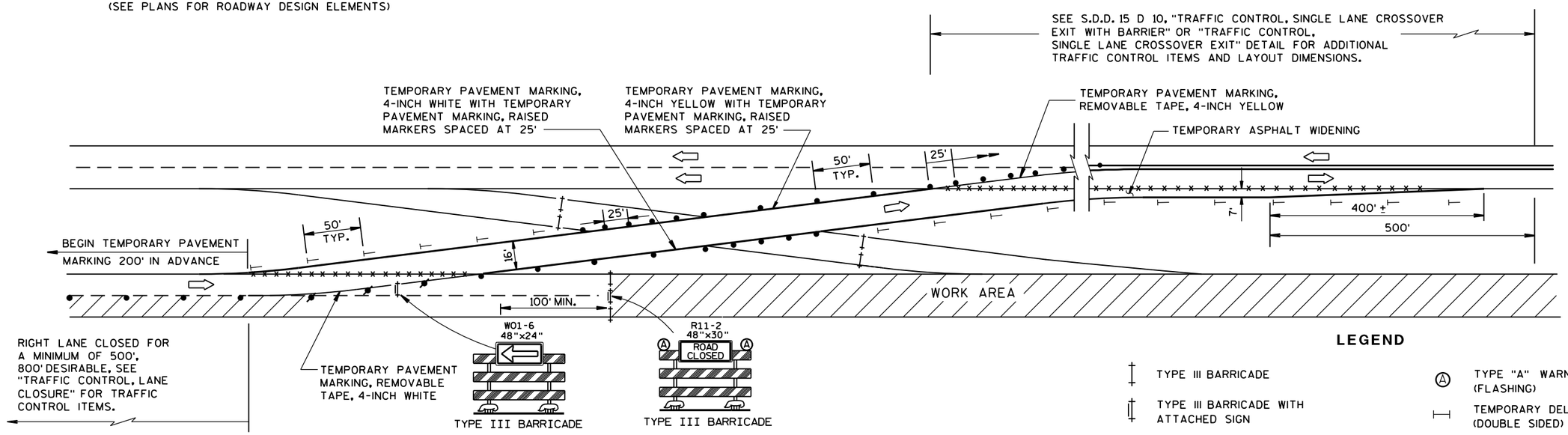

LEGEND

- TYPE III BARRICADE
- TYPE III BARRICADE WITH ATTACHED SIGN
- TRAFFIC CONTROL DRUM WITH TYPE "C" STEADY BURN LIGHT
- TRAFFIC CONTROL DRUM
- TEMPORARY DELINEATOR (STEEL POST W/SINGLE DELINEATOR) COLOR OF DELINEATOR SHALL MATCH THE COLOR OF THE RESPECTIVE EDGELINE MARKING
- TYPE "A" WARNING LIGHT (FLASHING)
- TEMPORARY DELINEATOR (DOUBLE SIDED)
- REMOVING PAVEMENT MARKINGS
- DELINEATOR FLEXIBLE/ TUBULAR MARKER
- DIRECTION OF TRAFFIC
- WORK AREA

GENERAL NOTES

THE EXACT NUMBER, LOCATION, AND SPACING OF ALL SIGNS AND DEVICES SHALL BE ADJUSTED TO FIT FIELD CONDITIONS AS APPROVED BY THE ENGINEER.

THE SPACING BETWEEN PROPOSED SIGNS SHOULD BE ADJUSTED TO NOT CONFLICT WITH AND TO PROVIDE A MINIMUM OF 200 FEET (500 FEET DESIRABLE) DISTANCE TO EXISTING SIGNS.

TEMPORARY PAVEMENT MARKING REMOVABLE TAPE SHALL BE USED WHEN CROSSING PERMANENT ROADWAY SURFACES THAT WILL REMAIN AFTER USE OF CROSSOVER AND TEMPORARY PAVEMENT MARKING WHERE USED.

ALL SIGNS ARE 48"x48" UNLESS OTHERWISE NOTED.

"WO" IS THE SAME AS "W" EXCEPT THE BACKGROUND IS ORANGE.

ANY SIGNS TEMPORARY OR EXISTING, WHICH CONFLICT WITH THE TRAFFIC CONTROL "IN USE" SHALL BE REMOVED OR COVERED AS NEEDED AND AS APPROVED BY THE ENGINEER. NO WARNING LIGHTS SHALL BE WORKING ON "COVERED" OR "DOWNED" SIGNS.

REVERSE DEVICES WHEN OTHER LEG OF CROSSOVER IS IN USE.

(1) FOR PERMANENT CROSSOVER, PAVEMENT MARKING SHOULD CONFORM TO SECTION 646 OF THE STANDARD SPECIFICATIONS.

(2) FOR PERMANENT CROSSOVER, INSTALL PERMANENT DELINEATORS ACCORDING TO SECTION 633 OF THE STANDARD SPECIFICATIONS.

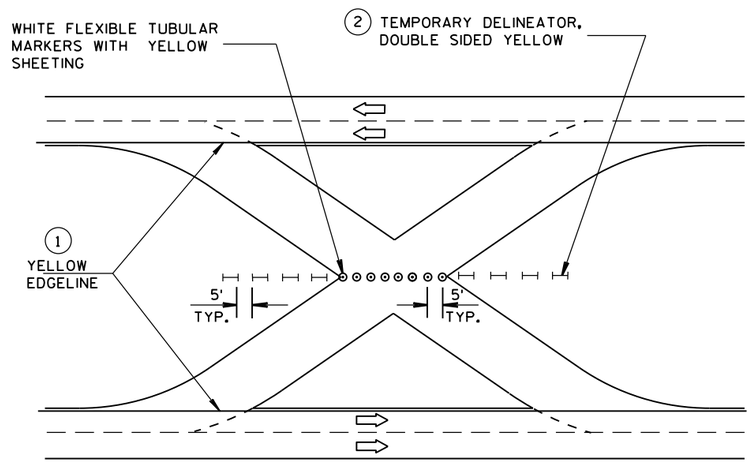

TRAFFIC CONTROL FOR CROSSOVER THAT IS NOT IN USE

TRAFFIC CONTROL, SINGLE LANE CROSSOVER

STATE OF WISCONSIN
DEPARTMENT OF TRANSPORTATION

APPROVED

9/2014	/S/ Travis Feltes	
DATE	STATE TRAFFIC ENGINEER	SIGN

FHWA

LEGEND

- TYPE III BARRICADE WITH ATTACHED SIGN
- SIGN ON PERMENENT SUPPORT
- TRAFFIC CONTROL DRUM WITH TYPE "C" STEADY BURN LIGHT
- TRAFFIC CONTROL DRUM
- FLASHING ARROW BOARD
- TYPE "A" WARNING LIGHT (FLASHING)
- REMOVING PAVEMENT MARKING
- DIRECTION OF TRAFFIC
- WORK AREA

GENERAL NOTES

THE EXACT NUMBER, LOCATION, AND SPACING OF ALL SIGNS AND DEVICES SHALL BE ADJUSTED TO FIT FIELD CONDITIONS AS APPROVED BY THE ENGINEER.

THE SPACING BETWEEN SIGNS SHOULD BE ADJUSTED TO NOT CONFLICT WITH AND TO PROVIDE A MINIMUM OF 200 FEET, (500 FEET DESIREABLE) DISTANCE TO EXISTING SIGNS.

THIS LANE CLOSURE IS TYPICAL FOR CLOSING RIGHT LANE - REVERSE FOR CLOSING LEFT LANE.

ALL SIGNS ARE 48"×48" UNLESS OTHERWISE NOTED.

"WO" IS THE SAME AS "W" EXCEPT THE BACKGROUND IS ORANGE.

ANY SIGNS TEMPORARY OR EXISTING, WHICH CONFLICT WITH TRAFFIC CONTROL "IN USE" SHALL BE REMOVED OR COVERED AS NEEDED AND AS APPROVED BY THE ENGINEER. NO WARNING LIGHTS SHALL BE WORKING ON "COVERED" OR "DOWNED" SIGNS.

CONSIDER GEOMETRICS WHEN LOCATING SIGNS AND ARROW BOARD SO THE DRIVER HAS A CLEAR VIEW OF THE ARROW BOARD AND LANE CLOSURE DRUMS FOR A MINIMUM 1500 FEET IN FRONT OF DRUMS.

FOR A LANE CLOSURE THAT IS IN PLACE LESS THAN 7 CONTINUOUS DAYS AND NIGHTS, THE ADVANCED WARNING SIGNS MAY BE MOUNTED ON PORTABLE SUPPORTS.

REMOVE PAVEMENT MARKINGS IF LANE CLOSURE IS TO BE IN PLACE FOR LONGER THAN 4 OR MORE DAYS AND NIGHTS.

WARNING LIGHTS ARE NOT REQUIRED IF THE LANE CLOSURE IS A DAYTIME ONLY OPERATION.

IF THE HORIZONTAL ALIGNMENT IS SUCH THAT A CURVE MAY REQUIRE ADDITIONAL DELINEATION, THE DEVICE SPACING MAY BE DECREASED TO 50 FEET.

ADJUSTMENTS IN BUFFER SPACE NEED TO BE INCORPORATED WHEN THE LANE CLOSURE OCCURS NEAR AN INTERCHANGE EXIT OR ENTRANCE RAMP. THE LANE CLOSURE MUST MUST TAKE PLACE FAR ENOUGH IN ADVANCE OF AN EXIT OR ENTRANCE RAMP TO STILL ALLOW FOR ADEQUATE BUFFER SPACE. THE MINIMUM LENGTH OF THE BUFFER SPACE BEFORE AN EXIT RAMP SHOULD BE 1/2 THE LENGTH OF THE TRANSITION AREA. THE ENTRANCE RAMP SHOULD BE FOLLOWED BY THE ORIGINAL BUFFER SPACE LENGTH OF 800 FEET DESIRABLE PRIOR TO ANOTHER TRAFFIC CONTROL CHANGE SUCH AS A CROSSOVER MANEUVER.

* THE LEFT REVERSE CURVE SIGN (WO1-4L) IS ONLY REQUIRED WHEN THIS DETAIL IS USED IN COMBINATION WITH "SINGLE LANE CROSSOVER" DETAIL.

** A SPEED LIMIT SIGN SHALL BE LOCATED 1500 FEET BEYOND THE END OF THE ACCELERATION LANE OF EACH ENTRANCE RAMP. THERE SHOULD BE A SPEED LIMIT SIGN INCORPORATED A MINIMUM OF EVERY 2 OR 3 MILES. INCLUDE A 65 MPH RESUME SPEED LIMIT SIGN 200 FEET MINIMUM (500 FEET DESIREABLE) BEYOND THE "END OF ROADWORK" SIGN.

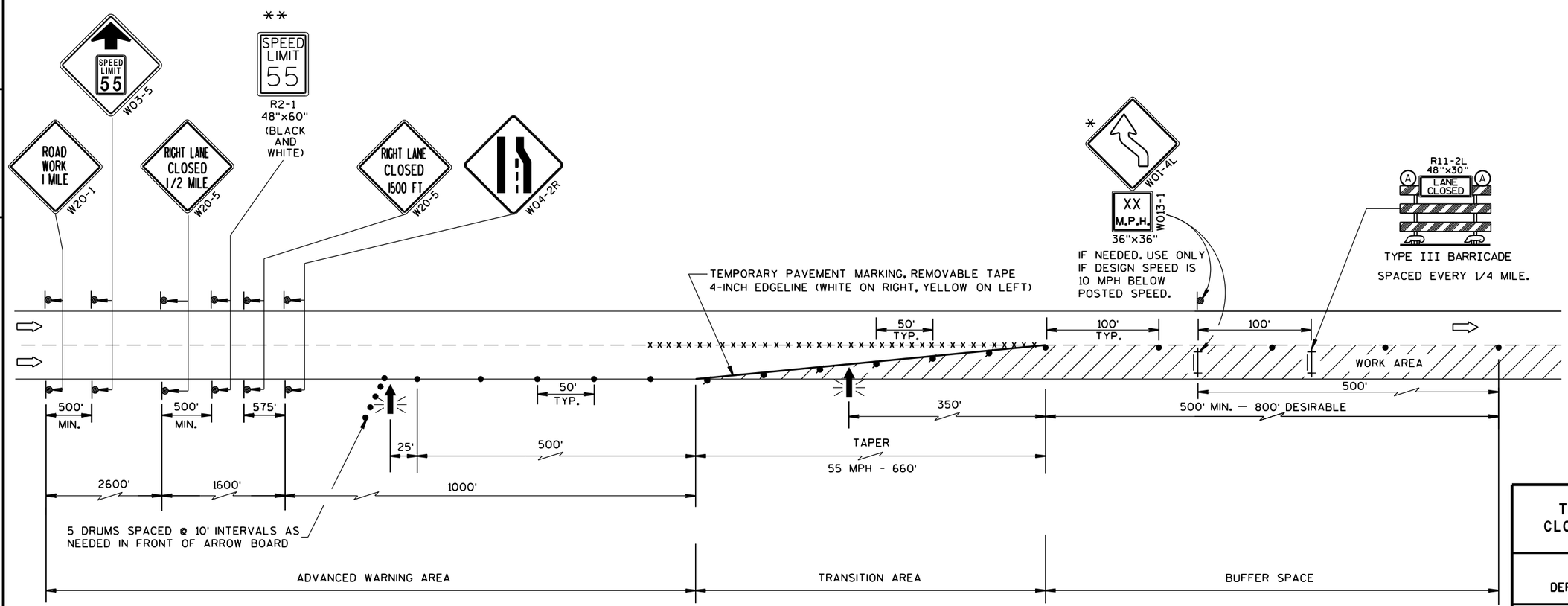

TRAFFIC CONTROL, LANE CLOSURE, SPEED REDUCTION

STATE OF WISCONSIN
DEPARTMENT OF TRANSPORTATION

APPROVED
Feb. 2015 — DATE
/S/ Travis Feltes — STATE TRAFFIC ENGINEER
FHWA

6

S.D.D. 15 D 12-5b

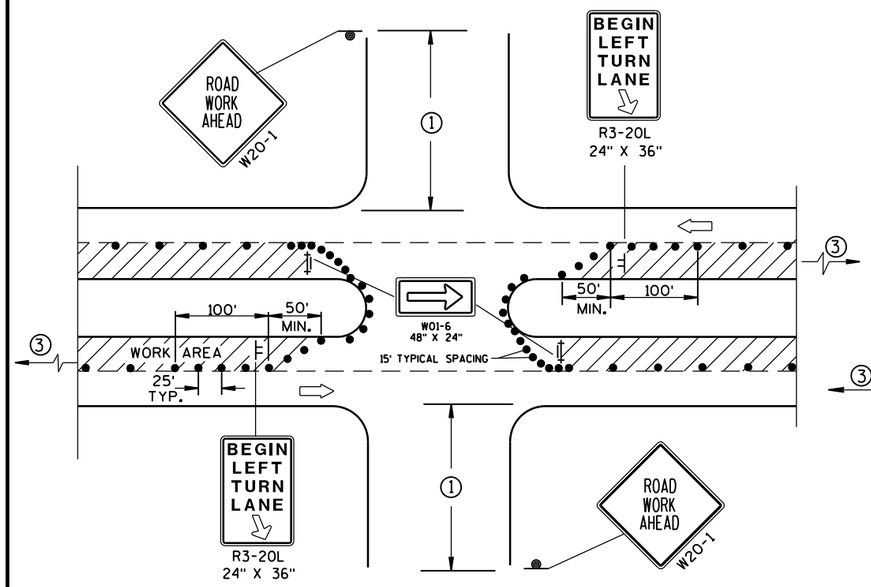

DETAIL A

FOR LEFT LANE CLOSURE AT INTERSECTION OR MEDIAN OPENING

PROVIDE TURN LANES AT INTERSECTIONS WHENEVER STAGING OF WORK ALLOWS. TAPER AND TURN LANE LENGTHS BASED ON FIELD CONDITIONS AS APPROVED BY THE ENGINEER.

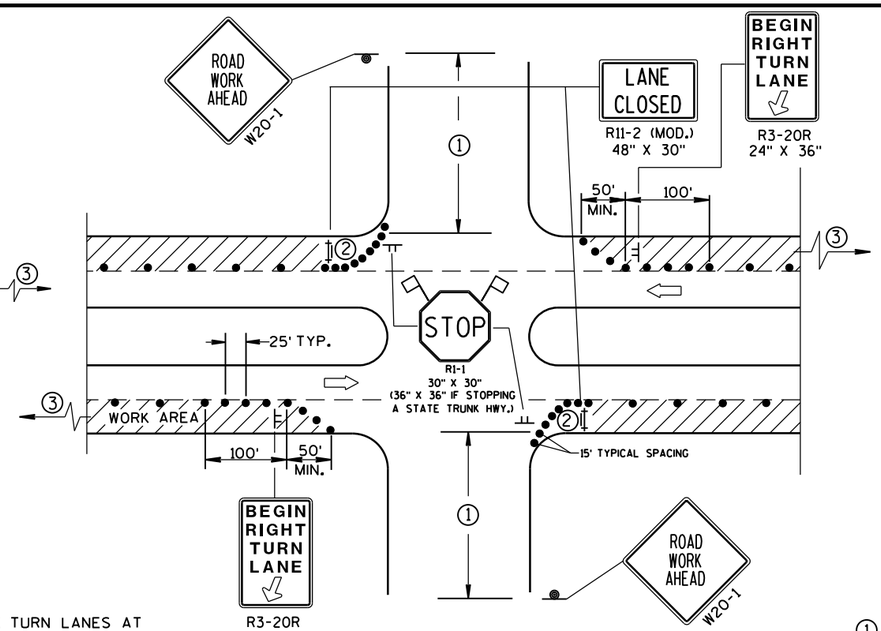

DETAIL B

FOR RIGHT LANE CLOSURE AT INTERSECTION

GENERAL NOTES

THE EXACT NUMBER, LOCATION, AND SPACING OF ALL SIGNS AND DEVICES SHALL BE ADJUSTED TO FIT FIELD CONDITIONS AS APPROVED BY THE ENGINEER.

THE SPACING BETWEEN SIGNS SHOULD BE ADJUSTED TO NOT CONFLICT WITH AND SHOULD PROVIDE A DESIRABLE MINIMUM OF 200 FEET CLEARANCE TO EXISTING SIGNS THAT WILL REMAIN IN PLACE.

ALL SIGNS ARE 48"x48" UNLESS OTHERWISE NOTED. IF NECESSARY DUE TO SPACE CONSTRAINTS IN URBAN AREAS, 36" X 36" SIGNS MAY BE USED IF APPROVED BY DISTRICT TRAFFIC UNIT.

"WO" SIGNS ARE THE SAME AS "W" SIGNS EXCEPT THE BACKGROUND IS ORANGE.

SIGN LAYOUTS SHALL BE IN ACCORDANCE WITH THE FHWA'S MANUAL OF STANDARD HIGHWAY SIGNS OR THE WISCONSIN STANDARD SIGN PLATES.

SIGNS THAT WILL BE IN PLACE LESS THAN 7 CONTINUOUS DAYS AND NIGHTS, OR THAT WILL BE PLACED IN A CLOSED LANE, MAY BE MOUNTED ON PORTABLE SUPPORTS.

ANY SIGNS TEMPORARY OR EXISTING, WHICH CONFLICT WITH TRAFFIC CONTROL "IN USE" SHALL BE REMOVED OR COVERED AS NEEDED AND AS APPROVED BY THE ENGINEER.

CHANNELIZING DEVICES PLACED ADJACENT TO WORK AREA SHALL BE PULLED BACK FROM THE TRAVEL LANE WHEN WORK IS NOT IN PROGRESS.

BARRICADES IN A CLOSED LANE THAT MUST BE MOVED FOR A WORK OPERATION SHALL BE IMMEDIATELY RE-ESTABLISHED UPON COMPLETION OF THE OPERATION OR, FOR CONTINUING OPERATIONS, AT THE END OF EACH WORKING DAY.

① 500' TYPICAL OR AT LAST INTERSECTION, WHICHEVER IS CLOSER.
350' IF 35-40 MPH.
200' IF 25-30 MPH.

② ALSO USE BARRICADE AND 15-FOOT TYPICAL DRUM SPACING AT COMMERCIAL DRIVEWAYS.

③ SEE SEPARATE LANE CLOSURE DETAIL FOR ADDITIONAL TRAFFIC CONTROL.

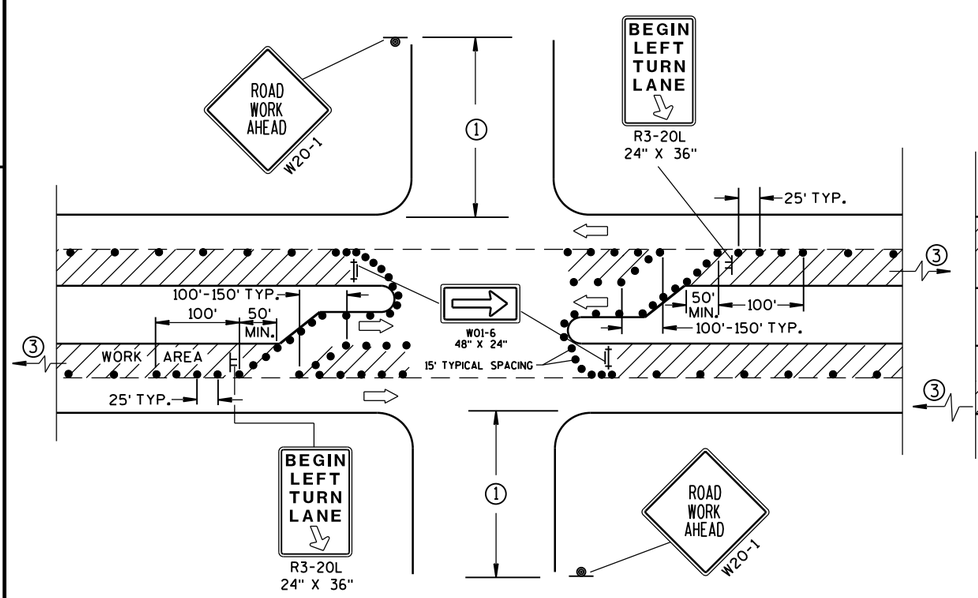

DETAIL C

FOR LEFT LANE CLOSURE AT INTERSECTION OR MEDIAN OPENING (WITH LEFT TURN BAY OPEN)

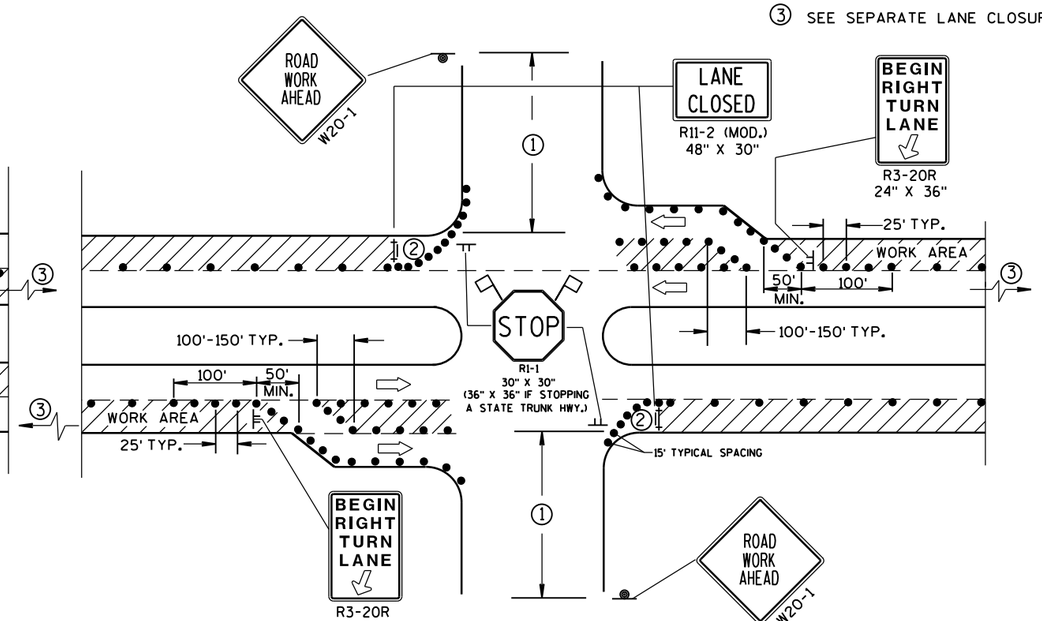

DETAIL D

FOR RIGHT LANE CLOSURE AT INTERSECTION (WITH RIGHT TURN BAY OPEN)

LEGEND

- TRAFFIC CONTROL DRUM
- SIGN ON PERMANENT SUPPORT
- SIGN ON TEMPORARY SUPPORT (5' MIN. MOUNTING HEIGHT)
- TYPE III BARRICADE WITH ATTACHED SIGN AND TYPE "A" WARNING LIGHT (FLASHING)
- DIRECTION OF TRAFFIC
- FLAGS, 16" X 16" MIN., (ORANGE)
- WORK AREA

TRAFFIC CONTROL, INTERSECTION WITHIN SINGLE LANE CLOSURE

STATE OF WISCONSIN
DEPARTMENT OF TRANSPORTATION

APPROVED
Nov. 2014 — /S/ Travis Feltes
DATE — STATE TRAFFIC ENGINEER — DESIGN
FHWA

NOTE: MAY BE USED ON ROADWAY WITH POSTED SPEED OF LESS THAN 40 MPH.

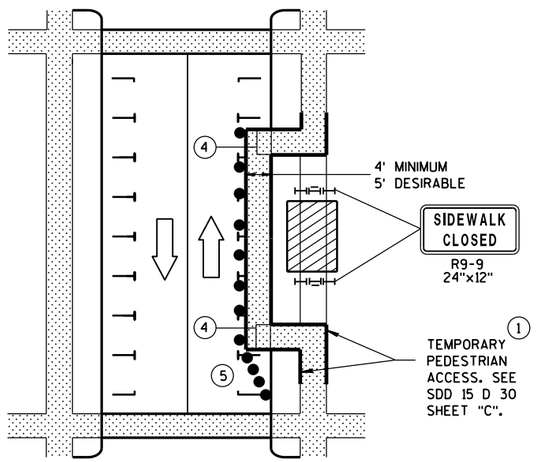

MID-BLOCK SIDEWALK CLOSURE IN PARKING LANE

NOTE: LAYOUT SAME AS ABOVE.

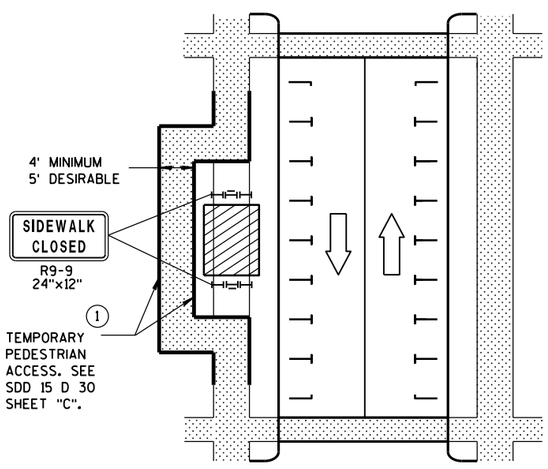

SIDEWALK DIVERSION

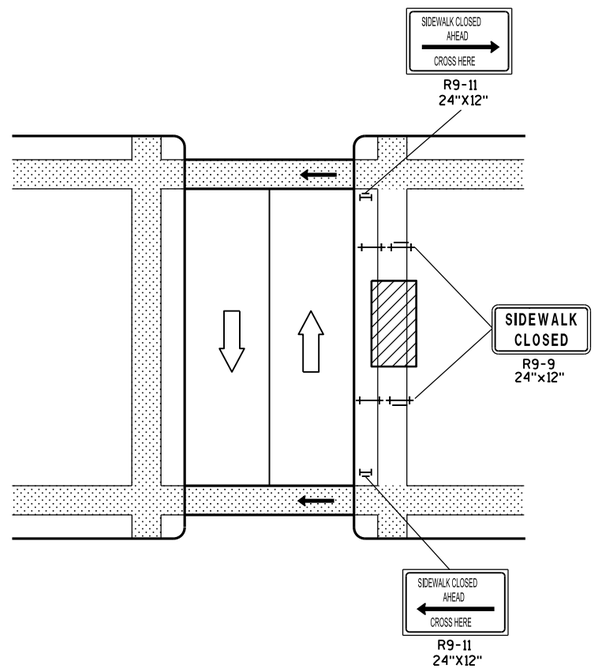

MID-BLOCK SIDEWALK CLOSURE

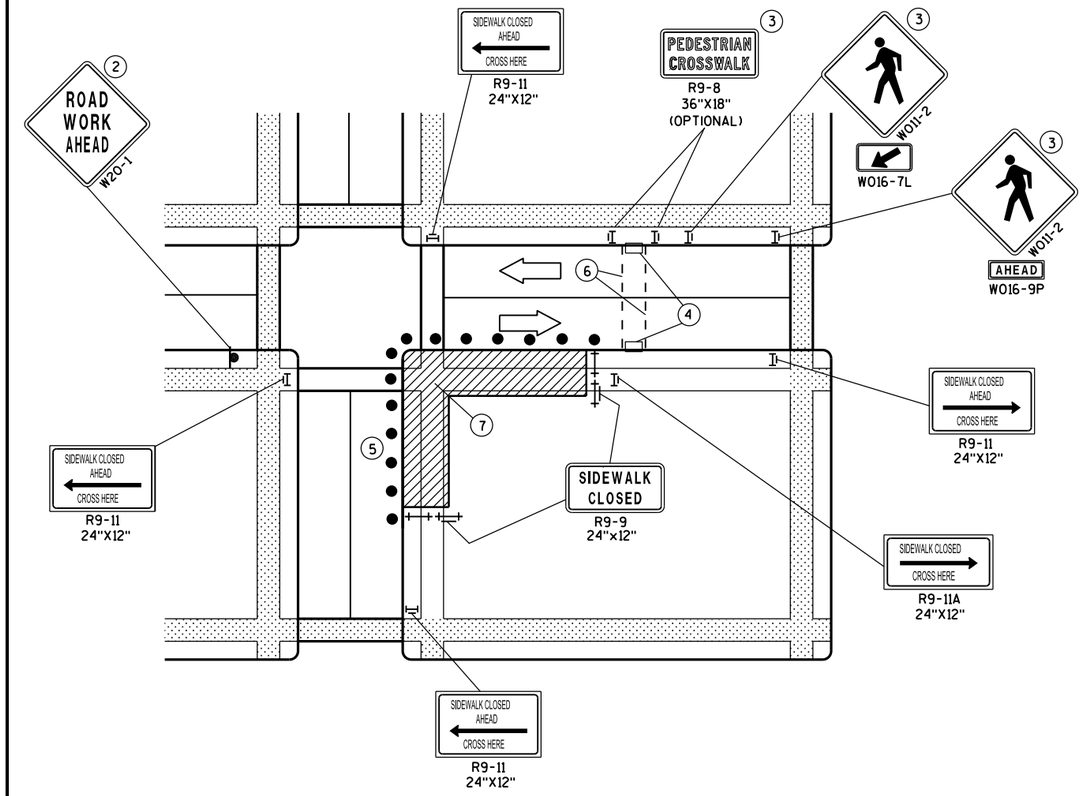

CORNER SIDEWALK CLOSURE WITH TEMPORARY CROSSWALK

GENERAL NOTES

WHEN CLOSING OR RELOCATING CROSSWALKS OR SIDEWALKS, PROVIDE DETECABLE TEMPORARY FACILITIES AND INCLUDE ACCESSIBILITY FEATURES CONSISTENT WITH EXISTING PEDESTRIAN FACILITIES.

TEMPORARY TRAFFIC CONTROL DEVICES FOR PEDESTRIANS ARE SHOWN. OTHER DEVICES MAY BE NECESSARY TO CONTROL VEHICULAR TRAFFIC. STAGE WORK, AS NECESSARY, TO PROVIDE A TEMPORARY PEDESTRIAN ACCESS ROUTE AT ALL TIMES. FOR ROADWAYS WITH NO AVAILABLE DETOURS, MAINTAIN ONE OPEN SIDEWALK AT ALL TIMES.

"WO" SIGN IS THE SAME AS "W" SIGN EXCEPT THE BACKGROUND IS ORANGE.

FOR NIGHTTIME CLOSURE USE TYPE "A" FLASHING WARNING LIGHTS ON BARRICADES, SUPPORTING SIGNS AND CLOSING SIDEWALK. USE TYPE "C" STEADY BURN LIGHTS ON CHANNELIZING DEVICES SEPARATING THE WORK AREA FROM VEHICULAR TRAFFIC.

PEDESTRIAN TRAFFIC SIGNAL DISPLAY CONTROLLING CLOSED CROSSWALK SHALL BE COVERED OR DEACTIVATED.

POST MOUNTED SIGNS LOCATED ADJACENT TO A SIDEWALK SHALL HAVE A 7 FOOT MINIMUM CLEARANCE FROM THE BOTTOM OF THE SIGN TO THE SIDEWALK SURFACE.

ALTERNATE SIDEWALK WORK BETWEEN LEFT AND RIGHT SIDE OF ROADWAY TO MAINTAIN PEDESTRIAN ACCESS.

1. IF SIDEWALK CLOSURE AFFECTS AN ACCESSIBLE AND DETECTABLE FACILITY, MAINTAIN ACCESSIBILITY AND DETECTABILITY ALONG THE ALTERNATE PEDESTRIAN ROUTE.
2. "ROAD WORK AHEAD" SIGNS ARE NOT REQUIRED IF THE SIDEWALK CLOSURE OCCURS WITHIN A LARGER WORK ZONE WHERE ADVANCE WARNING SIGNS ARE ALREADY PRESENT, OR IF THE WORK AREA AND EQUIPMENT ARE MORE THAN 2 FEET BEHIND THE CURB.
3. IF TEMPORARY PEDESTRIAN CROSSWALK IS NOT PROVIDED, OMIT R9-8 AND W011-2 SIGN ASSEMBLIES. IF PROVIDED INCLUDE ON BOTH SIDES OF THE CROSSWALK.
4. TEMPORARY CURB RAMPS. SEE SDD 15 D 30 SHEET "B".
5. DRUMS OR BARRICADES AT 25 FOOT SPACING. STREET PARKING SHALL BE PROHIBITED FOR AT LEAST 50 FEET IN ADVANCE OF THE MID-BLOCK CROSSWALK.
6. TEMPORARY PAVEMENT MARKING FOR CROSSWALK LINES.
7. LIMIT WORK TO ONE QUADRANT AT A TIME TO MINIMIZE PEDESTRIAN DISRUPTION.

LEGEND

- SIGN ON PERMANENT SUPPORT
- UNDER PEDESTRIAN TRAFFIC
- WORK AREA
- PEDESTRIAN CHANNELIZATION DEVICE
- TYPE II BARRICADE WITH/WITHOUT SIGN (ALL WITH ONE WARNING LIGHT, TYPE A, LOW-INTENSITY FLASHING)
- TYPE III BARRICADE WITH/WITHOUT SIGN (ALL WITH ONE WARNING LIGHT, TYPE A, LOW-INTENSITY FLASHING)
- DIRECTION OF TRAFFIC
- TRAFFIC CONTOL DRUM

TRAFFIC CONTROL, PEDESTRIAN ACCOMMODATION

STATE OF WISCONSIN
DEPARTMENT OF TRANSPOI

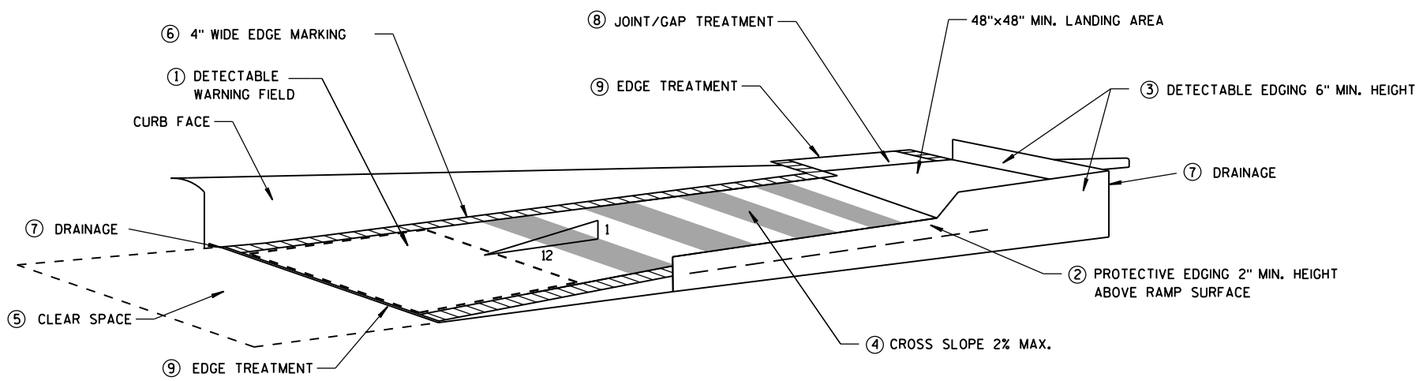

TEMPORARY CURB RAMP PARALLEL TO CURB

GENERAL NOTES

NOTIFY THE BUS COMPANY 7 DAYS IN ADVANCE OF THE BUS STOP RELOCATION.

ALTERNATE SIDEWALK WORK BETWEEN LEFT AND RIGHT SIDE OF ROADWAY TO MAINTAIN PEDESTRIAN ACCESS.

① CURB RAMPS SHALL BE 48" MIN. WIDTH WITH A FIRM, STABLE AND SLIP RESISTANT SURFACE. INSTALL CONTRASTING DETECTABLE WARNING FIELD AT PEDESTRIAN STREET CROSSINGS. REFER TO SDD 8D5 SHEET "E".

② PROTECTIVE EDGING WITH A 2" MIN. HEIGHT SHALL BE INSTALLED WHEN A CURB RAMP OR LANDING PLATFORM HAS A VERTICAL DROP OF 6" OR GREATER OR HAS A SIDE APRON SLOPE STEEPER THAN 1:3 (33%). PROTECTIVE EDGING SHOULD BE CONSIDERED WHEN CURB RAMPS OR LANDING PLATFORMS HAVE A VERTICAL DROP OF 3" OR MORE.

③ DETECTABLE EDGING WITH 6" MIN. HEIGHT AND CONTRASTING COLOR SHALL BE INSTALLED ON ALL CURB RAMP LANDINGS WHERE THE WALKWAY CHANGES DIRECTION (TURNS).

④ CURB RAMPS AND LANDINGS SHALL HAVE A 1:50 (2%) MAX. CROSS-SLOPE.

⑤ CLEAR SPACE OF 48"X48" MIN. SHALL BE PROVIDED ABOVE AND BELOW THE CURB RAMP.

⑥ THE CURB RAMP WALKWAY EDGE SHALL BE MARKED WITH A YELLOW COLOR, 4" WIDE MARKING, UNLESS A CONTRASTING DETECTABLE WARNING FIELD IS PROVIDED.

⑦ DO NOT RESTRICT WATER FLOW IN THE GUTTER SYSTEM.

⑧ LATERAL JOINTS OR GAPS BETWEEN SURFACES SHALL BE LESS THAN 1/2" WIDTH.

⑨ CHANGES BETWEEN SURFACE HEIGHTS SHALL NOT EXCEED 1/2". LATERAL EDGES SHALL BE VERTICAL UP TO 1/4" HIGH, AND BEVELED AT 1:2 BETWEEN 1/4" AND 1/2".

⑩ 5' WIDE MIN. WITH PEDSETRIAN SAFETY FENCE, 10' WIDE MIN. WITHOUT PEDESTRIAN SAFETY FENCE.

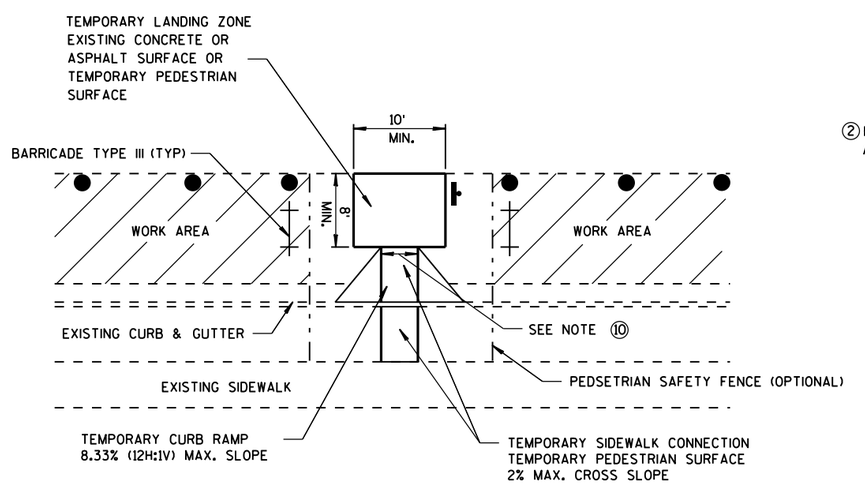

TEMPORARY BUS STOP PAD

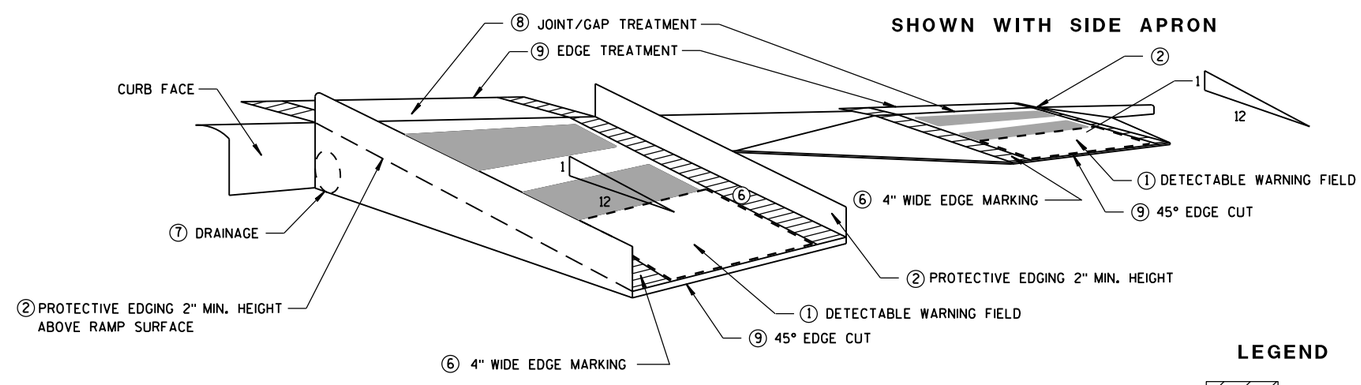

TEMPORARY CURB RAMP PERPENDICULAR TO CURB

LEGEND

- WORK AREA
- TYPE III BARRICADE
- TRAFFIC CONTOL DRUM

TRAFFIC CONTROL, TEMPORARY ADA COMPLIANT PEDESTRIAN ACCOMMODATION

STATE OF WISCONSIN
DEPARTMENT OF TRANSPORTATION

APPROVED

March 2015 — DATE

/S/ Travis Feltes — STATE TRAFFIC ENGINEER — SIGN

FHWA

363

6

S.D.D. 15 D 30-2b

6

S.D.D. 15 D 30-2b

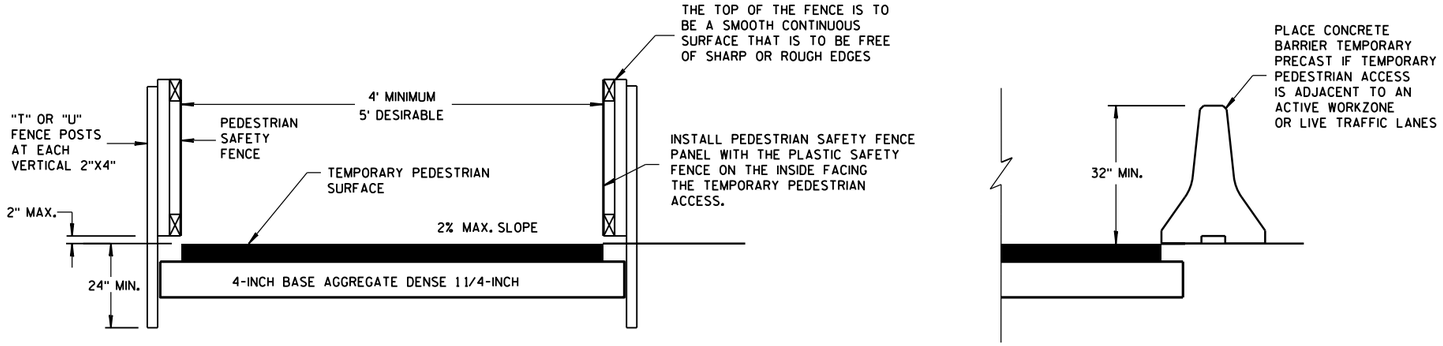

TEMPORARY PEDESTRIAN ACCESS

GENERAL NOTES

1. INTERCHANGEABLE WITH THE PEDESTRIAN SAFETY FENCE.

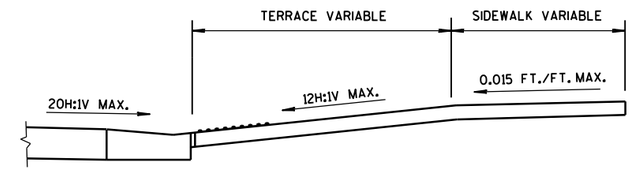

SECTION A-A

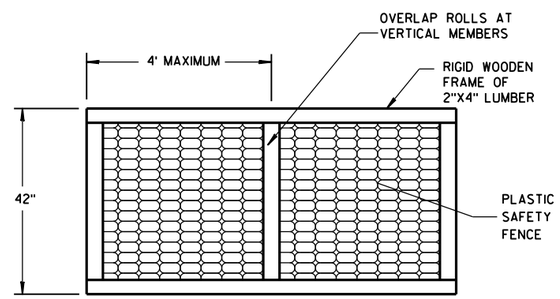

PEDESTRIAN SAFETY FENCE

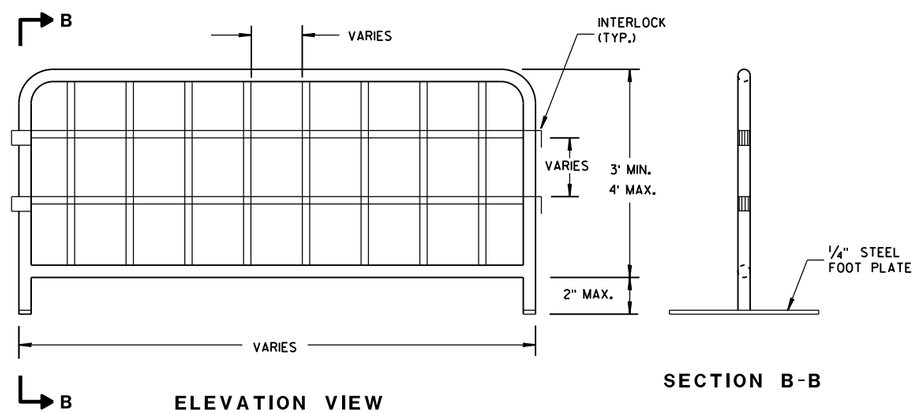

TEMPORARY PEDESTRIAN STEEL BARRICADE (1)

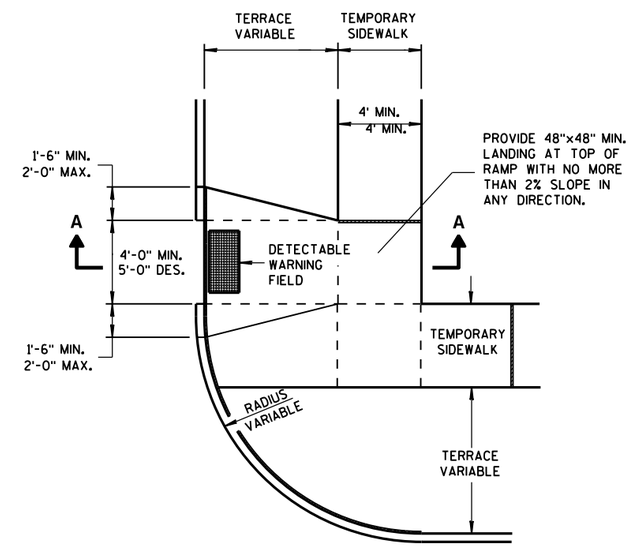

PLAN VIEW

TEMPORARY TYPE 3 RAMP

(OUTSIDE OF CROSSWALK AREA)

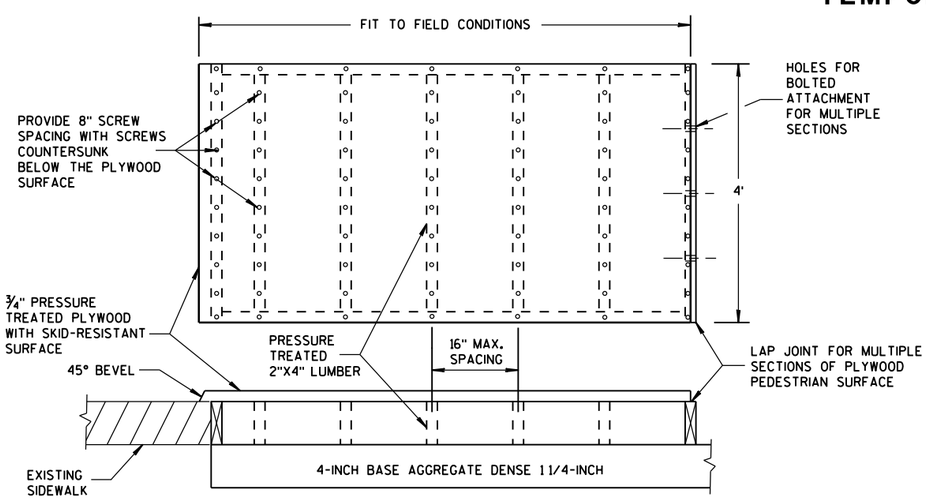

TEMPORARY PEDESTRIAN SURFACE PLYWOOD

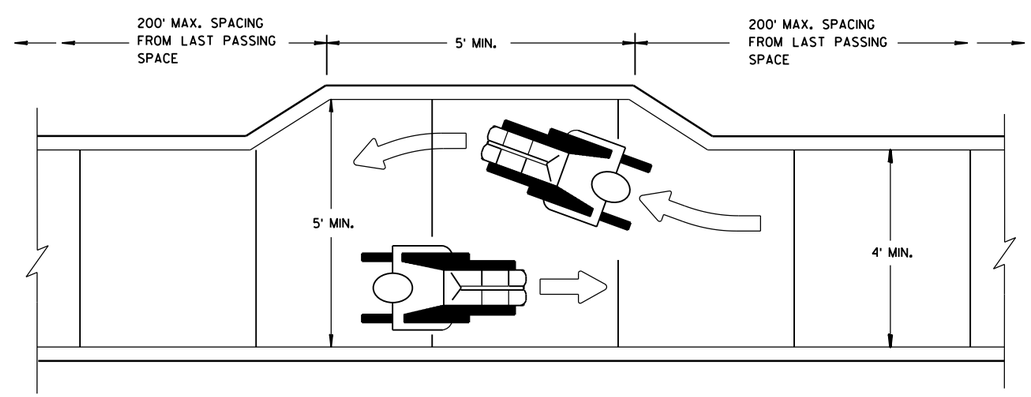

NARROW SIDEWALK PASSING DETAIL

TRAFFIC CONTROL, PEDESTRIAN ACCOMMODATION

STATE OF WISCONSIN
DEPARTMENT OF TRANSPORTATION

APPROVED
March 2015 — DATE
/S/ Travis Feltes — STATE TRAFFIC ENGINEER — SIGN
FHWA

6

S.D.D. 15 D 30-2c

TYPICAL ASSEMBLIES

J1-1

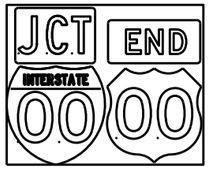

J1-2

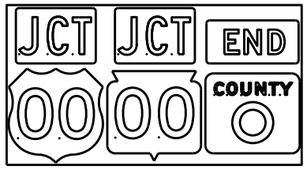

J1-3

J2-1

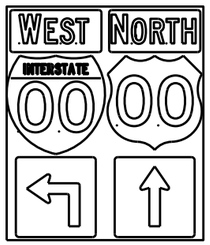

J2-2

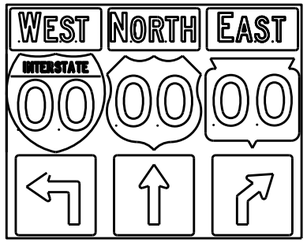

J2-3

JV

(Typical Vertical J-Assembly
See Note 10 and 11)

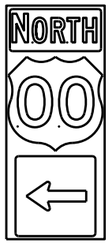

J3-1

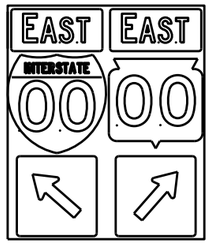

J3-2

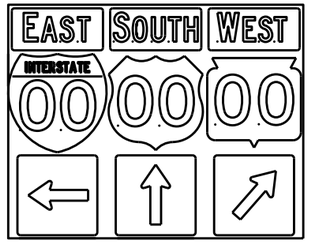

J3-3

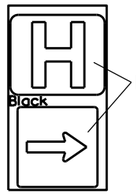

Blue Background

JH-1

J4-1

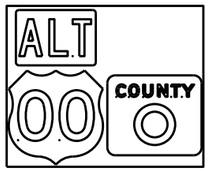

J4-2

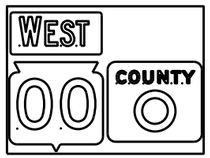

J4-2

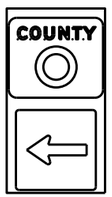

J13-1

J12-1

J32-1

J33-1

J23-1

J22-1

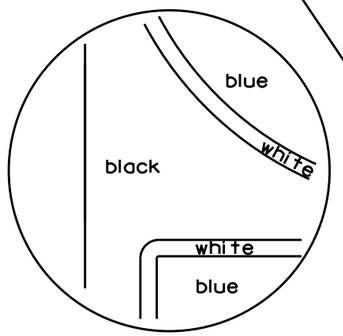

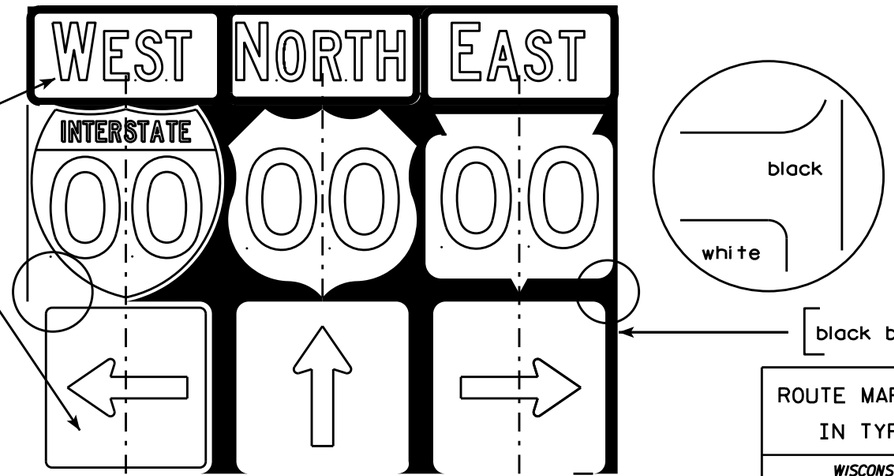

NOTES

1. Signs are Type II - Type H Reflective - reference WIS DOT Standard Specification for HIGHWAY and STRUCTURE CONSTRUCTION latest edition.
2. Color:
   Background - Black Non-reflective
   Message - see Note 5
3. Message Series - See Note 5
4. Corners shall be square or rounded if base material is plywood. If base material is metal the corners shall be rounded.
5. The colors and message spacing on each marker shall be according to the applicable route marker panel specifications.
6. Certain marker heads require the component pieces to be the same color. As an example, all the components used with an M1-1 Interstate marker shall be blue.
7. Single panel j-assemblies shall only be used with route marker shields that are same size. If the route marker shields are different size use multiple piece component.
8. Route assemblies that have 24 inch route shields and have dimensions greater than 48 inches (both vertical and horizontal) shall have one horizontal splice between the arrows and route shields. Vertical splices shall not be used on route assemblies with a horizontal dimension of 144 inches or less. The contractor shall not use more than one vertical joint per sign and the joint shall be between route shields.
9. Route assemblies that have 36 inch shields and have dimensions greater than 48 inchs (both vertical and horizontal) shall have two horizontal splices. One horizontal splice shall be between the cardinal direction and route shields and the other horizontal splice shall be between the arrows and route shields. Vertical splices shall not be used on route assemblies with a horizontal dimension of 144 or less. The contractor shall not use more than one vertical joint per sign and the joint shall be between route shields.
10. All Vertical J Assemblies are given a Sign Code of JV
11. For JV Assemblies that have a mixture of Interstate and non Interstate shields, arrows and cardinals shall be white on blue.

ROUTE MARKERS & COMPONENTS
IN TYPICAL ASSEMBLIES

WISCONSIN DEPT OF TRANSPORTATION

APPROVED Matthew R Rauch
for State Traffic Engineer

DATE 2/06/14 PLATE A2-1S.8

PROJECT NO: | SHEET NO: E

URBAN AREA

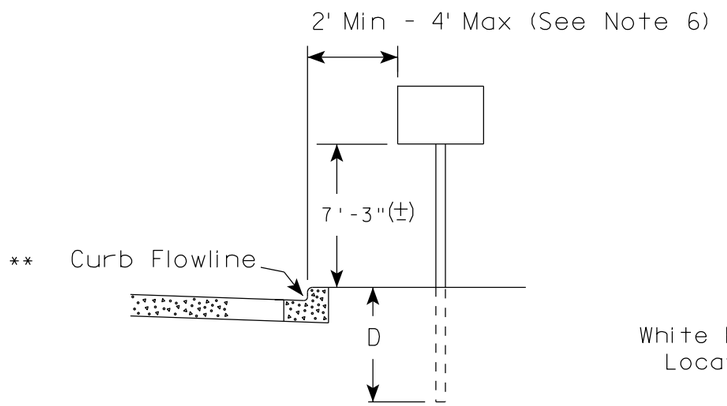

RURAL AREA (See Note 2)

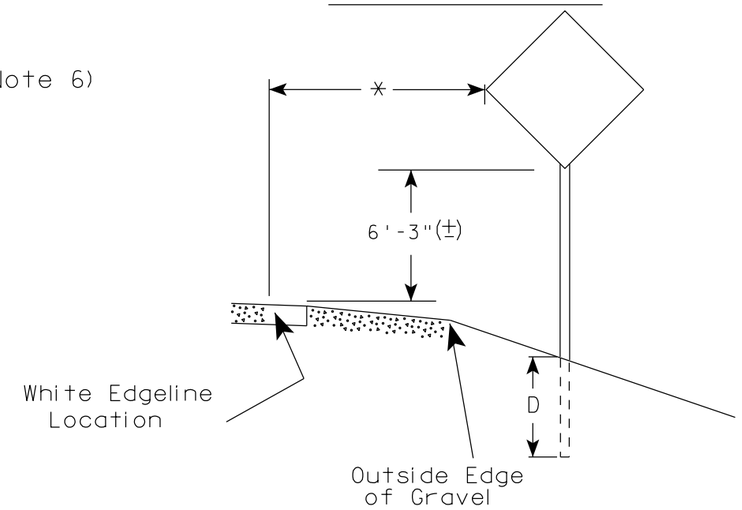

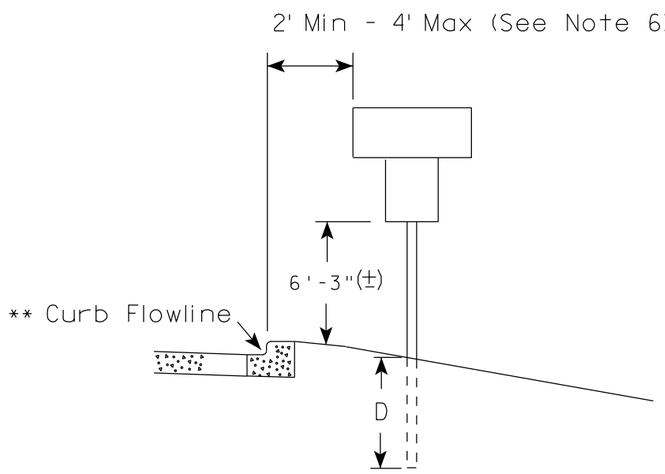

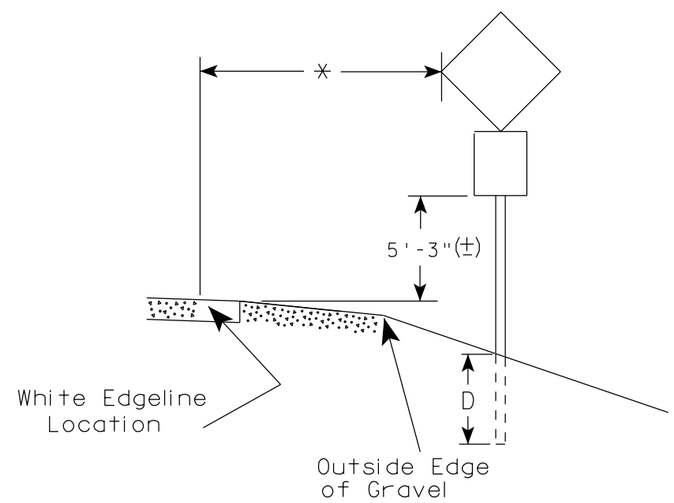

** The existence of curb and gutter does not in itself mandate the vertical clearance illustrated. That height is typically measured where there is sidewalk adjacent to the roadway or parking is permitted. In the absence of sidewalk vertical clearance is measured from the top of the curb. Offset of signs is measured from the flow line.

* 6 feet from edge of a paved shoulder or 12 feet from the edge of pavement (edge line location) or 2 feet from outside edge of gravel, whichever is greater unless directed by project engineer.

GENERAL NOTES

1. Signs wider than 4 feet or 20 sq.ft or larger, shall be mounted on multiple posts. Refer to plate A4-4.
2. If signs are mounted on barrier wall, see A4-10 sign plate.
3. For expressways and freeways, mounting height is 7'- 3" (±) or 6'-3" (±) depending upon existence of a sub-sign.
4. Minimum mounting height for J assemblies (A2-1S) is 7'-3" (±) or 6'-3" (±) per urban or rural detail respectively.
5. Minimum mounting height for signs mounted on traffic signal poles is 5'- 3" (±).
6. Offset distance shall be consistent with existing signs or consistent throughout length of project.
7. The (±) tolerance for mounting height is 3 inches.
8. Folding signs shall be mounted at a height of 5'-3" (±) or as directd by the Engineer.
9. The Double Arrow sign (W12-1) shall be mounted at a height of 2'-3" (±). The Chevron sign (W1-8), Roundabout Chevron panel (R6-4B), Enhanced Reference Markers, Clearance Markers (W5-52), Mile Markers (D10 series), In Road Object Markers (W5-54) & End of Road Markers (W5-56) shall be mounted at a height of 4'-3" (±).

POST EMBEDMENT DEPTH

Area of Sign Installation (Sq. Ft.)	D (Min)
20 or Less	4'
Greater than 20	5'

TYPICAL INSTALLATION OF PERMANENT TYPE II SIGNS ON SINGLE POSTS

WISCONSIN DEPT OF TRANSPORTATION

APPROVED Matthew R Rauch for State Traffic Engineer

DATE 7/23/15 PLATE NO. A4-3.20

PROJECT NO:	HWY:	COUNTY:		SHEET NO:	E

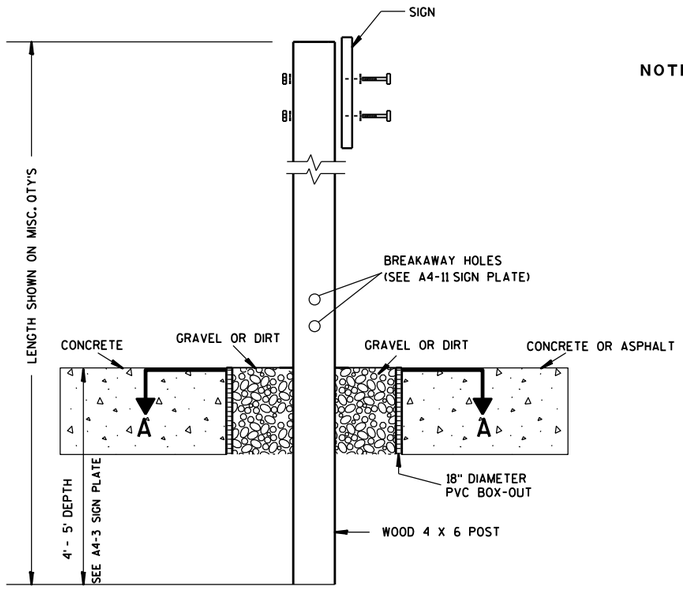

ELEVATION VIEW

DETAIL OF WOOD 4 X 6 SIGN POST IN BOX-OUT

NOTES:
1. ALL MATERIAL TO BE APPROVED BY ENGINEER PRIOR TO INSTALLATION
2. SEE SIGN PLATE A4-8 FOR SIGN HARDWARE REQUIREMENTS
3. 18 INCH X 18 INCH SQUARE BOX-OUTS MAY BE USED FOR INSTALLATIONS IN EXISTING CONCRETE OR ASPHALT LOCATIONS.

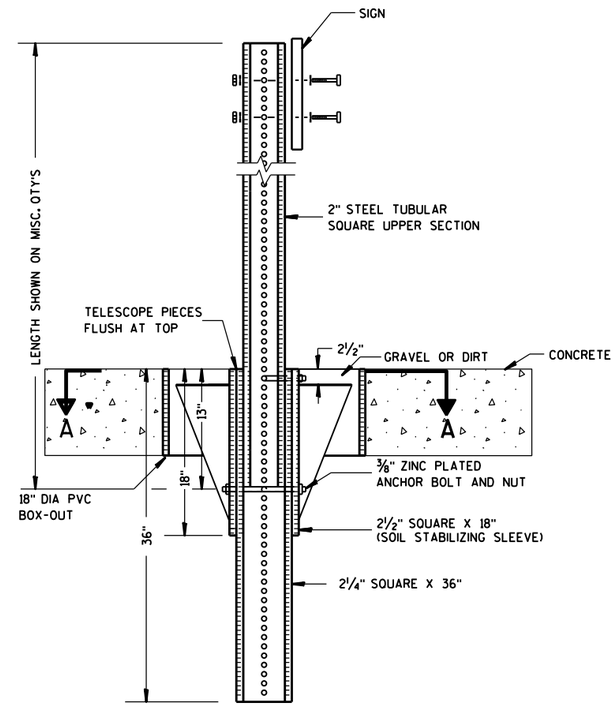

ELEVATION VIEW

DETAIL OF STEEL 2 X 2 SIGN POST IN BOX-OUT

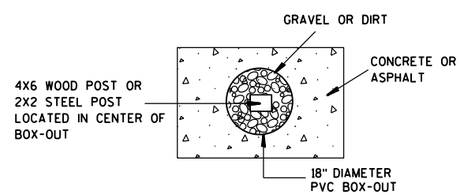

PLAN VIEW

FOR NEW CONCRETE/ASPHALT INSTALLATIONS

SIGN POST
BOX-OUTS
A4-3B

WISCONSIN DEPT OF TRANSPORTATION

APPROVED Matthew R Rauch
for State Traffic Engineer

DATE 1/27/14 PLATE NO. A4-3B.1

PROJECT NO:	HWY:	COUNTY:		SHEET NO:	E

URBAN AREA

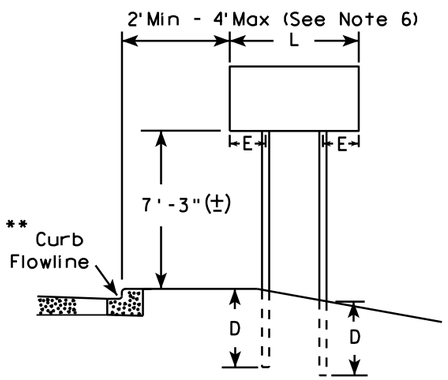

RURAL AREA (See Note 3)

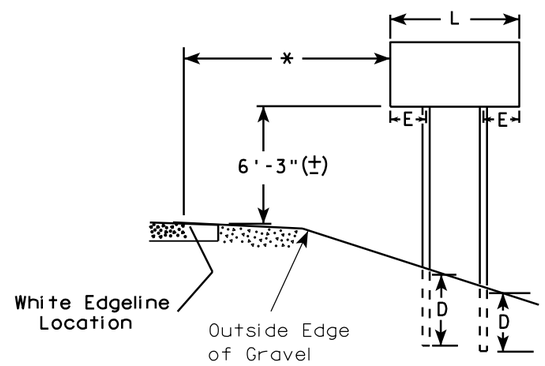

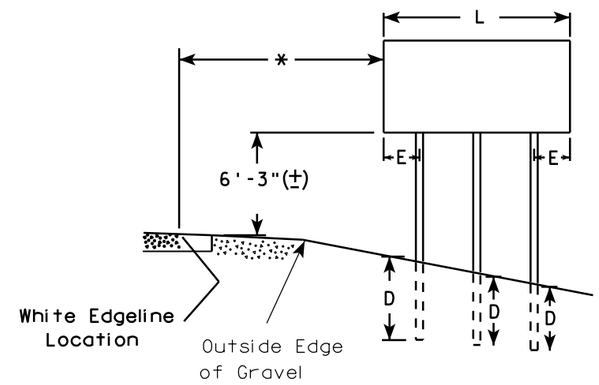

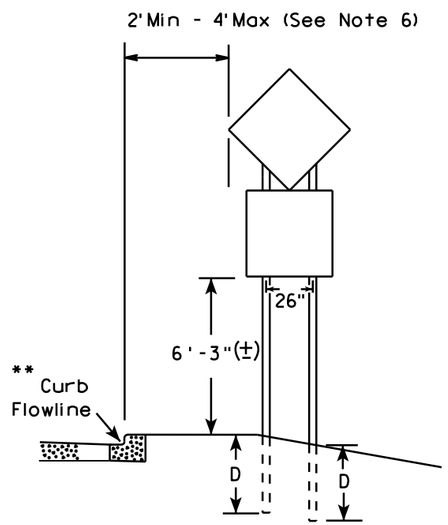

48" DIAMOND WARNING SIGN

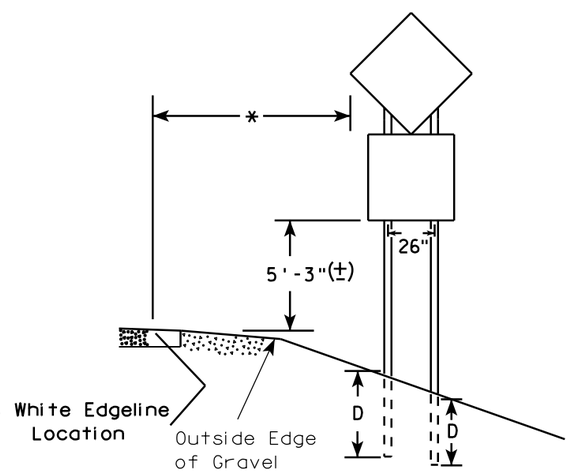

48" DIAMOND WARNING SIGN

GENERAL NOTES

1. For 3 or 4 post installations, individual post spacing shall be greater than 3'-6".
2. See tables below for required number of posts.
3. For expressways and freeways, mounting height is 7'-3" (±) or 6'-3" (±) depending upon existence of sub-sign.
4. The (±) tolerance for mounting height is 3 inches.
5. Minimum mounting height for J assemblies (A2-1S) is 7'-3" (±) or 6'-3" (±) per urban or rural detail respectively.
6. Offset distance shall be consistent with existing signs or consistent throughout length of project.
7. Folding signs shall be mounted at a height of 5'-3" (±) or as directed by the engineer.
8. The Double Arrow sign (W12-1) shall be mounted at a height of 2'-3" (±). The Chevron sign (W1-8), Roundabout Chevron panel (R6-4B), Clearance Markers (W5-52), Mile Markers (D10 series), In Road Object Markers (W5-54) & End of Road Markers (W5-56) shall be mounted at a height of 4"-3" (±).

* 6 feet from edge of a paved shoulder or 12 feet from the edge of pavement (edge line location) or 2 feet from outside edge of gravel, whichever is greater unless directed by project engineer.

** The existence of curb and gutter does not in itself mandate the vertical clearance illustrated. That height is typically measured where there is sidewalk adjacent to the roadway or parking is permitted. In the absence of sidewalk vertical clearance is measured from the top of the curb. Offset of signs is measured from the flow line.

*** See A4-3 sign plate for signs 4' or less in width and less than 20 S.F. in area.

SIGN SHAPE OTHER THAN DIAMOND (TWO POSTS REQUIRED)	
L	E
*** Greater than 48" Less than 60"	12"
60" to 120"	L/5

SIGN SHAPE OTHER THAN DIAMOND (THREE POSTS REQUIRED)	
L	E
Greater than 120" less than 168"	12"

SIGN SHAPE OTHER THAN DIAMOND (FOUR POSTS REQUIRED)	
L	E
168" and greater	12"

POST EMBEDMENT DEPTH

Area of Sign Installation (Sq. Ft.)	D (Min)
20 or Less	4'
Greater than 20	5'

TYPICAL INSTALLATION OF TYPE II SIGNS ON MULTIPLE POSTS

WISCONSIN DEPT OF TRANSPORTATION

APPROVED Matthew R Rauch
for State Traffic Engineer

DATE 7/23/15 PLATE NO. A4-4 14 368

PROJECT NO:	HWY:	COUNTY:		SHEET NO:	E

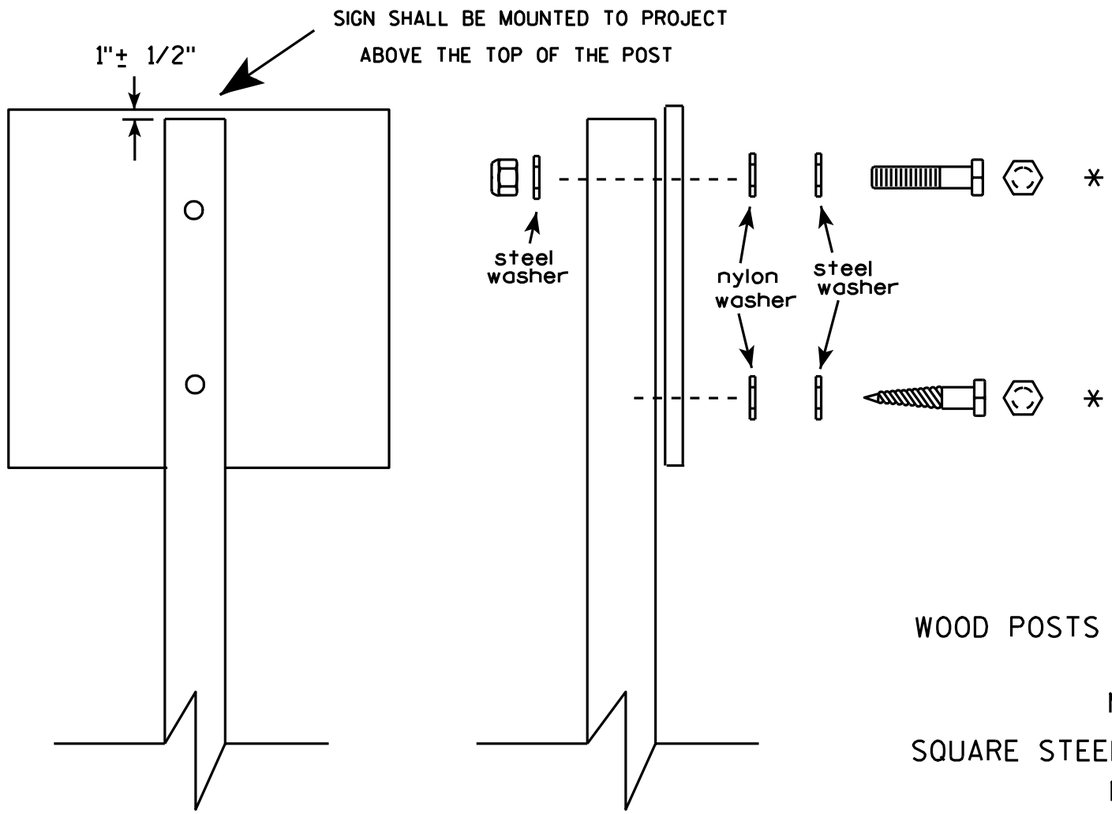

Nuts, bolts and lags used for mounting signs shall have hexagonal heads and shall be either :

a. Hot dip galvanized in accordance with ASTM Designation: A 153, Class D, or SC 3

b. Electro-galvanized in accordance with ASTM Designation : B 633, TYPE III, SC 3.

Threads on bolts and nuts shall be manufactured with sufficient allowance for the cadmium plate or galvanized coating to permit the nuts to run freely on the bolts.

WOOD POSTS (4" x 4" or 4" x 6")

LAG SCREWS - 3/8" X 3"

MACHINE BOLTS - 5/16" X 6-1/2" or 7" Length w/ nuts

SQUARE STEEL POSTS (2" x 2")

MACHINE BOLTS - 3/8" X 3-1/4" Length w/ nuts

RIVETS - 9/32 " (6605-9-6) BULB-TITE, TRI-FOLD, ALUMINUM BODY/MANDREL O.D. FLANGE .720-.765 INCH, GRIP RANGE .042-.375 INCH

WASHERS (ALL POSTS) -

1-1/4" O.D. X 3/8" I.D. X 1/16" STEEL

1-1/4" O.D. X 3/8" I.D. X .080 NYLON for all Type H signs.

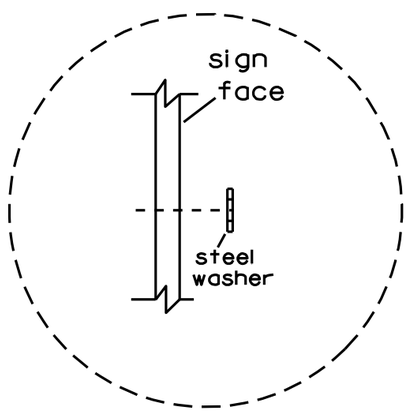

Washer Placement when Sign Has Other Than Type H or Type F Face

* Two different fastening systems are shown for illustration purposes. On any individual sign, either one or the other system shall be used. Actual number of fasteners per sign varies with the sign area, but normally there are two. For a single post installation, all signs greater than 9 sq. ft. require the use of 3 fasteners.

ATTACHMENT OF SIGNS TO POSTS

WISCONSIN DEPT OF TRANSPORTATION

APPROVED Matthew R Rauch
for State Traffic Engineer

DATE 3/23/10 PLATE NO. A4-8.7

PROJECT NO:				SHEET NO: 369	E

TELESCOPIC TUBING ANCHORS
TWO PIECE SYSTEM

2 1/4" SQUARE
12 GAUGE
PERFORATED
GALVANIZED FINISH

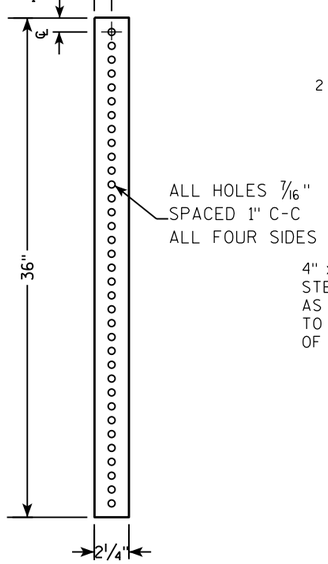

2 1/2" SQUARE
12 GAUGE
OMNI-DIRECTIONAL
PERFORATED
SOIL STABILIZING SLEEVE
GALVANIZED FINISH

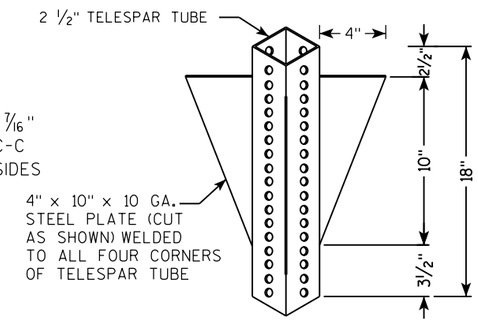

DETAIL OF TUBULAR STEEL SIGN POST
(IN POURED CONCRETE OR ASPHALT)

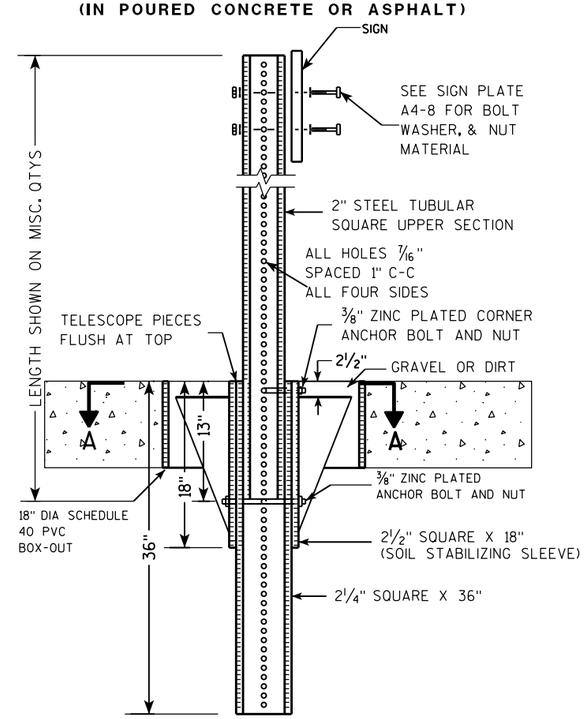

DETAIL OF TUBULAR STEEL SIGN POST
(IN LOCATIONS OTHER THAN POURED CONCRETE OR ASPHALT)

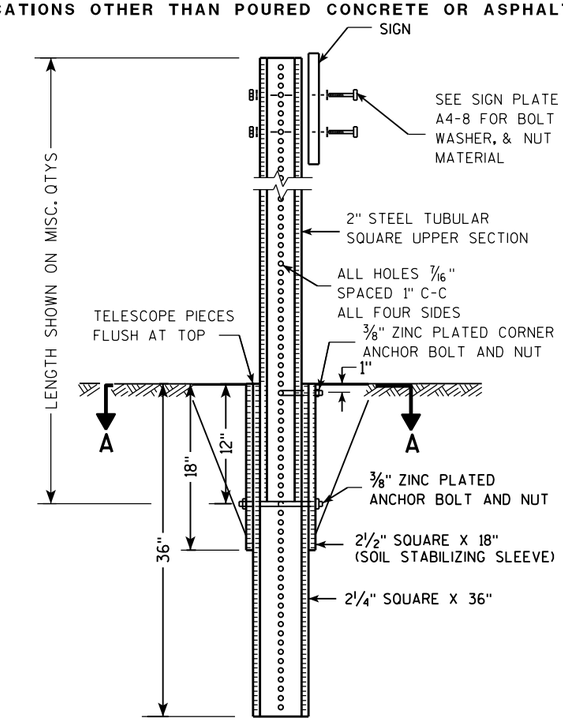

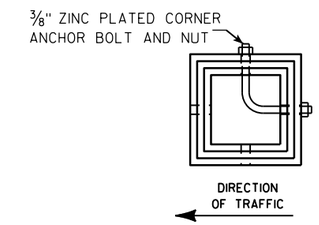

SECTION A-A

Area of Sign Installation (Sq. Ft.)	Number of Required Posts
9 or less	1
Greater than 9 less than or equal to 18	2
Greater than 18 less than or equal to 27	3

Signs wider than 3 feet or larger than 9 sq. ft shall be mounted on multiple posts (see above table).

TUBULAR STEEL
SIGN POST
A4-9

WISCONSIN DEPT OF TRANSPORTATION

APPROVED Matthew R Rauch
for State Traffic Engineer

DATE 2/05/15 PLATE A4-9.9

370

PROJECT NO:	HWY:	COUNTY:		SHEET NO:	E

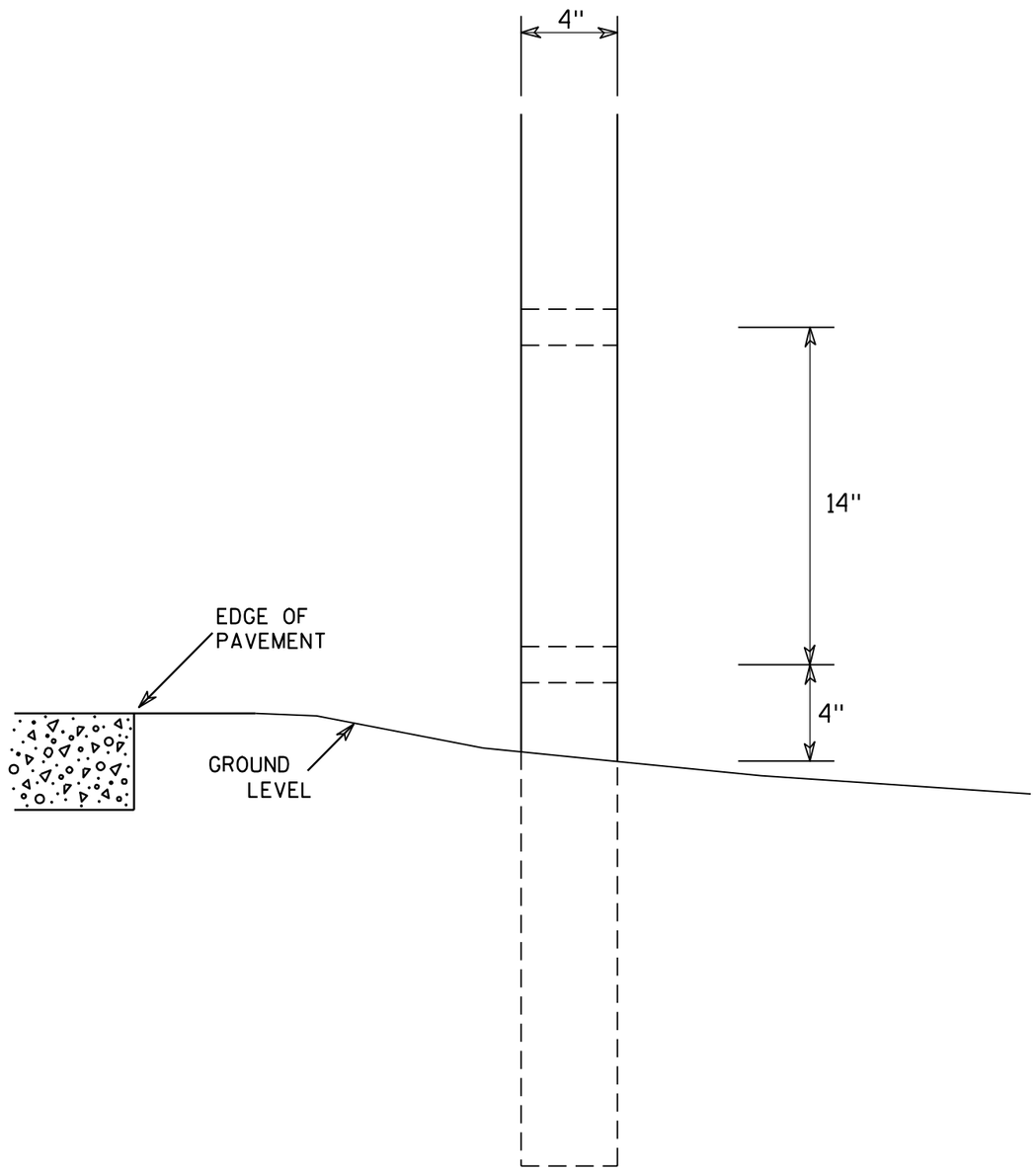

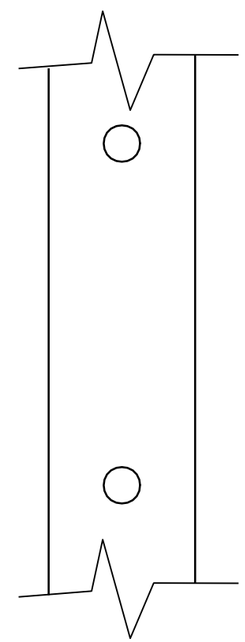

SIDE VIEW

GENERAL NOTES

1. All 4 x 6 Wood Posts shall be modified by having two 1½" diameter holes drilled perpendicular to the roadway centerline.

4 X 6 WOOD POST MODIFICATIONS

WISCONSIN DEPT OF TRANSPORTATION

APPROVED Chester J Spang for State Traffic Engineer

DATE 3/27/97 PLATE NO. A4-11.2

PROJECT NO:	HWY:	COUNTY:		SHEET NO: 371	E

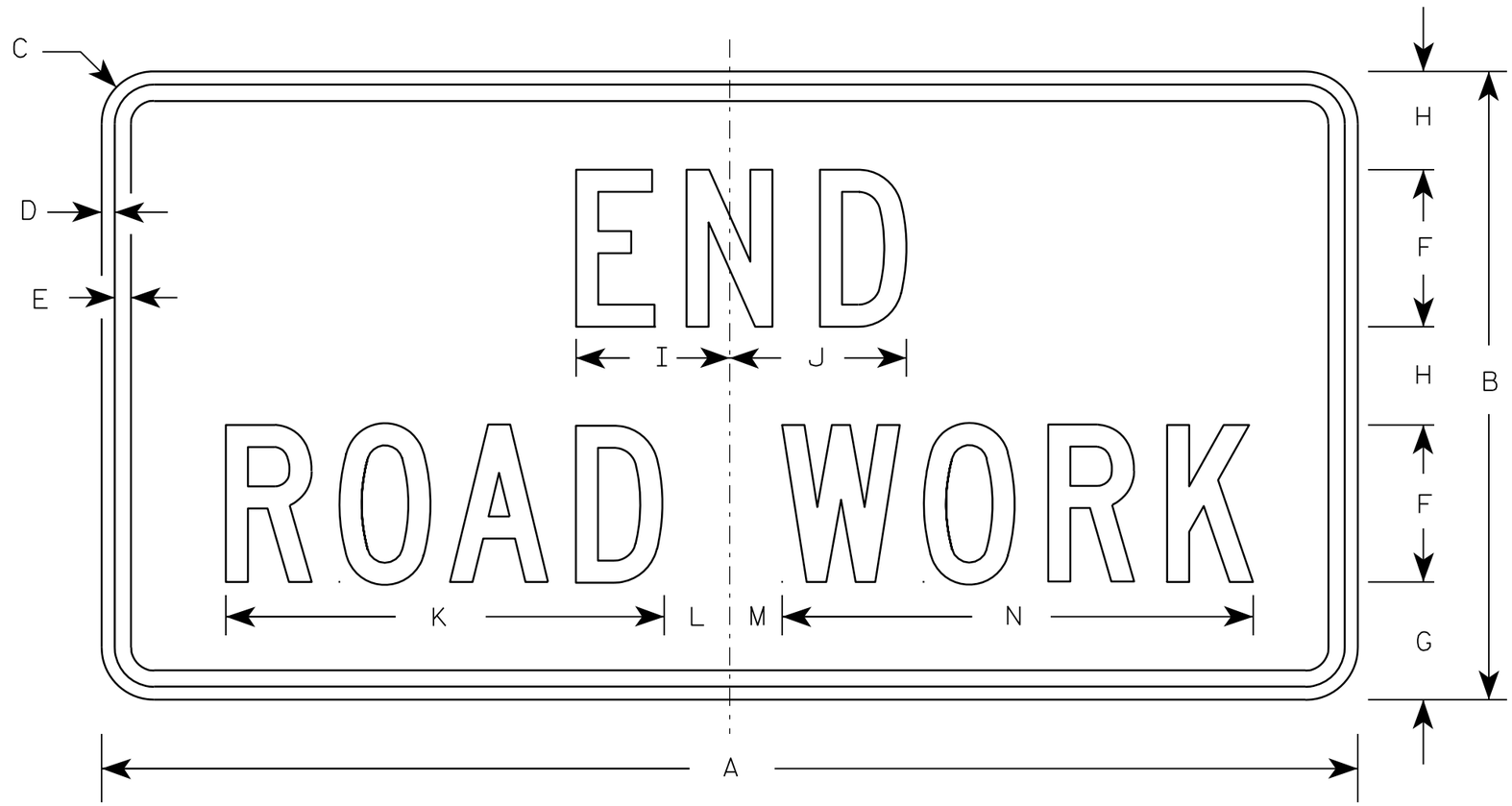

G20-2A

NOTES

1. Sign is Type II - Type F Reflective - reference WIS DOT Standard Specification for HIGHWAY and STRUCTURE CONSTRUCTION latest edition.
2. Color:
   Background - Orange
   Message - Black
3. Message Series - C
4. Corners may be square or rounded when base material is plywood but borders shall be rounded as shown. When base material is metal, the corners and borders shall be rounded.

Metric equivalent for this sign is:

SIZE	
1	900 mm X 450 mm
2	1200 mm X 600 mm
3	1200 mm X 600 mm
4	1200 mm X 600 mm
5	1200 mm X 600 mm

SIZE	A	B	C	D	E	F	G	H	I	J	K	L	M	N	O	P	Q	R	S	T	U	V	W	X	Y	Z	Area sq. ft.	Area m2
1	36	18	1 1/8	3/8	1/2	4	3 3/4	2 1/2	4 1/8	4 1/8	11 1/8	2	1	12 1/8													4.5	0.41
2	48	24	1 1/2	1/2	5/8	6	4 1/2	3 3/4	5 7/8	6 3/4	16 3/4	2 1/2	1 3/4	18 1/2													8.0	0.72
3	48	24	1 1/2	1/2	5/8	6	4 1/2	3 3/4	5 7/8	6 3/4	16 3/4	2 1/2	1 3/4	18 1/2													8.0	0.72
4	48	24	1 1/2	1/2	5/8	6	4 1/2	3 3/4	5 7/8	6 3/4	16 3/4	2 1/2	1 3/4	18 1/2													8.0	0.72
5	48	24	1 1/2	1/2	5/8	6	4 1/2	3 3/4	5 7/8	6 3/4	16 3/4	2 1/2	1 3/4	18 1/2													8.0	0.72

STANDARD SIGN

G20-2A

WISCONSIN DEPT OF TRANSPORTATION

APPROVED Matthew R Rauch
for State Traffic Engineer

DATE 9/30/09 PLATE NO. G20-2A.8

PROJECT NO:	HWY:	COUNTY:		SHEET NO: 372	E

NOTES

1. Sign is Type II - See Note 6 - reference WIS DOT Standard Specification for HIGHWAY and STRUCTURE CONSTRUCTION latest edition.
2. Color:
   Background - White & Black - See Note 6
   Message - Black
3. Message Series - See note 5
4. Corners may be square or rounded when base material is plywood but borders shall be rounded as shown. When base material is metal, the corners and borders shall be rounded.
5. Substitute appropriate numerals and adjust spacing as per Plate A10-1.
6. Permanent Signs
   Background - Type H Reflective
   Detour or other temporary signs
   Background - Reflective

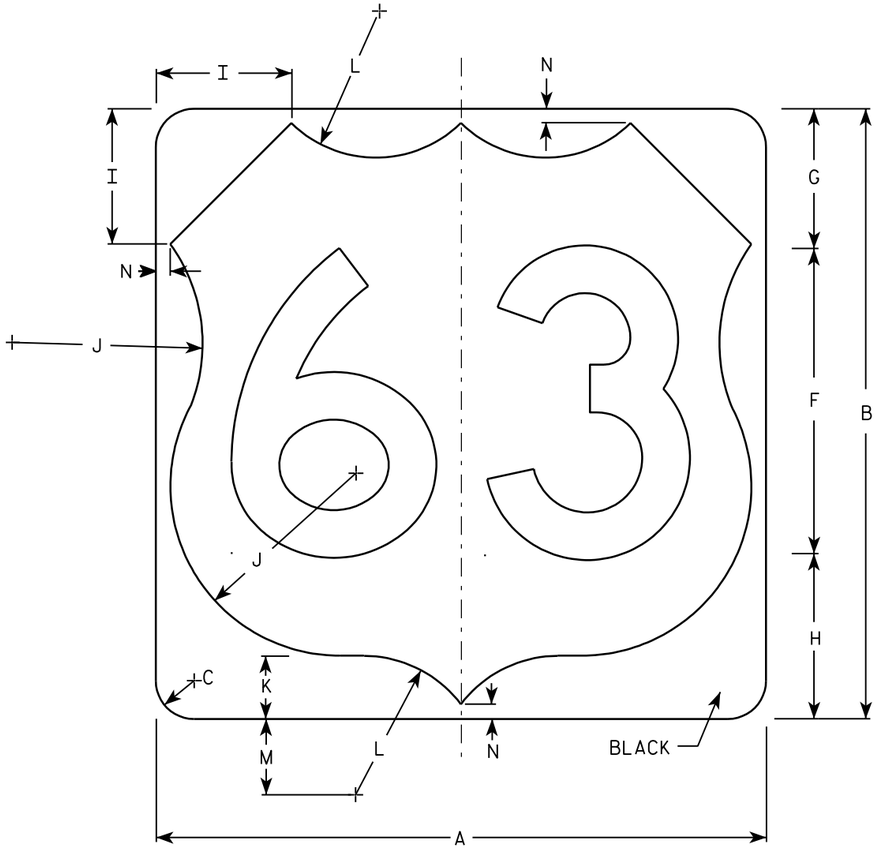

M1-4

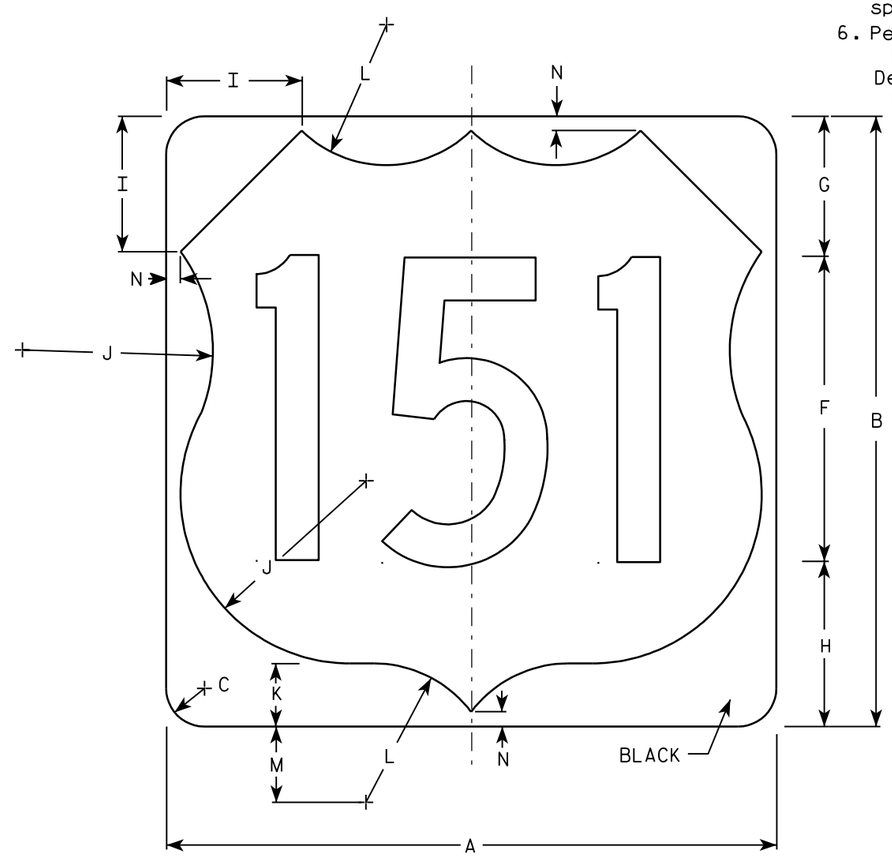

M1-4

Metric equivalent for this sign is:

SIZE	
1	
2	600 mm X 600 mm
3	900 mm X 900 mm
4	900 mm X 900 mm
5	900 mm X 900 mm

SIZE	A	B	C	D	E	F	G	H	I	J	K	L	M	N	O	P	Q	R	S	T	U	V	W	X	Y	Z	Area sq. ft.	Area m2
1																												
2	24	24	1 1/2			12	5 1/2	6 1/2	5	7 1/2	2 1/2	5 1/2	3	1/2													4.0	.36
3	36	36	2 1/4			18	8 1/4	9 1/4	7 1/4	11 1/4	3 3/4	8 1/4	4 1/2	3/4													9.0	.81
4	36	36	2 1/4			18	8 1/4	9 1/4	7 1/4	11 1/4	3 3/4	8 1/4	4 1/2	3/4													9.0	.81
5	36	36	2 1/4			18	8 1/4	9 1/4	7 1/4	11 1/4	3 3/4	8 1/4	4 1/2	3/4													9.0	.81

USH MARKER
M1-4 FOR ASSEMBLIES

WISCONSIN DEPT OF TRANSPORTATION

APPROVED Matthew R Rauch
for State Traffic Engineer

DATE 08/25/05 PLATE NO. M1-4.9

PROJECT NO: | HWY: | COUNTY: | SHEET NO: 373 | E

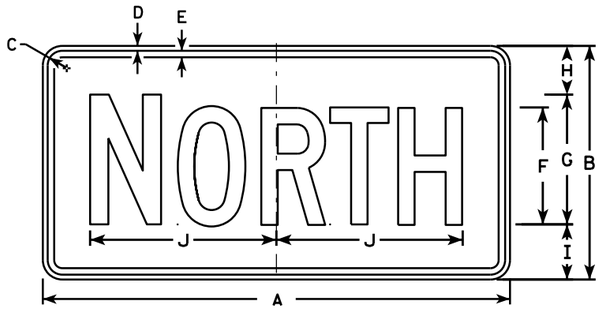

M3-1
MK3-1
MM3-1
MN3-1

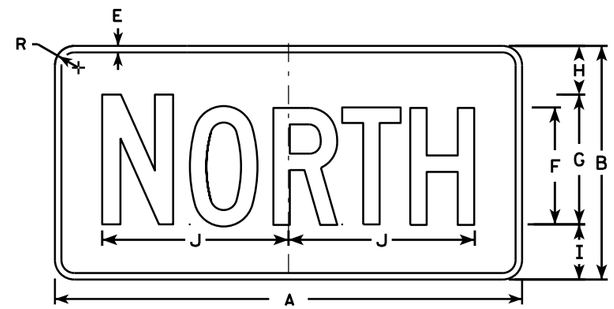

MB3-1

M3-2
MK3-2
MM3-2
MN3-2

MB3-2

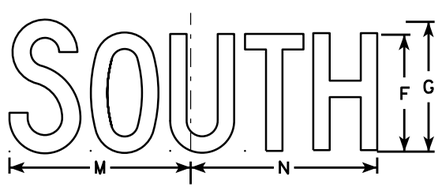

M3-3
MK3-3
MM3-3
MN3-3

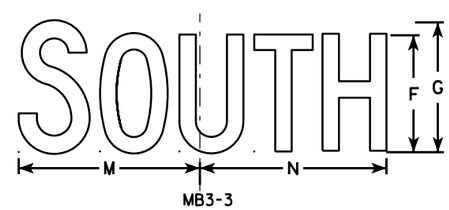

MB3-3

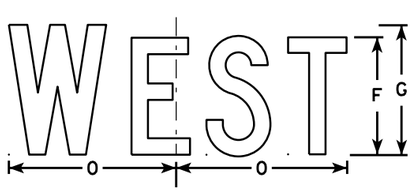

M3-4
MK3-4
MM3-4
MN3-4

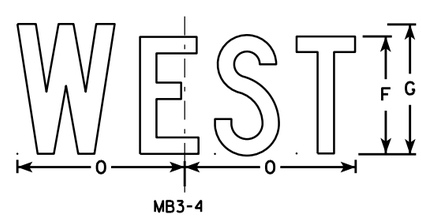

MB3-4

NOTES

1. All Signs Type II - Type H
2. Color:
   Background - See note 5
   Message - See note 5
3. Message Series - C
4. Corners may be square or rounded when base material is plywood but borders shall be rounded as shown. When base material is metal, the corners and borders shall be rounded.
5. M3-1 thru M3-4 Background - White
   Message - Black
   MB3-1 thru MB3-4 Background - Blue
   Message - White
   MK3-1 thru MK3-4 Background - Green
   Message - White
   MM3-1 thru MM3-4 Background - White
   Message - Green
   MN3-1 thru MN3-4 Background - Brown
   Message - White
6. Note the first letter of each direction is larger than the remainder of the message.

SIZE	A	B	C	D	E	F	G	H	I	J	K	L	M	N	O	P	Q	R	S	T	U	V	W	X	Y	Z	Area sq. ft.
1																											
2	24	12	1 1/8	3/8	3/8	6	7	2 1/4	2 3/4	10 1/4	7 7/8	8 3/8	10 1/4	9 3/4	8 3/4			1 1/2									2.00
3	36	18	1 1/8	3/8	1/2	9	10	3 3/4	4 1/4	14 3/8	12	12 1/8	14	14 1/8	13			1 1/2									4.5
4	36	18	1 1/8	3/8	1/2	9	10	3 3/4	4 1/4	14 3/8	12	12 1/8	14	14 1/8	13			1 1/2									4.5
5	36	18	1 1/8	3/8	1/2	9	10	3 3/4	4 1/4	14 3/8	12	12 1/8	14	14 1/8	13			1 1/2									4.5

STANDARD SIGNS
M3-1 thur M3-4
SERIES

WISCONSIN DEPT OF TRANSPORTATION

APPROVED Matthew R Rauch
for State Traffic Engineer

DATE 6/30/14 PLATE NO M3-1.13

PROJECT NO: | HWY: | COUNTY: | SHEET NO: | E

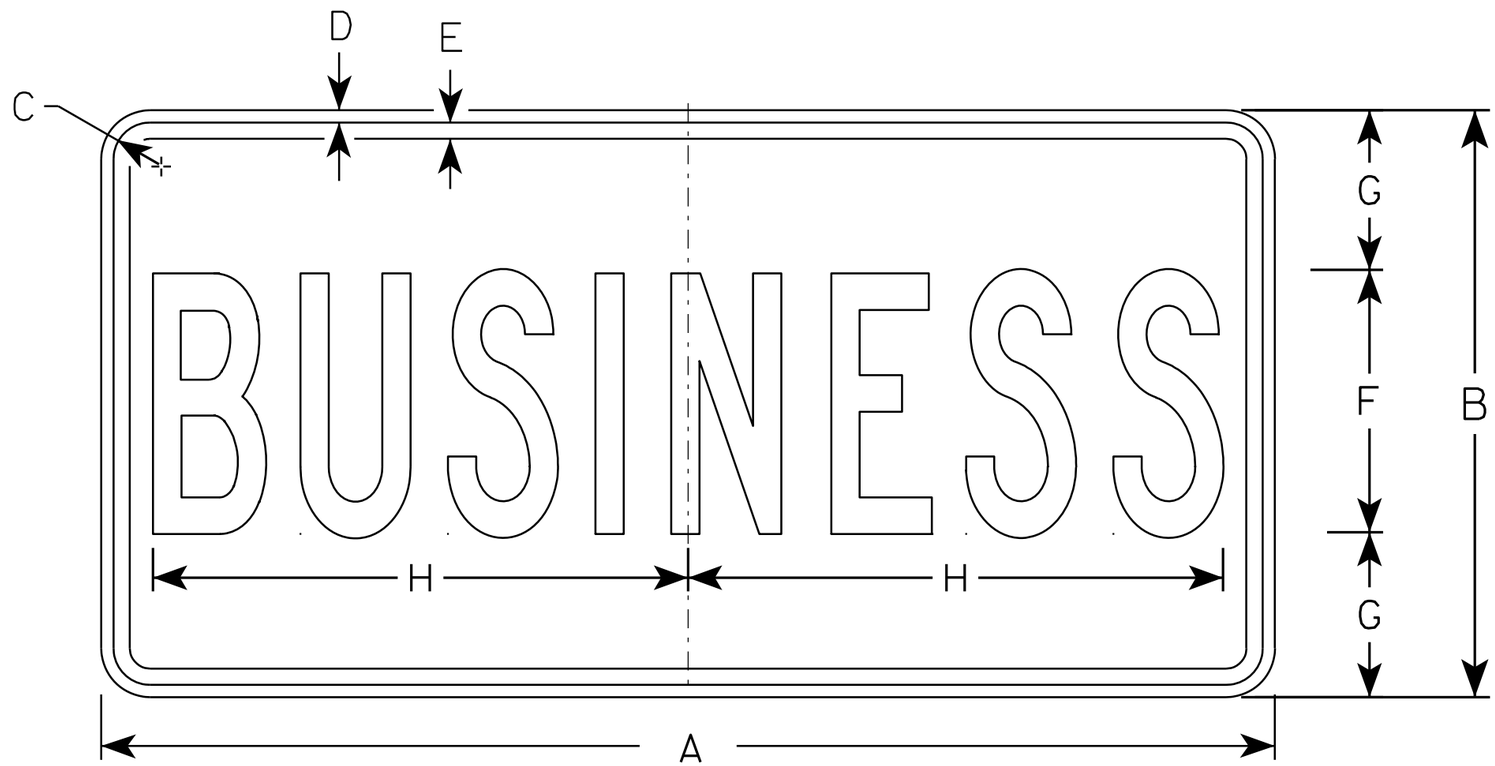

M4 - 3

NOTES

1. Sign is Type II - See Note 5 - reference WIS DOT Standard Specification for HIGHWAY and STRUCTURE CONSTRUCTION latest edition.
2. Color:
   Background - White - See Note 5
   Message - Black
3. Message Series - B
4. Corners may be square or rounded when base material is plywood but borders shall be rounded as shown. When base material is metal, the corners and borders shall be rounded.
5. Permanent Signs
   Background - Type H Reflective
   Detour or other temporary Signs
   Background - Reflective

SIZE	A	B	C	D	E	F	G	H	I	J	K	L	M	N	O	P	Q	R	S	T	U	V	W	X	Y	Z	Area sq. ft.
1																											
2	24	12	1 1/8	3/8	3/8	5	3 1/2	9 5/8																			2.0
3	36	18	1 1/8	3/8	1/2	8	5	16 3/8																			4.5
4																											
5																											

STANDARD SIGN
M4 - 3

WISCONSIN DEPT OF TRANSPORTATION

APPROVED Matthew R Rauch
for State Traffic Engineer

DATE 11/10/10 PLATE NO. M4-3.5

PROJECT NO: | HWY: | COUNTY: | SHEET NO: 375 | E

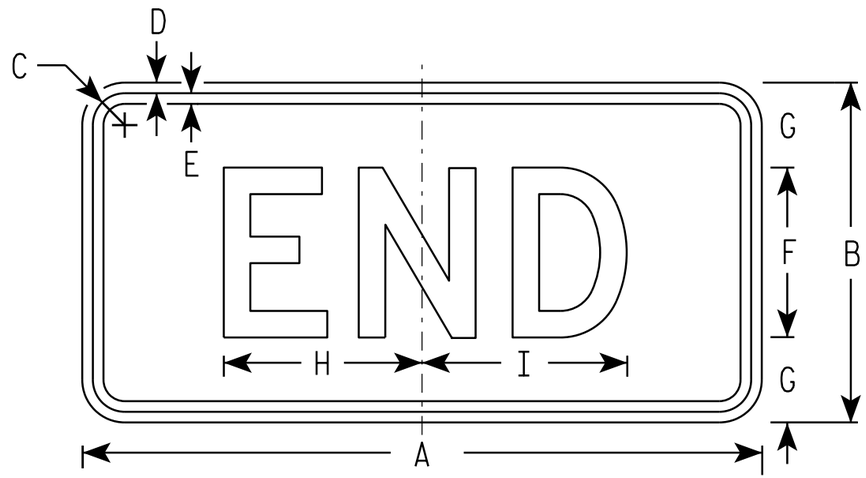

M4-6
MK4-6
MM4-6
MN4-6
MR4-6

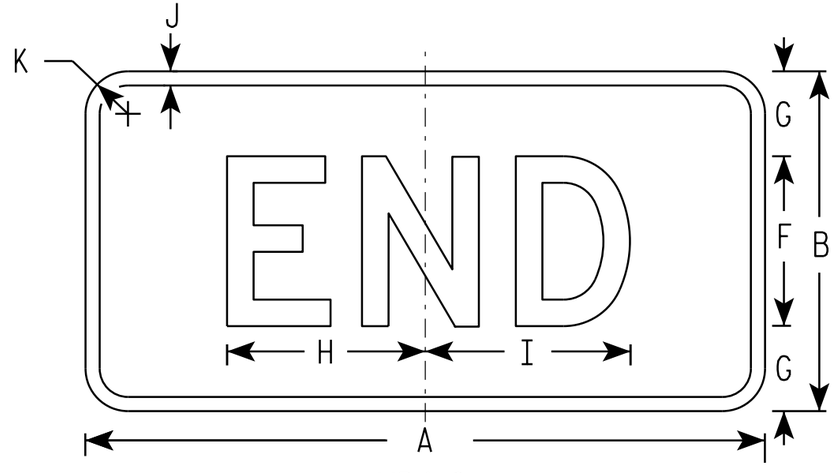

MB4-6

NOTES

1. Sign is Type II - Type H
2. Color:
   Background - See note 5
   Message - See note 5
3. Message Series - D
4. Corners may be square or rounded when base material is plywood but borders shall be rounded as shown. When base material is metal, the corners and borders shall be rounded.
5. M4-6 Background - White
   Message - Black

   MB4-6 Background - Blue
   Message - White

   MK4-6 Background - Green
   Message - White

   MM4-6 Background - White
   Message - Green

   MN4-6 Background - Brown
   Message - White

   MR4-6 Background - Brown
   Message - Yellow

SIZE	A	B	C	D	E	F	G	H	I	J	K	L	M	N	O	P	Q	R	S	T	U	V	W	X	Y	Z	Area sq. ft.
1																											
2	24	12	1 1/8	3/8	3/8	6	3	7	7 1/4	1/2	1 1/2																2.00
3	36	18	1 1/8	3/8	1/2	9	4 1/2	12	11 7/8	1/2	1 1/2																4.5
4	36	18	1 1/8	3/8	1/2	9	4 1/2	12	11 7/8	1/2	1 1/2																4.5
5	36	18	1 1/8	3/8	1/2	9	4 1/2	12	11 7/8	1/2	1 1/2																4.5

STANDARD SIGN
M4-6

WISCONSIN DEPT OF TRANSPORTATION

APPROVED Matthew R Rauch
for State Traffic Engineer

DATE 6/30/14 PLATE 376 '14-7.8

PROJECT NO: | HWY: | COUNTY: | SHEET NO: | E

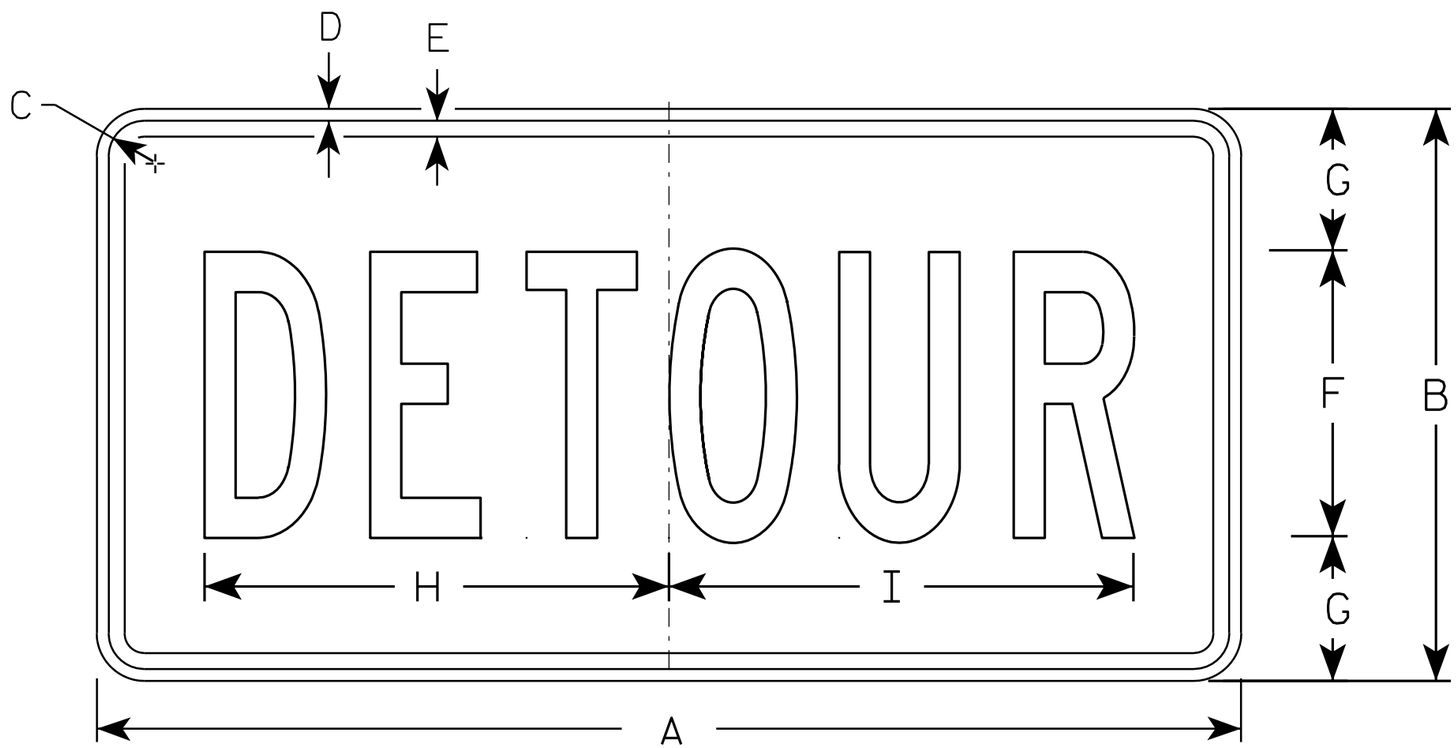

M4-8

NOTES

1. Sign is Type II - Type F Reflective - reference WIS DOT Standard Specification for HIGHWAY and STRUCTURE CONSTRUCTION latest edition.
2. Color:
   Background - Orange
   Message - Black
3. Message Series - B
4. Corners may be square or rounded when base material is plywood but borders shall be rounded as shown. When base material is metal, the corners and borders shall be rounded.

SIZE	A	B	C	D	E	F	G	H	I	J	K	L	M	N	O	P	Q	R	S	T	U	V	W	X	Y	Z	Area sq. ft.
1																											
2	24	12	1 1/8	3/8	3/8	6	3	10	10 1/4																		2.0
3	36	18	1 1/8	3/8	1/2	9	4 1/2	14 5/8	14 1/2																		4.5
4																											
5																											

STANDARD SIGN
M4-8

WISCONSIN DEPT OF TRANSPORTATION

APPROVED Matthew R Rauch
for State Traffic Engineer

DATE 11/10/10 PLATE NO. M4-8.2

PROJECT NO: | HWY: | COUNTY: | SHEET NO: 377 | E

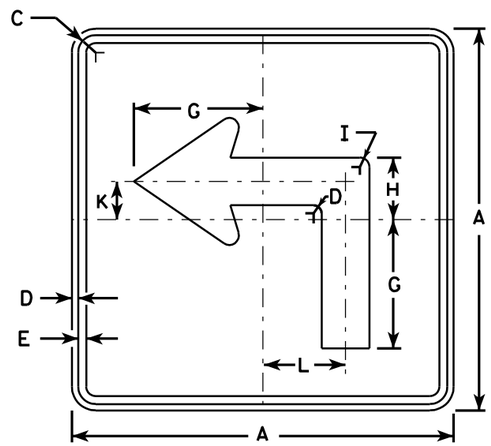

M5-1L
MK5-1L
MM5-1L
MO5-1L
MP5-1L
MR5-1L

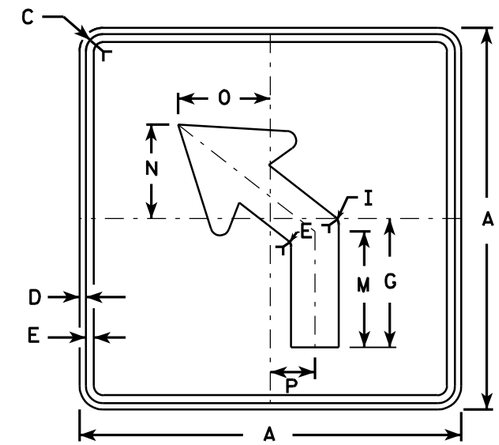

M5-2L
MK5-2L
MM5-2L
MO5-2L
MP5-2L
MR5-2L

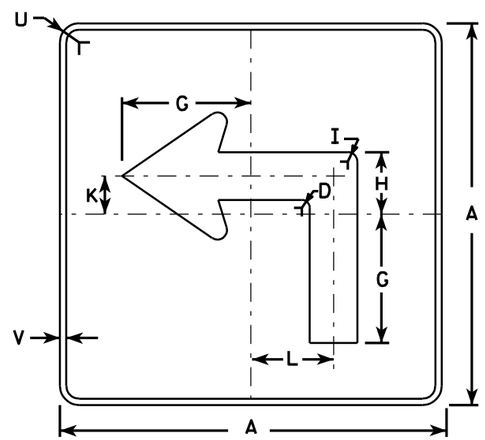

MB5-1L
MG5-1L
MN5-1L

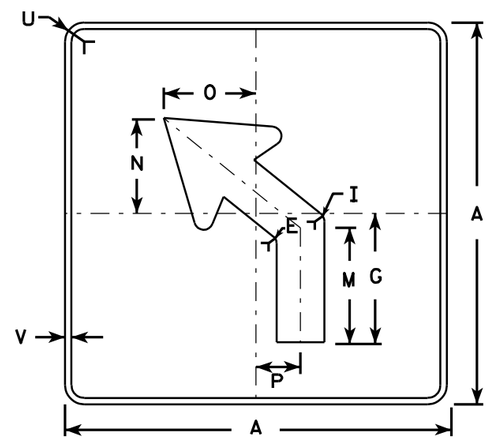

MB5-2L
MG5-2L
MN5-2L

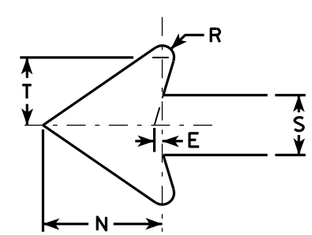

NOTES

1. Signs are Type II - See Note 4 - reference WIS DOT Standard Specification for HIGHWAY and STRUCTURE CONSTRUCTION latest edition.
2. Color:
   Background - See note 4
   Message - See note 4
3. Corners may be square or rounded when base material is plywood but borders shall be rounded as shown. When base material is metal, the corners and borders shall be rounded.
4. M5-1 and M5-2 Background - White - Type H Reflective
   Message - Black
   MB5-1 and MB5-2 Background - Blue
   Message - White - Type H Reflective
   MG5-1 and MG5-2 Background - Green
   Message - White - Type H Reflective
   MK5-1 and MK5-2 Background - Green
   Message - White Type H Reflective
   MM5-1 and MM5-2 Background - White - Type H Reflective
   Message - Green
   MN5-1 and MN5-2 Background - Brown
   Message - White - Type H Reflective
   MO5-1 and MO5-2 Background - Orange - Type F Reflective
   Message - Black
   MP5-1 and MP5-2 Background - White - Type H Reflective
   Message - Blue
   MR5-1 and MR5-2 Background - Brown
   Message - Yellow - Type H Reflective
5. M5-1R same as M5-1L except arrow points right.
6. M5-2R same as M5-2L except arrow tilts right.

SIZE	A	B	C	D	E	F	G	H	I	J	K	L	M	N	O	P	Q	R	S	T	U	V	W	X	Y	Z	Area sq. ft.
1																											
2	21		1 1/8	3/8	3/8		7	3 3/8	5/8		2 1/8	4 1/2	6 3/8	5 1/4	5	2 1/2		1/2	2 5/8	3	1 1/2	1/2					3.06
3	30		1 3/8	1/2	5/8		10 1/8	4 7/8	7/8		3	6 1/2	9 1/8	7 1/2	7 1/4	3 1/2		3/4	3 3/4	4 1/4	1 7/8	1/2					6.25
4	30		1 3/8	1/2	5/8		10 1/8	4 7/8	7/8		3	6 1/2	9 1/8	7 1/2	7 1/4	3 1/2		3/4	3 3/4	4 1/4	1 7/8	1/2					6.25
5	30		1 3/8	1/2	5/8		10 1/8	4 7/8	7/8		3	6 1/2	9 1/8	7 1/2	7 1/4	3 1/2		3/4	3 3/4	4 1/4	1 7/8	1/2					6.25

STANDARD SIGN
M5-1 & M5-2

WISCONSIN DEPT OF TRANSPORTATION

APPROVED Matthew R Rauch
for State Traffic Engineer

DATE 7/29/13 PLATE NO. M5-1.12

PROJECT NO: | HWY: | COUNTY: | SHEET NO: 378 | E

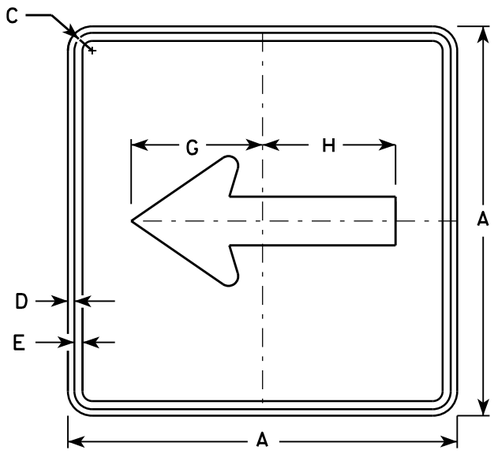

M6-1
MK6-1
MM6-1
MN6-1
MO6-1
MP6-1
MR6-1

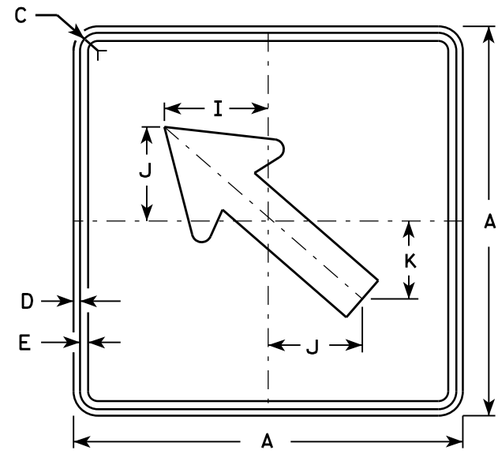

M6-2
MK6-2
MM6-2
MN6-2
MO6-2
MP6-2
MR6-2

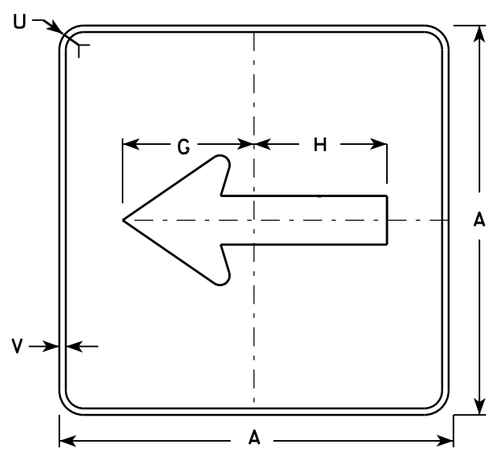

MB6-1

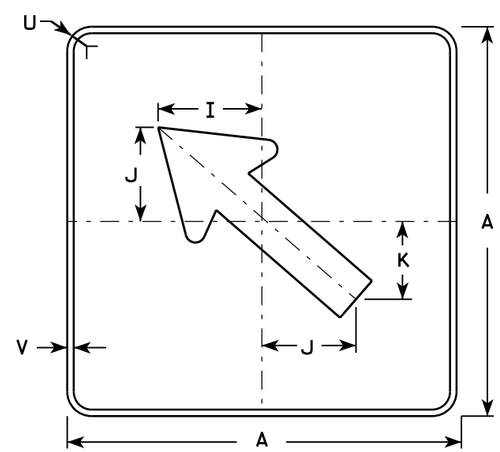

MB6-2

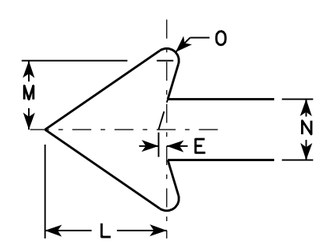

NOTES

1. Signs are Type II - Type H except as Shown
2. Color:
   Background - See note 4
   Message - See note 4
3. Corners may be square or rounded when base material is plywood but borders shall be rounded as shown. When base material is metal, the corners and borders shall be rounded.
4. M6-1 and M6-2 Background - White
   Message - Black

   MB6-1 and MB6-2 Background - Blue
   Message - White

   MG6-1 and MG6-2 Background - Green
   Message - White

   MK6-1 and MK6-2 Background - Green
   Message - White

   MM6-1 and MM6-2 Background - White
   Message - Green

   MN6-1 and MN6-2 Background - Brown
   Message - White

   MO6-1 and MO6-2 Background - Orange - Type F Reflective
   Message - Black

   MP6-1 and MP6-2 Background - White
   Message - Blue

   MR6-1 and MR6-2 Background - Brown
   Message - Yellow

SIZE	A	B	C	D	E	F	G	H	I	J	K	L	M	N	O	P	Q	R	S	T	U	V	W	X	Y	Z	Area sq. ft.
1																											
2	21		1 1/8	3/8	3/8		7 1/2	7 1/8	5 5/8	5	4 1/4	5 1/4	3	2 5/8	1/2						1 1/2	1/2					3.06
3	30		1 3/8	1/2	5/8		10 3/4	10 1/4	8	7 1/4	6	7 1/2	4 1/4	3 3/4	3/4						1 7/8	1/2					6.25
4	30		1 3/8	1/2	5/8		10 3/4	10 1/4	8	7 1/4	6	7 1/2	4 1/4	3 3/4	3/4						1 7/8	1/2					6.25
5	30		1 3/8	1/2	5/8		10 3/4	10 1/4	8	7 1/4	6	7 1/2	4 1/4	3 3/4	3/4						1 7/8	1/2					6.25

STANDARD SIGN
M6-1 & M6-2
SERIES

WISCONSIN DEPT OF TRANSPORTATION

APPROVED Matthew R Rauch
for State Traffic Engineer

DATE 7/03/14 PLATE M6-1.14

PROJECT NO: | HWY: | COUNTY: | SHEET NO: | E

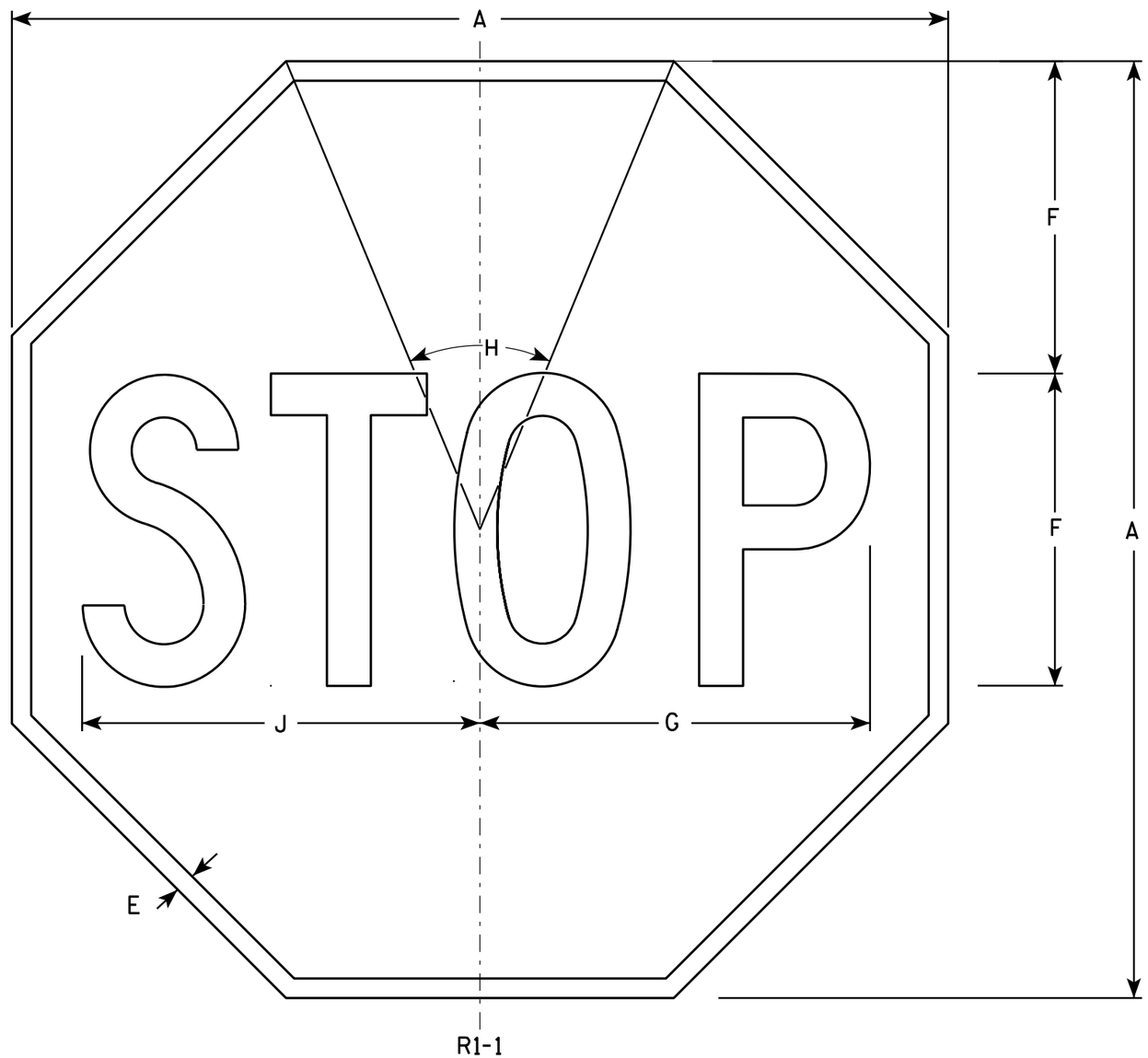

NOTES

1. Sign is Type II - Type H Reflective - reference WIS DOT Standard Specification for HIGHWAY and STRUCTURE CONSTRUCTION latest edition.
2. Color:
   Background - Red
   Message - White
3. Message Series - C

SIZE	A	B	C	D	E	F	G	H	I	J	K	L	M	N	O	P	Q	R	S	T	U	V	W	X	Y	Z	Area sq. ft.
1	24				3/8	8	10	45°		10 1/4																	3.31
2S	30				5/8	10	12 1/2	45°		12 3/4																	5.18
2M	36				3/4	12	15	45°		15 3/8																	7.46
3	36				3/4	12	15	45°		15 3/8																	7.46
4	48				1	16	20	45°		20 1/2																	13.25
5	48				1	16	20	45°		20 1/2																	13.25
6	18				3/8	6	7 3/4	45°		7 3/4																	1.86
7	12				1/4	4	5	45°		5 1/8																	0.78

STANDARD SIGN
R1-1

WISCONSIN DEPT OF TRANSPORTATION

APPROVED Matthew R Rauch
for State Traffic Engineer

DATE 12/03/10 PLATE NO. R1-1.12

PROJECT NO: | HWY: | COUNTY: | SHEET NO: 380 | E

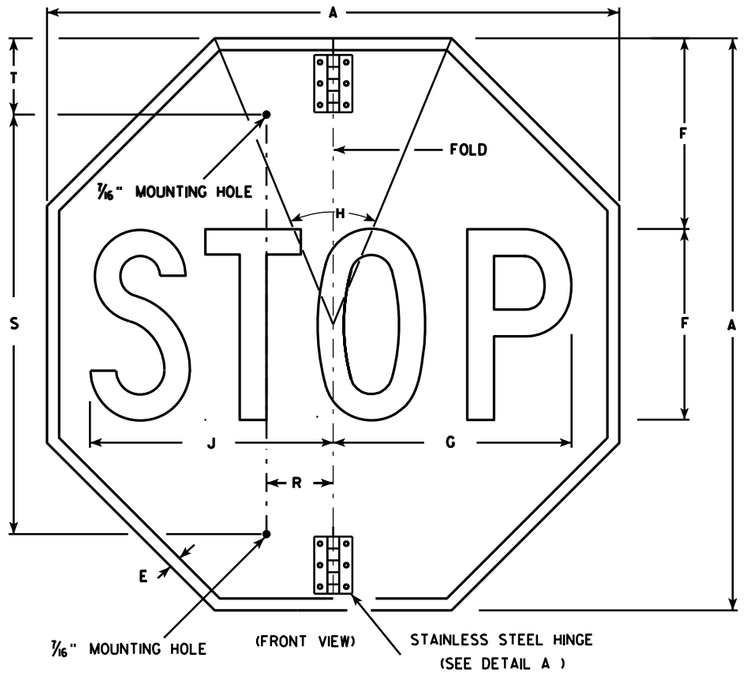

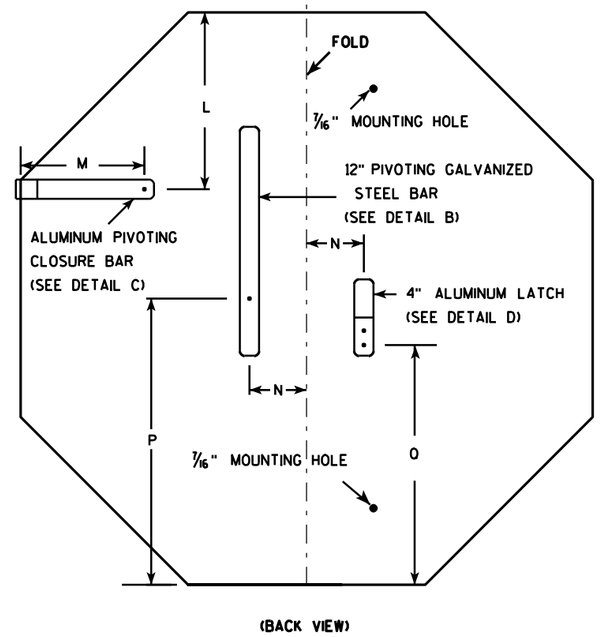

NOTES

1. Sign is Type II - Type H Reflective - reference WIS DOT Standard Specification for HIGHWAY and STRUCTURE CONSTRUCTION latest edition.
2. Color:
   Background - Red
   Message - White
3. Message Series - C
4. All hardware used on the folding STOP sign installation shall conform to 637.2.4 of the WIS DOT Standard Specification.

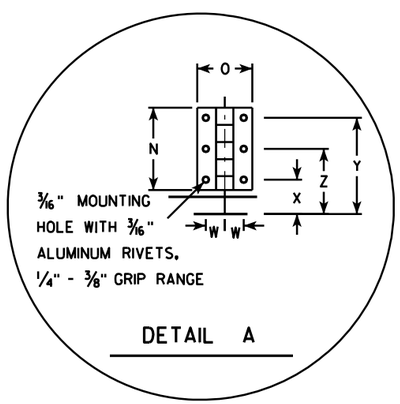

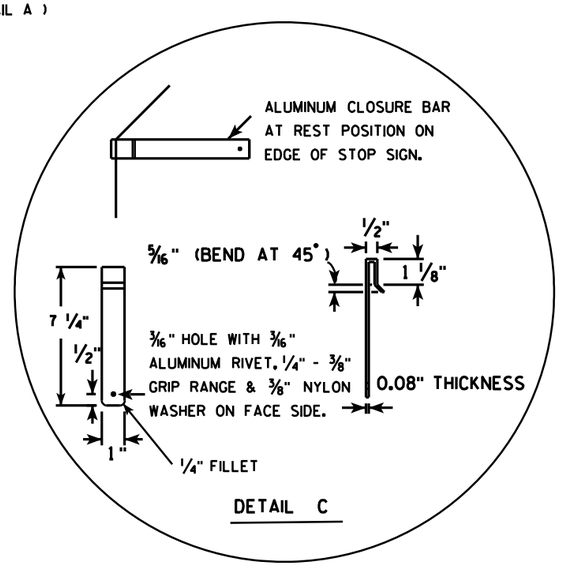

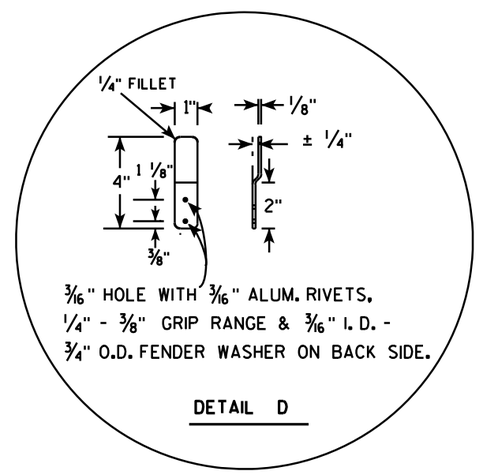

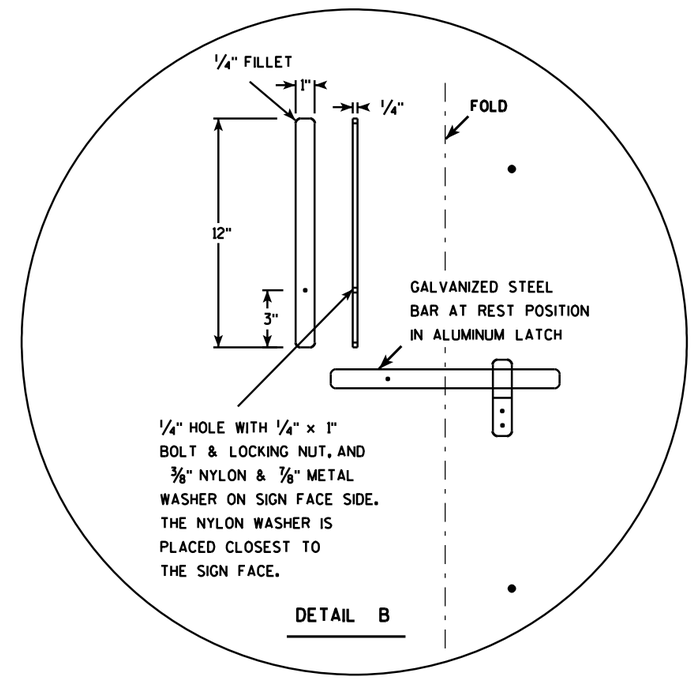

SIZE	A	B	C	D	E	F	G	H	I	J	K	L	M	N	O	P	Q	R	S	T	U	V	W	X	Y	Z	Area sq. ft.
1																											
2S	30				5/8	10	12 1/2	45		12 3/4		9 1/4	6 1/2	3	2	15	12 3/8	2 1/2	22	5			11/16	1 1/4	3 1/2	2 3/8	5.18
2M	36				3/4	12	15	45		15 3/8		11	6 1/2	3	2	18	15 3/8	2 1/2	26	5			11/16	1 1/4	3 1/2	2 3/8	7.46
3	36				3/4	12	15	45		15 3/8		11	6 1/2	3	2	18	15 3/8	2 1/2	26	5			11/16	1 1/4	3 1/2	2 3/8	7.46
4																											
5																											

STANDARD SIGN
R1-1F

WISCONSIN DEPT OF TRANSPORTATION

APPROVED Matthew R Rauch
for State Traffic Engineer

DATE 12/03/10 PLATE NO. R1-1F.3

PROJECT NO:	HWY:	COUNTY:		SHEET NO: 381	E

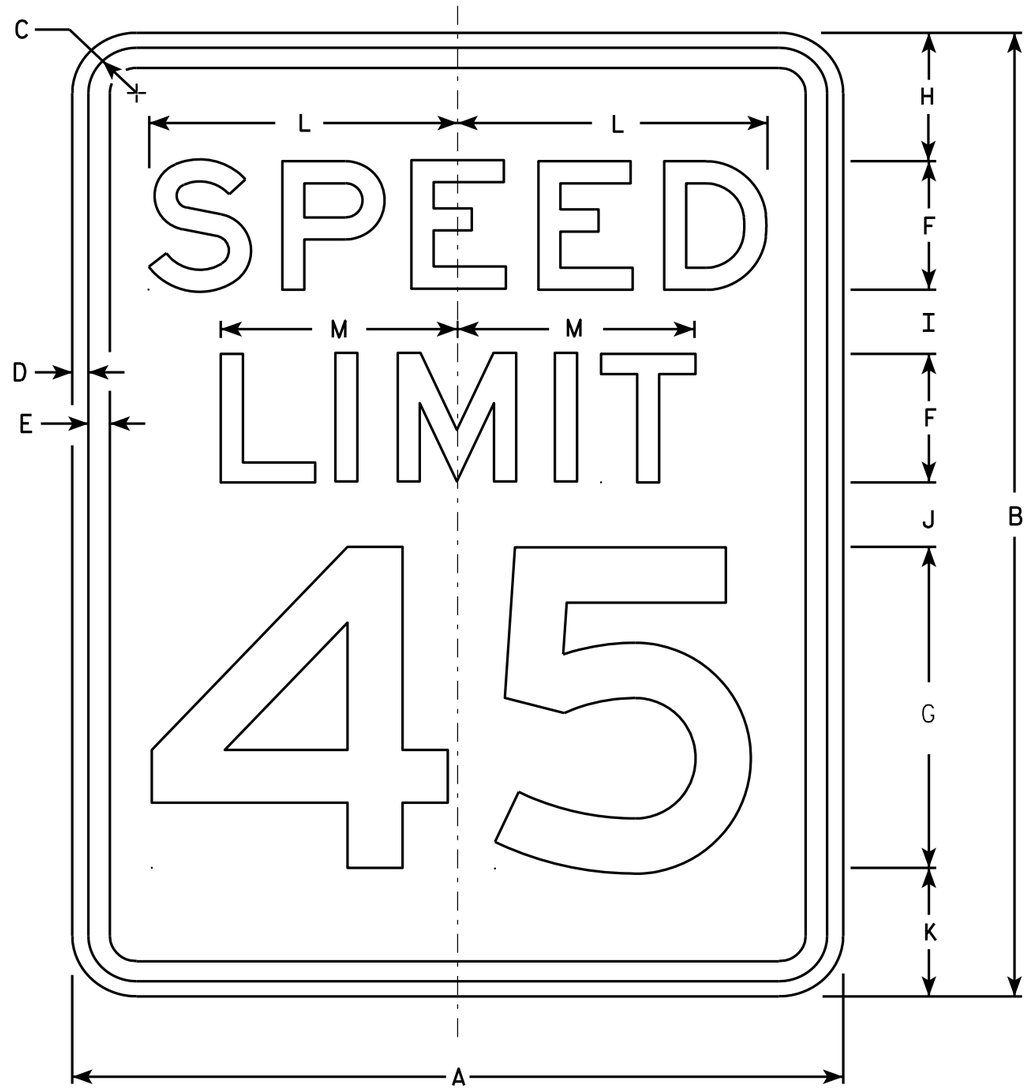

R2-1

NOTES

1. Sign is Type II - Type H Reflective - reference WIS DOT Standard Specification for HIGHWAY and STRUCTURE CONSTRUCTION latest edition.
2. Color:
   Background - White
   Message - Black
3. Message Series - E
4. Corners may be square or rounded when base material is plywood but borders shall be rounded as shown. When base material is metal, the corners and borders shall be rounded.
5. Substitute appropriate numerals and optically adjust spacing to achieve proper balance.

SIZE	A	B	C	D	E	F	G	H	I	J	K	L	M	N	O	P	Q	R	S	T	U	V	W	X	Y	Z	Area sq. ft.
1	18	24	1 1/8	3/8	1/2	3	8	3	2	2	3	7 1/4	5 1/2														3.0
2S	24	30	1 1/8	3/8	1/2	4	10	3	2 1/4	3 3/8	3 3/8	9 5/8	7 3/8														5.0
2M	30	36	1 3/8	1/2	5/8	5	12	5	2 1/2	2 1/2	4	12	9 1/4														7.5
3	36	48	1 3/8	1/2	5/8	6	14	6	5	5	6	14 3/8	11														12.0
4	36	48	1 3/8	1/2	5/8	6	14	6	5	5	6	14 3/8	11														12.0
5	48	60	2 1/4	3/4	1	8	20	6	4 1/2	6 3/4	6 3/4	19 1/4	14 5/8														20.0

STANDARD SIGN
R2-1

WISCONSIN DEPT OF TRANSPORTATION

APPROVED Matthew R Rauch
for State Traffic Engineer

DATE 5/26/10 PLATE NO. R2-1.13

PROJECT NO: | HWY: | COUNTY: | SHEET NO: 382 | E

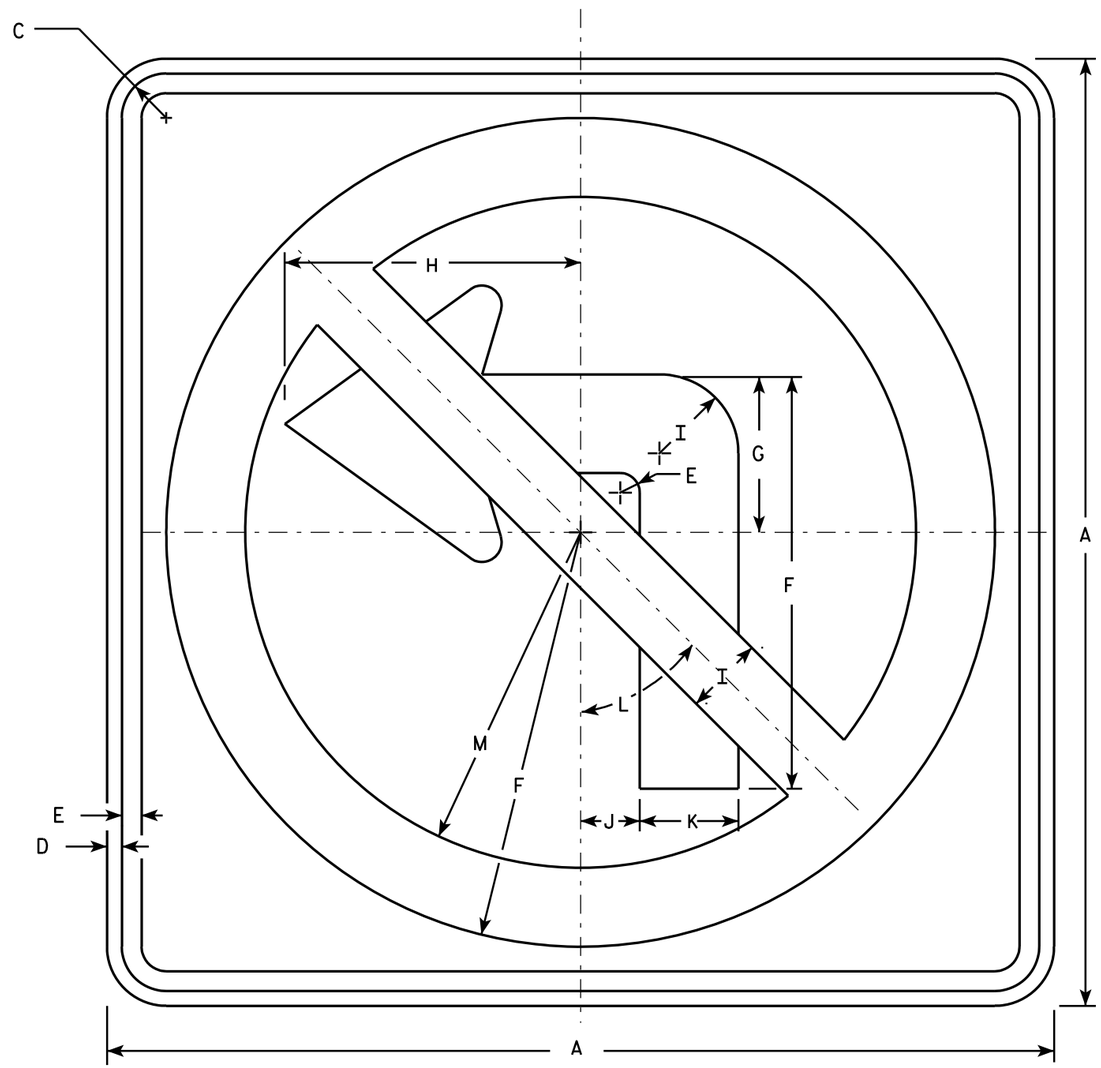

R3-2

NOTES

1. Sign is Type II - Type H Reflective - reference WIS DOT Standard Specification for HIGHWAY and STRUCTURE CONSTRUCTION latest edition.
2. Color:
   Background - White
   Message - See note 4
3. Corners may be square or rounded when base material is plywood but borders shall be rounded as shown. When base material is metal, the corners and borders shall be rounded.
4. Border & Arrow are non reflective black, the circle with diagonal bar is reflective red.

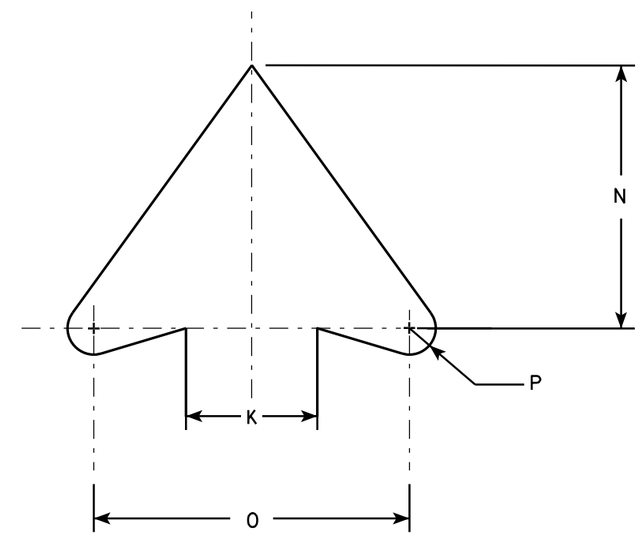

ARROW DETAIL

SIZE	A	B	C	D	E	F	G	H	I	J	K	L	M	N	O	P	Q	R	S	T	U	V	W	X	Y	Z	Area sq. ft.
1	24		1 1/8	3/8	1/2	10 1/2	4	7 1/2	2	1 1/2	2 1/2	45°	8 1/2	5	6	1/2											4.0
2S	24		1 1/8	3/8	1/2	10 1/2	4	7 1/2	2	1 1/2	2 1/2	45°	8 1/2	5	6	1/2											4.0
2M	36		1 5/8	5/8	3/4	15 3/4	6	11 1/4	3	2 1/4	3 3/4	45°	12 3/4	7 1/2	9	3/4											9.0
3	36		1 5/8	5/8	3/4	15 3/4	6	11 1/4	3	2 1/4	3 3/4	45°	12 3/4	7 1/2	9	3/4											9.0
4	36		1 5/8	5/8	3/4	15 3/4	6	11 1/4	3	2 1/4	3 3/4	45°	12 3/4	7 1/2	9	3/4											9.0
5	48		2 1/4	3/4	1	21	8	15	4	3	5	45°	17	10	12	1											16.0

STANDARD SIGN
R3-2

WISCONSIN DEPT OF TRANSPORTATION

APPROVED Matthew R Rauch
for State Traffic Engineer

DATE 12/08/10 PLATE NO. R3-2.10

PROJECT NO:	HWY:	COUNTY:		SHEET NO: 383	E

NOTES

1. Sign is Type II - Type H Reflective - reference WIS DOT Standard Specification for HIGHWAY and STRUCTURE CONSTRUCTION latest edition.
2. Color:
   Background - White
   Message - Black
3. Message Series - D
4. Corners may be square or rounded when base material is plywood but borders shall be rounded as shown. When base material is metal, the corners and borders shall be rounded.

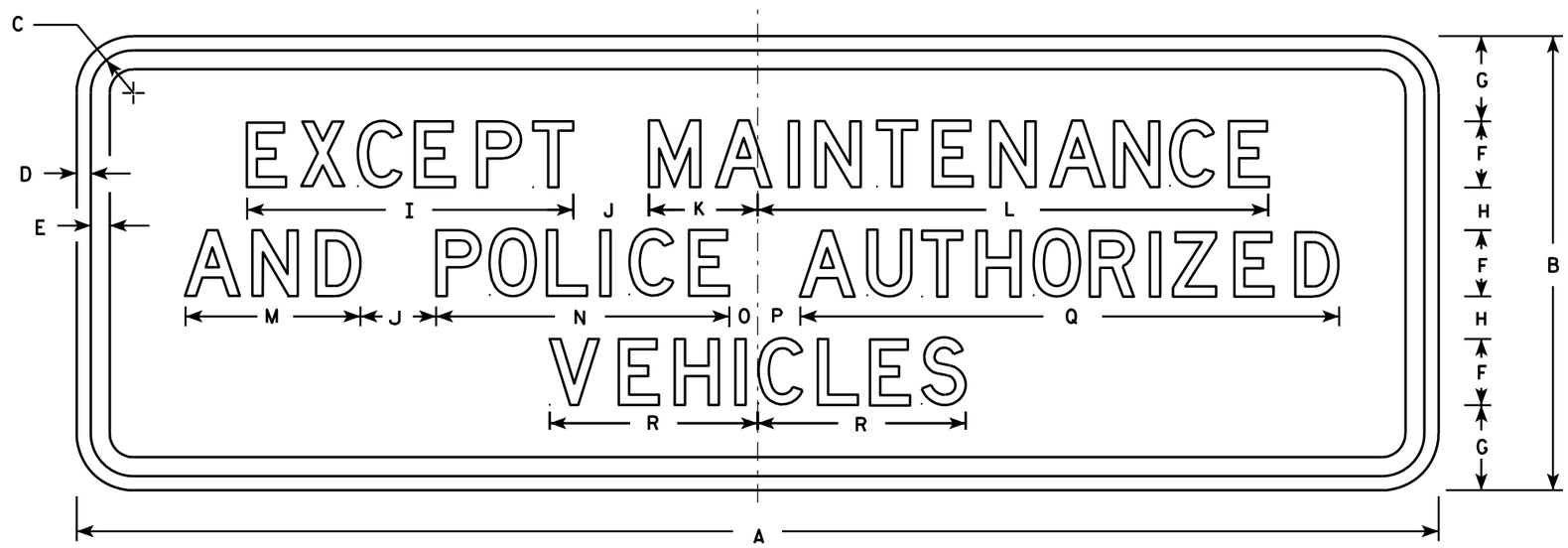

R3-4A

SIZE	A	B	C	D	E	F	G	H	I	J	K	L	M	N	O	P	Q	R	S	T	U	V	W	X	Y	Z	Area sq. ft.
1																											
2S																											
2M																											
3																											
4	36	12	1 3/8	1/2	3/8	1 3/4	2 1/4	1 1/8	8 5/8	2	2 7/8	13 1/2	4 5/8	7 3/4	3/4	1 1/8	14 1/4	5 1/2									3.0
5	36	12	1 3/8	1/2	3/8	1 3/4	2 1/4	1 1/8	8 5/8	2	2 7/8	13 1/2	4 5/8	7 3/4	3/4	1 1/8	14 1/4	5 1/2									3.0

STANDARD SIGN
R3-4A

WISCONSIN DEPT OF TRANSPORTATION

APPROVED Matthew R Rauch
for State Traffic Engineer

DATE 3/17/2011 PLATE NO. R3-4A.10

PROJECT NO:	HWY:	COUNTY:		SHEET NO: 384	E

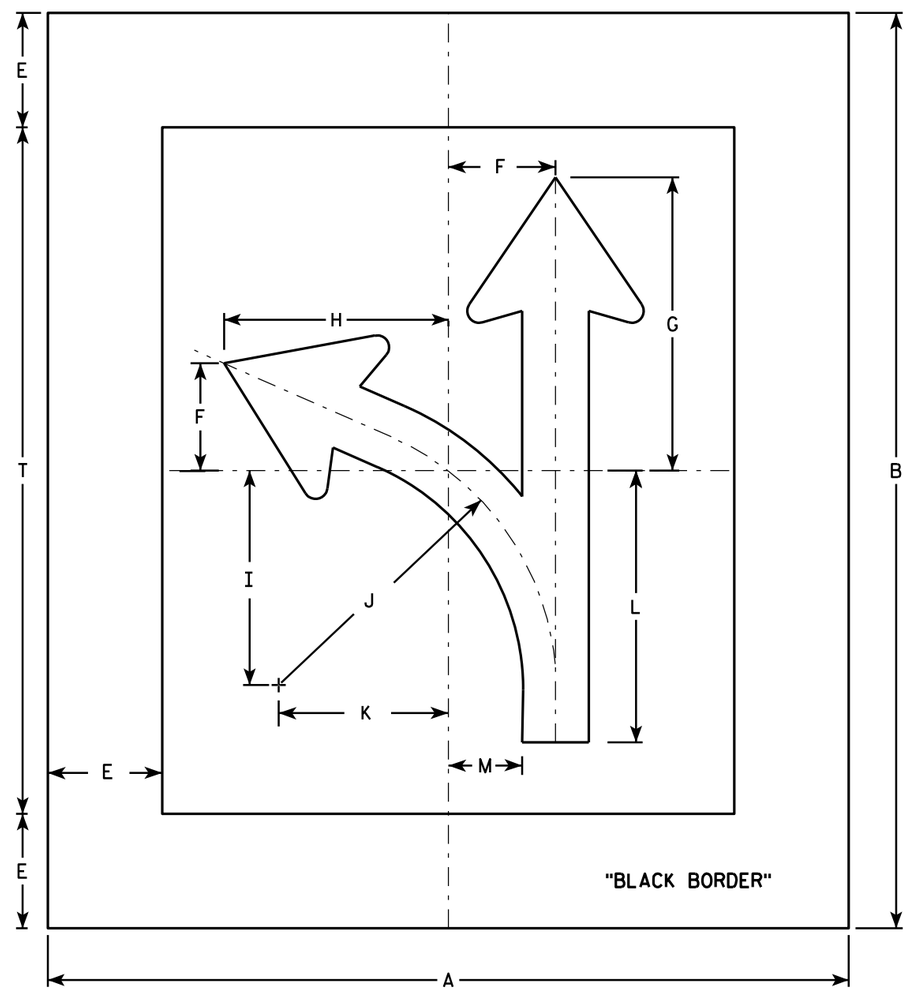

R3-6L

NOTES

1. Sign is Type II - Type H Reflective - reference WIS DOT Standard Specification for HIGHWAY and STRUCTURE CONSTRUCTION latest edition.
2. Color:
   Background - White
   Message - Black
3. Corners may be square or rounded when base material is plywood. When base material is metal, the corners shall be rounded.
4. R3-6R is the same as R3-6L except curved portion of arrow points right.
5. The 6" border is non-reflective black.

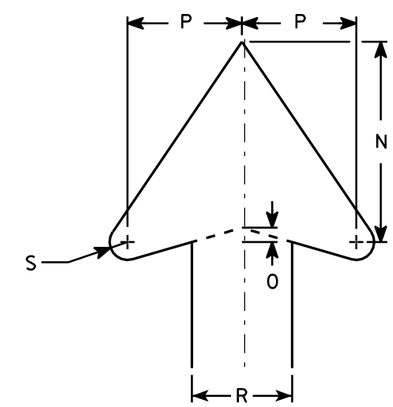

ARROW DETAIL

SIZE	A	B	C	D	E	F	G	H	I	J	K	L	M	N	O	P	Q	R	S	T	U	V	W	X	Y	Z	Area sq. ft.
1																											
2S	42	48			6	5 5/8	15 3/8	11 3/4	11 1/4	14 1/2	8 7/8	14 1/4	3 7/8	7	1/2	4		3 1/2	5/8	36							14.0
2M	42	48			6	5 5/8	15 3/8	11 3/4	11 1/4	14 1/2	8 7/8	14 1/4	3 7/8	7	1/2	4		3 1/2	5/8	36							14.0
3																											
4																											
5																											

STANDARD SIGN
R3-6

WISCONSIN DEPT OF TRANSPORTATION

APPROVED Matthew R Rauch
for State Traffic Engineer

DATE 3/17/2011 PLATE NO. R3-6.5

PROJECT NO: HWY: COUNTY: SHEET NO: 385 E

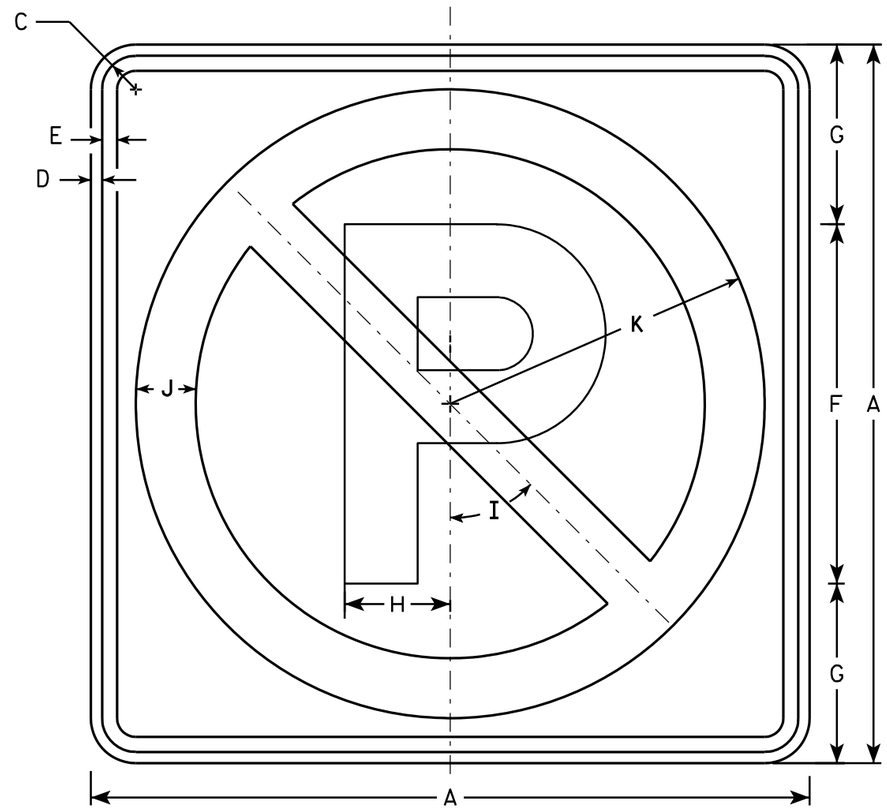

R3-8A

NOTES

1. Sign is Type II - Type H Reflective - reference WIS DOT Standard Specification for HIGHWAY and STRUCTURE CONSTRUCTION latest edition.
2. Color:
   Background - White
   Message - See note 4
3. Corners may be square or rounded when base material is plywood but borders shall be rounded as shown. When base material is metal, the corners and borders shall be rounded.
4. Border & Letter P are non reflective black, the circle with diagonal bar is reflective red.

SIZE	A	B	C	D	E	F	G	H	I	J	K	L	M	N	O	P	Q	R	S	T	U	V	W	X	Y	Z	Area sq. ft.
1																											
2S	24		1 1/8	3/8	1/2	12	6	3 1/2	45°	2	10 1/2																4.0
2M	24		1 1/8	3/8	1/2	12	6	3 1/2	45°	2	10 1/2																4.0
3																											
4																											
5																											

STANDARD SIGN
R3-8A

WISCONSIN DEPT OF TRANSPORTATION

APPROVED Matthew R Rauch
for State Traffic Engineer

DATE 8/01/12 PLATE NO. R3-8A.1

PROJECT NO: | HWY: | COUNTY: | SHEET NO: 386 | E

R3-17

NOTES

1. Sign is Type II - Type H Reflective - reference WIS DOT Standard Specification for HIGHWAY and STRUCTURE CONSTRUCTION latest edition.
2. Color:
   Background - AS SHOWN
   Message - BLACK
3. Message Series - C or as noted on the Signs.
4. Corners may be square or rounded when base material is plywood but borders shall be rounded as shown. When base material is metal, the corners and borders shall be rounded.

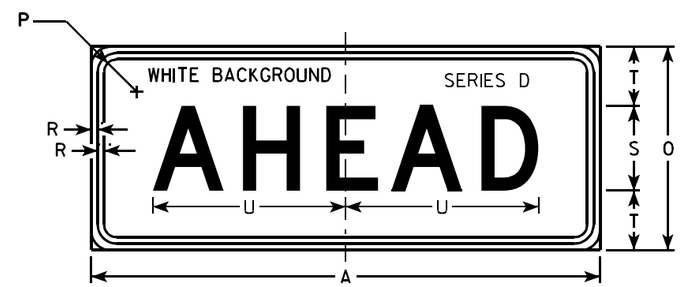

R3-17ap

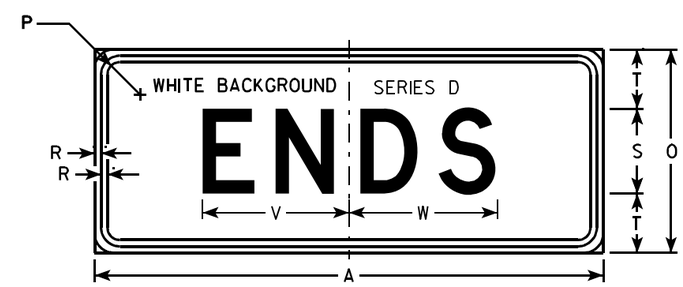

R3-17bp

SIZE	A	B	C	D	E	F	G	H	I	J	K	L	M	N	O	P	Q	R	S	T	U	V	W	X	Y	Z	R3-17 Area sq. ft.	R3-17ap Area sq. ft.	R3-17bp Area sq. ft.
1																													
2S	30	24	1 1/8	3/8	1/2	2	4	4 1/8	7 7/8	6 3/8	9 1/2	2 5/8	7/8	13	12	1 1/8	3 3/8	3/8	5	3 1/2	11 3/8	8 5/8	8 3/4	2 3/8	15 5/8	8	5.0	2.5	2.5
2M	30	24	1 1/8	3/8	1/2	2	4	4 1/8	7 7/8	6 3/8	9 1/2	2 5/8	7/8	13	12	1 1/8	3 3/8	3/8	5	3 1/2	11 3/8	8 5/8	8 3/4	2 3/8	15 5/8	8	5.0	2.5	2.5
3																													
4																													
5																													

STANDARD SIGN
R3-17 & R3-17a&bp

WISCONSIN DEPT OF TRANSPORTATION

APPROVED Matthew R Rauch
for State Traffic Engineer

DATE 4/12/2011 PLATE NO. R3-17.2

PROJECT NO:

SHEET NO: 387 E

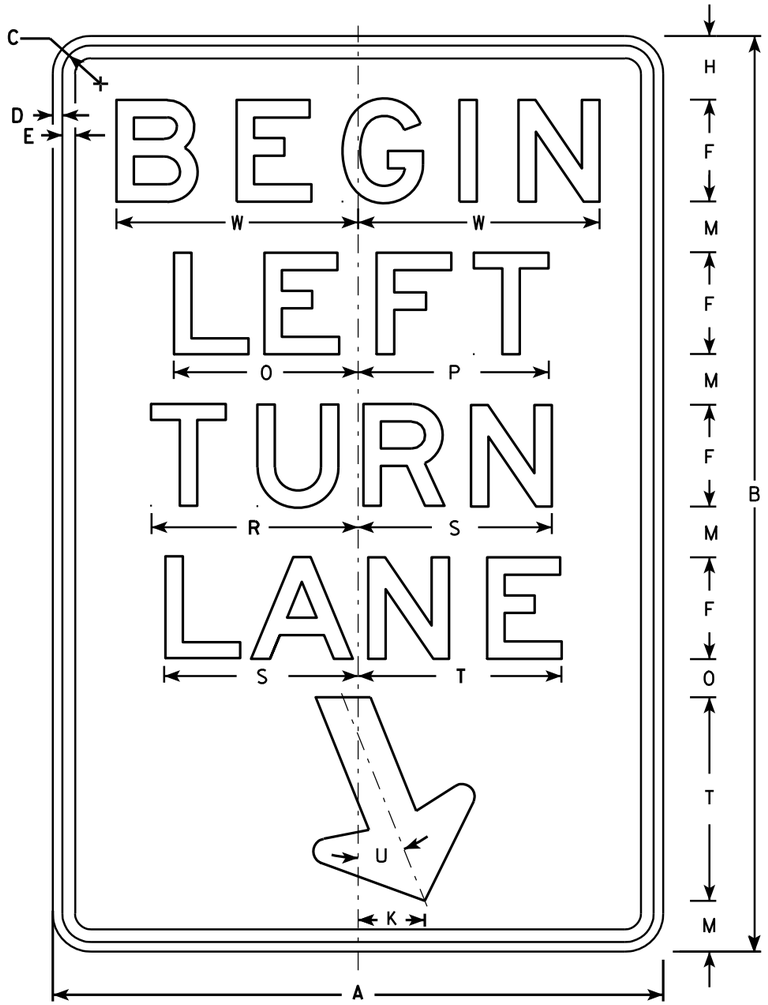

R3-20L

NOTES

1. Sign is Type II - Type H Reflective - reference WIS DOT Standard Specification for HIGHWAY and STRUCTURE CONSTRUCTION latest edition.
2. Color:
   Background - White
   Message - Black
3. Message Series - E
4. Corners may be square or rounded when base material is plywood but borders shall be rounded as shown. When base material is metal, the corners and borders shall be rounded.

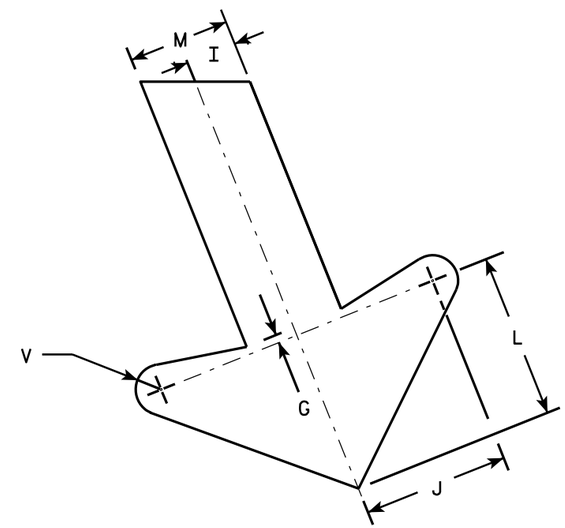

ARROW DETAIL

SIZE	A	B	C	D	E	F	G	H	I	J	K	L	M	N	O	P	Q	R	S	T	U	V	W	X	Y	Z	Area sq. ft.
1																											
2S	24	36	1 1/8	3/8	1/2	4	1/4	2 1/2	1	2 7/8	2 5/8	3 1/4	2	1 1/2	7 1/4	7 1/2		8 1/8	7 5/8	8	22°	1/2	9 1/2				6.0
2M	24	36	1 1/8	3/8	1/2	4	1/4	2 1/2	1	2 7/8	2 5/8	3 1/4	2	1 1/2	7 1/4	7 1/2		8 1/8	7 5/8	8	22°	1/2	9 1/2				6.0
3	36	54	1 3/4	1/2	5/8	6	3/8	3 3/4	1 1/2	4 1/4	4	4 7/8	3	2 1/4	10 7/8	11 1/4		12 1/4	11 1/2	12	22°	3/4	13 1/4				13.5
4																											
5																											

STANDARD SIGN
R3-20L

WISCONSIN DEPT OF TRANSPORTATION

APPROVED Matthew R Rauch
for State Traffic Engineer

DATE 10/18/10 PLATE NO. R3-20L.7

PROJECT NO: | HWY: | COUNTY: | SHEET NO: 388 | E

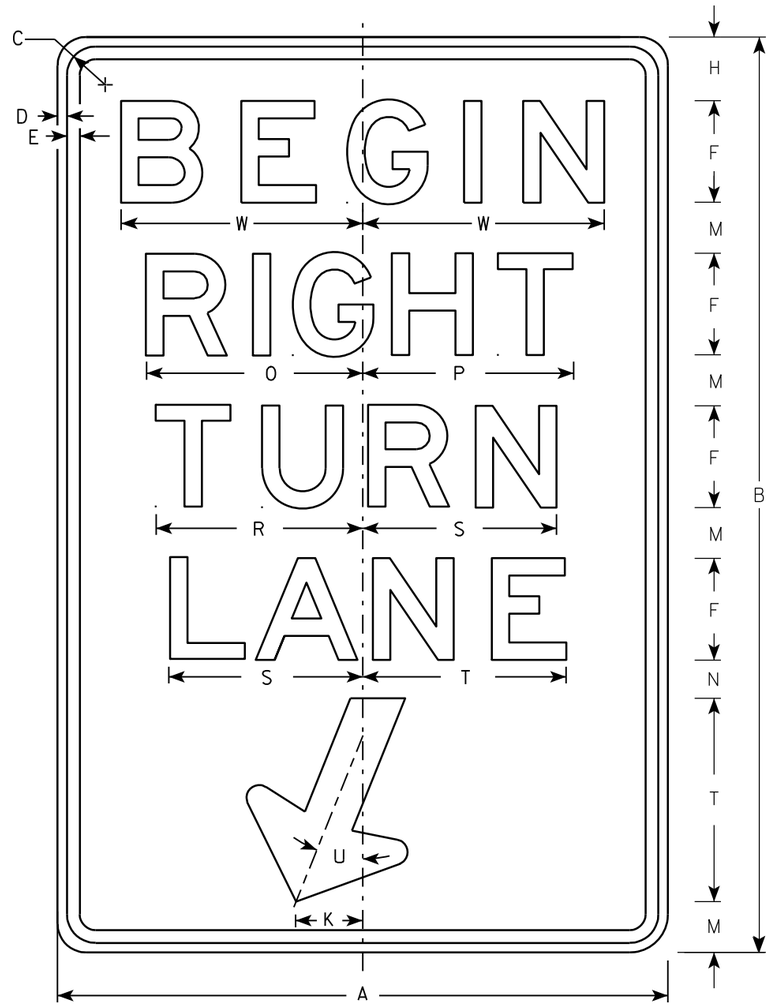

R3-20R

NOTES

1. Sign is Type II - Type H Reflective - reference WIS DOT Standard Specification for HIGHWAY and STRUCTURE CONSTRUCTION latest edition.
2. Color:
   Background - White
   Message - Black
3. Message Series - E
4. Corners may be square or rounded when base material is plywood but borders shall be rounded as shown. When base material is metal, the corners and borders shall be rounded.

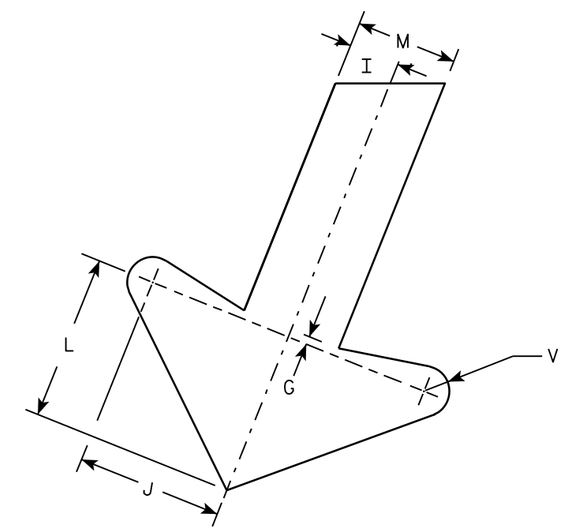

ARROW DETAIL

SIZE	A	B	C	D	E	F	G	H	I	J	K	L	M	N	O	P	Q	R	S	T	U	V	W	X	Y	Z	Area sq. ft.
1																											
2S	24	36	1 1/8	3/8	1/2	4	1/4	2 1/2	1	2 7/8	2 5/8	3 1/4	2	1 1/2	8 1/2	8 1/4		8 1/8	7 5/8	8	22°	1/2	9 1/2				6.0
2M	24	36	1 1/8	3/8	1/2	4	1/4	2 1/2	1	2 7/8	2 5/8	3 1/4	2	1 1/2	8 1/2	8 1/4		8 1/8	7 5/8	8	22°	1/2	9 1/2				6.0
3	36	54	1 3/4	1/2	5/8	6	3/8	3 3/4	1 1/2	4 1/4	4	4 7/8	3	2 1/4	12 3/4	12 1/2		12 1/4	11 1/2	12	22°	3/4	13 1/4				13.5
4																											
5																											

STANDARD SIGN
R3-20R

WISCONSIN DEPT OF TRANSPORTATION

APPROVED Matthew R Rauch
for State Traffic Engineer

DATE 10/18/10 PLATE NO. R3-20R.6

PROJECT NO:	HWY:	COUNTY:		SHEET NO: 389	E

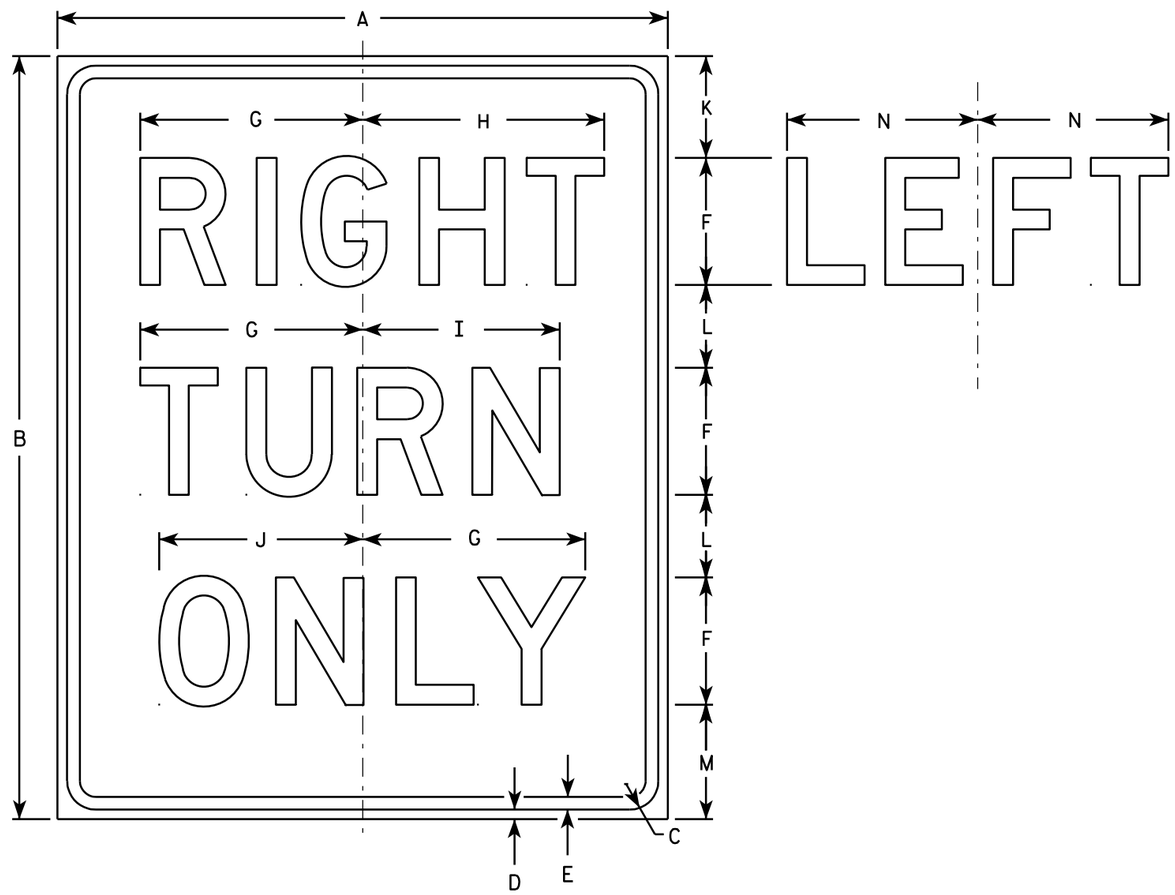

R3-53R

NOTES

1. Sign is Type II - Type H Reflective - reference WIS DOT Standard Specification for HIGHWAY and STRUCTURE CONSTRUCTION latest edition.
2. Color:
   Background - White
   Message - Black
3. Message Series - D
4. Corners may be square or rounded when base material is plywood but borders shall be rounded as shown. When base material is metal, the corners and borders shall be rounded.
5. R3-53L same as R3-53R except LEFT is substituted for RIGHT.

SIZE	A	B	C	D	E	F	G	H	I	J	K	L	M	N	O	P	Q	R	S	T	U	V	W	X	Y	Z	Area sq. ft.
1																											
2S	24	30	1 1/8	3/8	1/2	5	8 3/4	9 1/2	7 3/4	8	4	3 1/4	4 1/2	7 1/2													5.0
2M	24	30	1 1/8	3/8	1/2	5	8 3/4	9 1/2	7 3/4	8	4	3 1/4	4 1/2	7 1/2													5.0
3	24	30	1 1/8	3/8	1/2	5	8 3/4	9 1/2	7 3/4	8	4	3 1/4	4 1/2	7 1/2													5.0
4																											
5																											

STANDARD SIGN
R3-53

WISCONSIN DEPT OF TRANSPORTATION

APPROVED Matthew R Rauch
for State Traffic Engineer

DATE 3/24/2011 PLATE NO. R3-53.8

PROJECT NO: | HWY: | COUNTY: | SHEET NO: 390 | E

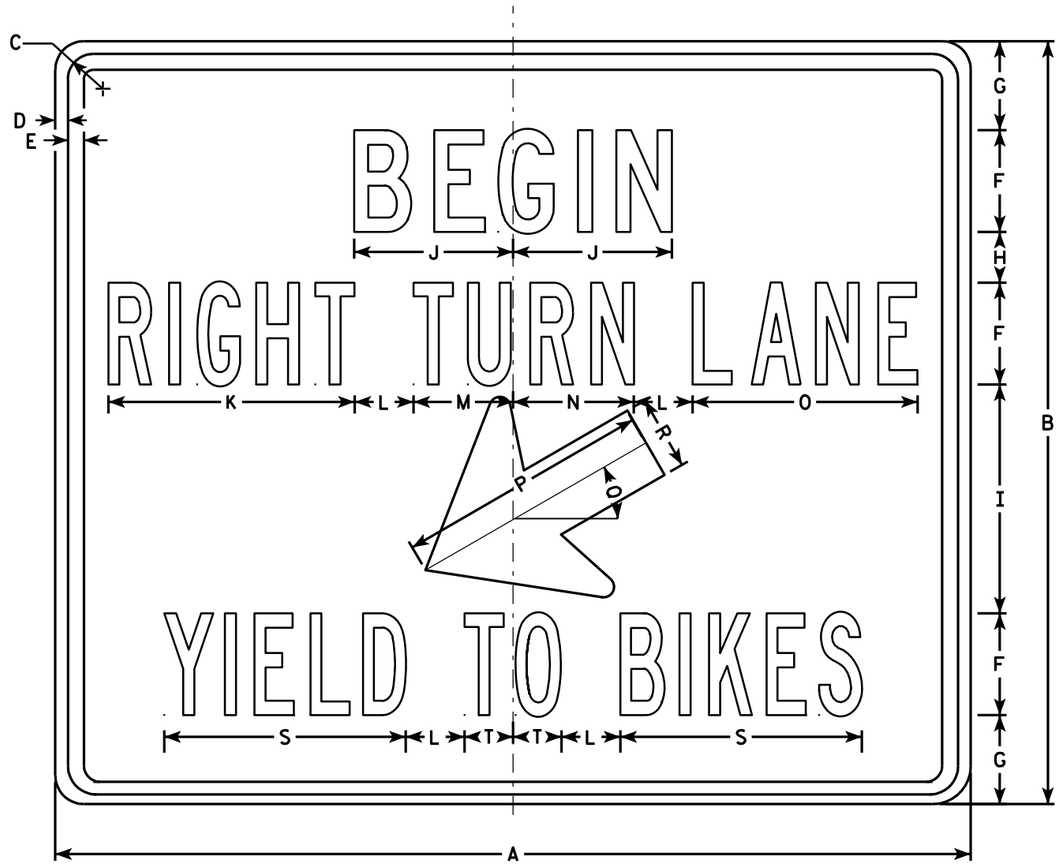

R4-4

NOTES

1. Sign is Type II - Type H Reflective - reference WIS DOT Standard Specification for HIGHWAY and STRUCTURE CONSTRUCTION latest edition.
2. Color:
   Background - White
   Message - Black
3. Message Series - See Note 5
4. Corners may be square or rounded when base material is plywood but borders shall be rounded as shown. When base material is metal, the corners and borders shall be rounded.
5. Line 1 is Series C
   Lines 2 & 3 are Series B

SIZE	A	B	C	D	E	F	G	H	I	J	K	L	M	N	O	P	Q	R	S	T	U	V	W	X	Y	Z	Area sq. ft.
1																											
2S	36	30	1 3/8	1/2	5/8	4	3 1/2	2	9	6 1/4	9 3/4	2 3/8	3 7/8	4 3/4	8 7/8	10	30°	2 7/8	9 1/2	1 7/8							7.5
2M	36	30	1 3/8	1/2	5/8	4	3 1/2	2	9	6 1/4	9 3/4	2 3/8	3 7/8	4 3/4	8 7/8	10	30°	2 7/8	9 1/2	1 7/8							7.5
3																											
4																											
5																											

STANDARD SIGN
R4-4

WISCONSIN DEPT OF TRANSPORTATION

APPROVED Matthew R Rauch
for State Traffic Engineer

DATE 3/25/2011 PLATE NO. R4-4.2

PROJECT NO:	HWY:	COUNTY:		SHEET NO: 391	E

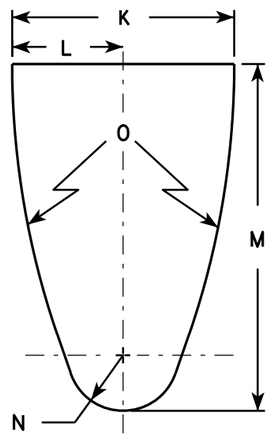

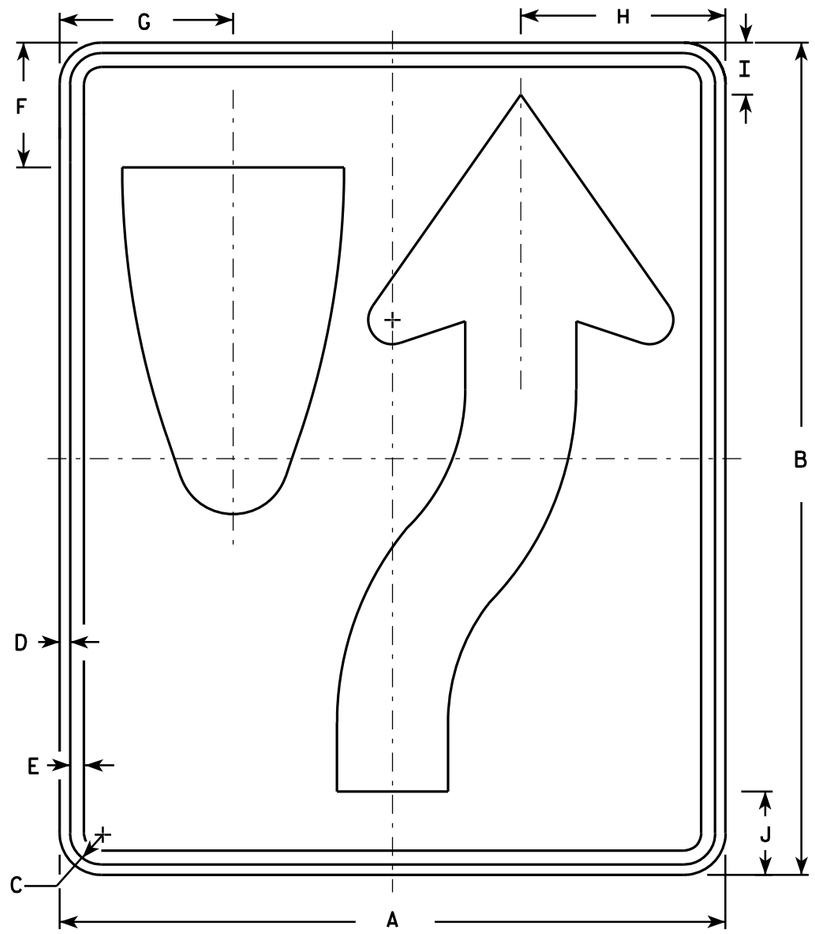

R4-7

NOTES

1. Sign is Type II - Type H Reflective - reference WIS DOT Standard Specification for HIGHWAY and STRUCTURE CONSTRUCTION latest edition. material is plywood but borders shall be rounded
2. Color:
   Background - White
   Message - Black
3. Corners may be square or rounded when base as shown. When base material is metal, the corners and borders shall be rounded.
4. R4-8 is the same as R4-7 except Legend is reversed.

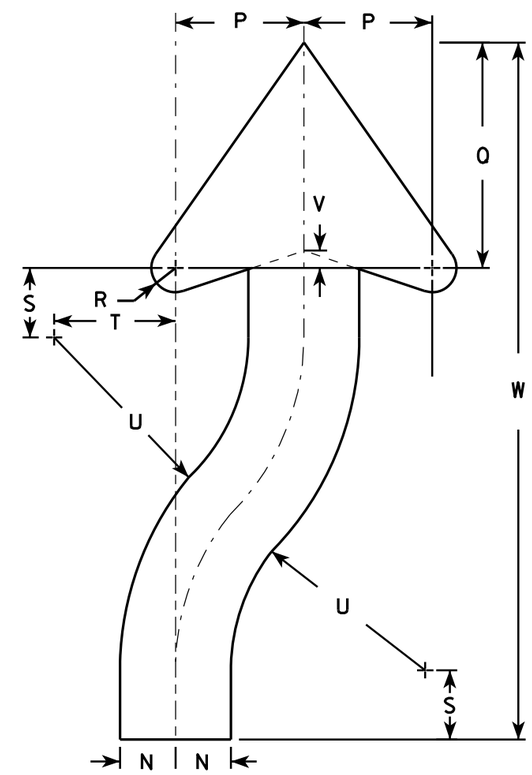

ARROW DETAIL

SIZE	A	B	C	D	E	F	G	H	I	J	K	L	M	N	O	P	Q	R	S	T	U	V	W	X	Y	Z	Area sq. ft.
1	18	24	1 1/8	3/8	1/2	3 3/8	4 3/4	5 1/2	1 3/8	2 1/4	6	3	9 3/8	1 1/2	22 1/2	3 1/2	6 1/8	5/8	1 7/8	3 1/4	6 3/4	1/2	20 3/8				3.0
2S	24	30	1 1/8	3/8	1/2	4 1/2	6 1/4	7 3/8	1 7/8	3	8	4	12 1/2	2	30	4 5/8	8 1/8	7/8	2 1/2	4 3/8	9	5/8	25 1/8				5.0
2M	24	30	1 1/8	3/8	1/2	4 1/2	6 1/4	7 3/8	1 7/8	3	8	4	12 1/2	2	30	4 5/8	8 1/8	7/8	2 1/2	4 3/8	9	5/8	25 1/8				5.0
3	36	48	1 3/4	1/2	5/8	6 3/4	9 3/8	11 1/8	2 7/8	4 1/2	12	6	18 3/4	3	45	6 7/8	12 1/4	1 1/4	3 3/4	6 5/8	13 1/2	1	40 3/4				12.0
4	36	48	1 3/4	1/2	5/8	6 3/4	9 3/8	11 1/8	2 7/8	4 1/2	12	6	18 3/4	3	45	6 7/8	12 1/4	1 1/4	3 3/4	6 5/8	13 1/2	1	40 3/4				12.0
5	48	60	2 1/4	3/4	1	9	12 1/2	14 3/4	3 3/4	6	16	8	25	4	60	9 1/4	16 1/4	1 5/8	5	8 3/4	18	1 1/4	50 1/4				20.0

STANDARD SIGN
R4-7 & R4-8

WISCONSIN DEPT OF TRANSPORTATION

APPROVED Matthew R Rauch for State Traffic Engineer

DATE 3/25/2011 PLATE NO. R4-7.8

PROJECT NO:	HWY:	COUNTY:		SHEET NO: 392	E

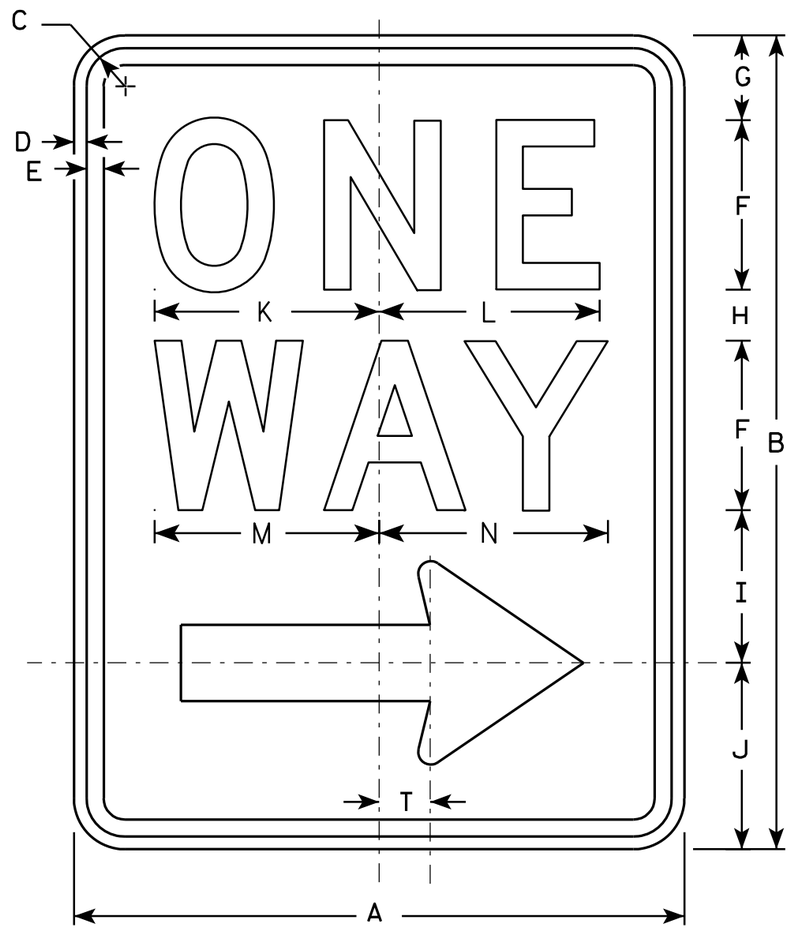

R6-2R

NOTES

1. Sign is Type II - Type H Reflective - reference WIS DOT Standard Specification for HIGHWAY and STRUCTURE CONSTRUCTION latest edition.
2. Color:
   Background - White
   Message - Black
3. Message Series - D
4. Corners may be square or rounded when base material is plywood but borders shall be rounded as shown. When base material is metal, the corners and borders shall be rounded.
5. R6-2L same as R6-2R except arrow points to the left.

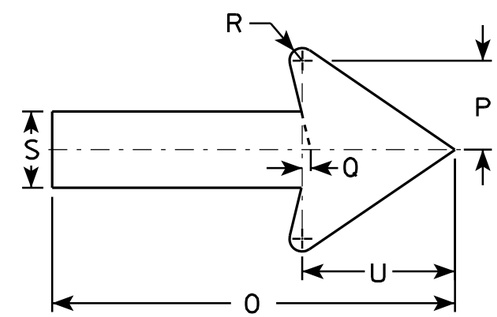

SIZE	A	B	C	D	E	F	G	H	I	J	K	L	M	N	O	P	Q	R	S	T	U	V	W	X	Y	Z
1	18	24	1 1/8	3/8	1/2	5	2 1/2	1 1/2	4 1/2	5 1/2	6 5/8	6 1/2	6 5/8	6 3/4	11 7/8	2 5/8	1/4	3/8	2 1/4	1 1/2	4 1/2					
2S	24	30	1 1/8	3/8	1/2	6	3	2 1/2	5 1/2	7	8 1/8	8 1/8	8 1/2	8 5/8	16	3 1/2	3/8	1/2	3	2	6					
2M	30	36	1 3/8	1/2	5/8	8	2 1/2	2 5/8	6 7/8	8	10 1/2	10 1/2	11 1/4	11 1/4	20	4 3/8	1/2	5/8	3 3/4	2 1/2	7 1/2					
3	36	48	1 7/8	1/2	5/8	10	5 1/4	3 1/4	9	10 1/2	12 3/4	12 3/4	13 1/4	13 1/2	24	5 5/8	1/2	3/4	4 3/4	3	9					
4	36	48	1 7/8	1/2	5/8	10	5 1/4	3 1/4	9	10 1/2	12 3/4	12 3/4	13 1/4	13 1/2	24	5 5/8	1/2	3/4	4 3/4	3	9					
5																										

STANDARD SIGN
R6-2 R&L

WISCONSIN DEPT OF TRANSPORTATION

APPROVED Matthew R Rauch
for State Traffic Engineer

DATE 11/2/10 PLATE NO. R6-2.8

PROJECT NO:	HWY:	COUNTY:		SHEET NO: 393	E

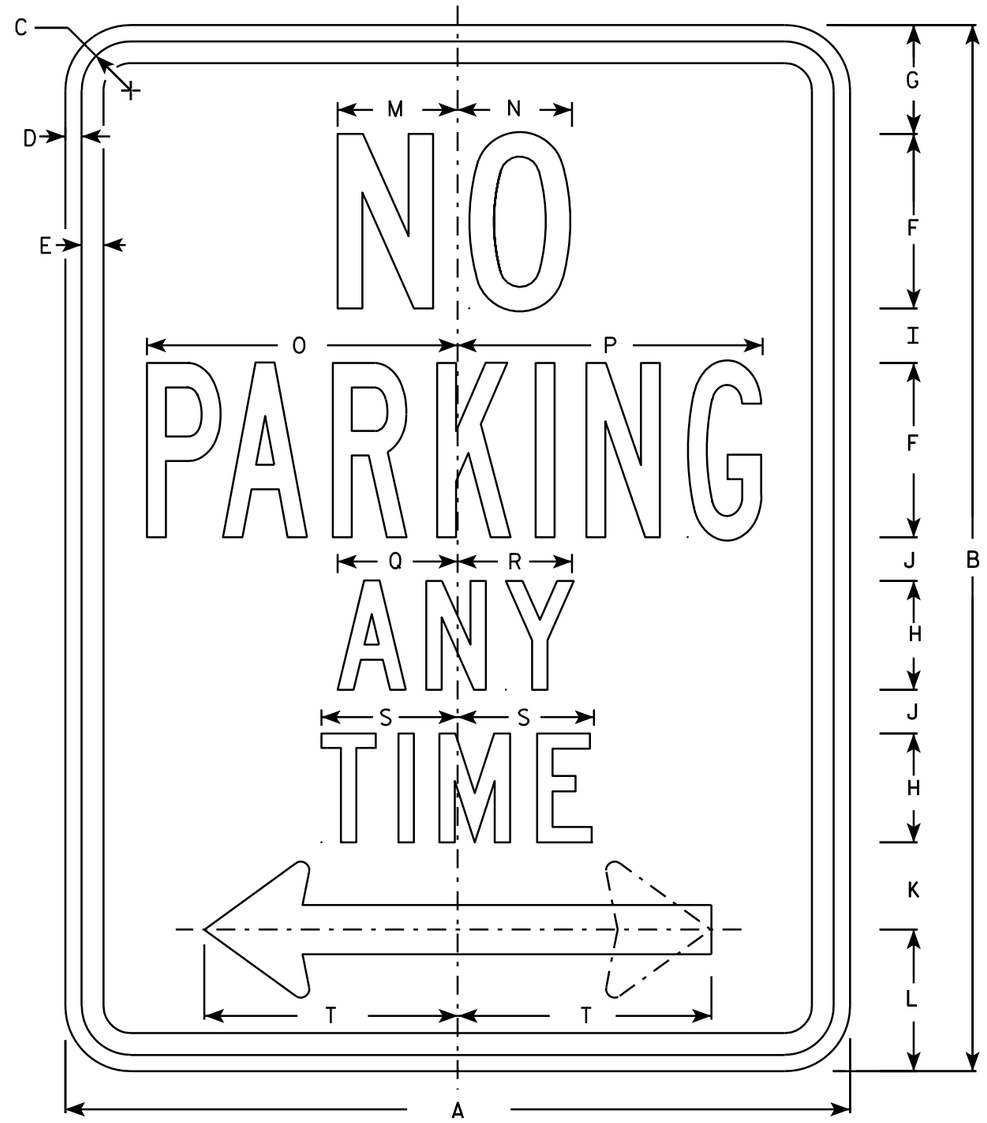

R7-1

NOTES

1. Sign is Type II - Type H Reflective - reference WIS DOT Standard Specification for HIGHWAY and STRUCTURE CONSTRUCTION latest edition.
2. Color:
   Background - White
   Message - Red
3. Message Series - See Note 5
4. Corners may be square or rounded when base material is plywood but borders shall be rounded as shown. When base material is metal, the corners and borders shall be rounded.
5. Lines 1, 3 and 4 are series C, line 2 is series B.
6. R7-1D (double arrow)
   R7-1L (left arrow)
   R7-1R (right arrow)

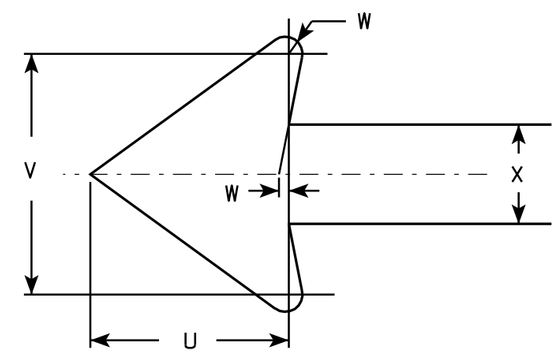

SIZE	A	B	C	D	E	F	G	H	I	J	K	L	M	N	O	P	Q	R	S	T	U	V	W	X	Y	Z	Area sq. ft.
1	12	18	1 1/8	3/8	3/8	3	1 7/8	2	7/8	5/8	1 1/2	2 1/2	2	2	4 7/8	4 7/8	2 1/4	2 1/8	2 1/2	3 7/8	1 1/2	1 3/4	1/8	3/4			1.5
2S	18	24	1 1/8	3/8	1/2	4	2 1/2	2 1/2	1 1/4	1	2	3 1/4	2 3/4	2 5/8	7 1/8	7	2 3/4	2 5/8	3 1/8	5 7/8	2 1/4	2 5/8	1/4	1 1/8			3.0
2M	24	30	1 1/8	3/8	1/2	5	3	3	2	1 1/4	2 1/2	4	3 1/4	3 3/8	9 1/4	9 1/4	3 1/4	3 1/4	3 3/4	7 3/4	3	3 1/2	1/4	1 1/2			5.0
3	24	30	1 1/8	3/8	1/2	5	3	3	2	1 1/4	2 1/2	4	3 1/4	3 3/8	9 1/4	9 1/4	3 1/4	3 1/4	3 3/4	7 3/4	3	3 1/2	1/4	1 1/2			5.0
4																											
5																											

STANDARD SIGN
R7-1

WISCONSIN DEPT OF TRANSPORTATION

APPROVED Matthew R Rauch
for State Traffic Engineer

DATE 3/31/2011 PLATE NO. R7-1.9

PROJECT NO:	HWY:	COUNTY:		SHEET NO: 394	E

R9-9

NOTES

1. Sign is Type II - Type H Reflective - reference WIS DOT Standard Specification for HIGHWAY and STRUCTURE CONSTRUCTION latest edition.
2. Color:
   Background - White
   Message - Black
3. Message Series - C
4. Corners may be square or rounded when base material is plywood but borders shall be rounded as shown. When base material is metal, the corners and borders shall be rounded.

SIZE	A	B	C	D	E	F	G	H	I	J	K	L	M	N	O	P	Q	R	S	T	U	V	W	X	Y	Z	Area sq. ft.
1																											
2S	30	18	1 3/4	1/2	1/2	4	3 1/2	3	10 3/4	8 1/8																	3.75
2M	30	18	1 3/4	1/2	1/2	4	3 1/2	3	10 3/4	8 1/8																	3.75
3																											
4																											
5																											

STANDARD SIGN
R9-9

WISCONSIN DEPT OF TRANSPORTATION

APPROVED Matthew R Rauch
for State Traffic Engineer

DATE 4/1/2011 PLATE NO. R9-9.5

PROJECT NO: | HWY: | COUNTY: | SHEET NO: 395 | E

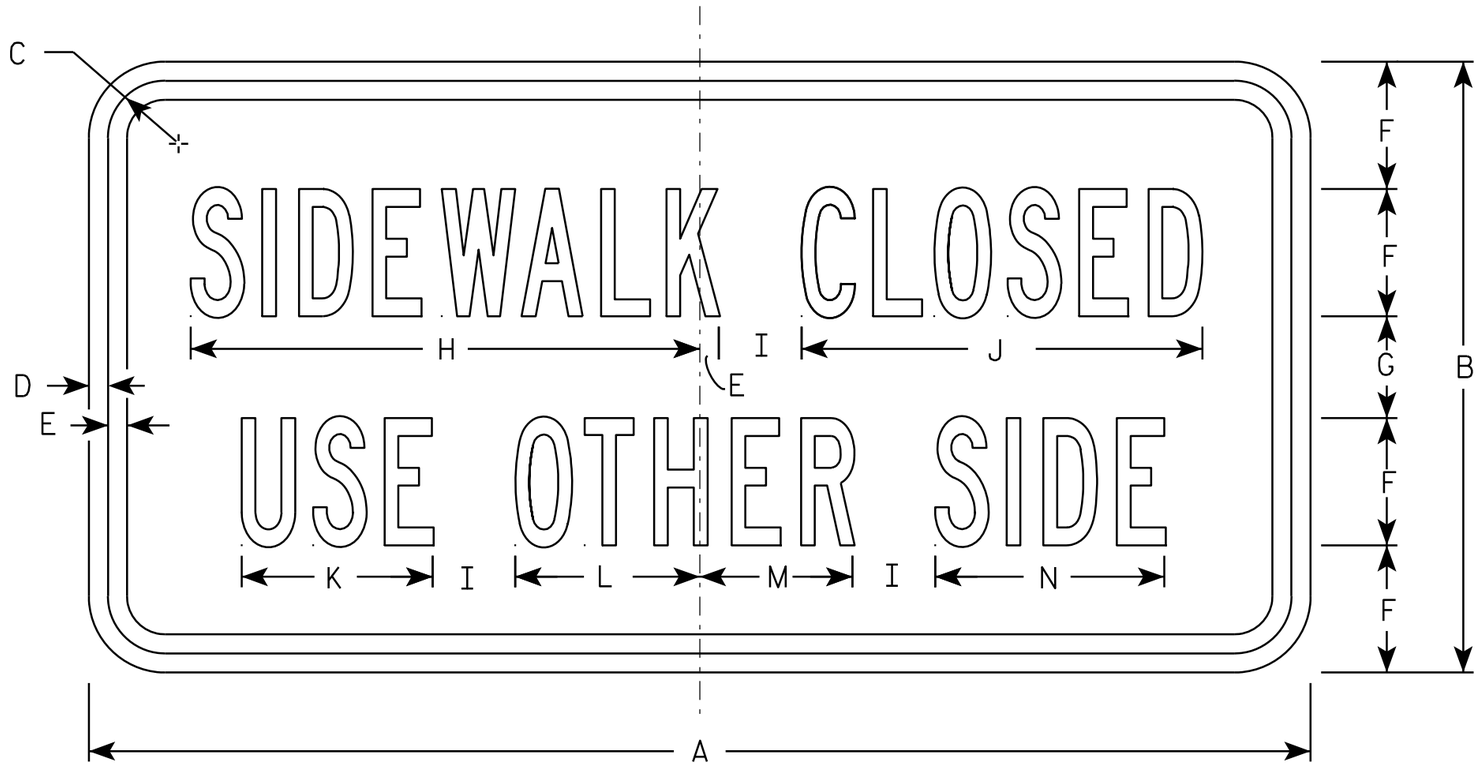

R9-10

NOTES

1. Sign is Type II - Type H Reflective - reference WIS DOT Standard Specification for HIGHWAY and STRUCTURE CONSTRUCTION latest edition.
2. Color:
   Background - White
   Message - Black
3. Message Series - B
4. Corners may be square or rounded when base material is plywood but borders shall be rounded as shown. When base material is metal, the corners and borders shall be rounded.

SIZE	A	B	C	D	E	F	G	H	I	J	K	L	M	N	O	P	Q	R	S	T	U	V	W	X	Y	Z	Area sq. ft.
1	24	12	1 1/8	3/8	3/8	2 1/2	2	10	1 5/8	7 7/8	3 3/4	3 5/8	3	4 1/2													2.0
2S	48	24	2 3/4	3/4	3/4	5	4	20	3 1/4	15 3/4	7 1/2	7 1/4	6	9													8.0
2M	48	24	2 3/4	3/4	3/4	5	4	20	3 1/4	15 3/4	7 1/2	7 1/4	6	9													8.0
3																											
4																											
5																											

STANDARD SIGN
R9-10

WISCONSIN DEPT OF TRANSPORTATION

APPROVED Matthew R Rauch
for State Traffic Engineer

DATE 8/16/2012 PLATE NO. R9-10.5

PROJECT NO: | HWY: | COUNTY: | SHEET NO: 396 | E

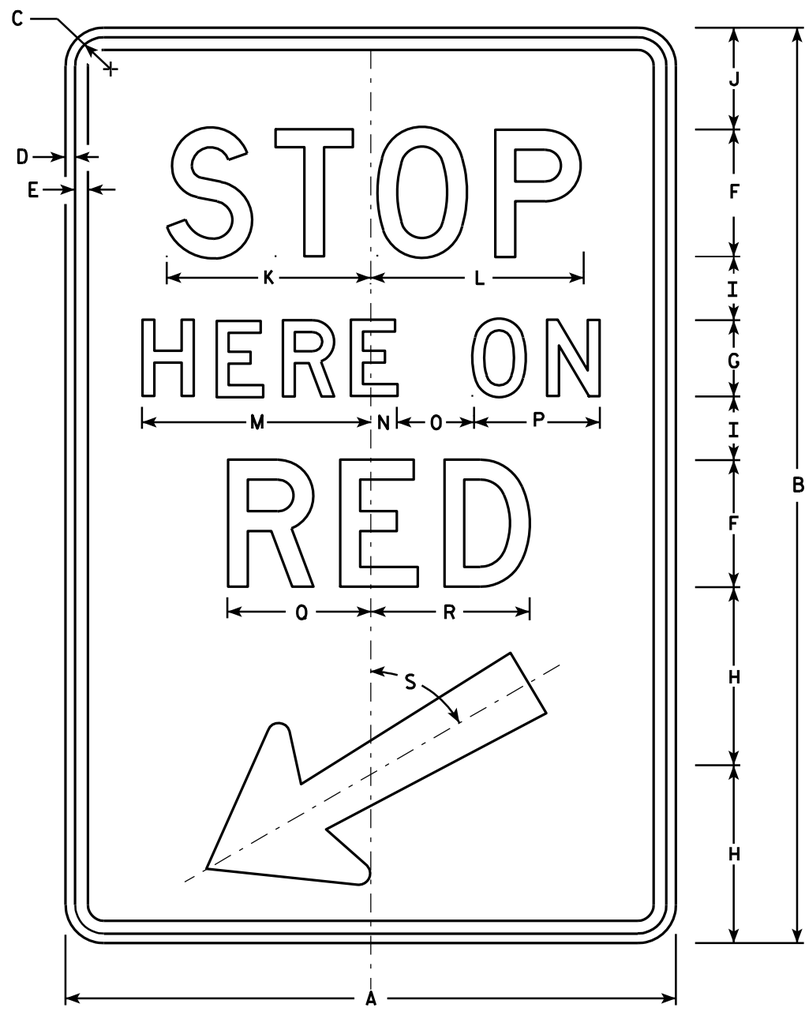

R10-6

NOTES

1. Sign is Type II - Type H Reflective - reference WIS DOT Standard Specification for HIGHWAY and STRUCTURE CONSTRUCTION latest edition.
2. Color:
   Background - White
   Message - Black
3. Message Series - D
4. Corners may be square or rounded when base material is plywood but borders shall be rounded as shown. When base material is metal, the corners and borders shall be rounded.

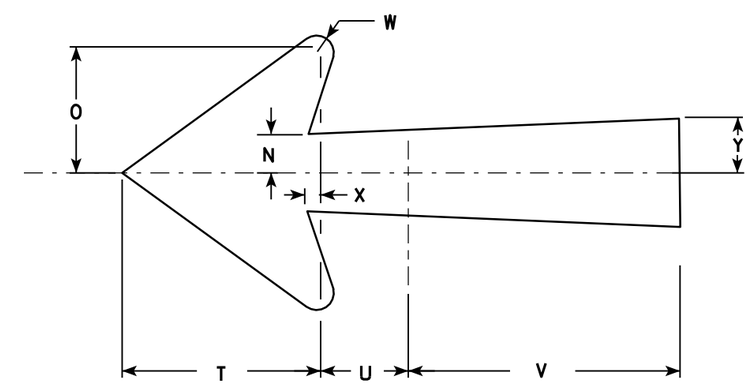

Arrow Detail

SIZE	A	B	C	D	E	F	G	H	I	J	K	L	M	N	O	P	Q	R	S	T	U	V	W	X	Y	Z	Area sq. ft.
1																											
2S	24	36	1 1/8	3/8	1/2	5	3	7	2 1/2	4	8	8 3/8	9	1	3	5	5 5/8	6 1/4	60°	5 1/4	2 1/4	7 1/8	1/2	3/8	1 3/8		6.0
2M	24	36	1 1/8	3/8	1/2	5	3	7	2 1/2	4	8	8 3/8	9	1	3	5	5 5/8	6 1/4	60°	5 1/4	2 1/4	7 1/8	1/2	3/8	1 3/8		6.0
3																											
4																											
5																											

STANDARD SIGN
R10-6

WISCONSIN DEPT OF TRANSPORTATION

APPROVED Matthew R Rauch
for State Traffic Engineer

DATE 4/5/11 PLATE NO. R10-6.6

PROJECT NO:	HWY:	COUNTY:		SHEET NO: 397	E

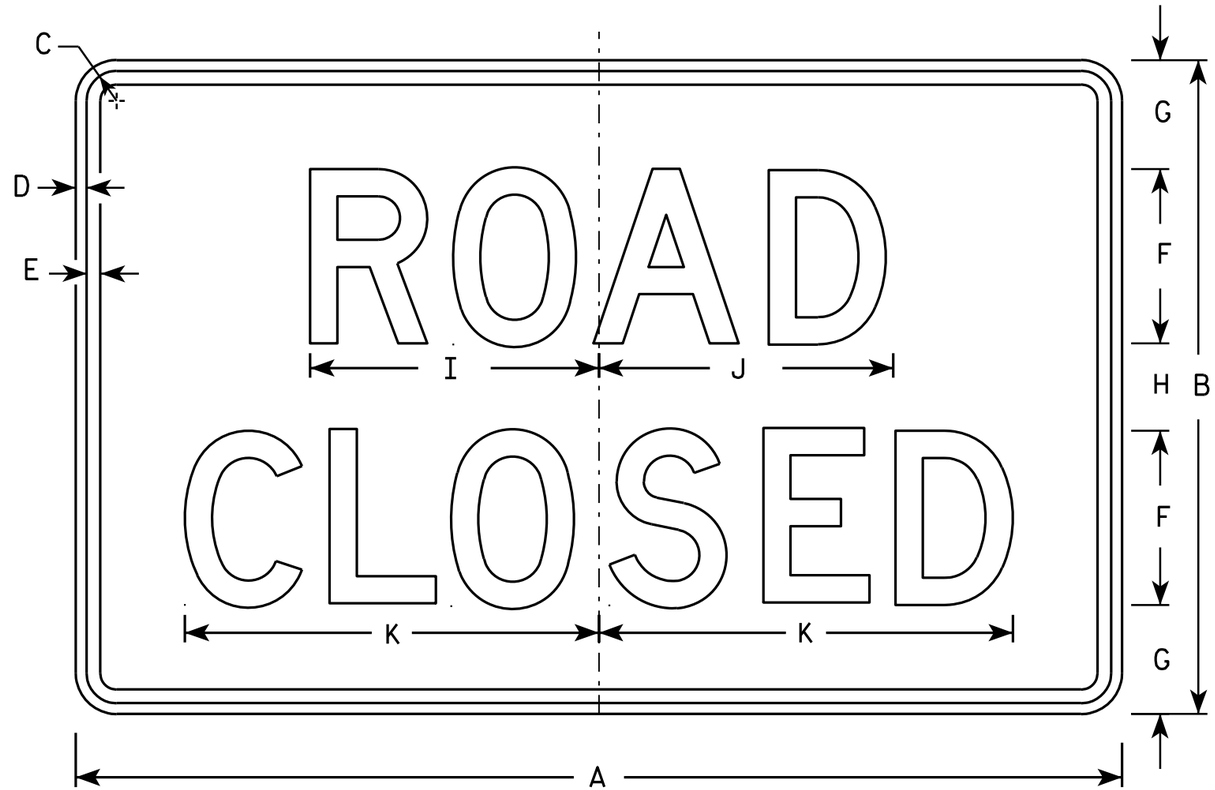

R11-2

NOTES

1. Sign is Type II - Type H Reflective - reference WIS DOT Standard Specification for HIGHWAY and STRUCTURE CONSTRUCTION latest edition.
2. Color:
   Background - White
   Message - Black
3. Message Series - D
4. Corners may be square or rounded when base material is plywood but borders shall be rounded as shown. When base material is metal, the corners and borders shall be rounded.
5. Modify the message as required.

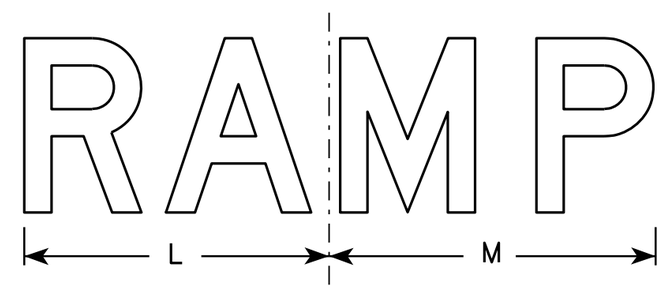

R11-2R

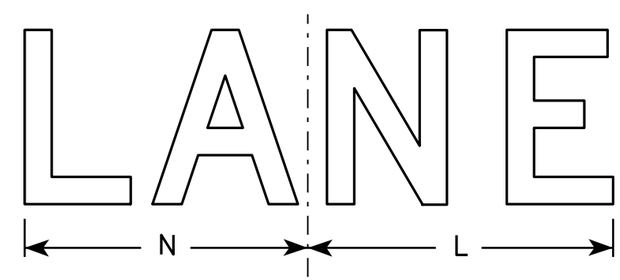

R11-2L

SIZE	A	B	C	D	E	F	G	H	I	J	K	L	M	N	O	P	Q	R	S	T	U	V	W	X	Y	Z	Area sq. ft.
1																											
2S	48	30	1 3/8	1/2	5/8	8	5	4	13 1/4	13 1/2	19	14	15	13													10.0
2M	48	30	1 3/8	1/2	5/8	8	5	4	13 1/4	13 1/2	19	14	15	13													10.0
3	48	30	1 3/8	1/2	5/8	8	5	4	13 1/4	13 1/2	19	14	15	13													10.0
4	48	30	1 3/8	1/2	5/8	8	5	4	13 1/4	13 1/2	19	14	15	13													10.0
5	48	30	1 3/8	1/2	5/8	8	5	4	13 1/4	13 1/2	19	14	15	13													10.0

STANDARD SIGN
R11-2

WISCONSIN DEPT OF TRANSPORTATION

APPROVED Matthew R Rauch
for State Traffic Engineer

DATE 4/1/11 PLATE NO. R11-2.10

PROJECT NO: | HWY: | COUNTY: | SHEET NO: 398 | E

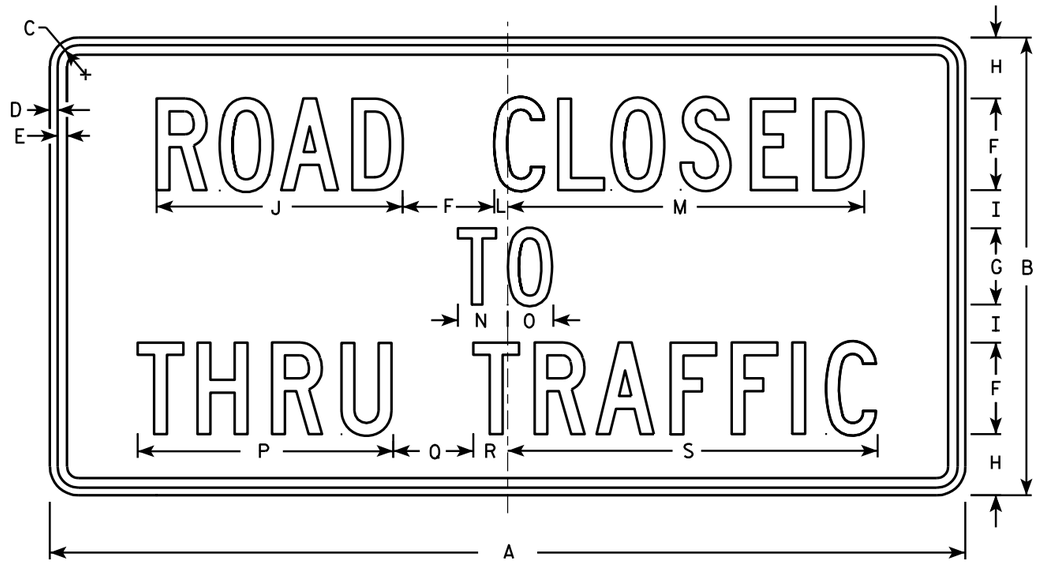

R11-4

NOTES

1. Sign is Type II - Type H Reflective - reference WIS DOT Standard Specification for HIGHWAY and STRUCTURE CONSTRUCTION latest edition.
2. Color:
   Background - White
   Message - Black
3. Message Series - C
4. Corners may be square or rounded when base material is plywood but borders shall be rounded as shown. When base material is metal, the corners and borders shall be rounded.

SIZE	A	B	C	D	E	F	G	H	I	J	K	L	M	N	O	P	Q	R	S	T	U	V	W	X	Y	Z	Area sq. ft.
1																											
2S	60	30	1 3/8	1/2	5/8	6	5	4	2 1/2	16 1/8		7/8	23 3/8	3 1/4	3	16 3/4	5 1/4	2 1/4	24 1/4								12.5
2M	60	30	1 3/8	1/2	5/8	6	5	4	2 1/2	16 1/8		7/8	23 3/8	3 1/4	3	16 3/4	5 1/4	2 1/4	24 1/4								12.5
3																											
4																											
5																											

STANDARD SIGN
R11 - 4

WISCONSIN DEPT OF TRANSPORTATION

APPROVED Matthew R Rauch for State Traffic Engineer

DATE 4/1/11 PLATE NO. R11-4.3

PROJECT NO: | HWY: | COUNTY: | SHEET NO: 399 | E

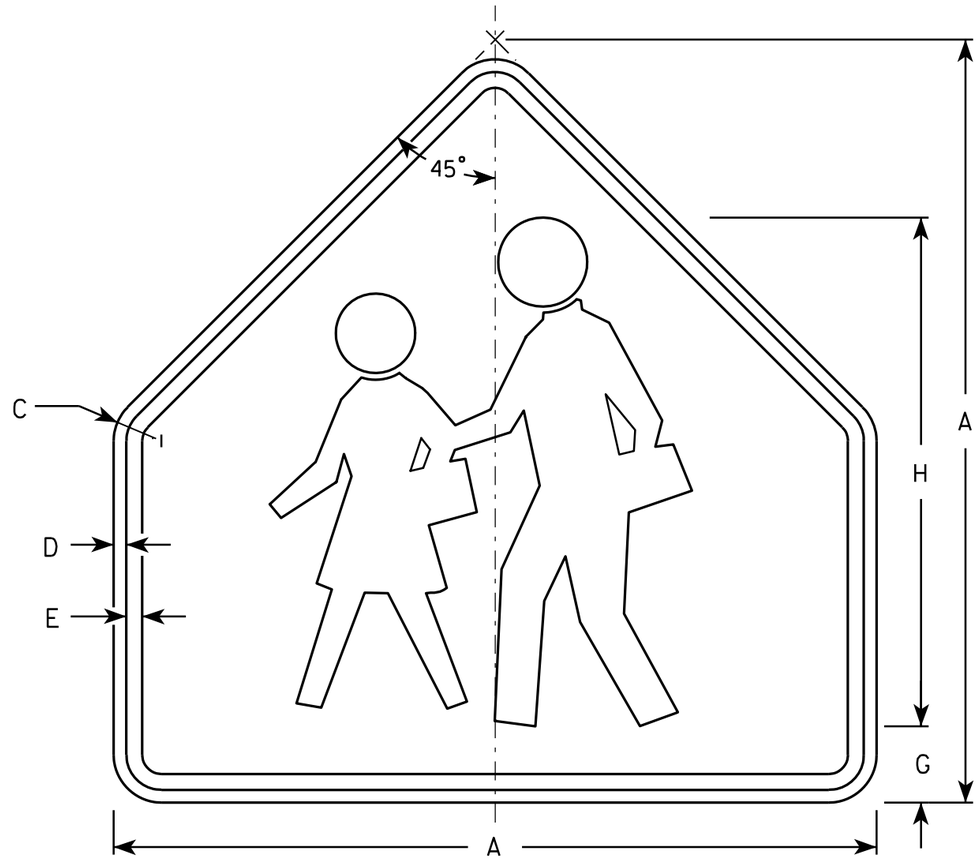

S1-1

NOTES

1. Sign is Type II - Type F Reflective - reference WIS DOT Standard Specification for HIGHWAY and STRUCTURE CONSTRUCTION latest edition.
2. Color:
   Background - Yellow-Green
   Message - Black
3. Corners may be square or rounded when base material is plywood but borders shall be rounded as shown. When base material is metal, the corners and borders shall be rounded.

SIZE	A	B	C	D	E	F	G	H	I	J	K	L	M	N	O	P	Q	R	S	T	U	V	W	X	Y	Z	Area sq. ft.
1	30		1 3/8	1/2	5/8		3	20																			4.69
2	36		1 5/8	5/8	3/4		3 1/2	24																			6.75
3	36		1 5/8	5/8	3/4		3 1/2	24																			6.75
4	48		2 1/4	3/4	1		4 3/4	32																			12
5																											

STANDARD SIGN
S1-1

WISCONSIN DEPT OF TRANSPORTATION

APPROVED Matthew R Rauch
for State Traffic Engineer
DATE 6/30/05 PLATE NO. S1-1.8

PROJECT NO: | HWY: | COUNTY: | SHEET NO: 400 | E

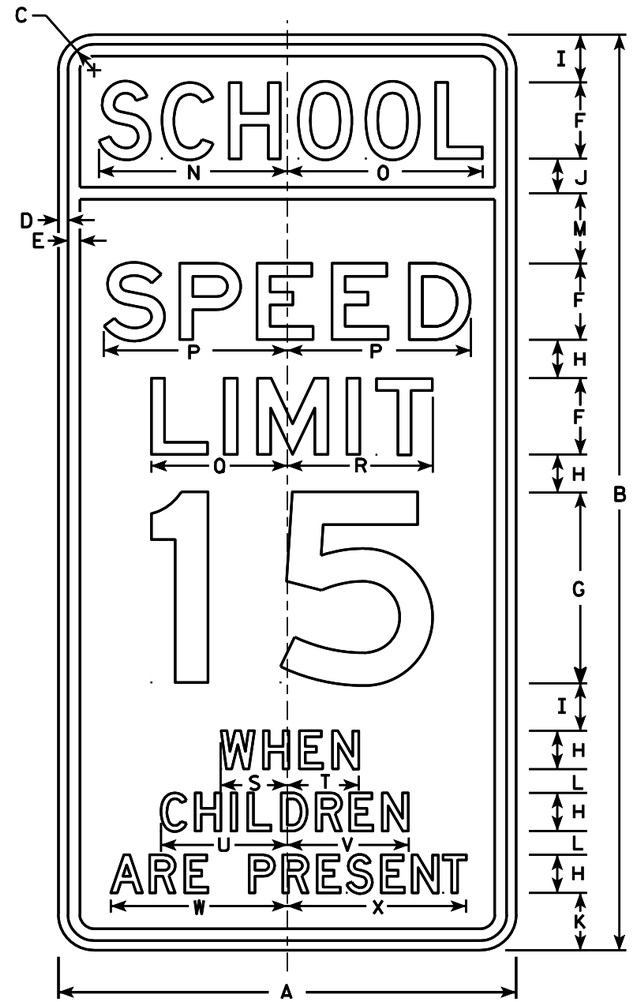

S4-51

NOTES

1. Sign is Type II - reference WIS DOT Standard Specification for HIGHWAY and STRUCTURE CONSTRUCTION latest edition. (See note 5).
2. Color:
   Background - See note 5
   Message - Black
3. Message Series - See note 6
4. Corners may be square or rounded when base material is plywood but borders shall be rounded as shown. When base material is metal, the corners and borders shall be rounded.
5. Top panel (SCHOOL) background - Yellow Green -Type F Reflective. Lower panel background - White -Type H Reflective.
6. From top to bottom:
   Lines 1, 5, 6 & 7 are series D
   Lines 2, 3 & 4 are series E
7. Line 4 substitute appropriate numerals and adjust spacing to achieve proper balance.

Metric equivalent for this sign is:

SIZE	
1	
2	600 mm X 1200 mm
3	900 mm X 1800 mm
4	
5	

SIZE	A	B	C	D	E	F	G	H	I	J	K	L	M	N	O	P	Q	R	S	T	U	V	W	X	Y	Z	Area sq. ft.	Area m2
1																												
2	24	48	1 3/8	1/2	5/8	4	10	2	2 1/2	1 3/4	3	1 1/4	3 3/4	9 7/8	10 1/4	9 5/8	7 1/8	7 5/8	3 1/2	3 3/8	6 5/8	6 3/8	9 1/4	9 3/8			8.00	0.72
3	36	72	2 1/4	3/4	1	6	15	3	3 3/4	2 3/4	4 1/2	1 7/8	5 1/2	15	15 1/4	14 1/2	11 1/4	11 1/2	5 1/2	5 3/4	10	9 3/4	14	14 1/8			18.00	1.62
4																												
5																												

STANDARD SIGN
S4-51

WISCONSIN DEPT OF TRANSPORTATION

APPROVED Matthew R Rauch
for State Traffic Engineer

DATE 4/26/10 PLATE NO. S4-51.9

PROJECT NO:	HWY:	COUNTY:		SHEET NO: 401	E

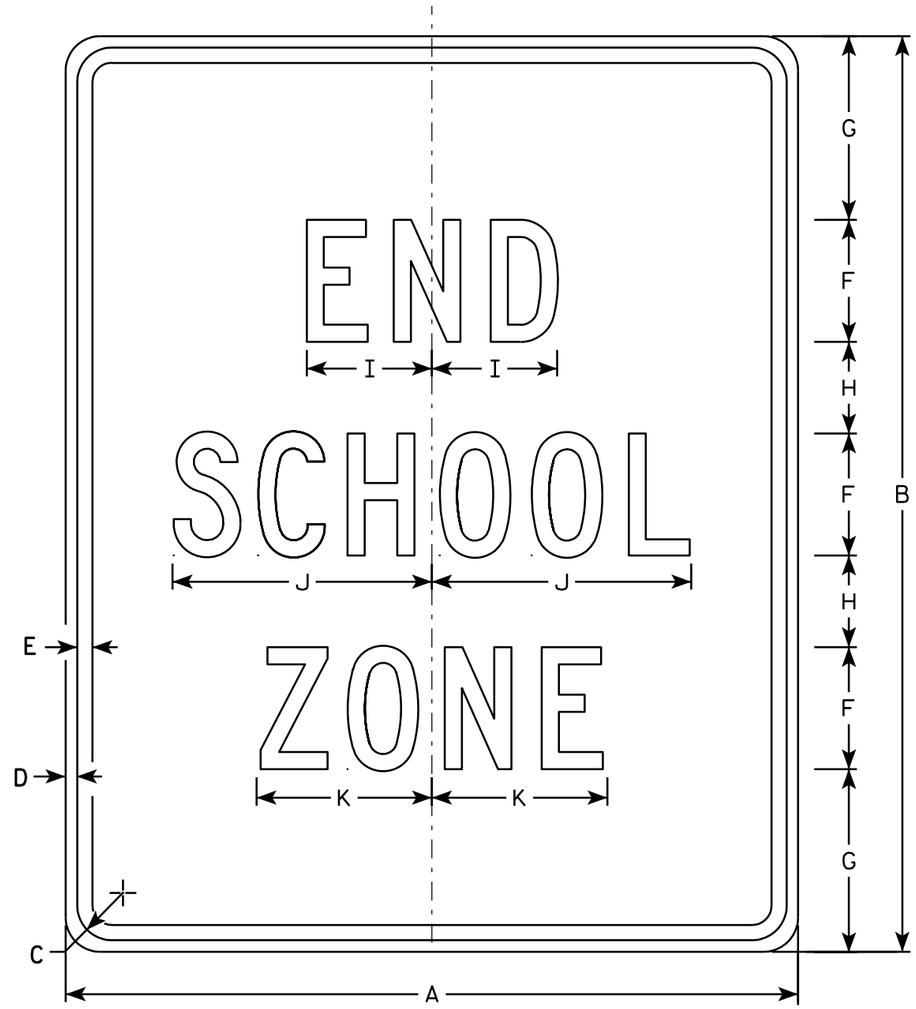

S5-2

NOTES

1. Sign is Type II - Type H Reflective - reference WIS DOT Standard Specification for HIGHWAY and STRUCTURE CONSTRUCTION latest edition.
2. Color:
   Background - White
   Message - Black
3. Message Series - C
4. Corners may be square or rounded when base material is plywood but borders shall be rounded as shown. When base material is metal, the corners and borders shall be rounded.

SIZE	A	B	C	D	E	F	G	H	I	J	K	L	M	N	O	P	Q	R	S	T	U	V	W	X	Y	Z	Area sq. ft.
1																											
2	24	30	1 1/8	3/8	1/2	4	6	3	4 1/8	8 1/2	5 3/4																5.0
3	36	42	1 5/8	5/8	3/4	6	7	5	6 1/8	12 5/8	8 5/8																10.5
4																											
5																											

STANDARD SIGN
S5-2

WISCONSIN DEPT OF TRANSPORTATION

APPROVED Matthew R Rauch
for State Traffic Engineer

DATE 3/8/11 PLATE NO. S5-2.2

PROJECT NO:	HWY:	COUNTY:		SHEET NO: 402	E

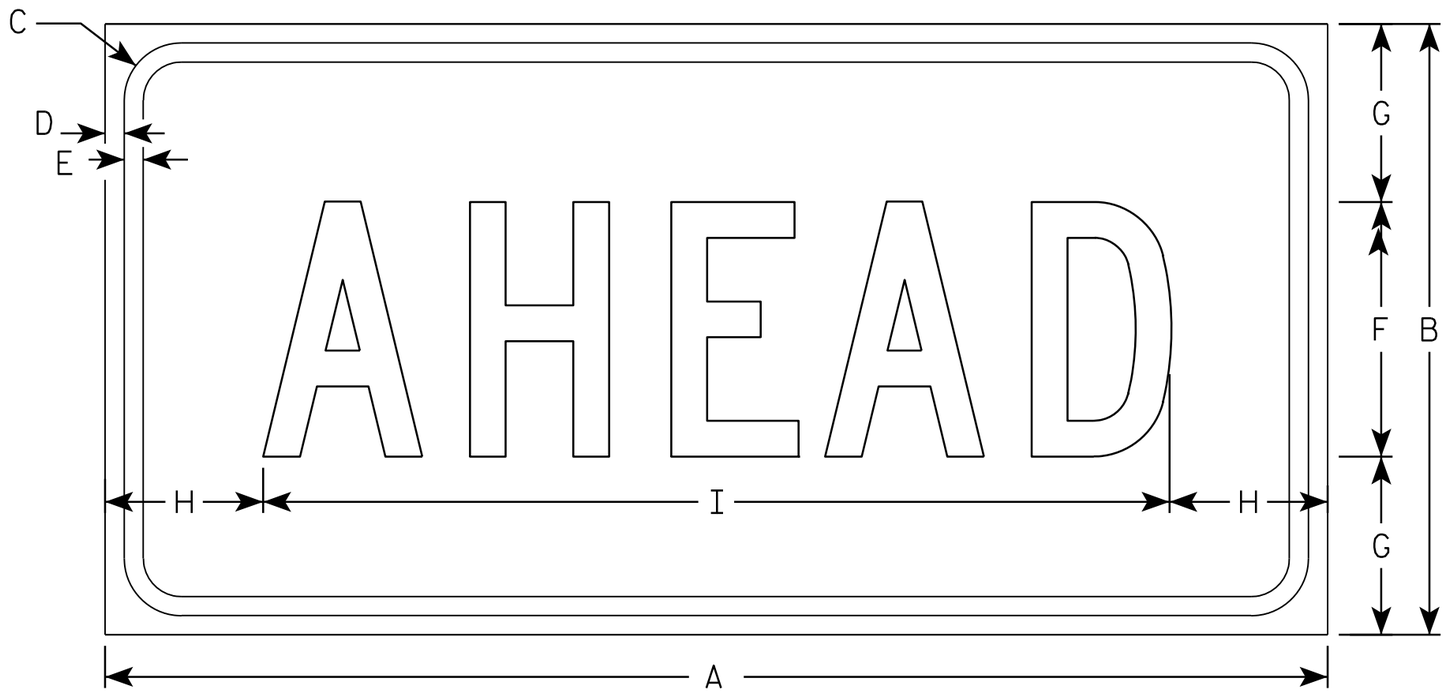

S16-9P

NOTES

1. Sign is Type II - Type F Reflective - reference WIS DOT Standard Specification for HIGHWAY and STRUCTURE CONSTRUCTION latest edition.
2. Color:
   Background - Yellow-Green
   Message - Black
3. Message Series - C
4. Corners may be square or rounded when base material is plywood but borders shall be rounded as shown. When base material is metal, the corners and borders shall be rounded.

SIZE	A	B	C	D	E	F	G	H	I	J	K	L	M	N	O	P	Q	R	S	T	U	V	W	X	Y	Z	Area sq. ft.
1	24	12	1 1/8	3/8	3/8	5	3 1/2	3 1/8	17 3/4																		2.0
2S	30	18	1 1/8	3/8	1/2	7	5 1/2	2 3/4	24 1/2																		3.75
2M	30	18	1 1/8	3/8	1/2	7	5 1/2	2 3/4	24 1/2																		3.75
3	30	18	1 1/8	3/8	1/2	7	3 1/2	2 3/4	24 1/2																		3.75
4	48	24	1 3/8	1/2	5/8	10	7	6 1/8	35 3/4																		8.0
5																											

STANDARD SIGN
S16-9P

WISCONSIN DEPT OF TRANSPORTATION

APPROVED Matthew R Rauch
for State Traffic Engineer

DATE 7/22/13 PLATE NO. S16-9P.1

PROJECT NO:	HWY:	COUNTY:		SHEET NO: 403	E

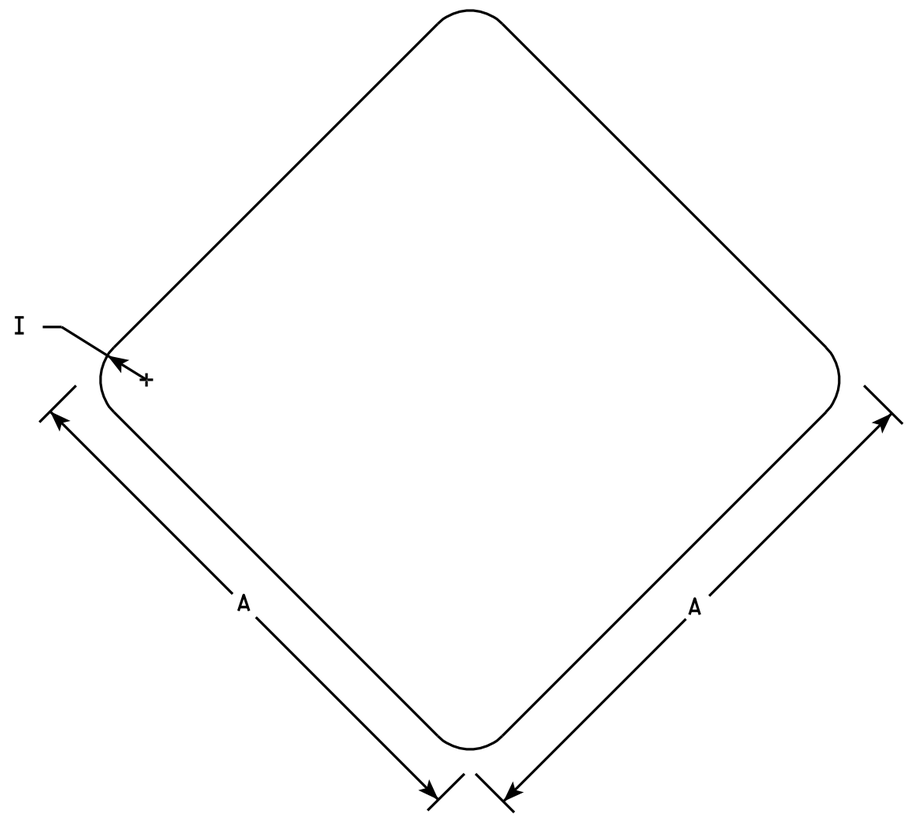

W5-56

NOTES

1. Sign is Type II - Type SH Reflective - reference WIS DOT Standard Specification for HIGHWAY and STRUCTURE CONSTRUCTION latest edition.
2. Color:
   Background - Red
3. Corners may be square or rounded when base material is plywood. When base material is metal the corners shall be rounded.

SIZE	A	B	C	D	E	F	G	H	I	J	K	L	M	N	O	P	Q	R	S	T	U	V	W	X	Y	Z	Area sq. ft.
1	12								1																		1.0
2S	18								1 ½																		2.25
2M	18								1 ½																		2.25
3																											
4																											
5																											

STANDARD SIGN
W5-56

WISCONSIN DEPT OF TRANSPORTATION

APPROVED Matthew R Rauch
for State Traffic Engineer

DATE 11/2/10 PLATE NO. W5-56.6

PROJECT NO: | HWY: | COUNTY: | SHEET NO: 404 | E

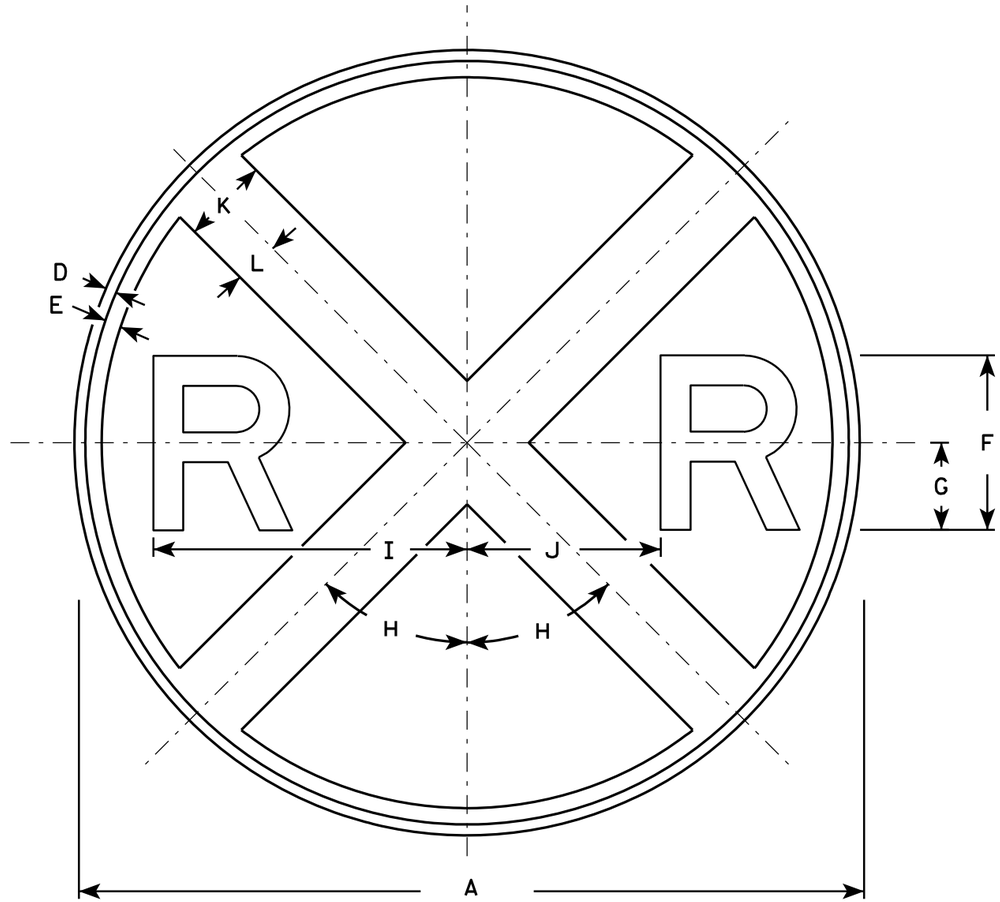

W10-1

NOTES

1. Sign is Type II - Type F Reflective - reference WIS DOT Standard Specification for HIGHWAY and STRUCTURE CONSTRUCTION latest edition.
2. Color:
   Background - Yellow
   Message - Black
3. Message Series - E

SIZE	A	B	C	D	E	F	G	H	I	J	K	L	M	N	O	P	Q	R	S	T	U	V	W	X	Y	Z	Area sq. ft.
1	30			3/8	5/8	7	3 1/2	45°	12 3/8	7 1/8	3	1 1/2															4.91
2S	36			5/8	3/4	8	4	45°	14 3/8	8 5/8	4	2															7.07
2M	36			5/8	3/4	8	4	45°	14 3/8	8 5/8	4	2															7.07
3																											
4	48			3/4	1 1/4	10	5	45°	18 3/8	11 5/8	5	2 1/2															12.57
5																											

STANDARD SIGN
W10-1

WISCONSIN DEPT OF TRANSPORTATION

APPROVED Matthew R Rauch for State Traffic Engineer
DATE 3/13/13 PLATE NO. W10-1.8

PROJECT NO: | HWY: | COUNTY: | SHEET NO: 405 | E

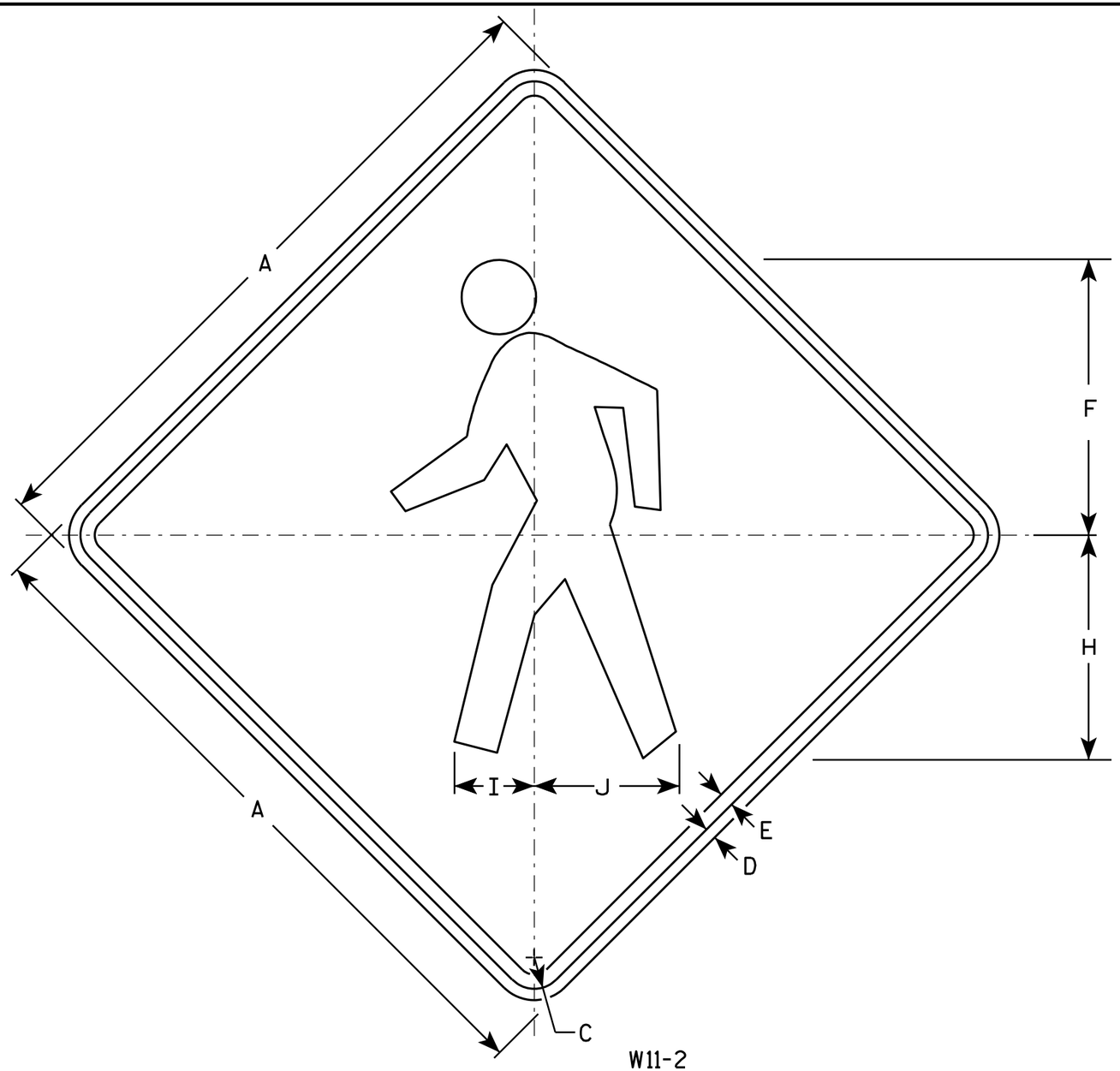

W11-2

NOTES

1. Sign is Type II - Type F Reflective - reference WIS DOT Standard Specification for HIGHWAY and STRUCTURE CONSTRUCTION latest edition.
2. Color:
   Background - Yellow
   Message - Black
3. Corners may be square or rounded when base material is plywood but borders shall be rounded as shown. When base material is metal, the corners and borders shall be rounded.

SIZE	A	B	C	D	E	F	G	H	I	J	K	L	M	N	O	P	Q	R	S	T	U	V	W	X	Y	Z	Area sq. ft.
1	24		1 1/8	3/8	1/2	9 3/4		7 7/8	2 7/8	5 1/8																	4.0
2S	30		1 3/8	1/2	5/8	12 1/8		9 7/8	3 1/2	6 3/8																	6.25
2M	36		1 5/8	5/8	3/4	14 1/2		11 7/8	4 1/4	7 5/8																	9.0
3	36		1 5/8	5/8	3/4	14 1/2		11 7/8	4 1/4	7 5/8																	9.0
4	48		2 1/4	3/4	1	19 3/8		15 3/4	5 5/8	10 1/4																	16.0
5																											

STANDARD SIGN
W11-2

WISCONSIN DEPT OF TRANSPORTATION

APPROVED Matthew R Rauch
for State Traffic Engineer

DATE 6/7/10 PLATE NO. W11-2.7

PROJECT NO:	HWY:	COUNTY:		SHEET NO: 406	E

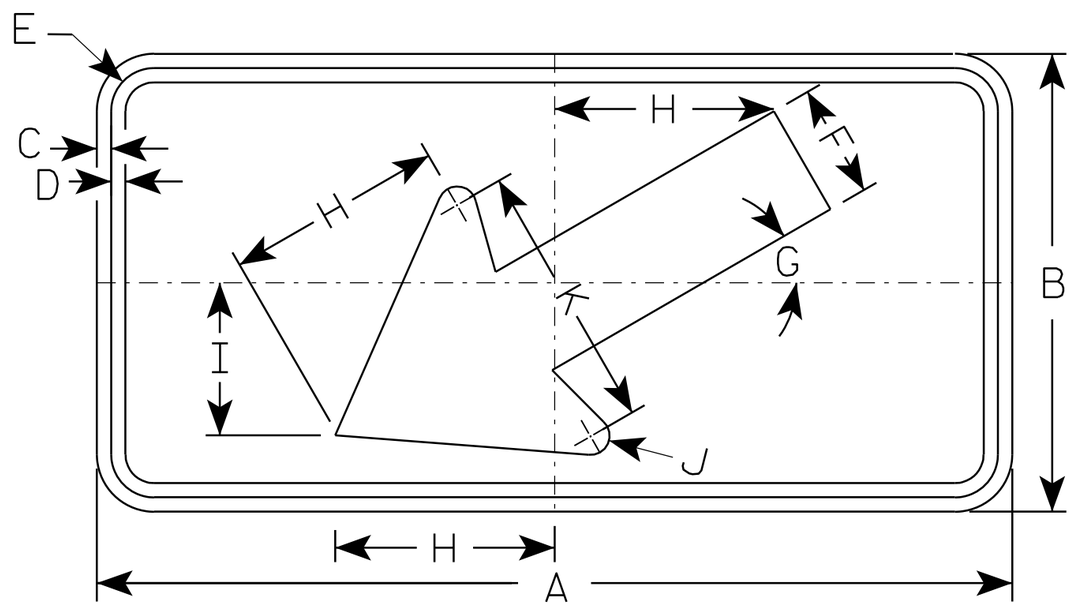

W16-7L

NOTES

1. Sign is Type II - Type F Reflective - reference WIS DOT Standard Specification for HIGHWAY and STRUCTURE CONSTRUCTION latest edition.
2. Color:
   Background - Yellow
   Message - Black
3. Corners may be square or rounded when base material is plywood but borders shall be rounded as shown. When base material is metal, the corners and borders shall be rounded.
4. W16-7R is the same as W16-L except the arrow is reversed along the vertical centerline.

SIZE	A	B	C	D	E	F	G	H	I	J	K	L	M	N	O	P	Q	R	S	T	U	V	W	X	Y	Z	Area sq. ft.
1																											
2S	24	12	3/8	3/8	1 1/8	3	30°	5 3/4	4	1/2	7																2.0
2M	30	18	3/8	1/2	1 1/8	4 1/2	30°	8 1/2	6	5/8	10 1/4																3.75
3	30	18	3/8	1/2	1 1/8	4 1/2	30°	8 1/2	6	5/8	10 1/4																3.75
4																											8
5																											8

STANDARD SIGN
W16-7

WISCONSIN DEPT OF TRANSPORTATION

APPROVED Matthew R Rauch
for State Traffic Engineer

DATE 11/02/10 PLATE NO. W16-7.5

PROJECT NO: | HWY: | COUNTY: | SHEET NO: 407 | E

NOTES

1. Sign is Type II - Type F Reflective - reference WIS DOT Standard Specification for HIGHWAY and STRUCTURE CONSTRUCTION latest edition.
2. Color:
   Background - Yellow
   Message - Black
3. Message Series - C
4. Corners may be square or rounded when base material is plywood but borders shall be rounded as shown. When base material is metal, the corners and borders shall be rounded.

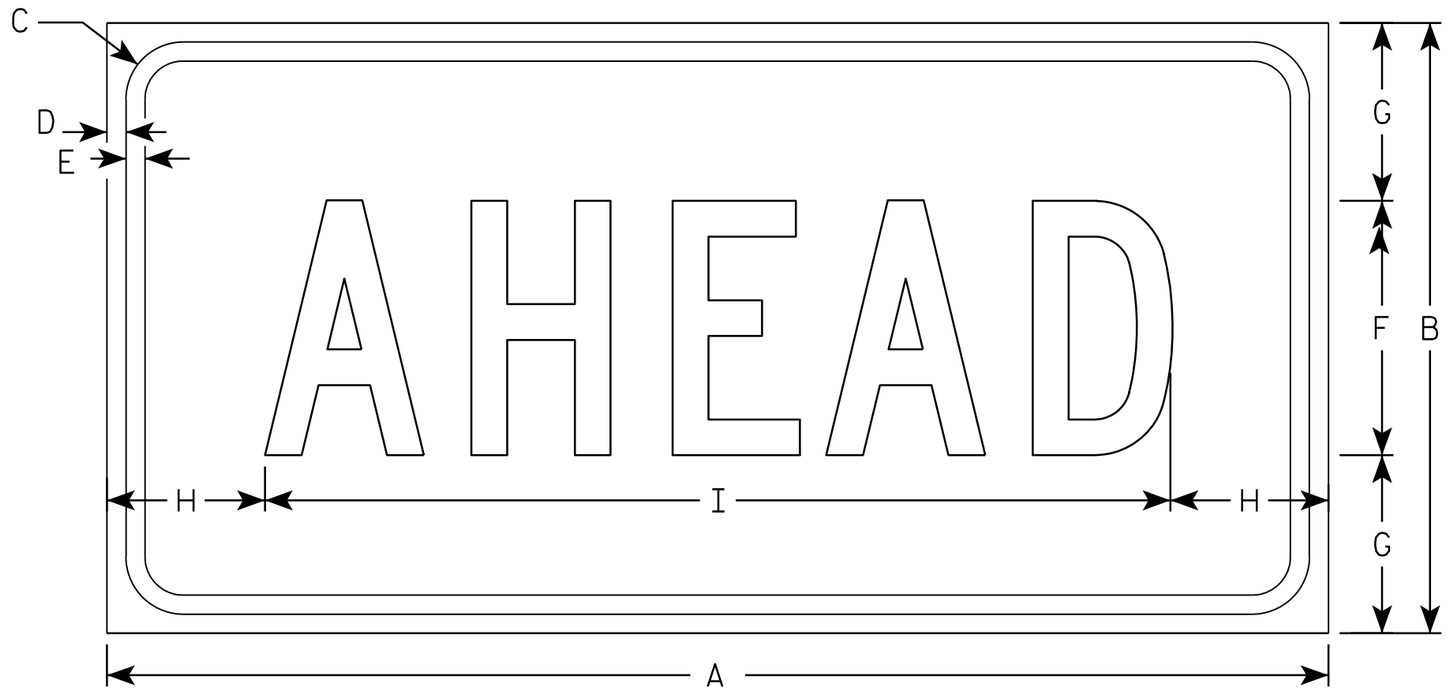

W16-9P

SIZE	A	B	C	D	E	F	G	H	I	J	K	L	M	N	O	P	Q	R	S	T	U	V	W	X	Y	Z	Area sq. ft.
1																											
2S	24	12	1 1/8	3/8	3/8	5	3 1/2	3 1/8	17 3/4																		2.0
2M	30	18	1 1/8	3/8	1/2	7	5 1/2	2 3/4	24 1/2																		3.75
3	30	18	1 1/8	3/8	1/2	7	3 1/2	2 3/4	24 1/2																		3.75
4	48	24	1 3/8	1/2	5/8	10	7	6 1/8	35 3/4																		8.0
5																											

STANDARD SIGN
W16-9P

WISCONSIN DEPT OF TRANSPORTATION

APPROVED Matthew R Rauch
for State Traffic Engineer

DATE 12/28/10 PLATE NO. W16-9P.6

PROJECT NO: | HWY: | COUNTY: | SHEET NO: 408 | E

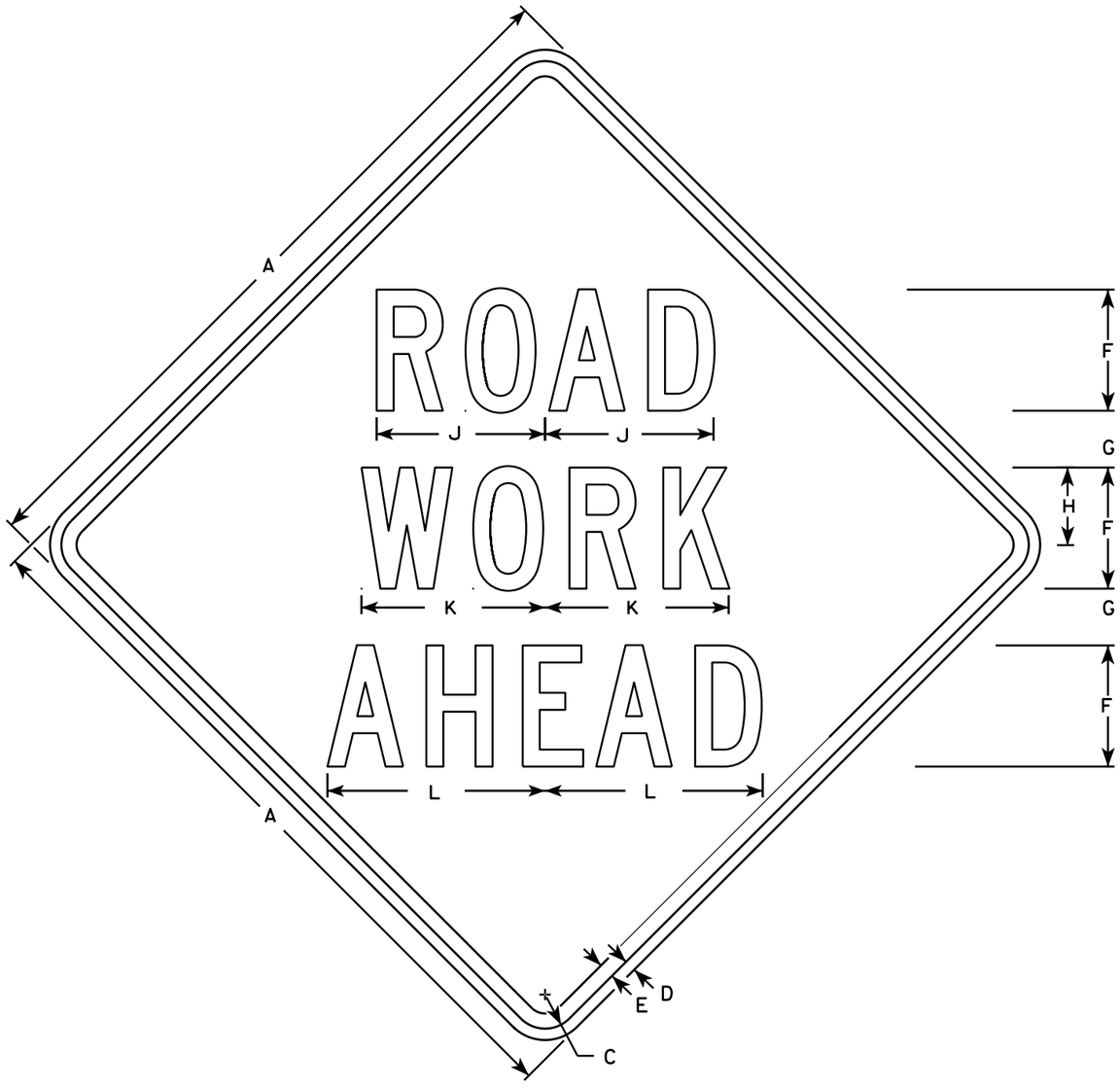

W20-1A

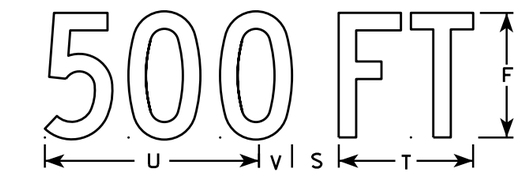

W20-1D

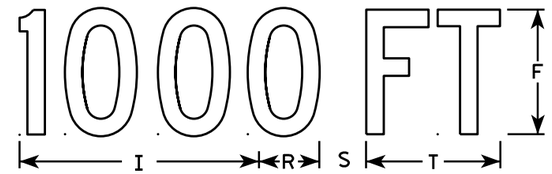

W20-1C

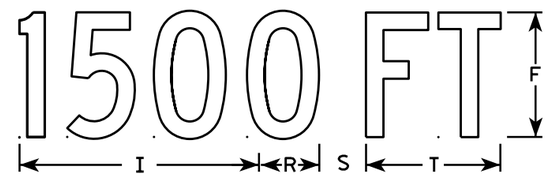

W20-1B

W20-1G

W20-1F

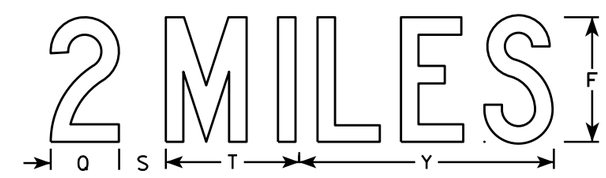

W20-1E

NOTES

1. Sign is Type II - Type F Reflective
2. Color:
   Background - Orange
   Message - Black
3. Message Series - C
4. Corners may be square or rounded when base material is plywood but borders shall be rounded as shown. When base material is metal, the corners and borders shall be rounded.

SIZE	A	B	C	D	E	F	G	H	I	J	K	L	M	N	O	P	Q	R	S	T	U	V	W	X	Y	Z	Area sq. ft.
1	36		1 3/8	1/2	5/8	5	2 5/8	3 1/4	10 1/8	7	7 5/8	8 7/8	1 1/8	4 1/2	3 1/2	9		2 1/2	2 1/4	5 5/8	9	1 3/8	8	1 3/4	10 3/4	6	9.0
2S	48		2 1/4	3/4	1	8	3 3/4	5 1/8	15 3/8	11 1/8	12 1/8	14 3/8	1 5/8	6 7/8	5 3/8	13 7/8	4 3/8	3 7/8	3	8 5/8	13 3/4	2 1/8	11 7/8	2 3/4	16 3/8	9	16.0
2M	48		2 1/4	3/4	1	8	3 3/4	5 1/8	15 3/8	11 1/8	12 1/8	14 3/8	1 5/8	6 7/8	5 3/8	13 7/8	4 3/8	3 7/8	3	8 5/8	13 3/4	2 1/8	11 7/8	2 3/4	16 3/8	9	16.0
3	48		2 1/4	3/4	1	8	3 3/4	5 1/8	15 3/8	11 1/8	12 1/8	14 3/8	1 5/8	6 7/8	5 3/8	13 7/8	4 3/8	3 7/8	3	8 5/8	13 3/4	2 1/8	11 7/8	2 3/4	16 3/8	9	16.0
4	48		2 1/4	3/4	1	8	3 3/4	5 1/8	15 3/8	11 1/8	12 1/8	14 3/8	1 5/8	6 7/8	5 3/8	13 7/8	4 3/8	3 7/8	3	8 5/8	13 3/4	2 1/8	11 7/8	2 3/4	16 3/8	9	16.0
5	48		2 1/4	3/4	1	8	3 3/4	5 1/8	15 3/8	11 1/8	12 1/8	14 3/8	1 5/8	6 7/8	5 3/8	13 7/8	4 3/8	3 7/8	3	8 5/8	13 3/4	2 1/8	11 7/8	2 3/4	16 3/8	9	16.0

STANDARD SIGN
W20-1A, B, C, D, F & G

WISCONSIN DEPT OF TRANSPORTATION

APPROVED

State Traffic Engineer

DATE 5/07/15 PLATE NO. W20-1.10

PROJECT NO:

SHEET NO: E

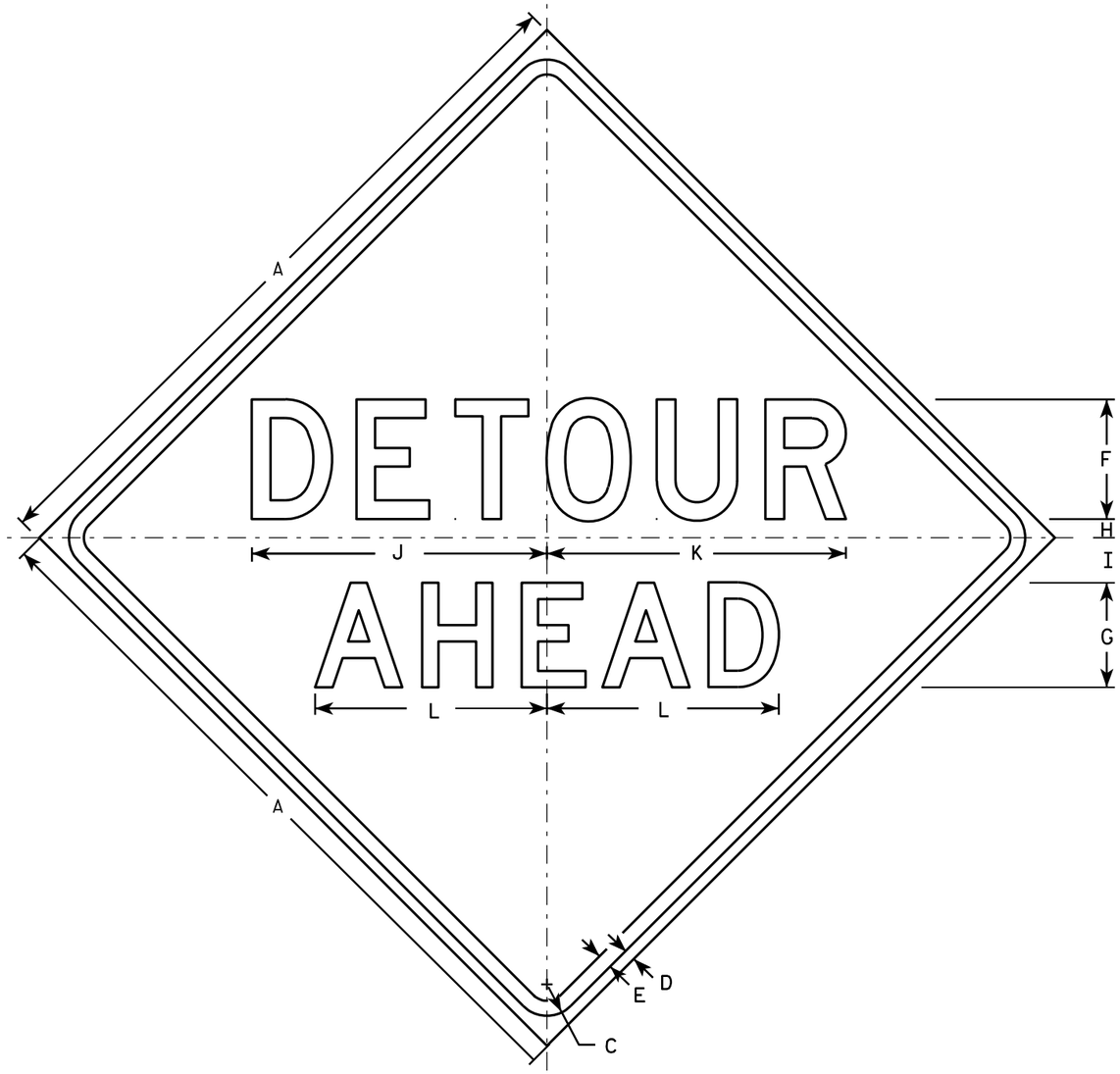

W20-2A

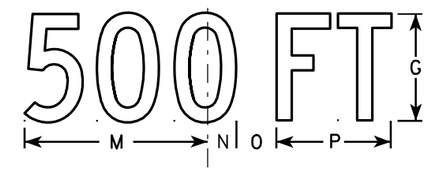

W20-2D

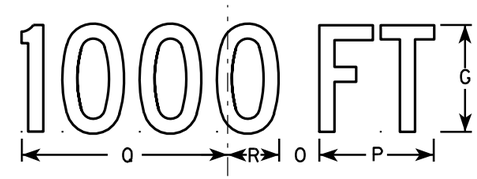

W20-2C

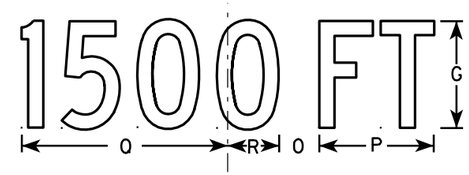

W20-2B

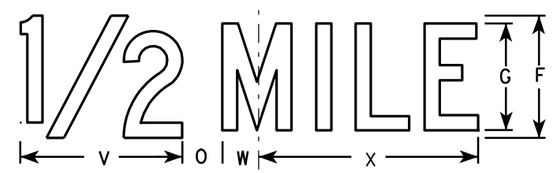

W20-2G

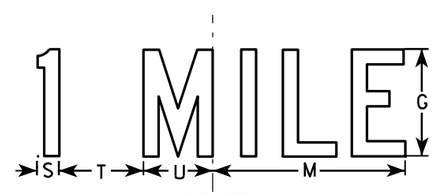

W20-2F

NOTES

1. Sign is Type II - Type F Reflective - reference WIS DOT Standard Specification for HIGHWAY and STRUCTURE CONSTRUCTION latest edition.
2. Color:
   Background - Orange
   Message - Black
3. Message Series - See note 5
4. Corners may be square or rounded when base material is plywood but borders shall be rounded as shown. When base material is metal, the corners and borders shall be rounded.
5. Line 1 is Series D.
   Line 2 is Series D for AHEAD and Series C for all other distances.

SIZE	A	B	C	D	E	F	G	H	I	J	K	L	M	N	O	P	Q	R	S	T	U	V	W	X	Y	Z	Area sq. ft.
1	36		1 5/8	5/8	3/4	6	5	1	2 1/4	14 3/4	15	11 5/8	9	1 3/8	1 7/8	5 5/8	10 1/8	2 1/2	1 1/8	4 1/2	3 1/2	8	1 3/4	10 3/4			9.0
2S	48		2 1/4	3/4	1	8	7	1 1/4	3	19 3/4	20	15 1/2	12	1 7/8	2 5/8	7 1/2	13 1/2	3 3/8	1 1/2	6	4 5/8	10 5/8	2 3/8	14 3/8			16.0
2M	48		2 1/4	3/4	1	8	7	1 1/4	3	19 3/4	20	15 1/2	12	1 7/8	2 5/8	7 1/2	13 1/2	3 3/8	1 1/2	6	4 5/8	10 5/8	2 3/8	14 3/8			16.0
3	48		2 1/4	3/4	1	8	7	1 1/4	3	19 3/4	20	15 1/2	12	1 7/8	2 5/8	7 1/2	13 1/2	3 3/8	1 1/2	6	4 5/8	10 5/8	2 3/8	14 3/8			16.0
4	48		2 1/4	3/4	1	8	7	1 1/4	3	19 3/4	20	15 1/2	12	1 7/8	2 5/8	7 1/2	13 1/2	3 3/8	1 1/2	6	4 5/8	10 5/8	2 3/8	14 3/8			16.0
5	48		2 1/4	3/4	1	8	7	1 1/4	3	19 3/4	20	15 1/2	12	1 7/8	2 5/8	7 1/2	13 1/2	3 3/8	1 1/2	6	4 5/8	10 5/8	2 3/8	14 3/8			16.0

STANDARD SIGN
W20-2A,B,C,D,F & G

WISCONSIN DEPT OF TRANSPORTATION

APPROVED Matthew R Rauch
for State Traffic Engineer
DATE 3/18/11 PLATE NO. W20-2.6

PROJECT NO: | HWY: | COUNTY: | SHEET NO: 410 | E

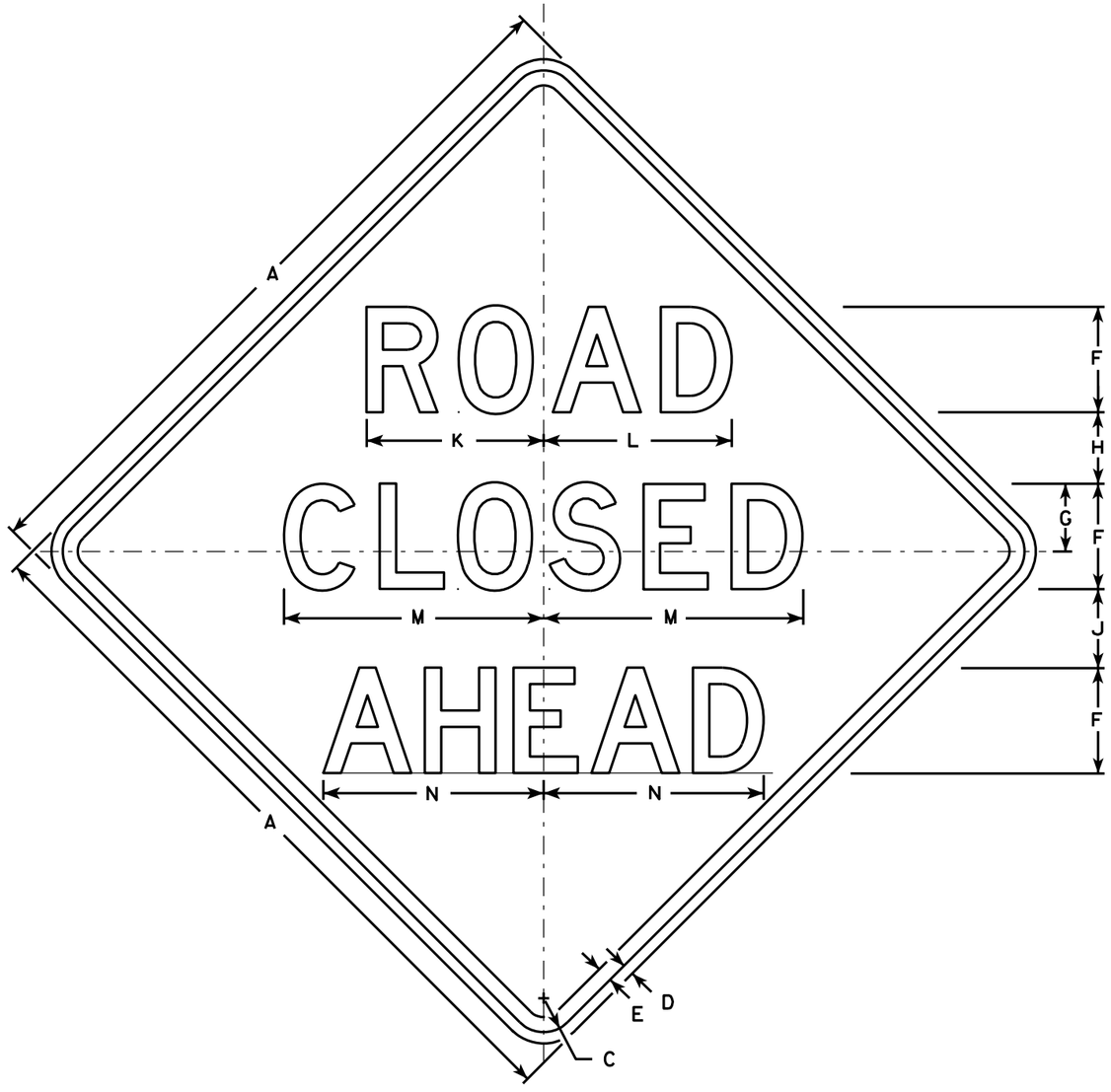

W20-3A

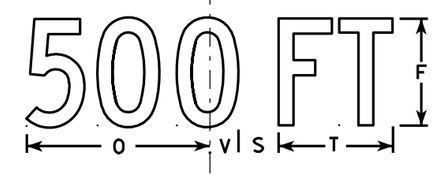

W20-3D

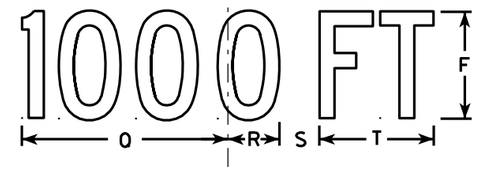

W20-3C

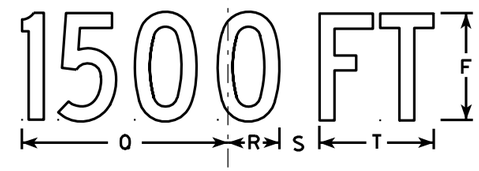

W20-3B

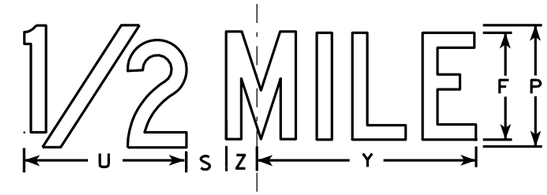

W20-3G

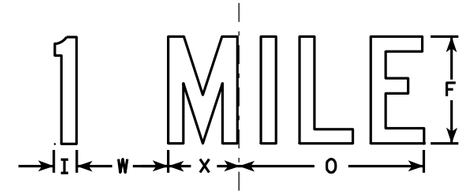

W20-3F

NOTES

1. Sign is Type II - Type F Reflective - reference WIS DOT Standard Specification for HIGHWAY and STRUCTURE CONSTRUCTION latest edition.
2. Color:
   Background - Orange
   Message - Black
3. Message Series - see note 5
4. Corners may be square or rounded when base material is plywood but borders shall be rounded as shown. When base material is metal, the corners and borders shall be rounded.
5. Lines 1 and 2 are Series D.
   Line 3 is Series D for AHEAD and Series C for all other distances.

SIZE	A	B	C	D	E	F	G	H	I	J	K	L	M	N	O	P	Q	R	S	T	U	V	W	X	Y	Z	Area sq. ft.
1	36		1 5/8	5/8	3/4	5	3 3/8	3 1/2	1 1/8	4	8 3/8	8 7/8	12 1/2	11	9	6	10 1/8	2 1/2	1 7/8	5 5/8	8	1 3/8	4 1/2	3 1/2	10 3/4	1 3/4	9.0
2S	48		2 1/4	3/4	1	7	4 1/2	4 3/4	1 1/2	5 1/4	11 3/4	12 1/2	17 1/4	14 5/8	12	8	13 1/2	3 3/8	2 5/8	7 1/2	10 5/8	1 7/8	6	4 5/8	14 3/8	2 3/8	16.0
2M	48		2 1/4	3/4	1	7	4 1/2	4 3/4	1 1/2	5 1/4	11 3/4	12 1/2	17 1/4	14 5/8	12	8	13 1/2	3 3/8	2 5/8	7 1/2	10 5/8	1 7/8	6	4 5/8	14 3/8	2 3/8	16.0
3	48		2 1/4	3/4	1	7	4 1/2	4 3/4	1 1/2	5 1/4	11 3/4	12 1/2	17 1/4	14 5/8	12	8	13 1/2	3 3/8	2 5/8	7 1/2	10 5/8	1 7/8	6	4 5/8	14 3/8	2 3/8	16.0
4	48		2 1/4	3/4	1	7	4 1/2	4 3/4	1 1/2	5 1/4	11 3/4	12 1/2	17 1/4	14 5/8	12	8	13 1/2	3 3/8	2 5/8	7 1/2	10 5/8	1 7/8	6	4 5/8	14 3/8	2 3/8	16.0
5	48		2 1/4	3/4	1	7	4 1/2	4 3/4	1 1/2	5 1/4	11 3/4	12 1/2	17 1/4	14 5/8	12	8	13 1/2	3 3/8	2 5/8	7 1/2	10 5/8	1 7/8	6	4 5/8	14 3/8	2 3/8	16.0

STANDARD SIGN
W20-3A, B, C, D, F & G

WISCONSIN DEPT OF TRANSPORTATION

APPROVED Matthew R Rauch
for State Traffic Engineer
DATE 3/18/11 PLATE NO. W20-3.7

PROJECT NO:	HWY:	COUNTY:		SHEET NO: 411	E

W20-56A

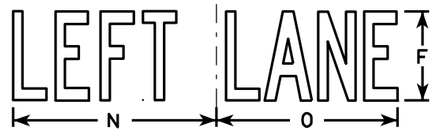

W20-55A

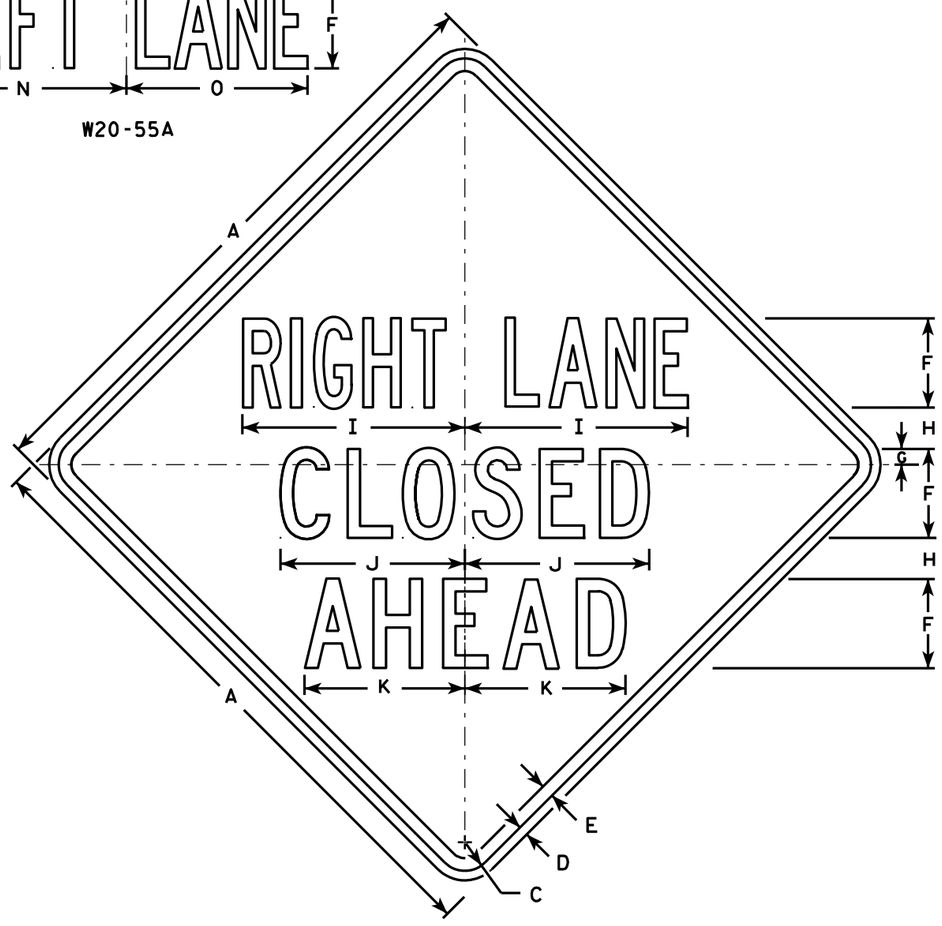

W20-5A

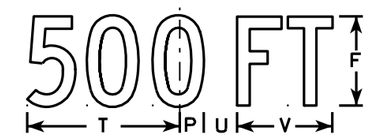

W20-5D

W20-5C

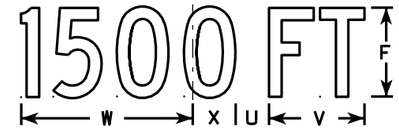

W20-5B

W20-5G

W20-5F

NOTES

1. Sign is Type II - Type F Reflective - reference WIS DOT Standard Specification for HIGHWAY and STRUCTURE CONSTRUCTION latest edition.
2. Color:
   Background - Orange
   Message - Black
3. Message Series - See Note 5
4. Corners may be square or rounded when base material is plywood but borders shall be rounded as shown. When base material is metal, the corners and borders shall be rounded.
5. " ------- LANE" is Series B.
   All other copy is Series C.

SIZE	A	B	C	D	E	F	G	H	I	J	K	L	M	N	O	P	Q	R	S	T	U	V	W	X	Y	Z	Area sq. ft.
1	36	6	1 5/8	5/8	3/4	5	7/8	2 1/2	13 1/8	10 3/4	9 1/2	14 1/4	13 5/8	12	12	1 3/8	1 1/8	4 1/2	3 1/2	9	1 7/8	5 5/8	10 1/8	2 1/2	1 3/4	8	9.0
2S	48	8	2 1/4	3/4	1	7	1 1/4	3 1/4	17 1/2	14 3/8	12 5/8	19	18 3/8	16	14 1/4	1 7/8	1 1/2	6	4 5/8	12	2 5/8	7 1/2	13 1/2	3 3/8	2 3/8	10 5/8	16.0
2M	48	8	2 1/4	3/4	1	7	1 1/4	3 1/4	17 1/2	14 3/8	12 5/8	19	18 3/8	16	14 1/4	1 7/8	1 1/2	6	4 5/8	12	2 5/8	7 1/2	13 1/2	3 3/8	2 3/8	10 5/8	16.0
3	48	8	2 1/4	3/4	1	7	1 1/4	3 1/4	17 1/2	14 3/8	12 5/8	19	18 3/8	16	14 1/4	1 7/8	1 1/2	6	4 5/8	12	2 5/8	7 1/2	13 1/2	3 3/8	2 3/8	10 5/8	16.0
4	48	8	2 1/4	3/4	1	7	1 1/4	3 1/4	17 1/2	14 3/8	12 5/8	19	18 3/8	16	14 1/4	1 7/8	1 1/2	6	4 5/8	12	2 5/8	7 1/2	13 1/2	3 3/8	2 3/8	10 5/8	16.0
5	48	8	2 1/4	3/4	1	7	1 1/4	3 1/4	17 1/2	14 3/8	12 5/8	19	18 3/8	16	14 1/4	1 7/8	1 1/2	6	4 5/8	12	2 5/8	7 1/2	13 1/2	3 3/8	2 3/8	10 5/8	16.0

STANDARD SIGN
W20-5A, B, C, D, F & G

WISCONSIN DEPT OF TRANSPORTATION

APPROVED Matthew R Rauch
for State Traffic Engineer

DATE 3/18/11 PLATE NO. W20-5.11

PROJECT NO:	HWY:	COUNTY:		SHEET NO: 412	E

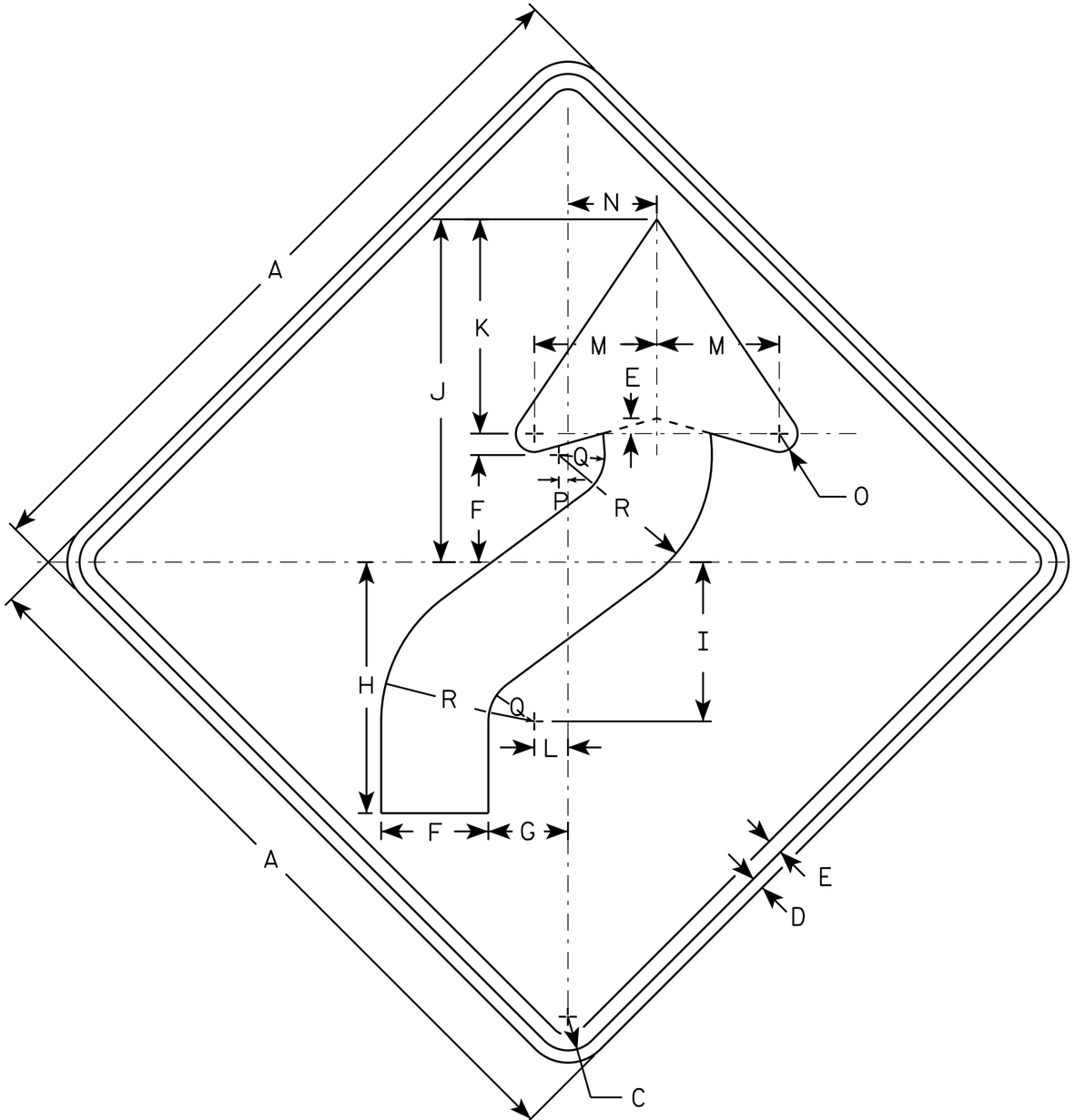

W01-4R

NOTES

1. Sign is Type II - Type F Reflective - reference WIS DOT Standard Specification for HIGHWAY and STRUCTURE CONSTRUCTION latest edition.
2. Color:
   Background - Orange
   Message - Black
3. Corners may be square or rounded when base material is plywood but borders shall be rounded as shown. When base material is metal, the corners and borders shall be rounded.
4. W01-4L is the same as W01-4R except the arrow is reversed along the vertical centerline.

SIZE	A	B	C	D	E	F	G	H	I	J	K	L	M	N	O	P	Q	R	S	T	U	V	W	X	Y	Z	Area sq. ft.
1	36		1 5/8	5/8	3/4	5 1/4	4	12 3/8	7 7/8	16 7/8	10 1/2	1 5/8	6	4 1/2	1	1/2	2 1/4	7 1/2									9.0
2S	48		2 1/4	3/4	1	7	5 1/4	16 1/2	10 1/2	22 1/2	14	2 1/4	8	6	1 1/4	5/8	3	10									16.0
2M	48		2 1/4	3/4	1	7	5 1/4	16 1/2	10 1/2	22 1/2	14	2 1/4	8	6	1 1/4	5/8	3	10									16.0
3	48		2 1/4	3/4	1	7	5 1/4	16 1/2	10 1/2	22 1/2	14	2 1/4	8	6	1 1/4	5/8	3	10									16.0
4	48		2 1/4	3/4	1	7	5 1/4	16 1/2	10 1/2	22 1/2	14	2 1/4	8	6	1 1/4	5/8	3	10									16.0
5	48		2 1/4	3/4	1	7	5 1/4	16 1/2	10 1/2	22 1/2	14	2 1/4	8	6	1 1/4	5/8	3	10									16.0

STANDARD SIGN
W01-4

WISCONSIN DEPT OF TRANSPORTATION

APPROVED Matthew R Rauch
for State Traffic Engineer

DATE 11/18/13 PLATE NO W01-4.1

PROJECT NO:	HWY:	COUNTY:		SHEET NO:	E

NOTES

1. Sign is Type II - Type F Reflective - reference WIS DOT Standard Specification for HIGHWAY and STRUCTURE CONSTRUCTION latest edition.
2. Color:
   Background - Orange
   Message - Black
3. Corners may be square or rounded when base material is plywood but borders shall be rounded as shown. When base material is metal, the corners and borders shall be rounded.

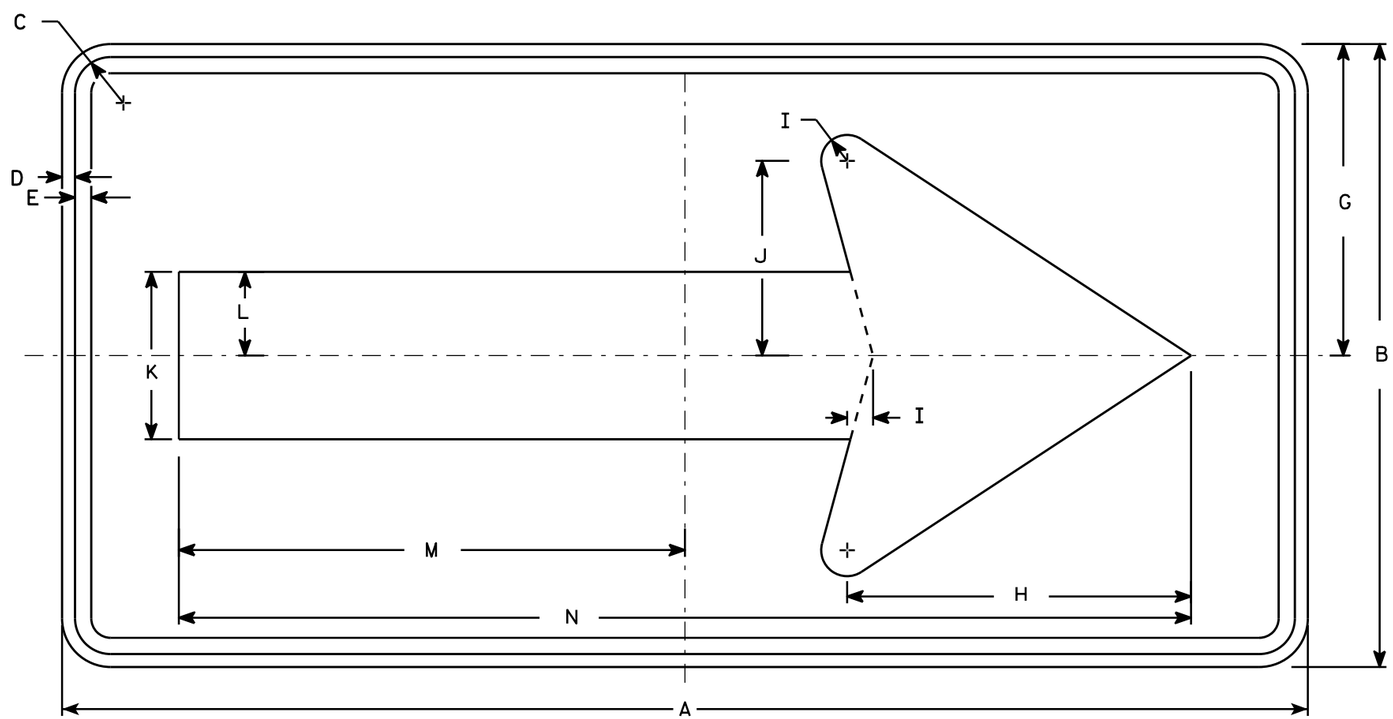

W01-6

SIZE	A	B	C	D	E	F	G	H	I	J	K	L	M	N	O	P	Q	R	S	T	U	V	W	X	Y	Z	Area sq. ft.
1																											
2S	48	24	1 3/8	1/2	5/8		12	13 1/4	1	7 1/2	6 1/2	3 1/4	19 1/2	39													8.0
2M	48	24	1 3/8	1/2	5/8		12	13 1/4	1	7 1/2	6 1/2	3 1/4	19 1/2	39													8.0
3	60	30	1 3/8	1/2	5/8		15	16 1/4	1 1/4	9 1/4	8	4	24 3/8	48 3/4													12.5
4	60	30	1 3/8	1/2	5/8		15	16 1/4	1 1/4	9 1/4	8	4	24 3/8	48 3/4													12.5
5	60	30	1 3/8	1/2	5/8		15	16 1/4	1 1/4	9 1/4	8	4	24 3/8	48 3/4													12.5

STANDARD SIGN
W01-6

WISCONSIN DEPT OF TRANSPORTATION

APPROVED Matthew R Rauch
for State Traffic Engineer

DATE 11/18/13 PLATE NO. W01-6.1

PROJECT NO: | HWY: | COUNTY: | SHEET NO: | E

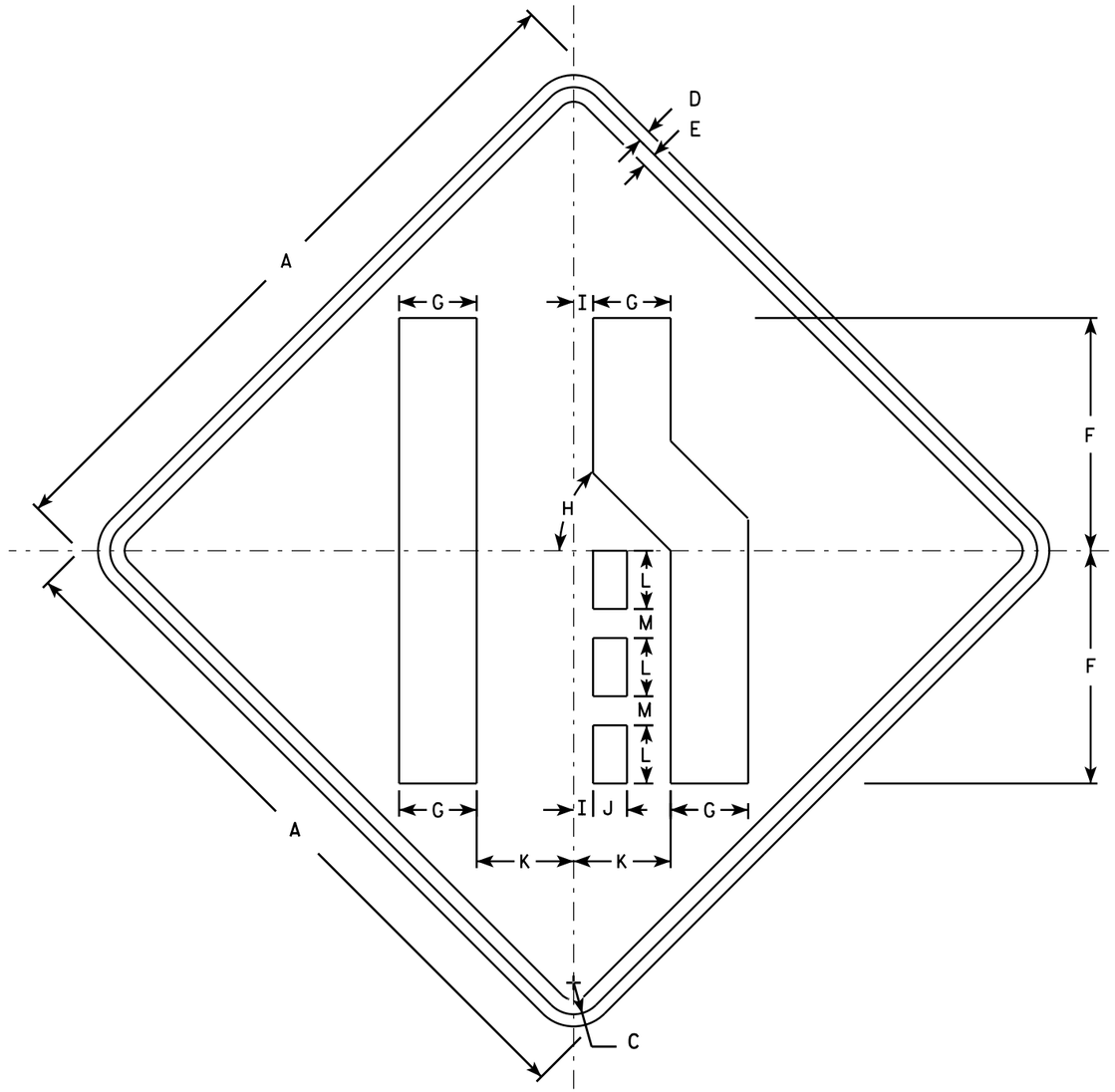

W04-2R

NOTES

1. Sign is Type II - Type F Reflective - reference WIS DOT Standard Specification for HIGHWAY and STRUCTURE CONSTRUCTION latest edition.
2. Color:
   Background - Orange
   Message - Black
3. Corners may be square or rounded when base material is plywood but borders shall be rounded as shown. When base material is metal, the corners and borders shall be rounded.
4. W04-2L is the same as W04-2R except the symbol is reversed along the vertical centerline.

SIZE	A	B	C	D	E	F	G	H	I	J	K	L	M	N	O	P	Q	R	S	T	U	V	W	X	Y	Z	Area sq. ft.
1	36		1 5/8	5/8	3/4	12	4	45°	1	1 3/4	5	3	1 1/2														9.0
2S	48		2 1/4	3/4	1	16	5 3/8	45°	1 1/4	2 3/8	6 3/4	4	2														16.0
2M	48		2 1/4	3/4	1	16	5 3/8	45°	1 1/4	2 3/8	6 3/4	4	2														16.0
3	48		2 1/4	3/4	1	16	5 3/8	45°	1 1/4	2 3/8	6 3/4	4	2														16.0
4	48		2 1/4	3/4	1	16	5 3/8	45°	1 1/4	2 3/8	6 3/4	4	2														16.0
5	48		2 1/4	3/4	1	16	5 3/8	45°	1 1/4	2 3/8	6 3/4	4	2														16.0

STANDARD SIGN
W04-2

WISCONSIN DEPT OF TRANSPORTATION

APPROVED Matthew R Rauch
for State Traffic Engineer

DATE 11/20/13 PLATE 415 W04-2.1

PROJECT NO:

SHEET NO: E

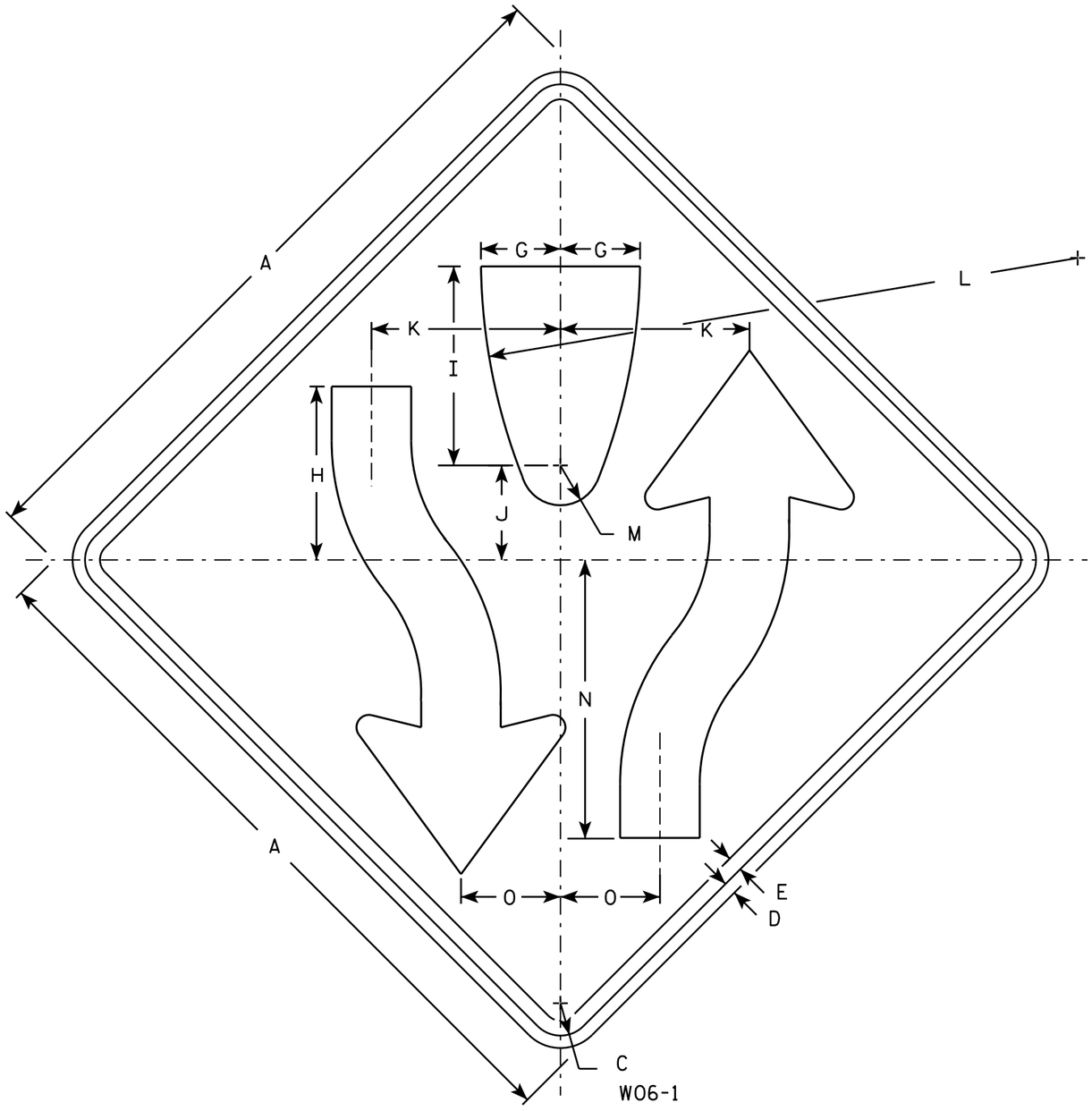

W06-1

NOTES

1. Sign is Type II - Type F Reflective - reference WIS DOT Standard Specification for HIGHWAY and STRUCTURE CONSTRUCTION latest edition.
2. Color:
   Background - Orange
   Message - Black
3. Corners may be square or rounded when base material is plywood but borders shall be rounded as shown. When base material is metal, the corners and borders shall be rounded.
4. W06-2 same as W06-1 but is rotated 180° when mounted.

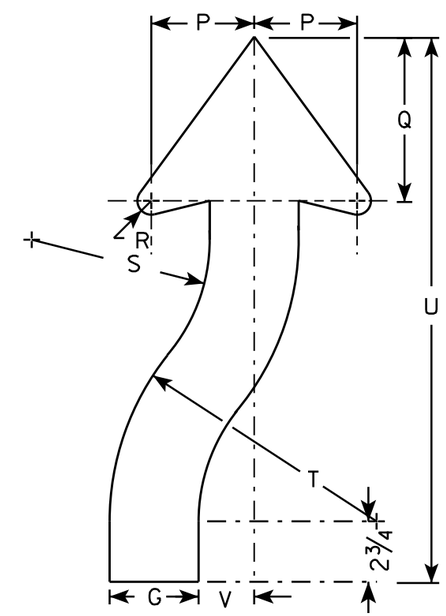

ARROW DETAIL

SIZE	A	B	C	D	E	F	G	H	I	J	K	L	M	N	O	P	Q	R	S	T	U	V	W	X	Y	Z	Area sq. ft.
1	36		1 5/8	5/8	3/4		4	8 3/4	10	4 3/4	9 1/2	30	2	14	5	4 5/8	7 3/8	7/8	8	12	24 1/2	2 1/2					9.0
2S	48		2 1/4	3/4	1		5 3/8	11 5/8	13 3/8	6 3/8	12 5/8	40	2 5/8	18 5/8	6 5/8	6 1/4	9 7/8	1 1/4	10 5/8	16	32 5/8	3 3/8					16.0
2M	48		2 1/4	3/4	1		5 3/8	11 5/8	13 3/8	6 3/8	12 5/8	40	2 5/8	18 5/8	6 5/8	6 1/4	9 7/8	1 1/4	10 5/8	16	32 5/8	3 3/8					16.0
3	48		2 1/4	3/4	1		5 3/8	11 5/8	13 3/8	6 3/8	12 5/8	40	2 5/8	18 5/8	6 5/8	6 1/4	9 7/8	1 1/4	10 5/8	16	32 5/8	3 3/8					16.0
4	48		2 1/4	3/4	1		5 3/8	11 5/8	13 3/8	6 3/8	12 5/8	40	2 5/8	18 5/8	6 5/8	6 1/4	9 7/8	1 1/4	10 5/8	16	32 5/8	3 3/8					16.0
5	48		2 1/4	3/4	1		5 3/8	11 5/8	13 3/8	6 3/8	12 5/8	40	2 5/8	18 5/8	6 5/8	6 1/4	9 7/8	1 1/4	10 5/8	16	32 5/8	3 3/8					16.0

STANDARD SIGN
W06-1 & W06-2

WISCONSIN DEPT OF TRANSPORTATION

APPROVED Matthew R Rauch
for State Traffic Engineer

DATE 11/20/13 PLATE NO W06-1.1

416

PROJECT NO:	HWY:	COUNTY:		SHEET NO:	E

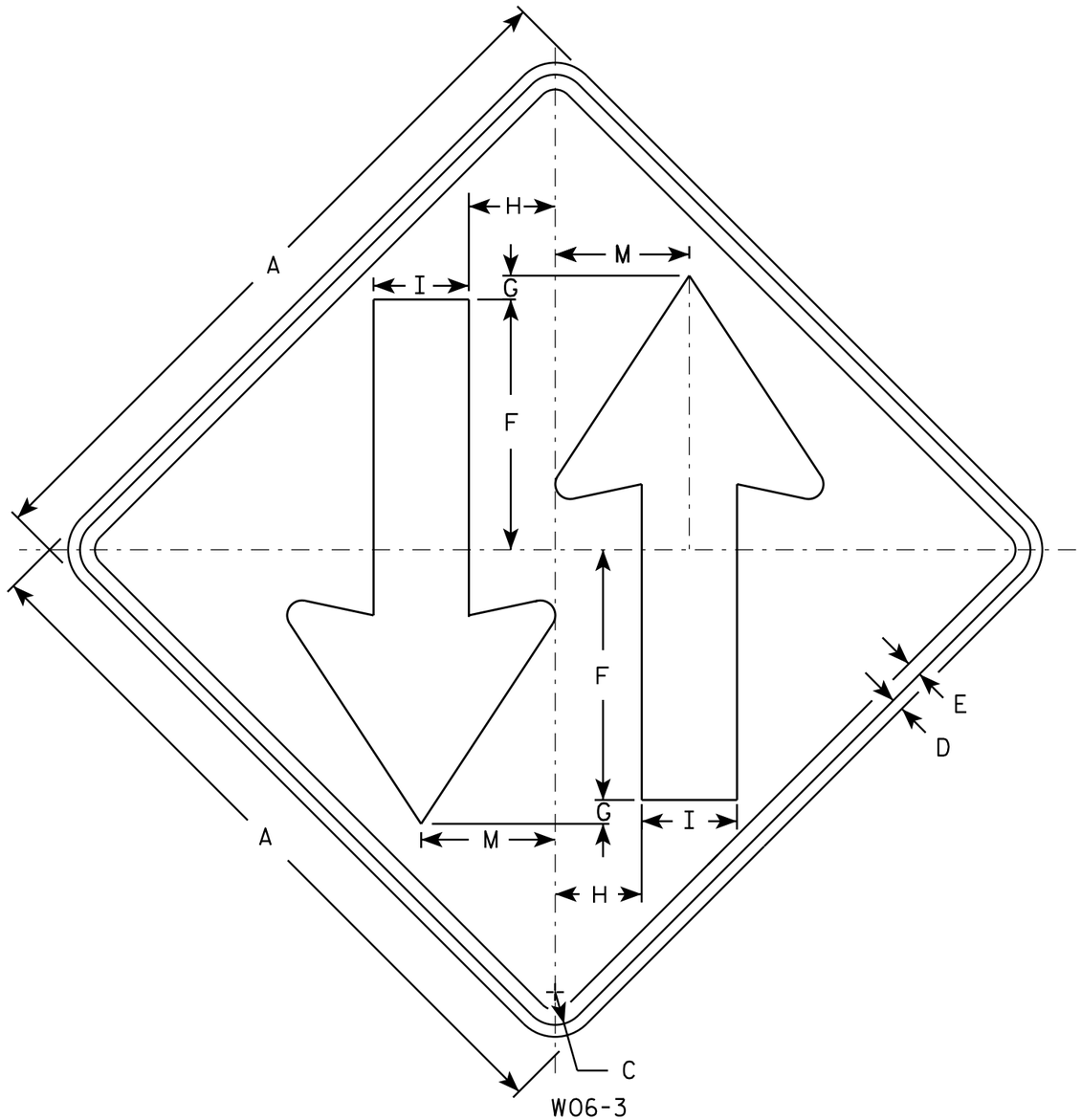

W06-3

NOTES

1. Sign is Type II - Type F Reflective - reference WIS DOT Standard Specification for HIGHWAY and STRUCTURE CONSTRUCTION latest edition.
2. Color:
   Background - Orange
   Message - Black
3. Corners may be square or rounded when base material is plywood but borders shall be rounded as shown. When base material is metal, the corners and borders shall be rounded.

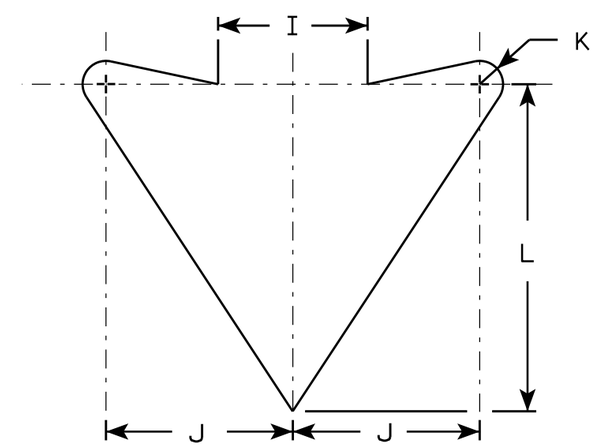

ARROW DETAIL

SIZE	A	B	C	D	E	F	G	H	I	J	K	L	M	N	O	P	Q	R	S	T	U	V	W	X	Y	Z	Area sq. ft.
1	36		1 5/8	5/8	3/4	12	1	4 1/4	5	6	3/4	10 1/2	6 3/4														9.0
2S	48		2 1/4	3/4	1	15 1/2	1	6	6	8	1	14	9														16.0
2M	48		2 1/4	3/4	1	15 1/2	1	6	6	8	1	14	9														16.0
3	48		2 1/4	3/4	1	15 1/2	1	6	6	8	1	14	9														16.0
4	48		2 1/4	3/4	1	15 1/2	1	6	6	8	1	14	9														16.0
5	48		2 1/4	3/4	1	15 1/2	1	6	6	8	1	14	9														16.0

STANDARD SIGN
W06-3

WISCONSIN DEPT OF TRANSPORTATION

APPROVED Matthew R Rauch
for State Traffic Engineer

DATE 11/20/13 PLATE 417 W06-3.1

PROJECT NO:	HWY:	COUNTY:		SHEET NO:	E

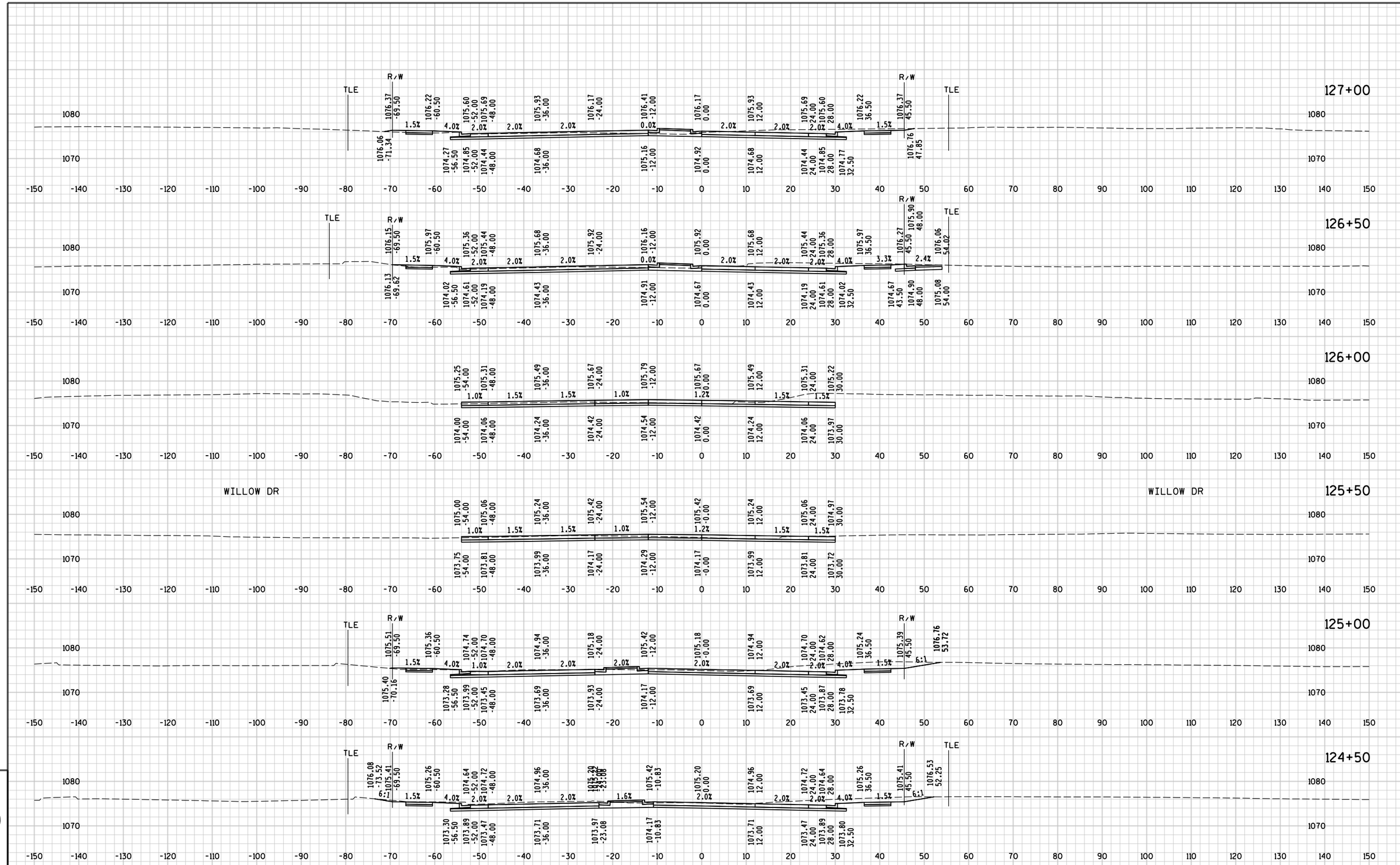

9

9

STATE PROJECT NO : 6414-00-78 - -	HWY: BUSINESS 51	COUNTY : PORTAGE	CROSS SECTIONS - POST ROAD	SHEET NO: 418	E

FILE NAME : P:\UZ\W\Witnc\112545\5-final-dsgn\51-drawings\40-TransHwy\090201 xs.dgn PLOT TIME : 2:37:08 PM PLOT DATE : 8/2/2015 PLOT BY : SEH PLOT NAME : PLOT SCALE : N/A

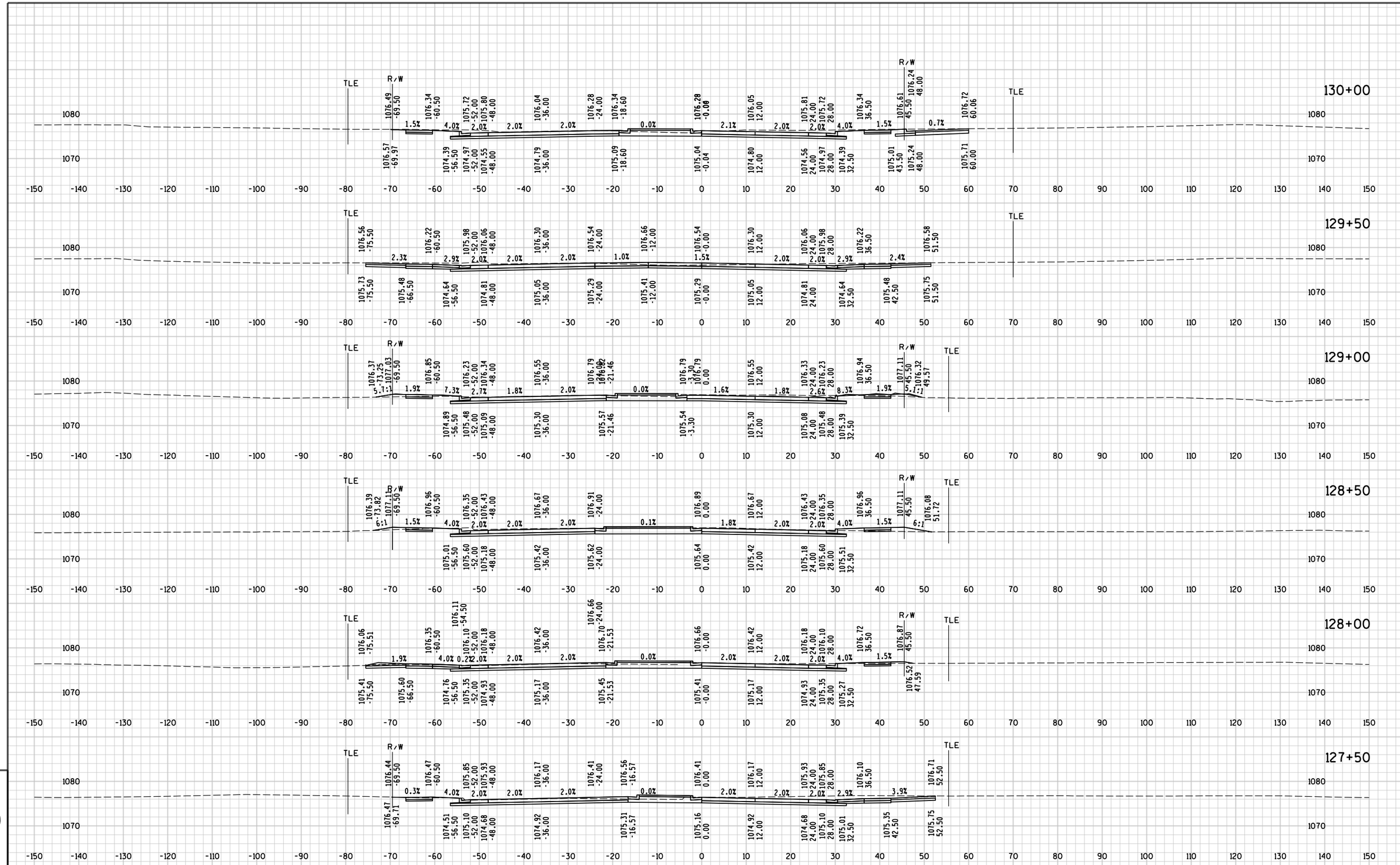

9

9

STATE PROJECT NO : 6414-00-78 - -	HWY: BUSINESS 51	COUNTY : PORTAGE	CROSS SECTIONS - POST ROAD	SHEET NO: 419	E

FILE NAME : P:\UZ\W\Witnc\112545\5-final-dsgn\51-drawings\40-TransHwy\090201 xs.dgn PLOT TIME : 2:37:08 PM PLOT DATE : 8/2/2015 PLOT BY : SEH PLOT NAME : PLOT SCALE : N/A

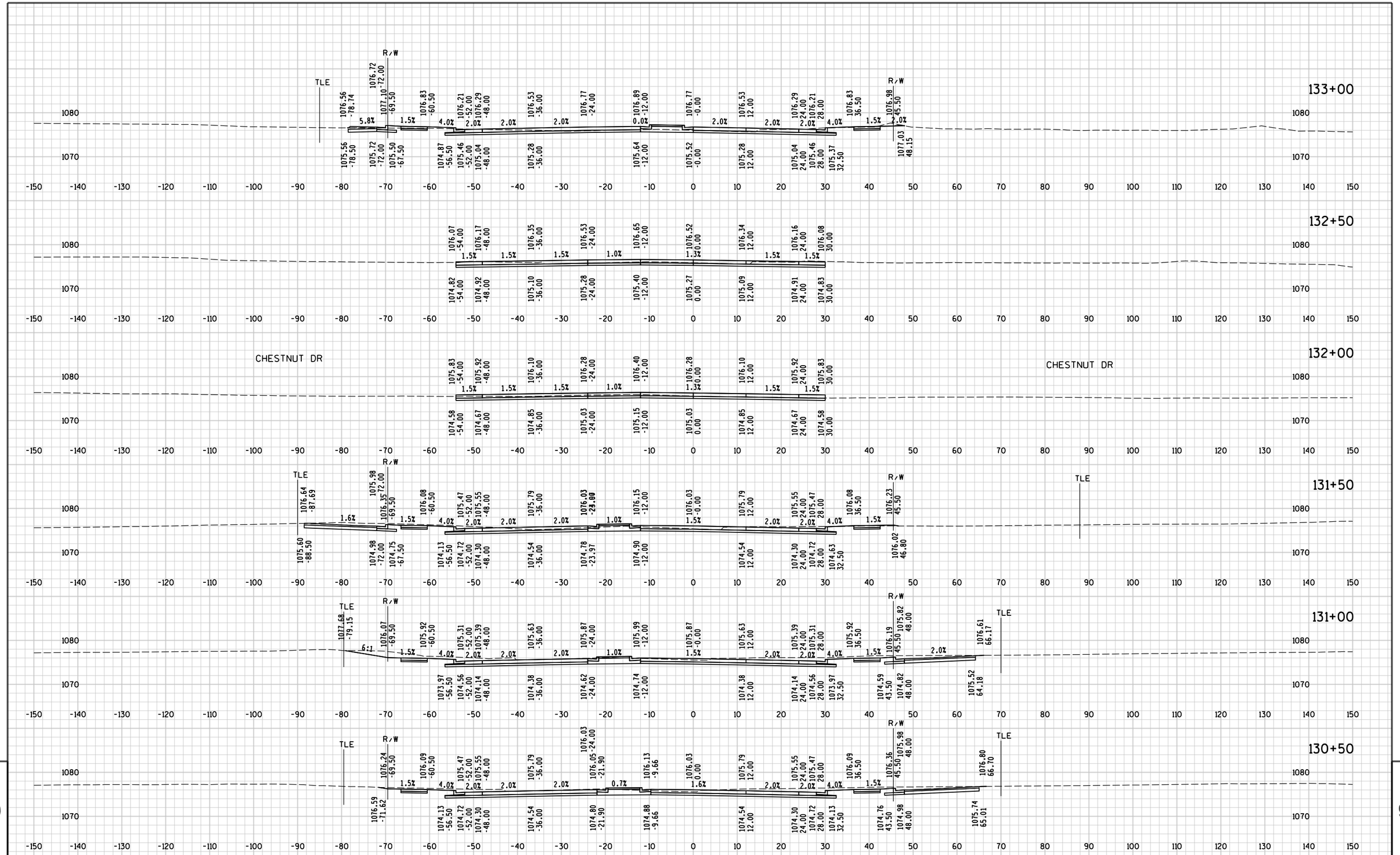

9

9

STATE PROJECT NO : 6414-00-78 - -	HWY: BUSINESS 51	COUNTY : PORTAGE	CROSS SECTIONS - POST ROAD	SHEET NO: 420	E

FILE NAME : P:\UZ\W\Witnc\112545\5-final-dsgn\51-drawings\40-TransHwy\090201 xs.dgn PLOT TIME : 2:37:08 PM PLOT DATE : 8/2/2015 PLOT BY : SEH PLOT NAME : PLOT SCALE : N/A

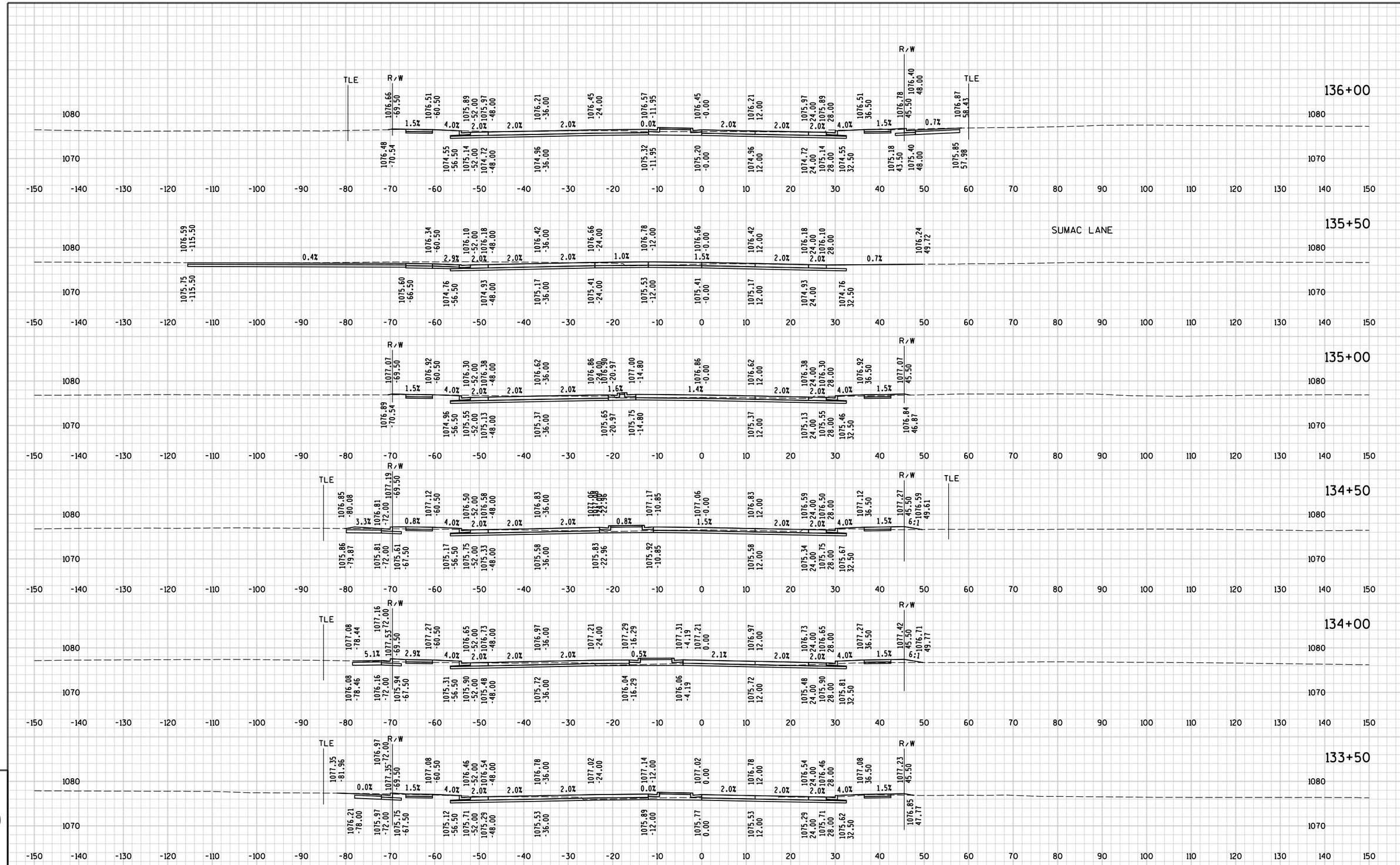

9

9

STATE PROJECT NO : 6414-00-78 - -	HWY: BUSINESS 51	COUNTY : PORTAGE	CROSS SECTIONS - POST ROAD	SHEET NO: 421	E

FILE NAME : P:\UZ\W\Witnc\112545\5-final-dsgn\51-drawings\40-TransHwy\090201 xs.dgn PLOT TIME : 2:37:09 PM PLOT DATE : 8/2/2015 PLOT BY : SEH PLOT NAME : PLOT SCALE : N/A

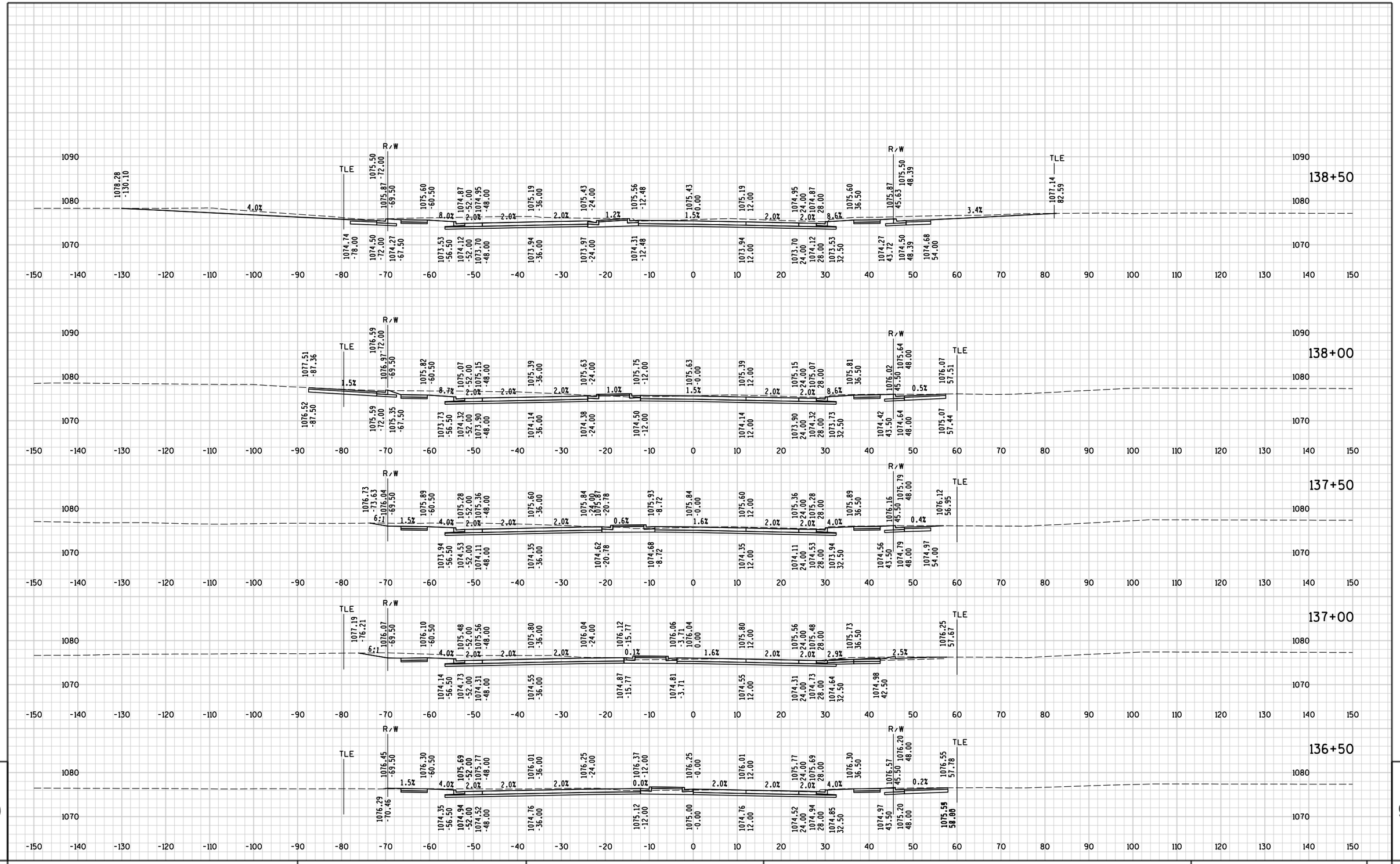

9

9

STATE PROJECT NO : 6414-00-78 - -	HWY: BUSINESS 51	COUNTY : PORTAGE	CROSS SECTIONS - POST ROAD	SHEET NO: 422	E

FILE NAME : P:\UZ\W\Witnc\112545\5-final-dsgn\51-drawings\40-TransHwy\090201 xs.dgn PLOT TIME : 2:37:09 PM PLOT DATE : 8/2/2015 PLOT BY : SEH PLOT NAME : PLOT SCALE : N/A

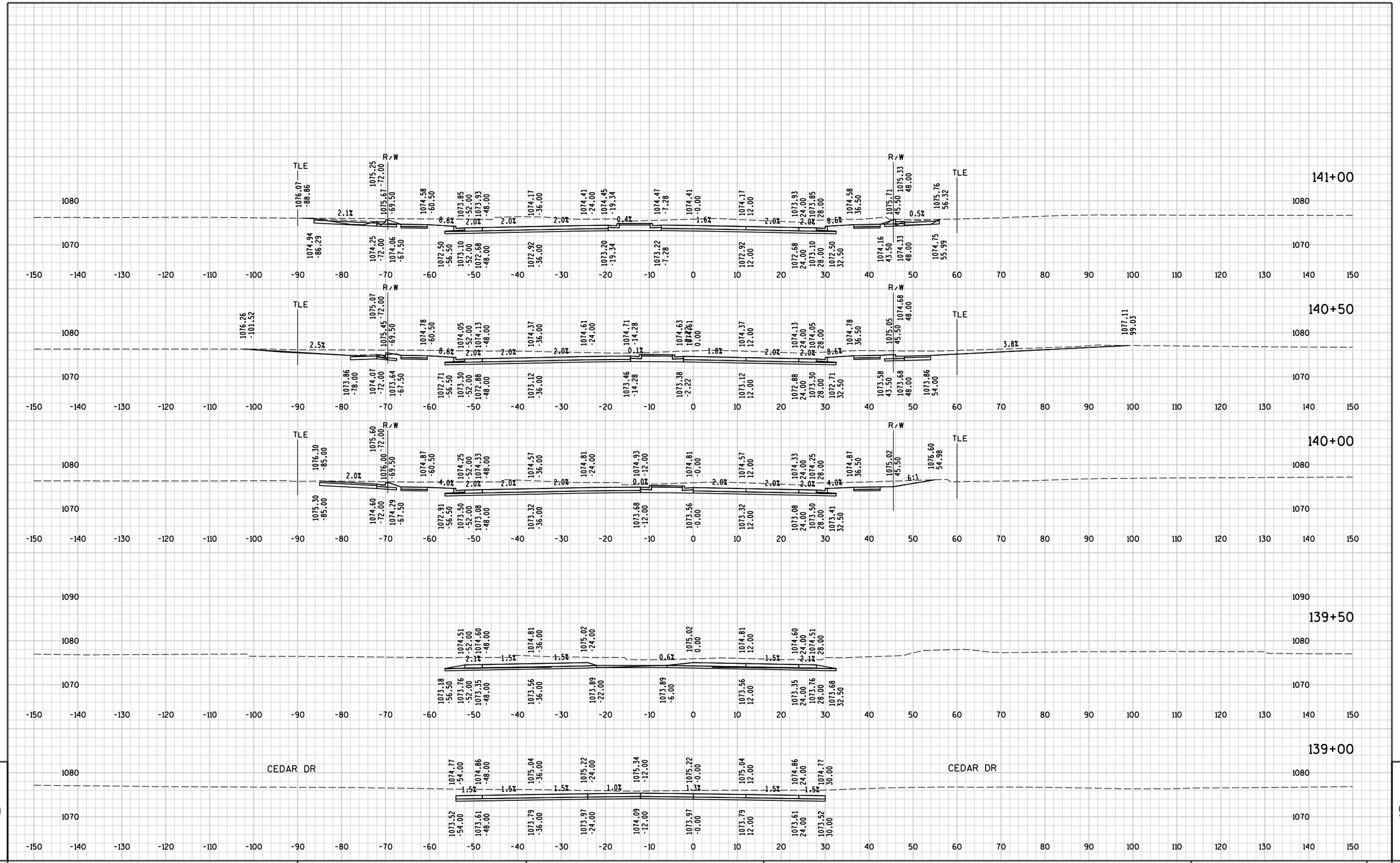

9

STATE PROJECT NO : 6414-00-78 - -	HWY: BUSINESS 51	COUNTY : PORTAGE	CROSS SECTIONS - POST ROAD	SHEET NO: 423	E

FILE NAME : P:\UZ\W\Witnc\112545\5-final-dsgn\51-drawings\40-TransHwy\090201 xs.dgn PLOT TIME : 2:37:09 PM PLOT DATE : 8/2/2015 PLOT BY : SEH PLOT NAME : PLOT SCALE : N/A

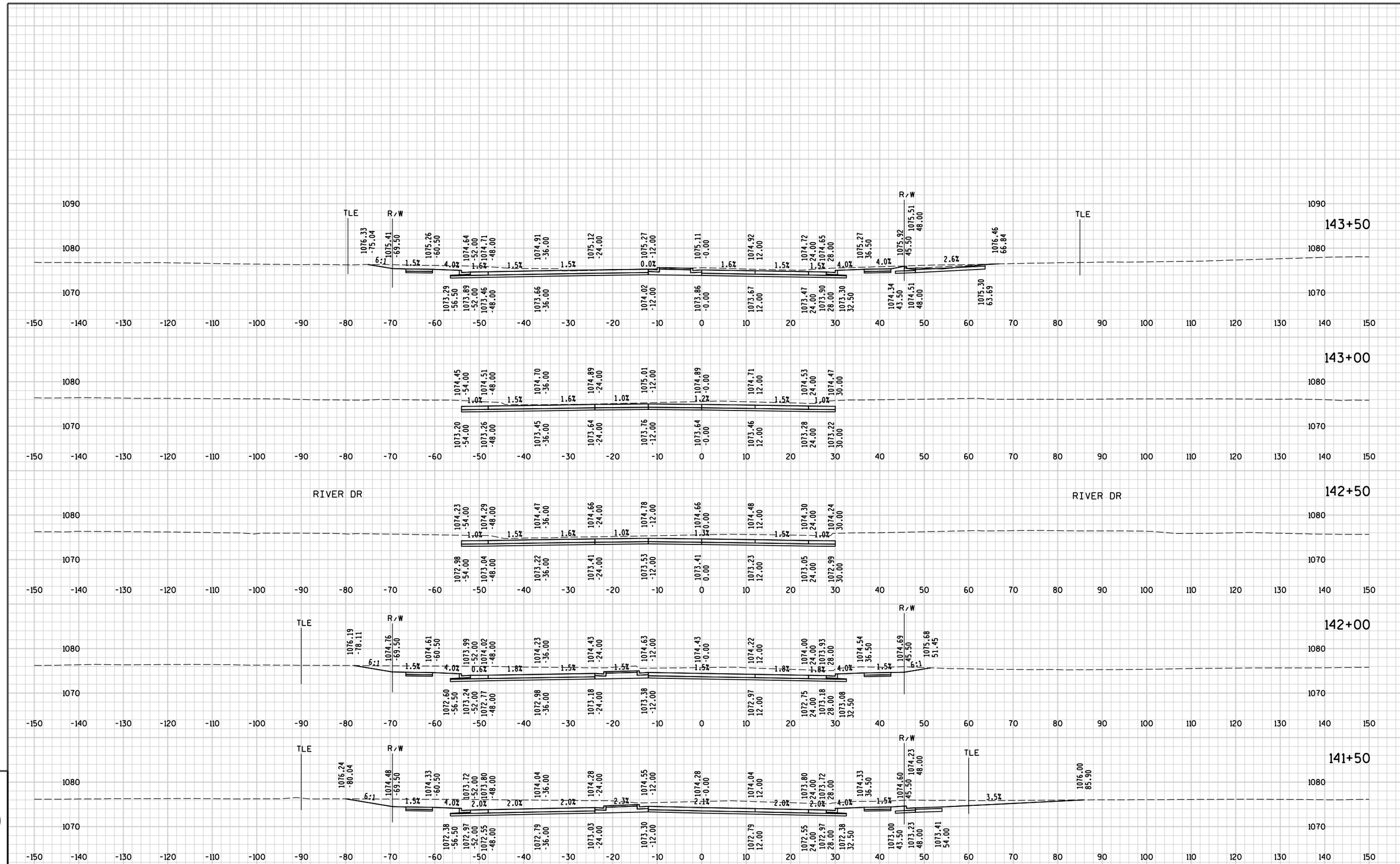

9

9

STATE PROJECT NO : 6414-00-78 - -	HWY: BUSINESS 51	COUNTY : PORTAGE	CROSS SECTIONS - POST ROAD	SHEET NO: 424	E

FILE NAME : P:\UZ\W\Witnc\112545\5-final-dsgn\51-drawings\40-TransHwy\090201 xs.dgn PLOT TIME : 2:37:10 PM PLOT DATE : 8/2/2015 PLOT BY : SEH PLOT NAME : PLOT SCALE : N/A

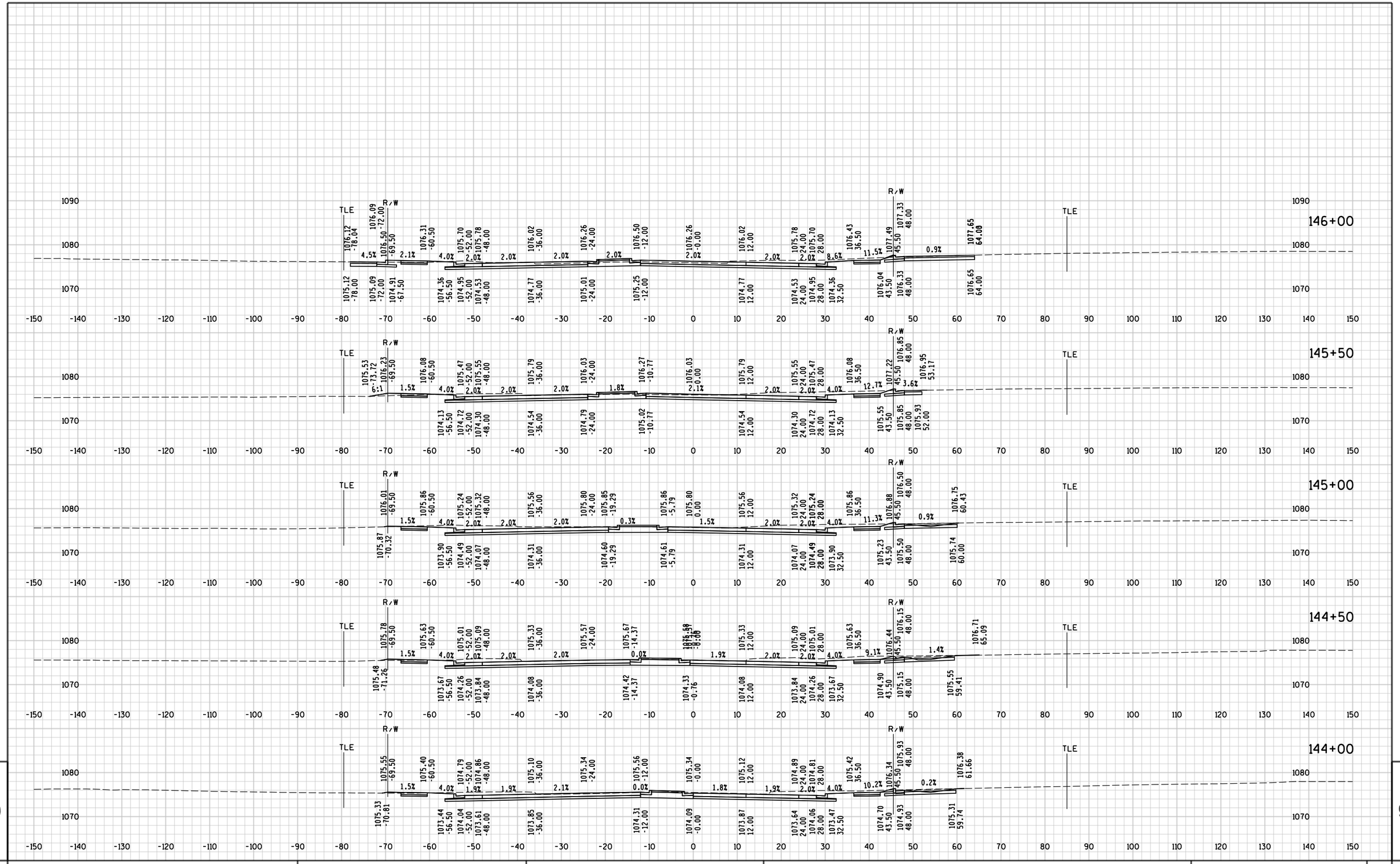

9

9

STATE PROJECT NO : 6414-00-78 - -	HWY: BUSINESS 51	COUNTY : PORTAGE	CROSS SECTIONS - POST ROAD	SHEET NO: 425	E

FILE NAME : P:\UZ\W\Witnc\112545\5-final-dsgn\51-drawings\40-TransHwy\090201 xs.dgn PLOT TIME : 2:37:10 PM PLOT DATE : 8/2/2015 PLOT BY : SEH PLOT NAME : PLOT SCALE : N/A

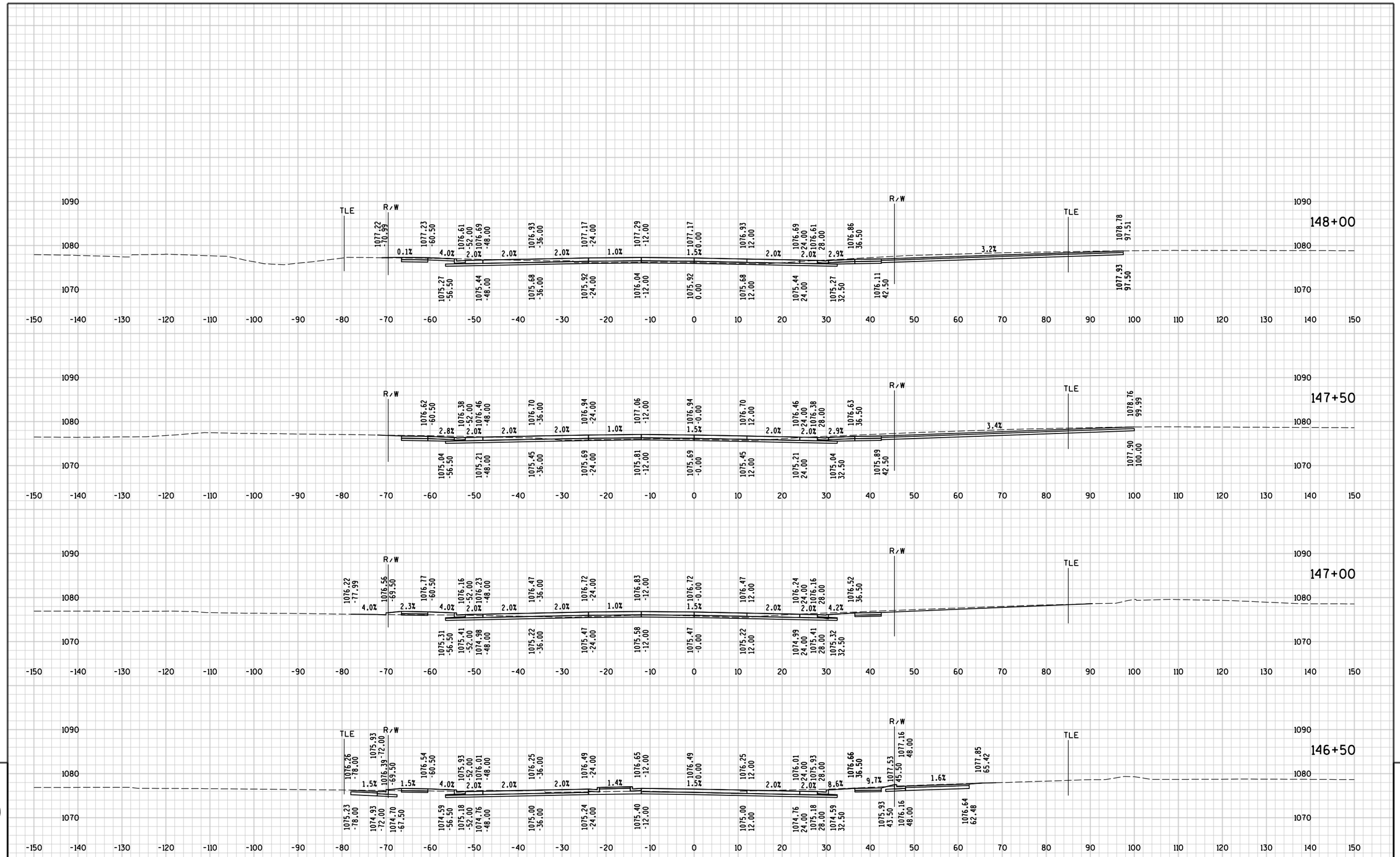

9

9

STATE PROJECT NO : 6414-00-78 - -	HWY: BUSINESS 51	COUNTY : PORTAGE	CROSS SECTIONS - POST ROAD	SHEET NO: 426	E

FILE NAME : P:\UZ\W\Witnc\112545\5-final-dsgn\51-drawings\40-TransHwy\090201 xs.dgn PLOT TIME : 2:37:10 PM PLOT DATE : 8/2/2015 PLOT BY : SEH PLOT NAME : PLOT SCALE : N/A

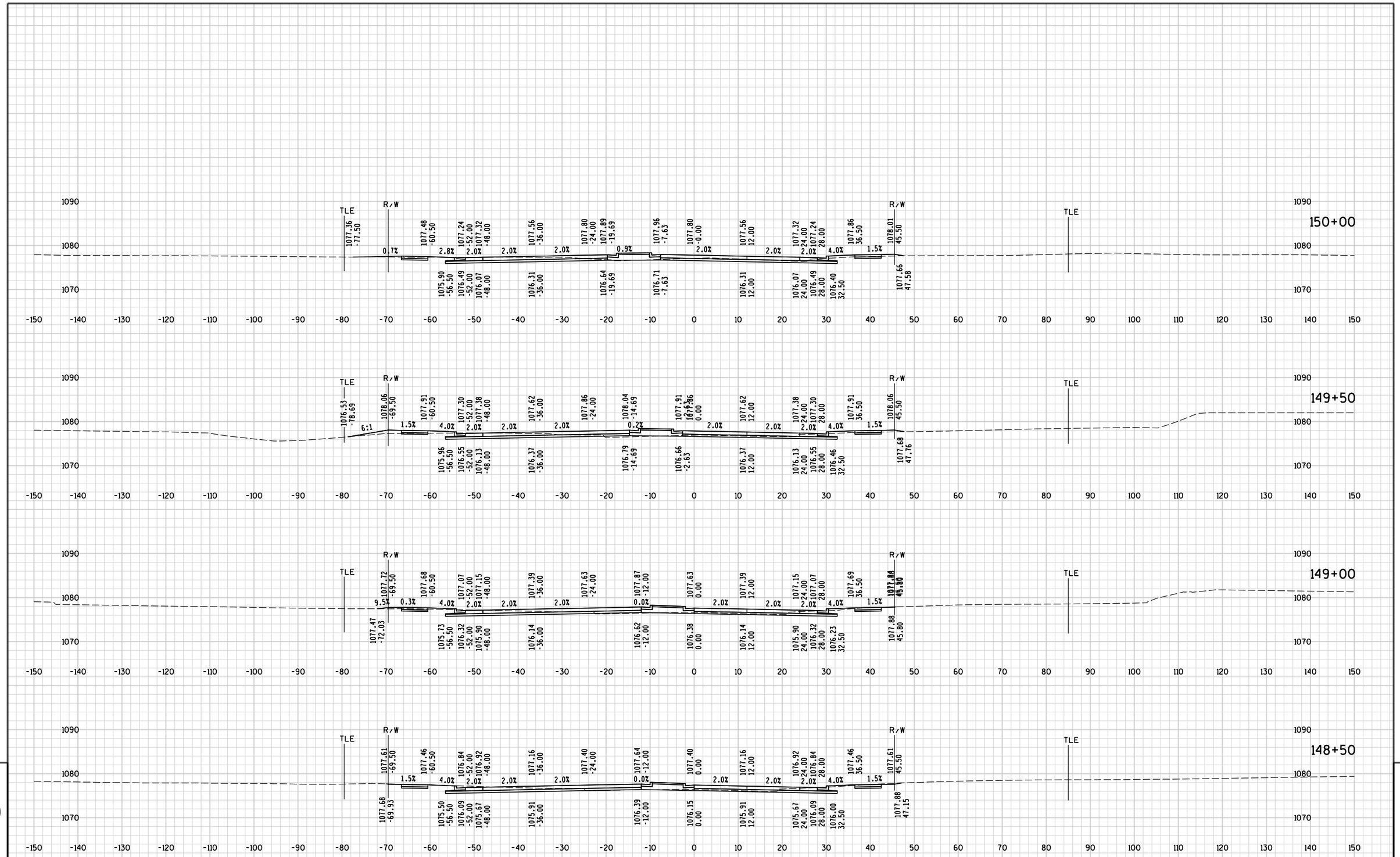

9

9

STATE PROJECT NO : 6414-00-78 - -	HWY: BUSINESS 51	COUNTY : PORTAGE	CROSS SECTIONS - POST ROAD	SHEET NO: 427	E

FILE NAME : P:\UZ\W\Witnc\112545\5-final-dsgn\51-drawings\40-TransHwy\090201 xs.dgn PLOT TIME : 2:37:11 PM PLOT DATE : 8/2/2015 PLOT BY : SEH PLOT NAME : PLOT SCALE : N/A

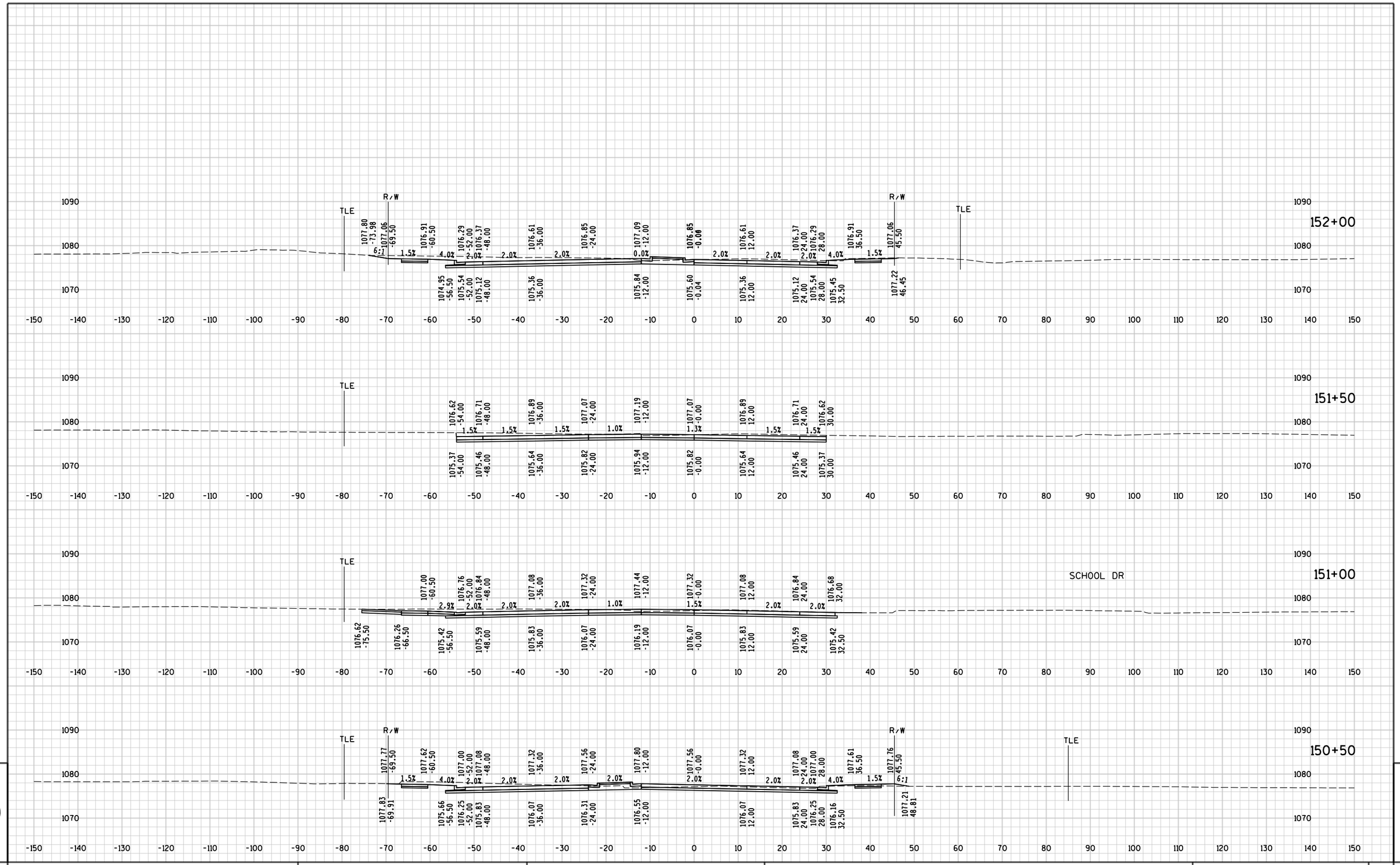

9

STATE PROJECT NO : 6414-00-78 - -	HWY: BUSINESS 51	COUNTY : PORTAGE	CROSS SECTIONS - POST ROAD	SHEET NO: 428	E

FILE NAME : P:\UZ\W\Witnc\112545\5-final-dsgn\51-drawings\40-TransHwy\090201 xs.dgn PLOT TIME : 2:37:11 PM PLOT DATE : 8/2/2015 PLOT BY : SEH PLOT NAME : PLOT SCALE : N/A

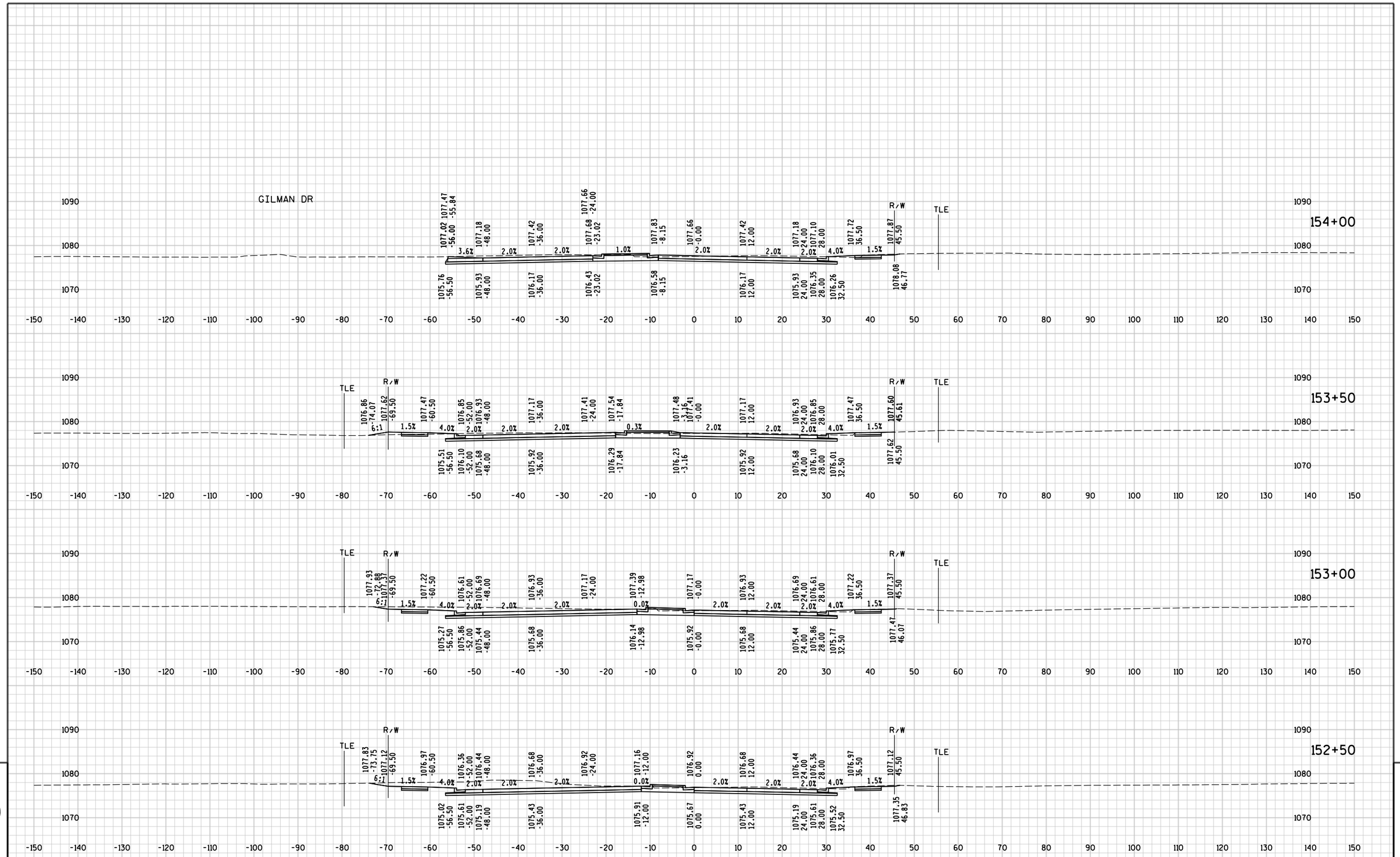

9

9

STATE PROJECT NO : 6414-00-78 - -	HWY: BUSINESS 51	COUNTY : PORTAGE	CROSS SECTIONS - POST ROAD	SHEET NO: 429	E

FILE NAME : P:\UZ\W\Witnc\112545\5-final-dsgn\51-drawings\40-TransHwy\090201 xs.dgn PLOT TIME : 2:37:11 PM PLOT DATE : 8/2/2015 PLOT BY : SEH PLOT NAME : PLOT SCALE : N/A

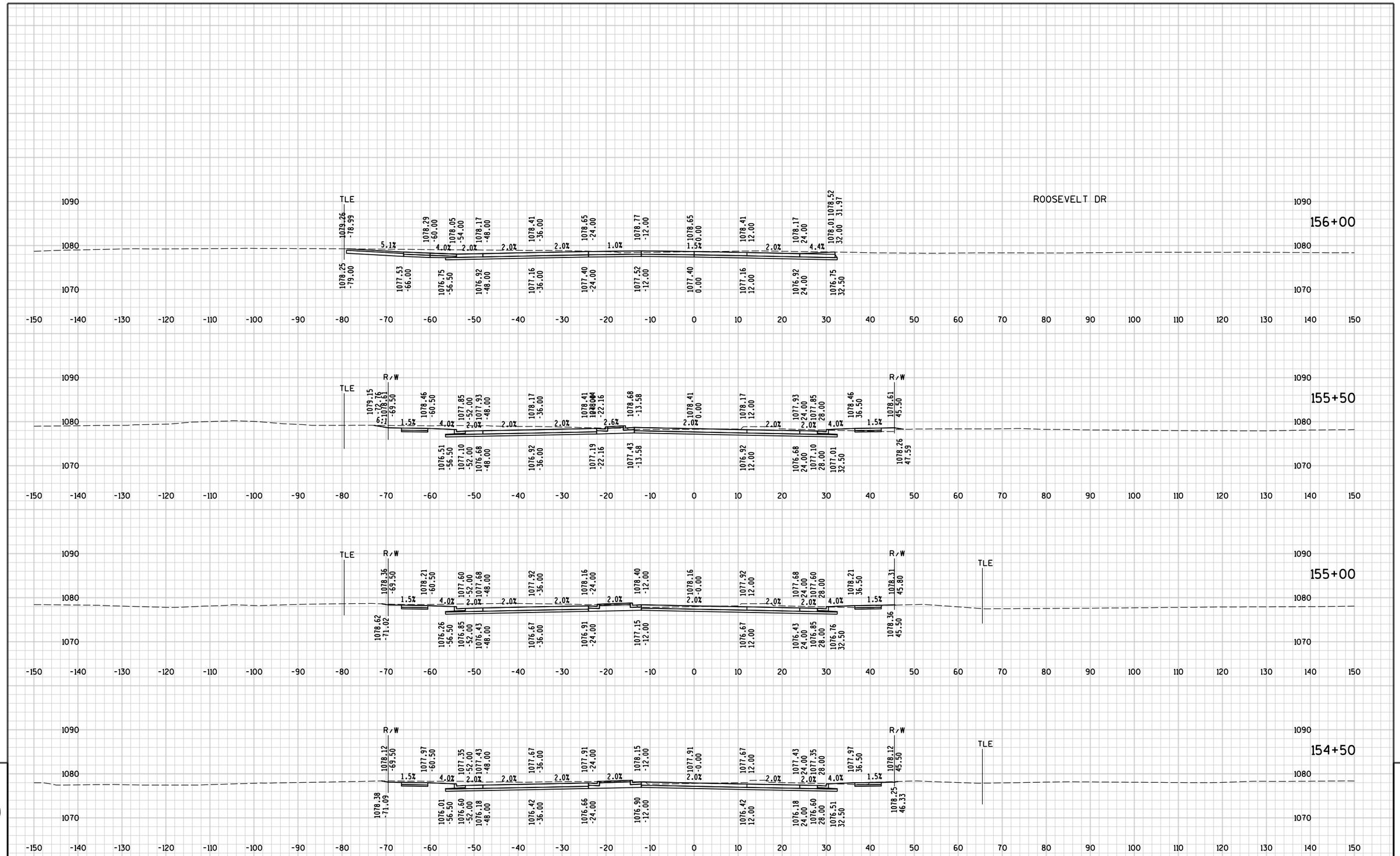

9

9

STATE PROJECT NO : 6414-00-78 - -	HWY: BUSINESS 51	COUNTY : PORTAGE	CROSS SECTIONS - POST ROAD	SHEET NO: 430	E

FILE NAME : P:\UZ\W\Witnc\112545\5-final-dsgn\51-drawings\40-TransHwy\090201 xs.dgn PLOT TIME : 2:37:11 PM PLOT DATE : 8/2/2015 PLOT BY : SEH PLOT NAME : PLOT SCALE : N/A

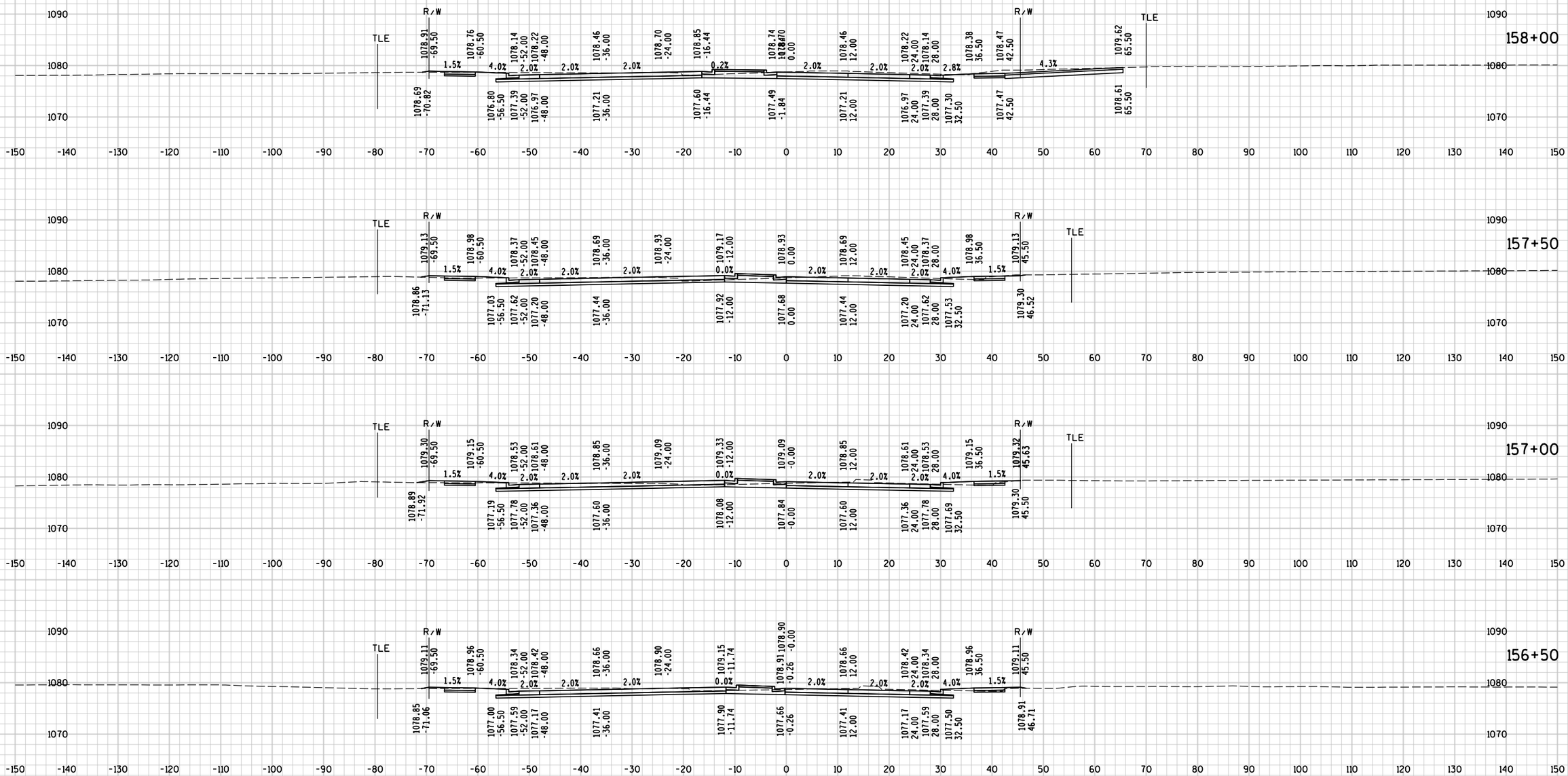

9

9

STATE PROJECT NO : 6414-00-78 - -	HWY: BUSINESS 51	COUNTY : PORTAGE	CROSS SECTIONS - POST ROAD	SHEET NO: 431	E

FILE NAME : P:\UZ\W\Witnc\112545\5-final-dsgn\51-drawings\40-TransHwy\090201 xs.dgn PLOT TIME : 2:37:12 PM PLOT DATE : 8/2/2015 PLOT BY : SEH PLOT NAME : PLOT SCALE : N/A

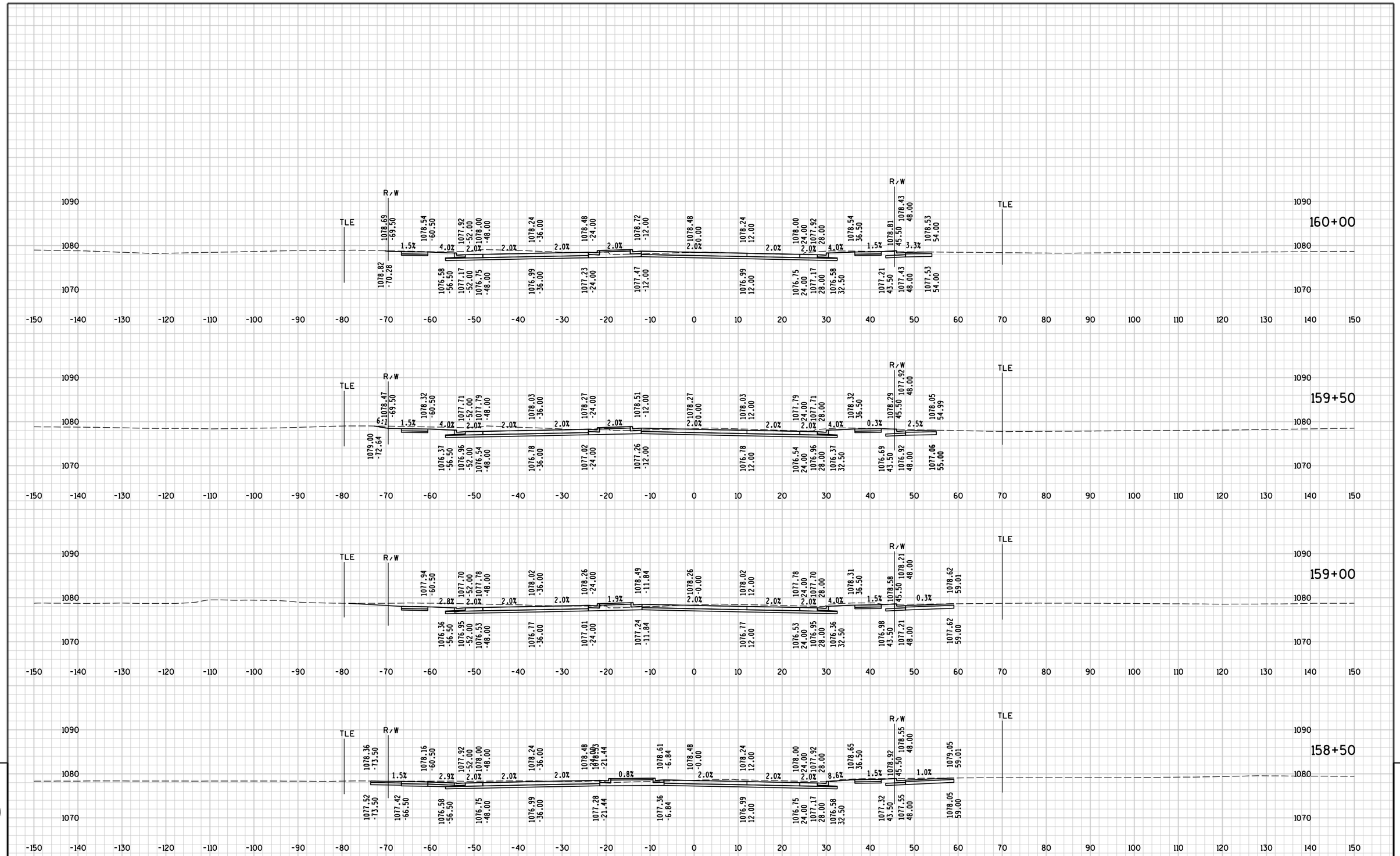

9

9

STATE PROJECT NO : 6414-00-78 - -	HWY: BUSINESS 51	COUNTY : PORTAGE	CROSS SECTIONS - POST ROAD	SHEET NO: 432	E

FILE NAME : P:\UZ\W\Witnc\112545\5-final-dsgn\51-drawings\40-TransHwy\090201 xs.dgn PLOT TIME : 2:37:12 PM PLOT DATE : 8/2/2015 PLOT BY : SEH PLOT NAME : PLOT SCALE : N/A

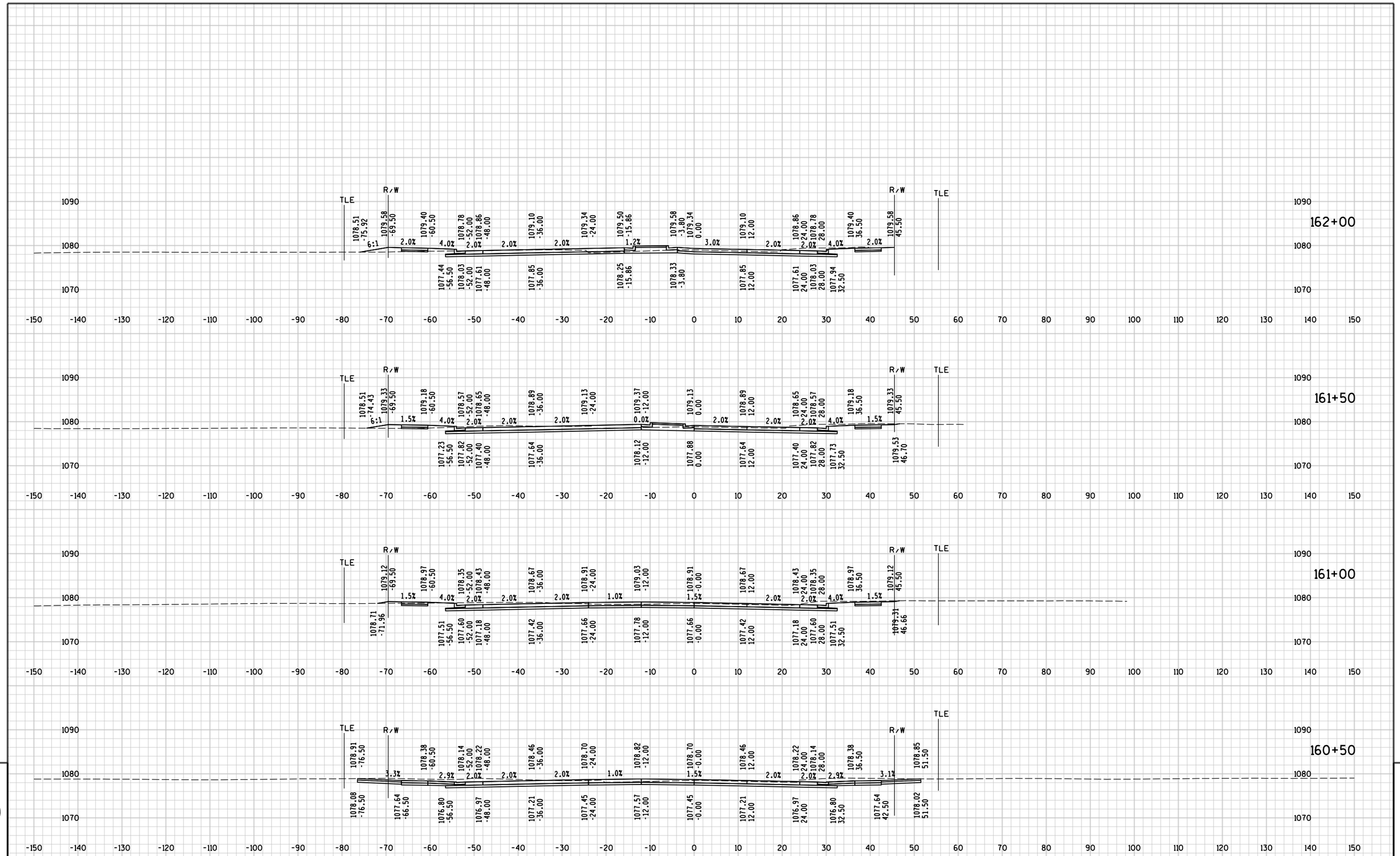

9

9

STATE PROJECT NO : 6414-00-78 - -	HWY: BUSINESS 51	COUNTY : PORTAGE	CROSS SECTIONS - POST ROAD	SHEET NO: 433	E

FILE NAME : P:\UZ\W\Witnc\112545\5-final-dsgn\51-drawings\40-TransHwy\090201 xs.dgn PLOT TIME : 2:37:12 PM PLOT DATE : 8/2/2015 PLOT BY : SEH PLOT NAME : PLOT SCALE : N/A

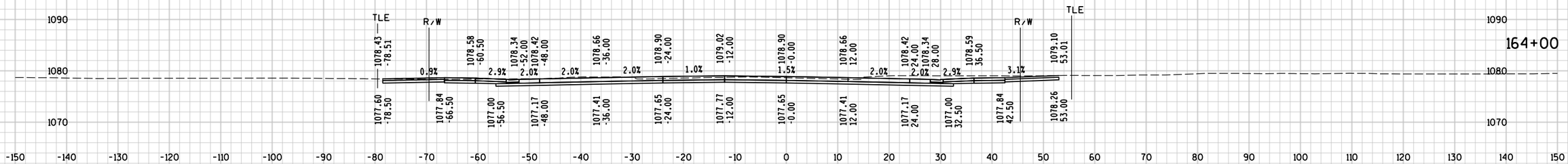

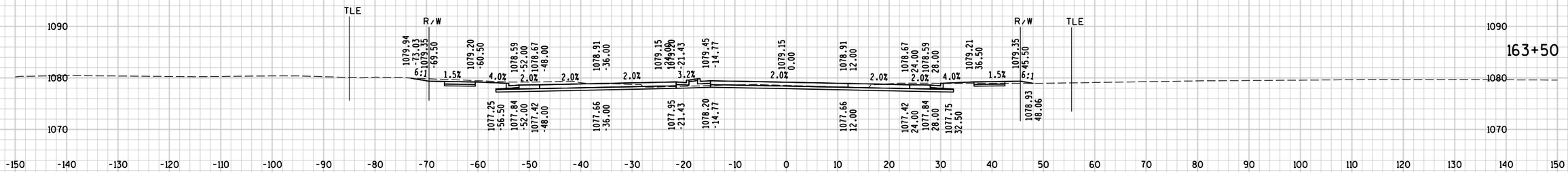

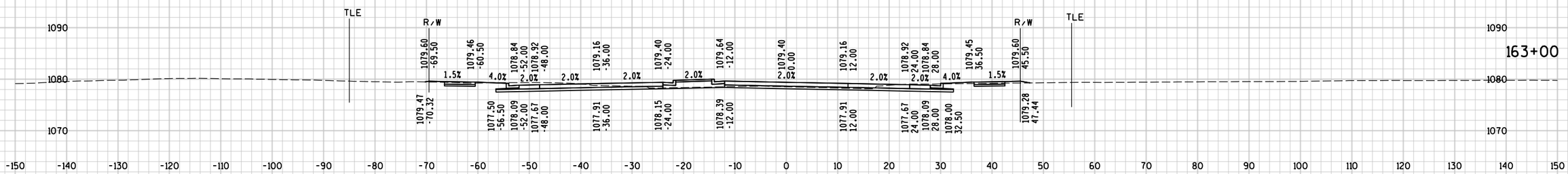

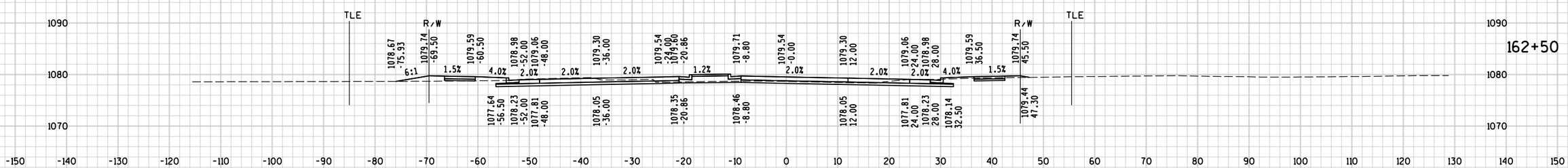

9

9

STATE PROJECT NO : 6414-00-78 - -	HWY: BUSINESS 51	COUNTY : PORTAGE	CROSS SECTIONS - POST ROAD	SHEET NO: 434	E

FILE NAME : P:\UZ\W\Witnc\112545\5-final-dsgn\51-drawings\40-TransHwy\090201 xs.dgn PLOT TIME : 2:37:12 PM PLOT DATE : 8/2/2015 PLOT BY : SEH PLOT NAME : PLOT SCALE : N/A

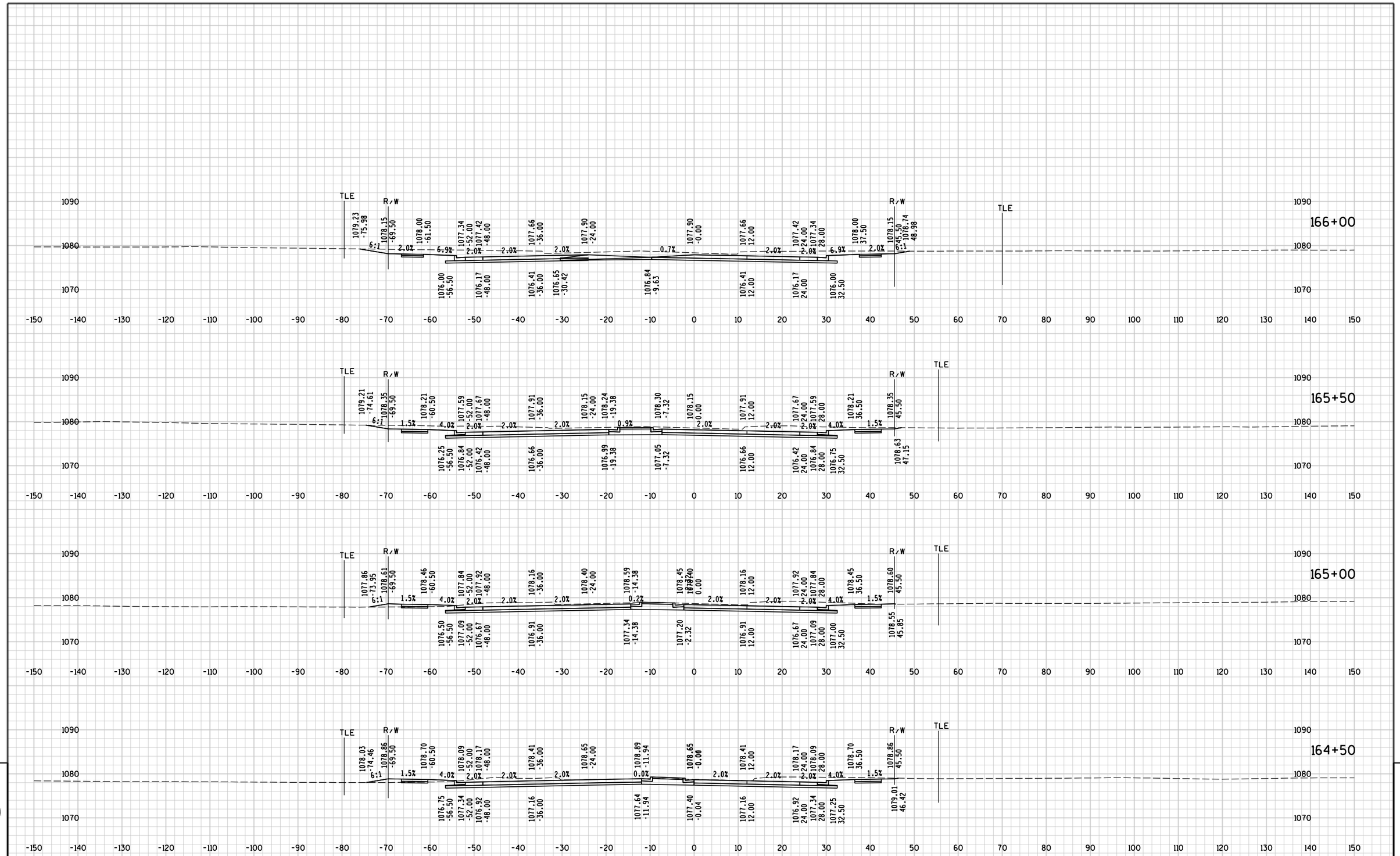

9

9

STATE PROJECT NO : 6414-00-78 - -	HWY: BUSINESS 51	COUNTY : PORTAGE	CROSS SECTIONS - POST ROAD	SHEET NO: 435	E

FILE NAME : P:\UZ\W\Witnc\112545\5-final-dsgn\51-drawings\40-TransHwy\090201 xs.dgn PLOT TIME : 2:37:13 PM PLOT DATE : 8/2/2015 PLOT BY : SEH PLOT NAME : PLOT SCALE : N/A

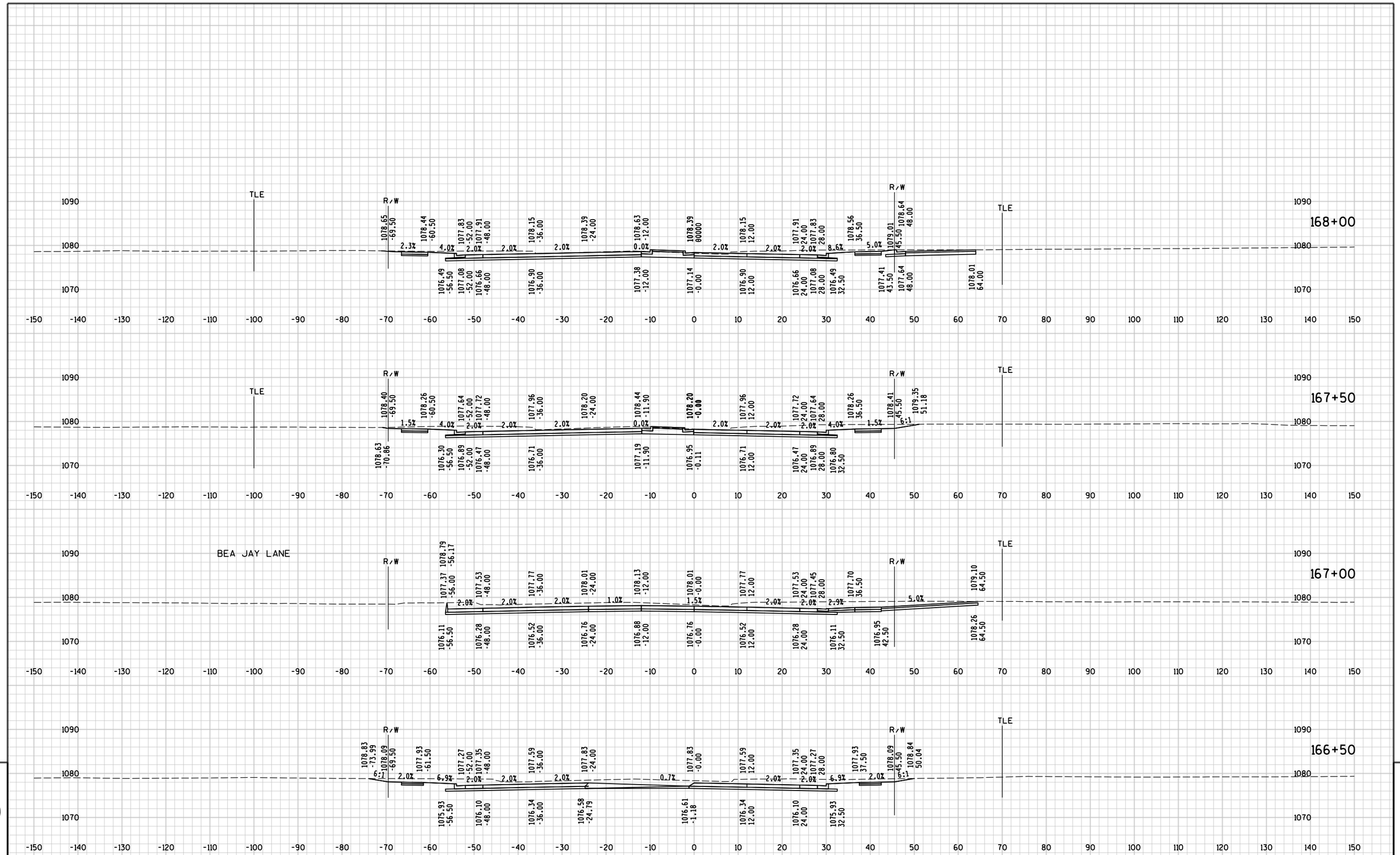

9

9

STATE PROJECT NO : 6414-00-78 - -	HWY: BUSINESS 51	COUNTY : PORTAGE	CROSS SECTIONS - POST ROAD	SHEET NO: 436	E

FILE NAME : P:\UZ\W\Witnc\112545\5-final-dsgn\51-drawings\40-TransHwy\090201 xs.dgn PLOT TIME : 2:37:13 PM PLOT DATE : 8/2/2015 PLOT BY : SEH PLOT NAME : PLOT SCALE : N/A

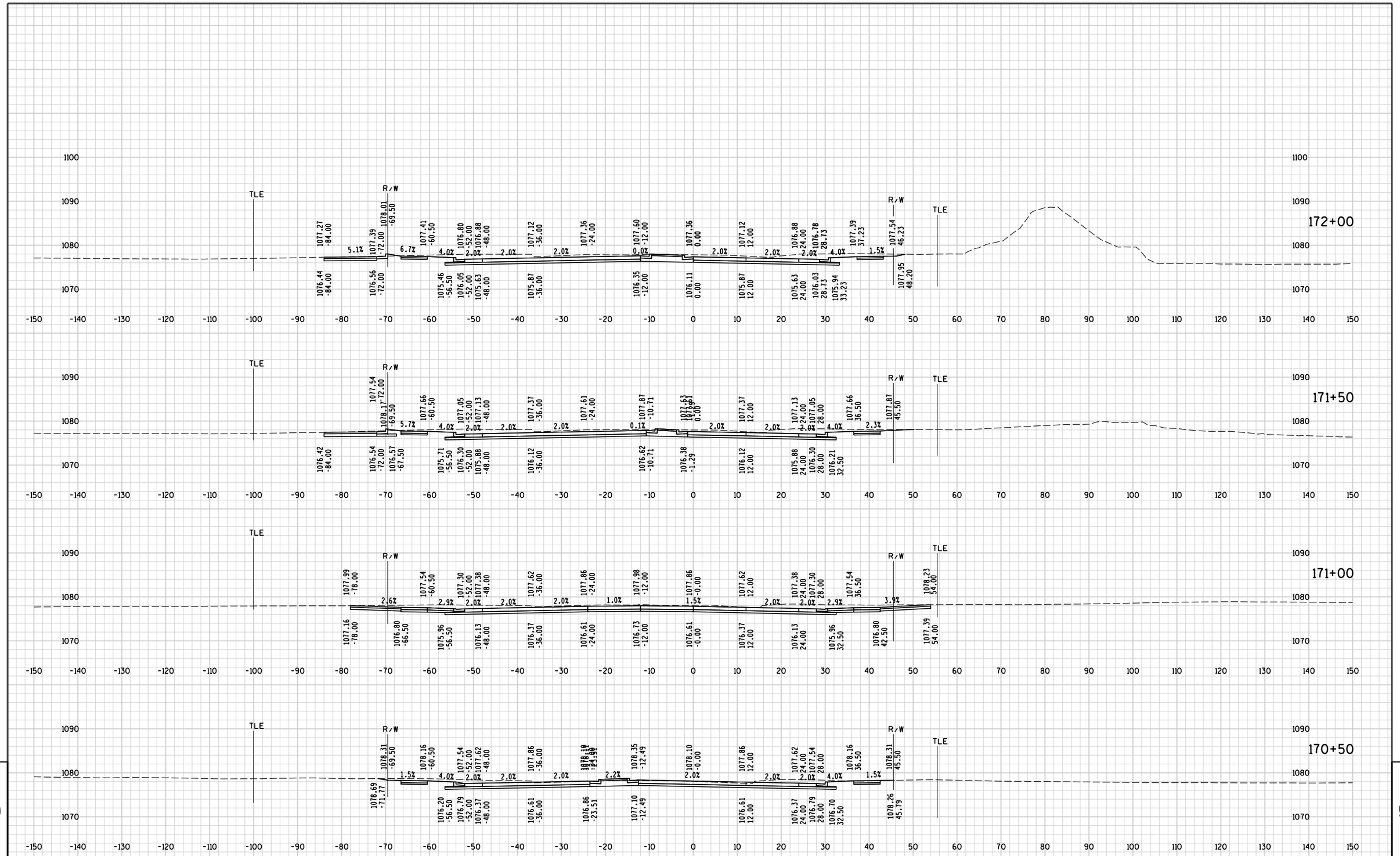

9

9

STATE PROJECT NO : 6414-00-78 - -	HWY: BUSINESS 51	COUNTY : PORTAGE	CROSS SECTIONS - POST ROAD	SHEET NO: 437	E

FILE NAME : P:\UZ\W\Witnc\112545\5-final-dsgn\51-drawings\40-TransHwy\090201 xs.dgn PLOT TIME : 2:37:13 PM PLOT DATE : 8/2/2015 PLOT BY : SEH PLOT NAME : PLOT SCALE : N/A

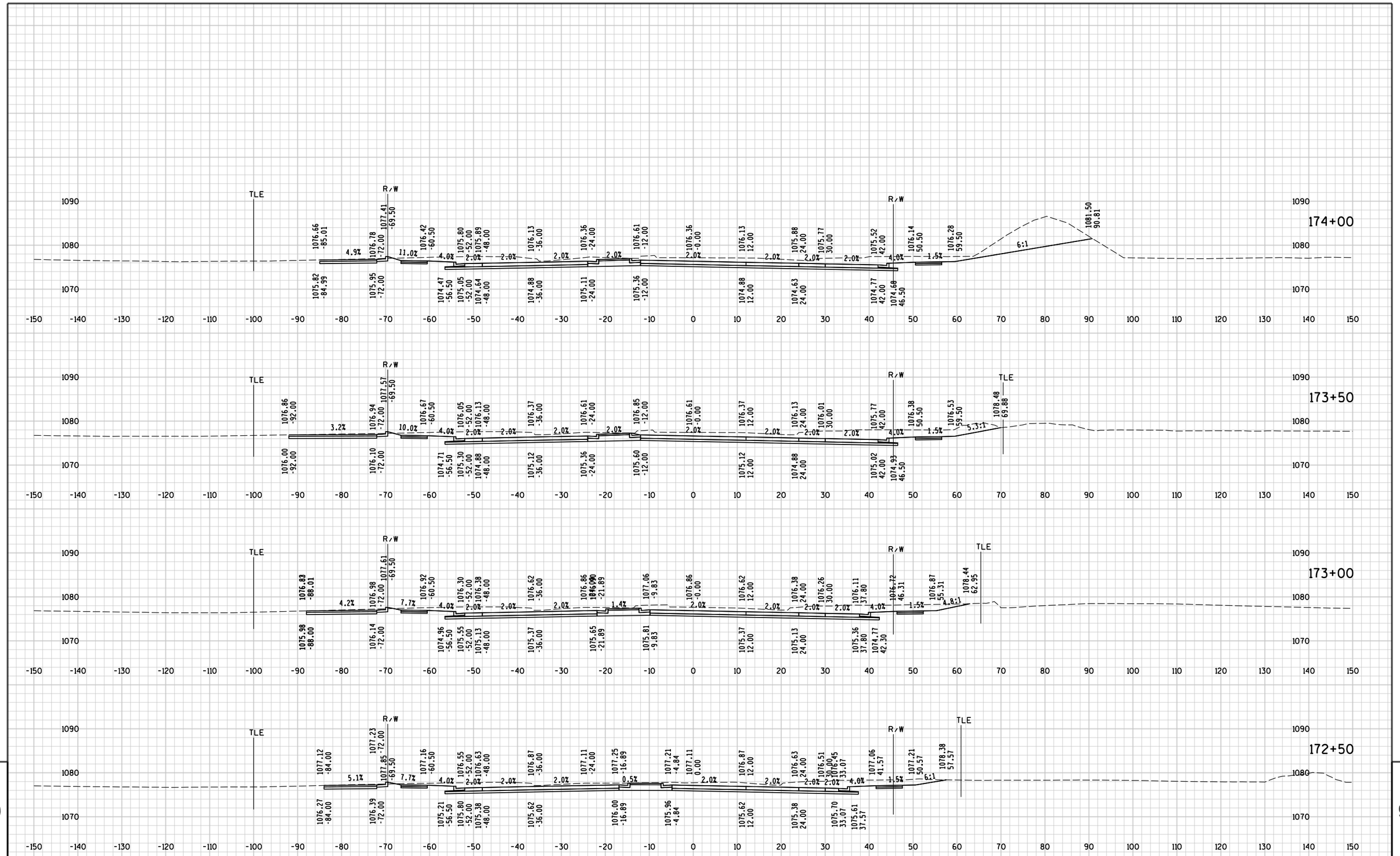

9

9

STATE PROJECT NO : 6414-00-78 - -	HWY: BUSINESS 51	COUNTY : PORTAGE	CROSS SECTIONS - POST ROAD	SHEET NO: 438	E

FILE NAME : P:\UZ\W\Witnc\112545\5-final-dsgn\51-drawings\40-TransHwy\090201 xs.dgn PLOT TIME : 2:37:14 PM PLOT DATE : 8/2/2015 PLOT BY : SEH PLOT NAME : PLOT SCALE : N/A

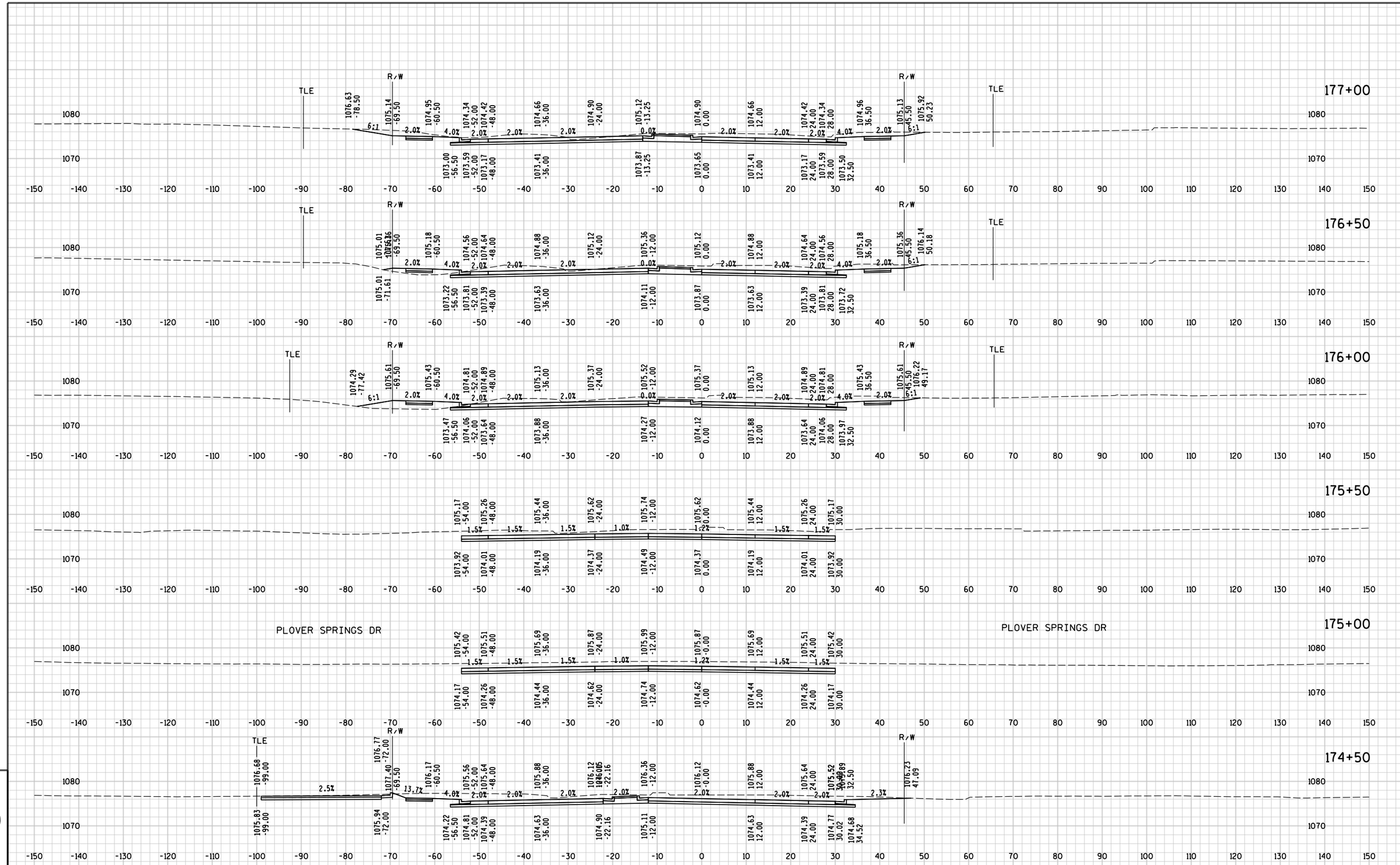

9

9

STATE PROJECT NO : 6414-00-78 - -	HWY: BUSINESS 51	COUNTY : PORTAGE	CROSS SECTIONS - POST ROAD	SHEET NO: 439	E

FILE NAME : P:\UZ\W\Witnc\112545\5-final-dsgn\51-drawings\40-TransHwy\090201 xs.dgn PLOT TIME : 2:37:14 PM PLOT DATE : 8/2/2015 PLOT BY : SEH PLOT NAME : PLOT SCALE : N/A

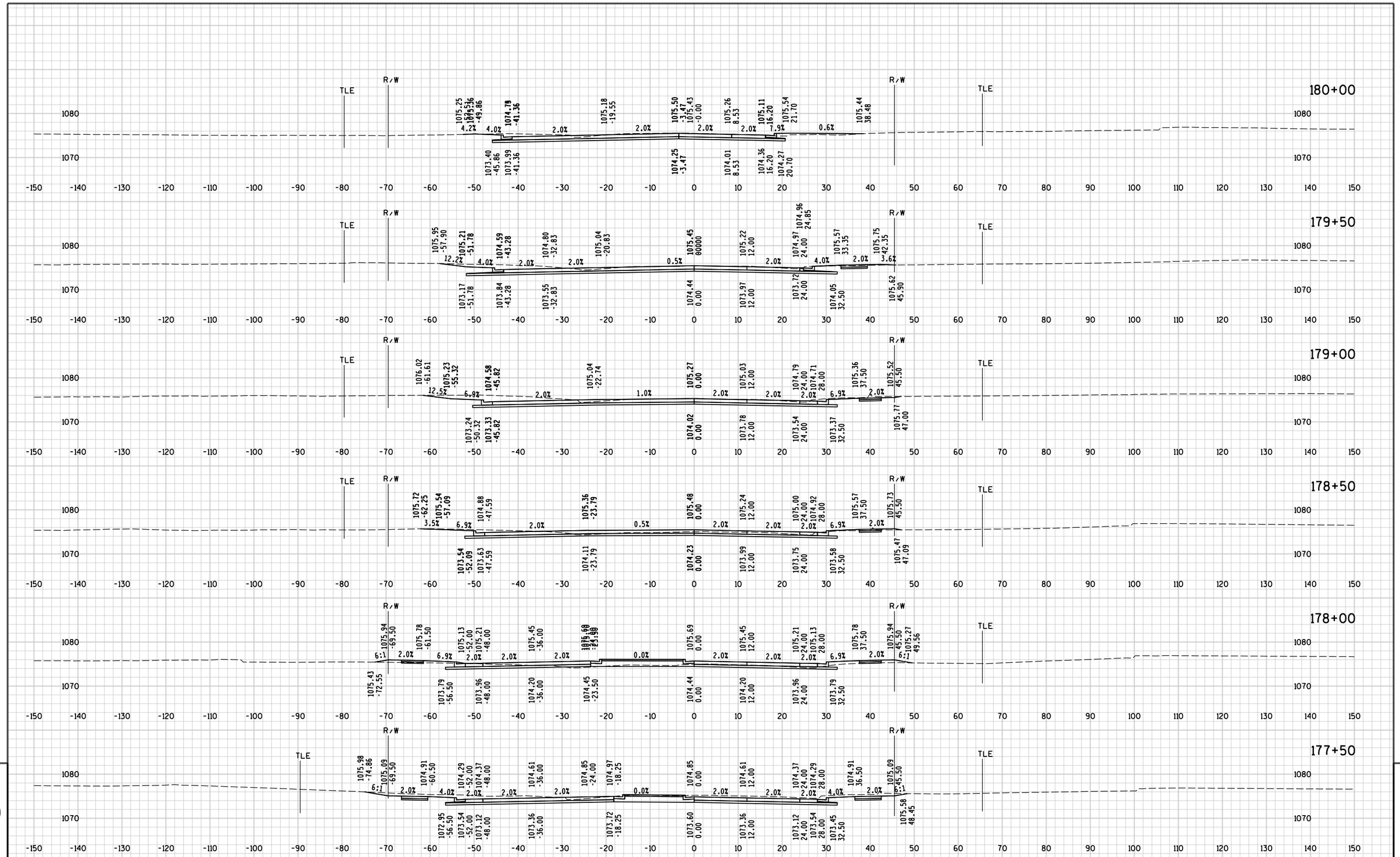

9

9

STATE PROJECT NO : 6414-00-78 - -	HWY: BUSINESS 51	COUNTY : PORTAGE	CROSS SECTIONS - POST ROAD	SHEET NO: 440	E

FILE NAME : P:\UZ\W\Witnc\112545\5-final-dsgn\51-drawings\40-TransHwy\090201 xs.dgn PLOT TIME : 2:37:14 PM PLOT DATE : 8/2/2015 PLOT BY : SEH PLOT NAME : PLOT SCALE : N/A

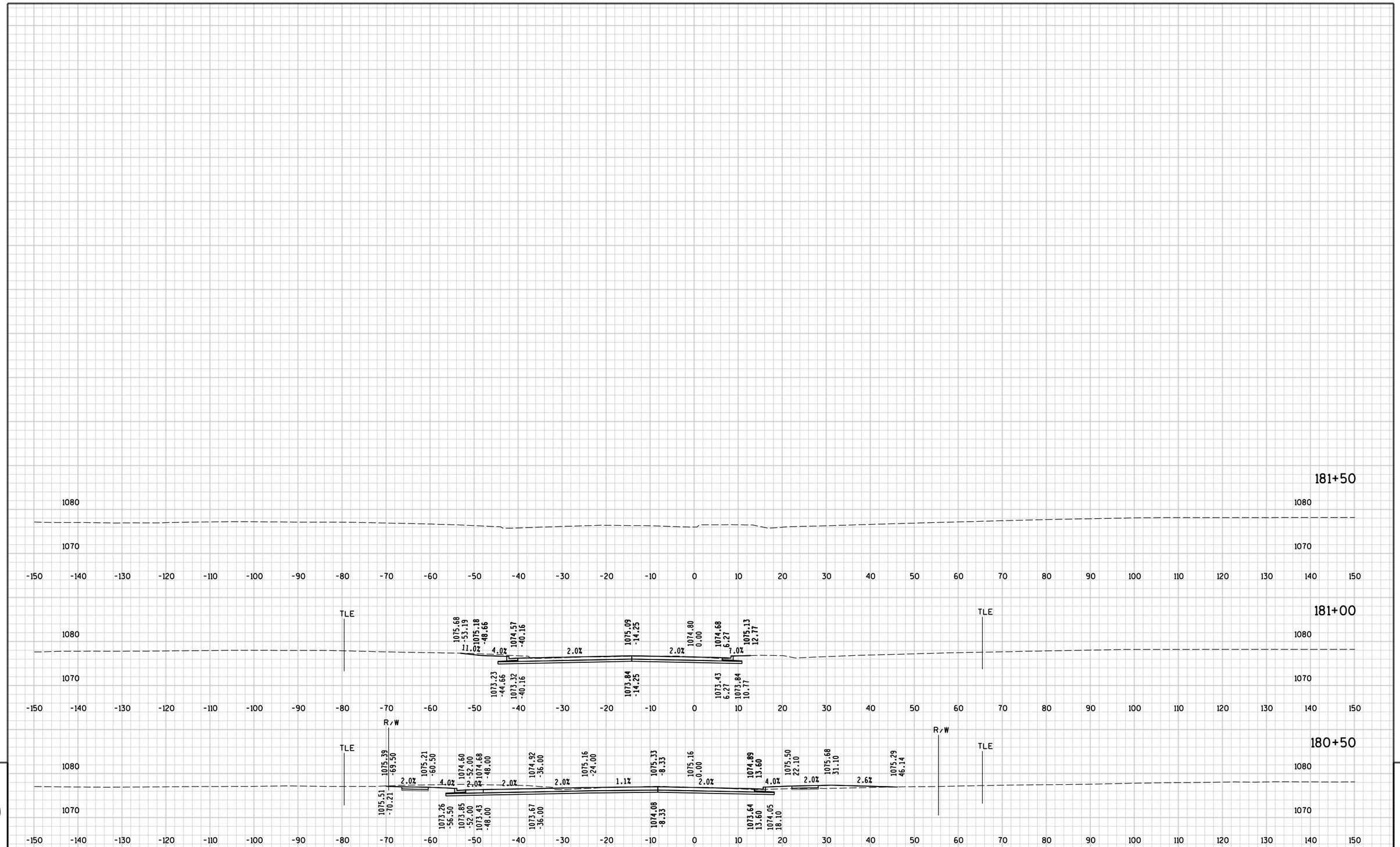

9

9

STATE PROJECT NO : 6414-00-78 - -	HWY: BUSINESS 51	COUNTY : PORTAGE	CROSS SECTIONS - POST ROAD	SHEET NO: 441	E

FILE NAME : P:\UZ\W\Witnc\112545\5-final-dsgn\51-drawings\40-TransHwy\090201 xs.dgn PLOT TIME : 2:37:14 PM PLOT DATE : 8/2/2015 PLOT BY : SEH PLOT NAME : PLOT SCALE : N/A

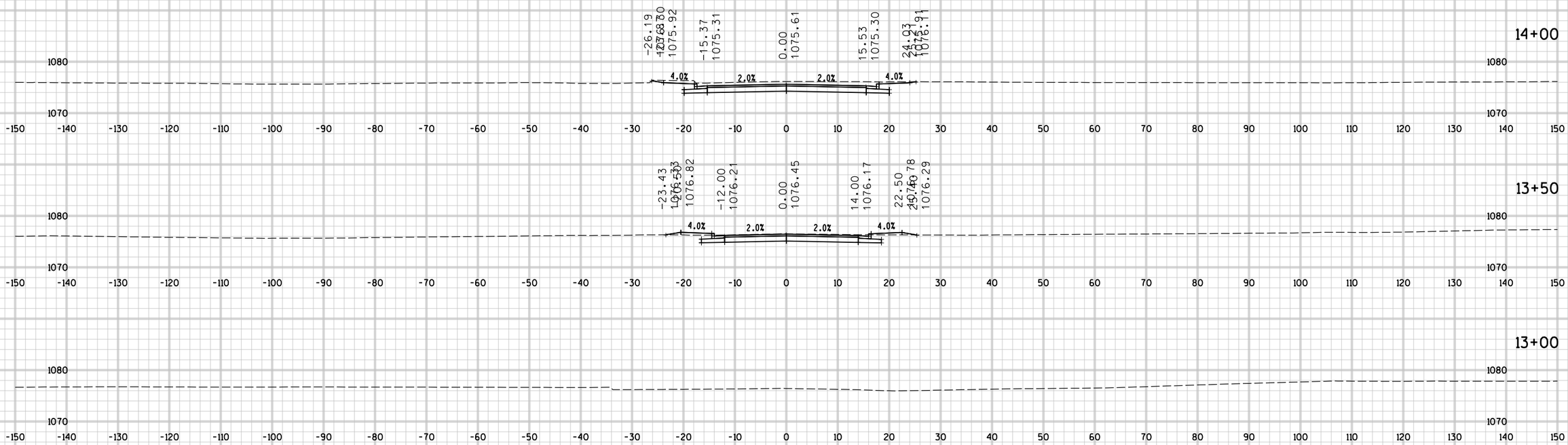

9

9

STATE PROJECT NO : 6414-00-78	HWY: BUSINESS 51	COUNTY : PORTAGE PORTAGE	CROSS SECTIONS - GREEN DR. W	SHEET NO: 442	E

FILE NAME : P:\UZ\W\Witnc\112545\5-final-dsgn\51-drawings\40-TransHwy\090202 xs.dgn PLOT TIME : 2:37:19 PM PLOT DATE : 8/2/2015 PLOT BY : SEH PLOT NAME : PLOT SCALE : N/A

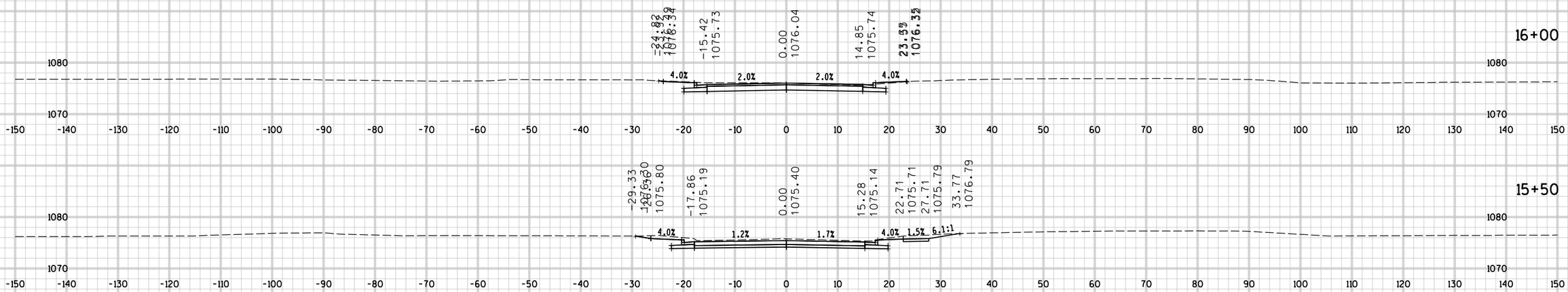

9

9

STATE PROJECT NO : 6414-00-78 - -	HWY: BUSINESS 51	COUNTY : PORTAGE	CROSS SECTIONS - GREEN DR. E	SHEET NO: 443	E

FILE NAME : P:\UZ\W\Witnc\112545\5-final-dsgn\51-drawings\40-TransHwy\090202 xs.dgn PLOT TIME : 2:37:19 PM PLOT DATE : 8/2/2015 PLOT BY : SEH PLOT NAME : PLOT SCALE : N/A

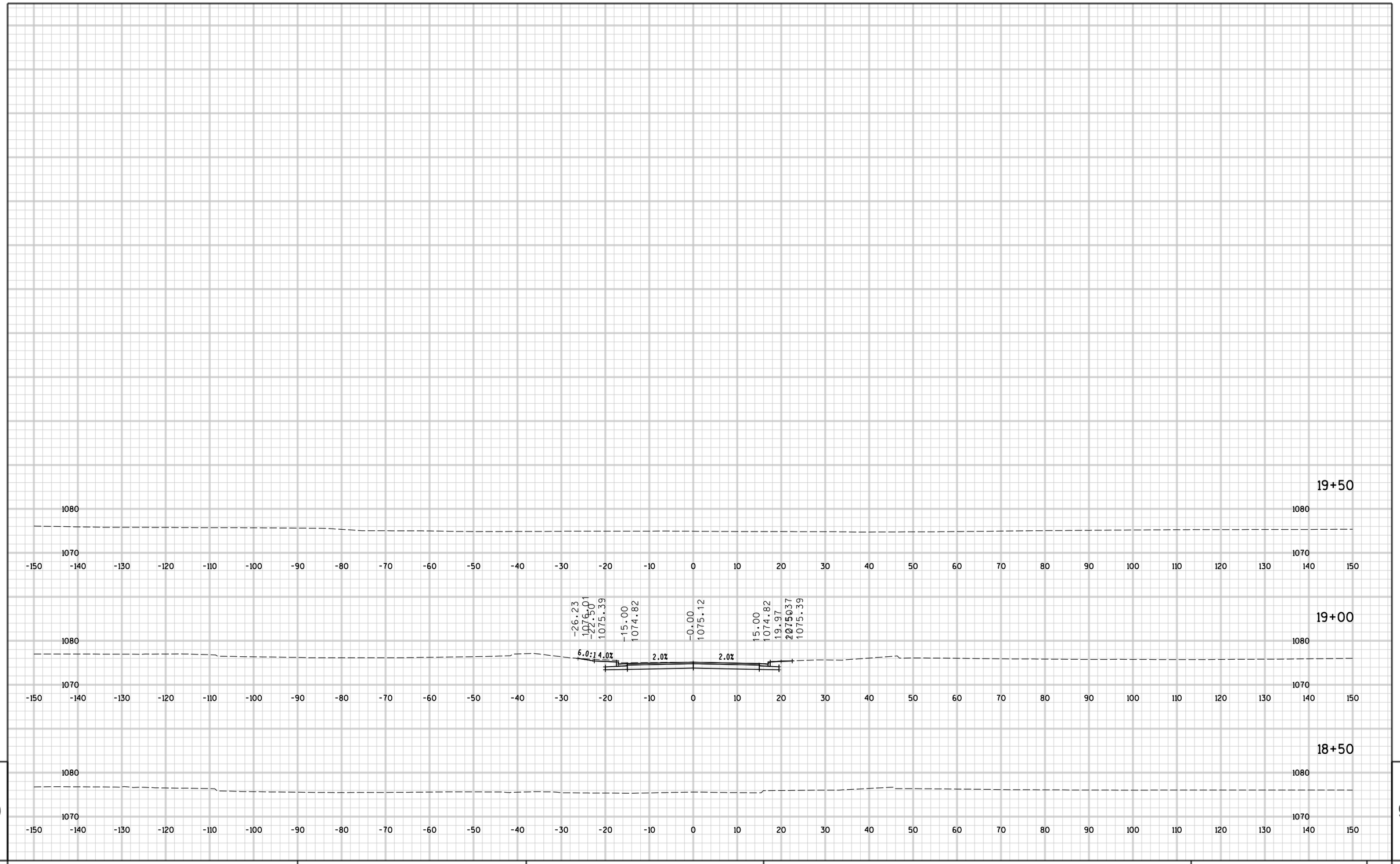

9

9

STATE PROJECT NO : 6414-00-78 - -	HWY: BUSINESS 51	COUNTY : PORTAGE	CROSS SECTIONS - WILLOW DR. W	SHEET NO: 444	E

FILE NAME : P:\UZ\W\Witnc\112545\5-final-dsgn\51-drawings\40-TransHwy\090202 xs.dgn PLOT TIME : 2:37:19 PM PLOT DATE : 8/2/2015 PLOT BY : SEH PLOT NAME : PLOT SCALE : N/A

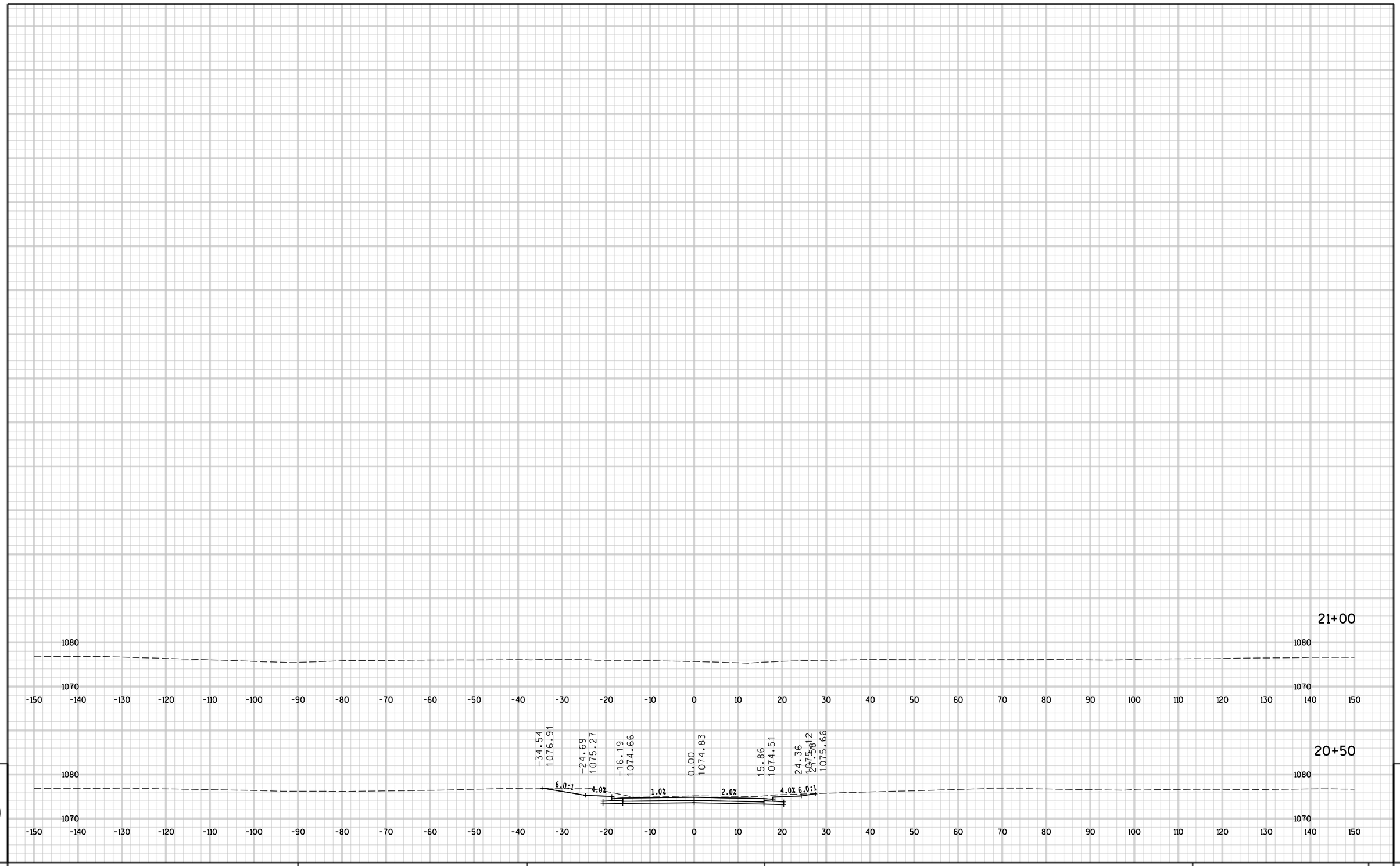

9

9

STATE PROJECT NO : 6414-00-78 - -	HWY: BUSINESS 51	COUNTY : PORTAGE	CROSS SECTIONS - WILLOW DR. E	SHEET NO: 445	E

FILE NAME : P:\UZ\W\Witnc\112545\5-final-dsgn\51-drawings\40-TransHwy\090202 xs.dgn PLOT TIME : 2:37:19 PM PLOT DATE : 8/2/2015 PLOT BY : SEH PLOT NAME : PLOT SCALE : N/A

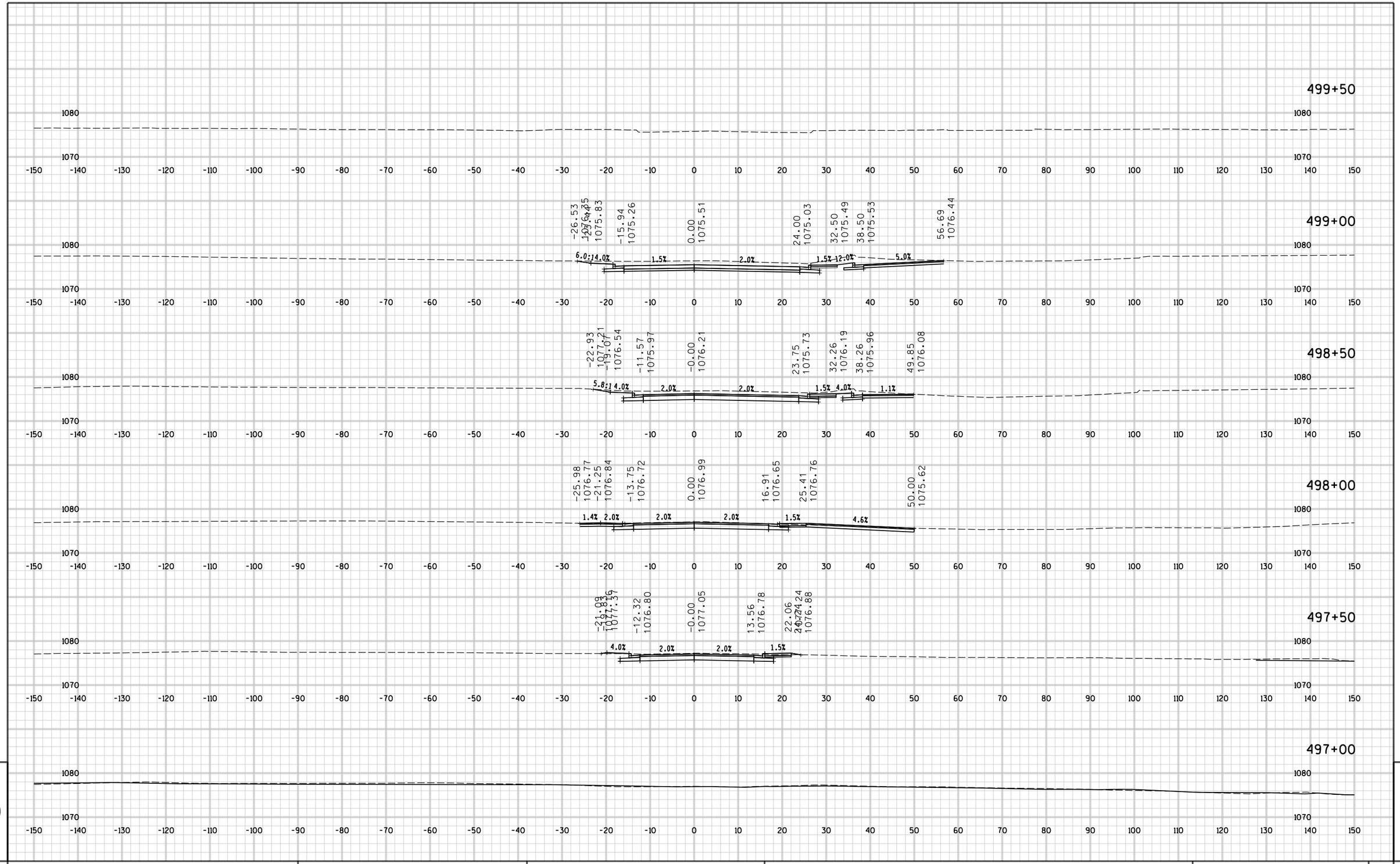

9

9

STATE PROJECT NO : 6414-00-78 - -	HWY: BUSINESS 51	COUNTY : PORTAGE	CROSS SECTIONS - CHESTNUT DR. W	SHEET NO: 446	E

FILE NAME : P:\UZ\W\Witnc\112545\5-final-dsgn\51-drawings\40-TransHwy\090202 xs.dgn PLOT TIME : 2:37:19 PM PLOT DATE : 8/2/2015 PLOT BY : SEH PLOT NAME : PLOT SCALE : N/A

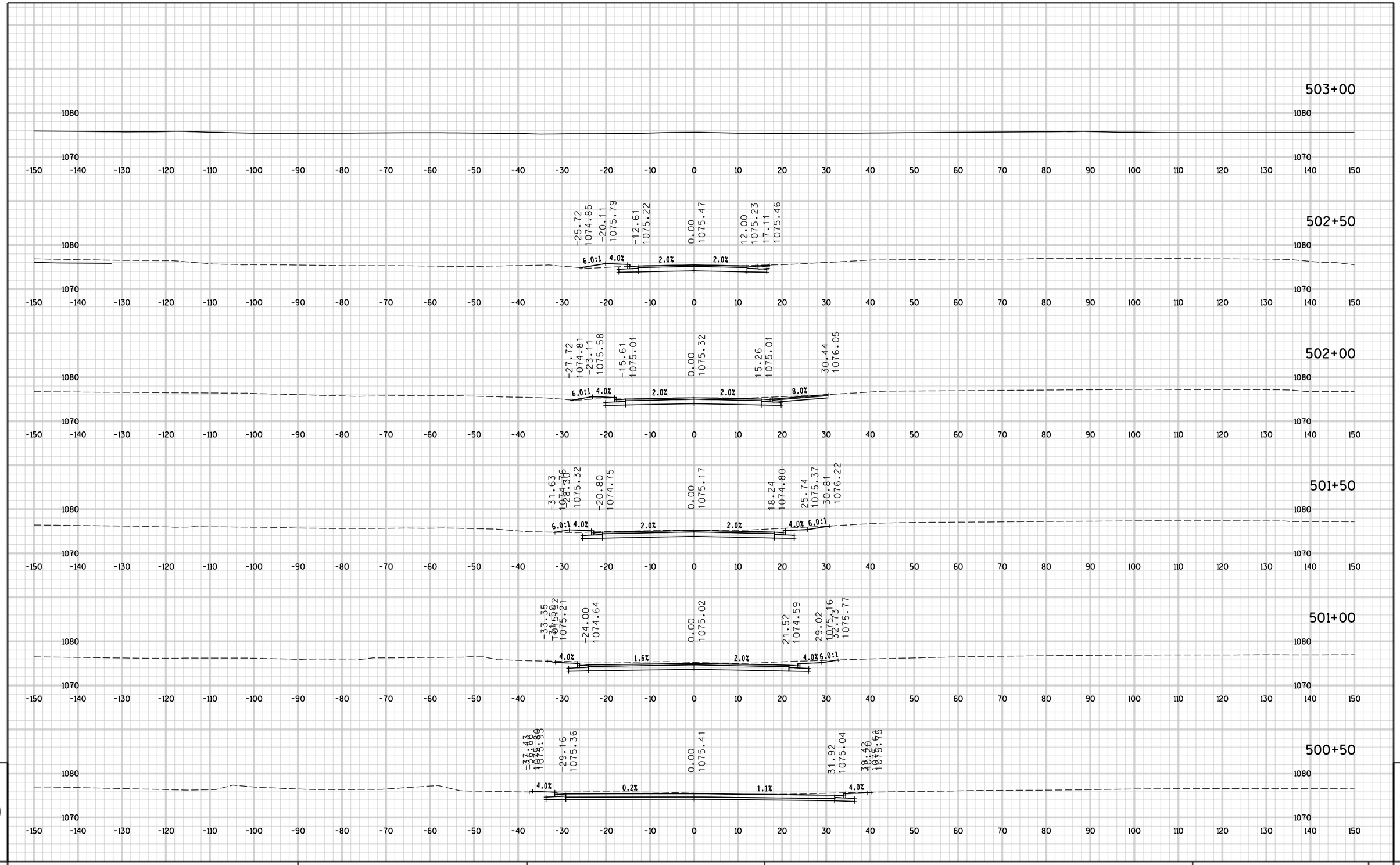

9

9

STATE PROJECT NO : 6414-00-78 - -	HWY: BUSINESS 51	COUNTY : PORTAGE	CROSS SECTIONS - CHESTNUT DR. E	SHEET NO: 447	E

FILE NAME : P:\UZ\W\Witnc\112545\5-final-dsgn\51-drawings\40-TransHwy\090202 xs.dgn PLOT TIME : 2:37:20 PM PLOT DATE : 8/2/2015 PLOT BY : SEH PLOT NAME : PLOT SCALE : N/A

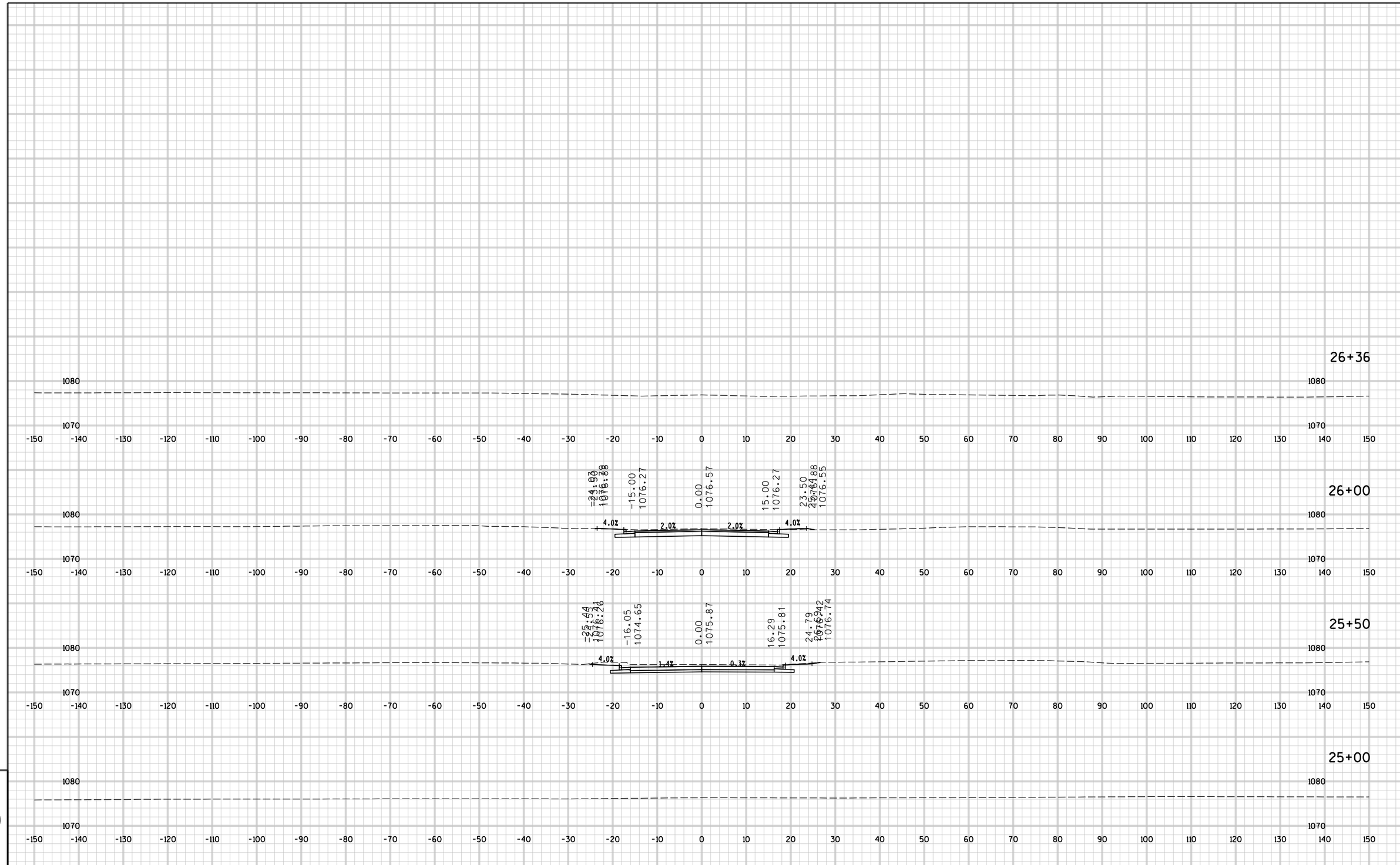

9

9

STATE PROJECT NO : 6414-00-78 - -	HWY: BUSINESS 51	COUNTY : PORTAGE	CROSS SECTIONS - SUMAC LN.	SHEET NO: 448	E

FILE NAME : P:\UZ\W\Witnc\112545\5-final-dsgn\51-drawings\40-TransHwy\090202 xs.dgn PLOT TIME : 2:37:21 PM PLOT DATE : 8/2/2015 PLOT BY : SEH PLOT NAME : PLOT SCALE : N/A

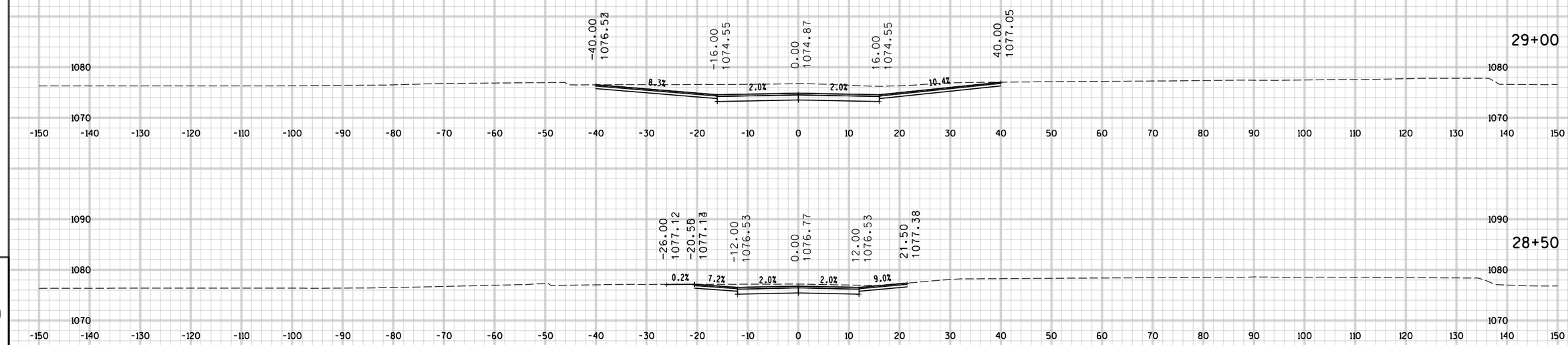

9

9

STATE PROJECT NO : 6414-00-78 - -	HWY: BUSINESS 51	COUNTY : PORTAGE	CROSS SECTIONS - CEDAR DR. W	SHEET NO: 449	E

FILE NAME : P:\UZ\W\Witnc\112545\5-final-dsgn\51-drawings\40-TransHwy\090202 xs.dgn PLOT TIME : 2:37:20 PM PLOT DATE : 8/2/2015 PLOT BY : SEH PLOT NAME : PLOT SCALE : N/A

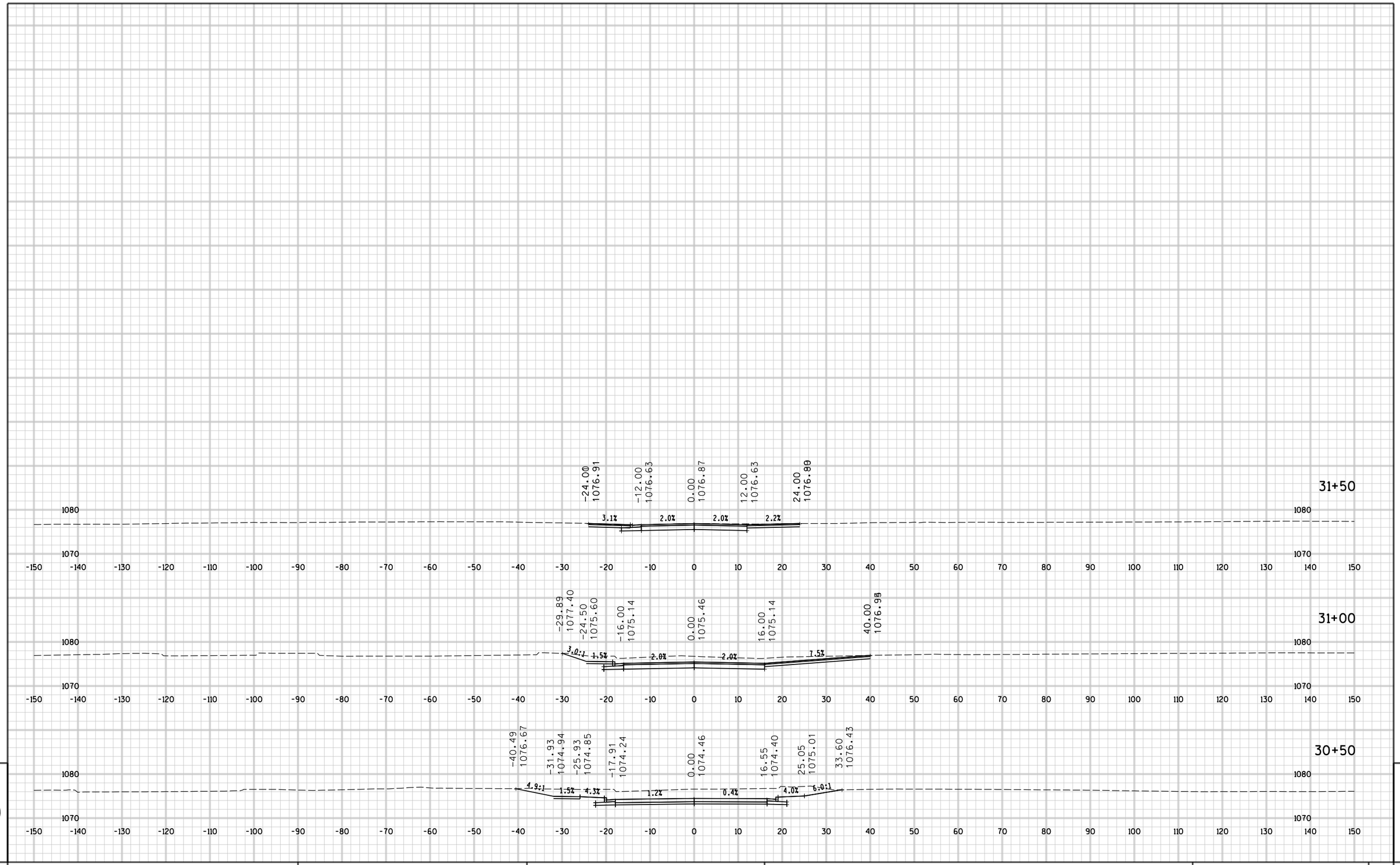

9

9

STATE PROJECT NO : 6414-00-78 - -	HWY: BUSINESS 51	COUNTY : PORTAGE	CROSS SECTIONS - CEDAR DR. E	SHEET NO: 450	E

FILE NAME : P:\UZ\W\Witnc\112545\5-final-dsgn\51-drawings\40-TransHwy\090202 xs.dgn PLOT TIME : 2:37:20 PM PLOT DATE : 8/2/2015 PLOT BY : SEH PLOT NAME : PLOT SCALE : N/A

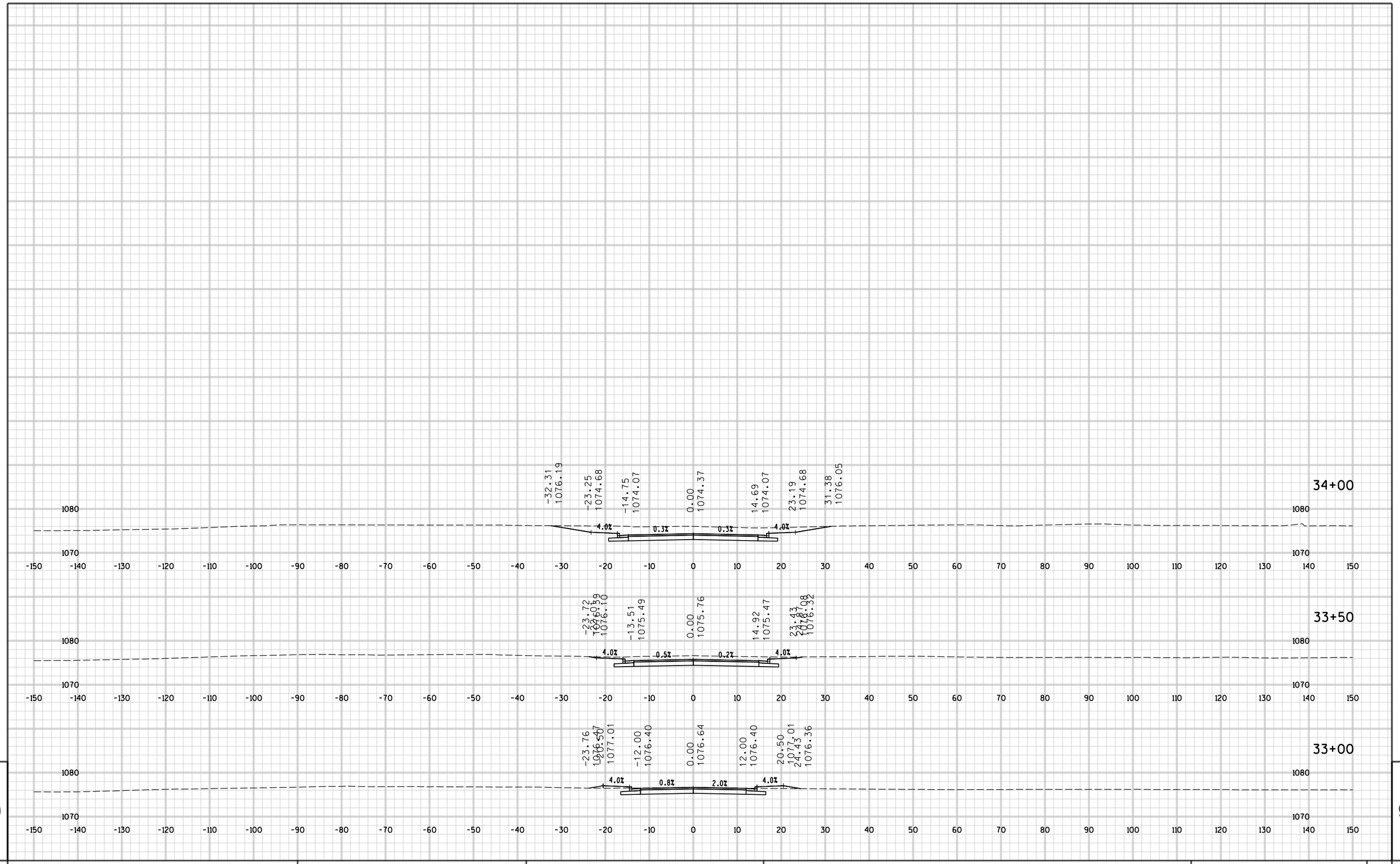

9

9

STATE PROJECT NO : 6414-00-78 - -	HWY: BUSINESS 51	COUNTY : PORTAGE	CROSS SECTIONS - RIVER DR.	SHEET NO: 451	E

FILE NAME : P:\UZ\W\Witnc\112545\5-final-dsgn\51-drawings\40-TransHwy\090202 xs.dgn PLOT TIME : 2:37:20 PM PLOT DATE : 8/2/2015 PLOT BY : SEH PLOT NAME : PLOT SCALE : N/A

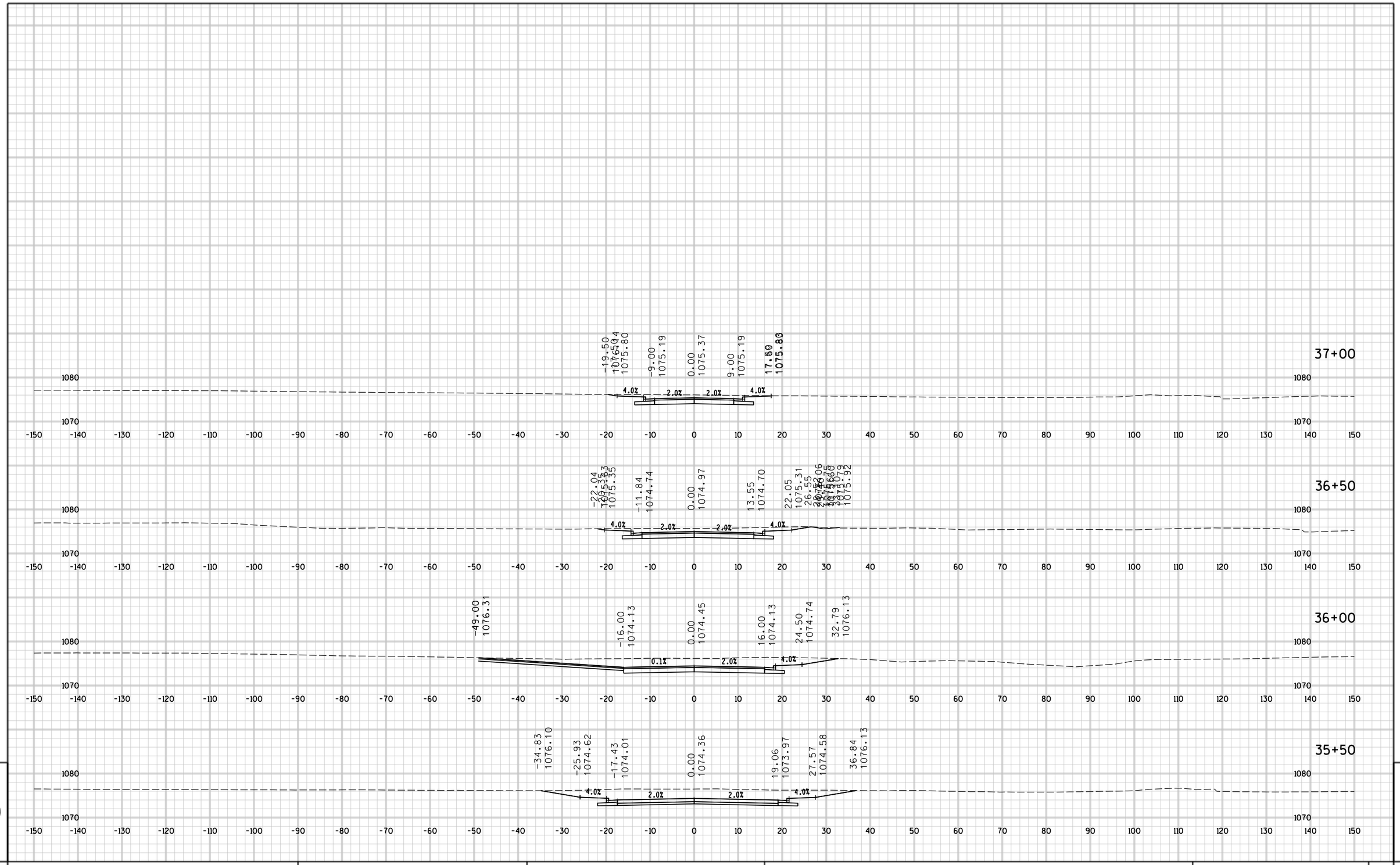

9

9

STATE PROJECT NO : 6414-00-78 - -	HWY: BUSINESS 51	COUNTY : PORTAGE	CROSS SECTIONS - SERVICE RD.	SHEET NO: 452	E

FILE NAME : P:\UZ\W\Witnc\112545\5-final-dsgn\51-drawings\40-TransHwy\090202 xs.dgn PLOT TIME : 2:37:21 PM PLOT DATE : 8/2/2015 PLOT BY : SEH PLOT NAME : PLOT SCALE : N/A

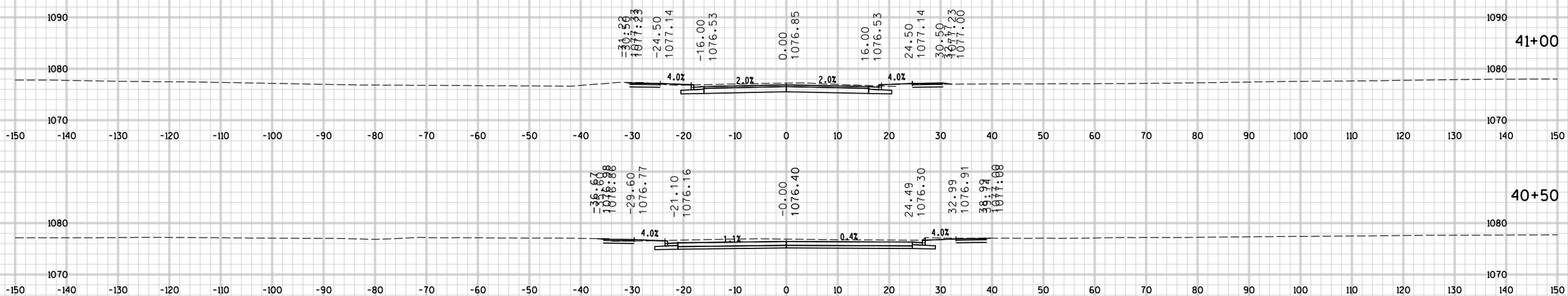

9

9

STATE PROJECT NO : 6414-00-78 - -	HWY: BUSINESS 51	COUNTY : PORTAGE	CROSS SECTIONS - SCHOOL DR.	SHEET NO: 453	E

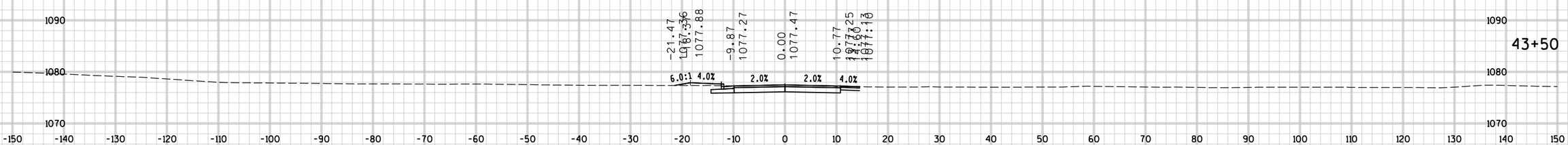

9

9

STATE PROJECT NO : 6414-00-78 - -	HWY: BUSINESS 51	COUNTY : PORTAGE	CROSS SECTIONS - GILMAN DR.	SHEET NO: 454	E

FILE NAME : P:\UZ\W\Witnc\112545\5-final-dsgn\51-drawings\40-TransHwy\090202 xs.dgn PLOT TIME : 2:37:21 PM PLOT DATE : 8/2/2015 PLOT BY : SEH PLOT NAME : PLOT SCALE : N/A

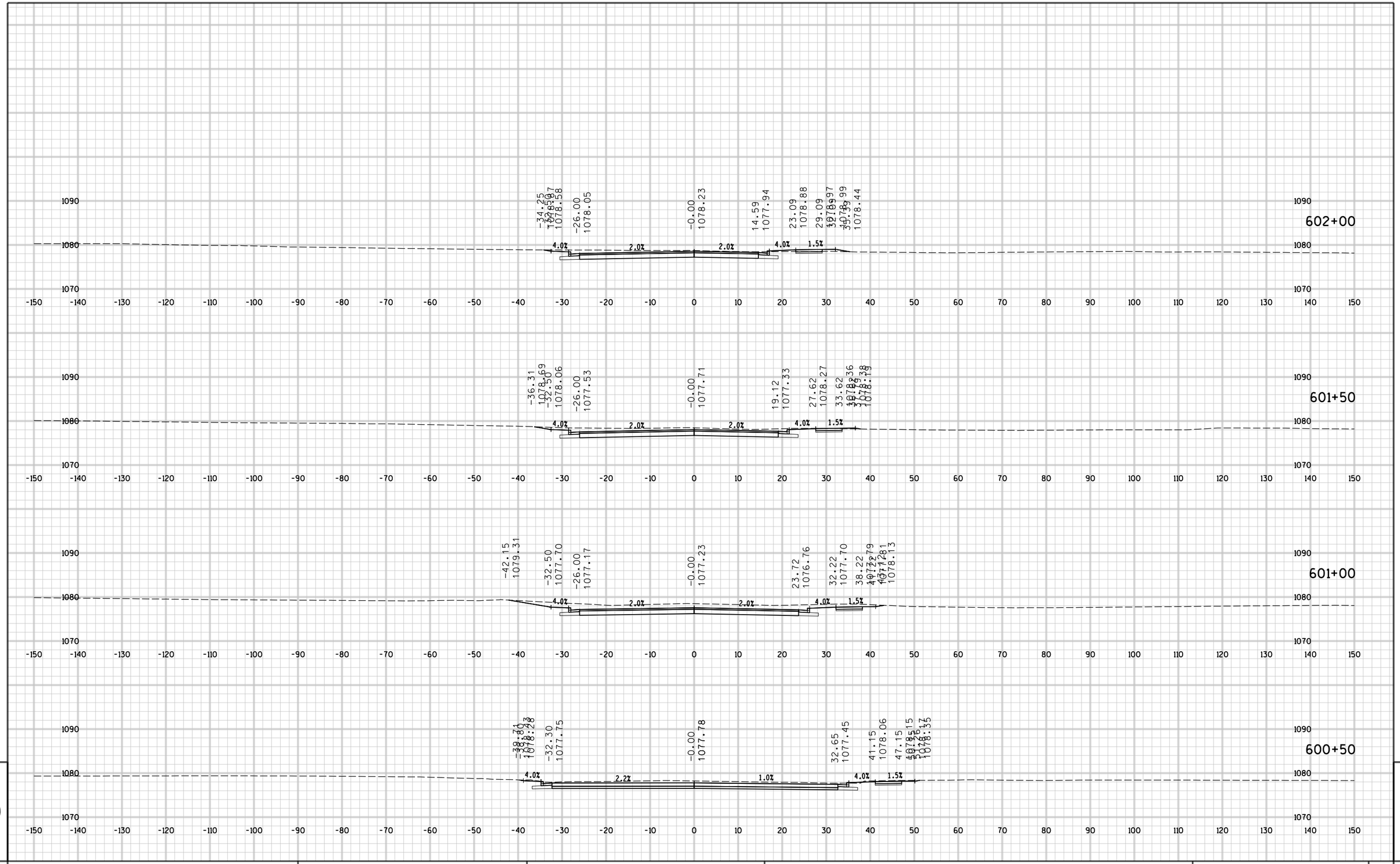

9

9

STATE PROJECT NO : 6414-00-78 - -	HWY: BUSINESS 51	COUNTY : PORTAGE	CROSS SECTIONS - ROOSEVELT DR.	SHEET NO: 455	E

FILE NAME : P:\UZ\W\Witnc\112545\5-final-dsgn\51-drawings\40-TransHwy\090202 xs.dgn PLOT TIME : 2:37:22 PM PLOT DATE : 8/2/2015 PLOT BY : SEH PLOT NAME : PLOT SCALE : N/A

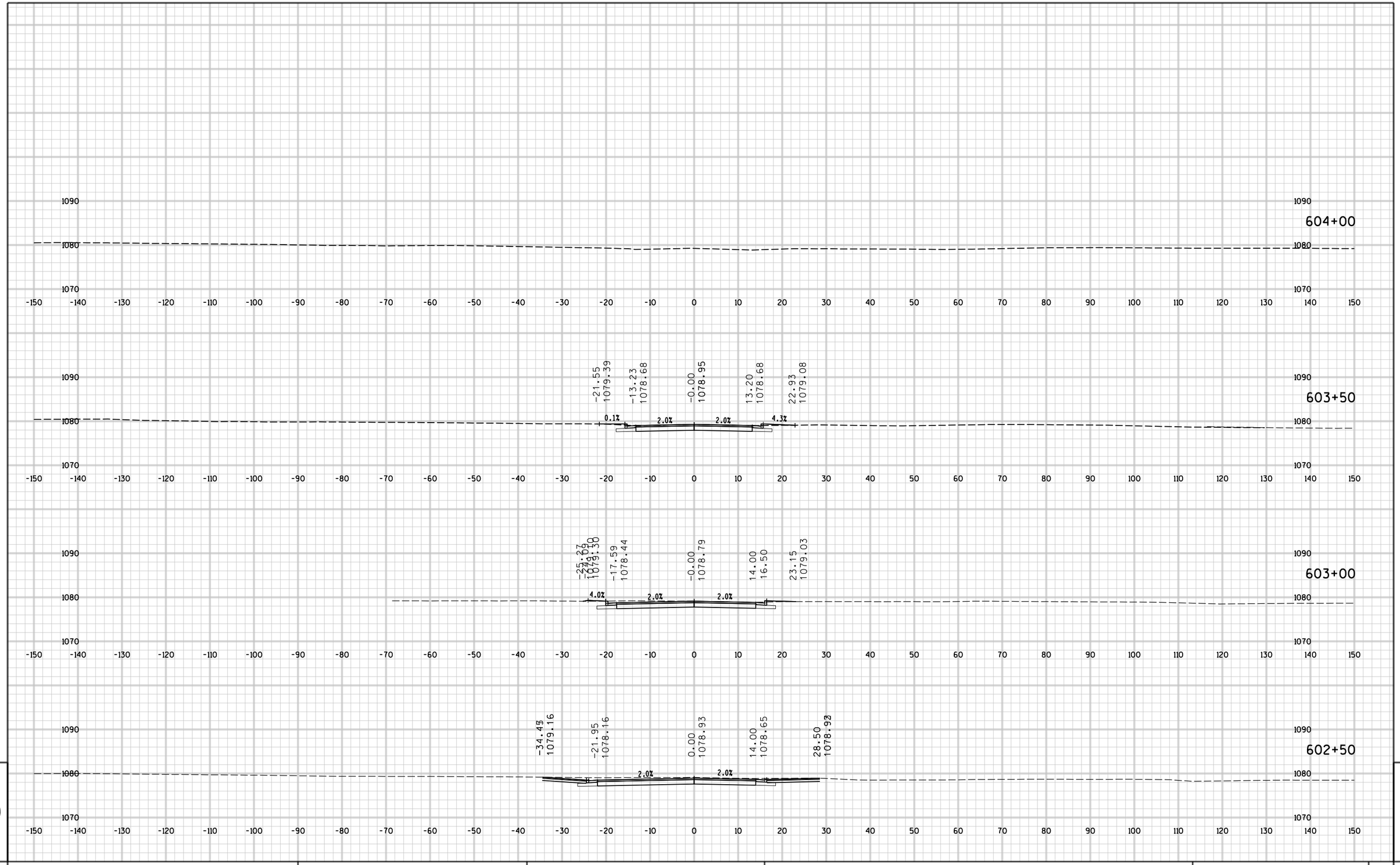

9

9

STATE PROJECT NO : 6414-00-78 - -	HWY: BUSINESS 51	COUNTY : PORTAGE	CROSS SECTIONS - ROOSEVELT DR.	SHEET NO: 456	E

FILE NAME : P:\UZ\W\Witnc\112545\5-final-dsgn\51-drawings\40-TransHwy\090202 xs.dgn PLOT TIME : 2:37:22 PM PLOT DATE : 8/2/2015 PLOT BY : SEH PLOT NAME : PLOT SCALE : N/A

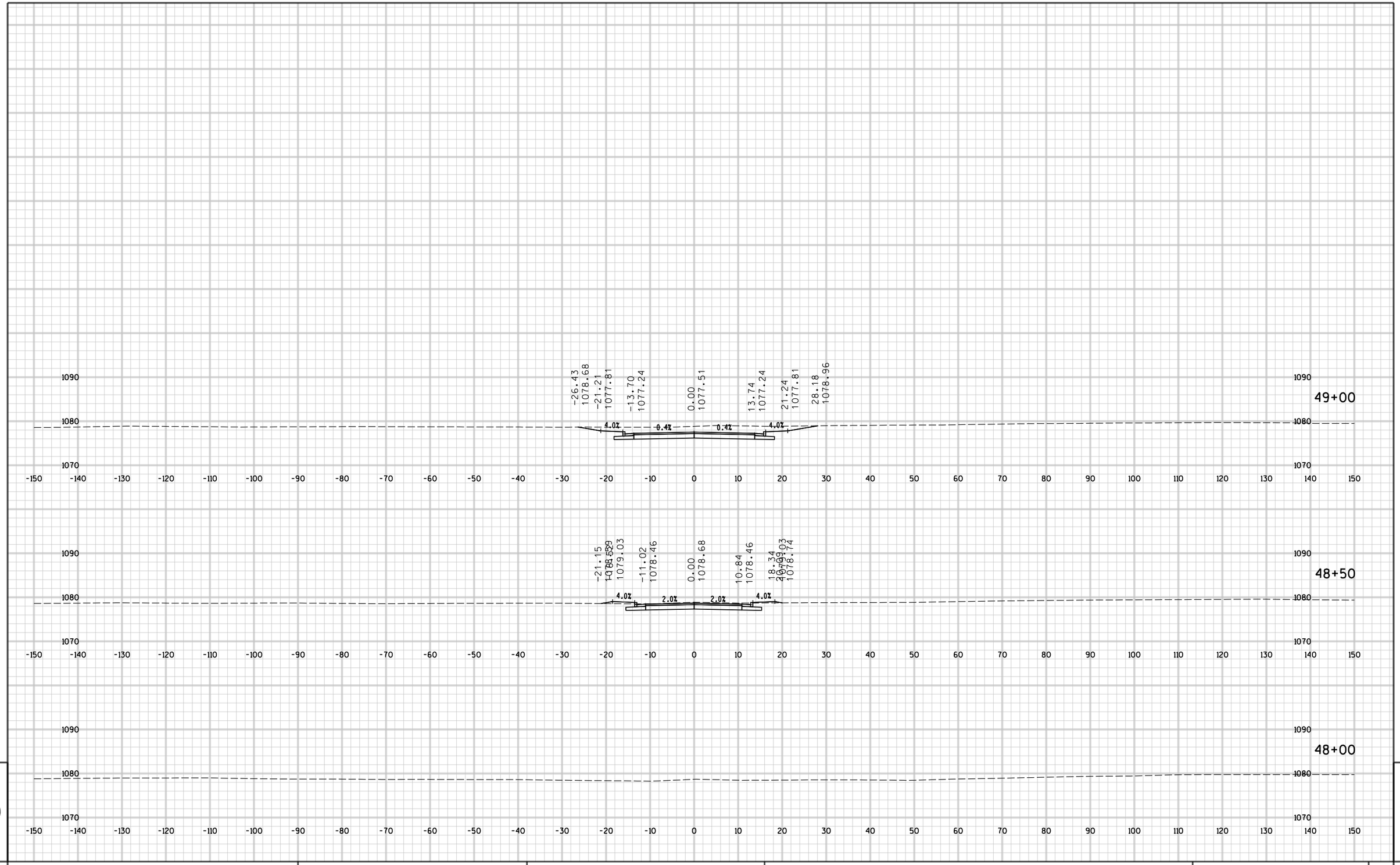

9

9

STATE PROJECT NO : 6414-00-78 - -	HWY: BUSINESS 51	COUNTY : PORTAGE	CROSS SECTIONS - BEA JAY LN.	SHEET NO: 457	E

FILE NAME : P:\UZ\W\Witnc\112545\5-final-dsgn\51-drawings\40-TransHwy\090202 xs.dgn PLOT TIME : 2:37:22 PM PLOT DATE : 8/2/2015 PLOT BY : SEH PLOT NAME : PLOT SCALE : N/A

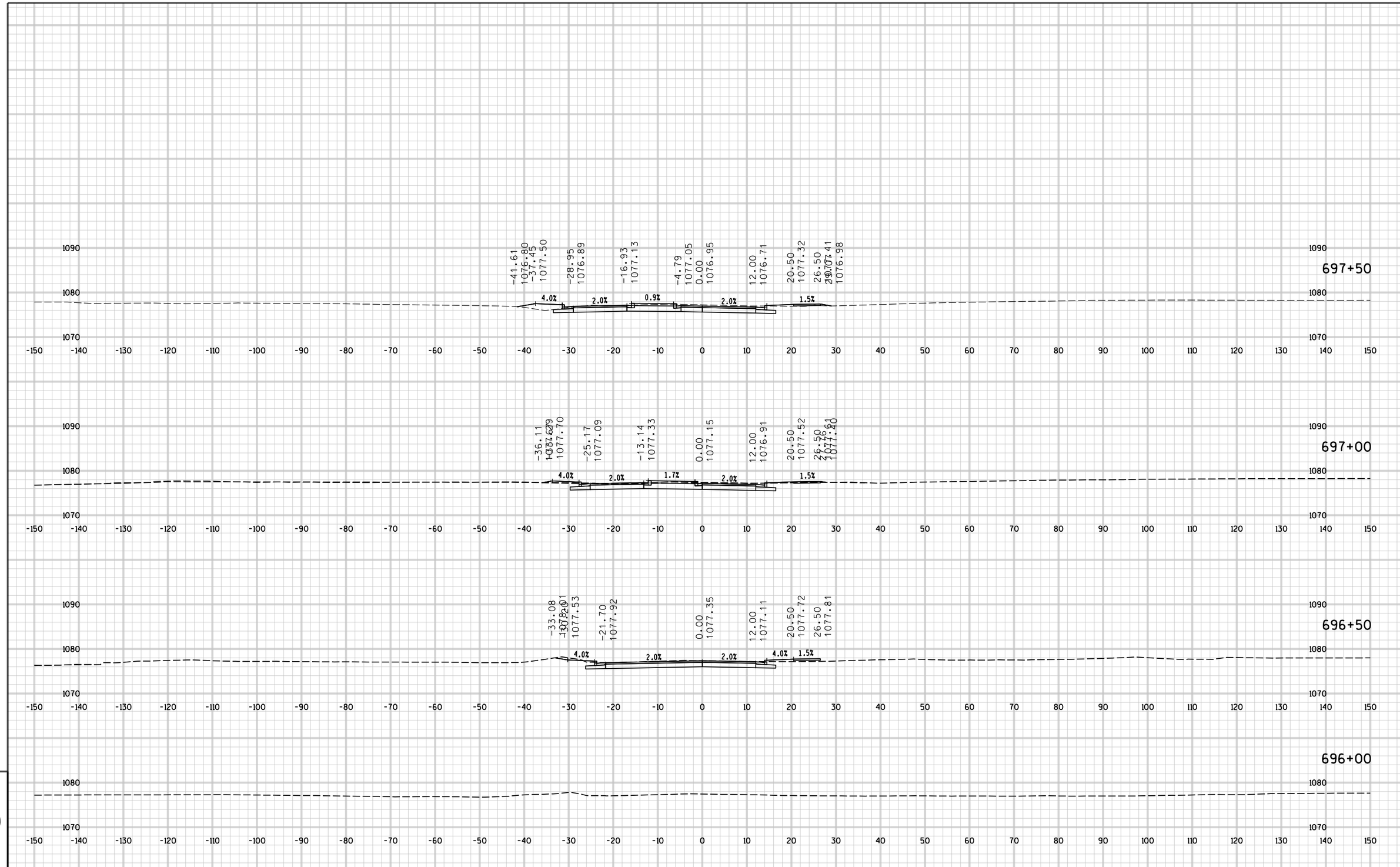

9

9

STATE PROJECT NO : 6414-00-78 - -	HWY: BUSINESS 51	COUNTY : PORTAGE	CROSS SECTIONS - PLOVER SPRINGS	SHEET NO: 458	E

FILE NAME : P:\UZ\W\Witnc\112545\5-final-dsgn\51-drawings\40-TransHwy\090202 xs.dgn PLOT TIME : 2:37:22 PM PLOT DATE : 8/2/2015 PLOT BY : SEH PLOT NAME : PLOT SCALE : N/A

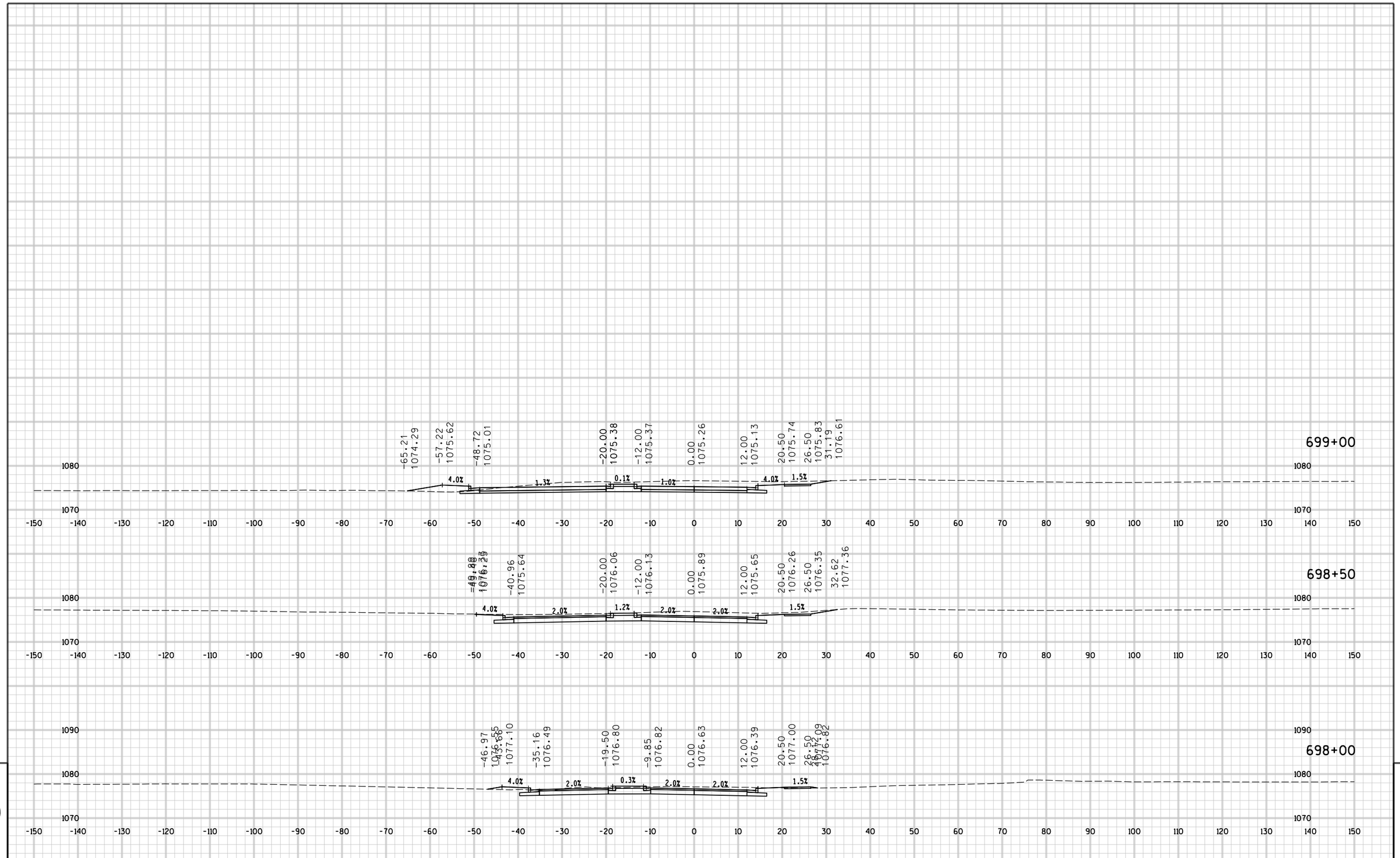

9

9

STATE PROJECT NO : 6414-00-78 - -	HWY: BUSINESS 51	COUNTY : PORTAGE	CROSS SECTIONS - PLOVER SPRINGS	SHEET NO: 459	E

FILE NAME : P:\UZ\W\Witnc\112545\5-final-dsgn\51-drawings\40-TransHwy\090202 xs.dgn PLOT TIME : 2:37:23 PM PLOT DATE : 8/2/2015 PLOT BY : SEH PLOT NAME : PLOT SCALE : N/A

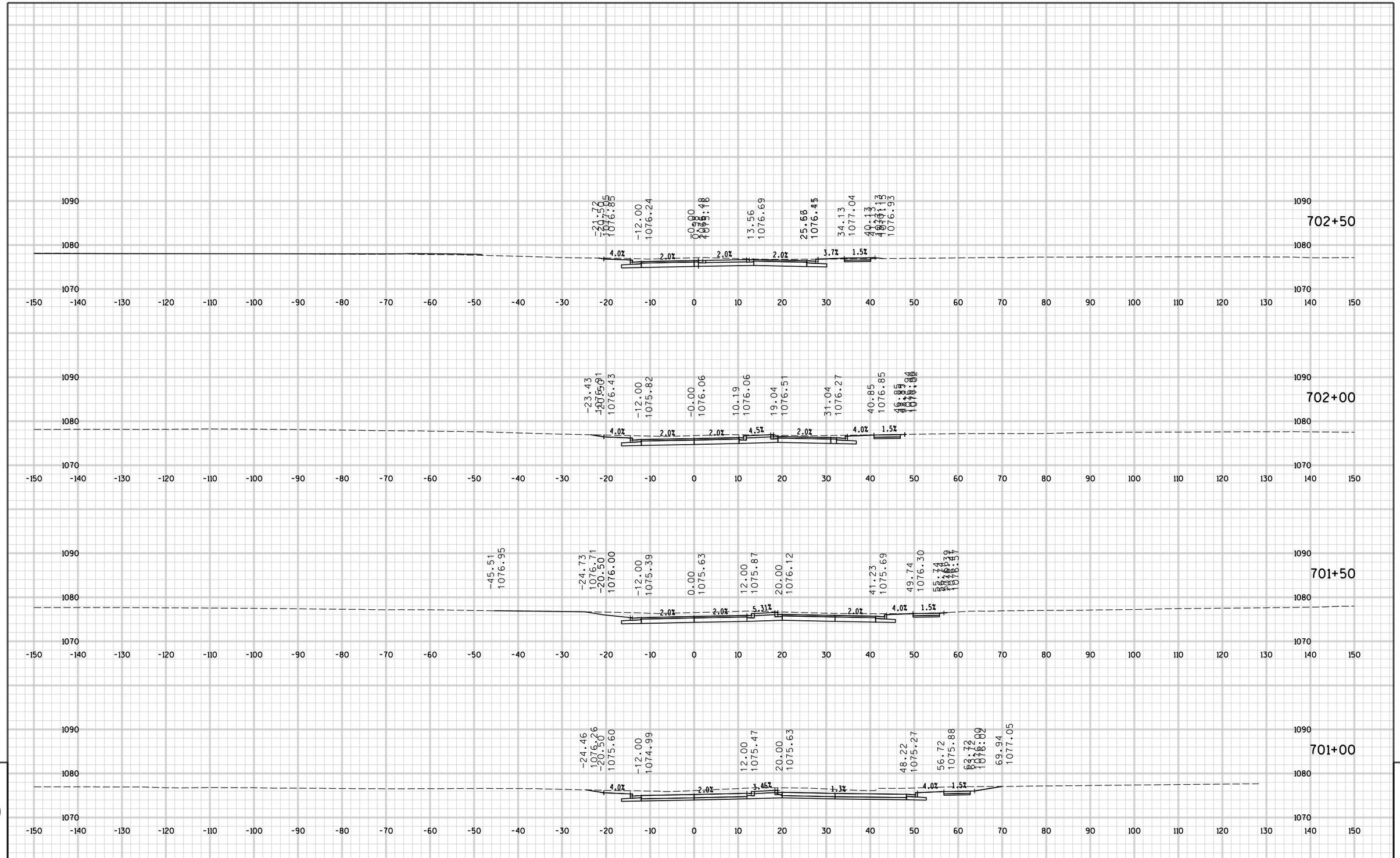

9

9

STATE PROJECT NO : 6414-00-78 - -	HWY: BUSINESS 51	COUNTY : PORTAGE	CROSS SECTIONS - PLOVER SPRINGS	SHEET NO: 460	E

FILE NAME : P:\UZ\W\Witnc\112545\5-final-dsgn\51-drawings\40-TransHwy\090202 xs.dgn PLOT TIME : 2:37:23 PM PLOT DATE : 8/2/2015 PLOT BY : SEH PLOT NAME : PLOT SCALE : N/A

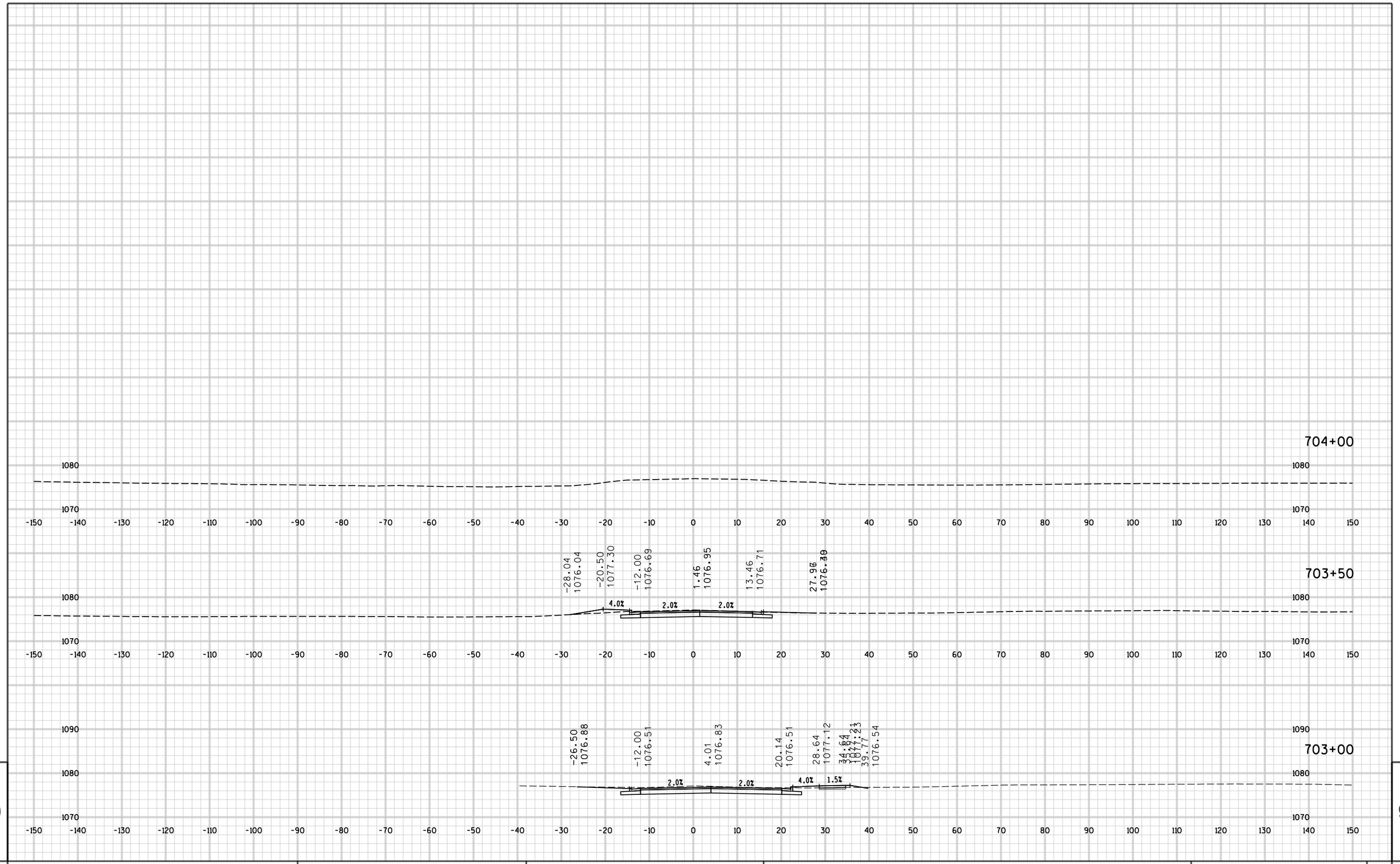

STATE PROJECT NO : 6414-00-78 - -	HWY: BUSINESS 51	COUNTY : PORTAGE	CROSS SECTIONS - PLOVER SPRINGS	SHEET NO: 461	E

FILE NAME : P:\UZ\W\Witnc\112545\5-final-dsgn\51-drawings\40-TransHwy\090202 xs.dgn PLOT TIME : 2:37:23 PM PLOT DATE : 8/2/2015 PLOT BY : SEH PLOT NAME : PLOT SCALE : N/A

Wisconsin Department of Transportation

Dedicated people creating transportation solutions through innovation and exceptional service.

http://www.dot.wisconsin.gov

WIS

DEC 2015

PROJECT ID: 6414-00-88
WITH: 6414-00-78

COUNTY: PORTAGE

ORDER OF SHEETS

TOTAL SHEETS = 20

STATE PROJECT	FEDERAL PROJECT	
	PROJECT	CONTRACT
6414-00-88	—	—

STATE OF WISCONSIN
DEPARTMENT OF TRANSPORTATION

PLAN OF PROPOSED IMPROVEMENT

VILLAGE OF PLOVER, POST ROAD

GREEN DRIVE TO SPRINGVILLE DRIVE

BUSINESS 51
LOCAL UTILITY
PORTAGE COUNTY

STATE PROJECT NUMBER
6414-00-88

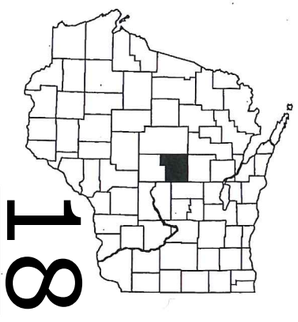

18

N

END PROJECT 6414-00-88
STA. 181+62.87

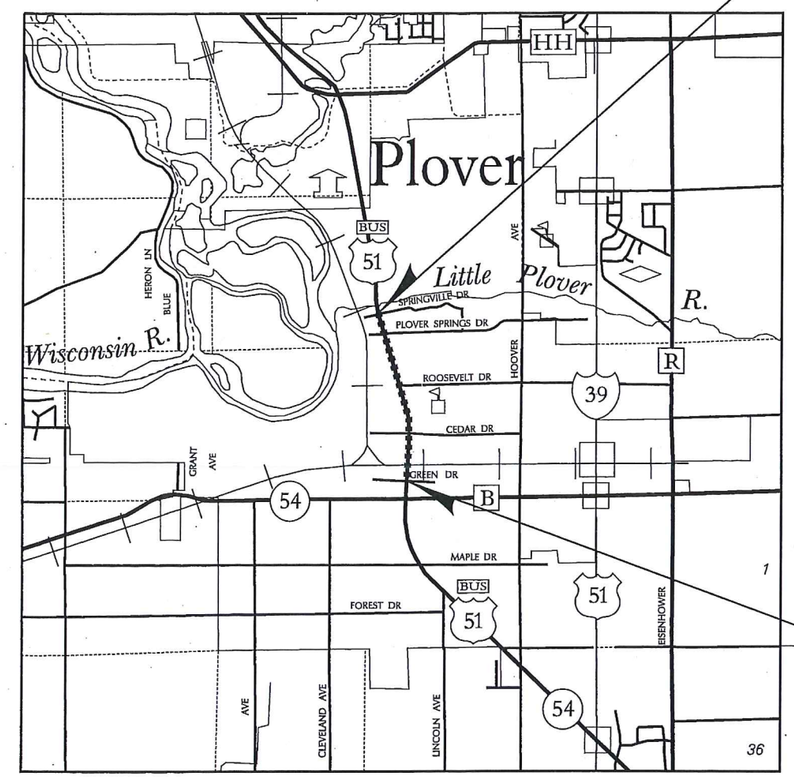

T-23-N

R-08-E

R-08-E

BEGIN PROJECT 6414-00-88
STA. 121+75.40
Y = 178118.367
X = 173533.775

LAYOUT
SCALE 0 ½ MI.

TOTAL NET LENGTH OF CENTERLINE = 1.134 MI.

COORDINATES ON THIS PLAN ARE REFERENCED TO THE WISCONSIN COUNTY COORDINATE SYSTEM (WCCS), PORTAGE COUNTY.

DESIGN DESIGNATION

A.A.D.T. 2015	=	18,700
A.A.D.T. 2035	=	22,900
D.H.V. 2035	=	2,420
D.D.	=	59/41%
T.	=	6.8% ADT
DESIGN SPEED	=	35/40 MPH
ESALS	=	3,255,800

CONVENTIONAL SYMBOLS

PLAN
- CORPORATE LIMITS
- PROPERTY LINE
- LOT LINE
- LIMITED HIGHWAY EASEMENT
- EXISTING RIGHT OF WAY
- PROPOSED OR NEW R/W LINE
- SLOPE INTERCEPT
- REFERENCE LINE
- EXISTING CULVERT
- PROPOSED CULVERT (Box or Pipe)
- COMBUSTIBLE FLUIDS — CAUTION
- MARSH AREA
- WOODED OR SHRUB AREA

PROFILE
- GRADE LINE
- ORIGINAL GROUND
- MARSH OR ROCK PROFILE (To be noted as such) — ROCK
- SPECIAL DITCH — LABEL
- GRADE ELEVATION — 95.36
- CULVERT (Profile View)

UTILITIES
- ELECTRIC — E
- FIBER OPTIC — FO
- GAS — G
- SANITARY SEWER — SAN
- STORM SEWER — SS
- TELEPHONE — T
- WATER — W
- UTILITY PEDESTAL
- POWER POLE
- TELEPHONE POLE

ACCEPTED FOR VILLAGE OF PLOVER
BY

7/15/15 — DATE — VILLAGE PRESIDENT

ORIGINAL PLANS PREPARED BY

AECOM
WISCONSIN
RYAN N. BARZ
E-37634
AMHERST
WI
PROFESSIONAL ENGINEER

7/15/15 (Date) (Signature)

STATE OF WISCONSIN
DEPARTMENT OF TRANSPORTATION

PREPARED BY

Surveyor	SEH
Designer	RYAN BARZ
Project Manager	
Regional Examiner	
Regional Supervisor	
C.O. Examiner	

APPROVED FOR THE DEPARTMENT
DATE: 8/13/15 (Signature)

E

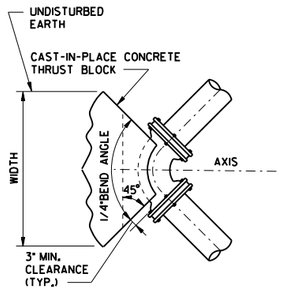

PLAN

NOTE:
THE BELOW TABLE BASED ON SOIL EQUIVALANT TO SAND AND GRAVEL CEMENTED WITH CLAY. FOR OTHER SOILS USE THE FOLLOWING FACTORS:

SOFT CLAY	4.00
SAND	2.00
SAND AND GRAVEL	1.33
SHALE	0.40

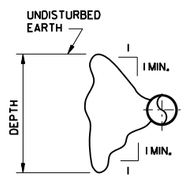

SECTION

AREA OF FACE CONCRETE THRUST BLOCKS

PIPE SIZES INCHES	1/6 BEND SQ. FT.	1/6 BEND SQ. FT.	TEES PLUGS, CAPS, & HYDRANTS SQ. FT.
6	5	3	4
8	8	5	6
10	13	7	9
12	15	10	13
14	25	14	18

THRUST RESTRAINT DETAIL

NTS

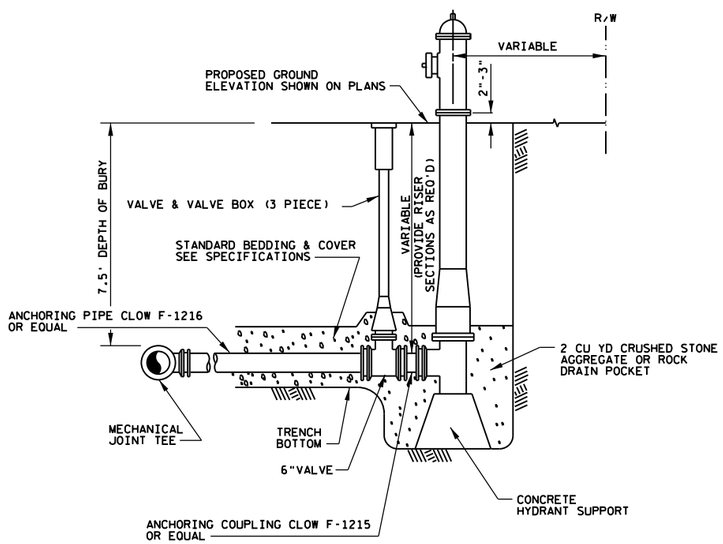

TYPICAL HYDRANT DETAIL

NTS

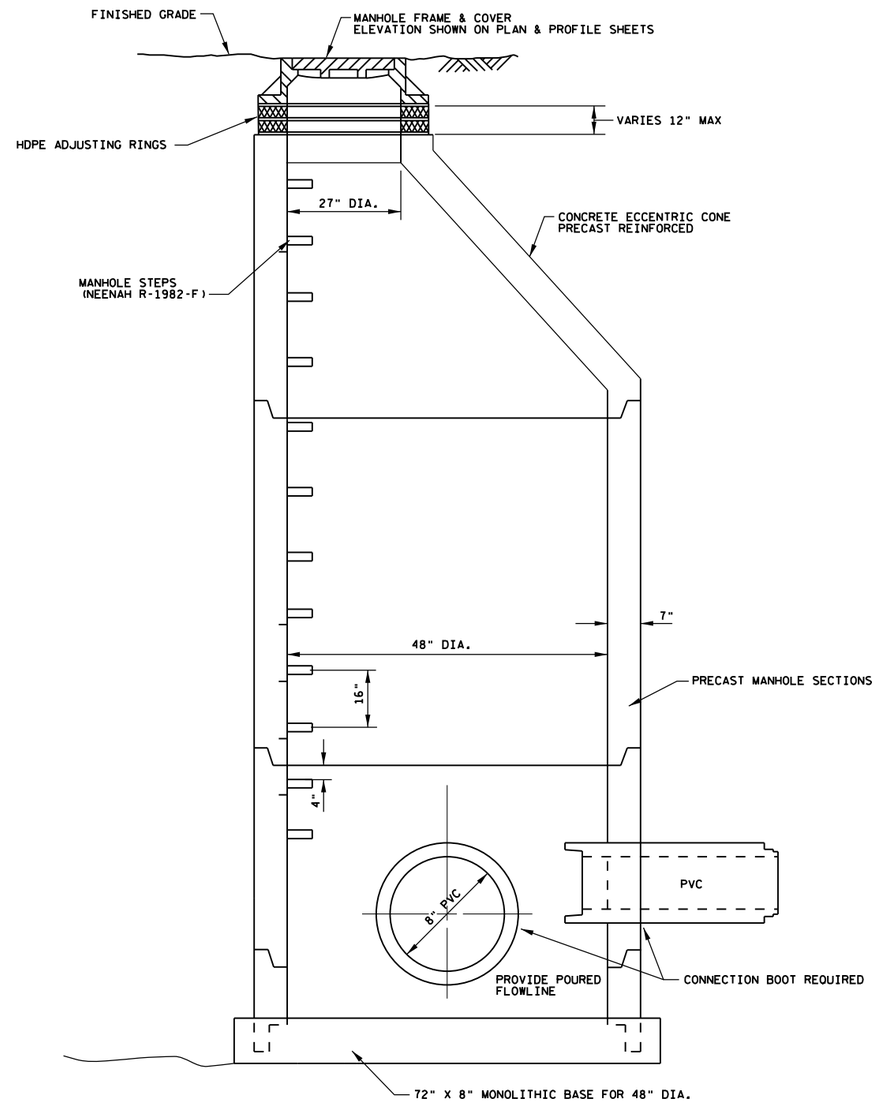

SECTION VIEW B

NTS

PRECAST MANHOLE

NTS

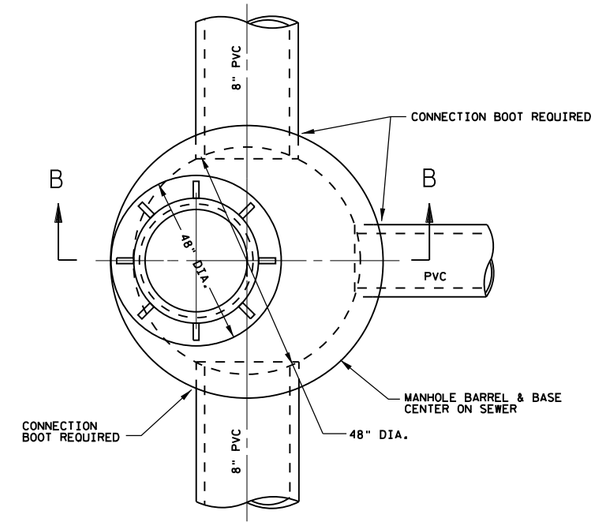

PLAN VIEW

NTS

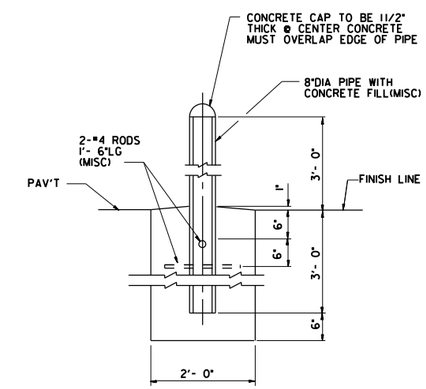

TYPICAL GUARD POST DETAIL

NTS

GENERAL NOTES

UTILITY INSTALLATION WILL OCCUR DURING THE APPROPRIATE TRAFFIC CONTROL STAGES IDENTIFIED IN 6414-00-78.

WATER SERVICES THAT CAN NOT BE INSTALLED COMPLETELY IN ONE TRAFFIC CONTROL STAGE CAN BE COILED, PLUGGED, MARKED, BURIED, AND CONNECTED IN A LATER STAGE.

2

13+95.2, 12.4' LT - SAN MH
REMOVE GRADE RINGS, FRAME & LID
REPLACE W/ PLASTIC RINGS, NEW FRAME & LID

123+35.9, 13.1' RT
REPLACE EXISTING WATER SERVICE
W/ NEW 1" PLASTIC, NEW SADDLE,
CORPORATION STOP,
CURB STOP & CURB BOX

125+14.4, 2.7' LT
REPLACE EXISTING WATER SERVICE
W/ NEW 1" PLASTIC, NEW SADDLE,
CORPORATION STOP,
CURB STOP & CURB BOX

ABANDON 8" WM STUB & VALVE
BACK TO WM
8" CAP REQUIRED

3.5 SY 2-INCH INSULATION
BOARD POLYSTYRENE

3.5 SY 2-INCH INSULATION
BOARD POLYSTYRENE

3.5 SY 2-INCH INSULATION
BOARD POLYSTYRENE

SALVAGE HYDRANT, ABANDON
VALVE & LEAD BACK TO MAIN
6" CAP REQUIRED

7 SY 2-INCH INSULATION
BOARD POLYSTYRENE

15+70, 22.5' LT
STANDARD HYDRANT 7.5' BURY
6" VALVE & VALVE BOX
12'-6" WM
6" X 8" TAPPING SLEEVE

3.5 SY 2-INCH INSULATION
BOARD POLYSTYRENE

15.1 SY 2-INCH INSULATION
BOARD POLYSTYRENE

12.5 SY 2-INCH INSULATION
BOARD POLYSTYRENE

3.5 SY 2-INCH INSULATION
BOARD POLYSTYRENE

15+70.9, 10.3' LT
15+88.8, 10.1' LT
REPLACE EXISTING WATER SERVICE
W/ NEW 1" PLASTIC, NEW SADDLE
CORPORATION STOP
CURB STOP & CURB BOX

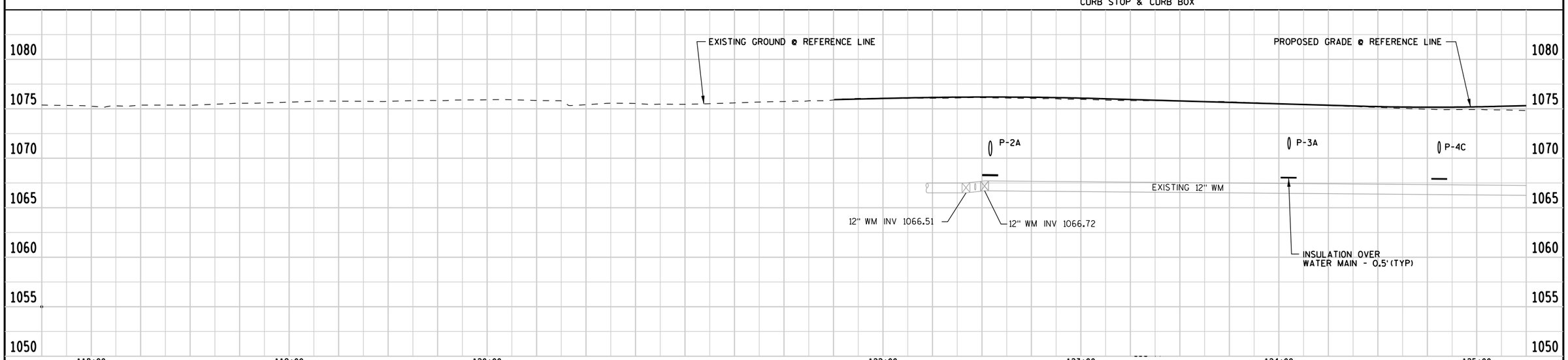

PROJECT NUMBER: 6414-00-88	HWY: BUSINESS 51	COUNTY: PORTAGE	UTILITY IMPROVEMENTS	SHEET 3	E

FILE NAME: I:\work\projects\66136\task_91_post_rd_utilities\gra\023001_up.dgn
BATCH PRINT SHEET 1 OF 12
PRINTER DRIVER: S:_acm-CADstds_Libraries\WISDOT\Microstation\Resources\MS_Printing\Printer_Drivers\ET_PDF_11 x 17.plt
PEN TABLE: \\USSTVIFP001\Data\Library\Work\Projects\66136\task_91_post_rd_utilities\gra\MS_Printing\Pen_Tables\ET_WisDOT.tbl
PLOT DATE: 8/25/2015
PLOT TIME: 6:40:04 AM
PLOT SCALE: 1:49.9999

2

125+14.4, 2.7'LT
REPLACE EXISTING WATER SERVICE
W/ NEW 1" PLASTIC, NEW SADDLE,
CORPORATION STOP,
CURB STOP & CURB BOX

3.5 SY 2-INCH
INSULATION
BOARD
POLYSTYRENE

ABANDON 8" WM
STUB & VALVE
8" CAP REQUIRED

19.5 SY 2-INCH INSULATION
BOARD POLYSTYRENE

3.5 SY 2-INCH INSULATION
BOARD POLYSTYRENE

3.5 SY 2-INCH INSULATION
BOARD POLYSTYRENE

3.5 SY 2-INCH
INSULATION
BOARD POLYSTYRENE

128+13.5, 14.1'LT
12" X 45 BEND

128+38.7, 5.8'RT
BEGIN 24" X 50'
STEEL CASING PIPE

21.8 SY 2-INCH
INSULATION
BOARD POLYSTYRENE

ABANDON 12"WM
AND VALVE

128+88.7, 6.5'RT
END 24" X 50'
STEEL CASING PIPE

SALVAGE HYDRANT
& REMOVE VALVE

129+13.0, 12.6'LT
12" X 45 BEND

20.5 SY 2-INCH
INSULATION
BOARD POLYSTYRENE

3.5 SY 2-INCH
INSULATION
BOARD POLYSTYRENE

19.6 SY 2-INCH
INSULATION
BOARD POLYSTYRENE

128+33.7, 5.8'RT
12" X 45 BEND

128+93.8, 6.7'RT
12" X 45 BEND

15.1 SY 2-INCH
INSULATION
BOARD POLYSTYRENE

SALVAGE HYDRANT,
ABANDON VALVE &
LEAD BACK TO MAIN
6" CAP REQUIRED

20+77, 21.2'RT
STANDARD HYDRANT, 7.5'BURY
6" VALVE & VALVE BOX
9'-6" WM
6" X 8" TAPPING SLEEVE

20+77.6, 12.1'LT
REPLACE EXISTING WATER SERVICE
W/ NEW 1" PLASTIC, NEW SADDLE
CORPORATION STOP
CURB STOP & CURB BOX

12.4 SY 2-INCH
INSULATION
BOARD POLYSTYRENE

126+46.7, 10.7'LT
127+5.2, 12.7'LT
REPLACE EXISTING WATER SERVICE
W/ NEW 1" PLASTIC, NEW SADDLE,
CORPORATION STOP,
CURB STOP & CURB BOX

128+20.6, 7.1'LT
128+20.9, 6.8'LT
REPLACE EXISTING WATER SERVICE
W/ NEW 1" PLASTIC, NEW SADDLE,
CORPORATION STOP,
CURB STOP & CURB BOX

17.3 SY 2-INCH
INSULATION
BOARD POLYSTYRENE

19.6 SY 2-INCH
INSULATION
BOARD POLYSTYRENE

129+97.5 9.1'LT
REPLACE EXISTING WATER SERVICE
W/ NEW 1" PLASTIC, NEW SADDLE,
CORPORATION STOP,
CURB STOP & CURB BOX

129+19.0, 44.0'RT
STANDARD HYDRANT, 7.5'BURY
6" VALVE & VALVE BOX
56'-6" WM
6" X 12" TAPPING SLEEVE

WILLOW DR
WISCONSIN CENTRAL LTD
BUSINESS 51
CHESNL
125+00
126+00
127+00
128+00
129+00
130+00
131+00
132+00
19+00
20+00
21+00
50+00

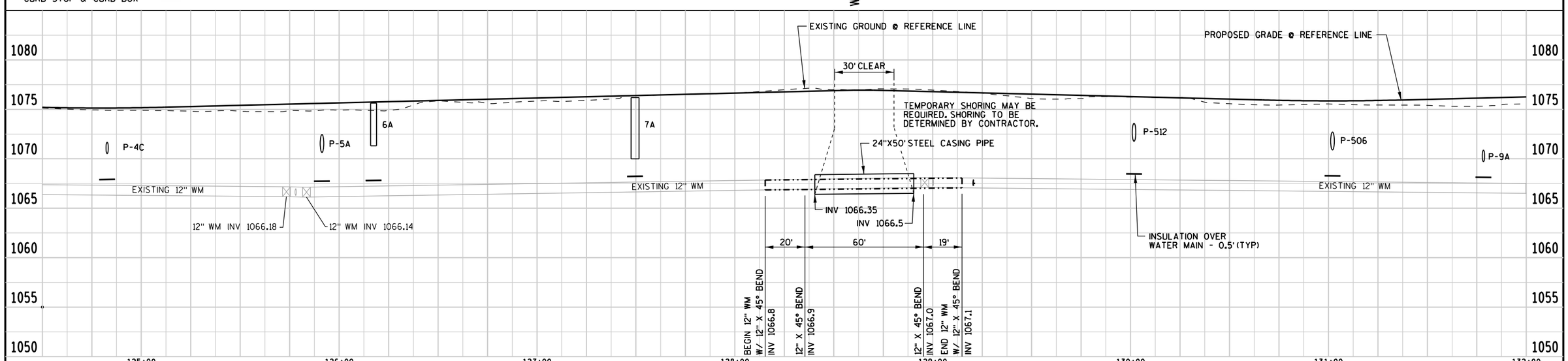

PROJECT NUMBER: 6414-00-88	HWY: BUSINESS 51	COUNTY: PORTAGE	UTILITY IMPROVEMENTS	SHEET 4	E

FILE NAME: I:\work\projects\66136\task_91_post_rd_utilities\gra\023002_up.dgn
BATCH PRINT SHEET 2 OF 12
PRINTER DRIVER: S:_acm-CADstds_Libraries\WISDOT\Microstation\Resources\MS_Printing\Printer_Drivers\ET_PDF_11 x 17.plt
PEN TABLE: \\USSTV1FP001\Data\Library\Work\Projects\66136\task_91_post_rd_utilities\gra\MS_Printing\Pen_Tables\ET_WisDOT.tbl
PLOT DATE: 10/14/2015
PLOT TIME: 12:22:09 PM
PLOT SCALE: 1:49.9999

3.5 SY 2-INCH INSULATION BOARD POLYSTYRENE

SALVAGE HYDRANT, ABANDON VALVE & LEAD AT WATER MAIN 6" CAP REQUIRED

CHESTNUT DR

499+00

ABANDON AT MAIN (IF A STUB)

3.5 SY 2-INCH INSULATION BOARD POLYSTYRENE

SALVAGE HYDRANT, ABANDON VALVE & LEAD AT WATER MAIN 6" CAP REQUIRED

135+34.2, 18.9' RT BEGIN 12" WM AT TEE

136+31.7, 24.7' LT SAN MH 4-15 REMOVE GRADE RINGS, FRAME & LID REPLACE W/ PLASTIC RINGS, NEW FRAME & NEW LID

N

32.9 SY 2-INCH INSULATION BOARD POLYSTYRENE

135+39.2, 19.0' RT 12" VALVE & VALVE BOX

33.8 SY 2-INCH INSULATION BOARD POLYSTYRENE

3.5 SY 2-INCH INSULATION BOARD POLYSTYRENE

3.5 SY 2-INCH INSULATION BOARD POLYSTYRENE

BUSINESS 51

132+00

133+00

134+00

135+00

136+00

137+00

138+00

500+00

30.2 SY 2-INCH INSULATION BOARD POLYSTYRENE

3.5 SY 2-INCH INSULATION BOARD POLYSTYRENE

39.1 SY 2-INCH INSULATION BOARD POLYSTYRENE

3.5 SY 2-INCH INSULATION BOARD POLYSTYRENE

3.5 SY 2-INCH INSULATION BOARD POLYSTYRENE

3.5 SY 2-INCH INSULATION BOARD POLYSTYRENE

5.3 SY 2-INCH INSULATION BOARD POLYSTYRENE

134+20.0, 13.3' RT
135+20.4, 18.5 RT
REPLACE EXISTING WATER SERVICE W/ NEW 1" PLASTIC, NEW SADDLE, CORPORATION STOP, CURB STOP & CURB BOX

25+68, 8.8' RT
STANDARD HYDRANT 7.5' BURY
6" VALVE & VALVE BOX
14'-6" WM
8" X 6" TAPPING SLEEVE

136+98.0, 21.6' RT
137+73.6, 20.5' RT
137+77.4, 20.4 RT
REPLACE EXISTING WATER SERVICE W/ NEW 1" PLASTIC, NEW SADDLE, CORPORATION STOP, CURB STOP & CURB BOX

4.4 SY 2-INCH INSULATION BOARD POLYSTYRENE

CHESTNUT DR

501+00

SUMAC LN

26+00

ASPHALT

CONCRETE

GRASS

STEPS

SIGN

TELE. PED

MH

SAN

SS

OH

INL

W

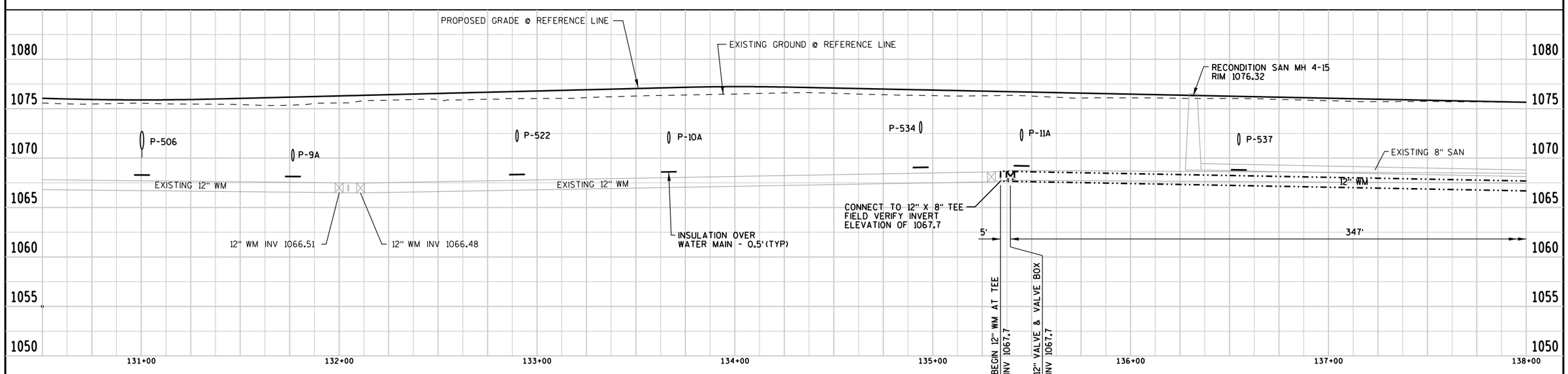

PROJECT NUMBER: 6414-00-88	HWY: BUSINESS 51	COUNTY: PORTAGE	UTILITY IMPROVEMENTS	SHEET 5	E

FILE NAME: I:\work\projects\66136\task_91_post_rd_utilities\gra\023003_up.dgn
BATCH PRINT SHEET 3 OF 12
PRINTER DRIVER: S:_acm-CADstds_Libraries\WISDOT\Microstation\Resources\MS_Printing\Printer_Drivers\ET_PDF_11 x 17.plt
PEN TABLE: \\USSTV1FP001\Data\Library\Work\Projects\66136\task_91_post_rd_utilities\gra\MS_Printing\Pen_Tables\ET_WisDOT.tbl
PLOT DATE: 8/25/2015
PLOT TIME: 6:40:08 AM
PLOT SCALE: 1:49.9999

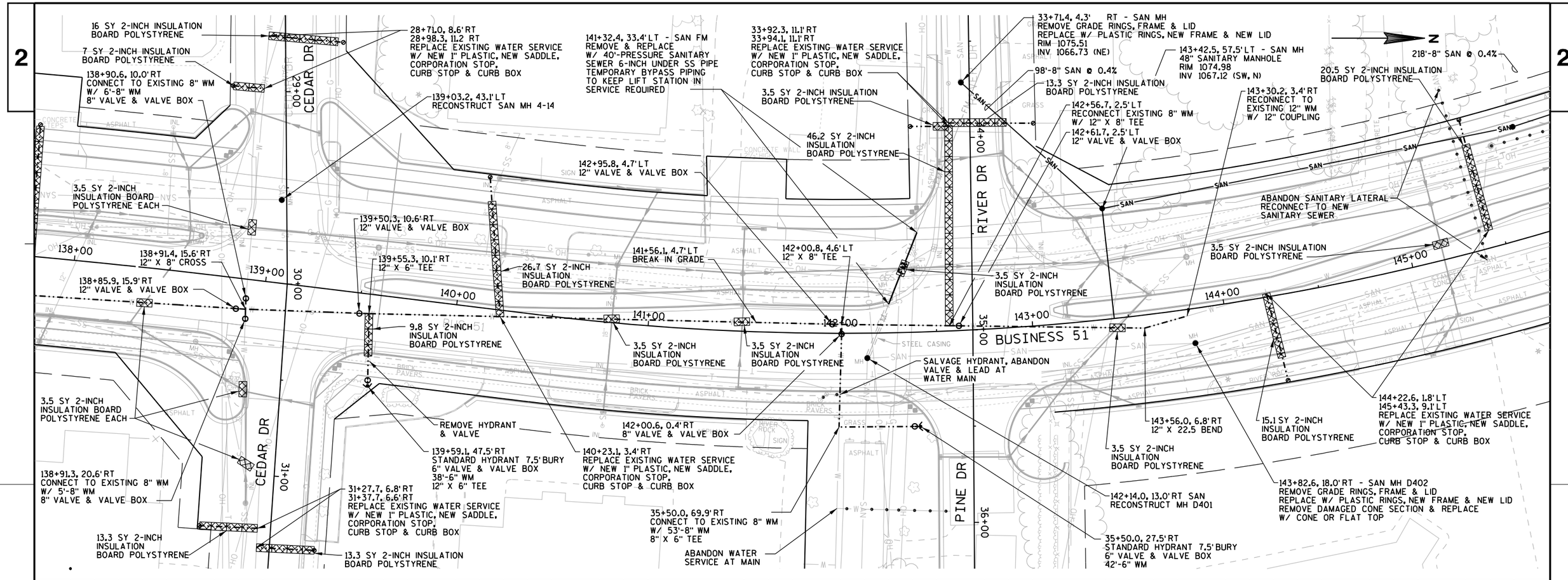

PROJECT NUMBER: 6414-00-88	HWY: BUSINESS 51	COUNTY: PORTAGE	UTILITY IMPROVEMENTS	SHEET 6	E

FILE NAME: I:\work\projects\66136\task_91_post_rd_utilities\gra\023004_up.dgn
BATCH PRINT SHEET 4 OF 12
PRINTER DRIVER: S:_acm-CADstds_Libraries\WISDOT\Microstation\Resources\MS_Printing\Printer_Drivers\ET_PDF_11 x 17.plt
PEN TABLE: \\USSTVIFP001\Data\Library\Work\Projects\66136\task_91_post_rd_utilities\gra\MS_Printing\Pen_Tables\ET_WisDOT.tbl
PLOT DATE: 8/25/2015
PLOT TIME: 6:40:10 AM
PLOT SCALE: 1:49.9999

2

ABANDON SAN MH D533
SALVAGE FRAME & LID

145+70.3, 57.5'LT - SAN MH
48" SANITARY MANHOLE
RIM 1076.02
INV 1067.99 (S,N)

145+85.7, 9.0'LT
146+62.3, 6.1'LT
REPLACE EXISTING WATER SERVICE
W/ NEW 1" PLASTIC, NEW SADDLE,
CORPORATION STOP,
CURB STOP & CURB BOX

147+11.7, 57.5'LT - SAN MH
48" SANITARY MANHOLE
RIM 1076.67
INV 1068.55 (S)

147+31, 63'LT
REPLACE LATERAL
W/ 40'-4" PVC

ABANDON SANITARY LATERAL
RECONNECT TO NEW
SANITARY SEWER

ABANDON SANITARY LATERAL
RECONNECT TO NEW
SANITARY SEWER

ABANDON SAN MH D511
SALVAGE FRAME & LID

140'-8" SAN @ 0.4%

22.2 SY 2-INCH INSULATION
BOARD POLYSTYRENE

3.5 SY 2-INCH INSULATION
BOARD POLYSTYRENE

25.1 SY 2-INCH INSULATION
BOARD POLYSTYRENE

33.8 SY 2-INCH INSULATION
BOARD POLYSTYRENE

151+37.11, 28.11'LT - SAN MH D512
REMOVE GRADE RINGS, FRAME & LID
REPLACE W/ PLASTIC RINGS, NEW FRAME & LID

32.0 SY 2-INCH INSULATION
BOARD POLYSTYRENE

151+43.8, 0.2'RT
REPLACE EXISTING WATER SERVICE
W/ NEW 1" PLASTIC, NEW SADDLE,
CORPORATION STOP,
CURB STOP & CURB BOX

146+00 147+00 148+00 149+00 150+00 151+00 152+00 153+00

BUSINESS 51

3.5 SY 2-INCH
INSULATION
BOARD POLYSTYRENE

3.5 SY 2-INCH
INSULATION
BOARD POLYSTYRENE

3.5 SY 2-INCH INSULATION
BOARD POLYSTYRENE

14.0 SY 2-INCH INSULATION
BOARD POLYSTYRENE

REMOVE HYDRANT
& VALVE

146+12, 20'RT
REPAIR SAG IN LATERAL
10'FROM MAIN

13.3 SY 2-INCH
INSULATION
BOARD POLYSTYRENE

147+05.1, 10.5'RT
RECONSTRUCT SAN MN D403
ABANDON SAN TO THE WEST
CUT PIPE & PLUG W/ GLUE CAP

148+07.2, 0.2'RT
149+87.0, 8.1'RT
REPLACE EXISTING WATER SERVICE
W/ NEW 1" PLASTIC, NEW SADDLE,
CORPORATION STOP,
CURB STOP & CURB BOX

151+03.6, 26.8'RT - SAN MH D404
REMOVE GRADE RINGS, FRAME & LID
REPLACE W/ PLASTIC RINGS, NEW FRAME & LID

17.8 SY 2-INCH INSULATION
BOARD POLYSTYRENE

146+55.0, 10.1'RT
EXTEND EAST
STANDARD HYDRANT, 7.5'BURY
6" VALVE & VALVE BOX
32'-6" WM
6" COUPLING

3.5 SY 2-INCH INSULATION
BOARD POLYSTYRENE

SCHOOL DR

41+00

40+77.1, 35.1'LT
STANDARD HYDRANT, 7.5'BURY
6" VALVE & VALVE BOX
52'-6" WM
8" X 6" TAPPING SLEEVE

SALVAGE HYDRANT, ABANDON VALVE
& LEAD AT WATER MAIN
6" CAP REQUIRED

2

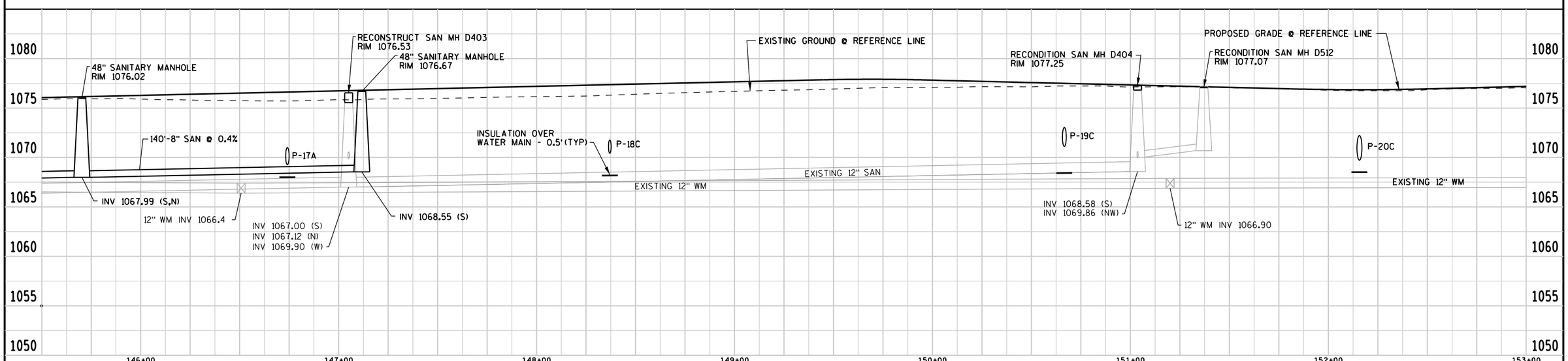

PROJECT NUMBER: 6414-00-88	HWY: BUSINESS 51	COUNTY: PORTAGE	UTILITY IMPROVEMENTS	SHEET 7	E

2

15.3 SY 2-INCH INSULATION BOARD POLYSTYRENE

43+69.0, 22.4'RT
44+15.5, 27.4'RT
REPLACE EXISTING WATER SERVICE
W/ NEW 1" PLASTIC, NEW SADDLE,
CORPORATION STOP,
CURB STOP & CURB BOX

155+85.6, 68.0'LT - RELOCATE SAN MH D414
48" SANITARY MANHOLE
2-4" LATERAL SERVICES
RIM 1079.13
INV 1068.31(NE)

62'-8" SAN @ 0.4%

ABANDON SAN MH D414
MAIN & LATERAL
SALVAGE FRAME & LID

156+22.5, 20.2'LT - SAN MH D413
REMOVE GRADE RINGS, FRAME & LID
REPLACE W/ PLASTIC RINGS, NEW FRAME & LID

32.0 SY 2-INCH INSULATION BOARD POLYSTYRENE

159+36.2, 68.5'LT
EXTEND WEST
STANDARD HYDRANT, 7.5'BURY
6" VALVE & VALVE BOX
47'-6" WM
6" COUPLING

3.5 SY 2-INCH INSULATION BOARD POLYSTYRENE

3.5 SY 2-INCH INSULATION BOARD POLYSTYRENE

34.7 SY 2-INCH INSULATION BOARD POLYSTYRENE

35.6 SY 2-INCH INSULATION BOARD POLYSTYRENE

29.3 SY 2-INCH INSULATION BOARD POLYSTYRENE

15.1 SY 2-INCH INSULATION BOARD POLYSTYRENE

3.5 SY 2-INCH INSULATION BOARD POLYSTYRENE

3.5 SY 2-INCH INSULATION BOARD POLYSTYRENE

3.5 SY 2-INCH INSULATION BOARD POLYSTYRENE

3.5 SY 2-INCH INSULATION BOARD POLYSTYRENE

3.5 SY 2-INCH INSULATION BOARD POLYSTYRENE

3.5 SY 2-INCH INSULATION BOARD POLYSTYRENE

8.9 SY 2-INCH INSULATION BOARD POLYSTYRENE

3.5 SY 2-INCH INSULATION BOARD POLYSTYRENE

155+21.2, 22.3'RT
REPLACE EXISTING WATER SERVICE
SHIFT SERVICE NORTH 7'
W/ NEW 1" PLASTIC, NEW SADDLE,
CORPORATION STOP,
CURB STOP & CURB BOX

156+43.5, 19.5'RT
157+54.8, 15.6'RT
REPLACE EXISTING WATER SERVICE
W/ NEW 1" PLASTIC, NEW SADDLE,
CORPORATION STOP,
CURB STOP & CURB BOX

159+07.7, 10.2'RT
159+77.3, 11.2'RT
REPLACE EXISTING WATER SERVICE
W/ NEW 1" PLASTIC, NEW SADDLE,
CORPORATION STOP,
CURB STOP & CURB BOX

159+27.9, 23.2'RT - SAN MH D415
REMOVE GRADE RINGS, FRAME & LID
REPLACE W/ PLASTIC RINGS, NEW FRAME & LID

156+22.5, 30.0'RT - SAN MH D412
REMOVE GRADE RINGS, FRAME & LID
REPLACE W/ PLASTIC RINGS, NEW FRAME & LID

GILMAN DR
ROOSEVELT DR
BUSINESS 51
BUS 51
44+00
601+00
153+00
154+00
155+00
156+00
157+00
158+00
159+00
160+00

PROPOSED GRADE @ REFERENCE LINE

48" SANITARY MANHOLE - D414
RIM 1079.13

ABANDON SAN MH D414

RECONDITION SAN MH D413
RIM 1078.81

RECONDITION SAN MH D412
RIM 1078.23

EXISTING GROUND @ REFERENCE LINE

RECONDITION SAN MH D415
RIM 1077.80

1080
1075
1070
1065
1060
1055
1050

P-22C
P-23A
P-24B
P-24H
P-25J
P-25C
P-26H

INSULATION OVER
WATER MAIN - 0.5'(TYP)

EXISTING 12" WM
EXISTING 12" SAN
EXISTING 12" WM
EXISTING 12" WM

12" WM INV 1066.51

INV 1068.27 (NE)

62'-8" SAN @ 0.4%

CONNECT TO
EXISTING SAN MH
INV 1068.02

INV 1068.02 (S,E)

12" WM INV 1069.56

INV 1066.94 (E)
INV 1066.97 (N)
INV 1067.42 (W)

INV 1067.69 (N,S)

12" WM INV 1068.67

12" WM INV 1067.75

153+00
154+00
155+00
156+00
157+00
158+00
159+00
160+00

PROJECT NUMBER: 6414-00-88	HWY: BUSINESS 51	COUNTY: PORTAGE	UTILITY IMPROVEMENTS	SHEET 8	E

FILE NAME: I:\work\projects\66136\task_91_post_rd_utilities\gra\023006_up.dgn
BATCH PRINT SHEET 6 OF 12
PRINTER DRIVER: S:_acm-CADstds_Libraries\WISDOT\Microstation\Resources\MS_Printing\Printer_Drivers\ET_PDF_11 x 17.plt
PEN TABLE: \\USSTV1FP001\Data\Library\Work\Projects\66136\task_91_post_rd_utilities\gra\MS_Printing\Pen_Tables\ET_WisDOT.tbl
PLOT DATE: 8/25/2015
PLOT TIME: 6:40:15 AM
PLOT SCALE: 1:49.9999

2

163+00.8, 68.5' LT
EXTEND WEST
STANDARD HYDRANT, 7.5' BURY
6" VALVE & VALVE BOX
47'-6" WM
6" COUPLING

164+55.1, 65.5' LT
ADJUST SAN MH B117, RIM 1078.76

3.5 SY 2-INCH
INSULATION
BOARD POLYSTYRENE

4.5 SY 2-INCH
INSULATION
BOARD POLYSTYRENE

49+09.1, 21.7' LT
STANDARD HYDRANT, 7.5' BURY
6" VALVE & VALVE BOX
14'-6" WM
12" X 6" TAPPING SLEEVE

166+53.0, 65.5' LT
ADJUST SAN MH B116, RIM 1078.01

11.6 SY 2-INCH
INSULATION
BOARD POLYSTYRENE

ABANDON EXISTING WATER
MAIN STUB & VALVE
8" CAP REQUIRED

3.5 SY 2-INCH
INSULATION BOARD
POLYSTYRENE EACH

21.3 SY 2-INCH
INSULATION
BOARD POLYSTYRENE

SALVAGE HYDRANT &
ABANDON VALVE AT
WATER MAIN
6" CAP REQUIRED

SALVAGE HYDRANT
& REMOVE VALVE

3.5 SY 2-INCH
INSULATION
BOARD POLYSTYRENE

25.8 SY 2-INCH
INSULATION
BOARD POLYSTYRENE

24.0 SY 2-INCH
INSULATION
BOARD POLYSTYRENE

3.5 SY 2-INCH
INSULATION
BOARD POLYSTYRENE

3.5 SY 2-INCH
INSULATION
BOARD POLYSTYRENE

11.6 SY 2-INCH INSULATION
BOARD POLYSTYRENE

3.5 SY 2-INCH
INSULATION
BOARD POLYSTYRENE

15.1 SY 2-INCH
INSULATION
BOARD POLYSTYRENE

17.8 SY 2-INCH
INSULATION
BOARD POLYSTYRENE

166+37.5, 7.5' RT - SAN MH D417
166+45.3, 32.9' LT - SAN MH B023
REMOVE GRADE RINGS, FRAME & LID
REPLACE W/ PLASTIC RINGS, NEW FRAME & LID

161+27, 19.5' RT
12" SAN MAIN TRUSS PIPE
REMOVE & REPLACE
W/ 12" PVC & 2-COUPLERS
ABOUT 9.5' DEEP

161+51.2, 5.0' RT
161+99.9, 3.3' RT
REPLACE EXISTING WATER SERVICE
W/ NEW 1" PLASTIC, NEW SADDLE,
CORPORATION STOP,
CURB STOP & CURB BOX

14.2 SY 2-INCH
INSULATION
BOARD POLYSTYRENE

163+19.9, 0.7' LT
163+66.1, 1.8' LT
164+19.0, 3.2' LT
REPLACE EXISTING WATER SERVICE
W/ NEW 1" PLASTIC, NEW SADDLE,
CORPORATION STOP,
CURB STOP & CURB BOX

164+70.8, 18.6' LT
12" X 45° BEND (HORIZ)

164+57.0, 4.1' LT
BEGIN 12" WM
W/ 12" X 45° BEND (HORIZ)

17.8 SY 2-INCH
INSULATION
BOARD POLYSTYRENE

165+70.8, 7.0' LT
166+04.8, 7.8' LT
167+17.6, 9.0' LT
REPLACE EXISTING WATER SERVICE
W/ NEW 1" PLASTIC, NEW SADDLE,
CORPORATION STOP,
CURB STOP & CURB BOX

165+25.3, 5.8' LT
END 12" WM
W/ 12" X 45° BEND (HORIZ)

162+70, 16' RT
RECONSTRUCT SAN MH D416

165+10.8, 19.6' LT
12" X 45° BEND (HORIZ)

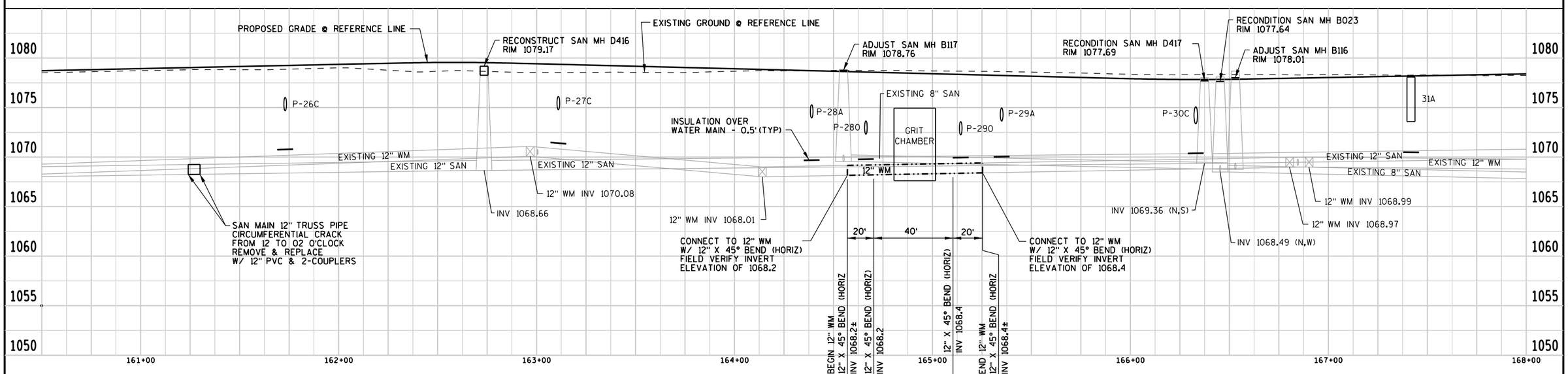

PROJECT NUMBER: 6414-00-88	HWY: BUSINESS 51	COUNTY: PORTAGE	UTILITY IMPROVEMENTS	SHEET 9	E

FILE NAME: I:\work\projects\66136\task_91_post_rd_utilities\gra\023007_up.dgn
BATCH PRINT SHEET 7 OF 12
PRINTER DRIVER: S:_acm-CADstds_Libraries\WISDOT\Microstation\Resources\MS_Printing\Printer_Drivers\ET_PDF_11 x 17.plt
PEN TABLE: \\USSTVIFP001\Data\Library\Work\Projects\66136\task_91_post_rd_utilities\gra\MS_Printing\Pen_Tables\ET_WisDOT.tbl
PLOT DATE: 8/25/2015
PLOT TIME: 6:40:17 AM
PLOT SCALE: 1:49.9999

2

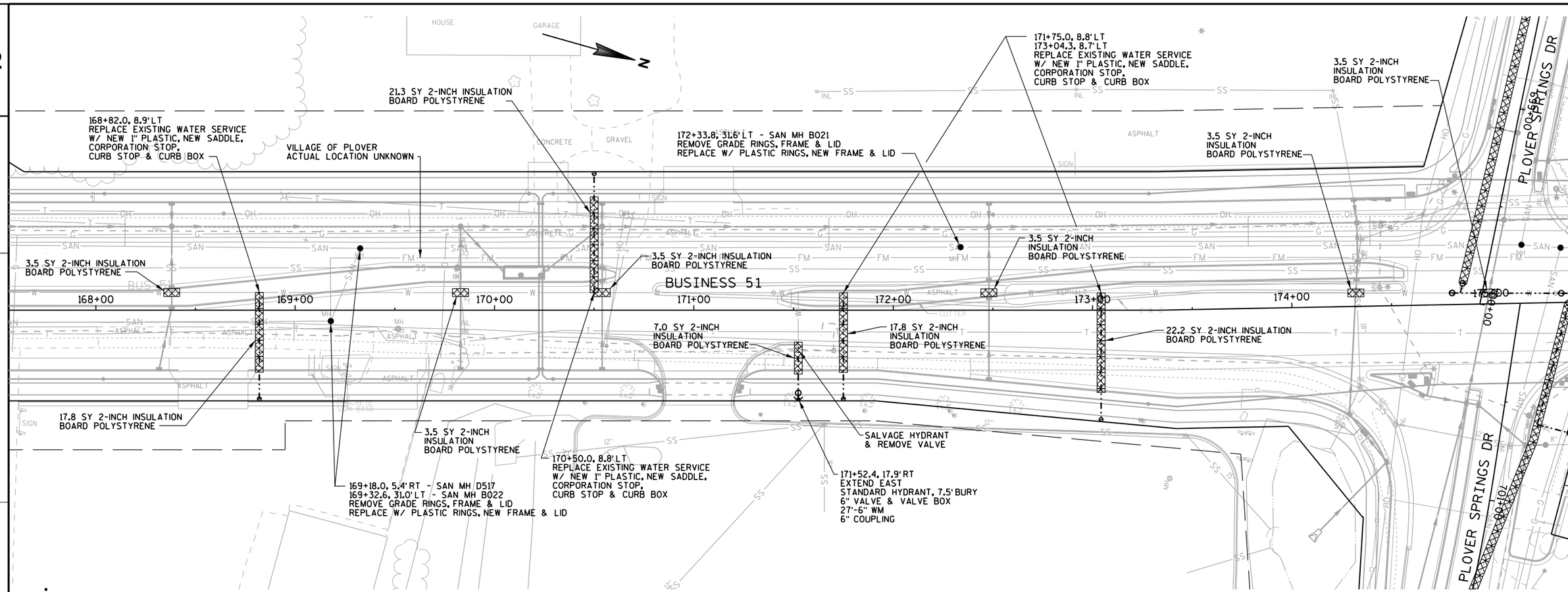

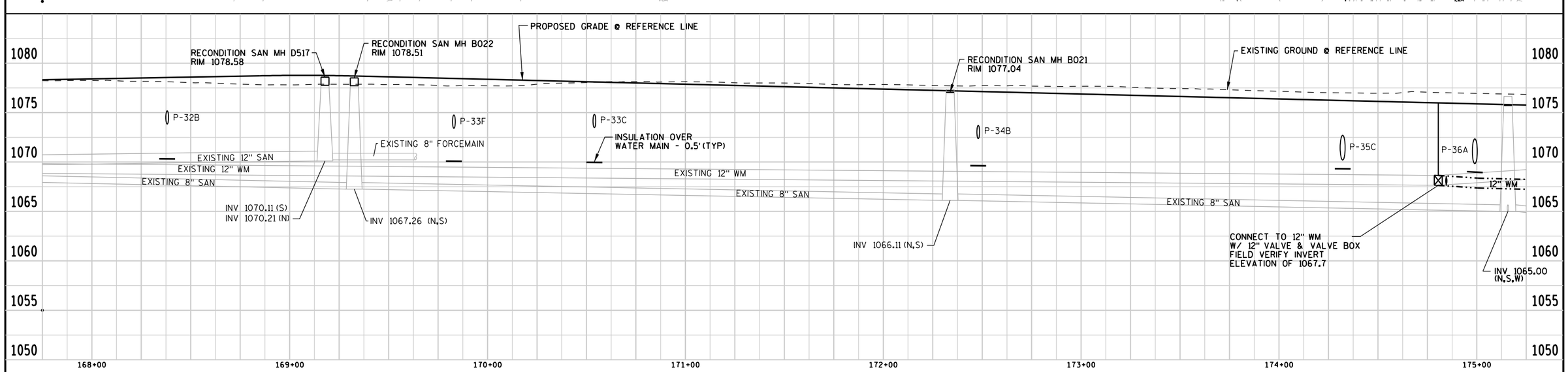

PROJECT NUMBER: 6414-00-88	HWY: BUSINESS 51	COUNTY: PORTAGE	UTILITY IMPROVEMENTS	SHEET 10	E

2

174+85.9, 10.6' LT
CONNECT TO EXISTING 8" WM
W/ 5'-8" WM
8" VALVE & VALVE BOX

174+80.5, 5.8' LT
BEGIN 12" WM
12" VALVE & VALVE BOX

175+15.7, 29.4' LT
RECONSTRUCT SAN MH B011

175+35.3, 27.5' LT - SAN MH B015
REMOVE GRADE RINGS, FRAME & LID
REPLACE W/ PLASTIC RINGS, NEW FRAME & LID

175+35.2, 4.7' LT
12" VALVE & VALVE BOX

175+40.2, 4.6' LT
12" X 8" TEE

175+60.2, 4.1' LT
12" X 45° BEND (HORIZ)

27.5 SY 2-INCH
INSULATION
BOARD POLYSTYRENE

177+31, 25' LT
REPLACE LATERAL
W/ 48'-4" PVC

177+61.9, 0.1' LT
12" X 45° BEND (HORIZ)

3.5 SY 2-INCH
INSULATION
BOARD POLYSTYRENE

178+59.2, 5.8' LT
END 12" WM
12" VALVE & VALVE BOX

26.7 SY 2-INCH INSULATION
BOARD POLYSTYRENE

179+33.3, 22.3' LT - SAN MH B014
REMOVE GRADE RINGS, FRAME & LID
REPLACE W/ PLASTIC RINGS, NEW FRAME & LID

179+90.0, 3.7' RT
REPLACE EXISTING WATER SERVICE
W/ NEW 2" PLASTIC, NEW SADDLE,
CORPORATION STOP,
CURB STOP & CURB BOX

26.7 SY 2-INCH
INSULATION
BOARD POLYSTYRENE

VILLAGE OF PLOVER
ACTUAL LOCATION UNKNOWN

12.5 SY 2-INCH
INSULATION
BOARD POLYSTYRENE

174+84.6, 5.8' LT
12" X 8" TEE

175+72.3, 8.0' RT
12" X 45° BEND (HORIZ)

3.5 SY 2-INCH
INSULATION
BOARD POLYSTYRENE

3.5 SY 2-INCH
INSULATION
BOARD POLYSTYRENE

3.5 SY 2-INCH
INSULATION
BOARD POLYSTYRENE

3.5 SY 2-INCH
INSULATION
BOARD POLYSTYRENE

176+85.0, 8.0' RT
REPLACE EXISTING WATER SERVICE
W/ NEW 1" PLASTIC, NEW SADDLE,
CORPORATION STOP,
CURB STOP & CURB BOX

177+53.8, 8.0' RT
12" X 45° BEND (HORIZ)

178+60.6, 47.0' RT
178+65.7, 47.0' RT
GUARD POST

178+62.9, 44.0' RT
EXTEND EAST
STANDARD HYDRANT, 7.5' BURY
6" VALVE & VALVE BOX
14'-6" WM
6" COUPLING

179+20.0, 3.9' RT
179+69.9, 4.2' RT
REPLACE EXISTING WATER SERVICE
W/ NEW 1" PLASTIC, NEW SADDLE,
CORPORATION STOP,
CURB STOP & CURB BOX

178+71, 22.3' LT
REPLACE LATERAL
W/ 69'-4" PVC

SALVAGE HYDRANT & REMOVE VALVE

BUSINESS 51

PLOVER SPRINGS DR

174+00 175+00 176+00 177+00 178+00 179+00 180+00 181+00

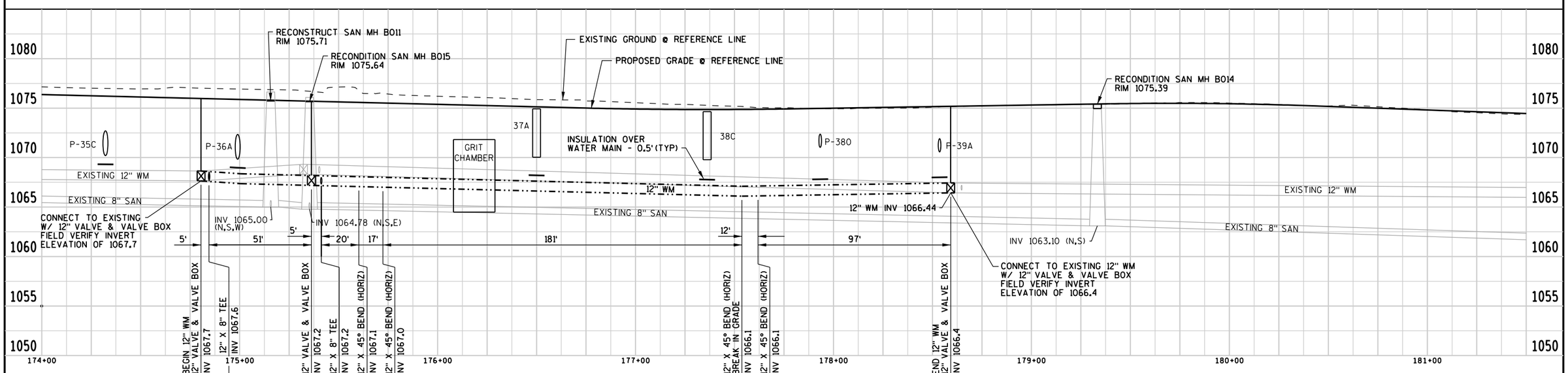

PROJECT NUMBER: 6414-00-88	HWY: BUSINESS 51	COUNTY: PORTAGE	UTILITY IMPROVEMENTS	SHEET 11	E

2

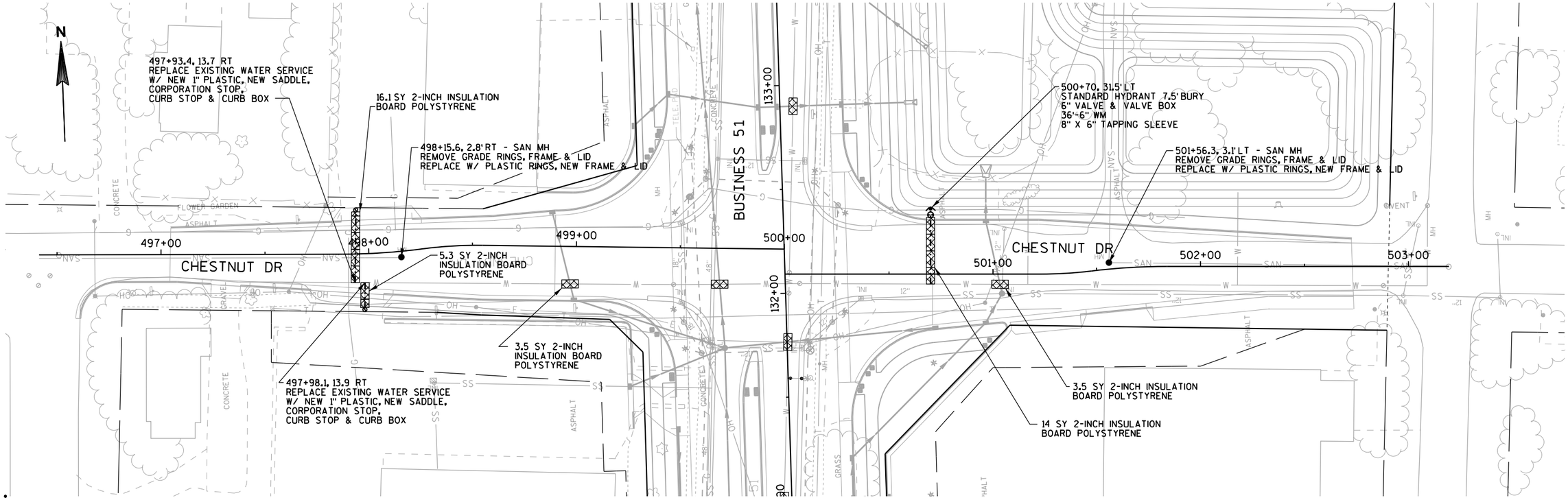

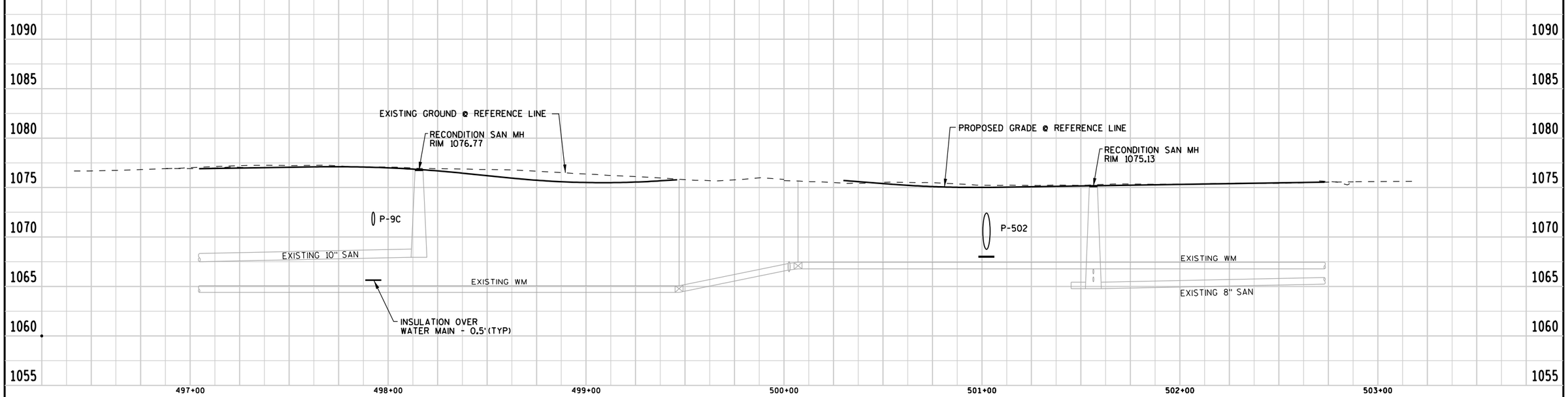

PROJECT NUMBER: 6414-00-88	HWY: BUSINESS 51	COUNTY: PORTAGE	UTILITY IMPROVEMENTS	SHEET 12	E

FILE NAME: \\USSTV1FP001\Data\Library\Work\Projects\66136\task_91_post_rd_utilities\gra\023012_up.dgn
BATCH PRINT SHEET 10 OF 12
PRINTER DRIVER: S:_acm-CADstds_Libraries\WISDOT\Microstation\Resources\MS_Printing\Printer_Drivers\ET_PDF_11 x 17.plt
PEN TABLE: \\USSTV1FP001\Data\Library\Work\Projects\66136\task_91_post_rd_utilities\gra\MS_Printing\Pen_Tables\ET_WisDOT.tbl
PLOT DATE: 8/25/2015
PLOT TIME: 6:40:26 AM
PLOT SCALE: 1:49.9999

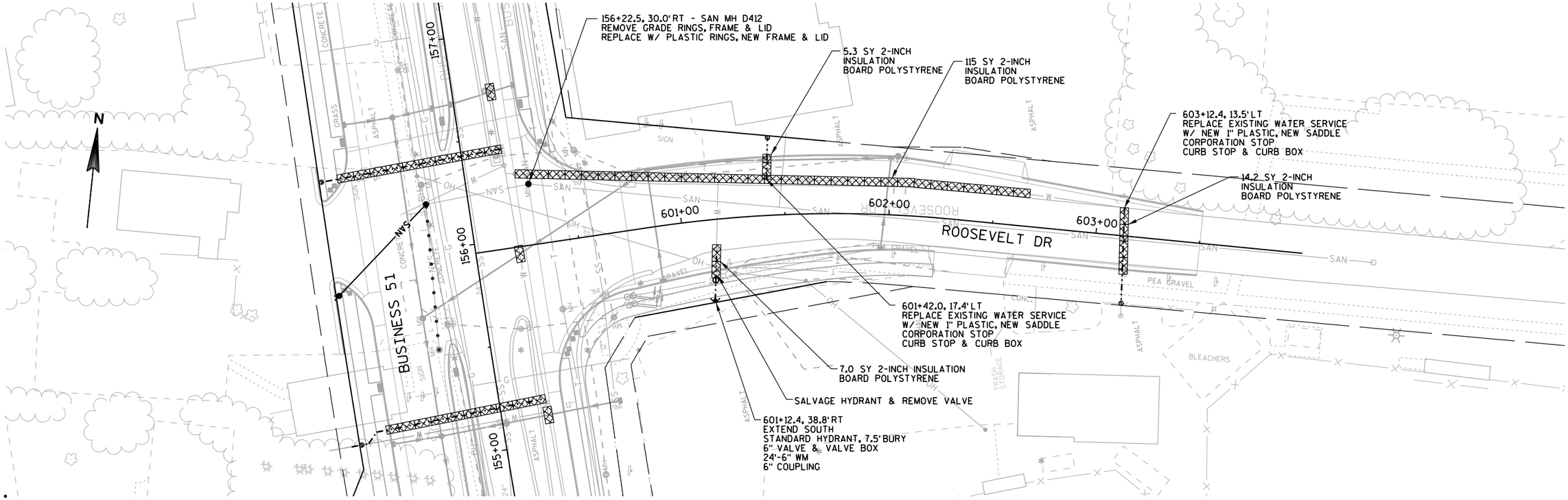

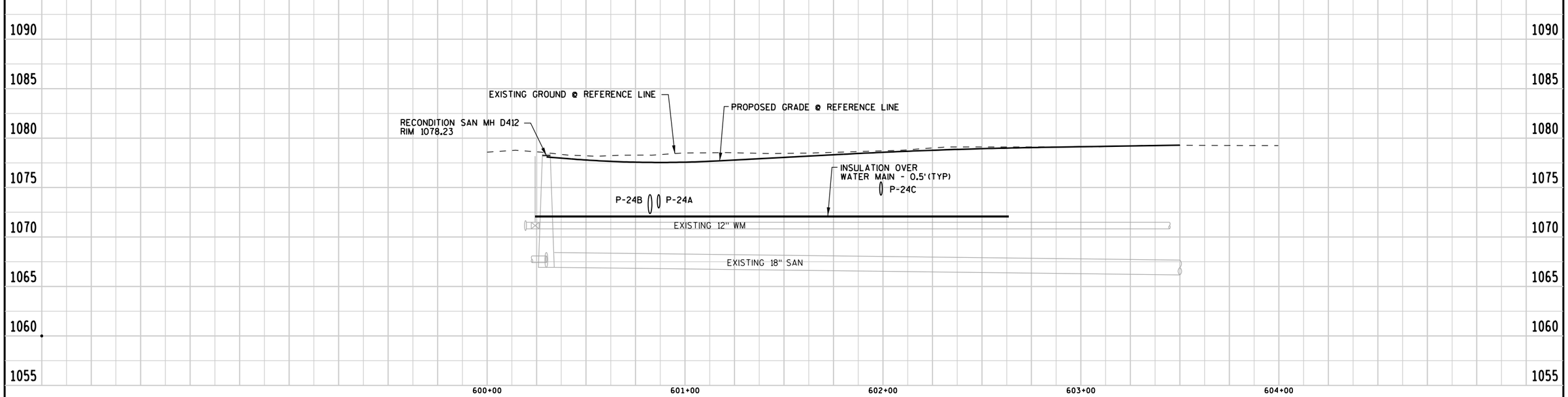

PROJECT NUMBER: 6414-00-88	HWY: BUSINESS 51	COUNTY: PORTAGE	UTILITY IMPROVEMENTS	SHEET 13	E

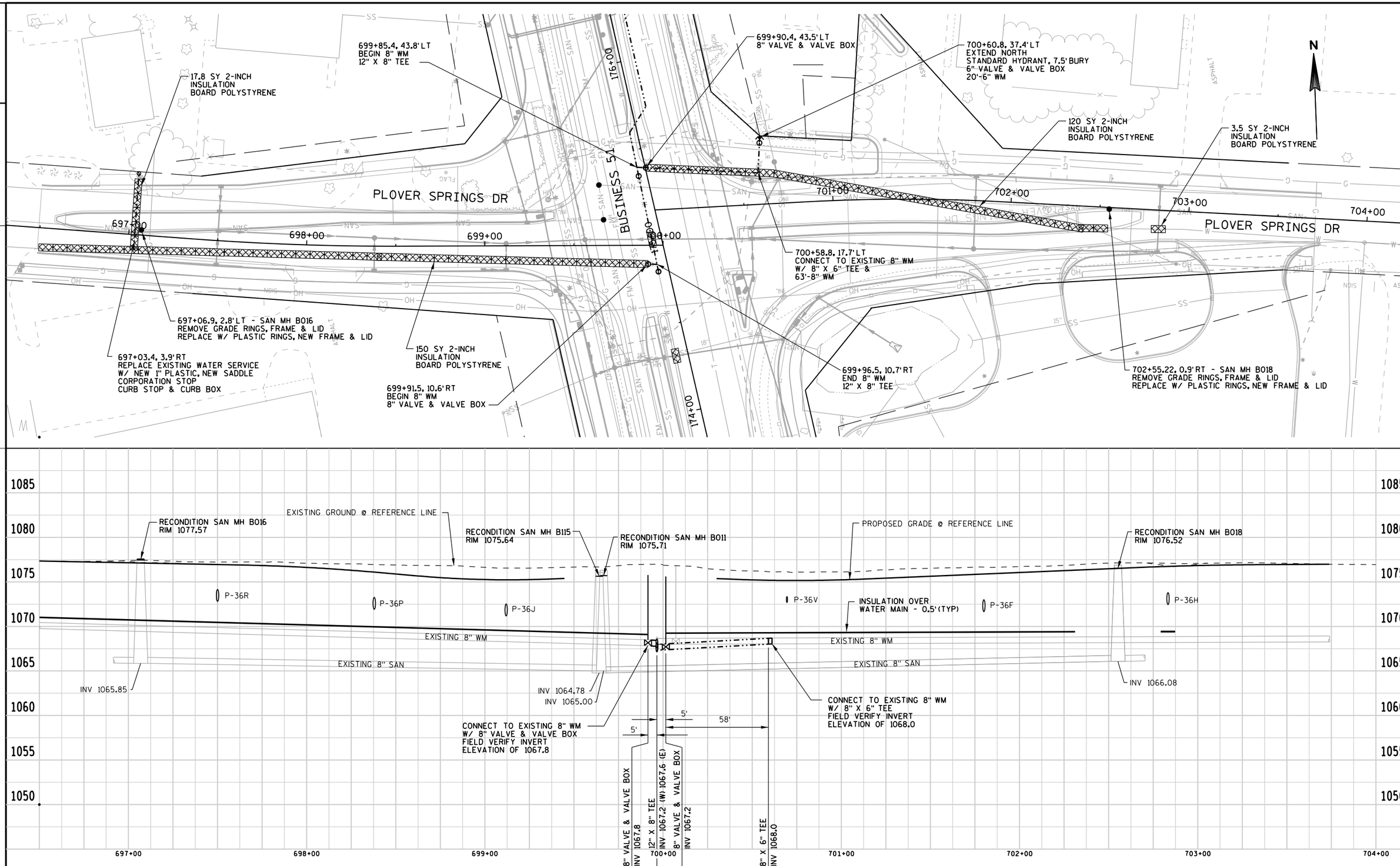

PROJECT NUMBER: 6414-00-88	HWY: BUSINESS 51	COUNTY: PORTAGE	UTILITY IMPROVEMENTS	SHEET 14	E

FILE NAME: \\USSTV1FP001\Data\Library\Work\Projects\66136\task_91_post_rd_utilities\gra\023014_up.dgn
BATCH PRINT SHEET 12 OF 12
PRINTER DRIVER: S:_acm-CADstds_Libraries\WISDOT\Microstation\Resources\MS_Printing\Printer_Drivers\ET_PDF_11 x 17.plt
PEN TABLE: \\USSTV1FP001\Data\Library\Work\Projects\66136\task_91_post_rd_utilities\gra\MS_Printing\Pen_Tables\ET_WisDOT.tbl
PLOT DATE: 8/25/2015
PLOT TIME: 6:40:30 AM
PLOT SCALE: 1:49.9999

3

DATE 01OCT15 E S T I M A T E O F Q U A N T I T I E S

LINE NUMBER	ITEM	ITEM DESCRIPTION	UNIT	TOTAL	6414-00-88 QUANTITY
0790	611.8110	Adjusting Manhole Covers	EACH	2.000	2.000
0810	611.8120.S	Cover Plates Temporary	EACH	25.000	25.000
0830	612.0902.S	Insulation Board Polystyrene (inch) 01. 2-Inch	SY	1,870.000	1,870.000
0840	619.1000	Mobilization	EACH	0.100	0.100
2420	SPV.0060	Special 16. Salvage Hydrant	EACH	16.000	16.000
2430	SPV.0060	Special 17. Removing Watermain Valve Box	EACH	9.000	9.000
2440	SPV.0060	Special 18. Abandoning Watermain Valve Box	EACH	14.000	14.000
2450	SPV.0060	Special 19. Plug Watermain Abandoned in Place	EACH	13.000	13.000
2460	SPV.0060	Special 20. Plug Sanitary Sewer Abandoned in Place	EACH	6.000	6.000
2470	SPV.0060	Special 21. Abandoning Water Service	EACH	1.000	1.000
2480	SPV.0060	Special 22. Abandoning Sanitary Lateral	EACH	3.000	3.000
2490	SPV.0060	Special 23. Adjusting Watermain Valve Box	EACH	22.000	22.000
2500	SPV.0060	Special 24. Hydrant	EACH	16.000	16.000
2510	SPV.0060	Special 25. Watermain Gate Valve and Box 6-Inch	EACH	16.000	16.000
2520	SPV.0060	Special 26. Watermain Gate Valve and Box 8-Inch	EACH	5.000	5.000
2530	SPV.0060	Special 27. Watermain Gate Valve and Box 12-Inch	EACH	8.000	8.000
2540	SPV.0060	Special 28. Watermain Coupling 6-Inch	EACH	6.000	6.000
2550	SPV.0060	Special 29. Watermain Coupling 12-Inch	EACH	1.000	1.000
2560	SPV.0060	Special 30. Watermain Bend 22-1/2 Degree 12-Inch	EACH	1.000	1.000
2570	SPV.0060	Special 31. Watermain Bend 45 Degree 12-Inch	EACH	12.000	12.000
2580	SPV.0060	Special 32. Watermain Tee 8 x 6-Inch	EACH	2.000	2.000
2590	SPV.0060	Special 33. Watermain Tee 12 x 6-Inch	EACH	1.000	1.000
2600	SPV.0060	Special 34. Watermain Tee 12 x 8-Inch	EACH	4.000	4.000
2610	SPV.0060	Special 35. Watermain Cross 12 x 8-Inch	EACH	1.000	1.000
2620	SPV.0060	Special 36. Watermain Tapping Sleeve 8 x 6-Inch	EACH	5.000	5.000
2630	SPV.0060	Special 37. Watermain Tapping Sleeve 12 x 6-Inch	EACH	2.000	2.000
2640	SPV.0060	Special 38. Cap Watermain to Remain in Service	EACH	11.000	11.000
2650	SPV.0060	Special 39. Tracer Wire Access Box	EACH	4.000	4.000
2660	SPV.0060	Special 40. Abandoning Sanitary Manhole	EACH	3.000	3.000
2670	SPV.0060	Special 41. Reconditioning Sanitary Manhole	EACH	21.000	21.000
2680	SPV.0060	Special 42. Reconstructing Sanitary Manhole	EACH	6.000	6.000
2690	SPV.0060	Special 43. Sanitary Manhole Casting	EACH	29.000	29.000
2700	SPV.0060	Special 44. Sanitary Sewer Repair 12-Inch	EACH	1.000	1.000
2710	SPV.0060	Special 45. Reconnect Sanitary Lateral	EACH	3.000	3.000
2720	SPV.0060	Special 46. Repair Sanitary Lateral	EACH	1.000	1.000
2730	SPV.0060	Special 47. Guard Post	EACH	2.000	2.000
2820	SPV.0090	Special 09. Watermain 6-Inch	LF	464.000	464.000
2830	SPV.0090	Special 10. Watermain 8-Inch	LF	131.000	131.000
2840	SPV.0090	Special 11. Watermain 12-Inch	LF	1,364.000	1,364.000
2850	SPV.0090	Special 12. Water Service 1-Inch	LF	3,009.000	3,009.000

3

DATE 01OCT15 E S T I M A T E O F Q U A N T I T I E S

LINE NUMBER	ITEM	ITEM DESCRIPTION	UNIT	TOTAL	6414-00-88 QUANTITY
2860	SPV.0090	Special 13. Water Service 2-Inch	LF	41.000	41.000
2870	SPV.0090	Special 14. Sanitary Sewer 8-Inch	LF	518.000	518.000
2880	SPV.0090	Special 15. Sanitary Lateral 4-Inch	LF	177.000	177.000
2890	SPV.0090	Special 16. Pressure Sanitary Sewer 6-Inch	LF	40.000	40.000
2900	SPV.0090	Special 17. Sanitary Sewer Televising	LF	524.000	524.000
2910	SPV.0090	Special 18. Class B Bedding	LF	50.000	50.000
2920	SPV.0090	Special 19. Casing Pipe 24-Inch	LF	50.000	50.000
3110	SPV.0200	Special 01. Sanitary Manhole	VF	34.900	34.900

3

3

3

ABANDONING WATERMAIN

STATION	LOCATION	SPV.0060.17 REMOVING WATERMAIN VALVE BOX EACH	SPV.0060.18 ABANDONING WATERMAIN VALVE BOX EACH	SPV.0060.19 PLUG WATER MAIN ABANDONED IN PLACE EACH	SPV.0060.21 ABANDONING WATER SERVICE EACH	SPV.0060.38 CAP WATER MAIN TO REMAIN IN SERVICE EACH
122+45	CROSS	--	2	1	--	1
125+75	LT	--	2	1	--	1
128+14	LT	--	--	1	--	--
128+95	LT	--	1	--	--	--
128+98	CROSS	1	--	--	--	--
129+13	LT	--	--	1	--	--
131+60	RT	--	1	1	--	1
133+90	RT	--	1	1	--	1
135+00	RT	--	1	1	--	1
139+59	RT	1	--	--	--	--
142+00	RT	--	1	1	--	1
146+55	RT	1	--	--	--	--
159+36	LT	1	--	--	--	--
163+00	LT	1	--	--	--	--
164+15	RT	--	1	1	--	1
171+52	RT	1	--	--	--	--
178+63	RT	1	--	--	--	--
15+40	LT	--	1	1	--	1
20+10	LT	--	1	1	--	1
35+90	RT	--	--	--	1	--
40+75	RT	--	1	1	--	1
49+36	LT	--	1	1	--	1
601+12	RT	1	--	--	--	--
700+61	LT	1	--	--	--	--
PROJECT TOTALS		9	14	13	1	11

GUARD POST

STATION	LOCATION	SPV.0060.47 GUARD POST EACH
178+60	RT	1
178+65	RT	1
PROJECT TOTALS		2

ABANDONING SANITARY SEWER

STATION	LOCATION	SPV.0060.20 PLUG SANITARY SEWER ABANDONED IN PLACE EACH	SPV.0060.22 ABANDONING SANITARY LATERAL EACH	SPV.0060.40 ABANDONING SANITARY MANHOLE EACH
145+40	CROSS	--	1	--
145+58	LT	1	--	1
147+00	LT	--	1	--
147+05	RT	1	--	--
147+13	LT	2	1	1
155+52	LT	1	--	1
156+23	LT	1	--	--
PROJECT TOTALS		6	3	3

SANITARY MANHOLES

STATION	LOCATION	611.8110 ADJUSTING MANHOLE COVERS EACH	611.8120.S COVER PLATES TEMPORARY EACH	SPV.0060.41 RECONDITIONING SANITARY MANHOLE EACH	SPV.0060.42 RECONSTRUCTING SANITARY MANHOLE EACH	SPV.0060.43 SANITARY MANHOLE CASTING EACH	SPV.0200.01 SANITARY MANHOLE VF
136+32	LT	--	1	1	--	1	--
139+03	LT	--	1	--	1	1	--
142+14	RT	--	1	--	1	1	--
143+43	LT	--	--	--	--	1	8
143+83	RT	--	1	--	1	1	--
145+70	LT	--	--	--	--	1	8
147+05	RT	--	1	--	1	1	--
147+11	LT	--	--	--	--	1	8.1
151+04	RT	--	1	1	--	1	--
151+37	LT	--	1	1	--	1	--
155+86	LT	--	--	--	--	1	10.8
156+23	LT	--	1	1	--	1	--
156+23	RT	--	1	1	--	1	--
159+28	RT	--	1	1	--	1	--
162+70	RT	--	1	--	1	1	--
164+55	LT	1	--	1	--	--	--
166+38	RT	--	1	1	--	1	--
166+45	LT	--	1	1	--	1	--
166+53	LT	1	--	1	--	--	--
169+18	RT	--	1	1	--	1	--
169+33	LT	--	1	1	--	1	--
172+34	LT	--	1	1	--	1	--
175+16	LT	--	1	--	1	1	--
175+35	LT	--	1	1	--	1	--
179+33	LT	--	1	1	--	1	--
13+95	LT	--	1	1	--	1	--
33+71	RT	--	1	1	--	1	--
498+16	RT	--	1	1	--	1	--
501+56	LT	--	1	1	--	1	--
697+03	LT	--	1	1	--	1	--
702+55	RT	--	1	1	--	1	--
PROJECT TOTALS		2	25	21	6	29	34.9

WATER SERVICE

STATION	LOCATION	SPV.0090.12 WATER SERVICE 1-INCH CAT 0010 LF	SPV.0090.12 WATER SERVICE 1-INCH CAT 0020 LF	SPV.0090.13 WATER SERVICE 2-INCH CAT 0010 LF	SPV.0090.13 WATER SERVICE 2-INCH CAT 0020 LF
123+36	RT	17	14	--	--
125+14	RT	17	29	--	--
126+47	LT	59	4	--	--
127+05	RT	17	40	--	--
128+21	LT	21	41	--	--
128+21	CROSS	45	6	--	--
129+98	LT	48	12	--	--
134+20	CROSS	62	20	--	--
135+20	CROSS	48	38	--	--
136+98	CROSS	48	42	--	--
137+74	RT	21	3	--	--
137+77	CROSS	49	40	--	--
140+23	LT	46	28	--	--
144+23	RT	34	13	--	--
145+43	LT	41	18	--	--
145+86	CROSS	52	--	--	--
146+62	LT	38	24	--	--
148+07	LT	38	31	--	--
149+87	CROSS	38	39	--	--
151+44	CROSS	39	45	--	--
155+21	CROSS	45	46	--	--
156+44	CROSS	49	39	--	--
157+55	CROSS	47	37	--	--
159+08	CROSS	40	39	--	--
159+77	RT	25	8	--	--
161+51	RT	27	12	--	--
162+00	LT	38	34	--	--
163+20	RT	28	17	--	--
163+66	LT	38	29	--	--
164+19	RT	47	--	--	--
165+71	LT	38	24	--	--
166+05	CROSS	51	--	--	--
167+18	CROSS	52	--	--	--
168+82	CROSS	28	25	--	--
170+50	LT	59	--	--	--
171+75	CROSS	36	17	--	--
173+04	CROSS	42	22	--	--
176+85	LT	64	--	--	--
179+20	CROSS	40	32	--	--
179+70	CROSS	49	24	--	--
179+90	RT	--	--	36	5
15+71	CROSS	43	--	--	--
15+89	LT	25	--	--	--
20+78	CROSS	42	--	--	--
28+71	CROSS	40	--	--	--
28+98	RT	16	--	--	--
31+28	RT	30	--	--	--
31+38	CROSS	30	--	--	--
33+92	CROSS	43	--	--	--
33+94	RT	18	--	--	--
43+69	CROSS	51	--	--	--
44+16	RT	7	--	--	--
497+93	CROSS	34	--	--	--
497+98	RT	12	--	--	--
601+42	LT	18	--	--	--
603+12	CROSS	45	--	--	--
697+03	CROSS	42	--	--	--
PROJECT TOTALS		2,117	892	36	5

3

3

WATER MAIN

BEGIN STATION	END STATION	LOCATION	SPV.0060.28 WATERMAIN COUPLING 6-INCH EACH	SPV.0060.29 WATERMAIN COUPLING 12-INCH EACH	SPV.0060.36 WATERMAIN TAPPING SLEEVE 8 X 6-INCH EACH	SPV.0060.37 WATERMAIN TAPPING SLEEVE 12 X 6-INCH EACH	SPV.0090.09 WATERMAIN 6-INCH LF	SPV.0090.10 WATERMAIN 8-INCH LF	SPV.0090.11 WATERMAIN 12-INCH LF	SPV.0090.19 CASING PIPE 24-INCH LF
128+13	129+13	CROSS	--	--	--	--	--	--	100	50
129+19		RT	--	--	--	1	56	--	--	--
135+34	143+30	RT	--	1	--	--	--	--	796	--
138+90	138+91	RT	--	--	--	--	--	11	--	--
139+55		RT	--	--	--	--	38	--	--	--
142+00		RT	--	--	--	--	--	53	--	--
146+55		RT	1	--	--	--	32	--	--	--
159+36		LT	1	--	--	--	47	--	--	--
163+00		LT	1	--	--	--	47	--	--	--
164+57	165+25	LT	--	--	--	--	--	--	80	--
171+52		RT	1	--	--	--	27	--	--	--
174+80	178+59	CROSS	--	--	--	--	--	5	388	--
178+63		RT	1	--	--	--	14	--	--	--
15+70		LT	--	--	1	--	12	--	--	--
20+77		RT	--	--	1	--	9	--	--	--
25+69		RT	--	--	1	--	14	--	--	--
35+50		RT	--	--	--	--	42	--	--	--
40+77		CROSS	--	--	1	--	52	--	--	--
49+09		LT	--	--	--	1	14	--	--	--
500+70		LT	--	--	1	--	36	--	--	--
601+12		RT	1	--	--	--	24	--	--	--
699+90	700+59	LT	--	--	--	--	--	62	--	--
PROJECT TOTALS			6	1	5	2	464	131	1,364	50

HYDRANTS

STATION	LOCATION	SPV.0060.16 SALVAGE HYDRANT EACH	SPV.0060.24 HYDRANT EACH
128+98	CROSS	1	--
129+19	RT	--	1
131+60	RT	1	--
135+00	RT	1	--
139+59	RT	1	1
142+00	RT	1	--
146+55	RT	1	1
159+36	LT	1	1
163+00	LT	1	1
171+52	RT	1	1
178+63	RT	1	1
15+40	LT	1	--
15+70	LT	--	1
20+10	LT	1	--
20+77	RT	--	1
25+69	RT	--	1
35+50	RT	--	1
40+75	RT	1	--
40+77	CROSS	--	1
49+09	LT	--	1
49+09	LT	1	--
500+70	LT	--	1
601+12	RT	1	1
700+61	LT	1	1
PROJECT TOTALS		16	16

WATER MAIN APPURTENANCES

STATION	LOCATION	SPV.0060.23 ADJUSTING WATERMAIN VALVE BOX EACH	SPV.0060.25 WATERMAIN GATE VALVE AND BOX 6-INCH EACH	SPV.0060.26 WATERMAIN GATE VALVE AND BOX 8-INCH EACH	SPV.0060.27 WATERMAIN GATE VALVE AND BOX 12-INCH EACH	SPV.0060.30 WATERMAIN BEND 22-1/2 DEGREE 12-INCH EACH	SPV.0060.31 WATERMAIN BEND 45 DEGREE 12-INCH EACH	SPV.0060.32 WATERMAIN TEE 8 X 6-INCH EACH	SPV.0060.33 WATERMAIN TEE 12 X 6-INCH EACH	SPV.0060.34 WATERMAIN TEE 12 X 8-INCH EACH	SPV.0060.35 WATERMAIN CROSS 12 X 8-INCH EACH
122+45	RT	3	--	--	--	--	--	--	--	--	--
125+75	LT	3	--	--	--	--	--	--	--	--	--
128+13	LT	--	--	--	--	--	1	--	--	--	--
128+34	RT	--	--	--	--	--	1	--	--	--	--
128+94	RT	--	--	--	--	--	1	--	--	--	--
129+13	LT	--	--	--	--	--	1	--	--	--	--
128+98	RT	--	1	--	--	--	--	--	--	--	--
132+05	RT	3	--	--	--	--	--	--	--	--	--
135+34	RT	2	--	--	1	--	--	--	--	--	--
138+91	RT	--	--	2	1	--	--	--	--	--	1
139+50	RT	--	--	--	1	--	--	--	--	--	--
139+55	RT	--	1	--	--	--	--	--	1	--	--
142+00	RT	--	--	1	1	--	--	1	--	1	--
142+60	LT	--	--	--	1	--	--	--	--	1	--
143+56	RT	--	--	--	--	1	--	--	--	--	--
146+50	LT	1	--	--	--	--	--	--	--	--	--
146+55	RT	--	1	--	--	--	--	--	--	--	--
151+20	RT	2	--	--	--	--	--	--	--	--	--
153+45	RT	2	--	--	--	--	--	--	--	--	--
159+30	RT	1	--	--	--	--	--	--	--	--	--
159+36	LT	--	1	--	--	--	--	--	--	--	--
162+95	LT	1	--	--	--	--	--	--	--	--	--
163+00	LT	--	1	--	--	--	--	--	--	--	--
164+57	LT	--	--	--	--	--	1	--	--	--	--
164+71	LT	--	--	--	--	--	1	--	--	--	--
165+11	LT	--	--	--	--	--	1	--	--	--	--
165+25	LT	--	--	--	--	--	1	--	--	--	--
166+85	LT	3	--	--	--	--	--	--	--	--	--
171+40	LT	1	--	--	--	--	--	--	--	--	--
171+52	RT	--	1	--	--	--	--	--	--	--	--
174+80	LT	--	--	--	1	--	--	--	--	--	--
174+86	LT	--	--	1	--	--	--	--	--	1	--
175+38	LT	--	--	1	1	--	--	--	--	1	--
175+60	LT	--	--	--	--	--	1	--	--	--	--
175+72	RT	--	--	--	--	--	1	--	--	--	--
177+54	RT	--	--	--	--	--	1	--	--	--	--
177+62	LT	--	--	--	--	--	1	--	--	--	--
178+59	LT	--	--	--	1	--	--	--	--	--	--
178+63	RT	--	1	--	--	--	--	--	--	--	--
15+70	LT	--	1	--	--	--	--	--	--	--	--
20+77	RT	--	1	--	--	--	--	--	--	--	--
25+69	RT	--	1	--	--	--	--	--	--	--	--
35+50	RT	--	1	--	--	--	--	--	--	--	--
40+77	CROSS	--	1	--	--	--	--	--	--	--	--
49+09	LT	--	1	--	--	--	--	--	--	--	--
500+70	LT	--	1	--	--	--	--	--	--	--	--
601+12	RT	--	1	--	--	--	--	--	--	--	--
700+59	LT	--	--	--	--	--	--	1	--	--	--
700+61	LT	--	1	--	--	--	--	--	--	--	--
PROJECT TOTALS		22	16	5	8	1	12	2	1	4	1

3

INSULATION BOARD

STATION	LOCATION	612.0902.S INSULATION BOARD POLYSTYRENE 2-INCH SY
122+55	RT	3.5
123+36	RT	7.0
124+05	RT	3.5
124+80	RT	3.5
125+14	RT	15.1
125+90	LT	3.5
126+15	LT	3.5
126+47	LT	19.5
127+05	RT	19.6
127+50	LT	3.5
128+21	LT	21.8
128+21	CROSS	17.3
129+19	CROSS	19.6
129+98	LT	20.5
130+00	LT	3.5
131+00	LT	3.5
131+75	LT	3.5
132+10	LT	3.5
132+90	RT	3.5
133+70	RT	3.5
134+20	CROSS	30.2
134+95	RT	3.5
135+20	CROSS	32.9
135+50	rt	3.5
136+55	RT	3.5
136+98	CROSS	33.8
137+74	RT	5.3
137+77	CROSS	39.1
138+40	RT	3.5
138+90	LT	3.5
139+59	RT	9.8
140+23	LT	26.7
140+80	LT	3.5
141+50	LT	3.5
142+30	LT	3.5
142+35	LT	3.5
142+56	LT	46.2
143+45	RT	3.5
144+23	RT	15.1
145+15	LT	3.5
145+43	LT	20.5
145+86	CROSS	17.8
146+55	RT	13.3
146+62	LT	22.2
146+70	RT	3.5
148+07	LT	25.1
148+35	RT	3.5
149+87	CROSS	33.8
150+65	RT	3.5
151+44	CROSS	32.0
152+15	RT	3.5
153+45	LT	3.5
154+35	RT	3.5
155+20	RT	3.5
155+21	CROSS	34.7
155+90	RT	3.5
156+44	CROSS	35.6
156+70	RT	3.5
157+55	CROSS	32.0
158+15	RT	3.5

STATION	LOCATION	612.0902.S INSULATION BOARD POLYSTYRENE 2-INCH SY
159+08	CROSS	29.3
159+25	RT	3.5
159+36	LT	15.1
159+77	RT	8.9
160+35	RT	3.5
161+51	RT	11.6
161+75	RT	3.5
162+00	LT	25.8
163+00	LT	11.6
163+10	CROSS	3.5
163+20	RT	14.2
163+66	LT	24.0
164+19	RT	15.1
164+40	LT	3.5
164+65	LT	3.5
165+15	LT	3.5
165+35	LT	3.5
165+71	LT	21.3
166+05	CROSS	17.8
166+35	LT	3.5
167+18	CROSS	17.8
167+40	LT	3.5
168+40	LT	3.5
168+82	CROSS	17.8
169+85	LT	3.5
170+50	LT	21.3
170+55	LT	3.5
171+52	RT	7.0
171+75	CROSS	17.8
172+50	LT	3.5
173+04	CROSS	22.2
174+30	LT	3.5
175+00	LT	3.5
176+50	RT	3.5
176+85	CROSS	27.5
177+35	RT	3.5
177+95	LT	3.5
178+55	LT	3.5
179+20	CROSS	26.7
179+70	CROSS	26.7
179+75	RT	3.5
179+90	RT	12.5
15+65	LT	3.5
15+70	LT	3.5
15+71	CROSS	12.5
15+89	LT	3.5
20+78	CROSS	12.4
25+30	RT	3.5
25+69	RT	4.4
28+71	CROSS	16.0
28+98	RT	7.0
30+55	RT	3.5
30+90	RT	3.5
31+28	RT	13.3
31+38	CROSS	13.3
33+92	CROSS	13.3
33+94	RT	3.5
40+65	RT	3.5
40+77	CROSS	14.0
41+00	RT	3.5

STATION	LOCATION	612.0902.S INSULATION BOARD POLYSTYRENE 2-INCH SY
43+69	CROSS	15.3
44+20	RT	3.5
49+09	LT	4.5
49+15	LT	3.5
497+93	CROSS	16.1
497+98	RT	5.3
498+95	RT	3.5
500+70	LT	14.0
501+05	RT	3.5
600+25 - 602+70	LT	115.0
601+12	RT	7.0
601+42	LT	5.3
603+12	CROSS	14.2
696+50 - 699+92	RT	150.0
697+03	CROSS	17.8
699+90 - 702+55	CROSS	120.0
702+80	RT	3.5
PROJECT TOTALS		1,870

SANITARY SEWER

BEGIN STATION	END STATION	LOCATION	SPV.0060.39 TRACER WIRE ACCESS BOX EACH	SPV.0090.14 SANITARY SEWER 8-INCH LF	SPV.0090.15 SANITARY LATERAL 4-INCH LF	SPV.0090.16 PRESSURE SANITARY SEWER 6-INCH LF	SPV.0090.17 SANITARY SEWER TELEVISING LF	SPV.0090.18 CLASS B BEDDING LF	SPV.0060.44 SANITARY SEWER REPAIR 12-INCH EACH	SPV.0060.45 RECONNECT SANITARY LATERAL EACH	SPV.0060.46 REPAIR SANITARY LATERAL EACH
142+25	142+42	LT	--	--	--	40	--	--	--	--	--
142+55	147+50	LT	--	456	40	--	456	--	--	3	--
146+12		RT	--	--	--	--	--	--	--	--	1
155+86	156+23	LT	--	62	--	--	68	--	--	--	--
155+86		LT	2	--	20	--	--	--	--	--	--
161+27		RT	--	--	--	--	--	--	1	--	--
177+31		LT	1	--	48	--	--	--	--	--	--
178+71		RT	1	--	69	--	--	--	--	--	--
UNDISTRIBUTED			--	--	--	--	--	50	--	--	--
PROJECT TOTALS			4	518	177	40	524	50	1	3	1

Wisconsin Department of Transportation

Dedicated people creating transportation solutions through innovation and exceptional service.

http://www.dot.wisconsin.gov