WIS

DEC 2015

PROJECT ID: 1166-00-61

WITH:

COUNTY: PORTAGE

ORDER OF SHEETS

Section No.	1	Title
Section No.	2	Typical Sections and Details
Section No.	3	Estimate of Quantities
Section No.	3	Miscellaneous Quantities
~~Section No.~~	~~4~~	~~Right of Way Plat~~
Section No.	5	Plan and Profile
Section No.	6	Standard Detail Drawings
Section No.	7	Sign Plates
Section No.	8	Structure Plans
Section No.	9	Computer Earthwork Data
Section No.	9	Cross Sections

TOTAL SHEETS = 216

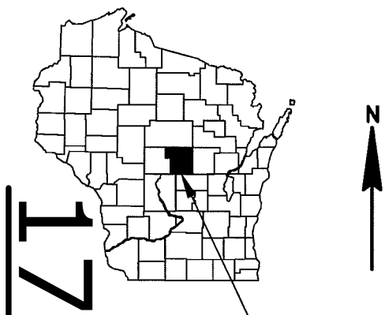

PROJECT LOCATION

STATE OF WISCONSIN
DEPARTMENT OF TRANSPORTATION

PLAN OF PROPOSED IMPROVEMENT

PLAINFIELD - STEVENS POINT

B-49-7,8,9,10,42,43,44,45-49,50

IH 39

PORTAGE COUNTY

STATE PROJECT	FEDERAL PROJECT	
	PROJECT	CONTRACT
1166-00-61	WISC 2015646	1

STATE PROJECT NUMBER

1166-00-61

END PROJECT

STA. 874+27.88 SB

Y = 162,135.25

X = 179,975.42

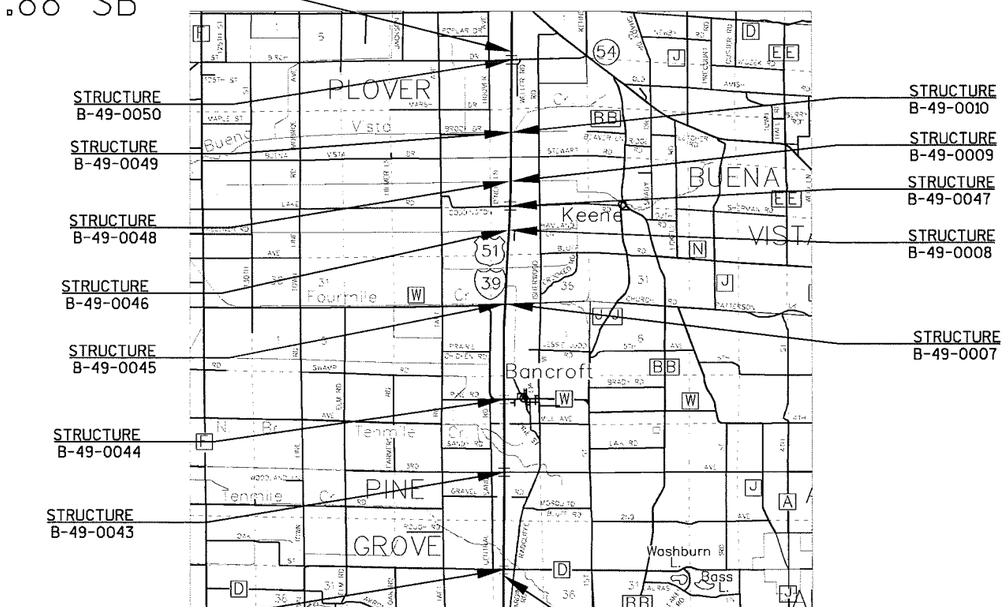

LAYOUT

SCALE 0 1 MI

BEGIN PROJECT

STA. 319+06.15 SB

Y = 106,546.69

X = 178,716.93

TOTAL NET LENGTH OF CENTERLINE = 1.29

"COORDINATES ON THIS PLAN ARE REFERENCED TO THE WISCONSIN COUNTY COORINATE SYSTEM (WCCS), 'PORTAGE' COUNTY." ELEVATIONS SHOWN ON THIS PLAN ARE REFERENCED TO USGS NAVD 88.

DESIGN DESIGNATION

A.A.D.T.	2017	=	15900
A.A.D.T.	2037	=	20600
D.H.V.		=	8.7
D.D.		=	57/43
T.		=	13.6%
DESIGN SPEED		=	70 MPH
ESALS		=	

CONVENTIONAL SYMBOLS

PLAN		PROFILE	
CORPORATE LIMITS		GRADE LINE	
PROPERTY LINE		ORIGINAL GROUND	
LOT LINE		MARSH OR ROCK PROFILE (To be noted as such)	ROCK
LIMITED HIGHWAY EASEMENT		SPECIAL DITCH	LABEL
EXISTING RIGHT OF WAY		GRADE ELEVATION	95.36
PROPOSED OR NEW R/W LINE		CULVERT (Profile View)	
SLOPE INTERCEPT		UTILITIES	
REFERENCE LINE		ELECTRIC	E
EXISTING CULVERT		FIBER OPTIC	FO
PROPOSED CULVERT (Box or Pipe)		GAS	G
COMBUSTIBLE FLUIDS	CAUTION	SANITARY SEWER	SAN
		STORM SEWER	SS
		TELEPHONE	T
MARSH AREA		WATER	W
		UTILITY PEDESTAL	
		POWER POLE	
WOODED OR SHRUB AREA		TELEPHONE POLE	

MSA PROFESSIONAL SERVICES

TRANSPORTATION • MUNICIPAL DEVELOPMENT • ENVIRONMENTAL

1230 South Boulevard Baraboo, WI 53913

608-356-2771 1-800-362-4505 Fax: 608-356-2770

Web Address: www.msa-ps.com

© MSA Professional Services, Inc.

WISCONSIN DAVID J. KATZNER E-37043 MARSHFIELD WI PROFESSIONAL ENGINEER

7/31/15 Date

Signature

STATE OF WISCONSIN
DEPARTMENT OF TRANSPORTATION

PREPARED BY

Surveyor	MSA Professional Services, Inc.
Designer	MSA Professional Services, Inc.
Project Manager	HOLLOWAY, DAN
Regional Examiner	SIMON, CHERYL
Regional Supervisor	KRETSCHMER, MICHAEL

APPROVED FOR THE DEPARTMENT

DATE:

Digitally signed by Daniel A Holloway
DN: cn=Daniel A Holloway, o, ou, email=daniel.holloway@dot.wi.go
(Signature)
Date: 2015.07.20 10:54:24 -05'00'

E

DNR LIAISON

WISCONSIN DEPARTMENT OF
NATURAL RESOURCES
ATTN: MARC HERSHFIELD
473 GRIFFITH DRIVE
WISCONSIN RAPIDS, WI 54494
715-421-7867
MARC.HERSHFIELD@WISCONSIN.GOV

UTILITIES

COMMUNICATION:
AT&T
ATTN: RICK PODOLAK
304 S DEWEY ST 4TH FLOOR
EAU CLAIRE, WI 54701
715-839-5565
RICK.T.PODOLAK@ATT.COM

COMMUNICATION:
UNION TELEPHONE COMPANY
ATTN: RONALD BOWDEN
P.O. BOX 96
PLAINFIELD, WI 54966-0096
715-335-6301
RBOWDEN@UNIONTEL.NET

ELECTRIC:
WISCONSIN PUBLIC SERVICE CORP.
ATTN: DON LUTZOW
P.O. BOX 1166
WAUSAU, WI 54402
715-848-7487
DALUTZOW@WISCONSINPUBLICSERVICE.COM

GAS/PETROLEUM:
KOCH PIPELINE COMPANY L.P.
ATTN: SEAN MANTEI
2267 COUNTY RD HH
JUNCTION CITY, WI 54443
715-457-6404
SEAN.MANTEI@KOCHPIPELINE.COM

COMMUNICATION:
WINDSTREAM KDL INC.
ATTN: JIM KOSTUCH
13935 BISHOPS DR
BROOKFIELD, WI 53005
262-792-7938
JAMES.KOSTUCH@WINDSTREAM.COM

GAS/PETROLEUM:
WISCONSIN PUBLIC SERVICE CORP.
ATTN: MATT CURTIN
2001 PLOVER RD
PLOVER, WI 54467
715-345-7582
MJCURTIN@WISCONSINPUBLICSERVICE.COM

DIGGERS HOTLINE
Dial 811 or (800) 242-8511
www.DiggersHotline.com

RUNOFF COEFFICIENT TABLE

	HYDROLOGIC SOIL GROUP											
	A			B			C			D		
	SLOPE RANGE (PERCENT)			SLOPE RANGE (PERCENT)			SLOPE RANGE (PERCENT)			SLOPE RANGE (PERCENT)		
LAND USE:	0-2	2-6	6 & OVER	0-2	2-6	6 & OVER	0-2	2-6	6 & OVER	0-2	2-6	6 & OVER
ROW CROPS	.08 .22	.16 .30	.22 .38	.12 .26	.20 .34	.27 .44	.15 .30	.24 .37	.33 .50	.19 .34	.28 .41	.38 .56
MEDIAN STRIP-TURF	.19 .24	.20 .26	.24 .30	.19 .25	.22 .28	.26 .33	.20 .26	.23 .30	.30 .37	.20 .27	.25 .32	.30 .40
SIDE SLOPE-TURF			.25 .32			.27 .34			.28 .36			.30 .38
PAVEMENT:												
ASPHALT	.70 - .95											
CONCRETE	.80 - .95											
BRICK	.70 - .80											
DRIVES, WALKS	.75 - .85											
ROOFS	.75 - .95											
GRAVEL ROADS, SHOULDERS	.40 - .60											

TOTAL PROJECT AREA = 8.85 ACRES
TOTAL AREA EXPECTED TO BE DISTURBED BY CONSTRUCTION ACTIVITIES = 8.85 ACRES

SECTION 2 ORDER

GENERAL NOTES
PROJECT OVERVIEW
TYPICAL SECTIONS
CONSTRUCTION DETAILS
TRAFFIC CONTROL

AS-BUILT REFERENCE (YEAR)*

PROJECT: 1160-01-74 (2000)
PROJECT: 1166-04-76 (2007)

*APPROVAL YEAR (NOT CONSTRUCTION)

GENERAL NOTES

PURSUANT TO CHAPTER 59 OF THE WISCONSIN STATUTES. THE CONTRACTOR SHALL CAREFULLY MAKE A SEARCH FOR EVIDENCE OF A LANDMARK IN ALL AREAS WHERE SUCH A LANDMARK MAY EXIST.

CURVE DATA SHOWN ON PLANS IS BASED ON AS-BUILTS.

BENCHMARKS WERE LOCATED IN THE FIELD USING GPS TECHNOLOGY.

NO TREES OR SHRUBS ARE TO BE REMOVED WITHOUT APPROVAL OF THE ENGINEER. CLEARING REQUIRED IN SECTIONS OF THE BIRCH DRIVE APPROACHES, DO NOT GRUB THESE AREAS.

CROSS SECTIONS SHOWN INCLUDE THE THICKNESS OF TOPSOIL WHERE REQUIRED.

THE LOCATIONS OF EXISTING AND PROPOSED UTILITY INSTALLATIONS AS SHOWN ON THE PLANS ARE APPROXIMATE. THERE MAY BE OTHER UTILITY INSTALLATIONS WITHIN THE AREA THAT ARE NOT SHOWN.

PAVING OPERATION SHALL BE CONSISTENT WITH THE PLAN TYPICAL SECTIONS AND CONSTRUCTED TO PREVENT HMA LONGITUDINAL JOINTS FROM BEING LOCATED WITHIN A DRIVING LANE.

THE 4" ASPHALTIC SURFACE SHALL CONSIST OF A 1¾" UPPER LAYER AND A 2¼" LOWER LAYER. USE 12.5 MM NOMINAL AGGREGATE.

THE 3" ASPHALTIC SURFACE SHALL CONSIST OF A 1½" UPPER LAYER AND A 1½" LOWER LAYER. USE 12.5 MM NOMINAL AGGREGATE.

2

N

BEGIN PROJECT
STA 319+06.15 SB

END PROJECT
STA 874+27.88 SB

STRUCTURE B-49-0042

STRUCTURE B-49-0043

STRUCTURE B-49-0044

STRUCTURE B-49-0045

STRUCTURE B-49-0046

STRUCTURE B-49-0047

STRUCTURE B-49-0048

STRUCTURE B-49-0049

STRUCTURE B-49-0050

STRUCTURE B-49-0007

STRUCTURE B-49-0008

STRUCTURE B-49-0009

STRUCTURE B-49-0010

DITCH NO. 2

DITCH NO. 3

DITCH NO. 4

DITCH NO. 8

GROVE

PINE

Tenmile Cr.

Fourmile Cr.

Vista Cr.

Hoover

TAFT RD

TAFT AVE

AKRON AVE

GRAVEL

3RD AVE

SANDY RD

PINE RD

CHICKEN RD

PRAIRIE

CENTRAL SANDS RD

CODDINGTON RD

O'NEIL LN

BROOK DR

MARSH DR

HOOVER

BIRCH DR

POPLAR DR

AVE

DR

LINCOLN AVE

HARDING RD

RADCLIFFE AVE

RD

MOSQUITO BLUFF RD

1ST ST

PINE ST

MILL AVE

Bancroft

JESSIE JUDD RD

ISHERWOOD RD

CROOKED RD

BLUFF RD

HAVILAND LN

STEWART RD

BEAVER LN

WELLER RD

EISENHOWER

PLEASANT DR

KENNEDY

Keene

39

51

54

W

D

J J

B B

B

36

1

31

6

PROJECT NO: 1166-00-61	HWY: IH 39	COUNTY: PORTAGE	PROJECT OVERVIEW	SHEET 3	E

FILE NAME : P:\90S\93\00093215\CADD\1166-00-61\SHEETSPLAN\020201_PO.DWG
LAYOUT NAME - ****

PLOT DATE : 7/20/2015 2:08 PM PLOT BY : BRAD LEE PLOT NAME : PLOT SCALE : 1 IN:5000 FT

WISDOT/CADDS SHEET 42

2

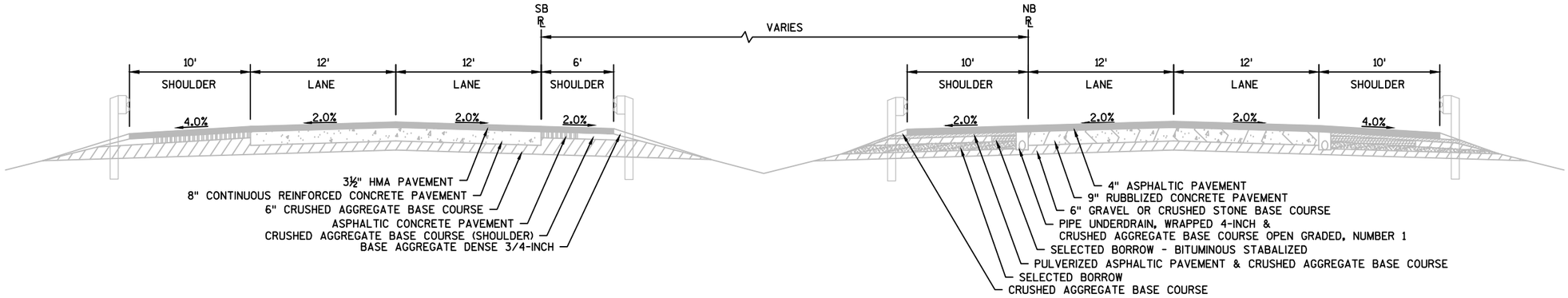

EXISTING TYPICAL SECTION
IH 39 (LOOKING NORTH)

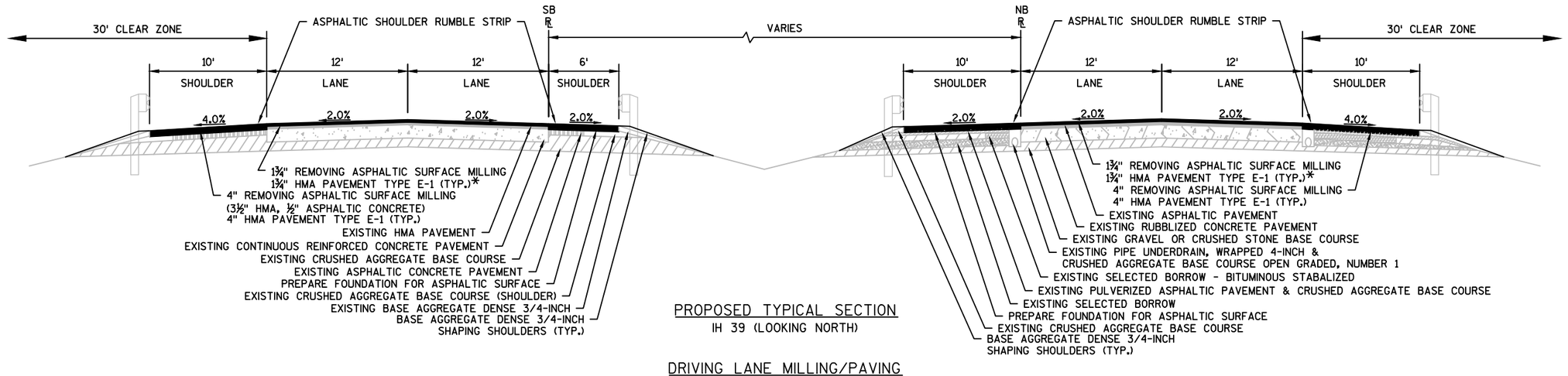

PROPOSED TYPICAL SECTION
IH 39 (LOOKING NORTH)

* HMA PAVEMENT THICKNESS MAY VARY
DUE TO RAISED GRADE AT BRIDGES

DRIVING LANE MILLING/PAVING

B-49-0045	STA 606+00.0SB - STA 606+25.9SB	B-49-0007	STA 605+00.0 - STA 606+35.3
	STA 606+50.1SB - STA 607+00.0SB		STA 606+59.4 - STA 607+75.0
B-49-0046	STA 685+25.0SB - STA 685+69.9SB	B-49-0008	STA 684+00.0 - STA 685+73.4
	STA 686+02.1SB - STA 686+50.0SB		STA 686+05.4 - STA 687+25.0
B-49-0048	STA 738+00.0SB - STA 738+56.9SB	B-49-0009	STA 737+50.0 - STA 738+59.4
	STA 738+81.1SB - STA 739+25.0SB		STA 738+83.4 - STA 740+25.0
B-49-0049	STA 791+00.0SB - STA 791+53.6SB	B-49-0010	STA 790+50.0 - STA 791+56.4
	STA 791+77.8SB - STA 792+50.0SB		STA 791+80.4 - STA 793+00.0

PROJECT NO: 1166-00-61	HWY: IH 39	COUNTY: PORTAGE	PLAN: TYPICAL SECTIONS	SHEET 4	E

2

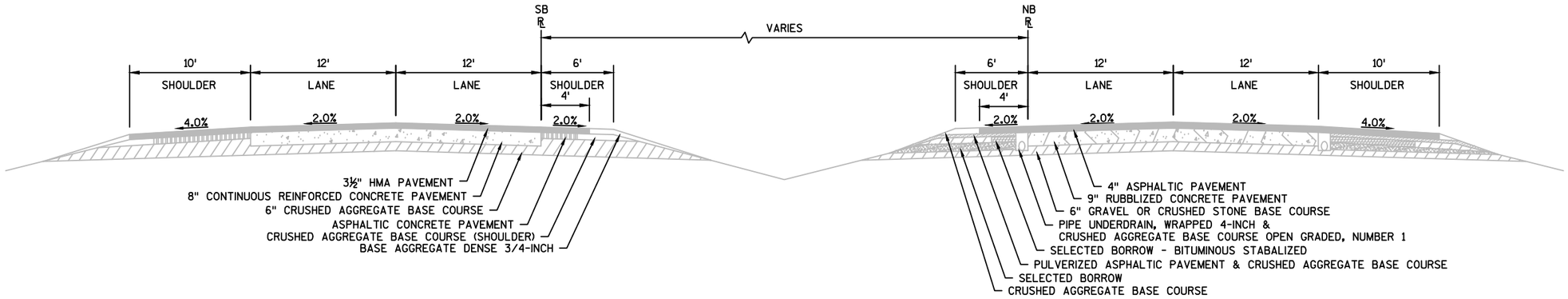

EXISTING TYPICAL SECTION
IH 39 (LOOKING NORTH)

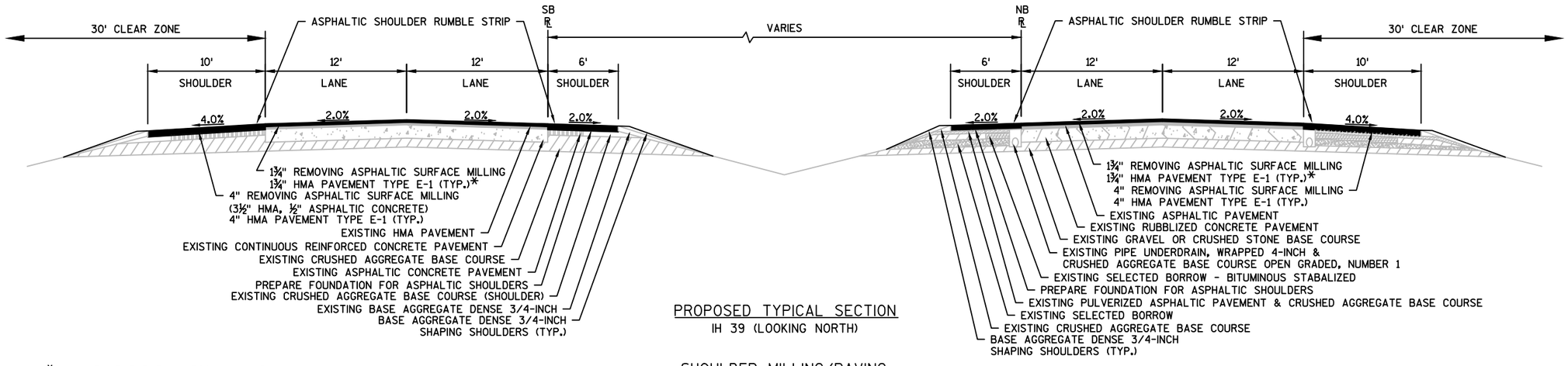

PROPOSED TYPICAL SECTION
IH 39 (LOOKING NORTH)

* HMA PAVEMENT THICKNESS MAY VARY
DUE TO RAISED GRADE AT BRIDGES

SHOULDER MILLING/PAVING

B-49-0045	STA 602+50.0SB - STA 606+24.0SB LT	B-49-0007	STA 599+75.0 - STA 606+35.0 LT
	STA 606+48.0SB - STA 612+25.0SB LT		STA 606+59.0 - STA 611+25.0 LT
	STA 602+50.0SB - STA 606+26.0SB RT		STA 599+75.0 - STA 606+37.0 RT
	STA 606+50.0SB - STA 612+25.0SB RT		STA 606+61.0 - STA 611+25.0 RT
B-49-0046	STA 681+75.0SB - STA 685+70.0SB LT	B-49-0008	STA 678+75.0 - STA 685+73.0 LT
	STA 686+02.0SB - STA 691+75.0SB LT		STA 686+05.0 - STA 690+75.0 LT
	STA 681+75.0SB - STA 685+69.0SB RT		STA 678+75.0 - STA 685+75.0 RT
	STA 686+01.0SB - STA 691+75.0SB RT		STA 686+06.0 - STA 690+75.0 RT
B-49-0048	STA 734+50.0SB - STA 738+57.0SB LT	B-49-0009	STA 732+25.0 - STA 738+59.0 LT
	STA 738+81.0SB - STA 744+50.0SB LT		STA 738+83.0 - STA 743+75.0 LT
	STA 734+50.0SB - STA 738+55.0SB RT		STA 732+25.0 - STA 738+61.0 RT
	STA 738+79.0SB - STA 744+50.0SB RT		STA 738+84.0 - STA 743+75.0 RT
B-49-0049	STA 787+50.0SB - STA 791+54.0SB LT	B-49-0010	STA 785+25.0 - STA 791+56.0 LT
	STA 791+78.0SB - STA 797+75.0SB LT		STA 791+80.0 - STA 796+50.0 LT
	STA 787+50.0SB - STA 791+52.0SB RT		STA 785+25.0 - STA 791+58.0 RT
	STA 791+76.0SB - STA 797+75.0SB RT		STA 791+82.0 - STA 796+50.0 RT

PROJECT NO: 1166-00-61	HWY: IH 39	COUNTY: PORTAGE	PLAN: TYPICAL SECTIONS	SHEET 5	E

2

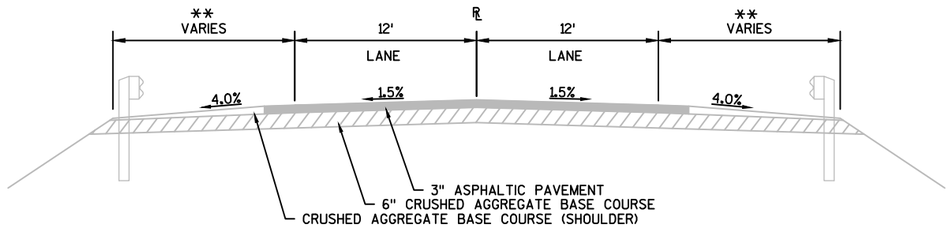

EXISTING TYPICAL SECTION
CTH D & CTH W

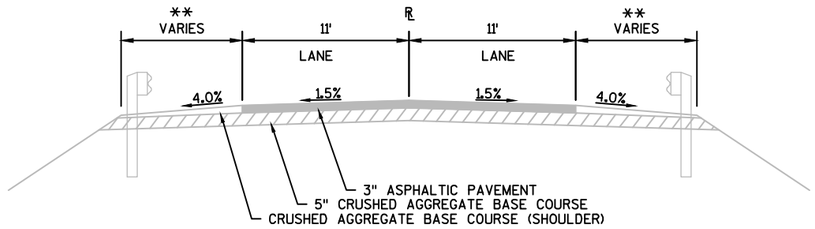

EXISTING TYPICAL SECTION
3RD AVE, CODDINGTON RD
& BIRCH DR

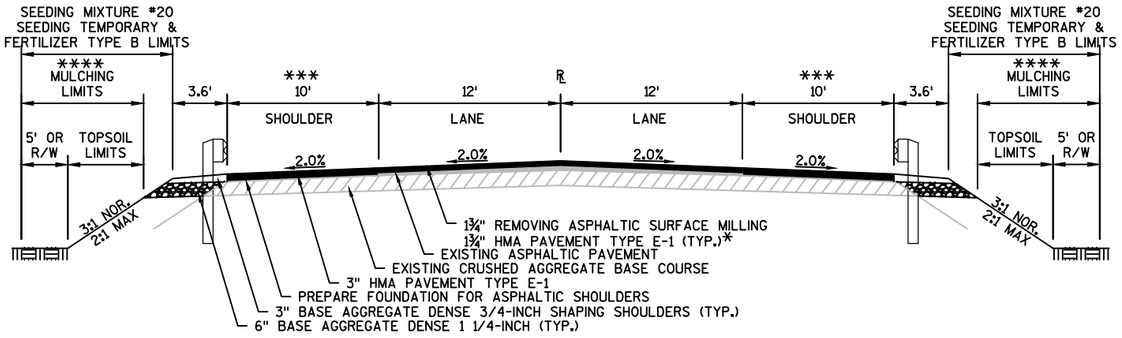

FINISHED TYPICAL SECTION
CTH D & CTH W

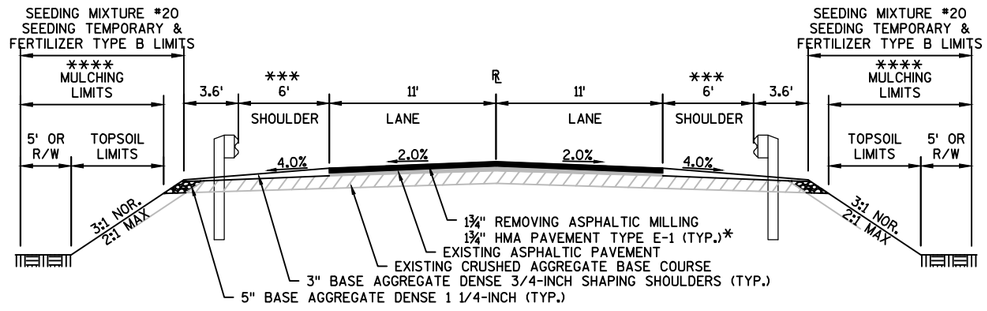

FINISHED TYPICAL SECTION
3RD AVE, CODDINGTON RD
& BIRCH DR

* HMA PAVEMENT THICKNESS MAY VARY DUE TO RAISED GRADE AT BRIDGES

** EXISTING SHOULDER PAVEMENT WIDTH VARIES

*** SEE PLAN & PROFILE SHEETS AND CROSS SECTIONS FOR MILL & OVERLAY/FULL DEPTH PAVEMENT WIDTHS.

**** USE EROSION MAT CLASS I TYPE B FOR SLOPES STEEPER THAN 3:1

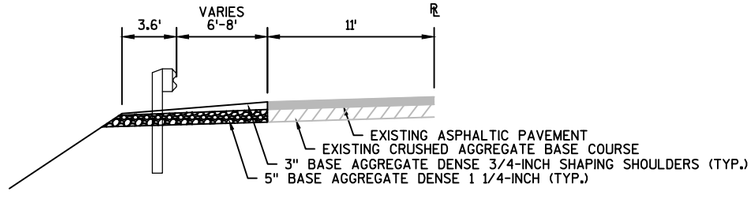

FINISHED TYPICAL SECTION
WITH BEAM GUARD
3RD AVE, CODDINGTON RD
& BIRCH DR

B-49-0043	STA 102+50J - STA 107+70J LT
	STA 111+05J - STA 114+50J LT
	STA 103+45J - STA 107+70J RT
	STA 111+05J - STA 114+55J RT
B-49-0047	STA 101+36N - STA 107+30N LT
	STA 111+00N - STA 115+00N LT
	STA 101+42N - STA 107+30N RT
	STA 111+00N - STA 113+85N RT
B-49-0050	STA 94+81S - STA 98+10S LT
	STA 100+95S - STA 107+44S LT
	STA 94+98S - STA 98+10S RT
	STA 100+95S - STA 107+02S RT

PROJECT NO: 1166-00-61	HWY: IH 39	COUNTY: PORTAGE	PLAN: TYPICAL SECTIONS	SHEET 6	E

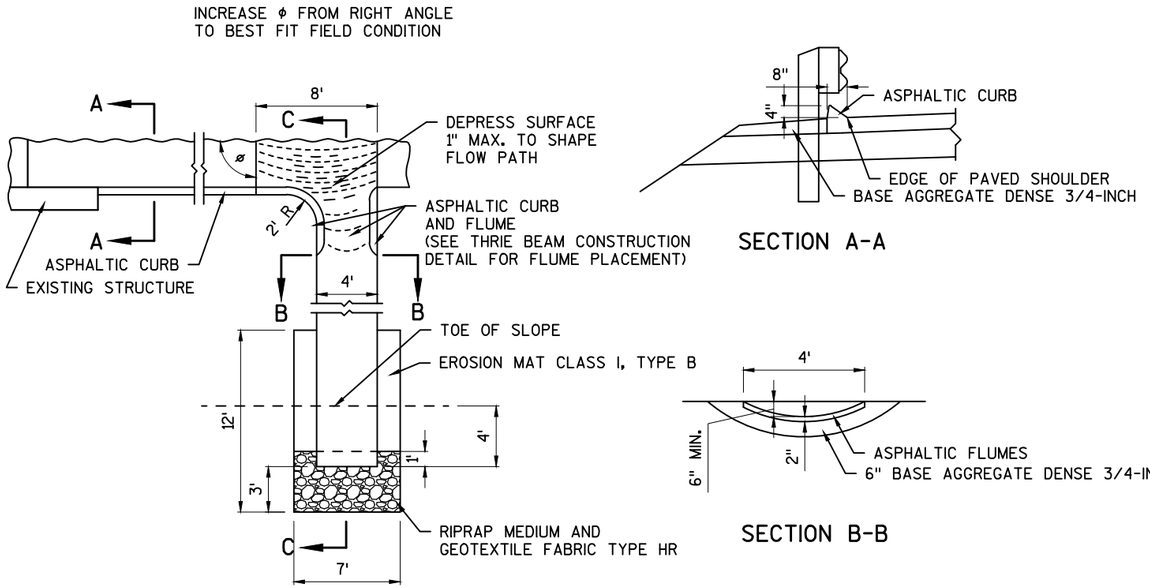

SECTION A-A

SECTION B-B

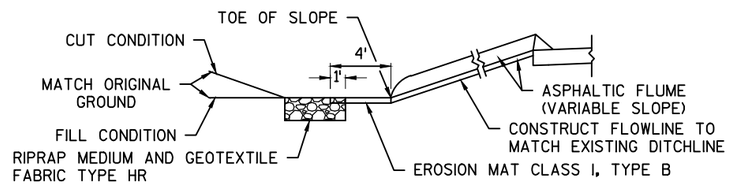

SECTION C-C

ASPHALTIC CURB & FLUME

	ASPHALTIC CURB LIMITS	ASPHALTIC FLUME LIMITS
CTH D:	STA 110+82.00G - STA 111+11.50G, RT	STA 111+11.50G - STA 111+19.50G, RT
	STA 110+82.00G - STA 111+11.50G, LT	STA 111+11.50G - STA 111+19.50G, LT
CTH W:	STA 110+81.50M - STA 111+10.50M, RT	STA 111+10.50M - STA 111+18.50M, RT

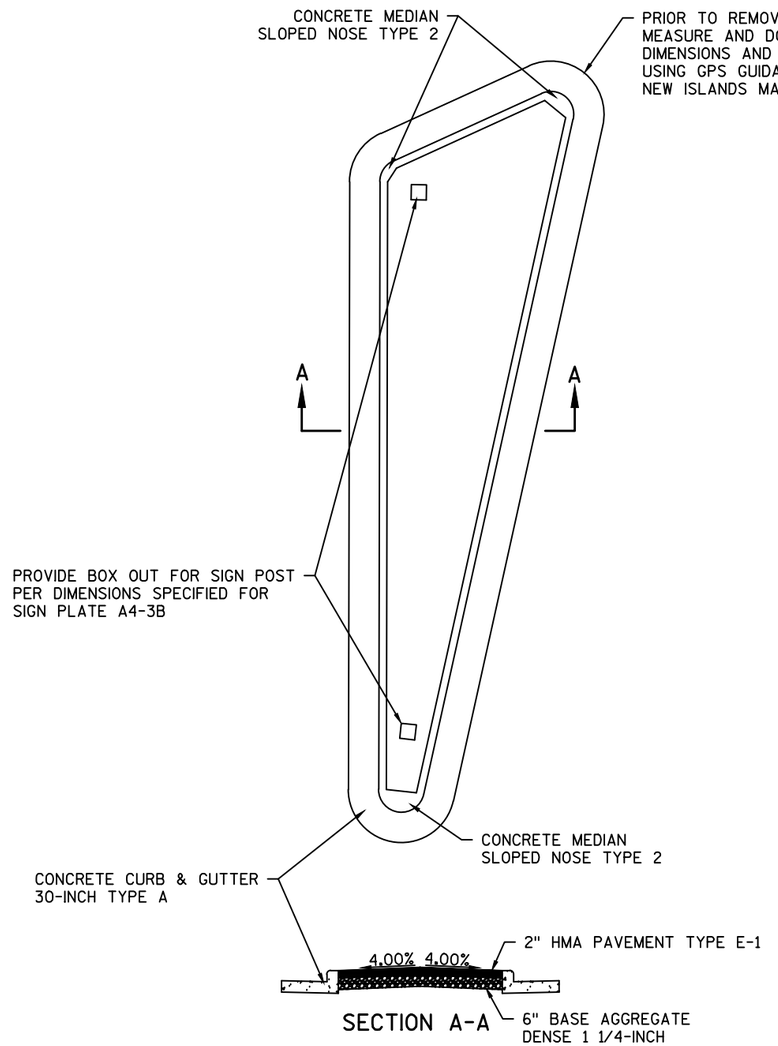

SECTION A-A

ISLAND DETAIL

CTH D & CTH W
RAMP TERMINALS

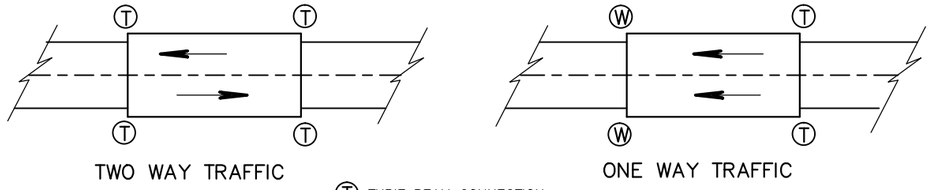

TWO WAY TRAFFIC

ONE WAY TRAFFIC

Ⓣ THRIE BEAM CONNECTION

Ⓦ W–BEAM CONNECTION WHEN REQUIRED

TYPICAL LOCATIONS OF THRIE BEAM AND W–BEAM CONNECTIONS TO BRIDGE

GENERAL NOTES

IF ROCK IS ENCOUNTERED, REMOVE ROCK TO FULL DEPTH OF POST PLUS 2½", AND 12" DIAMETER AROUND POST. SEE 14B42 FOR MORE DETAILS.

TRANSITION USES STEEL POSTS ONLY.

SEE STANDARD DETAIL DRAWING 14 B 42 FOR MORE INFORMATION.

Ⓐ BRIDGE RAILING TYPE "W" DOES NOT REQUIRE A TERMINAL CONNECTOR.

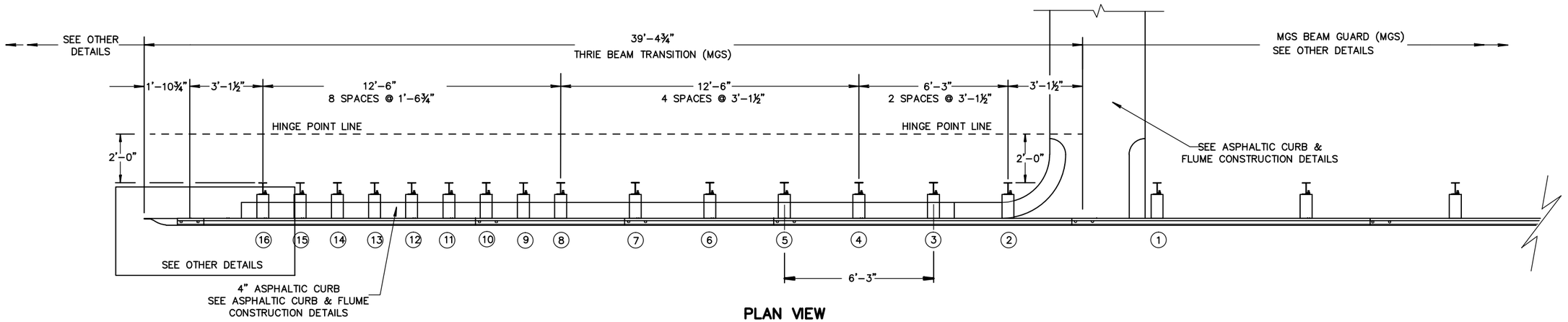

PLAN VIEW

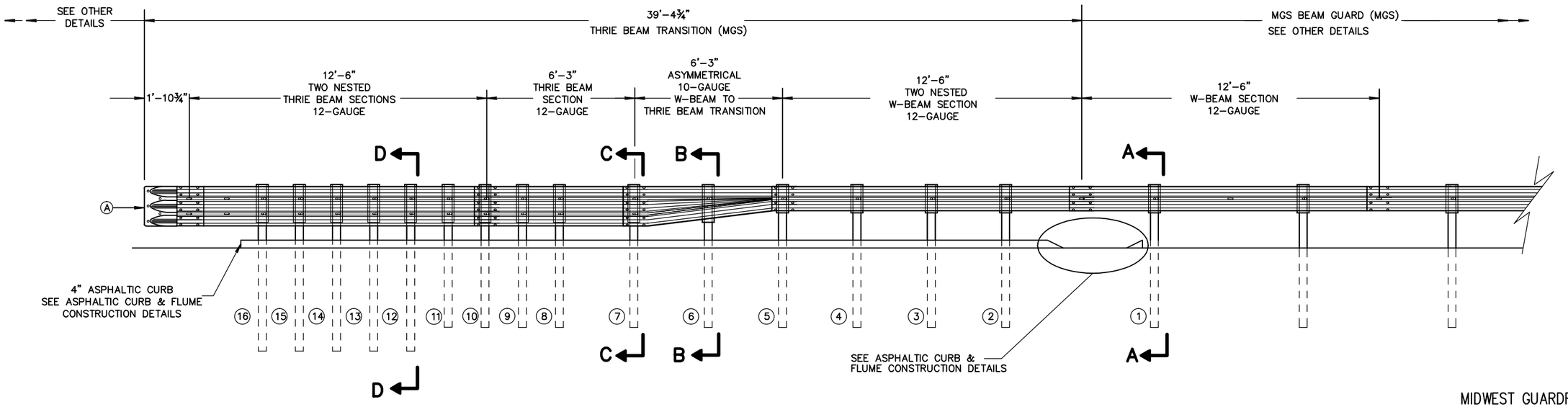

ELEVATION VIEW

MIDWEST GUARDRAIL SYSTEM
THRIE BEAM TRANSITION (MGS)

MIDWEST GUARDRAIL SYSTEM THRIE BEAM TRANSITION

PROJECT NO: 1166-00-61	HWY: IH 39	COUNTY: PORTAGE	CONSTRUCTION DETAILS	SHEET 8	E

GENERAL NOTES

(1) WHEN USING STEEL POSTS AND WOOD BLOCKOUTS INSTALL FOUR 10D GALVANIZED NAILS. INSTALL NAILS AT THE BACK CORNERS OF THE BLOCK AND BEND THE NAILS OVER THE FLANGE OF THE STEEL POST.

(B) TOLERANCE FOR TOP OF W-BEAM RAIL IS ± 1".

SECTION A–A
POSTS 1–5

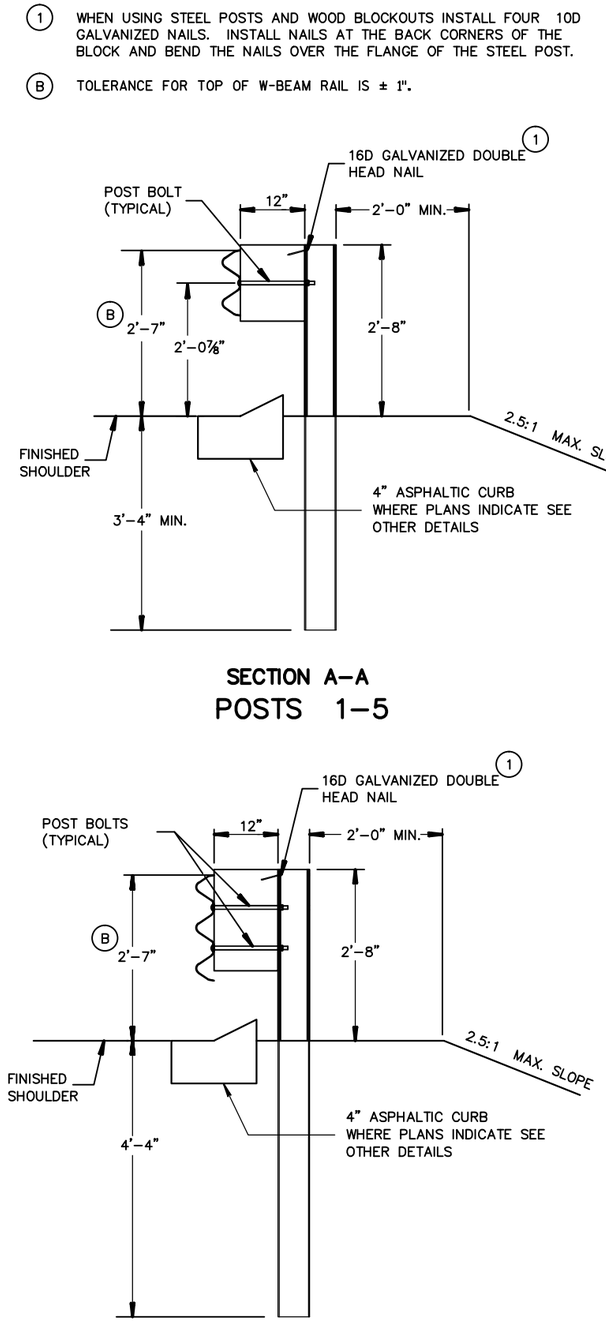

SECTION D–D
POSTS 12–16

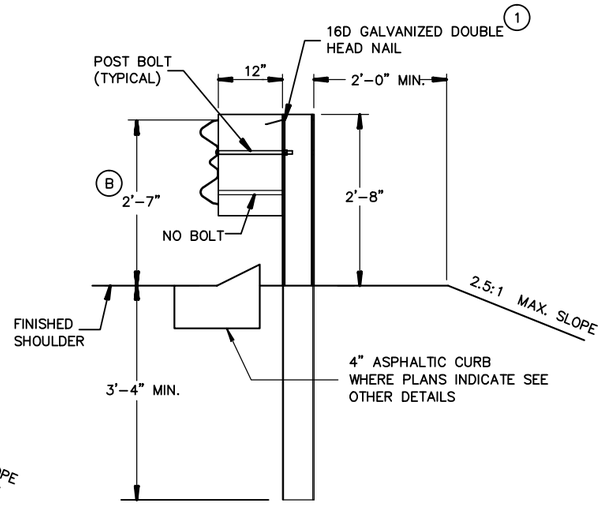

SECTION B–B
POST 6

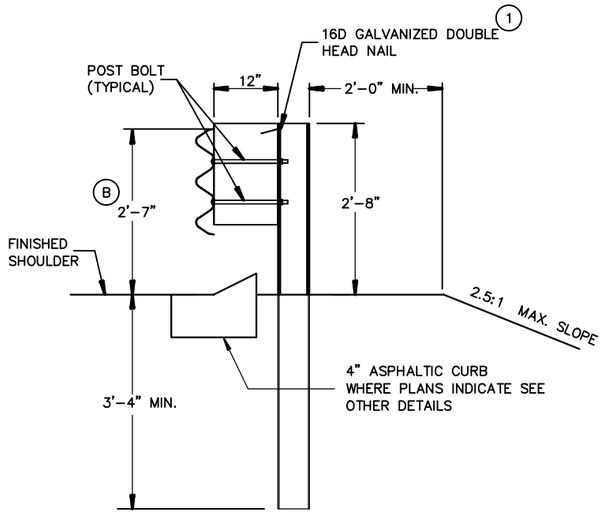

SECTION C–C
POSTS 7–11

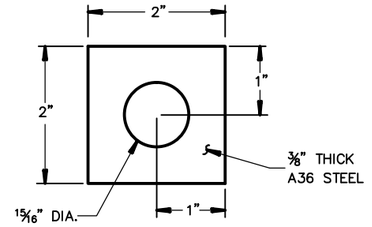

PLATE WASHER DETAIL

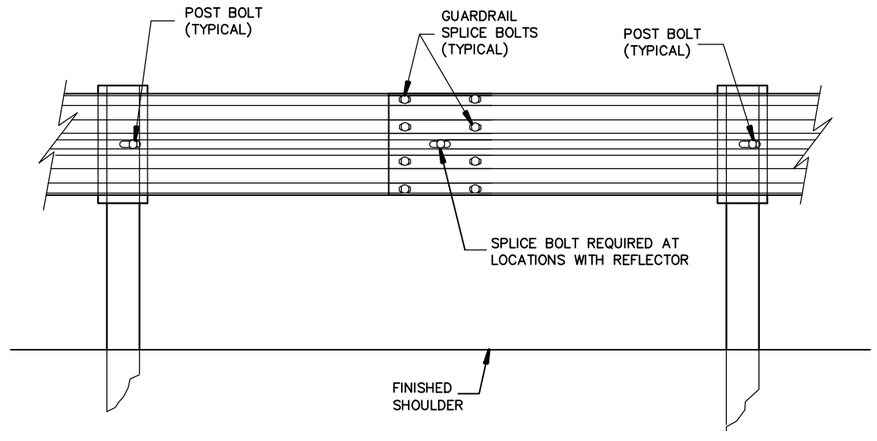

SPLICE DETAIL

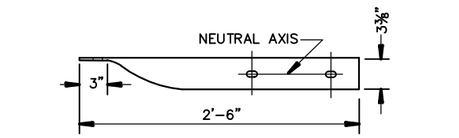

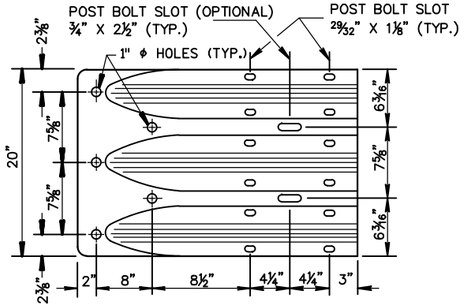

THRIE BEAM TERMINAL CONNECTOR

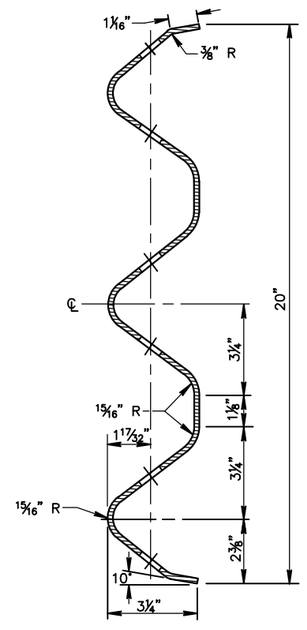

SECTION THRU THRIE BEAM RAIL ELEMENT

MIDWEST GUARDRAIL SYSTEM
THRIE BEAM TRANSITION (MGS)

PROJECT NO: 1166-00-61	HWY: IH 39	COUNTY: PORTAGE	CONSTRUCTION DETAILS	SHEET 9	E

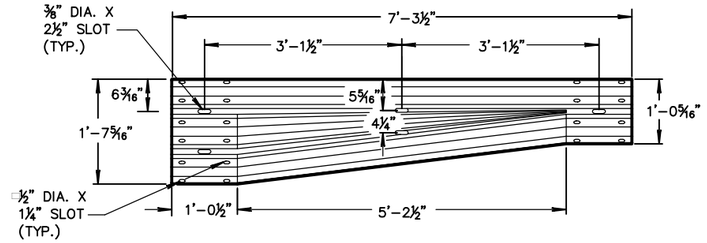

W-BEAM TO THRIE BEAM TRANSITION SECTION

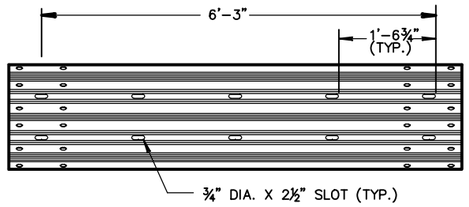

6'-3" THRIE BEAM SECTION

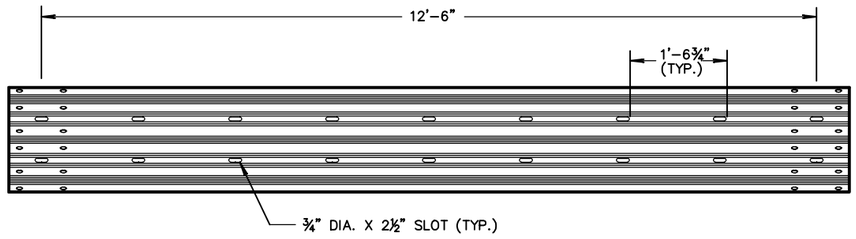

12'-6" THRIE BEAM SECTION

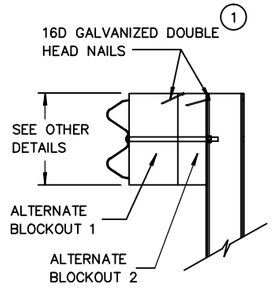

SIDE VIEW

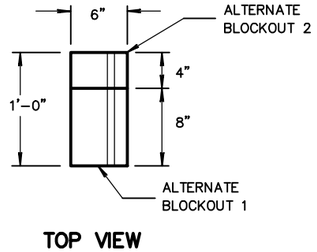

TOP VIEW

ALTERNATE WOOD BLOCKOUT DETAIL

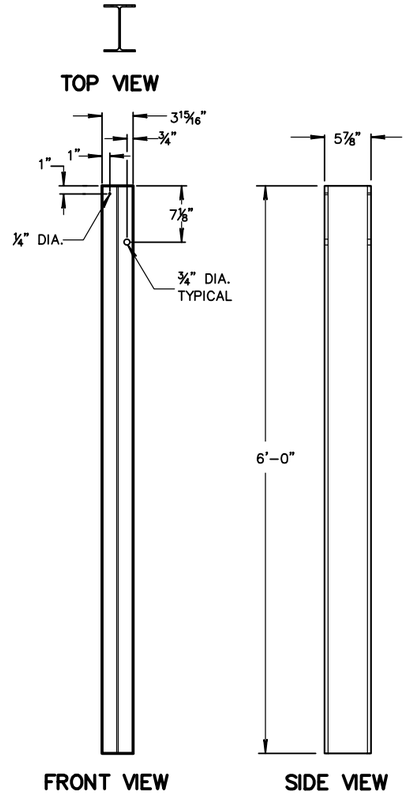

FRONT VIEW SIDE VIEW

STEEL POSTS 1-5

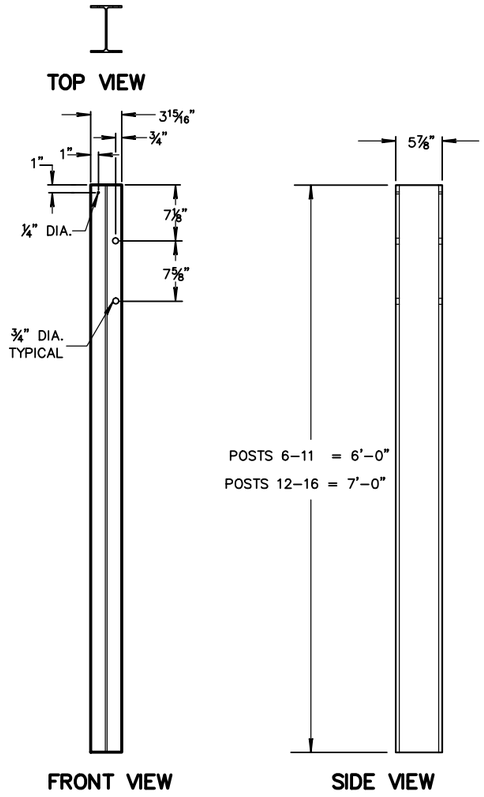

FRONT VIEW SIDE VIEW

STEEL POSTS 6-16

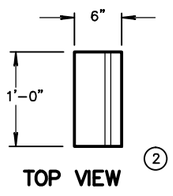

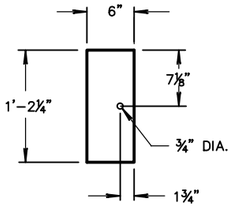

FRONT VIEW

BLOCKOUT POSTS 1-5

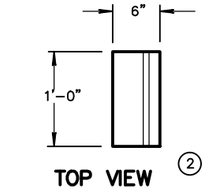

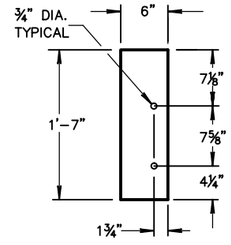

FRONT VIEW

BLOCKOUT POSTS 6-16

GENERAL NOTES

STEEL POSTS ARE W6X9 OR W6X8.5.

BOLT HOLES FOR POST ARE ON FRONT AND OF SIDE OF POST.

(1) WHEN USING STEEL POSTS AND WOOD BLOCKOUTS INSTALL FOUR 16D GALVANIZED NAILS. INSTALL NAILS AT THE BACK CORNERS OF THE BLOCK AND BEND THE NAILS OVER THE FLANGE OF THE STEEL POST.

(2) WOOD BLOCKS MAY BE CONSTRUCTED OUT OF 2 WOOD BLOCKS. SEE ALTERNATE WOOD BLOCK DETAIL.

MIDWEST GUARDRAIL SYSTEM
THRIE BEAM TRANSITION (MGS)

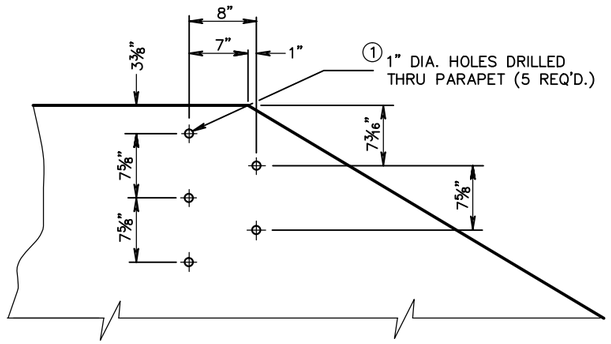

DRILL HOLE LOCATION AND PATTERN FOR THRIE BEAM CONNECTION

GENERAL NOTES

① DRILLING BOLT HOLES THROUGH THE PARAPET, BOLTS, NUTS, WASHERS AND REPAIRING DAMAGED CONCRETE ARE INCIDENTAL TO THE CONTRACT.

② BOLTS MAY BE A325 BOLTS OR A449 BOLTS. BOLT LENGTH AND THREADING LENGTH ARE TO ALLOW FOR A TIGHT CONNECTION BETWEEN RIGID BARRIER AND THRIE BEAM CONNECTION PLATE. CONTRACTOR IS TO FIELD VERIFY BOLT LENGTH AND THREAD LENGTH. ONE ROUND WASHER REQUIRED BETWEEN BOLT HEAD AND THRIE BEAM CONNECTOR PLATE. BOLTS THAT EXTEND THROUGH THE PARAPET AND OUT THE BACK FACE REQUIRE A HARDENED ROUND STEEL WASHER THAT IS 2" O.D. X ⅝" THICK AND ONE PLATE WASHER. REPAIR ANY DAMAGED CONCRETE FROM BOLT INSTALLATION.

Ⓑ TOLERANCE FOR TOP OF BEAM IS ± 1".

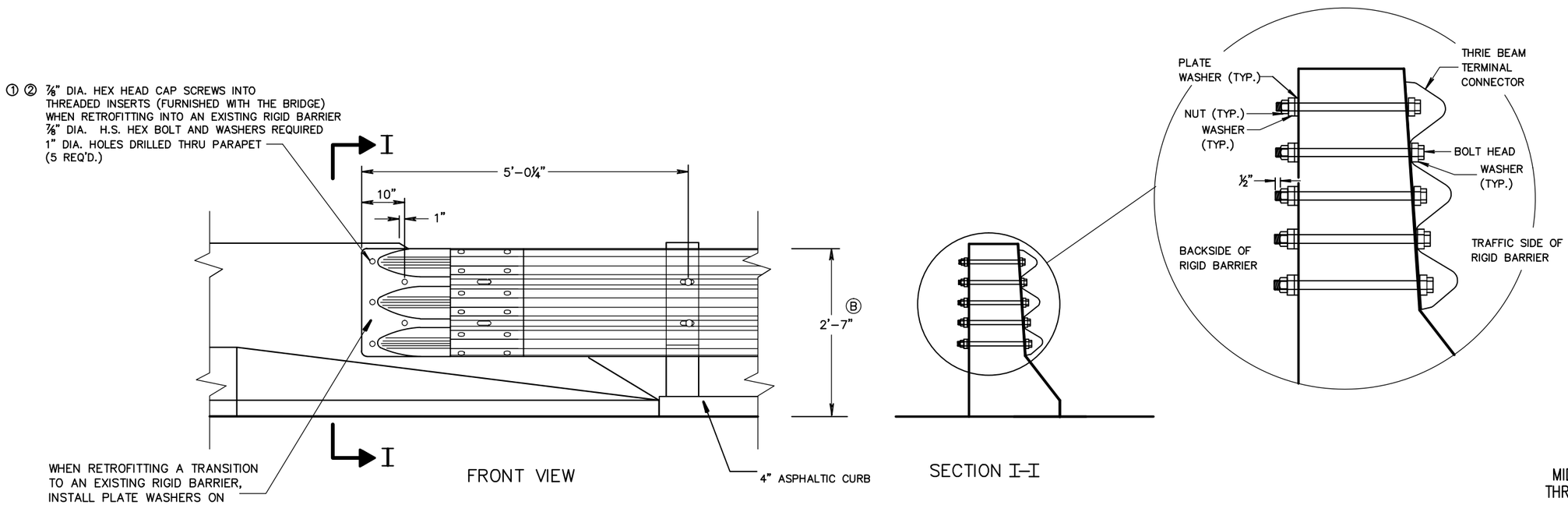

THRIE BEAM CONNECTION TO BRIDGE PARAPETS WITH SLOPED ENDS

MIDWEST GUARDRAIL SYSTEM
THRIE BEAM TRANSITION (MGS)

GENERAL NOTES FOR CHANGEABLE MESSAGE BOARDS

PCMS=PORTABLE CHANGEABLE MESSAGE SIGN

CONSIDER ROADWAY GEOMETRICS WHEN LOCATING MESSAGE SIGNS. PLACE THE SIGNS SO THE DRIVER HAS A CLEAR VIEW OF THE MESSAGE FOR A MINIMUM OF 1,000 FEET.

MESSAGE SIGNS SHOULD BE PLACED AS FAR AWAY FROM LIVE TRAFFIC LANES AS POSSIBLE WITHOUT HAMPERING VISIBILITY. IN ADVANCE OF INTERSTATE CONSTRUCTION PROJECTS, THE SIGNS SHOULD BE PLACED ON THE BACKSLOPE BEYOND THE DITCH. THE LOCATION SELECTED SHOULD BE AT OR SLIGHTLY ABOVE THE ELEVATION OF THE ROADWAY.

FOR INTERMITTENT WORK SUCH AS FREEWAY LANE CLOSURE, OR WHERE SITE CONDITIONS DO NOT ALLOW OTHERWISE, THE SIGNS MAY BE PLACED ON THE SHOULDER. THE SITE SHOULD BE VISITED TO ASSURE VISIBILITY, SAFETY AND MAINTENANCE CONSIDERATIONS. A TAPER OR REFLECTORIZED DRUMS OR BARRICADES SHOULD BE PLACED AHEAD OF A PCMS THAT IS PLACED ON THE SHOULDER IF IT IS NOT SHIELDED BY A BARRIER.

SITE 1 MESSAGE SIGN IS TO BE IN PLACE AND DISPLAYING THE "PRIOR TO CONSTRUCTION" MESSAGES FOR SEVEN DAYS PRIOR TO THE EXPECTED START OF WORK ON IH 39 NB.

SITE 2 MESSAGE SIGN IS TO BE IN PLACE AND DISPLAYING THE "PRIOR TO CONSTRUCTION" MESSAGES FOR SEVEN DAYS PRIOR TO THE EXPECTED START OF WORK ON IH 39 NB.

SITE 3 MESSAGE SIGN IS TO BE IN PLACE AND DISPLAYING THE "PRIOR TO CONSTRUCTION" MESSAGES FOR SEVEN DAYS PRIOR TO THE EXPECTED START OF WORK ON IH 39 SB.

SITE 4 MESSAGE SIGN IS TO BE IN PLACE AND DISPLAYING THE "PRIOR TO CONSTRUCTION" MESSAGES FOR SEVEN DAYS PRIOR TO THE EXPECTED START OF WORK ON IH 39 SB.

MAINTENANCE CROSSOVER LOCATIONS (MILE MARKER)

140.5
142.8
144.0
146.6
148.1
149.6

MESSAGE OVERVIEW												
SIGN OWNER	PCMS SITE NO. (DIR.)	MILE MARKER	7 DAYS PRIOR TO MAINLINE IH 39 CONSTRUCTION		7 DAYS PRIOR TO OVERPASS * CONSTRUCTION		DURING SHOULDER CLOSURE		DURING INSIDE LANE CLOSURE		DURING OUTSIDE LANE CLOSURE	
			FRAME 1 (2 SEC)	FRAME 2 (2 SEC)	FRAME 1 (2 SEC)	FRAME 2 (2 SEC)	FRAME 1 (2 SEC)	FRAME 2 (2 SEC)	FRAME 1 (2 SEC)	FRAME 2 (2 SEC)	FRAME 1 (2 SEC)	FRAME 2 (2 SEC)
CONTRACTOR	4 (SB)	152.5	SINGLE LANE TRAFFIC	BEGINS MON XX	SINGLE LANE TRAFFIC	MON 6 AM TO SUN 6 AM	SHLDRS CLOSED	2 MILES AHEAD	LEFT LANE CLOSED	2 MILES AHEAD	RIGHT LANE CLOSED	2 MILES AHEAD
CONTRACTOR	3 (SB)	151.5	SINGLE LANE TRAFFIC	BEGINS MON XX	SINGLE LANE TRAFFIC	MON 6 AM TO SUN 6 AM	SHLDRS CLOSED	1 MILE AHEAD	LEFT LANE CLOSED	1 MILE AHEAD	RIGHT LANE CLOSED	1 MILE AHEAD
CONTRACTOR	2 (NB)	135.0	SINGLE LANE TRAFFIC	BEGINS MON XX	SINGLE LANE TRAFFIC	SAT 6 AM TO FRI 12PM	SHLDRS CLOSED	2 MILES AHEAD	LEFT LANE CLOSED	2 MILES AHEAD	RIGHT LANE CLOSED	2 MILES AHEAD
CONTRACTOR	1 (NB)	134.0	SINGLE LANE TRAFFIC	BEGINS MON XX	SINGLE LANE TRAFFIC	SAT 6 AM TO FRI 12PM	SHLDRS CLOSED	3 MILES AHEAD	LEFT LANE CLOSED	3 MILES AHEAD	RIGHT LANE CLOSED	3 MILES AHEAD

*OVERPASS CONSTRUCTION INCLUDES CTH D, 3RD AVENUE, CTH W, CODDINGTON ROAD, AND BIRCH DRIVE.

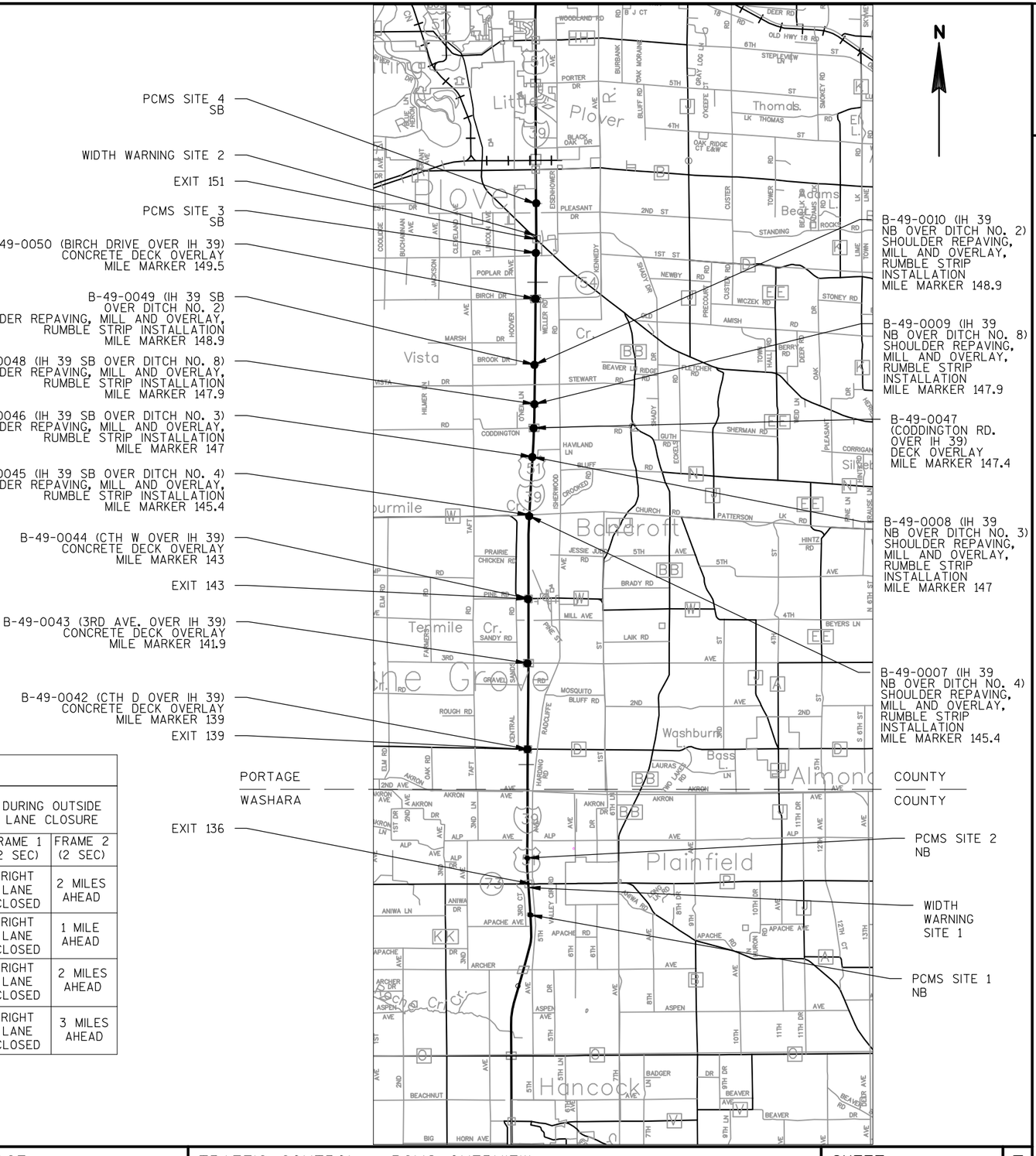

PROJECT NO: 1166-00-61	HWY: IH 39	COUNTY: PORTAGE	TRAFFIC CONTROL - PCMS OVERVIEW	SHEET 12	E

2

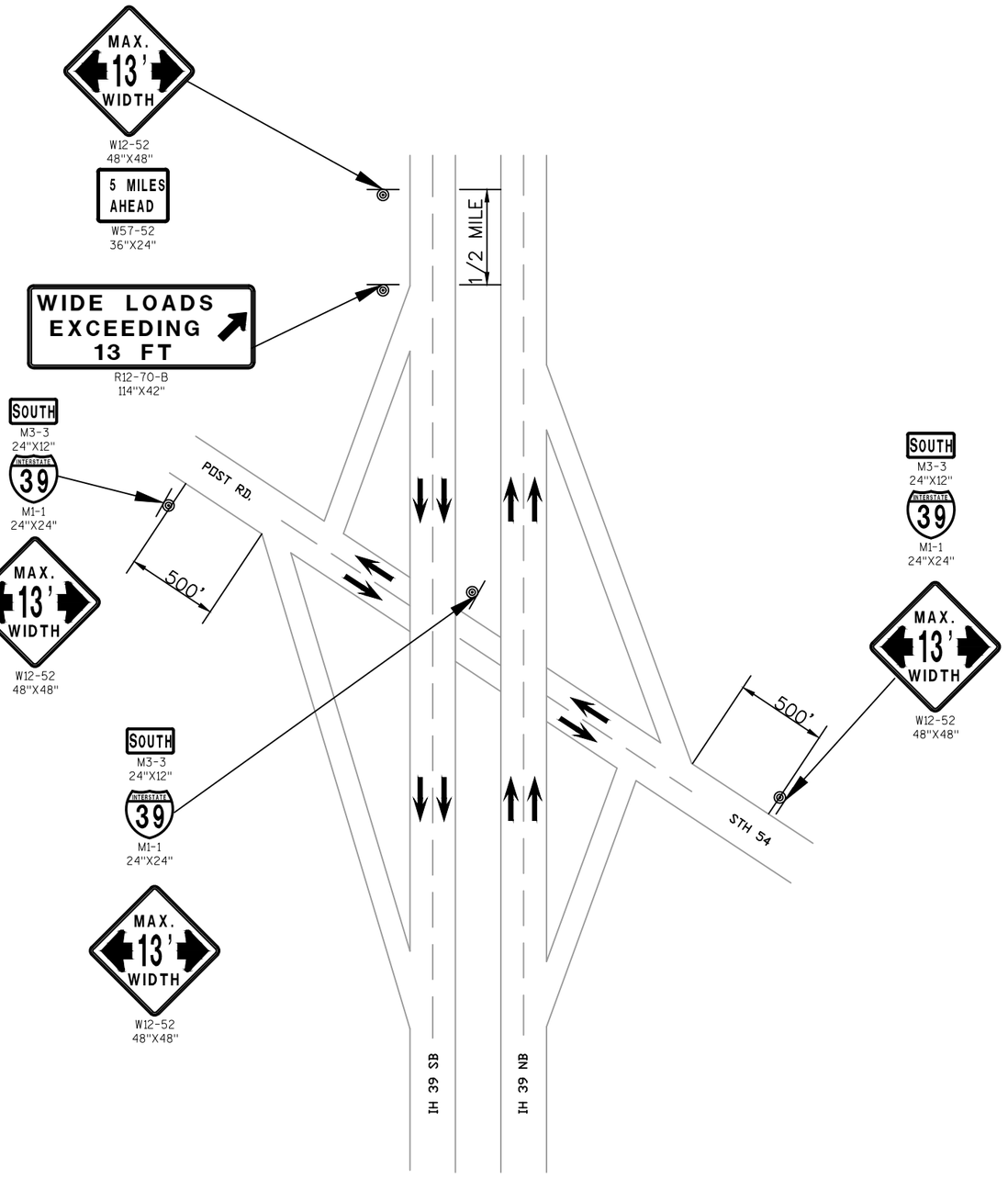

ADVANCE WARNING - WIDTH RESTRICTION

EXIT 151
FOR IH 39 SB TRAFFIC
STAGE 3 ONLY

PROJECT NO:1166-00-61	HWY:IH 39	COUNTY:PORTAGE	TRAFFIC CONTROL - ADVANCE SIGNING DETAILS	SHEET 13	E

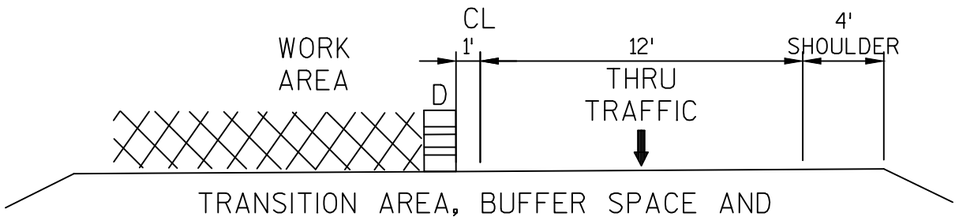

TRANSITION AREA, BUFFER SPACE AND
LANE CLOSURE

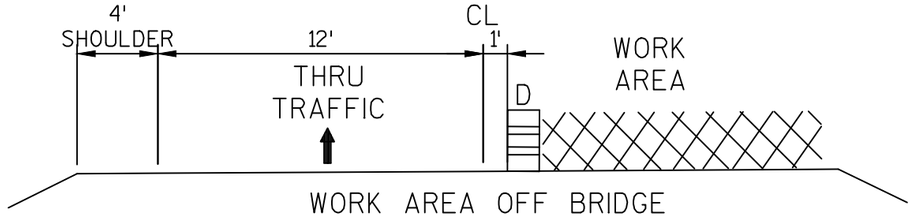

WORK AREA OFF BRIDGE

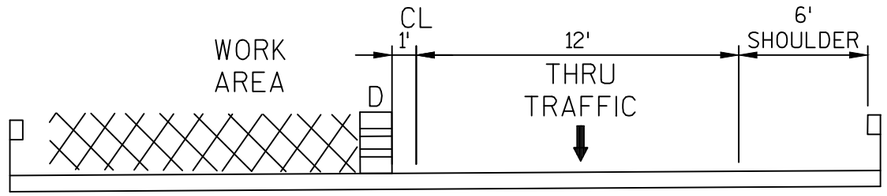

WORK AREA ON BRIDGE

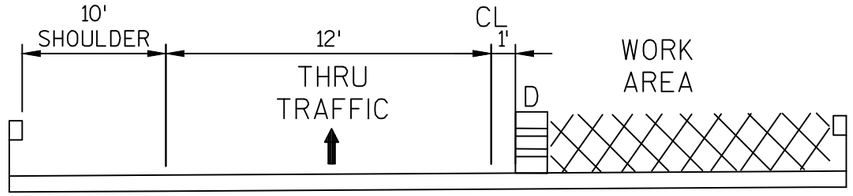

WORK AREA ON BRIDGE

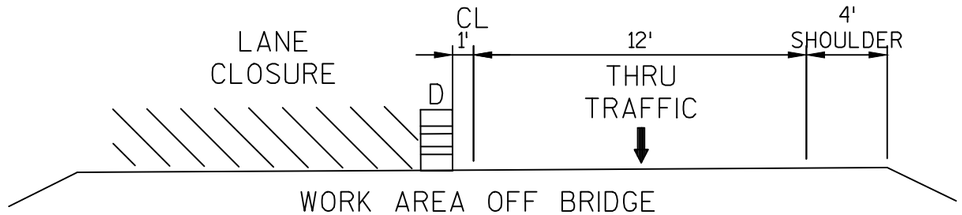

WORK AREA OFF BRIDGE

IH 39 SOUTH BOUND

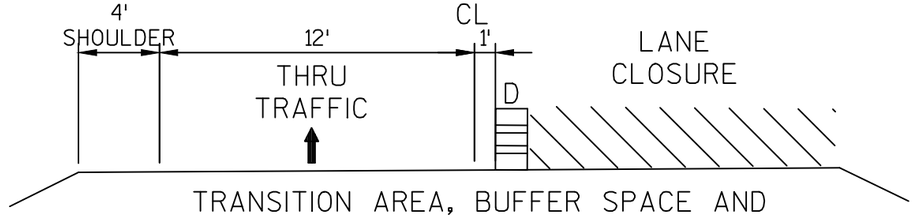

TRANSITION AREA, BUFFER SPACE AND
LANE CLOSURE

IH 39 NORTH BOUND

TYPICAL SECTION
(LOOKING NORTH)

D - TRAFFIC CONTROL DRUM

NOTE: NOT TO SCALE

PROJECT NO:1166-00-61	HWY: IH 39	COUNTY:PORTAGE	TRAFFIC CONTROL - STAGE 1 TYPICAL SECTIONS	SHEET 14	E

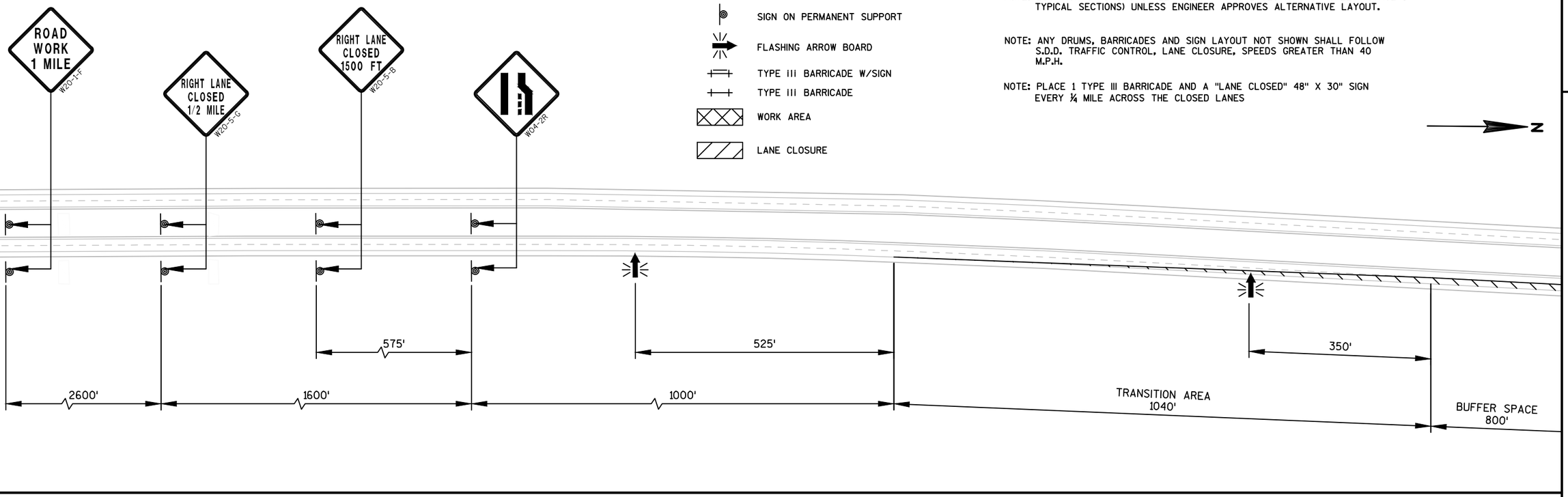
ROAD WORK 1 MILE
W20-1-F
RIGHT LANE CLOSED 1/2 MILE
W20-5-G
RIGHT LANE CLOSED 1500 FT
W20-5-B
W04-2R
SIGN ON PERMANENT SUPPORT
FLASHING ARROW BOARD
TYPE III BARRICADE W/SIGN
TYPE III BARRICADE
WORK AREA
LANE CLOSURE
NOTE: LOCATION OF DRUMS SHALL FOLLOW TYPICAL SECTIONS ON SHEET (STAGE 1 TYPICAL SECTIONS) UNLESS ENGINEER APPROVES ALTERNATIVE LAYOUT.
NOTE: ANY DRUMS, BARRICADES AND SIGN LAYOUT NOT SHOWN SHALL FOLLOW S.D.D. TRAFFIC CONTROL, LANE CLOSURE, SPEEDS GREATER THAN 40 M.P.H.
NOTE: PLACE 1 TYPE III BARRICADE AND A "LANE CLOSED" 48" X 30" SIGN EVERY ¼ MILE ACROSS THE CLOSED LANES
N
575'
525'
350'
2600'
1600'
1000'
TRANSITION AREA 1040'
BUFFER SPACE 800'

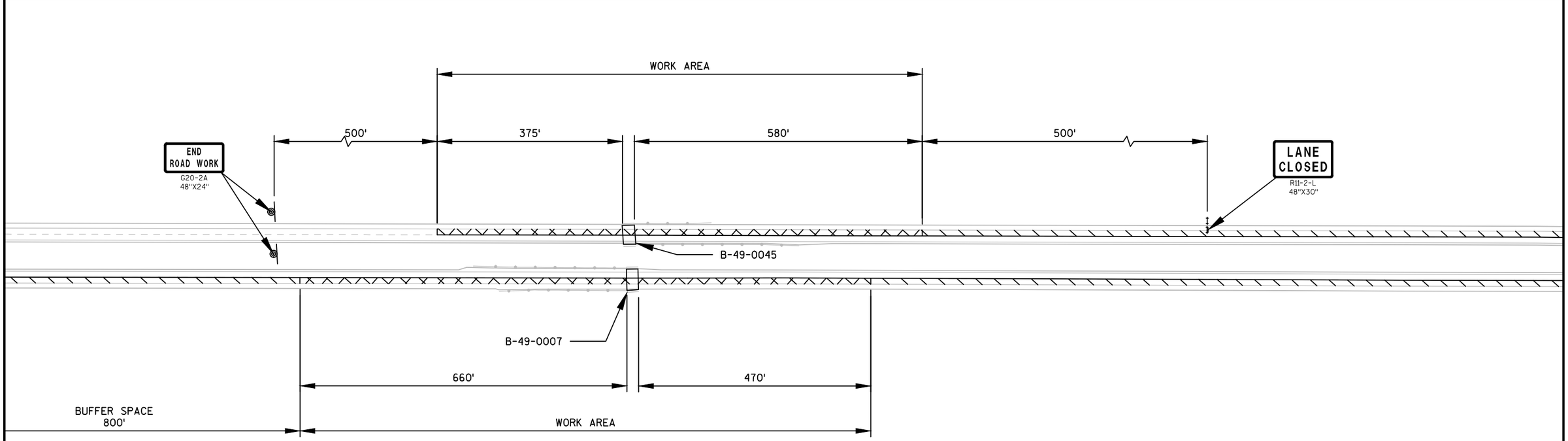
WORK AREA
END ROAD WORK
G20-2A
48"X24"
500'
375'
580'
500'
LANE CLOSED
R11-2-L
48"X30"
B-49-0045
B-49-0007
660'
470'
BUFFER SPACE 800'
WORK AREA

NOTE: LOCATION OF DRUMS SHALL FOLLOW TYPICAL SECTIONS ON SHEET (STAGE 1 TYPICAL SECTIONS) UNLESS ENGINEER APPROVES ALTERNATIVE LAYOUT.

NOTE: ANY DRUMS, BARRICADES AND SIGN LAYOUT NOT SHOWN SHALL FOLLOW S.D.D. TRAFFIC CONTROL, LANE CLOSURE, SPEEDS GREATER THAN 40 M.P.H.

NOTE: PLACE 1 TYPE III BARRICADE AND A "LANE CLOSED" 48" X 30" SIGN EVERY ¼ MILE ACROSS THE CLOSED LANES

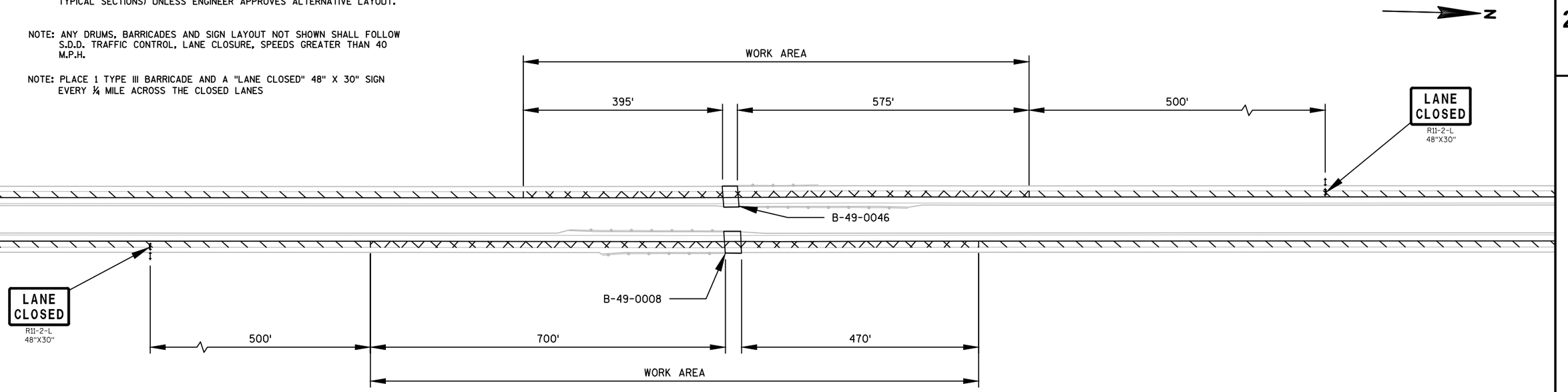

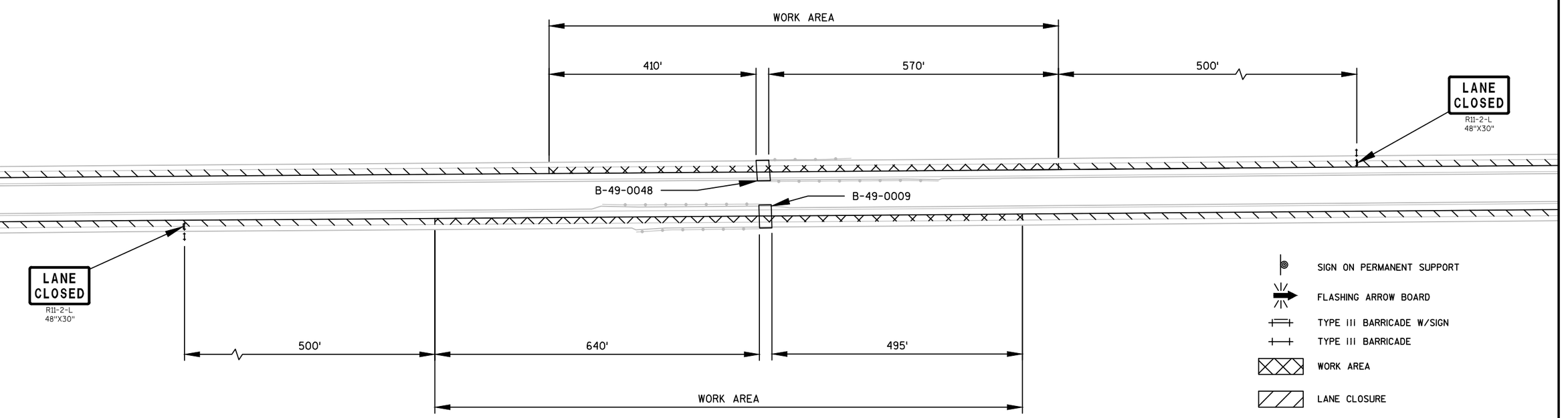

PROJECT NO: 1166-00-61	HWY: IH 39	COUNTY: PORTAGE	TRAFFIC CONTROL - STAGE 1	SHEET 16	E

NOTE: LOCATION OF DRUMS SHALL FOLLOW TYPICAL SECTIONS ON SHEET (STAGE 1 TYPICAL SECTIONS) UNLESS ENGINEER APPROVES ALTERNATIVE LAYOUT.

NOTE: ANY DRUMS, BARRICADES AND SIGN LAYOUT NOT SHOWN SHALL FOLLOW S.D.D. TRAFFIC CONTROL, LANE CLOSURE, SPEEDS GREATER THAN 40 M.P.H.

NOTE: PLACE 1 TYPE III BARRICADE AND A "LANE CLOSED" 48" X 30" SIGN EVERY ¼ MILE ACROSS THE CLOSED LANES

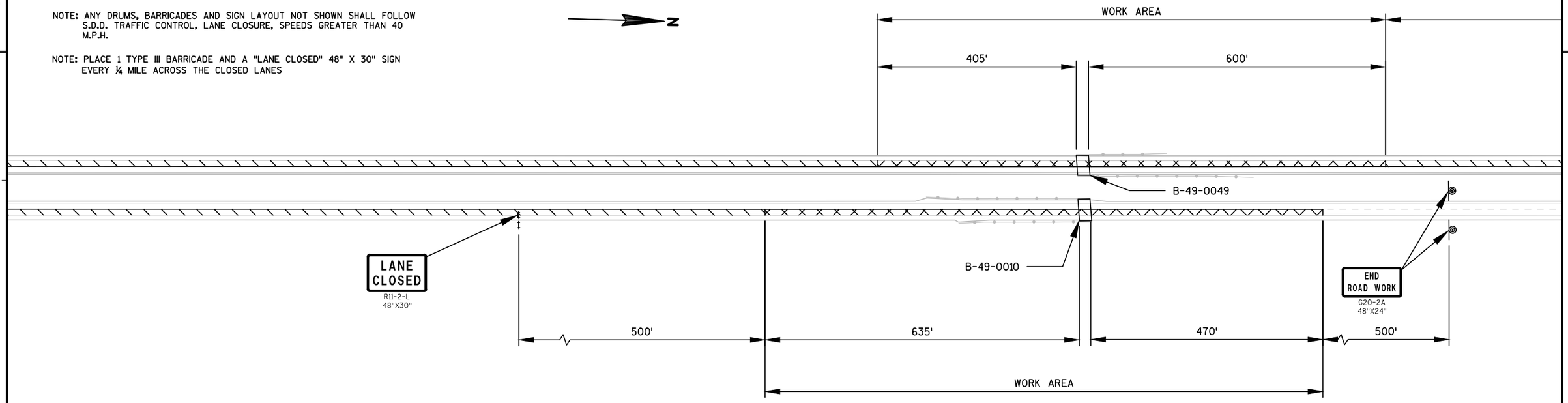

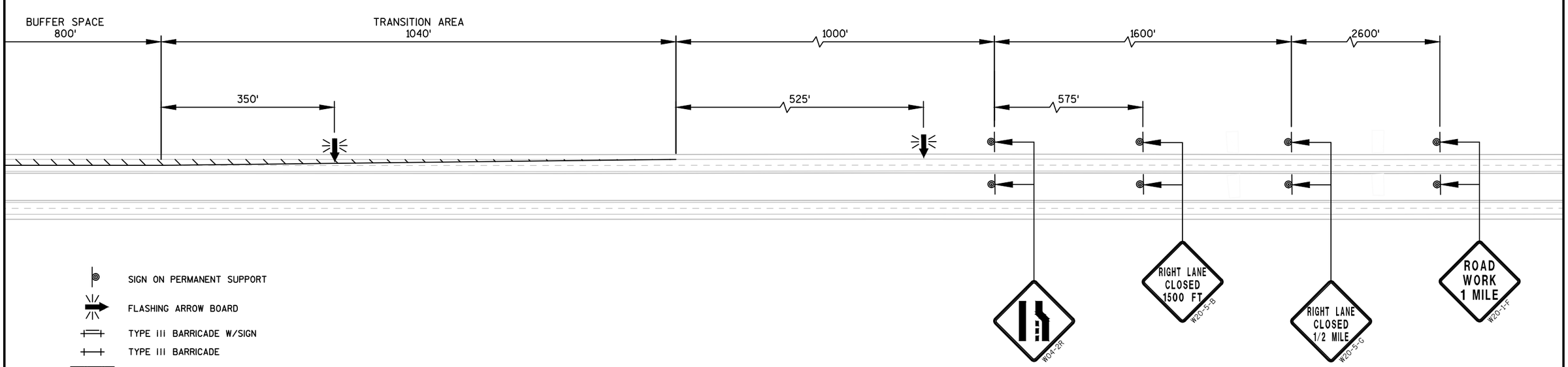

PROJECT NO: 1166-00-61	HWY: IH 39	COUNTY: PORTAGE	TRAFFIC CONTROL - STAGE 1	SHEET 17	E

2

NOTE: B-49-0043 BRIDGE CLOSURE SHALL FOLLOW S.D.D. BARRICADES AND SIGNS FOR MAINLINE CLOSURES (MAINLINE CLOSURE, NO POSTED DETOUR).

NOTE: DURING BRIDGE DECK PREPARATION WORK, IF ANY "FULL DEPTH DECK REPAIR" IS DETERMINED TO BE NECESSARY, MAINLINE CLOSURES SHALL FOLLOW S.D.D. TRAFFIC CONTROL, LANE CLOSURE, SPEEDS GREATER THAN 40 M.P.H. WITH BARRIER.

NOTE: PLACE ROAD CLOSED AHEAD SIGNS AT THE INTERSECTION WITH CENTRAL SANDS ROAD, 0.2 MILES WEST OF THE BRIDGE, AND AT THE INTERSECTION WITH HARDING ROAD, 0.7 MILES EAST OF THE BRIDGE.

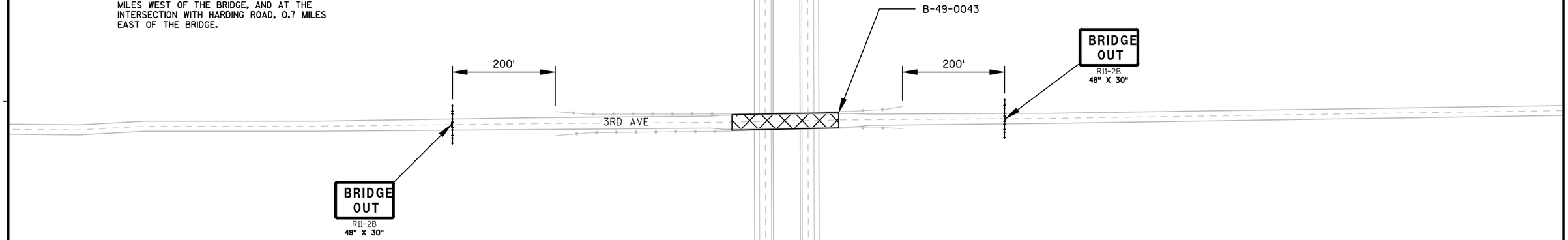

2

NOTE: B-49-0047 BRIDGE CLOSURE SHALL FOLLOW S.D.D. BARICADES AND SIGNS FOR MAINLINE CLOSURES (MAINLINE CLOSURE, NO POSTED DETOUR).

NOTE: DURING BRIDGE DECK PREPARATION WORK, IF ANY "FULL DEPTH DECK REPAIR" IS DETERMINED TO BE NECESSARY, MAINLINE CLOSURES SHALL FOLLOW S.D.D. TRAFFIC CONTROL, LANE CLOSURE, SPEEDS GREATER THAN 40 M.P.H. WITH BARRIER.

NOTE: PLACE ROAD CLOSED AHEAD SIGNS AT THE INTERSECTION WITH TAFT AVENUE, 1.5 MILES WEST OF THE BRIDGE, AND AT THE INTERSECTION WITH ISHERWOOD ROAD, 0.6 MILES EAST OF THE BRIDGE.

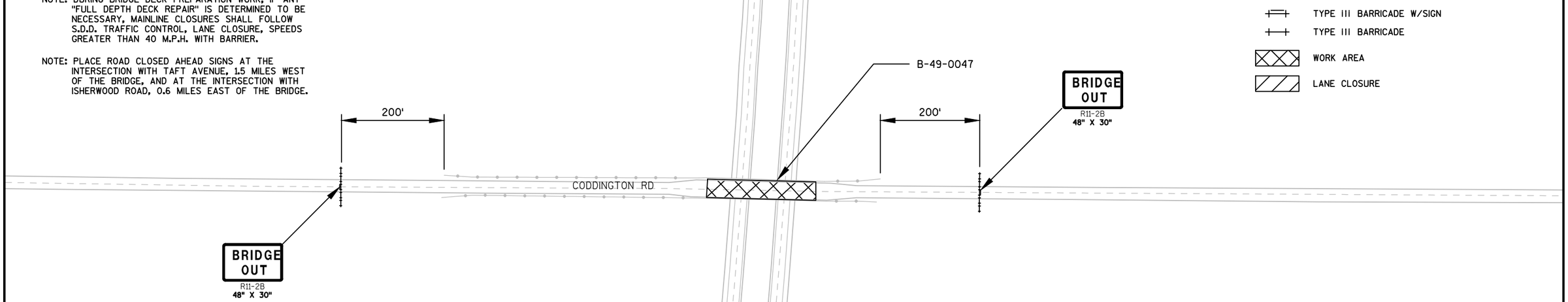

PROJECT NO: 1166-00-61	HWY: IH 39	COUNTY: PORTAGE	TRAFFIC CONTROL - STAGE 1	SHEET 18	E

FILE NAME : P:\90S\93\00093215\CADD\1166-00-61\SHEETSPLAN\026001-S1.DWG PLOT DATE : 5/27/2015 9:09 AM PLOT BY : BRAD LEE PLOT NAME : PLOT SCALE : **********

NOTE: B-49-0050 BRIDGE CLOSURE SHALL FOLLOW S.D.D. BARICADES AND SIGNS FOR MAINLINE CLOSURES (MAINLINE CLOSURE, NO POSTED DETOUR).

NOTE: DURING BRIDGE DECK PREPARATION WORK, IF ANY "FULL DEPTH DECK REPAIR" IS DETERMINED TO BE NECESSARY, MAINLINE CLOSURES SHALL FOLLOW S.D.D. TRAFFIC CONTROL, LANE CLOSURE, SPEEDS GREATER THAN 40 M.P.H. WITH BARRIER.

NOTE: PLACE ROAD CLOSED AHEAD SIGNS AT THE INTERSECTION WITH HOOVER AVENUE, 0.4 MILES WEST OF THE BRIDGE, AND AT THE INTERSECTION WITH ISHERWOOD ROAD, 0.5 MILES EAST OF THE BRIDGE.

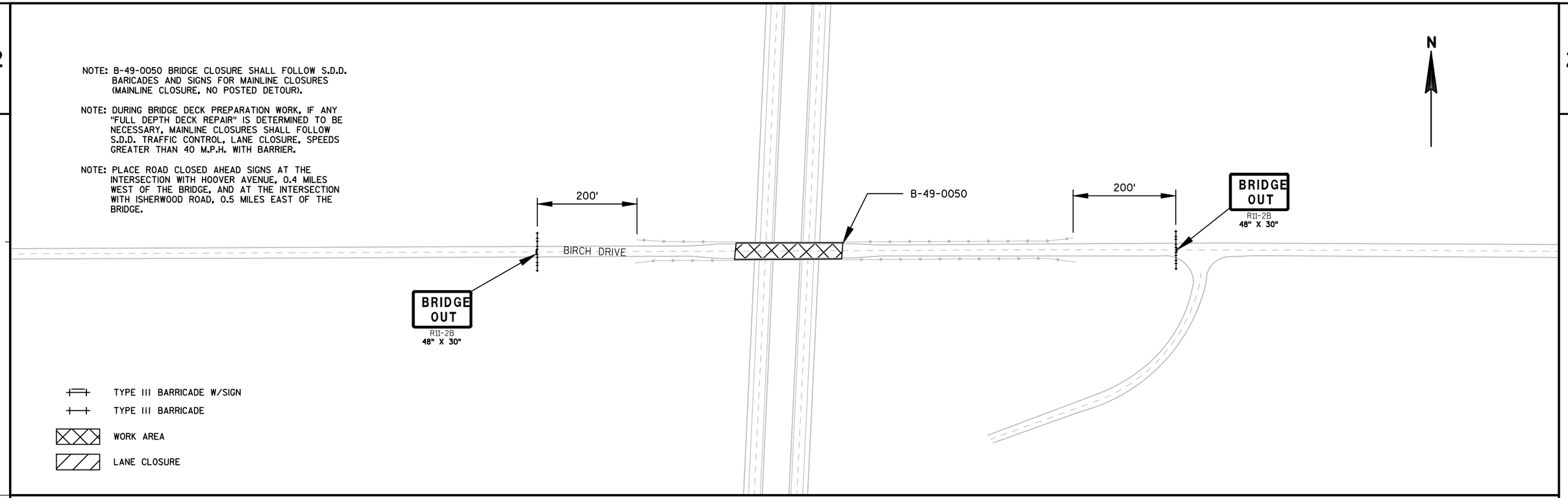

PROJECT NO: 1166-00-61	HWY: IH 39	COUNTY: PORTAGE	TRAFFIC CONTROL - STAGE 1	SHEET 19	E

2

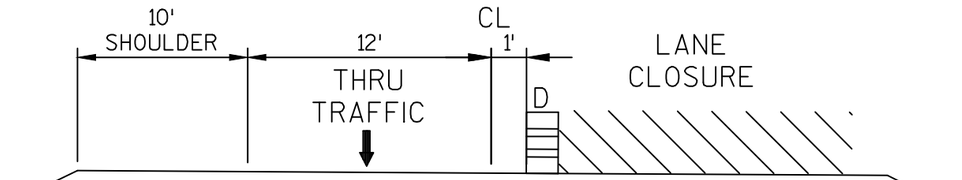

TRANSITION AREA, BUFFER SPACE AND
LANE CLOSURE

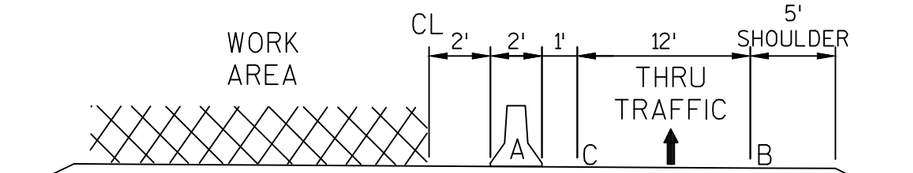

WORK AREA OFF BRIDGE

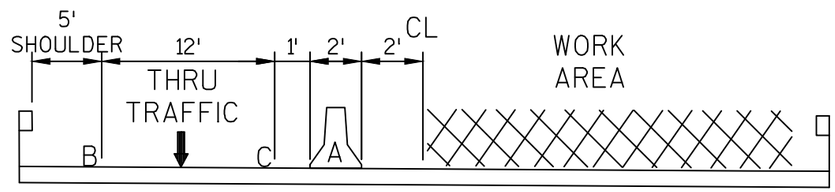

WORK AREA ON BRIDGE

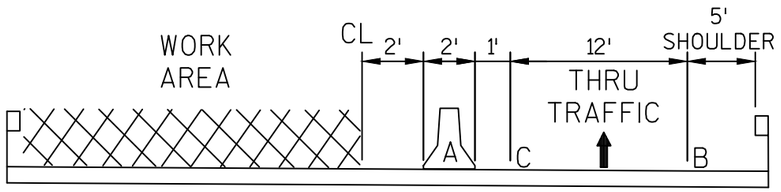

WORK AREA ON BRIDGE

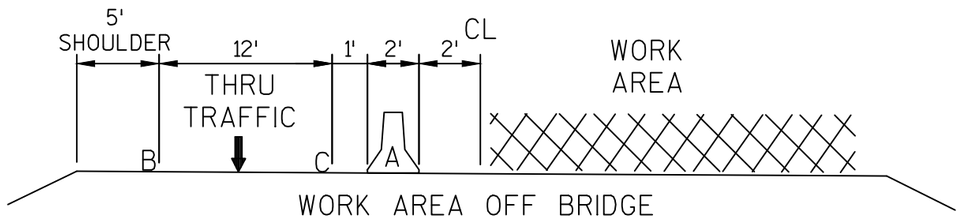

WORK AREA OFF BRIDGE

IH 39 SOUTH BOUND

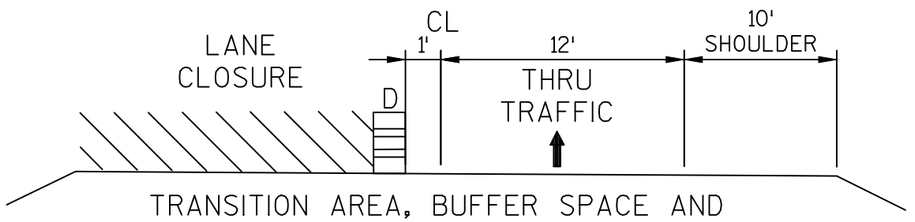

TRANSITION AREA, BUFFER SPACE AND
LANE CLOSURE

IH 39 NORTH BOUND

TYPICAL SECTION
(LOOKING NORTH)

A - CONCRETE BARRIER TEMPORARY PRECAST
B - TEMPORARY PAVEMENT MARKING REMOVABLE TAPE 4-INCH WHITE
C - TEMPORARY PAVEMENT MARKING REMOVABLE TAPE 4-INCH YELLOW
D - TRAFFIC CONTROL DRUM

NOTE: NOT TO SCALE

PROJECT NO: 1166-00-61	HWY: IH 39	COUNTY: PORTAGE	TRAFFIC CONTROL - STAGE 2 TYPICAL SECTIONS	SHEET 20	E

FILE NAME : P:\90S\93\00093215\CADD\1166-00-61\SHEETSPLAN\PAVEMENTLINES.DWG PLOT DATE : 9/1/2015 7:44 AM PLOT BY : BRAD LEE PLOT NAME : PLOT SCALE : 1 IN:200 FT
WISDOT/CADDS SHEET 42

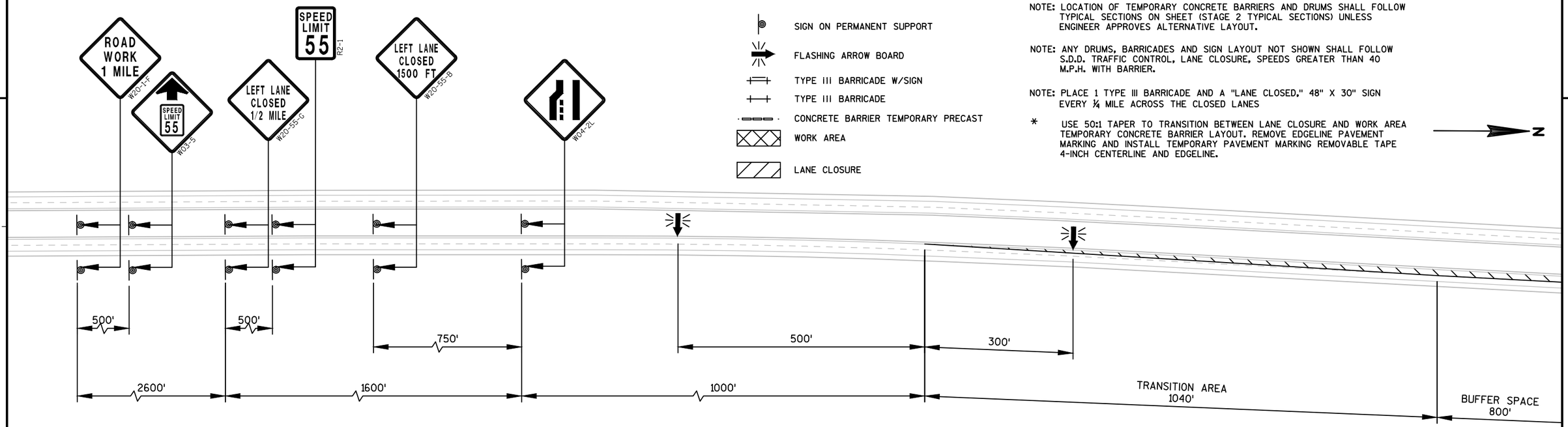

NOTE: LOCATION OF TEMPORARY CONCRETE BARRIERS AND DRUMS SHALL FOLLOW TYPICAL SECTIONS ON SHEET (STAGE 2 TYPICAL SECTIONS) UNLESS ENGINEER APPROVES ALTERNATIVE LAYOUT.

NOTE: ANY DRUMS, BARRICADES AND SIGN LAYOUT NOT SHOWN SHALL FOLLOW S.D.D. TRAFFIC CONTROL, LANE CLOSURE, SPEEDS GREATER THAN 40 M.P.H. WITH BARRIER.

NOTE: PLACE 1 TYPE III BARRICADE AND A "LANE CLOSED," 48" X 30" SIGN EVERY ¼ MILE ACROSS THE CLOSED LANES

* USE 50:1 TAPER TO TRANSITION BETWEEN LANE CLOSURE AND WORK AREA TEMPORARY CONCRETE BARRIER LAYOUT. REMOVE EDGELINE PAVEMENT MARKING AND INSTALL TEMPORARY PAVEMENT MARKING REMOVABLE TAPE 4-INCH CENTERLINE AND EDGELINE.

N

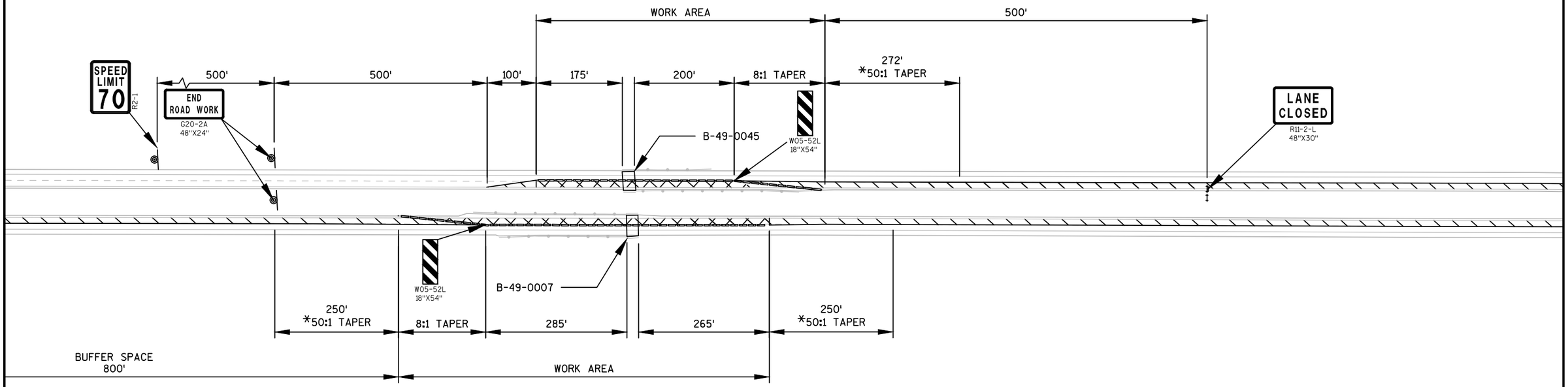

PROJECT NO: 1166-00-61	HWY: IH 39	COUNTY: PORTAGE	TRAFFIC CONTROL - STAGE 2	SHEET 21	E

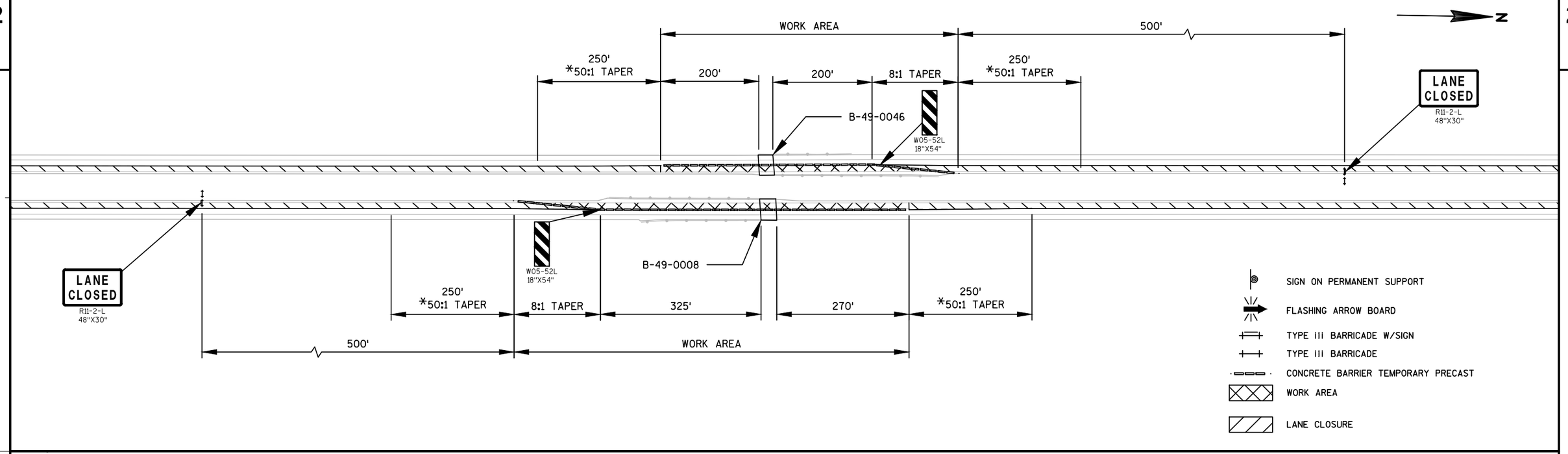

NOTE: LOCATION OF TEMPORARY CONCRETE BARRIERS AND DRUMS SHALL FOLLOW TYPICAL SECTIONS ON SHEET (STAGE 2 TYPICAL SECTIONS) UNLESS ENGINEER APPROVES ALTERNATIVE LAYOUT.

NOTE: ANY DRUMS, BARRICADES AND SIGN LAYOUT NOT SHOWN SHALL FOLLOW S.D.D. TRAFFIC CONTROL, LANE CLOSURE, SPEEDS GREATER THAN 40 M.P.H. WITH BARRIER.

NOTE: PLACE 1 TYPE III BARRICADE AND A "LANE CLOSED" 48" X 30" SIGN EVERY ¼ MILE ACROSS THE CLOSED LANES

* USE 50:1 TAPER TO TRANSITION BETWEEN LANE CLOSURE AND WORK AREA TEMPORARY CONCRETE BARRIER LAYOUT. REMOVE EDGELINE PAVEMENT MARKING AND INSTALL TEMPORARY PAVEMENT MARKING REMOVABLE TAPE 4-INCH CENTERLINE AND EDGELINE.

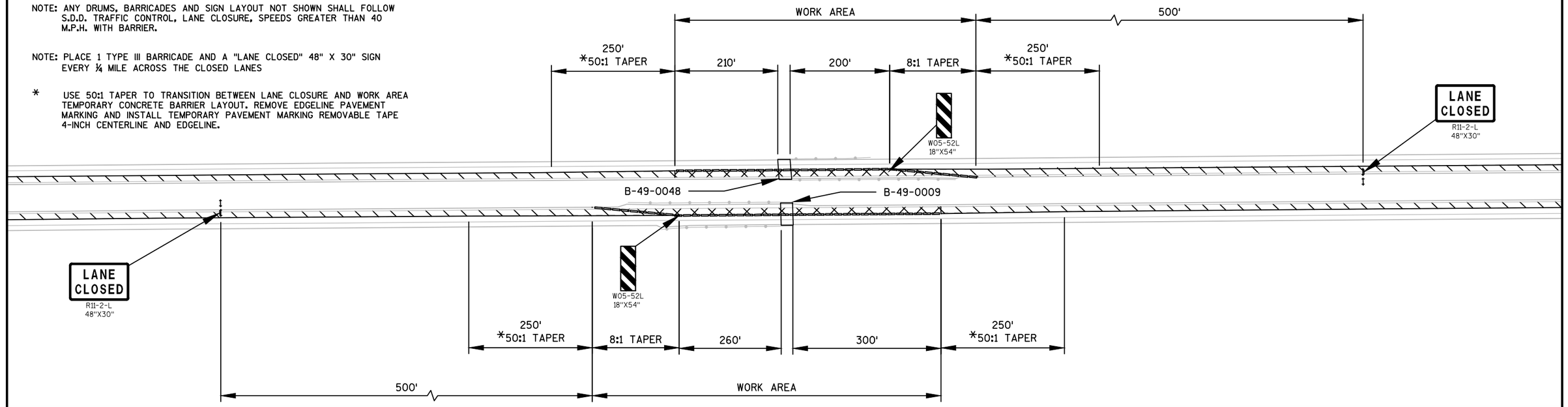

PROJECT NO: 1166-00-61	HWY: IH 39	COUNTY: PORTAGE	TRAFFIC CONTROL - STAGE 2	SHEET 22	E

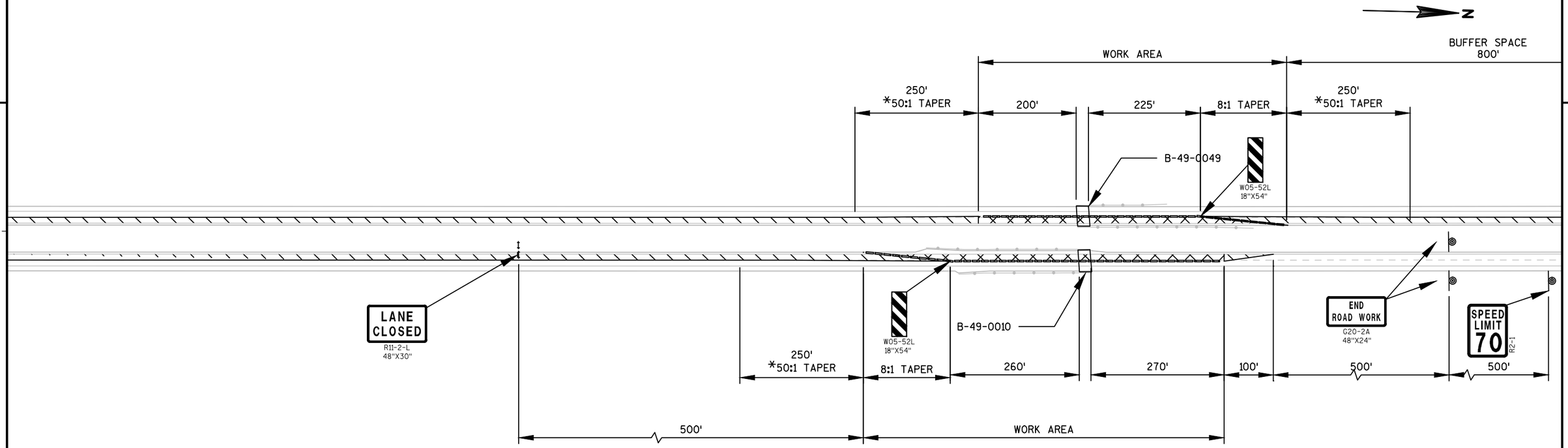

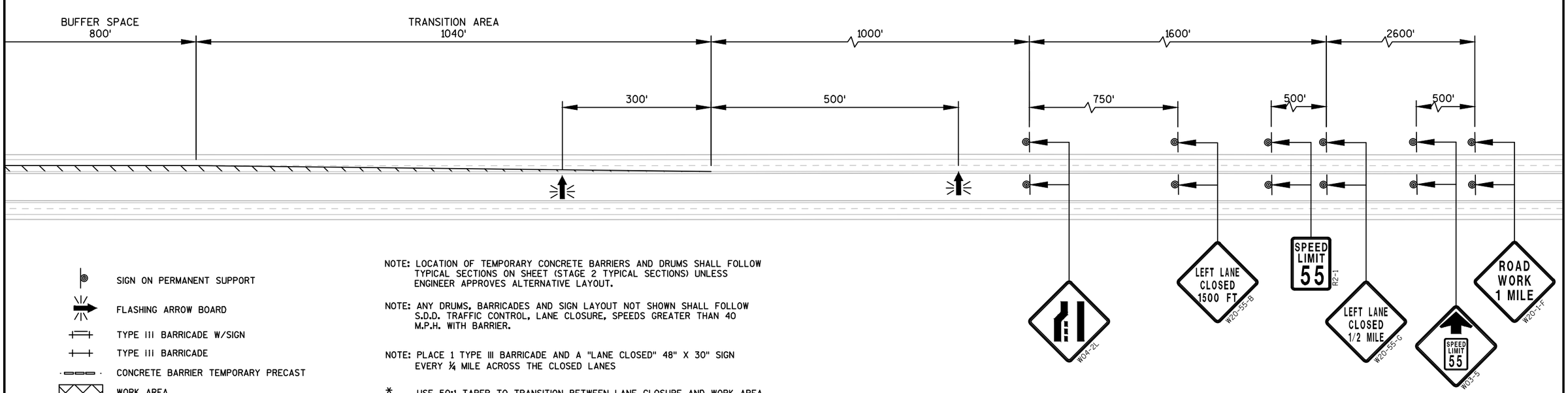

SIGN ON PERMANENT SUPPORT

FLASHING ARROW BOARD

TYPE III BARRICADE W/SIGN

TYPE III BARRICADE

CONCRETE BARRIER TEMPORARY PRECAST

WORK AREA

LANE CLOSURE

NOTE: LOCATION OF TEMPORARY CONCRETE BARRIERS AND DRUMS SHALL FOLLOW TYPICAL SECTIONS ON SHEET (STAGE 2 TYPICAL SECTIONS) UNLESS ENGINEER APPROVES ALTERNATIVE LAYOUT.

NOTE: ANY DRUMS, BARRICADES AND SIGN LAYOUT NOT SHOWN SHALL FOLLOW S.D.D. TRAFFIC CONTROL, LANE CLOSURE, SPEEDS GREATER THAN 40 M.P.H. WITH BARRIER.

NOTE: PLACE 1 TYPE III BARRICADE AND A "LANE CLOSED" 48" X 30" SIGN EVERY ¼ MILE ACROSS THE CLOSED LANES

* USE 50:1 TAPER TO TRANSITION BETWEEN LANE CLOSURE AND WORK AREA TEMPORARY CONCRETE BARRIER LAYOUT. REMOVE EDGELINE PAVEMENT MARKING AND INSTALL TEMPORARY PAVEMENT MARKING REMOVABLE TAPE 4-INCH CENTERLINE AND EDGELINE.

PROJECT NO: 1166-00-61	HWY: IH 39	COUNTY: PORTAGE	TRAFFIC CONTROL - STAGE 2	SHEET 23	E

2

TEMPORARY SIGNALS CONSTRUCTION NOTES:

1. TRAFFIC SIGNAL CONTROLLER AND CABINET TO BE SUPPLIED BY THE CONTRACTOR.
2. CONTRACTOR SHALL BE RESPONSIBLE FOR POWER INSTALLATION AND COORDINATION WITH WISCONSIN PUBLIC SERVICE (WPS) THREE WEEKS PRIOR TO CONSTRUCTION.
3. SIGNALS SHALL BE INTERCONNECTED WITH OVERHEAD LINES OR ELECTRICAL CONDUIT.
4. ALL EXISTING SIGNS IN CONFLICT WITH TEMPORARY TRAFFIC CONTROL WILL BE COVERED.
5. DRUMS, BARRICADES, PAVEMENT MARKING, AND SIGNS LAYOUT SHALL FOLLOW S.D.D. TRAFFIC CONTROL, ONE LANE ROAD WITH TEMPORARY SIGNALS.
6. *SPACING OF SIGNS PER S.D.D. TRAFFIC CONTROL, ONE LANE ROAD WITH TEMPORARY SIGNALS.
7. ELECTRIC LINE CONTINUES TO METER BREAKER PEDESTAL, FINAL LOCATION OF METER DETERMINED BY WPS.

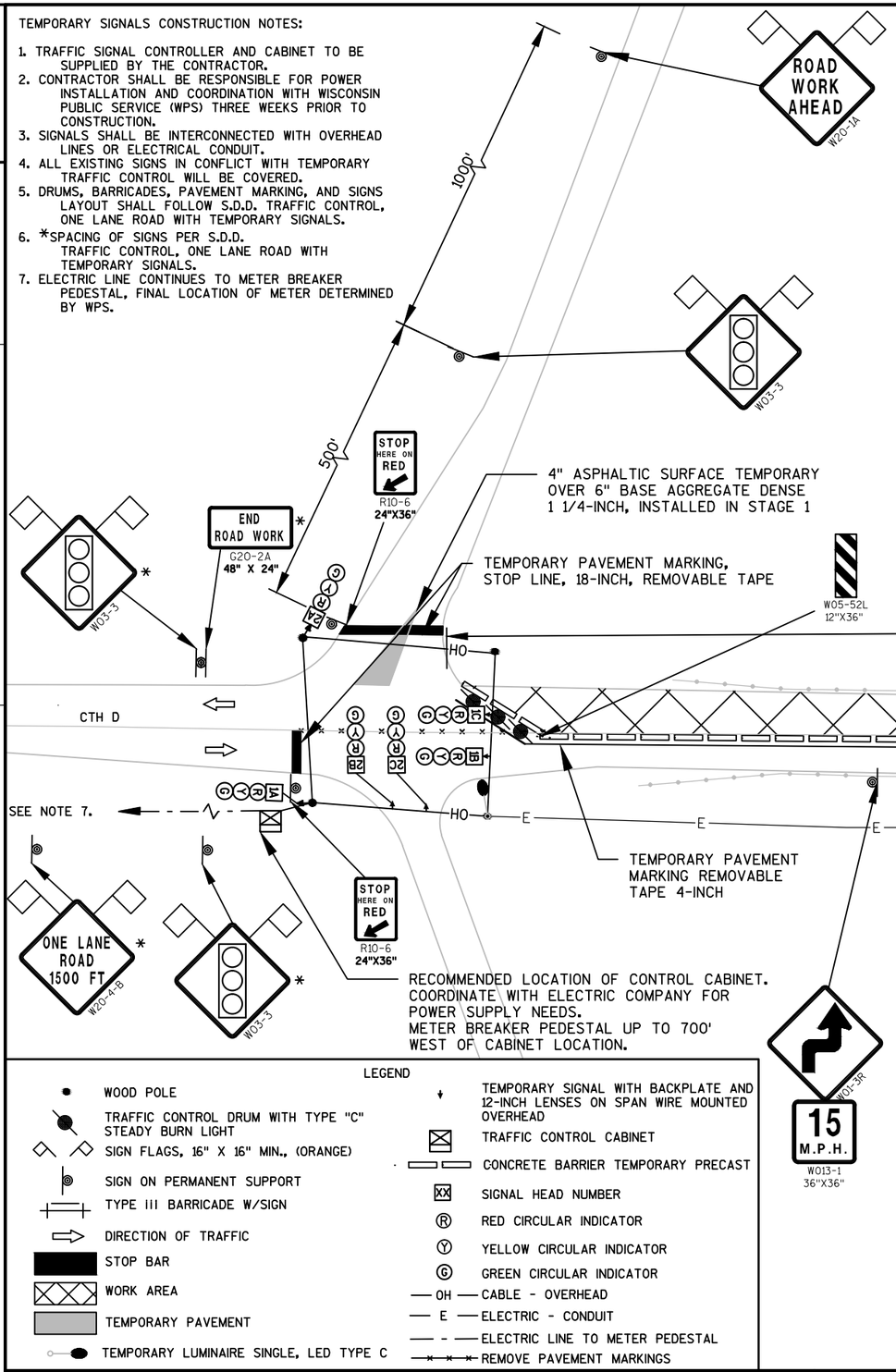

WORK AREA | CL | 2' | 2' | 1' | 12' | 5' | THRU TRAFFIC

TYPICAL SECTION A-A

NOTE: DURING BRIDGE DECK PREPARATION WORK, IF ANY "FULL DEPTH DECK REPAIR" IS DETERMINED TO BE NECESSARY, MAINLINE CLOSURES SHALL FOLLOW S.D.D. TRAFFIC CONTROL, LANE CLOSURE, SPEEDS GREATER THAN 40 M.P.H. WITH BARRIER.

N

LEGEND

- WOOD POLE
- TRAFFIC CONTROL DRUM WITH TYPE "C" STEADY BURN LIGHT
- SIGN FLAGS, 16" X 16" MIN., (ORANGE)
- SIGN ON PERMANENT SUPPORT
- TYPE III BARRICADE W/SIGN
- DIRECTION OF TRAFFIC
- STOP BAR
- WORK AREA
- TEMPORARY PAVEMENT
- TEMPORARY LUMINAIRE SINGLE, LED TYPE C
- TEMPORARY SIGNAL WITH BACKPLATE AND 12-INCH LENSES ON SPAN WIRE MOUNTED OVERHEAD
- TRAFFIC CONTROL CABINET
- CONCRETE BARRIER TEMPORARY PRECAST
- XX SIGNAL HEAD NUMBER
- (R) RED CIRCULAR INDICATOR
- (Y) YELLOW CIRCULAR INDICATOR
- (G) GREEN CIRCULAR INDICATOR
- OH CABLE - OVERHEAD
- E ELECTRIC - CONDUIT
- ELECTRIC LINE TO METER PEDESTAL
- REMOVE PAVEMENT MARKINGS

PROJECT NO: 1166-00-61	HWY: IH 39	COUNTY: PORTAGE	TRAFFIC CONTROL - CTH D STAGE 2 SIGNAL LAYOUT	SHEET 24	E

FILE NAME : P:\90S\93\00093215\CADD\1166-00-61\SHEETSPLAN\026001-S2_ALT SIGNAL (ERIN).DWG PLOT DATE : 7/20/2015 2:56 PM PLOT BY : ERIN KATOPODIS PLOT NAME : PLOT SCALE : **********

TEMPORARY SIGNALS CONSTRUCTION NOTES:

1. TRAFFIC SIGNAL CONTROLLER AND CABINET TO BE SUPPLIED BY THE CONTRACTOR.
2. CONTRACTOR SHALL BE RESPONSIBLE FOR POWER INSTALLATION AND COORDINATION WITH WISCONSIN PUBLIC SERVICE (WPS) THREE WEEKS PRIOR TO CONSTRUCTION.
3. SIGNALS SHALL BE INTERCONNECTED WITH OVERHEAD LINES OR ELECTRICAL CONDUIT.
4. ALL EXISTING SIGNS IN CONFLICT WITH TEMPORARY TRAFFIC CONTROL WILL BE COVERED.
5. DRUMS, BARRICADES, PAVEMENT MARKING, AND SIGNS LAYOUT SHALL FOLLOW S.D.D. TRAFFIC CONTROL, ONE LANE ROAD WITH TEMPORARY SIGNALS.
6. *SPACING OF SIGNS PER S.D.D. TRAFFIC CONTROL, ONE LANE ROAD WITH TEMPORARY SIGNALS.
7. ELECTRIC LINE CONTINUES TO METER BREAKER PEDESTAL, FINAL LOCATION OF METER DETERMINED BY WPS.

ROAD WORK AHEAD W20-1A

W03-3

1000'

500'

END ROAD WORK G20-2A 48" X 24"

STOP HERE ON RED R10-6 24"X36"

4" ASPHALTIC SURFACE TEMPORARY OVER 6" BASE AGGREGATE DENSE 1 1/4-INCH, INSTALLED IN STAGE 1

TEMPORARY PAVEMENT MARKING, STOP LINE, 18-INCH, REMOVABLE TAPE

4" ASPHALTIC SURFACE TEMPORARY OVER 6" BASE AGGREGATE DENSE 1 1/4-INCH, INSTALLED IN STAGE 1

W05-52L 12"X36"

700'

ONE LANE TWO WAY TRAFFIC BETWEEN RAMPS

B-49-0044

CTH W

OH

E

A

TEMPORARY PAVEMENT MARKING, 4-INCH, REMOVABLE TAPE, WHITE EDGELINE

W05-52R 12"X36"

CONNECT RAMP TERMINAL SIGNALS VIA OVERHEAD WIRE OR CONDUIT ATTACHED TO BRIDGE.FOR OVERHEAD WIRE MAINTAIN REQUIRED MINIMUM CLEARANCE ABOVE INTERSTATE TRAFFIC.

W01-3R

15 M.P.H. W013-1 36"X36"

ONE LANE ROAD 1500 FT W20-4-B

IH 39 SOUTHBOUND

IH 39 NORTHBOUND

WORK AREA | CL | 2' | 2' | 1' | 12' | 5' | THRU TRAFFIC

TYPICAL SECTION A-A

TEMPORARY PAVEMENT MARKING REMOVABLE TAPE 4-INCH, WHITE EDGELINE

NOTE: DURING BRIDGE DECK PREPARATION WORK, IF ANY "FULL DEPTH DECK REPAIR" IS DETERMINED TO BE NECESSARY, MAINLINE CLOSURES SHALL FOLLOW S.D.D. TRAFFIC CONTROL, LANE CLOSURE, SPEEDS GREATER THAN 40 M.P.H. WITH BARRIER.

W01-6 48" X 24"

TYPE III BARRICADE

W01-3L

15 M.P.H. W013-1 36"X36"

100'

4B R Y G

4C R Y G

SEE NOTE 7.

STOP HERE ON RED R10-6 24"X36"

END ROAD WORK G20-2A 48" X 24"

4" ASPHALTIC SURFACE TEMPORARY OVER 6" BASE AGGREGATE DENSE 1 1/4-INCH, INSTALLED IN STAGE 1

RECOMMENDED LOCATION OF CONTROL CABINET. COORDINATE WITH ELECTRIC COMPANY FOR POWER SUPPLY NEEDS. METER BREAKER PEDESTAL UP TO 700' EAST OF CABINET LOCATION.

ROAD WORK AHEAD W20-1A

N

LEGEND

- WOOD POLE
- TRAFFIC CONTROL DRUM WITH TYPE "C" STEADY BURN LIGHT
- SIGN FLAGS, 16" X 16" MIN., (ORANGE)
- SIGN ON PERMANENT SUPPORT
- TYPE III BARRICADE W/SIGN
- DIRECTION OF TRAFFIC
- STOP BAR
- WORK AREA
- TEMPORARY PAVEMENT
- TEMPORARY LUMINAIRE SINGLE, LED TYPE C
- TEMPORARY SIGNAL WITH BACKPLATE AND 12-INCH LENSES ON SPAN WIRE MOUNTED OVERHEAD
- TRAFFIC CONTROL CABINET
- CONCRETE BARRIER TEMPORARY PRECAST
- XX SIGNAL HEAD NUMBER
- (R) RED CIRCULAR INDICATOR
- (Y) YELLOW CIRCULAR INDICATOR
- (G) GREEN CIRCULAR INDICATOR
- OH — CABLE - OVERHEAD
- E — ELECTRIC - CONDUIT
- - - ELECTRIC LINE TO METER PEDESTAL
- REMOVE PAVEMENT MARKINGS

PROJECT NO: 1166-00-61	HWY: IH 39	COUNTY: PORTAGE	TRAFFIC CONTROL - CTH W STAGE 2 SIGNAL LAYOUT	SHEET 25	E

SEQUENCE OF OPERATION

RING 1

	HEAD NUMBERS	01 R/W	01 CLEAR TO **	01 CLEAR TO	02 R/W	02 CLEAR TO **	02 CLEAR TO	03 R/W	03 CLEAR TO **	03 CLEAR TO	04 R/W	04 CLEAR TO **	04 CLEAR TO	FLASH
01	1A, 1B, 1C	G	Y	R	R	R	R	R	R	R	R	R	R	R
02	2A, 2B, 2C	R	R	R	G	Y	R	R	R	R	R	R	R	R
03	3A, 3B, 3C	R	R	R	R	R	R	G	Y	R	R	R	R	R
04	4A, 4B, 4C	R	R	R	R	R	R	R	R	R	G	Y	R	R
05														
06														
07														
08														
02P														
04P														
06P														
08P														

NOT USED | NOT USED | NOT USED | NOT USED

RING 2

	HEAD NUMBERS	05 R/W	05 CLEAR TO **	05 CLEAR TO	06 R/W	06 CLEAR TO **	06 CLEAR TO	07 R/W	07 CLEAR TO **	07 CLEAR TO	08 R/W	08 CLEAR TO **	08 CLEAR TO
01													
02													
03													
04													
05													
06													
07													
08													
02P													
04P													
06P													
08P													

BARRIER

** CLEARANCE TO A PHASE IN CONFLICT WITH THIS PHASE ON (SEE CHART 1)

NOTE: USE THIS SEQUENCE CHART AND TIMING PLAN FOR BOTH INTERCHANGES

NOTE: PHASING AND TIMING APPLICABLE TO BOTH STAGE 2 AND STAGE 3 OF CONSTRUCTION

CONTROLLER LOGIC

PHASE NUMBER	PHASE LOCKING	DUAL ENTRY W / Ø	PHASE RECALL	PHASE ACTIVE
1			MAX	
2			MAX	
3			MAX	
4			MAX	
5				
6				
7				
8				

OVERLAPS

O.L. "A" =
O.L. "B" =
O.L. "C" =
O.L. "D" =

TIMING/COORDINATION DATA

INTERSECTION: IH 39 & CTH D/W INTERCHANGES

TIMING PLAN	PHASE	1	2	3	4	5	6	7	8
	GREEN	15	12	15	12				
	YELLOW	3	3	3	3				
	ALL RED	1	41	1	41				
	TOTAL	19	56	19	56				
	MODE								

OFFSET: N/A
CYCLE LENGTH: 150
TIME OF DAY: FULL DAY
DAY OF WEEK: WEEKDAY (M–F)

CHART 1

PHASE ON	NONCONFLICTING PHASE ALLOWED TO TIME CONCURRENTLY	PHASES IN CONFLICT WITH PHASE ON
1	–	2, 3, 4
2	–	1, 3, 4
3	–	1, 2, 4
4	–	1, 2, 3
5		
6		
7		
8		

TYPE OF INTERCONNECT COMMUNICATION	
NONE	X
TBC	
CLOSED LOOP TWISTED PAIR*	
CLOSED LOOP FIBER OPTIC*	
RADIO	
*LOCATION OF MASTER CONTROLLER NO:	
SIGNAL SYSTEM #:	

TYPE OF PRE-EMPT	
NONE	X
RAILROAD	
EMERGENCY VEHICLE	
3M	
TOMAR	
HARDWIRE	
OTHER	
LIFT BRIDGE	
QUEUE DETECTOR	

TYPE OF LIGHTING	
BY OTHER AGENCY	
IN TRAFFIC SIGNAL CABINET	
IN SEPARATE DOT LIGHTING CABINET	

N

CTH D INTERCHANGE WITH IH 39 &
CTH W INTERCHANGE WITH IH 39
TEMPORARY SIGNALS
PORTAGE COUNTY

SIGNAL NO.

CONTROLLER TYPE:

DATE PAGE NO. OF

PROJECT NO: 1166-00-61	HWY: IH 39	COUNTY: PORTAGE	TEMPORARY SEQUENCE OF OPERATIONS	SHEET E

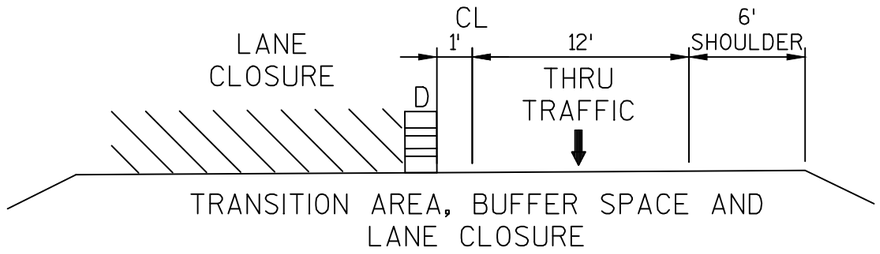

TRANSITION AREA, BUFFER SPACE AND
LANE CLOSURE

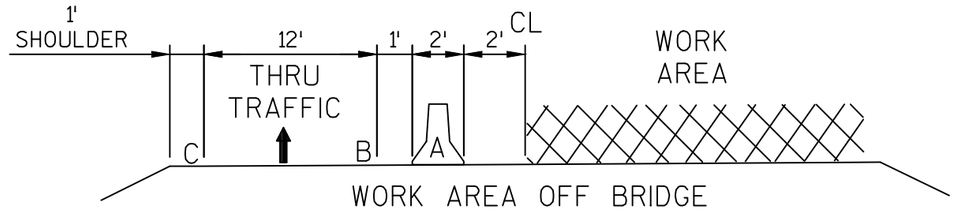

WORK AREA OFF BRIDGE

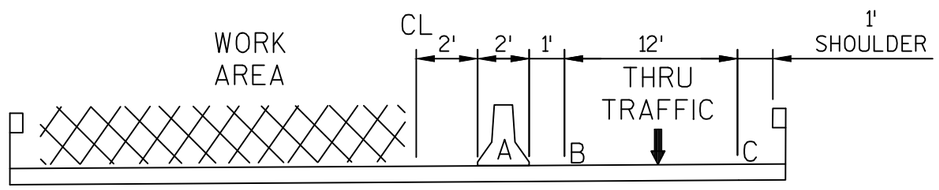

WORK AREA ON BRIDGE

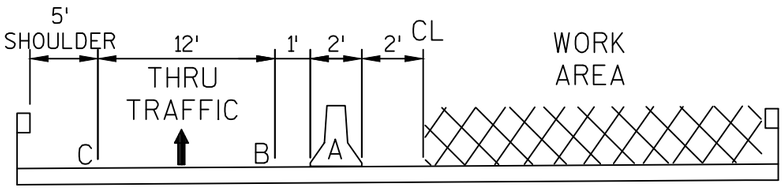

WORK AREA ON BRIDGE

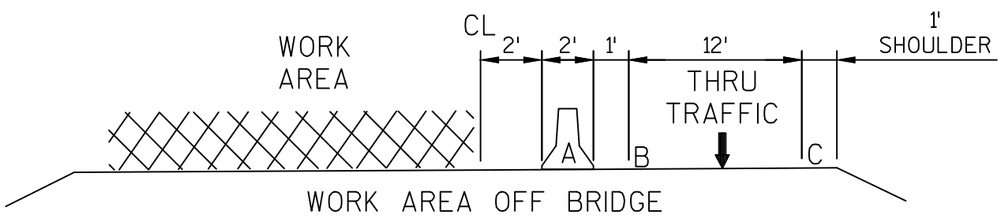

WORK AREA OFF BRIDGE

IH 39 SOUTH BOUND

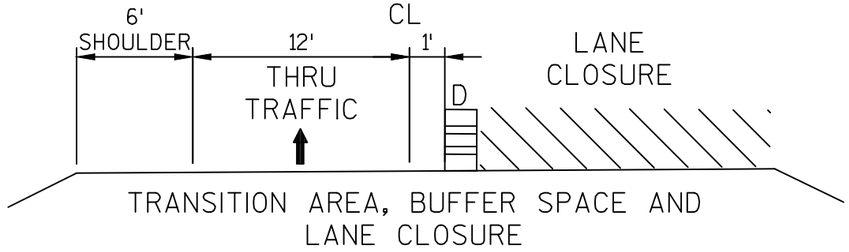

TRANSITION AREA, BUFFER SPACE AND
LANE CLOSURE

IH 39 NORTH BOUND

TYPICAL SECTION
(LOOKING NORTH)

A - CONCRETE BARRIER TEMPORARY PRECAST
B - TEMPORARY PAVEMENT MARKING REMOVABLE TAPE 4-INCH WHITE
C - TEMPORARY PAVEMENT MARKING REMOVABLE TAPE 4-INCH YELLOW
D - TRAFFIC CONTROL DRUM

NOTE: NOT TO SCALE

PROJECT NO: 1166-00-61	HWY: IH 39	COUNTY: PORTAGE	TRAFFIC CONTROL - STAGE 3 TYPICAL SECTIONS	SHEET 27	E

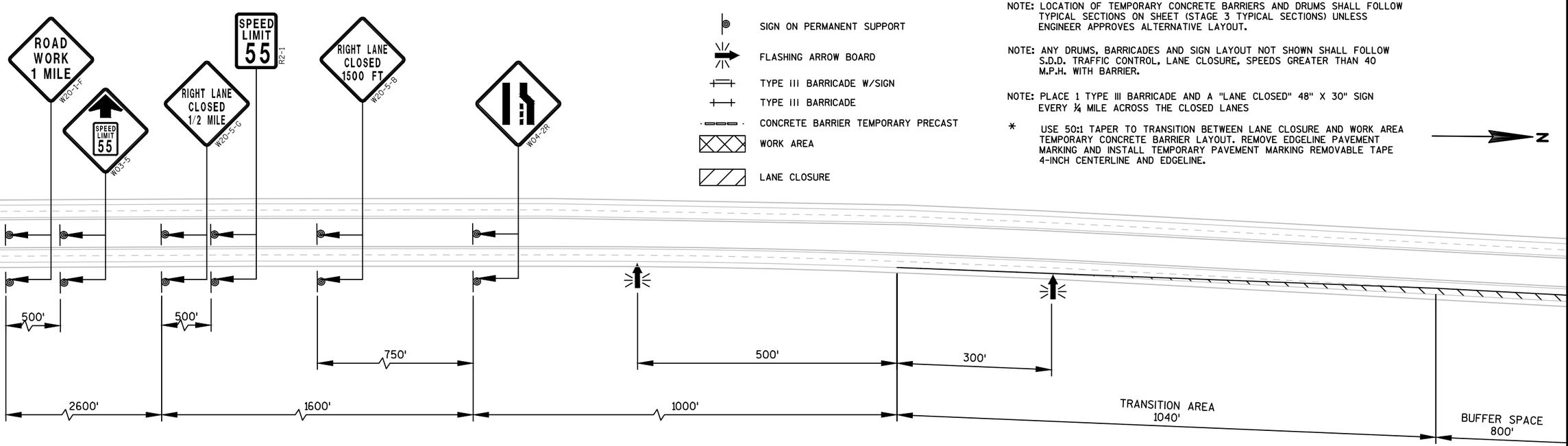

NOTE: LOCATION OF TEMPORARY CONCRETE BARRIERS AND DRUMS SHALL FOLLOW TYPICAL SECTIONS ON SHEET (STAGE 3 TYPICAL SECTIONS) UNLESS ENGINEER APPROVES ALTERNATIVE LAYOUT.

NOTE: ANY DRUMS, BARRICADES AND SIGN LAYOUT NOT SHOWN SHALL FOLLOW S.D.D. TRAFFIC CONTROL, LANE CLOSURE, SPEEDS GREATER THAN 40 M.P.H. WITH BARRIER.

NOTE: PLACE 1 TYPE III BARRICADE AND A "LANE CLOSED" 48" X 30" SIGN EVERY ¼ MILE ACROSS THE CLOSED LANES

* USE 50:1 TAPER TO TRANSITION BETWEEN LANE CLOSURE AND WORK AREA TEMPORARY CONCRETE BARRIER LAYOUT. REMOVE EDGELINE PAVEMENT MARKING AND INSTALL TEMPORARY PAVEMENT MARKING REMOVABLE TAPE 4-INCH CENTERLINE AND EDGELINE.

N

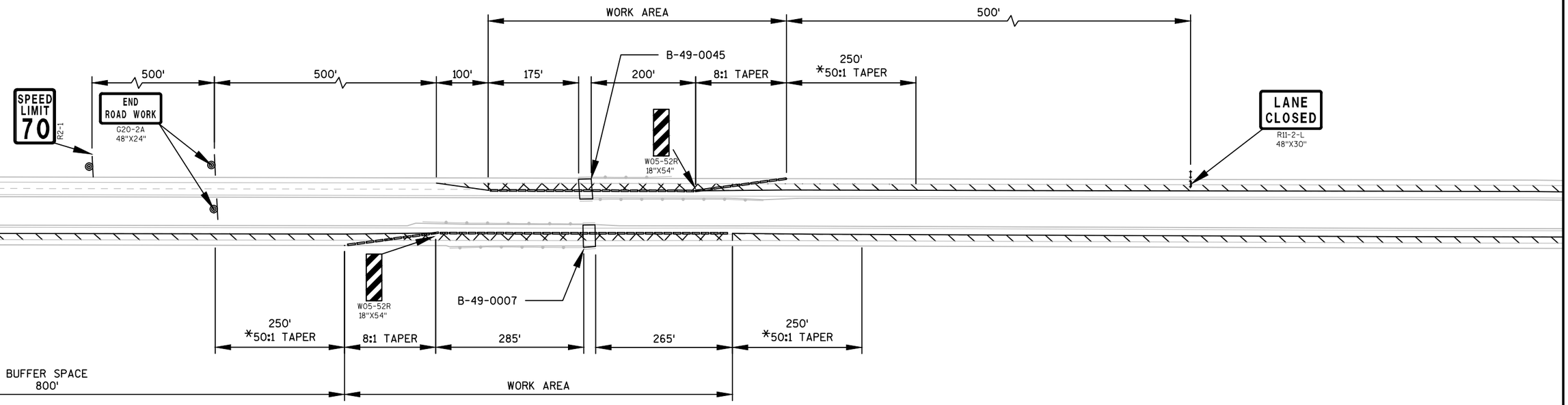

NOTE: LOCATION OF TEMPORARY CONCRETE BARRIERS AND DRUMS SHALL FOLLOW TYPICAL SECTIONS ON SHEET (STAGE 3 TYPICAL SECTIONS) UNLESS ENGINEER APPROVES ALTERNATIVE LAYOUT.

NOTE: ANY DRUMS, BARRICADES AND SIGN LAYOUT NOT SHOWN SHALL FOLLOW S.D.D. TRAFFIC CONTROL, LANE CLOSURE, SPEEDS GREATER THAN 40 M.P.H. WITH BARRIER.

NOTE: PLACE 1 TYPE III BARRICADE AND A "LANE CLOSED" 48" X 30" SIGN EVERY ¼ MILE ACROSS THE CLOSED LANES

* USE 50:1 TAPER TO TRANSITION BETWEEN LANE CLOSURE AND WORK AREA TEMPORARY CONCRETE BARRIER LAYOUT. REMOVE EDGELINE PAVEMENT MARKING AND INSTALL TEMPORARY PAVEMENT MARKING REMOVABLE TAPE 4-INCH CENTERLINE AND EDGELINE.

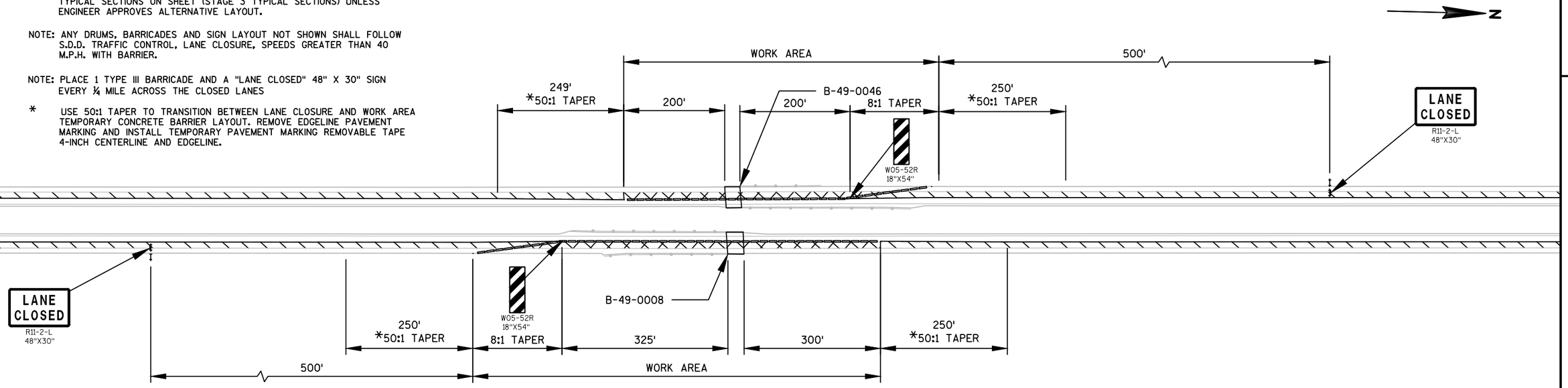

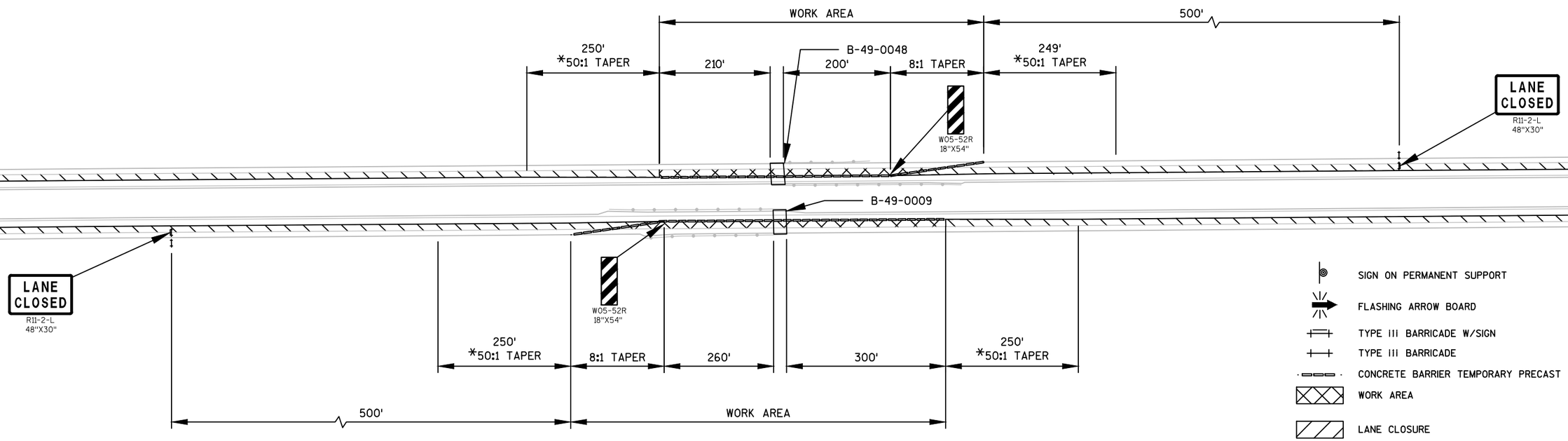

PROJECT NO: 1166-00-61	HWY: IH 39	COUNTY: PORTAGE	TRAFFIC CONTROL - STAGE 3	SHEET 29	E

NOTE: LOCATION OF TEMPORARY CONCRETE BARRIERS AND DRUMS SHALL FOLLOW TYPICAL SECTIONS ON SHEET (STAGE 3 TYPICAL SECTIONS) UNLESS ENGINEER APPROVES ALTERNATIVE LAYOUT.

NOTE: ANY DRUMS, BARRICADES AND SIGN LAYOUT NOT SHOWN SHALL FOLLOW S.D.D. TRAFFIC CONTROL, LANE CLOSURE, SPEEDS GREATER THAN 40 M.P.H. WITH BARRIER.

NOTE: PLACE 1 TYPE III BARRICADE AND A "LANE CLOSED" 48" X 30" SIGN EVERY ¼ MILE ACROSS THE CLOSED LANES

* USE 50:1 TAPER TO TRANSITION BETWEEN LANE CLOSURE AND WORK AREA TEMPORARY CONCRETE BARRIER LAYOUT. REMOVE EDGELINE PAVEMENT MARKING AND INSTALL TEMPORARY PAVEMENT MARKING REMOVABLE TAPE 4-INCH CENTERLINE AND EDGELINE.

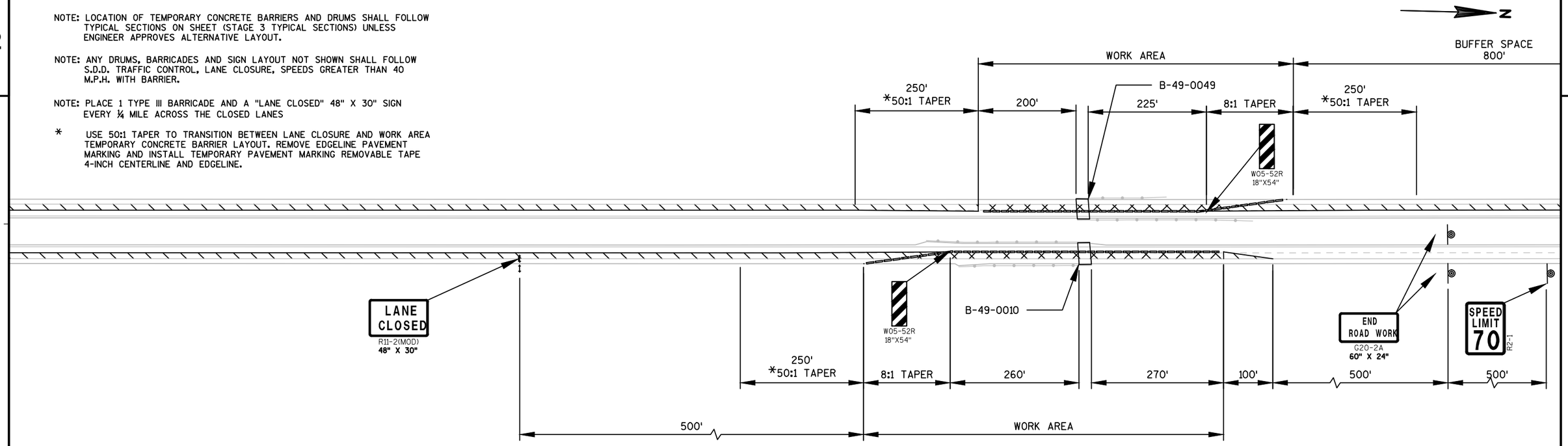

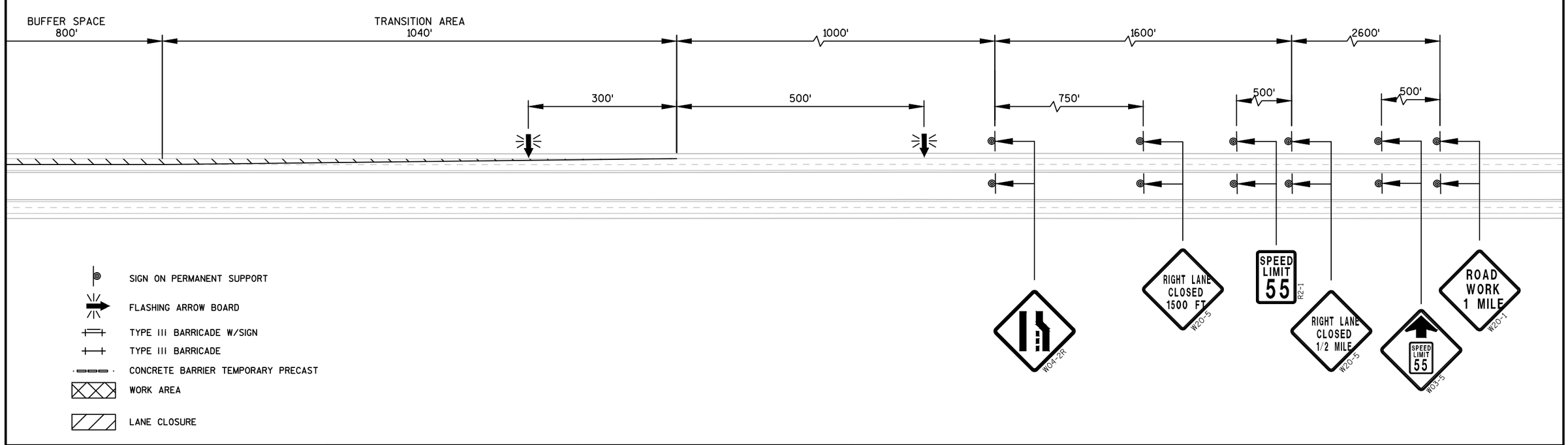

PROJECT NO: 1166-00-61	HWY: IH 39	COUNTY: PORTAGE	TRAFFIC CONTROL - STAGE 3	SHEET 30	E

TEMPORARY SIGNALS CONSTRUCTION NOTES:

1. TRAFFIC SIGNAL CONTROLLER AND CABINET TO BE SUPPLIED BY THE CONTRACTOR.
2. CONTRACTOR SHALL BE RESPONSIBLE FOR POWER INSTALLATION AND COORDINATION WITH WISCONSIN PUBLIC SERVICE (WPS) THREE WEEKS PRIOR TO CONSTRUCTION.
3. SIGNALS SHALL BE INTERCONNECTED WITH OVERHEAD LINES OR ELECTRICAL CONDUIT.
4. ALL EXISTING SIGNS IN CONFLICT WITH TEMPORARY TRAFFIC CONTROL WILL BE COVERED.
5. DRUMS, BARRICADES, PAVEMENT MARKING, AND SIGNS LAYOUT SHALL FOLLOW S.D.D. TRAFFIC CONTROL, ONE LANE ROAD WITH TEMPORARY SIGNALS.
6. *SPACING OF SIGNS PER S.D.D. TRAFFIC CONTROL, ONE LANE ROAD WITH TEMPORARY SIGNALS.
7. ELECTRIC LINE CONTINUES TO METER BREAKER PEDESTAL, FINAL LOCATION OF METER DETERMINED BY WPS.

NOTE: DURING BRIDGE DECK PREPARATION WORK, IF ANY "FULL DEPTH DECK REPAIR" IS DETERMINED TO BE NECESSARY, MAINLINE CLOSURES SHALL FOLLOW S.D.D. TRAFFIC CONTROL, LANE CLOSURE, SPEEDS GREATER THAN 40 M.P.H. WITH BARRIER.

N

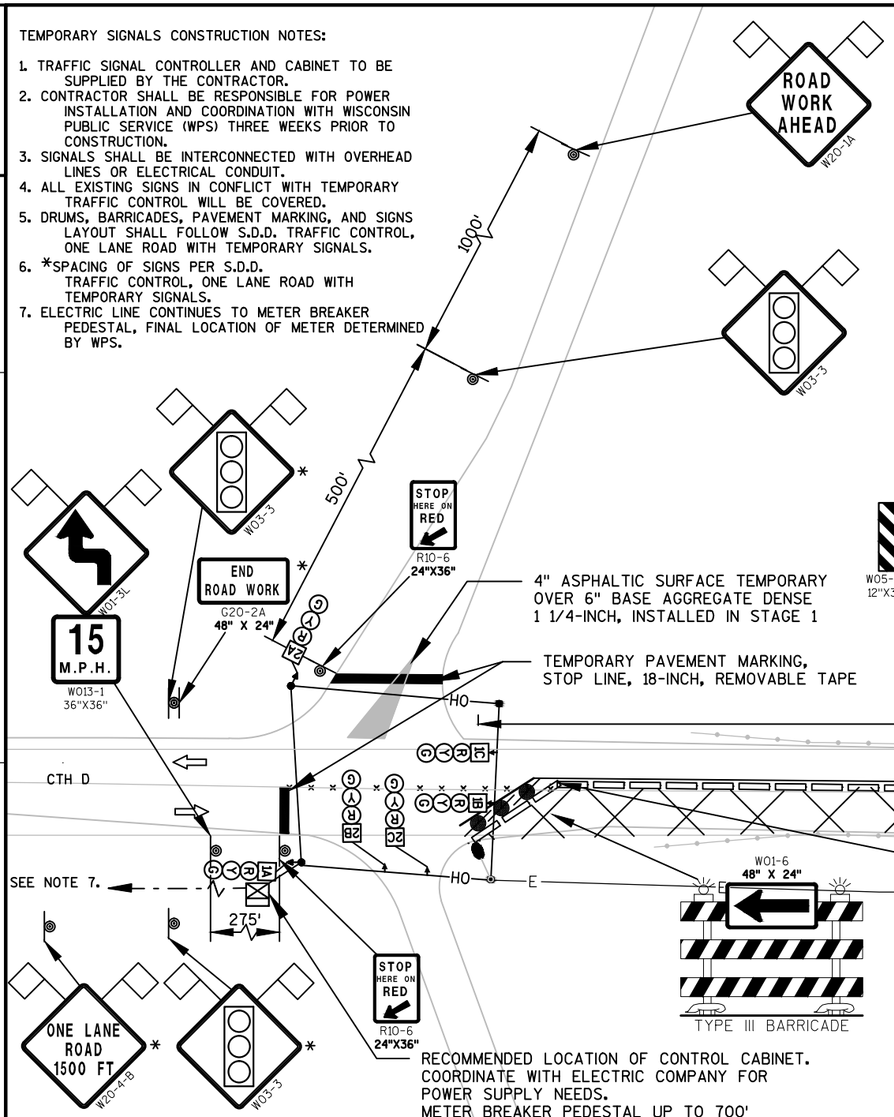

LEGEND

- WOOD POLE
- TRAFFIC CONTROL DRUM WITH TYPE "C" STEADY BURN LIGHT
- SIGN FLAGS, 16" X 16" MIN., (ORANGE)
- SIGN ON PERMANENT SUPPORT
- TYPE III BARRICADE W/SIGN
- DIRECTION OF TRAFFIC
- STOP BAR
- WORK AREA
- TEMPORARY PAVEMENT
- TEMPORARY LUMINAIRE SINGLE, LED TYPE C
- TEMPORARY SIGNAL WITH BACKPLATE AND 12-INCH LENSES ON SPAN WIRE MOUNTED OVERHEAD
- TRAFFIC CONTROL CABINET
- CONCRETE BARRIER TEMPORARY PRECAST
- XX SIGNAL HEAD NUMBER
- (R) RED CIRCULAR INDICATOR
- (Y) YELLOW CIRCULAR INDICATOR
- (G) GREEN CIRCULAR INDICATOR
- OH — CABLE - OVERHEAD
- E — ELECTRIC - CONDUIT
- - - ELECTRIC LINE TO METER PEDESTAL
- × × × REMOVE PAVEMENT MARKINGS

PROJECT NO: 1166-00-61	HWY: IH 39	COUNTY: PORTAGE	TRAFFIC CONTROL - CTH D STAGE 3 SIGNAL LAYOUT	SHEET 31	E

TEMPORARY SIGNALS CONSTRUCTION NOTES:

1. TRAFFIC SIGNAL CONTROLLER AND CABINET TO BE SUPPLIED BY THE CONTRACTOR.
2. CONTRACTOR SHALL BE RESPONSIBLE FOR POWER INSTALLATION AND COORDINATION WITH WISCONSIN PUBLIC SERVICE (WPS) THREE WEEKS PRIOR TO CONSTRUCTION.
3. SIGNALS SHALL BE INTERCONNECTED WITH OVERHEAD LINES OR ELECTRICAL CONDUIT.
4. ALL EXISTING SIGNS IN CONFLICT WITH TEMPORARY TRAFFIC CONTROL WILL BE COVERED.
5. DRUMS, BARRICADES, PAVEMENT MARKING, AND SIGNS LAYOUT SHALL FOLLOW S.D.D. TRAFFIC CONTROL, ONE LANE ROAD WITH TEMPORARY SIGNALS.
6. *SPACING OF SIGNS PER S.D.D. TRAFFIC CONTROL, ONE LANE ROAD WITH TEMPORARY SIGNALS.
7. ELECTRIC LINE CONTINUES TO METER BREAKER PEDESTAL, FINAL LOCATION OF METER DETERMINED BY WPS.

NOTE: DURING BRIDGE DECK PREPARATION WORK, IF ANY "FULL DEPTH DECK REPAIR" IS DETERMINED TO BE NECESSARY, MAINLINE CLOSURES SHALL FOLLOW S.D.D. TRAFFIC CONTROL, LANE CLOSURE, SPEEDS GREATER THAN 40 M.P.H. WITH BARRIER.

N

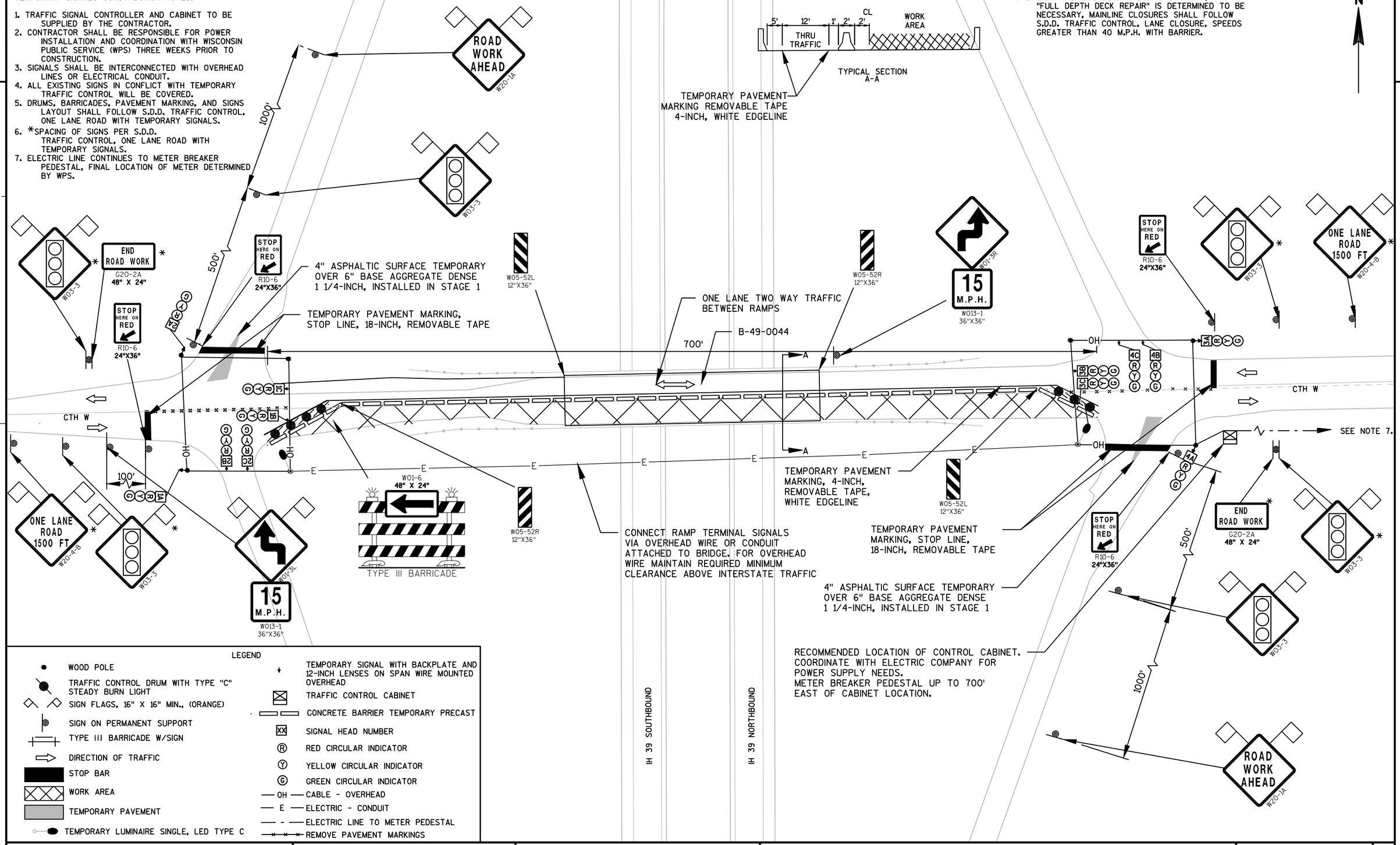

LEGEND

- WOOD POLE
- TRAFFIC CONTROL DRUM WITH TYPE "C" STEADY BURN LIGHT
- SIGN FLAGS, 16" X 16" MIN., (ORANGE)
- SIGN ON PERMANENT SUPPORT
- TYPE III BARRICADE W/SIGN
- DIRECTION OF TRAFFIC
- STOP BAR
- WORK AREA
- TEMPORARY PAVEMENT
- TEMPORARY LUMINAIRE SINGLE, LED TYPE C
- TEMPORARY SIGNAL WITH BACKPLATE AND 12-INCH LENSES ON SPAN WIRE MOUNTED OVERHEAD
- TRAFFIC CONTROL CABINET
- CONCRETE BARRIER TEMPORARY PRECAST
- XX SIGNAL HEAD NUMBER
- (R) RED CIRCULAR INDICATOR
- (Y) YELLOW CIRCULAR INDICATOR
- (G) GREEN CIRCULAR INDICATOR
- OH — CABLE - OVERHEAD
- E — ELECTRIC - CONDUIT
- - - ELECTRIC LINE TO METER PEDESTAL
- REMOVE PAVEMENT MARKINGS

PROJECT NO: 1166-00-61	HWY: IH 39	COUNTY: PORTAGE	TRAFFIC CONTROL - CTH W STAGE 3 SIGNAL LAYOUT	SHEET 32	E

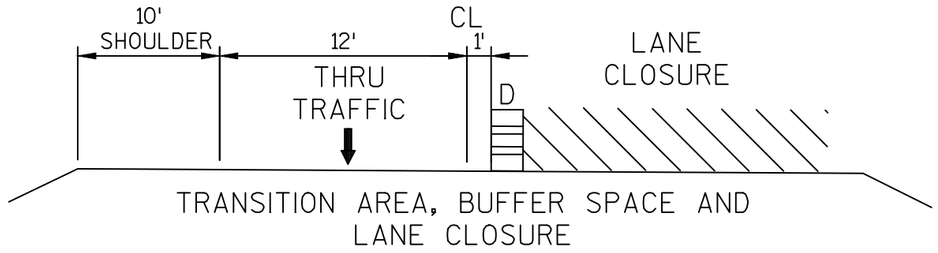

TRANSITION AREA, BUFFER SPACE AND
LANE CLOSURE

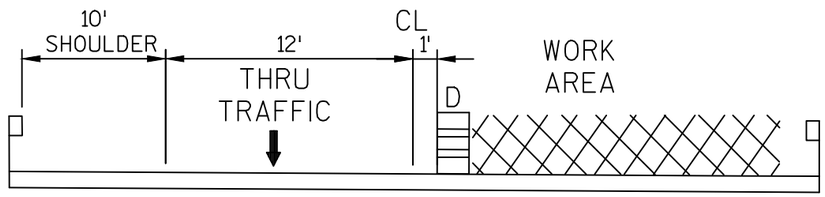

WORK AREA ON BRIDGE

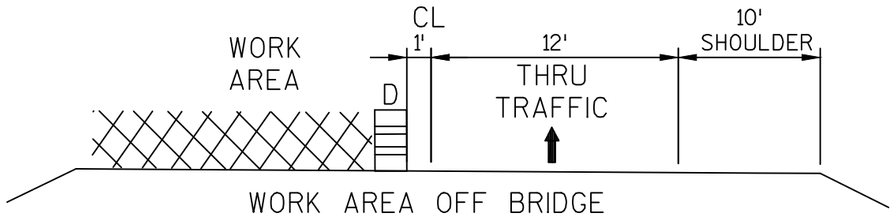

WORK AREA OFF BRIDGE

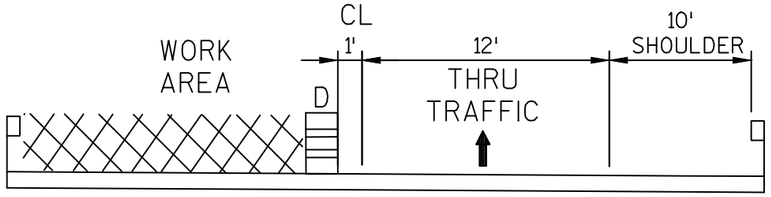

WORK AREA ON BRIDGE

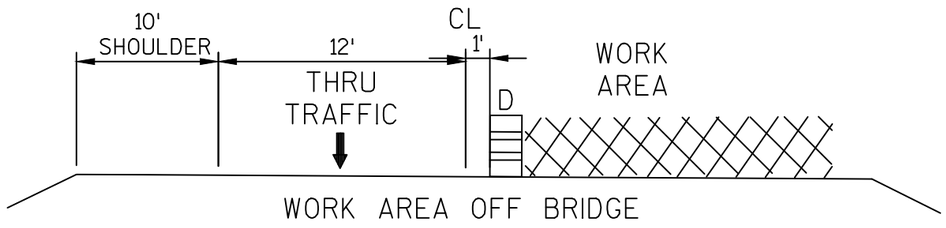

WORK AREA OFF BRIDGE

IH 39 SOUTH BOUND

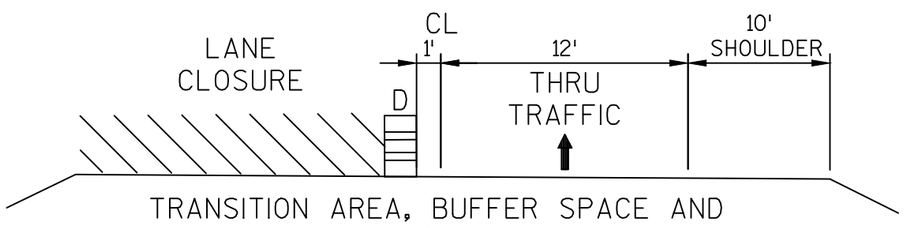

TRANSITION AREA, BUFFER SPACE AND
LANE CLOSURE

IH 39 NORTH BOUND

TYPICAL SECTION
(LOOKING NORTH)

D - TRAFFIC CONTROL DRUM

NOTE: NOT TO SCALE

PROJECT NO:1166-00-61	HWY: IH 39	COUNTY: PORTAGE	TRAFFIC CONTROL - STAGE 4 TYPICAL SECTIONS	SHEET 33	E

2

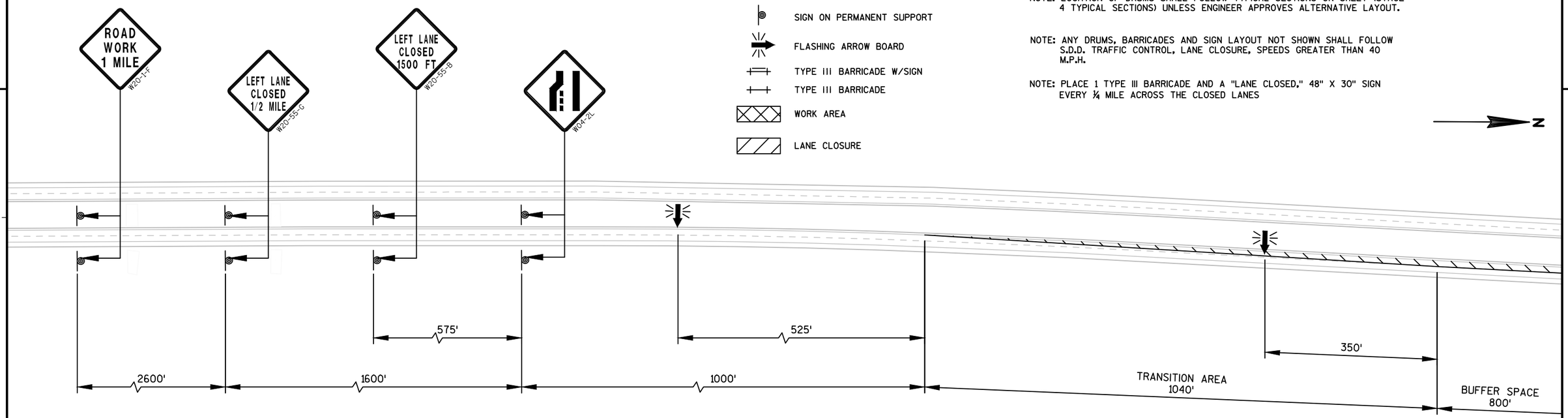

NOTE: LOCATION OF DRUMS SHALL FOLLOW TYPICAL SECTIONS ON SHEET (STAGE 4 TYPICAL SECTIONS) UNLESS ENGINEER APPROVES ALTERNATIVE LAYOUT.

NOTE: ANY DRUMS, BARRICADES AND SIGN LAYOUT NOT SHOWN SHALL FOLLOW S.D.D. TRAFFIC CONTROL, LANE CLOSURE, SPEEDS GREATER THAN 40 M.P.H.

NOTE: PLACE 1 TYPE III BARRICADE AND A "LANE CLOSED," 48" X 30" SIGN EVERY ¼ MILE ACROSS THE CLOSED LANES

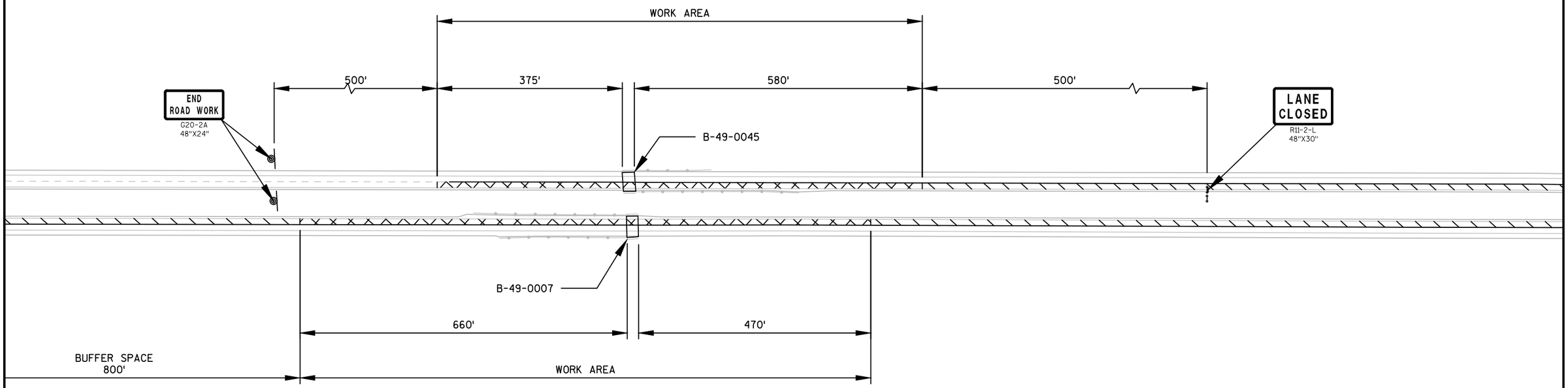

PROJECT NO: 1166-00-61	HWY: IH 39	COUNTY: PORTAGE	TRAFFIC CONTROL - STAGE 4	SHEET 34	E

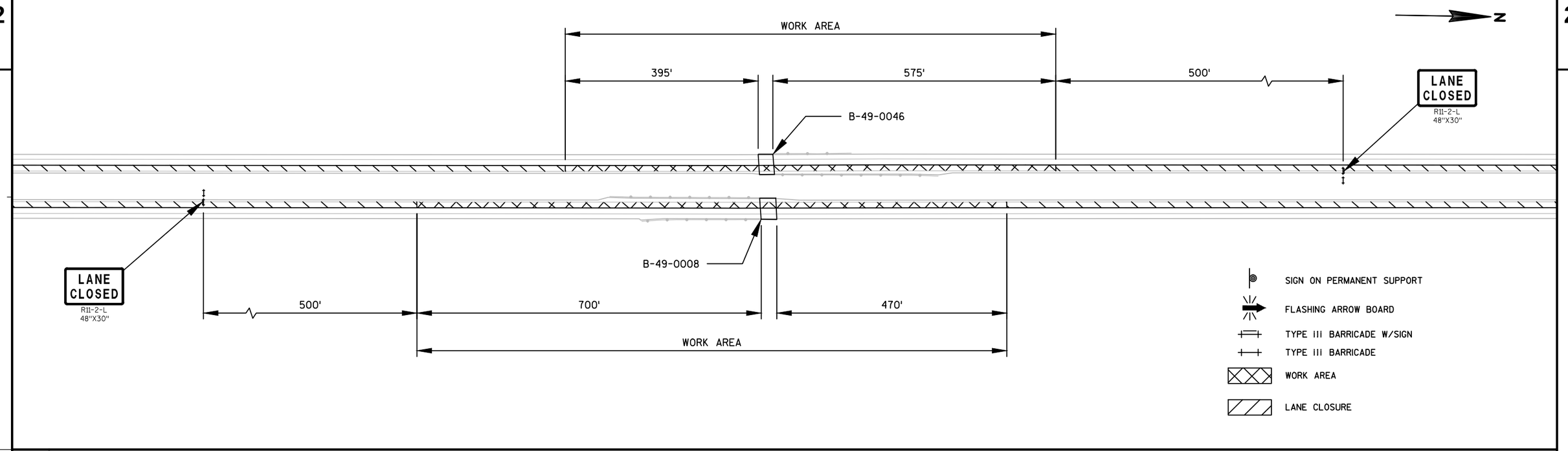

NOTE: LOCATION OF DRUMS SHALL FOLLOW TYPICAL SECTIONS ON SHEET (STAGE 4 TYPICAL SECTIONS) UNLESS ENGINEER APPROVES ALTERNATIVE LAYOUT.

NOTE: ANY DRUMS, BARRICADES AND SIGN LAYOUT NOT SHOWN SHALL FOLLOW S.D.D. TRAFFIC CONTROL, LANE CLOSURE, SPEEDS GREATER THAN 40 M.P.H.

NOTE: PLACE 1 TYPE III BARRICADE AND A "LANE CLOSED" 48" X 30" SIGN EVERY ¼ MILE ACROSS THE CLOSED LANES

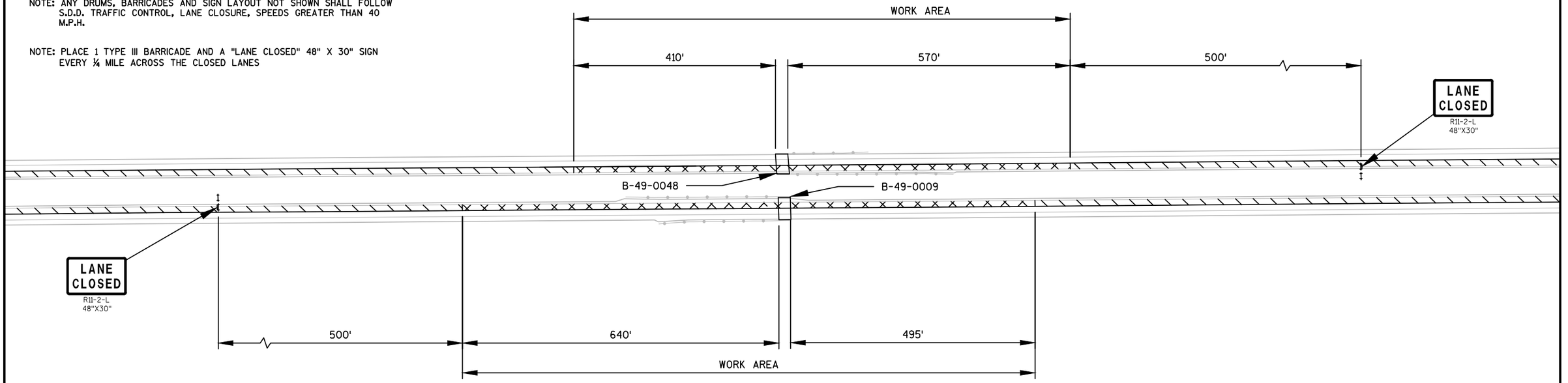

PROJECT NO: 1166-00-61	HWY: IH 39	COUNTY: PORTAGE	TRAFFIC CONTROL - STAGE 4	SHEET 35	E

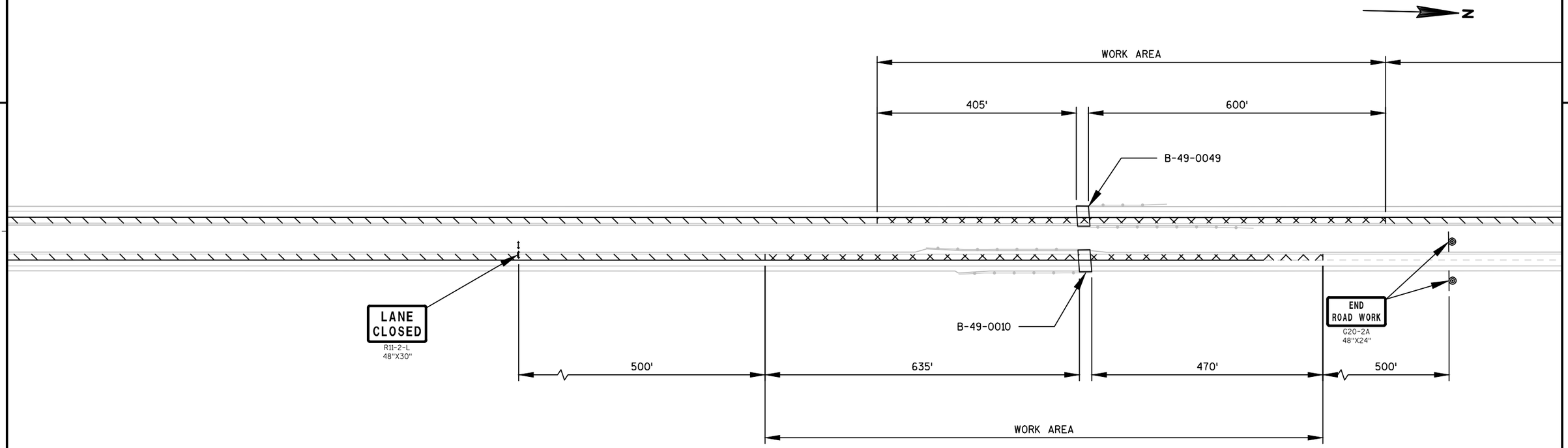

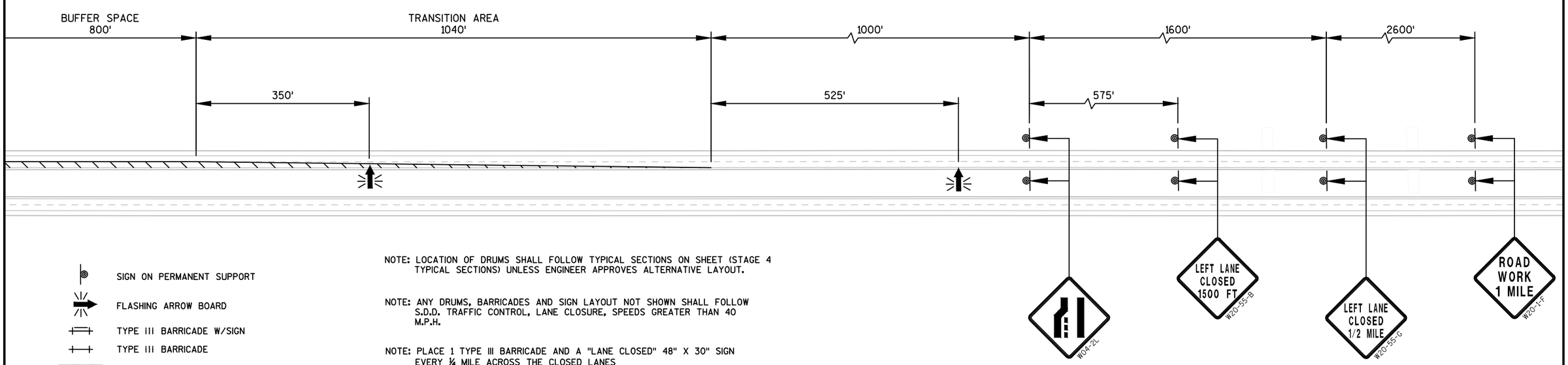

SIGN ON PERMANENT SUPPORT

FLASHING ARROW BOARD

TYPE III BARRICADE W/SIGN

TYPE III BARRICADE

WORK AREA

LANE CLOSURE

NOTE: LOCATION OF DRUMS SHALL FOLLOW TYPICAL SECTIONS ON SHEET (STAGE 4 TYPICAL SECTIONS) UNLESS ENGINEER APPROVES ALTERNATIVE LAYOUT.

NOTE: ANY DRUMS, BARRICADES AND SIGN LAYOUT NOT SHOWN SHALL FOLLOW S.D.D. TRAFFIC CONTROL, LANE CLOSURE, SPEEDS GREATER THAN 40 M.P.H.

NOTE: PLACE 1 TYPE III BARRICADE AND A "LANE CLOSED" 48" X 30" SIGN EVERY ¼ MILE ACROSS THE CLOSED LANES

PROJECT NO: 1166-00-61	HWY: IH 39	COUNTY: PORTAGE	TRAFFIC CONTROL - STAGE 4	SHEET 36	E

DATE 07OCT15 E S T I M A T E O F Q U A N T I T I E S

LINE NUMBER	ITEM	ITEM DESCRIPTION	UNIT	TOTAL	1166-00-61 QUANTITY
0010	201.0105	Clearing	STA	2.000	2.000
0020	203.0225.S	Debris Containment (structure) 01. B-49-42	LS	1.000	1.000
0030	203.0225.S	Debris Containment (structure) 02. B-49-43	LS	1.000	1.000
0040	203.0225.S	Debris Containment (structure) 03. B-49-44	LS	1.000	1.000
0050	203.0225.S	Debris Containment (structure) 04. B-49-7	LS	1.000	1.000
0060	203.0225.S	Debris Containment (structure) 05. B-49-45	LS	1.000	1.000
0070	203.0225.S	Debris Containment (structure) 06. B-49-8	LS	1.000	1.000
0080	203.0225.S	Debris Containment (structure) 07. B-49-46	LS	1.000	1.000
0090	203.0225.S	Debris Containment (structure) 08. B-49-47	LS	1.000	1.000
0100	203.0225.S	Debris Containment (structure) 09. B-49-9	LS	1.000	1.000
0110	203.0225.S	Debris Containment (structure) 10. B-49-48	LS	1.000	1.000
0120	203.0225.S	Debris Containment (structure) 11. B-49-10	LS	1.000	1.000
0130	203.0225.S	Debris Containment (structure) 12. B-49-49	LS	1.000	1.000
0140	203.0225.S	Debris Containment (structure) 13. B-49-50	LS	1.000	1.000
0150	204.0120	Removing Asphaltic Surface Milling	SY	24,530.000	24,530.000
0160	204.0150	Removing Curb & Gutter	LF	480.000	480.000
0170	204.0165	Removing Guardrail	LF	4,590.000	4,590.000
0180	205.0100	Excavation Common	CY	1,691.000	1,691.000
0190	208.1100	Select Borrow	CY	5,619.000	5,619.000
0200	211.0400	Prepare Foundation for Asphaltic Shoulders	STA	179.000	179.000
0210	213.0100	Finishing Roadway (project) 01. 1166-00-61	EACH	1.000	1.000
0220	305.0110	Base Aggregate Dense 3/4-Inch	TON	2,418.000	2,418.000
0230	305.0120	Base Aggregate Dense 1 1/4-Inch	TON	2,662.000	2,662.000
0240	305.0500	Shaping Shoulders	STA	210.000	210.000
0250	416.0610	Drilled Tie Bars	EACH	160.000	160.000
0260	455.0105	Asphaltic Material PG58-28	TON	285.000	285.000
0270	455.0605	Tack Coat	GAL	1,913.000	1,913.000
0280	460.1101	HMA Pavement Type E-1	TON	4,723.000	4,723.000
0290	460.2000	Incentive Density HMA Pavement	DOL	3,030.000	3,030.000
0300	460.4000	HMA Cold Weather Paving	TON	882.000	882.000
0310	465.0125	Asphaltic Surface Temporary	TON	140.000	140.000
0320	465.0310	Asphaltic Curb	LF	90.000	90.000
0330	465.0315	Asphaltic Flumes	SY	83.000	83.000
0340	465.0400	Asphaltic Shoulder Rumble Strips	LF	16,840.000	16,840.000
0350	502.3100	Expansion Device (structure) 01. B-49-42	LS	1.000	1.000
0360	502.3100	Expansion Device (structure) 02. B-49-43	LS	1.000	1.000
0370	502.3100	Expansion Device (structure) 03. B-49-44	LS	1.000	1.000
0380	502.3100	Expansion Device (structure) 08. B-49-47	LS	1.000	1.000
0390	502.3100	Expansion Device (structure) 13. B-49-50	LS	1.000	1.000
0400	502.3200	Protective Surface Treatment	SY	5,571.000	5,571.000
0410	502.3210	Pigmented Surface Sealer	SY	1,043.000	1,043.000

3

DATE 07OCT15 E S T I M A T E O F Q U A N T I T I E S

LINE NUMBER	ITEM	ITEM DESCRIPTION	UNIT	TOTAL	1166-00-61 QUANTITY
0420	505.0600	Bar Steel Reinforcement HS Coated Structures	LB	13,300.000	13,300.000
0430	505.0906	Bar Couplers No. 6	EACH	36.000	36.000
0440	509.0301	Preparation Decks Type 1	SY	139.000	139.000
0450	509.0302	Preparation Decks Type 2	SY	62.000	62.000
0460	509.0500	Cleaning Decks	SY	4,922.000	4,922.000
0470	509.0600	Cleaning Approaches	SY	240.000	240.000
0480	509.1000	Joint Repair	SY	181.000	181.000
0490	509.1500	Concrete Surface Repair	SF	125.000	125.000
0500	509.2000	Full-Depth Deck Repair	SY	7.000	7.000
0510	509.2500	Concrete Masonry Overlay Decks	CY	421.800	421.800
0520	509.9005.S	Removing Concrete Masonry Deck Overlay (structure) 04. B-49-7	SY	115.000	115.000
0530	509.9005.S	Removing Concrete Masonry Deck Overlay (structure) 06. B-49-8	SY	153.000	153.000
0540	509.9005.S	Removing Concrete Masonry Deck Overlay (structure) 09. B-49-9	SY	115.000	115.000
0550	509.9005.S	Removing Concrete Masonry Deck Overlay (structure) 11. B-49-10	SY	115.000	115.000
0560	509.9050.S	Cleaning Parapets	LF	2,596.000	2,596.000
0570	601.0409	Concrete Curb & Gutter 30-Inch Type A	LF	400.000	400.000
0580	603.8000	Concrete Barrier Temporary Precast Delivered	LF	13,850.000	13,850.000
0590	603.8125	Concrete Barrier Temporary Precast Installed	LF	13,850.000	13,850.000
0600	604.9015.S	Reseal Crushed Aggregate Slope Paving	SY	1,098.000	1,098.000
0610	606.0200	Riprap Medium	CY	6.000	6.000
0620	614.0150	Anchor Assemblies for Steel Plate Beam Guard	EACH	20.000	20.000
0630	614.2300	MGS Guardrail 3	LF	3,825.000	3,825.000
0640	614.2500	MGS Thrie Beam Transition	LF	788.000	788.000
0650	614.2610	MGS Guardrail Terminal EAT	EACH	20.000	20.000
0660	618.0100	Maintenance And Repair of Haul Roads (project) 01. 1166-00-61	EACH	1.000	1.000
0670	619.1000	Mobilization	EACH	1.000	1.000
0680	620.0300	Concrete Median Sloped Nose	SF	200.000	200.000
0690	624.0100	Water	MGAL	76.000	76.000
0700	625.0100	Topsoil	SY	11,147.000	11,147.000
0710	627.0200	Mulching	SY	11,328.000	11,328.000
0720	628.1504	Silt Fence	LF	8,892.000	8,892.000
0730	628.1520	Silt Fence Maintenance	LF	8,892.000	8,892.000
0740	628.1905	Mobilizations Erosion Control	EACH	3.000	3.000
0750	628.1910	Mobilizations Emergency Erosion Control	EACH	2.000	2.000
0760	628.2004	Erosion Mat Class I Type B	SY	3,944.000	3,944.000
0770	629.0210	Fertilizer Type B	CWT	11.800	11.800
0780	630.0120	Seeding Mixture No. 20	LB	577.000	577.000
0790	630.0200	Seeding Temporary	LB	577.000	577.000
0800	630.0300	Seeding Borrow Pit	LB	29.000	29.000
0810	634.0614	Posts Wood 4x6-Inch X 14-FT	EACH	10.000	10.000
0820	637.2210	Signs Type II Reflective H	SF	82.360	82.360
0830	637.2230	Signs Type II Reflective F	SF	16.000	16.000
0840	638.2602	Removing Signs Type II	EACH	18.000	18.000
0850	638.3000	Removing Small Sign Supports	EACH	10.000	10.000
0860	643.0200	Traffic Control Surveillance and Maintenance (project) 01. 1166-00-61	DAY	88.000	88.000

3

DATE 07OCT15 E S T I M A T E O F Q U A N T I T I E S

LINE NUMBER	ITEM	ITEM DESCRIPTION	UNIT	TOTAL	1166-00-61 QUANTITY
0870	643.0300	Traffic Control Drums	DAY	18,046.000	18,046.000
0880	643.0420	Traffic Control Barricades Type III	DAY	1,658.000	1,658.000
0890	643.0705	Traffic Control Warning Lights Type A	DAY	3,316.000	3,316.000
0900	643.0715	Traffic Control Warning Lights Type C	DAY	2,116.000	2,116.000
0910	643.0800	Traffic Control Arrow Boards	DAY	132.000	132.000
0920	643.0900	Traffic Control Signs	DAY	5,124.000	5,124.000
0930	643.0920	Traffic Control Covering Signs Type II	EACH	8.000	8.000
0940	643.1050	Traffic Control Signs PCMS	DAY	352.000	352.000
0950	645.0120	Geotextile Fabric Type HR	SY	21.000	21.000
0960	646.0106	Pavement Marking Epoxy 4-Inch	LF	25,340.000	25,340.000
0970	646.0126	Pavement Marking Epoxy 8-Inch	LF	320.000	320.000
0980	646.0600	Removing Pavement Markings	LF	24,860.000	24,860.000
0990	647.0456	Pavement Marking Curb Epoxy	LF	120.000	120.000
1000	647.0566	Pavement Marking Stop Line Epoxy 18-Inch	LF	200.000	200.000
1010	647.0606	Pavement Marking Island Nose Epoxy	EACH	12.000	12.000
1020	649.0400	Temporary Pavement Marking Removable Tape 4-Inch	LF	57,520.000	57,520.000
1030	649.1200	Temporary Pavement Marking Stop Line Removable Tape 18-Inch	LF	320.000	320.000
1040	650.5000	Construction Staking Base	LF	3,787.000	3,787.000
1050	650.5500	Construction Staking Curb Gutter and Curb & Gutter	LF	480.000	480.000
1060	650.9910	Construction Staking Supplemental Control (project) 01. 1166-00-61	LS	1.000	1.000
1070	650.9920	Construction Staking Slope Stakes	LF	3,787.000	3,787.000
1080	690.0150	Sawing Asphalt	LF	1,038.000	1,038.000
1090	690.0250	Sawing Concrete	LF	480.000	480.000
1100	ASP.1T0A	On-the-Job Training Apprentice at $5. 00/HR	HRS	2,000.000	2,000.000
1110	ASP.1T0G	On-the-Job Training Graduate at $5.00/HR	HRS	1,260.000	1,260.000
1120	SPV.0045	Special 01. Portable Changeable Message Sign (PCMS) Cellular Communications	DAY	352.000	352.000
1130	SPV.0105	Special 01. Temporary Traffic Signals for Interchanges (CTH D)	LS	1.000	1.000
1140	SPV.0105	Special 02. Temporary Traffic Signals for Interchanges (CTH W)	LS	1.000	1.000
1150	SPV.0120	Special 01. Water for Seeded Areas	MGAL	384.000	384.000

3

CLEARING

CATEGORY	STRUCTURE	STATION	LOCATION	201.0105 CLEARING STA
0140	B-49-0050	95+75S - 96+75S	LT	1
		101+25S - 102+25S	LT	1
			TOTAL	2

REMOVING PAVEMENT

CATEGORY	STRUCTURE	STATION	LOCATION	204.0120 REMOVING ASPHALTIC SURFACE MILLING SY
0140	B-49-0045	606+00.0SB - 606+25.9SB	DRIVING LANE / LT SHOULDER	100
		606+50.1SB - 607+00.0SB	DRIVING LANE / LT SHOULDER	190
		602+50.0 SB - 606+24.0SB	LT SHOULDER	420
		606+48.0SB - 612+25.0SB	LT SHOULDER	640
		602+50.0SB - 606+26.0SB	RT (MEDIAN) SHOULDER	170
		606+50.0SB - 612+25.0SB	RT (MEDIAN) SHOULDER	320
	B-49-0007	605+00.0 - 606+35.3	DRIVING LANE / RT SHOULDER	510
		606+59.4 - 607+75.0	DRIVING LANE / RT SHOULDER	440
		599+75.0 - 606+35.0	LT (MEDIAN) SHOULDER	520
		606+59.0 - 611+25.0	LT (MEDIAN) SHOULDER	210
		599+75.0 - 606+37.0	RT SHOULDER	740
		606+61.0 - 611+25.0	RT SHOULDER	520
	B-49-0046	685+25.0SB - 685+69.9SB	DRIVING LANE / LT SHOULDER	170
		686+02.1SB - 686+50.0SB	DRIVING LANE / LT SHOULDER	180
		681+75.0SB - 685+70.0SB	LT SHOULDER	440
		686+02.0SB - 691+75.0SB	LT SHOULDER	640
		681+75.0SB - 685+69.0SB	RT (MEDIAN) SHOULDER	180
		686+01.0SB - 691+75.0SB	RT (MEDIAN) SHOULDER	320
	B-49-0008	684+00.0 - 685+73.4	DRIVING LANE / RT SHOULDER	660
		686+05.4 - 687+25.0	DRIVING LANE / RT SHOULDER	460
		678+75.0 - 685+73.0	LT (MEDIAN) SHOULDER	530
		686+05.0 - 690+75.0	LT (MEDIAN) SHOULDER	210
		678+75.0 - 685+75.0	RT SHOULDER	780
		686+06.0 - 690+75.0	RT SHOULDER	520
	B-49-0048	738+00.0SB - 738+56.9SB	DRIVING LANE / LT SHOULDER	220
		738+81.1SB - 739+25.0SB	DRIVING LANE / LT SHOULDER	170
		734+50.0SB - 738+57.0SB	LT SHOULDER	450
		738+81.0SB - 744+50.0SB	LT SHOULDER	630
		734+50.0SB - 738+55.0SB	RT (MEDIAN) SHOULDER	180
		738+79.0SB - 744+50.0SB	RT (MEDIAN) SHOULDER	330
	B-49-0009	737+50.0 - 738+59.4	DRIVING LANE / RT SHOULDER	410
		738+83.4 - 740+25.0	DRIVING LANE / RT SHOULDER	540
		732+25.0 - 738+59.0	LT (MEDIAN) SHOULDER	490
		738+83.0 - 743+75.0	LT (MEDIAN) SHOULDER	220
		732+25.0 - 738+61.0	RT SHOULDER	710
		738+84.0 - 743+75.0	RT SHOULDER	550
	B-49-0049	791+00.0SB - 791+53.6SB	DRIVING LANE / LT SHOULDER	200
		791+77.8SB - 792+50.0SB	DRIVING LANE / LT SHOULDER	270
		787+50.0SB - 791+54.0SB	LT SHOULDER	450
		791+78.0SB - 797+75.0SB	LT SHOULDER	660
		787+50.0SB - 791+52.0SB	RT (MEDIAN) SHOULDER	180
		791+76.0SB - 797+75.0SB	RT (MEDIAN) SHOULDER	340
	B-49-0010	790+50.0 - 791+56.4	DRIVING LANE / RT SHOULDER	400
		791+80.1 - 793+00.0	DRIVING LANE / RT SHOULDER	450
		785+25.0 - 791+56.0	LT (MEDIAN) SHOULDER	500
		791+80.0 - 796+50.0	LT (MEDIAN) SHOULDER	210
		785+25.0 - 791+58.0	RT SHOULDER	700
		791+82.0 - 796+50.0	RT SHOULDER	520
	B-49-0042	106+10.00G - 108+42.92G	CTH D	1,170
		110+62.08G - 113+00.00G	CTH D	730
	B-49-0043	107+70.00J - 108+42.92J	3RD AVE	240
		110+62.08J - 111+05.00J	3RD AVE	130
	B-49-0044	106+00.00M - 108+42.92M	CTH W	850
		110+62.08M - 113+00.00M	CTH W	1,100
	B-49-0047	107+30.00N - 108+36.36N	CODDINGTON RD	320
		110+55.54N - 111+00.00N	CODDINGTON RD	130
	B-49-0050	98+10.00S - 98+49.73S	BIRCH DR	110
		100+68.91S - 100+95.00S	BIRCH DR	100
			TOTAL	24,530

REMOVING CURB & GUTTER

CATEGORY	STRUCTURE	STATION	LOCATION	204.0150 REMOVING CURB & GUTTER LF
0140	B-49-0042	105+50G	LT	120
		113+50G	RT	120
	B-49-0044	105+50M	LT	120
		113+50M	RT	120
			TOTAL	480

REMOVING GUARDRAIL

CATEGORY	STRUCTURE	STATION	LOCATION	204.0165 REMOVING GUARDRAIL LF
0140	B-49-0042	107+05G - 108+27G	LT	125
		107+05G - 108+27G	RT	125
		110+77G - 111+98G	RT	125
		110+77G - 111+98G	LT	125
	B-49-0043	104+50J - 108+27J	LT	375
		104+50J - 108+27J	RT	375
		110+80J - 112+02J	RT	125
		110+80J - 112+02J	LT	125
	B-49-0044	107+03M - 108+26M	LT	125
		107+03M - 108+26M	RT	125
		110+77M - 112+02M	RT	125
		110+77M - 112+02M	LT	125
	B-49-0047	102+95N - 108+20N	LT	525
		102+95N - 108+20N	RT	525
		110+72N - 111+95N	RT	125
		110+72N - 111+95N	LT	125
	B-49-0050	96+50S - 98+35S	LT	185
		96+50S - 98+35S	RT	185
		100+86S - 105+46S	RT	460
		100+86S - 105+46S	LT	460
			TOTAL	4,590

EXCAVATION & BORROW

Division	From/To Station	Location	Common Excavation (1) (ITEM # 205.0100)		Salvaged/Unusable Pavement Material (3)	Available Material (4)	Unexpanded Fill	Expanded Fill (5)	Mass Ordinate +/- (6)	Waste	Select Borrow	Comment:
			Cut (2)	EBS Excavation				Factor 1.25			(ITEM # 208.1100)	
1	106+10.01G - 108+21.87G	CTH D	97	---		97	11	14	83	83	0	
	110+83.08G - 113+00.00G	CTH D	112	---		112	17	21	173	91	0	
	102+50.00J - 108+00.00J	3RD AVE	239	---		239	1,060	1,325	-913	-1087	0	
	111+00.00J - 114+55.00J	3RD AVE	97	---		97	404	505	-1321	-408	0	
	106+00.00M - 108+23.96M	CTH W	170	---		170	61	76	-1227	94	0	
	111+00.00M - 113+00.00M	CTH W	105	---		105	6	7	-1129	98	0	
	101+50.00N - 108+14.87N	CODDINGTON RD	316	---		316	1,684	2,105	-2917	-1788	0	
	110+7704N - 115+00.00N	CODDINGTON RD	160	---		160	803	1,004	-3761	-844	0	
	94+81.00S - 98+28.47S	BIRCH DR	114	---		114	822	1,027	-4674	-913	0	
	100+90.17S - 107+44.00S	BIRCH DR	280	---		280	980	1,225	-5619	-945	0	
Division 1 Subtotal			1691	0	0	1691	5848	7310	-5619	-5619	5619	
Grand Total Project 1166-00-61			1691	0	0	1691	5848	7310	-5619	-5619	5619	
PROJECT 1166-00-61 Total Common Exc			1,691									

1) Common Excavation is the sum of the Cut and EBS Excavation columns. Item number 205.0100
2) Salvaged/Unsuable Pavement Material is included in Cut.
3) Salvaged/Unusable Pavement Material
4) Available Material = Cut - Salvaged/Unusuable Pavement Material
5) Expanded Fill. Factor = 1.25
6) The Mass Ordinate + or - Qty calculated for the Division. Plus quantity indicates an excess of material within the Division. Minus indicates a shortage of material within the Division.

3

3

BASE AGGREGATE ITEMS

CATEGORY	STRUCTURE	STATION	LOCATION	211.0400 PREPARE FOUNDATION FOR ASPHALTIC SHOULDERS STA	305.0110 BASE AGGREGATE DENSE 3/4-INCH TON	305.0120 BASE AGGREGATE DENSE 1 1/4-INCH TON	305.0500 SHAPING SHOULDERS STA	624.0100 WATER MGAL
0140	B-49-0045	602+50.0 SB - 606+24.0SB	LT SHOULDER	4	28	---	4	0.4
		606+48.0SB - 612+25.0SB	LT SHOULDER	6	43	---	6	0.6
		602+50.0SB - 606+26.0SB	RT (MEDIAN) SHOULDER	4	28	---	4	0.4
		606+50.0SB - 612+25.0SB	RT (MEDIAN) SHOULDER	6	43	---	6	0.6
	B-49-0007	599+75.0 - 606+35.0	LT (MEDIAN) SHOULDER	7	49	---	7	0.7
		606+59.0 - 611+25.0	LT (MEDIAN) SHOULDER	5	35	---	5	0.5
		599+75.0 - 606+37.0	RT SHOULDER	7	49	---	7	0.7
		606+61.0 - 611+25.0	RT SHOULDER	5	34	---	5	0.5
	B-49-0046	681+75.0SB - 685+70.0SB	LT SHOULDER	4	29	---	4	0.4
		686+02.0SB - 691+75.0SB	LT SHOULDER	6	42	---	6	0.6
		681+75.0SB - 685+69.0SB	RT (MEDIAN) SHOULDER	4	29	---	4	0.4
		686+01.0SB - 691+75.0SB	RT (MEDIAN) SHOULDER	6	43	---	6	0.6
	B-49-0008	678+75.0 - 685+73.0	LT (MEDIAN) SHOULDER	7	52	---	7	0.8
		686+05.0 - 690+75.0	LT (MEDIAN) SHOULDER	5	35	---	5	0.5
		678+75.0 - 685+75.0	RT SHOULDER	7	52	---	7	0.8
		686+06.0 - 690+75.0	RT SHOULDER	5	35	---	5	0.5
	B-49-0048	734+50.0SB - 738+57.0SB	LT SHOULDER	4	30	---	4	0.5
		738+81.0SB - 744+50.0SB	LT SHOULDER	6	42	---	6	0.6
		734+50.0SB - 738+55.0SB	RT (MEDIAN) SHOULDER	4	30	---	4	0.5
		738+79.0SB - 744+50.0SB	RT (MEDIAN) SHOULDER	6	42	---	6	0.6
	B-49-0009	732+25.0 - 738+59.0	LT (MEDIAN) SHOULDER	6	47	---	6	0.7
		738+83.0 - 743+75.0	LT (MEDIAN) SHOULDER	5	36	---	5	0.5
		732+25.0 - 738+61.0	RT SHOULDER	6	47	---	6	0.7
		738+84.0 - 743+75.0	RT SHOULDER	5	36	---	5	0.5
	B-49-0049	787+50.0SB - 791+54.0SB	LT SHOULDER	4	30	---	4	0.5
		791+78.0SB - 797+75.0SB	LT SHOULDER	6	44	---	6	0.7
		787+50.0SB - 791+52.0SB	RT (MEDIAN) SHOULDER	4	30	---	4	0.5
		791+76.0SB - 797+75.0SB	RT (MEDIAN) SHOULDER	6	44	---	6	0.7
	B-49-0010	785+25.0 - 791+56.0	LT (MEDIAN) SHOULDER	6	47	---	6	0.7
		791+80.0 - 796+50.0	LT (MEDIAN) SHOULDER	5	35	---	5	0.5
		785+25.0 - 791+58.0	RT SHOULDER	6	47	---	6	0.7
		791+82.0 - 796+50.0	RT SHOULDER	5	35	---	5	0.5
	B-49-0042	106+10.00G - 108+42.92G	CTH D	2	29	94	2	1.8
		110+62.08G - 113+00.00G	CTH D	2	26	205	2	3.5
		105+50G	ISLAND	---	---	6	---	0.1
		113+50G	ISLAND	---	---	11	---	0.2
		105+50G	TEMP ISLAND	---	---	14	---	0.2
		113+50G	TEMP ISLAND	---	---	21	---	0.3
	B-49-0043	102+50.00J - 108+42.92J	3RD AVE	---	188	352	6	8.1
		110+62.08J - 114+55.00J	3RD AVE	---	122	240	4	5.4
	B-49-0044	106+00.00M - 108+42.92M	CTH W	2	25	204	2	3.4
		110+62.08M - 113+00.00M	CTH W	2	26	86	2	1.7
		105+50M	ISLAND	---	---	11	---	0.2
		113+50M	ISLAND	---	---	10	---	0.2
		105+50M	TEMP ISLAND	---	---	22	---	0.3
		113+50M	TEMP ISLAND	---	---	20	---	0.3
	B-49-0047	101+36.00N - 108+36.36N	CODDINGTON RD	---	248	448	7	10.4
		110+55.54N - 115+00.00N	CODDINGTON RD	---	136	246	4	5.7
	B-49-0050	94+81.00S - 98+49.73S	BIRCH DR	---	128	234	4	5.4
		100+68.91S - 107+44.00S	BIRCH DR	---	242	438	7	10.2
		TOTAL		179	2,418	2,662	210	76

NOTE: BASE AGGREGATE DENSE (3/4-INCH & 1 1/4-INCH) WERE CALCULATED USING 2.0 TONS/CY.

ASPHALT PAVEMENT ITEMS

CATEGORY	STRUCTURE	STATION - STATION	LOCATION	THICKNESS	455.0105 ASPHALTIC MATERIAL PG58-28 TON	455.0605 TACK* COAT GAL	460.1101 HMA PAVEMENT TYPE E-1 TON	460.2000 INCENTIVE DENSITY HMA PAVEMENT DOL	460.4000 HMA COLD WEATHER PAVING TON
0140	B-49-0045	606+00.0SB - 606+25.9SB	DRIVING LANE / LT SHOULDER	1.75	1	7	10	---	---
		606+50.1SB - 607+00.0SB	DRIVING LANE / LT SHOULDER	1.75	2	14	19	---	---
		602+50.0 SB - 606+24.0SB	LT SHOULDER	4	6	30	94	---	24
		606+48.0SB - 612+25.0SB	LT SHOULDER	4	8	45	145	---	36
		602+50.0SB - 606+26.0SB	RT (MEDIAN) SHOULDER	4	4	18	57	---	14
		606+50.0SB - 612+25.0SB	RT (MEDIAN) SHOULDER	4	5	27	87	---	22
	B-49-0007	605+00.0 - 606+35.3	DRIVING LANE / RT SHOULDER	1.75	3	36	51	---	---
		606+59.4 - 607+75.0	DRIVING LANE / RT SHOULDER	1.75	3	31	44	---	---
		599+75.0 - 606+35.0	LT (MEDIAN) SHOULDER	4	8	42	134	---	34
		606+59.0 - 611+25.0	LT (MEDIAN) SHOULDER	4	4	22	71	---	18
		599+75.0 - 606+37.0	RT SHOULDER	4	10	52	167	---	42
		606+61.0 - 611+25.0	RT SHOULDER	4	7	37	117	---	29
	B-49-0046	685+25.0SB - 685+69.9SB	DRIVING LANE / LT SHOULDER	1.75	1	12	17	---	---
		686+02.1SB - 686+50.0SB	DRIVING LANE / LT SHOULDER	1.75	1	13	18	---	---
		681+75.0SB - 685+70.0SB	LT SHOULDER	4	6	31	100	---	25
		686+02.0SB - 691+75.0SB	LT SHOULDER	4	8	45	144	---	36
		681+75.0SB - 685+69.0SB	RT (MEDIAN) SHOULDER	4	4	19	60	---	15
		686+01.0SB - 691+75.0SB	RT (MEDIAN) SHOULDER	4	5	27	87	---	22
	B-49-0008	684+00.0 - 685+73.4	DRIVING LANE / RT SHOULDER	1.75	4	46	65	---	---
		686+05.4 - 687+25.0	DRIVING LANE / RT SHOULDER	1.75	3	32	46	---	---
		678+75.0 - 685+73.0	LT (MEDIAN) SHOULDER	4	8	43	138	---	35
		686+05.0 - 690+75.0	LT (MEDIAN) SHOULDER	4	4	22	71	---	18
		678+75.0 - 685+75.0	RT SHOULDER	4	10	55	176	---	44
		686+06.0 - 690+75.0	RT SHOULDER	4	7	37	118	---	30
	B-49-0048	738+00.0SB - 738+56.9SB	DRIVING LANE / LT SHOULDER	1.75	2	16	22	---	---
		738+81.1SB - 739+25.0SB	DRIVING LANE / LT SHOULDER	1.75	1	12	17	---	---
		734+50.0SB - 738+57.0SB	LT SHOULDER	4	6	32	103	---	26
		738+81.0SB - 744+50.0SB	LT SHOULDER	4	8	45	143	---	36
		734+50.0SB - 738+55.0SB	RT (MEDIAN) SHOULDER	4	4	19	62	---	16
		738+79.0SB - 744+50.0SB	RT (MEDIAN) SHOULDER	4	5	27	87	---	22
	B-49-0009	737+50.0 - 738+59.4	DRIVING LANE / RT SHOULDER	1.75	3	29	41	---	---
		738+83.4 - 740+25.0	DRIVING LANE / RT SHOULDER	1.75	3	38	53	---	---
		732+25.0 - 738+59.0	LT (MEDIAN) SHOULDER	4	7	40	127	---	32
		738+83.0 - 743+75.0	LT (MEDIAN) SHOULDER	4	5	23	75	---	19
		732+25.0 - 738+61.0	RT SHOULDER	4	9	50	160	---	40
		738+84.0 - 743+75.0	RT SHOULDER	4	7	39	124	---	31
	B-49-0049	791+00.0SB - 791+53.6SB	DRIVING LANE / LT SHOULDER	1.75	2	15	21	---	---
		791+77.8SB - 792+50.0SB	DRIVING LANE / LT SHOULDER	1.75	2	20	27	---	---
		787+50.0SB - 791+54.0SB	LT SHOULDER	4	6	32	102	---	26
		791+78.0SB - 797+75.0SB	LT SHOULDER	4	9	47	150	---	38
		787+50.0SB - 791+52.0SB	RT (MEDIAN) SHOULDER	4	4	19	61	---	15
		791+76.0SB - 797+75.0SB	RT (MEDIAN) SHOULDER	4	6	28	91	---	23
	B-49-0010	790+50.0 - 791+56.4	DRIVING LANE / RT SHOULDER	1.75	3	29	40	---	---
		791+80.1 - 793+00.0	DRIVING LANE / RT SHOULDER	1.75	3	32	45	---	---
		785+25.0 - 791+56.0	LT (MEDIAN) SHOULDER	4	8	40	129	---	32
		791+80.0 - 796+50.0	LT (MEDIAN) SHOULDER	4	4	22	71	---	18
		785+25.0 - 791+58.0	RT SHOULDER	4	9	50	159	---	40
		791+82.0 - 796+50.0	RT SHOULDER	4	7	37	118	---	30
	B-49-0042	106+10.00G - 108+42.92G	CTH D	1.75	7	83	117	---	---
		110+62.08G - 113+00.00G	CTH D	1.75	5	55	78	---	---
		111+02.80G - 113+00.00G	CTH D SHOULDERS	3	4	29	70	---	---
		105+50G	ISLAND	2	---	2	3	---	---
		113+50G	ISLAND	2	---	3	4	---	---
	B-49-0043	107+70.00J - 108+42.92J	3RD AVE	1.75	2	18	25	---	---
		110+62.08J - 111+05.00J	3RD AVE	1.75	1	12	17	---	---
	B-49-0044	106+00.00M - 108+42.92M	CTH W	1.75	5	60	85	---	---
		106+00.00M - 108+21.33M	CTH W SHOULDER	3	4	27	64	---	---
		110+62.08M - 113+00.00M	CTH W	1.75	7	81	114	---	---
		105+50M	ISLAND	2	---	3	4	---	---
		113+50M	ISLAND	2	---	3	4	---	---
	B-49-0047	107+30.00N - 108+36.36N	CODDINGTON RD	1.75	2	23	32	---	---
		110+55.54N - 111+00.00N	CODDINGTON RD	1.75	1	12	17	---	---
	B-49-0050	98+10.00S - 98+49.73S	BIRCH DR	1.75	1	11	15	---	---
		100+68.91S - 100+95.00S	BIRCH DR	1.75	1	7	10	---	---
			TOTAL		285	1913	4723	3030	882

NOTE: TACK COAT CALCULATED AT 0.07 GALLONS PER SQUARE YARD

3

TEMPORARY ASPHALT

CATEGORY	STRUCTURE	STATION	LOCATION	ASPHALTIC THICKNESS INCHES	465.0125 ASPHALTIC SURFACE TEMPORARY TON
0140	B-49-0042	105+50G	LT	4	9
		113+50G	RT	4	14
		111+00G - 113+00G	RT SHOULDER	4	55
	B-49-0044	105+50M	LT	4	14
		113+50M	RT	4	14
		106+20M - 108+23M	RT SHOULDER	4	34
			TOTAL		140

ASPHALTIC CURB & FLUMES

CATEGORY	STRUCTURE	STATION	LOCATION	465.0310 ASPHALTIC CURB LF	465.0315 ASPHALTIC FLUMES SY
0140	B-49-0042	110+82.00G - 111+19.50G	RT	30	26
		110+82.00G - 111+19.50G	LT	30	26
	B-49-0044	110+81.50M - 111+18.50M	RT	30	31
		TOTAL		90	83

RUMBLE STRIPS

CATEGORY	STRUCTURE	STATION	LOCATION	465.0400 ASPHALTIC SHOULDER RUMBLE STRIP LF
0140	B-49-0045	602+50.0 SB - 606+24.0SB	LT SHOULDER	370
		606+48.0SB - 612+25.0SB	LT SHOULDER	580
		602+50.0SB - 606+26.0SB	RT (MEDIAN) SHOULDER	380
		606+50.0SB - 612+25.0SB	RT (MEDIAN) SHOULDER	580
	B-49-0007	599+75.0 - 606+35.0	LT (MEDIAN) SHOULDER	660
		606+59.0 - 611+25.0	LT (MEDIAN) SHOULDER	470
		599+75.0 - 606+37.0	RT SHOULDER	660
		606+61.0 - 611+25.0	RT SHOULDER	460
	B-49-0046	681+75.0SB - 685+70.0SB	LT SHOULDER	400
		686+02.0SB - 691+75.0SB	LT SHOULDER	570
		681+75.0SB - 685+69.0SB	RT (MEDIAN) SHOULDER	390
		686+01.0SB - 691+75.0SB	RT (MEDIAN) SHOULDER	570
	B-49-0008	678+75.0 - 685+73.0	LT (MEDIAN) SHOULDER	700
		686+05.0 - 690+75.0	LT (MEDIAN) SHOULDER	470
		678+75.0 - 685+75.0	RT SHOULDER	700
		686+06.0 - 690+75.0	RT SHOULDER	470
	B-49-0048	734+50.0SB - 738+57.0SB	LT SHOULDER	410
		738+81.0SB - 744+50.0SB	LT SHOULDER	570
		734+50.0SB - 738+55.0SB	RT (MEDIAN) SHOULDER	410
		738+79.0SB - 744+50.0SB	RT (MEDIAN) SHOULDER	570
	B-49-0009	732+25.0 - 738+59.0	LT (MEDIAN) SHOULDER	630
		738+83.0 - 743+75.0	LT (MEDIAN) SHOULDER	490
		732+25.0 - 738+61.0	RT SHOULDER	640
		738+84.0 - 743+75.0	RT SHOULDER	490
	B-49-0049	787+50.0SB - 791+54.0SB	LT SHOULDER	400
		791+78.0SB - 797+75.0SB	LT SHOULDER	600
		787+50.0SB - 791+52.0SB	RT (MEDIAN) SHOULDER	400
		791+76.0SB - 797+75.0SB	RT (MEDIAN) SHOULDER	600
	B-49-0010	785+25.0 - 791+56.0	LT (MEDIAN) SHOULDER	630
		791+80.0 - 796+50.0	LT (MEDIAN) SHOULDER	470
		785+25.0 - 791+58.0	RT SHOULDER	630
		791+82.0 - 796+50.0	RT SHOULDER	470
		TOTAL		16,840

CLEANING APPROACHES

CATEGORY	STRUCTURE	STATION	LOCATION	509.0600 CLEANING APPROACHES SY
0140	B-49-0042	110+62.08G - 110+87.88G	LT	30
		110+62.08G - 110+87.98G	RT	30
	B-49-0043	110+62.08J - 110+88.04J	LT	20
		110+62.08J - 110+88.04J	RT	20
	B-49-0044	110+62.08M - 110+86.64M	LT	30
		110+62.08M - 110+86.87M	RT	30
	B-49-0047	110+56.24N - 110+80.55N	LT	20
		110+54.84N - 110+80.55N	RT	20
	B-49-0050	98+24.47S - 98+51.17S	LT	20
		98+22.73S - 98+50.06S	RT	20
		TOTAL		240

NOTE: CLEANING APPROACHES IS FOR MILLING OF CONCRETE APPROACH SHOULDERS.

CURB & GUTTER

CATEGORY	STRUCTURE	STATION	LOCATION	601.0409 CONCRETE CURB & GUTTER 30-INCH TYPE A LF	620.0300 CONCRETE MEDIAN SLOPED NOSE SF	416.0610 DRILLED TIE BARS EACH
0140	B-49-0042	105+50G	LT	100	50	40
		113+50G	RT	100	50	40
	B-49-0044	105+50M	LT	100	50	40
		113+50M	RT	100	50	40
		TOTAL		400	200	160

RIPRAP ITEMS

CATEGORY	STRUCTURE	STATION	LOCATION	606.0200 RIPRAP MEDIUM CY	645.0120 GEOTEXTILE FABRIC TYPE HR SY
0140	B-49-0042	111+19.50G	RT	2	7
		111+19.50G	LT	2	7
	B-49-0044	111+18.50M	RT	2	7
		TOTAL		6	21

ROADWAY BARRIER ITEMS

CATEGORY	STRUCTURE	STATION - STATION	LOCATION	614.2300 MGS GUARDRAIL 3 LF	614.2500 MGS THRIE BEAM TRANSITION LF	614.2610 MGS GUARDRAIL TERMINAL EAT EACH
0140	B-49-0042	106+59G - 108+27G	RT	75.0	39.40	1
		106+72G - 108+27G	LT	62.5	39.40	1
		110+78G - 112+08G	RT	37.5	39.40	1
		110+78G - 112+71G	LT	100.0	39.40	1
	B-49-0043	104+46J - 108+26J	RT	287.5	39.40	1
		103+71J - 108+26J	LT	362.5	39.40	1
		110+78J - 113+58J	RT	187.5	39.40	1
		110+78J - 114+33J	LT	262.5	39.40	1
	B-49-0044	106+98M - 108+28M	RT	37.5	39.40	1
		106+98M - 108+28M	LT	37.5	39.40	1
		110+77M - 112+07M	RT	37.5	39.40	1
		110+77M - 112+07M	LT	37.5	39.40	1
	B-49-0047	102+52N - 108+20N	RT	475.0	39.40	1
		102+67N - 108+22N	LT	462.5	39.40	1
		110+70N - 112+50N	RT	87.5	39.40	1
		110+72N - 114+15N	LT	250.0	39.40	1
	B-49-0050	96+41S - 98+33S	RT	100.0	39.40	1
		96+43S - 98+35S	LT	100.0	39.40	1
		100+84S - 105+76S	RT	400.0	39.40	1
		100+85S - 106+03S	LT	425.0	39.40	1
		TOTAL		3825.0	788.00	20

MAINTENANCE AND REPAIR OF HAUL ROADS

CATEGORY	PROJECT	618.0100 MAINTENANCE AND REPAIR OF HAUL ROADS EACH
0140	1166-00-61	1
	TOTAL	1

3

RESTORATION ITEMS

CATEGORY	STRUCTURE	STATION - STATION	LOCATION	625.0100 TOPSOIL SY	627.0200 MULCHING SY	629.0210 FERTILIZER TYPE B CWT	630.0120 SEEDING MIXTURE #20 LB	630.0200 SEEDING TEMPORARY LB	630.0300 SEEDING BORROW PIT LB	SPV.0120.01 WATER FOR SEEDED AREAS MGAL
0140	B-49-0042	106+37G - 108+22G	RT	75	106	0.1	6	6	---	4.9
		106+50G - 108+22G	LT	85	58	0.1	6	6	---	4.9
		110+81G - 112+53G	RT	120	172	0.2	7	7	---	6.2
		110+81G - 113+00G	LT	163	213	0.2	9	9	---	7.5
	B-49-0043	103+50J - 108+21J	RT	763	953	0.7	31	31	---	26.0
		102+50J - 108+21J	LT	913	714	0.9	37	37	---	31.1
		110+83J - 114+55J	RT	522	428	0.5	22	22	---	18.4
		110+83J - 114+50J	LT	335	142	0.4	17	17	---	14.2
	B-49-0044	106+51M - 108+23M	RT	100	139	0.2	7	7	---	5.4
		106+52M - 108+23M	LT	243	273	0.3	11	11	---	9.3
		110+82M - 112+39M	RT	51	86	0.1	5	5	---	3.8
		110+82M - 112+37M	LT	58	83	0.1	5	5	---	4.0
	B-49-0047	101+36N - 108+15N	RT	1,350	826	1.2	52	52	---	42.9
		101+40N - 108+17N	LT	1,442	1,125	1.3	54	54	---	44.6
		110+75N - 113+83N	RT	762	833	0.7	28	28	---	23.2
		110+77N - 115+00N	LT	632	497	0.6	27	27	---	22.1
	B-49-0050	94+83S - 98+29S	RT	997	849	0.8	35	35	---	29.1
		94+82S - 98+31S	LT	680	669	0.6	27	27	---	22.1
		100+89S - 107+00S	RT	787	642	0.8	35	35	---	28.8
		100+91S - 107+45S	LT	1,065	820	1.0	43	43	---	35.7
	BORROW PIT		---	---	1,699	1.1	---	---	23	---
	UNDISTRIBUTED SEED		---	---	---	---	115	115	6	---
		TOTAL		11,147	11,328	11.8	577	577	29	384

EROSION CONTROL ITEMS

CATEGORY	STRUCTURE	STATION - STATION	LOCATION	628.1504 SILT FENCE LF	628.1520 SILT FENCE MAINTENANCE LF	628.2004 EROSION MAT CLASS I TYPE B SY
0140	B-49-0042	106+37G - 108+22G	RT	190	190	30
		106+50G - 108+22G	LT	180	180	69
		110+81G - 112+53G	RT	180	180	24
		110+81G - 113+00G	LT	230	230	30
		111+19.50G	RT	---	---	6
		111+19.50G	LT	---	---	6
	B-49-0043	103+50J - 108+21J	RT	480	480	35
		102+50J - 108+21J	LT	580	580	292
		110+83J - 114+55J	RT	370	370	152
		110+83J - 114+50J	LT	370	370	176
	B-49-0044	106+51M - 108+23M	RT	180	180	24
		106+52M - 108+23M	LT	180	180	44
		110+82M - 112+39M	RT	170	170	13
		110+82M - 112+37M	LT	170	170	21
		111+18.50M	RT	---	---	6
	B-49-0047	101+36N - 108+15N	RT	690	690	623
		101+40N - 108+17N	LT	690	690	435
		110+75N - 113+83N	RT	320	320	65
		110+77N - 115+00N	LT	430	430	205
	B-49-0050	94+83S - 98+29S	RT	360	360	260
		94+82S - 98+31S	LT	360	360	125
		100+89S - 107+00S	RT	620	620	270
		100+91S - 107+45S	LT	660	660	376
		UNDISTRIBUTED		1,482	1,482	657
		TOTAL		8,892	8,892	3,944

3

SIGNING

CATEGORY	LOCATION	SIGN CODE	SIGN SIZE IN X IN	637.2210 SIGNS TYPE II REFLECTIVE H SF	637.2230 SIGNS TYPE II REFLECTIVE F SF	634.0614 4X6 INCH POST WOOD 14 FT EACH	638.2602 REMOVING SIGNS TYPE II EACH	638.3000 REMOVING SMALL SIGN SUPPORTS EACH	MESSAGE
0140	CTH D NB OFF RAMP	R1-1	36 X 36	7.46	---	1	1	1	STOP
	CTH D NB OFF RAMP	R6-2L	24 X 30	5	---	---	1	---	ONE WAY
	CTH D NB OFF RAMP	R6-2R	24 X 30	5	---	---	1	---	ONE WAY
	CTH D NB OFF RAMP	W12-1D	24 X 24	---	4	1	1	1	DOUBLE ARROW *
	CTH D SB OFF RAMP	R1-1	36 X 36	7.46	---	1	1	1	STOP
	CTH D SB OFF RAMP	R6-2L	24 X 30	5	---	---	1	---	ONE WAY
	CTH D SB OFF RAMP	R6-2R	24 X 30	5	---	---	1	---	ONE WAY
	CTH D SB OFF RAMP	W12-1D	24 X 24	---	4	1	1	1	DOUBLE ARROW
	CTH W NB OFF RAMP	R1-1	36 X 36	7.46	---	1	1	1	STOP
	CTH W NB OFF RAMP	R6-2L	24 X 30	5	---	---	1	---	ONE WAY
	CTH W NB OFF RAMP	R6-2R	24 X 30	5	---	---	1	1	ONE WAY
	CTH W NB OFF RAMP	W12-1D	24 X 24	---	4	1	1	1	DOUBLE ARROW
	CTH W NB OFF RAMP	R5-1	30 X 30	6.26	---	1	1	---	DO NOT ENTER
	CTH W SB OFF RAMP	R1-1	36 X 36	7.46	---	1	1	1	STOP
	CTH W SB OFF RAMP	R6-2L	24 X 30	5	---	---	1	---	ONE WAY
	CTH W SB OFF RAMP	R6-2R	24 X 30	5	---	---	1	1	ONE WAY
	CTH W SB OFF RAMP	W12-1D	24 X 24	---	4	1	1	1	DOUBLE ARROW
	CTH W SB OFF RAMP	R5-1	30 X 30	6.26	---	1	1	---	DO NOT ENTER
	TOTAL			82.36	16	10	18	10	

3

TRAFFIC CONTROL ITEMS

CATEGORY	LOCATION	DAYS	603.8000 CONCRETE BARRIER TEMPORARY PRECAST DELIVERED LF	603.8125 CONCRETE BARRIER TEMPORARY PRECAST INSTALLED LF	643.0200 TRAFFIC CONTROL SURVEILLANCE AND MAINTENANCE DAYS	TRAFFIC CONTROL DRUMS EACH	643.0300 TRAFFIC CONTROL DRUMS DAYS	TRAFFIC CONTROL BARRICADES TYPE III EACH	643.0420 TRAFFIC CONTROL BARRICADES TYPE III DAYS	TRAFFIC CONTROL WARNING LIGHTS TYPE A EACH	643.0705 TRAFFIC CONTROL WARNING LIGHTS TYPE A DAYS	TRAFFIC CONTROL WARNING LIGHTS TYPE C EACH	643.0715 TRAFFIC CONTROL WARNING LIGHTS TYPE C DAYS	TRAFFIC CONTROL ARROW BOARDS EACH	643.0800 TRAFFIC CONTROL ARROW BOARDS DAYS	643.0920 TRAFFIC* CONTROL COVERING SIGNS TYPE II EACH	TRAFFIC CONTROL SIGNS EACH	643.0900 TRAFFIC CONTROL SIGNS DAYS	TRAFFIC CONTROL SIGNS PCMS EACH	643.1050 TRAFFIC CONTROL SIGNS PCMS DAYS	SPV.0045 PCMS CELLULAR COMMUNICATION DAYS
0140	NB STAGE 1	5	---	---	5	255	1,275	14	70	28	140	20	100	2	10	---	24	120	2	10	10
	SB STAGE 1	5	---	---	---	255	1,275	14	70	28	140	20	100	2	10	---	24	120	2	10	10
	NB STAGE 2	13	3000	3000	13	255	3,315	14	182	28	364	20	260	2	26	---	33	429	2	26	26
	SB STAGE 2	13	2500	2500	---	255	3,315	14	182	28	364	20	260	2	26	---	33	429	2	26	26
	NB STAGE 3	13	3000	3000	13	255	3,315	14	182	28	364	20	260	2	26	---	33	429	2	26	26
	SB STAGE 3	13	2500	2500	---	255	3,315	14	182	28	364	20	260	2	26	---	33	429	2	26	26
	NB STAGE 4	2	---	---	2	255	510	14	28	28	56	20	40	2	4	---	24	48	2	4	4
	SB STAGE 4	2	---	---	---	255	510	14	28	28	56	20	40	2	4	---	24	48	2	4	4
	CTH D STAGE 1	5	---	---	5	50	250	---	---	---	---	20	100	---	---	---	---	---	4	20	20
	CTH D STAGE 2	21	712.5	712.5	21	6	126	1	21	2	42	6	126	---	---	4	24	504	4	84	84
	CTH D STAGE 3	22	712.5	712.5	22	6	132	1	22	2	44	6	132	---	---	---	24	528	4	88	88
	CTH D STAGE 4	2	---	---	2	50	100	---	---	---	---	20	40	---	---	---	---	---	4	8	8
	CTH W STAGE 1	5	---	---	---	50	250	---	---	---	---	20	100	---	---	---	---	---	---	---	---
	CTH W STAGE 2	21	712.5	712.5	---	6	126	1	21	2	42	6	126	---	---	4	24	504	---	---	---
	CTH W STAGE 3	22	712.5	712.5	3	6	132	1	22	2	44	6	132	---	---	---	24	528	4	12	12
	CTH W STAGE 4	2	---	---	2	50	100	---	---	---	---	20	40	---	---	---	---	---	4	8	8
	3RD AVE	24	---	---	---	---	---	9	216	18	432	---	---	---	---	---	14	336	---	---	---
	CODDINGTON RD	24	---	---	---	---	---	9	216	18	432	---	---	---	---	---	14	336	---	---	---
	BIRCH DR	24	---	---	---	---	---	9	216	18	432	---	---	---	---	---	14	336	---	---	---
	TOTAL		13,850	13,850	88		18,046		1,658		3,316		2,116		132	8		5,124		352	352

NOTE: TRAFFIC CONTROL COVERING SIGNS TYPE II INCLUDES 1 CYCLE FOR ALL NECESSARY SIGNS, DURING STAGE 2 AND STAGE 3 CONSTRUCTION OF CTH D AND CTH W

TEMPORARY PAVEMENT MARKING

CATEGORY	LOCATION	646.0600 REMOVING PAVEMENT MARKINGS LF	649.0400 TEMPORARY PAVEMENT MARKING REMOVABLE TAPE 4-INCH LF	649.1200 TEMPORARY PAVEMENT MARKING STOP LINE REMOVABLE TAPE 18-INCH LF
0140	NB STAGE 1	260	1040	---
	SB STAGE 1	260	1040	---
	NB STAGE 2	5,700	12440	---
	SB STAGE 2	5,200	11440	---
	NB STAGE 3	5,700	12440	---
	SB STAGE 3	5,200	11440	---
	NB STAGE 4	---	1040	---
	SB STAGE 4	---	1040	---
	CTH D STAGE 2	1,270	1400	160
	CTH D STAGE 3	---	1400	---
	CTH W STAGE 2	1,270	1400	160
	CTH W STAGE 3	---	1400	---
	TOTAL	24,860	57,520	320

PAVEMENT MARKING

CATEGORY	STRUCTURE	646.0106 PAVEMENT MARKING EPOXY 4-INCH WHITE LF	646.0106 PAVEMENT MARKING EPOXY 4-INCH YELLOW LF	646.0126 PAVEMENT MARKING EPOXY 8-INCH WHITE LF	647.0456 PAVEMENT MARKING CURB EPOXY YELLOW LF	647.0566 PAVEMENT MARKING STOP LINE EPOXY 18-INCH LF	647.0606 PAVEMENT MARKING ISLAND NOSE EPOXY EACH
0140	B-49-0045	1,075	1,110	---	---	---	---
	B-49-0007	1,535	1,260	---	---	---	---
	B-49-0046	1,100	1,120	---	---	---	---
	B-49-0008	1,345	1,310	---	---	---	---
	B-49-0048	1,100	1,120	---	---	---	---
	B-49-0009	1,285	1,270	---	---	---	---
	B-49-0049	1,380	1,140	---	---	---	---
	B-49-0010	1,250	1,240	---	---	---	---
	B-49-0042	1,380	1,470	160	60	100	6
	B-49-0044	1,380	1,470	160	60	100	6
	SUB-TOTALS	12,830	12,510	320	120	200	12
	TOTAL	25,340		320	120	200	12

TEMPORARY TRAFFIC SIGNALS FOR INTERCHANGES

CATEGORY	LOCATION	SPV.0105.01 TEMPORARY TRAFFIC SIGNALS FOR INTERCHANGES (CTH D) LS	SPV.0105.02 TEMPORARY TRAFFIC SIGNALS FOR INTERCHANGES (CTH W) LS
0140	1166-00-61	1	1
	TOTAL	1	1

SAWING PAVEMENT ITEMS

CATEGORY	STRUCTURE	STATION	LOCATION	690.0150 SAWING ASPHALT LF	690.0250 SAWING CONCRETE LF
0140	B-49-0045	606+00.0SB	DRIVING LANE	24	---
		607+00.0SB	DRIVING LANE	24	---
		606+00.0SB	LT SHOULDER	10	---
		607+00.0SB	LT SHOULDER	10	---
		602+50.0SB	LT SHOULDER	10	---
		612+25.0SB	LT SHOULDER	10	---
		602+50.0SB	RT (MEDIAN) SHOULDER	4	---
		612+25.0SB	RT (MEDIAN) SHOULDER	4	---
	B-49-0007	605+00.0	DRIVING LANE	24	---
		607+75.0	DRIVING LANE	24	---
		605+00.0	RT SHOULDER	10	---
		607+75.0	RT SHOULDER	10	---
		599+75.0	RT SHOULDER	10	---
		611+25.0	RT SHOULDER	10	---
		599+75.0	LT (MEDIAN) SHOULDER	4	---
		611+25.0	LT (MEDIAN) SHOULDER	4	---
	B-49-0046	685+25.0SB	DRIVING LANE	24	---
		686+50.0SB	DRIVING LANE	24	---
		685+25.0SB	LT SHOULDER	10	---
		686+50.0SB	LT SHOULDER	10	---
		681+75.0SB	LT SHOULDER	10	---
		691+75.0SB	LT SHOULDER	10	---
		681+75.0SB	RT (MEDIAN) SHOULDER	4	---
		691+75.0SB	RT (MEDIAN) SHOULDER	4	---
	B-49-0008	684+00.0	DRIVING LANE	24	---
		687+25.0	DRIVING LANE	24	---
		684+00.0	RT SHOULDER	10	---
		687+25.0	RT SHOULDER	10	---
		678+75.0	RT SHOULDER	10	---
		690+75.0	RT SHOULDER	10	---
		678+75.0	LT (MEDIAN) SHOULDER	4	---
		690+75.0	LT (MEDIAN) SHOULDER	4	---
	B-49-0048	738+00.0SB	DRIVING LANE	24	---
		739+25.0SB	DRIVING LANE	24	---
		738+00.0SB	LT SHOULDER	10	---
		739+25.0SB	LT SHOULDER	10	---
		734+50.0SB	LT SHOULDER	10	---
		744+50.0SB	LT SHOULDER	10	---
		734+50.0SB	RT (MEDIAN) SHOULDER	4	---
		744+50.0SB	RT (MEDIAN) SHOULDER	4	---
	B-49-0009	737+50.0	DRIVING LANE	24	---
		740+25.0	DRIVING LANE	24	---
		737+50.0	RT SHOULDER	10	---
		740+25.0	RT SHOULDER	10	---
		732+25.0	RT SHOULDER	10	---
		743+75.0	RT SHOULDER	10	---
		732+25.0	LT (MEDIAN) SHOULDER	4	---
		743+75.0	LT (MEDIAN) SHOULDER	4	---
	B-49-0049	791+00.0SB	DRIVING LANE	24	---
		792+50.0SB	DRIVING LANE	24	---
		791+00.0SB	LT SHOULDER	10	---
		792+50.0SB	LT SHOULDER	10	---
		787+50.0SB	LT SHOULDER	10	---
		797+75.0SB	LT SHOULDER	10	---
		787+50.0SB	RT (MEDIAN) SHOULDER	4	---

CONTINUED IN NEXT COLUMN

CONTINUED FROM PREVIOUS COLUMN

SAWING PAVEMENT ITEMS

CATEGORY	STRUCTURE	STATION	LOCATION	690.0150 SAWING ASPHALT LF	690.0250 SAWING CONCRETE LF
0140		797+75.0SB	RT (MEDIAN) SHOULDER	4	---
	B-49-0010	790+50.0	DRIVING LANE	24	---
		793+00.0	DRIVING LANE	24	---
		790+50.0	RT SHOULDER	10	---
		793+00.0	RT SHOULDER	10	---
		785+25.0	RT SHOULDER	10	---
		796+50.0	RT SHOULDER	10	---
		785+25.0	LT (MEDIAN) SHOULDER	4	---
		796+50.0	LT (MEDIAN) SHOULDER	4	---
	B-49-0042	105+50G	LT	---	120
		106+00G	DRIVING LANE	24	---
		113+00G	DRIVING LANE	24	---
		113+50G	RT	---	120
	B-49-0043	107+70J	DRIVING LANE	22	---
		111+00J	DRIVING LANE	34	---
	B-49-0044	105+50M	LT	---	120
		106+00M	DRIVING LANE	24	---
		113+00M	DRIVING LANE	24	---
		113+50M	RT	---	120
	B-49-0047	107+30N	DRIVING LANE	22	---
		111+00N	DRIVING LANE	32	---
	B-49-0050	98+10S	DRIVING LANE	32	---
		100+95S	DRIVING LANE	32	---
			TOTAL	1,038	480

CONSTRUCTION STAKING

CATEGORY	STRUCTURE	STATION	650.5000 CONSTRUCTION STAKING BASE LF	650.5500 CONSTRUCTION STAKING CURB & GUTTER LF	650.9910 CONSTRUCTION STAKING SUPPLEMENTAL CONTROL LS	650.9920 CONSTRUCTION STAKING SLOPE STAKES LF
0140	B-49-0042	106+37G - 108+22G	185	120	---	185
		110+81G - 113+00G	219	120	---	219
	B-49-0043	102+50J - 108+21J	571	---	---	571
		110+83J - 114+55J	372	---	---	372
	B-49-0044	106+51M- 108+23M	172	120	---	172
		110+82M- 112+39M	157	120	---	157
	B-49-0047	101+36N - 108+17N	681	---	---	681
		110+75N - 115+00N	425	---	---	425
	B-49-0050	94+82S - 98+31S	349	---	---	349
		100+89S - 107+45S	656	---	---	656
		TOTAL	3,787	480	1	3,787

3

BENCH MARKS			
NO.	STA.	DESCRIPTION	ELEV.
4	606+50.1NB, 98.5' LT	DISK ON NW CORNER STRUCTURE B-49-45	1075.70

ASPHALT MILL & OVERLAY LIMITS

BM #4

SB IH 39

603+00 604+00 605+00 606+00 607+00 608+00 609+00

SB IH 39 R/L

STRUCTURE B-49-0045

N

EXISTING BEAM GUARD TO REMAIN

END OF DECK STA. 606+35.37

END OF DECK STA. 606+59.37

603+00 604+00 605+00 606+00 607+00 608+00 609+00

NB IH 39 R/L

SAWCUT

NB IH 39

SAWCUT

SAWCUT (STAGE 3 CONSTRUCTION)

SAWCUT (STAGE 3 CONSTRUCTION)

EXISTING BEAM GUARD TO REMAIN

NOTE: STRUCTURE B-49-0007: CENTERLINE RAISED 0.045" TO 0.088" FOR CROWN AND PROFILE CORRECTION.

STRUCTURE B-49-0007 SEE STRUCTURE PLANS

5

5

1084 1082 1080 1078 1076 1074 1072 1070 1068

STA = 605+00.00 ELEV = 1076.07

STA = 606+00.00 ELEV = 1075.90

STA = 606+35.37 ELEV = 1075.88

STA = 606+59.37 ELEV = 1075.87

STA = 607+75.00 ELEV = 1075.80

-0.16% -0.06% -0.06% -0.06%

CONTRACTOR TO ROLL GRADE WITHIN THE LAST 50' TO MATCH EXISTING.

EXISTING R/L PROFILE

FINISHED R/L PROFILE

603+50 604+00 605+00 606+00 607+00 608+00 609+00

1076.25 1076.25 1076.22 1076.07 1076.07 1075.88 1075.99 1075.82 1075.90 1075.87 1075.88 1075.78 1075.84 1075.66 1075.82 1075.78

PROJECT NO: 1166-00-61	HWY: IH 39	COUNTY: PORTAGE	PLAN AND PROFILE: B-49-0007	SHEET 47	E

BENCH MARKS			
NO.	STA.	DESCRIPTION	ELEV.
4	606+47.2SB, 35.5' LT	DISK ON NW CORNER STRUCTURE B-49-45	1075.70

ASPHALT MILL & OVERLAY LIMITS

STRUCTURE B-49-0045
SEE STRUCTURE PLANS

NOTE: STRUCTURE B-49-0045: FINAL CENTERLINE RAISED 1.20" TO 1.81" FOR CROWN AND PROFILE CORRECTION.

N

SAWCUT (STAGE 3 CONSTRUCTION)

BM #4

SAWCUT (STAGE 3 CONSTRUCTION)

EXISTING BEAM GUARD TO REMAIN

SAWCUT

SAWCUT

SB IH 39

604+00 605+00 606+00 607+00 608+00 609+00 61

SB IH 39 R/L

END OF DECK
STA. 606+25.92

END OF DECK
STA. 606+50.08

EXISTING BEAM GUARD TO REMAIN

STRUCTURE B-49-0007

604+00 605+00 606+00 607+00 608+00 609+00 610

NB IH 39

NB IH 39 R/L

5

5

1084 1082 1080 1078 1076 1074 1072 1070 1068

STA = 606+00.00
ELEV = 1075.92

STA = 606+25.92
ELEV = 1075.90

STA = 606+50.08
ELEV = 1075.88

STA = 607+00.00
ELEV = 1075.84

-0.08% -0.08% -0.08%

FINISHED R/L PROFILE

EXISTING R/L PROFILE

604+00 605+00 606+00 607+00 608+00 609+00 609+50

1075.91 1075.92 1075.84 1075.88 1075.84 1075.84 1075.85 1075.89 1075.96 1075.91

PROJECT NO: 1166-00-61	HWY: IH 39	COUNTY: PORTAGE	PLAN AND PROFILE: B-49-0045	SHEET 48	E

FILE NAME : P:\90S\93\00093215\CADD\1166-00-61\SHEETSPLAN\050101-PP.DWG
LAYOUT NAME - 050101-PP - B-49-045

PLOT DATE : 7/29/2015 1:25 PM PLOT BY : BRAD LEE PLOT NAME : PLOT SCALE : 1:40_XREF

BENCH MARKS			
NO.	STA.	DESCRIPTION	ELEV.
5	685+99.6NB, 97.8' LT	DISK ON NW CORNER STRUCTURE B-49-46	1075.50

ASPHALT MILL & OVERLAY LIMITS

BM #5

SB IH 39

683+00 684+00 685+00 686+00 687+00 688+00

SB IH 39 R/L

STRUCTURE B-49-0046

N

EXISTING BEAM GUARD TO REMAIN

END OF DECK STA. 685+73.37

END OF DECK STA. 686+05.37

NB IH 39

NB IH 39 R/L

SAWCUT

SAWCUT (STAGE 3 CONSTRUCTION)

EXISTING BEAM GUARD TO REMAIN

STRUCTURE B-49-0008 SEE STRUCTURE PLANS

NOTE: STRUCTURE B-49-0008: CENTERLINE RAISED 0.06" FOR CROWN AND PROFILE CORRECTION.

5

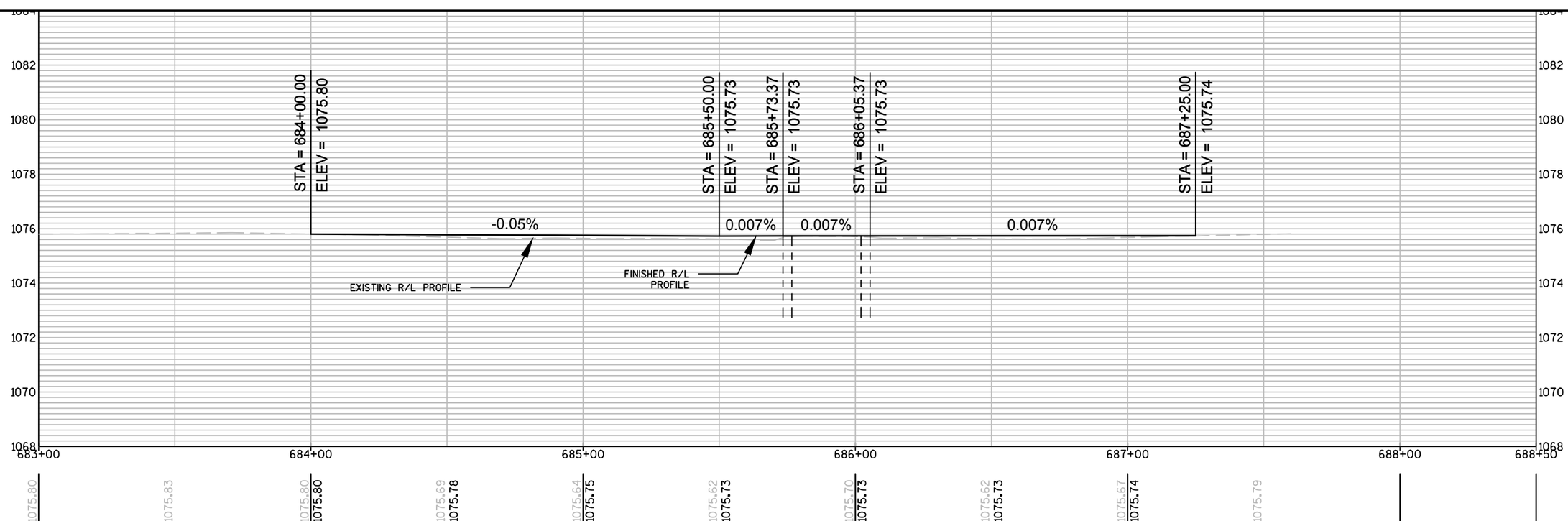

PROJECT NO: 1166-00-61	HWY: IH 39	COUNTY: PORTAGE	PLAN AND PROFILE: B-49-0008	SHEET 49	E

ASPHALT MILL & OVERLAY LIMITS

BENCH MARKS			
NO.	STA.	DESCRIPTION	ELEV.
5	685+99.8SB, 34.0' LT	DISK ON NW CORNER STRUCTURE B-49-46	1075.50

NOTE: STRUCTURE B-49-0046: FINAL CENTERLINE RAISED 1.31" TO 1.66" FOR CROWN AND PROFILE CORRECTION.

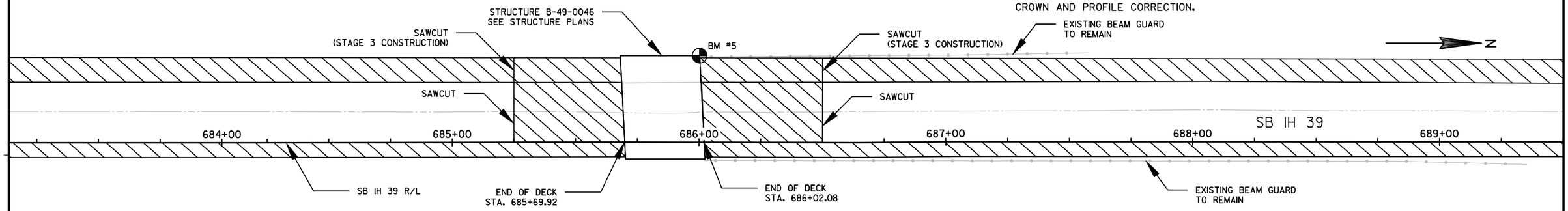

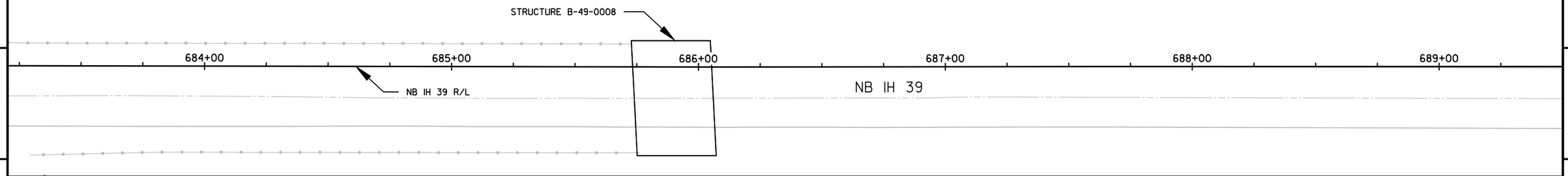

5

5

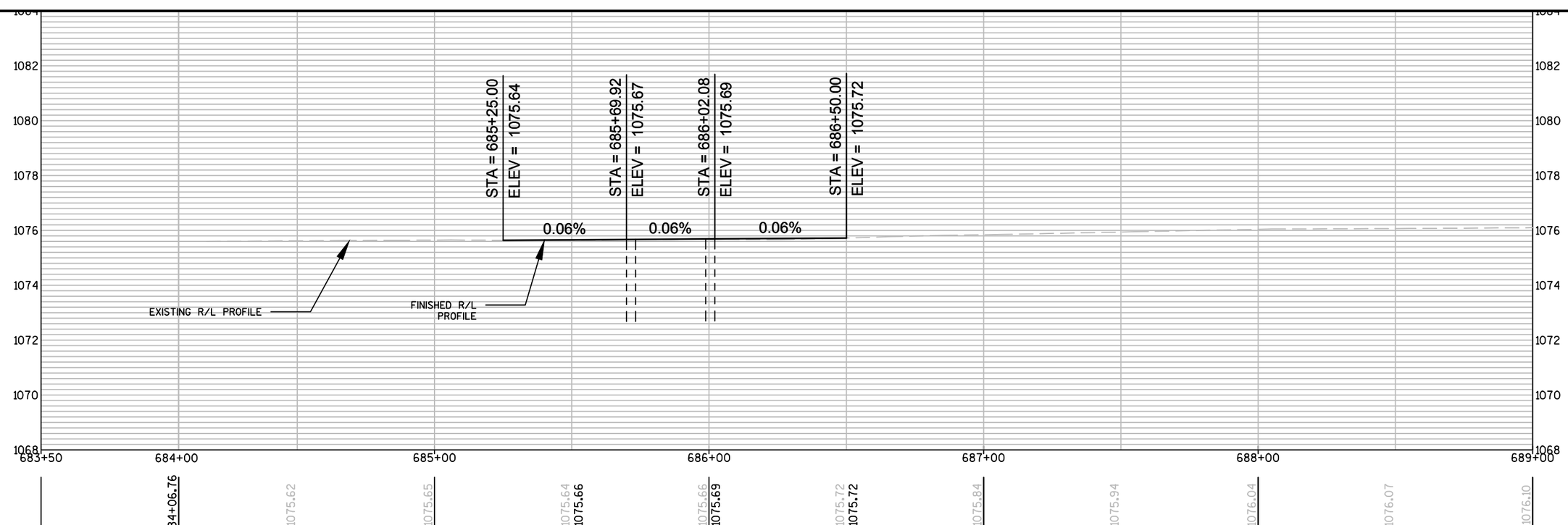

PROJECT NO: 1166-00-61	HWY: IH 39	COUNTY: PORTAGE	PLAN AND PROFILE: B-49-0046	SHEET 50	E

FILE NAME : P:\90S\93\00093215\CADD\1166-00-61\SHEETSPLAN\050101-PP.DWG
LAYOUT NAME - 050101-PP - B-49-046
PLOT DATE : 7/29/2015 1:26 PM PLOT BY : BRAD LEE PLOT NAME : PLOT SCALE : 1:40_XREF
WISDOT/CADDS SHEET 44

BENCH MARKS			
NO.	STA.	DESCRIPTION	ELEV.
7	738+77.8NB, 99.2' LT	DISK ON NW CORNER STRUCTURE B-49-48	1076.04

ASPHALT MILL &
OVERLAY LIMITS

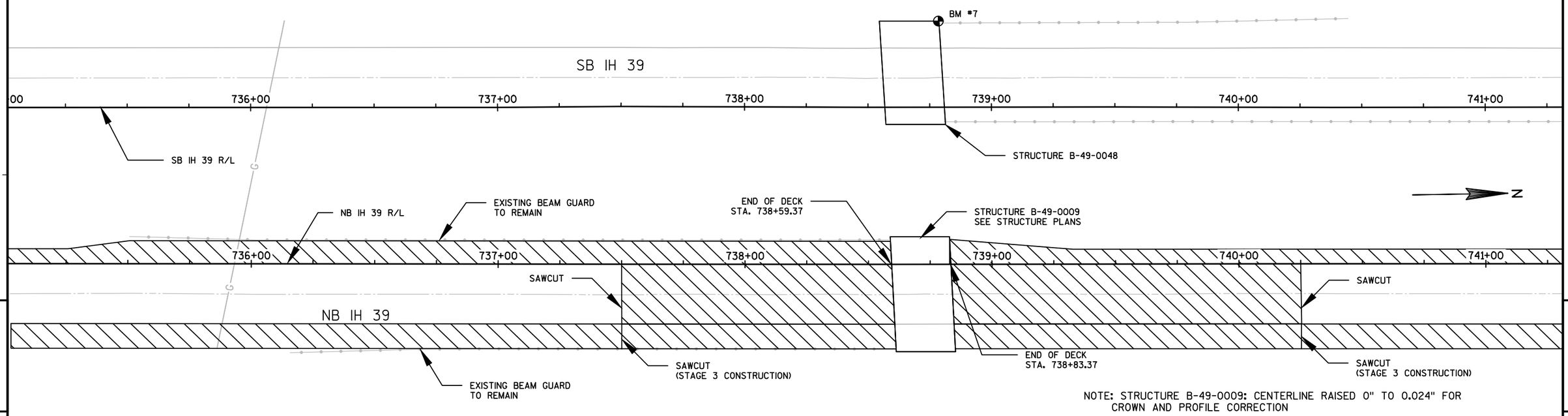

NOTE: STRUCTURE B-49-0009: CENTERLINE RAISED 0" TO 0.024" FOR CROWN AND PROFILE CORRECTION

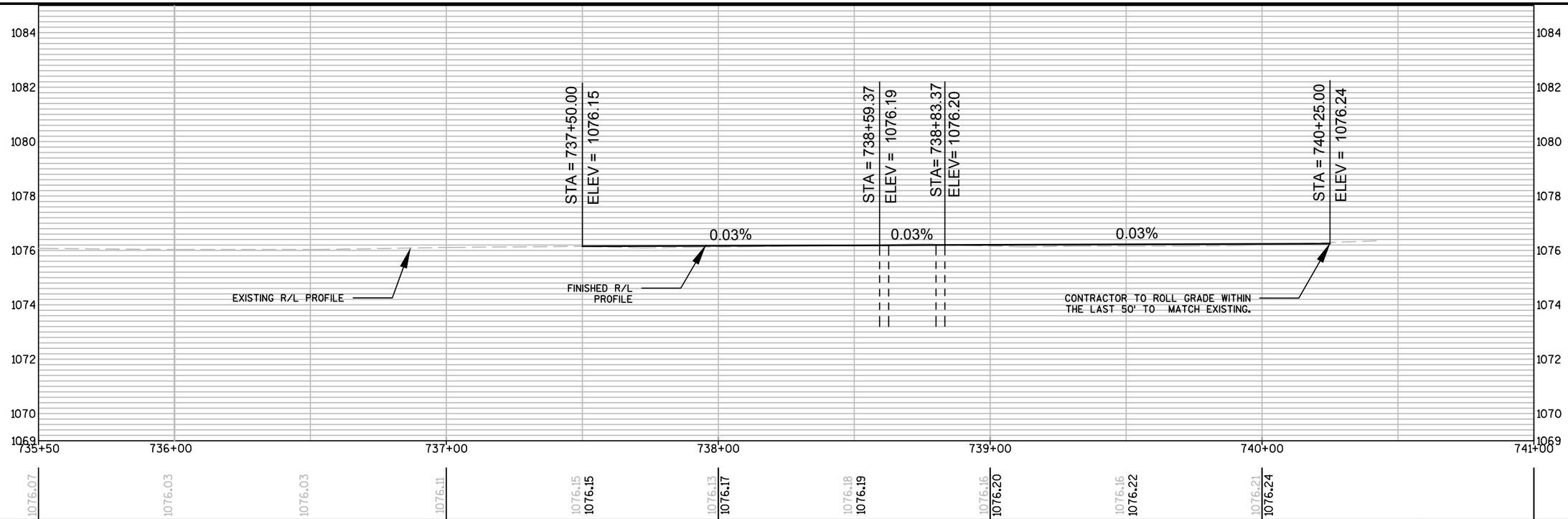

PROJECT NO: 1166-00-61	HWY: IH 39	COUNTY: PORTAGE	PLAN AND PROFILE: B-49-0009	SHEET 51	E

BENCH MARKS			
NO.	STA.	DESCRIPTION	ELEV.
7	738+78.0SB, 35.6' LT	DISK ON NW CORNER STRUCTURE B-49-48	1076.04

ASPHALT MILL & OVERLAY LIMITS

NOTE: STRUCTURE B-49-0048: FINAL CENTERLINE RAISED 0.408" TO 0.516" FOR CROWN AND PROFILE CORRECTION.

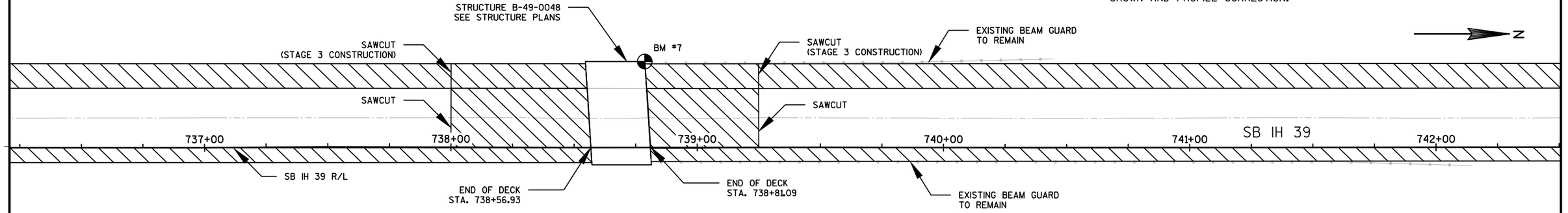

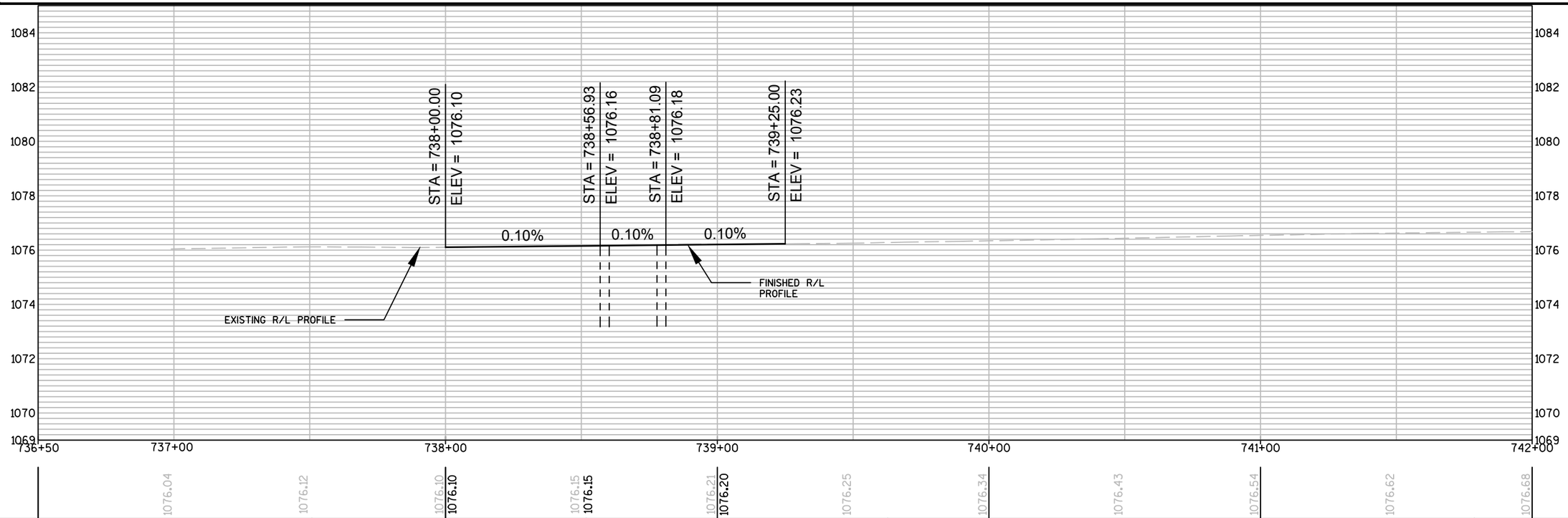

PROJECT NO: 1166-00-61	HWY: IH 39	COUNTY: PORTAGE	PLAN AND PROFILE: B-49-0048	SHEET 52	E

FILE NAME : P:\90S\93\00093215\CADD\1166-00-61\SHEETSPLAN\050101-PP.DWG
LAYOUT NAME - 050101-PP - B-49-048
PLOT DATE : 7/29/2015 1:28 PM PLOT BY : BRAD LEE PLOT NAME : PLOT SCALE : 1:40_XREF
WISDOT/CADDS SHEET 44

BENCH MARKS			
NO.	STA.	DESCRIPTION	ELEV.
8	791+75.1NB, 99.1' LT	DISK ON NW CORNER STRUCTURE B-49-49	1074.26

ASPHALT MILL & OVERLAY LIMITS

N

BM *8

SB IH 39

+00 789+00 790+00 791+00 792+00 793+00 794+00

SB IH 39 R/L

STRUCTURE B-49-0049

EXISTING BEAM GUARD TO REMAIN

END OF DECK STA. 791+56.37

+00 789+00 790+00 791+00 792+00 793+00 794+00

NB IH 39 R/L

SAWCUT

SAWCUT

NB IH 39

EXISTING BEAM GUARD TO REMAIN

SAWCUT (STAGE 3 CONSTRUCTION)

END OF DECK STA. 791+80.37

SAWCUT (STAGE 3 CONSTRUCTION)

STRUCTURE B-49-0010 SEE STRUCTURE PLANS

NOTE: STRUCTURE B-49-0010: CENTERLINE RAISED 0.012" TO 0.252" FOR CROWN AND PROFILE CORRECTION

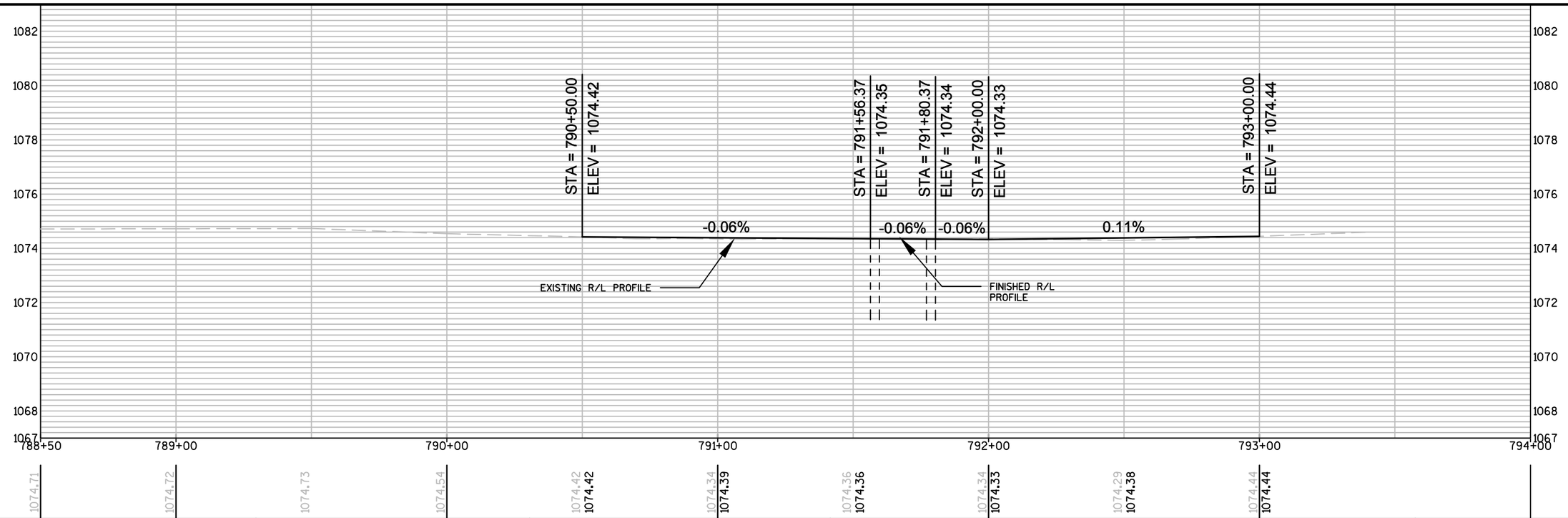

PROJECT NO: 1166-00-61	HWY: IH 39	COUNTY: PORTAGE	PLAN AND PROFILE: B-49-0010	SHEET 53	E

FILE NAME : P:\90S\93\00093215\CADD\1166-00-61\SHEETSPLAN\050101-PP.DWG
LAYOUT NAME - B-49-010

PLOT DATE : 7/29/2015 1:28 PM PLOT BY : BRAD LEE PLOT NAME : PLOT SCALE : 1:40_XREF

WISDOT/CADDS SHEET 44

ASPHALT MILL &
OVERLAY LIMITS

BENCH MARKS			
NO.	STA.	DESCRIPTION	ELEV.
8	791+74.6SB, 35.8' LT	DISK ON NW CORNER STRUCTURE B-49-49	1074.26

NOTE: STRUCTURE B-49-0049: FINAL CENTERLINE RAISED 1.416" TO 1.488"
FOR CROWN AND PROFILE CORRECTION.

END OF DECK
STA. 791+53.62

STRUCTURE B-49-0049
SEE STRUCTURE PLANS

SAWCUT
(STAGE 3 CONSTRUCTION)

BM #8

SAWCUT
(STAGE 3 CONSTRUCTION)

EXISTING BEAM GUARD
TO REMAIN

N

SAWCUT

SAWCUT

790+00 791+00 792+00 793+00 SB IH 39 794+00 795+00

SB IH 39 R/L

END OF DECK
STA. 791+77.78

EXISTING BEAM GUARD
TO REMAIN

STRUCTURE B-49-0010

790+00 791+00 792+00 793+00 794+00 795+00

NB IH 39

NB IH 39 R/L

5

5

1082 1080 1078 1076 1074 1072 1070 1068 1067

STA = 791+00.00
ELEV = 1074.45

STA = 791+53.62
ELEV = 1074.45

STA = 791+77.78
ELEV = 1074.45

STA = 792+50.00
ELEV = 1074.45

CONTRACTOR TO ROLL GRADE WITHIN
THE LAST 50' TO MATCH EXISTING.

0.00% 0.00% 0.00%

FINISHED R/L
PROFILE

EXISTING R/L PROFILE

789+50 790+00 791+00 792+00 793+00 794+00 795+00

1074.42 1074.40 1074.45 1074.45 1074.36 1074.45 1074.42 1074.45 1074.46 1074.45 1074.53 1074.58 1074.62 1074.62 1074.61

PROJECT NO: 1166-00-61	HWY: IH 39	COUNTY: PORTAGE	PLAN AND PROFILE: B-49-0049	SHEET 54	E

FILE NAME : P:\90S\93\00093215\CADD\1166-00-61\SHEETSPLAN\050101-PP.DWG
LAYOUT NAME - 050101-PP - B-49-049

PLOT DATE : 7/29/2015 1:29 PM PLOT BY : BRAD LEE PLOT NAME : PLOT SCALE : 1:40_XREF

PAVEMENT MARKING EPOXY 8-INCH WHITE

PAVEMENT MARKING ISLAND NOSE EPOXY

PAVEMENT MARKING STOP LINE EPOXY 18-INCH

SLOPE INTERCEPT

W12-1D
24"X24"

SAWCUT AND REMOVE ISLAND FOR TRAFFIC CONTROL, INSTALL 4" ASPHALTIC SURFACE TEMPORARY OVER 6" BASE AGGREGATE DENSE 1 1/4-INCH, AND REPLACE ACCORDING TO CONSTRUCTION DETAIL USING DIMENSIONS/LOCATIONS DETERMINED FROM CONSTRUCTION STAKING CURB & GUTTER.

ONE WAY
R6-2-L
24"X30"

ONE WAY
R6-2-R
24"X30"

STOP
R1-1
36"X36"

PAVEMENT MARKING ISLAND NOSE EPOXY

GRAVEL EDGE

MGS EAT REQUIRED
+72

EXISTING GUARDRAIL
TO BE REMOVED

MGS THRIE BEAM TRANSITION REQ'D

+22

STRUCTURE B-49-0042
SEE STRUCTURE PLANS

SAWCUT

SB IH 39 R/L

N

320+00

320+00

104+00G

105+00G

106+00G

107+00G

108+00G

CTH D

109+00G

110+00G

CTH D C/L

319+00

319+00

BM #1

MATCH LINE STA. 110+00G

+36, 24' RT

MGS EAT REQUIRED
+59

GRAVEL EDGE

SLOPE INTERCEPT

+09

MGS THRIE BEAM TRANSITION REQ'D

EXISTING GUARDRAIL
TO BE REMOVED

NB IH 39 R/L

ASPHALTIC MILL & OVERLAY LIMITS

EROSION MAT CLASS I, TYPE B

SILT FENCE

PROPOSED SIGN MOUNTED ON POST

BEGIN CONSTRUCTION
STA. 106+10G
Y=106,551.32
X=178,400.84

BENCH MARKS			
NO.	STA.	DESCRIPTION	ELEV.
1	108+26.7G, 23.1' RT	DISK ON SW PARAPET OF STRUCTURE	1120.78

VPI STA = 106+90.00G
VPI ELEV = 1133.95
L = 1500'
G1 = 4.0%
G2 = -4.0%

STA = 106+10.00G
ELEV = 1118.73

STA = 108+42.92G
ELEV = 1118.33

FINISHED C/L PROFILE (RAISE 1.0625 INCHES FROM EXISTING FOR CROWN CORRECTION)

EXISTING C/L PROFILE

CONTRACTOR TO ROLL GRADE WITHIN THE LAST 50' TO MATCH EXISTING

1126
1124
1122
1120
1118
1116
1114
1112

104+00
105+00
106+00
107+00
108+00
109+00
110+00

1117.71
1118.03
1118.34
1118.61
1118.84 1118.90
1118.97 1118.95
1118.91 1118.85
1118.58 1118.63
1118.13 1118.27
1117.65 1117.77
1117.05 1117.15
1116.29 1116.39

PROJECT NO: 1166-00-61	HWY: IH 39	COUNTY: PORTAGE	PLAN AND PROFILE: CTH D B-49-0042	SHEET 55	E

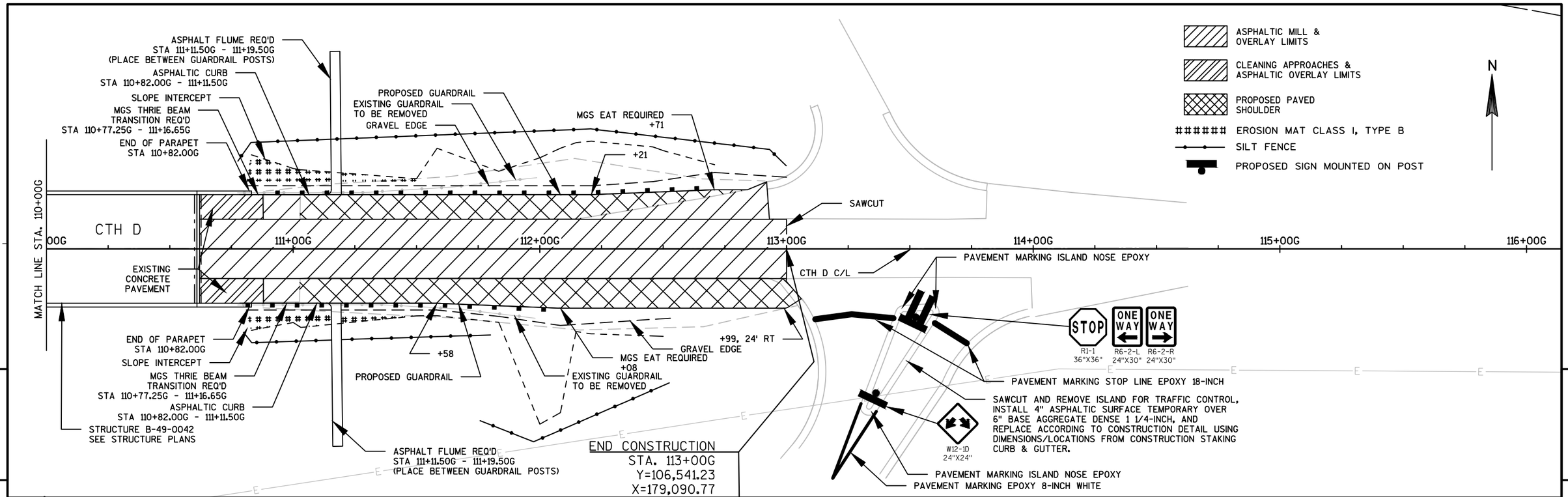

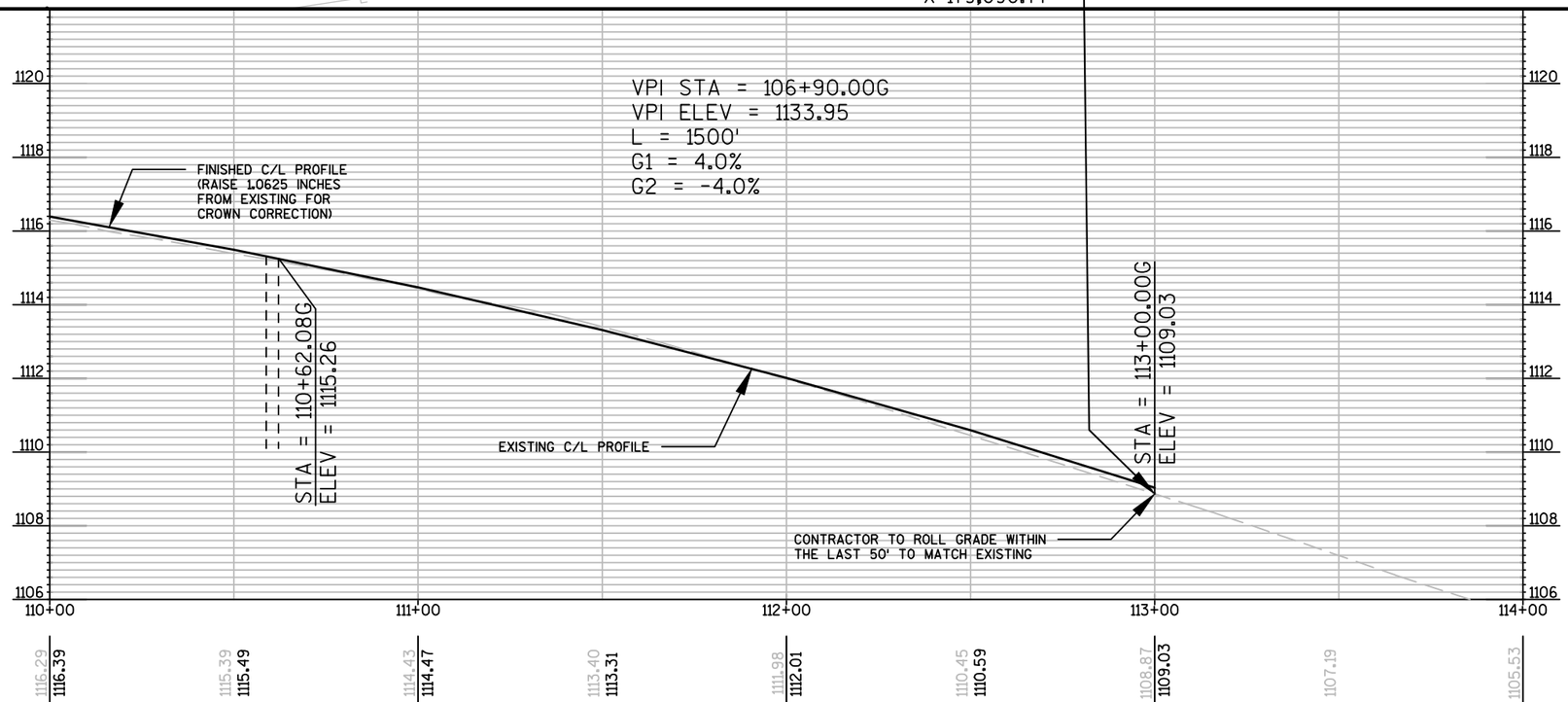

PROJECT NO: 1166-00-61	HWY: IH 39	COUNTY: PORTAGE	PLAN AND PROFILE: CTH D B-49-0042	SHEET 56	E

EROSION MAT CLASS I, TYPE B

SILT FENCE

EXISTING R/W

SLOPE INTERCEPT

N

BEGIN CONSTRUCTION
STA. 102+50J
Y=117,036.17
X=178,148.02

GRAVEL EDGE

MGS EAT REQUIRED
+71

+21

PROPOSED GUARDRAIL
EXISTING GUARDRAIL
TO BE REMOVED

100+00J | 101+00J | 102+00J | 103+00J | 104+00J | 105+00J

3RD AVE.

3RD AVE. C/L

MATCH LINE STA. 105+50J

GRAVEL EDGE

MGS EAT REQUIRED
+46

+96

EXISTING GUARDRAIL
TO BE REMOVED

PROPOSED GUARDRAIL

EXISTING R/W

SLOPE INTERCEPT

5

5

1102 | 1100 | 1098 | 1096 | 1094 | 1092 | 1090 | 1088 | 1087

EXISTING C/L PROFILE

99+50 | 100+00 | 101+00 | 102+00

1088.00 | 1089.07 | 1090.28 | 1091.86 | 1093.53 | 1095.49 | 1097.45

1102 | 1100 | 1098 | 1096 | 1094 | 1092 | 1090 | 1088 | 1087

1112 | 1110 | 1108 | 1106 | 1104 | 1102 | 1100 | 1098

EXISTING C/L PROFILE

103+00 | 104+00 | 105+00 | 105+50

1099.39 | 1101.32 | 1103.22 | 1105.13 | 1106.83 | 1108.38

PROJECT NO: 1166-00-61	HWY: IH 39	COUNTY: PORTAGE	PLAN AND PROFILE: 3RD AVE. B-49-0043	SHEET 57	E

FILE NAME : P:\90S\93\00093215\CADD\1166-00-61\SHEETSPLAN\050101-PP.DWG
LAYOUT NAME - 050101-PP - B-49-043

PLOT DATE : 7/29/2015 1:30 PM | PLOT BY : BRAD LEE | PLOT NAME : | PLOT SCALE : 1:40_XREF

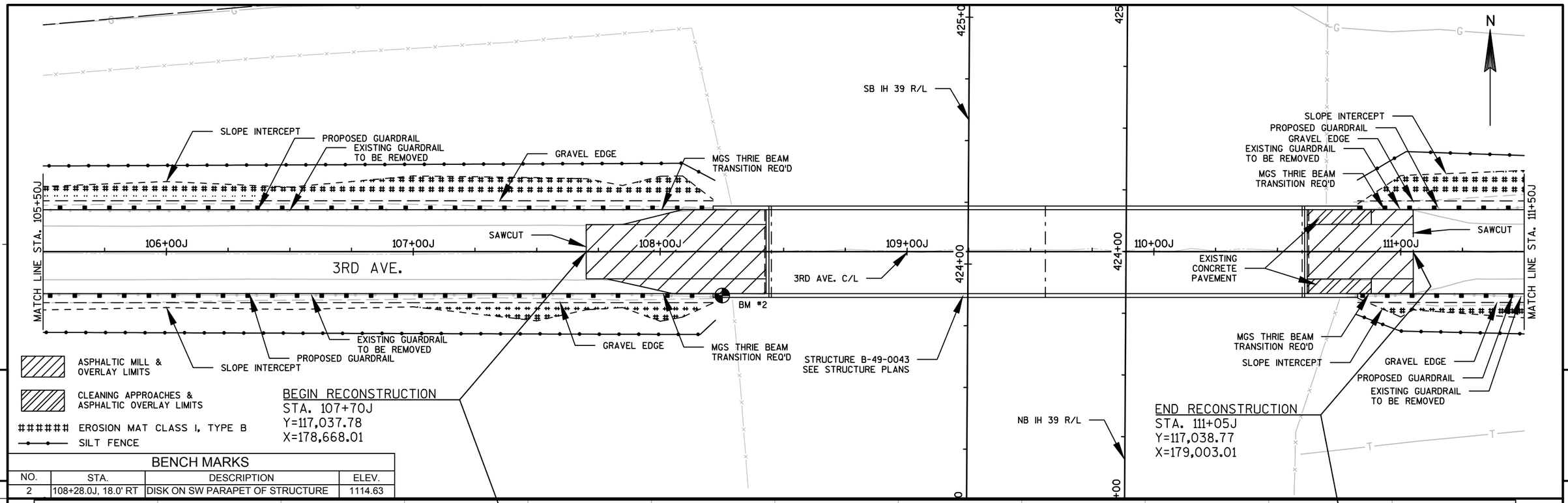

BENCH MARKS			
NO.	STA.	DESCRIPTION	ELEV.
2	108+28.0J, 18.0' RT	DISK ON SW PARAPET OF STRUCTURE	1114.63

PROJECT NO: 1166-00-61	HWY: IH 39	COUNTY: PORTAGE	PLAN AND PROFILE: 3RD AVE. B-49-0043	SHEET 58	E

FILE NAME : P:\90S\93\00093215\CADD\1166-00-61\SHEETSPLAN\050101-PP.DWG
LAYOUT NAME - 050101-PP - B-49-043 (1)
PLOT DATE : 7/29/2015 1:31 PM PLOT BY : BRAD LEE PLOT NAME : PLOT SCALE : 1:40_XREF
WISDOT/CADDS SHEET 44

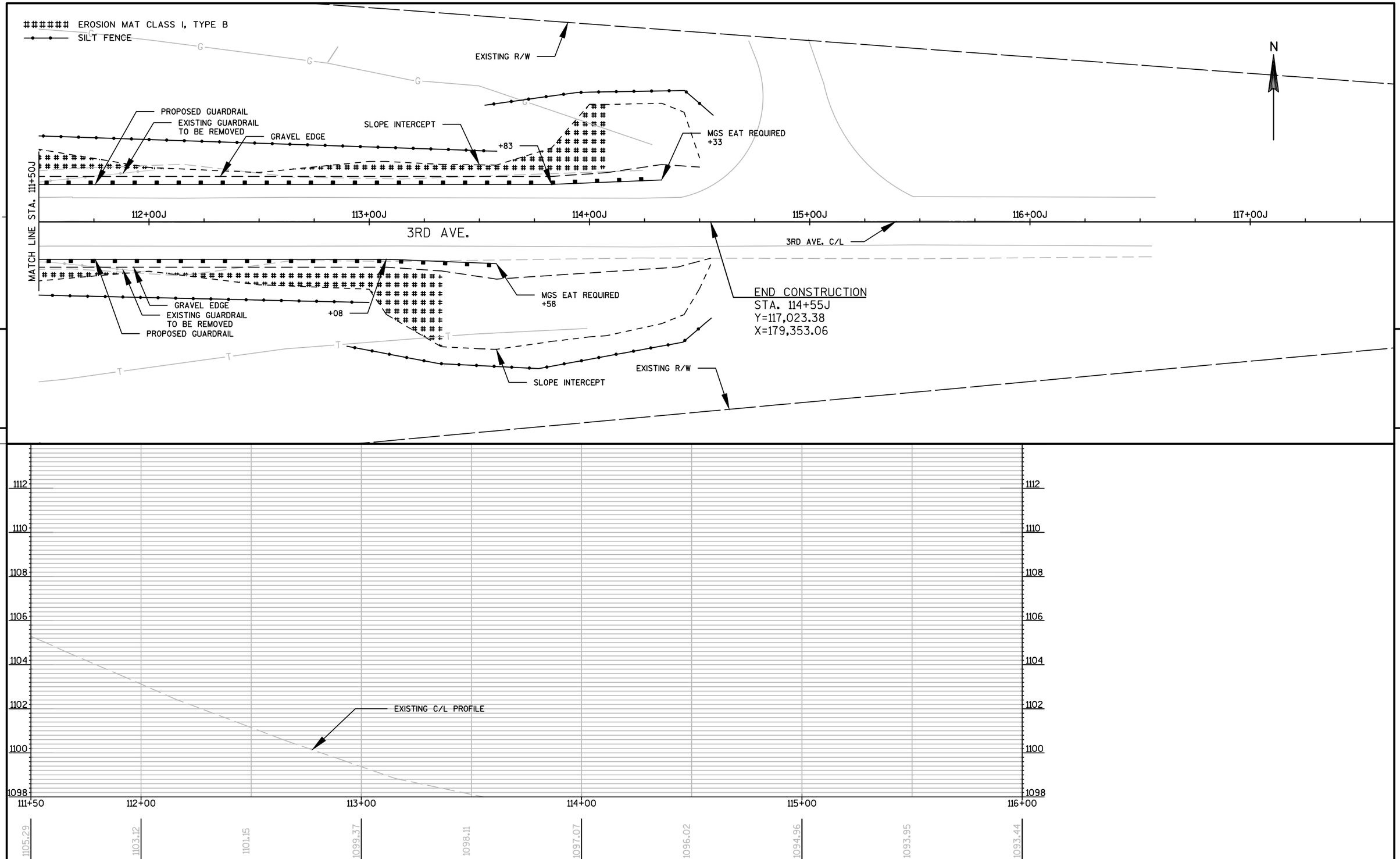

PROJECT NO: 1166-00-61	HWY: IH 39	COUNTY: PORTAGE	PLAN AND PROFILE: 3RD AVE. B-49-0043	SHEET 59	E

FILE NAME : P:\90S\93\00093215\CADD\1166-00-61\SHEETSPLAN\050101-PP.DWG
LAYOUT NAME - 050101-PP - B-49-043 (2)

PLOT DATE : 7/29/2015 1:32 PM PLOT BY : BRAD LEE PLOT NAME : PLOT SCALE : 1:40_XREF

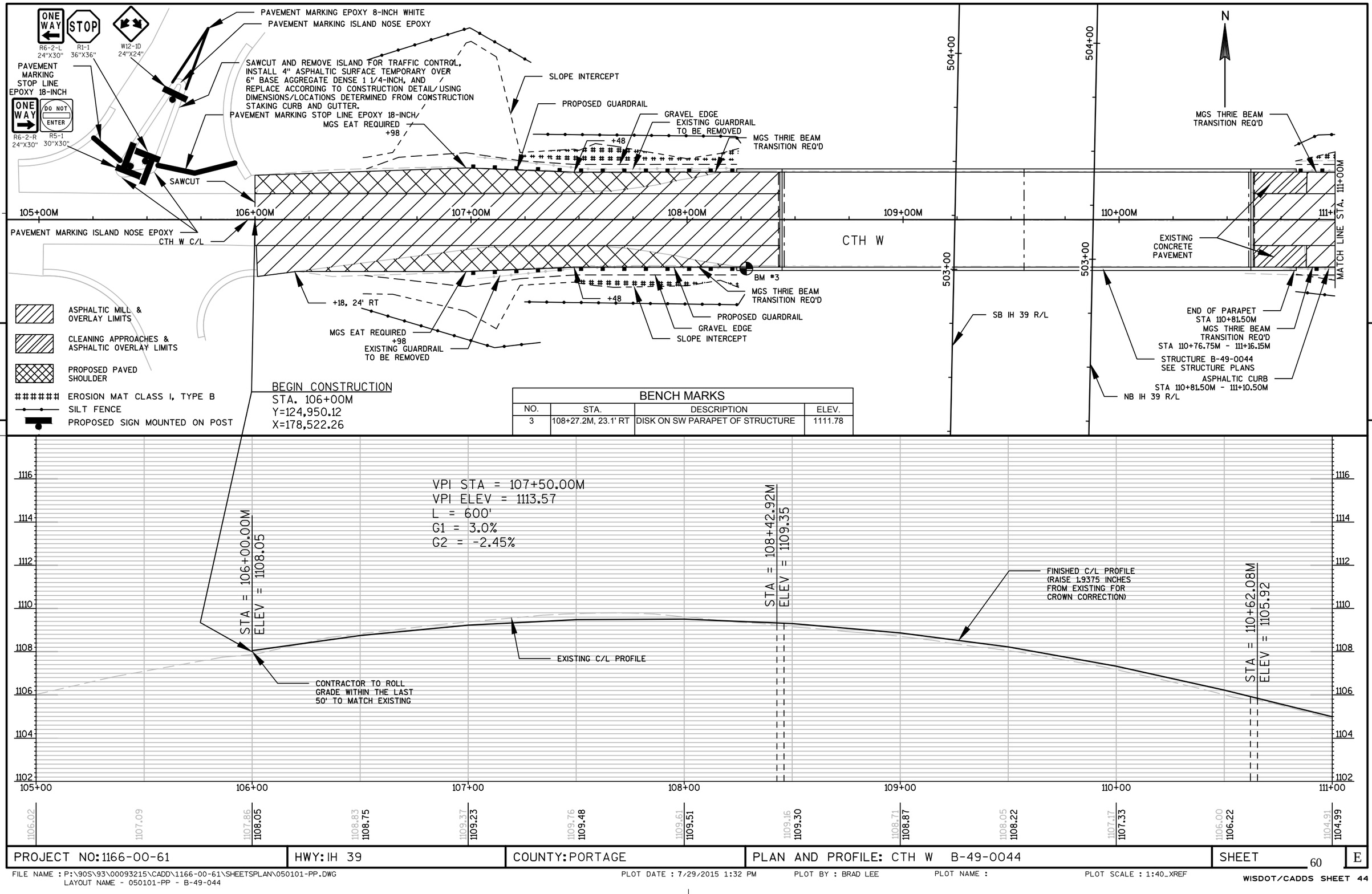

BENCH MARKS			
NO.	STA.	DESCRIPTION	ELEV.
3	108+27.2M, 23.1' RT	DISK ON SW PARAPET OF STRUCTURE	1111.78

PROJECT NO: 1166-00-61	HWY: IH 39	COUNTY: PORTAGE	PLAN AND PROFILE: CTH W B-49-0044	SHEET 60	E

N

ASPHALTIC MILL & OVERLAY LIMITS

EROSION MAT CLASS I, TYPE B

SILT FENCE

PROPOSED SIGN MOUNTED ON POST

GRAVEL EDGE
PROPOSED GUARDRAIL
SLOPE INTERCEPT
EXISTING GUARDRAIL TO BE REMOVED
MGS EAT REQUIRED +07
+59, 22' LT
+57
+32, 22' LT
MATCH LINE STA. 111+00M
SAWCUT
CTH W C/L
CTH W
00M
112+00M
113+00M
114+00M
115+00M
116+00M
117+00M
PAVEMENT MARKING ISLAND NOSE EPOXY
DO NOT ENTER R5-1 30"X30"
ONE WAY R6-2-R 24"X30"
PAVEMENT MARKING ISLAND NOSE EPOXY
PAVEMENT MARKING STOP LINE EPOXY 18-INCH
+32, 22.8' RT
MGS EAT REQUIRED +07
+57
GRAVEL EDGE
EXISTING GUARDRAIL TO BE REMOVED
SLOPE INTERCEPT
PROPOSED GUARDRAIL
ASPHALTIC CURB STA 110+81.50M - 111+10.50M
ONE WAY R6-2-L 24"X30"
STOP R1-1 36"X36"
PAVEMENT MARKING STOP LINE EPOXY 18-INCH
SAWCUT AND REMOVE ISLAND FOR TRAFFIC CONTROL, INSTALL 4" ASPHALTIC SURFACE TEMPORARY OVER 6" BASE AGGREGATE DENSE 1 1/4-INCH, AND REPLACE ACCORDING TO CONSTRUCTION DETAIL USING DIMENSIONS/LOCATIONS DETERMINED FROM CONSTRUCTION STAKING CURB & GUTTER.
W12-1D 24"X24"
ASPHALT FLUME REQ'D STA 111+10.50M - 111+18.50M (PLACE BETWEEN GUARDRAIL POSTS)
END CONSTRUCTION
STA. 113+00M
Y=124,962.15
X=179,222.15
PAVEMENT MARKING ISLAND NOSE EPOXY
PAVEMENT MARKING EPOXY 8-INCH WHITE

5

5

1110
1108
1106
1104
1102
1100
1098
1096
1095

EXISTING C/L PROFILE

STA = 113+00.00M
ELEV = 1100.09

CONTRACTOR TO ROLL GRADE WITHIN THE LAST 50' TO MATCH EXISTING

111+00
112+00
113+00
114+00

1104.91 1104.99
1103.75 1103.77
1102.52 1102.55
1101.27 1101.32
1100.01 1100.09
1098.82
1097.47

PROJECT NO: 1166-00-61	HWY: IH 39	COUNTY: PORTAGE	PLAN AND PROFILE: CTH W B-49-0044	SHEET 61	E

FILE NAME : P:\90S\93\00093215\CADD\1166-00-61\SHEETSPLAN\050101-PP.DWG
LAYOUT NAME - 050101-PP - B-49-044 (5)

PLOT DATE : 7/29/2015 1:33 PM PLOT BY : BRAD LEE PLOT NAME : PLOT SCALE : 1:40_XREF

EROSION MAT CLASS I, TYPE B
SILT FENCE

N

EXISTING R/W

SLOPE INTERCEPT

EXISTING GUARDRAIL
TO BE REMOVED

MGS EAT REQUIRED
+67

+17

PROPOSED GUARDRAIL

GRAVEL EDGE

CODDINGTON RD. C/L

00+00N | 101+00N | 102+00N | 103+00N | 104+00N | 105+00N | 106+

MATCH LINE STA. 106+00N

CODDINGTON RD.

BEGIN CONSTRUCTION
STA. 101+36N
Y=145,905.809
X=178,916.101

MGS EAT REQUIRED
+52

+02

EXISTING GUARDRAIL
TO BE REMOVED

SLOPE INTERCEPT

PROPOSED GUARDRAIL

GRAVEL EDGE

EXISTING R/W

5

5

1090 1088 1086 1084 1082 1080 1078 1076 1075

1090 1088 1086 1084 1082 1080 1078 1076 1075

1100 1098 1096 1094 1092 1090 1088 1086 1085

1100 1098 1096 1094 1092 1090 1088 1086 1085

EXISTING C/L PROFILE

EXISTING C/L PROFILE

00+00 | 101+00 | 102+00 | 103+00 | 104+00 | 105+00 | 106+00

1078.81 | 1080.61 | 1082.53 | 1084.46 | 1086.37 | 1088.31 | 1090.31 | 1092.20 | 1093.76 | 1095.13 | 1096.27 | 1097.25 | 1097.95

PROJECT NO: 1166-00-61	HWY: IH 39	COUNTY: PORTAGE	PLAN AND PROFILE: CODDINGTON RD. B-49-0047	SHEET 62	E

FILE NAME : P:\90S\93\00093215\CADD\1166-00-61\SHEETSPLAN\050101-PP.DWG
LAYOUT NAME - 050101-PP - B-49-047

PLOT DATE : 7/29/2015 1:33 PM PLOT BY : BRAD LEE PLOT NAME : PLOT SCALE : 1:40_XREF

BENCH MARKS			
NO.	STA.	DESCRIPTION	ELEV.
6	108+20.4N, 18' RT	DISK ON SW PARAPET OF STRUCTURE	1101.88

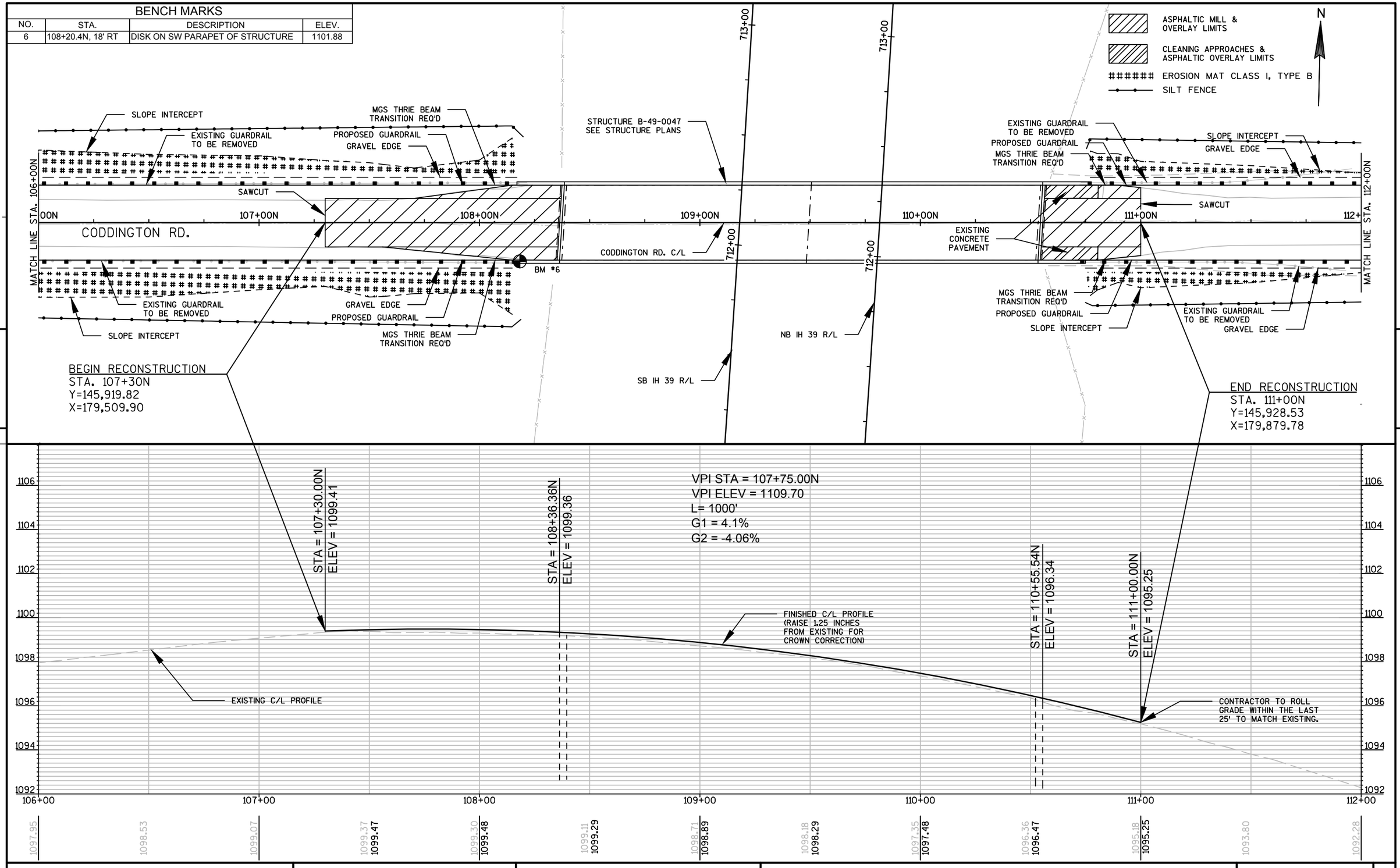

PROJECT NO: 1166-00-61	HWY: IH 39	COUNTY: PORTAGE	PLAN AND PROFILE: CODDINGTON RD. B-49-0047	SHEET 63	E

EROSION MAT CLASS I, TYPE B
SILT FENCE

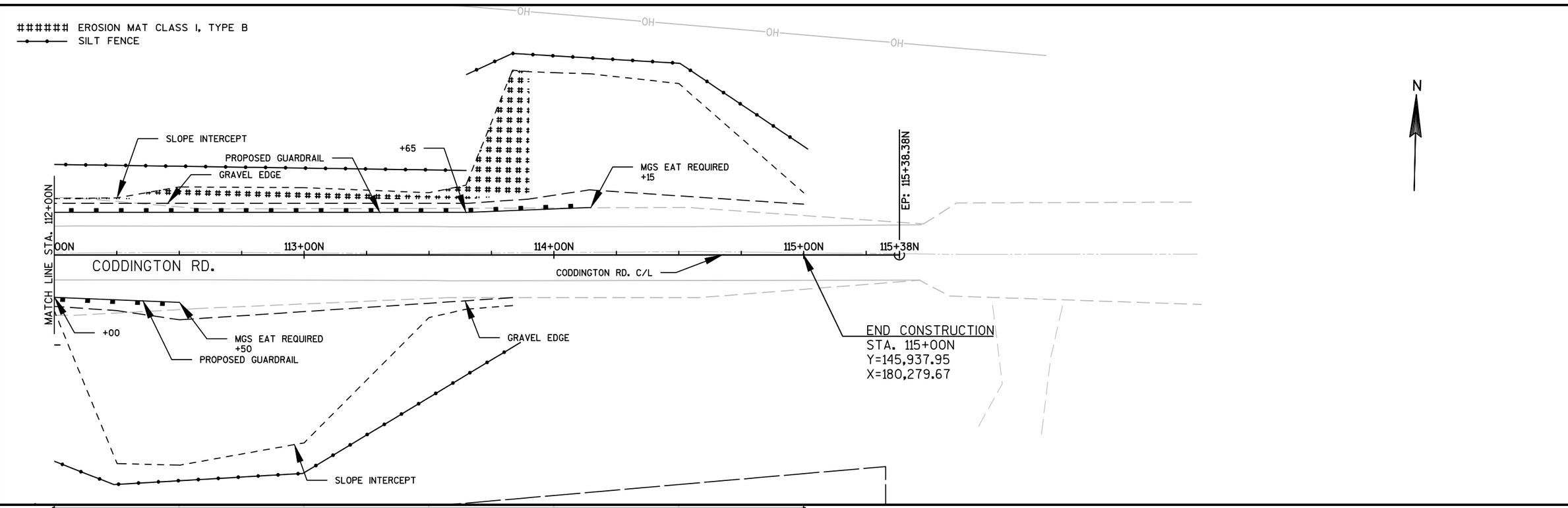

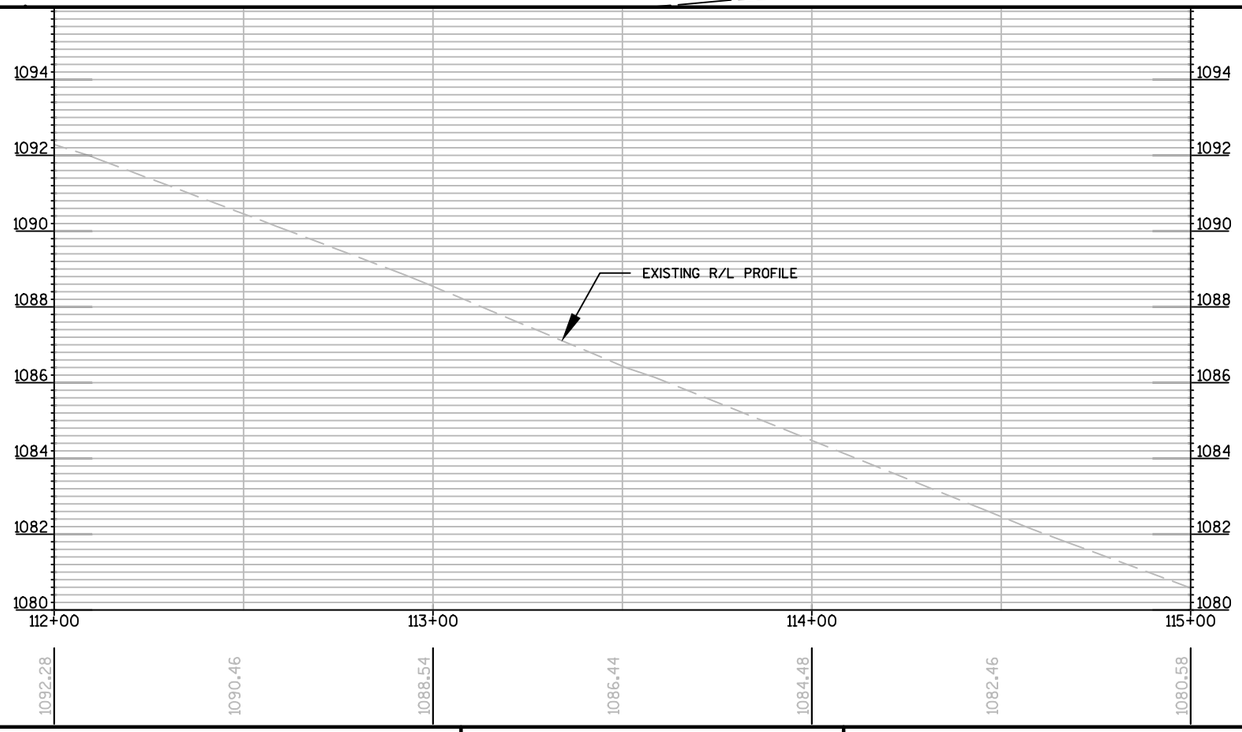

PROJECT NO: 1166-00-61	HWY: IH 39	COUNTY: PORTAGE	PLAN AND PROFILE: CODDINGTON RD. B-49-0047	SHEET 64	E

FILE NAME : P:\90S\93\00093215\CADD\1166-00-61\SHEETSPLAN\050101-PP.DWG
LAYOUT NAME - 050101-PP - B-49-47 (2)
PLOT DATE : 7/29/2015 1:35 PM PLOT BY : BRAD LEE PLOT NAME : PLOT SCALE : 1:40_XREF

EROSION MAT CLASS I, TYPE B

SILT FENCE

EXISTING R/W

CLEAR ONLY, DO NOT GRUB

SLOPE INTERCEPT

MGS EAT REQUIRED +43

+93

EXISTING GUARDRAIL TO BE REMOVED

GRAVEL EDGE

PROPOSED GUARDRAIL

MATCH LINE STA. 97+75S

N

92+00S 93+00S 94+00S 95+00S 96+00S 97+00S

BIRCH DR. C/L

BIRCH DR.

BEGIN CONSTRUCTION
STA. 94+81S
Y=161,775.87
X=179,526.72

+91

MGS EAT REQUIRED +41

PROPOSED GUARDRAIL

GRAVEL EDGE

EXISTING GUARDRAIL TO BE REMOVED

SLOPE INTERCEPT

EXISTING R/W

OH

5

5

1098 1096 1094 1092 1090 1088 1086 1084

1112 1110 1108 1106 1104 1102 1100 1098

EXISTING C/L PROFILE

EXISTING C/L PROFILE

92+00 93+00 94+00 95+00 96+00 97+00 97+75

1085.21 1086.98 1088.76 1090.62 1092.59 1094.57 1096.58 1098.58 1100.56 1102.57 1104.53 1105.47

PROJECT NO: 1166-00-61	HWY: IH 39	COUNTY: PORTAGE	PLAN AND PROFILE: BIRCH DR. B-49-0050	SHEET 65	E

FILE NAME : P:\90S\93\00093215\CADD\1166-00-61\SHEETSPLAN\050101-PP.DWG
LAYOUT NAME - 050101-PP - B-49-050

PLOT DATE : 7/29/2015 1:35 PM PLOT BY : BRAD LEE PLOT NAME : PLOT SCALE : 1:40_XREF

BENCH MARKS			
NO.	STA.	DESCRIPTION	ELEV.
9	98+34.5S, 18.4' RT	DISK ON SW PARAPET OF STRUCTURE	1109.60

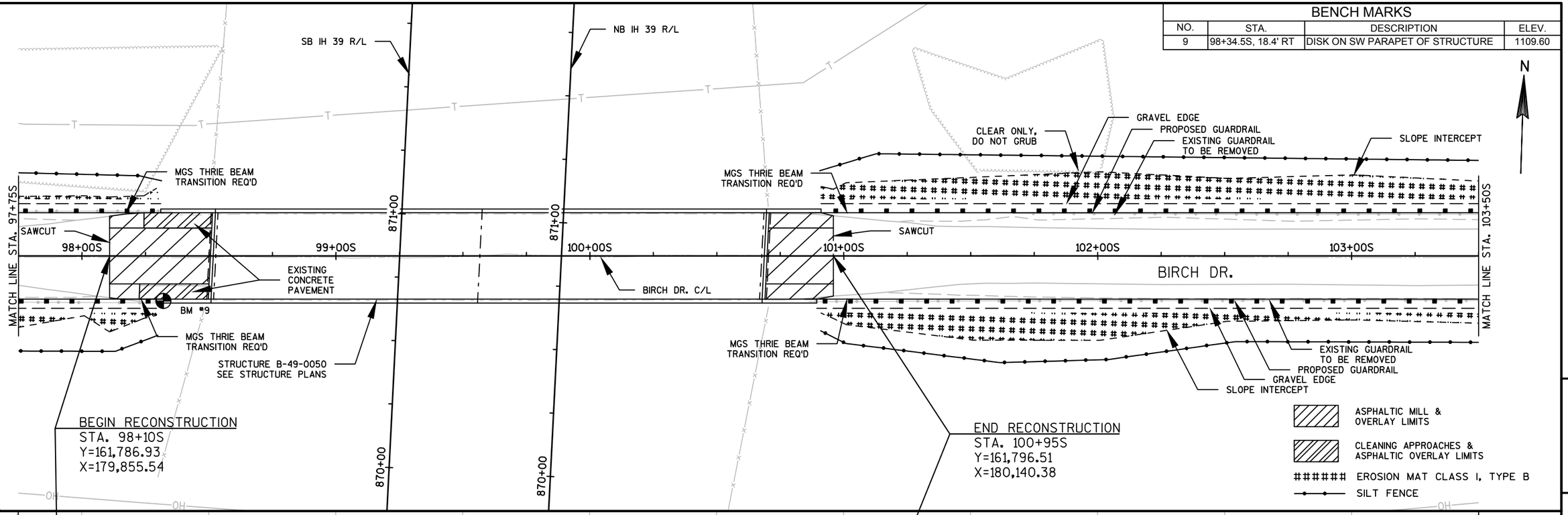

PROJECT NO: 1166-00-61	HWY: IH 39	COUNTY: PORTAGE	PLAN AND PROFILE: BIRCH DR. B-49-0050	SHEET 66	E

EROSION MAT CLASS I, TYPE B

SILT FENCE

N

EXISTING R/W

SLOPE INTERCEPT

GRAVEL EDGE

EXISTING GUARDRAIL TO BE REMOVED

PROPOSED GUARDRAIL

+53

MGS EAT REQUIRED +03

EP: 109+17.02S

MATCH LINE STA. 103+50S

104+00S 105+00S 106+00S 107+00S 108+00S 109+00S 109+17S

BIRCH DR.

BIRCH DR. C/L

PROPOSED GUARDRAIL

EXISTING GUARDRAIL TO BE REMOVED

GRAVEL EDGE

SLOPE INTERCEPT

+26

MGS EAT REQUIRED +76

END CONSTRUCTION
STA. 107+44S
Y=161,818.33
X=180,789.01

EXISTING R/W

5

5

1110 1108 1106 1104 1102 1100 1098 1096 1095

EXISTING C/L PROFILE

1110 1108 1106 1104 1102 1100 1098 1096 1094 1092 1090

EXISTING C/L PROFILE

1104 1102 1100 1098 1096 1094 1092 1090

103+50 104+00 105+00 106+00 107+00 108+00

1108.97 1107.83 1106.45 1104.82 1102.91 1100.84 1098.88 1097.12 1095.21 1093.10

PROJECT NO: 1166-00-61	HWY: IH 39	COUNTY: PORTAGE	PLAN AND PROFILE: BIRCH DR. B-49-0050	SHEET 67	E

Standard Detail Drawing List

08D01-18	CONCRETE CURB, CONCRETE CURB AND GUTTER AND TIES
08E09-06	SILT FENCE
09D01-05	CABINET SERVICE INSTALLATION (METER BREAKER PEDESTAL)
09D02-03	SIGNAL CONTROL CABINET
09G01-04A	SPAN WIRE TEMPORARY TRAFFIC SIGNAL
09G01-04D	SPAN WIRE TEMPORARY TRAFFIC SIGNAL
09G01-04E	SPAN WIRE TEMPORARY TRAFFIC SIGNAL
09G01-04F	SPAN WIRE TEMPORARY TRAFFIC SIGNAL
09G01-04G	SPAN WIRE TEMPORARY TRAFFIC SIGNAL
11B02-02	CONCRETE MEDIAN NOSE
13A05-05A	SHOULDER RUMBLE STRIP, MILLING
13A05-05B	SHOULDER RUMBLE STRIP, MILLING
14B07-14A	CONCRETE BARRIER TEMPORARY PRECAST, 12'-6"
14B07-14B	CONCRETE BARRIER TEMPORARY PRECAST, 12'-6"
14B07-14C	CONCRETE BARRIER TEMPORARY PRECAST, 12'-6"
14B07-14D	CONCRETE BARRIER TEMPORARY PRECAST, 12'-6"
14B07-14E	CONCRETE BARRIER TEMPORARY PRECAST, 12'-6"
14B07-14F	CONCRETE BARRIER TEMPORARY PRECAST, 12'-6"
14B07-14G	CONCRETE BARRIER TEMPORARY PRECAST, 12'-6"
14B07-14H	CONCRETE BARRIER TEMPORARY PRECAST, 12'-6"
14B08-02A	CRASH CUSHION/SAND BARREL ARRAY AND OTHER TEMPORARY BARRIER LAYOUT DETAILS
14B08-02B	CRASH CUSHION/SAND BARREL ARRAY AND OTHER TEMPORARY BARRIER LAYOUT DETAILS
14B08-02C	CRASH CUSHION/SAND BARREL ARRAY AND OTHER TEMPORARY BARRIER LAYOUT DETAILS
14B08-02D	CRASH CUSHION/SAND BARREL ARRAY AND OTHER TEMPORARY BARRIER LAYOUT DETAILS
14B08-02E	CRASH CUSHION/SAND BARREL ARRAY AND OTHER TEMPORARY BARRIER LAYOUT DETAILS
14B42-03A	MIDWEST GUARDRAIL SYSTEM (MGS) GUARDRAIL
14B42-03B	MIDWEST GUARDRAIL SYSTEM (MGS) GUARDRAIL
14B42-03C	MIDWEST GUARDRAIL SYSTEM (MGS) GUARDRAIL
14B44-02A	MIDWEST GUARDRAIL SYSTEM ENERGY ABSORBING TERMINAL (MGS)
14B44-02B	MIDWEST GUARDRAIL SYSTEM ENERGY ABSORBING TERMINAL (MGS)
14B44-02C	MIDWEST GUARDRAIL SYSTEM ENERGY ABSORBING TERMINAL (MGS)
14B45-04A	MIDWEST GUARDRAIL SYSTEM THRIE BEAM TRANSITION (MGS)
14B45-04B	MIDWEST GUARDRAIL SYSTEM THRIE BEAM TRANSITION (MGS)
14B45-04C	MIDWEST GUARDRAIL SYSTEM THRIE BEAM TRANSITION (MGS)
15C02-05A	BARRICADES AND SIGNS FOR MAINLINE CLOSURES
15C02-05B	BARRICADES AND SIGNS FOR MAINLINE CLOSURES
15C06-07	SIGNING & MARKING FOR TWO LANE BRIDGES
15C08-16A	PAVEMENT MARKING (MAINLINE)
15C08-16B	PAVEMENT MARKING (INTERSECTIONS)
15C08-16F	PAVEMENT MARKING (ISLANDS)
15C12-04	TRAFFIC CONTROL FOR LANE CLOSURE (SUITABLE FOR MOVING OPERATIONS)
15C33-01	STOP LINE AND CROSSWALK PAVEMENT MARKING
15D03-02	TRAFFIC CONTROL, LANE CLOSURE, SPEEDS GREATER THAN 40 M.P.H. WITH BARRIER
15D12-05A	TRAFFIC CONTROL, LANE CLOSURE
15D12-05B	TRAFFIC CONTROL, LANE CLOSURE, SPEED REDUCTION
15D28-03	TRAFFIC CONTROL, WORK ON SHOULDER OR PARKING LANE, UNDIVIDED ROADWAY
15D33-03	TRAFFIC CONTROL, ONE LANE ROAD WITH TEMPORARY SIGNALS
16A01-06	LANDMARK REFERENCE MONUMENTS AND COVERS

6

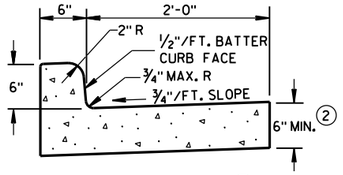

TYPES A & D ①

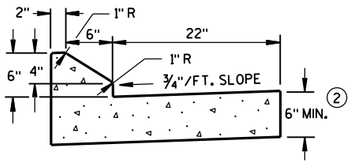

6" SLOPED CURB TYPES G & J ①

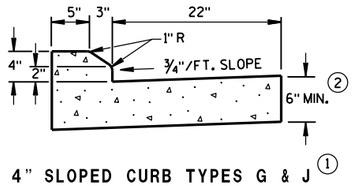

4" SLOPED CURB TYPES G & J ①

CONCRETE CURB & GUTTER 30"

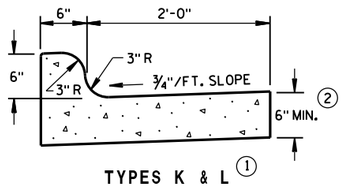

TYPES K & L ①

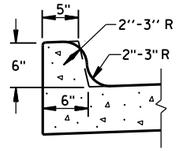

OPTIONAL CURB SHAPE FOR TYPES K & L ①

CONCRETE CURB & GUTTER 30"

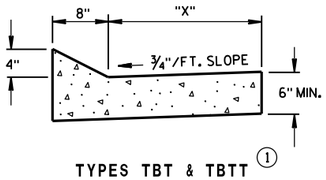

TYPES TBT & TBTT ①

CONCRETE CURB & GUTTER

TBT & TBTT	"X"
30"	22"
36"	28"

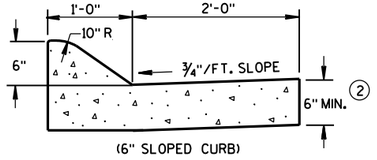

(6" SLOPED CURB)

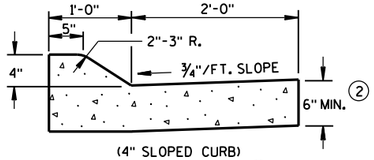

(4" SLOPED CURB)

TYPES A & D ①

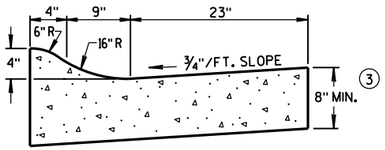

4" SLOPED CURB TYPES R & T ① ④

CONCRETE CURB & GUTTER 36"

GENERAL NOTES

DETAILS OF CONSTRUCTION, MATERIALS AND WORKMANSHIP NOT SHOWN ON THIS DRAWING SHALL CONFORM TO THE PERTINENT REQUIREMENTS OF THE CONTRACT.

PAVEMENT TIES AND TIE BARS SHALL BE EPOXY COATED IN CONFORMANCE WITH SUBSECTION 505.2.6.2 OF THE STANDARD SPECIFICATIONS.

INTEGRAL CURB & GUTTER SHALL CONFORM TO THE DETAILS SHOWN FOR CONCRETE CURB & GUTTER INCLUDING THE TRANSVERSE GUTTER SLOPE. A LONGITUDINAL CONSTRUCTION JOINT IS NOT REQUIRED WITH INTEGRAL CURB AND GUTTER.

WHERE THE TRANSVERSE JOINTS IN THE PAVEMENT ARE REQUIRED TO BE SEALED, THE JOINTS IN THE INTEGRAL CURB AND GUTTER SHALL BE SEALED TO THE FACE OF CURB WITH THE SAME TYPE OF SEALANT. THE COST OF FURNISHING AND INSTALLING THIS SEALANT SHALL BE INCIDENTAL TO THE ITEM CONCRETE CURB AND GUTTER.

UNLESS OTHERWISE SHOWN ON THE TYPICAL CROSS SECTIONS, THE BASE AGGREGATE AND COMMON EXCAVATION LIMITS ARE 2'-0" BEHIND THE BACK OF CURBS.

① TIE BARS ARE REQUIRED FOR CURB AND GUTTER TYPES A, G, K, R AND TBTT.

② THE BOTTOM OF CURB AND GUTTER MAY BE CONSTRUCTED EITHER LEVEL OR PARALLEL TO THE SLOPE OF THE SUBGRADE OR BASE AGGREGATE PROVIDED A 6" MINIMUM GUTTER THICKNESS IS MAINTAINED.

③ THE BOTTOM OF CURB AND GUTTER MAY BE CONSTRUCTED EITHER LEVEL OR PARALLEL TO THE SLOPE OF THE SUBGRADE OR BASE AGGREGATE PROVIDED A 8" MINIMUM GUTTER THICKNESS IS MAINTAINED.

④ THE FACE OF CURB IS 6" FROM THE BACK OF CURB.

⑤ WHEN REVERSE SLOPE GUTTER IS REQUIRED, THE LOCATION(S) WILL BE SHOWN ELSEWHERE IN THE PLAN.

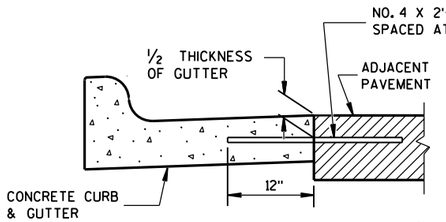

TYPICAL TIE BAR LOCATION ①

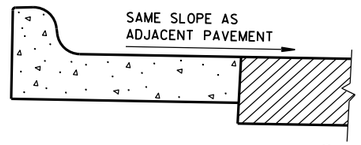

REVERSE SLOPE GUTTER ⑤
(TYPICAL FOR ALL CURB & GUTTER TYPES)

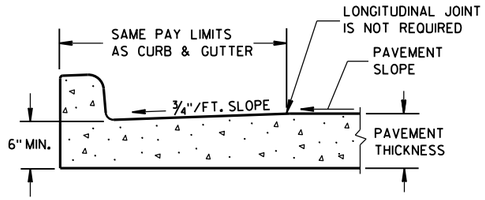

PARTIAL SECTION OF PAVEMENT
WITH INTEGRAL CURB & GUTTER

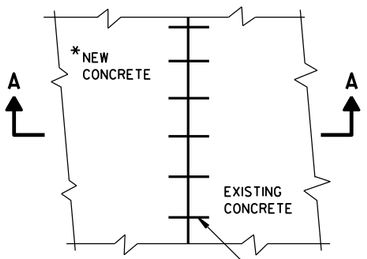

PLAN VIEW

*NEW CURB & GUTTER, SURFACE DRAINS, CONCRETE PAVEMENT OR OTHER NEW CONCRETE.

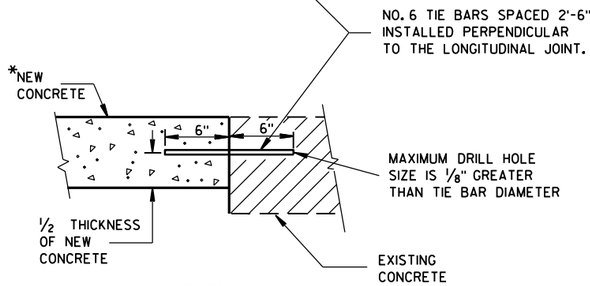

SECTION A-A

TIE BARS DRILLED
INTO EXISTING PAVEMENT

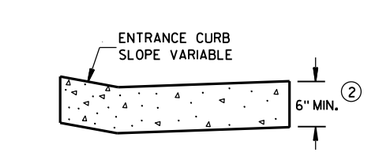

DRIVEWAY ENTRANCE CURB
(WHEN DIRECTED BY THE ENGINEER)

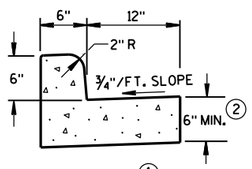

① TYPES A & D

CONCRETE CURB & GUTTER 18"

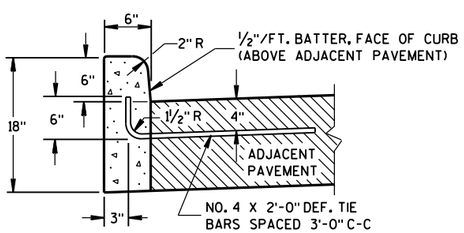

① TYPES A & D

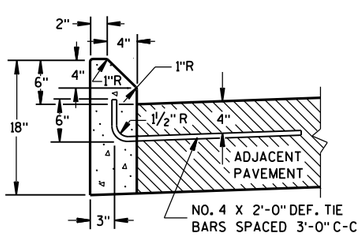

① TYPES G & J

CONCRETE CURB

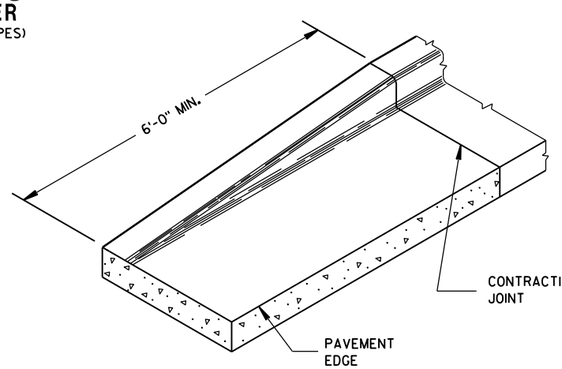

END SECTION CURB & GUTTER

CONCRETE CURB, CONCRETE CURB & GUTTER AND TIES

STATE OF WISCONSIN
DEPARTMENT OF TRANSPORTATION

APPROVED
June, 2015 — DATE
/S/ Jerry H. Zogg — ROADWAY STANDARDS ENGINEER
FHWA

6

S.D.D. 8 D 1-18

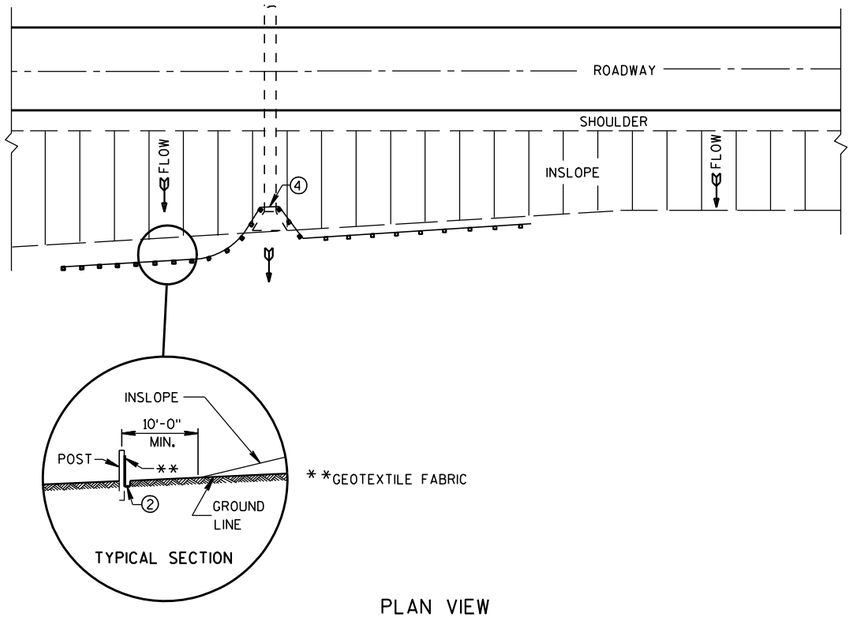

PLAN VIEW

TYPICAL APPLICATION OF SILT FENCE

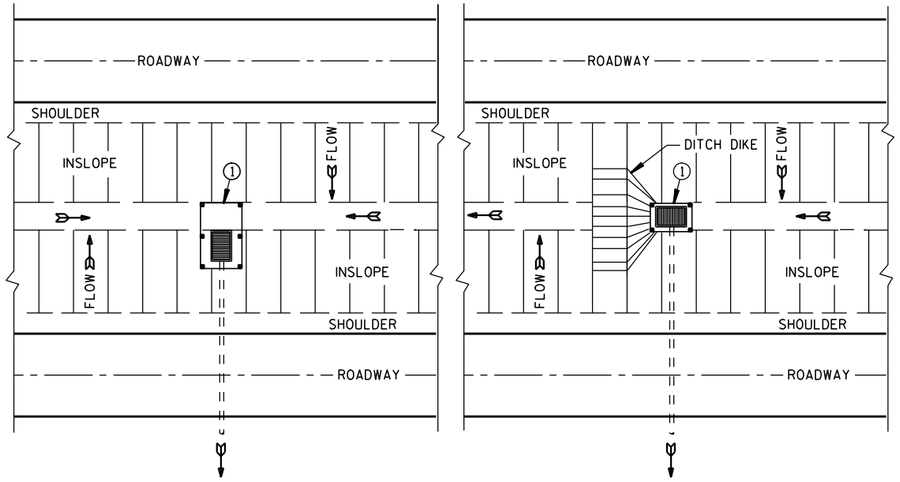

PLAN VIEW

SILT FENCE AT MEDIAN SURFACE DRAINS

GENERAL NOTES

DETAILS OF CONSTRUCTION NOT SHOWN ON THIS DRAWING SHALL CONFORM TO THE PERTINENT REQUIREMENTS OF THE STANDARD SPECIFICATIONS AND APPLICABLE SPECIAL PROVISIONS.

① HORIZONTAL BRACE REQUIRED WITH 2" X 4" WOODEN FRAME OR EQUIVALENT AT TOP OF POSTS.

② FOR MANUAL INSTALLATIONS THE TRENCH SHALL BE A MINIMUM OF 4" WIDE & 6" DEEP TO BURY AND ANCHOR THE GEOTEXTILE FABRIC. FOLD MATERIAL TO FIT TRENCH AND BACKFILL & COMPACT TRENCH WITH EXCAVATED SOIL.

③ WOOD POSTS SHALL BE A MINIMUM SIZE OF 1⅛" X 1⅛" OF OAK OR HICKORY.

④ SILT FENCE TO EXTEND ACROSS THE TOP OF THE PIPE.

⑤ CONSTRUCT SILT FENCE FROM A CONTINUOUS ROLL IF POSSIBLE BY CUTTING LENGTHS TO AVOID JOINTS. IF A JOINT IS NECESSARY USE ONE OF THE FOLLOWING TWO METHODS; A) OVERLAP THE END POSTS AND TWIST, OR ROTATE, AT LEAST 180 DEGREES, B) HOOK THE END OF EACH SILT FENCE LENGTH.

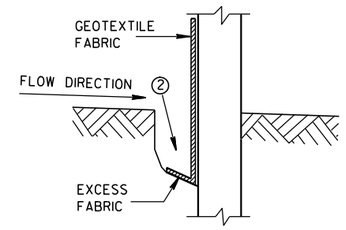

TRENCH DETAIL

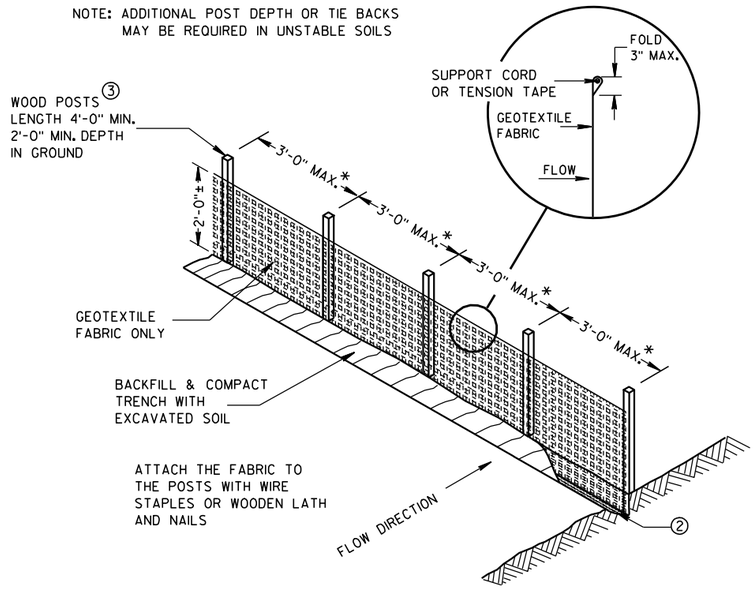

SILT FENCE

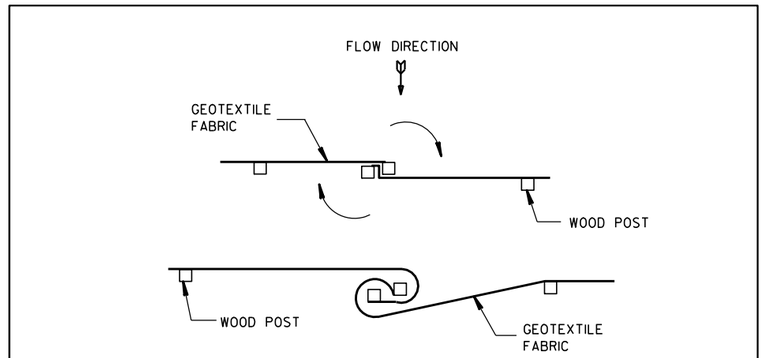

TWIST METHOD

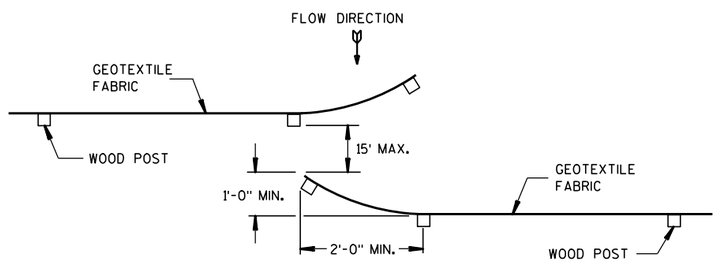

HOOK METHOD

JOINING TWO LENGTHS OF SILT FENCE ⑤

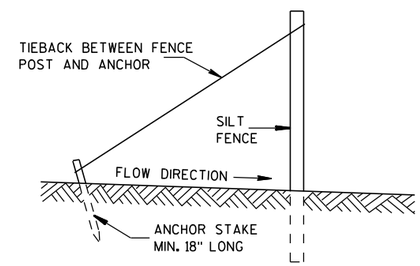

SILT FENCE TIE BACK

(WHEN REQUIRED BY THE ENGINEER)

SILT FENCE

STATE OF WISCONSIN
DEPARTMENT OF TRANSPORTATION

APPROVED
4-29-05 DATE
/S/ Beth Cannestra
CHIEF ROADWAY DEVELOPMENT ENGINEER
FHWA

6

S.D.D. 8 E 9-6

6

S.D.D. 8 E 9-6

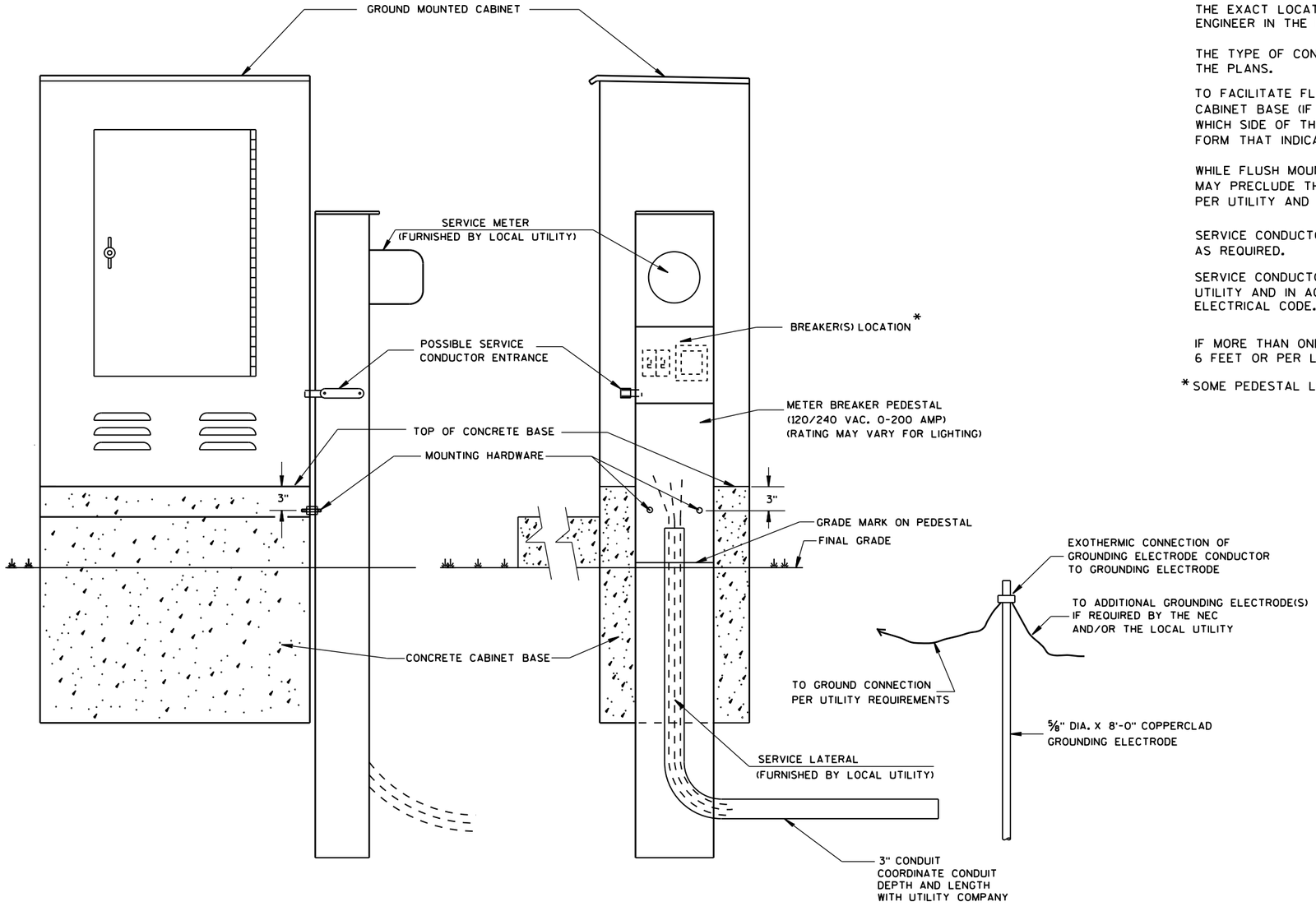

TYPICAL CABINET SERVICE INSTALLATION

GENERAL NOTES

DETAILS OF CONSTRUCTION, MATERIALS AND WORKMANSHIP NOT SHOWN ON THIS DRAWING SHALL CONFORM TO THE PERTINENT REQUIREMENTS OF THE CONTRACT.

THE EXACT LOCATION OF THE METER BREAKER PEDESTAL SHALL BE DETERMINED BY THE ENGINEER IN THE FIELD.

THE TYPE OF CONCRETE CABINET BASE TO BE INSTALLED SHALL BE AS CALLED FOR IN THE PLANS.

TO FACILITATE FLUSH MOUNTING OF THE METER BREAKER PEDESTAL AGAINST THE SIDE OF THE CABINET BASE (IF FLUSH MOUNTING POSSIBLE. CONFER WITH THE LOCAL UTILITY TO DETERMINE WHICH SIDE OF THE CONCRETE BASE THE ELECTRICAL SERVICE LATERAL WILL APPROACH. THEN FORM THAT INDICATED SIDE FOR FULL SIDE DEPTH.

WHILE FLUSH MOUNTING IS THE MOST DESIRABLE MOUNTING CONFIGURATION UTILITY REQUIREMENTS MAY PRECLUDE THIS OPTION. CONTRACTOR MUST PROVIDE UTILITY APPROVED PEDESTAL AND INSTALL PER UTILITY AND MANUFACTURERS REQUIREMENTS.

SERVICE CONDUCTOR ENTRANCES SHALL BE RIGID METALLIC CONDUIT, NIPPLES AND/OR CONDULETS AS REQUIRED.

SERVICE CONDUCTOR ENTRANCES SHALL BE SIZED AND LOCATED AS REQUIRED BY THE LOCAL UTILITY AND IN ACCORDANCE WITH APPROPRIATE ARTICLES OF THE LATEST ACCEPTED NATIONAL ELECTRICAL CODE.

IF MORE THAN ONE GROUNDING ELECTRODE IS REQUIRED, THE DISTANCE APART SHALL BE 6 FEET OR PER LOCAL UTILITY REGULATIONS.

* SOME PEDESTAL LIGHTING PLANS SHOW MAIN LUGS ONLY.

CABINET SERVICE INSTALLATION (METER BREAKER PEDESTAL)

STATE OF WISCONSIN
DEPARTMENT OF TRANSPORTATION

APPROVED
Sept. 2014 — DATE
/S/ Ahmet Demirbilek — STATE ELECTRICAL
FHWA

6
S.D.D. 9 D 1-5

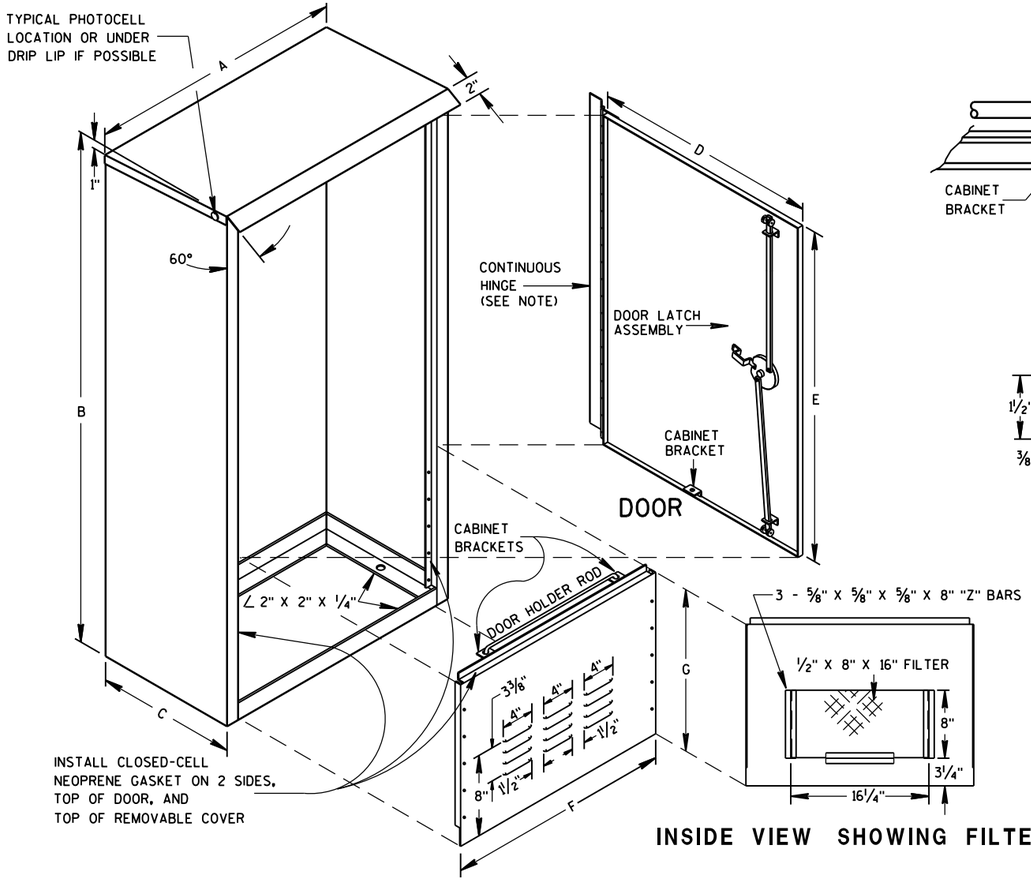

REMOVABLE COVER

INSIDE VIEW SHOWING FILTER

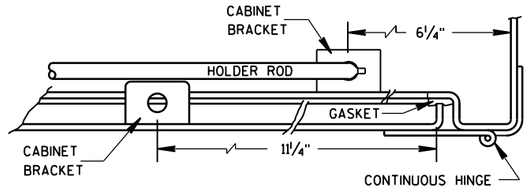

HINGE & DOOR HOLDER

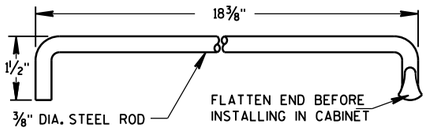

HOLDER ROD

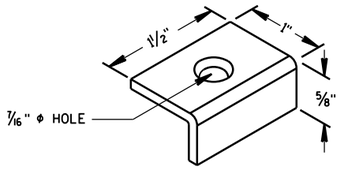

CABINET BRACKET

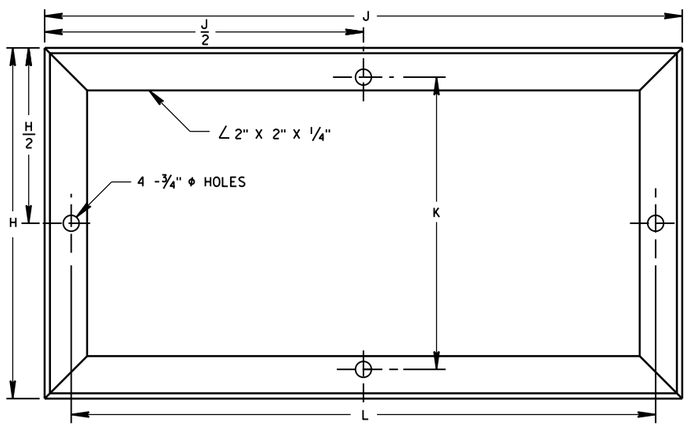

MOUNTING BASE

TABLE OF DIMENSIONS (INCHES)

MARK	CABINET TYPE		
	3060	3860	3866
A	30	38	38
B	60	60	66
C	16 1/2	16 1/2	24
D	26 1/2	34 3/4	33 3/4
E	38 3/4	38 3/4	38 3/4
F	26 1/2	34 3/4	33 3/4
G	19	19	25
H	16 1/2	16 1/2	24
H/2	8 1/4	8 1/4	12
J	30	38	38
J/2	15	19	19
K	13 3/4	13 3/4	21 1/4
L	27 1/2	35 1/2	35 1/2

GENERAL NOTES

DETAILS OF CONSTRUCTION, MATERIALS AND WORKMANSHIP NOT SHOWN ON THIS DRAWING SHALL CONFORM TO THE PERTINENT REQUIREMENTS OF THE STANDARD SPECIFICATIONS AND APPLICABLE SPECIAL PROVISIONS.

PRIME WITH PHOSPHATE TREATMENT AND PRIMER.

FINISH EXTERIOR SURFACES WITH RUSTOLEUM #906 SILVER GRAY OR APPROVED EQUAL.

FINISH INTERIOR WITH RUSTOLEUM #2766 HIGH GLOSS WHITE ENAMEL OR APPROVED EQUAL.

ALL SHEET METAL PARTS SHALL BE .125 INCH THICK ALUMINUM.

ALL SEAMS SHALL BE CONTINUOUSLY WELDED.

ALUMINUM SHALL BE TYPE 5052-H32.

CONTINUOUS HINGE SHALL BE HEAVY GAUGE ALUMINUM WITH 1/4" DIAMETER STAINLESS STEEL HINGE PIN. HINGE IS SECURED WITH 1/4" X 20 TPI STAINLESS STEEL CARRIAGE BOLTS AND STAINLESS STEEL NYLOCK NUTS.

A SINGLE PHOTOCELL SHALL BE LOCATED ON THE NORTH-NORTHEAST SIDE OF THE CABINET UNLESS OTHERWISE CALLED FOR IN THE SPECIAL PROVISIONS. THE PHOTOCELL SHALL BE PLACED AS SHOWN AND SHALL BE LISTED ON THE DEPARTMENTS APPROVED PRODUCTS LIST.

DOOR LATCH ASSEMBLY TO BE PROVIDED WITH THREE-POINT LOCKING MECHANISM.

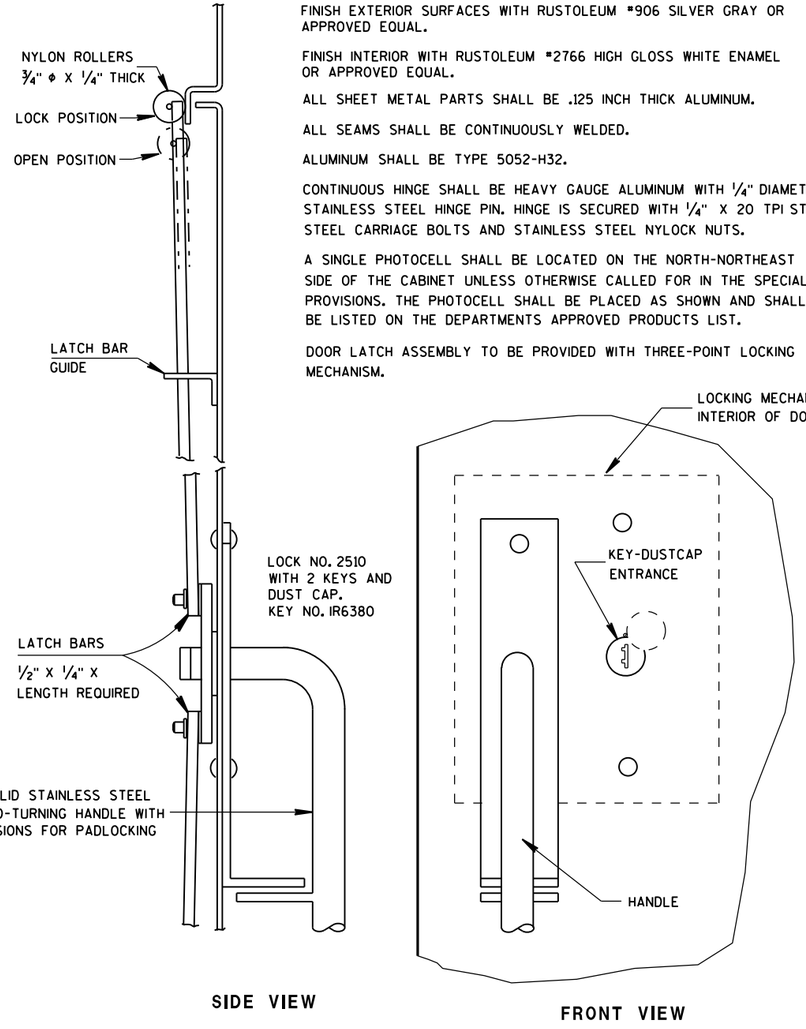

SIDE VIEW

FRONT VIEW

LATCH ASSEMBLY

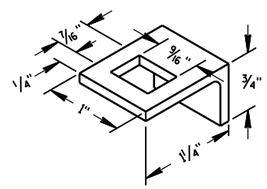

LATCH BAR GUIDE

SIGNAL CONTROL CABINET

STATE OF WISCONSIN
DEPARTMENT OF TRANSPORTATION

APPROVED
Sept. 2014
DATE

/S/ Ahmet Demirbilek
STATE ELECTRICAL

FHWA

6

S.D.D. 9 D 2-3

6

S.D.D. 9 D 2-3

GENERAL NOTES

DETAILS OF CONSTRUCTION, MATERIALS AND WORKMANSHIP NOT SHOWN ON THIS DRAWING SHALL CONFORM TO THE PERTINENT REQUIREMENTS OF THE CONTRACT.

1. WOOD POLES SHALL BE CLASS 4. LENGTH DETERMINED BY SIGNAL PLAN.

2. SIGNAL FACES:
   A. ALL SECTIONS SHALL BE 12" AND POLYCARBONATE.
   B. EACH SHALL CONTAIN A 5" WIDE DULL BLACK POLYCARBONATE BACKPLATE.
   C. EACH SHALL BE WIRED FROM THE TOP SIGNAL MOUNTING BRACKET.
   D. NEAR RIGHT SIGNAL FACE SUSPENDED ON THE TETHER (NO BACKPLATE) SHALL NOT BE OVER THE TRAVELED WAY. IF THE POLE IS WITHIN 5 FEET OF THE TRAVELED WAY MOUNT THE SIGNAL FACE ON THE WOOD POLE WITH BACKPLATE.

3. SPAN WIRE:
   A. EACH SPAN WIRE SHALL BE INDIVIDUALLY DOWN GUYED.
   B. SIGNAL AND LIGHTING CABLES SHALL ONLY BE ATTACHED TO THE UPPER SPAN WIRE.
   C. THE SIGNAL ASSEMBY SHALL HAVE A 17' MIN. HEIGHT ABOVE THE ROADWAY. THIS SHALL BE MEASURED AFTER THE SPAN WIRE INSTALLATION IS COMPLETED WITH ALL CABLES AND SIGNAL FACES IN PLACE. MAINTAIN MINIMUM AND MAXIMUM HEIGHTS AS ROADWAY WORK PROGRESSES.

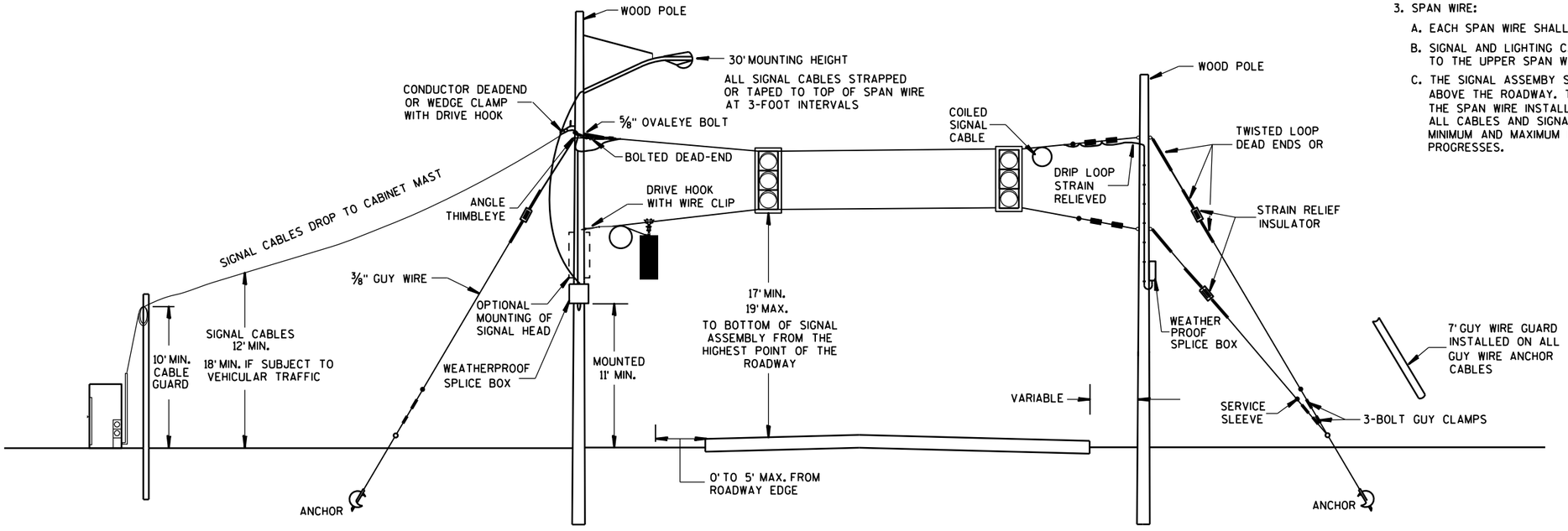

SPAN WIRE
TEMPORARY SIGNALS

MINIMUM POLE LENGTHS	POLE BURIEL DEPTHS
25'	5'
30'	6'
35'	7'
40'	8'
45'	9'

SPAN WIRE
TEMPORARY TRAFFIC SIGNAL

STATE OF WISCONSIN
DEPARTMENT OF TRANSPORTATION

APPROVED
June, 2015 — DATE
/S/ Ahmet Demirbilek — STATE ELECTRICAL
FHWA

6

S.D.D. 9 G 1-4a

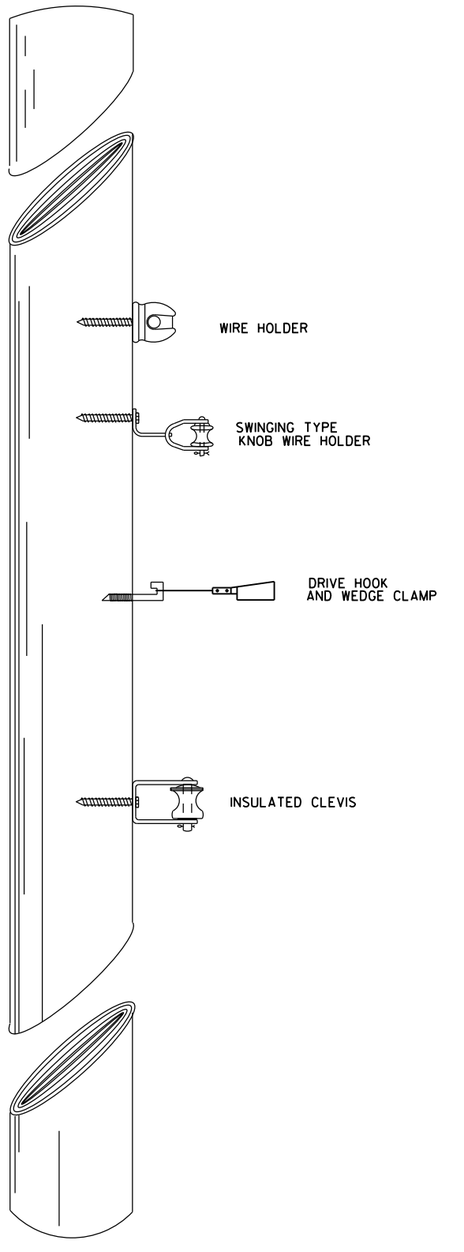

TYPICAL CABLE HANGERS

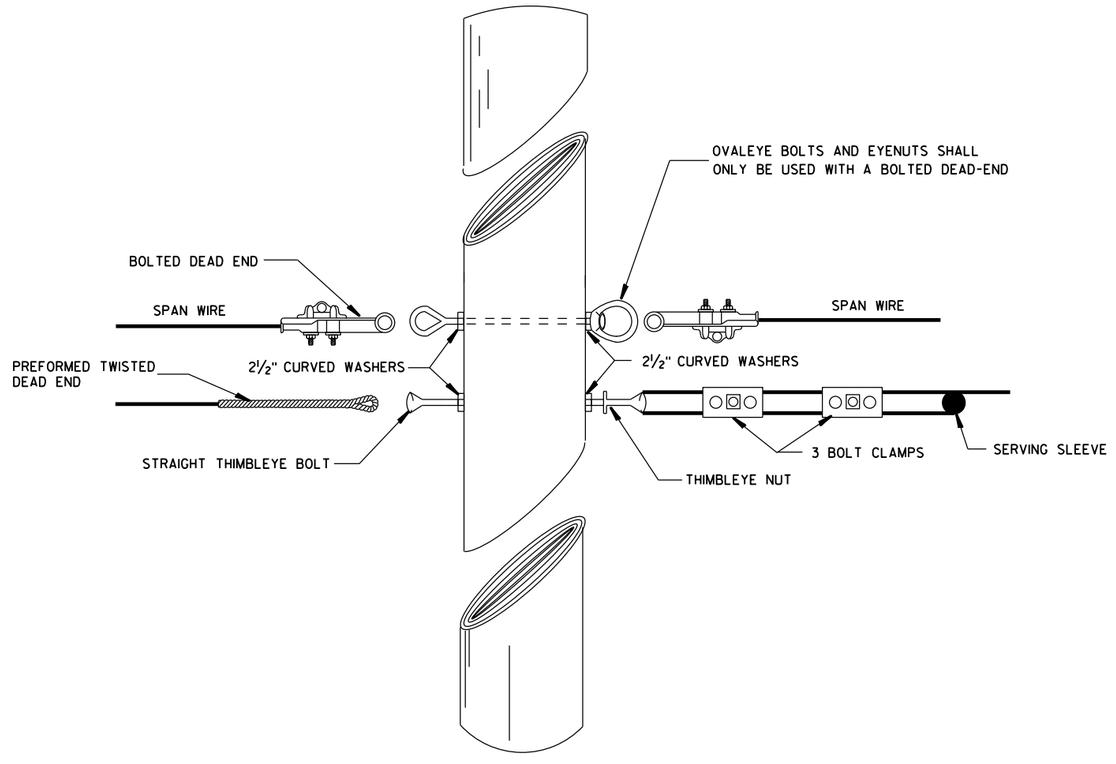

TYPICAL DEAD-ENDING

SPAN WIRE
TEMPORARY TRAFFIC SIGNAL

STATE OF WISCONSIN
DEPARTMENT OF TRANSPORTATION

APPROVED

June, 2015
DATE

/S/ Ahmet Demirbilek
STATE ELECTRICAL

FHWA

6

S.D.D. 9 G 1-4d

6

S.D.D. 9 G 1-4d

GENERAL NOTES

1. USE ¾" DRILL IN WOOD POLE TO PROVIDE HOLE FOR ⅝" BOLTS.
2. SAFTY LOOP REQUIRED ON EACH END OF ALL SPAN WIRES.

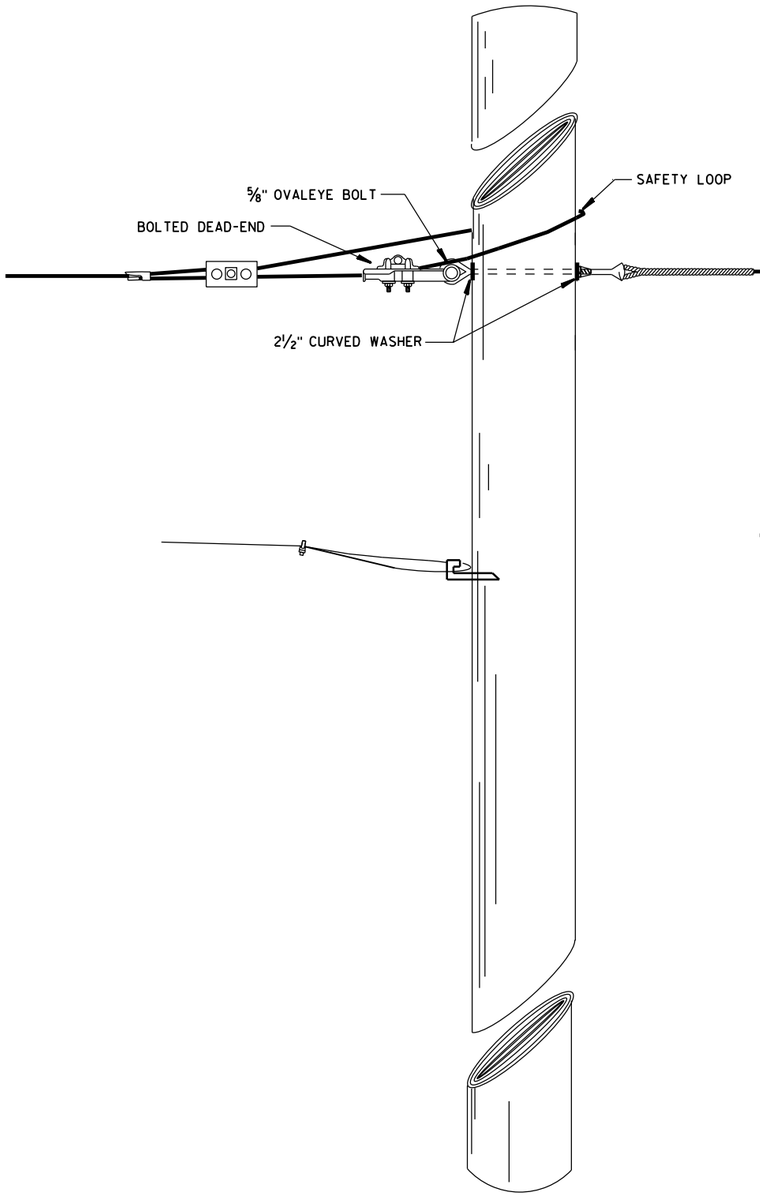

SPAN WIRE POLE

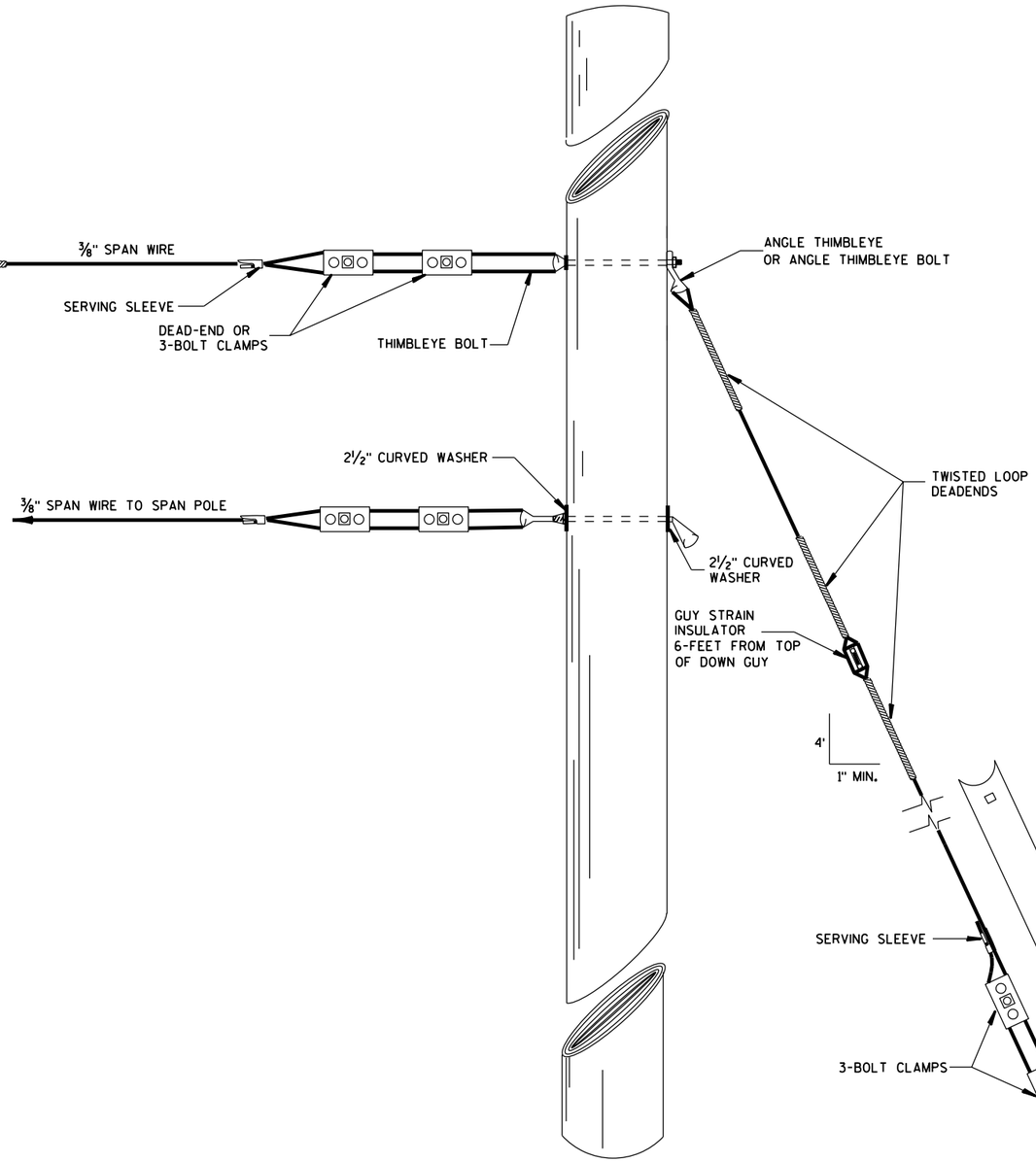

GUY POLE

TYPICAL DEAD-ENDINGS OR GUYING

SPAN WIRE TEMPORARY TRAFFIC SIGNAL
STATE OF WISCONSIN DEPARTMENT OF TRANSPORTATION
APPROVED June. 2015 (DATE) — /S/ Ahmet Demirbilek (STATE ELECTRICAL)
FHWA

6

S.D.D. 9 G 1-4e

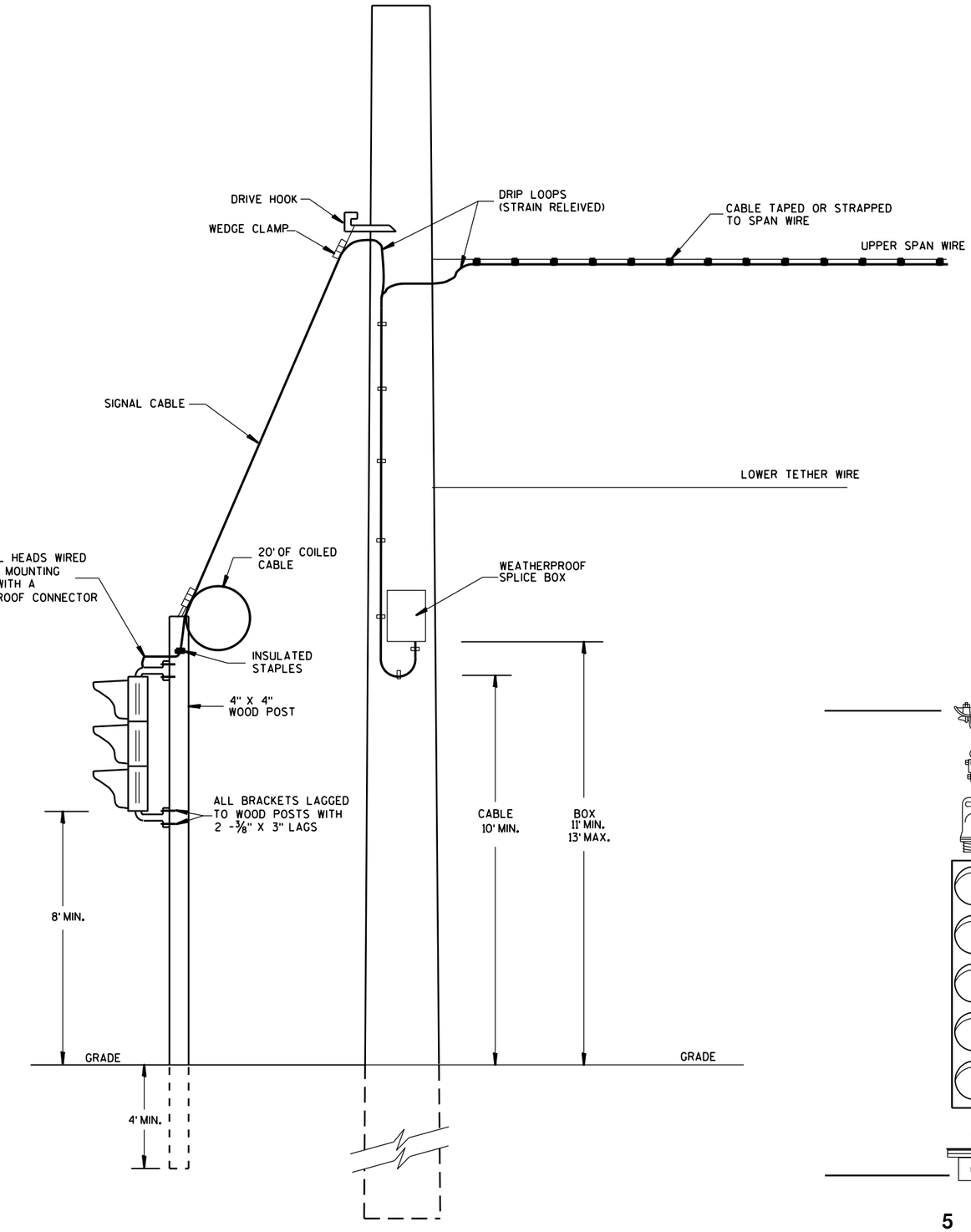

TYPICAL DROP TO TEMPORARY MOVEABLE SIGNAL

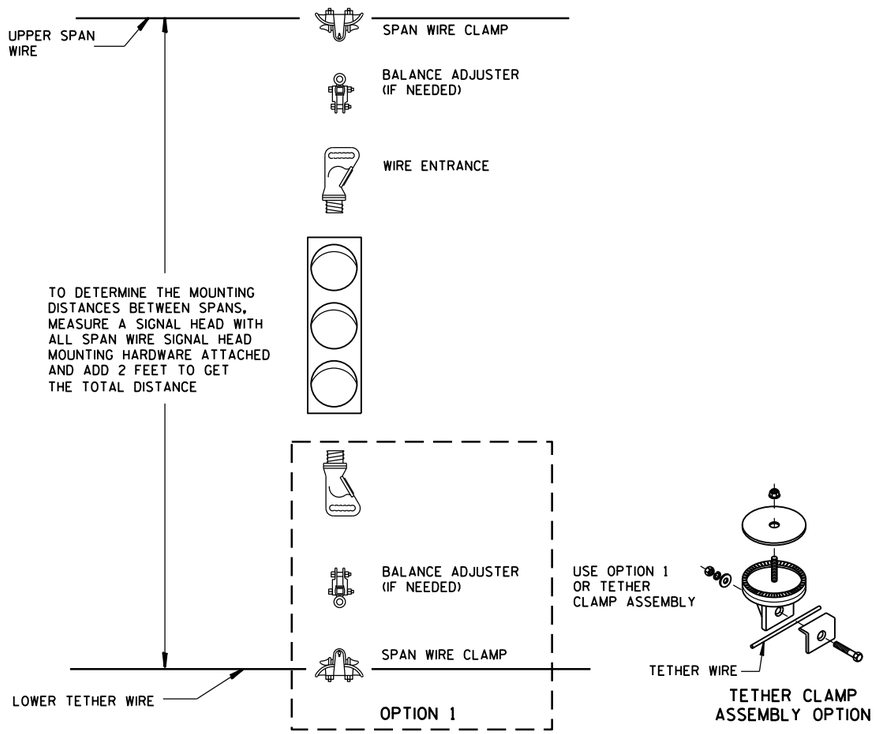

TETHER CLAMP ASSEMBLY OPTION

TYPICAL SPAN WIRE MOUNTING HARDWARE

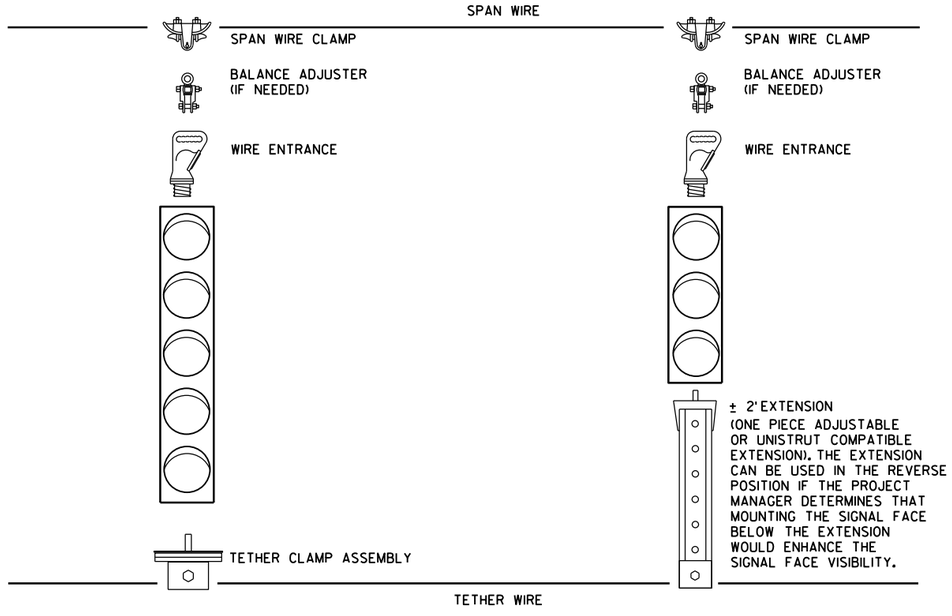

5 SECTION VERTICAL WITH 3 SECTION VERTICAL ON ONE SPAN WIRE

SPAN WIRE TEMPORARY TRAFFIC SIGNAL

STATE OF WISCONSIN
DEPARTMENT OF TRANSPORTATION

APPROVED

June. 2015 — DATE

/S/ Ahmet Demirbilek — STATE ELECTRICAL

FHWA

6

S.D.D. 9 G 1-4f

6

S.D.D. 9 G 1-4f

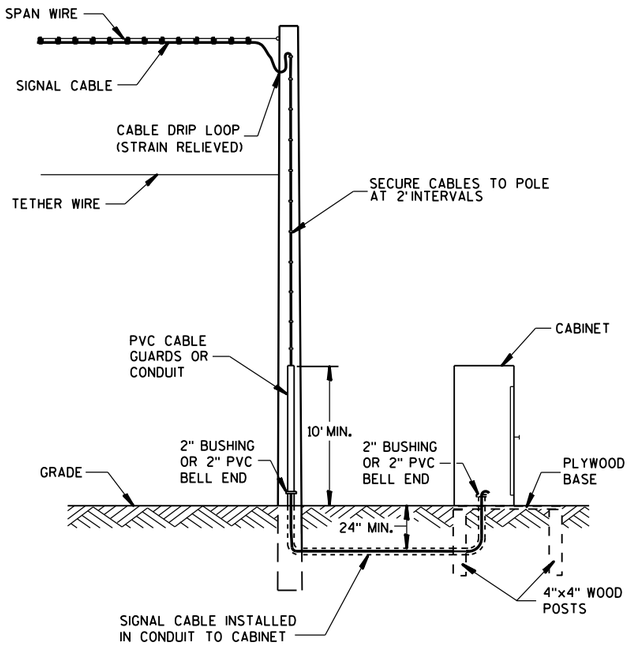

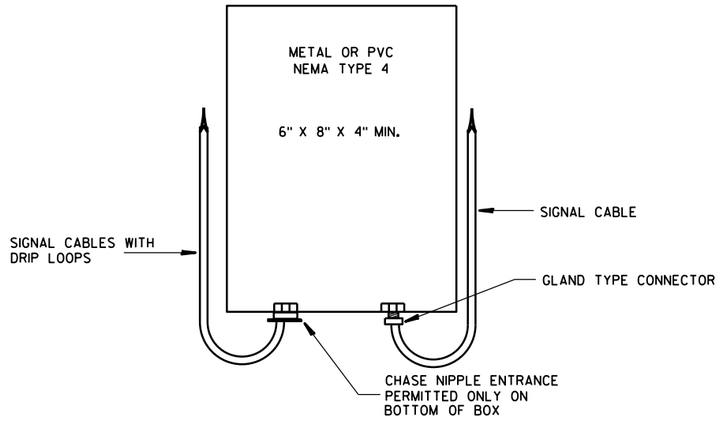

SPLICE BOX

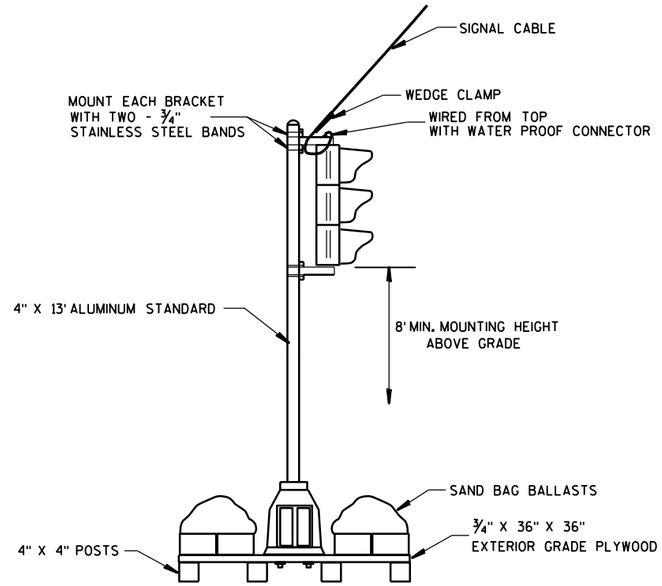

TYPICAL SKID TYPE TEMPORARY

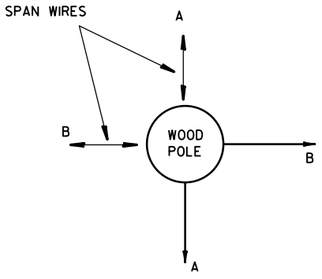

ALL DOWN OR SIDEWALK GUYS
SHALL BE INSTALLED IN THE
OPPOSITE DIRECTION OF THE
STRAIN OF THE SPAN WIRE

CORNER POLES

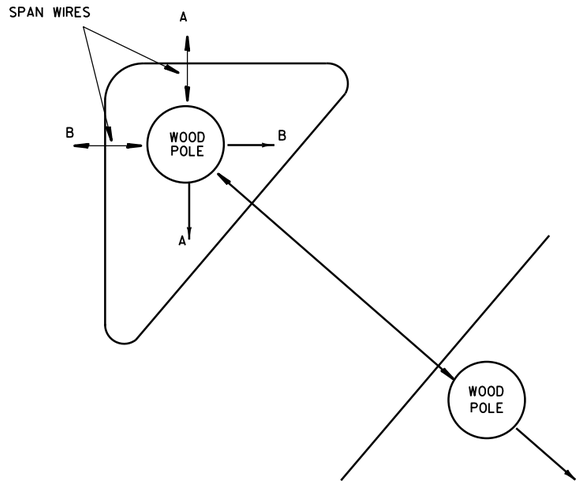

ISLAND POLES

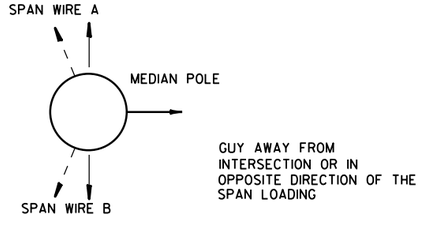

MEDIAN POLES

SPAN WIRE
TEMPORARY TRAFFIC SIGNAL

STATE OF WISCONSIN
DEPARTMENT OF TRANSPORTATION

APPROVED
June, 2015 — DATE
/S/ Ahmet Demirbilek — STATE ELECTRICAL 77
FHWA

6

S.D.D. 9 G 1-4g

6

S.D.D. 9 G 1-4g

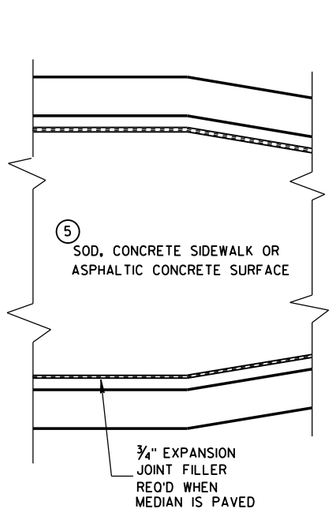

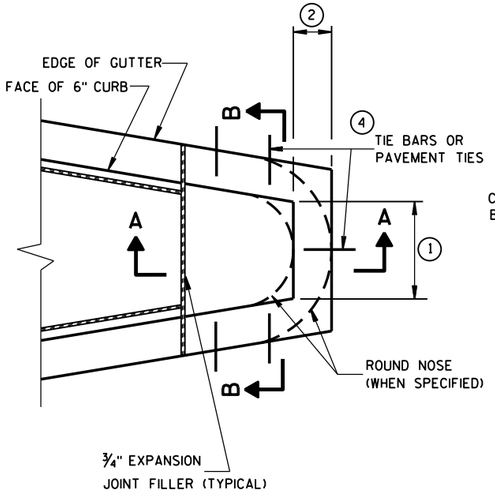

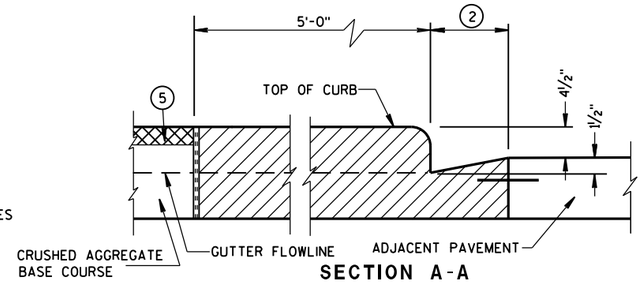

SECTION A-A

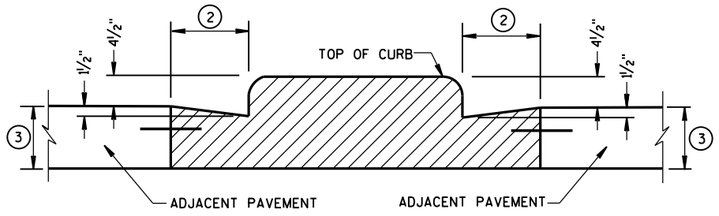

SECTION B-B

CONCRETE MEDIAN BLUNT NOSE DETAIL

GENERAL NOTES

DETAILS OF CONSTRUCTION, MATERIALS AND WORKMANSHIP NOT SHOWN ON THIS DRAWING SHALL CONFORM TO THE PERTINENT REQUIREMENTS OF THE STANDARD SPECIFICATIONS AND THE APPLICABLE SPECIAL PROVISIONS.

(1) SEE PLAN FOR MEDIAN NOSE WIDTH AND RADIUS (FOR ROUND NOSE ALTERNATE).

(2) WIDTH OF GUTTER TO MATCH EXISTING ADJACENT GUTTER OR AS SPECIFIED ELSEWHERE IN THE PLAN.

(3) DEPTH EQUAL TO ADJACENT PAVEMENT. ADJACENT PAVEMENT STRUCTURE DETAILS ARE SHOWN ON THE PLAN. TYPICAL OPTIONS ARE:

(1) NEW OR EXISTING CONCRETE PAVEMENT.

(2) ASPHALTIC CONCRETE PAVEMENT OVER NEW OR EXISTING CONCRETE BASE COURSE.

(3) ASPHALTIC CONCRETE PAVEMENT OVER CRUSHED AGGREGATE BASE COURSE.

(4) TIE BARS OR PAVEMENT TIES REQUIRED IN NEW CONCRETE PAVEMENT OR CONCRETE BASE COURSE. TIE BARS SHALL BE NO. 4 X 2'-0" SPACED AT 2'-0" C-C.

PAVEMENT TIES REQUIRED IN EXISTING CONCRETE BASE COURSE. PAVEMENT TIES SHALL BE NO. 6 X 1'-0" SPACED AT 3'-0" C-C INSTALLED ON A HORIZONTAL SKEW OF 6:1. THE DIRECTION OF SKEW SHALL ALTERNATE AFTER EVERY ONE OR TWO BARS.

(5) SURFACE TYPE AND DETAILS ARE SHOWN ELSEWHERE IN THE PLAN.

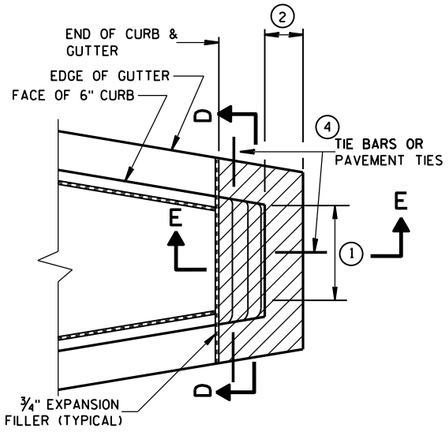

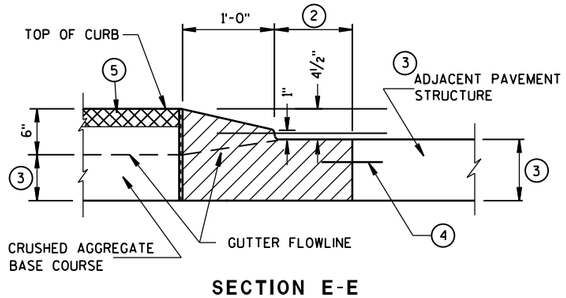

SECTION E-E

CONCRETE MEDIAN SLOPED NOSE TYPE 2

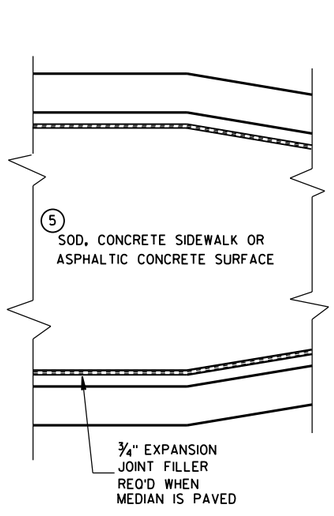

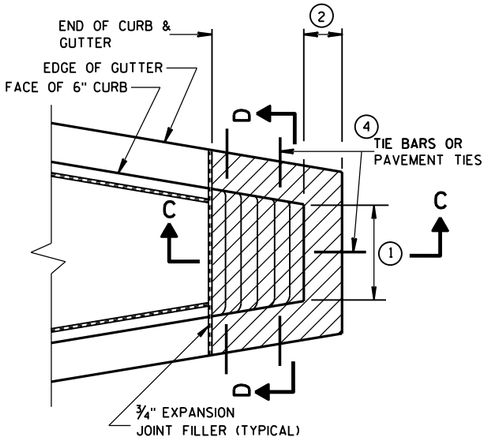

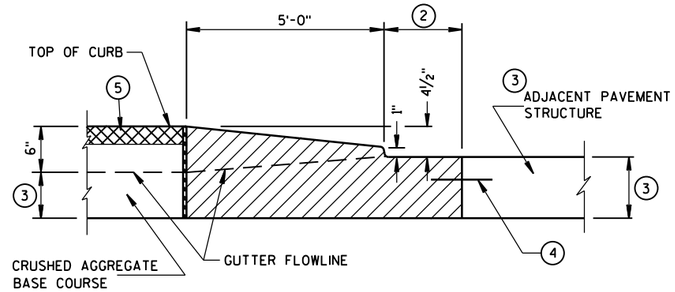

SECTION C-C

CONCRETE MEDIAN SLOPED NOSE TYPE 1

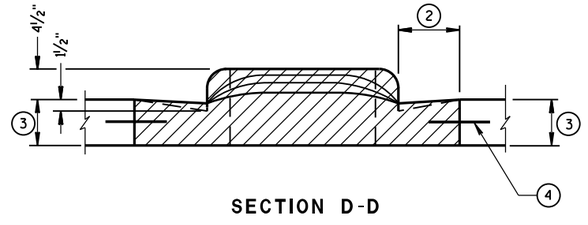

SECTION D-D

CONCRETE MEDIAN NOSE

STATE OF WISCONSIN
DEPARTMENT OF TRANSPORTATION

APPROVED

6/8/2006
DATE

/S/ Jerry H. Zogg
ROADWAY STANDARDS D ENGINEER

78

FHWA

6

S.D.D. 11 B 2-2

6

S.D.D. 11 B 2-2

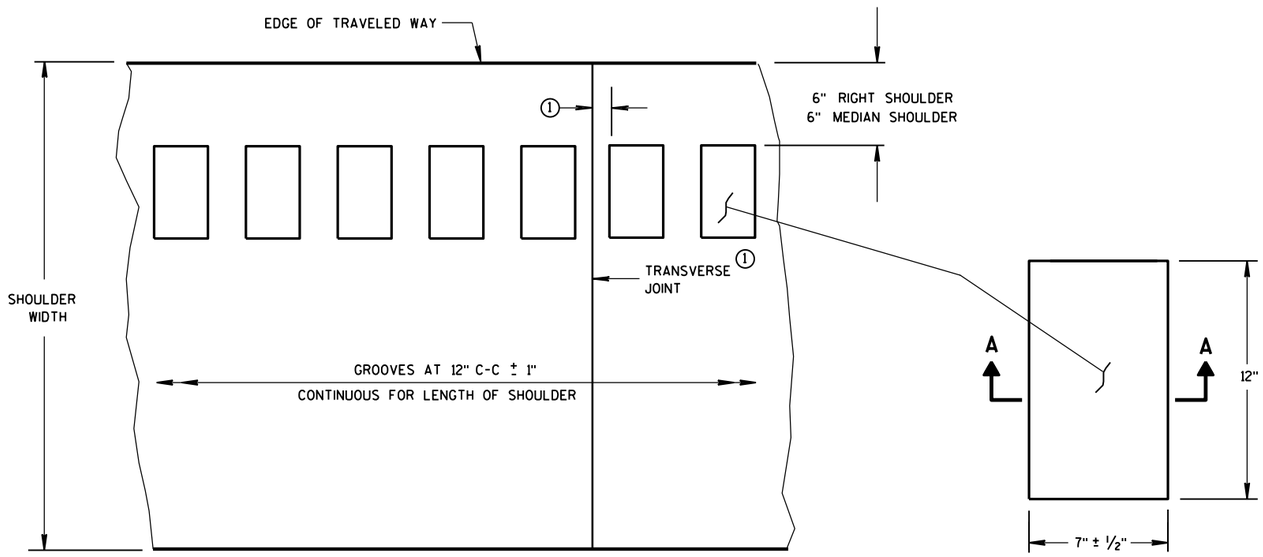

PLAN VIEW
SHOULDER WITH GROOVES

PLAN VIEW
(SINGLE GROOVE)

PLACEMENT DETAIL FOR MILLED RUMBLE STRIP

GENERAL NOTES

DETAILS OF CONSTRUCTION SHOWN ON THIS DRAWING SHALL CONFORM TO THE PERTINENT REQUIREMENTS OF THE STANDARD SPECIFICATIONS AND APPLICABLE SPECIAL PROVISIONS.

RUMBLE STRIPS ON EXPRESSWAYS

DO NOT INSTALL RUMBLE STRIPS ACROSS SIDE ROAD INTERSECTIONS, COMMERCIAL DRIVEWAYS, PRIVATE DRIVEWAYS OR ADJACENT TO RIGHT TURN LANES, LEFT TURN LANES, TURN LANE TAPERS, BRIDGE DECKS, BRIDGE APPROACHES, OR 100 FEET IN ADVANCE OF RAILROAD CROSSING. THE ATTACHED STANDARD DETAIL DRAWING SHOWS THE LOCATION OF THE RUMBLE STRIPS AT INTERCHANGE AREAS.

(1) CONCRETE PAVEMENT - RUMBLE STRIPS SHALL BE A MINIMUM OF 6" AWAY FROM TRANSVERSE JOINTS.

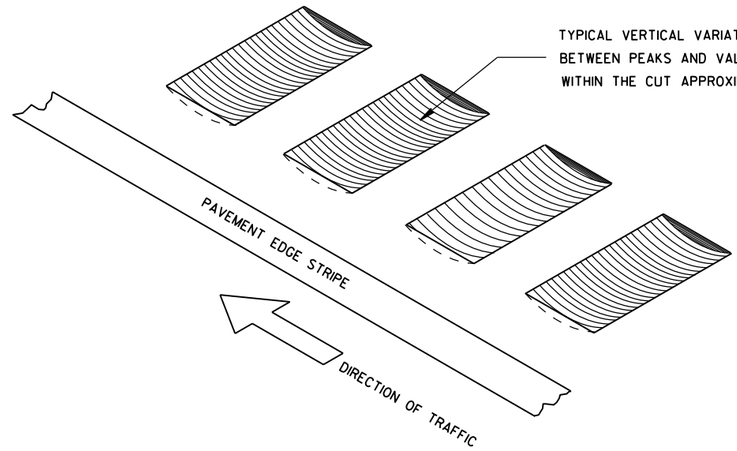

ISOMETRIC

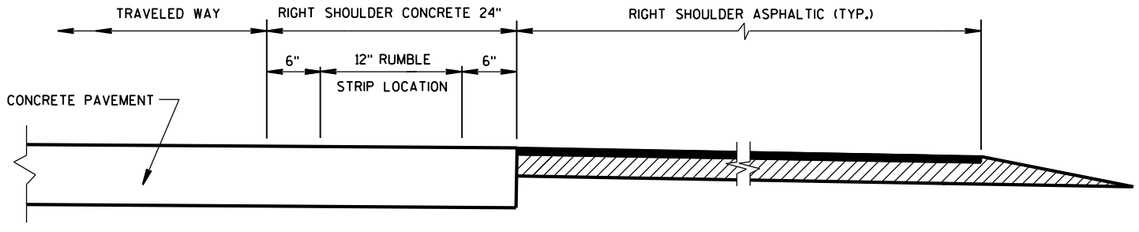

SECTION VIEW
CONCRETE PAVEMENT EXTENDS INTO RIGHT SHOULDER)

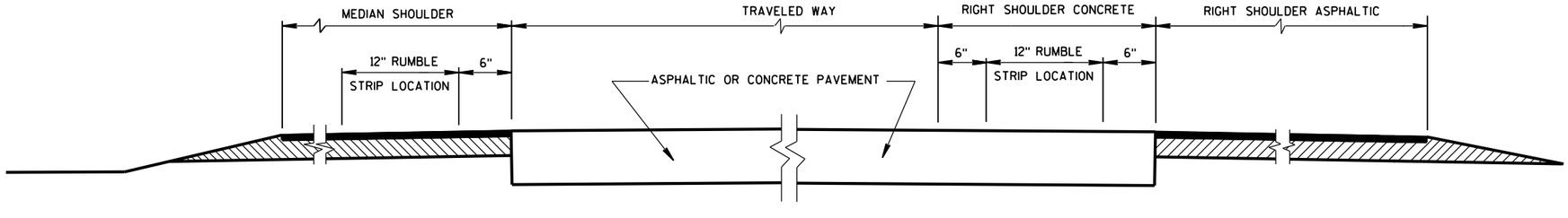

SECTION VIEW

TYPICAL LOCATIONS OF SHOULDER RUMBLE STRIPS IN RURAL DIVIDED HIGHWAYS

(ONE ROADWAY IS SHOWN)

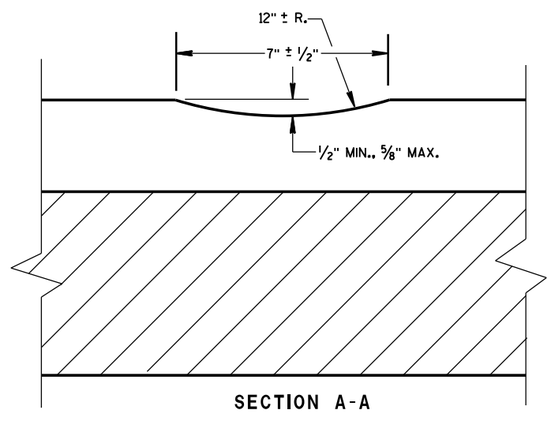

SECTION A-A

SHOULDER RUMBLE STRIP, MILLING

STATE OF WISCONSIN
DEPARTMENT OF TRANSPOR

6

S.D.D. 13 A 5-5a

6

S.D.D. 13 A 5-5a

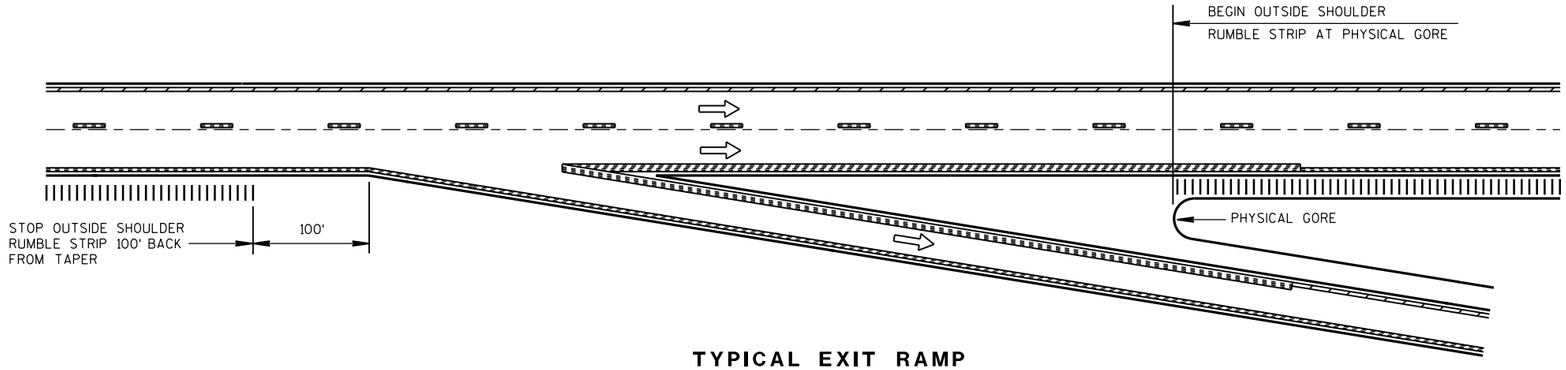

TYPICAL EXIT RAMP

NOTES:

NO RUMBLE STRIP ON EXIT, DIRECTIONAL, OR ENTRANCE RAMPS, EXCEPT NEAR THE ENTRANCE TAPER END AND ALONG THE PARALLEL RAMP AREA AS SHOWN.

PAVEMENT MARKING DETAILS AND SPECIFICATIONS ARE PROVIDED ELSEWHERE IN THE CONTRACT.

NOTE:
ARROW SYMBOL (⇨)
SHOWS DIRECTION OF TRAVEL

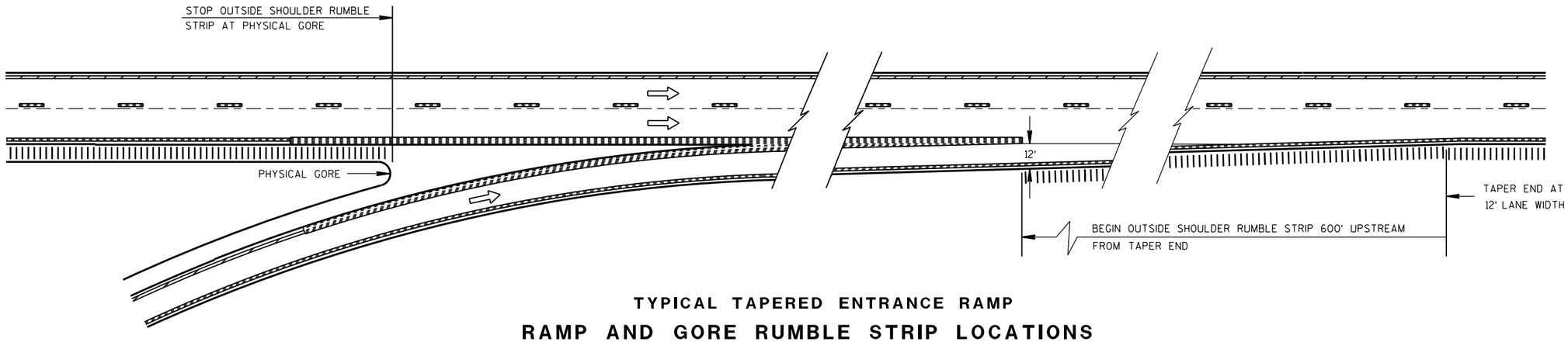

TYPICAL TAPERED ENTRANCE RAMP

RAMP AND GORE RUMBLE STRIP LOCATIONS

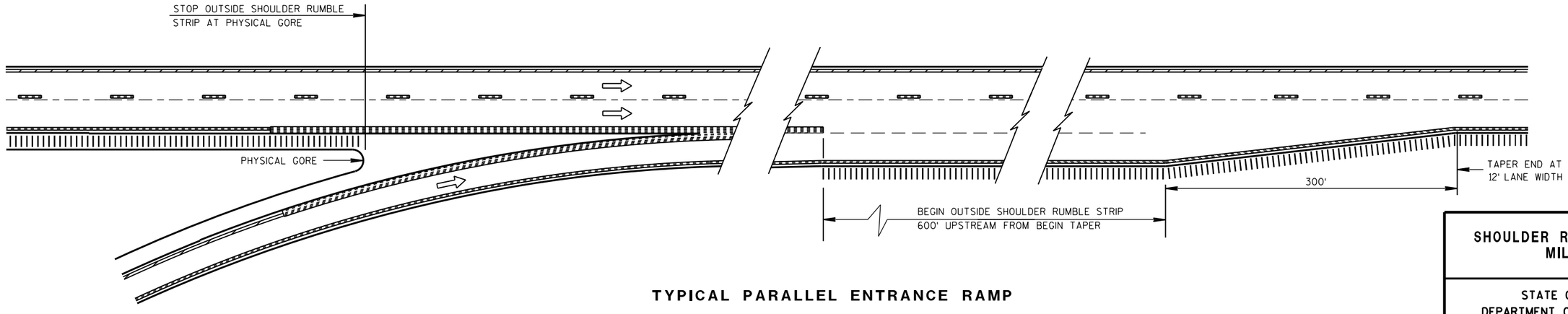

TYPICAL PARALLEL ENTRANCE RAMP

RAMP AND GORE RUMBLE STRIP LOCATIONS

SHOULDER RUMBLE STRIP, MILLING

STATE OF WISCONSIN
DEPARTMENT OF TRANSPORTATION

APPROVED

12/17/2012
DATE

/S/ Jerry H. Zoga
ROADWAY STANDARDS ENGINEER

FHWA

6

S.D.D. 13 A 5-5b

6

S.D.D. 13 A 5-5b

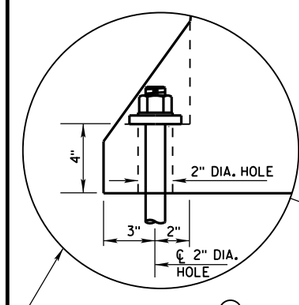

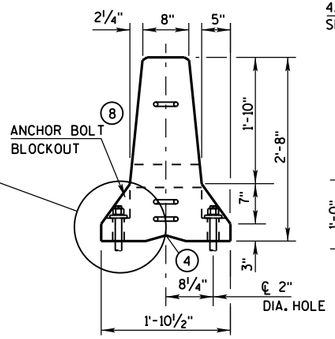

END VIEW

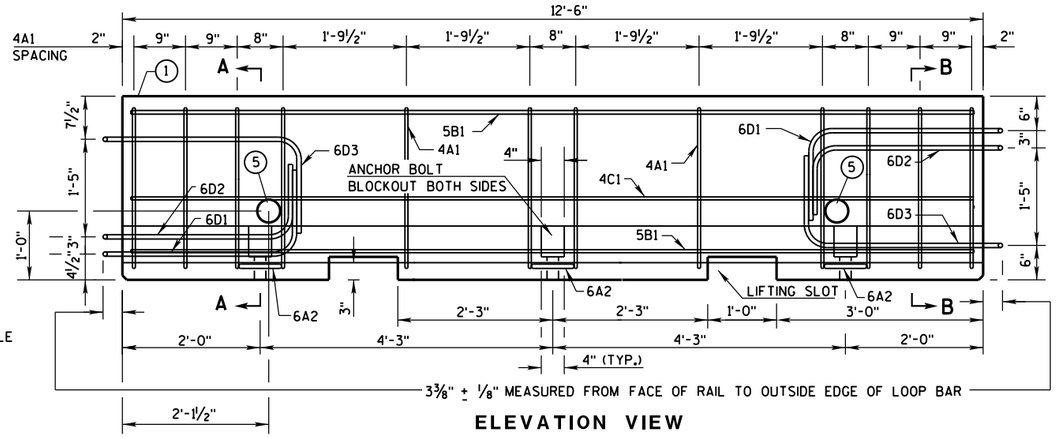

ELEVATION VIEW

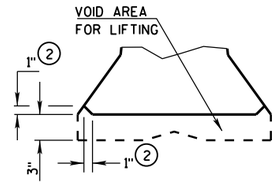

DETAIL "B"
LIFTING SLOT DETAIL

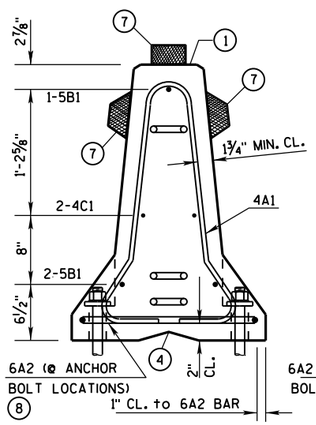

SECTION A-A
(STIRRUP PLACEMENT)

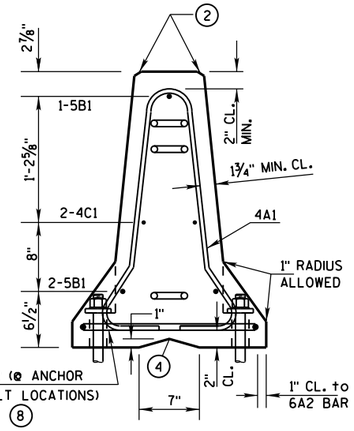

SECTION B-B
(STIRRUP PLACEMENT)

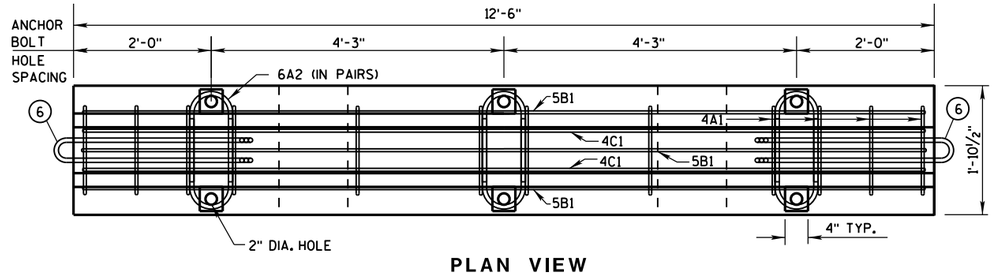

PLAN VIEW

DETAILS OF BARRIER SECTION

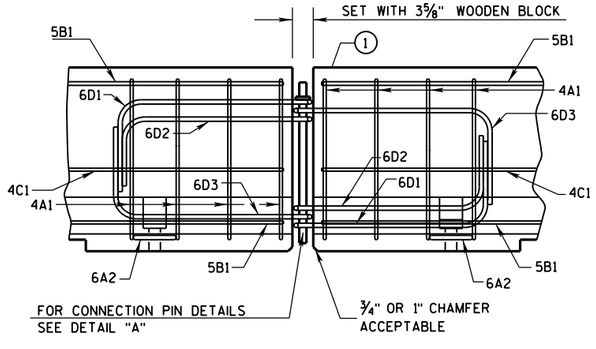

DETAILS OF BARRIER CONNECTION

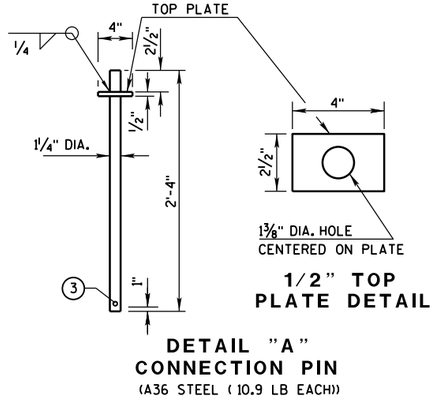

1/2" TOP
PLATE DETAIL

DETAIL "A"
CONNECTION PIN
(A36 STEEL (10.9 LB EACH))

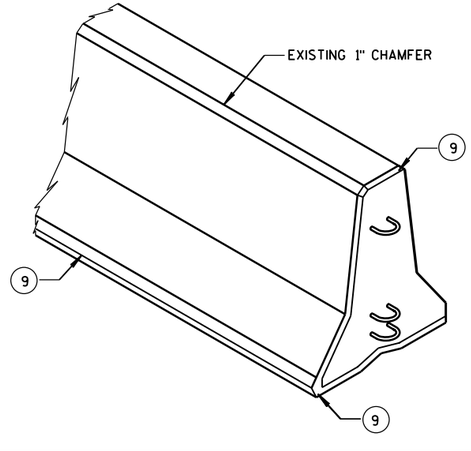

GENERAL NOTES

THESE GENERAL NOTES APPLY TO SHEETS 14B7-14(a) THRU 14B7-14(h).

DO NOT INTERMIX CONCRETE BARRIER TEMPORARY PRCAST, 12'-6" (CBTP12.5) WITH OTHER TEMPORARY CONCRETE BARRIERS.

USE ASTM A-615, GRADE 60, DEFORMED STEEL BARS FOR BARS 4A1, 6A2, 5B1 AND 4C1 IN THE BARRIER SECTION AND FOR 4V1, 4V2, 4V3, 4V4, 4V5, 4V6, 4F1, 4F2 AND 5F3 IN THE BARRIER TAPER SECTION.

LOOP BARS 6D1, 6D2 AND 6D3 SHALL BE ¾" SMOOTH STEEL BARS WITH A MINIMUM YIELD STRENGTH OF 60 KSI, A TENSILE STRENGTH OF NOT LESS THAN 1.25 TIMES THE YIELD STRENGTH BUT A MINIMUM OF 80 KSI, A MINIMUM 14% ELONGATION IN 8 INCHES AND PASSING A 180 DEGREE BEND TEST USING A 3-½" PIN BEND DIAMETER FOR BEND TESTS. THE LOOPS SHALL BE INSTALLED WITHIN ⅛" OF THE PLAN DIMENSION.

CONSTRUCT LIFTING SLOTS AS SPECIFIED ON THE PLANS TO FACILITATE THE DRAINAGE OF WATER AFTER INSTALLATION.

PLACE BARRIER ON A PAVED SURFACE. REMOVE ALL LOOSE DIRT AND SAND FROM THE ROADWAY SURFACE PRIOR TO PLACEMENT OF THE BARRIER.

INSTALL MECHANICAL OR ADHESIVE ANCHORS PER MANUFACTURER'S RECOMMENDATIONS. PROVIDE MANUFACTURER'S INFORMATION TO PROJECT ENGINEER.

(1) MARK ONE END OF EACH BARRIER PERMANENTLY BY FORMING INTO THE BARRIER THE FOLLOWING INFORMATION:
   a. TYPE: WI CBTP
   b. MANUFACTURER
   c. DATE MANUFACTURED (MONTH AND YEAR)

(2) 1" CHAMFER TO PREVENT SPALLING.

(3) A ⅜" HOLE IN THE CONNECTION PIN, AT THE LOCATION SHOWN, IS ACCEPTABLE, BUT NOT REQUIRED..

(4) "V" NOTCH IS OPTIONAL.

(5) THE 4" DIAMETER, 11 GAUGE STEEL, ROUND MECHANICAL TUBING SLEEVE FOR LIFTING (OPTIONAL).

(6) NEVER USE LOOP BARS (6D1, 6D2 OR 6D3) TO LIFT, MOVE OR REPOSITION THE BARRIER.

(7) USE DELINEATORS CONFORMING TO SECTION 633 OF THE STANDARD SPECIFICATIONS. CONTRACTOR MAY USE ALTERNATE SHAPES AND HOUSING. INSTALL DELINEATORS ACCORDING TO MANUFACTURES INSTRUCTION. INSTALL YELLOW REFLECTORS WHEN BARRIER IS LOCATED TO THE LEFT OF TRAFFIC AND WHITE REFLECTORS WHEN BARRIER IS LOCATED TO THE RIGHT OF TRAFFIC. SPACE DELINEATORS A MAXIMUM OF 25 FEET APART. PROVIDE TOP MOUNTED DELINEATORS IN ADDITION TO THE SIDE MOUNTED DELINEATORS ON ALL BARRIER INSTALLATIONS LOCATED ON A CURVED ALIGNMENT LONGER THAN 200 FEET AND ON BARRIERS USED TO SEPARATE OPPOSING TRAFFIC.

(8) SEE SHEET D FOR ANCHORING CRITERIA.

(9) 1" CHAMFER OPTIONAL.

CONCRETE BARRIER TEMPORARY PRECAST, 12'-6"

STATE OF WISCONSIN
DEPARTMENT OF TRANSPOR

6

S.D.D. 14 B 7-14a

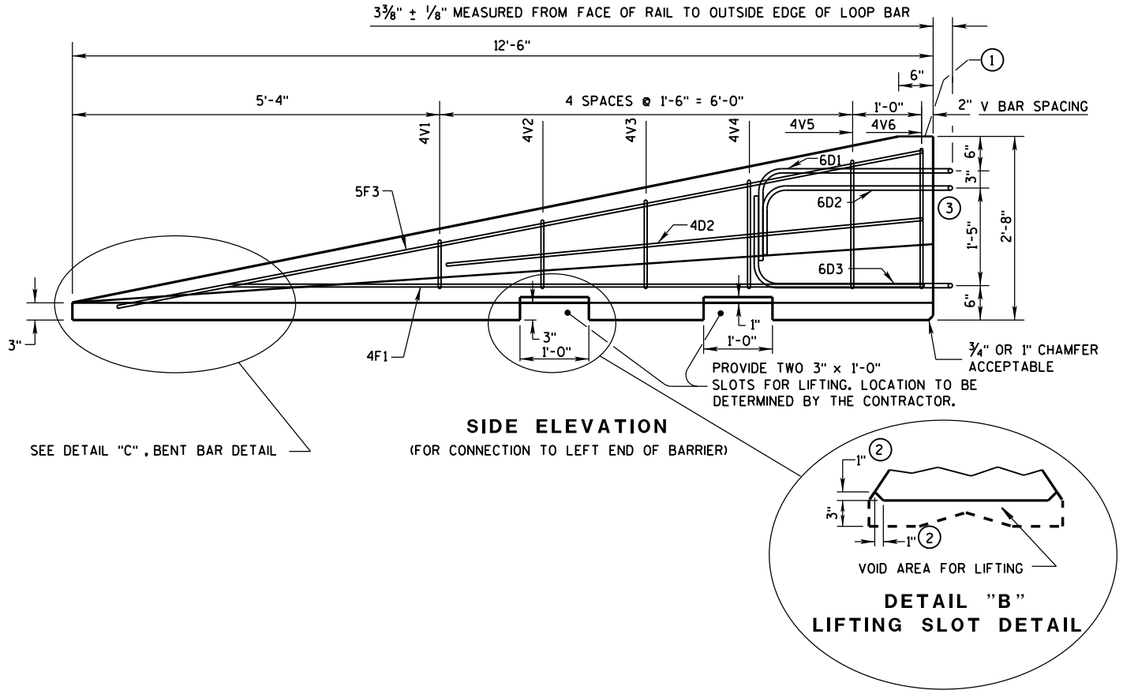

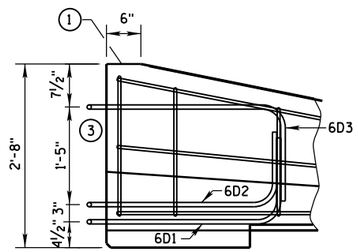

GENERAL NOTES

1. MARK ONE END OF EACH BARRIER PERMANENTLY BY FORMING INTO THE BARRIER THE FOLLOWING INFORMATION:
   a. TYPE WICBTP
   b. MANUFACTURER
   c. DATE MANUFACTURED (MONTH AND YEAR)
2. 1" CHAMFER TO PREVENT SPALLING.
3. NEVER USE LOOP BARS (6D1, 6D2 OR 6D3) TO LIFT, MOVE OR REPOSITION THE BARRIER.

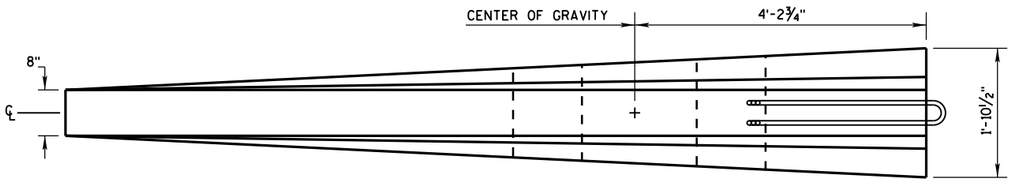

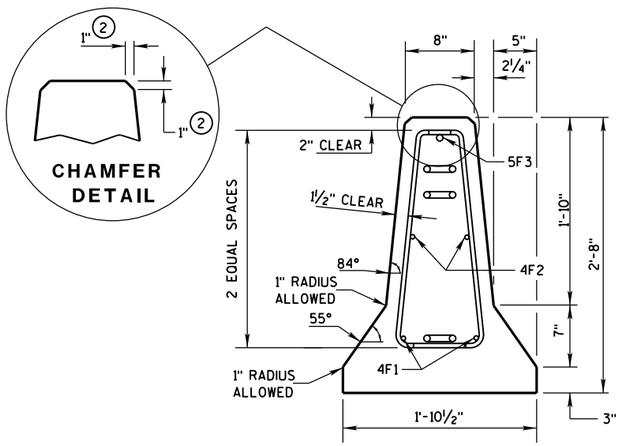

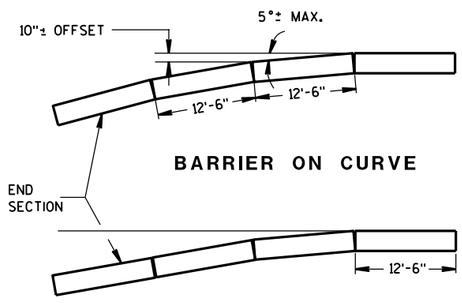

POSTED SPEED, (MPH)	FLARE RATE
40 OR LESS	6:1
45 OR GREATER	8:1

DETAILS OF BARRIER TAPER SECTION

CONCRETE BARRIER
TEMPORARY PRECAST, 12'-6"

STATE OF WISCONSIN
DEPARTMENT OF TRANSPOI

6
S.D.D. 14 B 7-14b

BARRIER TAPER SECTION BILL OF MATERIALS

(PER 12'-6" BARRIER TAPER SECTION)

BAR	BAR SIZE	NO. OF BARS	LENGTH FT.
4V1	4	2	1'-11"
4V2	4	2	2'-2"
4V3	4	2	2'-6"
4V4	4	2	2'-9"
4V5	4	2	3'-2"
4V6	4	2	3'-4"
4F1	4	2	12'-0"
4F2	4	2	7'-6"
5F3	5	1	11'-9"
LOOP ASSEMBLY			
6D1	6	1	8'-5"
6D2	6	1	7'-7"
6D3	6	1	8'-6"

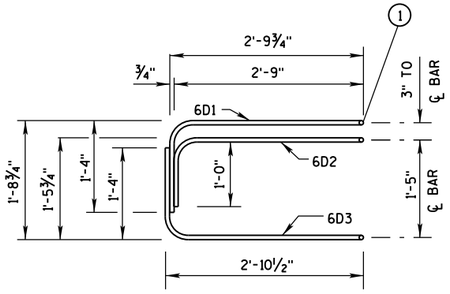

ELEVATION
LOOP BAR ASSEMBLY

DETAIL "C"
BENT BAR DETAIL

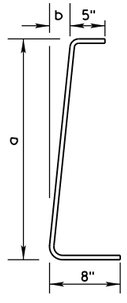

BAR	a	b
V1	10"	1"
V2	1'-1"	1¼"
V3	1'-5"	1⅝"
V4	1'-8"	1⅞"
V5	2'-0½"	2⅜"
V6	2'-3"	2¾"

4V BARS
2 AT EACH SIZE REQUIRED
FOR STIRRUP ASSEMBLY

TAPER BARRIER SECTION

GENERAL NOTES

(1) NEVER USE LOOP BARS (6D1, 6D2 OR 6D3) TO LIFT, MOVE OR REPOSITION THE BARRIER.

BARRIER SECTION BILL OF MATERIALS

(PER 12'-6" BARRIER SECTION)

BAR	BAR SIZE	NO. OF BARS	LENGTH FT.
4A1	4	12	6'-0"
6A2	6	6	2'-11"
5B1	5	3	12'-2"
4C1	4	2	12'-2"
LOOP ASSEMBLY			
6D1	6	2	8'-5"
6D2	6	2	7'-7"
6D3	6	2	8'-6"

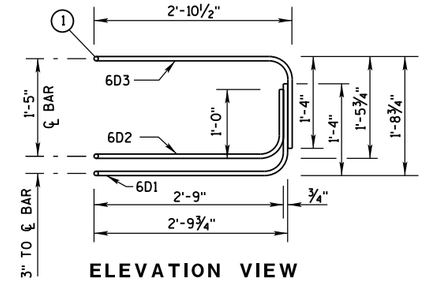

ELEVATION VIEW

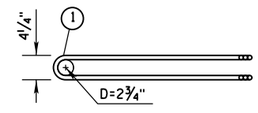

PLAN VIEW
LOOP BAR ASSEMBLY
(MARKED END SHOWN, INVERT FOR OTHER END)

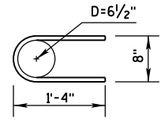

6A2

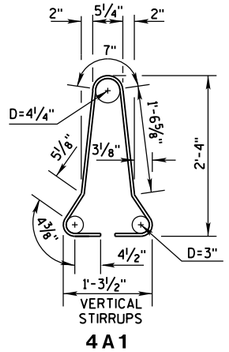

4A1

BARRIER SECTION

CONCRETE BARRIER
TEMPORARY PRECAST, 12'-6"

STATE OF WISCONSIN
DEPARTMENT OF TRANSPOR

6

S.D.D. 14 B 7-14c

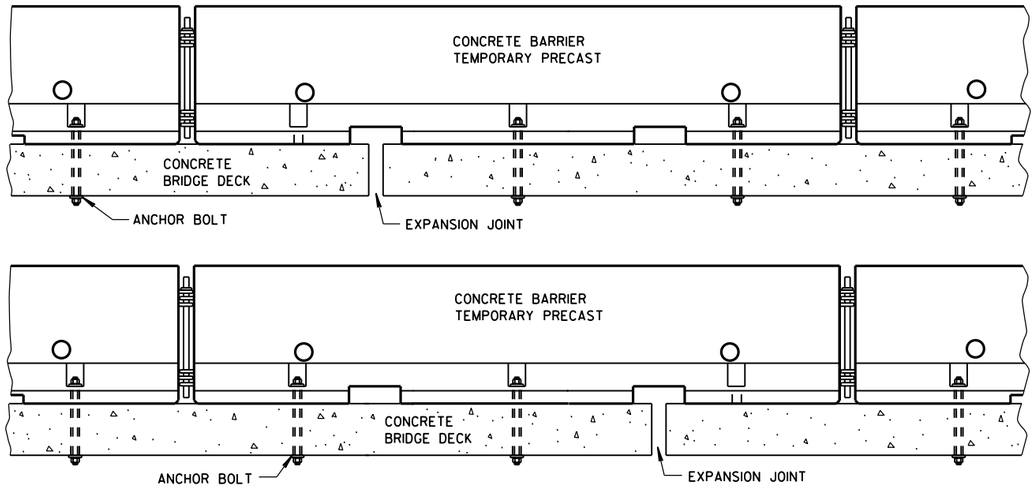

TREATMENT AT BRIDGE DECK EXPANSION JOINTS

(NO SINGLE CONCRETE BARRIER SECTION SHALL BE ANCHORED TO BOTH THE BRIDGE DECK AND THE APPROACH SLAB. ALL ANCHOR BOLT LOCATIONS SHALL BE ANCHORED TO THE DECK IN ACCORDANCE WITH THE DETAIL. NO MORE THAN ONE ANCHOR BOLT SHALL BE ELIMINATED FROM A BARRIER SECTION WHEN SPANNING AN EXPANSION JOINT.)

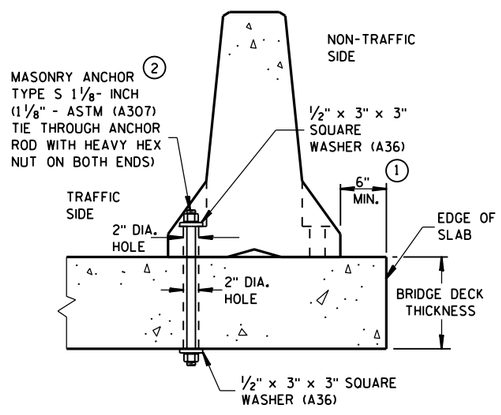

THROUGH BOLTED ANCHOR INSTALLATION ON BRIDGE DECK

(DO NOTUSE ON CONCRETE BRIDGE DECK WITH ASPHALT OVERLAY)

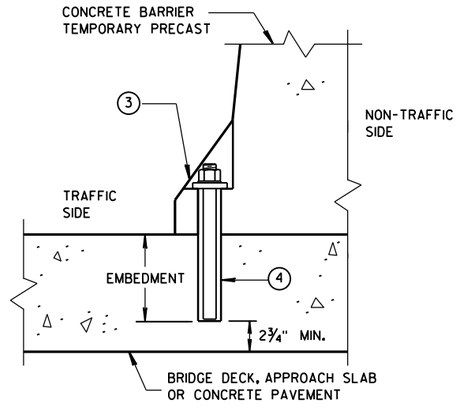

REMOVABLE ADHESIVE BONDED ANCHOR ② INSTALLATION ON CONCRETE BRIDGE DECK, CONCRETE APPROACH SLAB, OR CONCRETE PAVEMENT

(DO NOT USE ON CONCRETE WITH AN ASPHALTIC OVERLAY)

GENERAL NOTES

① CONCRETE BARRIER TEMPORARY PRECAST, 12'-6" SHALL BE ANCHORED IF:
THE DISTANCE TO A 2 FOOT OR GREATER DROPOFF THAT IS STEEPER THAN 3H : 1V, FOR EXAMPLE THE EDGE OF A BRIDGE DECK OR A DROPOFF AT THE EDGE OF PAVEMENT, IS LESS THAN 4 FEET FROM THE SIDE OF THE BARRIER CLOSEST TO THE DROPOFF AND THE POSTED SPEED IS 45 MPH OR GREATER, OR

THE DISTANCE TO A 2 FOOT OR GREATER DROPOFF THAT IS STEEPER THAN 3H : 1V, FOR EXAMPLE THE EDGE OF A BRIDGE DECK OR A DROPOFF AT THE EDGE OF PAVEMENT, IS LESS THAN 2 FEET FROM THE SIDE OF THE BARRIER CLOSEST TO THE DROPOFF AND THE POSTED SPEED IS 40 MPH OR LESS.

② ANCHORING IS INCIDENTAL TO CONCRETE BARRIER TEMPORARY PRECAST.

WITH THE APPROVAL OF THE ENGINEER, REMOVABLE ADHESIVE BONDED ANCHOR BOLT INSTALLATION MAY BE USED IN LIEU OF THROUGH BOLTED ANCHOR INSTALLATION. THE ADHESIVE BONDED ANCHOR BOLT MUST BE REMOVABLE. USE ASTM (A307) MASONRY ANCHORS TYPE S 1⅛-INCH, EMBEDDED TO A DEPTH SUFFICIENT TO DEVELOP THE ULTIMATE CAPACITY OF THE ANCHOR BOLT AND PROVIDE DOCUMENTATION TO CONFIRM THIS.

UPON REMOVAL OR RELOCATION OF THE BARRIER UNITS, REMOVE ALL ANCHOR BOLTS AND COMPLETELY FILL IN THE REMAINING HOLES IN CONCRETE BRIDGE DECKS, CONCRETE APPROACH SLABS AND CONCRETE PAVEMENTS THAT ARE TO REMAIN, WITH A NON-SHRINK COMMERICAL GROUT OR MATERIAL IDENTIFIED ON THE CURRENT WISDOT APPROVED PRODUCTS LIST.

③ 1⅛" DIAMENTER A307 THREADED ROD, ½" X 3" X 3" SQUARE PLATE WASHER WITH ASTM A36 STEEL, ASTM A563A HEAVY HEX NUT.

④ ADHESIVE ANCHORS WITH A MINIMUM BOND STRENGTH OF 1,800 PSI AND 5¼" EMBEDMENT. SEE 603.2 AND 603.3.1.2 OF THE WISCONSIN STANDARD SPECIFICATIONS FOR MORE INFORMATION ON ADHESIVE ANCHORS.

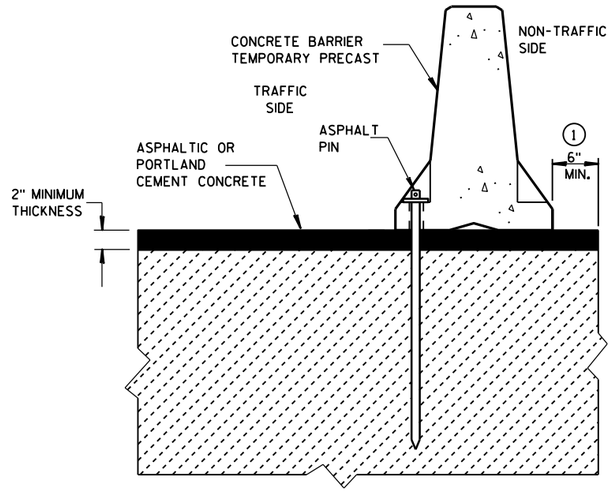

STAKE DOWN INSTALLATION FOR ASPHALTIC OR PORTLAND CEMENT CONCRETE SURFACE

(STAKING IS INCIDENTAL TO CONCRETE BARRIER TEMPORARY PRECAST)

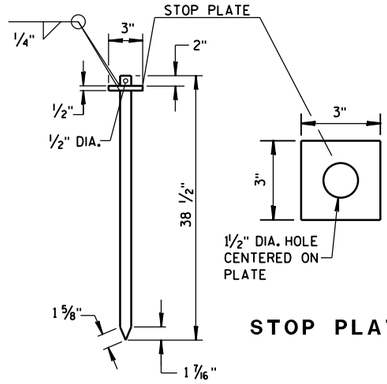

STOP PLATE

(ASTM A36 STEEL)

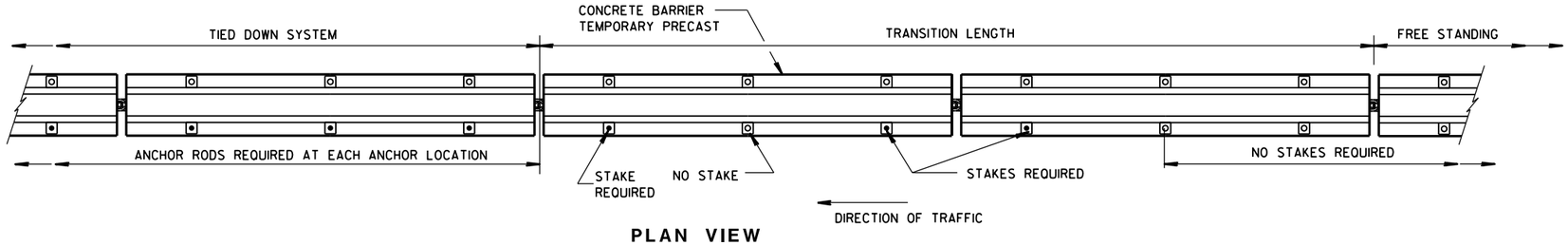

PLAN VIEW

FREE STANDING TRANSITION TO TIED-DOWN SYSTEM

(PLACE TRANSITION IN A TANGENT SECTION OF BARRIER PARALLEL TO THE ROADWAY. IF TRANSITION OCCURS ON STRUCTURAL SLAB, ANCHOR AS SHOWN.)

CONCRETE BARRIER
TEMPORARY PRECAST, 12'-6"

STATE OF WISCONSIN
DEPARTMENT OF TRANSPOI

6
S.D.D. 14 B 7-14d

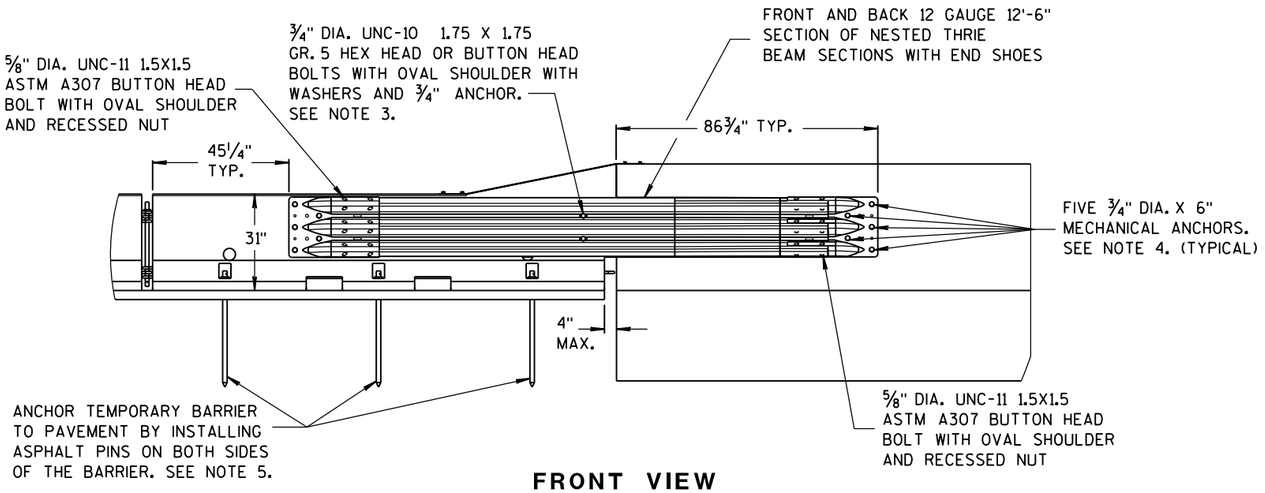

FRONT VIEW

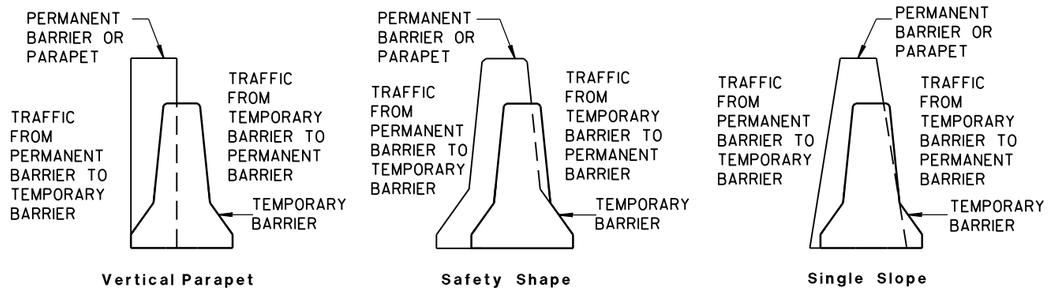

TEMPORARY BARRIER PLACEMENT FOR BI-DIRECTIONAL TRANSITION TO TIED-DOWN SYSTEM

NOTES

NESTED THRIE BEAM IS REQUIRED ON BOTH SIDES OF THE TEMPORARY BARRIER FOR ALL INSTALLATIONS.

1. CAP END PLATE PLACED FLUSH WITH UPSTREAM END OF PERMANENT BARRIER OR PARAPET.
2. THRIE BEAM PIECES ARE OFFSET 15 1/4" TO PREVENT INTERFERENCE FROM THE ANCHORS ON OPPOSING SIDES.
3. MINIMUM MECHANICAL OR ADHESIVE ANCHOR STRENGTH REQUIREMENTS: ULTIMATE TENSILE LOAD 9.48 KIPS AND ULTIMATE SHEAR LOAD 10.48 KIPS.
4. MINIMUM MECHANICAL OR ADHESIVE ANCHOR STRENGTH REQUIREMENTS: ULTIMATE TENSILE LOAD 17.9 KIPS AND ULTIMATE SHEAR LOAD 21.96 KIPS.
5. MAY BE USED ON CONCRETE OR ASPHALT PAVEMENTS. ASPHALT OPTION SHOWN. FOR CONCRETE OPTION SEE OTHER DETAILS.
6. MINIMUM MECHANICAL OR ADHESIVE ANCHOR STRENGTH REQUIREMENTS: ULTIMATE TENSILE LOAD 12.14 KIPS AND ULTIMATE SHEAR LOAD 17.5 KIPS.

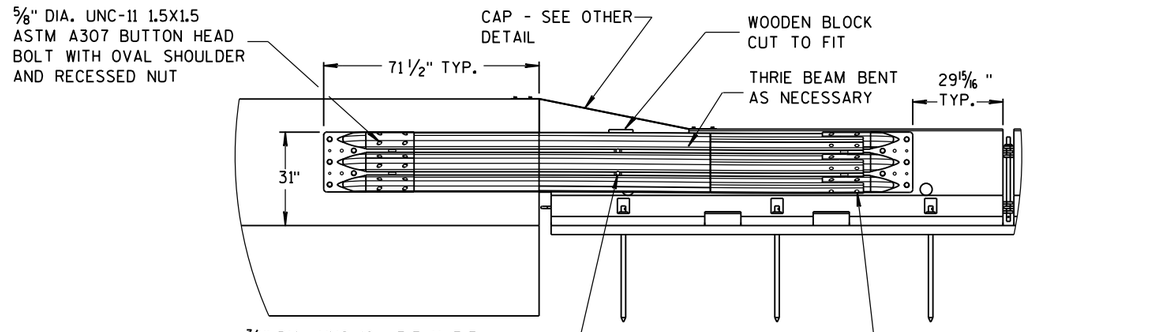

BACK VIEW

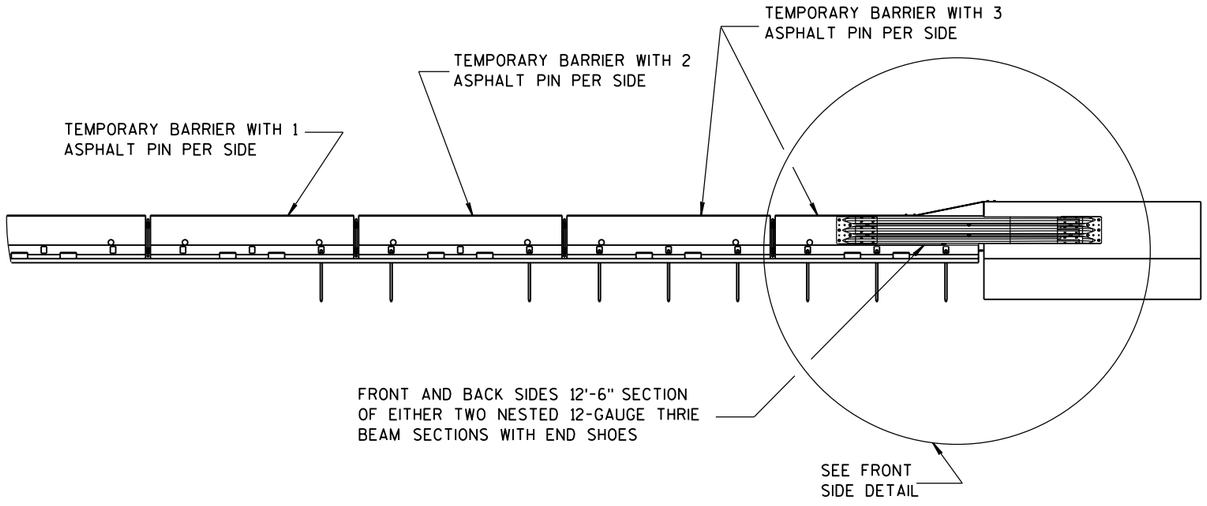

FRONT VIEW

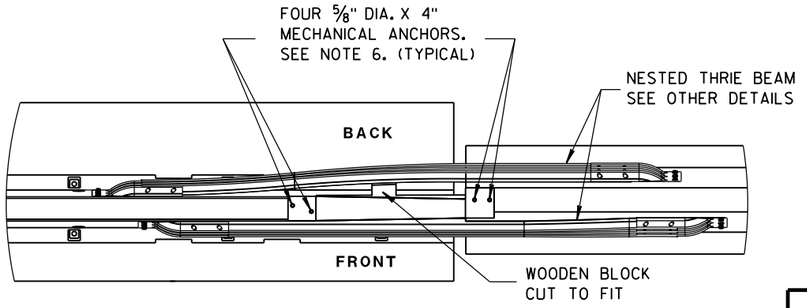

PLAN VIEW

BI-DIRECTIONAL TRANSITION TO TIED-DOWN SYSTEM

CONCRETE BARRIER
TEMPORARY PRECAST, 12'-6"

STATE OF WISCONSIN
DEPARTMENT OF TRANSPO

6
S.D.D. 14 B 7-14e

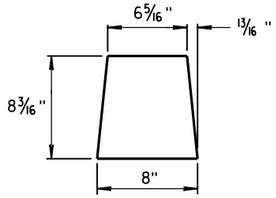

GUSSET 1

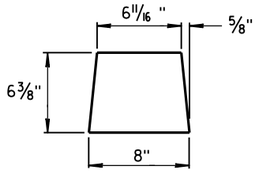

GUSSET 2

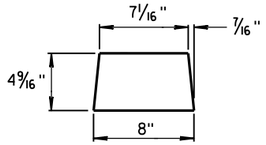

GUSSET 3

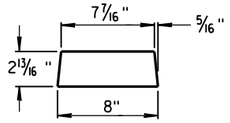

GUSSET 4

GUSSETS

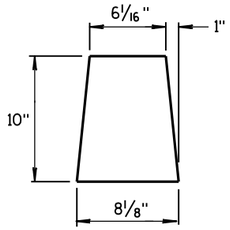

END PLATE

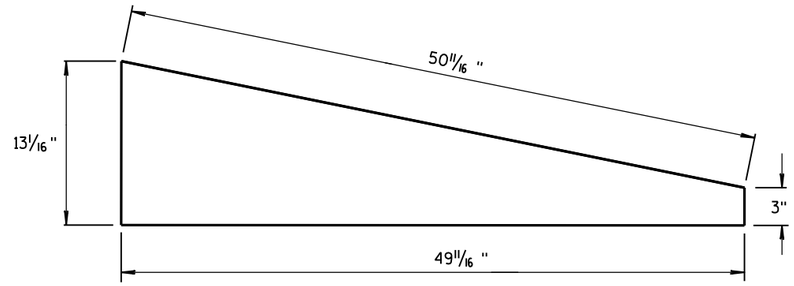

SIDE PLATE

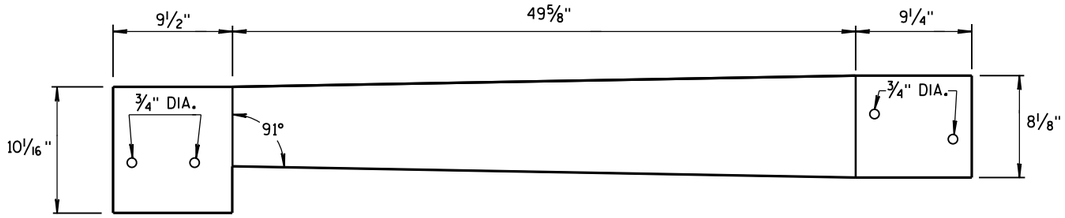

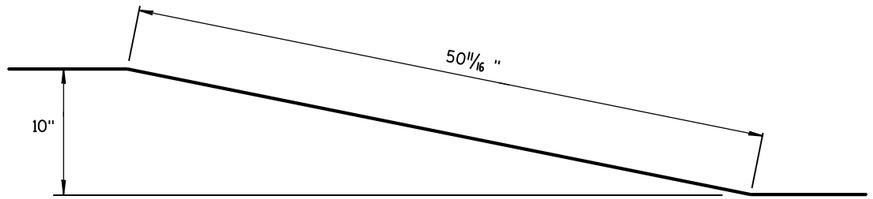

TOP PLATE

SIDE, TOP AND END PLATES FOR CAP FROM TEMPORARY CONCRETE BARRIER TO 42" PERMANENT CONCRETE BARRIER

SIDE PLATES, TOP PLATE, END PLATE AND GUSSETS ARE 12 GAUGE ASTM A36 GALVANIZED STEEL.

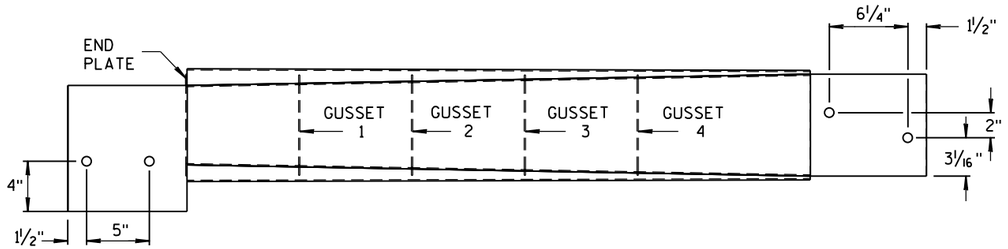

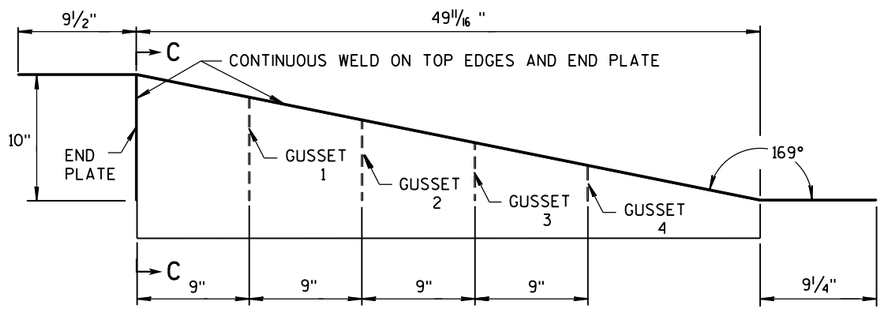

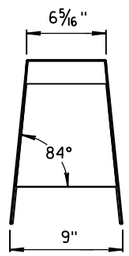

SECTION C-C

NOTES

1. FOUR GUSSETS AND END PLATE ARE STITCH WELDED ON THREE SIDES.
2. TWO TRIANGULAR SIDE PLATES ARE STITCH WELDED TO TOP PLATE, END PLATE, AND GUSSETS.

CAP DETAILS FOR TEMPORARY CONCRETE BARRIER TO 42" PERMANENT CONCRETE BARRIER

CONCRETE BARRIER
TEMPORARY PRECAST, 12'-6"

STATE OF WISCONSIN
DEPARTMENT OF TRANSPOI

6

S.D.D. 14 B 7-14f

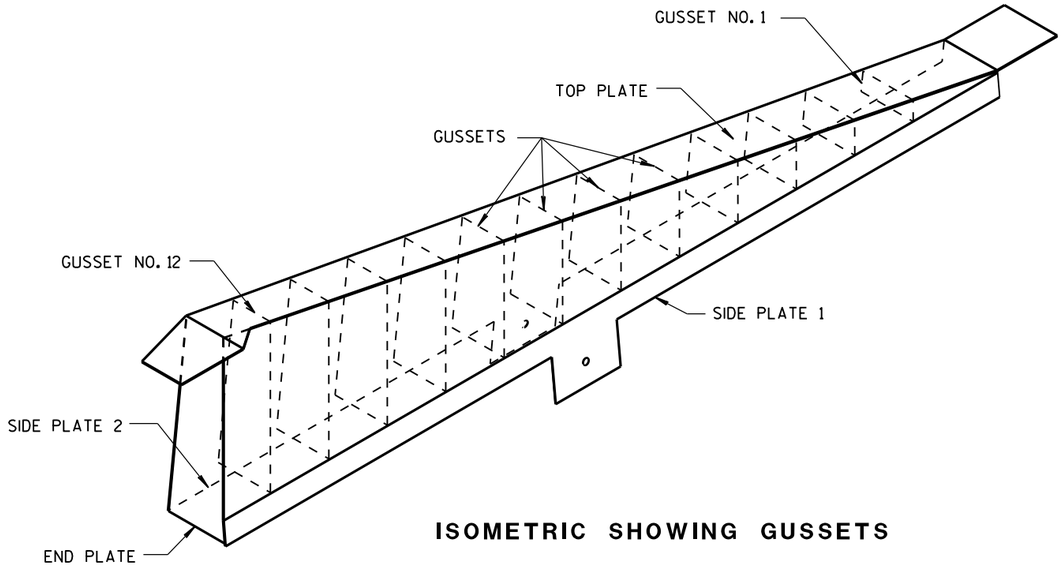

ISOMETRIC SHOWING GUSSETS

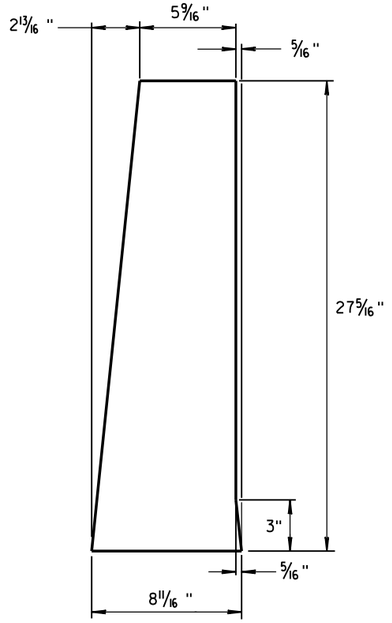

END PLATE

1/8" STEEL PLATE

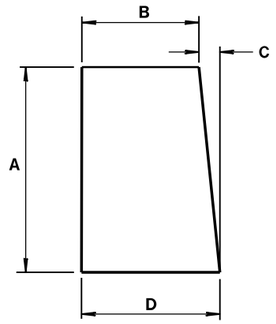

GUSSETS 1 - 12

ALL GUSSETS 1/8" STEEL PLATE

GUSSET DIMENSIONS				
GUSSET NO.	A	B	C	D
1	2 7/8"	7 3/4"	1/4"	8
2	4 11/16 "	7 9/16 "	1/2"	8
3	6 1/2"	7 3/8"	11/16 "	8 1/16 "
4	8 5/16 "	7 3/16 "	7/8"	8 1/16 "
5	10 1/8"	7"	1 1/16 "	8 1/16 "
6	11 15/16 "	6 13/16 "	1 1/4"	8 1/16 "
7	13 3/4"	6 5/8"	1 7/16 "	8 1/16 "
8	15 9/16 "	6 7/16 "	1 9/16 "	8 1/16 "
9	17 3/8"	6 1/4"	1 13/16 "	8 1/16 "
10	19 3/16 "	6 1/16 "	1 15/16 "	8 1/16 "
11	21"	5 7/8"	2 3/16 "	8 1/16 "
12	22 13/16 "	5 11/16 "	2 5/16 "	8 1/16 "

SIDE PLATES, TOP PLATE, END PLATE AND GUSSETS ARE 12 GAUGE ASTM A36 STEEL AND GALVANIZED.

GUSSETS AND END PLATE ARE STITCH WELDED ON 3 SIDES. TWO TRIANGULAR SIDE PLATES ARE STITCH WELDED TO TOP PLATE, END PLATE AND GUSSETS.

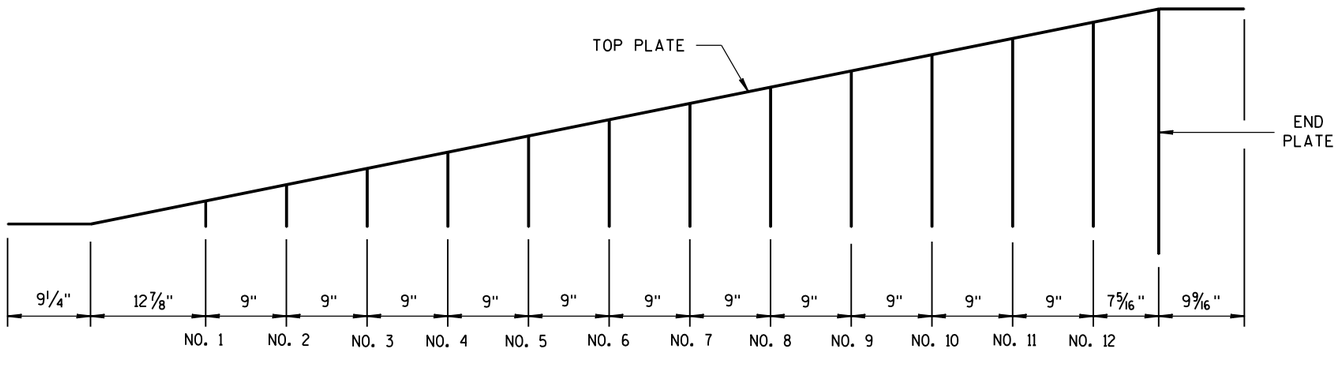

GUSSET LOCATION

CAP DETAILS FOR TEMPORARY CONCRETE BARRIER TO 56" PERMANENT CONCRETE BARRIER

CONCRETE BARRIER
TEMPORARY PRECAST, 12'-6"

STATE OF WISCONSIN
DEPARTMENT OF TRANSPOR

6

S.D.D. 14 B 7-14g

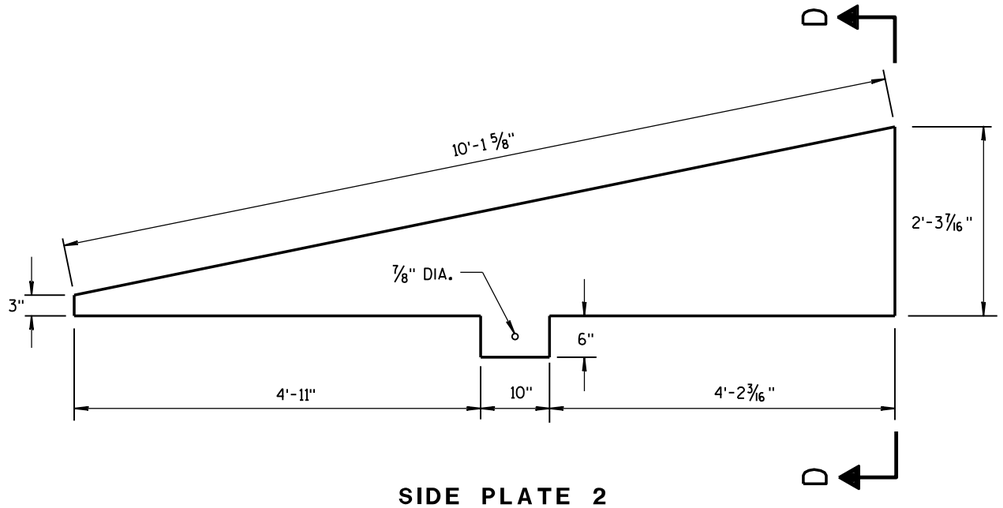

SIDE PLATE 2

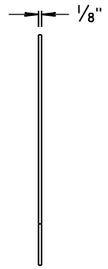

END VIEW

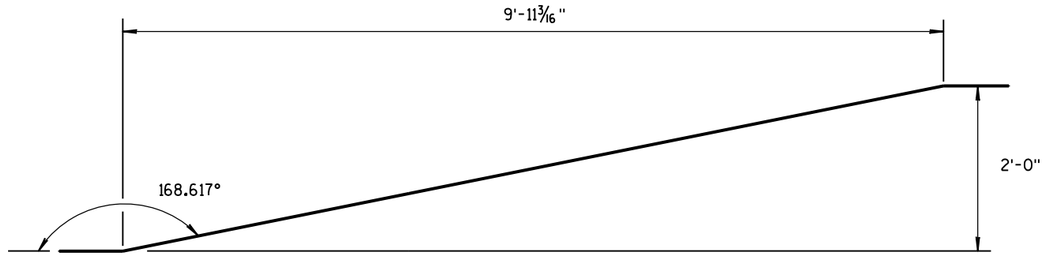

SIDE VIEW

TOP PLATE

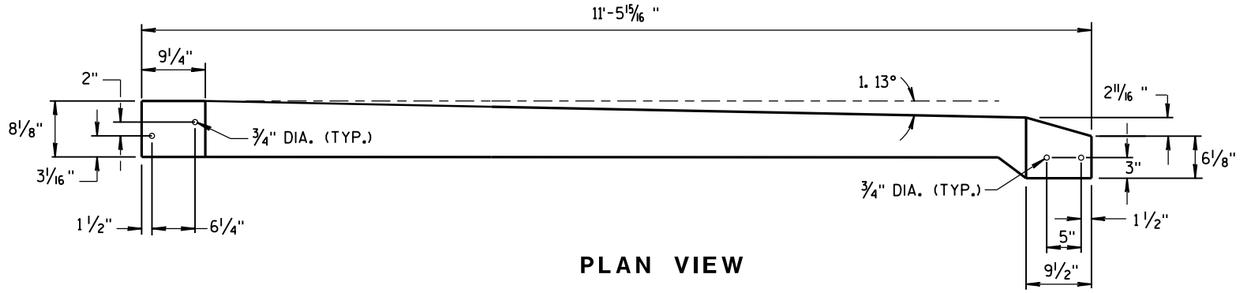

PLAN VIEW

TOP PLATE

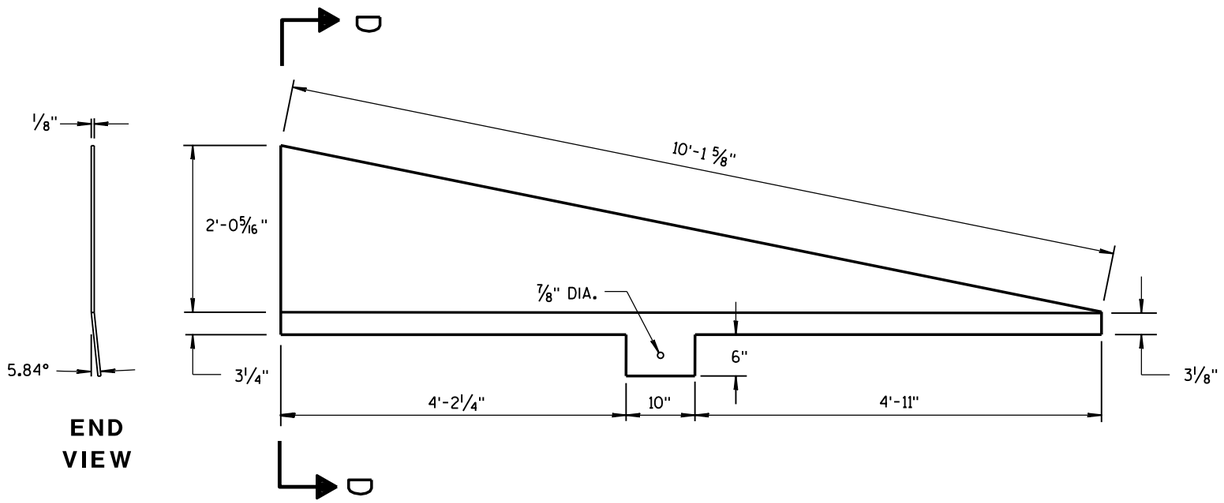

END VIEW

SIDE PLATE 1

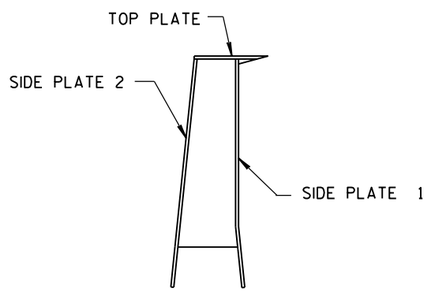

SECTION D-D

CAP DETAILS FOR TEMPORARY CONCRETE BARRIER TO 56" PERMANENT CONCRETE BARRIER

CONCRETE BARRIER
TEMPORARY PRECAST, 12'-6"

STATE OF WISCONSIN
DEPARTMENT OF TRANSPORTATION

APPROVED
June 2014 — DATE
/S/ Jerry H. Zoaa — ROADWAY STANDARD DEVELOPMENT ENGINEER
FHWA

6

S.D.D. 14 B 7-14h

6

S.D.D. 14 B 7-14h

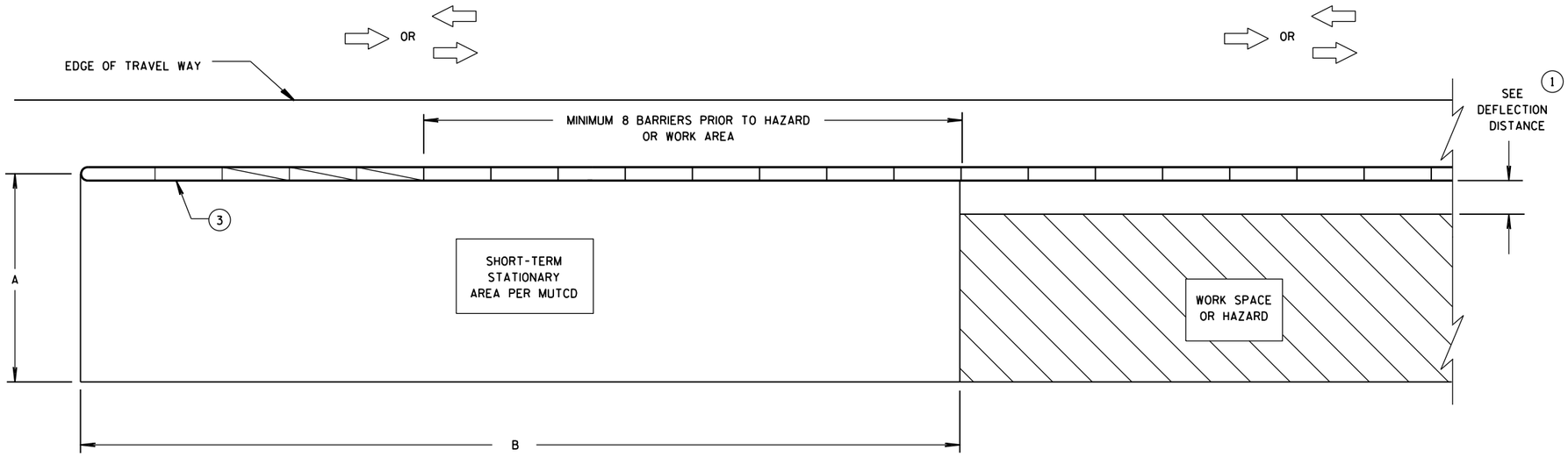

CRASH CUSHION/SAND BARREL ARRAY AND TEMPORARY BARRIER INSTALLATION FOR TRAFFIC ON ONE SIDE OF BARRIER

DIMENSION A TABLE (2)

FACILITY	POSTED SPEED MPH	DIMENSION A	
		MIN. FT	MAX. FT
FREEWAY/EXPRESSWAY	ALL	15	20
NON-FREEWAY/EXPRESSWAY	GREATER THAN OR EQUAL TO 45	10	15
NON-FREEWAY/EXPRESSWAY	LESS THAN 45	8	10
AADT LESS THAN 1,500	ALL	8	10

DIMENSION B TABLE (2)

POSTED SPEEDS MPH	DIMENSION B FT
20	115
25	155
30	200
35	250
40	305
45	360
50	425
55	495
60	570
65	645

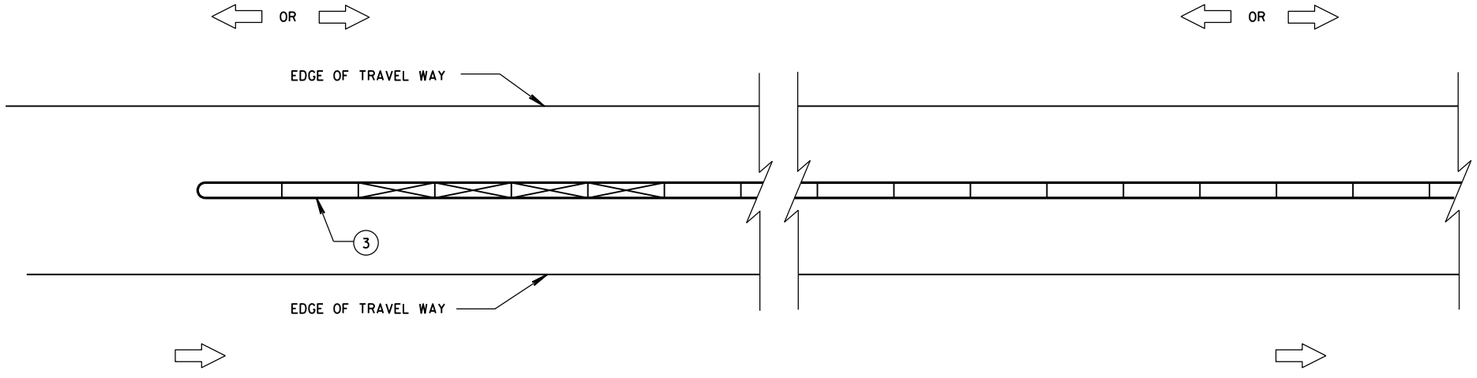

CRASH CUSHION/SAND BARREL ARRAY AND TEMPORARY BARRIER INSTALLATION FOR TRAFFIC ON BOTH SIDES OF BARRIER

LEGEND

- DIRECTION OF TRAVEL
- CRASH CUSHION OR SAND BARREL ARRAY
- SEE FREE STANDING TRANSITION TO TIED-DOWN SYSTEM DETAILS
- SEE BI-DIRECTIONAL TRANSITION TO TIED-DOWN SYSTEM DETAILS
- 3 PINS PLACED ON TRAFFIC SIDE OF BARRIER
- PERMANENT CONCRETE BARRIER OR CONCRETE PARAPET
- FREE STANDING TEMPORARY BARRIER

GENERAL NOTES

SEE STANDARD DETAIL DRAWING 14B7 FOR MORE INFORMATION.

DETAILS PROVIDE A GENERAL LAYOUT OF TEMPORARY CONCRETE BARRIER, CRASH CUSHIONS, SAND BARREL ARRAYS AND TIE DOWN TRANSITIONS. DETAILS PROVIDED MAY NOT FIT ALL POSSIBLE SITUATIONS OR SITE CONDITIONS. SEE OTHER SECTIONS OF THE CONTRACT OR PROJECT ENGINEER FOR MORE DETAILS.

ADDITIONAL TEMPORARY BARRIER MAY BE REQUIRED TO PROTECT TRAVELING PUBLIC FROM HAZARDS, CONTRACTOR'S OPERATIONS OR TO CONTROL TRAFFIC.

TEMPORARY BARRIER MAY BE REQUIRED TO BE ANCHORED TO PAVEMENT OR BRIDGE DECK.

FOR DETAILS ON CRASH CUSHION OR SAND BARREL ARRAYS SEE OTHER SECTIONS OF THE PLAN AND MANUFACTURE'S DETAILS.

SLOPES LEADING TO TEMPORARY BARRIER, CRASH CUSHION OR SAND BARREL ARRAY ARE 10:1 OR LESS.

(1) FOR DEFLECTION INFORMATION SEE STANDARD DETAIL DRAWING 14B7.

(2) VALUES PROVIDED MAY NOT FIT ALL POSSIBLE SITUATIONS OR SITE CONDITIONS. SEE OTHER SECTIONS OF THE CONTRACT OR PROJECT ENGINEER FOR MORE DETAILS.

(3) ANCHOR TEMPORARY BARRIER ACCORDING TO CRASH CUSHION OR SAND BARREL MANUFACTURER'S RECOMMENDATIONS. IF MANUFACTURER'S RECOMMENDATIONS ARE NOT PROVIDED, ANCHOR 3 PINS ON TRAFFIC SIDE.

CRASH CUSHION/SAND BARREL ARRAY AND OTHER TEMPORARY BARRIER LAYOUT DETAILS

STATE OF WISCONSIN
DEPARTMENT OF TRANSPOR

6

S.D.D. 14 B 8-2a
S.D.D. 14 B 8-2a

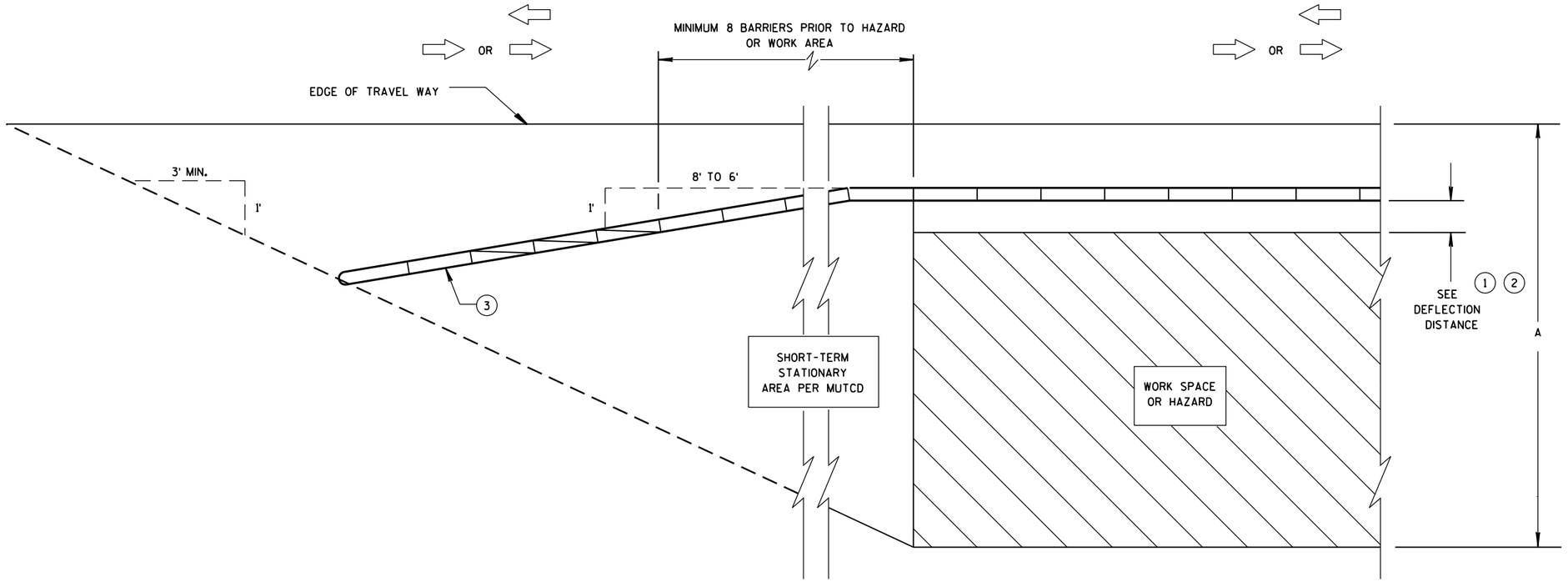

CRASH CUSHION/SAND BARREL ARRAY AND TEMPORARY BARRIER INSTALLATION FOR TRAFFIC ON ONE SIDE - FLARED INSTALLATION

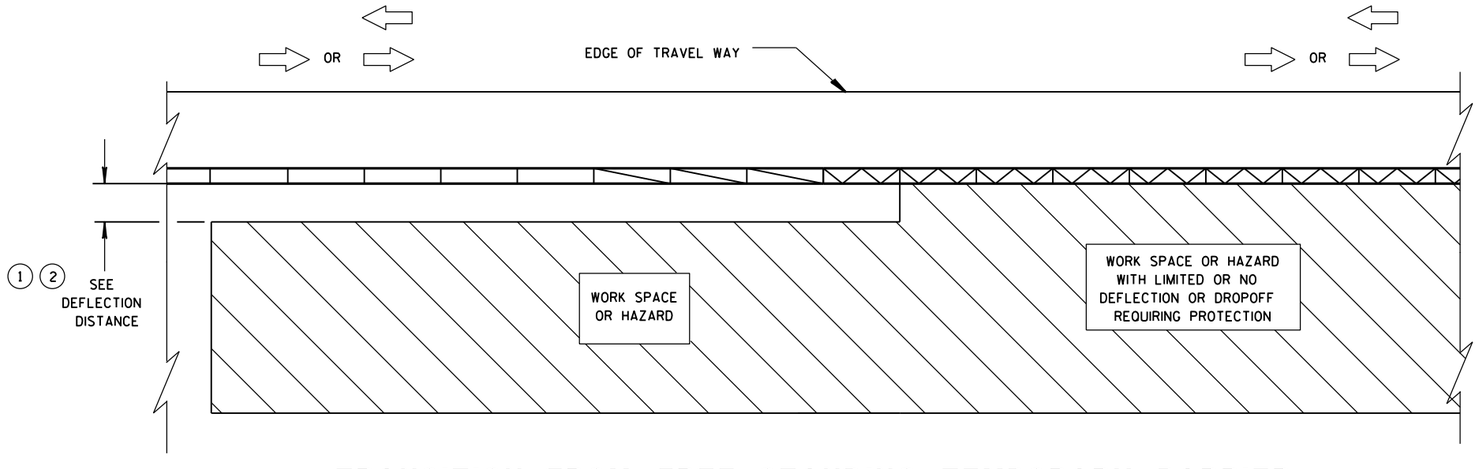

TRANSITION FROM FREE STANDING TEMPORARY BARRIER TO ANCHORED BARRIER

LEGEND

- DIRECTION OF TRAVEL
- CRASH CUSHION OR SAND BARREL ARRAY
- SEE FREE STANDING TRANSITION TO TIED-DOWN SYSTEM DETAILS
- SEE BI-DIRECTIONAL TRANSITION TO TIED-DOWN SYSTEM DETAILS
- 3 PINS PLACED ON TRAFFIC SIDE OF BARRIER
- PERMANENT CONCRETE BARRIER OR CONCRETE PARAPET
- FREE STANDING TEMPORARY BARRIER

CRASH CUSHION/SAND BARREL ARRAY AND OTHER TEMPORARY BARRIER LAYOUT DETAILS

STATE OF WISCONSIN
DEPARTMENT OF TRANSPOI

6

S.D.D. 14 B 8-2b

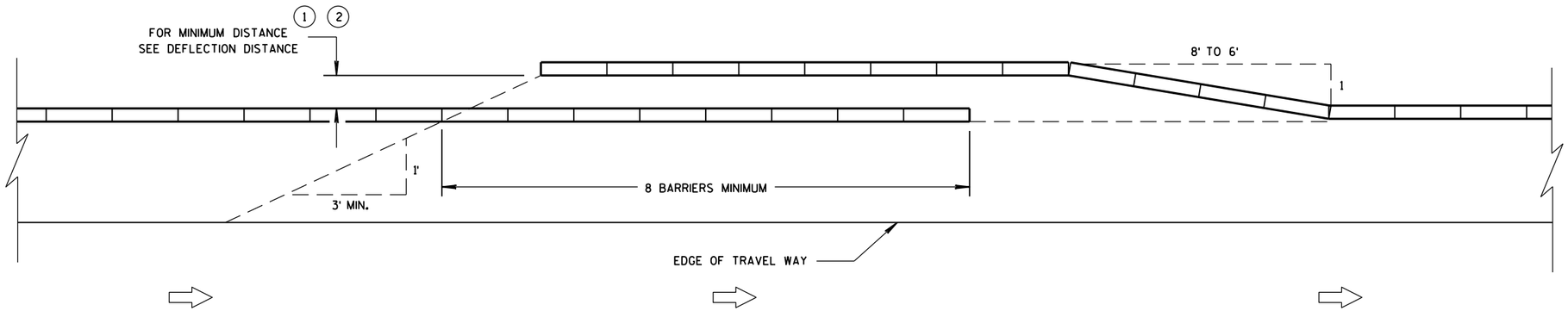

TEMPORARY BARRIER OVERLAP - ONE-WAY TRAFFIC

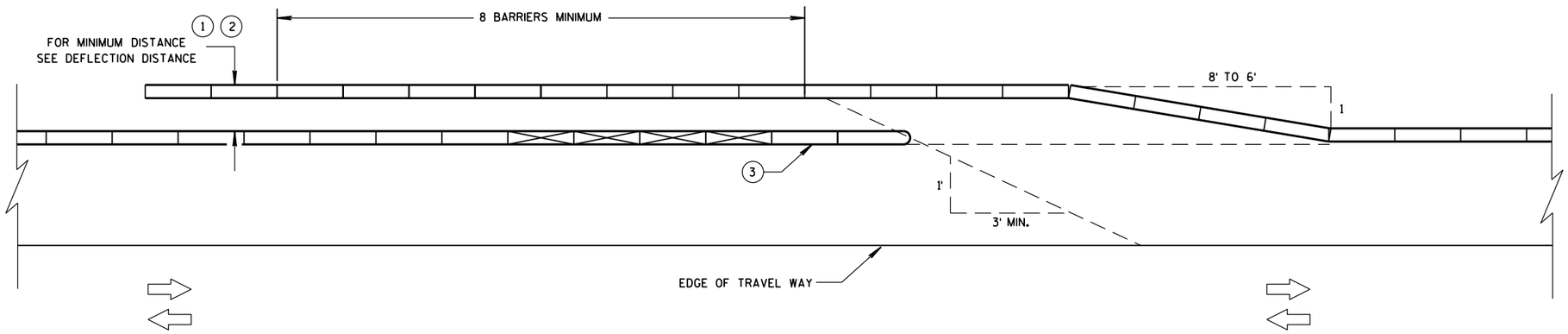

TEMPORARY BARRIER OVERLAP - TWO-WAY TRAFFIC

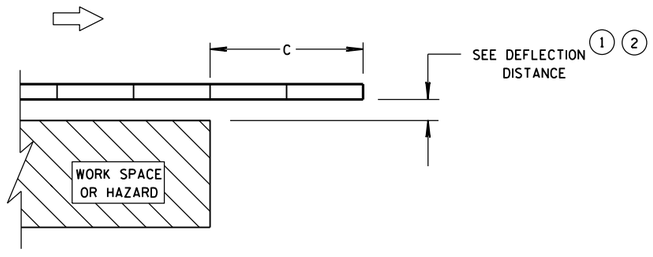

ENDING TEMPORARY BARRIER DOWNSTREAM - UNANCHORED

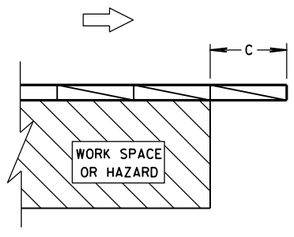

ENDING TEMPORARY BARRIER DOWNSTREAM - ANCHORED

LEGEND

- DIRECTION OF TRAVEL
- CRASH CUSHION OR SAND BARREL ARRAY
- SEE FREE STANDING TRANSITION TO TIED-DOWN SYSTEM DETAILS
- SEE BI-DIRECTIONAL TRANSITION TO TIED-DOWN SYSTEM DETAILS
- 3 PINS PLACED ON TRAFFIC SIDE OF BARRIER
- PERMANENT CONCRETE BARRIER OR CONCRETE PARAPET
- FREE STANDING TEMPORARY BARRIER

CRASH CUSHION/SAND BARREL ARRAY AND OTHER TEMPORARY BARRIER LAYOUT DETAILS

STATE OF WISCONSIN
DEPARTMENT OF TRANSPOR

6

S.D.D. 14 B 8-2c

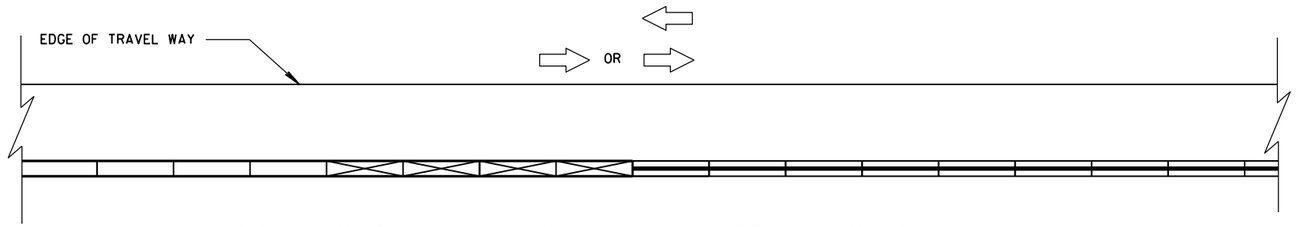

CONNECTING TEMPORARY BARRIER TO PERMANENT
CONCRETE BARRIER-TRAFFIC ON ONE SIDE

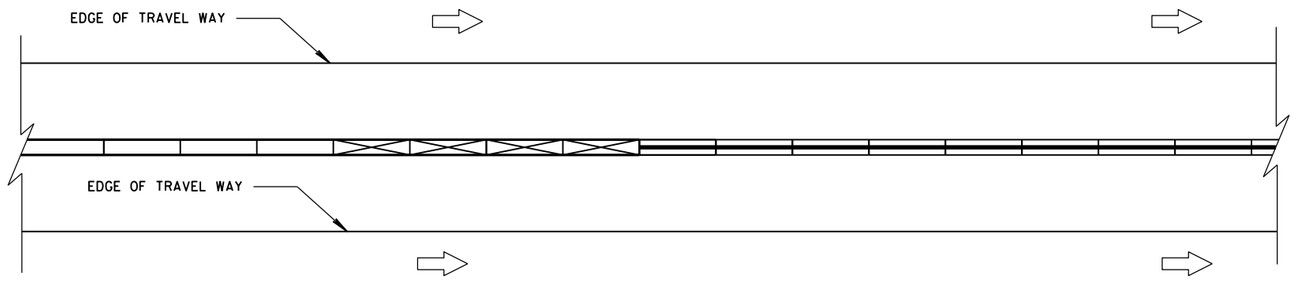

CONNECTING TEMPORARY BARRIER TO PERMANENT
CONCRETE BARRIER-TRAFFIC ON BOTH SIDES

LEGEND

DIRECTION OF TRAVEL

CRASH CUSHION OR
SAND BARREL ARRAY

SEE FREE STANDING TRANSITION
TO TIED-DOWN SYSTEM DETAILS

SEE BI-DIRECTIONAL TRANSITION
TO TIED-DOWN SYSTEM DETAILS

3 PINS PLACED ON
TRAFFIC SIDE OF BARRIER

PERMANENT CONCRETE BARRIER
OR CONCRETE PARAPET

FREE STANDING TEMPORARY
BARRIER

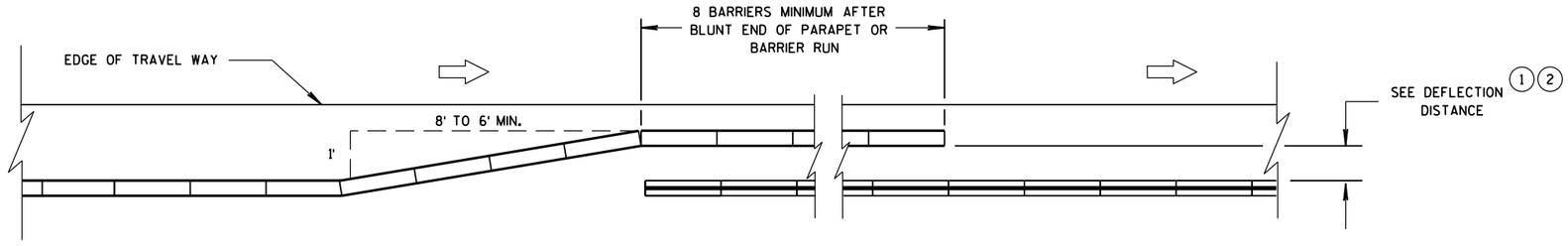

OVERLAPPING TEMPORARY BARRIER AND PERMANENT BARRIER -
ONE WAY TRAFFIC

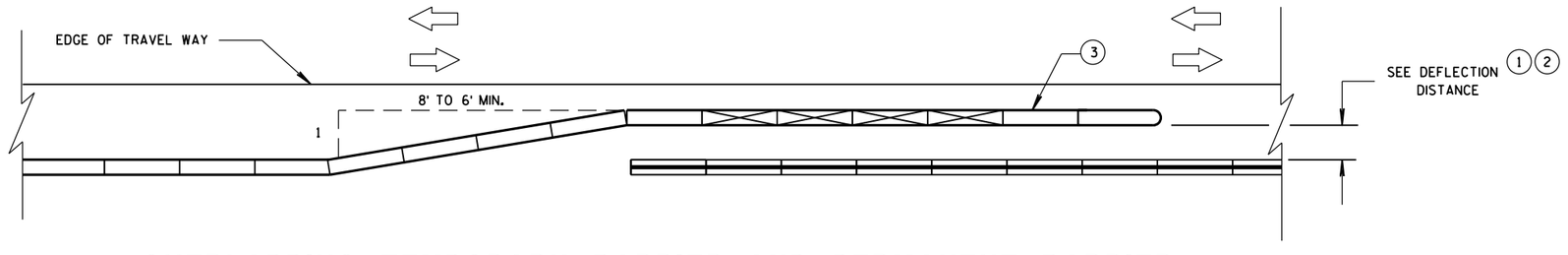

OVERLAPPING TEMPORARY BARRIER AND PERMANENT BARRIER -
TWO WAY TRAFFIC

CRASH CUSHION/SAND BARREL
ARRAY AND OTHER TEMPORARY
BARRIER LAYOUT DETAILS

STATE OF WISCONSIN
DEPARTMENT OF TRANSPOR

6

S.D.D. 14 B 8-2d

LEGEND

DIRECTION OF TRAVEL

CRASH CUSHION OR SAND BARREL ARRAY

SEE FREE STANDING TRANSITION TO TIED-DOWN SYSTEM DETAILS

SEE BI-DIRECTIONAL TRANSITION TO TIED-DOWN SYSTEM DETAILS

3 PINS PLACED ON TRAFFIC SIDE OF BARRIER

PERMANENT CONCRETE BARRIER OR CONCRETE PARAPET

FREE STANDING TEMPORARY BARRIER

DIMENSION C TABLE (2)

AVAILABLE DEFLECTION DISTANCE	MINIMUM LENGTH OF BARRIER BEYOND HAZARD FT
GREATER THAN 8'	12.5
LESS THAN OR EQUAL TO 8' BUT GREATER THAN 4'	50
LESS THAN OR EQUAL TO 4'	100

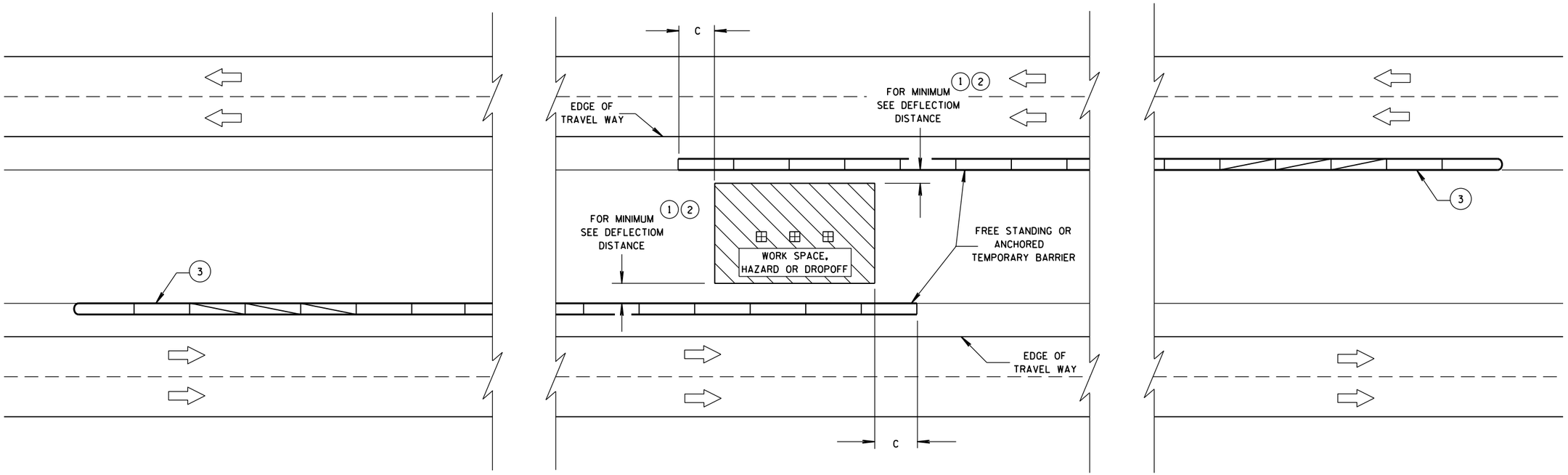

CRASH CUSHION/SAND BARREL ARRAY AND OTHER TEMPORARY BARRIER LAYOUT DETAILS

STATE OF WISCONSIN
DEPARTMENT OF TRANSPORTATION

APPROVED
June, 2015
DATE
/S/ Jerry H. Zogg
ROADWAY STANDARDS ENGINNER
93
ENT
FHWA

6

S.D.D. 14 B 8-2e

6

S.D.D. 14 B 8-2e

GENERAL NOTES

(1) WOOD OR STEEL POSTS (w6X9 OR w6X8.5) MAY BE USED. DO NOT INTERMIX WOOD AND STEEL POSTS. INSTALL STEEL POSTS WITH HOLES ON APPROACHING TRAFFIC SIDE.

(2) USE WOOD OR APPROVED PLASTIC BLOCKOUTS. WOOD BLOCKOUTS MAY BE CONSTRUCTED OUT OF TWO OR MORE WOOD BLOCKOUTS. SEE ALTERNATE WOOD BLOCKOUT DETAIL. DIMENSIONS OF APPROVED PLASTIC BLOCKOUTS MAY VARY.

(3) IF ROCK IS ENCOUNTERED DURING EXCAVATION, PROVIDE A HOLE 12 INCHES IN DIAMETER EXTENDING 20 INCHES DEEP INTO THE ROCK. PLACE APPROXIMATELY 2½ INCHES OF GRANULAR MATERIAL IN THE BOTTOM OF THE HOLE. CUT THE POSTS THE TO LENGTH AMD INSTALL. BACKFILL WITH EXCAVATED MATERIAL AND COMPACT. BACKFILL IS TO BE FREE OF LARGE ROCKS.

(4) WHEN THE DISTANCE FROM BACK OF POST TO SHOULDER HINGE POINT IS LESS THAN 2 FEET INSTALL LONGER POST AT HALF POST SPACING (K).

(5) FOR NEW MGS INSTALLATION TOP OF W-BEAM RAIL TOLERANCE IS ± 1". FOR EXISTING MGS INSTALLATION TOP OF W-BEAM IS BETWEEN 27¾" TO 32".

(6) WHEN USING STEEL POST AND WOOD BLOCKOUTS INSTALL FOUR 16D GALVANIZED NAILS. INSTALL NAILS AT THE BACK CORNERS OF THE BLOCK AND BEND THE NAILS OVER THE FLANGE OF THE STEEL POST.

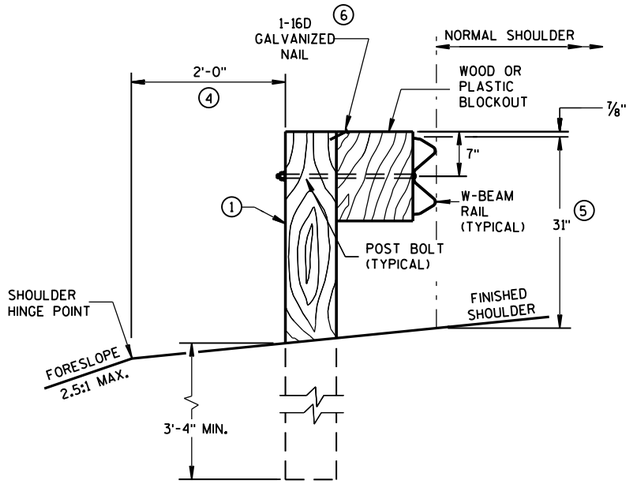

END VIEW

LOCATED ALONG A ROADWAY SHOULDER
STANDARD INSTALLATION

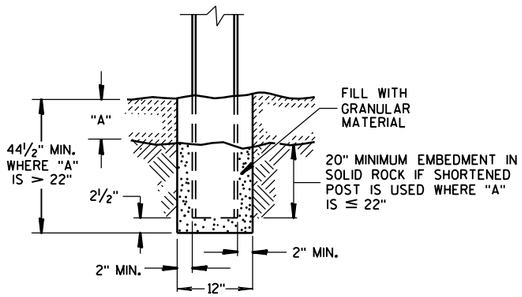

END VIEW

SETTING STEEL OR WOOD POST IN ROCK (3)

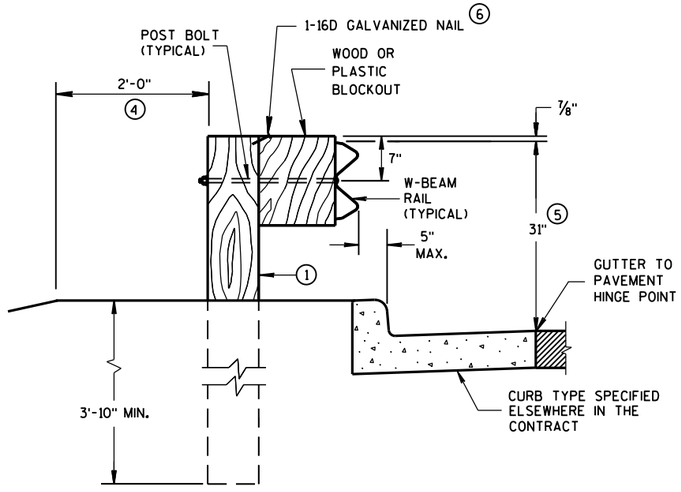

END VIEW

LOCATED ALONG A CURBED ROADWAY

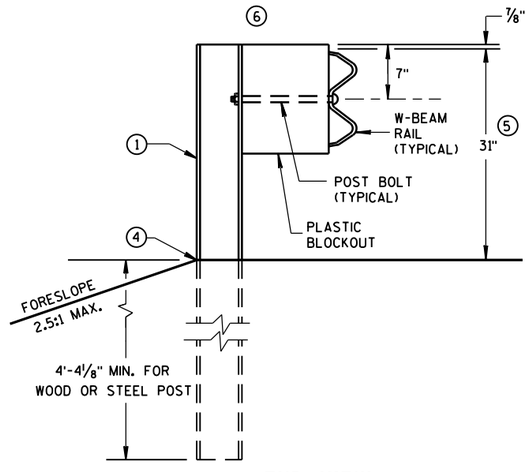

END VIEW

MGS LONGER POST AT HALFPOST SPACING W BEAM (K)

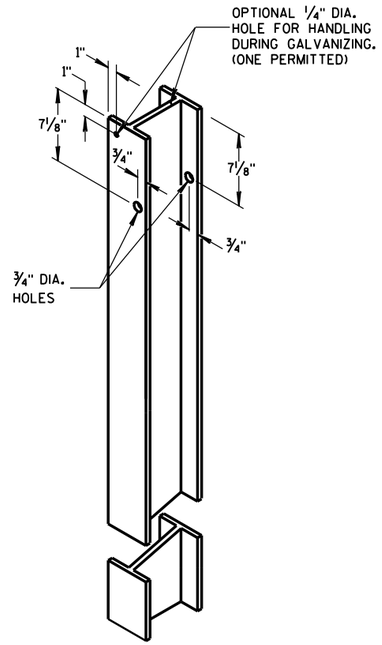

STEEL POST &
HOLE PUNCHING DETAIL
(w6X9) (1)

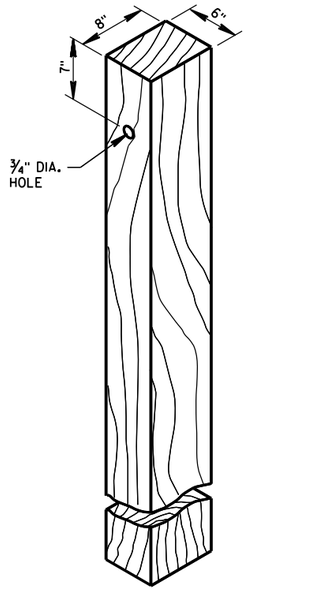

WOOD POST
(6" X 8") NOMINAL (1)

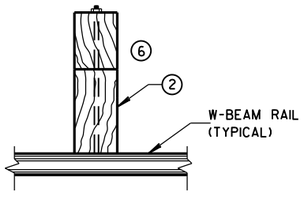

PLAN VIEW
WOOD POST,
BLOCKOUT & BEAM

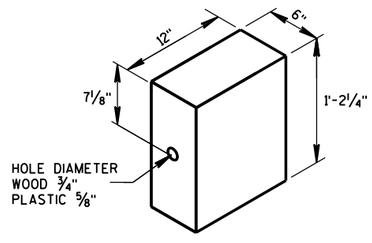

WOOD OR
PLASTIC BLOCKOUT (2)

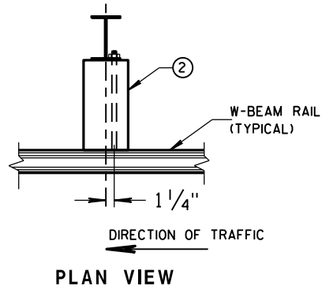

PLAN VIEW
STEEL POST,
PLASTIC BLOCKOUT & BEAM

MIDWEST GUARDRAIL SYSTEM
(MGS) GUARDRAIL

STATE OF WISCONSIN
DEPARTMENT OF TRANSPOR

6
S.D.D. 14 B 42-3a

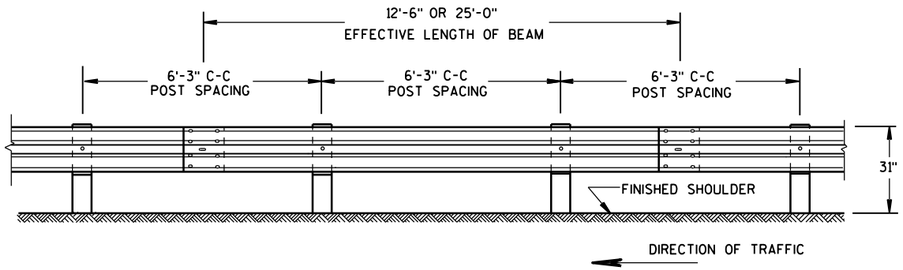

FRONT VIEW

POST SPACING STANDARD INSTALLATION

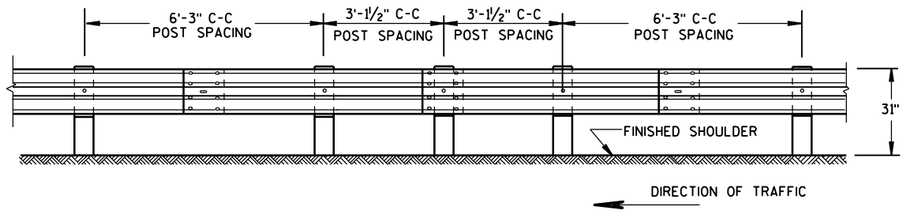

FRONT VIEW

HALF POST SPACING (HS) AND HALF POST SPACING WITH LONGER POSTS (K)

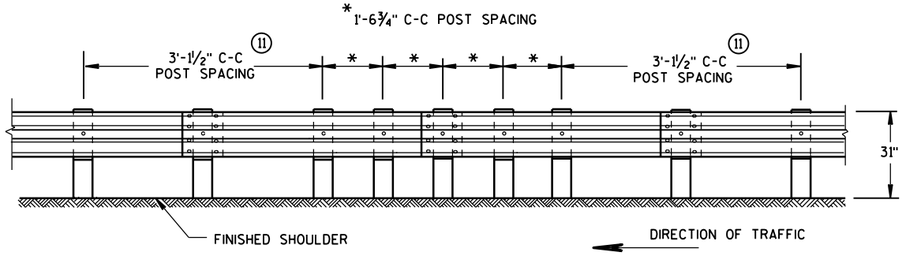

FRONT VIEW

QUARTER POST SPACING (QS)

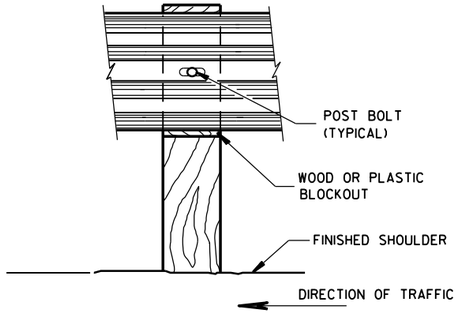

FRONT VIEW AT WOOD POST

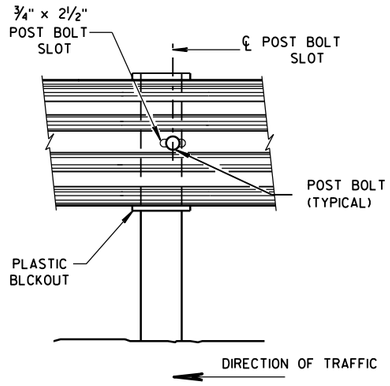

FRONT VIEW AT STEEL POST

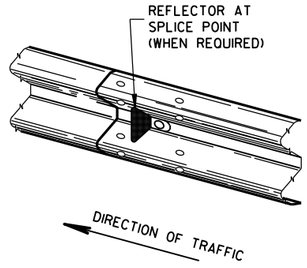

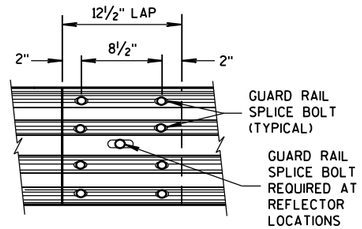

FRONT VIEW

MID-SPAN BEAM SPLICE

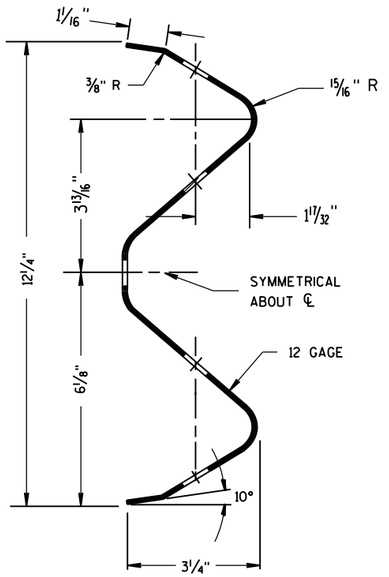

SECTION THRU W-BEAM RAIL

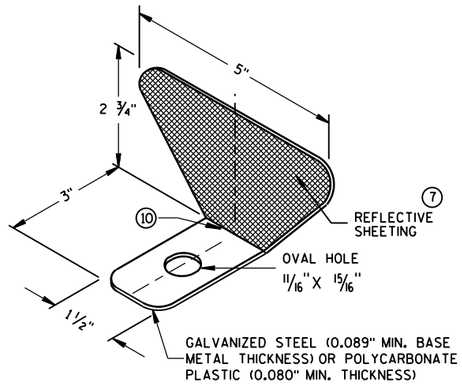

ONE SIDED REFLECTOR DETAIL AND TYPICAL INSTALLATION ⑦

GENERAL NOTES

⑦ PROVIDE SILVER REFLECTIVE SHEETING ON ALL REFLECTORS EXCEPT THOSE LOCATED ALONG THE LEFT EDGE OF ONE-WAY ROADWAYS, WHICH SHALL BE PROVIDED WITH YELLOW REFLECTIVE SHEETING. SHEETING IS TYPE H. SEE STANDARD SPECIFICATION 637.

⑧ DO NOT INSTALL REFLECTORS ON THE FIRST 50 FEET OF THE APPROACH END OF THE ENERGY ABSORBING TERMINAL. RAIL SPLICE LOCATIONS ARE THE ONLY ACCEPTABLE LOCATIONS FOR REFLECTORS.

⑨ REVERSE EVERY OTHER REFLECTOR FOR 2-WAY VISIBILITY. THE CONTRACTOR MAY FURNISH TWO-SIDED REFLECTORS IN LIEU OF ONE-SIDED REFLECTORS.

⑩ PROVIDE AN ANGLE OF BEND OF 90° ± 1° FOR TWO-SIDED REFLECTORS.

⑪ 25 FEET OF HALF POST SPACING IS REQUIRED ON APPROACH AND DEPARTURE ENDS OF QUARTER POST SPACING.

POST BOLTS ARE A ⅝" DIAMETER ASTM A307 GUARDRAIL BOLT. A POST BOLT REQUIRES ⅝" DIAMETER A563A DOUBLE RECESSED (DR) HEAVY HEX NUT AND ⅝" DIAMETER F844 FLAT WASHER. POST BOLTS MAY BE LONGER IF MULTIPLE BLOCKOUTS ARE BEING USED.

GUARD RAIL SPLICE BOLTS ARE A ⅝" DIAMETER ASTM A307 GUARDRAIL HEAD BOLT. A GUARDRAIL SPLICE BOLT REQUIRES ⅝" DIAMETER A563A DOUBLE RECESSED (DR) HEAVY HEX NUT.

REFLECTOR SPACING ⑧

	BEAM GUARD LENGTH	REFLECTOR SPACING	NO. SURFACES REFLECTORIZED	MIN. NO. REFLECTORS
ONE WAY TRAFFIC	< 200' > 200'	50' C-C 100' C-C	1 1	3
TWO WAY TRAFFIC	< 200' > 200'	25' C-C 50' C-C	1 ⑨ 1	6
TWO WAY TRAFFIC	< 200' > 200'	50' C-C 100' C-C	2 2 ⑩	3

MIDWEST GUARDRAIL SYSTEM
(MGS) GUARDRAIL

STATE OF WISCONSIN
DEPARTMENT OF TRANSPOR

6

S.D.D. 14 B 42-3b

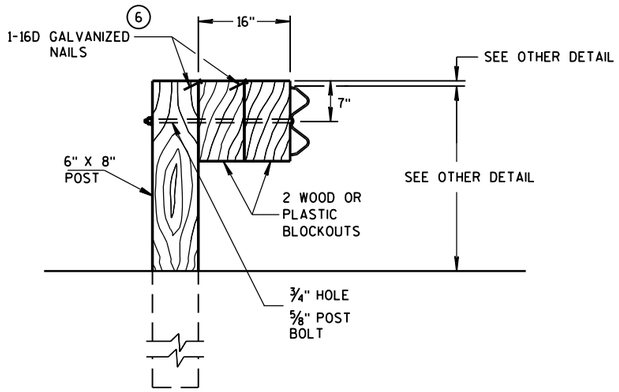

DETAIL FOR 16" BLOCKOUT DEPTH

IT IS ACCEPTABLE TO USE BLOCKOUTS UP TO 16" DEEP TO INCREASE THE POST OFFSET TO AVOID UNDERGROUND OBSTACLES. THERE IS NO LIMIT TO THE NUMBER OF POSTS THAT CAN HAVE ADDITIONAL BLOCKOUTS UP TO 16" DEEP.

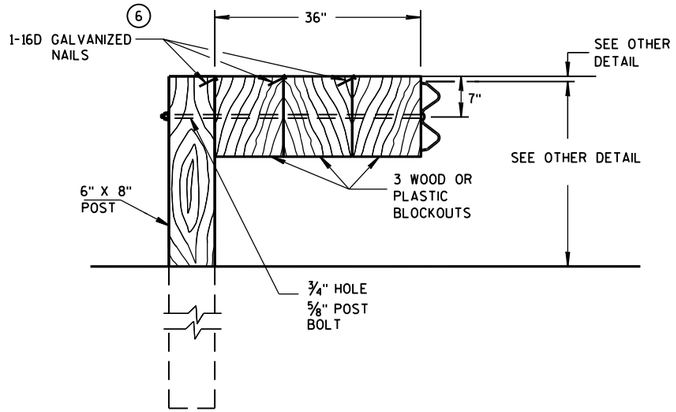

DETAIL FOR 36" BLOCKOUT DEPTH

NOTES: UNDER SPECIAL CIRCUMSTANCES, SUCH AS AVOIDING OBSTACLES THAT ARE NOT RELOCATED, IT IS ACCEPTABLE TO INSTALL ADDITIONAL BLOCKOUTS TO OBTAIN UP TO 36" DEPTH FOR ONE OR TWO POSTS IN A SECTION OF GUARDRAIL.

DO NOT USE 16" OR 36" BLOCKOUTS IF IT CAUSES THE POST TO BE DRIVEN BEYOND SHOULDER HINGE POINT OR CAUSES A FIXED OBJECT TO BE WITHIN THE DEFLECTION DISTANCE OF THE BARRIER.

NOTE: 1. ALL FILLETS SHALL HAVE A MINIMUM RADIUS OF 1/16".
2. IF THE BOLT EXTENDS MORE THAN 1/4" FROM THE NUT THE BOLT SHOULD BE TRIMMED BACK.

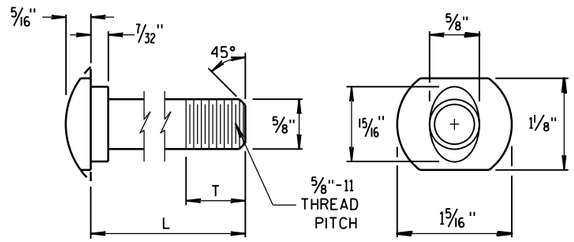

POST BOLT TABLE

L	T (MIN.)
1¼"	1⅛"
2"	1¾"
10"	4"
14"	4 1/16"
18"	4"
21"	4 1/16"
25"	4"

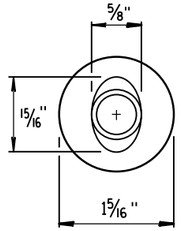

ALTERNATE BOLT HEAD

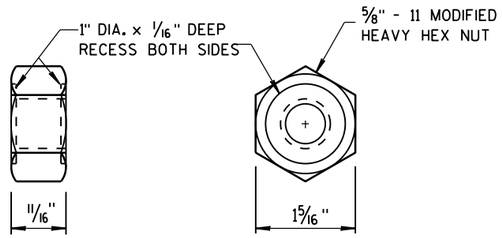

POST BOLT AND RECESS NUT

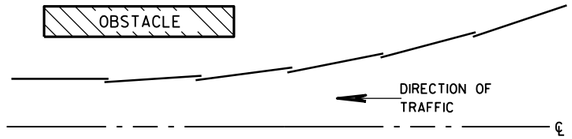

PLAN VIEW

BEAM LAPPING DETAIL

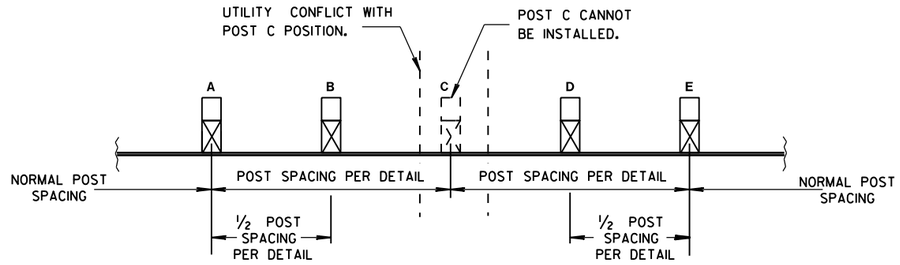

POST DRIVING FOR CONTINUOUS UNDERGROUND OBSTRUCTION

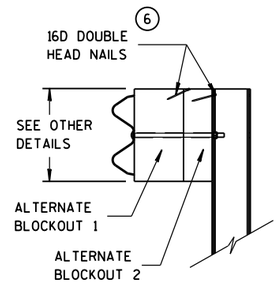

SIDE VIEW

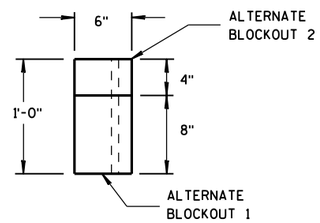

TOP VIEW

ALTERNATE WOOD BLOCKOUT DETAIL

MIDWEST GUARDRAIL SYSTEM (MGS) GUARDRAIL

STATE OF WISCONSIN
DEPARTMENT OF TRANSPORTATION

APPROVED
June 2014 — DATE
/S/ Jerry H. Zogg — ROADWAY STANDARDS DEVELOPMENT ENGINEER
FHWA

6
S.D.D. 14 B 42-3c

GENERAL NOTES

(A) THE SLOPE IN THE AREA BOUNDED BY THE GRADELINE, THE HINGE POINT LINE (HPL), AND THE CLEAR ZONE LIMITS (CZL) SHALL BE 4:1 OR FLATTER.

(B) AFTER FINAL ASSEMBLY, RECHECK CABLE TO BE SURE IT IS TAUT AND HAS NOT RELAXED.

(C) DIFFERENT MANUFACTURES REQUIRE DIFFERENT PERFORATED W-BEAM RAIL END PANELS. SEE MANUFACTURES INFORMATION.

(D) THE TOP OF THE STEEL TUBE ON POST 1 AND POST 2 SHALL NOT BE MORE THAN 3" ABOVE THE FINISH GROUND ELEVATION.

(F) ATTACH ALUMINUM SHEET TO E.A.T. HEAD USING 4 STAINLESS STEEL SELF-TAPPING SCREWS. ONE SCREW PER CORNER.

(G) ½" DIAMETER X 3" LONG LAG BOLT AND WASHER.

(H) HARDWARE VARIES BETWEEN DIFFERENT MANUFACTURES. SEE MANUFACTURE'S DRAWING FOR INFORMATION.

(I) DIMENSIONS MAY VARY. SEE MANUFACTURE'S INFORMATION.

SEE SDD 14B42 FOR MORE INFORMATION.

* DO NOT ATTACH BLOCKOUTS TO POSTS 1 AND 2.

DO NOT INSTALL REFLECTORS ON THE FIRST 50 FEET OF THE APPROACH END OF THE ENERGY ABSORBING TERMINAL.

W-BEAM RAIL SPLICES ARE LOCATED AT POST NUMBER 3, AND BETWEEN POST 5 AND 6, BETWEEN POSTS 7 AND 8, AND MIDDLE OF THE SPAN AFTER POST 9.

THE CENTER OF THE UPPER 3½" DIAMETER HOLE ON POST NUMBER 3 THROUGH POST 9 IS TO BE FLUSH WITH THE GROUND LINE UP TO A MAXIMUM OF 2" ABOVE GROUND LINE.

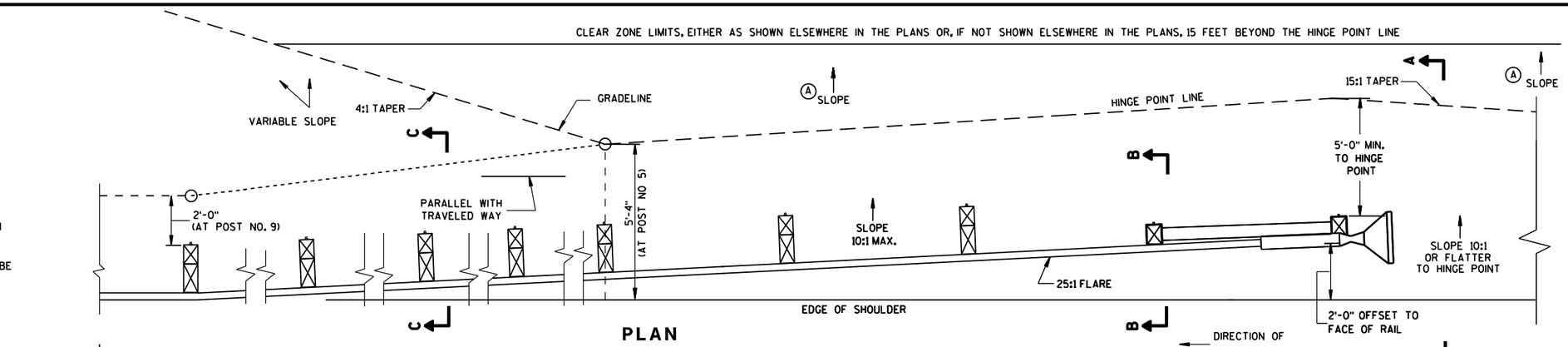

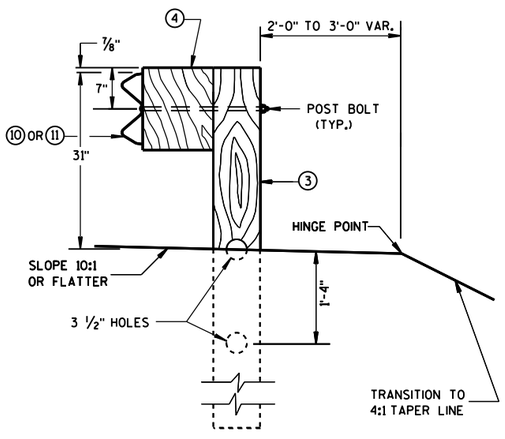

SECTION C-C
TYPICAL AT POST NOS. 3-9

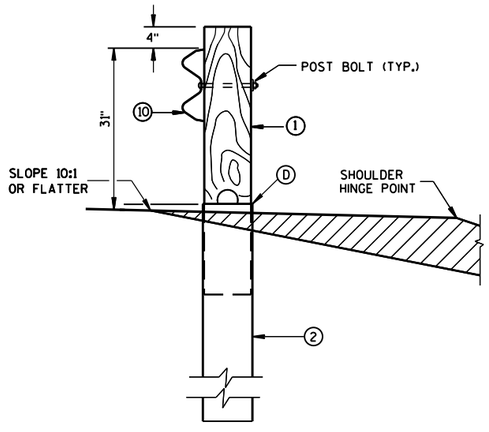

SECTION B-B
TYPICAL AT POST NO. 2*

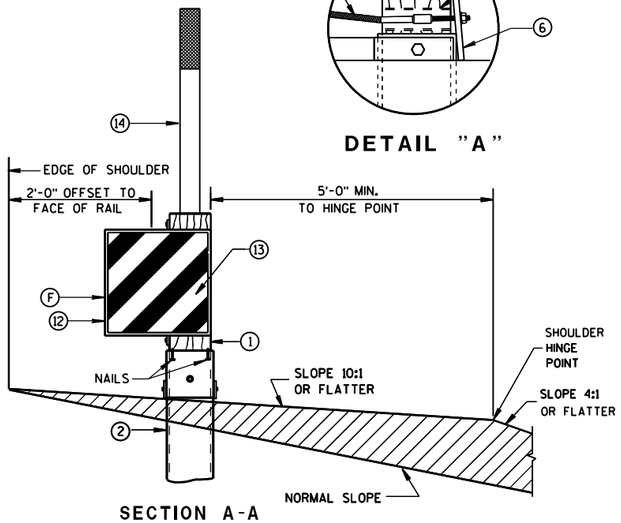

SECTION A-A
TYPICAL AT POST NO. 1*

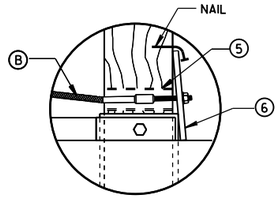

DETAIL "A"

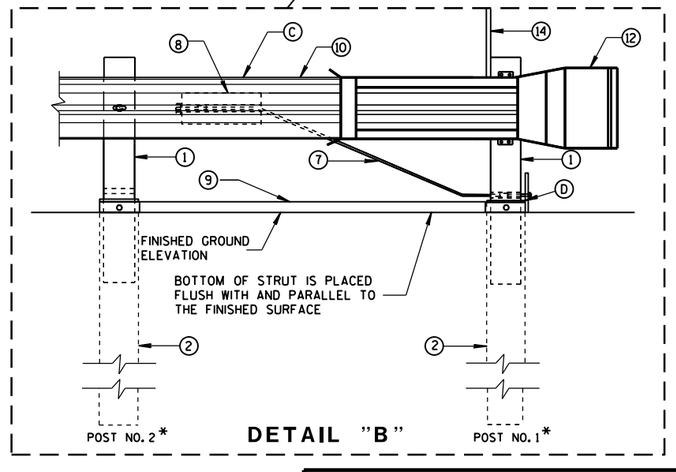

DETAIL "B"

MIDWEST GUARDRAIL SYSTEM
ENERGY ABSORBING TERMINAL
(MGS)

STATE OF WISCONSIN
DEPARTMENT OF TRANSPOR 97

S.D.D. 14 B 44-2a

6

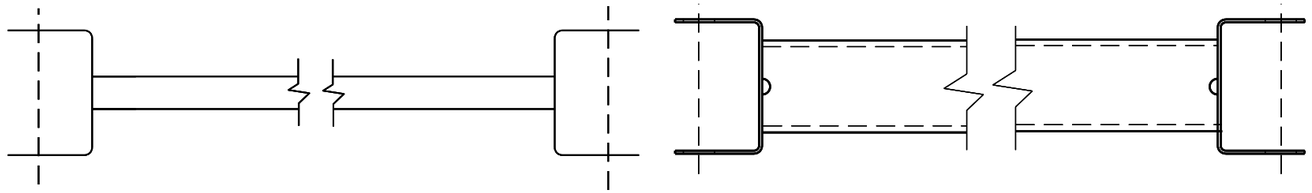

GENERIC GROUND STRUT (9) (H)

BILL OF MATERIALS

PART NO.	DESCRIPTION MATERIALS PROVIDED BY MGS EAT MANUFACTURER. SEE MANUFACTURER'S DETAILS FOR MORE INFORMATION.
(1)	WOOD BREAKAWAY POST
(2)	6" X 8" X 0.188", 6'-0" LONG FOUNDATION TUBE AT POSTS 1 AND 2
(3)	WOOD CRT
(4)	WOOD BLOCKOUT
(5)	PIPE SLEEVE
(6)	BEARING PLATE
(7)	BCT CABLE ASSEMBLY
(8)	ANCHOR CABLE BOX
(9)	GROUND STRUT
(10)	PERFORATED W-BEAM RAIL END PANEL, 12'-6" LONG.
(11)	STANDARD W-BEAM RAIL. MULTIPLE SECTIONS REQUIRED. SECTIONS VARY IN LENGTH.
(12)	END SECTION EAT
(13)	0.040" ALUMINUM SHEET WITH REFLECTIVE SHEETING TYPE F PER SECTION 637 OF THE STANDARD SPECIFICATIONS
(14)	EAT MARKER POST - YELLOW (SEE APPROVED PRODUCTS LIST)

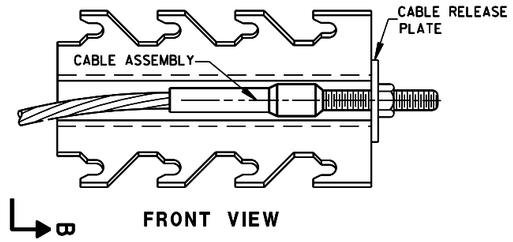

FRONT VIEW

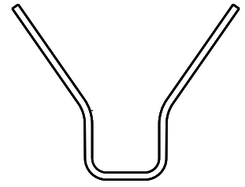

SECTION B-B

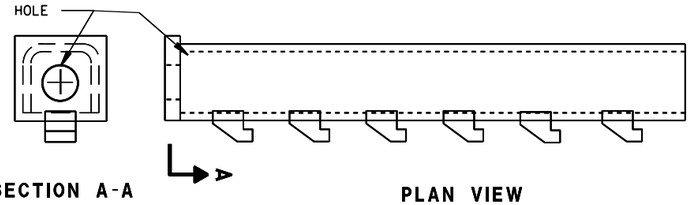

SECTION A-A

PLAN VIEW

GENERIC ANCHOR CABLE BOX (8) (H)

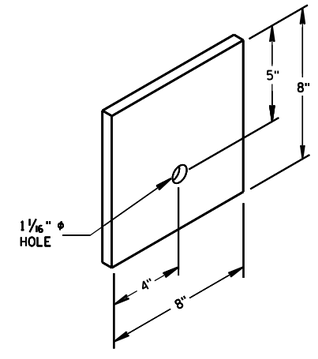

BEARING PLATE (6)

MIDWEST GUARDRAIL SYSTEM
ENERGY ABSORBING TERMINAL
(MGS)

STATE OF WISCONSIN
DEPARTMENT OF TRANSPOI

6

S.D.D. 14 B 44-2b

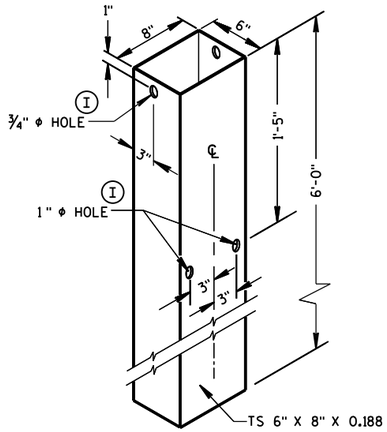

FOUNDATION TUBE (2)

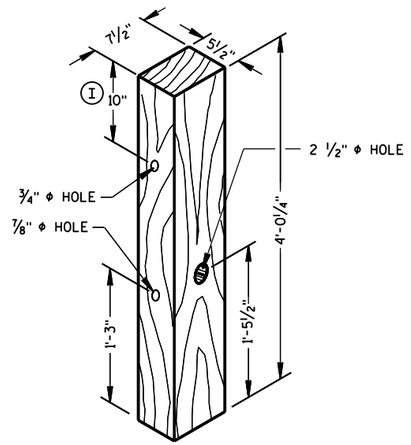

POSTS NUMBER 1 AND 2

WOOD BREAKAWAY POST (1)

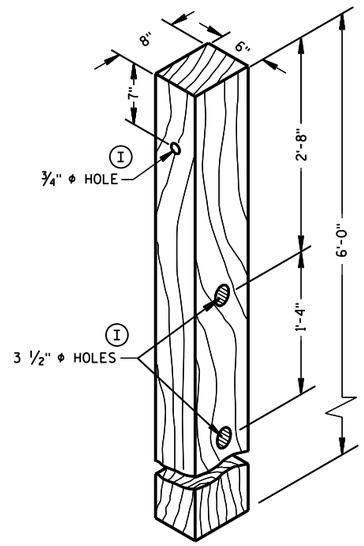

POSTS NUMBER 3-9

WOOD CRT POST (3)

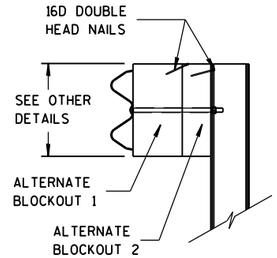

SIDE VIEW

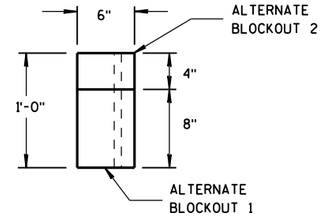

TOP VIEW

ALTERNATE WOOD BLOCKOUT DETAIL

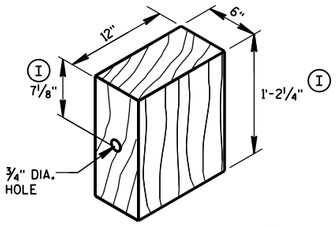

WOOD BLOCKOUT (4)

REQ'D. AT ALL POSTS EXCEPT POST NO'S 1 & 2

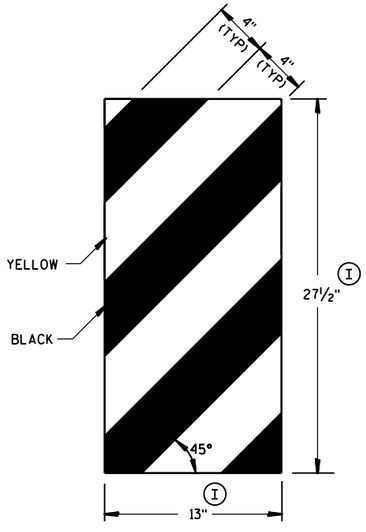

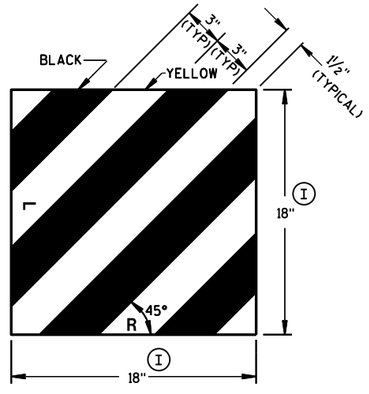

GENERIC REFLECTIVE SHEETING (13) (H)

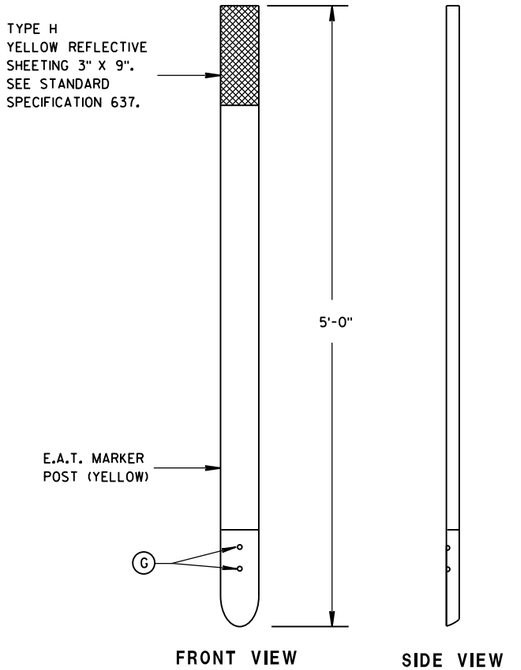

FRONT VIEW

SIDE VIEW

E.A.T. MARKER POST (14)

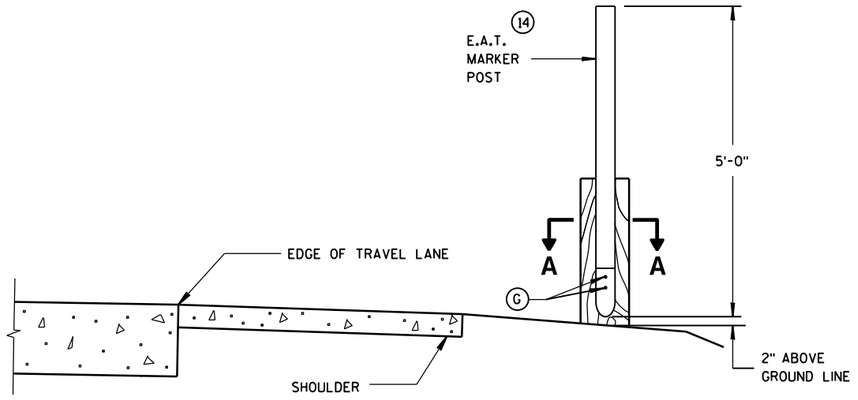

TYPICAL INSTALLATION OF E.A.T. MARKER POST BACKSIDE OF POST NO. 1

(E.A.T. AND RAIL REMOVED FOR CLARITY)

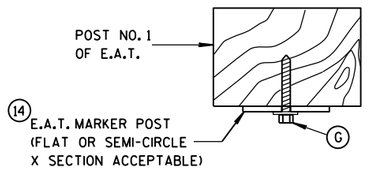

SECTION A-A

MIDWEST GUARDRAIL SYSTEM ENERGY ABSORBING TERMINAL (MGS)

STATE OF WISCONSIN
DEPARTMENT OF TRANSPORTATION

APPROVED
June 2014 — DATE
/S/ Jerry H. Zogg — ROADWAY STANDARDS ENGINEER
FHWA

6

S.D.D. 14 B 44-2c

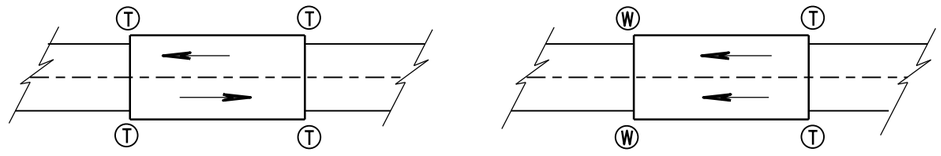

TWO WAY TRAFFIC

ONE WAY TRAFFIC

(T) THRIE BEAM CONNECTION

(W) W-BEAM CONNECTION WHEN REQUIRED

TYPICAL LOCATIONS OF THRIE BEAM AND W-BEAM CONNECTIONS TO BRIDGE

GENERAL NOTES

IF ROCK IS ENCOUNTERED, REMOVE ROCK TO FULL DEPTH OF POST PLUS 2½", AND 12" DIAMETER AROUND POST. SEE 14B42 FOR MORE DETAILS.

TRANSITION USES STEEL POSTS ONLY.

SEE STANDARD DETAIL DRAWING 14 B 42 FOR MORE INFORMATION.

(1) BRIDGE RAILING TYPE "W" DOES NOT REQUIRE A TERMINAL CONNECTOR.

(2) OPTIONAL CURB AND GUTTER OR DRAINAGE FEATURE SEE PLAN FOR INFORMATION.

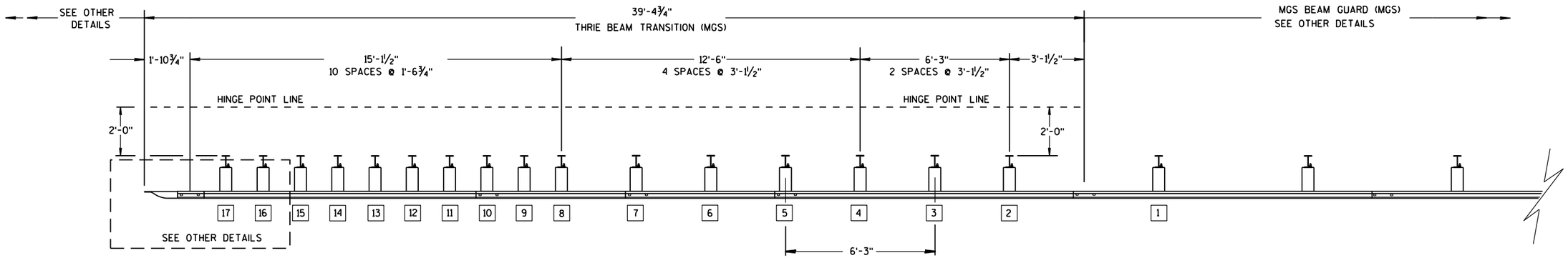

PLAN VIEW

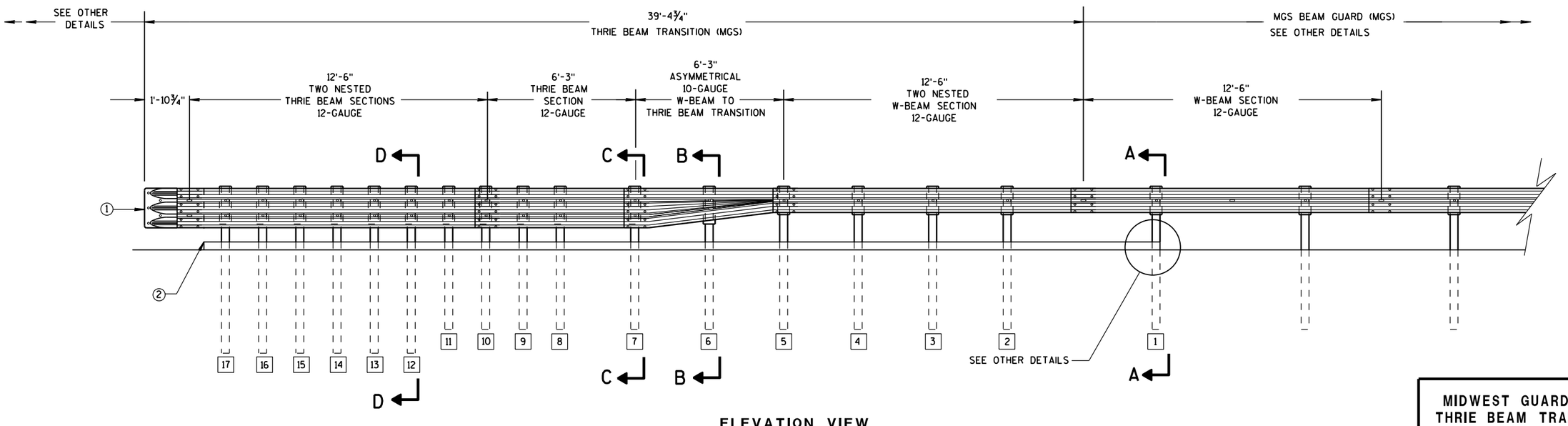

ELEVATION VIEW

MIDWEST GUARDRAIL SYSTEM THRIE BEAM TRANSITION

MIDWEST GUARDRAIL SYSTEM
THRIE BEAM TRANSITION (MGS)

STATE OF WISCONSIN
DEPARTMENT OF TRANSPOI

6

S.D.D. 14 B 45-4a

6

S.D.D. 14 B 45-4a

GENERAL NOTES

(2) OPTIONAL CURB AND GUTTER OR DRAINAGE_FEATURE SEE PLAN FOR INFORMATION.

(3) WHEN USING STEEL POSTS AND WOOD BLOCKOUTS INSTALL FOUR 10D GALVANIZED NAILS. INSTALL NAILS AT THE BACK CORNERS OF THE BLOCK AND BEND THE NAILS OVER THE FLANGE OF THE STEEL POST.

(4) TOLERANCE FOR TOP OF W-BEAM RAIL IS ± 1".

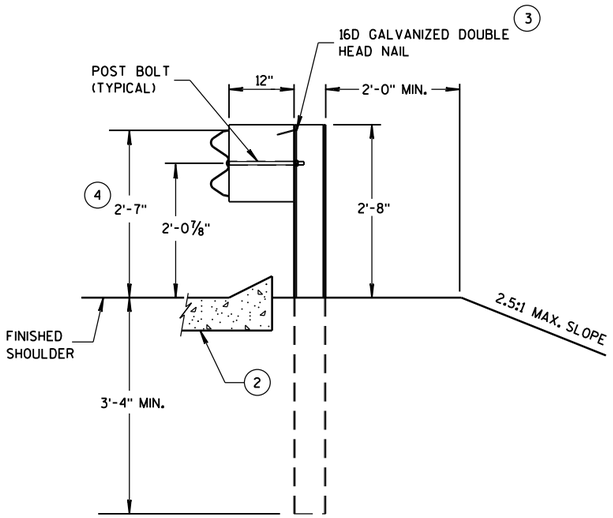

SECTION A-A

POSTS 1-5

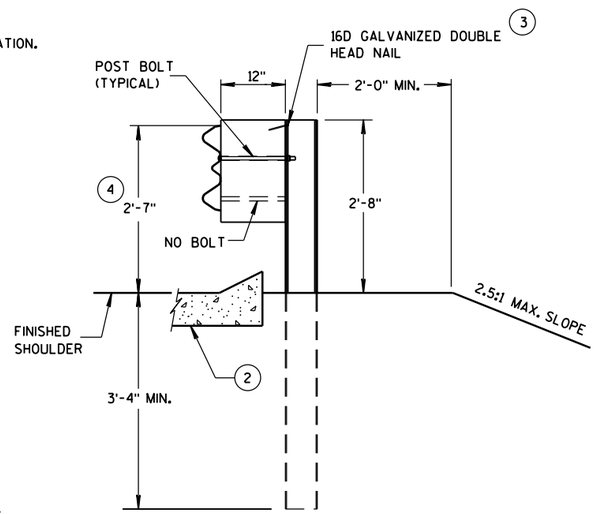

SECTION B-B

POST 6

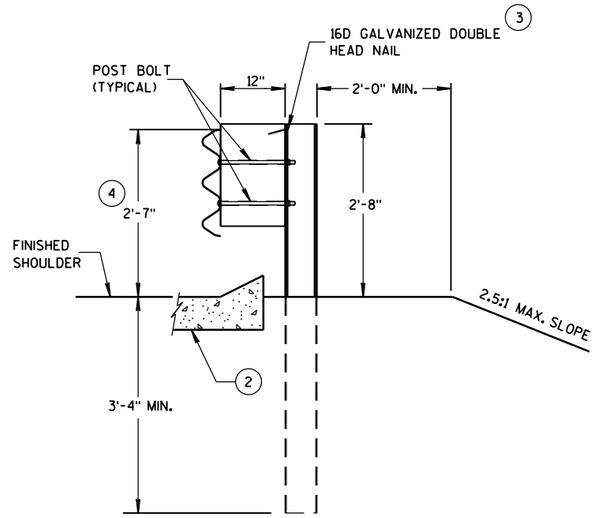

SECTION C-C

POSTS 7-11

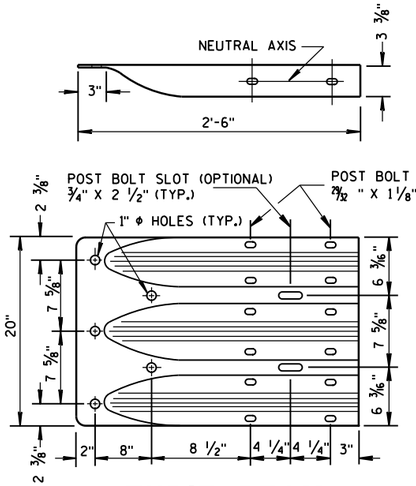

THRIE BEAM TERMINAL CONNECTOR

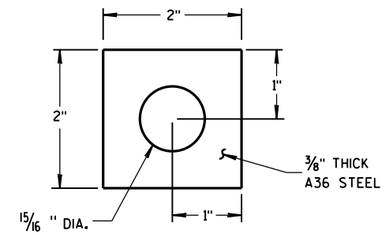

PLATE WASHER DETAIL

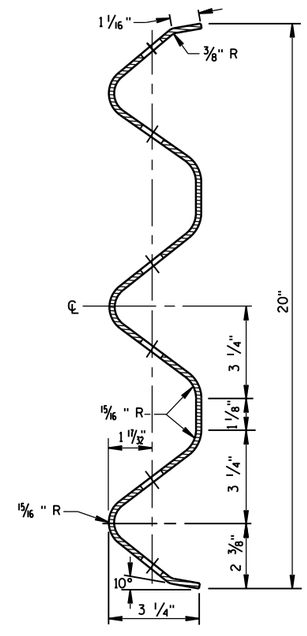

SECTION THRU THRIE BEAM RAIL ELEMENT

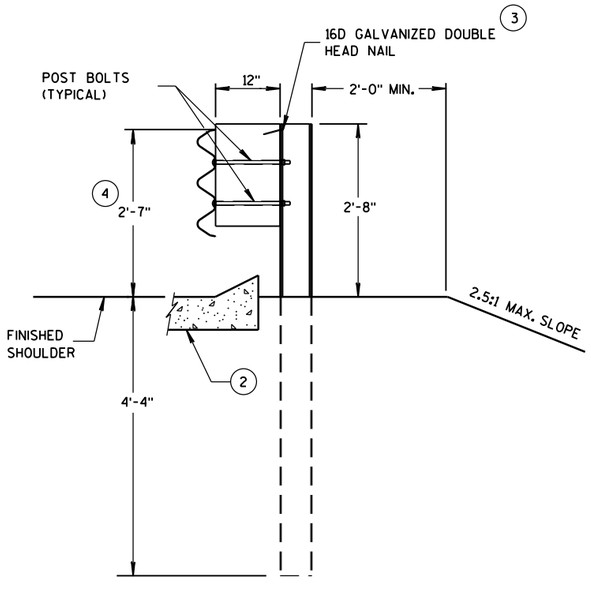

SECTION D-D

POSTS 12-17

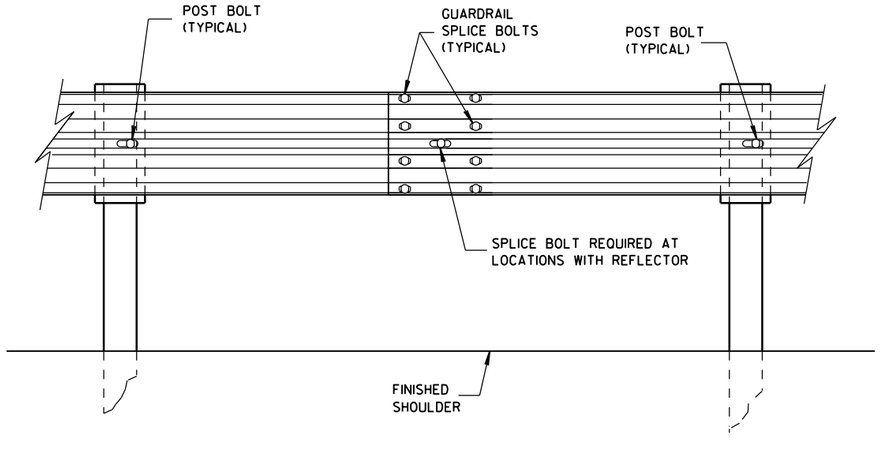

SPLICE DETAIL

MIDWEST GUARDRAIL SYSTEM
THRIE BEAM TRANSITION (MGS)

STATE OF WISCONSIN
DEPARTMENT OF TRANSPOI

6

S.D.D. 14 B 45-4b

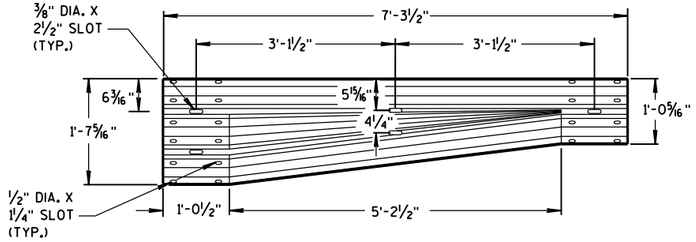

W-BEAM TO THRIE BEAM TRANSITION SECTION

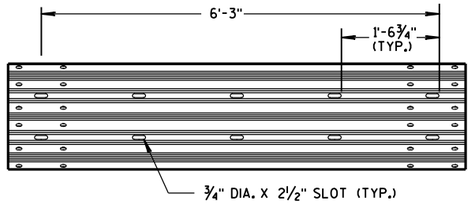

6'-3" THRIE BEAM SECTION

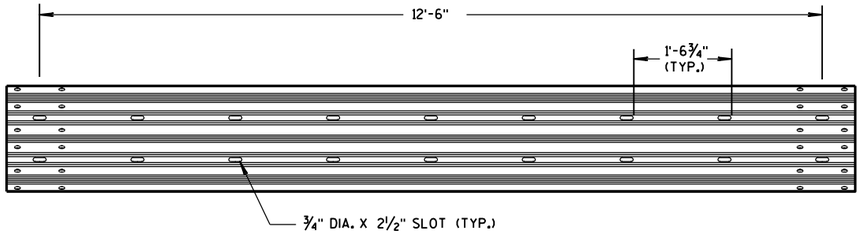

12'-6" THRIE BEAM SECTION

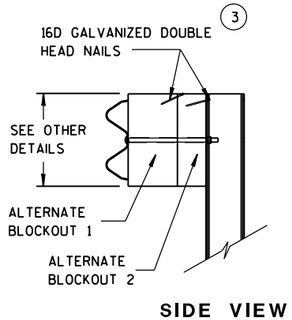

SIDE VIEW

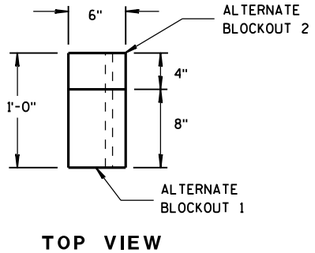

TOP VIEW

ALTERNATE WOOD BLOCKOUT DETAIL

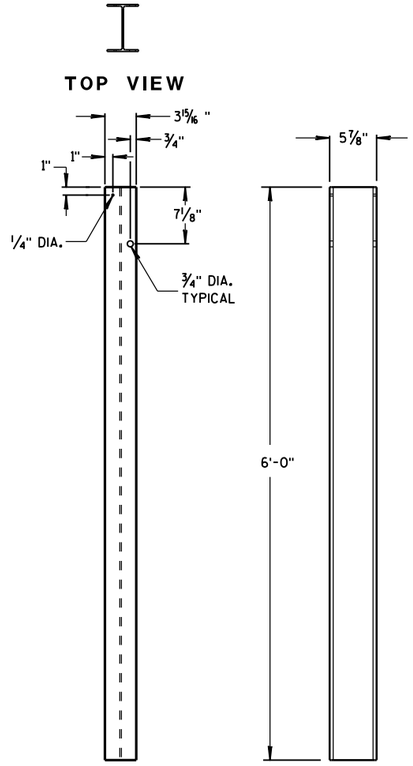

STEEL POSTS 1-5

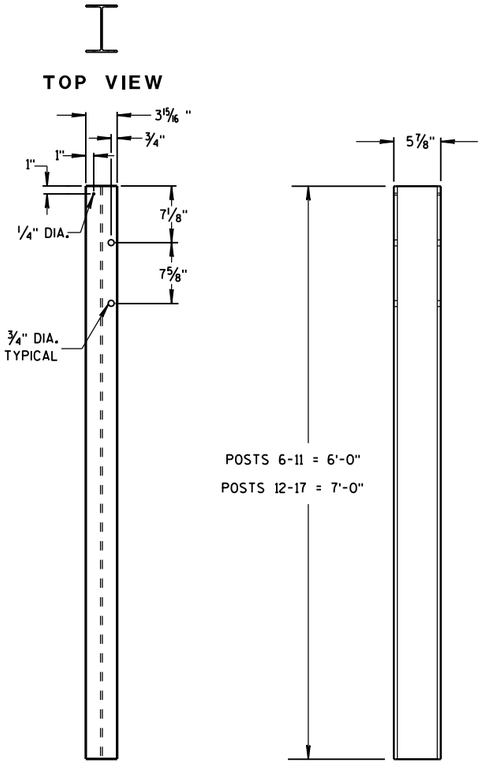

STEEL POSTS 6-17

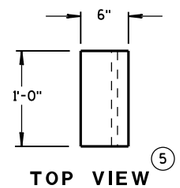

TOP VIEW (5)

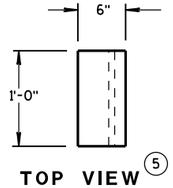

TOP VIEW (5)

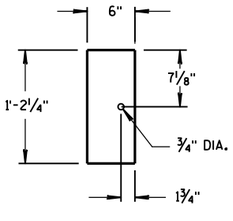

FRONT VIEW

BLOCKOUT POSTS 1-5

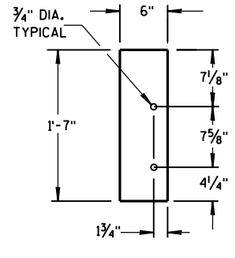

FRONT VIEW

BLOCKOUT POSTS 6-17

GENERAL NOTES

STEEL POSTS ARE W6X9 OR W6X8.5.

BOLT HOLES FOR POST ARE ON FRONT AND OF SIDE OF POST.

(3) WHEN USING STEEL POSTS AND WOOD BLOCKOUTS INSTALL FOUR 16D GALVANIZED NAILS. INSTALL NAILS AT THE BACK CORNERS OF THE BLOCK AND BEND THE NAILS OVER THE FLANGE OF THE STEEL POST.

(5) WOOD BLOCKS MAY BE CONSTRUCTED OUT OF 2 WOOD BLOCKS. SEE ALTERNATE WOOD BLOCK DETAIL.

MIDWEST GUARDRAIL SYSTEM
THRIE BEAM TRANSITION (MGS)

STATE OF WISCONSIN
DEPARTMENT OF TRANSPOI

6

S.D.D. 14 B 45-4c

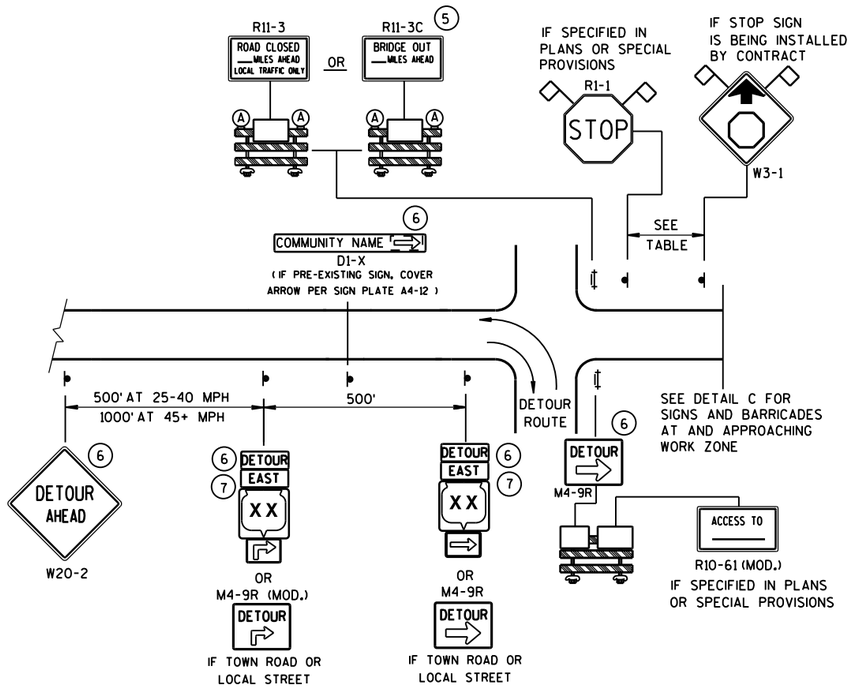

DETAIL A
MAINLINE CLOSURE WITH POSTED DETOUR

WORK ZONE GREATER THAN ½ MILE FROM DETOUR ROUTE (1000 FEET IF URBAN)

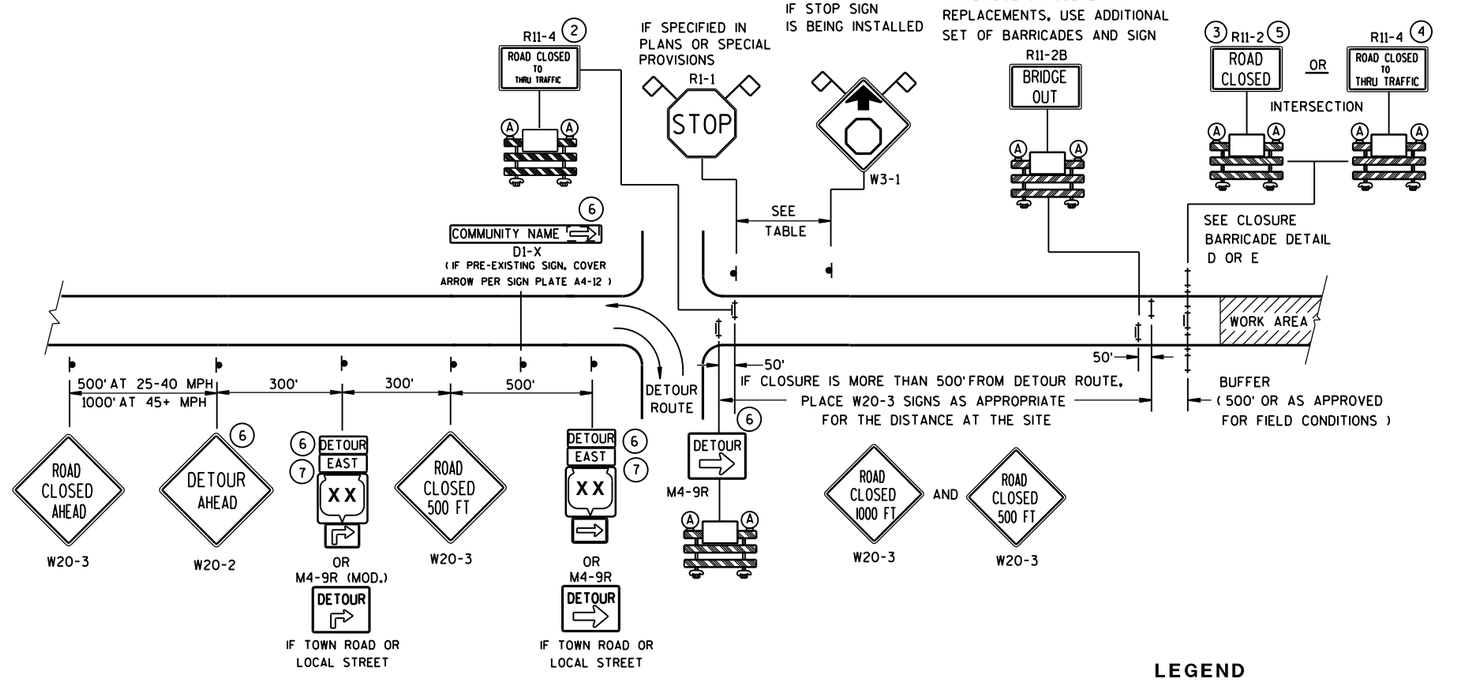

DETAIL B
MAINLINE CLOSURE WITH POSTED DETOUR

WORK ZONE LESS THAN ½ MILE FROM DETOUR ROUTE (1000 FEET IF URBAN)

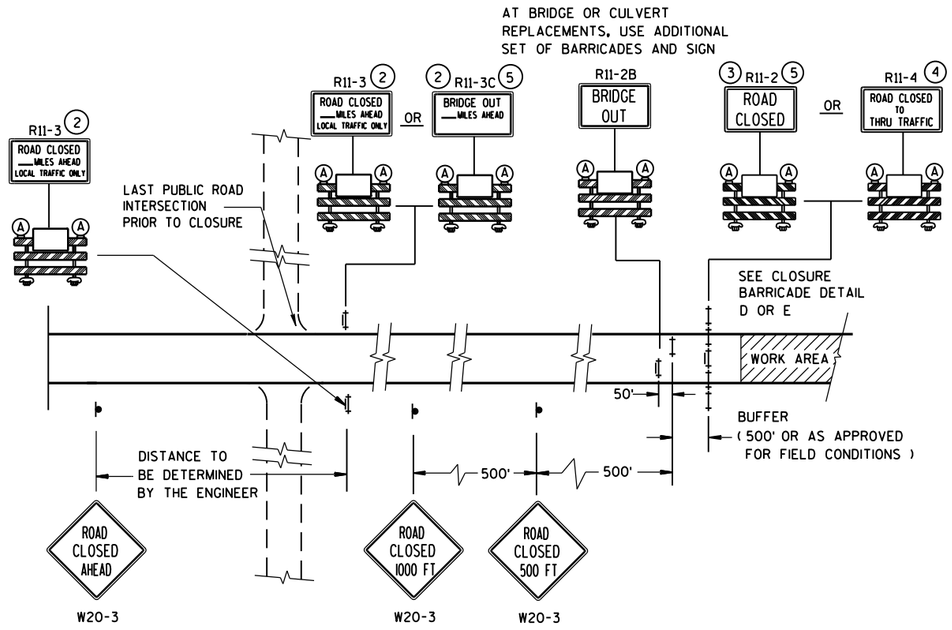

DETAIL C
MAINLINE CLOSURE, NO POSTED DETOUR

SPEED LIMIT (MPH)	"STOP AHEAD" ADVANCE WARNING DISTANCE (FT)
25	200
30	200
35	350
40	350
45	500
50	550
55	750

SEE SDD 15C2-SHEET "**b**" FOR GENERAL NOTES AND FOOTNOTES ① THROUGH ⑦

LEGEND

- SIGN ON PERMANENT SUPPORT
- TYPE III BARRICADE
- TYPE III BARRICADE WITH ATTACHED SIGN
- (A) TYPE "A" WARNING LIGHT (FLASHING)
- WORK AREA
- DETOUR / EAST — M4-8 / M3-X
- XX — M1-4; COUNTY XX — M1-5A; XX — M1-6
- M05-1 OR M06-1
- FLAGS, 16" X 16" MIN., (ORANGE)

BARRICADES AND SIGNS FOR MAINLINE CLOSURES

STATE OF WISCONSIN
DEPARTMENT OF TRANSPORTATION

8/2013 DATE

/S/ Travis Feltes
STATE TRAFFIC ENGINEER

FHWA

6

S.D.D. 15 C 2-5a

6

S.D.D. 15 C 2-5a

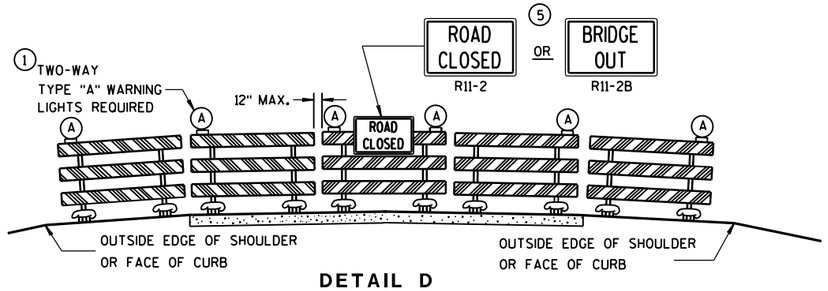

DETAIL D

ROAD CLOSURE BARRICADE DETAIL

APPROACH VIEW

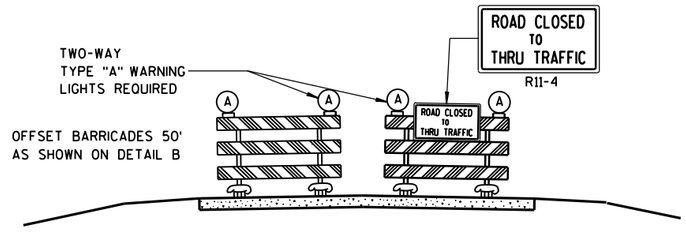

DETAIL E

LANE CLOSURE BARRICADE DETAIL

APPROACH VIEW

SEE SDD 15C2-SHEET "**a**" FOR LEGEND

GENERAL NOTES

THE EXACT NUMBER, LOCATION, AND SPACING OF ALL SIGNS AND BARRICADES SHALL BE ADJUSTED TO FIT FIELD CONDITIONS AS APPROVED BY THE ENGINEER.

ANY SIGNS TEMPORARY OR EXISTING, WHICH CONFLICT WITH TRAFFIC CONTROL "IN USE" SHALL BE REMOVED OR COVERED AS NEEDED AND AS APPROVED BY THE ENGINEER.

THE SPACING BETWEEN TRAFFIC CONTROL SIGNS SHOULD BE ADJUSTED TO NOT CONFLICT WITH AND SHOULD PROVIDE A DESIRABLE MINIMUM OF 200 FEET CLEARANCE TO EXISTING SIGNS THAT WILL REMAIN IN PLACE.

BARRICADES THAT MUST BE MOVED FOR A WORK OPERATION SHALL BE IMMEDIATELY RE-ESTABLISHED UPON COMPLETION OF THE OPERATION OR, FOR CONTINUING OPERATIONS, AT THE END OF EACH WORKING DAY.

SIGNS THAT WILL BE IN PLACE LESS THAN 7 CONTINUOUS DAYS AND NIGHTS MAY BE MOUNTED ON PORTABLE SUPPORTS.

ALL TYPE III BARRICADES SHALL HAVE RAILS REFLECTORIZED ON BOTH FACES. STRIPES SHALL BE PROPERLY SLOPED DOWN TOWARD THE TRAFFIC SIDE OR AS SHOWN IN THE ROAD CLOSURE BARRICADE DETAIL D FOR FULL ROAD CLOSURES.

TYPE "A" LOW-INTENSITY FLASHING WARNING LIGHTS SHALL BE VISIBLE ON BOTH SIDES OF THE BARRICADE.

THE R11-2, R11-3, M4-9, R11-4 AND R10-61 SIGNS PLACED ON BARRICADES SHALL COVER NO MORE THAN THE TOP RAIL. THE SIGNS SHALL NOT COVER ANY PORTION OF THE MIDDLE OR BOTTOM RAILS.

"WO AND "MO" SIGNS ARE THE SAME AS "W" AND "M" SIGNS EXCEPT THE BACKGROUND IS ORANGE.

ALL SIGNS SHALL BE 48" X 48" UNLESS OTHERWISE NOTED BELOW:
- R11-2 SHALL BE 48" X 30".
- R11-3, R11-4 AND R10-61 SHALL BE 60" X 30".
- M4-9 SHALL BE 30" X 24".
- M3-X SHALL BE 24" X 12". (36" X 18" IF NEEDED TO MATCH EXISTING SIGNS.)
- M4-8 SHALL BE 24" X 12". (30" X 15" IF NEEDED TO MATCH EXISTING SIGNS.)
- M1-4, M1-5A, AND M1-6 SHALL BE 24" X 24". (36" X 36" IF NEEDED TO MATCH EXISTING SIGNS.)
- M05-1 AND M06-1 SHALL BE 21" X 21". (30" X 30" IF NEEDED TO MATCH EXISTING SIGNS.)
- D1-X SHALL BE AS SHOWN ON SPECIFIC PROJECT SIGNING DETAIL SHEETS.
- R1-1 SHALL BE 36" X 36".

(1) TWO WARNING LIGHTS SHALL BE PROVIDED ON THE CENTER BARRICADE AND A MINIMUM OF ONE WARNING LIGHT SHALL BE PROVIDED ON EACH OF THE OTHER BARRICADES WITHIN THE ROADWAY LIMITS. SPACING OF THE WARNING LIGHTS SHALL BE UNIFORM TO THE EDGE OF ROADWAY AS SHOWN (APPROX. 8-FOOT LIGHT SPACING).

(2) THESE SIGNS AND BARRICADES ARE NOT REQUIRED IF ROAD CLOSURE BEGINS AT INTERSECTION.

(3) FOR ROAD CLOSURE WITHOUT LOCAL ACCESS TO PROJECT, SEE ROAD CLOSURE BARRICADE DETAIL D.

(4) FOR ROAD CLOSURE WITH LOCAL ACCESS TO PROJECT, SEE LANE CLOSURE BARRICADE DETAIL E.

(5) FOR BRIDGE OR CULVERT REPLACEMENTS, SUBSTITUTE "BRIDGE OUT" INSTEAD OF "ROAD CLOSED" ON R11-2 AND R11-3 SIGNS.

(6) INSTALL DETOUR AND COMMUNITY GUIDE SIGNS AND ARROWS ONLY IF SPECIFIED IN THE CONTRACT. IF THERE ARE EXISTING ROUTE MARKER ASSEMBLIES THAT WILL REMAIN IN PLACE, ADJUST THE LOCATION OF THE DETOUR ROUTE SIGNS TO CORRESPOND WITH THE EXISTING ASSEMBLIES. MODIFY EXISTING SIGNS WHERE POSSIBLE. SEE SPECIFIC PROJECT DETOUR SIGNING DETAIL SHEETS. IF DETOUR SIGNS ARE BEING INSTALLED BY OTHERS, PLACE THE CONTRACTED TRAFFIC CONTROL SIGNS TO ALLOW FOR PLACEMENT OF ALL WARNING, DETOUR AND GUIDE SIGNS AS SHOWN.

(7) "EAST" CARDINAL DIRECTION MARKERS AND RIGHT TURN ARROWS ARE SHOWN. USE OTHER CARDINAL DIRECTIONS AND ARROWS AS APPROPRIATE.

BARRICADES AND SIGNS FOR MAINLINE CLOSURES

STATE OF WISCONSIN
DEPARTMENT OF TRANSPORTATION

8/2013 — DATE

/S/ Travis Feltes — STATE TRAFFIC ENGINEER

FHWA

6

S.D.D. 15 C 2-5b

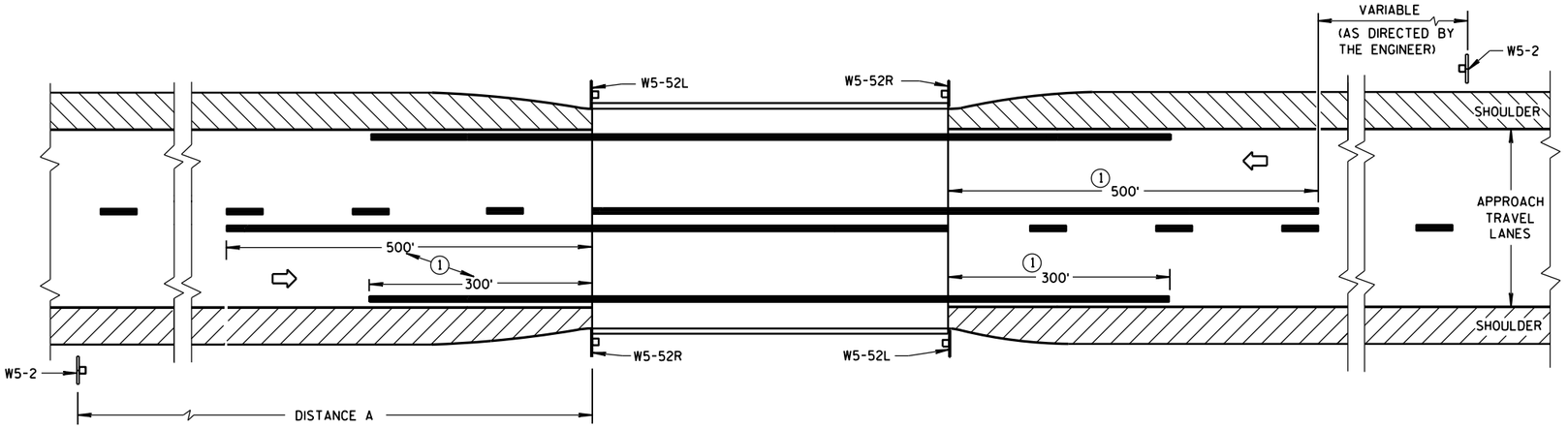

GENERAL NOTES

DETAILS OF TRAFFIC CONTROL DEVICES AND INSTALLATION NOT SHOWN ON THIS DRAWING SHALL CONFORM TO THE PERTINENT REQUIREMENTS OF THE STANDARD SPECIFICATIONS, THE SPECIAL PROVISIONS, AND THE MANUAL ON UNIFORM TRAFFIC CONTROL DEVICES.

PAVEMENT MARKING SHOWN ON THIS DRAWING IS NOT REQUIRED UNLESS OTHERWISE SPECIFIED IN THE CONTRACT. WHEN SPECIFIED, PAVEMENT MARKING SHALL CONFORM TO THIS DRAWING AND OTHER CONTRACT REQUIREMENTS.

(1) MINIMUM DISTANCE UNLESS OTHERWISE SHOWN ON THE PLAN.

(2) FACE OF OBJECT MARKERS W5-52R, AND W5-52L SHALL BE COVERED WITH TYPE F REFLECTIVE SHEETING.

(3) LOCATE OBJECT MARKER POST(S) BEHIND GUARDRAIL WHEN PRESENT.

DISTANCE TABLE

POSTED OR 85th PERCENTILE SPEED	DISTANCE "A"
25	150'
30	200'
35	250'
40	300'
45	400'
50	550'
55	750'

SITUATION 1

WARRANTING CRITERIA:

BRIDGE WIDTH IS AT LEAST 16 FEET BUT LESS THAN 24 FEET

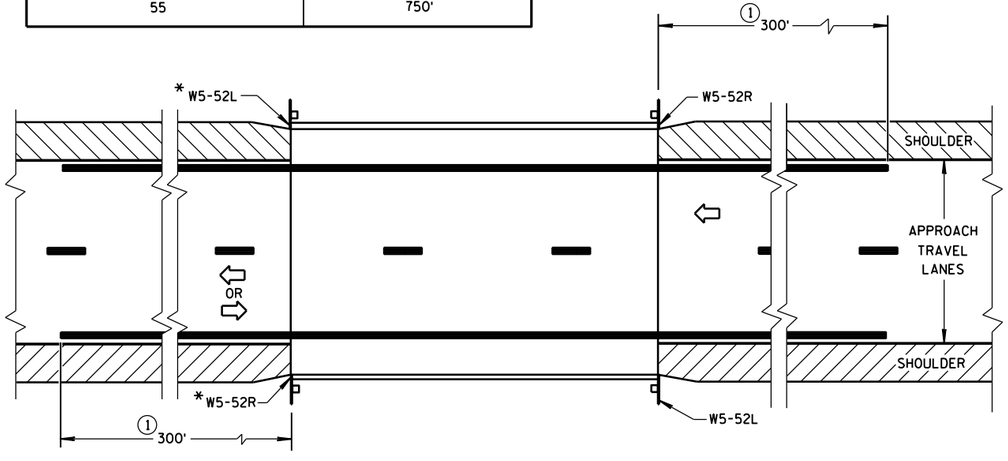

*OMIT ON ONE-WAY TRAVELLED WAYS

SITUATION 2

WARRANTING CRITERIA:

1. BRIDGE WIDTH IS AT LEAST 24 FEET AND
2. BRIDGE IS LESS THAN 6 FEET WIDER (ON EACH SIDE) THAN APPROACH TRAVEL LANES.

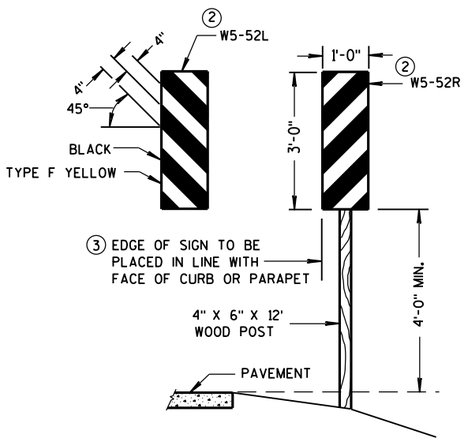

OBJECT MARKER PLACEMENT

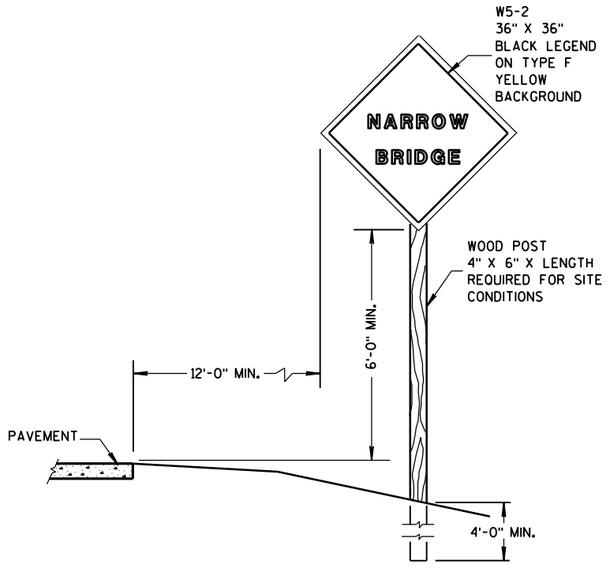

SIGN PLACEMENT

SIGNING & MARKING FOR TWO LANE BRIDGES

STATE OF WISCONSIN
DEPARTMENT OF TRANSPORTATION

APPROVED

3-2014 DATE

/S/ Travis Feltes STATE TRAFFIC ENGINEER

FHWA

6

S.D.D. 15 C 6-7

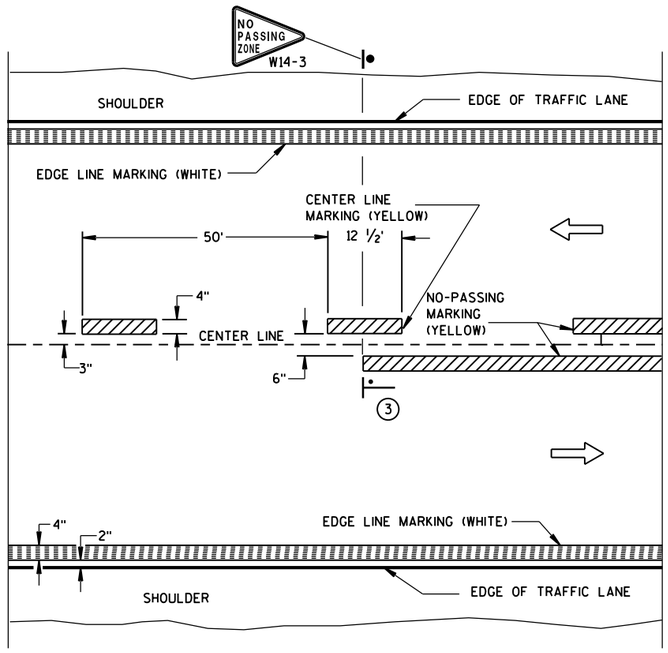

TWO WAY TRAFFIC

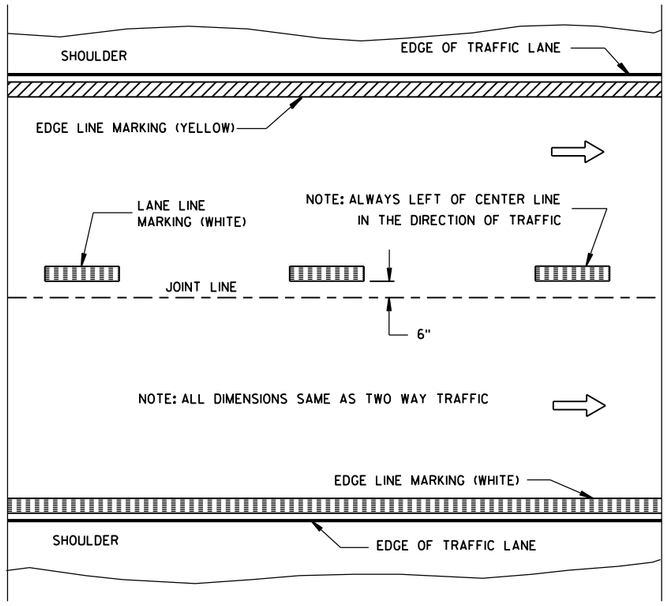

ONE WAY TRAFFIC

PERMANENT PAVEMENT MARKING

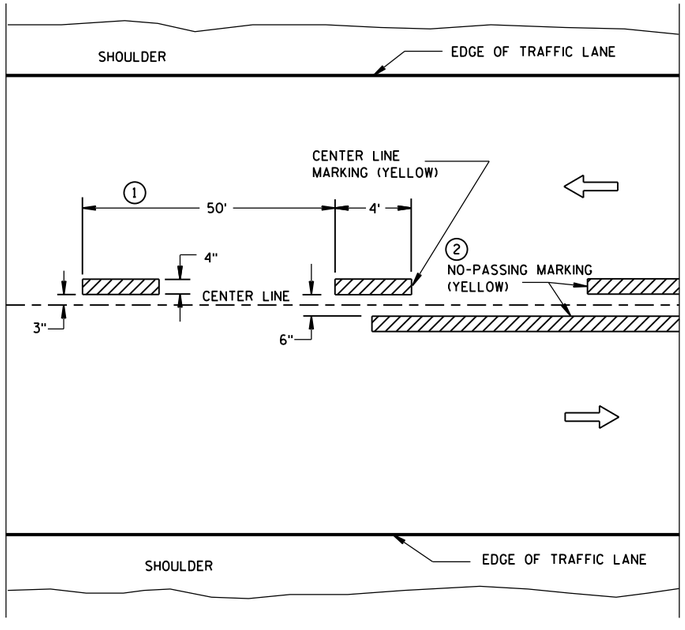

TWO WAY TRAFFIC

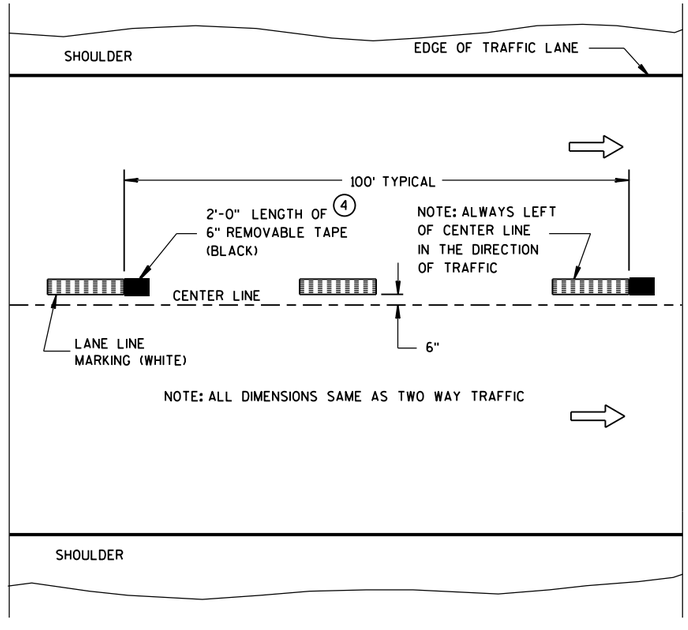

ONE WAY TRAFFIC

TEMPORARY (INTERMEDIATE) PAVEMENT MARKING

(SHOWS CYCLE FOR TEMPORARY CENTER LINE OR TEMPORARY LANE LINE MARKING)

GENERAL NOTES

DETAILS OF CONSTRUCTION NOT SHOWN ON THIS DRAWING SHALL CONFORM TO STANDARD SPECIFICATIONS AND SPECIAL PROVISIONS.

1. HALF CYCLE LENGTHS (25'±) WITH 2' MINIMUM STRIPE LENGTHS SHALL BE PROVIDED ON ROADWAYS (INCLUDING TEMPORARY TRAVELED WAYS) WITH REVERSE CURVATURE, CURVATURE OF OVER 5 DEGREES OR WHEN DIRECTED BY THE ENGINEER TO MARK UNUSUAL ALIGNMENT OF THE TRAVELED WAY.
2. NO PASSING ZONE TEMPORARY PAVEMENT MARKING IS REQUIRED TO BE PLACED, WHERE APPROPRIATE, ALONG WITH CENTERLINE TEMPORARY PAVEMENT MARKING WHEN A SAME DAY PERMANENT PAVEMENT MARKING ITEM IS INCLUDED IN THE CONTRACT.
3. NO PASSING ZONE MARKINGS ARE PLACED ACCORDING TO "T" MARKINGS. IF EXISTING NO PASSING ZONE W14-3 SIGNS ARE BEYOND 50 FEET IN EITHER DIRECTION, THE SIGNS SHALL BE MOVED TO THE "T" MARKINGS.
4. CONCRETE ONLY.

NOTE

ARROW SYMBOL (⇨) SHOWS DIRECTION OF TRAVEL

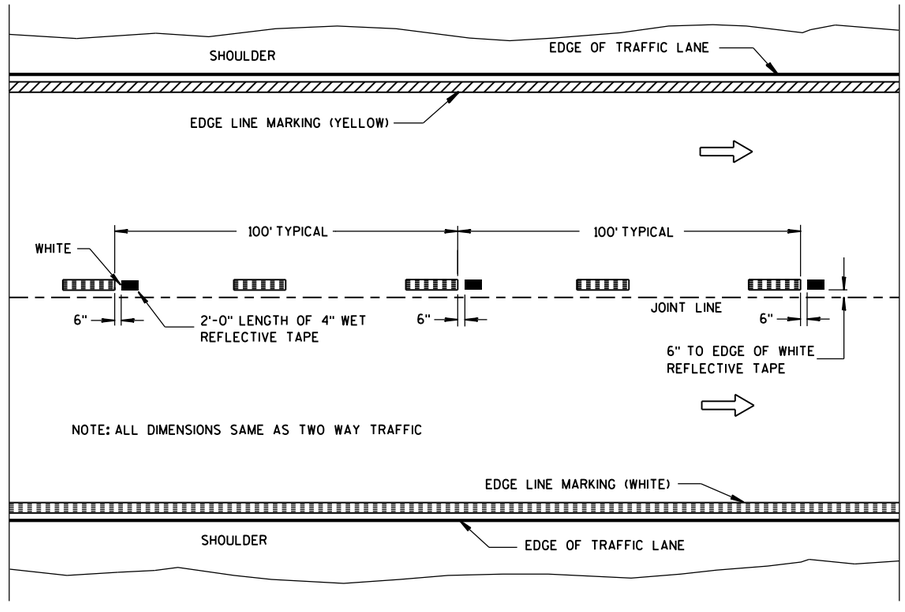

WET REFLECTIVE TAPE SUPPLEMENT TO
SPRAYED OR NON WET REFLECTIVE TAPE LANE LINE

LEGEND

"T" MARKING

POST MOUNTED SIGN

PAVEMENT MARKING (MAINLINE)

STATE OF WISCONSIN
DEPARTMENT OF TRANSPORTATION

APPROVED

5-13-2013 — DATE

/S/ Travis Feltes — STATE TRAFFIC E

FHWA

6

S.D.D. 15 C 8-16a

6

S.D.D. 15 C 8-16a

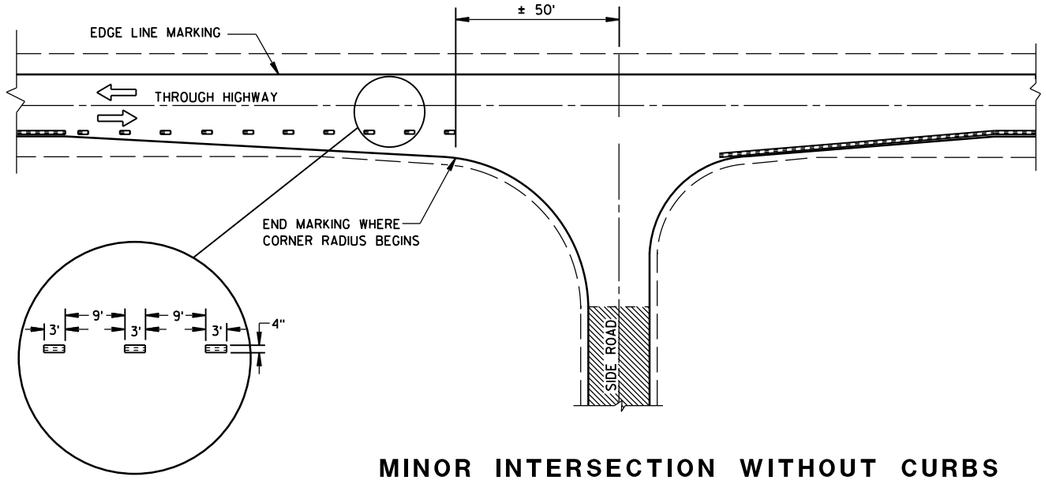

MINOR INTERSECTION WITHOUT CURBS

GENERAL NOTES

EDGE LINES SHALL BE OMITTED THROUGH INTERSECTIONS. EDGE LINES SHALL BE CONTINUED THROUGH DRIVEWAYS.

(1) WHEN DISTANCE "A" IS LESS THAN 250 FEET, OMIT LANE LINE.

(2) WHEN DISTANCE "B" IS LESS THAN 100 FEET, OMIT CHANNELIZING LANE LINE.

(3) ALTERNATIVE MARKING SHALL BE PROVIDED WHEN SPECIFIED IN THE CONTRACT. TYPICAL SITUATIONS WHERE THIS MARKING MAY BE REQUIRED ARE WHERE THE INTERSECTION IS ON A SHARP HORIZONTAL CURVE OR CREST VERTICAL CURVE IN AN UNLIGHTED AREA SUCH THAT THE EDGE LINE MAY BE MISLEADING TO THE MOTORIST OR DISAPPEAR FROM SIGHT.

(4) THE EDGE LINE IN THE TAPER AREAS OF THE BYPASS LANE AND THE BYPASS LANE SHALL BE LOCATED 1-FOOT FROM EDGE OF PAVEMENT TO THE OUTSIDE EDGE OF EDGE LINE.

(5) BARRIER LINE ENDS AT SIDE ROAD PAVEMENT/SURFACE EDGE EXTENSION.

(6) BARRIER LINE STARTS 500 FEET PRIOR TO THE BYPASS TAPER.

(7) IF THE DISTANCE BETWEEN 2 SUCCESSIVE NO-PASSING ZONES IS LESS THAN THE MINIMUM DISTANCE BETWEEN ZONES, CONNECT THE 2 ZONES.

(8) 3' LINE 9' GAP, EXCEPT RETRACE THE EXISTING LINE - GAP PATTERN WHERE EXISTING MARKINGS ARE IN PLACE.

ARROW SYMBOL (⇨) SHOWS DIRECTION OF TRAVEL

(7)

POSTED SPEED (MPH)	MINIMUM DISTANCE BETWEEN ZONES (FEET)
25 - 30	528
35 - 40	528
45 - 50	686
55	792

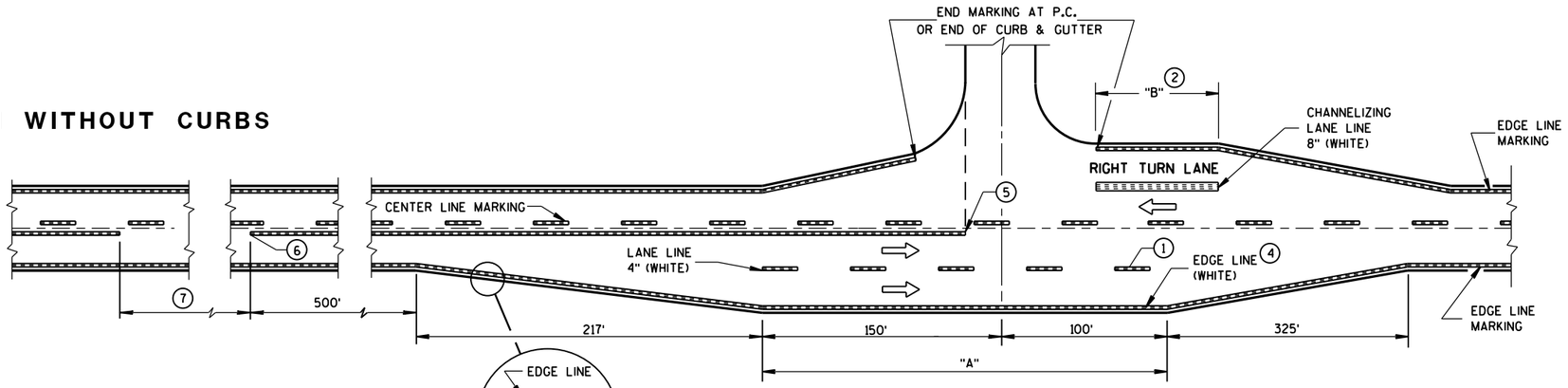

MAJOR INTERSECTIONS

(INTERSECTION WITH FULL RIGHT TURN LANE OR BYPASS LANES)

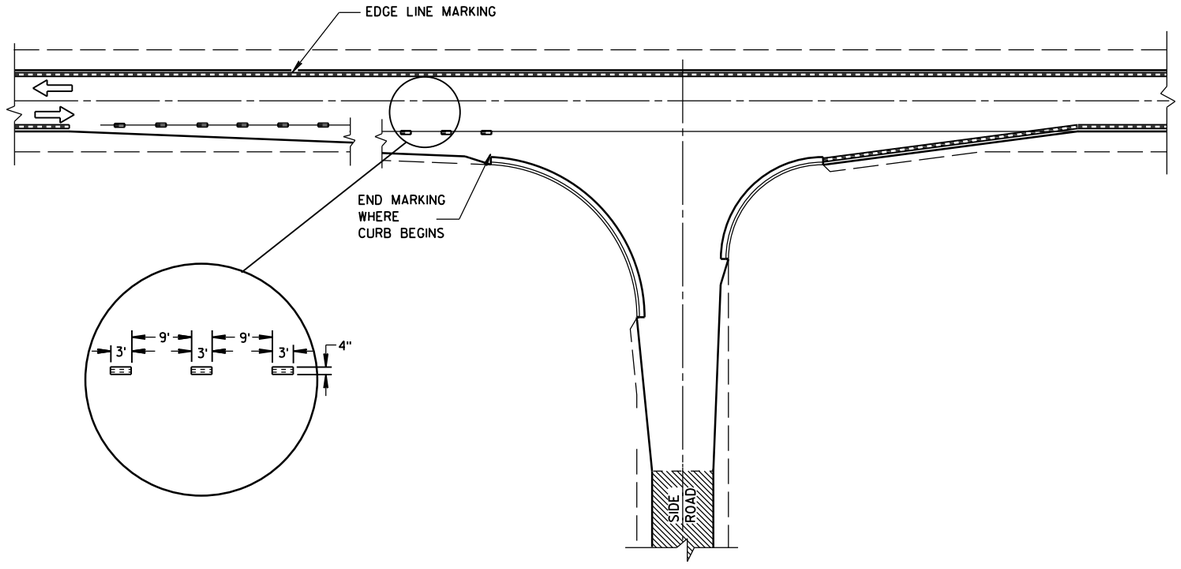

MINOR INTERSECTION WITH CURBS

(TYPICAL MARKING)

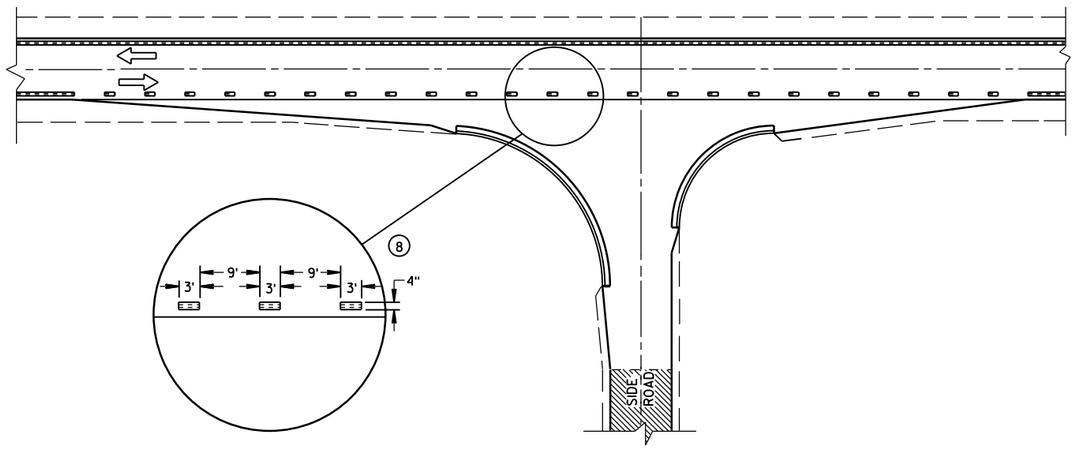

MINOR INTERSECTION WITH CURBS

(3) (FOR SPECIAL CONDITIONS AS SPECIFIED)

PAVEMENT MARKING
(INTERSECTIONS)

STATE OF WISCONSIN
DEPARTMENT OF TRANSPOR

6

S.D.D. 15 C 8-16b

6

S.D.D. 15 C 8-16b

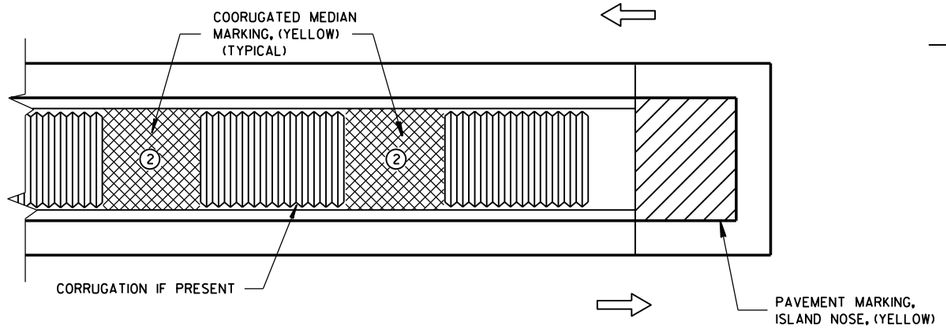

MEDIAN ISLAND WITH SQUARE BLUNT NOSE

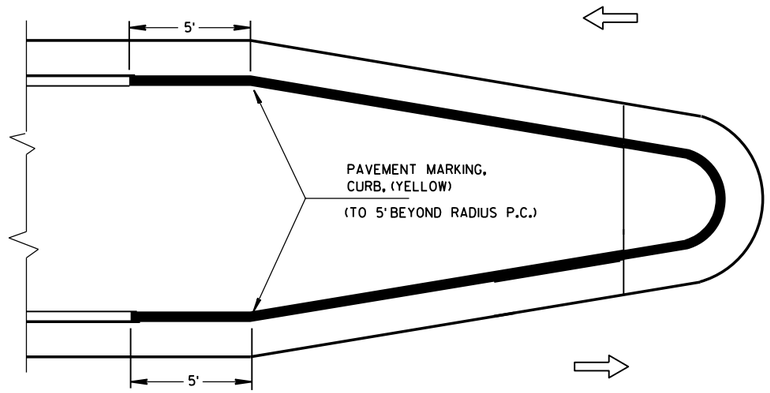

MEDIAN ISLAND WITH ROUND BLUNT NOSE

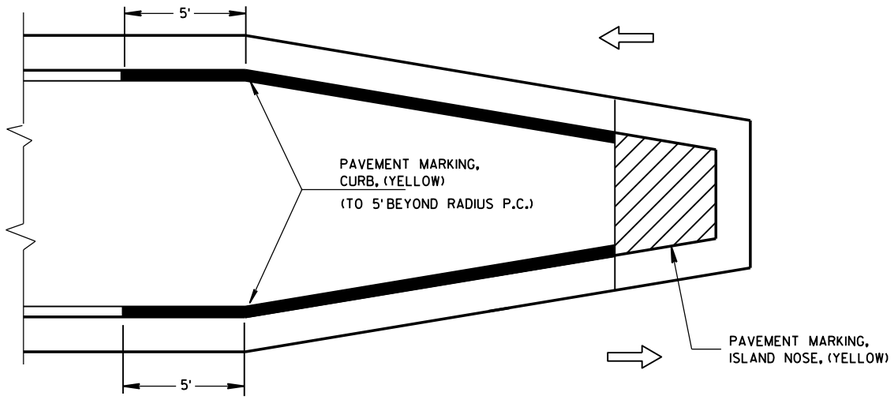

MEDIAN ISLAND WITH SLOPED NOSE

TYPICAL PLACEMENT OF PAVEMENT MARKING ON MEDIAN ISLANDS

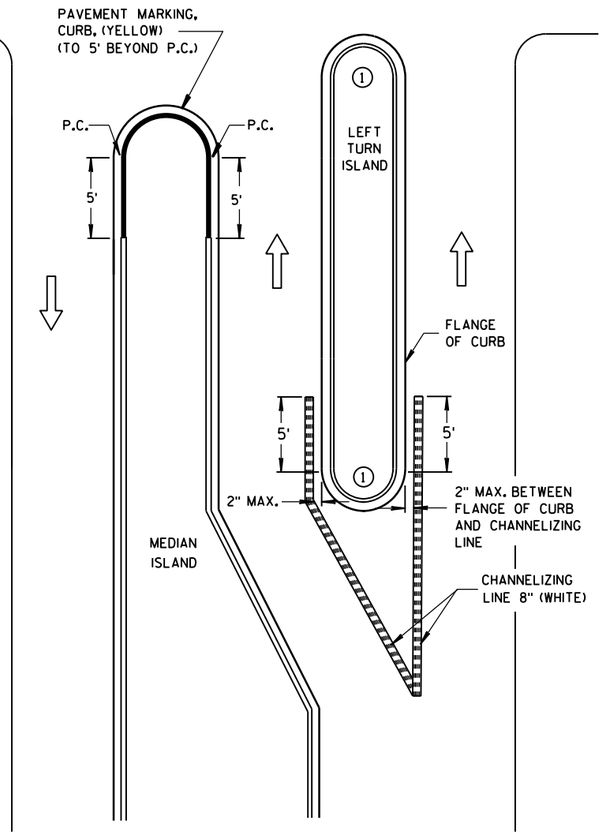

LEFT TURN & MEDIAN ISLAND

GENERAL NOTES

1. DO NOT MARK CURB NOSES THAT SEPARATE LANES OF TRAFFIC TRAVELING IN THE SAME DIRECTION.

2. WHEN CONCRETE CORRUGATED MEDIAN IS CONSTRUCTED TO SEPARATE TRAFFIC OPERATING IN THE OPPOSING DIRECTION YELLOW PAVEMENT MARKING SHALL BE APPLIED TO THE FLAT PORTION OF THE CONCRETE CORRUGATED MEDIAN. THE ITEM OF PAVEMENT MARKING, CONCRETE CORRUGATED MEDIAN, WILL BE MEASURED IN PLACE AND AND ACCEPTED IN ACCORDANCE WITH THE CONTRACT AND PAID FOR AT THE CONTRACT UNIT PRICE PER SQUARE FOOT.

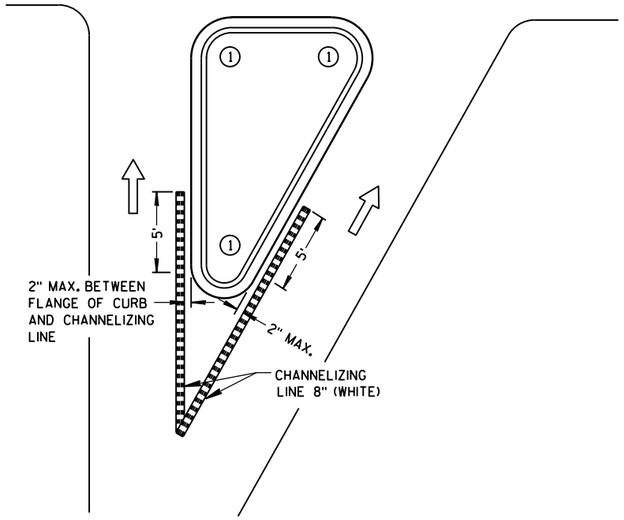

RIGHT TURN ISLAND

LEGEND

- ISLAND NOSE MARKING
- CURB MARKING
- CORRUGATED MEDIAN MARKING
- DIRECTION OF TRAVEL

PAVEMENT MARKING
(ISLANDS)

STATE OF WISCONSIN
DEPARTMENT OF TRANSPOI

6

S.D.D. 15 C 8-16f

LEGEND

SIGN ON PORTABLE OR PERMANENT SUPPORT

DIRECTION OF TRAFFIC

WORK AREA

FLAGGER, EQUIPPED WITH STOP/SLOW PADDLE FASTENED ON SUPPORT STAFF

SIGN SPACING TABLE

SPEED LIMIT	SIGN SPACING A,B,C
25-35 MPH	200'
35-40 MPH	350'
45-55 MPH	500'

W3-4

USE OF THE "BE PREPARED TO STOP" SIGN IS OPTIONAL. WHEN USED, THIS SIGN SHALL BE LOCATED BETWEEN THE W20-7a AND W20-4 SIGNS. A 500' TYPICAL SPACING SHALL BE PROVIDED BETWEEN THE SIGNS.

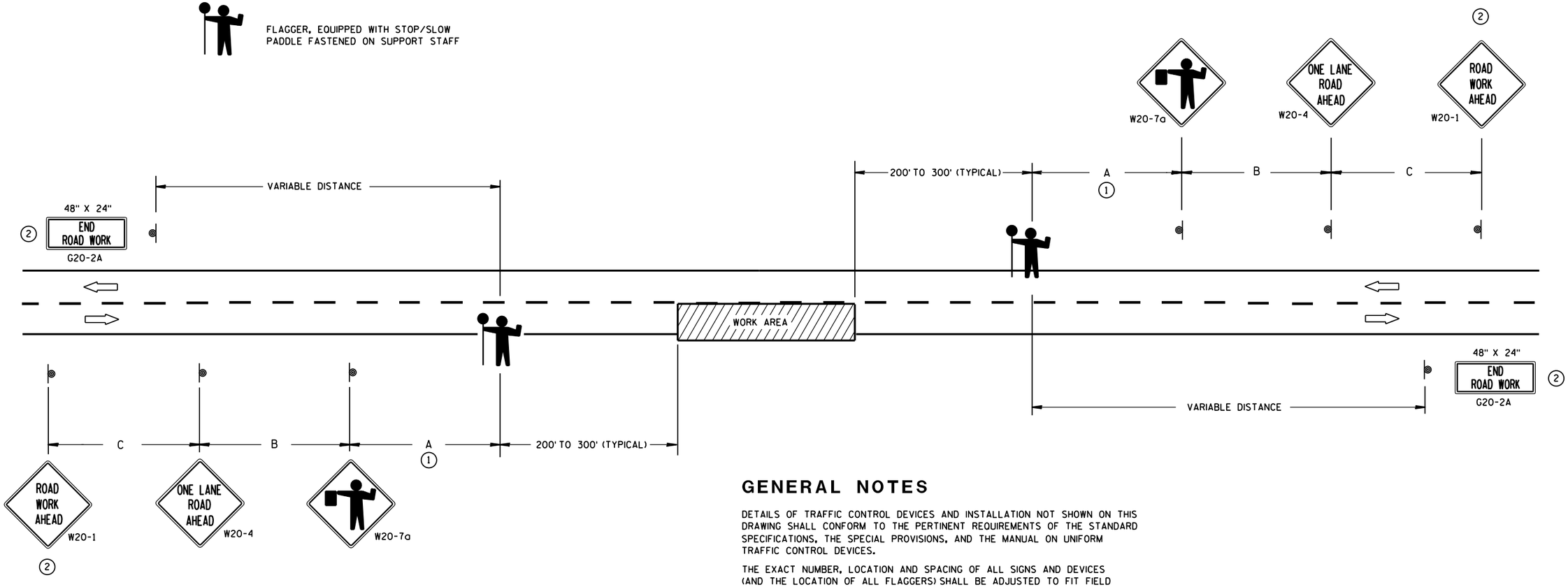

(1) FOR A MOVING WORK OPERATION,
SIGNING FOR BOTH DIRECTIONS SHALL BE REESTABLISHED (AS SIMULTANEOUSLY AS PRACTICAL) AT APPROXIMATELY 3500 FOOT INTERVALS IN THE MOVING WORK OPERATION OR AS APPROVED BY THE ENGINEER.

(2) SIGN NOT REQUIRED IF FLAGGING OPERATION OCCURS WITHIN A SIGNED ROAD WORK ZONE AREA.

GENERAL NOTES

DETAILS OF TRAFFIC CONTROL DEVICES AND INSTALLATION NOT SHOWN ON THIS DRAWING SHALL CONFORM TO THE PERTINENT REQUIREMENTS OF THE STANDARD SPECIFICATIONS, THE SPECIAL PROVISIONS, AND THE MANUAL ON UNIFORM TRAFFIC CONTROL DEVICES.

THE EXACT NUMBER, LOCATION AND SPACING OF ALL SIGNS AND DEVICES (AND THE LOCATION OF ALL FLAGGERS) SHALL BE ADJUSTED TO FIT FIELD CONDITIONS AS APPROVED BY THE ENGINEER.

THE FIRST ADVANCE WARNING SIGN SHOULD TYPICALLY BE LOCATED IN ADVANCE OF THE ANTICIPATED TRAFFIC BACKUP OR QUEUE.

WHEN A SIDE ROAD OR RAMP INTERSECTS THE FACILITY ON WHICH THE WORK IS BEING PERFORMED, ADDITIONAL TRAFFIC CONTROLS SHALL BE PROVIDED AS SPECIFIED IN THE PLANS AND/OR THE SPECIAL PROVISIONS OR AS APPROVED BY THE ENGINEER.

FLAGGERS SHALL BE IN SIGHT OF EACH OTHER OR IN DIRECT COMMUNICATION AT ALL TIMES. THEY SHALL BE EQUIPPED WITH STOP/SLOW PADDLES FASTENED ON SUPPORT STAFFS. WHEN THE FLAGGING OPERATION IS NOT IN EFFECT, COVER OR REMOVE ALL TEMPORARY TRAFFIC CONTROL SIGNS.

ALL SIGNS ARE 48" X 48" UNLESS OTHERWISE NOTED.

TRAFFIC CONTROL FOR LANE CLOSURE (SUITABLE FOR MOVING OPERATIONS)

STATE OF WISCONSIN
DEPARTMENT OF TRANSPORTATION

APPROVED
8/2013 — DATE
/S/ Travis Feltes — STATE TRAFFIC ENGINEER
FHWA

6

S.D.D. 15 C 12-4

6

S.D.D. 15 C 12-4

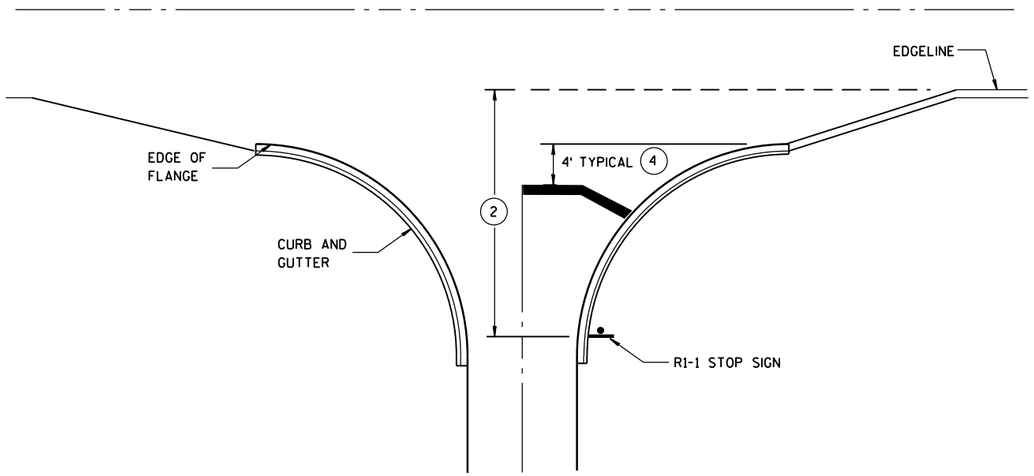

TYPICAL STOP LINE PAVEMENT MARKING WITH CURB AND GUTTER

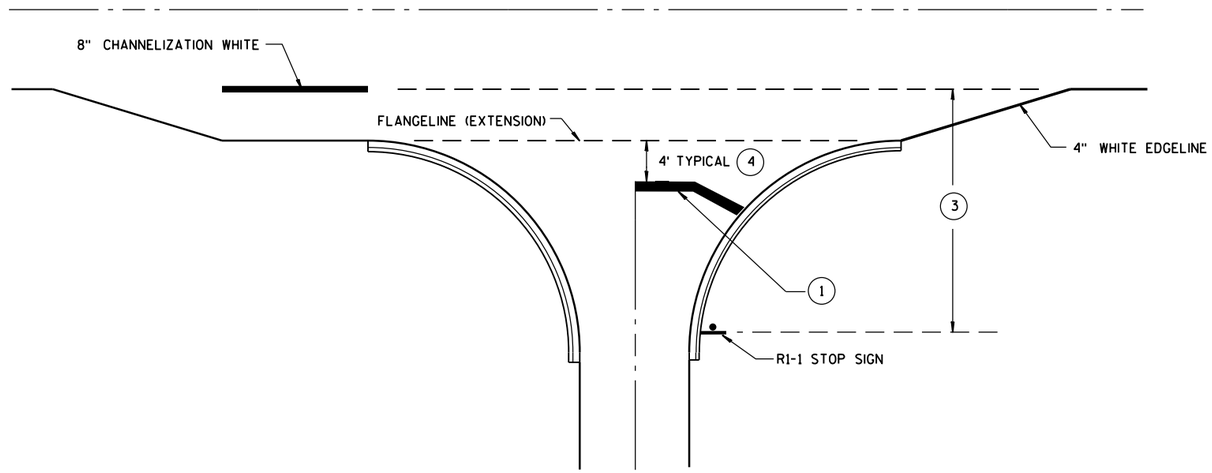

TYPICAL STOP LINE PAVEMENT MARKING FOR SIDEROADS WITH RIGHT TURN LANE

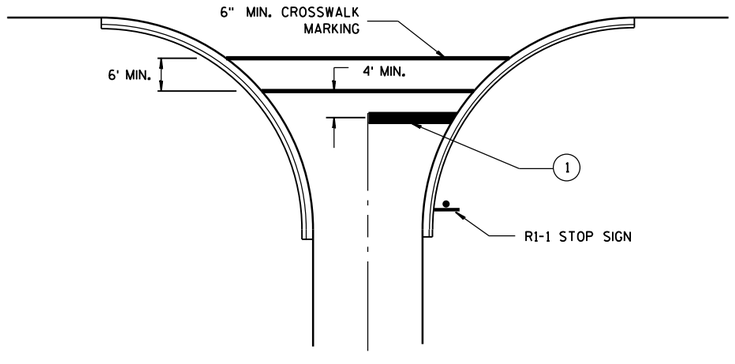

TYPICAL STOP LINE PAVEMENT MARKING FOR SIDEROADS WITH CROSSWALK MARKING

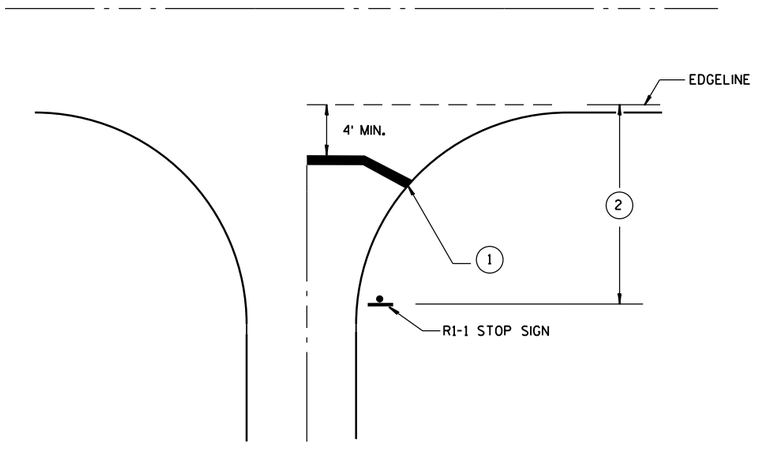

TYPICAL STOP LINE PAVEMENT MARKING WITHOUT CURB AND GUTTER

GENERAL NOTES

1. 18-INCH STOP LINES MAY BE DELETED OR ADDED BY THE PROJECT ENGINEER BASED ON VISIBILITY AND SIGHT LINES.
2. IF STOP SIGN IS LESS THAN OR EQUAL TO 40 FEET FROM THE EDGELINE THAN NO STOP LINE IS REQUIRED.
3. IF STOP SIGN IS LESS THAN OR EQUAL TO 30 FEET FROM THE FLANGELINE EXTENSION THAN NO STOP LINE IS REQUIRED.
4. MOVE CLOSER TO EDGE OF TRAVEL LANE AS NEEDED FOR VISIBILITY AND SIGHT LINES.

STOP LINE AND CROSSWALK PAVEMENT MARKING

STATE OF WISCONSIN
DEPARTMENT OF TRANSPORTATION

APPROVED

4/30/2013
DATE

/S/ Travis Feltes
STATE TRAFFIC E

FHWA

6

S.D.D. 15 C 33-1

LEGEND

- SIGN ON PERMANENT SUPPORT
- TRAFFIC CONTROL DRUM WITH TYPE "C" STEADY BURN LIGHT
- TRAFFIC CONTROL DRUM
- FLASHING ARROW BOARD
- REMOVING PAVEMENT MARKING
- CONCRETE BARRIER TEMPORARY PRECAST
- DIRECTION OF TRAFFIC
- WORK AREA

W057-52
36"x24"

INSTALL ON EACH APPROACH AT THE CLOSEST INTERSECTION WITH A STATE OR COUNTY TRUNK HIGHWAY, OR AS DIRECTED BY THE ENGINEER. WIDTH ON SIGN TO BE APPROX. 1 FOOT LESS THAN AVAILABLE WIDTH (OMIT IF AVAILABLE WIDTH IS MORE THAN 16 FEET).

LOCATED 500 FEET IN ADVANCE OF R2-1 SIGN AND 500 FEET BEYOND THE "ROAD WORK 1 MILE" SIGN.

R2-1
48"x60"
(BLACK AND WHITE)

IF THE REGULATORY SPEED HAS BEEN REDUCED, A SPEED LIMIT SIGN SHALL BE LOCATED 1500 FEET BEYOND THE END OF THE ACCELERATION LANE OF EACH ENTRANCE RAMP. THERE SHOULD BE A SPEED LIMIT SIGN INCORPORATED A MINIMUM OF EVERY 2 OR 3 MILES.

* INCLUDE RESUME SPEED LIMIT SIGN A MINIMUM OF 200 FEET (500 FEET DESIRABLE) AFTER END ROAD WORK SIGNS.

GENERAL NOTES

THIS LANE CLOSURE IS TYPICAL FOR CLOSING RIGHT LANE - REVERSE FOR CLOSING LEFT LANE.

THE EXACT NUMBER, LOCATION, AND SPACING OF ALL SIGNS AND DEVICES SHALL BE ADJUSTED TO FIT FIELD CONDITIONS AS APPROVED BY THE ENGINEER.

THE SPACING BETWEEN SIGNS SHOULD BE ADJUSTED TO NOT CONFLICT WITH AND TO PROVIDE A MINIMUM OF 200 FEET (500 FEET DESIRABLE) CLEARANCE TO EXISTING SIGNS.

ALL SIGNS ARE 48"x48" UNLESS OTHERWISE NOTED.

"WO" IS THE SAME AS "W" EXCEPT THE BACKGROUND IS ORANGE.

ANY SIGNS TEMPORARY OR EXISTING, WHICH CONFLICT WITH TRAFFIC CONTROL "IN USE" SHALL BE REMOVED OR COVERED AS NEEDED OR AS APPROVED BY THE ENGINEER.

(1) CONSIDER ROADWAY GEOMETRICS WHEN LOCATING SIGNS AND ARROW BOARD SO THE DRIVER HAS A CLEAR VIEW OF THE ARROW BOARD AND LANE CLOSURE DRUMS FOR A MINIMUM 1500 FEET IN FRONT OF DRUM TAPER.

FOR A LANE CLOSURE THAT IS IN PLACE LESS THAN 7 CONTINUOUS DAYS AND NIGHTS, THE ADVANCED WARNING SIGNS MAY BE MOUNTED ON PORTABLE SUPPORTS.

REMOVE PAVEMENT MARKINGS IF LANE CLOSURE IS TO BE IN PLACE FOR 4 OR MORE CONTINUOUS DAYS AND NIGHTS.

IF THE HORIZONTAL ALIGNMENT IS SUCH THAT A CURVE MAY REQUIRE ADDITIONAL DELINEATION, THE DEVICE SPACING MAY BE DECREASED TO 50 FEET.

ADJUSTMENTS IN BUFFER SPACE NEED TO BE INCORPORATED WHEN THE LANE CLOSURE OCCURS NEAR AN INTERCHANGE EXIT OR ENTRANCE RAMP OR INTERSECTION. THE LANE CLOSURE MUST TAKE PLACE FAR ENOUGH IN ADVANCE OF AN EXIT OR ENTRANCE RAMP TO STILL ALLOW FOR ADEQUATE BUFFER SPACE. THE MINIMUM LENGTH OF THE BUFFER SPACE BEFORE AN EXIT RAMP SHOULD BE 1/2 THE LENGTH OF THE TRANSITION AREA. THE ENTRANCE RAMP SHOULD BE FOLLOWED BY THE ORIGINAL BUFFER SPACE LENGTH OF 800 FEET DESIRABLE PRIOR TO ANOTHER TRAFFIC CONTROL CHANGE SUCH AS A CROSSOVER MANEUVER.

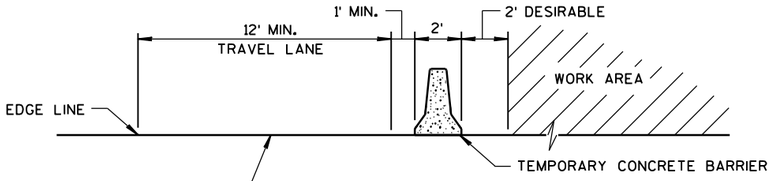

TYPICAL SECTION

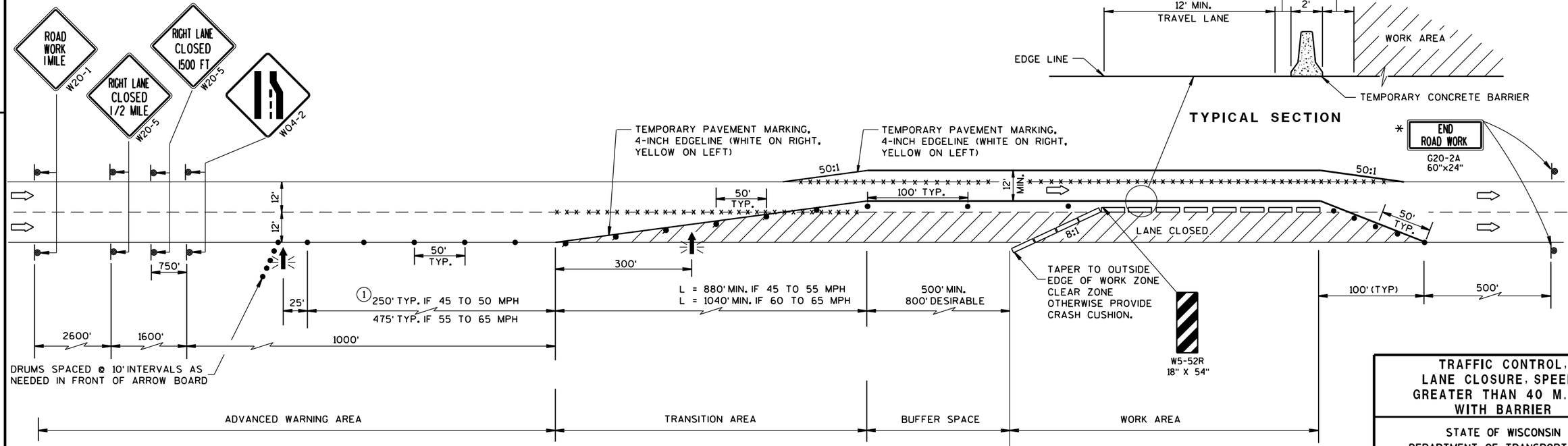

TRAFFIC CONTROL, LANE CLOSURE, SPEEDS GREATER THAN 40 M.P.H. WITH BARRIER

STATE OF WISCONSIN
DEPARTMENT OF TRANSPORTATION

APPROVED
8/2013 — DATE
/S/ Travis Feltes — STATE TRAFFIC ENGINEER — SIGN

FHWA

6

S.D.D. 15 D 3-2

LEGEND

- TYPE III BARRICADE WITH ATTACHED SIGN
- SIGN ON PERMENENT SUPPORT
- TRAFFIC CONTROL DRUM WITH TYPE "C" STEADY BURN LIGHT
- TRAFFIC CONTROL DRUM
- FLASHING ARROW BOARD
- (A) TYPE "A" WARNING LIGHT (FLASHING)
- REMOVING PAVEMENT MARKING
- DIRECTION OF TRAFFIC
- WORK AREA

GENERAL NOTES

THE EXACT NUMBER, LOCATION, AND SPACING OF ALL SIGNS AND DEVICES SHALL BE ADJUSTED TO FIT FIELD CONDITIONS AS APPROVED BY THE ENGINEER.

THE SPACING BETWEEN SIGNS SHOULD BE ADJUSTED TO NOT CONFLICT WITH AND TO PROVIDE A MINIMUM OF 200 FEET, (500 FEET DESIREABLE) DISTANCE TO EXISTING SIGNS.

THIS LANE CLOSURE IS TYPICAL FOR CLOSING RIGHT LANE - REVERSE FOR CLOSING LEFT LANE.

ALL SIGNS ARE 48"x48" UNLESS OTHERWISE NOTED.

"WO" IS THE SAME AS "W" EXCEPT THE BACKGROUND IS ORANGE.

ANY SIGNS TEMPORARY OR EXISTING, WHICH CONFLICT WITH TRAFFIC CONTROL "IN USE" SHALL BE REMOVED OR COVERED AS NEEDED AND AS APPROVED BY THE ENGINEER. NO WARNING LIGHTS SHALL BE WORKING ON "COVERED" OR "DOWNED" SIGNS.

CONSIDER GEOMETRICS WHEN LOCATING SIGNS AND ARROW BOARD SO THE DRIVER HAS A CLEAR VIEW OF THE ARROW BOARD AND LANE CLOSURE DRUMS FOR A MINIMUM 1500 FEET IN FRONT OF DRUMS.

FOR A LANE CLOSURE THAT IS IN PLACE LESS THAN 7 CONTINUOUS DAYS AND NIGHTS, THE ADVANCED WARNING SIGNS MAY BE MOUNTED ON PORTABLE SUPPORTS.

REMOVE PAVEMENT MARKINGS IF LANE CLOSURE IS TO BE IN PLACE FOR LONGER THAN 4 OR MORE DAYS AND NIGHTS.

WARNING LIGHTS ARE NOT REQUIRED IF THE LANE CLOSURE IS A DAYTIME ONLY OPERATION.

IF THE HORIZONTAL ALIGNMENT IS SUCH THAT A CURVE MAY REQUIRE ADDITIONAL DELINEATION, THE DEVICE SPACING MAY BE DECREASED TO 50 FEET.

ADJUSTMENTS IN BUFFER SPACE NEED TO BE INCORPORATED WHEN THE LANE CLOSURE OCCURS NEAR AN INTERCHANGE EXIT OR ENTRANCE RAMP. THE LANE CLOSURE MUST MUST TAKE PLACE FAR ENOUGH IN ADVANCE OF AN EXIT OR ENTRANCE RAMP TO STILL ALLOW FOR ADEQUATE BUFFER SPACE. THE MINIMUM LENGTH OF THE BUFFER SPACE BEFORE AN EXIT RAMP SHOULD BE 1/2 THE LENGTH OF THE TRANSITION AREA. THE ENTRANCE RAMP SHOULD BE FOLLOWED BY THE ORIGINAL BUFFER SPACE LENGTH OF 800 FEET DESIRABLE PRIOR TO ANOTHER TRAFFIC CONTROL CHANGE SUCH AS A CROSSOVER MANEUVER.

* THE LEFT REVERSE CURVE SIGN (WO1-4L) IS ONLY REQUIRED WHEN THIS DETAIL IS USED IN COMBINATION WITH "SINGLE LANE CROSSOVER" DETAIL.

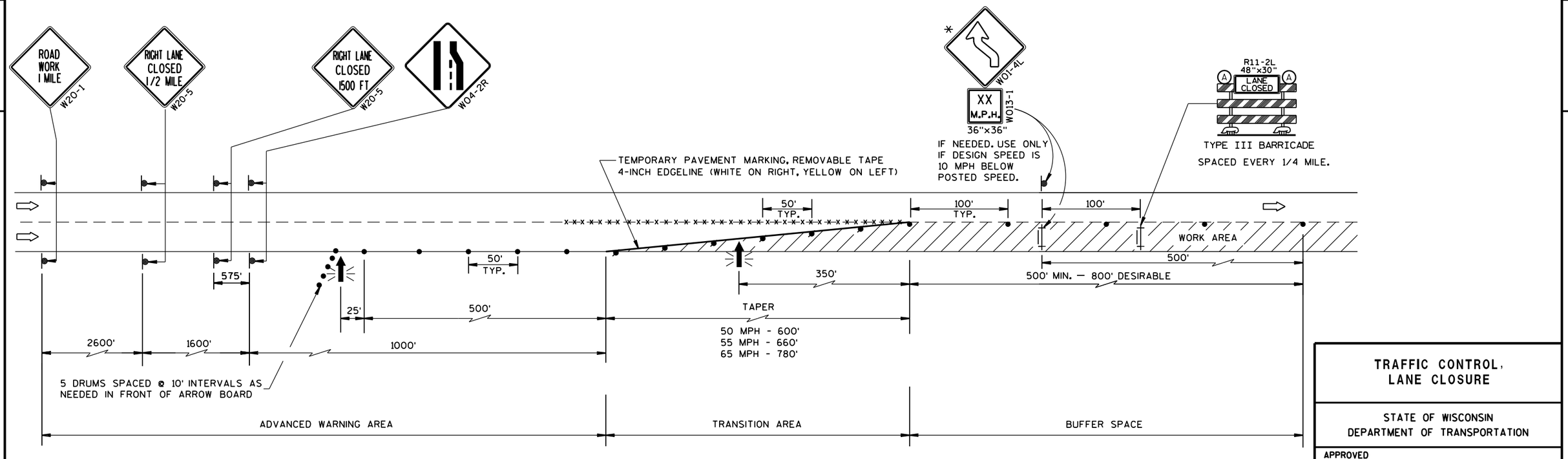

TRAFFIC CONTROL, LANE CLOSURE

STATE OF WISCONSIN
DEPARTMENT OF TRANSPORTATION

APPROVED
Feb. 2015 — DATE
/S/ Travis Feltes — STATE TRAFFIC ENGINEER
FHWA

6

S.D.D. 15 D 12-5a

LEGEND

- TYPE III BARRICADE WITH ATTACHED SIGN
- SIGN ON PERMENENT SUPPORT
- TRAFFIC CONTROL DRUM WITH TYPE "C" STEADY BURN LIGHT
- TRAFFIC CONTROL DRUM
- FLASHING ARROW BOARD
- (A) TYPE "A" WARNING LIGHT (FLASHING)
- REMOVING PAVEMENT MARKING
- DIRECTION OF TRAFFIC
- WORK AREA

GENERAL NOTES

THE EXACT NUMBER, LOCATION, AND SPACING OF ALL SIGNS AND DEVICES SHALL BE ADJUSTED TO FIT FIELD CONDITIONS AS APPROVED BY THE ENGINEER.

THE SPACING BETWEEN SIGNS SHOULD BE ADJUSTED TO NOT CONFLICT WITH AND TO PROVIDE A MINIMUM OF 200 FEET, (500 FEET DESIREABLE) DISTANCE TO EXISTING SIGNS.

THIS LANE CLOSURE IS TYPICAL FOR CLOSING RIGHT LANE - REVERSE FOR CLOSING LEFT LANE.

ALL SIGNS ARE 48"×48" UNLESS OTHERWISE NOTED.

"WO" IS THE SAME AS "W" EXCEPT THE BACKGROUND IS ORANGE.

ANY SIGNS TEMPORARY OR EXISTING, WHICH CONFLICT WITH TRAFFIC CONTROL "IN USE" SHALL BE REMOVED OR COVERED AS NEEDED AND AS APPROVED BY THE ENGINEER. NO WARNING LIGHTS SHALL BE WORKING ON "COVERED" OR "DOWNED" SIGNS.

CONSIDER GEOMETRICS WHEN LOCATING SIGNS AND ARROW BOARD SO THE DRIVER HAS A CLEAR VIEW OF THE ARROW BOARD AND LANE CLOSURE DRUMS FOR A MINIMUM 1500 FEET IN FRONT OF DRUMS.

FOR A LANE CLOSURE THAT IS IN PLACE LESS THAN 7 CONTINUOUS DAYS AND NIGHTS, THE ADVANCED WARNING SIGNS MAY BE MOUNTED ON PORTABLE SUPPORTS.

REMOVE PAVEMENT MARKINGS IF LANE CLOSURE IS TO BE IN PLACE FOR LONGER THAN 4 OR MORE DAYS AND NIGHTS.

WARNING LIGHTS ARE NOT REQUIRED IF THE LANE CLOSURE IS A DAYTIME ONLY OPERATION.

IF THE HORIZONTAL ALIGNMENT IS SUCH THAT A CURVE MAY REQUIRE ADDITIONAL DELINEATION, THE DEVICE SPACING MAY BE DECREASED TO 50 FEET.

ADJUSTMENTS IN BUFFER SPACE NEED TO BE INCORPORATED WHEN THE LANE CLOSURE OCCURS NEAR AN INTERCHANGE EXIT OR ENTRANCE RAMP. THE LANE CLOSURE MUST MUST TAKE PLACE FAR ENOUGH IN ADVANCE OF AN EXIT OR ENTRANCE RAMP TO STILL ALLOW FOR ADEQUATE BUFFER SPACE. THE MINIMUM LENGTH OF THE BUFFER SPACE BEFORE AN EXIT RAMP SHOULD BE 1/2 THE LENGTH OF THE TRANSITION AREA. THE ENTRANCE RAMP SHOULD BE FOLLOWED BY THE ORIGINAL BUFFER SPACE LENGTH OF 800 FEET DESIRABLE PRIOR TO ANOTHER TRAFFIC CONTROL CHANGE SUCH AS A CROSSOVER MANEUVER.

* THE LEFT REVERSE CURVE SIGN (WO1-4L) IS ONLY REQUIRED WHEN THIS DETAIL IS USED IN COMBINATION WITH "SINGLE LANE CROSSOVER" DETAIL.

** A SPEED LIMIT SIGN SHALL BE LOCATED 1500 FEET BEYOND THE END OF THE ACCELERATION LANE OF EACH ENTRANCE RAMP. THERE SHOULD BE A SPEED LIMIT SIGN INCORPORATED A MINIMUM OF EVERY 2 OR 3 MILES. INCLUDE A 65 MPH RESUME SPEED LIMIT SIGN 200 FEET MINIMUM (500 FEET DESIREABLE) BEYOND THE "END OF ROADWORK" SIGN.

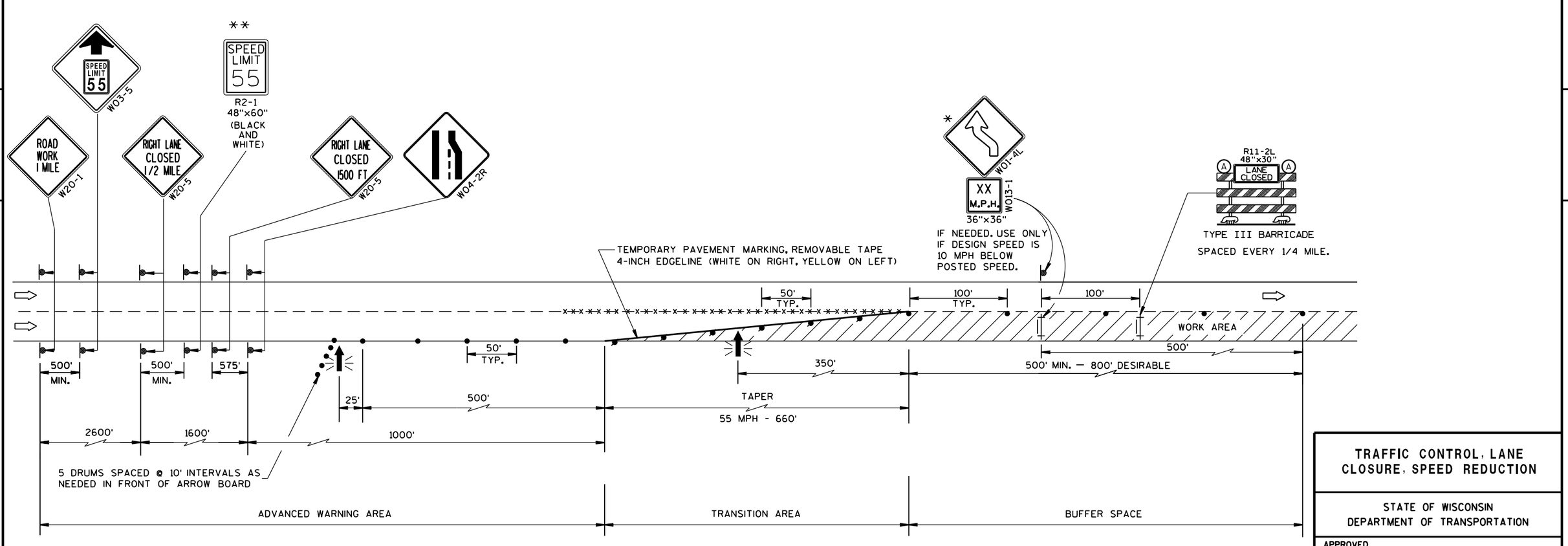

TRAFFIC CONTROL, LANE CLOSURE, SPEED REDUCTION

STATE OF WISCONSIN
DEPARTMENT OF TRANSPORTATION

APPROVED

Feb. 2015 — DATE

/S/ Travis Feltes — STATE TRAFFIC ENGINEER

FHWA

S.D.D. 15 D 12-5b

S.D.D. 15 D 12-5b

GENERAL NOTES

THE EXACT NUMBER, LOCATION AND SPACING OF ALL SIGNS AND DEVICES SHALL BE ADJUSTED TO FIT FIELD CONDITIONS AS APPROVED BY THE ENGINEER.

ALL SIGNS ARE 48" X 48" UNLESS OTHERWISE NOTED. IF NECESSARY DUE TO SPACE CONSTRAINTS IN URBAN AREAS, 36" X 36" SIGNS MAY BE USED IF APPROVED BY DISTRICT TRAFFIC UNIT.

"WO" SIGNS ARE THE SAME AS "W" SIGNS EXCEPT THE BACKGROUND IS ORANGE.

SIGNS THAT WILL BE IN PLACE LESS THAN 7 CONTINUOUS DAYS AND NIGHTS MAY BE MOUNTED ON PORTABLE SUPPORTS.

ANY SIGNS TEMPORARY OR EXISTING, WHICH CONFLICT WITH TRAFFIC CONTROL "IN USE" SHALL BE REMOVED OR COVERED AS NEEDED AND AS APPROVED BY THE ENGINEER.

W20-1A AND G20-2A SIGNS ARE NOT REQUIRED IF THE WORK AREA IS WITHIN A LARGER WORK ZONE WHERE THESE SIGNS ARE ALREADY PRESENT. G20-2A SIGNS MAY ALSO BE OMITTED IF DURATION OF WORK IS LESS THAN 7 CONTINUOUS DAYS AND NIGHTS.

CHANNELIZING DEVICES PLACED ADJACENT TO THE WORK AREA SHALL BE PULLED BACK FROM THE TRAVEL LANE WHEN WORK IS NOT IN PROGRESS.

TABLE A

S \ W	SHOULDER TAPER LENGTH (FEET) 4	6	8	10	BUFFER SPACE (FEET)
30	20	30	40	50	200
35	30	45	55	70	250
40	40	55	75	90	305
45	60	90	120	150	360
50	70	100	135	170	425
55	75	110	150	185	495

W = SHOULDER WIDTH (FEET)
S = NON-CONSTRUCTION SPEED LIMIT (MPH)

TAPER LENGTH

L = WS AT 45 MPH OR GREATER

$L = \frac{WS^2}{60}$ AT 40 MPH OR LESS

SHOULDER TAPER LENGTH = $\frac{1}{3}L$

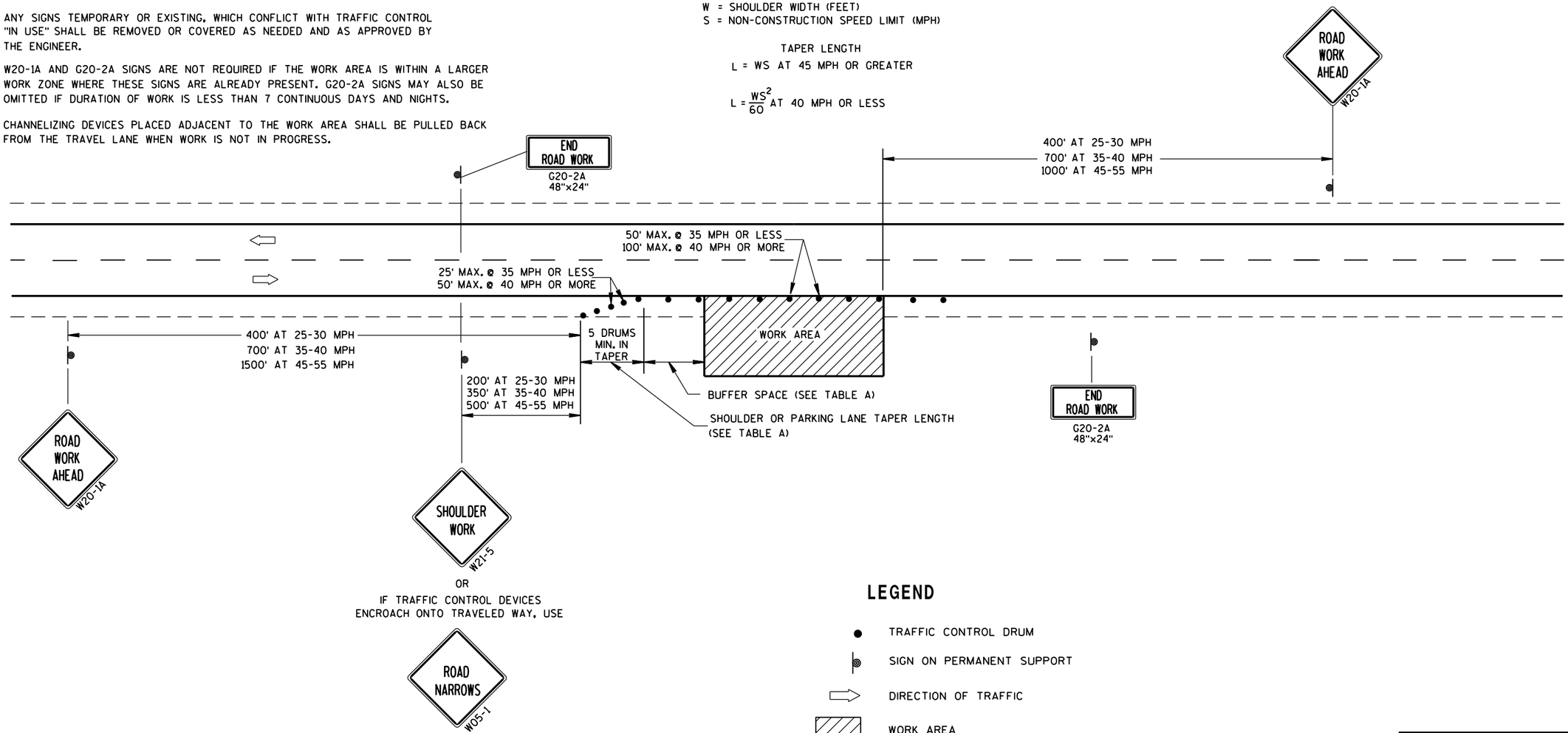

LEGEND

- TRAFFIC CONTROL DRUM
- SIGN ON PERMANENT SUPPORT
- DIRECTION OF TRAFFIC
- WORK AREA

TRAFFIC CONTROL, WORK ON SHOULDER OR PARKING LANE, UNDIVIDED ROADWAY

STATE OF WISCONSIN
DEPARTMENT OF TRANSPORTATION

APPROVED
July 14, 2015 /S/ Peter Amakobe Atepe
DATE STATEWIDE WORK ZO SAFETY ENGI FIC
FHWA

6

S.D.D. 15 D 28-3

LEGEND

- SIGN ON PERMANENT SUPPORT
- REMOVING PAVEMENT MARKING
- TYPE III BARRICADE WITH ATTACHED SIGN
- CONCRETE BARRIER TEMPORARY PRECAST
- FLAGS, 16" x 16" MIN., (ORANGE)
- TRAFFIC CONTROL DRUM
- TRAFFIC CONTROL DRUM WITH TYPE "C" STEADY BURN LIGHT
- ASPHALTIC PAVEMENT WIDENING
- DIRECTION OF TRAFFIC
- 4" X 6" WOOD POST
- TEMPORARY SIGNAL WITH BACKPLATE AND 12-INCH LENSES ON BREAKAWAY POLE

W057-52
36"x24"

INSTALL ON EACH APPROACH AT THE CLOSEST INTERSECTION WITH A STATE OR COUNTY TRUNK HIGHWAY, OR AS DIRECTED BY THE ENGINEER. WIDTH ON SIGN TO BE APPROX. 1-FOOT LESS THAN AVAILABLE WIDTH. (OMIT IF AVAILABLE WIDTH IS MORE THAN 16 FEET.)

GENERAL NOTES

THE EXACT NUMBER, LOCATION AND SPACING OF ALL SIGNS AND DEVICES SHALL BE ADJUSTED TO FIT FIELD CONDITIONS.

THE SPACING BETWEEN TRAFFIC CONTROL SIGNS SHOULD BE ADJUSTED TO NOT CONFLICT WITH AND SHOULD PROVIDE A MINIMUM OF 200 FEET (500 FEET DESIRABLE) CLEARANCE TO EXISTING SIGNS THAT WILL REMAIN IN PLACE.

ALL SIGNS ARE 48"x48" UNLESS OTHERWISE NOTED.

"WO" IS THE SAME AS "W" EXCEPT THE BACKGROUND IS ORANGE.

SIGN LAYOUTS SHALL BE IN ACCORDANCE WITH THE FHWA'S MANUAL OF STANDARD HIGHWAY SIGNS OR THE WISCONSIN STANDARD SIGN PLATES.

ANY SIGNS TEMPORARY OR EXISTING, WHICH CONFLICT WITH TRAFFIC CONTROL "IN USE" SHALL BE REMOVED OR COVERED AS NEEDED AND AS APPROVED BY THE ENGINEER.

PLACE TEMPORARY PAVEMENT MARKING EDGELINE AND CENTERLINE, AND REMOVE EXISTING PAVEMENT MARKINGS IF LANE CLOSURE IS TO BE IN PLACE FOR 4 OR MORE CONTINUOUS DAYS AND NIGHTS OR AS NOTED ON DETAIL.

* 500-FOOT SPACING SHOWN IS FOR ROADWAYS WITH A PRE-CONSTRUCTION REGULATORY SPEED LIMIT OF 45 MPH OR MORE. FOR 35-40 MPH, USE 350-FOOT TYPICAL SPACING. FOR 25-30 MPH, USE 200-FOOT TYPICAL SPACING.

** USE 300' SPACING IF PRE-CONSTRUCTION REGULATORY SPEED LIMIT IS 35 MPH OR LESS.

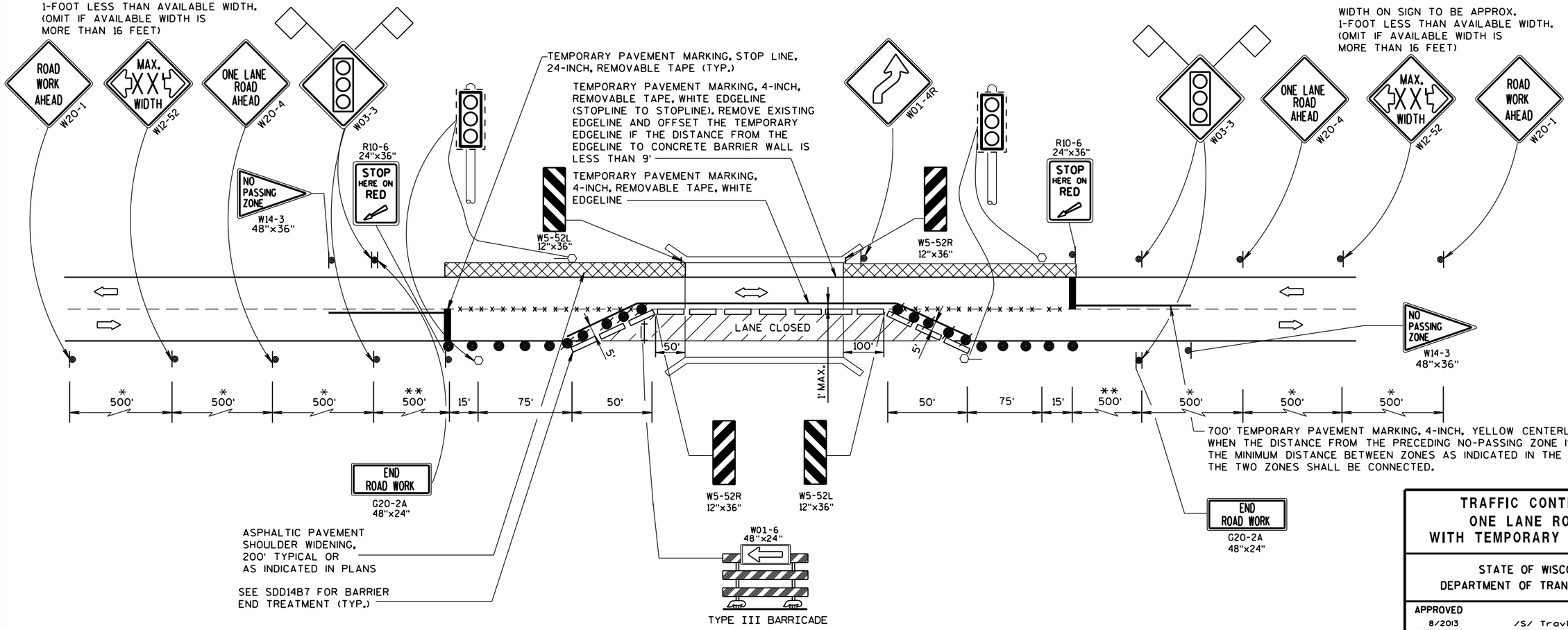

TRAFFIC CONTROL, ONE LANE ROAD WITH TEMPORARY SIGNALS

STATE OF WISCONSIN
DEPARTMENT OF TRANSPORTATION

APPROVED
8/2013 — DATE
/S/ Travis Feltes — STATE TRAFFIC ENGINEER
FHWA

6

S.D.D. 15 D 33-3

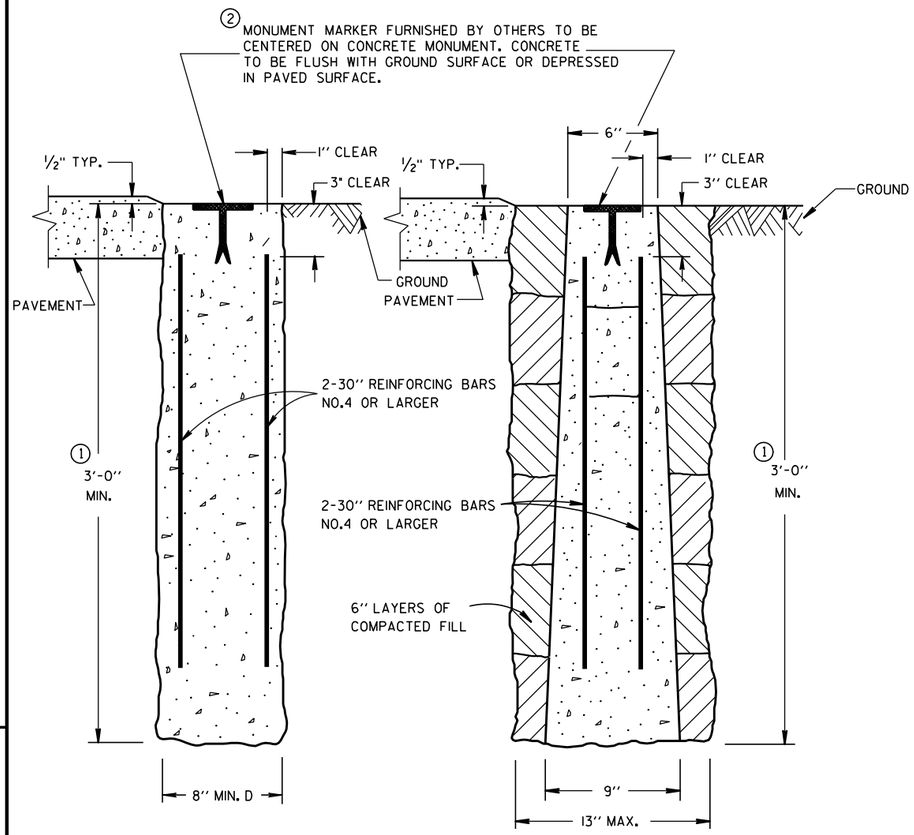

CAST-IN-PLACE PRECAST

CONCRETE MONUMENTS

TYPE A

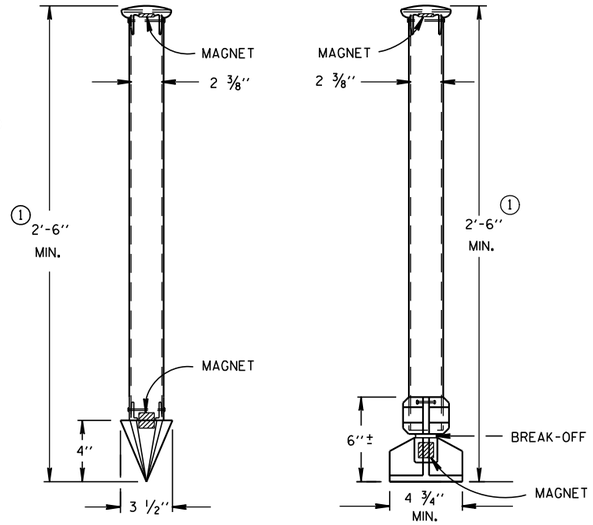

TYPE C DRIVE-IN MONUMENT

TYPE D BREAK-OFF MONUMENT

ALUMINUM MONUMENTS

(INCLUDES MARKER)

GENERAL NOTES

DETAILS OF CONSTRUCTION, MATERIALS AND WORKMANSHIP NOT SHOWN ON THIS DRAWING SHALL CONFORM TO THE PERTINENT REQUIREMENTS OF THE STANDARD SPECIFICATIONS AND THE APPLICABLE SPECIAL PROVISIONS.

DETAILED DRAWINGS OF PROPOSED ALTERNATE DESIGNS FOR METAL MONUMENTS OR MONUMENT COVERS SHALL BE SUBMITTED TO THE ENGINEER FOR APPROVAL.

INSTALLED METAL MONUMENTS MUST BE EASILY DETECTED WITH A DIP NEEDLE. INSERT PERMANENT MAGNETS SHALL BE ATTACHED NEAR THE TOP AND BOTTOM OF THOSE MONUMENTS CONSTRUCTED OF A METAL ALLOY WHICH IS NOT ATTRACTIVE TO A DIP NEEDLE.

THE CAST IRON MONUMENT COVER SHALL BE A "NON-ROCKING" TYPE. ADJUSTMENT OF THE COVER TO GRADE MAY BE ACCOMPLISHED BY THE USE OF MORTAR AND BRICK, OR BY EITHER PRECAST OR CAST-IN-PLACE REINFORCED CONCRETE GRADE RINGS.

MONUMENTS SHALL BE LOCATED AND PLACED AT THE DIRECTION OF THE ENGINEER.

ALUMINUM MONUMENTS AND MONUMENT COVERS SHALL BE MADE FROM AN ALUMINUM AND MAGNESIUM ALLOY AS DETERMINED BY THE MANUFACTURER.

THE MONUMENT COVERS DETAILED ON THIS DRAWING ARE NOT EQUAL ALTERNATES. MONUMENT COVERS SHALL BE CAST IRON UNLESS ALUMINUM IS SPECIFIED ELSEWHERE IN THE CONTRACT.

MONUMENT SHALL BE CAST-IN-PLACE CONCRETE UNLESS PRECAST CONCRETE OR ALUMINUM MONUMENTS ARE SPECIFIED IN THE CONTRACT OR PERMITTED BY THE ENGINEER.

① MINIMUM LENGTH SHALL BE 4'-0" FOR MONUMENTS INSTALLED IN PAVED AREAS.

② AN OFFICIAL COUNTY MONUMENT MARKER SUPPLIED BY A COUNTY MAY BE REQUIRED FOR SOME SECTION CORNERS AND WITNESS MONUMENTS INSTEAD OF THIS WIS DOT MARKER.

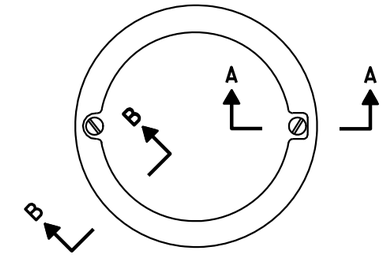

TOP VIEW

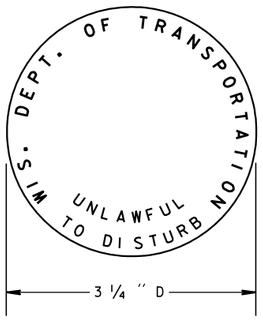

② WIS DOT MONUMENT MARKER LOGO FOR TYPES "A", "C" & "D"

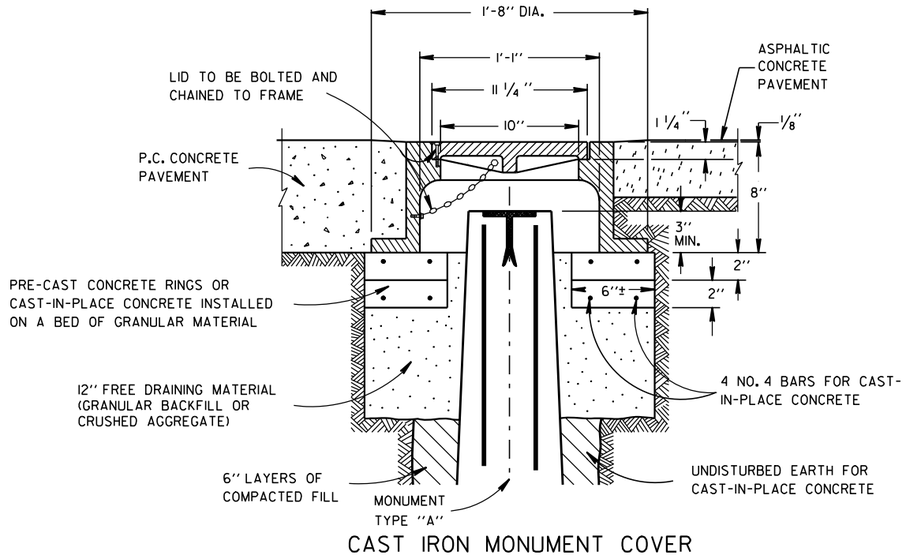

CAST IRON MONUMENT COVER

(APPROXIMATE WEIGHT - 95 LBS.)

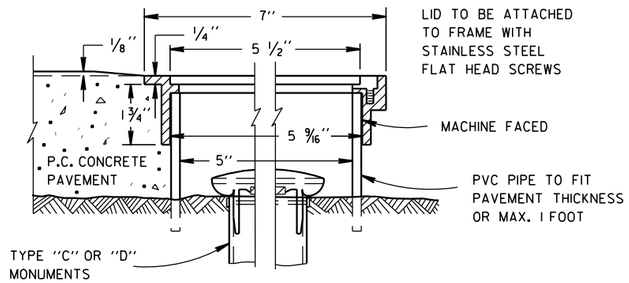

SECTION B-B SECTION A-A

ALUMINUM MONUMENT COVER

(APPROXIMATE WEIGHT 2 LBS)

(FOR CONCRETE PAVEMENT ONLY)

LANDMARK REFERENCE MOUNMENTS AND COVERS

STATE OF WISCONSIN
DEPARTMENT OF TRANSPORTATION

APPROVED
9/22/1999 DATE
/S/ Rory L. Rhinesmith
CHIEF ROADWAY DEVELOPMENT ENGINEER
FHWA

6

S.D.D. 16 A 1-6

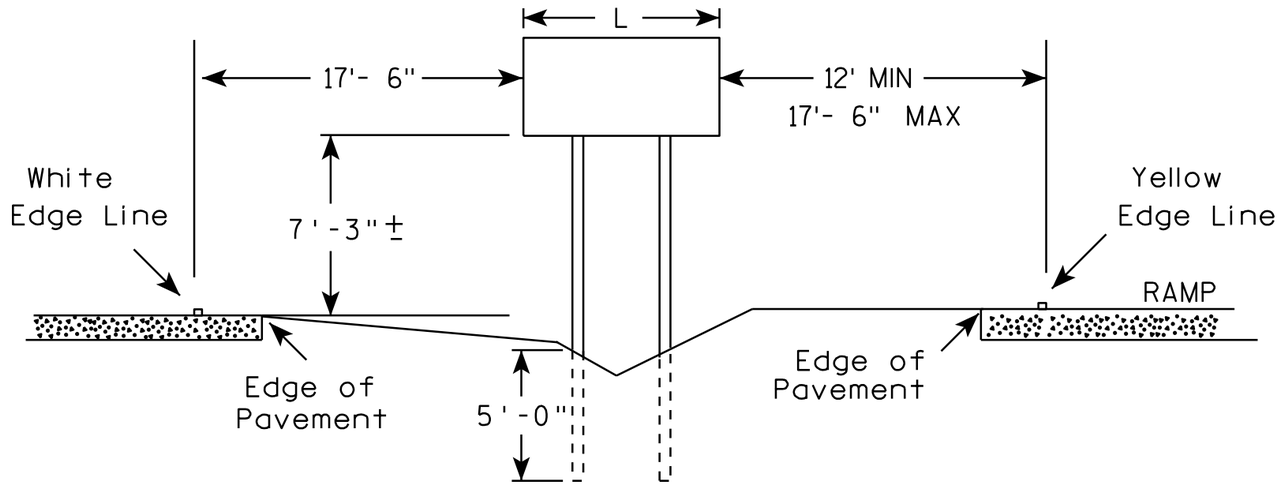

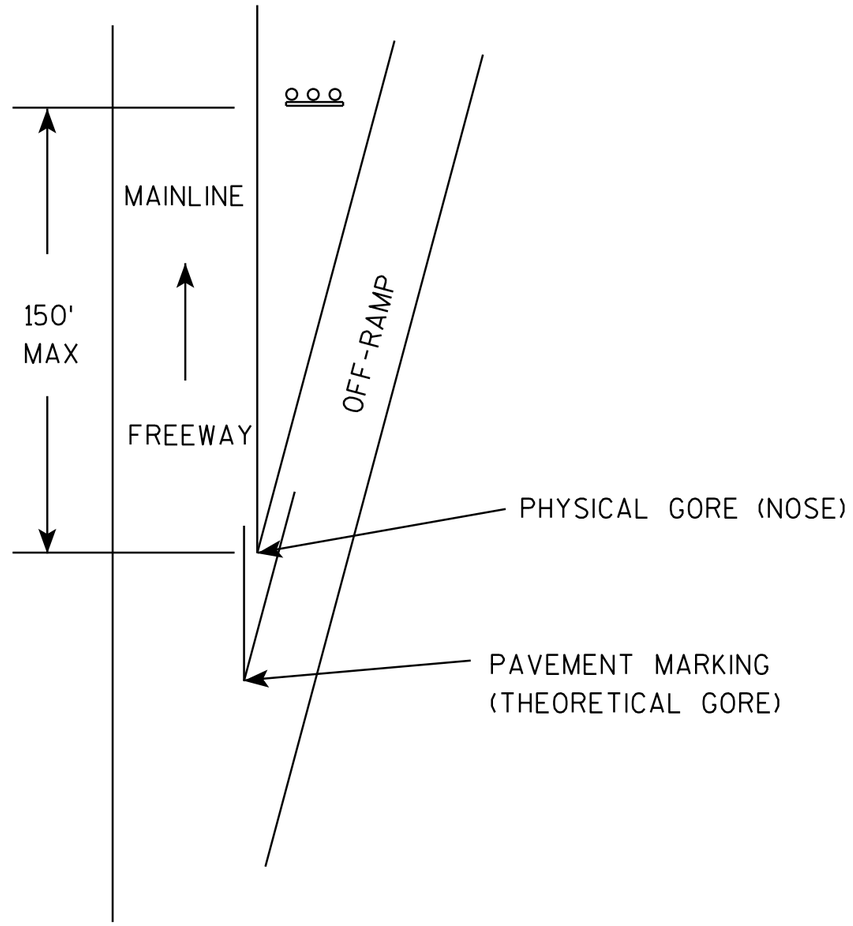

GENERAL NOTES

1. The 150 foot distance from the physical gore (where pavement ends) will normally provide the offsets as shown.
2. If roadway geometrics permit, the sign may be closer than the 150 foot distance as long as the offsets are maintained.
3. At no time shall the location be greater than 150 feet. If the normal offsets cannot be maintained, they can be reduced to 6 feet from the edge of the paved shoulder (both freeway and ramp).
4. The offset from edge of sign to the yellow edge line on the ramp is shown as a minimum of 12 feet and a maximum of 17 feet, 6 inches. Preference is adhering to the maximum rather than the minimum dimension.
5. When L is equal to or exceeds 10 feet, use 3 posts as per A4-4.
6. The (∓) tolerance for the mounting height is 3 inches.

TYPICAL INSTALLATION
OF TYPE II SIGNS ON
WOOD POSTS IN GORE

WISCONSIN DEPT OF TRANSPORTATION

APPROVED Matthew R Rauch
for State Traffic Engineer

DATE 2/06/14 PLATE A4-2.3

PROJECT NO: | SHEET NO: E

URBAN AREA

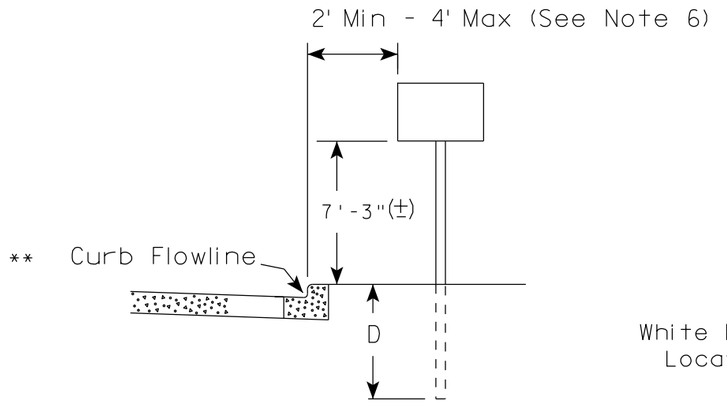

RURAL AREA (See Note 2)

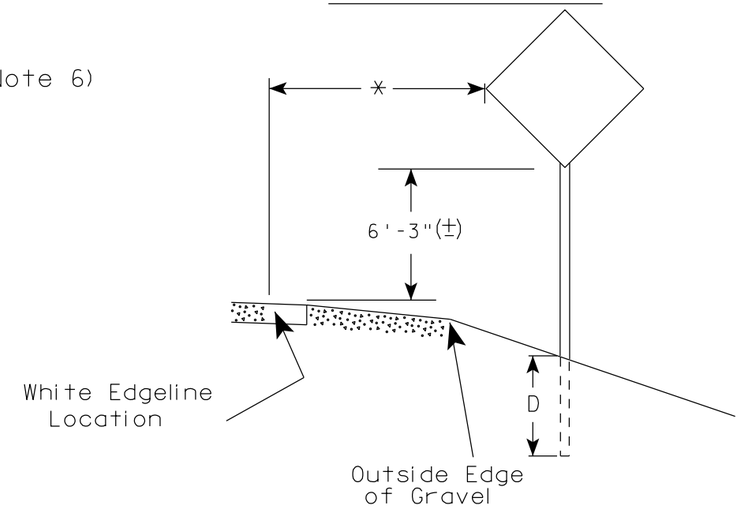

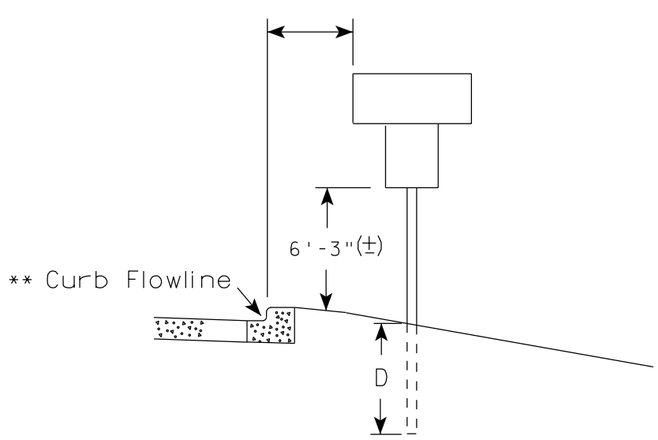

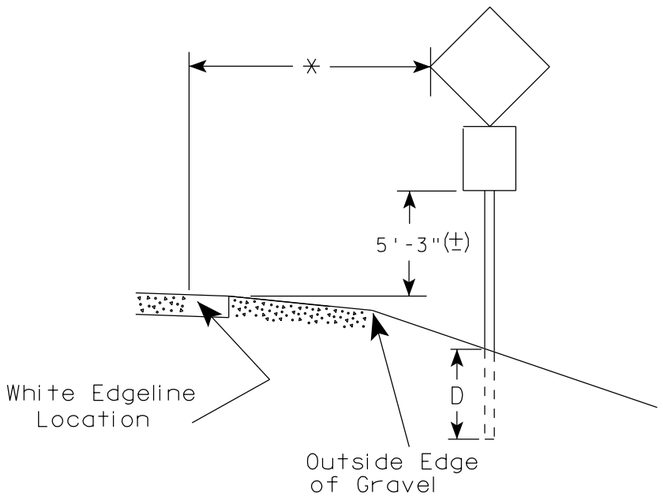

** The existence of curb and gutter does not in itself mandate the vertical clearance illustrated. That height is typically measured where there is sidewalk adjacent to the roadway or parking is permitted. In the absence of sidewalk vertical clearance is measured from the top of the curb. Offset of signs is measured from the flow line.

* 6 feet from edge of a paved shoulder or 12 feet from the edge of pavement (edge line location) or 2 feet from outside edge of gravel, whichever is greater unless directed by project engineer.

POST EMBEDMENT DEPTH

Area of Sign Installation (Sq. Ft.)	D (Min)
20 or Less	4'
Greater than 20	5'

GENERAL NOTES

1. Signs wider than 4 feet, 20 sq.ft or larger, shall be mounted on multiple posts. Refer to plate A4-4.
2. If signs are mounted on barrier wall, see A4-10 sign plate.
3. For expressways and freeways, mounting height is 7'- 3" (±) or 6'-3" (±) depending upon existence of a sub-sign.
4. Minimum mounting height for J assemblies (A2-1S) is 7'-3" (±) or 6'-3" (±) per urban or rural detail respectively.
5. Minimum mounting height for signs mounted on traffic signal poles is 5'- 3" (±).
6. Offset distance shall be consistent with existing signs or consistent throughout length of project.
7. The (±) tolerance for mounting height is 3 inches.
8. Folding signs shall be mounted at a height of 5'-3" (±) or as directd by the Engineer.
9. The Double Arrow sign (W12-1) shall be mounted at a height of 2'-3" (±). The Chevron sign (W1-8), Roundabout Chevron panel (R6-4B), Enhanced Reference Markers, Clearance Markers (W5-52), Mile Markers (D10 series), In Road Object Markers (W5-54) & End of Road Markers (W5-56) shall be mounted at a height of 4'-3" (±).

TYPICAL INSTALLATION OF PERMANENT TYPE II SIGNS ON SINGLE POSTS

WISCONSIN DEPT OF TRANSPORTATION

APPROVED Matthew R Rauch
for State Traffic Engineer

DATE 11/12/14 PLATE NO. A4-3.19

PROJECT NO:	HWY:	COUNTY:		SHEET NO:	E

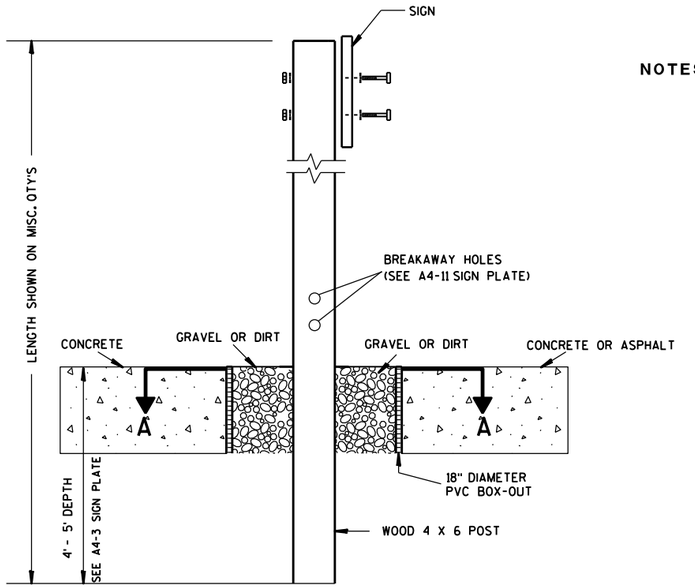

ELEVATION VIEW

DETAIL OF WOOD 4 X 6 SIGN POST IN BOX-OUT

NOTES:
1. ALL MATERIAL TO BE APPROVED BY ENGINEER PRIOR TO INSTALLATION
2. SEE SIGN PLATE A4-8 FOR SIGN HARDWARE REQUIREMENTS
3. 18 INCH X 18 INCH SQUARE BOX-OUTS MAY BE USED FOR INSTALLATIONS IN EXISTING CONCRETE OR ASPHALT LOCATIONS.

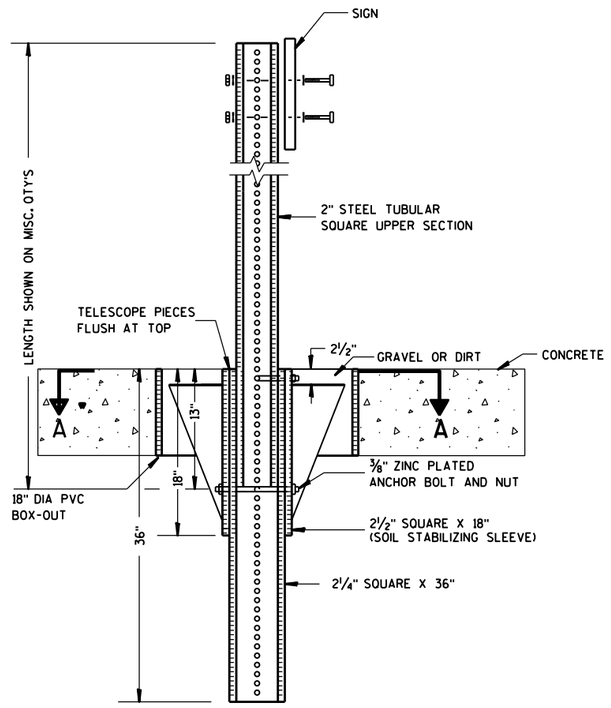

ELEVATION VIEW

DETAIL OF STEEL 2 X 2 SIGN POST IN BOX-OUT

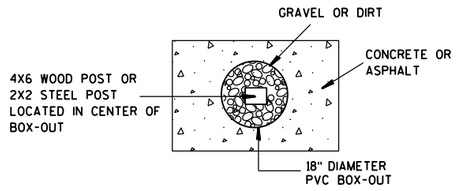

PLAN VIEW

FOR NEW CONCRETE/ASPHALT INSTALLATIONS

SIGN POST BOX-OUTS A4-3B

WISCONSIN DEPT OF TRANSPORTATION

APPROVED Matthew R Rauch
for State Traffic Engineer

DATE 1/27/14 PLATE NO. A4-3B.1

PROJECT NO:	HWY:	COUNTY:		SHEET NO:	E

FILE NAME : C:\CAEFiles\Projects\tr_stdplate\A43B.DGN PLOT DATE : 27-JAN-2014 09:48 PLOT BY : mscsja PLOT NAME : PLOT SCALE : 13.659812:1.000000 WISDOT/CADDS SHEET 42

URBAN AREA

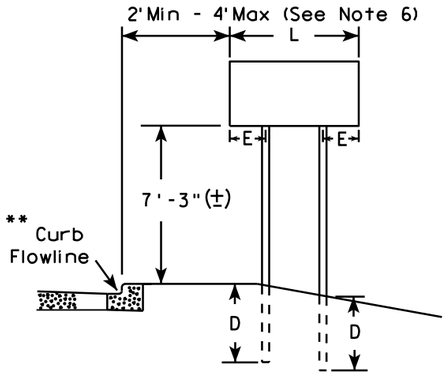

RURAL AREA (See Note 3)

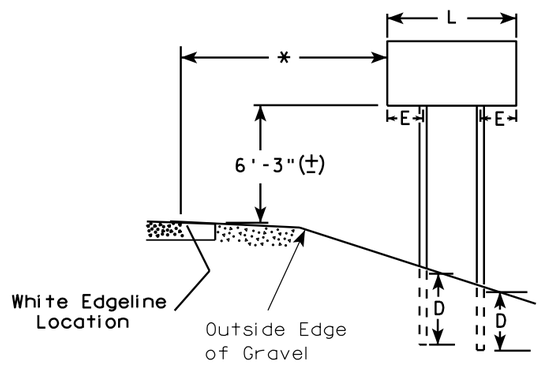

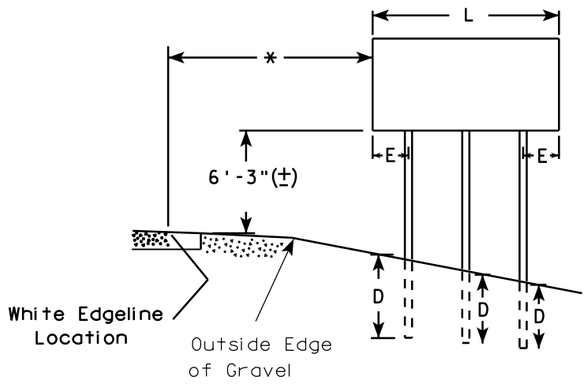

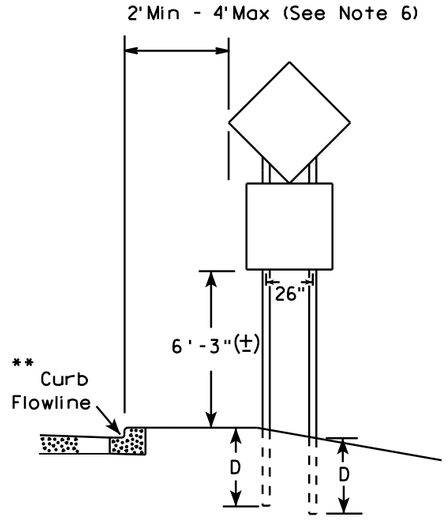

48" DIAMOND WARNING SIGN

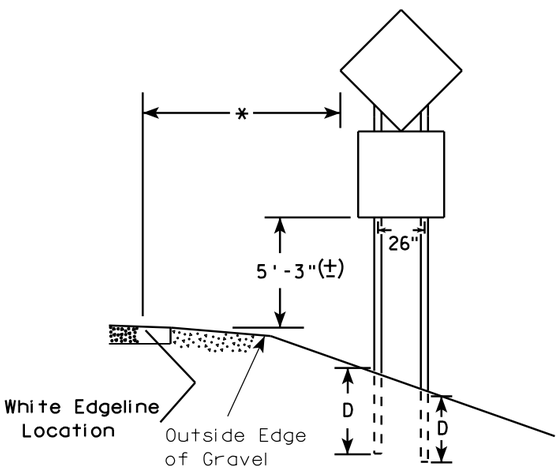

48" DIAMOND WARNING SIGN

GENERAL NOTES

1. For 3 or 4 post installations, individual post spacing shall be greater than 3'-6".
2. See tables below for required number of posts.
3. For expressways and freeways, mounting height is 7'-3" (±) or 6'-3" (±) depending upon existence of sub-sign.
4. The (±) tolerance for mounting height is 3 inches.
5. Minimum mounting height for J assemblies (A2-1S) is 7'-3" (±) or 6'-3" (±) per urban or rural detail respectively.
6. Offset distance shall be consistent with existing signs or consistent throughout length of project.
7. Folding signs shall be mounted at a height of 5'-3" (±) or as directed by the engineer.
8. The Double Arrow sign (W12-1) shall be mounted at a height of 2'-3" (±). The Chevron sign (W1-8), Roundabout Chevron panel (R6-4B), Clearance Markers (W5-52), Mile Markers (D10 series), In Road Object Markers (W5-54) & End of Road Markers (W5-56) shall be mounted at a height of 4"-3" (±).

* 6 feet from edge of a paved shoulder or 12 feet from the edge of pavement (edge line location) or 2 feet from outside edge of gravel, whichever is greater unless directed by project engineer.

** The existence of curb and gutter does not in itself mandate the vertical clearance illustrated. That height is typically measured where there is sidewalk adjacent to the roadway or parking is permitted. In the absence of sidewalk vertical clearance is measured from the top of the curb. Offset of signs is measured from the flow line.

*** See A4-3 sign plate for signs 4' or less in width or less than 20 S.F. in area.

SIGN SHAPE OTHER THAN DIAMOND (TWO POSTS REQUIRED)	
L	E
Greater than 48" Less than 60"	12"
60" to 120"	L/5

***

SIGN SHAPE OTHER THAN DIAMOND (THREE POSTS REQUIRED)	
L	E
Greater than 120" less than 168"	12"

SIGN SHAPE OTHER THAN DIAMOND (FOUR POSTS REQUIRED)	
L	E
168" and greater	12"

POST EMBEDMENT DEPTH

Area of Sign Installation (Sq. Ft.)	D (Min)
20 or Less	4'
Greater than 20	5'

TYPICAL INSTALLATION OF TYPE II SIGNS ON MULTIPLE POSTS

WISCONSIN DEPT OF TRANSPORTATION

APPROVED Matthew R Rauch
for State Traffic Engineer

DATE 11/12/14 PLATE NO. A4-4 120 13

PROJECT NO:	HWY:	COUNTY:		SHEET NO:	E

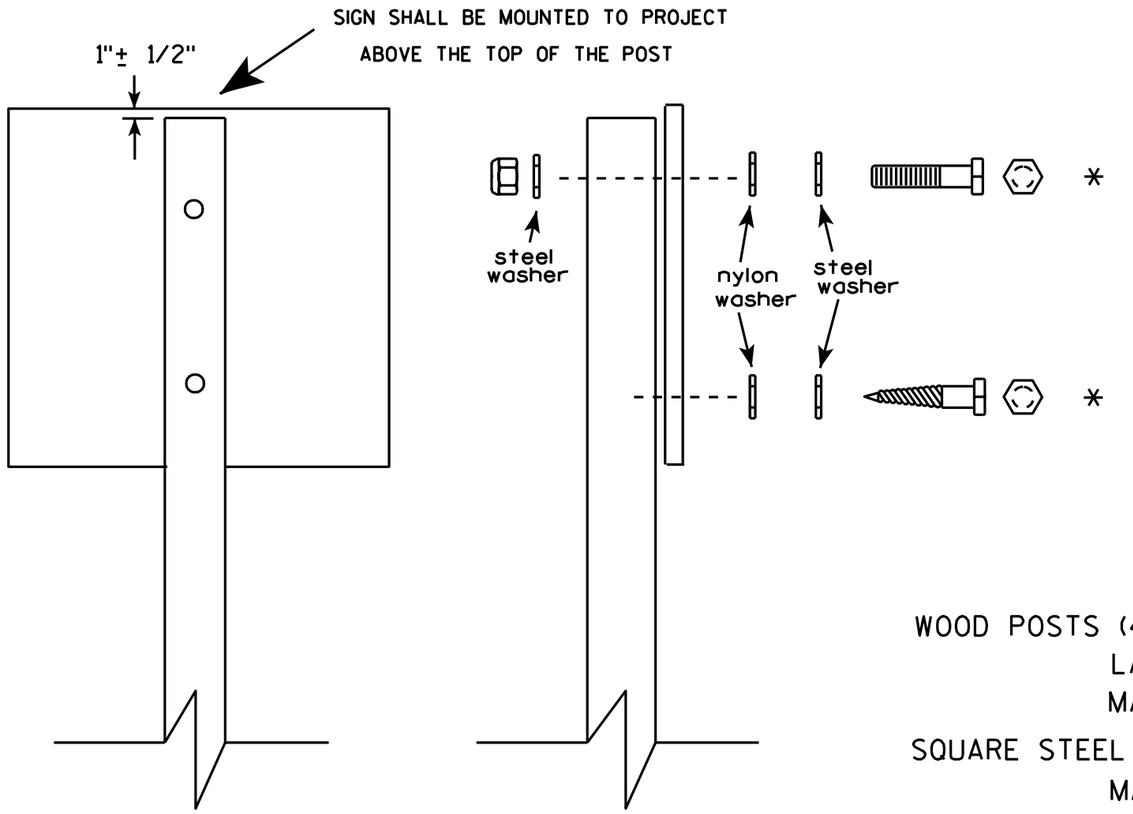

Nuts, bolts and lags used for mounting signs shall have hexagonal heads and shall be either :

a. Hot dip galvanized in accordance with ASTM Designation: A 153, Class D, or SC 3

b. Electro-galvanized in accordance with ASTM Designation : B 633, TYPE III, SC 3.

Threads on bolts and nuts shall be manufactured with sufficient allowance for the cadmium plate or galvanized coating to permit the nuts to run freely on the bolts.

WOOD POSTS (4" x 4" or 4" x 6")
LAG SCREWS - 3/8" X 3"
MACHINE BOLTS - 5/16" X 6-1/2" or 7" Length w/ nuts

SQUARE STEEL POSTS (2" x 2")
MACHINE BOLTS - 3/8" X 3-1/4" Length w/ nuts
RIVETS - 9/32 " (6605-9-6) BULB-TITE, TRI-FOLD, ALUMINUM BODY/MANDREL
O.D. FLANGE .720-.765 INCH, GRIP RANGE .042-.375 INCH

WASHERS (ALL POSTS) -
1-1/4" O.D. X 3/8" I.D. X 1/16" STEEL
1-1/4" O.D. X 3/8" I.D. X .080 NYLON for all Type H signs.

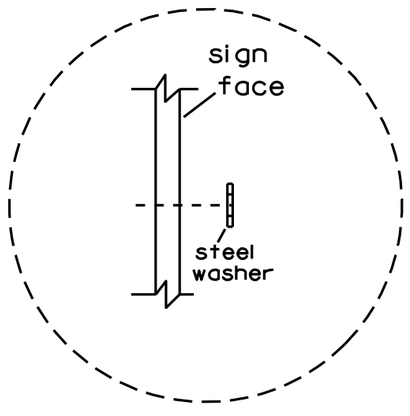

Washer Placement when Sign Has Other Than Type H or Type F Face

* Two different fastening systems are shown for illustration purposes. On any individual sign, either one or the other system shall be used. Actual number of fasteners per sign varies with the sign area, but normally there are two. For a single post installation, all signs greater than 9 sq. ft. require the use of 3 fasteners.

ATTACHMENT OF SIGNS TO POSTS

WISCONSIN DEPT OF TRANSPORTATION

APPROVED Matthew R Rauch
for State Traffic Engineer

DATE 3/23/10 PLATE NO. A4-8.7

7

7

PROJECT NO:

SHEET NO: 121 E

TELESCOPIC TUBING ANCHORS
TWO PIECE SYSTEM

2 1/4 " SQUARE
12 GAUGE
PERFORATED
GALVANIZED FINISH

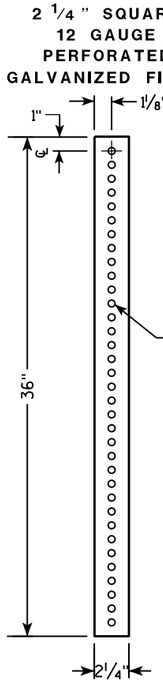

2 1/2 " SQUARE
12 GAUGE
OMNI-DIRECTIONAL
PERFORATED
SOIL STABILIZING SLEEVE
GALVANIZED FINISH

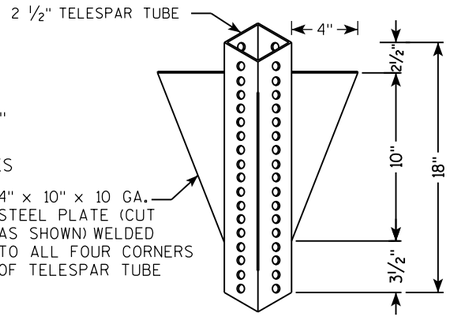

DETAIL OF TUBULAR STEEL SIGN POST
(IN POURED CONCRETE OR ASPHALT)

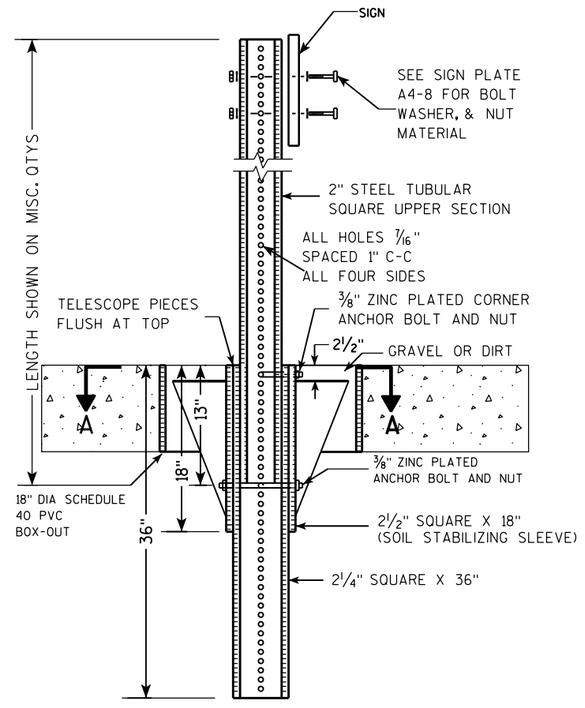

DETAIL OF TUBULAR STEEL SIGN POST
(IN LOCATIONS OTHER THAN POURED CONCRETE OR ASPHALT)

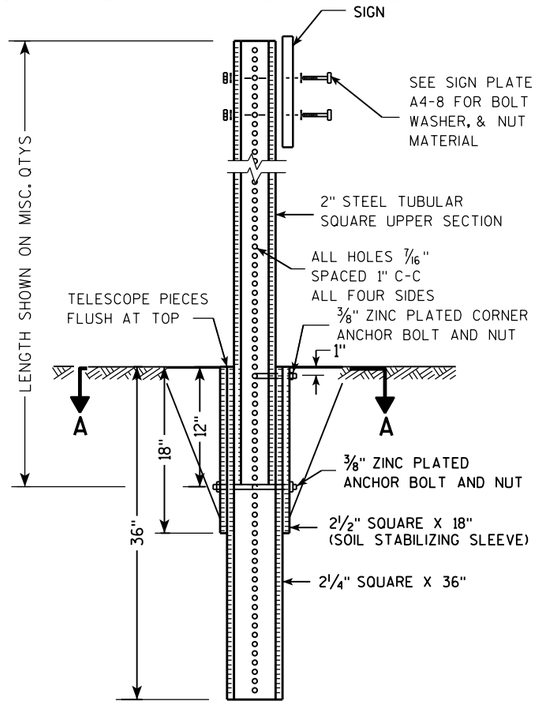

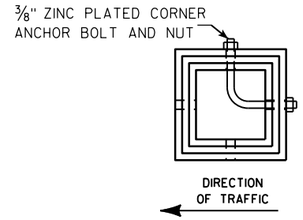

SECTION A-A

Area of Sign Installation (Sq. Ft.)	Number of Required Posts
9 or less	1
Greater than 9 less than or equal to 18	2
Greater than 18 less than or equal to 27	3

Signs wider than 3 feet or larger than 9 sq. ft shall be mounted on multiple posts (see above table).

TUBULAR STEEL
SIGN POST
A4-9

WISCONSIN DEPT OF TRANSPORTATION

APPROVED Matthew R Rauch
for State Traffic Engineer

DATE 2/05/15 PLATE A4-9.9

PROJECT NO:	HWY:	COUNTY:		SHEET NO:	E

FILE NAME : C:\CAEFiles\Projects\tr_stdplate\A49.DGN PLOT DATE : 05-FEB-2015 17:09 PLOT BY : mscsja PLOT NAME : PLOT SCALE : 13.659812:1.000000
WISDOT/CADDS SHEET 42

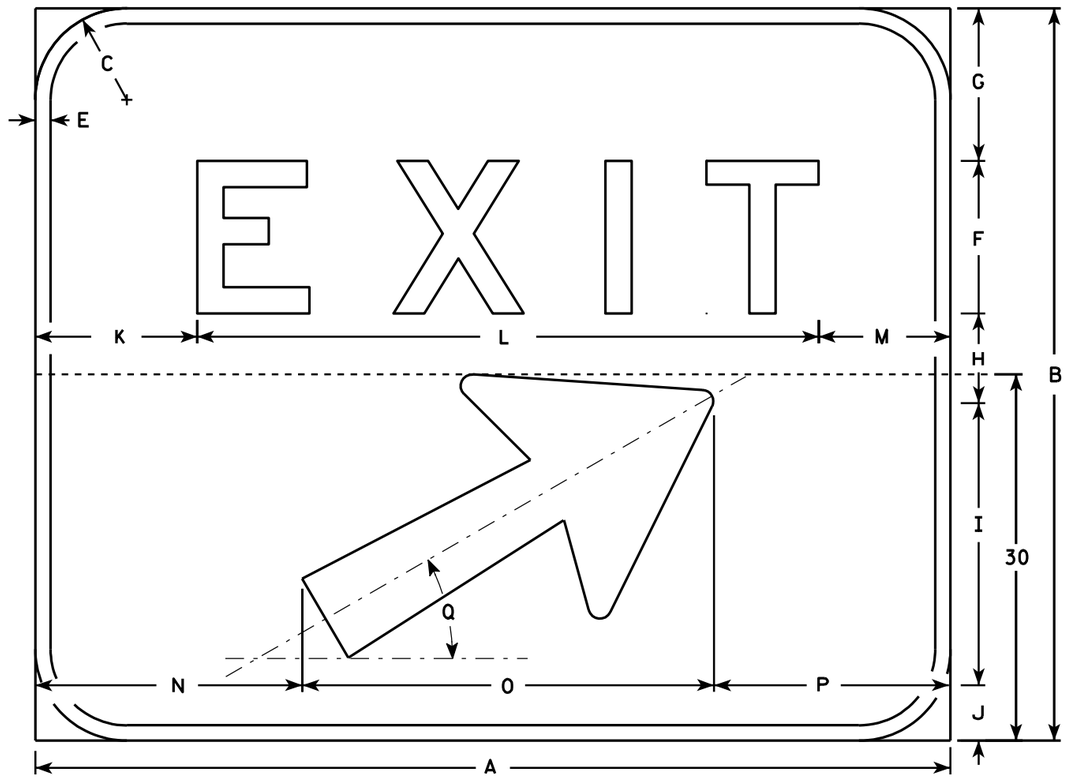

E5-1

NOTES

1. Sign is Type II - Type H reflective - reference WIS DOT Standard Specification for HIGHWAY and STRUCTURE CONSTRUCTION latest edition.
2. Color:
   Background - Green
   Message - White (Type H reflective)
3. Message Series - E
4. Corners may be square or rounded but borders shall be rounded as shown.
5. Base material for this sign shall be plywood and shall be split into two seperate pieces for the 72 x 60 size as shown on the detail by the dashed line (----------).
6. Arrow is Type "A" from sign plate A1-1.
7. As per the Standard Spec's, this sign shall not have a vertical joint.

Metric equivalent for this sign is:

SIZE	
1	
2	
3	
4	1500 mm X 1200 mm
5	1800 mm X 1500 mm

SIZE	A	B	C	D	E	F	G	H	I	J	K	L	M	N	O	P	Q	R	S	T	U	V	W	X	Y	Z	Area sq. ft.	Area m2
1																												
2																												
3																												
4	60	48	6		1	10	10	5 7/8	18 1/2	3 5/8	10 5/8	40 3/4	8 5/8	17 1/2	27	15 1/2	30°										20.0	1.80
5	72	60	6		1	12	12	10	18 1/2	7 1/2	13 1/4	48 1/2	10 1/4	23 1/2	27	21 1/2	30°										30.0	2.70

STANDARD SIGN
E5 - 1

WISCONSIN DEPT OF TRANSPORTATION

APPROVED Chester J Spang for State Traffic Engineer

DATE 6/22/00 PLATE NO. E5-1.8

PROJECT NO:	HWY:	COUNTY:		SHEET NO: 123	E

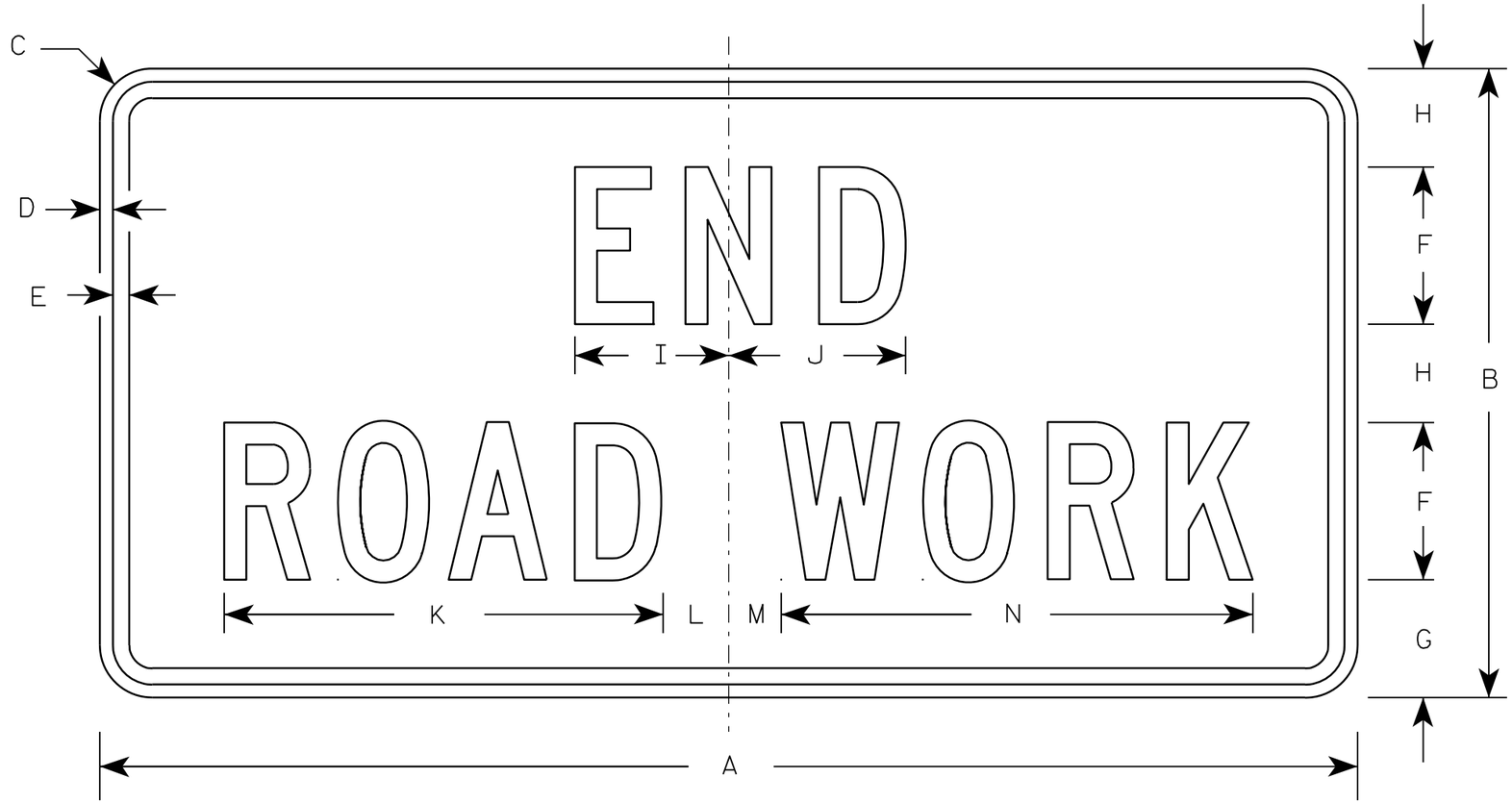

G20-2A

NOTES

1. Sign is Type II - Type F Reflective - reference WIS DOT Standard Specification for HIGHWAY and STRUCTURE CONSTRUCTION latest edition.
2. Color:
   Background - Orange
   Message - Black
3. Message Series - C
4. Corners may be square or rounded when base material is plywood but borders shall be rounded as shown. When base material is metal, the corners and borders shall be rounded.

Metric equivalent for this sign is:

SIZE	
1	900 mm X 450 mm
2	1200 mm X 600 mm
3	1200 mm X 600 mm
4	1200 mm X 600 mm
5	1200 mm X 600 mm

SIZE	A	B	C	D	E	F	G	H	I	J	K	L	M	N	O	P	Q	R	S	T	U	V	W	X	Y	Z	Area sq. ft.	Area m2
1	36	18	1 1/8	3/8	1/2	4	3 3/4	2 1/2	4 1/8	4 1/8	11 1/8	2	1	12 1/8													4.5	0.41
2	48	24	1 1/2	1/2	5/8	6	4 1/2	3 3/4	5 7/8	6 3/4	16 3/4	2 1/2	1 3/4	18 1/2													8.0	0.72
3	48	24	1 1/2	1/2	5/8	6	4 1/2	3 3/4	5 7/8	6 3/4	16 3/4	2 1/2	1 3/4	18 1/2													8.0	0.72
4	48	24	1 1/2	1/2	5/8	6	4 1/2	3 3/4	5 7/8	6 3/4	16 3/4	2 1/2	1 3/4	18 1/2													8.0	0.72
5	48	24	1 1/2	1/2	5/8	6	4 1/2	3 3/4	5 7/8	6 3/4	16 3/4	2 1/2	1 3/4	18 1/2													8.0	0.72

STANDARD SIGN
G20-2A

WISCONSIN DEPT OF TRANSPORTATION

APPROVED Matthew R Rauch
for State Traffic Engineer

DATE 9/30/09 PLATE NO. G20-2A.8

PROJECT NO:	HWY:	COUNTY:		SHEET NO: 124	E

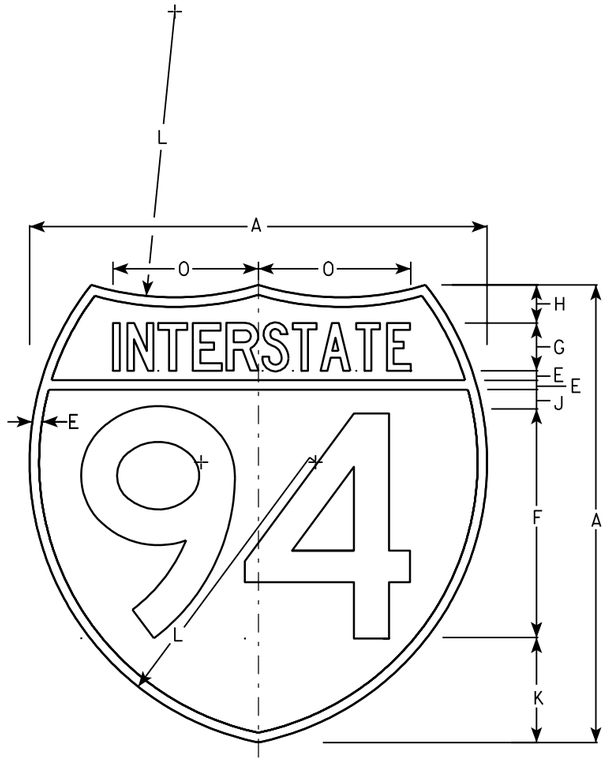

M1-1

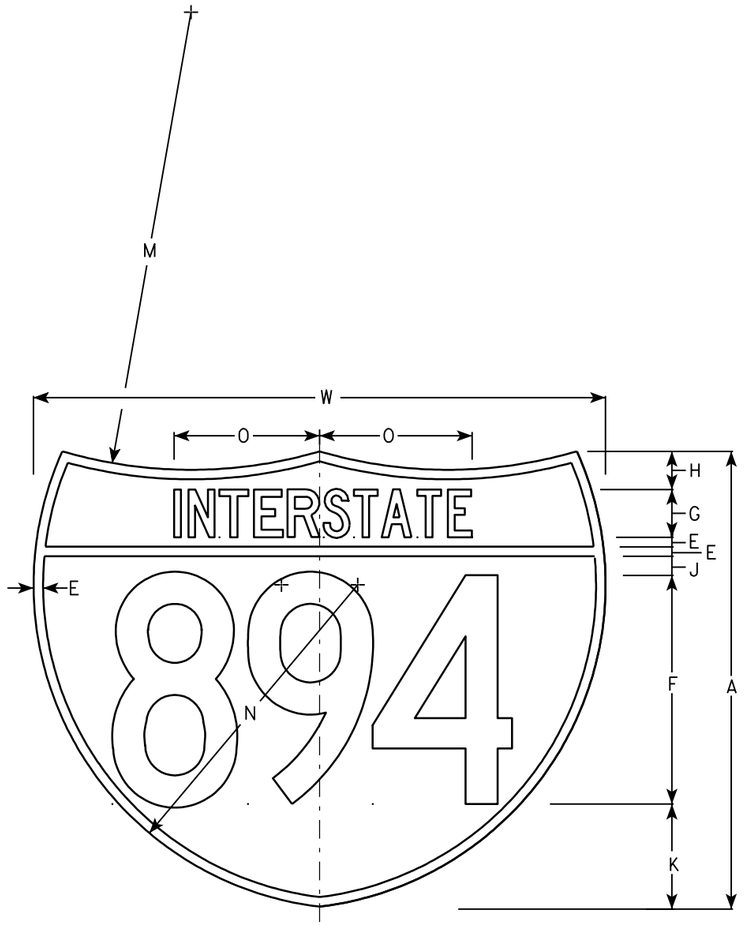

M1-1A

NOTES

1. Sign is Type II - See Note 6 - reference WIS DOT Standard Specification for HIGHWAY and STRUCTURE CONSTRUCTION latest edition.
2. Color:
   Background - Top Red - Bottom Blue (See Note 6)
   Message - White - See Note 6
3. Message Series - See note 5
4. Substitute appropriate numerals & ajust spacing as per plate A10-1.
5. M1-1 - Numerals - D
   Interstate - C
   M1-1A - All copy - C
6. Permanent Signs
   Message - Type H Reflective
   Detour or other temporary signs
   Background - Reflective
   Message - Reflective

Metric equivalent for these signs are:

SIZE	M1-1	SIZE	M1-1A
1			
2	600 mm X 600 mm	2	600 mm X 750 mm
3	900 mm X 900 mm	3	900 mm X 1125 mm
4	900 mm X 900 mm	4	900 mm X 1125 mm
5	900 mm X 900 mm	5	900 mm X 1125 mm

SIZE	A	B	C	D	E	F	G	H	I	J	K	L	M	N	O	P	Q	R	S	T	U	V	W	X	Y	M1-1 Area sq. ft.	M1-1A Area sq. ft.	M1-1 Area m2	M1-1A Area m2
1																													
2	24				1/2	12	2 1/2	2		1	5 1/2	15	24	17	7 7/8								30			3.13	3.91	.36	.46
3	36				3/4	18	3 3/4	3		1 1/2	8 1/4	22 1/2	36	25 1/2	11 3/4								45			7.03	8.79	.81	1.05
4	36				3/4	18	3 3/4	3		1 1/2	8 1/4	22 1/2	36	25 1/2	11 3/4								45			7.03	8.79	.81	1.05
5	36				3/4	18	3 3/4	3		1 1/2	8 1/4	22 1/2	36	25 1/2	11 3/4								45			7.03	8.79	.81	1.05

INTERSTATE ROUTE MARKER
M1-1 FOR ASSEMBLIES

WISCONSIN DEPT OF TRANSPORTATION

APPROVED Matthew R Rauch
for State Traffic Engineer

DATE 08/23/05 PLATE NO. M1-1.8

PROJECT NO:	HWY:	COUNTY:		SHEET NO: 125	E

NOTES

1. Sign is Type II - See Note 6 - reference WIS DOT Standard Specification for HIGHWAY and STRUCTURE CONSTRUCTION latest edition.
2. Color:
   Background - White & Black - See Note 6
   Message - Black
3. Message Series - See note 5
4. Corners may be square or rounded when base material is plywood but borders shall be rounded as shown. When base material is metal, the corners and borders shall be rounded.
5. Substitute appropriate numerals and adjust spacing as per Plate A10-1.
6. Permanent Signs
   Background - Type H Reflective
   Detour or other temporary signs
   Background - Reflective

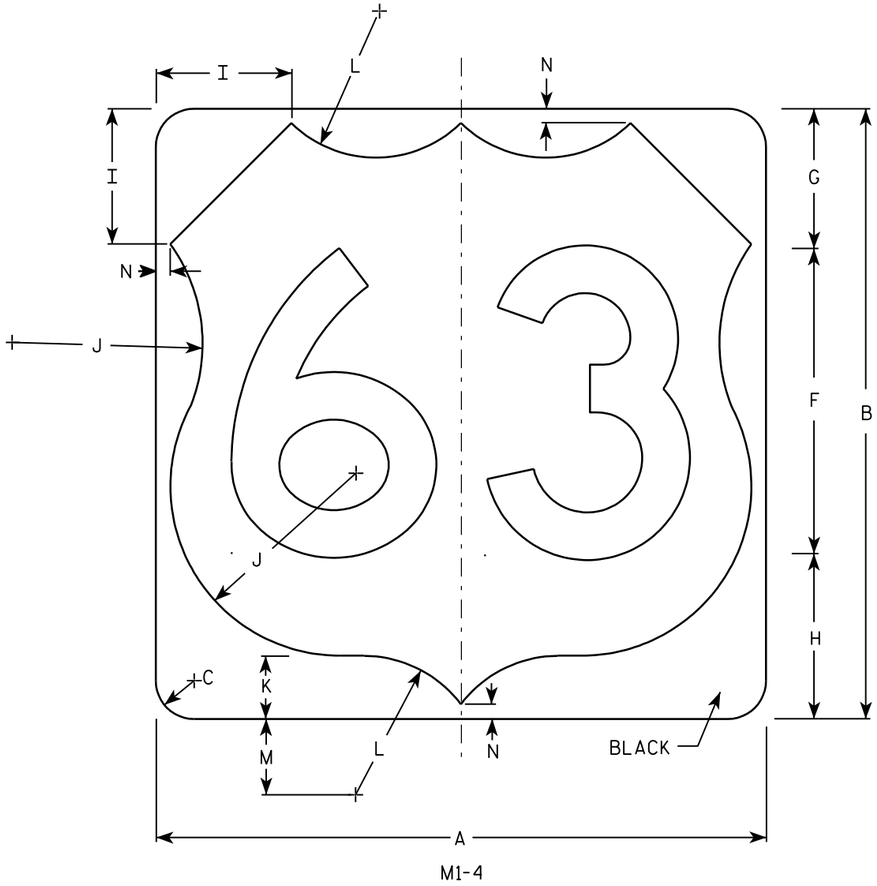

M1-4

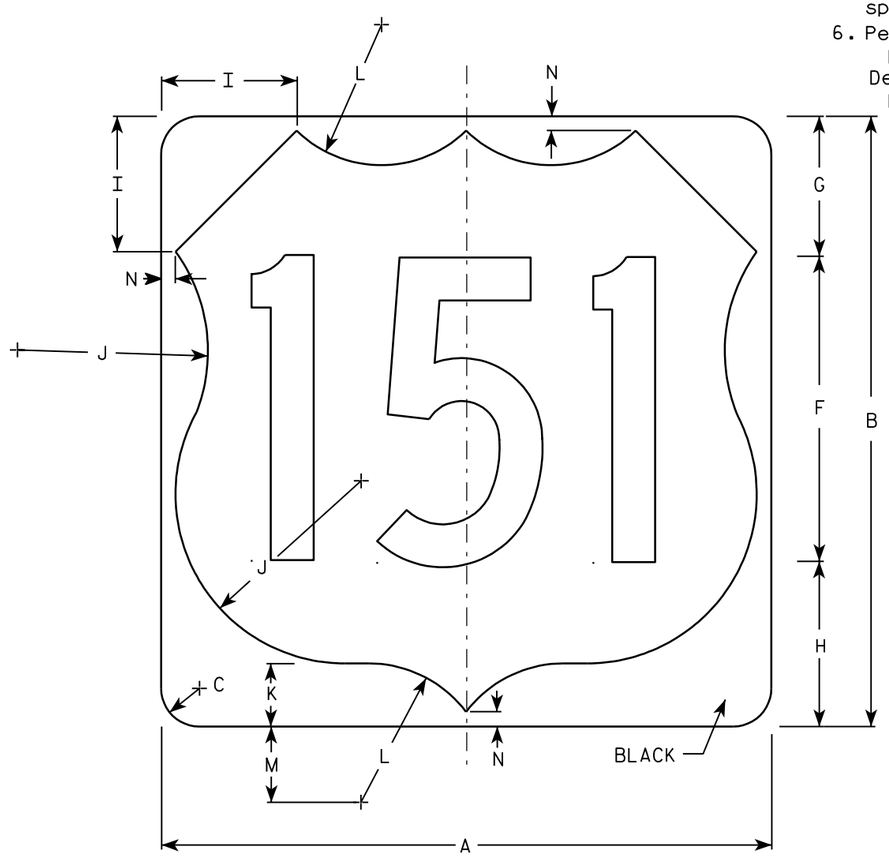

M1-4

7

7

Metric equivalent for this sign is:

SIZE	
1	
2	600 mm X 600 mm
3	900 mm X 900 mm
4	900 mm X 900 mm
5	900 mm X 900 mm

SIZE	A	B	C	D	E	F	G	H	I	J	K	L	M	N	O	P	Q	R	S	T	U	V	W	X	Y	Z	Area sq. ft.	Area m2
1																												
2	24	24	1 1/2			12	5 1/2	6 1/2	5	7 1/2	2 1/2	5 1/2	3	1/2													4.0	.36
3	36	36	2 1/4			18	8 1/4	9 1/4	7 1/4	11 1/4	3 3/4	8 1/4	4 1/2	3/4													9.0	.81
4	36	36	2 1/4			18	8 1/4	9 1/4	7 1/4	11 1/4	3 3/4	8 1/4	4 1/2	3/4													9.0	.81
5	36	36	2 1/4			18	8 1/4	9 1/4	7 1/4	11 1/4	3 3/4	8 1/4	4 1/2	3/4													9.0	.81

USH MARKER
M1-4 FOR ASSEMBLIES

WISCONSIN DEPT OF TRANSPORTATION

APPROVED Matthew R Rauch
for State Traffic Engineer

DATE 08/25/05 PLATE NO. M1-4.9

PROJECT NO:	HWY:	COUNTY:		SHEET NO: 126	E

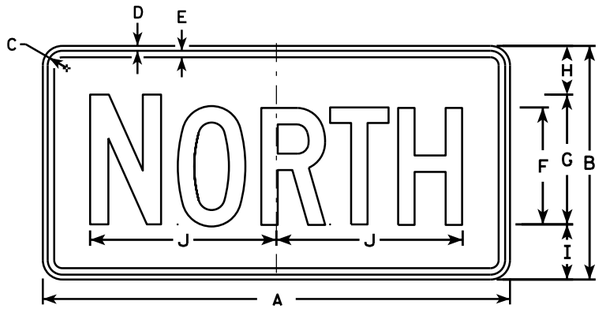

M3-1
MK3-1
MM3-1
MN3-1

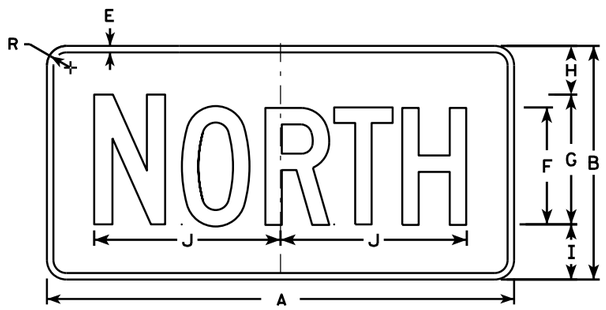

MB3-1

M3-2
MK3-2
MM3-2
MN3-2

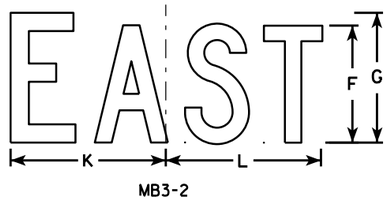

MB3-2

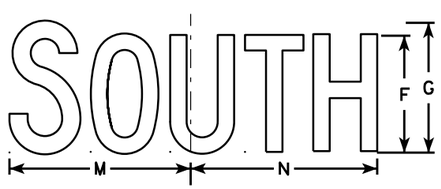

M3-3
MK3-3
MM3-3
MN3-3

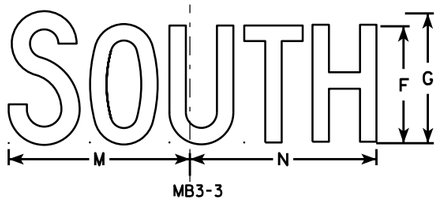

MB3-3

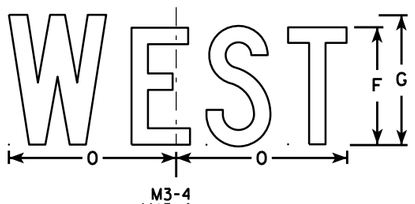

M3-4
MK3-4
MM3-4
MN3-4

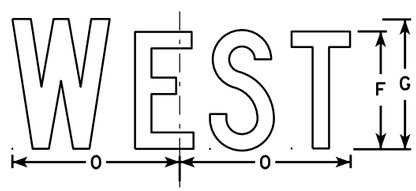

MB3-4

NOTES

1. All Signs Type II - Type H
2. Color:
   Background - See note 5
   Message - See note 5
3. Message Series - C
4. Corners may be square or rounded when base material is plywood but borders shall be rounded as shown. When base material is metal, the corners and borders shall be rounded.
5. M3-1 thru M3-4 Background - White
   Message - Black
   MB3-1 thru MB3-4 Background - Blue
   Message - White
   MK3-1 thru MK3-4 Background - Green
   Message - White
   MM3-1 thru MM3-4 Background - White
   Message - Green
   MN3-1 thru MN3-4 Background - Brown
   Message - White
6. Note the first letter of each direction is larger than the remainder of the message.

SIZE	A	B	C	D	E	F	G	H	I	J	K	L	M	N	O	P	Q	R	S	T	U	V	W	X	Y	Z	Area sq. ft.
1																											
2	24	12	1 1/8	3/8	3/8	6	7	2 1/4	2 3/4	10 1/4	7 7/8	8 3/8	10 1/4	9 3/4	8 3/4			1 1/2									2.00
3	36	18	1 1/8	3/8	1/2	9	10	3 3/4	4 1/4	14 3/8	12	12 1/8	14	14 1/8	13			1 1/2									4.5
4	36	18	1 1/8	3/8	1/2	9	10	3 3/4	4 1/4	14 3/8	12	12 1/8	14	14 1/8	13			1 1/2									4.5
5	36	18	1 1/8	3/8	1/2	9	10	3 3/4	4 1/4	14 3/8	12	12 1/8	14	14 1/8	13			1 1/2									4.5

STANDARD SIGNS
M3-1 thur M3-4
SERIES

WISCONSIN DEPT OF TRANSPORTATION

APPROVED Matthew R Rauch for State Traffic Engineer

DATE 6/30/14 PLATE NO M3-1.13

PROJECT NO: | HWY: | COUNTY: | | SHEET NO: E

7

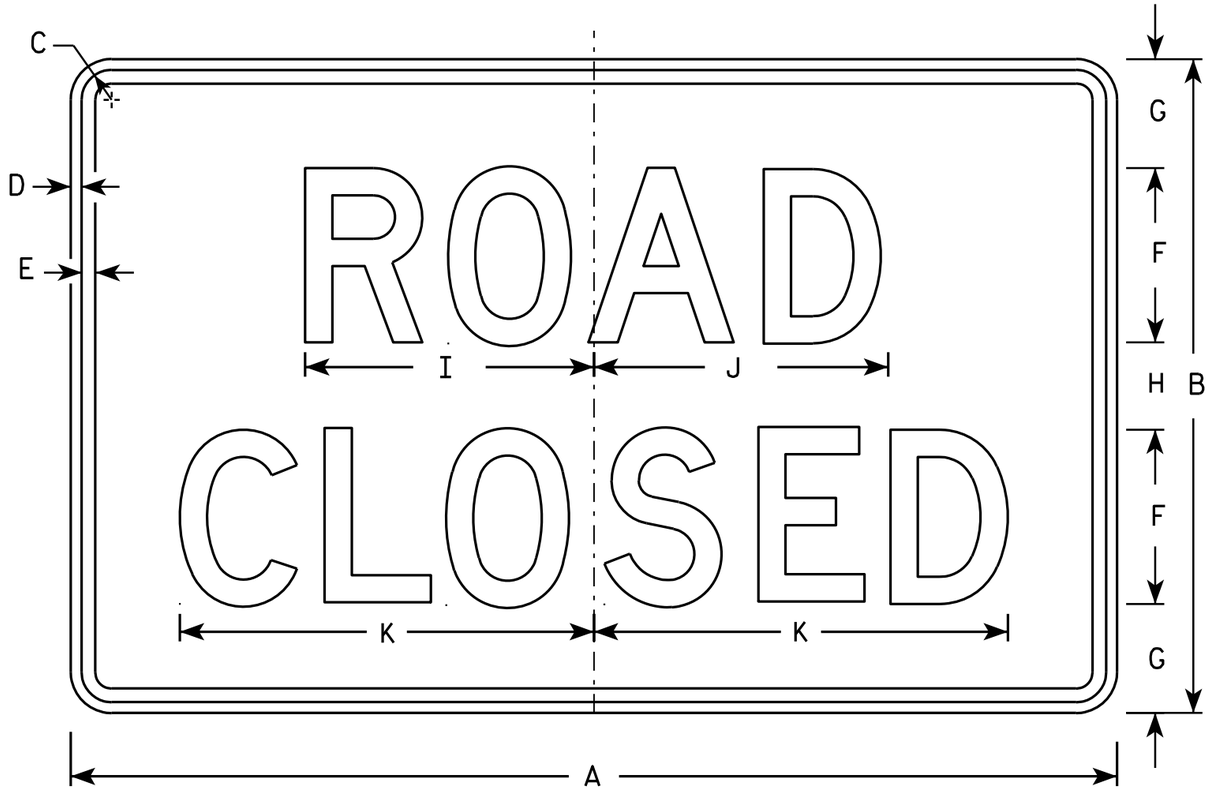

R11-2

NOTES

1. Sign is Type II - Type H Reflective - reference WIS DOT Standard Specification for HIGHWAY and STRUCTURE CONSTRUCTION latest edition.
2. Color:
   Background - White
   Message - Black
3. Message Series - D
4. Corners may be square or rounded when base material is plywood but borders shall be rounded as shown. When base material is metal, the corners and borders shall be rounded.
5. Modify the message as required.

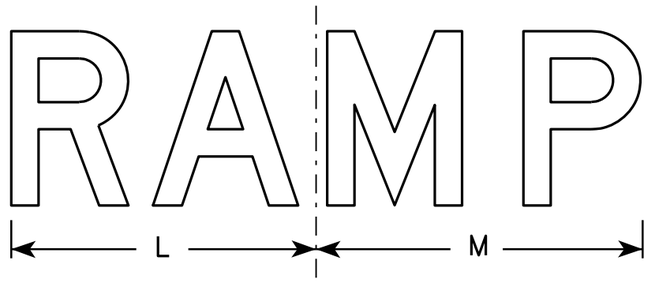

R11-2R

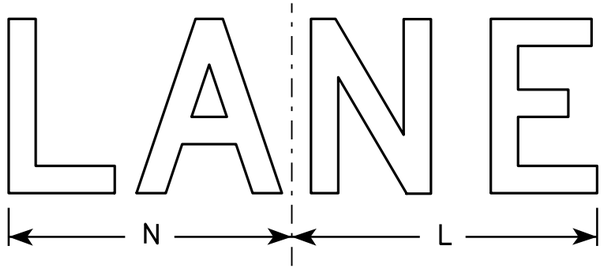

R11-2L

SIZE	A	B	C	D	E	F	G	H	I	J	K	L	M	N	O	P	Q	R	S	T	U	V	W	X	Y	Z	Area sq. ft.
1																											
2S	48	30	1 3/8	1/2	5/8	8	5	4	13 1/4	13 1/2	19	14	15	13													10.0
2M	48	30	1 3/8	1/2	5/8	8	5	4	13 1/4	13 1/2	19	14	15	13													10.0
3	48	30	1 3/8	1/2	5/8	8	5	4	13 1/4	13 1/2	19	14	15	13													10.0
4	48	30	1 3/8	1/2	5/8	8	5	4	13 1/4	13 1/2	19	14	15	13													10.0
5	48	30	1 3/8	1/2	5/8	8	5	4	13 1/4	13 1/2	19	14	15	13													10.0

STANDARD SIGN
R11-2

WISCONSIN DEPT OF TRANSPORTATION

APPROVED Matthew R Rauch
for State Traffic Engineer

DATE 4/1/11 PLATE NO. R11-2.10

PROJECT NO:	HWY:	COUNTY:		SHEET NO: 128	E

FILE NAME : C:\Users\PROJECTS\tr_stdplate\R112.DGN PLOT DATE : 01-APR-2011 14:25 PLOT BY : mscj9h PLOT NAME : PLOT SCALE : 6.952219:1.000000

WISDOT/CADDS SHEET 42

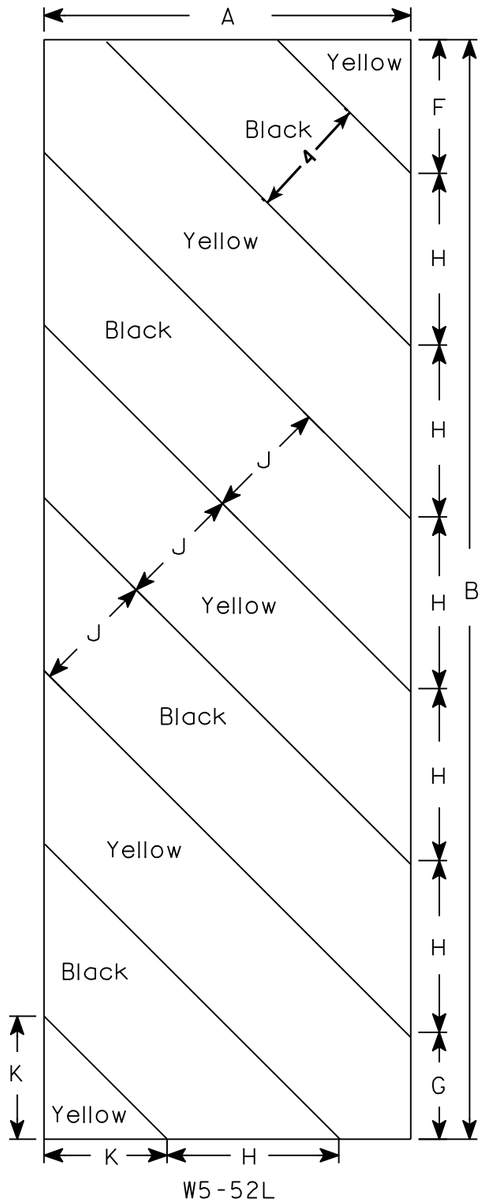

W5-52L

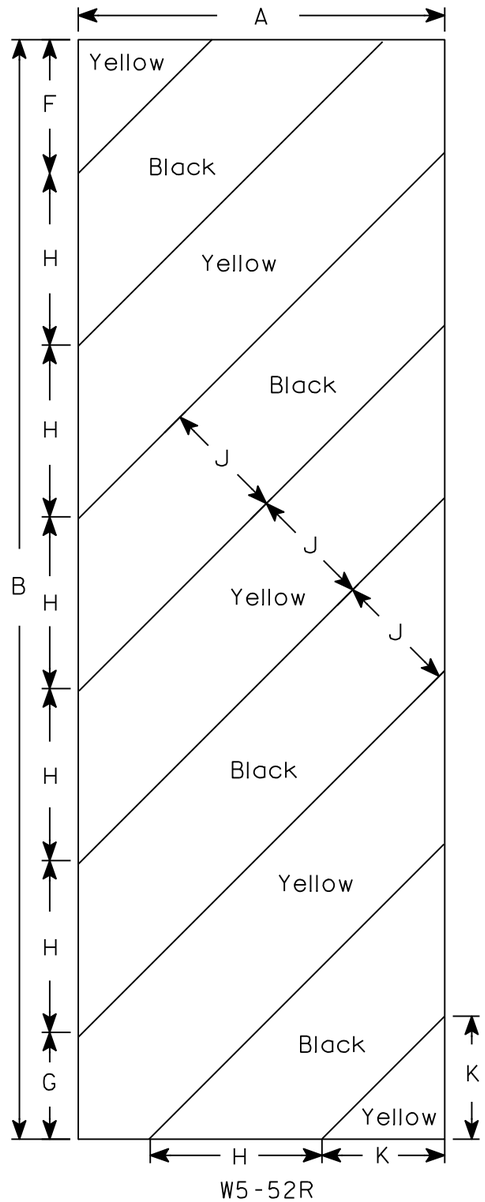

W5-52R

NOTES

1. Sign is Type II - Type F Reflective - reference WIS DOT Standard Specification for HIGHWAY and STRUCTURE CONSTRUCTION latest edition.
2. Color:
   Background - Yellow
   Message - Black
3. Corners may be square or rounded when base material is plywood but borders shall be rounded as shown. When base material is metal, the corners and borders shall be rounded.
4. Alternate colors of stripes as shown.

SIZE	A	B	C	D	E	F	G	H	I	J	K	L	M	N	O	P	Q	R	S	T	U	V	W	X	Y	Z	Area sq. ft.
1																											
2S	12	36				4 3/8	3 1/2	5 5/8	45°	4	4																3.0
2M	12	36				4 3/8	3 1/2	5 5/8	45°	4	4																3.0
3	18	54				6	5 1/2	8 1/2	45°	6	6 9/16																6.75
4																											
5																											

STANDARD SIGN

W5-52L & W5-52R

WISCONSIN DEPT OF TRANSPORTATION

APPROVED Matthew R Rauch
for State Traffic Engineer

DATE 5/29/12 PLATE NO. W5-52.9

PROJECT NO: | HWY: | COUNTY: | SHEET NO: 129 | E

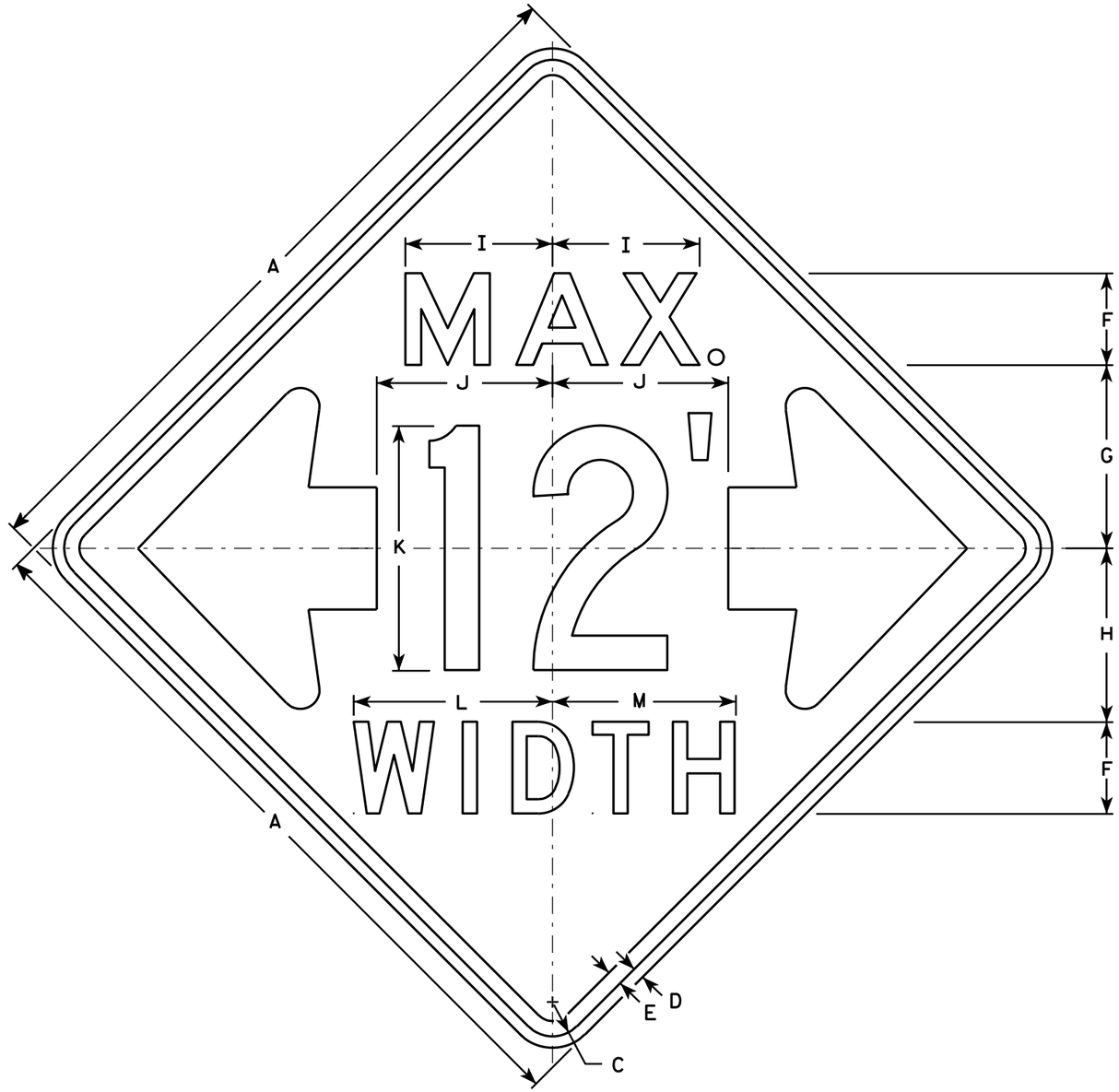

W12-52

NOTES

1. Sign is Type II - Type F Reflective - reference WIS DOT Standard Specification for HIGHWAY and STRUCTURE CONSTRUCTION latest edition.
2. Color:
   Background - Orange
   Message - Black
3. Message Series - See note 5
4. Corners may be square or rounded when base material is plywood but borders shall be rounded as shown. When base material is metal, the corners and borders shall be rounded.
5. The top line is series E, the numerals are series C, and the bottom line is series D.
6. Substitute appropriate numerals and adjust spacing as required.

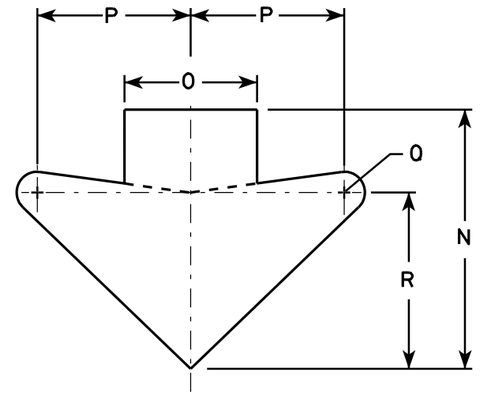

ARROW DETAIL

SIZE	A	B	C	D	E	F	G	H	I	J	K	L	M	N	O	P	Q	R	S	T	U	V	W	X	Y	Z	Area sq. ft.
1																											
2S	48		2 1/4	3/4	1	6	12	11 3/8	9 5/8	11 1/2	16	13	12	15 5/8	8	9 1/4	1 1/4	10 5/8									16.0
2M	48		2 1/4	3/4	1	6	12	11 3/8	9 5/8	11 1/2	16	13	12	15 5/8	8	9 1/4	1 1/4	10 5/8									16.0
3																											
4																											
5																											

STANDARD SIGN
W12-52

WISCONSIN DEPT OF TRANSPORTATION

APPROVED Matthew R Rauch
for State Traffic Engineer

DATE 3/16/11 PLATE NO. W12-52.7

PROJECT NO: | HWY: | COUNTY: | SHEET NO: 130 | E

7

FILE NAME : C:\Users\PROJECTS\tr_stdplate\W1252.DGN PLOT DATE : 16-MAR-2011 14:45 PLOT BY : mscj9h PLOT NAME : PLOT SCALE : 9.137199:1.000000
WISDOT/CADDS SHEET 42

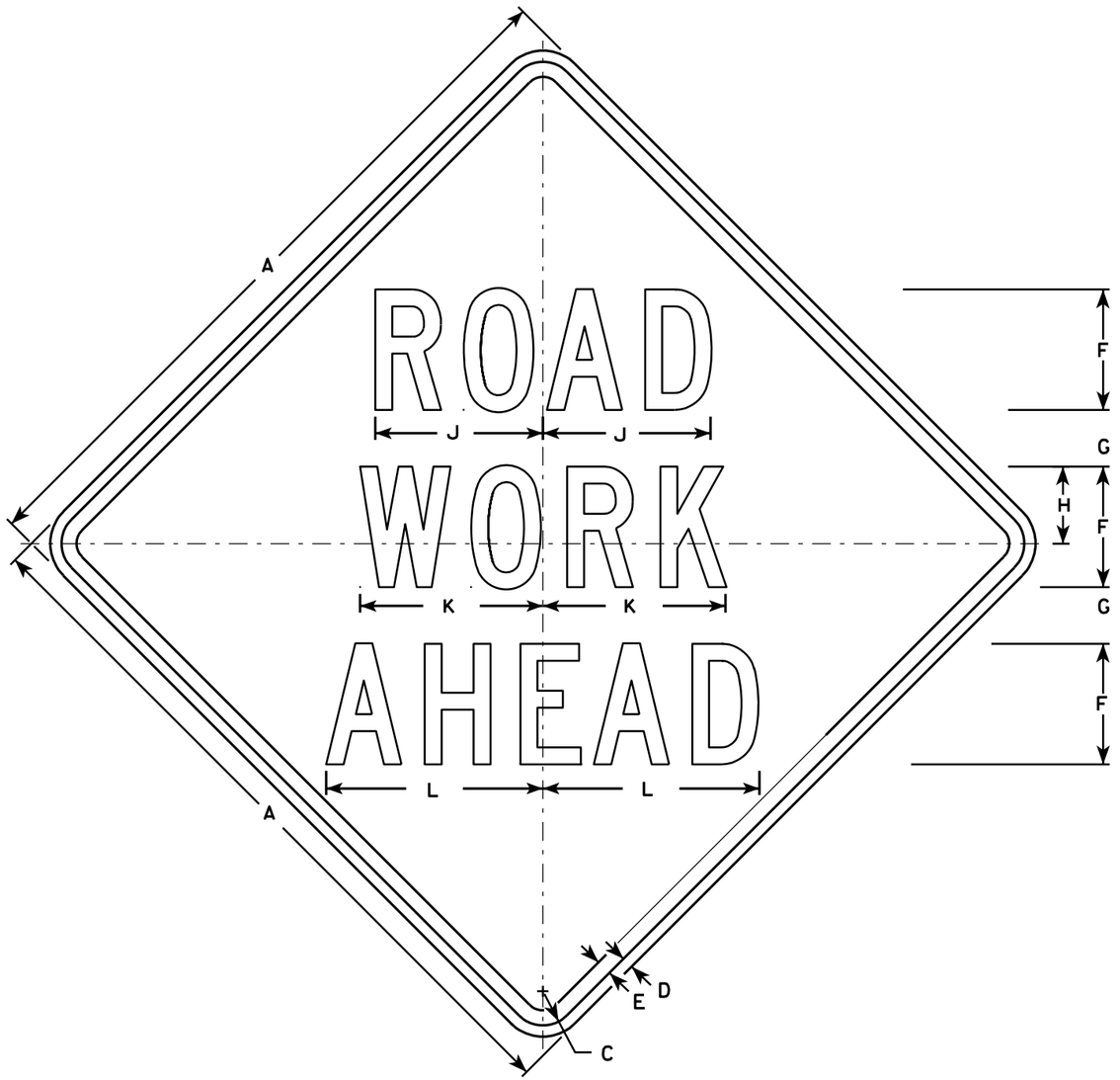

W20-1A

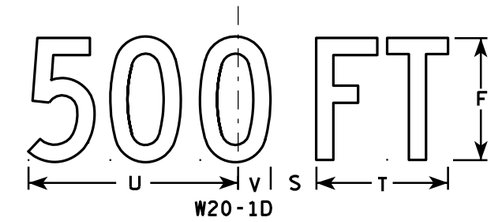

W20-1D

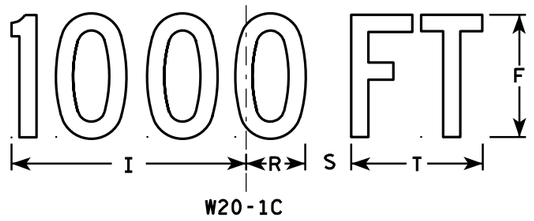

W20-1C

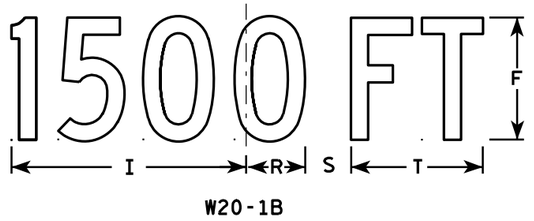

W20-1B

W20-1G

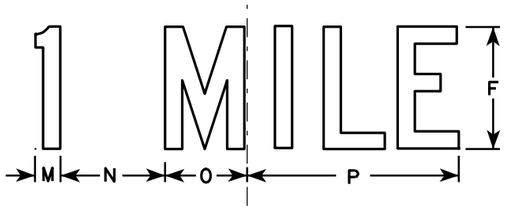

W20-1F

NOTES

1. Sign is Type II - Type F Reflective - reference WIS DOT Standard Specification for HIGHWAY and STRUCTURE CONSTRUCTION latest edition.
2. Color:
   Background - Orange
   Message - Black
3. Message Series - C
4. Corners may be square or rounded when base material is plywood but borders shall be rounded as shown. When base material is metal, the corners and borders shall be rounded.

SIZE	A	B	C	D	E	F	G	H	I	J	K	L	M	N	O	P	Q	R	S	T	U	V	W	X	Y	Z	Area sq. ft.
1	36		1 3/8	1/2	5/8	5	2 5/8	3 1/4	10 1/8	7	7 5/8	8 7/8	1 1/8	4 1/2	3 1/2	9		2 1/2	1 7/8	5 5/8	9	1 3/8	8	1 3/4	10 3/4	6	9.0
2S	48		2 1/4	3/4	1	8	3 3/4	5 1/8	15 3/8	11 1/8	12 1/8	14 3/8	1 5/8	6 7/8	5 3/8	13 7/8		3 7/8	3	8 5/8	13 3/4	2 1/8	11 7/8	2 3/4	16 3/8	9	16.0
2M	48		2 1/4	3/4	1	8	3 3/4	5 1/8	15 3/8	11 1/8	12 1/8	14 3/8	1 5/8	6 7/8	5 3/8	13 7/8		3 7/8	3	8 5/8	13 3/4	2 1/8	11 7/8	2 3/4	16 3/8	9	16.0
3	48		2 1/4	3/4	1	8	3 3/4	5 1/8	15 3/8	11 1/8	12 1/8	14 3/8	1 5/8	6 7/8	5 3/8	13 7/8		3 7/8	3	8 5/8	13 3/4	2 1/8	11 7/8	2 3/4	16 3/8	9	16.0
4	48		2 1/4	3/4	1	8	3 3/4	5 1/8	15 3/8	11 1/8	12 1/8	14 3/8	1 5/8	6 7/8	5 3/8	13 7/8		3 7/8	3	8 5/8	13 3/4	2 1/8	11 7/8	2 3/4	16 3/8	9	16.0
5	48		2 1/4	3/4	1	8	3 3/4	5 1/8	15 3/8	11 1/8	12 1/8	14 3/8	1 5/8	6 7/8	5 3/8	13 7/8		3 7/8	3	8 5/8	13 3/4	2 1/8	11 7/8	2 3/4	16 3/8	9	16.0

STANDARD SIGN
W20-1A, B, C, D, F & G

WISCONSIN DEPT OF TRANSPORTATION

APPROVED Matthew R Rauch
for State Traffic Engineer

DATE 3/18/11 PLATE NO. W20-1.9

PROJECT NO:

SHEET NO: 131 E

FILE NAME : C:\Users\PROJECTS\tr_stdplate\W201.DGN PLOT DATE : 18-MAR-2011 09:56 PLOT BY : mscj9h

WISDOT/CADDS SHEET 42

7

7

W20-56A

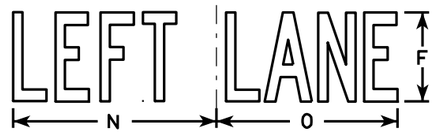

W20-55A

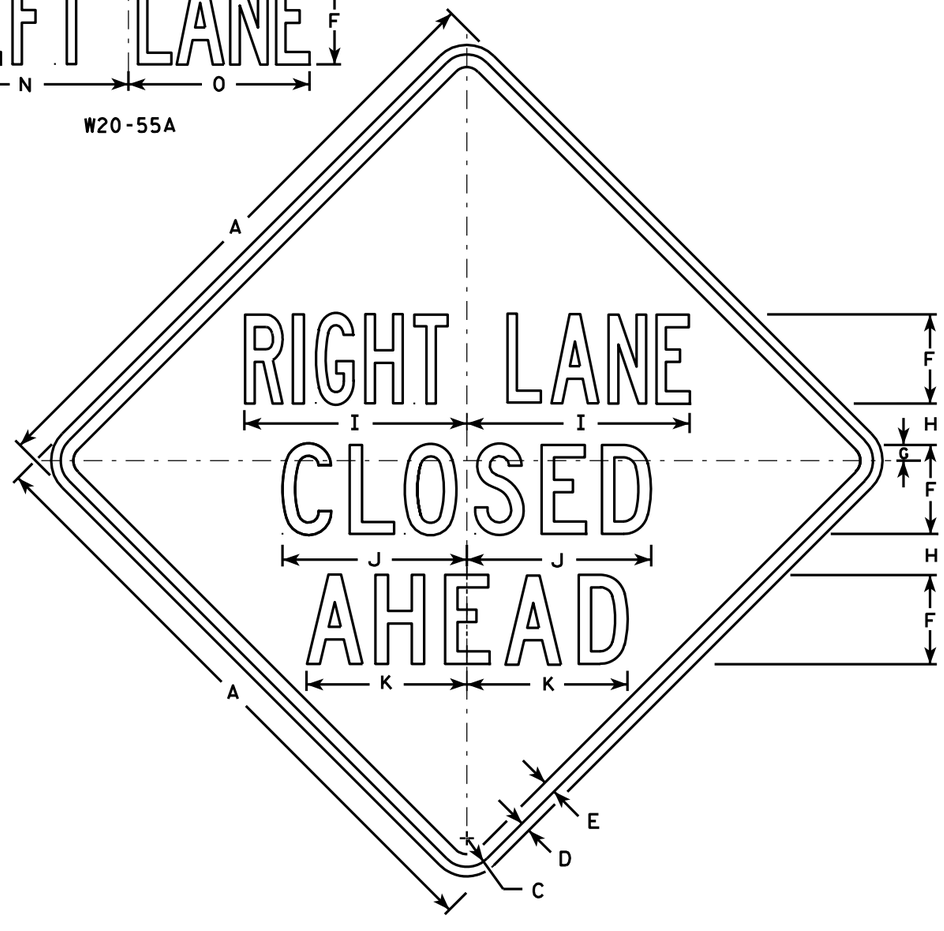

W20-5A

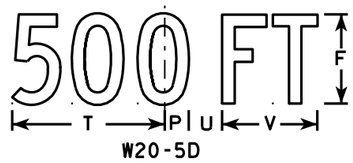

W20-5D

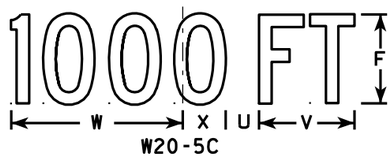

W20-5C

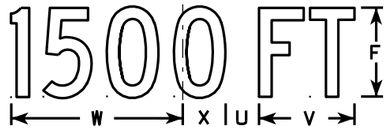

W20-5B

W20-5G

W20-5F

NOTES

1. Sign is Type II - Type F Reflective - reference WIS DOT Standard Specification for HIGHWAY and STRUCTURE CONSTRUCTION latest edition.
2. Color:
   Background - Orange
   Message - Black
3. Message Series - See Note 5
4. Corners may be square or rounded when base material is plywood but borders shall be rounded as shown. When base material is metal, the corners and borders shall be rounded.
5. " _____ LANE" is Series B.
   All other copy is Series C.

SIZE	A	B	C	D	E	F	G	H	I	J	K	L	M	N	O	P	Q	R	S	T	U	V	W	X	Y	Z	Area sq. ft.
1	36	6	1 5/8	5/8	3/4	5	1/8	2 1/2	13 1/8	10 3/4	9 1/2	14 1/4	13 5/8	12	12	1 3/8	1 1/8	4 1/2	3 1/2	9	1 1/8	5 5/8	10 1/8	2 1/2	1 3/4	8	9.0
2S	48	8	2 1/4	3/4	1	7	1 1/4	3 1/4	17 1/2	14 3/8	12 5/8	19	18 3/8	16	14 1/4	1 7/8	1 1/2	6	4 5/8	12	2 5/8	7 1/2	13 1/2	3 3/8	2 3/8	10 5/8	16.0
2M	48	8	2 1/4	3/4	1	7	1 1/4	3 1/4	17 1/2	14 3/8	12 5/8	19	18 3/8	16	14 1/4	1 7/8	1 1/2	6	4 5/8	12	2 5/8	7 1/2	13 1/2	3 3/8	2 3/8	10 5/8	16.0
3	48	8	2 1/4	3/4	1	7	1 1/4	3 1/4	17 1/2	14 3/8	12 5/8	19	18 3/8	16	14 1/4	1 7/8	1 1/2	6	4 5/8	12	2 5/8	7 1/2	13 1/2	3 3/8	2 3/8	10 5/8	16.0
4	48	8	2 1/4	3/4	1	7	1 1/4	3 1/4	17 1/2	14 3/8	12 5/8	19	18 3/8	16	14 1/4	1 7/8	1 1/2	6	4 5/8	12	2 5/8	7 1/2	13 1/2	3 3/8	2 3/8	10 5/8	16.0
5	48	8	2 1/4	3/4	1	7	1 1/4	3 1/4	17 1/2	14 3/8	12 5/8	19	18 3/8	16	14 1/4	1 7/8	1 1/2	6	4 5/8	12	2 5/8	7 1/2	13 1/2	3 3/8	2 3/8	10 5/8	16.0

STANDARD SIGN
W20-5A, B, C, D, F & G

WISCONSIN DEPT OF TRANSPORTATION

APPROVED Matthew R Rauch
for State Traffic Engineer

DATE 3/18/11 PLATE NO. W20-5.11

PROJECT NO: | HWY: | COUNTY: | SHEET NO: 132 | E

7

FILE NAME : C:\Users\PROJECTS\tr_stdplate\W205.DGN PLOT DATE : 18-MAR-2011 12:15 PLOT BY : mscj9h PLOT NAME : PLOT SCALE : 11.918087:1.000000
WISDOT/CADDS SHEET 42

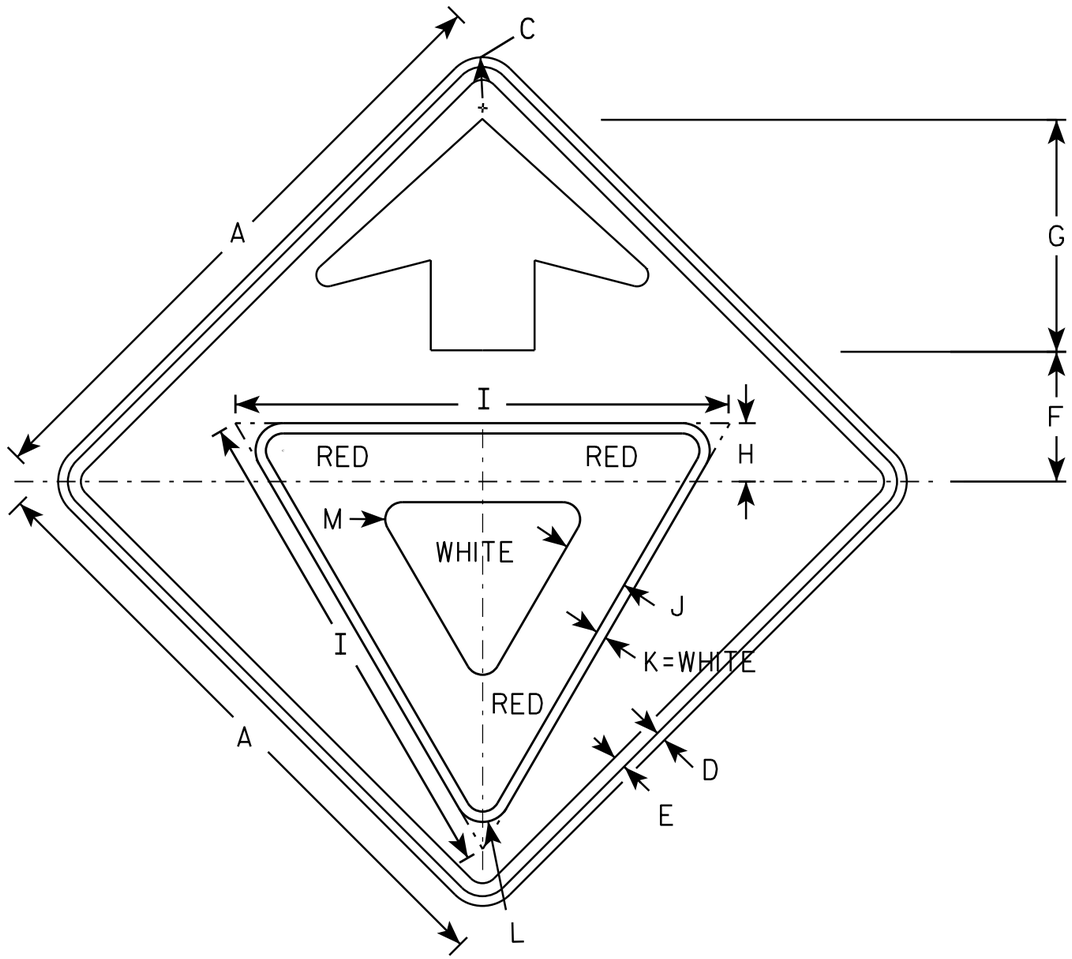

W03-2

NOTES

1. All Signs Type II - Type F Reflective - reference WIS DOT Standard Specification for HIGHWAY and STRUCTURE CONSTRUCTION latest edition.
2. Color:
   Background - ORANGE
   Arrow & Border - BLACK
   Yield Symbol - WHITE BORDER ON RED BACKGROUND

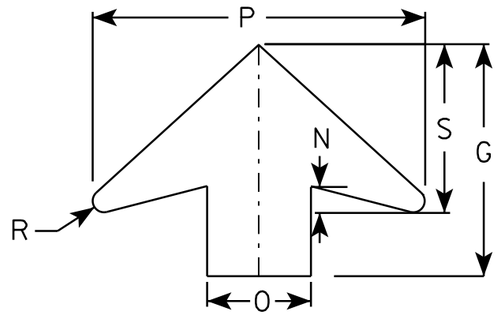

ARROW DETAIL

SIZE	A	B	C	D	E	F	G	H	I	J	K	L	M	N	O	P	Q	R	S	T	U	V	W	X	Y	Z	Area sq. ft.
1	36		1 5/8	5/8	3/4	7 1/2	13 1/2	3 3/8	28	3 3/4	5/8	1 1/2	1	1 5/8	6	19 1/4		5/8	9 3/4								9.0
2S	48		2 1/4	3/4	1	10	17 7/8	4 1/2	38	5	3/4	2 1/8	1 3/8	2	8	25 5/8		7/8	13								16.0
2M	48		2 1/4	3/4	1	10	17 7/8	4 1/2	38	5	3/4	2 1/8	1 3/8	2	8	25 5/8		7/8	13								16.0
3	48		2 1/4	3/4	1	10	17 7/8	4 1/2	38	5	3/4	2 1/8	1 3/8	2	8	25 5/8		7/8	13								16.0
4	48		2 1/4	3/4	1	10	17 7/8	4 1/2	38	5	3/4	2 1/8	1 3/8	2	8	25 5/8		7/8	13								16.0
5	48		2 1/4	3/4	1	10	17 7/8	4 1/2	38	5	3/4	2 1/8	1 3/8	2	8	25 5/8		7/8	13								16.0

STANDARD SIGN
W03-2

WISCONSIN DEPT OF TRANSPORTATION

APPROVED Matthew R Rauch
for State Traffic Engineer

DATE 11/20/13 PLATE W03-2.1

PROJECT NO: SHEET NO: E

FILE NAME : C:\CAEFiles\Projects\tr_stdplate\W032.DGN PLOT DATE : 20-NOV-2013 11:18 PLOT BY : mscsja

WISDOT/CADDS SHEET 42

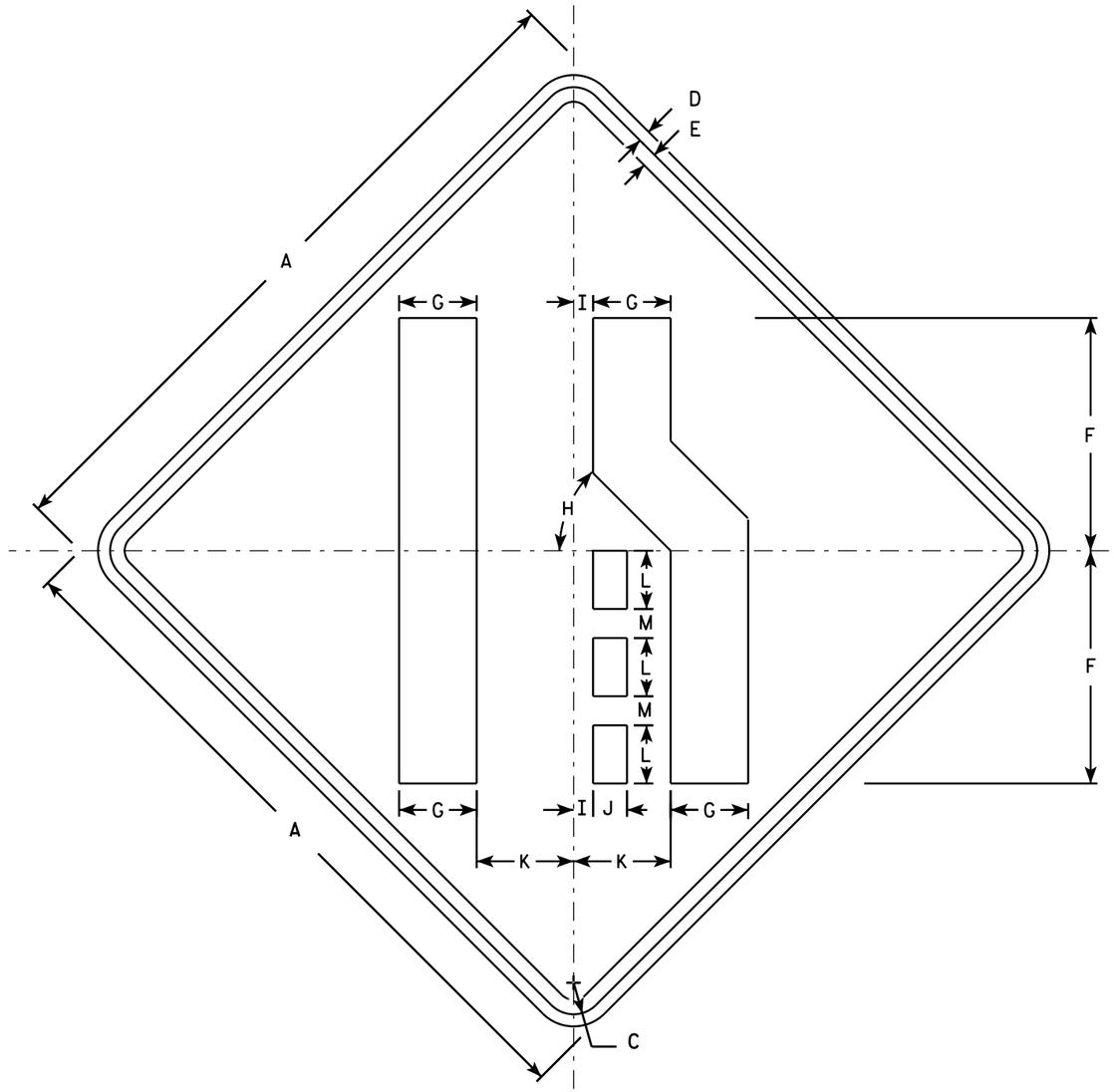

W04-2R

NOTES

1. Sign is Type II - Type F Reflective - reference WIS DOT Standard Specification for HIGHWAY and STRUCTURE CONSTRUCTION latest edition.
2. Color:
   Background - Orange
   Message - Black
3. Corners may be square or rounded when base material is plywood but borders shall be rounded as shown. When base material is metal, the corners and borders shall be rounded.
4. W04-2L is the same as W04-2R except the symbol is reversed along the vertical centerline.

SIZE	A	B	C	D	E	F	G	H	I	J	K	L	M	N	O	P	Q	R	S	T	U	V	W	X	Y	Z	Area sq. ft.
1	36		1 5/8	5/8	3/4	12	4	45°	1	1 3/4	5	3	1 1/2														9.0
2S	48		2 1/4	3/4	1	16	5 3/8	45°	1 1/4	2 3/8	6 3/4	4	2														16.0
2M	48		2 1/4	3/4	1	16	5 3/8	45°	1 1/4	2 3/8	6 3/4	4	2														16.0
3	48		2 1/4	3/4	1	16	5 3/8	45°	1 1/4	2 3/8	6 3/4	4	2														16.0
4	48		2 1/4	3/4	1	16	5 3/8	45°	1 1/4	2 3/8	6 3/4	4	2														16.0
5	48		2 1/4	3/4	1	16	5 3/8	45°	1 1/4	2 3/8	6 3/4	4	2														16.0

STANDARD SIGN
W04-2

WISCONSIN DEPT OF TRANSPORTATION

APPROVED Matthew R Rauch
for State Traffic Engineer

DATE 11/20/13 PLATE 134 W04-2.1

PROJECT NO: | SHEET NO: E

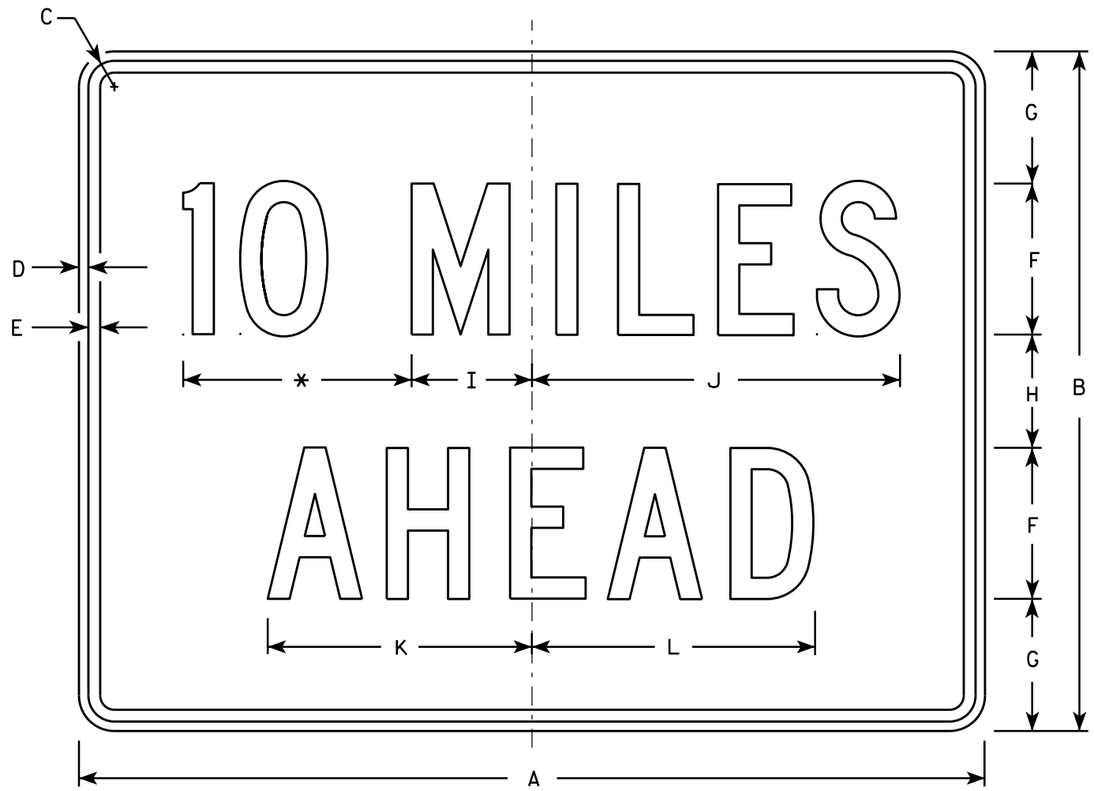

W057-52

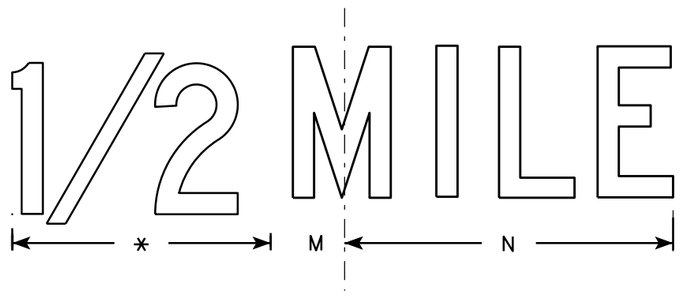

NOTES

1. Sign is Type II - Type F Reflective - reference WIS DOT Standard Specification for HIGHWAY and STRUCTURE CONSTRUCTION latest edition.
2. Color:
   Background - Orange
   Message - Black
3. Message Series - C
4. Corners may be square or rounded when base material is plywood but borders shall be rounded as shown. When base material is metal, the corners and borders shall be rounded.
5. Substitute appropriate numerals and optically adjust spacing to achieve proper balance.

* See note 5

SIZE	A	B	C	D	E	F	G	H	I	J	K	L	M	N	O	P	Q	R	S	T	U	V	W	X	Y	Z	Area sq. ft.
1	36	24	1 1/8	3/8	1/2	6	4 1/2	3	4 3/4	14 5/8	10 5/8	11 3/8	2	13													6.0
2S	48	36	1 3/8	1/2	5/8	8	7	6	6 3/8	19 1/2	14	15	2 3/4	17 3/8													12.0
2M	48	36	1 3/8	1/2	5/8	8	7	6	6 3/8	19 1/2	14	15	2 3/4	17 3/8													12.0
3	48	36	1 3/8	1/2	5/8	8	7	6	6 3/8	19 1/2	14	15	2 3/4	17 3/8													12.0
4	48	36	1 3/8	1/2	5/8	8	7	6	6 3/8	19 1/2	14	15	2 3/4	17 3/8													12.0
5	48	36	1 3/8	1/2	5/8	8	7	6	6 3/8	19 1/2	14	15	2 3/4	17 3/8													12.0

STANDARD SIGN
W057-52

WISCONSIN DEPT OF TRANSPORTATION

APPROVED Matthew R Rauch
for State Traffic Engineer

DATE 11/20/13 PLATE W057-52.1

PROJECT NO:	HWY:	COUNTY:		SHEET NO:	E

FILE NAME : C:\CAEfiles\Projects\tr_stdplate\W05752.DGN PLOT DATE : 28-FEB-2014 11:42 PLOT BY : mscj9h PLOT NAME : PLOT SCALE : 8.026599:1.000000 WISDOT/CADDS SHEET 42

STATE PROJECT NUMBER
1166-00-61

BENCHMARKS ⊕ NAVD 88			
NO.	STA.	DESCRIPTION	ELEV.
4	606+50.1, 98.5' LT	DISK ON NW CORNER STRUCTURE B-49-45	1075.70

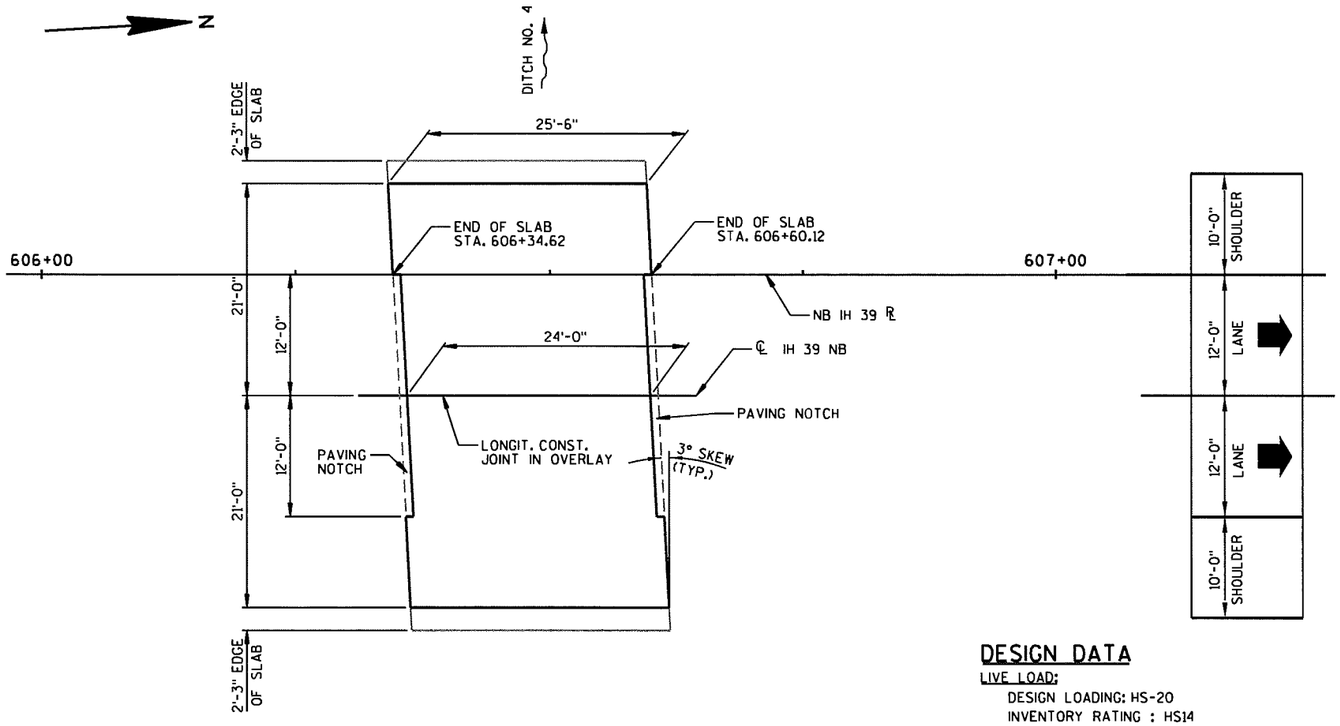

PLAN

(REHAB - CONCRETE OVERLAY ON EXISTING SINGLE SPAN FLAT SLAB)

DESIGN DATA

LIVE LOAD:

DESIGN LOADING: HS-20
INVENTORY RATING : HS14
OPERATIONAL RATING : HS24
WISCONSIN STANDARD PERMIT VEHICLE (WIS-SPV): 140 KIPS

TRAFFIC DATA:

A.A.D.T. (2017) = 15,900
A.A.D.T. (2037) = 20,600

MATERIAL PROPERTIES:

CONCRETE MASONRY ——— f'c = 4,000 P.S.I.
CONCRETE MASONRY OVERLAY DECKS ——— f'c = 4,000 P.S.I.

LIST OF DRAWINGS

1. OVERLAY PLAN

ESTIMATED QUANTITIES

	ITEM NUMBER	BID ITEM	UNIT	TOTAL
	203.0225.S.04	DEBRIS CONTAINMENT STRUCTURE B-49-7	LS	1
	502.3200	PROTECTIVE SURFACE TREATMENT	SY	115
*	509.0301	PREPARATION DECKS TYPE 1	SY	6
*	509.0302	PREPARATION DECKS TYPE 2	SY	3
**	509.1500	CONCRETE SURFACE REPAIR	SF	5
	509.2500	CONCRETE MASONRY OVERLAY DECKS	CY	7.2
	509.9005.S.04	REMOVING CONCRETE MASONRY DECK OVERLAY STRUCTURE B-49-7	SY	115

* QUANTITY LISTED FOR PREPARATION DECKS TYPE 1 AND TYPE 2 IS TENTATIVE. CONTRACTOR SHALL COORDINATE THE FIELD IDENTIFICATION AND DETERMINATION OF ALL DECK REPAIR LOCATIONS WITH THE ENGINEER. DECK PREPARATION REPAIRS SHALL BE FILLED WITH "CONCRETE MASONRY OVERLAY DECKS".

** CONCRETE SURFACE REPAIR REQUIRED ON SLAB EDGES AS DESIGNATED BY THE ENGINEER. QUANTITY LISTED IS TENTATIVE. CONTRACTOR SHALL COORDINATE THE FIELD IDENTIFICATION AND DETERMINATION OF ALL SURFACE REPAIR LOCATIONS WITH THE ENGINEER.

GENERAL NOTES

DRAWINGS SHALL NOT BE SCALED.

ALL DIMENSIONS SHOWN ARE BASED ON EXISTING PLANS. ORIGINAL 1962 PLANS, 1979 RAILING PLANS AND 1998 OVERLAY PLANS ARE AVAILABLE FROM THE WISCONSIN DEPARTMENT OF TRANSPORTATION.

THIS PROJECT WILL REHABILITATE THE EXISTING STRUCTURE, B-49-7, A SINGLE SPAN, 25.5' CONCRETE FLAT SLAB BRIDGE SET ON CONCRETE PILE AND CAP ABUTMENTS WITH TIMBER BACKING.

SEE THE ROAD PLAN AND PROFILE SHEETS FOR THE APPROXIMATE LOCATIONS OF EXISTING AND PROPOSED UTILITY INSTALLATIONS. THERE MAY BE OTHER UTILITY INSTALLATIONS WITHIN THE PROJECT AREA THAT ARE NOT SHOWN.

■ THE EXISTING CROSS SLOPE IS 1.5%. THE MINIMUM OVERLAY THICKNESS OF 1½" OCCURS AT THE EAST AND WEST OVERLAY EDGES.

THE EXISTING CONCRETE OVERLAY SHALL BE REMOVED FROM THE BRIDGE DECK UNDER THE BID ITEM "REMOVING CONCRETE MASONRY DECK OVERLAY STRUCTURE B-49-7".

PROTECTIVE SURFACE TREATMENT SHALL BE APPLIED TO THE ENTIRE TOP SURFACE OF THE NEW CONCRETE OVERLAY.

AVERAGE OVERLAY THICKNESS ESTIMATED AT 1.92 INCHES FOR CONCRETE MASONRY OVERLAY QUANTITY.

SEE ROAD PLANS FOR TRAFFIC CONTROL STAGES.

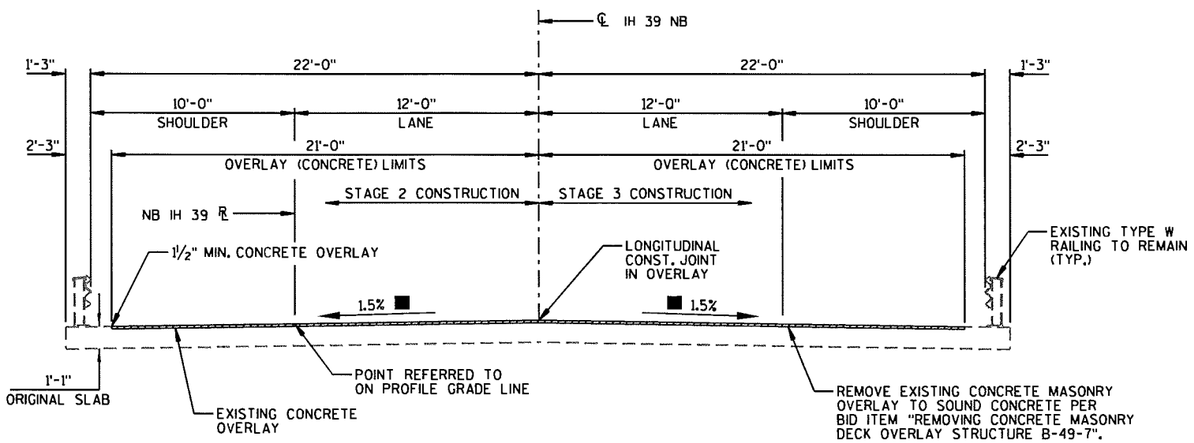

CROSS SECTION THRU ROADWAY

(LOOKING NORTH)

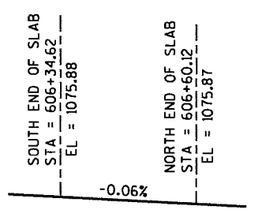

NEW PROFILE GRADE IH 39 NORTH BOUND

DESIGN CONTACT:
JOSHUA SWENO
(608) 355-8852

BRIDGE OFFICE CONTACT:
WILLIAM DREHER
(608) 266-8489

NO.	DATE	REVISION	BY

MSA PROFESSIONAL SERVICES
TRANSPORTATION • MUNICIPAL DEVELOPMENT • ENVIRONMENTAL
1230 South Boulevard Baraboo, WI 53913
608-356-2771 1-800-362-4505 Fax: 608-356-2770

STATE OF WISCONSIN
DEPARTMENT OF TRANSPORTATION
ACCEPTED William C. Dreher SDR 08/05/15
CHIEF STRUCTURES DESIGN ENGINEER DATE

STRUCTURE B-49-7

USH 51/IH 39 NORTH BOUND OVER DITCH NO. 4

COUNTY	TOWN/~~CITY/VILLAGE~~
PORTAGE	BUENA VISTA

DESIGN SPEC.
REHABILITATION - N/A

DESIGNED BY	DESIGN CK'D.	DRAWN BY	PLANS CK'D.
JRS	MSR	RLR	JRS

OVERLAY PLAN

SHEET 136 OF 1

8

8

93215_B-49-0007_01.dgn 7/23/2015 8:12:02 AM trabska

FILE= 93215_B-49-0007_01.DGN
DATE= 7-23-2015

STATE PROJECT NUMBER
1166-00-61

BENCHMARKS ⊕ NAVD 88			
NO.	STA.	DESCRIPTION	ELEV.
5	685+99.6, 97.8' LT	DISK ON NW CORNER STRUCTURE B-49-46	1075.50

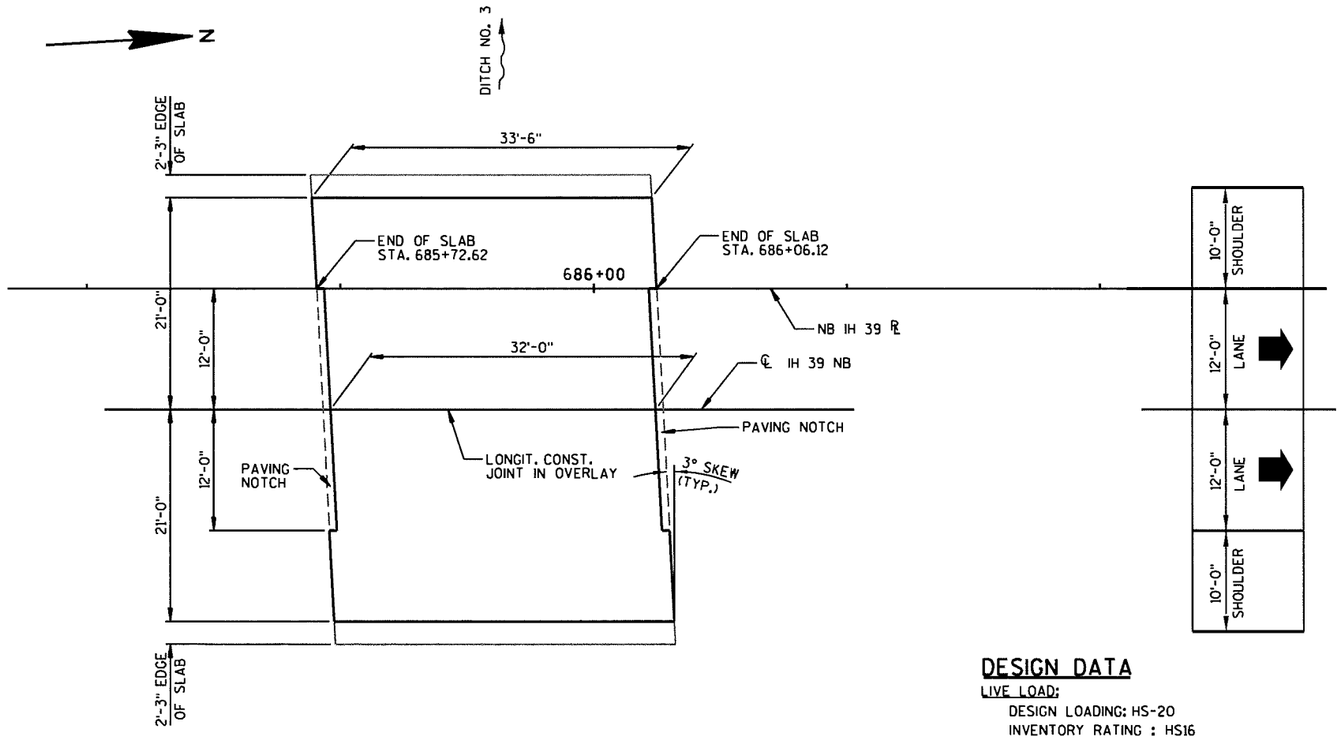

PLAN

(REHAB - CONCRETE OVERLAY ON EXISTING SINGLE SPAN FLAT SLAB)

ESTIMATED QUANTITIES

	ITEM NUMBER	BID ITEM	UNIT	TOTAL
	203.0225.S.06	DEBRIS CONTAINMENT STRUCTURE B-49-8	LS	1
	502.3200	PROTECTIVE SURFACE TREATMENT	SY	153
*	509.0301	PREPARATION DECKS TYPE 1	SY	8
*	509.0302	PREPARATION DECKS TYPE 2	SY	4
**	509.1500	CONCRETE SURFACE REPAIR	SF	5
	509.2500	CONCRETE MASONRY OVERLAY DECKS	CY	9.8
	509.9005.S.06	REMOVING CONCRETE MASONRY DECK OVERLAY STRUCTURE B-49-8	SY	153

* QUANTITY LISTED FOR PREPARATION DECKS TYPE 1 AND TYPE 2 IS TENTATIVE. CONTRACTOR SHALL COORDINATE THE FIELD IDENTIFICATION AND DETERMINATION OF ALL DECK REPAIR LOCATIONS WITH THE ENGINEER. DECK PREPARATION AREAS SHALL BE FILLED WITH "CONCRETE MASONRY OVERLAY DECKS".

** CONCRETE SURFACE REPAIR REQUIRED ON SLAB EDGES AS DESIGNATED BY THE ENGINEER. QUANTITY LISTED IS TENTATIVE. CONTRACTOR SHALL COORDINATE THE FIELD IDENTIFICATION AND DETERMINATION OF ALL SURFACE REPAIR LOCATIONS WITH THE ENGINEER.

DESIGN DATA

LIVE LOAD:

DESIGN LOADING: HS-20
INVENTORY RATING : HS16
OPERATIONAL RATING : HS29
WISCONSIN STANDARD PERMIT VEHICLE (WIS-SPV): 180 KIPS

TRAFFIC DATA:

A.A.D.T. (2017) = 15,900
A.A.D.T. (2037) = 20,600

MATERIAL PROPERTIES:

CONCRETE MASONRY ——— f'c = 4,000 P.S.I.
CONCRETE MASONRY OVERLAY DECKS ——— f'c = 4,000 P.S.I.

LIST OF DRAWINGS

1. OVERLAY PLAN

GENERAL NOTES

DRAWINGS SHALL NOT BE SCALED.

ALL DIMENSIONS SHOWN ARE BASED ON EXISTING PLANS. ORIGINAL 1962 PLANS, 1979 RAILING PLANS AND 1998 OVERLAY PLANS ARE AVAILABLE FROM THE WISCONSIN DEPARTMENT OF TRANSPORTATION.

THIS PROJECT WILL REHABILITATE THE EXISTING STRUCTURE, B-49-8, A SINGLE SPAN, 33.5' CONCRETE FLAT SLAB BRIDGE SET ON CONCRETE PILE AND CAP ABUTMENTS WITH TIMBER BACKING.

SEE THE ROAD PLAN AND PROFILE SHEETS FOR THE APPROXIMATE LOCATIONS OF EXISTING AND PROPOSED UTILITY INSTALLATIONS. THERE MAY BE OTHER UTILITY INSTALLATIONS WITHIN THE PROJECT AREA THAT ARE NOT SHOWN.

■ THE EXISTING CROSS SLOPE IS 1.5%. THE MINIMUM OVERLAY THICKNESS OF 1½" OCCURS AT THE EAST AND WEST OVERLAY EDGES.

THE EXISTING CONCRETE OVERLAY SHALL BE REMOVED FROM THE BRIDGE DECK UNDER THE BID ITEM "REMOVING CONCRETE MASONRY DECK OVERLAY STRUCTURE B-49-8".

PROTECTIVE SURFACE TREATMENT SHALL BE APPLIED TO THE ENTIRE TOP SURFACE OF THE NEW CONCRETE OVERLAY.

AVERAGE OVERLAY THICKNESS ESTIMATED AT 1.91 INCHES FOR CONCRETE MASONRY OVERLAY QUANTITY.

SEE ROAD PLANS FOR TRAFFIC CONTROL STAGES.

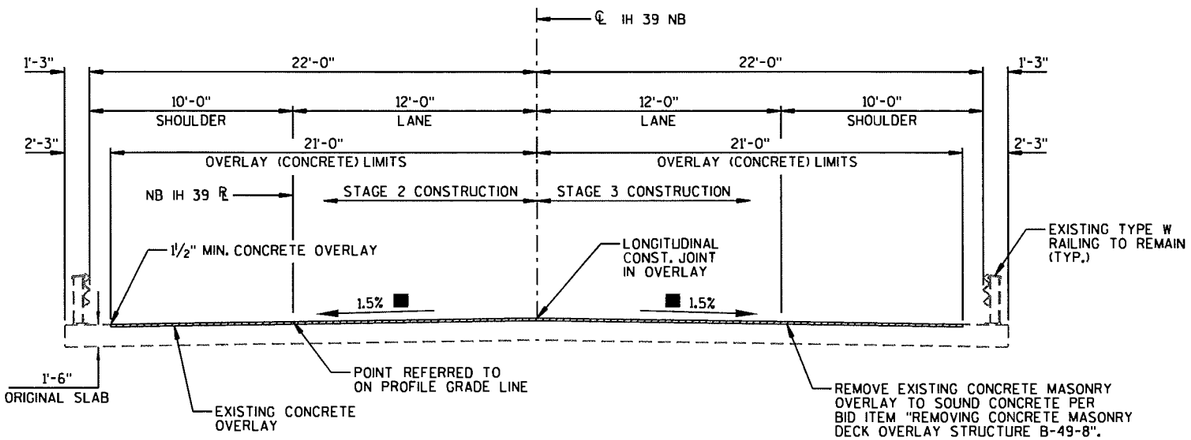

CROSS SECTION THRU ROADWAY

(LOOKING NORTH)

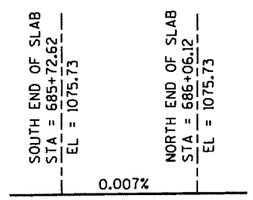

NEW PROFILE GRADE IH 39 NORTH BOUND

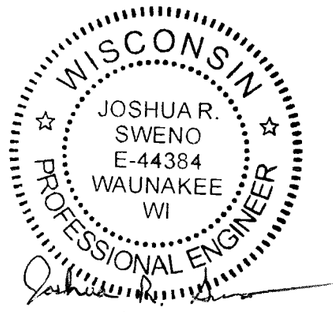

DESIGN CONTACT:
JOSHUA SWENO
(608) 355-8852

BRIDGE OFFICE CONTACT:
WILLIAM DREHER
(608) 266-8489

NO.	DATE	REVISION	BY

MSA PROFESSIONAL SERVICES
TRANSPORTATION • MUNICIPAL DEVELOPMENT • ENVIRONMENTAL
1230 South Boulevard Baraboo, WI 53913
608-356-2771 1-800-362-4505 Fax: 608-356-2770

STATE OF WISCONSIN
DEPARTMENT OF TRANSPORTATION

ACCEPTED William C. Dreher SDR 08/05/15
CHIEF STRUCTURES DESIGN ENGINEER DATE

STRUCTURE B-49-8

USH 51/IH 39 NORTH BOUND OVER DITCH NO. 3

COUNTY	TOWN/~~CITY/VILLAGE~~
PORTAGE	BUENA VISTA

DESIGN SPEC.
REHABILITATION - N/A

DESIGNED BY	DESIGN CK'D.	DRAWN BY	PLANS CK'D.
JRS	MSR	RLR	JRS

OVERLAY PLAN

SHEET 1 OF 1
137

8

8

93215_B-49-0008_01.dgn 7/23/2015 8:16:24 AM rrabska

FILE= 93215_B-49-0008_01.DGN
DATE= 7/23/2015

STATE PROJECT NUMBER
1166-00-61

BENCHMARKS ⊕ NAVD 88			
NO.	STA.	DESCRIPTION	ELEV.
7	738+77.8, 99.2' LT	DISK ON NW CORNER STRUCTURE B-49-48	1076.04

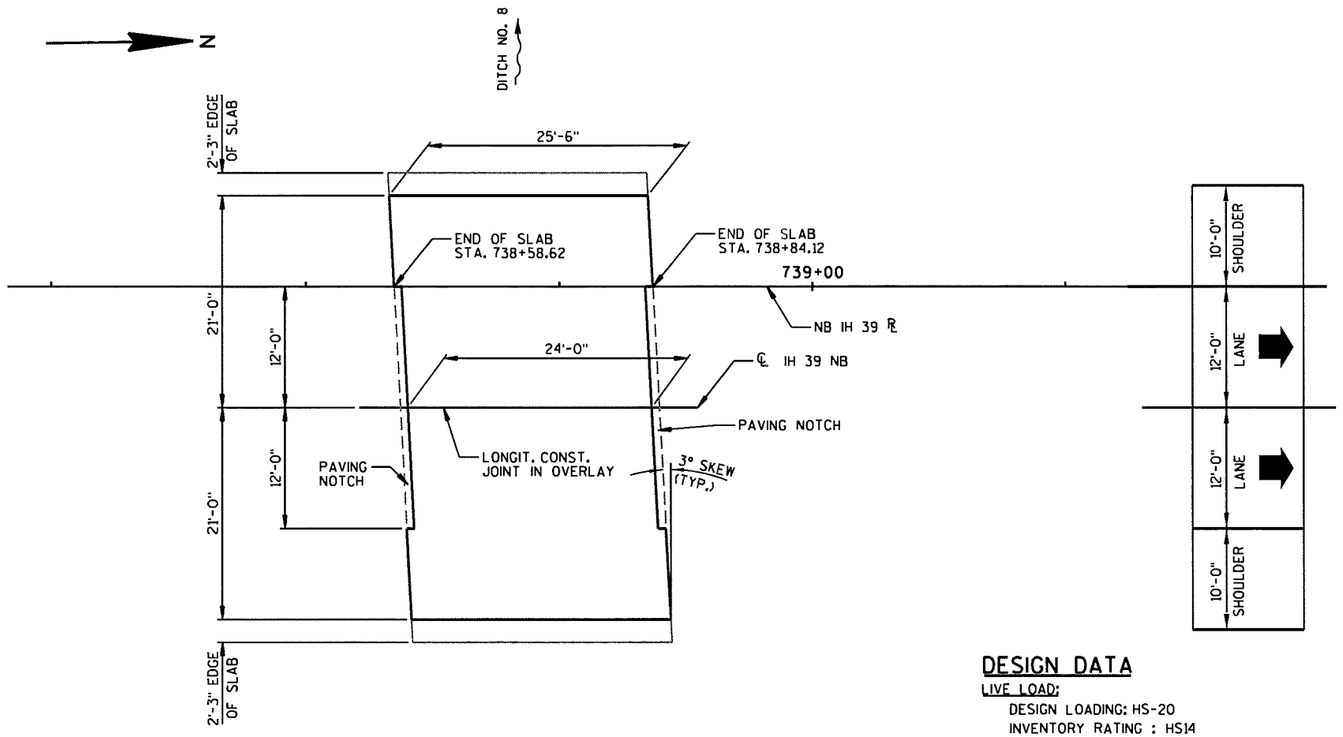

PLAN

(REHAB - CONCRETE OVERLAY ON EXISTING SINGLE SPAN FLAT SLAB)

DESIGN DATA

LIVE LOAD:

DESIGN LOADING: HS-20
INVENTORY RATING : HS14
OPERATIONAL RATING : HS24
WISCONSIN STANDARD PERMIT VEHICLE (WIS-SPV): 140 KIPS

TRAFFIC DATA:

A.A.D.T. (2017) = 15,900
A.A.D.T. (2037) = 20,600

MATERIAL PROPERTIES:

CONCRETE MASONRY ——— f'c = 4,000 P.S.I.
CONCRETE MASONRY OVERLAY DECKS ——— f'c = 4,000 P.S.I.

LIST OF DRAWINGS

1. OVERLAY PLAN

ESTIMATED QUANTITIES

	ITEM NUMBER	BID ITEM	UNIT	TOTAL
	203.0225.S.09	DEBRIS CONTAINMENT STRUCTURE B-49-9	LS	1
	502.3200	PROTECTIVE SURFACE TREATMENT	SY	115
*	509.0301	PREPARATION DECKS TYPE 1	SY	6
*	509.0302	PREPARATION DECKS TYPE 2	SY	3
**	509.1500	CONCRETE SURFACE REPAIR	SF	5
	509.2500	CONCRETE MASONRY OVERLAY DECKS	CY	7.1
	509.9005.S.09	REMOVING CONCRETE MASONRY DECK OVERLAY STRUCTURE B-49-9	SY	115

* QUANTITY LISTED FOR PREPARATION DECKS TYPE 1 AND TYPE 2 IS TENTATIVE. CONTRACTOR SHALL COORDINATE THE FIELD IDENTIFICATION AND DETERMINATION OF ALL DECK REPAIR LOCATIONS WITH THE ENGINEER. DECK PREPARATION REPAIRS SHALL BE FILLED WITH "CONCRETE MASONRY OVERLAY DECKS".

** CONCRETE SURFACE REPAIR REQUIRED ON SLAB EDGES AS DESIGNATED BY THE ENGINEER. QUANTITY LISTED IS TENTATIVE. CONTRACTOR SHALL COORDINATE THE FIELD IDENTIFICATION AND DETERMINATION OF ALL SURFACE REPAIR LOCATIONS WITH THE ENGINEER.

GENERAL NOTES

DRAWINGS SHALL NOT BE SCALED.

ALL DIMENSIONS SHOWN ARE BASED ON EXISTING PLANS. ORIGINAL 1962 PLANS, 1979 RAILING PLANS AND 1998 OVERLAY PLANS ARE AVAILABLE FROM THE WISCONSIN DEPARTMENT OF TRANSPORTATION.

THIS PROJECT WILL REHABILITATE THE EXISTING STRUCTURE, B-49-9, A SINGLE SPAN, 25.5' CONCRETE FLAT SLAB BRIDGE SET ON CONCRETE PILE AND CAP ABUTMENTS WITH TIMBER BACKING.

SEE THE ROAD PLAN AND PROFILE SHEETS FOR THE APPROXIMATE LOCATIONS OF EXISTING AND PROPOSED UTILITY INSTALLATIONS. THERE MAY BE OTHER UTILITY INSTALLATIONS WITHIN THE PROJECT AREA THAT ARE NOT SHOWN.

■ THE EXISTING CROSS SLOPE IS 1.5%. THE MINIMUM OVERLAY THICKNESS OF ½" OCCURS AT THE EAST AND WEST OVERLAY EDGES.

THE EXISTING CONCRETE OVERLAY SHALL BE REMOVED FROM THE BRIDGE DECK UNDER THE BID ITEM "REMOVING CONCRETE MASONRY DECK OVERLAY STRUCTURE B-49-9".

PROTECTIVE SURFACE TREATMENT SHALL BE APPLIED TO THE ENTIRE TOP SURFACE OF THE NEW CONCRETE OVERLAY.

AVERAGE OVERLAY THICKNESS ESTIMATED AT 1.89 INCHES FOR CONCRETE MASONRY OVERLAY QUANTITY.

SEE ROAD PLANS FOR TRAFFIC CONTROL STAGES.

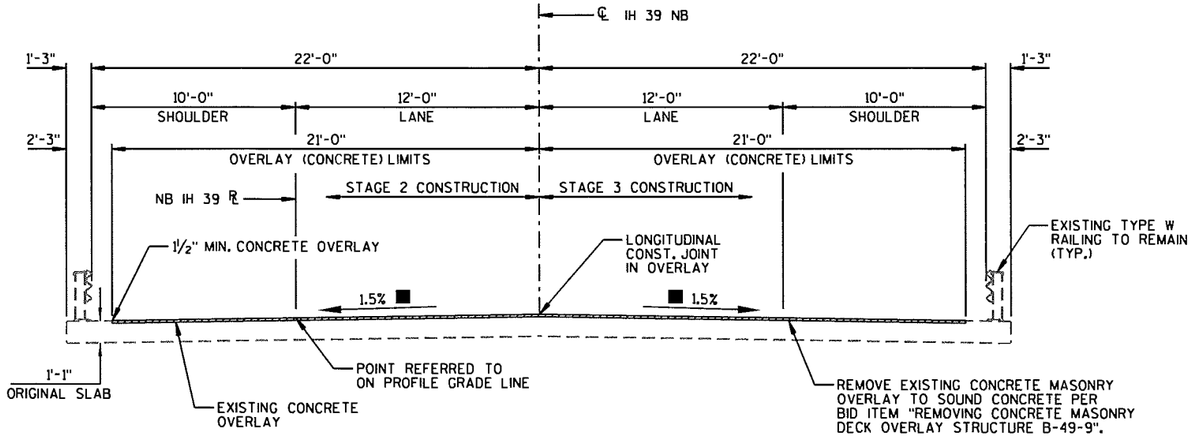

CROSS SECTION THRU ROADWAY

(LOOKING NORTH)

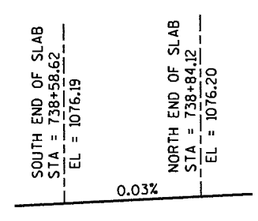

NEW PROFILE GRADE IH 39 NORTH BOUND

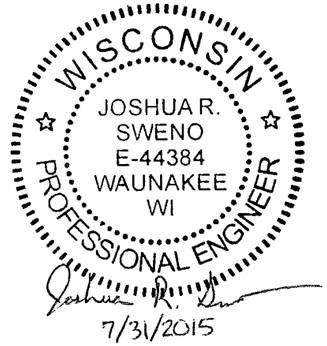

DESIGN CONTACT:
JOSHUA SWENO
(608) 355-8852

BRIDGE OFFICE CONTACT:
WILLIAM DREHER
(608) 266-8489

NO.	DATE	REVISION	BY

MSA PROFESSIONAL SERVICES
TRANSPORTATION • MUNICIPAL DEVELOPMENT • ENVIRONMENTAL
1230 South Boulevard Baraboo, WI 53913
608-356-2771 1-800-362-4505 Fax: 608-356-2770

STATE OF WISCONSIN
DEPARTMENT OF TRANSPORTATION
ACCEPTED William C. Dreher SDR 08/05/15
CHIEF STRUCTURES DESIGN ENGINEER DATE

STRUCTURE B-49-9

USH 51/IH 39 NORTH BOUND OVER DITCH NO. 8

COUNTY	TOWN/~~CITY/VILLAGE~~
PORTAGE	BUENA VISTA

DESIGN SPEC.
REHABILITATION - N/A

DESIGNED BY	DESIGN CK'D.	DRAWN BY	PLANS CK'D.
JRS	MSR	RLR	JRS

OVERLAY PLAN

SHEET 138 OF 1

8

8

FILE= 93215_B-49-0009_01.DGN
DATE= 7/23/2015

93215 B-49-0009 01.dgn 7/23/2015 8:21:56 AM trabska

STATE PROJECT NUMBER
1166-00-61

BENCHMARKS — NAVD 88

NO.	STA.	DESCRIPTION	ELEV.
8	791+75.1, 99.1' LT	DISK ON NW CORNER STRUCTURE B-49-49	1074.26

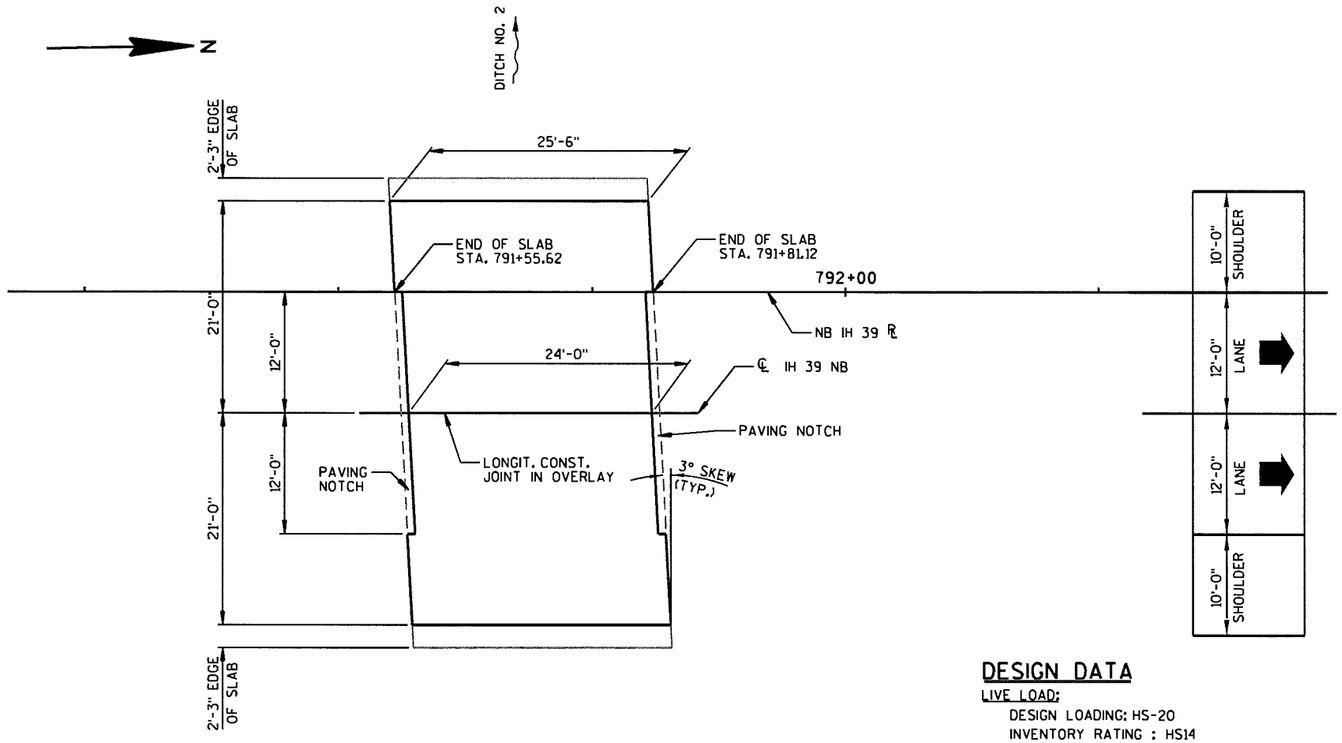

PLAN

(REHAB - CONCRETE OVERLAY ON EXISTING SINGLE SPAN FLAT SLAB)

ESTIMATED QUANTITIES

	ITEM NUMBER	BID ITEM	UNIT	TOTAL
	203.0225.S.11	DEBRIS CONTAINMENT STRUCTURE B-49-10	LS	1
	502.3200	PROTECTIVE SURFACE TREATMENT	SY	115
*	509.0301	PREPARATION DECKS TYPE 1	SY	6
*	509.0302	PREPARATION DECKS TYPE 2	SY	3
**	509.1500	CONCRETE SURFACE REPAIR	SF	5
	509.2500	CONCRETE MASONRY OVERLAY DECKS	CY	7.3
	509.9005.S.11	REMOVING CONCRETE MASONRY DECK OVERLAY STRUCTURE B-49-10	SY	115

* QUANTITY LISTED FOR PREPARATION DECKS TYPE 1 AND TYPE 2 IS TENTATIVE. CONTRACTOR SHALL COORDINATE THE FIELD IDENTIFICATION AND DETERMINATION OF ALL DECK REPAIR LOCATIONS WITH THE ENGINEER. DECK PREPARATION REPAIRS SHALL BE FILLED WITH "CONCRETE MASONRY OVERLAY DECKS".

** CONCRETE SURFACE REPAIR REQUIRED ON SLAB EDGES AS DESIGNATED BY THE ENGINEER. QUANTITY LISTED IS TENTATIVE. CONTRACTOR SHALL COORDINATE THE FIELD IDENTIFICATION AND DETERMINATION OF ALL SURFACE REPAIR LOCATIONS WITH THE ENGINEER.

DESIGN DATA

LIVE LOAD:

DESIGN LOADING: HS-20
INVENTORY RATING : HS14
OPERATIONAL RATING : HS24
WISCONSIN STANDARD PERMIT VEHICLE (WIS-SPV): 140 KIPS

TRAFFIC DATA:

A.A.D.T. (2017) = 15,900
A.A.D.T. (2037) = 20,600

MATERIAL PROPERTIES:

CONCRETE MASONRY ——— f'c = 4,000 P.S.I.
CONCRETE MASONRY OVERLAY DECKS ——— f'c = 4,000 P.S.I.

LIST OF DRAWINGS

1. OVERLAY PLAN

GENERAL NOTES

DRAWINGS SHALL NOT BE SCALED.

ALL DIMENSIONS SHOWN ARE BASED ON EXISTING PLANS. ORIGINAL 1962 PLANS, 1978 RAILING PLANS AND 1998 OVERLAY PLANS ARE AVAILABLE FROM THE WISCONSIN DEPARTMENT OF TRANSPORTATION.

THIS PROJECT WILL REHABILITATE THE EXISTING STRUCTURE, B-49-10, A SINGLE SPAN, 25.5' CONCRETE FLAT SLAB BRIDGE SET ON CONCRETE PILE AND CAP ABUTMENTS WITH TIMBER BACKING.

SEE THE ROAD PLAN AND PROFILE SHEETS FOR THE APPROXIMATE LOCATIONS OF EXISTING AND PROPOSED UTILITY INSTALLATIONS. THERE MAY BE OTHER UTILITY INSTALLATIONS WITHIN THE PROJECT AREA THAT ARE NOT SHOWN.

■ THE EXISTING CROSS SLOPE IS 1.5%. THE MINIMUM OVERLAY THICKNESS OF 1½" OCCURS AT THE EAST AND WEST OVERLAY EDGES.

THE EXISTING CONCRETE OVERLAY SHALL BE REMOVED FROM THE BRIDGE DECK UNDER THE BID ITEM "REMOVING CONCRETE MASONRY DECK OVERLAY STRUCTURE B-49-10".

PROTECTIVE SURFACE TREATMENT SHALL BE APPLIED TO THE ENTIRE TOP SURFACE OF THE NEW CONCRETE OVERLAY.

AVERAGE OVERLAY THICKNESS ESTIMATED AT 1.95 INCHES FOR CONCRETE MASONRY OVERLAY QUANTITY.

SEE ROAD PLANS FOR TRAFFIC CONTROL STAGES.

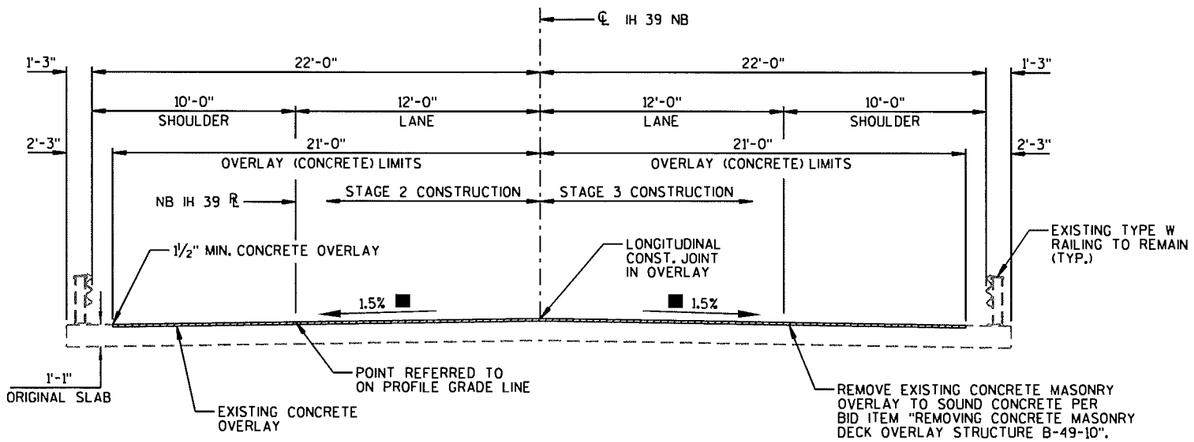

CROSS SECTION THRU ROADWAY

(LOOKING NORTH)

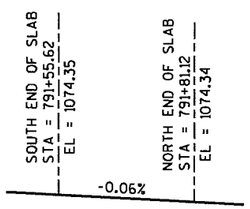

NEW PROFILE GRADE IH 39 NORTH BOUND

WISCONSIN
JOSHUA R. SWENO
E-44384
WAUNAKEE
WI
PROFESSIONAL ENGINEER
Joshua R. Sweno
7/31/2015

DESIGN CONTACT:
JOSHUA SWENO
(608) 355-8852

BRIDGE OFFICE CONTACT:
WILLIAM DREHER
(608) 266-8489

NO.	DATE	REVISION	BY

MSA PROFESSIONAL SERVICES
TRANSPORTATION • MUNICIPAL DEVELOPMENT • ENVIRONMENTAL
1230 South Boulevard Baraboo, WI 53913
608-356-2771 1-800-362-4505 Fax: 608-356-2770

STATE OF WISCONSIN
DEPARTMENT OF TRANSPORTATION
ACCEPTED William C. Dreher SDR 08/05/15
CHIEF STRUCTURES DESIGN ENGINEER — DATE

STRUCTURE B-49-10

USH 51/IH 39 NORTH BOUND OVER DITCH NO. 2

COUNTY	TOWN/~~CITY/VILLAGE~~
PORTAGE	PLOVER

DESIGN SPEC.
REHABILITATION - N/A

DESIGNED BY	DESIGN CK'D.	DRAWN BY	PLANS CK'D.
JRS	MSR	RLR	JRS

OVERLAY PLAN

SHEET 139 OF 1

FILE= 93215_B-49-0010_01.DGN
DATE= 7/23/2015

93215 B-49-0010 01.dgn 7/23/2015 8:27:14 AM rrabska

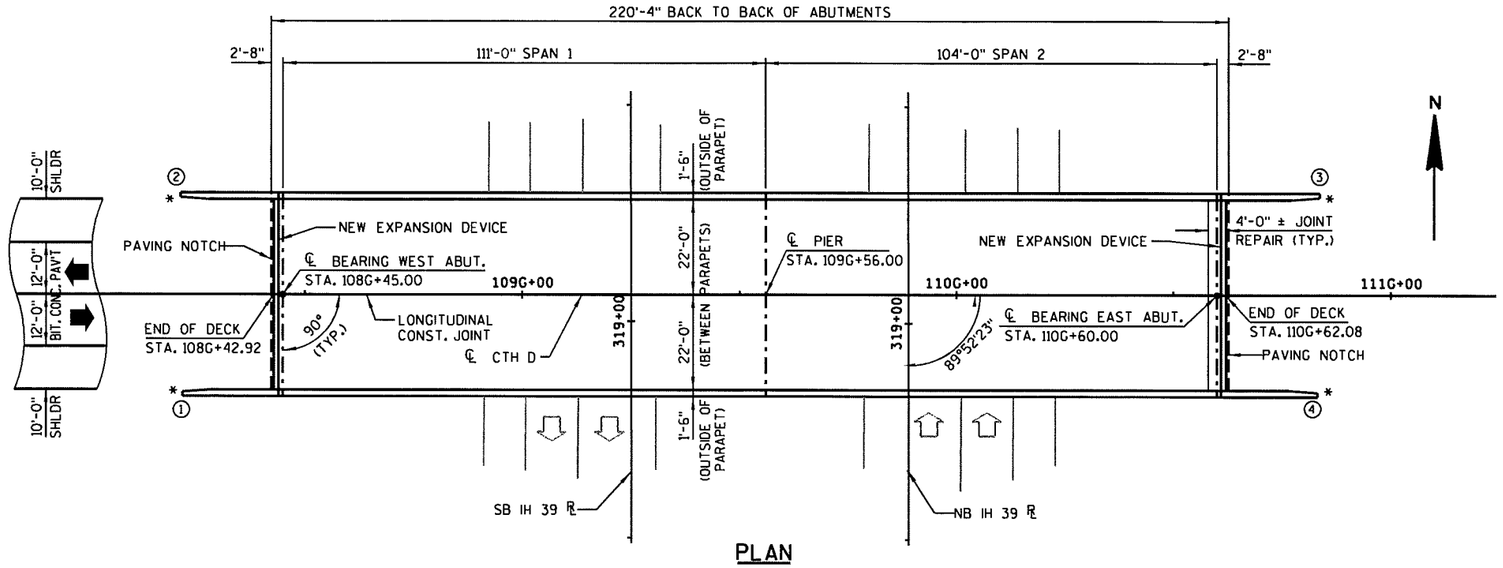

PLAN

(REHAB - CONCRETE OVERLAY ON EXISTING TWO SPAN STEEL DECK GIRDER)

◯ - INDICATES WING NUMBER

* - INDICATES LOCATION OF PROVISION FOR NEW THRIE BEAM ATTACHMENT AT WINGS (SEE SDD MIDWEST GUARDRAIL SYSTEM THRIE BEAM TRANSITION (MGS)).

STATE PROJECT NUMBER
1166-00-61

BENCHMARKS ⌖ NAVD 88

NO.	STA.	DESCRIPTION	ELEV.
1	108G+26.7, 23.1' RT	DISK ON SW PARAPET OF STRUCTURE	1120.78

DESIGN DATA

LIVE LOAD:

DESIGN LOADING: HS-20
INVENTORY RATING : HS18
OPERATIONAL RATING : HS30
WISCONSIN STANDARD PERMIT VEHICLE (WIS-SPV): 190 KIPS

TRAFFIC DATA:	IH 39	CTH D
A.A.D.T. (2017) =	15,900	> 1,000
A.A.D.T. (2037) =	19,700	(2011)

MATERIAL PROPERTIES:

CONCRETE MASONRY — f'c = 4,000 P.S.I.
CONCRETE MASONRY OVERLAY DECKS — f'c = 4,000 P.S.I.
EXISTING BAR STEEL REINFORCEMENT — fy = 60,000 P.S.I.
HIGH STRENGTH BAR STEEL REINFORCEMENT, GRADE 60 — fy = 60,000 P.S.I.

LIST OF DRAWINGS

1. GENERAL PLAN
2. CROSS SECTION, QUANTITIES & NOTES
3. STRIP SEAL EXPANSION JOINT
4. STRIP SEAL EXPANSION JOINT DETAILS

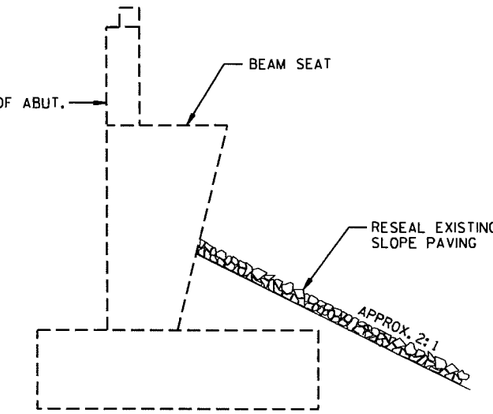

SLOPE PAVING AT ABUTMENTS

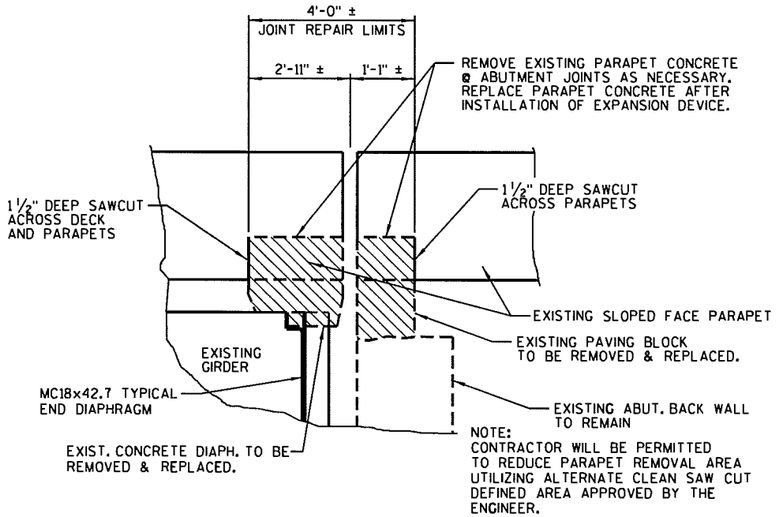

REMOVAL DETAIL

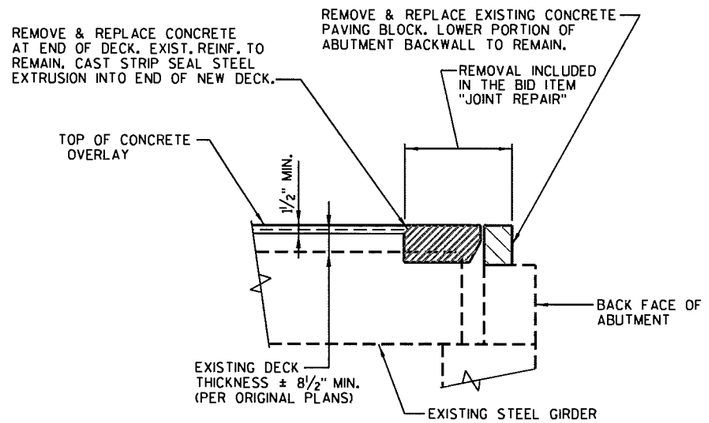

PART LONGITUDINAL SECTION

WISCONSIN
JOSHUA R. SWENO
E-44384
WAUNAKEE WI
PROFESSIONAL ENGINEER
7/31/2015

DESIGN CONTACT:
JOSHUA SWENO
(608) 355-8852

BRIDGE OFFICE CONTACT:
WILLIAM DREHER
(608) 266-8489

NO.	DATE	REVISION	BY

MSA PROFESSIONAL SERVICES
TRANSPORTATION • MUNICIPAL DEVELOPMENT • ENVIRONMENTAL
1230 South Boulevard Baraboo, WI 53913
608-356-2771 1-800-362-4505 Fax: 608-356-2770

STATE OF WISCONSIN
DEPARTMENT OF TRANSPORTATION
ACCEPTED William C. Dreher SDR 08/05/15
CHIEF STRUCTURES DESIGN ENGINEER DATE

STRUCTURE B-49-42

CTH D OVER IH 39

COUNTY PORTAGE | TOWN/~~CITY/VILLAGE~~ PINE GROVE

DESIGN SPEC. REHABILITATION - N/A

DESIGNED BY	DESIGN CK'D.	DRAWN BY	PLANS CK'D.
JRS	MSR	RLR	JRS

GENERAL PLAN

SHT 140 OF 4

8

8

FILE= 930215_B-49-0042_01.DGN
DATE= 7/23/2015

93215 B-49-0042 01.dgn 7/23/2015 8:32:09 AM rranska

STATE PROJECT NUMBER

1166-00-61

TOTAL ESTIMATED QUANTITIES

	ITEM NUMBER	BID ITEM	UNIT	WEST ABUT.	PIER	EAST ABUT.	SUPER	TOTAL
	203.0225.S.01	DEBRIS CONTAINMENT STRUCTURE B-49-42	LS	-	-	-	-	1
	502.3100.01	EXPANSION DEVICE STRUCTURE B-49-42	LS	-	-	-	-	1
	502.3200	PROTECTIVE SURFACE TREATMENT	SY	-	-	-	1072	1072
	502.3210	PIGMENTED SURFACE SEALER	SY	-	-	-	208	208
	505.0600	BAR STEEL REINFORCEMENT HS COATED STRUCTURES	LB	-	-	-	3095	3095
	505.0906	BAR COUPLERS NO. 6	EACH	-	-	-	18	18
*	509.0301	PREPARATION DECKS TYPE 1	SY	-	-	-	26	26
*	509.0302	PREPARATION DECKS TYPE 2	SY	-	-	-	8	8
	509.0500	CLEANING DECKS	SY	-	-	-	1037	1037
	509.1000	JOINT REPAIR	SY	-	-	-	41	41
**	509.1500	CONCRETE SURFACE REPAIR	SF	20	-	10	-	30
*	509.2000	FULL-DEPTH DECK REPAIR	SY	-	-	-	2	2
	509.2500	CONCRETE MASONRY OVERLAY DECKS	CY	-	-	-	76	76
	509.9050.S.	CLEANING PARAPETS	LF	-	-	-	518	518
	604.9015.S.	RESEAL CRUSHED AGGREGATE SLOPE PAVING	SY	126	-	126	-	252
	614.0150	ANCHOR ASSEMBLIES FOR STEEL PLATE BEAM GUARD	EACH	-	-	-	4	4

* — QUANTITY LISTED IS AN ESTIMATE. CONTRACTOR SHALL COORDINATE THE FIELD IDENTIFICATION AND DETERMINATION OF ALL DECK REPAIR LOCATIONS WITH THE ENGINEER. DECK PREPARATION REPAIRS SHALL BE FILLED WITH "CONCRETE MASONRY OVERLAY DECKS".

** — CONCRETE SURFACE REPAIR SHALL BE USED FOR NEEDED REPAIRS. LOCATIONS AND LIMITS OF REPAIR SHALL BE DETERMINED IN THE FIELD BY THE ENGINEER.

⬡ — INDICATES GIRDER NUMBER.

GENERAL NOTES

DRAWINGS SHALL NOT BE SCALED.

SEE ROAD PLANS FOR TRAFFIC CONTROL.

THE FIRST DIGIT OF A THREE DIGIT BAR MARK SIGNIFIES THE BAR SIZE.

BAR STEEL REINFORCEMENT SHALL BE EMBEDDED 2" CLEAR UNLESS SHOWN OR NOTED OTHERWISE.

DIMENSIONS AND STATIONING SHOWN ARE BASED ON EXISTING PLANS. ORIGINAL 1979 PLANS ARE AVAILABLE FROM THE WISCONSIN DEPARTMENT OF TRANSPORTATION.

THE LOCATIONS OF EXISTING UTILITY INSTALLATIONS AS SHOWN ON THE PLANS ARE APPROXIMATE. THERE MAY BE OTHER UTILITY INSTALLATIONS WITHIN THE PROJECT AREA THAT ARE NOT SHOWN.

IMPROVEMENTS INCLUDE A CONCRETE OVERLAY OF THE BRIDGE DECK, REPLACING JOINTS, CLEANING PARAPETS, AND RESEALING SLOPE PAVING.

ALL CONCRETE REMOVAL SHALL BE DEFINED BY A 1½" DEEP SAW CUT.

THIS PROJECT WILL REHABILITATE THE EXISTING STRUCTURE, B-49-42, A TWO SPAN, 220.33 FOOT LONG, STEEL DECK GIRDER BRIDGE SET ON FULL RETAINING 'A4' CONCRETE ABUTMENTS AND A MULTI-COLUMN PIER.

PROTECTIVE SURFACE TREATMENT SHALL BE APPLIED TO THE ENTIRE TOP SURFACE OF THE CONCRETE OVERLAY.

A MINIMUM OF 1½" CONCRETE SHALL BE REMOVED FROM THE BRIDGE DECK AREA SHOWN UNDER THE BID ITEM "CLEANING DECKS".

■ THE EXISTING CROSS SLOPE IS 1.5%. THE MINIMUM OVERLAY THICKNESS OF 1½" OCCURS AT THE NORTH AND SOUTH OVERLAY EDGES.

AVERAGE OVERLAY THICKNESS ESTIMATED AT 2.03 INCHES FOR "CONCRETE MASONRY OVERLAY DECKS" QUANTITY.

PIGMENTED SURFACE SEALER SHALL BE APPLIED TO THE TOP AND ROADWAY FACE OF THE PARAPETS.

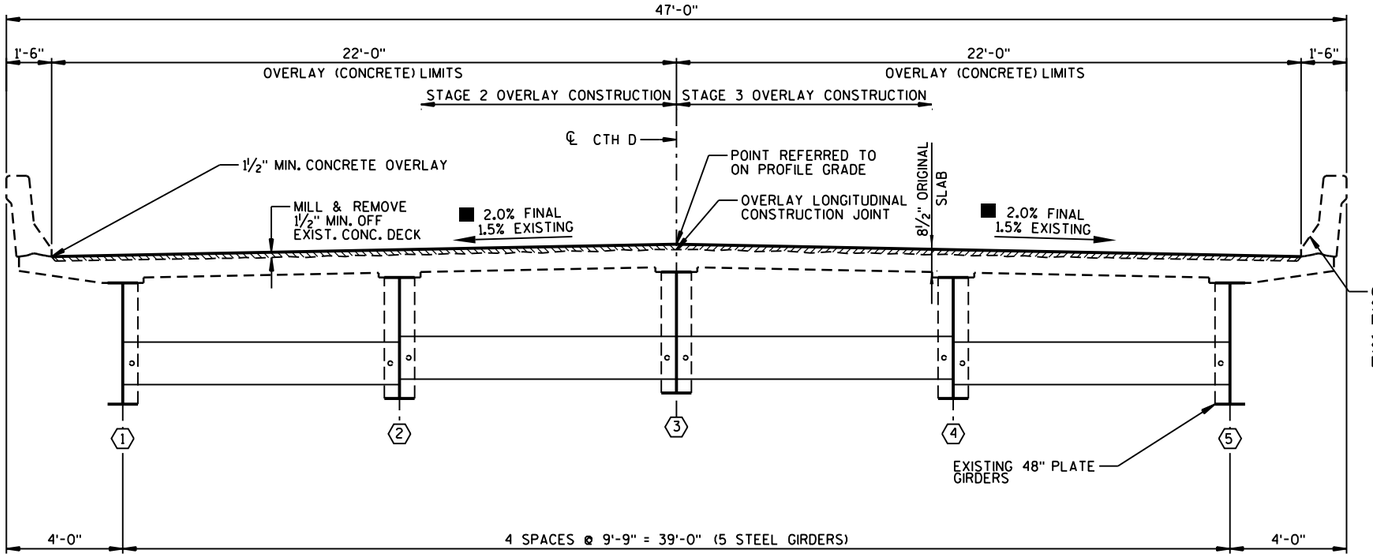

CROSS SECTION THRU ROADWAY

(LOOKING EAST)

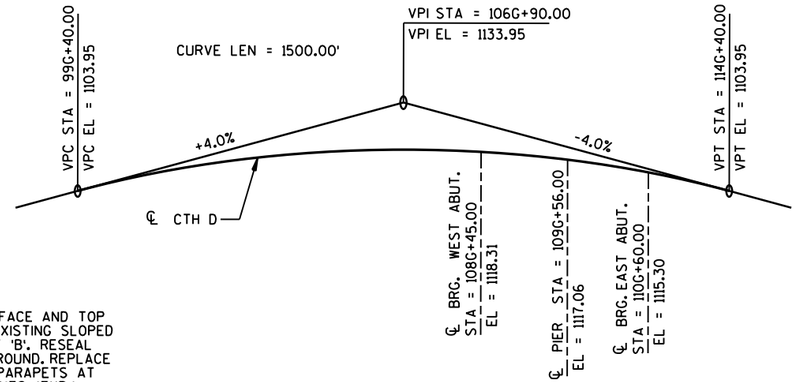

NEW PROFILE GRADE - CTH D

NO.	DATE	REVISION	BY

STATE OF WISCONSIN
DEPARTMENT OF TRANSPORTATION

STRUCTURE B-49-42

DRAWN BY RLR | PLANS CK'D. JRS

CROSS SECTION, QUANTITIES & NOTES

SHEET 2 OF 4

141

FILE= 93215_B-49-0042_02.DGN
DATE= 7/23/2015

93215_B-49-0042_02.dgn 7/23/2015 8:36:21 AM rrabska

STATE PROJECT NUMBER

1166-00-61

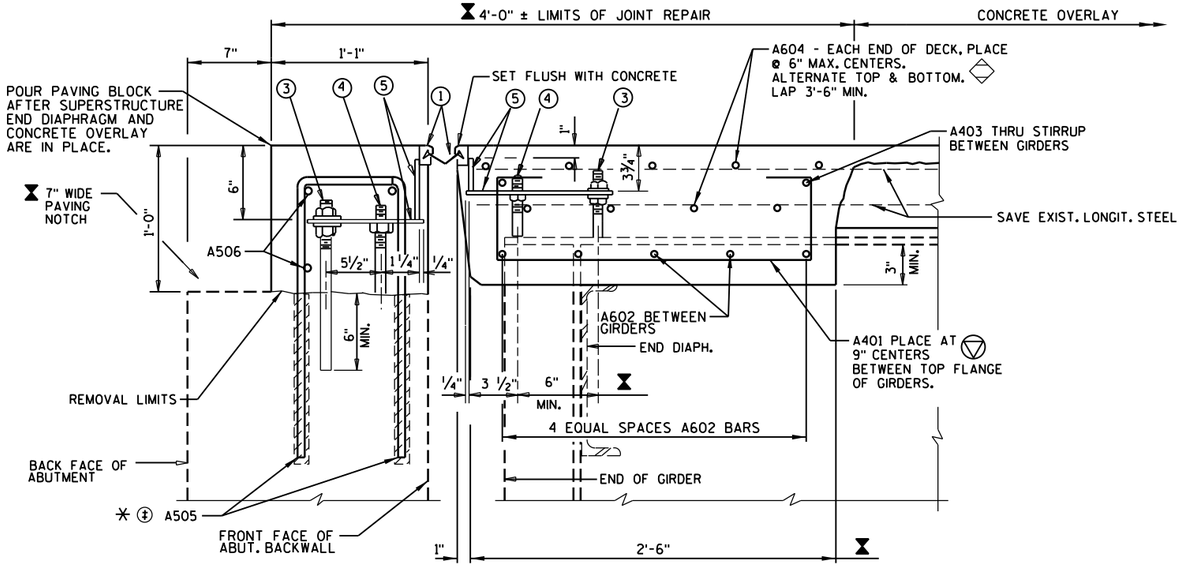

SECTION THRU JOINT AT ABUTMENTS

BILL OF BARS (COATED) 3095 LBS.

MARK	NO. REQ'D	LENGTH	BENT	LOCATION
A401	96	3'-11"	X	DIAPH @ ABUT. - STIRRUP - VERT.
A602	40	8'-5"		DIAPH @ ABUT. - BETWEEN GIRDERS - TRANS.
A403	32	8'-5"		DECK ENDS BETWEEN GIRDERS - THRU STRIP SEAL & STIRRUPS - TRANS.
A604	36	22'-10"		DECK ENDS - ABOVE DIAPHRAGM - TRANS.
✳ A505	188	2'-11"	X	ABUTMENT BACKWALL TOP - TYPE L - VERT.
A506	42	8'-0"		ABUTMENT BACKWALL TOP - TRANS.

DIMENSIONS IN BENDING DETAILS ARE OUT TO OUT OF BAR.
EPOXY COAT ALL BAR STEEL.

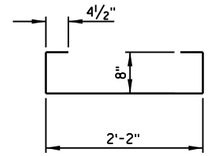

A401

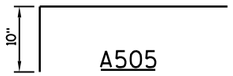

A505

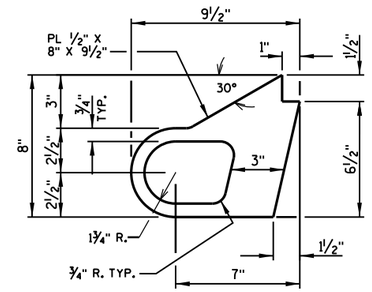

ALTERNATE STRIP SEAL ANCHOR

LEGEND

Ⓣ - REMOVE EXISTING VERTICAL REINFORCING BARS DURING REMOVAL OF PAVING BLOCK. REPLACE WITH "MASONRY ANCHORS TYPE L NO. 5 BARS" SPACED AT 1'-0".

✳ - MASONRY ANCHORS TYPE L NO. 5 BARS. EMBED BAR 1'-6" INTO CONCRETE. ANCHOR HOLES SHALL BE 4" CLEAR MIN. TO FACE OF EXISTING CONCRETE. TURN 10" HORIZONTAL LEG OF A505 BARS AS NECESSARY TO FIT.

▽ - DIMENSION IS GIVEN NORMAL TO ℄ OF GIRDER.

⧗ - DIMENSION IS GIVEN NORMAL TO THE ℄ OF ABUTMENT.

◇ - BAR COUPLERS NO. 6 ARE REQUIRED AT LONGITUDINAL CONSTRUCTION JOINT BETWEEN BARS A604. IF BAR LAPS ARE REQUIRED AT BAR COUPLERS, PROVIDE A MINIMUM LAP LENGTH OF 3'-6". IF FLANGED COUPLERS ARE USED, CLIP FLANGES TO PROVIDE 2" COVER TO TOP OF SLAB.

◯ - SEE SHEET 4 FOR LEGEND OF EXPANSION JOINT COMPONENTS.

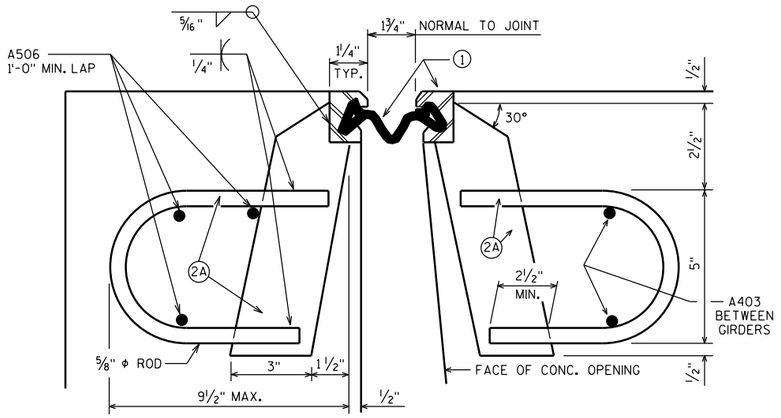

SYM. ABOUT ℄ JOINT UNLESS OTHERWISE SHOWN OR NOTED.

SECTION THRU JOINT

ROADWAY TRAFFIC AREA BETWEEN EXTERIOR GIRDERS.

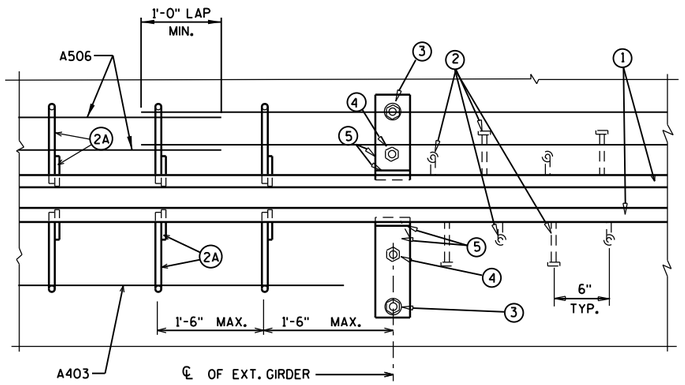

PART PLAN

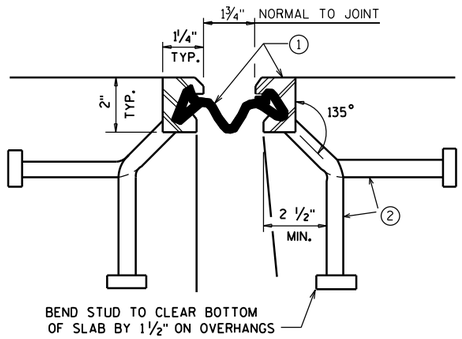

SECTION THRU JOINT

EXTERIOR GIRDER TO EDGE OF DECK & AT PARAPETS

NO.	DATE	REVISION	BY

STATE OF WISCONSIN
DEPARTMENT OF TRANSPORTATION

STRUCTURE B-49-42

DRAWN BY RLR | PLANS CK'D. JRS

STRIP SEAL EXPANSION JOINT

SHEET 3 OF 4
142

8

8

FILE= 93215 B-49-0042_03.DGN
DATE= 7/23/2015

93215_B-49-0042_03.dgn 7/23/2015 8:37:59 AM rrabska

STATE PROJECT NUMBER

1166-00-61

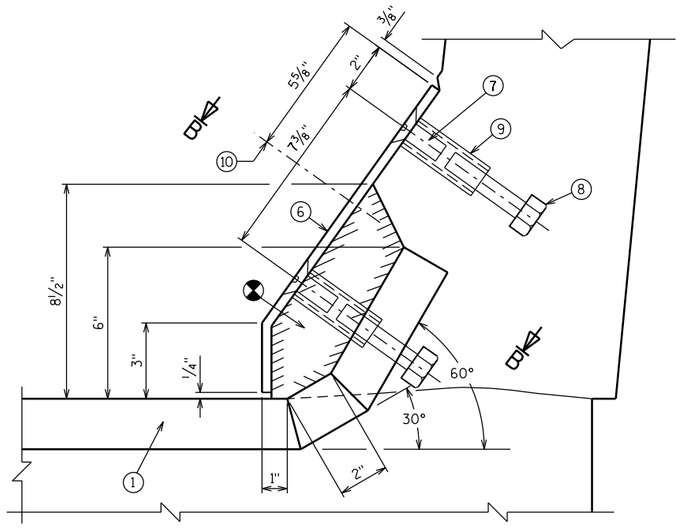

SECTION A-A

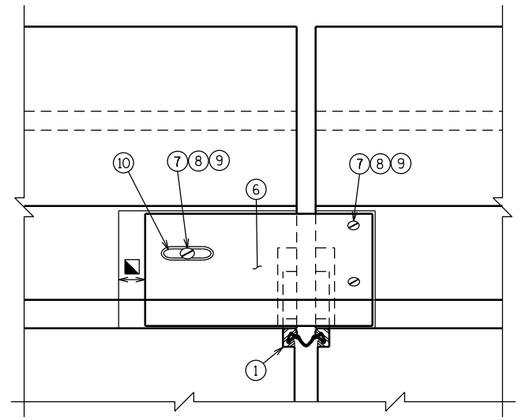

VIEW OF PARAPET PLATE FROM ROADWAY

LEGEND

(1) NEOPRENE STRIP SEAL (4 - INCH) & STEEL EXTRUSIONS. SET JOINT OPENING AT 1¾". JOINT OPENING GIVEN NORMAL TO JOINT.

(2) STUDS ⅝" ϕ X 6⅜" LONG AT 6" ALTERNATE CENTERS. WELD TO EXTRUSIONS & BEND AS SHOWN AFTER WELDING.

(2A) ½" THICK ANCHOR PLATE WITH ⅝"ϕ ROD OR ALTERNATE STRIP SEAL ANCHOR. WELD ROD TO ANCHOR PLATE. WELD ANCHOR PLATE TO NO. 1 AT 1'-6" CTRS. BETWEEN GIRDERS.

(3) ¾" ϕ THREADED ROD WITH 2 NUTS AND PLATE WASHERS. FIELD WELD THREADED ROD TO TOP FLANGE OR ATTACH BY BOLTING THRU FLANGE. ON ABUTMENT SIDE, GROUT THREADED ROD INTO FIELD DRILLED HOLES IN ABUTMENT BACKWALL AS SHOWN.

(4) ¾"ϕ THREADED ROD WITH NUT. TACK WELD NUT TO NO. 5.

(5) FABRICATE SUPPORT FROM 3" X ½" BAR AS SHOWN OR EQUIVALENT, ONE PER GIRDER PER SIDE. FIELD OR SHOP WELD TO NO. 1. IF FIELD WELDED, COVER WELDED AREAS WITH EPOXY-COATING MATERIAL. PROVIDE 1½" ϕ HOLE FOR NO. 3 & 1" ϕ HOLE FOR NO. 4.

(6) GALVANIZED PLATE ⅜" x 1'-2" x 2'-0" LONG WITH HOLES FOR NO. 7. BEND AS SHOWN.

(7) ¾" ϕ x 1½" STAINLESS STEEL SOCKET FLAT HEAD SCREWS WITH ANTI-SEIZE LUBRICANT. PLACE IN COUNTERSUNK HOLE. RECESS 1/16" BELOW PLATE SURFACE.

(8) ¾" ϕ x 4" GALV. HEX HEAD BOLT. BEND 45°.

(9) ¾" ϕ x 2¼" GALV. THREADED COUPLING.

(10) 1" x 5" SLOTTED COUNTERSUNK HOLE FOR NO. 7. PLACE SLOT PARALLEL TO DIRECTION OF MOVEMENT.

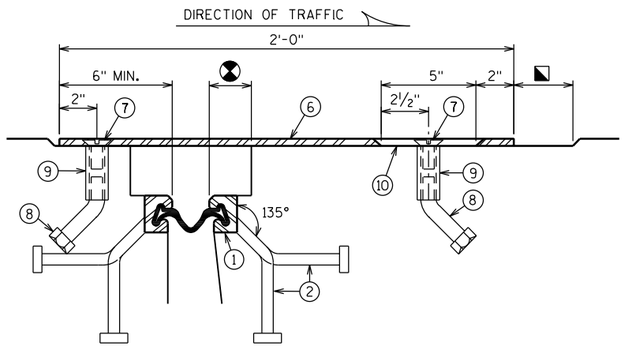

SECTION B-B

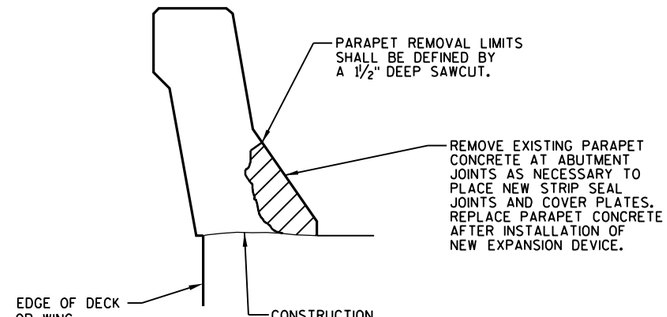

PARAPET REMOVAL LIMITS

SALVAGE ALL EXISTING BAR STEEL IN PARAPETS

⊗ — BLOCK OUT CONCRETE 2" EACH SIDE OF JOINT OPENING

◪ — JOINT OPENING DIMENSION ALONG SKEW PLUS ½"

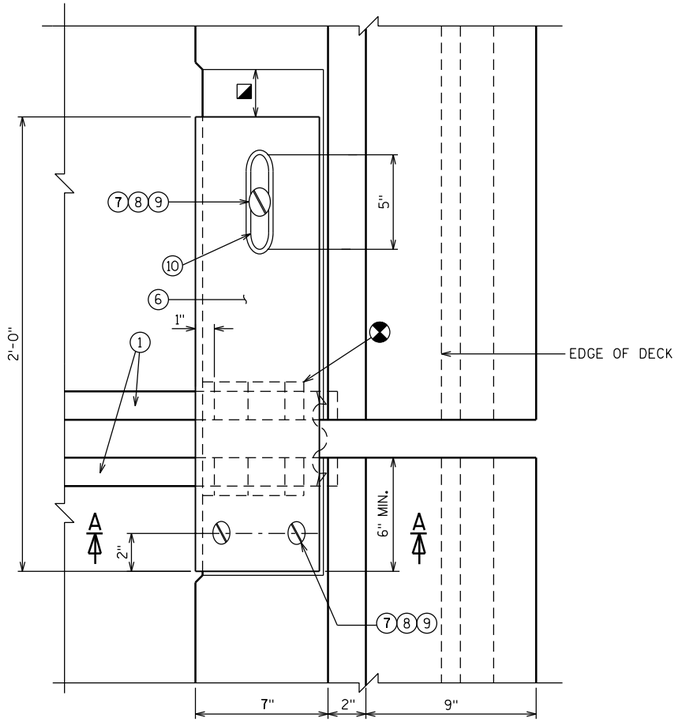

PLAN AT PARAPET

NOTES

ONE FIELD SPLICE PERMITTED IN STEEL EXTRUSIONS, UNLESS MORE ARE REQUIRED FOR STAGED CONSTRUCTION, HANDLING OR GALVANIZING REQUIREMENTS. IF SPLICE IS USED, DETAILS SHALL BE SUBMITTED FOR APPROVAL. NO SPLICING IN NEOPRENE STRIP SEAL.

AFTER FABRICATION, BUT BEFORE SHIPMENT, STRAIGHTEN STEEL EXTRUSIONS SUCH THAT THEY SHALL BE FREE FROM WARP, TWIST & SWEEP.

FABRICATOR SHALL PROVIDE MEANS OF KEEPING GALVANIZED EXTRUSIONS CLEAN & SMOOTH DURING SHIPMENT AND PRIOR TO APPLYING LUBRICANT ADHESIVE FOR NEOPRENE GLAND INSTALLATION.

SANDBLAST PLATES & EXTRUSIONS AFTER FABRICATION IN ACCORDANCE WITH SSPC SP. #6 "COMMERCIAL BLAST CLEANING". AFTER BLAST CLEANING, THE PLATES, SUPPORTS, & EXTRUSIONS SHALL BE HOT DIPPED GALVANIZED.

ANCHOR SYSTEM NO. 8 & NO. 9 SHALL CONFORM TO ASTM A307 & SHALL BE GALVANIZED IN ACCORDANCE WITH ASTM A153 CLASS C & D.

STRIP SEAL EXPANSION JOINT ASSEMBLY, INCLUDING PARAPET PLATES, ANCHOR STUDS & HARDWARE, CONNECTIONS AND FIELD DRILLING, WILL BE PAID FOR AT THE LUMP SUM PRICE BID FOR "EXPANSION DEVICE STRUCTURE B-49-42".

NO.	DATE	REVISION	BY

STATE OF WISCONSIN
DEPARTMENT OF TRANSPORTATION

STRUCTURE B-49-42

DRAWN BY RLR | PLANS CK'D. JRS

STRIP SEAL EXPANSION JOINT DETAILS

SHEET 4 OF 4

143

8

8

FILE= 93215 B-49-0042_04.DGN
DATE= 7/23/2015

93215_B-49-0042_04.dgn 7/23/2015 8:39:48 AM trabska

STATE PROJECT NUMBER
1166-00-61

BENCHMARKS ⊕ NAVD 88			
NO.	STA.	DESCRIPTION	ELEV.
2	108J+28, 18' RT	DISK ON SW PARAPET OF STRUCTURE	1114.63

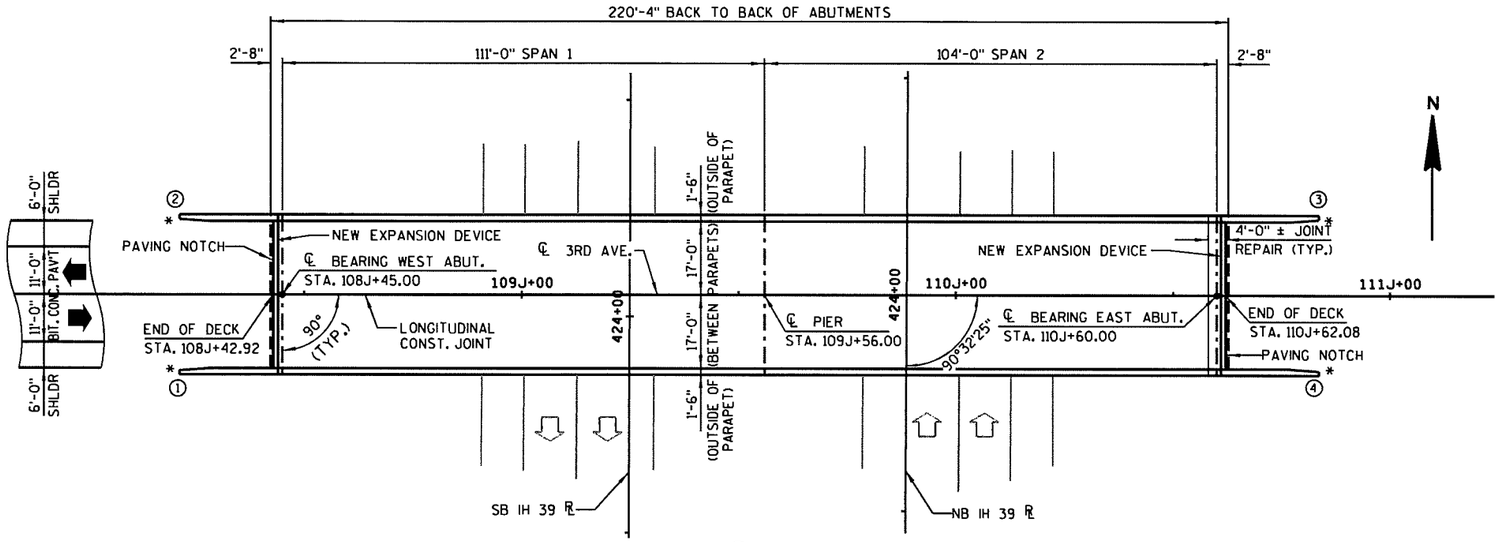

PLAN

(REHAB - CONCRETE OVERLAY ON EXISTING TWO SPAN STEEL DECK GIRDER)

◯ - INDICATES WING NUMBER

* - INDICATES LOCATION OF PROVISION FOR NEW THRIE BEAM ATTACHMENT AT WINGS (SEE SDD MIDWEST GUARDRAIL SYSTEM THRIE BEAM TRANSITION (MGS)).

DESIGN DATA

LIVE LOAD:

DESIGN LOADING: HS-20
INVENTORY RATING : HS17
OPERATIONAL RATING : HS29
WISCONSIN STANDARD PERMIT VEHICLE (WIS-SPV): 200 KIPS

TRAFFIC DATA:	IH 39	3RD AVE.
A.A.D.T. (2017) =	15,900	< 250
A.A.D.T. (2037) =	19,700	(2011)

MATERIAL PROPERTIES:

CONCRETE MASONRY — f'c = 4,000 P.S.I.
CONCRETE MASONRY OVERLAY DECKS — f'c = 4,000 P.S.I.
EXISTING BAR STEEL REINFORCEMENT — fy = 60,000 P.S.I.
HIGH STRENGTH BAR STEEL REINFORCEMENT, GRADE 60 — fy = 60,000 P.S.I.

LIST OF DRAWINGS

1. GENERAL PLAN
2. CROSS SECTION, QUANTITIES & NOTES
3. STRIP SEAL EXPANSION JOINT
4. STRIP SEAL EXPANSION JOINT DETAILS

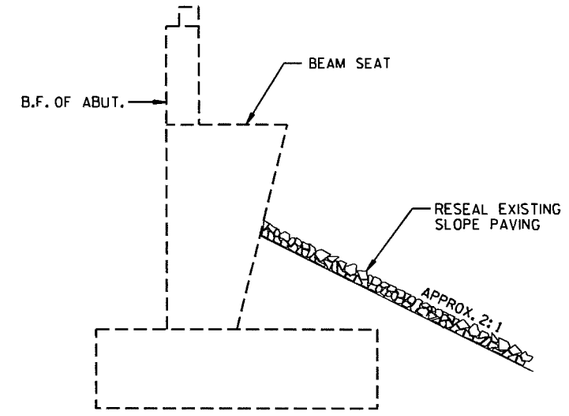

SLOPE PAVING AT ABUTMENTS

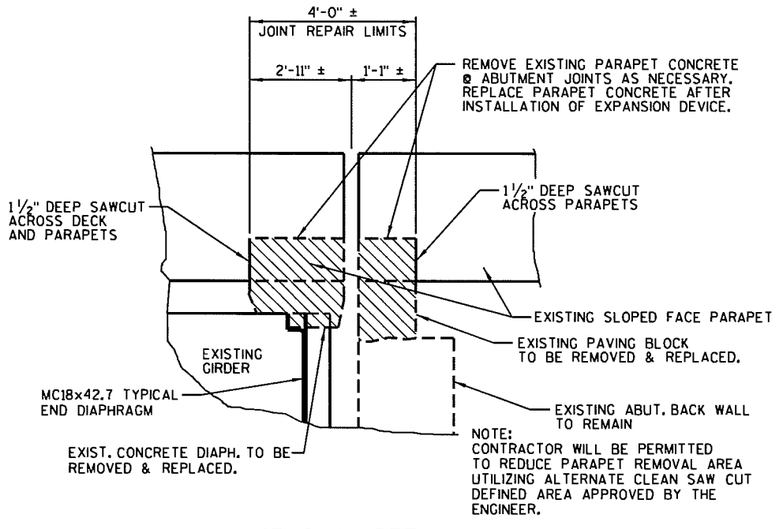

REMOVAL DETAIL

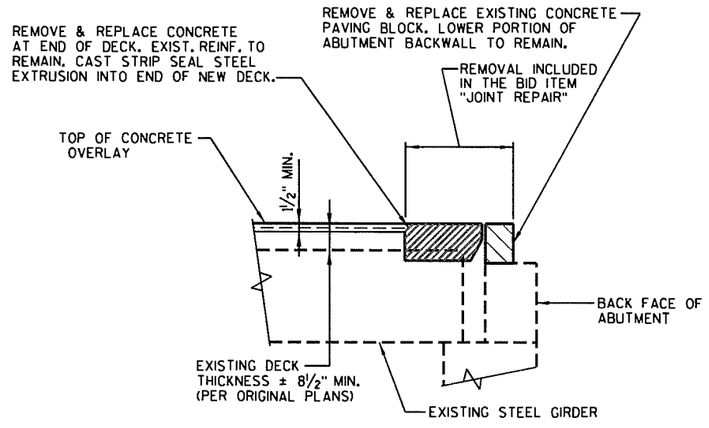

PART LONGITUDINAL SECTION

WISCONSIN
JOSHUA R. SWENO
E-44384
WAUNAKEE
WI
PROFESSIONAL ENGINEER
7/31/2015

DESIGN CONTACT:
JOSHUA SWENO
(608) 355-8852

BRIDGE OFFICE CONTACT:
WILLIAM DREHER
(608) 266-8489

NO.	DATE	REVISION	BY

MSA PROFESSIONAL SERVICES — TRANSPORTATION • MUNICIPAL DEVELOPMENT • ENVIRONMENTAL
1230 South Boulevard Baraboo, WI 53913
608-356-2771 1-800-362-4505 Fax: 608-356-2770

STATE OF WISCONSIN
DEPARTMENT OF TRANSPORTATION
ACCEPTED William C. Dreher SDR 08/05/15
CHIEF STRUCTURES DESIGN ENGINEER — DATE

STRUCTURE B-49-43

3RD AVENUE OVER IH 39

COUNTY	TOWN/~~CITY/VILLAGE~~
PORTAGE	PINE GROVE

DESIGN SPEC. REHABILITATION - N/A

DESIGNED BY	DESIGN CK'D.	DRAWN BY	PLANS CK'D.
JRS	MSR	RLR	JRS

GENERAL PLAN

SHT 144 OF 4

8

8

93215_B-49-0043_01.dgn 7/23/2015 8:42:41 AM rrabska

FILE= 930215_B-49-0043_01.DGN
DATE= 7/23/2015

STATE PROJECT NUMBER

1166-00-61

TOTAL ESTIMATED QUANTITIES

	ITEM NUMBER	BID ITEM	UNIT	WEST ABUT.	PIER	EAST ABUT.	SUPER	TOTAL
	203.0225.S.02	DEBRIS CONTAINMENT STRUCTURE B-49-43	LS	-	-	-	-	1
	502.3100.02	EXPANSION DEVICE STRUCTURE B-49-43	LS	-	-	-	-	1
	502.3200	PROTECTIVE SURFACE TREATMENT	SY	-	-	-	828	828
	502.3210	PIGMENTED SURFACE SEALER	SY	-	-	-	209	209
	505.0600	BAR STEEL REINFORCEMENT HS COATED STRUCTURES	LB	-	-	-	2370	2370
*	509.0301	PREPARATION DECKS TYPE 1	SY	-	-	-	4	4
*	509.0302	PREPARATION DECKS TYPE 2	SY	-	-	-	2	2
	509.0500	CLEANING DECKS	SY	-	-	-	801	801
	509.1000	JOINT REPAIR	SY	-	-	-	33	33
**	509.1500	CONCRETE SURFACE REPAIR	SF	2.5	-	2.5	-	5
*	509.2000	FULL-DEPTH DECK REPAIR	SY	-	-	-	1	1
	509.2500	CONCRETE MASONRY OVERLAY DECKS	CY	-	-	-	67	67
	509.9050.S.	CLEANING PARAPETS	LF	-	-	-	520	520
	604.9015.S.	RESEAL CRUSHED AGGREGATE SLOPE PAVING	SY	99	-	99	-	198
	614.0150	ANCHOR ASSEMBLIES FOR STEEL PLATE BEAM GUARD	EACH	-	-	-	4	4

* — QUANTITY LISTED IS AN ESTIMATE. CONTRACTOR SHALL COORDINATE THE FIELD IDENTIFICATION AND DETERMINATION OF ALL DECK REPAIR LOCATIONS WITH THE ENGINEER. DECK PREPARATION REPAIRS SHALL BE FILLED WITH "CONCRETE MASONRY OVERLAY DECKS".

** — CONCRETE SURFACE REPAIR SHALL BE USED FOR NEEDED REPAIRS. LOCATIONS AND LIMITS OF REPAIR SHALL BE DETERMINED IN THE FIELD BY THE ENGINEER.

⬡ — INDICATES GIRDER NUMBER.

GENERAL NOTES

DRAWINGS SHALL NOT BE SCALED.

SEE ROAD PLANS FOR TRAFFIC CONTROL.

THE FIRST DIGIT OF A THREE DIGIT BAR MARK SIGNIFIES THE BAR SIZE.

BAR STEEL REINFORCEMENT SHALL BE EMBEDDED 2" CLEAR UNLESS SHOWN OR NOTED OTHERWISE.

DIMENSIONS AND STATIONING SHOWN ARE BASED ON EXISTING PLANS. ORIGINAL 1979 PLANS ARE AVAILABLE FROM THE WISCONSIN DEPARTMENT OF TRANSPORTATION.

THE LOCATIONS OF EXISTING UTILITY INSTALLATIONS AS SHOWN ON THE PLANS ARE APPROXIMATE. THERE MAY BE OTHER UTILITY INSTALLATIONS WITHIN THE PROJECT AREA THAT ARE NOT SHOWN.

IMPROVEMENTS INCLUDE A CONCRETE OVERLAY OF THE BRIDGE DECK, REPLACING JOINTS, CLEANING PARAPETS, AND RESEALING SLOPE PAVING.

ALL CONCRETE REMOVAL SHALL BE DEFINED BY A 1½" DEEP SAW CUT.

THIS PROJECT WILL REHABILITATE THE EXISTING STRUCTURE, B-49-43, A TWO SPAN, 220.33 FOOT LONG, STEEL DECK GIRDER BRIDGE SET ON FULL RETAINING 'A4' CONCRETE ABUTMENTS AND A MULTI-COLUMN PIER.

PROTECTIVE SURFACE TREATMENT SHALL BE APPLIED TO THE ENTIRE TOP SURFACE OF THE CONCRETE OVERLAY

A MINIMUM OF 1½" CONCRETE SHALL BE REMOVED FROM THE BRIDGE DECK AREA SHOWN UNDER THE BID ITEM "CLEANING DECKS".

■ THE EXISTING CROSS SLOPE IS 1.5%. THE MINIMUM OVERLAY THICKNESS OF 1½" OCCURS AT THE NORTH AND SOUTH OVERLAY EDGES.

AVERAGE OVERLAY THICKNESS ESTIMATED AT 2.47 INCHES FOR "CONCRETE MASONRY OVERLAY DECKS" QUANTITY.

PIGMENTED SURFACE SEALER SHALL BE APPLIED TO THE TOP AND ROADWAY FACE OF THE PARAPETS.

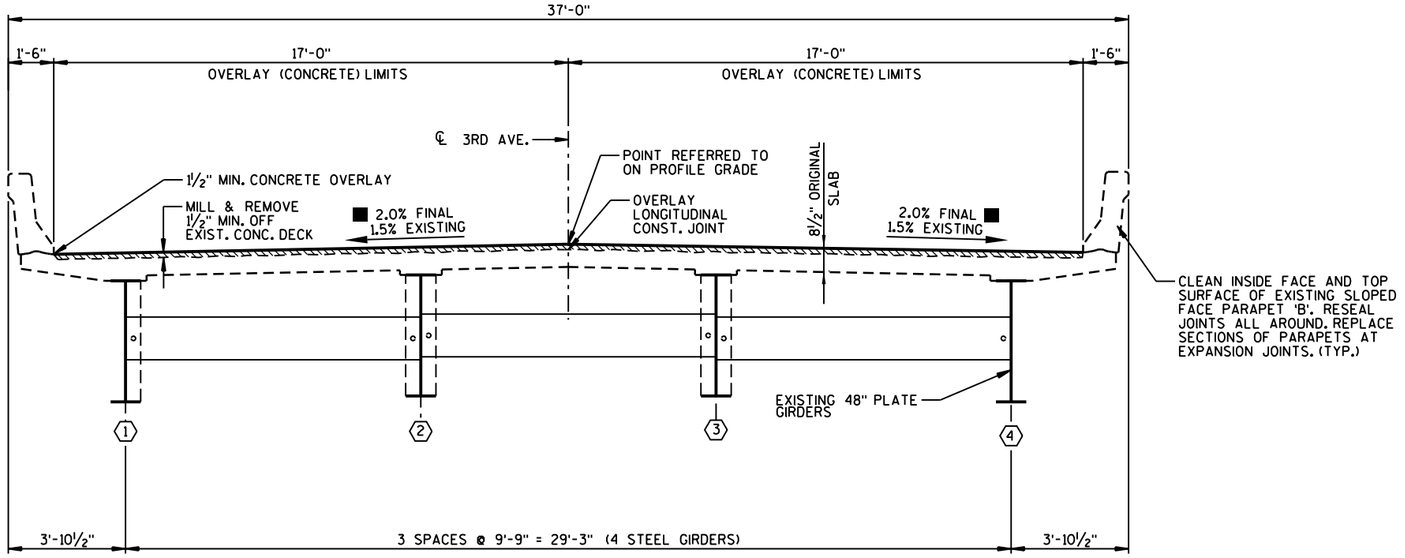

CROSS SECTION THRU ROADWAY

(LOOKING EAST)

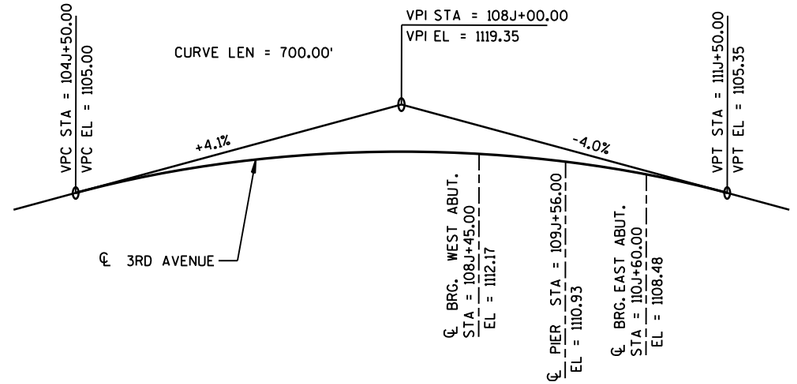

NEW PROFILE GRADE - 3RD AVENUE

NO.	DATE	REVISION	BY

STATE OF WISCONSIN
DEPARTMENT OF TRANSPORTATION

STRUCTURE B-49-43

DRAWN BY RLR | PLANS CK'D. JRS

CROSS SECTION, QUANTITIES & NOTES

SHEET 2 OF 4

145

8

8

FILE= 93215_B-49-0043_02.DGN
DATE= 7/23/2015

93215_B-49-0043_02.dgn 7/23/2015 8:46:05 AM rrabska

STATE PROJECT NUMBER

1166-00-61

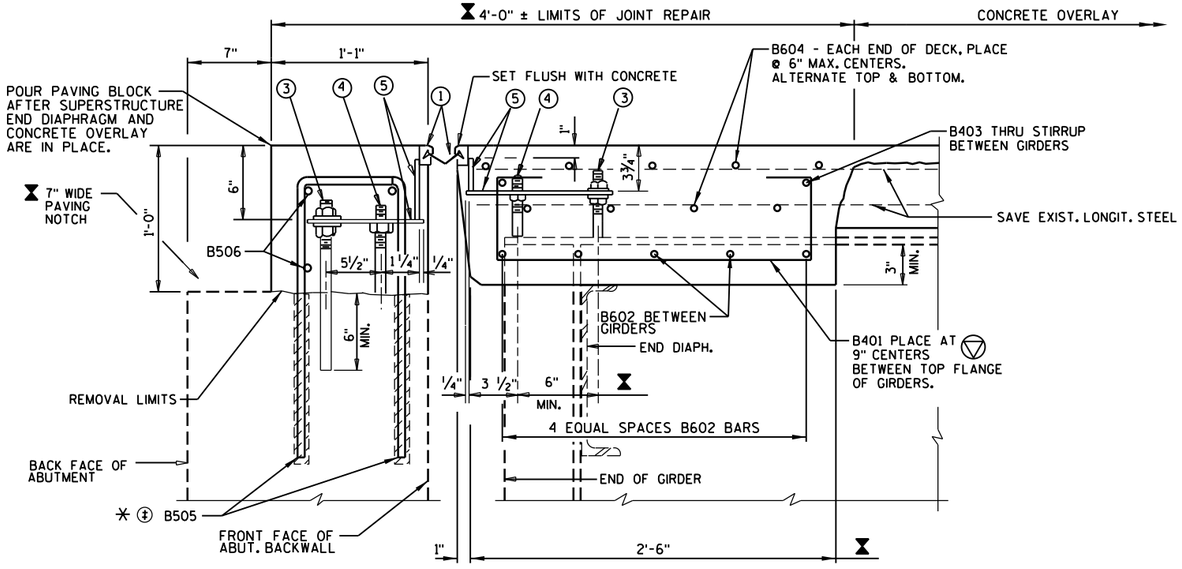

SECTION THRU JOINT AT ABUTMENTS

BILL OF BARS (COATED) 2370 LBS.

MARK	NO. REQ'D	LENGTH	BENT	LOCATION
B401	72	3'-11"	X	DIAPH @ ABUT. - STIRRUP - VERT.
B602	30	8'-5"		DIAPH @ ABUT. - BETWEEN GIRDERS - TRANS.
B403	24	8'-5"		DECK ENDS BETWEEN GIRDERS - THRU STRIP SEAL & STIRRUPS - TRANS.
B604	18	35'-10"		DECK ENDS - ABOVE DIAPHRAGM - TRANS.
✳ B505	148	2'-11"	X	ABUTMENT BACKWALL TOP - TYPE L - VERT.
B506	30	8'-0"		ABUTMENT BACKWALL TOP - TRANS.

DIMENSIONS IN BENDING DETAILS ARE OUT TO OUT OF BAR.
EPOXY COAT ALL BAR STEEL.

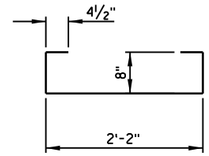

B401

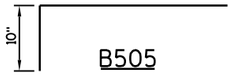

B505

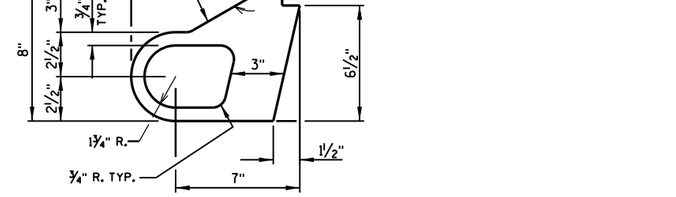

ALTERNATE STRIP SEAL ANCHOR

LEGEND

- ‡ - REMOVE EXISTING VERTICAL REINFORCING BARS DURING REMOVAL OF PAVING BLOCK. REPLACE WITH "MASONRY ANCHORS TYPE L NO. 5 BARS" SPACED AT 1'-0".
- ✳ - MASONRY ANCHORS TYPE L NO. 5 BARS. EMBED BAR 1'-6" INTO CONCRETE. ANCHOR HOLES SHALL BE 4" CLEAR MIN. TO FACE OF EXISTING CONCRETE. TURN 10" HORIZONTAL LEG OF B505 BARS AS NECESSARY TO FIT.
- ▽ - DIMENSION IS GIVEN NORMAL TO ℄ OF GIRDER.
- ⧗ - DIMENSION IS GIVEN NORMAL TO THE ℄ OF ABUTMENT.
- ◯ - SEE SHEET 4 FOR LEGEND OF EXPANSION JOINT COMPONENTS.

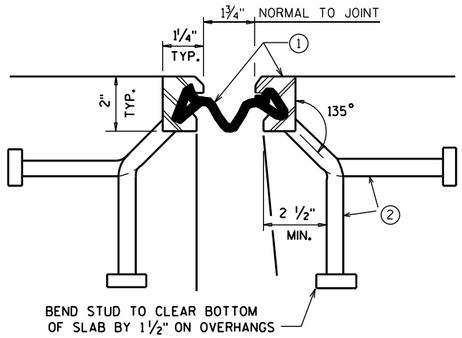

SECTION THRU JOINT
EXTERIOR GIRDER TO EDGE OF DECK & AT PARAPETS

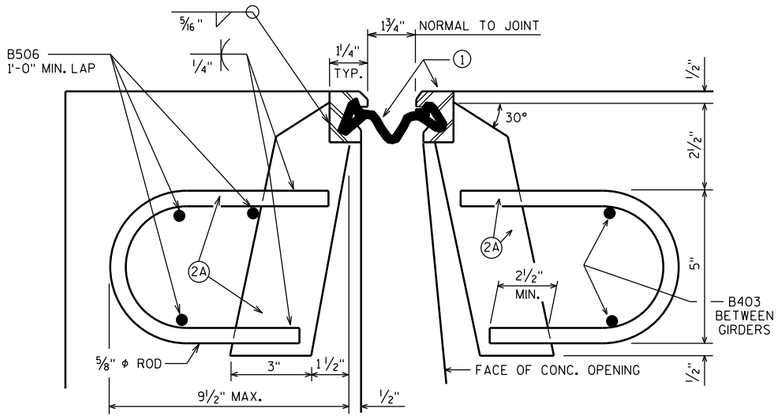

SYM. ABOUT ℄ JOINT UNLESS OTHERWISE SHOWN OR NOTED.

SECTION THRU JOINT
ROADWAY TRAFFIC AREA BETWEEN EXTERIOR GIRDERS.

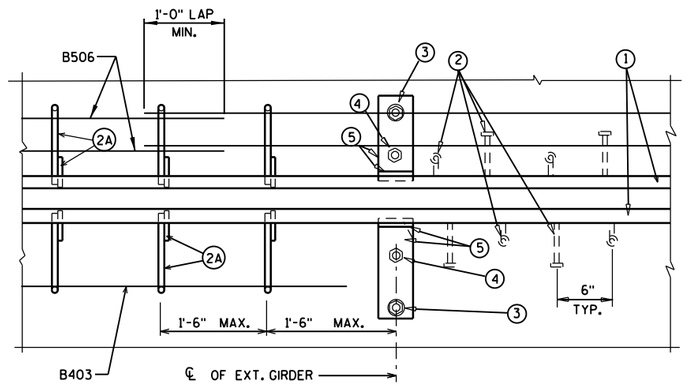

PART PLAN

NO.	DATE	REVISION	BY

STATE OF WISCONSIN
DEPARTMENT OF TRANSPORTATION

STRUCTURE B-49-43

DRAWN BY RLR | PLANS CK'D. JRS

STRIP SEAL EXPANSION JOINT

SHEET 3 OF 4

146

8

8

FILE= 93215 B-49-0043_03.DGN
DATE= 7/23/2015

93215_B-49-0043_03.dgn 7/23/2015 8:47:26 AM rrabska

STATE PROJECT NUMBER

1166-00-61

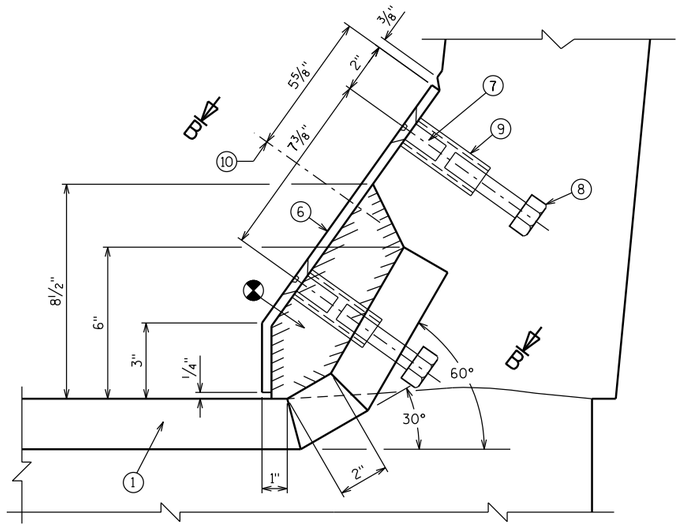

SECTION A-A

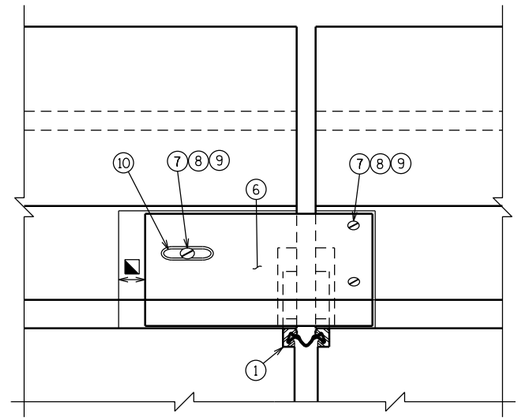

VIEW OF PARAPET PLATE FROM ROADWAY

LEGEND

1. NEOPRENE STRIP SEAL (4 - INCH) & STEEL EXTRUSIONS. SET JOINT OPENING AT 1¾". JOINT OPENING GIVEN NORMAL TO JOINT.
2. STUDS ⅝" ϕ X 6⅜" LONG AT 6" ALTERNATE CENTERS. WELD TO EXTRUSIONS & BEND AS SHOWN AFTER WELDING.
2A. ½" THICK ANCHOR PLATE WITH ⅝"ϕ ROD OR ALTERNATE STRIP SEAL ANCHOR. WELD ROD TO ANCHOR PLATE. WELD ANCHOR PLATE TO NO. 1 AT 1'-6" CTRS. BETWEEN GIRDERS.
3. ¾" ϕ THREADED ROD WITH 2 NUTS AND PLATE WASHERS. FIELD WELD THREADED ROD TO TOP FLANGE OR ATTACH BY BOLTING THRU FLANGE. ON ABUTMENT SIDE, GROUT THREADED ROD INTO FIELD DRILLED HOLES IN ABUTMENT BACKWALL AS SHOWN.
4. ¾"ϕ THREADED ROD WITH NUT. TACK WELD NUT TO NO. 5.
5. FABRICATE SUPPORT FROM 3" X ½" BAR AS SHOWN OR EQUIVALENT, ONE PER GIRDER PER SIDE. FIELD OR SHOP WELD TO NO. 1. IF FIELD WELDED, COVER WELDED AREAS WITH EPOXY-COATING MATERIAL. PROVIDE 1½" ϕ HOLE FOR NO. 3 & 1" ϕ HOLE FOR NO. 4.
6. GALVANIZED PLATE ⅜" x 1'-2" x 2'-0" LONG WITH HOLES FOR NO. 7. BEND AS SHOWN.
7. ¾" ϕ x 1½" STAINLESS STEEL SOCKET FLAT HEAD SCREWS WITH ANTI-SEIZE LUBRICANT. PLACE IN COUNTERSUNK HOLE. RECESS 1/16" BELOW PLATE SURFACE.
8. ¾" ϕ x 4" GALV. HEX HEAD BOLT. BEND 45°.
9. ¾" ϕ x 2¼" GALV. THREADED COUPLING.
10. 1" x 5" SLOTTED COUNTERSUNK HOLE FOR NO. 7. PLACE SLOT PARALLEL TO DIRECTION OF MOVEMENT.

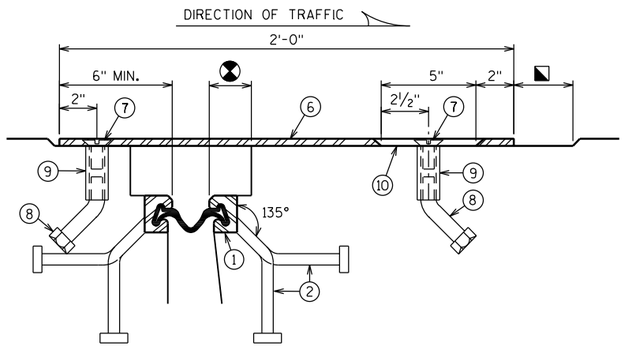

SECTION B-B

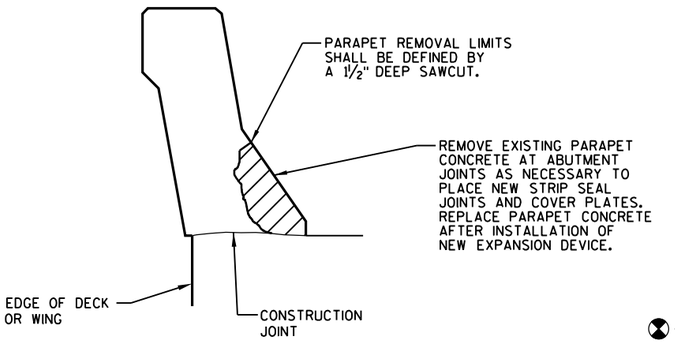

PARAPET REMOVAL LIMITS

SALVAGE ALL EXISTING BAR STEEL IN PARAPETS

⊗ — BLOCK OUT CONCRETE 2" EACH SIDE OF JOINT OPENING

◪ — JOINT OPENING DIMENSION ALONG SKEW PLUS ½"

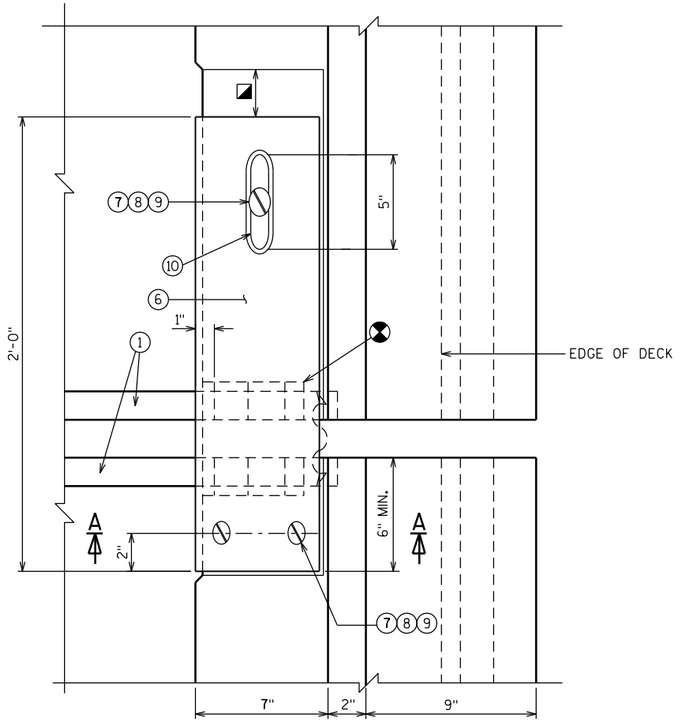

PLAN AT PARAPET

NOTES

ONE FIELD SPLICE PERMITTED IN STEEL EXTRUSIONS, UNLESS MORE ARE REQUIRED FOR STAGED CONSTRUCTION, HANDLING OR GALVANIZING REQUIREMENTS. IF SPLICE IS USED, DETAILS SHALL BE SUBMITTED FOR APPROVAL. NO SPLICING IN NEOPRENE STRIP SEAL.

AFTER FABRICATION, BUT BEFORE SHIPMENT, STRAIGHTEN STEEL EXTRUSIONS SUCH THAT THEY SHALL BE FREE FROM WARP, TWIST & SWEEP.

FABRICATOR SHALL PROVIDE MEANS OF KEEPING GALVANIZED EXTRUSIONS CLEAN & SMOOTH DURING SHIPMENT AND PRIOR TO APPLYING LUBRICANT ADHESIVE FOR NEOPRENE GLAND INSTALLATION.

SANDBLAST PLATES & EXTRUSIONS AFTER FABRICATION IN ACCORDANCE WITH SSPC SP. #6 "COMMERCIAL BLAST CLEANING". AFTER BLAST CLEANING, THE PLATES, SUPPORTS, & EXTRUSIONS SHALL BE HOT DIPPED GALVANIZED.

ANCHOR SYSTEM NO. 8 & NO. 9 SHALL CONFORM TO ASTM A307 & SHALL BE GALVANIZED IN ACCORDANCE WITH ASTM A153 CLASS C & D.

STRIP SEAL EXPANSION JOINT ASSEMBLY, INCLUDING PARAPET PLATES, ANCHOR STUDS & HARDWARE, CONNECTIONS AND FIELD DRILLING, WILL BE PAID FOR AT THE LUMP SUM PRICE BID FOR "EXPANSION DEVICE STRUCTURE B-49-43".

8

8

NO.	DATE	REVISION	BY

STATE OF WISCONSIN
DEPARTMENT OF TRANSPORTATION

STRUCTURE B-49-43

DRAWN BY RLR | PLANS CK'D. JRS

STRIP SEAL EXPANSION JOINT DETAILS

SHEET 4 OF 4

147

FILE= 93215 B-49-0043_04.DGN
DATE= 7/23/2015

93215_B-49-0043_04.dgn 7/23/2015 8:48:53 AM trabska

STATE PROJECT NUMBER
1166-00-61

BENCHMARKS ⌖ NAVD 88			
NO.	STA.	DESCRIPTION	ELEV.
3	108M+27.2, 23.1' RT	DISK ON SW PARAPET OF STRUCTURE	1111.78

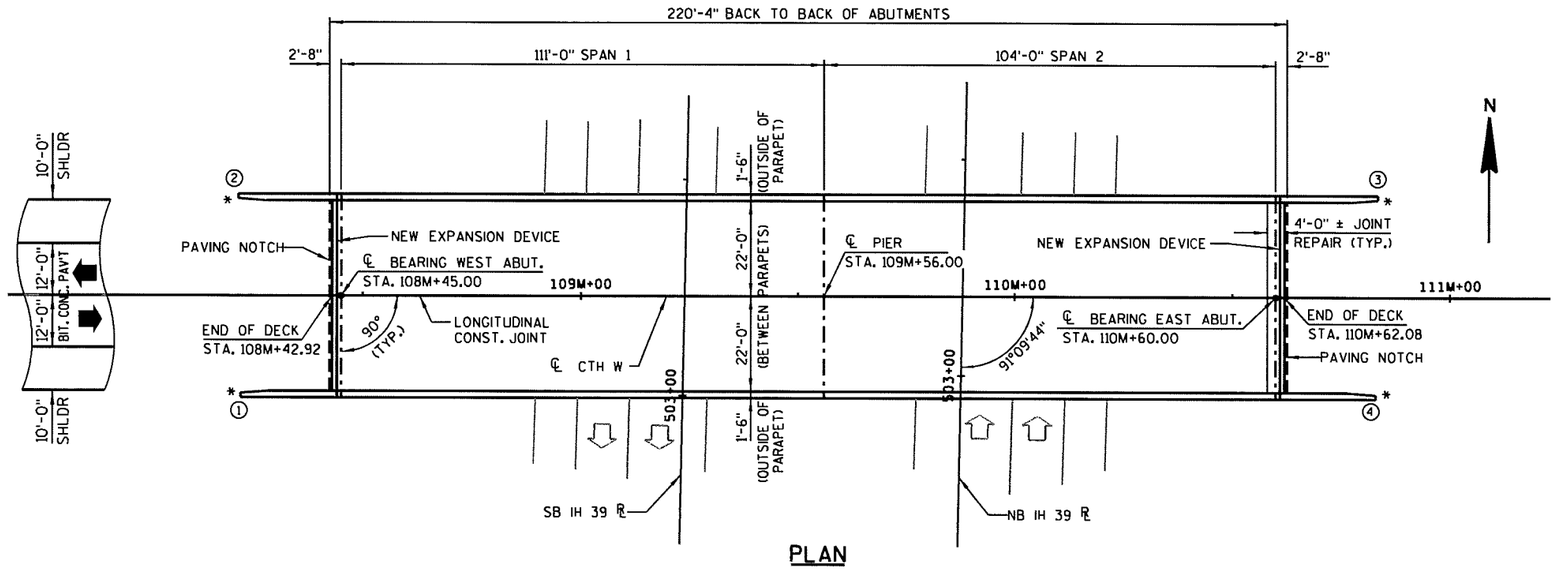

PLAN

(REHAB - CONCRETE OVERLAY ON EXISTING TWO SPAN STEEL DECK GIRDER)

◯ - INDICATES WING NUMBER

* - INDICATES LOCATION OF PROVISION FOR NEW THRIE BEAM ATTACHMENT AT WINGS (SEE SDD MIDWEST GUARDRAIL SYSTEM THRIE BEAM TRANSITION (MGS)).

DESIGN DATA

LIVE LOAD:

DESIGN LOADING: HS-20
INVENTORY RATING : HS18
OPERATIONAL RATING : HS30
WISCONSIN STANDARD PERMIT VEHICLE (WIS-SPV): 190 KIPS

TRAFFIC DATA:	IH 39	CTH W
A.A.D.T. (2017) =	15,900	> 1,800
A.A.D.T. (2037) =	20,600	(2011)

MATERIAL PROPERTIES:

CONCRETE MASONRY — f'c = 4,000 P.S.I.
CONCRETE MASONRY OVERLAY DECKS — f'c = 4,000 P.S.I.
EXISTING BAR STEEL REINFORCEMENT — fy = 60,000 P.S.I.
HIGH STRENGTH BAR STEEL REINFORCEMENT, GRADE 60 — fy = 60,000 P.S.I.

LIST OF DRAWINGS

1. GENERAL PLAN
2. CROSS SECTION, QUANTITIES & NOTES
3. STRIP SEAL EXPANSION JOINT
4. STRIP SEAL EXPANSION JOINT DETAILS

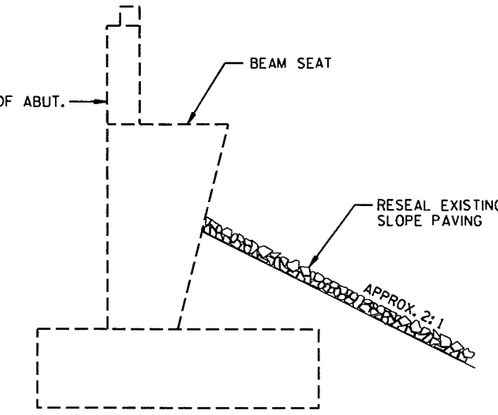

SLOPE PAVING AT ABUTMENTS

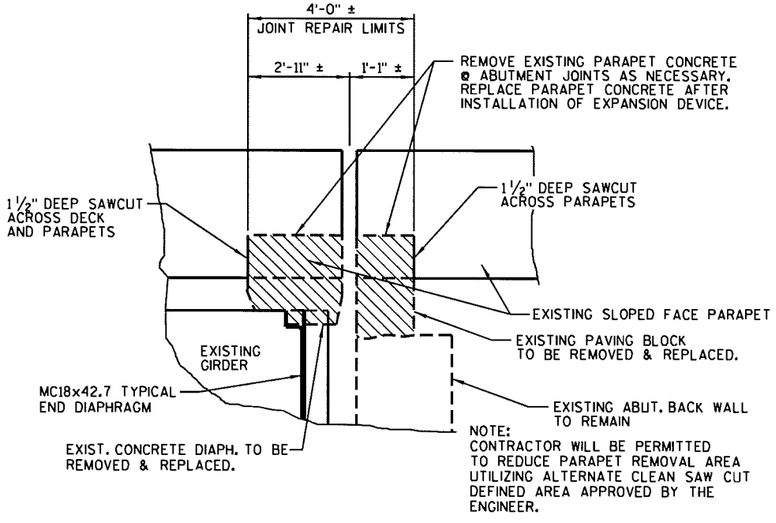

REMOVAL DETAIL

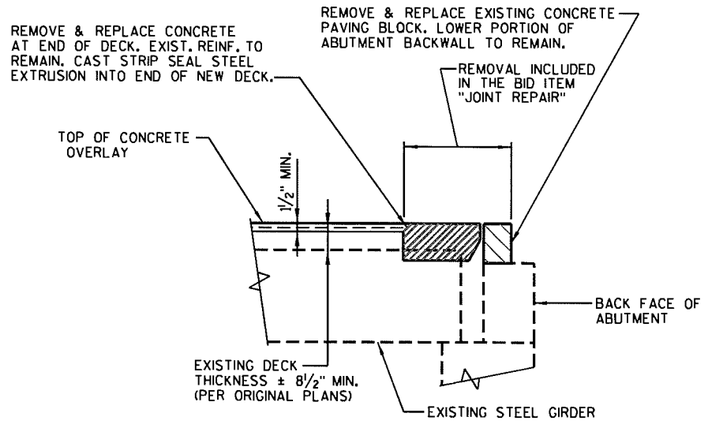

PART LONGITUDINAL SECTION

WISCONSIN
JOSHUA R. SWENO
E-44384
WAUNAKEE WI
PROFESSIONAL ENGINEER
7/31/2015

DESIGN CONTACT:
JOSHUA SWENO
(608) 355-8852

BRIDGE OFFICE CONTACT:
WILLIAM DREHER
(608) 266-8489

NO.	DATE	REVISION	BY

MSA PROFESSIONAL SERVICES
TRANSPORTATION • MUNICIPAL DEVELOPMENT • ENVIRONMENTAL
1230 South Boulevard Baraboo, WI 53913
608-356-2771 1-800-362-4505 Fax: 608-356-2770

STATE OF WISCONSIN
DEPARTMENT OF TRANSPORTATION
ACCEPTED William C. Dreher SDR 08/05/15
CHIEF STRUCTURES DESIGN ENGINEER DATE

STRUCTURE B-49-44

CTH W OVER IH 39

COUNTY	TOWN/~~CITY/VILLAGE~~
PORTAGE	PINE GROVE

DESIGN SPEC.
REHABILITATION - N/A

DESIGNED BY	DESIGN CK'D.	DRAWN BY	PLANS CK'D.
JRS	MSR	RLR	JRS

GENERAL PLAN

SHT 148 OF 4

8

8

93215_B-49-0044_01.dgn 7/23/2015 8:51:07 AM franska

FILE= 930215_B-49-0044_01.DGN
DATE= 7/23/2015

STATE PROJECT NUMBER

1166-00-61

TOTAL ESTIMATED QUANTITIES

	ITEM NUMBER	BID ITEM	UNIT	WEST ABUT.	PIER	EAST ABUT.	SUPER	TOTAL
	203.0225.S.03	DEBRIS CONTAINMENT STRUCTURE B-49-44	LS	-	-	-	-	1
	502.3100.03	EXPANSION DEVICE STRUCTURE B-49-44	LS	-	-	-	-	1
	502.3200	PROTECTIVE SURFACE TREATMENT	SY	-	-	-	1072	1072
	502.3210	PIGMENTED SURFACE SEALER	SY	-	-	-	208	208
	505.0600	BAR STEEL REINFORCEMENT HS COATED STRUCTURES	LB	-	-	-	3095	3095
	505.0906	BAR COUPLERS NO. 6	EACH	-	-	-	18	18
*	509.0301	PREPARATION DECKS TYPE 1	SY	-	-	-	41	41
*	509.0302	PREPARATION DECKS TYPE 2	SY	-	-	-	21	21
	509.0500	CLEANING DECKS	SY	-	-	-	1037	1037
	509.1000	JOINT REPAIR	SY	-	-	-	41	41
**	509.1500	CONCRETE SURFACE REPAIR	SF	10	-	15	5	30
*	509.2000	FULL-DEPTH DECK REPAIR	SY	-	-	-	2	2
	509.2500	CONCRETE MASONRY OVERLAY DECKS	CY	-	-	-	92	92
	509.9050.S.	CLEANING PARAPETS	LF	-	-	-	518	518
	604.9015.S.	RESEAL CRUSHED AGGREGATE SLOPE PAVING	SY	126	-	126	-	252
	614.0150	ANCHOR ASSEMBLIES FOR STEEL PLATE BEAM GUARD	EACH	-	-	-	4	4

* — QUANTITY LISTED IS AN ESTIMATE. CONTRACTOR SHALL COORDINATE THE FIELD IDENTIFICATION AND DETERMINATION OF ALL DECK REPAIR LOCATIONS WITH THE ENGINEER. DECK PREPARATION REPAIRS SHALL BE FILLED WITH "CONCRETE MASONRY OVERLAY DECKS".

** — CONCRETE SURFACE REPAIR SHALL BE USED FOR NEEDED REPAIRS. LOCATIONS AND LIMITS OF REPAIR SHALL BE DETERMINED IN THE FIELD BY THE ENGINEER.

⬡ — INDICATES GIRDER NUMBER.

GENERAL NOTES

DRAWINGS SHALL NOT BE SCALED.

SEE ROAD PLANS FOR TRAFFIC CONTROL.

THE FIRST DIGIT OF A THREE DIGIT BAR MARK SIGNIFIES THE BAR SIZE.

BAR STEEL REINFORCEMENT SHALL BE EMBEDDED 2" CLEAR UNLESS SHOWN OR NOTED OTHERWISE.

DIMENSIONS AND STATIONING SHOWN ARE BASED ON EXISTING PLANS. ORIGINAL 1978 PLANS ARE AVAILABLE FROM THE WISCONSIN DEPARTMENT OF TRANSPORTATION.

THE LOCATIONS OF EXISTING UTILITY INSTALLATIONS AS SHOWN ON THE PLANS ARE APPROXIMATE. THERE MAY BE OTHER UTILITY INSTALLATIONS WITHIN THE PROJECT AREA THAT ARE NOT SHOWN.

IMPROVEMENTS INCLUDE A CONCRETE OVERLAY OF THE BRIDGE DECK, REPLACING JOINTS, CLEANING PARAPETS, AND RESEALING SLOPE PAVING.

ALL CONCRETE REMOVAL SHALL BE DEFINED BY A 1½" DEEP SAW CUT.

THIS PROJECT WILL REHABILITATE THE EXISTING STRUCTURE, B-49-44, A TWO SPAN, 220.33 FOOT LONG, STEEL DECK GIRDER BRIDGE SET ON FULL RETAINING 'A4' CONCRETE ABUTMENTS AND A MULTI-COLUMN PIER.

PROTECTIVE SURFACE TREATMENT SHALL BE APPLIED TO THE ENTIRE TOP SURFACE OF THE CONCRETE OVERLAY.

A MINIMUM OF 1½" CONCRETE SHALL BE REMOVED FROM THE BRIDGE DECK AREA SHOWN UNDER THE BID ITEM "CLEANING DECKS".

■ THE EXISTING CROSS SLOPE IS 1.5%. THE MINIMUM OVERLAY THICKNESS OF 1½" OCCURS AT THE NORTH AND SOUTH OVERLAY EDGES.

AVERAGE OVERLAY THICKNESS ESTIMATED AT 2.47 INCHES FOR "CONCRETE MASONRY OVERLAY DECKS" QUANTITY.

PIGMENTED SURFACE SEALER SHALL BE APPLIED TO THE TOP AND ROADWAY FACE OF THE PARAPETS.

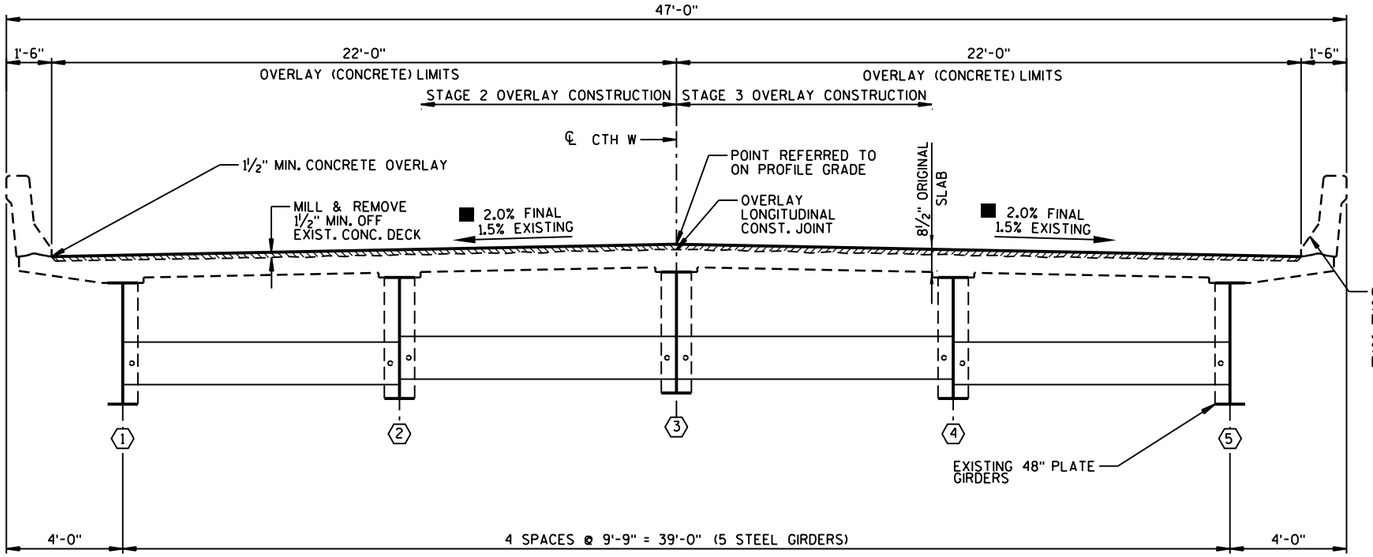

CROSS SECTION THRU ROADWAY

(LOOKING EAST)

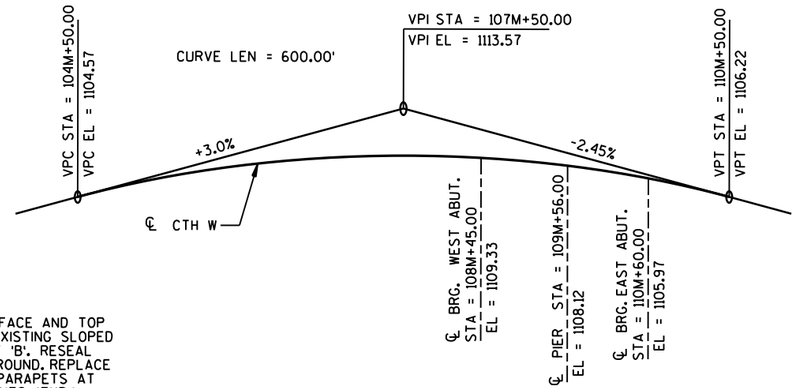

NEW PROFILE GRADE - CTH W

NO.	DATE	REVISION	BY

STATE OF WISCONSIN
DEPARTMENT OF TRANSPORTATION

STRUCTURE B-49-44

DRAWN BY RLR | PLANS CK'D. JRS

CROSS SECTION, QUANTITIES & NOTES

SHEET 2 OF 4
149

FILE= 93215_B-49-0044_02.DGN
DATE= 7/23/2015

8

8

93215_B-49-0044_02.dgn 7/23/2015 8:55:05 AM rrabska

STATE PROJECT NUMBER

1166-00-61

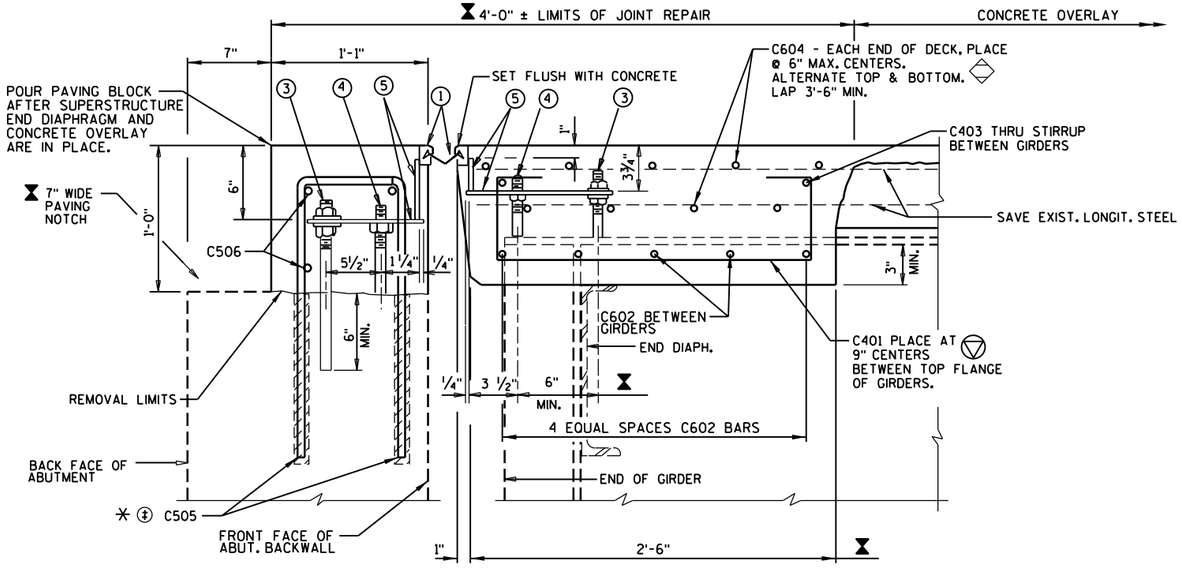

SECTION THRU JOINT AT ABUTMENTS

BILL OF BARS (COATED) 3095 LBS.

MARK	NO. REQ'D	LENGTH	BENT	LOCATION
C401	96	3'-11"	X	DIAPH @ ABUT. - STIRRUP - VERT.
C602	40	8'-5"		DIAPH @ ABUT. - BETWEEN GIRDERS - TRANS.
C403	32	8'-5"		DECK ENDS BETWEEN GIRDERS - THRU STRIP SEAL & STIRRUPS - TRANS.
C604	36	22'-10"		DECK ENDS - ABOVE DIAPHRAGM - TRANS.
✳ C505	188	2'-11"	X	ABUTMENT BACKWALL TOP - TYPE L - VERT.
C506	42	8'-0"		ABUTMENT BACKWALL TOP - TRANS.

DIMENSIONS IN BENDING DETAILS ARE OUT TO OUT OF BAR.
EPOXY COAT ALL BAR STEEL.

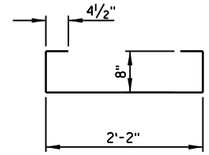

C401

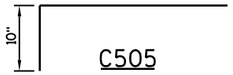

C505

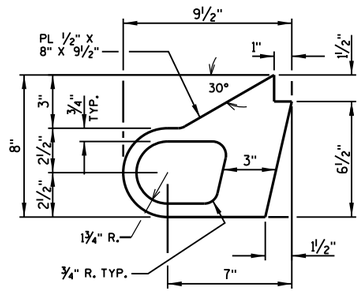

ALTERNATE STRIP SEAL ANCHOR

LEGEND

Ⓣ - REMOVE EXISTING VERTICAL REINFORCING BARS DURING REMOVAL OF PAVING BLOCK. REPLACE WITH "MASONRY ANCHORS TYPE L NO. 5 BARS" SPACED AT 1'-0".

✳ - MASONRY ANCHORS TYPE L NO. 5 BARS. EMBED BAR 1'-6" INTO CONCRETE. ANCHOR HOLES SHALL BE 4" CLEAR MIN. TO FACE OF EXISTING CONCRETE. TURN 10" HORIZONTAL LEG OF C505 BARS AS NECESSARY TO FIT.

▽ - DIMENSION IS GIVEN NORMAL TO ℄ OF GIRDER.

⧗ - DIMENSION IS GIVEN NORMAL TO THE ℄ OF ABUTMENT.

◇ - BAR COUPLERS NO. 6 ARE REQUIRED AT LONGITUDINAL CONSTRUCTION JOINT BETWEEN BARS C604. IF BAR LAPS ARE REQUIRED AT BAR COUPLERS, PROVIDE A MINIMUM LAP LENGTH OF 3'-6". IF FLANGED COUPLERS ARE USED, CLIP FLANGES TO PROVIDE 2" COVER TO TOP OF SLAB.

◯ - SEE SHEET 4 FOR LEGEND OF EXPANSION JOINT COMPONENTS.

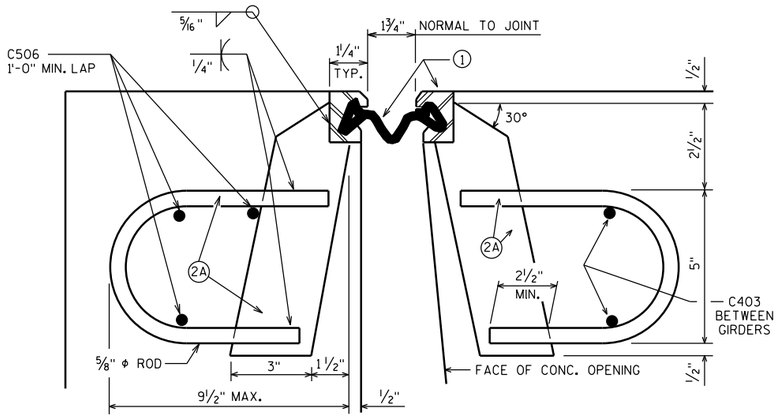

AT PAVING BLOCK AT DECK

SYM. ABOUT ℄ JOINT UNLESS OTHERWISE SHOWN OR NOTED.

SECTION THRU JOINT

ROADWAY TRAFFIC AREA BETWEEN EXTERIOR GIRDERS.

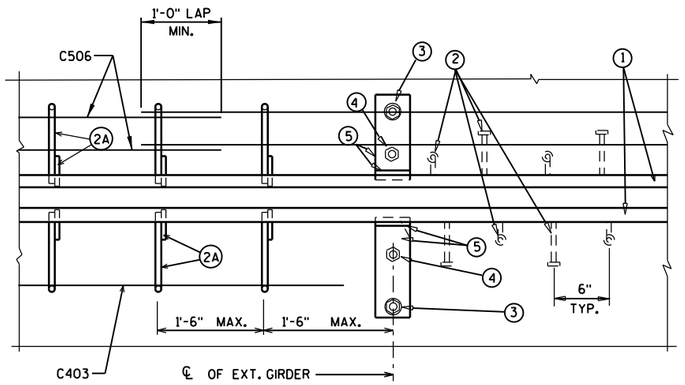

PART PLAN

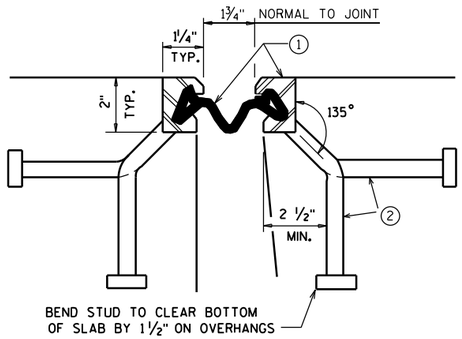

SECTION THRU JOINT

EXTERIOR GIRDER TO EDGE OF DECK & AT PARAPETS

8

8

NO.	DATE	REVISION	BY

STATE OF WISCONSIN
DEPARTMENT OF TRANSPORTATION

STRUCTURE B-49-44

DRAWN BY RLR | PLANS CK'D. JRS

STRIP SEAL EXPANSION JOINT

SHEET 3 OF 4
150

FILE= 93215 B-49-0044_03.DGN
DATE= 7/23/2015

93215_B-49-0044_03.dgn 7/23/2015 8:56:00 AM rrabska

STATE PROJECT NUMBER

1166-00-61

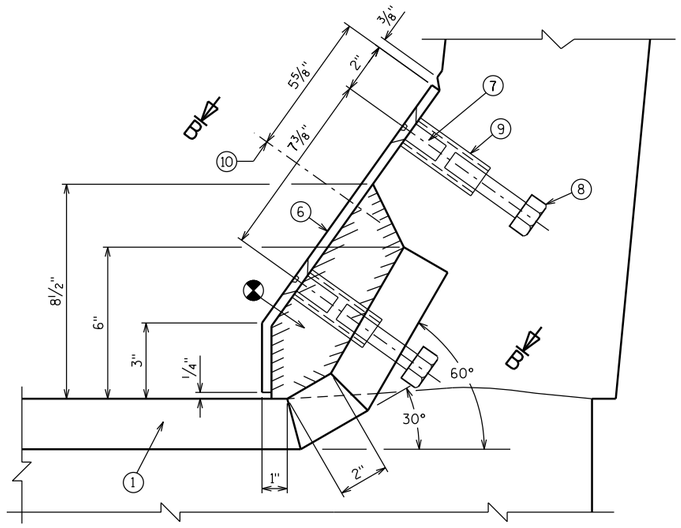

SECTION A-A

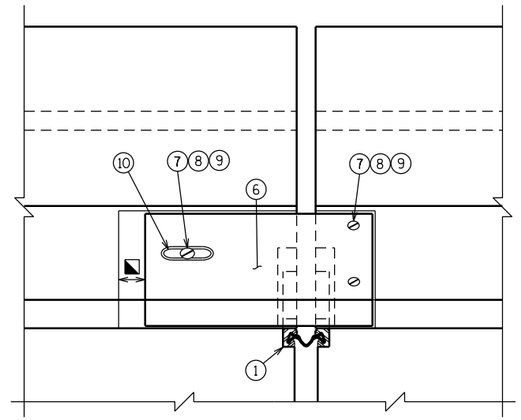

VIEW OF PARAPET PLATE FROM ROADWAY

LEGEND

(1) NEOPRENE STRIP SEAL (4 - INCH) & STEEL EXTRUSIONS. SET JOINT OPENING AT 1¾". JOINT OPENING GIVEN NORMAL TO JOINT.

(2) STUDS ⅝" ϕ X 6⅜" LONG AT 6" ALTERNATE CENTERS. WELD TO EXTRUSIONS & BEND AS SHOWN AFTER WELDING.

(2A) ½" THICK ANCHOR PLATE WITH ⅝"ϕ ROD OR ALTERNATE STRIP SEAL ANCHOR. WELD ROD TO ANCHOR PLATE. WELD ANCHOR PLATE TO NO. 1 AT 1'-6" CTRS. BETWEEN GIRDERS.

(3) ¾" ϕ THREADED ROD WITH 2 NUTS AND PLATE WASHERS. FIELD WELD THREADED ROD TO TOP FLANGE OR ATTACH BY BOLTING THRU FLANGE. ON ABUTMENT SIDE, GROUT THREADED ROD INTO FIELD DRILLED HOLES IN ABUTMENT BACKWALL AS SHOWN.

(4) ¾"ϕ THREADED ROD WITH NUT. TACK WELD NUT TO NO. 5.

(5) FABRICATE SUPPORT FROM 3" X ½" BAR AS SHOWN OR EQUIVALENT, ONE PER GIRDER PER SIDE. FIELD OR SHOP WELD TO NO. 1. IF FIELD WELDED, COVER WELDED AREAS WITH EPOXY-COATING MATERIAL. PROVIDE 1½" ϕ HOLE FOR NO. 3 & 1" ϕ HOLE FOR NO. 4.

(6) GALVANIZED PLATE ⅜" x 1'-2" x 2'-0" LONG WITH HOLES FOR NO. 7. BEND AS SHOWN.

(7) ¾" ϕ x 1½" STAINLESS STEEL SOCKET FLAT HEAD SCREWS WITH ANTI-SEIZE LUBRICANT. PLACE IN COUNTERSUNK HOLE. RECESS 1/16" BELOW PLATE SURFACE.

(8) ¾" ϕ x 4" GALV. HEX HEAD BOLT. BEND 45°.

(9) ¾" ϕ x 2¼" GALV. THREADED COUPLING.

(10) 1" x 5" SLOTTED COUNTERSUNK HOLE FOR NO. 7. PLACE SLOT PARALLEL TO DIRECTION OF MOVEMENT.

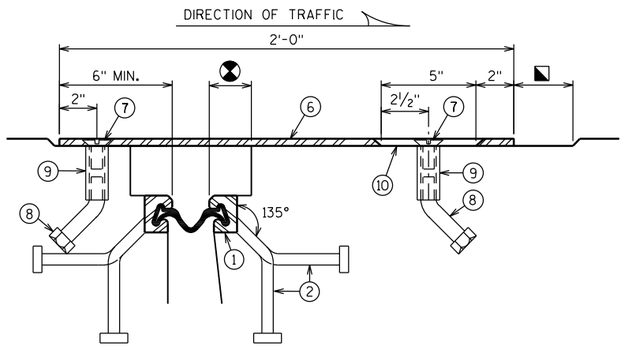

SECTION B-B

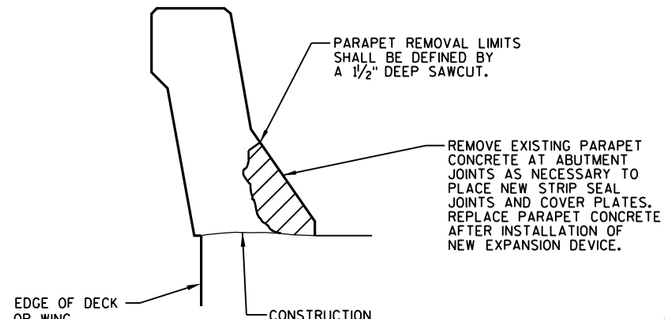

PARAPET REMOVAL LIMITS

SALVAGE ALL EXISTING BAR STEEL IN PARAPETS

⊗ — BLOCK OUT CONCRETE 2" EACH SIDE OF JOINT OPENING

◪ — JOINT OPENING DIMENSION ALONG SKEW PLUS ½"

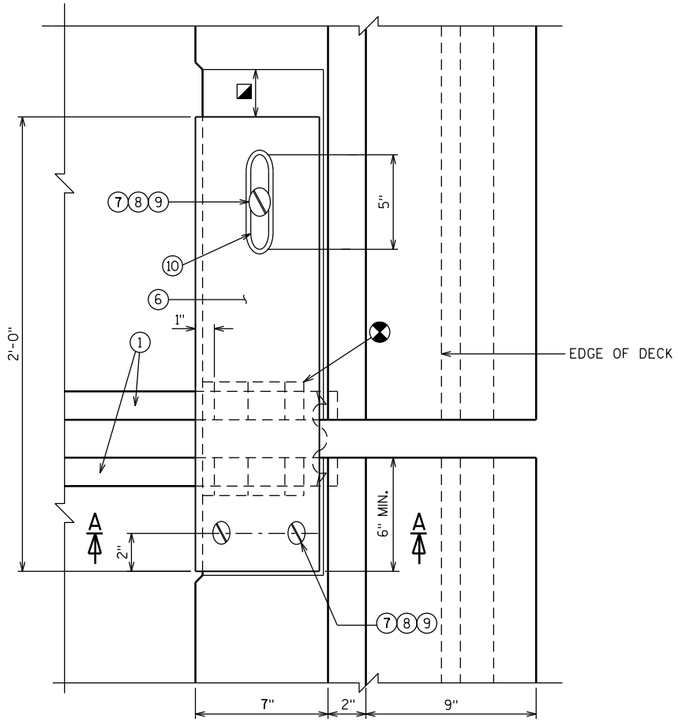

PLAN AT PARAPET

NOTES

ONE FIELD SPLICE PERMITTED IN STEEL EXTRUSIONS, UNLESS MORE ARE REQUIRED FOR STAGED CONSTRUCTION, HANDLING OR GALVANIZING REQUIREMENTS. IF SPLICE IS USED, DETAILS SHALL BE SUBMITTED FOR APPROVAL. NO SPLICING IN NEOPRENE STRIP SEAL.

AFTER FABRICATION, BUT BEFORE SHIPMENT, STRAIGHTEN STEEL EXTRUSIONS SUCH THAT THEY SHALL BE FREE FROM WARP, TWIST & SWEEP.

FABRICATOR SHALL PROVIDE MEANS OF KEEPING GALVANIZED EXTRUSIONS CLEAN & SMOOTH DURING SHIPMENT AND PRIOR TO APPLYING LUBRICANT ADHESIVE FOR NEOPRENE GLAND INSTALLATION.

SANDBLAST PLATES & EXTRUSIONS AFTER FABRICATION IN ACCORDANCE WITH SSPC SP. #6 "COMMERCIAL BLAST CLEANING". AFTER BLAST CLEANING, THE PLATES, SUPPORTS, & EXTRUSIONS SHALL BE HOT DIPPED GALVANIZED.

ANCHOR SYSTEM NO. 8 & NO. 9 SHALL CONFORM TO ASTM A307 & SHALL BE GALVANIZED IN ACCORDANCE WITH ASTM A153 CLASS C & D.

STRIP SEAL EXPANSION JOINT ASSEMBLY, INCLUDING PARAPET PLATES, ANCHOR STUDS & HARDWARE, CONNECTIONS AND FIELD DRILLING, WILL BE PAID FOR AT THE LUMP SUM PRICE BID FOR "EXPANSION DEVICE STRUCTURE B-49-44".

8

8

NO.	DATE	REVISION	BY

STATE OF WISCONSIN
DEPARTMENT OF TRANSPORTATION

STRUCTURE B-49-44

DRAWN BY RLR | PLANS CK'D. JRS

STRIP SEAL EXPANSION JOINT DETAILS

SHEET 4 OF 4

151

FILE= 93215 B-49-0044_04.DGN
DATE= 7/23/2015

93215_B-49-0044_04.dgn 7/23/2015 8:57:07 AM trabska

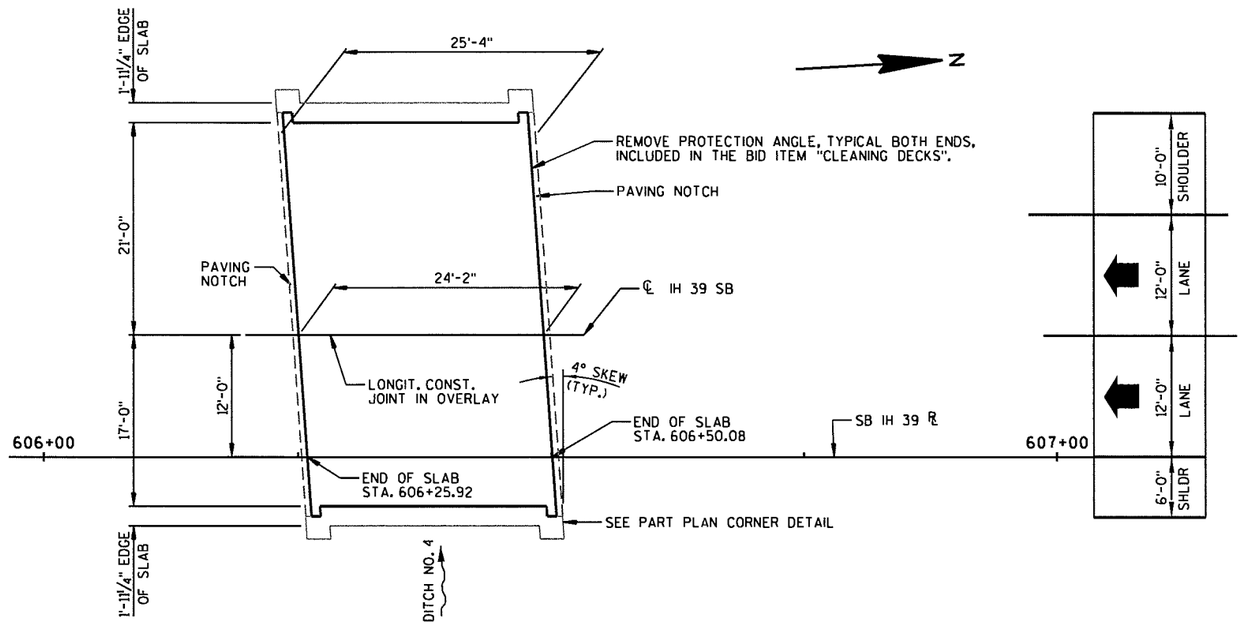

PLAN

(REHAB - CONCRETE OVERLAY ON EXISTING SINGLE SPAN FLAT SLAB)

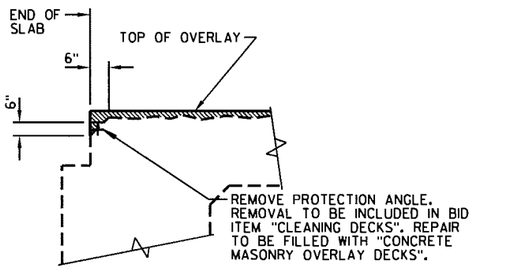

PART LONGITUDINAL SECTION

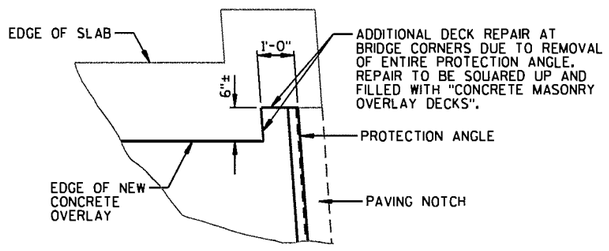

PART PLAN CORNER DETAIL

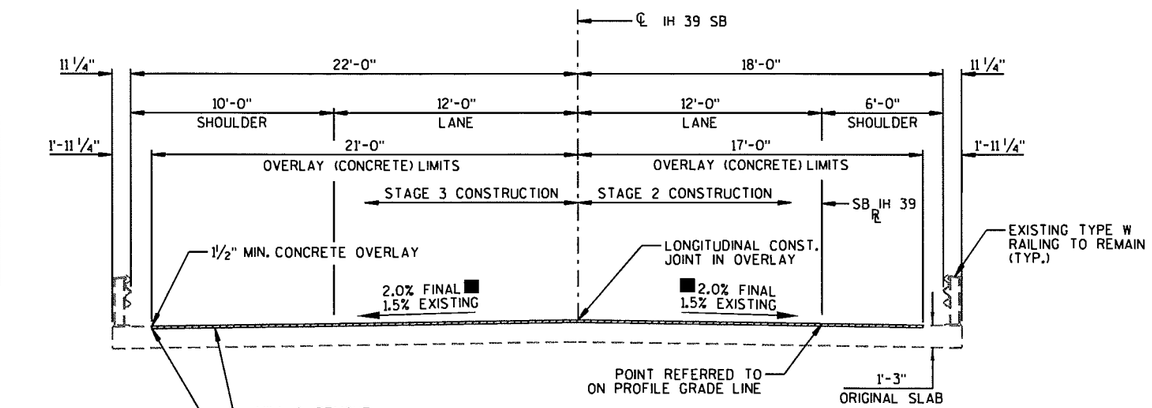

CROSS SECTION THRU ROADWAY

(LOOKING NORTH)

DESIGN DATA

LIVE LOAD:
- DESIGN LOADING: HS-20
- INVENTORY RATING : HS18
- OPERATIONAL RATING : HS32
- WISCONSIN STANDARD PERMIT VEHICLE (WIS-SPV): 190 KIPS

TRAFFIC DATA:
- A.A.D.T. (2017) = 15,900
- A.A.D.T. (2037) = 20,600

MATERIAL PROPERTIES:
- CONCRETE MASONRY ——— f'c = 4,000 P.S.I.
- CONCRETE MASONRY OVERLAY DECKS — f'c = 4,000 P.S.I.

LIST OF DRAWINGS

1. OVERLAY PLAN

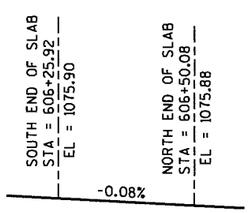

NEW PROFILE GRADE IH 39 SOUTH BOUND

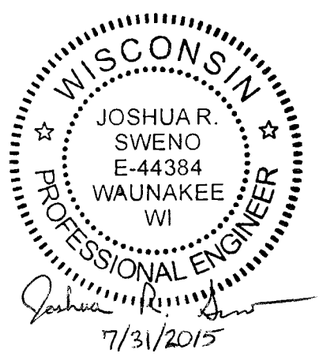

DESIGN CONTACT:
JOSHUA SWENO
(608) 355-8852

BRIDGE OFFICE CONTACT:
WILLIAM DREHER
(608) 266-8489

STATE PROJECT NUMBER

1166-00-61

BENCHMARKS ⌖ NAVD 88

NO.	STA.	DESCRIPTION	ELEV.
4	606+47.2, 35.5' LT	DISK ON NW CORNER STRUCTURE B-49-45	1075.70

ESTIMATED QUANTITIES

	ITEM NUMBER	BID ITEM	UNIT	TOTAL
	203.0225.S.05	DEBRIS CONTAINMENT STRUCTURE B-49-45	LS	1
	502.3200	PROTECTIVE SURFACE TREATMENT	SY	103
*	509.0301	PREPARATION DECKS TYPE 1	SY	6
*	509.0302	PREPARATION DECKS TYPE 2	SY	3
	509.0500	CLEANING DECKS	SY	103
**	509.1500	CONCRETE SURFACE REPAIR	SF	5
	509.2500	CONCRETE MASONRY OVERLAY DECKS	CY	8.1

* QUANTITY LISTED FOR PREPARATION DECKS TYPE 1 AND TYPE 2 IS TENTATIVE. CONTRACTOR SHALL COORDINATE THE FIELD IDENTIFICATION AND DETERMINATION OF ALL DECK REPAIR LOCATIONS WITH THE ENGINEER. DECK PREPARATION REPAIRS SHALL BE FILLED WITH "CONCRETE MASONRY OVERLAY DECKS".

** CONCRETE SURFACE REPAIR REQUIRED ON SLAB EDGES AS DESIGNATED BY THE ENGINEER. QUANTITY LISTED IS TENTATIVE. CONTRACTOR SHALL COORDINATE THE FIELD IDENTIFICATION AND DETERMINATION OF ALL SURFACE REPAIR LOCATIONS WITH THE ENGINEER.

GENERAL NOTES

DRAWINGS SHALL NOT BE SCALED.

ALL DIMENSIONS SHOWN ARE BASED ON EXISTING PLANS. ORIGINAL 1979 PLANS ARE AVAILABLE FROM THE WISCONSIN DEPARTMENT OF TRANSPORTATION.

THIS PROJECT WILL REHABILITATE THE EXISTING STRUCTURE, B-49-45, A SINGLE SPAN, 25.33' CONCRETE FLAT SLAB BRIDGE SET ON CONCRETE PILE AND CAP ABUTMENTS WITH TIMBER BACKING.

SEE THE ROAD PLAN AND PROFILE SHEETS FOR THE APPROXIMATE LOCATIONS OF EXISTING AND PROPOSED UTILITY INSTALLATIONS. THERE MAY BE OTHER UTILITY INSTALLATIONS WITHIN THE PROJECT AREA THAT ARE NOT SHOWN.

■ THE EXISTING CROSS SLOPE IS 1.5%. THE MINIMUM OVERLAY THICKNESS OF 1½" OCCURS AT THE EAST AND WEST OVERLAY EDGES.

A MINIMUM OF 1 ½" CONCRETE SHALL BE REMOVED FROM THE BRIDGE DECK AREA SHOWN UNDER THE BID ITEM "CLEANING DECKS".

PROTECTIVE SURFACE TREATMENT SHALL BE APPLIED TO THE ENTIRE TOP SURFACE OF THE CONCRETE OVERLAY.

AVERAGE OVERLAY THICKNESS ESTIMATED AT 2.26 INCHES FOR CONCRETE MASONRY OVERLAY QUANTITY.

SEE ROAD PLANS FOR TRAFFIC CONTROL STAGES.

NO.	DATE	REVISION	BY

MSA PROFESSIONAL SERVICES — TRANSPORTATION • MUNICIPAL DEVELOPMENT • ENVIRONMENTAL
1230 South Boulevard Baraboo, WI 53913
608-356-2771 1-800-362-4505 Fax: 608-356-2770

STATE OF WISCONSIN
DEPARTMENT OF TRANSPORTATION
ACCEPTED William C. Dreher SDR 08/05/15
CHIEF STRUCTURES DESIGN ENGINEER DATE

STRUCTURE B-49-45

USH 51/IH 39 SOUTH BOUND OVER DITCH NO. 4

COUNTY	TOWN/~~CITY/VILLAGE~~
PORTAGE	BUENA VISTA

DESIGN SPEC. REHABILITATION - N/A

DESIGNED BY	DESIGN CK'D.	DRAWN BY	PLANS CK'D.
JRS	MSR	RLR	JRS

OVERLAY PLAN

SHEET 152 OF 1

8

8

93215_B-49-0045_01.dgn 7/23/2015 8:14:19 AM franska

FILE= 93215_B-49-0045_01.DGN
DATE= 7-23-2015

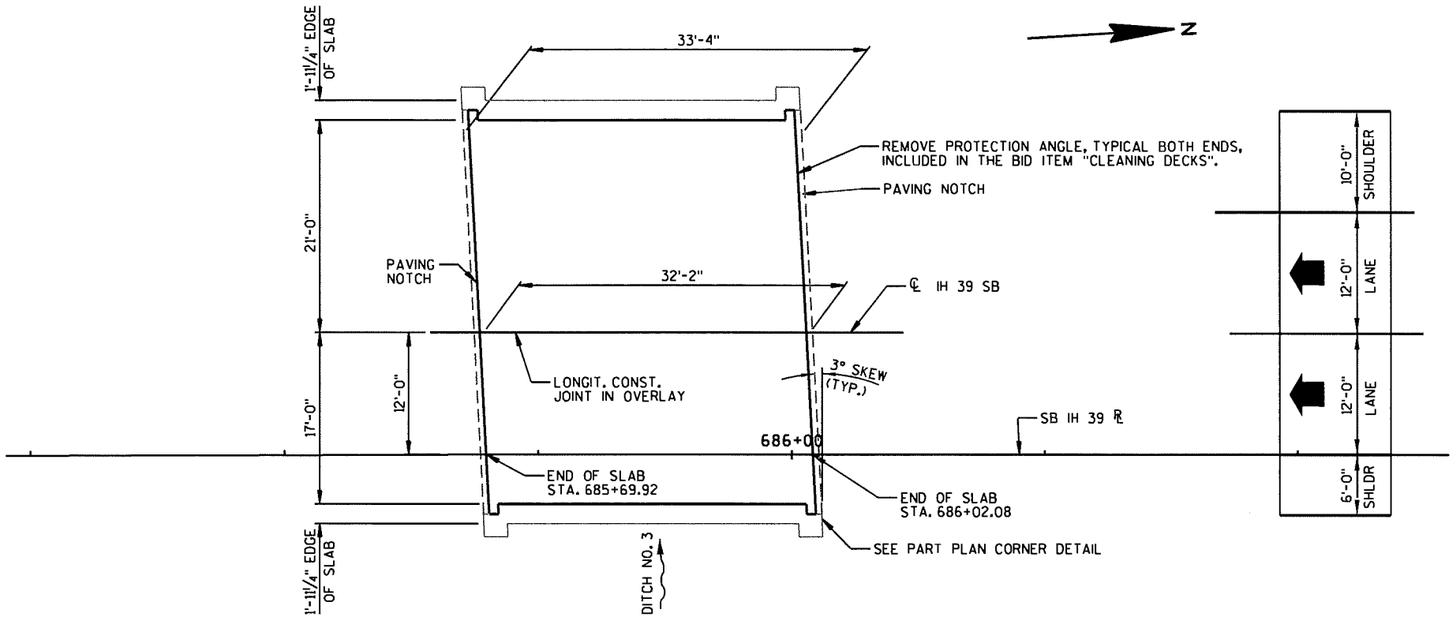

PLAN

(REHAB - CONCRETE OVERLAY ON EXISTING SINGLE SPAN FLAT SLAB)

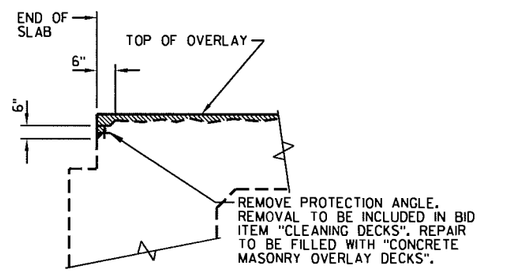

PART LONGITUDINAL SECTION

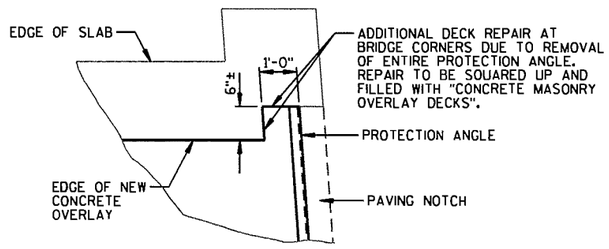

PART PLAN CORNER DETAIL

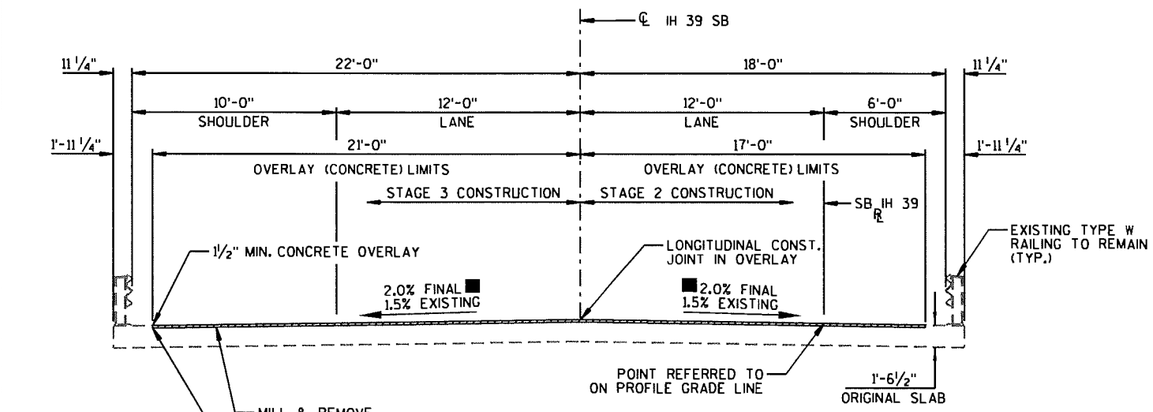

CROSS SECTION THRU ROADWAY

(LOOKING NORTH)

DESIGN DATA

LIVE LOAD:

DESIGN LOADING: HS-20
INVENTORY RATING : HS18
OPERATIONAL RATING : HS31
WISCONSIN STANDARD PERMIT VEHICLE (WIS-SPV): 200 KIPS

TRAFFIC DATA:

A.A.D.T. (2017) = 15,900
A.A.D.T. (2037) = 20,600

MATERIAL PROPERTIES:

CONCRETE MASONRY ——— f'c = 4,000 P.S.I.
CONCRETE MASONRY OVERLAY DECKS — f'c = 4,000 P.S.I.

LIST OF DRAWINGS

1. OVERLAY PLAN

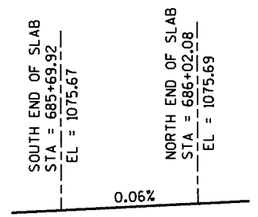

NEW PROFILE GRADE IH 39 SOUTH BOUND

STATE PROJECT NUMBER
1166-00-61

BENCHMARKS ⊕ NAVD 88

NO.	STA.	DESCRIPTION	ELEV.
5	685+99.8, 34.0' LT	DISK ON NW CORNER STRUCTURE B-49-46	1075.50

ESTIMATED QUANTITIES

	ITEM NUMBER	BID ITEM	UNIT	TOTAL
	203.0225.S.07	DEBRIS CONTAINMENT STRUCTURE B-49-46	LS	1
	502.3200	PROTECTIVE SURFACE TREATMENT	SY	136
*	503.0301	PREPARATION DECKS TYPE 1	SY	7
*	503.0302	PREPARATION DECKS TYPE 2	SY	4
	503.0500	CLEANING DECKS	SY	136
**	503.1500	CONCRETE SURFACE REPAIR	SF	5
	503.2500	CONCRETE MASONRY OVERLAY DECKS	CY	10.7

* QUANTITY LISTED FOR PREPARATION DECKS TYPE 1 AND TYPE 2 IS TENTATIVE. CONTRACTOR SHALL COORDINATE THE FIELD IDENTIFICATION AND DETERMINATION OF ALL DECK REPAIR LOCATIONS WITH THE ENGINEER. DECK PREPARATION REPAIRS SHALL BE FILLED WITH "CONCRETE MASONRY OVERLAY DECKS".

** CONCRETE SURFACE REPAIR REQUIRED ON SLAB EDGES AS DESIGNATED BY THE ENGINEER. QUANTITY LISTED IS TENTATIVE. CONTRACTOR SHALL COORDINATE THE FIELD IDENTIFICATION AND DETERMINATION OF ALL SURFACE REPAIR LOCATIONS WITH THE ENGINEER.

GENERAL NOTES

DRAWINGS SHALL NOT BE SCALED.

ALL DIMENSIONS SHOWN ARE BASED ON EXISTING PLANS. ORIGINAL 1979 PLANS ARE AVAILABLE FROM THE WISCONSIN DEPARTMENT OF TRANSPORTATION.

THIS PROJECT WILL REHABILITATE THE EXISTING STRUCTURE, B-49-46, A SINGLE SPAN, 33.33' CONCRETE FLAT SLAB BRIDGE SET ON CONCRETE PILE AND CAP ABUTMENTS WITH TIMBER BACKING.

SEE THE ROAD PLAN AND PROFILE SHEETS FOR THE APPROXIMATE LOCATIONS OF EXISTING AND PROPOSED UTILITY INSTALLATIONS. THERE MAY BE OTHER UTILITY INSTALLATIONS WITHIN THE PROJECT AREA THAT ARE NOT SHOWN.

■ THE EXISTING CROSS SLOPE IS 1.5%. THE MINIMUM OVERLAY THICKNESS OF 1½" OCCURS AT THE EAST AND WEST OVERLAY EDGES.

A MINIMUM OF 1 ½" CONCRETE SHALL BE REMOVED FROM THE BRIDGE DECK AREA SHOWN UNDER THE BID ITEM "CLEANING DECKS".

PROTECTIVE SURFACE TREATMENT SHALL BE APPLIED TO THE ENTIRE TOP SURFACE OF THE NEW CONCRETE OVERLAY.

AVERAGE OVERLAY THICKNESS ESTIMATED AT 2.25 INCHES FOR CONCRETE MASONRY OVERLAY QUANTITY.

SEE ROAD PLANS FOR TRAFFIC CONTROL STAGES.

DESIGN CONTACT:
JOSHUA SWENO
(608) 355-8852

BRIDGE OFFICE CONTACT:
WILLIAM DREHER
(608) 266-8489

NO.	DATE	REVISION	BY

MSA PROFESSIONAL SERVICES
TRANSPORTATION • MUNICIPAL DEVELOPMENT • ENVIRONMENTAL
1230 South Boulevard Baraboo, WI 53913
608-356-2771 1-800-362-4505 Fax: 608-356-2770

STATE OF WISCONSIN
DEPARTMENT OF TRANSPORTATION
ACCEPTED William C. Dreher SOR 08/05/15
CHIEF STRUCTURES DESIGN ENGINEER DATE

STRUCTURE B-49-46

USH 51/IH 39 SOUTH BOUND OVER DITCH NO. 3

COUNTY	TOWN/~~CITY/VILLAGE~~
PORTAGE	BUENA VISTA

DESIGN SPEC.
REHABILITATION - N/A

DESIGNED BY	DESIGN CK'D.	DRAWN BY	PLANS CK'D.
JRS	MSR	RLR	JRS

OVERLAY PLAN

SHEET 153 OF 1

8

8

FILE= 93215_B-49-0046_01.DGN
DATE= 7-23-2015

93215 B-49-0046 01.dgn 7/23/2015 8:18:23 AM frabska

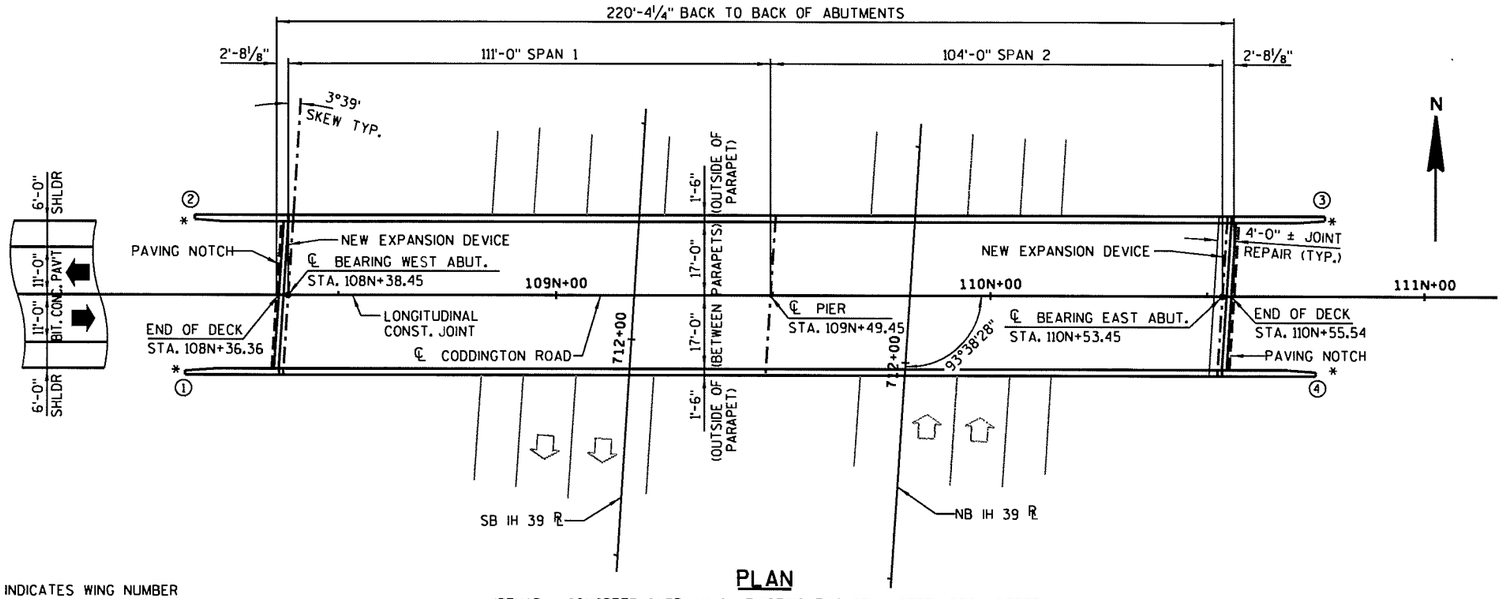

PLAN

(REHAB - CONCRETE OVERLAY ON EXISTING TWO SPAN STEEL DECK GIRDER)

◯ - INDICATES WING NUMBER

* - INDICATES LOCATION OF PROVISION FOR NEW THRIE BEAM ATTACHMENT AT WINGS (SEE SDD MIDWEST GUARDRAIL SYSTEM THRIE BEAM TRANSITION (MGS)).

▲ - DIMENSION TAKEN NORMAL TO ℄ OF ABUTMENT.

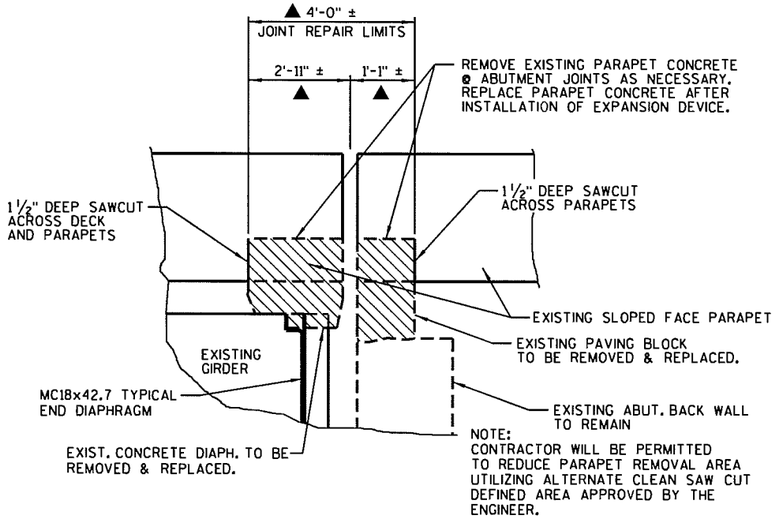

REMOVAL DETAIL

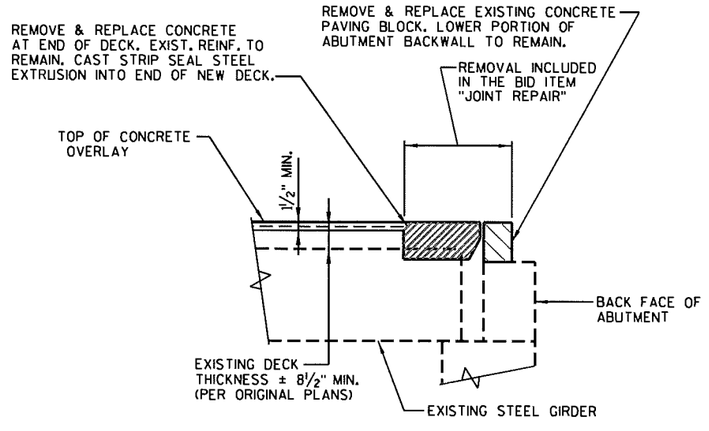

PART LONGITUDINAL SECTION

STATE PROJECT NUMBER
1166-00-61

BENCHMARKS ⌖ NAVD 88

NO.	STA.	DESCRIPTION	ELEV.
6	108N+20.40, 18'RT	DISK ON SW PARAPET OF STRUCTURE	1101.88

DESIGN DATA

LIVE LOAD:
- DESIGN LOADING: HS-20
- INVENTORY RATING : HS17
- OPERATIONAL RATING : HS29
- WISCONSIN STANDARD PERMIT VEHICLE (WIS-SPV): 200 KIPS

TRAFFIC DATA:

	IH 39	CODDINGTON RD.
A.A.D.T. (2017) =	15,900	< 250
A.A.D.T. (2037) =	20,600	(2011)

MATERIAL PROPERTIES:
- CONCRETE MASONRY — f'c = 4,000 P.S.I.
- CONCRETE MASONRY OVERLAY DECKS — f'c = 4,000 P.S.I.
- EXISTING BAR STEEL REINFORCEMENT — fy = 60,000 P.S.I.
- HIGH STRENGTH BAR STEEL REINFORCEMENT, GRADE 60 — fy = 60,000 P.S.I.

LIST OF DRAWINGS

1. GENERAL PLAN
2. CROSS SECTION, QUANTITIES & NOTES
3. STRIP SEAL EXPANSION JOINT
4. STRIP SEAL EXPANSION JOINT DETAILS

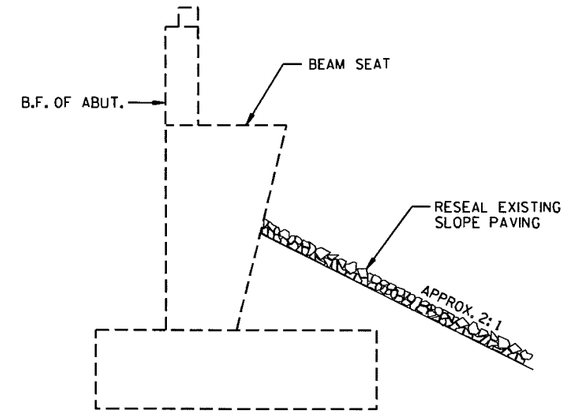

SLOPE PAVING AT ABUTMENTS

WISCONSIN
JOSHUA R. SWENO
E-44384
WAUNAKEE
WI
PROFESSIONAL ENGINEER
7/31/2015

DESIGN CONTACT:
JOSHUA SWENO
(608) 355-8852

BRIDGE OFFICE CONTACT:
WILLIAM DREHER
(608) 266-8489

NO.	DATE	REVISION	BY

MSA PROFESSIONAL SERVICES — TRANSPORTATION • MUNICIPAL DEVELOPMENT • ENVIRONMENTAL
1230 South Boulevard Baraboo, WI 53913
608-356-2771 1-800-362-4505 Fax: 608-356-2770

STATE OF WISCONSIN
DEPARTMENT OF TRANSPORTATION
ACCEPTED William C. Dreher SDR 08/05/15
CHIEF STRUCTURES DESIGN ENGINEER — DATE

STRUCTURE B-49-47

CODDINGTON ROAD OVER IH 39

COUNTY	TOWN/~~CITY/VILLAGE~~
PORTAGE	BUENA VISTA

DESIGN SPEC. REHABILITATION - N/A

DESIGNED BY	DESIGN CK'D.	DRAWN BY	PLANS CK'D.
JRS	MSR	RLR	JRS

GENERAL PLAN

SHT 154 OF 4

8

8

FILE= 930215_B-49-0047_01.DGN
DATE= 7/23/2015

93215 B-49-0047 01.dgn 7/23/2015 8:58:41 AM franska

STATE PROJECT NUMBER

1166-00-61

TOTAL ESTIMATED QUANTITIES

	ITEM NUMBER	BID ITEM	UNIT	WEST ABUT.	PIER	EAST ABUT.	SUPER	TOTAL
	203.0225.S.08	DEBRIS CONTAINMENT STRUCTURE B-49-47	LS	-	-	-	-	1
	502.3100.08	EXPANSION DEVICE STRUCTURE B-49-47	LS	-	-	-	-	1
	502.3200	PROTECTIVE SURFACE TREATMENT	SY	-	-	-	828	828
	502.3210	PIGMENTED SURFACE SEALER	SY	-	-	-	209	209
	505.0600	BAR STEEL REINFORCEMENT HS COATED STRUCTURES	LB	-	-	-	2370	2370
*	509.0301	PREPARATION DECKS TYPE 1	SY	-	-	-	4	4
*	509.0302	PREPARATION DECKS TYPE 2	SY	-	-	-	2	2
	509.0500	CLEANING DECKS	SY	-	-	-	801	801
	509.1000	JOINT REPAIR	SY	-	-	-	33	33
**	509.1500	CONCRETE SURFACE REPAIR	SF	2.5	-	2.5	-	5
*	509.2000	FULL-DEPTH DECK REPAIR	SY	-	-	-	1	1
	509.2500	CONCRETE MASONRY OVERLAY DECKS	CY	-	-	-	59	59
	509.9050.S.	CLEANING PARAPETS	LF	-	-	-	520	520
	604.9015.S.	RESEAL CRUSHED AGGREGATE SLOPE PAVING	SY	99	-	99	-	198
	614.0150	ANCHOR ASSEMBLIES FOR STEEL PLATE BEAM GUARD	EACH	-	-	-	4	4

* — QUANTITY LISTED IS AN ESTIMATE. CONTRACTOR SHALL COORDINATE THE FIELD IDENTIFICATION AND DETERMINATION OF ALL DECK REPAIR LOCATIONS WITH THE ENGINEER. DECK PREPARATION REPAIRS SHALL BE FILLED WITH "CONCRETE MASONRY OVERLAY DECKS".

** — CONCRETE SURFACE REPAIR SHALL BE USED FOR NEEDED REPAIRS. LOCATIONS AND LIMITS OF REPAIR SHALL BE DETERMINED IN THE FIELD BY THE ENGINEER.

⬡ — INDICATES GIRDER NUMBER.

GENERAL NOTES

DRAWINGS SHALL NOT BE SCALED.

SEE ROAD PLANS FOR TRAFFIC CONTROL.

THE FIRST DIGIT OF A THREE DIGIT BAR MARK SIGNIFIES THE BAR SIZE.

BAR STEEL REINFORCEMENT SHALL BE EMBEDDED 2" CLEAR UNLESS SHOWN OR NOTED OTHERWISE.

DIMENSIONS AND STATIONING SHOWN ARE BASED ON EXISTING PLANS. ORIGINAL 1977 PLANS ARE AVAILABLE FROM THE WISCONSIN DEPARTMENT OF TRANSPORTATION.

THE LOCATIONS OF EXISTING UTILITY INSTALLATIONS AS SHOWN ON THE PLANS ARE APPROXIMATE. THERE MAY BE OTHER UTILITY INSTALLATIONS WITHIN THE PROJECT AREA THAT ARE NOT SHOWN.

IMPROVEMENTS INCLUDE A CONCRETE OVERLAY OF THE BRIDGE DECK, REPLACING JOINTS, CLEANING PARAPETS, AND RESEALING SLOPE PAVING.

ALL CONCRETE REMOVAL SHALL BE DEFINED BY A 1½" DEEP SAW CUT.

THIS PROJECT WILL REHABILITATE THE EXISTING STRUCTURE, B-49-47, A TWO SPAN, 220.35 FOOT LONG, STEEL DECK GIRDER BRIDGE SET ON FULL RETAINING 'A4' CONCRETE ABUTMENTS AND A MULTI-COLUMN PIER.

PROTECTIVE SURFACE TREATMENT SHALL BE APPLIED TO THE ENTIRE TOP SURFACE OF THE CONCRETE OVERLAY.

A MINIMUM OF 1½" CONCRETE SHALL BE REMOVED FROM THE BRIDGE DECK AREA SHOWN UNDER THE BID ITEM "CLEANING DECKS".

■ THE EXISTING CROSS SLOPE IS 1.5%. THE MINIMUM OVERLAY THICKNESS OF 1½" OCCURS AT THE NORTH AND SOUTH OVERLAY EDGES.

AVERAGE OVERLAY THICKNESS ESTIMATED AT 2.13 INCHES FOR "CONCRETE MASONRY OVERLAY DECKS" QUANTITY.

PIGMENTED SURFACE SEALER SHALL BE APPLIED TO THE TOP AND ROADWAY FACE OF THE PARAPETS.

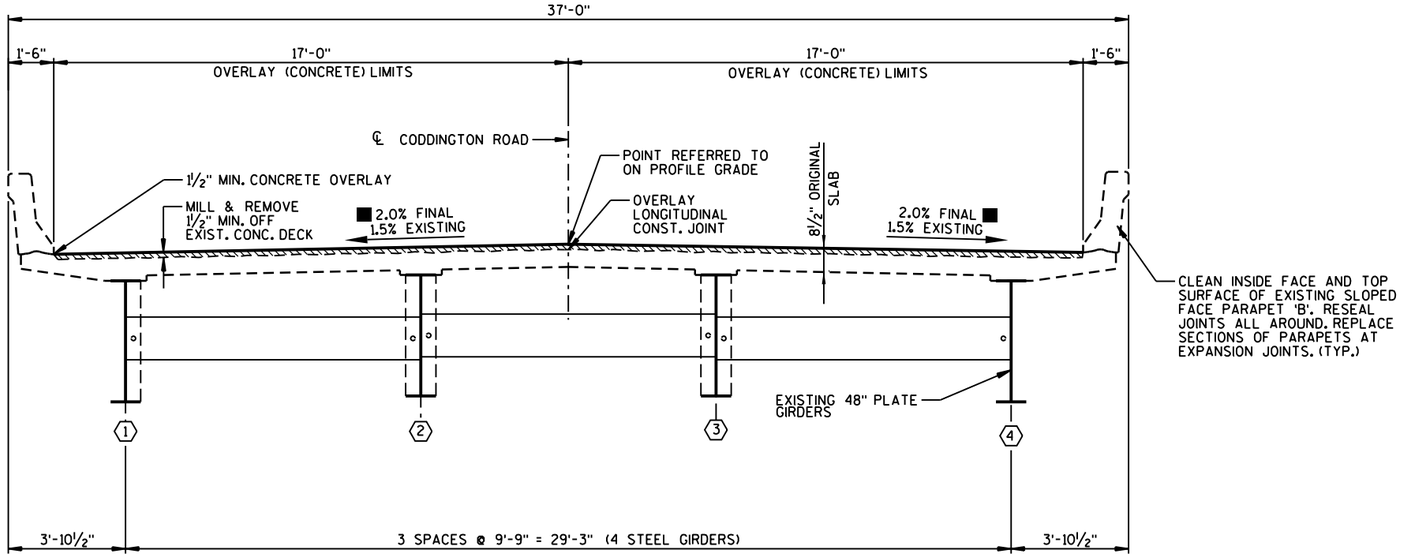

CROSS SECTION THRU ROADWAY

(LOOKING EAST)

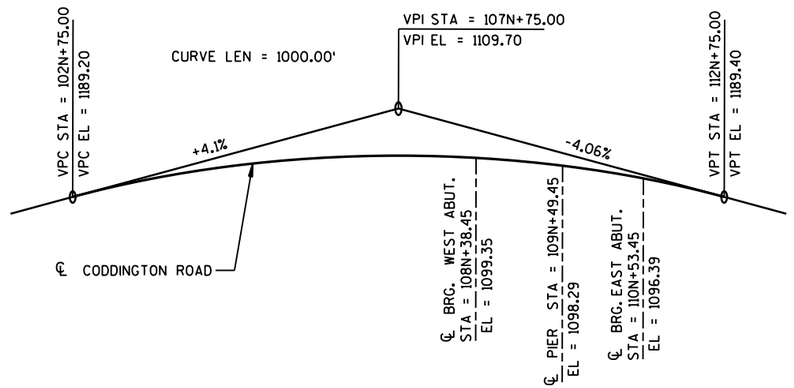

NEW PROFILE GRADE - CODDINGTON ROAD

NO.	DATE	REVISION	BY

STATE OF WISCONSIN
DEPARTMENT OF TRANSPORTATION

STRUCTURE B-49-47

DRAWN BY RLR | PLANS CK'D. JRS

CROSS SECTION, QUANTITIES & NOTES

SHEET 2 OF 4

155

8

8

93215_B-49-0047_02.dgn 7/23/2015 9:11:56 AM rrabska

FILE= 93215_B-49-0047_02.DGN
DATE=7/23/2015

STATE PROJECT NUMBER

1166-00-61

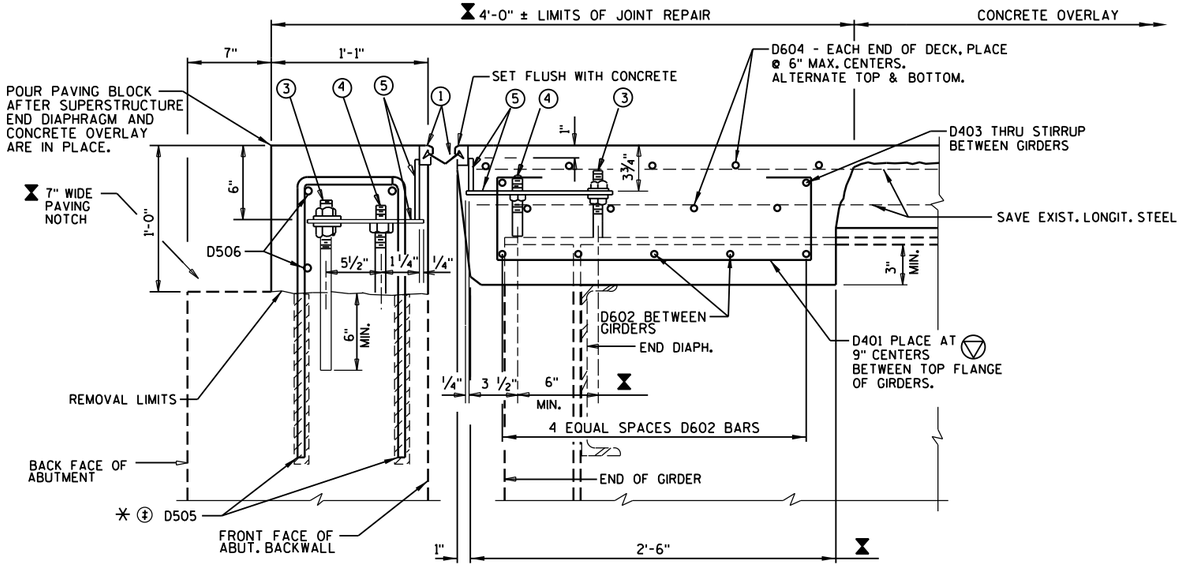

SECTION THRU JOINT AT ABUTMENTS

BILL OF BARS (COATED) 2370 LBS.

	MARK	NO. REQ'D	LENGTH	BENT	LOCATION
	D401	72	3'-11"	X	DIAPH @ ABUT. - STIRRUP - VERT.
	D602	30	8'-5"		DIAPH @ ABUT. - BETWEEN GIRDERS - TRANS.
	D403	24	8'-5"		DECK ENDS BETWEEN GIRDERS - THRU STRIP SEAL & STIRRUPS - TRANS.
	D604	18	35'-10"		DECK ENDS - ABOVE DIAPHRAGM - TRANS.
✳	D505	148	2'-11"	X	ABUTMENT BACKWALL TOP - TYPE L - VERT.
	D506	30	8'-0"		ABUTMENT BACKWALL TOP - TRANS.

DIMENSIONS IN BENDING DETAILS ARE OUT TO OUT OF BAR.
EPOXY COAT ALL BAR STEEL.

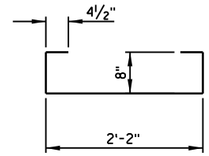

D401

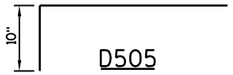

D505

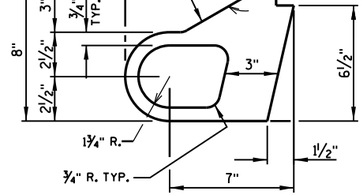

ALTERNATE STRIP SEAL ANCHOR

LEGEND

- ‡ - REMOVE EXISTING VERTICAL REINFORCING BARS DURING REMOVAL OF PAVING BLOCK. REPLACE WITH "MASONRY ANCHORS TYPE L NO. 5 BARS" SPACED AT 1'-0".
- ✳ - MASONRY ANCHORS TYPE L NO. 5 BARS. EMBED BAR 1'-6" INTO CONCRETE. ANCHOR HOLES SHALL BE 4" CLEAR MIN. TO FACE OF EXISTING CONCRETE. TURN 10" HORIZONTAL LEG OF D505 BARS AS NECESSARY TO FIT.
- ▽ - DIMENSION IS GIVEN NORMAL TO ℄ OF GIRDER.
- ⧗ - DIMENSION IS GIVEN NORMAL TO THE ℄ OF ABUTMENT.
- ◯ - SEE SHEET 4 FOR LEGEND OF EXPANSION JOINT COMPONENTS.

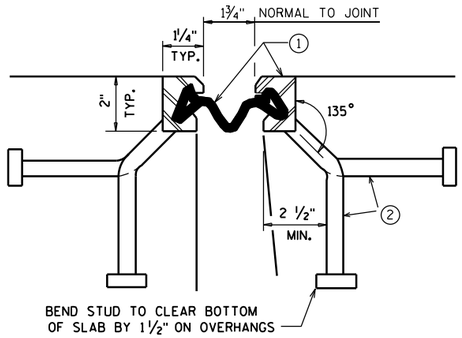

SECTION THRU JOINT

EXTERIOR GIRDER TO EDGE OF DECK & AT PARAPETS

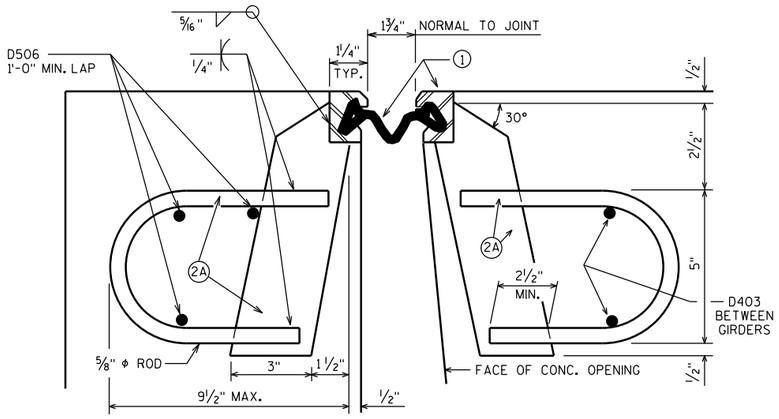

SYM. ABOUT ℄ JOINT UNLESS OTHERWISE SHOWN OR NOTED.

SECTION THRU JOINT

ROADWAY TRAFFIC AREA BETWEEN EXTERIOR GIRDERS.

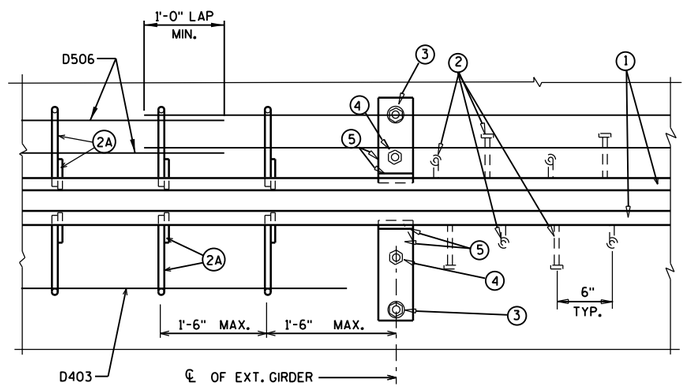

PART PLAN

NO.	DATE	REVISION	BY

STATE OF WISCONSIN
DEPARTMENT OF TRANSPORTATION

STRUCTURE B-49-47

DRAWN BY RLR | PLANS CK'D. JRS

STRIP SEAL EXPANSION JOINT

SHEET 3 OF 4

156

8

8

FILE= 93215 B-49-0047_03.DGN
DATE= 7/23/2015

93215_B-49-0047_03.dgn 7/23/2015 9:13:38 AM rrabska

STATE PROJECT NUMBER

1166-00-61

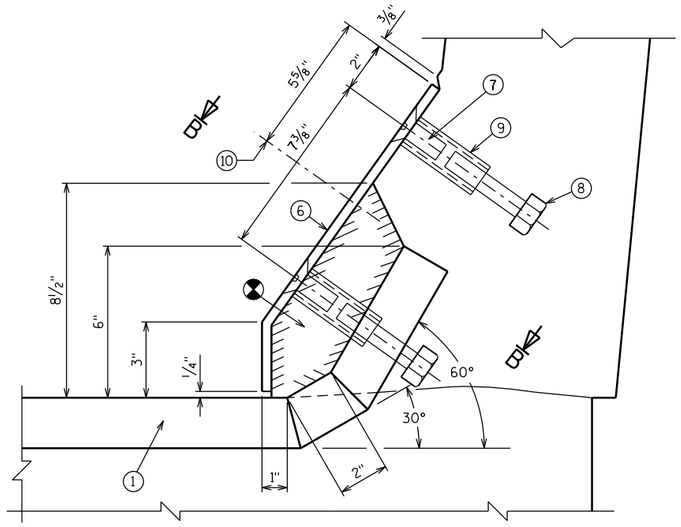

SECTION A-A

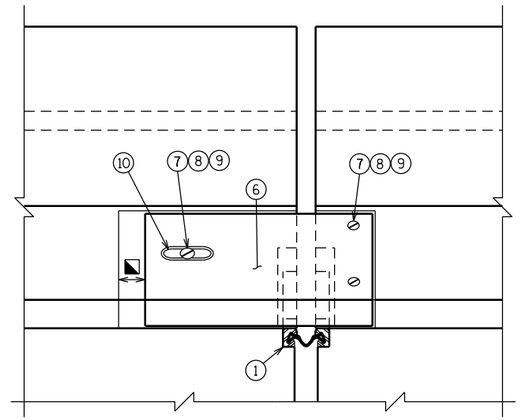

VIEW OF PARAPET PLATE FROM ROADWAY

LEGEND

(1) NEOPRENE STRIP SEAL (4 - INCH) & STEEL EXTRUSIONS. SET JOINT OPENING AT 1¾". JOINT OPENING GIVEN NORMAL TO JOINT.

(2) STUDS ⅝" ϕ X 6⅜" LONG AT 6" ALTERNATE CENTERS. WELD TO EXTRUSIONS & BEND AS SHOWN AFTER WELDING.

(2A) ½" THICK ANCHOR PLATE WITH ⅝"ϕ ROD OR ALTERNATE STRIP SEAL ANCHOR. WELD ROD TO ANCHOR PLATE. WELD ANCHOR PLATE TO NO. 1 AT 1'-6" CTRS. BETWEEN GIRDERS.

(3) ¾" ϕ THREADED ROD WITH 2 NUTS AND PLATE WASHERS. FIELD WELD THREADED ROD TO TOP FLANGE OR ATTACH BY BOLTING THRU FLANGE. ON ABUTMENT SIDE, GROUT THREADED ROD INTO FIELD DRILLED HOLES IN ABUTMENT BACKWALL AS SHOWN.

(4) ¾"ϕ THREADED ROD WITH NUT. TACK WELD NUT TO NO. 5.

(5) FABRICATE SUPPORT FROM 3" X ½" BAR AS SHOWN OR EQUIVALENT, ONE PER GIRDER PER SIDE. FIELD OR SHOP WELD TO NO. 1. IF FIELD WELDED, COVER WELDED AREAS WITH EPOXY-COATING MATERIAL. PROVIDE 1½" ϕ HOLE FOR NO. 3 & 1" ϕ HOLE FOR NO. 4.

(6) GALVANIZED PLATE ⅜" x 1'-2" x 2'-0" LONG WITH HOLES FOR NO. 7. BEND AS SHOWN.

(7) ¾" ϕ x 1½" STAINLESS STEEL SOCKET FLAT HEAD SCREWS WITH ANTI-SEIZE LUBRICANT. PLACE IN COUNTERSUNK HOLE. RECESS 1/16" BELOW PLATE SURFACE.

(8) ¾" ϕ x 4" GALV. HEX HEAD BOLT. BEND 45°.

(9) ¾" ϕ x 2¼" GALV. THREADED COUPLING.

(10) 1" x 5" SLOTTED COUNTERSUNK HOLE FOR NO. 7. PLACE SLOT PARALLEL TO DIRECTION OF MOVEMENT.

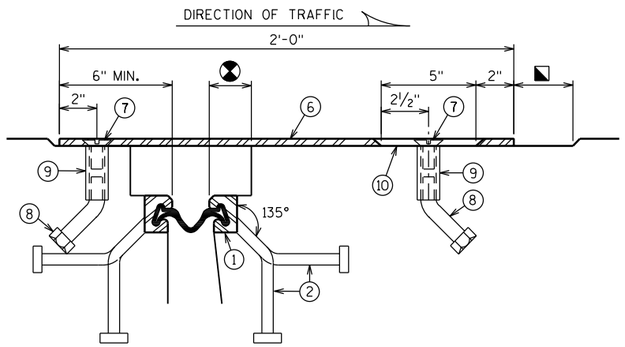

SECTION B-B

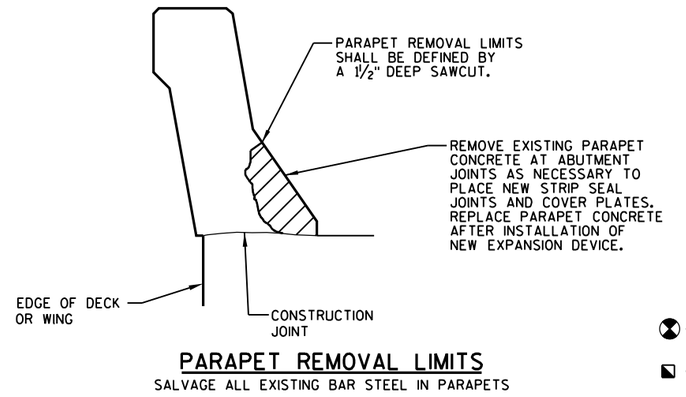

PARAPET REMOVAL LIMITS

SALVAGE ALL EXISTING BAR STEEL IN PARAPETS

⊗ — BLOCK OUT CONCRETE 2" EACH SIDE OF JOINT OPENING

◪ — JOINT OPENING DIMENSION ALONG SKEW PLUS ½"

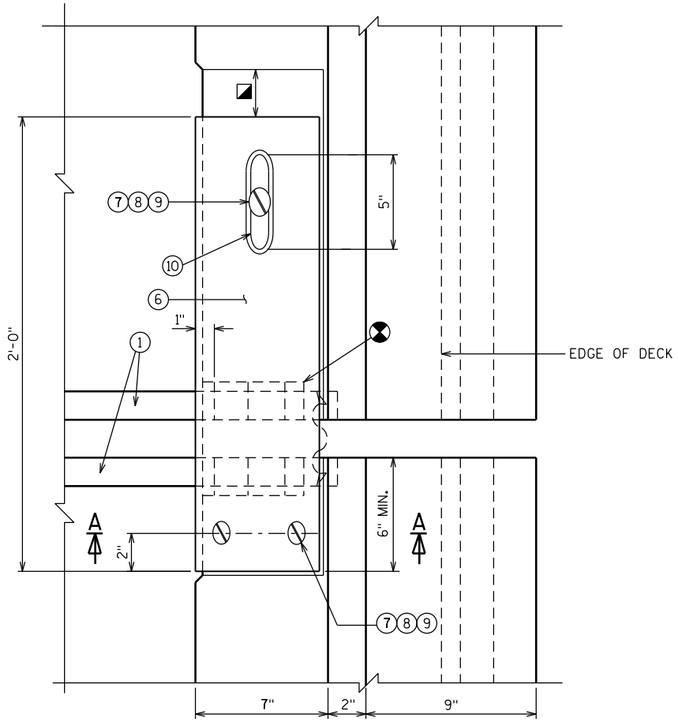

PLAN AT PARAPET

NOTES

ONE FIELD SPLICE PERMITTED IN STEEL EXTRUSIONS, UNLESS MORE ARE REQUIRED FOR STAGED CONSTRUCTION, HANDLING OR GALVANIZING REQUIREMENTS. IF SPLICE IS USED, DETAILS SHALL BE SUBMITTED FOR APPROVAL. NO SPLICING IN NEOPRENE STRIP SEAL.

AFTER FABRICATION, BUT BEFORE SHIPMENT, STRAIGHTEN STEEL EXTRUSIONS SUCH THAT THEY SHALL BE FREE FROM WARP, TWIST & SWEEP.

FABRICATOR SHALL PROVIDE MEANS OF KEEPING GALVANIZED EXTRUSIONS CLEAN & SMOOTH DURING SHIPMENT AND PRIOR TO APPLYING LUBRICANT ADHESIVE FOR NEOPRENE GLAND INSTALLATION.

SANDBLAST PLATES & EXTRUSIONS AFTER FABRICATION IN ACCORDANCE WITH SSPC SP. #6 "COMMERCIAL BLAST CLEANING". AFTER BLAST CLEANING, THE PLATES, SUPPORTS, & EXTRUSIONS SHALL BE HOT DIPPED GALVANIZED.

ANCHOR SYSTEM NO. 8 & NO. 9 SHALL CONFORM TO ASTM A307 & SHALL BE GALVANIZED IN ACCORDANCE WITH ASTM A153 CLASS C & D.

STRIP SEAL EXPANSION JOINT ASSEMBLY, INCLUDING PARAPET PLATES, ANCHOR STUDS & HARDWARE, CONNECTIONS AND FIELD DRILLING, WILL BE PAID FOR AT THE LUMP SUM PRICE BID FOR "EXPANSION DEVICE STRUCTURE B-49-47".

8

8

NO.	DATE	REVISION	BY

STATE OF WISCONSIN
DEPARTMENT OF TRANSPORTATION

STRUCTURE B-49-47

DRAWN BY RLR | PLANS CK'D. JRS

STRIP SEAL EXPANSION JOINT DETAILS

SHEET 4 OF 4

157

FILE= 93215 B-49-0047_04.DGN
DATE= 7/23/2015

93215_B-49-0047_04.dgn 7/23/2015 9:14:41 AM trabska

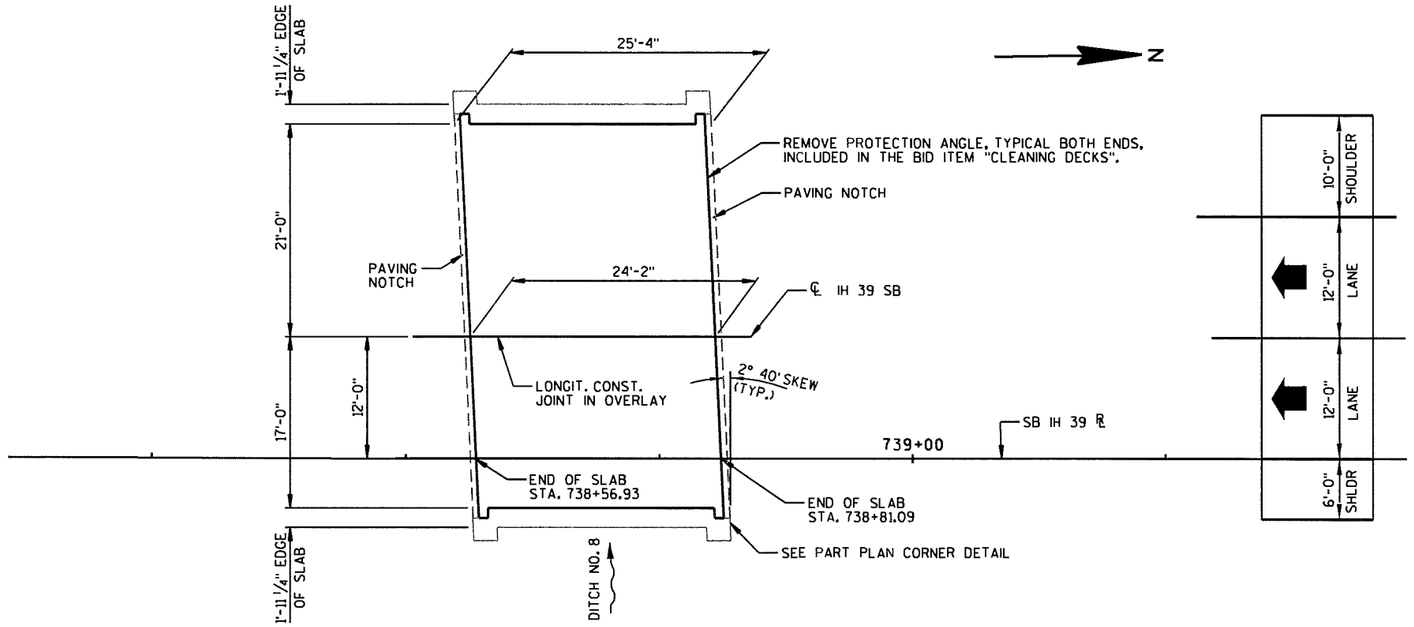

PLAN

(REHAB - CONCRETE OVERLAY ON EXISTING SINGLE SPAN FLAT SLAB)

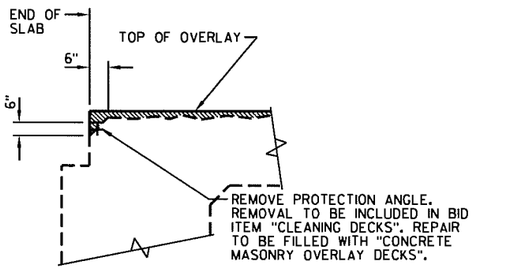

PART LONGITUDINAL SECTION

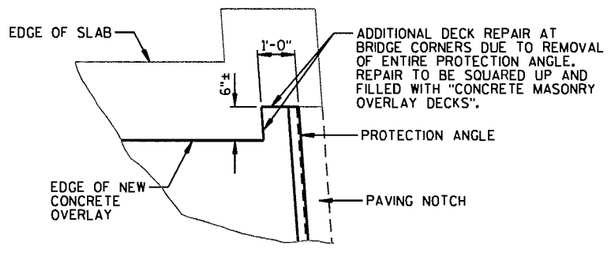

PART PLAN CORNER DETAIL

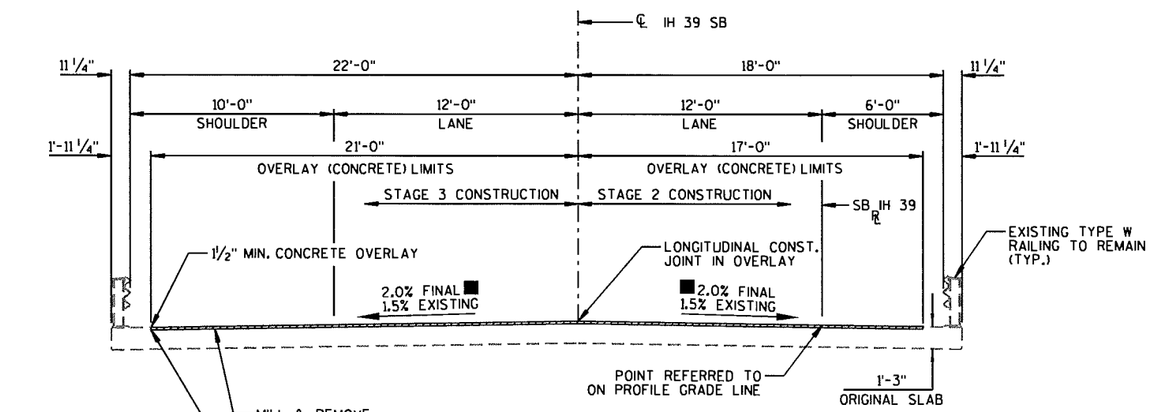

CROSS SECTION THRU ROADWAY

(LOOKING NORTH)

STATE PROJECT NUMBER
1166-00-61

BENCHMARKS NAVD 88

NO.	STA.	DESCRIPTION	ELEV.
7	738+78.0, 35.6' LT	DISK ON NW CORNER STRUCTURE B-49-48	1076.04

ESTIMATED QUANTITIES

	ITEM NUMBER	BID ITEM	UNIT	TOTAL
	203.0225.S.10	DEBRIS CONTAINMENT STRUCTURE B-49-48	LS	1
	502.3200	PROTECTIVE SURFACE TREATMENT	SY	103
*	509.0301	PREPARATION DECKS TYPE 1	SY	6
*	509.0302	PREPARATION DECKS TYPE 2	SY	3
	509.0500	CLEANING DECKS	SY	103
**	509.1500	CONCRETE SURFACE REPAIR	SF	15
	509.2500	CONCRETE MASONRY OVERLAY DECKS	CY	6.6

* QUANTITY LISTED FOR PREPARATION DECKS TYPE 1 AND TYPE 2 IS TENTATIVE. CONTRACTOR SHALL COORDINATE THE FIELD IDENTIFICATION AND DETERMINATION OF ALL DECK REPAIR LOCATIONS WITH THE ENGINEER. DECK PREPARATION REPAIRS SHALL BE FILLED WITH "CONCRETE MASONRY OVERLAY DECKS".

** CONCRETE SURFACE REPAIR REQUIRED ON SLAB EDGES AS DESIGNATED BY THE ENGINEER. QUANTITY LISTED IS TENTATIVE. CONTRACTOR SHALL COORDINATE THE FIELD IDENTIFICATION AND DETERMINATION OF ALL SURFACE REPAIR LOCATIONS WITH THE ENGINEER.

DESIGN DATA

LIVE LOAD:

DESIGN LOADING: HS-20
INVENTORY RATING : HS18
OPERATIONAL RATING : HS32
WISCONSIN STANDARD PERMIT VEHICLE (WIS-SPV): 190 KIPS

TRAFFIC DATA:

A.A.D.T. (2017) = 15,900
A.A.D.T. (2037) = 20,600

MATERIAL PROPERTIES:

CONCRETE MASONRY ——— f'c = 4,000 P.S.I.
CONCRETE MASONRY OVERLAY DECKS — f'c = 4,000 P.S.I.

LIST OF DRAWINGS

1. OVERLAY PLAN

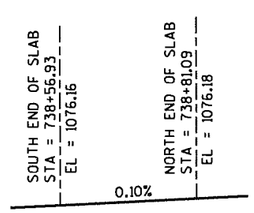

NEW PROFILE GRADE IH 39 SOUTH BOUND

GENERAL NOTES

DRAWINGS SHALL NOT BE SCALED.

ALL DIMENSIONS SHOWN ARE BASED ON EXISTING PLANS. ORIGINAL 1978 PLANS ARE AVAILABLE FROM THE WISCONSIN DEPARTMENT OF TRANSPORTATION.

THIS PROJECT WILL REHABILITATE THE EXISTING STRUCTURE, B-49-48, A SINGLE SPAN, 25.33' CONCRETE FLAT SLAB BRIDGE SET ON CONCRETE PILE AND CAP ABUTMENTS WITH TIMBER BACKING.

SEE THE ROAD PLAN AND PROFILE SHEETS FOR THE APPROXIMATE LOCATIONS OF EXISTING AND PROPOSED UTILITY INSTALLATIONS. THERE MAY BE OTHER UTILITY INSTALLATIONS WITHIN THE PROJECT AREA THAT ARE NOT SHOWN.

■ THE EXISTING CROSS SLOPE IS 1.5%. THE MINIMUM OVERLAY THICKNESS OF 1½" OCCURS AT THE EAST AND WEST OVERLAY EDGES.

A MINIMUM OF 1 ½" CONCRETE SHALL BE REMOVED FROM THE BRIDGE DECK AREA SHOWN UNDER THE BID ITEM "CLEANING DECKS".

PROTECTIVE SURFACE TREATMENT SHALL BE APPLIED TO THE ENTIRE TOP SURFACE OF THE NEW CONCRETE OVERLAY.

AVERAGE OVERLAY THICKNESS ESTIMATED AT 1.73 INCHES FOR CONCRETE MASONRY OVERLAY QUANTITY.

SEE ROAD PLANS FOR TRAFFIC CONTROL STAGES.

DESIGN CONTACT:
JOSHUA SWENO
(608) 355-8852

BRIDGE OFFICE CONTACT:
WILLIAM DREHER
(608) 266-8489

NO.	DATE	REVISION	BY

MSA PROFESSIONAL SERVICES
TRANSPORTATION • MUNICIPAL DEVELOPMENT • ENVIRONMENTAL
1230 South Boulevard Baraboo, WI 53913
608-356-2771 1-800-362-4305 Fax: 608-356-2770

STATE OF WISCONSIN
DEPARTMENT OF TRANSPORTATION
ACCEPTED William C. Dreher SDR 08/05/15
CHIEF STRUCTURES DESIGN ENGINEER DATE

STRUCTURE B-49-48

USH 51/IH 39 SOUTH BOUND OVER DITCH NO. 8

COUNTY	TOWN/~~CITY/VILLAGE~~
PORTAGE	BUENA VISTA

DESIGN SPEC. REHABILITATION - N/A

DESIGNED BY	DESIGN CK'D.	DRAWN BY	PLANS CK'D.
JRS	MSR	RLR	JRS

OVERLAY PLAN

SH 158 OF 1

8

8

FILE= 93215_B-49-0048_01.DGN
DATE= 7-23-2015

93215_B-49-0048_01.dgn 7/23/2015 8:24:52 AM franska

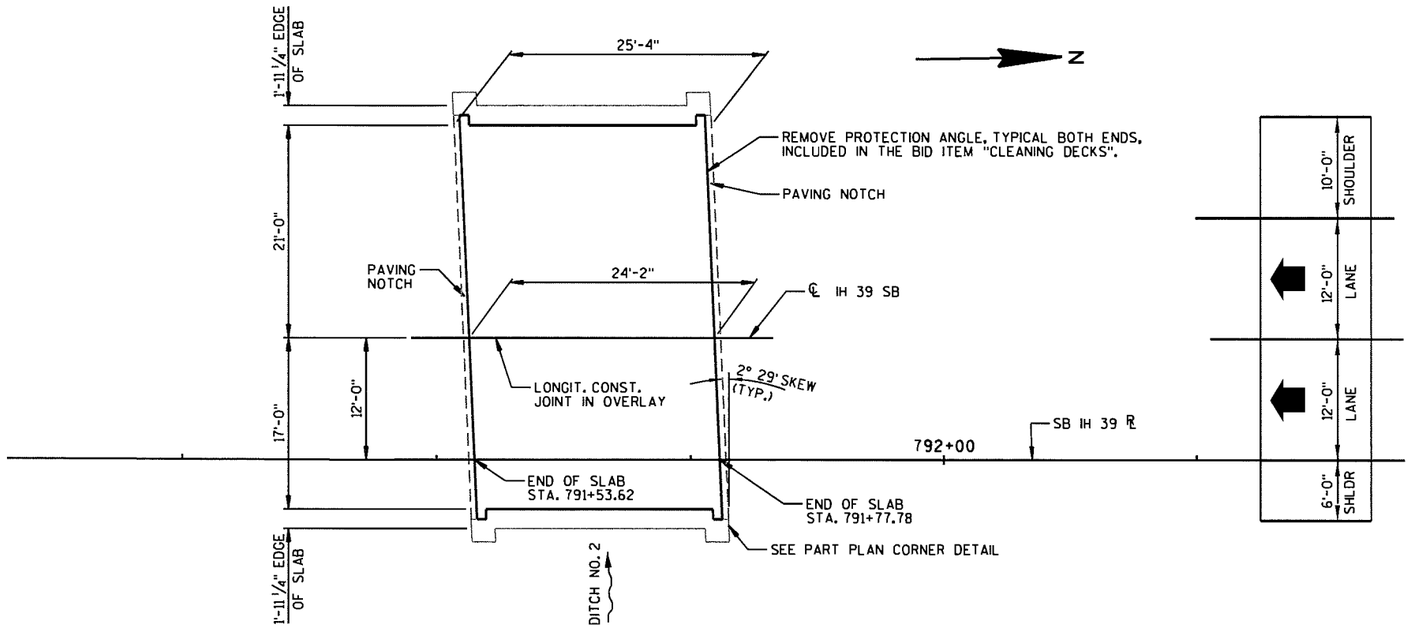

PLAN

(REHAB - CONCRETE OVERLAY ON EXISTING SINGLE SPAN FLAT SLAB)

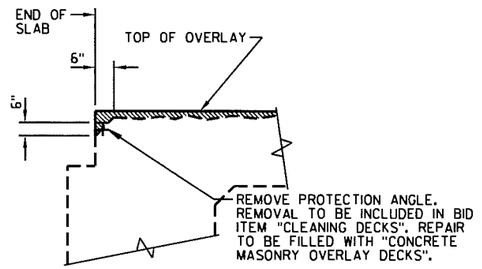

PART LONGITUDINAL SECTION

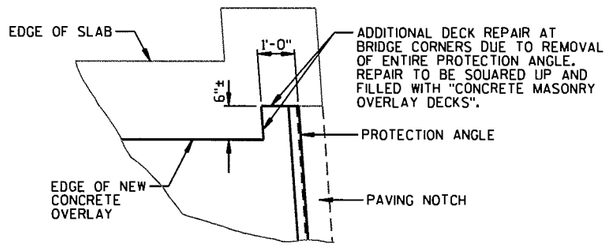

PART PLAN CORNER DETAIL

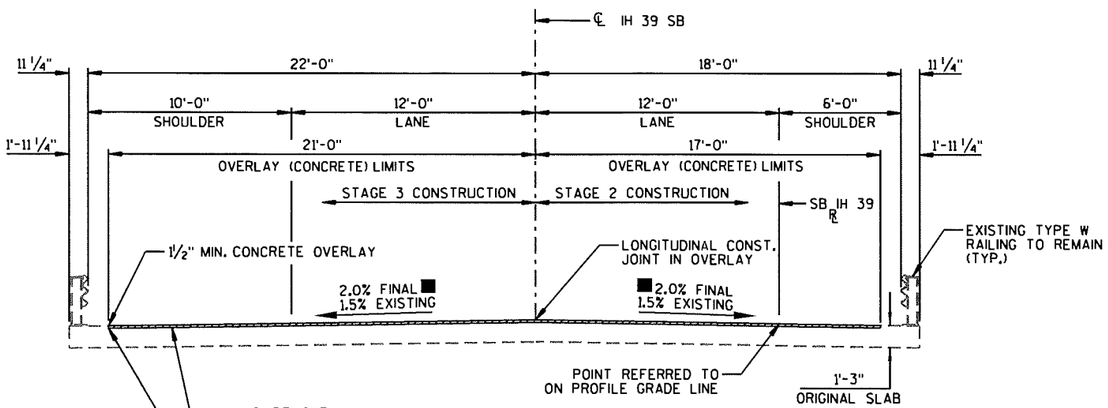

CROSS SECTION THRU ROADWAY

(LOOKING NORTH)

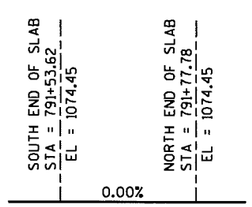

NEW PROFILE GRADE IH 39 SOUTH BOUND

DESIGN DATA

LIVE LOAD:

DESIGN LOADING: HS-20
INVENTORY RATING : HS18
OPERATIONAL RATING : HS32
WISCONSIN STANDARD PERMIT VEHICLE (WIS-SPV): 190 KIPS

TRAFFIC DATA:

A.A.D.T. (2017) = 15,900
A.A.D.T. (2037) = 20,600

MATERIAL PROPERTIES:

CONCRETE MASONRY ——— f'c = 4,000 P.S.I.
CONCRETE MASONRY OVERLAY DECKS — f'c = 4,000 P.S.I.

LIST OF DRAWINGS

1. OVERLAY PLAN

STATE PROJECT NUMBER
1166-00-61

BENCHMARKS ⊕ NAVD 88

NO.	STA.	DESCRIPTION	ELEV.
8	791+74.6, 35.8' LT	DISK ON NW CORNER STRUCTURE B-49-49	1074.26

ESTIMATED QUANTITIES

	ITEM NUMBER	BID ITEM	UNIT	TOTAL
	203.0225.S.12	DEBRIS CONTAINMENT STRUCTURE B-49-49	LS	1
	502.3200	PROTECTIVE SURFACE TREATMENT	SY	103
*	509.0301	PREPARATION DECKS TYPE 1	SY	6
*	509.0302	PREPARATION DECKS TYPE 2	SY	3
	509.0500	CLEANING DECKS	SY	103
**	509.1500	CONCRETE SURFACE REPAIR	SF	5
	509.2500	CONCRETE MASONRY OVERLAY DECKS	CY	8.0

* QUANTITY LISTED FOR PREPARATION DECKS TYPE 1 AND TYPE 2 IS TENTATIVE. CONTRACTOR SHALL COORDINATE THE FIELD IDENTIFICATION AND DETERMINATION OF ALL DECK REPAIR LOCATIONS WITH THE ENGINEER. DECK PREPARATION REPAIRS SHALL BE FILLED WITH "CONCRETE MASONRY OVERLAY DECKS".

** CONCRETE SURFACE REPAIR REQUIRED ON SLAB EDGES AS DESIGNATED BY THE ENGINEER. QUANTITY LISTED IS TENTATIVE. CONTRACTOR SHALL COORDINATE THE FIELD IDENTIFICATION AND DETERMINATION OF ALL SURFACE REPAIR LOCATIONS WITH THE ENGINEER.

GENERAL NOTES

DRAWINGS SHALL NOT BE SCALED.

ALL DIMENSIONS SHOWN ARE BASED ON EXISTING PLANS. ORIGINAL 1978 PLANS ARE AVAILABLE FROM THE WISCONSIN DEPARTMENT OF TRANSPORTATION.

THIS PROJECT WILL REHABILITATE THE EXISTING STRUCTURE, B-49-49, A SINGLE SPAN, 25.33' CONCRETE FLAT SLAB BRIDGE SET ON CONCRETE PILE AND CAP ABUTMENTS WITH TIMBER BACKING.

SEE THE ROAD PLAN AND PROFILE SHEETS FOR THE APPROXIMATE LOCATIONS OF EXISTING AND PROPOSED UTILITY INSTALLATIONS. THERE MAY BE OTHER UTILITY INSTALLATIONS WITHIN THE PROJECT AREA THAT ARE NOT SHOWN.

■ THE EXISTING CROSS SLOPE IS 1.5%. THE MINIMUM OVERLAY THICKNESS OF 1½" OCCURS AT THE EAST AND WEST OVERLAY EDGES.

A MINIMUM OF 1 ½" CONCRETE SHALL BE REMOVED FROM THE BRIDGE DECK AREA SHOWN UNDER THE BID ITEM "CLEANING DECKS".

PROTECTIVE SURFACE TREATMENT SHALL BE APPLIED TO THE ENTIRE TOP SURFACE OF THE NEW CONCRETE OVERLAY.

AVERAGE OVERLAY THICKNESS ESTIMATED AT 2.23 INCHES FOR CONCRETE MASONRY OVERLAY QUANTITY.

SEE ROAD PLANS FOR TRAFFIC CONTROL STAGES.

WISCONSIN
JOSHUA R. SWENO
E-44384
WAUNAKEE
WI
PROFESSIONAL ENGINEER
7/31/2015

DESIGN CONTACT:
JOSHUA SWENO
(608) 355-8852

BRIDGE OFFICE CONTACT:
WILLIAM DREHER
(608) 266-8489

NO.	DATE	REVISION	BY

MSA PROFESSIONAL SERVICES
TRANSPORTATION • MUNICIPAL DEVELOPMENT • ENVIRONMENTAL
1230 South Boulevard Baraboo, WI 53913
608-356-2771 1-800-362-4505 Fax: 608-356-2770

STATE OF WISCONSIN
DEPARTMENT OF TRANSPORTATION
ACCEPTED William C. Dreher SDR 08/05/15
CHIEF STRUCTURES DESIGN ENGINEER DATE

STRUCTURE B-49-49

USH 51/IH 39 SOUTH BOUND OVER DITCH NO. 2

COUNTY	TOWN/~~CITY/VILLAGE~~
PORTAGE	PLOVER

DESIGN SPEC.
REHABILITATION - N/A

DESIGNED BY	DESIGN CK'D.	DRAWN BY	PLANS CK'D.
JRS	MSR	RLR	JRS

OVERLAY PLAN

SHEET 159 OF 1

8

8

FILE= 93215_B-49-0049_01.DGN
DATE= 7/23/2015

93215_B-49-0049_01.dgn 7/23/2015 8:30:38 AM rranska

STATE PROJECT NUMBER
1166-00-61

BENCHMARKS ⊕ NAVD 88			
NO.	STA.	DESCRIPTION	ELEV.
9	98S+34.5, 18.4' RT.	DISK ON SW PARAPET OF STRUCTURE	1109.60

DESIGN DATA

LIVE LOAD:

DESIGN LOADING: HS-20
INVENTORY RATING : HS17
OPERATIONAL RATING : HS30
WISCONSIN STANDARD PERMIT VEHICLE (WIS-SPV): 190 KIPS

TRAFFIC DATA:	IH 39	BIRCH DR.
A.A.D.T. (2017) =	15,900	< 350
A.A.D.T. (2037) =	20,600	(2011)

MATERIAL PROPERTIES:

CONCRETE MASONRY — f'c = 4,000 P.S.I.
CONCRETE MASONRY OVERLAY DECKS — f'c = 4,000 P.S.I.
EXISTING BAR STEEL REINFORCEMENT — fy = 60,000 P.S.I.
HIGH STRENGTH BAR STEEL REINFORCEMENT, GRADE 60 — fy = 60,000 P.S.I.

LIST OF DRAWINGS

1. GENERAL PLAN
2. CROSS SECTION, QUANTITIES & NOTES
3. STRIP SEAL EXPANSION JOINT
4. STRIP SEAL EXPANSION JOINT DETAILS

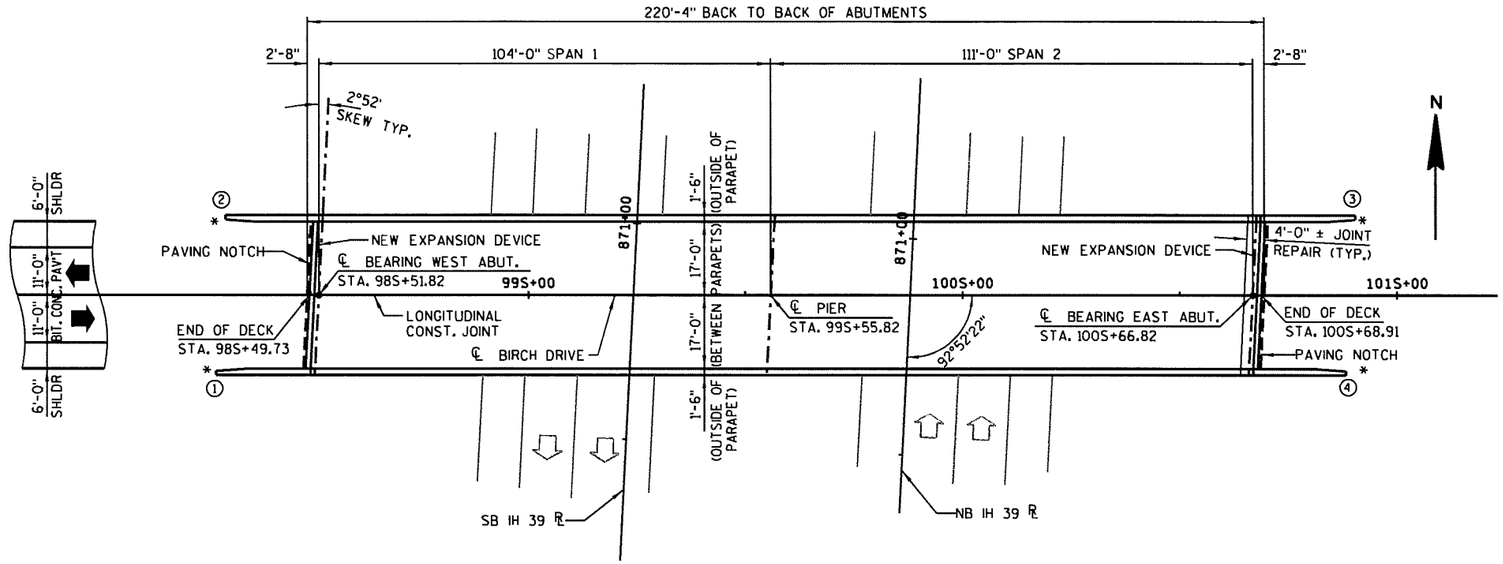

PLAN

(REHAB - CONCRETE OVERLAY ON EXISTING TWO SPAN STEEL DECK GIRDER)

◯ - INDICATES WING NUMBER

* - INDICATES LOCATION OF PROVISION FOR NEW THRIE BEAM ATTACHMENT AT WINGS (SEE SDD MIDWEST GUARDRAIL SYSTEM THRIE BEAM TRANSITION (MGS)).

▲ - DIMENSION GIVEN NORMAL TO ℄ OF ABUTMENT.

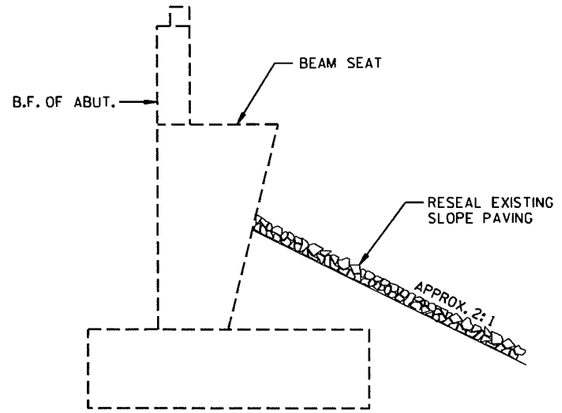

SLOPE PAVING AT ABUTMENTS

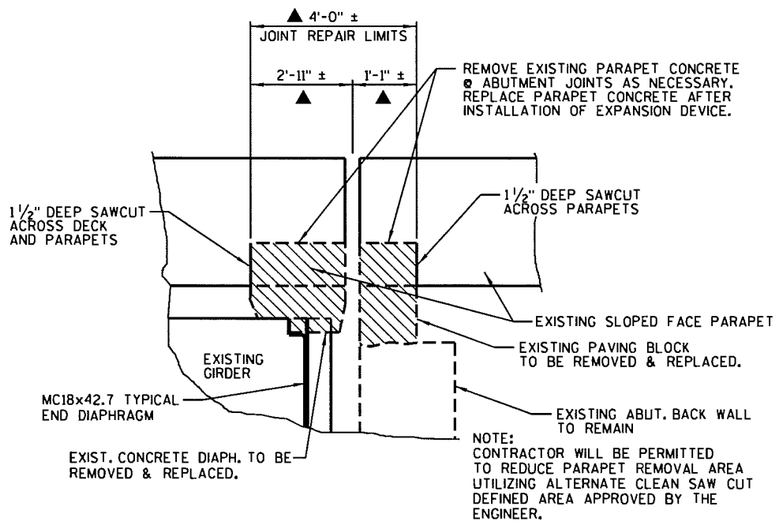

REMOVAL DETAIL

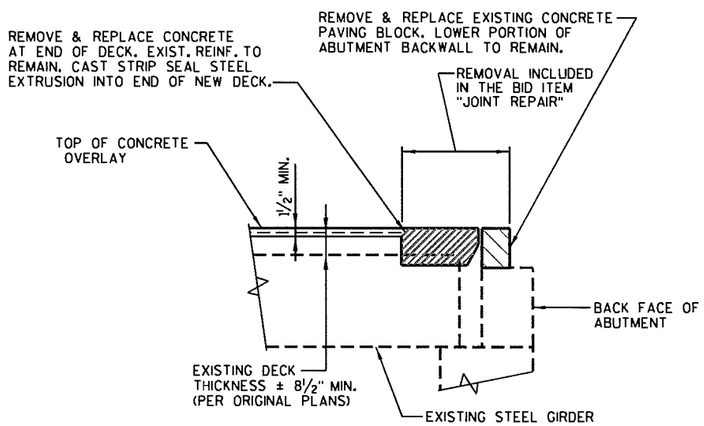

PART LONGITUDINAL SECTION

JOSHUA R. SWENO
E-44384
WAUNAKEE
WI
PROFESSIONAL ENGINEER

7/31/2015

DESIGN CONTACT:
JOSHUA SWENO
(608) 355-8852

BRIDGE OFFICE CONTACT:
WILLIAM DREHER
(608) 266-8489

NO.	DATE	REVISION	BY

MSA PROFESSIONAL SERVICES
TRANSPORTATION • MUNICIPAL DEVELOPMENT • ENVIRONMENTAL
1230 South Boulevard Baraboo, WI 53913
608-356-2771 1-800-362-4005 Fax: 608-356-2770

STATE OF WISCONSIN
DEPARTMENT OF TRANSPORTATION

ACCEPTED William C. Dreher SDR 08/05/15
CHIEF STRUCTURES DESIGN ENGINEER — DATE

STRUCTURE B-49-50

BIRCH DRIVE OVER IH 39

COUNTY	TOWN/~~CITY/VILLAGE~~
PORTAGE	PLOVER

DESIGN SPEC.
REHABILITATION - N/A

DESIGNED BY	JRS	DESIGN CK'D.	MSR	DRAWN BY	RLR	PLANS CK'D.	JRS

GENERAL PLAN

SHEET 1 OF 4
160

8

8

FILE= 93215_B-49-0050_01.DGN
DATE= 7/23/2015

93215 B-49-0050 01.dgn 7/23/2015 2:49:17 PM rranska

STATE PROJECT NUMBER

1166-00-61

TOTAL ESTIMATED QUANTITIES

	ITEM NUMBER	BID ITEM	UNIT	WEST ABUT.	PIER	EAST ABUT.	SUPER	TOTAL
	203.0225.S.13	DEBRIS CONTAINMENT STRUCTURE B-49-50	LS	-	-	-	-	1
	502.3100.13	EXPANSION DEVICE STRUCTURE B-49-50	LS	-	-	-	-	1
	502.3200	PROTECTIVE SURFACE TREATMENT	SY	-	-	-	828	828
	502.3210	PIGMENTED SURFACE SEALER	SY	-	-	-	209	209
	505.0600	BAR STEEL REINFORCEMENT HS COATED STRUCTURES	LB	-	-	-	2370	2370
*	509.0301	PREPARATION DECKS TYPE 1	SY	-	-	-	13	13
*	509.0302	PREPARATION DECKS TYPE 2	SY	-	-	-	3	3
	509.0500	CLEANING DECKS	SY	-	-	-	801	801
	509.1000	JOINT REPAIR	SY	-	-	-	33	33
**	509.1500	CONCRETE SURFACE REPAIR	SF	2.5	-	2.5	-	5
*	509.2000	FULL-DEPTH DECK REPAIR	SY	-	-	-	1	1
	509.2500	CONCRETE MASONRY OVERLAY DECKS	CY	-	-	-	63	63
	509.9050.S.	CLEANING PARAPETS	LF	-	-	-	520	520
	604.9015.S.	RESEAL CRUSHED AGGREGATE SLOPE PAVING	SY	99	-	99	-	198
	614.0150	ANCHOR ASSEMBLIES FOR STEEL PLATE BEAM GUARD	EACH	-	-	-	4	4

* — QUANTITY LISTED IS AN ESTIMATE. CONTRACTOR SHALL COORDINATE THE FIELD IDENTIFICATION AND DETERMINATION OF ALL DECK REPAIR LOCATIONS WITH THE ENGINEER. DECK PREPARATION REPAIRS SHALL BE FILLED WITH "CONCRETE MASONRY OVERLAY DECKS".

** — CONCRETE SURFACE REPAIR SHALL BE USED FOR NEEDED REPAIRS. LOCATIONS AND LIMITS OF REPAIR SHALL BE DETERMINED IN THE FIELD BY THE ENGINEER.

⬡ — INDICATES GIRDER NUMBER.

GENERAL NOTES

DRAWINGS SHALL NOT BE SCALED.

SEE ROAD PLANS FOR TRAFFIC CONTROL.

THE FIRST DIGIT OF A THREE DIGIT BAR MARK SIGNIFIES THE BAR SIZE.

BAR STEEL REINFORCEMENT SHALL BE EMBEDDED 2" CLEAR UNLESS SHOWN OR NOTED OTHERWISE.

DIMENSIONS AND STATIONING SHOWN ARE BASED ON EXISTING PLANS. ORIGINAL 1977 PLANS ARE AVAILABLE FROM THE WISCONSIN DEPARTMENT OF TRANSPORTATION.

THE LOCATIONS OF EXISTING UTILITY INSTALLATIONS AS SHOWN ON THE PLANS ARE APPROXIMATE. THERE MAY BE OTHER UTILITY INSTALLATIONS WITHIN THE PROJECT AREA THAT ARE NOT SHOWN.

IMPROVEMENTS INCLUDE A CONCRETE OVERLAY OF THE BRIDGE DECK, REPLACING JOINTS, CLEANING PARAPETS, AND RESEALING SLOPE PAVING.

ALL CONCRETE REMOVAL SHALL BE DEFINED BY A 1½" DEEP SAW CUT.

THIS PROJECT WILL REHABILITATE THE EXISTING STRUCTURE, B-49-50, A TWO SPAN, 220.33 FOOT LONG, STEEL DECK GIRDER BRIDGE SET ON FULL RETAINING 'A4' CONCRETE ABUTMENTS AND A MULTI-COLUMN PIER.

PROTECTIVE SURFACE TREATMENT SHALL BE APPLIED TO THE ENTIRE TOP SURFACE OF THE CONCRETE OVERLAY.

A MINIMUM OF 1½" CONCRETE SHALL BE REMOVED FROM THE BRIDGE DECK AREA SHOWN UNDER THE BID ITEM "CLEANING DECKS".

■ THE EXISTING CROSS SLOPE IS 1.5%. THE MINIMUM OVERLAY THICKNESS OF 1½" OCCURS AT THE NORTH AND SOUTH OVERLAY EDGES.

AVERAGE OVERLAY THICKNESS ESTIMATED AT 2.25 INCHES FOR "CONCRETE MASONRY OVERLAY DECKS" QUANTITY.

PIGMENTED SURFACE SEALER SHALL BE APPLIED TO THE TOP AND ROADWAY FACE OF THE PARAPETS.

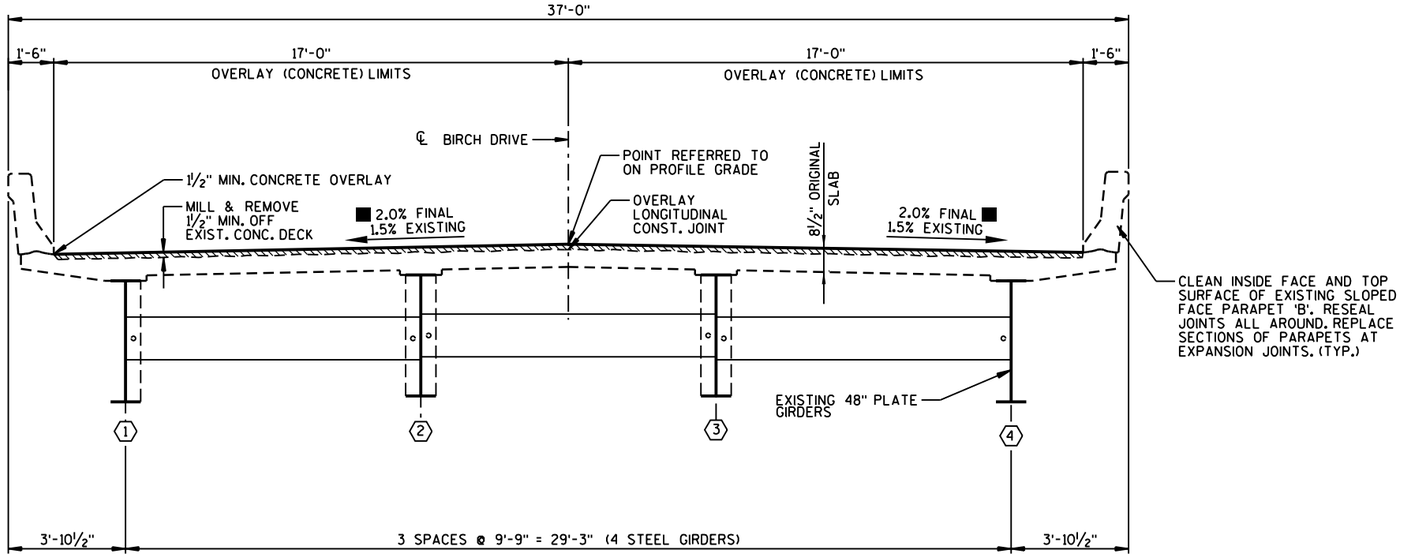

CROSS SECTION THRU ROADWAY

(LOOKING EAST)

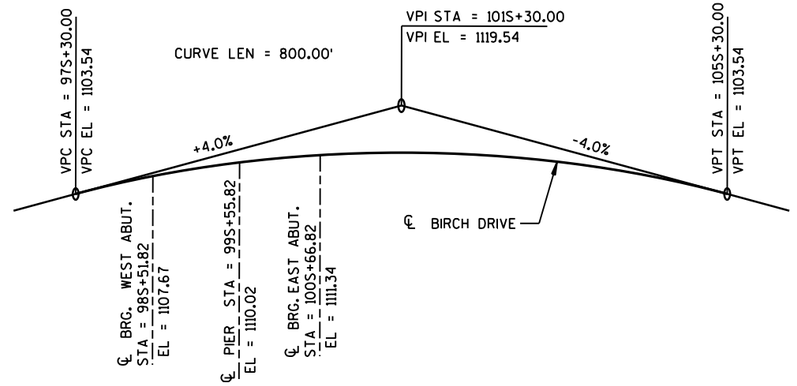

NEW PROFILE GRADE - BIRCH DRIVE

NO.	DATE	REVISION	BY

STATE OF WISCONSIN
DEPARTMENT OF TRANSPORTATION

STRUCTURE B-49-50

DRAWN BY RLR | PLANS CK'D. JRS

CROSS SECTION, QUANTITIES & NOTES

SHEET 2 OF 4

161

8

8

FILE= 93215_B-49-0050_02.DGN
DATE= 7/23/2015

93215_B-49-0050_02.dgn 7/23/2015 9:19:18 AM rrabska

STATE PROJECT NUMBER

1166-00-61

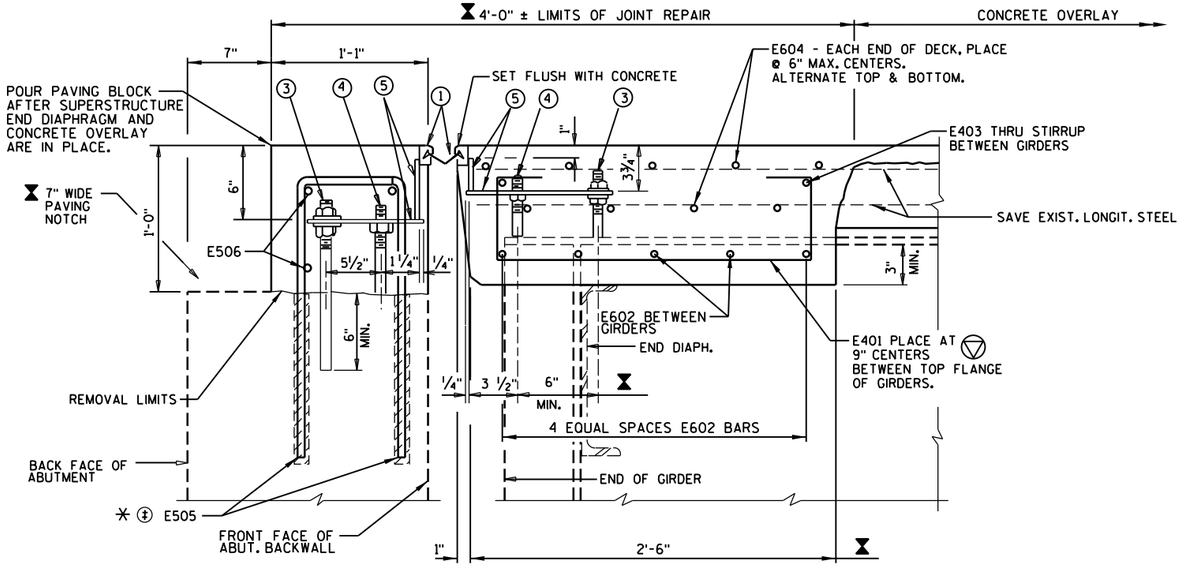

SECTION THRU JOINT AT ABUTMENTS

BILL OF BARS (COATED) 2370 LBS.

	MARK	NO. REQ'D	LENGTH	BENT	LOCATION
	E401	72	3'-11"	X	DIAPH @ ABUT. - STIRRUP - VERT.
	E602	30	8'-5"		DIAPH @ ABUT. - BETWEEN GIRDERS - TRANS.
	E403	24	8'-5"		DECK ENDS BETWEEN GIRDERS - THRU STRIP SEAL & STIRRUPS - TRANS.
	E604	18	35'-10"		DECK ENDS - ABOVE DIAPHRAGM - TRANS.
✳	E505	148	2'-11"	X	ABUTMENT BACKWALL TOP - TYPE L - VERT.
	E506	30	8'-0"		ABUTMENT BACKWALL TOP - TRANS.

DIMENSIONS IN BENDING DETAILS ARE OUT TO OUT OF BAR.
EPOXY COAT ALL BAR STEEL.

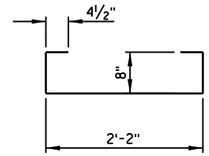

E401

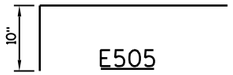

E505

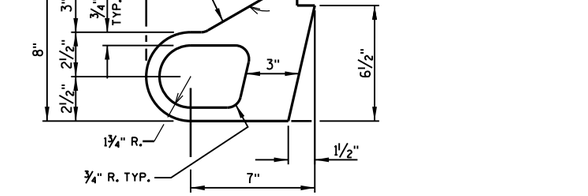

ALTERNATE STRIP SEAL ANCHOR

LEGEND

- ‡ - REMOVE EXISTING VERTICAL REINFORCING BARS DURING REMOVAL OF PAVING BLOCK. REPLACE WITH "MASONRY ANCHORS TYPE L NO. 5 BARS" SPACED AT 1'-0".
- ✳ - MASONRY ANCHORS TYPE L NO. 5 BARS. EMBED BAR 1'-6" INTO CONCRETE. ANCHOR HOLES SHALL BE 4" CLEAR MIN. TO FACE OF EXISTING CONCRETE. TURN 10" HORIZONTAL LEG OF E505 BARS AS NECESSARY TO FIT.
- ▽ - DIMENSION IS GIVEN NORMAL TO ℄ OF GIRDER.
- ⧗ - DIMENSION IS GIVEN NORMAL TO THE ℄ OF ABUTMENT.
- ◯ - SEE SHEET 4 FOR LEGEND OF EXPANSION JOINT COMPONENTS.

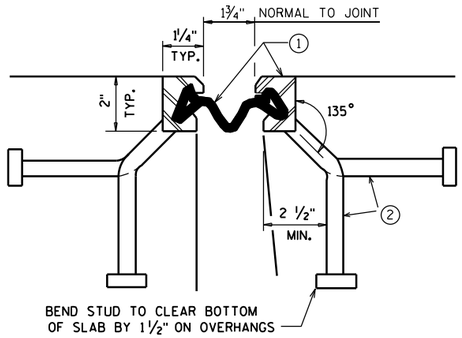

SECTION THRU JOINT

EXTERIOR GIRDER TO EDGE OF DECK & AT PARAPETS

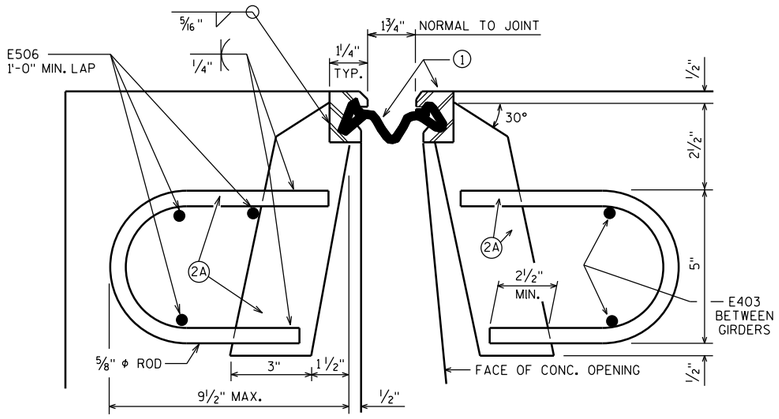

SYM. ABOUT ℄ JOINT UNLESS OTHERWISE SHOWN OR NOTED.

SECTION THRU JOINT

ROADWAY TRAFFIC AREA BETWEEN EXTERIOR GIRDERS.

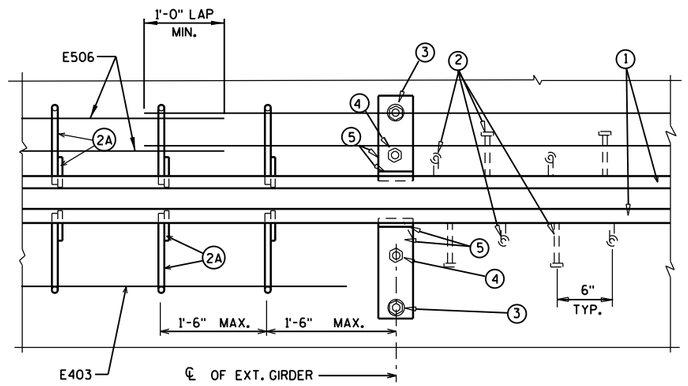

PART PLAN

NO.	DATE	REVISION	BY

STATE OF WISCONSIN
DEPARTMENT OF TRANSPORTATION

STRUCTURE B-49-50

DRAWN BY RLR | PLANS CK'D. JRS

STRIP SEAL EXPANSION JOINT

SHEET 3 OF 4

162

8

8

FILE= 93215 B-49-0050_03.DGN
DATE= 7/23/2015

93215_B-49-0050_03.dgn 7/23/2015 9:20:21 AM rrabska

STATE PROJECT NUMBER

1166-00-61

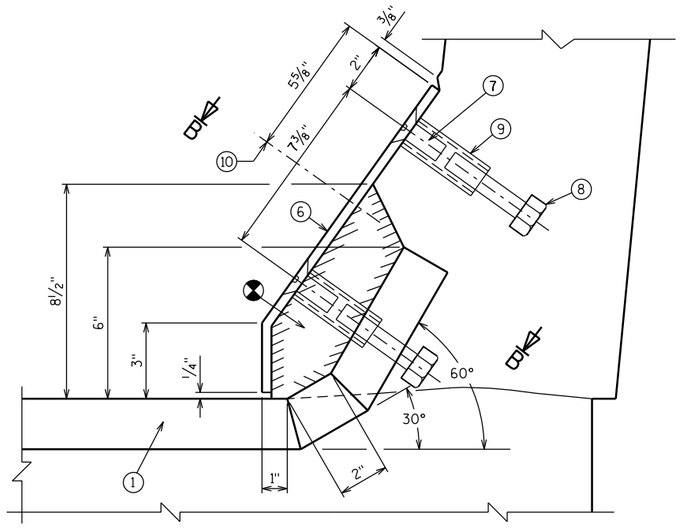

SECTION A-A

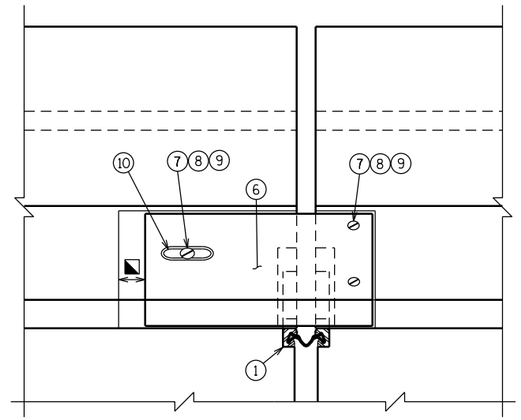

VIEW OF PARAPET PLATE FROM ROADWAY

LEGEND

(1) NEOPRENE STRIP SEAL (4 - INCH) & STEEL EXTRUSIONS. SET JOINT OPENING AT 1¾". JOINT OPENING GIVEN NORMAL TO JOINT.

(2) STUDS ⅝" ϕ X 6⅜" LONG AT 6" ALTERNATE CENTERS. WELD TO EXTRUSIONS & BEND AS SHOWN AFTER WELDING.

(2A) ½" THICK ANCHOR PLATE WITH ⅝"ϕ ROD OR ALTERNATE STRIP SEAL ANCHOR. WELD ROD TO ANCHOR PLATE. WELD ANCHOR PLATE TO NO. 1 AT 1'-6" CTRS. BETWEEN GIRDERS.

(3) ¾" ϕ THREADED ROD WITH 2 NUTS AND PLATE WASHERS. FIELD WELD THREADED ROD TO TOP FLANGE OR ATTACH BY BOLTING THRU FLANGE. ON ABUTMENT SIDE, GROUT THREADED ROD INTO FIELD DRILLED HOLES IN ABUTMENT BACKWALL AS SHOWN.

(4) ¾"ϕ THREADED ROD WITH NUT. TACK WELD NUT TO NO. 5.

(5) FABRICATE SUPPORT FROM 3" X ½" BAR AS SHOWN OR EQUIVALENT, ONE PER GIRDER PER SIDE. FIELD OR SHOP WELD TO NO. 1. IF FIELD WELDED, COVER WELDED AREAS WITH EPOXY-COATING MATERIAL. PROVIDE 1½" ϕ HOLE FOR NO. 3 & 1" ϕ HOLE FOR NO. 4.

(6) GALVANIZED PLATE ⅜" x 1'-2" x 2'-0" LONG WITH HOLES FOR NO. 7. BEND AS SHOWN.

(7) ¾" ϕ x 1½" STAINLESS STEEL SOCKET FLAT HEAD SCREWS WITH ANTI-SEIZE LUBRICANT. PLACE IN COUNTERSUNK HOLE. RECESS 1/16" BELOW PLATE SURFACE.

(8) ¾" ϕ x 4" GALV. HEX HEAD BOLT. BEND 45°.

(9) ¾" ϕ x 2¼" GALV. THREADED COUPLING.

(10) 1" x 5" SLOTTED COUNTERSUNK HOLE FOR NO. 7. PLACE SLOT PARALLEL TO DIRECTION OF MOVEMENT.

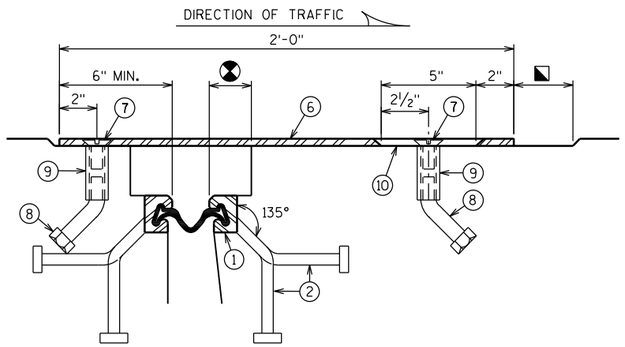

SECTION B-B

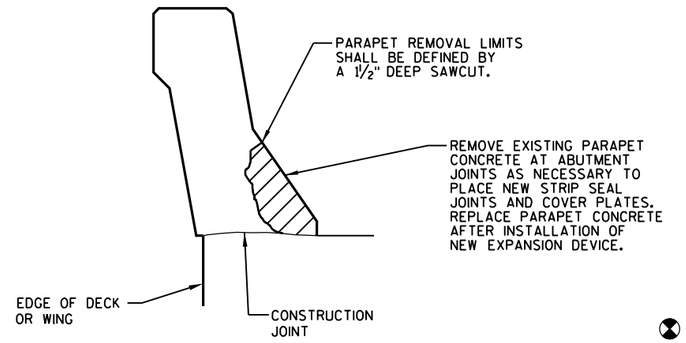

PARAPET REMOVAL LIMITS

SALVAGE ALL EXISTING BAR STEEL IN PARAPETS

⊗ — BLOCK OUT CONCRETE 2" EACH SIDE OF JOINT OPENING

◪ — JOINT OPENING DIMENSION ALONG SKEW PLUS ½"

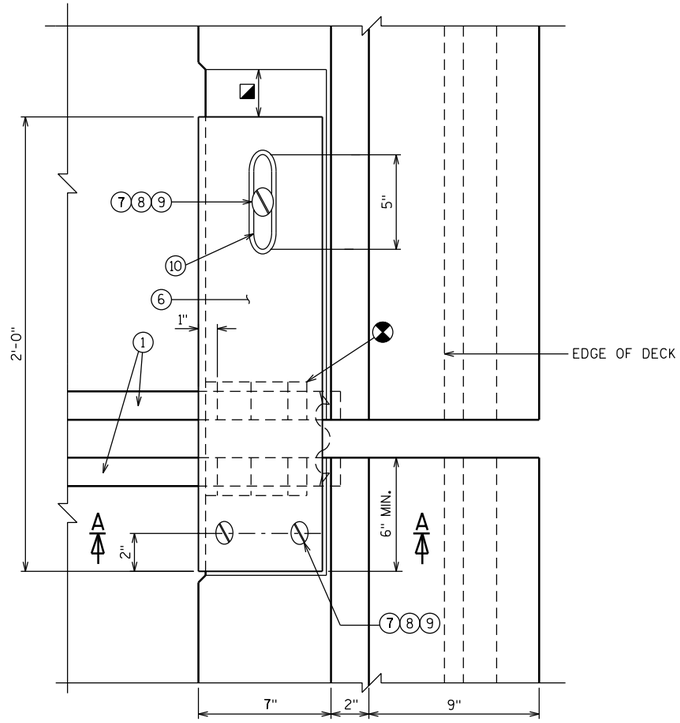

PLAN AT PARAPET

NOTES

ONE FIELD SPLICE PERMITTED IN STEEL EXTRUSIONS, UNLESS MORE ARE REQUIRED FOR STAGED CONSTRUCTION, HANDLING OR GALVANIZING REQUIREMENTS. IF SPLICE IS USED, DETAILS SHALL BE SUBMITTED FOR APPROVAL. NO SPLICING IN NEOPRENE STRIP SEAL.

AFTER FABRICATION, BUT BEFORE SHIPMENT, STRAIGHTEN STEEL EXTRUSIONS SUCH THAT THEY SHALL BE FREE FROM WARP, TWIST & SWEEP.

FABRICATOR SHALL PROVIDE MEANS OF KEEPING GALVANIZED EXTRUSIONS CLEAN & SMOOTH DURING SHIPMENT AND PRIOR TO APPLYING LUBRICANT ADHESIVE FOR NEOPRENE GLAND INSTALLATION.

SANDBLAST PLATES & EXTRUSIONS AFTER FABRICATION IN ACCORDANCE WITH SSPC SP. #6 "COMMERCIAL BLAST CLEANING". AFTER BLAST CLEANING, THE PLATES, SUPPORTS, & EXTRUSIONS SHALL BE HOT DIPPED GALVANIZED.

ANCHOR SYSTEM NO. 8 & NO. 9 SHALL CONFORM TO ASTM A307 & SHALL BE GALVANIZED IN ACCORDANCE WITH ASTM A153 CLASS C & D.

STRIP SEAL EXPANSION JOINT ASSEMBLY, INCLUDING PARAPET PLATES, ANCHOR STUDS & HARDWARE, CONNECTIONS AND FIELD DRILLING, WILL BE PAID FOR AT THE LUMP SUM PRICE BID FOR "EXPANSION DEVICE STRUCTURE B-49-50".

8

8

NO.	DATE	REVISION	BY

STATE OF WISCONSIN
DEPARTMENT OF TRANSPORTATION

STRUCTURE B-49-50

DRAWN BY RLR | PLANS CK'D. JRS

STRIP SEAL EXPANSION JOINT DETAILS

SHEET 4 OF 4

163

FILE= 93215 B-49-0050_04.DGN
DATE= 7/23/2015

93215_B-49-0050_04.dgn 7/23/2015 9:21:35 AM trabska

FILE NAME : N:\pds\design_id\
PLOT DATE : _____
PLOT BY : _____
PLOT NAME : _____
ORG DATE : _Dec. 2014
ORIGINATOR :
PLOT SCALE : 1:1

CTH D

STATION	DISTANCE FEET	AREA (SF)		INCREMENTAL VOL (CY)		CUMULATIVE VOL (CY)		MASS HAUL
		COMMON	FILL	COMMON	FILL *	COMMON	FILL	
106+10.01		9	0					
	49.13			19	2	19	2	17
106+59.14		12	2					
	12.50			6	1	24	3	22
106+71.64		13	1					
	12.50			6	0	31	3	28
106+84.14		15	0					
	12.00			6	0	37	3	34
106+96.14		13	1					
	13.00			6	1	43	4	39
107+09.14		12	1					
	12.50			6	0	48	4	44
107+21.64		12	1					
	28.36			14	1	62	5	57
107+50.00		14	0					
	50.00			25	4	87	9	79
108+00.00		13	3					
	21.87			9	5	97	14	83
108+21.87		10	8					
		212		97	14			

* INCLUDES 1.25 EXPANSION FACTOR

CTH D

STATION	DISTANCE FEET	AREA (SF)		INCREMENTAL VOL (CY)		CUMULATIVE VOL (CY)		MASS HAUL
		COMMON	FILL	COMMON	FILL *	COMMON	FILL	
110+83.08		2	12					
	16.92			3	6	3	6	-3
111+00.00		6	3					
	50.00			20	4	23	10	13
111+50.00		16	0					
	8.36			5	1	28	10	17
111+58.36		16	3					
	25.00			16	2	44	12	32
111+83.36		20	0					
	25.00			18	4	62	17	46
112+08.36		20	8					
	12.50			8	2	71	19	52
112+20.86		17	0					
	25.00			15	0	86	19	67
112+45.86		15	0					
	25.00			14	1	100	20	80
112+70.86		15	1					
	29.14			12	2	112	21	91
113+00.00		8	2					
		217		112	21			

* INCLUDES 1.25 EXPANSION FACTOR

3RD AVE

STATION	DISTANCE FEET	AREA (SF)		INCREMENTAL VOL (CY)		CUMULATIVE VOL (CY)		MASS HAUL
		COMMON	FILL	COMMON	FILL *	COMMON	FILL	
102+50.00		8	0					
	50.00			16	69	16	69	-53
103+00.00		9	60					
	50.00			23	213	39	282	-243
103+50.00		16	124					
	21.14			12	174	51	456	-405
103+71.14		15	232					
	25.00			14	254	65	709	-644
103+96.14		16	207					
	25.00			15	187	81	896	-816
104+21.14		17	116					
	25.00			15	156	95	1052	-957
104+46.14		15	154					
	25.00			12	150	107	1203	-1095
104+71.14		11	106					
	25.00			11	61	119	1264	-1145
104+96.14		13	0					
	53.86			28	2	147	1266	-1119
105+50.00		15	2					
	50.00			24	7	170	1273	-1102
106+00.00		11	4					
	50.00			21	7	191	1280	-1089
106+50.00		11	2					
	50.00			16	13	207	1293	-1086
107+00.00		6	9					
	50.00			14	18	220	1311	-1091
107+50.00		9	7					
	50.00			18	14	239	1325	-1087
108+00.00		10	6					
		550		239	1,325			

* INCLUDES 1.25 EXPANSION FACTOR

CONTINUED ON NEXT PAGE

FILE NAME : N:\pds\design_id\
PLOT DATE : _____
PLOT BY : _____
PLOT NAME : _____
ORG DATE : _Dec. 2014
ORIGINATOR :
PLOT SCALE : 1:1

3RD AVE

STATION	DISTANCE FEET	AREA (SF)		INCREMENTAL VOL (CY)		CUMULATIVE VOL (CY)		MASS HAUL
		COMMON	FILL	COMMON	FILL *	COMMON	FILL	
111+00.00		10	7					
	50.00			16	20	16	20	-4
111+50.00		7	10					
	50.00			14	15	30	35	-5
112+00.00		9	3					
	50.00			15	11	45	46	-1
112+50.00		8	7					
	57.78			17	35	62	81	-19
113+07.78		8	20					
	25.00			8	44	70	125	-55
113+32.78		9	57					
	25.00			8	84	78	209	-131
113+57.78		8	88					
	25.00			6	92	84	301	-217
113+82.78		6	71					
	25.00			5	87	89	389	-300
114+07.78		5	80					
	25.00			5	82	93	471	-377
114+32.78		5	62					
	22.22			4	35	97	505	-408
114+55.00		4	5					
		355		97	505			

* INCLUDES 1.25 EXPANSION FACTOR

CTH W

STATION	DISTANCE FEET	AREA (SF)		INCREMENTAL VOL (CY)		CUMULATIVE VOL (CY)		MASS HAUL
		COMMON	FILL	COMMON	FILL *	COMMON	FILL	
106+00.00		19	0					
	50.00			39	0	39	0	39
106+50.00		22	0					
	47.72			39	41	78	41	37
106+97.72		22	37					
	25.00			21	21	99	62	37
107+22.72		24	0					
	25.00			20	3	120	65	54
107+47.72		20	5					
	52.28			39	7	158	72	86
108+00.00		20	0					
	23.96			12	4	170	76	94
108+23.96		7	7					
		224		170	76			

* INCLUDES 1.25 EXPANSION FACTOR

CTH W

STATION	DISTANCE FEET	AREA (SF)		INCREMENTAL VOL (CY)		CUMULATIVE VOL (CY)		MASS HAUL
		COMMON	FILL	COMMON	FILL *	COMMON	FILL	
111+00.00		7	2					
	57.27			25	2	25	2	22
111+57.27		16	0					
	25.00			14	2	39	4	35
111+82.27		14	3					
	25.00			14	2	53	6	47
112+07.27		16	1					
	42.73			29	1	82	7	74
112+50.00		21	0					
	50.00			24	0	105	7	98
113+00.00		5	0					
		200		105	7			

* INCLUDES 1.25 EXPANSION FACTOR

FILE NAME : N:\pds\design_dt\
PLOT DATE : _____
PLOT BY : _____
PLOT NAME : _____
ORG DATE : _Dec. 2014
ORIGINATOR :
PLOT SCALE : 1:1

CODDINGTON RD

STATION	DISTANCE FEET	AREA (SF)		INCREMENTAL VOL (CY)		CUMULATIVE VOL (CY)		MASS HAUL
		COMMON	FILL	COMMON	FILL *	COMMON	FILL	
101+50.00		15	53					
	50.00			26	327	26	327	-302
102+00.00		13	230					
	52.09			27	741	53	1068	-1016
102+52.09		14	385					
	14.67			8	254	61	1323	-1262
102+66.76		15	364					
	10.33			6	160	67	1483	-1416
102+77.09		16	306					
	14.67			7	197	74	1680	-1606
102+91.76		11	274					
	10.33			5	101	78	1781	-1702
103+02.09		12	148					
	14.67			7	51	86	1831	-1746
103+16.76		15	2					
	33.24			19	8	105	1839	-1734
103+50.00		16	9					
	50.00			28	21	133	1861	-1728
104+00.00		14	10					
	50.00			25	25	158	1886	-1728
104+50.00		13	12					
	50.00			23	30	181	1915	-1735
105+00.00		12	13					
	50.00			22	30	202	1945	-1743
105+50.00		11	12					
	50.00			20	32	222	1977	-1755
106+00.00		10	15					
	50.00			17	33	239	2010	-1771
106+50.00		9	14					
	50.00			20	26	259	2036	-1777
107+00.00		13	9					
	50.00			30	26	289	2062	-1773
107+50.00		19	13					
	50.00			25	27	314	2089	-1775
108+00.00		8	10					
	14.87			3	16	316	2105	-1788
108+14.87		2	37					
		665		316	2,105			

* INCLUDES 1.25 EXPANSION FACTOR

CODDINGTON RD

STATION	DISTANCE FEET	AREA (SF)		INCREMENTAL VOL (CY)		CUMULATIVE VOL (CY)		MASS HAUL
		COMMON	FILL	COMMON	FILL *	COMMON	FILL	
110+77.04		3	17					
	22.96			5	12	5	12	-7
111+00.00		9	6					
	50.00			18	9	23	21	2
111+50.00		11	2					
	50.15			20	2	43	23	20
112+00.15		10	0					
	25.00			11	77	54	100	-46
112+25.15		15	133					
	24.85			13	185	67	285	-218
112+50.00		13	189					
	50.00			23	333	91	618	-528
113+00.00		12	99					
	50.00			21	117	112	735	-623
113+50.00		11	2					
	14.81			7	1	119	736	-617
113+64.81		13	1					
	25.00			9	36	128	772	-644
113+89.81		7	60					
	25.00			7	91	135	863	-728
114+14.81		8	97					
	35.19			11	104	146	967	-821
114+50.00		8	31					
	50.00			14	36	160	1004	-844
115+00.00		7	1					
		423		160	1,004			

* INCLUDES 1.25 EXPANSION FACTOR

FILE NAME : N:\pds\design_id\
PLOT DATE : _____
PLOT BY : _____
PLOT NAME : _____
ORG DATE : _Dec. 2014
ORIGINATOR :
PLOT SCALE : 1:1

BIRCH DR

STATION	DISTANCE FEET	AREA (SF)		INCREMENTAL VOL (CY)		CUMULATIVE VOL (CY)		MASS HAUL
		COMMON	FILL	COMMON	FILL *	COMMON	FILL	
94+81.00		3	1					
	19.00			3	1	3	1	2
95+00.00		6	2					
	50.00			12	66	15	68	-53
95+50.00		6	56					
	50.00			13	235	28	303	-275
96+00.00		8	148					
	40.69			13	357	41	660	-618
96+40.69		9	231					
	25.00			9	226	51	886	-835
96+65.69		11	160					
	25.00			10	99	60	985	-925
96+90.69		10	12					
	59.31			26	28	86	1013	-927
97+50.00		13	9					
	50.00			22	11	108	1025	-916
98+00.00		10	1					
	28.47			6	3	114	1027	-913
98+28.47		2	3					
	347			114	1,027			

* INCLUDES 1.25 EXPANSION FACTOR

BIRCH DR

STATION	DISTANCE FEET	AREA (SF)		INCREMENTAL VOL (CY)		CUMULATIVE VOL (CY)		MASS HAUL
		COMMON	FILL	COMMON	FILL *	COMMON	FILL	
100+90.17		12	1					
	9.83			5	3	5	3	2
101+00.00		15	10					
	50.00			24	39	29	42	-13
101+50.00		11	24					
	50.00			17	55	46	97	-51
102+00.00		7	23					
	50.00			13	37	59	133	-74
102+50.00		8	8					
	50.00			14	18	73	152	-78
103+00.00		7	8					
	50.00			14	15	87	167	-80
103+50.00		7	5					
	50.00			15	12	103	179	-77
104+00.00		9	5					
	50.00			21	13	124	192	-69
104+50.00		13	6					
	50.00			28	13	152	205	-53
105+00.00		17	5					
	26.25			18	6	170	211	-41
105+26.25		19	5					
	25.00			18	63	187	274	-86
105+51.25		20	105					
	25.00			17	183	204	457	-253
105+76.25		17	211					
	26.70			15	278	219	735	-516
106+02.95		13	238					
	47.05			21	344	239	1079	-840
106+50.00		11	78					
	50.00			23	120	262	1199	-937
107+00.00		14	26					
	44.00			18	27	280	1225	-945
107+44.00		8	0					
	654			280	1,225			

* INCLUDES 1.25 EXPANSION FACTOR

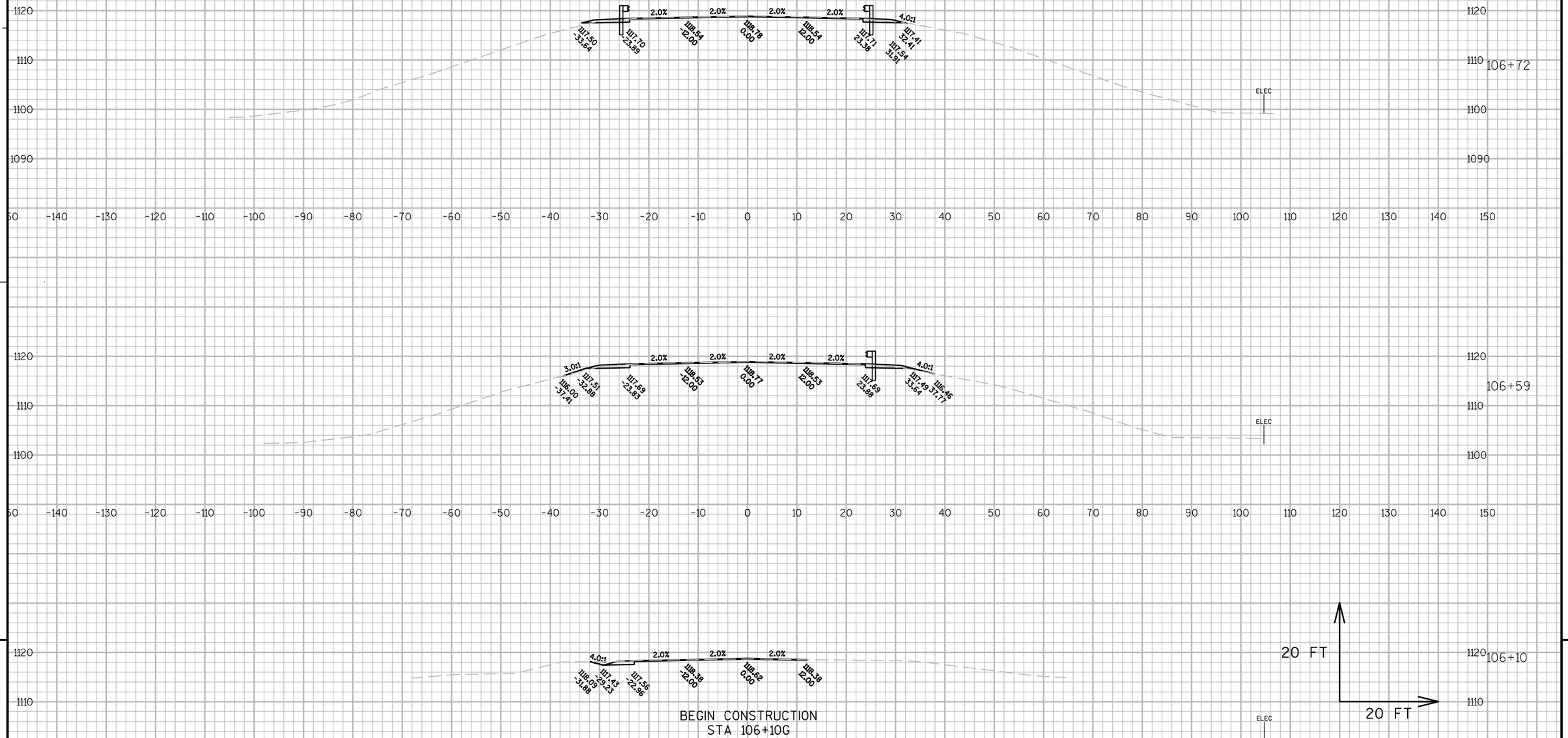

PROJECT NO: 1166-00-61	HWY: IH 39	COUNTY: PORTAGE	CROSS SECTIONS: CTH D	SHEET 168	E

FILE NAME : P:\90S\93\00093215\CADD\1166-00-61\DESIGN\CORRIDORS\CRDR-OVERHEAD-STREETS.DWG
LAYOUT NAME - 090201_XS
PLOT DATE : 7/29/2015 10:04 AM PLOT BY : BRAD LEE PLOT NAME : PLOT SCALE : 1 IN:20 FT
WISDOT/CADDS SHEET 49

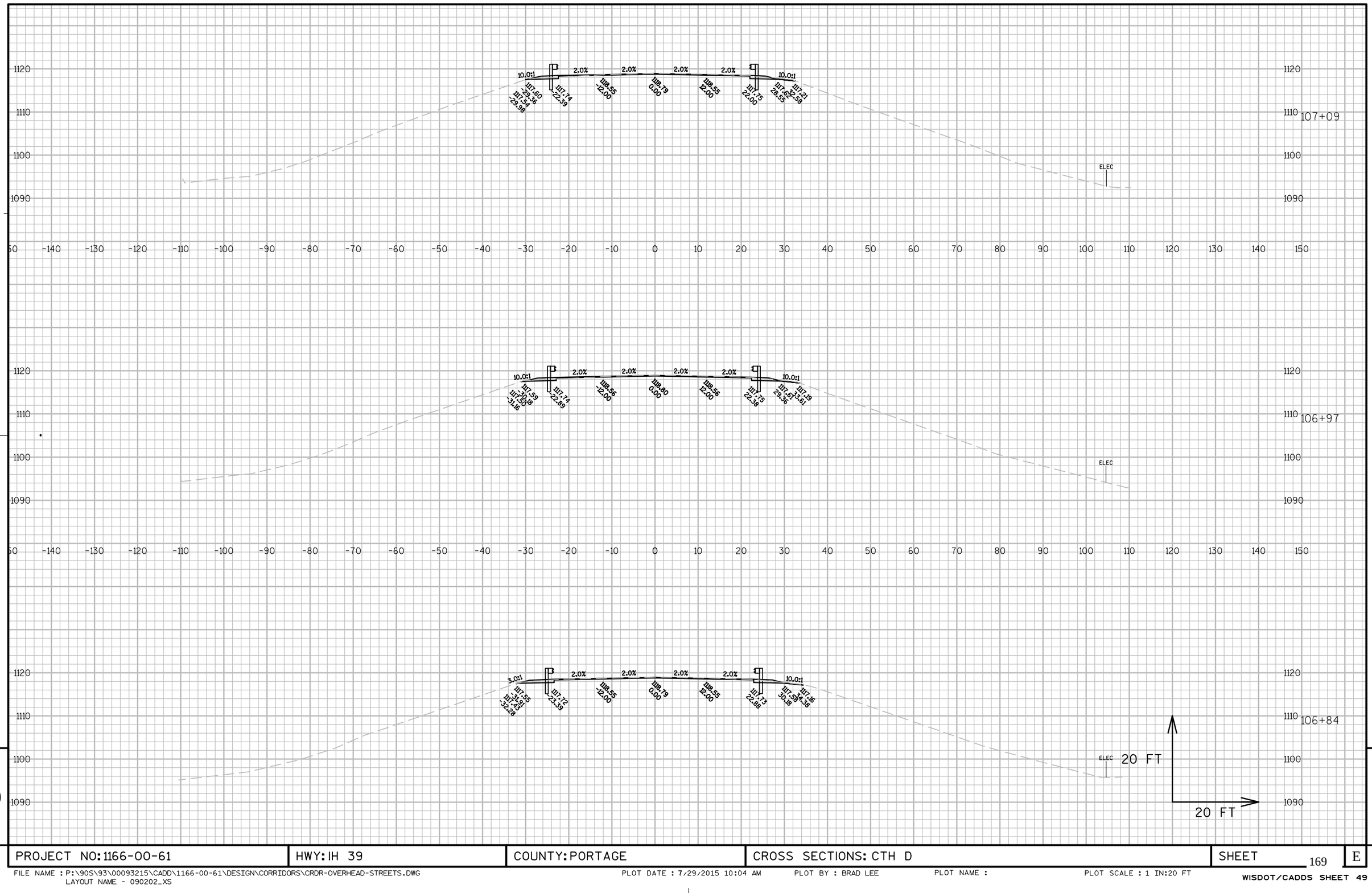

9

9

PROJECT NO: 1166-00-61	HWY: IH 39	COUNTY: PORTAGE	CROSS SECTIONS: CTH D	SHEET 169	E

FILE NAME : P:\90S\93\00093215\CADD\1166-00-61\DESIGN\CORRIDORS\CRDR-OVERHEAD-STREETS.DWG
LAYOUT NAME - 090202_XS

PLOT DATE : 7/29/2015 10:04 AM PLOT BY : BRAD LEE PLOT NAME : PLOT SCALE : 1 IN:20 FT

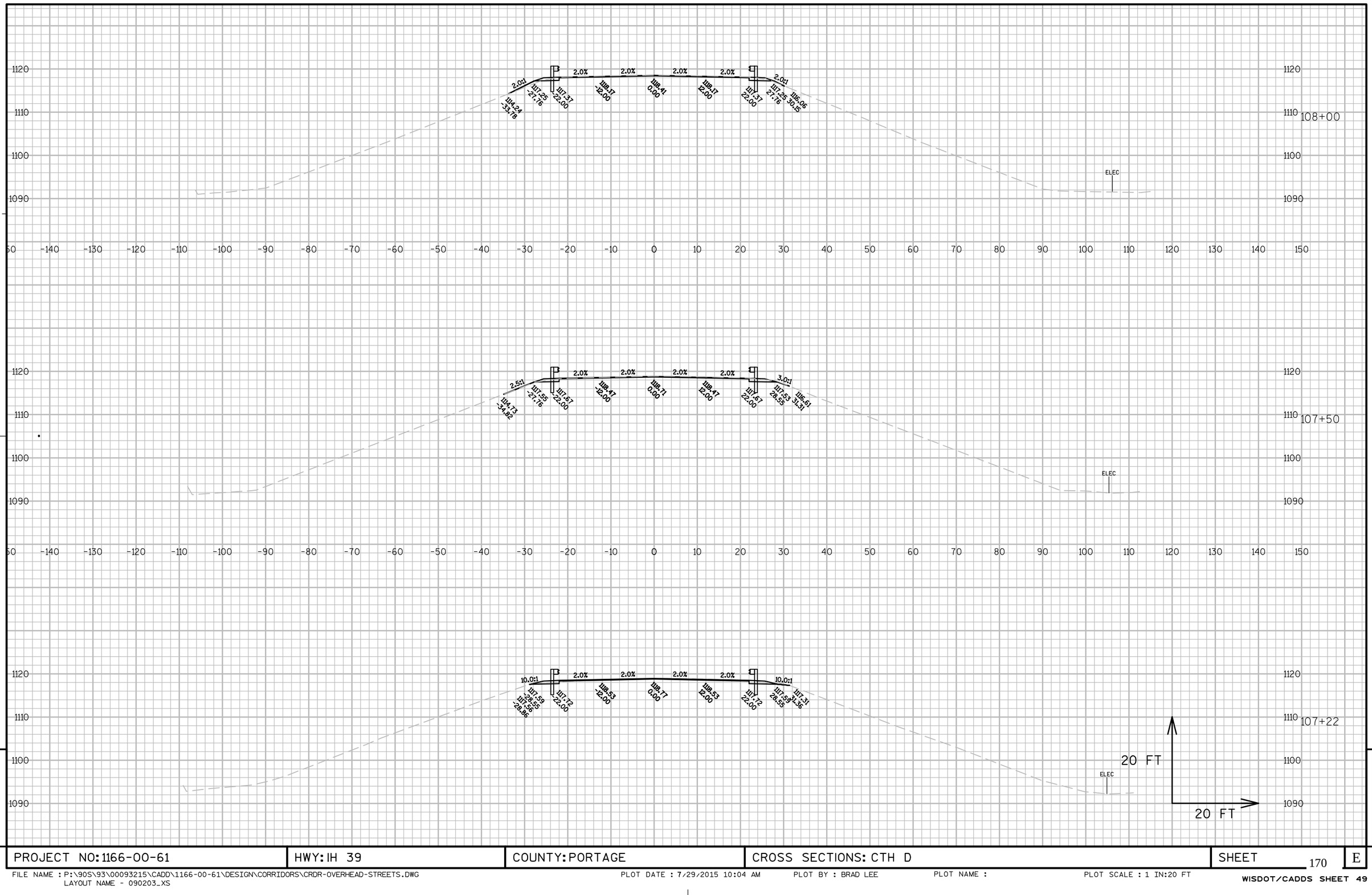

9

9

PROJECT NO: 1166-00-61	HWY: IH 39	COUNTY: PORTAGE	CROSS SECTIONS: CTH D	SHEET 170	E

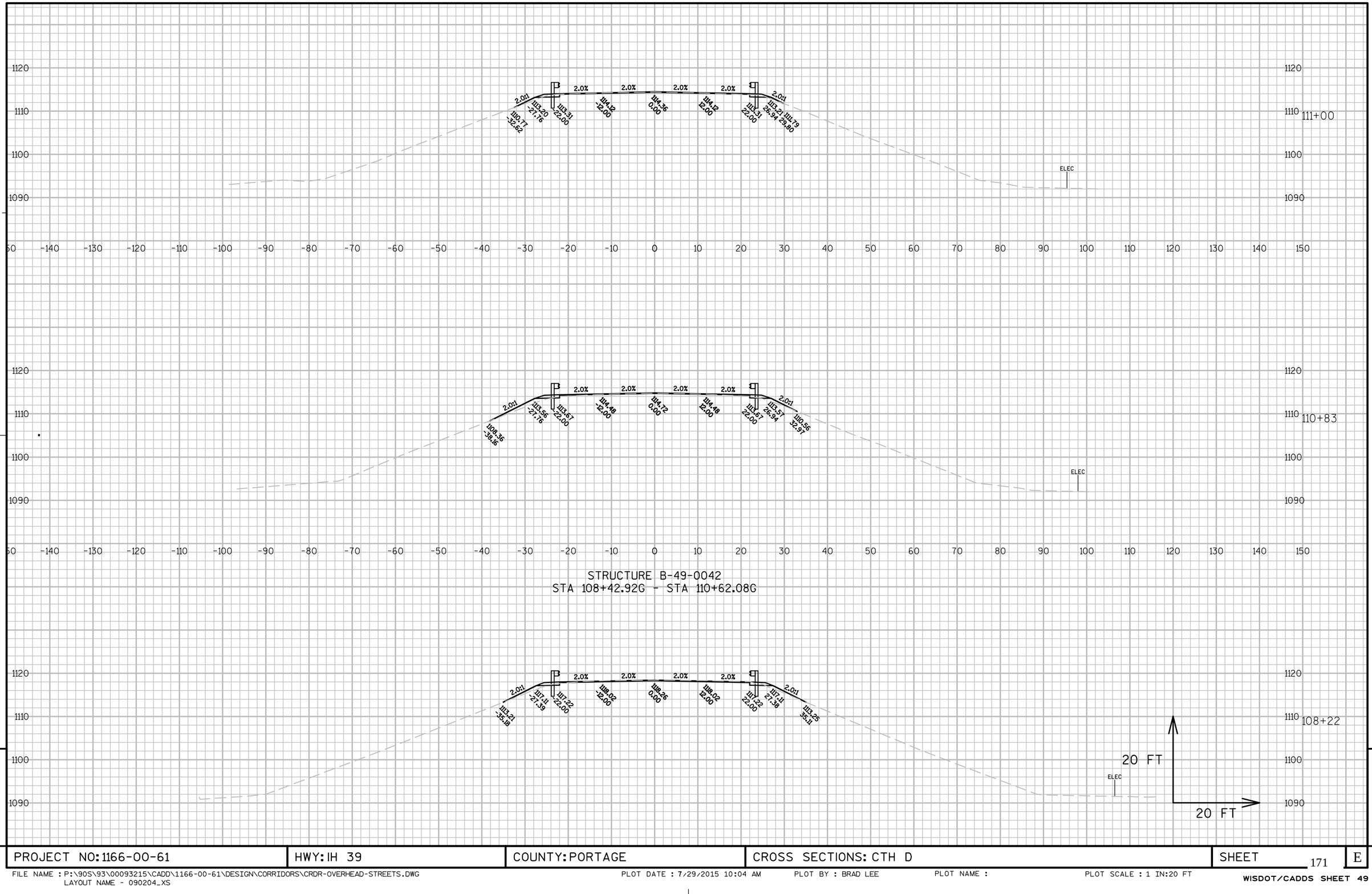

STRUCTURE B-49-0042
STA 108+42.92G - STA 110+62.08G

9

9

PROJECT NO: 1166-00-61	HWY: IH 39	COUNTY: PORTAGE	CROSS SECTIONS: CTH D	SHEET 171	E

FILE NAME : P:\90S\93\00093215\CADD\1166-00-61\DESIGN\CORRIDORS\CRDR-OVERHEAD-STREETS.DWG
LAYOUT NAME - 090204_XS

PLOT DATE : 7/29/2015 10:04 AM PLOT BY : BRAD LEE PLOT NAME : PLOT SCALE : 1 IN:20 FT

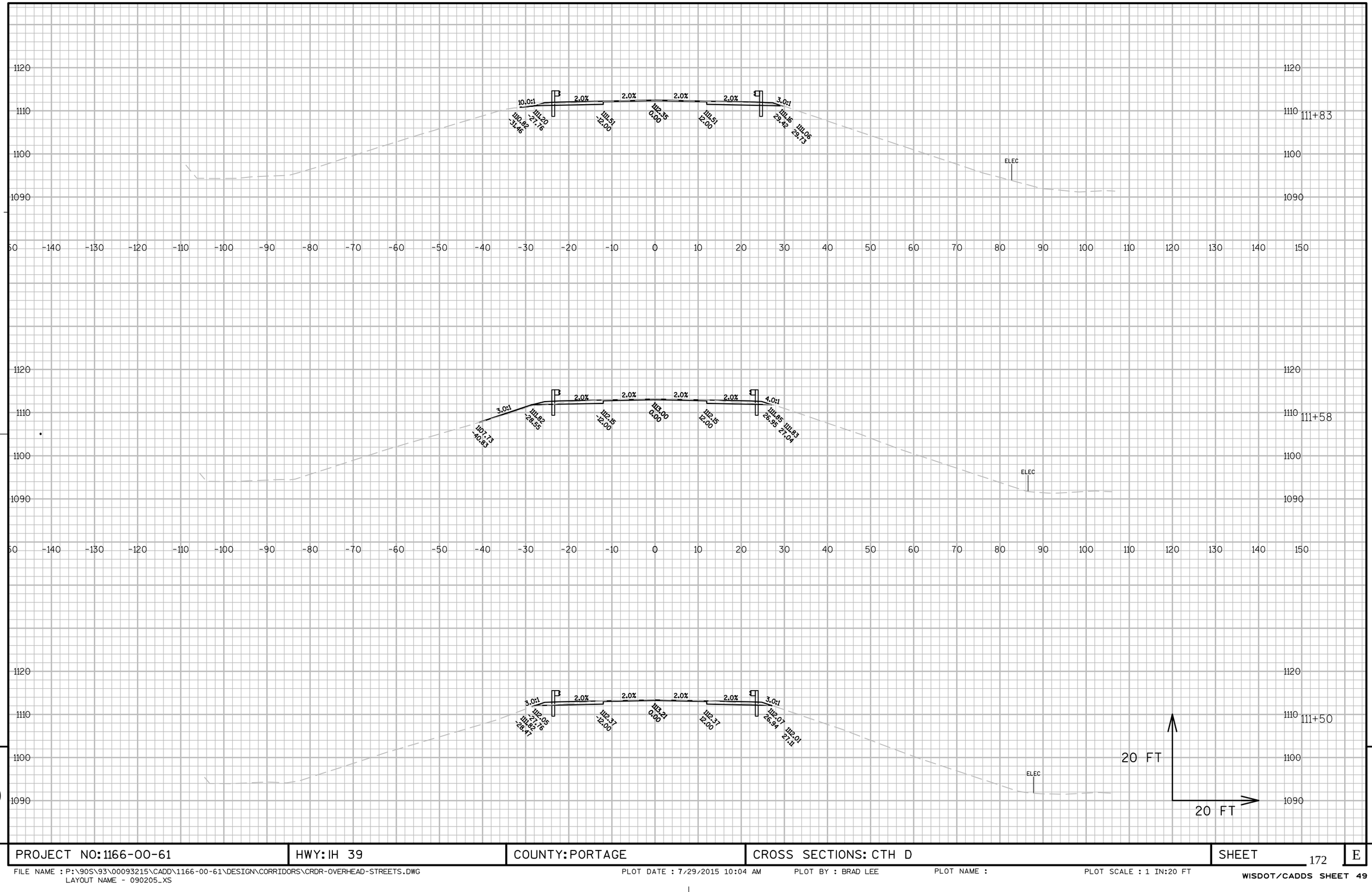

9

9

PROJECT NO: 1166-00-61	HWY: IH 39	COUNTY: PORTAGE	CROSS SECTIONS: CTH D	SHEET 172	E

FILE NAME : P:\90S\93\00093215\CADD\1166-00-61\DESIGN\CORRIDORS\CRDR-OVERHEAD-STREETS.DWG
LAYOUT NAME - 090205_XS

PLOT DATE : 7/29/2015 10:04 AM PLOT BY : BRAD LEE PLOT NAME : PLOT SCALE : 1 IN:20 FT

WISDOT/CADDS SHEET 49

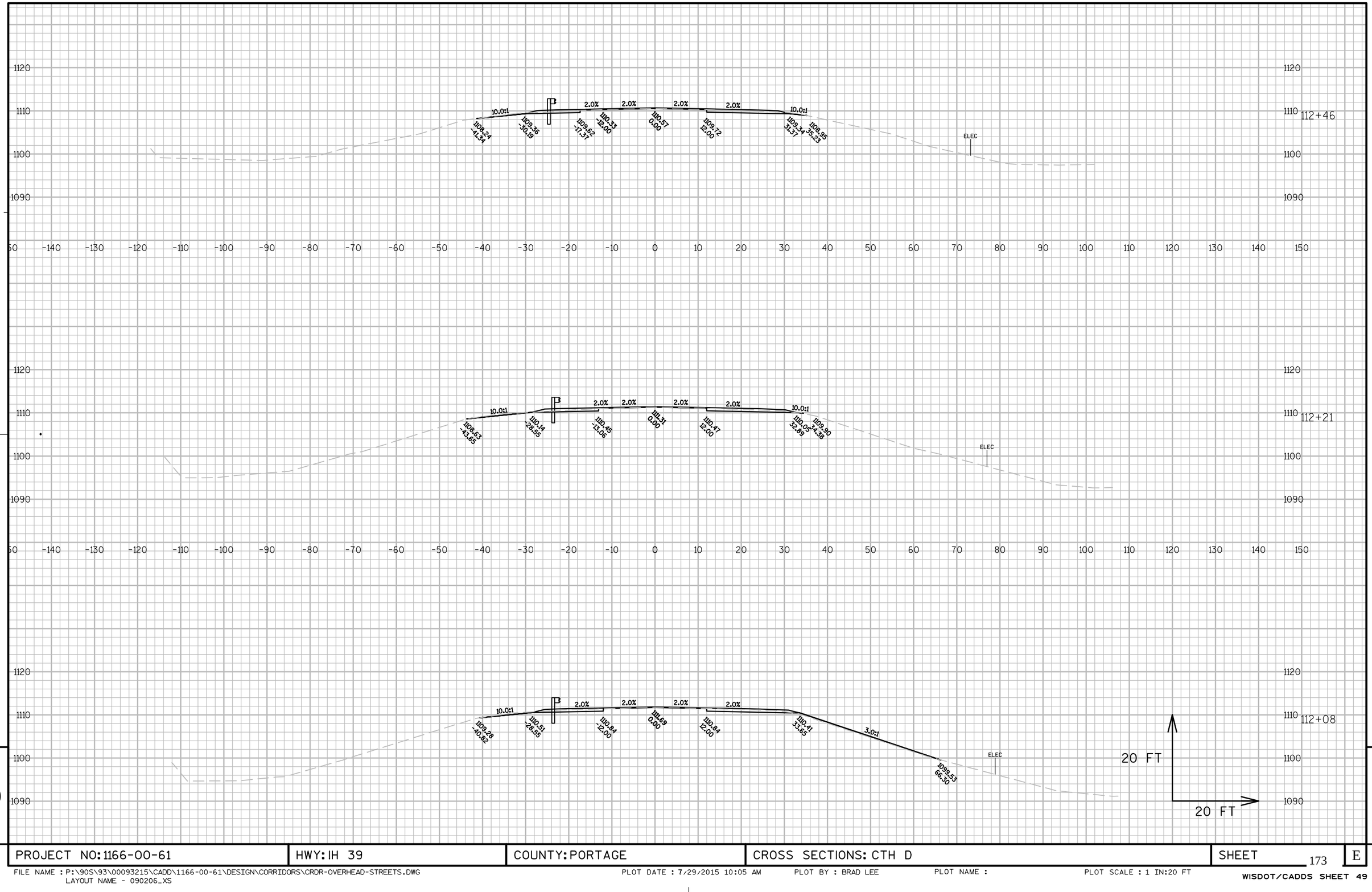

PROJECT NO: 1166-00-61	HWY: IH 39	COUNTY: PORTAGE	CROSS SECTIONS: CTH D	SHEET 173	E

FILE NAME : P:\90S\93\00093215\CADD\1166-00-61\DESIGN\CORRIDORS\CRDR-OVERHEAD-STREETS.DWG
LAYOUT NAME - 090206_XS

PLOT DATE : 7/29/2015 10:05 AM PLOT BY : BRAD LEE PLOT NAME : PLOT SCALE : 1 IN:20 FT

WISDOT/CADDS SHEET 49

END CONSTRUCTION
STA 113+00G

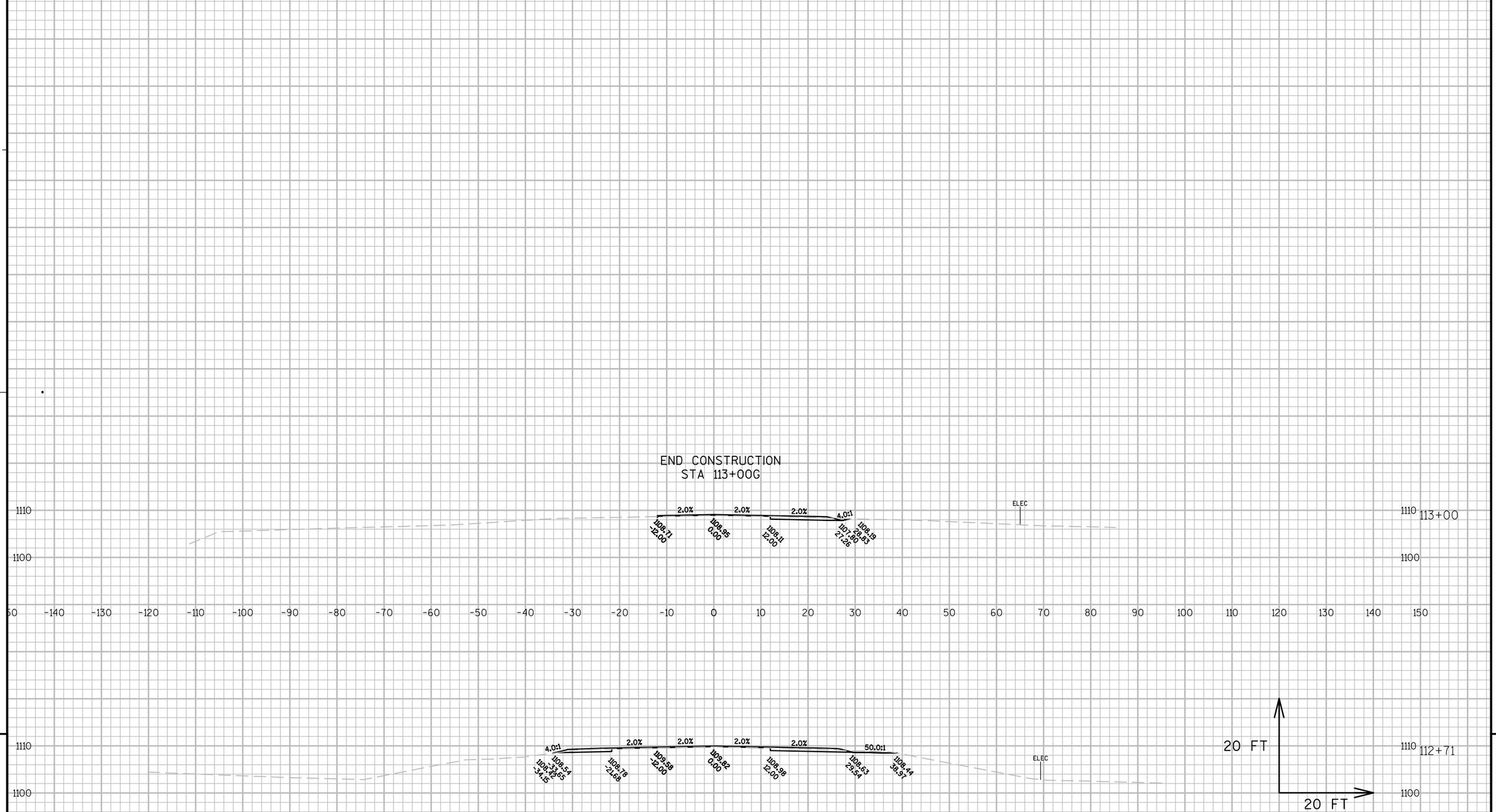

PROJECT NO: 1166-00-61	HWY: IH 39	COUNTY: PORTAGE	CROSS SECTIONS: CTH D	SHEET 174	E

FILE NAME : P:\90S\93\00093215\CADD\1166-00-61\DESIGN\CORRIDORS\CRDR-OVERHEAD-STREETS.DWG
LAYOUT NAME - 090207_XS
PLOT DATE : 7/29/2015 10:05 AM PLOT BY : BRAD LEE PLOT NAME : PLOT SCALE : 1 IN:20 FT

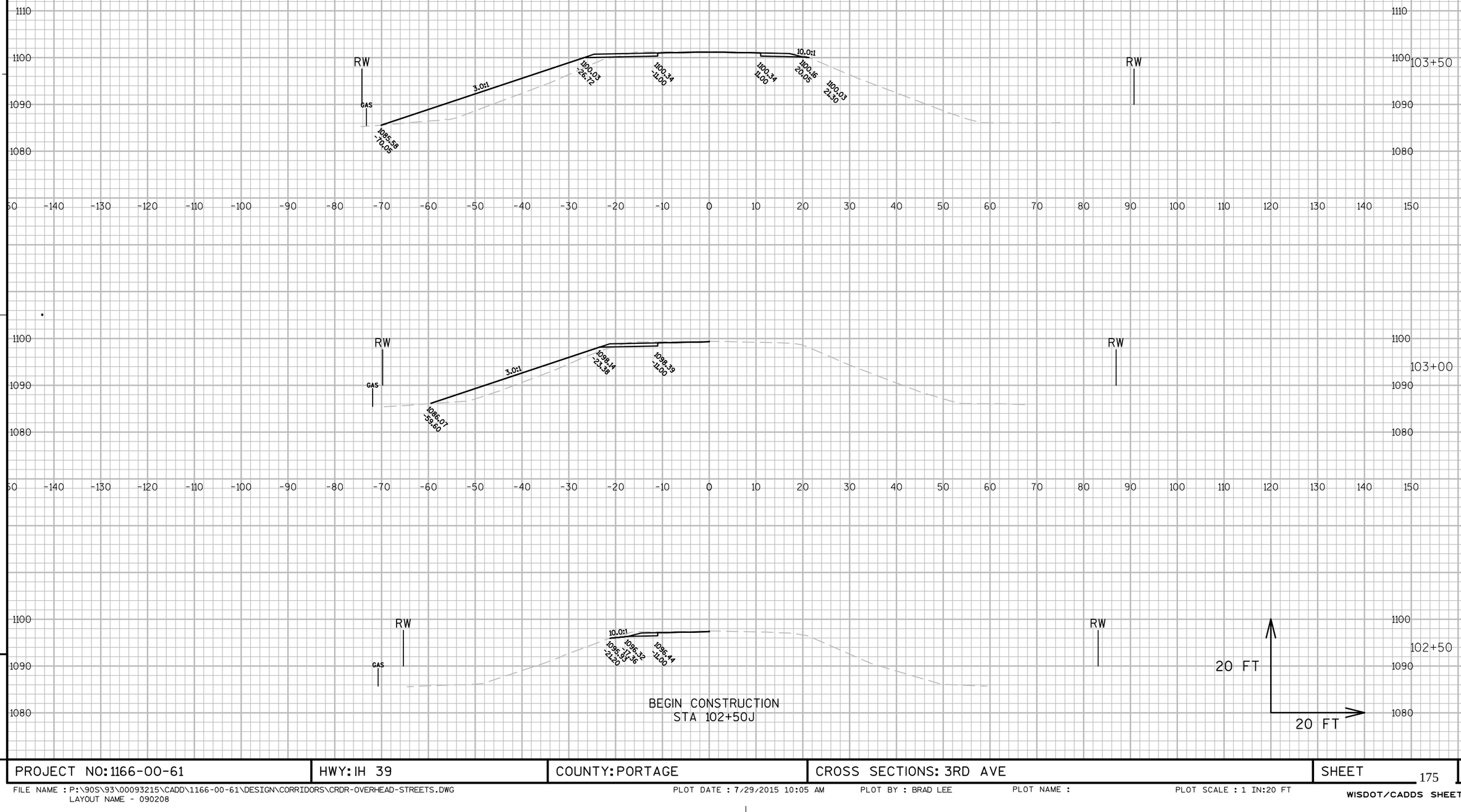

PROJECT NO: 1166-00-61	HWY: IH 39	COUNTY: PORTAGE	CROSS SECTIONS: 3RD AVE	SHEET 175	E

FILE NAME : P:\90S\93\00093215\CADD\1166-00-61\DESIGN\CORRIDORS\CRDR-OVERHEAD-STREETS.DWG
LAYOUT NAME - 090208

PLOT DATE : 7/29/2015 10:05 AM PLOT BY : BRAD LEE PLOT NAME : PLOT SCALE : 1 IN:20 FT

WISDOT/CADDS SHEET 49

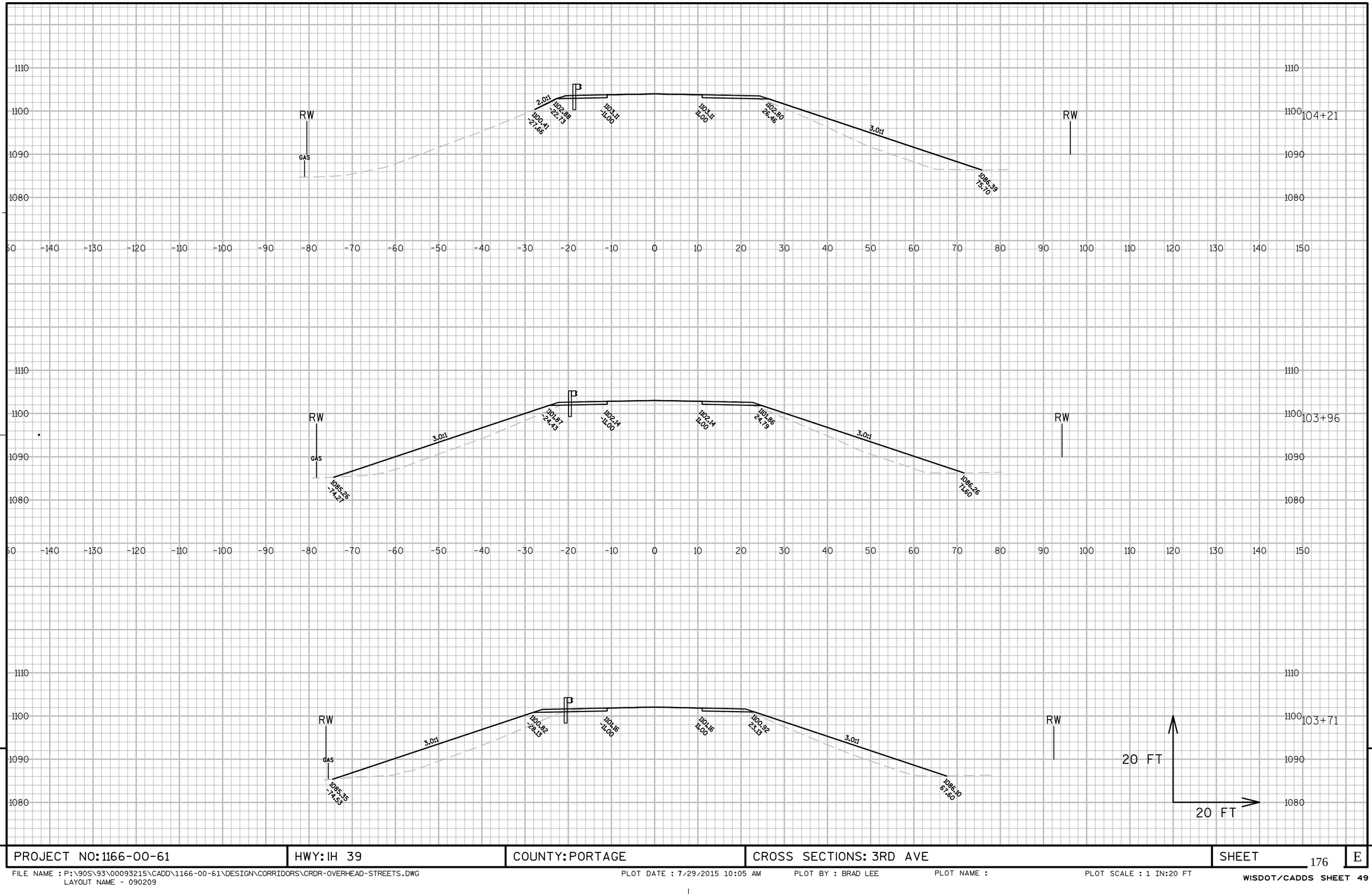

PROJECT NO: 1166-00-61	HWY: IH 39	COUNTY: PORTAGE	CROSS SECTIONS: 3RD AVE	SHEET	E

FILE NAME : P:\90S\93\00093215\CADD\1166-00-61\DESIGN\CORRIDORS\CRDR-OVERHEAD-STREETS.DWG
LAYOUT NAME - 090209

PLOT DATE : 7/29/2015 10:05 AM PLOT BY : BRAD LEE PLOT NAME : PLOT SCALE : 1 IN:20 FT

WISDOT/CADDS SHEET 49

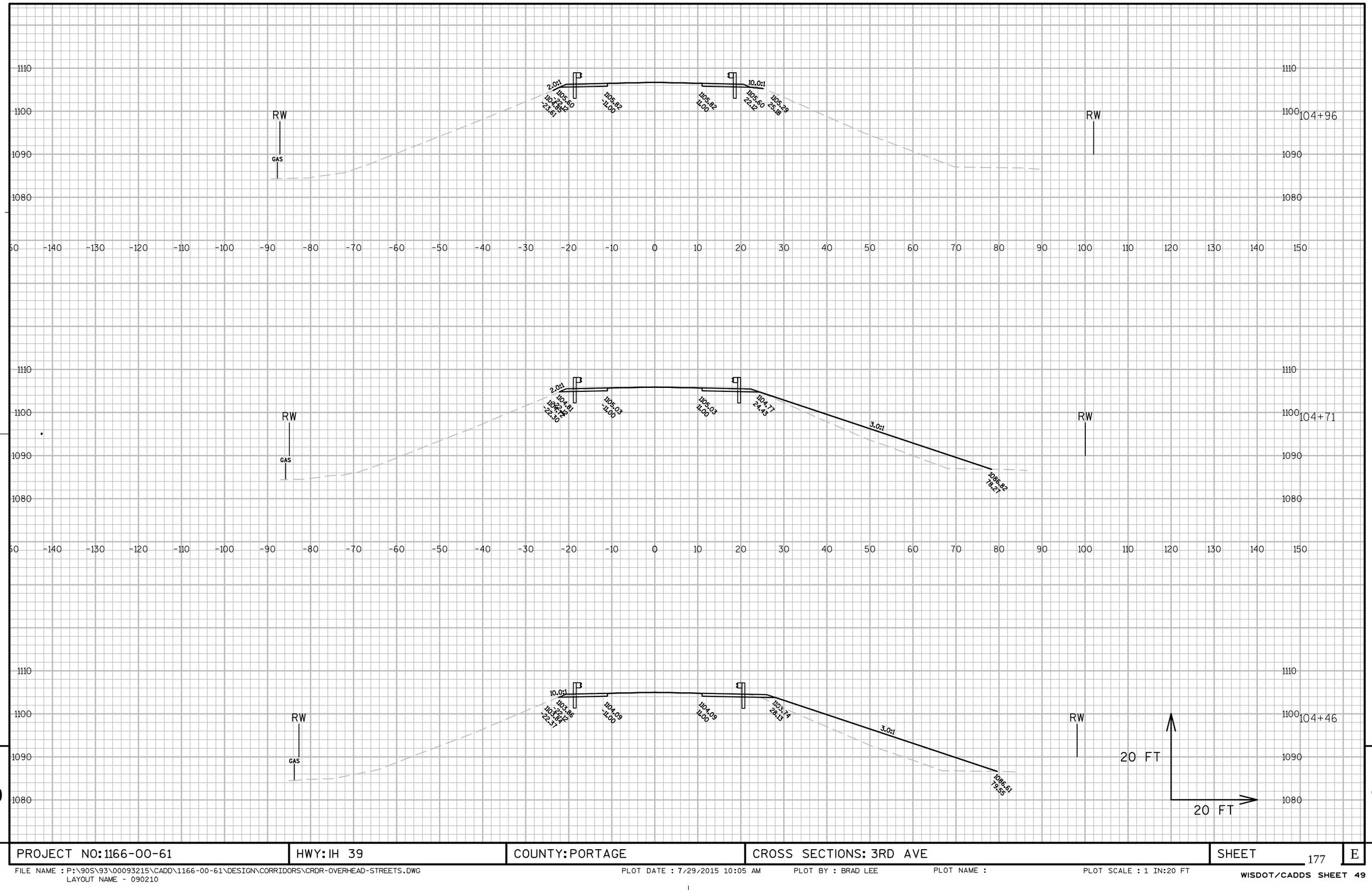

PROJECT NO: 1166-00-61	HWY: IH 39	COUNTY: PORTAGE	CROSS SECTIONS: 3RD AVE	SHEET 177	E

FILE NAME : P:\90S\93\00093215\CADD\1166-00-61\DESIGN\CORRIDORS\CRDR-OVERHEAD-STREETS.DWG
LAYOUT NAME - 090210

PLOT DATE : 7/29/2015 10:05 AM PLOT BY : BRAD LEE PLOT NAME : PLOT SCALE : 1 IN:20 FT

WISDOT/CADDS SHEET 49

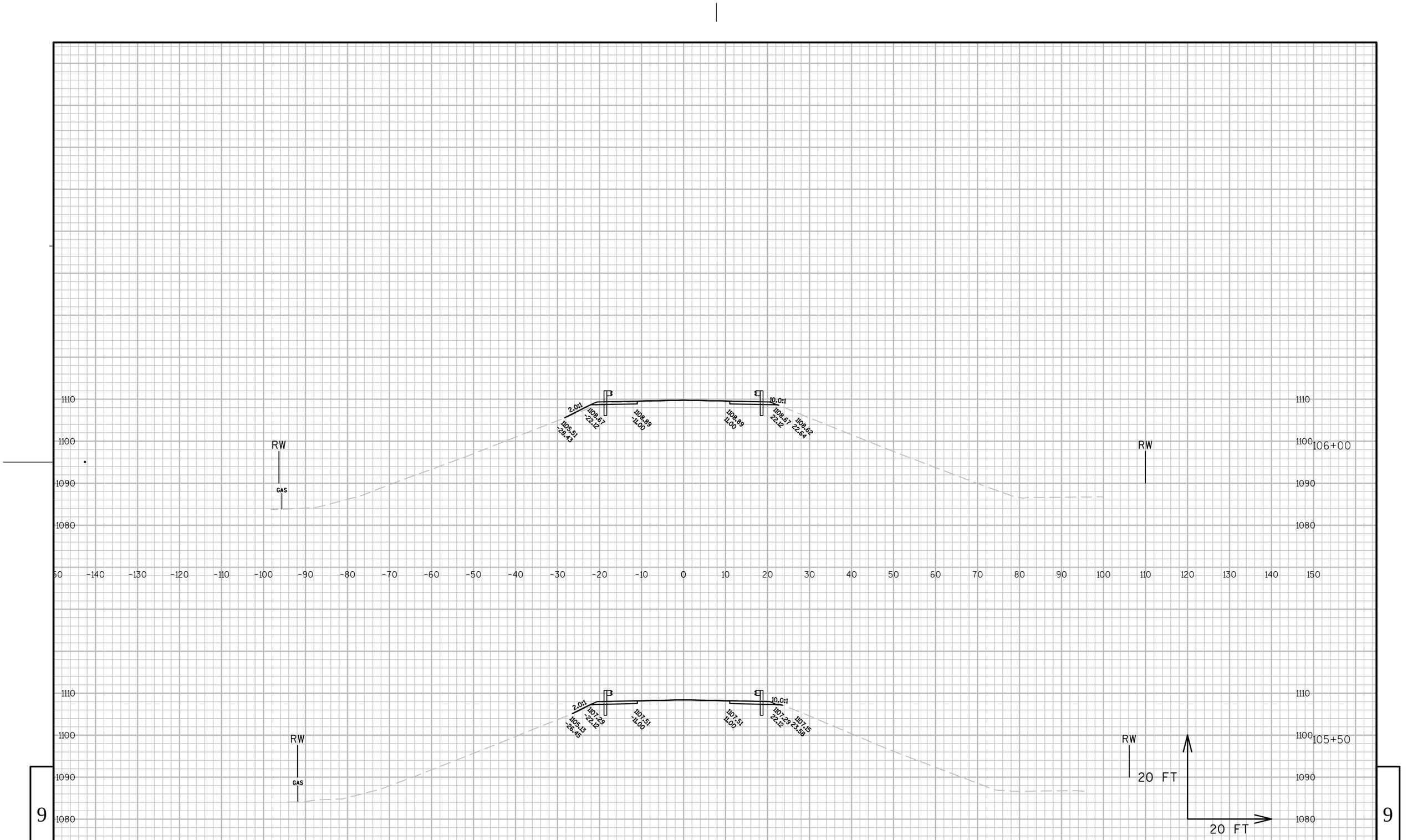

PROJECT NO: 1166-00-61	HWY: IH 39	COUNTY: PORTAGE	CROSS SECTIONS: 3RD AVE	SHEET 178	E

FILE NAME : P:\90S\93\00093215\CADD\1166-00-61\DESIGN\CORRIDORS\CRDR-OVERHEAD-STREETS.DWG
LAYOUT NAME - 090211

PLOT DATE : 7/29/2015 10:06 AM PLOT BY : BRAD LEE PLOT NAME : PLOT SCALE : 1 IN:20 FT

WISDOT/CADDS SHEET 49

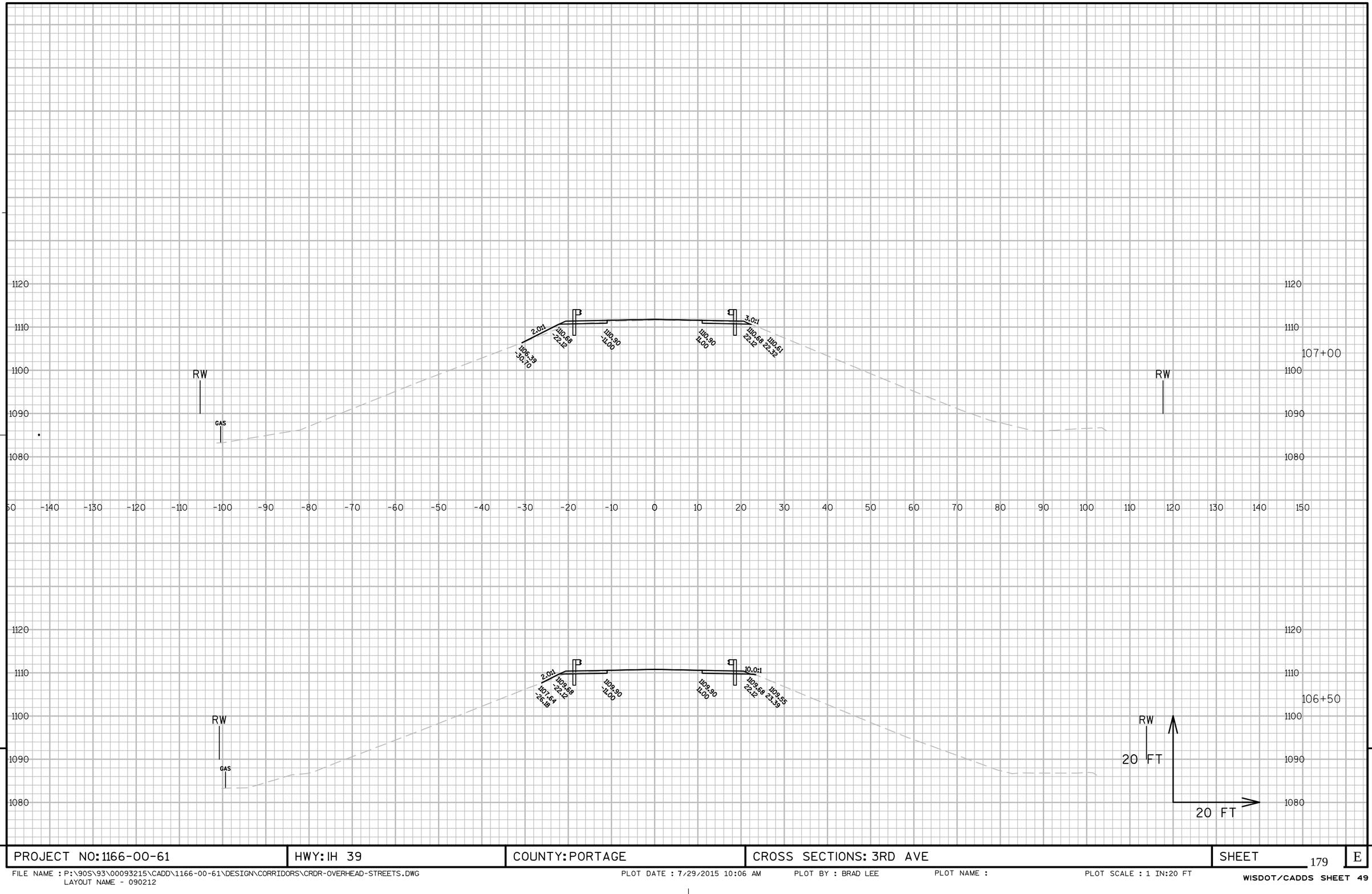

PROJECT NO: 1166-00-61	HWY: IH 39	COUNTY: PORTAGE	CROSS SECTIONS: 3RD AVE	SHEET 179	E

FILE NAME : P:\90S\93\00093215\CADD\1166-00-61\DESIGN\CORRIDORS\CRDR-OVERHEAD-STREETS.DWG
LAYOUT NAME - 090212

PLOT DATE : 7/29/2015 10:06 AM PLOT BY : BRAD LEE PLOT NAME : PLOT SCALE : 1 IN:20 FT

WISDOT/CADDS SHEET 49

STRUCTURE B-49-0043
STA 108+42.92J - STA 110+62.08J

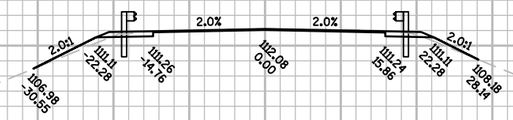

BEGIN RECONSTRUCTION
STA 107+70J

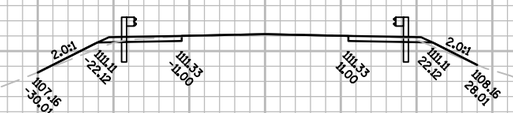

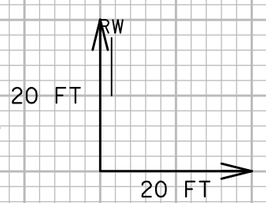

PROJECT NO: 1166-00-61	HWY: IH 39	COUNTY: PORTAGE	CROSS SECTIONS: 3RD AVE	SHEET 180	E

FILE NAME : P:\90S\93\00093215\CADD\1166-00-61\DESIGN\CORRDORS\CRDR-OVERHEAD-STREETS.DWG
LAYOUT NAME - 090213
PLOT DATE : 7/29/2015 10:06 AM PLOT BY : BRAD LEE PLOT NAME : PLOT SCALE : 1 IN:20 FT

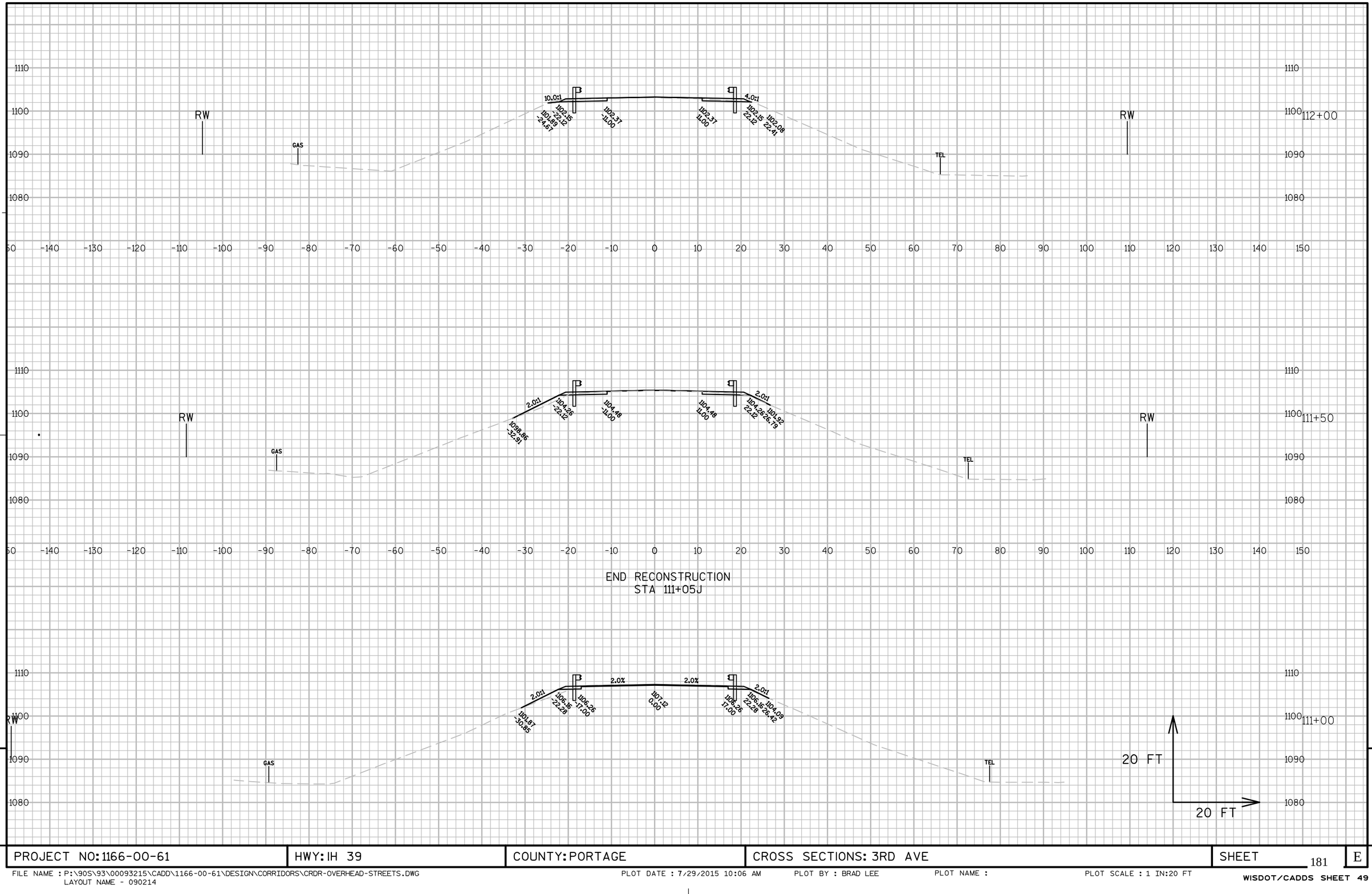

END RECONSTRUCTION
STA 111+05J

9

9

PROJECT NO: 1166-00-61	HWY: IH 39	COUNTY: PORTAGE	CROSS SECTIONS: 3RD AVE	SHEET 181	E

FILE NAME : P:\90S\93\00093215\CADD\1166-00-61\DESIGN\CORRIDORS\CRDR-OVERHEAD-STREETS.DWG
LAYOUT NAME - 090214

PLOT DATE : 7/29/2015 10:06 AM PLOT BY : BRAD LEE PLOT NAME : PLOT SCALE : 1 IN:20 FT

WISDOT/CADDS SHEET 49

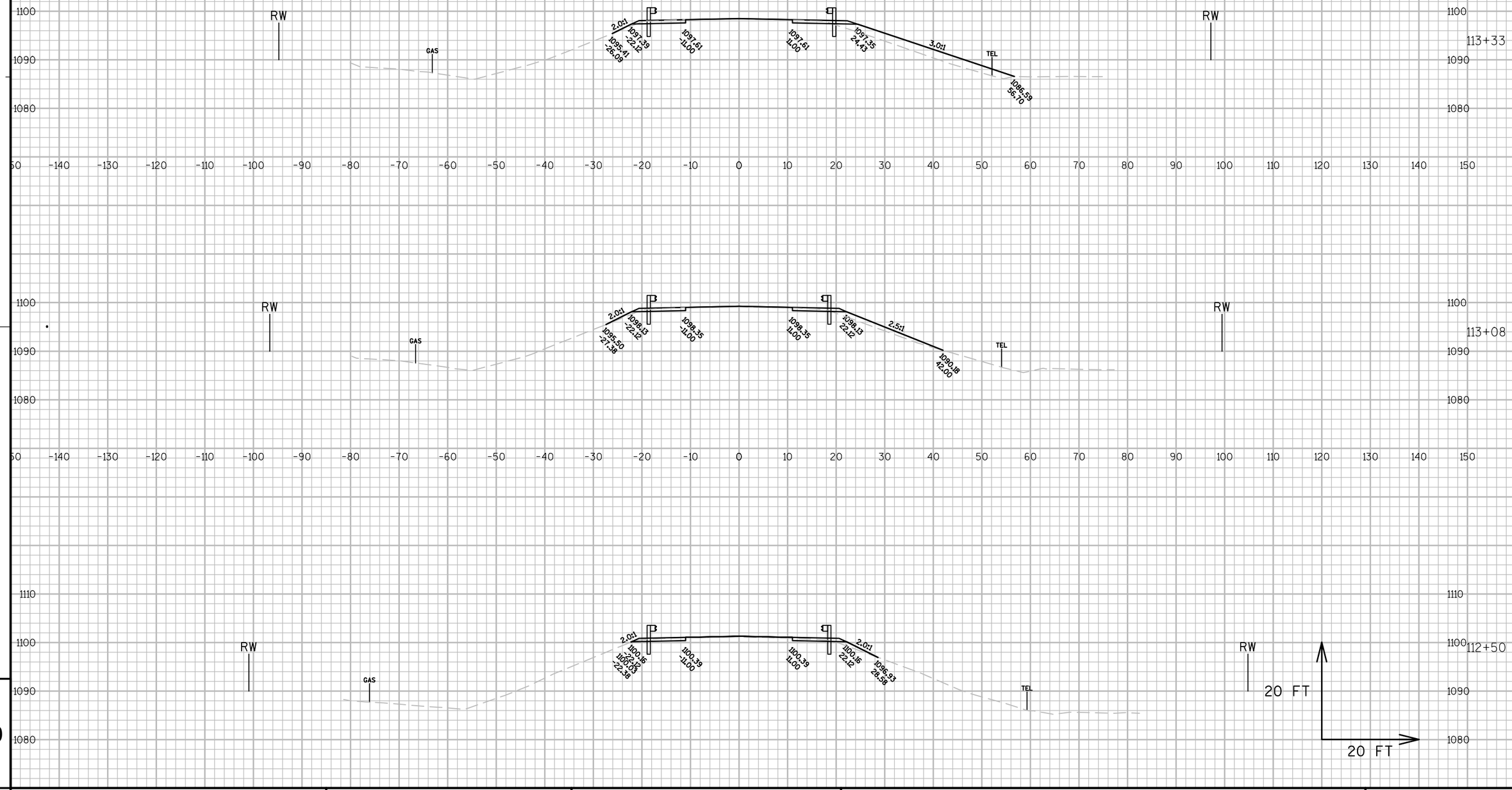

PROJECT NO: 1166-00-61	HWY: IH 39	COUNTY: PORTAGE	CROSS SECTIONS: 3RD AVE	SHEET 182	E

FILE NAME : P:\90S\93\00093215\CADD\1166-00-61\DESIGN\CORRIDORS\CRDR-OVERHEAD-STREETS.DWG
LAYOUT NAME - 090215

PLOT DATE : 7/29/2015 10:06 AM PLOT BY : BRAD LEE PLOT NAME : PLOT SCALE : 1 IN:20 FT

WISDOT/CADDS SHEET 49

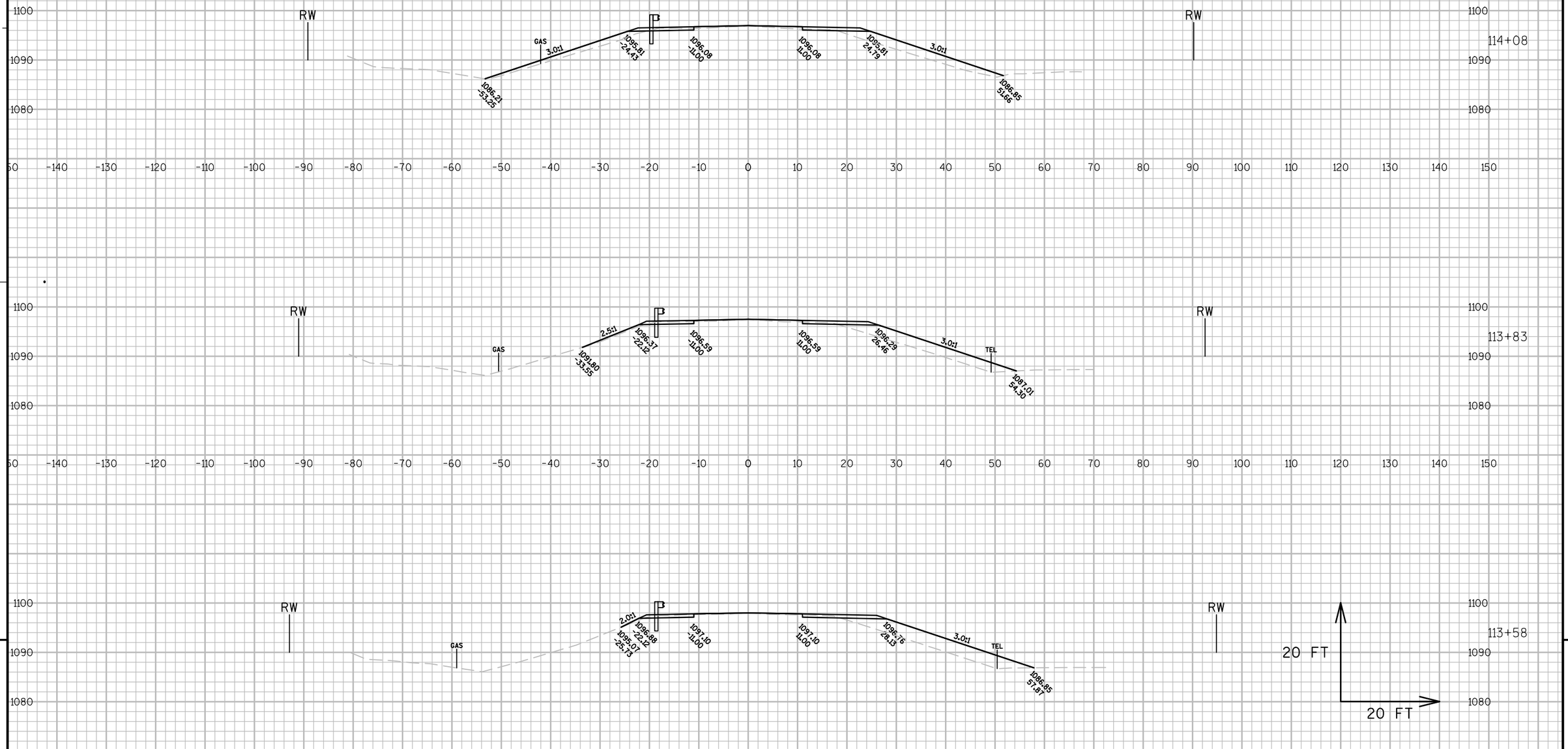

PROJECT NO: 1166-00-61	HWY: IH 39	COUNTY: PORTAGE	CROSS SECTIONS: 3RD AVE	SHEET 183	E

FILE NAME : P:\90S\93\00093215\CADD\1166-00-61\DESIGN\CORRIDORS\CRDR-OVERHEAD-STREETS.DWG
LAYOUT NAME - 090216

PLOT DATE : 7/29/2015 10:07 AM PLOT BY : BRAD LEE PLOT NAME : PLOT SCALE : 1 IN:20 FT

WISDOT/CADDS SHEET 49

END CONSTRUCTION
STA 114+55J

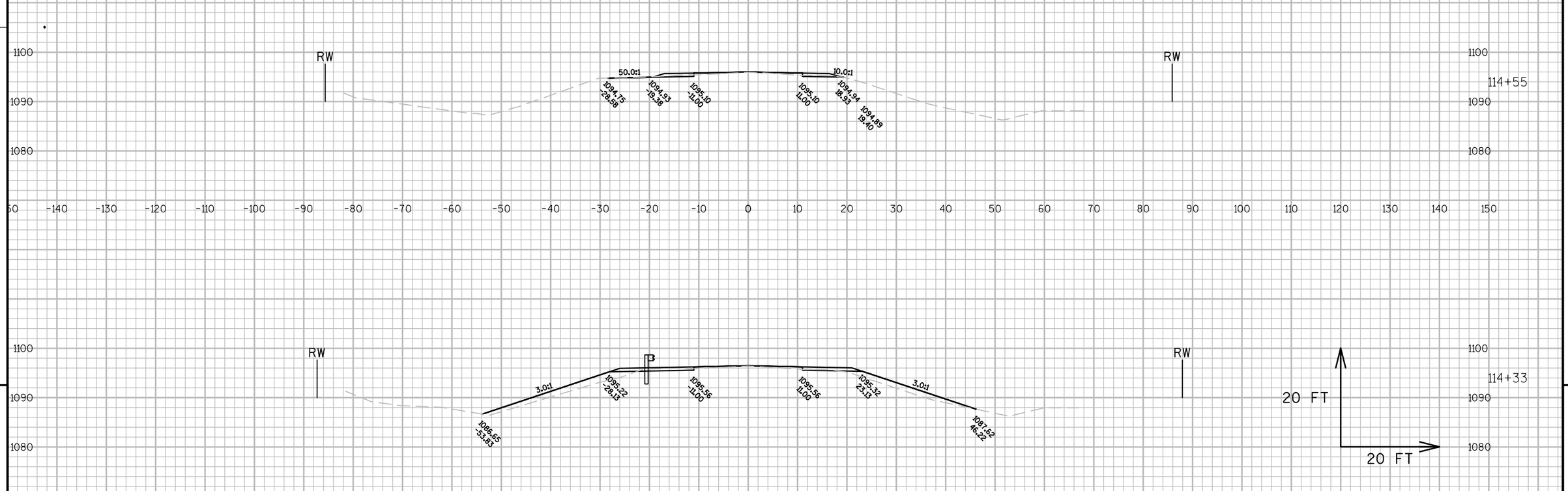

PROJECT NO: 1166-00-61	HWY: IH 39	COUNTY: PORTAGE	CROSS SECTIONS: 3RD AVE	SHEET 184	E

FILE NAME : P:\90S\93\00093215\CADD\1166-00-61\DESIGN\CORRIDORS\CRDR-OVERHEAD-STREETS.DWG
LAYOUT NAME - 090217
PLOT DATE : 7/29/2015 10:07 AM PLOT BY : BRAD LEE PLOT NAME : PLOT SCALE : 1 IN:20 FT

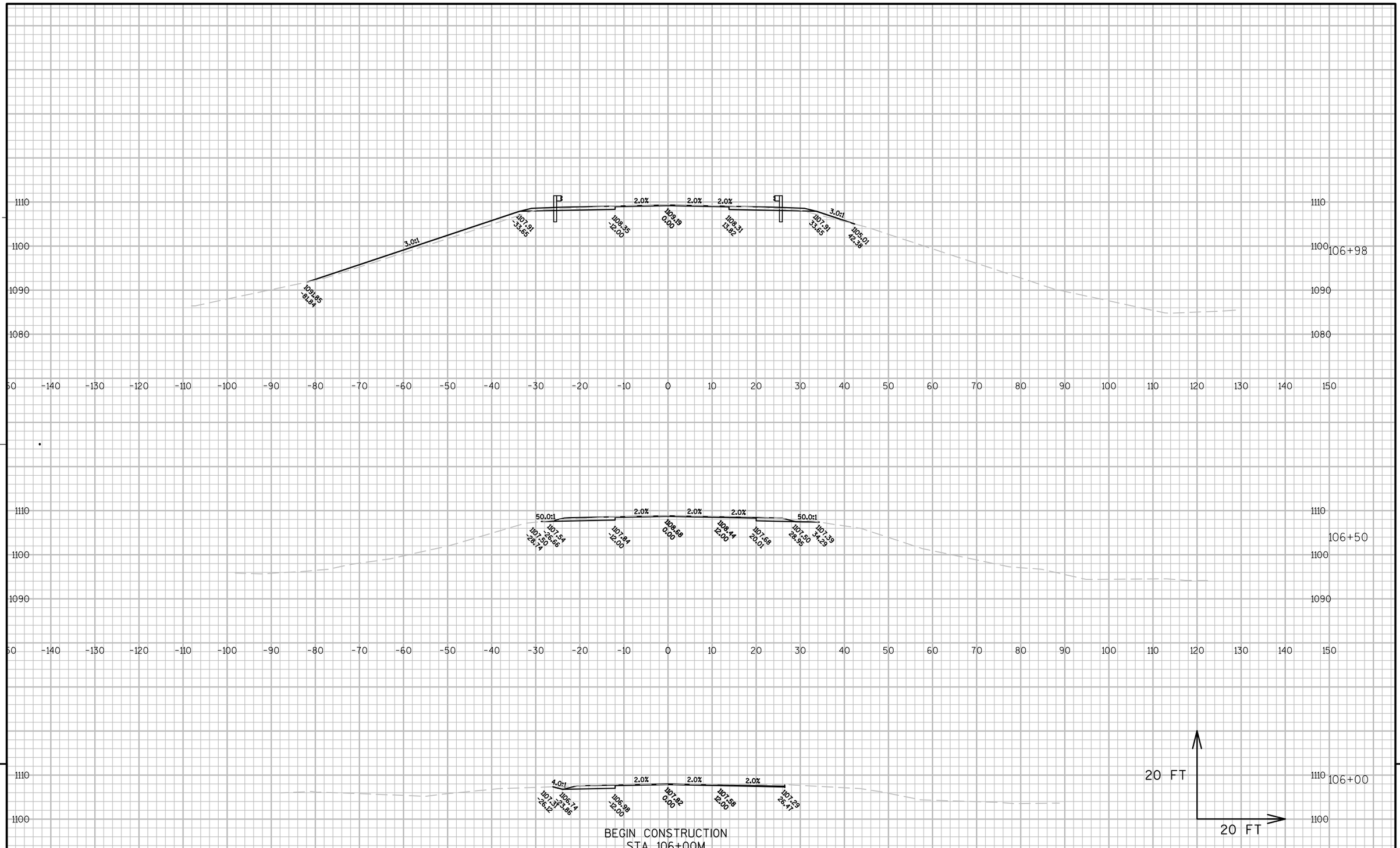

9

9

PROJECT NO: 1166-00-61	HWY: IH 39	COUNTY: PORTAGE	CROSS SECTIONS: CTH W	SHEET 185	E

FILE NAME : P:\90S\93\00093215\CADD\1166-00-61\DESIGN\CORRIDORS\CRDR-OVERHEAD-STREETS.DWG
LAYOUT NAME - 090218_XS
PLOT DATE : 7/29/2015 10:07 AM PLOT BY : BRAD LEE PLOT NAME : PLOT SCALE : 1 IN:20 FT
WISDOT/CADDS SHEET 49

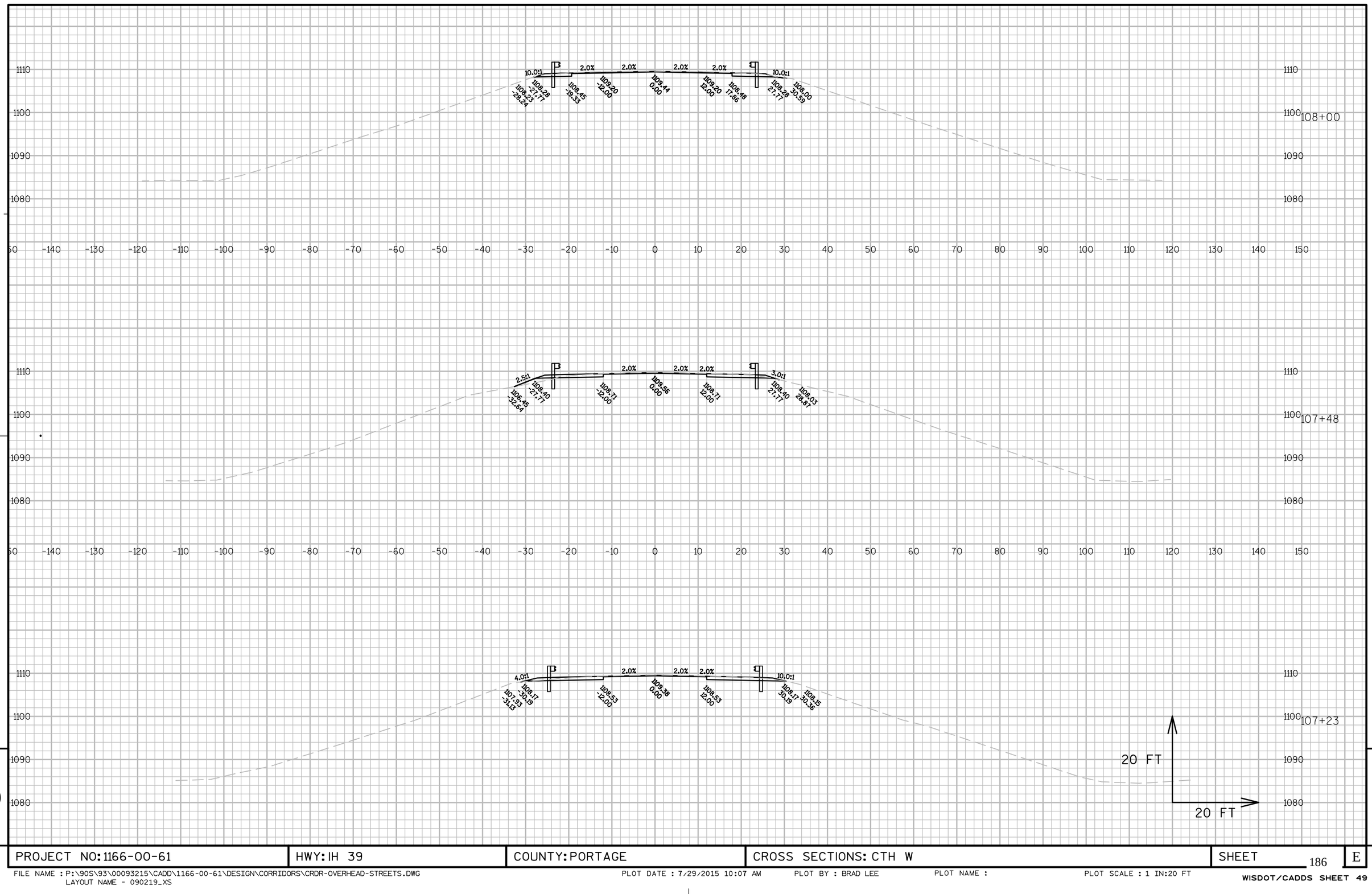

9

9

PROJECT NO: 1166-00-61	HWY: IH 39	COUNTY: PORTAGE	CROSS SECTIONS: CTH W	SHEET 186	E

FILE NAME : P:\90S\93\00093215\CADD\1166-00-61\DESIGN\CORRIDORS\CRDR-OVERHEAD-STREETS.DWG
LAYOUT NAME - 090219_XS

PLOT DATE : 7/29/2015 10:07 AM PLOT BY : BRAD LEE PLOT NAME : PLOT SCALE : 1 IN:20 FT

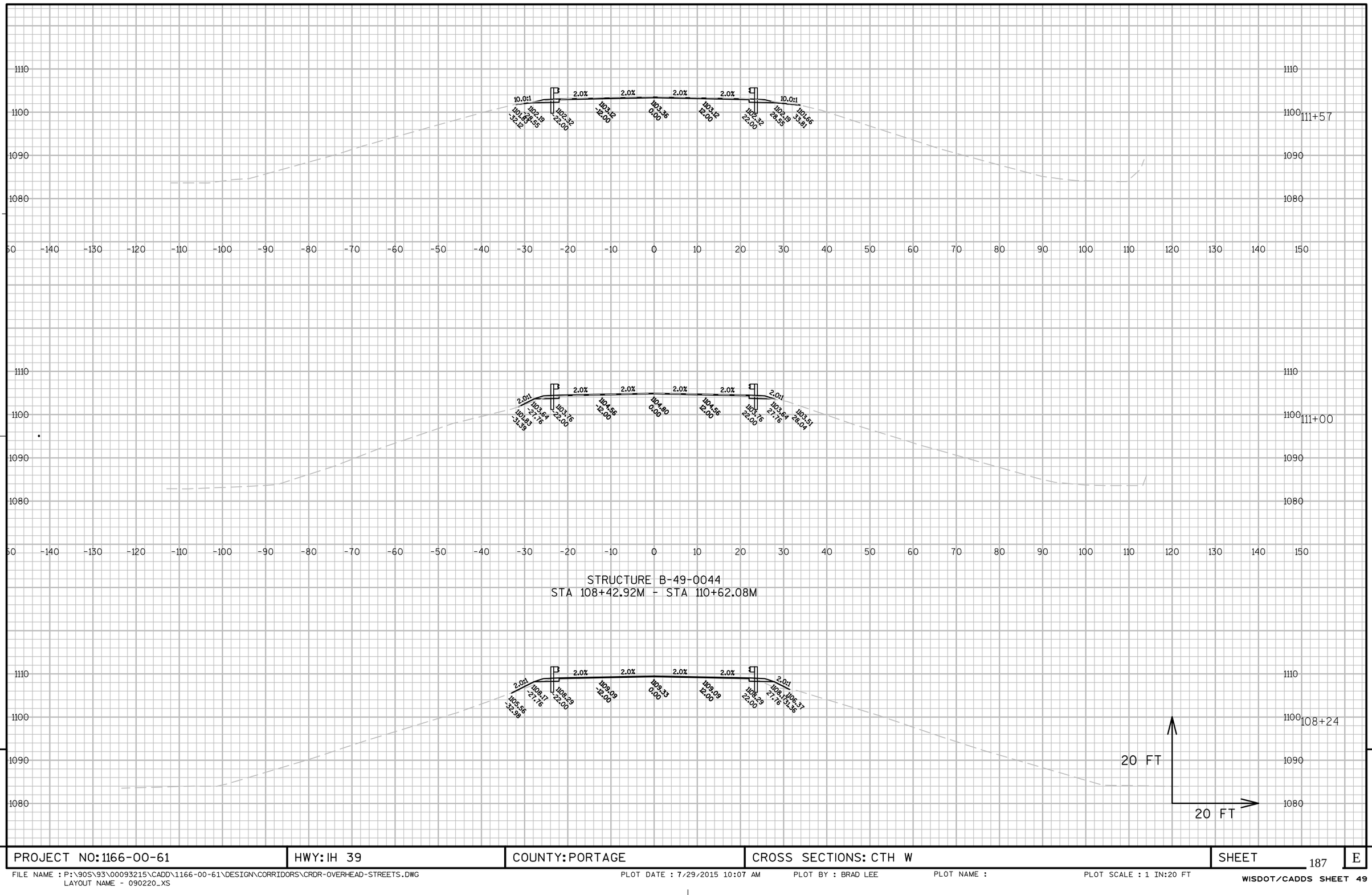

STRUCTURE B-49-0044
STA 108+42.92M - STA 110+62.08M

PROJECT NO: 1166-00-61	HWY: IH 39	COUNTY: PORTAGE	CROSS SECTIONS: CTH W	SHEET 187	E

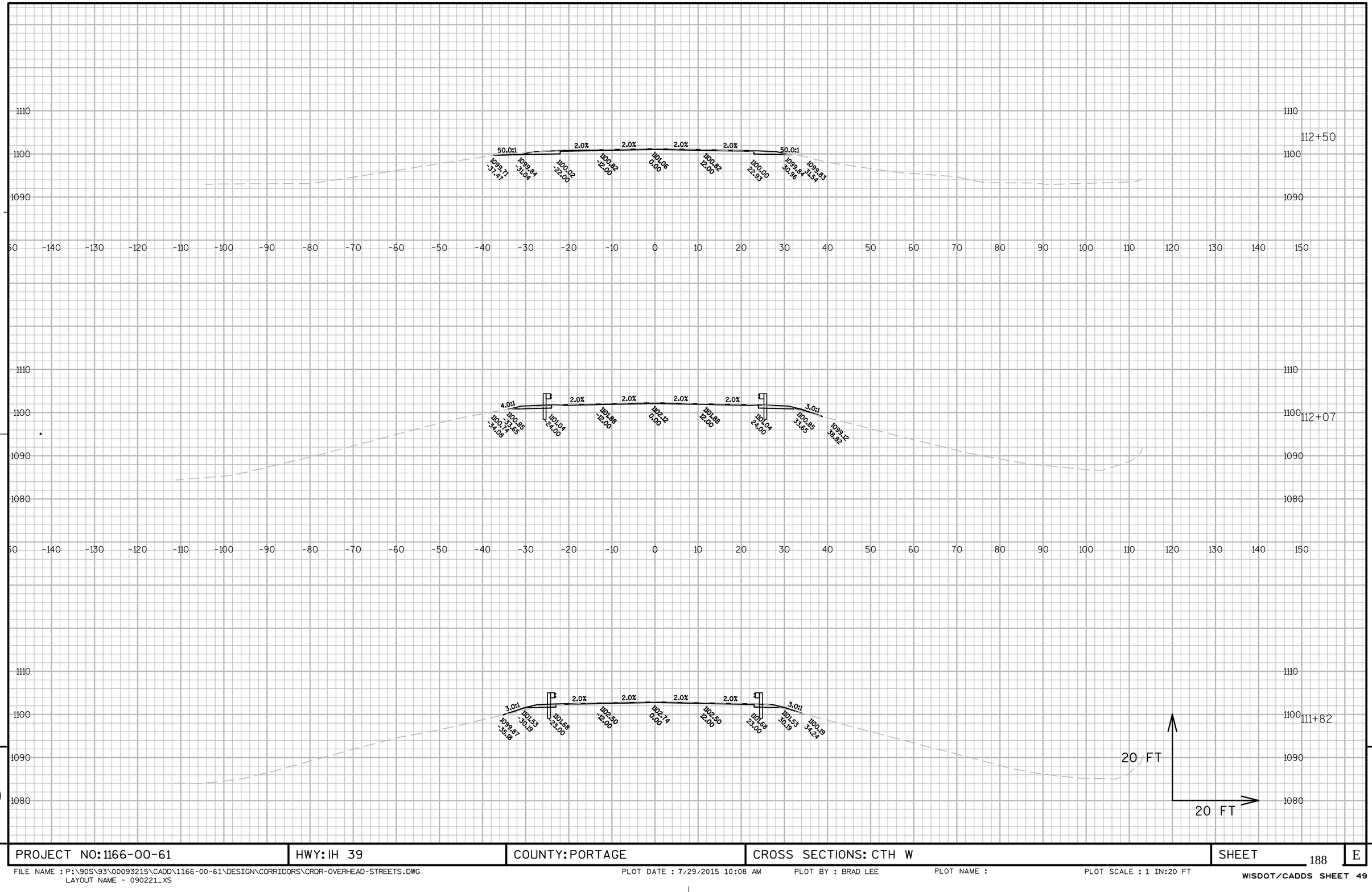

9

9

PROJECT NO: 1166-00-61	HWY: IH 39	COUNTY: PORTAGE	CROSS SECTIONS: CTH W	SHEET 188	E

FILE NAME : P:\90S\93\00093215\CADD\1166-00-61\DESIGN\CORRIDORS\CRDR-OVERHEAD-STREETS.DWG
LAYOUT NAME - 090221_XS

PLOT DATE : 7/29/2015 10:08 AM PLOT BY : BRAD LEE PLOT NAME : PLOT SCALE : 1 IN:20 FT

END CONSTRUCTION
STA 113+00M

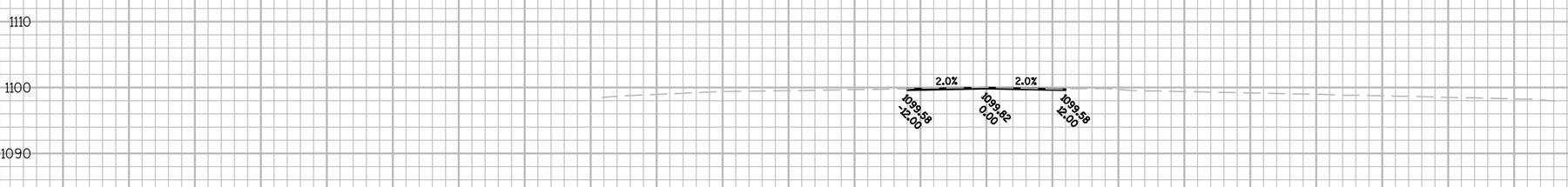

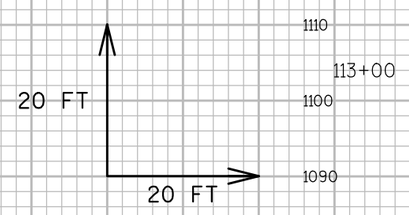

9

9

PROJECT NO: 1166-00-61	HWY: IH 39	COUNTY: PORTAGE	CROSS SECTIONS: CTH W	SHEET 189	E

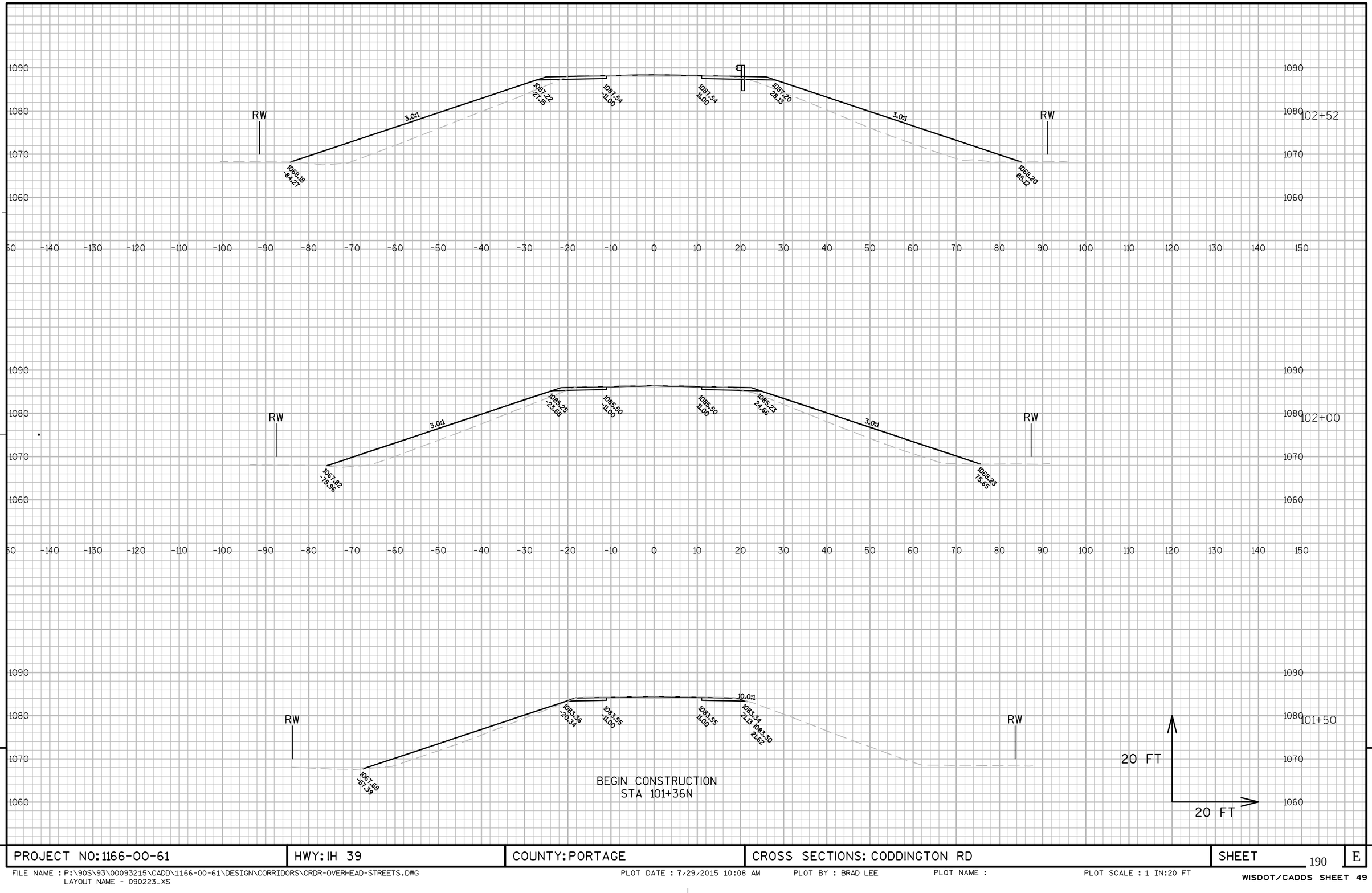

PROJECT NO: 1166-00-61	HWY: IH 39	COUNTY: PORTAGE	CROSS SECTIONS: CODDINGTON RD	SHEET 190	E

FILE NAME : P:\90S\93\00093215\CADD\1166-00-61\DESIGN\CORRIDORS\CRDR-OVERHEAD-STREETS.DWG
LAYOUT NAME - 090223_XS

PLOT DATE : 7/29/2015 10:08 AM PLOT BY : BRAD LEE PLOT NAME : PLOT SCALE : 1 IN:20 FT

WISDOT/CADDS SHEET 49

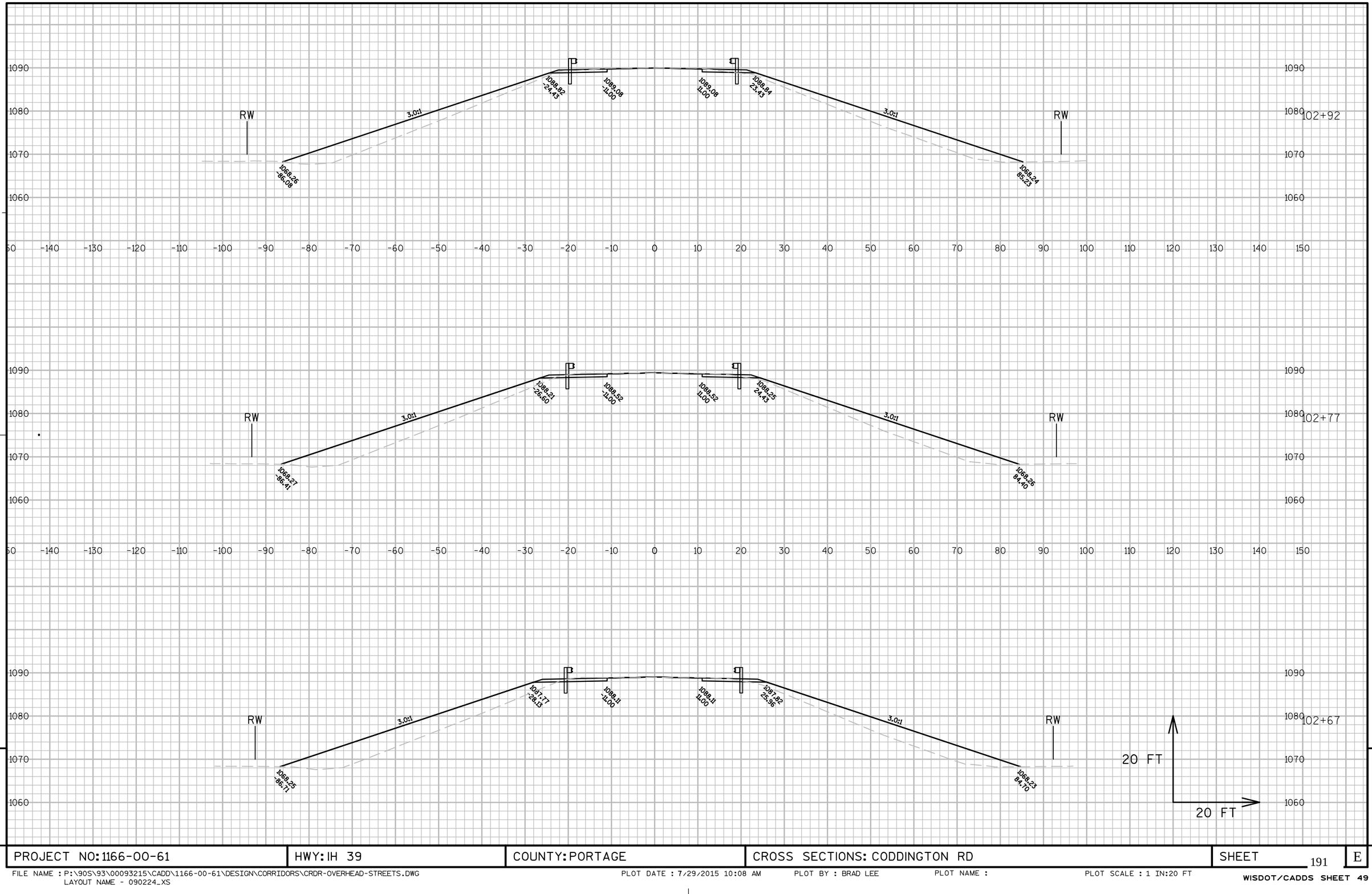

PROJECT NO: 1166-00-61	HWY: IH 39	COUNTY: PORTAGE	CROSS SECTIONS: CODDINGTON RD	SHEET 191	E

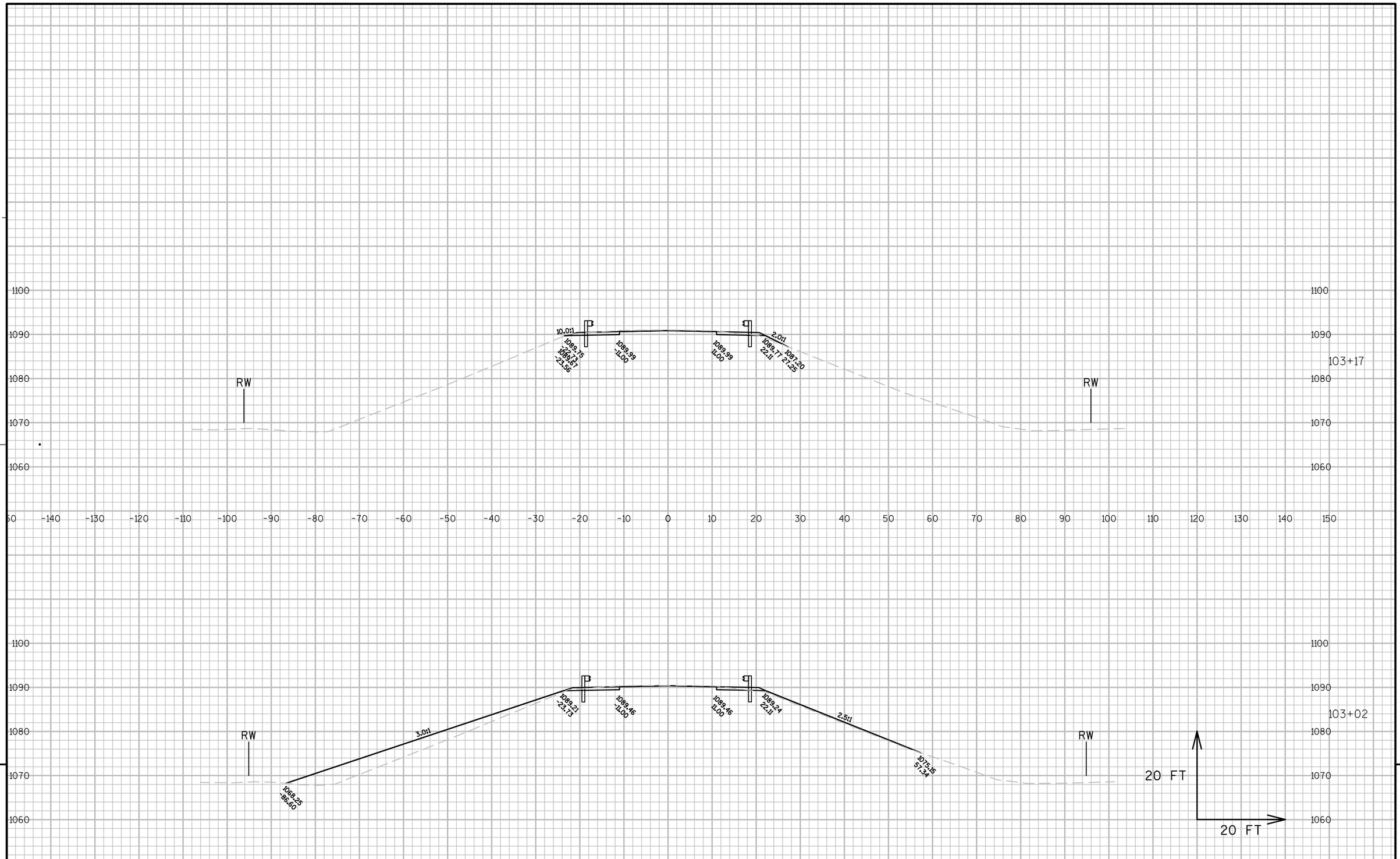

PROJECT NO: 1166-00-61	HWY: IH 39	COUNTY: PORTAGE	CROSS SECTIONS: CODDINGTON RD	SHEET 192	E

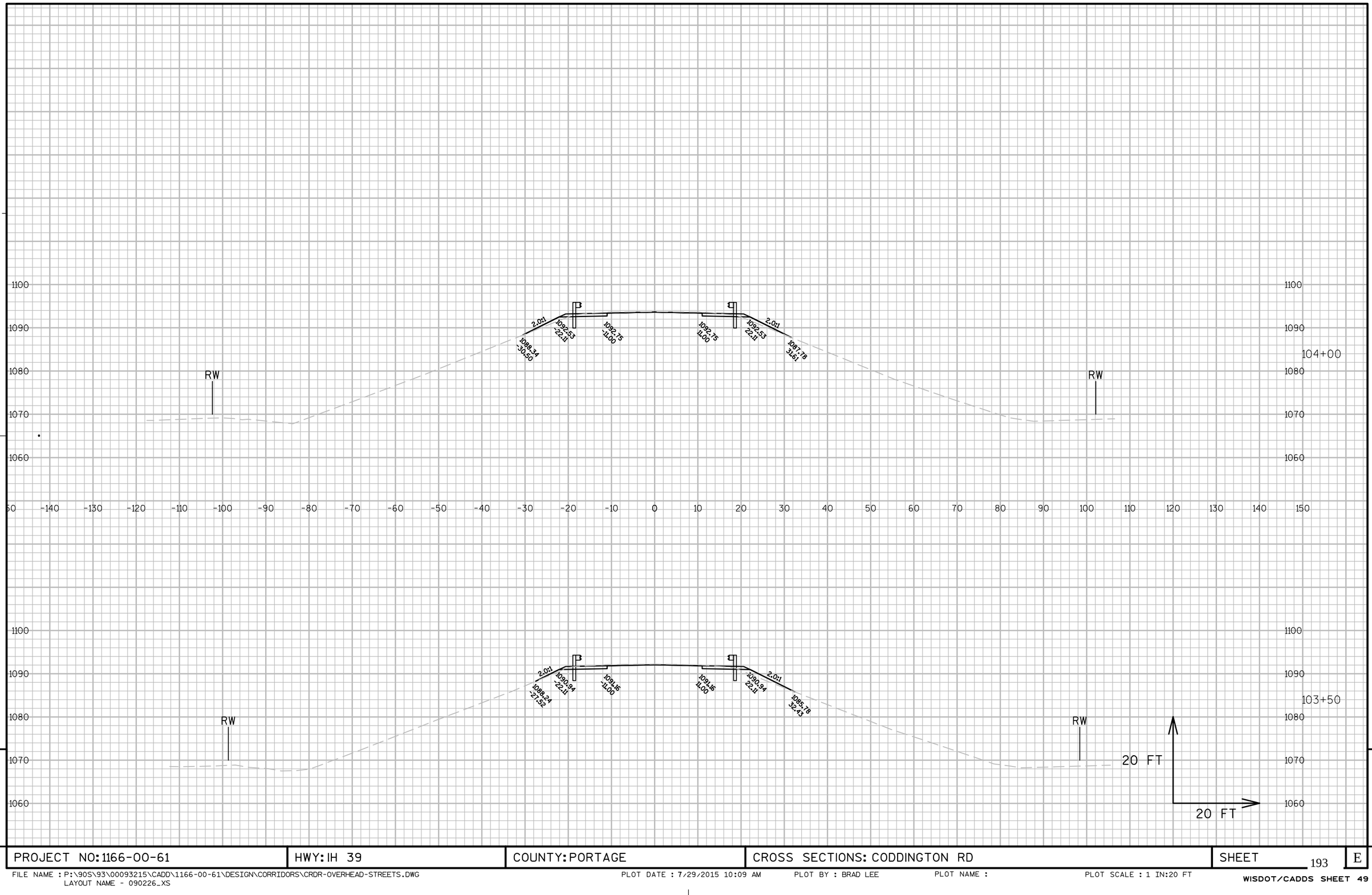

PROJECT NO: 1166-00-61	HWY: IH 39	COUNTY: PORTAGE	CROSS SECTIONS: CODDINGTON RD	SHEET 193	E

FILE NAME : P:\90S\93\00093215\CADD\1166-00-61\DESIGN\CORRIDORS\CRDR-OVERHEAD-STREETS.DWG
LAYOUT NAME - 090226_XS

PLOT DATE : 7/29/2015 10:09 AM PLOT BY : BRAD LEE PLOT NAME : PLOT SCALE : 1 IN:20 FT

WISDOT/CADDS SHEET 49

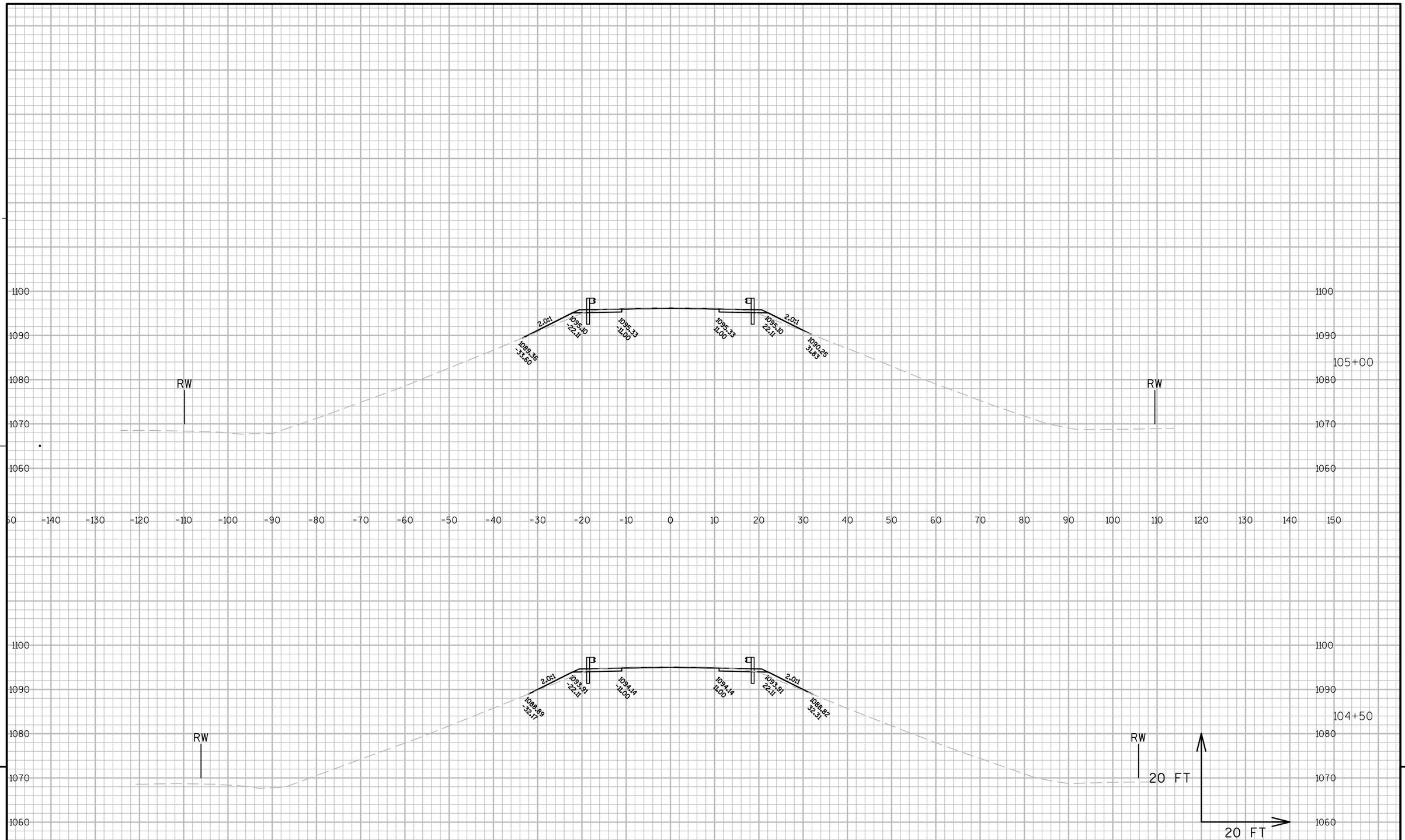

PROJECT NO: 1166-00-61	HWY: IH 39	COUNTY: PORTAGE	CROSS SECTIONS: CODDINGTON RD	SHEET 194	E

FILE NAME : P:\90S\93\00093215\CADD\1166-00-61\DESIGN\CORRIDORS\CRDR-OVERHEAD-STREETS.DWG
LAYOUT NAME - 090227_XS

PLOT DATE : 7/29/2015 10:09 AM PLOT BY : BRAD LEE PLOT NAME : PLOT SCALE : 1 IN:20 FT

WISDOT/CADDS SHEET 49

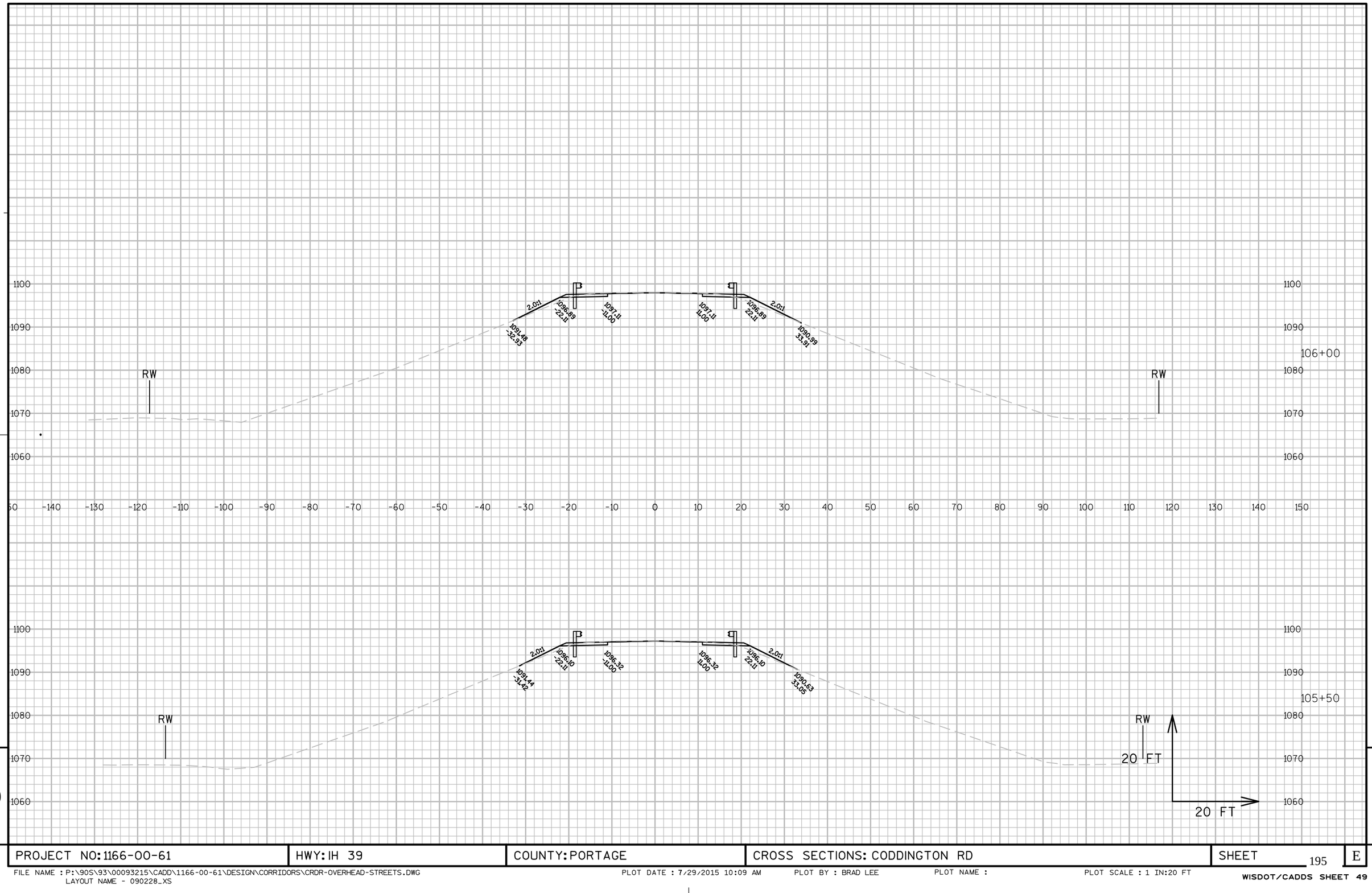

PROJECT NO: 1166-00-61	HWY: IH 39	COUNTY: PORTAGE	CROSS SECTIONS: CODDINGTON RD	SHEET 195	E

FILE NAME : P:\90S\93\00093215\CADD\1166-00-61\DESIGN\CORRIDORS\CRDR-OVERHEAD-STREETS.DWG
LAYOUT NAME - 090228_XS

PLOT DATE : 7/29/2015 10:09 AM PLOT BY : BRAD LEE PLOT NAME : PLOT SCALE : 1 IN:20 FT

WISDOT/CADDS SHEET 49

BEGIN RECONSTRUCTION
STA 107+30N

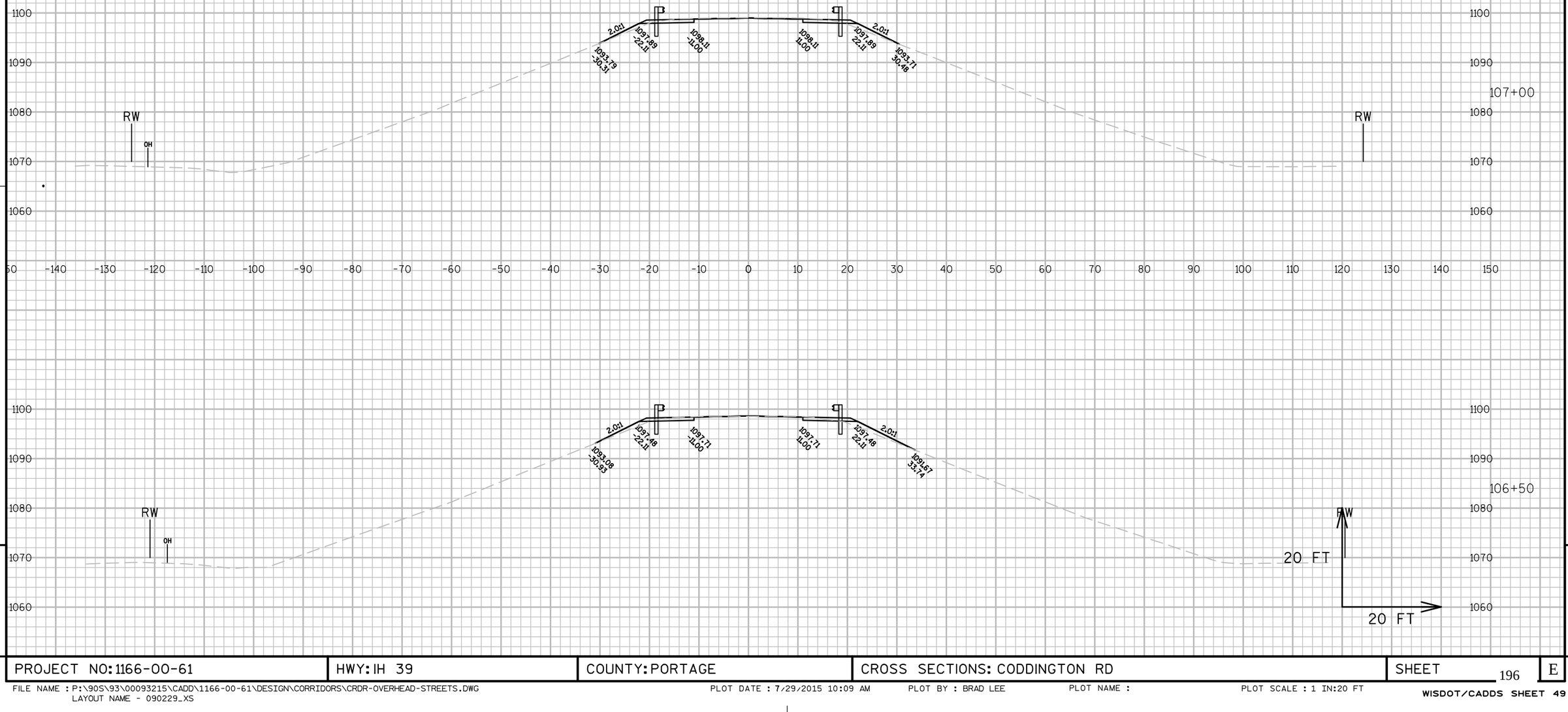

PROJECT NO: 1166-00-61	HWY: IH 39	COUNTY: PORTAGE	CROSS SECTIONS: CODDINGTON RD	SHEET 196	E

FILE NAME : P:\90S\93\00093215\CADD\1166-00-61\DESIGN\CORRIDORS\CRDR-OVERHEAD-STREETS.DWG
LAYOUT NAME - 090229_XS
PLOT DATE : 7/29/2015 10:09 AM PLOT BY : BRAD LEE PLOT NAME : PLOT SCALE : 1 IN:20 FT

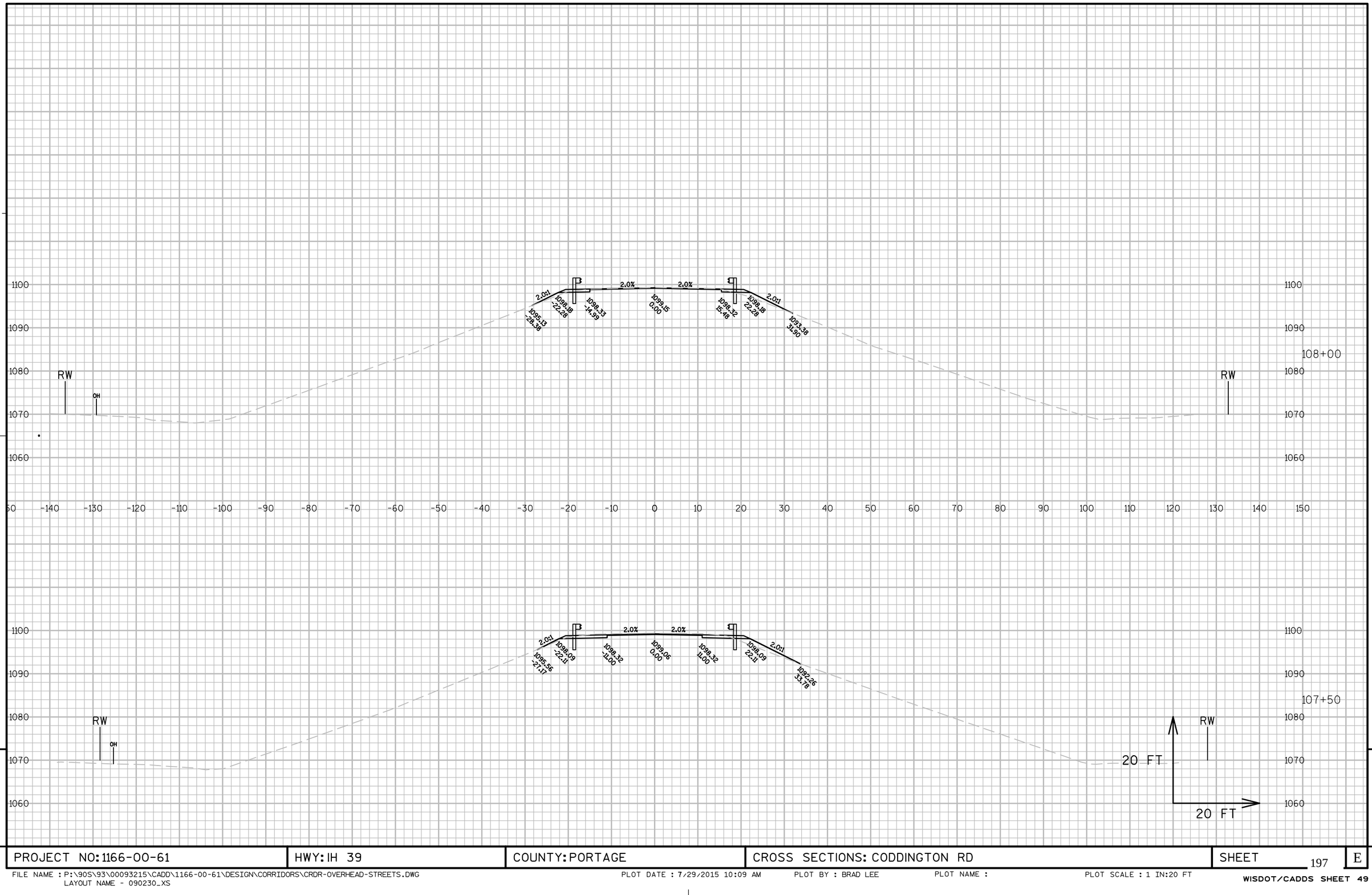

PROJECT NO: 1166-00-61	HWY: IH 39	COUNTY: PORTAGE	CROSS SECTIONS: CODDINGTON RD	SHEET 197	E

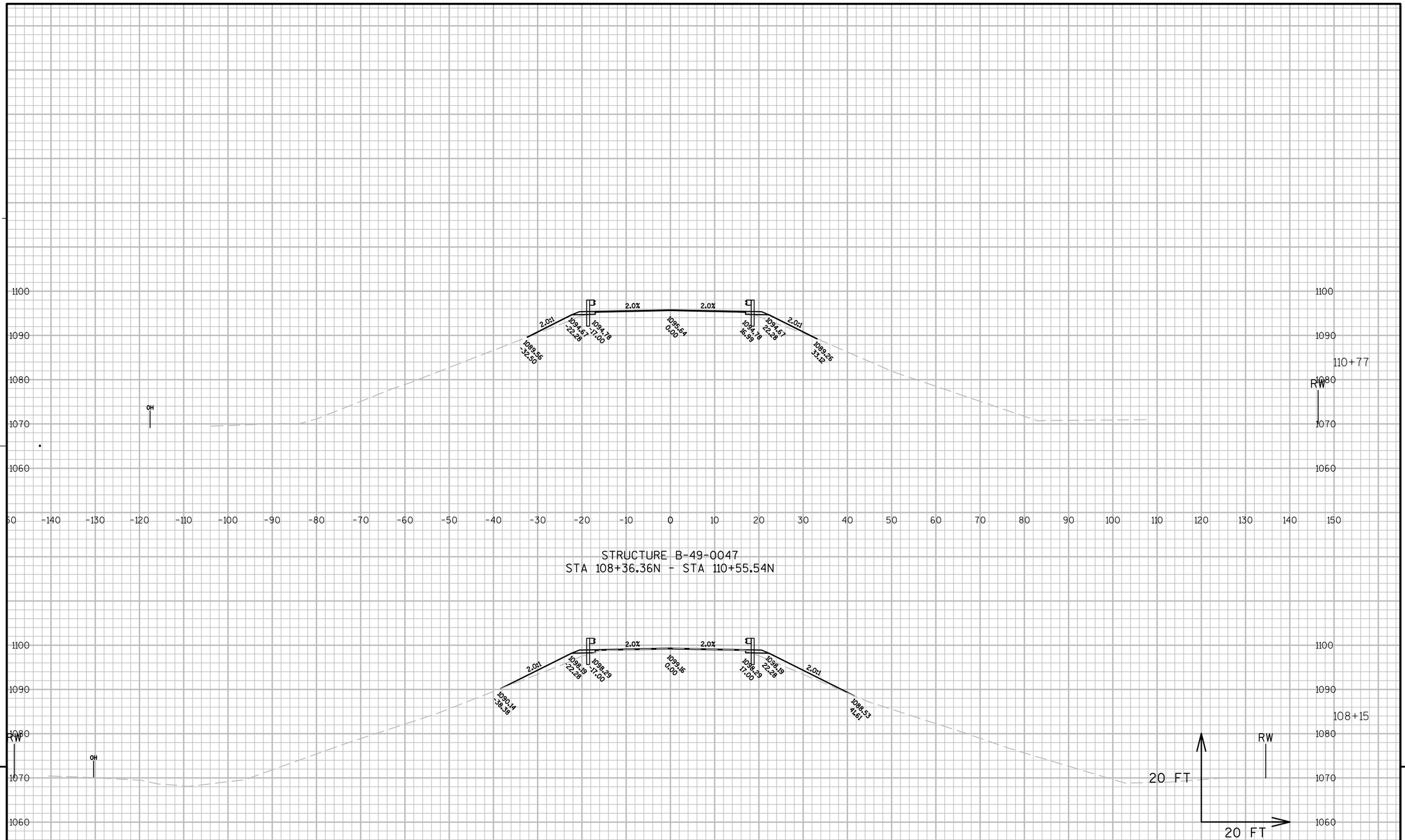

9

PROJECT NO: 1166-00-61	HWY: IH 39	COUNTY: PORTAGE	CROSS SECTIONS: CODDINGTON RD	SHEET 198	E

FILE NAME : P:\90S\93\00093215\CADD\1166-00-61\DESIGN\CORRIDORS\CRDR-OVERHEAD-STREETS.DWG
LAYOUT NAME - 090231_XS

PLOT DATE : 7/29/2015 10:09 AM PLOT BY : BRAD LEE PLOT NAME : PLOT SCALE : 1 IN:20 FT

WISDOT/CADDS SHEET 49

9

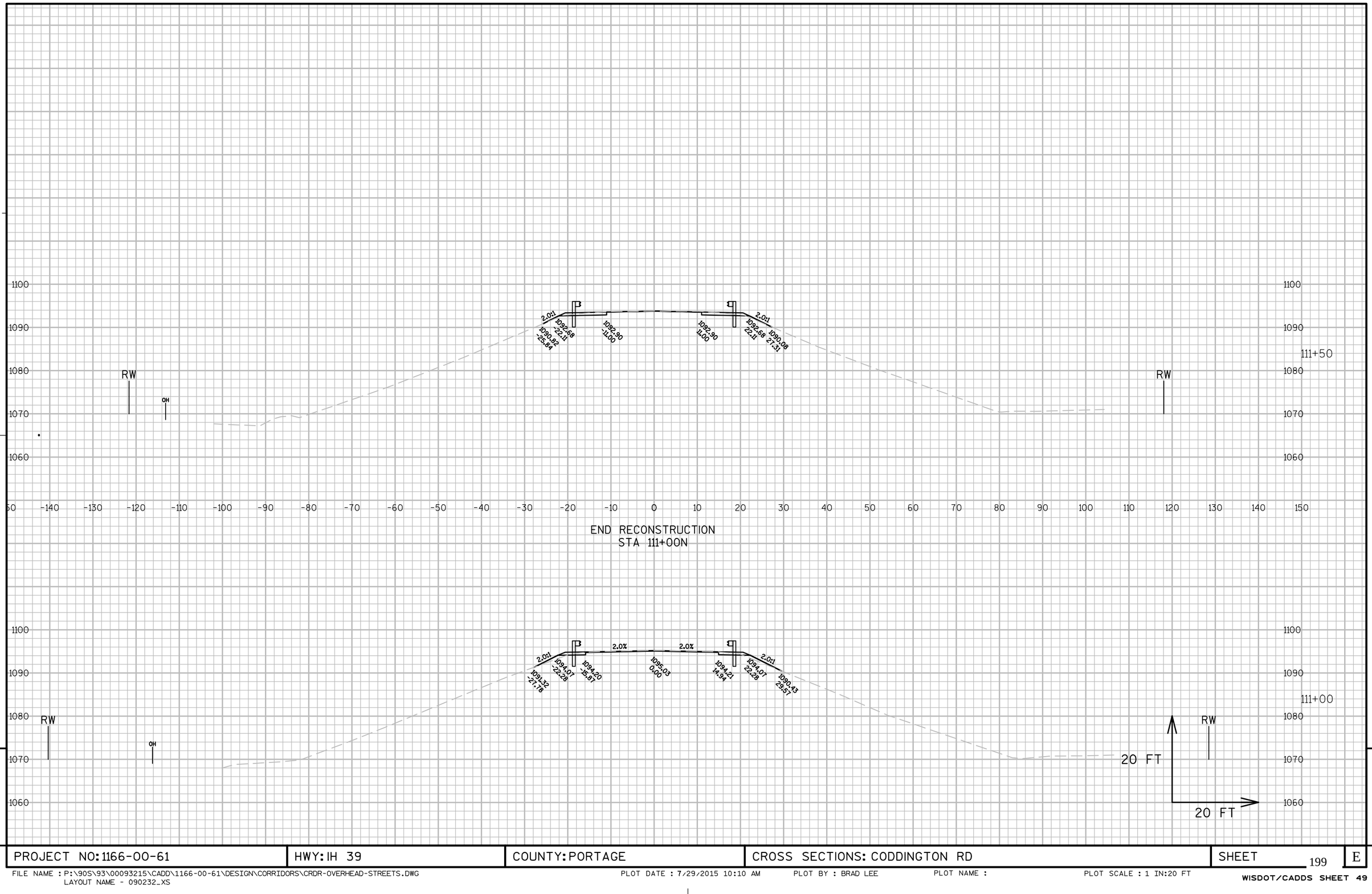

PROJECT NO: 1166-00-61	HWY: IH 39	COUNTY: PORTAGE	CROSS SECTIONS: CODDINGTON RD	SHEET 199	E

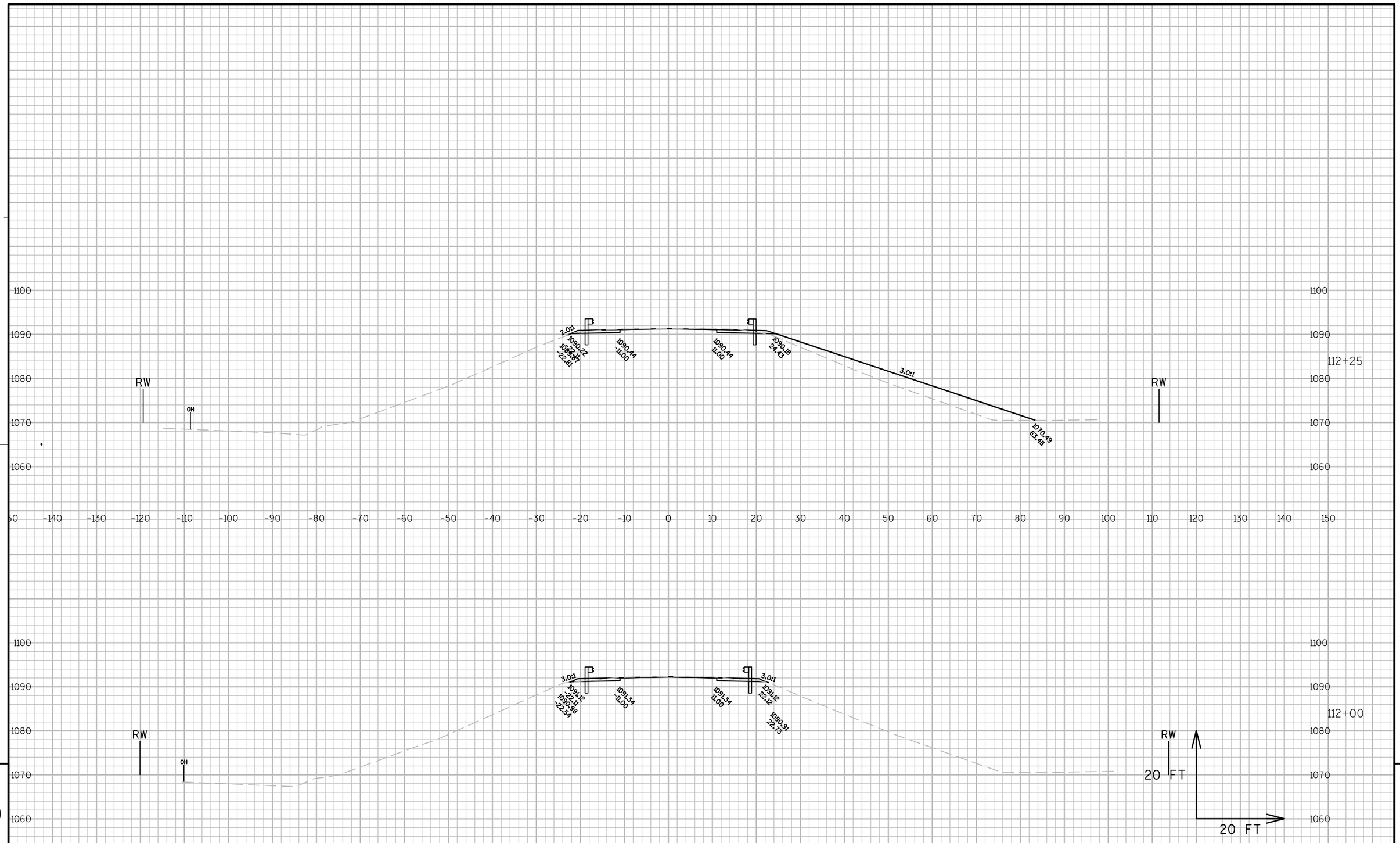

PROJECT NO: 1166-00-61	HWY: IH 39	COUNTY: PORTAGE	CROSS SECTIONS: CODDINGTON RD	SHEET 200	E

FILE NAME : P:\90S\93\00093215\CADD\1166-00-61\DESIGN\CORRIDORS\CRDR-OVERHEAD-STREETS.DWG
LAYOUT NAME - 090233_XS

PLOT DATE : 7/29/2015 10:10 AM PLOT BY : BRAD LEE PLOT NAME : PLOT SCALE : 1 IN:20 FT

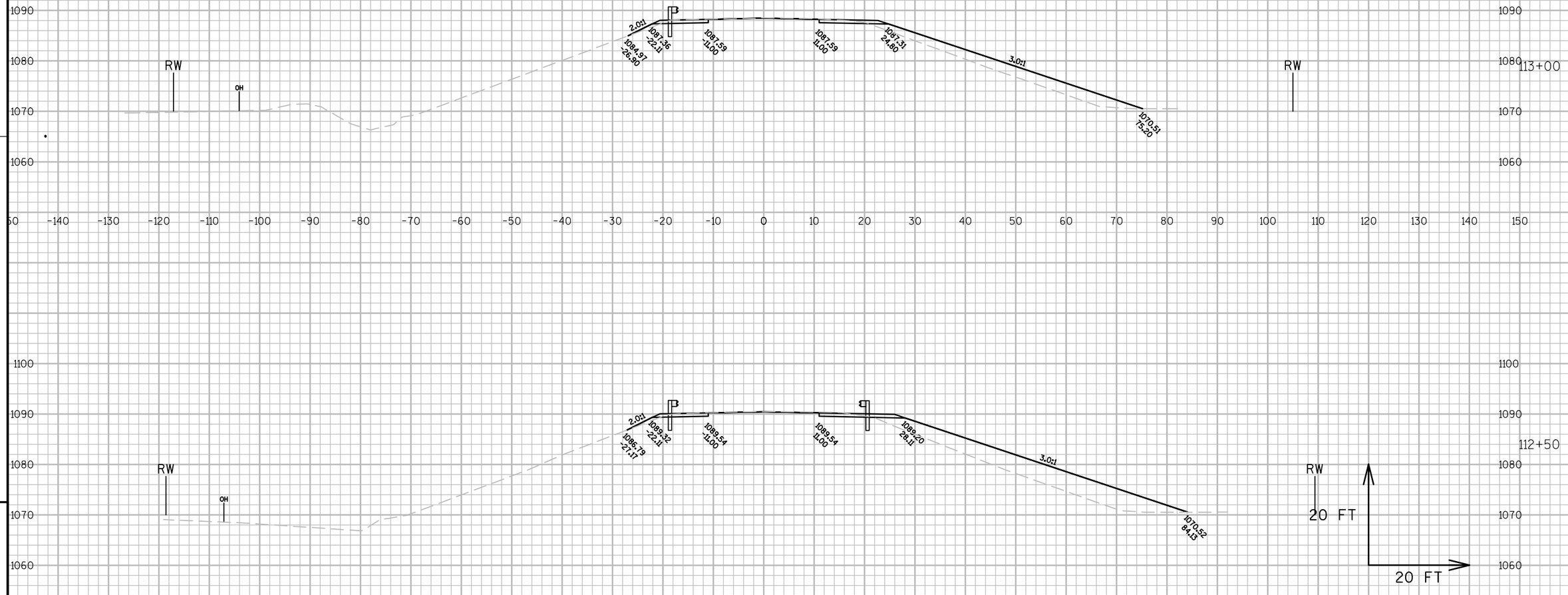

PROJECT NO: 1166-00-61	HWY: IH 39	COUNTY: PORTAGE	CROSS SECTIONS: CODDINGTON RD	SHEET 201	E

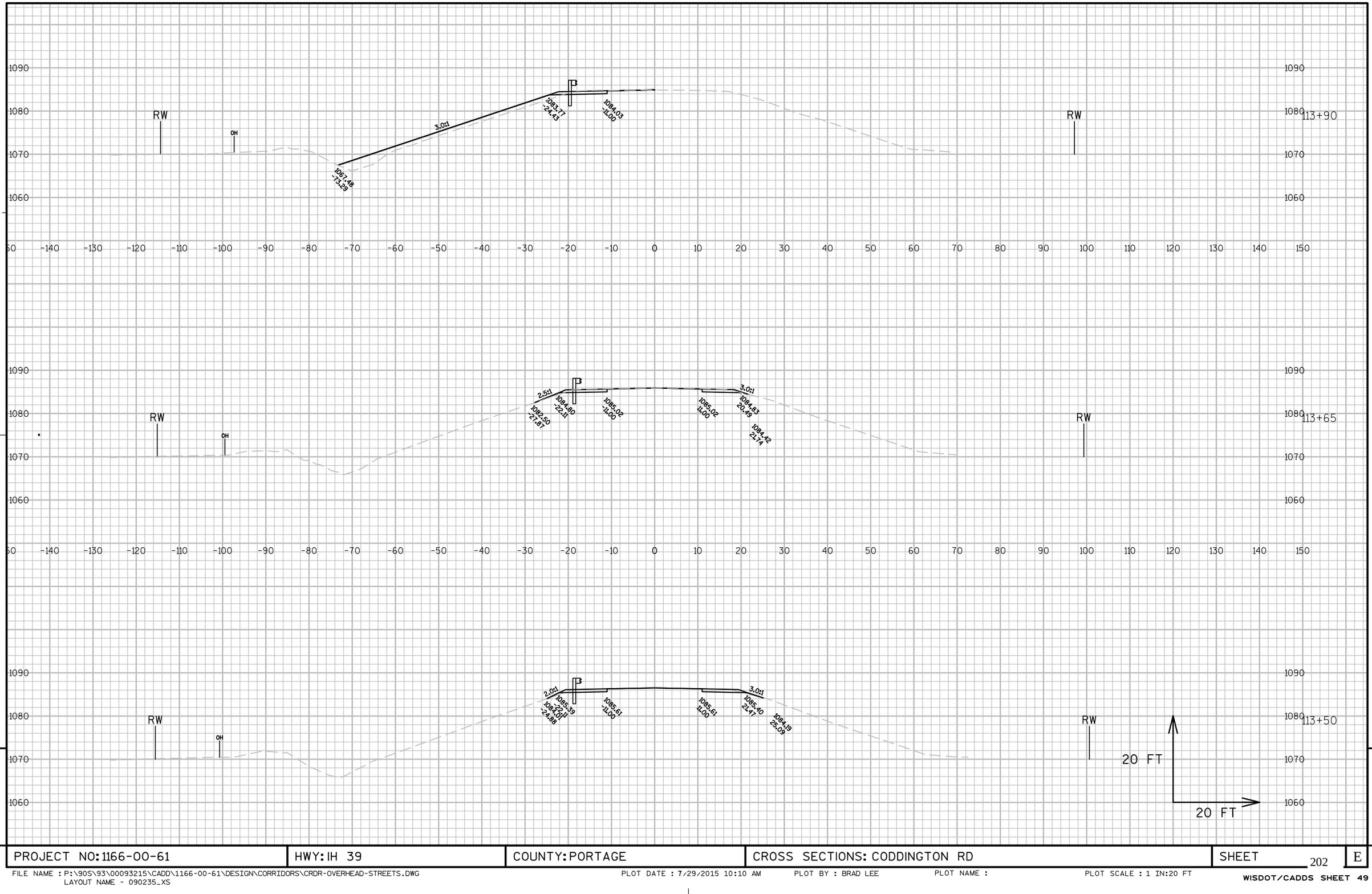

9

9

PROJECT NO: 1166-00-61	HWY: IH 39	COUNTY: PORTAGE	CROSS SECTIONS: CODDINGTON RD	SHEET 202	E

END CONSTRUCTION
STA 115+00N

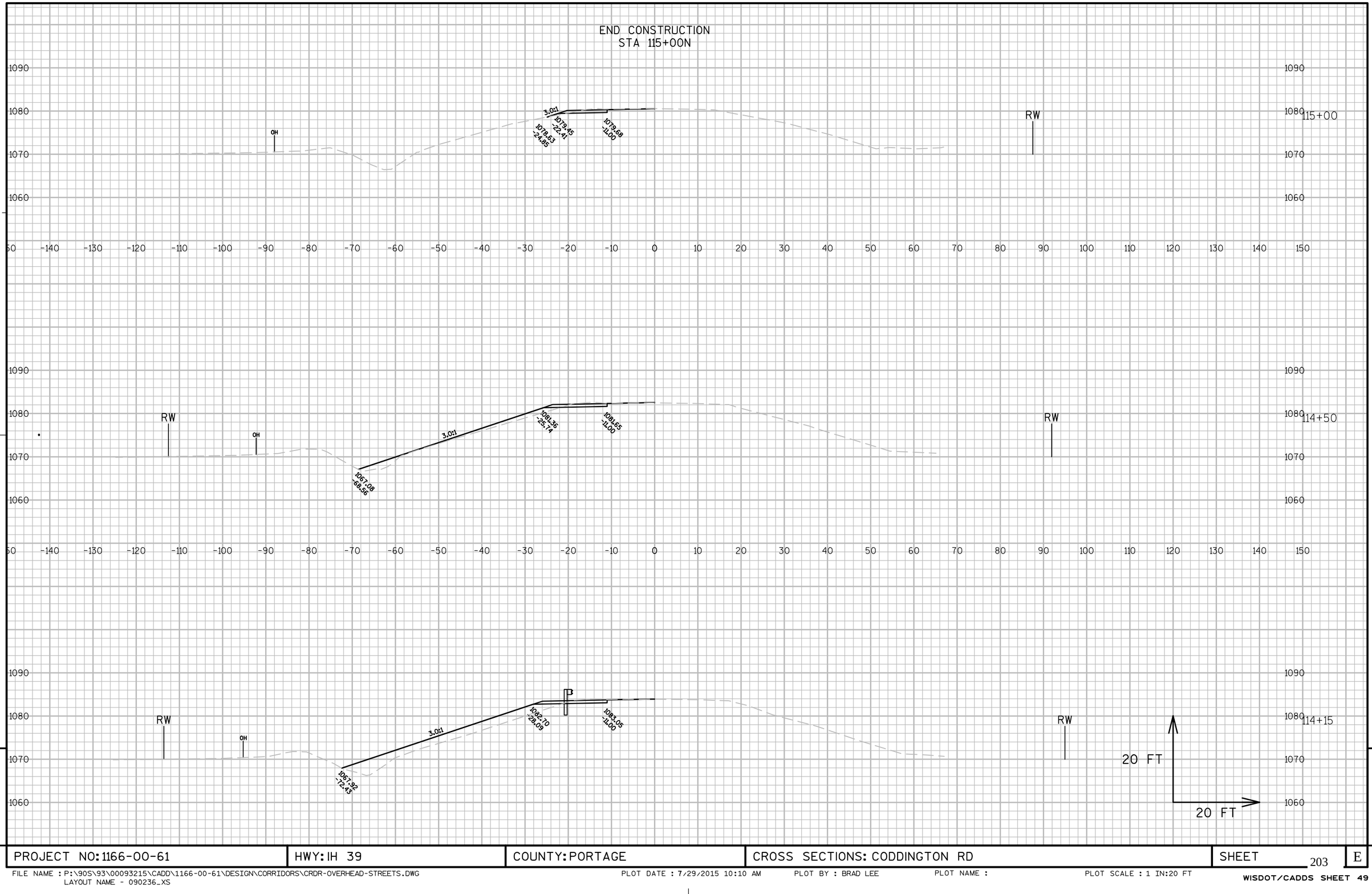

PROJECT NO: 1166-00-61	HWY: IH 39	COUNTY: PORTAGE	CROSS SECTIONS: CODDINGTON RD	SHEET 203	E

FILE NAME : P:\90S\93\00093215\CADD\1166-00-61\DESIGN\CORRIDORS\CRDR-OVERHEAD-STREETS.DWG
LAYOUT NAME - 090236_XS

PLOT DATE : 7/29/2015 10:10 AM PLOT BY : BRAD LEE PLOT NAME : PLOT SCALE : 1 IN:20 FT

WISDOT/CADDS SHEET 49

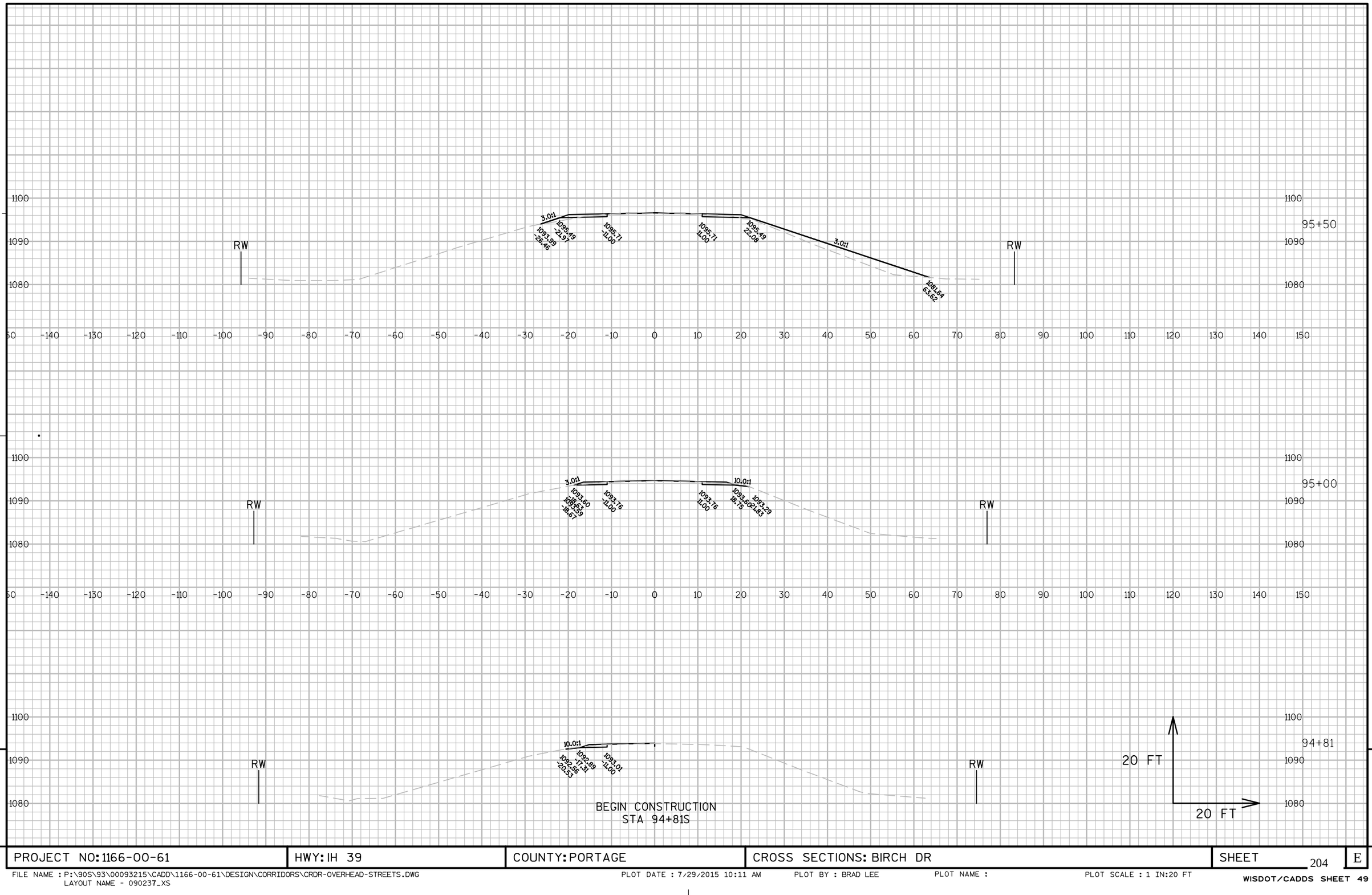

PROJECT NO: 1166-00-61	HWY: IH 39	COUNTY: PORTAGE	CROSS SECTIONS: BIRCH DR	SHEET 204	E

FILE NAME : P:\90S\93\00093215\CADD\1166-00-61\DESIGN\CORRIDORS\CRDR-OVERHEAD-STREETS.DWG
LAYOUT NAME - 090237_XS

PLOT DATE : 7/29/2015 10:11 AM PLOT BY : BRAD LEE PLOT NAME : PLOT SCALE : 1 IN:20 FT

WISDOT/CADDS SHEET 49

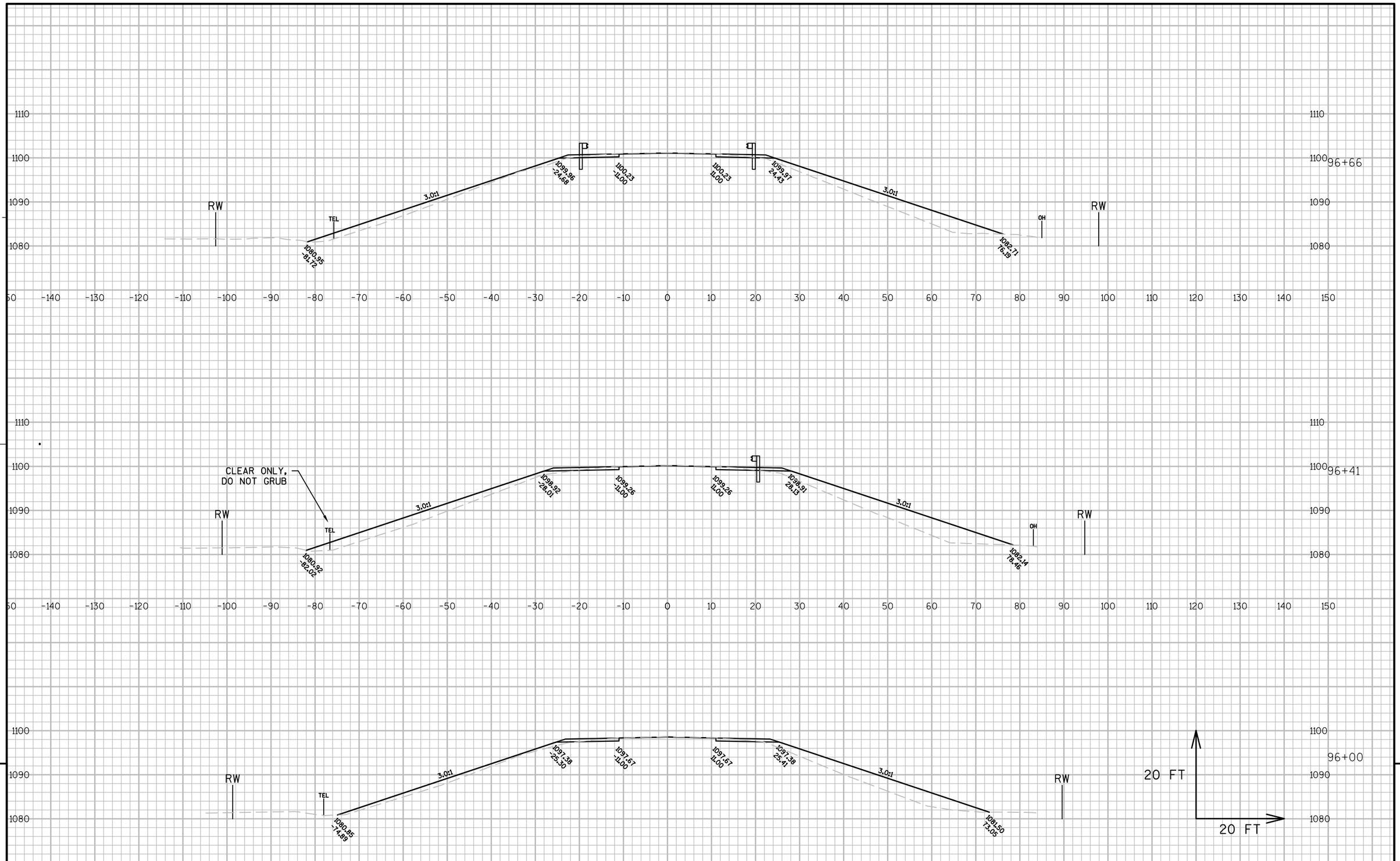

PROJECT NO: 1166-00-61	HWY: IH 39	COUNTY: PORTAGE	CROSS SECTIONS: BIRCH DR	SHEET 205	E

FILE NAME : P:\90S\93\00093215\CADD\1166-00-61\DESIGN\CORRIDORS\CRDR-OVERHEAD-STREETS.DWG
LAYOUT NAME - 090238_XS
PLOT DATE : 7/29/2015 10:11 AM PLOT BY : BRAD LEE PLOT NAME : PLOT SCALE : 1 IN:20 FT
WISDOT/CADDS SHEET 49

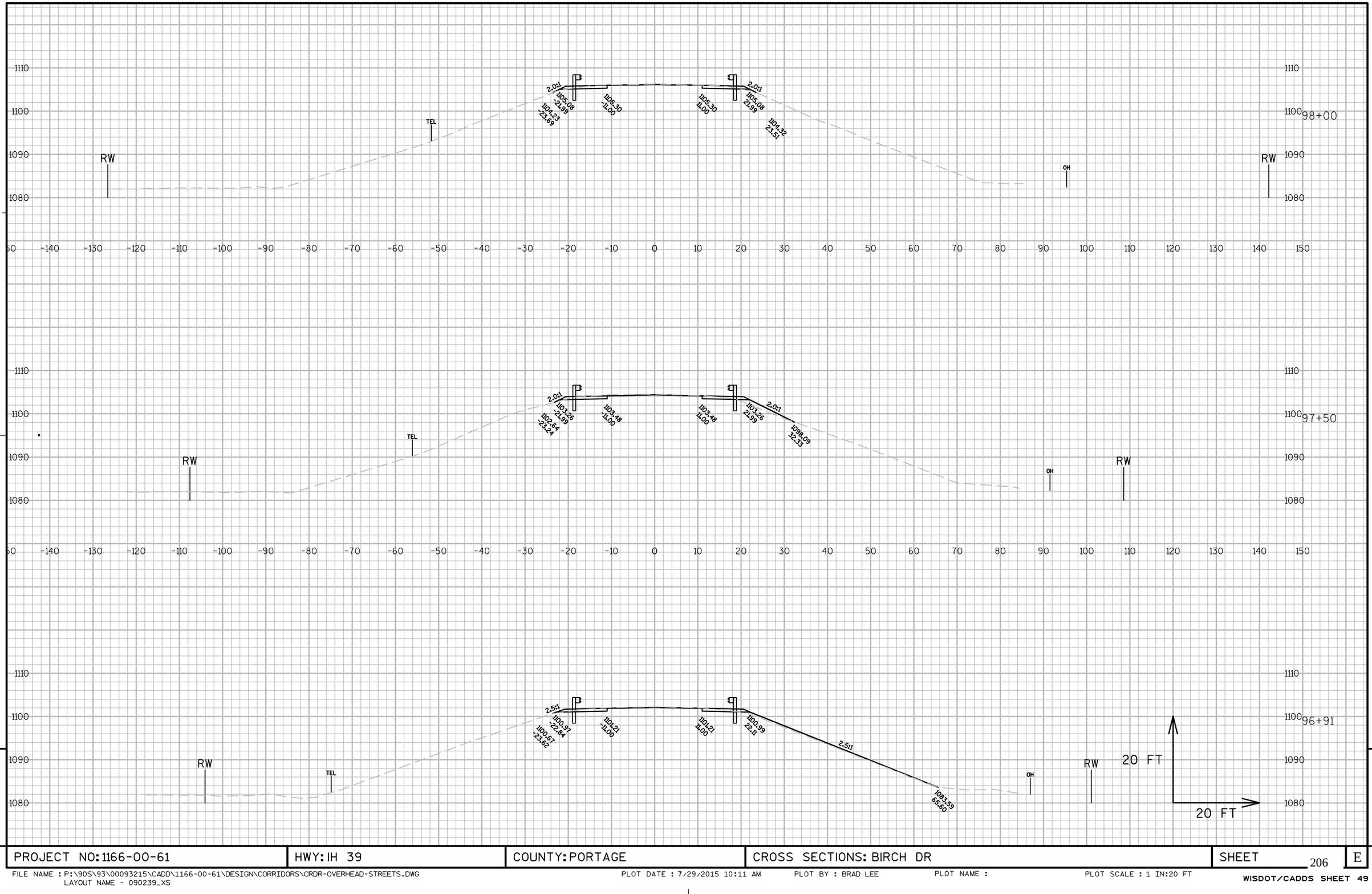

PROJECT NO: 1166-00-61	HWY: IH 39	COUNTY: PORTAGE	CROSS SECTIONS: BIRCH DR	SHEET 206	E

FILE NAME : P:\90S\93\00093215\CADD\1166-00-61\DESIGN\CORRIDORS\CRDR-OVERHEAD-STREETS.DWG
LAYOUT NAME - 090239_XS

PLOT DATE : 7/29/2015 10:11 AM PLOT BY : BRAD LEE PLOT NAME : PLOT SCALE : 1 IN:20 FT

WISDOT/CADDS SHEET 49

END RECONSTRUCTION
STA 100+95S

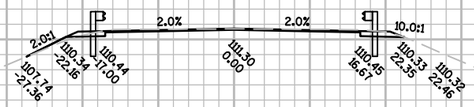

STRUCTURE B-49-0050
STA 98+49.73S - STA 100+68.91S

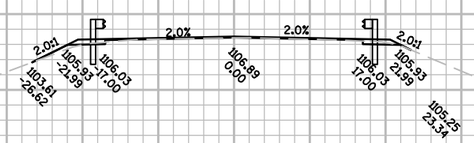

BEGIN RECONSTRUCTION
STA 98+10S

PROJECT NO: 1166-00-61	HWY: IH 39	COUNTY: PORTAGE	CROSS SECTIONS: BIRCH DR	SHEET 207	E

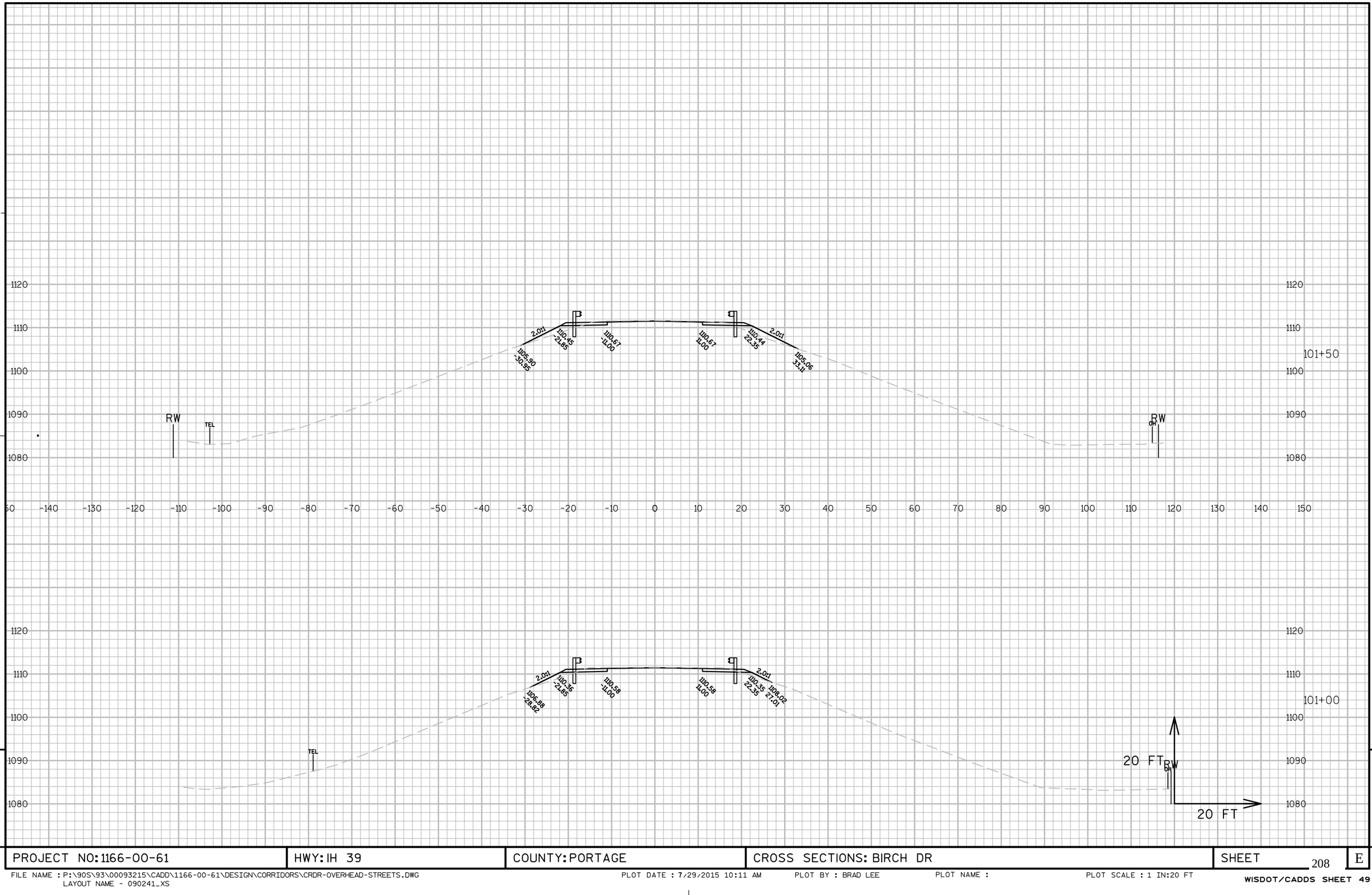

PROJECT NO: 1166-00-61	HWY: IH 39	COUNTY: PORTAGE	CROSS SECTIONS: BIRCH DR	SHEET 208	E

FILE NAME : P:\90S\93\00093215\CADD\1166-00-61\DESIGN\CORRIDORS\CRDR-OVERHEAD-STREETS.DWG
LAYOUT NAME - 090241_XS

PLOT DATE : 7/29/2015 10:11 AM PLOT BY : BRAD LEE PLOT NAME : PLOT SCALE : 1 IN:20 FT

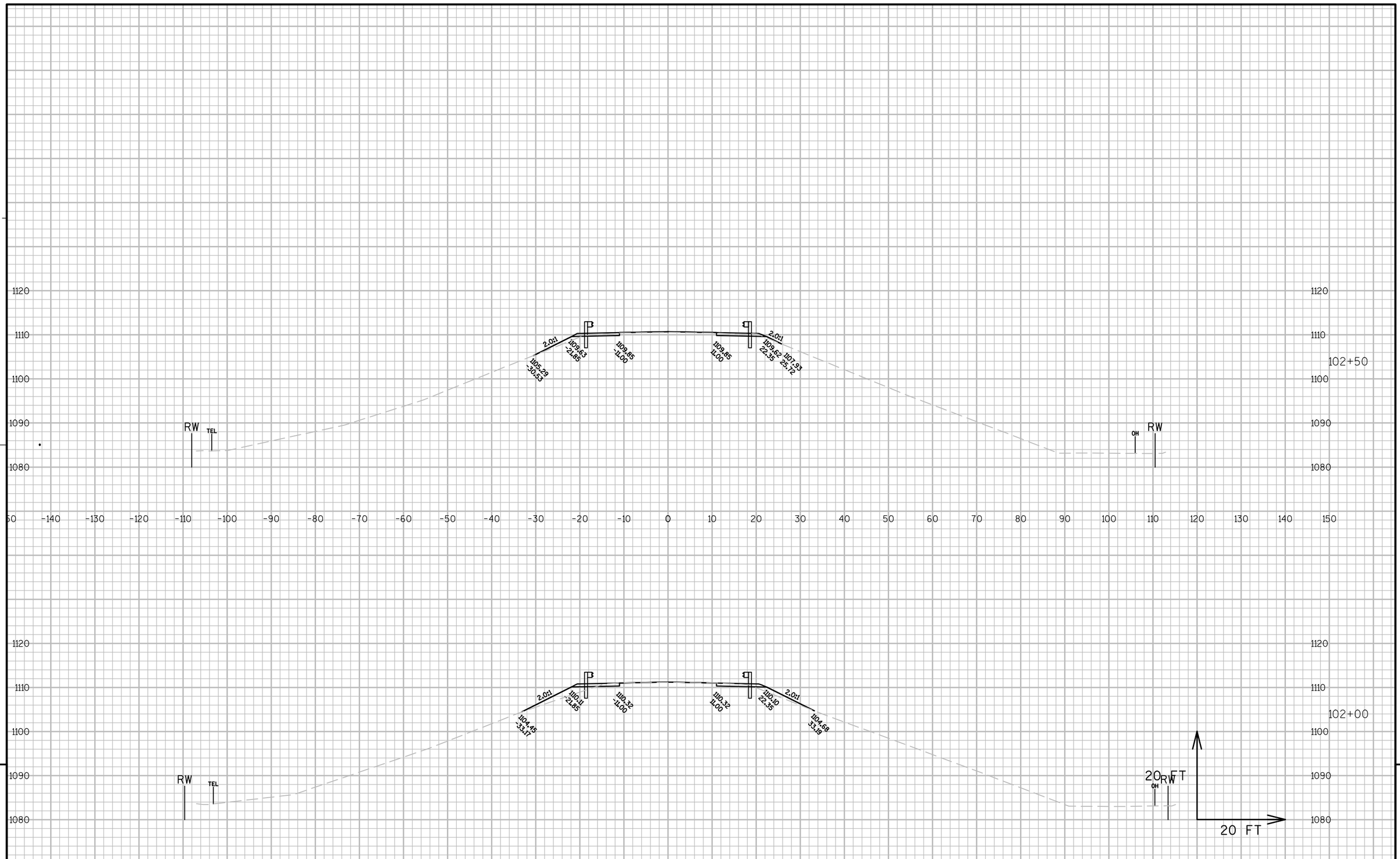

PROJECT NO: 1166-00-61	HWY: IH 39	COUNTY: PORTAGE	CROSS SECTIONS: BIRCH DR	SHEET 209	E

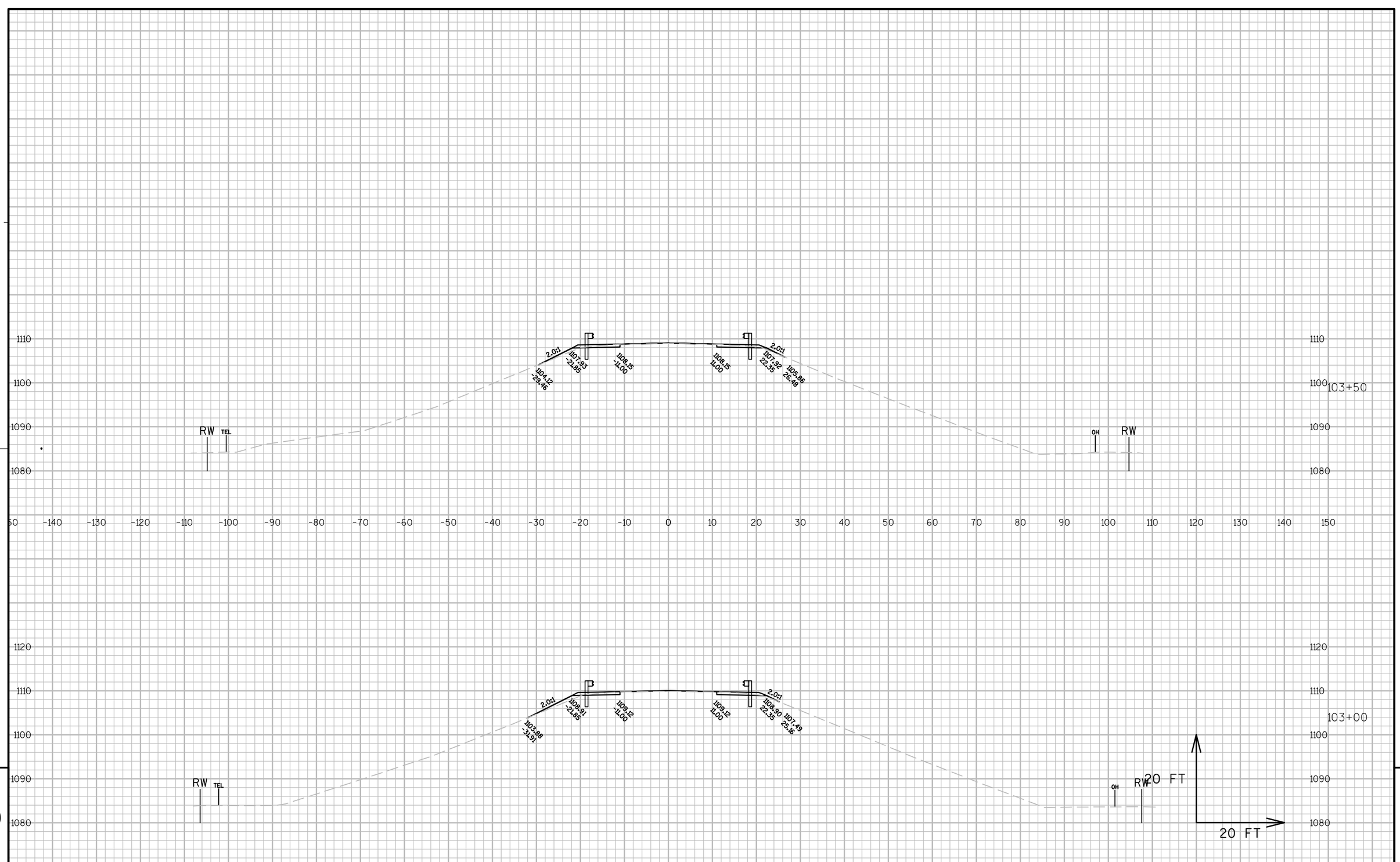

9

9

PROJECT NO: 1166-00-61	HWY: IH 39	COUNTY: PORTAGE	CROSS SECTIONS: BIRCH DR	SHEET 210	E

FILE NAME : P:\90S\93\00093215\CADD\1166-00-61\DESIGN\CORRIDORS\CRDR-OVERHEAD-STREETS.DWG
LAYOUT NAME - 090243_XS

PLOT DATE : 7/29/2015 10:12 AM PLOT BY : BRAD LEE PLOT NAME : PLOT SCALE : 1 IN:20 FT

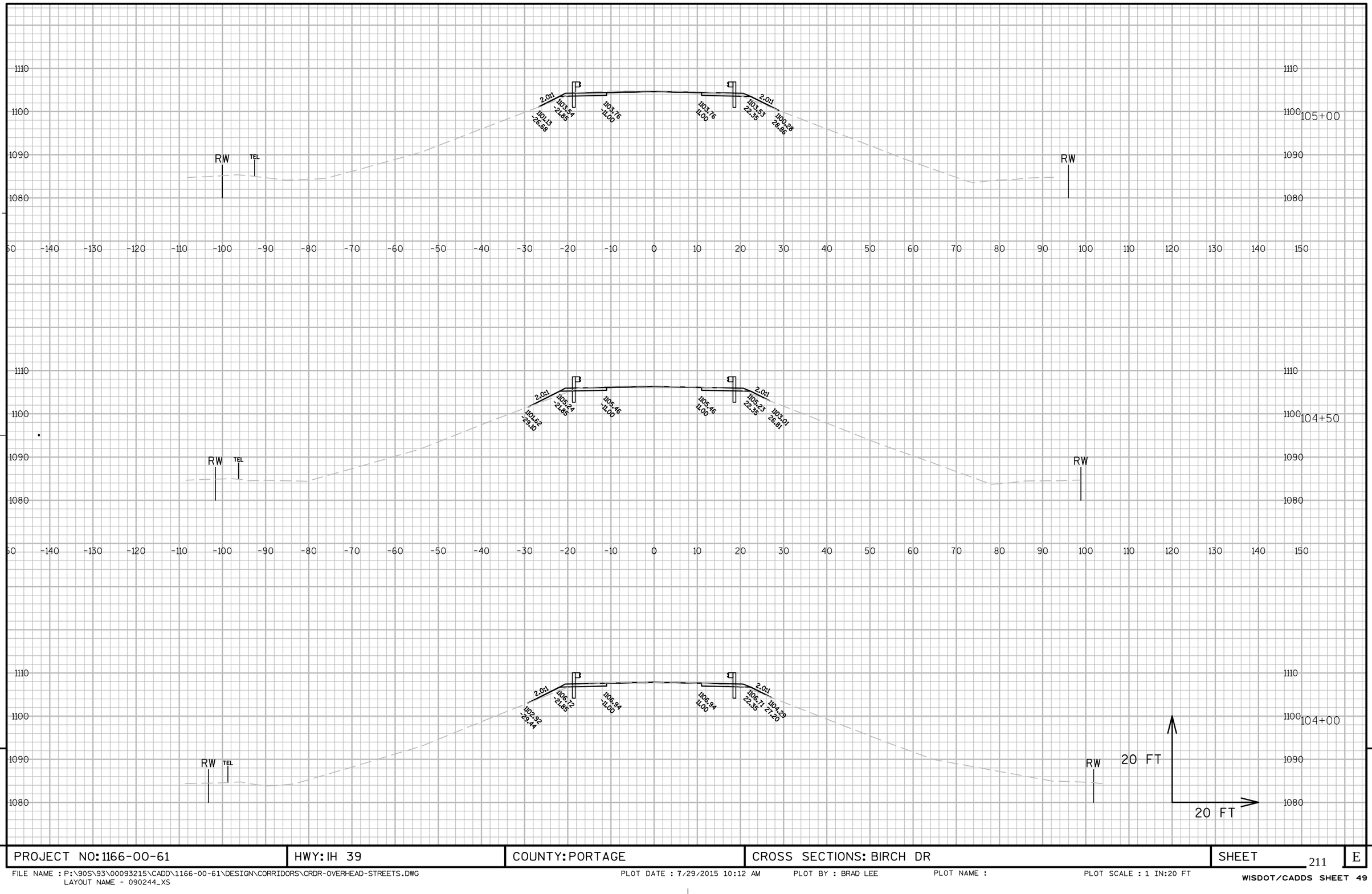

PROJECT NO: 1166-00-61	HWY: IH 39	COUNTY: PORTAGE	CROSS SECTIONS: BIRCH DR	SHEET 211	E

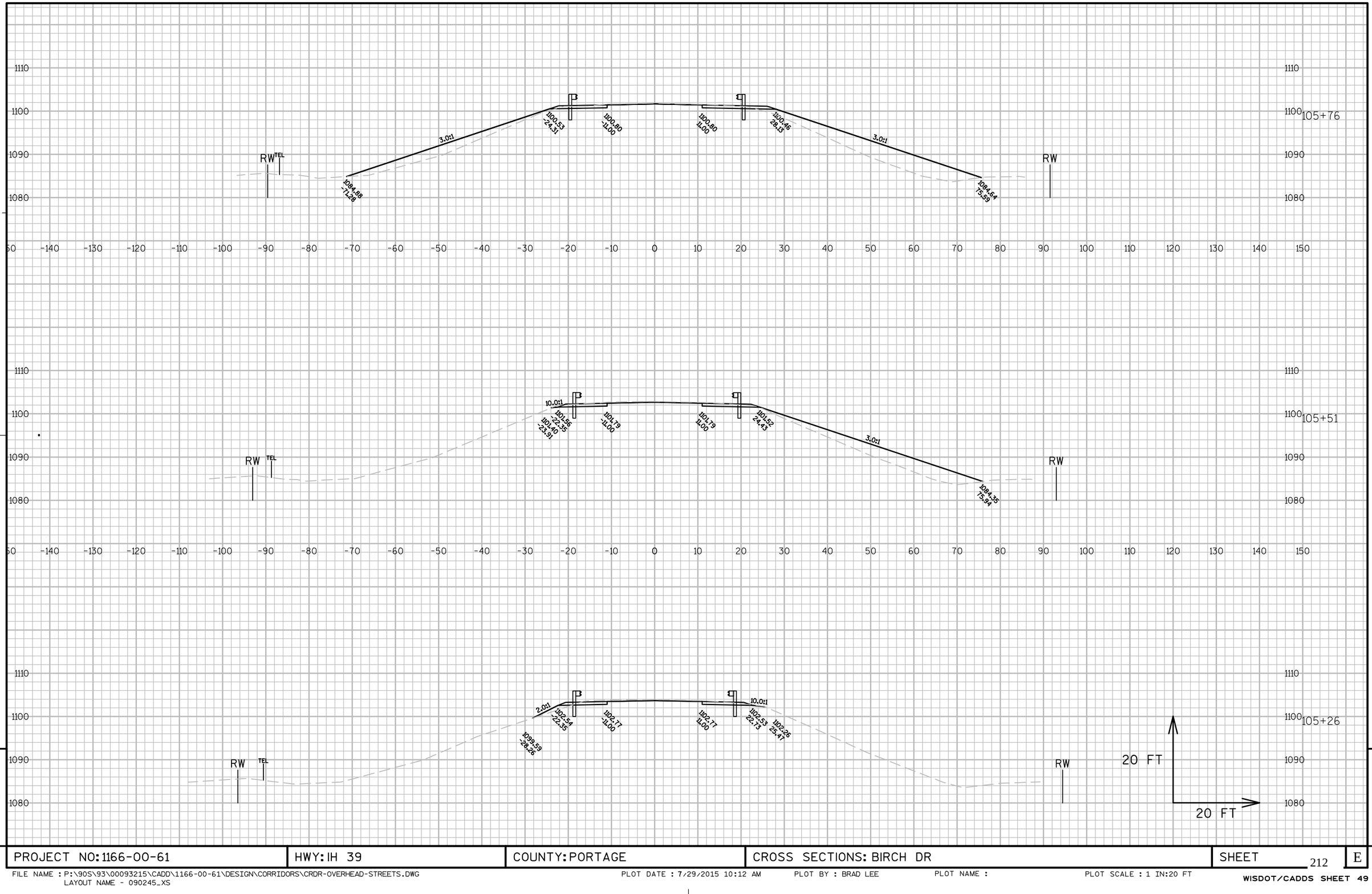

PROJECT NO: 1166-00-61	HWY: IH 39	COUNTY: PORTAGE	CROSS SECTIONS: BIRCH DR	SHEET 212	E

FILE NAME : P:\90S\93\00093215\CADD\1166-00-61\DESIGN\CORRIDORS\CRDR-OVERHEAD-STREETS.DWG
LAYOUT NAME - 090245_XS

PLOT DATE : 7/29/2015 10:12 AM PLOT BY : BRAD LEE PLOT NAME : PLOT SCALE : 1 IN:20 FT

WISDOT/CADDS SHEET 49

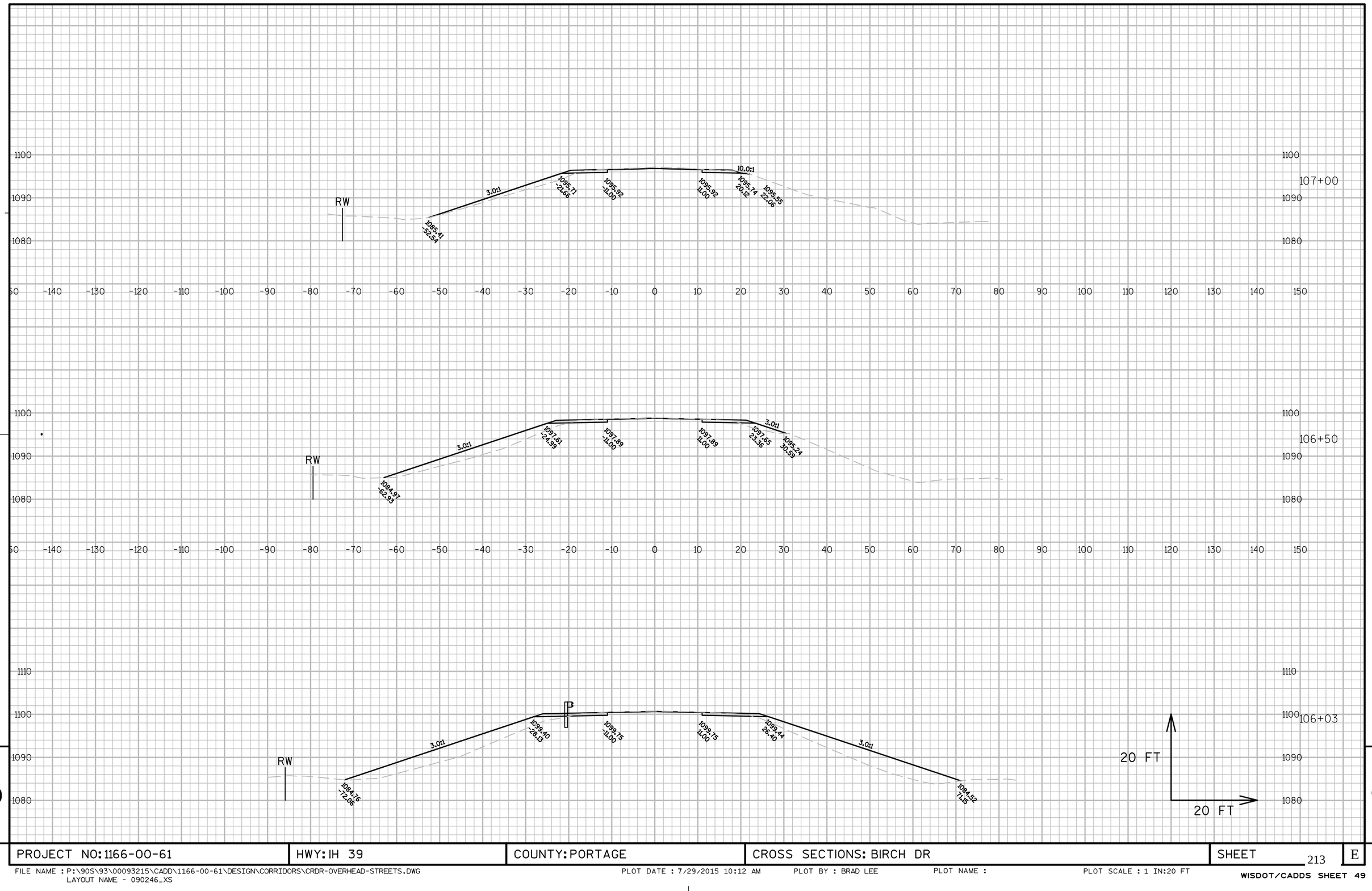

PROJECT NO: 1166-00-61	HWY: IH 39	COUNTY: PORTAGE	CROSS SECTIONS: BIRCH DR	SHEET 213	E

FILE NAME : P:\90S\93\00093215\CADD\1166-00-61\DESIGN\CORRIDORS\CRDR-OVERHEAD-STREETS.DWG
LAYOUT NAME - 090246_XS

PLOT DATE : 7/29/2015 10:12 AM PLOT BY : BRAD LEE PLOT NAME : PLOT SCALE : 1 IN:20 FT

WISDOT/CADDS SHEET 49

END CONSTRUCTION
STA 107+44S

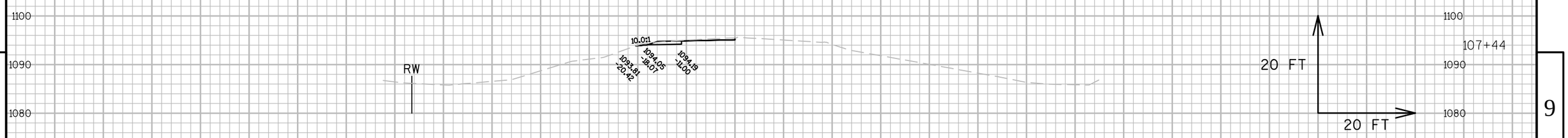

9

9

PROJECT NO: 1166-00-61	HWY: IH 39	COUNTY: PORTAGE	CROSS SECTIONS: BIRCH DR	SHEET 214	E

FILE NAME : P:\90S\93\00093215\CADD\1166-00-61\DESIGN\CORRIDORS\CRDR-OVERHEAD-STREETS.DWG
LAYOUT NAME - 090247_XS
PLOT DATE : 7/29/2015 10:13 AM PLOT BY : BRAD LEE PLOT NAME : PLOT SCALE : 1 IN:20 FT
WISDOT/CADDS SHEET 49

Notes

Wisconsin Department of Transportation

Dedicated people creating transportation solutions
through innovation and exceptional service.

http://www.dot.wisconsin.gov