EAU NOVEMBER 2015

PROJECT ID: 7550-00-60

COUNTY: JACKSON

ORDER OF SHEETS

Section No.	1	Title
Section No.	2	Typical Sections and Details
Section No.	3	Estimate of Quantities
Section No.	3	Miscellaneous Quantities
Section No.	4	Right of Way Plat
Section No.	5	Plan and Profile
Section No.	6	Standard Detail Drawings
Section No.	7	Sign Plates
~~Section No.~~	~~8~~	~~Structure Plans~~
Section No.	9	Computer Earthwork Data
Section No.	9	Cross Sections

TOTAL SHEETS = 278

34

N

DESIGN DESIGNATION

A.A.D.T. (2015)	=	1,100
A.A.D.T. (2035)	=	1,300
D.H.V. (2035)	=	3.0%
D.D.	=	60/40
T.	=	3.6%
DESIGN SPEED	=	55 MPH
ESAL	=	532,900

BEGIN PROJECT 7550-00-60
STA. 0+31
Y=24621.135
X=7743.102

STATE OF WISCONSIN
DEPARTMENT OF TRANSPORTATION

PLAN OF PROPOSED IMPROVEMENT

GALESVILLE - MELROSE

WEST COUNTY LINE TO STH 71 EAST BND

STH 54

JACKSON COUNTY

STATE PROJECT NUMBER
7550-00-60

STATE PROJECT	FEDERAL PROJECT	
	PROJECT	CONTRACT
7550-00-60	———	—

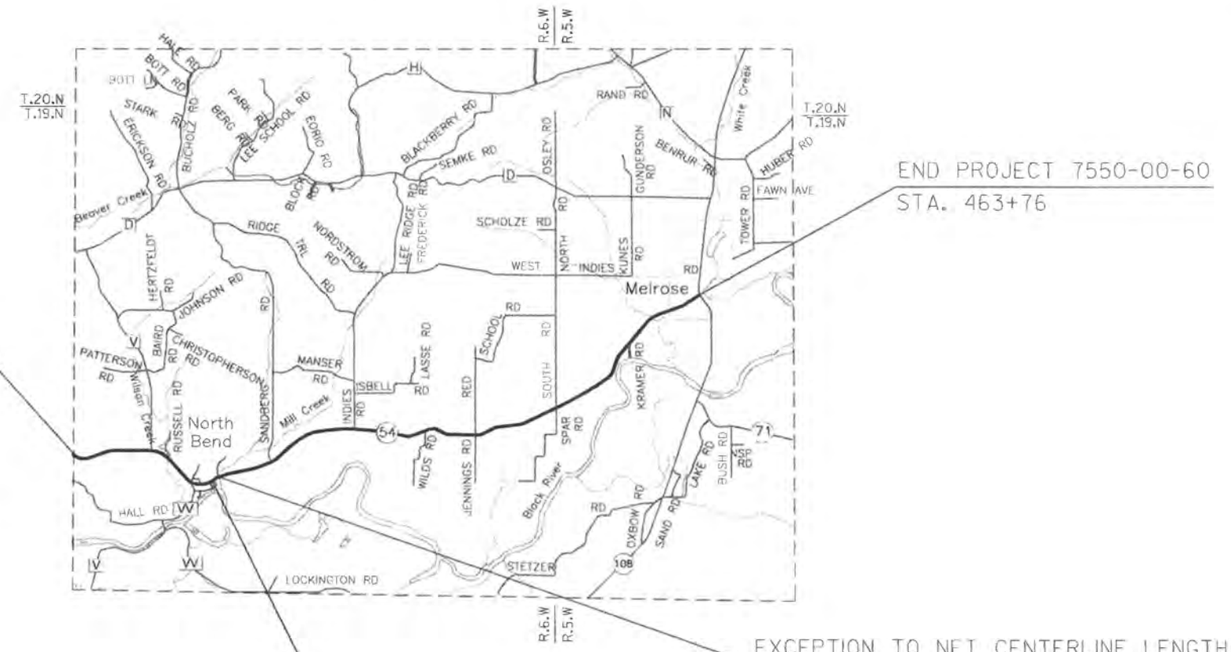

EXCEPTION TO NET CENTERLINE LENGTH
STA. 105+37 - STA. 105+86 (B27-00-180)

EXCEPTION TO NET CENTERLINE LENGTH
STA. 101+30 - STA. 104+50

LAYOUT
SCALE 0 1 MI. 2 MI.

TOTAL NET LENGTH OF CENTERLINE = 8.708 MI.

Coordinates on this plan are referenced to the Wisconsin Coordinate Reference System (WISCRS), Jackson County, NAD 83 (2007).

CONVENTIONAL SYMBOLS

PLAN		PROFILE	
CORPORATE LIMITS		GRADE LINE	
PROPERTY LINE		ORIGINAL GROUND	
LOT LINE		MARSH OR ROCK PROFILE (To be noted as such)	ROCK
LIMITED HIGHWAY EASEMENT		SPECIAL DITCH	LABEL
EXISTING RIGHT OF WAY		GRADE ELEVATION	95.36
PROPOSED OR NEW R/W LINE		CULVERT (Profile View)	
SLOPE INTERCEPT		UTILITIES	
REFERENCE LINE		ELECTRIC	E
EXISTING CULVERT		FIBER OPTIC	FO
PROPOSED CULVERT (Box or Pipe)		GAS	G
COMBUSTIBLE FLUIDS	CAUTION	SANITARY SEWER	SAN
		STORM SEWER	SS
		TELEPHONE	T
MARSH AREA		WATER	W
		UTILITY PEDESTAL	
		POWER POLE	
WOODED OR SHRUB AREA		TELEPHONE POLE	

ORIGINAL PLANS PREPARED BY

GREMMER & ASSOCIATES, INC.
CONSULTING ENGINEERS
Stevens Point • Fond du Lac
120 Wilshire Boulevard North • Stevens Point, WI 54481
(715) 341-4363 • fax (715) 341-1856

WISCONSIN
DAVID L. GLODOWSKI
E-31571
STEVENS POINT
WIS.
PROFESSIONAL ENGINEER

4-25-14 (Date) Dave Glodowski
DAVID GLODOWSKI, PE

STATE OF WISCONSIN
DEPARTMENT OF TRANSPORTATION

PREPARED BY	
Surveyor	GREMMER / WISDOT
Designer	GREMMER & ASSOCIATES, INC.
Project Manager	DAVE KOEPP
Regional Examiner	DAN OJIBWAY
Regional Supervisor	TIM MASON
C.O. Examiner	

APPROVED FOR THE DEPARTMENT
DATE: 4/25/14 (Signature)

E

GENERAL NOTES

CURVE DATA IS BASED ON ARC DEFINITION.

NO TREE OR SHRUBS ARE TO BE REMOVED WITHOUT THE APPROVAL OF THE ENGINEER.

THE LOCATION OF EXISTING UTILITY INSTALLATIONS AS SHOWN ON THE PLANS ARE APPROXIMATE. THERE MAY BE OTHER UTILITY INSTALLATIONS WITHIN THE PROJECT ARE THAT ARE NOT SHOWN.

TOPSOIL IN DISTURBED AREAS WILL BE PLACED AT A THICKNESS OF 4 INCHES MINIMUM.

MILLING AND PAVING REPORTS SHOWN IN PLANS ARE BASED ON DTM DATA PROVIDED BY OTHERS. FIELD VERIFY ACTUAL EXISTING CONDITIONS AND ON-SITE ENGINEER MAY ADJUST AS REQUIRED.

LOCATIONS FOR PASSING/NO PASSING SIGNS AND MARKING SHALL BE DETERMINED IN THE FIELD.

WDNR LIAISON

WISCONSIN DEPARTMENT OF NATURAL RESOURCES
DNR SERVICE CENTER
ATTN: KAREN KALVELAGE
3550 MORMON COULEE ROAD
LA CROSSE, WI 54601
PHONE 608.785.9115
FAX 608.785.9990
EMAIL karen.kalvelage@wisconsin.gov

DESIGN CONTACT

GREMMER & ASSOCIATES, INC.
ATTN: DAVE GLODOWSKI
120 WILSHIRE BOULEVARD NORTH
STEVENS POINT, WI 54481
PHONE 715.341.4363
EMAIL d.glodowski@gremmerassociates.com

UTILITIES

CENTURYLINK
ATTN: BRIAN STELPLUGH
333 NORTH FRONT STREET
LA CROSSE, WI 54601
PHONE 608.796.5142 (OFFICE)
PHONE 608.780.1238 (CELL)
24-HOUR EMERGENCY REPAIR 800.824.2877
EMAIL brian.stelplugh@centurylink.com

MELROSE MUNICIPAL WATER UTILITY
ATTN: RAMON KNUDTSON
112 NORTH WASHINGTON STREET
P.O. BOX 117
MELROSE, WI 54642
PHONE 608.488.3191 (OFFICE)
PHONE 608.792.2598 (CELL)
EMAIL utilities@melrosewi.com

MELROSE MUNICIPAL SANITARY UTILITY
ATTN: RAMON KNUDTSON
112 NORTH WASHINGTON STREET
P.O. BOX 117
MELROSE, WI 54642
PHONE 608.488.3191 (OFFICE)
PHONE 608.792.2598 (CELL)
EMAIL utilities@melrosewi.com

XCEL ENERGY
ATTN: KAYE CROOK
1003 SOUTH BLACK RIVER STREET
SPARTA, WI 54656
PHONE 608.789.3677 EXT 14
EMAIL kaye.m.crook@xcelenergy.com

2

ORDER OF SECTION 2 SHEETS

GENERAL NOTES
TYPICAL SECTIONS
CONSTRUCTION DETAILS
EROSION CONTROL
PERMANENT SIGNING
PAVEMENT MARKING
ALIGNMENT DIAGRAM

DIGGERS HOTLINE
Dial 811 or (800)242-8511
www.DiggersHotline.com

2

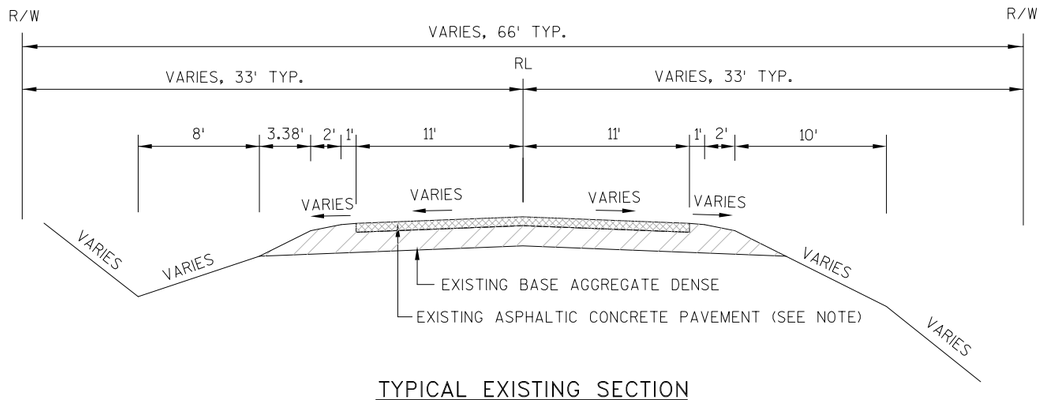

TYPICAL EXISTING SECTION

STA. 0+31 TO STA. 100+00
STA. 106+00 TO STA. 463+76

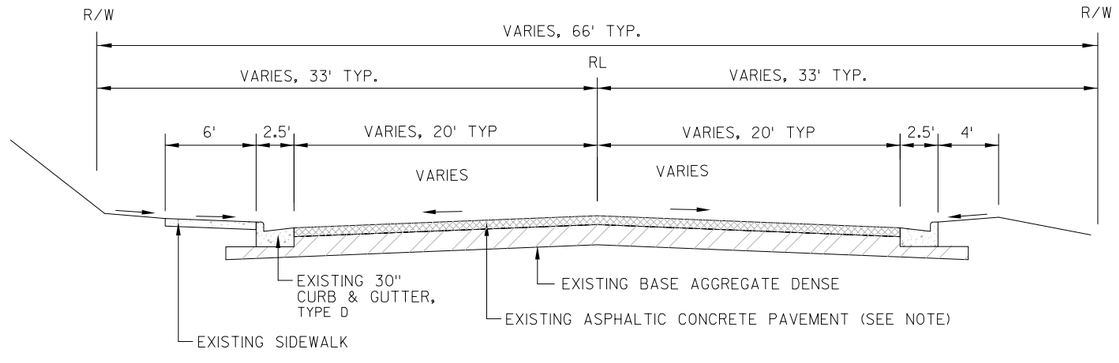

TYPICAL EXISTING SECTION

STA. 100+00 TO STA. 106+00

NOTE:
SEE CONSTRUCTION DETAIL FOR EXISTING PAVEMENT THICKNESSES

2

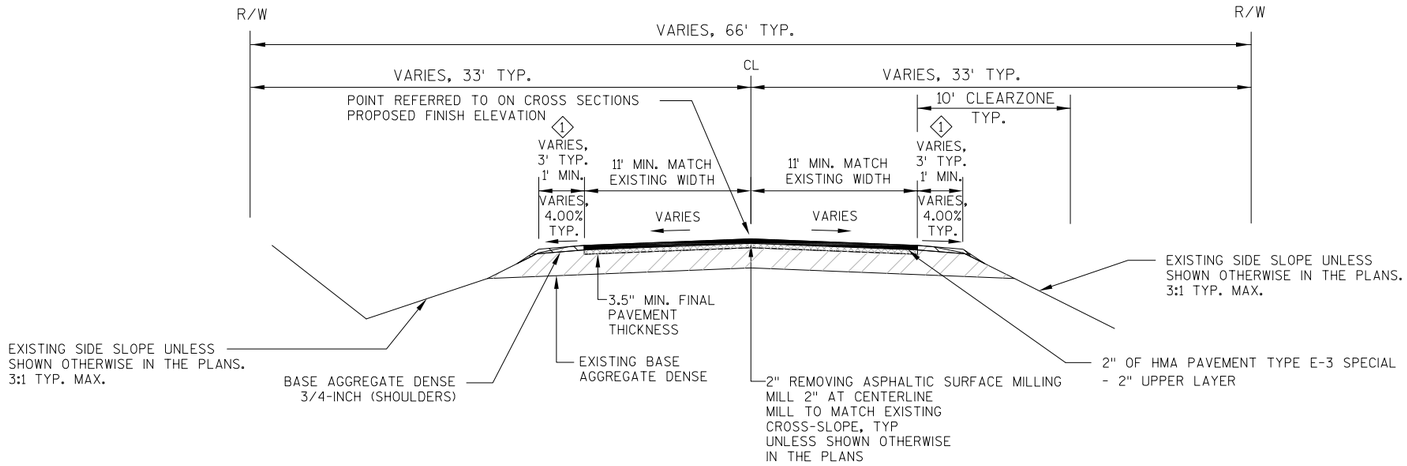

1 IN EXISTING AND PROPOSED BEAMGUARD SECTIONS PAVE SHOULDER WITH 2" OF HMA PAVEMENT TYPE E-3 SPECIAL OVER 2" OF ASPHALTIC SURFACE TO FACE OF RAIL (SEE CONSTRUCTION DETAIL)

TYPICAL FINISHED SECTION

STA. 0+31 TO STA. 100+00
STA. 106+00 TO STA. 463+76

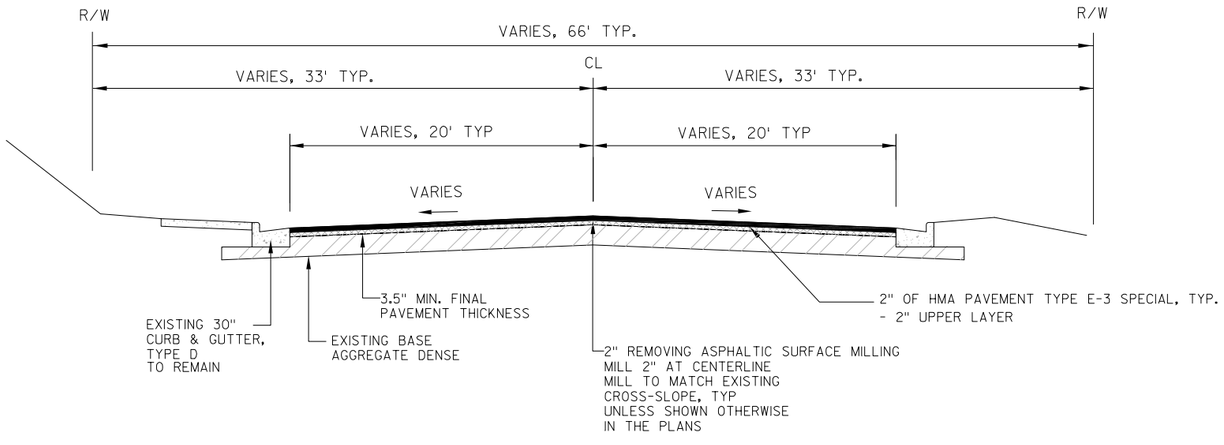

TYPICAL FINISHED SECTION

STA. 100+00 TO STA. 106+00
(EXCEPT FROM STA. 101+30 TO STA. 104+50 & STA. 105+37 TO 105+86,
NO CONSTRUCTION, MATCH EXISTING, EXISTING PAVEMENT TO REMAIN IN PLACE)

2

2

396

397

398

EXISTING R/W

PROPOSED TLE

PROPOSED R/W

VPO

INL

PROPOSED R/W

PROPOSED TLE

6" ASPHALTIC CURB

REMOVE/REPLACE BEAM GUARD AND END TREATMENTS

ASPHALT FLUME

18" CMCP TO REMAIN

SILT FENCE

REMOVE EXISTING CULVERT

EXISTING R/W

SECTION LINE

PROPOSED R/W

REMOVE EXISTING ASPHALTIC CURB

SLOPE IMPROVEMENT RIP RAP HEAVY REQ'D SEE CROSS SECTIONS

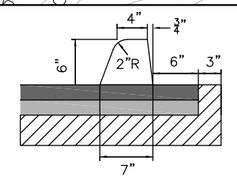

ASPHALTIC CURB DETAIL

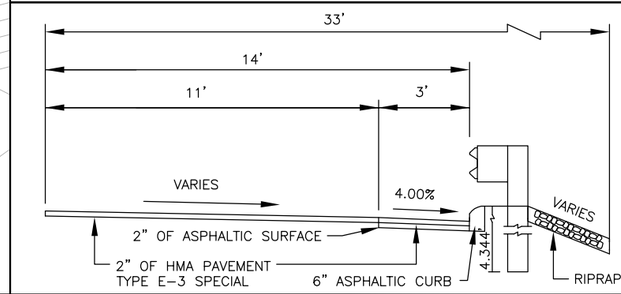

PROJECT NO: 7550-00-60	HWY: STH 54	COUNTY: JACKSON	CONSTRUCTION DETAILS	SHEET NO: 5	E

FILE NAME: 020404_CD PATH: PLOTTED ON 16 APR 2014 12:40:54 GADDK 1:2

2

2

STH 54

STEEL PLATE BEAM GUARD ENERGY ABSORBING TERMINAL
REMOVE EXISTING GUARDRAIL
CONNECT TO EXISTING GUARDRAIL

+78.0
+78.0 / 21.7' RT
+01.9 / 19.9' RT
+25.6
+28.0 / 17.1' RT
+97.5 / 17.5' LT
+11.8
+36.8 / 22.5' LT
+61.8 / 23.1' LT
+61.8
+86.2
+86.2 / 15.9' RT
+10.2 / 19.2' RT
+35.1
+35.1 / 20.9' RT

2
3
4
5
15:1
15:1

STEEL PLATE BEAM GUARD ENERGY ABSORBING TERMINAL
REMOVE EXISTING GUARDRAIL
CONNECT TO EXISTING GUARDRAIL

STEEL PLATE BEAM GUARD ENERGY ABSORBING TERMINAL
REMOVE EXISTING GUARDRAIL
CONNECT TO EXISTING GUARDRAIL

SEE CROSS SECTIONS FOR ADDITIONAL GRADING INFORMATION

PROJECT NO: 7550-00-60	HWY: STH54	COUNTY: JACKSON	CONSTRUCTION DETAILS – BEAM GUARD	SHEET NO: 6	E

FILE NAME: 020405_CD PATH: PLOTTED ON 21 FEB 2014 13:07:37 GADDK 1:2

2

536 LF OF MGS
GUARDRAIL 3 K

MGS GUARDRAIL TERMINAL EAT
CONNECT TO EXISTING GUARDRAIL

+50.0
19.94' LT

+96.79
16.0' LT

+50.0

58

59

60

61

STH 54

SEE CROSS SECTIONS FOR
ADDITIONAL GRADING INFORMATION

PROJECT NO: 7550-00-60	HWY: STH54	COUNTY: JACKSON	CONSTRUCTION DETAILS – BEAM GUARD	SHEET NO: 7	E

2

40 LF OF MGS THRIE BEAM TRANSITION

REMOVE EXISITNG GUARDRAIL

+31.6
15.8' LT

+71.2
18.1' LT

62

63

64

65

+45.6
14.0' RT

+06.6
23.7' RT

+06.6
19.8' RT

+57.1
19.8' RT

+57.1
17.8' RT

+97.5
17.5' RT

REMOVE EXISITNG GUARDRAIL

MGS GUARDRAIL TERMINAL EAT

40 LF OF MGS THRIE BEAM TRANSITION

SEE CROSS SECTIONS FOR ADDITIONAL GRADING INFORMATION

PROJECT NO: 7550-00-60	HWY: STH54	COUNTY: JACKSON	CONSTRUCTION DETAILS – BEAM GUARD	SHEET NO: 8	E

2

40 LF OF MGS THRIE BEAM TRANSITION

REMOVE EXISTING GUARDRAIL

76 LF OF MGS GUARDRAIL 3 K

MGS GUARDRAIL TERMINAL EAT

+34.4 17.9' LT

+74.0 15.7' LT

+50.0 16.0' LT

+00.0 22.9' LT

66

67

68

+50.0

+00.0

+66.6 17.3' RT

+07.0 17.1' RT

+00.0 16.0' RT

+50.0

+50.0 19.9' RT

40 LF OF MGS THRIE BEAM TRANSITION

REMOVE EXISTING GUARDRAIL

93 LF OF MGS GUARDRAIL 3 K

MGS GUARDRAIL TERMINAL EAT

SEE CROSS SECTIONS FOR ADDITIONAL GRADING INFORMATION

STH 54

PROJECT NO: 7550-00-60	HWY: STH54	COUNTY: JACKSON	CONSTRUCTION DETAILS – BEAM GUARD	SHEET NO: 9 E

FILE NAME: 020407_CD PATH: PLOTTED ON 27 FEB 2014 07:59:44 GADDK 1:2

2

2

78

79

80

+85.0

+35.0

+63.1

+13.1

15:1

15:1

+85.0
25.4' RT

+10.0
21.7' RT

+35.0
18.4' RT

+63.1
18.3' RT

+88.4
22.7' RT

+13.1
20.3' LT

STEEL PLATE BEAM GUARD
ENERGY ABSORBING TERMINAL
REMOVE EXISTING GUARDRAIL
CONNECT TO EXISTING GUARDRAIL

STEEL PLATE BEAM GUARD
ENERGY ABSORBING TERMINAL
REMOVE EXISTING GUARDRAIL
CONNECT TO EXISTING
GUARDRAIL

SEE CROSS SECTIONS FOR
ADDITIONAL GRADING INFORMATION

PROJECT NO: 7550-00-60	HWY: STH54	COUNTY: JACKSON	CONSTRUCTION DETAILS – BEAM GUARD	SHEET NO: 10	E

2

2

+39.8
119.2' LT

DAM

SALVAGE

88 LF OF STEEL THRIE BEAM

REMOVE EXISTING GUARDRAIL

MGS GUARDRAIL TERMINAL EAT

REMOVE EXISTING GUARDRAIL

40 LF OF MGS THRIE BEAM TRANSITION

+09.7
39.8' LT

Y=23244.9343
X=17082.0795

R=16'

+21.0
18.3' LT

+09.3
19.3' LT

+49.1
21.9' LT

+98.6
28.8' LT

+49.1
19.9' LT

+98.6
21.9' LT

105

106

107

+43.1
17.0' RT

+93.4
19.0' RT

+02.9
17.8' RT

+43.1
19.0' RT

+93.4
25.7' RT

STEEL PLATE BEAM GUARD SHORT RADIUS TERMINAL CONNECT TO EXISTING STRUCTURE

40 LF OF MGS THRIE BEAM TRANSITION

REMOVE EXISTING GUARDRAIL

MGS GUARDRAIL TERMINAL EAT

SEE CROSS SECTIONS FOR ADDITIONAL GRADING INFORMATION

PROJECT NO: 7550-00-60	HWY: STH54	COUNTY: JACKSON	CONSTRUCTION DETAILS	SHEET NO: 11	E

FILE NAME: 020409_CD PATH: PLOTTED ON 27 FEB 2014 08:11:06 GADDK 1:2

2

15:1

241

242

243

244

MGS GUARDRAIL TERMINAL EAT

+79.1 17.6' LT

+79.1

+04.1 17.6' LT

+29.2 16.0' LT

+29.1

MGS GUARDRAIL TERMINAL EAT

+75.0

+75.0 19.9' RT

+25.0

+25.0 16.0' RT

REMOVE EXISTING GUARDRAIL

675 LF OF MGS GUARDRAIL 3 K

571 LF OF MGS GUARDRAIL 3 K

REMOVE EXISTING GUARDRAIL

248

249

250

+00.0 16.0' LT

+00.0

+50.0 22.9' LT

+50.0

MGS GUARDRAIL TERMINAL EAT

+00.0

+00.0 16.0' RT

MGS GUARDRAIL TERMINAL EAT

+50.0

+50.0 22.9' RT

SEE CROSS SECTIONS FOR ADDITIONAL GRADING INFORMATION

PROJECT NO: 7550-00-60	HWY: STH54	COUNTY: JACKSON	CONSTRUCTION DETAILS	SHEET NO: 12	E

FILE NAME: 020410_CD PATH: PLOTTED ON 22 JUL 2015 15:24:23 GADDK 1:2

2

2

STEEL PLATE BEAM GUARD
ENERGY ABSORBING TERMINAL
REMOVE EXISTING GUARDRAIL
CONNECT TO EXISTING GUARDRAIL

+43.2
26.1' LT

+68.2
23.8' LT

+93.2
17.9' LT

+43.2

293

294

295

296

+44.4

+33.4

+44.4
26.6' RT

+69.4
24.5' RT

+94.4
18..7' RT

+83.5
19.0' RT

+08.5
24.3' RT

+33.4
23.0' RT

STEEL PLATE BEAM GUARD
ENERGY ABSORBING TERMINAL
REMOVE EXISTING GUARDRAIL
CONNECT TO EXISTING GUARDRAIL

STEEL PLATE BEAM GUARD
ENERGY ABSORBING TERMINAL
REMOVE EXISTING GUARDRAIL
CONNECT TO EXISTING
GUARDRAIL

SEE CROSS SECTIONS FOR
ADDITIONAL GRADING INFORMATION

PROJECT NO: 7550-00-60	HWY: STH54	COUNTY: JACKSON	CONSTRUCTION DETAILS	SHEET NO: 13	E

FILE NAME: 020411_CD PATH: PLOTTED ON 27 FEB 2014 10:20:50 GADDK 1:2

2

2

STEEL PLATE BEAM GUARD
ENERGY ABSORBING TERMINAL
REMOVE EXISTING GUARDRAIL
CONNECT TO EXISTING GUARDRAIL

N

+84.0
20.0' LT

+08.5
24.3' LT

+32.6
28.5' LT

15:1
TAPER

+84.1

+33.2
21.6' LT

296

297

298

SEE CROSS SECTIONS FOR
ADDITIONAL GRADING INFORMATION

PROJECT NO: 7550-00-60	HWY: STH54	COUNTY: JACKSON	CONSTRUCTION DETAILS	SHEET NO: 14	E

FILE NAME: 020412_CD PATH: PLOTTED ON 27 FEB 2014 10:27:31 GADDK 1:2

2

2

367

MGS GUARDRAIL TERMINAL EAT

368

369

370

+50.0

+00.0

+50.0 17.9' RT

+75.0 16.9' RT

+00.0 16.0' RT

650 LF OF MGS GUARDRAIL 3 K

373

374

MGS GUARDRAIL TERMINAL EAT

375

+50.0

+00.0

+50.0 16.0' RT

+75.0 16.9' RT

+00.0 17.9' RT

SEE CROSS SECTIONS FOR ADDITIONAL GRADING INFORMATION

PROJECT NO: 7550-00-60	HWY: STH54	COUNTY: JACKSON	CONSTRUCTION DETAILS	SHEET NO: 15	E

2

2

STH 54

383

384

385

MGS GUARDRAIL
TERMINAL EAT

+29.5

+78.8

+29.5
21.0' RT

+54.4
19.3' RT

+78.8
16.0' RT

1,032 LF OF MGS
GUARDRAIL 3 K

393

394

395

MGS GUARDRAIL
TERMINAL EAT

+10.4

+60.9

+10.4
16.0' RT

+35.6
19.3' RT

+60.8
21.0' RT

15:1

+40.7
14.0' RT

REMOVE
EXISTING
GUARDRAIL

SEE CROSS SECTIONS FOR
ADDITIONAL GRADING INFORMATION

PROJECT NO: 7550-00-60	HWY: STH54	COUNTY: JACKSON	CONSTRUCTION DETAILS	SHEET NO: 16	E

FILE NAME: 020413_CD PATH: PLOTTED ON 27 FEB 2014 10:32:27 GADDK 1:2

2

PROPOSED TLE

PROPOSED R/W

MPO

INL

PROPOSED R/W

PROPOSED TLE

EXISTING R/W

MGS GUARDRAIL TERMINAL EAT

150 LF OF MGS GUARDRAIL 3 K

MGS GUARDRAIL TERMINAL EAT

397

398

399

397

+25.0

+75.0

+24.7

+74.6

15:1

15:1

+25.0
17.9' RT

+50.0
17.9' RT

+75.0
16.0' RT

+24.6
16.0' RT

+49.6
19.5' RT

+74.6
22.8' RT

REMOVE EXISTING GUARDRAIL

EXISTING R/W

W

PROPOSED R/W

SEE CROSS SECTIONS FOR ADDITIONAL GRADING INFORMATION

2

PROJECT NO: 7550-00-60	HWY: STH54	COUNTY: JACKSON	CONSTRUCTION DETAILS	SHEET NO: 17	E

FILE NAME: 020414_CD PATH: PLOTTED ON 22 JUL 2015 15:25:22 GADDK 1:2

2

STEEL PLATE BEAM GUARD
ENERGY ABSORBING TERMINAL
REMOVE EXISTING GUARDRAIL
CONNECT TO EXISTING GUARDRAIL

+62.2 / 24.3' LT

+11.5 MATCH EXISTING

+12.6 / 14.0' LT

+62.2 / 20.4' LT

+11.5 / 20.3' LT

427

428

429

+03.7 / 22.2' RT

+52.2 / 20.2' RT

+03.7 / 25.8' RT

+52.2 MATCH EXISTING

FM SAN

STEEL PLATE BEAM GUARD
ENERGY ABSORBING TERMINAL
REMOVE EXISTING GUARDRAIL
CONNECT TO EXISTING GUARDRAIL

SEE CROSS SECTIONS FOR
ADDITIONAL GRADING INFORMATION

PROJECT NO: 7550-00-60	HWY: STH54	COUNTY: JACKSON	CONSTRUCTION DETAILS	SHEET NO: 18	E

2

2

STEEL PLATE BEAM GUARD
ENERGY ABSORBING TERMINAL
REMOVE EXISTING GUARDRAIL
CONNECT TO EXISTING GUARDRAIL

+96.8
MATCH
EXISTING

+96.8
19.8' LT

+46.2
25.7' LT

+46.2
21.8' LT

4:1

+09.4
14.0' LT

431

432

433

+80.1
20.6' RT

+80.1
MATCH
EXISTING

+30.7
22.6' RT

+30.7
26.5' RT

+73.6
21.3' RT

+73.6
25.2' RT

+24.1
19.8' RT

+24.1
MATCH
EXISTING

FM SAN

STEEL PLATE BEAM GUARD
ENERGY ABSORBING TERMINAL
REMOVE EXISTING GUARDRAIL
CONNECT TO EXISTING GUARDRAIL

STEEL PLATE BEAM GUARD
ENERGY ABSORBING TERMINAL
REMOVE EXISTING GUARDRAIL
CONNECT TO EXISTING GUARDRAIL

SEE CROSS SECTIONS FOR
ADDITIONAL GRADING INFORMATION

PROJECT NO: 7550-00-60	HWY: STH54	COUNTY: JACKSON	CONSTRUCTION DETAILS	SHEET NO: 19	E

2

CEMETERY

436

437

438

+27.1
21.1' RT

+27.1
23.0' RT

+77.0
23.1' RT

+77.0
27.0' RT

SAN FM SAN SAN FM SAN SAN FM SAN

STEEL PLATE BEAM GUARD
ENERGY ABSORBING TERMINAL
REMOVE EXISTING GUARDRAIL
CONNECT TO EXISTING GUARDRAIL

SEE CROSS SECTIONS FOR
ADDITIONAL GRADING INFORMATION

PROJECT NO: 7550-00-60	HWY: STH54	COUNTY: JACKSON	CONSTRUCTION DETAILS	SHEET NO: 20 E

SUPERELEVATION DATA

CURVE NO.	PC	PT	R (FT)	TRANSITION IN REGION STATIONING				TRANSITION OUT REGION STATIONING				MAX e	DESIGN SPEED (MPH)
				END NORMAL CROWN	LEVEL CROWN	REVERSE CROWN	BEGIN FULL SUPER	END FULL SUPER	REVERSE CROWN	LEVEL CROWN	BEGIN NORMAL CROWN		
1	-3+80.94	-0+07.98	1145.92	--	--	--	--	--	--	--	--	--	--
2	1+35.07	4+10.45	337.03	-0+15.94	0+34.39	0+84.73	1+85.39	3+60.12	4+60.79	5+11.12	5+61.45	5.60%	30
3	8+09.31	10+79.65	545.67	6+58.31	7+08.64	7+58.98	8+59.64	10+29.32	11+29.99	11+80.32	12+80.99	6.00%	40
4	24+15.28	28+03.82	1266.45	22+63.42	23+14.60	23+65.79	24+65.60	27+53.49	28+53.30	29+04.49	29+55.67	4.00%	35
5	53+08.71	67+39.71	1732.97	51+65.59	51+16.70	52+67.81	53+54.70	66+93.71	67+80.59	68+31.71	68+82.82	4.50%	45
6	81+61.27	88+97.28	1432.39	80+12.70	80+63.93	81+15.15	82+09.93	88+48.61	89+43.38	89+94.61	90+45.84	5.30%	50
7	88+97.28	99+61.45	1145.92	87+46.27	87+96.60	88+46.93	89+47.60	99+11.11	100+11.70	100+62.10	101+12.40	3.70%	35
8	102+64.63	113+41.32	2864.79	101+40.10	101+91.20	102+42.40	103+01.20	113+04.60	113+63.40	114+14.60	114+65.80	4.50%	60
9	124+30.41	132+16.08	4911.07	123+26.70	123+77.70	124+28.70	124+56.70	131+89.70	132+17.70	132+68.70	133+19.70	1.50%	45
10	140+21.30	147+92.26	2045.92	138+86.90	139+37.90	139+88.90	140+62.90	147+50.50	148+24.50	148+75.50	149+26.60	4.00%	45
11	158+78.99	183+99.54	3819.71	157+68.70	158+19.60	158+70.50	159+08.60	183+69.80	184+08.0	184+58.80	185+09.70	1.50%	40
12	188+12.76	193+75.22	5868.76	187+19.40	187+69.40	188+19.40	188+34.40	193+53.50	193+68.50	194+18.50	194+68.50	2.70%	60
13	205+02.10	210+84.14	3819.71	203+91.90	204+42.70	204+93.60	205+31.70	210+54.40	210+92.60	211+43.40	211+94.30	2.00%	40
14	234+51.80	242+08.79	1400.22	233+03.20	233+54.40	234+05.60	235+00.40	241+60.10	242+54.80	243+06.10	243+57.30	3.40%	30
15	252+16.19	258+80.53	755.55	250+65.10	251+15.50	251+65.80	252+66.50	258+30.20	259+30.80	259+81.20	260+31.50	5.90%	45
16	262+01.73	267+20.08	1168.11	260+50.70	261+01.0	261+51.30	262+52.0	266+69.70	267+70.40	268+20.70	268+71.0	2.00%	25
17	284+00.27	289+28.23	1097.32	282+49.20	282+99.60	283+49.90	284+50.60	288+77.90	289+78.50	290+28.90	290+79.20	3.50%	30
18	296+15.89	301+51.12	1348.14	294+64.0	295+15.20	295+66.40	296+66.20	301+00.70	302+00.60	302+51.70	303+02.90	2.80%	30
19	313+55.57	318+11.22	1452.30	312+07.0	312+58.20	313+09.40	314+04.20	317+62.50	318+57.30	319+08.50	319+59.70	4.00%	40
20	348+87.91	354+83.21	7536.03	348+01.20	348+51.20	349+01.20	349+06.20	354+64.80	354+69.80	355+19.80	355+69.80	2.20%	60
21	378+82.00	384+97.84	965.15	377+30.90	377+81.30	378+31.60	379+32.30	384+47.50	385+48.10	385+98.50	386+48.80	3.80%	30
22	392+18.41	397+97.90	1676.95	390+75.20	391+26.40	391+77.50	392+64.40	397+51.90	398+38.70	398+89.90	399+41.0	3.50%	35
23	424+42.84	433+60.64	1718.87	422+99.70	423+50.80	424+01.90	424+88.80	433+14.60	434+01.50	434+52.60	435+03.70	5.40%	55
24	450+04.14	453+80.48	1432.39	448+55.50	449+06.80	449+58.0	450+52.80	453+31.80	454+26.50	454+77.80	455+29.0	4.60%	45

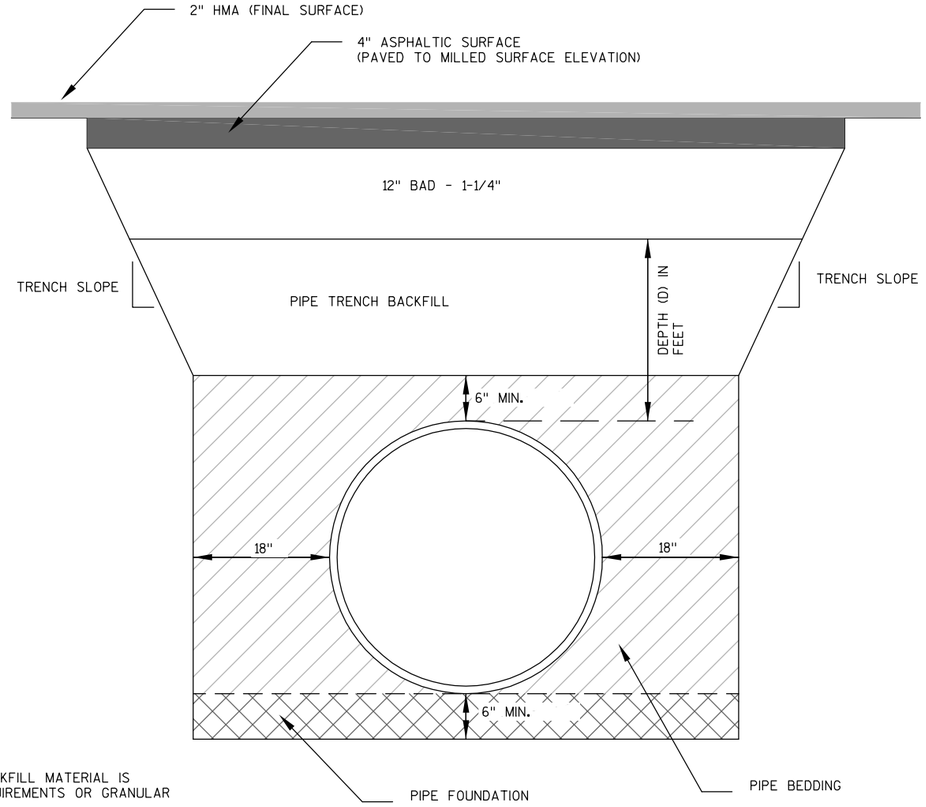

NOTES:

- PIPE FOUNDATION, PIPE BEDDING, AND PIPE TRENCH BACKFILL MATERIAL IS EXISTING SUITABLE EXCAVATED MATERIAL MEETING REQUIREMENTS OR GRANULAR BACKFILL INCIDENTAL TO CULVERT ITEM.
- TRENCH SLOPES PER ALL REQUIREMENTS AND AS FOLLOWS:
  D<6' - TRENCH SLOPES 2:1
  D>6' - TRENCH SLOPES 1.5:1

CULVERT REPLACEMENT DETAIL

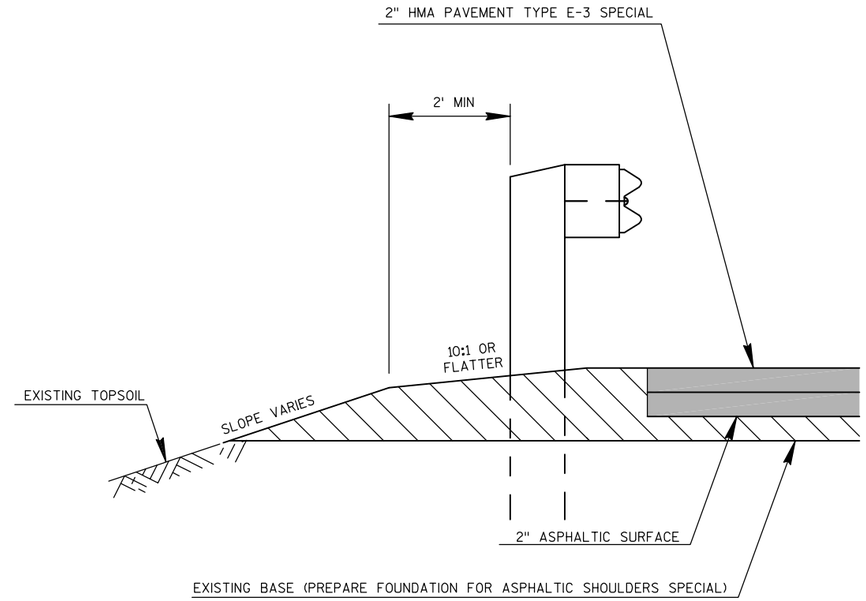

SECTION A-A

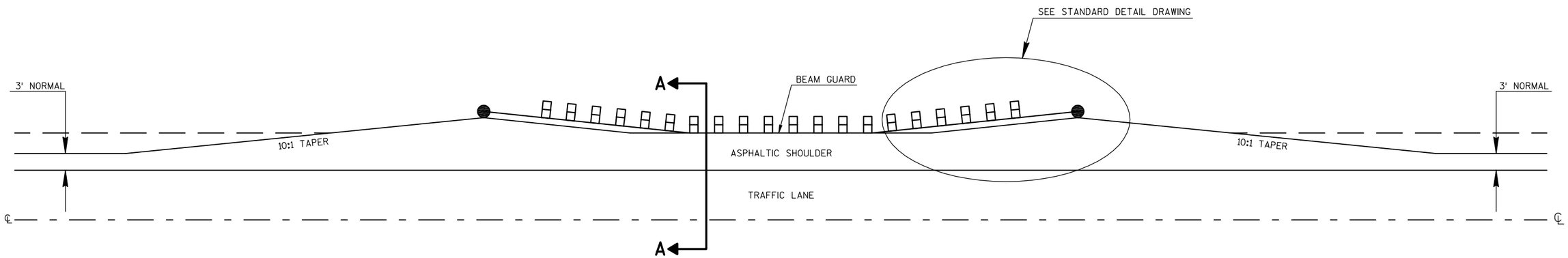

DETAIL FOR ASPHALTIC SHOULDER AT GUARDRAIL

PROJECT NO: 7550-00-60	HWY: STH54	COUNTY: JACKSON	CONSTRUCTION DETAILS	SHEET NO: 22	E

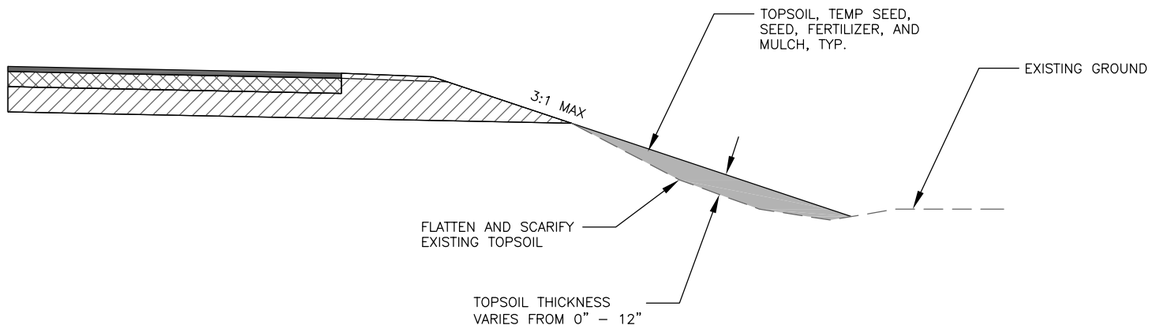

SIDE SLOPE IMPROVEMENT AREAS

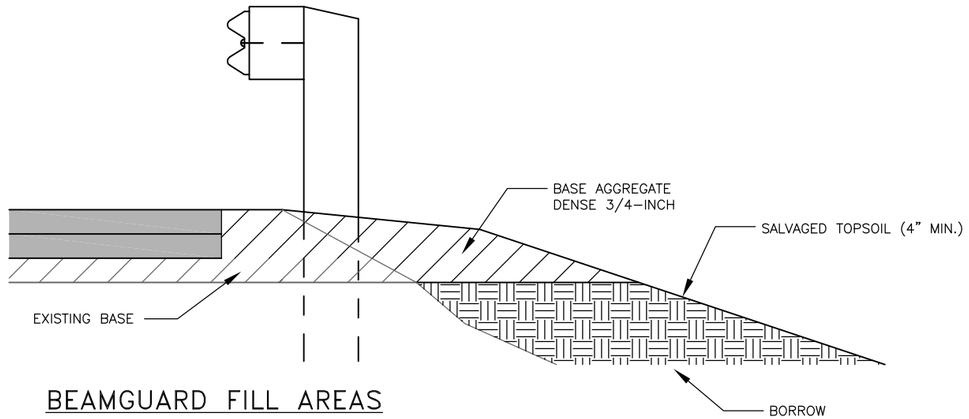

BEAMGUARD FILL AREAS

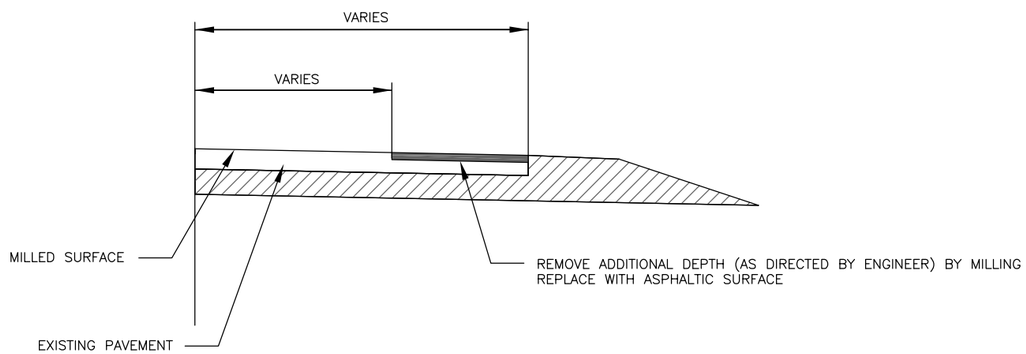

LANE REPAIR DETAIL

EXISTING PAVEMENT THICKNESS LOG

APPROXIMATE LOCATION (STA)	PAVEMENT THICKNESS (IN)
14+78	7 1/4
26+93	7
40+66	7 3/4
54+38	5 1/4
73+92	4
81+31	7 1/4
92+40	5 1/2
108+77	6 1/2
119+33	2
132+00	3
145+73	9 1/2
158+40	3 1/2
172+13	5
184+80	9
198+53	8
211+73	7 3/4
224+93	11 1/4
238+13	5 1/2
256+08	2 3/4
267+17	3 1/2
277+73	5 1/4
292+51	7 1/2
303+60	3 1/2
319+44	8 1/2
333+70	3 1/2
346+37	4
369+07	6
384+38	8
403+92	6
412+37	5
425+57	6
435+60	5
448+80	3 1/2
458+30	4

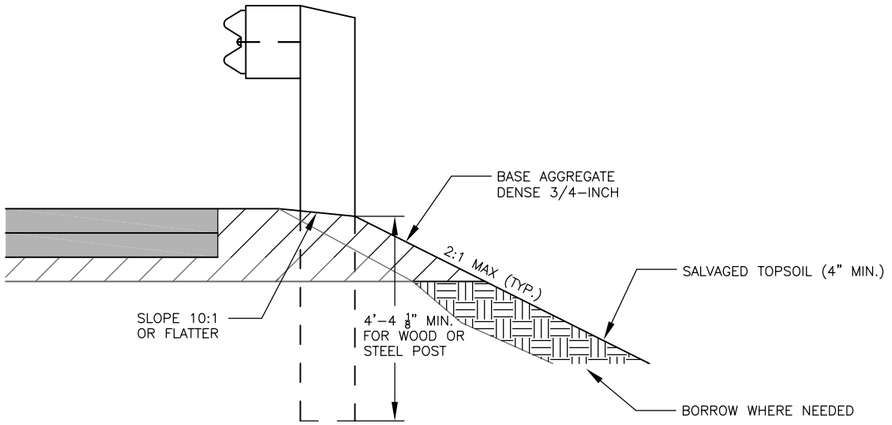

DETAIL FOR BEAM GUARD WITH SIDE SLOPES GREATER THAN 2.5:1

* ALL OTHER DIMENSIONS AND MATERIAL PER SDD FOR BEAM GUARD

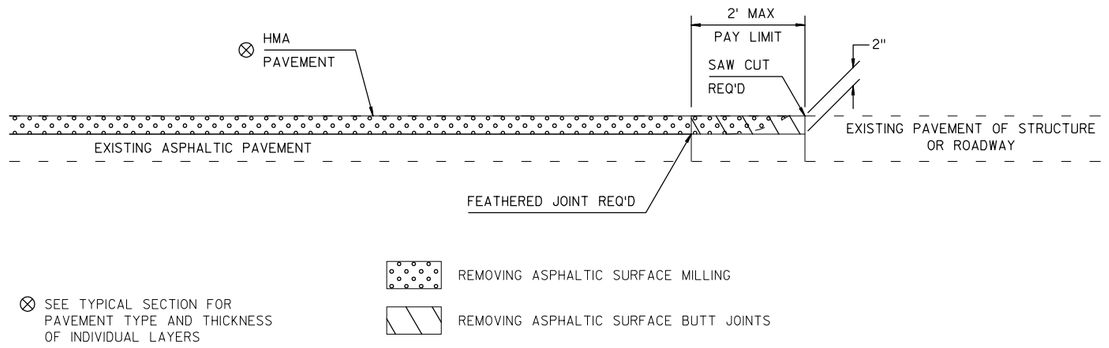

DETAIL OF BUTTED JOINT

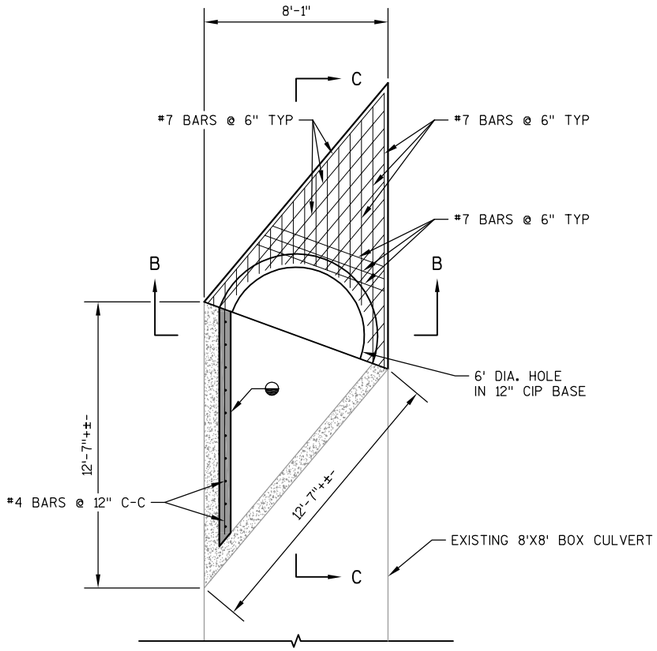

HALF SECTION A-A

NOTES:

DRAWING IS REPRESENTATIVE EXAMPLE OF STRUCTURE.

EXISTING DIMENSIONS ARE APPROXIMATE, CONTRACTOR SHALL FIELD VERIFY.

ALL STEEL SHALL BE 2" CLEAR UNLESS OTHERWISE NOTED.

REMOVE EXISTING VERTICAL WALLS ABOVE BOX CULVERT.

◒ 6" WIDE CAST-IN-PLACE SUPPLEMENTAL WALLS INSIDE 3 REMAINING BOX CULVERT VERTICAL WALLS REQUIRED.

★ 12" THICK CAST-IN-PLACE BASE WITH 6' DIAMETER HOLE REQUIRED.

MODIFIED MANHOLE 6-FT DIAMETER TO BE INSTALLED ON NEW BASE TO REQUIRED ELEVATION.

⚠ ALL JOINTS ABOVE 12" BASE SHALL BE SEALED WITH A BUTYL RUBBER PER SEALANT MANUFACTURER'S RECOMMENDATIONS.

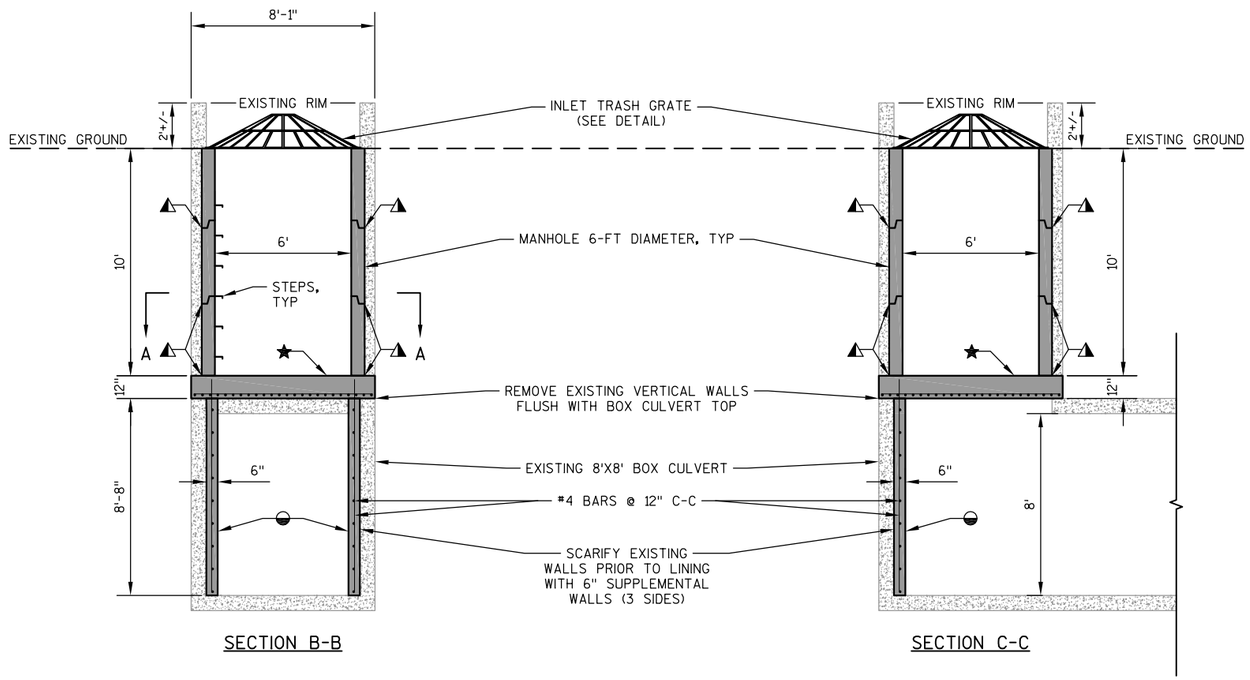

SECTION B-B

SECTION C-C

BOX CULVERT INLET SPECIAL DETAIL

NOTES:

DRILL AND INSTALL WEDGE ANCHORS INTO TOP OF MANHOLE BARREL SECTION AS REQUIRED PER GRATE MANUFACTURER.

GRATE OD	=	82"
MANHOLE OD	=	86"
MANHOLE ID	=	72"
BAR THICKNESS	=	1"

GRATE SHALL BE GALVANIZED STEEL.

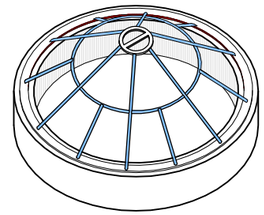

ISOMETRIC VIEW

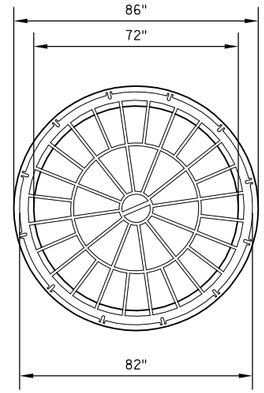

PLAN VIEW

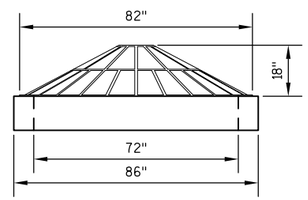

SECTION VIEW

BOX CULVERT INLET TRASH GRATE DETAIL

2

EROSION CONTROL NOTES

ALL DISTURBED AREAS SHALL RECEIVE 4" (MIN.) TOPSOIL, TEMP SEED, SEED, FERTILIZER, AND MULCH.

INLET PROTECTION (TYPE B OR C) REQUIRED FOR ALL INLET STRUCTURES WITHIN PROJECT LIMITS.

PLACE SILT FENCE AT THE FOLLOWING LOCATONS:

STA 106+00 TO STA 107+25 – 33' LT

STA 367+50 TO STA 375+00 – 33' RT

PLACE TEMPORARY DITCH CHECKS AT DISTURBED EXISTING DITCH/SWALE LOCATIONS.

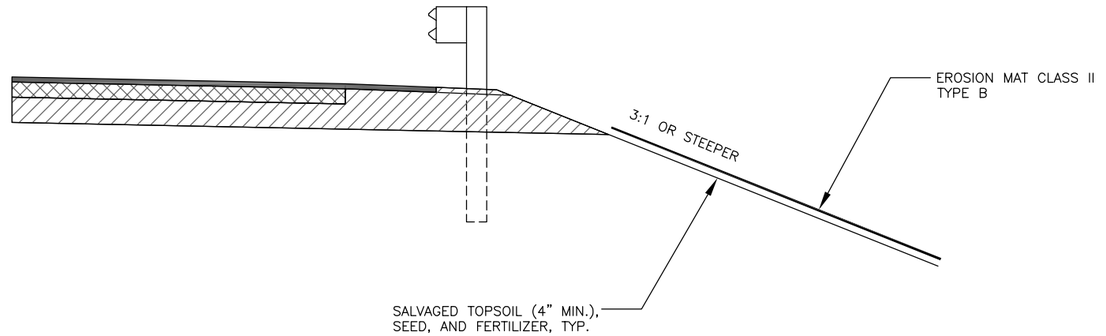

GUARDRAIL EMBANKMENT AREAS

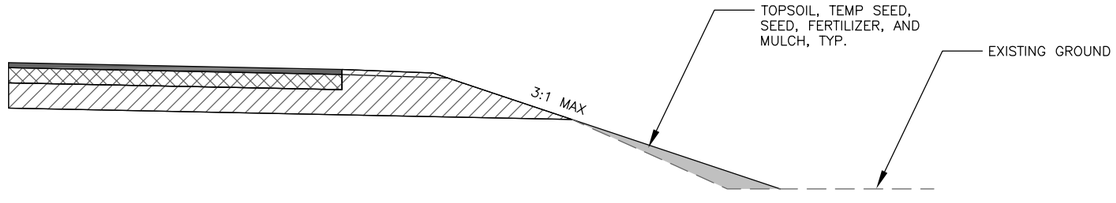

IMPROVEMENT AREAS SIDE SLOPE

PROJECT NO: 7550–00–60	HWY: STH54	COUNTY: JACKSON	EROSION CONTROL PLAN	SHEET NO: 26	E

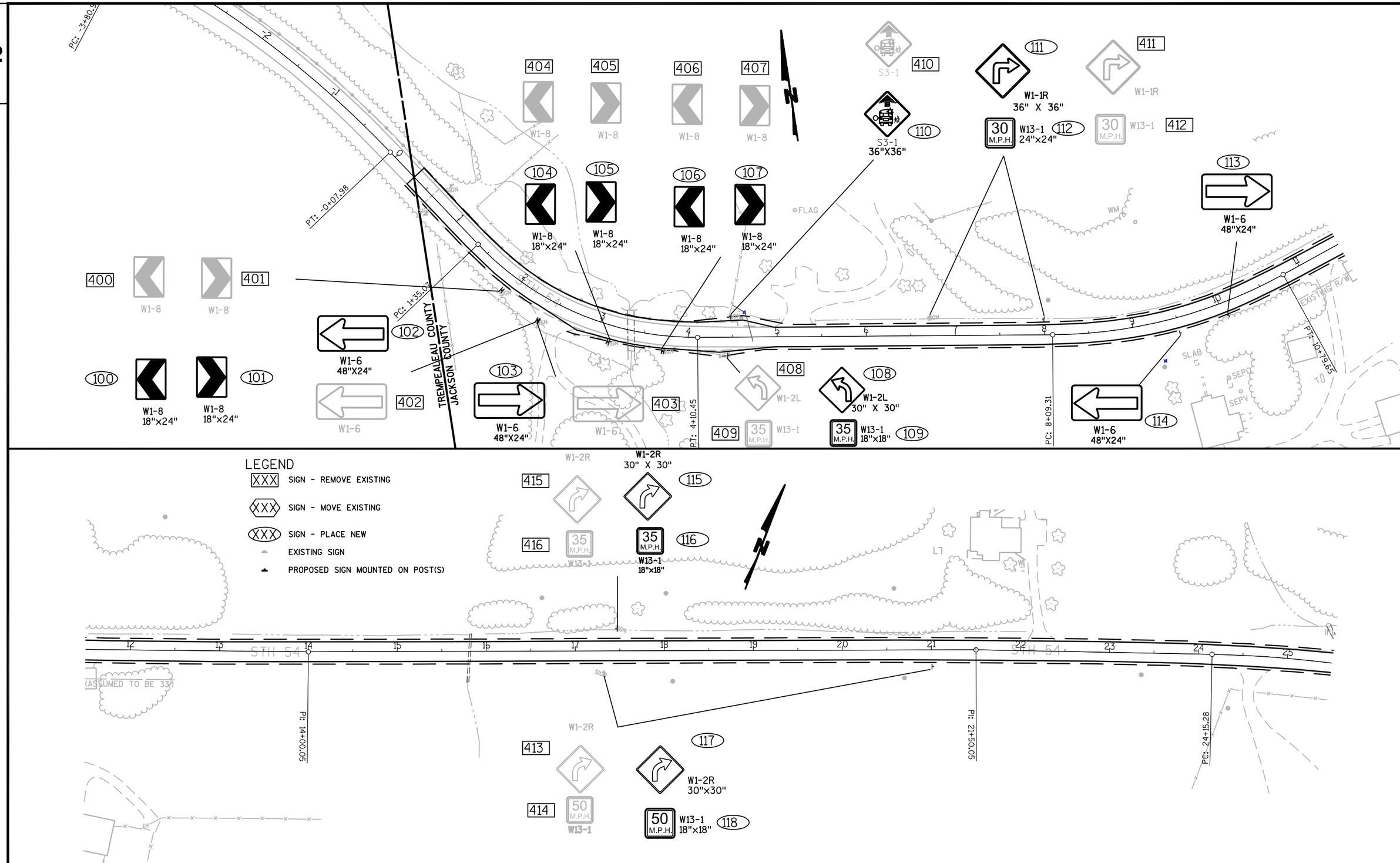

PROJECT NO: 7550-00-60	HWY: STH54	COUNTY: JACKSON	PERMANENT SIGNING	SHEET NO: 27	E

FILE NAME : 023201_PS PLOT DATE : 16 APR 2014 11:09:13 PLOT BY : GADDK PLOT NAME : PLOT SCALE : 1:1

WISDOT/CADDS SHEET 42

NOTE: NO PASSING ZONE SIGNS AND POSTS TO BE INSTALLED AFTER SPOTTING IS COMPLETED. THE NUMBER AND LOCATION TO BE APPROVED BY ENGINEER.

LEGEND

XXX SIGN - REMOVE EXISTING

XXX SIGN - MOVE EXISTING

XXX SIGN - PLACE NEW

EXISTING SIGN

PROPOSED SIGN MOUNTED ON POST(S)

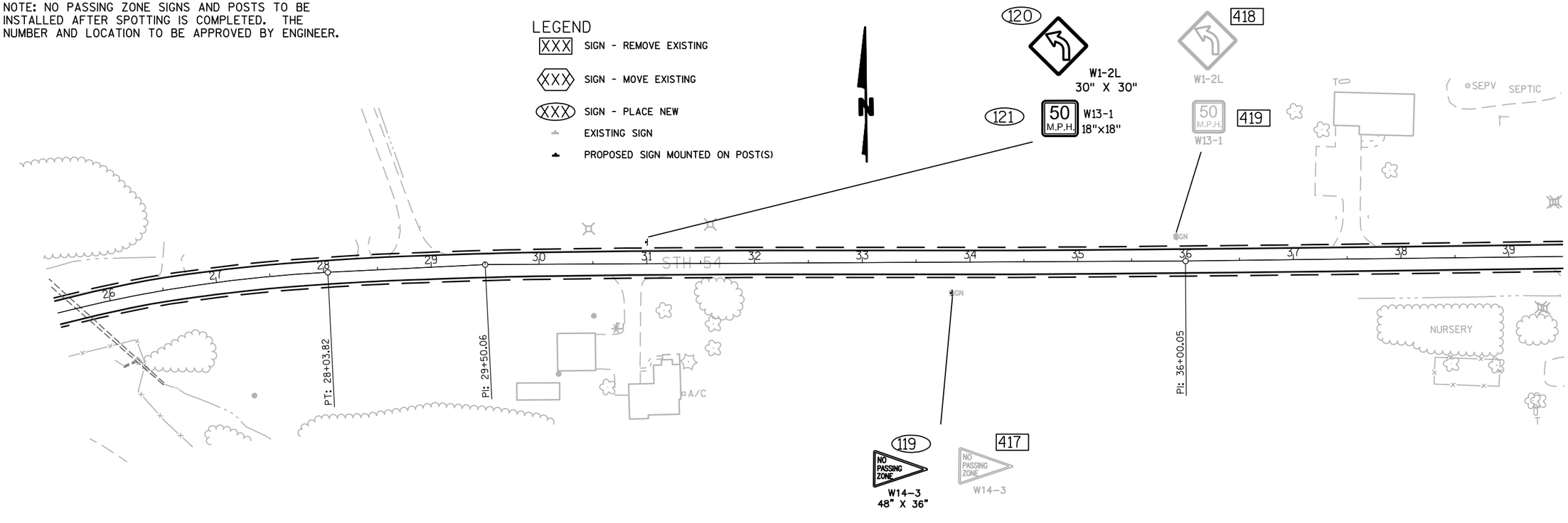

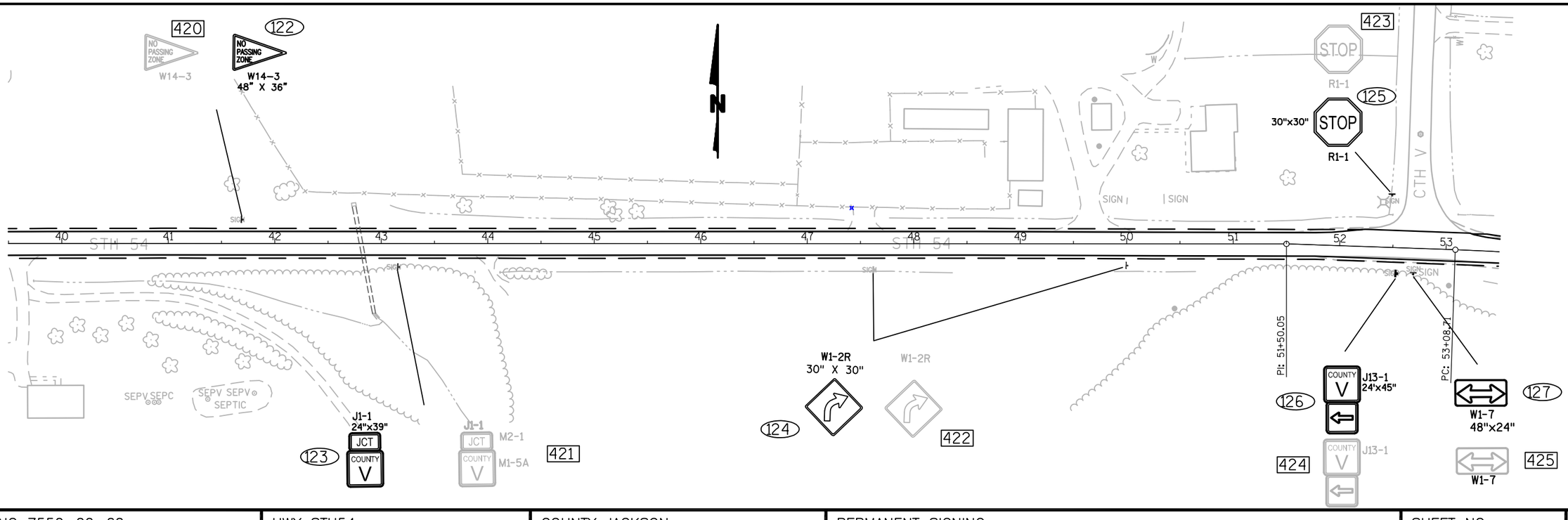

PROJECT NO: 7550-00-60	HWY: STH54	COUNTY: JACKSON	PERMANENT SIGNING	SHEET NO: 28	E

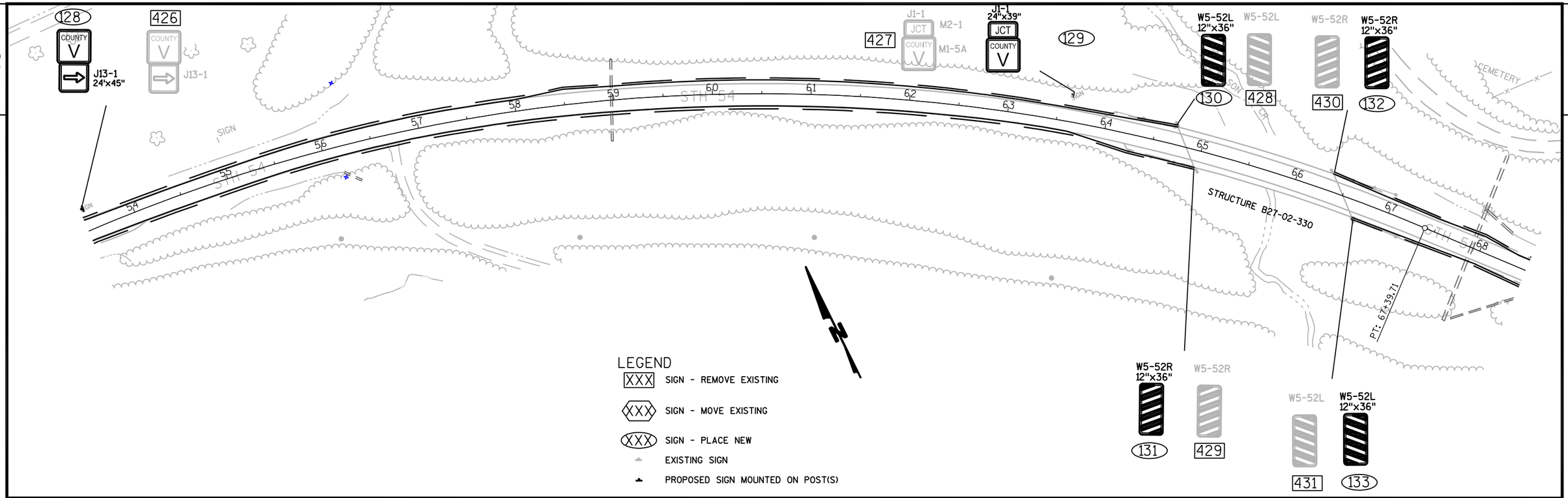

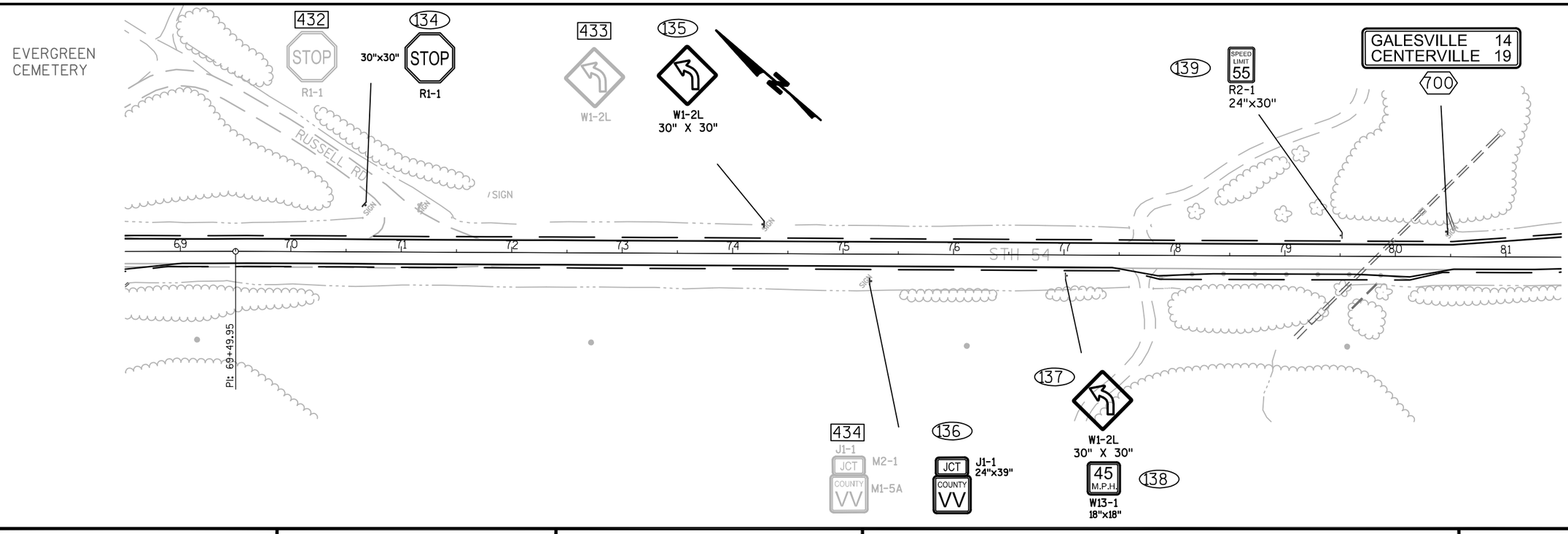

PROJECT NO: 7550-00-60	HWY: STH54	COUNTY: JACKSON	PERMANENT SIGNING	SHEET NO: 29	E

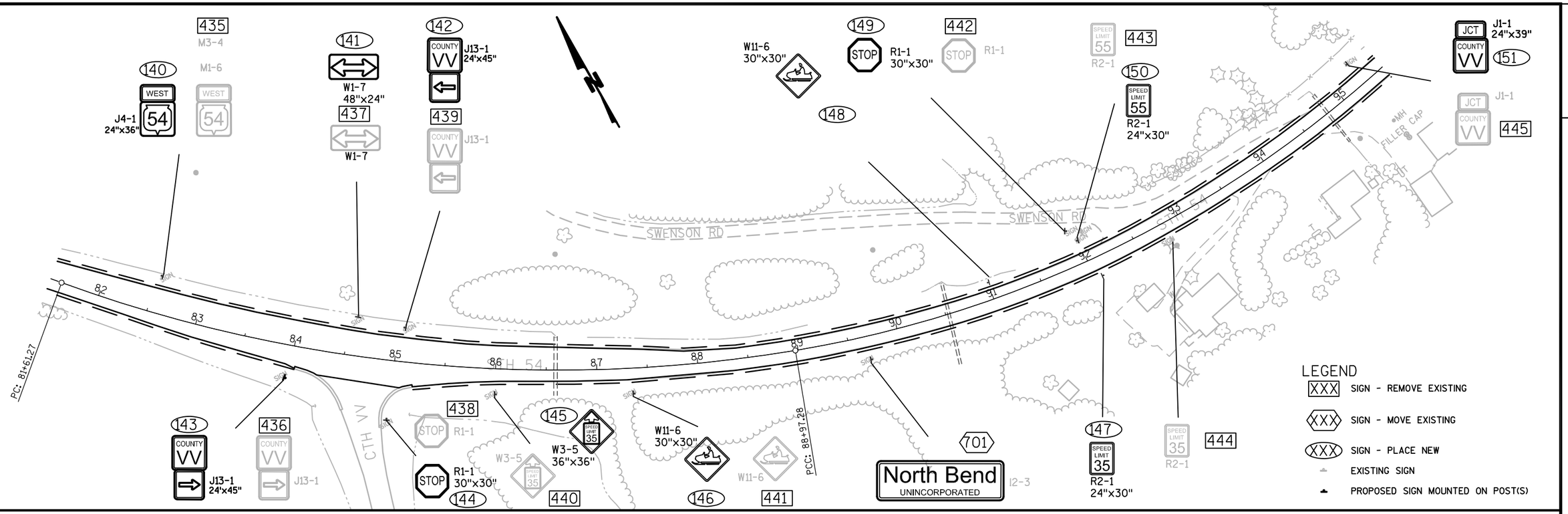

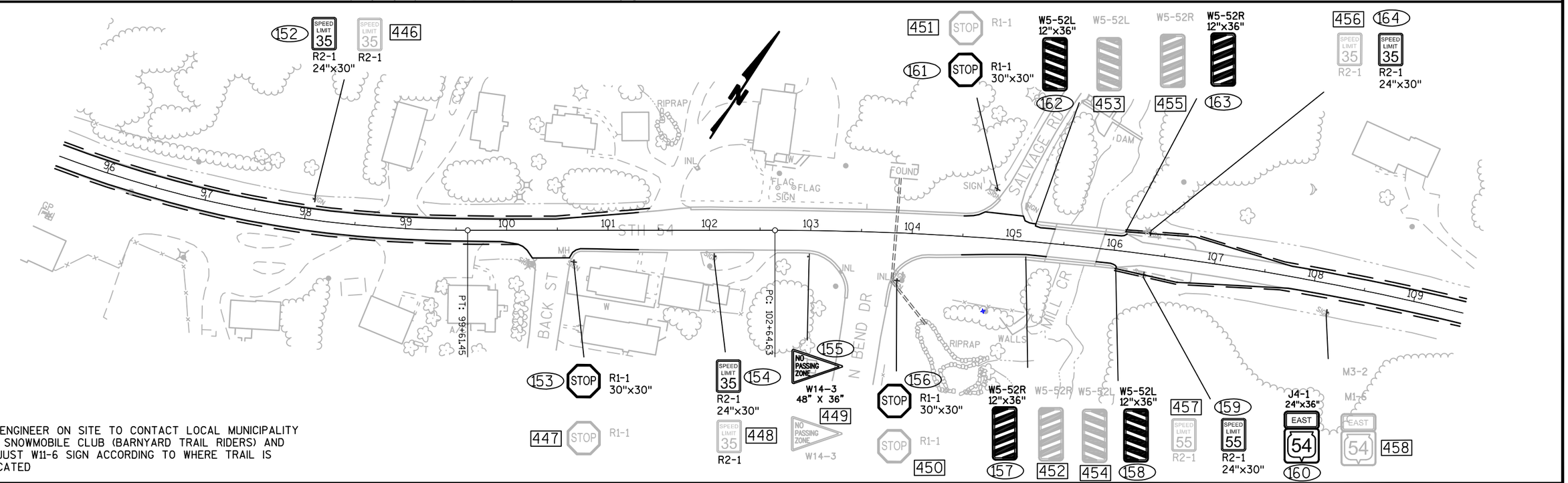

* ENGINEER ON SITE TO CONTACT LOCAL MUNICIPALITY OR SNOWMOBILE CLUB (BARNYARD TRAIL RIDERS) AND ADJUST W11-6 SIGN ACCORDING TO WHERE TRAIL IS LOCATED

PROJECT NO: 7550-00-60	HWY: STH54	COUNTY: JACKSON	PERMANENT SIGNING	SHEET NO: 30	E

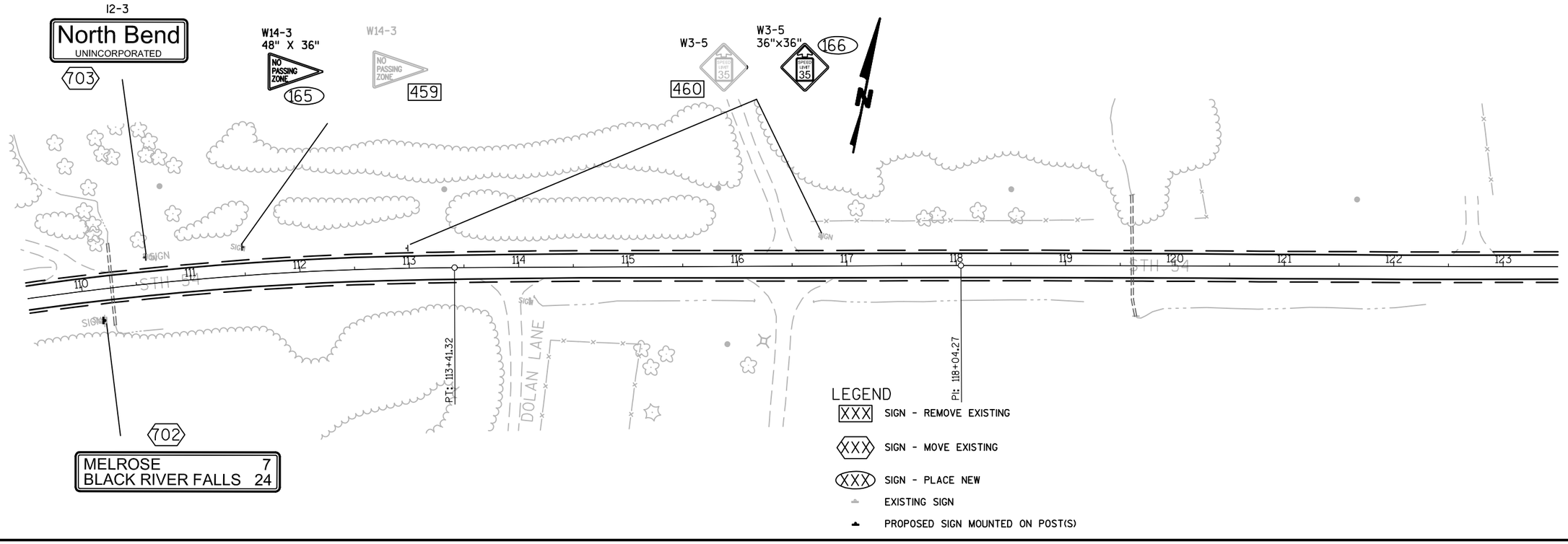

NOTE: NO PASSING ZONE SIGNS AND POSTS TO BE INSTALLED AFTER SPOTTING IS COMPLETED. THE NUMBER AND LOCATION TO BE APPROVED BY ENGINEER.

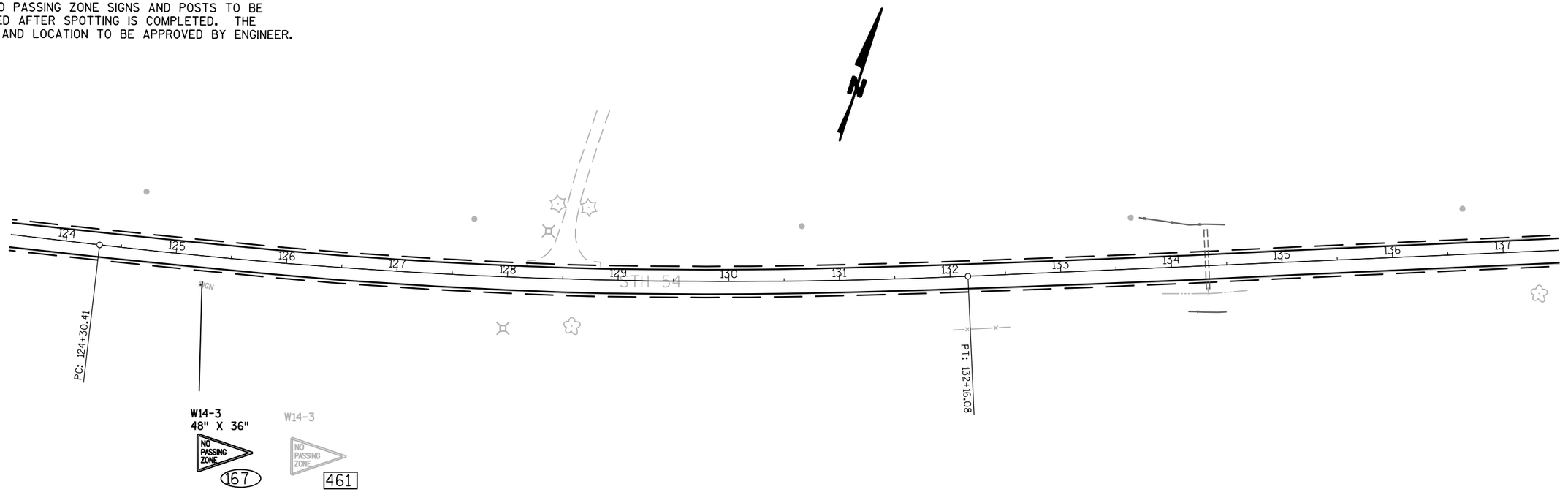

PROJECT NO: 7550-00-60	HWY: STH54	COUNTY: JACKSON	PERMANENT SIGNING	SHEET NO: 31	E

2

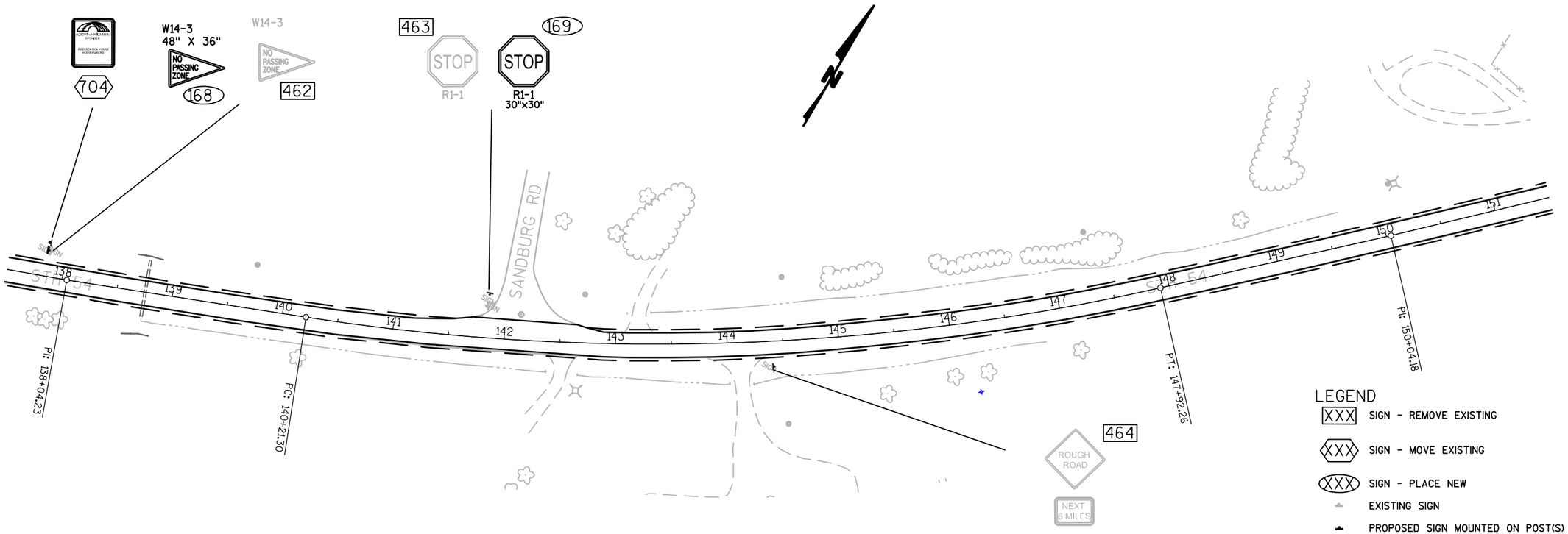

NOTE: NO PASSING ZONE SIGNS AND POSTS TO BE INSTALLED AFTER SPOTTING IS COMPLETED. THE NUMBER AND LOCATION TO BE APPROVED BY ENGINEER.

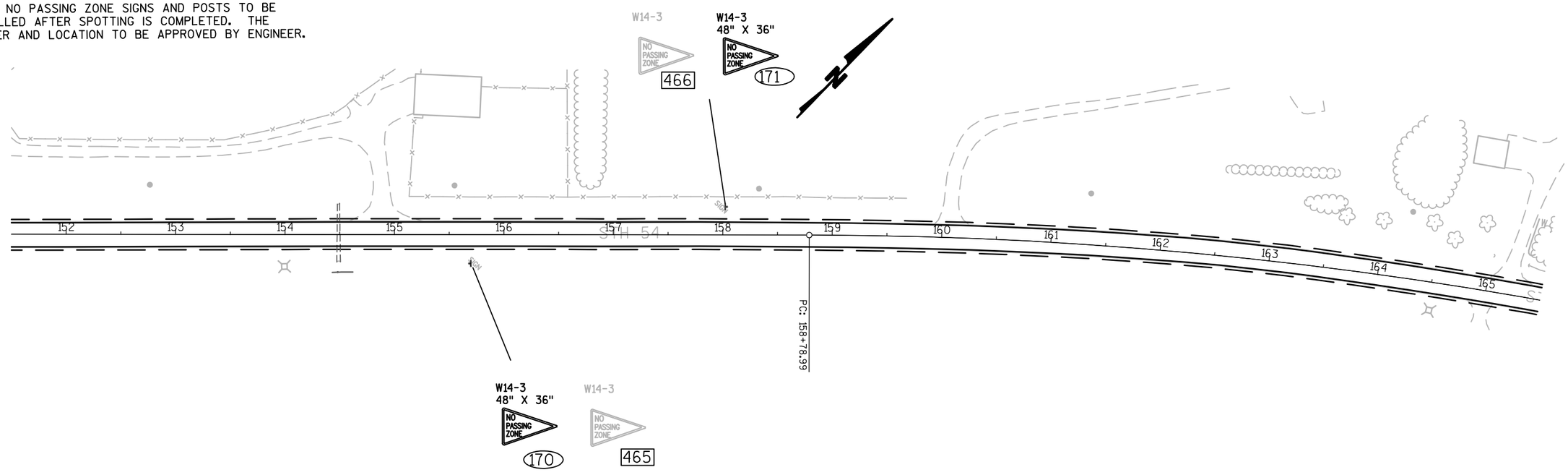

PROJECT NO: 7550-00-60	HWY: STH54	COUNTY: JACKSON	PERMANENT SIGNING	SHEET NO: 32	E

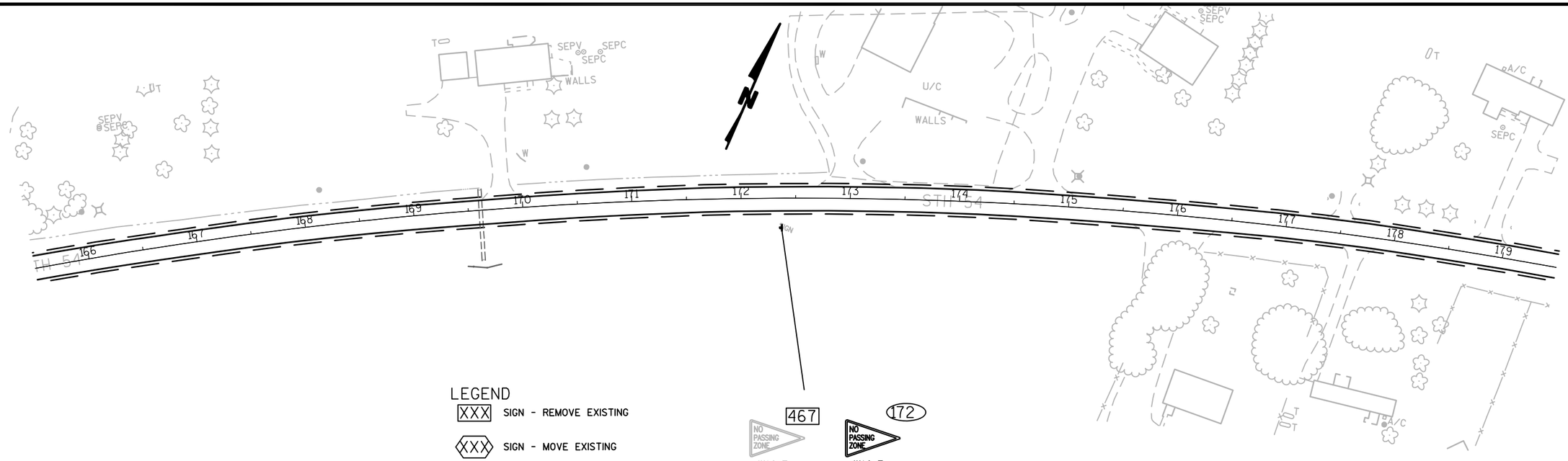

NOTE: NO PASSING ZONE SIGNS AND POSTS TO BE INSTALLED AFTER SPOTTING IS COMPLETED. THE NUMBER AND LOCATION TO BE APPROVED BY ENGINEER.

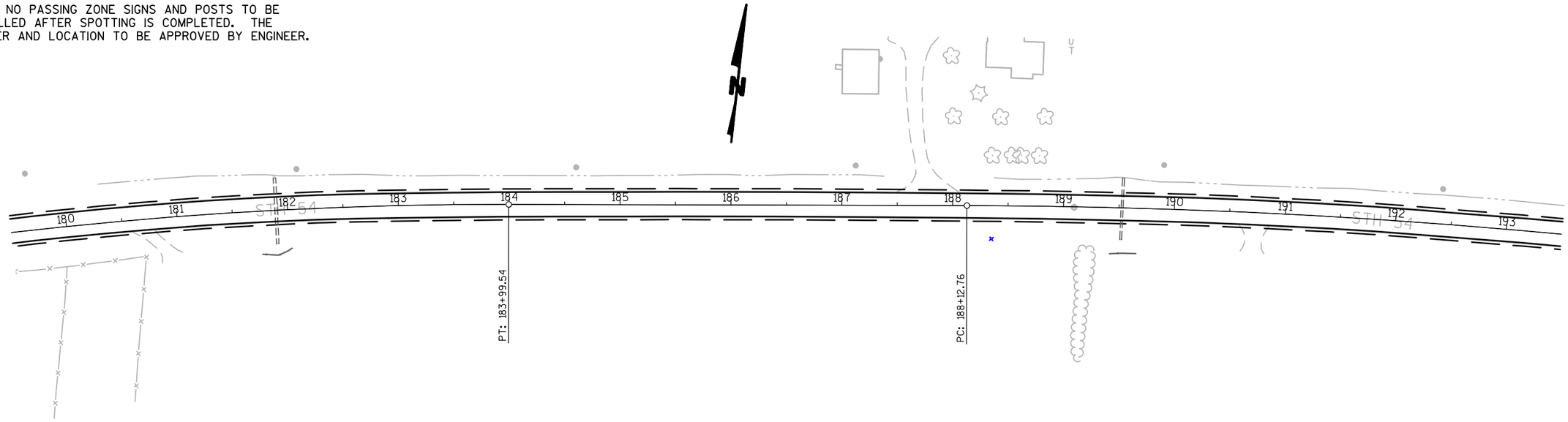

PROJECT NO: 7550-00-60	HWY: STH54	COUNTY: JACKSON	PERMANENT SIGNING	SHEET NO: 33	E

2

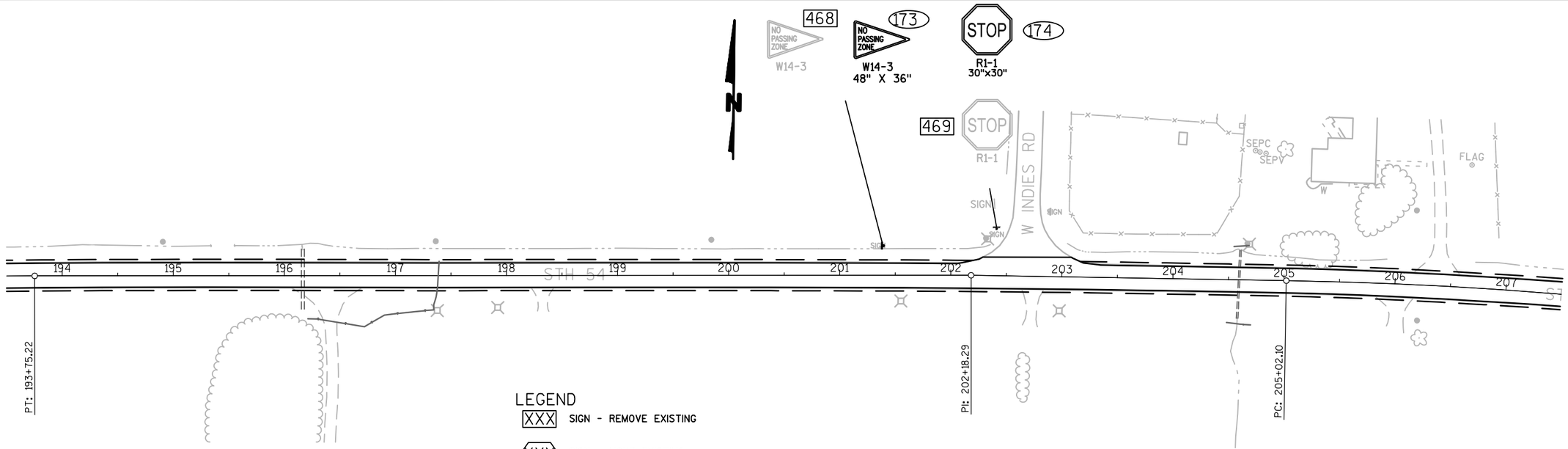

LEGEND

XXX SIGN - REMOVE EXISTING

XXX SIGN - MOVE EXISTING

XXX SIGN - PLACE NEW

EXISTING SIGN

PROPOSED SIGN MOUNTED ON POST(S)

NOTE: NO PASSING ZONE SIGNS AND POSTS TO BE INSTALLED AFTER SPOTTING IS COMPLETED. THE NUMBER AND LOCATION TO BE APPROVED BY ENGINEER.

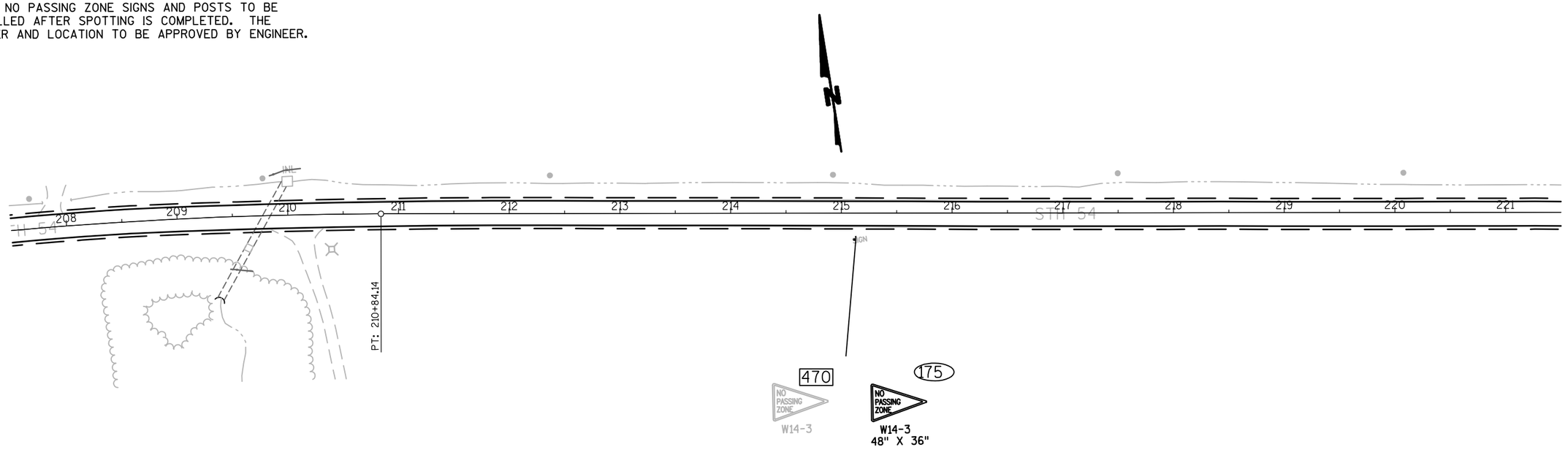

PROJECT NO: 7550-00-60	HWY: STH54	COUNTY: JACKSON	PERMANENT SIGNING	SHEET NO: 34	E

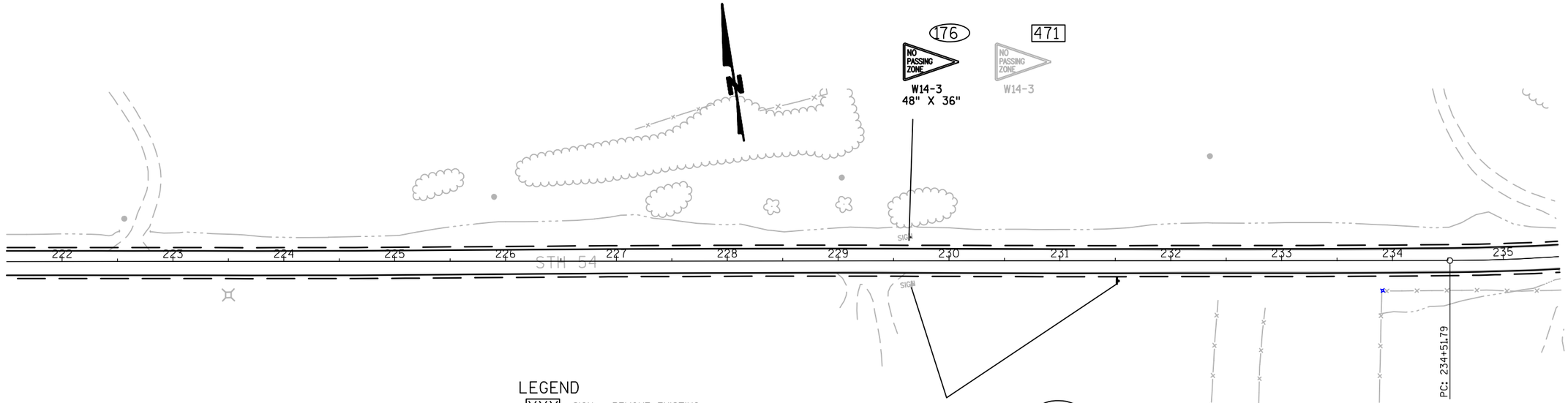

LEGEND

- XXX — SIGN - REMOVE EXISTING
- XXX — SIGN - MOVE EXISTING
- XXX — SIGN - PLACE NEW
- EXISTING SIGN
- PROPOSED SIGN MOUNTED ON POST(S)

NOTE: NO PASSING ZONE SIGNS AND POSTS TO BE INSTALLED AFTER SPOTTING IS COMPLETED. THE NUMBER AND LOCATION TO BE APPROVED BY ENGINEER.

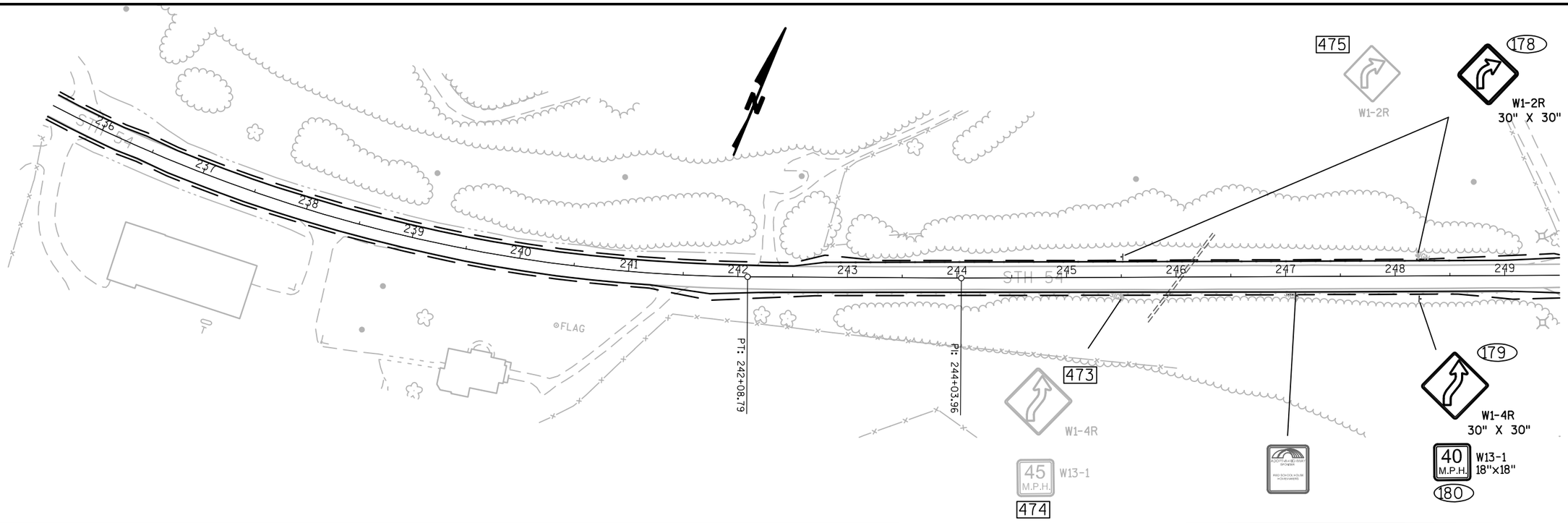

PROJECT NO: 7550-00-60	HWY: STH54	COUNTY: JACKSON	PERMANENT SIGNING	SHEET NO: 35	E

FILE NAME : 023209_PS PLOT DATE : 16 APR 2014 11:15:13 PLOT BY : GADDK PLOT NAME : PLOT SCALE : 1:1

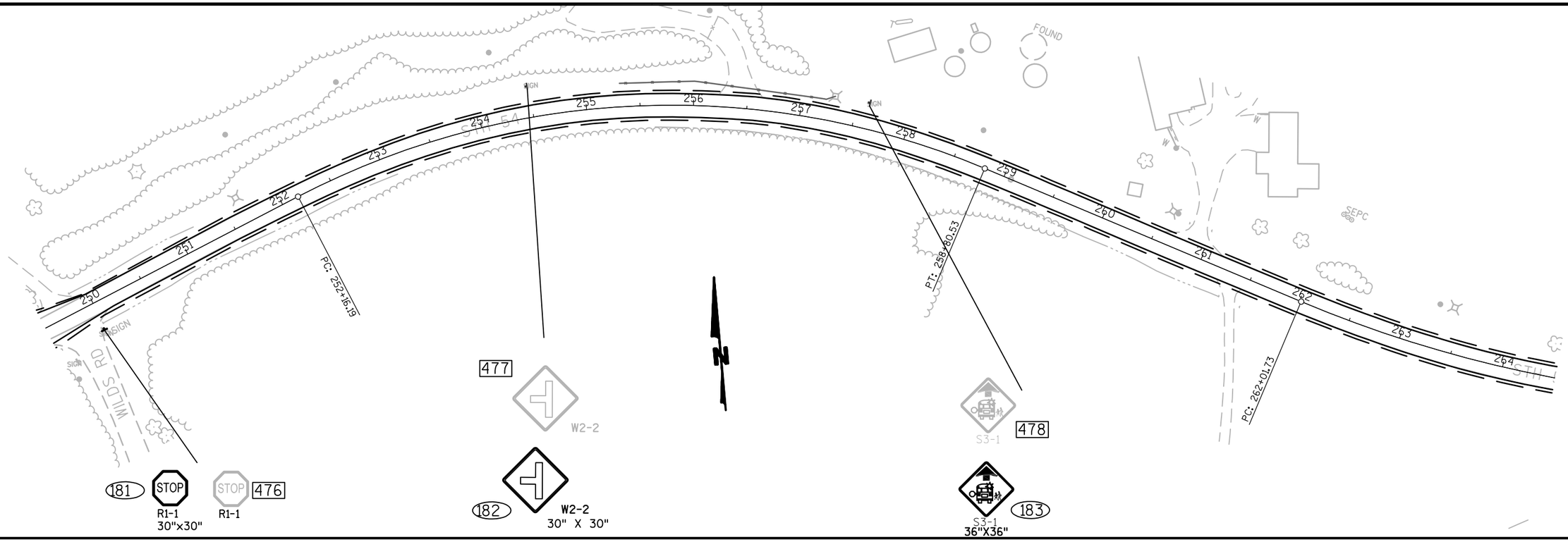

NOTE: NO PASSING ZONE SIGNS AND POSTS TO BE INSTALLED AFTER SPOTTING IS COMPLETED. THE NUMBER AND LOCATION TO BE APPROVED BY ENGINEER.

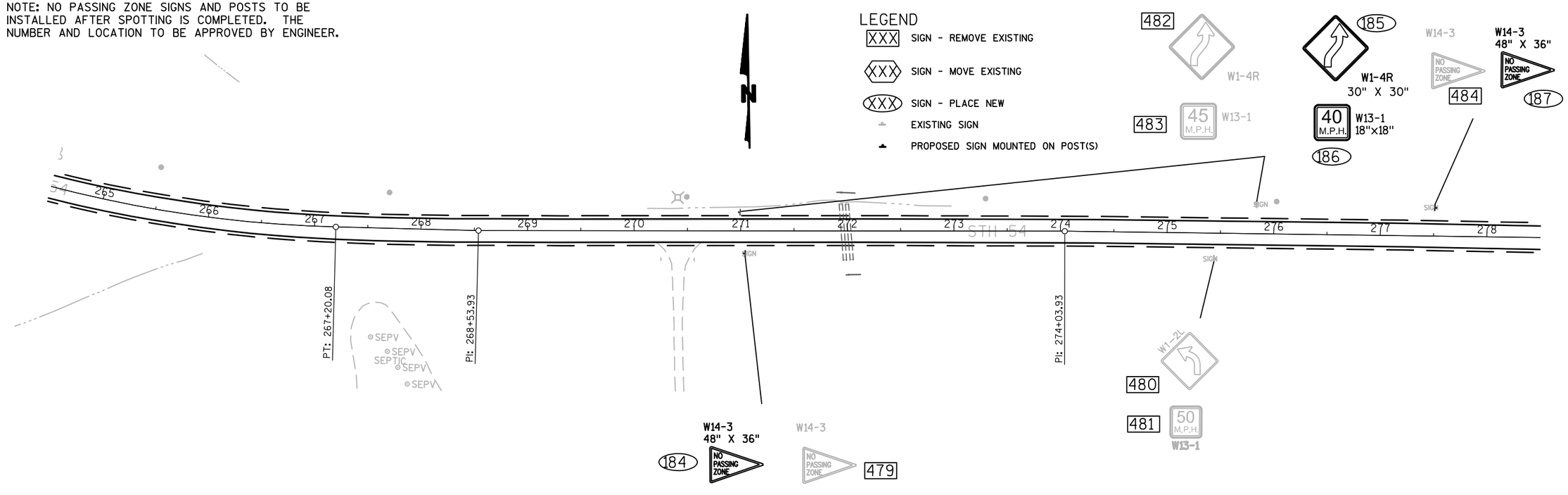

PROJECT NO: 7550-00-60	HWY: STH54	COUNTY: JACKSON	PERMANENT SIGNING	SHEET NO: 36	E

2

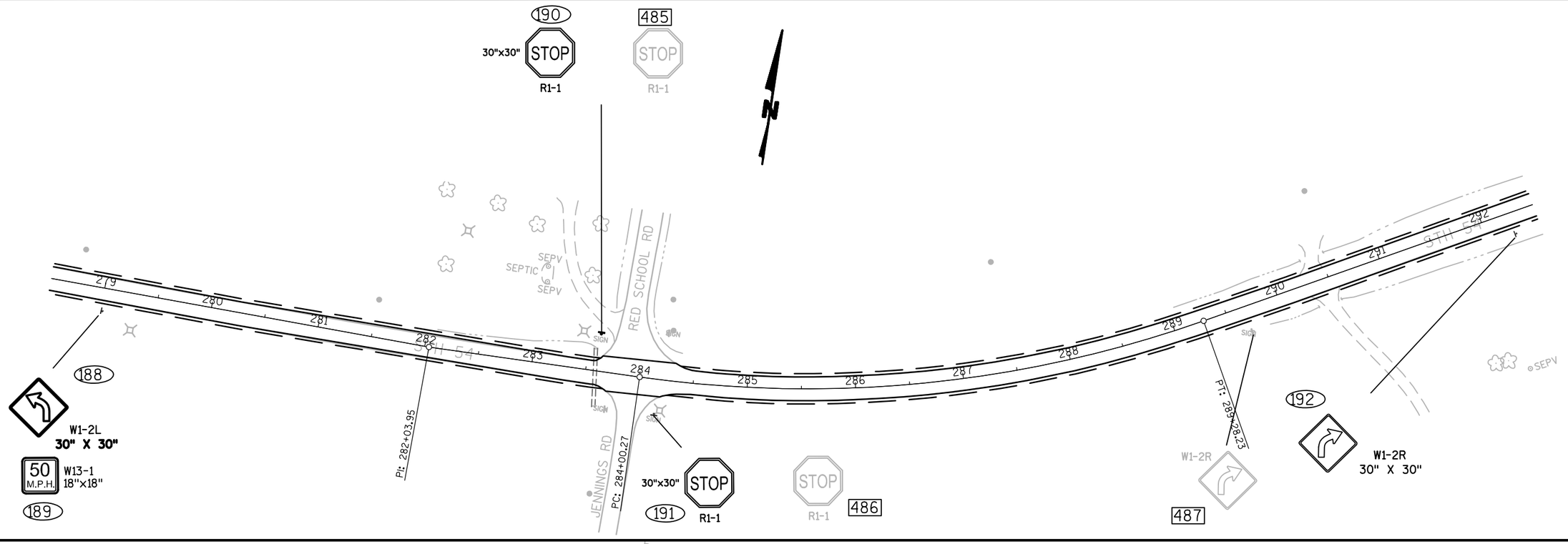

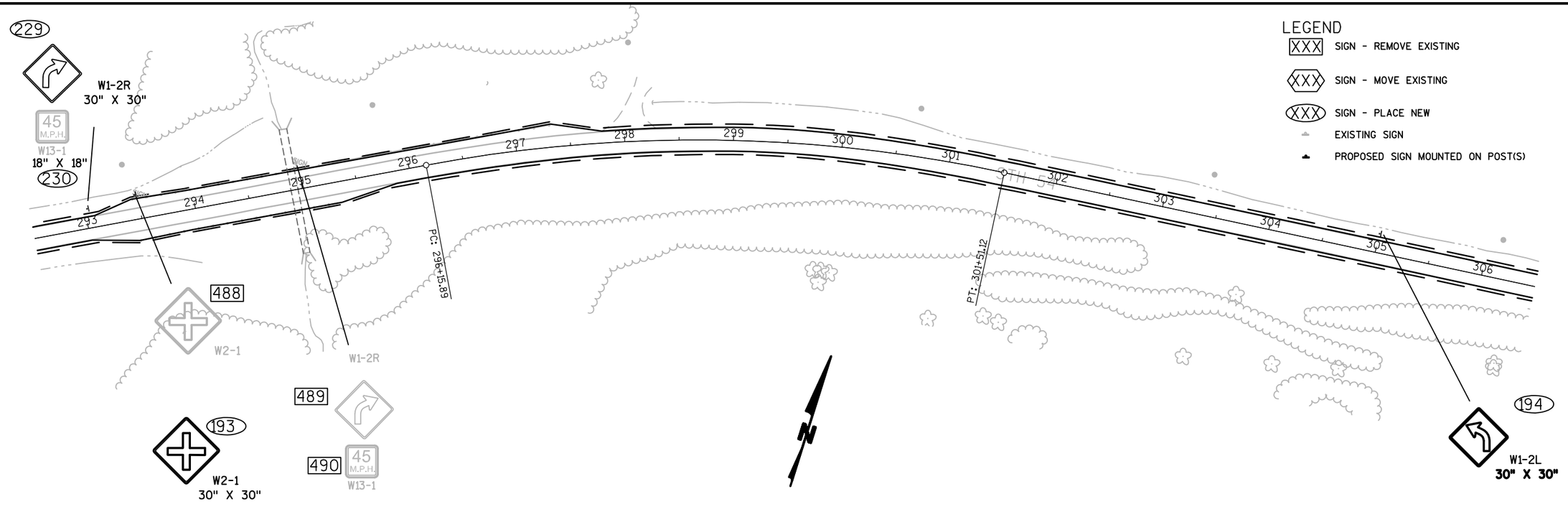

PROJECT NO: 7550-00-60	HWY: STH54	COUNTY: JACKSON	PERMANENT SIGNING	SHEET NO: 37	E

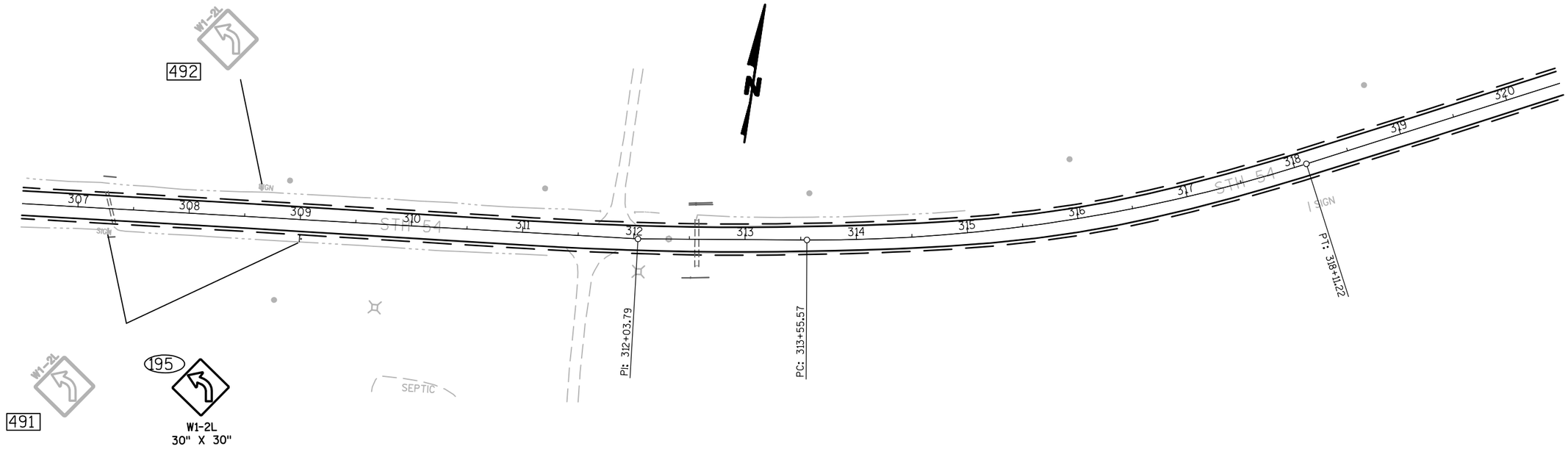

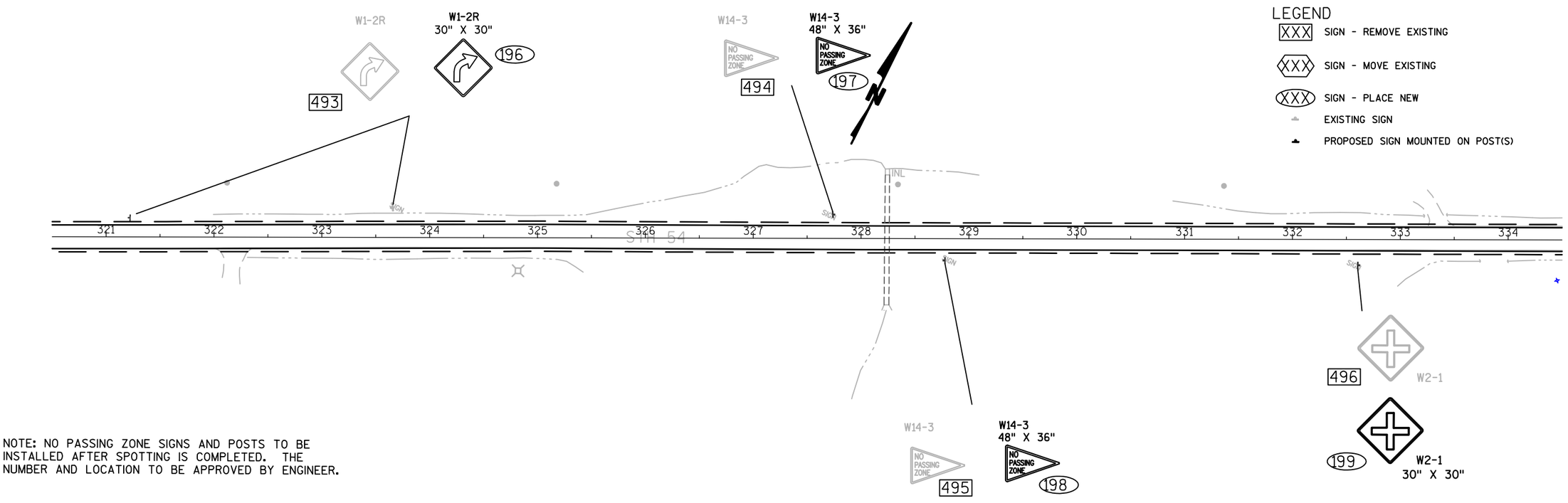

NOTE: NO PASSING ZONE SIGNS AND POSTS TO BE INSTALLED AFTER SPOTTING IS COMPLETED. THE NUMBER AND LOCATION TO BE APPROVED BY ENGINEER.

PROJECT NO: 7550-00-60	HWY: STH54	COUNTY: JACKSON	PERMANENT SIGNING	SHEET NO: 38	E

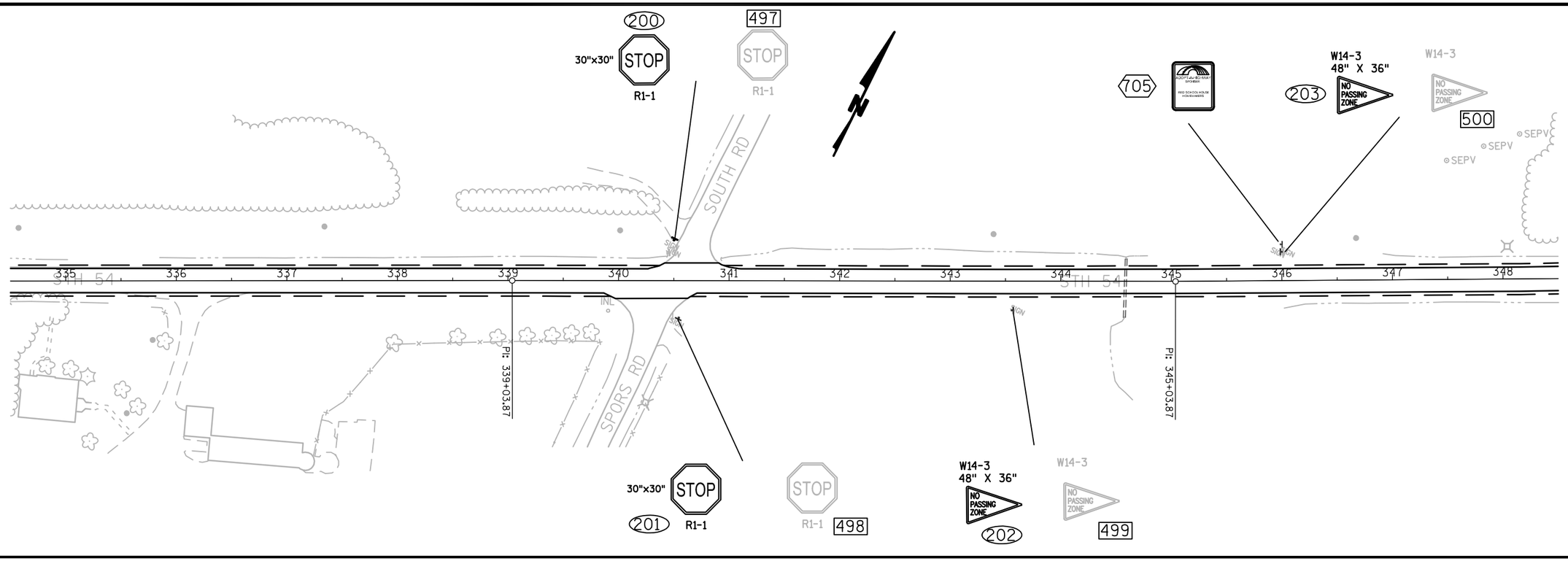

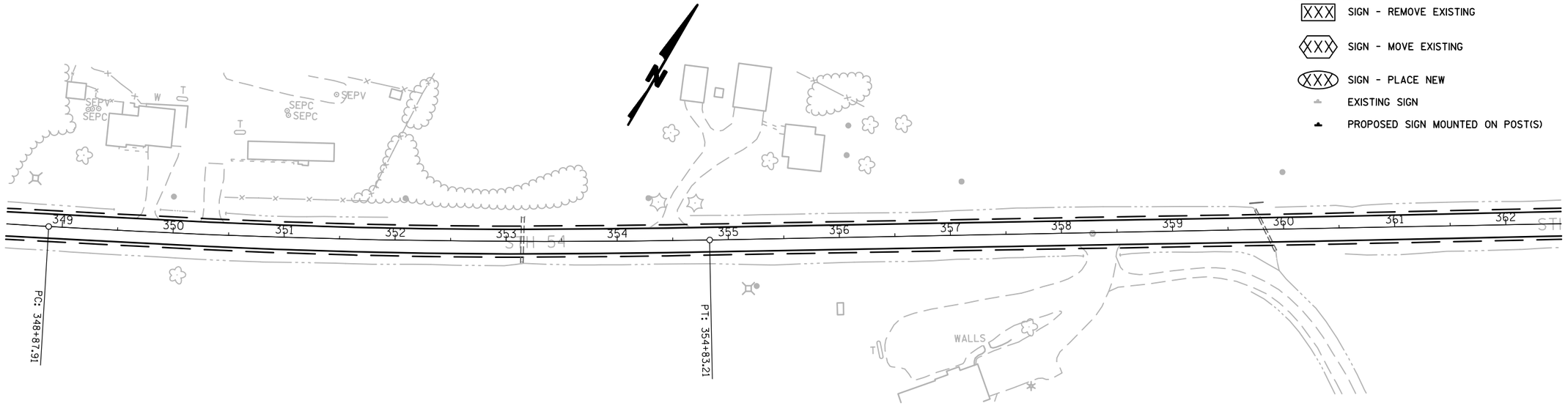

NOTE: NO PASSING ZONE SIGNS AND POSTS TO BE INSTALLED AFTER SPOTTING IS COMPLETED. THE NUMBER AND LOCATION TO BE APPROVED BY ENGINEER.

PROJECT NO: 7550-00-60	HWY: STH54	COUNTY: JACKSON	PERMANENT SIGNING	SHEET NO: 39	E

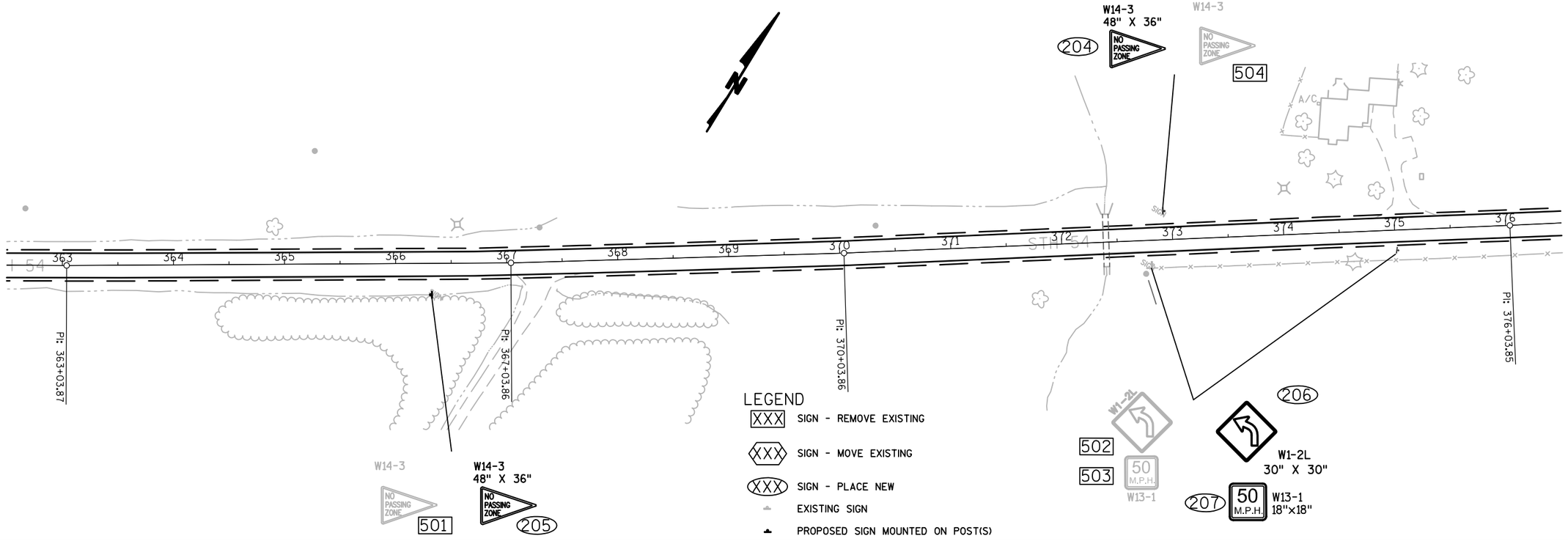

NOTE: NO PASSING ZONE SIGNS AND POSTS TO BE INSTALLED AFTER SPOTTING IS COMPLETED. THE NUMBER AND LOCATION TO BE APPROVED BY ENGINEER.

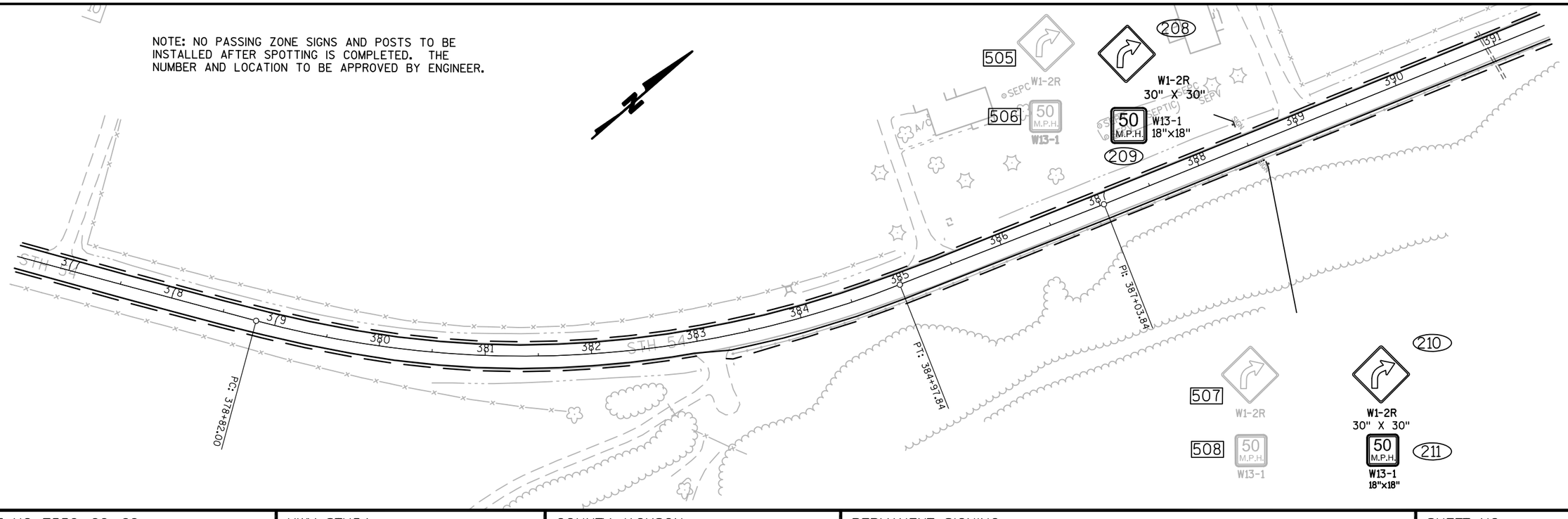

PROJECT NO: 7550-00-60	HWY: STH54	COUNTY: JACKSON	PERMANENT SIGNING	SHEET NO: 40	E

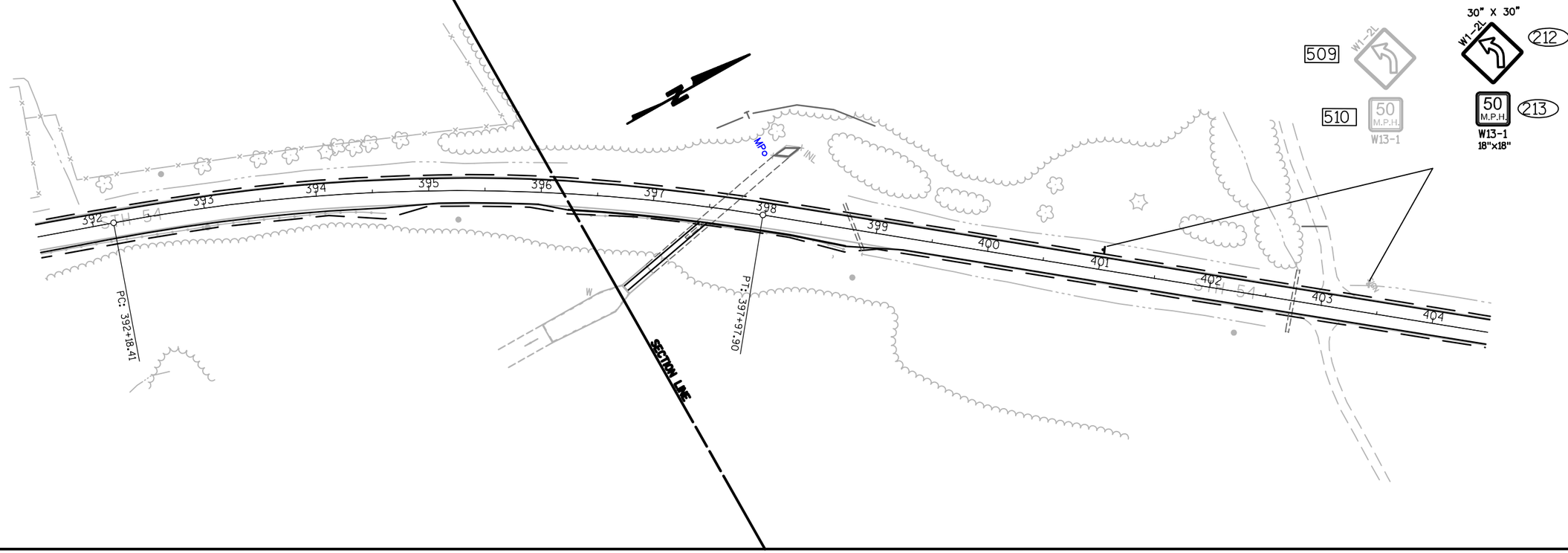

NOTE: NO PASSING ZONE SIGNS AND POSTS TO BE INSTALLED AFTER SPOTTING IS COMPLETED. THE NUMBER AND LOCATION TO BE APPROVED BY ENGINEER.

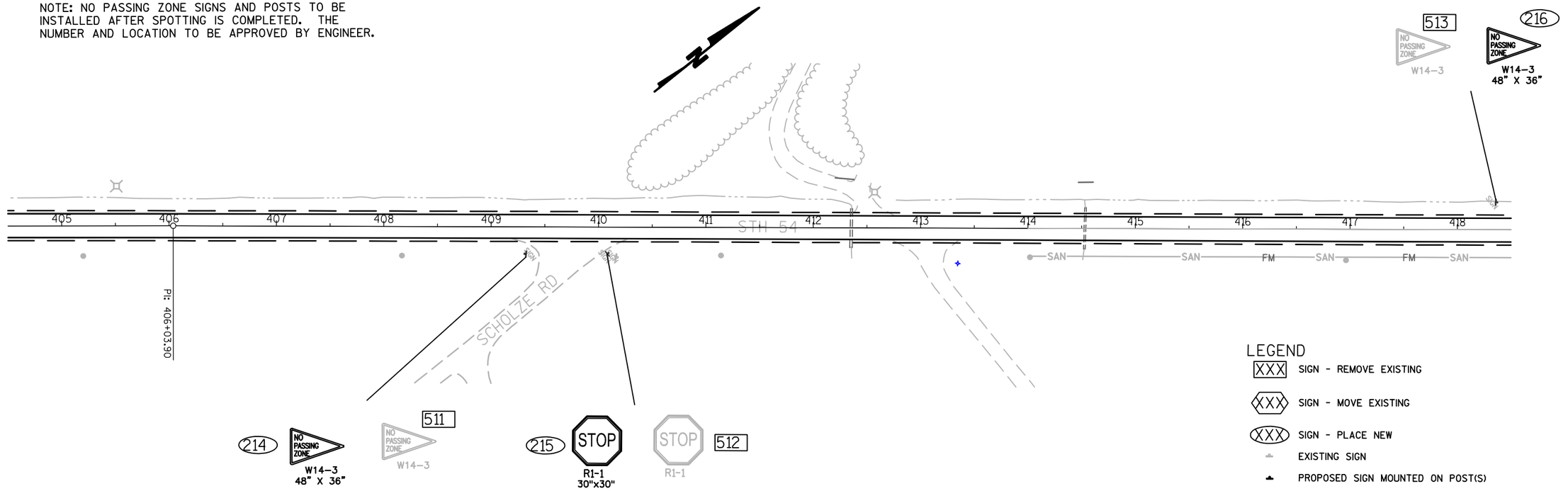

PROJECT NO: 7550-00-60	HWY: STH54	COUNTY: JACKSON	PERMANENT SIGNING	SHEET NO: 41	E

2

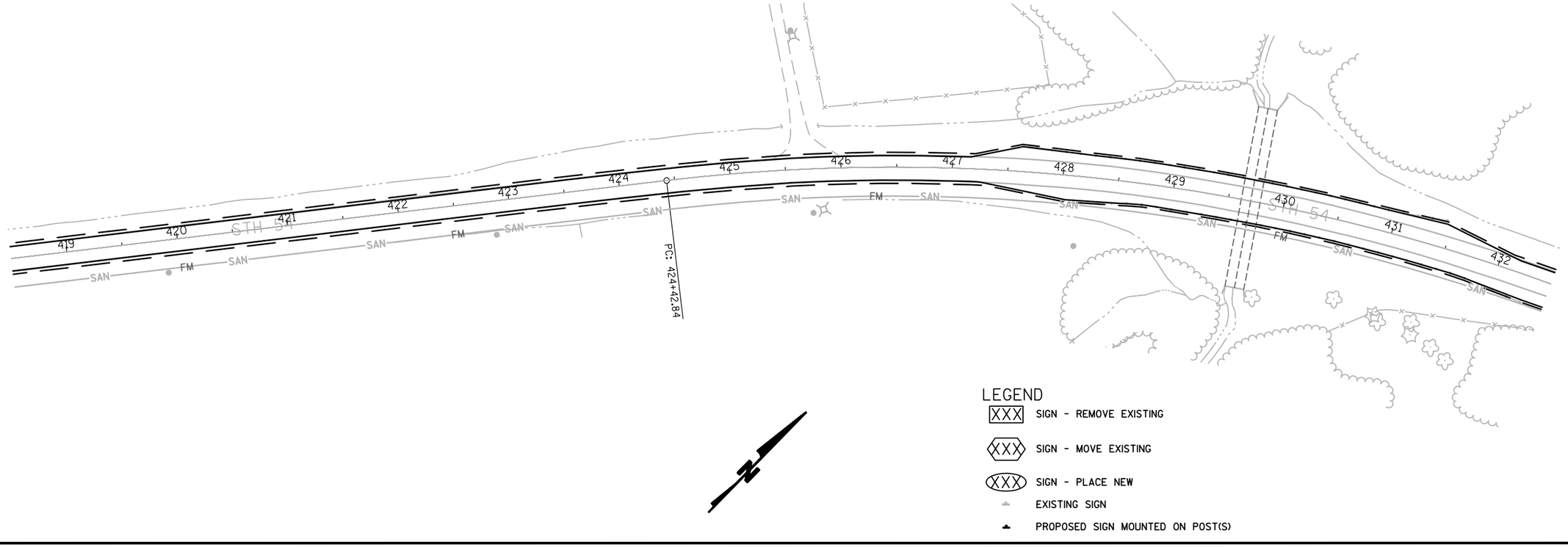

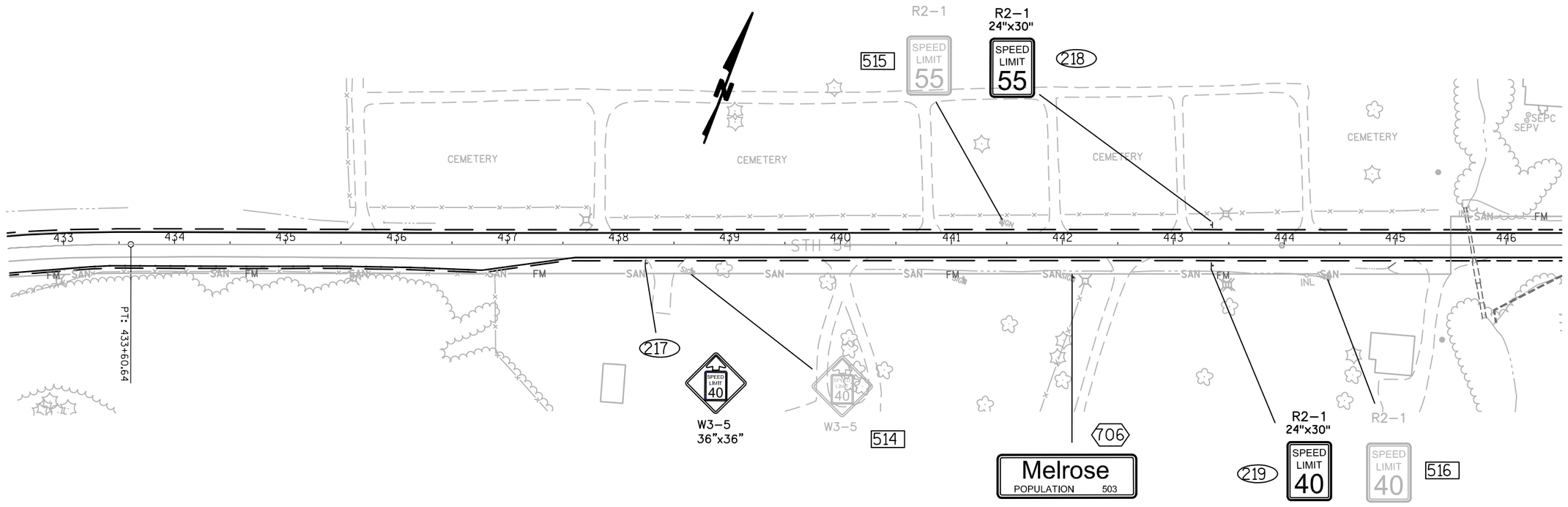

PROJECT NO: 7550-00-60	HWY: STH54	COUNTY: JACKSON	PERMANENT SIGNING	SHEET NO: 42	E

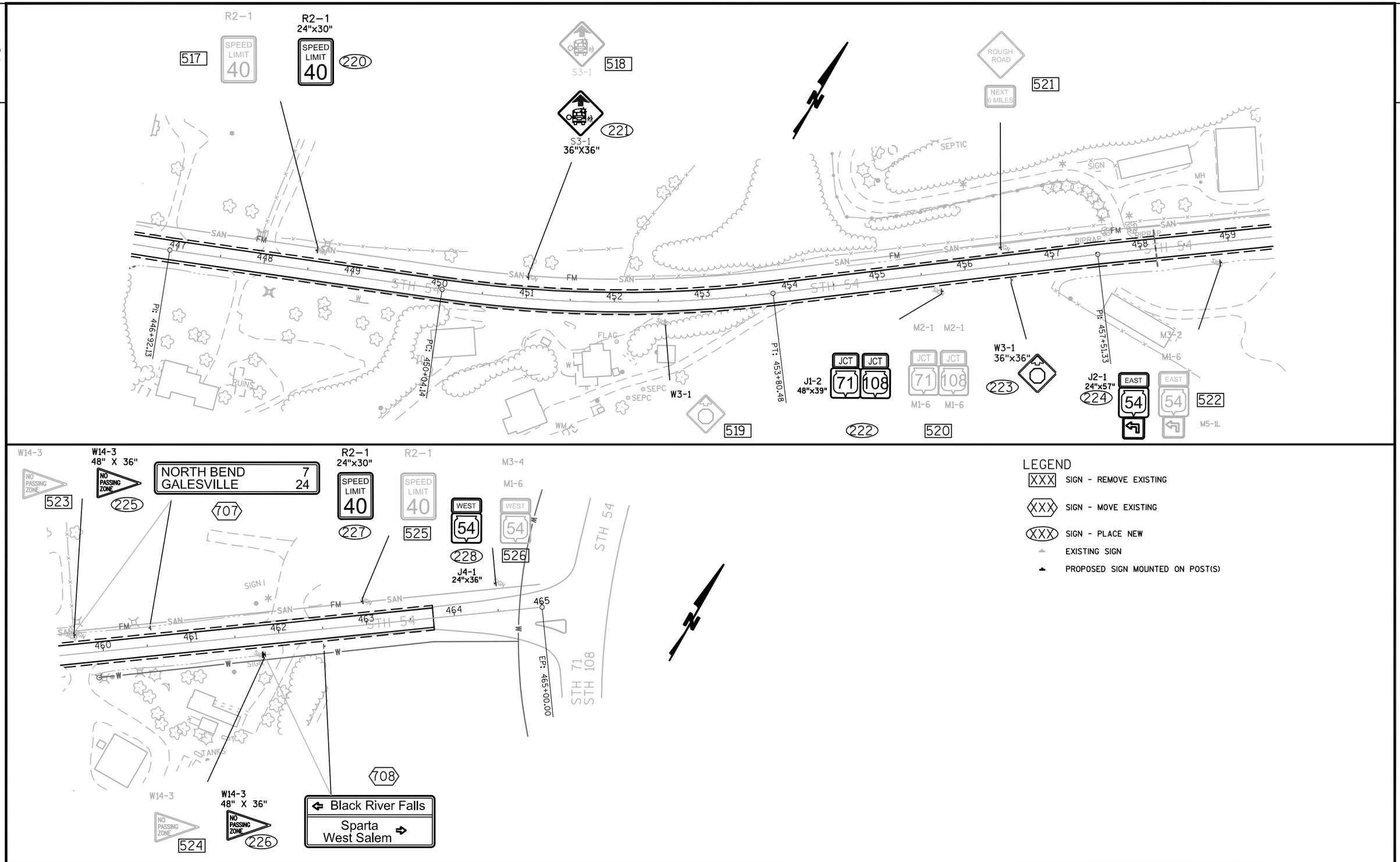

LEGEND

- XXX — SIGN - REMOVE EXISTING
- XXX — SIGN - MOVE EXISTING
- XXX — SIGN - PLACE NEW
- EXISTING SIGN
- PROPOSED SIGN MOUNTED ON POST(S)

PROJECT NO: 7550-00-60	HWY: STH54	COUNTY: JACKSON	PERMANENT SIGNING	SHEET NO: 43	E

FILE NAME : 023217_PS PLOT DATE : 16 APR 2014 11:21:32 PLOT BY : GADDK PLOT NAME : PLOT SCALE : 1:1

2

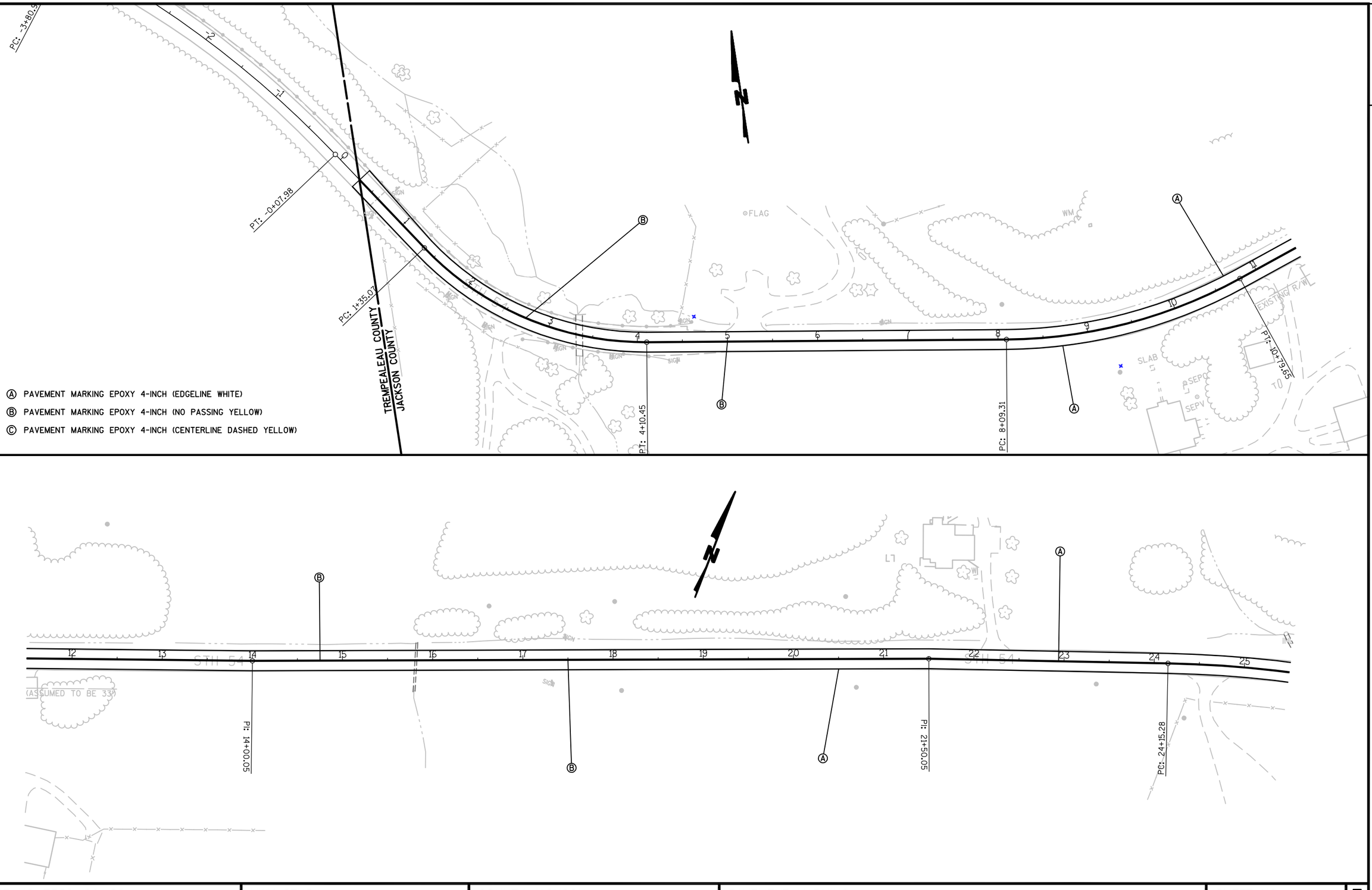

PROJECT NO: 7550-00-60	HWY: STH54	COUNTY: JACKSON	PAVEMENT MARKING	SHEET NO: 44	E

2

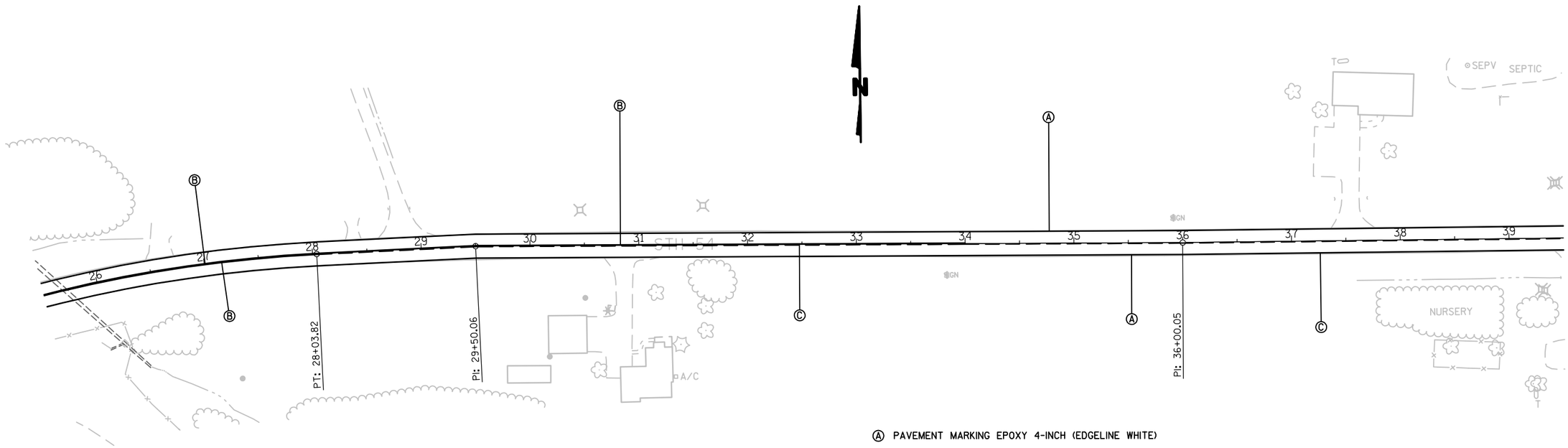

Ⓐ PAVEMENT MARKING EPOXY 4-INCH (EDGELINE WHITE)

Ⓑ PAVEMENT MARKING EPOXY 4-INCH (NO PASSING YELLOW)

Ⓒ PAVEMENT MARKING EPOXY 4-INCH (CENTERLINE DASHED YELLOW)

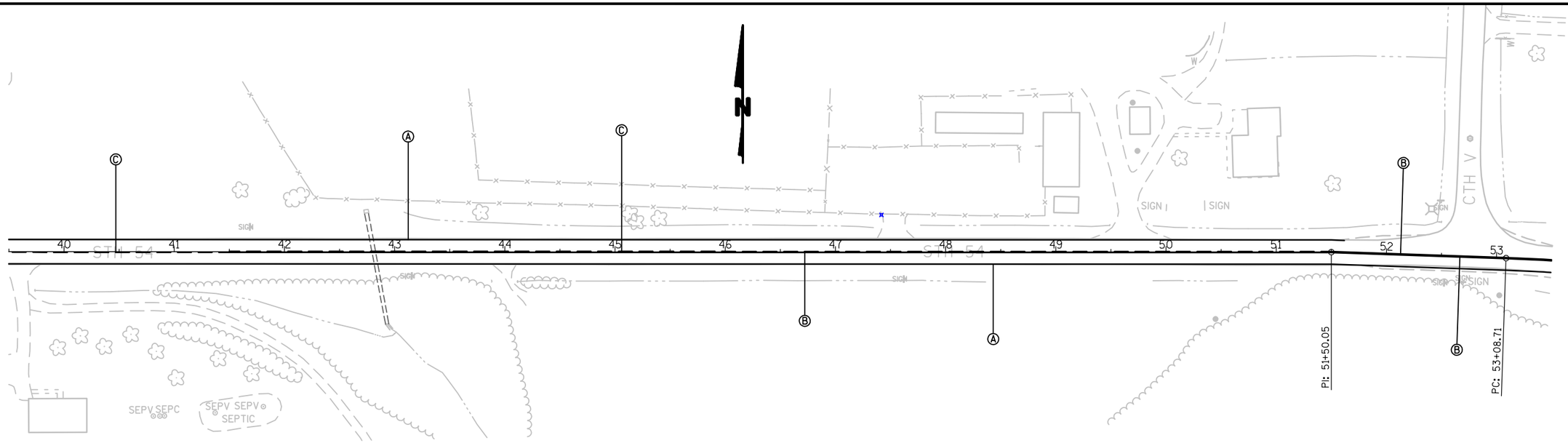

PROJECT NO: 7550-00-60	HWY: STH54	COUNTY: JACKSON	PAVEMENT MARKING	SHEET NO: 45	E

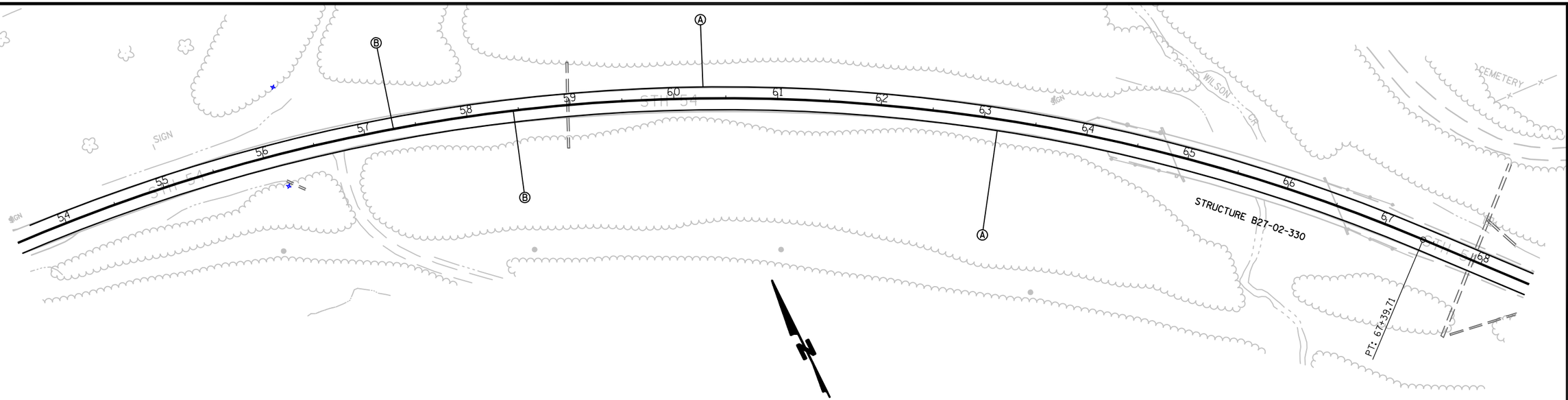

Ⓐ PAVEMENT MARKING EPOXY 4-INCH (EDGELINE WHITE)

Ⓑ PAVEMENT MARKING EPOXY 4-INCH (NO PASSING YELLOW)

Ⓒ PAVEMENT MARKING EPOXY 4-INCH (CENTERLINE DASHED YELLOW)

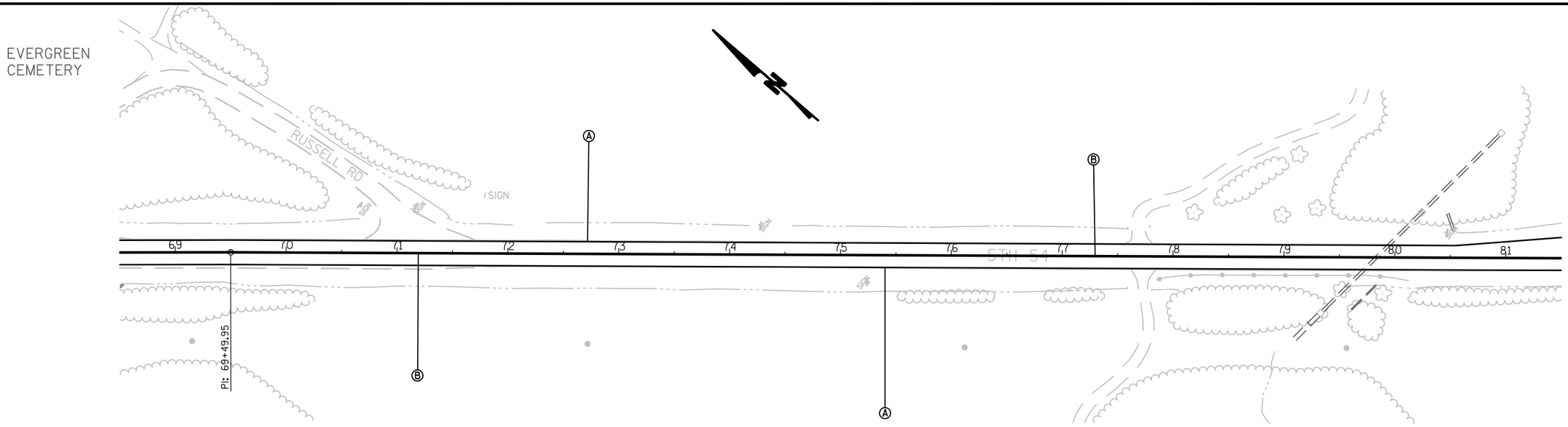

PROJECT NO: 7550-00-60	HWY: STH54	COUNTY: JACKSON	PAVEMENT MARKING	SHEET NO: 46	E

FILE NAME : 024503_PM PLOT DATE : 21 FEB 2014 08:16:08 PLOT BY : GADDK PLOT NAME : PLOT SCALE : 1:1

2

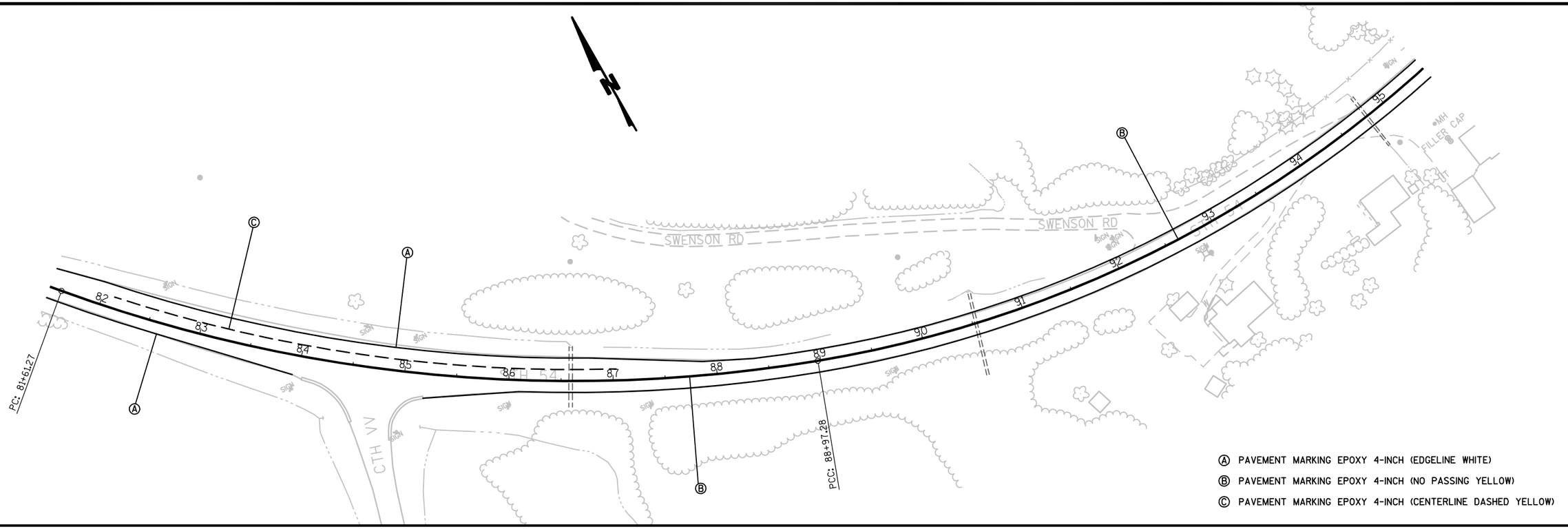

Ⓐ PAVEMENT MARKING EPOXY 4-INCH (EDGELINE WHITE)

Ⓑ PAVEMENT MARKING EPOXY 4-INCH (NO PASSING YELLOW)

Ⓒ PAVEMENT MARKING EPOXY 4-INCH (CENTERLINE DASHED YELLOW)

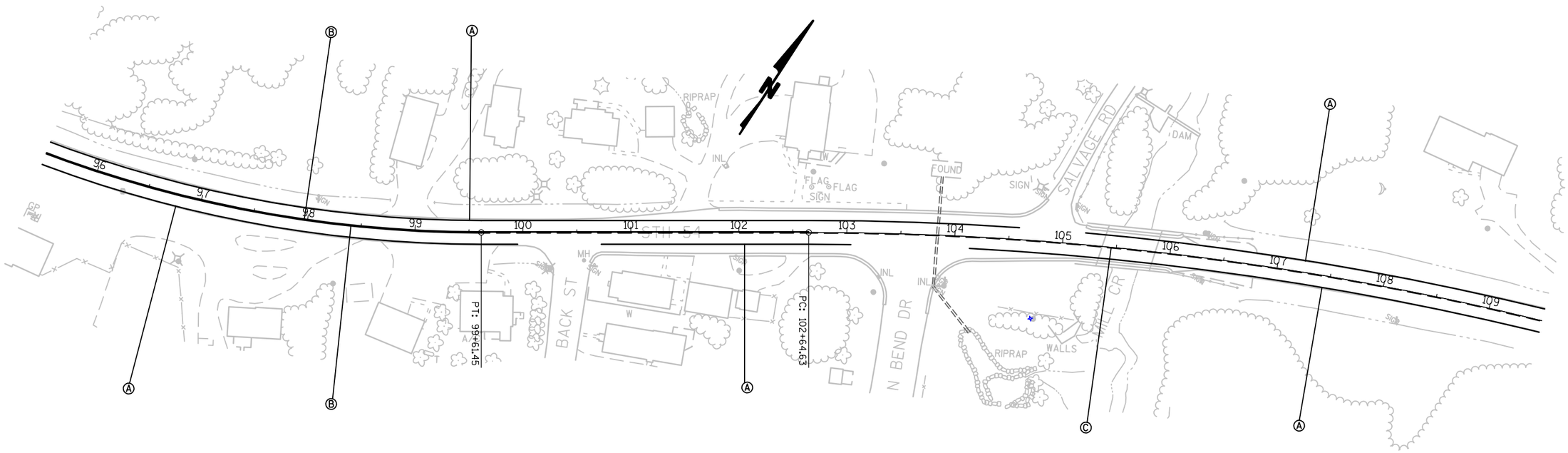

PROJECT NO: 7550-00-60	HWY: STH54	COUNTY: JACKSON	PAVEMENT MARKING	SHEET NO: 47	E

2

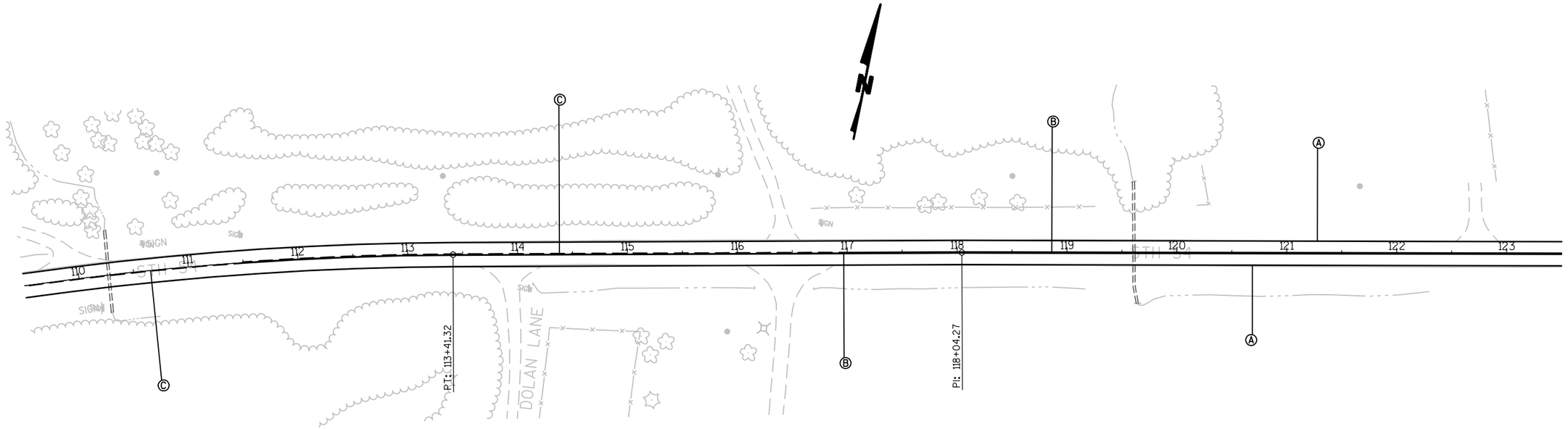

Ⓐ PAVEMENT MARKING EPOXY 4-INCH (EDGELINE WHITE)

Ⓑ PAVEMENT MARKING EPOXY 4-INCH (NO PASSING YELLOW)

Ⓒ PAVEMENT MARKING EPOXY 4-INCH (CENTERLINE DASHED YELLOW)

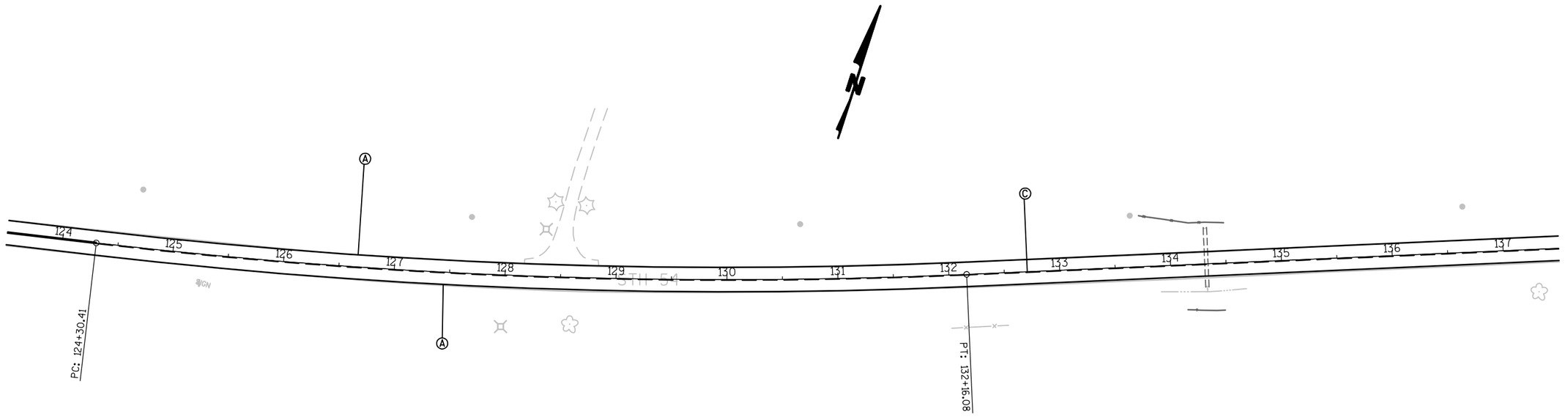

PROJECT NO: 7550-00-60	HWY: STH54	COUNTY: JACKSON	PAVEMENT MARKING	SHEET NO: 48	E

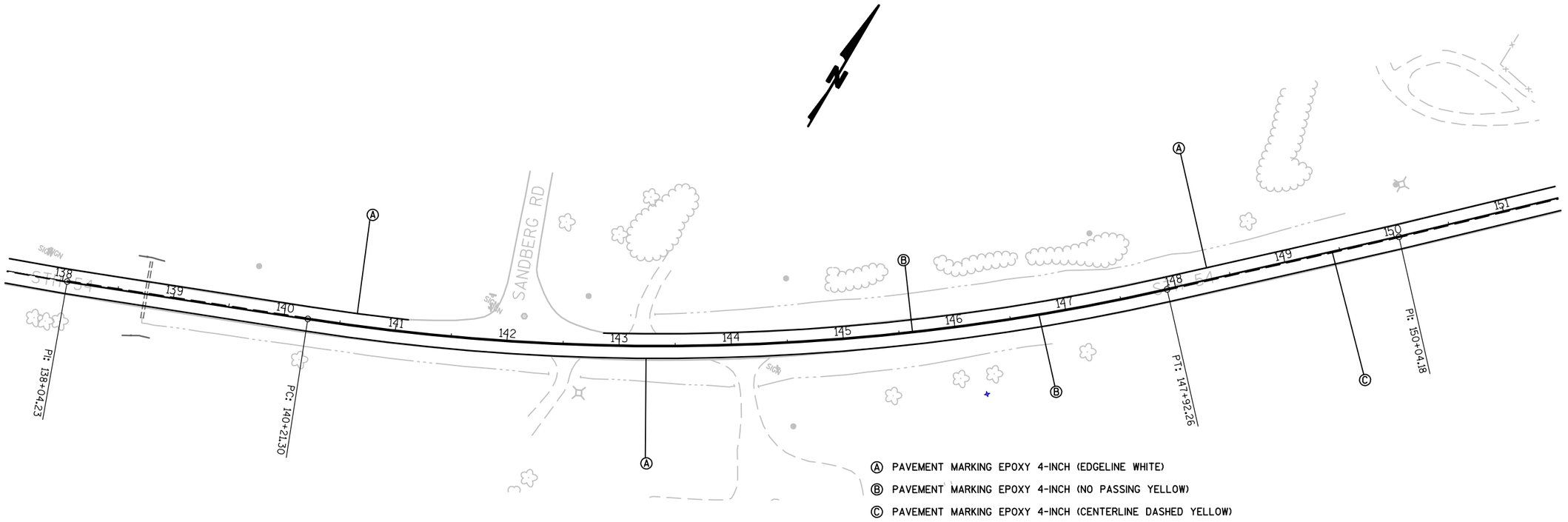

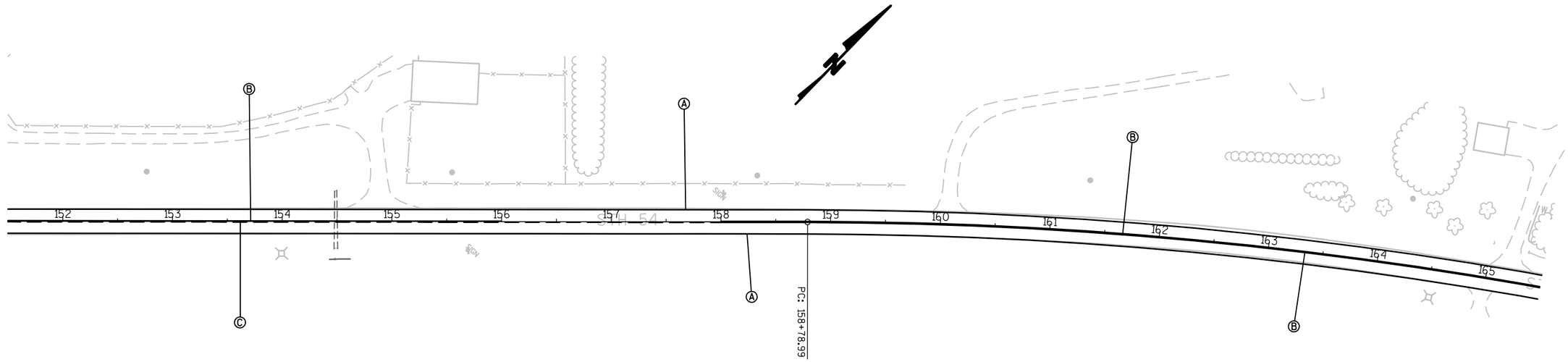

PROJECT NO: 7550-00-60	HWY: STH54	COUNTY: JACKSON	PAVEMENT MARKING	SHEET NO: 49	E

FILE NAME : 024506_PM PLOT DATE : 21 FEB 2014 08:55:05 PLOT BY : GADDK PLOT NAME : PLOT SCALE : 1:1

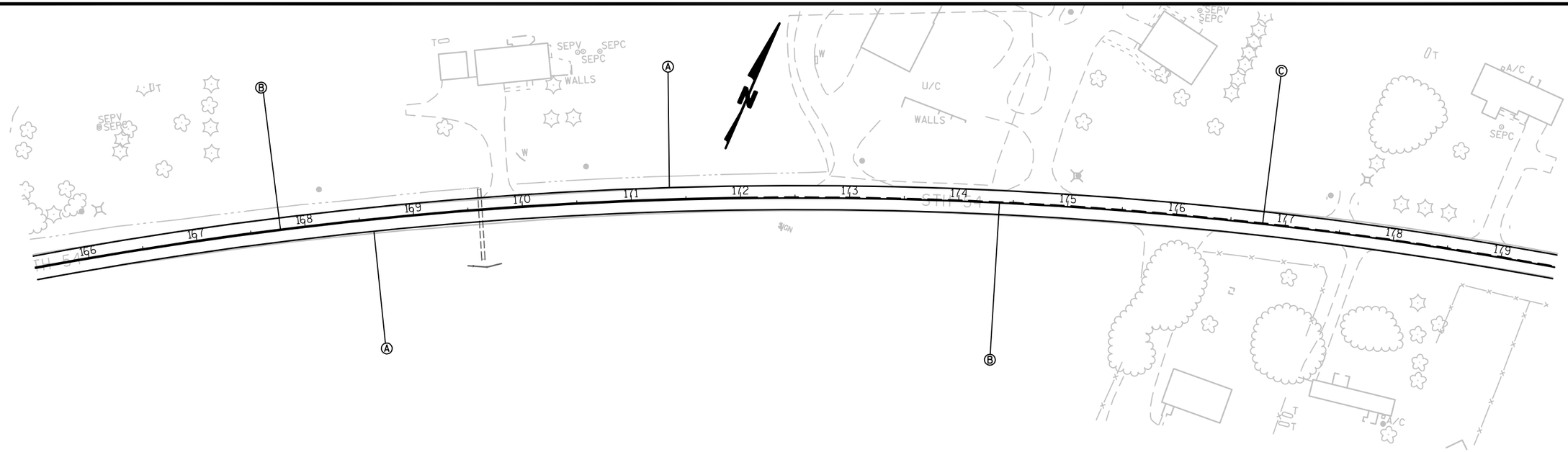

Ⓐ PAVEMENT MARKING EPOXY 4-INCH (EDGELINE WHITE)

Ⓑ PAVEMENT MARKING EPOXY 4-INCH (NO PASSING YELLOW)

Ⓒ PAVEMENT MARKING EPOXY 4-INCH (CENTERLINE DASHED YELLOW)

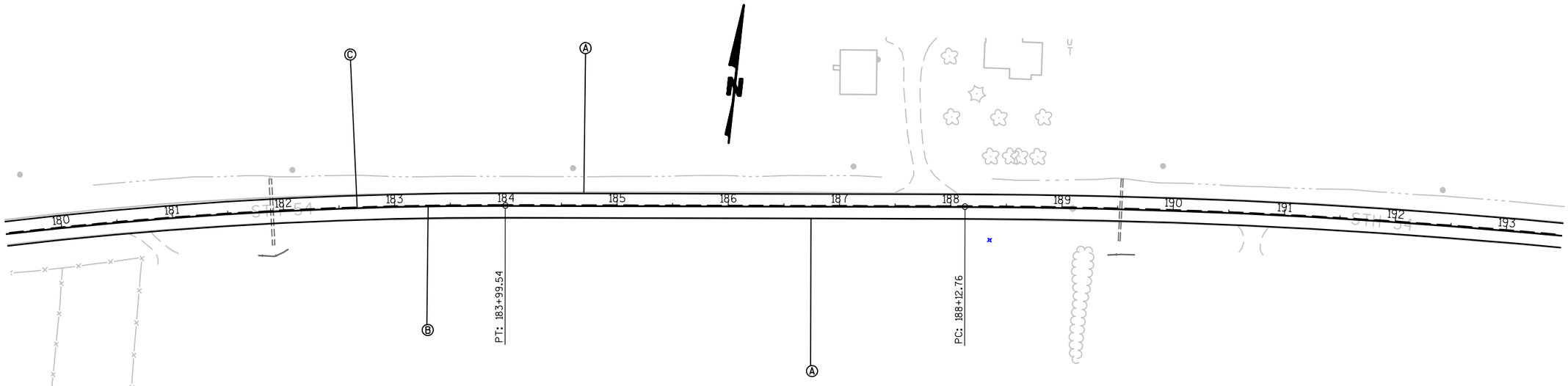

PROJECT NO: 7550-00-60	HWY: STH54	COUNTY: JACKSON	PAVEMENT MARKING	SHEET NO: 50	E

FILE NAME : 024507_PM PLOT DATE : 21 FEB 2014 08:59:22 PLOT BY : GADDK PLOT NAME : PLOT SCALE : 1:1

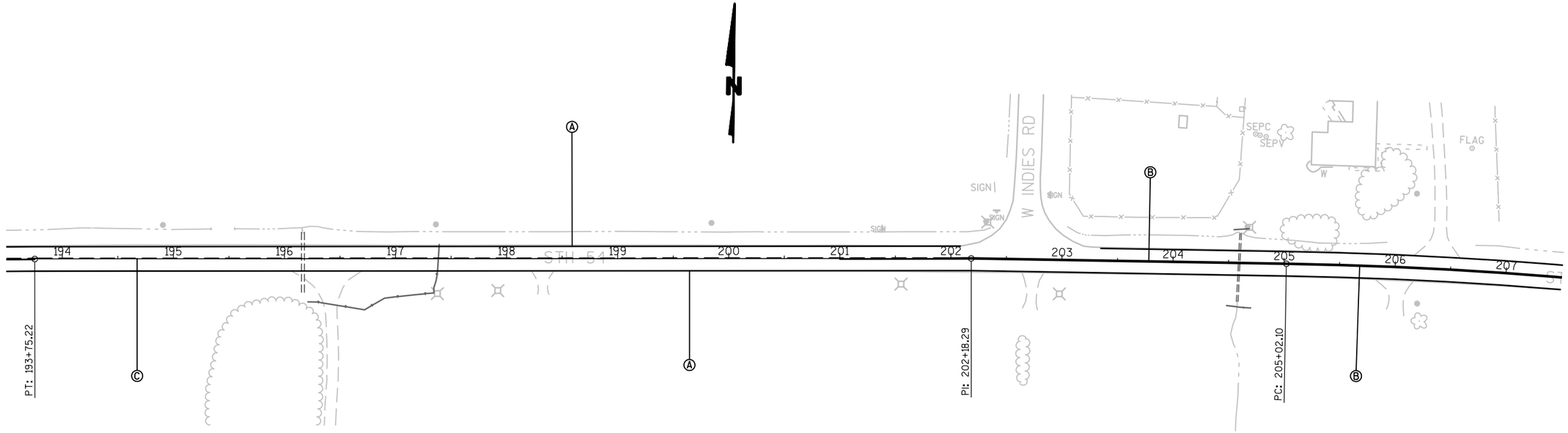

Ⓐ PAVEMENT MARKING EPOXY 4-INCH (EDGELINE WHITE)

Ⓑ PAVEMENT MARKING EPOXY 4-INCH (NO PASSING YELLOW)

Ⓒ PAVEMENT MARKING EPOXY 4-INCH (CENTERLINE DASHED YELLOW)

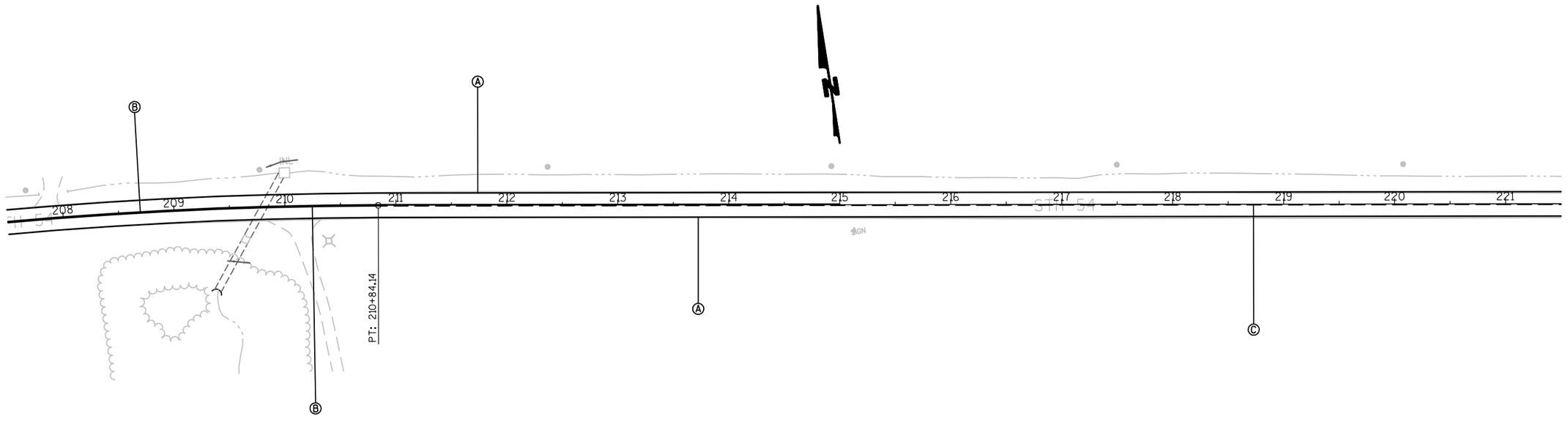

PROJECT NO: 7550-00-60	HWY: STH54	COUNTY: JACKSON	PAVEMENT MARKING	SHEET NO: 51	E

2

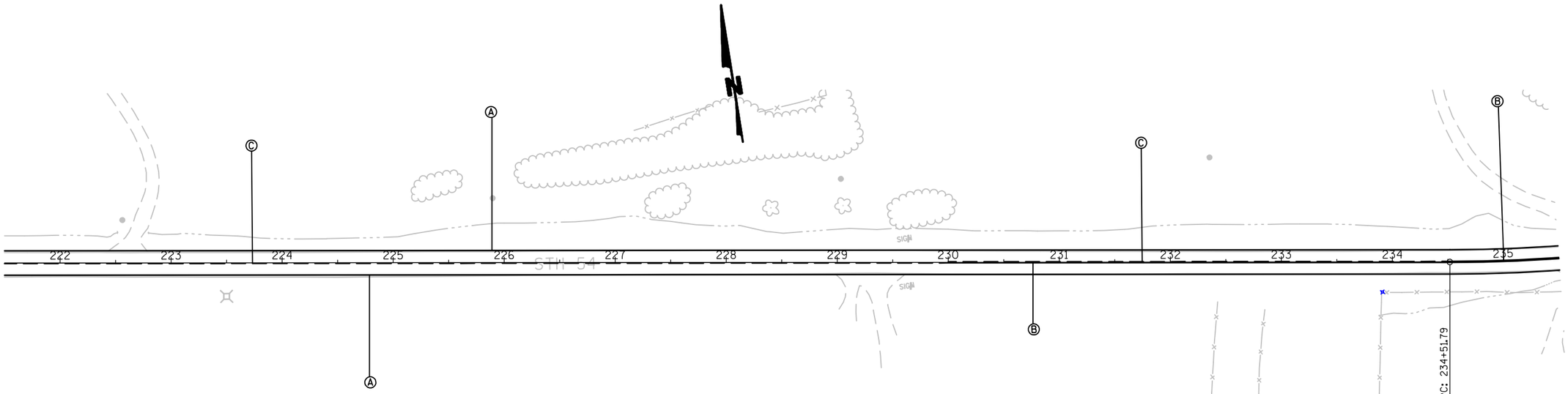

Ⓐ PAVEMENT MARKING EPOXY 4-INCH (EDGELINE WHITE)

Ⓑ PAVEMENT MARKING EPOXY 4-INCH (NO PASSING YELLOW)

Ⓒ PAVEMENT MARKING EPOXY 4-INCH (CENTERLINE DASHED YELLOW)

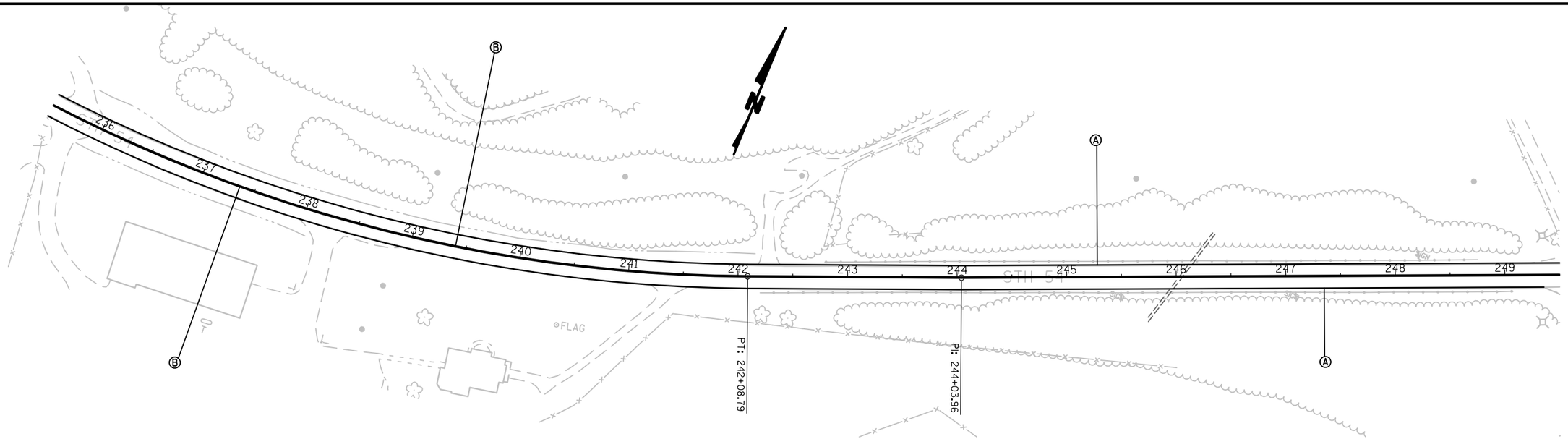

PROJECT NO: 7550-00-60	HWY: STH54	COUNTY: JACKSON	PAVEMENT MARKING	SHEET NO: 52	E

2

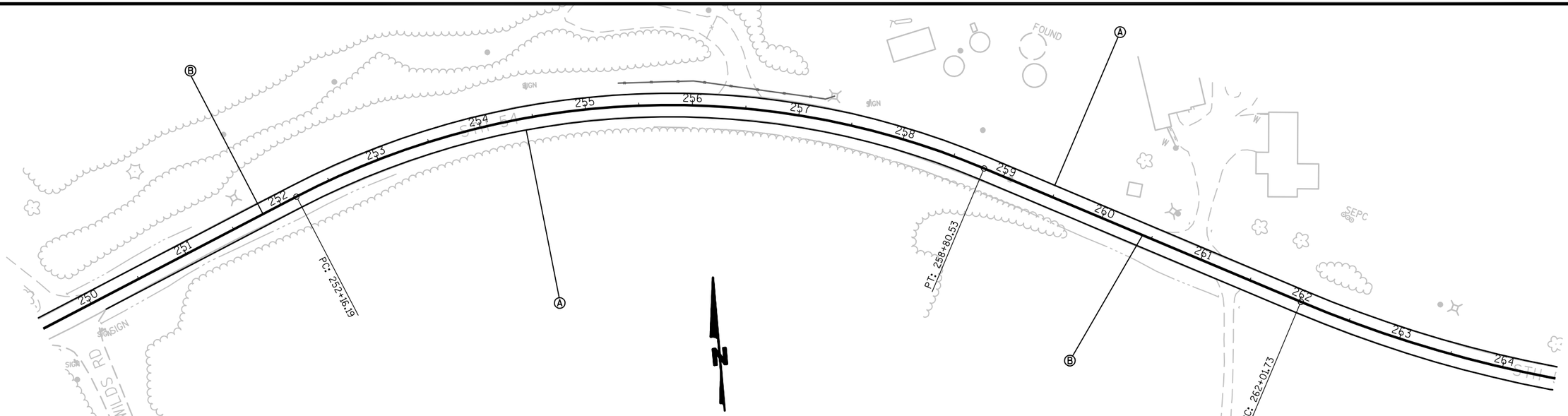

Ⓐ PAVEMENT MARKING EPOXY 4-INCH (EDGELINE WHITE)

Ⓑ PAVEMENT MARKING EPOXY 4-INCH (NO PASSING YELLOW)

Ⓒ PAVEMENT MARKING EPOXY 4-INCH (CENTERLINE DASHED YELLOW)

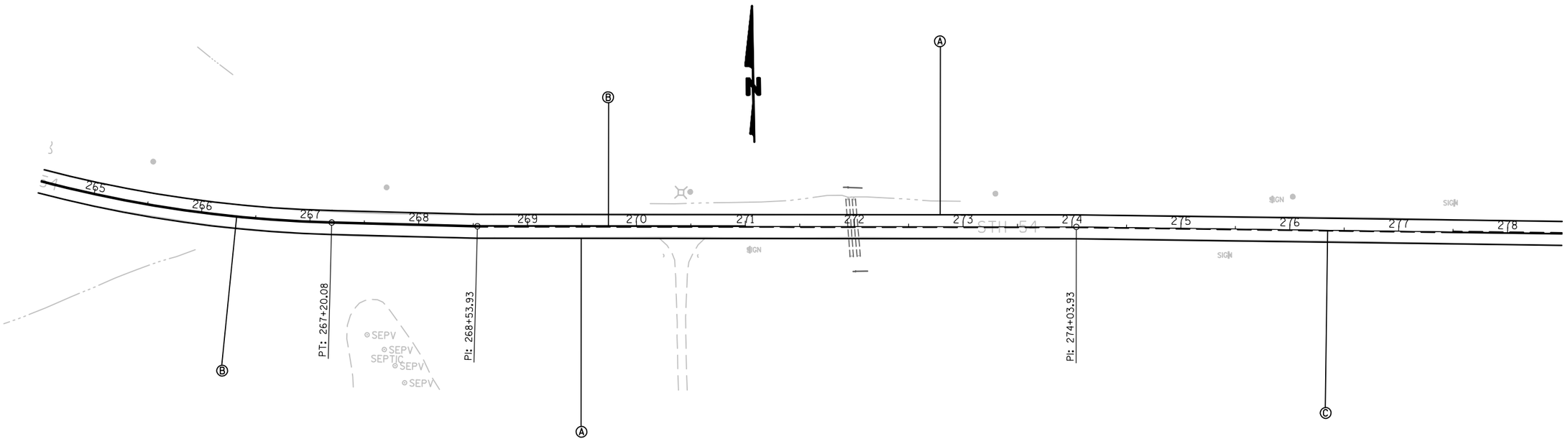

PROJECT NO: 7550-00-60	HWY: STH54	COUNTY: JACKSON	PAVEMENT MARKING	SHEET NO: 53	E

2

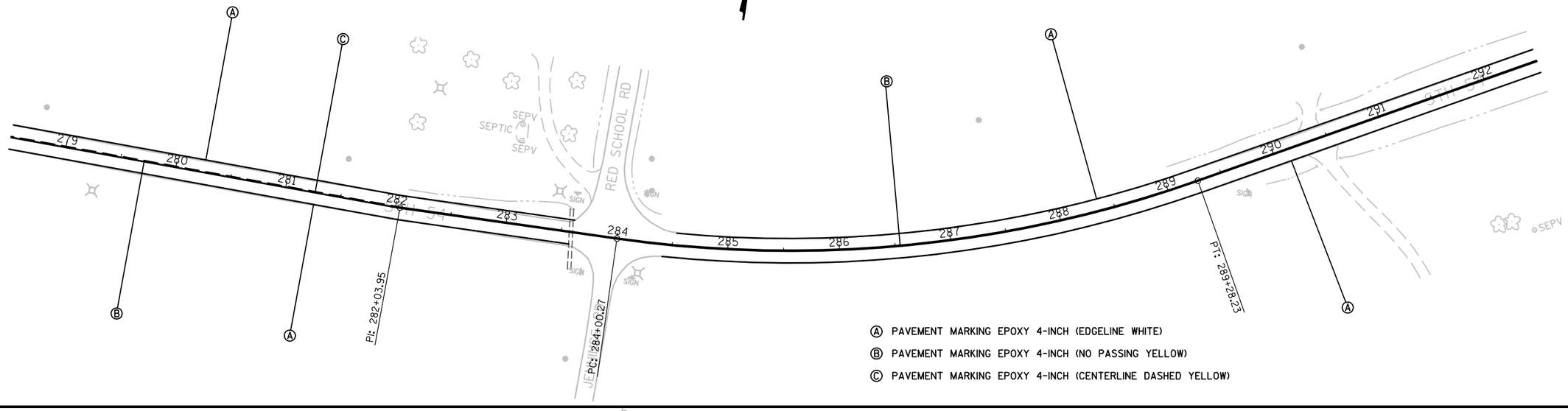

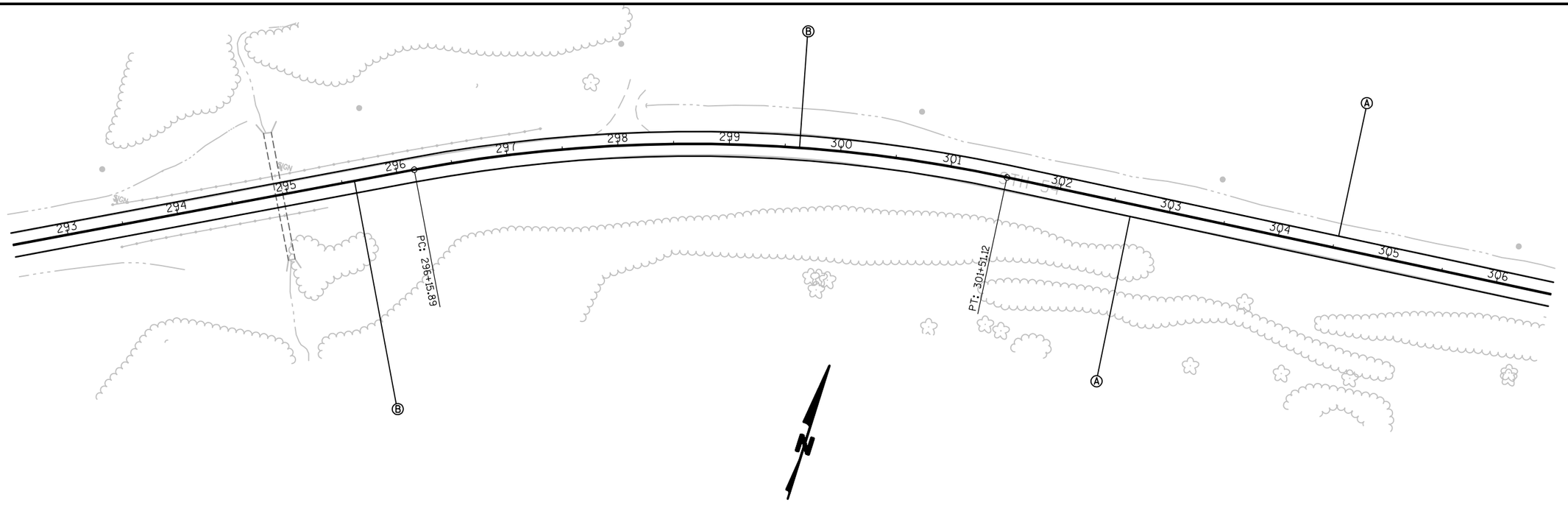

PROJECT NO: 7550-00-60	HWY: STH54	COUNTY: JACKSON	PAVEMENT MARKING	SHEET NO: 54	E

2

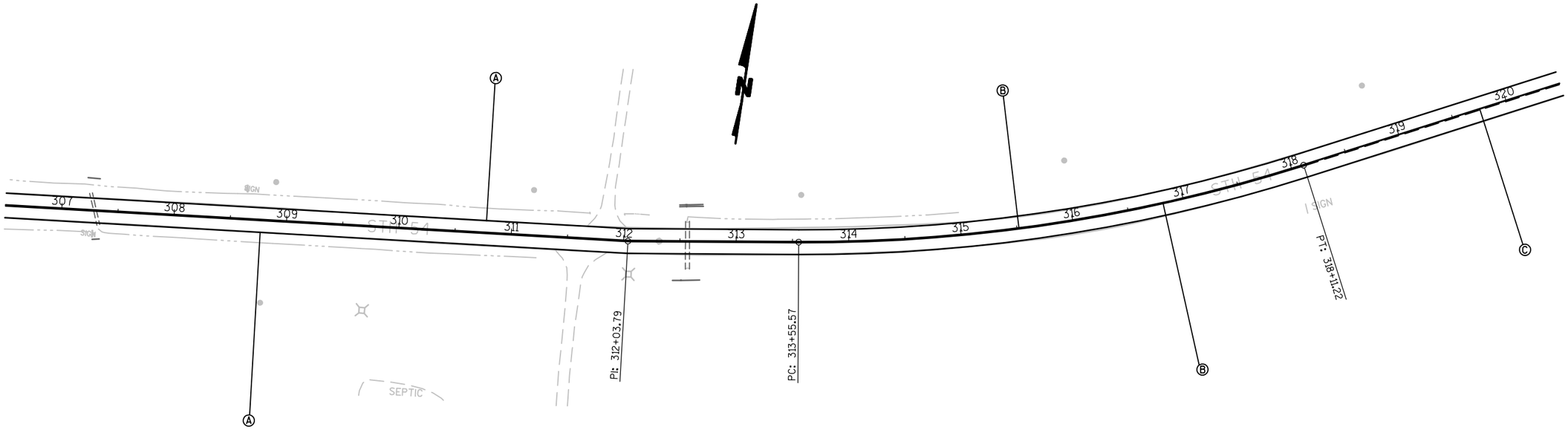

Ⓐ PAVEMENT MARKING EPOXY 4-INCH (EDGELINE WHITE)

Ⓑ PAVEMENT MARKING EPOXY 4-INCH (NO PASSING YELLOW)

Ⓒ PAVEMENT MARKING EPOXY 4-INCH (CENTERLINE DASHED YELLOW)

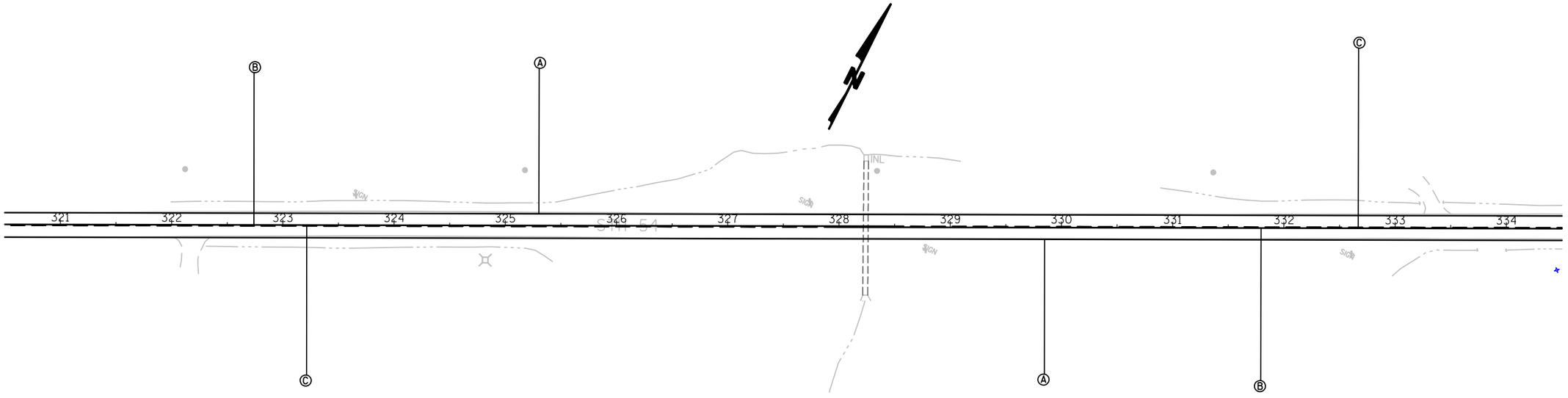

PROJECT NO: 7550-00-60	HWY: STH54	COUNTY: JACKSON	PAVEMENT MARKING	SHEET NO: 55	E

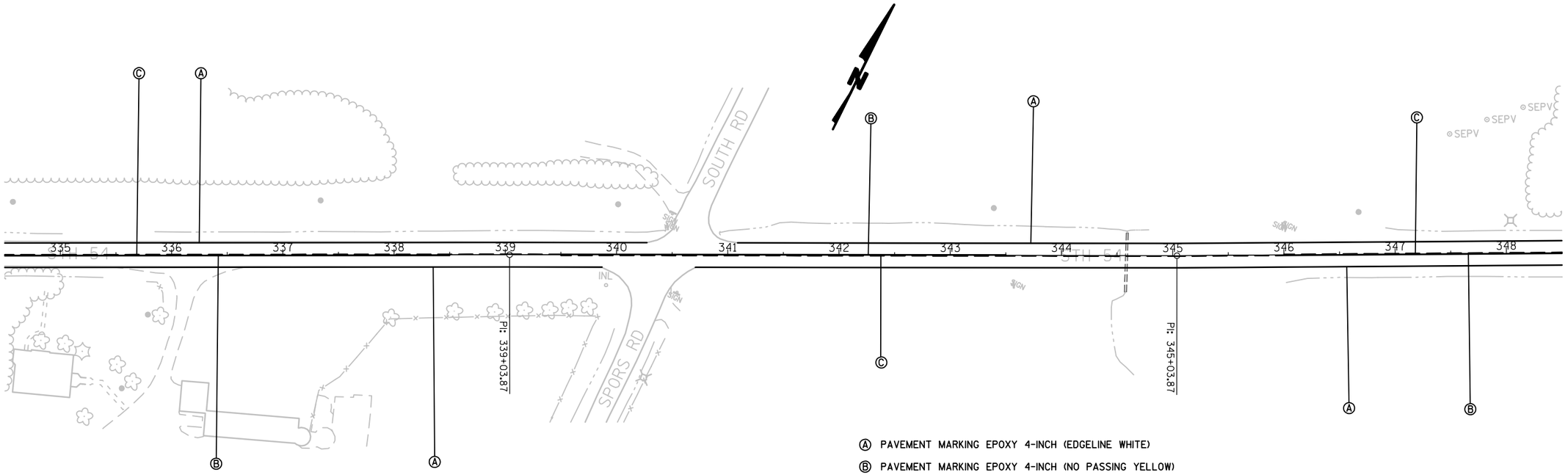

Ⓐ PAVEMENT MARKING EPOXY 4-INCH (EDGELINE WHITE)

Ⓑ PAVEMENT MARKING EPOXY 4-INCH (NO PASSING YELLOW)

Ⓒ PAVEMENT MARKING EPOXY 4-INCH (CENTERLINE DASHED YELLOW)

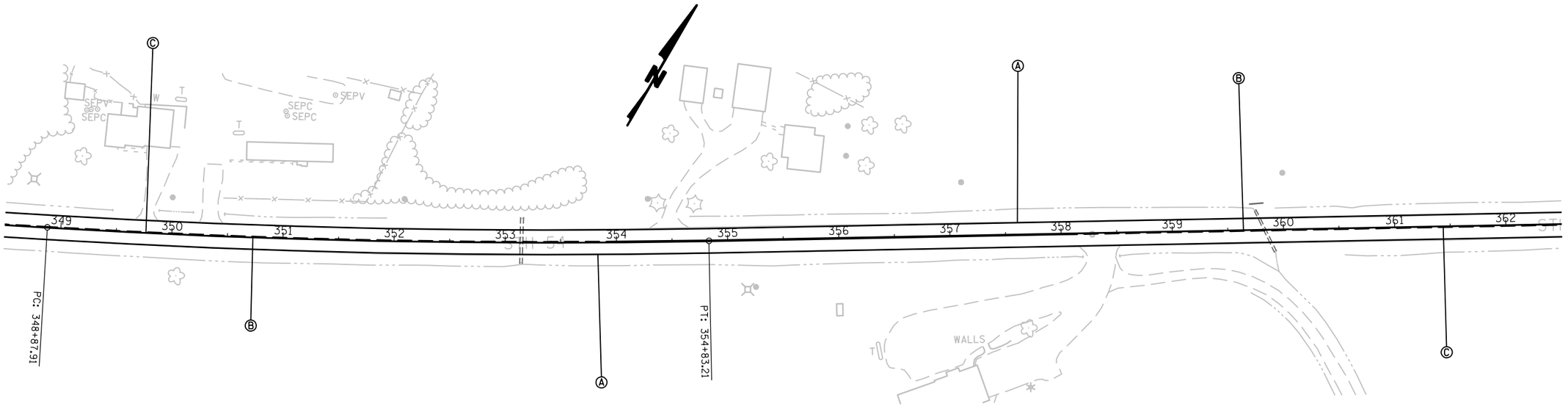

PROJECT NO: 7550-00-60	HWY: STH54	COUNTY: JACKSON	PAVEMENT MARKING	SHEET NO: 56	E

2

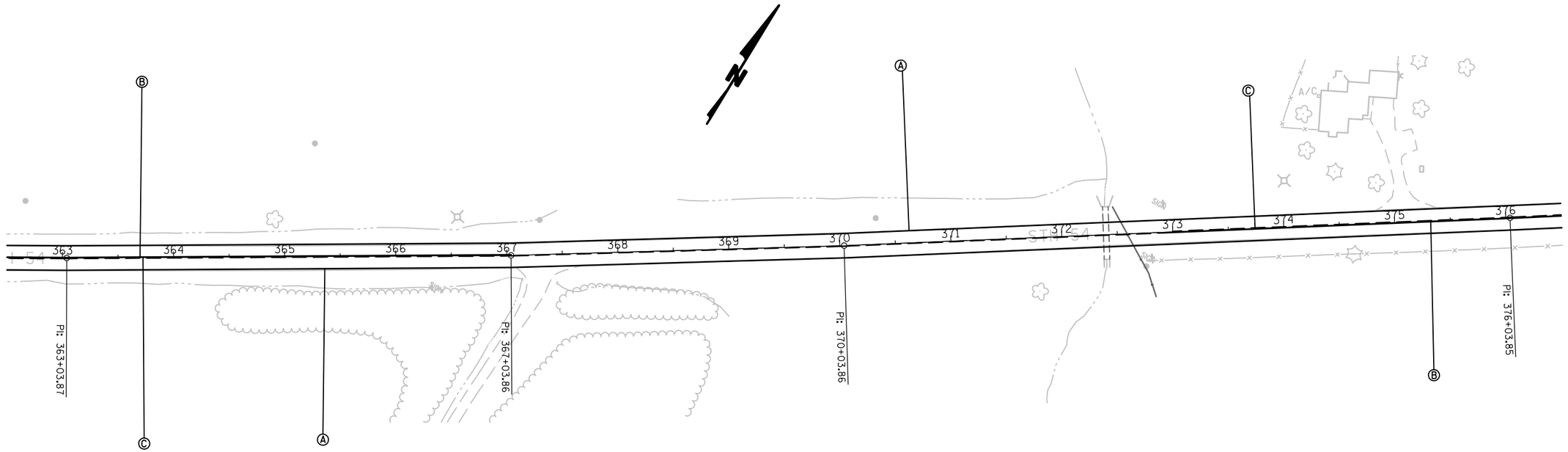

Ⓐ PAVEMENT MARKING EPOXY 4-INCH (EDGELINE WHITE)

Ⓑ PAVEMENT MARKING EPOXY 4-INCH (NO PASSING YELLOW)

Ⓒ PAVEMENT MARKING EPOXY 4-INCH (CENTERLINE DASHED YELLOW)

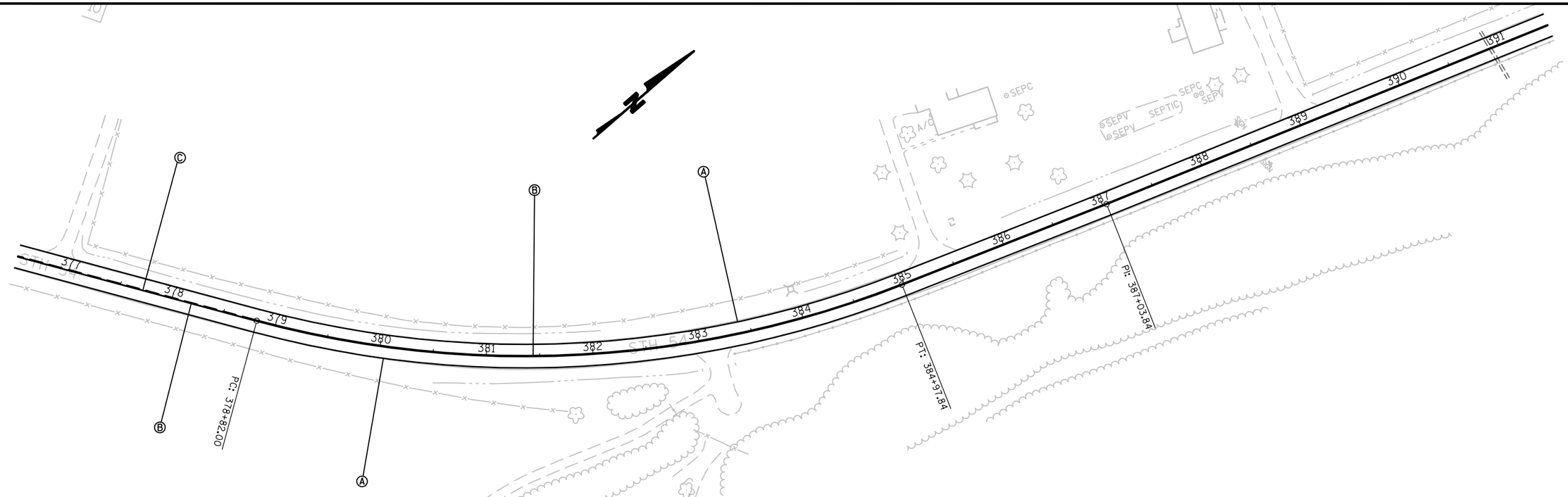

PROJECT NO: 7550-00-60	HWY: STH54	COUNTY: JACKSON	PAVEMENT MARKING	SHEET NO: 57	E

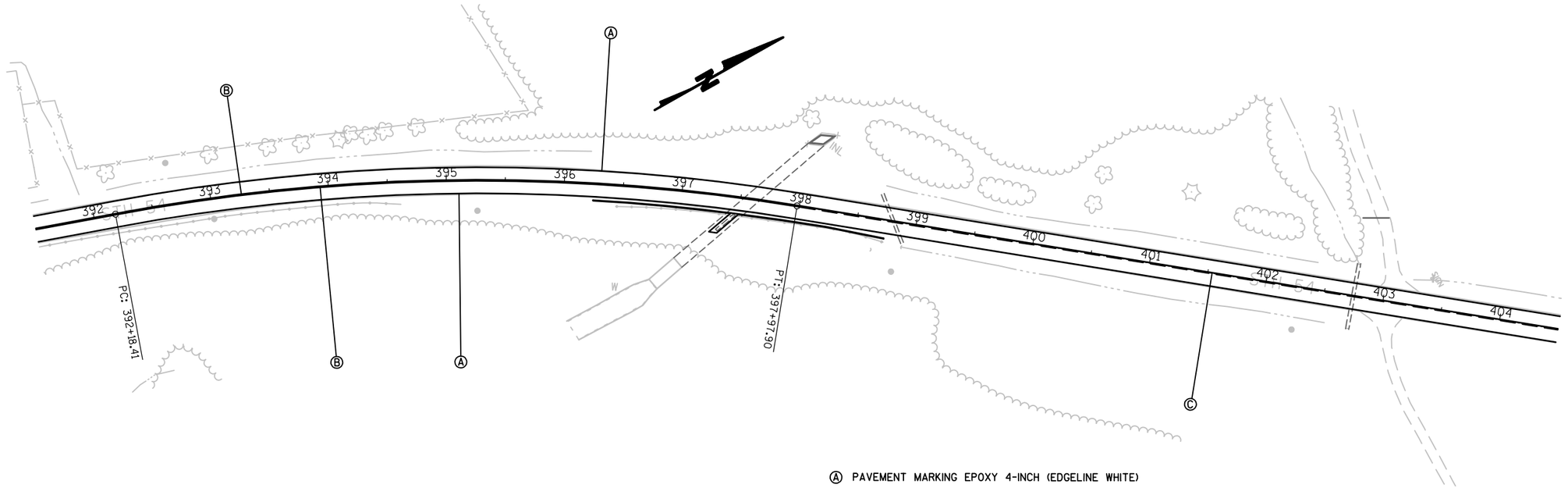

Ⓐ PAVEMENT MARKING EPOXY 4-INCH (EDGELINE WHITE)
Ⓑ PAVEMENT MARKING EPOXY 4-INCH (NO PASSING YELLOW)
Ⓒ PAVEMENT MARKING EPOXY 4-INCH (CENTERLINE DASHED YELLOW)

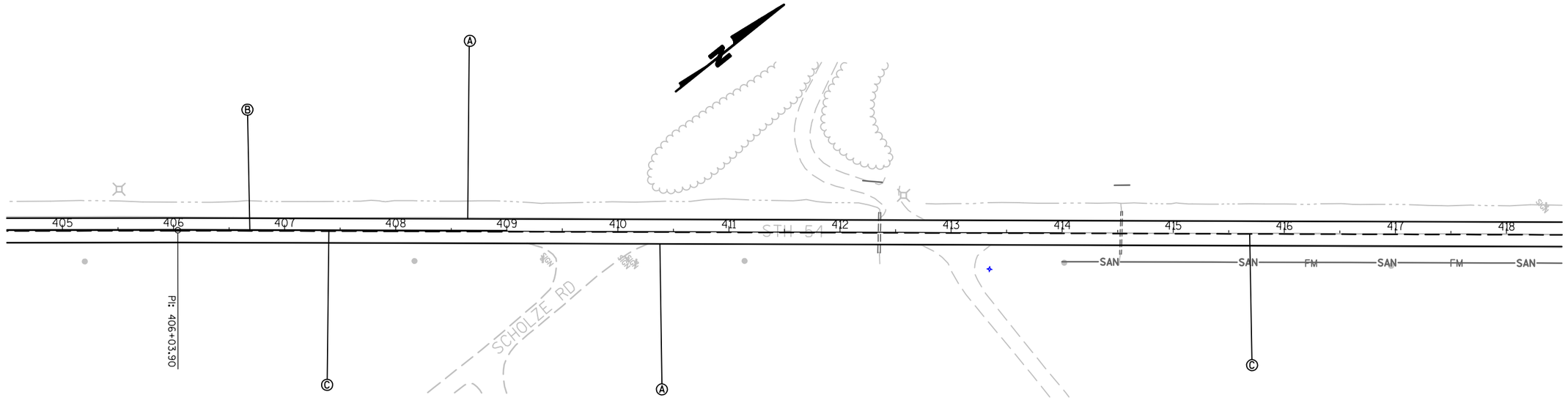

PROJECT NO: 7550-00-60	HWY: STH54	COUNTY: JACKSON	PAVEMENT MARKING	SHEET NO: 58	E

FILE NAME : 024515_PM PLOT DATE : 21 FEB 2014 09:48:28 PLOT BY : GADDK PLOT NAME : PLOT SCALE : 1:1

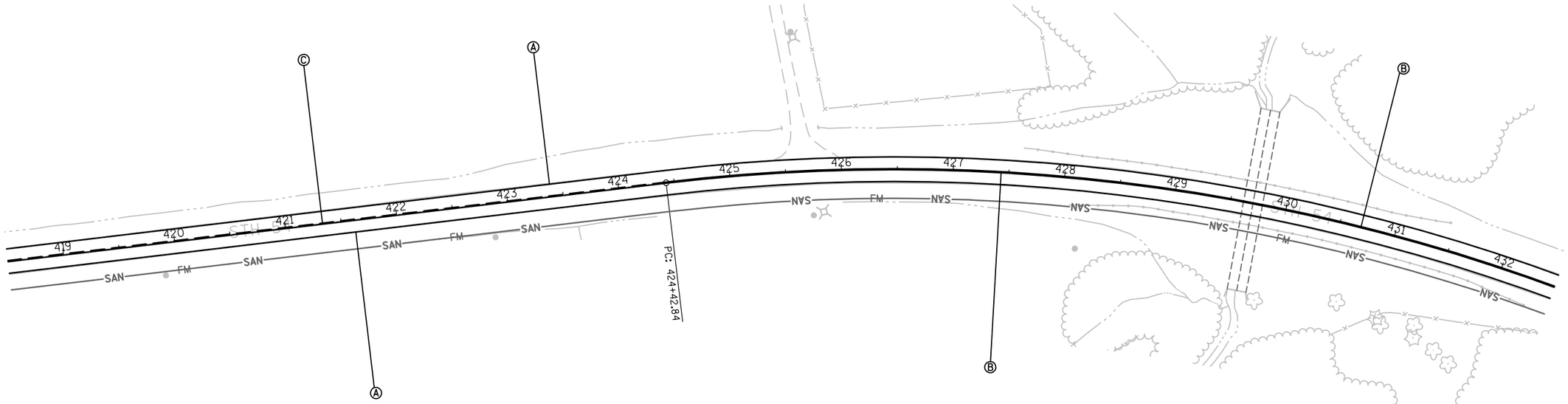

Ⓐ PAVEMENT MARKING EPOXY 4-INCH (EDGELINE WHITE)

Ⓑ PAVEMENT MARKING EPOXY 4-INCH (NO PASSING YELLOW)

Ⓒ PAVEMENT MARKING EPOXY 4-INCH (CENTERLINE DASHED YELLOW)

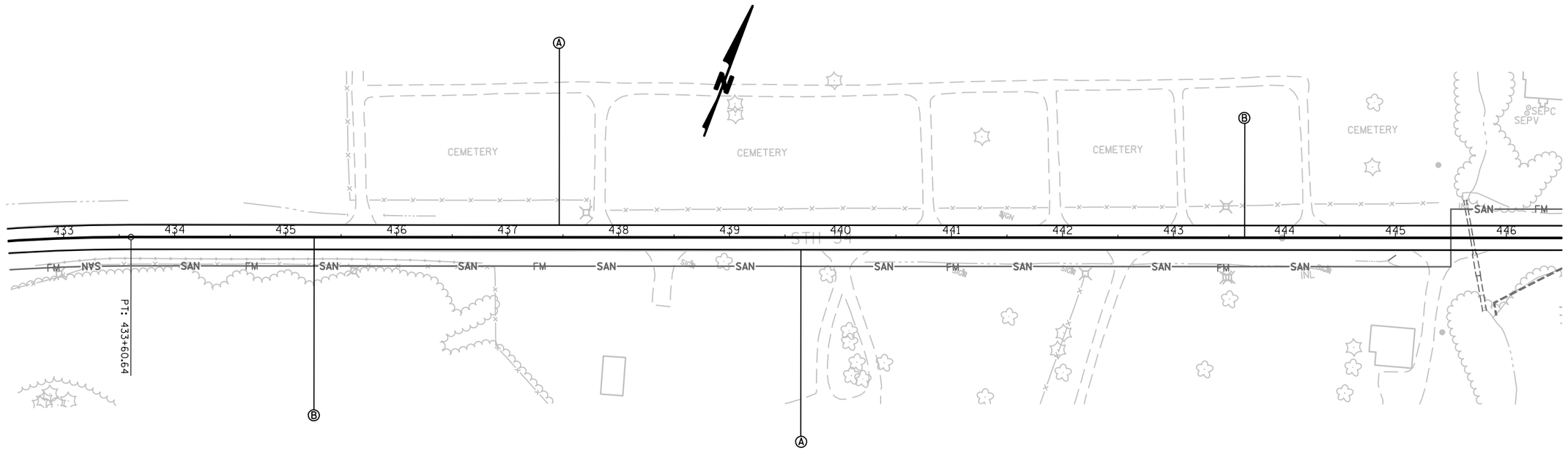

PROJECT NO: 7550-00-60	HWY: STH54	COUNTY: JACKSON	PAVEMENT MARKING	SHEET NO: 59	E

2

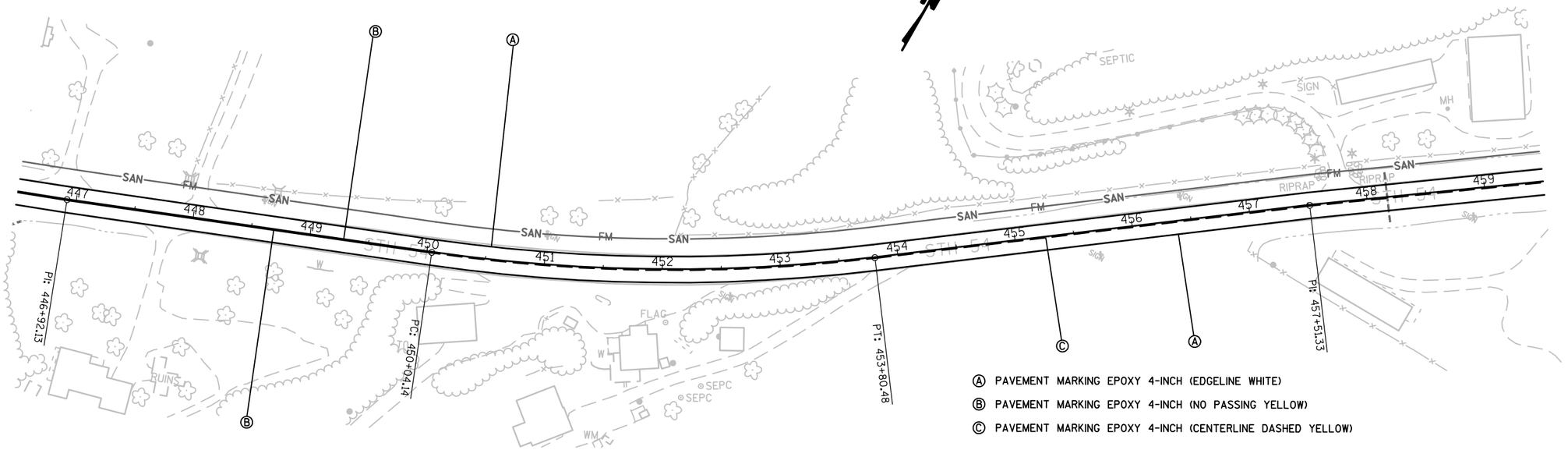

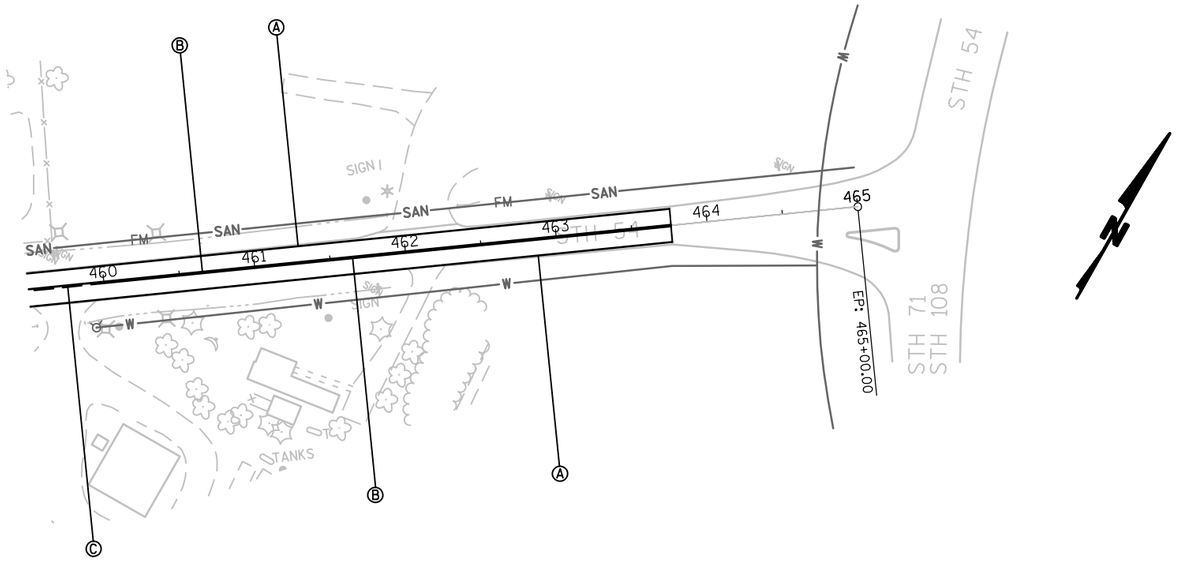

PROJECT NO: 7550-00-60	HWY: STH54	COUNTY: JACKSON	PAVEMENT MARKING	SHEET NO: 60	E

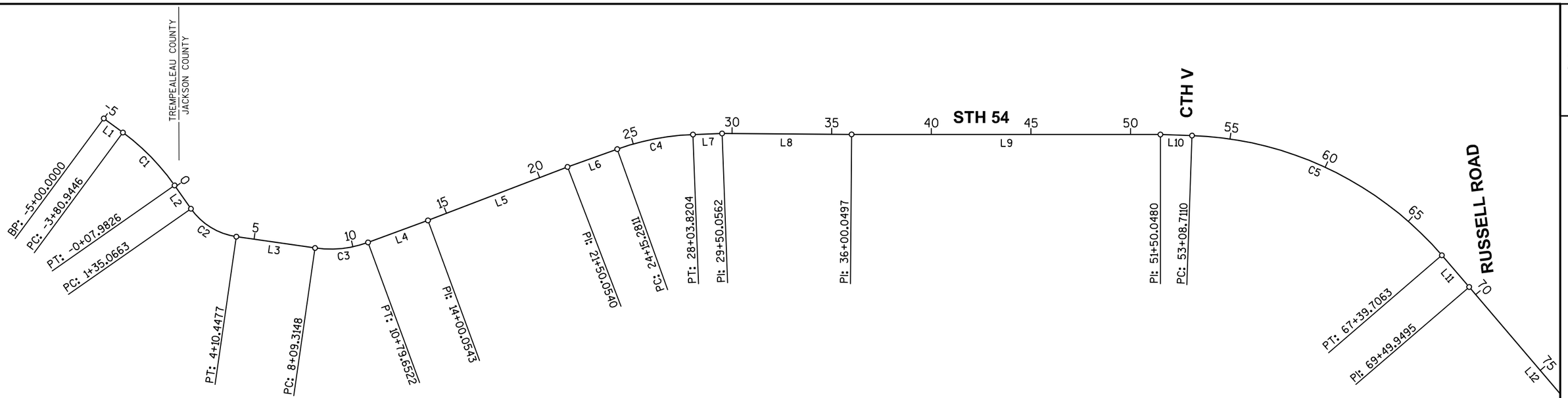

Line Table: STH 54 Alignment				
Line #	Length	Direction	Start Point	End Point
L1	119.06	S53° 38' 05.45"E	(7365.49,24989.37)	(7461.36,24918.77)
L2	143.05	S34° 59' 12.54"E	(7720.75,24653.07)	(7802.77,24535.88)
L3	398.87	S81° 48' 05.97"E	(8030.84,24395.54)	(8425.63,24338.66)
L4	320.40	N69° 48' 46.50"E	(8691.75,24366.60)	(8992.47,24477.17)
L5	750.00	N69° 00' 40.93"E	(8992.47,24477.17)	(9692.70,24745.81)
L6	265.23	N70° 17' 54.30"E	(9692.70,24745.81)	(9942.41,24835.22)
L7	146.24	N87° 52' 35.10"E	(10322.42,24908.49)	(10468.56,24913.91)
L8	649.99	S89° 35' 16.48"E	(10468.56,24913.91)	(11118.54,24909.23)
L9	1550.00	S89° 59' 05.11"E	(11118.54,24909.23)	(12668.53,24908.82)
L10	158.66	S88° 02' 03.29"E	(12668.53,24908.82)	(12827.10,24903.38)
L11	210.24	S40° 43' 20.68"E	(14081.04,24302.01)	(14218.20,24142.67)
L12	1211.32	S40° 22' 34.46"E	(14218.20,24142.67)	(15002.90,23219.87)

NOTE - THE ALIGNMENT SHOWN IS A 'STICK DIAGRAM' APPROXIMATING THE CENTERLINE OF EXISTING PAVEMENT, AS EXTRACTED FROM AERIAL MAPPING. IT IS NOT BASED ON A GROUND SURVEY, AND SHOULD NOT BE USED TO DETERMINE RIGHT-OF-WAY LIMITS.

Curve Table: STH 54 Alignment						
Curve #	Radius	Length	Chord Direction	Start Point	End Point	PI
C1	1145.92	372.96	S44° 18' 38.99"E	(7461.36,24918.77)	(7720.75,24653.07)	(7612.87,24807.22)
C2	337.03	275.38	S58° 23' 39.25"E	(7802.77,24535.88)	(8030.84,24395.54)	(7886.43,24416.34)
C3	545.67	270.34	N84° 00' 20.26"E	(8425.63,24338.66)	(8691.75,24366.60)	(8562.22,24318.98)
C4	1266.45	388.54	N79° 05' 14.70"E	(9942.41,24835.22)	(10322.42,24908.49)	(10126.75,24901.23)
C5	1732.97	1431.00	S64° 22' 41.98"E	(12827.10,24903.38)	(14081.04,24302.01)	(13585.79,24877.34)

CL CURVE DATA
CURVE 1

PI	-1+92.800
N	24807.217
E	7612.869
DELTA	18°38'53"
D	05°00'00"
T	188.145'
L	372.962'
R	1145.920'
LC	371.318'
LCB	N44°18'39"W

CL CURVE DATA
CURVE 2

PI	2+80.966
N	24416.343
E	7886.429
DELTA	46°48'53"
D	17°00'00"
T	145.899'
L	275.381'
R	337.034'
LC	267.785'
LCB	N58°23'39"W

CL CURVE DATA
CURVE 3

PI	9+47.318
N	24318.979
E	8562.220
DELTA	28°23'08"
D	10°30'00"
T	138.003'
L	270.337'
R	545.674'
LC	267.581'
LCB	S84°00'20"W

CL CURVE DATA
CURVE 4

PI	26+11.089
N	24901.231
E	10126.751
DELTA	17°34'41"
D	04°31'27"
T	195.808'
L	388.539'
R	1266.450'
LC	387.017'
LCB	S79°05'15"W

CL CURVE DATA
CURVE 5

PI	60+67.842
N	24877.335
E	13585.788
DELTA	47°18'43"
D	03°18'22"
T	759.131'
L	1430.995'
R	1732.970'
LC	1390.685'
LCB	N64°22'42"W

N

PROJECT NO: 7550-00-30	HWY: STH 54	COUNTY: JACKSON	ALIGNMENT DIAGRAM	SHEET 61 E

Line Table: STH 54 Alignment				
Line #	Length	Direction	Start Point	End Point
L12	1211.32	S40° 22' 34.46"E	(14218.20,24142.67)	(15002.90,23219.87)
L13	303.19	N56° 58' 30.40"E	(16619.80,22918.13)	(16874.00,23083.36)
L14	462.96	N78° 30' 31.67"E	(17864.60,23488.79)	(18318.28,23581.02)
L15	626.14	N78° 52' 22.01"E	(18318.28,23581.02)	(18932.65,23701.86)
L16	588.15	N69° 42' 23.81"E	(19688.16,23914.37)	(20239.80,24118.36)
L17	217.07	N68° 26' 49.16"E	(20239.80,24118.36)	(20441.69,24198.10)
L18	211.92	N46° 51' 22.57"E	(21089.16,24608.18)	(21243.79,24753.10)
L19	874.80	N46° 01' 35.18"E	(21243.79,24753.10)	(21873.35,25360.50)

NOTE - THE ALIGNMENT SHOWN IS A 'STICK DIAGRAM' APPROXIMATING THE CENTERLINE OF EXISTING PAVEMENT, AS EXTRACTED FROM AERIAL MAPPING. IT IS NOT BASED ON A GROUND SURVEY, AND SHOULD NOT BE USED TO DETERMINE RIGHT-OF-WAY LIMITS.

Curve Table: STH 54 Alignment						
Curve #	Radius	Length	Chord Direction	Start Point	End Point	PI
C6	1432.39	736.01	S55° 05' 47.08"E	(15002.90,23219.87)	(15599.89,22803.35)	(15246.68,22933.19)
C7	1145.92	1064.17	N83° 34' 45.35"E	(15599.89,22803.35)	(16619.80,22918.13)	(16138.59,22605.33)
C8	2864.79	1076.68	N67° 44' 31.04"E	(16874.00,23083.36)	(17864.60,23488.79)	(17330.75,23380.26)
C9	4911.07	785.67	N74° 17' 22.91"E	(18932.65,23701.86)	(19688.16,23914.37)	(19318.92,23777.83)
C10	2045.92	770.96	N57° 39' 05.86"E	(20441.69,24198.10)	(21089.16,24608.18)	(20804.52,24341.41)

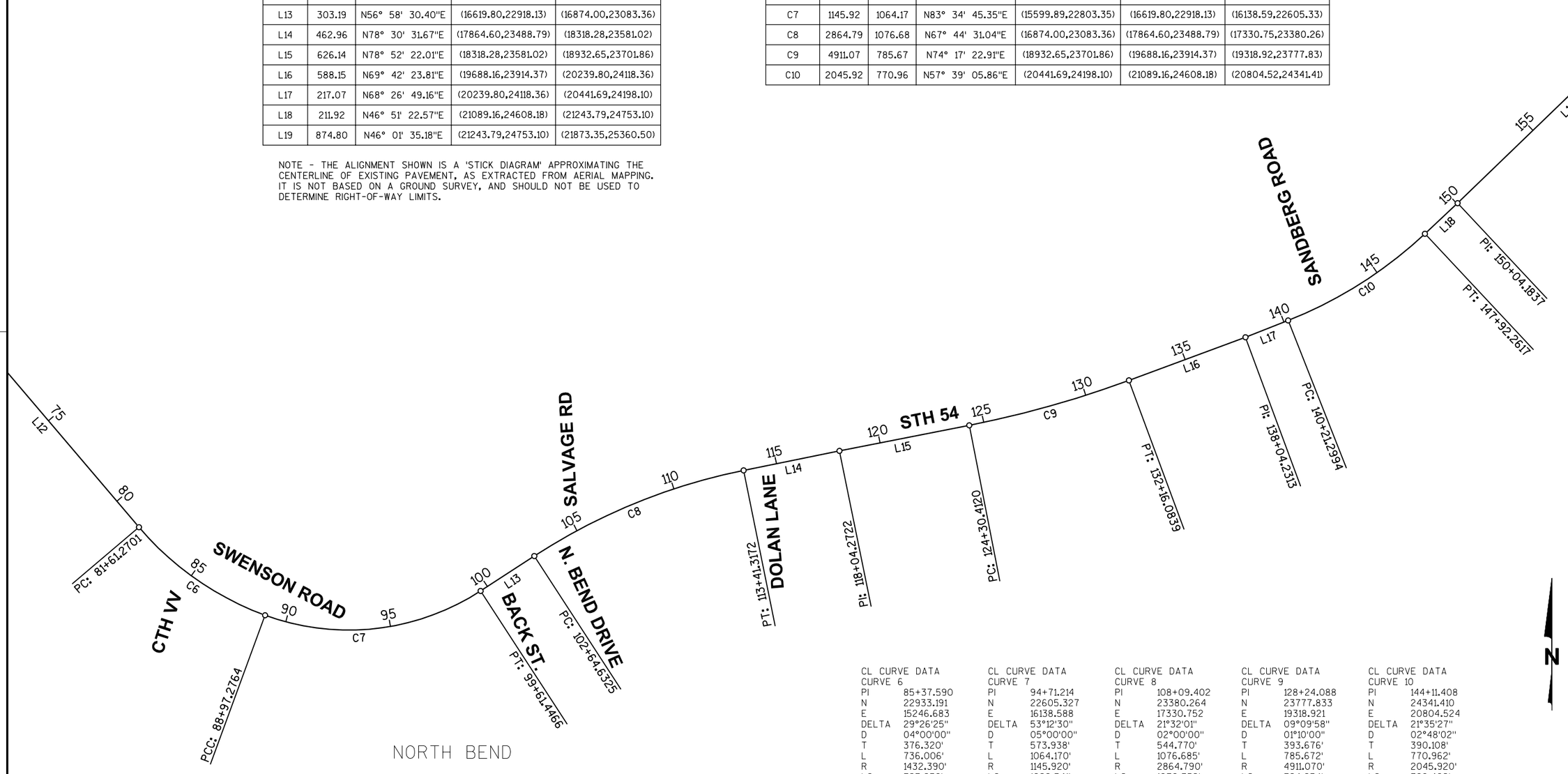

CL CURVE DATA CURVE 6	
PI	85+37.590
N	22933.191
E	15246.683
DELTA	29°26'25"
D	04°00'00"
T	376.320'
L	736.006'
R	1432.390'
LC	727.936'
LCB	N55°05'47"W

CL CURVE DATA CURVE 7	
PI	94+71.214
N	22605.327
E	16138.588
DELTA	53°12'30"
D	05°00'00"
T	573.938'
L	1064.170'
R	1145.920'
LC	1026.341'
LCB	S83°34'45"W

CL CURVE DATA CURVE 8	
PI	108+09.402
N	23380.264
E	17330.752
DELTA	21°32'01"
D	02°00'00"
T	544.770'
L	1076.685'
R	2864.790'
LC	1070.359'
LCB	S67°44'31"W

CL CURVE DATA CURVE 9	
PI	128+24.088
N	23777.833
E	19318.921
DELTA	09°09'58"
D	01°10'00"
T	393.676'
L	785.672'
R	4911.070'
LC	784.834'
LCB	S74°17'23"W

CL CURVE DATA CURVE 10	
PI	144+11.408
N	24341.410
E	20804.524
DELTA	21°35'27"
D	02°48'02"
T	390.108'
L	770.962'
R	2045.920'
LC	766.409'
LCB	S57°39'06"W

PROJECT NO: 7550-00-30	HWY: STH 54	COUNTY: JACKSON	ALIGNMENT DIAGRAM	SHEET 62 E

2

Line Table: STH 54 Alignment				
Line #	Length	Direction	Start Point	End Point
L19	874.80	N46° 01' 35.18"E	(21243.79,24753.10)	(21873.35,25360.50)
L20	413.23	N83° 50' 05.04"E	(24115.25,26409.22)	(24526.09,26453.60)
L21	843.07	N89° 19' 33.37"E	(25087.33,26487.14)	(25930.34,26497.06)
L22	283.81	S89° 40' 36.15"E	(25930.34,26497.06)	(26214.15,26495.45)
L23	2367.65	S80° 56' 45.70"E	(26793.68,26447.92)	(29131.83,26075.34)

Curve Table: STH 54 Alignment						
Curve #	Radius	Length	Chord Direction	Start Point	End Point	PI
C11	3819.71	2520.55	N64° 55' 50.11"E	(21873.35,25360.50)	(24115.25,26409.22)	(22814.73,26268.74)
C12	5868.76	562.46	N86° 34' 49.21"E	(24526.09,26453.60)	(25087.33,26487.14)	(24805.91,26483.83)
C13	3819.71	582.04	S85° 18' 40.92"E	(26214.15,26495.45)	(26793.68,26447.92)	(26505.73,26493.81)
C14	1400.22	756.99	N83° 33' 58.39"E	(29131.83,26075.34)	(29874.93,26159.13)	(29514.99,26014.28)

NOTE - THE ALIGNMENT SHOWN IS A 'STICK DIAGRAM' APPROXIMATING THE CENTERLINE OF EXISTING PAVEMENT, AS EXTRACTED FROM AERIAL MAPPING. IT IS NOT BASED ON A GROUND SURVEY, AND SHOULD NOT BE USED TO DETERMINE RIGHT-OF-WAY LIMITS.

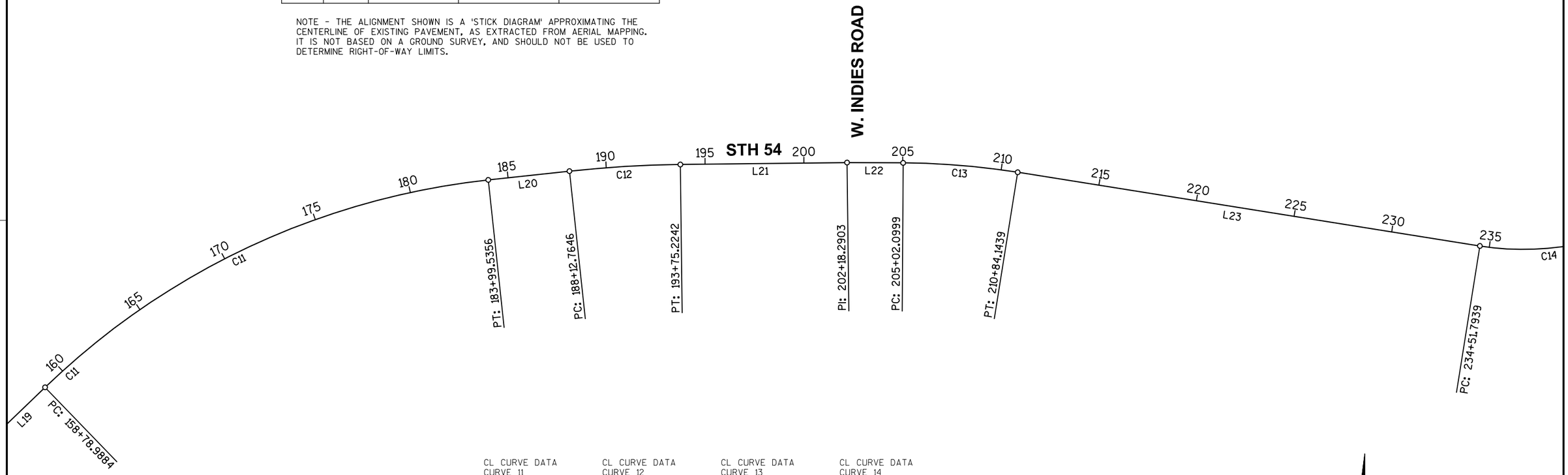

CL CURVE DATA	
CURVE 11	
PI	171+87.076
N	26268.736
E	22814.730
DELTA	37°48'30"
D	01°30'00"
T	1308.088'
L	2520.547'
R	3819.710'
LC	2475.064'
LCB	S64°55'50"W

CL CURVE DATA	
CURVE 12	
PI	190+94.210
N	26483.826
E	24805.909
DELTA	05°29'28"
D	00°58'35"
T	281.445'
L	562.460'
R	5868.760'
LC	562.244'
LCB	S86°34'49"W

CL CURVE DATA	
CURVE 13	
PI	207+93.686
N	26493.809
E	26505.730
DELTA	08°43'50"
D	01°30'00"
T	291.586'
L	582.044'
R	3819.710'
LC	581.481'
LCB	N85°18'41"W

CL CURVE DATA	
CURVE 14	
PI	238+39.787
N	26014.282
E	29514.992
DELTA	30°58'32"
D	04°05'31"
T	387.993'
L	756.993'
R	1400.220'
LC	747.808'
LCB	S83°33'58"W

PROJECT NO: 7550-00-30	HWY: STH 54	COUNTY: JACKSON	ALIGNMENT DIAGRAM	SHEET 63 E

2

Line Table: STH 54 Alignment				
Line #	Length	Direction	Start Point	End Point
L24	195.17	N68° 04' 42.49"E	(29874.93,26159.13)	(30055.99,26232.00)
L25	812.23	N67° 27' 35.80"E	(30055.99,26232.00)	(30806.18,26543.35)
L26	321.20	S62° 09' 38.24"E	(31448.64,26513.62)	(31732.66,26363.62)
L27	133.85	S87° 35' 08.24"E	(32228.95,26229.46)	(32362.69,26223.82)
L28	550.00	S88° 58' 52.99"E	(32362.69,26223.82)	(32912.60,26214.04)
L29	800.02	S88° 16' 40.25"E	(32912.60,26214.04)	(33712.26,26190.00)
L30	196.32	N89° 30' 32.73"E	(33712.26,26190.00)	(33908.57,26191.68)
L31	687.66	N61° 56' 31.48"E	(34415.31,26320.61)	(35022.15,26644.06)
L32	1052.68	N84° 41' 21.01"E	(35531.48,26796.71)	(36579.64,26894.15)
L33	151.78	N81° 44' 45.24"E	(36579.64,26894.15)	(36729.85,26915.94)

NOTE - THE ALIGNMENT SHOWN IS A 'STICK DIAGRAM' APPROXIMATING THE CENTERLINE OF EXISTING PAVEMENT, AS EXTRACTED FROM AERIAL MAPPING. IT IS NOT BASED ON A GROUND SURVEY, AND SHOULD NOT BE USED TO DETERMINE RIGHT-OF-WAY LIMITS.

Curve Table: STH 54 Alignment						
Curve #	Radius	Length	Chord Direction	Start Point	End Point	PI
C14	1400.22	756.99	N83° 33' 58.39"E	(29131.83,26075.34)	(29874.93,26159.13)	(29514.99,26014.28)
C15	755.55	664.34	S87° 21' 01.22"E	(30806.18,26543.35)	(31448.64,26513.62)	(31134.40,26679.57)
C16	1168.11	518.35	S74° 52' 23.24"E	(31732.66,26363.62)	(32228.95,26229.46)	(31965.68,26240.56)
C17	1097.32	527.96	N75° 43' 32.10"E	(33908.57,26191.68)	(34415.31,26320.61)	(34177.76,26193.99)
C18	1348.14	535.23	N73° 18' 56.24"E	(35022.15,26644.06)	(35531.48,26796.71)	(35261.46,26771.61)
C19	1452.30	455.65	N72° 45' 27.99"E	(36729.85,26915.94)	(36957.18,26948.92)	

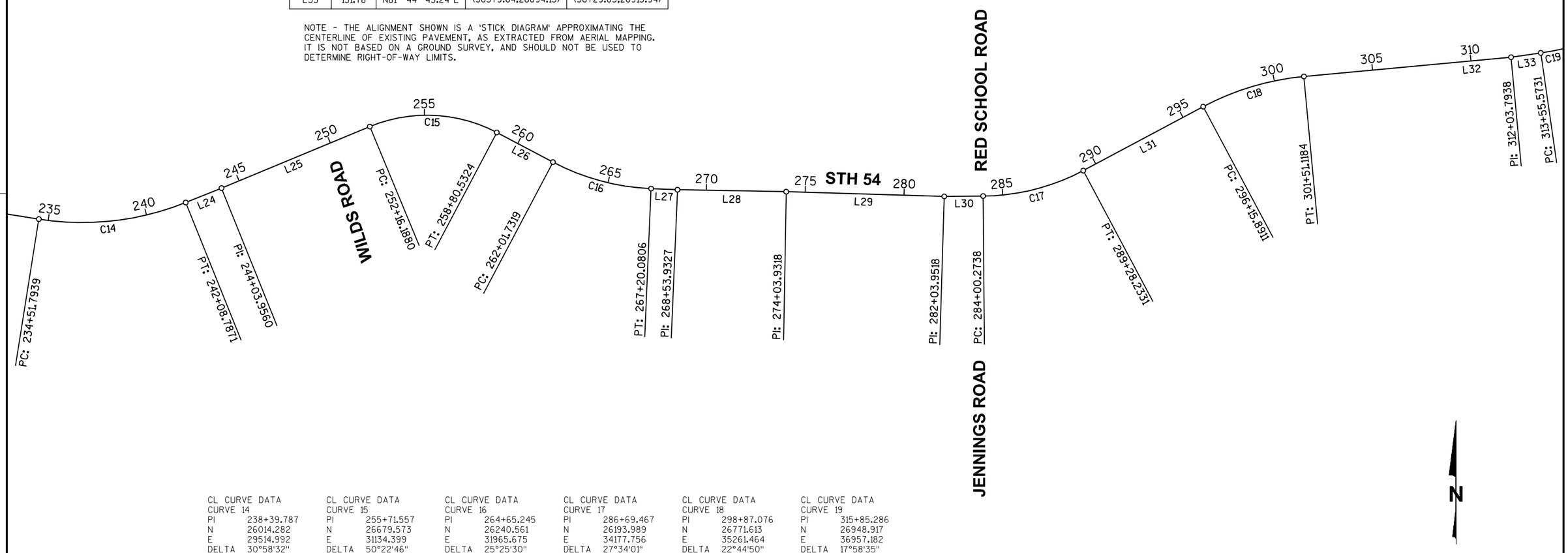

CL CURVE DATA CURVE 14		CL CURVE DATA CURVE 15		CL CURVE DATA CURVE 16		CL CURVE DATA CURVE 17		CL CURVE DATA CURVE 18		CL CURVE DATA CURVE 19	
PI	238+39.787	PI	255+71.557	PI	264+65.245	PI	286+69.467	PI	298+87.076	PI	315+85.286
N	26014.282	N	26679.573	N	26240.561	N	26193.989	N	26771.613	N	26948.917
E	29514.992	E	31134.399	E	31965.675	E	34177.756	E	35261.464	E	36957.182
DELTA	30°58'32"	DELTA	50°22'46"	DELTA	25°25'30"	DELTA	27°34'01"	DELTA	22°44'50"	DELTA	17°58'35"
D	04°05'31"	D	07°34'00"	D	04°54'18"	D	05°13'17"	D	04°15'00"	D	03°56'43"
T	387.993'	T	355.369'	T	263.513'	T	269.193'	T	271.185'	T	229.713'
L	756.993'	L	664.344'	L	518.349'	L	527.959'	L	535.227'	L	455.652'
R	1400.220'	R	755.549'	R	1168.110'	R	1097.320'	R	1348.140'	R	1452.300'
LC	747.808'	LC	643.149'	LC	514.106'	LC	522.882'	LC	531.719'	LC	453.785'
LCB	S83°33'58"W	LCB	N87°21'01"W	LCB	N74°52'23"W	LCB	S75°43'32"W	LCB	S73°18'56"W	LCB	S72°45'28"W

PROJECT NO: 7550-00-30	HWY: STH 54	COUNTY: JACKSON	ALIGNMENT DIAGRAM	SHEET 64 E

Line Table: STH 54 Alignment				
Line #	Length	Direction	Start Point	End Point
L33	151.78	N81° 44' 45.24"E	(36579.64,26894.15)	(36729.85,26915.94)
L34	2092.64	N63° 46' 10.73"E	(37163.24,27050.45)	(39040.39,27975.35)
L35	600.00	N63° 54' 56.23"E	(39040.39,27975.35)	(39579.28,28239.17)
L36	384.04	N63° 24' 57.97"E	(39579.28,28239.17)	(39922.72,28411.03)
L37	820.66	N58° 53' 24.50"E	(40444.01,28698.17)	(41146.64,29122.19)
L38	399.99	N58° 19' 26.65"E	(41146.64,29122.19)	(41487.05,29332.23)
L39	300.00	N56° 58' 54.22"E	(41487.05,29332.23)	(41738.60,29495.70)
L40	600.00	N56° 16' 40.52"E	(41738.60,29495.70)	(42237.64,29828.80)
L41	278.15	N56° 01' 14.17"E	(42237.64,29828.80)	(42468.29,29984.26)
L42	206.00	N19° 27' 41.40"E	(42838.88,30463.03)	(42907.52,30657.27)
L43	514.57	N18° 52' 51.15"E	(42907.52,30657.27)	(43074.03,31144.15)

NOTE - THE ALIGNMENT SHOWN IS A 'STICK DIAGRAM' APPROXIMATING THE CENTERLINE OF EXISTING PAVEMENT, AS EXTRACTED FROM AERIAL MAPPING. IT IS NOT BASED ON A GROUND SURVEY, AND SHOULD NOT BE USED TO DETERMINE RIGHT-OF-WAY LIMITS.

Curve Table: STH 54 Alignment						
Curve #	Radius	Length	Chord Direction	Start Point	End Point	PI
C19	1452.30	455.65	N72° 45' 27.99"E	(36729.85,26915.94)	(37163.24,27050.45)	(36957.18,26948.92)
C20	7536.03	595.29	N61° 09' 11.24"E	(39922.72,28411.03)	(40444.01,28698.17)	(40189.04,28544.30)
C21	965.15	615.84	N37° 44' 27.78"E	(42468.29,29984.26)	(42838.88,30463.03)	(42732.66,30162.44)

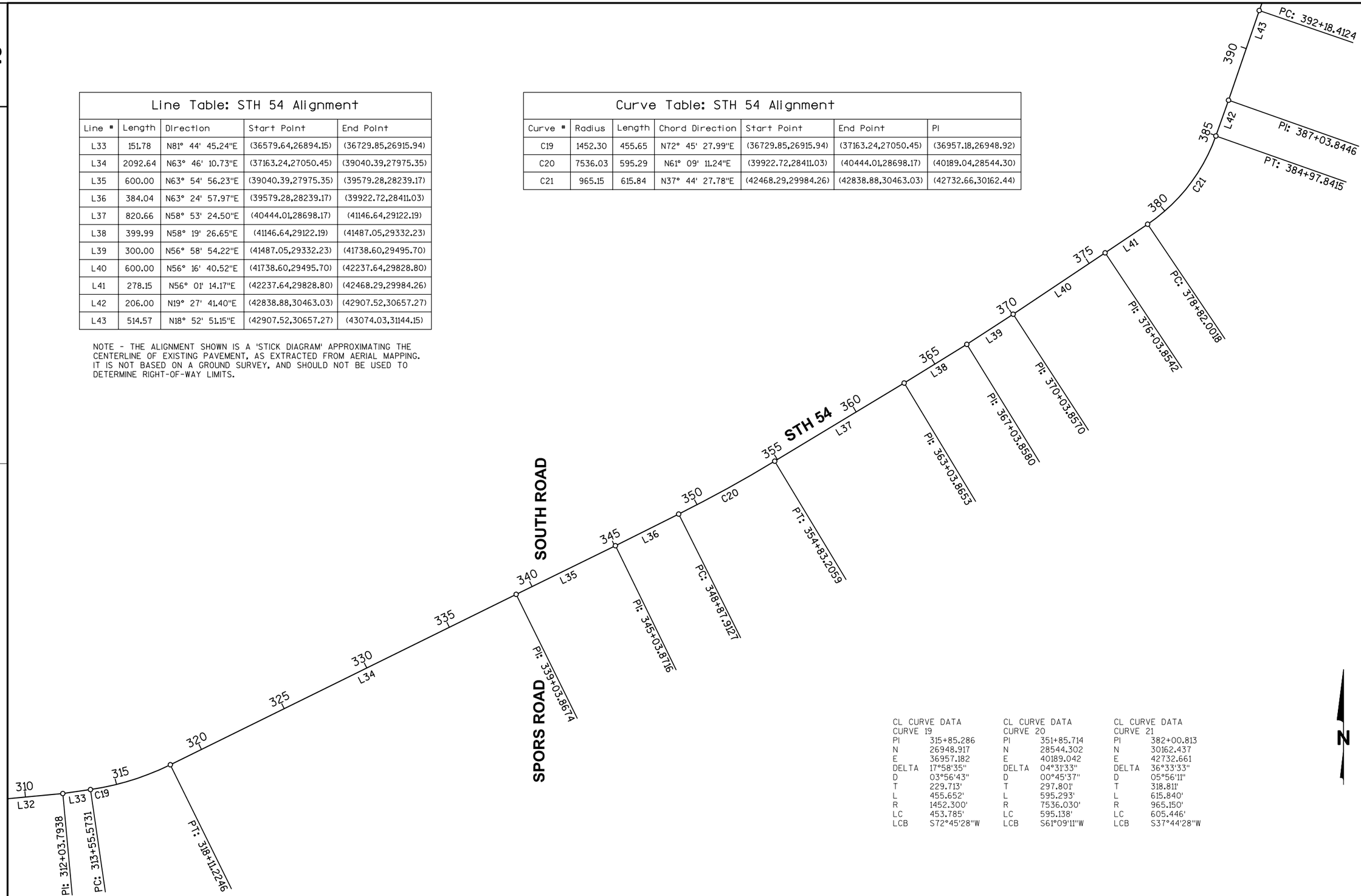

CL CURVE DATA	
CURVE 19	
PI	315+85.286
N	26948.917
E	36957.182
DELTA	17°58'35"
D	03°56'43"
T	229.713'
L	455.652'
R	1452.300'
LC	453.785'
LCB	S72°45'28"W

CL CURVE DATA	
CURVE 20	
PI	351+85.714
N	28544.302
E	40189.042
DELTA	04°31'33"
D	00°45'37"
T	297.801'
L	595.293'
R	7536.030'
LC	595.138'
LCB	S61°09'11"W

CL CURVE DATA	
CURVE 21	
PI	382+00.813
N	30162.437
E	42732.661
DELTA	36°33'33"
D	05°56'11"
T	318.811'
L	615.840'
R	965.150'
LC	605.446'
LCB	S37°44'28"W

PROJECT NO: 7550-00-30	HWY: STH 54	COUNTY: JACKSON	ALIGNMENT DIAGRAM	SHEET 65 E

Line Table: STH 54 Alignment				
Line #	Length	Direction	Start Point	End Point
L43	514.57	N18° 52' 51.15"E	(42907.52,30657.27)	(43074.03,31144.15)
L44	806.00	N38° 40' 48.65"E	(43351.64,31649.53)	(43855.37,32278.73)
L45	1838.93	N38° 57' 36.14"E	(43855.37,32278.73)	(45011.65,33708.66)
L46	1331.49	N69° 33' 13.03"E	(45747.76,34238.45)	(46995.37,34703.58)
L47	312.01	N68° 43' 31.08"E	(46995.37,34703.58)	(47286.12,34816.79)
L48	370.86	N53° 40' 18.98"E	(47614.95,34997.58)	(47913.73,35217.28)
L49	748.67	N54° 46' 34.79"E	(47913.73,35217.28)	(48525.32,35649.08)

NOTE - THE ALIGNMENT SHOWN IS A 'STICK DIAGRAM' APPROXIMATING THE CENTERLINE OF EXISTING PAVEMENT, AS EXTRACTED FROM AERIAL MAPPING. IT IS NOT BASED ON A GROUND SURVEY, AND SHOULD NOT BE USED TO DETERMINE RIGHT-OF-WAY LIMITS.

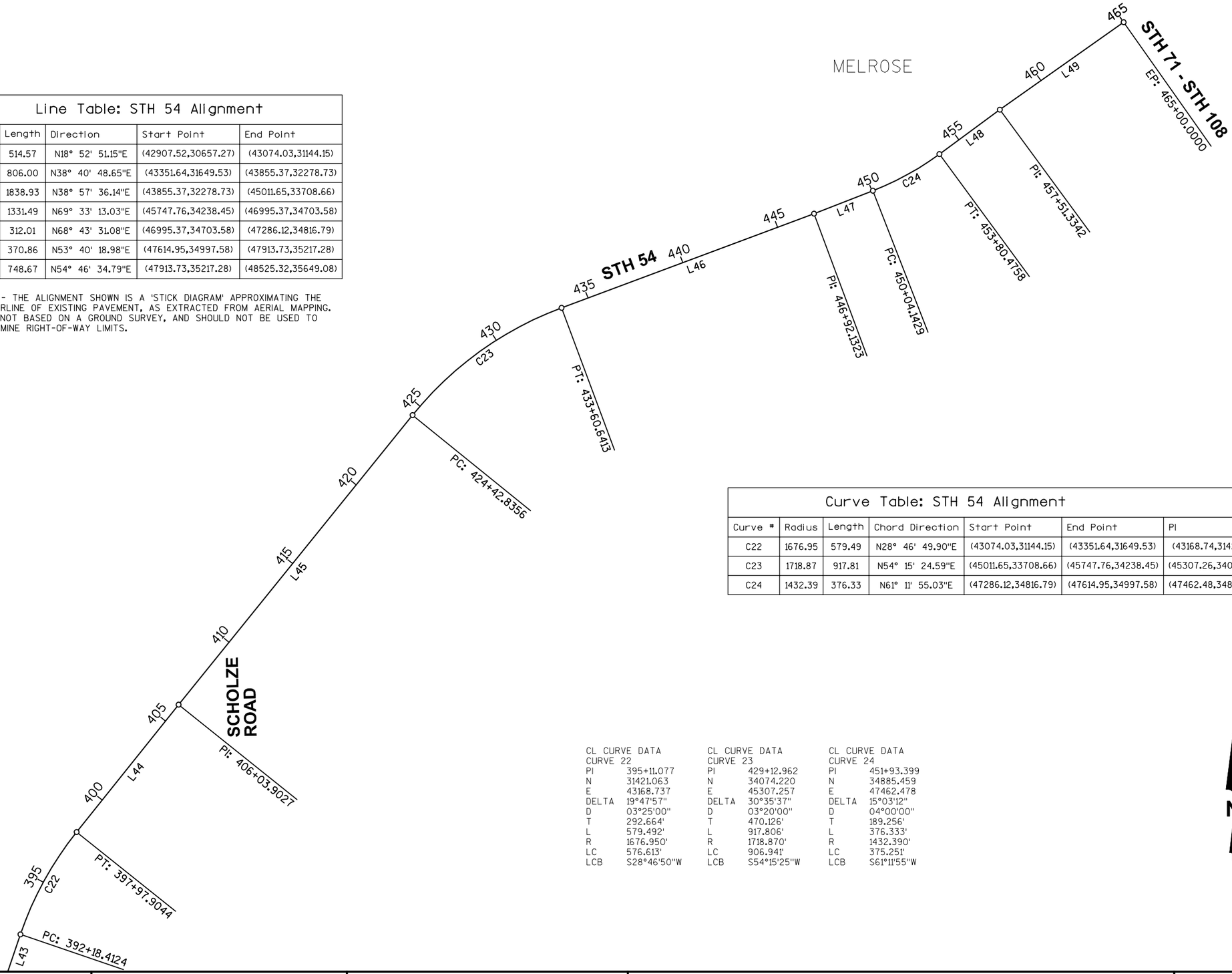

Curve Table: STH 54 Alignment						
Curve #	Radius	Length	Chord Direction	Start Point	End Point	PI
C22	1676.95	579.49	N28° 46' 49.90"E	(43074.03,31144.15)	(43351.64,31649.53)	(43168.74,31421.06)
C23	1718.87	917.81	N54° 15' 24.59"E	(45011.65,33708.66)	(45747.76,34238.45)	(45307.26,34074.22)
C24	1432.39	376.33	N61° 11' 55.03"E	(47286.12,34816.79)	(47614.95,34997.58)	(47462.48,34885.46)

CL CURVE DATA
CURVE 22

PI	395+11.077
N	31421.063
E	43168.737
DELTA	19°47'57"
D	03°25'00"
T	292.664'
L	579.492'
R	1676.950'
LC	576.613'
LCB	S28°46'50"W

CL CURVE DATA
CURVE 23

PI	429+12.962
N	34074.220
E	45307.257
DELTA	30°35'37"
D	03°20'00"
T	470.126'
L	917.806'
R	1718.870'
LC	906.941'
LCB	S54°15'25"W

CL CURVE DATA
CURVE 24

PI	451+93.399
N	34885.459
E	47462.478
DELTA	15°03'12"
D	04°00'00"
T	189.256'
L	376.333'
R	1432.390'
LC	375.251'
LCB	S61°11'55"W

N

PROJECT NO: 7550-00-30	HWY: STH 54	COUNTY: JACKSON	ALIGNMENT DIAGRAM	SHEET 66 E

DATE 07AUG15 E S T I M A T E O F Q U A N T I T I E S

LINE NUMBER	ITEM	ITEM DESCRIPTION	UNIT	TOTAL	7550-00-60 QUANTITY
0010	201.0105	Clearing	STA	2.000	2.000
0020	201.0205	Grubbing	STA	1.000	1.000
0030	203.0100	Removing Small Pipe Culverts	EACH	11.000	11.000
0040	203.0200	Removing Old Structure (station) 01. 181+90	LS	1.000	1.000
0050	204.0110	Removing Asphaltic Surface	SY	861.000	861.000
0060	204.0115	Removing Asphaltic Surface Butt Joints	SY	40.000	40.000
0070	204.0120	Removing Asphaltic Surface Milling	SY	116,200.000	116,200.000
0080	208.0100	Borrow	CY	4,000.000	4,000.000
0090	213.0100	Finishing Roadway (project) 01. 7550-00-60	EACH	1.000	1.000
0100	305.0110	Base Aggregate Dense 3/4-Inch	TON	3,998.000	3,998.000
0110	305.0120	Base Aggregate Dense 1 1/4-Inch	TON	977.000	977.000
0120	305.0500	Shaping Shoulders	STA	826.000	826.000
0130	455.0605	Tack Coat	GAL	9,340.000	9,340.000
0140	460.2000	Incentive Density HMA Pavement	DOL	9,410.000	9,410.000
0150	465.0105	Asphaltic Surface	TON	3,236.000	3,236.000
0160	465.0110	Asphaltic Surface Patching	TON	75.000	75.000
0170	465.0310	Asphaltic Curb	LF	250.000	250.000
0180	465.0315	Asphaltic Flumes	SY	15.000	15.000
0190	520.7000	Cleaning Culvert Pipes	EACH	8.000	8.000
0200	521.0115	Culvert Pipe Corrugated Steel 15-Inch	LF	50.000	50.000
0210	521.0118	Culvert Pipe Corrugated Steel 18-Inch	LF	94.000	94.000
0220	521.0124	Culvert Pipe Corrugated Steel 24-Inch	LF	308.000	308.000
0230	521.0130	Culvert Pipe Corrugated Steel 30-Inch	LF	52.000	52.000
0240	521.0136	Culvert Pipe Corrugated Steel 36-Inch	LF	60.000	60.000
0250	521.1015	Apron Endwalls for Culvert Pipe Steel 15-Inch	EACH	2.000	2.000
0260	521.1018	Apron Endwalls for Culvert Pipe Steel 18-Inch	EACH	4.000	4.000
0270	521.1024	Apron Endwalls for Culvert Pipe Steel 24-Inch	EACH	13.000	13.000
0280	521.1030	Apron Endwalls for Culvert Pipe Steel 30-Inch	EACH	2.000	2.000
0290	521.1036	Apron Endwalls for Culvert Pipe Steel 36-Inch	EACH	2.000	2.000
0300	522.1024	Apron Endwalls for Culvert Pipe Reinforced Concrete 24-Inch	EACH	2.000	2.000
0310	524.0124	Culvert Pipe Salvaged 24-Inch	LF	126.000	126.000
0320	524.0624	Apron Endwalls for Culvert Pipe Salvaged 24-Inch	EACH	1.000	1.000
0330	606.0300	Riprap Heavy	CY	460.000	460.000
0340	611.0651	Inlet Covers Type S	EACH	1.000	1.000
0350	611.3225	Inlets 2x2.5-FT	EACH	1.000	1.000
0360	614.0230	Steel Thrie Beam	LF	88.000	88.000
0370	614.0345	Steel Plate Beam Guard Short Radius	LF	11.000	11.000
0380	614.0370	Steel Plate Beam Guard Energy Absorbing Terminal	EACH	15.000	15.000
0390	614.0390	Steel Plate Beam Guard Short Radius Terminal	EACH	1.000	1.000
0400	614.0920	Salvaged Rail	LF	3,854.000	3,854.000
0410	614.2330	MGS Guardrail 3 K	LF	3,783.000	3,783.000
0420	614.2500	MGS Thrie Beam Transition	LF	240.000	240.000
0430	614.2610	MGS Guardrail Terminal EAT	EACH	16.000	16.000
0440	618.0100	Maintenance And Repair of Haul Roads (project) 01. 7550-00-60	EACH	1.000	1.000

3

DATE 07AUG15 — E S T I M A T E O F Q U A N T I T I E S

LINE NUMBER	ITEM	ITEM DESCRIPTION	UNIT	TOTAL	7550-00-60 QUANTITY
0450	619.1000	Mobilization	EACH	1.000	1.000
0460	625.0105	Topsoil	CY	1,725.000	1,725.000
0470	625.0500	Salvaged Topsoil	SY	15,889.000	15,889.000
0480	627.0200	Mulching	SY	4,359.000	4,359.000
0490	628.1504	Silt Fence	LF	1,470.000	1,470.000
0500	628.1520	Silt Fence Maintenance	LF	735.000	735.000
0510	628.1905	Mobilizations Erosion Control	EACH	1.000	1.000
0520	628.1910	Mobilizations Emergency Erosion Control	EACH	1.000	1.000
0530	628.2023	Erosion Mat Class II Type B	SY	17,023.000	17,023.000
0540	628.7010	Inlet Protection Type B	EACH	1.000	1.000
0550	628.7015	Inlet Protection Type C	EACH	2.000	2.000
0560	628.7504	Temporary Ditch Checks	LF	150.000	150.000
0570	629.0210	Fertilizer Type B	CWT	13.500	13.500
0580	630.0120	Seeding Mixture No. 20	LB	578.000	578.000
0590	630.0200	Seeding Temporary	LB	289.000	289.000
0600	633.5200	Markers Culvert End	EACH	36.000	36.000
0610	634.0612	Posts Wood 4x6-Inch X 12-FT	EACH	4.000	4.000
0620	634.0614	Posts Wood 4x6-Inch X 14-FT	EACH	27.000	27.000
0630	634.0616	Posts Wood 4x6-Inch X 16-FT	EACH	19.000	19.000
0640	634.0618	Posts Wood 4x6-Inch X 18-FT	EACH	49.000	49.000
0650	634.0620	Posts Wood 4x6-Inch X 20-FT	EACH	15.000	15.000
0660	634.0812	Posts Tubular Steel 2x2-Inch X 12-FT	EACH	4.000	4.000
0670	637.2210	Signs Type II Reflective H	SF	229.200	229.200
0680	637.2230	Signs Type II Reflective F	SF	502.250	502.250
0690	638.2102	Moving Signs Type II	EACH	9.000	9.000
0700	638.2602	Removing Signs Type II	EACH	112.000	112.000
0710	638.3000	Removing Small Sign Supports	EACH	118.000	118.000
0720	642.5201	Field Office Type C	EACH	1.000	1.000
0730	643.0100	Traffic Control (project) 01. 7550-00-60	EACH	1.000	1.000
0740	643.0300	Traffic Control Drums	DAY	1,400.000	1,400.000
0750	643.0420	Traffic Control Barricades Type III	DAY	20.000	20.000
0760	643.0715	Traffic Control Warning Lights Type C	DAY	160.000	160.000
0770	643.0900	Traffic Control Signs	DAY	3,690.000	3,690.000
0780	645.0120	Geotextile Fabric Type HR	SY	690.000	690.000
0790	646.0106	Pavement Marking Epoxy 4-Inch	LF	91,140.000	91,140.000
0800	646.0406	Pavement Marking Same Day Epoxy 4-Inch	LF	74,458.000	74,458.000
0810	646.0600	Removing Pavement Markings	LF	3,200.000	3,200.000
0820	648.0100	Locating No-Passing Zones	MI	8.780	8.780
0830	649.0100	Temporary Pavement Marking 4-Inch	LF	92,690.000	92,690.000
0840	649.1400	Temporary Pavement Marking Stop Line Removable Tape 24-Inch	LF	352.000	352.000
0850	650.4000	Construction Staking Storm Sewer	EACH	1.000	1.000
0860	650.6000	Construction Staking Pipe Culverts	EACH	13.000	13.000
0870	650.8000	Construction Staking Resurfacing Reference	LF	46,345.000	46,345.000
0880	650.9910	Construction Staking Supplemental Control (project) 01. 7550-00-60	LS	1.000	1.000
0890	650.9920	Construction Staking Slope Stakes	LF	4,500.000	4,500.000
0900	690.0150	Sawing Asphalt	LF	674.000	674.000
0910	SPV.0060	Special 01. Cleaning Box Culvert	EACH	1.000	1.000
0920	SPV.0090	Special 01. Removing Asphaltic Curb	LF	229.000	229.000
0930	SPV.0105	Special 01. Material Transfer Vehicle	LS	1.000	1.000
0940	SPV.0105	Special 02. Preparation Of Foundation Asphaltic Paving Special	LS	1.000	1.000

3

DATE 07AUG15 E S T I M A T E O F Q U A N T I T I E S

LINE NUMBER	ITEM	ITEM DESCRIPTION	UNIT	TOTAL	7550-00-60 QUANTITY
0950	SPV.0105	Special 03. Box Culvert Joint Repair Station 328+25	LS	1.000	1.000
0960	SPV.0105	Special 04. Box Culvert Joint Repair Station 372+45	LS	1.000	1.000
0970	SPV.0105	Special 05. Box Culvert Inlet Special	LS	1.000	1.000
0980	SPV.0105	Special 06. Milling and Removing Temporary Joint	LS	1.000	1.000
0990	SPV.0170	Special 01. Prepare Foundation For Asphaltic Shoulders Special	STA	96.000	96.000
1000	SPV.0170	Special 02. Reheating HMA Pavement Longitudinal Joint	STA	460.000	460.000
1010	SPV.0195	Special 01. HMA Pavement Type E-3 Special	TON	14,699.000	14,699.000
1020	SPV.0195	Special 02. Lane Repair	TON	1,815.000	1,815.000

ALL CATEGORIES ARE 0010
UNLESS NOTED OTHERWISE

3

CLEARING AND GRUBBING

STATION - STATION	LOCATION	201.0105 CLEARING STA	201.0205 GRUBBING STA
397+00 - 399+00	LT	2	1
TOTALS		**2**	**1**

REMOVING SMALL PIPE CULVERTS

STATION	LOCATION	203.0100 EACH	COMMENTS
15+81	LT & RT	1	REMOVE 44 LF OF CP 24-INCH
134+33	LT & RT	1	REMOVE 42 LF OF CP 30-INCH
138+75	LT & RT	1	REMOVE 40 LF OF CP 24-INCH
154+49	LT & RT	1	REMOVE 36 LF OF CP 24-INCH
169+61	LT & RT	1	REMOVE 44 LF OF CP 24-INCH
189+53	LT & RT	1	REMOVE 44 LF OF CP 18-INCH
307+29	LT & RT	1	REMOVE 40 LF OF CP 24-INCH
344+59	LT & RT	1	REMOVE 56 LF OF CP 24-INCH
390+92	LT & RT	1	REMOVE 44 LF OF CP 15-INCH
397+39	RT	1	REMOVE 20 LF OF CP 12-INCH
414+53	LT & RT	1	REMOVE 40 LF OF CP 18-INCH
TOTAL		**11**	

REMOVING OLD STRUCTURE

STATION	LOCATION	203.0200 LUMP SUM	COMMENTS
01. 181+90	LT & RT	1	REMOVE 38 LF OF 3'X4' BOX CULVERT
TOTAL		**1**	

REMOVING ASPHALTIC SURFACE BUTT JOINTS

STATION	204.0115 SY	COMMENTS
0+31	5	BEGINNING OF PROJECT
64+80	5	BEGINNING OF STRUCTURE B27-02-330
66+50	5	END OF STRUCTURE B27-02-330
101+30	5	BEGIINNING OF NORTH BEND GAP
104+50	5	END OF NORTH BEND GAP
105+37	5	BEGINNING OF STRUCTURE B27-00-180
105+86	5	END OF STRUCTURE B27-00-180
463+76	5	END OF PROJECT
TOTAL	**40**	

REMOVING ASPHALTIC SURFACE

STATION - STATION	LOCATION	204.0110 SY
15+66 - 15+96	LT & RT	73
86+38 - 86+80	LT & RT	156
134+20 - 134+46	LT & RT	64
138+63 - 138+87	LT & RT	59
154+37 - 154+61	LT & RT	59
169+43 - 169+79	LT & RT	88
181+73 - 182+06	LT & RT	81
189+42 - 189+64	LT & RT	54
307+17 - 307+42	LT & RT	61
344+44 - 344+74	LT & RT	73
390+84 - 391+00	LT & RT	39
414+42 - 414+64	LT & RT	54
TOTAL		**861**

BASE AGGREGATE DENSE

STATION - STATION	LOCATION	305.0110 BASE AGGREGATE DENSE 3/4-INCH TON	305.0120 BASE AGGREGATE DENSE 1 1/4-INCH TON	COMMENTS
15+66 - 15+96	LT & RT	--	85	CULVERT REPLACEMENT
86+38 - 86+80	LT & RT	--	160	CULVERT REPLACEMENT
134+20 - 134+46	LT & RT	--	74	CULVERT REPLACEMENT
138+63 - 138+87	LT & RT	--	68	CULVERT REPLACEMENT
154+37 - 154+61	LT & RT	--	68	CULVERT REPLACEMENT
169+43 - 169+79	LT & RT	--	102	CULVERT REPLACEMENT
181+73 - 182+06	LT & RT	--	94	CULVERT REPLACEMENT
189+42 - 189+64	LT & RT	--	62	CULVERT REPLACEMENT
307+17 - 307+42	LT & RT	--	71	CULVERT REPLACEMENT
344+44 - 344+74	LT & RT	--	85	CULVERT REPLACEMENT
390+84 - 391+00	LT & RT	--	46	CULVERT REPLACEMENT
414+42 - 414+64	LT & RT	--	62	CULVERT REPLACEMENT
0+31 - 64+84	LT & RT	518	--	SHOULDERS
66+50 - 101+30	LT & RT	286	--	SHOULDERS
106+03 - 463+76	LT & RT	3,194	--	SHOULDERS
TOTALS		**3,998**	**977**	

SALVAGED RAIL

STATION - STATION	LOCATION	614.0920 LF
2+50 - 3+00	RT	56
4+00 - 4+50	RT	51
4+00 - 4+50	LT	50
64+00 - 64+50	LT	65
64+00 - 64+50	RT	70
66+50 - 67+00	LT	68
66+50 - 67+00	RT	70
105+00 - 105+25	LT	134
106+00 - 106+50	LT	65
106+00 - 106+50	RT	64
242+00 - 249+00	RT	687
242+50 - 249+00	LT	596
293+50 - 294+00	RT	55
293+50 - 294+00	LT	55
294+50 - 295+00	RT	53
297+00 - 297+50	LT	45
383+00 - 394+50	RT	1,132
396+50 - 398+50	RT	229
427+50 - 428+00	LT	52
428+00 - 428+50	RT	53
431+00 - 431+50	LT	50
431+50 - 432+00	RT	50
432+50 - 433+00	RT	52
436+00 - 436+50	RT	52
TOTAL		**3,854**

SHAPING SHOULDERS

STATION - STATION	LOCATION	305.0500 STA
4+97 - 52+00	LT	48
53+50 - 58+00	LT	5
68+38 - 101+30	LT	33
107+74 - 141+25	LT	34
143+00 - 202+14	LT	60
203+22 - 242+50	LT	40
250+00 - 283+50	LT	34
284+50 - 293+08	LT	9
297+79 - 340+30	LT	43
341+10 - 427+16	LT	87
432+18 - 463+76	LT	32
0+31 - 2+33	RT	3
4+97 - 63+63	RT	59
69+02 - 77+43	RT	9
80+53 - 84+00	RT	4
85+25 - 100+00	RT	15
107+76 - 241+20	RT	134
250+14 - 283+50	RT	34
284+50 - 293+02	RT	9
295+88 - 339+75	RT	44
340+70 - 366+04	RT	26
375+39 - 382+95	RT	8
395+08 - 396+00	RT	1
399+25 - 427+24	RT	28
437+61 - 463+76	RT	27
TOTAL		**826**

REMOVING ASPHALTIC SURFACE MILLING

STATION - STATION	LOCATION	204.0120 SY
0+31 - 64+84	LT & RT	16,467
66+50 - 101+30	LT & RT	9,959
104+50 - 105+37	LT & RT	353
105+86 - 463+76	LT & RT	89,421
TOTAL		**116,200**

BORROW

STATION - STATION	LOCATION	208.0100 BORROW CY
CULVERTS / UNDISTRIBUTED	LT & RT	870
BEAM GUARD AREAS	LT & RT	3,130
TOTALS		**4,000**

ALL CATEGORIES ARE 0010
UNLESS NOTED OTHERWISE

3

ASPHALTIC ITEMS

STATION - STATION	LOCATION	455.0605 TACK COAT GAL	SPV.0195.01 HMA PAVEMENT TYPE E-3 SPECIAL TON	465.0105 ASPHALTIC SURFACE TON	465.0110 ASPHALTIC SURFACE PATCHING TON
15+66 - 15+96	LT & RT	--	--	18	--
86+38 - 86+80	LT & RT	--	--	38	--
134+20 - 134+46	LT & RT	--	--	15	--
138+63 - 138+87	LT & RT	--	--	14	--
154+37 - 154+61	LT & RT	--	--	14	--
169+43 - 169+79	LT & RT	--	--	21	--
181+73 - 182+06	LT & RT	--	--	20	--
189+42 - 189+64	LT & RT	--	--	13	--
307+17 - 307+42	LT & RT	--	--	15	--
344+44 - 344+74	LT & RT	--	--	18	--
390+84 - 391+00	LT & RT	--	--	9	--
414+42 - 414+64	LT & RT	--	--	13	--
LEVELING/WEDGING	UNDISTRIBUTED	--	--	2,500	--
MINOR REPAIRS AS NEEDED	UNDISTRIBUTED	--	--	--	75
0+31 - 64+84	LT & RT	1,320	2,079	77	--
66+50 - 101+30	LT & RT	805	1,264	40	--
104+50 - 105+37	LT & RT	25	43	--	--
105+86 - 463+76	LT & RT	7,190	11,313	411	--
	TOTALS	**9,340**	**14,699**	**3,236**	**75**

ASPHALTIC CURB

STATION - STATION	LOCATION	465.0310 LF
396+25 - 398+75	RT	250
	TOTAL	**250**

ASPHALTIC FLUMES

STATION	LOCATION	465.0315 SY
397+46	RT	15
	TOTAL	**15**

CLEANING CULVERT PIPES

STATION	LOCATION	520.7000 EACH	COMMENTS
80+50	RT	1	CMCP 48-INCH
94+79	LT & RT	1	CMCP 24-INCH
204+60	LT & RT	1	CMCP 18-INCH
353+15	LT & RT	1	CMCP 24-INCH
359+83	LT & RT	1	CMCP 24-INCH
398+81	LT & RT	1	CMCP 18-INCH
412+36	LT & RT	1	CMCP 18-INCH
458+17	LT & RT	1	CMCP 15-INCH
	TOTAL	**8**	

RIPRAP AND GEOTEXTILE FABRIC

STATION	LOCATION	606.0300 RIPRAP HEAVY CY	645.0120 GEOTEXTILE FABRIC TYPE HR SY
396+40 - 398+50	RT	460	690
	TOTALS	**460**	**690**

CULVERT PIPE ITEMS

STATION	LOCATION	STEEL PIPE THICKNESS INCHES	521.0115 CPCS 15-INCH LF	521.0118 CPCS 18-INCH LF	521.0124 CPCS 24-INCH LF	521.0130 CPCS 30-INCH LF	521.0136 CPCS 36-INCH LF	521.1015 AEW FOR CP STEEL 15-INCH EACH	521.1018 AEW FOR CP STEEL 18-INCH EACH	521.1024 AEW FOR CP STEEL 24-INCH EACH	521.1030 AEW FOR CP STEEL 30-INCH EACH	521.1036 AEW FOR CP STEEL 36-INCH EACH	522.1024 AEW FOR CPRC 24-INCH EACH	524.0124 CP SALVAGED 24-INCH LF	524.0624 AEW FOR CP SALVAGED 24-INCH EACH	633.5200 MARKERS CULVERT END EACH
15+81	LT & RT	0.064	--	--	50	--	--	--	--	2	--	--	--	--	--	2
86+59	LT & RT	0.064	--	--	--	--	--	--	--	1	--	--	--	66	1	2
119+61	LT & RT	--	--	--	--	--	--	--	--	--	--	--	2	60	--	2
134+33	LT & RT	0.079	--	--	--	52	--	--	--	--	2	--	--	--	--	2
138+75	LT & RT	0.064	--	--	50	--	--	--	--	2	--	--	--	--	--	2
154+49	LT & RT	0.064	--	--	52	--	--	--	--	2	--	--	--	--	--	2
169+61	LT & RT	0.064	--	--	66	--	--	--	--	2	--	--	--	--	--	2
181+90	LT & RT	0.079	--	--	--	--	60	--	--	--	--	2	--	--	--	2
189+53	LT & RT	0.064	--	56	--	--	--	--	2	--	--	--	--	--	--	2
307+29	LT & RT	0.064	--	--	38	--	--	--	--	2	--	--	--	--	--	2
344+59	LT & RT	0.064	--	--	52	--	--	--	--	2	--	--	--	--	--	2
390+92	LT & RT	0.064	50	--	--	--	--	2	--	--	--	--	--	--	--	2
414+53	LT & RT	0.064	--	38	--	--	--	--	2	--	--	--	--	--	--	2
UNDISTRIBUTED	--	--	--	--	--	--	--	--	--	--	--	--	--	--	--	10
		TOTALS	**50**	**94**	**308**	**52**	**60**	**2**	**4**	**13**	**2**	**2**	**2**	**126**	**1**	**36**

3

STORM SEWER ITEMS

STATION	LOCATION	611.3225 INLETS 2X2.5-FT EACH	611.0651 INLET COVERS TYPE S EACH
283+60	LT	1	1
TOTALS		**1**	**1**

INLET PROTECTION

STATION	LOCATION	628.7010 TYPE B EACH	628.7015 TYPE C EACH
103+30	RT	--	1
103+82	RT	--	1
283+60	LT	1	--
TOTALS		**1**	**2**

STEEL PLATE BEAM GUARD ITEMS

STATION - STATION	LOCATION	614.0230 STEEL THRIE BEAM LF	614.0345 STEEL PLATE BEAM GUARD SHORT RADIUS LF	614.0370 STEEL PLATE BEAM GUARD ENERGY ABSORBING TERMINAL EACH	614.0390 STEEL PLATE BEAM GUARD SHORT RADIUS TERMINAL EACH	614.2330 MGS GUARDRAIL 3 K LF	614.2500 MGS THRIE BEAM TRANSITION LF	614.2610 MGS GUARDRAIL TERMINAL EAT EACH
2+78 - 3+26	RT	--	--	1	--	--	--	--
3+86 - 4+35	RT	--	--	1	--	--	--	--
4+12 - 4+62	LT	--	--	1	--	--	--	--
58+50 - 64+71	LT	--	--	--	--	536	40	1
64+07 - 64+98	RT	--	--	--	--	--	40	1
66+34 - 68+00	LT	--	--	--	--	76	40	1
66+67 - 68+50	RT	--	--	--	--	93	40	1
77+85 - 78+35	RT	--	--	1	--	--	--	--
79+63 - 80+13	RT	--	--	1	--	--	--	--
105+10 - 105+21	LT	88	11	--	1	--	--	--
106+03 - 106+93	RT	--	--	--	--	--	40	1
106+09 - 106+99	LT	--	--	--	--	--	40	1
241+75 - 249+50	RT	--	--	--	--	675	--	2
242+79 - 249+50	LT	--	--	--	--	571	--	2
293+43 - 293+94	LT & RT	--	--	2	--	--	--	--
294+83 - 295+33	RT	--	--	1	--	--	--	--
296+84 - 297+33	LT	--	--	1	--	--	--	--
383+29 - 394+60	RT	--	--	--	--	1,032	--	2
367+50 - 375+00	RT	--	--	--	--	650	--	2
396+25 - 398+75	RT	--	--	--	--	150	--	2
427+62 - 428+12	LT	--	--	1	--	--	--	--
428+04 - 428+52	RT	--	--	1	--	--	--	--
430+97 - 431+46	LT	--	--	1	--	--	--	--
431+80 - 432+31	RT	--	--	1	--	--	--	--
432+74 - 433+24	RT	--	--	1	--	--	--	--
436+27 - 436+77	RT	--	--	1	--	--	--	--
TOTALS		**88**	**11**	**15**	**1**	**3,783**	**240**	**16**

SILT FENCE

STATION - STATION	LOCATION	628.1504 LF	628.1520 MAINTENANCE LF
106+09 - 107+00	LT	110	55
369+00 - 377+00	RT	800	400
395+75 - 399+00	RT	360	180
UNDISTRIBUTED		200	100
TOTAL		**1,470**	**735**

3

TEMPORARY DITCH CHECKS

STATION	LOCATION	628.7504 LF
UNDISTRIBUTED	--	150
TOTAL		**150**

LANDSCAPING ITEMS

STATION - STATION	LOCATION	625.0105 TOPSOIL CY	625.0500 SALVAGED TOPSOIL SY	627.0200 MULCHING SY	628.2023 EROSION MAT CLASS II TYPE B SY	629.0210 FERTILIZER TYPE B CWT	630.0120 SEED MIX NO. 20 LBS	630.0200 SEED TEMPORARY LBS
CULVERTS / INLETS	LT & RT	125	--	--	1,134	0.7	31	15
BEAM GUARD AREAS	LT & RT	874	15,889	--	15,889	10.0	429	215
EXIST GRADES STEEPER THAN 3:1	LT & RT	726	--	4,359	--	2.8	118	59
TOTALS		**1,725**	**15,889**	**4,359**	**17,023**	**13.5**	**578**	**289**

ALL CATEGORIES ARE 0010
UNLESS NOTED OTHERWISE

ALL CATEGORIES ARE 0010
UNLESS NOTED OTHERWISE

SIGNING ITEMS

SIGN NUMBER	STATION	LOCATION	SIGN CODE	SIZE	634.0612 POSTS WOOD 4X6X12 EACH	634.0614 POSTS WOOD 4X6X14 EACH	634.0616 POSTS WOOD 4X6X16 EACH	634.0618 POSTS WOOD 4X6X18 EACH	634.0620 POSTS WOOD 4X6X20 EACH	634.0812 POSTS TUBULAR STEEL 2x2X12 EACH	637.2210 SIGNS TYPE II REFLECTIVE H SF	637.2230 SIGNS TYPE II REFLECTIVE F SF	COMMENTS
100	1+88	RT	W1-8	18X24	--	1	--	--	--	--	--	3.00	--
101	1+88	RT	W1-8	18X24	--	--	--	--	--	--	--	3.00	SAME POST AS SIGN NO. 100
102	2+37	RT	W1-6	48X24	1	--	--	--	--	--	--	8.00	--
103	2+37	RT	W1-6	48X24	--	--	--	--	--	--	--	8.00	SAME POST AS SIGN NO. 102
104	3+14	RT	W1-8	18X24	1	--	--	--	--	--	--	3.00	--
105	3+14	RT	W1-8	18X24	--	--	--	--	--	--	--	3.00	SAME POST AS SIGN NO. 104
106	3+73	RT	W1-8	18X24	1	--	--	--	--	--	--	3.00	--
107	3+73	RT	W1-8	18X24	--	--	--	--	--	--	--	3.00	SAME POST AS SIGN NO. 106
108	4+45	RT	W1-2L	30X30	--	--	--	1	--	--	--	6.25	--
109	4+45	RT	W13-1	18x18	--	--	--	--	--	--	--	2.25	SAME POST AS SIGN NO. 108
110	4+47	LT	S3-1	36X36	--	1	--	--	--	--	--	9.00	--
111	6+70	LT	W1-1R	36X36	--	--	--	--	1	--	--	9.00	--
112	6+70	LT	W13-1	24X24	--	--	--	--	--	--	--	4.00	SAME POST AS SIGN NO. 111
113	10+00	RT	W1-6	24X24	--	1	--	--	--	--	--	8.00	--
114	9+50	RT	W1-6	24X24	--	--	--	--	--	--	--	8.00	--
115	17+50	LT	W1-2R	30X30	--	1	--	--	--	--	--	6.25	--
116	17+50	LT	W13-1	18X18	--	--	--	--	--	--	--	2.25	SAME POST AS SIGN NO. 115
117	21+00	RT	W1-2R	30X30	--	1	--	--	--	--	--	6.25	--
118	21+00	RT	W13-1	18X18	--	--	--	--	--	--	--	2.25	SAME POST AS SIGN NO. 117
119	33+82	RT	W14-3	48X36	--	--	--	--	1	--	--	6.25	--
120	31+00	LT	W1-2L	30X30	--	--	--	--	--	--	--	6.25	--
121	31+00	LT	W13-1	18X18	--	--	--	--	1	--	--	2.25	SAME POST AS SIGN NO. 120
122	41+70	LT	W14-3	48X36	--	--	--	--	--	--	--	6.25	--
123	43+17	RT	J1-1	24X39	--	1	--	--	--	--	6.50	--	--
124	50+00	RT	W1-2R	30X30	--	--	--	--	--	--	--	6.25	--
125	52+48	LT	R1-1	30X30	--	1	--	--	--	--	5.18	--	--
126	52+55	RT	J13-1	24X45	--	--	--	--	--	--	7.50	--	--
127	52+70	RT	W1-7	48X24	--	1	--	--	--	--	--	8.00	--
128	53+52	LT	J13-1	24X45	--	--	--	--	--	--	7.50	--	--
129	63+61	LT	J1-1	24X39	--	--	--	1	--	--	6.50	--	--
130	64+70	LT	W5-52L	12X36	--	--	--	--	1	--	--	3.00	--
131	64+98	RT	W5-52R	12X36	--	--	--	--	--	--	--	3.00	--
132	66+35	LT	W5-52R	12X36	--	--	--	1	--	--	--	3.00	--
133	66+69	RT	W5-52L	12X36	--	--	--	1	--	--	--	3.00	--
134	70+67	LT	R1-1	30X30	--	--	--	--	1	--	5.18	--	--
135	74+27	LT	W1-2L	30X30	--	--	--	--	1	--	--	6.25	--
136	75+25	RT	J1-1	24X39	--	1	--	--	--	--	6.50	--	--
137	77+00	RT	W1-2L	30X30	--	--	--	1	--	--	--	6.25	--
138	77+00	RT	W13-1	18X18	--	--	1	--	--	--	--	2.25	SAME POST AS SIGN NO. 137
139	79+50	LT	R2-1	24X30	--	--	--	1	--	--	5.00	--	--
700	80+46	LT	--	--	--	--	1	--	--	--	--	--	MOVE SIGN, NORTH BEND UNICORPORATED
140	82+54	LT	J4-1	24X36	--	--	1	--	--	--	6.00	--	--
141	84+50	LT	W1-7	48X24	--	--	1	--	--	--	--	8.00	--
142	85+06	LT	J13-1	24X45	--	--	--	1	--	--	7.50	--	--
143	83+97	RT	J13-1	24X45	--	--	--	1	--	--	7.50	--	--
144	84+99	RT	R1-1	30X30	--	1	--	--	--	--	5.18	--	--
145	86+00	RT	W3-5	36X36	--	--	--	1	--	--	--	9.00	--
146	87+36	RT	W11-6	30X30	--	--	1	--	--	--	--	6.25	--
147	92+00	RT	R2-1	24X30	--	--	1	--	--	--	5.00	--	--
148	91+00	LT	W11-6	30X30	--	--	--	1	--	--	--	6.25	
149	91+93	LT	R1-1	30X30	--	1	--	--	--	--	5.18	--	--
150	92+00	LT	R2-1	24X30	--	1	--	--	--	--	5.00	--	--
151	95+24	LT	J1-1	24X39	--	--	--	1	--	--	6.50	--	--
152	98+06	LT	R2-1	24X30	--	--	1	--	--	--	5.00	--	--
153	100+66	RT	R1-1	30X30	--	1	--	--	--	--	5.18	--	MOVE SIGN, GALESVILLE 14 / CENTERVILLE 19
154	102+06	RT	R2-1	24X30	--	1	--	--	--	--	5.00	--	--

CONTINUED ON NEXT SHEET

ALL CATEGORIES ARE 0010
UNLESS NOTED OTHERWISE

SIGNING ITEMS

SIGN NUMBER	STATION	LOCATION	SIGN CODE	SIZE	634.0612 POSTS WOOD 4X6X12 EACH	634.0614 POSTS WOOD 4X6X14 EACH	634.0616 POSTS WOOD 4X6X16 EACH	634.0618 POSTS WOOD 4X6X18 EACH	634.0620 POSTS WOOD 4X6X20 EACH	634.0812 POSTS TUBULAR STEEL 2x2X12 EACH	637.2210 SIGNS TYPE II REFLECTIVE H SF	637.2230 SIGNS TYPE II REFLECTIVE F SF	COMMENTS
155	102+97	RT	W14-3	48X36	--	1	--	--	--	--	--	6.00	--
156	103+87	RT	R1-1	30X30	--	1	--	--	--	--	5.18	--	--
157	105+13	RT	W5-52R	12X36	--	--	--	--	--	1	--	3.00	--
158	106+04	RT	W5-52L	12X36	--	--	--	--	--	1	--	3.00	--
159	106+32	RT	R2-1	24X30	--	1	--	--	--	--	5.00	--	--
160	108+17	RT	J4-1	24X36	--	--	--	1	--	--	6.00	--	--
161	104+80	LT	R1-1	30X30	--	1	--	--	--	--	5.18	--	--
162	105+20	LT	W5-52L	12X36	--	--	--	--	--	1	--	3.00	--
163	106+11	LT	W5-52R	12X36	--	--	--	--	--	1	--	3.00	--
164	106+32	LT	R2-1	24X30	1	--	--	--	--	--	5.00	--	--
702	110+18	RT	--	--	--	--	--	2	--	--	--	--	MOVE SIGN, MELROSE 7 / BLACK RIVER FALLS 24
703	110+60	LT	--	--	--	--	1	--	--	--	--	--	MOVE SIGN, NORTH BEND UNICORPORATED
165	111+50	LT	W14-3	48X36	--	--	--	1	--	--	--	6.00	--
166	113+00	LT	W3-5	36X36	--	--	--	1	--	--	--	9.00	--
167	125+25	RT	W14-3	48X36	--	--	--	1	--	--	--	6.00	--
704	137+85	LT	--	--	--	--	--	1	--	--	--	--	MOVE SIGN, ADOPT-A-HIGHWAY
168	137+85	LT	W14-3	48X36	--	--	--	1	--	--	--	6.00	--
169	141+84	LT	R1-1	30X30	--	1	--	--	--	--	5.18	--	--
170	155+68	RT	W14-3	48X36	--	--	--	1	--	--	--	6.00	--
171	158+04	LT	W14-3	48X36	--	--	--	1	--	--	--	6.00	--
172	172+36	RT	W14-3	48X36	--	--	--	1	--	--	--	6.00	--
173	201+39	LT	W14-3	48X36	--	--	--	1	--	--	--	6.00	--
174	202+41	LT	R1-1	30X30	--	1	--	--	--	--	5.18	--	--
175	215+12	RT	W14-3	48X36	--	--	--	1	--	--	--	6.00	--
176	229+65	LT	W14-3	48X36	--	--	--	1	--	--	--	6.00	--
177	231+50	RT	W1-2L	30X30	--	--	--	--	1	--	--	6.25	--
178	245+50	LT	W1-2R	30X30	--	--	--	--	--	--	--	6.25	--
179	248+25	RT	W1-4R	30X30	--	--	1	--	--	--	--	6.25	--
180	248+25	RT	W13-1	18X18	--	--	--	--	--	--	--	2.25	SAME POST AS SIGN NO. 179
181	249+98	RT	R1-1	30X30	--	1	--	--	--	--	5.18	--	--
182	254+47	LT	W2-2	30X30	--	--	--	1	--	--	--	6.25	--
183	257+60	LT	S3-1	36X36	--	--	--	1	--	--	--	9.00	--
184	271+03	RT	W14-3	48X36	--	--	--	1	--	--	--	6.00	--
185	271+00	LT	W1-4R	30X30	--	--	--	--	1	--	--	6.25	--
186	271+00	LT	W13-1	18X18	--	--	--	--	--	--	--	2.25	SAME POST AS SIGN NO. 185
187	277+50	LT	W14-3	48X36	--	--	--	1	--	--	--	6.00	--
188	279+00	RT	W1-2L	30X30	--	--	--	--	1	--	--	6.25	--
189	279+00	RT	W13-1	18X18	--	--	--	--	--	--	--	2.25	SAME POST AS SIGN NO. 188
190	283+60	LT	R1-1	30X30	--	1	--	--	--	--	5.18	--	--
191	284+18	RT	R1-1	30X30	--	1	--	--	--	--	5.18	--	--
192	292+20	RT	W1-2R	30X30	--	--	--	--	1	--	--	6.25	--
229	293+00	LT	W1-2R	30X30	--	--	--	1	--	--	--	6.25	--
230	293+00	LT	W13-1	18X18	--	--	--	--	--	--	--	2.25	SAME POST AS SIGN NO. 229
193	293+47	LT	W2-1	30X30	--	1	--	--	--	--	--	6.25	--
194	305+00	LT	W1-2L	30X30	--	--	1	--	--	--	--	6.25	--
195	309+00	RT	W1-2L	30X30	--	--	--	--	1	--	--	6.25	--
196	321+15	LT	W1-2R	30X30	--	--	--	--	1	--	--	6.25	--
197	327+75	LT	W14-3	48X36	--	--	--	1	--	--	--	6.00	--
198	328+77	RT	W14-3	48X36	--	--	--	1	--	--	--	6.00	--
199	332+62	RT	W2-1	30X30	--	--	--	1	--	--	--	6.25	--
200	340+50	LT	R1-1	30X30	--	1	--	--	--	--	5.18	--	--
201	340+55	RT	R1-1	30X30	--	1	--	--	--	--	5.18	--	--
202	343+56	RT	W14-3	48X36	--	--	--	1	--	--	--	6.00	--
705	346+00	LT	--	--	--	--	--	1	--	--	--	--	MOVE SIGN, ADOPT-A-HIGHWAY
203	346+00	LT	W14-3	48X36	--	--	--	1	--	--	--	6.00	--

CONTINUED ON NEXT SHEET

ALL CATEGORIES ARE 0010
UNLESS NOTED OTHERWISE

SIGNING ITEMS

SIGN NUMBER	STATION	LOCATION	SIGN CODE	SIZE	634.0612 POSTS WOOD 4X6X12 EACH	634.0614 POSTS WOOD 4X6X14 EACH	634.0616 POSTS WOOD 4X6X16 EACH	634.0618 POSTS WOOD 4X6X18 EACH	634.0620 POSTS WOOD 4X6X20 EACH	634.0812 POSTS TUBULAR STEEL 2x2X12 EACH	637.2210 SIGNS TYPE II REFLECTIVE H SF	637.2230 SIGNS TYPE II REFLECTIVE F SF	COMMENTS
204	372+94	LT	W14-3	48X36	--	--	--	1	--	--	--	6.00	--
205	366+31	RT	W14-3	48X36	--	--	--	1	--	--	--	6.00	--
206	375+00	RT	W1-2L	30X30	--	--	--	--	1	--	--	6.25	--
207	375+00	RT	W13-1	18X18	--	--	--	--	--	--	--	2.25	SAME POST AS SIGN NO. 206
208	388+44	LT	W1-2R	30X30	--	--	--	1	--	--	--	6.25	--
209	388+44	LT	W13-1	18X18	--	--	--	--	--	--	--	2.25	SAME POST AS SIGN NO. 208
210	388+61	RT	W1-2R	30X30	--	--	1	--	--	--	--	6.25	--
211	388+61	RT	W13-1	18X18	--	--	--	--	--	--	--	2.25	SAME POST AS SIGN NO. 210
212	401+00	LT	W1-2L	30X30	--	--	--	--	1	--	--	6.25	--
213	401+00	LT	W13-1	18X18	--	--	--	--	--	--	--	2.25	SAME POST AS SIGN NO. 212
214	409+31	RT	W14-3	48X36	--	--	--	1	--	--	--	6.00	--
215	410+09	RT	R1-1	30X30	--	1	--	--	--	--	5.18	--	--
216	418+37	LT	W14-3	48X36	--	--	--	1	--	--	--	6.00	--
217	438+34	RT	W3-5	36X36	--	--	--	1	--	--	--	9.00	--
218	443+34	LT	R2-1	24X30	--	--	1	--	--	--	5.00	--	--
706	442+10	RT	--	--	--	--	1	--	--	--	--	--	MOVE SIGN, MELROSE POPULATION 503
219	443+34	LT	R2-1	24X30	--	--	1	--	--	--	5.00	--	--
220	448+57	LT	R2-1	24X30	--	--	1	--	--	--	5.00	--	--
221	451+00	LT	S3-1	36X36	--	--	--	1	--	--	--	9.00	--
222	455+72	RT	J1-2	48X39	--	--	--	1	--	--	13.00	--	--
223	456+50	RT	W3-1	36X36	--	--	--	1	--	--	--	9.00	--
224	458+90	RT	J2-1	24X57	--	--	--	--	1	--	9.50	--	--
225	459+70	LT	W14-3	48X36	--	--	--	1	--	--	--	6.00	--
707	460+54	LT	--	--	--	--	2	--	--	--	--	--	MOVE SIGN, NORTH BEND 7 / GALESVILLE 24
226	461+81	RT	W14-3	48X36	--	--	--	1	--	--	--	6.00	--
708	462+50	RT	--	--	--	--	--	2	--	--	--	--	MOVE SIGN, BLACK RIVER FALLS/SPARTA/WEST SALEM
227	463+00	LT	R2-1	24X30	--	--	1	--	--	--	5.00	--	--
228	464+50	LT	J4-1	24X36	--	--	1	--	--	--	6.00	--	SAME POST AS SIGN NO.
				TOTALS	**4**	**27**	**19**	**49**	**15**	**4**	**229.20**	**502.25**	

ALL CATEGORIES ARE 0010
UNLESS NOTED OTHERWISE

3

TRAFFIC CONTROL

LOCATION	643.0300 DRUMS DAYS	643.0420 BARRICADES TYPE III DAYS	643.0715 WARNING LIGHTS TYPE C DAYS	643.0900 SIGNS DAYS	COMMENTS
WEST PROJECT LIMITS	--	--	--	300	ADVANCE WARNING SIGNS (SDD 15C4-2)
EAST PROJECT LIMITS	--	--	--	300	ADVANCE WARNING SIGNS (SDD 15C4-2)
STH 71/107, S. OF STH 54	--	--	--	180	RD WORK AHEAD, WEST STH 54 (SDD 15C4-2)
SIDE ROADS	--	--	--	960	ADVANCE WARNING SIGNS (SDD 15C4-2)
CTH V INTERSECTION	--	--	--	120	ROAD WORK NEXT X MILES (SDD 15C4-2)
CTH VV INTERSECTION	--	--	--	120	ROAD WORK NEXT X MILES (SDD 15C4-2)
CULVERT REPLACEMENTS	--	--	--	720	LOOSE GRAVEL
CULVERT / BOX CULVERT	500	20	160	280	ONE LANE ROAD STOP CONDITION
MILLING / ASPHALT WORK	--	--	--	510	UNEVEN LANES/GROOVED PAV'T/NO CENTERLINE
UNDISTRIBUTED	900	--	--	200	TEMP CL OR SHOULDER WORK (SDD 15D28-2)
TOTALS	**1,400**	**20**	**160**	**3,690**	

PAVEMENT MARKING

STATION - STATION	LOCATION	646.0106 EPOXY 4-INCH WHITE LF	646.0406 EPOXY 4-INCH SAME DAY YELLOW LF	COMMENTS
0+31 - 84+50	LT & RT	16,473	14,334	
82+12 - 87+03	LT	125	--	BYPASS LANE LINE
84+50 - 202+50	LT & RT	22,892	21,573	
202+50 - 284+00	LT & RT	16,058	11,399	
284+00 - 340+50	LT & RT	11,122	9,563	
340+50 - 463+76	LT & RT	24,470	17,589	
	TOTALS	**91,140**	**74,458**	

3

PAVEMENT MARKING

STATION - STATION	LOCATION	649.0100 TEMPORARY 4-INCH YELLOW LF	649.1400 TEMPORARY STOP LINE REMOVABLE TAPE 24-INCH WHITE LF	646.0600 REMOVING PAVEMENT MARKING YELLOW LF	COMMENTS
0+31 - 84+50	LT & RT	16,838	--	--	CENTERLINE - DOUBLE YELLOW
84+50 - 202+50	LT & RT	23,600	--	--	CENTERLINE - DOUBLE YELLOW
202+50 - 284+00	LT & RT	16,300	--	--	CENTERLINE - DOUBLE YELLOW
284+00 - 340+50	LT & RT	11,300	--	--	CENTERLINE - DOUBLE YELLOW
340+50 - 463+76	LT & RT	24,652	--	--	CENTERLINE - DOUBLE YELLOW
CULVERT / BOX CULVERT	LT & RT	--	352	3,200	ONE LANE ROAD STOP CONDITION
	TOTALS	**92,690**	**352**	**3,200**	

CONSTRUCTION STAKING

STATION - STATION	650.4000 STORM SEWER EACH	650.6000 PIPE CULVERT EACH	650.8000 RESURFACING REFERENCE LF	650.9910 SUPPLEMENTAL CONTROL LS	650.9920 SLOPE STAKES LF
0+31 - 463+76	1	13	46,345	1	4,500
TOTALS	**1**	**13**	**46,345**	**1**	**4,500**

ALL CATEGORIES ARE 0010
UNLESS NOTED OTHERWISE

REMOVING SIGN ITEMS

SIGN NO.	STATION	LOCATION	638.2102 MOVING SIGNS TYPE II EACH	638.2602 REMOVING SIGNS TYPE II EACH	638.3000 REMOVING SMALL SIGN SUPPORTS EACH	COMMENTS
400	1+88	RT	--	1	1	--
401	1+88	RT	--	--	--	SAME POST AS SIGN NO. 400
402	2+37	RT	--	1	1	--
403	2+37	RT	--	--	--	SAME POST AS SIGN NO. 402
404	3+14	RT	--	1	1	--
405	3+14	RT	--	--	--	SAME POST AS SIGN NO. 404
406	3+73	RT	--	1	1	--
407	3+73	RT	--	--	--	SAME POST AS SIGN NO. 406
408	4+45	RT	--	1	1	--
409	4+45	RT	--	--	--	SAME POST AS SIGN NO. 408
410	4+47	LT	--	1	1	--
411	6+70	LT	--	1	1	--
412	6+70	LT	--	--	--	SAME POST AS SIGN NO. 411
413	17+33	RT	--	1	1	--
414	17+33	RT	--	--	--	SAME POST AS SIGN NO. 413
415	17+46	LT	--	1	1	--
416	17+46	LT	--	--	--	SAME POST AS SIGN NO. 415
417	33+82	RT	--	1	1	--
418	35+90	LT	--	1	1	--
419	35+90	LT	--	--	--	SAME POST AS SIGN NO. 418
420	41+70	LT	--	1	1	--
421	43+17	RT	--	1	1	--
422	47+63	RT	--	1	1	--
423	52+48	LT	--	1	1	--
424	52+55	RT	--	1	1	--
425	52+70	RT	--	1	1	--
426	53+52	LT	--	1	1	--
427	63+61	LT	--	1	1	--
428	64+70	LT	--	1	1	--
429	64+98	RT	--	1	1	--
430	66+35	LT	--	1	1	--
431	66+69	RT	--	1	1	--
432	70+67	LT	--	1	1	--
433	74+27	LT	--	1	1	--
434	75+25	RT	--	1	1	--
700	80+46	LT	1	--	1	--
435	82+54	LT	--	1	1	--
436	83+97	RT	--	1	1	--
437	84+58	LT	--	1	1	--
438	84+99	RT	--	1	1	--
439	85+06	LT	--	1	1	--
440	86+02	RT	--	1	1	--
441	87+36	RT	--	1	1	--
701	89+69	RT	1	--	1	--
442	91+93	LT	--	1	1	--
443	91+98	LT	--	1	1	--
444	92+84	RT	--	1	1	--
445	95+24	LT	--	1	1	--
446	98+06	LT	--	1	1	--
447	100+66	RT	--	1	1	--
448	102+06	RT	--	1	1	--
449	102+97	RT	--	1	1	--
450	103+87	RT	--	1	1	--
451	104+80	LT	--	1	1	--
452	105+13	RT	--	1	1	--
453	105+20	LT	--	1	1	--

REMOVING SIGN ITEMS

SIGN NO.	STATION	LOCATION	638.2102 MOVING SIGNS TYPE II EACH	638.2602 REMOVING SIGNS TYPE II EACH	638.3000 REMOVING SMALL SIGN SUPPORTS EACH	COMMENTS
454	106+04	RT	--	1	1	--
455	106+11	LT	--	1	1	--
456	106+32	LT	--	1	1	--
457	106+32	RT	--	1	1	--
458	108+17	RT	--	1	1	--
702	110+18	RT	1	--	2	--
703	110+60	LT	1	--	1	--
459	111+50	LT	--	1	1	--
460	116+75	LT	--	1	1	--
461	125+25	RT	--	1	1	--
462	137+85	LT	--	1	--	SAME POST AS SIGN NO. 704
704	137+85	LT	1	--	1	PLACE BELOW SIGN NO. 186
463	141+84	LT	--	1	1	--
464	144+42	RT	--	2	1	--
465	155+68	RT	--	1	1	--
466	158+04	LT	--	1	1	--
467	172+36	RT	--	1	1	--
468	201+39	LT	--	1	1	--
469	202+41	LT	--	1	1	--
470	215+12	RT	--	1	1	--
471	229+65	LT	--	1	1	--
472	229+68	RT	--	1	1	--
473	245+50	RT	--	1	1	--
474	245+50	RT	--	--	--	SAME POST AS SIGN NO. 473
475	248+20	LT	--	1	1	--
476	249+98	RT	--	1	1	--
477	254+47	LT	--	1	1	--
478	257+60	LT	--	1	1	--
479	271+03	RT	--	1	1	--
480	275+46	RT	--	1	1	--
481	275+46	RT	--	--	--	SAME POST AS SIGN NO. 480
482	275+82	LT	--	1	1	--
483	275+82	LT	--	--	--	SAME POST AS SIGN NO. 482
484	277+50	LT	--	1	1	--
485	283+60	LT	--	1	1	--
486	284+18	RT	--	1	1	--
487	289+69	RT	--	1	1	--
488	293+47	LT	--	1	1	--
489	294+97	LT	--	1	1	--
490	294+97	LT	--	--	--	SAME POST AS SIGN NO. 489
491	307+30	RT	--	1	1	--
492	308+62	LT	--	1	1	--
493	323+64	LT	--	1	1	--
494	327+75	LT	--	1	1	--
495	328+77	RT	--	1	1	--
496	332+62	RT	--	1	1	--
497	340+50	LT	--	1	1	--
498	340+55	RT	--	1	1	--
499	343+56	RT	--	1	1	--
500	346+00	LT	--	1	--	SAME POST AS SIGN NO. 705
705	346+00	LT	1	--	1	PLACE BELOW SIGN NO. 231
501	366+31	RT	--	1	1	--
502	372+82	RT	--	1	1	--
503	372+82	RT	--	--	--	SAME POST AS SIGN NO. 502
504	372+94	LT	--	1	1	--
505	388+44	LT	--	1	1	--

CONTINUED ON NEXT SHEET

3

ALL CATEGORIES ARE 0010
UNLESS NOTED OTHERWISE

REMOVING SIGN ITEMS

SIGN NO.	STATION	LOCATION	638.2102 MOVING SIGNS TYPE II EACH	638.2602 REMOVING SIGNS TYPE II EACH	638.3000 REMOVING SMALL SIGN SUPPORTS EACH	COMMENTS
506	388+44	LT	--	--	--	SAME POST AS SIGN NO. 505
507	388+61	RT	--	1	1	--
508	388+61	RT	--	--	--	SAME POST AS SIGN NO. 507
509	403+38	LT	--	1	1	--
510	403+38	LT	--	--	--	SAME POST AS SIGN NO. 509
511	409+31	RT	--	1	1	--
512	410+09	RT	--	1	1	--
513	418+37	LT	--	1	1	--
514	438+67	RT	--	1	1	--
515	441+44	LT	--	1	1	--
706	442+10	RT	1	--	1	--
516	444+41	RT	--	1	1	--
517	448+57	LT	--	1	1	--
518	451+00	LT	--	1	1	--
519	452+58	RT	--	1	1	--
520	455+72	RT	--	1	1	--
521	456+42	LT	--	2	1	--
522	458+90	RT	--	1	1	--
523	459+70	LT	--	1	--	SAME POST AS SIGN NO. 707
707	459+70	LT	1	--	2	MOVE TO STA 460+54 LT
524	461+81	RT	--	1	--	SAME POST AS SIGN NO. 708
708	461+81	RT	1	--	2	MOVE TO STA 462+50 RT
525	462+97	LT	--	1	1	--
526	464+49	LT	--	1	1	--
	TOTALS		**9**	**112**	**118**	

BOX CULVERT JOINT REPAIR

STATION	LOCATION	SPV.0105 LUMP SUM	COMMENTS
.03 328+25	LT & RT	1	4'W X 3'H BOX CULVERT, 2 JOINT REPAIRS NEAR SHOULDERS
.04 372+45	CL	1	6'W X 5'H BOX CULVERT, 1 JOINT REPAIR NEAR CENTERLINE
	TOTAL	**2**	

CLEANING BOX CULVERT

STATION	LOCATION	SPV.0060.01 EACH	COMMENTS
429+65	LT & RT	1	DOUBLE BOX CULVERT, EAST BARRELL 8'X8'
	TOTAL	**1**	

SAWING ASPHALT

STATION - STATION	LOCATION	690.0150 LF	COMMENTS
0+31	LT & RT	23	WEST PROJECT LIMIT
15+66	LT & RT	22	CULVERT REPLACEMENT
15+96	LT & RT	22	CULVERT REPLACEMENT
86+38	LT & RT	34	CULVERT REPLACEMENT
86+60	LT & RT	33	CULVERT REPLACEMENT
101+30	LT & RT	37	PAVING GAP
104+50	LT & RT	38	PAVING GAP
134+20	LT & RT	22	CULVERT REPLACEMENT
134+46	LT & RT	22	CULVERT REPLACEMENT
138+63	LT & RT	22	CULVERT REPLACEMENT
138+87	LT & RT	22	CULVERT REPLACEMENT
154+37	LT & RT	22	CULVERT REPLACEMENT
154+61	LT & RT	22	CULVERT REPLACEMENT
169+43	LT & RT	22	CULVERT REPLACEMENT
169+79	LT & RT	22	CULVERT REPLACEMENT
181+74	LT & RT	22	CULVERT REPLACEMENT
182+07	LT & RT	22	CULVERT REPLACEMENT
189+42	LT & RT	22	CULVERT REPLACEMENT
189+64	LT & RT	22	CULVERT REPLACEMENT
307+17	LT & RT	22	CULVERT REPLACEMENT
307+42	LT & RT	22	CULVERT REPLACEMENT
344+44	LT & RT	22	CULVERT REPLACEMENT
344+74	LT & RT	22	CULVERT REPLACEMENT
390+84	LT & RT	22	CULVERT REPLACEMENT
391+00	LT & RT	22	CULVERT REPLACEMENT
414+42	LT & RT	22	CULVERT REPLACEMENT
414+64	LT & RT	22	CULVERT REPLACEMENT
463+76	LT & RT	25	EAST PROJECT LIMIT
	TOTAL	**674**	

LOCATING NO-PASSING ZONES

STATION - STATION	648.0100 MI
00+31 - 463+76	8.78
TOTAL	**8.78**

REMOVING ASPHALTIC CURB

STATION - STATION	LOCATION	SPV.0090.01 LF
396+46 - 398+75	RT	229
TOTAL		**229**

PREPARE FOUNDATION FOR ASPHALTIC SHOULDERS SPECIAL

STATION - STATION	LOCATION	SPV.0170.01 STA
0+31 - 4+97	LT	5
58+00 - 64+76	LT	7
66+34 - 68+38	LT	2
106+09 - 107+74	LT	2
242+50 - 250+00	LT	8
293+08 - 297+79	LT	5
427+16 - 432+18	LT	5
2+33 - 4+97	RT	3
63+63 - 64+98	RT	2
66+62 - 69+02	RT	3
77+43 - 80+53	RT	3
106+03 - 107+76	RT	2
241+20 - 250+14	RT	9
293+02 - 295+88	RT	3
366+04 - 375+39	RT	10
382+95 - 395+08	RT	12
396+00 - 399+25	RT	4
427+24 - 437+61	RT	11
TOTAL		**96**

REHEATING HMA PAVEMENT LONGITUDINAL JOINT

STATION - STATION	LOCATION	SPV.0170.02 STA
0+31 - 64+84	CL	65
66+50 - 101+30	CL	36
104+50 - 105+37	CL	1
105+86 - 463+76	CL	358
	TOTAL	**460**

LANE REPAIR

STATION - STATION	LOCATION	SPV.0195.02 TON
UNDISTRIBUTED	--	1,815
	TOTAL	**1,815**

BOX CULVERT INLET SPECIAL

STATION	LOCATION	SPV.0105 LUMP SUM	COMMENTS
.05 397+50	LT	1	MODIFIED MANHOLE 6-FT DIAMETER
	TOTAL	**1**	

MILLING AND REMOVING TEMPORARY JOINT

STATION	LOCATION	SPV.0105 LUMP SUM	COMMENTS
.06 00+31 - 463+76	CL	1	PROJECT 7550-00-60
	TOTAL	**1**	

ALL CATEGORIES ARE 0010
UNLESS NOTED OTHERWISE

TRANSPORTATION PROJECT PLAT NO: 7550-00-21 - 4.01

PART OF LOT 1 OF CSM 1972, BEING PART OF GOVERNMENT LOT 1 OF SECTION 19; AND PART OF THE SE1/4-SE1/4 OF SECTION 18, T19N, R5W, ALL IN THE TOWN OF MELROSE, JACKSON COUNTY, WISCONSIN

RELOCATION ORDER - STH 54 (WEST COUNTY LINE TO STH 71 EAST BND), JACKSON COUNTY

SEE PROJECT 7551-03-21

TO PROPERLY ESTABLISH, LAY OUT, WIDEN, ENLARGE, EXTEND, CONSTRUCT, RECONSTRUCT, IMPROVE, OR MAINTAIN A PORTION OF THE HIGHWAY DESIGNATED ABOVE, THE STATE OF WISCONSIN DEPARTMENT OF TRANSPORTATION DEEMS IT NECESSARY TO RELOCATE OR CHANGE SAID HIGHWAY AND ACQUIRE CERTAIN LANDS AND INTERESTS OR RIGHTS IN LANDS FOR THE ABOVE NAMED PROJECT.

TO EFFECT THIS CHANGE, PURSUANT TO AUTHORITY GRANTED UNDER SUBSECTION 84.02 (3), 84.09 AND 84.30, WISCONSIN STATUTES, THE DEPARTMENT OF TRANSPORTATION HEREBY ORDERS THAT:
1) THAT PORTION OF SAID HIGHWAY AS SHOWN ON THIS PLAT IS LAID OUT AND ESTABLISHED TO THE LINES AND WIDTHS AS SO SHOWN FOR THE ABOVE NAMED PROJECT.
2) THE LANDS OR INTERESTS OR RIGHTS IN LANDS AS SHOWN ON THIS PLAT ARE REQUIRED BY THE DEPARTMENT FOR THE ABOVE PROJECT AND SHALL BE ACQUIRED IN THE NAME OF THE STATE OF WISCONSIN, PURSUANT TO THE PROVISIONS OF SUBSECTION 84.09 (1) OR (2), WISCONSIN STATUTES.

Document Number: 376440
Volume: IT Page: 09
Shari Marg
Register of Deeds
Jackson County, WI
Recorded: 12/11/2014
at: 10:30 AM
Transfer Tax Paid: $0.00
Transfer Tax Exempt *
Recording Fee Paid: $50.00
Number of Pages: 1

RESERVED FOR REGISTER OF DEEDS
PROJECT NUMBER 7550-00-21- 4.01
AMENDMENT NO:

SCHEDULE OF LANDS & INTERESTS REQUIRED

OWNER'S NAMES ARE SHOWN FOR REFERENCE PURPOSES ONLY AND ARE SUBJECT TO CHANGE PRIOR TO THE TRANSFER OF LAND INTERESTS TO THE DEPARTMENT.

PARCEL NUMBER	OWNER (S)	INTEREST REQUIRED	R/W NEW	ACRES REQUIRED EXISTING	TOTAL	TLE ACRES TEMP.
1	FRANCIS P. & KIMBERLY L. PONTERIO	FEE, TLE	0.06	0.11	0.17	0.08
2	HENRY & HEIDI BEFELER	FEE	0.22	0.08	0.30	0
3	LAVON WANKUM, ETAL	FEE	0.12	0.20	0.32	0
UTILITY INTERESTS REQUIRED:						
900	CENTURYTEL OF CENTRAL WISCONSIN LLC	RELEASE OF RIGHTS				

NOTES

POSITIONS SHOWN ON THIS PLAT ARE WISCONSIN COORDINATE REFERENCE SYSTEM COORDINATES (WISCRS), JACKSON COUNTY, NAD83(2007) IN US SURVEY FEET. VALUES SHOWN ARE GRID COORDINATES, GRID BEARINGS, AND GRID DISTANCES. GRID DISTANCES MAY BE USED AS GROUND DISTANCES.

RIGHT-OF-WAY MONUMENTS ARE TYPE 2 MONUMENTS AND WILL BE PLACED PRIOR TO THE COMPLETION OF THE PROJECT. TYPE 2 MONUMENTS ARE TYPICALLY 1" I.D. x 24" IRON PIPES WEIGHING 1.68 LBS/FT. UNLESS OTHERWISE NOTED.

RIGHT-OF-WAY BOUNDARIES ARE DEFINED WITH COURSES OF THE PERIMETER OF THE HIGHWAY LANDS REFERENCED TO THE U.S. PUBLIC LAND SURVEY SYSTEM OR OTHER SURVEYS OF PUBLIC RECORD.

PROPERTY LINES SHOWN ON THIS PLAT ARE DRAWN FROM DATA DERIVED FROM MAPS AND DOCUMENTS OF PUBLIC RECORD AND/OR EXISTING OCCUPATIONAL LINES. EXCLUDING RIGHT-OF-WAY BOUNDARIES, THIS PLAT MAY NOT BE A TRUE REPRESENTATION OF EXISTING PROPERTY LINES, AND SHOULD NOT BE USED AS A SUBSTITUTE FOR AN ACCURATE FIELD SURVEY.

NOT WITHSTANDING ITS DEPICTION ON A PLAT, THE BOUNDARY OF A PARCEL EXTENDS TO THE BOUNDARY OF THE ADJOINING PROPERTY PARCEL OR BODY OF WATER.

A TEMPORARY LIMITED EASEMENT (TLE) IS A RIGHT FOR CONSTRUCTION PURPOSES, AS DEFINED HEREIN, INCLUDING THE RIGHT TO OPERATE NECESSARY EQUIPMENT THEREON AND THE RIGHT OF INGRESS AND EGRESS, AS LONG AS REQUIRED FOR SUCH PUBLIC PURPOSE, INCLUDING THE RIGHT TO PRESERVE, PROTECT, REMOVE, OR PLANT THEREON ANY VEGETATION THAT THE HIGHWAY AUTHORITIES MAY DEEM NECESSARY OR DESIRABLE. ALL TLEs EXPIRE AT THE COMPLETION OF THE CONSTRUCTION PROJECT FOR WHICH THIS INSTRUMENT IS GIVEN.

DIMENSIONING FOR THE NEW RIGHT-OF-WAY IS MEASURED ALONG AND PERPENDICULAR TO NEW REFERENCE LINES.

FOR CURRENT ACCESS/DRIVEWAY INFORMATION, CONTACT THE WISCONSIN DEPARTMENT OF TRANSPORTATION REGION OFFICE IN EAU CLAIRE.

CONVENTIONAL SYMBOLS AND ABBREVIATIONS

SECTION LINE
QUARTER LINE
SIXTEENTH LINE
NEW REFERENCE LINE
NEW R/W LINE
EXISTING R/W LINE
PROPERTY LINE P.L.
LOT AND TIE LINES
UNDERGROUND FACILITY G (TYPE)
TEMP. LIMITED EASEMENT
PERM. LIMITED EASEMENT
R/W MONUMENT (SET)
IRON PIPE OR BAR (FOUND)
SIGN
POWER POLE
TELEPHONE POLE
UTILITY PEDESTAL
LIGHT POLE
POLE
MANHOLE
INLET
HYDRANT
VALVE
R/W GUARD POST
P. POLE (COMPENSABLE)
PEDESTAL (COMPENSABLE)
RECORDED AS (SLANTED)
SAME OWNERSHIP
NO ACCESS (ACQUISITION)
ACCESS RESTRICTED (BY PREVIOUS PROJECT/CONTROL)
POINT NUMBER, MAJOR (X)
POINT NUMBER, MINOR (X)
POINT NUMBER, EXISTING (X)
IRON PIPES / MONUMENTS
SECTION CORNER:

AC	ACRES
ACC	ACCESS CONTROL
AP	ACCESS POINT
BAR	ROUND IRON REBAR
BLDG	BUILDING
C	CURVE
CSM	CERTIFIED SURVEY MAP
DOC	DOCUMENT
E	ELECTRIC CABLE
EX	EXISTING
FO	FIBER OPTIC CABLE
FRAC	FRACTIONAL
G	GAS MAIN
GAR	GARAGE
H	HOUSE
HE	HIGHWAY EASEMENT
INL	INLET
IP	IRON PIPE
J/I	JACKET/IMAGE
MC	MEANDER CORNER
MH	MANHOLE
M/L	MEANDER LINE
OH	OVERHEAD UTILITY LINE
OL	OUTLOT
PID	TAX PARCEL IDENTIFICATION NO.
PERM	PERMANENT
PL	PROPERTY LINE
PLE	PERMANENT LIMITED EASEMENT
POS	PLAT OF SURVEY
PP	POWER POLE
R/L	REFERENCE LINE
ROR	RELEASE OF RIGHTS
R/W	RIGHT OF WAY
RWGP	R/W GUARD POST
SAN	SANITARY SEWER
SEC	SECTION
T	TELEPHONE CABLE
TEMP	TEMPORARY
TLE	TEMPORARY LIMITED EASEMENT
V/P	VOLUME/PAGE

BASIS OF EXISTING HIGHWAY R/W

ROUTE	BASIS	YEAR
STH 54	STATE AID PROJECT NO. 5094	1928
	R/W PROJECT 7551-03-21	1989
	HELD EXISTING PAVEMENT TO ESTABLISH RADIUS AT CURVE 22	

COURSE TABLE

FROM POINT	TO POINT	BEARING	DISTANCE
102	1000	S89°54'41"W	726.00'
1000	1001	S00°01'42"E	80.00'
1001	1002	S89°54'41"W	147.63'
1002	1003	N59°46'58"W	41.25'
1009	1004	N11°04'20"W	66.76'
1004	1005	N11°04'20"W	53.52'
1005	1006	N38°40'49"E	52.10'
1006	1007	S51°19'11"E	40.50'
1007	1008	S26°12'41"E	109.33'
1008	1000	S00°30'30"E	118.12'

COORDINATE TABLE

POINT	Y (NORTH)	X (EAST)
503	31649.531	43351.644
504	32251.250	43833.370
1000	31504.929	43394.898
1001	31424.929	43394.937
1002	31424.701	43247.304
1003	31445.461	43211.659
1004	31653.259	43291.663
1005	31705.778	43281.386
1006	31746.446	43313.944
1007	31721.135	43345.560
1008	31623.047	43393.850

TOWN OF SE-SE SEC. 18, T19N, R5W

PARCEL 1
FRANCIS P. PONTERIO & KIMBERLY L. PONTERIO
V572/P340 DOC. 367969
SUBJECT TO LIFE ESTATE OF SYLVIA SCOTT
V222/P778 DOC. 210780

TLE FOR SLOPES & CONSTRUCTION ACCESS

CONVEYANCE OF EASEMENT
GTE NORTH INC.
V303/P968
DOC. 254601
1 ROD STRIP
(IN TLE ONLY - NOT IN FEE)

16.5' UTILITY EASEMENT V303/P968

16.5' UTILITY EASEMENT V280/P353

TRANS 233 RESTRICTIONS APPLY

SAP 5094

EXISTING R/W

STH 54

PI: 405+68.70 N38°57'42"E

RL CURVE DATA
CURVE 22 - STH 54
PI 395+11.077
Y 31421.064
X 43168.737
DELTA 19°47'57"
D 03°25'00"
T 292.664'
L 579.492'
R 1676.950'
LC 576.613'
LCB N28°46'50"E
PC 392+18.41

CURVE TABLE

FROM POINT	TO POINT	RADIUS	ARC LENGTH	CHORD BEARING	CHORD LENGTH
1003	1009	1676.95'	169.96'	N33°07'15"E	169.88'

PT: 397+97.90

PARCEL 3
LAVON WANKUM, ROMAN M. WANKUM, RAE ELLEN YEAGER, ROBERT WANKUM, RACHEL WANKUM, AND REBECCA ROOF
V584/P164

PARCEL 2
HENRY BEFELER & HEIDI BEFELER
V450/P654

PLE FOR EROSION CONTROL V332/P947

EASEMENT FOR EROSION CONTROL V203/P16

LOT 2 CSM 1560 V7/P95 DOC. 280380

LOT 1 CSM 1972 V9/P93 DOC. 295524

NOTE - HELD AS-BUILT 3°25' RADIUS AT CURVE 22 TO DEFINE THE CENTER OF EXISTING R/W, NOT THE RECORD 4° RADIUS SHOWN ON OLD PLANS.

SECTION LINE N89°54'41"E 2640.02'

NE CORNER LOT 1 CSM 1972

396+19.62 (726') — 873.07'

GOV. LOT 1 SEC. 19, T19N, R5W

SCALE, FEET 0' 50' 100'

MELROSE

GN

SCHOLZE ROAD SECTION LINE N00°30'30"W 2630.45'

1-1/2" IRON PIPE WITH BRASS CAP
Y 34136.40
X 44097.56
105

NOTE - A 1" DIA. IRON BAR WAS FOUND AT THE NORTHEAST CORNER OF THE SE-SE, Y32823.80, X44102.63, AND OFF-LINE. THE SECTION LINE SHOWN HERE IS THE STRAIGHT LINE BETWEEN THE TWO PLSS CORNERS.

PROJECT LOCATION
SHEET LOCATION
T19N T18N R6W R5W

GREMMER & ASSOCIATES, INC.
CONSULTING ENGINEERS
Stevens Point • Fond du Lac

I, DAVID L. ROBERTS, PROFESSIONAL LAND SURVEYOR, HEREBY CERTIFY THAT IN FULL COMPLIANCE WITH THE PROVISIONS OF SECTION 84.095 OF THE WISCONSIN STATUTES AND UNDER THE DIRECTION OF THE WISCONSIN DEPARTMENT OF TRANSPORTATION, I HAVE SURVEYED AND MAPPED TRANSPORTATION PROJECT PLAT 7550-00-21-4.01, AND THAT SUCH PLAT CORRECTLY REPRESENTS ALL EXTERIOR BOUNDARIES OF THE SURVEYED LAND.

DATE 12/04/2014 DAVID L. ROBERTS PLS S-1725, FOR GREMMER & ASSOCIATES, INC.

THIS PLAT AND RELOCATION ORDER ARE APPROVED FOR THE WISCONSIN DEPARTMENT OF TRANSPORTATION.

DATE _____ MICHAEL PILLER TSS SUPERVISOR

WISCONSIN DAVID L. ROBERTS S-1725 STEVENS POINT WI LAND SURVEYOR

1-1/2" IRON PIPE WITH BRASS CAP
Y 31506.05
X 44120.90
102

2" IRON PIPE WITH BRASS CAP
Y 31501.97
X 41480.88
101

2" IRON PIPE WITH BRASS CAP
Y 28858.33
X 44122.20
111
SECTION LINE N00°01'42"W 2647.72'

REVISED: 12/17/2014

040401_54.DWG

APPRAISAL PLAT DATE: 12/04/2014

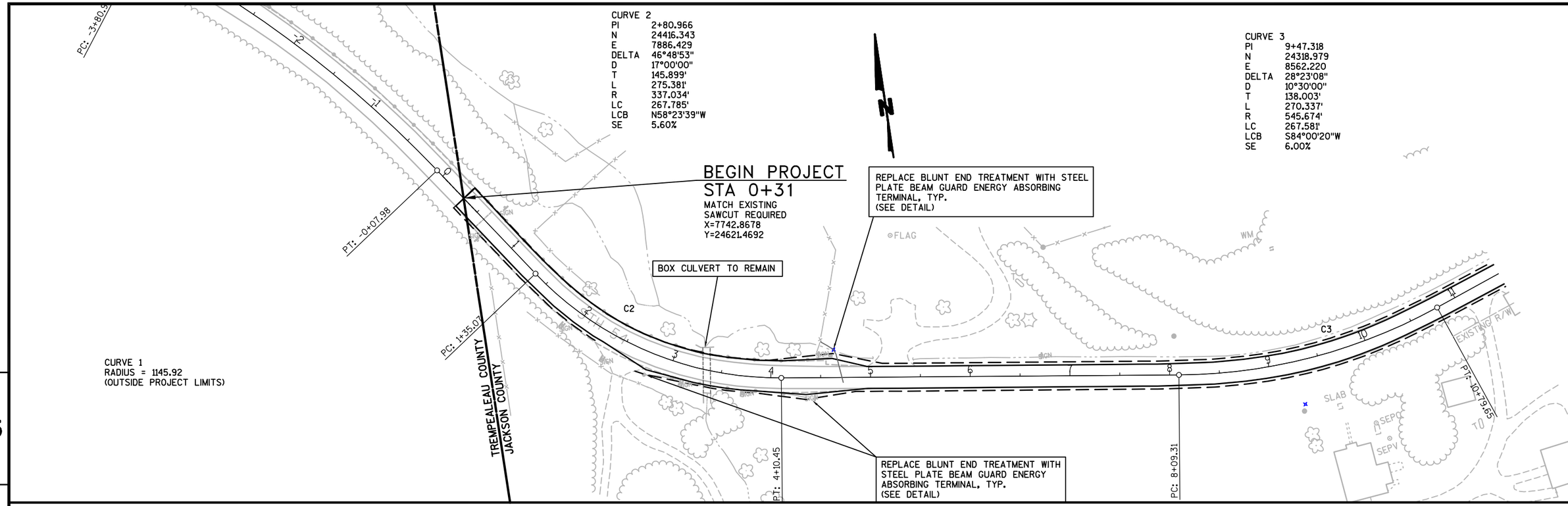

PROJECT NO: 7550-00-60	HWY: STH54	COUNTY: JACKSON	ROADWAY PLAN	SHEET NO: 81	E

FILE NAME : 050101_PP PLOT DATE : 21 FEB 2014 16:05:06 PLOT BY : GADDK PLOT NAME : PLOT SCALE : 1:1

WISDOT/CADDS SHEET 42

CURVE 4
PI 26+11.089
N 24901.231
E 10126.751
DELTA 17°34'41"
D 04°31'27"
T 195.808'
L 388.539'
R 1266.450'
LC 387.017'
LCB S79°05'15"W
SE 4.00%

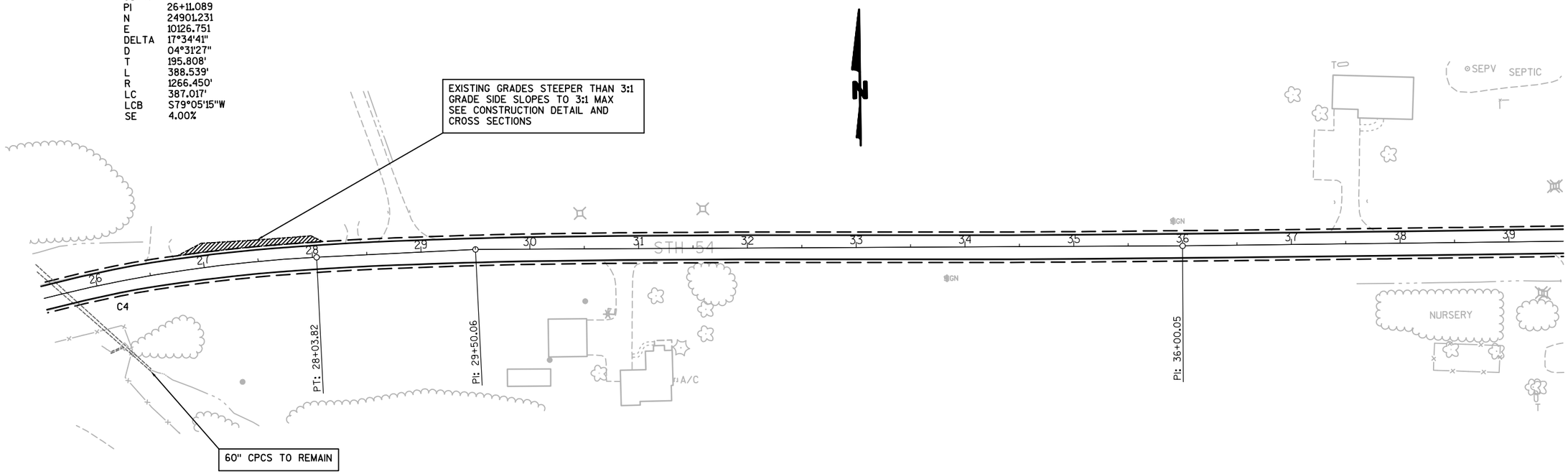

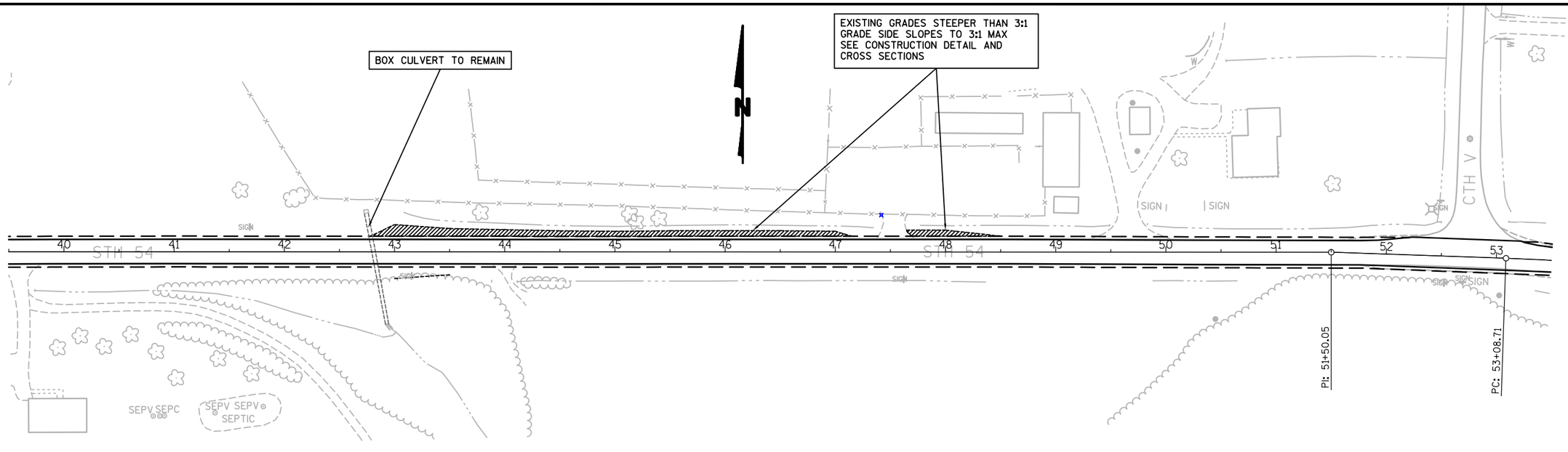

PROJECT NO: 7550-00-60	HWY: STH54	COUNTY: JACKSON	ROADWAY PLAN	SHEET NO: 82	E

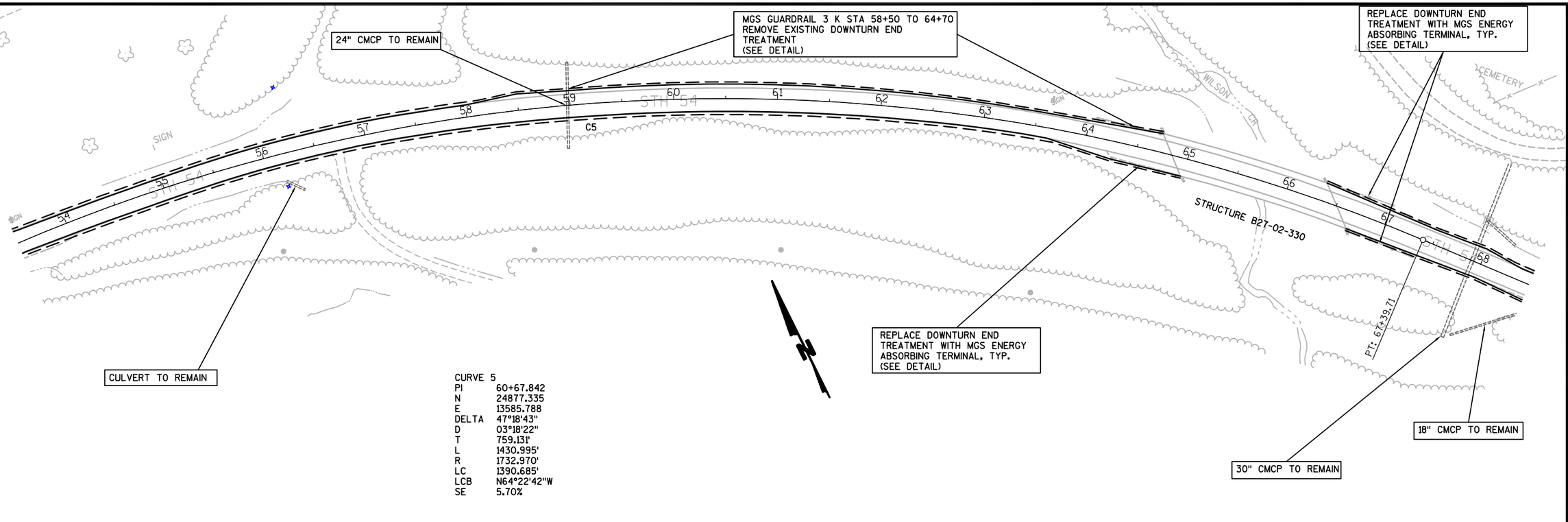

CURVE 5

PI	60+67.842
N	24877.335
E	13585.788
DELTA	47°18'43"
D	03°18'22"
T	759.131'
L	1430.995'
R	1732.970'
LC	1390.685'
LCB	N64°22'42"W
SE	5.70%

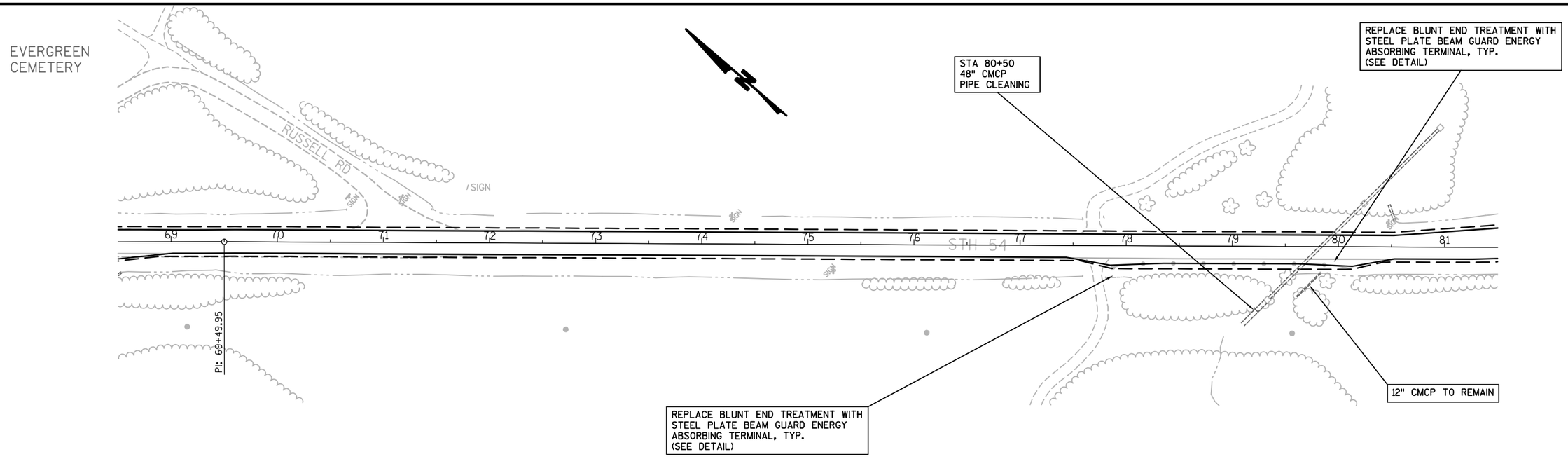

PROJECT NO: 7550-00-60	HWY: STH54	COUNTY: JACKSON	ROADWAY PLAN	SHEET NO: 83 E

FILE NAME : 050103_PP PLOT DATE : 23 JAN 2014 15:27:45 PLOT BY : GADDK PLOT NAME : PLOT SCALE : 1:1

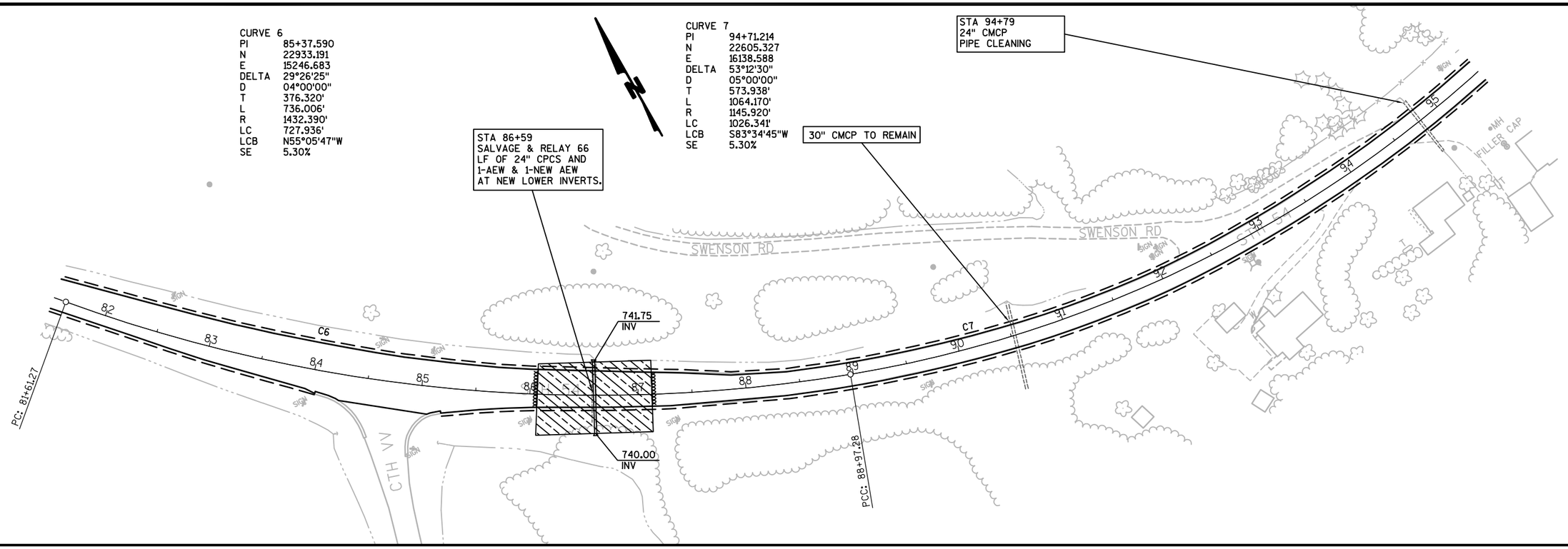

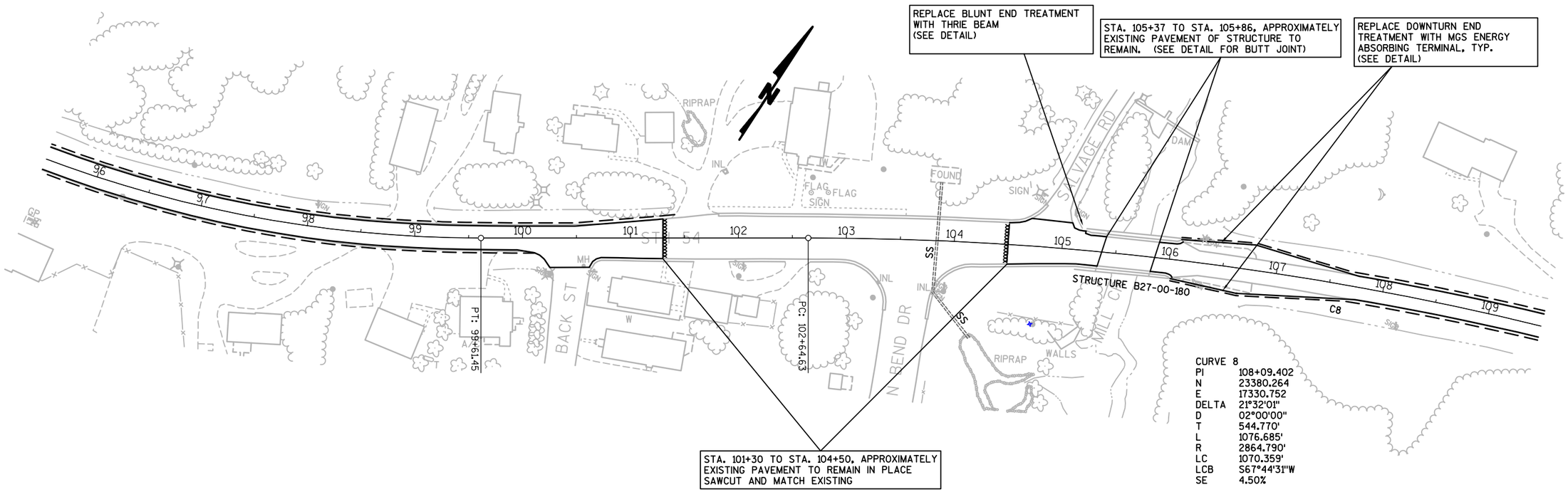

PROJECT NO: 7550-00-60	HWY: STH54	COUNTY: JACKSON	ROADWAY PLAN	SHEET NO: 84	E

FILE NAME : 050104_PP PLOT DATE : 24 FEB 2014 13:30:33 PLOT BY : GADDK PLOT NAME : PLOT SCALE : 1:1

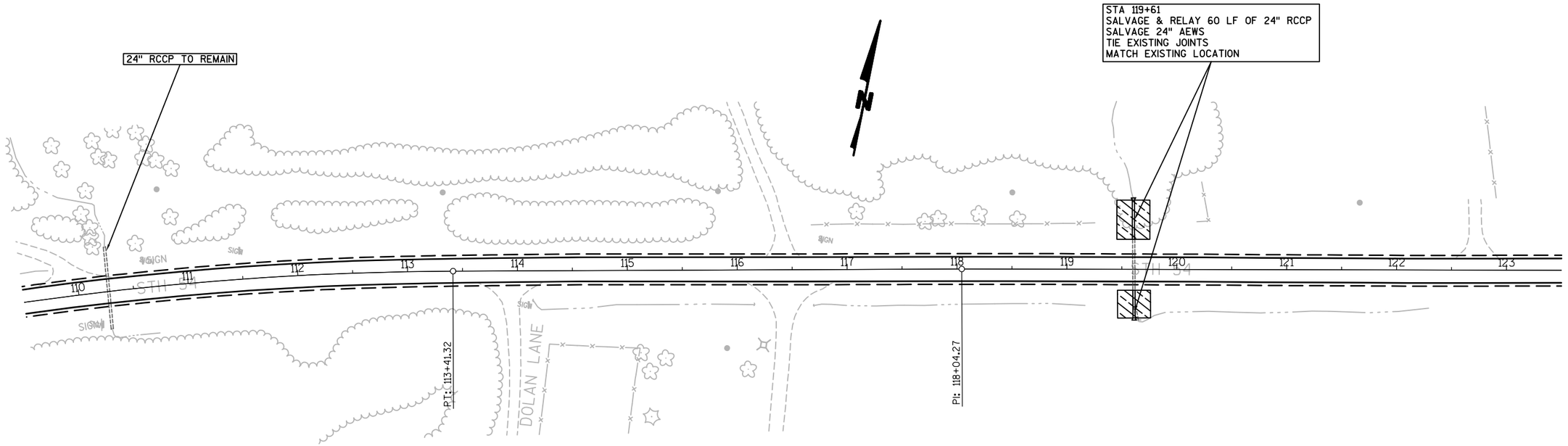

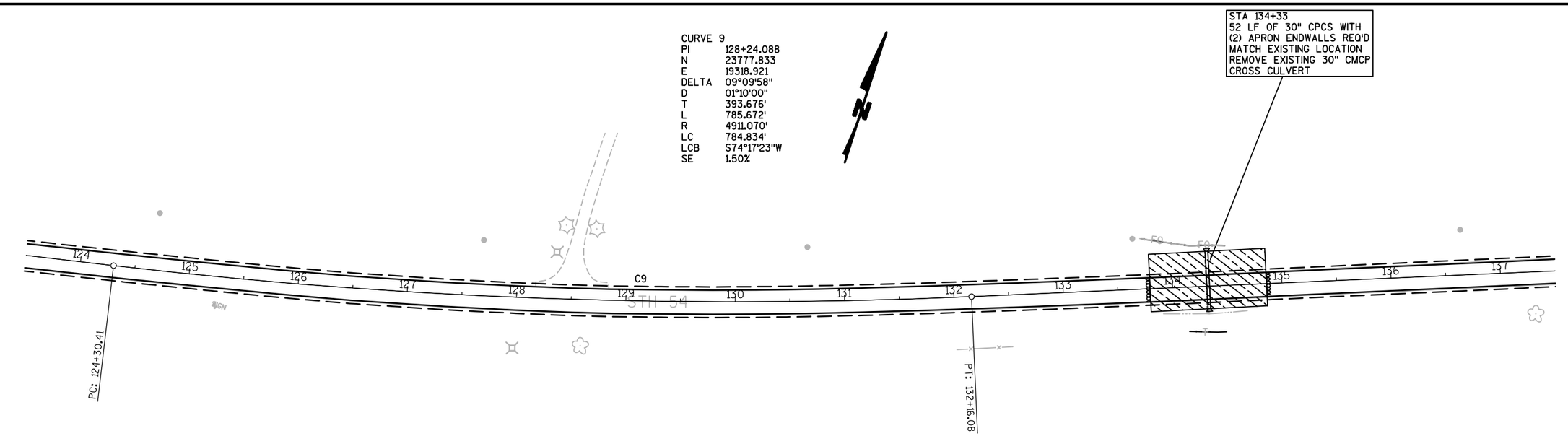

PROJECT NO: 7550-00-60	HWY: STH54	COUNTY: JACKSON	ROADWAY PLAN	SHEET NO: 85	E

FILE NAME : 050105_PP PLOT DATE : 16 APR 2014 09:19:07 PLOT BY : GADDK PLOT NAME : PLOT SCALE : 1:1

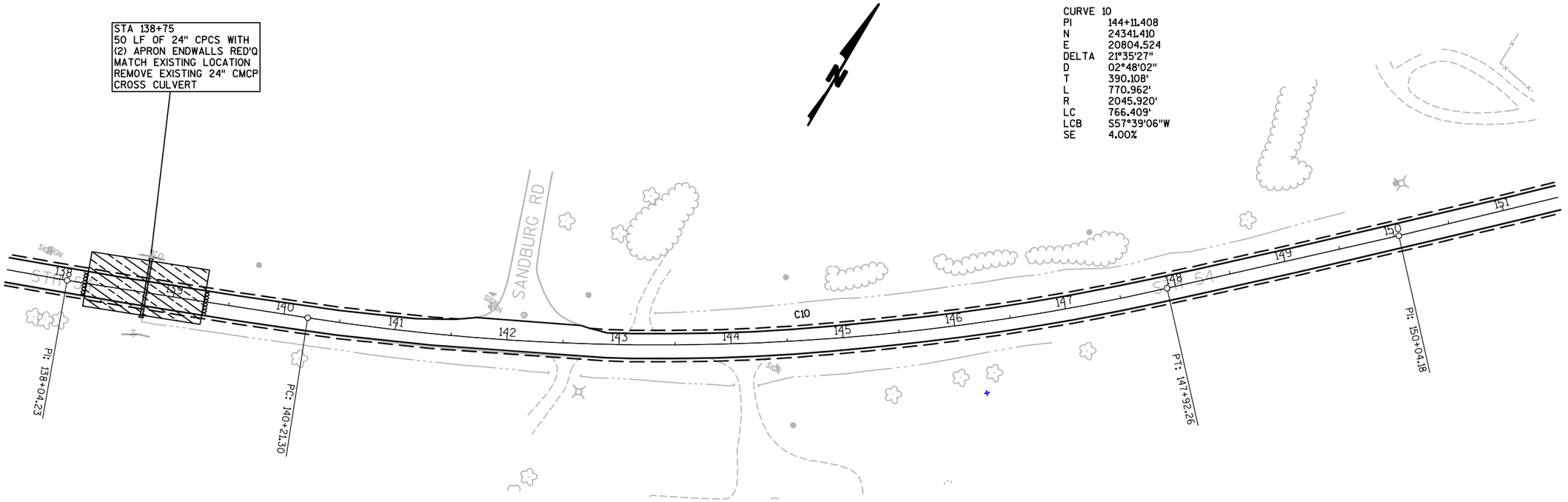

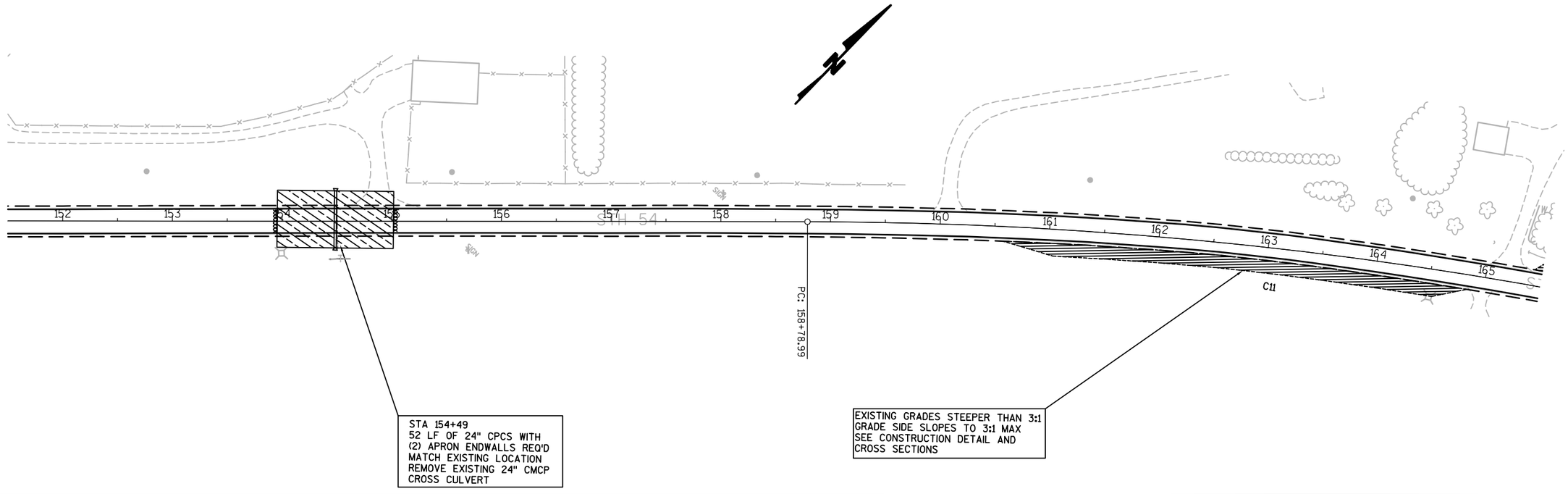

PROJECT NO: 7550-00-60	HWY: STH54	COUNTY: JACKSON	ROADWAY PLAN	SHEET NO: 86	E

FILE NAME : 050106_PP PLOT DATE : 16 APR 2014 09:26:20 PLOT BY : GADDK PLOT NAME : PLOT SCALE : 1:1

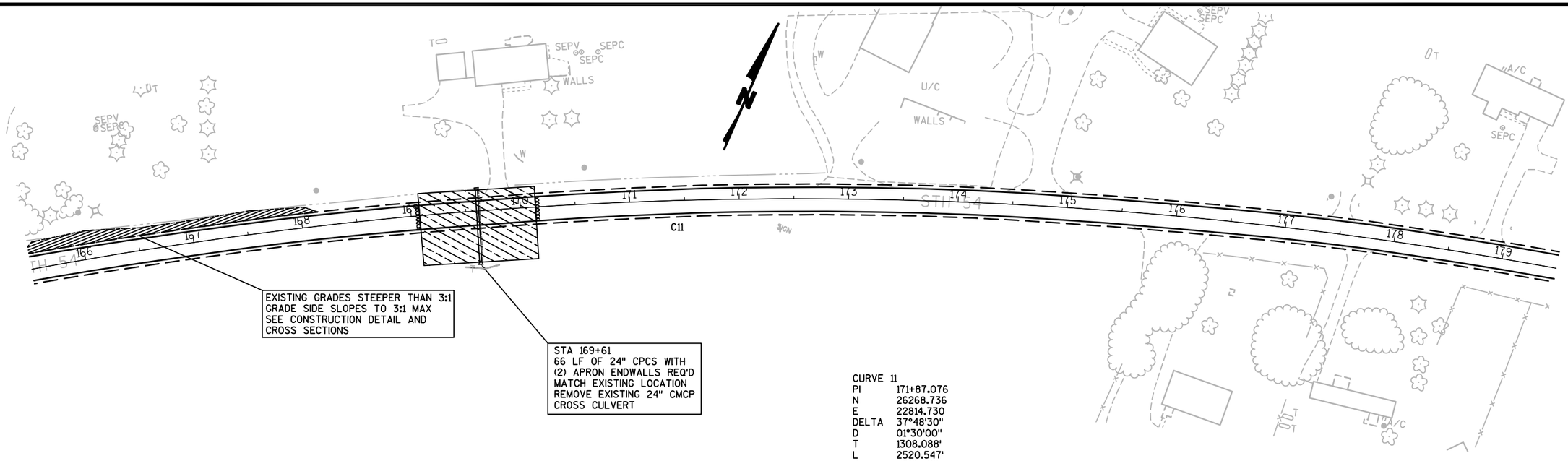

CURVE 11

PI	171+87.076
N	26268.736
E	22814.730
DELTA	37°48'30"
D	01°30'00"
T	1308.088'
L	2520.547'
R	3819.710'
LC	2475.064'
LCB	S64°55'50"W
SE	1.50%

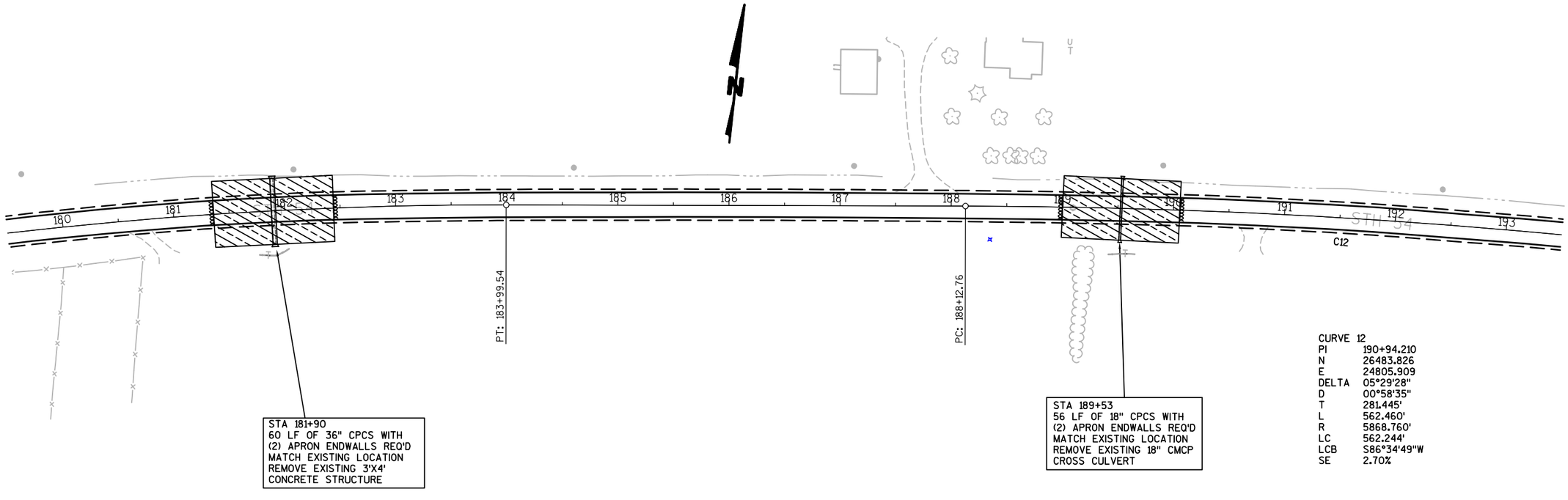

CURVE 12

PI	190+94.210
N	26483.826
E	24805.909
DELTA	05°29'28"
D	00°58'35"
T	281.445'
L	562.460'
R	5868.760'
LC	562.244'
LCB	S86°34'49"W
SE	2.70%

PROJECT NO: 7550-00-60	HWY: STH54	COUNTY: JACKSON	ROADWAY PLAN	SHEET NO: 87	E

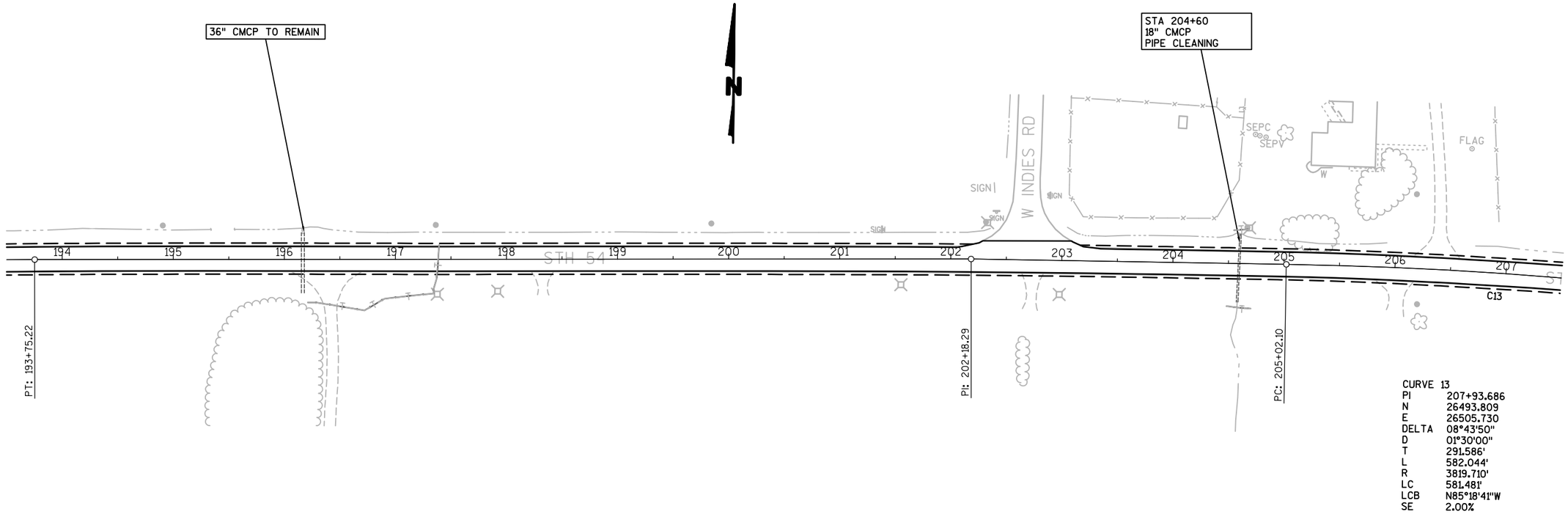

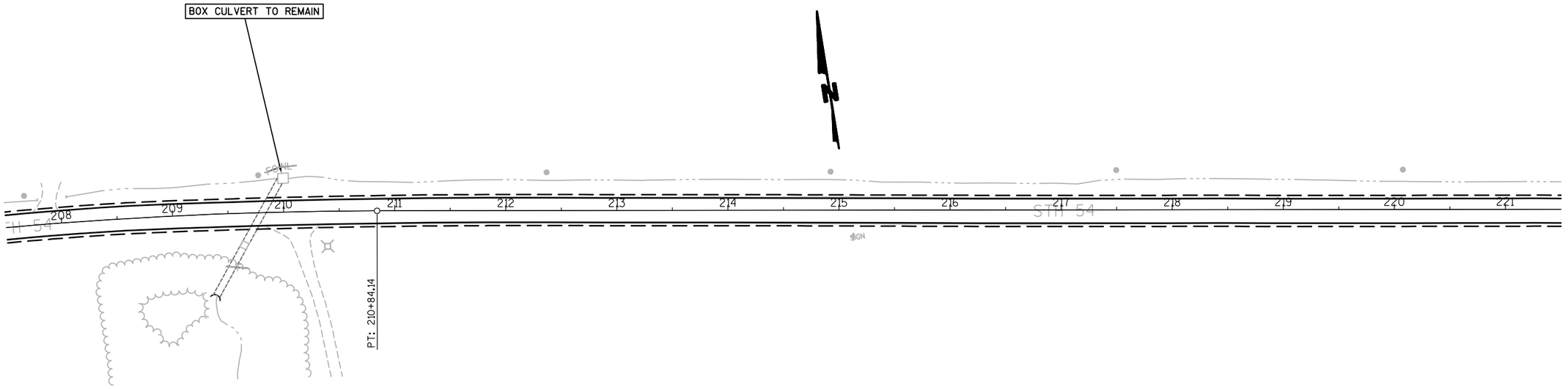

PROJECT NO: 7550-00-60	HWY: STH54	COUNTY: JACKSON	ROADWAY PLAN	SHEET NO: 88	E

FILE NAME : 050108_PP PLOT DATE : 16 APR 2014 09:50:23 PLOT BY : GADDK PLOT NAME : PLOT SCALE : 1:1

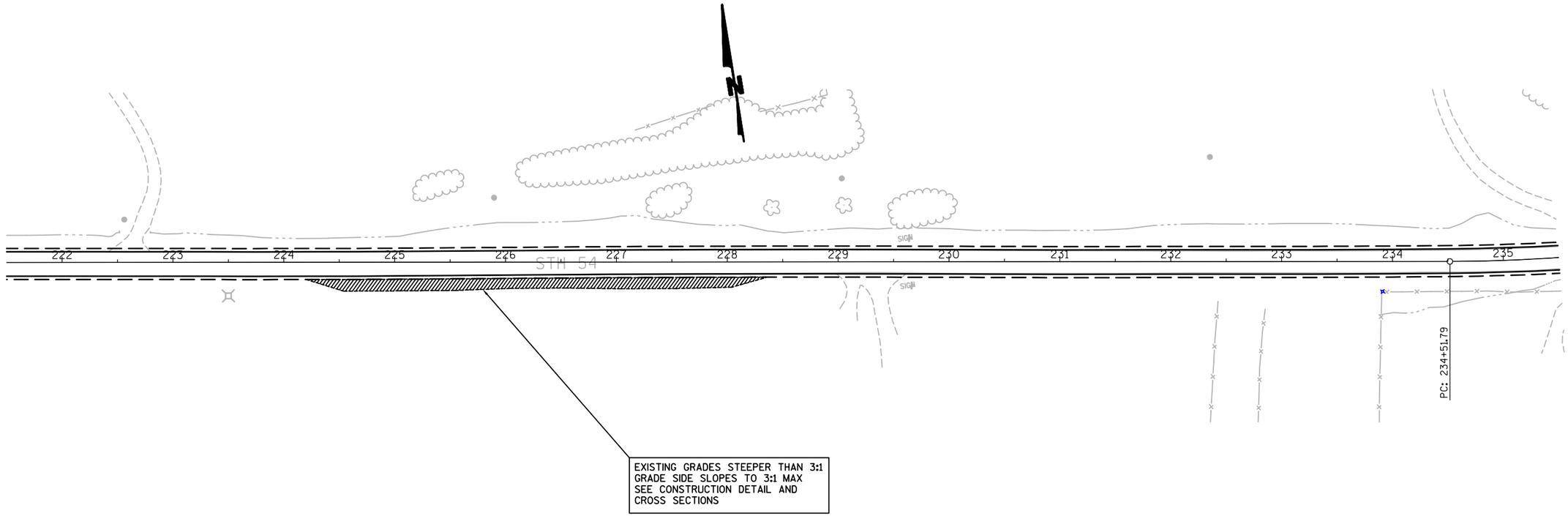

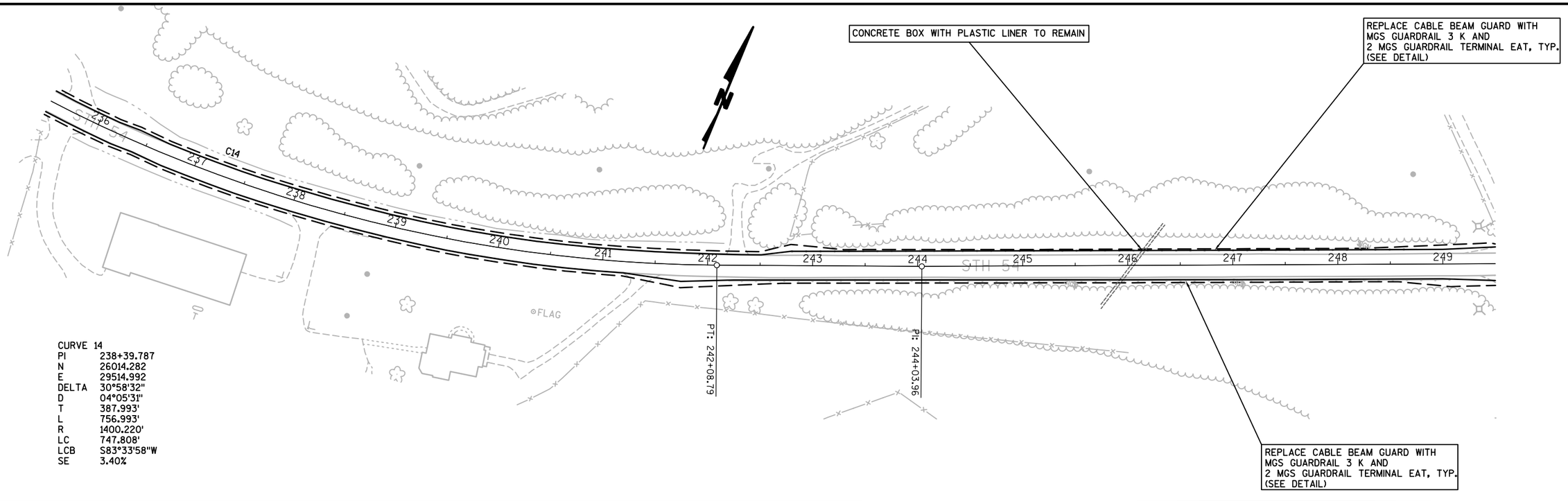

CURVE 14

PI	238+39.787
N	26014.282
E	29514.992
DELTA	30°58'32"
D	04°05'31"
T	387.993'
L	756.993'
R	1400.220'
LC	747.808'
LCB	S83°33'58"W
SE	3.40%

PROJECT NO: 7550-00-60	HWY: STH54	COUNTY: JACKSON	ROADWAY PLAN	SHEET NO: 89	E

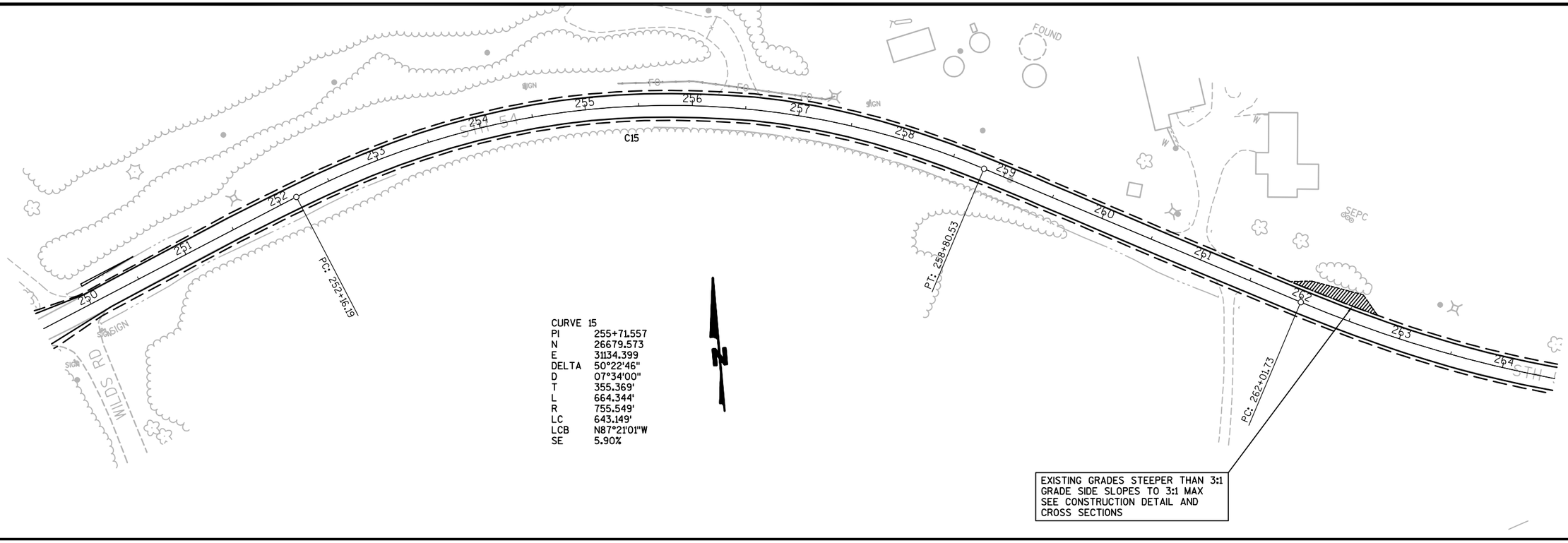

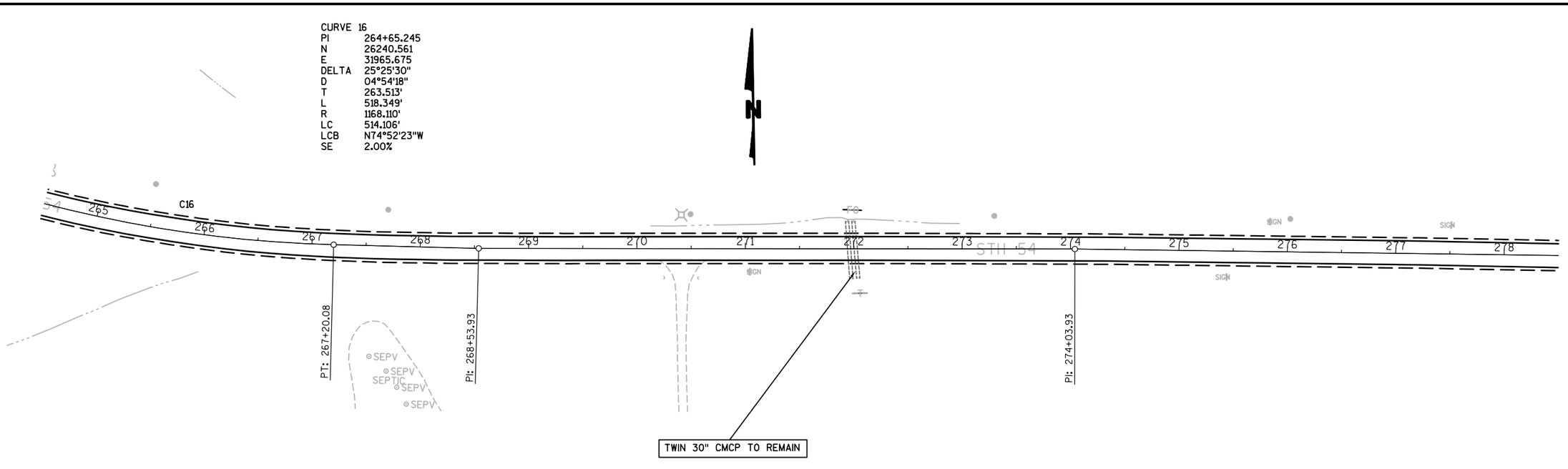

PROJECT NO: 7550-00-60	HWY: STH54	COUNTY: JACKSON	ROADWAY PLAN	SHEET NO: 90	E

FILE NAME : 050110_PP PLOT DATE : 16 APR 2014 09:54:38 PLOT BY : GADDK PLOT NAME : PLOT SCALE : 1:1

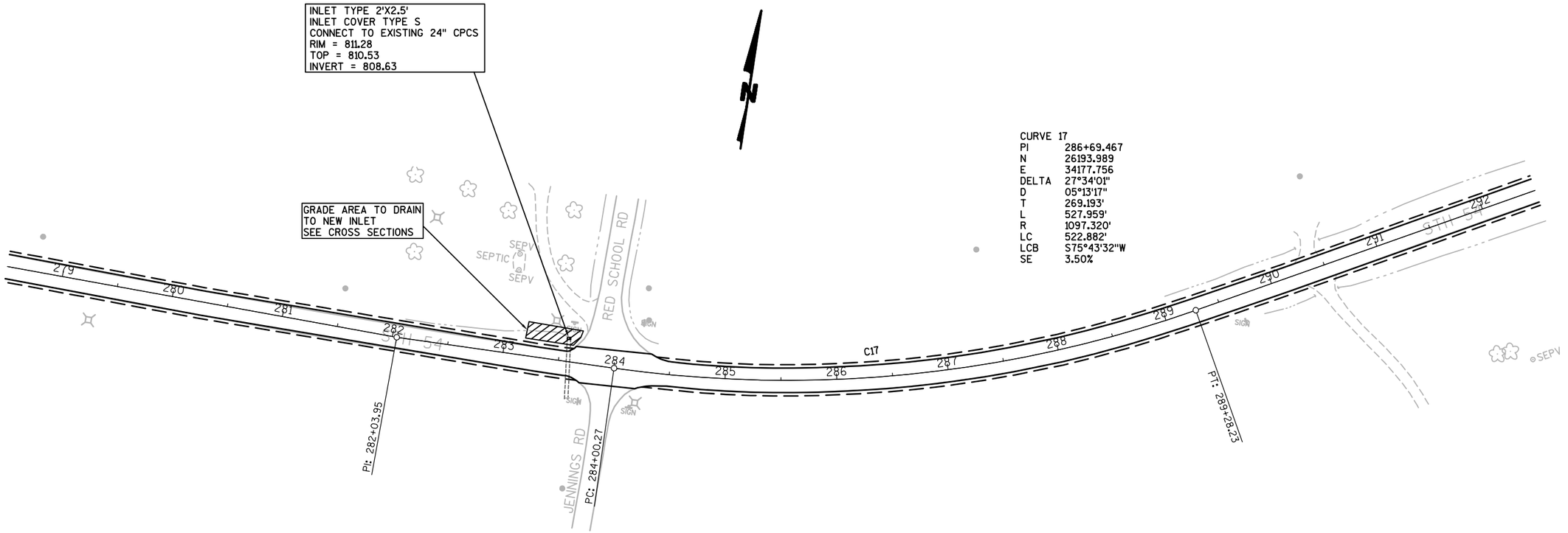

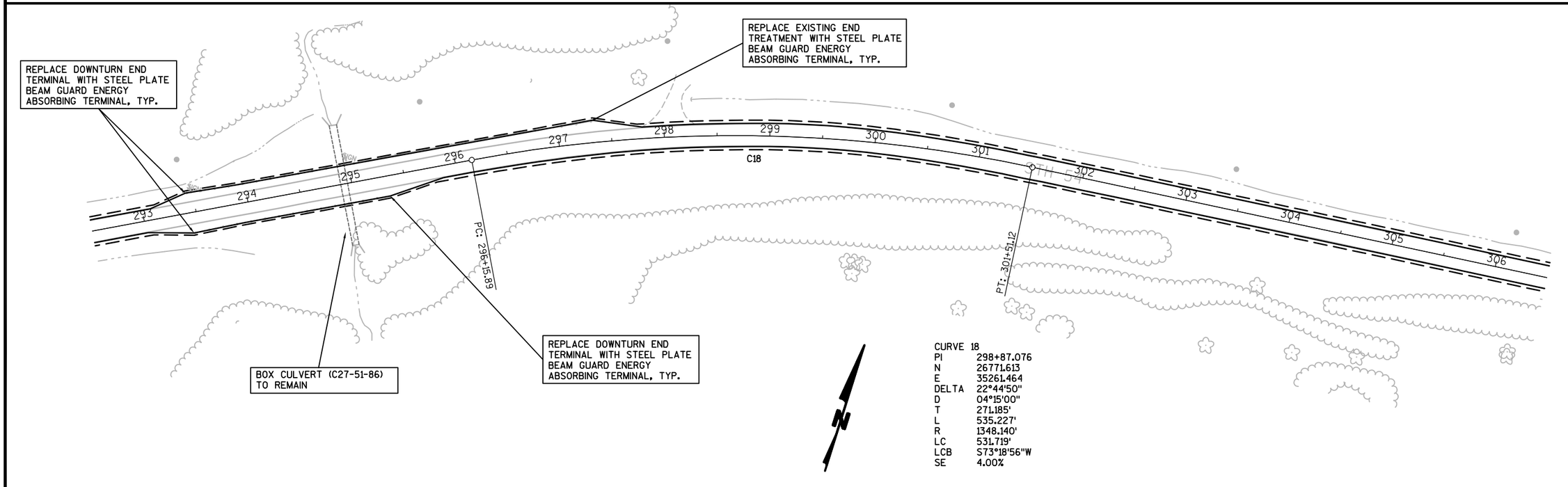

PROJECT NO: 7550-00-60	HWY: STH54	COUNTY: JACKSON	ROADWAY PLAN	SHEET NO: 91	E

FILE NAME : 050111_PP PLOT DATE : 24 FEB 2014 13:52:31 PLOT BY : GADDK PLOT NAME : PLOT SCALE : 1:1

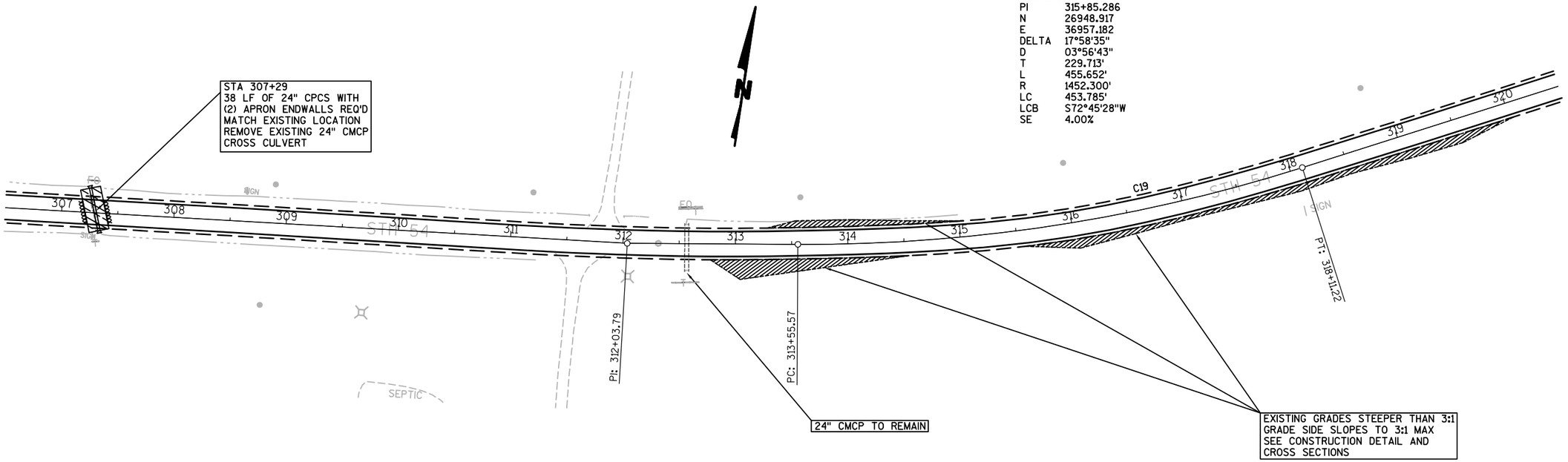

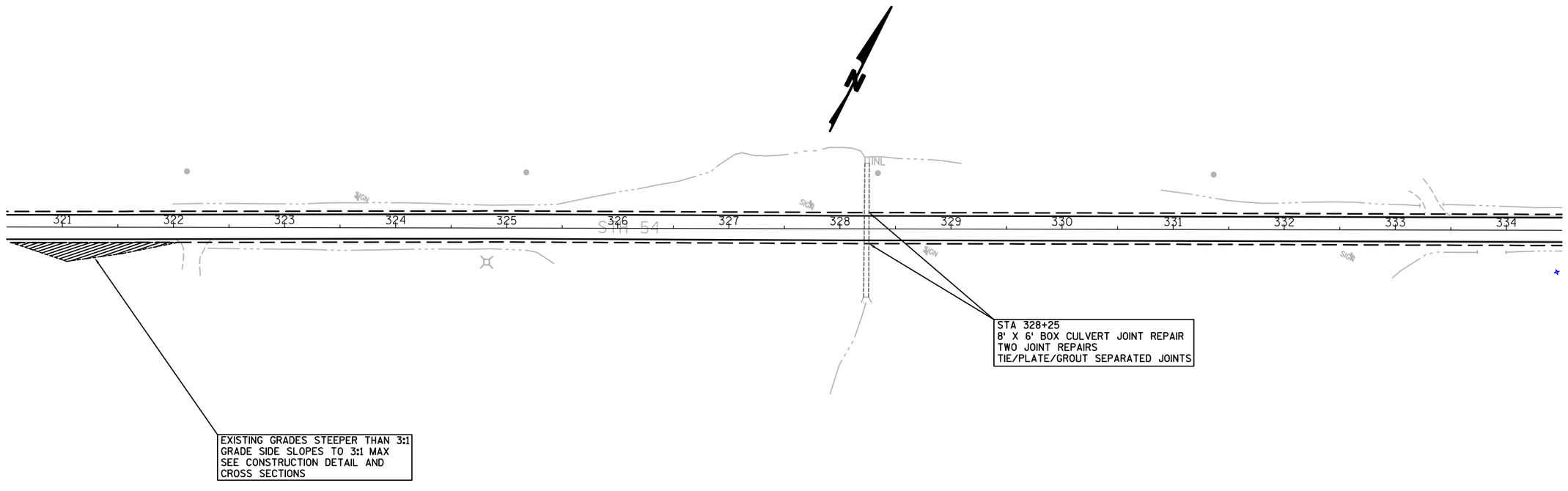

PROJECT NO: 7550-00-60	HWY: STH54	COUNTY: JACKSON	ROADWAY PLAN	SHEET NO: 92	E

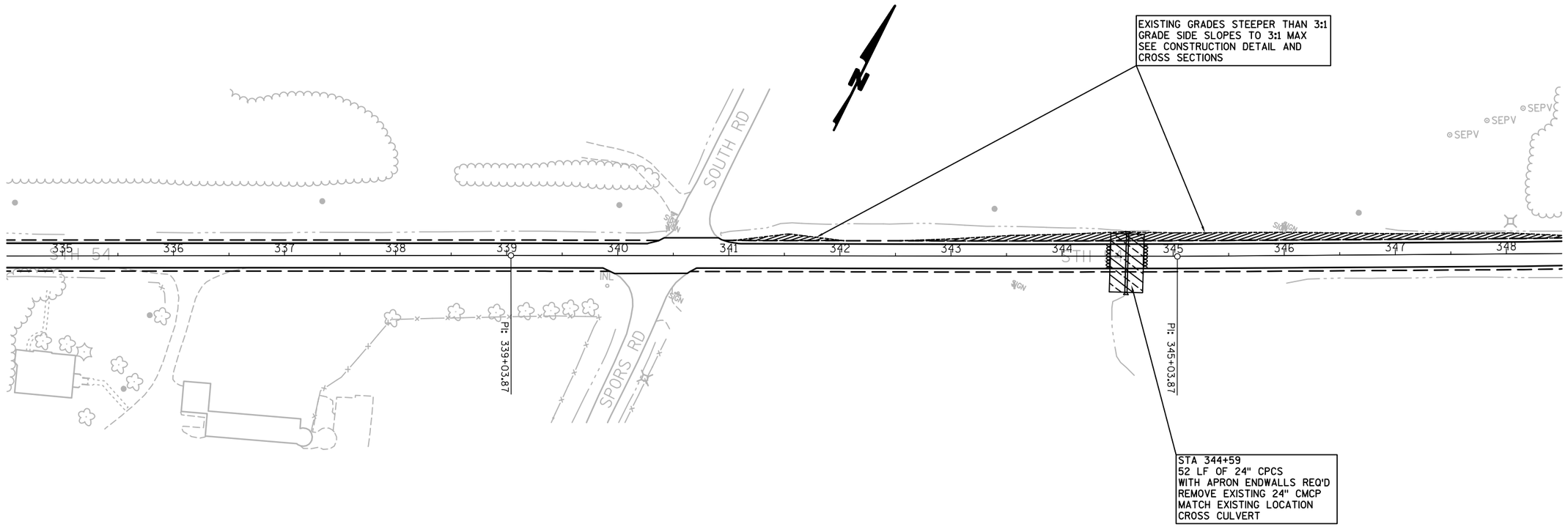

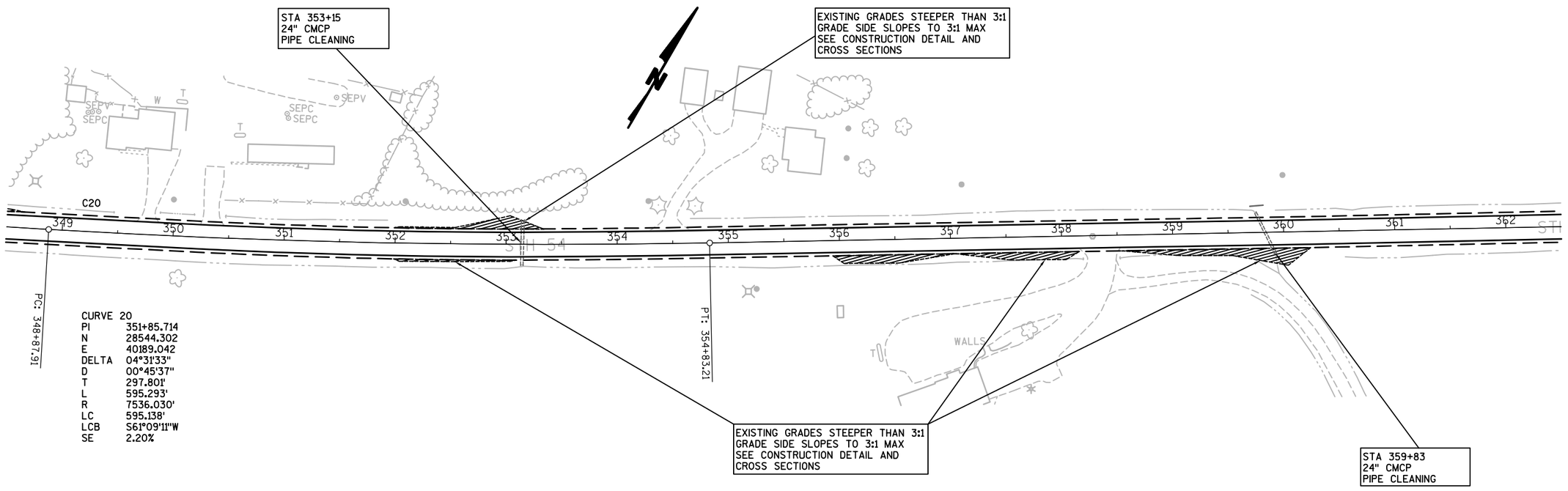

PROJECT NO: 7550-00-60	HWY: STH54	COUNTY: JACKSON	ROADWAY PLAN	SHEET NO: 93	E

FILE NAME : 050113_PP PLOT DATE : 21 FEB 2014 16:25:24 PLOT BY : GADDK PLOT NAME : PLOT SCALE : 1:1

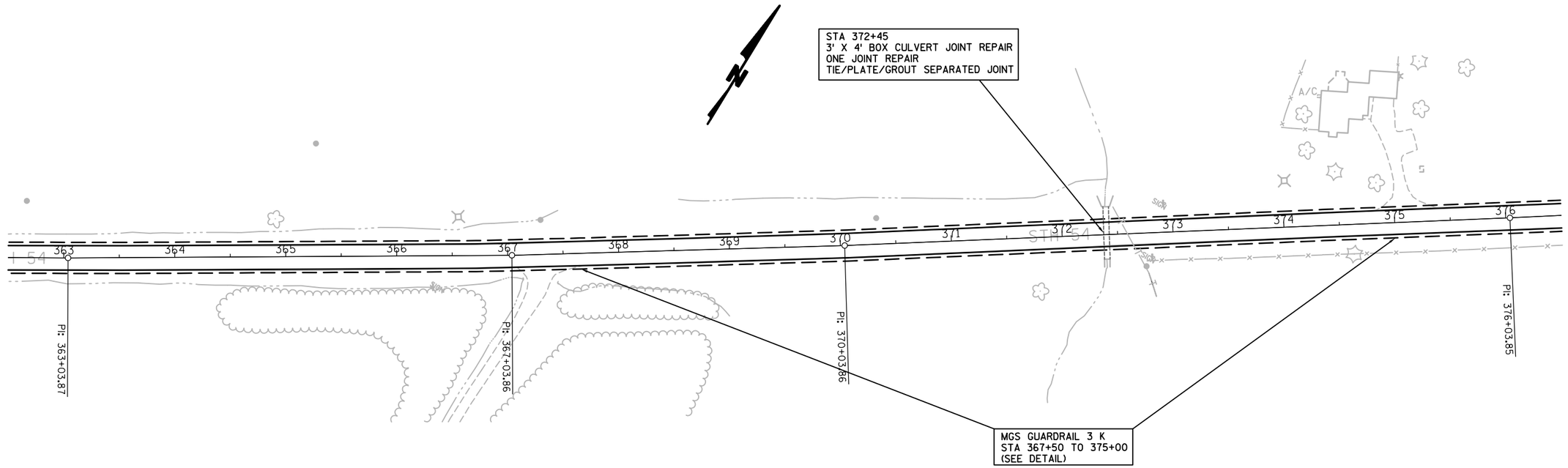

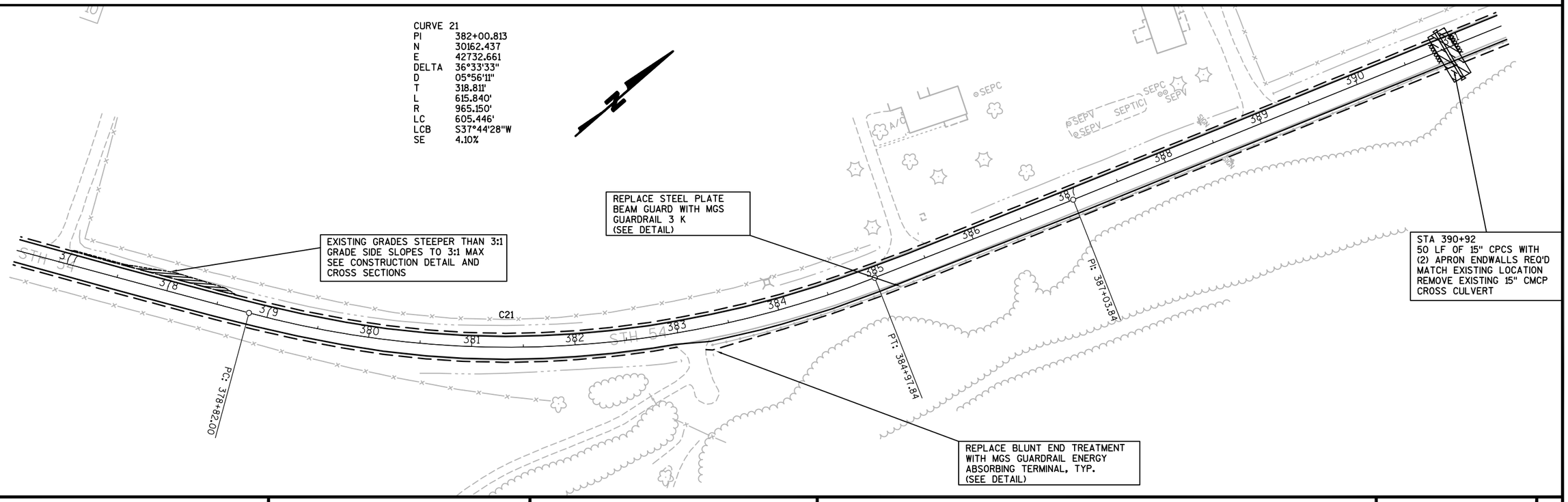

PROJECT NO: 7550-00-60	HWY: STH54	COUNTY: JACKSON	ROADWAY PLAN	SHEET NO: 94	E

FILE NAME : 050114_PP PLOT DATE : 16 APR 2014 10:28:53 PLOT BY : GADDK PLOT NAME : PLOT SCALE : 1:1

SEE SDD 15D28-2 TRAFFIC CONTROL, WORK ON SHOULDER OR PARKING LANE, UNDIVIDED ROADWAY

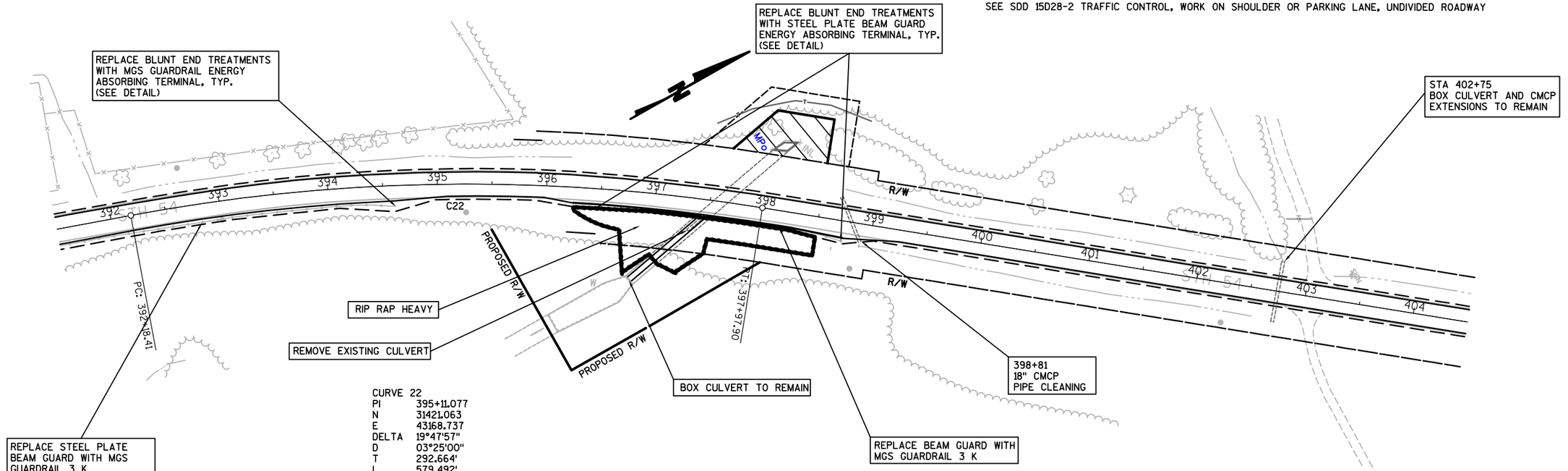

CURVE 22

PI	395+11.077
N	31421.063
E	43168.737
DELTA	19°47'57"
D	03°25'00"
T	292.664'
L	579.492'
R	1676.950'
LC	576.613'
LCB	S28°46'50"W
SE	3.50%

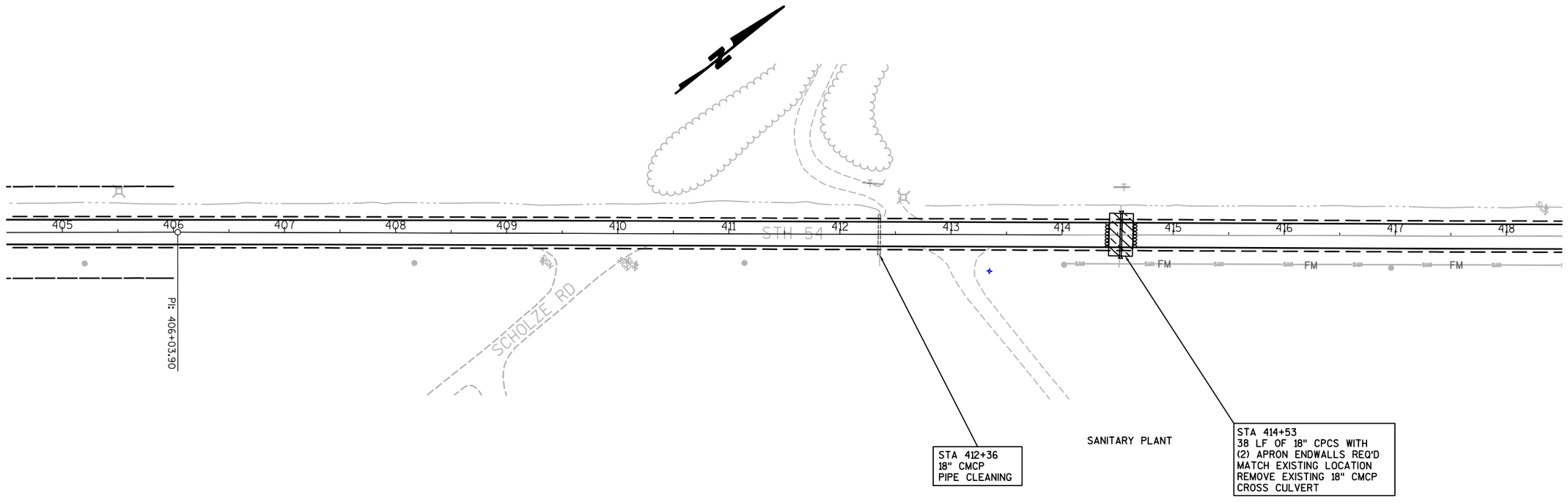

PROJECT NO: 7550-00-60	HWY: STH54	COUNTY: JACKSON	ROADWAY PLAN	SHEET NO: 95	E

FILE NAME : 050115_PP PLOT DATE : 16 APR 2014 10:32:54 PLOT BY : GADDK PLOT NAME : PLOT SCALE : 1:1

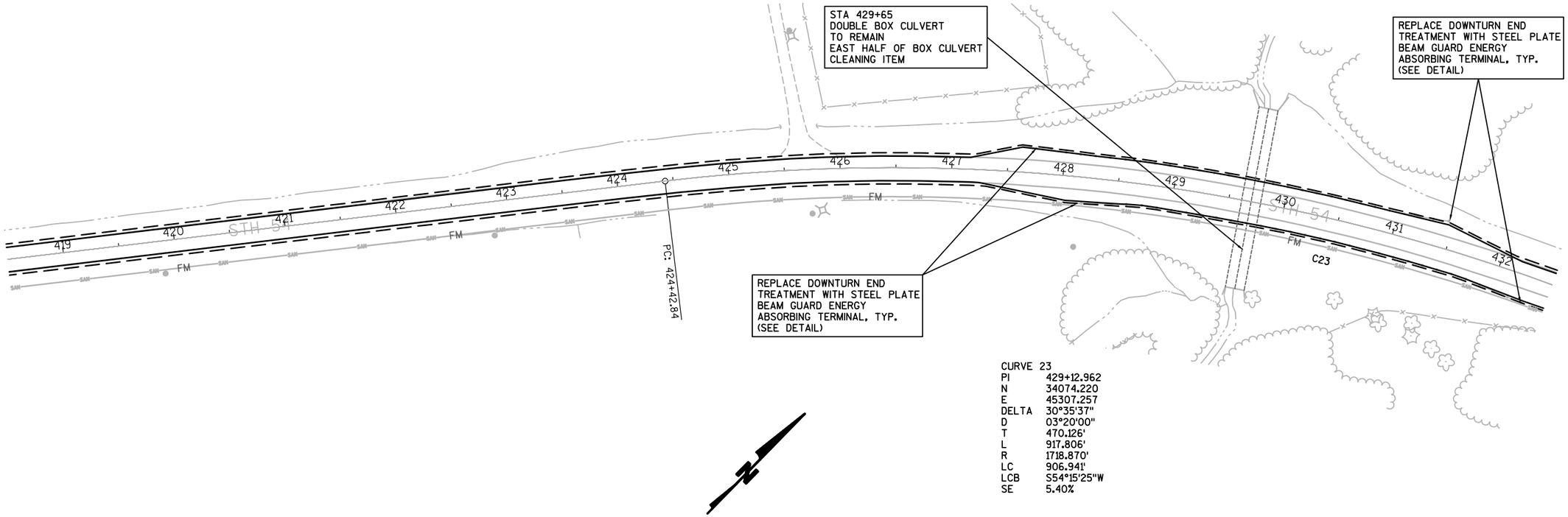

CURVE 23

PI	429+12.962
N	34074.220
E	45307.257
DELTA	30°35'37"
D	03°20'00"
T	470.126'
L	917.806'
R	1718.870'
LC	906.941'
LCB	S54°15'25"W
SE	5.40%

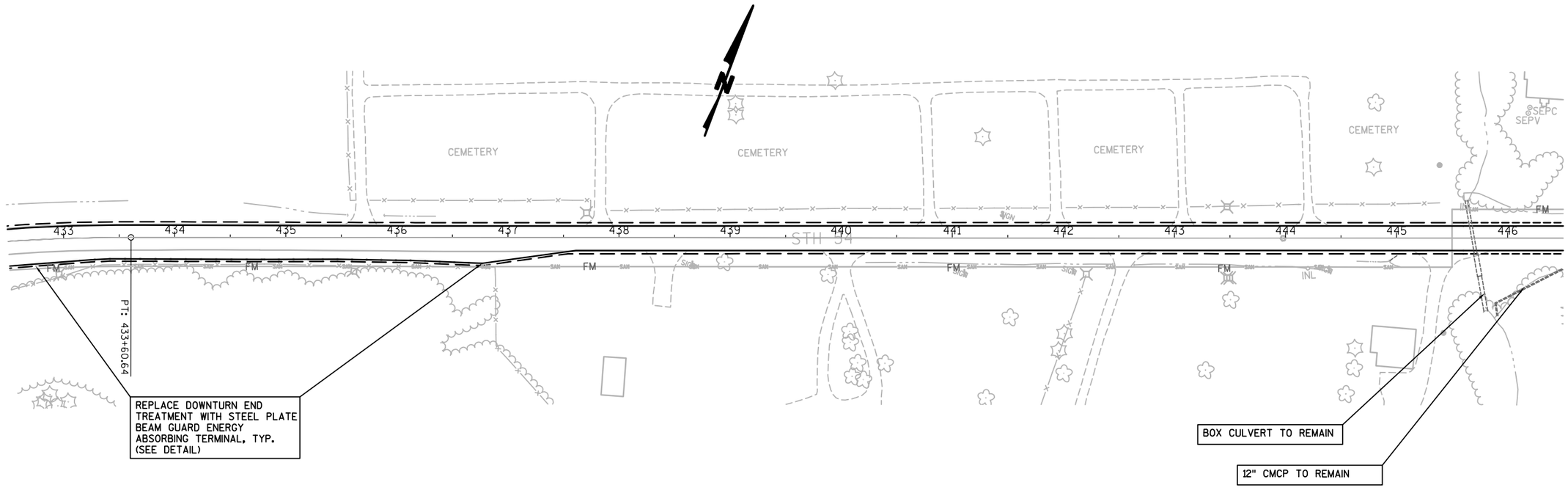

PROJECT NO: 7550-00-60	HWY: STH54	COUNTY: JACKSON	ROADWAY PLAN	SHEET NO: 96	E

FILE NAME : 050116_PP PLOT DATE : 24 FEB 2014 14:11:10 PLOT BY : GADDK PLOT NAME : PLOT SCALE : 1:1

CURVE 24
PI 451+93.399
N 34885.459
E 47462.478
DELTA 15°03'12"
D 04°00'00"
T 189.256'
L 376.333'
R 1432.390'
LC 375.251'
LCB S61°11'55"W
SE 4.60%

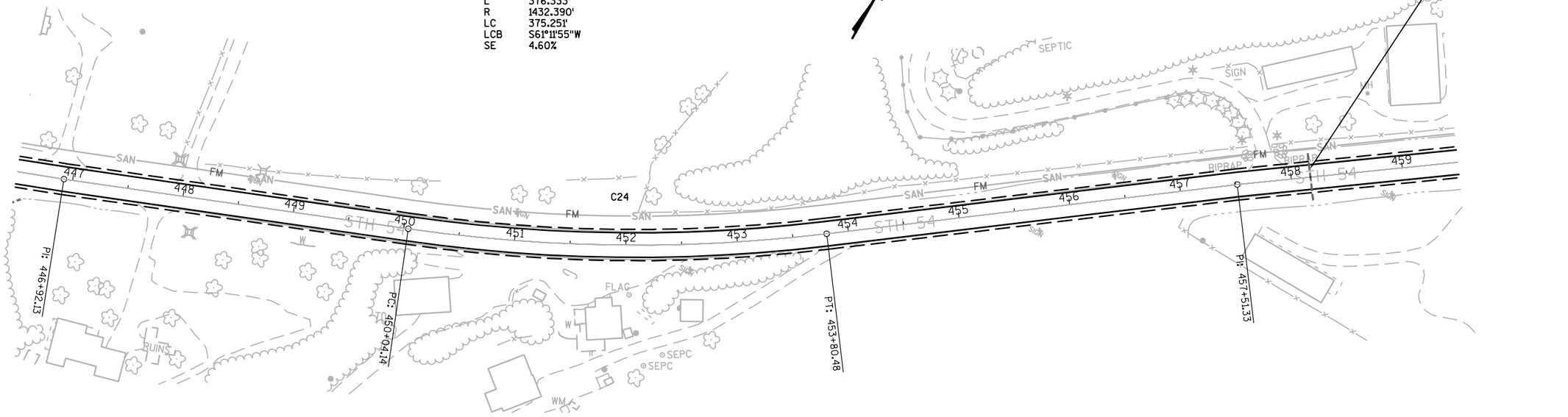

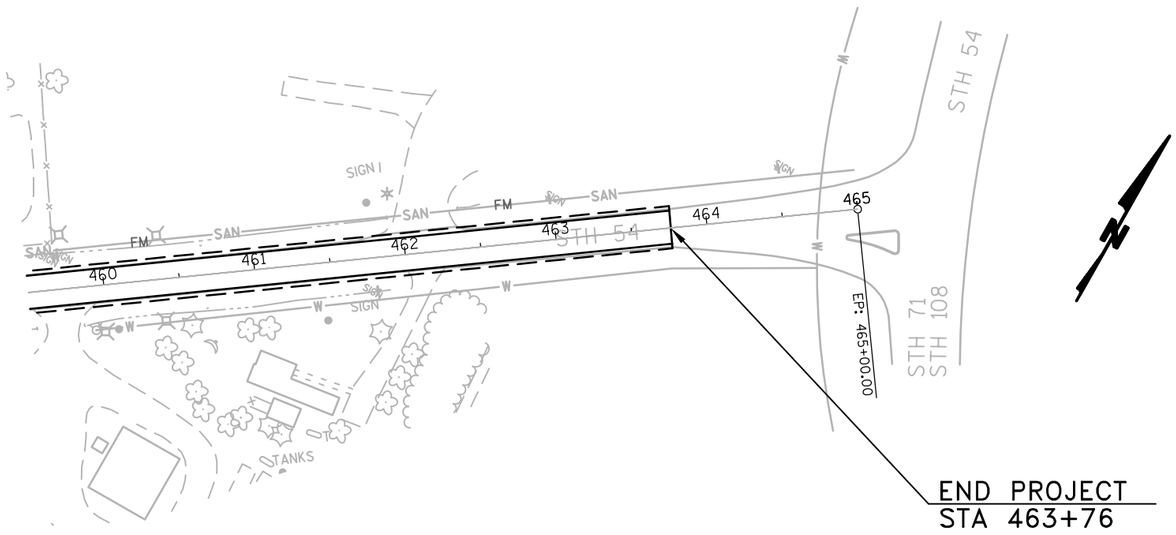

END PROJECT
STA 463+76
MATCH EXISTING
SAWCUT REQUIRED

PROJECT NO: 7550-00-60	HWY: STH54	COUNTY: JACKSON	ROADWAY PLAN	SHEET NO: 97 E

FILE NAME : 050117_PP PLOT DATE : 24 FEB 2014 14:16:24 PLOT BY : GADDK PLOT NAME : PLOT SCALE : 1:1

Standard Detail Drawing List

08A05-19C	INLET COVERS TYPE F, HM, HM-S, S, T, V, HM-GJ, & HM-GJ-S
08C07-01	INLETS 2X2-FT, 2X2.5-FT, 2X3-FT AND 2.5X3-FT
08D04-05	CONCRETE SURFACE DRAINS & ASPHALTIC FLUMES
08E08-03	TYPICAL INSTALLATIONS OF EROSION BALES / TEMPORARY DITCH CHECKS
08E09-06	SILT FENCE
08E10-02	INLET PROTECTION TYPE A, B, C AND D
08F01-11	APRON ENDWALLS FOR CULVERT PIPE
08F04-07	JOINT TIES FOR CONCRETE PIPE AND CONCRETE COLLAR DETAIL
14B15-08A	STEEL PLATE BEAM GUARD, CLASS "A" INSTALLATION & ELEMENTS
14B15-08B	STEEL PLATE BEAM GUARD, CLASS "A" INSTALLATION & ELEMENTS
14B15-08C	STEEL PLATE BEAM GUARD, CLASS "A", INSTALLATION & ELEMENTS
14B18-06A	STEEL PLATE BEAM GUARD, CLASS "A" (AT BRIDGES, OBSTACLES AND SIDEROADS/DRIVEWAYS)
14B20-11A	STEEL THRIE BEAM STRUCTURE APPROACH
14B20-11D	STEEL THRIE BEAM STRUCTURE APPROACH, CONNECTION TO SLOPED END PARAPETS
14B20-11E	STEEL THRIE BEAM STRUCTURE APPROACH, CONNECTION TO BRIDGE RAILING TYPES "F" AND "W"
14B20-11F	STEEL THRIE BEAM STRUCTURE APPROACH, CONNECTION TO BRIDGE RAILING TYPE "M"
14B24-08A	STEEL PLATE BEAM GUARD ENERGY ABSORBING TERMINAL
14B24-08B	STEEL PLATE BEAM GUARD ENERGY ABSORBING TERMINAL
14B24-08C	STEEL PLATE BEAM GUARD ENERGY ABSORBING TERMINAL
14B27-01A	STEEL PLATE BEAM GUARD SHORT RADIUS TERMINAL
14B27-01B	STEEL PLATE BEAM GUARD SHORT RADIUS TERMINAL
14B27-01C	STEEL PLATE BEAM GUARD SHORT RADIUS TERMINAL
14B29-01	SAFETY EDGE
14B42-03A	MIDWEST GUARDRAIL SYSTEM (MGS) GUARDRAIL
14B42-03B	MIDWEST GUARDRAIL SYSTEM (MGS) GUARDRAIL
14B42-03C	MIDWEST GUARDRAIL SYSTEM (MGS) GUARDRAIL
14B44-02A	MIDWEST GUARDRAIL SYSTEM ENERGY ABSORBING TERMINAL (MGS)
14B44-02B	MIDWEST GUARDRAIL SYSTEM ENERGY ABSORBING TERMINAL (MGS)
14B44-02C	MIDWEST GUARDRAIL SYSTEM ENERGY ABSORBING TERMINAL (MGS)
14B45-03A	MIDWEST GUARDRAIL SYSTEM THRIE BEAM TRANSITION (MGS)
14B45-03B	MIDWEST GUARDRAIL SYSTEM THRIE BEAM TRANSITION (MGS)
14B45-03C	MIDWEST GUARDRAIL SYSTEM THRIE BEAM TRANSITION (MGS)
14B45-03D	MIDWEST GUARDRAIL SYSTEM THRIE BEAM TRANSITION (MGS)
14B45-03E	MIDWEST GUARDRAIL SYSTEM THRIE BEAM TRANSITION (MGS)
14B45-03F	MIDWEST GUARDRAIL SYSTEM THRIE BEAM TRANSITION (MGS)
14B45-03G	MIDWEST GUARDRAIL SYSTEM THRIE BEAM TRANSITION (MGS)
14B45-03H	MIDWEST GUARDRAIL SYSTEM THRIE BEAM TRANSITION (MGS)
14B45-03I	MIDWEST GUARDRAIL SYSTEM THRIE BEAM TRANSITION (MGS)
14B45-03J	MIDWEST GUARDRAIL SYSTEM THRIE BEAM TRANSITION (MGS)
15A03-02A	FLEXIBLE MARKER POST FOR CULVERT END
15A03-02B	FLEXIBLE MARKER POST FOR CULVERT END
15C04-02	TRAFFIC CONTROL, ADVANCE WARNING SIGNS 45 M.P.H. OR GREATER TWO-WAY UNDIVIDED ROAD OPEN TO TRAFFIC
15C08-16A	PAVEMENT MARKING (MAINLINE)
15C08-16B	PAVEMENT MARKING (INTERSECTIONS)
15C08-16C	PAVEMENT MARKING (CLIMBING LANE & PASSING LANE)
15C08-16D	PAVEMENT MARKING (CLIMBING LANE & PASSING LANE)
15C12-04	TRAFFIC CONTROL FOR LANE CLOSURE (SUITABLE FOR MOVING OPERATIONS)
15C19-02A	MOVING PAVEMENT MARKING OPERATION TWO-LANE TWO-WAY ROADWAY
15D28-02	TRAFFIC CONTROL, WORK ON SHOULDER OR PARKING LANE, UNDIVIDED ROADWAY
15D32-03	TRAFFIC CONTROL, ONE LANE ROAD STOP CONDITION

6

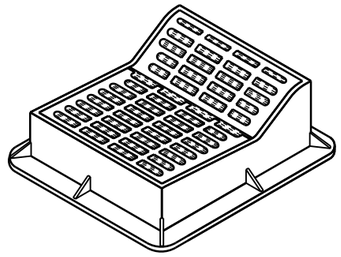

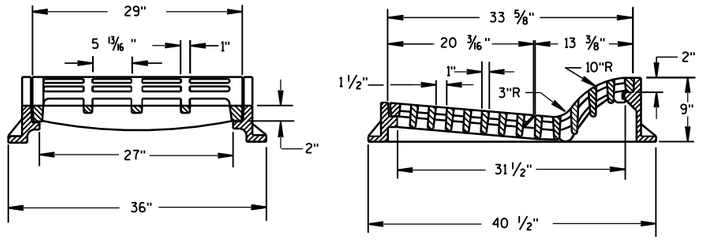

TYPE "F"

USE WITH TYPES A & D CONCRETE CURB & GUTTER, 36 INCH.

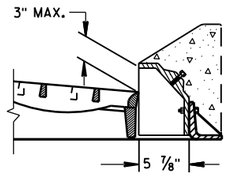

ALTERNATIVE CURB BOX FOR TYPE "HM" COVER

USE WITH TYPES G & J CONCRETE CURB & GUTTER, 30 INCH
NOTED AS TYPE HM-GJ ON DRAINAGE TABLE

NOTE:
SPECIAL GRATE FOR THE
TYPE "H" COVER MAY ALSO BE
USED FOR THE TYPE "HM-GJ" COVER
NOTED AS TYPE HM-GJ-S ON DRAINAGE TABLE

GENERAL NOTES

DETAILS OF CONSTRUCTION, MATERIALS AND WORKMANSHIP NOT SHOWN ON THIS DRAWING SHALL CONFORM TO THE PERTINENT REQUIREMENTS OF THE STANDARD SPECIFICATIONS AND THE APPLICABLE SPECIAL PROVISIONS.

DETAIL DRAWINGS FOR PROPOSED ALTERNATE DESIGNS FOR INLET COVERS SHALL BE SUBMITTED TO THE ENGINEER FOR APPROVAL PROVIDING THAT SUCH ALTERNATE DESIGNS MAKE PROVISION FOR EQUIVALENT CAPACITY AND STRENGTH.

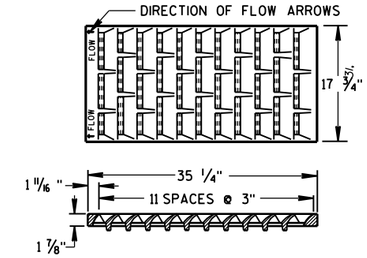

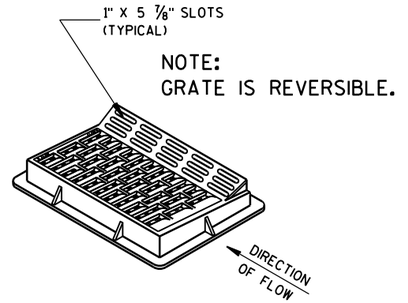

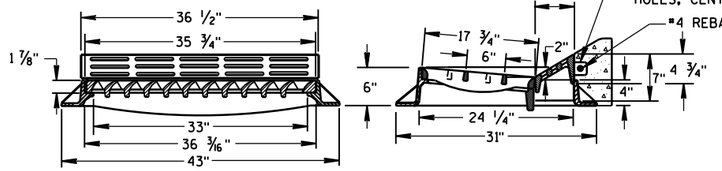

TYPE "HM"

USE WITH TYPES A & D CONCRETE CURB & GUTTER, 36 INCH.

NOTE:
SPECIAL GRATE FOR THE
TYPE "H" COVER MAY ALSO BE
USED FOR THE TYPE "HM" COVER
NOTED AS TYPE HM-S ON DRAINAGE TABLE

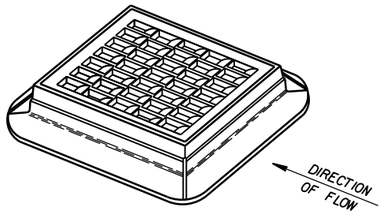

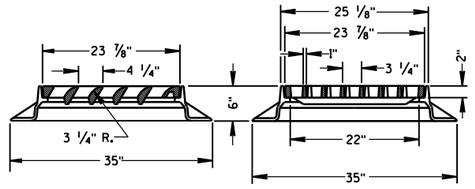

TYPE "S"

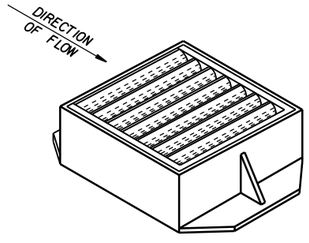

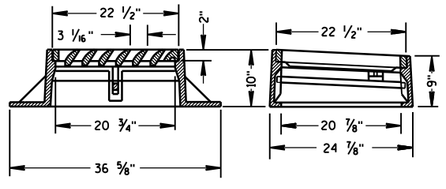

TYPE "V"

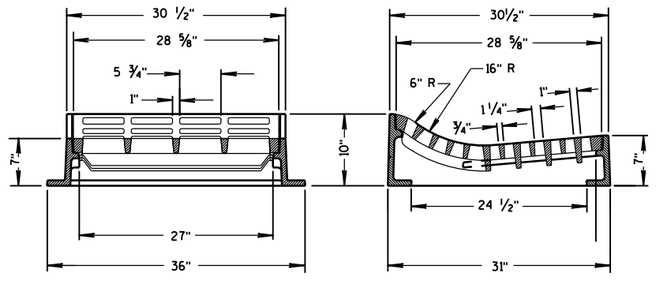

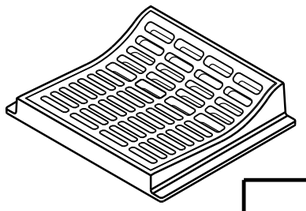

TYPE "T"

USE WITH TYPES R & T CONCRETE CURB & GUTTER, 36 INCH.

INLET COVERS
TYPE F, HM, HM-S, S, T, V, HM-GJ, & HM-GJ-S

STATE OF WISCONSIN
DEPARTMENT OF TRANSPORTATION

APPROVED
11/27/2013
DATE

/S/ Jerry H. Zogg
ROADWAY STANDARDS ENGINEER

FHWA

6

S.D.D. 8 A 5-19c

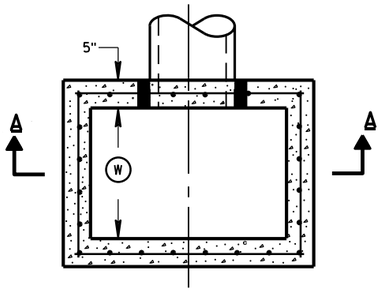

PLAN VIEW

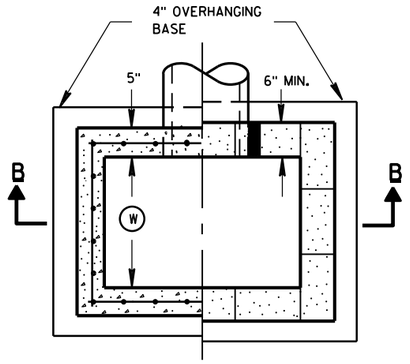

PLAN VIEW

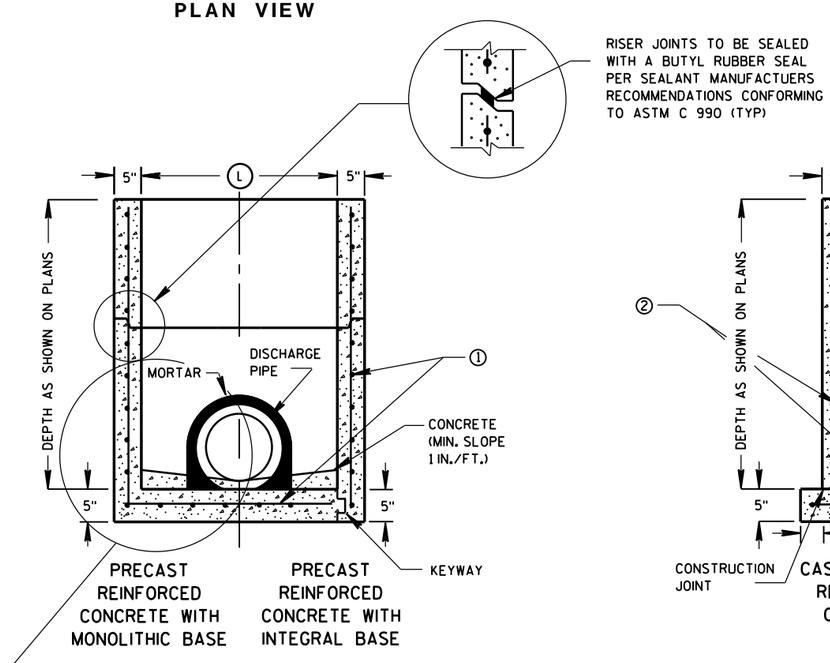

SECTION A-A

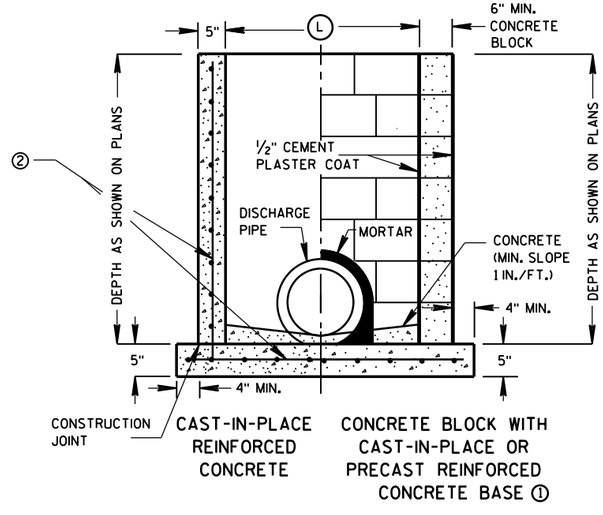

SECTION B-B

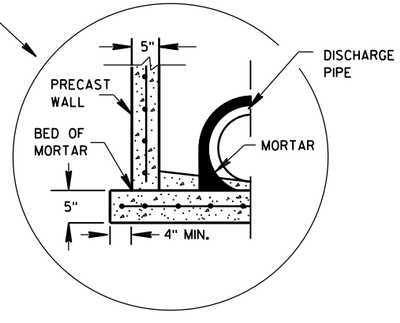

SEPARATE PRECAST REINFORCED CONCRETE BASE OPTION

GENERAL NOTES

DETAILS OF CONSTRUCTION, MATERIALS AND WORKMANSHIP NOT SHOWN ON THIS DRAWING SHALL CONFORM TO THE PERTINENT REQUIREMENTS OF THE STANDARD SPECIFICATIONS AND THE APPLICABLE SPECIAL PROVISIONS.

UNLESS OTHERWISE AUTHORIZED IN WRITING BY THE ENGINEER, THE CONTRACTOR SHALL NOT ORDER AND DELIVER PRECAST INLET UNITS REQUIRED FOR THE PROJECT UNTIL A LIST OF SIZES IS FURNISHED BY THE ENGINEER.

DETAILED DRAWINGS FOR PROPOSED ALTERNATE DESIGNS FOR UNDERGROUND DRAINAGE STRUCTURES SHALL BE SUBMITTED TO THE ENGINEER FOR APPROVAL PROVIDING THAT SUCH ALTERNATE DESIGNS MAKE PROVISION FOR EQUIVALENT CAPACITY AND STRENGTH.

ALL PRECAST INLET UNITS SHALL CONFORM TO THE PERTINENT REQUIREMENTS OF ASTM C 913.

ALL DRAINAGE STRUCTURES ARE DESIGNATED ON THE PLANS AS "MANHOLES 3X3-L", "CATCH BASINS 4-B", "INLETS 2X3-H", ETC. THE FIRST NUMBERS DESIGNATES THE SIZE OF THE STRUCTURE, AND THE FOLLOWING LETTER DESIGNATES THE TYPE OF COVER TO BE USED TO COMPRISE THE COMPLETE UNIT.

BASES SHALL BE PLACED ON A BED OF MATERIAL AT LEAST 6 INCHES IN DEPTH, WHICH MEETS THE REQUIREMENTS OF GRANULAR BACKFILL. THIS BEDDING SHALL BE COMPACTED AND PROVIDE UNIFORM SUPPORT FOR THE ENTIRE AREA OF THE BASE.

ALL BAR STEEL REINFORCEMENT SHALL BE EMBEDDED 2 INCHES CLEAR UNLESS OTHERWISE SHOWN OR NOTED.

PRECAST REINFORCED RISERS SHALL HAVE A TONGUE AND GROOVE JOINT WITH TONGUE UP OR DOWN.

4" OVERHANGING BASES ARE REQUIRED FOR CAST-IN-PLACE REINFORCED CONCRETE AND CONCRETE BLOCK INSTALLATIONS.
4" OVERHANG IS REQUIRED WHEN SEPARATE PRECAST BASE IS PROVIDED.
OVERHANG IS NOT REQUIRED ON PRECAST STRUCTURES WITH AN INTEGRAL OR MONOLITHIC BASE.

MAXIMUM INSIDE PIPE DIAMETER DETERMINED BY 3 INCH CLEARANCE ON EACH SIDE OF THE OUTSIDE WALL OF THE PIPE. SEE DETAIL "A". ASSUMES PIPE ENTERS PERPENDICULAR TO THE STRUCTURE.

① FOR PRECAST INLETS PROVIDE REINFORCING STEEL IN ACCORDANCE TO ASTM C 913.

② CONTRACTOR TO PROVIDE DRAWING(S) STAMPED BY A PROFESSIONAL ENGINEER FOR STEEL REINFORCING DESIGN FOR CAST-IN-PLACE STRUCTURES.

INLET COVER MATRIX

INLET SIZE		INLET COVER TYPE	ALL A'S	ALL B'S	BW	F	ALL H'S	S	T	V	WM
	WIDTH (W) (FT)	LENGTH (L) (FT)									
2X2-FT	2	2	X	X				X		X	
2X2.5-FT	2	2.5			X			X	X	X	X
2X3-FT	2	3					X				
2.5X3-FT	2.5	3				X					

PIPE MATRIX

INLET SIZE	MAXIMUM INSIDE PIPE DIAMETER	
	WIDTH (IN)	LENGTH (IN)
2X2-FT	12	12
2X2.5-FT	12	18
2X3-FT	12	24
2.5X3-FT	18	24

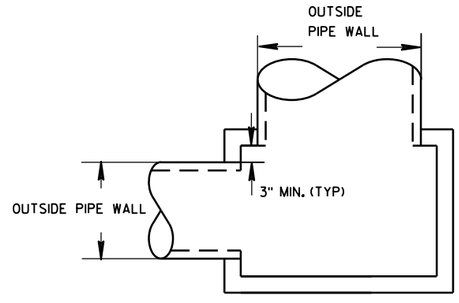

DETAIL "A"

INLETS 2X2-FT, 2X2.5-FT, 2X3-FT AND 2.5X3-FT

STATE OF WISCONSIN
DEPARTMENT OF TRANSPORTATION

APPROVED
6/5/2012
DATE
/S/ Jerry H. Zogg
ROADWAY STANDARDS DE ENGINEER
FHWA

6

S.D.D. 8 C 7-1

ASPHALTIC FLUME

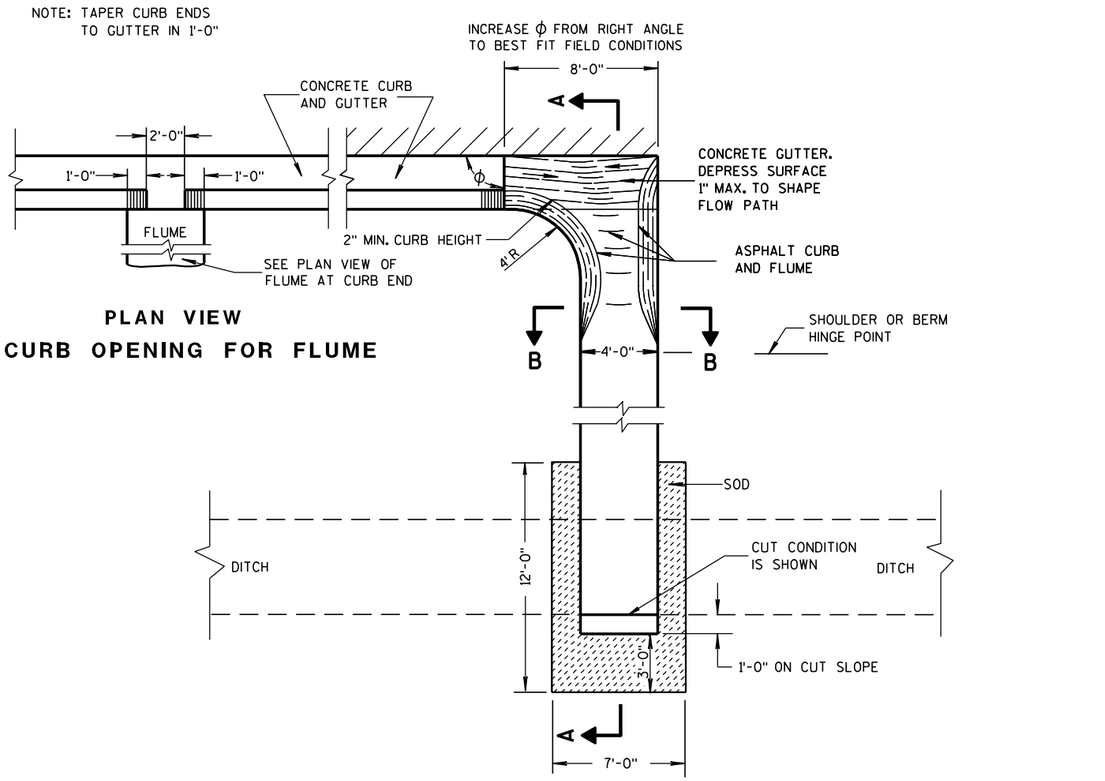

PLAN VIEW
CURB OPENING FOR FLUME

PLAN VIEW
FLUME AT CURB END

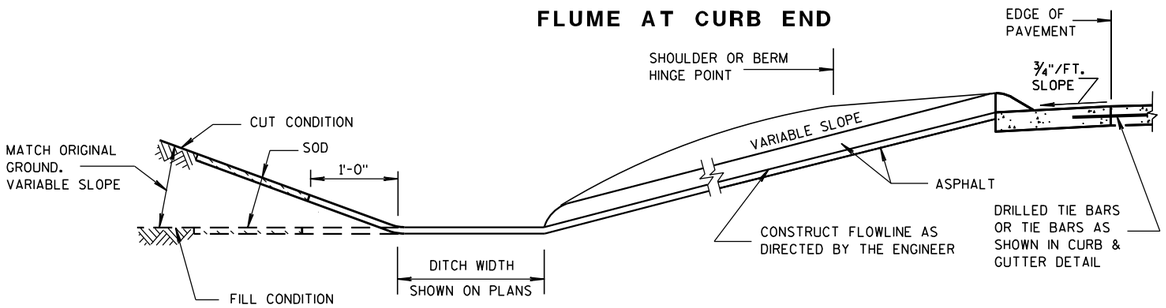

SECTION A-A

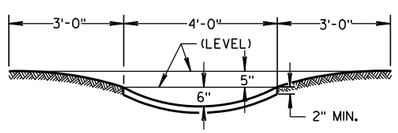

SECTION B-B

GENERAL NOTES

DETAILS OF CONSTRUCTION, MATERIALS AND WORKMANSHIP NOT SHOWN ON THIS DRAWING SHALL CONFORM TO PERTINENT REQUIREMENTS OF THE STANDARD SPECIFICATIONS AND APPLICABLE SPECIAL PROVISIONS.

WELDED STEEL WIRE FABRIC SHALL BE IN ACCORDANCE WITH AASHTO SPECIFICATION M55.

① JOINTS SHALL BE ⅛ TO ¼ INCH WIDE BY 1½ INCHES DEEP AND SPACED AT UNIFORM INTERVALS OF APPROXIMATELY 4 FEET.

② GEOTEXTILE FABRIC TYPE "R" SHALL UNDERLAY THE FULL LENGTH AND WIDTH OF THE CONCRETE SURFACE DRAIN AND RIPRAP.

③ CONCRETE SURFACE DRAIN WITHOUT CURB AND GUTTER MAY BE USED ON BACKSLOPES WHEN SPECIFIED

③ CONCRETE SURFACE DRAIN

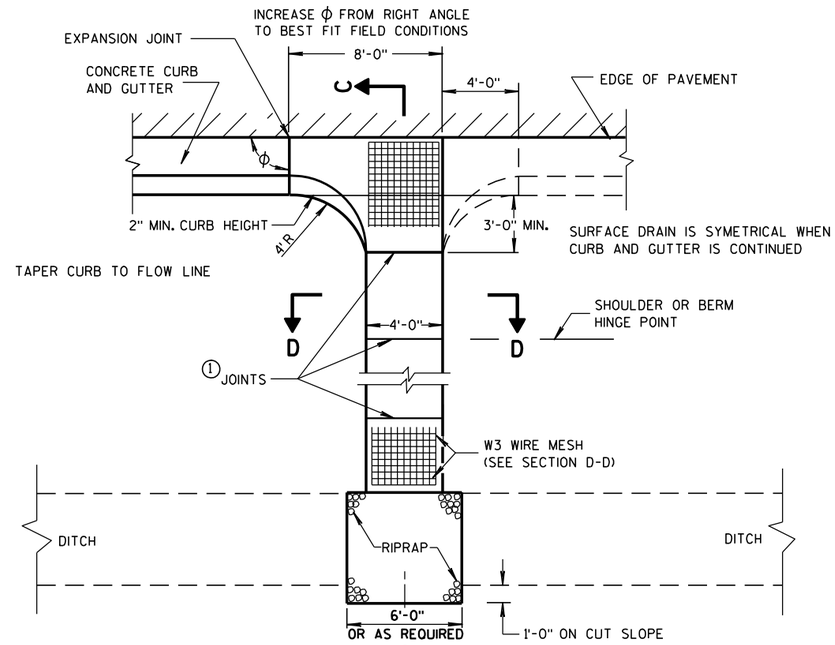

PLAN VIEW

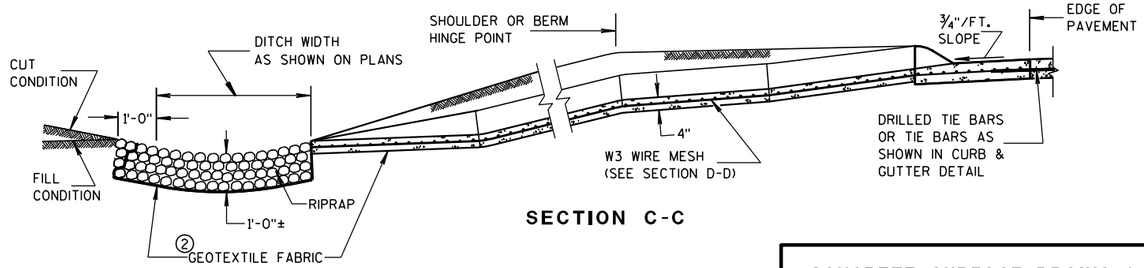

SECTION C-C

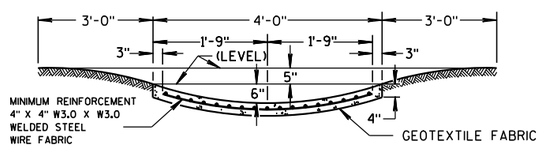

SECTION D-D

CONCRETE SURFACE DRAINS & ASPHALTIC FLUMES

STATE OF WISCONSIN
DEPARTMENT OF TRANSPORTATION

APPROVED

9-4-08 DATE — /S/ Jerry H. Zogg ROADWAY STANDARDS ENGINEER — MENT

FHWA

6

S.D.D. 8 D 4-5

6

S.D.D. 8 D 4-5

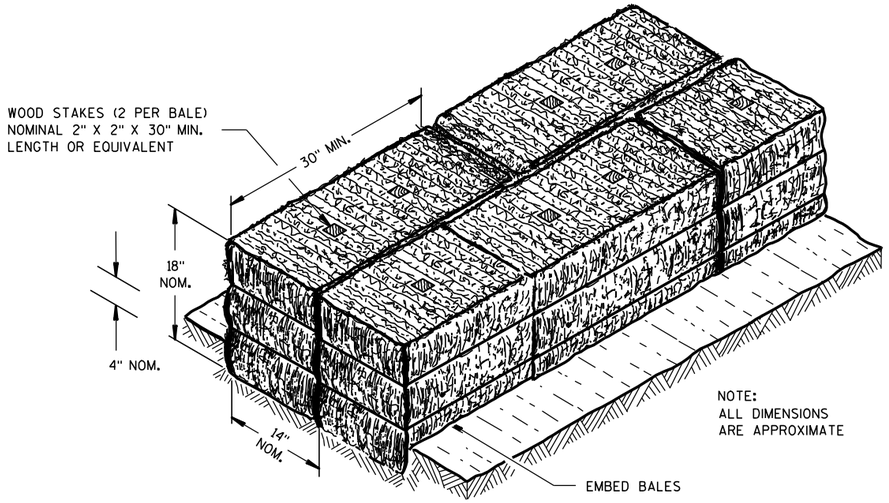

SECTION A-A

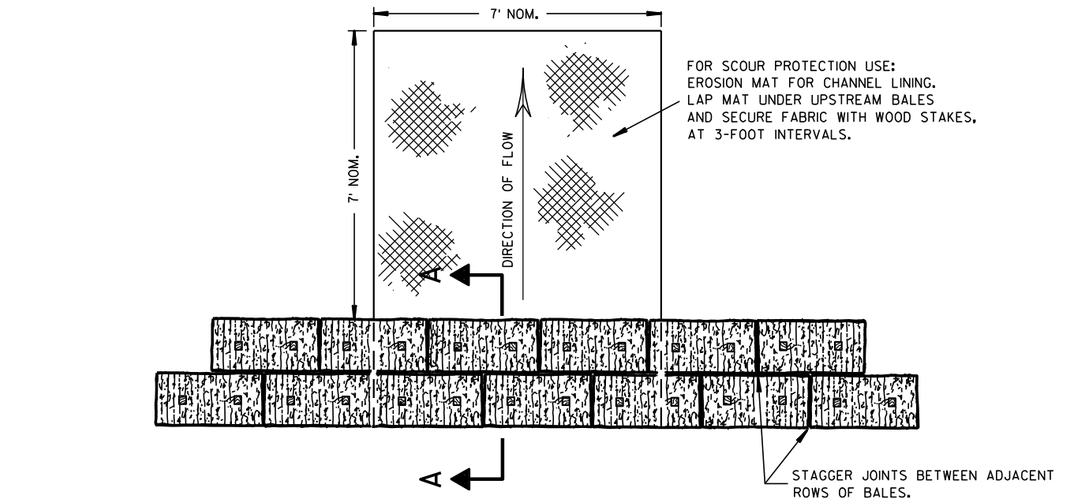

PLAN VIEW

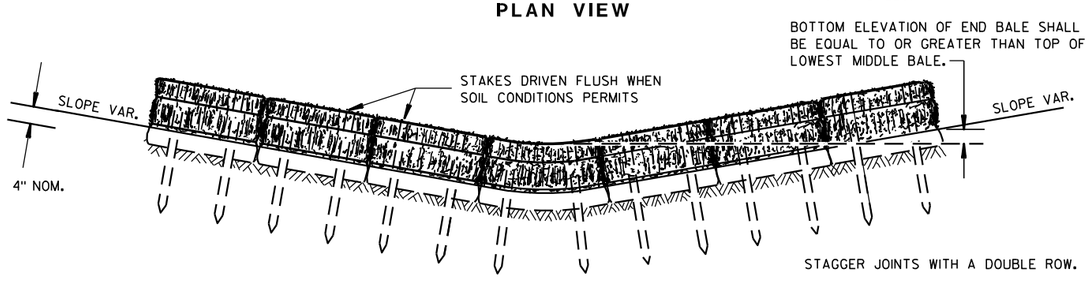

FRONT ELEVATION

TEMPORARY DITCH CHECK USING EROSION BALES ①

GENERAL NOTES

DETAILS OF CONSTRUCTION, MATERIALS AND WORKMANSHIP NOT SHOWN ON THIS DRAWING SHALL CONFORM TO THE PERTINENT REQUIREMENTS OF THE STANDARD SPECIFICATIONS AND THE APPLICABLE SPECIAL PROVISIONS.

① TEMPORARY DITCH CHECKS EITHER EROSION BALES OR MANUFACTURED SHALL BE PAID FOR UNDER THE BID ITEM OF TEMPORARY DITCH CHECK. THE DEPARTMENT WILL NOT PAY FOR TEMPORARY DITCH CHECKS CONSTRUCTED OF A SINGLE ROW OF EROSION BALES.

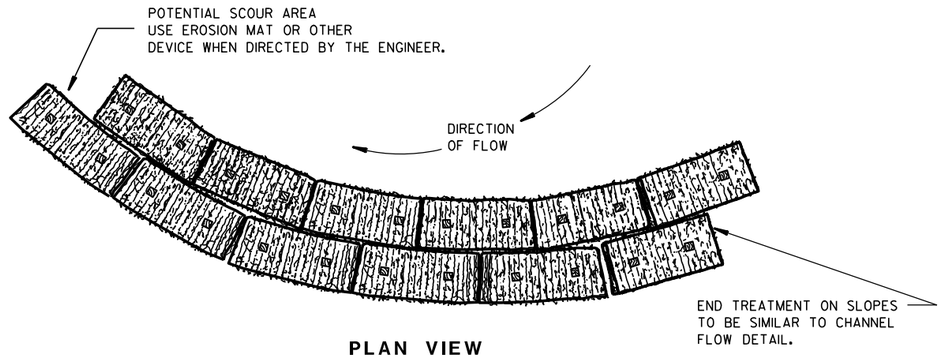

PLAN VIEW

WHEN ALTERING THE DIRECTION OF FLOW

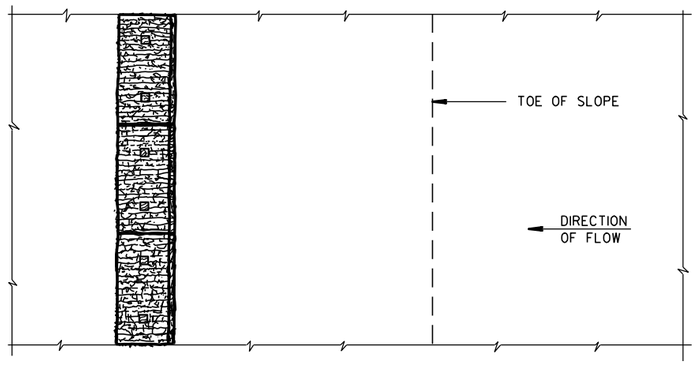

PLAN VIEW

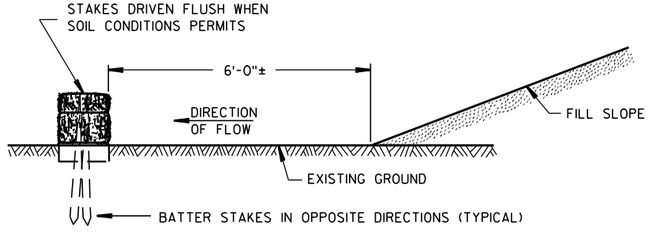

FRONT ELEVATION

WHEN EXISTING GROUND SLOPES AWAY FROM FILL SLOPE

EROSION BALES FOR SHEET FLOW

TYPICAL INSTALLATIONS OF EROSION BALES / TEMPORARY DITCH CHECKS

STATE OF WISCONSIN
DEPARTMENT OF TRANSPORTATION

APPROVED
6/04/02 DATE
/S/ Beth Cannestra
CHIEF ROADWAY DEVELOPMENT ENGINEER
FHWA

6

S.D.D. 8 E 8-3

6

S.D.D. 8 E 8-3

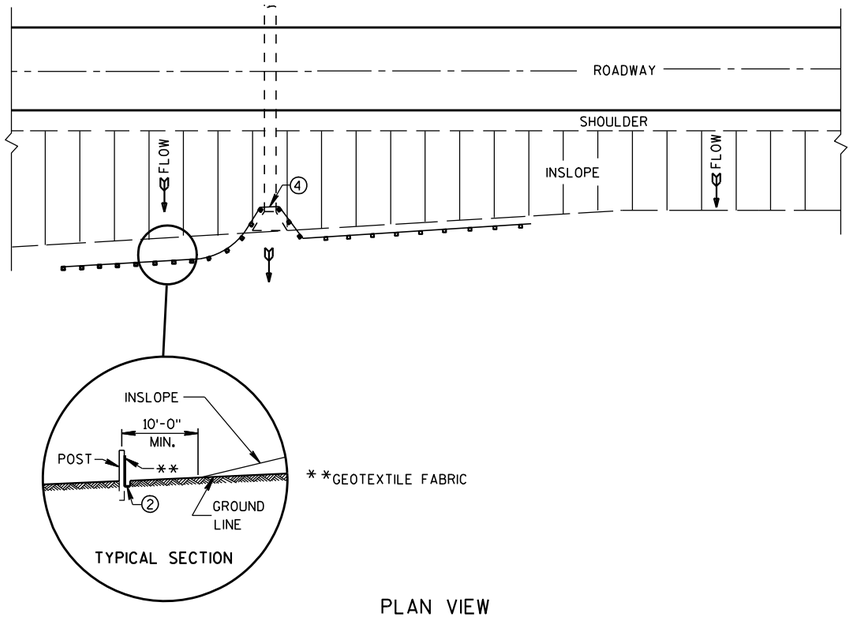

PLAN VIEW

TYPICAL APPLICATION OF SILT FENCE

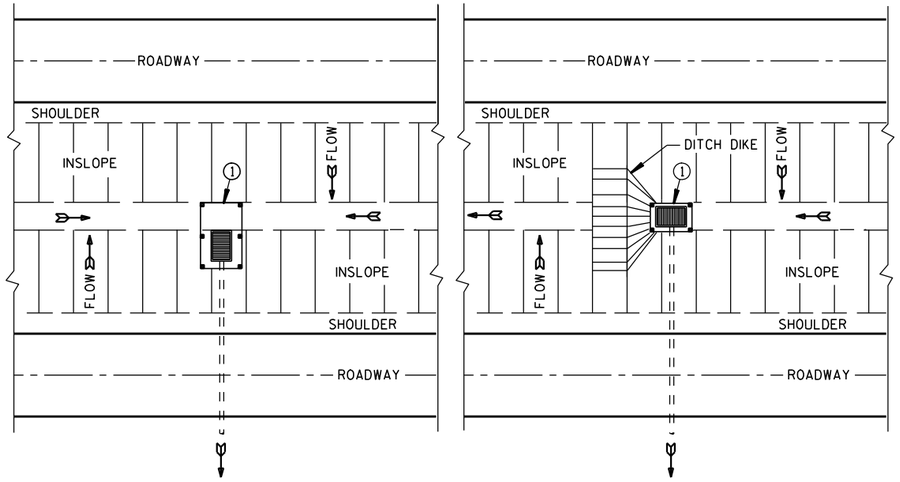

PLAN VIEW

SILT FENCE AT MEDIAN SURFACE DRAINS

GENERAL NOTES

DETAILS OF CONSTRUCTION NOT SHOWN ON THIS DRAWING SHALL CONFORM TO THE PERTINENT REQUIREMENTS OF THE STANDARD SPECIFICATIONS AND APPLICABLE SPECIAL PROVISIONS.

1. HORIZONTAL BRACE REQUIRED WITH 2" X 4" WOODEN FRAME OR EQUIVALENT AT TOP OF POSTS.
2. FOR MANUAL INSTALLATIONS THE TRENCH SHALL BE A MINIMUM OF 4" WIDE & 6" DEEP TO BURY AND ANCHOR THE GEOTEXTILE FABRIC. FOLD MATERIAL TO FIT TRENCH AND BACKFILL & COMPACT TRENCH WITH EXCAVATED SOIL.
3. WOOD POSTS SHALL BE A MINIMUM SIZE OF 1⅛" X 1⅛" OF OAK OR HICKORY.
4. SILT FENCE TO EXTEND ACROSS THE TOP OF THE PIPE.
5. CONSTRUCT SILT FENCE FROM A CONTINUOUS ROLL IF POSSIBLE BY CUTTING LENGTHS TO AVOID JOINTS. IF A JOINT IS NECESSARY USE ONE OF THE FOLLOWING TWO METHODS; A) OVERLAP THE END POSTS AND TWIST, OR ROTATE, AT LEAST 180 DEGREES, B) HOOK THE END OF EACH SILT FENCE LENGTH.

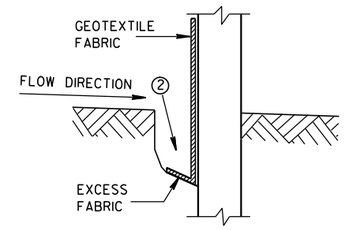

TRENCH DETAIL

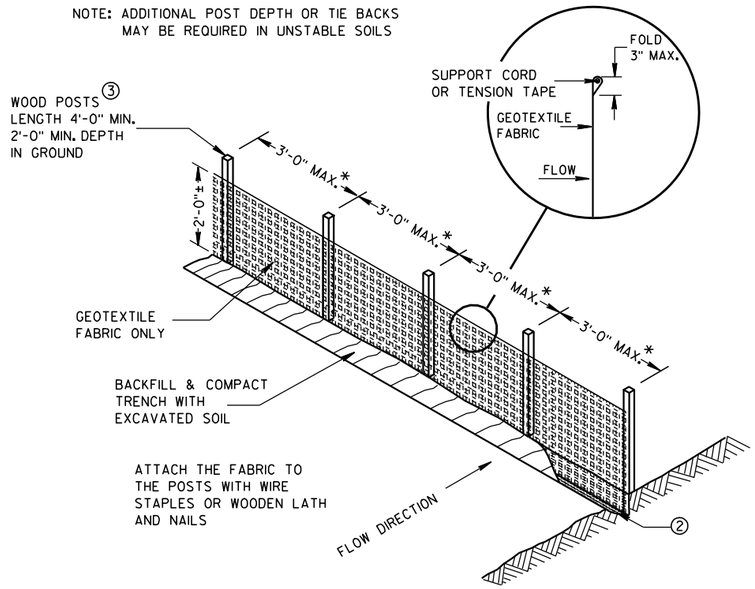

SILT FENCE

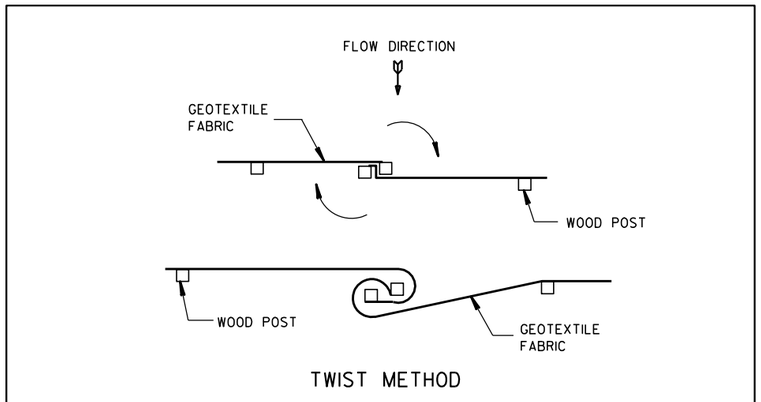

TWIST METHOD

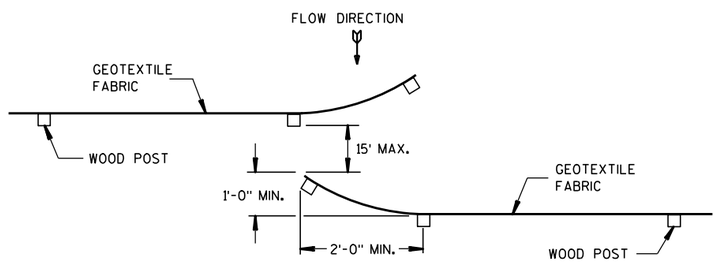

HOOK METHOD

JOINING TWO LENGTHS OF SILT FENCE 5

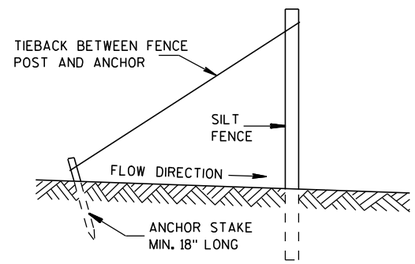

SILT FENCE TIE BACK

(WHEN REQUIRED BY THE ENGINEER)

SILT FENCE

STATE OF WISCONSIN
DEPARTMENT OF TRANSPORTATION

APPROVED
4-29-05 DATE
/S/ Beth Cannestra
CHIEF ROADWAY DEVELOPMENT ENGINEER
FHWA

6

S.D.D. 8 E 9-6

6

S.D.D. 8 E 9-6

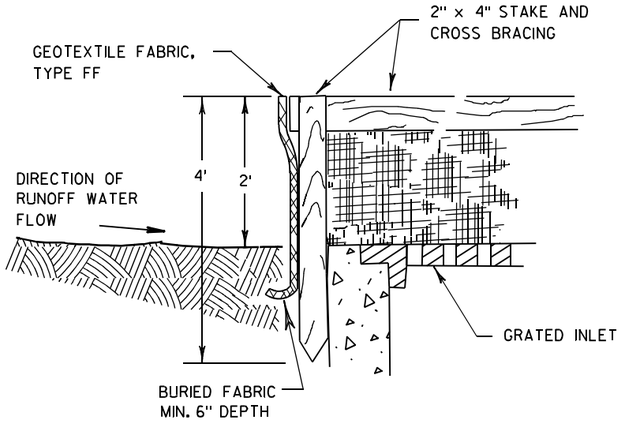

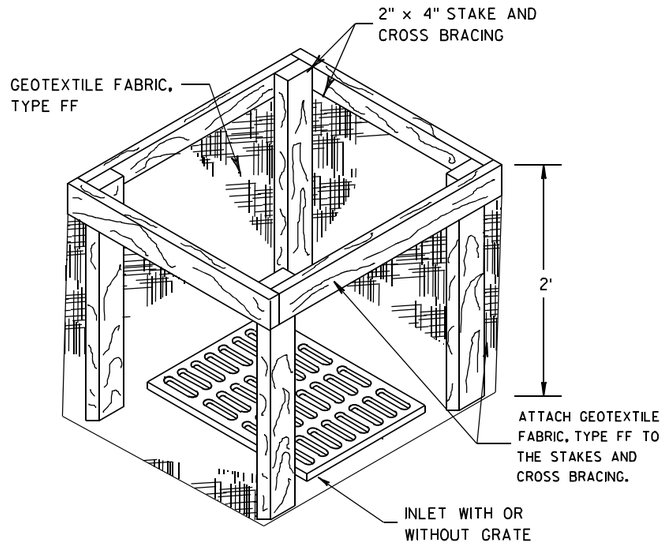

INLET PROTECTION, TYPE A

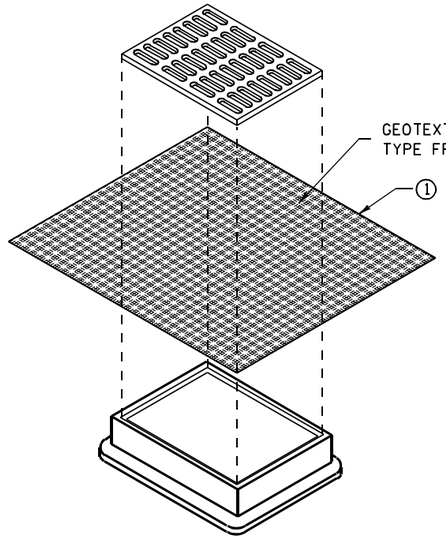

INLET PROTECTION, TYPE B
(WITHOUT CURB BOX)

(CAN BE INSTALLED IN ANY INLET WITHOUT A CURB BOX)

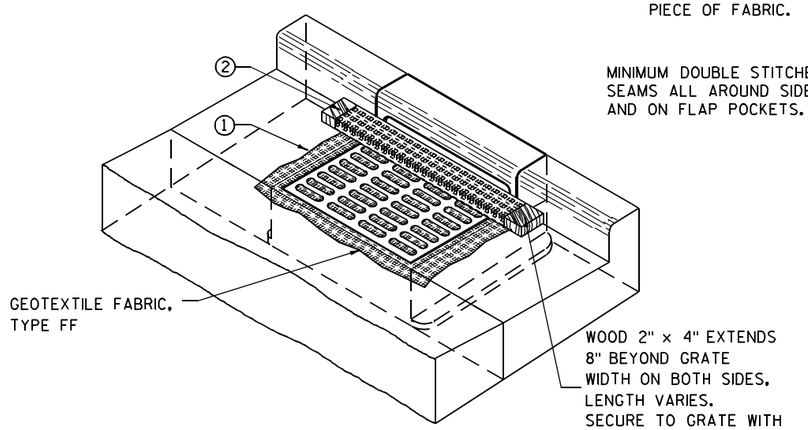

INLET PROTECTION, TYPE C (WITH CURB BOX)

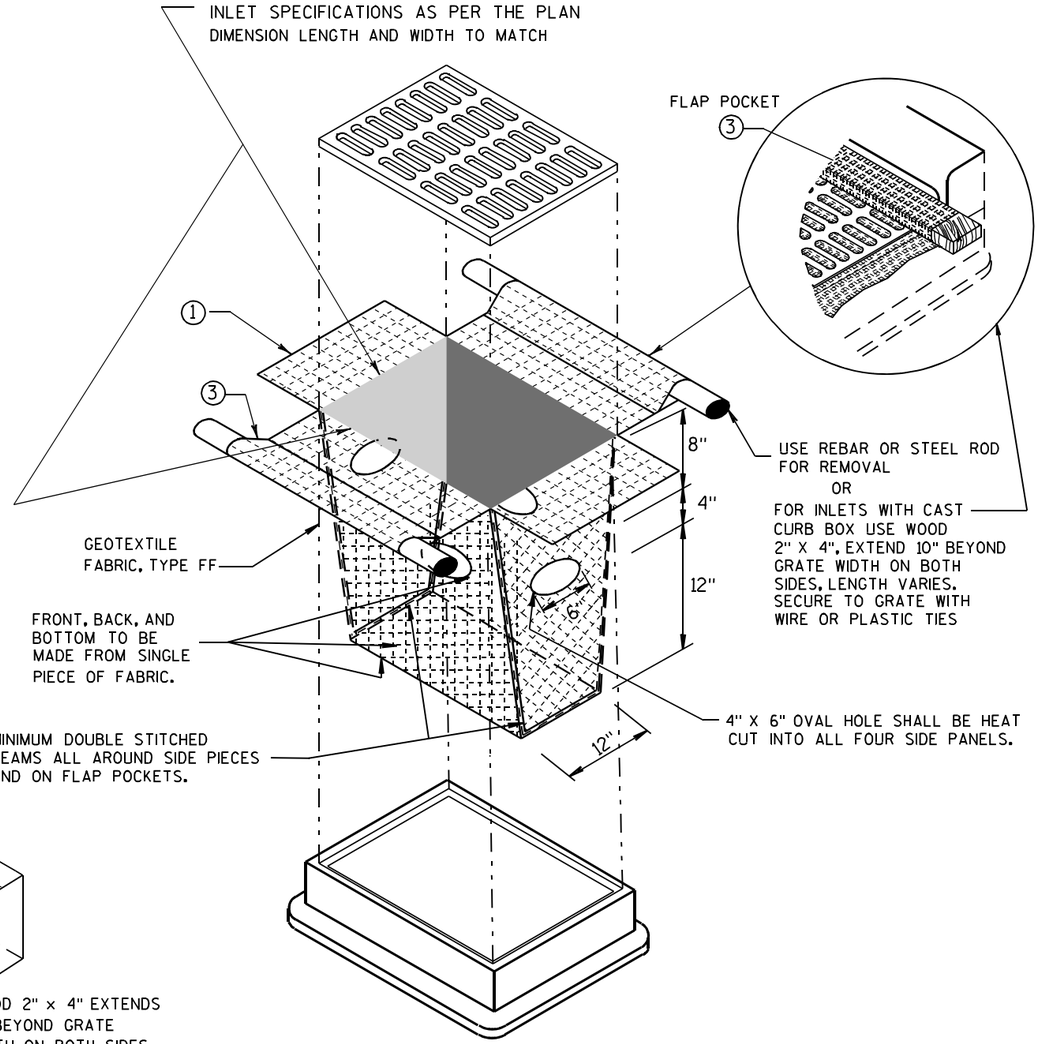

INLET PROTECTION, TYPE D

(CAN BE INSTALLED IN ANY INLET TYPE WITH
OR WITHOUT A CURB BOX AS PER NOTE ②)

GENERAL NOTES

INLET PROTECTION DEVICES SHALL BE MAINTAINED OR REPLACED AT THE DIRECTION OF THE ENGINEER.

MANUFACTURED ALTERNATIVES APPROVED AND LISTED ON THE DEPARTMENT'S EROSION CONTROL PRODUCT ACCEPTABILITY LIST MAY BE SUBSTITUTED.

WHEN REMOVING OR MAINTAINING INLET PROTECTION, CARE SHALL BE TAKEN SO THAT THE SEDIMENT TRAPPED ON THE GEOTEXTILE FABRIC DOES NOT FALL INTO THE INLET. ANY MATERIAL FALLING INTO THE INLET SHALL BE REMOVED IMMEDIATELY.

① FINISHED SIZE, INCLUDING FLAP POCKETS WHERE REQUIRED, SHALL EXTEND A MINIMUM OF 10" AROUND THE PERIMETER TO FACILITATE MAINTENANCE OR REMOVAL.

② FOR INLET PROTECTION, TYPE C (WITH CURB BOX), AN ADDITIONAL 18" OF FABRIC IS WRAPPED AROUND THE WOOD AND SECURED WITH STAPLES. THE WOOD SHALL NOT BLOCK THE ENTIRE HEIGHT OF THE CURB BOX OPENING.

③ FLAP POCKETS SHALL BE LARGE ENOUGH TO ACCEPT WOOD 2X4.

INSTALLATION NOTES

TYPE B & C

TRIM EXCESS FABRIC IN THE FLOW LINE TO WITHIN 3" OF THE GRATE.

THE CONTRACTOR SHALL DEMONSTRATE A METHOD OF MAINTENANCE, USING A SEWN FLAP, HAND HOLDS OR OTHER METHOD TO PREVENT ACCUMULATED SEDIMENT FROM ENTERING THE INLET.

TYPE D

DO NOT INSTALL INLET PROTECTION TYPE D IN INLETS SHALLOWER THAN 30", MEASURED FROM THE BOTTOM OF THE INLET TO THE TOP OF THE GRATE.

TRIM EXCESS FABRIC IN THE FLOW LINE TO WITHIN 3" OF THE GRATE.

THE INSTALLED BAG SHALL HAVE A MINIMUM SIDE CLEARANCE, BETWEEN THE INLET WALLS AND THE BAG, MEASURED AT THE BOTTOM OF THE OVERFLOW HOLES, OF 3". WHERE NECESSARY THE CONTRACTOR SHALL CINCH THE BAG, USING PLASTIC ZIP TIES, TO ACHIEVE THE 3" CLEARANCE. THE TIES SHALL BE PLACED AT A MAXIMUM OF 4" FROM THE BOTTOM OF THE BAG.

INLET PROTECTION
TYPE A, B, C, AND D

STATE OF WISCONSIN
DEPARTMENT OF TRANSPORTATION

APPROVED

10/16/02
DATE

/S/ Beth Cannestra
CHIEF ROADWAY DEVELOPMENT ENGINEER

FHWA

6

S.D.D. 8 E 10-2

METAL APRON ENDWALLS

PIPE DIA. (IN.)	MIN. THICK. (Inches) STEEL	MIN. THICK. (Inches) ALUM.	DIMENSIONS (Inches) A (±1")	B (MAX.)	H (±1")	L (±1 1/2")	L1 ①	L2 ①	W (±2")	APPROX. SLOPE	BODY
12	.064	.060	6	6	6	21	12	17 1/2	24	2 1/2 to 1	1 Pc.
15	.064	.060	7	8	6	26	14	21 3/4	30	2 1/2 to 1	1 Pc.
18	.064	.060	8	10	6	31	15	28 1/4	36	2 1/2 to 1	1 Pc.
21	.064	.060	9	12	6	36	18	29 5/8	42	2 1/2 to 1	1 Pc.
24	.064	.075	10	13	6	41	18	37 1/4	48	2 1/2 to 1	1 Pc.
30	.079	.075	12	16	8	51	18	52 1/4	60	2 1/2 to 1	1 Pc.
36	.079	.105	14	19	9	60	24	59 3/4	72	2 1/2 to 1	2 Pc.
42	.109	.105	16	22	11	69	24	75 5/8	84	2 1/2 to 1	2 Pc.
48	.109	.105	18	27	12	78	24	81	90	2 1/4 to 1	3 Pc.
54	.109	.105	18	30	12	84	30	85 1/2	102	2 1/4 to 1	3 Pc.
60	.109×	.105×	18	33	12	87	—	—	114	2 to 1	3 Pc.
66	.109×	.105×	18	36	12	87	—	—	120	2 to 1	3 Pc.
72	.109×	.105×	18	39	12	87	—	—	126	2 to 1	3 Pc.
78	.109×	.105×	18	42	12	87	—	—	132	1 1/2 to 1	3 Pc.
84	.109×	.105×	18	45	12	87	—	—	138	1 1/2 to 1	3 Pc.
90	.109×	.105×	18	37	12	87	—	—	144	1 1/2 to 1	3 Pc.
96	.109×	.105×	18	35	12	87	—	—	150	1 1/2 to 1	3 Pc.

× EXCEPT CENTER PANEL SEE GENERAL NOTES

REINFORCED CONCRETE APRON ENDWALLS

PIPE DIA. (IN.)	DIMENSIONS (Inches) T	A	B	C	D	E	G	APPROX. SLOPE
12	2	4	24	48 7/8	72 1/8	24	2	3 to 1
15	2 1/4	6	27	46	73	30	2 1/4	3 to 1
18	2 1/2	9	27	46	73	36	2 1/2	3 to 1
21	2 3/4	9	36	37 1/2	73 1/2	42	2 3/4	3 to 1
24	3	9 1/2	43 1/2	30	73 1/2	48	3	3 to 1
27	3 1/4	10 1/2	49 1/2	24	73 1/2	54	3 1/4	3 to 1
30	3 1/2	12	54	19 3/4	73 1/2	60	3 1/2	3 to 1
36	4	15	63	34 3/4	97 3/4	72	4	3 to 1
42	4 1/2	21	63	35	98	78	4 1/2	3 to 1
48	5	24	72	26	98	84	5	3 to 1
54	5 1/2	27	65	* 33 1/4 - ** 35	* 98 1/4 - ** 100	90	5 1/2	2 2/5 to 1
60	6	* 30 - ** 35	60	39	99	96	5	2 to 1
66	6 1/2	* 24 - ** 30	* 72 - ** 78	* 21 - ** 27	99	102	5 1/2	2 to 1
72	7	* 24 - ** 36	78	21	99	108	6	2 to 1
78	7 1/2	* 24 - ** 36	78	21	99	114	6 1/2	2 to 1
84	8	36	90 1/2	21	111 1/2	120	6 1/2	1 1/2 to 1
90	8 1/2	41	87 1/2	24	111 1/2	132	6 1/2	1 1/2 to 1

*MINIMUM
**MAXIMUM

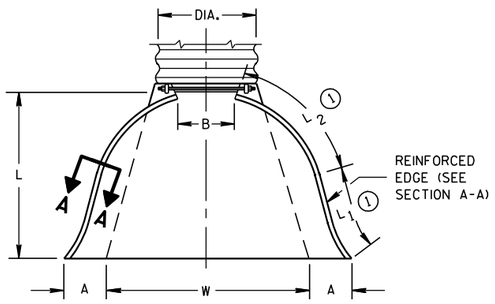

PLAN VIEW

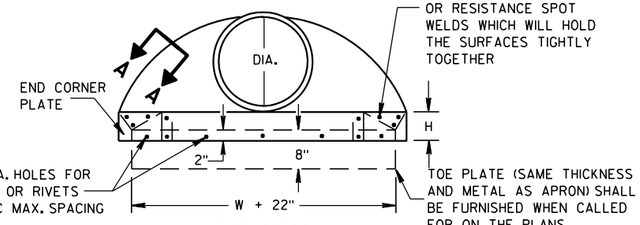

END VIEW

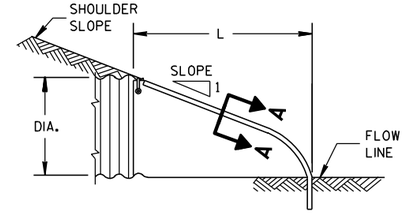

SIDE ELEVATION

METAL ENDWALLS

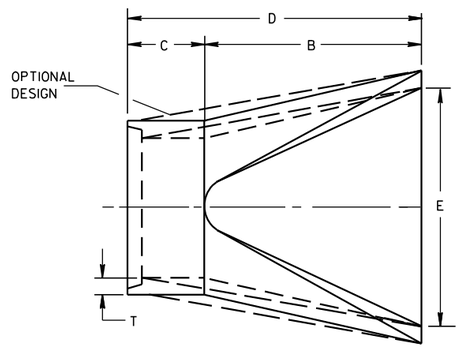

PLAN

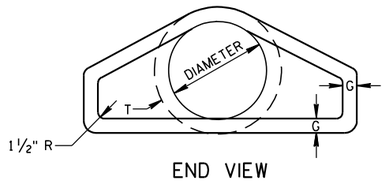

END VIEW

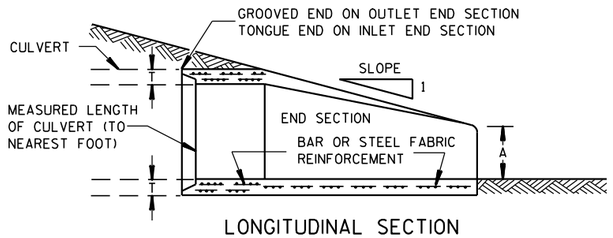

LONGITUDINAL SECTION

CONCRETE ENDWALLS

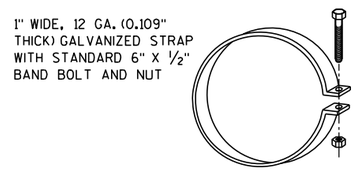

ALTERNATE FOR TYPE 1 CONNECTION

END SECTION CONNECTOR STRAP

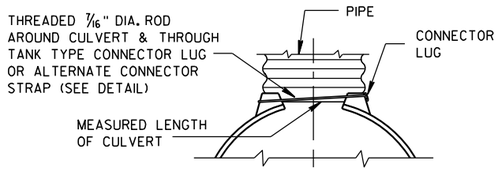

TYPE 1
FOR 12" THRU 24" CORR. PIPE

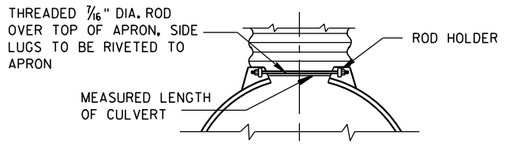

TYPE 2
FOR 30" THRU 96" CORR. PIPE

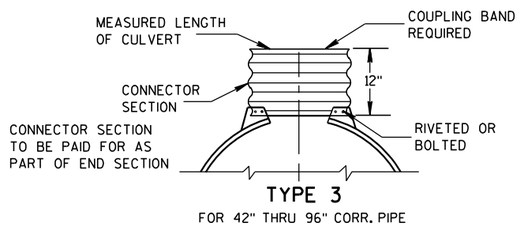

TYPE 3
FOR 42" THRU 96" CORR. PIPE

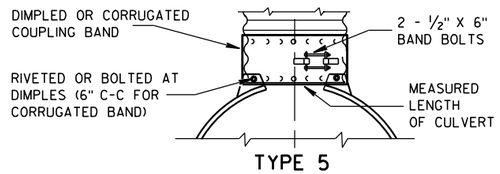

TYPE 5
ALTERNATE FOR:
ALL SIZES CORRUGATED CIRCULAR PIPE

NOTE: DIMPLED BAND FITS OVER OUTSIDE OF ENDWALL. AND CORRUGATED BAND FITS INSIDE ENDWALL. DIMPLED BAND MAY BE USED WITH HELICALLY CORRUGATED PIPE.

FOR CIRCUMFERENTIALLY CORRUGATED PIPE USE ENDWALL CONNECTION DETAILS 1, 2, 3 OR 5 AS APPLICABLE.

FOR HELICALLY CORRUGATED PIPE USE ENDWALL CONNECTION DETAILS 1, 2 OR 5.

FOR HELICALLY CORRUGATED PIPES WITH TWO CIRCUMFERENTIAL CORRUGATIONS AT EACH END USE ENDWALL CONNECTION DETAILS 1, 2 OR 3.

CONNECTION DETAILS

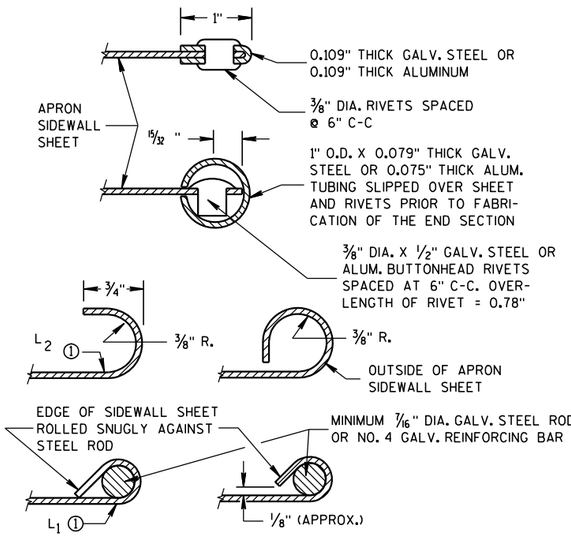

SECTION A-A

GENERAL NOTES

DETAILS OF CONSTRUCTION, MATERIALS AND WORKMANSHIP NOT SHOWN ON THIS DRAWING SHALL CONFORM TO THE PERTINENT REQUIREMENTS OF THE STANDARD SPECIFICATIONS AND THE APPLICABLE SPECIAL PROVISIONS.

CONCRETE CULVERT ENDWALLS MAY NOT BE USED WITH GALVANIZED STEEL OR ALUMINUM CULVERT PIPE OR VISE VERSA. GALVANIZED STEEL OR ALUMINUM ENDWALLS SHALL NORMALLY BE INSTALLED ON CULVERT PIPE OF THE SAME METAL.

ALL THREE PIECE STEEL APRON ENDWALLS FOR 60" DIAMETER PIPE AND LARGER SHALL HAVE 0.109" SIDES AND 0.138" CENTER PANELS. ALL THREE PIECE ALUMINUM APRON ENDWALLS FOR 60" DIAMETER PIPE AND LARGER SHALL HAVE 0.105" SIDES AND 0.134" CENTER PANELS. THE WIDTH OF CENTER PANELS SHALL BE GREATER THAN 20 PERCENT OF THE PIPE PERIMETER.

LAP SEAMS SHALL BE TIGHTLY JOINED BY GALVANIZED RIVETS OR BOLTS FOR STEEL UNITS AND ALUMINUM RIVETS AND BOLTS FOR ALUMINUM UNITS. FOR THE 60" THROUGH 96" DIAMETER APRON ENDWALL SIZES, THE REINFORCED EDGES AND CENTER PANEL SEAMS SHALL BE FURTHER REINFORCED WITH GALVANIZED STEEL OR ALUMINUM STIFFENER ANGLES. THE ANGLES SHALL BE ATTACHED BY GALVANIZED NUTS AND BOLTS FOR STEEL UNITS AND ALUMINUM NUTS AND BOLTS FOR ALUMINUM UNITS.

WHERE TWO OR MORE PIPES WITH APRON ENDWALLS ARE LAID ADJACENT TO EACH OTHER, THEY SHALL BE SEPARATED BY A DISTANCE SUFFICIENT TO PROVIDE A MINIMUM CLEARANCE OF 6 INCHES BETWEEN APRON ENDWALLS.

① FOR PIPE SIZES UP TO 60" DIAMETER, A 180° ROLLED EDGE MAY BE USED INSTEAD OF STEEL ROD REINFORCEMENT. SEE SECTION A-A.

APRON ENDWALLS FOR CULVERT PIPE

STATE OF WISCONSIN
DEPARTMENT OF TRANSPORTATION

APPROVED
11/30/94 DATE
/S/ Rory L. Rhinesmith
CHIEF ROADWAY DEVELOPMENT ENGINEER

FHWA

6
S.D.D. 8 F 1-11

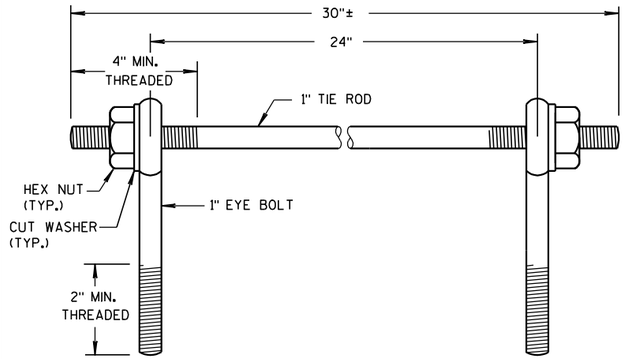

EYE BOLTS AND TIE ROD

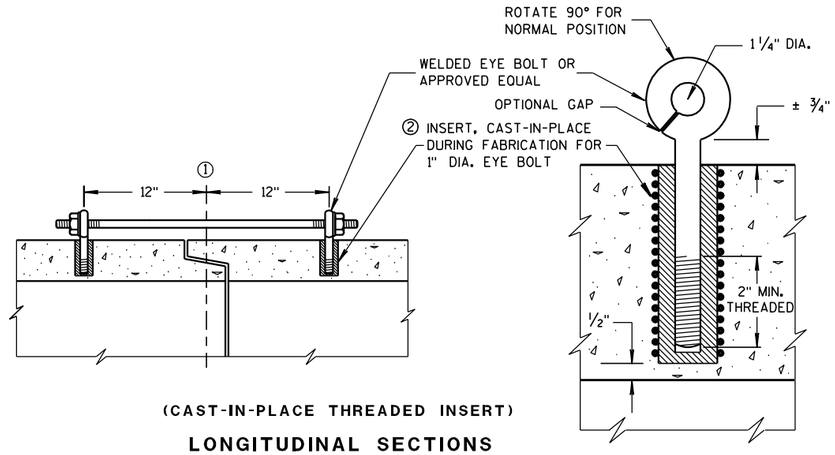

(CAST-IN-PLACE THREADED INSERT)

LONGITUDINAL SECTIONS

EYE BOLT AND TIE ROD ASSEMBLY (ALTERNATE NO. 1)

GENERAL NOTES

DETAILS OF CONSTRUCTION, MATERIALS, AND WORKMANSHIP NOT SHOWN ON THIS DRAWING SHALL CONFORM TO THE PERTINENT REQUIREMENTS OF THE STANDARD SPECIFICATIONS AND APPLICABLE SPECIAL PROVISIONS.

CONCRETE CULVERT AND STORM SEWER PIPE SHALL BE TIED TOGETHER IN THE MANNER ILLUSTRATED BY THIS DETAIL AT LOCATIONS DESIGNATED IN THE STANDARD SPECIFICATIONS AND THE PLAN. THE CONTRACTOR MAY USE EITHER ALTERNATE 1, 2 OR 3 FOR DRAINAGE STRUCTURES. ONLY ALTERNATE 1 AND 3 MAY BE USED FOR CATTLE PASSES, UNLESS OTHERWISE STATED IN THE CONTRACT. THE MATERIALS, FABRICATION AND WORK NECESSARY TO TIE THE PIPE BY THIS DETAIL WILL BE CONSIDERED INCIDENTAL TO THE PIPE AND APRON ENDWALLS IF REQUIRED.

DETAILED DRAWINGS FOR PROPOSED ALTERNATE DESIGNS FOR JOINT TIES SHALL BE SUBMITTED TO THE ENGINEER FOR APPROVAL.

JOINT TIES TO BE HOT-DIP GALVANIZED PER ASTM A 153.

① ℄ OF TONGUE AND GROOVE OR BELL AND SPIGOT JOINTS.

② THE INSIDE OF THE THREADED INSERTS SHALL BE CLEAN TO ALLOW THE INSERTION OF THREADED EYE BOLTS.

③ HOLES SHALL BE CAST-IN-PLACE OR DRILLED 12 INCHES FROM ℄ OF TONGUE AND GROOVE.

④ BOLT PROJECTION INSIDE OF PIPE SHALL NOT EXCEED 2 INCHES.

⑤ OPENING TO BE ROD DIAMETER PLUS 1 INCH.

⑥ LENGTH ADEQUATE TO EXTEND TO WITHIN 1/2 INCH OF THE INNER SURFACE OF THE PIPE.

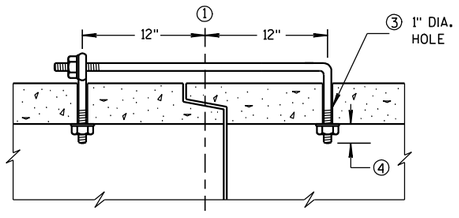

(TONGUE & GROOVE PIPE)

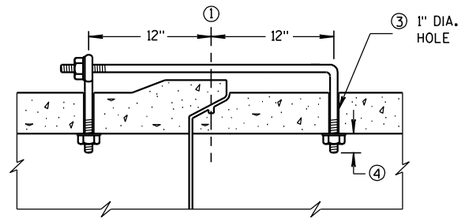

(MODIFIED BELL PIPE)

LONGITUDINAL SECTION

EYE BOLT DIMENSION TABLE

PIPE SIZE	L = LENGTH	
	TONGUE & GROOVE PIPE	MODIFIED BELL PIPE
18" TO 24"	4 1/2"	6 1/4"
30"	5"	7"
36"	5 1/2"	7"
42"	6"	
48"	6 1/2"	
60"	7 1/2"	
66"	8"	

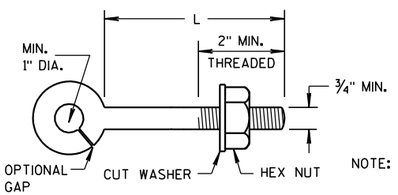

NOTE:

EYE BOLT

NOTE: TWO EYE BOLTS MAY BE USED WITH A 30" LONG THREADED ROD IN LIEU OF THE 90° BENT TIE ROD.

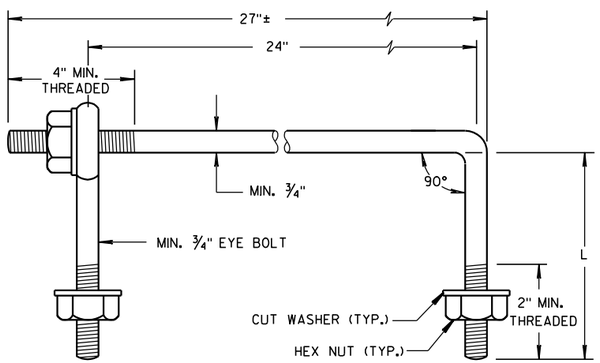

EYE BOLT AND TIE ROD

(JOINT TIES FOR 18" TO 66" DIA. CONCRETE PIPE)

EYE BOLT AND TIE ROD ASSEMBLY (ALTERNATE NO. 2)

ADJUSTABLE TIE ROD TABLE

PIPE DIAMETER	TIE ROD DIAMETER	D	L_1	N
12-60	5/8	5/8	5	1/2
66-84	3/4	3/4	5	1/2
90-108	1	1	7	1 1/16

DIMENSIONS SHOWN ARE IN INCHES

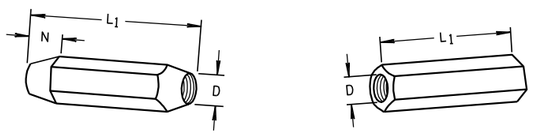

TAPERED PLAIN

RIGHT AND LEFT THREADS

SLEEVE NUTS

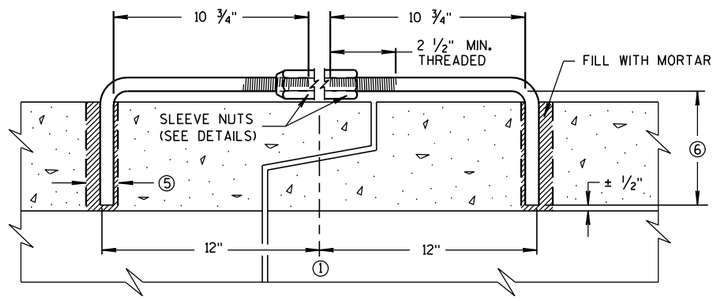

LONGITUDINAL SECTION

(JOINT TIES FOR 12" TO 108" DIA. CONCRETE PIPE)

ADJUSTABLE TIE ROD (ALTERNATE NO. 3)

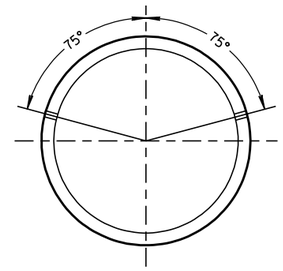

PLACEMENT OF (2) CAST-IN-PLACE INSERTS OR HOLES DURING FABRICATION FOR PIPE SECTIONS REQUIRING TIE RODS

TRANSVERSE SECTION

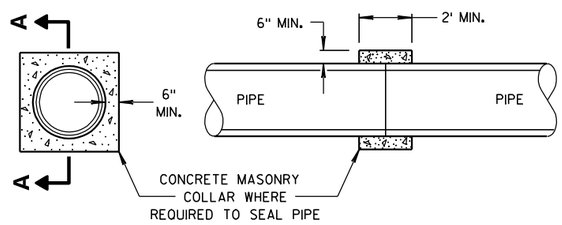

SECTION A-A

CONCRETE COLLAR DETAIL

JOINT TIES FOR CONCRETE PIPE AND CONCRETE COLLAR DETAIL

STATE OF WISCONSIN
DEPARTMENT OF TRANSPORTATION

APPROVED
6/5/2012 — DATE
/S/ Jerry H. Zogg — ROADWAY STANDARDS ENGINEER
FHWA

6

S.D.D. 8 F 4-7

6

S.D.D. 8 F 4-7

GENERAL NOTES

DETAILS OF CONSTRUCTION, MATERIALS AND WORKMANSHIP NOT SHOWN ON THIS DRAWING SHALL CONFORM TO THE PERTINENT REQUIREMENTS OF THE STANDARD SPECIFICATIONS, AND THE APPLICABLE SPECIAL PROVISIONS.

(1) W6 X 9 OR W6 X 8.5 STEEL POSTS AND NOTCHED PLASTIC BLOCKOUTS ARE ACCEPTABLE ALTERNATIVES FOR 6" X 8" WOOD POSTS WITH WOOD OR PLASTIC BLOCKOUTS. USE APPROVED NOTCHED PLASTIC BLOCKOUTS WITH STEEL POSTS. APPROVED PLASTIC BLOCKOUT DESIGNS MAY VARY FROM THIS TYPICAL DETAIL WHEN USED IN CONJUNCTION WITH STEEL POSTS.

DO NOT MIX STEEL POSTS AND WOOD POSTS IN A SINGLE INSTALLATION.

(2) USE STRUCTURAL STEEL POSTS CONFORMING TO ASTM A 36. GALVANIZED POSTS ACCORDING TO AASHTO M 111. EITHER SET THE POSTS IN DRILLED HOLES OR DRIVE TO GRADE. REMOVE MUSHROOMING CAUSED BY DRIVING AND REPAIR DAMAGED SPELTER COATING ON GALVANIZED POSTS.

(3) INSTALL STEEL POSTS WITH HOLES ON APPROACHING TRAFFIC SIDE.

(4) USE EITHER WOOD OR APPROVED PLASTIC BLOCKOUTS ON WOOD POSTS.

(5) IF THE DISTANCE FROM BACK OF POST TO SHOULDER HINGE POINT IS LESS THAN 2 FEET INSTALL LONGER POST AT HALF POST SPACING, W BEAM (LHW).

(6) IF ROCK IS ENCOUNTERED DURING EXCAVATION, THE ENGINEER MAY APPROVE USING A 12 INCH DIAMETER POST HOLE EXTENDING 20 INCHES DEEP INTO THE ROCK. PLACE GRANULAR MATERIAL IN THE BOTTOM OF THE HOLE APPROXIMATELY 2½ INCHES DEEP. CUT THE POSTS TO LENGTH AND PLACE IN YHE HOLE. BACKFILL WITH MATERIAL EXCAVATED FROM THE HOLE AND COMPACT ADEQUATEY.

(7) WHEN USING STEEL POSTS AND WOOD BLOCKOUTS INSTALL FOUR 16D GALVANIZED NAILS. INSTALL NAILS AT THE BACK CORNERS OF THE BLOCK AND BEND THE NAILS OVER THE FLANGE OF THE STEEL POST.

INSTALL BEAM GUARD SECTIONS AND ALL NECESSARY HARDWARE ACCORDING TO THE APPLICABLE PLAN AND CURRENT STANDARD AND SUPPLEMENTAL SPECIFICATIONS.

ALL DIMENSIONS ARE SUBJECT TO MANUFACTURER'S TOLERANCES EXCEPT WHERE ALLOWABLE TOLERANCES ARE SHOWN.

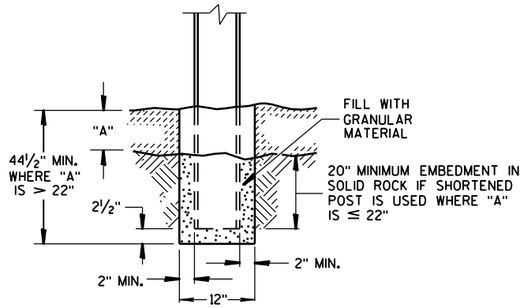

END VIEW
SETTING STEEL OR WOOD POST IN ROCK (6)

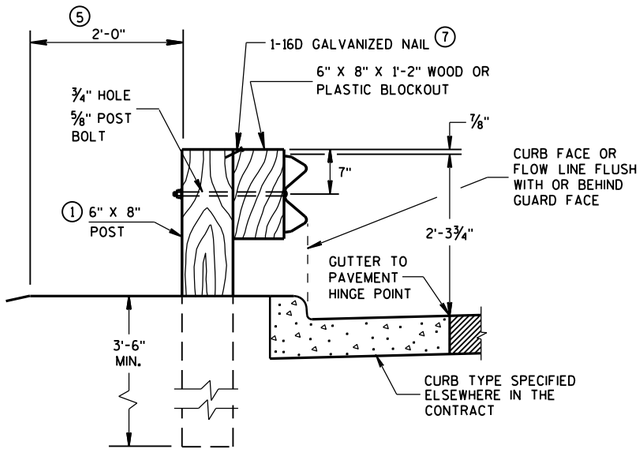

END VIEW
LOCATED ALONG A CURBED ROADWAY

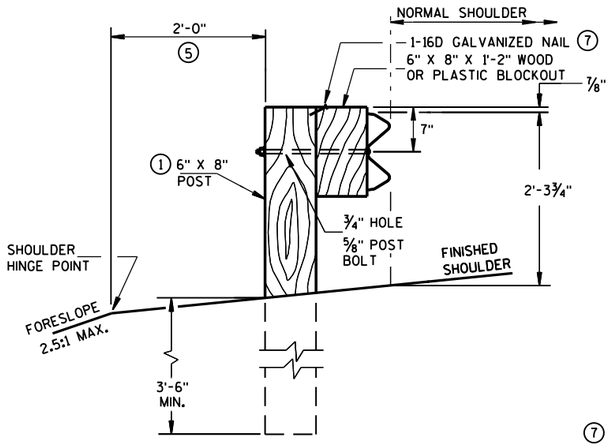

END VIEW
LOCATED ALONG A ROADWAY SHOULDER
STANDARD INSTALLATION

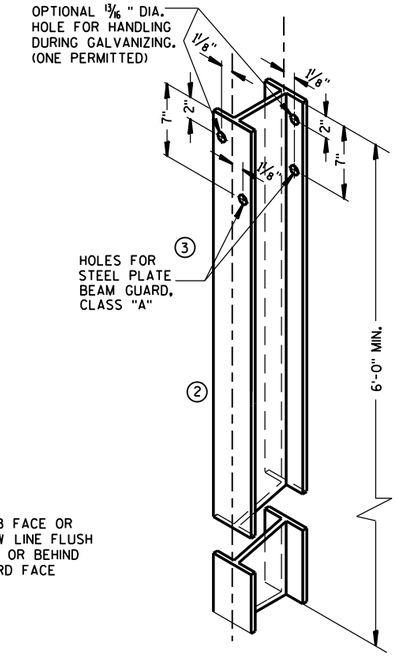

STEEL POST &
HOLE PUNCHING DETAIL
(W6 X 9) (1)

ALL HOLES 13/16" DIAMETER EXCEPT AS NOTED

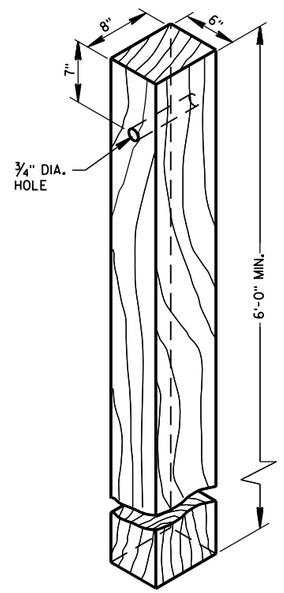

WOOD POST
(6"X8") NOMINAL

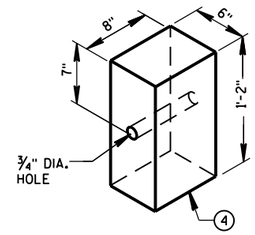

WOOD OR PLASTIC
BLOCKOUT FOR
WOOD POSTS

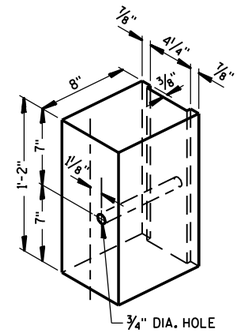

TYPICAL NOTCHED (1)
PLASTIC BLOCKOUT
FOR STEEL POSTS

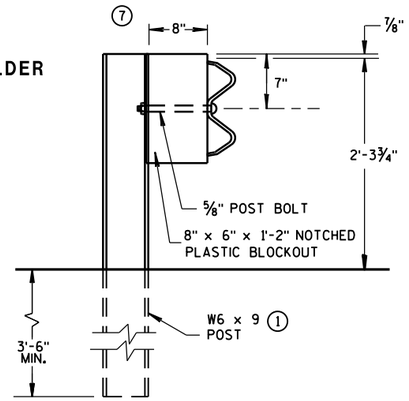

END VIEW
STEEL POST & NOTCHED
PLASTIC BLOCKOUT ALTERNATIVE
STANDARD INSTALLATION

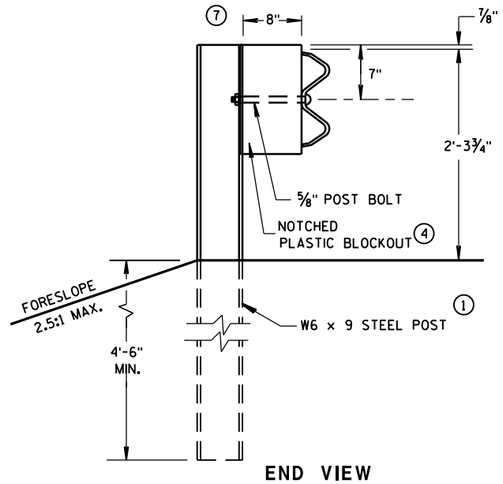

END VIEW
LONGER POST AT HALF
POST SPACING W BEAM
(LHW)

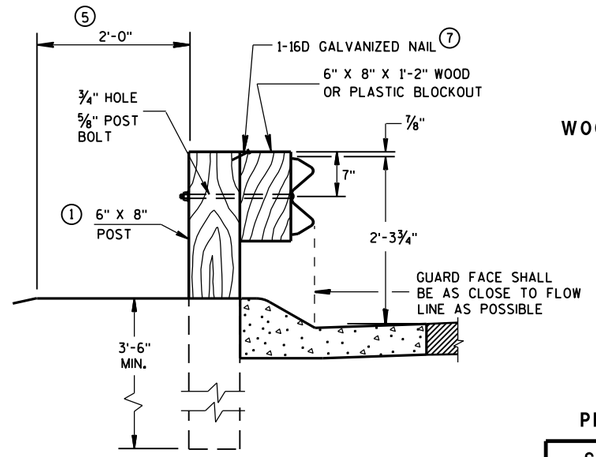

END VIEW
LOCATED ALONG A
MOUNTABLE CURBED ROADWAY

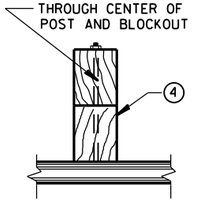

PLAN VIEW
WOOD POST, BLOCKOUT & BEAM

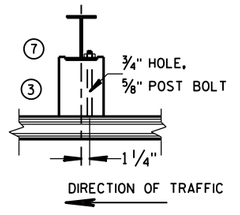

PLAN VIEW
STEEL POST, NOTCHED
PLASTIC BLOCKOUT & BEAM

TYPICAL INSTALLATION OF STEEL PLATE BEAM GUARD

STEEL PLATE BEAM GUARD,
CLASS "A"
INSTALLATION & ELEMENTS

STATE OF WISCONSIN
DEPARTMENT OF TRANSPOI

6
S.D.D. 14 B 15-8a

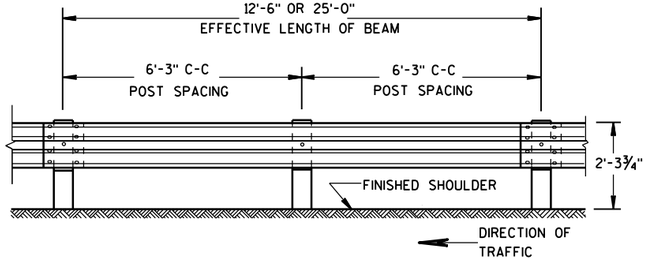

FRONT VIEW

POST SPACING STANDARD INSTALLATION

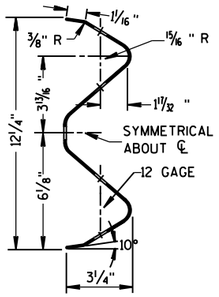

SECTION THRU W BEAM

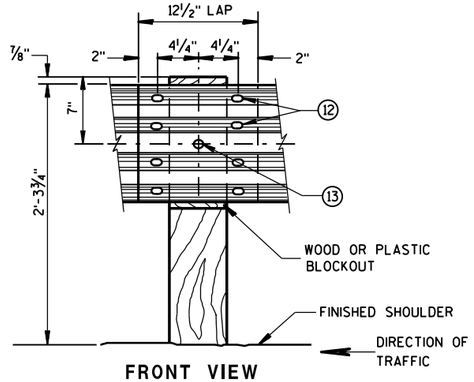

FRONT VIEW

BEAM SPLICE AT WOOD POST AND POST MOUNTING DETAIL

GENERAL NOTES

(8) PROVIDE SILVER REFLECTIVE SHEETING ON ALL REFLECTORS EXCEPT THOSE LOCATED ALONG THE LEFT EDGE OF ONE-WAY ROADWAYS, WHICH SHALL BE PROVIDED WITH YELLOW REFLECTIVE SHEETING. SHEETING IS TYPE H. SEE STANDARD SPECIFICATION 637.

(9) DO NOT INSTALL REFLECTORS ON THE FIRST 50 FEET OF THE APPROACH END OF THE ENERGY ABSORBING TERMINAL.

(10) REVERSE EVERY OTHER REFLECTOR FOR 2-WAY VISIBILITY. THE CONTRACTOR MAY FURNISH TWO-SIDED REFLECTORS IN LIEU OF ONE-SIDED REFLECTORS.

(11) PROVIDE AN ANGLE OF BEND OF 90° ± 1° FOR TWO-SIDED REFLECTORS.

(12) 8 -⅝" ϕ X 2" BUTTON HEAD BOLTS WITH OVAL SHOULDERS & RECESS NUTS.

(13) ⅝" DIA. BUTTON HEAD BOLT AND RECESS NUT WITH ⅝" DIA. F844 FLAT WASHER UNDER NUT.

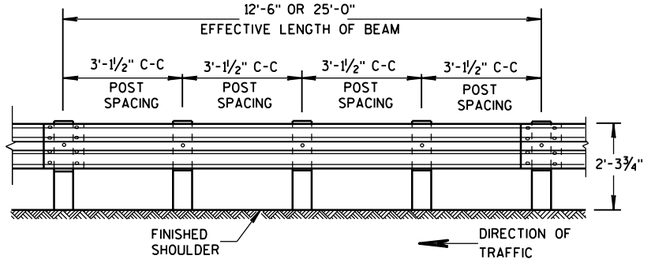

FRONT VIEW

POST SPACING FOR LONGER POST AT HALF POST SPACING W BEAM (LHW)

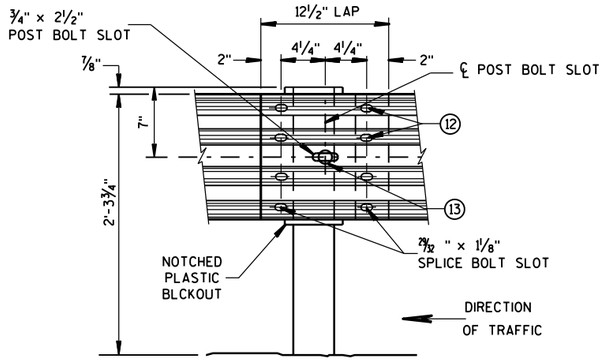

FRONT VIEW

BEAM SPLICE AT STEEL POST

TYPICAL SPLICING DETAILS OF STEEL PLATE BEAM GUARD

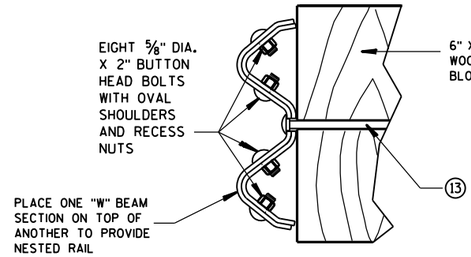

NESTED W BEAM (NW)

USE ALL OTHER STANDARD BEAM GUARD DETAILS FOR CONSTRUCTING NESTED W BEAM (NW)

REFLECTOR SPACING (9)

	BEAM GUARD LENGTH	REFLECTOR SPACING	NO. SURFACES REFLECTORIZED	MIN. NO. REFLECTORS
ONE WAY TRAFFIC	< 200'	50' C-C	1	3
	> 200'	100' C-C	1	
TWO WAY TRAFFIC	< 200'	25' C-C	1 (10)	6
	> 200'	50' C-C	1	
TWO WAY TRAFFIC	< 200'	50' C-C	2 (11)	3
	> 200'	100' C-C	2	

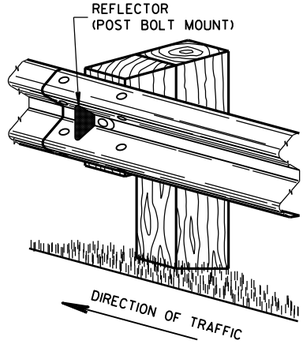

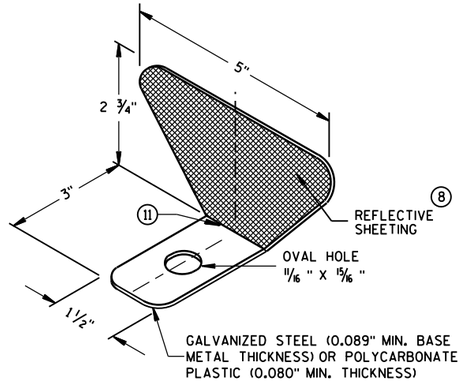

ONE SIDED REFLECTOR DETAIL AND TYPICAL INSTALLATION (8)

STEEL PLATE BEAM GUARD,
CLASS "A",
INSTALLATION & ELEMENTS

STATE OF WISCONSIN
DEPARTMENT OF TRANSPOR

6
S.D.D. 14 B 15-8b

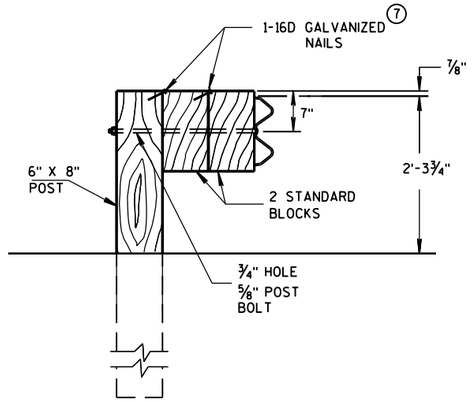

DETAIL FOR DOUBLE BLOCKS

THE NUMBER OF DOUBLE BLOCK POSTS WITHIN A BARRIER RUN IS UNLIMITED

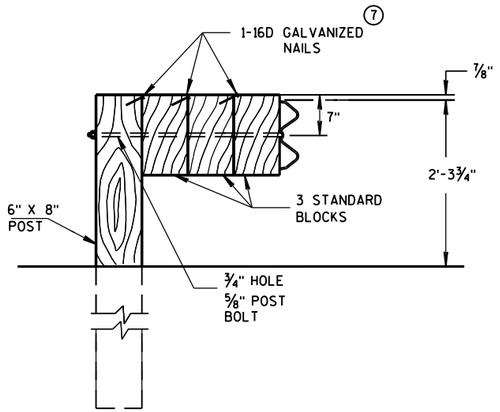

DETAIL FOR TRIPLE BLOCKS

TRIPLE BLOCK DETAIL IS LIMITED TO ONE LOCATION WITHIN A BEAM GUARD RUN.

NOTES: USE DOUBLE OR TRIPLE BLOCKS WHEN UNDERGROUND OBSTACLES PREVENT THE POST FROM BEING INSTALLED.

DO NOT USE EXTRA BLOCKOUTS IF IT CAUSES THE POST TO BE DRIVEN BEYOND SHOULDER HINGE POINT OR CAUSES A FIXED OBJECT TO BE WITHIN THE DEFLECTION DISTANCE OF THE BARRIER.

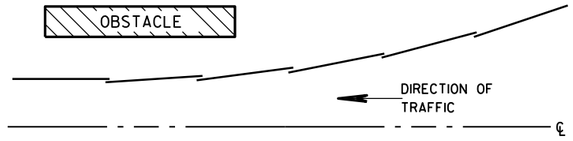

PLAN VIEW
BEAM LAPPING DETAIL

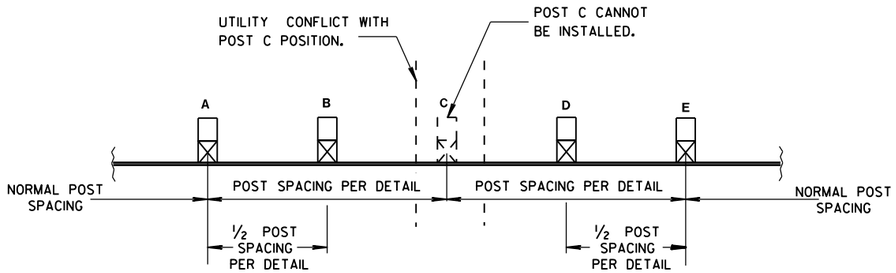

POST DRIVING FOR CONTINUOUS UNDERGROUND OBSTRUCTION

STEEL PLATE BEAM GUARD, CLASS "A", INSTALLATION & ELEMENTS

STATE OF WISCONSIN
DEPARTMENT OF TRANSPORTATION

APPROVED
June 2014 — DATE
/S/ Jerry H. Zogg — ROADWAY STANDARDS DEVELOPMENT ENGINEER
FHWA

6

S.D.D. 14 B 15-8c

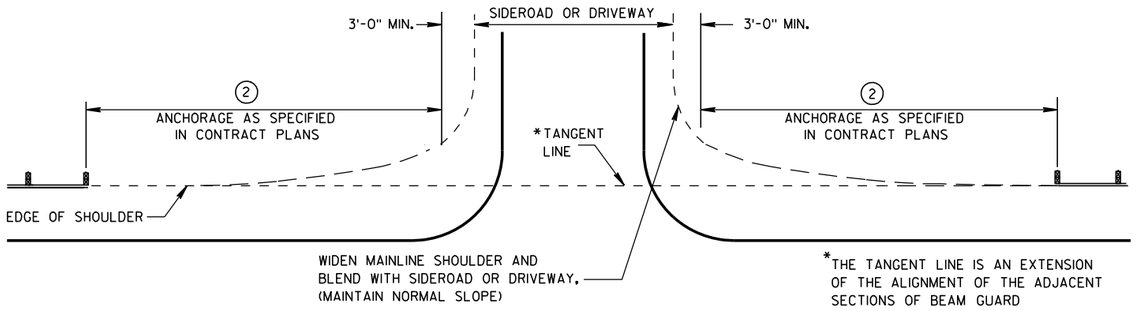

BEAM GUARD AT SIDEROADS OR DRIVEWAYS

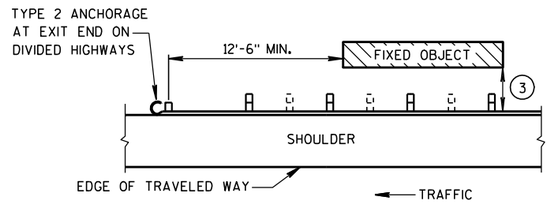

BEAM GUARD AT OBSTACLES EXIT END - ONE WAY TRAFFIC

GENERAL NOTES

DETAILS OF CONSTRUCTION, MATERIALS AND WORKMANSHIP SHALL CONFORM TO THE PERTINENT STANDARD SPECIFICATIONS AND THE APPLICABLE SPECIAL PROVISIONS.

W6 X 9 OR W6 X 8.5 STEEL POSTS WITH NOTCHED PLASTIC BLOCKOUTS ARE ACCEPTABLE ALTERNATIVES FOR 6" X 8" WOOD POSTS WITH WOOD OR PLASTIC BLOCKOUTS. USE APPROVED NOTCHED PLASTIC BLOCKOUTS WITH STEEL POSTS.

THE LOCATIONS AND LENGTHS OF BEAM GUARD ARE SHOWN ELSEWHERE IN THE PLAN.

(1) STEEL THRIE BEAM STRUCTURAL APPROACH (STBSA) - SEE CURRENT SDD 14B20.

(2) USE AN APPROVED END TREATMENT FOR THE TRAFFIC APPROACH SIDE OF BRIDGE/OBSTACLES. USE TYPE 2 ANCHORAGE ONLY AT THE DOWNSTREAM ENDS OF BEAM GUARD LOCATED ALONG ROADWAYS WITH ONE WAY TRAFFIC.

(3)

MINIMUM LATERAL DISTANCE FROM FACE OF BEAM GUARD TO FIXED OBJECT	POST SPACING
3'-6"	3' - 1½"
4'-6"	6' - 3"

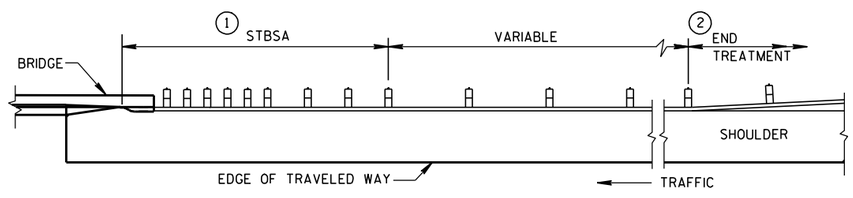

BEAM GUARD AT FULL WIDTH BRIDGES

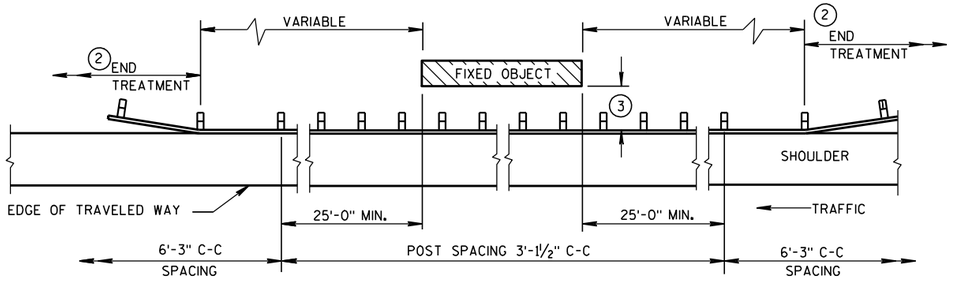

BEAM GUARD AT OBSTACLES - TWO WAY TRAFFIC

(RAIL TO OBSTACLE CLEARANCE 3'-6" TO 4'-6")

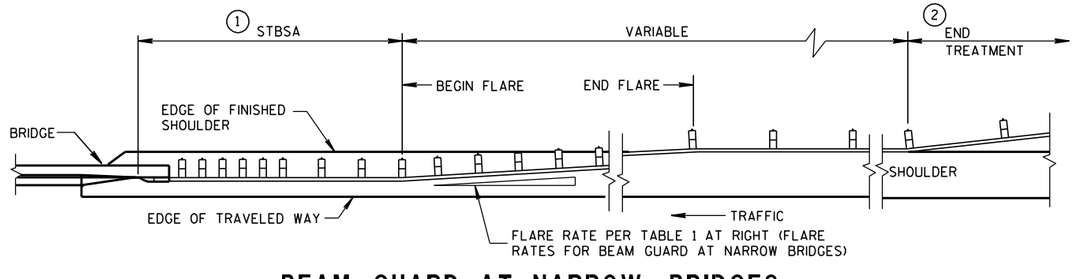

BEAM GUARD AT NARROW BRIDGES
(FLARED TO SHOULDER EDGE, THEN PARALLEL TO ROADWAY)

TABLE 1
FLARE RATES FOR BEAM GUARD AT NARROW BRIDGES

POSTED SPEED (MPH)	FLARE RATE
25	13:1
30	15:1
35	16:1
40	18:1
45	21:1
50	24:1
55	26:1
65	30:1

STEEL PLATE BEAM GUARD CLASS "A" AT BRIDGES, OBSTACLES AND SIDEROADS/DRIVEWAYS

STATE OF WISCONSIN
DEPARTMENT OF TRANSPORTATION

APPROVED

8-21-07 DATE

/S/ Jerry H. Zogg
ROADWAY STANDARDS DEVELOPMENT ENGINEER

FHWA

6

S.D.D. 14 B 18-6a

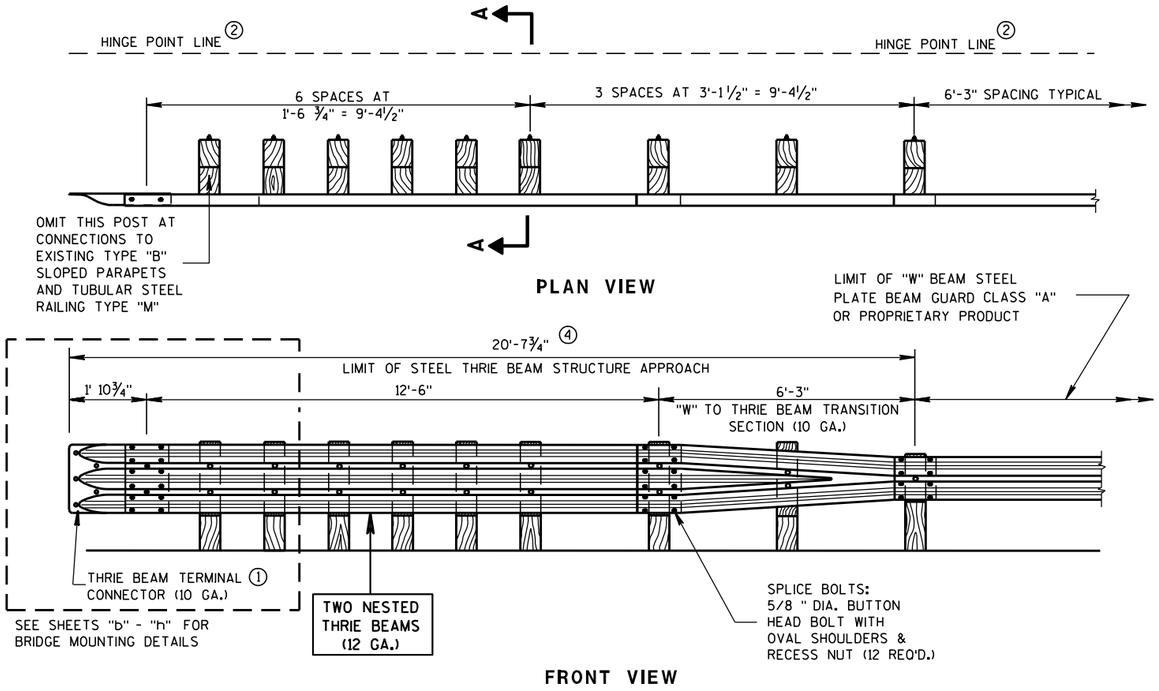

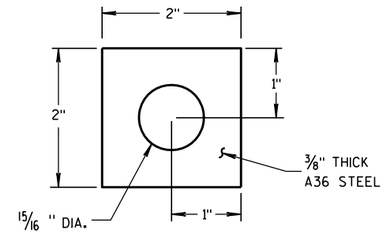

PLATE WASHER DETAIL

GENERAL NOTES

BOLT THE THRIE BEAM TO ALL POSTS AND BLOCKOUTS. DRILL OR PUNCH BOLT HOLES IN THE BEAM IF THE POST SPACING IS LESS THAN 6'-3".

DO NOT USE STEEL POSTS AND NOTCHED PLASTIC BLOCKOUTS IN THE STEEL THRIE BEAM STRUCTURAL APPROACH AND THE TRANSITION SECTION OF STEEL PLATE BEAM GUARD, CLASS "A" INSTALLATIONS.

IF ROCK IS ENCOUNTERED, REMOVE ROCK TO FULL DEPTH OF POST PLUS 2 1/2" , AND 12" DIAMETER AROUND POST. SEE 14B15 FOR MORE DETAILS.

① BRIDGE RAILING TYPE "W" DOES NOT REQUIRE A TERMINAL CONNECTOR.

② MINIMUM EMBEDMENT SHALL BE 4'-0". WHERE EXISTING CONDITIONS DO NOT PERMIT THE APPROPRIATE EARTHWORK SHOWN ON THE PLAN TYPICAL SECTIONS OR DETAILS, THE ENGINEER MAY ALLOW THE REDUCTION OR ELIMINATION OF THE 2 FOOT DISTANCE TO THE HINGE POINT. OTHERWISE BUILD AS THE PLAN SHOWS OR AS THE ENGINEER DIRECTS. IF THE 2 FOOT DISTANCE TO THE HINGE POINT IS REDUCED OR ELIMINATED, INCREASE THE POST EMBEDMENT DEPTH TO 4'-6" OR MORE.

③ POST BOLTS ARE 5/8" DIAMETER ASTM A307 BUTTON HEAD BOLT. A POST BOLT REQUIRES A 5/8" DIAMETER A563A DOUBLE RECESSED (DR) HEAVY HEX AND A 5/8" DIAMETER F844 FLAT WASHER. LENGTH OF POST BOLT MAY VARY.

④ ALL WOOD POSTS MUST BE 6" X 8" AND AT LEAST 7'-0" LONG.

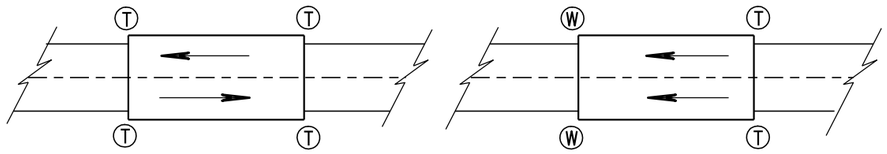

TWO WAY TRAFFIC

ONE WAY TRAFFIC

T THRIE BEAM CONNECTION

W W-BEAM CONNECTION WHEN REQUIRED

TYPICAL LOCATIONS OF THRIE BEAM AND W-BEAM CONNECTIONS TO BRIDGE

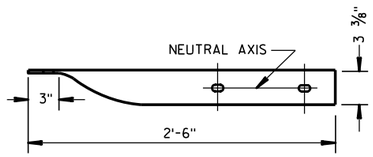

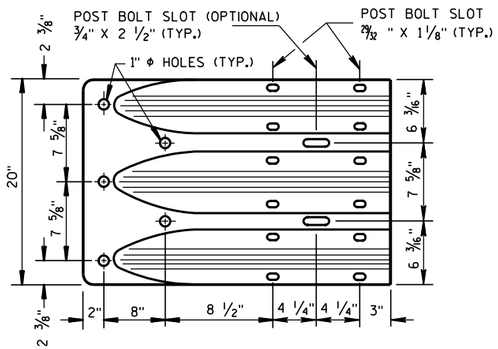

THRIE BEAM TERMINAL CONNECTOR

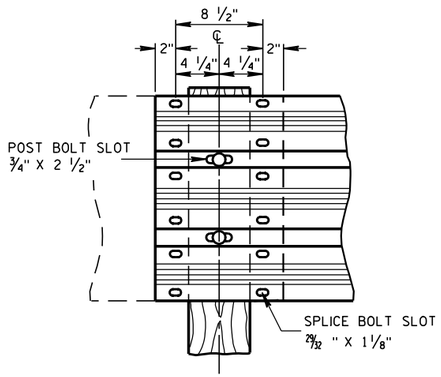

THRIE BEAM SPLICE

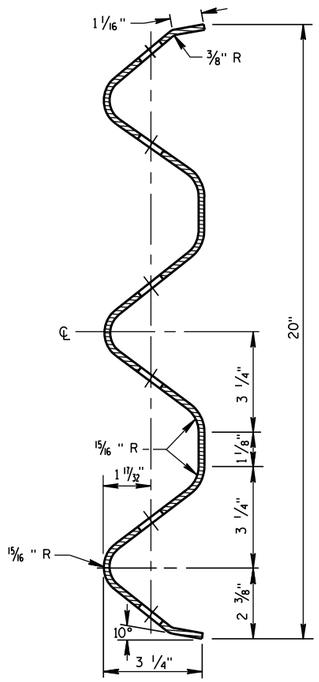

SECTION THRU THRIE BEAM RAIL ELEMENT

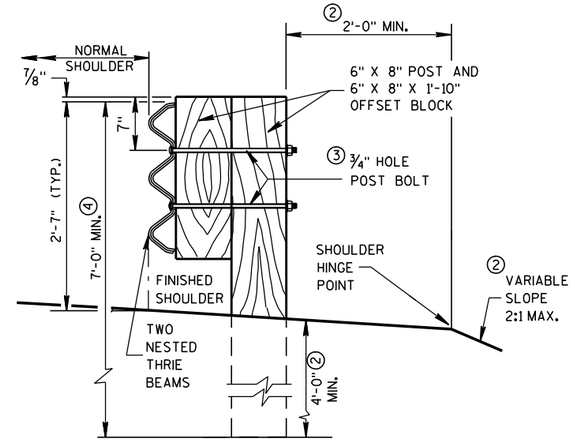

SECTION A-A

STEEL THRIE BEAM STRUCTURE APPROACH

STATE OF WISCONSIN
DEPARTMENT OF TRANSPORTATION

APPROVED

8/31/2012
DATE

/S/ Jerry H. Zogg
ROADWAY STANDARDS ENGINEER

FHWA

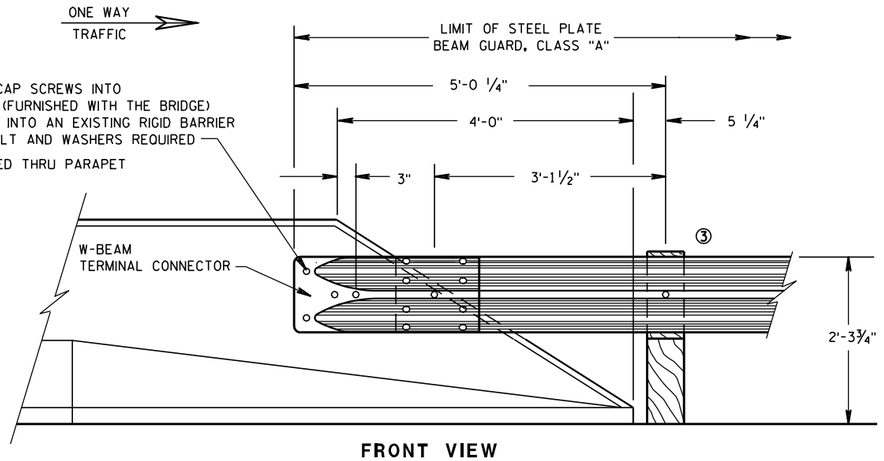

FRONT VIEW

W BEAM CONNECTION TO PARAPETS WITH SLOPED ENDS

(USE ONLY AT TRAFFIC EXIT END OF ONE WAY BRIDGE)

GENERAL NOTES

THESE ARE TYPICAL CONNECTION DETAILS. ADJUST THE POSTION OF CONNECTIONS TO EXISTING BRIDGES TO FIT THE ACTUAL BRIDGE AND SITE DIMENSIONS.

BOLTS, NUTS AND WASHERS SHALL CONFORM TO ASTM A325, A449 AND GALVANIZED PER STANDARD SPECIFICATIONS 614.

① DRILLING BOLT HOLES THROUGH THE PARAPET, BOLTS, NUTS, WASHERS AND REPAIRING DAMAGED CONCRETE ARE INCIDENTAL TO THE CONTRACT.

② BOLTS MAY BE A325 BOLTS OR A449 BOLTS. BOLT LENGTH AND THREADING LENGTH ARE TO ALLOW FOR A TIGHT CONNECTION BETWEEN RIGID BARRIER AND THRIE BEAM CONNECTION PLATE. CONTRACTOR IS TO FIELD VERIFY BOLT LENGTH AND THREAD LENGTH. ONE ROUND WASHER REQUIRED BETWEEN BOLT HEAD AND THRIE BEAM TERMINAL CONNECTOR. BOLTS THAT EXTEND THROUGH THE PARAPET AND OUT THE BACK FACE REQUIRE A HARDENED ROUND STEEL WASHER THAT IS 2" O.D. X 5/8" THICK AND ONE PLATE WASHER. REPAIR ANY DAMAGED CONCRETE FROM BOLT INSTALLATION.

③ W6 X 9 OR W6 X 8.5 STEEL POSTS AND NOTCHED PLASTIC BLOCKOUTS ARE ACCEPTABLE ALTERNATIVES FOR 6" X 8" WOOD POST WITH WOOD OR PLASTIC BLOCKOUTS. USE APPROVED NOTCHED PLASTIC BLOCKOUTS WITH STEEL POSTS.

DO NOT USE STEEL POSTS AND NOTCHED PLASTIC BLOCKOUTS IN THE STEEL THRIE BEAM STRUCTURAL APPROACH AND THE TRANSITION SECTION OF STEEL PLATE BEAM GUARD, CLASS "A" INSTALLATIONS.

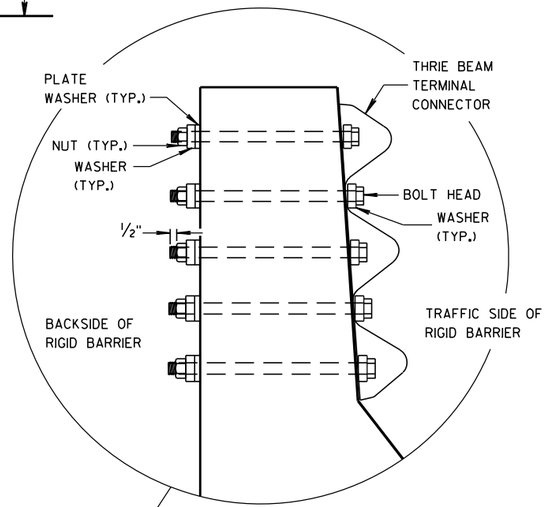

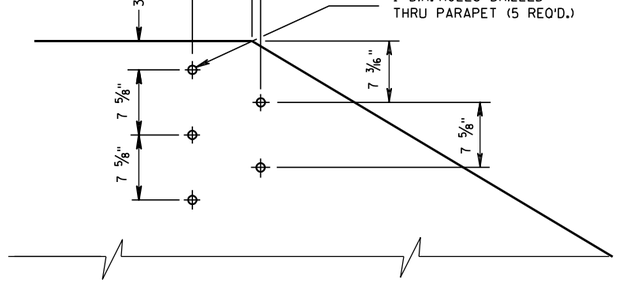

DRILL HOLE LOCATION AND PATTERN FOR THRIE BEAM CONNECTION

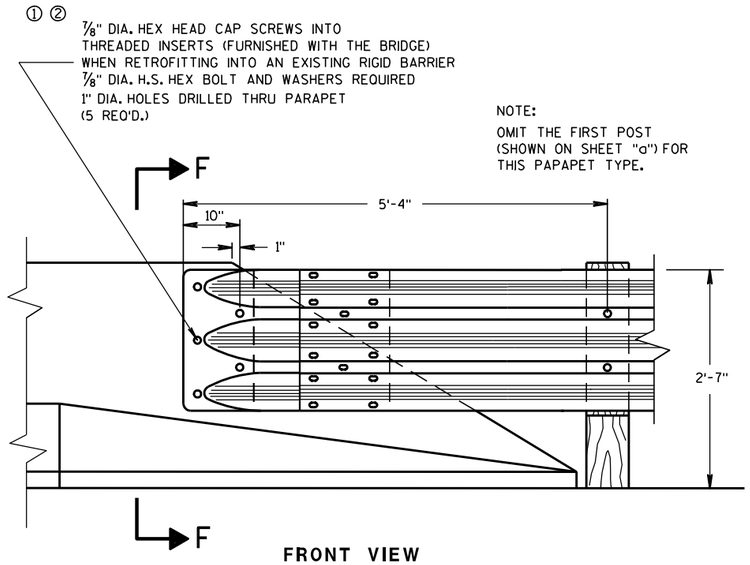

FRONT VIEW

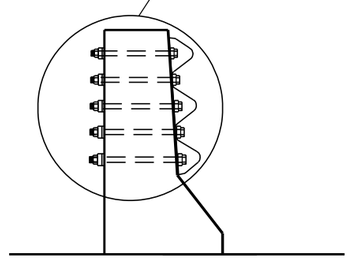

SECTION F-F

THRIE BEAM CONNECTION TO BRIDGE PARAPETS WITH SLOPED ENDS

STEEL THRIE BEAM STRUCTURE APPROACH, CONNECTION TO SLOPED END PARAPETS

STATE OF WISCONSIN
DEPARTMENT OF TRANSPORTATION

APPROVED
8/31/2012 — DATE
/S/ Jerry H. [illegible] — ROADWAY STANDARDS DEVELOPMENT ENGINEER
FHWA

6

S.D.D. 14 B 20-11d

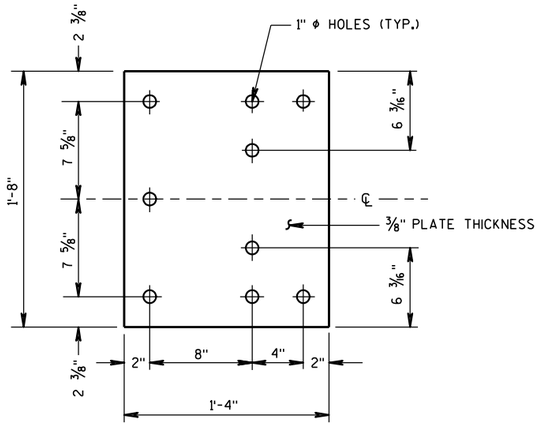

BACK-UP PLATE DETAIL

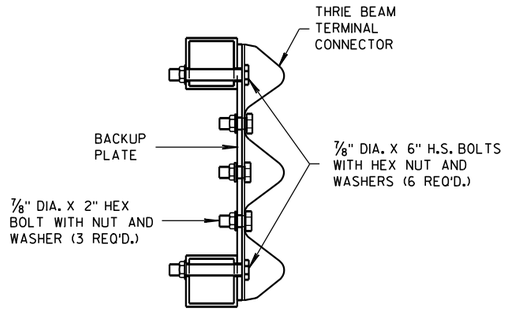

SECTION G-G

GENERAL NOTES

BOLTS, PLATES, NUTS AND WASHERS SHALL CONFORM TO THE REQUIREMENTS OF ASTM SPECIFICATION A 325 AND BE GALVANIZED IN ACCORDANCE WITH ASTM A 153.

① DRILLING BOLT HOLES THROUGH THE PARAPET, BOLTS, NUTS, WASHERS AND REPAIRING DAMAGED CONCRETE ARE INCIDENTAL TO THE CONTRACT.

② VARY THIS DIMENSION DEPENDING ON ABUTMENT TYPE, WINGWALL DETAILS, AND ANGLE OF SKEW. PLACE THE FIRST WOOD POST OFF THE BRIDGE SHALL AS CLOSE AS FEASIBLE TO THE STEEL END POST.

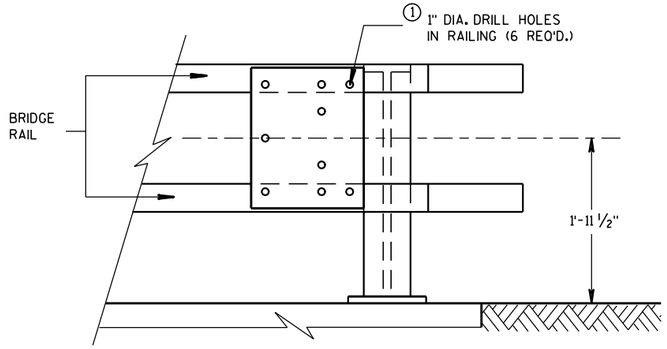

BACK-UP PLATE MOUNTING ONTO BRIDGE RAILING

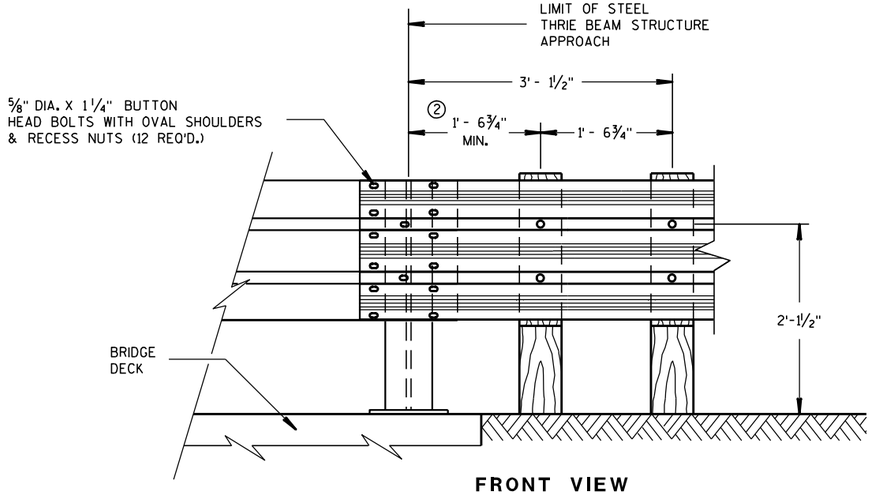

FRONT VIEW

THRIE BEAM CONNECTION TO STEEL RAILING TYPE "W"

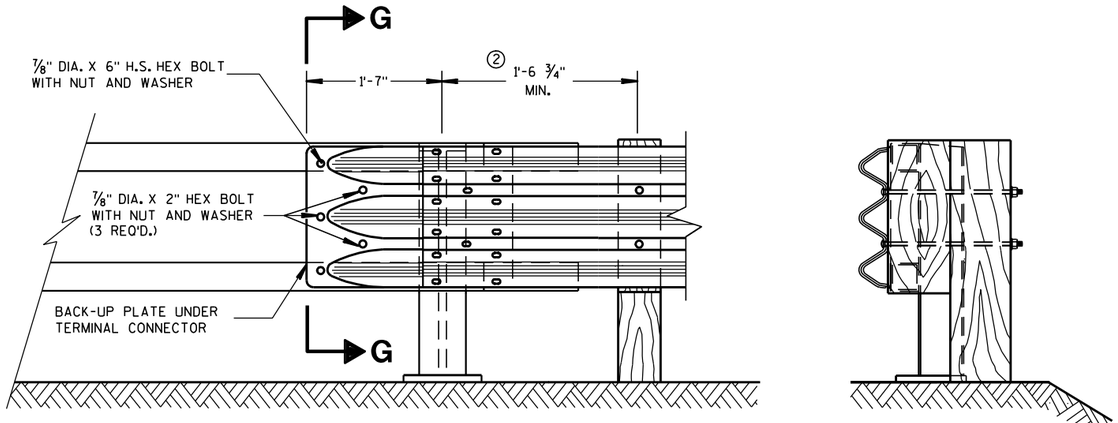

FRONT VIEW

END VIEW

THRIE BEAM CONNECTION TO TUBULAR RAILING TYPE "F"

STEEL THRIE BEAM STRUCTURE APPROACH, CONNECTION TO BRIDGE RAILING TYPES "F" AND "W"

STATE OF WISCONSIN
DEPARTMENT OF TRANSPORTATION

APPROVED
8/31/2012 DATE
/S/ Jerry H ____ ROADWAY STANDARDS ENGINEER
ENT
FHWA

6

S.D.D. 14 B 20-11e

6

S.D.D. 14 B 20-11e

GENERAL NOTES

① VARY THIS DIMENSION DEPENDING ON ABUTMENT TYPE, WINGWALL DETAILS, AND ANGLE OF SKEW. PLACE THE FIRST WOOD POST OFF THE BRIDGE SHALL BE AS CLOSE AS FEASIBLE TO THE STEEL END POST.

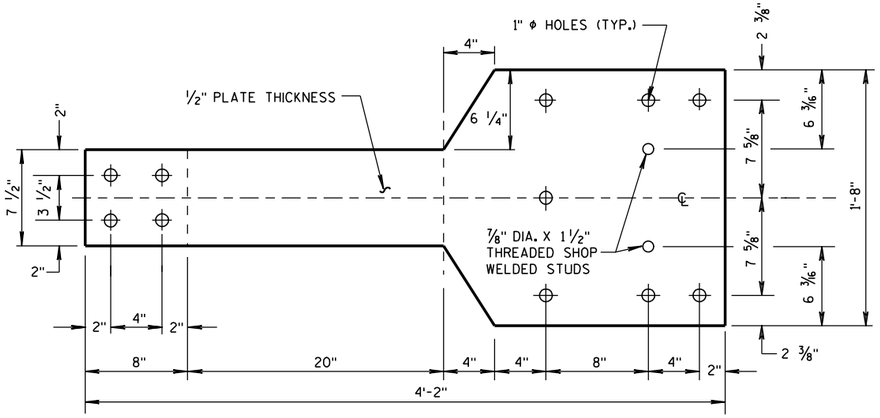

FRONT VIEW

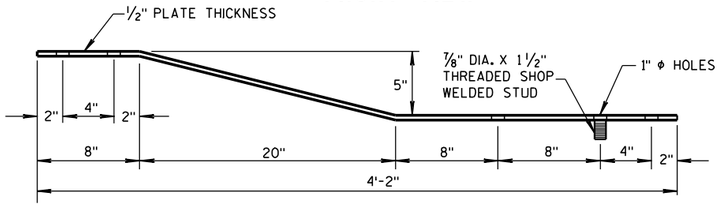

PLAN VIEW

BACK-UP PLATE DETAIL, TYPE "M"

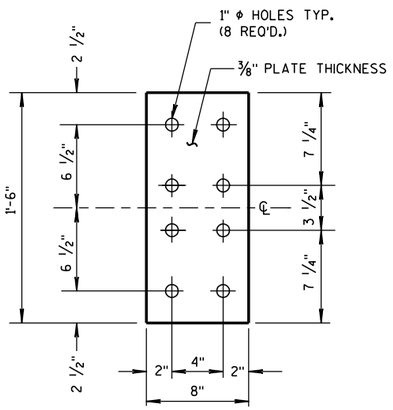

FRONT VIEW

ANCHOR PLATE DETAIL, TYPE "M"

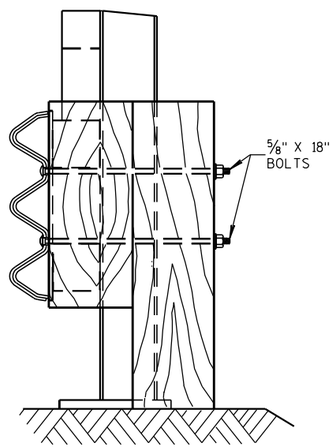

SECTION I-I

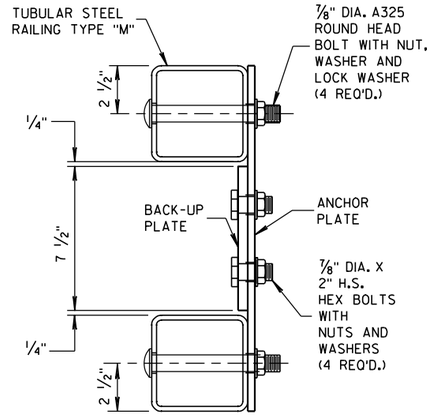

SECTION H-H

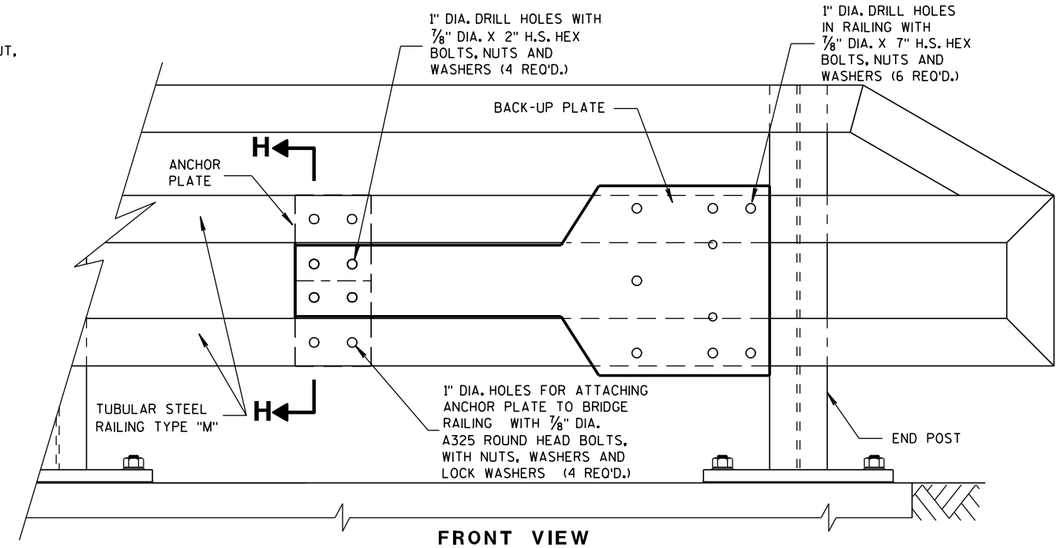

FRONT VIEW

ANCHOR AND BACK-UP PLATE MOUNTING TO BRIDGE RAILING, TYPE "M"

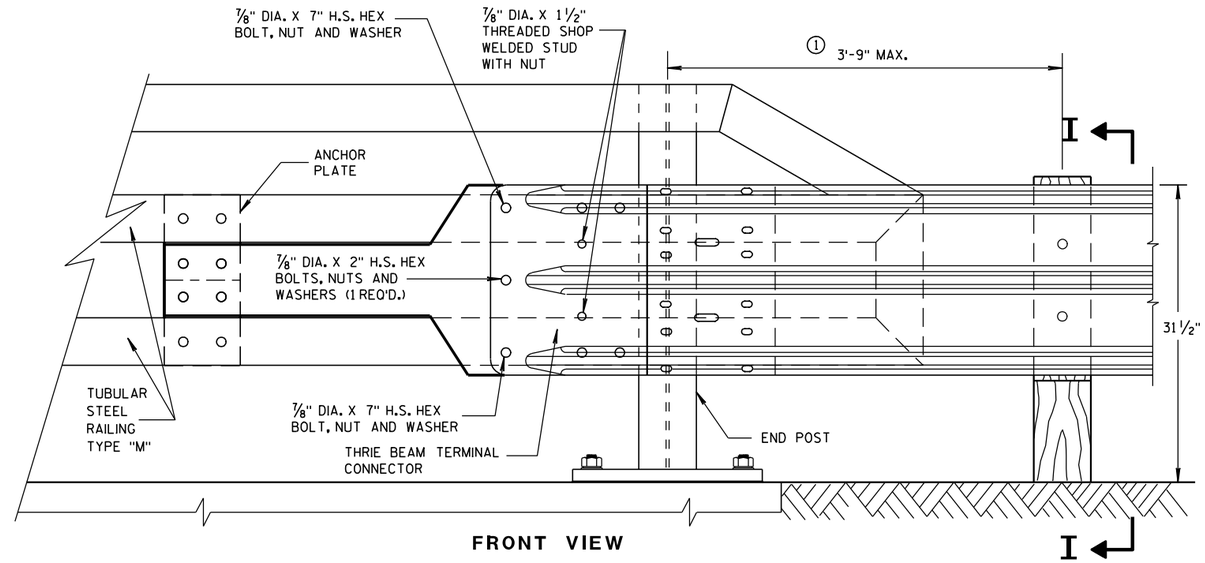

FRONT VIEW

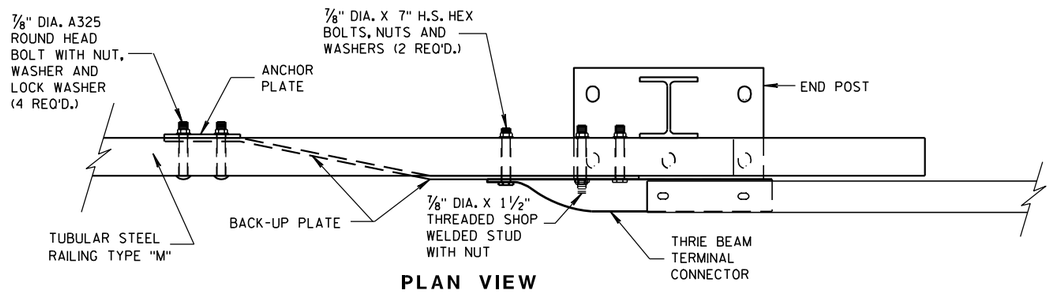

PLAN VIEW

THRIE BEAM CONNECTION TO TUBULAR RAILING, TYPE "M"

STEEL THRIE BEAM STRUCTURE APPROACH, CONNECTION TO BRIDGE RAILING TYPE "M"

STATE OF WISCONSIN
DEPARTMENT OF TRANSPORTATION

APPROVED
8/31/2012 — DATE
/S/ Jerry H. [illegible] — ROADWAY STANDARDS ENGINEER
FHWA

BILL OF MATERIALS

NOTE NO.	QTY.	DESCRIPTION
①	4	WOOD BREAKAWAY TERMINAL POST: 5½" X 7½" X 3'-9"
②	**	STEEL TUBE: OPTION 1 - QUANITY OF 4 TS 8" X 6" X 0.188", 4'-6" LONG OR OPTION 2 - QUANITY OF 2 TS 8" X 6" X 0.188", 6'-0" AND 2 TS 8" X 6" X 0.188", 4'-6" LONG
③	2	SOIL PLATE: 2'-0" X 1'-6" X ¼" **
④	4	WOOD BREAKAWAY CRT POST: 6" X 8" X 6'-0"
⑤	6	WOOD OFFSET BLOCKS: 6' X 8" X 1'-2"
⑥	1	PIPE SLEEVE: 2" X 5 ½" STANDARD PIPE
⑦	1	BEARING PLATE
⑧	1	BCT CABLE ASSEMBLY
⑨	1	CABLE ANCHOR BOX
⑩	1	STRUT & YOKE
⑪	1	STEEL PLATE BEAM, END PANEL 12 GA. 13'-6½" LONG FOR SKT-350, ET-2000 AND ET-2000 PLUS
⑫	3	STEEL PLATE BEAM: 12 GA. 13'-6½"
⑬	1	ET-2000/ET-2000 PLUS GUARDRAIL EXTRUDER OR SKT-350 IMPACT HEAD: AS FURNISHED BY MANUFACTURER
⑭	1	0.040" ALUMINUM SHEET WITH REFLECTIVE SHEETING TYPE F PER SECTION 637 OF THE STANDARD SPECIFICATIONS
⑮	1	E.A.T. MARKER POST

GENERAL NOTES

FOLLOW MANUFACTURE'S BOLTING RECOMMENDATIONS. IF NONE ARE AVAILABLE, INSTALL ⅝" ø X 1'-6" BUTTON HEAD BOLTS AT ALL POSTS EXCEPT FOR POST 1.

(A) THE SLOPE IN THE AREA BOUNDED BY THE GRADELINE, THE HINGE POINT LINE (HPL), AND THE CLEAR ZONE LIMITS (CZL) SHALL BE 4:1 OR FLATTER.

(B) AFTER FINAL ASSEMBLY, RECHECK CABLE TO BE SURE IT IS TAUT AND HAS NOT RELAXED.

(C) THE 13 SLOT FIRST RAIL PANEL MAY BE USED IN LIEU OF THE 3 SLOT RAIL PANEL ON SKT-350 ONLY.

(D) THE TOP OF THE STEEL TUBE ON POSTS 1 THROUGH 4 SHALL NOT BE MORE THAN 3" ABOVE THE FINISH GROUND ELEVATION.

(E) THE CENTER OF THE UPPER 3½" DIAMETER HOLE ON POST 5 THROUGH 8 SHALL BE ¾" ABOVE THE FINISHED GROUND LINE.

(F) ATTACH ALUMINUM SHEET TO E.A.T. HEAD USING 4 STAINLESS STEEL SELF-TAPPING SCREWS. ONE SCREW PER CORNER.

STEEL POSTS SHALL NOT BE ALLOWED FOR USE WITH ENERGY ABSORBING TERMINALS.

DO NOT INSTALL REFLECTORS ON THE FIRST 50 FEET OF THE APPROACH END OF THE ENERGY ABSORBING TERMINAL.

* DO NOT ATTACH BLOCKOUTS TO POSTS 1 AND 2.

** SDD SHOWS 4 - 54 INCH STEEL TUBES WITH SOIL PLATES INSTALLED ON POST 1 AND POST 2. POST 3 AND 4 DO NOT NEED SOIL PLATES. AN ALTERNATIVE INSTALLATION WOULD CONSIST OF 2 - 72 INCH STEEL TUBES ON POST 1 AND POST 2 AND 54 INCH SOIL TUBES ON POSTS 3 AND 4. THE ALTERNATIVE INSTALLATION DOES NOT REQUIRE SOIL PLATES.

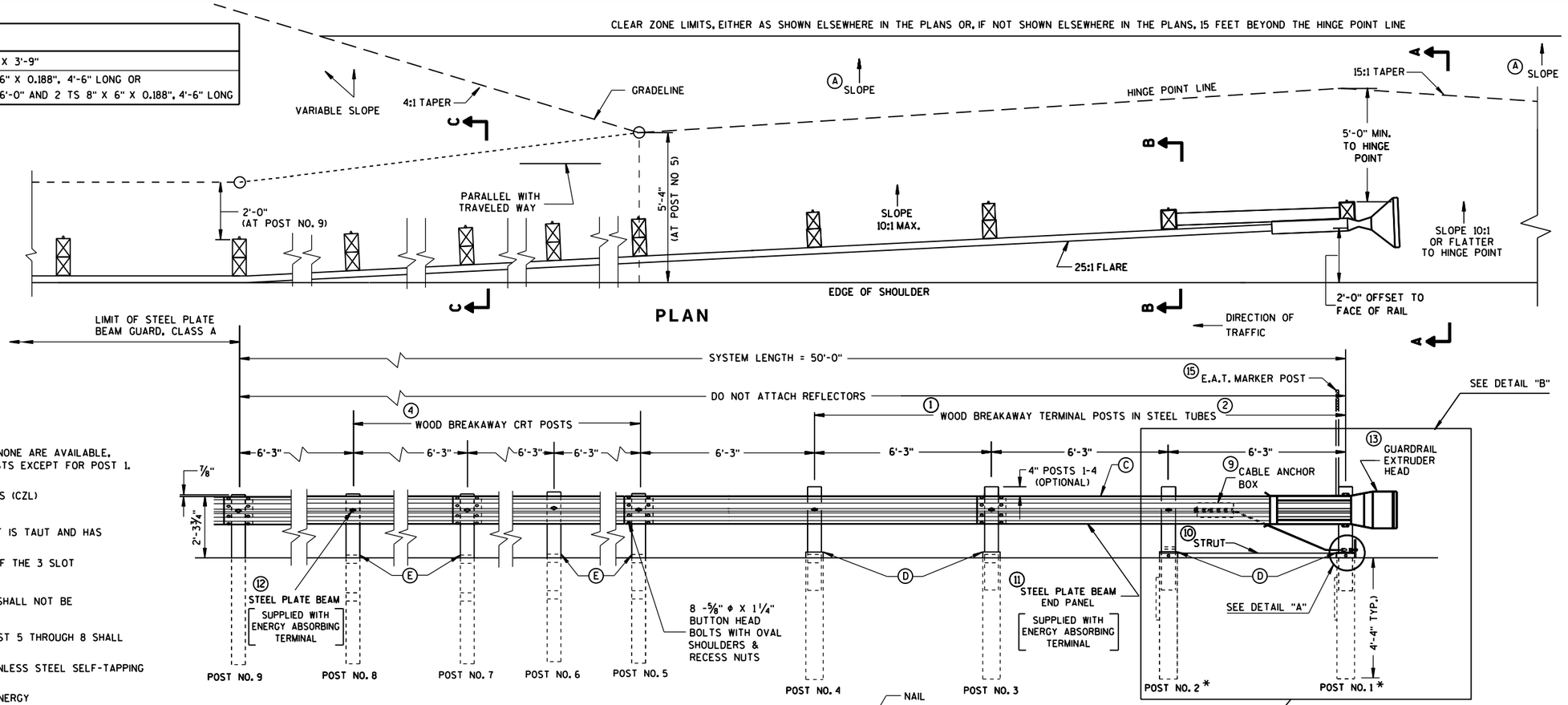

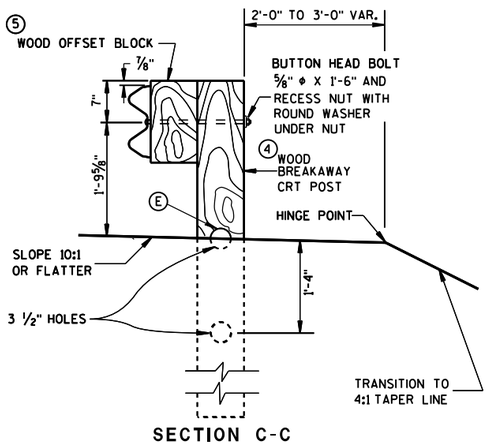

SECTION C-C
TYPICAL AT POST NOS. 6, 8

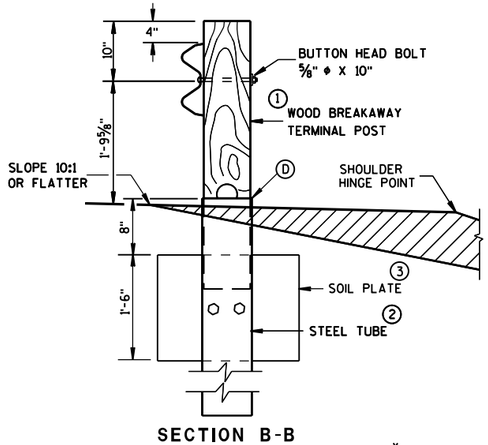

SECTION B-B
TYPICAL AT POST NO. 2*

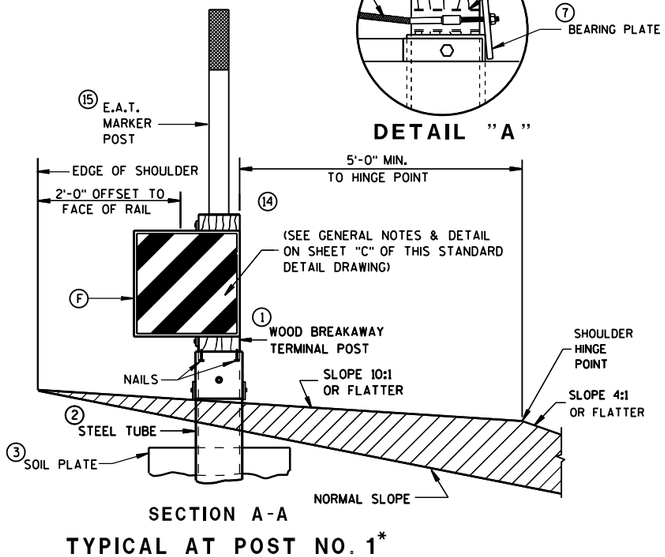

SECTION A-A
TYPICAL AT POST NO. 1*

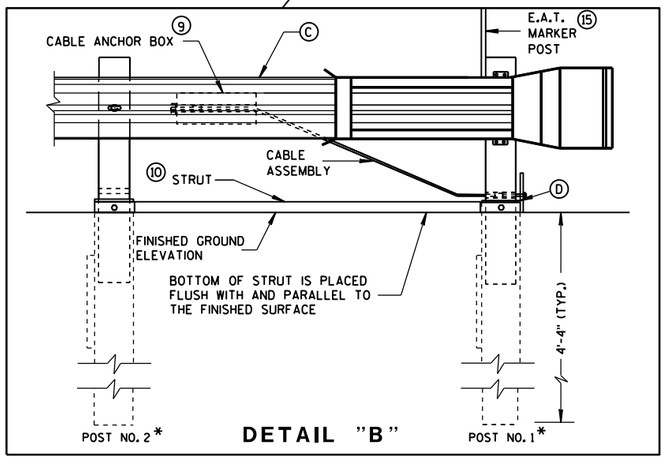

DETAIL "B"

STEEL PLATE BEAM GUARD ENERGY ABSORBING TERMINAL

STATE OF WISCONSIN
DEPARTMENT OF TRANSPOR

6

S.D.D. 14 B 24-8a

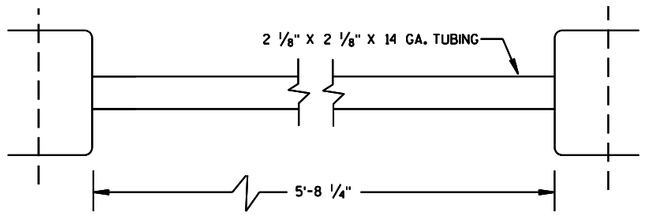

⑩ STRUT DETAIL (SKT-350)

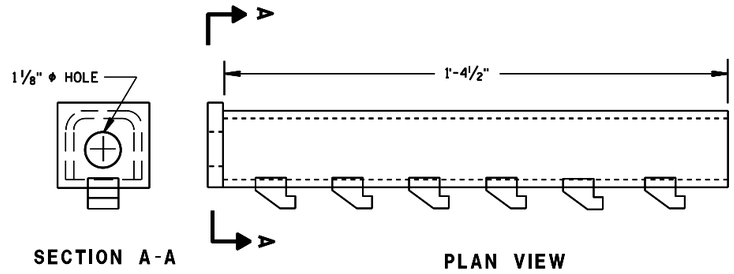

⑨ CABLE ANCHOR BOX (ET-2000/ET-2000 PLUS)

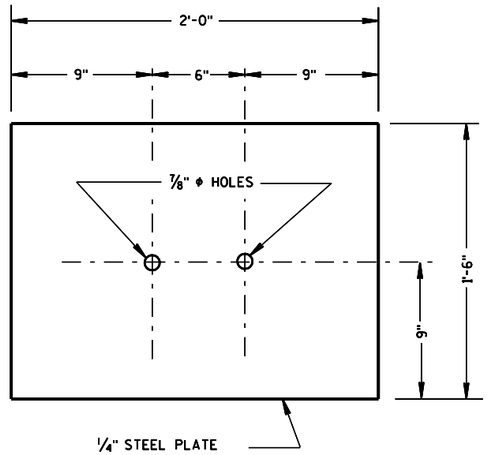

③ SOIL PLATE

(SKT-350, ET-2000/ET-2000 PLUS)

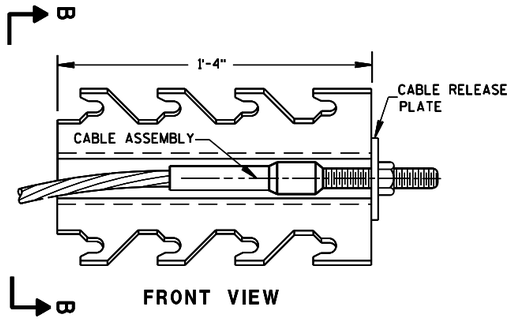

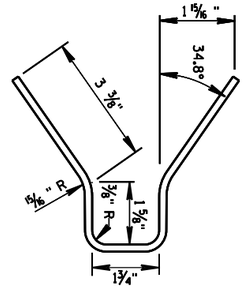

⑨ CABLE ANCHOR BOX (SKT-350)

(SKT-350)

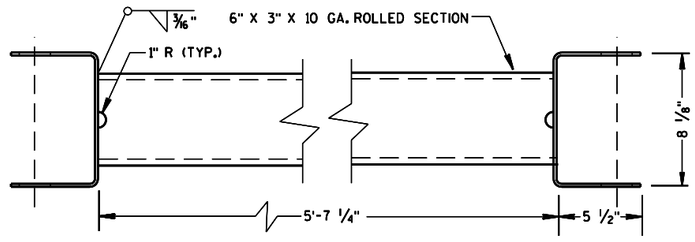

⑩ STRUT DETAIL (ET-2000/ET-2000 PLUS)

(ET-2000/ET-2000 PLUS)

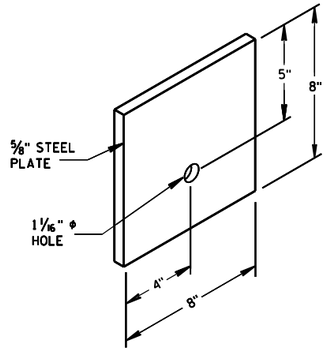

⑦ STEEL BEARING PLATE

(SKT-350, ET-2000/ET-2000 PLUS)

6

6

S.D.D. 14 B 24-8b

S.D.D. 14 B 24-8b

STEEL PLATE BEAM GUARD
ENERGY ABSORBING TERMINAL

STATE OF WISCONSIN
DEPARTMENT OF TRANSPOI

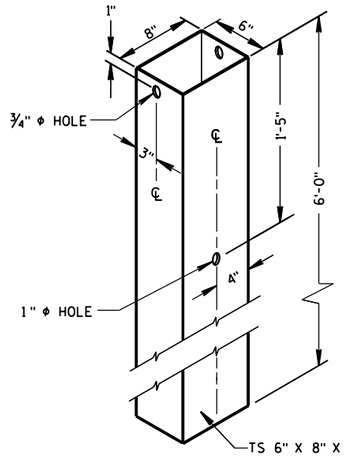

② 72" STEEL TUBE
(POSTS NO. 1-4

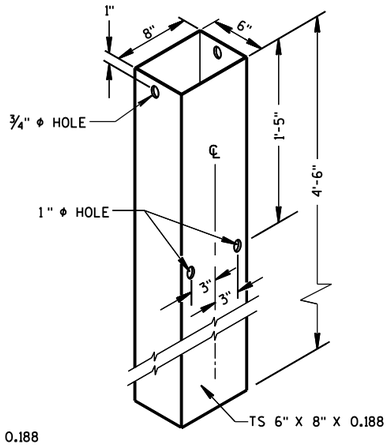

② 54" STEEL TUBE
(POSTS NO. 1-4

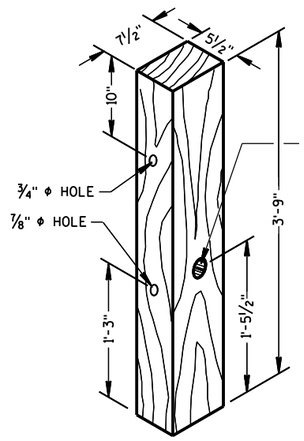

① TERMINAL POST
(POSTS NO. 1-4

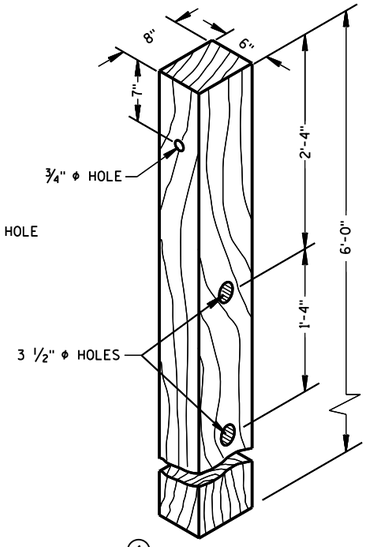

④ CRT POST
(POSTS NO'S 5-8

WOOD BREAKAWAY POSTS

GENERAL NOTES

WHEN ROCK IS ENCOUNTERED DURING EXCAVATION, A 12 INCH DIA. POST HOLE EXTENDING 20 INCHES DEEP INTO THE ROCK MAY BE USED IF APPROVED BY THE ENGINEER. GRANULAR MATERIAL SHALL BE PLACED IN THE BOTTOM OF THE HOLE APPROXIMATELY 2 ½" INCHES DEEP TO PROVIDE DRAINAGE. THE SOIL TUBES SHALL BE FIELD CUT TO LENGTH, PLACED IN THE HOLE AND BACKFILLED WITH ADEQUATELY COMPACTED MATERIAL EXCAVATED FROM THE HOLE.

SEE APPROVED PRODUCTS LIST FOR ACCEPTABLE E. A. T. MARKER POST.

(G) ½" DIA. X 3" LAG BOLT WITH WASHER.

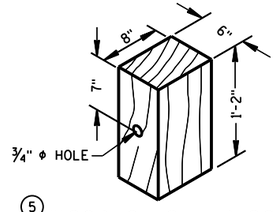

⑤ WOOD OFFSET BLOCK
REQ'D. AT ALL POSTS EXCEPT POST NO'S 1 & 2

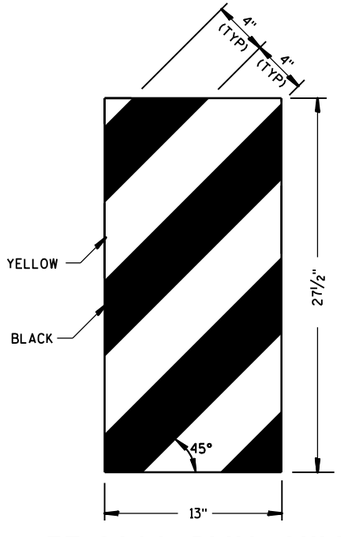

ET-2000 PLUS ONLY

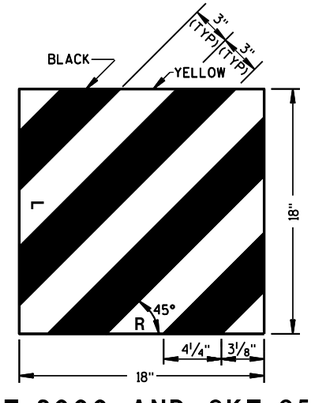

ET-2000 AND SKT-350

⑭ REFLECTIVE SHEETING DETAILS

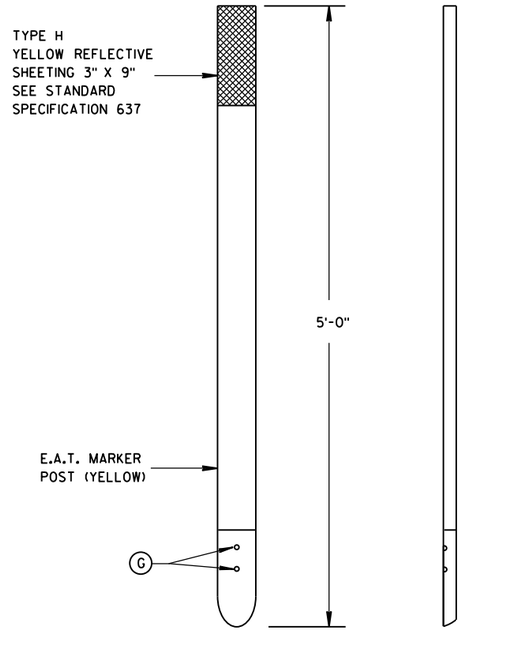

FRONT VIEW SIDE VIEW

⑮ E.A.T. MARKER POST

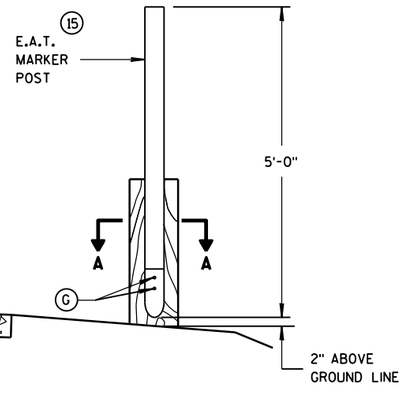

TYPICAL INSTALLATION OF E.A.T.
MARKER POST BACKSIDE OF POST NO. 1
(E.A.T. AND RAIL REMOVED FOR CLARITY)

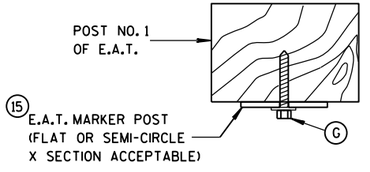

SECTION A-A

STEEL PLATE BEAM GUARD
ENERGY ABSORBING TERMINAL

STATE OF WISCONSIN
DEPARTMENT OF TRANSPORTATION

APPROVED
June 2014 — DATE
/S/ Jerry H. Zoda — ROADWAY STANDARDS ENGINEER
FHWA

6

S.D.D. 14 B 24-8c

6

S.D.D. 14 B 24-8c

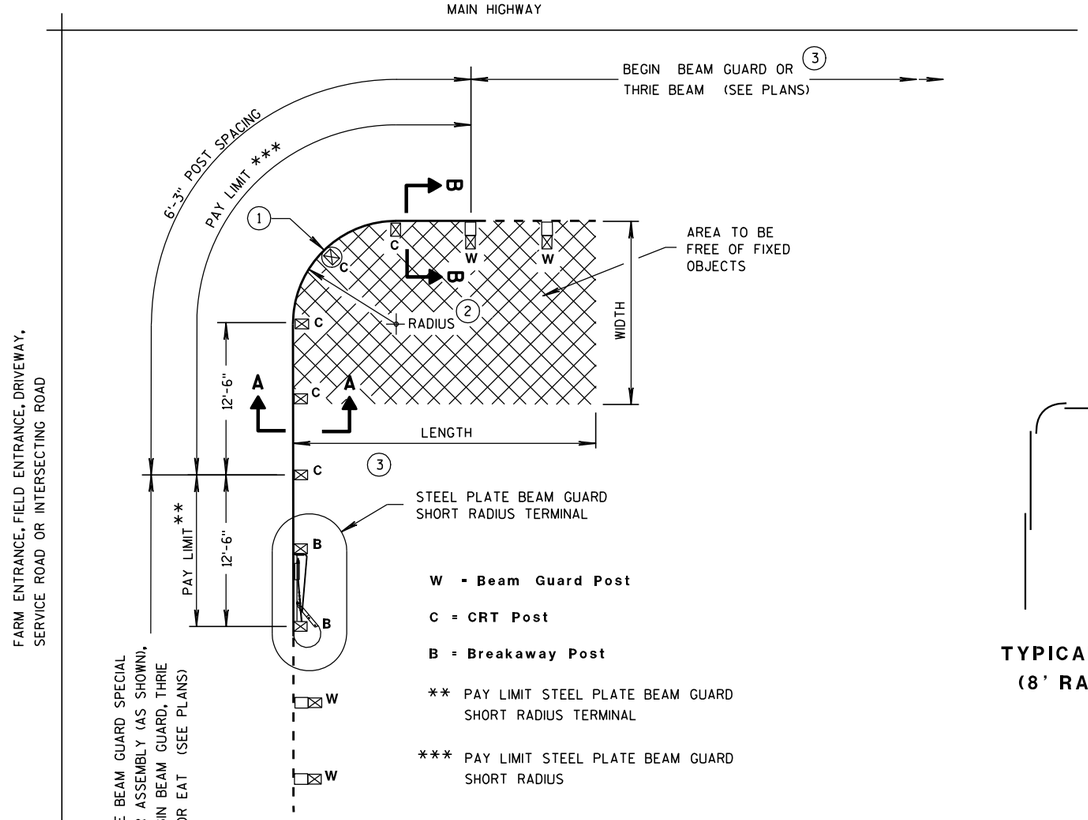

TYPICAL LAYOUT
(8' RADIUS SHOWN)

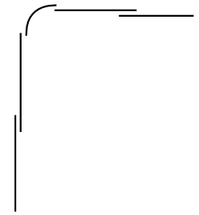

TYPICAL LAP SPLICES
(8' RADIUS SHOWN)

GENERAL NOTES

ALL ANGLES, CHANNELS, AND PLATES SHALL CONFORM TO THE REQUIREMENTS OF ASTM A36 AND THE STRUCTURAL TUBING SHALL CONFORM TO ASTM A 500. WELDING SHALL MEET THE CURRENT REQUIREMENTS OF THE AMERICAN WELDING SOCIETY STRUCTURAL WELDING CODE ANSI/AWS D1.1. ALL STRUCTURAL STEEL SHALL BE GALVANIZED IN ACCORDANCE WITH ASTM A 123. PUNCHING, DRILLING, CUTTING, OR WELDING WILL NOT BE PERMITTED AFTER GALVANIZING. FURNISH AND INSTALL HARDWARE PER STANDARD SPECIFICATION 614.2. UNLESS NOTED OTHERWISE.

SHOP BEND CURVED RAIL SECTIONS.

SEE STANDARD DETAIL DRAWING 14 B 15 FOR OTHER DETAIL.

(1) ON THE 8 FOOT RADIUS INSTALLATION, DO NOT INSTALL BUTTON HEAD BOLT AT CENTER CRT POST.

(2) RADIUS FROM 8' - 36'. SEE PLAN.

(3) HEIGHT TRANSITION MAY BE REQUIRED. SEE PLAN OR PROJECT ENGINEER.

(4) 5/8" ø X 1'-6" BUTTON HEAD BOLT AND RECESS NUT WITH ROUND WASHER UNDER NUT.

RADIUS	NUMBER OF CRT POSTS	*NUMBER AND LENGTH OF CURVED RAILS	REQUIRED AREA FREE OF FIXED OBJECTS (LENGTH x WIDTH)
8'	5	1 at 12.5'	25' x 15'
16'	7	1 at 25'	30' x 15'
24'	9	1 at 25' and 1 at 12.5'	40' x 20'
32'	11	2 at 25'	50' x 20'

* THE NUMBER OF RAILS IS BASED ON A 90° INTERSECTION. SEE PLAN FOR NON 90° INSTALLATIONS.

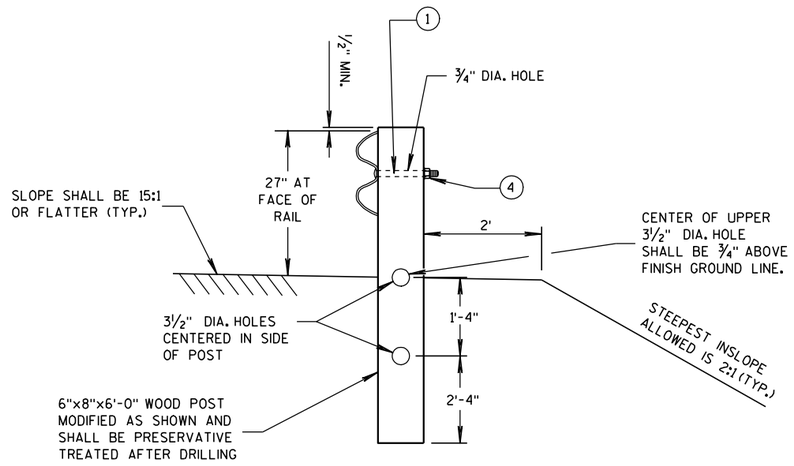

SECTION A-A
(CRT POST)

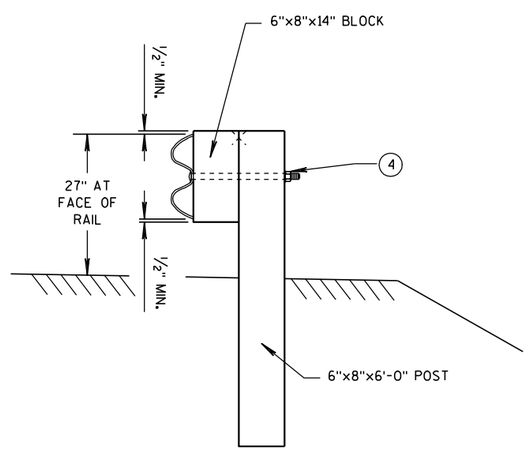

SECTION B-B
(BEAM GUARD POST)

STEEL PLATE BEAM GUARD SHORT RADIUS TERMINAL

STEEL PLATE BEAM GUARD SHORT RADIUS TERMINAL	
STATE OF WISCONSIN DEPARTMENT OF TRANSPORTATION	

6

S.D.D. 14 B 27-1a

6

S.D.D. 14 B 27-1a

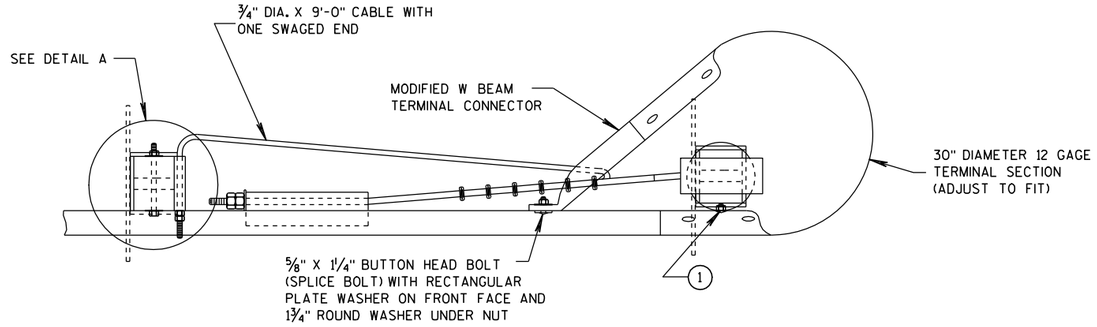

PLAN VIEW

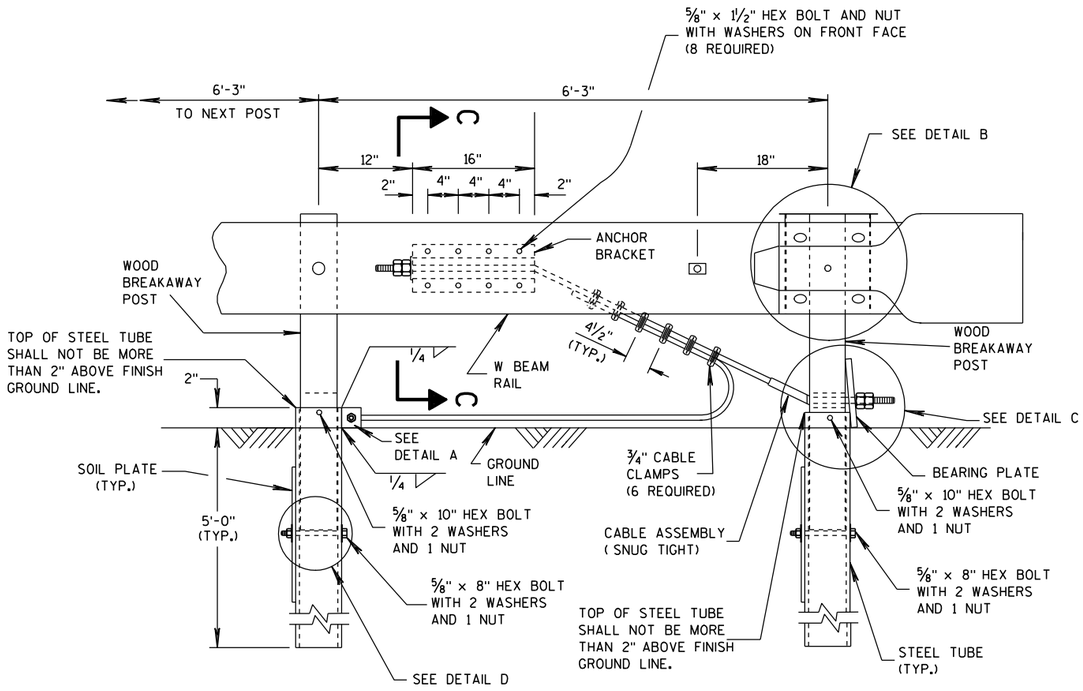

ELEVATION VIEW

STEEL PLATE BEAM GUARD SHORT RADIUS TERMINAL

GENERAL NOTES

(1) ATTACH W BEAM RAIL TO THE STEEL PIPE WITH A ⅝" X 2" BUTTON HEAD BOLT WITH NO WASHER. CONNECTION TO THE POST IS NOT REQUIRED.

INSTALL GALVANIZED ¾" (6X19) PREFORMED WIRE OR INDEPENDENT WIRE ROPE CORE CONFORMING TO AASHTO M 30. MANUFACTURE WIRE ROPE OUT OF IMPROVED PLOW STEEL WITH A MINIMUM BREAKING STRENGTH OF 42,800 PSI.

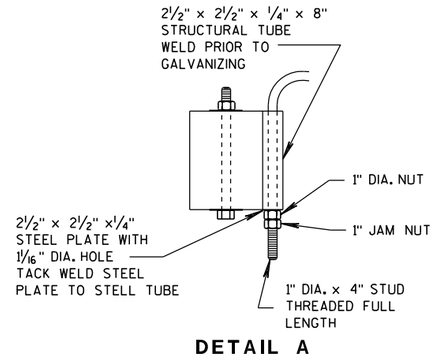

DETAIL A

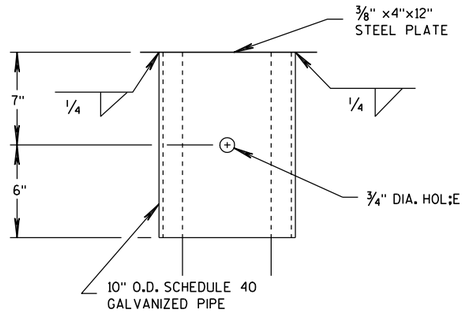

DETAIL B

(BEAM GUARD AND TERMINAL SECTION NOT SHOWN)

STEEL PLATE BEAM GUARD SHORT RADIUS TERMINAL

STATE OF WISCONSIN
DEPARTMENT OF TRANSPORTATION

6

S.D.D. 14 B 27-1b

6

S.D.D. 14 B 27-1b

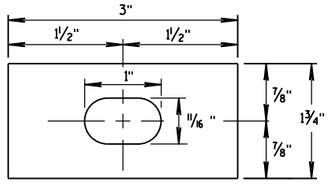

RECTANGULAR PLATE WASHER

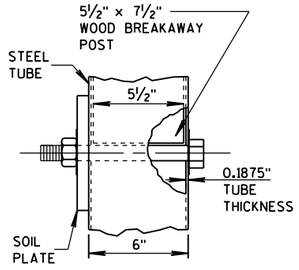

DETAIL D

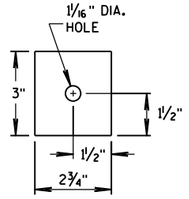

END PLATE

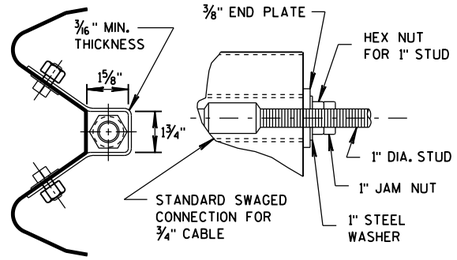

SECTION C-C
(END PLATE REMOVED)

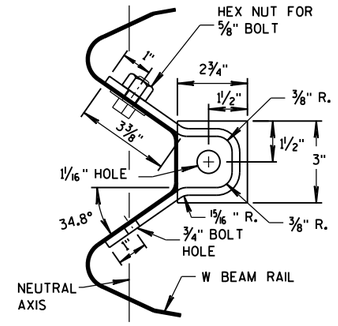

ANCHOR BRACKET

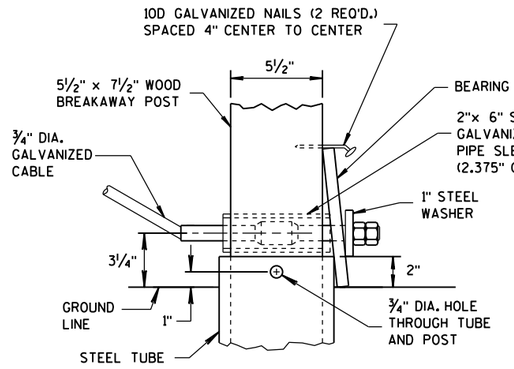

DETAIL C

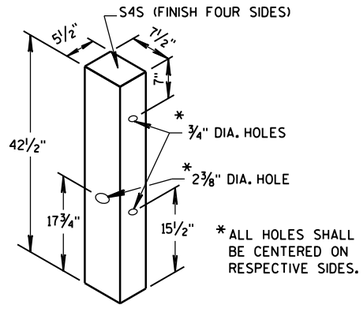

WOOD BREAKAWAY POST

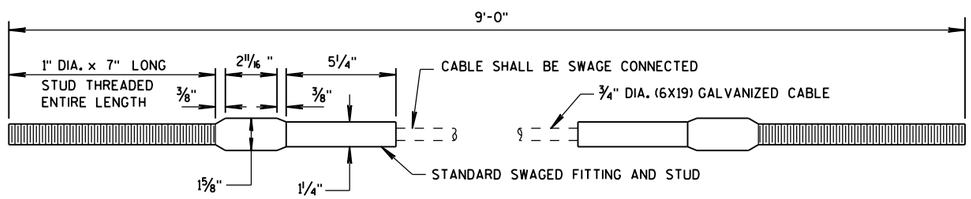

CABLE ASSEMBLY

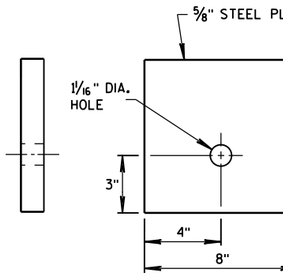

BEARING PLATE

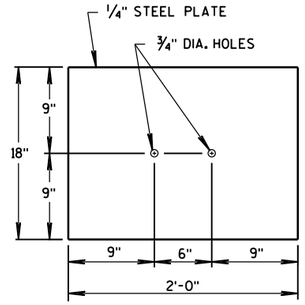

SOIL PLATE

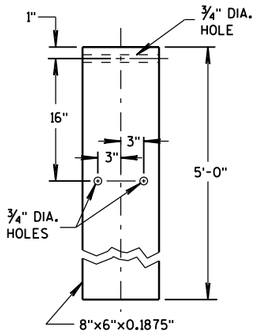

STEEL TUBE

STEEL PLATE BEAM GUARD SHORT RADIUS TERMINAL

STATE OF WISCONSIN
DEPARTMENT OF TRANSPORTATION

APPROVED
12/18/08 — DATE
/S/ Jerry H. Zogg — ROADWAY STANDARDS DEVELOPMENT ENGINEER
FHWA

6

S.D.D. 14 B 27-1c

6

S.D.D. 14 B 27-1c

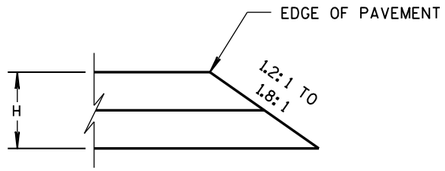

CONSTRUCTED WITH FINAL TWO LAYERS

FOR H 5" OR LESS

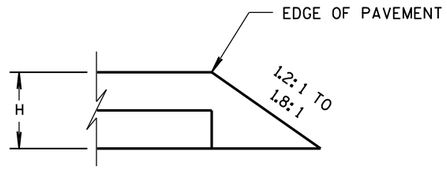

CONSTRUCTED WITH FINAL LAYER

FOR H 5" OR LESS

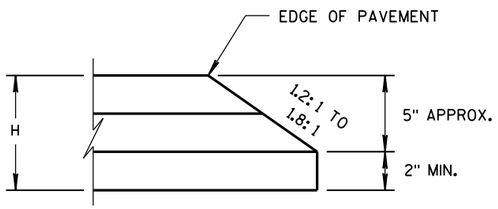

CONSTRUCTED WITH FINAL TWO LAYERS

FOR H GREATER THAN 5"

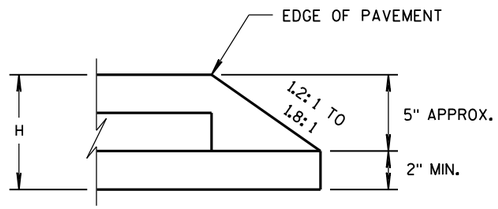

CONSTRUCTED WITH FINAL LAYER

FOR H GREATER THAN 5"

HMA PAVEMENT AND HMA OVERLAYS

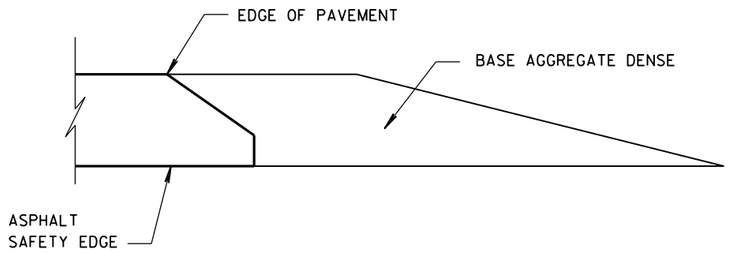

FINISHED SHOULDER AGGREGATE PLACEMENT

6

6

S.D.D. 14 B 29-1

S.D.D. 14 B 29-1

SAFETY EDGE SM

STATE OF WISCONSIN
DEPARTMENT OF TRANSPORTATION

APPROVED

11/30/2012
DATE

/S/ Jerry H. Zoda
ROADWAY STANDARDS DEVELOPMENT ENGINEER

FHWA

GENERAL NOTES

1. WOOD OR STEEL POSTS (w6X9 OR w6X8.5) MAY BE USED. DO NOT INTERMIX WOOD AND STEEL POSTS. INSTALL STEEL POSTS WITH HOLES ON APPROACHING TRAFFIC SIDE.

2. USE WOOD OR APPROVED PLASTIC BLOCKOUTS. WOOD BLOCKOUTS MAY BE CONSTRUCTED OUT OF TWO OR MORE WOOD BLOCKOUTS. SEE ALTERNATE WOOD BLOCKOUT DETAIL. DIMENSIONS OF APPROVED PLASTIC BLOCKOUTS MAY VARY.

3. IF ROCK IS ENCOUNTERED DURING EXCAVATION, PROVIDE A HOLE 12 INCHES IN DIAMETER EXTENDING 20 INCHES DEEP INTO THE ROCK. PLACE APPROXIMATELY 2½ INCHES OF GRANULAR MATERIAL IN THE BOTTOM OF THE HOLE. CUT THE POSTS THE TO LENGTH AMD INSTALL. BACKFILL WITH EXCAVATED MATERIAL AND COMPACT. BACKFILL IS TO BE FREE OF LARGE ROCKS.

4. WHEN THE DISTANCE FROM BACK OF POST TO SHOULDER HINGE POINT IS LESS THAN 2 FEET INSTALL LONGER POST AT HALF POST SPACING (K).

5. FOR NEW MGS INSTALLATION TOP OF W-BEAM RAIL TOLERANCE IS ± 1". FOR EXISTING MGS INSTALLATION TOP OF W-BEAM IS BETWEEN 27¾" TO 32".

6. WHEN USING STEEL POST AND WOOD BLOCKOUTS INSTALL FOUR 16D GALVANIZED NAILS. INSTALL NAILS AT THE BACK CORNERS OF THE BLOCK AND BEND THE NAILS OVER THE FLANGE OF THE STEEL POST.

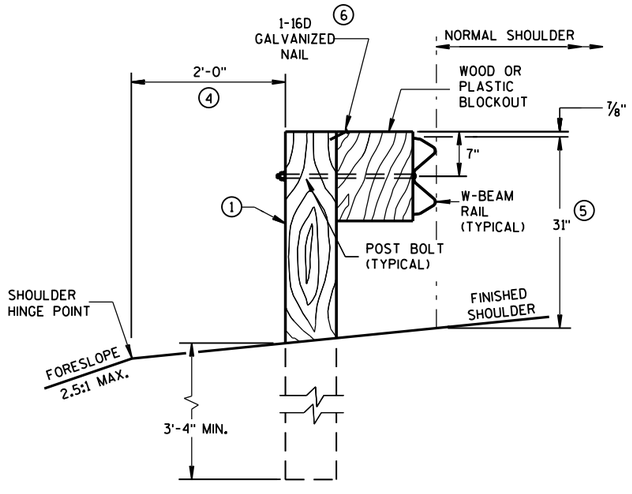

END VIEW

LOCATED ALONG A ROADWAY SHOULDER
STANDARD INSTALLATION

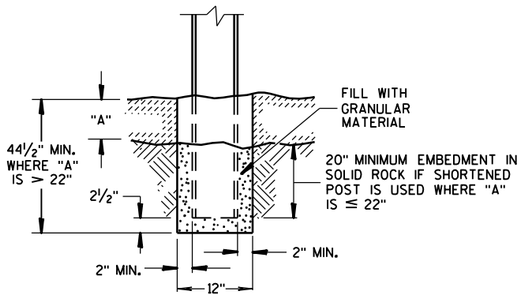

END VIEW

SETTING STEEL OR WOOD POST IN ROCK 3

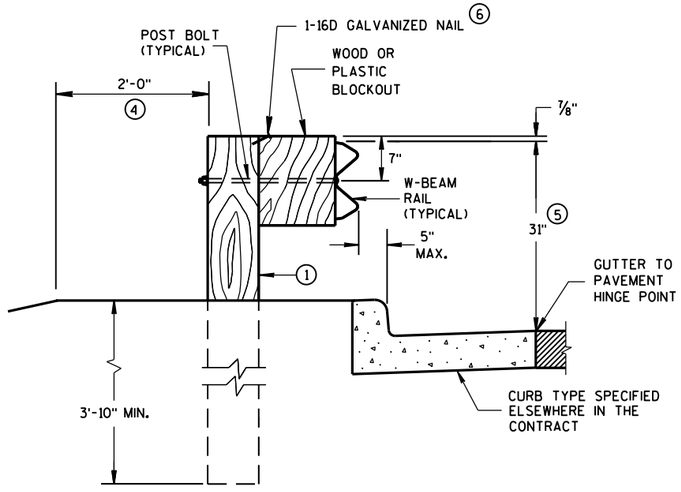

END VIEW

LOCATED ALONG A CURBED ROADWAY

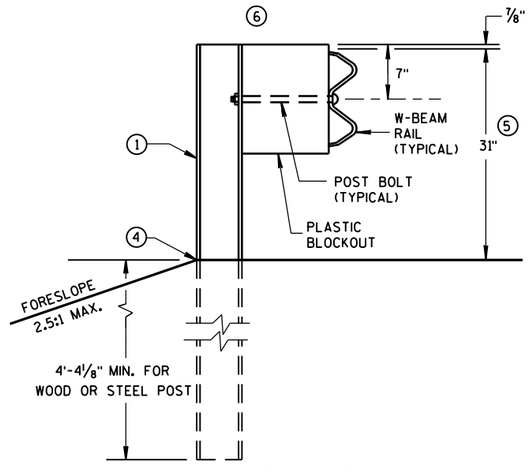

END VIEW

MGS LONGER POST AT HALFPOST SPACING W BEAM (K)

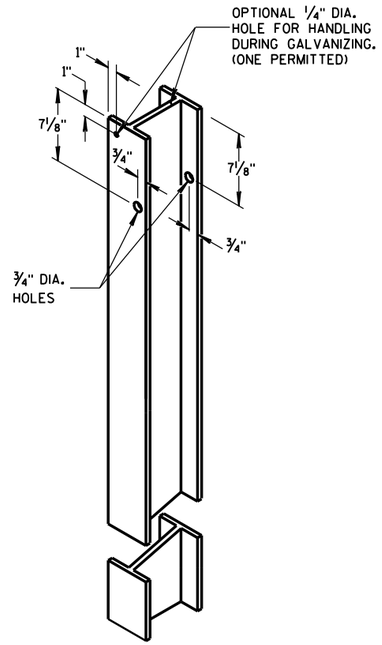

STEEL POST &
HOLE PUNCHING DETAIL
(w6X9) 1

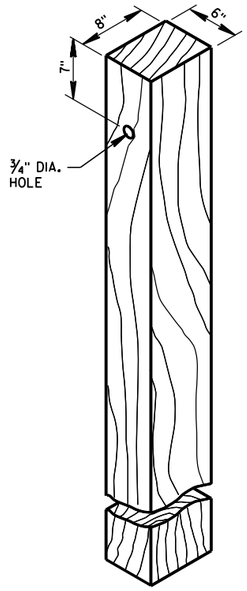

WOOD POST
(6" X 8") NOMINAL 1

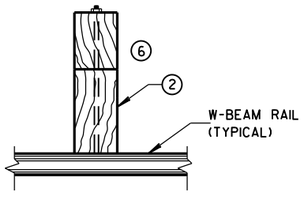

PLAN VIEW
WOOD POST,
BLOCKOUT & BEAM

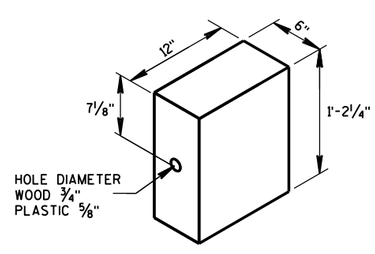

WOOD OR
PLASTIC BLOCKOUT 2

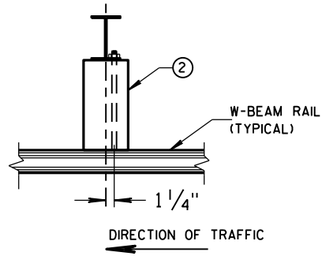

PLAN VIEW
STEEL POST,
PLASTIC BLOCKOUT & BEAM

MIDWEST GUARDRAIL SYSTEM
(MGS) GUARDRAIL

STATE OF WISCONSIN
DEPARTMENT OF TRANSPOI

6

S.D.D. 14 B 42-3a

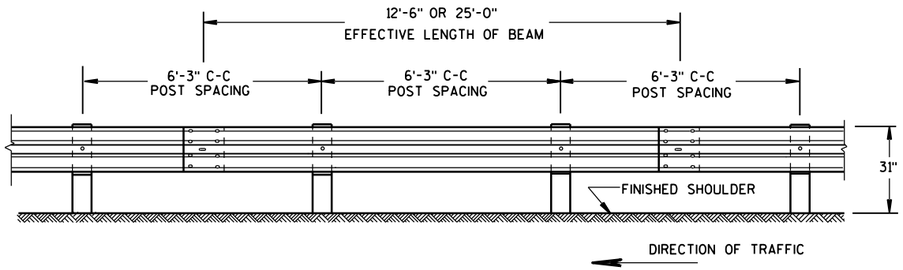

FRONT VIEW

POST SPACING STANDARD INSTALLATION

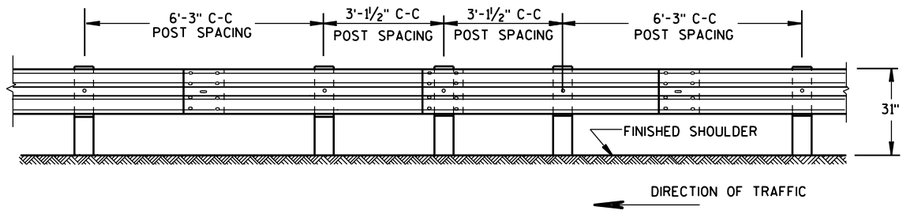

FRONT VIEW

HALF POST SPACING (HS) AND HALF POST SPACING WITH LONGER POSTS (K)

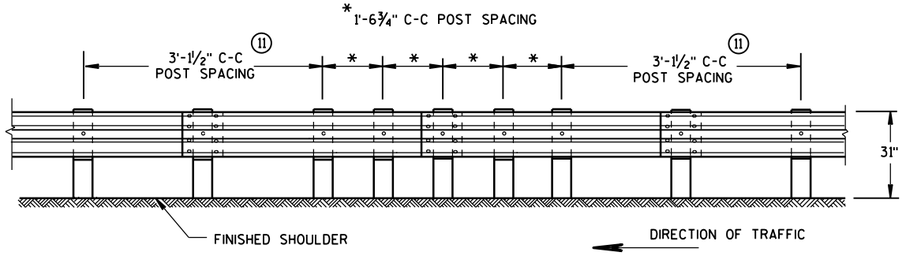

FRONT VIEW

QUARTER POST SPACING (QS)

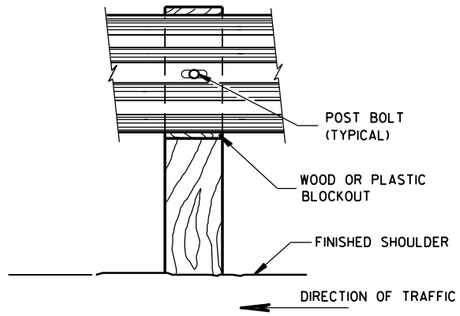

FRONT VIEW AT WOOD POST

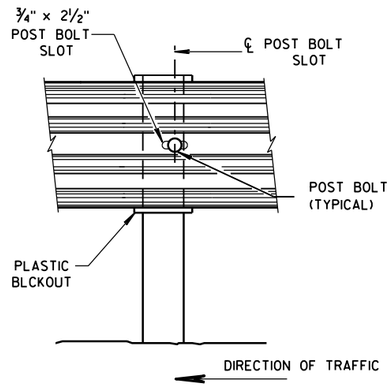

FRONT VIEW AT STEEL POST

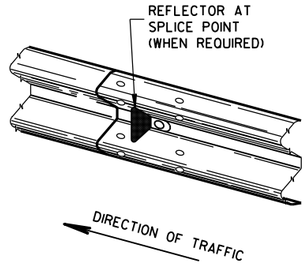

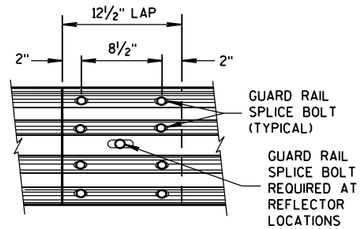

FRONT VIEW

MID-SPAN BEAM SPLICE

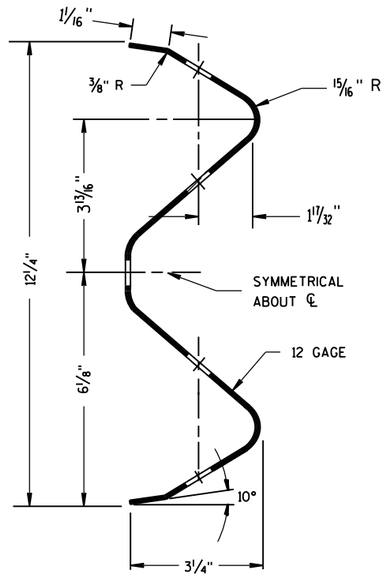

SECTION THRU W-BEAM RAIL

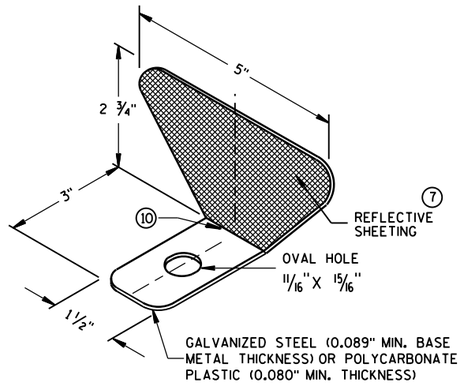

GENERAL NOTES

⑦ PROVIDE SILVER REFLECTIVE SHEETING ON ALL REFLECTORS EXCEPT THOSE LOCATED ALONG THE LEFT EDGE OF ONE-WAY ROADWAYS, WHICH SHALL BE PROVIDED WITH YELLOW REFLECTIVE SHEETING. SHEETING IS TYPE H. SEE STANDARD SPECIFICATION 637.

⑧ DO NOT INSTALL REFLECTORS ON THE FIRST 50 FEET OF THE APPROACH END OF THE ENERGY ABSORBING TERMINAL. RAIL SPLICE LOCATIONS ARE THE ONLY ACCEPTABLE LOCATIONS FOR REFLECTORS.

⑨ REVERSE EVERY OTHER REFLECTOR FOR 2-WAY VISIBILITY. THE CONTRACTOR MAY FURNISH TWO-SIDED REFLECTORS IN LIEU OF ONE-SIDED REFLECTORS.

⑩ PROVIDE AN ANGLE OF BEND OF 90° ± 1° FOR TWO-SIDED REFLECTORS.

⑪ 25 FEET OF HALF POST SPACING IS REQUIRED ON APPROACH AND DEPARTURE ENDS OF QUARTER POST SPACING.

POST BOLTS ARE A ⅝" DIAMETER ASTM A307 GUARDRAIL BOLT. A POST BOLT REQUIRES ⅝" DIAMETER A563A DOUBLE RECESSED (DR) HEAVY HEX NUT AND ⅝" DIAMETER F844 FLAT WASHER. POST BOLTS MAY BE LONGER IF MULTIPLE BLOCKOUTS ARE BEING USED.

GUARD RAIL SPLICE BOLTS ARE A ⅝" DIAMETER ASTM A307 GUARDRAIL HEAD BOLT. A GUARDRAIL SPLICE BOLT REQUIRES ⅝" DIAMETER A563A DOUBLE RECESSED (DR) HEAVY HEX NUT.

REFLECTOR SPACING ⑧

	BEAM GUARD LENGTH	REFLECTOR SPACING	NO. SURFACES REFLECTORIZED	MIN. NO. REFLECTORS
ONE WAY TRAFFIC	< 200'	50' C-C	1	3
	> 200'	100' C-C	1	
TWO WAY TRAFFIC	< 200'	25' C-C	1 ⑨	6
	> 200'	50' C-C	1	
TWO WAY TRAFFIC	< 200'	50' C-C	2	3
	> 200'	100' C-C	2 ⑩	

ONE SIDED REFLECTOR DETAIL AND TYPICAL INSTALLATION ⑦

MIDWEST GUARDRAIL SYSTEM
(MGS) GUARDRAIL

STATE OF WISCONSIN
DEPARTMENT OF TRANSPO

6

S.D.D. 14 B 42-3b

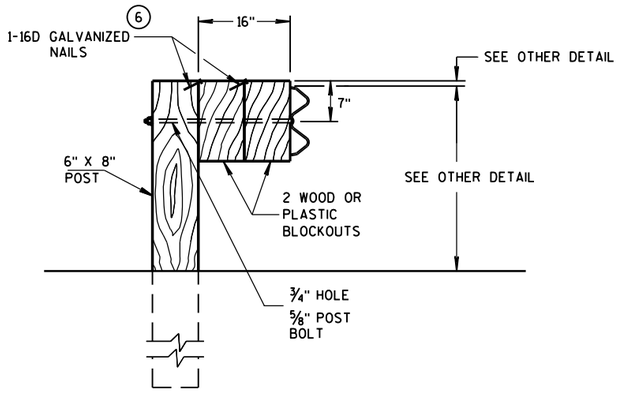

DETAIL FOR 16" BLOCKOUT DEPTH

IT IS ACCEPTABLE TO USE BLOCKOUTS UP TO 16" DEEP TO INCREASE THE POST OFFSET TO AVOID UNDERGROUND OBSTACLES. THERE IS NO LIMIT TO THE NUMBER OF POSTS THAT CAN HAVE ADDITIONAL BLOCKOUTS UP TO 16" DEEP.

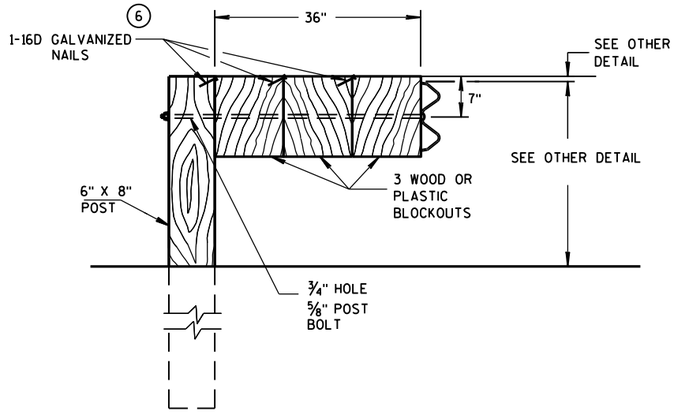

DETAIL FOR 36" BLOCKOUT DEPTH

NOTES: UNDER SPECIAL CIRCUMSTANCES, SUCH AS AVOIDING OBSTACLES THAT ARE NOT RELOCATED, IT IS ACCEPTABLE TO INSTALL ADDITIONAL BLOCKOUTS TO OBTAIN UP TO 36" DEPTH FOR ONE OR TWO POSTS IN A SECTION OF GUARDRAIL.

DO NOT USE 16" OR 36" BLOCKOUTS IF IT CAUSES THE POST TO BE DRIVEN BEYOND SHOULDER HINGE POINT OR CAUSES A FIXED OBJECT TO BE WITHIN THE DEFLECTION DISTANCE OF THE BARRIER.

NOTE: 1. ALL FILLETS SHALL HAVE A MINIMUM RADIUS OF 1/16".
2. IF THE BOLT EXTENDS MORE THAN 1/4" FROM THE NUT THE BOLT SHOULD BE TRIMMED BACK.

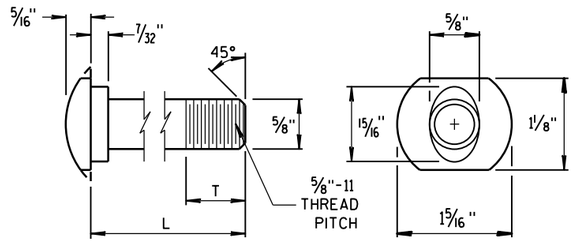

POST BOLT TABLE

L	T (MIN.)
1 1/4"	1 1/8"
2"	1 3/4"
10"	4"
14"	4 1/16"
18"	4"
21"	4 1/16"
25"	4"

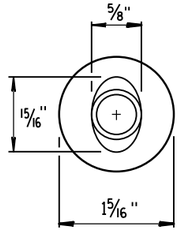

ALTERNATE BOLT HEAD

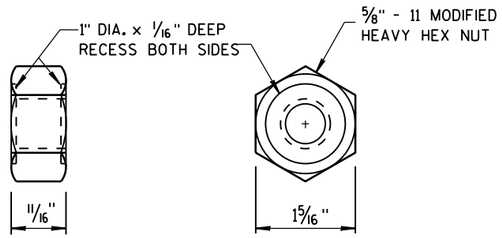

POST BOLT AND RECESS NUT

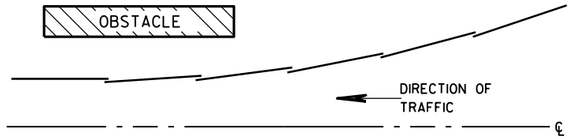

PLAN VIEW

BEAM LAPPING DETAIL

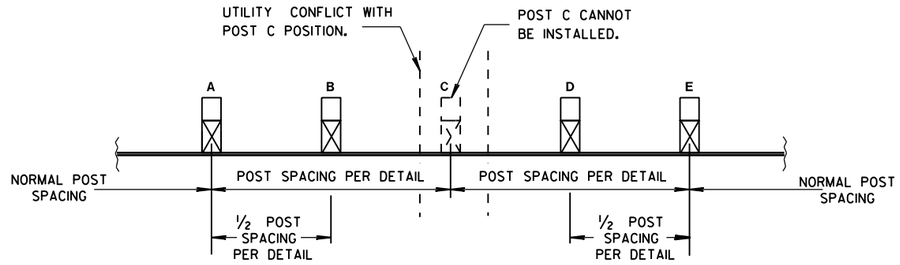

POST DRIVING FOR CONTINUOUS UNDERGROUND OBSTRUCTION

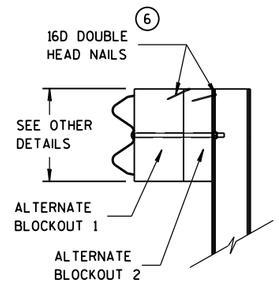

SIDE VIEW

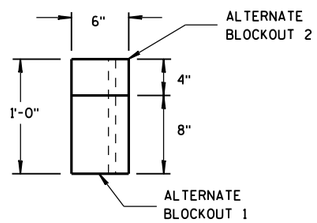

TOP VIEW

ALTERNATE WOOD BLOCKOUT DETAIL

MIDWEST GUARDRAIL SYSTEM (MGS) GUARDRAIL

STATE OF WISCONSIN
DEPARTMENT OF TRANSPORTATION

APPROVED
June 2014 — DATE
/S/ Jerry H. Zogg — ROADWAY STANDARDS DEVELOPMENT ENGINEER
FHWA

6
S.D.D. 14 B 42-3c

GENERAL NOTES

(A) THE SLOPE IN THE AREA BOUNDED BY THE GRADELINE, THE HINGE POINT LINE (HPL), AND THE CLEAR ZONE LIMITS (CZL) SHALL BE 4:1 OR FLATTER.

(B) AFTER FINAL ASSEMBLY, RECHECK CABLE TO BE SURE IT IS TAUT AND HAS NOT RELAXED.

(C) DIFFERENT MANUFACTURES REQUIRE DIFFERENT PERFORATED W-BEAM RAIL END PANELS. SEE MANUFACTURES INFORMATION.

(D) THE TOP OF THE STEEL TUBE ON POST 1 AND POST 2 SHALL NOT BE MORE THAN 3" ABOVE THE FINISH GROUND ELEVATION.

(F) ATTACH ALUMINUM SHEET TO E.A.T. HEAD USING 4 STAINLESS STEEL SELF-TAPPING SCREWS. ONE SCREW PER CORNER.

(G) ½" DIAMETER X 3" LONG LAG BOLT AND WASHER.

(H) HARDWARE VARIES BETWEEN DIFFERENT MANUFACTURES. SEE MANUFACTURE'S DRAWING FOR INFORMATION.

(I) DIMENSIONS MAY VARY. SEE MANUFACTURE'S INFORMATION.

SEE SDD 14B42 FOR MORE INFORMATION.

* DO NOT ATTACH BLOCKOUTS TO POSTS 1 AND 2.

DO NOT INSTALL REFLECTORS ON THE FIRST 50 FEET OF THE APPROACH END OF THE ENERGY ABSORBING TERMINAL.

W-BEAM RAIL SPLICES ARE LOCATED AT POST NUMBER 3, AND BETWEEN POST 5 AND 6, BETWEEN POSTS 7 AND 8, AND MIDDLE OF THE SPAN AFTER POST 9.

THE CENTER OF THE UPPER 3½" DIAMETER HOLE ON POST NUMBER 3 THROUGH POST 9 IS TO BE FLUSH WITH THE GROUND LINE UP TO A MAXIMUM OF 2" ABOVE GROUND LINE.

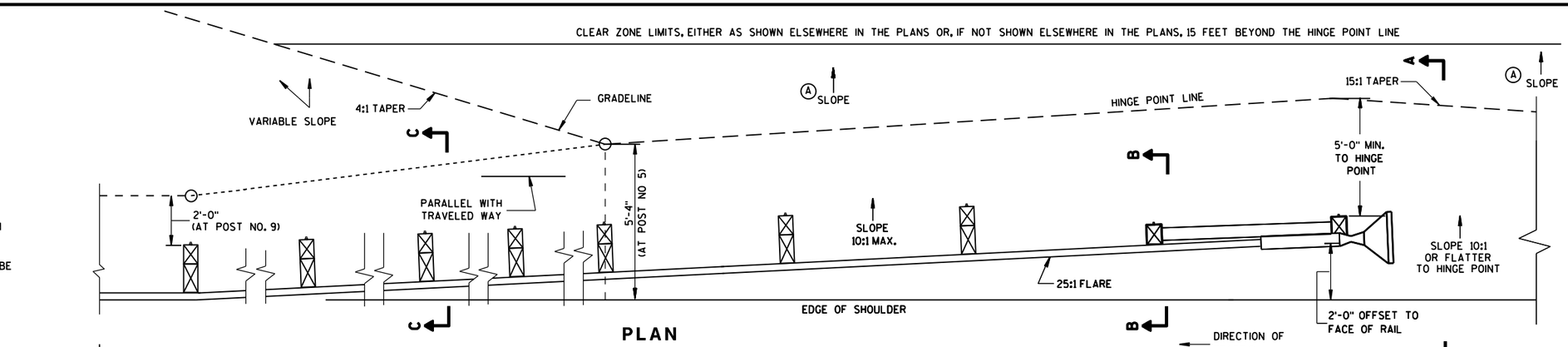

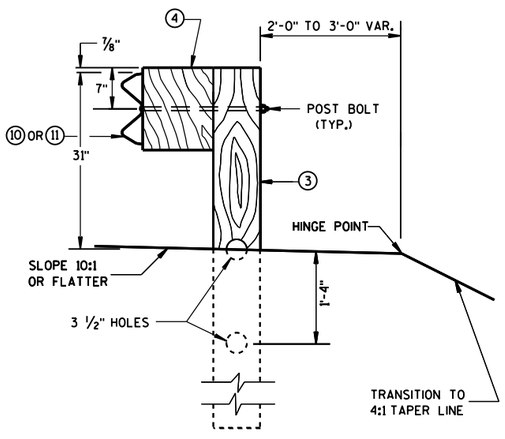

SECTION C-C
TYPICAL AT POST NOS. 3-9

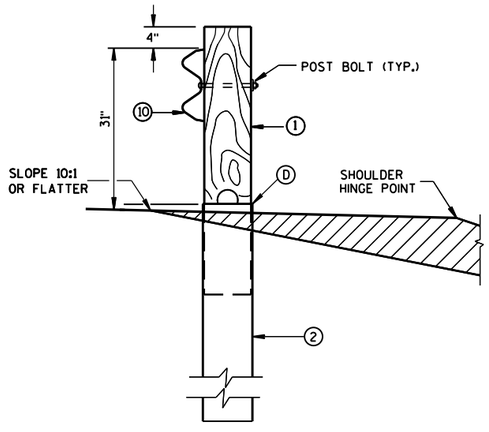

SECTION B-B
TYPICAL AT POST NO. 2*

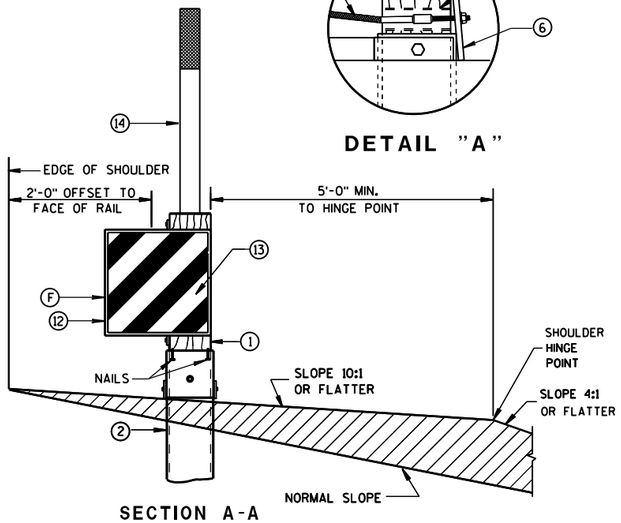

SECTION A-A
TYPICAL AT POST NO. 1*

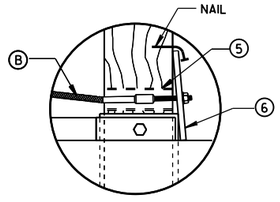

DETAIL "A"

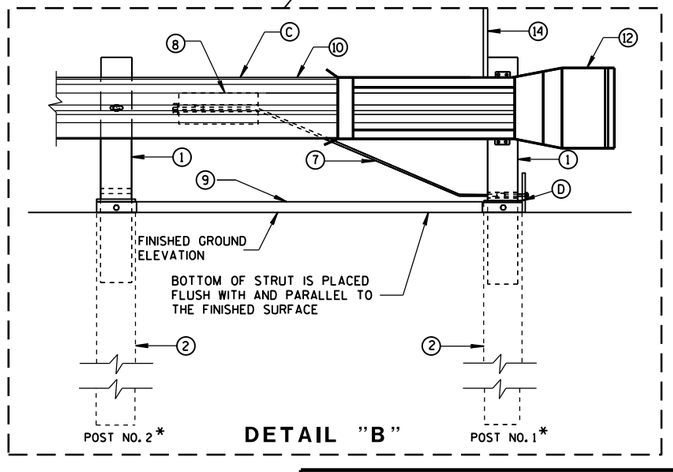

DETAIL "B"

MIDWEST GUARDRAIL SYSTEM
ENERGY ABSORBING TERMINAL (MGS)

STATE OF WISCONSIN
DEPARTMENT OF TRANSPO

S.D.D. 14 B 44-2a

S.D.D. 14 B 44-2a

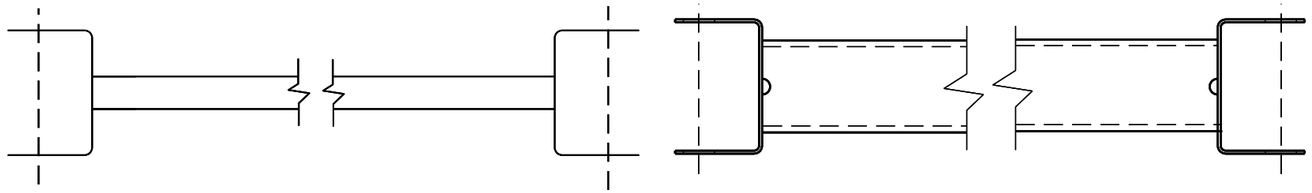

⑨ Ⓗ

GENERIC GROUND STRUT

BILL OF MATERIALS

PART NO.	DESCRIPTION MATERIALS PROVIDED BY MGS EAT MANUFACTURER. SEE MANUFACTURER'S DETAILS FOR MORE INFORMATION.
①	WOOD BREAKAWAY POST
②	6" X 8" X 0.188", 6'-0" LONG FOUNDATION TUBE AT POSTS 1 AND 2
③	WOOD CRT
④	WOOD BLOCKOUT
⑤	PIPE SLEEVE
⑥	BEARING PLATE
⑦	BCT CABLE ASSEMBLY
⑧	ANCHOR CABLE BOX
⑨	GROUND STRUT
⑩	PERFORATED W-BEAM RAIL END PANEL, 12'-6" LONG.
⑪	STANDARD W-BEAM RAIL. MULTIPLE SECTIONS REQUIRED. SECTIONS VARY IN LENGTH.
⑫	END SECTION EAT
⑬	0.040" ALUMINUM SHEET WITH REFLECTIVE SHEETING TYPE F PER SECTION 637 OF THE STANDARD SPECIFICATIONS
⑭	EAT MARKER POST - YELLOW (SEE APPROVED PRODUCTS LIST)

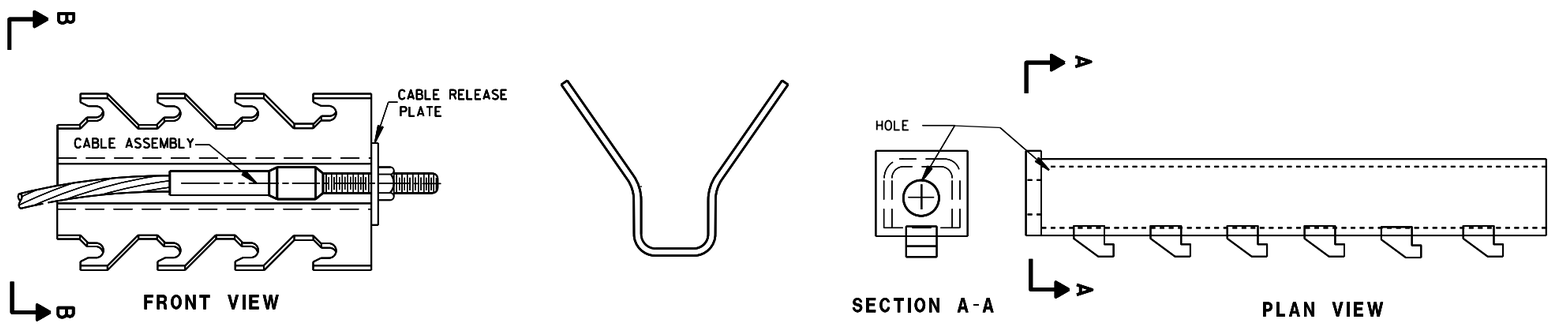

GENERIC ANCHOR CABLE BOX ⑧ Ⓗ

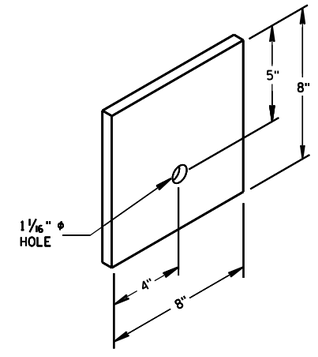

BEARING PLATE ⑥

MIDWEST GUARDRAIL SYSTEM
ENERGY ABSORBING TERMINAL
(MGS)

STATE OF WISCONSIN
DEPARTMENT OF TRANSPOI

6
S.D.D. 14 B 44-2b

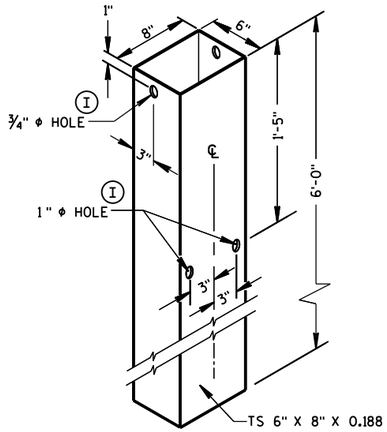

FOUNDATION TUBE (2)

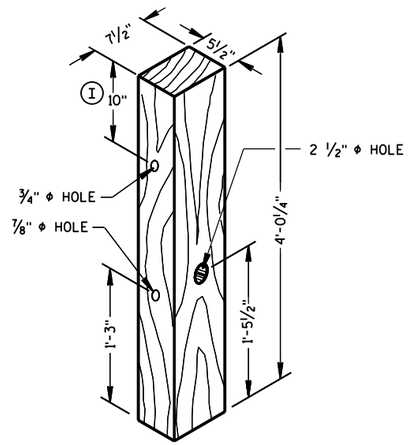

POSTS NUMBER 1 AND 2

WOOD BREAKAWAY POST (1)

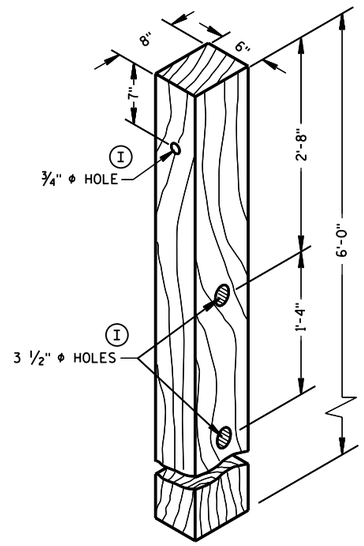

POSTS NUMBER 3-9

WOOD CRT POST (3)

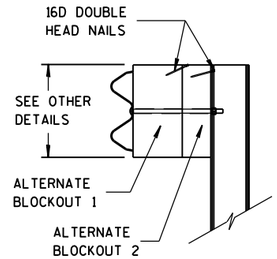

SIDE VIEW

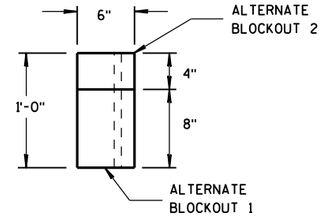

TOP VIEW

ALTERNATE WOOD BLOCKOUT DETAIL

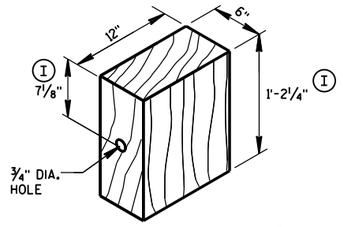

WOOD BLOCKOUT (4)

REQ'D. AT ALL POSTS EXCEPT POST NO'S 1 & 2

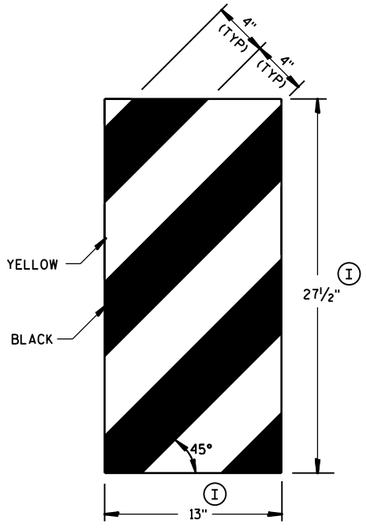

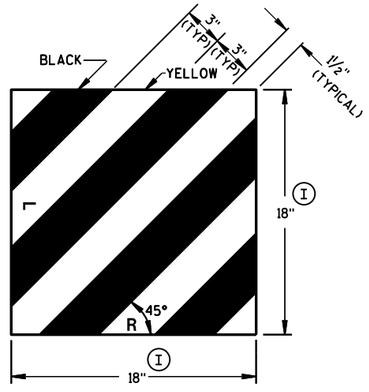

GENERIC REFLECTIVE SHEETING (13) (H)

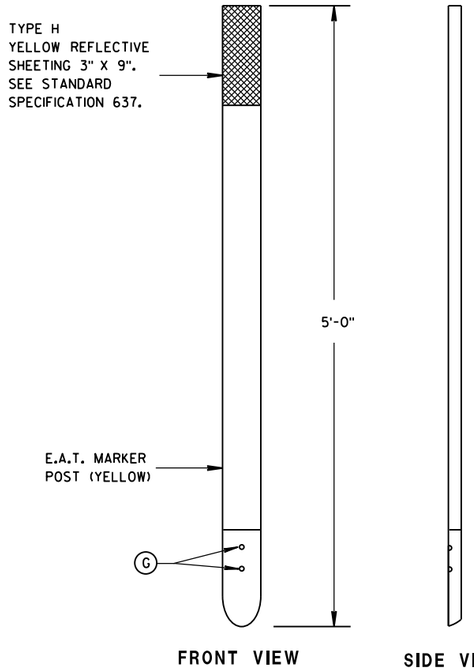

FRONT VIEW

SIDE VIEW

E.A.T. MARKER POST (14)

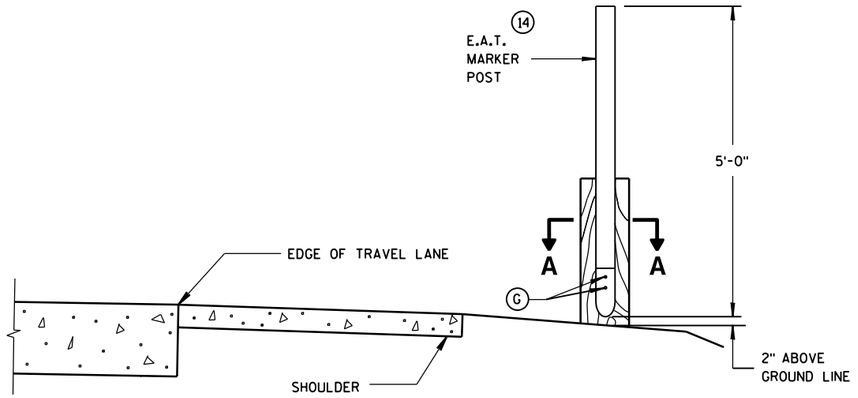

TYPICAL INSTALLATION OF E.A.T. MARKER POST BACKSIDE OF POST NO. 1

(E.A.T. AND RAIL REMOVED FOR CLARITY)

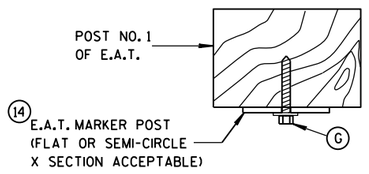

SECTION A-A

MIDWEST GUARDRAIL SYSTEM ENERGY ABSORBING TERMINAL (MGS)

STATE OF WISCONSIN
DEPARTMENT OF TRANSPORTATION

APPROVED
June 2014 — DATE
/S/ Jerry H. Zogg — ROADWAY STANDARDS ENGINEER
FHWA

6

S.D.D. 14 B 44-2c

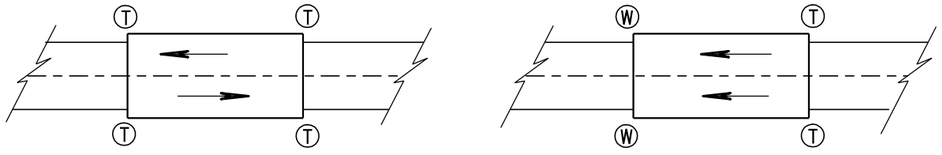

TWO WAY TRAFFIC

ONE WAY TRAFFIC

Ⓣ THRIE BEAM CONNECTION

Ⓦ W-BEAM CONNECTION WHEN REQUIRED

TYPICAL LOCATIONS OF THRIE BEAM AND W-BEAM CONNECTIONS TO BRIDGE

GENERAL NOTES

BOLT THE THRIE BEAM TO ALL POSTS AND BLOCKOUTS. DRILL OR PUNCH BOLT HOLES IN THE BEAM IF THE POST SPACING IS LESS THAN 6'-3.

IF ROCK IS ENCOUNTERED, REMOVE ROCK TO FULL DEPTH OF POST PLUS 2½", AND 12" DIAMETER AROUND POST. SEE 14B42 FOR MORE DETAILS.

TRANSITION USES STEEL POSTS ONLY.

SEE STANDARD DETAIL DRAWING 14 B 42 FOR MORE INFORMATION.

Ⓐ BRIDGE RAILING TYPE "W" DOES NOT REQUIRE A TERMINAL CONNECTOR.

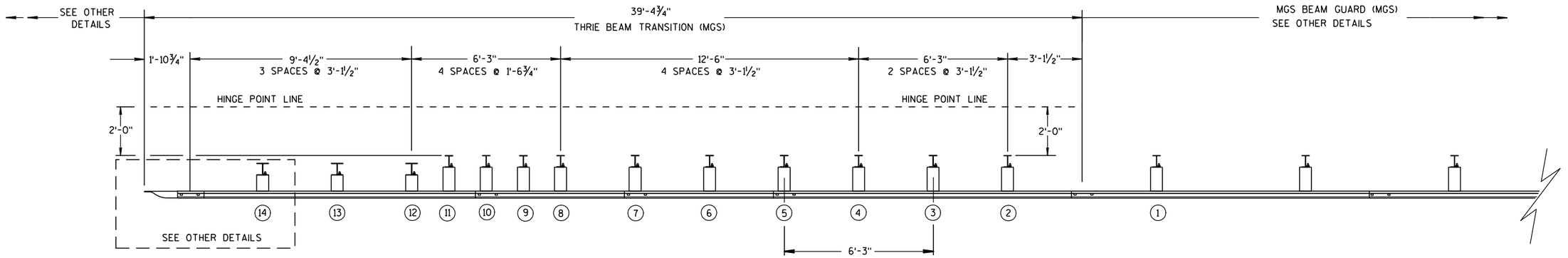

PLAN VIEW

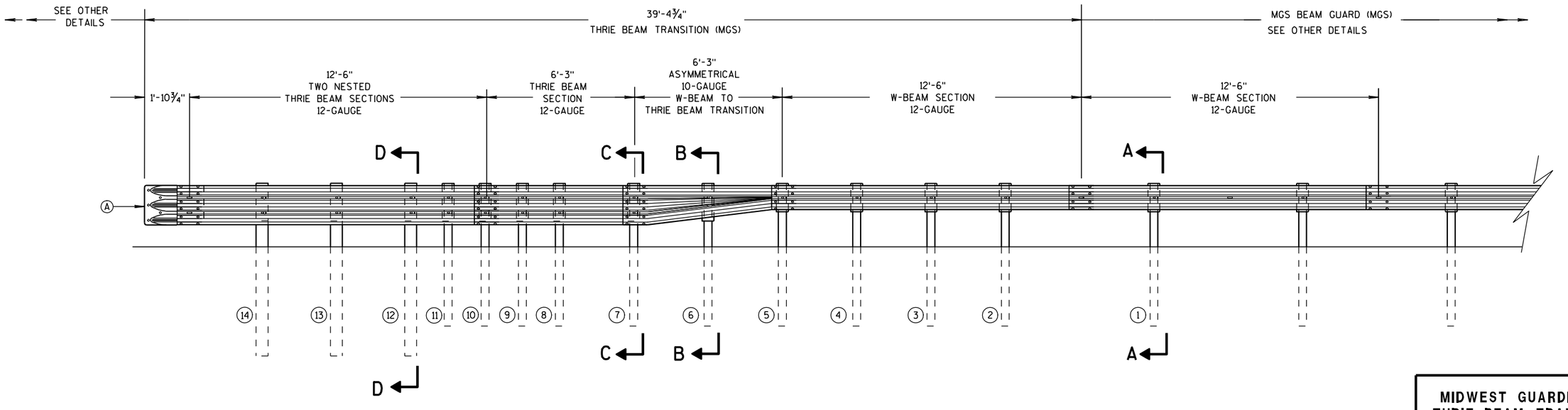

ELEVATION VIEW

MIDWEST GUARDRAIL SYSTEM THRIE BEAM TRANSITION

MIDWEST GUARDRAIL SYSTEM
THRIE BEAM TRANSITION (MGS)

STATE OF WISCONSIN
DEPARTMENT OF TRANSPORTATION

6

S.D.D. 14 B 45-3a

6

S.D.D. 14 B 45-3a

GENERAL NOTES

(B) TOLERANCE FOR TOP OF W-BEAM RAIL IS ± 1".

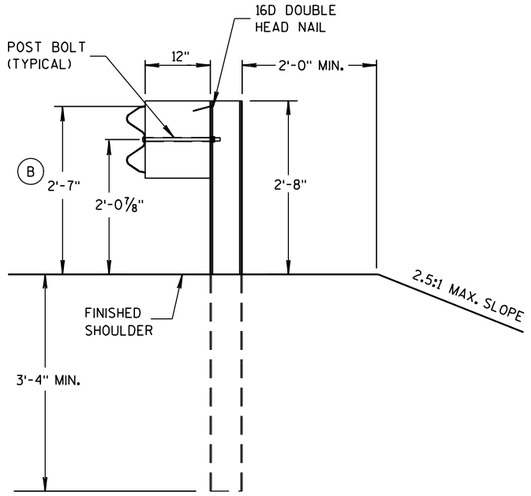

SECTION A-A

POSTS 1-5

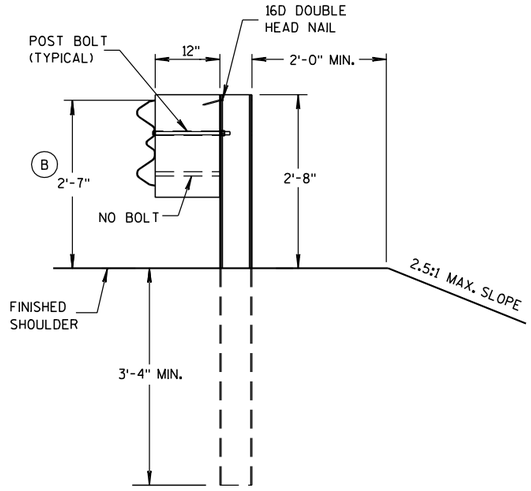

SECTION B-B

POST 6

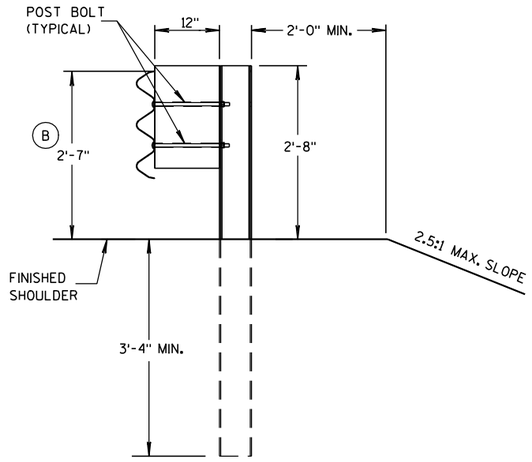

SECTION C-C

POSTS 7-11

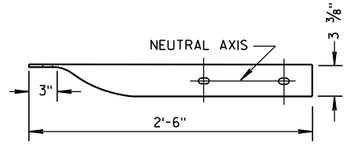

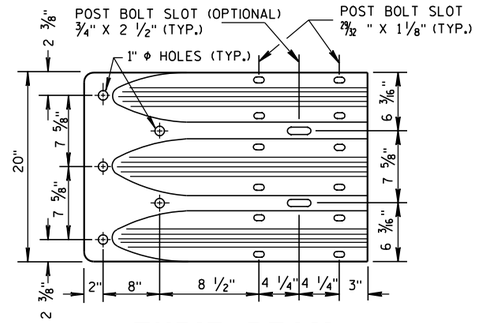

THRIE BEAM TERMINAL CONNECTOR

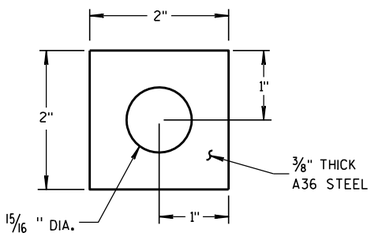

PLATE WASHER DETAIL

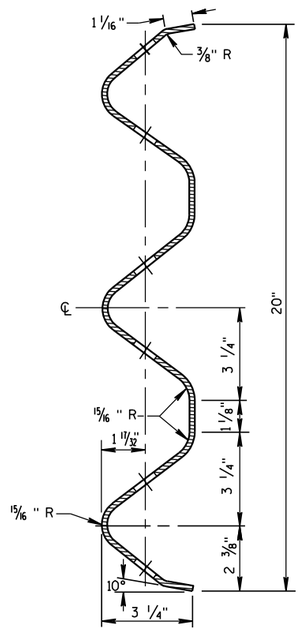

SECTION THRU THRIE BEAM RAIL ELEMENT

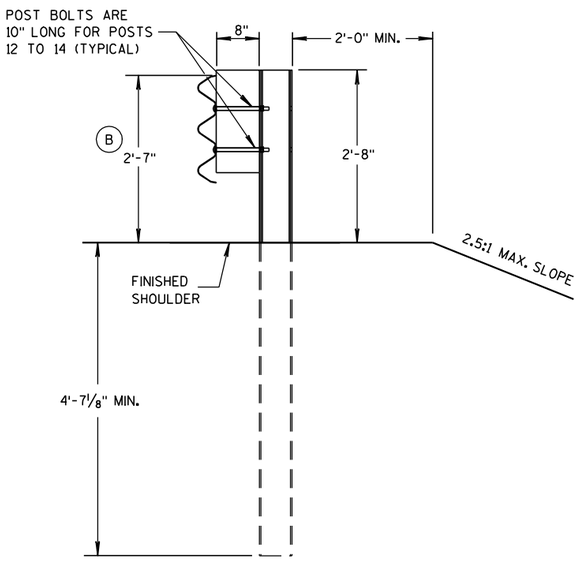

SECTION D-D

POSTS 12-14

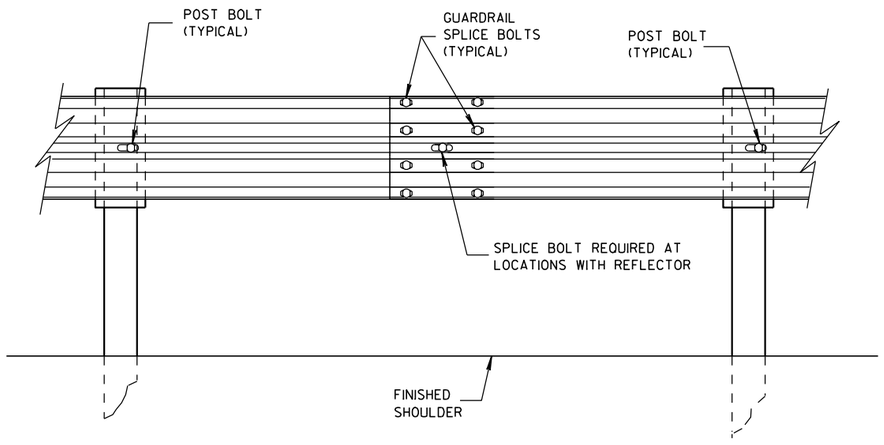

SPLICE DETAIL

MIDWEST GUARDRAIL SYSTEM
THRIE BEAM TRANSITION (MGS)

STATE OF WISCONSIN
DEPARTMENT OF TRANSPORTATION

6
S.D.D. 14 B 45-3b

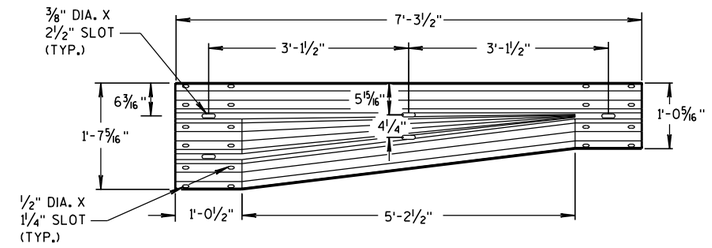

W-BEAM TO THRIE BEAM TRANSITION SECTION

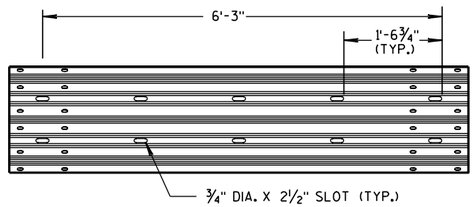

6'-3" THRIE BEAM SECTION

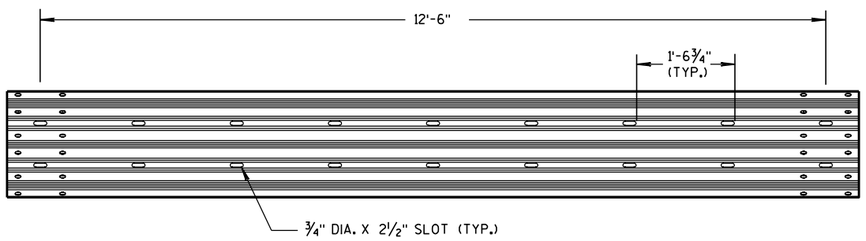

12'-6" THRIE BEAM SECTION

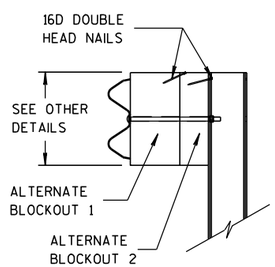

SIDE VIEW

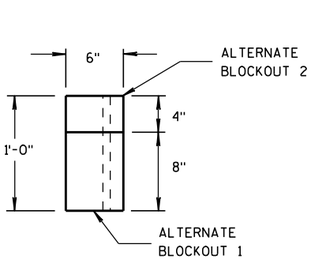

TOP VIEW

ALTERNATE WOOD BLOCKOUT DETAIL

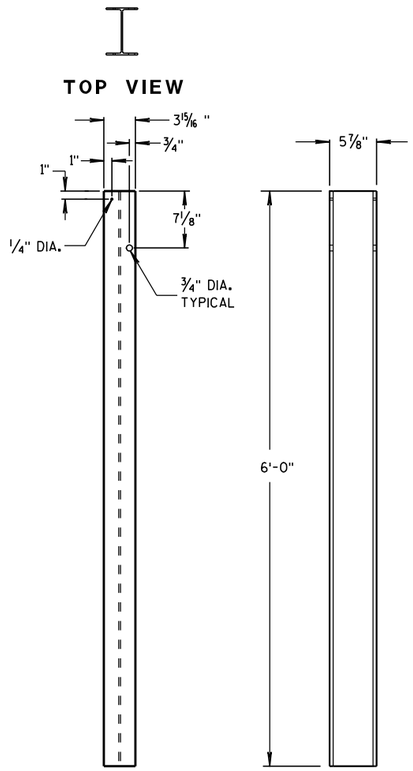

STEEL POSTS 1-5

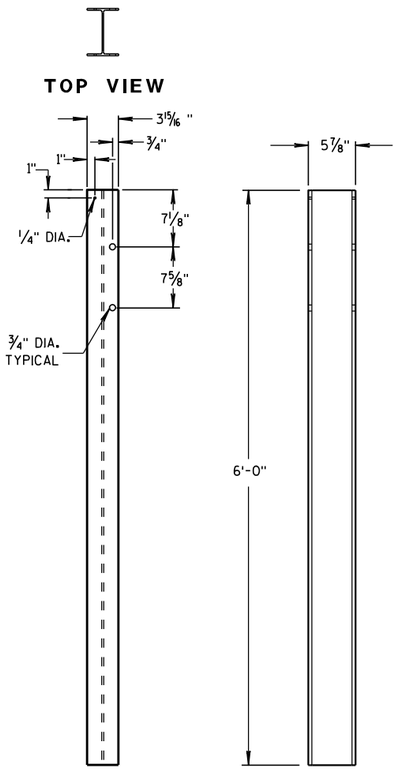

STEEL POSTS 6-11

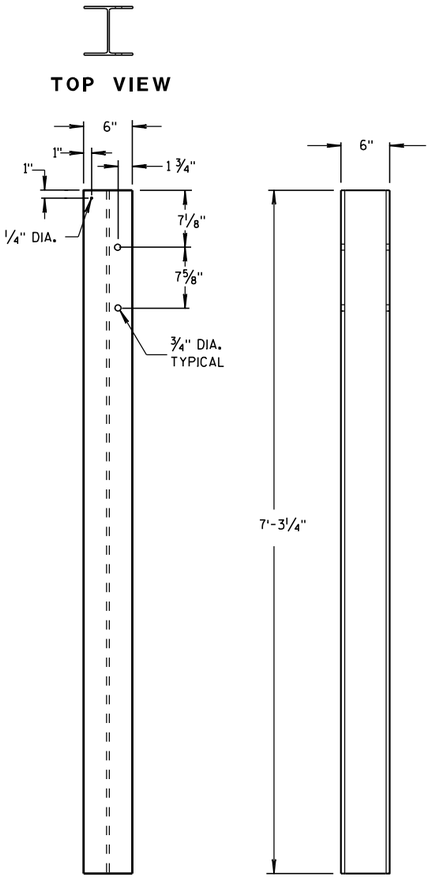

STEEL POSTS 12-14

① WOOD BLOCKS MAY BE CONSTRUCTED OUT OF 2 WOOD BLOCKS. SEE ALTERNATE WOOD BLOCK DETAIL.

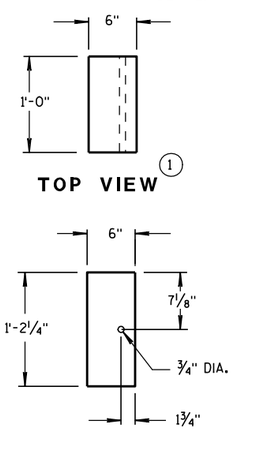

BLOCKOUT POSTS 1-5

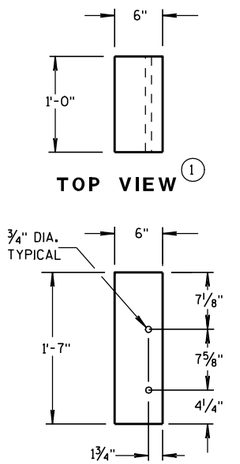

BLOCKOUT POSTS 6-11

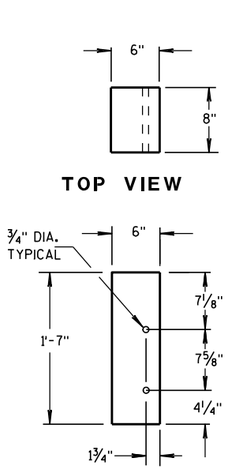

BLOCKOUT POSTS 12-14

STEEL POST SIZES

POST NUMBER	SECTION TYPE	LENGTH
①	W6x9	72"
②	W6x9	72"
③	W6x9	72"
④	W6x9	72"
⑤	W6x9	72"
⑥	W6x9	72"
⑦	W6x9	72"
⑧	W6x9	72"
⑨	W6x9	72"
⑩	W6x9	72"
⑪	W6x9	72"
⑫	W6x15	87 1/8"
⑬	W6x15	87 1/8"
⑭	W6x15	87 1/8"

MIDWEST GUARDRAIL SYSTEM
THRIE BEAM TRANSITION (MGS)

STATE OF WISCONSIN
DEPARTMENT OF TRANSPORTATION

6

S.D.D. 14 B 45-3c

6

S.D.D. 14 B 45-3c

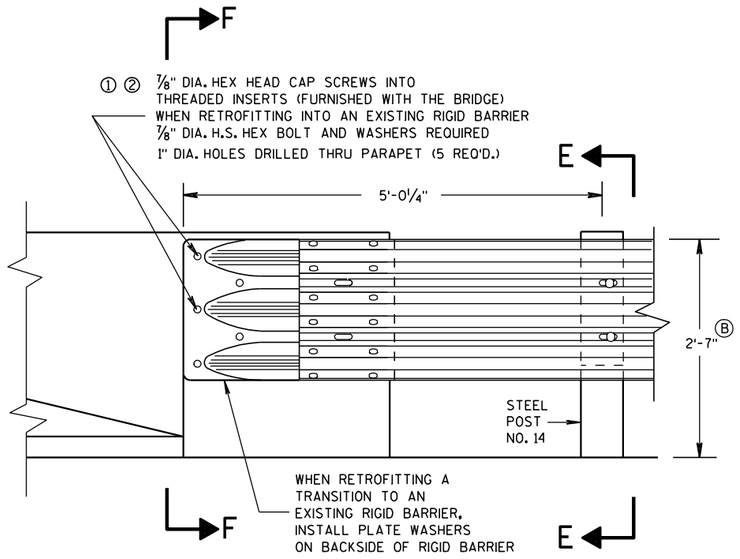

FRONT VIEW

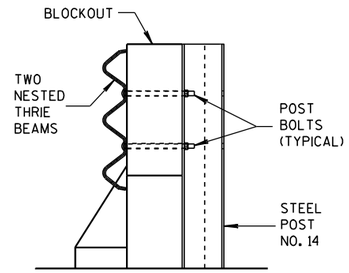

SECTION E-E

GENERAL NOTES

THESE ARE TYPICAL CONNECTION DETAILS. ADJUST THE POSTION OF CONNECTIONS TO EXISTING BRIDGES TO FIT THE ACTUAL BRIDGE AND SITE DIMENSIONS.

① DRILLING BOLT HOLES THROUGH THE PARAPET, BOLTS, NUTS, WASHERS AND REPAIRING DAMAGED CONCRETE ARE INCIDENTAL TO THE CONTRACT.

② BOLTS MAY BE A325 BOLTS OR A449 BOLTS. BOLT LENGTH AND THREADING LENGTH ARE TO ALLOW FOR A TIGHT CONNECTION BETWEEN RIGID BARRIER AND THRIE BEAM CONNECTION PLATE. CONTRACTOR IS TO FIELD VERIFY BOLT LENGTH AND THREAD LENGTH. ONE ROUND WASHER REQUIRED BETWEEN BOLT HEAD AND THRIE BEAM CONNECTOR PLATE. BOLTS THAT EXTEND THROUGH THE PARAPET AND OUT THE BACK FACE REQUIRE A HARDENED ROUND STEEL WASHER THAT IS 2" O.D. X 5/8" THICK AND ONE PLATE WASHER. REPAIR ANY DAMAGED CONCRETE FROM BOLT INSTALLATION.

③ THE RECESS FOR A W-BEAM CONNECTION, WHICH EXISTS ON SOME PARAPETS OF THIS TYPE, SHALL BE FILLED WITH A TREATED TIMBER BLOCKOUT. BLOCKOUT SIZE IS 1'-6" X 2'-0" X 3 1/2".

Ⓑ TOLERANCE FOR TOP OF BEAM IS ± 1".

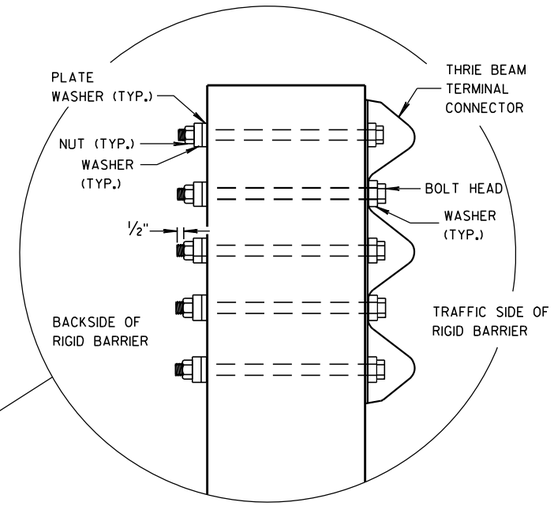

THRIE BEAM CONNECTION TO BRIDGE PARAPET WITH SQUARE ENDS

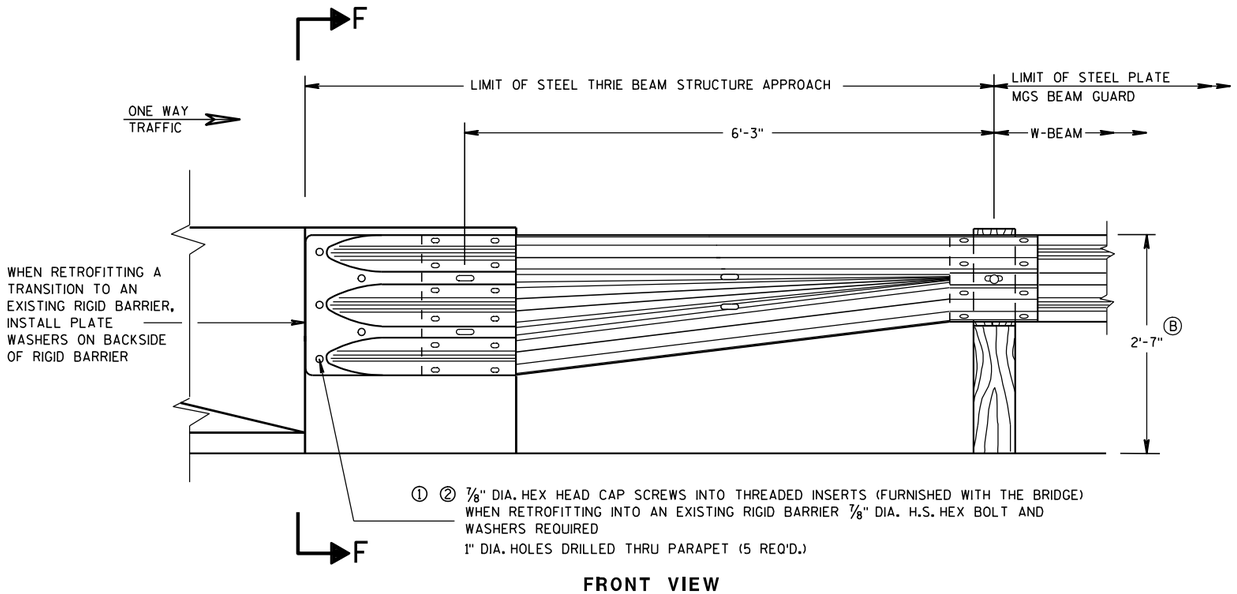

FRONT VIEW

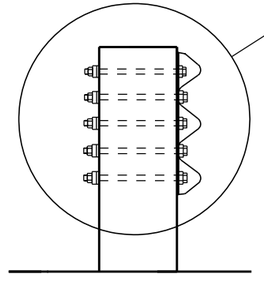

SECTION F-F

W BEAM TRANSITION AND CONNECTION TO BRIDGE PARAPETS WITH SQUARE ENDS

(USE ONLY ON THE TRAFFIC EXIT END OF ONE WAY BRIDGES)

MIDWEST GUARDRAIL SYSTEM
THRIE BEAM TRANSITION (MGS)

STATE OF WISCONSIN
DEPARTMENT OF TRANSPORTATION

APPROVED

8/31/2012 — DATE

/S/ Jerry H. [illegible] — ROADWAY STANDARDS [illegible] ENGINEER

FHWA

GENERAL NOTES

THESE ARE TYPICAL CONNECTION DETAILS. ADJUST THE POSTION OF CONNECTIONS TO EXISTING BRIDGES TO FIT THE ACTUAL BRIDGE AND SITE DIMENSIONS.

① DRILLING BOLT HOLES THROUGH THE PARAPET, BOLTS, NUTS, WASHERS AND REPAIRING DAMAGED CONCRETE ARE INCIDENTAL TO THE CONTRACT.

② BOLTS MAY BE A325 BOLTS OR A449 BOLTS. BOLT LENGTH AND THREADING LENGTH ARE TO ALLOW FOR A TIGHT CONNECTION BETWEEN RIGID BARRIER AND THRIE BEAM CONNECTION PLATE. CONTRACTOR IS TO FIELD VERIFY BOLT LENGTH AND THREAD LENGTH. ONE ROUND WASHER REQUIRED BETWEEN BOLT HEAD AND THRIE BEAM CONNECTOR PLATE. BOLTS THAT EXTEND THROUGH THE PARAPET AND OUT THE BACK FACE REQUIRE A HARDENED ROUND STEEL WASHER THAT IS 2" O.D. X 5/8" THICK AND ONE PLATE WASHER. REPAIR ANY DAMAGED CONCRETE FROM BOLT INSTALLATION.

③ THE RECESS FOR A W-BEAM CONNECTION, WHICH EXISTS ON SOME PARAPETS OF THIS TYPE, SHALL BE FILLED WITH A TREATED TIMBER BLOCKOUT. BLOCKOUT SIZE IS 1'-6" X 2'-0" X 3 1/2". BLOCK IS INCIDENTAL TO THE CONTRACT.

④ BOLT, NUT AND WASHERS NOT REQUIRED FOR THIS LOCATION WHEN RETROFITTING AN EXISTING PAPAPET AND THE HOLE IS EITHER ABOVE PARAPET OR WITHIN 4 INCHES OF THE EDGE OF PARAPET.

Ⓑ TOLERANCE FOR TOP OF BEAM IS ± 1".

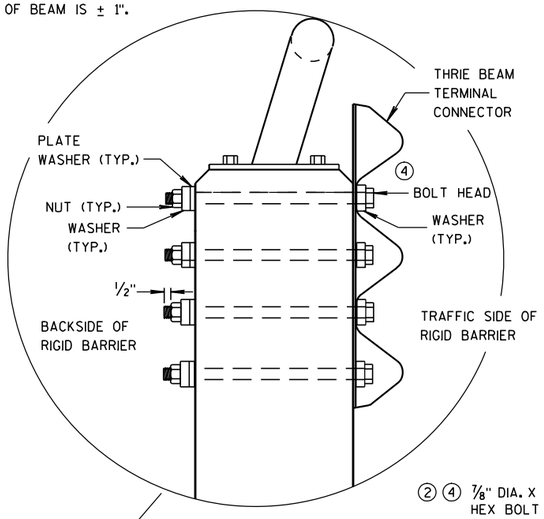

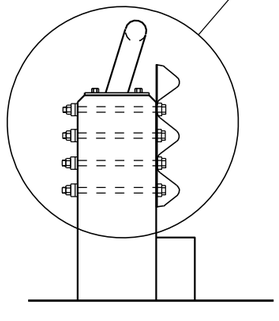

SECTION G-G

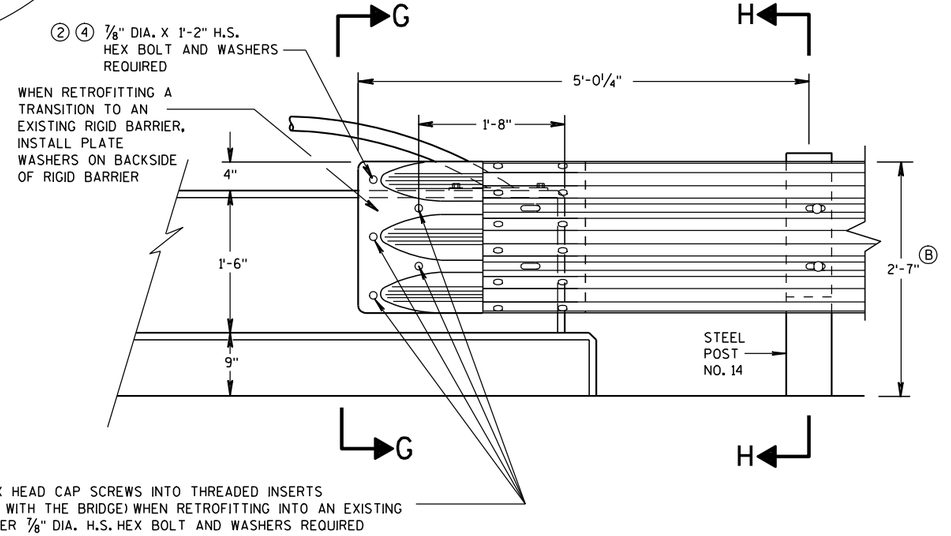

FRONT VIEW

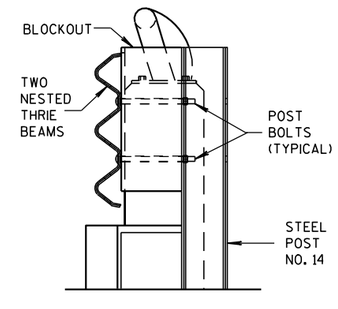

SECTION H-H

THRIE BEAM CONNECTION TO VERTICAL FACED PARAPETS

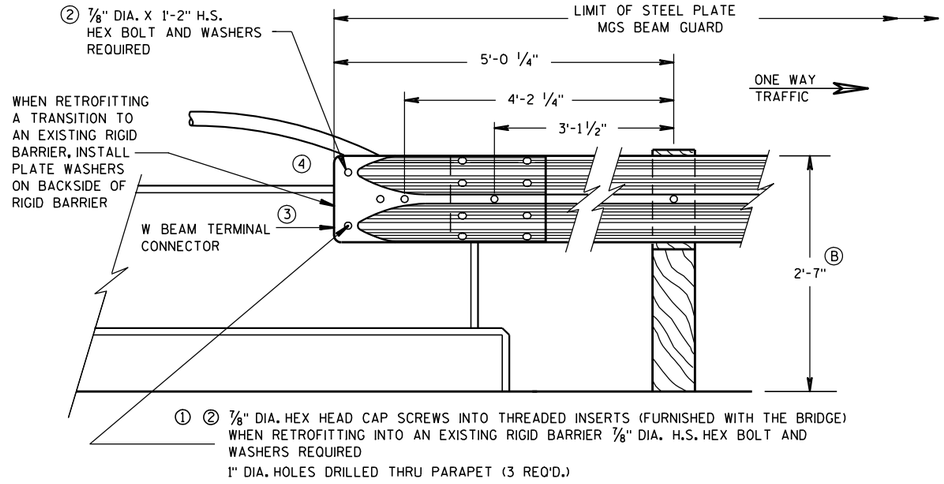

FRONT VIEW

W BEAM CONNECTION TO VERTICAL FACE PARAPET
(USE ONLY ON THE TRAFFIC EXIT END OF ONE WAY BRIDGES)

MIDWEST GUARDRAIL SYSTEM
THRIE BEAM TRANSITION (MGS)

STATE OF WISCONSIN
DEPARTMENT OF TRANSPORTATION

APPROVED

8-31-2012 — DATE

/S/ Jerry H. Zogg — ROADWAY STANDARDS DEVELOPMENT ENGINEER

FHWA

6
S.D.D. 14 B 45-3e

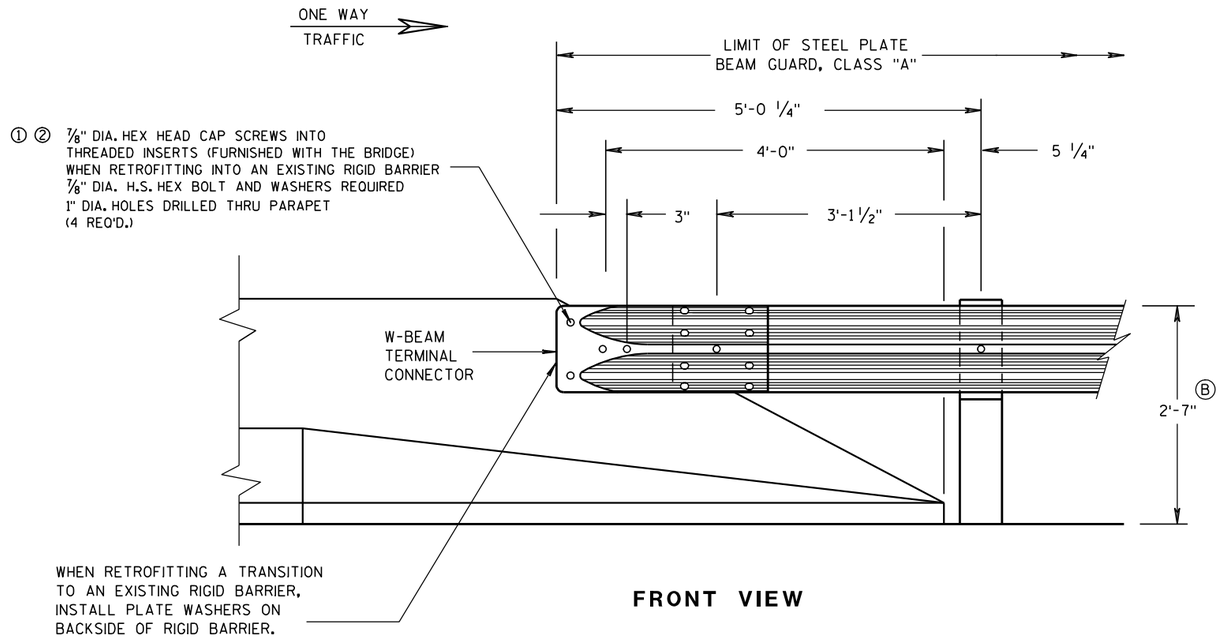

FRONT VIEW

W BEAM CONNECTION TO PARAPETS WITH SLOPED ENDS

(USE ONLY AT TRAFFIC EXIT END OF ONE WAY BRIDGE)

GENERAL NOTES

① DRILLING BOLT HOLES THROUGH THE PARAPET, BOLTS, NUTS, WASHERS AND REPAIRING DAMAGED CONCRETE ARE INCIDENTAL TO THE CONTRACT.

② BOLTS MAY BE A325 BOLTS OR A449 BOLTS. BOLT LENGTH AND THREADING LENGTH ARE TO ALLOW FOR A TIGHT CONNECTION BETWEEN RIGID BARRIER AND THRIE BEAM CONNECTION PLATE. CONTRACTOR IS TO FIELD VERIFY BOLT LENGTH AND THREAD LENGTH. ONE ROUND WASHER REQUIRED BETWEEN BOLT HEAD AND THRIE BEAM CONNECTOR PLATE. BOLTS THAT EXTEND THROUGH THE PARAPET AND OUT THE BACK FACE REQUIRE A HARDENED ROUND STEEL WASHER THAT IS 2" O.D. X 5/8" THICK AND ONE PLATE WASHER. REPAIR ANY DAMAGED CONCRETE FROM BOLT INSTALLATION.

Ⓑ TOLERANCE FOR TOP OF BEAM IS ± 1".

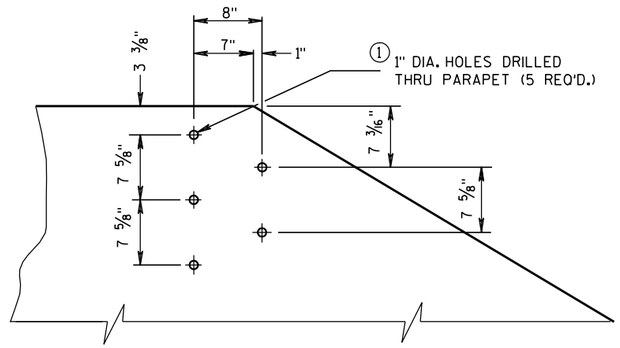

DRILL HOLE LOCATION AND PATTERN FOR THRIE BEAM CONNECTION

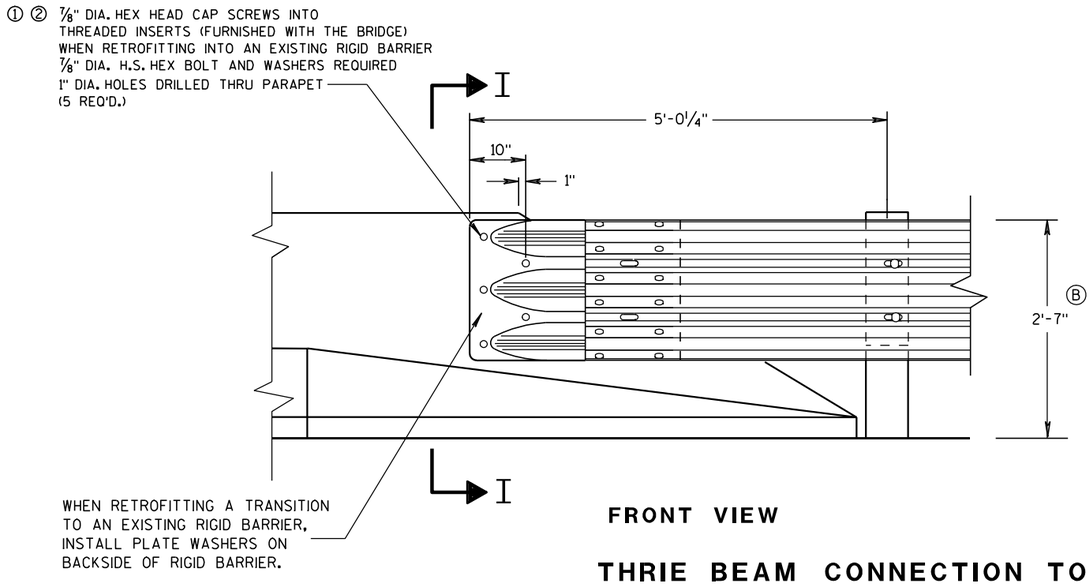

FRONT VIEW

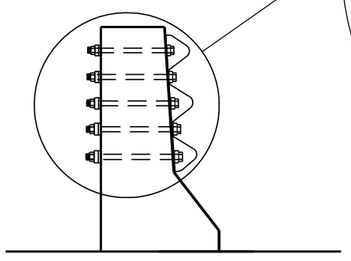

SECTION I-I

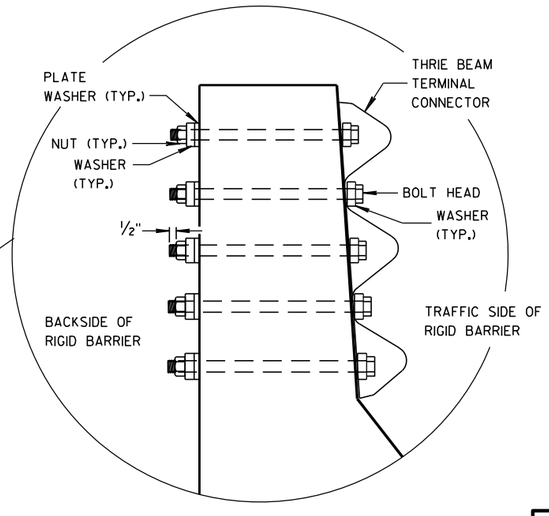

THRIE BEAM CONNECTION TO BRIDGE PARAPETS WITH SLOPED ENDS

MIDWEST GUARDRAIL SYSTEM
THRIE BEAM TRANSITION (MGS)

STATE OF WISCONSIN
DEPARTMENT OF TRANSPORTATION

APPROVED

8/31/2012 — DATE

/S/ Jerry H. Zogg — ROADWAY STANDARDS ENGINEER

133

ENT

FHWA

6

S.D.D. 14 B 45-3f

6

S.D.D. 14 B 45-3f

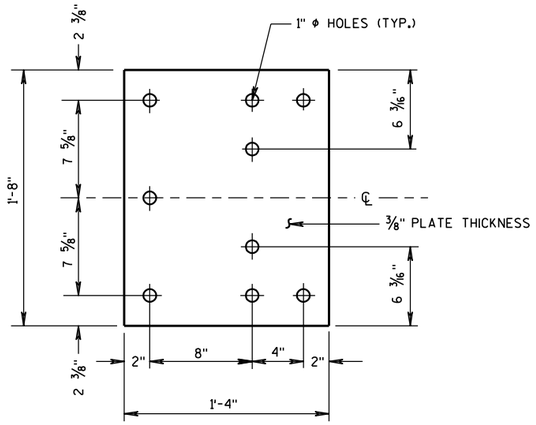

BACK-UP PLATE DETAIL

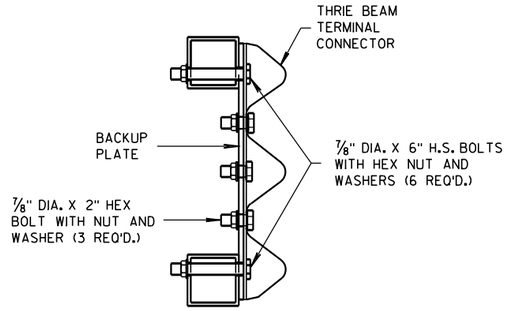

SECTION J-J

GENERAL NOTES

(1) DRILLING HOLES THROUGH THE PAPRPET, BOLTS, NUTS, WASHERS AND REPAIRING DAMAGED CONCRETE ARE INCIDENTAL TO THE CONTRACT.

(B) TOLERANCE FOR TOP OF BEAM IS ± 1".

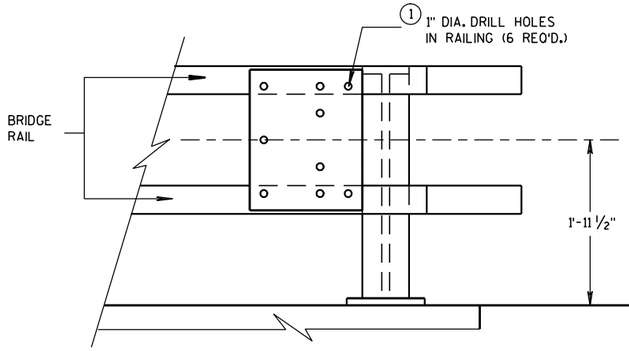

BACK-UP PLATE MOUNTING ONTO BRIDGE RAILING

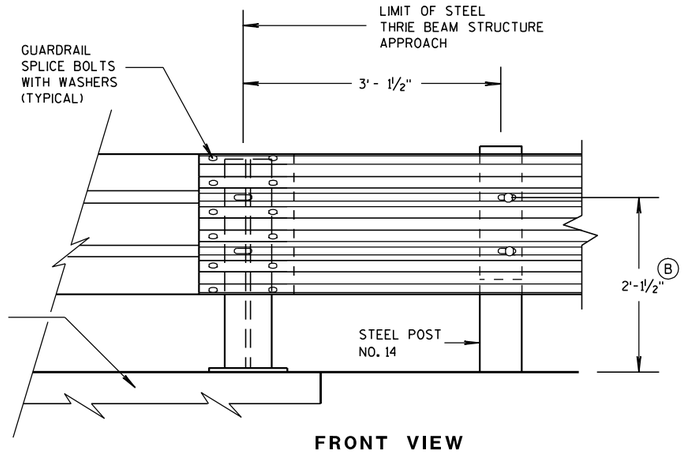

FRONT VIEW

THRIE BEAM CONNECTION TO STEEL RAILING TYPE "W"

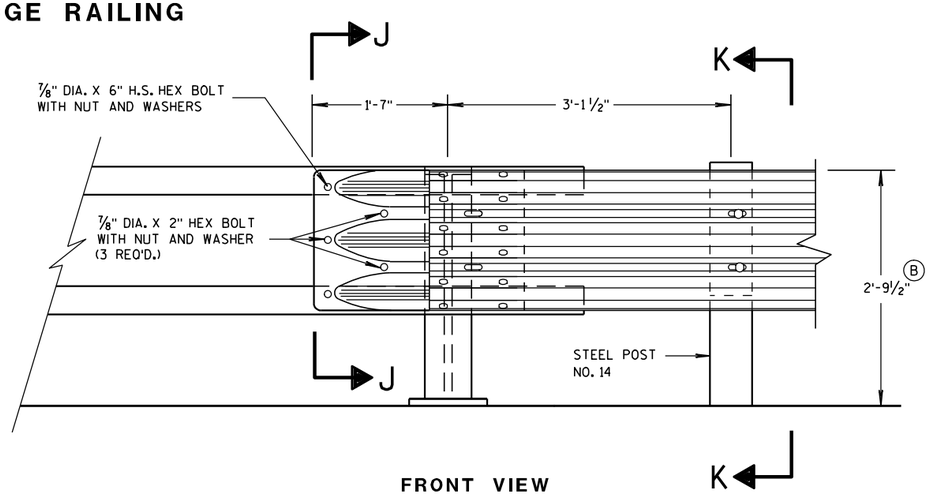

FRONT VIEW

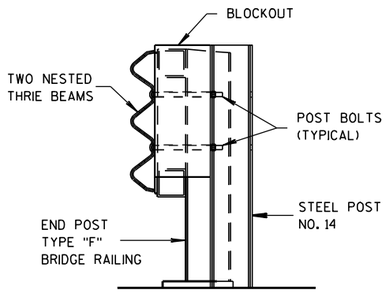

SECTION K-K

THRIE BEAM CONNECTION TO TUBULAR RAILING TYPE "F"

MIDWEST GUARDRAIL SYSTEM THRIE BEAM TRANSITION (MGS)
STATE OF WISCONSIN DEPARTMENT OF TRANSPORTATION
APPROVED 8/31/2012 DATE /S/ Jerry H. Zogg ROADWAY STANDARDS DEVELOPMENT ENGINEER FHWA

6

S.D.D. 14 B 45-3g

6

S.D.D. 14 B 45-3g

GENERAL NOTES

(B) TOLERANCE FOR TOP OF W-BEAM RAIL IS ± 1".

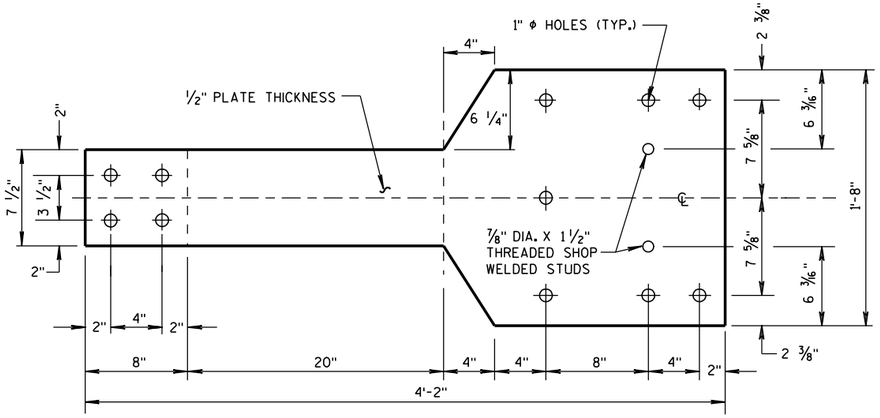

FRONT VIEW

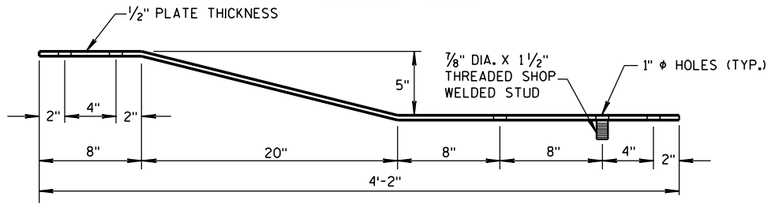

PLAN VIEW

BACK-UP PLATE DETAIL, TYPE "M"

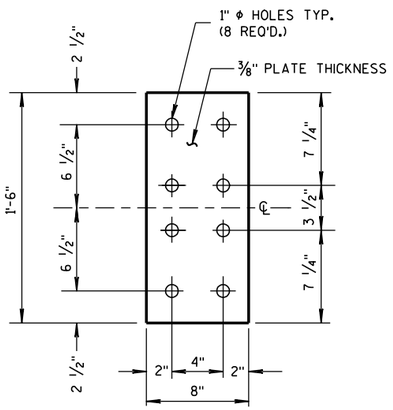

FRONT VIEW

ANCHOR PLATE DETAIL, TYPE "M"

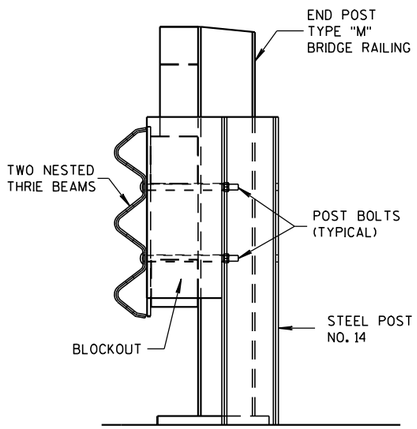

SECTION M-M

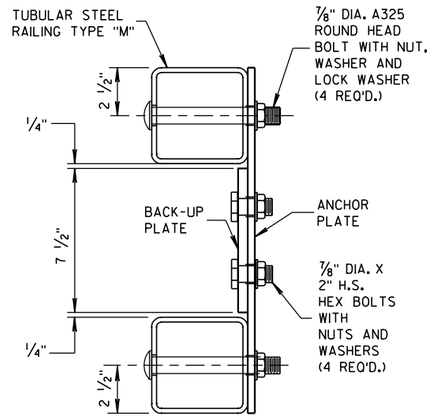

SECTION L-L

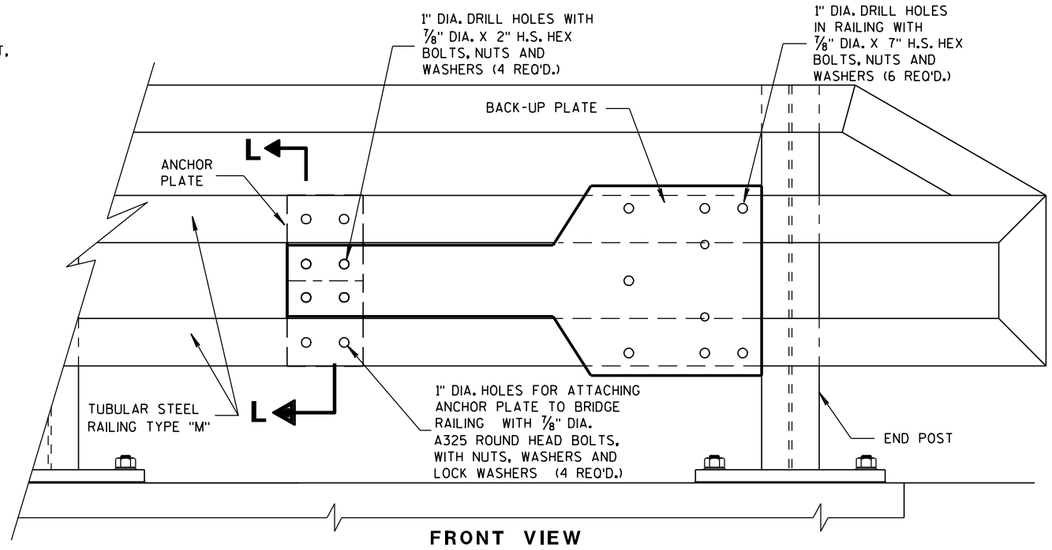

FRONT VIEW

ANCHOR AND BACK-UP PLATE MOUNTING TO BRIDGE RAILING, TYPE "M"

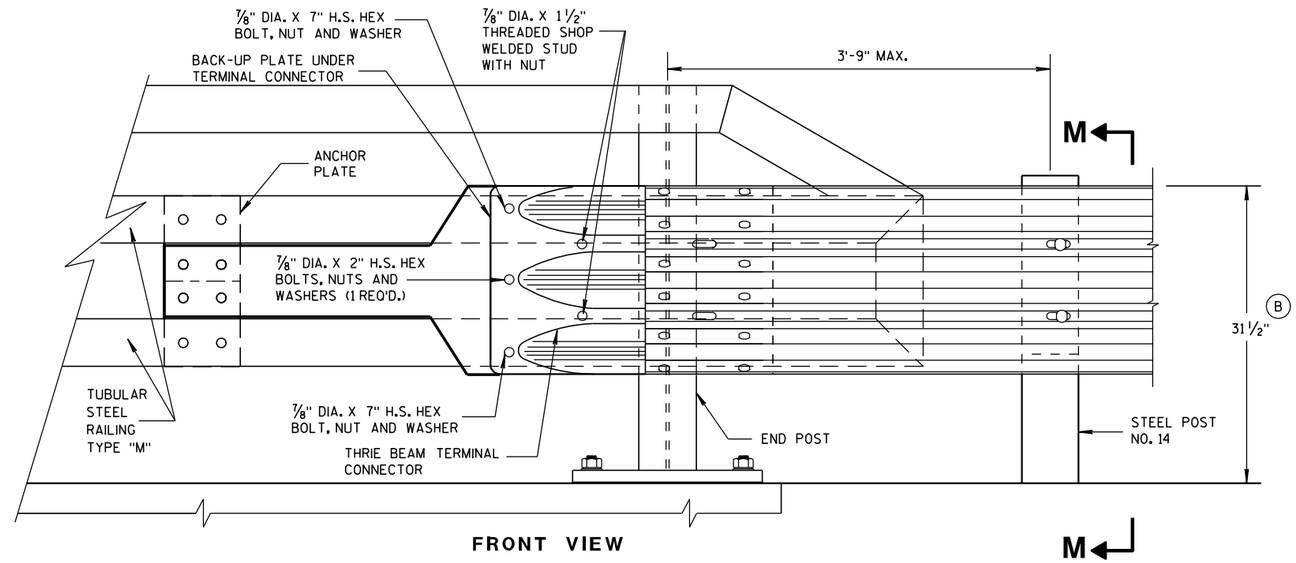

FRONT VIEW

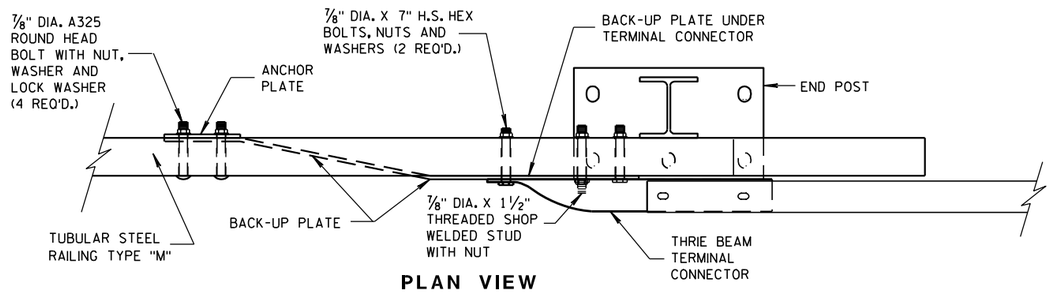

PLAN VIEW

THRIE BEAM CONNECTION TO TUBULAR RAILING, TYPE "M"

MIDWEST GUARDRAIL SYSTEM THRIE BEAM TRANSITION (MGS)

STATE OF WISCONSIN
DEPARTMENT OF TRANSPORTATION

APPROVED
8-31-2012 DATE
/S/ Jerry H. [illegible]
ROADWAY STANDARDS ENGINEER
FHWA

GENERAL NOTES

COVER PLATE PANELS ARE 3/16" THICK.

ALL STIFFENERS ARE 1/4" THICK.

CONNECTOR PLATE SHALL BE FABRICATED FROM ASTM GRADE A36 STEEL AND GALVANIZED.

FOR GALVANIZED REQUIREMENTS, SEE SECTION 614 OF THE STANDARD SPECIFICATIONS.

ALL HOLE DIAMETERS SHALL BE 1".

FOR OPPOSITE SIDE INSTALLATION MIRROR DRAWINGS.

(1) STIFFENERS LOCATED AT THE OUTSIDE EDGES OF THE COVER PLATES SHALL BE WELDED AS FOLLOWS:
SINGLE BEVEL GROOVE WELD ON EXTERNAL SIDES AND 3/16" FILLET WELD BY 1" LONG SPACED AT 2" ON INTERNAL SIDES.

(2) STIFFENERS LOCATED ON THE INSIDE OF THE COVER PLATE SHALL BE WELDED AS FOLLOWS:
3/16" FILLET WELD BY 1" LONG SPACED AT 2".

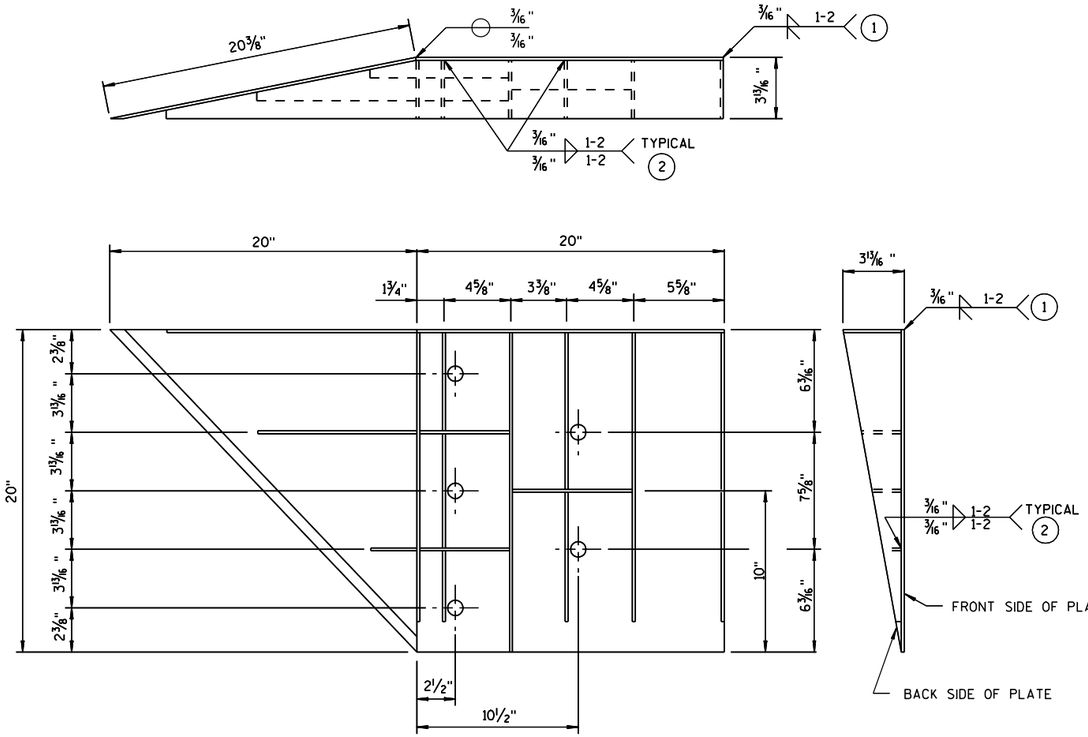

WELDING INSTRUCTION

(VIEWED FROM BACK SIDE OF PLATE)

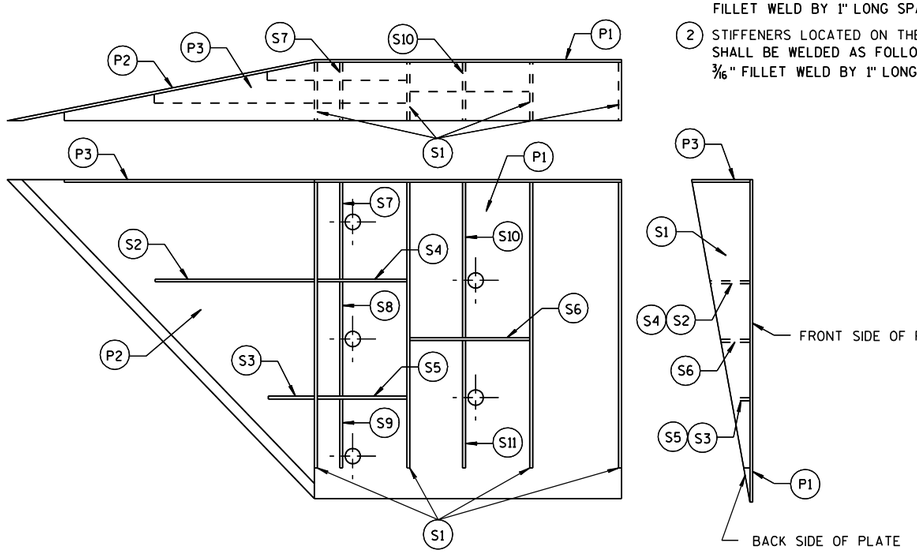

PLATE AND STIFFENER IDENTIFICATION

(VIEWED FROM BACK SIDE OF PLATE)

CONNECTOR PLATE DIMENSION (PER ASSEMBLY)

PLATE	QUANTITY	SHAPE	SIZE (A x B x C x D)	THICKNESS
P1	1		20" x 20"	3/16"
P2	1		20" x 20" x 28 9/16"	3/16"
P3	1		39" x 3 5/8" x 20" x 19 5/16"	3/16"
S1	4		18 7/16" x 3 5/8" x 18 3/4"	1/4"
S2	1		10 1/4" x 2 7/16" x 10 3/8" x 1/2"	1/4"
S3	1		3" x 1 1/16" x 3 1/8" x 1/2"	1/4"
S4	1		6 1/8" x 2 7/16"	1/4"
S5	1		6 1/8" x 1 1/16"	1/4"
S6	1		7 3/4" x 1 3/4"	1/4"
S7	1		2 9/16" x 6" x 3 5/8" x 5 7/8"	1/4"
S8	1		1 5/32" x 7 1/2" x 2 1/2" x 7 3/8"	1/4"
S9	1		6 1/16" x 6 3/16" x 1 3/32"	1/4"
S10	1		1 7/8" x 9 7/8" x 3 5/8" x 9 11/16"	1/4"
S11	1		8 1/2" x 8 3/4" x 1 13/16"	1/4"

SINGLE SLOPE CONNECTION PLATE

MIDWEST GUARDRAIL SYSTEM
THRIE BEAM TRANSITION (MGS)

STATE OF WISCONSIN
DEPARTMENT OF TRANSPORTATION

APPROVED
8/31/2012 DATE
/S/ Jerry H ____
ROADWAY STANDARDS ENGINEER

FHWA

6

S.D.D. 14 B 45-3i

6

S.D.D. 14 B 45-3i

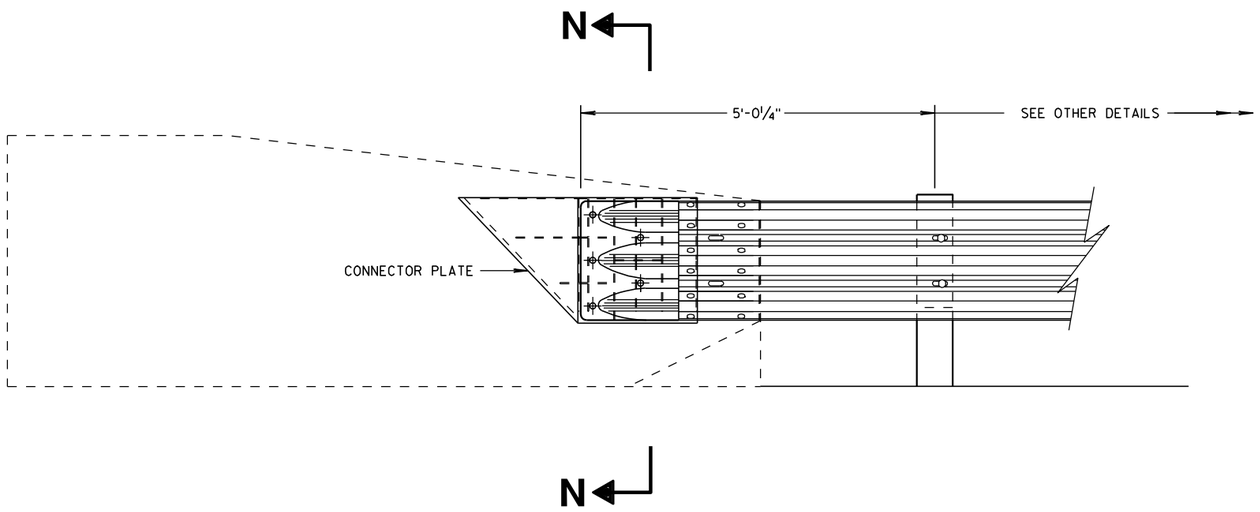

THRIE BEAM CONNECTION TO SINGLE SLOPE BARRIER

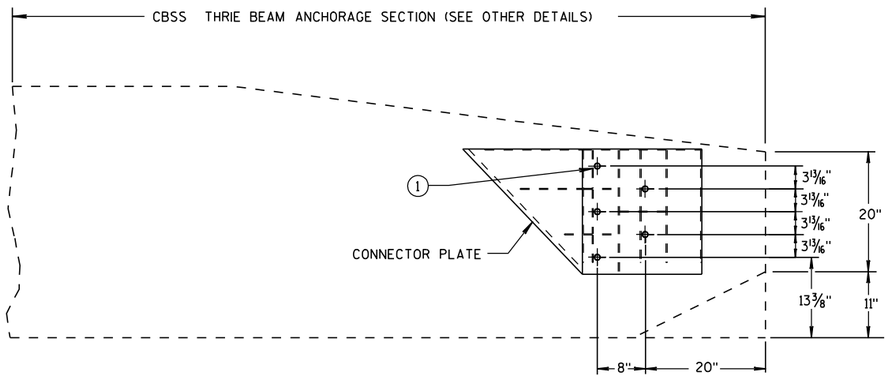

SINGLE SLOPE CONNECTION PLATE PLACEMENT

GENERAL NOTES

CONNECTOR PLATE, DRILLING BOLT HOLES THROUGH THE PARAPET, BOLTS, NUTS, WASHERS AND REPAIRING DAMAGED CONCRETE ARE INCIDENTAL TO THE CONTRACT.

(1) BOLTS MAY BE A325 BOLTS OR A449 BOLTS. BOLT LENGTH AND THREADING LENGTH ARE TO ALLOW FOR A TIGHT CONNECTION BETWEEN RIGID BARRIER AND THRIE BEAM CONNECTION PLATE. CONTRACTOR IS TO FIELD VERIFY BOLT LENGTH AND THREAD LENGTH. ONE ROUND WASHER REQUIRED BETWEEN BOLT HEAD AND THRIE BEAM CONNECTOR PLATE. BOLTS THAT EXTEND THROUGH THE PARAPET AND OUT THE BACK FACE REQUIRE A HARDENED ROUND STEEL WASHER THAT IS 2" O.D. X ⅝" THICK AND ONE PLATE WASHER. REPAIR ANY DAMAGED CONCRETE FROM BOLT INSTALLATION.

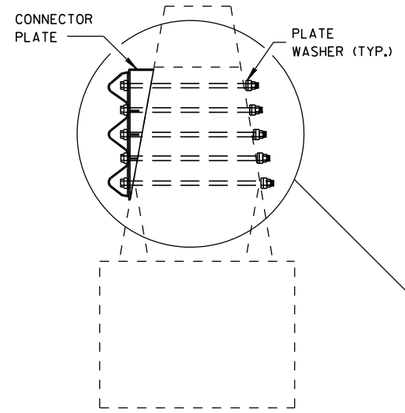

SECTION N-N

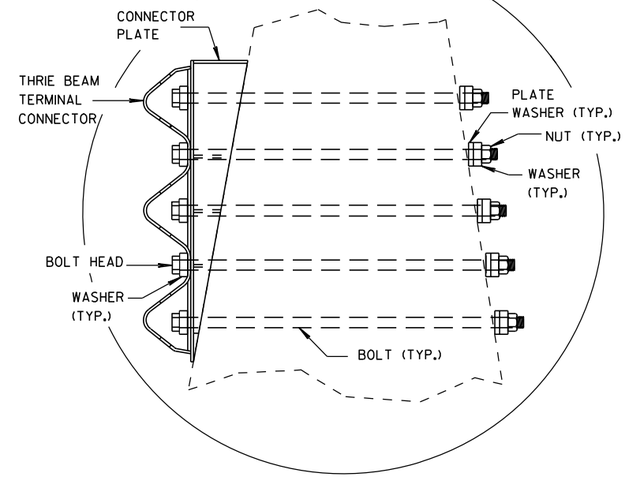

MIDWEST GUARDRAIL SYSTEM
THRIE BEAM TRANSITION (MGS)

STATE OF WISCONSIN
DEPARTMENT OF TRANSPORTATION

APPROVED
8/31/2012 — DATE
/S/ Jerry H. [illegible] — ROADWAY STANDARDS ENGINEER
FHWA

6

S.D.D. 14 B 45-3j

6

S.D.D. 14 B 45-3j

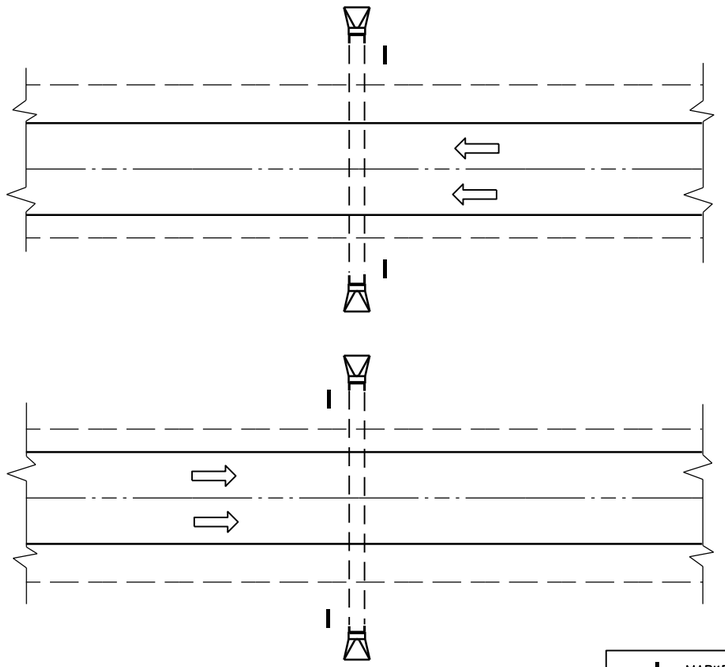

PLAN VIEW

DIVIDED HIGHWAY

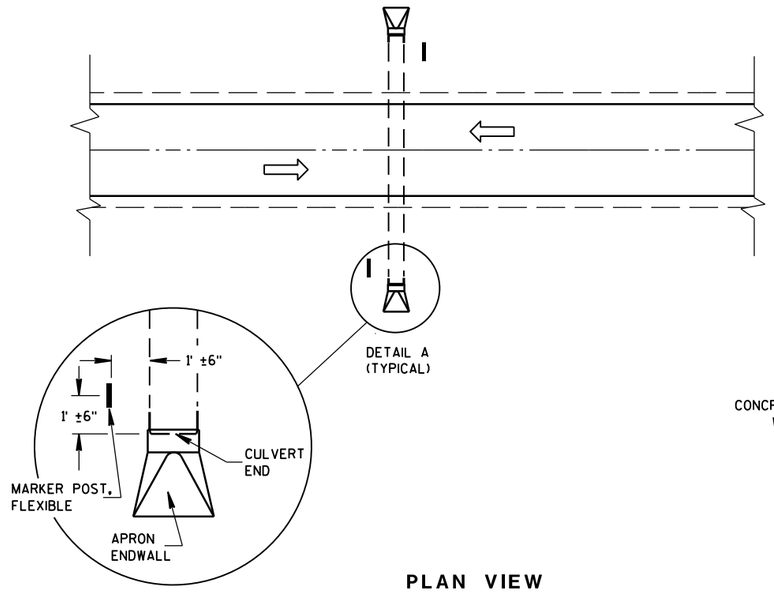

DETAIL A
(TYPICAL)

PLAN VIEW

UNDIVIDED HIGHWAY

MARKER POST, FLEXIBLE

DIRECTION OF TRAFFIC FLOW

GENERAL NOTES

DETAILS OF CONSTRUCTION, MATERIALS AND WORKMANSHIP NOT SHOWN ON THIS DRAWING SHALL CONFORM TO THE PERTINENT REQUIREMENTS OF THE STANDARD SPECIFICATIONS AND THE APPLICABLE SPECIAL PROVISIONS.

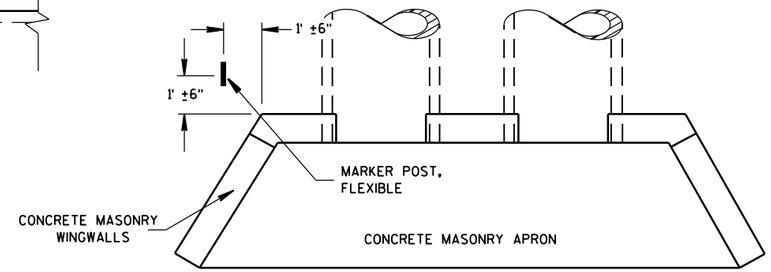

PLAN VIEW

CONCRETE MASONRY ENDWALLS FOR CULVERT PIPE AND PIPE ARCH

FLEXIBLE MARKER POST LOCATION

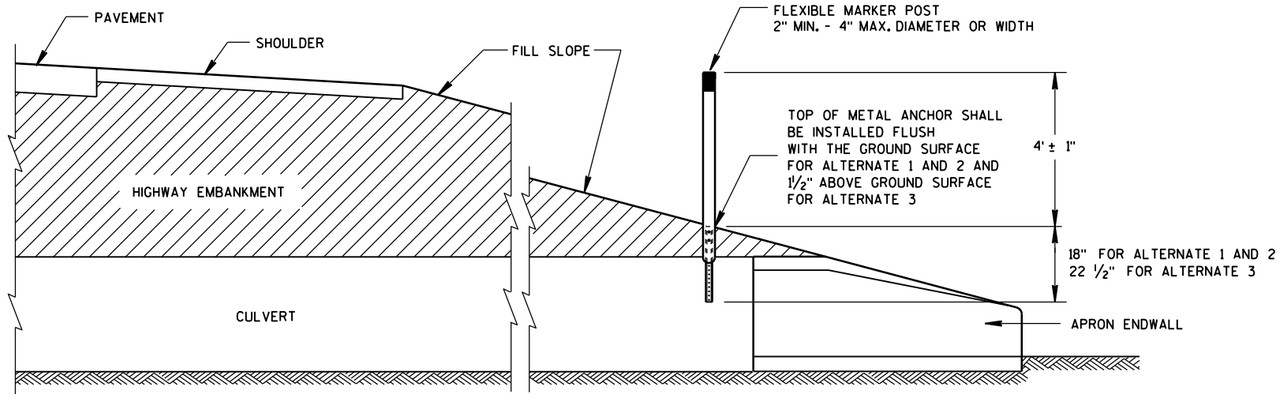

CROSS SECTION

FLEXIBLE MARKER POST

FLEXIBLE MARKER POST FOR CULVERT END

STATE OF WISCONSIN
DEPARTMENT OF TRANSPOI

6

S.D.D. 15 A 3-2a

6

S.D.D. 15 A 3-2a

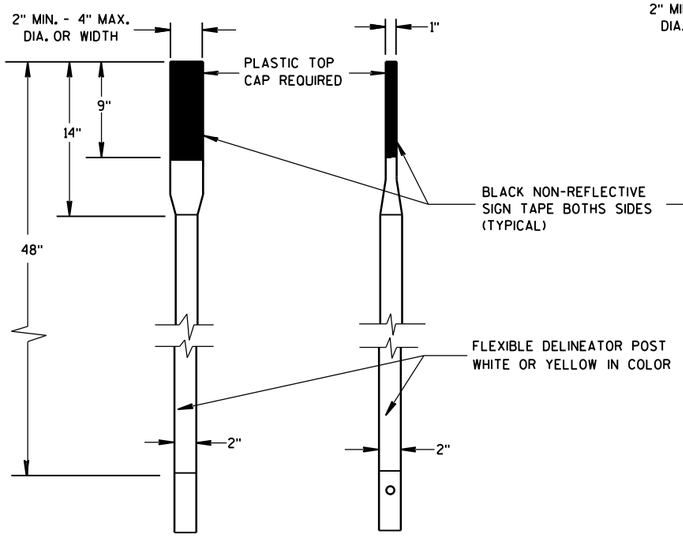

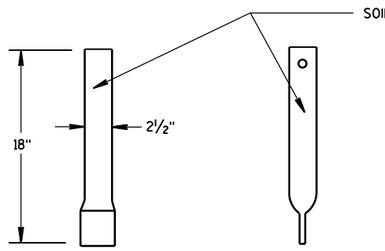

FRONT VIEW SIDE VIEW

ALTERNATE 1

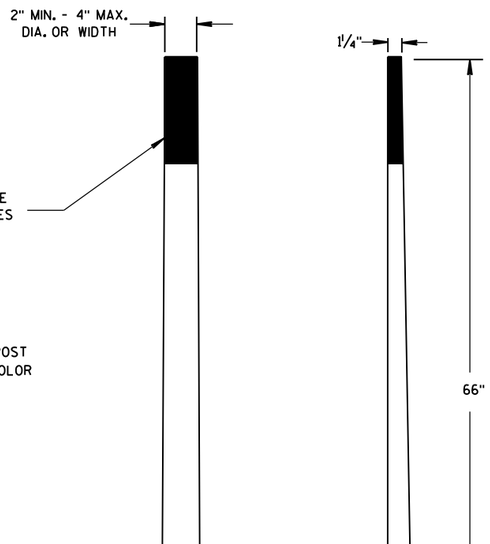

FRONT VIEW SIDE VIEW

ALTERNATE 2

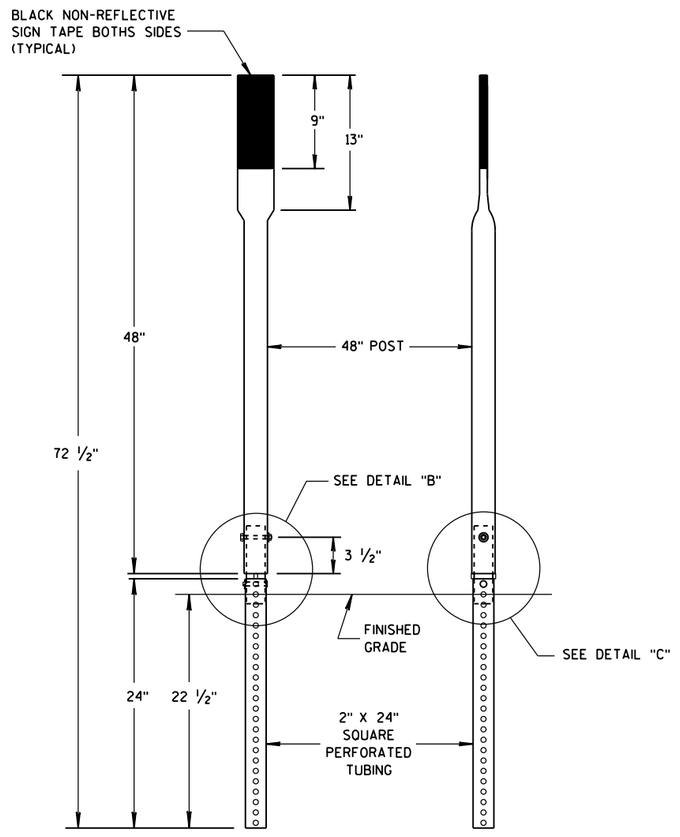

FRONT VIEW SIDE VIEW

ALTERNATE 3

FLEXIBLE MARKER POSTS

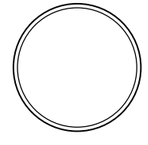

SECTION A-A

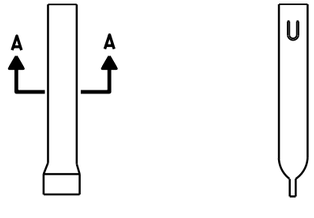

FRONT VIEW SIDE VIEW

ALTERNATE 1

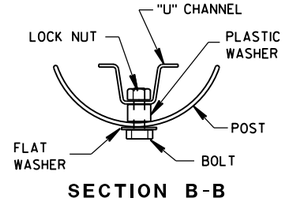

SECTION B-B

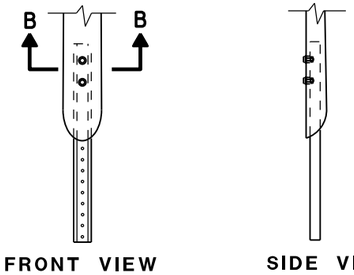

FRONT VIEW SIDE VIEW

ALTERNATE 2

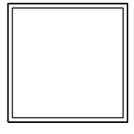

SECTION C-C

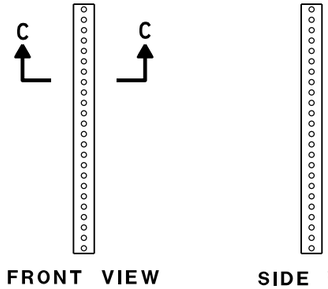

FRONT VIEW SIDE VIEW

ALTERNATE 3

FLEXIBLE MARKER POST ANCHORS

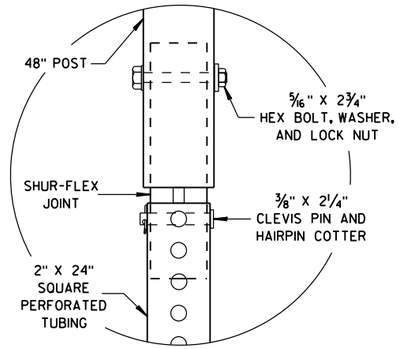

DETAIL B

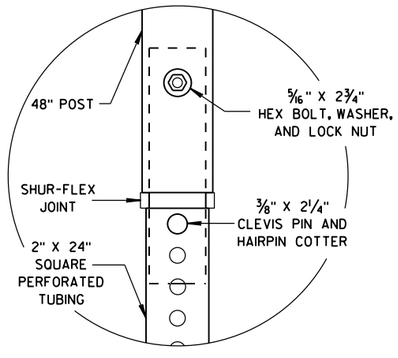

DETAIL C

FLEXIBLE MARKER POST
FOR CULVERT END

STATE OF WISCONSIN
DEPARTMENT OF TRANSPORTATION

APPROVED
10/1/2012 — DATE
/S/ Travis Feltes — STATE TRAFFIC ENGINEER
FHWA

6

S.D.D. 15 A 3-2b

6

S.D.D. 15 A 3-2b

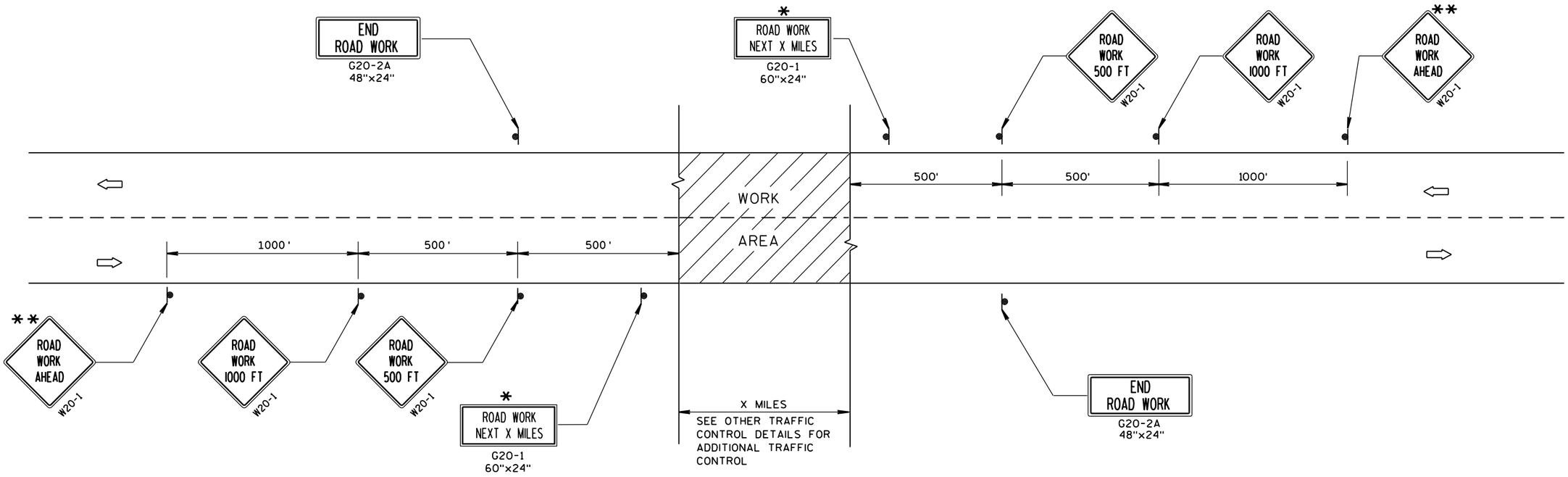

TYPICAL SIDEROAD APPROACH WARNING SIGN DETAIL

GENERAL NOTES

THE EXACT NUMBER, LOCATION, AND SPACING OF ALL SIGNS AND DEVICES SHALL BE ADJUSTED TO FIT FIELD CONDITIONS.

THE SPACING BETWEEN TRAFFIC CONTROL SIGNS SHOULD BE ADJUSTED TO NOT CONFLICT WITH AND SHOULD PROVIDE A MINIMUM OF 200 FEET (500 FEET DESIRABLE) CLEARANCE TO EXISTING SIGNS THAT WILL REMAIN IN PLACE.

ALL SIGNS ARE 48"x48" UNLESS OTHERWISE NOTED.

SIGNS THAT WILL BE IN PLACE LESS THAN 7 CONTINUOUS DAYS AND NIGHTS MAY BE MOUNTED ON PORTABLE SUPPORTS.

IF A "STOP" SIGN MUST BE REMOVED FOR A WORK OPERATION, A TEMPORARY "STOP" SIGN SHALL BE PLACED PRIOR TO THE SIGN REMOVAL, OR A FLAGGER SHALL BE PROVIDED UNTIL THE SIGN IS RE-ESTABLISHED.

* OMIT G20-1 SIGNS IF LENGTH OF WORK AREA IS 2 MILES OR LESS.

** PLACE ADDITIONAL W20-1 "ROAD WORK AHEAD" SIGN IF WORK AREA WITHIN THE PROJECT IS SEPARATED BY MORE THAN 2 MILES FROM PREVIOUS WORK AREA.

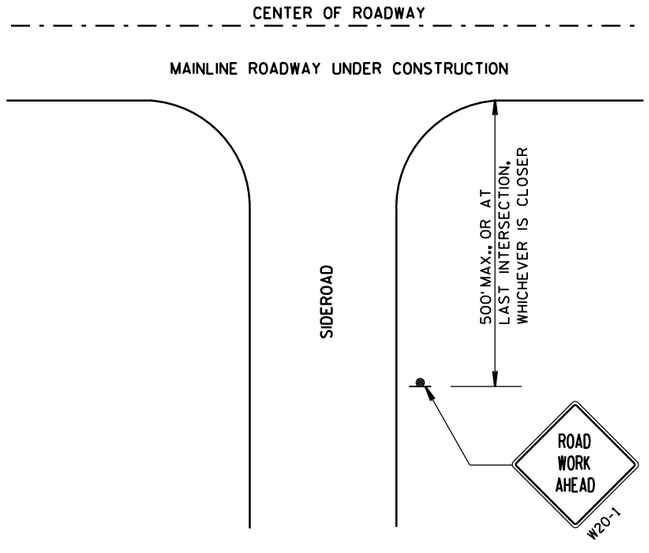

LEGEND

- SIGN ON PERMANENT SUPPORT
- DIRECTION OF TRAFFIC
- WORK AREA

TRAFFIC CONTROL, ADVANCE WARNING SIGNS 45 M.P.H. OR GREATER TWO-WAY UNDIVIDED ROAD OPEN TO TRAFFIC

STATE OF WISCONSIN
DEPARTMENT OF TRANSPORTATION

APPROVED

8/2013 — DATE

/S/ Travis Feltes — STATE TRAFFIC ENGINEER

FHWA

SIGN

6

S.D.D. 15 C 4-2

6

S.D.D. 15 C 4-2

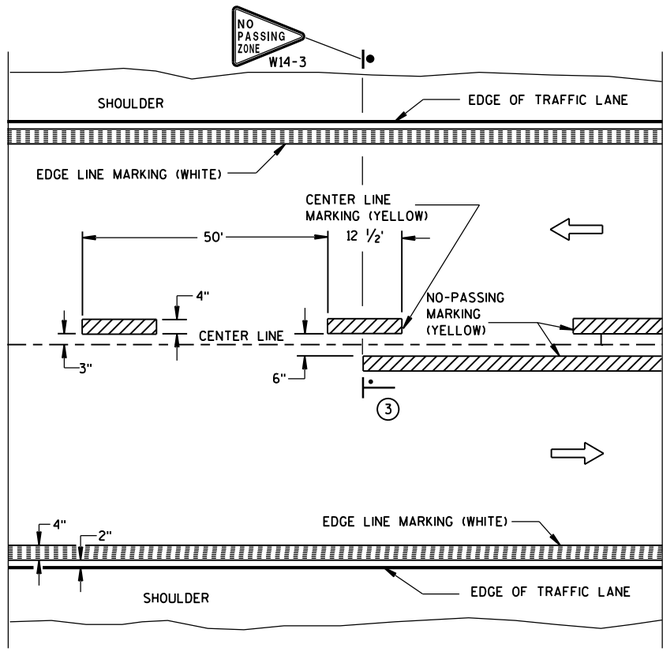

TWO WAY TRAFFIC

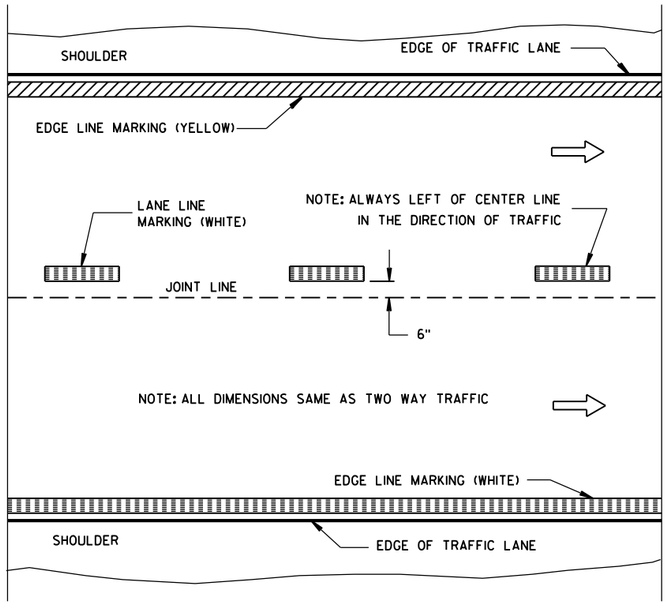

ONE WAY TRAFFIC

PERMANENT PAVEMENT MARKING

GENERAL NOTES

DETAILS OF CONSTRUCTION NOT SHOWN ON THIS DRAWING SHALL CONFORM TO STANDARD SPECIFICATIONS AND SPECIAL PROVISIONS.

1. HALF CYCLE LENGTHS (25'±) WITH 2' MINIMUM STRIPE LENGTHS SHALL BE PROVIDED ON ROADWAYS (INCLUDING TEMPORARY TRAVELED WAYS) WITH REVERSE CURVATURE, CURVATURE OF OVER 5 DEGREES OR WHEN DIRECTED BY THE ENGINEER TO MARK UNUSUAL ALIGNMENT OF THE TRAVELED WAY.
2. NO PASSING ZONE TEMPORARY PAVEMENT MARKING IS REQUIRED TO BE PLACED, WHERE APPROPRIATE, ALONG WITH CENTERLINE TEMPORARY PAVEMENT MARKING WHEN A SAME DAY PERMANENT PAVEMENT MARKING ITEM IS INCLUDED IN THE CONTRACT.
3. NO PASSING ZONE MARKINGS ARE PLACED ACCORDING TO "T" MARKINGS. IF EXISTING NO PASSING ZONE W14-3 SIGNS ARE BEYOND 50 FEET IN EITHER DIRECTION, THE SIGNS SHALL BE MOVED TO THE "T" MARKINGS.
4. CONCRETE ONLY.

NOTE

ARROW SYMBOL (⇨) SHOWS DIRECTION OF TRAVEL

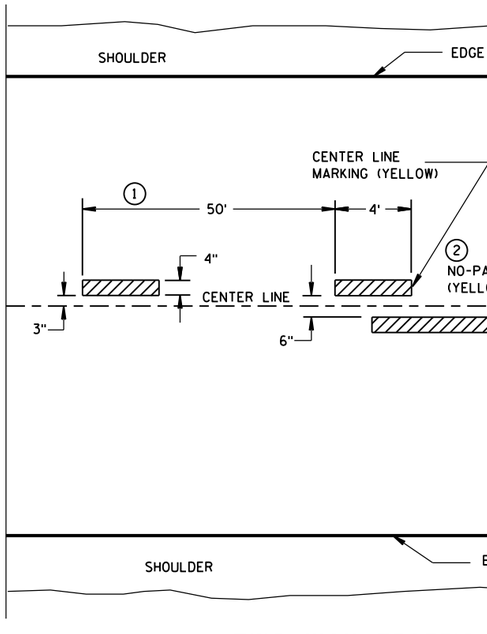

TWO WAY TRAFFIC

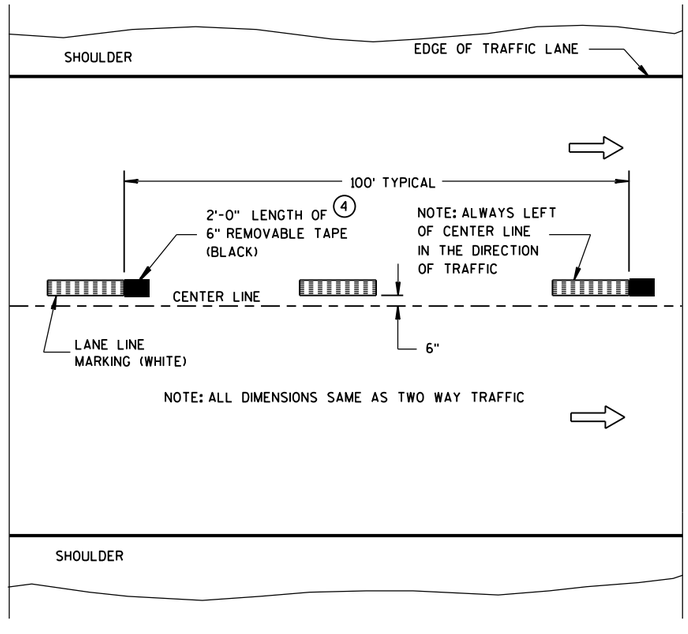

ONE WAY TRAFFIC

TEMPORARY (INTERMEDIATE) PAVEMENT MARKING

(SHOWS CYCLE FOR TEMPORARY CENTER LINE OR TEMPORARY LANE LINE MARKING)

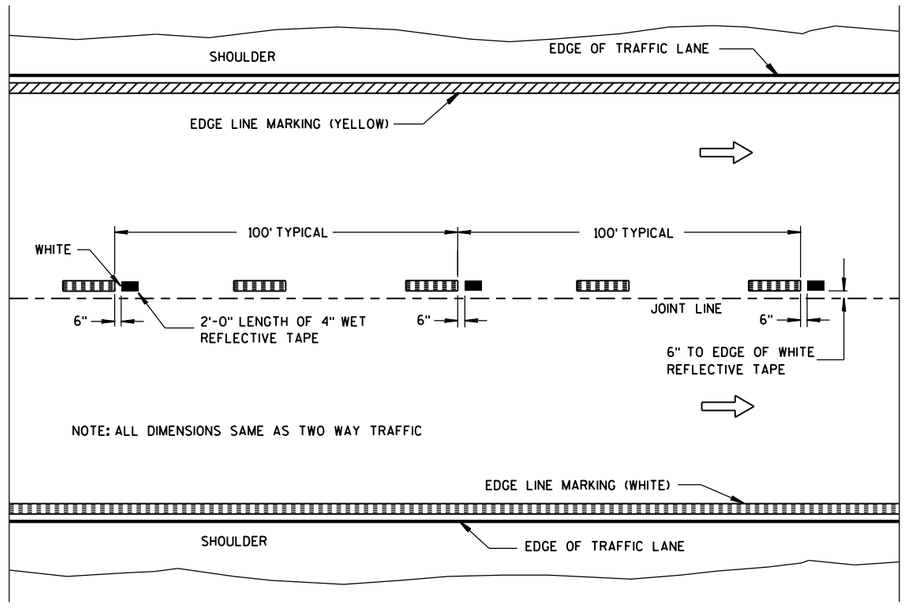

WET REFLECTIVE TAPE SUPPLEMENT TO
SPRAYED OR NON WET REFLECTIVE TAPE LANE LINE

LEGEND

"T" MARKING

POST MOUNTED SIGN

PAVEMENT MARKING (MAINLINE)

STATE OF WISCONSIN
DEPARTMENT OF TRANSPORTATION

APPROVED

5-13-2013 DATE

/S/ Travis Feltes STATE TRAFFIC E

FHWA

6

S.D.D. 15 C 8-16a

6

S.D.D. 15 C 8-16a

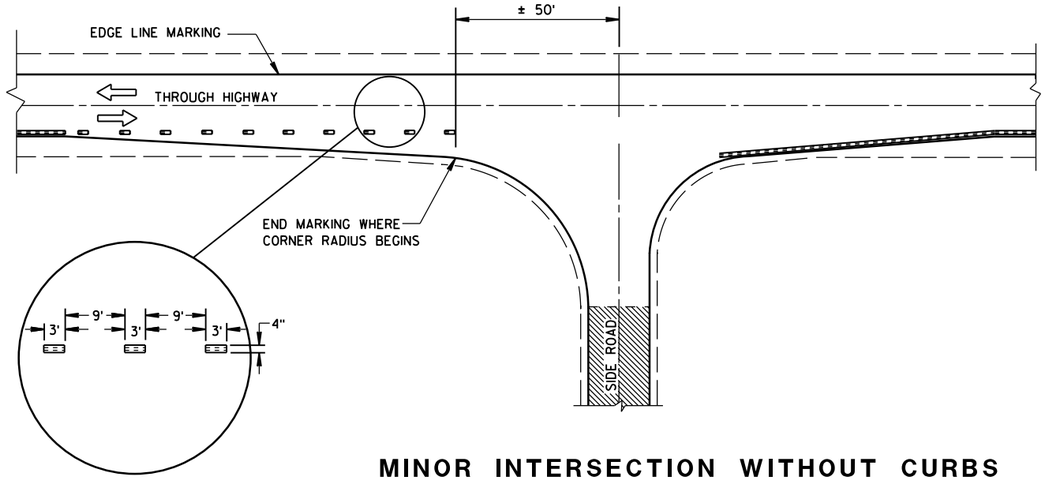

MINOR INTERSECTION WITHOUT CURBS

GENERAL NOTES

EDGE LINES SHALL BE OMITTED THROUGH INTERSECTIONS. EDGE LINES SHALL BE CONTINUED THROUGH DRIVEWAYS.

(1) WHEN DISTANCE "A" IS LESS THAN 250 FEET, OMIT LANE LINE.

(2) WHEN DISTANCE "B" IS LESS THAN 100 FEET, OMIT CHANNELIZING LANE LINE.

(3) ALTERNATIVE MARKING SHALL BE PROVIDED WHEN SPECIFIED IN THE CONTRACT. TYPICAL SITUATIONS WHERE THIS MARKING MAY BE REQUIRED ARE WHERE THE INTERSECTION IS ON A SHARP HORIZONTAL CURVE OR CREST VERTICAL CURVE IN AN UNLIGHTED AREA SUCH THAT THE EDGE LINE MAY BE MISLEADING TO THE MOTORIST OR DISAPPEAR FROM SIGHT.

(4) THE EDGE LINE IN THE TAPER AREAS OF THE BYPASS LANE AND THE BYPASS LANE SHALL BE LOCATED 1-FOOT FROM EDGE OF PAVEMENT TO THE OUTSIDE EDGE OF EDGE LINE.

(5) BARRIER LINE ENDS AT SIDE ROAD PAVEMENT/SURFACE EDGE EXTENSION.

(6) BARRIER LINE STARTS 500 FEET PRIOR TO THE BYPASS TAPER.

(7) IF THE DISTANCE BETWEEN 2 SUCCESSIVE NO-PASSING ZONES IS LESS THAN THE MINIMUM DISTANCE BETWEEN ZONES, CONNECT THE 2 ZONES.

(8) 3' LINE 9' GAP, EXCEPT RETRACE THE EXISTING LINE - GAP PATTERN WHERE EXISTING MARKINGS ARE IN PLACE.

ARROW SYMBOL (⇨) SHOWS DIRECTION OF TRAVEL

(7)

POSTED SPEED (MPH)	MINIMUM DISTANCE BETWEEN ZONES (FEET)
25 - 30	528
35 - 40	528
45 - 50	686
55	792

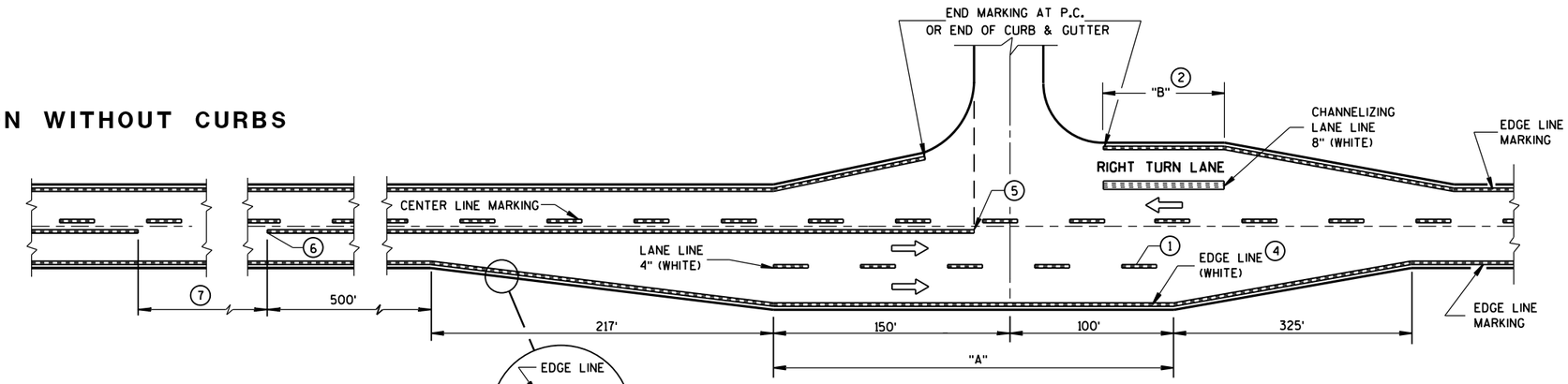

MAJOR INTERSECTIONS

(INTERSECTION WITH FULL RIGHT TURN LANE OR BYPASS LANES)

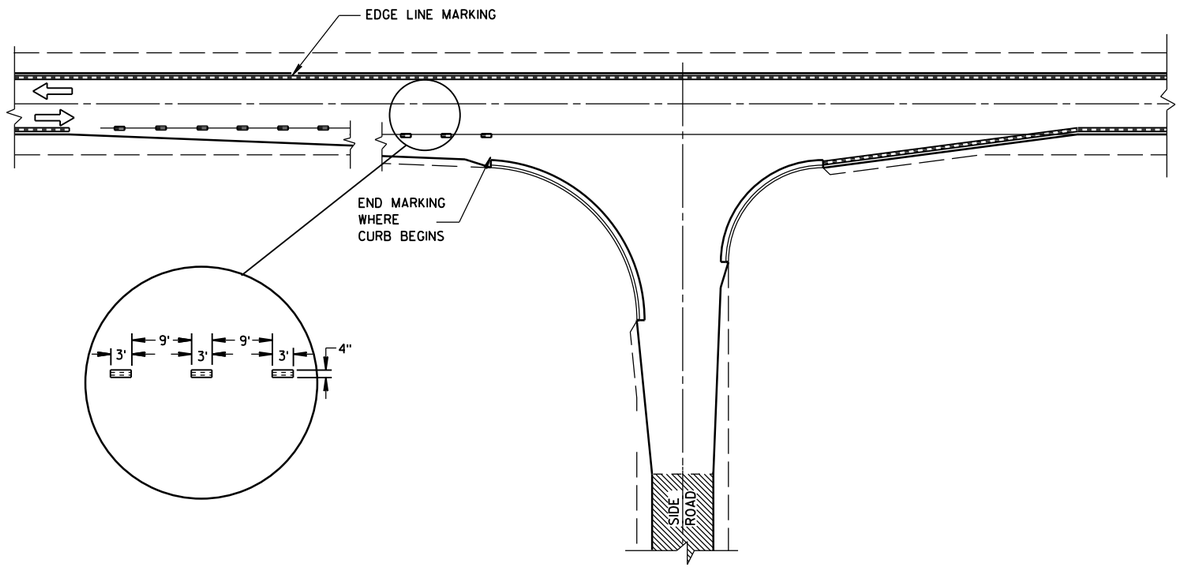

MINOR INTERSECTION WITH CURBS

(TYPICAL MARKING)

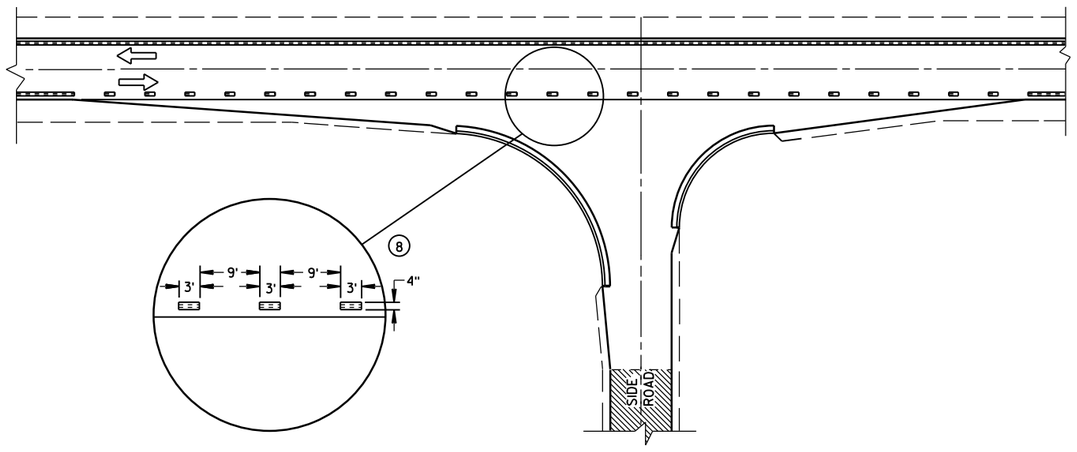

MINOR INTERSECTION WITH CURBS

(3) (FOR SPECIAL CONDITIONS AS SPECIFIED)

PAVEMENT MARKING
(INTERSECTIONS)

STATE OF WISCONSIN
DEPARTMENT OF TRANSPOR

6

S.D.D. 15 C 8-16b

6

S.D.D. 15 C 8-16b

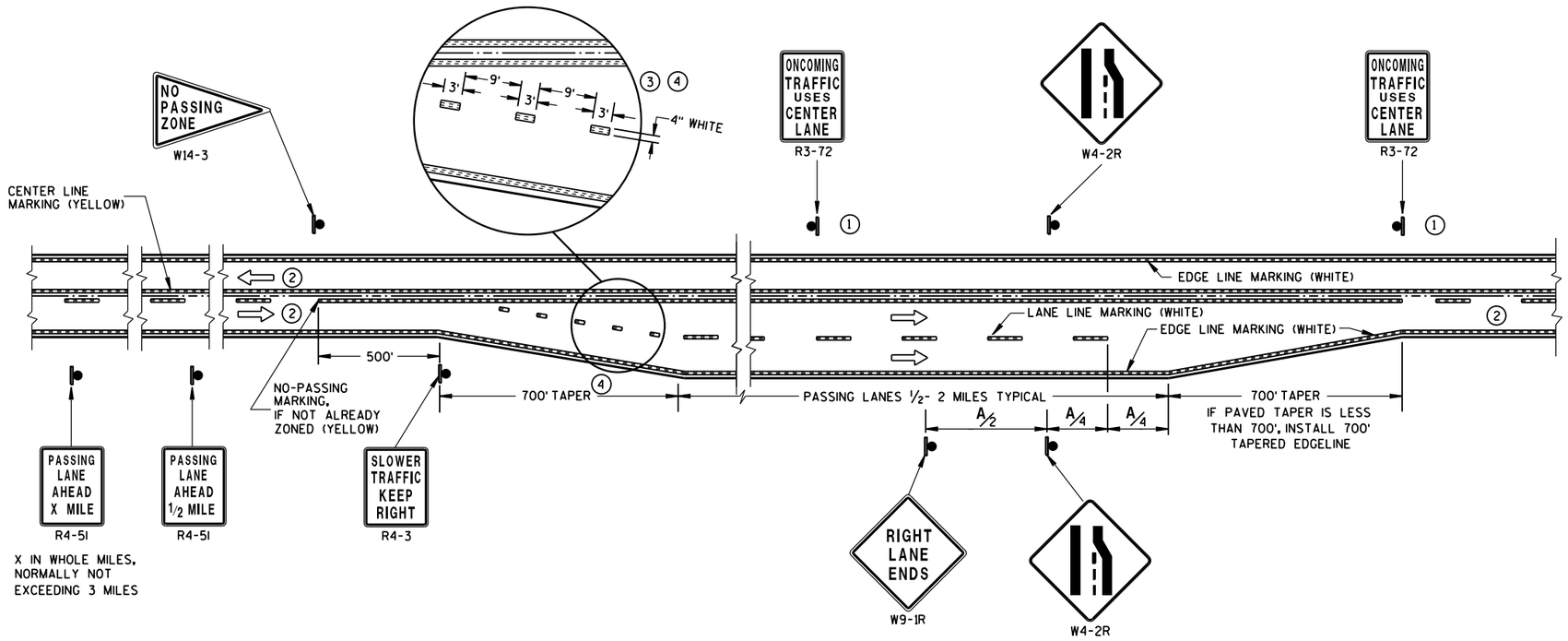

SOLID DOUBLE-YELLOW LINE
(THROUGHOUT ENTIRE PASSING/CLIMBING LANE)

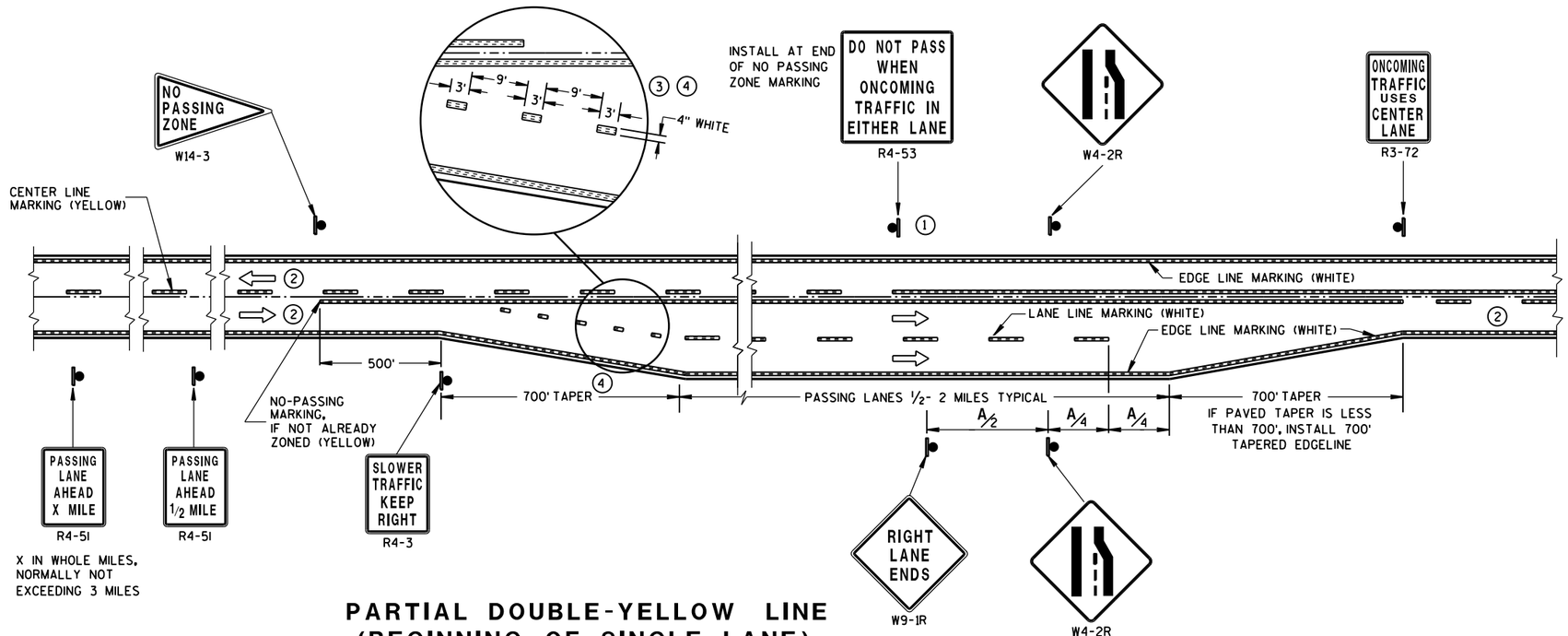

PARTIAL DOUBLE-YELLOW LINE
(BEGINNING OF SINGLE LANE)

GENERAL NOTES

1. SIGN SHALL BE REPEATED AT 1 MILE INCREMENTS OR AT THE DISCRETION OF THE REGIONAL TRAFFIC ENGINEER.
2. THERE MAY BE SOLID YELLOW ON THE CENTERLINE DUE TO SIGHT CONDITIONS.
3. THE TAPER LENGTH OF THE DOTTED LINE PAVEMENT MARKING SHALL BE 700 FEET, 3'LINE 9'GAP, EXCEPT RETRACE THE EXISTING LINE-GAP PATTERN WHERE EXISTING MARKINGS ARE IN PLACE.
4. WHEN THE ENTRANCE TAPER IS LESS THAN 700 FEET OR THE SHOULDER WIDTH IN THE PASSING/CLIMBING LANE IS LESS THAN THE ADJACENT HIGHWAY, DO NOT INSTALL DOTTED LINE PAVEMENT MARKING.

ARROW SYMBOL (⇨) SHOWS DIRECTION OF TRAVEL

DISTANCE TABLE

POSTED OR 85th PERCENTILE SPEED	DISTANCE "A"
45	750
50	850
55	950

PAVEMENT MARKING & SIGNING (CLIMBING LANE & PASSING LANE)

STATE OF WISCONSIN
DEPARTMENT OF TRANSPOR

6

S.D.D. 15 C 8-16c

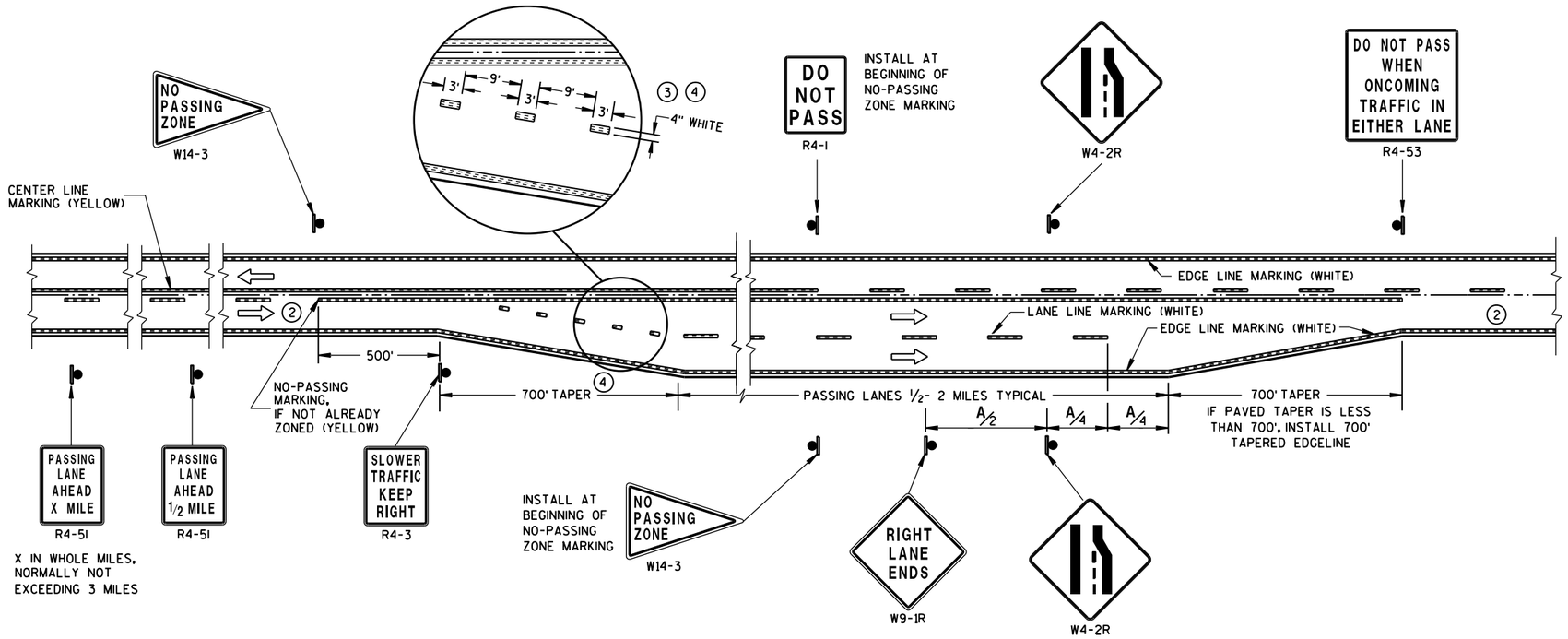

SOLID DOUBLE-YELLOW LINE (END OF SINGLE LANE)

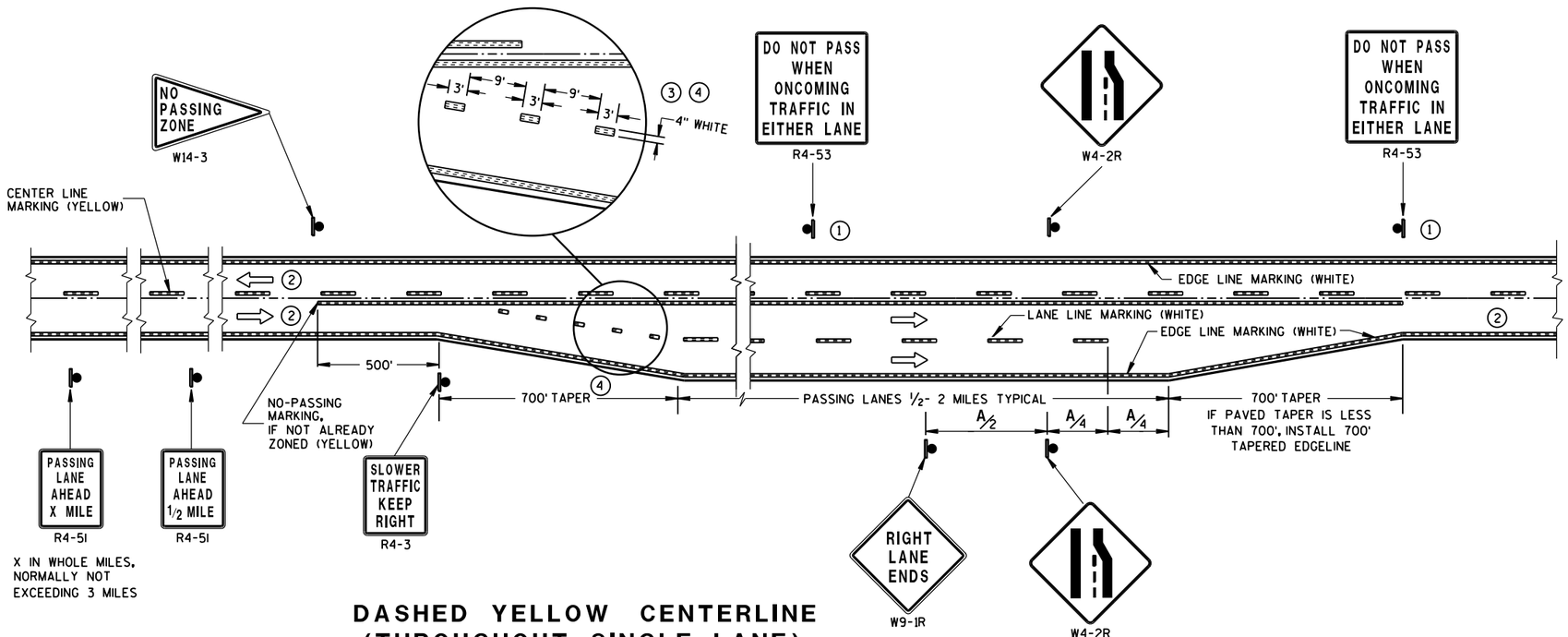

DASHED YELLOW CENTERLINE (THROUGHOUT SINGLE LANE)

GENERAL NOTES

1. SIGN SHALL BE REPEATED AT 1/2 MILE INCREMENTS OR AT THE DISCRETION OF THE REGIONAL TRAFFIC ENGINEER.
2. THERE MAY BE SOLID YELLOW ON THE CENTERLINE DUE TO SIGHT CONDITIONS.
3. THE TAPER LENGTH OF THE DOTTED LINE PAVEMENT MARKING SHALL BE 700 FEET, 3'LINE 9'GAP, EXCEPT RETRACE THE EXISTING LINE-GAP PATTERN WHERE EXISTING MARKINGS ARE IN PLACE.
4. WHEN THE ENTRANCE TAPER IS LESS THAN 700 FEET OR THE SHOULDER WIDTH IN THE PASSING/CLIMBING LANE IS LESS THAN THE ADJACENT HIGHWAY, DO NOT INSTALL DOTTED LINE PAVEMENT MARKING.

ARROW SYMBOL (⇨) SHOWS DIRECTION OF TRAVEL

DISTANCE TABLE

POSTED OR 85th PERCENTILE SPEED	DISTANCE "A"
45	750
50	850
55	950

PAVEMENT MARKING & SIGNING (CLIMBING LANE & PASSING LANE)

STATE OF WISCONSIN
DEPARTMENT OF TRANSPOI

6

S.D.D. 15 C 8-16d

LEGEND

SIGN ON PORTABLE OR PERMANENT SUPPORT

DIRECTION OF TRAFFIC

WORK AREA

FLAGGER, EQUIPPED WITH STOP/SLOW PADDLE FASTENED ON SUPPORT STAFF

SIGN SPACING TABLE

SPEED LIMIT	SIGN SPACING A,B,C
25-35 MPH	200'
35-40 MPH	350'
45-55 MPH	500'

W3-4

USE OF THE "BE PREPARED TO STOP" SIGN IS OPTIONAL. WHEN USED, THIS SIGN SHALL BE LOCATED BETWEEN THE W20-7a AND W20-4 SIGNS. A 500' TYPICAL SPACING SHALL BE PROVIDED BETWEEN THE SIGNS.

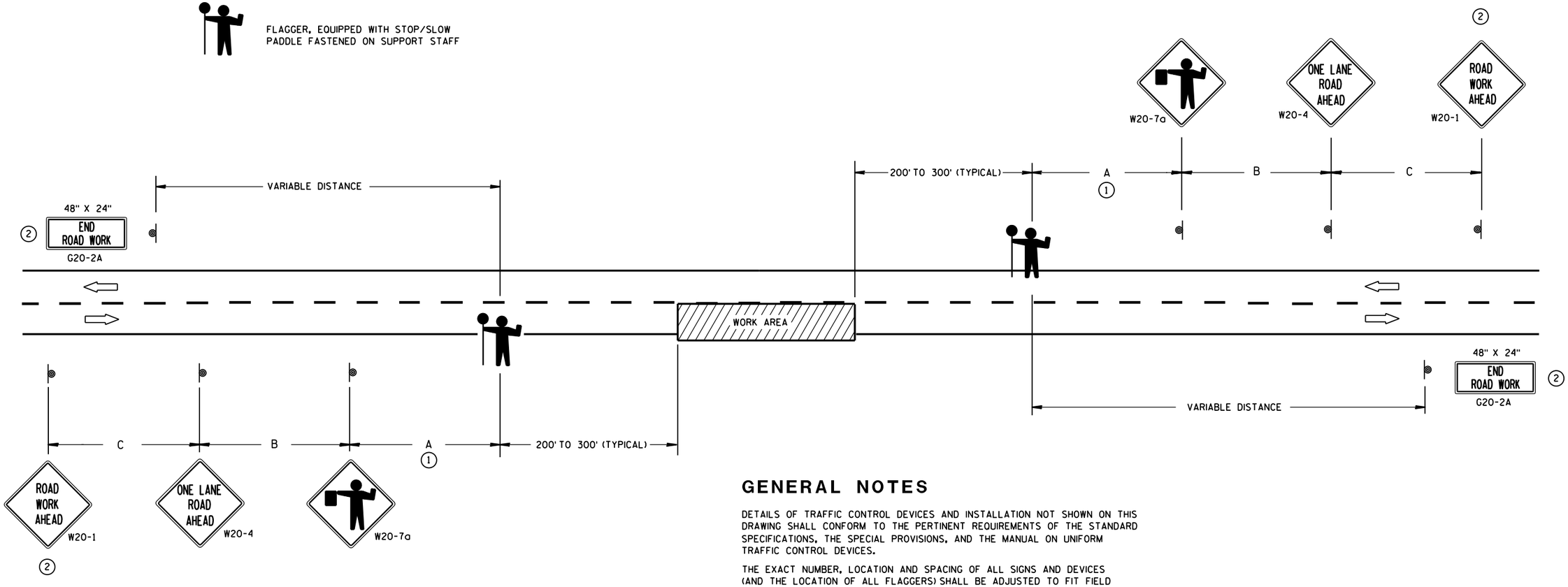

(1) FOR A MOVING WORK OPERATION,
SIGNING FOR BOTH DIRECTIONS SHALL BE REESTABLISHED (AS SIMULTANEOUSLY AS PRACTICAL) AT APPROXIMATELY 3500 FOOT INTERVALS IN THE MOVING WORK OPERATION OR AS APPROVED BY THE ENGINEER.

(2) SIGN NOT REQUIRED IF FLAGGING OPERATION OCCURS WITHIN A SIGNED ROAD WORK ZONE AREA.

GENERAL NOTES

DETAILS OF TRAFFIC CONTROL DEVICES AND INSTALLATION NOT SHOWN ON THIS DRAWING SHALL CONFORM TO THE PERTINENT REQUIREMENTS OF THE STANDARD SPECIFICATIONS, THE SPECIAL PROVISIONS, AND THE MANUAL ON UNIFORM TRAFFIC CONTROL DEVICES.

THE EXACT NUMBER, LOCATION AND SPACING OF ALL SIGNS AND DEVICES (AND THE LOCATION OF ALL FLAGGERS) SHALL BE ADJUSTED TO FIT FIELD CONDITIONS AS APPROVED BY THE ENGINEER.

THE FIRST ADVANCE WARNING SIGN SHOULD TYPICALLY BE LOCATED IN ADVANCE OF THE ANTICIPATED TRAFFIC BACKUP OR QUEUE.

WHEN A SIDE ROAD OR RAMP INTERSECTS THE FACILITY ON WHICH THE WORK IS BEING PERFORMED, ADDITIONAL TRAFFIC CONTROLS SHALL BE PROVIDED AS SPECIFIED IN THE PLANS AND/OR THE SPECIAL PROVISIONS OR AS APPROVED BY THE ENGINEER.

FLAGGERS SHALL BE IN SIGHT OF EACH OTHER OR IN DIRECT COMMUNICATION AT ALL TIMES. THEY SHALL BE EQUIPPED WITH STOP/SLOW PADDLES FASTENED ON SUPPORT STAFFS. WHEN THE FLAGGING OPERATION IS NOT IN EFFECT, COVER OR REMOVE ALL TEMPORARY TRAFFIC CONTROL SIGNS.

ALL SIGNS ARE 48" X 48" UNLESS OTHERWISE NOTED.

TRAFFIC CONTROL FOR LANE CLOSURE (SUITABLE FOR MOVING OPERATIONS)

STATE OF WISCONSIN
DEPARTMENT OF TRANSPORTATION

APPROVED
8/2013
DATE
/S/ Travis Feltes
STATE TRAFFIC ENGINEER

FHWA

6

S.D.D. 15 C 12-4

6

S.D.D. 15 C 12-4

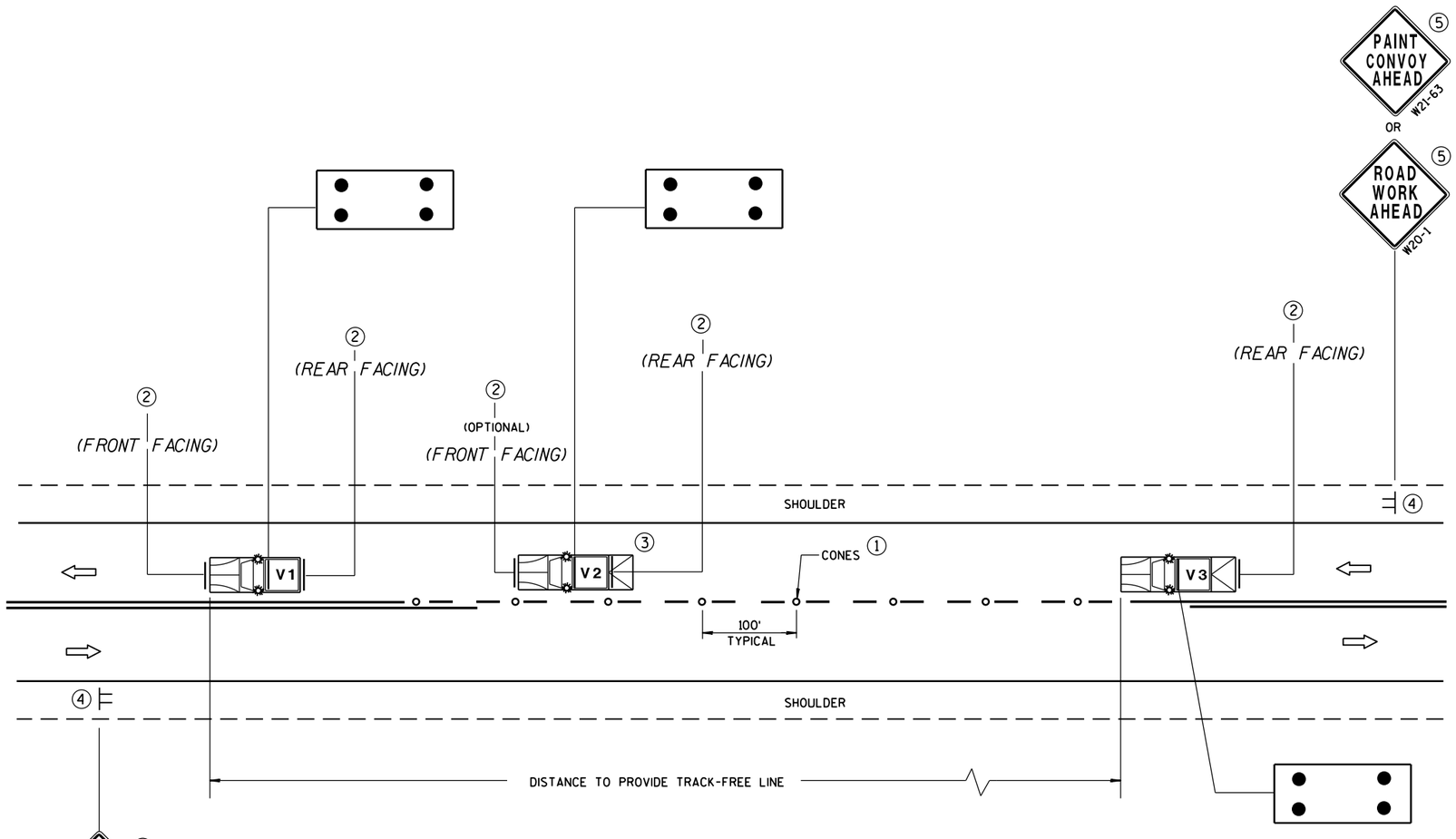

GENERAL NOTES

ALL VEHICLES SHALL BE EQUIPPED WITH TWO 360 DEGREE HIGH INTENSITY YELLOW FLASHING LIGHTS OR STROBE LIGHTS AND OPERATED WITH HEADLIGHTS TURNED ON.

VEHICLES SHALL BE EQUIPPED WITH REAR FACING TYPE B OR C FLASHING ARROW PANEL OPERATING IN CAUTION MODE. SIGNS PLACED ON VEHICLES MUST NOT OBSCURE THE ARROW PANEL.

ALL SIGNS ARE 48" X 48" UNLESS OTHERWISE SPECIFIED.

IF SPEED LIMIT IS 40 MPH OR LESS STATIONARY SIGNS MAY BE OMITTED IF CONES ARE USED.

ALTERNATE SIGN MESSAGES, SUCH AS "PAINT CREW AHEAD" OR "ROAD PAINTING AHEAD" MAY BE USED.

DISTANCE BETWEEN VEHICLES MAY VARY ACCORDING TO TERRAIN, SIGHT DISTANCE, PAINT DRYING TIME, AND OTHER FACTORS. WHENEVER ADEQUATE STOPPING SIGHT DISTANCE EXISTS TO THE REAR, SHADOW VEHICLES SHOULD MAINTAIN THE MINIMUM DISTANCE FROM THE WORK VEHICLE AND PROCEED AT THE SAME SPEED AS THE WORK VEHICLE. SHADOW VEHICLES SHOULD SLOW DOWN IN ADVANCE OF VERTICAL OR HORIZONTAL CURVES THAT RESTRICT SIGHT DISTANCE.

THE WORK AND SHADOW VEHICLES SHOULD PULL OVER PERIODICALLY TO ALLOW TRAFFIC TO PASS.

THIS DRAWING SHALL BE USED FOR CENTERLINE OR EDGELINE MARKING.

WHEN NO WORK ACTIVITY IS TAKING PLACE, REMOVE OR TURN THE STATIONARY WARNING SIGNS AWAY FROM TRAFFIC.

(1) CONES MAY BE OMITTED ON PAINTED LINE IF APPROVED BY THE ENGINEER. CONSIDER PAVEMENT MARKING DRY OR CURE TIMES AND TRAFFIC VOLUME.

(2) USE STANDARD SIGN W21-64 WITH APPROPRIATE ARROW.

WET PAINT W21-64 OR WET PAINT W21-64

(3) OPTIONAL TRUCK-MOUNTED ATTENUATOR.

(4) SIGNS SHALL BE REPEATED APPROXIMATELY EVERY THREE MILES.

(5) IF CONSTRUCTION WORK ZONE SIGNS ARE IN PLACE, W20-1 OR W21-63 ARE NOT REQUIRED.

LEGEND

- **V1** LEAD VEHICLE
- **V2** SHADOW VEHICLE
- **V3** TRAIL VEHICLE WITH TMA
- **TMA** TRUCK-MOUNTED ATTENUATOR
- SIGN ON TEMPORARY SUPPORT
- DIRECTION OF TRAFFIC
- CONES
- FLASHING ARROW PANEL (CAUTION)

MOVING PAVEMENT MARKING OPERATIONS
TWO-LANE TWO-WAY ROADWAY

MOVING PAVEMENT MARKING OPERATION TWO-LANE TWO-WAY ROADWAY	
STATE OF WISCONSIN DEPARTMENT OF TRANSPORTATION	
APPROVED 5/3/2013 DATE FHWA	/S/ Travis Feltes STATE TRAFFIC E

6

S.D.D. 15 C 19-2a

GENERAL NOTES

THE EXACT NUMBER, LOCATION AND SPACING OF ALL SIGNS AND DEVICES SHALL BE ADJUSTED TO FIT FIELD CONDITIONS AS APPROVED BY THE ENGINEER.

ALL SIGNS ARE 48" X 48" UNLESS OTHERWISE NOTED. IF NECESSARY DUE TO SPACE CONSTRAINTS IN URBAN AREAS, 36" X 36" SIGNS MAY BE USED IF APPROVED BY DISTRICT TRAFFIC UNIT.

"WO" SIGNS ARE THE SAME AS "W" SIGNS EXCEPT THE BACKGROUND IS ORANGE.

SIGNS THAT WILL BE IN PLACE LESS THAN 7 CONTINUOUS DAYS AND NIGHTS MAY BE MOUNTED ON PORTABLE SUPPORTS.

ANY SIGNS TEMPORARY OR EXISTING, WHICH CONFLICT WITH TRAFFIC CONTROL "IN USE" SHALL BE REMOVED OR COVERED AS NEEDED AND AS APPROVED BY THE ENGINEER.

W20-1 AND G20-2A SIGNS ARE NOT REQUIRED IF THE WORK AREA IS WITHIN A LARGER WORK ZONE WHERE THESE SIGNS ARE ALREADY PRESENT. G20-2A SIGNS MAY ALSO BE OMITTED IF DURATION OF WORK IS LESS THAN 7 CONTINUOUS DAYS AND NIGHTS.

CHANNELIZING DEVICES PLACED ADJACENT TO THE WORK AREA SHALL BE PULLED BACK FROM THE TRAVEL LANE WHEN WORK IS NOT IN PROGRESS.

TABLE A

S \ W	SHOULDER TAPER LENGTH (FEET) 4	6	8	10	BUFFER SPACE (FEET)
30	20	30	40	50	85
35	30	45	55	70	120
40	40	55	75	90	170
45	60	90	120	150	220
50	70	100	135	170	280
55	75	110	150	185	335

W = SHOULDER WIDTH (FEET)
S = NON-CONSTRUCTION SPEED LIMIT (MPH)

SHOULDER TAPER LENGTH
= WS AT 45 MPH OR GREATER

$= \frac{WS^2}{60}$ AT 40 MPH OR LESS

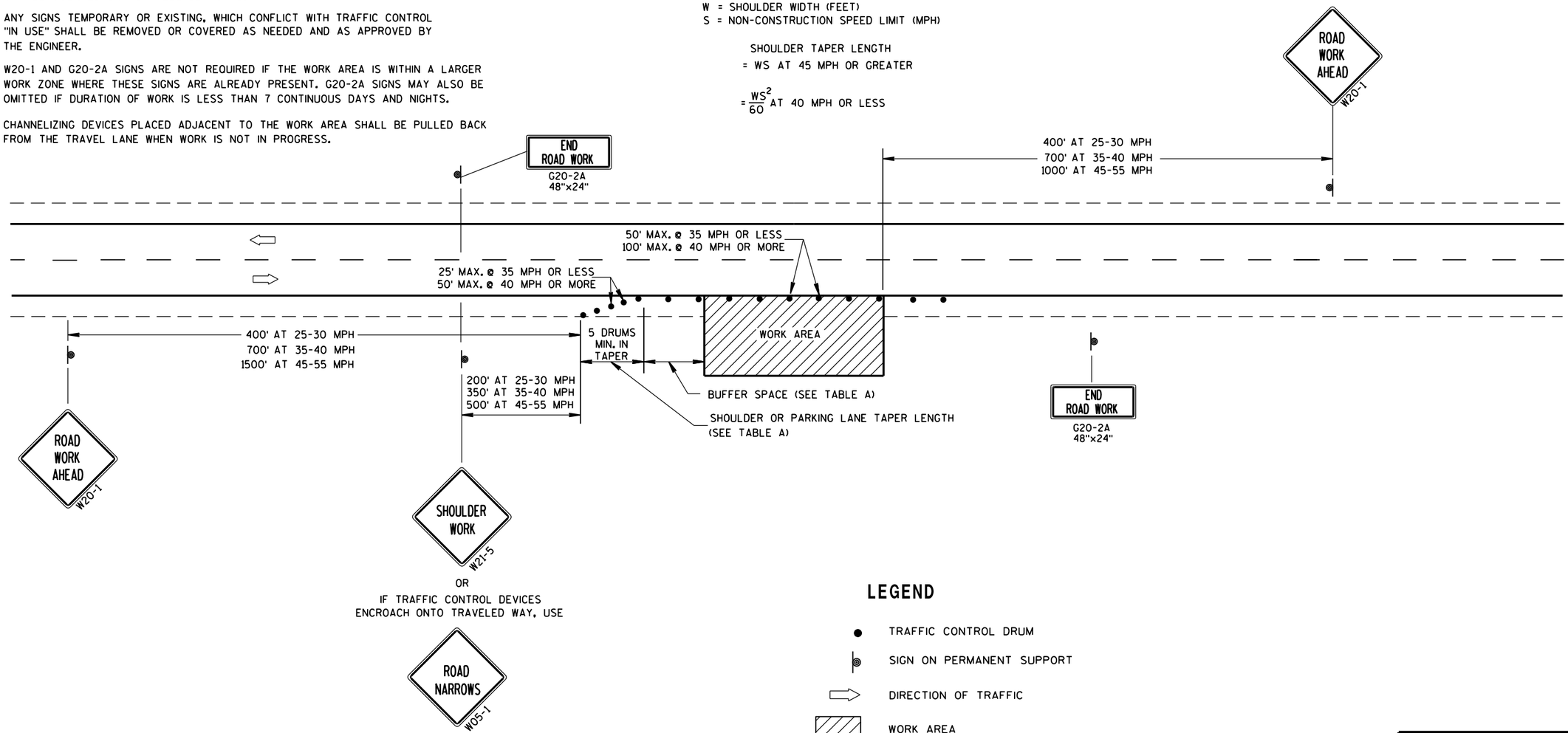

LEGEND

- TRAFFIC CONTROL DRUM
- SIGN ON PERMANENT SUPPORT
- DIRECTION OF TRAFFIC
- WORK AREA

TRAFFIC CONTROL, WORK ON SHOULDER OR PARKING LANE, UNDIVIDED ROADWAY

STATE OF WISCONSIN
DEPARTMENT OF TRANSPORTATION

APPROVED

8/2013 DATE

/S/ Travis Feltes
STATE TRAFFIC ENGINEER

FHWA

6

S.D.D. 15 D 28-2

LEGEND

- SIGN ON PERMANENT SUPPORT
- REMOVING PAVEMENT MARKING
- TYPE III BARRICADE WITH ATTACHED SIGN
- CONCRETE BARRIER TEMPORARY PRECAST
- FLAGS, 16" x 16" MIN., (ORANGE)
- TRAFFIC CONTROL DRUM
- TRAFFIC CONTROL DRUM WITH TYPE "C" STEADY BURN LIGHT
- ASPHALTIC PAVEMENT WIDENING
- DIRECTION OF TRAFFIC

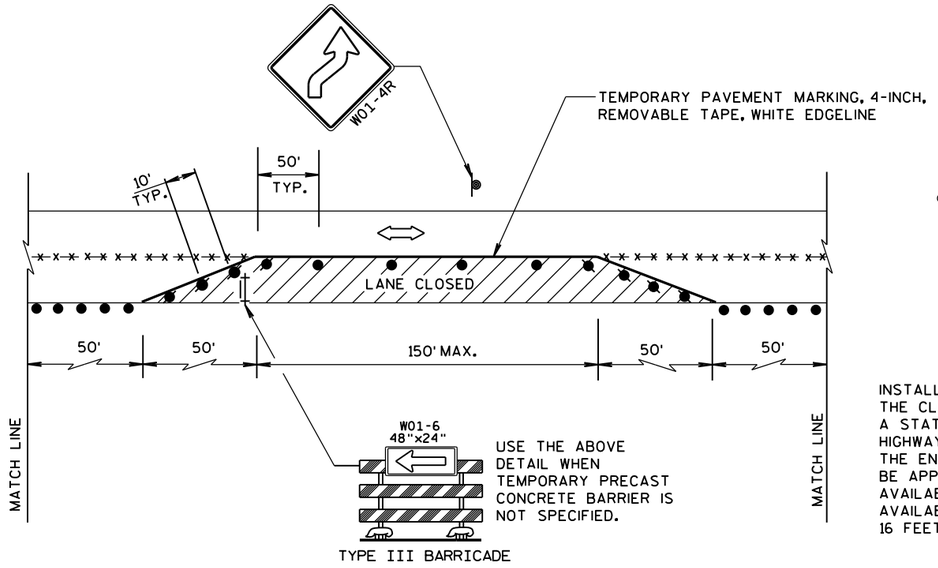

TYPE III BARRICADE

W057-52
36"x24"

INSTALL ON EACH APPROACH AT THE CLOSEST INTERSECTION WITH A STATE OR COUNTY TRUNK HIGHWAY, OR AS DIRECTED BY THE ENGINEER. WIDTH ON SIGN TO BE APPROX. 1-FOOT LESS THAN AVAILABLE WIDTH. (OMIT IF AVAILABLE WIDTH IS MORE THAN 16 FEET.)

GENERAL NOTES

THE EXACT NUMBER, LOCATION AND SPACING OF ALL SIGNS AND DEVICES SHALL BE ADJUSTED TO FIT FIELD CONDITIONS.

THE SPACING BETWEEN TRAFFIC CONTROL SIGNS SHOULD BE ADJUSTED TO NOT CONFLICT WITH AND SHOULD PROVIDE A MINIMUM OF 200 FEET (500 FEET DESIRABLE) CLEARANCE TO EXISTING SIGNS THAT WILL REMAIN IN PLACE.

ALL SIGNS ARE 48"x48" UNLESS OTHERWISE NOTED.

"WO" IS THE SAME AS "W" EXCEPT THE BACKGROUND IS ORANGE.

SIGN LAYOUTS SHALL BE IN ACCORDANCE WITH THE FHWA'S MANUAL OF STANDARD HIGHWAY SIGNS OR THE WISCONSIN STANDARD SIGN PLATES.

ANY SIGNS TEMPORARY OR EXISTING, WHICH CONFLICT WITH TRAFFIC CONTROL "IN USE" SHALL BE REMOVED OR COVERED AS NEEDED AND AS APPROVED BY THE ENGINEER.

PLACE TEMPORARY PAVEMENT MARKING EDGELINE AND CENTERLINE, AND REMOVE EXISTING PAVEMENT MARKINGS IF LANE CLOSURE IS TO BE IN PLACE FOR 4 OR MORE CONTINUOUS DAYS AND NIGHTS OR AS NOTED ON DETAIL.

* 500-FOOT SPACING SHOWN IS FOR ROADWAYS WITH A PRE-CONSTRUCTION REGULATORY SPEED LIMIT OF 45 MPH OR MORE. FOR 35-40 MPH, USE 350-FOOT TYPICAL SPACING. FOR 25-30 MPH, USE 200-FOOT TYPICAL SPACING.

WIDTH ON SIGN TO BE APPROX. 1-FOOT LESS THAN AVAILABLE WIDTH. (OMIT IF AVAILABLE WIDTH IS MORE THAN 16 FEET)

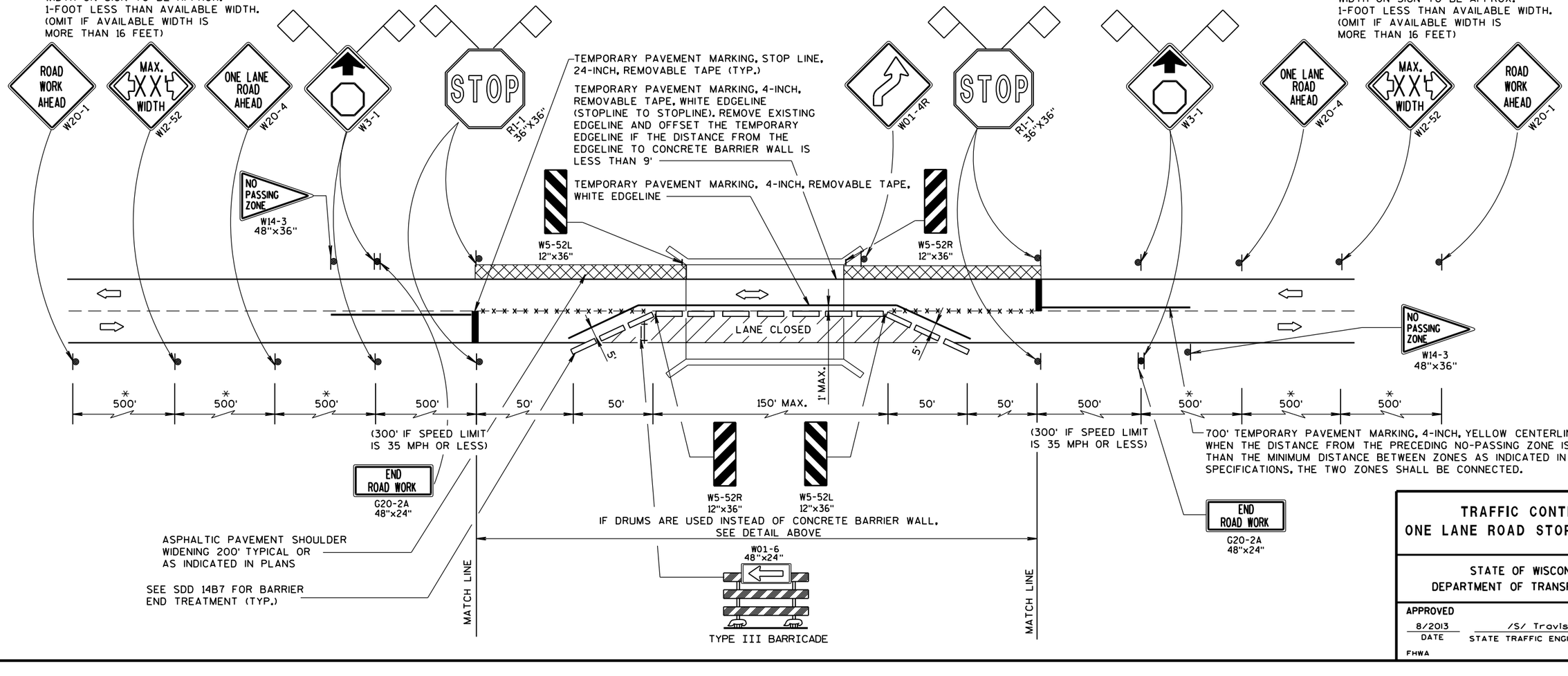

TYPE III BARRICADE

TRAFFIC CONTROL, ONE LANE ROAD STOP CONDITION

STATE OF WISCONSIN
DEPARTMENT OF TRANSPORTATION

APPROVED

8/2013 DATE

/S/ Travis Feltes
STATE TRAFFIC ENGINEER

SIGN

FHWA

6

S.D.D. 15 D 32-3

6

S.D.D. 15 D 32-3

TYPICAL ASSEMBLIES

J1-1

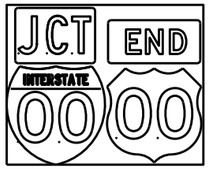

J1-2

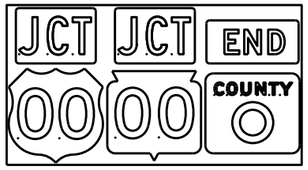

J1-3

J2-1

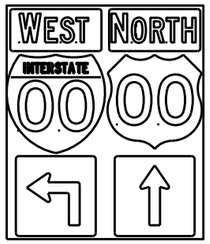

J2-2

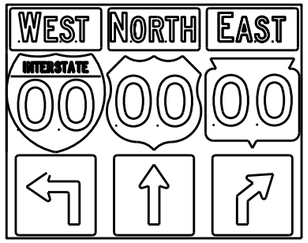

J2-3

JV

(Typical Vertical J-Assembly
See Note 10 and 11)

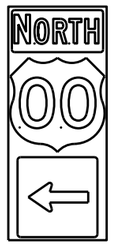

J3-1

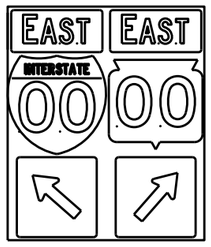

J3-2

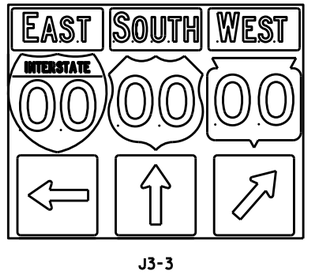

J3-3

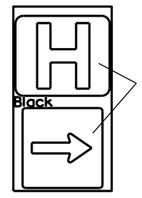

JH-1

J4-1

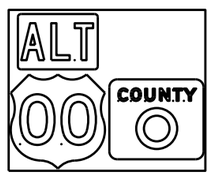

J4-2

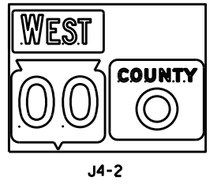

J4-2

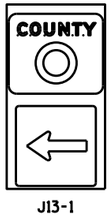

J13-1

J12-1

J32-1

J33-1

J23-1

J22-1

[blue background with interstate]

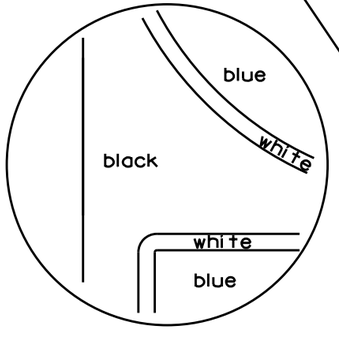

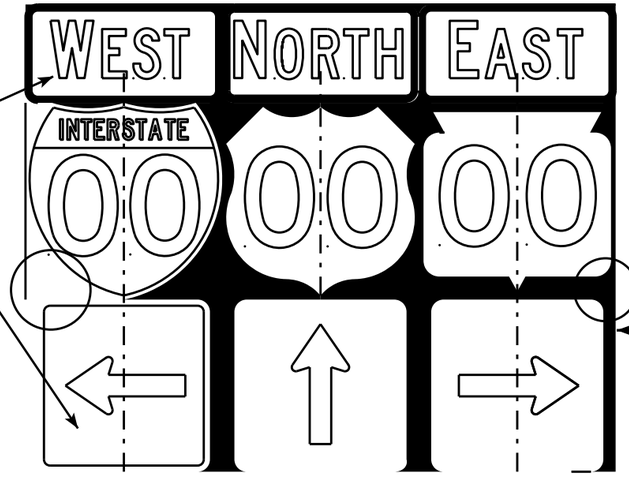

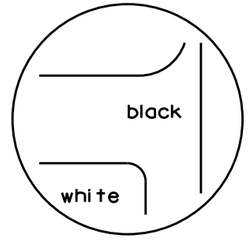

[black background]

NOTES

1. Signs are Type II - Type H Reflective - reference WIS DOT Standard Specification for HIGHWAY and STRUCTURE CONSTRUCTION latest edition.
2. Color:
   Background - Black Non-reflective
   Message - see Note 5
3. Message Series - See Note 5
4. Corners shall be square or rounded if base material is plywood. If base material is metal the corners shall be rounded.
5. The colors and message spacing on each marker shall be according to the applicable route marker panel specifications.
6. Certain marker heads require the component pieces to be the same color. As an example, all the components used with an M1-1 Interstate marker shall be blue.
7. Single panel j-assemblies shall only be used with route marker shields that are same size. If the route marker shields are different size use multiple piece component.
8. Route assemblies that have 24 inch route shields and have dimensions greater than 48 inches (both vertical and horizontal) shall have one horizontal splice between the arrows and route shields. Vertical splices shall not be used on route assemblies with a horizontal dimension of 144 inches or less. The contractor shall not use more than one vertical joint per sign and the joint shall be between route shields.
9. Route assemblies that have 36 inch shields and have dimensions greater than 48 inchs (both vertical and horizontal) shall have two horizontal splices. One horizontal splice shall be between the cardinal direction and route shields and the other horizontal splice shall be between the arrows and route shields. Vertical splices shall not be used on route assemblies with a horizontal dimension of 144 or less. The contractor shall not use more than one vertical joint per sign and the joint shall be between route shields.
10. All Vertical J Assemblies are given a Sign Code of JV
11. For JV Assemblies that have a mixture of Interstate and non Interstate shields, arrows and cardinals shall be white on blue.

ROUTE MARKERS & COMPONENTS
IN TYPICAL ASSEMBLIES

WISCONSIN DEPT OF TRANSPORTATION

APPROVED Matthew R Rauch
for State Traffic Engineer

DATE 2/06/14 PL... A2-1S.8

PROJECT NO: SHEET NO: E

FILE NAME : C:\CAEFiles\Projects\tr_stdplate\A21S.DGN PLOT DATE : 06-FEB-2014 14:10 PLOT BY : mscsja PLOT NAME :
WISDOT/CADDS SHEET 42

URBAN AREA

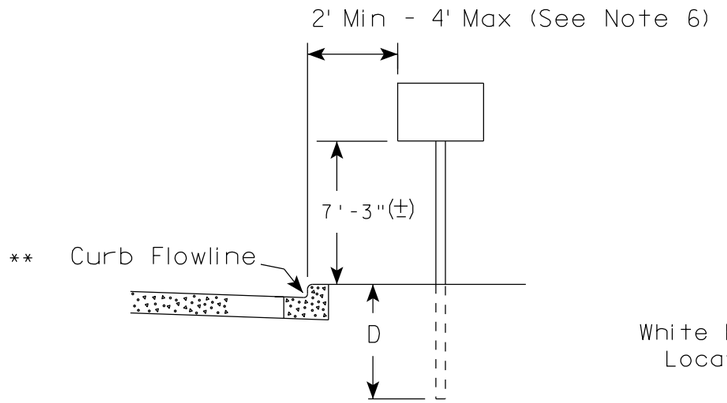

RURAL AREA (See Note 2)

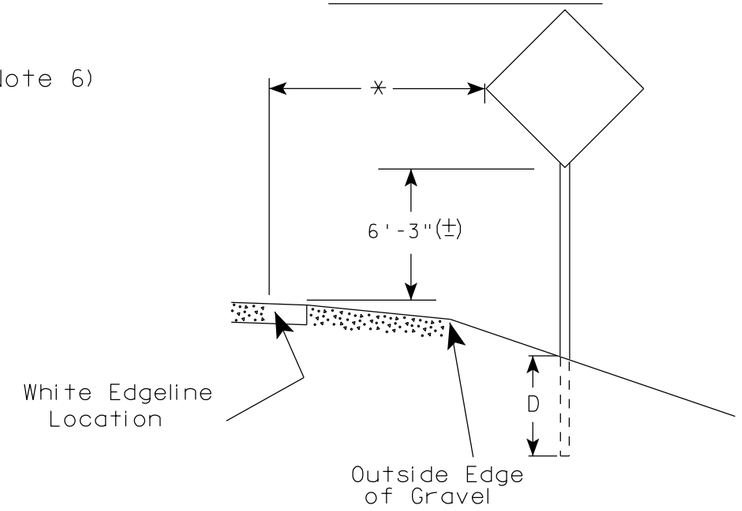

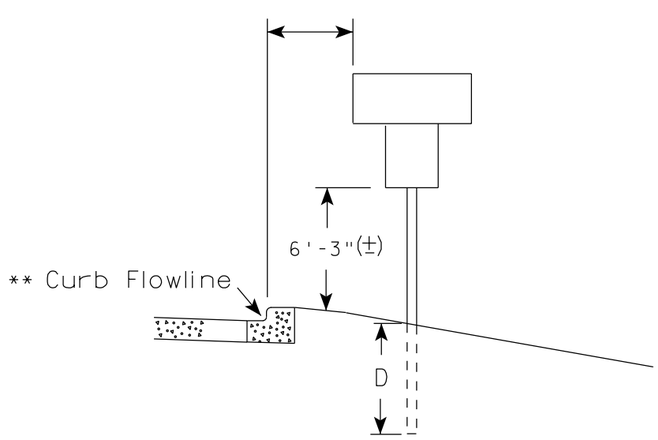

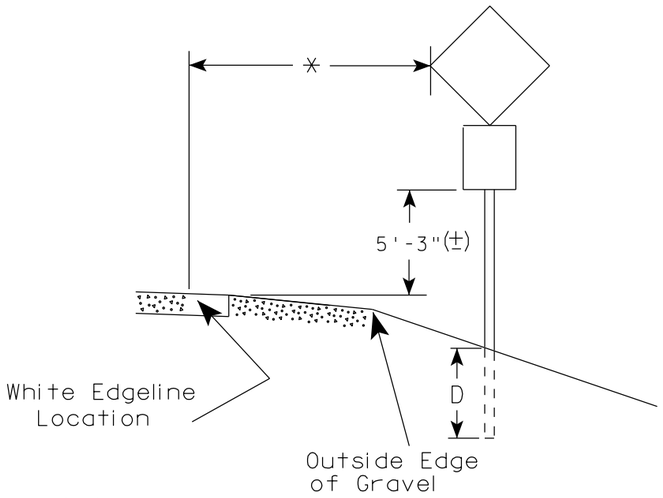

GENERAL NOTES

1. Signs wider than 4 feet, 20 sq.ft or larger, shall be mounted on multiple posts. Refer to plate A4-4.
2. If signs are mounted on barrier wall, see A4-10 sign plate.
3. For expressways and freeways, mounting height is 7'- 3" (±) or 6'-3" (±) depending upon existence of a sub-sign.
4. Minimum mounting height for J assemblies (A2-1S) is 7'-3" (±) or 6'-3" (±) per urban or rural detail respectively.
5. Minimum mounting height for signs mounted on traffic signal poles is 5'- 3" (±).
6. Offset distance shall be consistent with existing signs or consistent throughout length of project.
7. The (±) tolerance for mounting height is 3 inches.
8. Folding signs shall be mounted at a height of 5'-3" (±) or as directd by the Engineer.
9. The Double Arrow sign (W12-1) shall be mounted at a height of 2'-3" (±). The Chevron sign (W1-8), Roundabout Chevron panel (R6-4B), Enhanced Reference Markers, Clearance Markers (W5-52), Mile Markers (D10 series), In Road Object Markers (W5-54) & End of Road Markers (W5-56) shall be mounted at a height of 4'-3" (±).

POST EMBEDMENT DEPTH

Area of Sign Installation (Sq. Ft.)	D (Min)
20 or Less	4'
Greater than 20	5'

** The existence of curb and gutter does not in itself mandate the vertical clearance illustrated. That height is typically measured where there is sidewalk adjacent to the roadway or parking is permitted. In the absence of sidewalk vertical clearance is measured from the top of the curb. Offset of signs is measured from the flow line.

* 6 feet from edge of a paved shoulder or 12 feet from the edge of pavement (edge line location) or 2 feet from outside edge of gravel, whichever is greater unless directed by project engineer.

TYPICAL INSTALLATION OF PERMANENT TYPE II SIGNS ON SINGLE POSTS

WISCONSIN DEPT OF TRANSPORTATION

APPROVED Matthew R Rauch
for State Traffic Engineer

DATE 11/12/14 PLATE NO. A4-3.19

PROJECT NO:	HWY:	COUNTY:		SHEET NO:	E

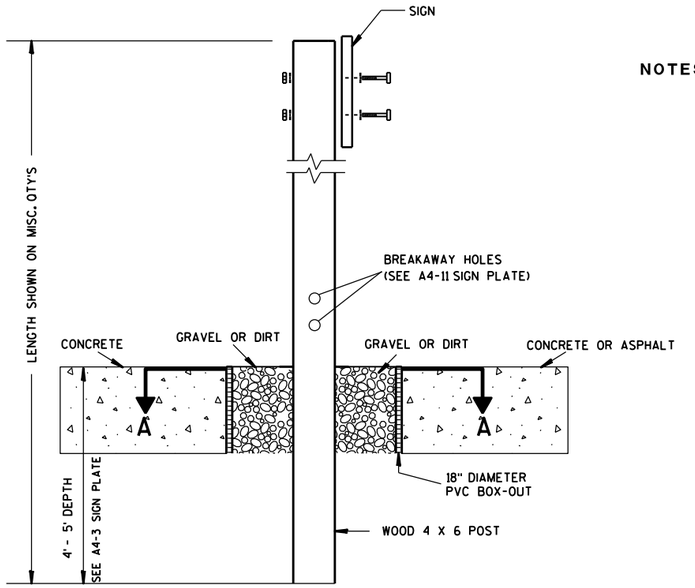

ELEVATION VIEW

DETAIL OF WOOD 4 X 6 SIGN POST IN BOX-OUT

NOTES:
1. ALL MATERIAL TO BE APPROVED BY ENGINEER PRIOR TO INSTALLATION
2. SEE SIGN PLATE A4-8 FOR SIGN HARDWARE REQUIREMENTS
3. 18 INCH X 18 INCH SQUARE BOX-OUTS MAY BE USED FOR INSTALLATIONS IN EXISTING CONCRETE OR ASPHALT LOCATIONS.

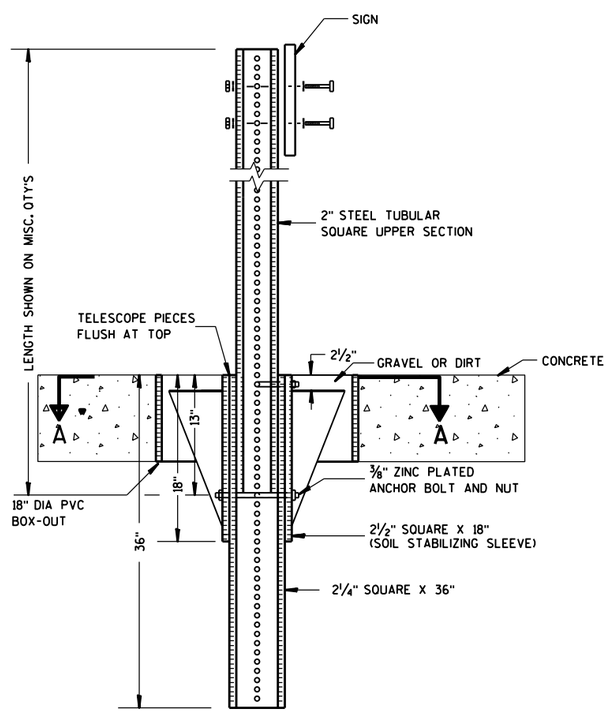

ELEVATION VIEW

DETAIL OF STEEL 2 X 2 SIGN POST IN BOX-OUT

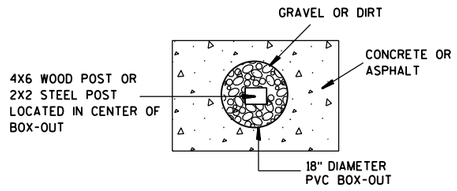

PLAN VIEW

FOR NEW CONCRETE/ASPHALT INSTALLATIONS

SIGN POST BOX-OUTS A4-3B

WISCONSIN DEPT OF TRANSPORTATION

APPROVED Matthew R Rauch
for State Traffic Engineer

DATE 1/27/14 PLATE NO. A4-3B.1

PROJECT NO:	HWY:	COUNTY:		SHEET NO:	E

FILE NAME : C:\CAEFiles\Projects\tr_stdplate\A43B.DGN PLOT DATE : 27-JAN-2014 09:48 PLOT BY : mscsja PLOT NAME : PLOT SCALE : 13.659812:1.000000 WISDOT/CADDS SHEET 42

URBAN AREA

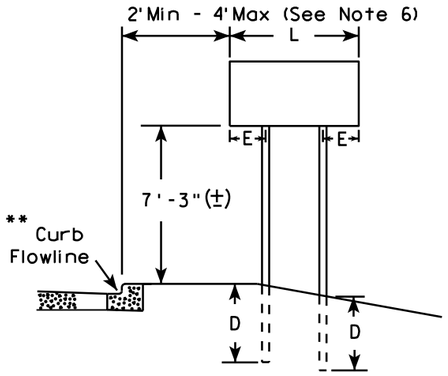

RURAL AREA (See Note 3)

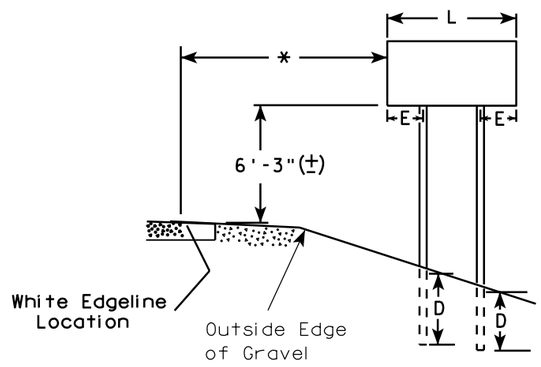

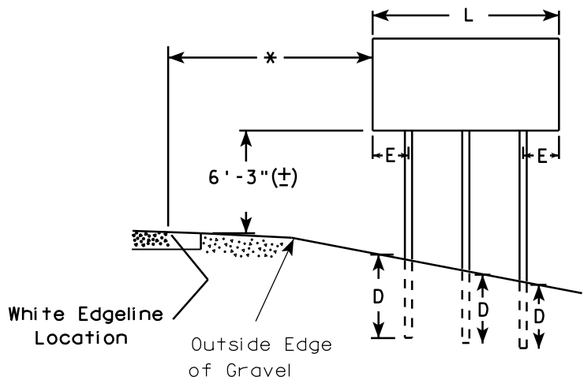

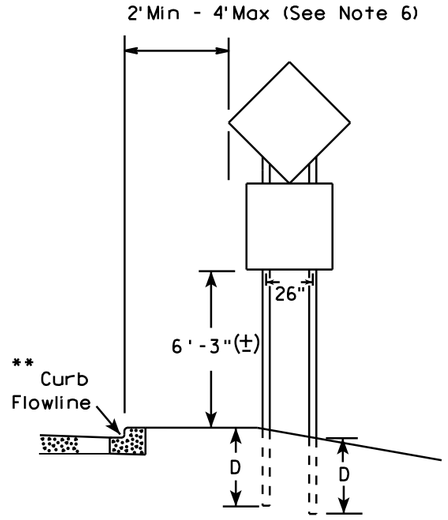

48" DIAMOND WARNING SIGN

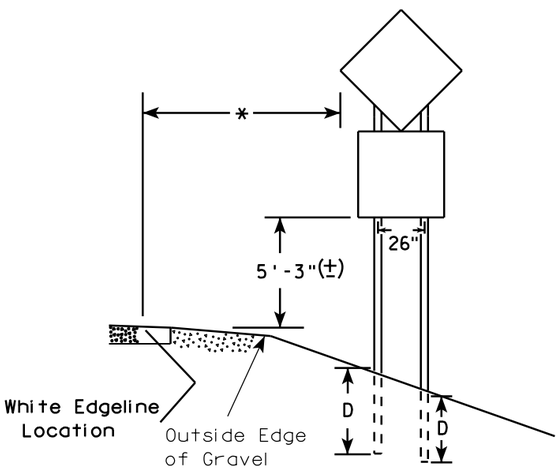

48" DIAMOND WARNING SIGN

GENERAL NOTES

1. For 3 or 4 post installations, individual post spacing shall be greater than 3'-6".
2. See tables below for required number of posts.
3. For expressways and freeways, mounting height is 7'-3" (±) or 6'-3" (±) depending upon existence of sub-sign.
4. The (±) tolerance for mounting height is 3 inches.
5. Minimum mounting height for J assemblies (A2-1S) is 7'-3" (±) or 6'-3" (±) per urban or rural detail respectively.
6. Offset distance shall be consistent with existing signs or consistent throughout length of project.
7. Folding signs shall be mounted at a height of 5'-3" (±) or as directed by the engineer.
8. The Double Arrow sign (W12-1) shall be mounted at a height of 2'-3" (±). The Chevron sign (W1-8), Roundabout Chevron panel (R6-4B), Clearance Markers (W5-52), Mile Markers (D10 series), In Road Object Markers (W5-54) & End of Road Markers (W5-56) shall be mounted at a height of 4"-3" (±).

* 6 feet from edge of a paved shoulder or 12 feet from the edge of pavement (edge line location) or 2 feet from outside edge of gravel, whichever is greater unless directed by project engineer.

** The existence of curb and gutter does not in itself mandate the vertical clearance illustrated. That height is typically measured where there is sidewalk adjacent to the roadway or parking is permitted. In the absence of sidewalk vertical clearance is measured from the top of the curb. Offset of signs is measured from the flow line.

*** See A4-3 sign plate for signs 4' or less in width or less than 20 S.F. in area.

SIGN SHAPE OTHER THAN DIAMOND (TWO POSTS REQUIRED)	
L	E
Greater than 48" Less than 60"	12"
60" to 120"	L/5

***

SIGN SHAPE OTHER THAN DIAMOND (THREE POSTS REQUIRED)	
L	E
Greater than 120" less than 168"	12"

SIGN SHAPE OTHER THAN DIAMOND (FOUR POSTS REQUIRED)	
L	E
168" and greater	12"

POST EMBEDMENT DEPTH

Area of Sign Installation (Sq. Ft.)	D (Min)
20 or Less	4'
Greater than 20	5'

TYPICAL INSTALLATION OF TYPE II SIGNS ON MULTIPLE POSTS

WISCONSIN DEPT OF TRANSPORTATION

APPROVED Matthew R Rauch
for State Traffic Engineer

DATE 11/12/14 PLATE NO. A4-4 13 152

PROJECT NO:	HWY:	COUNTY:		SHEET NO:	E

FILE NAME : C:\CAEFiles\Projects\tr_stdplate\A44.DGN PLOT DATE : 12-NOV-2014 14:01 PLOT BY : mscsja PLOT NAME : PLOT SCALE : 107.021305:1.000000

WISDOT/CADDS SHEET 42

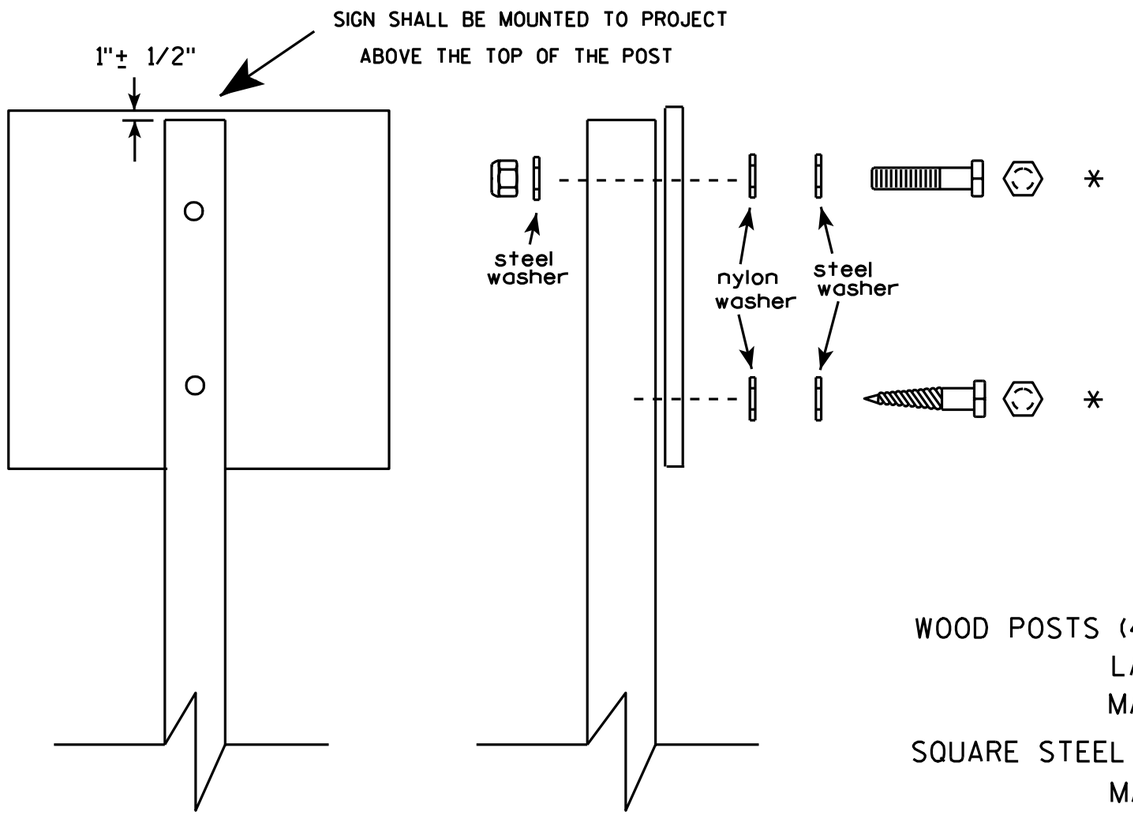

Nuts, bolts and lags used for mounting signs shall have hexagonal heads and shall be either :

a. Hot dip galvanized in accordance with ASTM Designation: A 153, Class D, or SC 3

b. Electro-galvanized in accordance with ASTM Designation : B 633, TYPE III, SC 3.

Threads on bolts and nuts shall be manufactured with sufficient allowance for the cadmium plate or galvanized coating to permit the nuts to run freely on the bolts.

WOOD POSTS (4" x 4" or 4" x 6")
LAG SCREWS - 3/8" X 3"
MACHINE BOLTS - 5/16" X 6-1/2" or 7" Length w/ nuts

SQUARE STEEL POSTS (2" x 2")
MACHINE BOLTS - 3/8" X 3-1/4" Length w/ nuts
RIVETS - 9/32 " (6605-9-6) BULB-TITE, TRI-FOLD, ALUMINUM BODY/MANDREL
O.D. FLANGE .720-.765 INCH, GRIP RANGE .042-.375 INCH

WASHERS (ALL POSTS) -
1-1/4" O.D. X 3/8" I.D. X 1/16" STEEL
1-1/4" O.D. X 3/8" I.D. X .080 NYLON for all Type H signs.

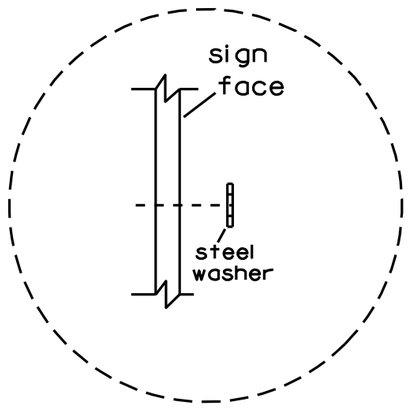

Washer Placement when Sign Has Other Than Type H or Type F Face

* Two different fastening systems are shown for illustration purposes. On any individual sign, either one or the other system shall be used. Actual number of fasteners per sign varies with the sign area, but normally there are two. For a single post installation, all signs greater than 9 sq. ft. require the use of 3 fasteners.

ATTACHMENT OF SIGNS TO POSTS

WISCONSIN DEPT OF TRANSPORTATION

APPROVED Matthew R Rauch
for State Traffic Engineer

DATE 3/23/10 PLATE NO. A4-8.7

7

7

PROJECT NO:

SHEET NO: 153 E

TELESCOPIC TUBING ANCHORS
TWO PIECE SYSTEM

2 1/4 " SQUARE
12 GAUGE
PERFORATED
GALVANIZED FINISH

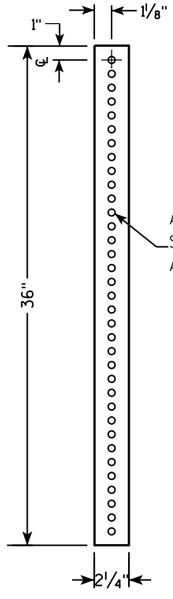

2 1/2 " SQUARE
12 GAUGE
OMNI-DIRECTIONAL
PERFORATED
SOIL STABILIZING SLEEVE
GALVANIZED FINISH

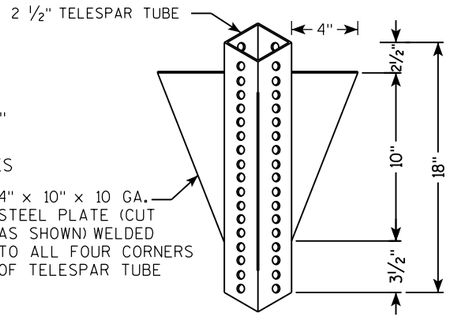

DETAIL OF TUBULAR STEEL SIGN POST
(IN POURED CONCRETE OR ASPHALT)

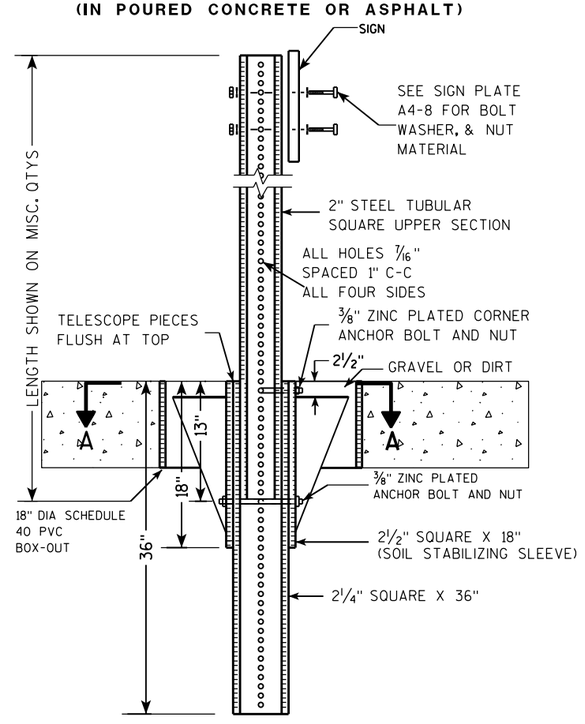

DETAIL OF TUBULAR STEEL SIGN POST
(IN LOCATIONS OTHER THAN POURED CONCRETE OR ASPHALT)

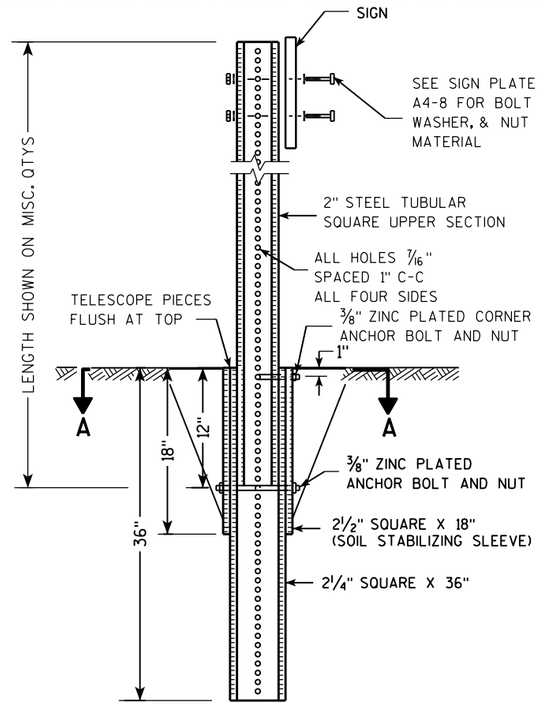

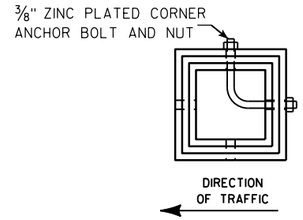

SECTION A-A

Area of Sign Installation (Sq. Ft.)	Number of Required Posts
9 or less	1
Greater than 9 less than or equal to 18	2
Greater than 18 less than or equal to 27	3

Signs wider than 3 feet or larger than 9 sq. ft shall be mounted on multiple posts (see above table).

TUBULAR STEEL
SIGN POST
A4-9

WISCONSIN DEPT OF TRANSPORTATION

APPROVED Matthew R Rauch
for State Traffic Engineer

DATE 2/05/15 PLATE 154 A4-9.9

PROJECT NO:	HWY:	COUNTY:		SHEET NO:	E

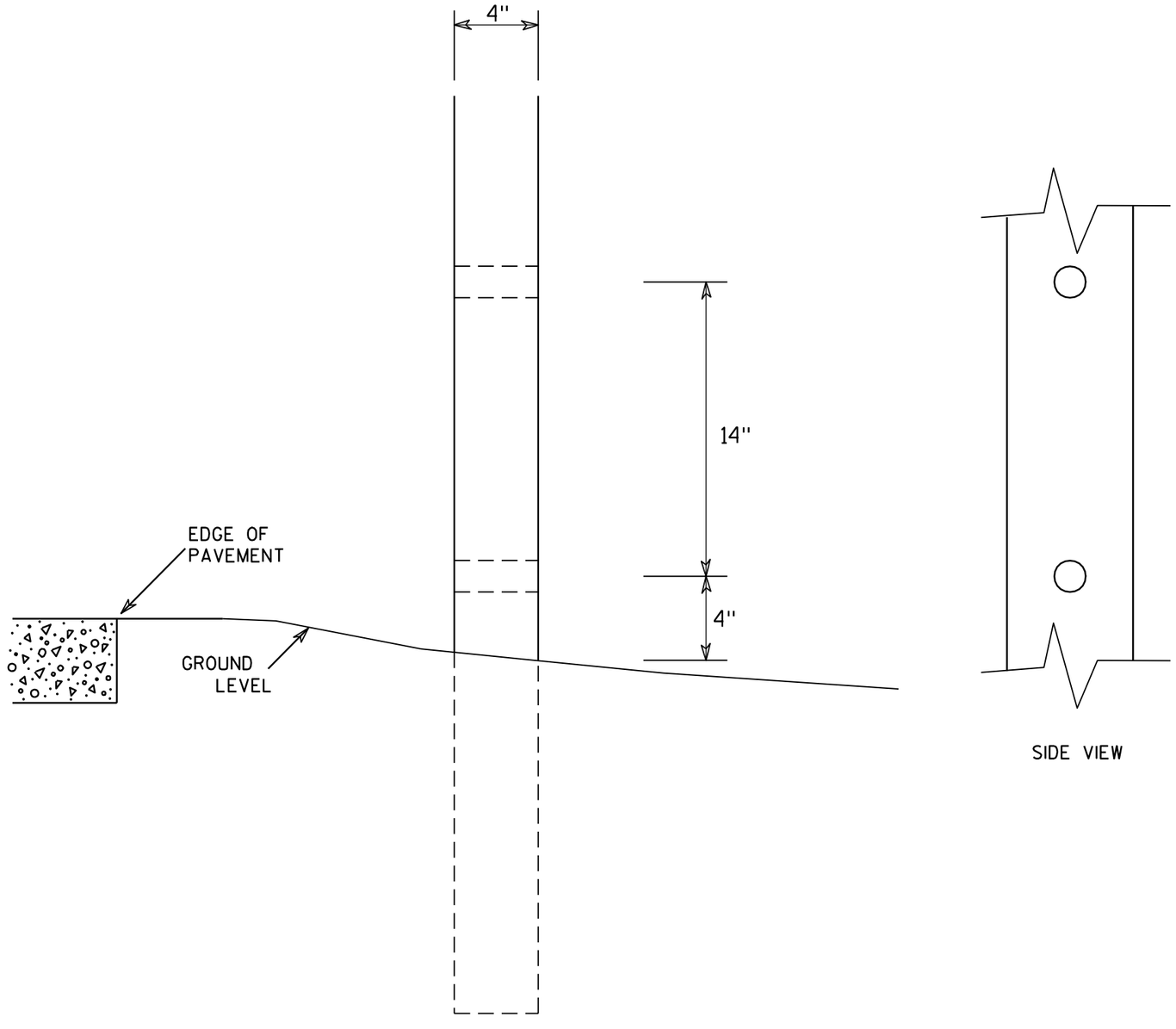

SIDE VIEW

GENERAL NOTES

1. All 4 x 6 Wood Posts shall be modified by having two 1½" diameter holes drilled perpendicular to the roadway centerline.

7

7

4 X 6 WOOD POST MODIFICATIONS

WISCONSIN DEPT OF TRANSPORTATION

APPROVED Chester J Spang for State Traffic Engineer

DATE 3/27/97 PLATE NO. A4-11.2

PROJECT NO:	HWY:	COUNTY:		SHEET NO: 155	E

BANDING

SINGLE SIGN

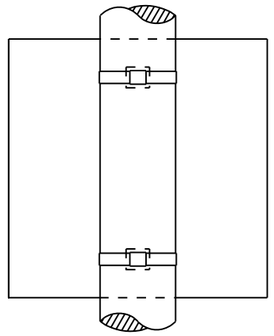

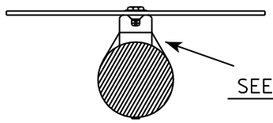

"J" ASSEMBLY

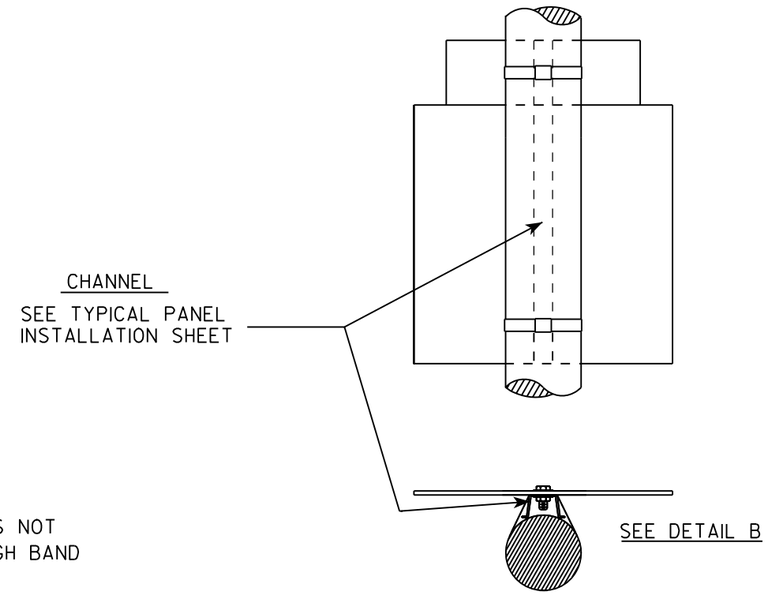

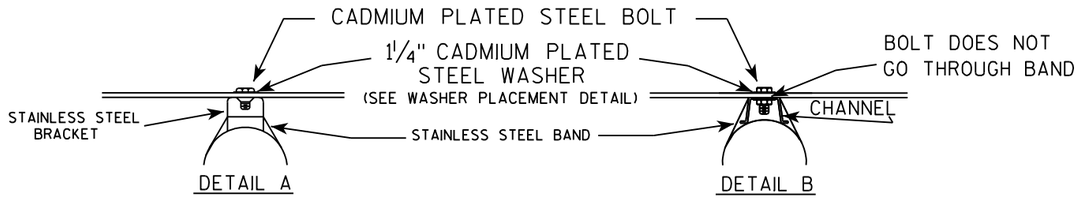

WASHER PLACEMENT

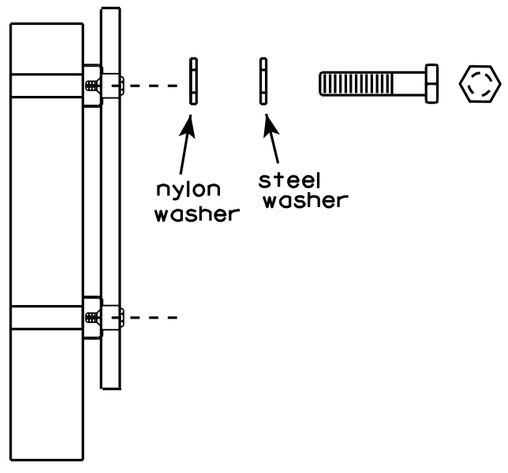

WASHERS (ALL POSTS) -
1-1/4" O.D. X 3/8" I.D. X 1/16" STEEL
1-1/4" O.D. X 3/8" I.D. X .080 NYLON
FOR ALL TYPE H SIGNS

GENERAL NOTES

1. Any sign over 3 feet in width shall use the V-Block banding method. See A5-10 standard plate.
2. Signs 3 feet or greater in height shall have three bracket bands installed. Signs less than 3 feet in height shall have two bracket bands installed.
3. Banding and assembly bracket shall be stainless steel. All bands shall be ¾" in width and 0.025" thickness.

STANDARD SIGN
SIGN BANDING DETAILS

WISCONSIN DEPT OF TRANSPORTATION

APPROVED Matthew R Rauch
for State Traffic Engineer

DATE 8/16/13 PLATE NO. A5-9.3

PROJECT NO:	HWY:	COUNTY:		SHEET NO: 156	E

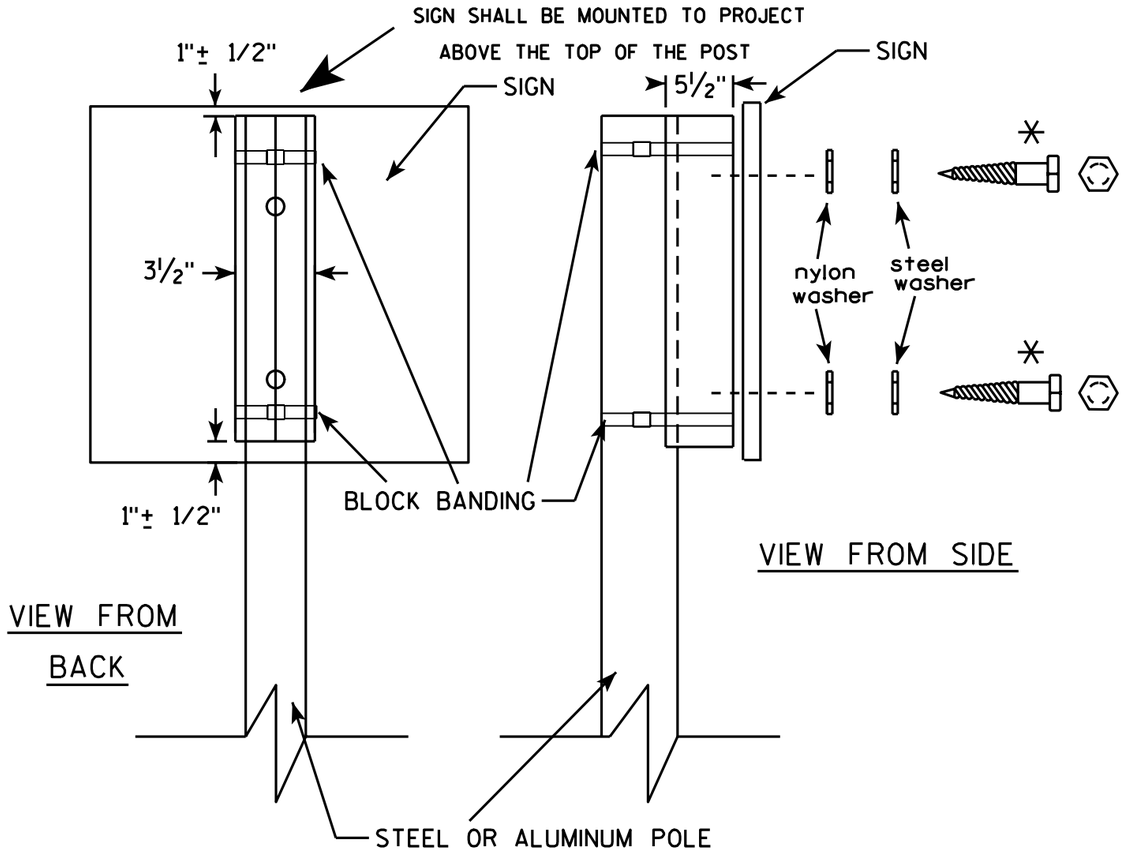

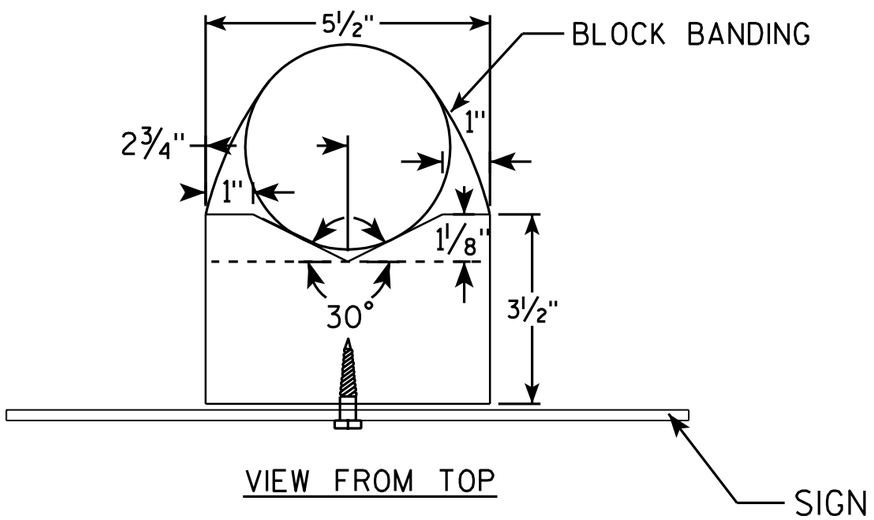

GENERAL NOTES

1. WOOD 4"X6" POST MATERIAL SHALL CONFORM TO 507.2.2 OF THE WisDOT STANDARD SPECIFICATIONS
2. BLOCK BANDING AND CLIPS SHALL BE STAINLESS STEEL, ¾" WIDTH AND 0.025" THICKNESS
3. SIGNS 3' OR GREATER IN HEIGHT SHALL UTILIZE 3 BLOCK BANDS. SIGNS UNDER 3' IN HEIGHT SHALL UTILIZE 2 BLOCK BANDS
4. ACTUAL NUMBER OF FASTENERS PER SIGN VARIES WITH THE SIGN AREA, BUT NORNALLY THERE ARE TWO. FOR SIGNS GREATER THAN 9 S.F. 3 FASTENERS SHALL BE USED.
5. ALL SIGN MOUNTING BOLTS AND WASHERS SHALL BE EITHER:
   a. Hot dip or mechanically galvanized in accordance with ASTM Designation: A 153, Class D, or
   b. Cadmium plated in accordance with ASTM Designation : B 766 TYPE 3, Class 12, or
   c. Electro-galvanized in accordance with ASTM Designation : B 633, TYPE III, SC 3.
6. ALL BOLTS SHALL HAVE HEXAGONAL HEADS.
7. STEEL WASHERS SHALL BE 1¼" O.D. X ⅜" I.D. X 1/16"
8. NYLON WASHERS SHALL BE 1¼" O.D. X ⅜" I.D. X .080 FOR TYPE H OR TYPE F FACE SIGN

✳ LAG BOLTS SHALL BE ⅜" X 2½"

BLOCK BANDING DETAIL (V-BLOCK OPTION)

WISCONSIN DEPT OF TRANSPORTATION

APPROVED Matthew R Rauch
for State Traffic Engineer

DATE 7/12/07 PLATE NO. A5-10.1

PROJECT NO:

SHEET NO: 157 E

FILE NAME : C:\Users\Projects\tr_stdplate\A510.dgn PLOT DATE : 06-AUG-2007 13:37 PLOT BY : ditjph

WISDOT/CADDS SHEET 42

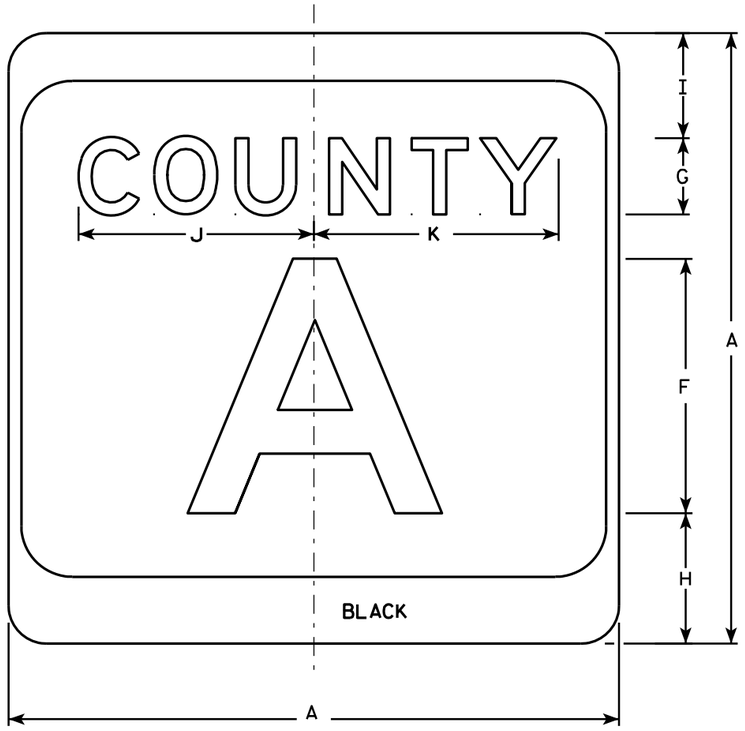

M1-5A

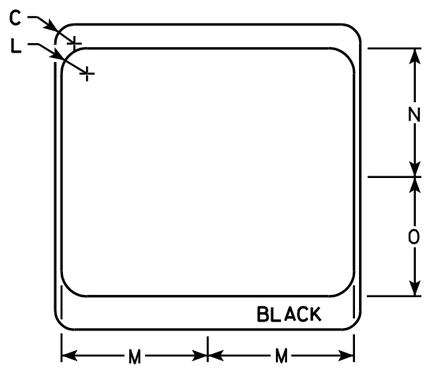

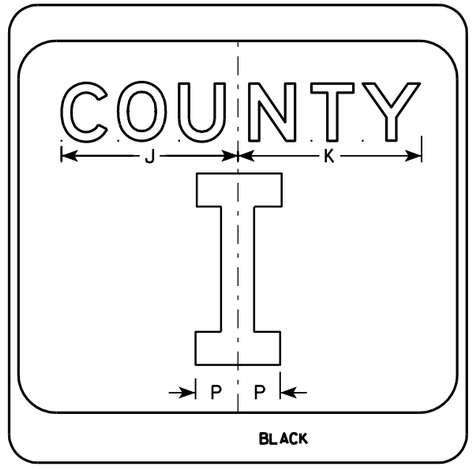

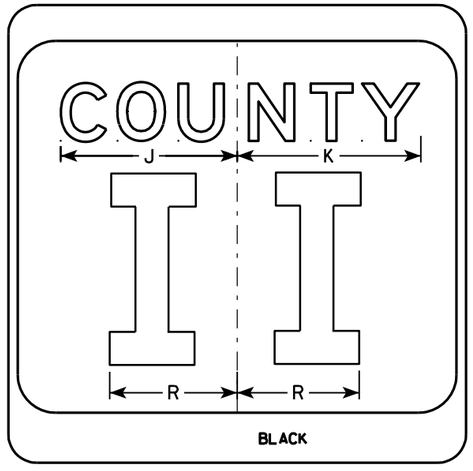

NOTES

1. Sign is Type II - see Note 7 - reference WIS DOT Standard Specification for HIGHWAY and STRUCTURE CONSTRUCTION latest edition.
2. Color:
   Background - White & Black - See Note 7
   Message - Black
3. Message Series - see Note 5
4. Corners may be square or rounded when base material is plywood but borders shall be rounded as shown. When base material is metal, the corners and borders shall be rounded.
5. Message Series E for 1 letter.
   Message Series D for 2 letters unless message is too big then Series C.
   Message Series C for 3 letters unless message is too big then Series B.
6. Substitute appropriate letters & optically center to achieve proper balance.
7. Permanent Signs
   Background - Type H Reflective
   Detour or temporary Signs
   Background - Reflective

SIZE	A	B	C	D	E	F	G	H	I	J	K	L	M	N	O	P	Q	R	S	T	U	V	W	X	Y	Z	Area sq. ft.
1																											
2	24		1 1/2			10	3	5 1/8	4 1/8	9 1/4	9 5/8	2	11 1/2	10 1/8	9 3/8	2 1/4		6 5/8									4.0
3	36		2 1/4			16	4	7 5/8	5 5/8	12 1/4	12 7/8	3	17 1/8	15 1/4	14	3 3/8		10									9.0
4	36		2 1/4			16	4	7 5/8	5 5/8	12 1/4	12 7/8	3	17 1/8	15 1/4	14	3 3/8		10									9.0
5	36		2 1/4			16	4	7 5/8	5 5/8	12 1/4	12 7/8	3	17 1/8	15 1/4	14	3 3/8		10									9.0

CTH MARKER
M1-5A FOR ASSEMBLIES

WISCONSIN DEPT OF TRANSPORTATION

APPROVED Matthew R Rauch
for State Traffic Engineer

DATE 9/27/11 PLATE NO. M1-5A.8

PROJECT NO:	HWY:	COUNTY:		SHEET NO: 158	E

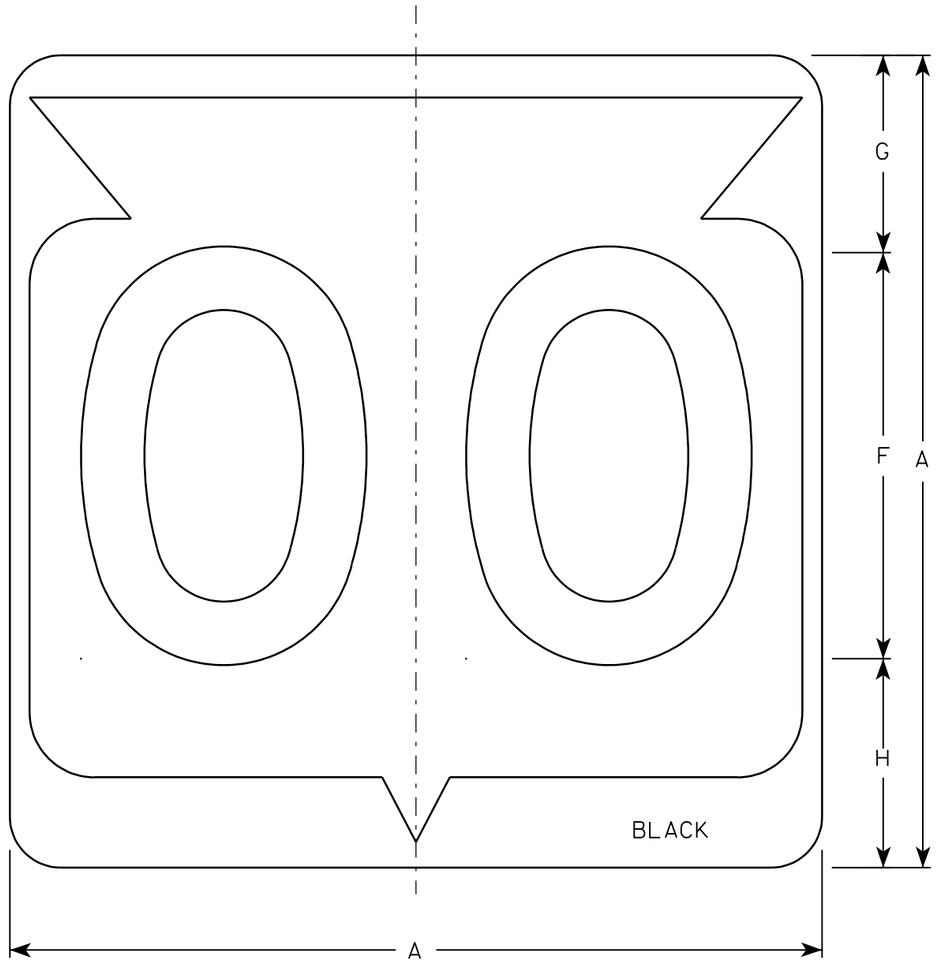

M1-6

NOTES

1. Sign is Type II - See Note 6 - reference WIS DOT Standard Specification for HIGHWAY and STRUCTURE CONSTRUCTION latest edition.
2. Color:
   Background - White & Black - See Note 6
   Message - Black
3. Message Series - See note 5
4. Corners may be square or rounded when base material is plywood but borders shall be rounded as shown. When base material is metal, the corners and borders shall be rounded.
5. Substitute appropriate Series numerals and adjust spacing as per plate A10-1.
6. Permanent Signs
   Background - Type H Reflective
   Detour or temporary Signs
   Background - Reflective

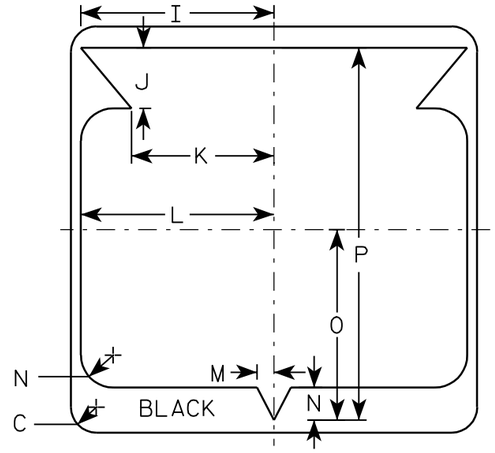

Metric equivalent for this sign is:

SIZE	
1	
2	600 mm X 600 mm
3	900 mm X 900 mm
4	900 mm X 900 mm
5	900 mm X 900 mm

SIZE	A	B	C	D	E	F	G	H	I	J	K	L	M	N	O	P	Q	R	S	T	U	V	W	X	Y	Z	Area sq. ft.	Area m2
1																												
2	24		1 1/2			12	5 1/2	6 1/2	10 1/4	2 1/2	8 7/8	11 1/2	1	1 7/8	11 1/4	21 7/8											4.0	.36
3	36		2 1/4			18	8 3/4	9 1/4	15 3/8	5 3/8	12 5/8	17 1/8	1 1/2	2 7/8	16 7/8	33											9.0	.81
4	36		2 1/4			18	8 3/4	9 1/4	15 3/8	5 3/8	12 5/8	17 1/8	1 1/2	2 7/8	16 7/8	33											9.0	.81
5	36		2 1/4			18	8 3/4	9 1/4	15 3/8	5 3/8	12 5/8	17 1/8	1 1/2	2 7/8	16 7/8	33											9.0	.81

STATE ROUTE MARKER M1-6 FOR ASSEMBLIES

WISCONSIN DEPT OF TRANSPORTATION

APPROVED Chester J Spang for State Traffic Engineer

DATE 3/20/02 PLATE NO. M1-6.9

PROJECT NO:	HWY:	COUNTY:		SHEET NO: 159	E

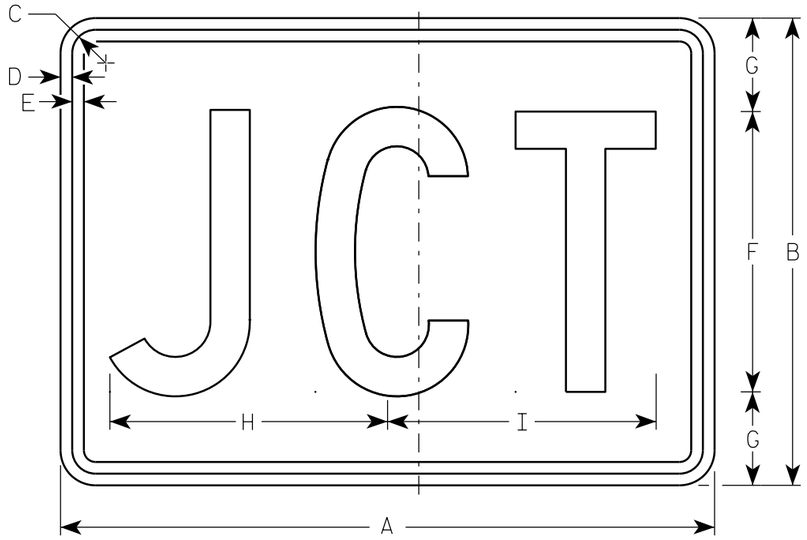

M2-1
MK2-1
MM2-1
MN2-1
MR2-1

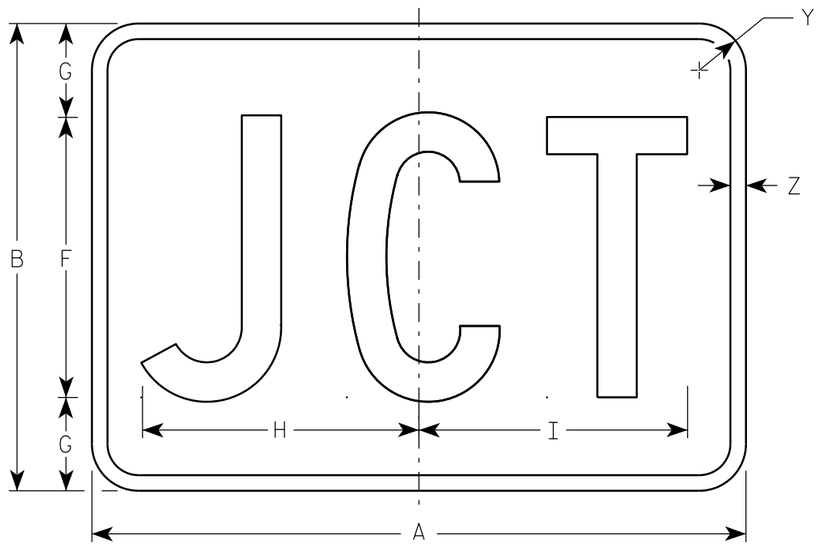

MB2-1

NOTES

1. Sign is Type II - Type H
2. Color:
   Background - See note 5
   Message - See note 5
3. Message Series - C
4. Corners may be square or rounded when base material is plywood but borders shall be rounded as shown. When base material is metal, the corners and borders shall be rounded.
5. M2-1 Background - White
   Message - Black
   MB2-1 Background - Blue
   Message - White
   MK2-1 Background - Green
   Message - White
   MM2-1 Background - White
   Message - Green
   MN2-1 Background - Brown
   Message - White
   MR2-1 Background - Brown
   Message - Yellow

SIZE	A	B	C	D	E	F	G	H	I	J	K	L	M	N	O	P	Q	R	S	T	U	V	W	X	Y	Z	Area sq. ft.
1																											
2	21	15	1 1/8	3/8	3/8	9	3	8 7/8	8 5/8																1 1/2	1/2	2.20
3	30	21	1 1/8	3/8	3/8	13	4	12 7/8	12 3/8																1 1/2	1/2	4.40
4	30	21	1 1/8	3/8	3/8	13	4	12 7/8	12 3/8																1 1/2	1/2	4.40
5	30	21	1 1/8	3/8	3/8	13	4	12 7/8	12 3/8																1 1/2	1/2	4.40

STANDARD SIGN
M2-1

WISCONSIN DEPT OF TRANSPORTATION

APPROVED Matthew R Rauch
For State Traffic Engineer

DATE 6/30/14 PLATE 160 12-1.11

PROJECT NO:	HWY:	COUNTY:		SHEET NO:	E

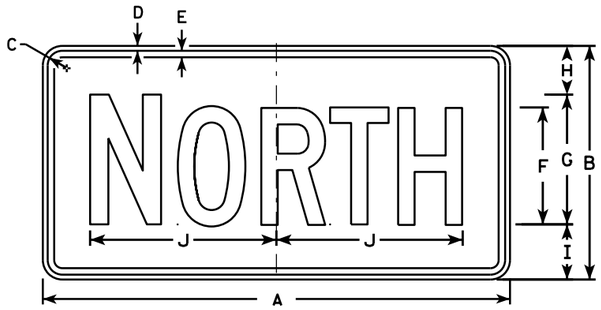

M3-1
MK3-1
MM3-1
MN3-1

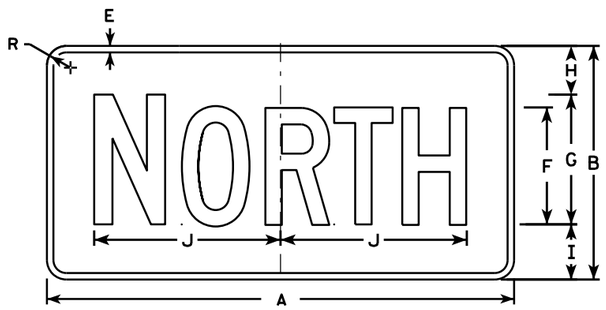

MB3-1

M3-2
MK3-2
MM3-2
MN3-2

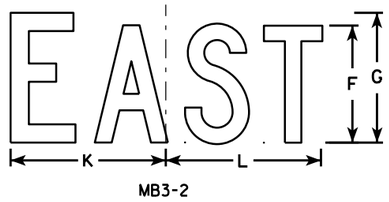

MB3-2

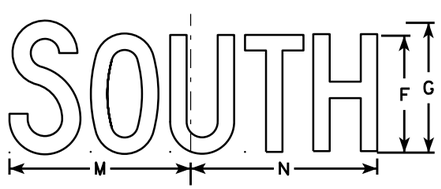

M3-3
MK3-3
MM3-3
MN3-3

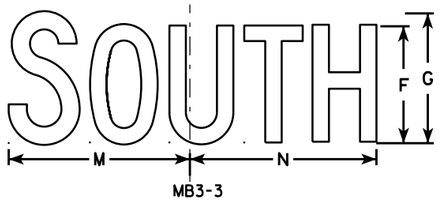

MB3-3

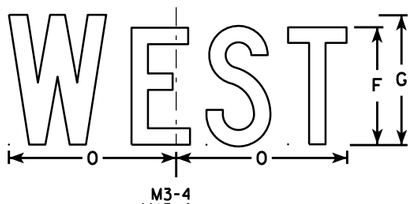

M3-4
MK3-4
MM3-4
MN3-4

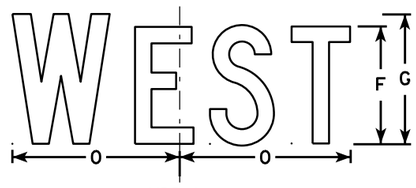

MB3-4

NOTES

1. All Signs Type II - Type H
2. Color:
   Background - See note 5
   Message - See note 5
3. Message Series - C
4. Corners may be square or rounded when base material is plywood but borders shall be rounded as shown. When base material is metal, the corners and borders shall be rounded.
5. M3-1 thru M3-4 Background - White
   Message - Black
   MB3-1 thru MB3-4 Background - Blue
   Message - White
   MK3-1 thru MK3-4 Background - Green
   Message - White
   MM3-1 thru MM3-4 Background - White
   Message - Green
   MN3-1 thru MN3-4 Background - Brown
   Message - White
6. Note the first letter of each direction is larger than the remainder of the message.

SIZE	A	B	C	D	E	F	G	H	I	J	K	L	M	N	O	P	Q	R	S	T	U	V	W	X	Y	Z	Area sq. ft.
1																											
2	24	12	1 1/8	3/8	3/8	6	7	2 1/4	2 3/4	10 1/4	7 7/8	8 3/8	10 1/4	9 3/4	8 3/4			1 1/2									2.00
3	36	18	1 1/8	3/8	1/2	9	10	3 3/4	4 1/4	14 3/8	12	12 1/8	14	14 1/8	13			1 1/2									4.5
4	36	18	1 1/8	3/8	1/2	9	10	3 3/4	4 1/4	14 3/8	12	12 1/8	14	14 1/8	13			1 1/2									4.5
5	36	18	1 1/8	3/8	1/2	9	10	3 3/4	4 1/4	14 3/8	12	12 1/8	14	14 1/8	13			1 1/2									4.5

STANDARD SIGNS
M3-1 thur M3-4
SERIES

WISCONSIN DEPT OF TRANSPORTATION

APPROVED Matthew R Rauch for State Traffic Engineer

DATE 6/30/14 PLATE NO M3-1.13

PROJECT NO: | HWY: | COUNTY: | | SHEET NO: E

7

7

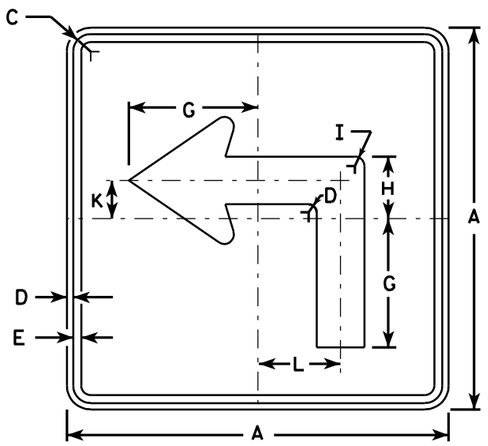

M5-1L
MK5-1L
MM5-1L
MO5-1L
MP5-1L
MR5-1L

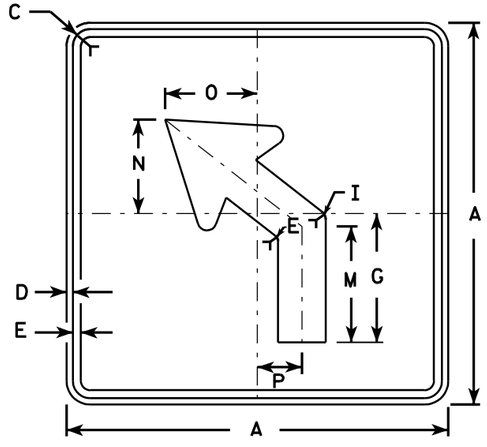

M5-2L
MK5-2L
MM5-2L
MO5-2L
MP5-2L
MR5-2L

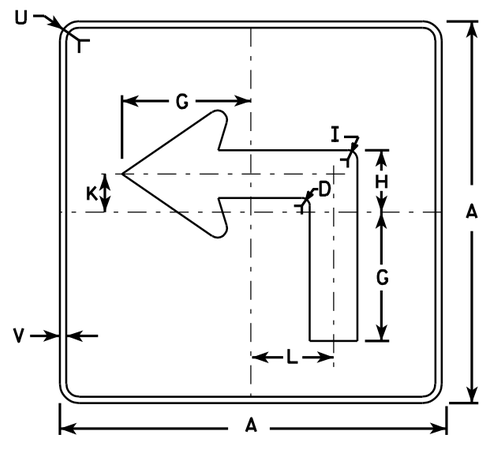

MB5-1L
MG5-1L
MN5-1L

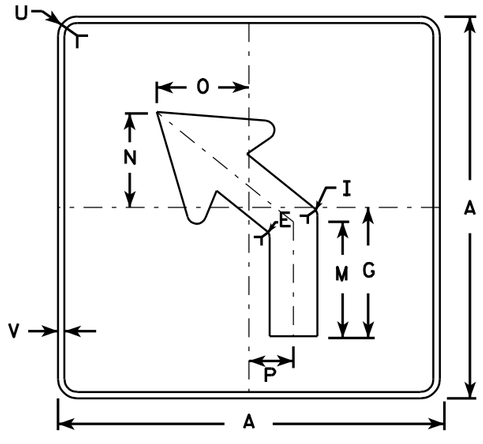

MB5-2L
MG5-2L
MN5-2L

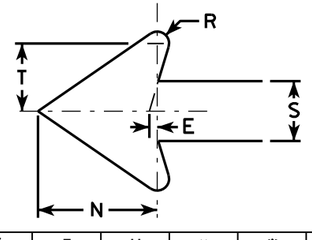

NOTES

1. Signs are Type II - See Note 4 - reference WIS DOT Standard Specification for HIGHWAY and STRUCTURE CONSTRUCTION latest edition.
2. Color:
   Background - See note 4
   Message - See note 4
3. Corners may be square or rounded when base material is plywood but borders shall be rounded as shown. When base material is metal, the corners and borders shall be rounded.
4. M5-1 and M5-2 Background - White - Type H Reflective
   Message - Black
   MB5-1 and MB5-2 Background - Blue
   Message - White - Type H Reflective
   MG5-1 and MG5-2 Background - Green
   Message - White - Type H Reflective
   MK5-1 and MK5-2 Background - Green
   Message - White Type H Reflective
   MM5-1 and MM5-2 Background - White - Type H Reflective
   Message - Green
   MN5-1 and MN5-2 Background - Brown
   Message - White - Type H Reflective
   MO5-1 and MO5-2 Background - Orange - Type F Reflective
   Message - Black
   MP5-1 and MP5-2 Background - White - Type H Reflective
   Message - Blue
   MR5-1 and MR5-2 Background - Brown
   Message - Yellow - Type H Reflective
5. M5-1R same as M5-1L except arrow points right.
6. M5-2R same as M5-2L except arrow tilts right.

SIZE	A	B	C	D	E	F	G	H	I	J	K	L	M	N	O	P	Q	R	S	T	U	V	W	X	Y	Z	Area sq. ft.
1																											
2	21		1 1/8	3/8	3/8		7	3 3/8	5/8		2 1/8	4 1/2	6 3/8	5 1/4	5	2 1/2		1/2	2 5/8	3	1 1/2	1/2					3.06
3	30		1 3/8	1/2	5/8		10 1/8	4 1/8	7/8		3	6 1/2	9 1/8	7 1/2	7 1/4	3 1/2		3/4	3 3/4	4 1/4	1 7/8	1/2					6.25
4	30		1 3/8	1/2	5/8		10 1/8	4 1/8	7/8		3	6 1/2	9 1/8	7 1/2	7 1/4	3 1/2		3/4	3 3/4	4 1/4	1 7/8	1/2					6.25
5	30		1 3/8	1/2	5/8		10 1/8	4 1/8	7/8		3	6 1/2	9 1/8	7 1/2	7 1/4	3 1/2		3/4	3 3/4	4 1/4	1 7/8	1/2					6.25

STANDARD SIGN
M5-1 & M5-2

WISCONSIN DEPT OF TRANSPORTATION

APPROVED Matthew R Rauch
for State Traffic Engineer

DATE 7/29/13 PLATE NO. M5-1.12

PROJECT NO: | HWY: | COUNTY: | SHEET NO: 162 | E

7

FILE NAME : C:\CAEFiles\Projects\tr_stdplate\M51.DGN PLOT DATE : 29-JUL-2013 13:34 PLOT BY : mscj9h PLOT NAME : PLOT SCALE : 11.908552:1.000000
WISDOT/CADDS SHEET 42

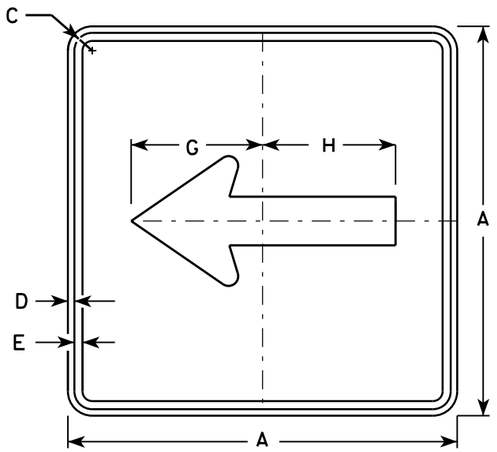

M6-1
MK6-1
MM6-1
MN6-1
MO6-1
MP6-1
MR6-1

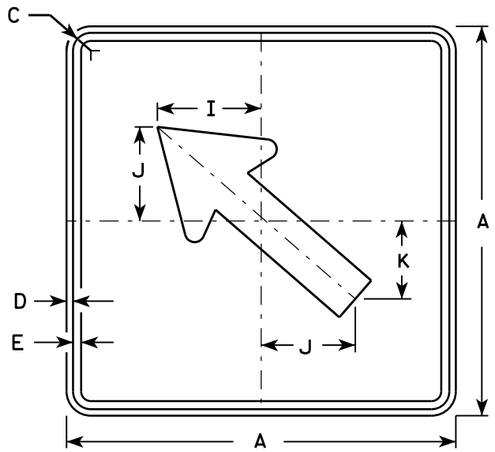

M6-2
MK6-2
MM6-2
MN6-2
MO6-2
MP6-2
MR6-2

NOTES

1. Signs are Type II - Type H except as Shown
2. Color:
   Background - See note 4
   Message - See note 4
3. Corners may be square or rounded when base material is plywood but borders shall be rounded as shown. When base material is metal, the corners and borders shall be rounded.
4. M6-1 and M6-2 Background - White
   Message - Black
   MB6-1 and MB6-2 Background - Blue
   Message - White
   MG6-1 and MG6-2 Background - Green
   Message - White
   MK6-1 and MK6-2 Background - Green
   Message - White
   MM6-1 and MM6-2 Background - White
   Message - Green
   MN6-1 and MN6-2 Background - Brown
   Message - White
   MO6-1 and MO6-2 Background - Orange - Type F Reflective
   Message - Black
   MP6-1 and MP6-2 Background - White
   Message - Blue
   MR6-1 and MR6-2 Background - Brown
   Message - Yellow

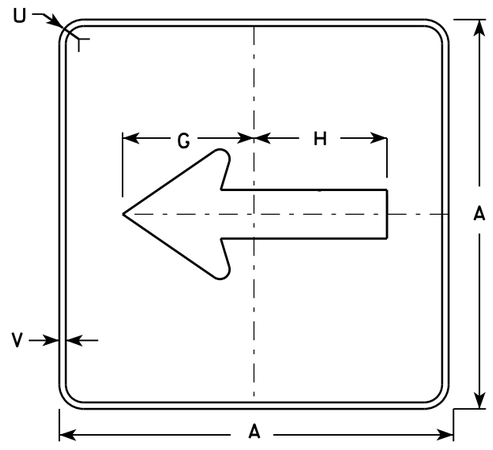

MB6-1

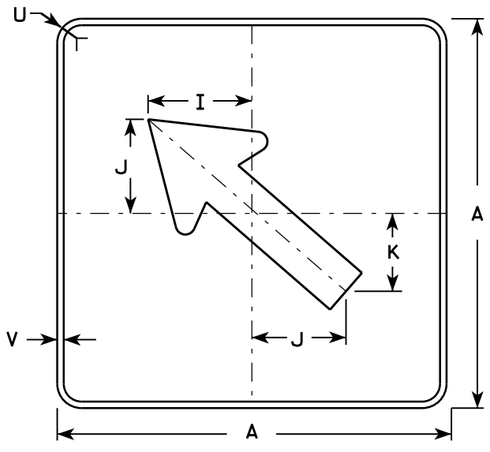

MB6-2

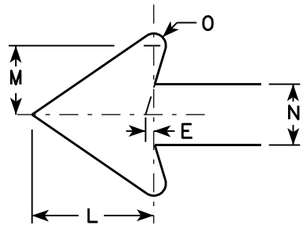

SIZE	A	B	C	D	E	F	G	H	I	J	K	L	M	N	O	P	Q	R	S	T	U	V	W	X	Y	Z	Area sq. ft.
1																											
2	21		1 1/8	3/8	3/8		7 1/2	7 1/8	5 5/8	5	4 1/4	5 1/4	3	2 5/8	1/2						1 1/2	1/2						3.06
3	30		1 3/8	1/2	5/8		10 3/4	10 1/4	8	7 1/4	6	7 1/2	4 1/4	3 3/4	3/4						1 7/8	1/2						6.25
4	30		1 3/8	1/2	5/8		10 3/4	10 1/4	8	7 1/4	6	7 1/2	4 1/4	3 3/4	3/4						1 7/8	1/2						6.25
5	30		1 3/8	1/2	5/8		10 3/4	10 1/4	8	7 1/4	6	7 1/2	4 1/4	3 3/4	3/4						1 7/8	1/2						6.25

STANDARD SIGN M6-1 & M6-2 SERIES

WISCONSIN DEPT OF TRANSPORTATION

APPROVED Matthew R Rauch
for State Traffic Engineer

DATE 7/03/14 PLATE M6-1.14

PROJECT NO: | HWY: | COUNTY: | SHEET NO: E

7

FILE NAME : C:\CAEFiles\Projects\tr_stdplate\M61.DGN PLOT DATE : 03-JUL-2014 14:28 PLOT BY : mscsja PLOT NAME : PLOT SCALE : 11.675051:1.000000
WISDOT/CADDS SHEET 42

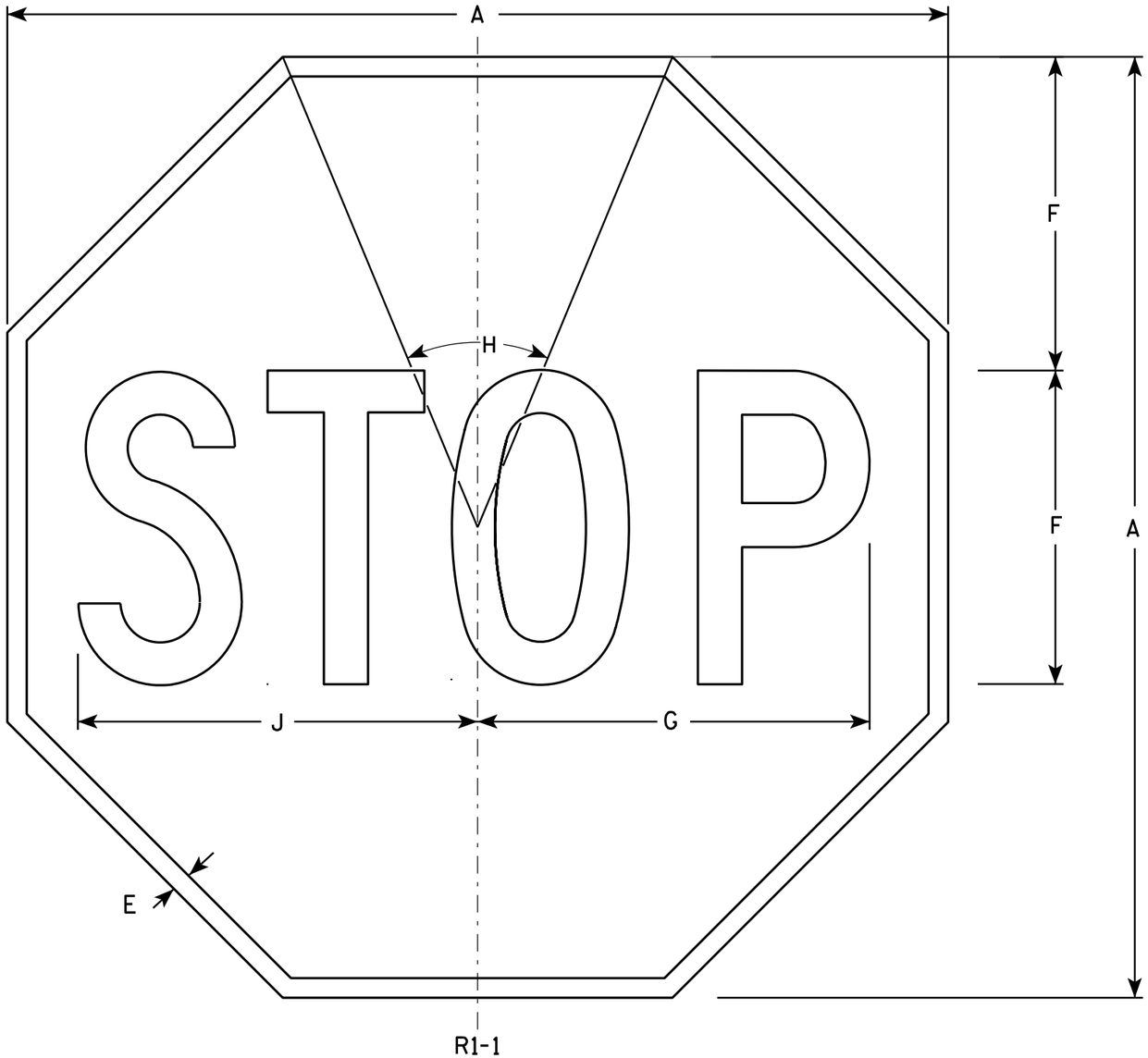

NOTES

1. Sign is Type II - Type H Reflective - reference WIS DOT Standard Specification for HIGHWAY and STRUCTURE CONSTRUCTION latest edition.
2. Color:
   Background - Red
   Message - White
3. Message Series - C

SIZE	A	B	C	D	E	F	G	H	I	J	K	L	M	N	O	P	Q	R	S	T	U	V	W	X	Y	Z	Area sq. ft.
1	24				3/8	8	10	45°		10 1/4																	3.31
2S	30				5/8	10	12 1/2	45°		12 3/4																	5.18
2M	36				3/4	12	15	45°		15 3/8																	7.46
3	36				3/4	12	15	45°		15 3/8																	7.46
4	48				1	16	20	45°		20 1/2																	13.25
5	48				1	16	20	45°		20 1/2																	13.25
6	18				3/8	6	7 3/4	45°		7 3/4																	1.86
7	12				1/4	4	5	45°		5 1/8																	0.78

STANDARD SIGN
R1-1

WISCONSIN DEPT OF TRANSPORTATION

APPROVED Matthew R Rauch
for State Traffic Engineer

DATE 12/03/10 PLATE NO. R1-1.12

PROJECT NO:	HWY:	COUNTY:		SHEET NO: 164	E

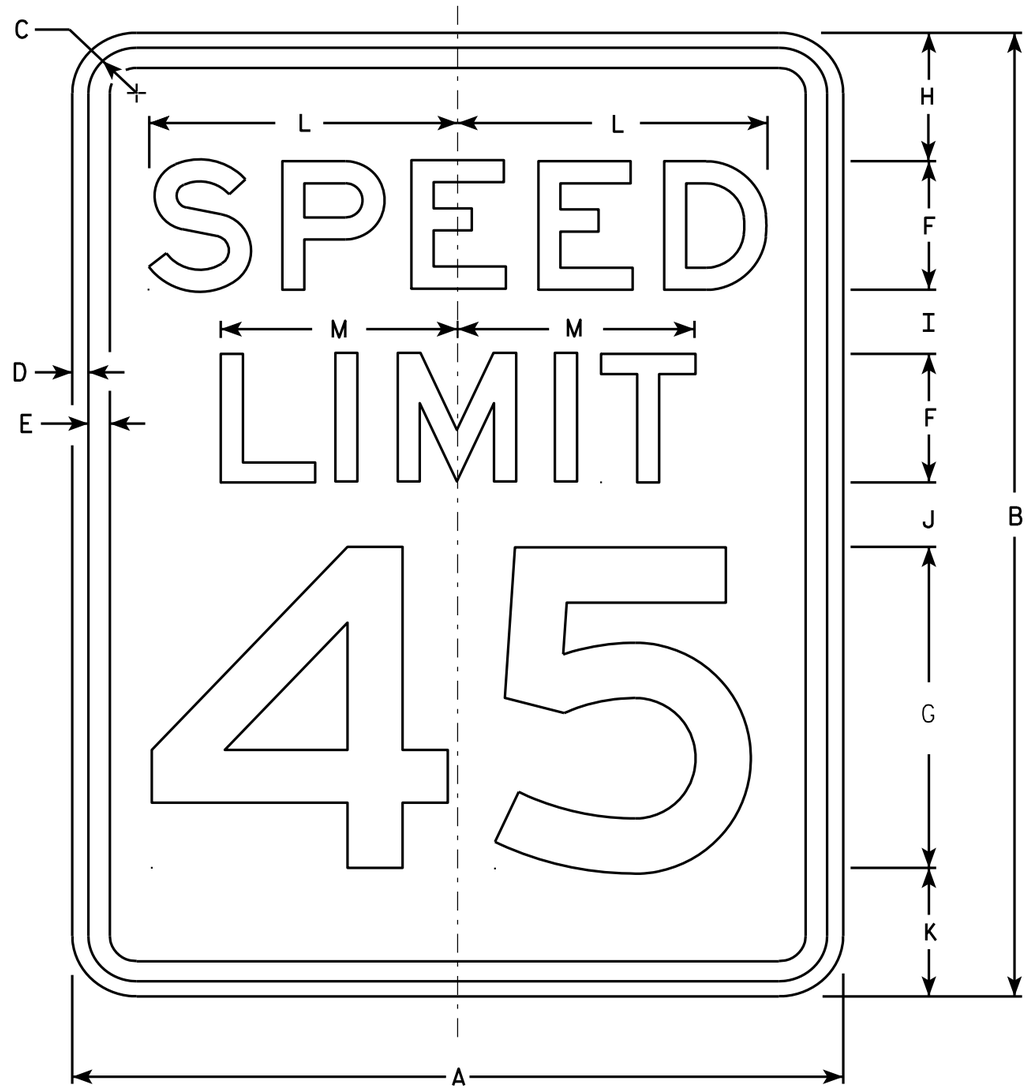

R2-1

NOTES

1. Sign is Type II - Type H Reflective - reference WIS DOT Standard Specification for HIGHWAY and STRUCTURE CONSTRUCTION latest edition.
2. Color:
   Background - White
   Message - Black
3. Message Series - E
4. Corners may be square or rounded when base material is plywood but borders shall be rounded as shown. When base material is metal, the corners and borders shall be rounded.
5. Substitute appropriate numerals and optically adjust spacing to achieve proper balance.

SIZE	A	B	C	D	E	F	G	H	I	J	K	L	M	N	O	P	Q	R	S	T	U	V	W	X	Y	Z	Area sq. ft.
1	18	24	1 1/8	3/8	1/2	3	8	3	2	2	3	7 1/4	5 1/2														3.0
2S	24	30	1 1/8	3/8	1/2	4	10	3	2 1/4	3 3/8	3 3/8	9 5/8	7 3/8														5.0
2M	30	36	1 3/8	1/2	5/8	5	12	5	2 1/2	2 1/2	4	12	9 1/4														7.5
3	36	48	1 3/8	1/2	5/8	6	14	6	5	5	6	14 3/8	11														12.0
4	36	48	1 3/8	1/2	5/8	6	14	6	5	5	6	14 3/8	11														12.0
5	48	60	2 1/4	3/4	1	8	20	6	4 1/2	6 3/4	6 3/4	19 1/4	14 5/8														20.0

STANDARD SIGN
R2-1

WISCONSIN DEPT OF TRANSPORTATION

APPROVED Matthew R Rauch
for State Traffic Engineer

DATE 5/26/10 PLATE NO. R2-1.13

PROJECT NO: | HWY: | COUNTY: | SHEET NO: 165 | E

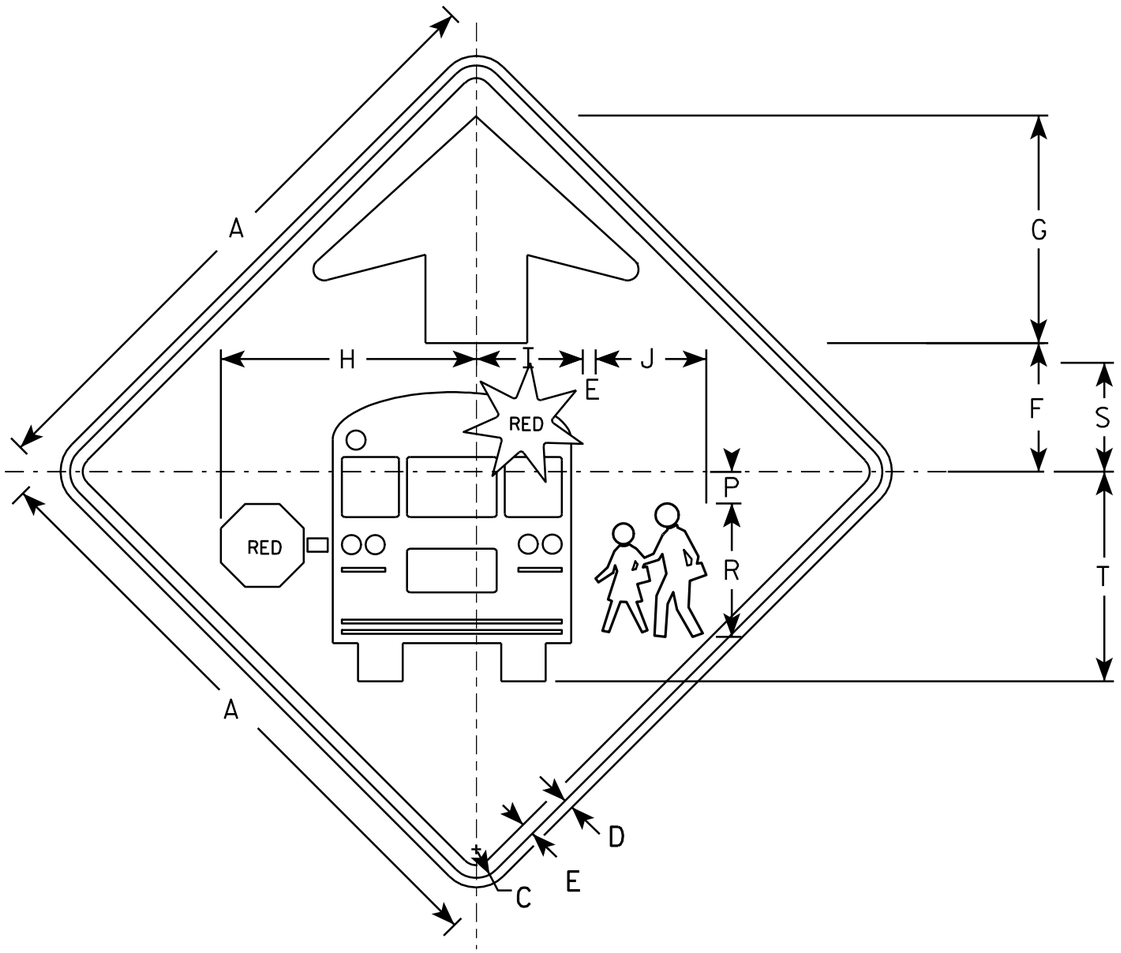

S3-1

NOTES

1. All Signs Type II - Type F Reflective - reference WIS DOT Standard Specification for HIGHWAY and STRUCTURE CONSTRUCTION latest edition.
2. Color:
   Background - YELLOW-GREEN
   Message - BLACK except as noted
   Circles except PEDS- RED BACKGROUND
3. Corners may be square or rounded when base material is plywood but borders shall be rounded as shown. When base material is metal, the corners and borders shall be rounded.

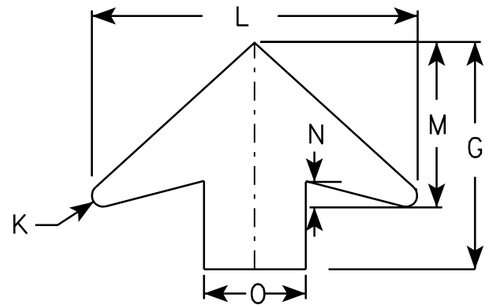

ARROW DETAIL

SIZE	A	B	C	D	E	F	G	H	I	J	K	L	M	N	O	P	Q	R	S	T	U	V	W	X	Y	Z	Area sq. ft.
1	30		1 3/8	1/2	5/8	6 1/4	11 1/4	12 1/2	5 1/4	5 1/2	1/2	16	8	1 1/4	5	1 1/2		6 5/8	5 3/8	10 3/8							6.25
2	36		1 5/8	5/8	3/4	7 1/2	13 1/2	15 1/8	6 1/4	6 1/2	5/8	19 1/4	9 3/4	1 5/8	6	1 7/8		7 7/8	6 3/8	12 3/8							9.0
3	48		2 1/4	3/4	1	10	17 7/8	20 1/8	8 3/8	8 3/4	7/8	25 5/8	13	2	8	2 1/2		10 1/2	8 1/2	16 1/2							16.0
4	48		2 1/4	3/4	1	10	17 7/8	20 1/8	8 3/8	8 3/4	7/8	25 5/8	13	2	8	2 1/2		10 1/2	8 1/2	16 1/2							16.0
5																											

STANDARD SIGN
S3-1

WISCONSIN DEPT OF TRANSPORTATION

APPROVED Matthew R Rauch
for State Traffic Engineer

DATE 6/8/10 PLATE NO. S3-1.6

PROJECT NO:

SHEET NO: 166 E

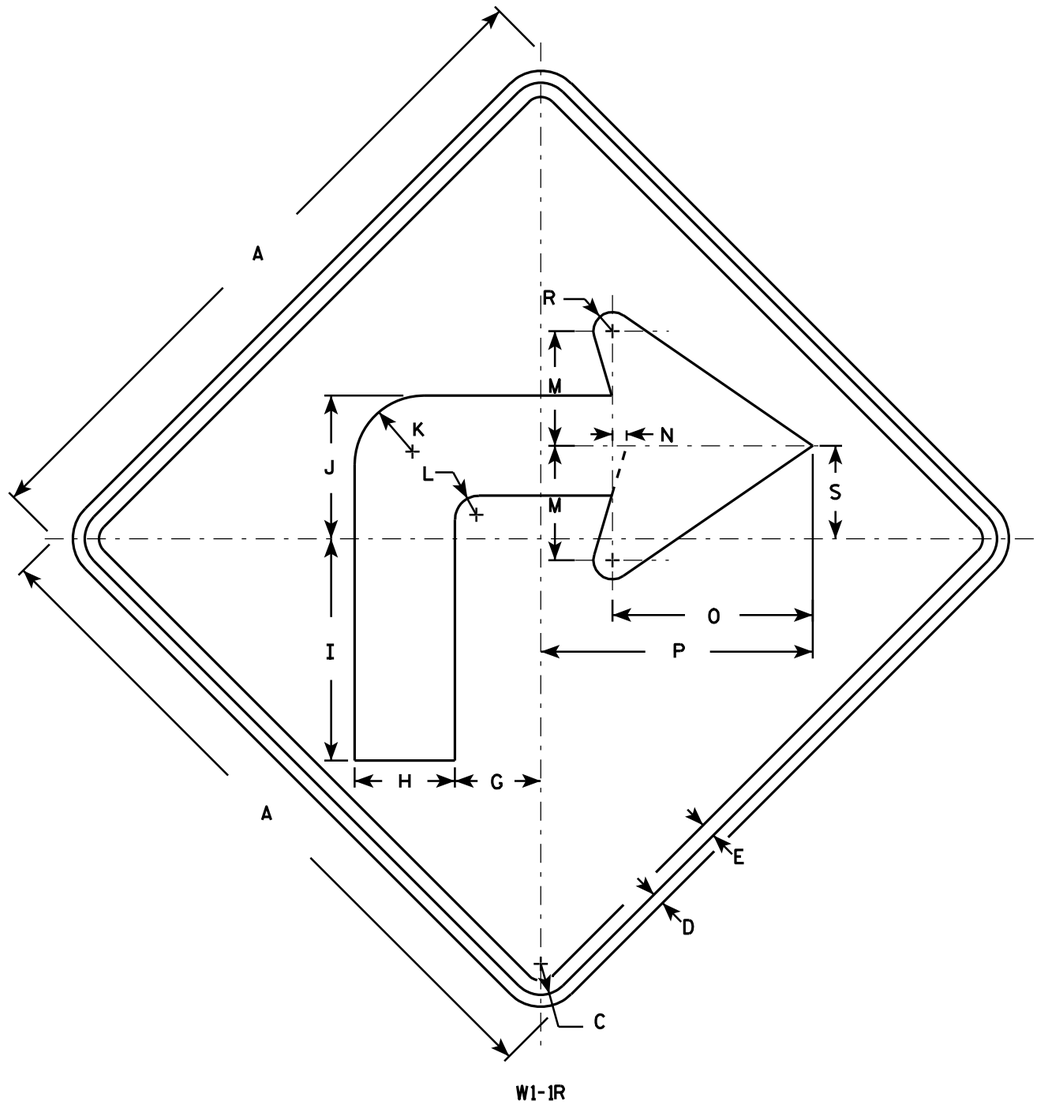

W1-1R

NOTES

1. Sign is Type II - Type F Reflective - reference WIS DOT Standard Specification for HIGHWAY and STRUCTURE CONSTRUCTION latest edition.
2. Color:
   Background - Yellow
   Message - Black
3. Corners may be square or rounded when base material is plywood but borders shall be rounded as shown. When base material is metal, the corners and borders shall be rounded.
4. W1-1L is the same as W1-1R except the arrow is reversed along the vertical centerline.

SIZE	A	B	C	D	E	F	G	H	I	J	K	L	M	N	O	P	Q	R	S	T	U	V	W	X	Y	Z	Area sq. ft.
1	24		1 1/8	3/8	1/2		3	3 1/2	7 3/4	5	2 1/2	7/8	4	1/2	7	9 1/2		5/8	3 1/4								4.0
2S	36		1 5/8	5/8	3/4		4 1/2	5 1/4	11 5/8	7 1/2	3 5/8	1 1/4	6	3/4	10 1/2	14 1/4		1	4 7/8								9.0
2M	36		1 5/8	5/8	3/4		4 1/2	5 1/4	11 5/8	7 1/2	3 5/8	1 1/4	6	3/4	10 1/2	14 1/4		1	4 7/8								9.0
3	36		1 5/8	5/8	3/4		4 1/2	5 1/4	11 5/8	7 1/2	3 5/8	1 1/4	6	3/4	10 1/2	14 1/4		1	4 7/8								9.0
4	48		2 1/4	3/4	1		6	7	15 1/2	10	4 7/8	1 5/8	8	1	14	19		1 1/4	6 1/2								16.0
5	48		2 1/4	3/4	1		6	7	15 1/2	10	4 7/8	1 5/8	8	1	14	19		1 1/4	6 1/2								16.0

STANDARD SIGN
W1-1

WISCONSIN DEPT OF TRANSPORTATION

APPROVED Matthew R Rauch
for State Traffic Engineer

DATE 5/15/12 PLATE NO. W1-1.11

PROJECT NO: | HWY: | COUNTY: | SHEET NO: 167 | E

NOTES

1. Sign is Type II - Type F Reflective - reference WIS DOT Standard Specification for HIGHWAY and STRUCTURE CONSTRUCTION latest edition.
2. Color:
   Background - Yellow
   Message - Black
3. Corners may be square or rounded when base material is plywood but borders shall be rounded as shown. When base material is metal, the corners and borders shall be rounded.
4. W1-2L is the same as W1-2R except the arrow is reversed along the vertical centerline.

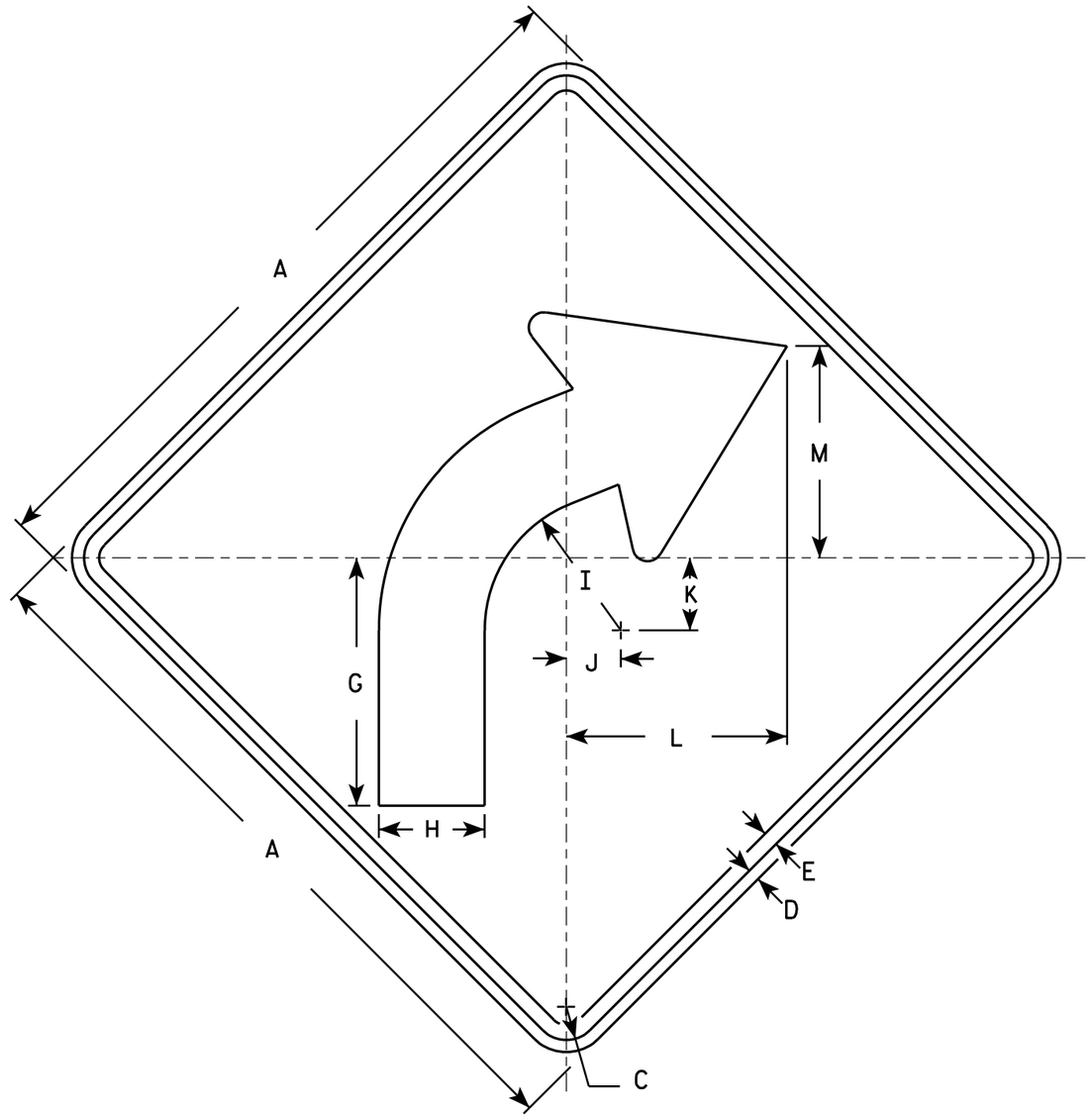

W1-2R

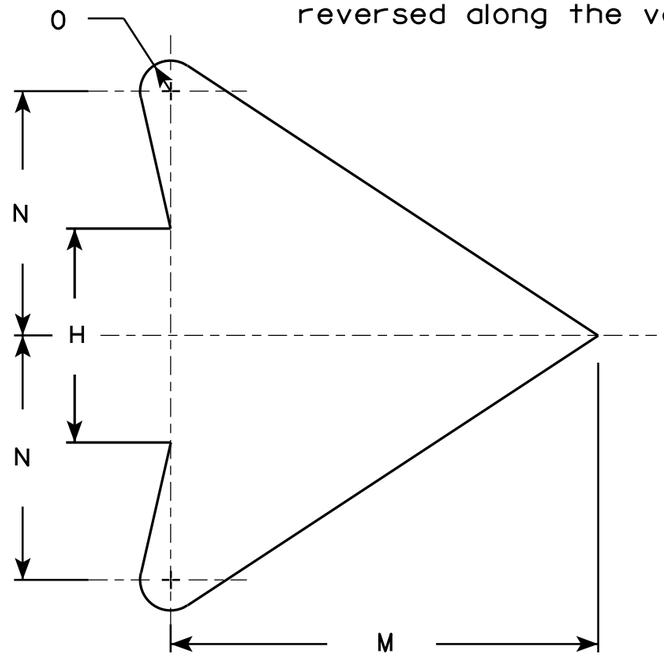

ARROW DETAIL

SIZE	A	B	C	D	E	F	G	H	I	J	K	L	M	N	O	P	Q	R	S	T	U	V	W	X	Y	Z	Area sq. ft.
1	24		1 1/8	3/8	1/2		8 1/4	3 1/2	4 1/2	1 3/4	2 3/8	7 1/4	7	4	1/2												4.0
2S	30		1 3/8	1/2	5/8		10 1/4	4 3/8	5 5/8	2 1/4	3	9 1/8	8 3/4	5	5/8												6.25
2M	36		1 5/8	5/8	3/4		12 3/8	5 1/4	6 3/4	2 5/8	3 1/2	10 7/8	10 1/2	6	3/4												9.0
3	36		1 5/8	5/8	3/4		12 3/8	5 1/4	6 3/4	2 5/8	3 1/2	10 7/8	10 1/2	6	3/4												9.0
4	36		1 5/8	5/8	3/4		12 3/8	5 1/4	6 3/4	2 5/8	3 1/2	10 7/8	10 1/2	6	3/4												9.0
5	48		2 1/4	3/4	1		16 1/2	7	9	3 1/2	4 5/8	14 1/2	14	8	1												16.0

STANDARD SIGN
W1-2

WISCONSIN DEPT OF TRANSPORTATION

APPROVED Matthew R Rauch
for State Traffic Engineer

DATE 5/15/12 PLATE NO. W1-2.10

PROJECT NO:	HWY:	COUNTY:		SHEET NO: 168	E

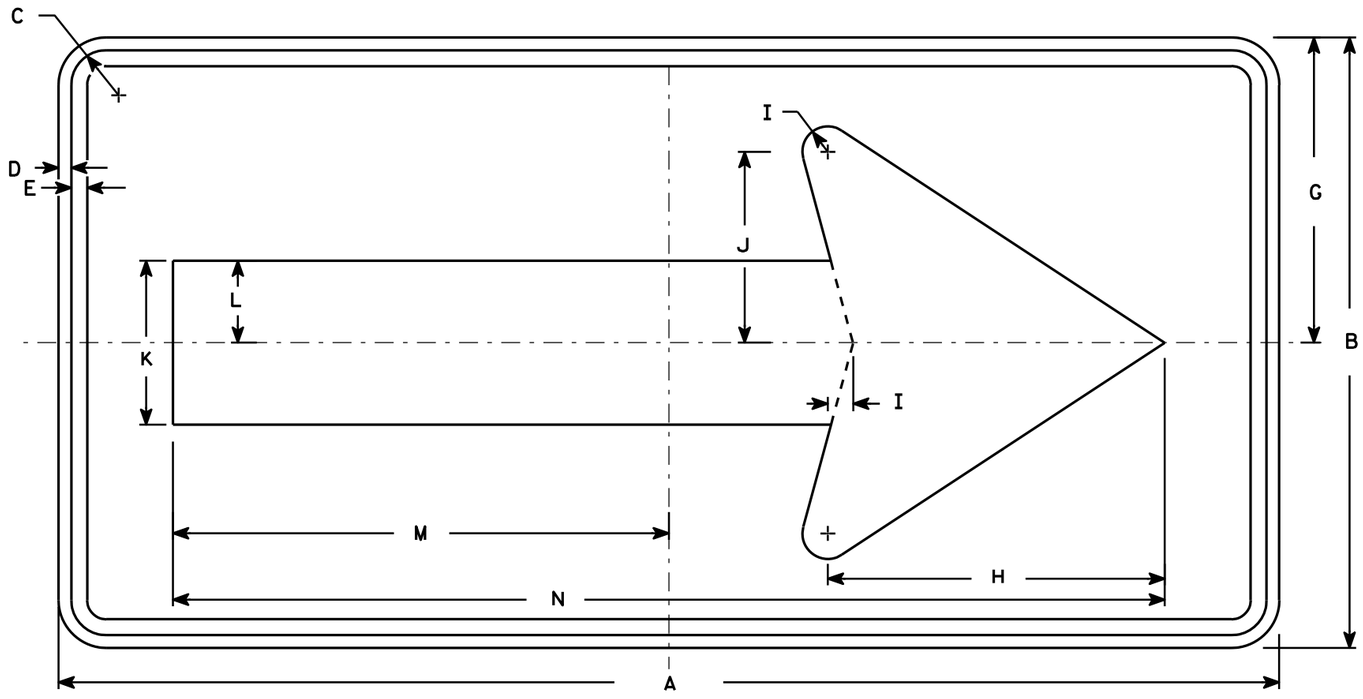

W1-6

NOTES

1. Sign is Type II - Type F Reflective - reference WIS DOT Standard Specification for HIGHWAY and STRUCTURE CONSTRUCTION latest edition.
2. Color:
   Background - Yellow
   Message - Black
3. Corners may be square or rounded when base material is plywood but borders shall be rounded as shown. When base material is metal, the corners and borders shall be rounded.

SIZE	A	B	C	D	E	F	G	H	I	J	K	L	M	N	O	P	Q	R	S	T	U	V	W	X	Y	Z	Area sq. ft.
1	36	18	1 1/8	3/8	3/8		9	10	3/4	5 5/8	4 3/4	2 3/8	14 5/8	29 1/4													4.5
2S	48	24	1 3/8	1/2	5/8		12	13 1/4	1	7 1/2	6 1/2	3 1/4	19 1/2	39													8.0
2M	48	24	1 3/8	1/2	5/8		12	13 1/4	1	7 1/2	6 1/2	3 1/4	19 1/2	39													8.0
3	60	30	1 3/8	1/2	5/8		15	16 1/4	1 1/4	9 1/4	8	4	24 3/8	48 3/4													12.5
4	60	30	1 3/8	1/2	5/8		15	16 1/4	1 1/4	9 1/4	8	4	24 3/8	48 3/4													12.5
5	96	48	2 1/4	3/4	1		24	26 1/2	2	15	13	6 1/2	39	78													32.0

STANDARD SIGN
W1-6

WISCONSIN DEPT OF TRANSPORTATION

APPROVED Matthew R Rauch
for State Traffic Engineer

DATE 6/7/10 PLATE NO. W1-6.8

PROJECT NO:	HWY:	COUNTY:		SHEET NO: 169

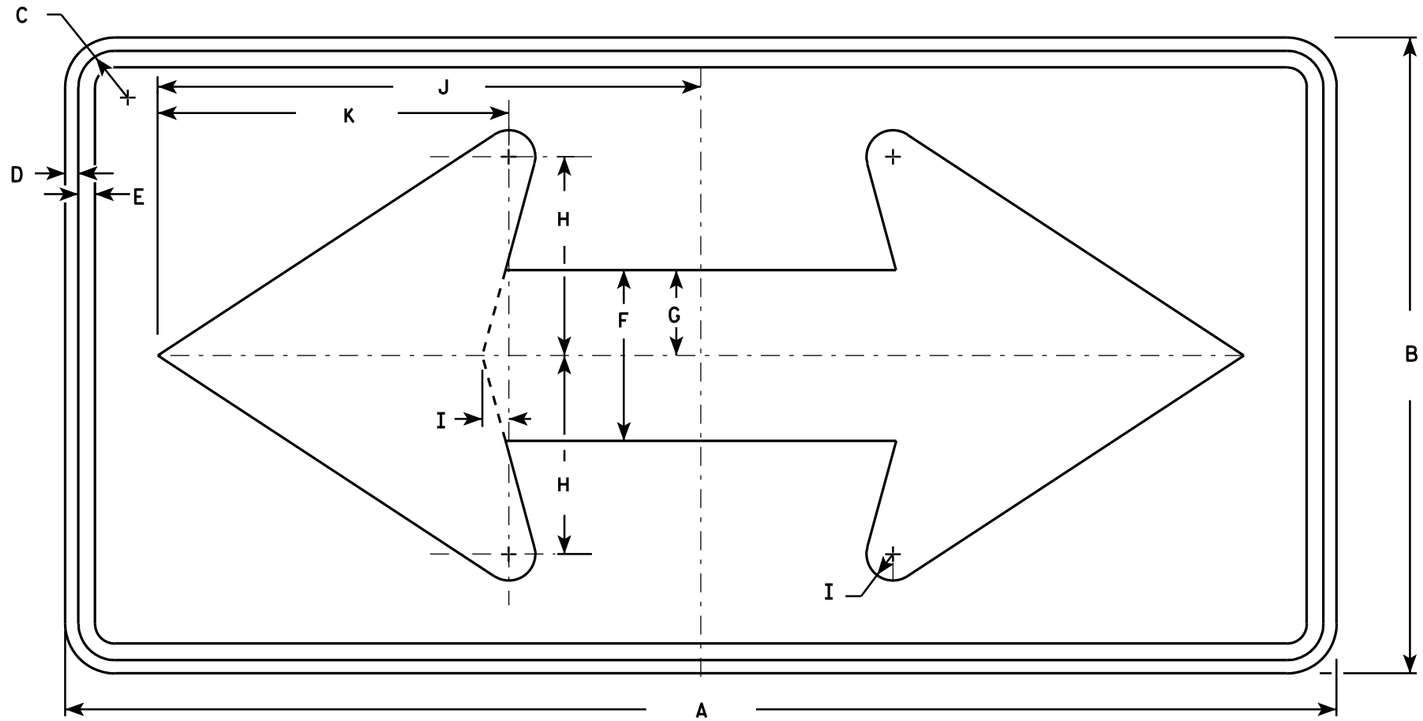

W1-7

NOTES

1. Sign is Type II - Type F Reflective - reference WIS DOT Standard Specification for HIGHWAY and STRUCTURE CONSTRUCTION latest edition.
2. Color:
   Background - Yellow
   Message - Black
3. Corners may be square or rounded when base material is plywood but borders shall be rounded as shown. When base material is metal, the corners and borders shall be rounded.

SIZE	A	B	C	D	E	F	G	H	I	J	K	L	M	N	O	P	Q	R	S	T	U	V	W	X	Y	Z	Area sq. ft.
1	36	18	1 1/8	3/8	1/2	5	2 1/2	5 3/4	3/4	15 5/8	10 1/8																4.5
2S	48	24	1 3/8	1/2	5/8	6 1/2	3 1/4	7 1/2	1	20 1/2	13 1/4																8.0
2M	48	24	1 3/8	1/2	5/8	6 1/2	3 1/4	7 1/2	1	20 1/2	13 1/4																8.0
3	60	30	1 3/8	1/2	5/8	8	4	9 1/4	1 1/4	25 3/8	16 1/4																12.5
4	60	30	1 3/8	1/2	5/8	8	4	9 1/4	1 1/4	25 3/8	16 1/4																12.5
5	96	48	2 1/4	3/4	1	13	6 1/2	15	2	41	26 1/2																32.0

STANDARD SIGN
W1-7

WISCONSIN DEPT OF TRANSPORTATION

APPROVED Matthew R Rauch
for State Traffic Engineer

DATE 6/7/10 PLATE NO. W1-7.7

PROJECT NO: | HWY: | COUNTY: | SHEET NO: 170 | E

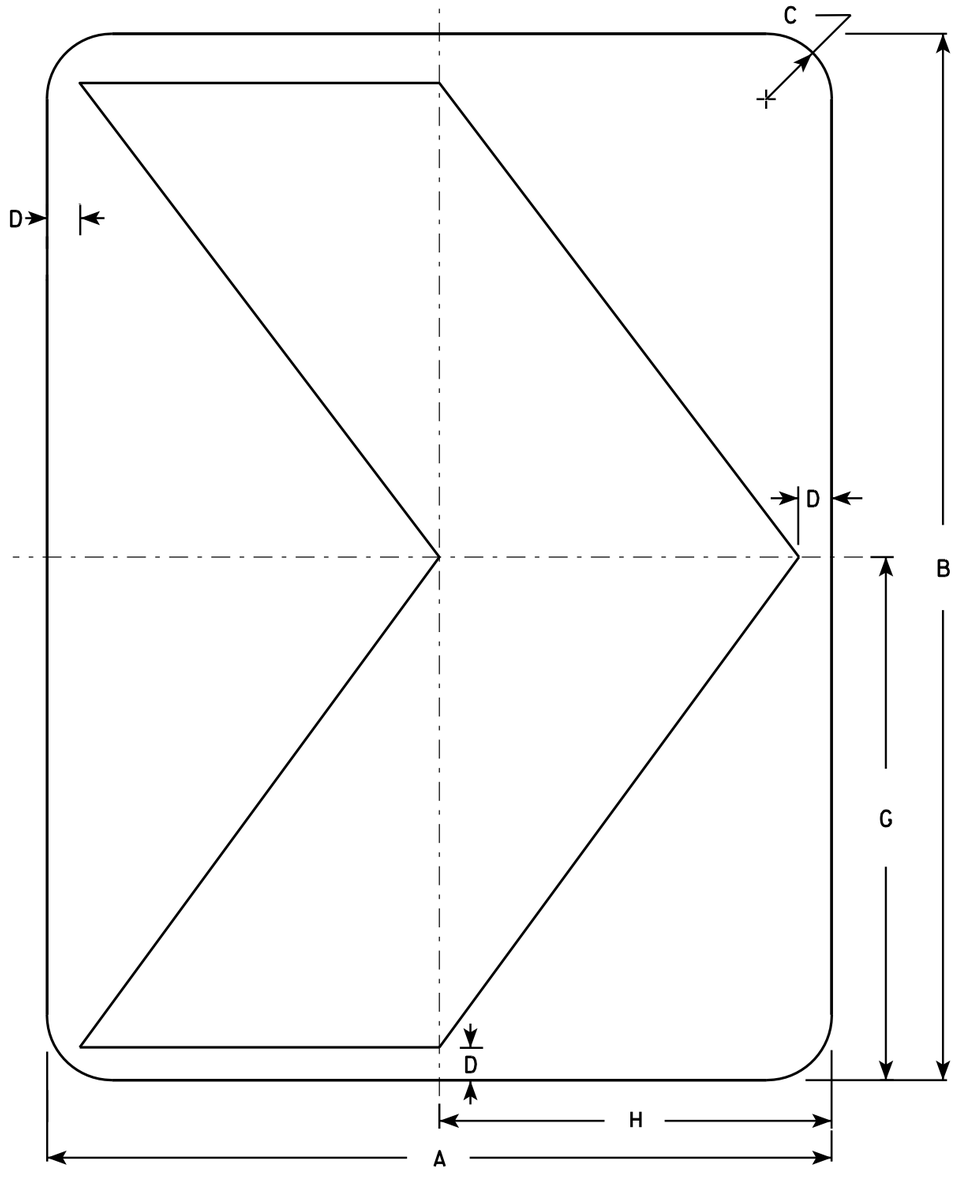

W1-8

NOTES

1. Sign is Type II - Type F Reflective - reference WIS DOT Standard Specification for HIGHWAY and STRUCTURE CONSTRUCTION latest edition.
2. Color:
   Background - Yellow
   Message - Black
3. Corners may be square or rounded when base material is plywood but borders shall be rounded as shown. When base material is metal, the corners and borders shall be rounded.

SIZE	A	B	C	D	E	F	G	H	I	J	K	L	M	N	O	P	Q	R	S	T	U	V	W	X	Y	Z	Area sq. ft.
1	12	18	1 ½	½			9	6																			1.5
2S	18	24	1 ½	¾			12	9																			3.0
2M	18	24	1 ½	¾			12	9																			3.0
3	24	30	1 ½	1			15	12																			5.0
4	30	36	1 ⅞	1 ¼			18	15																			7.5
5	36	48	2 ¼	1 ½			24	18																			12.0

STANDARD SIGN
W1-8

WISCONSIN DEPT OF TRANSPORTATION

APPROVED Matthew R Rauch
for State Traffic Engineer

DATE 6/7/10 PLATE NO. W1-8.6

PROJECT NO:

SHEET NO: 171 E

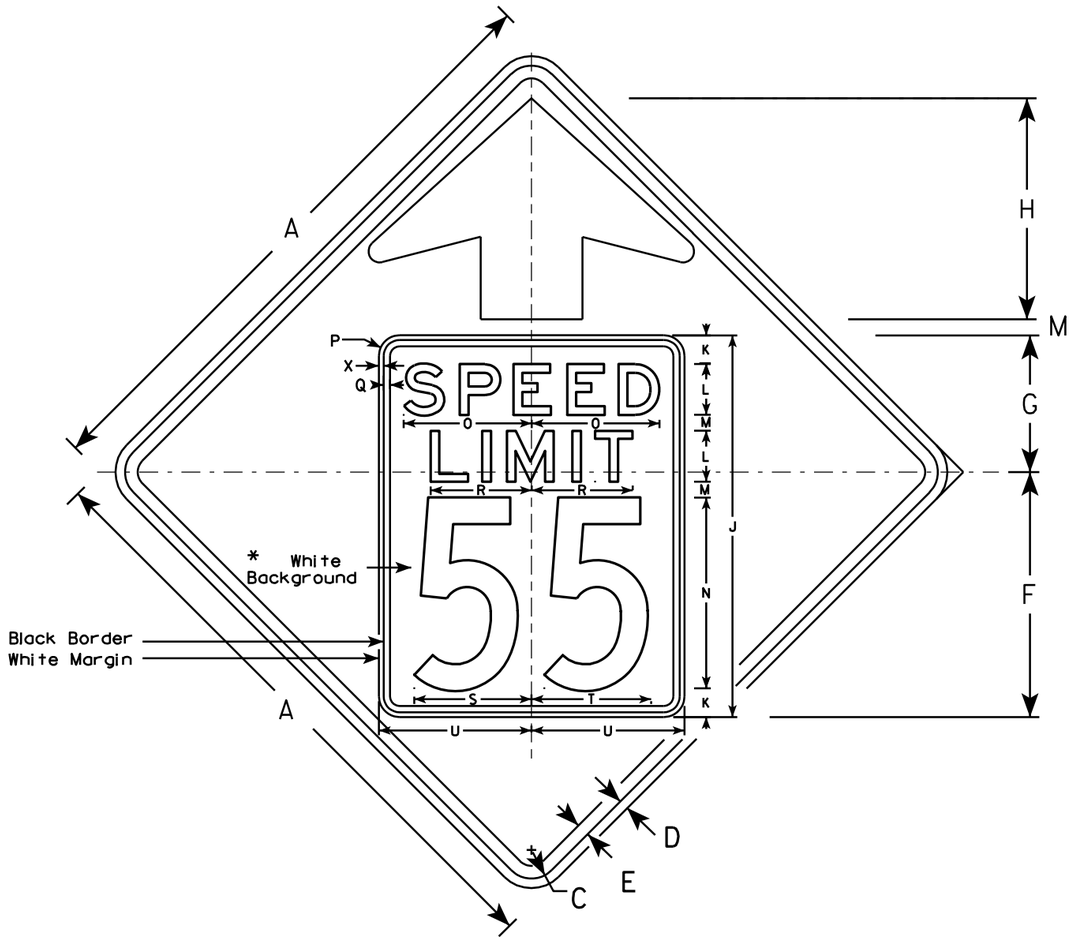

W3-5

NOTES

1. Sign is Type II - Type F Reflective - reference WIS DOT Standard Specification for HIGHWAY and STRUCTURE CONSTRUCTION latest edition.
2. Color: *
   Background - YELLOW*
   Message - BLACK
3. Message Series - C for numbers Series E for wording
4. Substitute appropriate numerals and optically adjust spacing to achieve proper balance

*Speed Limit Sign shall have a White Background

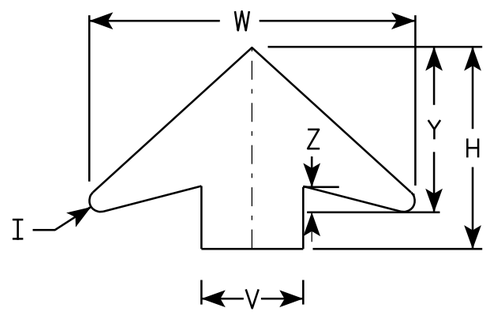

ARROW DETAIL

SIZE	A	B	C	D	E	F	G	H	I	J	K	L	M	N	O	P	Q	R	S	T	U	V	W	X	Y	Z	Area sq. ft.
1																											
2S	36		1 5/8	5/8	3/4	14 1/2	9 1/2	11 1/2	5/8	24	2	3	1	12	7 1/8	1 1/2	3/8	5 3/4	7 1/4	7 1/8	9	6	19 1/4	3/8	9 3/4	1 5/8	9.0
2M	36		1 5/8	5/8	3/4	14 1/2	9 1/2	11 1/2	5/8	24	2	3	1	12	7 1/8	1 1/2	3/8	5 3/4	7 1/4	7 1/8	9	6	19 1/4	3/8	9 3/4	1 5/8	9.0
3	36		1 5/8	5/8	3/4	14 1/2	9 1/2	11 1/2	5/8	24	2	3	1	12	7 1/8	1 1/2	3/8	5 3/4	7 1/4	7 1/8	9	6	19 1/4	3/8	9 3/4	1 5/8	9.0
4	48		2 1/4	3/4	1	19 1/4	10 3/4	17 3/8	7/8	30	2 1/4	4	1 1/4	15	10	1 5/8	1/2	8	9 1/4	9 3/8	12	8	25 5/8	3/8	13	2	16.0
5	48		2 1/4	3/4	1	19 1/4	10 3/4	17 3/8	7/8	30	2 1/4	4	1 1/4	15	10	1 5/8	1/2	8	9 1/4	9 3/8	12	8	25 5/8	3/8	13	2	16.0

STANDARD SIGN
W3-5

WISCONSIN DEPT OF TRANSPORTATION

APPROVED Matthew R Rauch
for State Traffic Engineer

DATE 5/29/12 PLATE NO. W3-5.5

PROJECT NO:

SHEET NO: 172 E

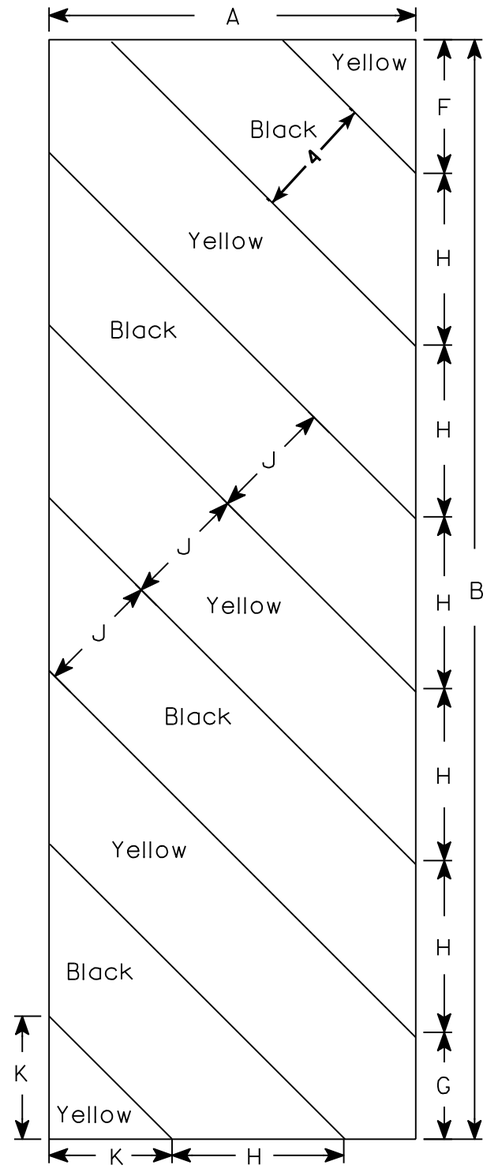

W5-52L

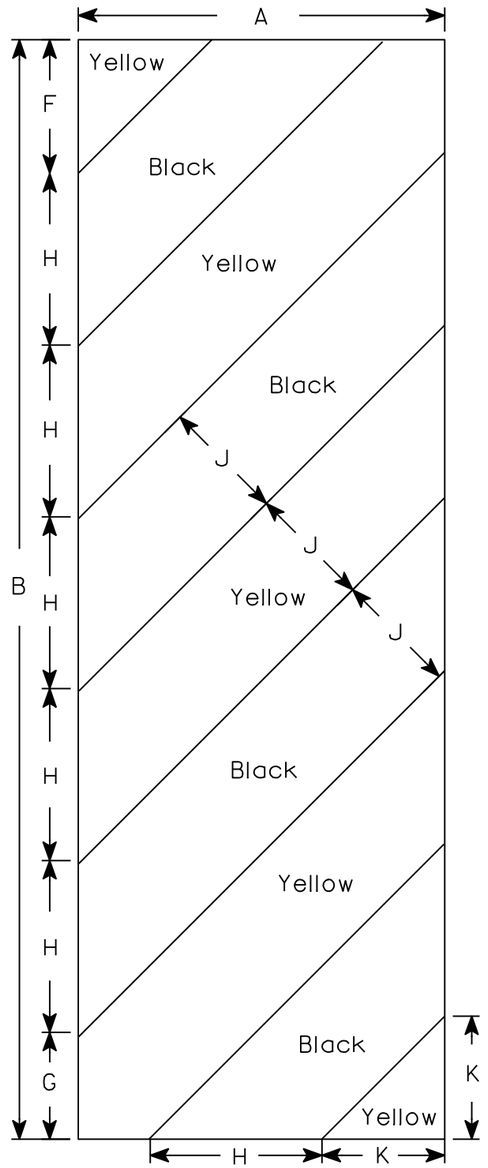

W5-52R

NOTES

1. Sign is Type II - Type F Reflective - reference WIS DOT Standard Specification for HIGHWAY and STRUCTURE CONSTRUCTION latest edition.
2. Color:
   Background - Yellow
   Message - Black
3. Corners may be square or rounded when base material is plywood but borders shall be rounded as shown. When base material is metal, the corners and borders shall be rounded.
4. Alternate colors of stripes as shown.

SIZE	A	B	C	D	E	F	G	H	I	J	K	L	M	N	O	P	Q	R	S	T	U	V	W	X	Y	Z	Area sq. ft.
1																											
2S	12	36				4 3/8	3 1/2	5 5/8	45°	4	4																3.0
2M	12	36				4 3/8	3 1/2	5 5/8	45°	4	4																3.0
3	18	54				6	5 1/2	8 1/2	45°	6	6 9/16																6.75
4																											
5																											

STANDARD SIGN

W5-52L & W5-52R

WISCONSIN DEPT OF TRANSPORTATION

APPROVED Matthew R Rauch
for State Traffic Engineer

DATE 5/29/12 PLATE NO. W5-52.9

PROJECT NO: | HWY: | COUNTY: | SHEET NO: 173 | E

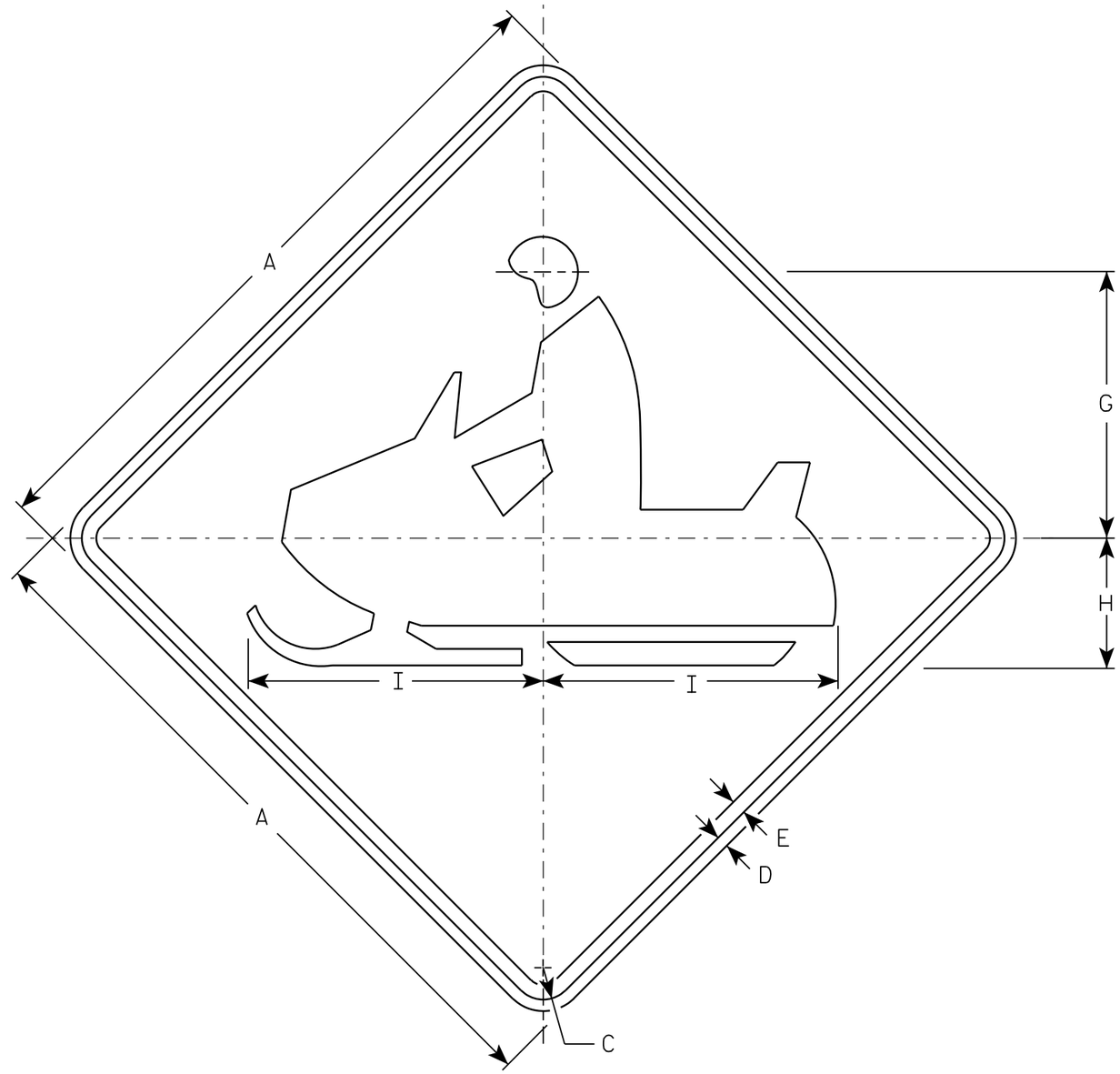

W11-6

NOTES

1. Sign is Type II - Type F Reflective - reference WIS DOT Standard Specification for HIGHWAY and STRUCTURE CONSTRUCTION latest edition.
2. Color:
   Background - Yellow
   Message - Black
3. Corners may be square or rounded when base material is plywood but borders shall be rounded as shown. When base material is metal, the corners and borders shall be rounded.

SIZE	A	B	C	D	E	F	G	H	I	J	K	L	M	N	O	P	Q	R	S	T	U	V	W	X	Y	Z	Area sq. ft.
1	24		1 1/8	3/8	1/2		9 1/2	4 1/2	10 1/4																		4.0
2S	30		1 3/8	1/2	5/8		11 1/2	5 5/8	12 3/4																		6.25
2M	30		1 3/8	1/2	5/8		11 1/2	5 5/8	12 3/4																		6.25
3	36		1 5/8	5/8	3/4		14 1/8	6 3/4	15 1/4																		9.0
4	48		2 1/4	3/4	1		19	9	20 1/2																		16.0
5																											

STANDARD SIGN
W11-6

WISCONSIN DEPT OF TRANSPORTATION

APPROVED Matthew R Rauch
for State Traffic Engineer

DATE 3/13/13 PLATE NO. W11-6.8

PROJECT NO: | HWY: | COUNTY: | SHEET NO: 174 | E

FILE NAME : C:\CAEFiles\Projects\tr_stdplate\W116.DGN PLOT DATE : 13-MAR-2013 12:57 PLOT BY : mscj9h PLOT NAME : PLOT SCALE : 5.954276:1.000000
WISDOT/CADDS SHEET 42

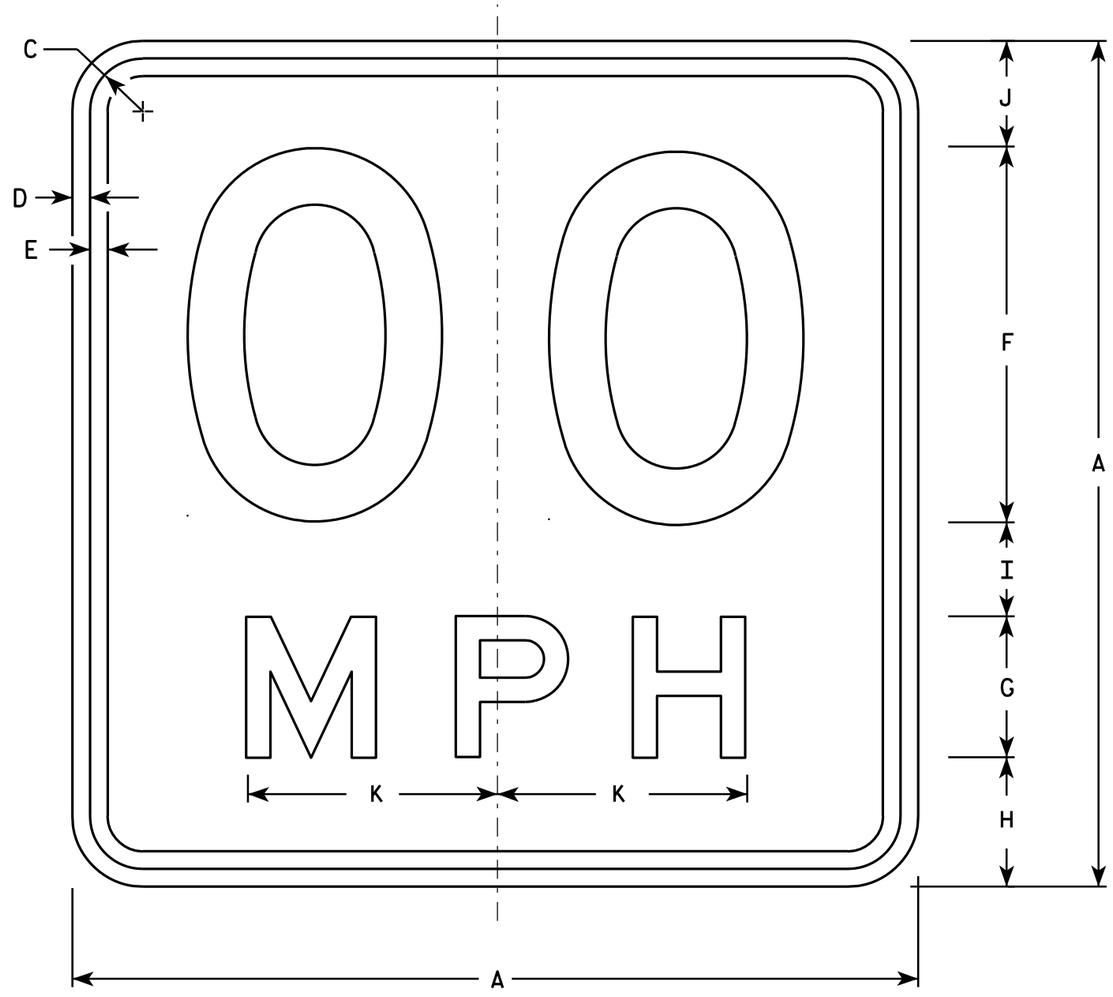

W13-1

* For 30" x 30" Warning Signs, use 18" x 18" W13-1 signs.
For 36" x 36" Warning Signs, use 24" x 24" W13-1 signs.

NOTES

1. Sign is Type II - Type F Reflective - reference WIS DOT Standard Specification for HIGHWAY and STRUCTURE CONSTRUCTION latest edition.
2. Color:
   Background - Yellow
   Message - Black
3. Message Series - See Note 6
4. Corners may be square or rounded when base material is plywood but borders shall be rounded as shown. When base material is metal, the corners and borders shall be rounded.
5. Substitute appropriate numerals and optically space about centerline to achieve proper balance.
6. Line 1 is Series D
   Line 2 is Series E

	SIZE	A	B	C	D	E	F	G	H	I	J	K	L	M	N	O	P	Q	R	S	T	U	V	W	X	Y	Z	Area sq. ft.
	1	18		1 1/8	3/8	3/8	8	3	2 3/4	2	2 1/4	5 3/8																2.25
*	2S	18		1 1/8	3/8	3/8	8	3	2 3/4	2	2 1/4	5 3/8																2.25
*	2M	18		1 1/8	3/8	3/8	8	3	2 3/4	2	2 1/4	5 3/8																2.25
	3	24		1 1/8	3/8	1/2	10	4	4	2 3/4	3 1/4	6 5/8																4.00
	4	36		1 5/8	5/8	3/4	16	6	5 1/2	4	4 1/2	10 5/8																9.00
	5	36		1 5/8	5/8	3/4	16	6	5 1/2	4	4 1/2	10 5/8																9.00

STANDARD SIGN
W13-1

WISCONSIN DEPT OF TRANSPORTATION

APPROVED Matthew R Rauch
for State Traffic Engineer

DATE 5/31/12 PLATE NO. W13-1.16

PROJECT NO: | HWY: | COUNTY: | SHEET NO: 175 | E

NOTES

1. Sign is Type II - Type F Reflective - reference WIS DOT Standard Specification for HIGHWAY and STRUCTURE CONSTRUCTION latest edition.
2. Color:
   Background - Yellow
   Message - Black
3. Message Series - See note 5
4. Corners and borders shall be rounded on all base materials for this sign.
5. Lines 1 and 2 are Series D.
   Line 3 is series C.

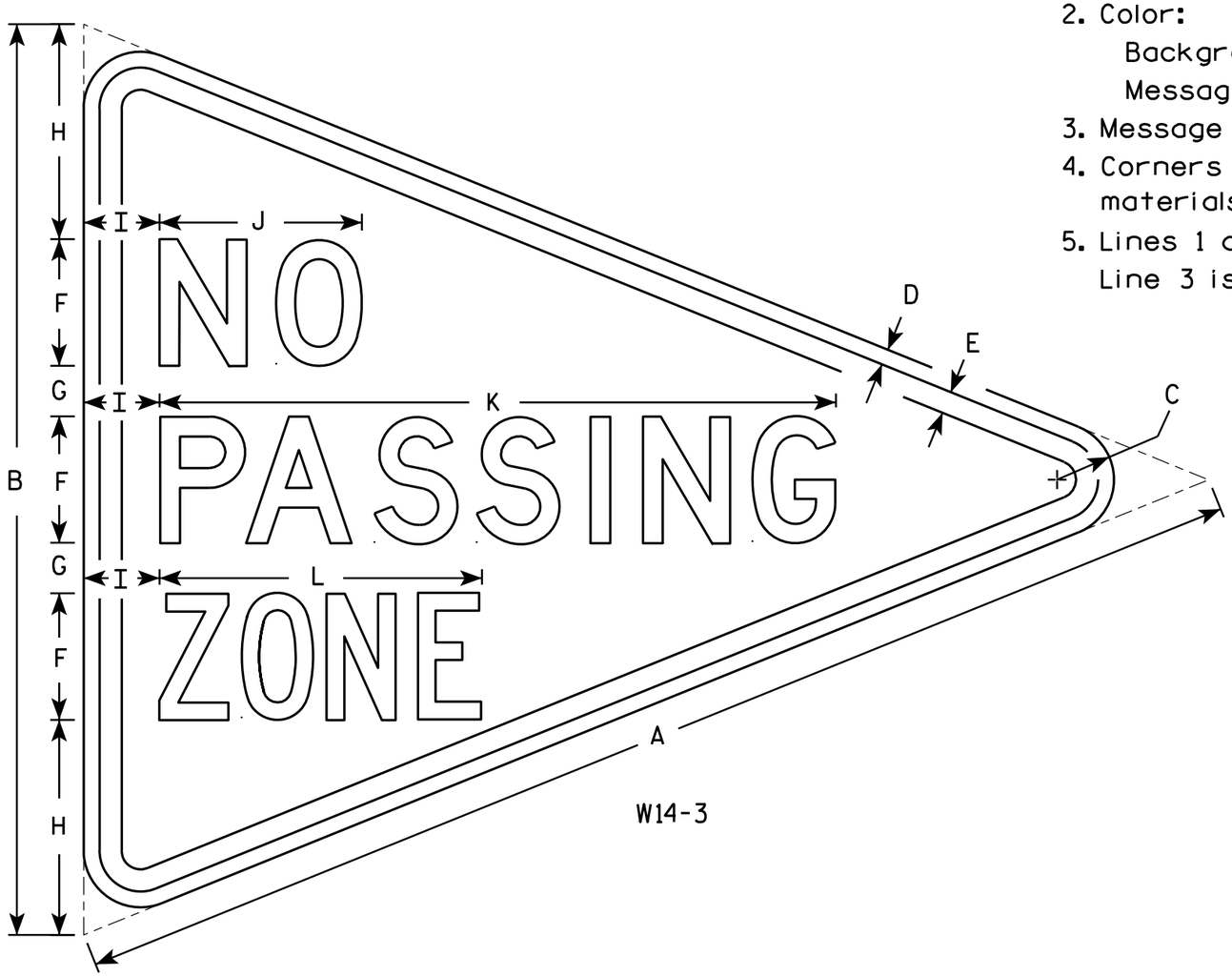

W14-3

SIZE	A	B	C	D	E	F	G	H	I	J	K	L	M	N	O	P	O	R	S	T	U	V	W	X	Y	Z	Area sq. ft.
1																											
2S	48	36	2 1/4	5/8	7/8	5	2	8 1/2	3	8	26 3/4	12 3/4															6.0
2M	48	36	2 1/4	5/8	7/8	5	2	8 1/2	3	8	26 3/4	12 3/4															6.0
3	64	48	3	3/4	1 1/4	6	3	12	4	10 3/4	33 5/8	16 1/2															10.7
4																											
5																											

STANDARD SIGN
W14-3

WISCONSIN DEPT OF TRANSPORTATION

APPROVED Matthew R Rauch
for State Traffic Engineer

DATE 6/7/10 PLATE NO. W14-3.9

PROJECT NO:	HWY:	COUNTY:		SHEET NO: 176	E

STH 54 – GALESVILLE – MELROSE (MAINLINE)
WEST COUNTY LINE TO STH 71 EAST BND
AVERAGE ENDAREA VOLUMES

FILL EXPANSION FACTOR= ***1.30***

STATION	END-AREA (SF)			INCREMENTAL VOLUME (CY)		CUMULATIVE VOLUME (CY)		MASS HAUL (CY)
	CUT	FILL	EXPAND FILL	CUT	EXP FILL	CUT	EXP FILL	
2+50.00	--	0.7	0.9	--	0.0	--	0	0
2+77.95	--	2.6	3.3	--	2.2	--	2	-2
3+01.69	--	6.2	8.0	--	5.0	--	7	-7
3+25.60	--	4.0	5.2	--	5.9	--	13	-13
3+86.23	--	5.9	7.7	--	14.5	--	28	-28
4+10.19	--	13.7	17.8	--	11.3	--	39	-39
4+11.83	--	15.7	20.4	--	1.2	--	40	-40
4+35.10	--	24.9	32.3	--	22.7	--	63	-63
4+36.81	--	26.0	33.8	--	2.1	--	65	-65
4+61.79	--	38.8	50.4	--	38.9	--	104	-104
5+00.00	--	30.2	39.3	--	63.4	--	167	-167

STH 54 – GALESVILLE – MELROSE (MAINLINE)
WEST COUNTY LINE TO STH 71 EAST BND
AVERAGE ENDAREA VOLUMES

FILL EXPANSION FACTOR= ***1.30***

STATION	END-AREA (SF)			INCREMENTAL VOLUME (CY)		CUMULATIVE VOLUME (CY)		MASS HAUL (CY)
	CUT	FILL	EXPAND FILL	CUT	EXP FILL	CUT	EXP FILL	
58+00.00	--	0.0	0.0	--	0.0	--	0	0
58+50.00	--	30.1	39.2	--	36.3	--	36	-36
58+74.99	--	21.4	27.9	--	31.0	--	67	-67
59+00.00	--	9.6	12.5	--	18.7	--	86	-86
59+50.00	--	11.6	15.0	--	25.5	--	111	-111
60+00.00	--	8.0	10.3	--	23.5	--	135	-135
60+50.00	--	8.1	10.5	--	19.3	--	154	-154
61+00.00	--	9.8	12.8	--	21.5	--	176	-176
61+50.00	--	11.6	15.1	--	25.8	--	202	-202
62+00.00	--	12.9	16.8	--	29.6	--	231	-231
62+50.00	--	2.9	3.8	--	19.1	--	250	-250
63+00.00	--	0.4	0.5	--	4.0	--	254	-254
63+50.00	--	0.0	0.0	--	0.5	--	255	-255
64+00.00	--	17.8	23.2	--	21.5	--	276	-276
64+26.75	--	25.0	32.5	--	27.6	--	304	-304
64+52.00	--	32.7	42.4	--	35.0	--	339	-339
64+77.26	--	9.9	12.8	--	25.9	--	365	-365

STH 54 – GALESVILLE – MELROSE (MAINLINE)
WEST COUNTY LINE TO STH 71 EAST BND
AVERAGE ENDAREA VOLUMES

FILL EXPANSION FACTOR= ***1.30***

STATION	END-AREA (SF)			INCREMENTAL VOLUME (CY)		CUMULATIVE VOLUME (CY)		MASS HAUL (CY)
	CUT	FILL	EXPAND FILL	CUT	EXP FILL	CUT	EXP FILL	
66+50.00	--	6.3	8.2	--	0.0	--	0	0
67+00.00	--	6.7	8.7	--	15.6	--	16	-16
67+50.00	--	14.7	19.1	--	25.7	--	41	-41
67+75.00	--	24.8	32.2	--	23.7	--	65	-65
68+00.00	--	25.7	33.3	--	30.3	--	95	-95
68+25.00	--	27.0	35.0	--	31.7	--	127	-127
68+50.00	--	20.1	26.1	--	28.3	--	155	-155
69+00.00	--	4.2	5.5	--	29.2	--	185	-185

STH 54 – GALESVILLE – MELROSE (MAINLINE)
WEST COUNTY LINE TO STH 71 EAST BND
AVERAGE ENDAREA VOLUMES

FILL EXPANSION FACTOR= ***1.30***

STATION	END-AREA (SF)			INCREMENTAL VOLUME (CY)		CUMULATIVE VOLUME (CY)		MASS HAUL (CY)
	CUT	FILL	EXPAND FILL	CUT	EXP FILL	CUT	EXP FILL	
77+50.00	--	19.9	25.8	--	0.0	--	0	0
77+85.02	--	13.3	17.3	--	28.0	--	28	-28
78+10.00	--	15.5	20.2	--	17.3	--	45	-45
78+34.98	--	6.3	8.1	--	13.1	--	58	-58
79+63.12	--	7.9	10.3	--	43.8	--	102	-102
79+88.10	--	13.3	17.3	--	12.8	--	115	-115
80+13.08	--	15.5	20.1	--	17.3	--	132	-132
80+50.00	--	14.6	18.9	--	26.7	--	159	-159

STH 54 – GALESVILLE – MELROSE (MAINLINE)
WEST COUNTY LINE TO STH 71 EAST BND
AVERAGE ENDAREA VOLUMES

FILL EXPANSION FACTOR= ***1.30***

STATION	END-AREA (SF)			INCREMENTAL VOLUME (CY)		CUMULATIVE VOLUME (CY)		MASS HAUL (CY)
	CUT	FILL	EXPAND FILL	CUT	EXP FILL	CUT	EXP FILL	
106+34.20	--	10.7	13.9	--	0.0	--	0	0
106+52.66	--	20.7	26.9	--	13.9	--	14	-14
106+65.57	--	26.3	34.2	--	14.6	--	29	-29
106+77.41	--	28.1	36.5	--	15.5	--	44	-44
107+00.00	--	20.8	27.0	--	26.6	--	71	-71
107+50.00	--	4.6	5.9	--	30.5	--	101	-101

STH 54 – GALESVILLE – MELROSE (MAINLINE)
WEST COUNTY LINE TO STH 71 EAST BND
AVERAGE ENDAREA VOLUMES

FILL EXPANSION FACTOR= ***1.30***

STATION	END-AREA (SF)			INCREMENTAL VOLUME (CY)		CUMULATIVE VOLUME (CY)		MASS HAUL (CY)
	CUT	FILL	EXPAND FILL	CUT	EXP FILL	CUT	EXP FILL	
241+50.00	--	19.7	25.6	--	0.0	--	0	0
241+75.00	--	28.4	37.0	--	29.0	--	29	-29
241+99.00	--	22.1	28.8	--	29.2	--	58	-58
242+25.00	--	13.7	17.8	--	22.4	--	81	-81
242+50.00	--	14.8	19.3	--	17.1	--	98	-98
242+79.17	--	40.2	52.3	--	38.7	--	136	-136
243+04.16	--	52.9	68.7	--	56.0	--	192	-192
243+29.14	--	64.2	83.4	--	70.4	--	263	-263
243+50.00	--	55.5	72.2	--	60.1	--	323	-323
244+00.00	--	73.0	94.9	--	154.7	--	478	-478
244+50.00	--	10.5	13.7	--	100.5	--	578	-578
245+00.00	--	32.4	42.1	--	51.6	--	630	-630
245+50.00	--	2.1	2.8	--	41.5	--	671	-671
246+00.00	--	1.6	2.1	--	4.5	--	676	-676
246+50.00	--	0.8	1.1	--	2.9	--	679	-679
247+00.00	--	3.6	4.7	--	5.3	--	684	-684
247+50.00	--	12.5	16.3	--	19.4	--	703	-703
248+00.00	--	10.4	13.5	--	27.6	--	731	-731
248+50.00	--	33.1	43.1	--	52.4	--	783	-783
249+00.00	--	27.2	35.4	--	72.6	--	856	-856
249+25.00	--	37.9	49.3	--	39.2	--	895	-895
249+50.00	--	31.9	41.5	--	42.0	--	937	-937
250+00.00	--	6.4	8.3	--	46.1	--	983	-983

STH 54 - GALESVILLE - MELROSE (MAINLINE)
WEST COUNTY LINE TO STH 71 EAST BND
AVERAGE ENDAREA VOLUMES

FILL EXPANSION FACTOR= ***1.30***

STATION	END-AREA (SF)			INCREMENTAL VOLUME (CY)		CUMULATIVE VOLUME (CY)		MASS HAUL (CY)
	CUT	FILL	EXPAND FILL	CUT	EXP FILL	CUT	EXP FILL	
293+00.00	--	0.0	0.0	--	0.0	--	0	0
293+43.29	--	17.2	22.4	--	18.0	--	18	-18
293+44.37	--	17.2	22.4	--	0.9	--	19	-19
293+68.28	--	12.9	16.7	--	17.3	--	36	-36
293+69.37	--	12.5	16.2	--	0.7	--	37	-37

STH 54 - GALESVILLE - MELROSE (MAINLINE)
WEST COUNTY LINE TO STH 71 EAST BND
AVERAGE ENDAREA VOLUMES

FILL EXPANSION FACTOR= ***1.30***

STATION	END-AREA (SF)			INCREMENTAL VOLUME (CY)		CUMULATIVE VOLUME (CY)		MASS HAUL (CY)
	CUT	FILL	EXPAND FILL	CUT	EXP FILL	CUT	EXP FILL	
295+08.43	--	10.7	14.0	--	0.0	--	0	0
295+33.42	--	11.9	15.5	--	13.6	--	14	-14
295+50.00	--	11.3	14.7	--	9.3	--	23	-23
296+00.00	--	2.1	2.7	--	16.0	--	39	-39

STH 54 - GALESVILLE - MELROSE (MAINLINE)
WEST COUNTY LINE TO STH 71 EAST BND
AVERAGE ENDAREA VOLUMES

FILL EXPANSION FACTOR= ***1.30***

STATION	END-AREA (SF)			INCREMENTAL VOLUME (CY)		CUMULATIVE VOLUME (CY)		MASS HAUL (CY)
	CUT	FILL	EXPAND FILL	CUT	EXP FILL	CUT	EXP FILL	
296+84.11	--	0.0	0.0	--	0.0	--	0	0
297+08.73	--	0.2	0.3	--	0.1	--	0	0
297+33.28	--	1.1	1.4	--	0.8	--	1	-1
297+50.00	--	1.8	2.4	--	1.2	--	2	-2

STH 54 - GALESVILLE - MELROSE (MAINLINE)
WEST COUNTY LINE TO STH 71 EAST BND
AVERAGE ENDAREA VOLUMES

FILL EXPANSION FACTOR= ***1.30***

STATION	END-AREA (SF)			INCREMENTAL VOLUME (CY)		CUMULATIVE VOLUME (CY)		MASS HAUL (CY)
	CUT	FILL	EXPAND FILL	CUT	EXP FILL	CUT	EXP FILL	
427+62.18	--	16.6	21.6	--	0.0	--	0	0
427+86.83	--	12.9	16.7	--	17.5	--	18	-18
428+03.66	--	12.0	15.5	--	10.1	--	28	-28
428+11.51	--	11.0	14.3	--	4.3	--	32	-32
428+28.97	--	5.8	7.5	--	7.1	--	39	-39
428+54.25	--	3.7	4.8	--	5.8	--	45	-45

STH 54 - GALESVILLE - MELROSE (MAINLINE)
WEST COUNTY LINE TO STH 71 EAST BND
AVERAGE ENDAREA VOLUMES

FILL EXPANSION FACTOR= ***1.30***

STATION	END-AREA (SF)			INCREMENTAL VOLUME (CY)		CUMULATIVE VOLUME (CY)		MASS HAUL (CY)
	CUT	FILL	EXPAND FILL	CUT	EXP FILL	CUT	EXP FILL	
367+50.00	--	13.1	17.1	--	0.0	--	0	0
367+75.00	--	21.0	27.3	--	20.6	--	21	-21
368+00.00	--	19.5	25.3	--	24.4	--	45	-45
368+50.00	--	9.4	12.2	--	34.7	--	80	-80
369+00.00	--	8.6	11.2	--	21.7	--	101	-101
369+50.00	--	9.9	12.8	--	22.3	--	124	-124
370+00.00	--	14.6	19.0	--	29.5	--	153	-153
370+50.00	--	18.3	23.8	--	39.6	--	193	-193
371+00.00	--	18.2	23.7	--	43.9	--	237	-237
371+50.00	--	20.9	27.2	--	47.1	--	284	-284
372+00.00	--	23.9	31.1	--	53.9	--	338	-338
372+50.00	--	31.1	40.4	--	66.2	--	404	-404
373+00.00	--	27.9	36.2	--	71.0	--	475	-475
373+50.00	--	27.9	36.3	--	67.2	--	542	-542
374+00.00	--	26.3	34.2	--	65.3	--	607	-607
374+50.00	--	24.7	32.1	--	61.4	--	669	-669
374+75.00	--	21.4	27.8	--	27.7	--	696	-696
375+00.00	--	22.3	29.0	--	26.3	--	723	-723
375+50.00	--	25.5	33.2	--	57.5	--	780	-780

STH 54 - GALESVILLE - MELROSE (MAINLINE)
WEST COUNTY LINE TO STH 71 EAST BND
AVERAGE ENDAREA VOLUMES

FILL EXPANSION FACTOR= ***1.30***

STATION	END-AREA (SF)			INCREMENTAL VOLUME (CY)		CUMULATIVE VOLUME (CY)		MASS HAUL (CY)
	CUT	FILL	EXPAND FILL	CUT	EXP FILL	CUT	EXP FILL	
383+00.00	--	4.5	5.8	--	0.0	--	0	0
383+29.55	--	8.1	10.5	--	9.0	--	9	-9
383+54.13	--	8.1	10.6	--	9.6	--	19	-19
383+78.76	--	3.1	4.0	--	6.6	--	25	-25
384+00.00	--	3.6	4.6	--	3.4	--	29	-29
384+50.00	--	5.0	6.4	--	10.3	--	39	-39
385+00.00	--	4.9	6.3	--	11.8	--	51	-51
385+50.00	--	1.9	2.5	--	8.2	--	59	-59
386+00.00	--	0.0	0.0	--	2.3	--	61	-61
386+50.00	--	0.0	0.0	--	0.0	--	61	-61
387+00.00	--	0.0	0.0	--	0.0	--	61	-61
387+50.00	--	1.4	1.8	--	1.6	--	63	-63
388+00.00	--	1.4	1.8	--	3.3	--	66	-66
388+50.00	--	1.4	1.8	--	3.4	--	70	-70
389+00.00	--	1.1	1.5	--	3.0	--	73	-73
389+50.00	--	1.7	2.2	--	3.4	--	76	-76
390+00.00	--	1.7	2.2	--	4.1	--	80	-80
390+50.00	--	1.7	2.2	--	4.0	--	84	-84
391+00.00	--	0.2	0.3	--	2.2	--	86	-86
391+50.00	--	0.2	0.3	--	0.5	--	87	-87
392+00.00	--	0.2	0.2	--	0.5	--	87	-87
392+50.00	--	0.3	0.3	--	0.5	--	88	-88
393+00.00	--	0.2	0.3	--	0.6	--	88	-88
393+50.00	--	0.2	0.2	--	0.5	--	89	-89
394+00.00	--	0.4	0.5	--	0.7	--	90	-90
394+10.38	--	0.4	0.5	--	0.2	--	90	-90
394+35.88	--	12.1	15.7	--	7.7	--	97	-97
394+60.86	--	17.7	23.0	--	17.9	--	115	-115
395+00.00	--	1.4	1.8	--	18.0	--	133	-133

STH 54 - GALESVILLE - MELROSE (MAINLINE)
WEST COUNTY LINE TO STH 71 EAST BND
AVERAGE ENDAREA VOLUMES

FILL EXPANSION FACTOR= ***1.30***

STATION	END-AREA (SF)			INCREMENTAL VOLUME (CY)		CUMULATIVE VOLUME (CY)		MASS HAUL (CY)
	CUT	FILL	EXPAND FILL	CUT	EXP FILL	CUT	EXP FILL	
430+96.83	--	9.9	12.9	--	0.0	--	0	0
431+21.53	--	14.7	19.1	--	14.6	--	15	-15
431+46.20	--	15.3	19.8	--	17.8	--	32	-32
431+80.14	--	2.4	3.1	--	14.4	--	47	-47
432+05.38	--	4.5	5.8	--	4.2	--	51	-51
432+30.66	--	8.3	10.8	--	7.8	--	59	-59
432+73.57	--	7.1	9.3	--	16.0	--	75	-75
432+98.83	--	3.0	3.9	--	6.2	--	81	-81
433+24.06	--	0.0	0.0	--	1.8	--	83	-83

STH 54 - GALESVILLE - MELROSE (MAINLINE)
WEST COUNTY LINE TO STH 71 EAST BND
AVERAGE ENDAREA VOLUMES

FILL EXPANSION FACTOR= ***1.30***

STATION	END-AREA (SF)			INCREMENTAL VOLUME (CY)		CUMULATIVE VOLUME (CY)		MASS HAUL (CY)
	CUT	FILL	EXPAND FILL	CUT	EXP FILL	CUT	EXP FILL	
436+27.07	--	29.4	38.3	--	0.0	--	0	0
436+52.06	--	20.3	26.4	--	29.9	--	30	-30
436+77.04	--	15.6	20.3	--	21.6	--	51	-51

EARTHWORK SUMMARY

LOCATION	CUT (CY)	EXPANDED FILL (CY)	MASS HAUL (CY)
BEAM GUARD (2+50 TO 5+00)	--	167	-167
BEAM GUARD (58+00 TO 64+77)	--	365	-365
BEAM GUARD (66+50 TO 69+00)	--	185	-185
BEAM GUARD (77+50 TO 80+50)	--	159	-159
BEAM GUARD (106+34 TO 107+50)	--	101	-101
BEAM GUARD (241+50 TO 250+00)	--	983	-983
BEAM GUARD (293+00 TO 293+69)	--	37	-37
BEAM GUARD (295+08 TO 296+00)	--	39	-39
BEAM GUARD (296+84 TO 297+50)	--	2	-2
BEAM GUARD (367+50 TO 375+50)	--	780	-780
BEAM GUARD (383+00 TO 395+00)	--	133	-133
BEAM GUARD (427+62 TO 428+54)	--	45	-45
BEAM GUARD (430+96 TO 433+24)	--	83	-83
BEAM GUARD (436+27 TO 436+77)	--	51	-51
TOTALS	**0**	**3130**	**-3130**

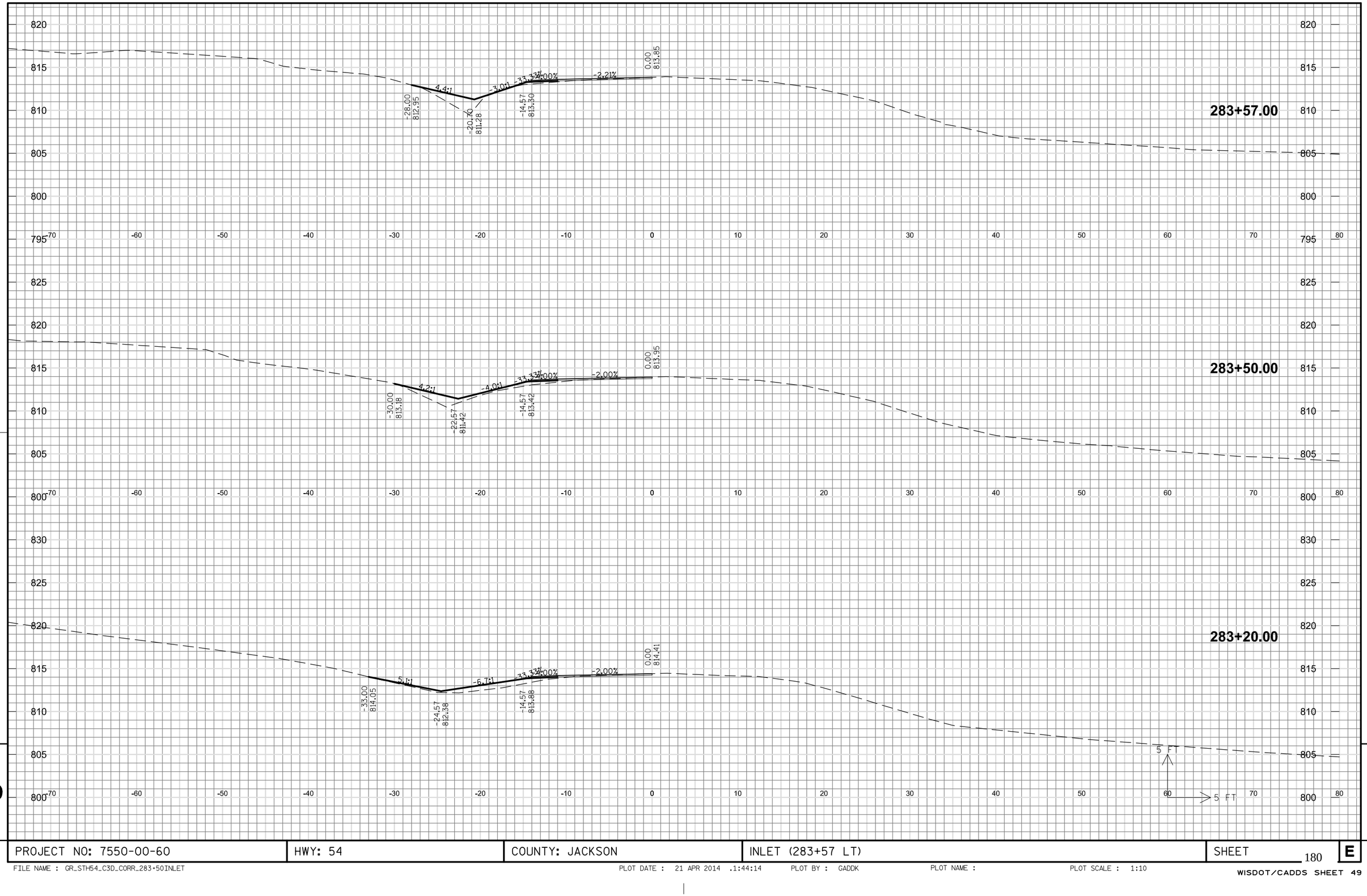

PROJECT NO: 7550-00-60	HWY: 54	COUNTY: JACKSON	INLET (283+57 LT)	SHEET 180	E

FILE NAME : GR_STH54_C3D_CORR_283+50INLET PLOT DATE : 21 APR 2014 .1:44:14 PLOT BY : GADDK PLOT NAME : PLOT SCALE : 1:10

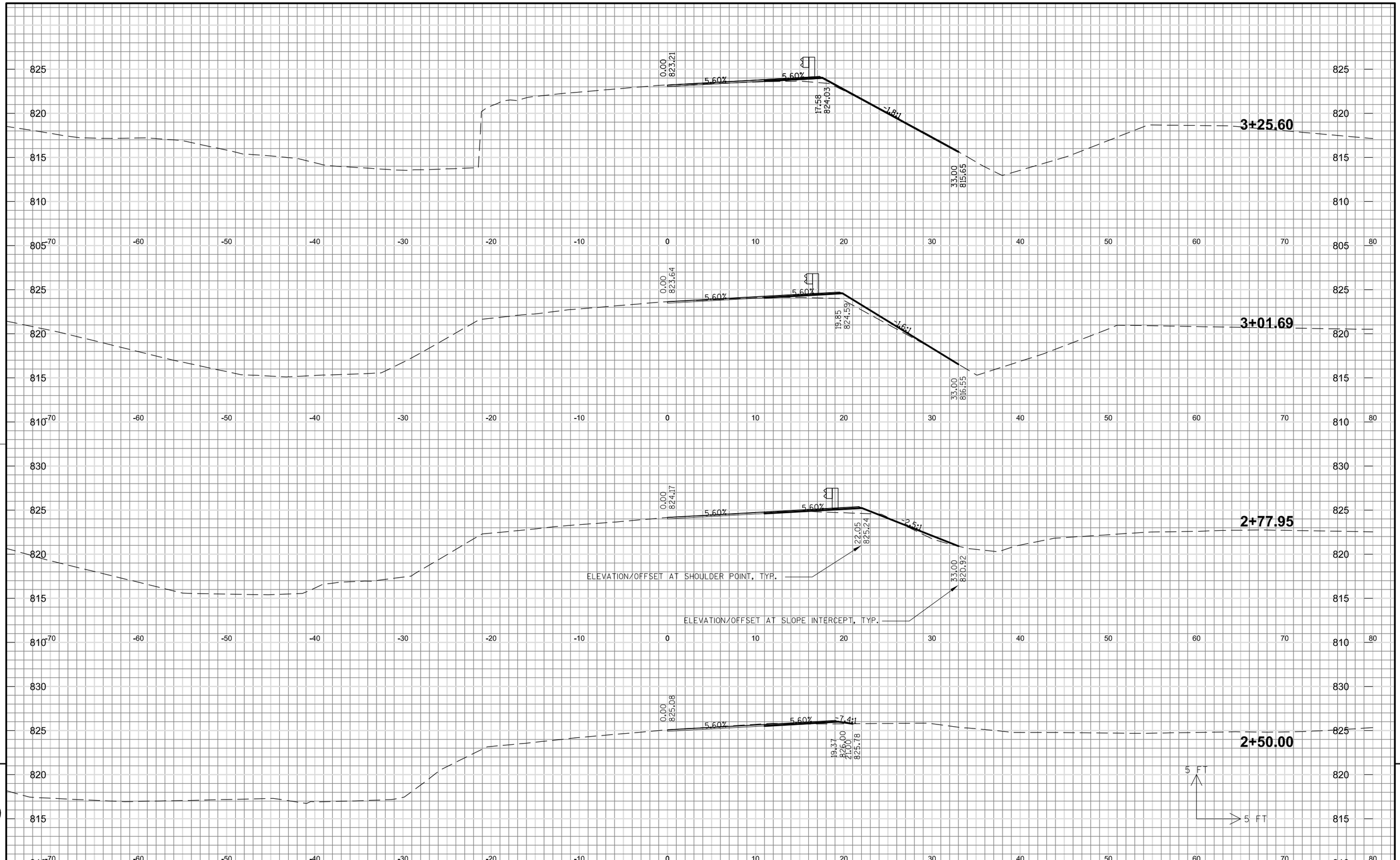

9

9

PROJECT NO: 7550-00-30	HWY: 54	COUNTY: JACKSON	CROSS SECTIONS (BEAMGUARD STA 3+00 TO 5+00)	SHEET	E

FILE NAME : GR_STH54_C3D_CORR_BEAMGUARD_300_450 PLOT DATE : 03 FEB 2014 15:17:28 PLOT BY : GADDK PLOT NAME : PLOT SCALE : 1:10

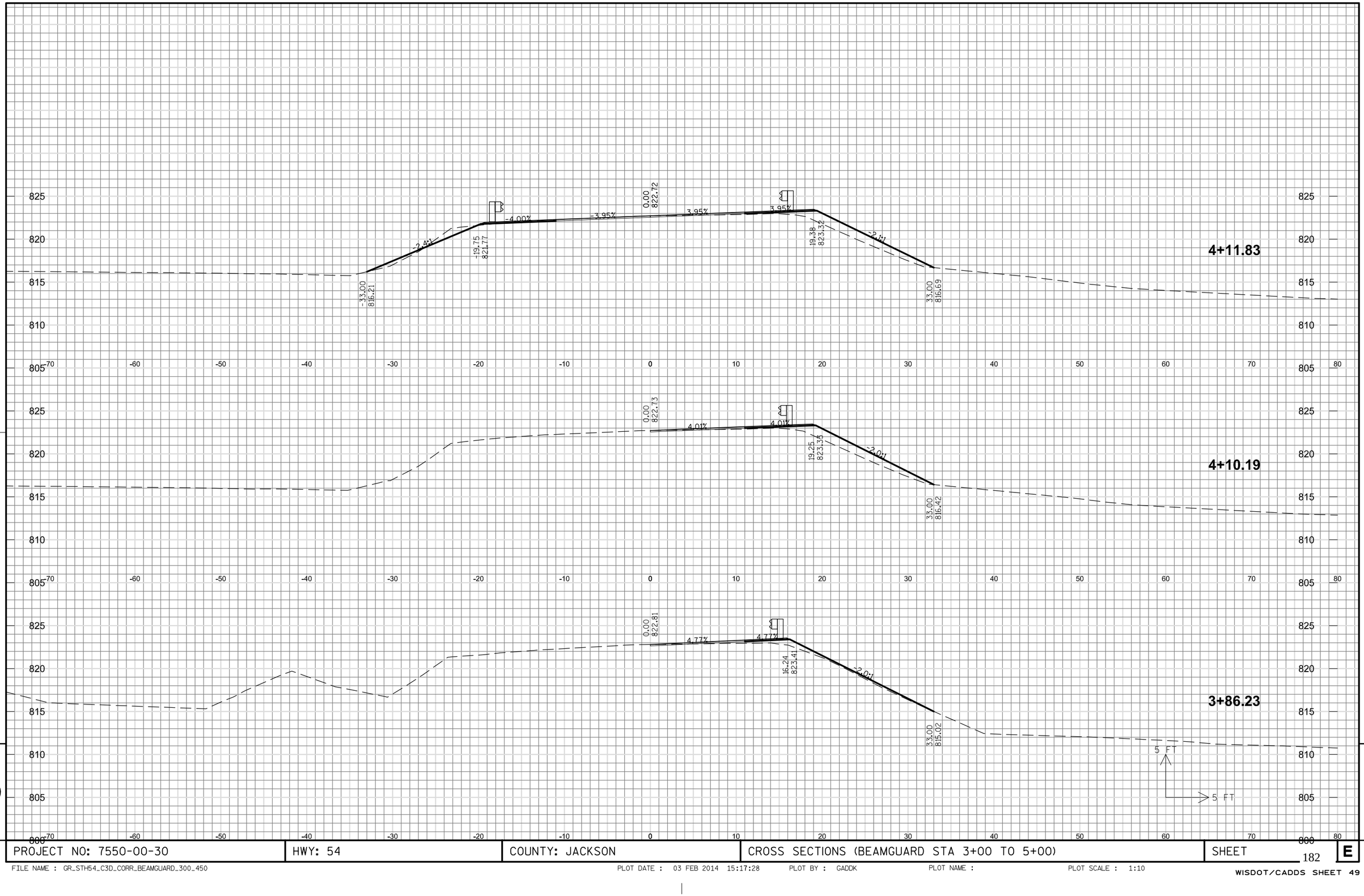

9

PROJECT NO: 7550-00-30	HWY: 54	COUNTY: JACKSON	CROSS SECTIONS (BEAMGUARD STA 3+00 TO 5+00)	SHEET	E

FILE NAME : GR_STH54_C3D_CORR_BEAMGUARD_300_450 PLOT DATE : 03 FEB 2014 15:17:28 PLOT BY : GADDK PLOT NAME : PLOT SCALE : 1:10

WISDOT/CADDS SHEET 49

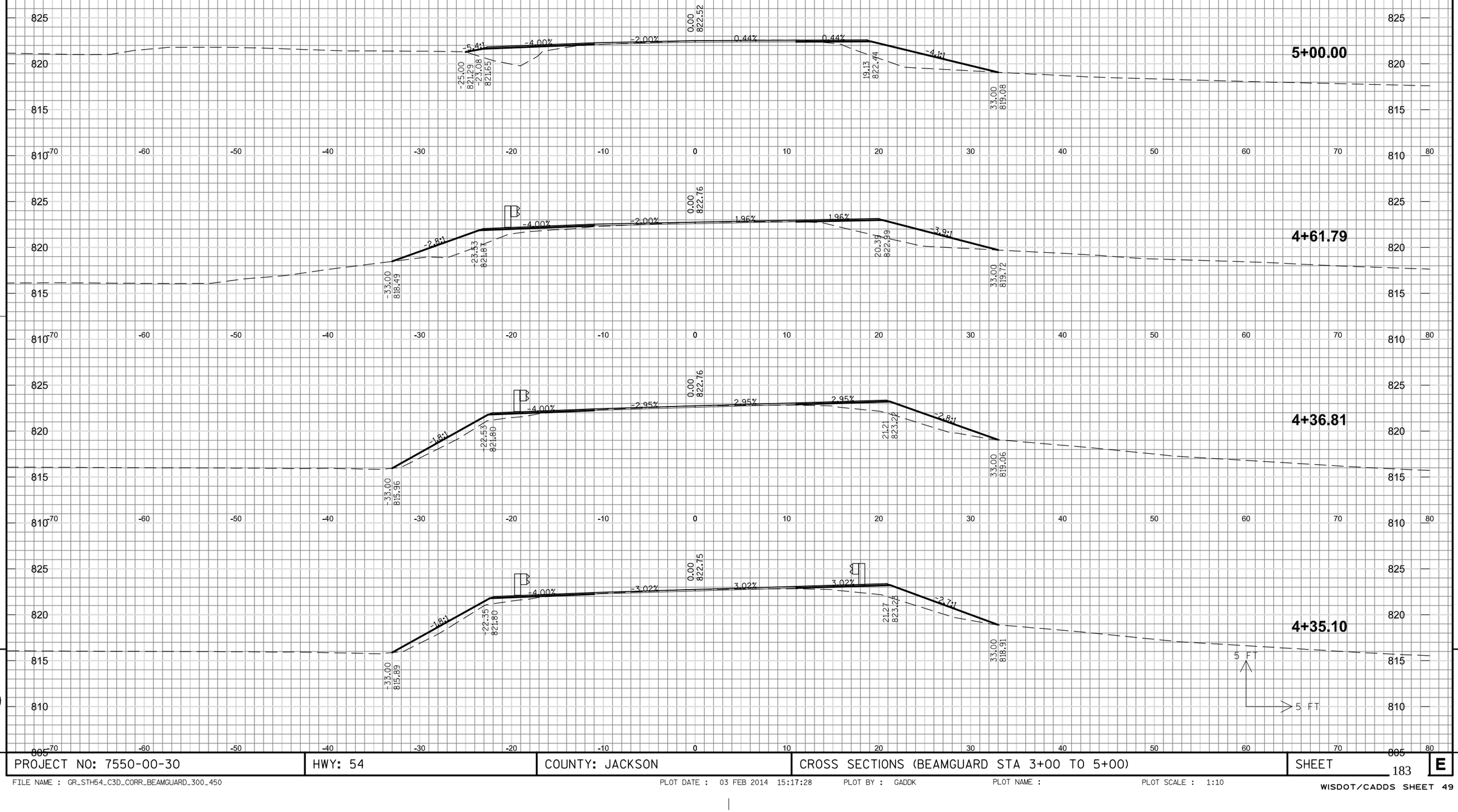

9

PROJECT NO: 7550-00-30	HWY: 54	COUNTY: JACKSON	CROSS SECTIONS (BEAMGUARD STA 3+00 TO 5+00)	SHEET	E

9

FILE NAME : GR_STH54_C3D_CORR_BEAMGUARD_300_450 PLOT DATE : 03 FEB 2014 15:17:28 PLOT BY : GADDK PLOT NAME : PLOT SCALE : 1:10

WISDOT/CADDS SHEET 49

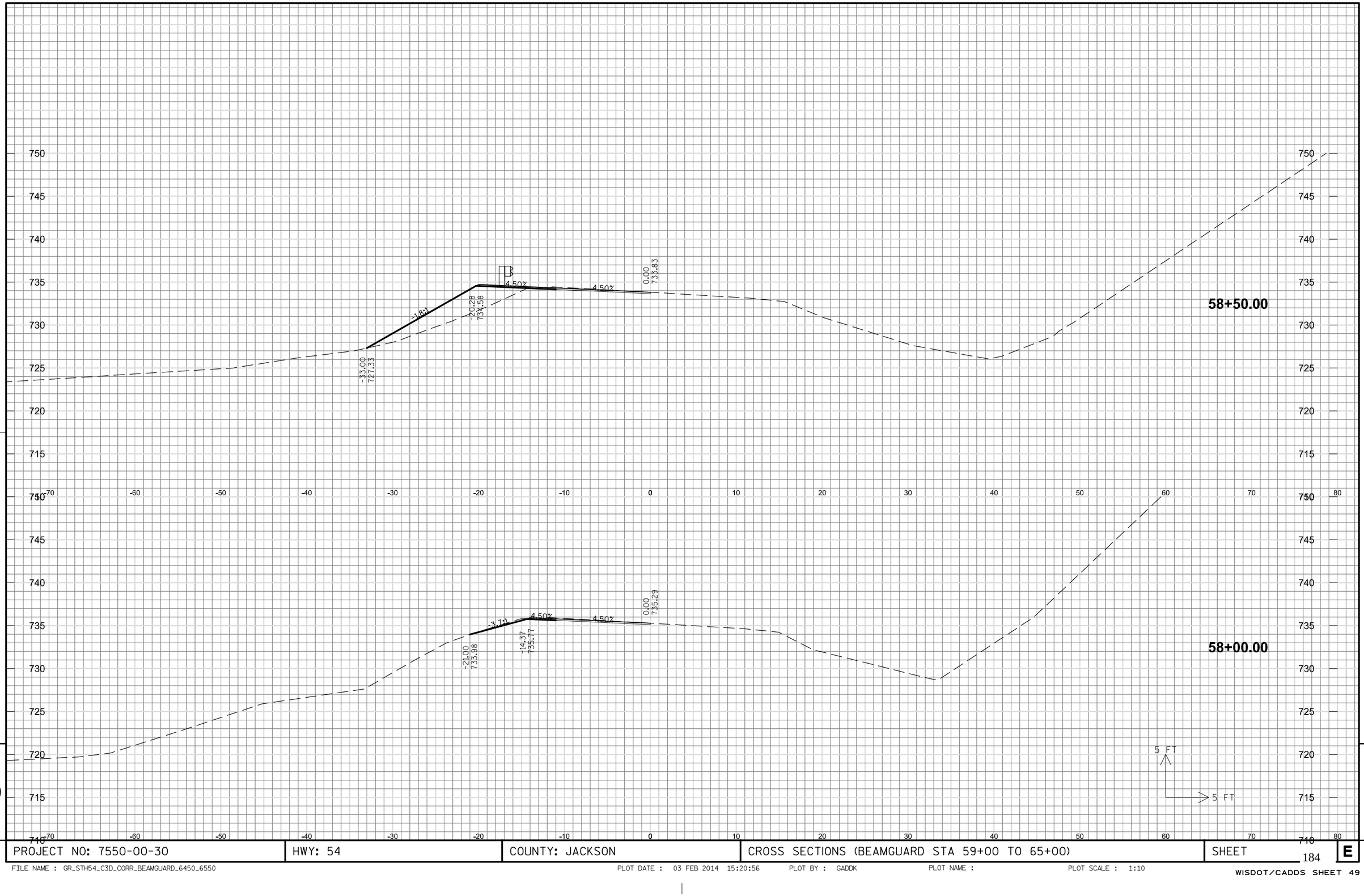

9

9

PROJECT NO: 7550-00-30	HWY: 54	COUNTY: JACKSON	CROSS SECTIONS (BEAMGUARD STA 59+00 TO 65+00)	SHEET 184 E

FILE NAME : GR_STH54_C3D_CORR_BEAMGUARD_6450_6550 PLOT DATE : 03 FEB 2014 15:20:56 PLOT BY : GADDK PLOT NAME : PLOT SCALE : 1:10

WISDOT/CADDS SHEET 49

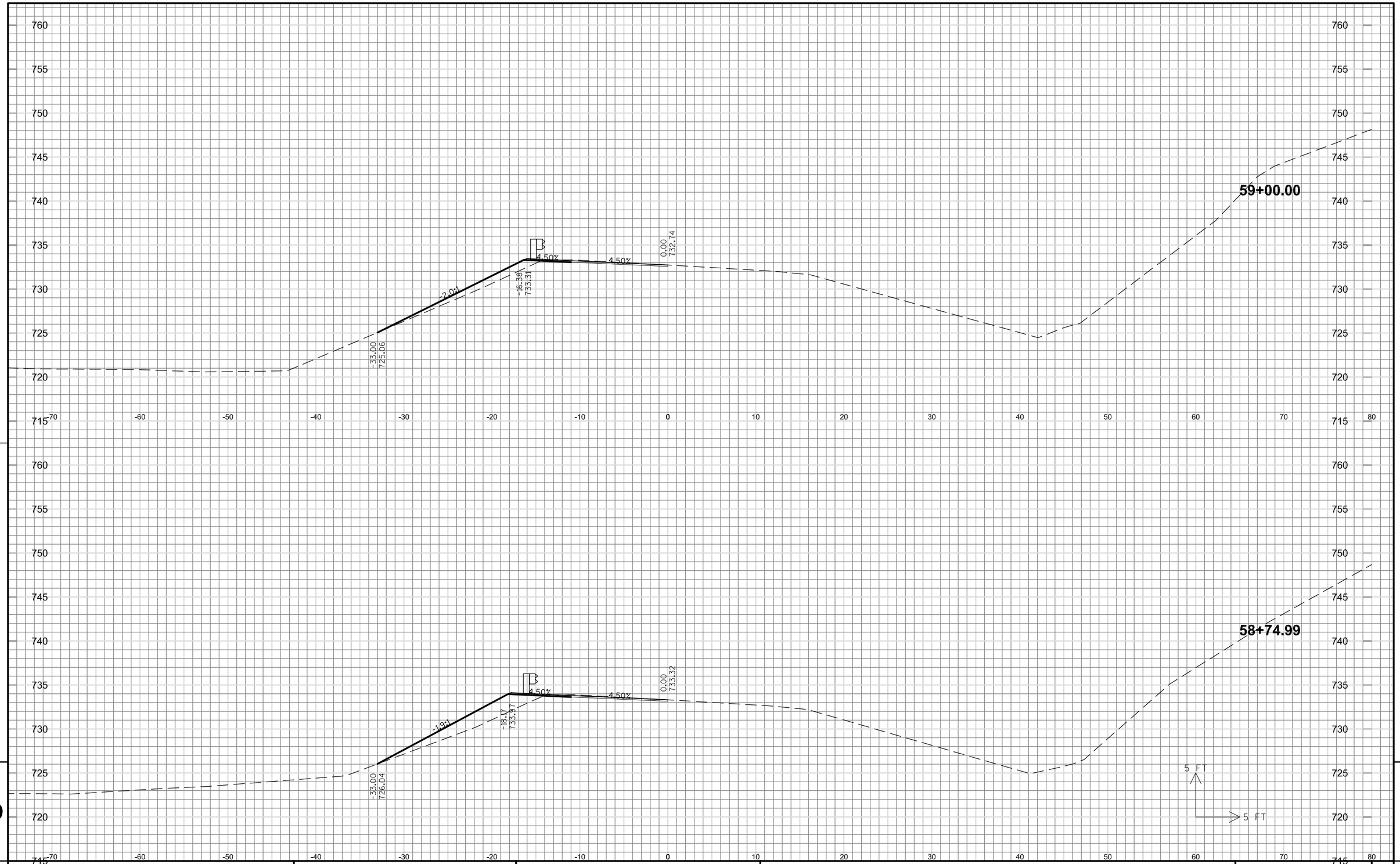

9

9

PROJECT NO: 7550-00-30	HWY: 54	COUNTY: JACKSON	CROSS SECTIONS (BEAMGUARD STA 59+00 TO 65+00)	SHEET	E

FILE NAME : GR_STH54_C3D_CORR_BEAMGUARD_6450_6550 PLOT DATE : 03 FEB 2014 15:20:56 PLOT BY : GADDK PLOT NAME : PLOT SCALE : 1:10

WISDOT/CADDS SHEET 49

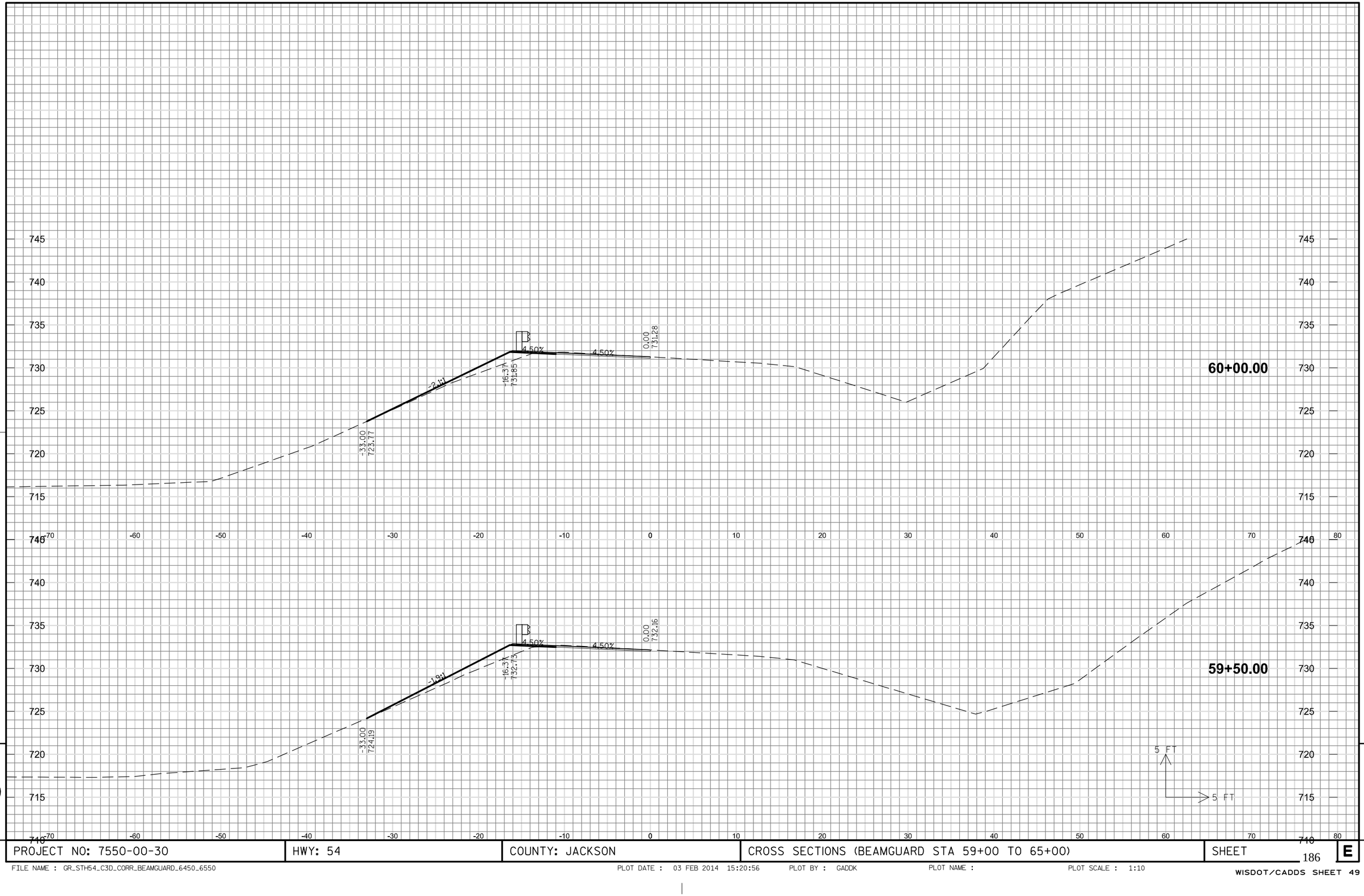

9

9

PROJECT NO: 7550-00-30	HWY: 54	COUNTY: JACKSON	CROSS SECTIONS (BEAMGUARD STA 59+00 TO 65+00)	SHEET E

FILE NAME : GR_STH54_C3D_CORR_BEAMGUARD_6450_6550 PLOT DATE : 03 FEB 2014 15:20:56 PLOT BY : GADDK PLOT NAME : PLOT SCALE : 1:10

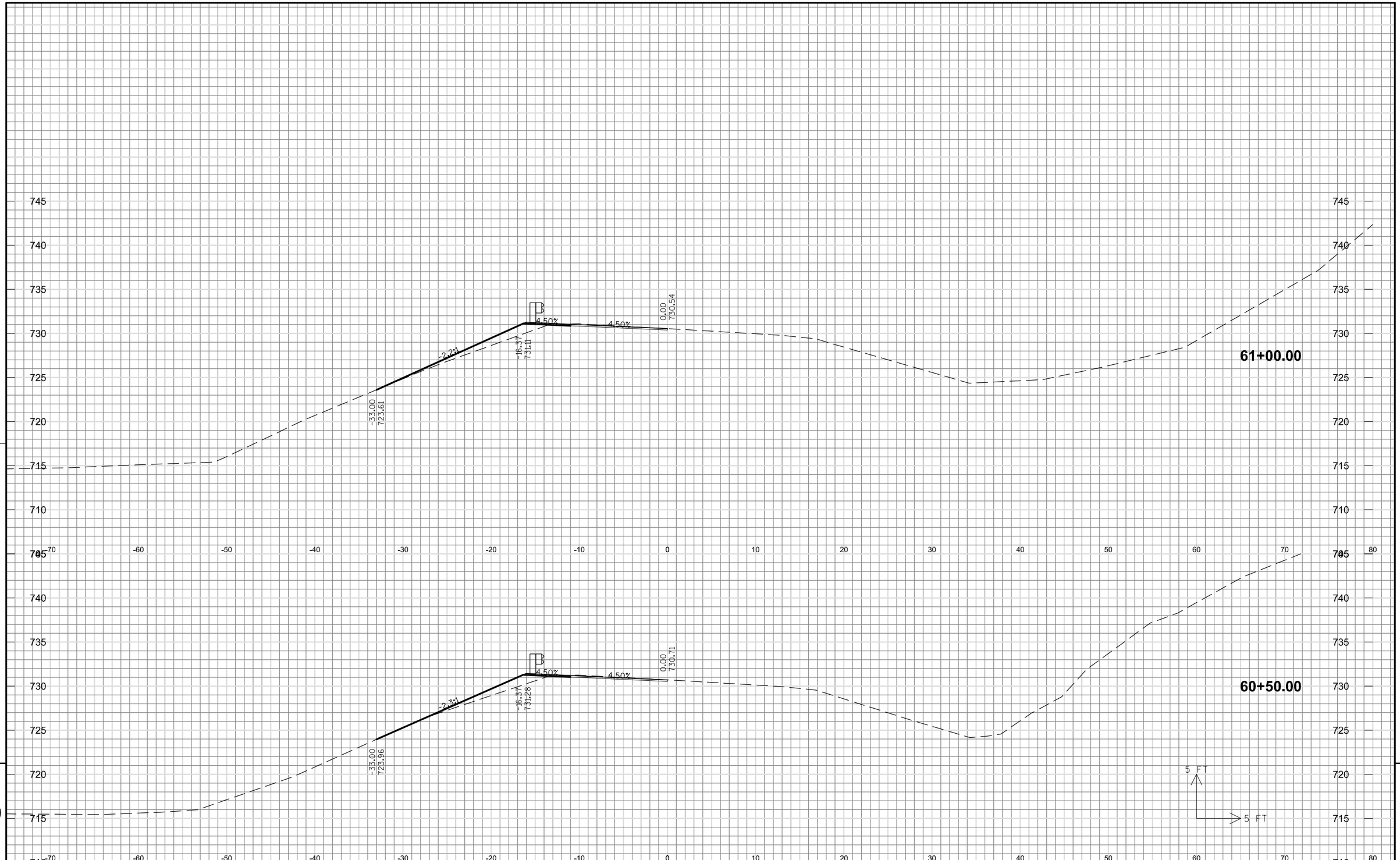

9

9

PROJECT NO: 7550-00-30	HWY: 54	COUNTY: JACKSON	CROSS SECTIONS (BEAMGUARD STA 59+00 TO 65+00)	SHEET 187	E

FILE NAME : GR_STH54_C3D_CORR_BEAMGUARD_6450_6550 PLOT DATE : 03 FEB 2014 15:20:56 PLOT BY : GADDK PLOT NAME : PLOT SCALE : 1:10

WISDOT/CADDS SHEET 49

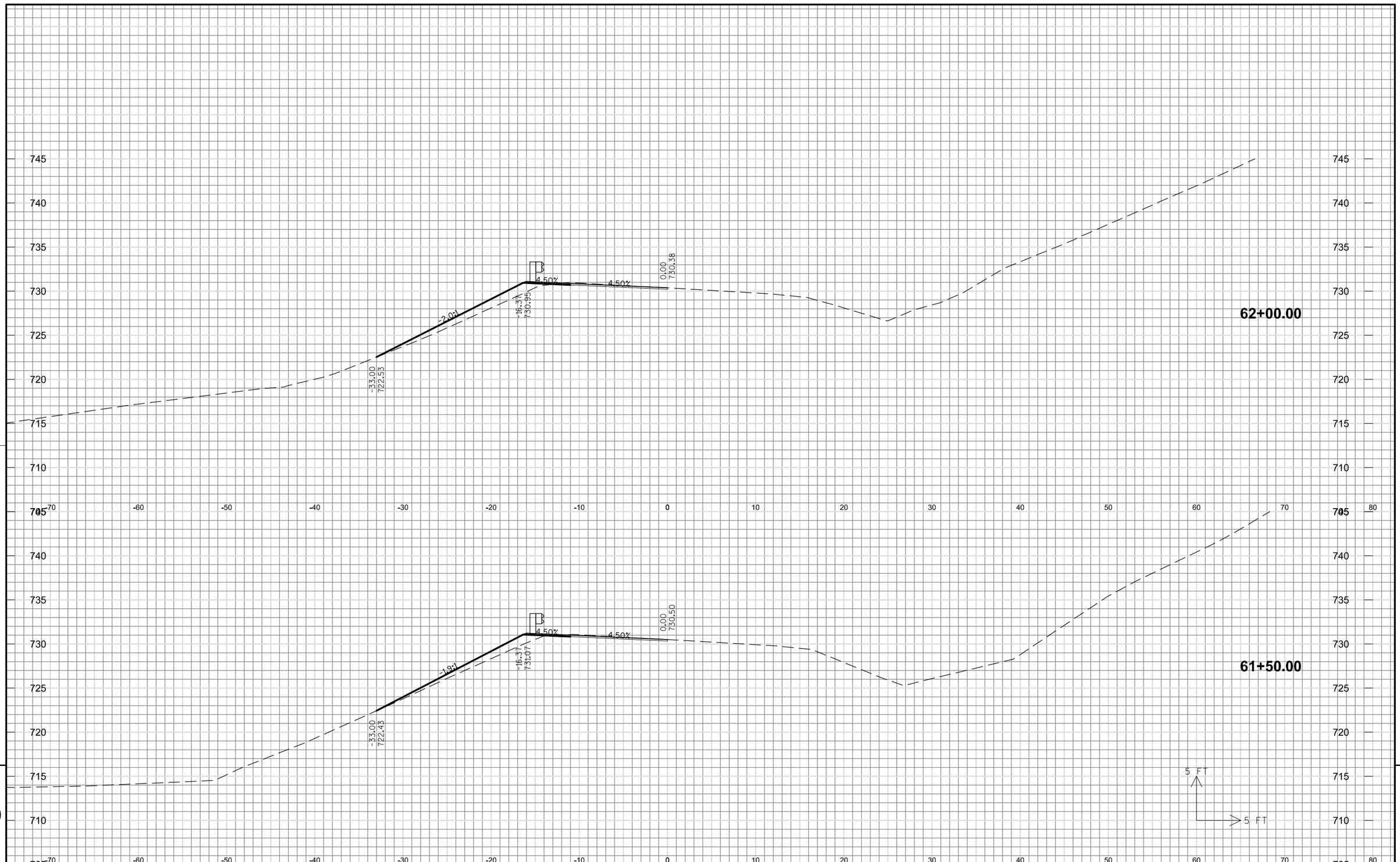

9

9

PROJECT NO: 7550-00-30	HWY: 54	COUNTY: JACKSON	CROSS SECTIONS (BEAMGUARD STA 59+00 TO 65+00)	SHEET	E

FILE NAME : GR_STH54_C3D_CORR_BEAMGUARD_6450_6550 PLOT DATE : 03 FEB 2014 15:20:56 PLOT BY : GADDK PLOT NAME : PLOT SCALE : 1:10

9

9

PROJECT NO: 7550-00-30	HWY: 54	COUNTY: JACKSON	CROSS SECTIONS (BEAMGUARD STA 59+00 TO 65+00)	SHEET	E

FILE NAME : GR_STH54_C3D_CORR_BEAMGUARD_6450_6550 PLOT DATE : 03 FEB 2014 15:20:56 PLOT BY : GADDK PLOT NAME : PLOT SCALE : 1:10

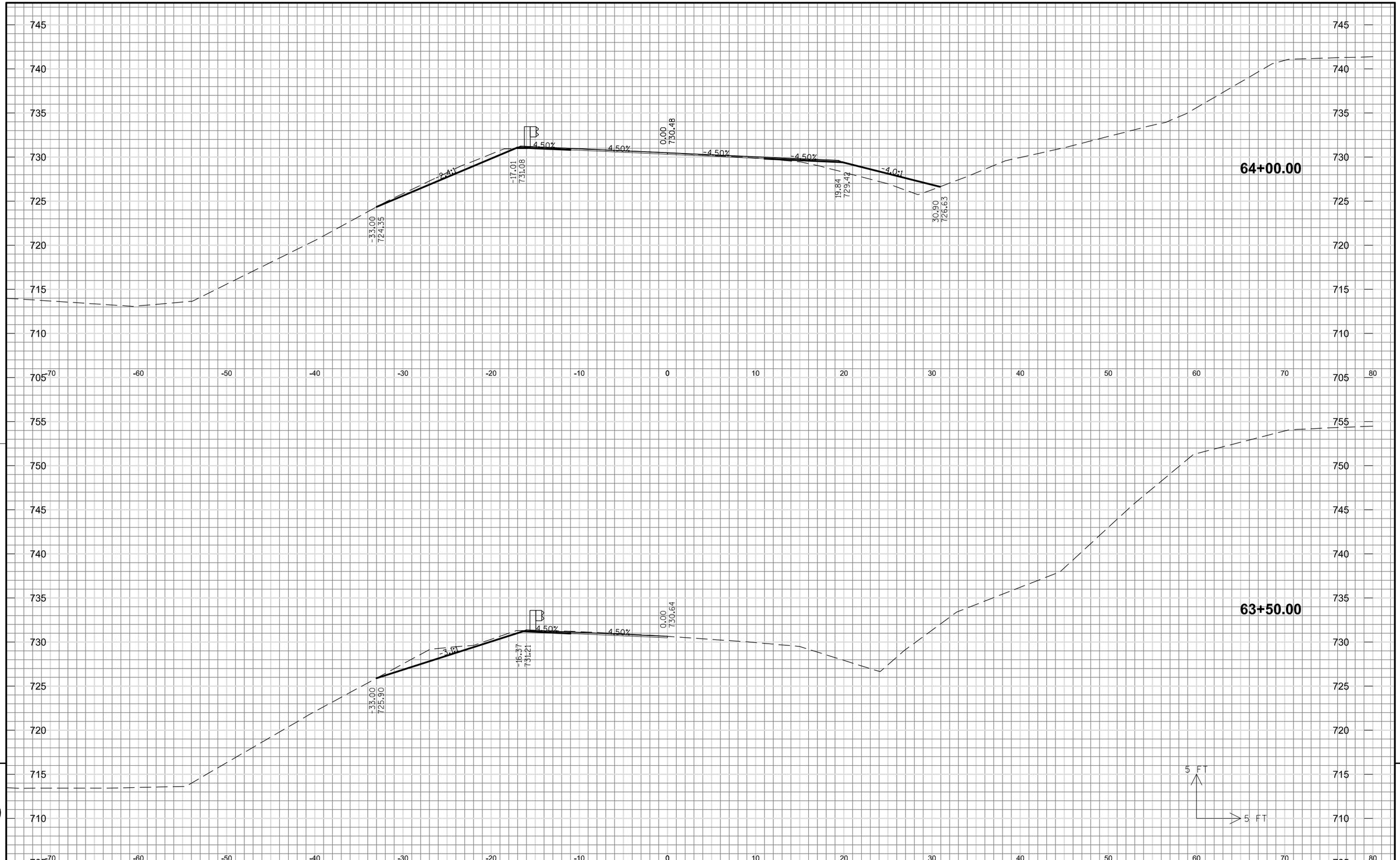

9

9

PROJECT NO: 7550-00-30	HWY: 54	COUNTY: JACKSON	CROSS SECTIONS (BEAMGUARD STA 59+00 TO 65+00)	SHEET	E

FILE NAME : GR_STH54_C3D_CORR_BEAMGUARD_6450_6550 PLOT DATE : 03 FEB 2014 15:20:56 PLOT BY : GADDK PLOT NAME : PLOT SCALE : 1:10

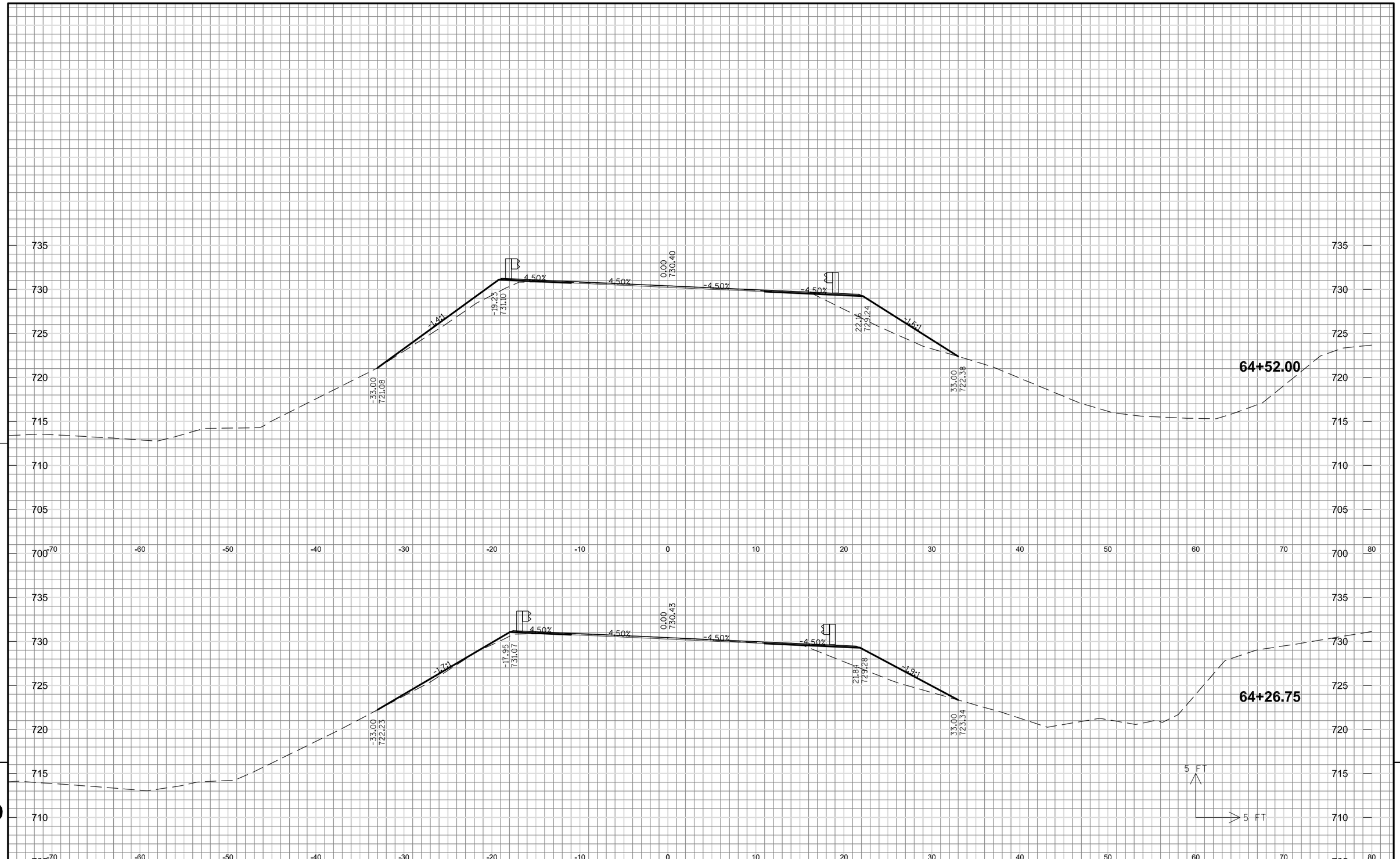

9

9

PROJECT NO: 7550-00-30	HWY: 54	COUNTY: JACKSON	CROSS SECTIONS (BEAMGUARD STA 59+00 TO 65+00)	SHEET	E

FILE NAME : GR_STH54_C3D_CORR_BEAMGUARD_6450_6550 PLOT DATE : 03 FEB 2014 15:20:56 PLOT BY : GADDK PLOT NAME : PLOT SCALE : 1:10

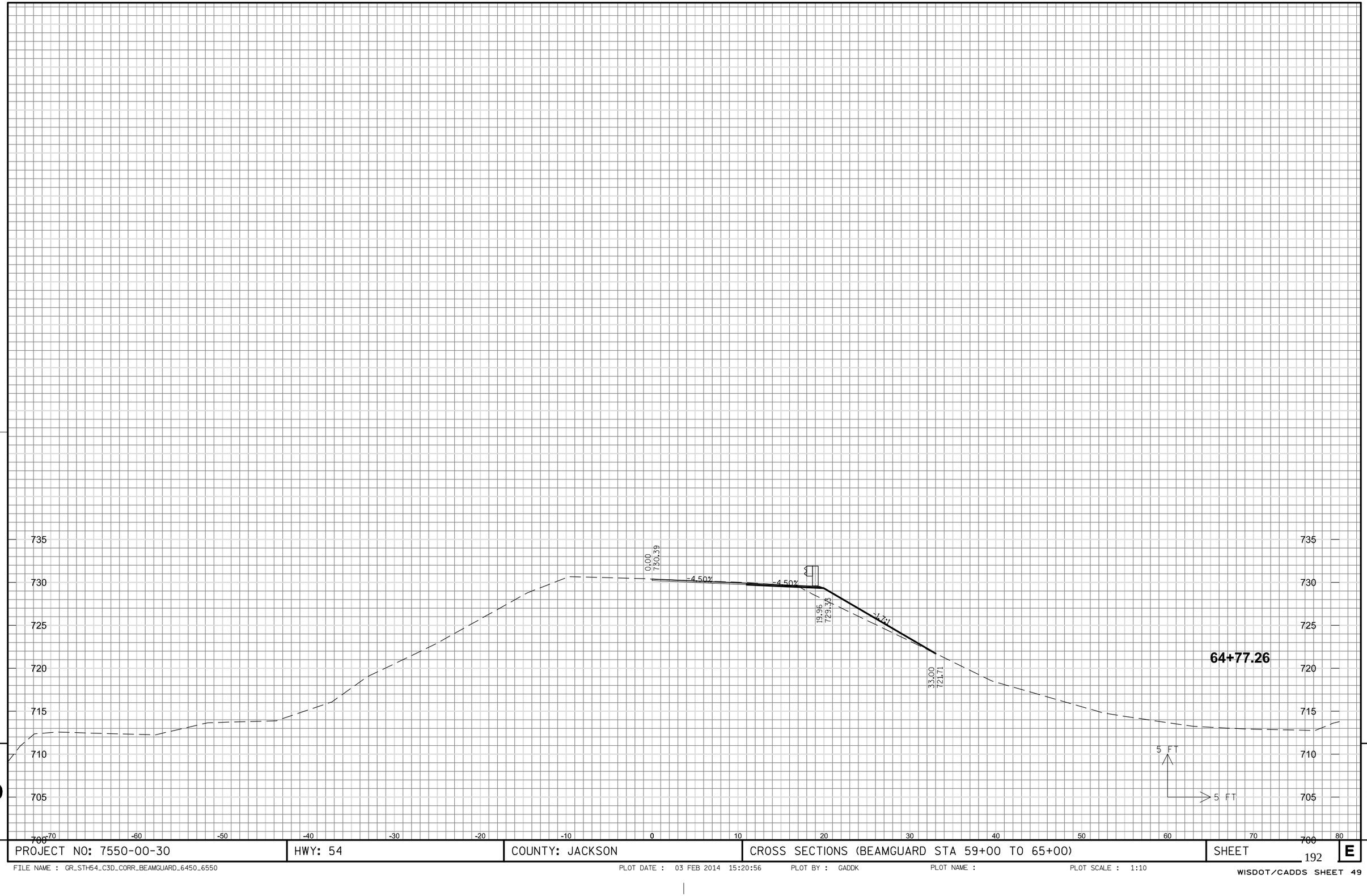

9

9

PROJECT NO: 7550-00-30	HWY: 54	COUNTY: JACKSON	CROSS SECTIONS (BEAMGUARD STA 59+00 TO 65+00)	SHEET 192	E

FILE NAME : GR_STH54_C3D_CORR_BEAMGUARD_6450_6550 PLOT DATE : 03 FEB 2014 15:20:56 PLOT BY : GADDK PLOT NAME : PLOT SCALE : 1:10

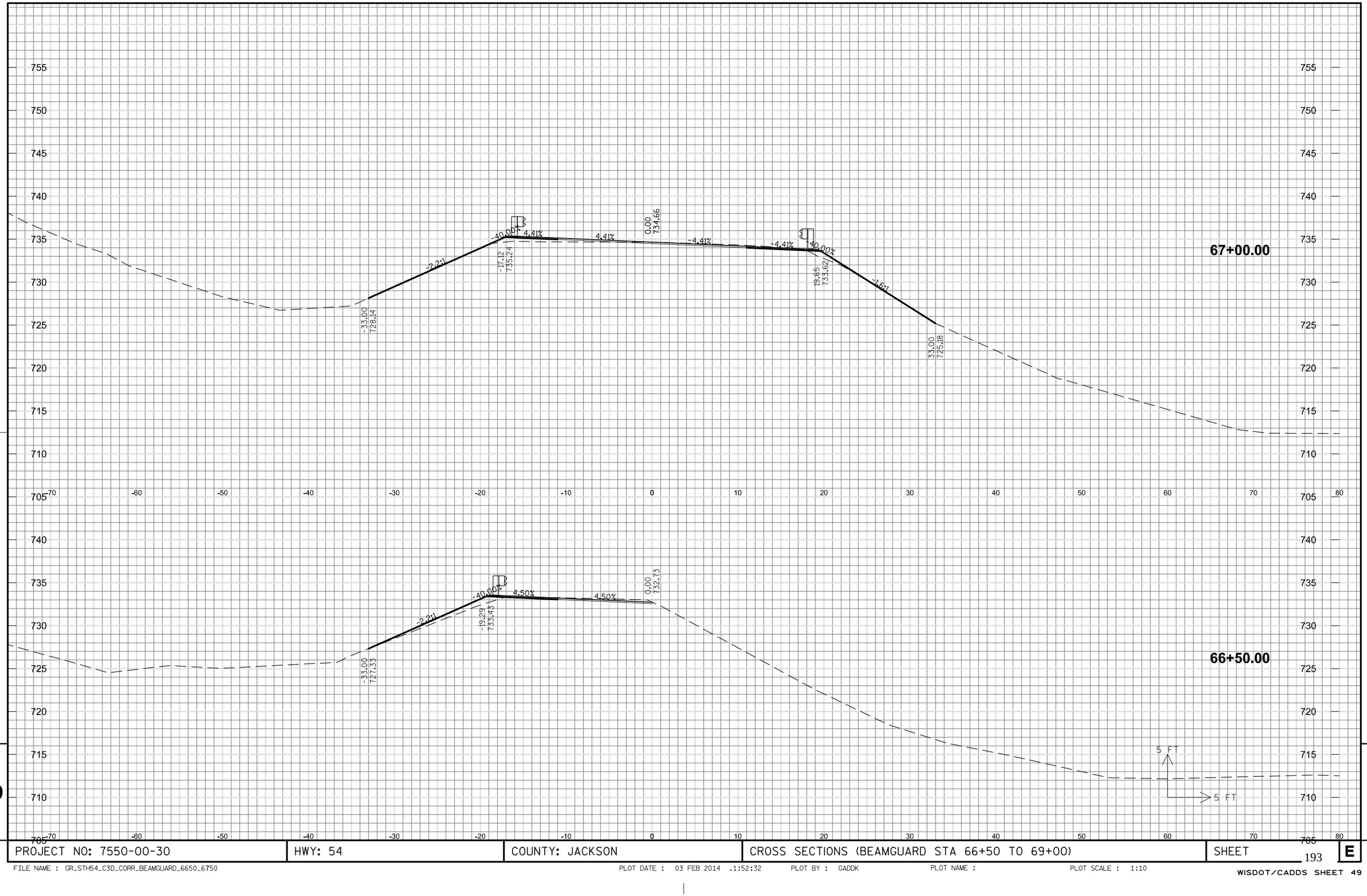

PROJECT NO: 7550-00-30	HWY: 54	COUNTY: JACKSON	CROSS SECTIONS (BEAMGUARD STA 66+50 TO 69+00)	SHEET E

FILE NAME : GR_STH54_C3D_CORR_BEAMGUARD_6650_6750 PLOT DATE : 03 FEB 2014 .1:52:32 PLOT BY : GADDK PLOT NAME : PLOT SCALE : 1:10

WISDOT/CADDS SHEET 49

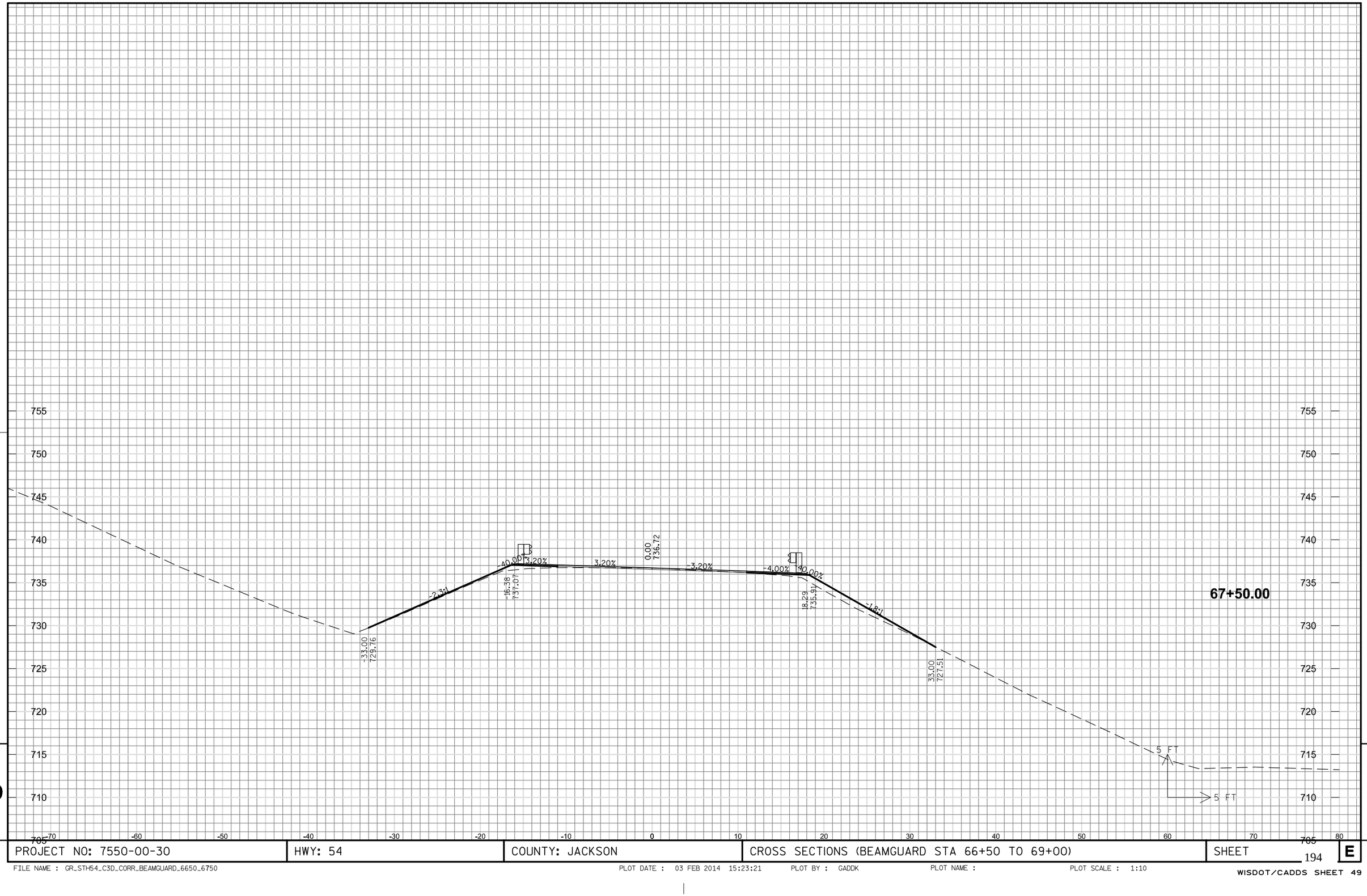

9

PROJECT NO: 7550-00-30	HWY: 54	COUNTY: JACKSON	CROSS SECTIONS (BEAMGUARD STA 66+50 TO 69+00)	SHEET	E

FILE NAME : GR_STH54_C3D_CORR_BEAMGUARD_6650_6750 PLOT DATE : 03 FEB 2014 15:23:21 PLOT BY : GADDK PLOT NAME : PLOT SCALE : 1:10

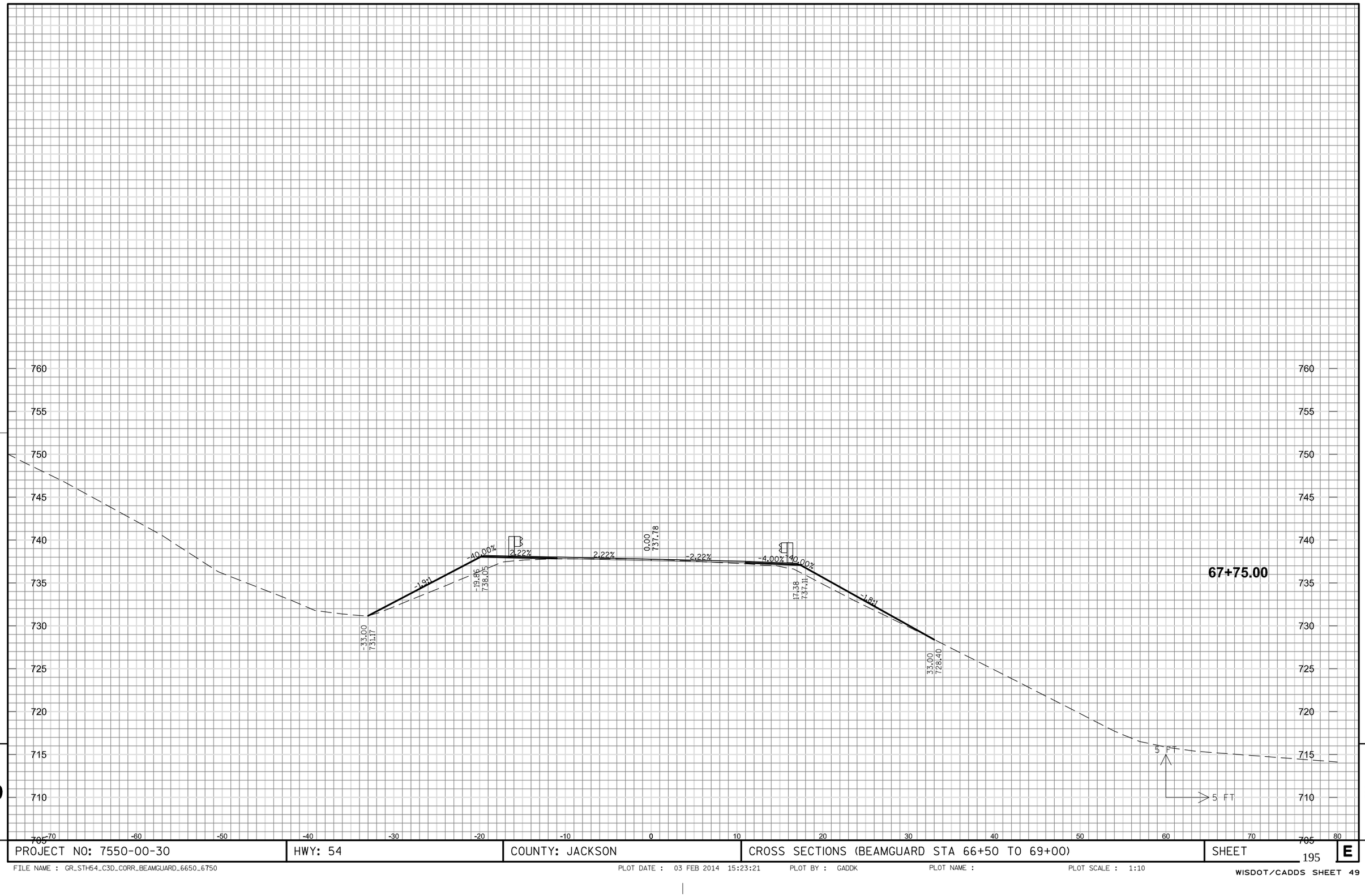

9

9

PROJECT NO: 7550-00-30	HWY: 54	COUNTY: JACKSON	CROSS SECTIONS (BEAMGUARD STA 66+50 TO 69+00)	SHEET	E

FILE NAME : GR_STH54_C3D_CORR_BEAMGUARD_6650_6750 PLOT DATE : 03 FEB 2014 15:23:21 PLOT BY : GADDK PLOT NAME : PLOT SCALE : 1:10

PROJECT NO: 7550-00-30	HWY: 54	COUNTY: JACKSON	CROSS SECTIONS (BEAMGUARD STA 66+50 TO 69+00)	SHEET	E

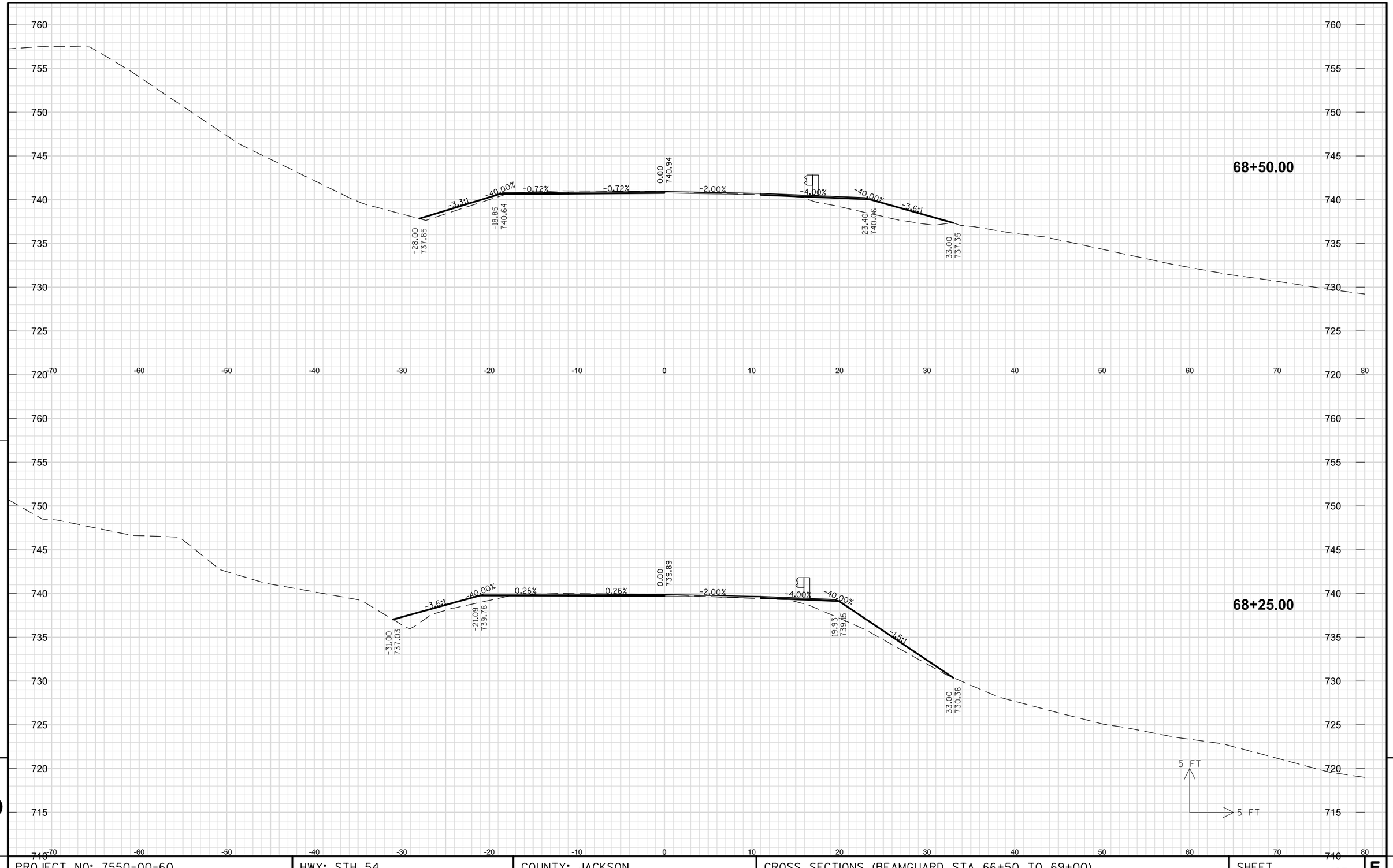

PROJECT NO: 7550-00-60	HWY: STH 54	COUNTY: JACKSON	CROSS SECTIONS (BEAMGUARD STA 66+50 TO 69+00)	SHEET 197 E

FILE NAME : GR_STH54_C3D_CORR_BEAMGUARD_6650_6750 PLOT DATE : 16 APR 2015 14:54:37 PLOT BY : GADDK PLOT NAME : PLOT SCALE : 1:10

WISDOT/CADDS SHEET 49

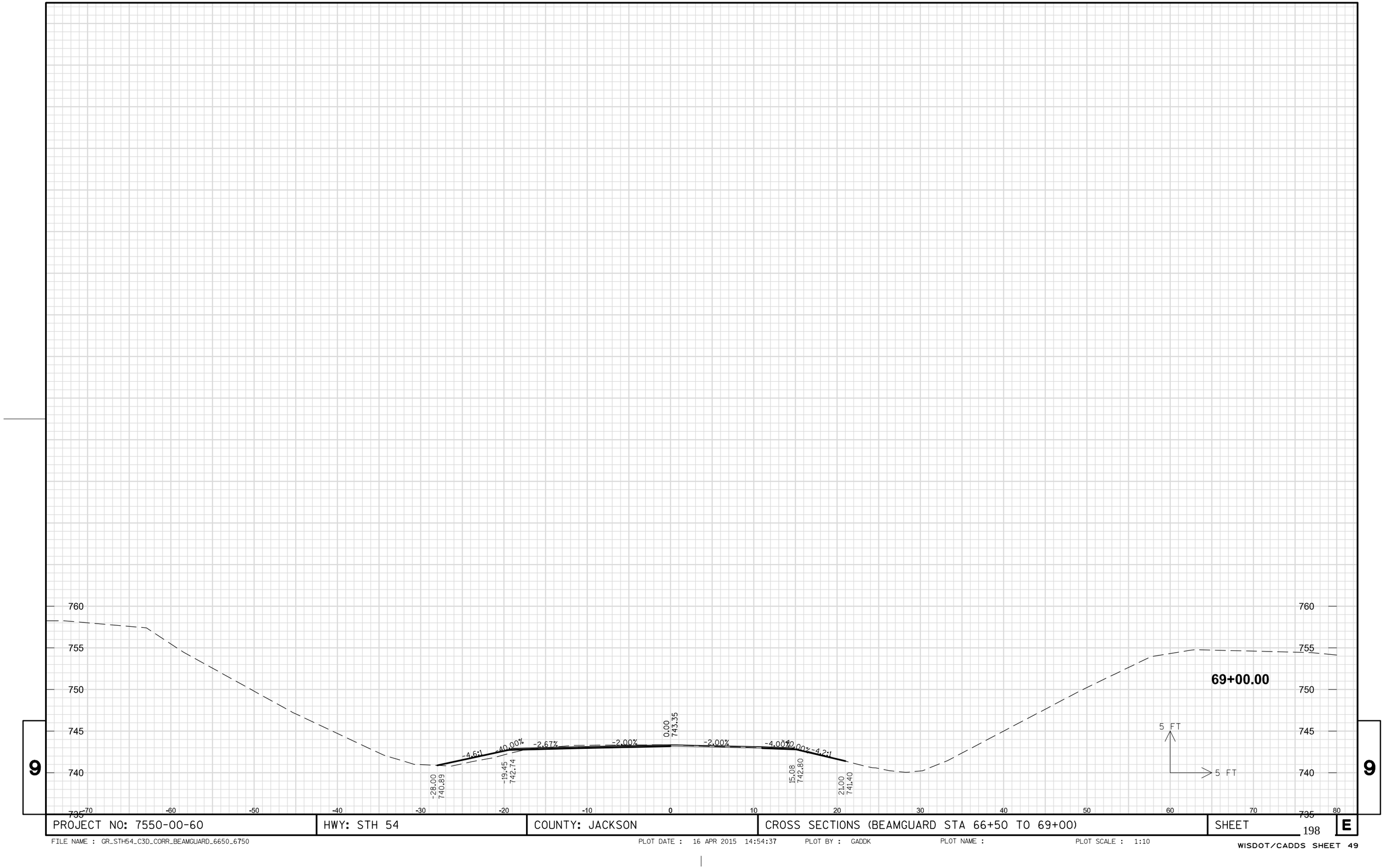

9

9

PROJECT NO: 7550-00-60	HWY: STH 54	COUNTY: JACKSON	CROSS SECTIONS (BEAMGUARD STA 66+50 TO 69+00)	SHEET 198 E

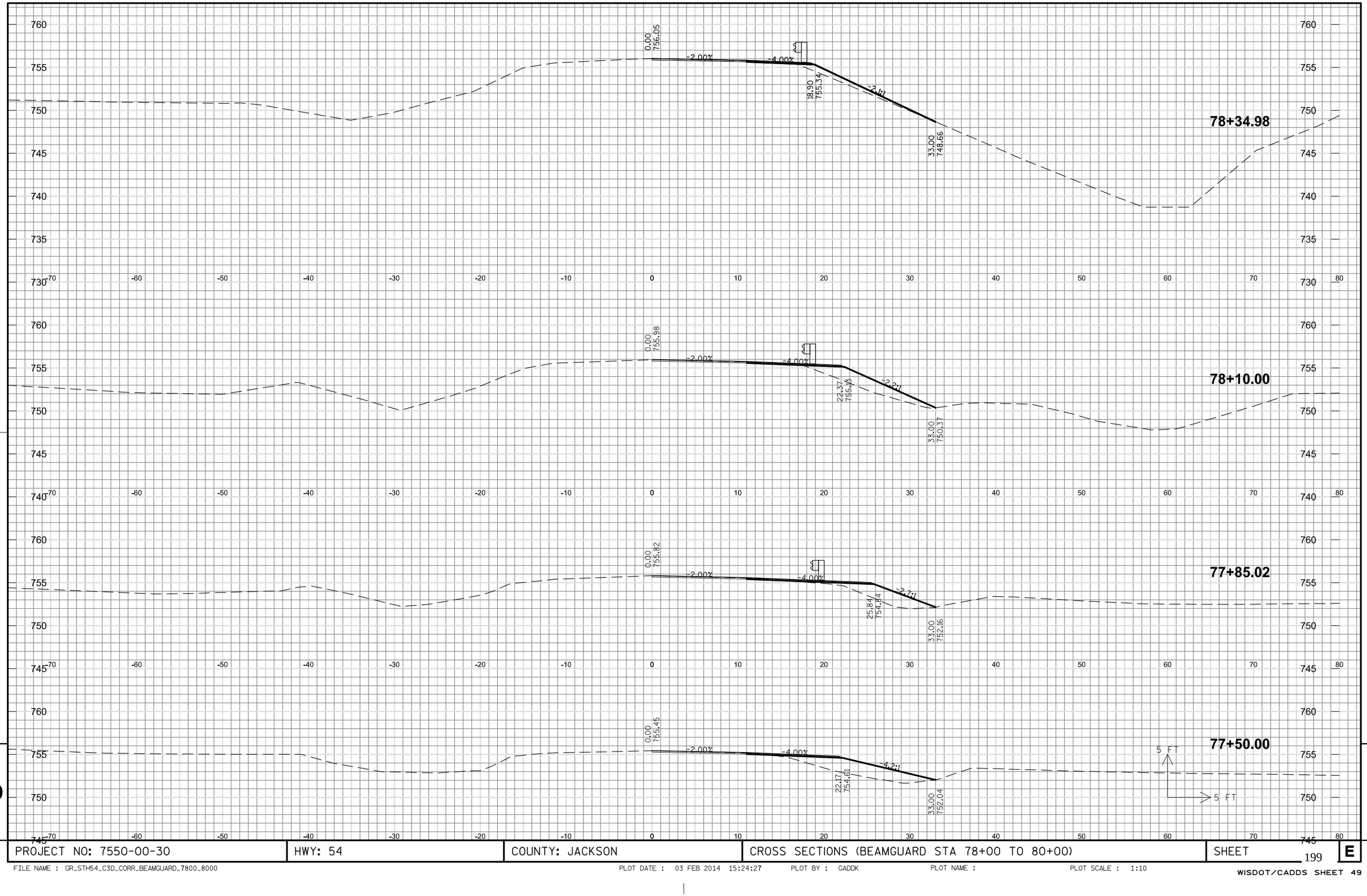

PROJECT NO: 7550-00-30	HWY: 54	COUNTY: JACKSON	CROSS SECTIONS (BEAMGUARD STA 78+00 TO 80+00)	SHEET	E

FILE NAME : GR_STH54_C3D_CORR_BEAMGUARD_7800_8000 PLOT DATE : 03 FEB 2014 15:24:27 PLOT BY : GADDK PLOT NAME : PLOT SCALE : 1:10

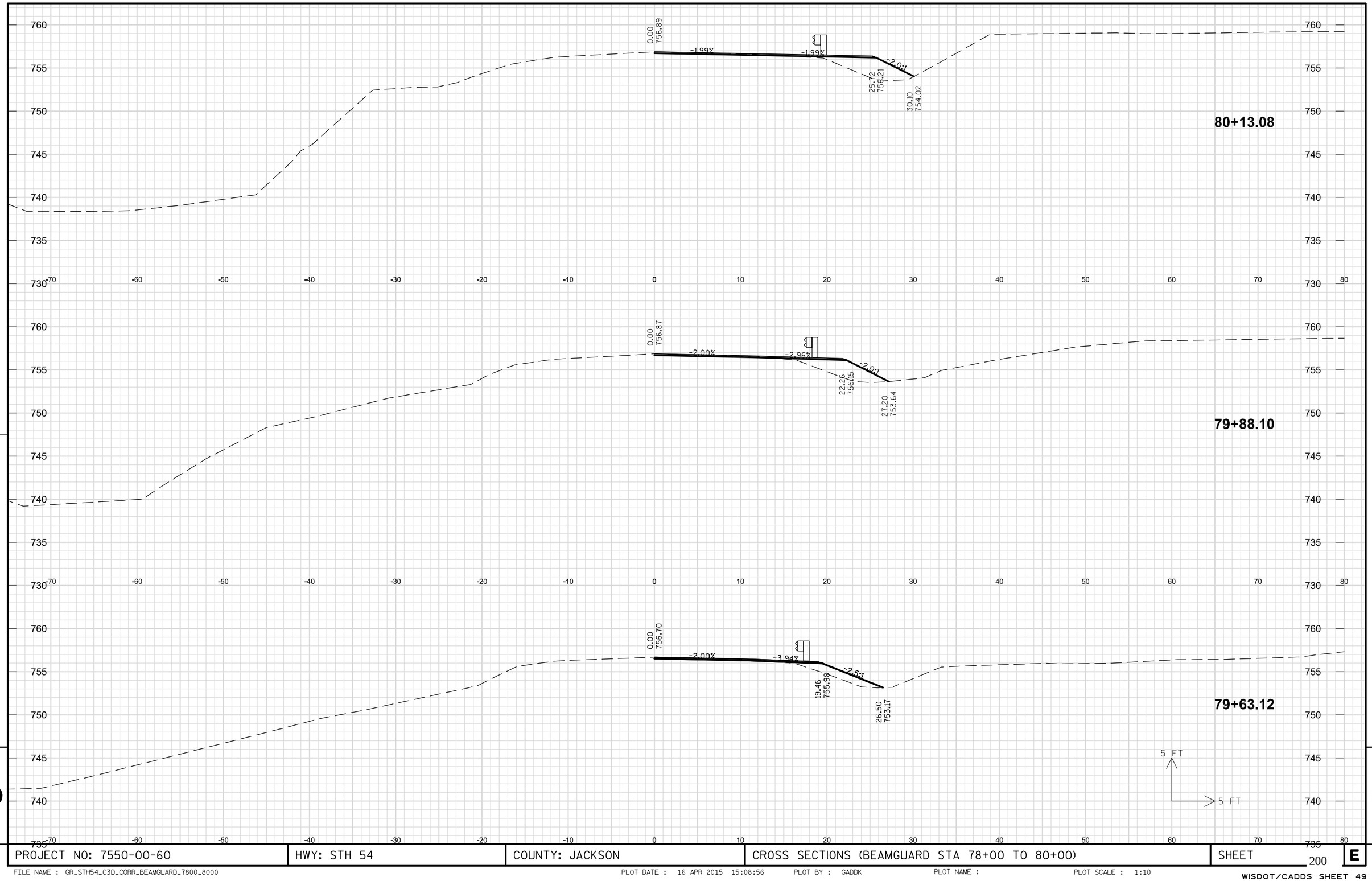

PROJECT NO: 7550-00-60	HWY: STH 54	COUNTY: JACKSON	CROSS SECTIONS (BEAMGUARD STA 78+00 TO 80+00)	SHEET 200 E

FILE NAME : GR_STH54_C3D_CORR_BEAMGUARD_7800_8000 PLOT DATE : 16 APR 2015 15:08:56 PLOT BY : GADDK PLOT NAME : PLOT SCALE : 1:10

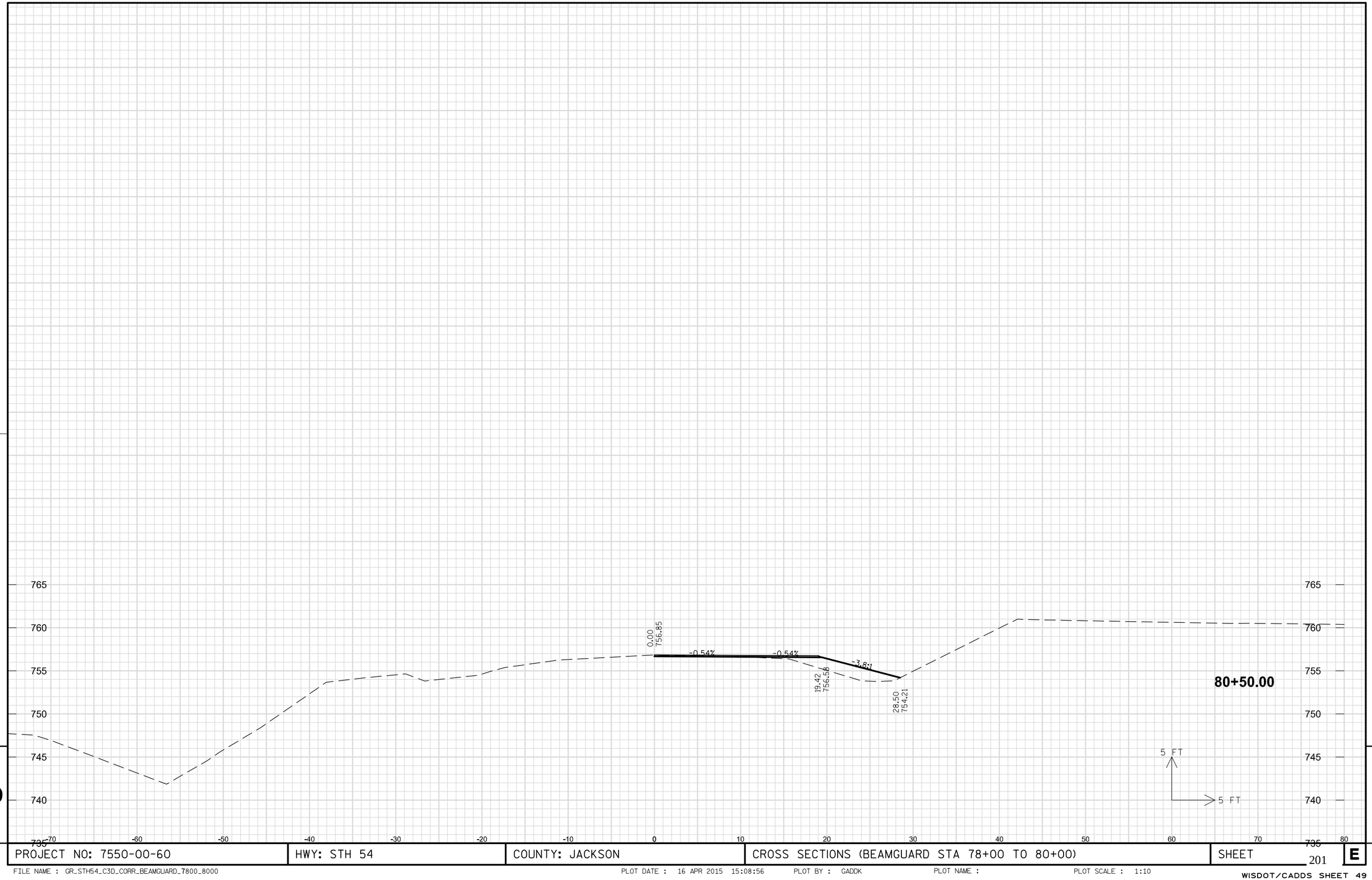

9

9

PROJECT NO: 7550-00-60	HWY: STH 54	COUNTY: JACKSON	CROSS SECTIONS (BEAMGUARD STA 78+00 TO 80+00)	SHEET 201	E

FILE NAME : GR_STH54_C3D_CORR_BEAMGUARD_7800_8000 PLOT DATE : 16 APR 2015 15:08:56 PLOT BY : GADDK PLOT NAME : PLOT SCALE : 1:10

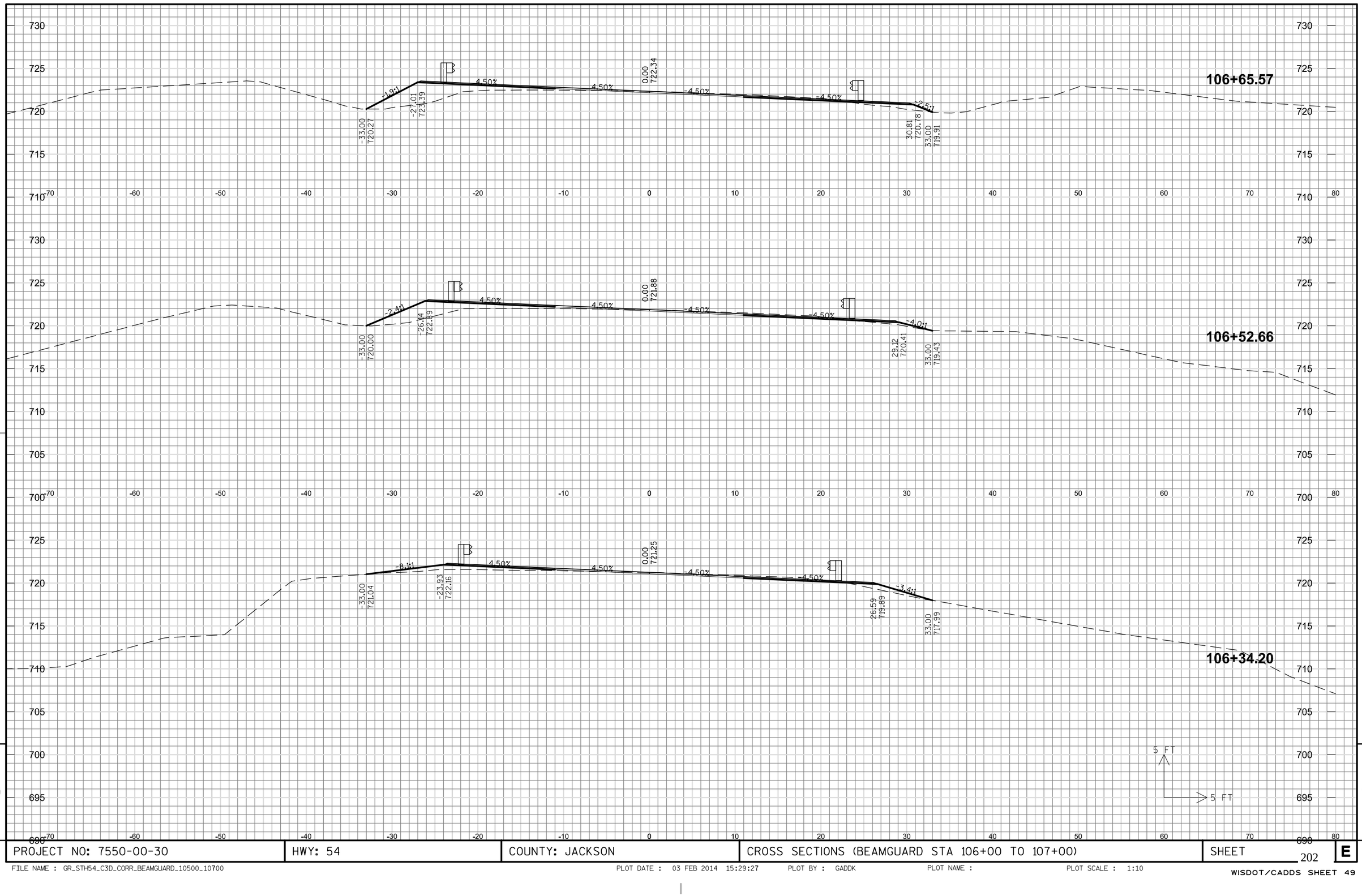

PROJECT NO: 7550-00-30	HWY: 54	COUNTY: JACKSON	CROSS SECTIONS (BEAMGUARD STA 106+00 TO 107+00)	SHEET E

FILE NAME : GR_STH54_C3D_CORR_BEAMGUARD_10500_10700 PLOT DATE : 03 FEB 2014 15:29:27 PLOT BY : GADDK PLOT NAME : PLOT SCALE : 1:10

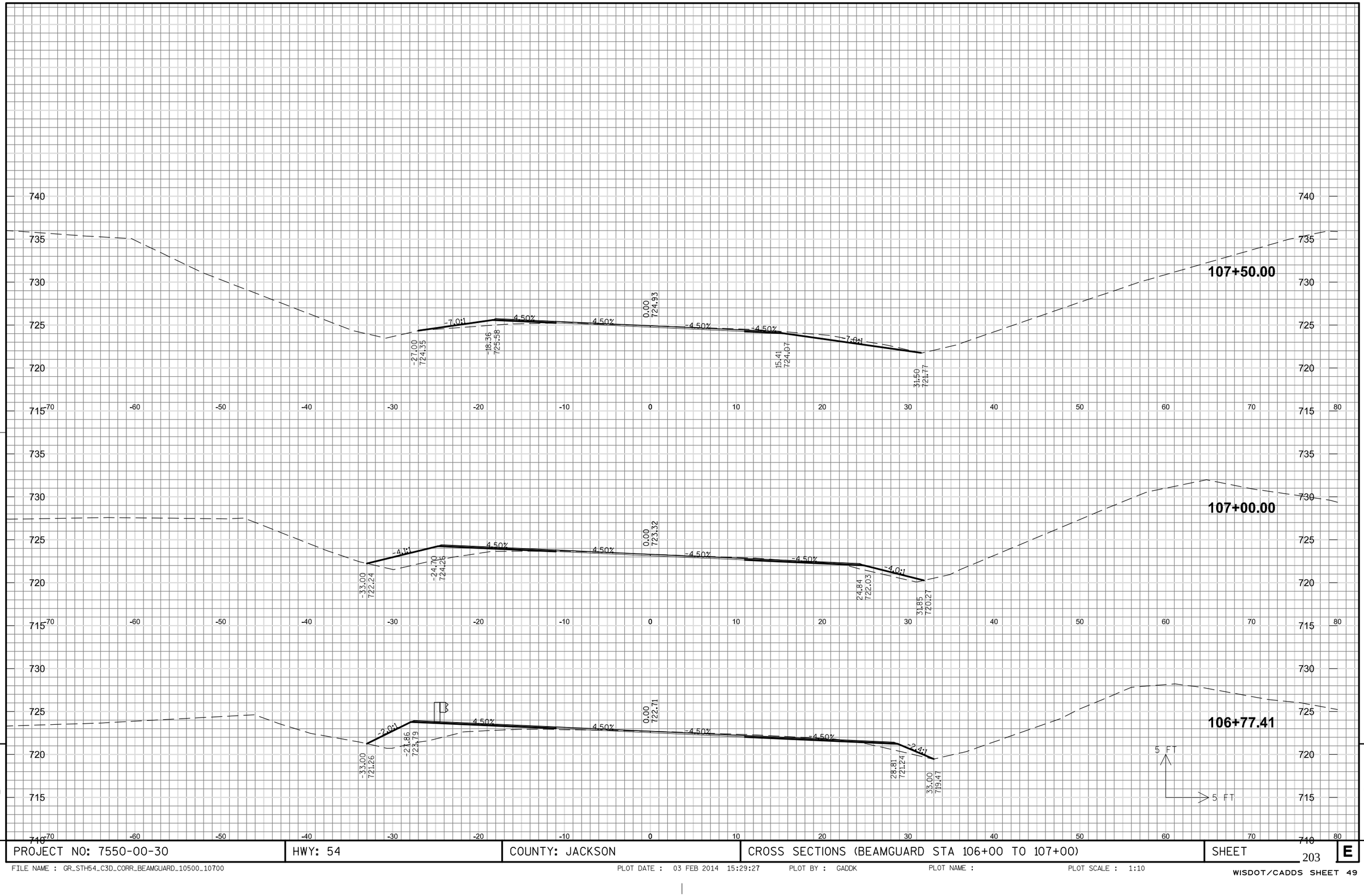

PROJECT NO: 7550-00-30	HWY: 54	COUNTY: JACKSON	CROSS SECTIONS (BEAMGUARD STA 106+00 TO 107+00)	SHEET 203 E

FILE NAME : GR_STH54_C3D_CORR_BEAMGUARD_10500_10700 PLOT DATE : 03 FEB 2014 15:29:27 PLOT BY : GADDK PLOT NAME : PLOT SCALE : 1:10

WISDOT/CADDS SHEET 49

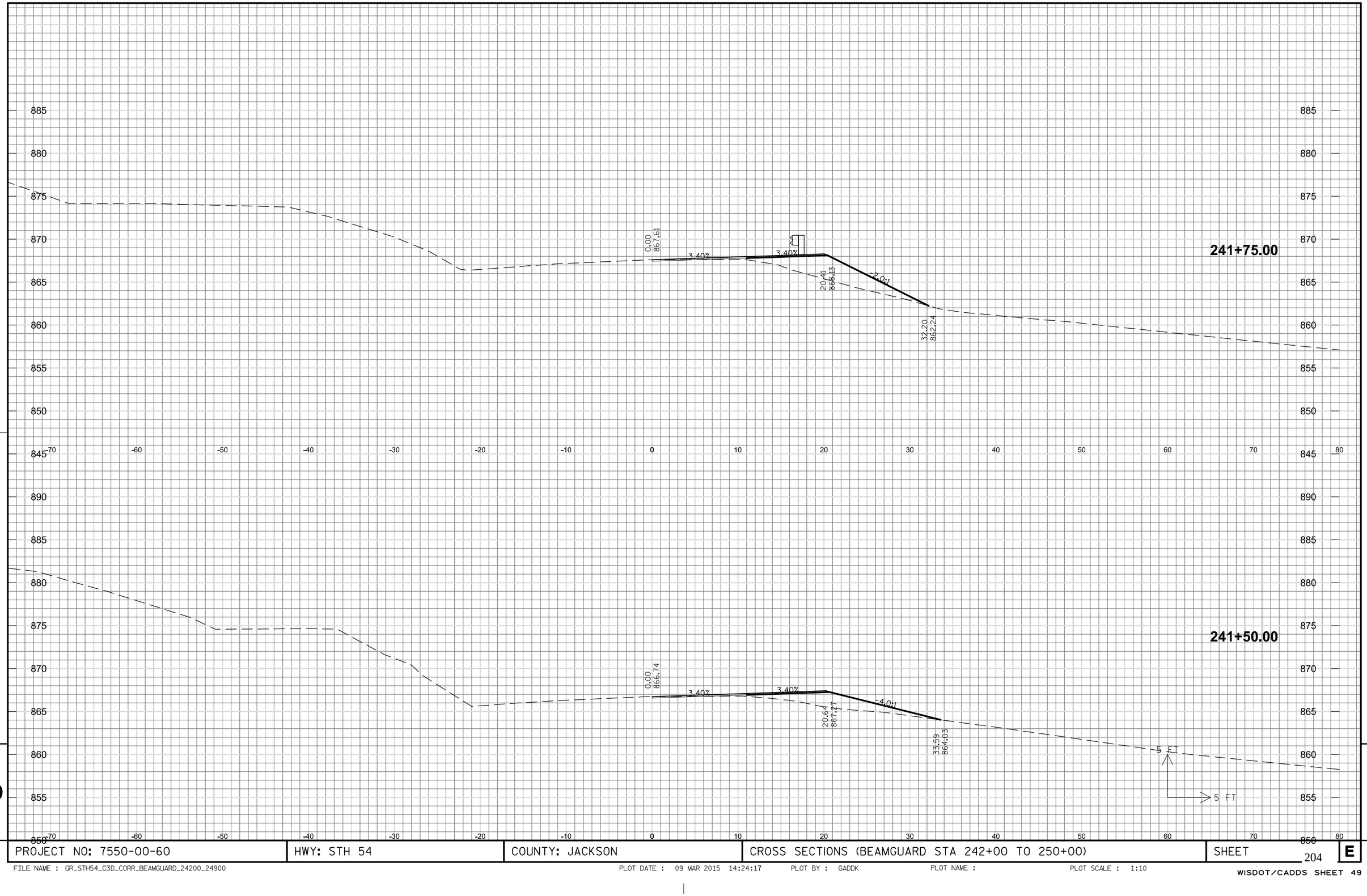

9

PROJECT NO: 7550-00-60	HWY: STH 54	COUNTY: JACKSON	CROSS SECTIONS (BEAMGUARD STA 242+00 TO 250+00)	SHEET 204	E

9

FILE NAME : GR_STH54_C3D_CORR_BEAMGUARD_24200_24900 PLOT DATE : 09 MAR 2015 14:24:17 PLOT BY : GADDK PLOT NAME : PLOT SCALE : 1:10

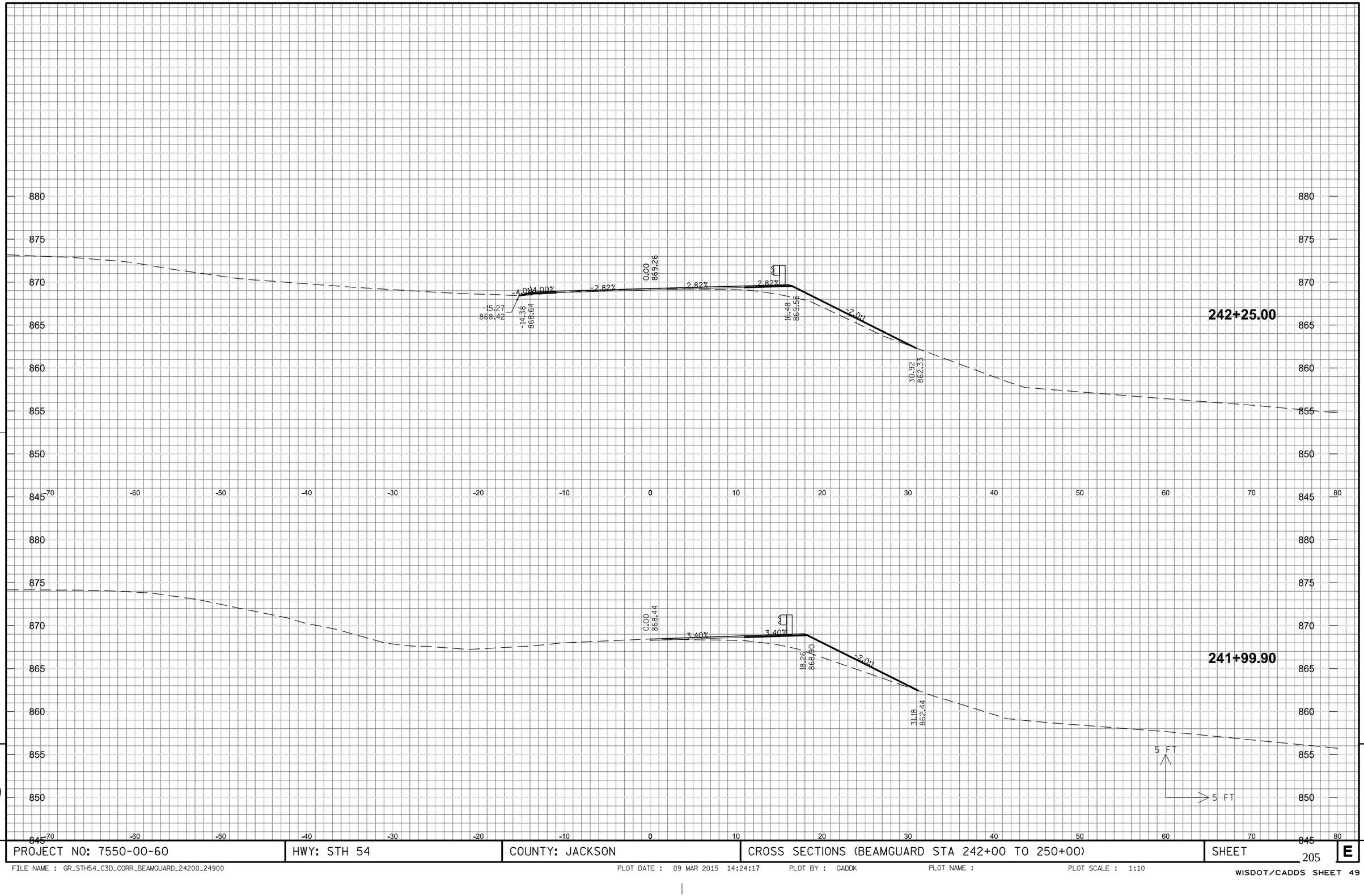

PROJECT NO: 7550-00-60	HWY: STH 54	COUNTY: JACKSON	CROSS SECTIONS (BEAMGUARD STA 242+00 TO 250+00)	SHEET 205 E

FILE NAME : GR_STH54_C3D_CORR_BEAMGUARD_24200_24900 PLOT DATE : 09 MAR 2015 14:24:17 PLOT BY : GADDK PLOT NAME : PLOT SCALE : 1:10

WISDOT/CADDS SHEET 49

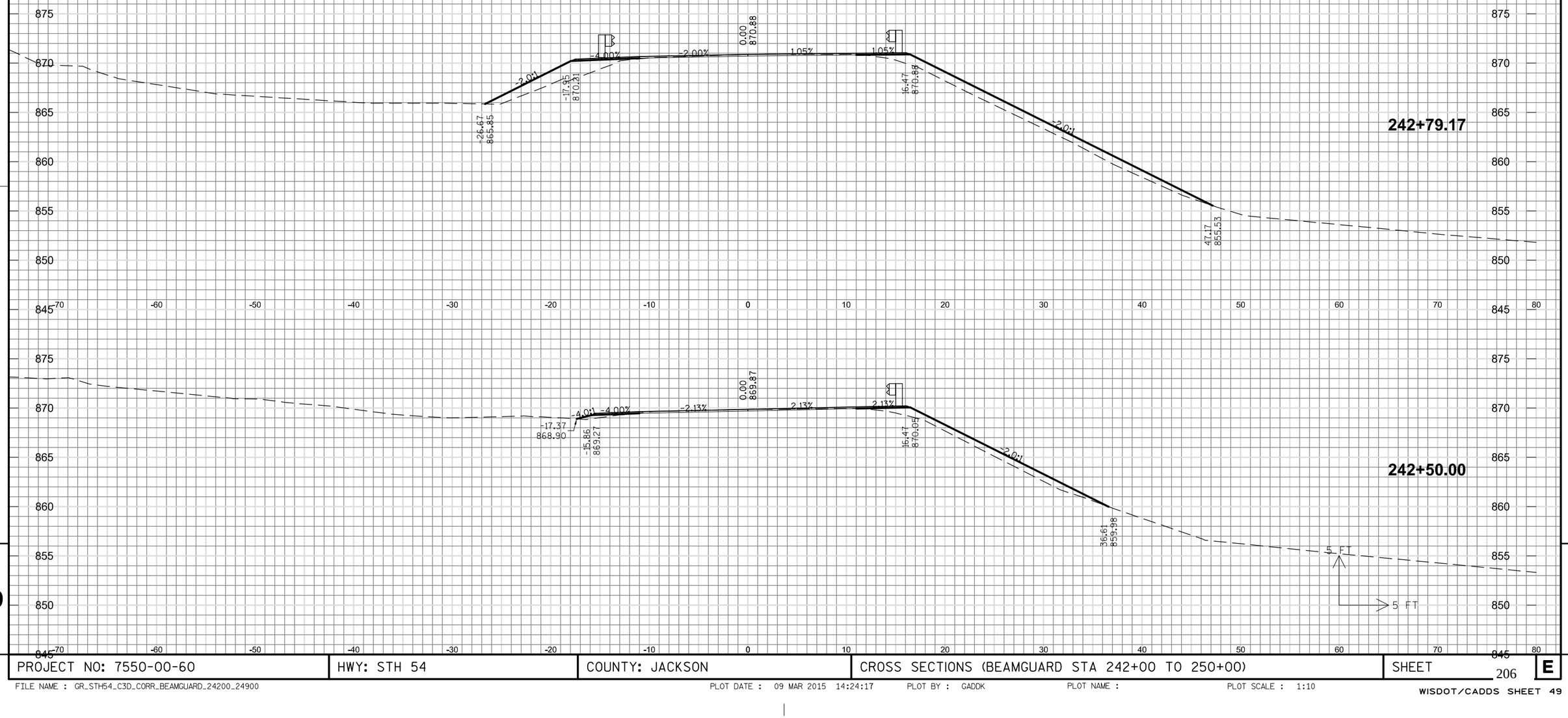

9

9

PROJECT NO: 7550-00-60	HWY: STH 54	COUNTY: JACKSON	CROSS SECTIONS (BEAMGUARD STA 242+00 TO 250+00)	SHEET 206	E

FILE NAME : GR_STH54_C3D_CORR_BEAMGUARD_24200_24900 PLOT DATE : 09 MAR 2015 14:24:17 PLOT BY : GADDK PLOT NAME : PLOT SCALE : 1:10

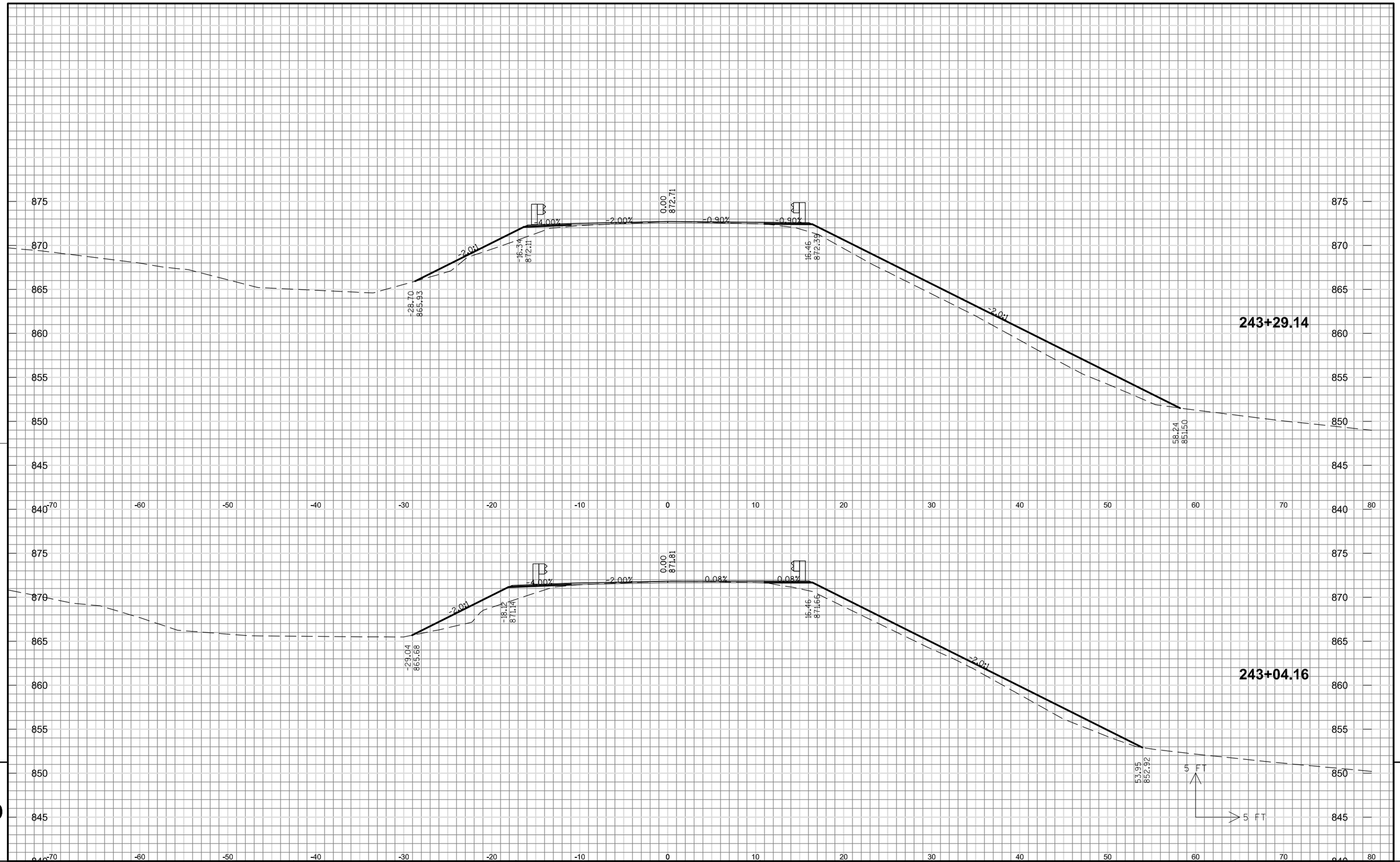

9

PROJECT NO: 7550-00-60	HWY: STH 54	COUNTY: JACKSON	CROSS SECTIONS (BEAMGUARD STA 242+00 TO 250+00)	SHEET 207	E

9

FILE NAME : GR_STH54_C3D_CORR_BEAMGUARD_24200_24900 PLOT DATE : 09 MAR 2015 14:24:17 PLOT BY : GADDK PLOT NAME : PLOT SCALE : 1:10

WISDOT/CADDS SHEET 49

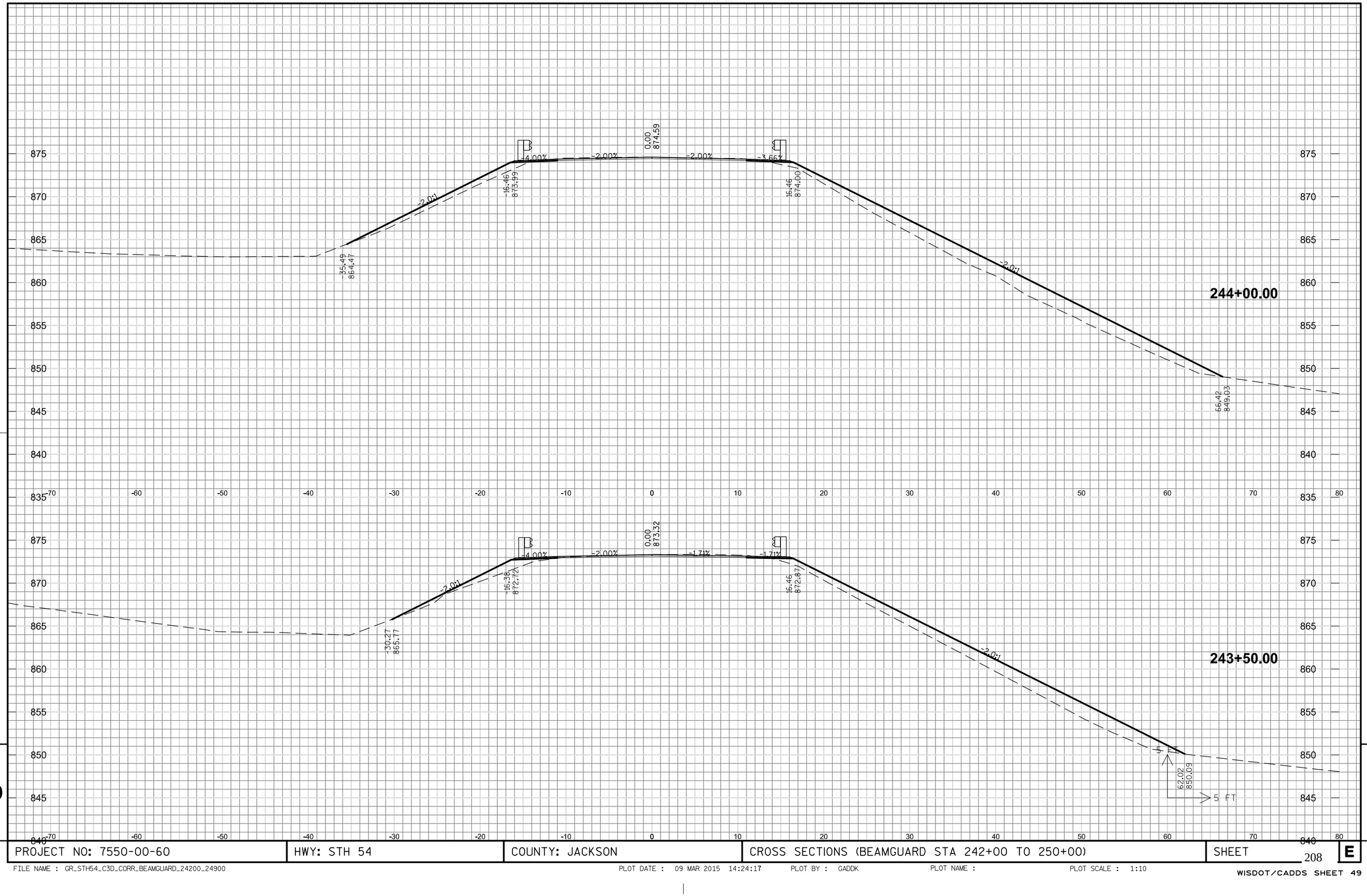

PROJECT NO: 7550-00-60	HWY: STH 54	COUNTY: JACKSON	CROSS SECTIONS (BEAMGUARD STA 242+00 TO 250+00)	SHEET 208 E

FILE NAME : GR_STH54_C3D_CORR_BEAMGUARD_24200_24900 PLOT DATE : 09 MAR 2015 14:24:17 PLOT BY : GADDK PLOT NAME : PLOT SCALE : 1:10

WISDOT/CADDS SHEET 49

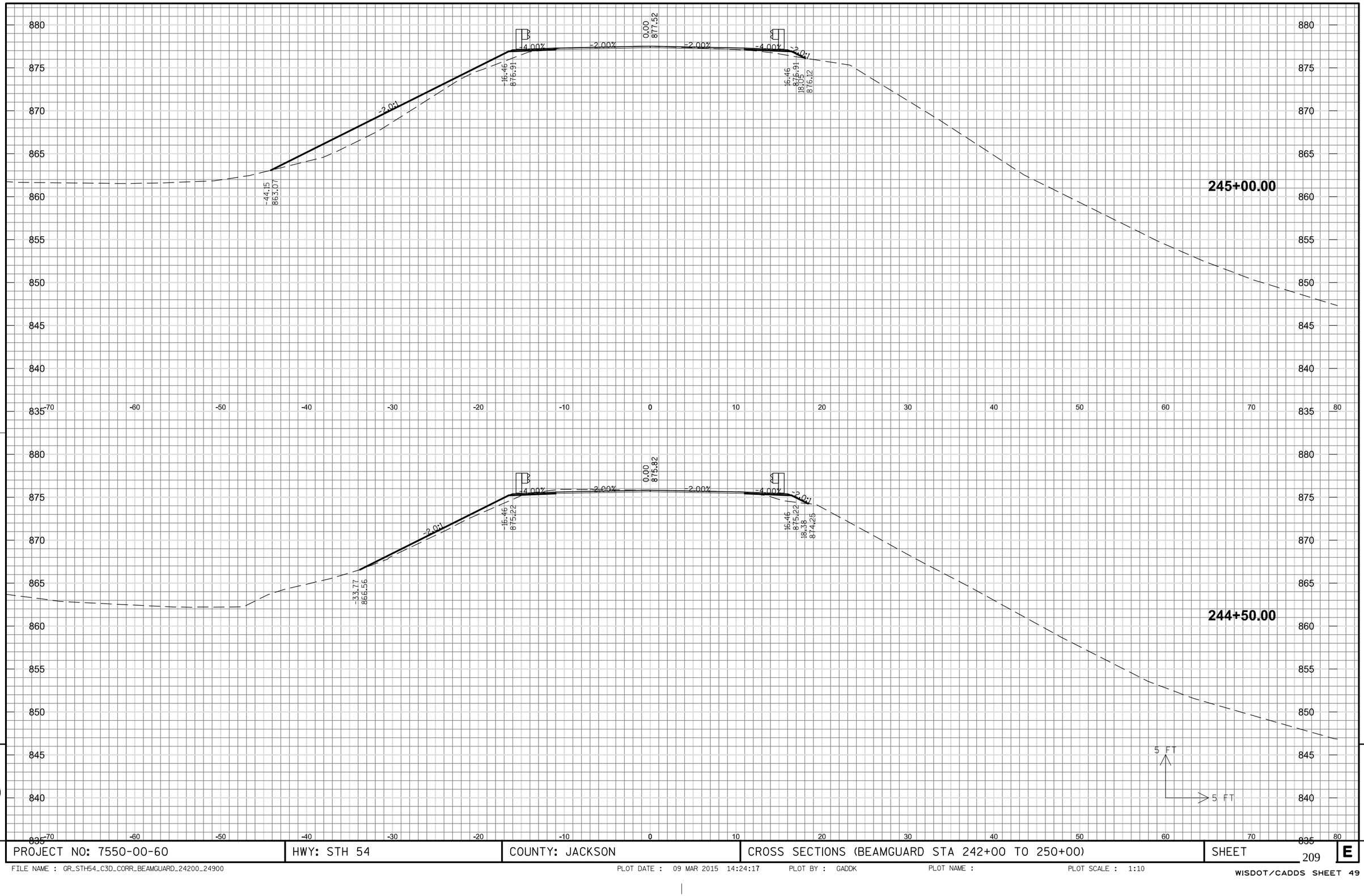

PROJECT NO: 7550-00-60	HWY: STH 54	COUNTY: JACKSON	CROSS SECTIONS (BEAMGUARD STA 242+00 TO 250+00)	SHEET	E

FILE NAME : GR_STH54_C3D_CORR_BEAMGUARD_24200_24900 PLOT DATE : 09 MAR 2015 14:24:17 PLOT BY : GADDK PLOT NAME : PLOT SCALE : 1:10

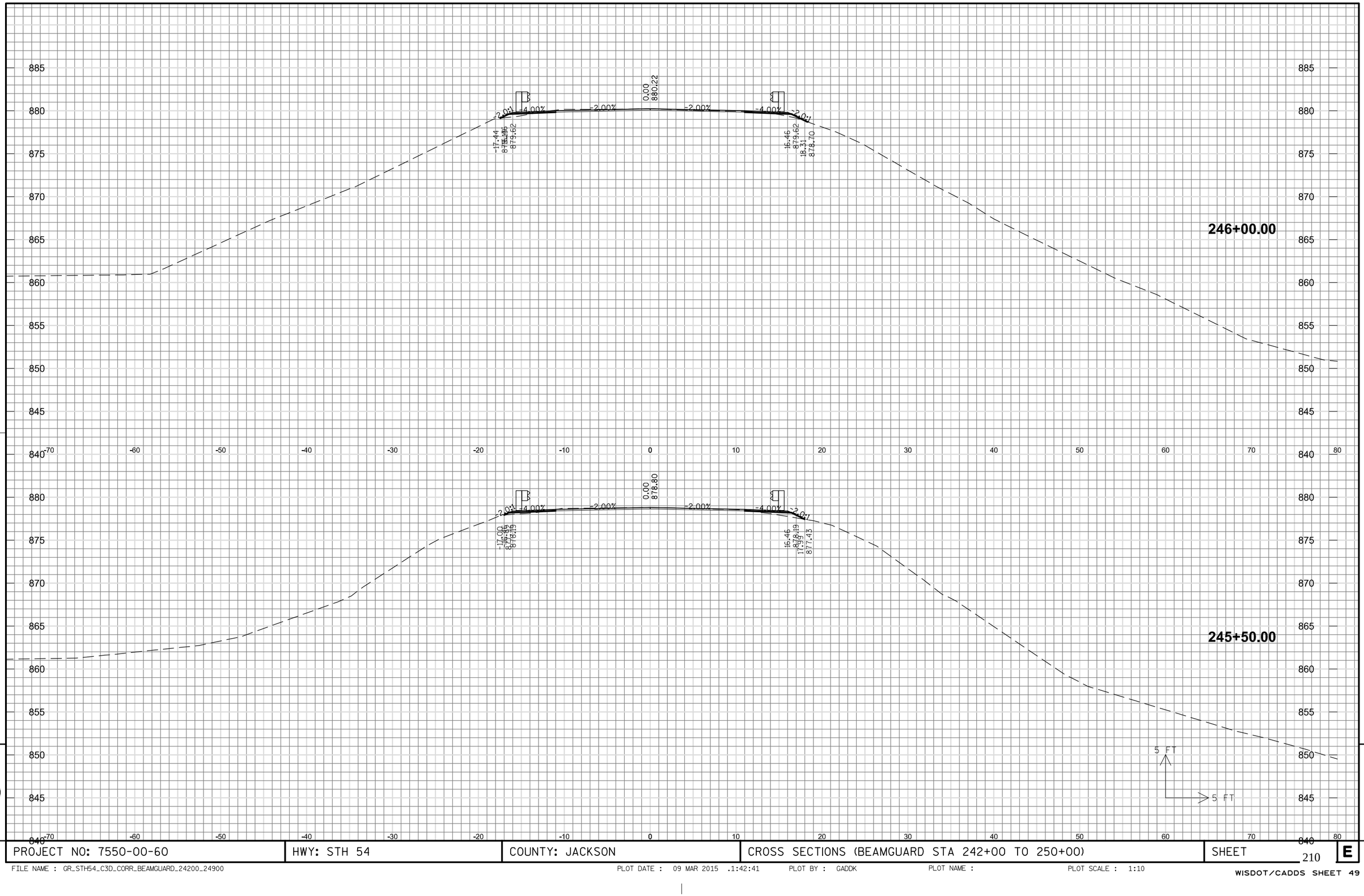

PROJECT NO: 7550-00-60	HWY: STH 54	COUNTY: JACKSON	CROSS SECTIONS (BEAMGUARD STA 242+00 TO 250+00)	SHEET 210	E

FILE NAME : GR_STH54_C3D_CORR_BEAMGUARD_24200_24900 PLOT DATE : 09 MAR 2015 .1:42:41 PLOT BY : GADDK PLOT NAME : PLOT SCALE : 1:10

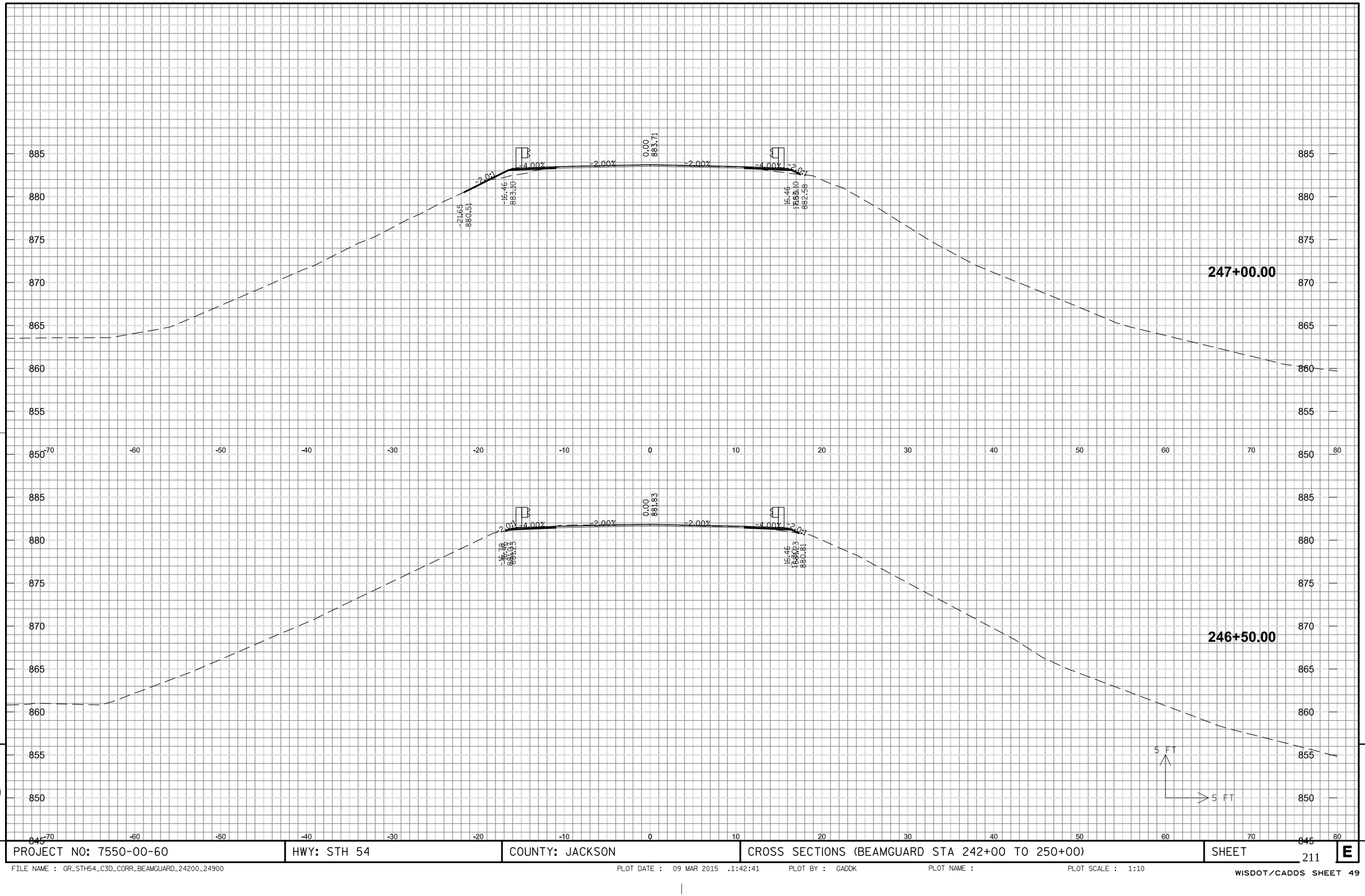

PROJECT NO: 7550-00-60	HWY: STH 54	COUNTY: JACKSON	CROSS SECTIONS (BEAMGUARD STA 242+00 TO 250+00)	SHEET	E

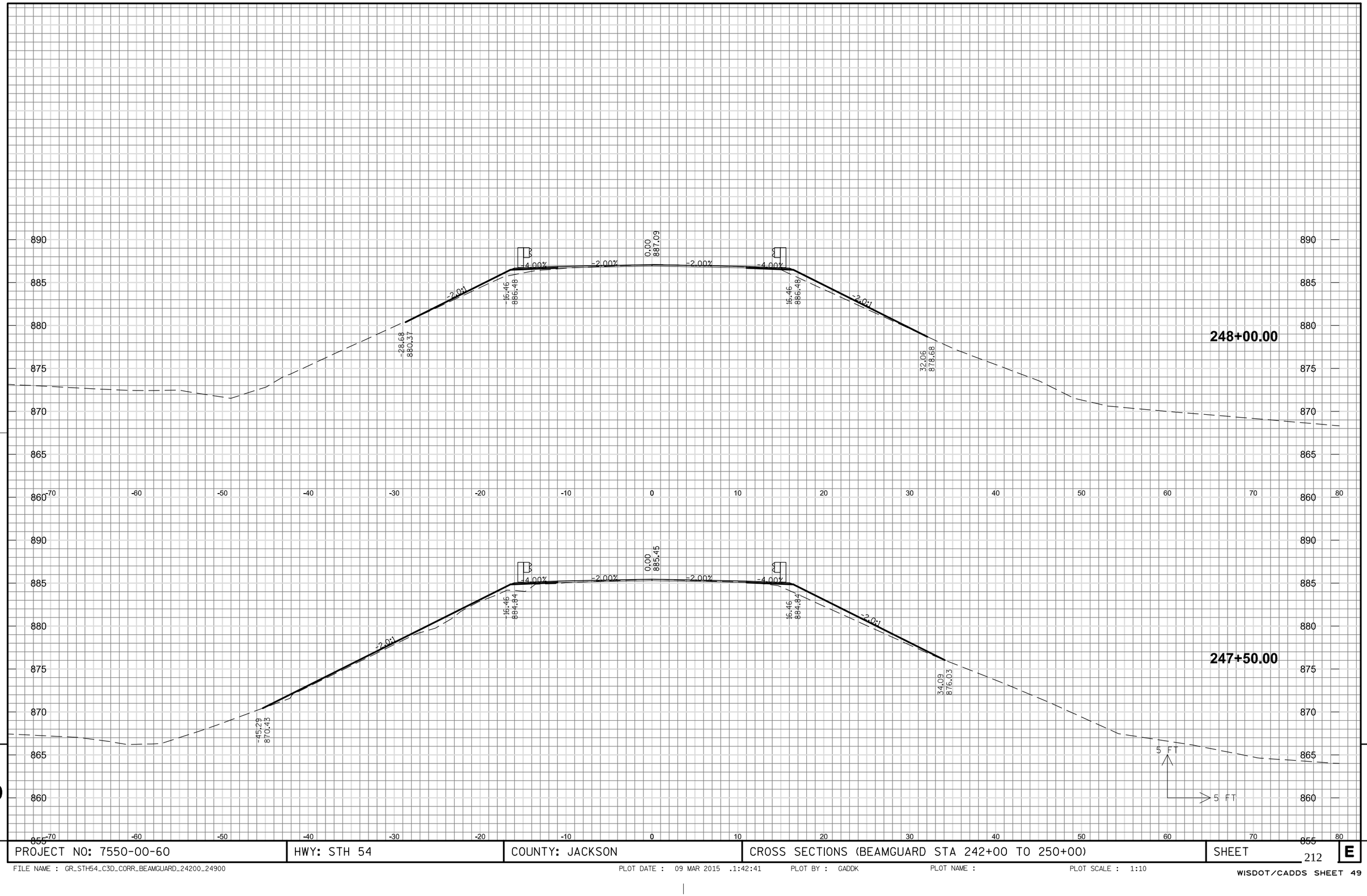

9

9

PROJECT NO: 7550-00-60	HWY: STH 54	COUNTY: JACKSON	CROSS SECTIONS (BEAMGUARD STA 242+00 TO 250+00)	SHEET	E

FILE NAME : GR_STH54_C3D_CORR_BEAMGUARD_24200_24900 PLOT DATE : 09 MAR 2015 .1:42:41 PLOT BY : GADDK PLOT NAME : PLOT SCALE : 1:10

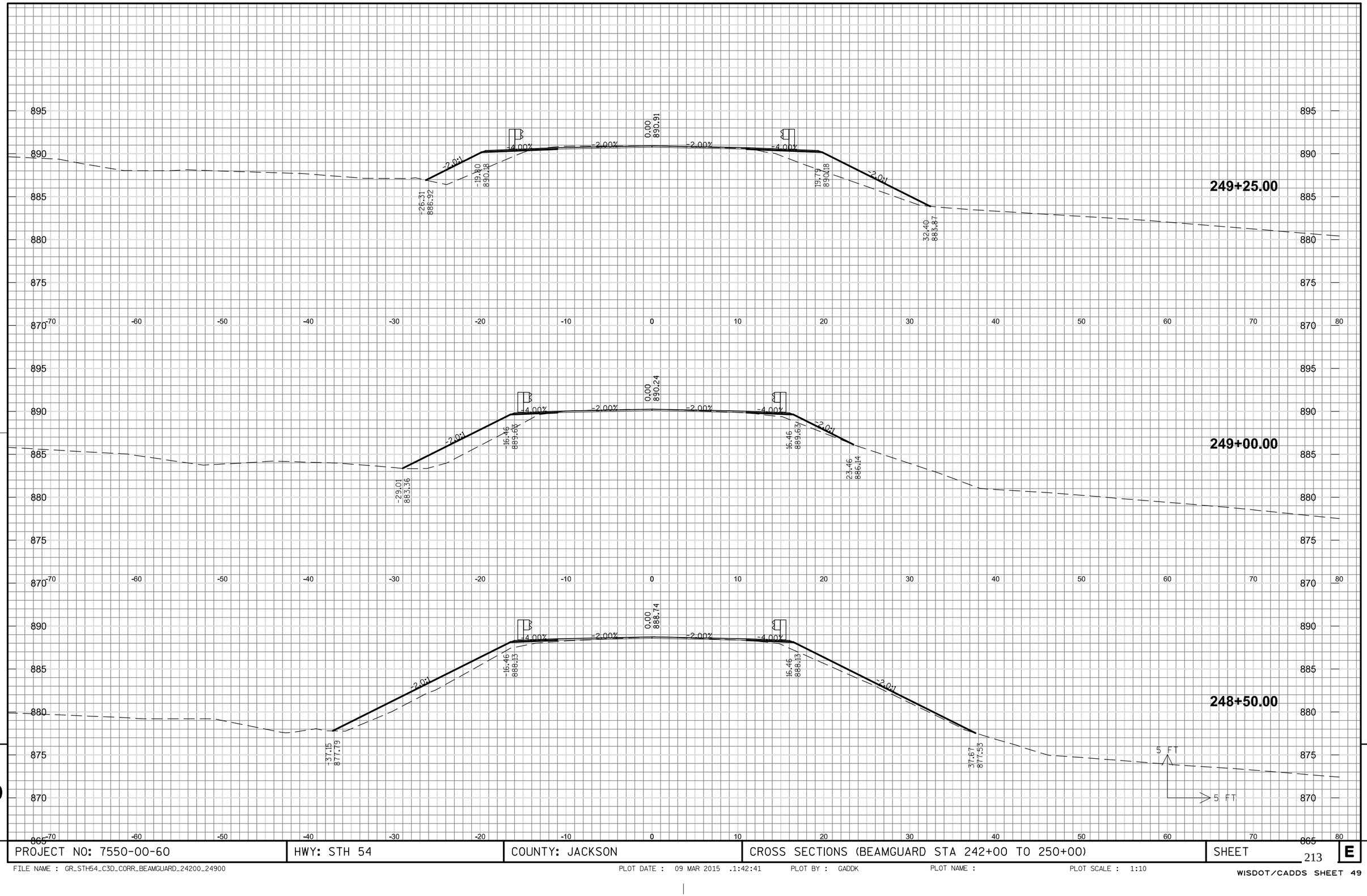

9

9

PROJECT NO: 7550-00-60	HWY: STH 54	COUNTY: JACKSON	CROSS SECTIONS (BEAMGUARD STA 242+00 TO 250+00)	SHEET 213 E

FILE NAME : GR_STH54_C3D_CORR_BEAMGUARD_24200_24900 PLOT DATE : 09 MAR 2015 .1:42:41 PLOT BY : GADDK PLOT NAME : PLOT SCALE : 1:10

WISDOT/CADDS SHEET 49

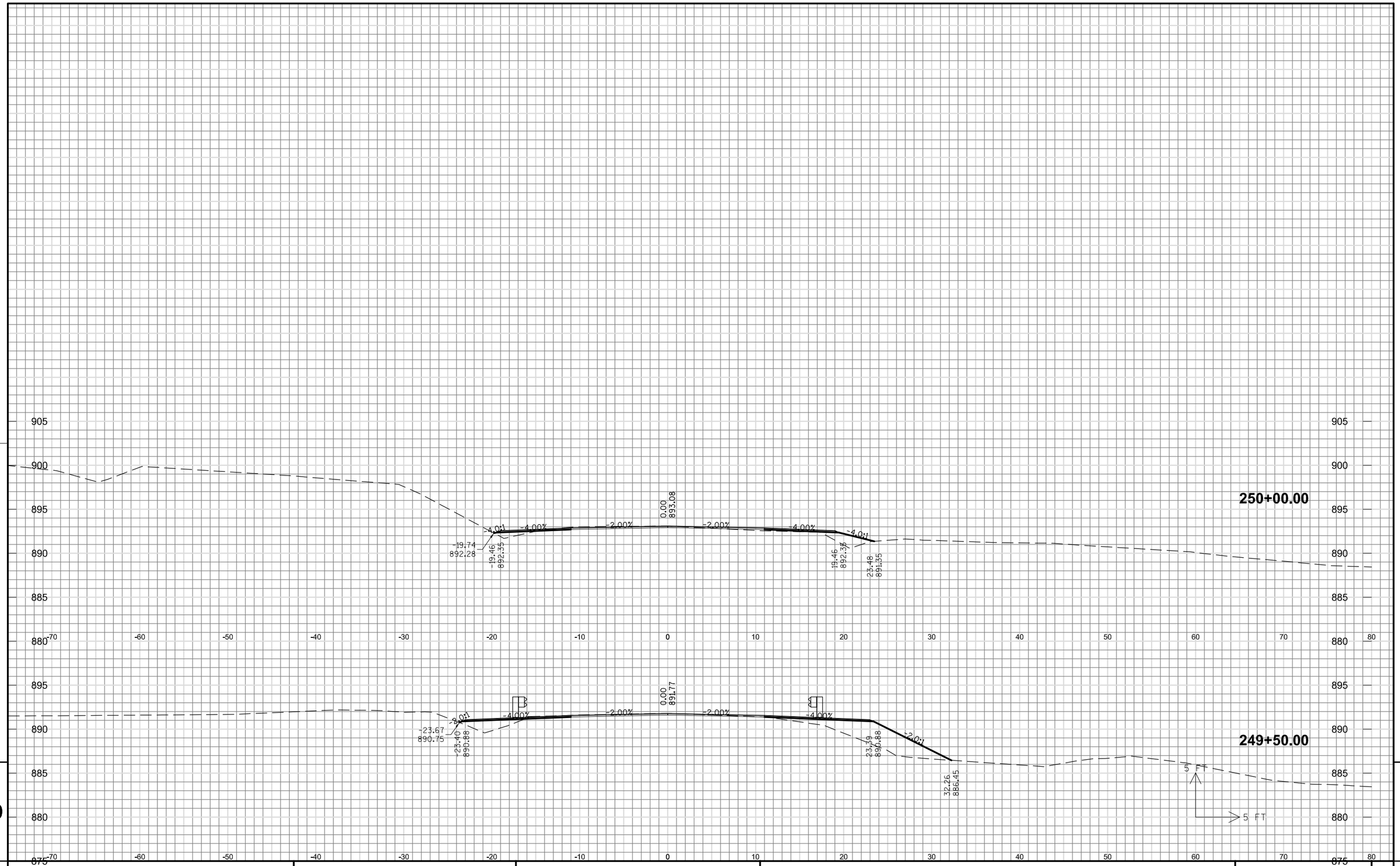

PROJECT NO: 7550-00-60	HWY: STH 54	COUNTY: JACKSON	CROSS SECTIONS (BEAMGUARD STA 242+00 TO 250+00)	SHEET 214 E

FILE NAME : GR_STH54_C3D_CORR_BEAMGUARD_24200_24900 PLOT DATE : 09 MAR 2015 .1:42:41 PLOT BY : GADDK PLOT NAME : PLOT SCALE : 1:10

WISDOT/CADDS SHEET 49

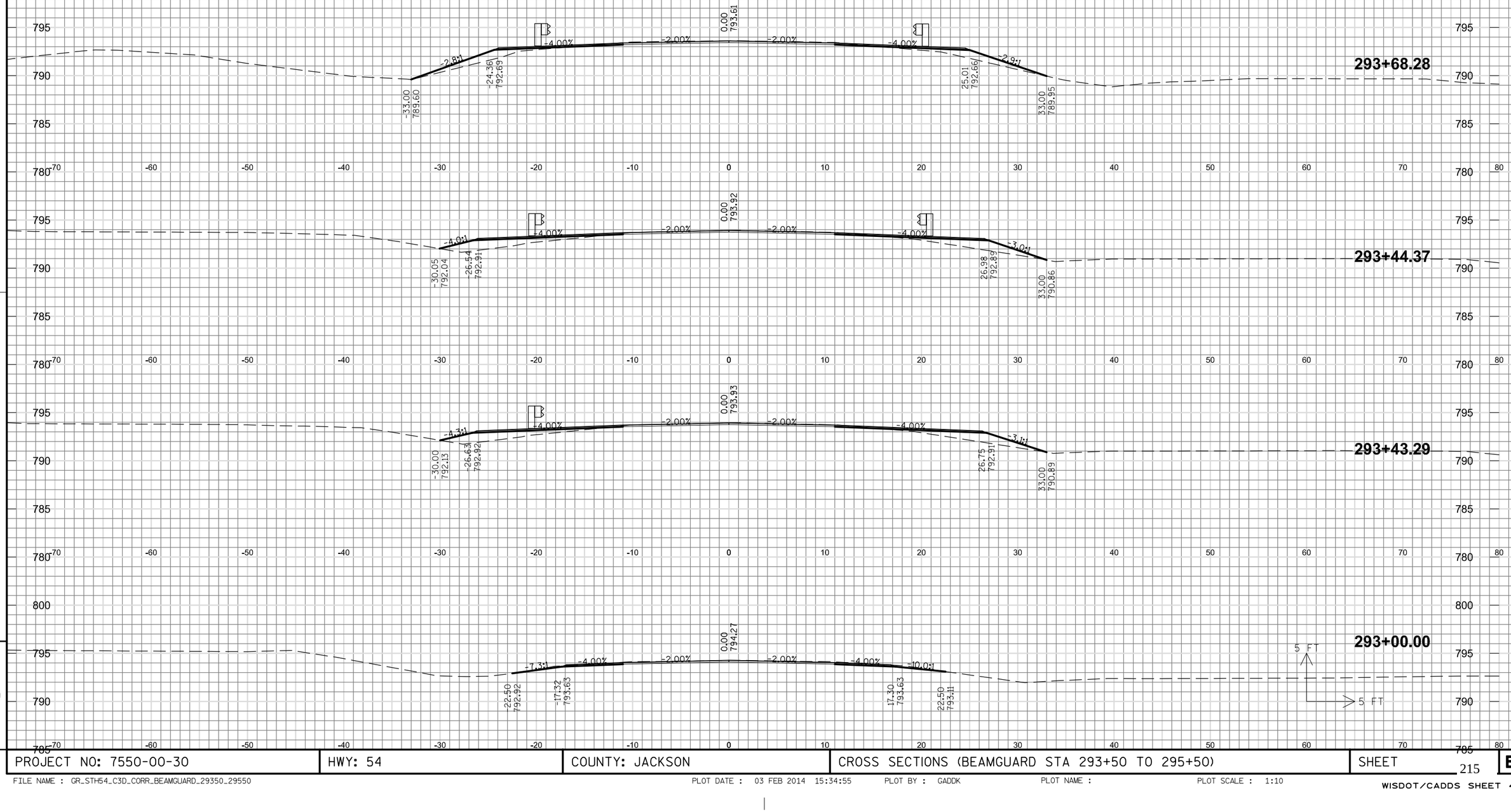

PROJECT NO: 7550-00-30	HWY: 54	COUNTY: JACKSON	CROSS SECTIONS (BEAMGUARD STA 293+50 TO 295+50)	SHEET 215	E

FILE NAME : GR_STH54_C3D_CORR_BEAMGUARD_29350_29550 PLOT DATE : 03 FEB 2014 15:34:55 PLOT BY : GADDK PLOT NAME : PLOT SCALE : 1:10

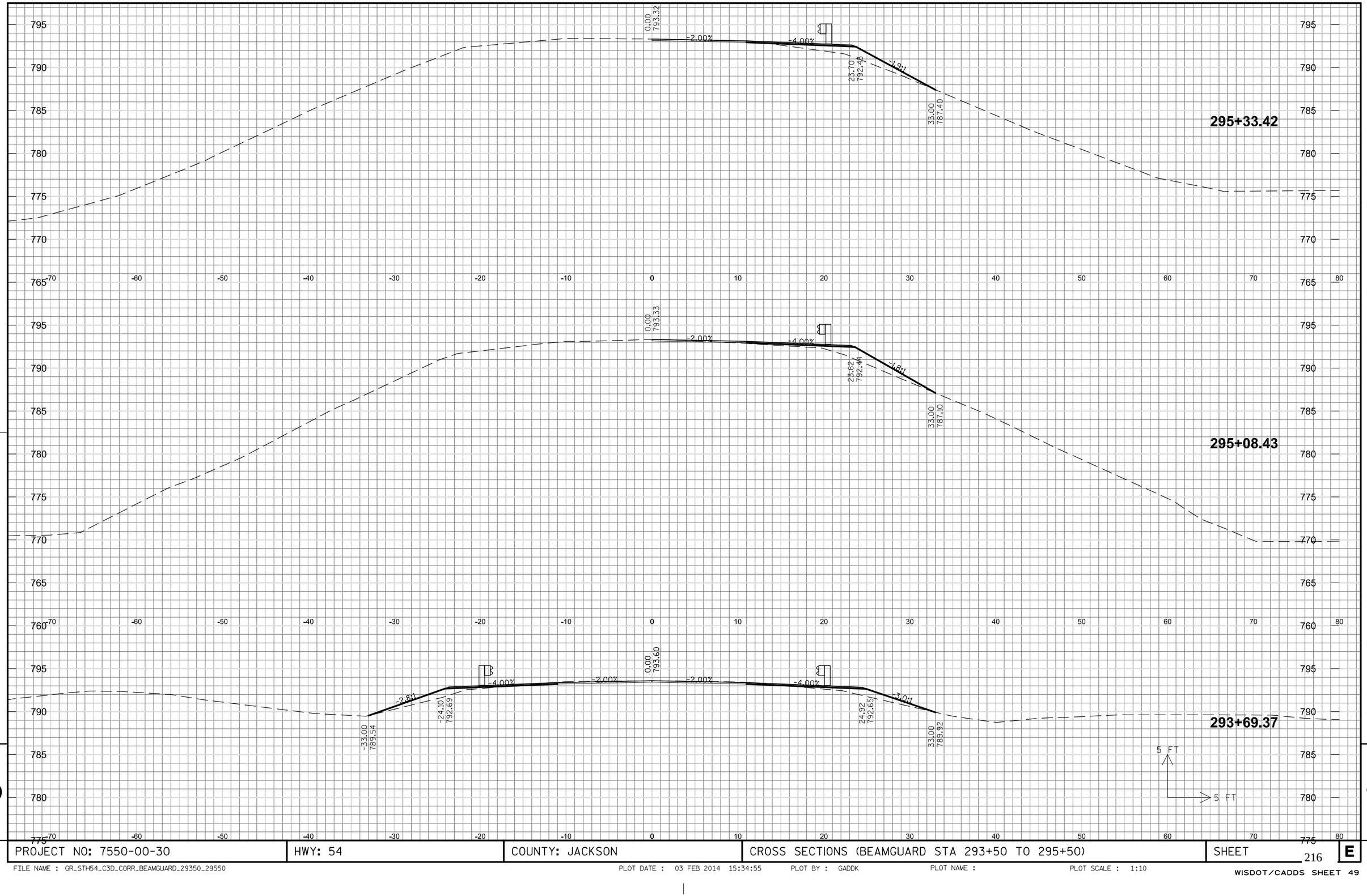

PROJECT NO: 7550-00-30	HWY: 54	COUNTY: JACKSON	CROSS SECTIONS (BEAMGUARD STA 293+50 TO 295+50)	SHEET	E

FILE NAME : GR_STH54_C3D_CORR_BEAMGUARD_29350_29550 PLOT DATE : 03 FEB 2014 15:34:55 PLOT BY : GADDK PLOT NAME : PLOT SCALE : 1:10

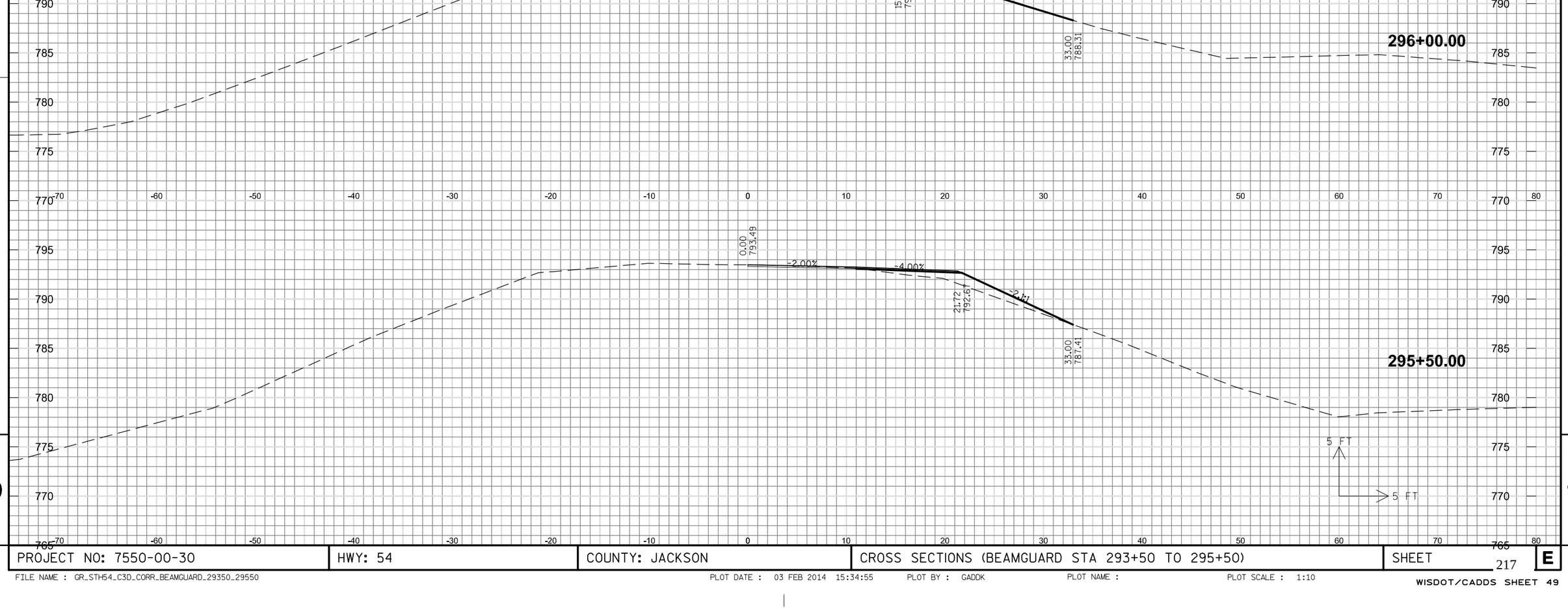

9

9

PROJECT NO: 7550-00-30	HWY: 54	COUNTY: JACKSON	CROSS SECTIONS (BEAMGUARD STA 293+50 TO 295+50)	SHEET 217	E

FILE NAME : GR_STH54_C3D_CORR_BEAMGUARD_29350_29550 PLOT DATE : 03 FEB 2014 15:34:55 PLOT BY : GADDK PLOT NAME : PLOT SCALE : 1:10

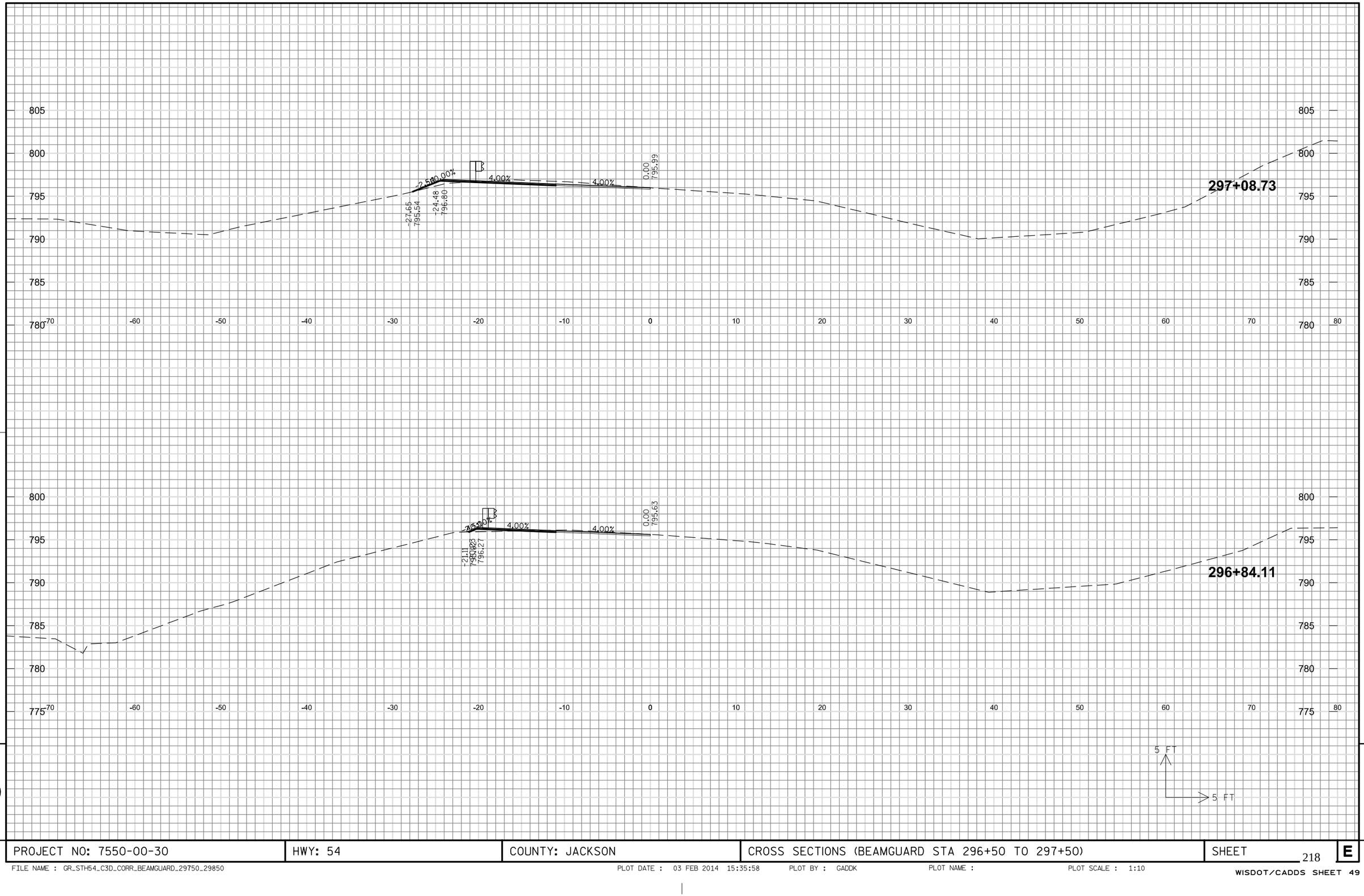

9

9

PROJECT NO: 7550-00-30	HWY: 54	COUNTY: JACKSON	CROSS SECTIONS (BEAMGUARD STA 296+50 TO 297+50)	SHEET 218	E

FILE NAME : GR_STH54_C3D_CORR_BEAMGUARD_29750_29850 PLOT DATE : 03 FEB 2014 15:35:58 PLOT BY : GADDK PLOT NAME : PLOT SCALE : 1:10

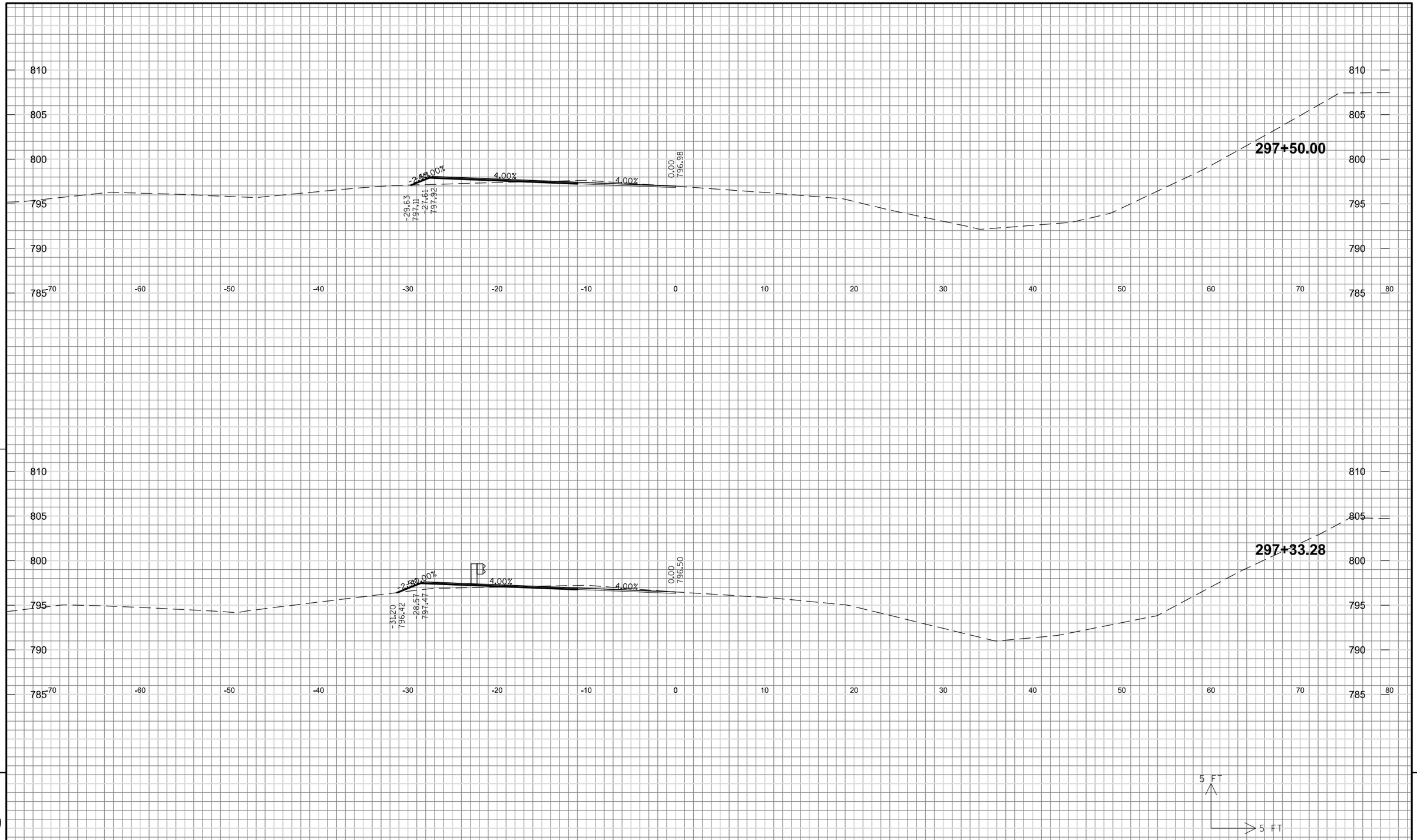

9

9

PROJECT NO: 7550-00-30	HWY: 54	COUNTY: JACKSON	CROSS SECTIONS (BEAMGUARD STA 296+50 TO 297+50)	SHEET 219	E

FILE NAME : GR_STH54_C3D_CORR_BEAMGUARD_29750_29850 PLOT DATE : 03 FEB 2014 15:35:58 PLOT BY : GADDK PLOT NAME : PLOT SCALE : 1:10

WISDOT/CADDS SHEET 49

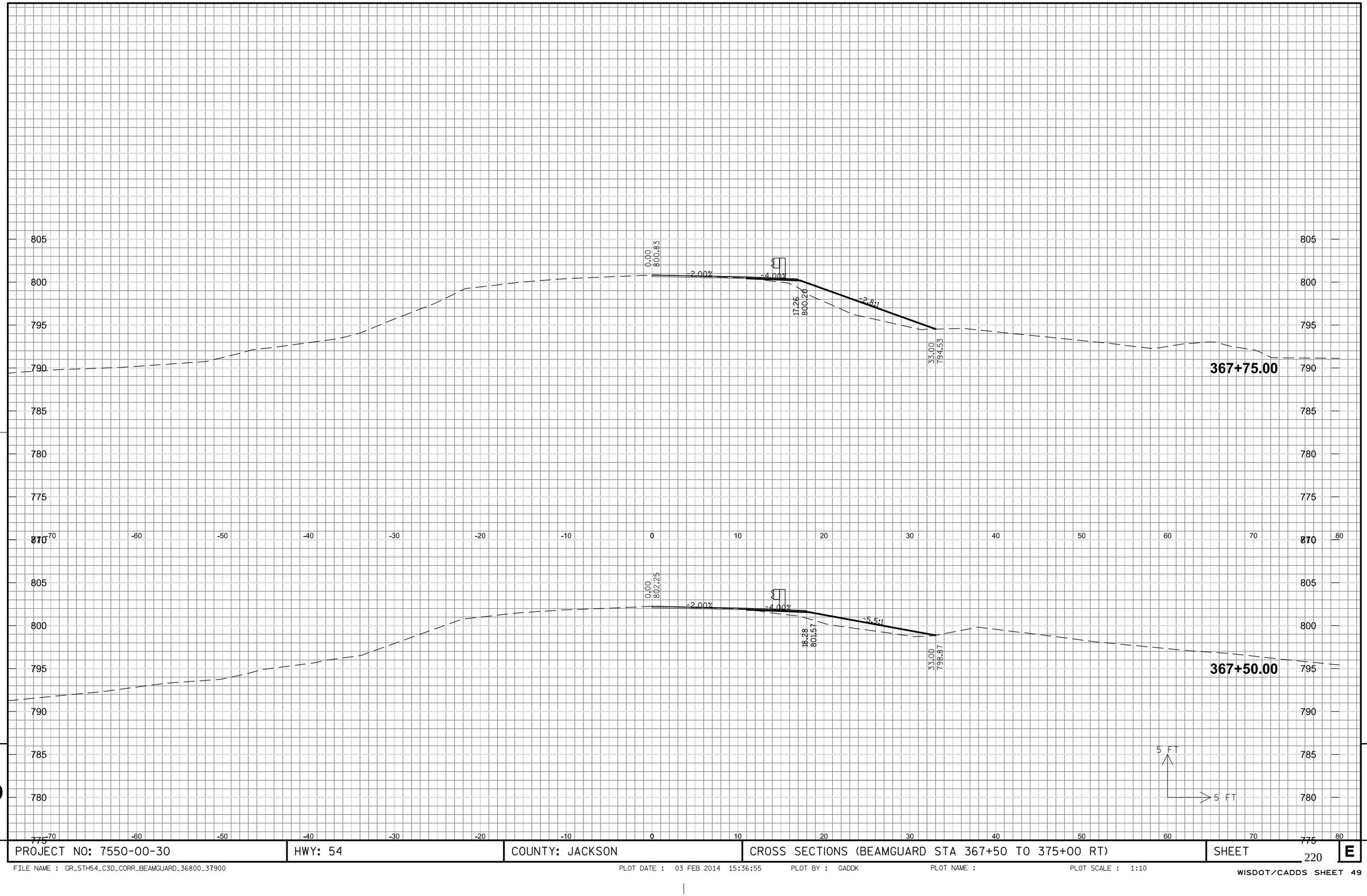

9

PROJECT NO: 7550-00-30	HWY: 54	COUNTY: JACKSON	CROSS SECTIONS (BEAMGUARD STA 367+50 TO 375+00 RT)	SHEET 220	E

9

FILE NAME : GR_STH54_C3D_CORR_BEAMGUARD_36800_37900 PLOT DATE : 03 FEB 2014 15:36:55 PLOT BY : GADDK PLOT NAME : PLOT SCALE : 1:10

WISDOT/CADDS SHEET 49

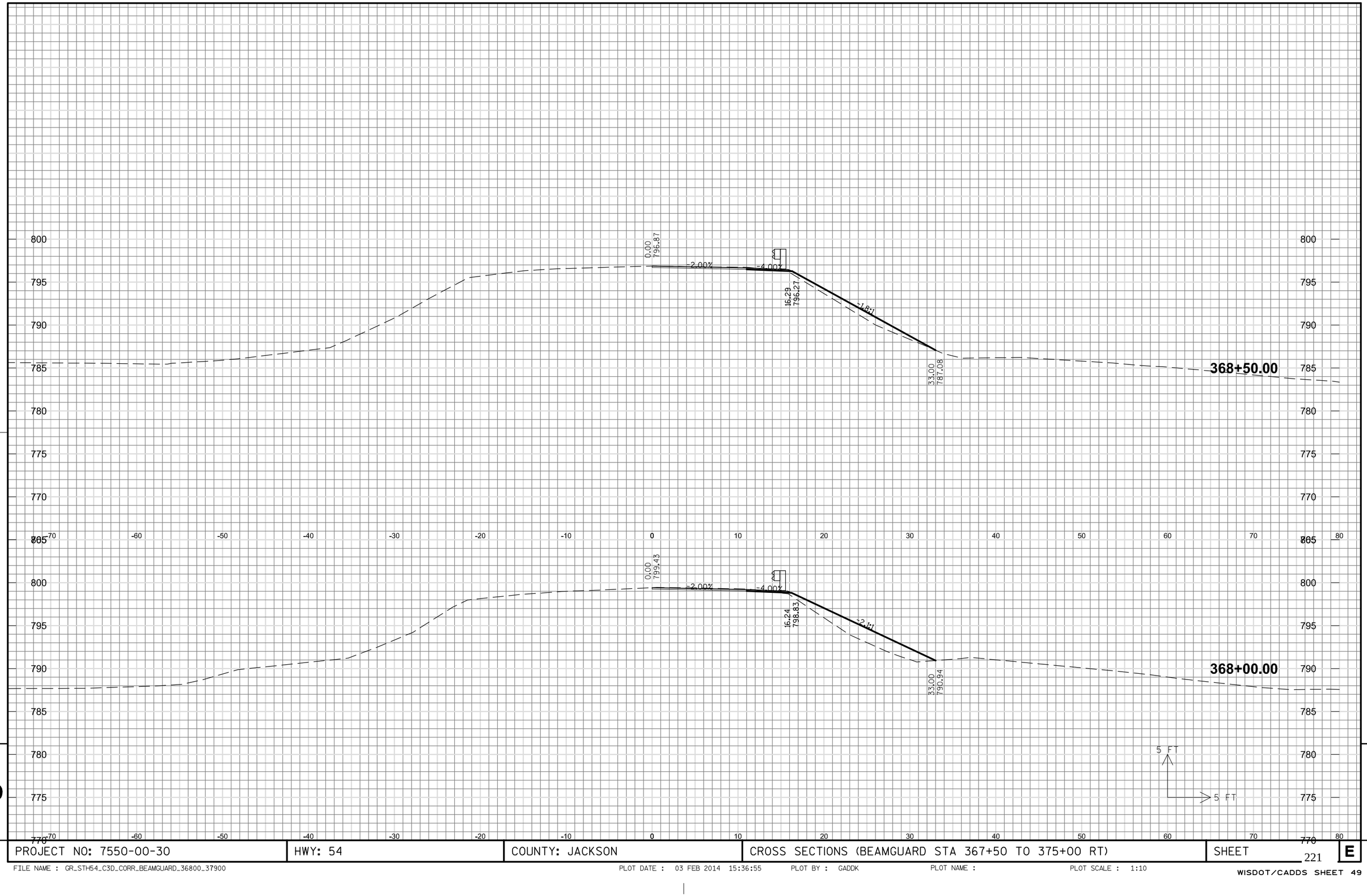

9

9

PROJECT NO: 7550-00-30	HWY: 54	COUNTY: JACKSON	CROSS SECTIONS (BEAMGUARD STA 367+50 TO 375+00 RT)	SHEET	E

FILE NAME : GR_STH54_C3D_CORR_BEAMGUARD_36800_37900 PLOT DATE : 03 FEB 2014 15:36:55 PLOT BY : GADDK PLOT NAME : PLOT SCALE : 1:10

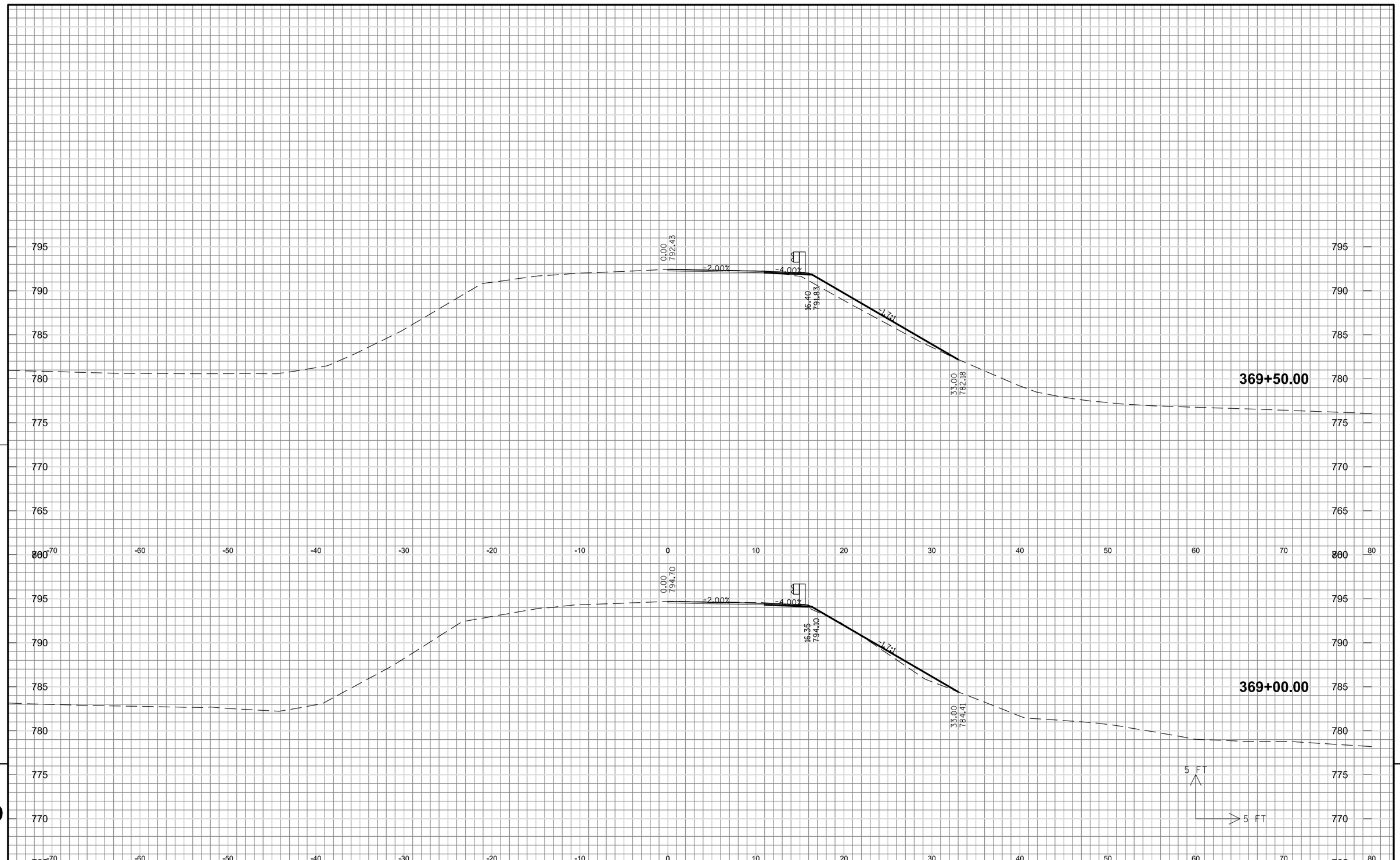

PROJECT NO: 7550-00-30	HWY: 54	COUNTY: JACKSON	CROSS SECTIONS (BEAMGUARD STA 367+50 TO 375+00 RT)	SHEET 222 E

FILE NAME : GR_STH54_C3D_CORR_BEAMGUARD_36800_37900 PLOT DATE : 03 FEB 2014 15:36:55 PLOT BY : GADDK PLOT NAME : PLOT SCALE : 1:10

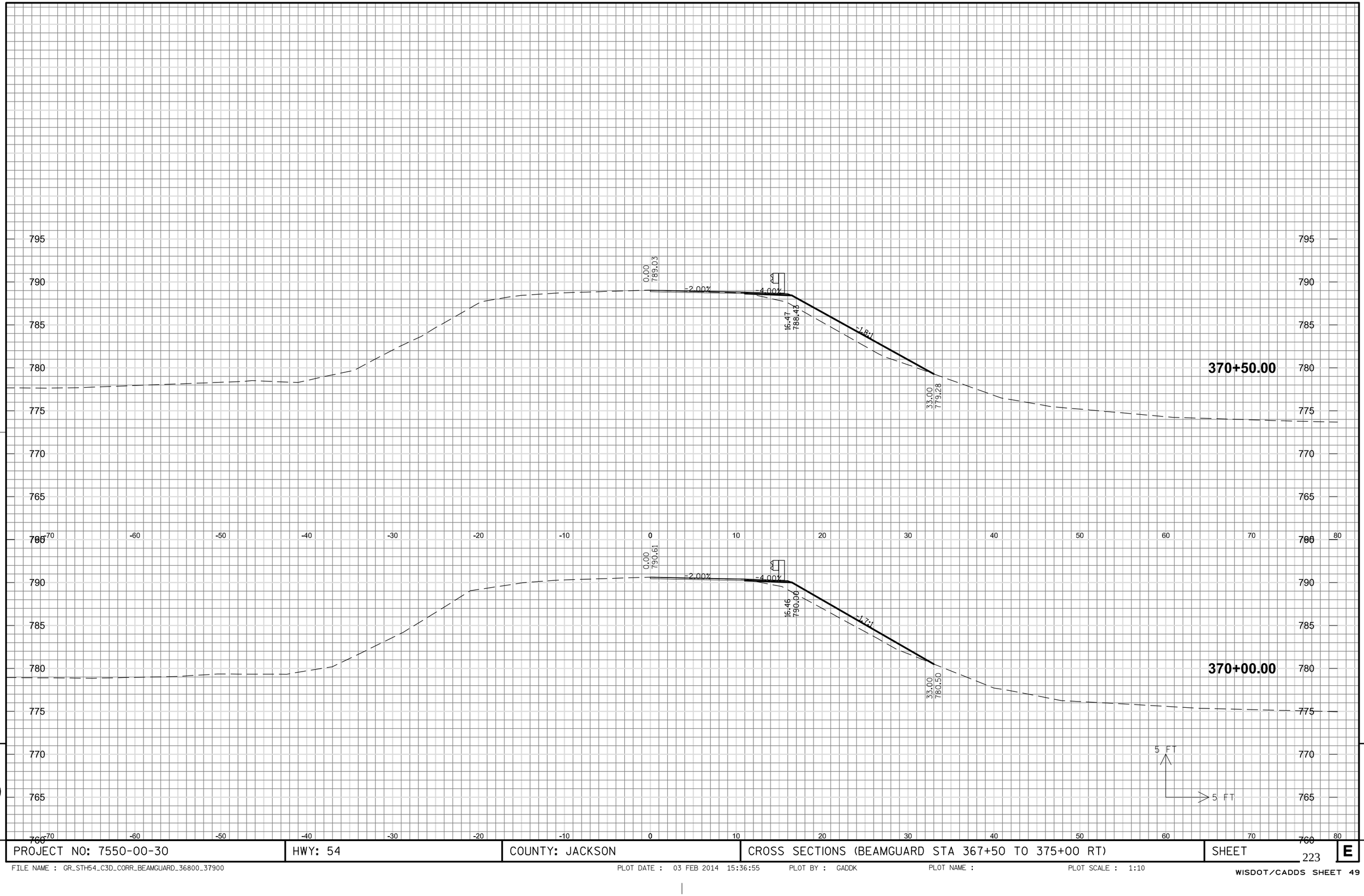

9

PROJECT NO: 7550-00-30	HWY: 54	COUNTY: JACKSON	CROSS SECTIONS (BEAMGUARD STA 367+50 TO 375+00 RT)	SHEET	E

FILE NAME : GR_STH54_C3D_CORR_BEAMGUARD_36800_37900 PLOT DATE : 03 FEB 2014 15:36:55 PLOT BY : GADDK PLOT NAME : PLOT SCALE : 1:10

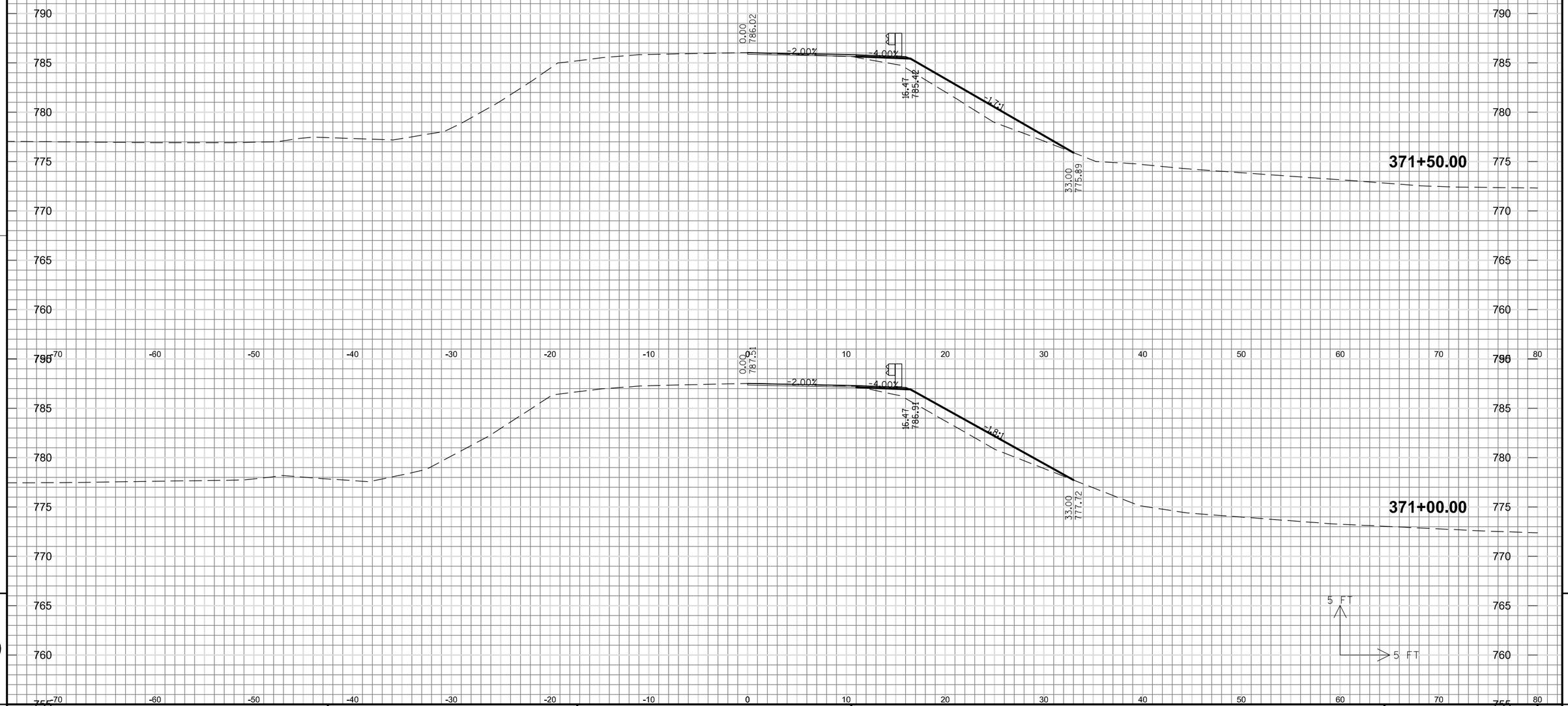

PROJECT NO: 7550-00-30	HWY: 54	COUNTY: JACKSON	CROSS SECTIONS (BEAMGUARD STA 367+50 TO 375+00 RT)	SHEET 224 E

FILE NAME : GR_STH54_C3D_CORR_BEAMGUARD_36800_37900 PLOT DATE : 03 FEB 2014 15:36:55 PLOT BY : GADDK PLOT NAME : PLOT SCALE : 1:10

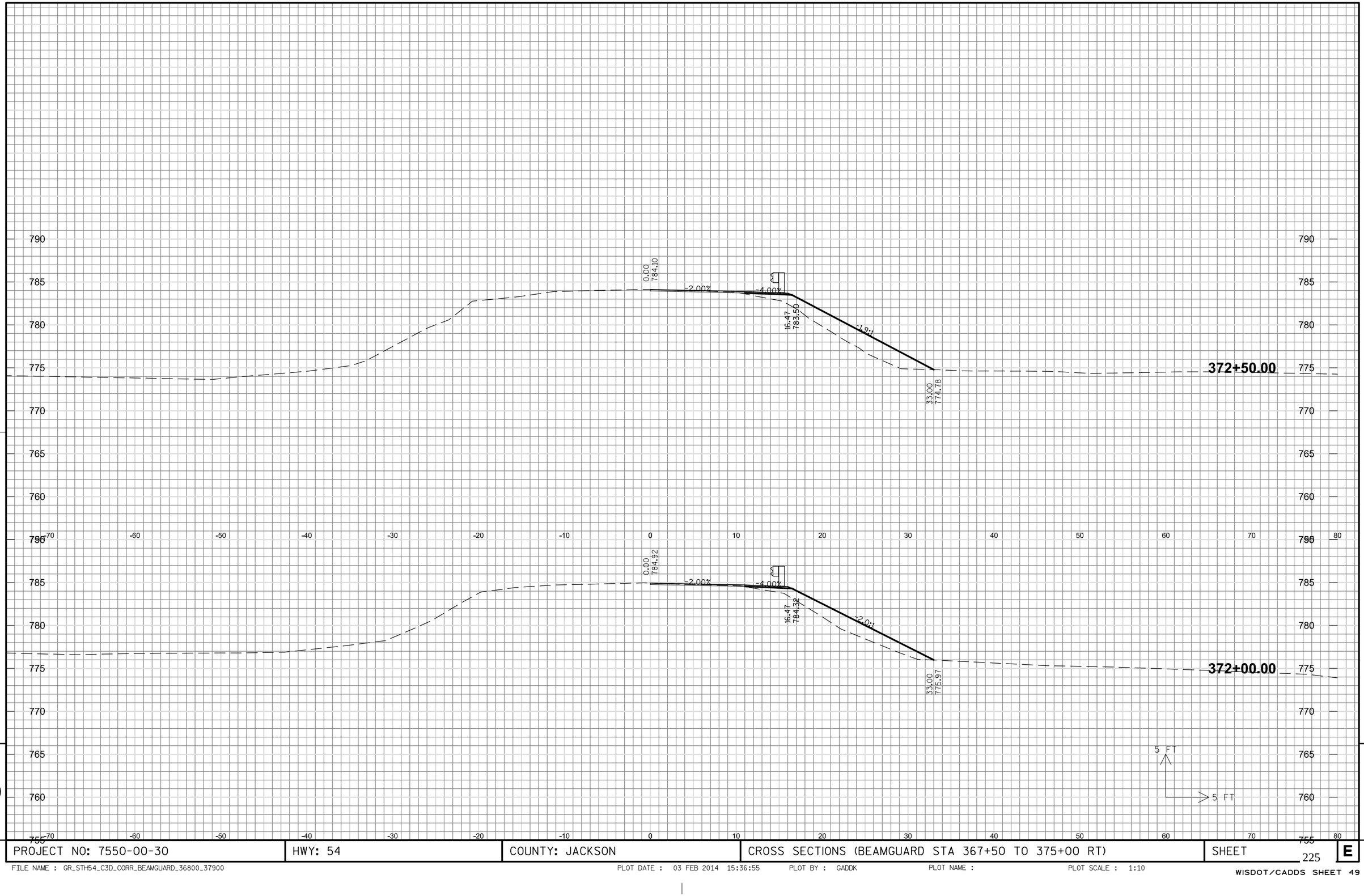

PROJECT NO: 7550-00-30	HWY: 54	COUNTY: JACKSON	CROSS SECTIONS (BEAMGUARD STA 367+50 TO 375+00 RT)	SHEET E

FILE NAME : GR_STH54_C3D_CORR_BEAMGUARD_36800_37900 PLOT DATE : 03 FEB 2014 15:36:55 PLOT BY : GADDK PLOT NAME : PLOT SCALE : 1:10

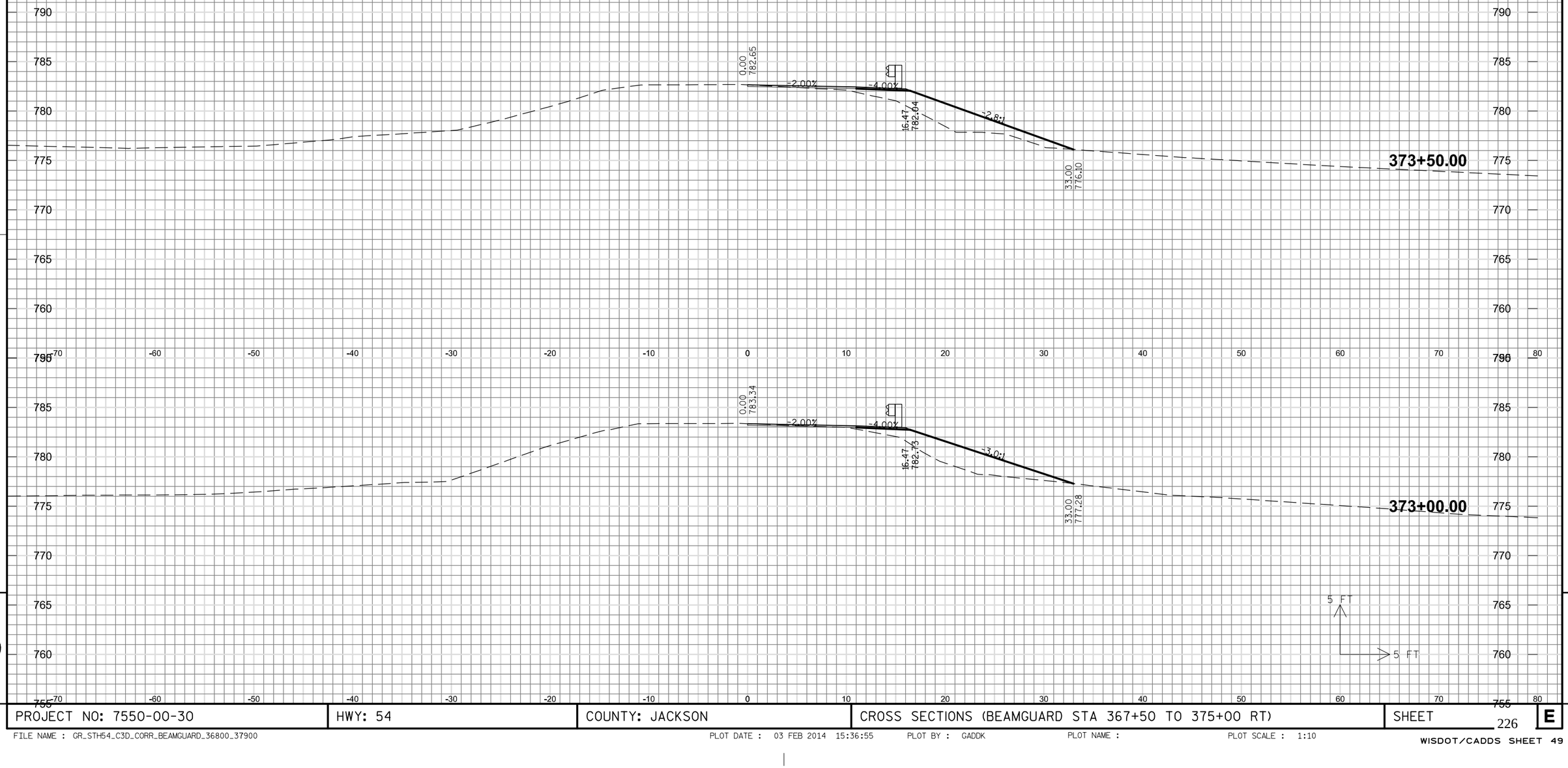

PROJECT NO: 7550-00-30	HWY: 54	COUNTY: JACKSON	CROSS SECTIONS (BEAMGUARD STA 367+50 TO 375+00 RT)	SHEET	E

FILE NAME : GR_STH54_C3D_CORR_BEAMGUARD_36800_37900 PLOT DATE : 03 FEB 2014 15:36:55 PLOT BY : GADDK PLOT NAME : PLOT SCALE : 1:10

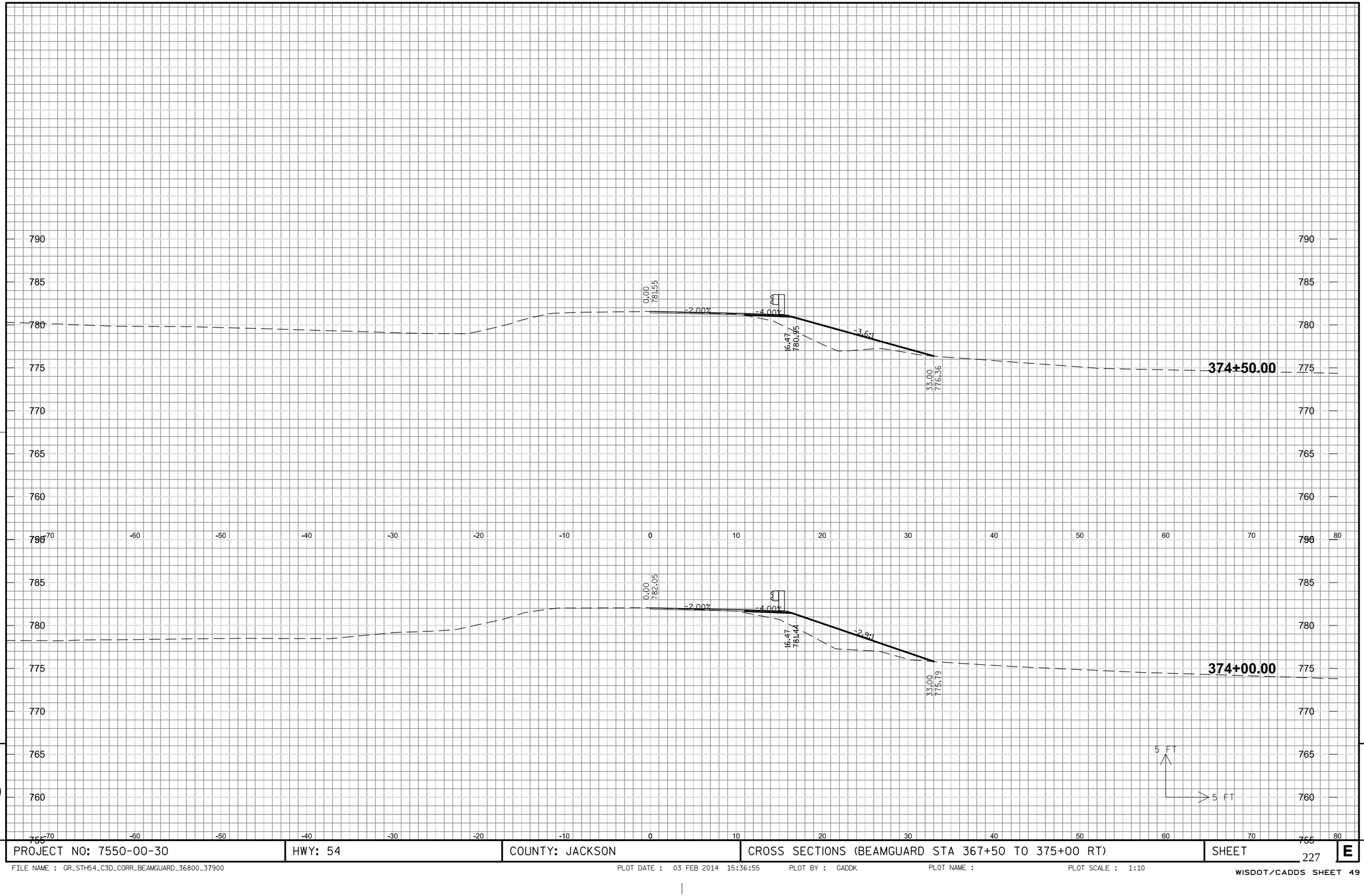

PROJECT NO: 7550-00-30	HWY: 54	COUNTY: JACKSON	CROSS SECTIONS (BEAMGUARD STA 367+50 TO 375+00 RT)	SHEET 227 E

FILE NAME : GR_STH54_C3D_CORR_BEAMGUARD_36800_37900 PLOT DATE : 03 FEB 2014 15:36:55 PLOT BY : GADDK PLOT NAME : PLOT SCALE : 1:10

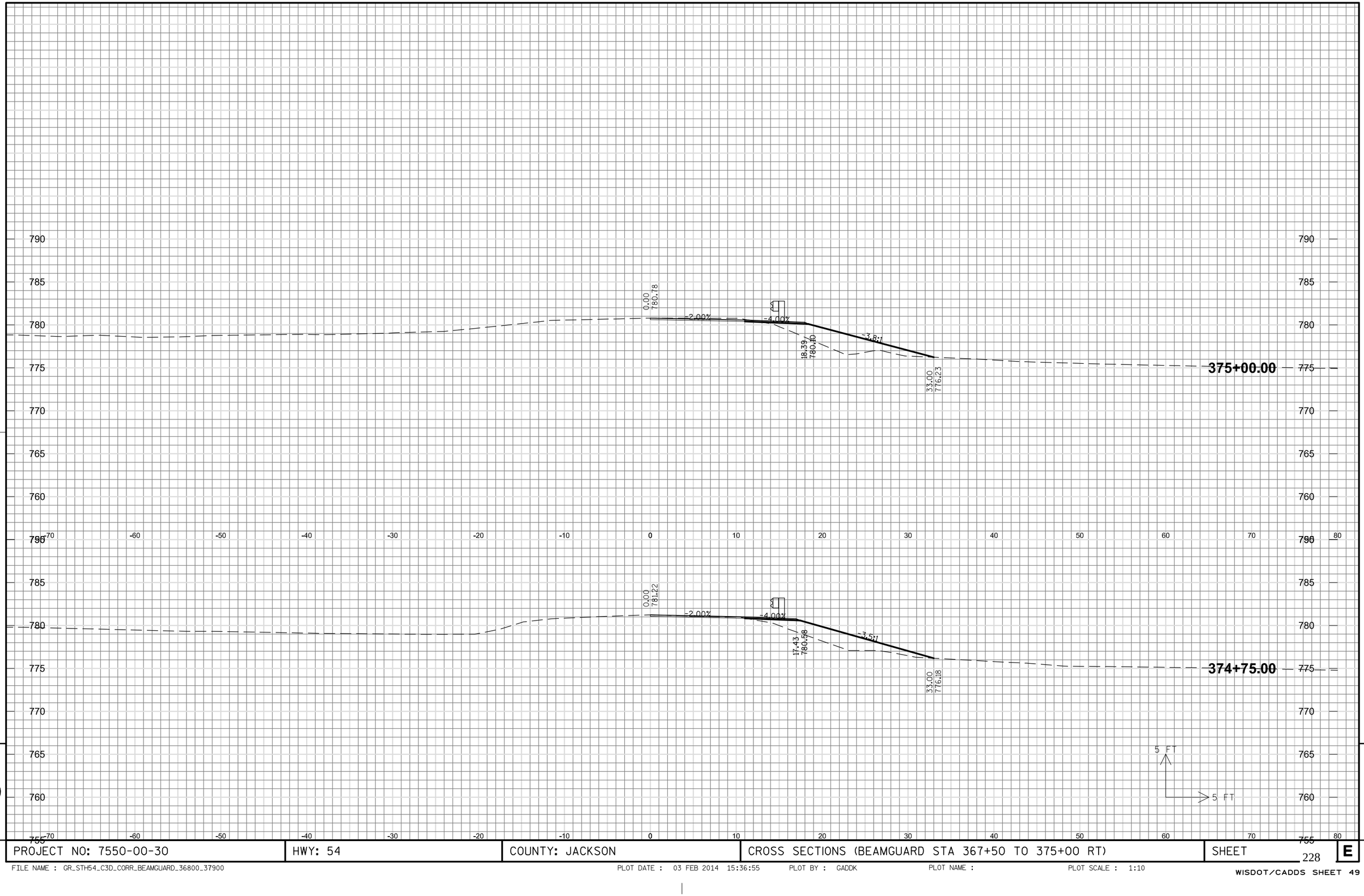

9

PROJECT NO: 7550-00-30	HWY: 54	COUNTY: JACKSON	CROSS SECTIONS (BEAMGUARD STA 367+50 TO 375+00 RT)	SHEET 228	E

9

FILE NAME : GR_STH54_C3D_CORR_BEAMGUARD_36800_37900 PLOT DATE : 03 FEB 2014 15:36:55 PLOT BY : GADDK PLOT NAME : PLOT SCALE : 1:10

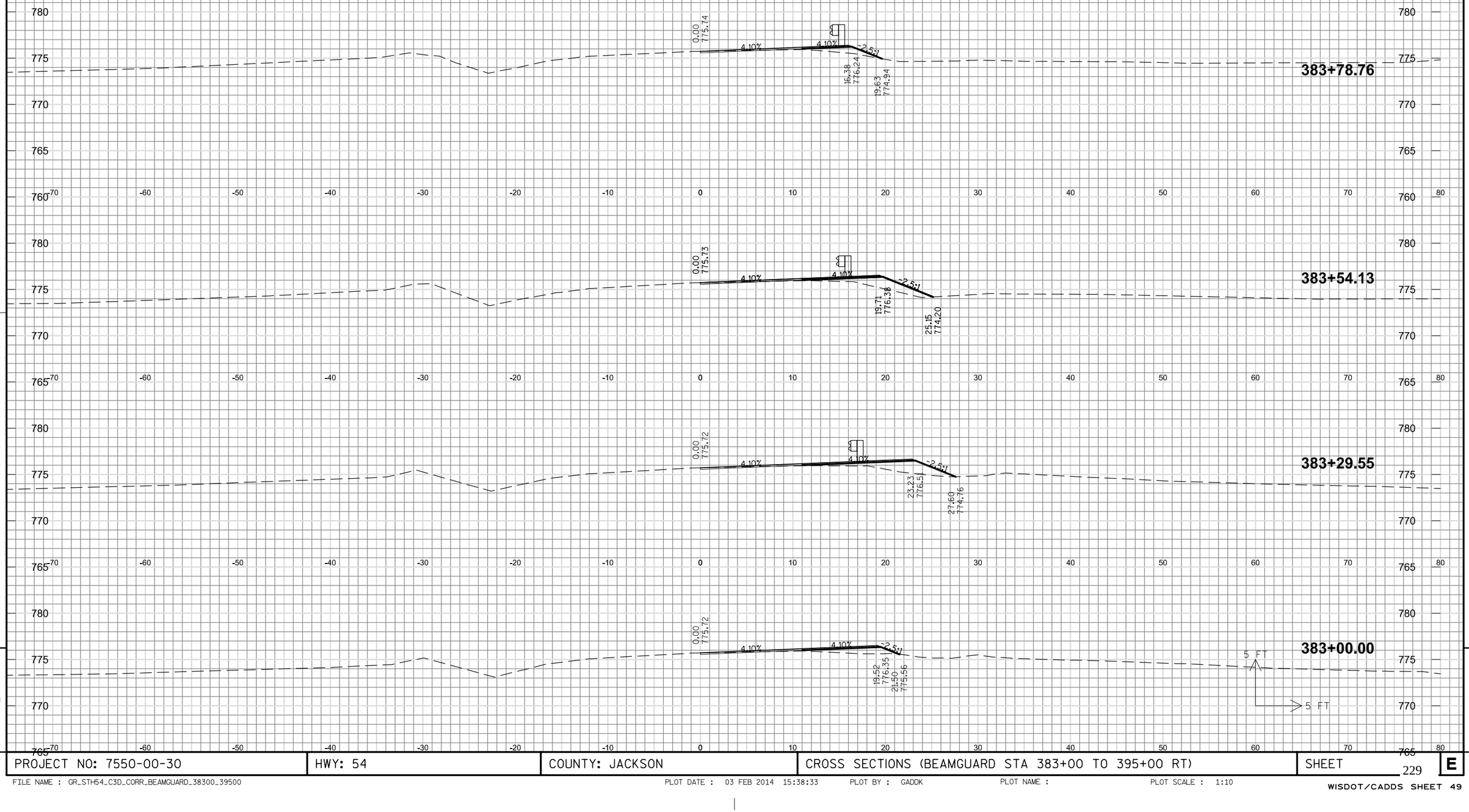

9

9

PROJECT NO: 7550-00-30	HWY: 54	COUNTY: JACKSON	CROSS SECTIONS (BEAMGUARD STA 383+00 TO 395+00 RT)	SHEET 229	E

FILE NAME : GR_STH54_C3D_CORR_BEAMGUARD_38300_39500 PLOT DATE : 03 FEB 2014 15:38:33 PLOT BY : GADDK PLOT NAME : PLOT SCALE : 1:10

WISDOT/CADDS SHEET 49

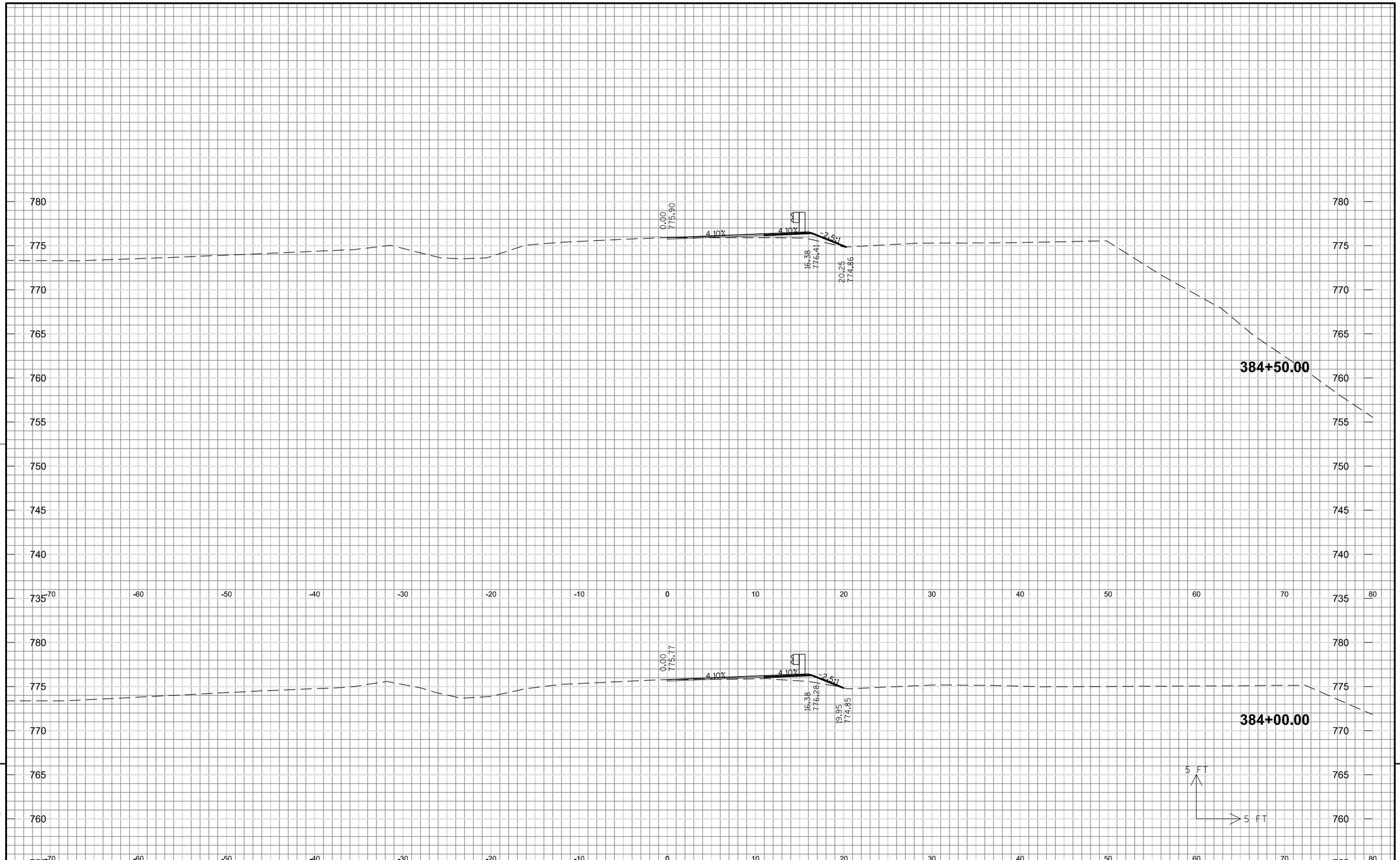

PROJECT NO: 7550-00-30	HWY: 54	COUNTY: JACKSON	CROSS SECTIONS (BEAMGUARD STA 383+00 TO 395+00 RT)	SHEET 230 E

FILE NAME : GR_STH54_C3D_CORR_BEAMGUARD_38300_39500 PLOT DATE : 03 FEB 2014 15:38:33 PLOT BY : GADDK PLOT NAME : PLOT SCALE : 1:10

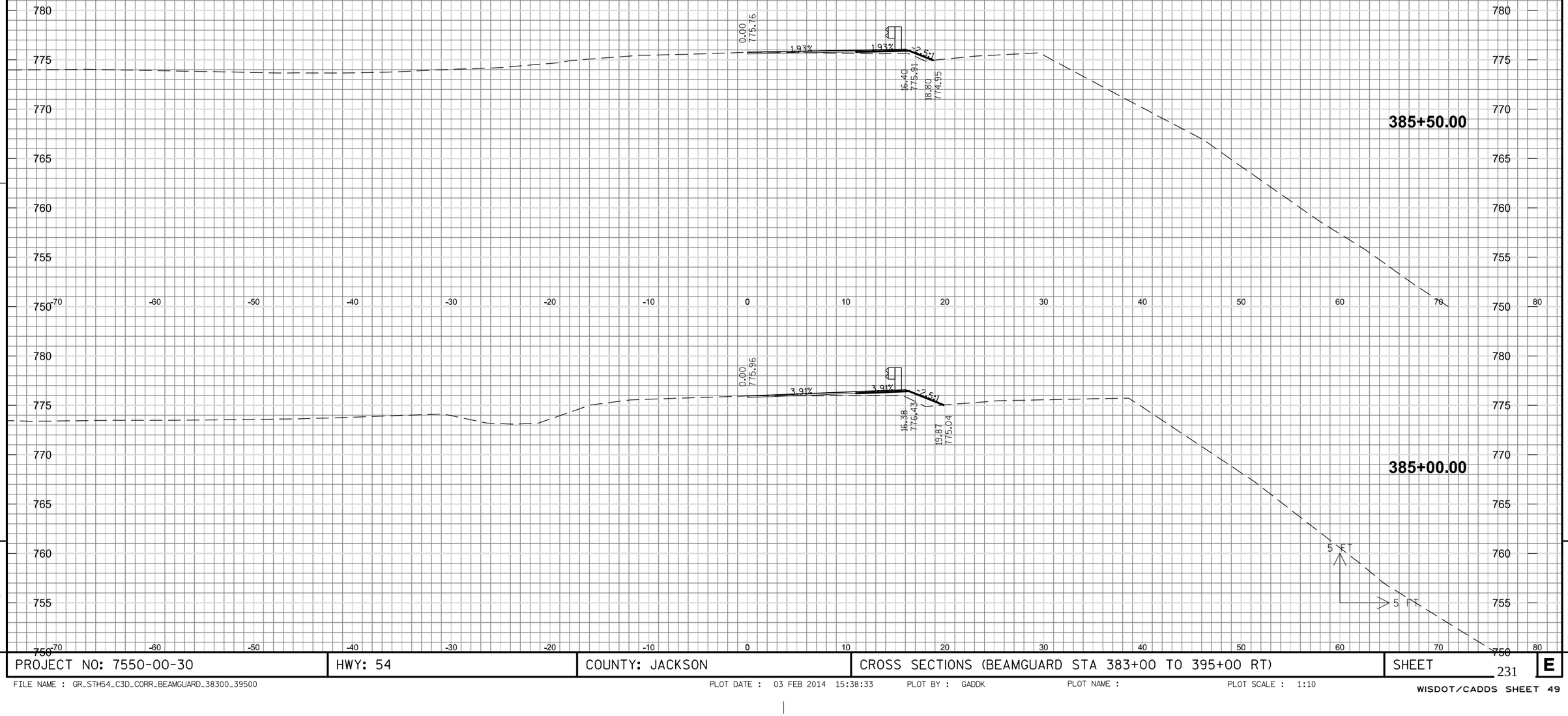

9

9

PROJECT NO: 7550-00-30	HWY: 54	COUNTY: JACKSON	CROSS SECTIONS (BEAMGUARD STA 383+00 TO 395+00 RT)	SHEET	E

FILE NAME : GR_STH54_C3D_CORR_BEAMGUARD_38300_39500 PLOT DATE : 03 FEB 2014 15:38:33 PLOT BY : GADDK PLOT NAME : PLOT SCALE : 1:10

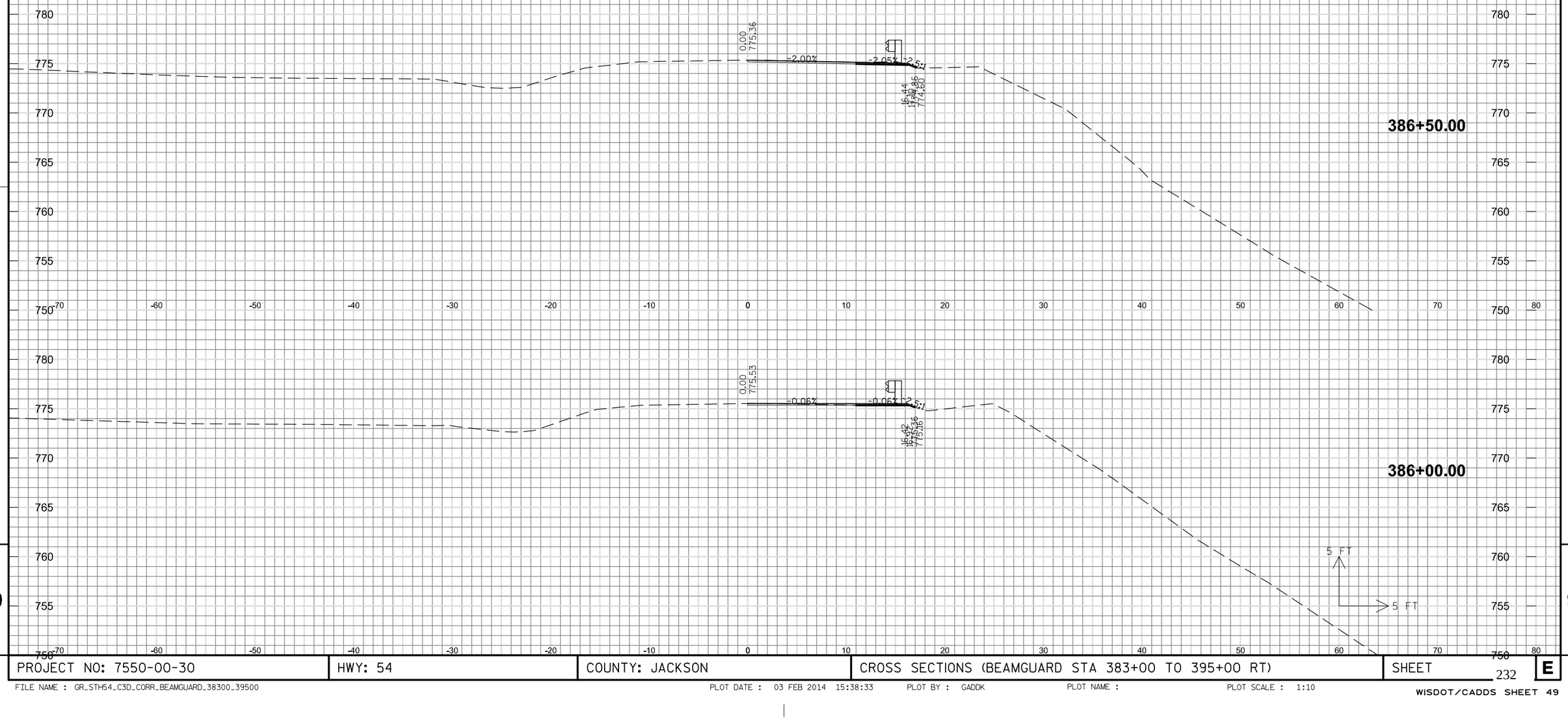

9

9

PROJECT NO: 7550-00-30	HWY: 54	COUNTY: JACKSON	CROSS SECTIONS (BEAMGUARD STA 383+00 TO 395+00 RT)	SHEET	E

FILE NAME : GR_STH54_C3D_CORR_BEAMGUARD_38300_39500 PLOT DATE : 03 FEB 2014 15:38:33 PLOT BY : GADDK PLOT NAME : PLOT SCALE : 1:10

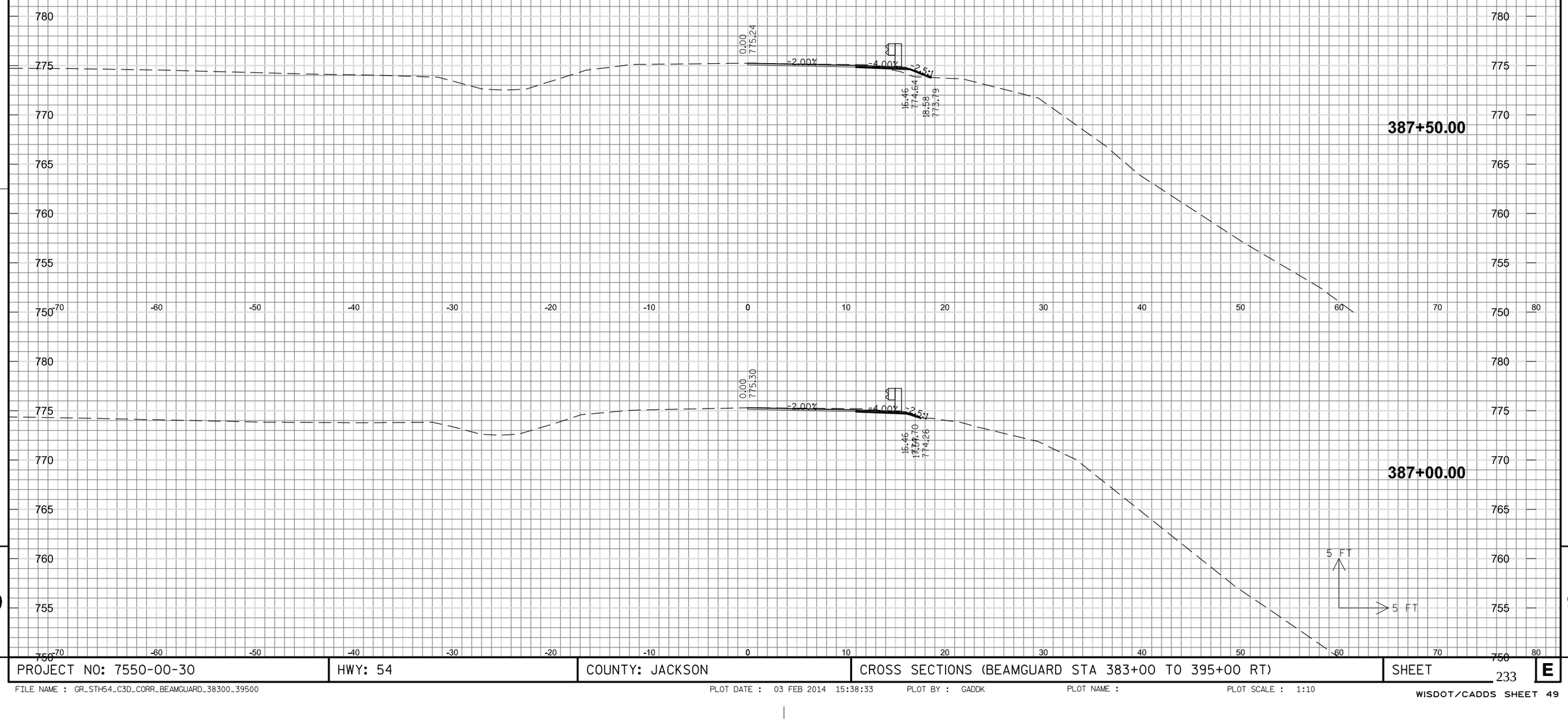

9

9

PROJECT NO: 7550-00-30	HWY: 54	COUNTY: JACKSON	CROSS SECTIONS (BEAMGUARD STA 383+00 TO 395+00 RT)	SHEET	E

FILE NAME : GR_STH54_C3D_CORR_BEAMGUARD_38300_39500 PLOT DATE : 03 FEB 2014 15:38:33 PLOT BY : GADDK PLOT NAME : PLOT SCALE : 1:10

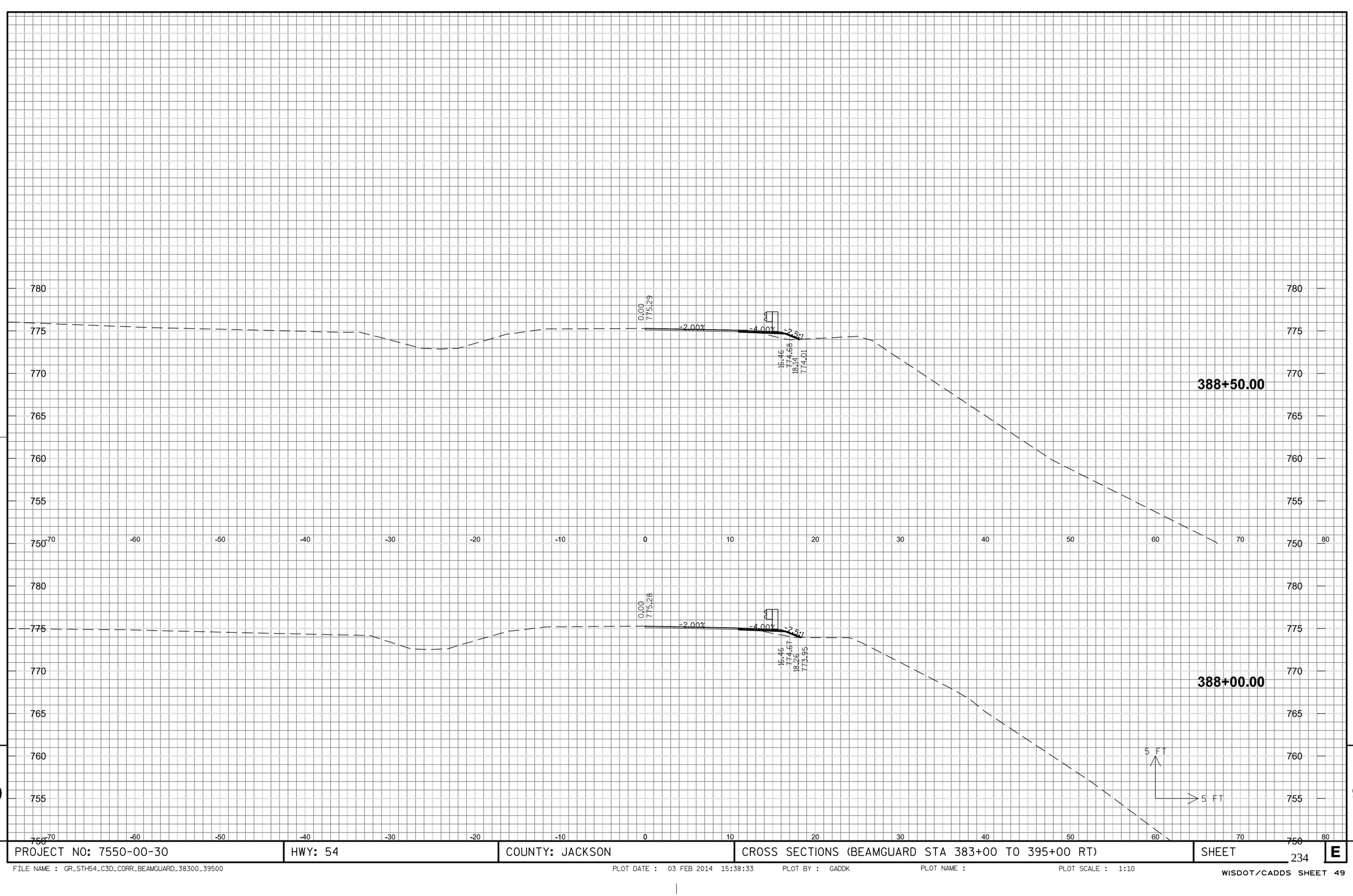

9

9

PROJECT NO: 7550-00-30	HWY: 54	COUNTY: JACKSON	CROSS SECTIONS (BEAMGUARD STA 383+00 TO 395+00 RT)	SHEET 234	E

FILE NAME : GR_STH54_C3D_CORR_BEAMGUARD_38300_39500 PLOT DATE : 03 FEB 2014 15:38:33 PLOT BY : GADDK PLOT NAME : PLOT SCALE : 1:10

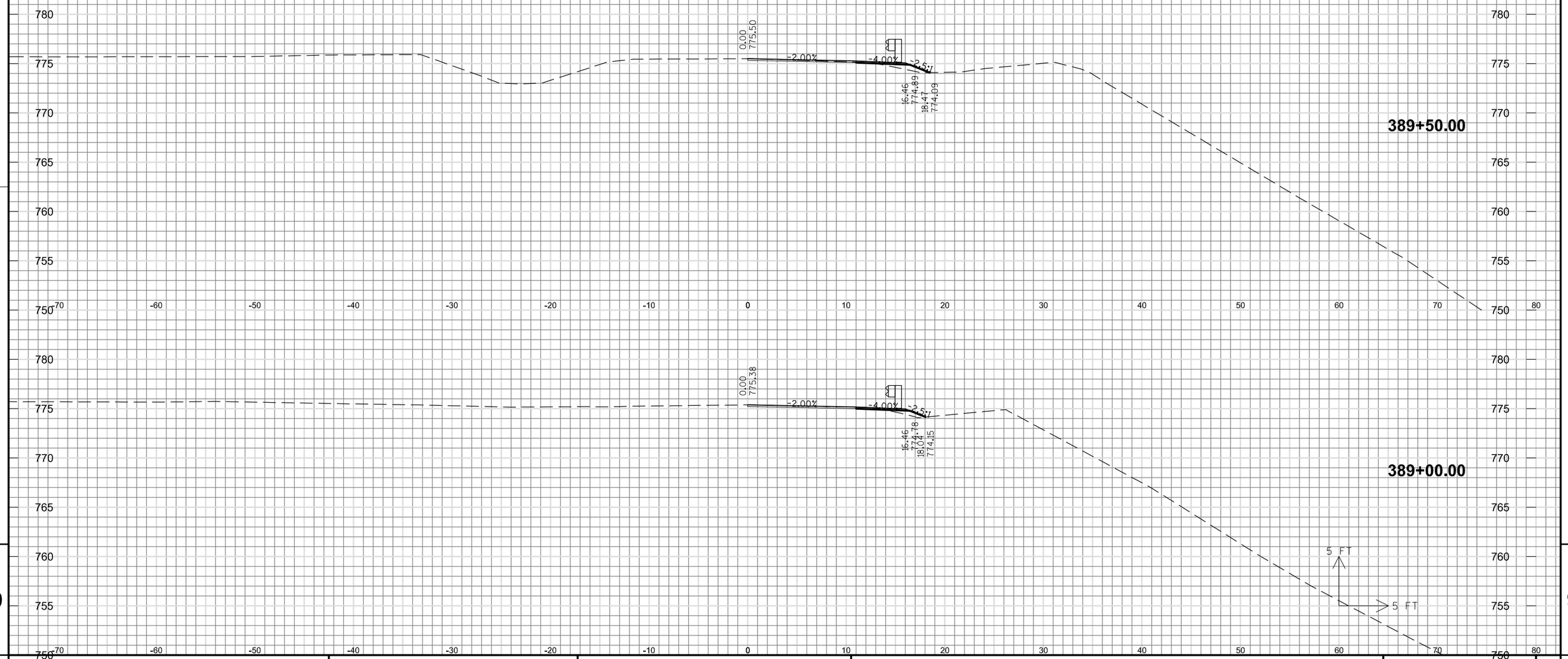

9

9

PROJECT NO: 7550-00-30	HWY: 54	COUNTY: JACKSON	CROSS SECTIONS (BEAMGUARD STA 383+00 TO 395+00 RT)	SHEET	E

FILE NAME : GR_STH54_C3D_CORR_BEAMGUARD_38300_39500 PLOT DATE : 03 FEB 2014 15:38:33 PLOT BY : GADDK PLOT NAME : PLOT SCALE : 1:10

9

PROJECT NO: 7550-00-30	HWY: 54	COUNTY: JACKSON	CROSS SECTIONS (BEAMGUARD STA 383+00 TO 395+00 RT)	SHEET	E

9

FILE NAME : GR_STH54_C3D_CORR_BEAMGUARD_38300_39500 PLOT DATE : 03 FEB 2014 15:38:33 PLOT BY : GADDK PLOT NAME : PLOT SCALE : 1:10

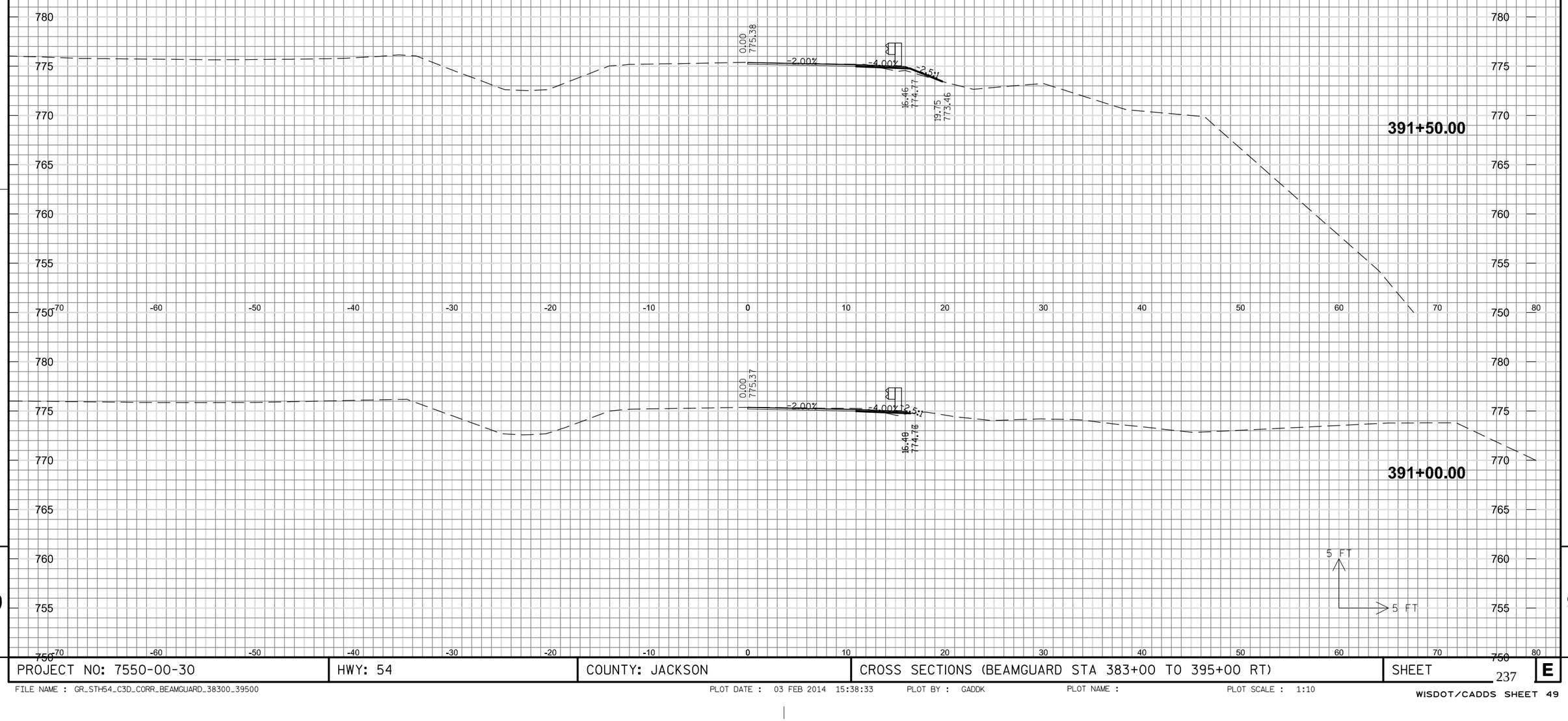

9

9

PROJECT NO: 7550-00-30	HWY: 54	COUNTY: JACKSON	CROSS SECTIONS (BEAMGUARD STA 383+00 TO 395+00 RT)	SHEET 237	E

FILE NAME : GR_STH54_C3D_CORR_BEAMGUARD_38300_39500 PLOT DATE : 03 FEB 2014 15:38:33 PLOT BY : GADDK PLOT NAME : PLOT SCALE : 1:10

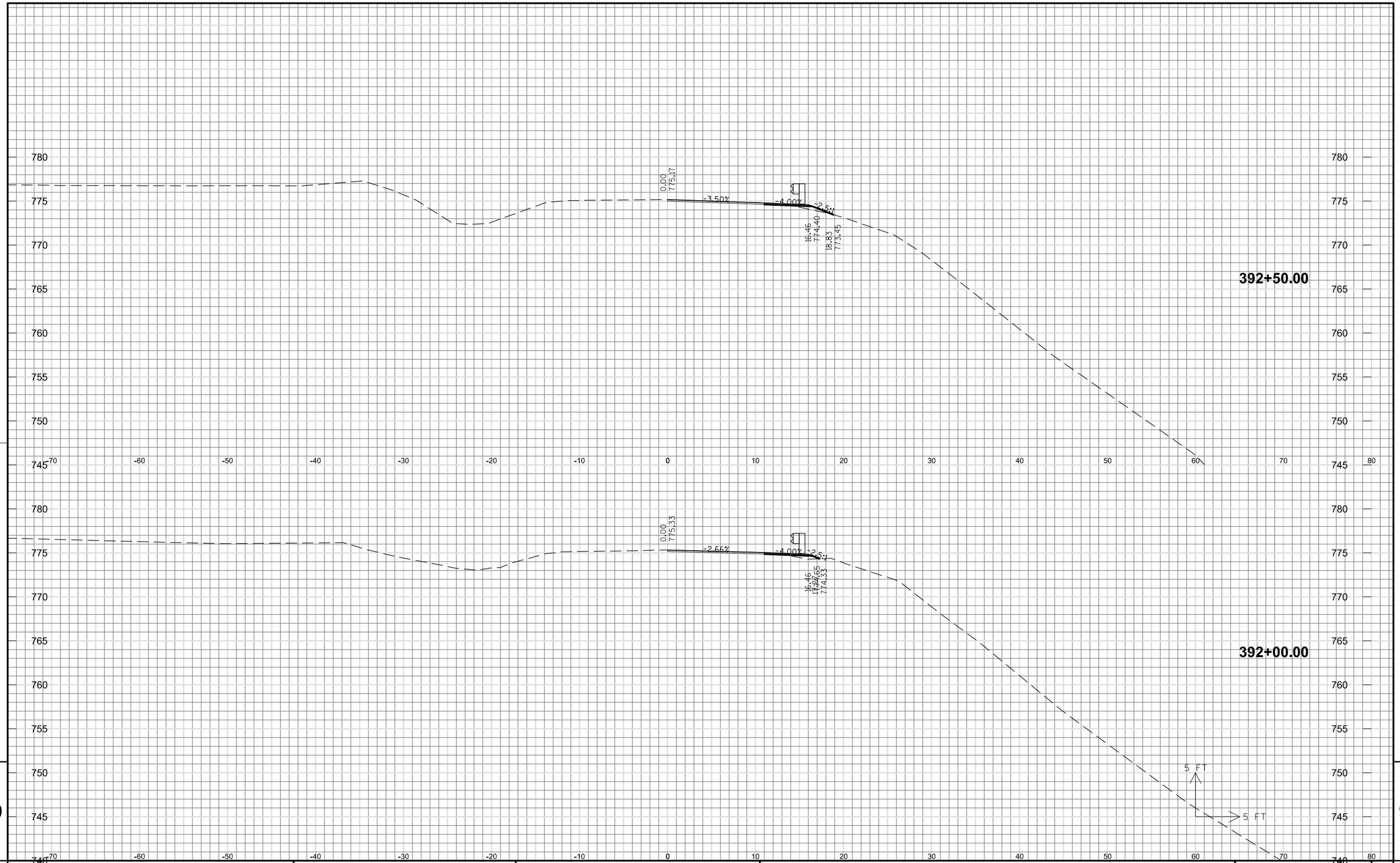

PROJECT NO: 7550-00-30	HWY: 54	COUNTY: JACKSON	CROSS SECTIONS (BEAMGUARD STA 383+00 TO 395+00 RT)	SHEET	E

FILE NAME : GR_STH54_C3D_CORR_BEAMGUARD_38300_39500 PLOT DATE : 03 FEB 2014 15:38:33 PLOT BY : GADDK PLOT NAME : PLOT SCALE : 1:10

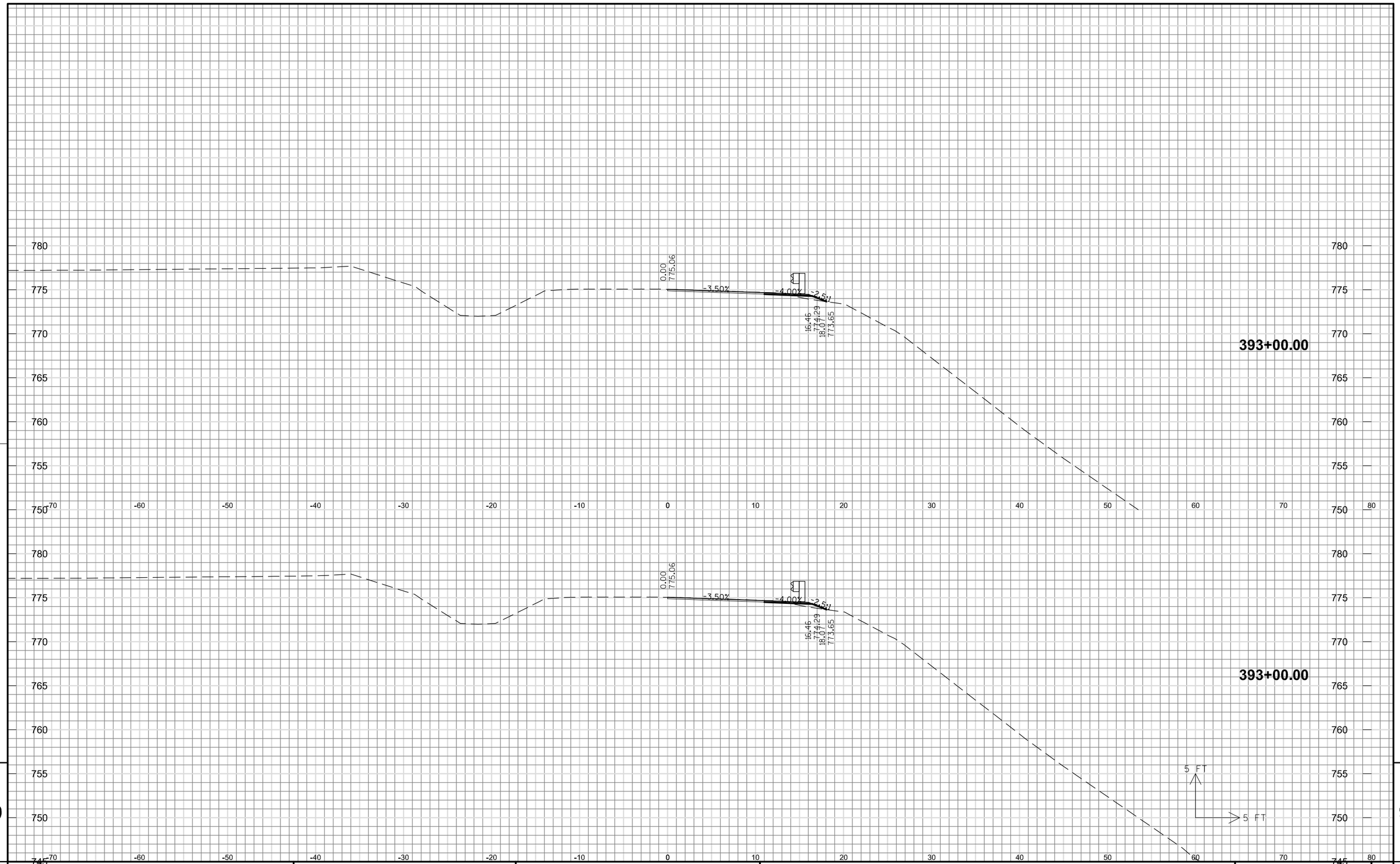

9

PROJECT NO: 7550-00-30	HWY: 54	COUNTY: JACKSON	CROSS SECTIONS (BEAMGUARD STA 383+00 TO 395+00 RT)	SHEET 239	E

FILE NAME : GR_STH54_C3D_CORR_BEAMGUARD_38300_39500 PLOT DATE : 03 FEB 2014 15:38:33 PLOT BY : GADDK PLOT NAME : PLOT SCALE : 1:10

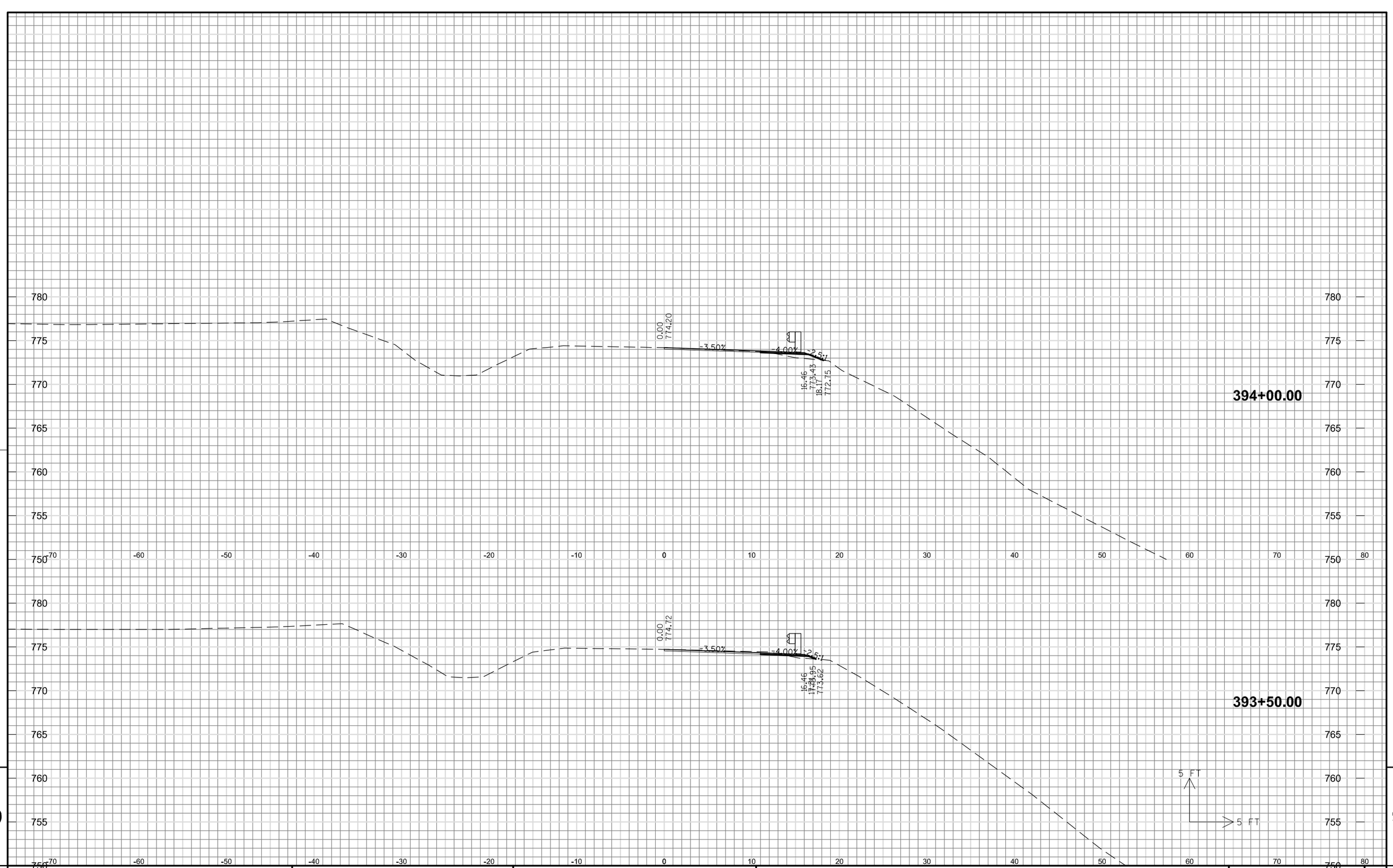

9

9

PROJECT NO: 7550-00-30	HWY: 54	COUNTY: JACKSON	CROSS SECTIONS (BEAMGUARD STA 383+00 TO 395+00 RT)	SHEET 240	E

FILE NAME : GR_STH54_C3D_CORR_BEAMGUARD_38300_39500 PLOT DATE : 03 FEB 2014 15:38:33 PLOT BY : GADDK PLOT NAME : PLOT SCALE : 1:10

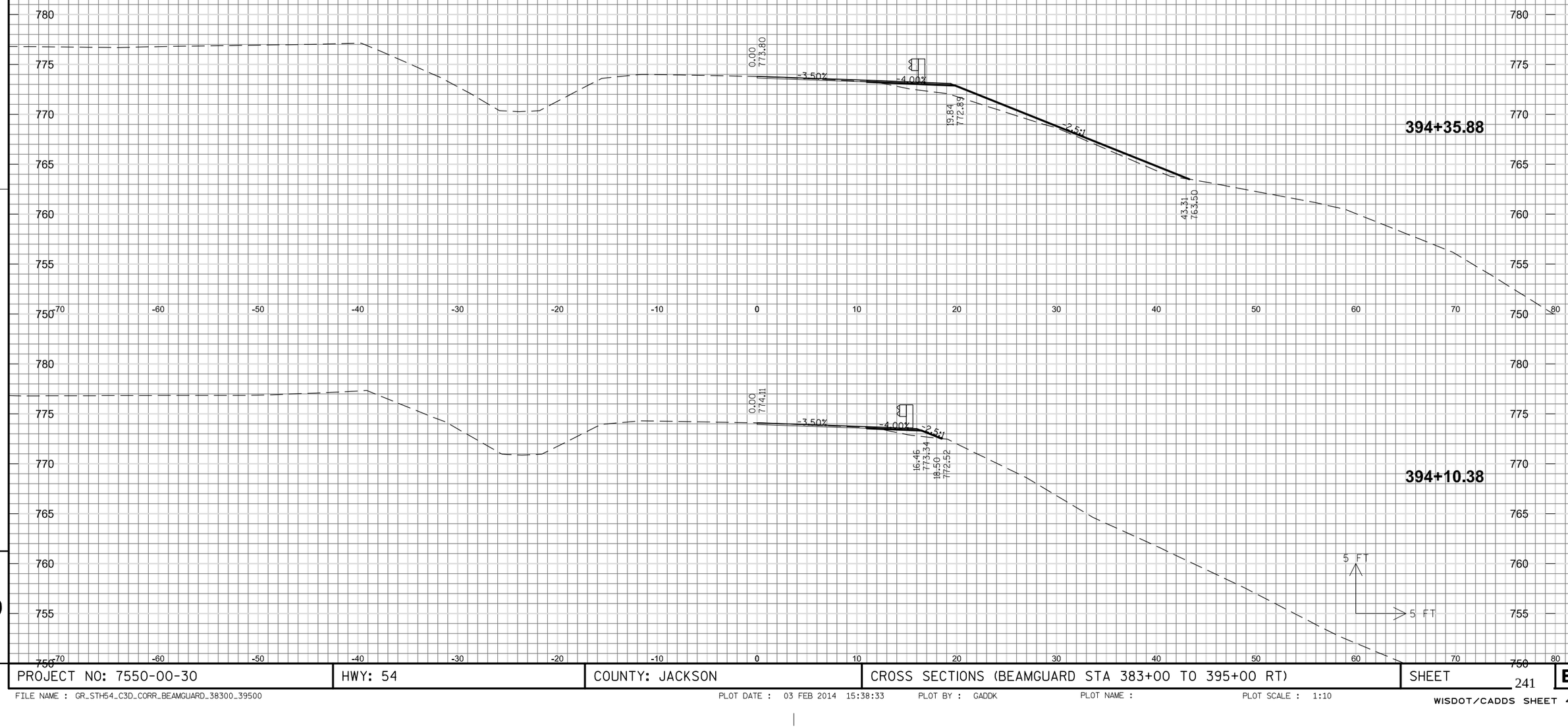

PROJECT NO: 7550-00-30	HWY: 54	COUNTY: JACKSON	CROSS SECTIONS (BEAMGUARD STA 383+00 TO 395+00 RT)	SHEET	E

FILE NAME : GR_STH54_C3D_CORR_BEAMGUARD_38300_39500 PLOT DATE : 03 FEB 2014 15:38:33 PLOT BY : GADDK PLOT NAME : PLOT SCALE : 1:10

PROJECT NO: 7550-00-30	HWY: 54	COUNTY: JACKSON	CROSS SECTIONS (BEAMGUARD STA 383+00 TO 395+00 RT)	SHEET	E

FILE NAME : GR_STH54_C3D_CORR_BEAMGUARD_38300_39500 PLOT DATE : 03 FEB 2014 15:38:33 PLOT BY : GADDK PLOT NAME : PLOT SCALE : 1:10

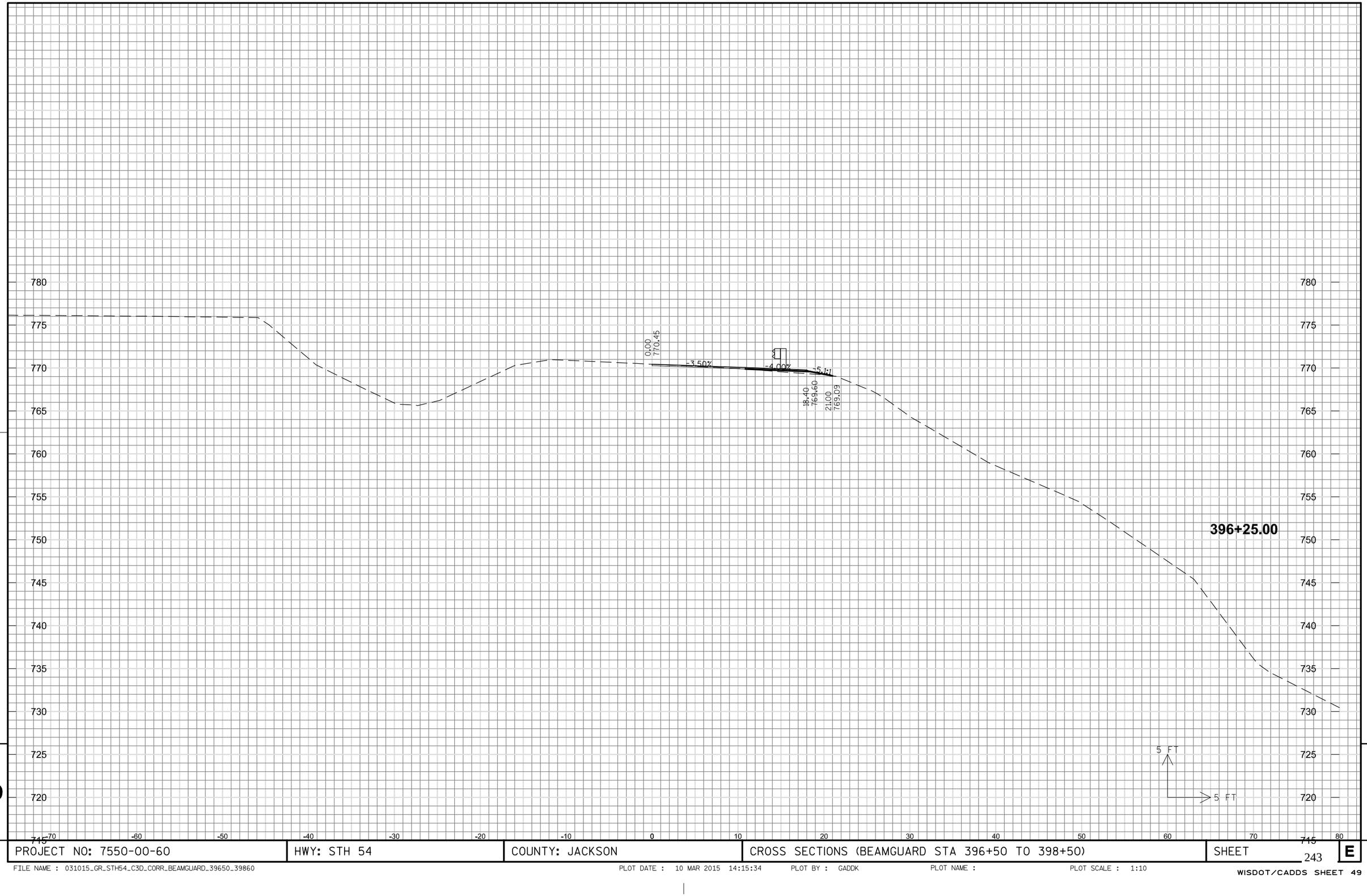

9

PROJECT NO: 7550-00-60	HWY: STH 54	COUNTY: JACKSON	CROSS SECTIONS (BEAMGUARD STA 396+50 TO 398+50)	SHEET	E

9

FILE NAME : 031015_GR_STH54_C3D_CORR_BEAMGUARD_39650_39860 PLOT DATE : 10 MAR 2015 14:15:34 PLOT BY : GADDK PLOT NAME : PLOT SCALE : 1:10

WISDOT/CADDS SHEET 49

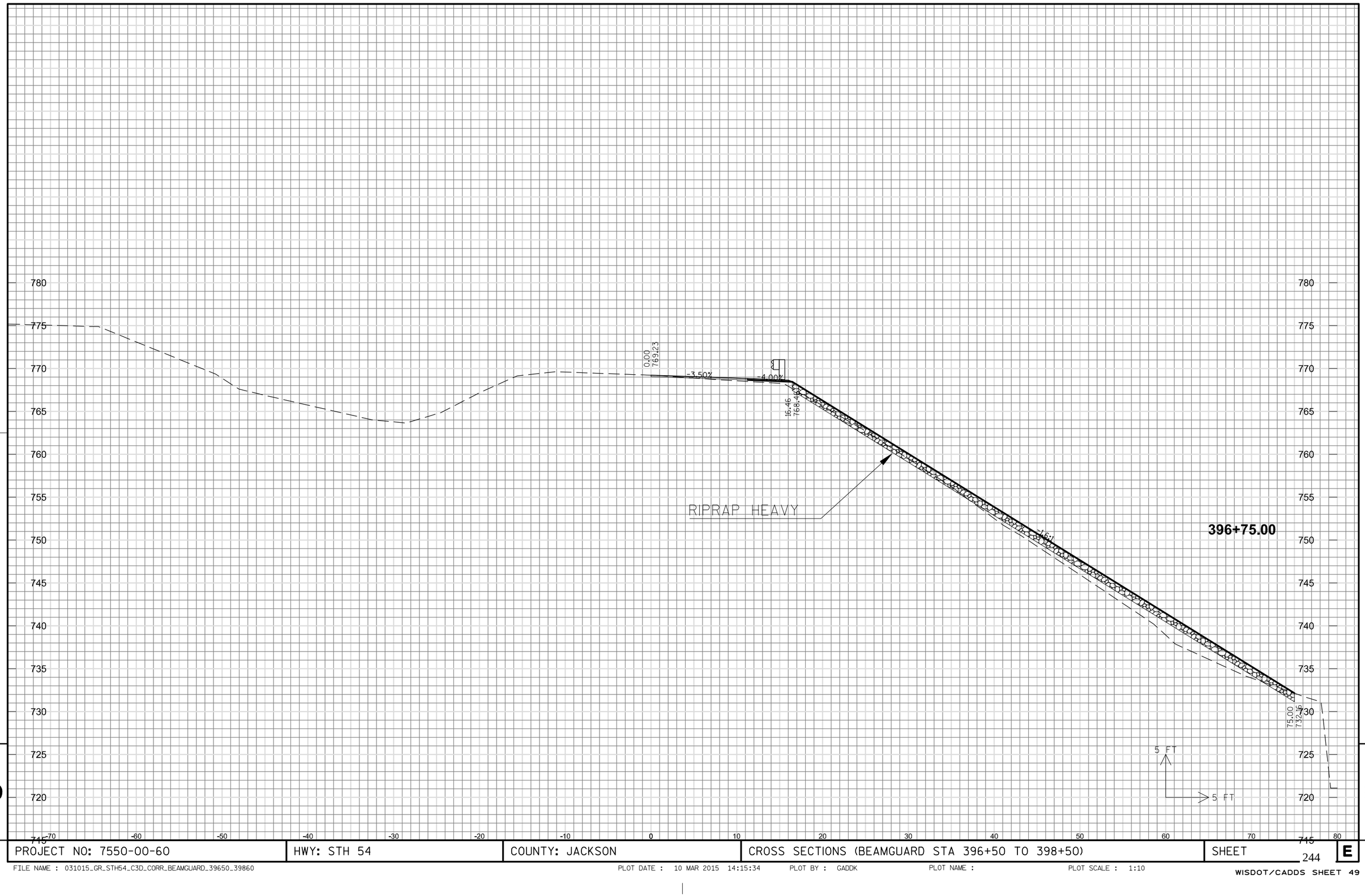

9

9

PROJECT NO: 7550-00-60	HWY: STH 54	COUNTY: JACKSON	CROSS SECTIONS (BEAMGUARD STA 396+50 TO 398+50)	SHEET 244	E

FILE NAME : 031015_GR_STH54_C3D_CORR_BEAMGUARD_39650_39860 PLOT DATE : 10 MAR 2015 14:15:34 PLOT BY : GADDK PLOT NAME : PLOT SCALE : 1:10

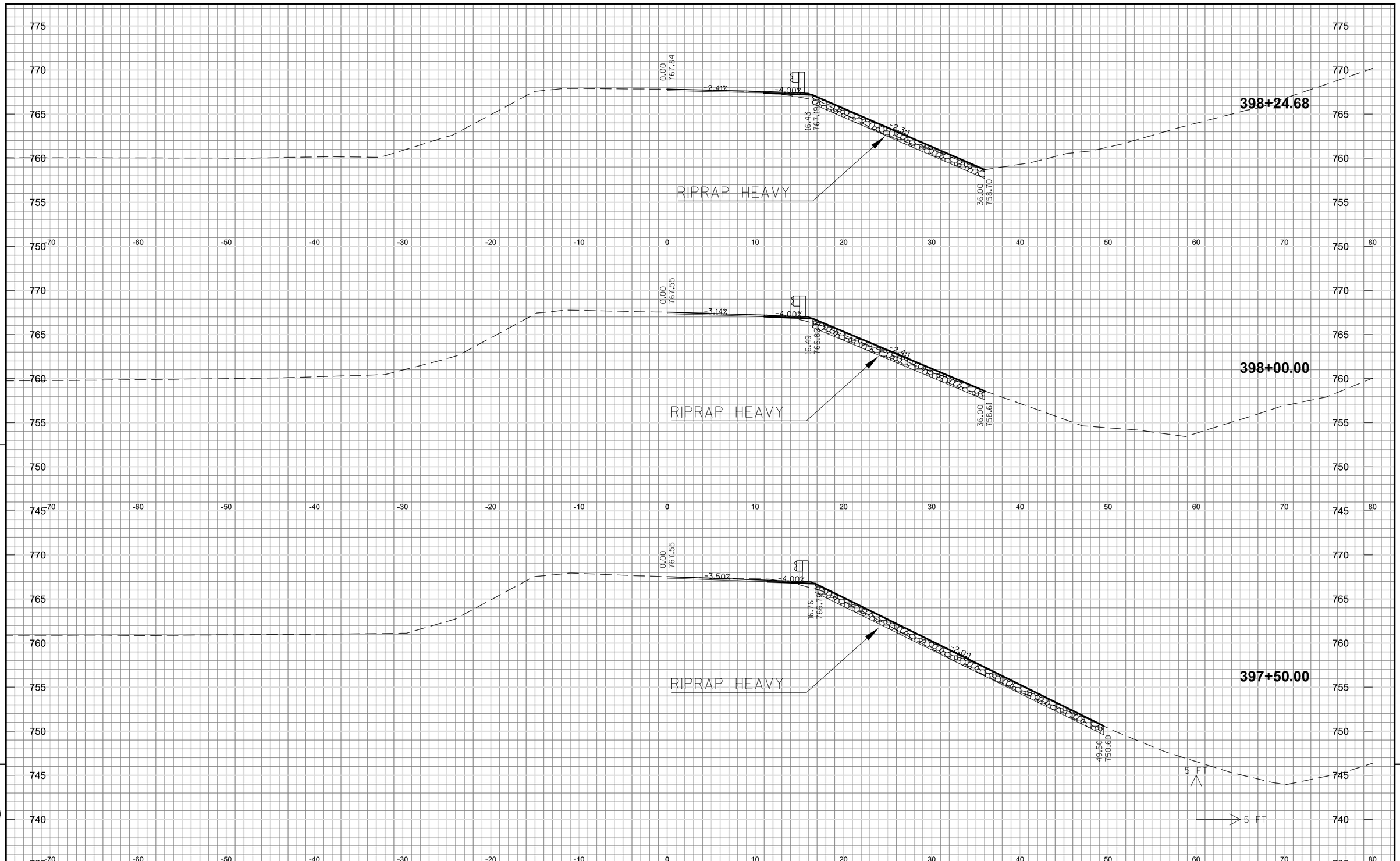

PROJECT NO: 7550-00-60	HWY: STH 54	COUNTY: JACKSON	CROSS SECTIONS (BEAMGUARD STA 396+50 TO 398+50)	SHEET 245	E

FILE NAME : 031015_GR_STH54_C3D_CORR_BEAMGUARD_39650_39860 PLOT DATE : 10 MAR 2015 14:15:34 PLOT BY : GADDK PLOT NAME : PLOT SCALE : 1:10

WISDOT/CADDS SHEET 49

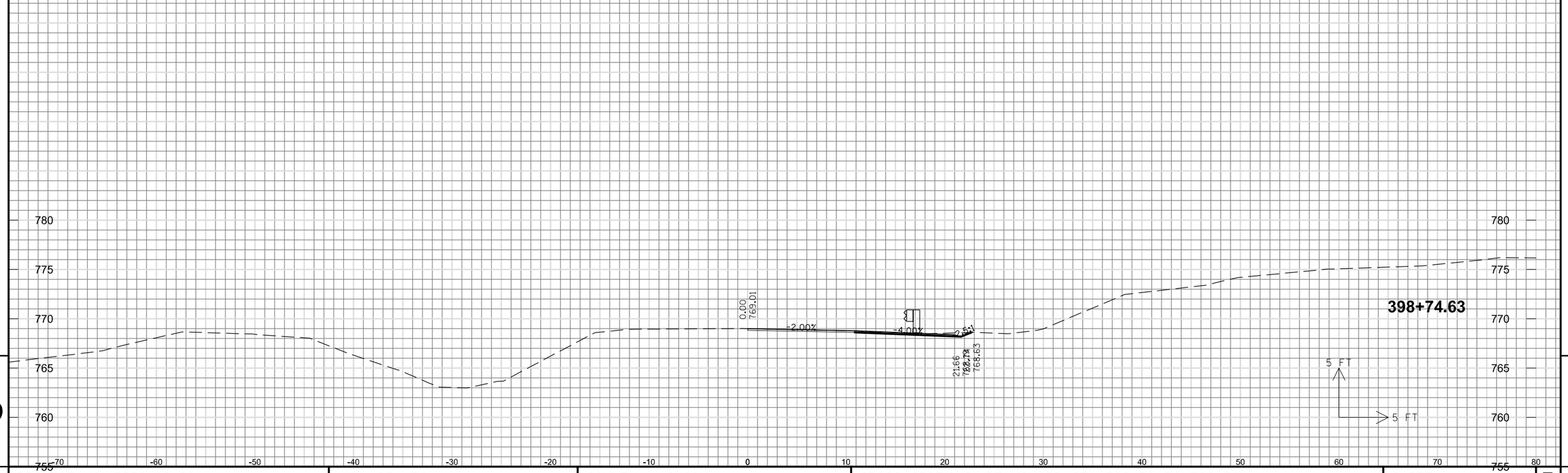

9

9

PROJECT NO: 7550-00-60	HWY: STH 54	COUNTY: JACKSON	CROSS SECTIONS (BEAMGUARD STA 396+50 TO 398+50)	SHEET 246	E

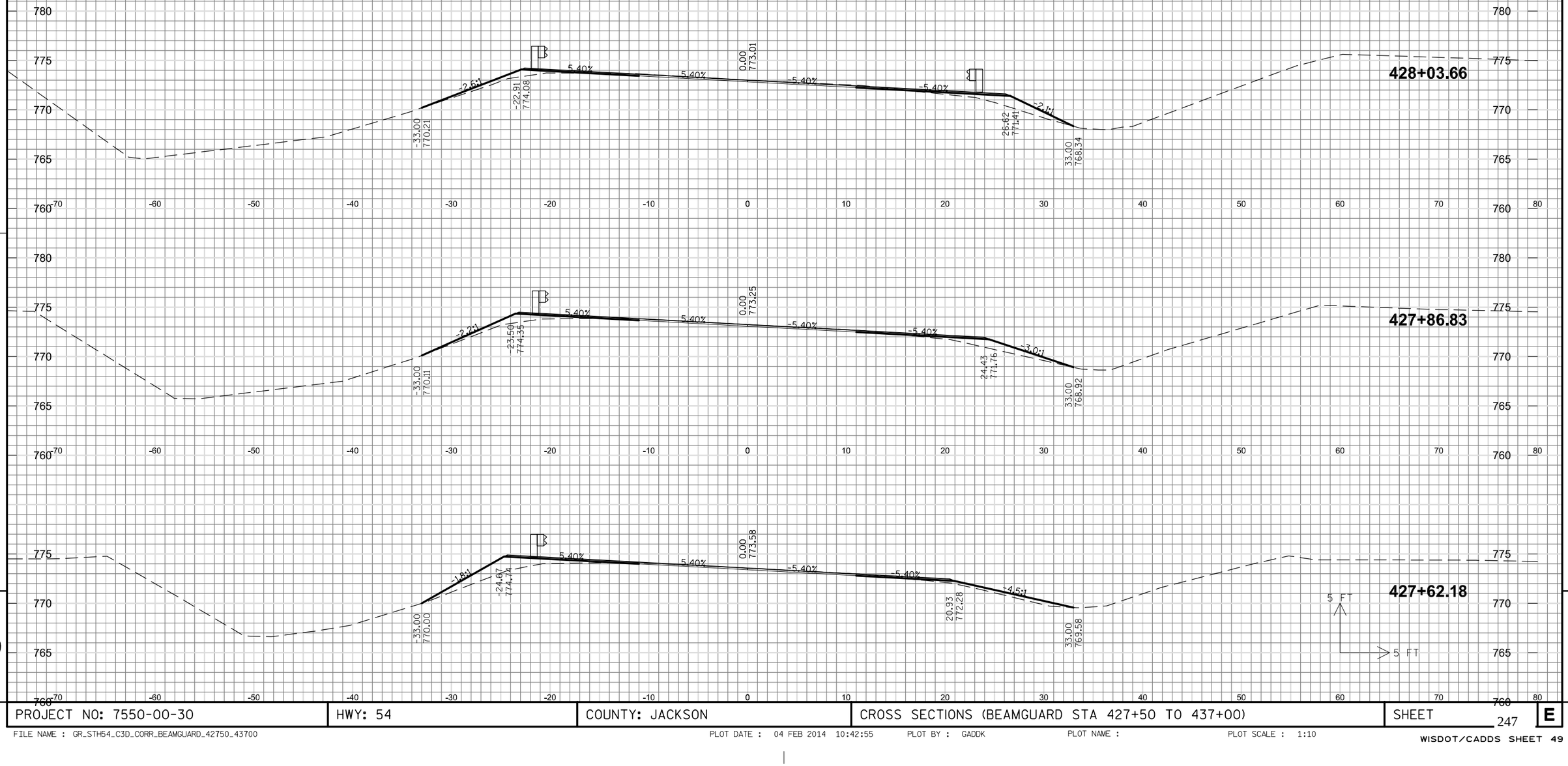

9

9

PROJECT NO: 7550-00-30	HWY: 54	COUNTY: JACKSON	CROSS SECTIONS (BEAMGUARD STA 427+50 TO 437+00)	SHEET 247	E

FILE NAME : GR_STH54_C3D_CORR_BEAMGUARD_42750_43700 PLOT DATE : 04 FEB 2014 10:42:55 PLOT BY : GADDK PLOT NAME : PLOT SCALE : 1:10

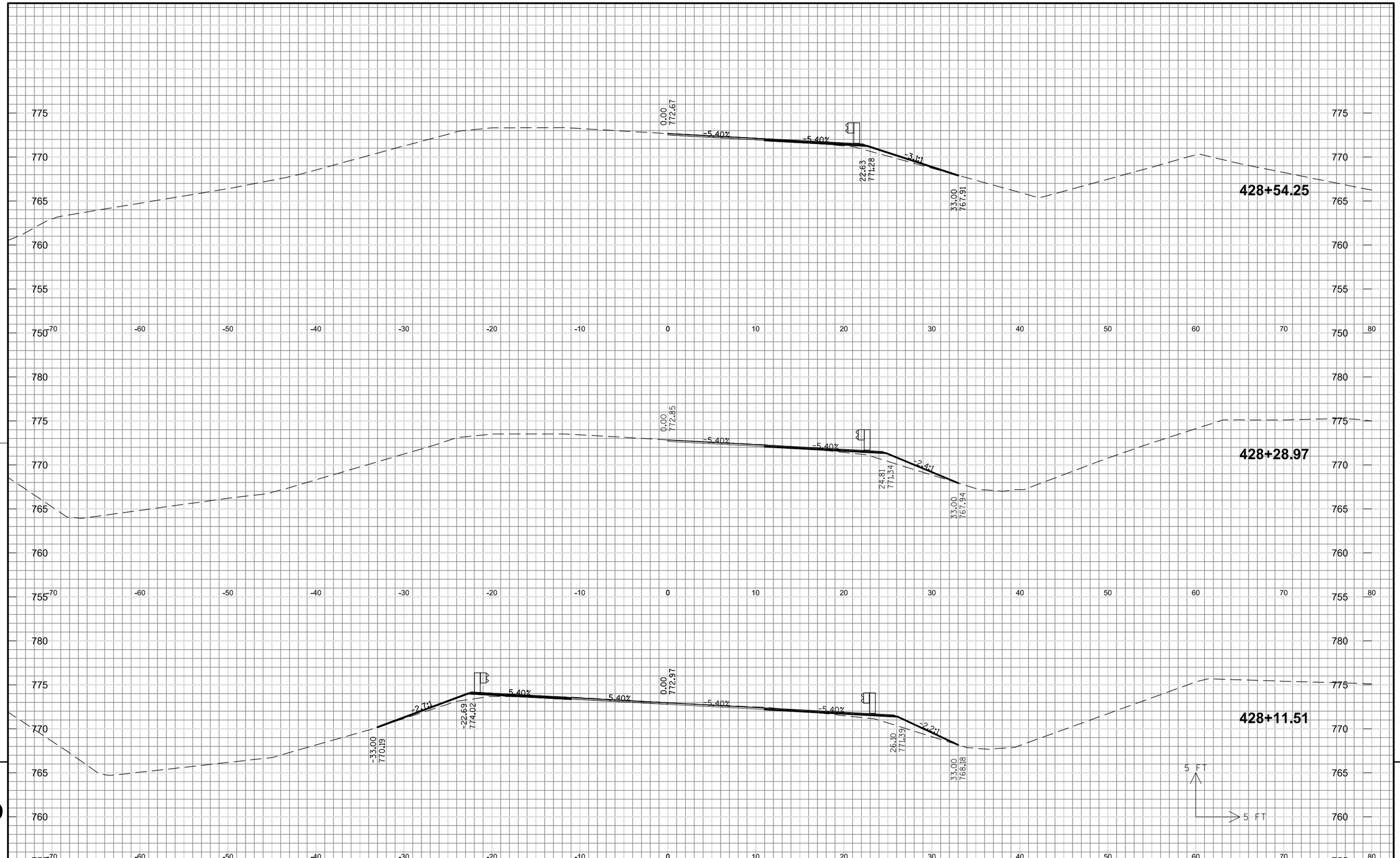

PROJECT NO: 7550-00-30	HWY: 54	COUNTY: JACKSON	CROSS SECTIONS (BEAMGUARD STA 427+50 TO 437+00)	SHEET 248 E

FILE NAME : GR_STH54_C3D_CORR_BEAMGUARD_42750_43700 PLOT DATE : 04 FEB 2014 10:42:55 PLOT BY : GADDK PLOT NAME : PLOT SCALE : 1:10

WISDOT/CADDS SHEET 49

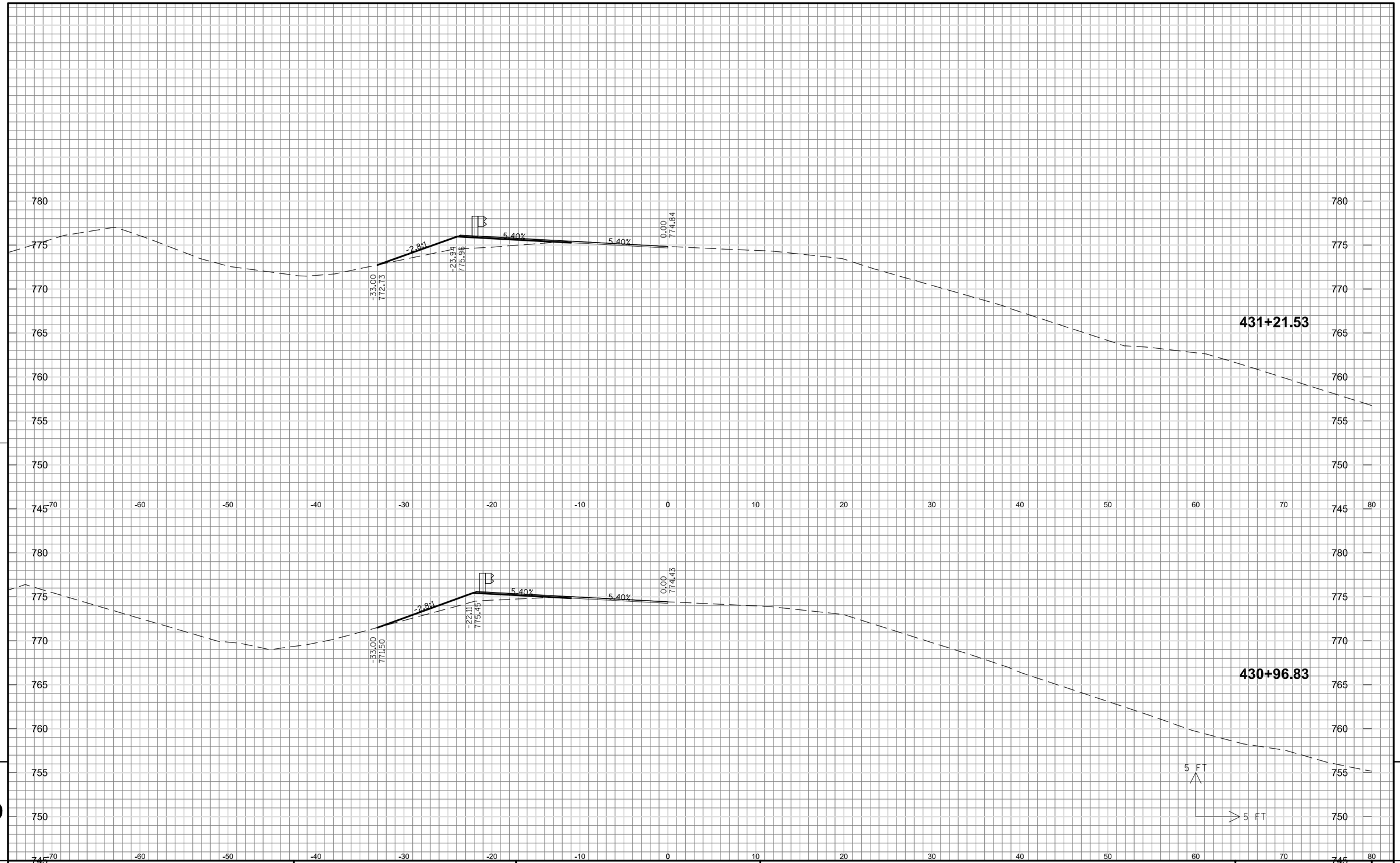

9

9

PROJECT NO: 7550-00-30	HWY: 54	COUNTY: JACKSON	CROSS SECTIONS (BEAMGUARD STA 427+50 TO 437+00)	SHEET	E

FILE NAME : GR_STH54_C3D_CORR_BEAMGUARD_42750_43700 PLOT DATE : 04 FEB 2014 10:42:55 PLOT BY : GADDK PLOT NAME : PLOT SCALE : 1:10

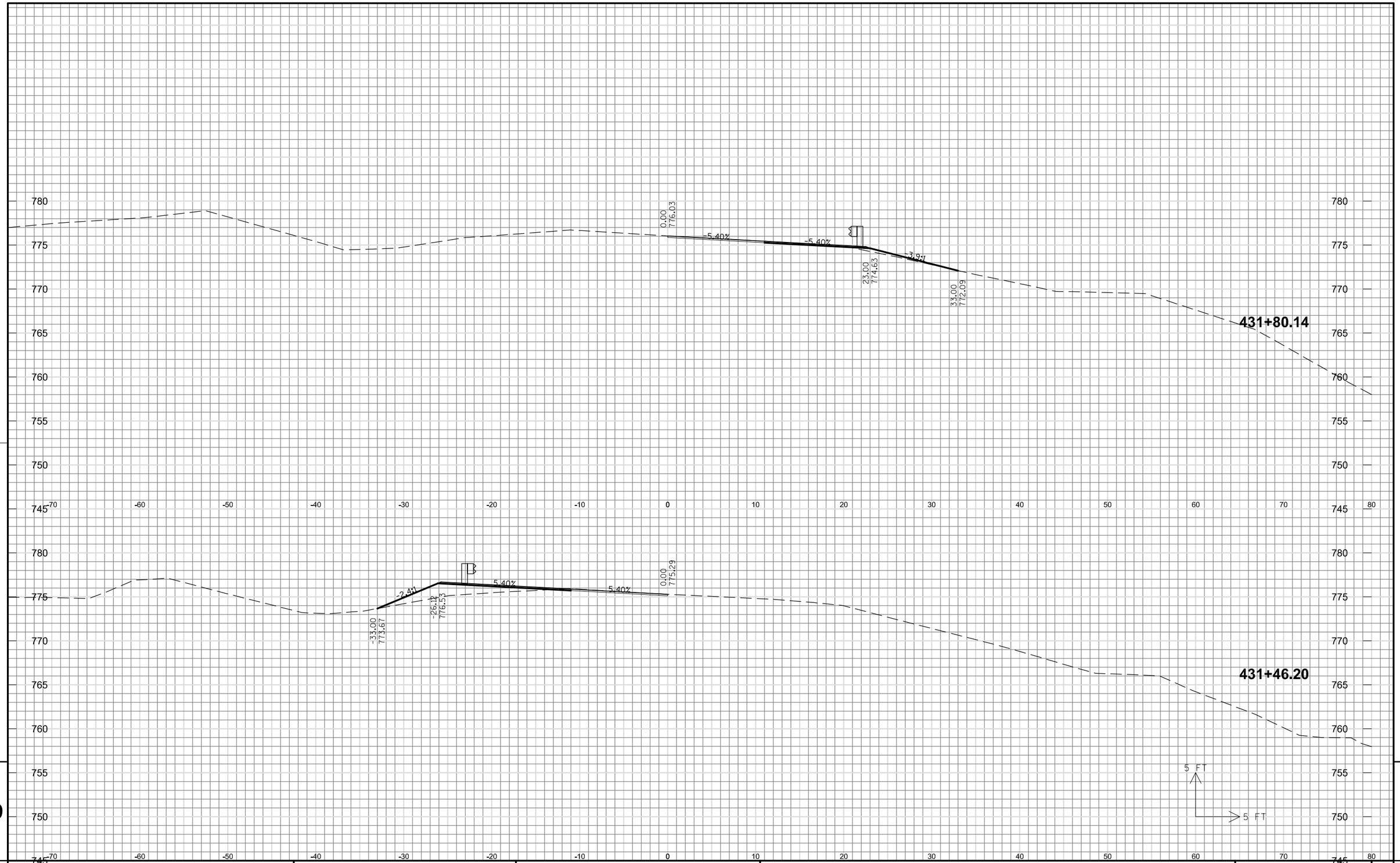

PROJECT NO: 7550-00-30	HWY: 54	COUNTY: JACKSON	CROSS SECTIONS (BEAMGUARD STA 427+50 TO 437+00)	SHEET	E

FILE NAME : GR_STH54_C3D_CORR_BEAMGUARD_42750_43700 PLOT DATE : 04 FEB 2014 10:42:55 PLOT BY : GADDK PLOT NAME : PLOT SCALE : 1:10

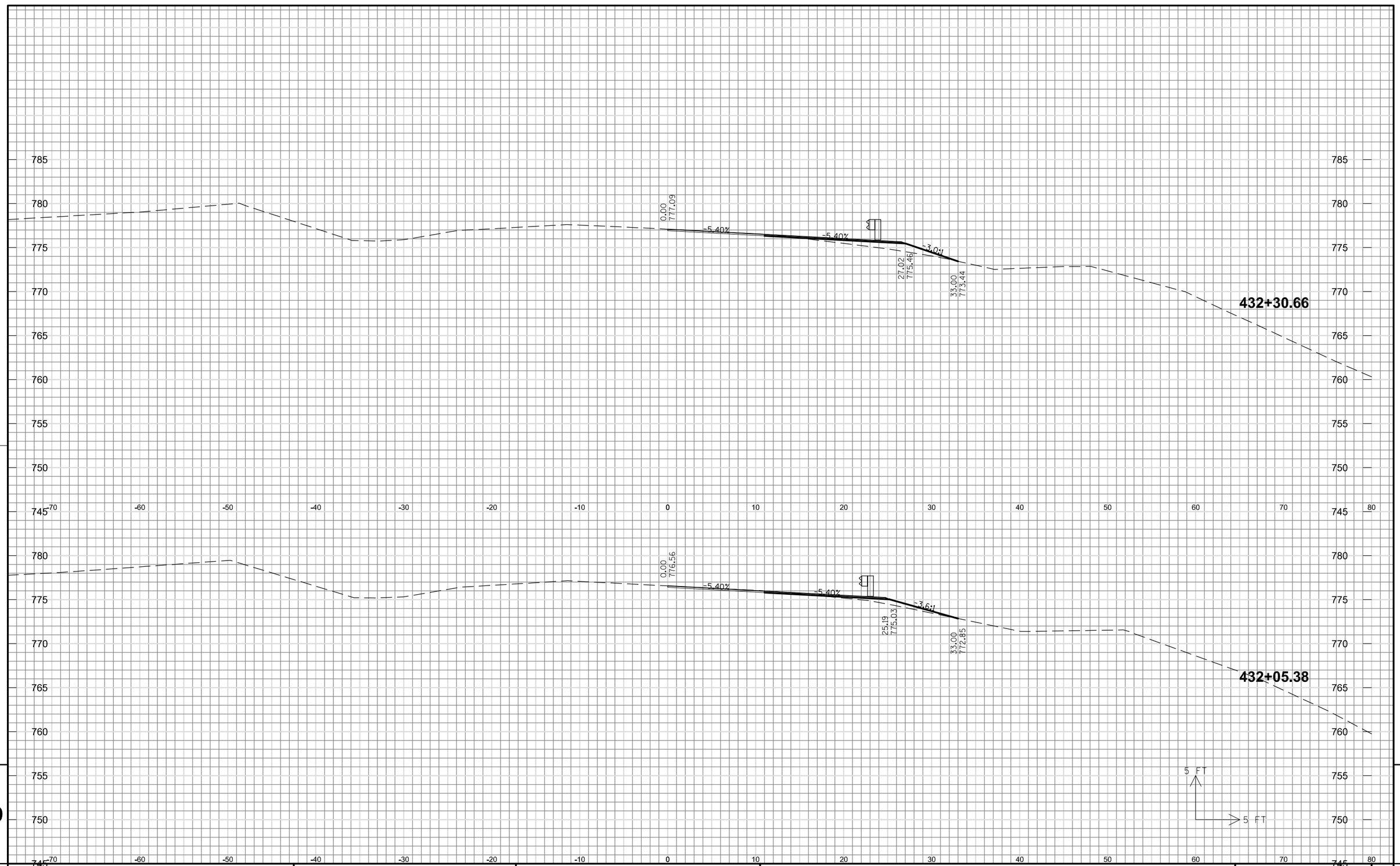

9

9

PROJECT NO: 7550-00-30	HWY: 54	COUNTY: JACKSON	CROSS SECTIONS (BEAMGUARD STA 427+50 TO 437+00)	SHEET	E

FILE NAME : GR_STH54_C3D_CORR_BEAMGUARD_42750_43700 PLOT DATE : 04 FEB 2014 10:42:55 PLOT BY : GADDK PLOT NAME : PLOT SCALE : 1:10

9

9

PROJECT NO: 7550-00-30	HWY: 54	COUNTY: JACKSON	CROSS SECTIONS (BEAMGUARD STA 427+50 TO 437+00)	SHEET	E

FILE NAME : GR_STH54_C3D_CORR_BEAMGUARD_42750_43700 PLOT DATE : 04 FEB 2014 10:42:55 PLOT BY : GADDK PLOT NAME : PLOT SCALE : 1:10

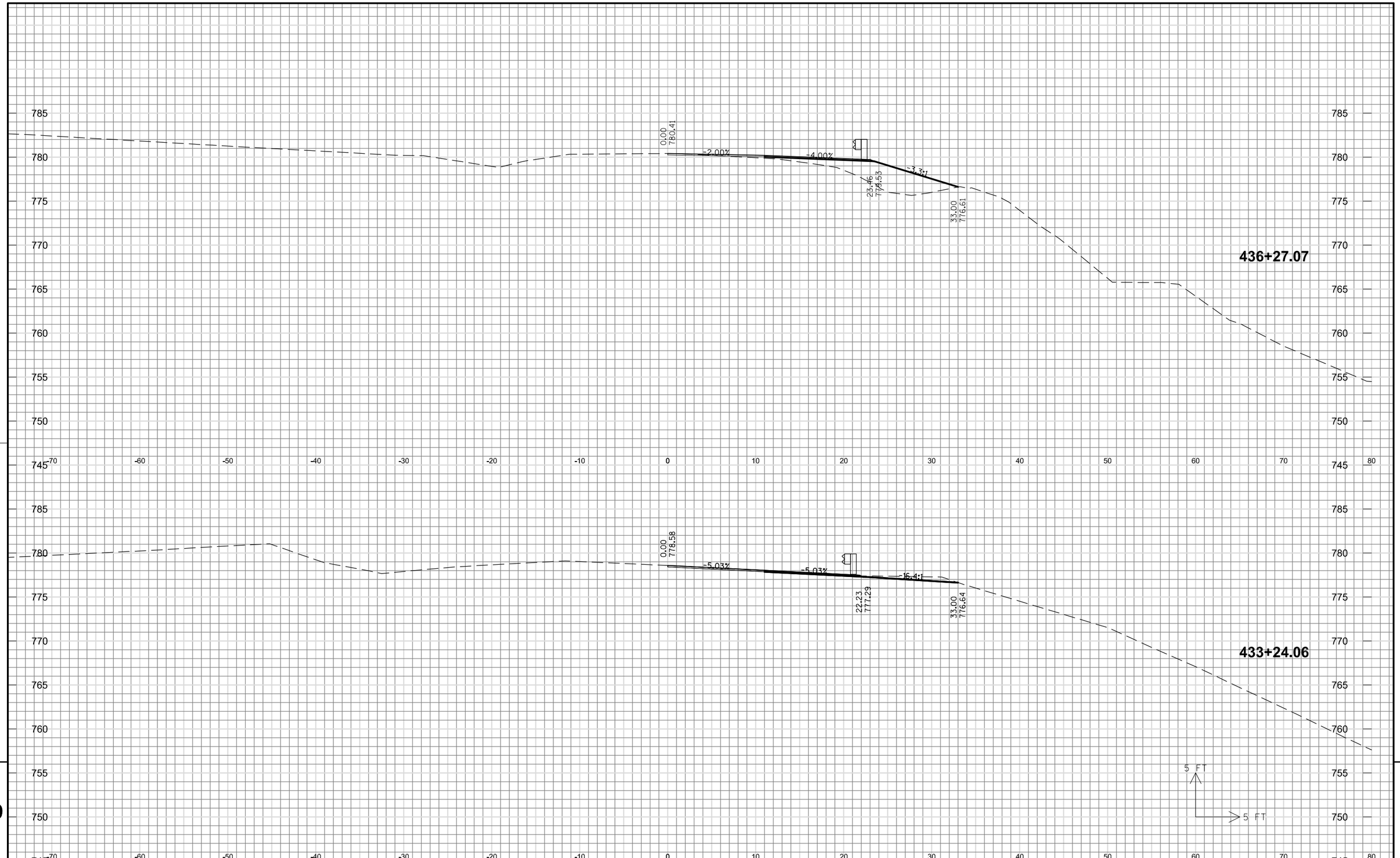

9

9

PROJECT NO: 7550-00-30	HWY: 54	COUNTY: JACKSON	CROSS SECTIONS (BEAMGUARD STA 427+50 TO 437+00)	SHEET 253	E

FILE NAME : GR_STH54_C3D_CORR_BEAMGUARD_42750_43700 PLOT DATE : 04 FEB 2014 10:42:55 PLOT BY : GADDK PLOT NAME : PLOT SCALE : 1:10

WISDOT/CADDS SHEET 49

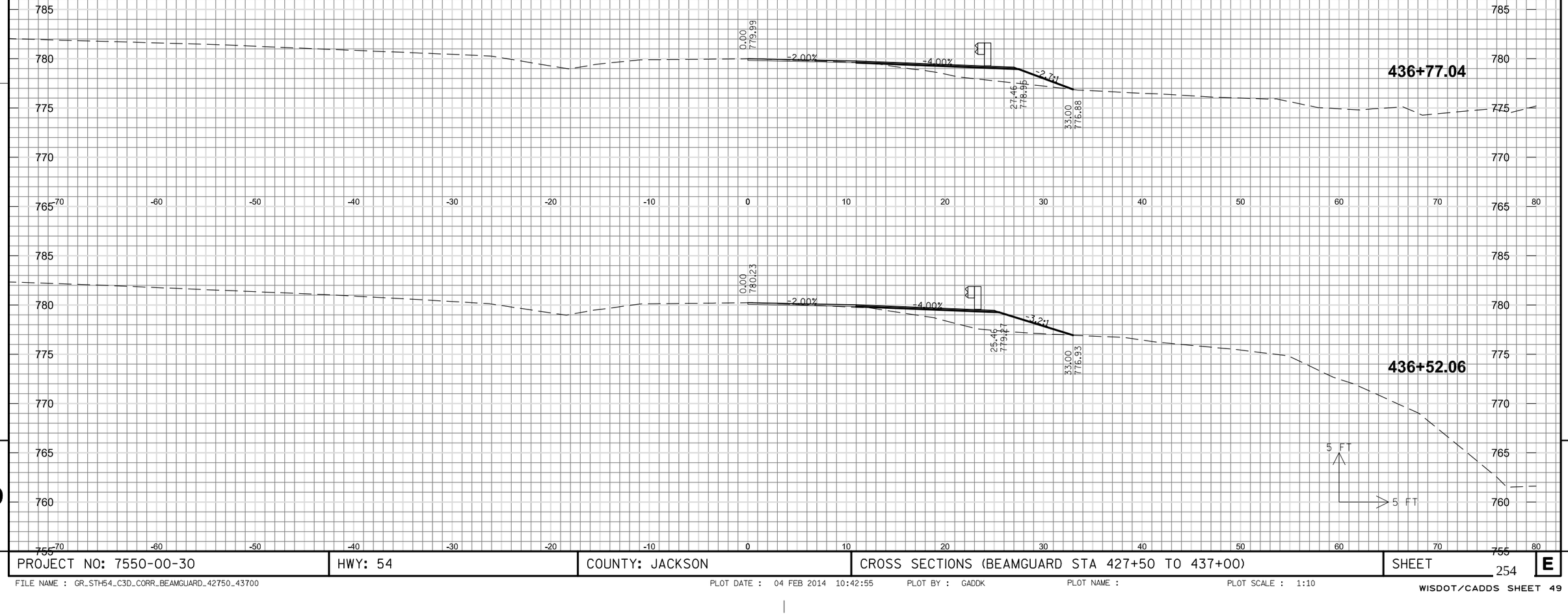

PROJECT NO: 7550-00-30	HWY: 54	COUNTY: JACKSON	CROSS SECTIONS (BEAMGUARD STA 427+50 TO 437+00)	SHEET 254 E

FILE NAME : GR_STH54_C3D_CORR_BEAMGUARD_42750_43700 PLOT DATE : 04 FEB 2014 10:42:55 PLOT BY : GADDK PLOT NAME : PLOT SCALE : 1:10

WISDOT/CADDS SHEET 49

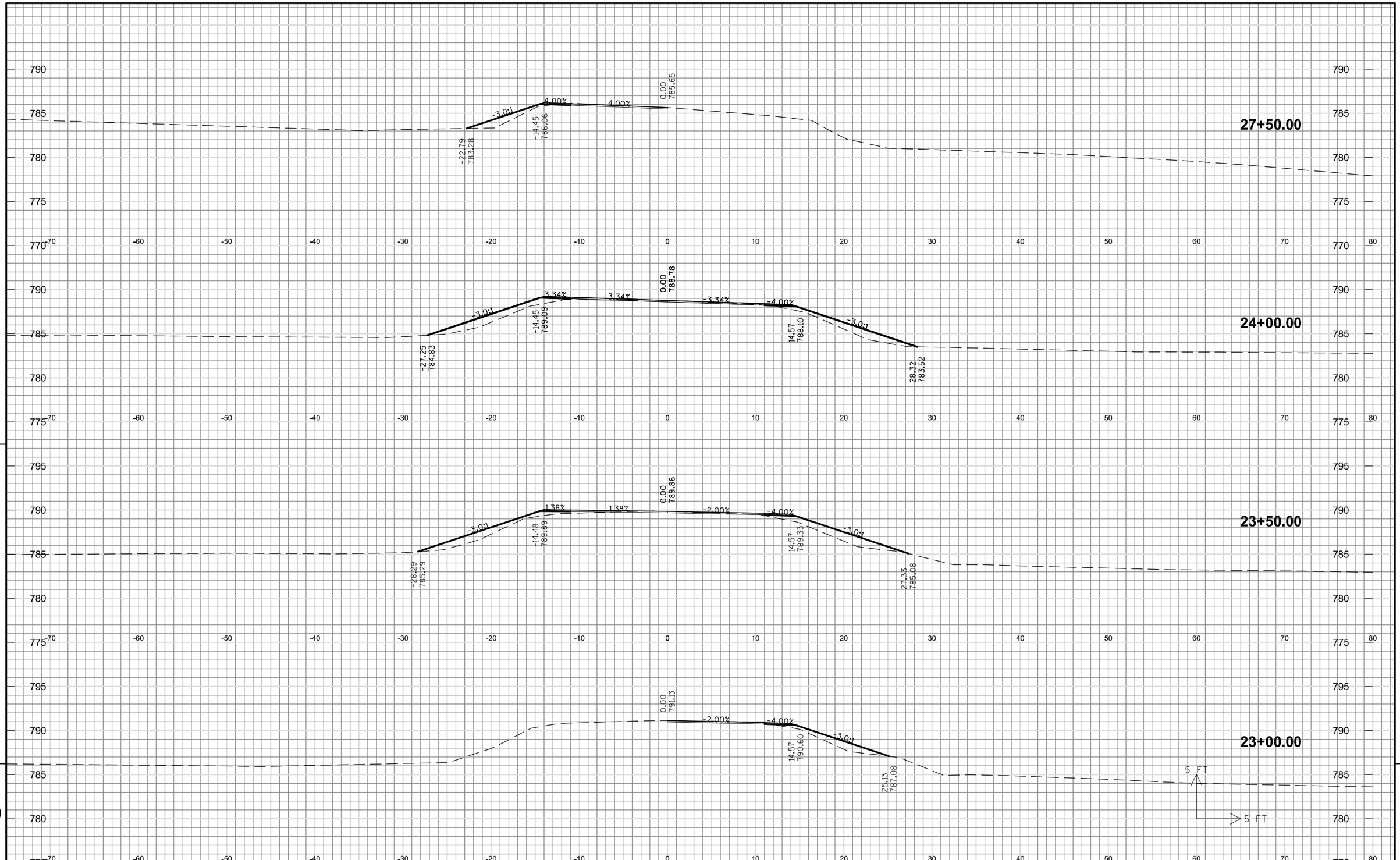

9

9

PROJECT NO: 7550-00-30	HWY: 54	COUNTY: JACKSON	CROSS SECTIONS (STEEP SIDE SLOPES)	SHEET 255	E

FILE NAME : GR_STH54_C3D_CORR_SIDESLOPES_BEAMGUARD PLOT DATE : 21 FEB 2014 15:52:27 PLOT BY : GADDK PLOT NAME : PLOT SCALE : 1:10

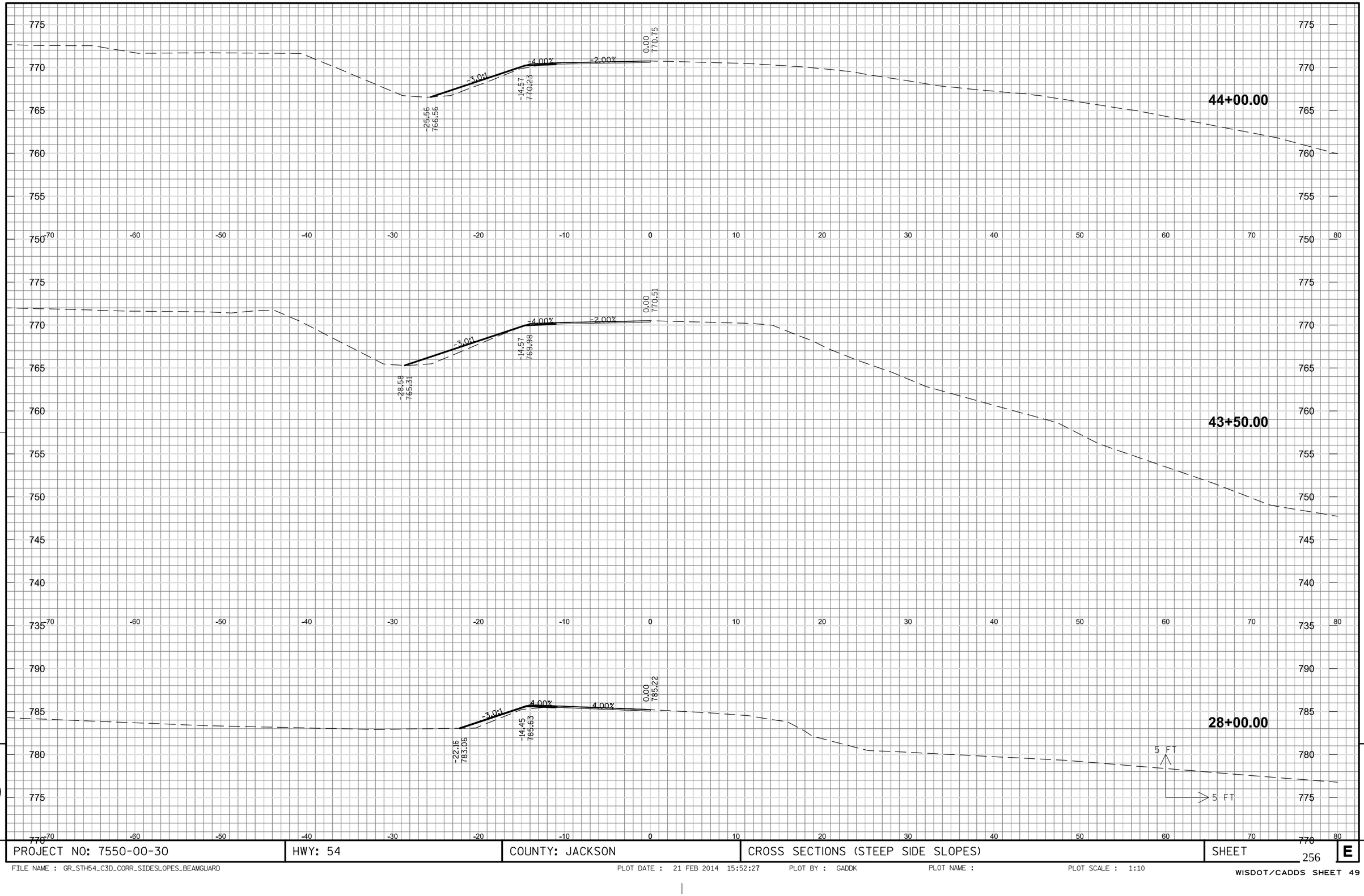

9

PROJECT NO: 7550-00-30	HWY: 54	COUNTY: JACKSON	CROSS SECTIONS (STEEP SIDE SLOPES)	SHEET	E

9

FILE NAME : GR_STH54_C3D_CORR_SIDESLOPES_BEAMGUARD PLOT DATE : 21 FEB 2014 15:52:27 PLOT BY : GADDK PLOT NAME : PLOT SCALE : 1:10

WISDOT/CADDS SHEET 49

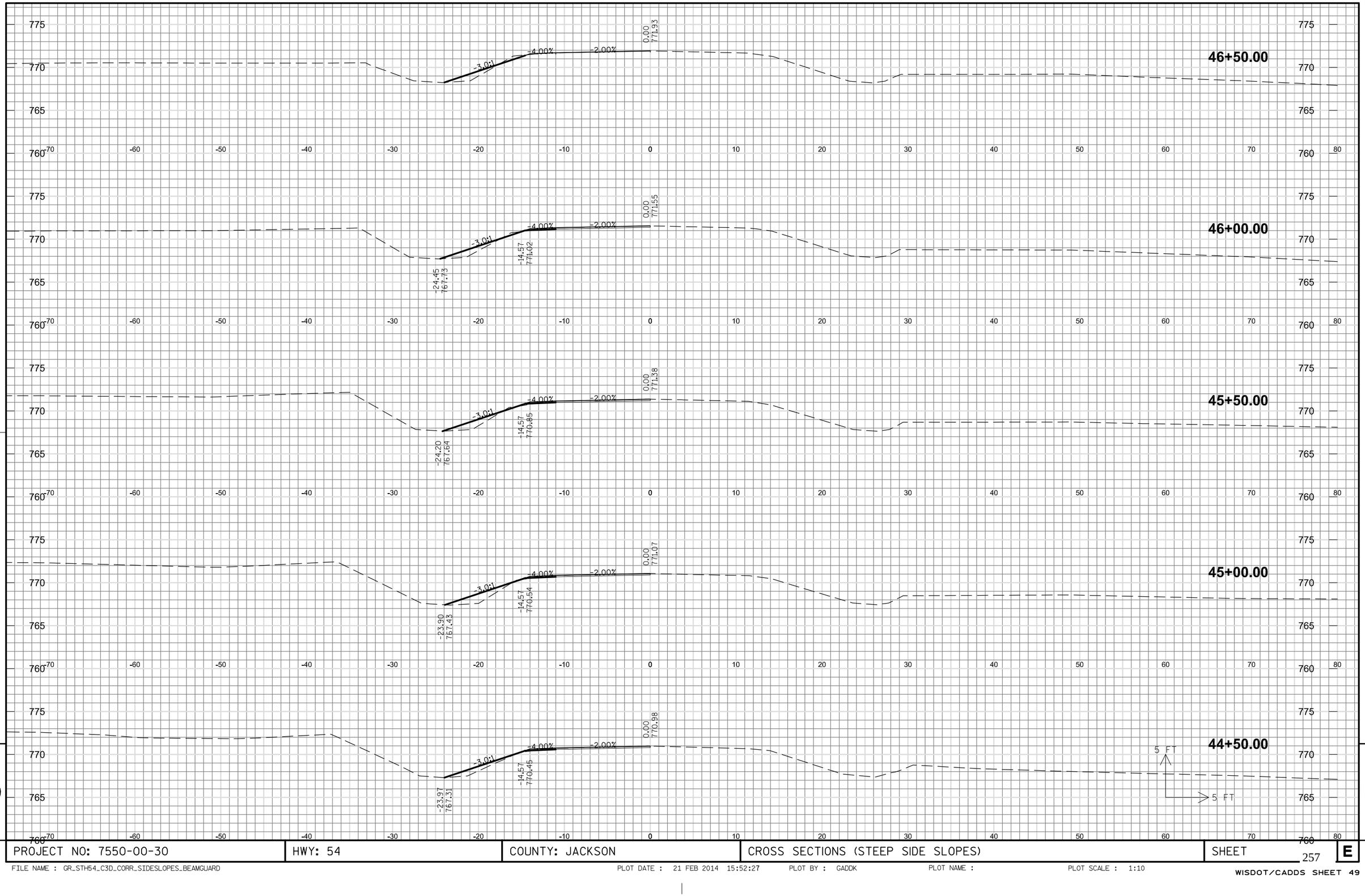

9

9

PROJECT NO: 7550-00-30	HWY: 54	COUNTY: JACKSON	CROSS SECTIONS (STEEP SIDE SLOPES)	SHEET 257	E

FILE NAME : GR_STH54_C3D_CORR_SIDESLOPES_BEAMGUARD PLOT DATE : 21 FEB 2014 15:52:27 PLOT BY : GADDK PLOT NAME : PLOT SCALE : 1:10

WISDOT/CADDS SHEET 49

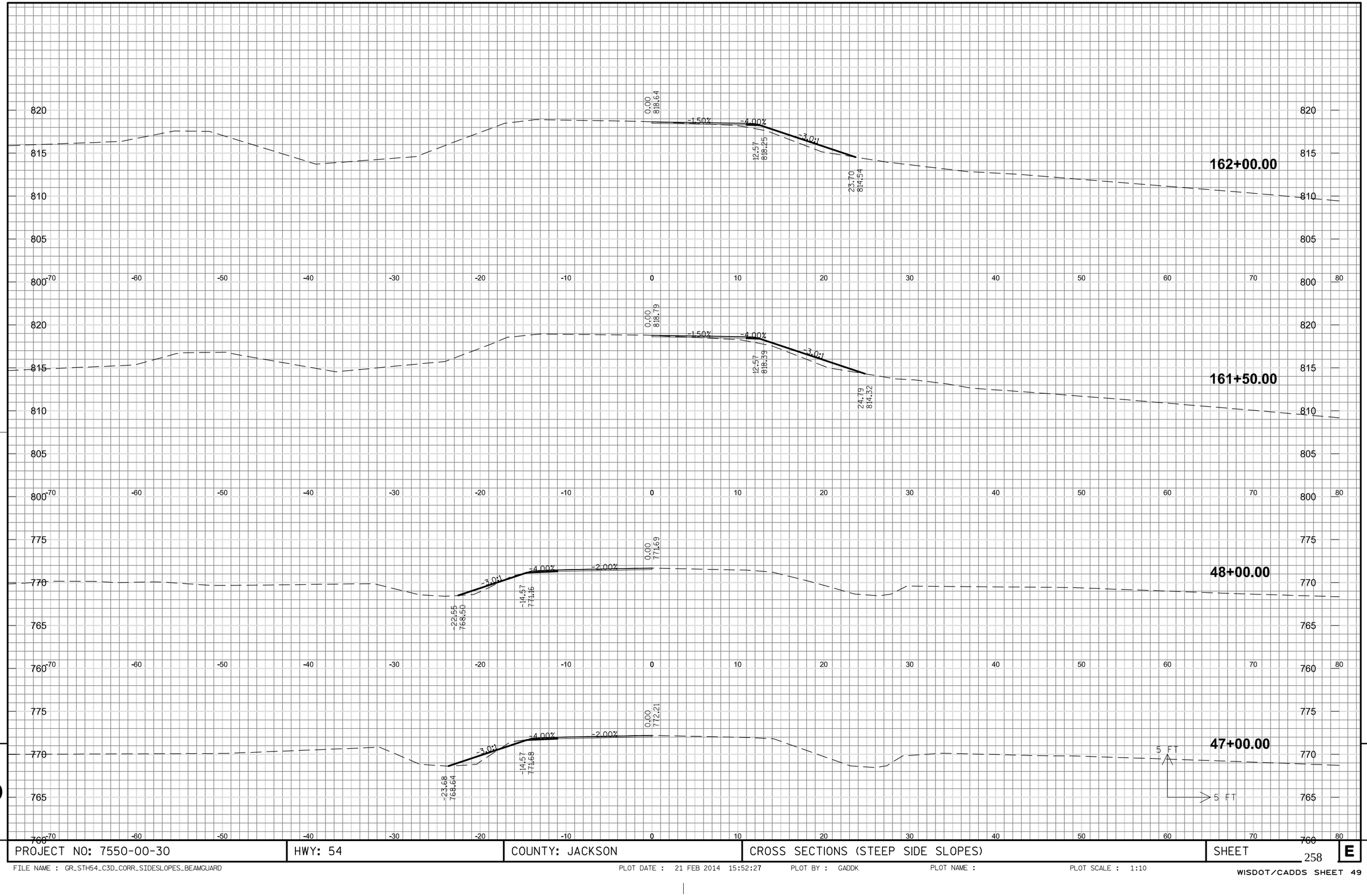

PROJECT NO: 7550-00-30	HWY: 54	COUNTY: JACKSON	CROSS SECTIONS (STEEP SIDE SLOPES)	SHEET	E

FILE NAME : GR_STH54_C3D_CORR_SIDESLOPES_BEAMGUARD PLOT DATE : 21 FEB 2014 15:52:27 PLOT BY : GADDK PLOT NAME : PLOT SCALE : 1:10

9

9

PROJECT NO: 7550-00-30	HWY: 54	COUNTY: JACKSON	CROSS SECTIONS (STEEP SIDE SLOPES)	SHEET 259	E

FILE NAME : GR_STH54_C3D_CORR_SIDESLOPES_BEAMGUARD PLOT DATE : 21 FEB 2014 15:52:27 PLOT BY : GADDK PLOT NAME : PLOT SCALE : 1:10

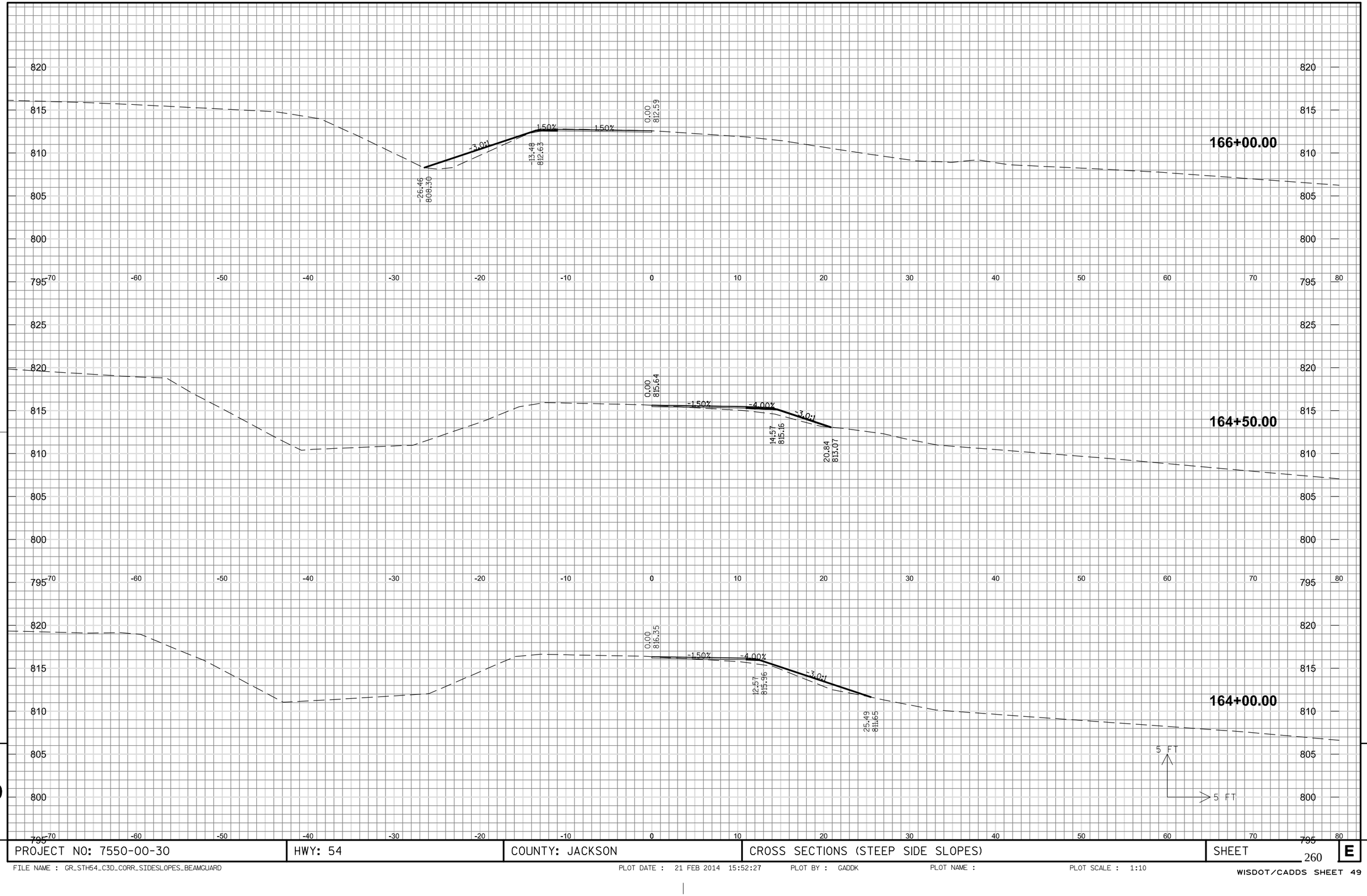

9

9

PROJECT NO: 7550-00-30	HWY: 54	COUNTY: JACKSON	CROSS SECTIONS (STEEP SIDE SLOPES)	SHEET 260 E

FILE NAME : GR_STH54_C3D_CORR_SIDESLOPES_BEAMGUARD PLOT DATE : 21 FEB 2014 15:52:27 PLOT BY : GADDK PLOT NAME : PLOT SCALE : 1:10

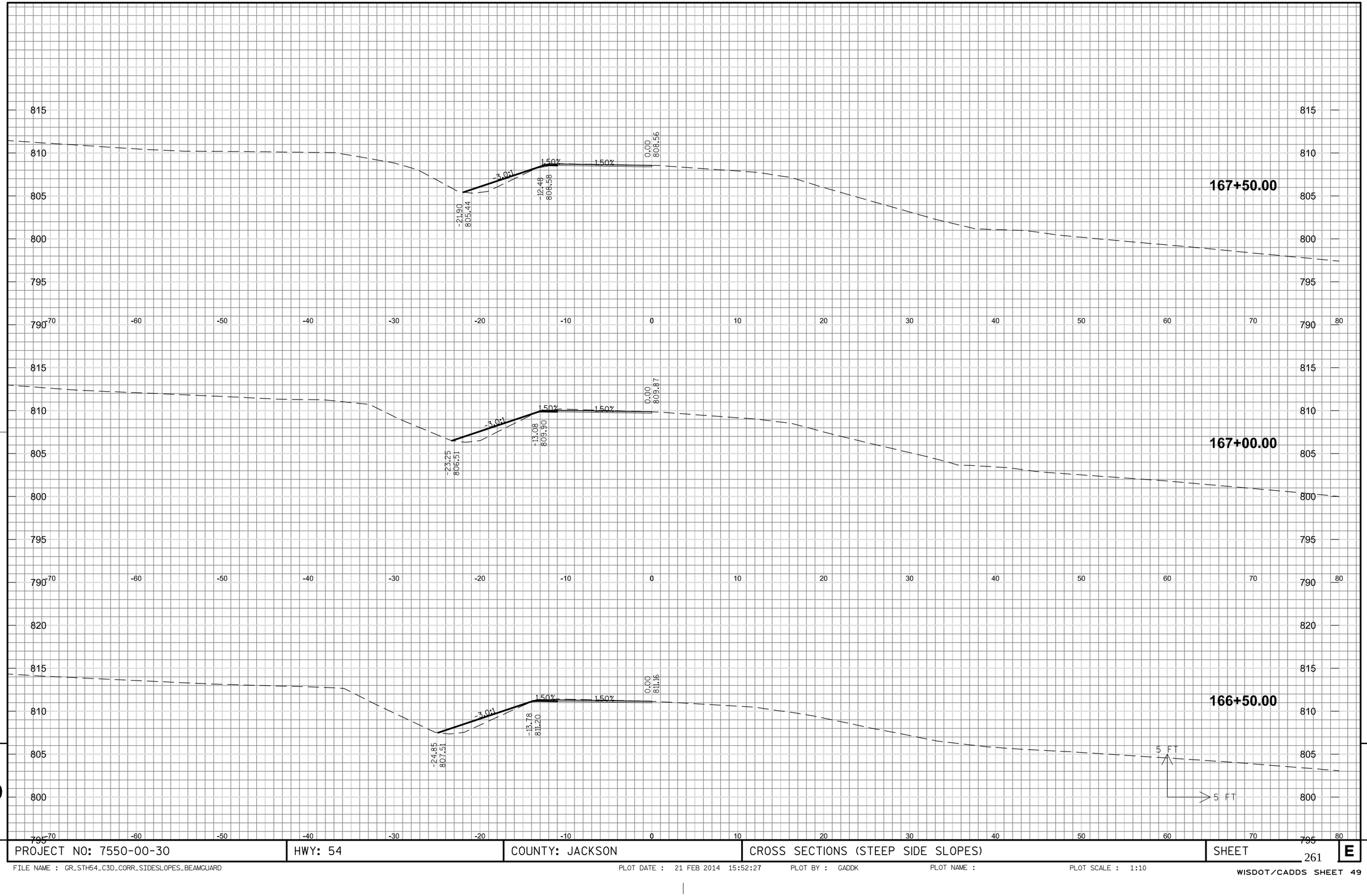

PROJECT NO: 7550-00-30	HWY: 54	COUNTY: JACKSON	CROSS SECTIONS (STEEP SIDE SLOPES)	SHEET 261 E

FILE NAME : GR_STH54_C3D_CORR_SIDESLOPES_BEAMGUARD PLOT DATE : 21 FEB 2014 15:52:27 PLOT BY : GADDK PLOT NAME : PLOT SCALE : 1:10

WISDOT/CADDS SHEET 49

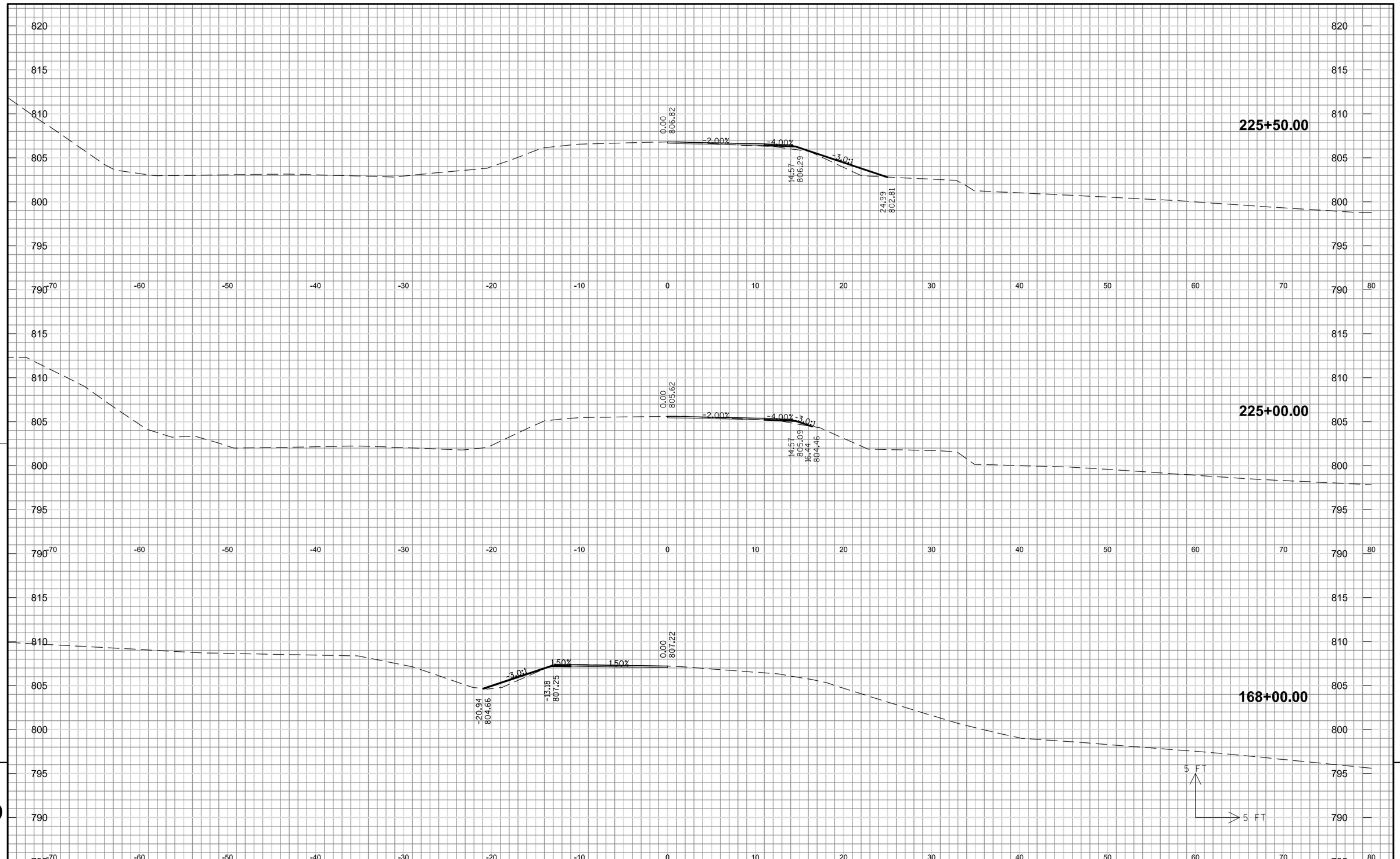

9

9

PROJECT NO: 7550-00-30 | HWY: 54 | COUNTY: JACKSON | CROSS SECTIONS (STEEP SIDE SLOPES) | SHEET 262 | E

FILE NAME : GR_STH54_C3D_CORR_SIDESLOPES_BEAMGUARD PLOT DATE : 21 FEB 2014 15:52:27 PLOT BY : GADDK PLOT NAME : PLOT SCALE : 1:10

WISDOT/CADDS SHEET 49

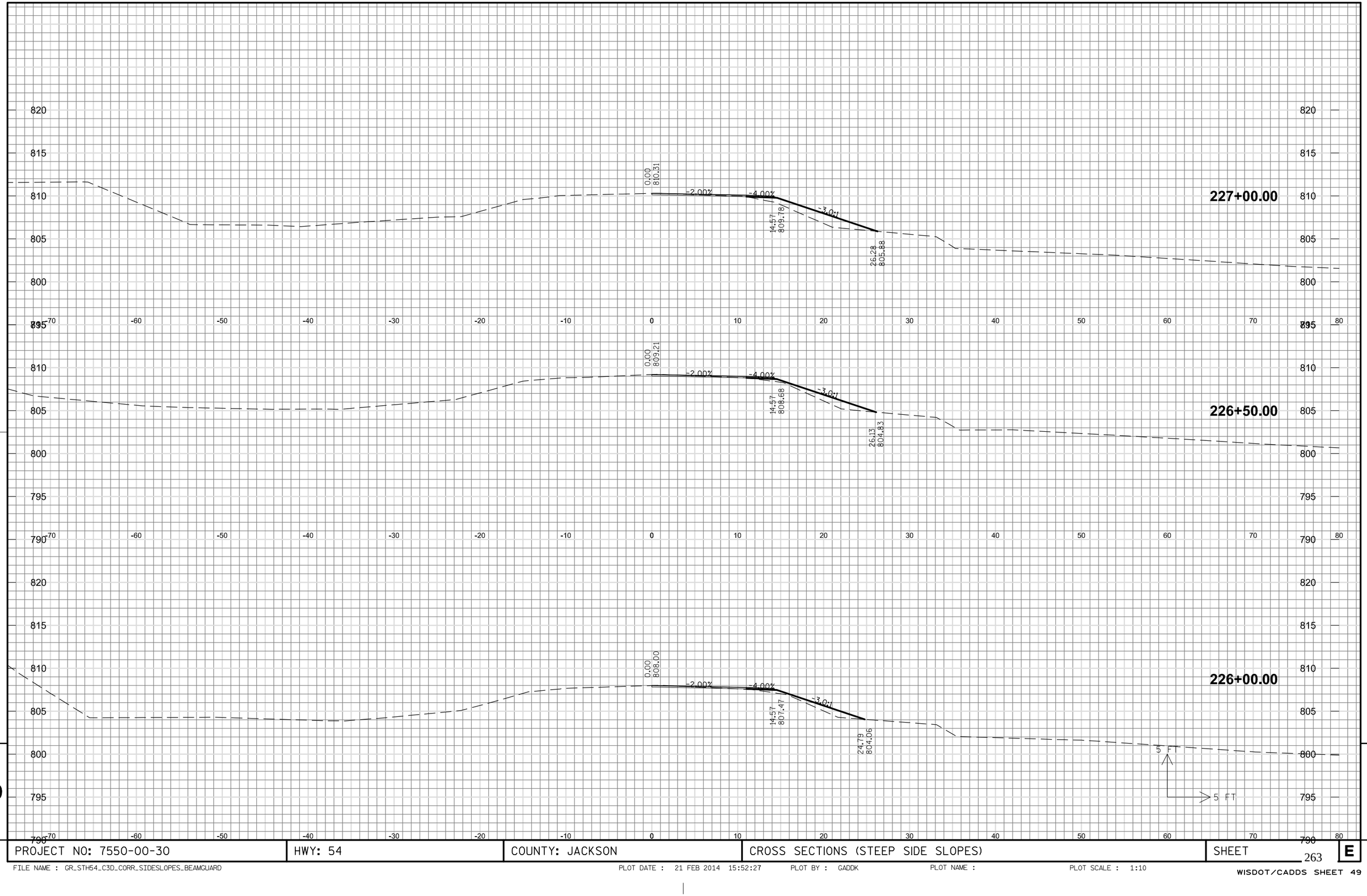
227+00.00
0.00
810.31
-2.00%
-4.00%
3.0:1
14.57
809.78
26.28
805.88
226+50.00
0.00
809.21
-2.00%
-4.00%
3.0:1
14.57
808.68
26.13
804.83
226+00.00
0.00
808.00
-2.00%
-4.00%
3.0:1
14.57
807.47
24.79
804.06
5 FT
5 FT

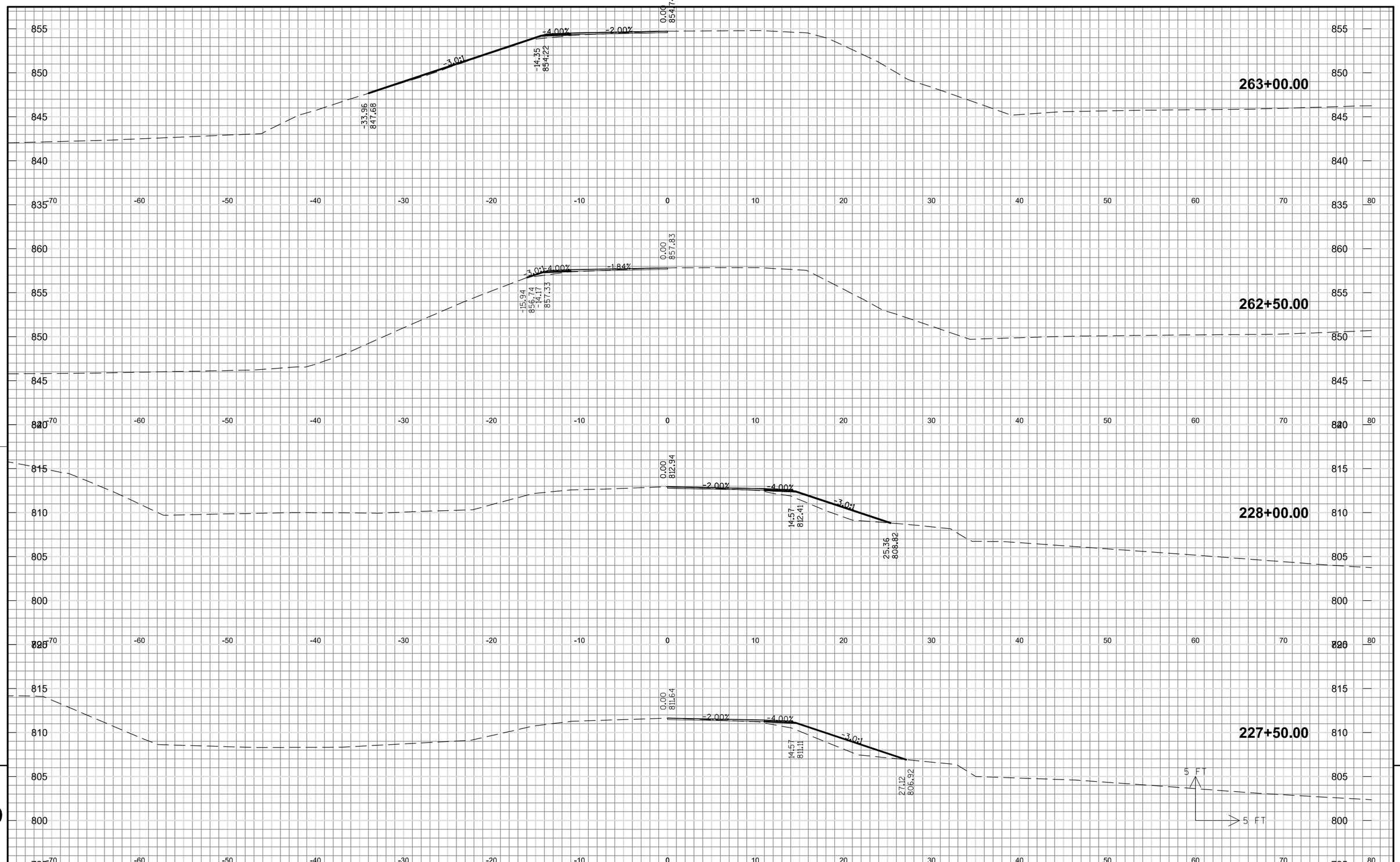

9

9

PROJECT NO: 7550-00-30	HWY: 54	COUNTY: JACKSON	CROSS SECTIONS (STEEP SIDE SLOPES)	SHEET 264	E

FILE NAME : GR_STH54_C3D_CORR_SIDESLOPES_BEAMGUARD PLOT DATE : 21 FEB 2014 15:52:27 PLOT BY : GADDK PLOT NAME : PLOT SCALE : 1:10

WISDOT/CADDS SHEET 49

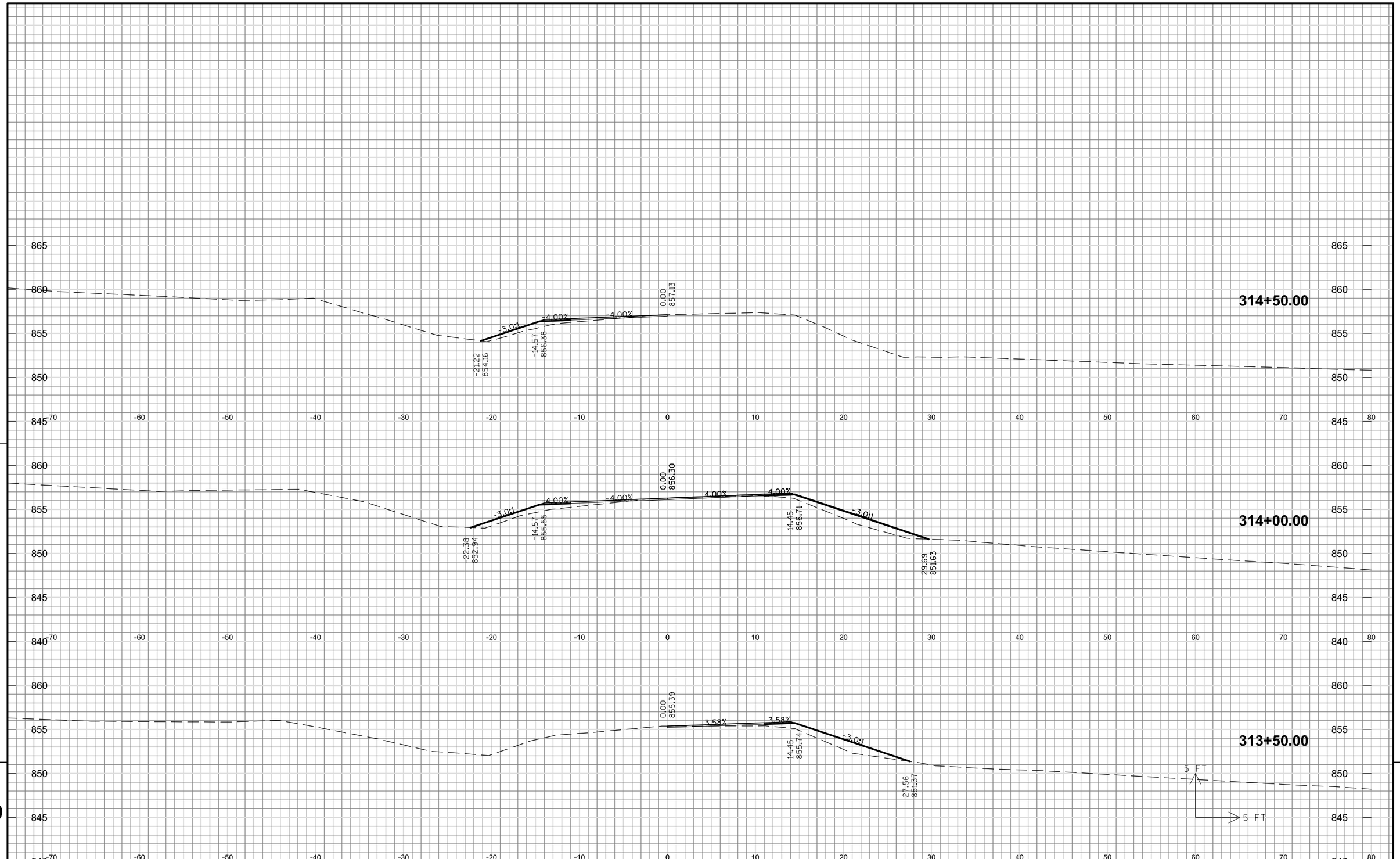

9

9

PROJECT NO: 7550-00-30	HWY: 54	COUNTY: JACKSON	CROSS SECTIONS (STEEP SIDE SLOPES)	SHEET 265	E

FILE NAME : GR_STH54_C3D_CORR_SIDESLOPES_BEAMGUARD PLOT DATE : 21 FEB 2014 15:52:27 PLOT BY : GADDK PLOT NAME : PLOT SCALE : 1:10

9

9

PROJECT NO: 7550-00-30	HWY: 54	COUNTY: JACKSON	CROSS SECTIONS (STEEP SIDE SLOPES)	SHEET 266	E

FILE NAME : GR_STH54_C3D_CORR_SIDESLOPES_BEAMGUARD PLOT DATE : 21 FEB 2014 15:52:27 PLOT BY : GADDK PLOT NAME : PLOT SCALE : 1:10

WISDOT/CADDS SHEET 49

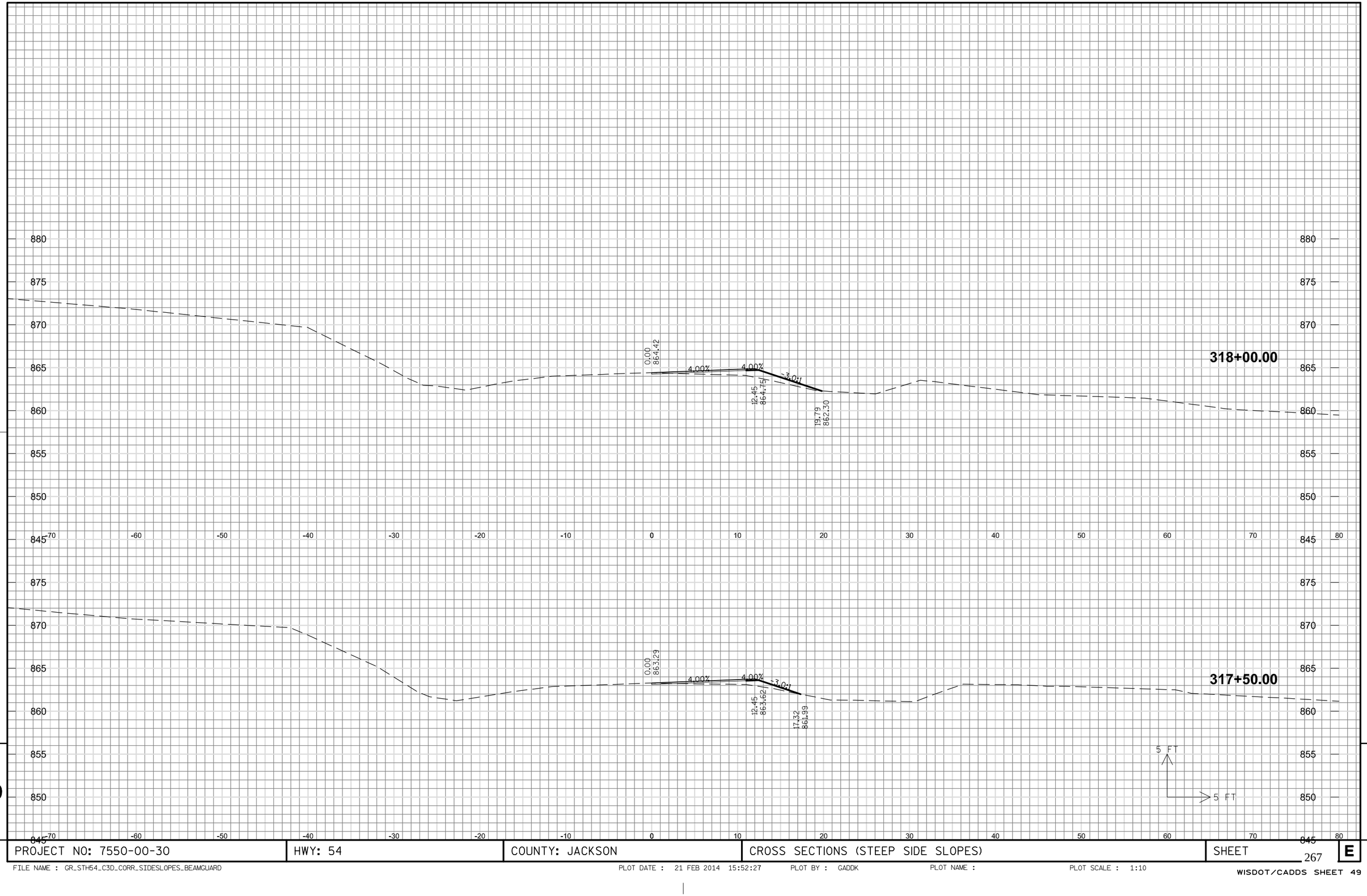

9

9

PROJECT NO: 7550-00-30	HWY: 54	COUNTY: JACKSON	CROSS SECTIONS (STEEP SIDE SLOPES)	SHEET 267	E

FILE NAME : GR_STH54_C3D_CORR_SIDESLOPES_BEAMGUARD PLOT DATE : 21 FEB 2014 15:52:27 PLOT BY : GADDK PLOT NAME : PLOT SCALE : 1:10

9

9

PROJECT NO: 7550-00-30	HWY: 54	COUNTY: JACKSON	CROSS SECTIONS (STEEP SIDE SLOPES)	SHEET 268	E

FILE NAME : GR_STH54_C3D_CORR_SIDESLOPES_BEAMGUARD PLOT DATE : 21 FEB 2014 15:52:27 PLOT BY : GADDK PLOT NAME : PLOT SCALE : 1:10

WISDOT/CADDS SHEET 49

9

9

PROJECT NO: 7550-00-30	HWY: 54	COUNTY: JACKSON	CROSS SECTIONS (STEEP SIDE SLOPES)	SHEET 269	E

FILE NAME : GR_STH54_C3D_CORR_SIDESLOPES_BEAMGUARD PLOT DATE : 21 FEB 2014 15:52:27 PLOT BY : GADDK PLOT NAME : PLOT SCALE : 1:10

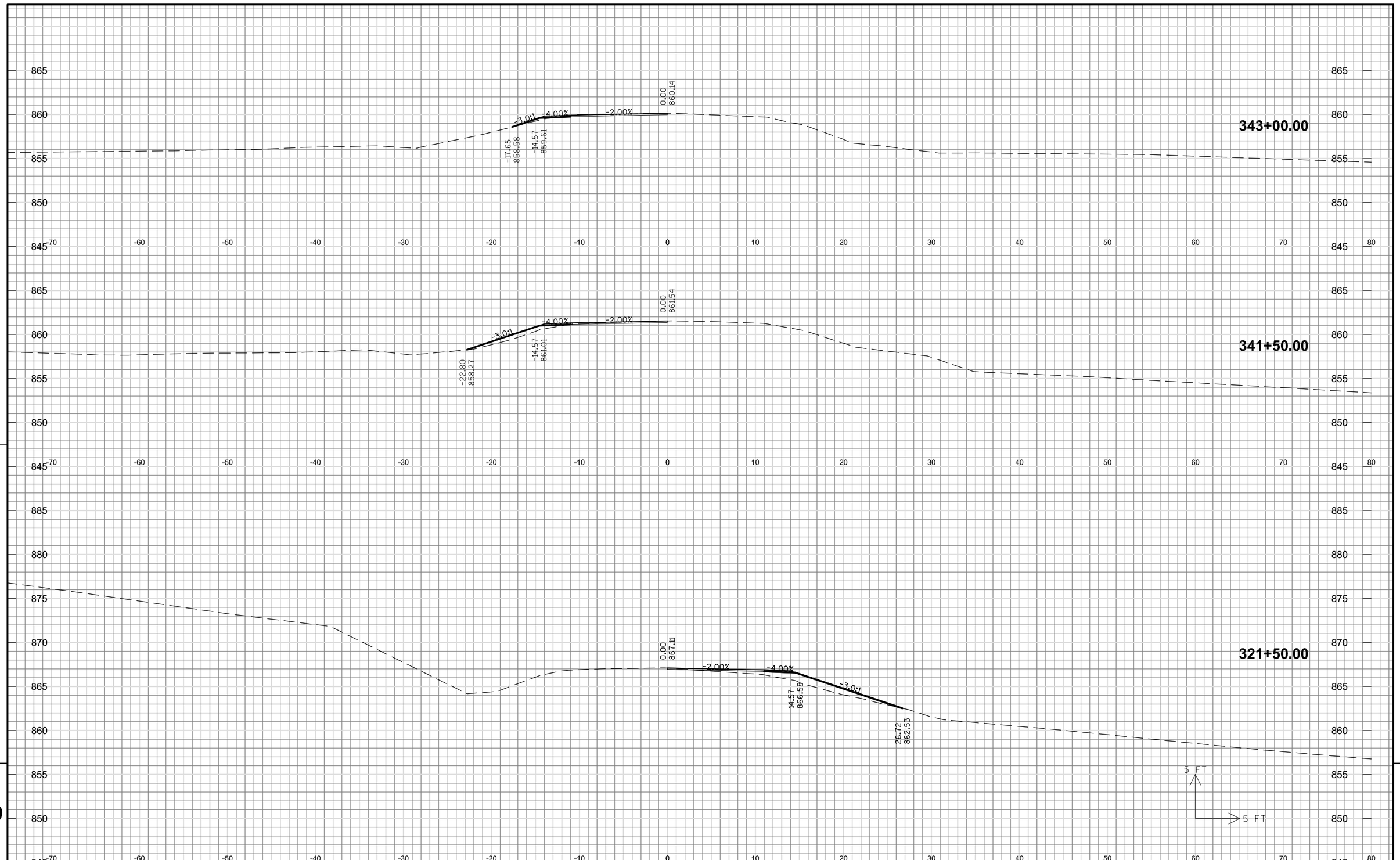

9

9

PROJECT NO: 7550-00-30	HWY: 54	COUNTY: JACKSON	CROSS SECTIONS (STEEP SIDE SLOPES)	SHEET 270	E

FILE NAME : GR_STH54_C3D_CORR_SIDESLOPES_BEAMGUARD PLOT DATE : 21 FEB 2014 15:52:27 PLOT BY : GADDK PLOT NAME : PLOT SCALE : 1:10

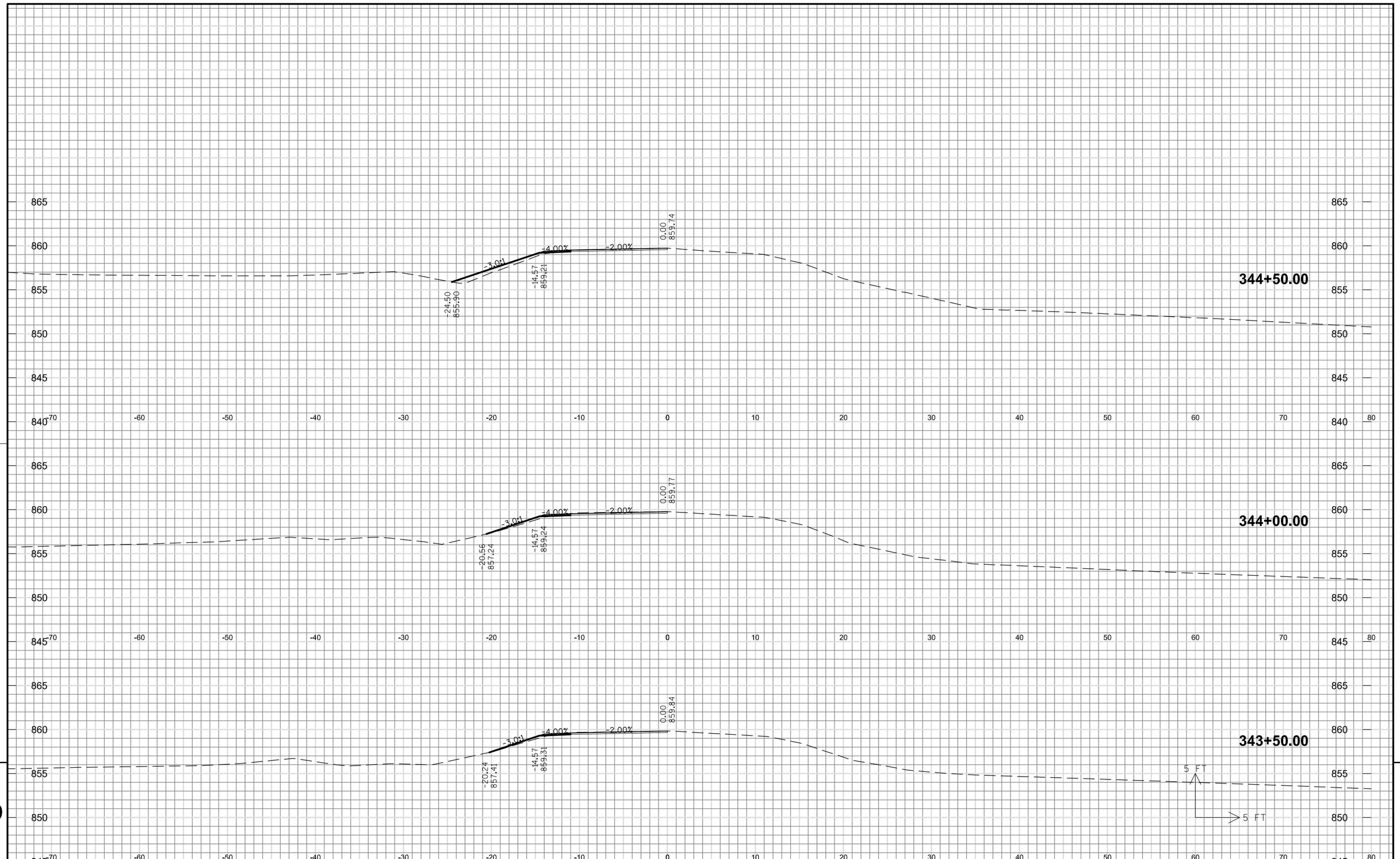

PROJECT NO: 7550-00-30	HWY: 54	COUNTY: JACKSON	CROSS SECTIONS (STEEP SIDE SLOPES)	SHEET 271 E

FILE NAME : GR_STH54_C3D_CORR_SIDESLOPES_BEAMGUARD PLOT DATE : 21 FEB 2014 15:52:27 PLOT BY : GADDK PLOT NAME : PLOT SCALE : 1:10

WISDOT/CADDS SHEET 49

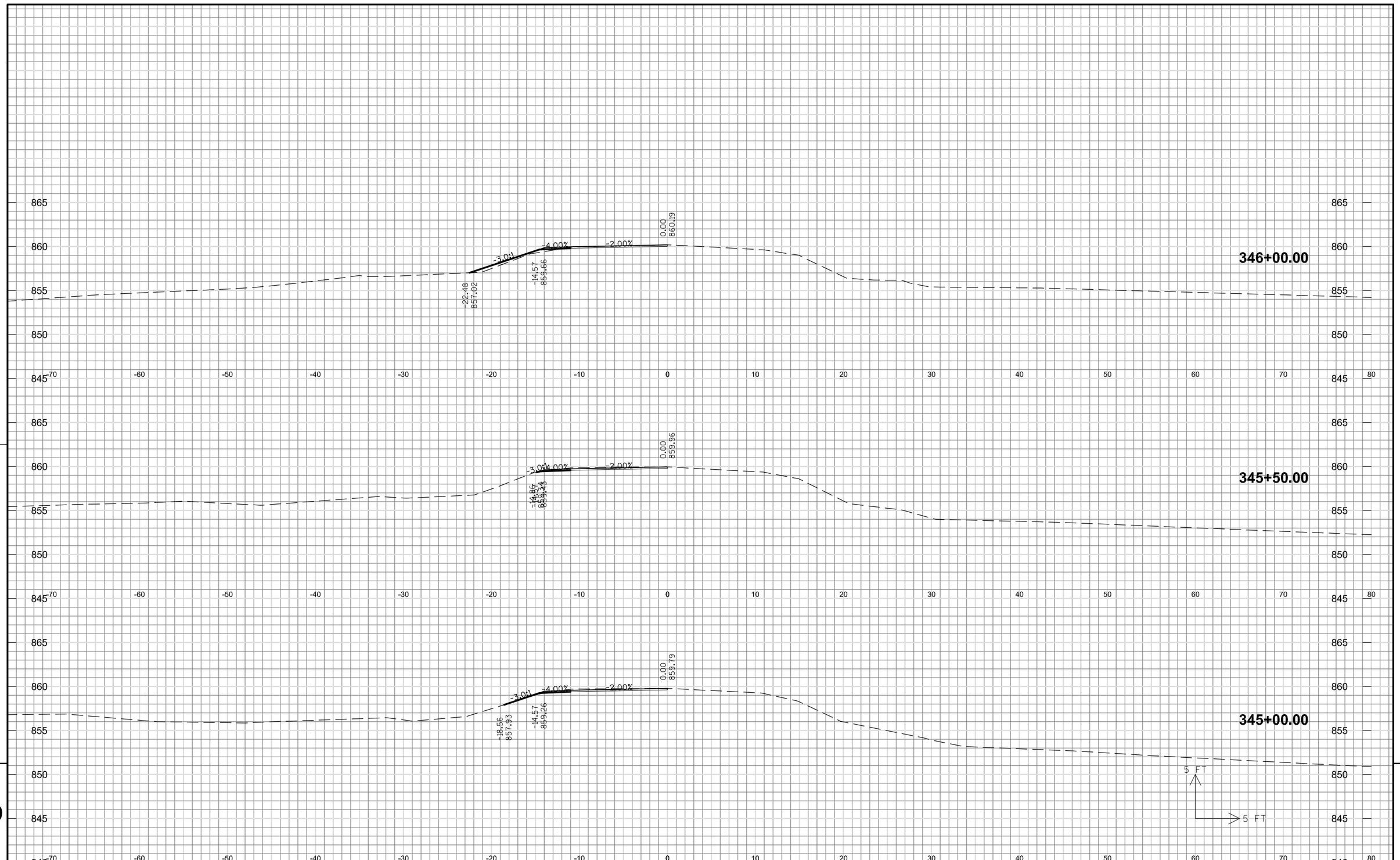

9

9

PROJECT NO: 7550-00-30	HWY: 54	COUNTY: JACKSON	CROSS SECTIONS (STEEP SIDE SLOPES)	SHEET 272	E

FILE NAME : GR_STH54_C3D_CORR_SIDESLOPES_BEAMGUARD PLOT DATE : 21 FEB 2014 15:52:27 PLOT BY : GADDK PLOT NAME : PLOT SCALE : 1:10

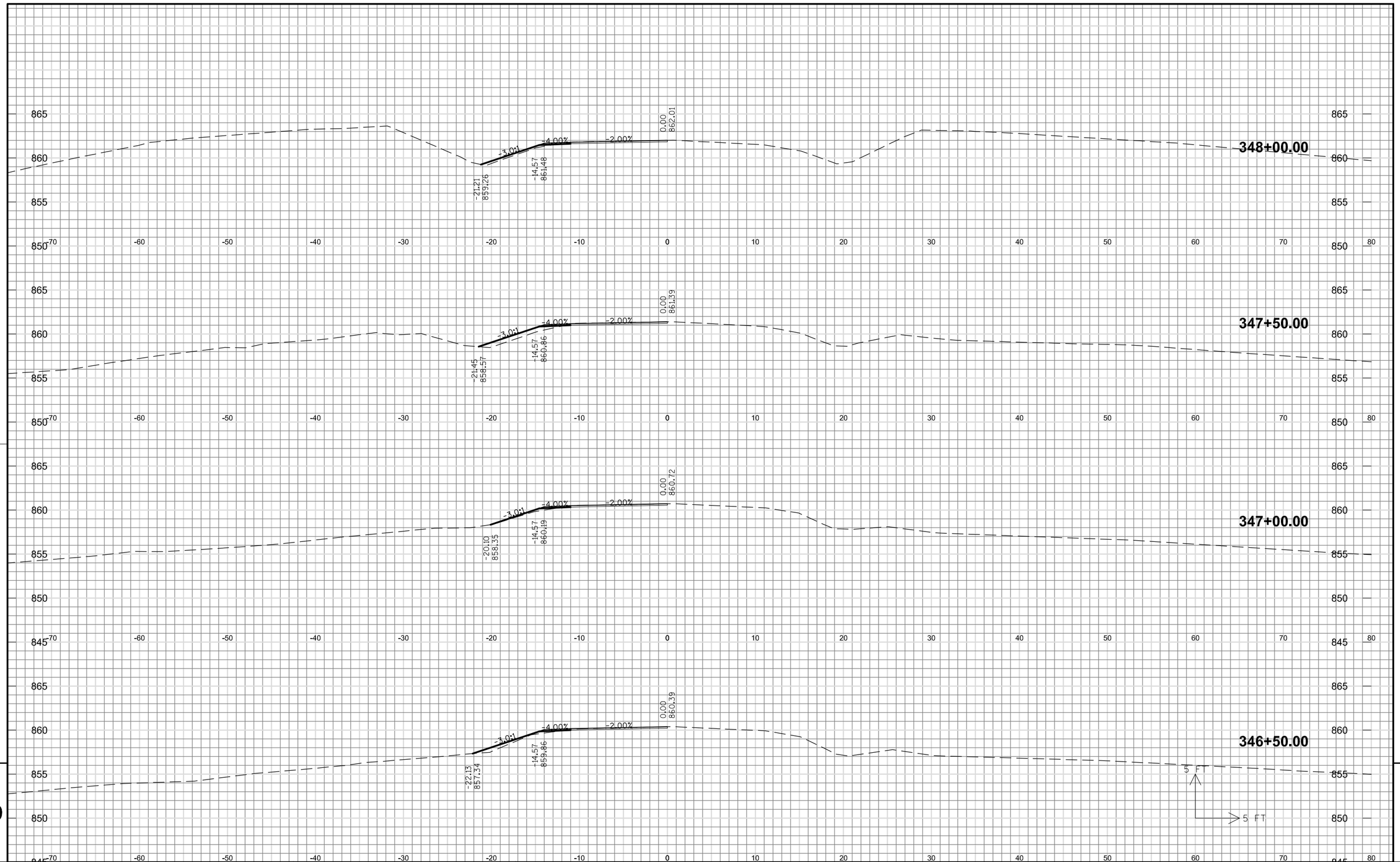

9

9

PROJECT NO: 7550-00-30	HWY: 54	COUNTY: JACKSON	CROSS SECTIONS (STEEP SIDE SLOPES)	SHEET 273	E

FILE NAME : GR_STH54_C3D_CORR_SIDESLOPES_BEAMGUARD PLOT DATE : 21 FEB 2014 15:52:27 PLOT BY : GADDK PLOT NAME : PLOT SCALE : 1:10

WISDOT/CADDS SHEET 49

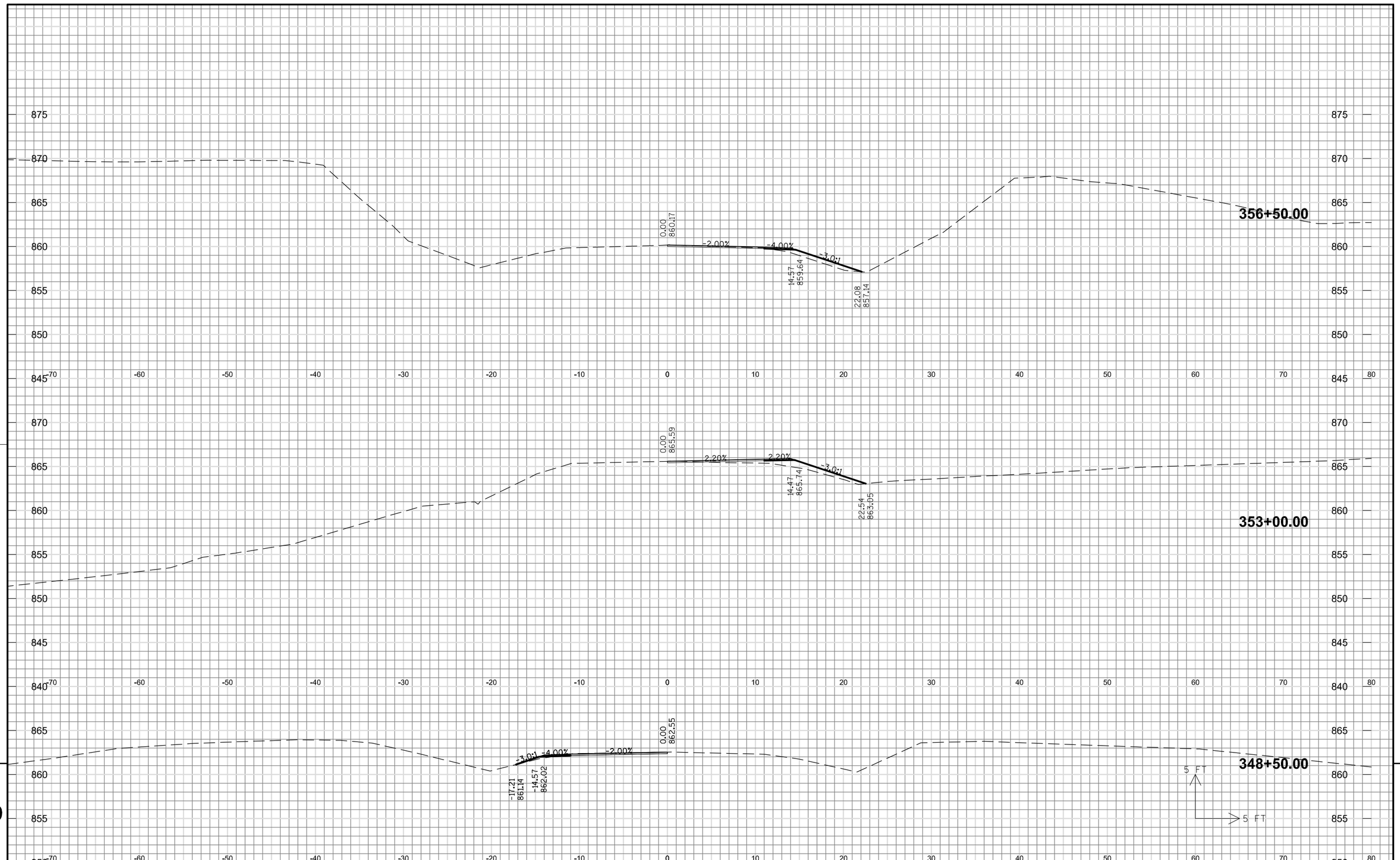

9

9

PROJECT NO: 7550-00-30	HWY: 54	COUNTY: JACKSON	CROSS SECTIONS (STEEP SIDE SLOPES)	SHEET 274	E

FILE NAME : GR_STH54_C3D_CORR_SIDESLOPES_BEAMGUARD PLOT DATE : 21 FEB 2014 15:52:27 PLOT BY : GADDK PLOT NAME : PLOT SCALE : 1:10

358+00.00
0.00
855.07
-2.00%
-4.00%
3.0:1
14.57
854.54
21.68
852.17
357+50.00
0.00
857.01
-2.00%
-4.00%
3.0:1
14.57
856.48
21.81
854.06
357+00.00
0.00
858.51
-2.00%
-4.00%
3.0:1
14.57
857.98
21.16
855.78
5 FT
5 FT

9

9

PROJECT NO: 7550-00-30	HWY: 54	COUNTY: JACKSON	CROSS SECTIONS (STEEP SIDE SLOPES)	SHEET 276	E

FILE NAME : GR_STH54_C3D_CORR_SIDESLOPES_BEAMGUARD PLOT DATE : 21 FEB 2014 15:52:27 PLOT BY : GADDK PLOT NAME : PLOT SCALE : 1:10

Notes

Wisconsin Department of Transportation

Dedicated people creating transportation solutions
through innovation and exceptional service.

http://www.dot.wisconsin.gov