LAX

NOVEMBER 2015

PROJECT ID: 5820-01-62
WITH:

COUNTY: LA CROSSE

ORDER OF SHEETS

TOTAL SHEETS = 204

STATE PROJECT	FEDERAL PROJECT	
	PROJECT	CONTRACT
5820-01-62	———	—

STATE OF WISCONSIN
DEPARTMENT OF TRANSPORTATION

PLAN OF PROPOSED IMPROVEMENT

COON VALLEY - BANGOR

(DUTCH CREEK BR TO STH 16)

STH 162

LA CROSSE COUNTY

07

N

STATE PROJECT NUMBER
5820-01-62

END PROJECT
STATION 467+00
X=513,956.0252
Y=168,717.0994

EXCEPTION TO NET CENTERLINE LENGTH
387+75 TO 388+42.5 B-32-70 67.5'

EXCEPTION TO NET CENTERLINE LENGTH
419+00 TO 421+43 B-32-288 243.4'

EXCEPTION TO NET CENTERLINE LENGTH
363+12 TO 363+43 RAILROAD CROSSING ID 390098U 30'

EXCEPTION TO NET CENTERLINE LENGTH
317+78.2 TO 318+90 B-32-15 111.8'

EXCEPTION TO NET CENTERLINE LENGTH
52+05 TO 53+08.3 B-32-12 103.3'

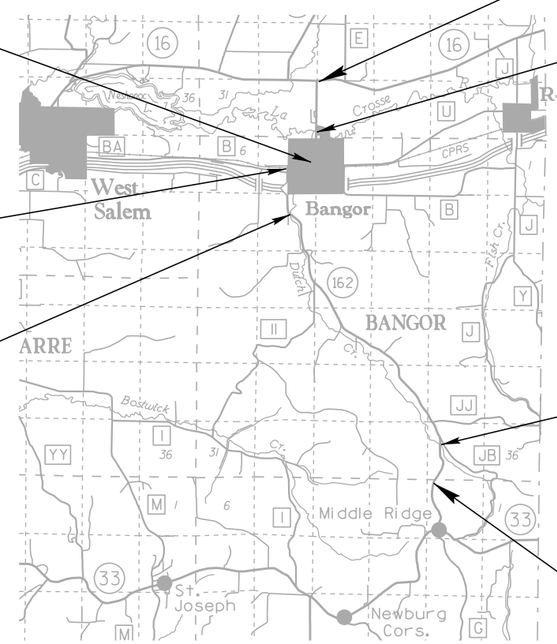

BEGIN PROJECT
STATION 12+27.71
X=525,311.9246
Y=131,692.4811

DESIGN DESIGNATION

A.D.T. (2016)	=	1,000 - 2,050
A.D.T. (2036)	=	1,200 - 2,350
D.H.V.	=	4.7
D.D.	=	60/40
T.	=	5.6%
DESIGN SPEED	=	55 MPH
ESALS	=	290,000 (660,000 NEAR IH-90)

CONVENTIONAL SYMBOLS

COUNTY LINE
CORPORATE LIMITS
PROPERTY LINE — P.L. + 58.1
LOT LINE
LIMITED EASEMENT
EXISTING RIGHT OF WAY
PROPOSED OR NEW R/W LINE
SURVEY LINE
SLOPE INTERCEPT
ORIGINAL GROUND
MARSH OR ROCK PROFILE (To be noted as such) — ROCK
MARSH AREA
WOODED OR SHRUB AREA

COMBUSTIBLE FLUIDS — CAUTION
UNDERGROUND UTILITIES
GAS — G
ELECTRIC — E
TELEPHONE OR TELEGRAPH — T
COMMUNICATIONS LINE — C
SERVICE PEDESTAL
POWER POLE
TELEPHONE POLE
RAILROAD
SANITARY SEWER — SAN
STORM SEWER — SS
WATER — W
EXISTING CULVERT
PROPOSED CULVERT (Box or Pipe)
CULVERT (Profile View)

LAYOUT
SCALE 0 1 MI 2 MI

TOTAL NET LENGTH OF CENTERLINE = 8.277 MI.

-"Coordinates on this plan are referenced to the Wisconsin County Coordinate System (WCCS), La Crosse County."

STATE OF WISCONSIN
DEPARTMENT OF TRANSPORTATION

PREPARED BY

Surveyor	JULIE JOLIVETTE-WOOD
Designer	KATHLEEN KLUDY
Project Manager	TODD WALDO
District Examiner	
District Supervisor	REINY YAHNKE, PE
C.O. Examiner	

APPROVED FOR DISTRICT OFFICE
DATE: 4/28/2015 Todd Waldo
(Signature)

E

GENERAL NOTES

1. THERE ARE UTILITIES WITHIN THE PROJECT LIMITS WHICH ARE NOT SHOWN ON PLANS. COORDINATE CONSTRUCTION ACTIVITIES WITH A CALL TO DIGGERS HOTLINE AND/OR A DIRECT CALL TO THE UTILITIES THAT HAVE FACILITIES IN THE AREA. NOT ALL UTILITIES ARE MEMBERS OF DIGGERS HOTLINE.
2. ALL P.E.'S SHALL BE REPLACED IN KIND (AGGREGATE, CONCRETE OR ASPHALT).
3. LOCATIONS OF PRIVATE AND FIELD ENTRANCES AS SHOWN ON PLAN ARE APPROXIMATE. THE EXACT LOCATIONS SHALL BE DETERMINED BY THE ENGINEER IN THE FIELD.
4. CONTRACTOR SHALL MAINTAIN ACCESS TO ALL DRIVEWAYS AT ALL TIMES EXCEPT WHEN OPERATIONS REQUIRE THE DRIVEWAY TO BE CLOSED. ACCESS TO DRIVEWAY SHALL BE RE-ESTABLISHED IMMEDIATELY AFTER OPERATIONS ARE COMPLETE. ACCESS SHALL BE PROVIDED DURING ALL NON-WORKING HOURS.
6. THE CONTRACTOR SHALL MAINTIAN ACCESS TO ALL FIRE HYDRANTS, WATER AND GAS VALVES AND ALL SEWER, WATER AND UTILITY MANHOLES.
7. CURB AND GUTTER WILL BE PLACED AFTER MILL AND RELAY OPERATIONS ARE COMPLETE. ALL CURB AND GUTTER ELEVATIONS WILL BE DETERMINED IN THE FIELD BY THE CONTRACTOR. EXCAVATION OF 2-3 INCHES OF COMPACTED BASE COURSE WILL BE REQUIRED TO PLACE CURB AND GUTTER.
8. MATERIAL DISPLACED DURING THE CONSTRUCTION OF THE CONCRETE CURB & GUTTER SHALL BE REPLACED TO THE ORGINAL GRADE LINE BY THOSE DOING THE WORK. THIS WORK SHALL BE INCIDENTIAL TO THE ITEM OF CONCRETE CURB AND GUTTER.
9. THE RATE OR SUPER ELEVATION AND LENGTH OF THE TRANSITION SHALL BE DETERMINED USING THE EXISTING SUPER ELEVATION, NOT TO EXCEED 0.08 AND DESIGN SPEED OF 55 MPH. THE LENGTH ON TANGENT AND ONE-THIRD WITHIN THE CURVE.
10. THE RATE OF APPLICATION FOR TACK COAT IS COMPUTED AT 0.07 GAL/SY.
11. ASPHALTIC SURFACE WEIGHT CALCULATIONS ARE BASED ON 113 LB/SY/IN
12. WHEN THE QUANTITIES OF ASPHALTIC SURFACE IS MEASURED FOR PAYMENT BY THE TON, THE DEPTH OF THICKNESS OF THE MATERIAL THAT IS SHOWN ON THE PLANS IS APPROXIMATE AND THE ACTUAL THICKNESS WILL DEPEND ON THE DISTRIBUTION OF THE MATERIAL AS DIRECTED BY THE ENGINEER.
13. THE 3.5 INCH HMA PAVEMENT TYPE E-1 SHALL BE PLACED IN TWO (2) 1.75 INCH LIFTS. BOTH LAYERS WILL USE A -1/2 INCH (12.5 mm) NOMINAL AGGREGATE SIZE MIXTURE.
14. ASPHALT MATERIAL FOR PLANT MIXES HAS BEEN ESTIMATED AT 5.5% OF THE HMA PAVEMENT.
15. ASPHALTIC CONCRETE PAVEMENT FOR SIDE ROAD PAVING SHALL BE A NOMINAL 2 INCH DEPTH, CONSTRUCTED WITH UPPER LAYER MATERIAL.
16. ALL RADII ARE MEASURED TO EDGE OF PAVEMENT OR FLAG OF CURB UNLESS OTHERWISE SHOWN OR NOTED ON THE PLAN.
17. EXPANSION JOINTS TO BE CONSTRUCTED AT ALL RADIUS POINTS IN CURB AND GUTTER OR AT LOCATIONS SHOWN ON THE PLAN. WHEN PORTIONS OF EXISTING ASPHALTIC SURFACES ARE TO BE REMOVED TO ACCOMMODATE NEW CONSTRUCTION, THE LINE OF SUCH REMOVAL SHALL BE NEATLY DELINEATED WITH A SAW CUT JOINT THROUGH THE ASPHALTIC SURFACE SO THAT REMOVAL OF THE ASPHALT SHALL BE ACCOMPLISHED WITHOUT DAMAGE TO REMAINING PORTIONS. THE LOCATION OF SAW JOINTS AND THE AMOUNT REMOVED AT SIDE ROADS WILL BE DETERMINED IN THE FIELD BY THE ENGINEER.
18. PAVEMENT REMOVAL WILL BE TO THE NEAREST JOINT OR A SAWED EDGE WILL BE REQUIRED AS DIRECTED BY THE ENGINEER.
19. UNLESS OTHERWISE IDENTIFIED BY CONSTRUCTION DETAILS, ALL INTERSECTIONS ARE TYPE "C" AS SHOWN ON THE STANDARD DETAILED DRAWING.
20. TYPE 'D' INTERSECTIONS SHALL BE AS SHOWN ON THE STANDARD DETAIL DRAWING AND DETERMINED IN THE FIELD BY THE ENGINEER
21. ALL BEAM GUARD WIDENING AND FINISHING SHALL BE COMPLETED PRIOR TO THIS CONTRACT BY OTHERS.
22. ENERGY ABSORBING TERMINALS SHALL BE OFFSET A MINIMUM OF 1 FOOT AT THE DIRECTION OF THE ENGINEER.
23. TRAFFIC CONTROL DRUMS SHALL BE PLACED AT LOCATIONS WHERE GUARD RAIL HAS BEEN REMOVED AT 50 FT MIN. SPACING, AS PER PLAN AND AT LOCATIONS AS DIRECTED BY THE ENGINEER.
24 THE CONTRACTOR'S PAVING OPERATIONS SHALL BE CONSISTENT WITH THE PLAN TYPICAL SECTIONS AND CONSTRUCTED TO PREVENT HMA LONGITUDINAL JOINTS FROM BEING LOCATED WITHIN A DRIVING, TURNING, PASSING OR PARKING LANE.
25. PREPARE FOUNDATION FOR ASPHALTIC PAVING IS USED IN THE SALVAGED ASPHALTIC PAVEMENT MILLING LOACTIONS

STANDARD ABBREVIATIONS

AGG.	AGGREGATE	DIA.	DIAMETER	MIN.	MINIMUM	S	SOUTH
AH	AHEAD	DISCH.	DISCHARGE	N.C.	NORMAL CROWN OR NO CHANGE	S.F.	SQUARE FOOT (FEET)
<	ANGLE	EA	EACH	N	NORTH	SDD	STANDARD DETAIL DRAWING(S)
AE, AEW	APRON ENDWALL	E	EAST	NO.	NUMBER	STH	STATE TRUNK HIGHWAY
ASPH.	ASPHALTIC	ELEC.	ELECTRIC(AL), ELEC. CABLE	PAV'T	PAVEMENT	STA.	STATION
A.D.T.	AVERAGE DAILY TRAFFIC	EL., ELEV.	ELEVATION	P.C.	POINT OF CURVATURE	S.E.	SUPERELEVATION
B.F.	BACK FACE	EXC.	EXCAVATION	P.I.	POINT OF INTERSECTION	S/L	SURVEY LINE
BK.	BACK	F.F.	FACE TO FACE	P.T.	POINT OF TANGENCY	T	TANGENT
BEG.	BEGIN	FERT.	FERTILIZER	V.P.C.	VERTICAL POINT OF CURVATURE	TEL.	TELEPHONE
B.M.	BENCH MARK	F.E.	FIELD ENTRANCE	V.P.I.	VERTICAL POINT OF INTERSECTION	TEMP.	TEMPORARY
C.E.	COMMERCIAL ENTRANCE	F/L, F.L.	FLOW LINE	V.P.T.	VERTICAL POINT OF TANGENCY	T.L.E.	TEMPORARY LIMITED EASEMENT
C/L	CENTER LINE	CWT.	HUNDRED WEIGHT	PCC	PORTLAND CEMENT CONCRETE	T.O.C.	TOP OF CURB
D	CENTRAL ANGLE OR DELTA	INL	INLET	P.E.	PRIVATE ENTRANCE	T.	(TRUCKS) PERCENT OF
C.M.C.P.	CORRUGATED METAL CULVERT PIPE	INTER.	INTERSECTION	P.L.	PROPERTY LINE	TYP.	TYPICAL
C.M.P.	CORRUGATED METAL PIPE	JT.	JOINT	R	RADIUS OR RANGE	UNCL.	UNCLASSIFIED
CO.	COUNTY	LT	LEFT	R/L	REFERENCE LINE	U.G.	UNDERGROUND (CABLE)
CTH	COUNTY TRUNK HIGHWAY	L.H.F.	LEFT HAND FORWARD	RT	RIGHT	V.C.	VERTICAL CURVE
CR.	CREEK	L.	LENGTH OF CURVE	REQ'D	REQUIRED	W	WEST
C.A.B.C.	CRUSHED AGGREGATE BASE COURSE	L.F.	LINEAR FOOT(FEET)	R.H.F.	RIGHT HAND FORWARD		
C.Y.	CUBIC YARD	LC.	LONG CHORD	R/W	RIGHT OF WAY		
C.P.	CULVERT PIPE	LS	LUMP SUM	R.	RIVER		
C. & G.	CURB AND GUTTER	M.P.	MARKER POST	RD.	ROAD		
D	DEGREE OF CURVE	MAX.	MAXIMUM	SHLD.	SHOULDER(S)		
D.H.V.	DESIGN HOUR VOLUME	MGAL	1000 GALLONS	SHR.	SHRINKAGE		

WISCONSIN DEPARTMENT OF TRANSPORTATION

SOUTHWEST REGION - LA CROSSE OFFICE
3550 MORMON COULEE RD
LA CROSSE, WI 54601
ATTN: TODD WALDO (PROJECT MANAGER)
PHONE: (608) 785-9462
TODD.WALDO@DOT.WI.GOV

SOUTHWEST REGION - LA CROSSE OFFICE
3550 MORMON COULEE RD
LA CROSSE, WI 54601
ATTN: KATHLEEN KLUDY (DESIGNER)
PHONE: (608) 785-9948
KATHLEEN.KLUDY@DOT.WI.GOV

LA CROSSE COUNTY HIGHWAY DEPARTMENT

TIM HAMMES, PATROL SUPERINTENDENT
(608) 792-1216

WISCONSIN DNR

DNR SERVICE CENTER
3550 MORMON COULEE RD
LA CROSSE, WI 54601
ATTN: KAREN KALVELAGE (LA CROSSE COUNTY)
(608) 785-9115
KAREN.KALVELAGE@WISCONSIN.GOV

RAILROAD COMPANIES & PERSONNEL

SOO LINE RAILWAY
EDWARD ARTHER OOM, MANAGER OF PUBLIC WORKS
SOUTHERN REGION EAST-ENGINEERING
SUITE 9126
120 S SIXTH ST
MINNEAPOLIS, MN 55402
OFFICES (612) 330-4553
MOBILE (630) 701-5882
oom0001@cpr.ca

UTILITY COMPANIES & PERSONNEL

STEVE BAKER
BANGOR MUNICIPAL UTILITY - ELECTRICITY, SEWER, AND WATER
106 15TH AVE NORTH
P.O. BOX 130
BANGOR, WI 54614
608-486-2151
sbaker@villageofbangor.com

PERRY MCCLELLAN
CHARTER COMMUNICATIONS - COMMUNICATION LINE
1228 12TH AVE S, PO BOX 279
ONALASKA, WI 54650
715-370-7140
perry.mcclellan@charter.com

KAYE CROOK
XCEL ENERGY - ELECTRICITY
1003 S BLACK RIVER ST
SPARTA, WI 54656
608-789-3677 EXT 14
kaye.m.crook@xcelenergy.com

JOHN LOUIS
WISCONSIN INDEPENDENT NETWORK, LLC - COMMUNICATION LINE
800 WISCONSIN ST
EAU CLAIRE, WI 54703-3612
715-864-2918
jlouis@wins.net

BRIAN STELPUGH
CENTURYLINK - COMMUNICATION LINE
333 N FRONT ST
P.O. BOX 4800
LA CROSSE, WI 54602
608-780-1238
brian .stelpugh@centurylink.com

LEONARD KLAAS
NORTHERN NATURAL GAS COMPANY - GAS / PETROLE
5557 COUNTY D
PLATTEVILLE, WI 53818
608-778-8514
leonard.klaas@nngco.com

CHARLES DIENGER
XCEL ENERGY - ELECTRICITY - TRANSMISSION
8701 MANTICELLO LANE
MAPLE GROVE, MN 55369
651-955-1089
charles.g.dienger@xcelenergy.com

TRAVIS KAHL
WE ENERGIES - GAS/PETROLEUM
1921 8TH STREET SOUTH
WISCONSIN RAPIDS, WI 54494
715-498-6180
travis.kahl@we-energies.com

DIGGERS HOTLINE
Dial 811 or (800) 242-8511
www.DiggersHotline.com

2

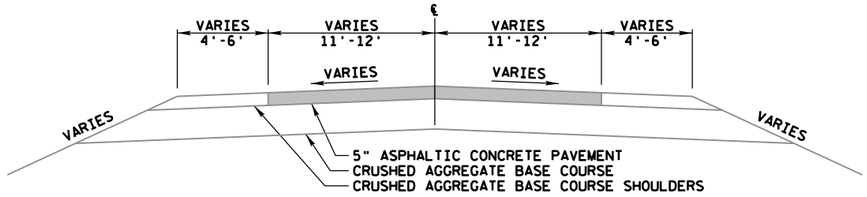

EXISTING TYPICAL SECTION

12+28 TO 326+69, 359+24 TO 387+75, 400+60 TO 465+50

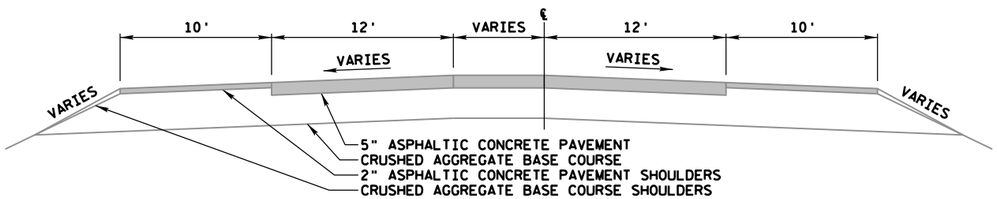

EXISTING RURAL TYPICAL SECTION

326+69 TO 330+80 - 333+46 TO 333+80 - 339+08 TO 339+51 - 349+60 TO 350+00 - 354+35 TO 356+50

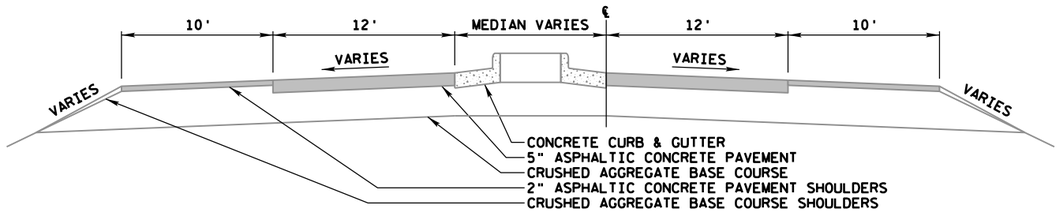

EXISTING RURAL TYPICAL SECTION

330+80 TO 333+46 - 333+80 TO 337+76 - 339+51 TO 347+18 - 350+00 TO 354+35

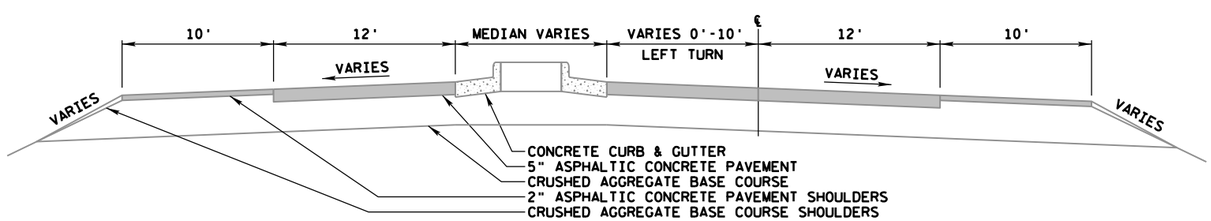

EXISTING RURAL TYPICAL SECTION

337+76 TO 339+08 - 347+18 TO 349+60

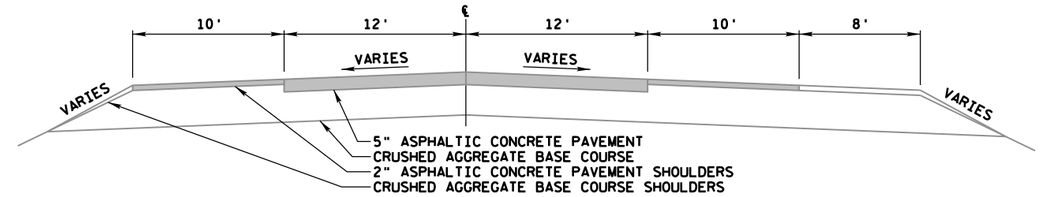

EXISTING RURAL TYPICAL SECTION

356+50 TO 359+24

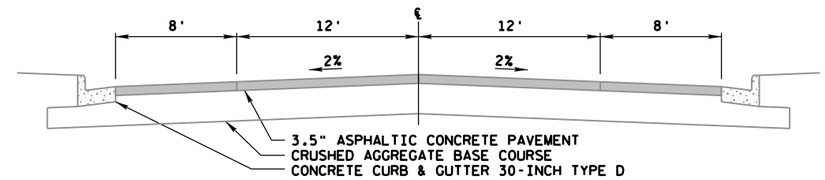

EXISTING URBAN TYPICAL SECTION

388+42 TO 398+40

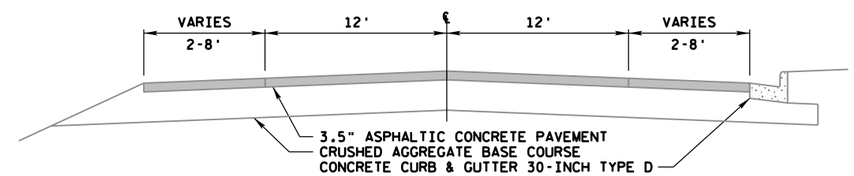

EXISTING URBAN TYPICAL SECTION

398+40 TO 400+60

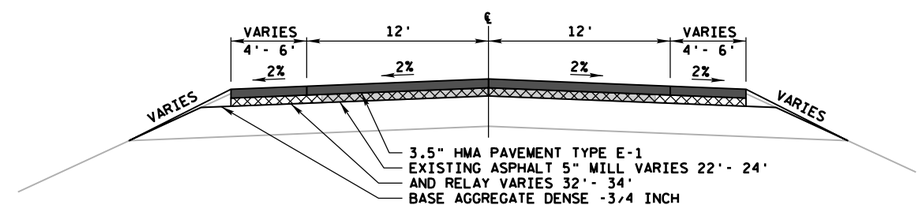

PROPOSED TYPICAL SECTION

12+28 TO 326+69, 359+24 TO 363+00

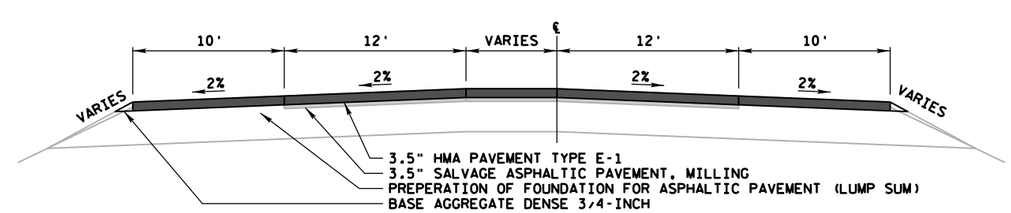

PROPOSED RURAL TYPICAL SECTION

326+69 TO 330+80 - 333+46 TO 333+80 - 339+08 TO 339+51 - 349+60 TO 349+97

2

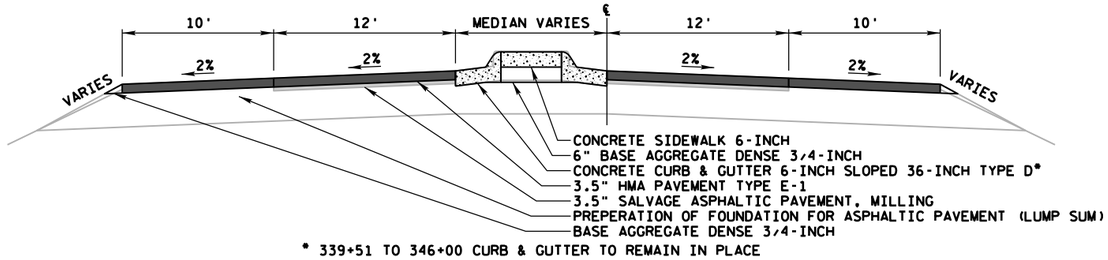

* 339+51 TO 346+00 CURB & GUTTER TO REMAIN IN PLACE

PROPOSED RURAL TYPICAL SECTION

330+80 TO 333+46, 333+80 TO 337+76, 339+51 TO 347+18, 349+97 TO 356+50

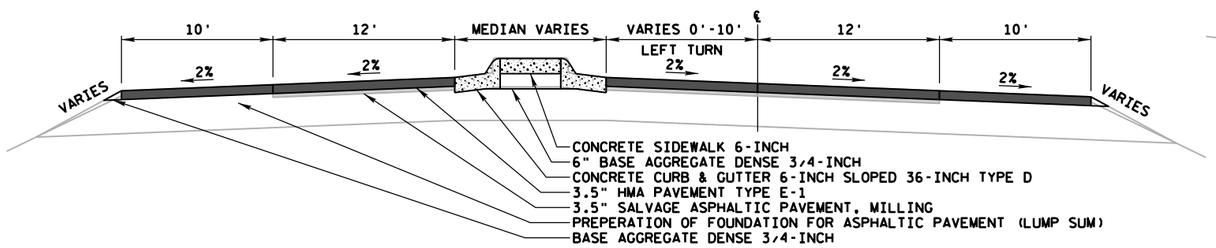

PROPOSED RURAL TYPICAL SECTION

337+76 TO 339+08, 347+18 TO 349+60

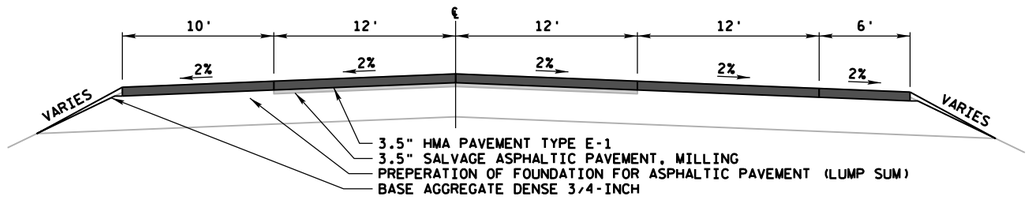

PROPOSED RURAL TYPICAL SECTION

356+50 TO 359+24

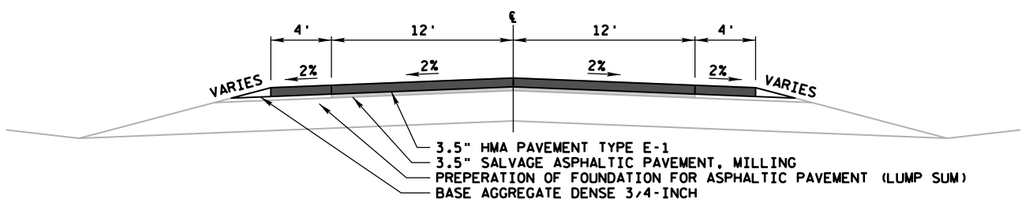

PROPOSED URBAN TYPICAL SECTION

363+00 TO 387+75

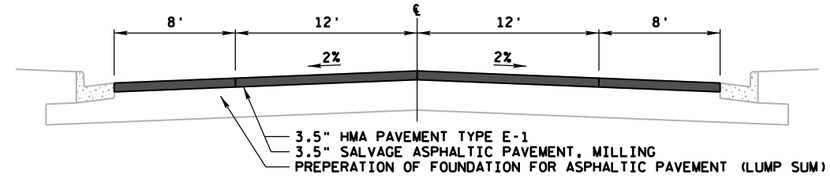

PROPOSED URBAN TYPICAL SECTION

388+42 TO 398+40

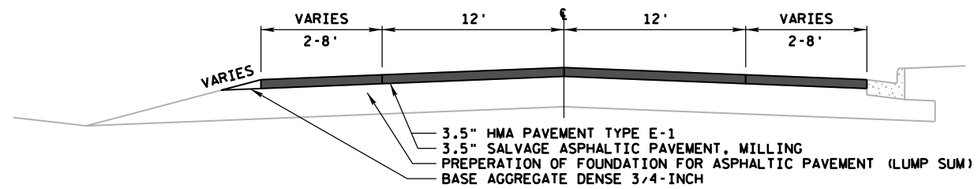

PROPOSED URBAN TYPICAL SECTION

398+40 TO 400+60

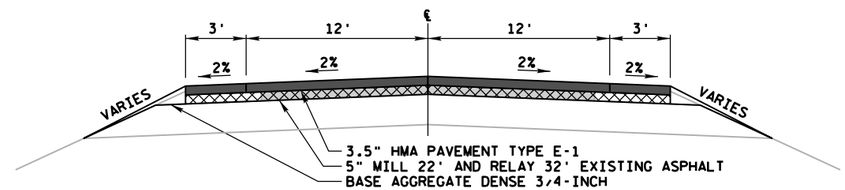

PROPOSED RURAL TYPICAL SECTION

400+60 TO 426+20, 431+50 TO 465+50

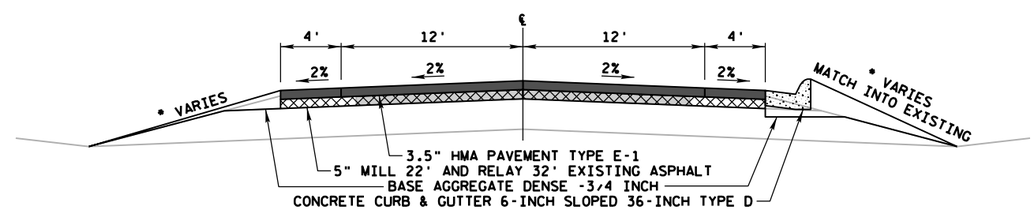

PROPOSED RURAL TYPICAL SECTION

426+20 TO 429+33

* FINISHING DONE BY OTHERS

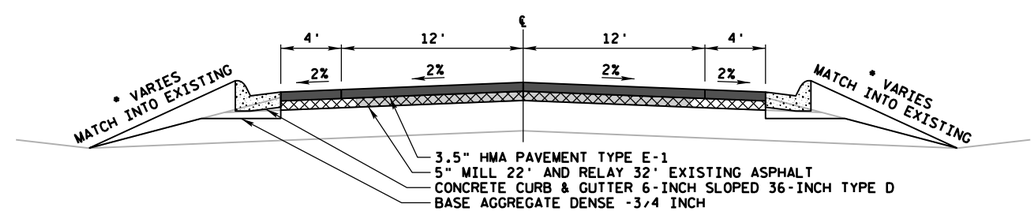

PROPOSED RURAL TYPICAL SECTION

429+33 TO 431+50

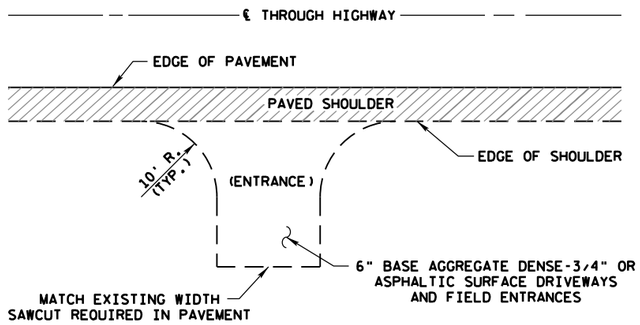

PRIVATE ENTRANCE DETAIL

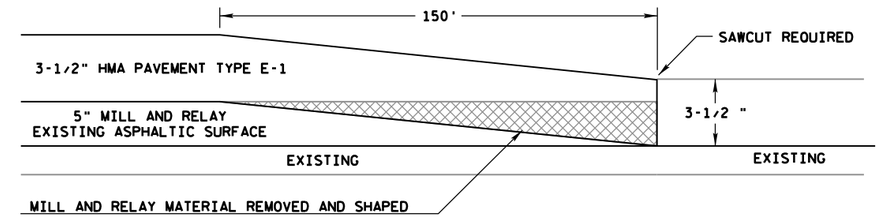

TRANSITION SECTION DETAIL

BEGIN/END PROJECT AND BRIDGES

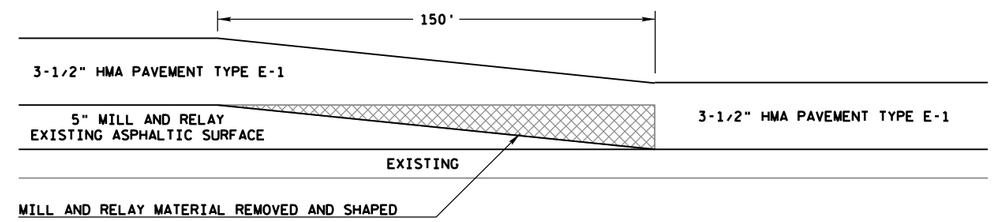

TRANSITION SECTION DETAIL

MILL AND RELAY TO SALVAGED ASPHALTIC PAVEMENT MILLING

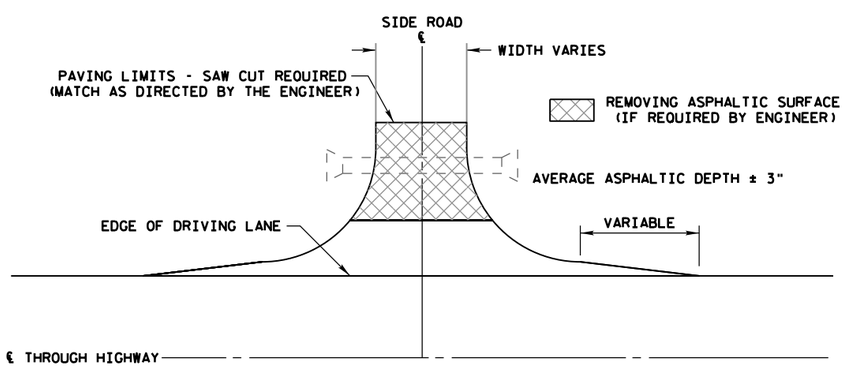

RURAL INTERSECTION BUTT OR FEATHER JOINT DETAIL

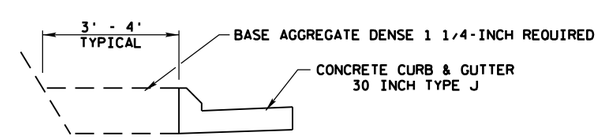

CONCRETE CURB & GUTTER 6-INCH SLOPED 30 INCH TYPE J BACKFILL DETAIL (RURAL SECTIONS)

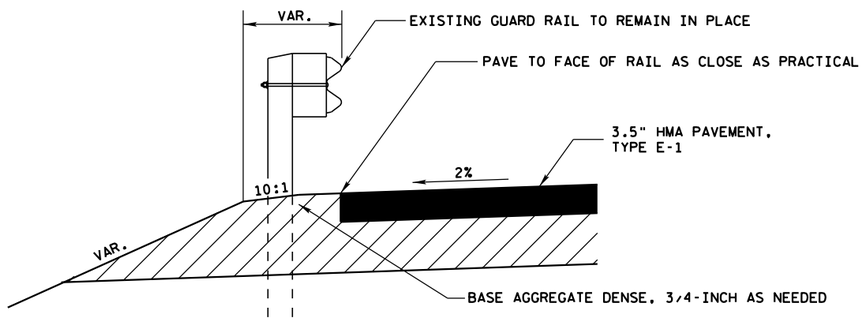

SECTION A-A

SHOULDER DETAIL AT GUARD RAIL

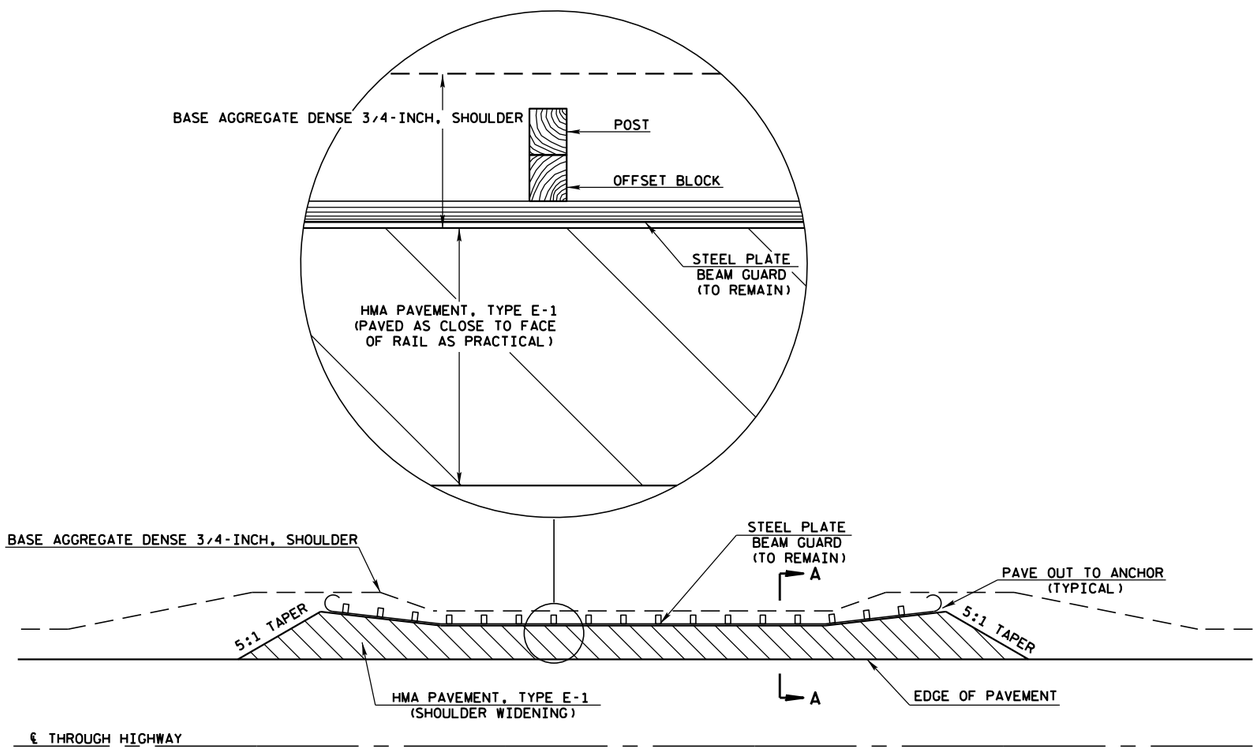

ASPHALTIC PAVING ALONG BEAM GUARD

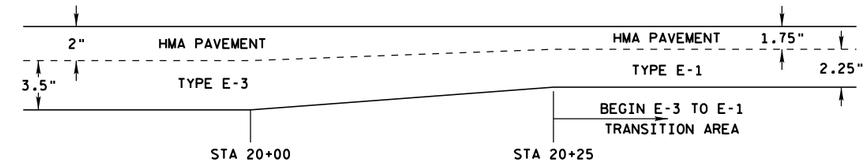

FEATHER JOINT DETAIL

2

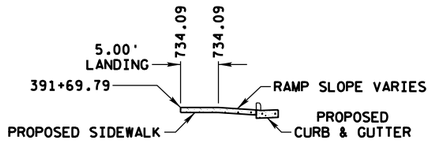

SECTION CC

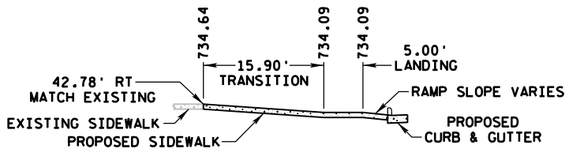

SECTION DD

FLOW LINE ELEVATIONS - CURB RAMP 1

NO.	STATION	OFFSET	ELEVATION
01	391+56.63	20.17'RT	732.04
02	391+66.77	17.16'RT	733.17
03	391+76.67	20.25'RT	733.40
04	391'X'+64.46	14.43'LT	733.84
05	391'X'+54.28	17.35'LT	734.10

FLOW LINE ELEVATIONS - CURB RAMP 2

NO.	STATION	OFFSET	ELEVATION
06	391'X'+55.51	22.74'RT	734.48
07	391'X'+65.77	20.50'RT	734.23
08	391'X'+77.23	24.84'RT	734.39
09	391'X'+81.55	63.31'RT	734.69
10	391'X'+80.08	46.28'RT	734.78

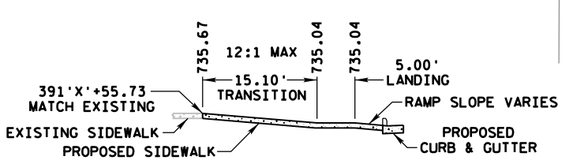

SECTION EE

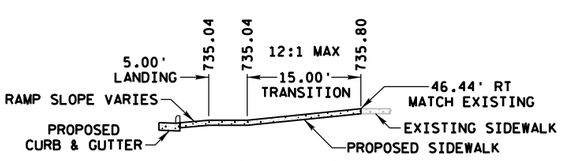

SECTION FF

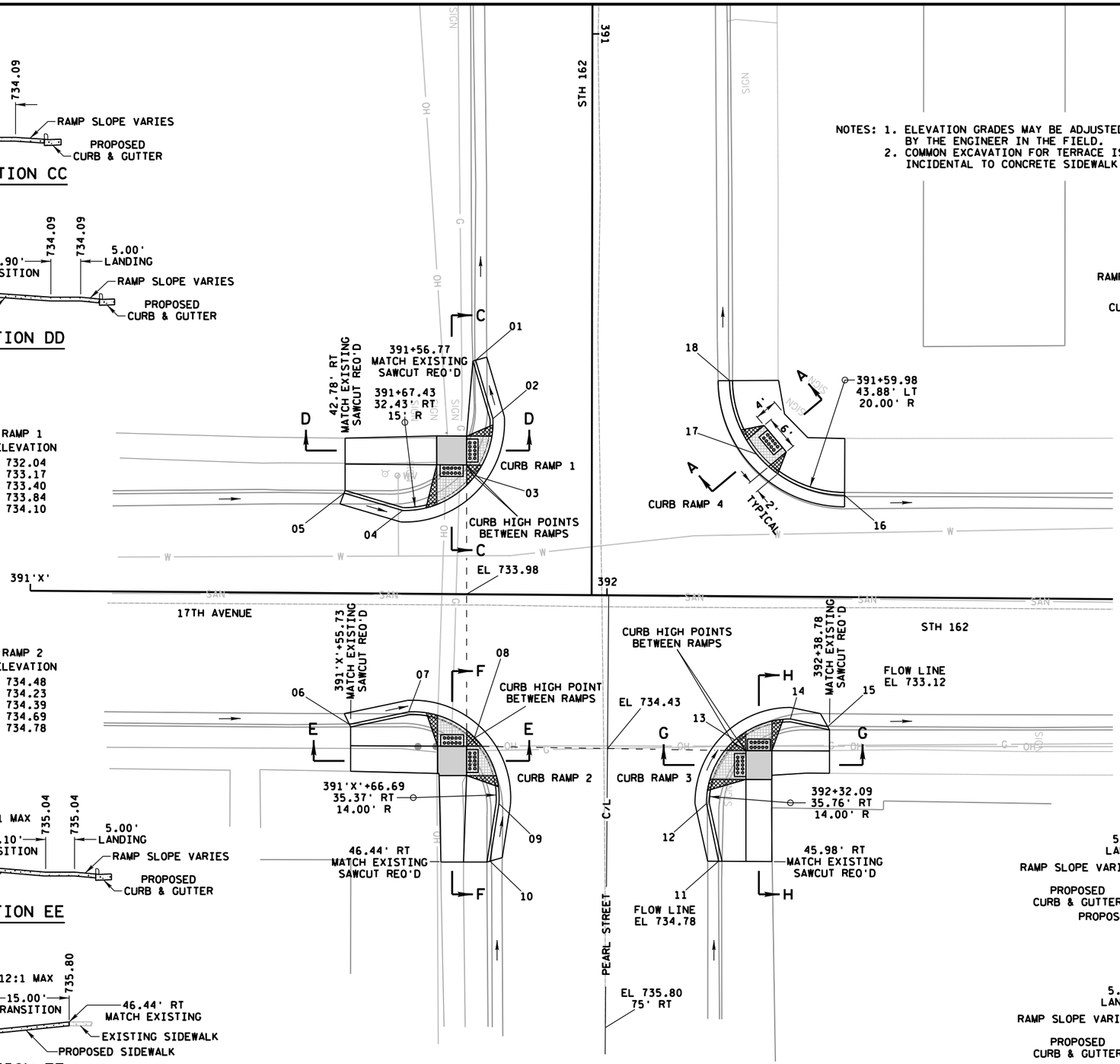

NOTES: 1. ELEVATION GRADES MAY BE ADJUSTED BY THE ENGINEER IN THE FIELD.
2. COMMON EXCAVATION FOR TERRACE IS INCIDENTAL TO CONCRETE SIDEWALK 4-INCH.

LEGEND

- RAMP SLOPE
- RAMP FLARE SLOPE
- RAMP LANDING AREA
- DETECTABLE WARNING FIELD

N

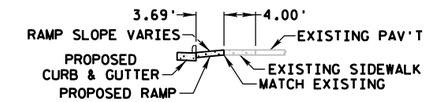

SECTION AA

FLOW LINE ELEVATIONS - CURB RAMP 4

NO.	STATION	OFFSET	ELEVATION
16	392+41.08	17.64'LT	732.96
17	391+72.86	28.58'LT	733.07
18	391+60.11	23.88'LT	732.69

FLOW LINE ELEVATIONS - CURB RAMP 3

NO.	STATION	OFFSET	ELEVATION
11	392+19.72	45.98'RT	734.49
12	392+17.54	35.99'RT	734.48
13	392+22.63	24.94'RT	733.88
14	392+31.97	21.21'RT	733.54
15	392+38.46	22.50'RT	733.12

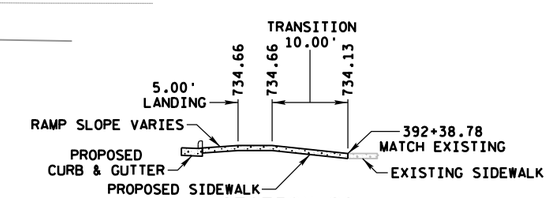

SECTION GG

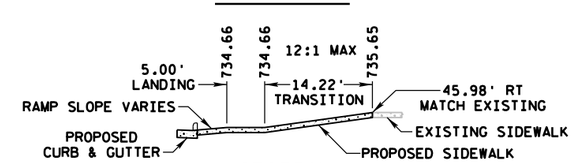

SECTION HH

PROJECT NO:5820-01-62	HWY:STH 162	COUNTY:LA CROSSE	CONSTRUCTION DETAILS - CURB RAMPS	SHEET 8	E

2

NOTES: 1. ELEVATION GRADES MAY BE ADJUSTED BY THE ENGINEER IN THE FIELD.
2. COMMON EXCAVATION FOR TERRACE IS INCIDENTAL TO CONCRETE SIDEWALK 4-INCH.

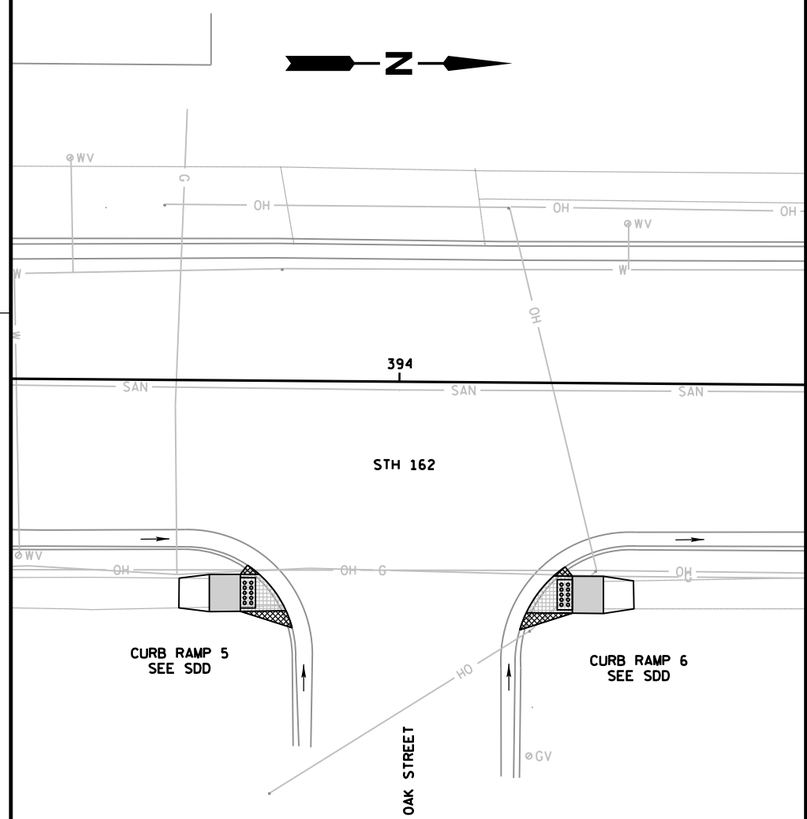

FLOW LINE ELEVATIONS - CURB RAMP 8

NO.	STATION	OFFSET	ELEVATION
16	396+04.67	51.54'RT	730.17
17	396+04.69	45.02'RT	730.15
18	395+98.93	34.98'RT	730.00
19	396+10.30	21.41'RT	729.81
20	396+26.34	21.25'RT	729.60

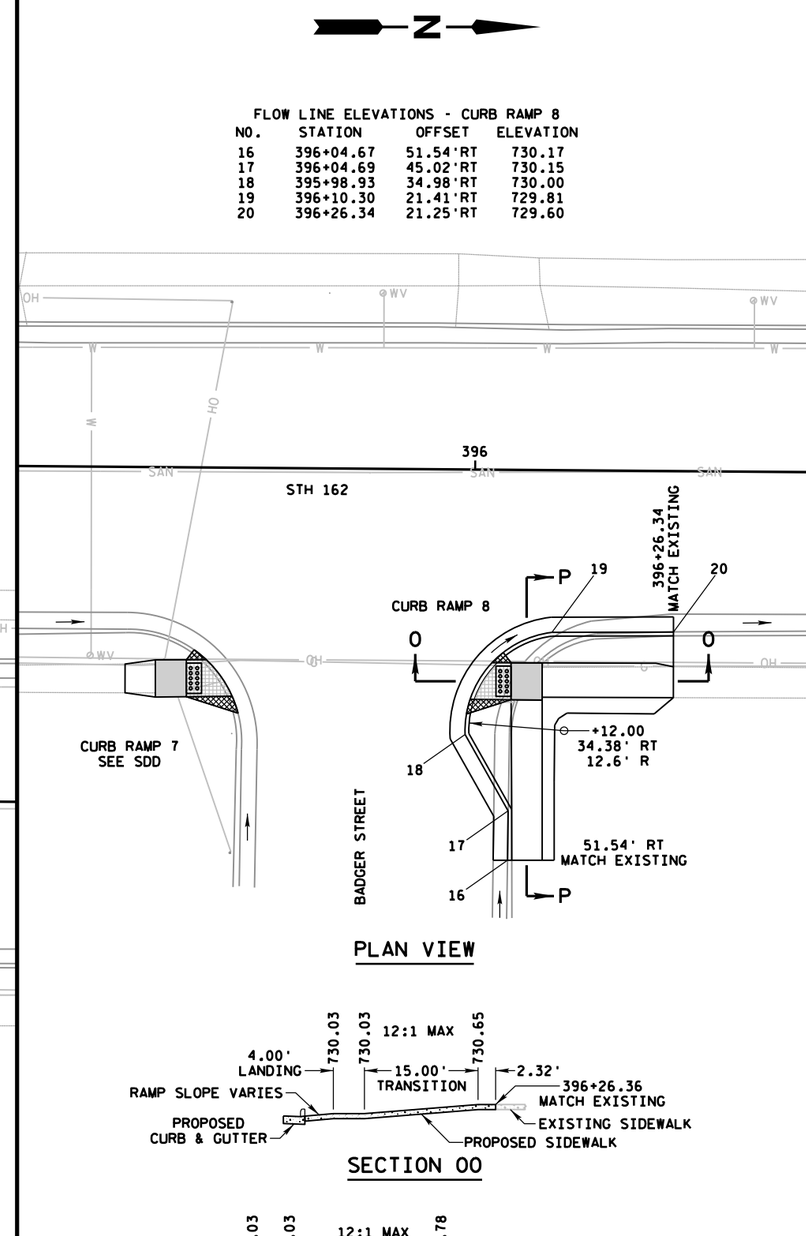

PLAN VIEW

SECTION OO

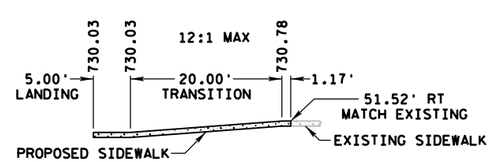

SECTION PP

LEGEND

- RAMP SLOPE
- RAMP FLARE SLOPE
- RAMP LANDING AREA 4' x 5' TYPICAL
- DETECTABLE WARNING FIELD

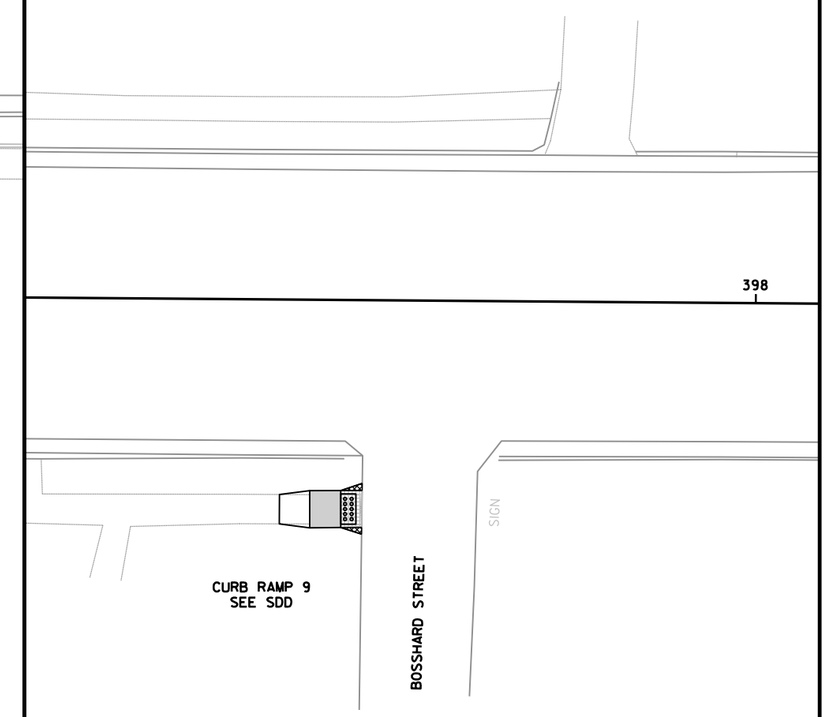

2

PROJECT NO: 5820-01-62	HWY: STH 162	COUNTY:LA CROSSE	CONSTRUCTION DETAILS - CURB RAMPS	SHEET 9	E

2

STH 162 AND CTH 'JB' INTERSECTION

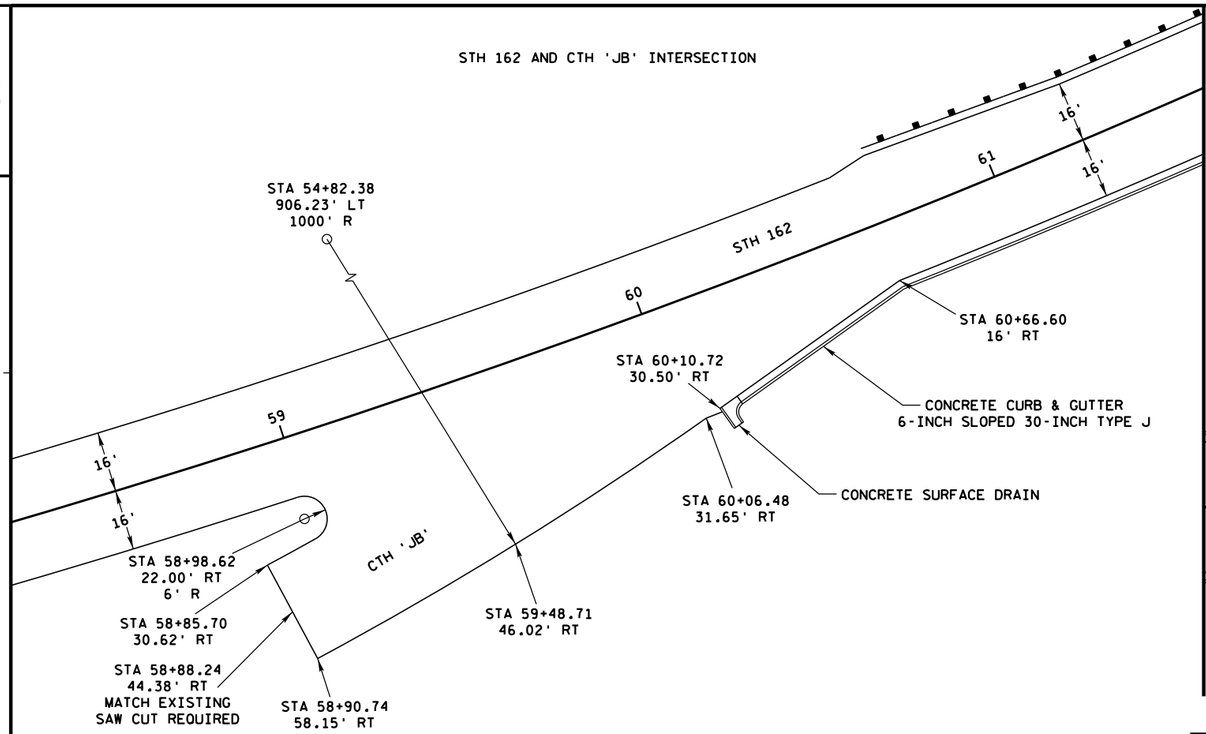

STH 162 AND CTH 'JJ' INTERSECTION

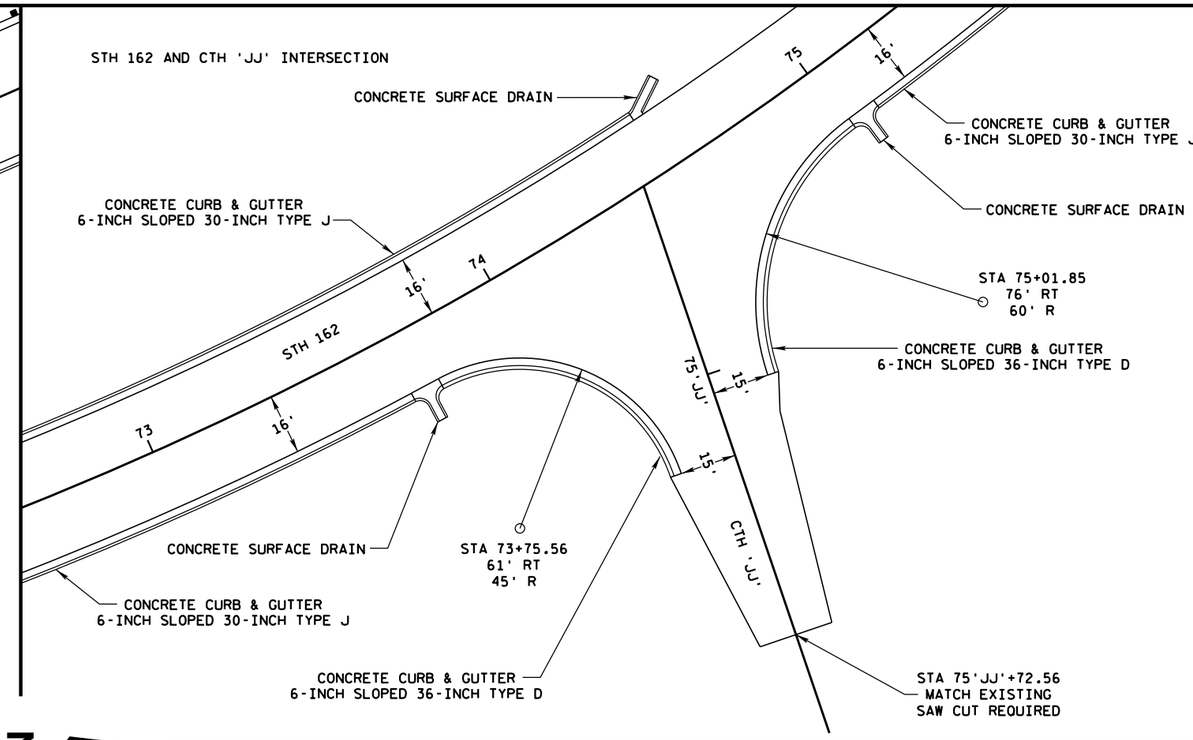

2

STH 162 AND SOUCHEK RD INTERSECTION

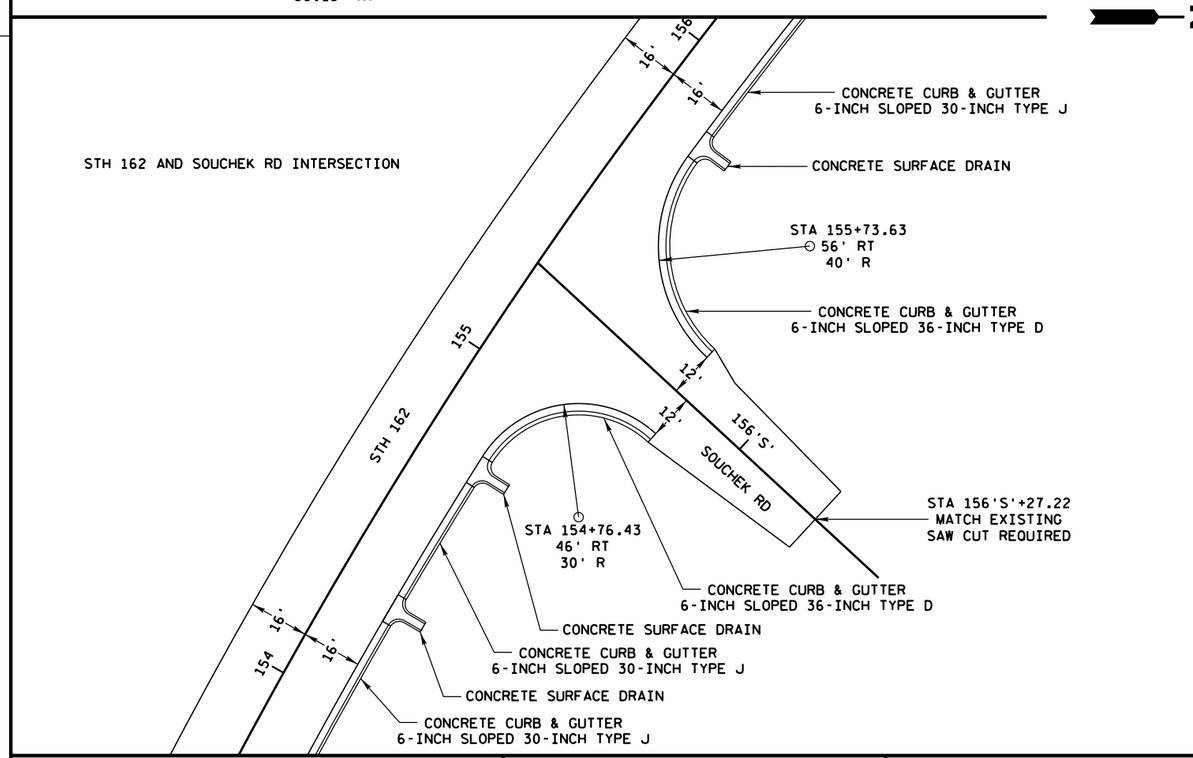

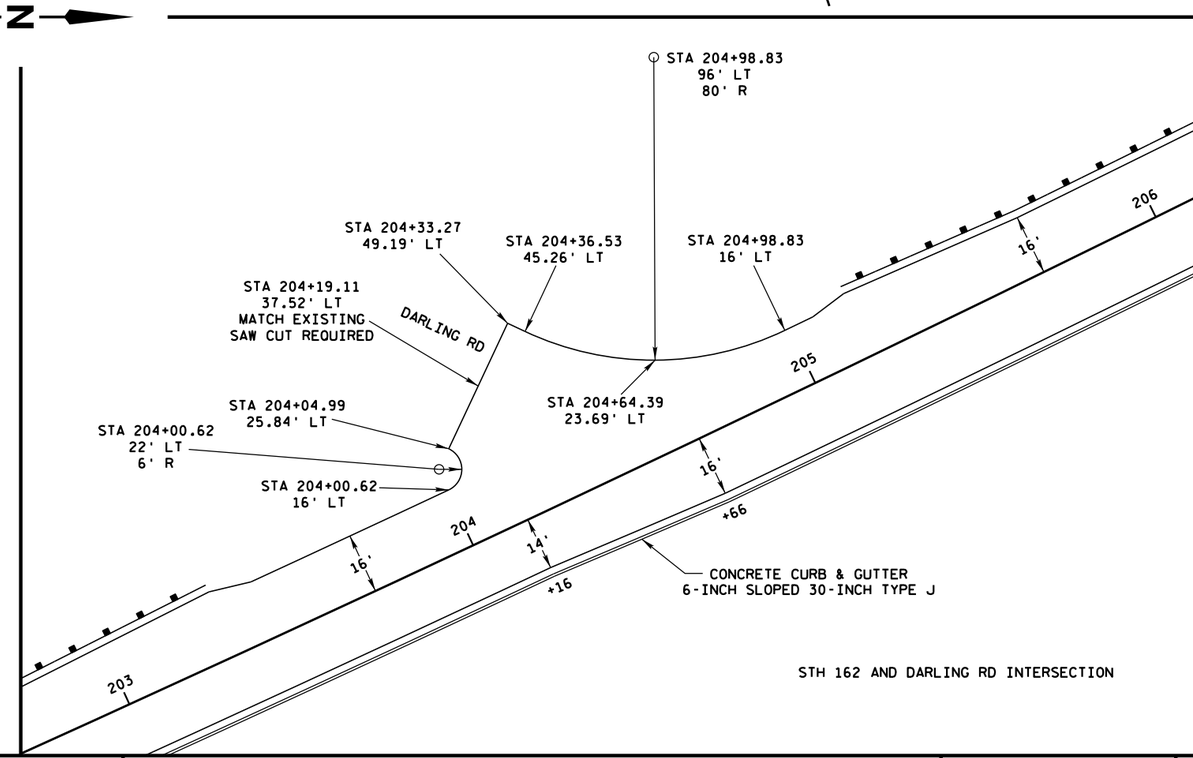

STH 162 AND DARLING RD INTERSECTION

PROJECT NO: 5820-01-62	HWY: STH 162	COUNTY: LA CROSSE	INTERSECTION DETAILS	SHEET 10	E

2

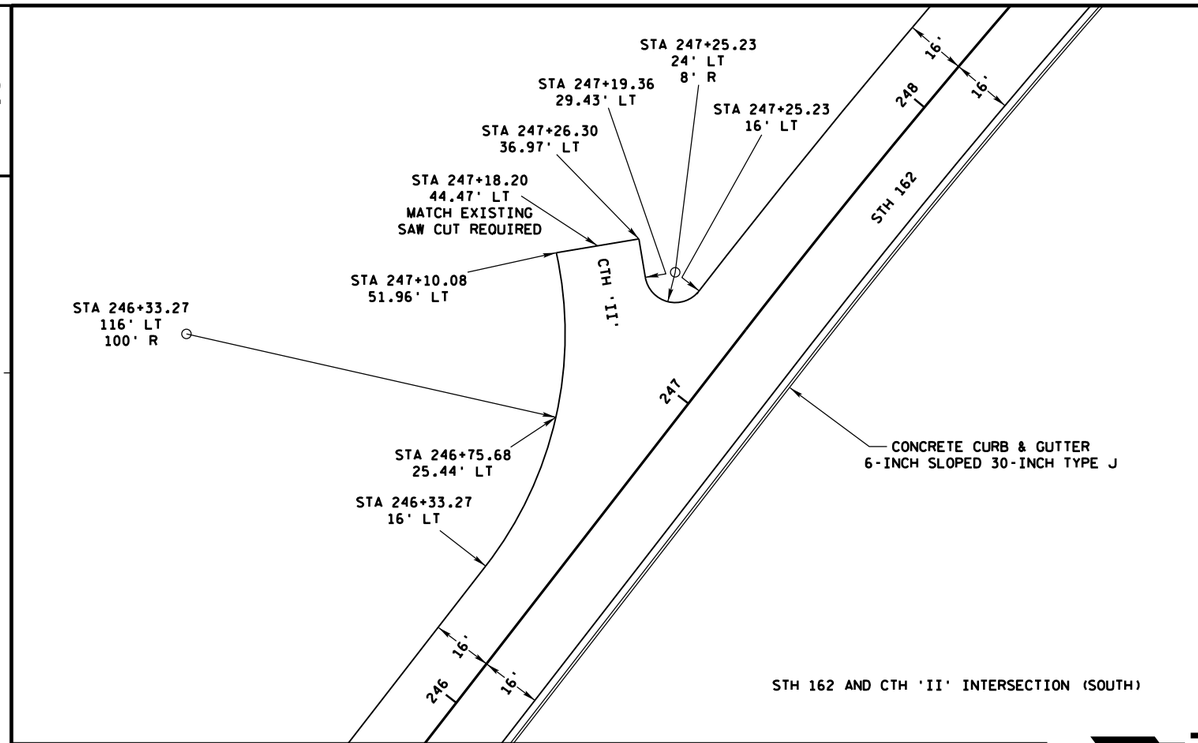

STH 162 AND CTH 'II' INTERSECTION (SOUTH)

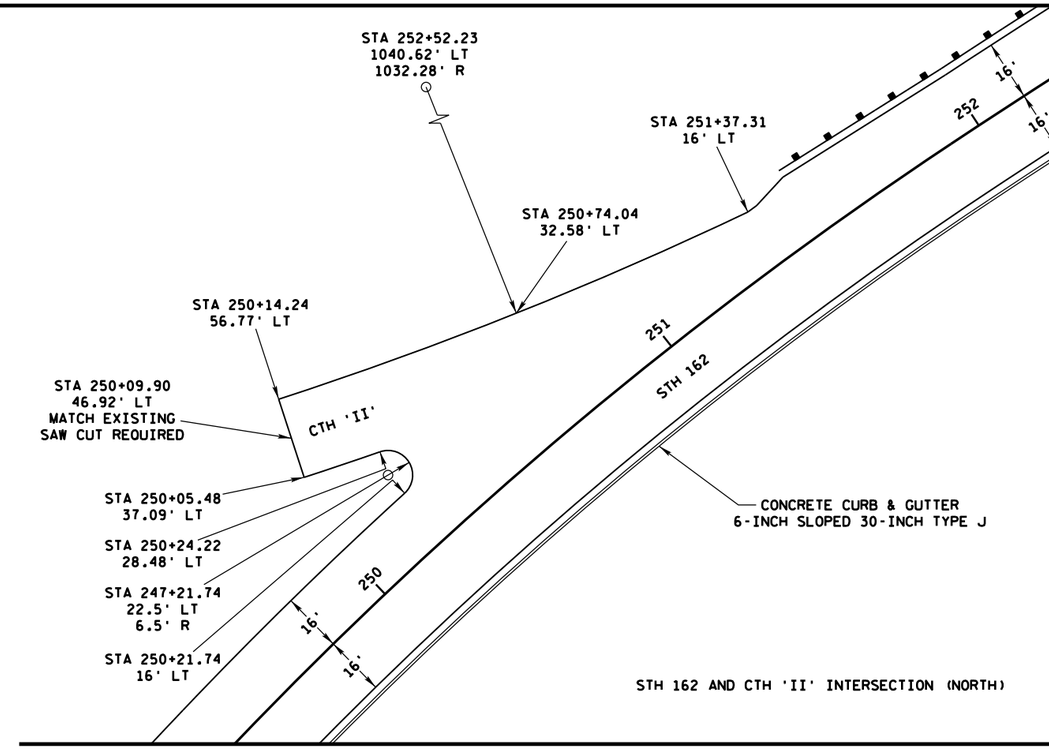

STH 162 AND CTH 'II' INTERSECTION (NORTH)

2

N

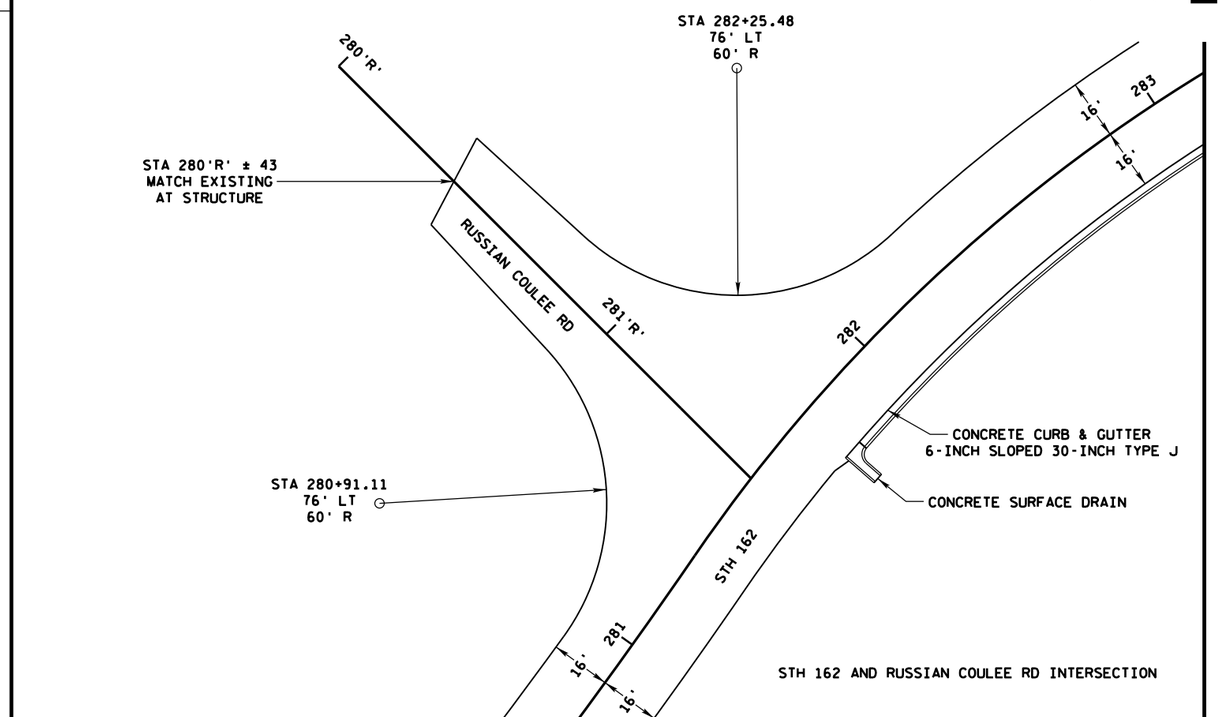

STH 162 AND RUSSIAN COULEE RD INTERSECTION

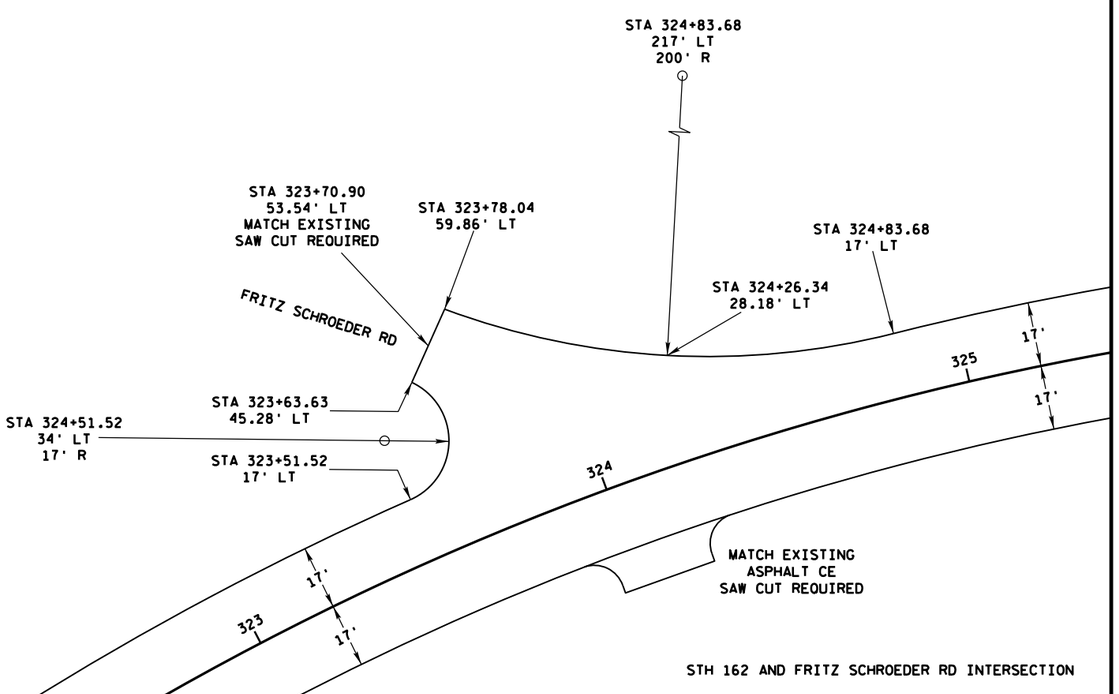

STH 162 AND FRITZ SCHROEDER RD INTERSECTION

PROJECT NO: 5820-01-62	HWY: STH 162	COUNTY: LA CROSSE	INTERSECTION DETAILS	SHEET 11	E

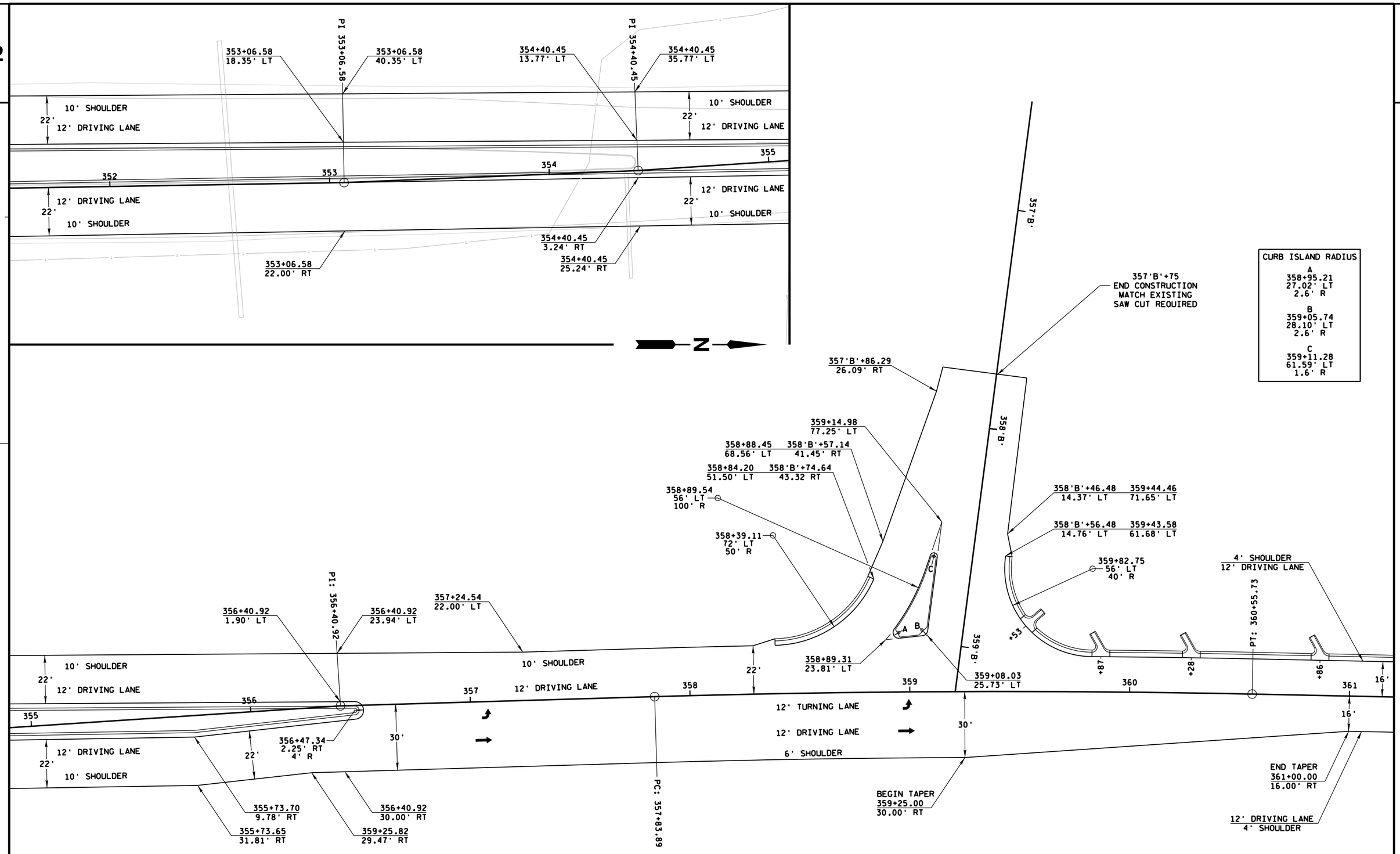

PROJECT NO: 5820-01-62	HWY: STH 162	COUNTY: LA CROSSE	INTERSECTION DETAILS - STH 162 AND CTH 'B'	SHEET 12	E

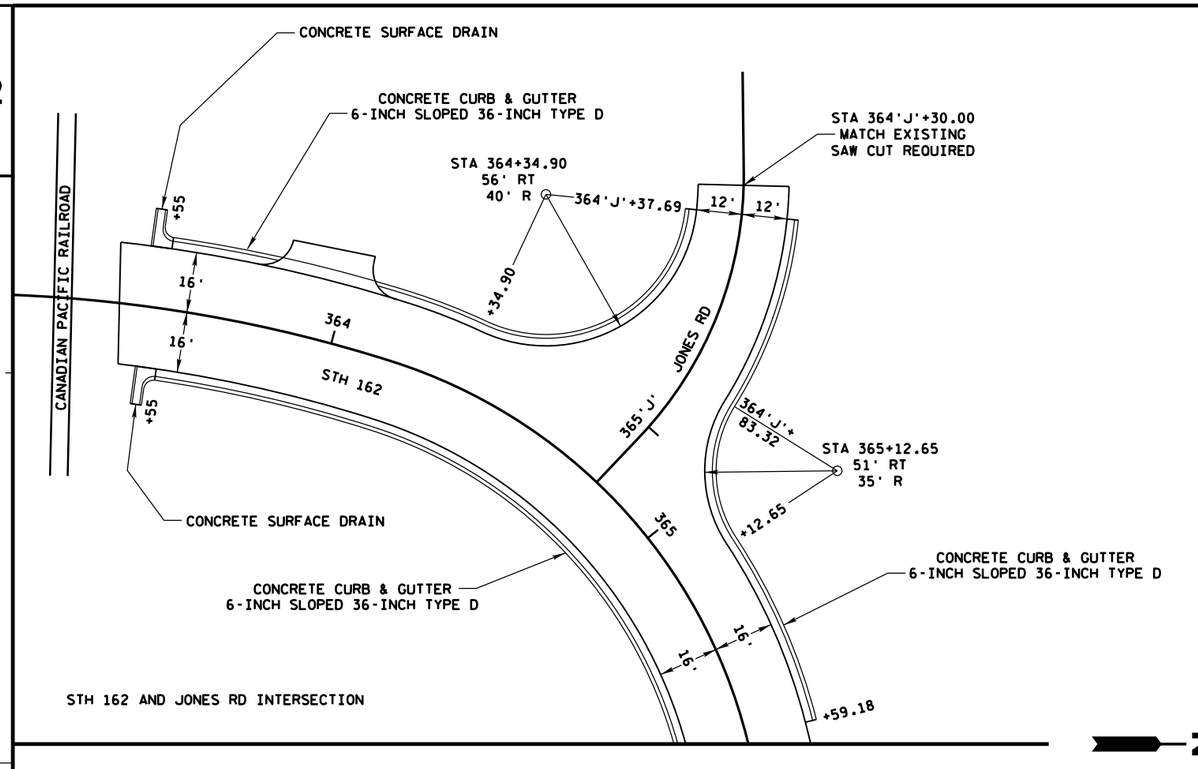

STH 162 AND JONES RD INTERSECTION

PROJECT NO: 5820-01-62	HWY: STH 162	COUNTY: LA CROSSE	INTERSECTION DETAILS	SHEET 13	E

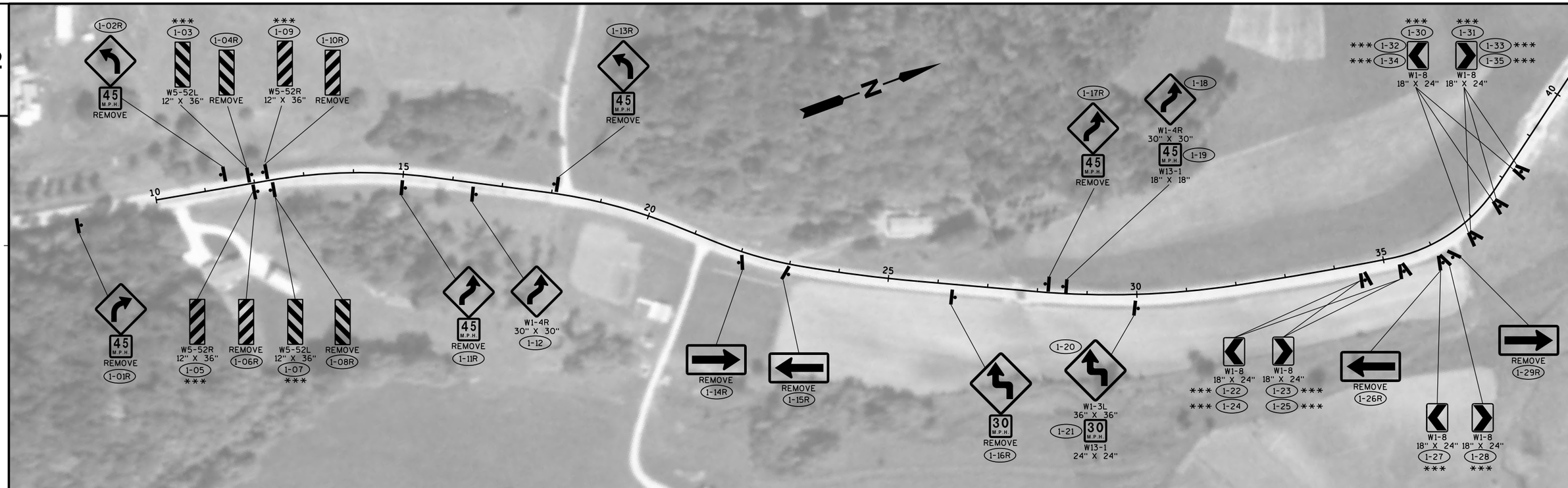

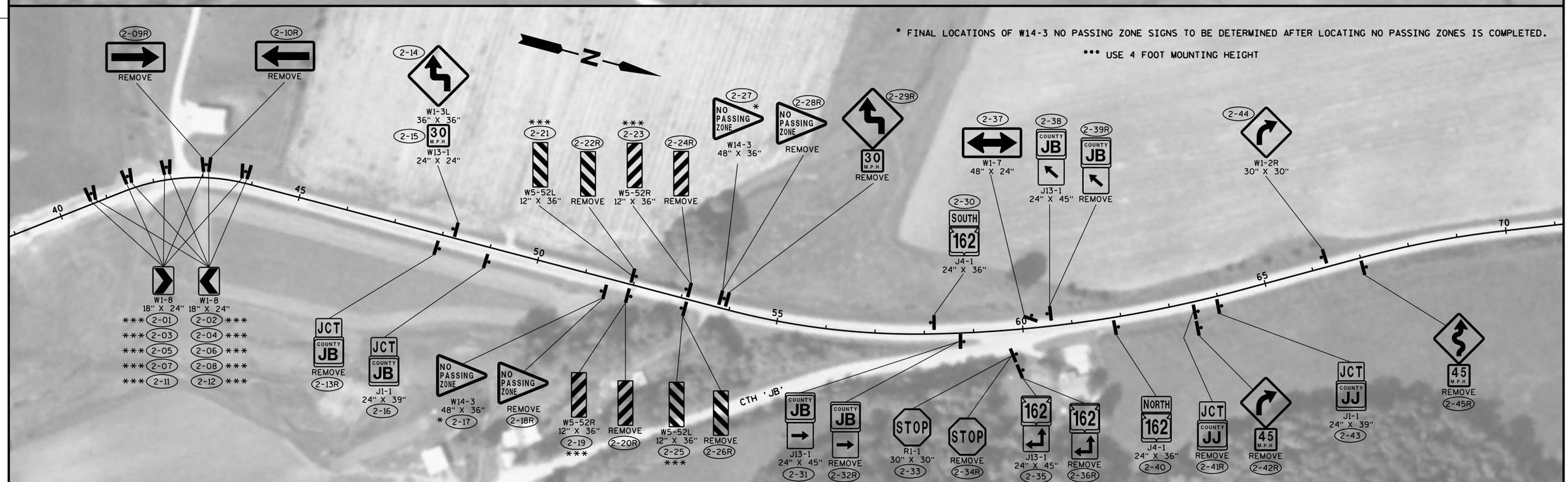

PROJECT NO:5820-01-62	HWY:STH 162	COUNTY:LA CROSSE	PERMANENT SIGNING	SHEET 14	E

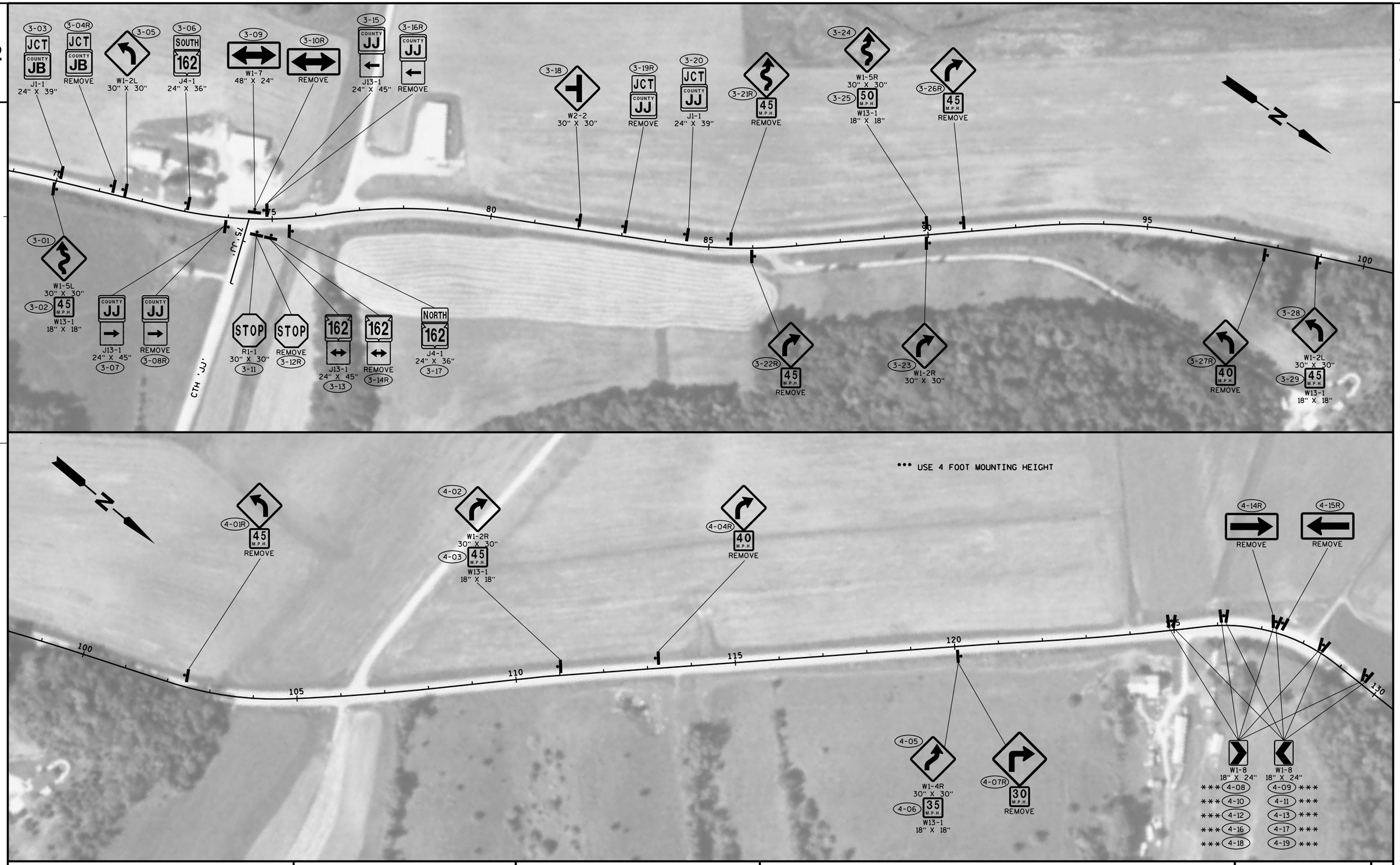

PROJECT NO:5820-01-62	HWY:STH 162	COUNTY:LA CROSSE	PERMANENT SIGNING	SHEET 15	E

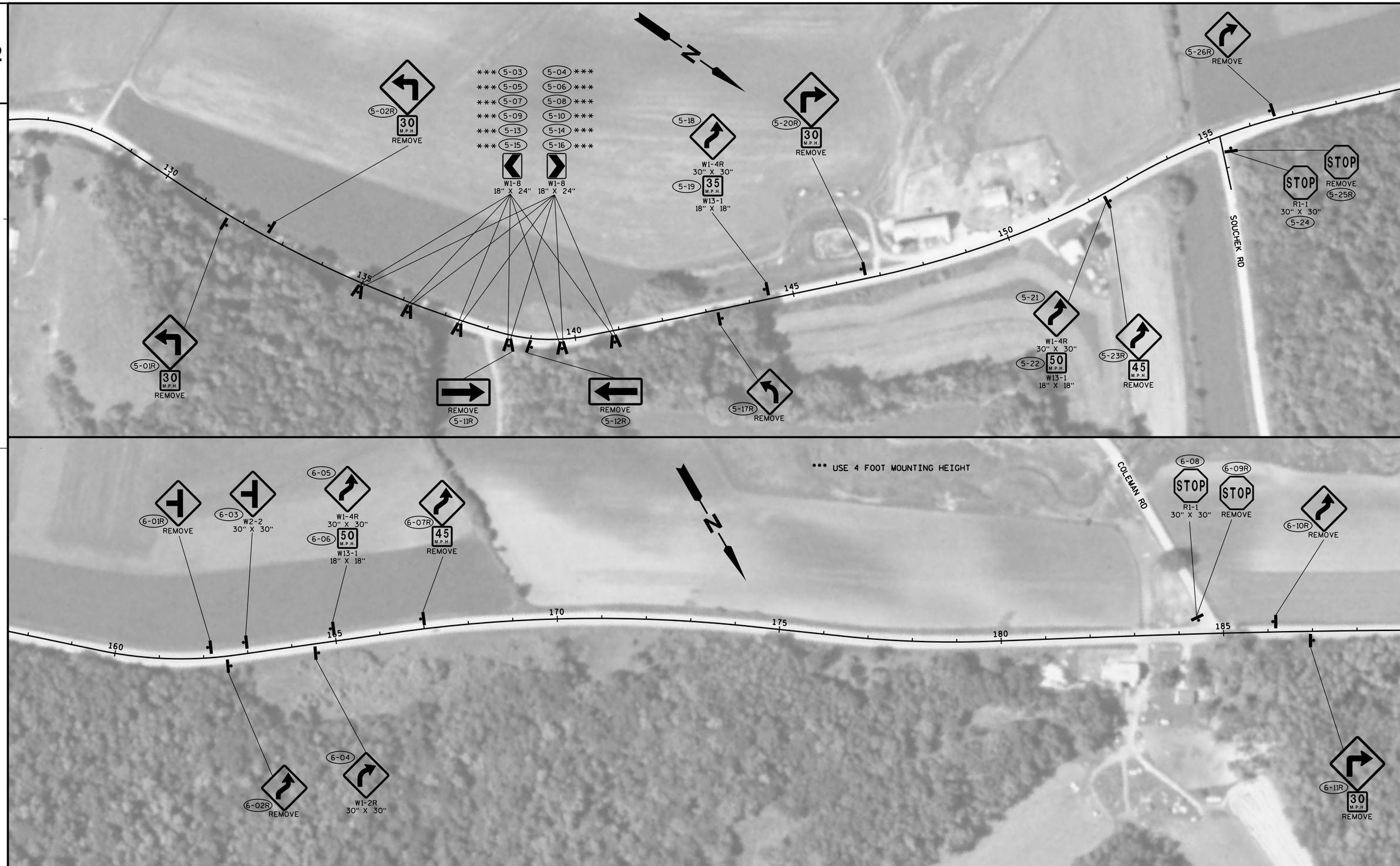

PROJECT NO:5820-01-62	HWY:STH 162	COUNTY:LA CROSSE	PERMANENT SIGNING	SHEET 16	E

FILE NAME : N:\PDS\c3d\58200132\Design\eplans\023205_ps.dgn PLOT DATE : 19-MAR-2015 15:52 PLOT BY : dotwow PLOT NAME : PLOT SCALE : 200:1

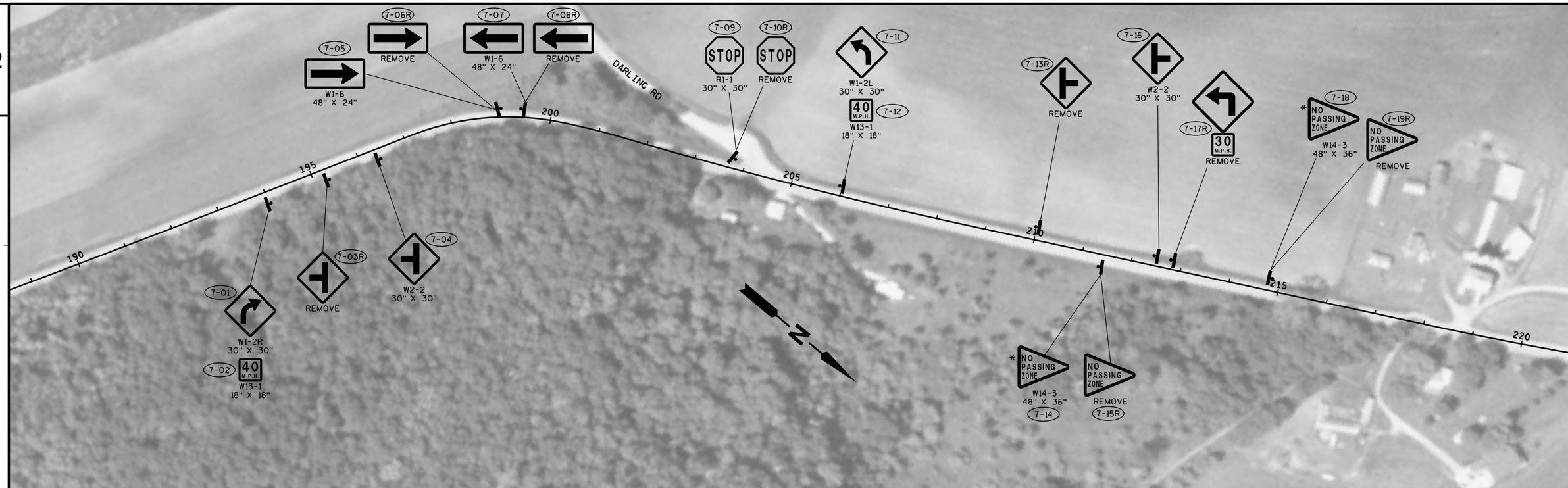

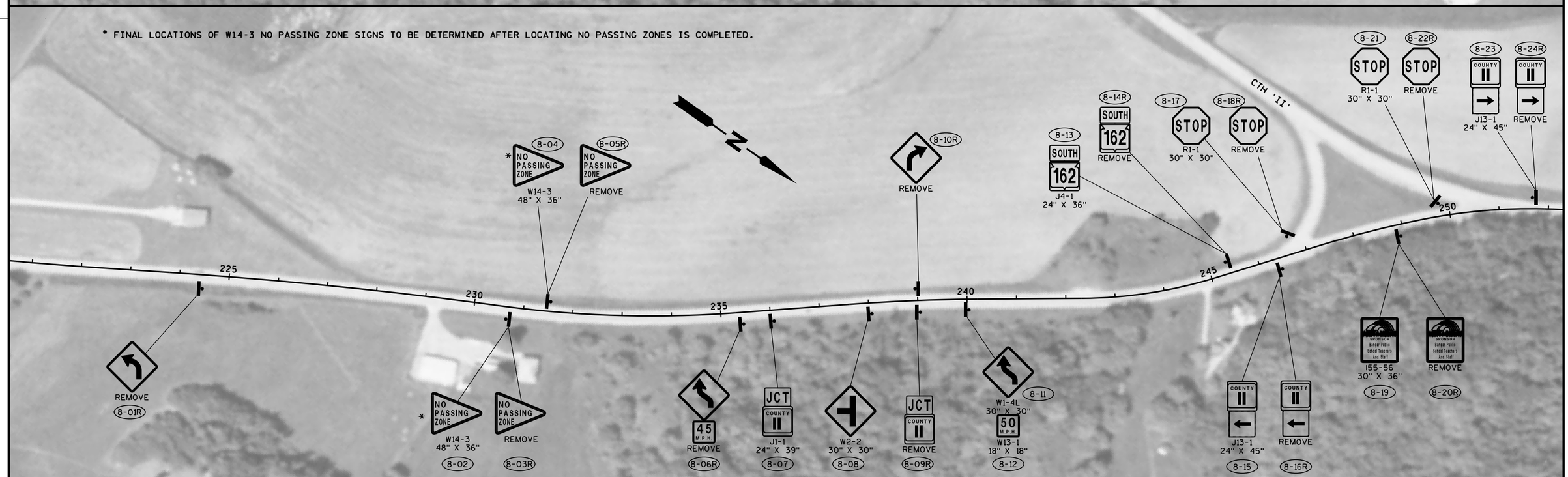

PROJECT NO:5820-01-62	HWY:STH 162	COUNTY:LA CROSSE	PERMANENT SIGNING	SHEET 17	E

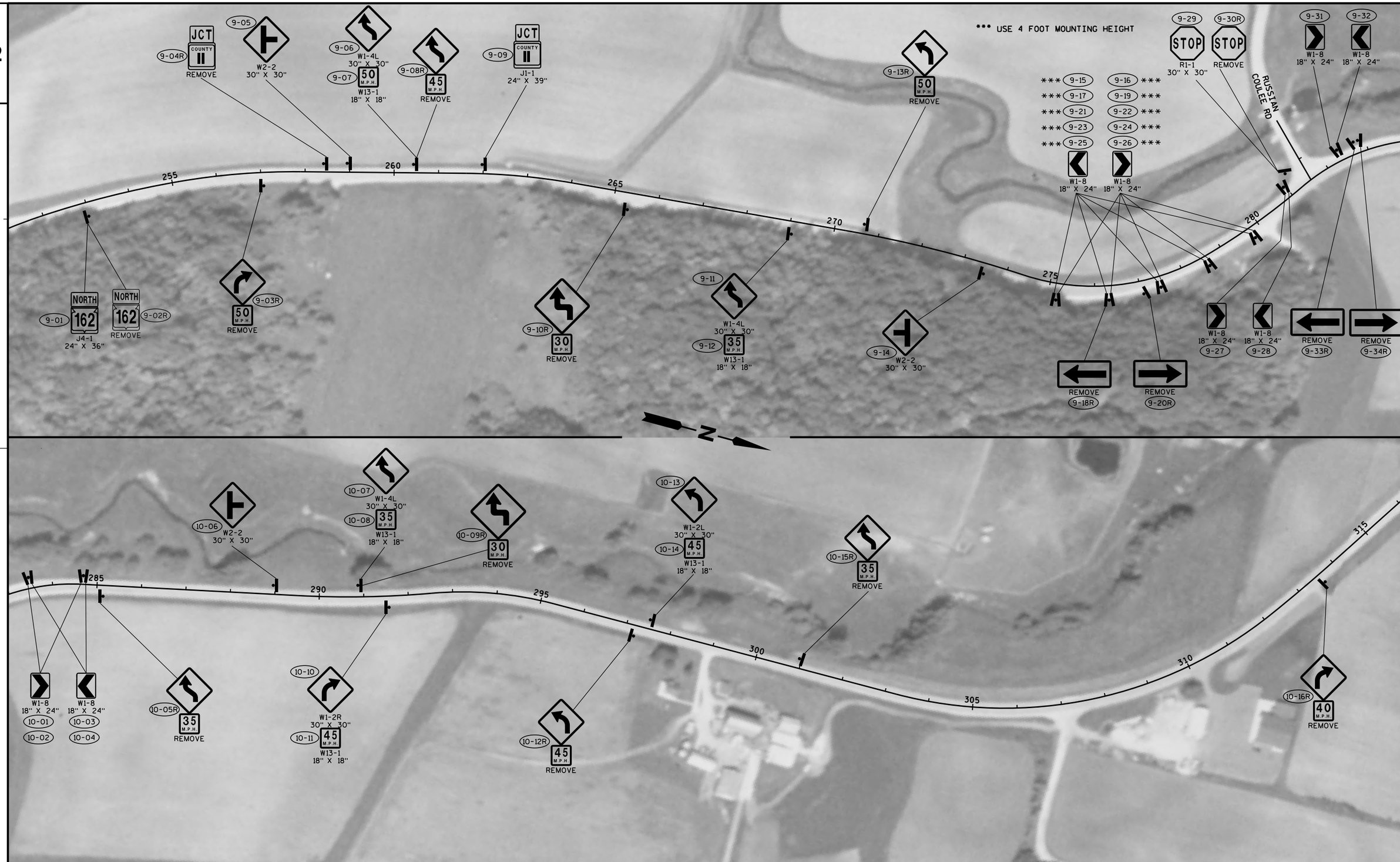

PROJECT NO:5820-01-62	HWY:STH 162	COUNTY:LA CROSSE	PERMANENT SIGNING	SHEET 18	E

FILE NAME : N:\PDS\c3d\58200132\Design\eplans\023209_ps.dgn PLOT DATE : 19-MAR-2015 15:52 PLOT BY : dotwow PLOT NAME : PLOT SCALE : 200:1

PROJECT NO:5820-01-62	HWY:STH 162	COUNTY:LA CROSSE	PERMANENT SIGNING	SHEET 19	E

FILE NAME : N:\PDS\c3d\58200132\Design\eplans\023211_ps.dgn PLOT DATE : 19-MAR-2015 15:52 PLOT BY : dotwow PLOT NAME : PLOT SCALE : 200:1

WISDOT/CADDS SHEET 42

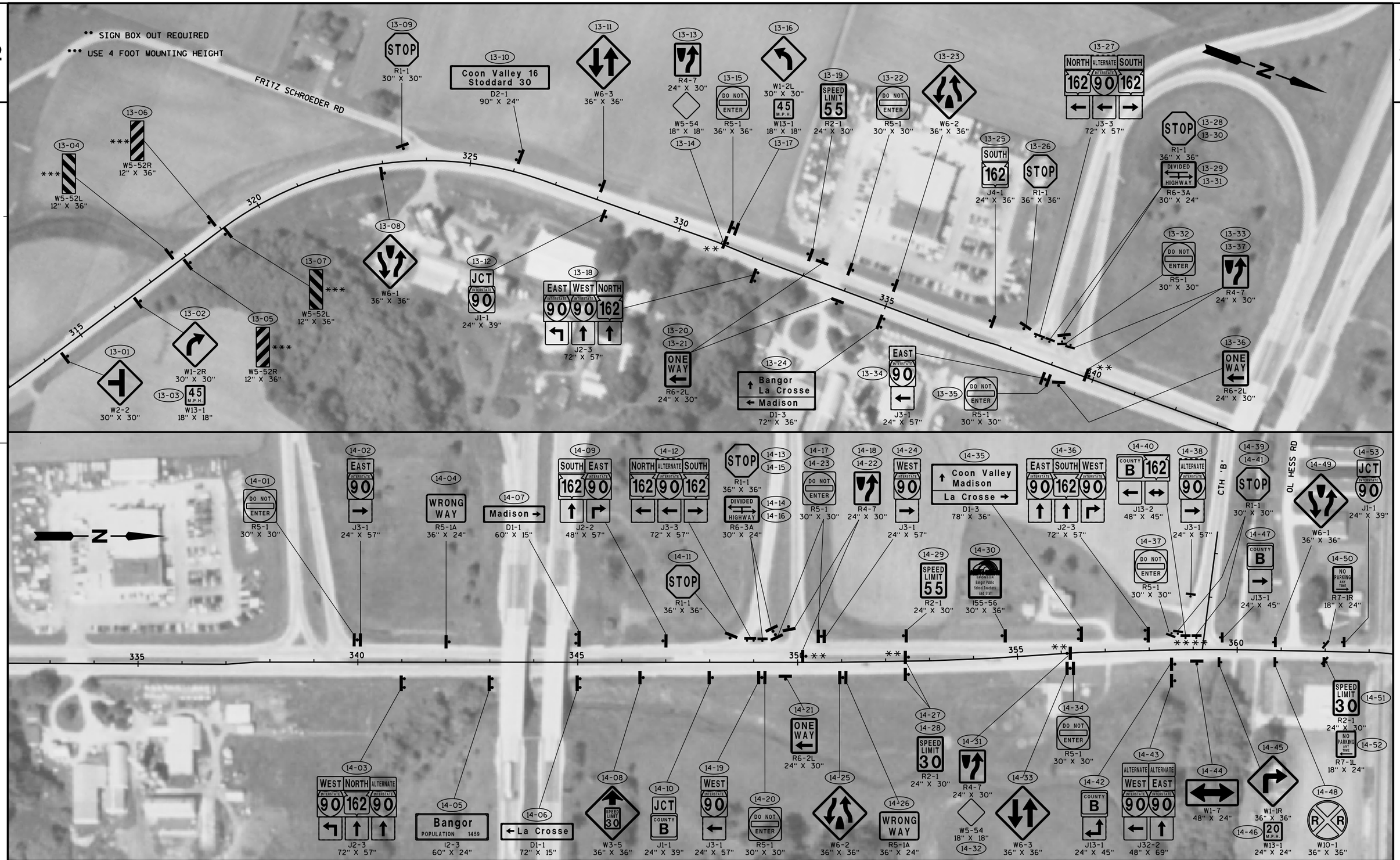

PROJECT NO:5820-01-62	HWY:STH 162	COUNTY:LA CROSSE	PERMANENT SIGNING	SHEET 20	E

FILE NAME : N:\PDS\c3d\58200132\Design\eplans\023212_ps.dgn PLOT DATE : 19-MAR-2015 15:52 PLOT BY : dotwow PLOT NAME : PLOT SCALE : 200:1

WISDOT/CADDS SHEET 42

PROJECT NO:5820-01-62	HWY:STH 162	COUNTY:LA CROSSE	PERMANENT SIGNING	SHEET 21	E

FILE NAME : N:\PDS\c3d\58200132\Design\eplans\023213_ps.dgn PLOT DATE : 19-MAR-2015 15:52 PLOT BY : dotwow PLOT NAME : PLOT SCALE : 200:1

WISDOT/CADDS SHEET 42

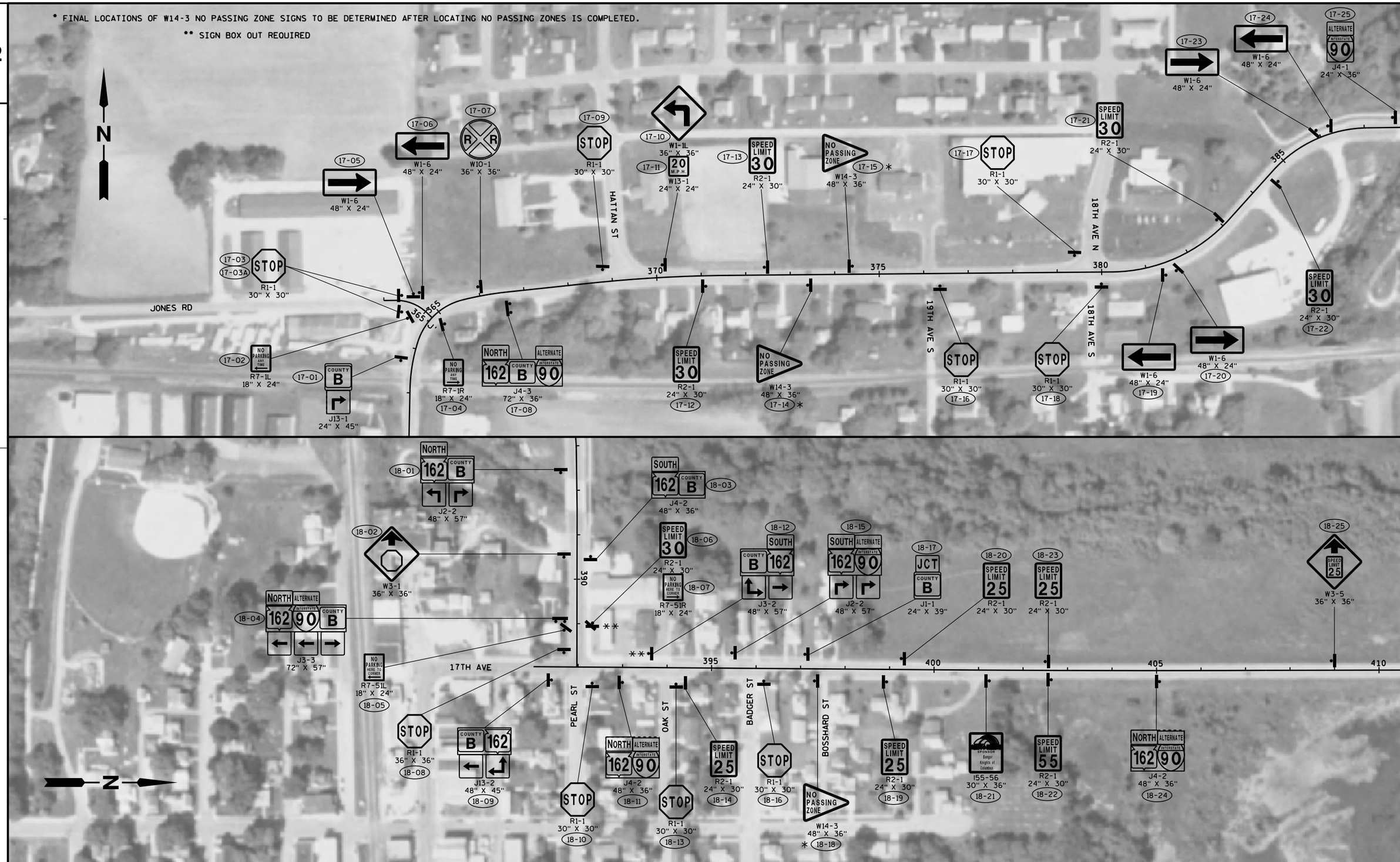
* FINAL LOCATIONS OF W14-3 NO PASSING ZONE SIGNS TO BE DETERMINED AFTER LOCATING NO PASSING ZONES IS COMPLETED.
** SIGN BOX OUT REQUIRED
N
JONES RD
HATTAN ST
18TH AVE N
19TH AVE S
18TH AVE S
17TH AVE
PEARL ST
OAK ST
BADGER ST
BOSSHARD ST
365
370
375
380
385
390
395
400
405
410
17-01 COUNTY B J13-1 24" X 45"
17-02 NO PARKING ANY TIME R7-1L 18" X 24"
17-03 17-03A STOP R1-1 30" X 30"
17-04 NO PARKING ANY TIME R7-1R 18" X 24"
17-05 W1-6 48" X 24"
17-06 W1-6 48" X 24"
17-07 W10-1 36" X 36"
17-08 NORTH 162 COUNTY B ALTERNATE INTERSTATE 90 J4-3 72" X 36"
17-09 STOP R1-1 30" X 30"
17-10 W1-1L 36" X 36"
17-11 20 M.P.H. W13-1 24" X 24"
17-12 SPEED LIMIT 30 R2-1 24" X 30"
17-13 SPEED LIMIT 30 R2-1 24" X 30"
17-14 * NO PASSING ZONE W14-3 48" X 36"
17-15 * NO PASSING ZONE W14-3 48" X 36"
17-16 STOP R1-1 30" X 30"
17-17 STOP R1-1 30" X 30"
17-18 STOP R1-1 30" X 30"
17-19 W1-6 48" X 24"
17-20 W1-6 48" X 24"
17-21 SPEED LIMIT 30 R2-1 24" X 30"
17-22 SPEED LIMIT 30 R2-1 24" X 30"
17-23 W1-6 48" X 24"
17-24 W1-6 48" X 24"
17-25 ALTERNATE INTERSTATE 90 J4-1 24" X 36"
18-01 NORTH 162 COUNTY B J2-2 48" X 57"
18-02 W3-1 36" X 36"
18-03 SOUTH 162 COUNTY B J4-2 48" X 36"
18-04 NORTH ALTERNATE 162 INTERSTATE 90 COUNTY B J3-3 72" X 57"
18-05 NO PARKING HERE TO CORNER R7-51L 18" X 24"
18-06 SPEED LIMIT 30 R2-1 24" X 30"
18-07 NO PARKING HERE TO CORNER R7-51R 18" X 24"
18-08 STOP R1-1 36" X 36"
18-09 COUNTY B 162 J13-2 48" X 45"
18-10 STOP R1-1 30" X 30"
18-11 NORTH ALTERNATE 162 INTERSTATE 90 J4-2 48" X 36"
18-12 COUNTY B SOUTH 162 J3-2 48" X 57"
18-13 STOP R1-1 30" X 30"
18-14 SPEED LIMIT 25 R2-1 24" X 30"
18-15 SOUTH ALTERNATE 162 INTERSTATE 90 J2-2 48" X 57"
18-16 STOP R1-1 30" X 30"
18-17 JCT COUNTY B J1-1 24" X 39"
18-18 * NO PASSING ZONE W14-3 48" X 36"
18-19 SPEED LIMIT 25 R2-1 24" X 30"
18-20 SPEED LIMIT 25 R2-1 24" X 30"
18-21 SPONSOR Bangor Knights of Columbus I55-56 30" X 36"
18-22 SPEED LIMIT 55 R2-1 24" X 30"
18-23 SPEED LIMIT 25 R2-1 24" X 30"
18-24 NORTH ALTERNATE 162 INTERSTATE 90 J4-2 48" X 36"
18-25 SPEED LIMIT 25 W3-5 36" X 36"
Z

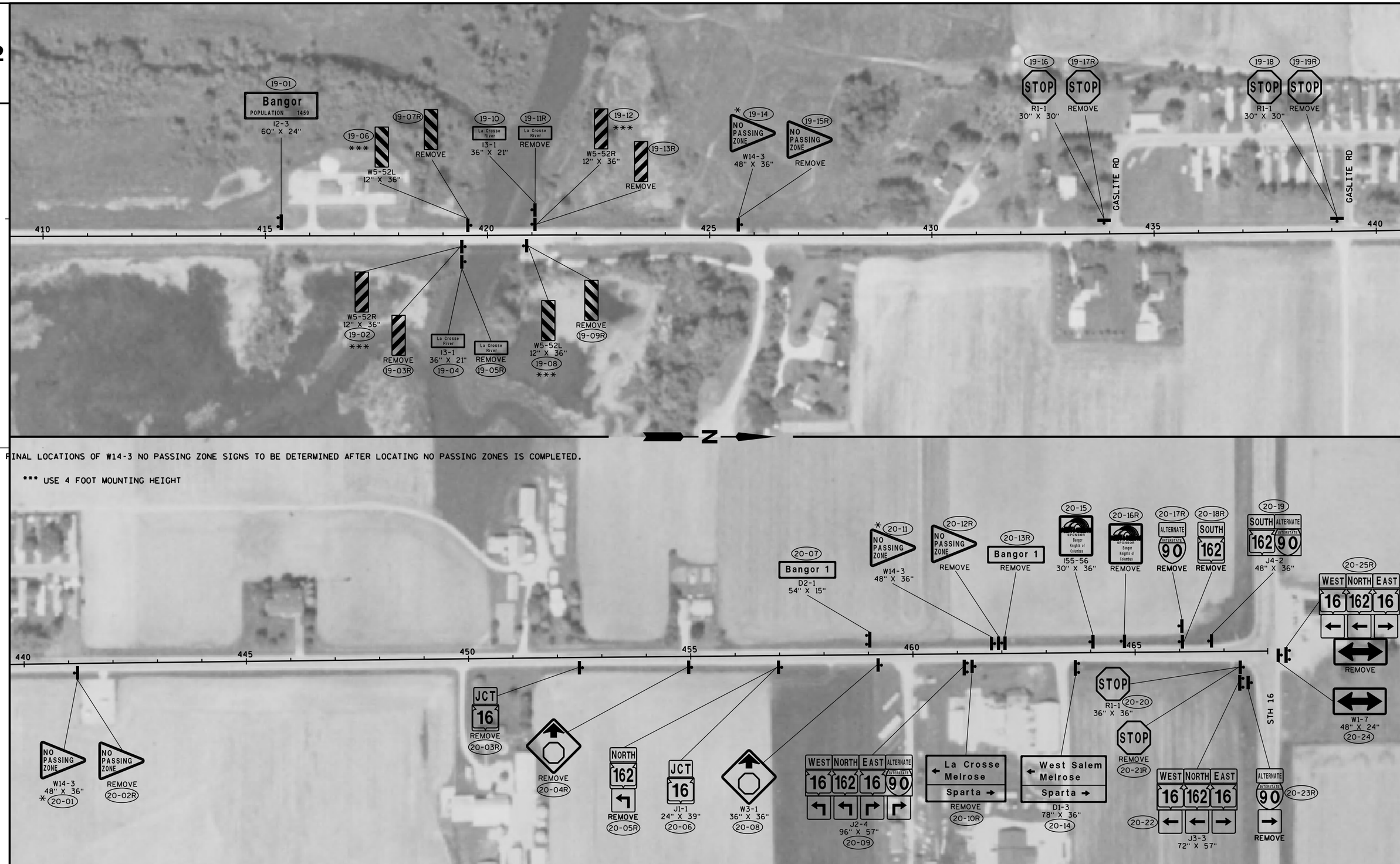

PROJECT NO:5820-01-62	HWY:STH 162	COUNTY:LA CROSSE	PERMANENT SIGNING	SHEET 23	E

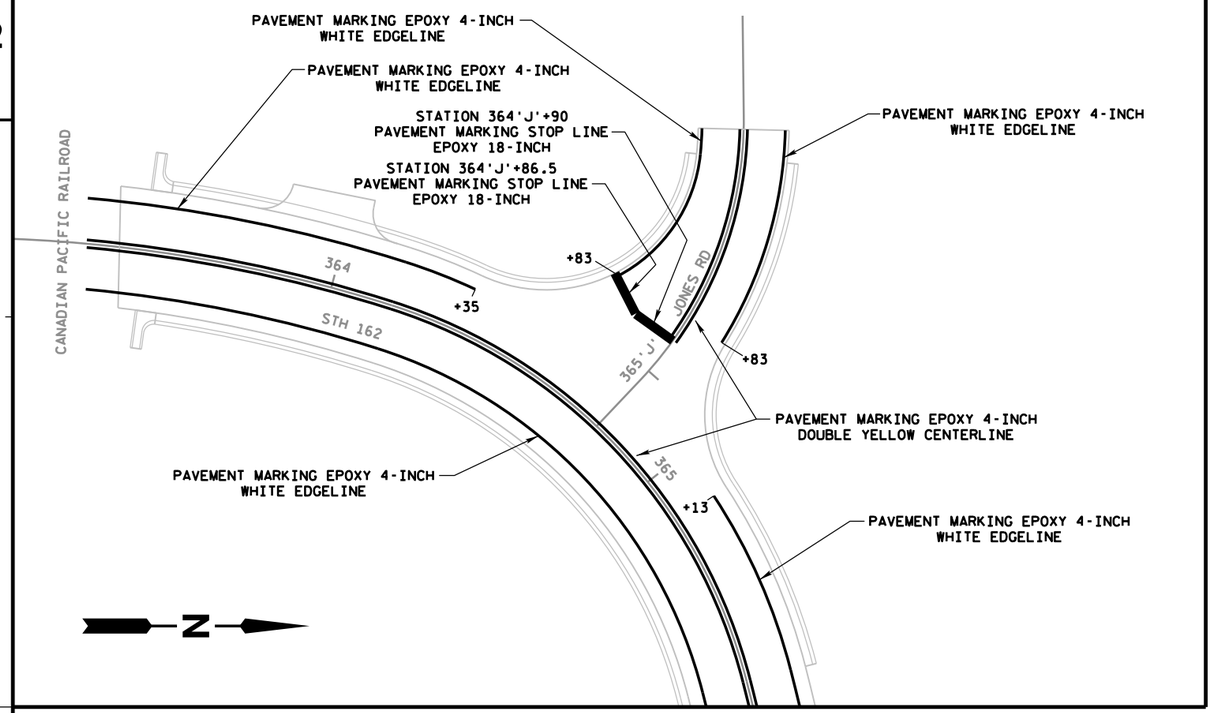

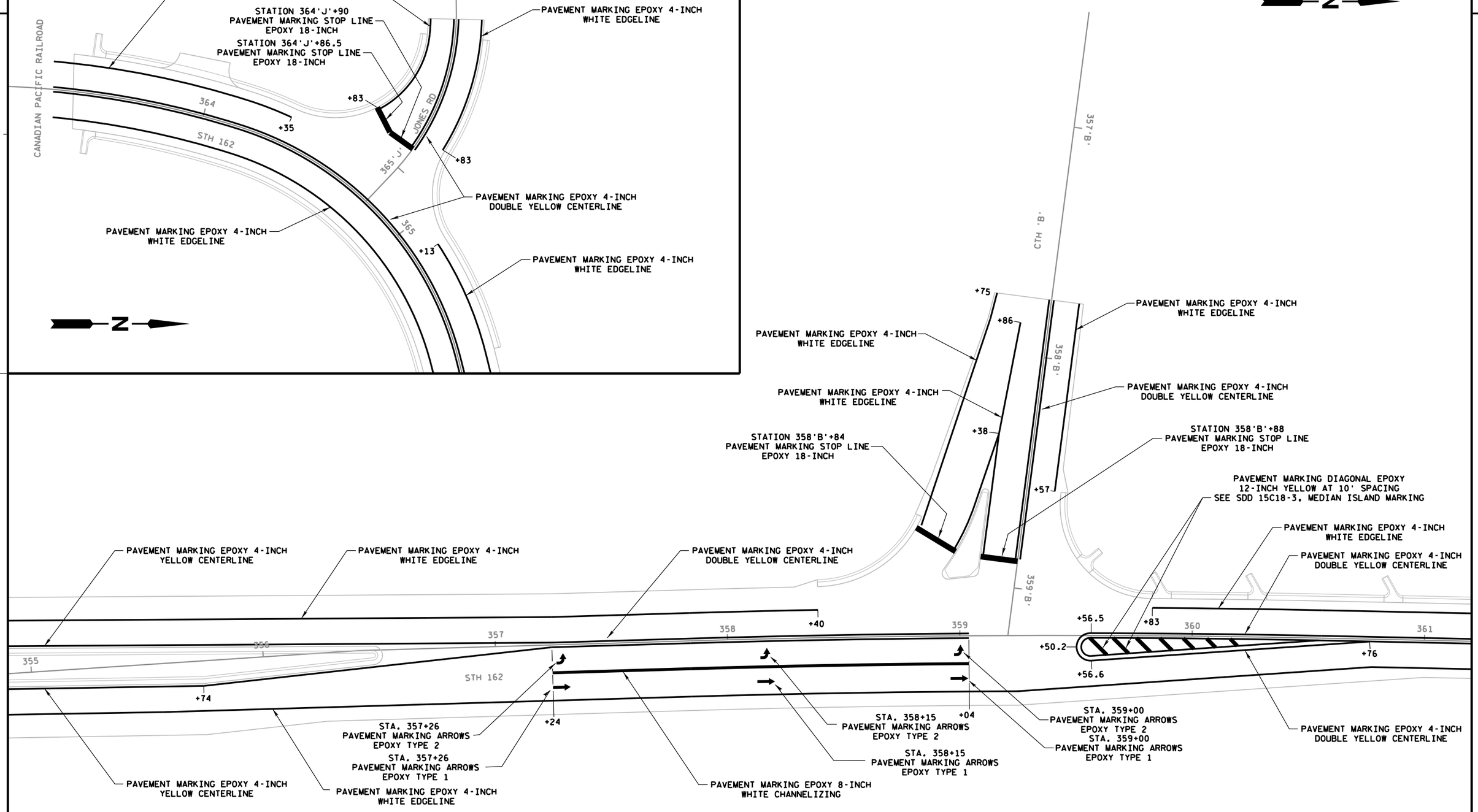

PROJECT NO: 5820-01-62	HWY: STH 162	COUNTY: LA CROSSE	PAVEMENT MARKING - STH 162 & CTH 'B', STH 162 & JONES RD	SHEET 24	E

2

NOTES:
1. BACKGROUND INDICATES APPROXIMATE LOCATION OF EXISTING FEATURES.
2. ALL TRAFFIC CONTROL DEVICE LOCATIONS ARE APPROXIMATE AND SHALL BE ADJUSTED TO FIT FIELD CONDITIONS AS APPROVED BY THE ENGINEER.
3. PEDESTRIAN SAFETY BARRIER CAN BE PLASTIC SAFETY FENCE WITH WOODEN FRAME PERIMETER OR OTHER BARRIER SYSTEM APPROVED BY THE ENGINEER.
4. REFLECTIVE DRUMS LOCATED IN LANE TAPER SHALL BE EQUIPPED WITH 1 TYPE "C" STEADY BURN WARNING LIGHT.
5. ALL PEDESTRIAN ACCOMMODATION BARRICADES SHALL BE EQUIPPED WITH 1 TYPE "A" LOW INTENSITY FLASHING WARNING LIGHT
6. TRAFFIC CONTROL, TEMPORARY CURB RAMPS, AND PEDESTRIAN SAFETY BARRIER MUST BE IN PLACE BEFORE WORK ON CURB RAMP AND SIDEWALK BEGINS.
7. TRAFFIC CONTROL, TEMPORARY CURB RAMPS, AND PEDESTRIAN SAFETY BARRIER MUST BE MAINTAINED UNTIL THEY ARE REMOVED.
8. MAINTAIN ACCESSIBLE HARD SURFACE CROSSWALKS PAST THE WORK ZONE DURING CONSTRUCTION OF THE CURB RAMPS.
9. STAGE THE CONSTRUCTION OF THE NEW CURB RAMPS AND SIDEWALK TO PROVIDE CONTINUOUS PEDESTRIAN ACCESS USING TEMPORARY PEDESTRIAN ACCESS ROUTES TO THE SIDEWALK ON OPPOSITE SIDES OF THE ROADWAY.
10. ALL TRAFFIC CONTROL FOR PEDESTRIAN ACCOMMODATION, TEMPORARY CURB RAMPS, AND PEDESTRIAN SAFETY BARRIER MUST REMAIN IN PLACE UNTIL NEW CURB RAMP AND SIDEWALK IS OPEN TO PEDESTRIAN TRAFFIC.
11. ALL WORK FROM REMOVAL TO INSTALLATION OF CURB RAMP AND SIDEWALK MUST BE COMPLETED WITHIN 5 DAYS.
12. FOR FURTHER GUIDANCE SEE SDD 15D30-2A, 15D30-2B, & 15D30-2C.

LEGEND

- WORK ZONE
- UNDER PEDESTRIAN TRAFFIC
- TRAFFIC CONTROL DRUM / WITH LIGHT
- TYPE II BARRICADE / WITH SIGN
- TYPE III BARRICADE / WITH SIGN

CURB RAMP 1 CANNOT BE WORKED ON AT THE SAME TIME AS CURB RAMPS 2, 3, OR 4.

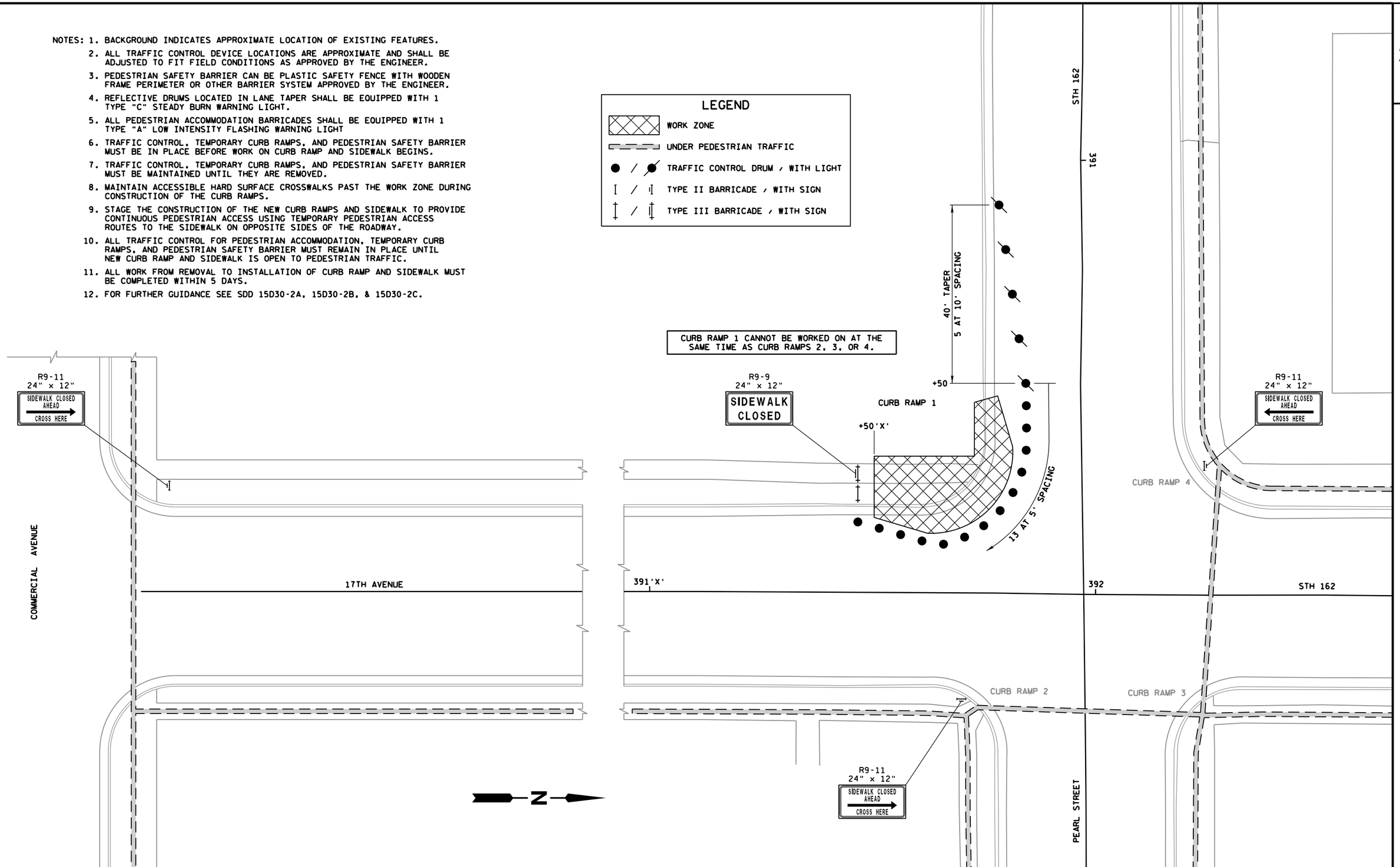

PROJECT NO:5820-01-62	HWY:STH 162	COUNTY:LA CROSSE	TRAFFIC CONTROL, PEDESTRIAN ACCOMMODATION 1	SHEET 25	E

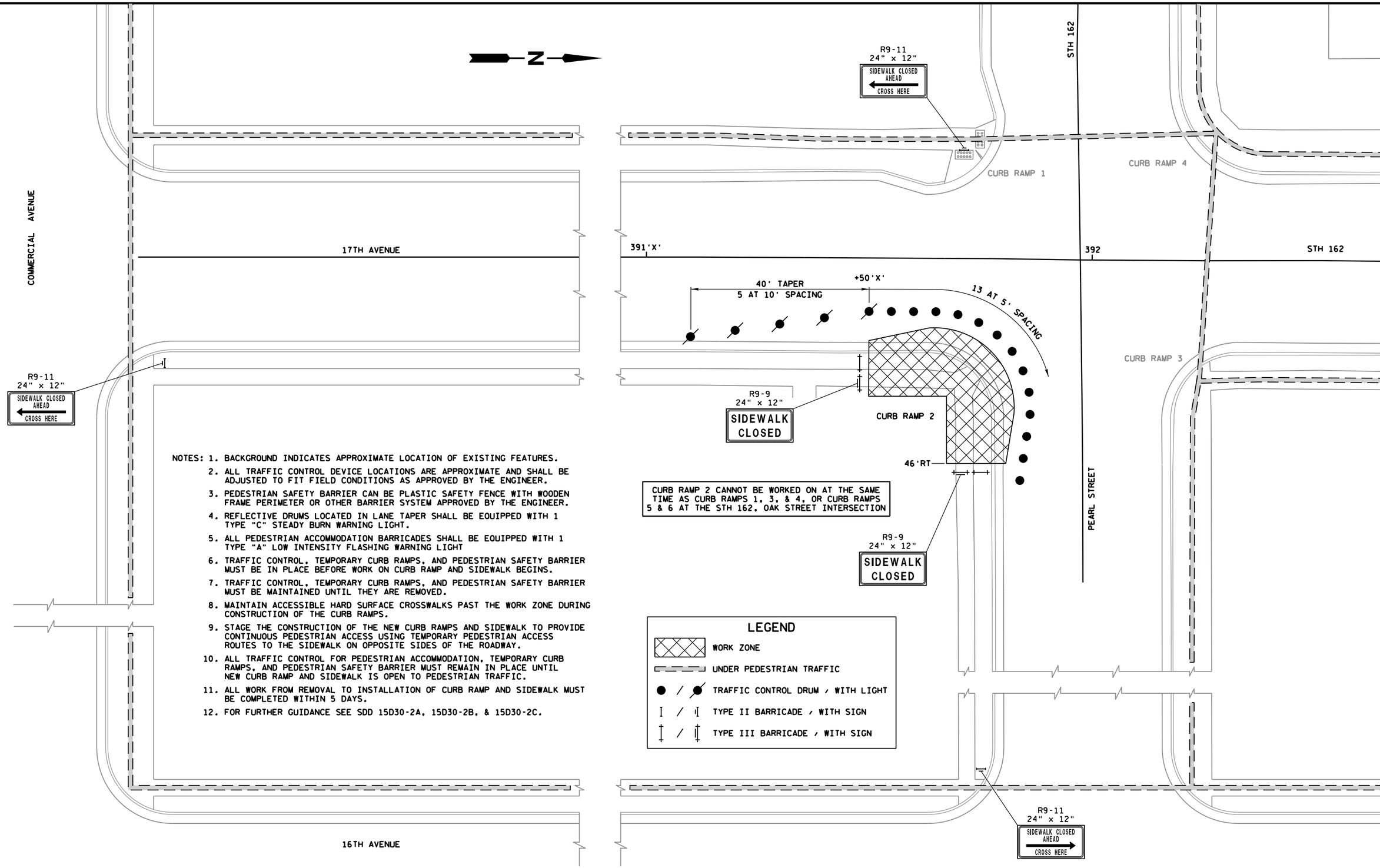

NOTES:

1. BACKGROUND INDICATES APPROXIMATE LOCATION OF EXISTING FEATURES.
2. ALL TRAFFIC CONTROL DEVICE LOCATIONS ARE APPROXIMATE AND SHALL BE ADJUSTED TO FIT FIELD CONDITIONS AS APPROVED BY THE ENGINEER.
3. PEDESTRIAN SAFETY BARRIER CAN BE PLASTIC SAFETY FENCE WITH WOODEN FRAME PERIMETER OR OTHER BARRIER SYSTEM APPROVED BY THE ENGINEER.
4. REFLECTIVE DRUMS LOCATED IN LANE TAPER SHALL BE EQUIPPED WITH 1 TYPE "C" STEADY BURN WARNING LIGHT.
5. ALL PEDESTRIAN ACCOMMODATION BARRICADES SHALL BE EQUIPPED WITH 1 TYPE "A" LOW INTENSITY FLASHING WARNING LIGHT
6. TRAFFIC CONTROL, TEMPORARY CURB RAMPS, AND PEDESTRIAN SAFETY BARRIER MUST BE IN PLACE BEFORE WORK ON CURB RAMP AND SIDEWALK BEGINS.
7. TRAFFIC CONTROL, TEMPORARY CURB RAMPS, AND PEDESTRIAN SAFETY BARRIER MUST BE MAINTAINED UNTIL THEY ARE REMOVED.
8. MAINTAIN ACCESSIBLE HARD SURFACE CROSSWALKS PAST THE WORK ZONE DURING CONSTRUCTION OF THE CURB RAMPS.
9. STAGE THE CONSTRUCTION OF THE NEW CURB RAMPS AND SIDEWALK TO PROVIDE CONTINUOUS PEDESTRIAN ACCESS USING TEMPORARY PEDESTRIAN ACCESS ROUTES TO THE SIDEWALK ON OPPOSITE SIDES OF THE ROADWAY.
10. ALL TRAFFIC CONTROL FOR PEDESTRIAN ACCOMMODATION, TEMPORARY CURB RAMPS, AND PEDESTRIAN SAFETY BARRIER MUST REMAIN IN PLACE UNTIL NEW CURB RAMP AND SIDEWALK IS OPEN TO PEDESTRIAN TRAFFIC.
11. ALL WORK FROM REMOVAL TO INSTALLATION OF CURB RAMP AND SIDEWALK MUST BE COMPLETED WITHIN 5 DAYS.
12. FOR FURTHER GUIDANCE SEE SDD 15D30-2A, 15D30-2B, & 15D30-2C.

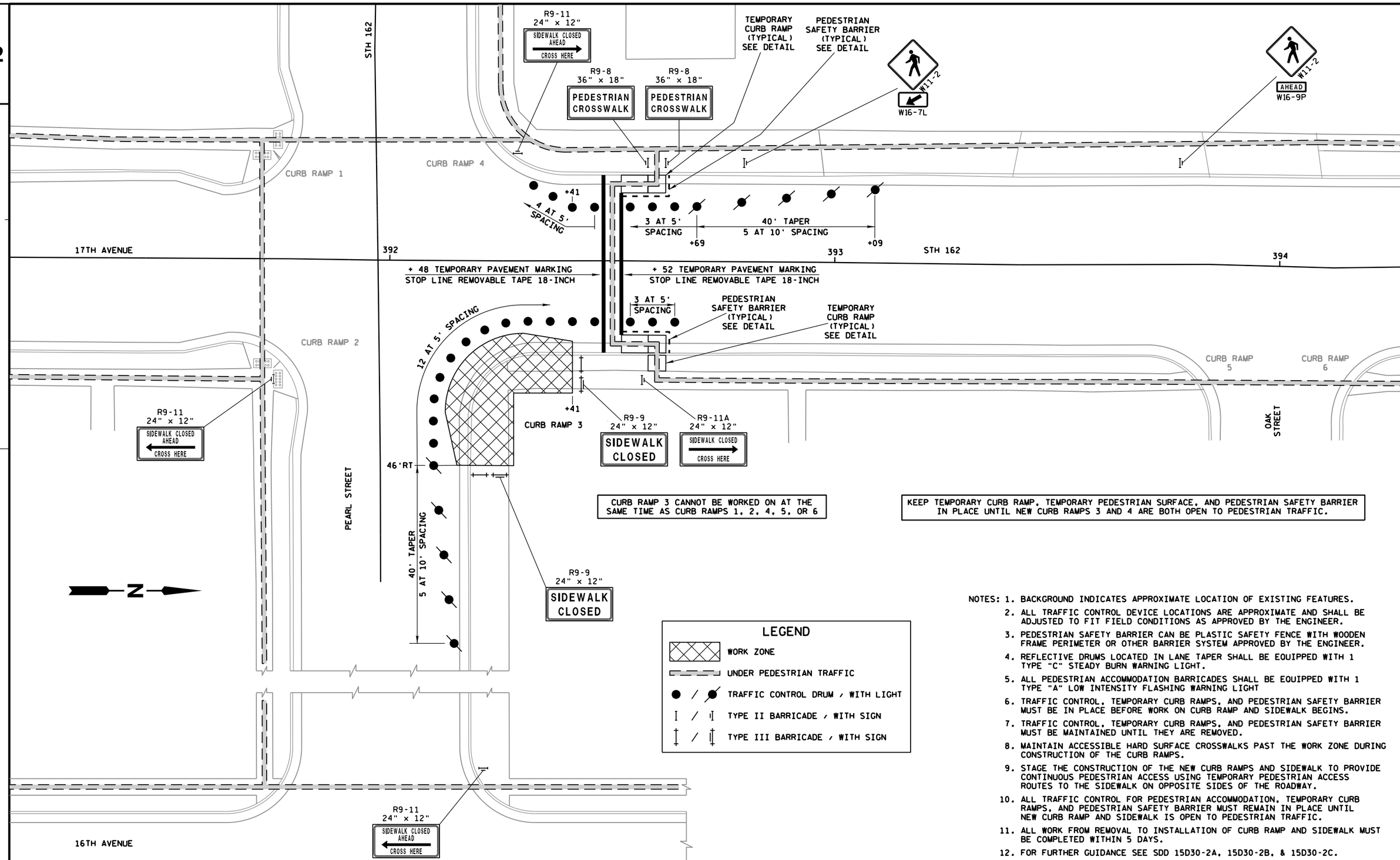

CURB RAMP 3 CANNOT BE WORKED ON AT THE SAME TIME AS CURB RAMPS 1, 2, 4, 5, OR 6

KEEP TEMPORARY CURB RAMP, TEMPORARY PEDESTRIAN SURFACE, AND PEDESTRIAN SAFETY BARRIER IN PLACE UNTIL NEW CURB RAMPS 3 AND 4 ARE BOTH OPEN TO PEDESTRIAN TRAFFIC.

NOTES:
1. BACKGROUND INDICATES APPROXIMATE LOCATION OF EXISTING FEATURES.
2. ALL TRAFFIC CONTROL DEVICE LOCATIONS ARE APPROXIMATE AND SHALL BE ADJUSTED TO FIT FIELD CONDITIONS AS APPROVED BY THE ENGINEER.
3. PEDESTRIAN SAFETY BARRIER CAN BE PLASTIC SAFETY FENCE WITH WOODEN FRAME PERIMETER OR OTHER BARRIER SYSTEM APPROVED BY THE ENGINEER.
4. REFLECTIVE DRUMS LOCATED IN LANE TAPER SHALL BE EQUIPPED WITH 1 TYPE "C" STEADY BURN WARNING LIGHT.
5. ALL PEDESTRIAN ACCOMMODATION BARRICADES SHALL BE EQUIPPED WITH 1 TYPE "A" LOW INTENSITY FLASHING WARNING LIGHT
6. TRAFFIC CONTROL, TEMPORARY CURB RAMPS, AND PEDESTRIAN SAFETY BARRIER MUST BE IN PLACE BEFORE WORK ON CURB RAMP AND SIDEWALK BEGINS.
7. TRAFFIC CONTROL, TEMPORARY CURB RAMPS, AND PEDESTRIAN SAFETY BARRIER MUST BE MAINTAINED UNTIL THEY ARE REMOVED.
8. MAINTAIN ACCESSIBLE HARD SURFACE CROSSWALKS PAST THE WORK ZONE DURING CONSTRUCTION OF THE CURB RAMPS.
9. STAGE THE CONSTRUCTION OF THE NEW CURB RAMPS AND SIDEWALK TO PROVIDE CONTINUOUS PEDESTRIAN ACCESS USING TEMPORARY PEDESTRIAN ACCESS ROUTES TO THE SIDEWALK ON OPPOSITE SIDES OF THE ROADWAY.
10. ALL TRAFFIC CONTROL FOR PEDESTRIAN ACCOMMODATION, TEMPORARY CURB RAMPS, AND PEDESTRIAN SAFETY BARRIER MUST REMAIN IN PLACE UNTIL NEW CURB RAMP AND SIDEWALK IS OPEN TO PEDESTRIAN TRAFFIC.
11. ALL WORK FROM REMOVAL TO INSTALLATION OF CURB RAMP AND SIDEWALK MUST BE COMPLETED WITHIN 5 DAYS.
12. FOR FURTHER GUIDANCE SEE SDD 15D30-2A, 15D30-2B, & 15D30-2C.

PROJECT NO:5820-01-62	HWY:STH 162	COUNTY:LA CROSSE	TRAFFIC CONTROL, PEDESTRIAN ACCOMMODATION 3	SHEET 27	E

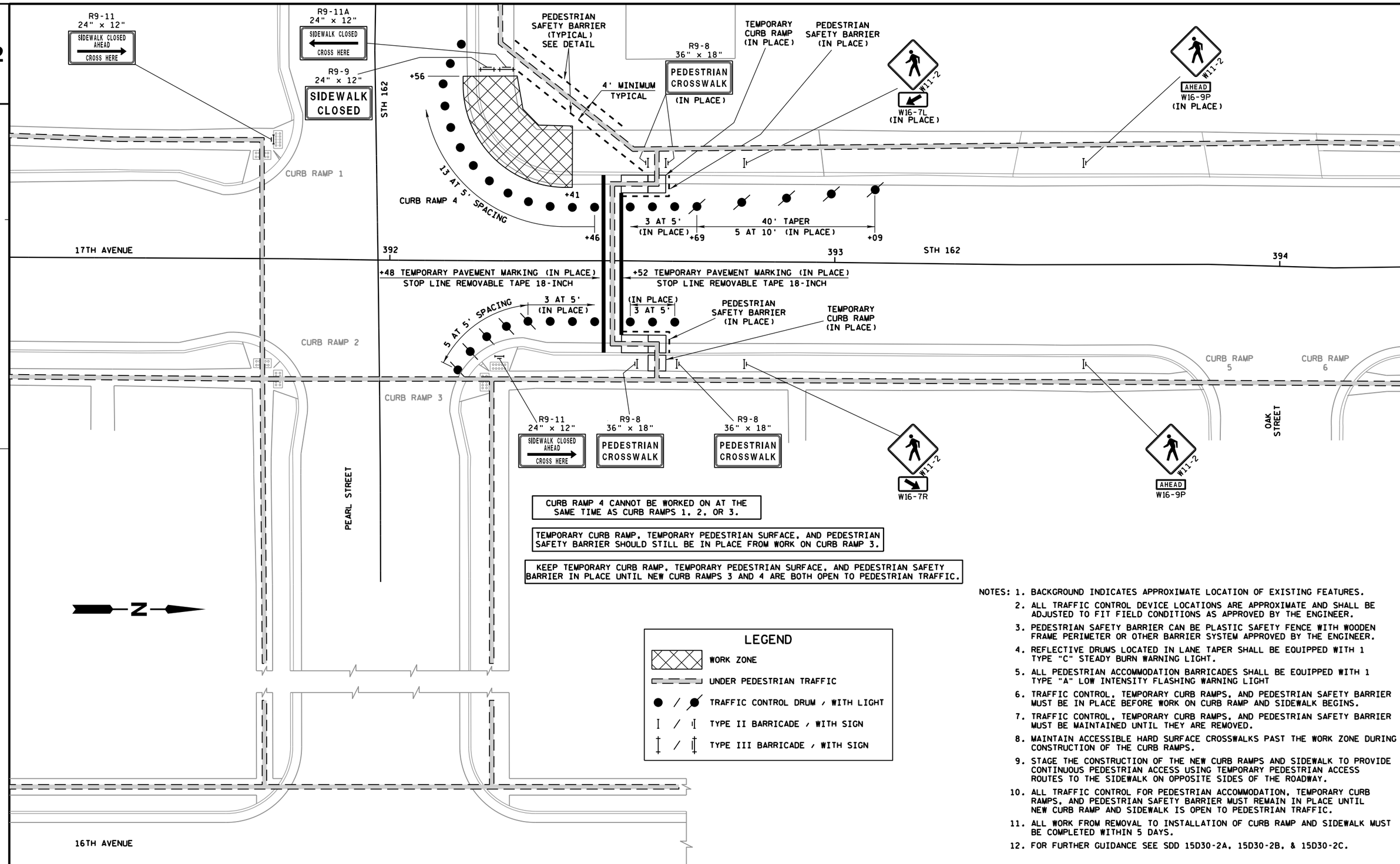

NOTES:
1. BACKGROUND INDICATES APPROXIMATE LOCATION OF EXISTING FEATURES.
2. ALL TRAFFIC CONTROL DEVICE LOCATIONS ARE APPROXIMATE AND SHALL BE ADJUSTED TO FIT FIELD CONDITIONS AS APPROVED BY THE ENGINEER.
3. PEDESTRIAN SAFETY BARRIER CAN BE PLASTIC SAFETY FENCE WITH WOODEN FRAME PERIMETER OR OTHER BARRIER SYSTEM APPROVED BY THE ENGINEER.
4. REFLECTIVE DRUMS LOCATED IN LANE TAPER SHALL BE EQUIPPED WITH 1 TYPE "C" STEADY BURN WARNING LIGHT.
5. ALL PEDESTRIAN ACCOMMODATION BARRICADES SHALL BE EQUIPPED WITH 1 TYPE "A" LOW INTENSITY FLASHING WARNING LIGHT
6. TRAFFIC CONTROL, TEMPORARY CURB RAMPS, AND PEDESTRIAN SAFETY BARRIER MUST BE IN PLACE BEFORE WORK ON CURB RAMP AND SIDEWALK BEGINS.
7. TRAFFIC CONTROL, TEMPORARY CURB RAMPS, AND PEDESTRIAN SAFETY BARRIER MUST BE MAINTAINED UNTIL THEY ARE REMOVED.
8. MAINTAIN ACCESSIBLE HARD SURFACE CROSSWALKS PAST THE WORK ZONE DURING CONSTRUCTION OF THE CURB RAMPS.
9. STAGE THE CONSTRUCTION OF THE NEW CURB RAMPS AND SIDEWALK TO PROVIDE CONTINUOUS PEDESTRIAN ACCESS USING TEMPORARY PEDESTRIAN ACCESS ROUTES TO THE SIDEWALK ON OPPOSITE SIDES OF THE ROADWAY.
10. ALL TRAFFIC CONTROL FOR PEDESTRIAN ACCOMMODATION, TEMPORARY CURB RAMPS, AND PEDESTRIAN SAFETY BARRIER MUST REMAIN IN PLACE UNTIL NEW CURB RAMP AND SIDEWALK IS OPEN TO PEDESTRIAN TRAFFIC.
11. ALL WORK FROM REMOVAL TO INSTALLATION OF CURB RAMP AND SIDEWALK MUST BE COMPLETED WITHIN 5 DAYS.
12. FOR FURTHER GUIDANCE SEE SDD 15D30-2A, 15D30-2B, & 15D30-2C.

PROJECT NO:5820-01-62	HWY:STH 162	COUNTY:LA CROSSE	TRAFFIC CONTROL, PEDESTRIAN ACCOMMODATION 4	SHEET 28	E

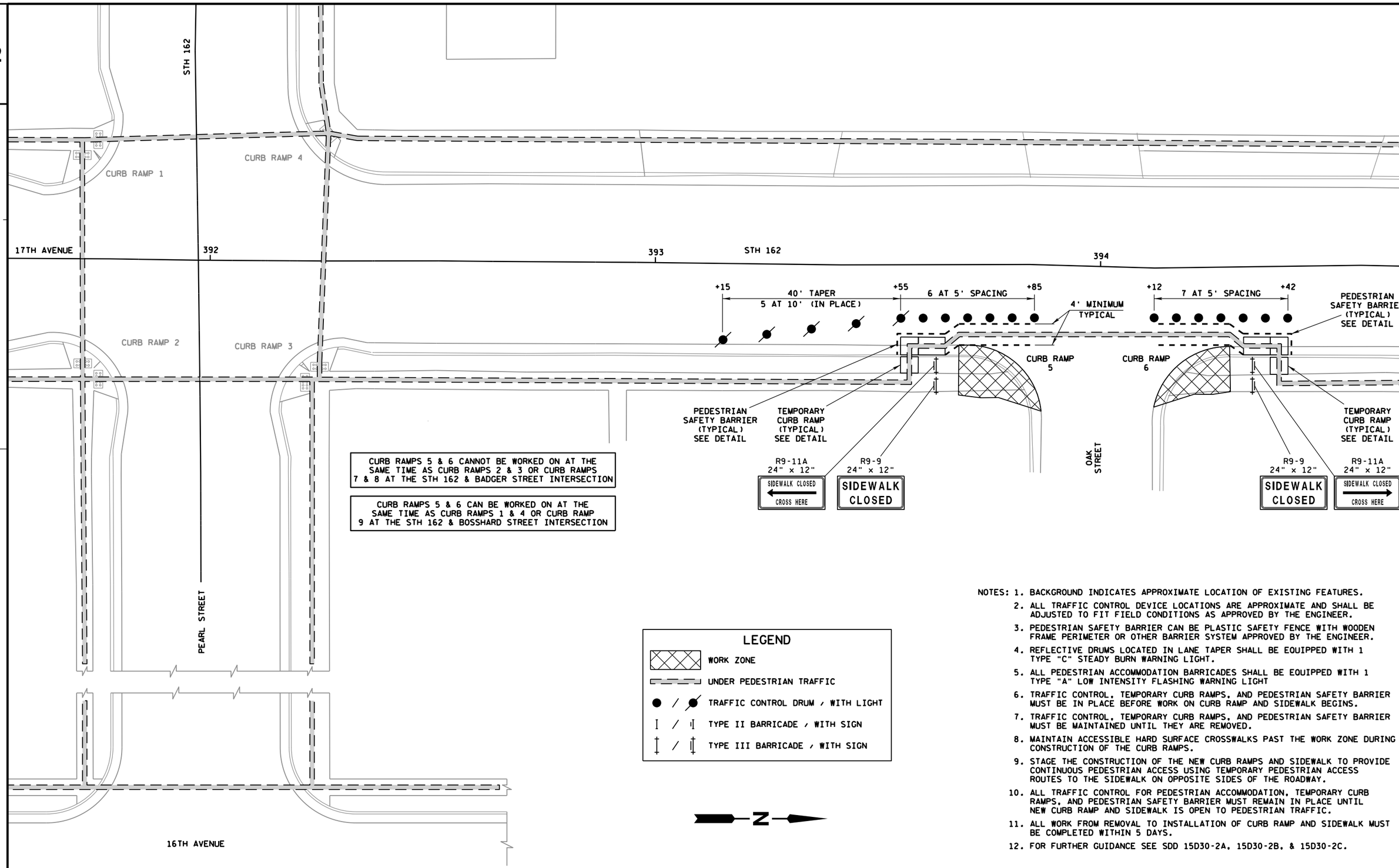

LEGEND

- WORK ZONE
- UNDER PEDESTRIAN TRAFFIC
- TRAFFIC CONTROL DRUM / WITH LIGHT
- TYPE II BARRICADE / WITH SIGN
- TYPE III BARRICADE / WITH SIGN

N

NOTES:

1. BACKGROUND INDICATES APPROXIMATE LOCATION OF EXISTING FEATURES.
2. ALL TRAFFIC CONTROL DEVICE LOCATIONS ARE APPROXIMATE AND SHALL BE ADJUSTED TO FIT FIELD CONDITIONS AS APPROVED BY THE ENGINEER.
3. PEDESTRIAN SAFETY BARRIER CAN BE PLASTIC SAFETY FENCE WITH WOODEN FRAME PERIMETER OR OTHER BARRIER SYSTEM APPROVED BY THE ENGINEER.
4. REFLECTIVE DRUMS LOCATED IN LANE TAPER SHALL BE EQUIPPED WITH 1 TYPE "C" STEADY BURN WARNING LIGHT.
5. ALL PEDESTRIAN ACCOMMODATION BARRICADES SHALL BE EQUIPPED WITH 1 TYPE "A" LOW INTENSITY FLASHING WARNING LIGHT
6. TRAFFIC CONTROL, TEMPORARY CURB RAMPS, AND PEDESTRIAN SAFETY BARRIER MUST BE IN PLACE BEFORE WORK ON CURB RAMP AND SIDEWALK BEGINS.
7. TRAFFIC CONTROL, TEMPORARY CURB RAMPS, AND PEDESTRIAN SAFETY BARRIER MUST BE MAINTAINED UNTIL THEY ARE REMOVED.
8. MAINTAIN ACCESSIBLE HARD SURFACE CROSSWALKS PAST THE WORK ZONE DURING CONSTRUCTION OF THE CURB RAMPS.
9. STAGE THE CONSTRUCTION OF THE NEW CURB RAMPS AND SIDEWALK TO PROVIDE CONTINUOUS PEDESTRIAN ACCESS USING TEMPORARY PEDESTRIAN ACCESS ROUTES TO THE SIDEWALK ON OPPOSITE SIDES OF THE ROADWAY.
10. ALL TRAFFIC CONTROL FOR PEDESTRIAN ACCOMMODATION, TEMPORARY CURB RAMPS, AND PEDESTRIAN SAFETY BARRIER MUST REMAIN IN PLACE UNTIL NEW CURB RAMP AND SIDEWALK IS OPEN TO PEDESTRIAN TRAFFIC.
11. ALL WORK FROM REMOVAL TO INSTALLATION OF CURB RAMP AND SIDEWALK MUST BE COMPLETED WITHIN 5 DAYS.
12. FOR FURTHER GUIDANCE SEE SDD 15D30-2A, 15D30-2B, & 15D30-2C.

PROJECT NO:5820-01-62	HWY:STH 162	COUNTY:LA CROSSE	TRAFFIC CONTROL, PEDESTRIAN ACCOMMODATION 5 & 6	SHEET 29	E

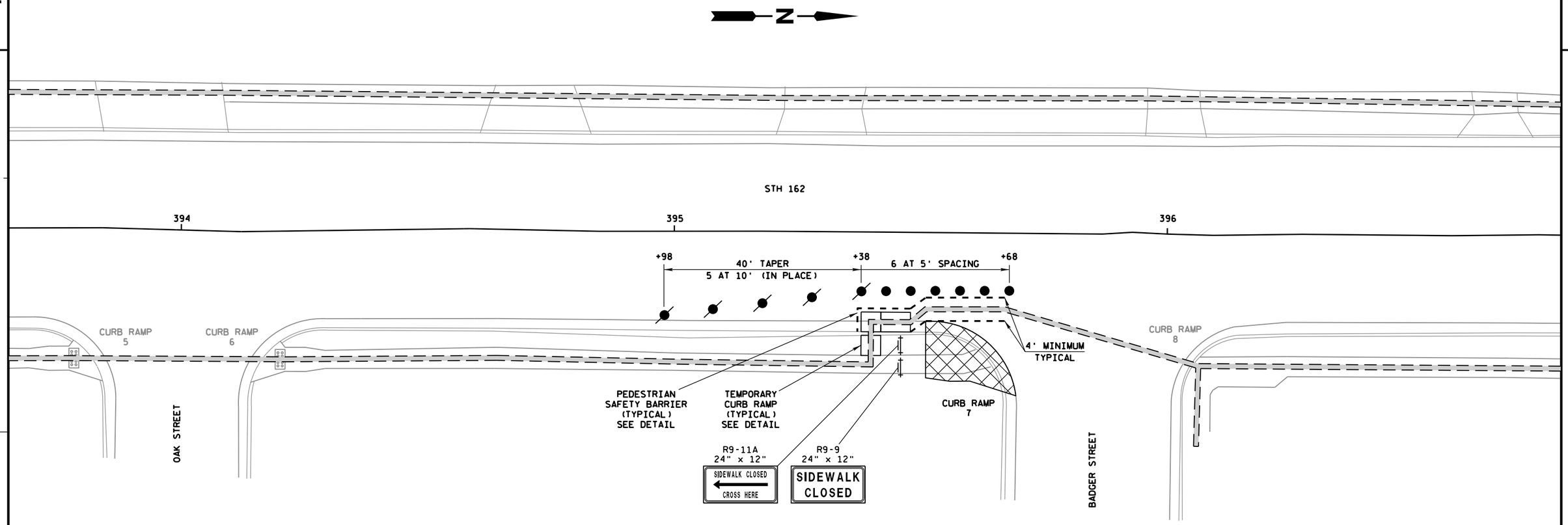

NOTES:
1. BACKGROUND INDICATES APPROXIMATE LOCATION OF EXISTING FEATURES.
2. ALL TRAFFIC CONTROL DEVICE LOCATIONS ARE APPROXIMATE AND SHALL BE ADJUSTED TO FIT FIELD CONDITIONS AS APPROVED BY THE ENGINEER.
3. PEDESTRIAN SAFETY BARRIER CAN BE PLASTIC SAFETY FENCE WITH WOODEN FRAME PERIMETER OR OTHER BARRIER SYSTEM APPROVED BY THE ENGINEER.
4. REFLECTIVE DRUMS LOCATED IN LANE TAPER SHALL BE EQUIPPED WITH 1 TYPE "C" STEADY BURN WARNING LIGHT.
5. ALL PEDESTRIAN ACCOMMODATION BARRICADES SHALL BE EQUIPPED WITH 1 TYPE "A" LOW INTENSITY FLASHING WARNING LIGHT
6. TRAFFIC CONTROL, TEMPORARY CURB RAMPS, AND PEDESTRIAN SAFETY BARRIER MUST BE IN PLACE BEFORE WORK ON CURB RAMP AND SIDEWALK BEGINS.
7. TRAFFIC CONTROL, TEMPORARY CURB RAMPS, AND PEDESTRIAN SAFETY BARRIER MUST BE MAINTAINED UNTIL THEY ARE REMOVED.
8. MAINTAIN ACCESSIBLE HARD SURFACE CROSSWALKS PAST THE WORK ZONE DURING CONSTRUCTION OF THE CURB RAMPS.
9. STAGE THE CONSTRUCTION OF THE NEW CURB RAMPS AND SIDEWALK TO PROVIDE CONTINUOUS PEDESTRIAN ACCESS USING TEMPORARY PEDESTRIAN ACCESS ROUTES TO THE SIDEWALK ON OPPOSITE SIDES OF THE ROADWAY.
10. ALL TRAFFIC CONTROL FOR PEDESTRIAN ACCOMMODATION, TEMPORARY CURB RAMPS, AND PEDESTRIAN SAFETY BARRIER MUST REMAIN IN PLACE UNTIL NEW CURB RAMP AND SIDEWALK IS OPEN TO PEDESTRIAN TRAFFIC.
11. ALL WORK FROM REMOVAL TO INSTALLATION OF CURB RAMP AND SIDEWALK MUST BE COMPLETED WITHIN 5 DAYS.
12. FOR FURTHER GUIDANCE SEE SDD 15D30-2A, 15D30-2B, & 15D30-2C.

CURB RAMP 7 CANNOT BE WORKED ON AT THE SAME TIME AS CURB RAMPS 5, 6, & 8.

LEGEND

- WORK ZONE
- UNDER PEDESTRIAN TRAFFIC
- TRAFFIC CONTROL DRUM / WITH LIGHT
- TYPE II BARRICADE / WITH SIGN
- TYPE III BARRICADE / WITH SIGN

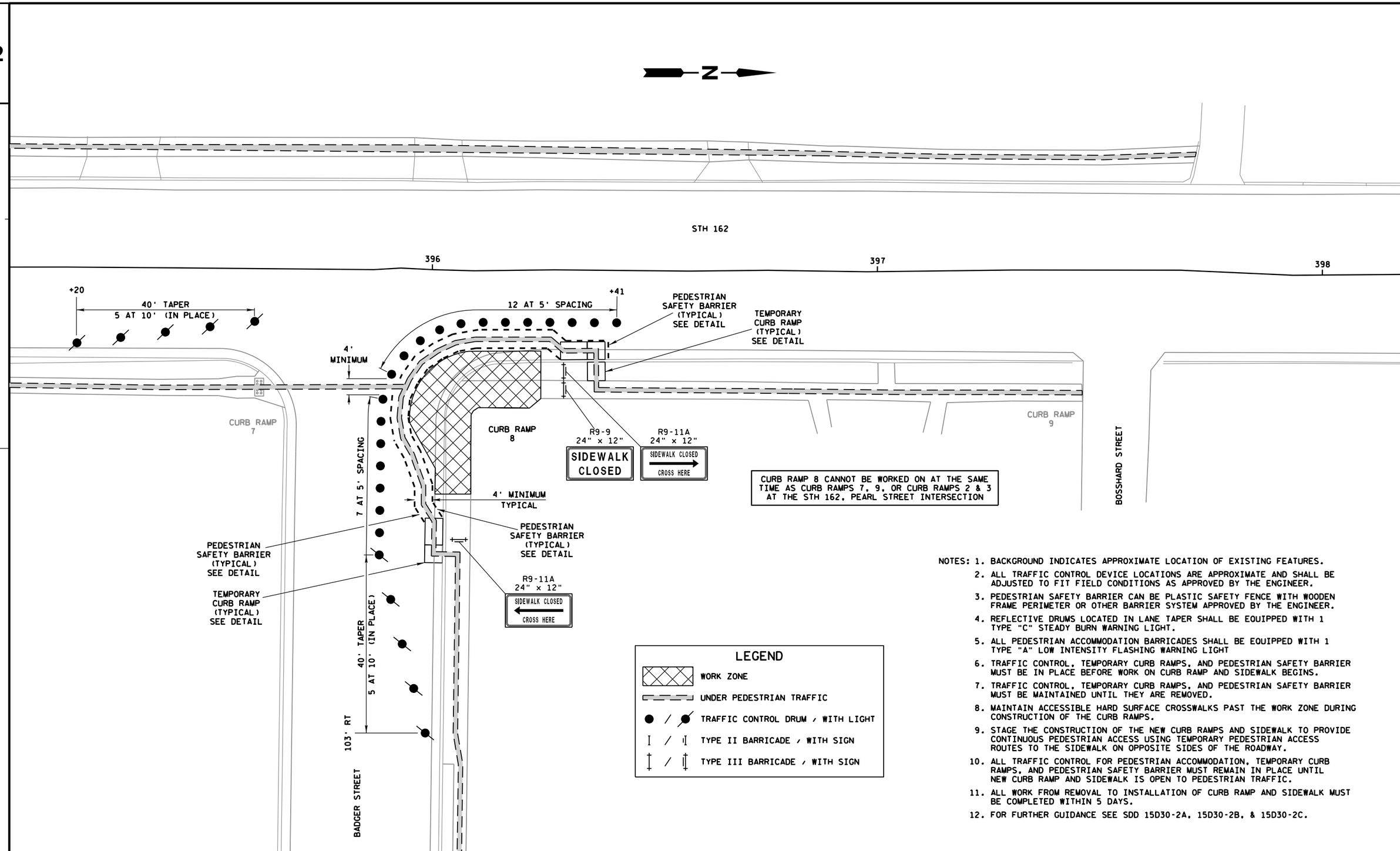

NOTES:

1. BACKGROUND INDICATES APPROXIMATE LOCATION OF EXISTING FEATURES.
2. ALL TRAFFIC CONTROL DEVICE LOCATIONS ARE APPROXIMATE AND SHALL BE ADJUSTED TO FIT FIELD CONDITIONS AS APPROVED BY THE ENGINEER.
3. PEDESTRIAN SAFETY BARRIER CAN BE PLASTIC SAFETY FENCE WITH WOODEN FRAME PERIMETER OR OTHER BARRIER SYSTEM APPROVED BY THE ENGINEER.
4. REFLECTIVE DRUMS LOCATED IN LANE TAPER SHALL BE EQUIPPED WITH 1 TYPE "C" STEADY BURN WARNING LIGHT.
5. ALL PEDESTRIAN ACCOMMODATION BARRICADES SHALL BE EQUIPPED WITH 1 TYPE "A" LOW INTENSITY FLASHING WARNING LIGHT
6. TRAFFIC CONTROL, TEMPORARY CURB RAMPS, AND PEDESTRIAN SAFETY BARRIER MUST BE IN PLACE BEFORE WORK ON CURB RAMP AND SIDEWALK BEGINS.
7. TRAFFIC CONTROL, TEMPORARY CURB RAMPS, AND PEDESTRIAN SAFETY BARRIER MUST BE MAINTAINED UNTIL THEY ARE REMOVED.
8. MAINTAIN ACCESSIBLE HARD SURFACE CROSSWALKS PAST THE WORK ZONE DURING CONSTRUCTION OF THE CURB RAMPS.
9. STAGE THE CONSTRUCTION OF THE NEW CURB RAMPS AND SIDEWALK TO PROVIDE CONTINUOUS PEDESTRIAN ACCESS USING TEMPORARY PEDESTRIAN ACCESS ROUTES TO THE SIDEWALK ON OPPOSITE SIDES OF THE ROADWAY.
10. ALL TRAFFIC CONTROL FOR PEDESTRIAN ACCOMMODATION, TEMPORARY CURB RAMPS, AND PEDESTRIAN SAFETY BARRIER MUST REMAIN IN PLACE UNTIL NEW CURB RAMP AND SIDEWALK IS OPEN TO PEDESTRIAN TRAFFIC.
11. ALL WORK FROM REMOVAL TO INSTALLATION OF CURB RAMP AND SIDEWALK MUST BE COMPLETED WITHIN 5 DAYS.
12. FOR FURTHER GUIDANCE SEE SDD 15D30-2A, 15D30-2B, & 15D30-2C.

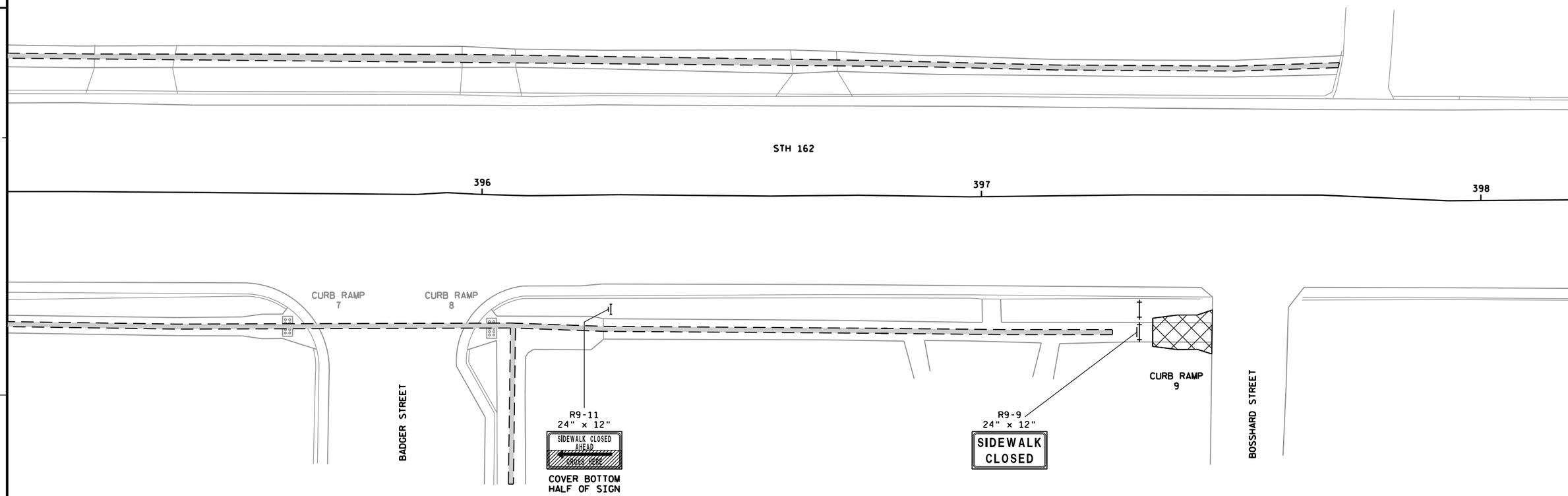

NOTES:
1. BACKGROUND INDICATES APPROXIMATE LOCATION OF EXISTING FEATURES.
2. ALL TRAFFIC CONTROL DEVICE LOCATIONS ARE APPROXIMATE AND SHALL BE ADJUSTED TO FIT FIELD CONDITIONS AS APPROVED BY THE ENGINEER.
3. PEDESTRIAN SAFETY BARRIER CAN BE PLASTIC SAFETY FENCE WITH WOODEN FRAME PERIMETER OR OTHER BARRIER SYSTEM APPROVED BY THE ENGINEER.
4. REFLECTIVE DRUMS LOCATED IN LANE TAPER SHALL BE EQUIPPED WITH 1 TYPE "C" STEADY BURN WARNING LIGHT.
5. ALL PEDESTRIAN ACCOMMODATION BARRICADES SHALL BE EQUIPPED WITH 1 TYPE "A" LOW INTENSITY FLASHING WARNING LIGHT
6. TRAFFIC CONTROL, TEMPORARY CURB RAMPS, AND PEDESTRIAN SAFETY BARRIER MUST BE IN PLACE BEFORE WORK ON CURB RAMP AND SIDEWALK BEGINS.
7. TRAFFIC CONTROL, TEMPORARY CURB RAMPS, AND PEDESTRIAN SAFETY BARRIER MUST BE MAINTAINED UNTIL THEY ARE REMOVED.
8. MAINTAIN ACCESSIBLE HARD SURFACE CROSSWALKS PAST THE WORK ZONE DURING CONSTRUCTION OF THE CURB RAMPS.
9. STAGE THE CONSTRUCTION OF THE NEW CURB RAMPS AND SIDEWALK TO PROVIDE CONTINUOUS PEDESTRIAN ACCESS USING TEMPORARY PEDESTRIAN ACCESS ROUTES TO THE SIDEWALK ON OPPOSITE SIDES OF THE ROADWAY.
10. ALL TRAFFIC CONTROL FOR PEDESTRIAN ACCOMMODATION, TEMPORARY CURB RAMPS, AND PEDESTRIAN SAFETY BARRIER MUST REMAIN IN PLACE UNTIL NEW CURB RAMP AND SIDEWALK IS OPEN TO PEDESTRIAN TRAFFIC.
11. ALL WORK FROM REMOVAL TO INSTALLATION OF CURB RAMP AND SIDEWALK MUST BE COMPLETED WITHIN 5 DAYS.
12. FOR FURTHER GUIDANCE SEE SDD 15D30-2A, 15D30-2B, & 15D30-2C.

CURB RAMP 9 CANNOT BE WORKED ON AT THE SAME TIME AS CURB RAMP8

LEGEND

- WORK ZONE
- UNDER PEDESTRIAN TRAFFIC
- TRAFFIC CONTROL DRUM / WITH LIGHT
- TYPE II BARRICADE / WITH SIGN
- TYPE III BARRICADE / WITH SIGN

2

SUPERELEVATION DATA

Curve #1
PI Station 13+93.71

Station	Type	Left	Right
10+67.7	End NC	-0.02	-0.02
11+21.04	Zero Super	0	-0.02
11+74.37	Rev Crown	0.02	-0.02
12+81.04	Begin FS	0.04	-0.04
15+03.87	End FS	0.04	-0.04
16+73.78		0.05	-0.05

Curve #2
PI Station 19+25.05

Station	Type	Left	Right
	-		
18+43.69	Begin FS	0.06	-0.06
20+05	End FS	0.06	-0.06
21+03.81	Zero Super	0	0
21+53.215	Rev Crown	-0.03	0.03
	-		

Curve #3
PI Station 22+36.14

Station	Type	Left	Right
	-		
22+02.62	Begin FS	-0.06	0.06
22+69.01	End FS	-0.06	0.06
	-		

Curve #4
PI Station 24+40.50

Station	Type	Left	Right
	-		
23+62.4	Begin FS	-0.045	0.045
25+18.53	End FS	-0.045	0.045
	-		

Curve #5
PI Station 29+99.73

Station	Type	Left	Right
	-		
28+33.62	Begin FS	-0.058	0.058
31+63.96	End FS	-0.058	0.058
	-		

Curve #6
PI Station 33+57.38

Station	Type	Left	Right
	-		
32+19.96	Begin FS	-0.023	0.023
34+94.74	End FS	-0.023	0.023
35+31.57		-0.0415	0.0415

Curve #7
PI Station 36+52.76

Station	Type	Left	Right
	-		
35+68.4	Begin FS	-0.06	0.06
37+22.57	End FS	-0.06	0.06
38+29.23	Rev Crown	-0.02	0.02
38+82.57	Zero Super	-0.02	0
39+35.9	Begin NC	-0.02	-0.02

Curve #8
PI Station 42+69.18

Station	Type	Left	Right
39+76.57	End NC	-0.02	-0.02
40+29.86	Zero Super	0	-0.02
40+83.2	Rev Crown	0.02	-0.02
41+89.86	Begin FS	0.04	-0.04
43+39.59	End FS	0.04	-0.04
44+46.25	Rev Crown	0.02	-0.02
44+99.59	Zero Super	0	-0.02
15+52.92	Begin NC	-0.02	-0.02

Curve #9
PI Station 56+03.64

Station	Type	Left	Right
52+36.4	End NC	-0.02	-0.02
52+89.73	Zero Super	-0.02	0
53+43.07	Rev Crown	-0.02	0.02
54+49.73	Begin FS	-0.06	0.06
57+54.96	End FS	-0.06	0.06
	-		

Curve #10
PI Station 61+30.27

Station	Type	Left	Right
	-		
58+49.95	-	-0.047	0.047
64+07.35	-	-0.047	0.047
65+78.71	-	0	0

Curve #11
PI Station 68+45.8

Station	Type	Left	Right
66+64.39	-	0.027	-0.027
67+50.07	-	0.055	-0.055
69+55.32	-	0.055	-0.055
71+33.046	-	0	0

Curve #12
PI Station 74+45.02

Station	Type	Left	Right
72+21.91	-	-0.03	0.03
73+10.77	Begin FS	-0.06	0.06
75+74.52	End FS	-0.06	0.06
76+01.18	-	-0.03	0.03

Curve #13
PI Station 77+96.25

Station	Type	Left	Right
	-		
76+27.85	-	0	0
76+54.51	-	0.03	-0.03
76+81.17	Begin FS	0.06	-0.06
79+08.78	End FS	0.06	-0.06
80+15.45	Rev Crown	0.02	-0.02
80+68.78	Zero Super	0	-0.02
80+86.95	Begin NC	-0.02	-0.02

Curve #14
PI Station 85+42.16

Station	Type	Left	Right
82+40.8	End NC	-0.02	-0.02
82+94.14	Zero Super	-0.02	0
83+47.47	Rev Crown	-0.02	0.02
84+54.14	Begin FS	-0.06	0.06
86+28.93	End FS	-0.06	0.06
87+35.59	Rev Crown	-0.02	0.02
87+88.93	Zero Super	-0.02	0
88+42.26	Begin NC	-0.02	-0.02

Curve #15
PI Station 94+16.65

Station	Type	Left	Right
90+80.51	End NC	-0.02	-0.02
91+33.84	Zero Super	0	-0.02
91+87.18	Rev Crown	0.02	-0.02
92+93.84	Begin FS	0.04	-0.04
95+38.33	End FS	0.04	-0.04
	-		

Curve #16
PI Station 97+92.57

Station	Type	Left	Right
	-		
96+14.66	Begin FS	0.026	-0.026
99+70.33	End FS	0.026	-0.026
100+42.42	-	0	0
101+14.52	-	-0.017	0.012
	-		

Curve #17
PI Station 103+45.76

Station	Type	Left	Right
	-		
101+86.61	-	-0.038	0.038
102+58.7	Begin FS	-0.06	0.06
104+29.91	End FS	-0.06	0.06
104+69.91	-	-0.045	0.045
	-		

Curve #18
PI Station 106+52.73

Station	Type	Left	Right
	-		
105+09.9	Begin FS	-0.03	0.03
107+95.43	End FS	-0.03	0.03
108+22.1	Rev Crown	-0.02	0.02
108+75.43	Zero Super	-0.02	0
109+28.76	Begin NC	-0.02	-0.02

Curve #19
PI Station 123+82.64

Station	Type	Left	Right
120+97.77	End NC	-0.02	-0.02
121+50.85	Zero Super	-0.02	0
122+03.92	Rev Crown	-0.02	0.02
122+19.85	Begin FS	-0.026	0.026
125+45.31	End FS	-0.026	0.026
125+83.48	-	0	0
126+02.56	-	0.03	-0.03
	-		

Curve #20
PI Station 127+37.57

Station	Type	Left	Right
	-		
126+21.64	Begin FS	0.06	-0.06
128+35.7	End FS	0.06	-0.06
128+99.42	-	0.03	-0.03
129+63.14	-	0.01	-0.01
	-		

Curve #21
PI Station 134+41.14

Station	Type	Left	Right
	-		
130+26.85	-	-0.01	0.01
130+90.57	Begin FS	-0.048	0.048
137+85.62	End FS	-0.048	0.048
138+33.62	-	-0.54	0.054
	-		

Curve #22
PI Station 139+27.70

Station	Type	Left	Right
	-		
138+81.61	Begin FS	-0.06	0.06
139+70.09	End FS	-0.06	0.06
140+76.75	Rev Crown	-0.02	0.02
141+30.09	Zero Super	-0.02	0
141+83.42	Begin NC	-0.02	-0.02

Curve #23
PI Station 148+22.09

Station	Type	Left	Right
145+33.91	End NC	-0.02	-0.02
145+87.37	Zero Super	-0.02	0
146+40.83	Rev Crown	-0.02	0.02
147+26.37	Begin FS	-0.052	0.052
149+30.06	End FS	-0.052	0.052
	-		

Curve #24
PI Station 151+25.68

Station	Type	Left	Right
	-		
150+16.06	Begin FS	-0.059	0.059
152+34.26	End FS	-0.059	0.059
152+61	-	-0.03	0.03
152+87+09	-	0	0
	-		

Curve #25
PI Station 154+95.70

Station	Type	Left	Right
	-		
153+13.5	-	0.03	-0.03
153+39.91	Begin FS	0.06	-0.06
156+48.24	End FS	0.06	-0.06
157+40.83	-	0.03	-0.03
158+33.42	-	0	0
	-		

Curve #26
PI Station 161+21.29

Station	Type	Left	Right
	-		
159+26.00	-	-0.03	0.03
160+18.59	Begin FS	-0.06	0.06
162+20.87	End FS	-0.06	0.06
163+27.54	Rev Crown	-0.02	0.02
163+80.87	Zero Super	-0.02	0
164+34.21	Begin NC	-0.02	-0.02

Curve #27
PI Station 170+35.85

Station	Type	Left	Right
165+06.77	End NC	-0.02	-0.02
165+59.94	Zero Super	0	-0.02
166+13.11	Rev Crown	0.02	-0.02
166+68.94	Begin FS	0.041	-0.041
173+98.72	End FS	0.041	-0.041
174+72.42	-	0.018	-0.018
175+46.13	-	0	0
	-		

Curve #28
PI Station 178+11.74

Station	Type	Left	Right
	-		
176+19.83	-	-0.023	0.023
176+93.53	Begin FS	-0.051	0.051
179+29.39	End FS	-0.051	0.051
180+12.06	Rev Crown	-0.02	0.02
180+65.39	Zero Super	-0.02	0
181+18.73	Begin NC	-0.02	-0.02

** FOR REFERENCE ONLY, TO BE VERIFIED IN THE FIELD BY ENGINEER**

*Note : Curve #29(PI STATION 190+71.89) & Curve #30 (PI STATION 198+73.48) REMAIN AT NORMAL CROWN

2

SUPERELEVATION DATA continued

Curve #31
PI Station 198+73.48

Station	Type	Left	Right
195+59.14	End NC	-0.02	-0.02
196+12.47	Zero Super	0	-0.02
196+65.81	Rev Crown	0.02	-0.02
197+72.47	Begin FS	0.06	-0.06
199+66.1	End FS	0.06	-0.06
	-		

Curve #32
PI Station 200+83.55

Station	Type	Left	Right
	-		
200+72.75	Begin FS	0.06	-0.06
200+94.26	End FS	0.06	-0.06
201+12.01	-	0.04	-0.04
201+47.5	-	0.02	-0.02
	-		

Curve #33
PI Station 205+06.54

Station	Type	Left	Right
	-		
201+47.5	-	0	0
201+65.25	Begin FS	-0.02	0.02
208+47.51	End FS	-0.02	0.02
208+47.51	Rev Crown	-0.02	0.02
209+00.51	Zero Super	-0.02	0
209+53.51	Begin NC	-0.02	-0.02

Curve #34
PI Station 220+25.73

Station	Type	Left	Right
217+21.61	End NC	-0.02	-0.02
217+74.65	Zero Super	-0.02	0
218+27.7	Rev Crown	-0.02	0.02
218+35.65	Begin FS	-0.023	0.023
222+15.68	End FS	-0.023	0.023
222+61.1	-	-0.012	0.012
223+06.53	-	0	0

Curve #35
PI Station 227+15.18

Station	Type	Left	Right
	-		
223+51.95	-	0.011	-0.011
223+97.37	Begin FS	0.02	-0.02
230+32.73	End FS	0.02	-0.02
230+48.48	-	0.002	-0.002
230+64.23	-	-0.015	0.015
	-		

Curve #36
PI Station 232+90.97

Station	Type	Left	Right
	-		
230+79.97	-	-0.033	0.033
230+95.72	Begin FS	-0.051	0.051
234+84.45	End FS	-0.051	0.051
235+61.86	-	-0.029	0.051
236+39.26	-	-0.007	0.051

Curve #37
PI Station 238+90.93

Station	Type	Left	Right
	-		
237+16.67	-	0.015	-0.037
237+94.07	Begin FS	0.037	-0.037
239+87.69	End FS	0.037	-0.037
240+62.23	-	0.01	-0.01
241+36.76	-	-0.01	0.01

Curve #38
PI Station 243+70.97

Station	Type	Left	Right
	-		
242+11.3	-	-0.036	0.036
242+85.83	Begin FS	-0.06	0.06
244+54.11	End FS	-0.06	0.06
245+33.35	-	-0.032	0.032
246+12.58	-	0	0
	-		

Curve #39
PI Station 248+32.95

Station	Type	Left	Right
	-		
246+91.82	-	0.024	-0.024
247+71.05	Begin FS	0.052	-0.052
248+94.68	End FS	0.052	-0.052
	-		

Curve #40
PI Station 250+66.63

Station	Type	Left	Right
	-		
249+94.33	Begin FS	0.06	-0.06
251+37.86	End FS	0.06	-0.06
	-		

Curve #41
PI Station 253+54.15

Station	Type	Left	Right
	-		
252+38.18	Begin FS	0.053	-0.053
254+69.48	End FS	0.053	-0.053
	-		

Curve #42
PI Station 256+53.68

Station	Type	Left	Right
	-		
255+69.8	Begin FS	0.06	-0.06
257+36.83	End FS	0.06	-0.06
258+43.5	Rev Crown	0.02	-0.02
258+96.83	Zero Super	0	-0.02
259+17	Begin NC	-0.02	-0.02

Curve #43
PI Station 262+83.37

Station	Type	Left	Right
260+01.95	End NC	-0.02	-0.02
260+55.28	Zero Super	0	-0.02
261+08.61	Rev Crown	0.02	-0.02
262+15.28	Begin FS	0.06	-0.06
263+50.93	End FS	0.06	-0.06
264+57.6	Rev Crown	0.02	-0.02
265+10.93	Zero Super	0	-0.02
265+64.26	Begin NC	-0.02	-0.02

Curve #44
PI Station 272+32.29

Station	Type	Left	Right
268+91.74	End NC	-0.02	-0.02
269+45.07	Zero Super	0	-0.02
269+98.41	Rev Crown	0.02	-0.02
270+65.07	Begin FS	0.045	-0.045
273+98.79	End FS	0.045	-0.045
274+22.12	-	0.019	-0.019
274+45.46	-	0.01	-0.01
	-		

Curve #45
PI Station 276+63.68

Station	Type	Left	Right
	-		
274+68.79	-	-0.034	0.034
274+92.12	Begin FS	-0.06	0.06
278+08.01	End FS	-0.06	0.06
	-		

Curve #46
PI Station 279+95.39

Station	Type	Left	Right
	-		
279+14.67	Begin FS	-0.06	0.06
280+75.4	End FS	-0.06	0.06
281+02.07	-	-0.03	0.03
281+28.73	-	0	0

Curve #47
PI Station 283+05.90

Station	Type	Left	Right
	-		
281+55.4	-	0.03	-0.03
281+82.06	Begin FS	0.06	-0.06
284+12.52	End FS	0.06	-0.06
285+19.19	Rev Crown	0.02	-0.02
285+72.52	Zero Super	0	-0.02
286+25.85	Begin NC	-0.02	-0.02

Curve #48
PI Station 291+02.71

Station	Type	Left	Right
288+05.08	End NC	-0.02	-0.02
288+58.29	Zero Super	-0.02	0
289+11.49	Rev Crown	-0.02	0.02
289+99.29	Begin FS	-0.053	0.053
292+05.64	End FS	-0.053	0.053
292+30.72	-	-0.025	0.025
292+55.81	-	0.004	-0.004
	-		

Curve #49
PI Station 293+92.28

Station	Type	Left	Right
	-		
292+80.89	-	0.032	-0.032
293+05.97	Begin FS	0.06	-0.06
294+75.81	End FS	0.06	-0.06
295+82.48	Rev Crown	-0.02	0.02
296+35.81	Zero Super	-0.02	0
296+89.15	Begin NC	-0.02	-0.02

Curve #50
PI Station 308+07.57

Station	Type	Left	Right
300+64	End NC	-0.02	-0.02
302+88	Zero Super	0.02	-0.02
303+30	Rev Crown	0.04	-0.04
303+44	Begin FS	0.08	-0.08
312+00	End FS	0.08	-0.08
	-	-	-

Curve #51
PI Station 313+13.00

Station	Type	Left	Right
	-	-	-
312+37.67	Begin FS	-	-
313+89	End FS	0.08	-0.08
314+17	Rev Crown	0.04	-0.04
314+45	Zero Super	0.02	-0.02
316+37	Begin NC	-0.02	-0.02

Curve #52
PI Station 323+19.15

Station	Type	Left	Right
316+37.667	End NC	-0.02	-0.02
318+61.66	Zero Super	-0.02	0
318+75.66	Rev Crown	-0.04	0.04
319+17.66	Begin FS	-0.08	0.08
326+52.33	End FS	-0.08	0.08
326+80.33	Rev Crown	-0.04	0.04
327+08.33	Zero Super	-0.02	0
329+32.33	Begin NC	-0.02	-0.02

Curve #54
PI Station 363+62.62

Station	Type	Left	Right
362+20.76	End NC	-0.02	-0.02
362+55.1	Zero Super	0	-0.02
362+89.45	Rev Crown	0.02	-0.02
363+34.1	Begin FS	0.046	-0.046
363+90.37	End FS	0.046	-0.046

Curve #55
PI Station 364+94.72

Station	Type	Left	Right
	-		
364+51.03	Begin FS	0.06	-0.06
365+24.85	End FS	0.06	-0.06
365+52.35	-	0.048	-0.048
	-		

Curve #56
PI Station 366+09.56

Station	Type	Left	Right
	-		
365+79.84	Begin FS	0.036	-0.036
366+39.09	End FS	0.036	-0.036
366+66.65	Rev Crown	0.02	-0.02
367+01.09	Zero Super	0	-0.02
367+35.54	Begin NC	-0.02	-0.02

Curve #58
PI Station 381+81.39

Station	Type	Left	Right
379+35.35	End NC	-0.02	-0.02
379+69.81	Zero Super	-0.02	0
380+04.28	Rev Crown	-0.02	0.02
380+50.81	Begin FS	-0.047	0.047
382+93.71	End FS	-0.047	0.047
383+44.61	-	-0.025	0.025
383+95.52	-	0	0

Curve #59
PI Station 385+94.73

Station	Type	Left	Right
	-		
384+46.42	-	0.025	-0.025
384+97.33	Begin FS	0.051	-0.051
386+77.66	End FS	0.051	-0.051
387+30.54	Rev Crown	0.02	-0.02
387+64.66	Zero Super	0	-0.02
387+98.78	Begin NC	-0.02	-0.02

** FOR REFERENCE ONLY, TO BE VERIFIED IN THE FIELD BY ENGINEER**

*Note : Curve #53(PI STATION 359+19.84); Curve #57 (PI STATION 370+02.9); CURVE #60 (PI STATION 403+71.76) AND CURVE # 61 (PI STATION 433+11.59)REMAIN AT NORMAL CROWN

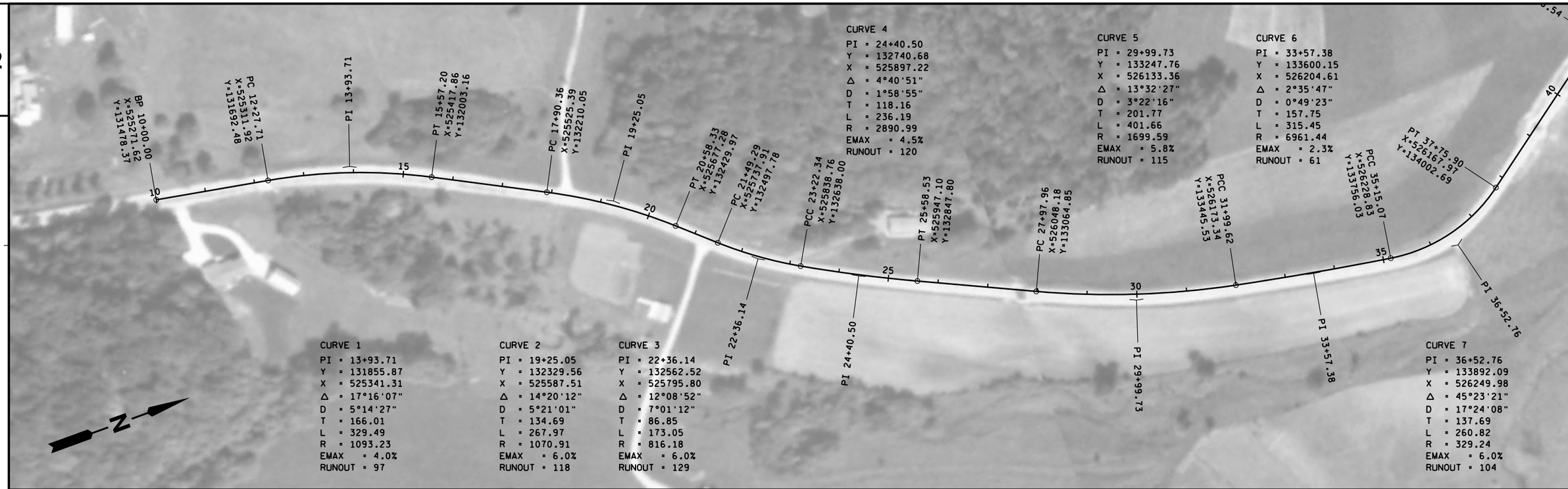
BP 10+00.00
X=525271.62
Y=131478.37
PC 12+27.71
X=525311.92
Y=131692.48
PI 13+93.71
PT 15+57.20
X=525417.86
Y=132003.16
PC 17+90.36
X=525525.39
Y=132210.05
PI 19+25.05
PT 20+58.33
X=525677.28
Y=132429.97
PC 21+49.29
X=525737.91
Y=132497.78
PCC 23+22.34
X=525838.76
Y=132638.00
PT 25+58.53
X=525947.10
Y=132847.80
PC 27+97.96
X=526048.18
Y=133064.85
PCC 31+99.62
X=526173.34
Y=133445.53
PCC 35+15.07
X=526228.83
Y=133756.03
PT 37+75.90
X=526167.97
Y=134002.69
PI 22+36.14
PI 24+40.50
PI 29+99.73
PI 33+57.38
PI 36+52.76
10
15
20
25
30
35
40
N
CURVE 1
PI = 13+93.71
Y = 131855.87
X = 525341.31
Δ = 17°16'07"
D = 5°14'27"
T = 166.01
L = 329.49
R = 1093.23
EMAX = 4.0%
RUNOUT = 97
CURVE 2
PI = 19+25.05
Y = 132329.56
X = 525587.51
Δ = 14°20'12"
D = 5°21'01"
T = 134.69
L = 267.97
R = 1070.91
EMAX = 6.0%
RUNOUT = 118
CURVE 3
PI = 22+36.14
Y = 132562.52
X = 525795.80
Δ = 12°08'52"
D = 7°01'12"
T = 86.85
L = 173.05
R = 816.18
EMAX = 6.0%
RUNOUT = 129
CURVE 4
PI = 24+40.50
Y = 132740.68
X = 525897.22
Δ = 4°40'51"
D = 1°58'55"
T = 118.16
L = 236.19
R = 2890.99
EMAX = 4.5%
RUNOUT = 120
CURVE 5
PI = 29+99.73
Y = 133247.76
X = 526133.36
Δ = 13°32'27"
D = 3°22'16"
T = 201.77
L = 401.66
R = 1699.59
EMAX = 5.8%
RUNOUT = 115
CURVE 6
PI = 33+57.38
Y = 133600.15
X = 526204.61
Δ = 2°35'47"
D = 0°49'23"
T = 157.75
L = 315.45
R = 6961.44
EMAX = 2.3%
RUNOUT = 61
CURVE 7
PI = 36+52.76
Y = 133892.09
X = 526249.98
Δ = 45°23'21"
D = 17°24'08"
T = 137.69
L = 260.82
R = 329.24
EMAX = 6.0%
RUNOUT = 104

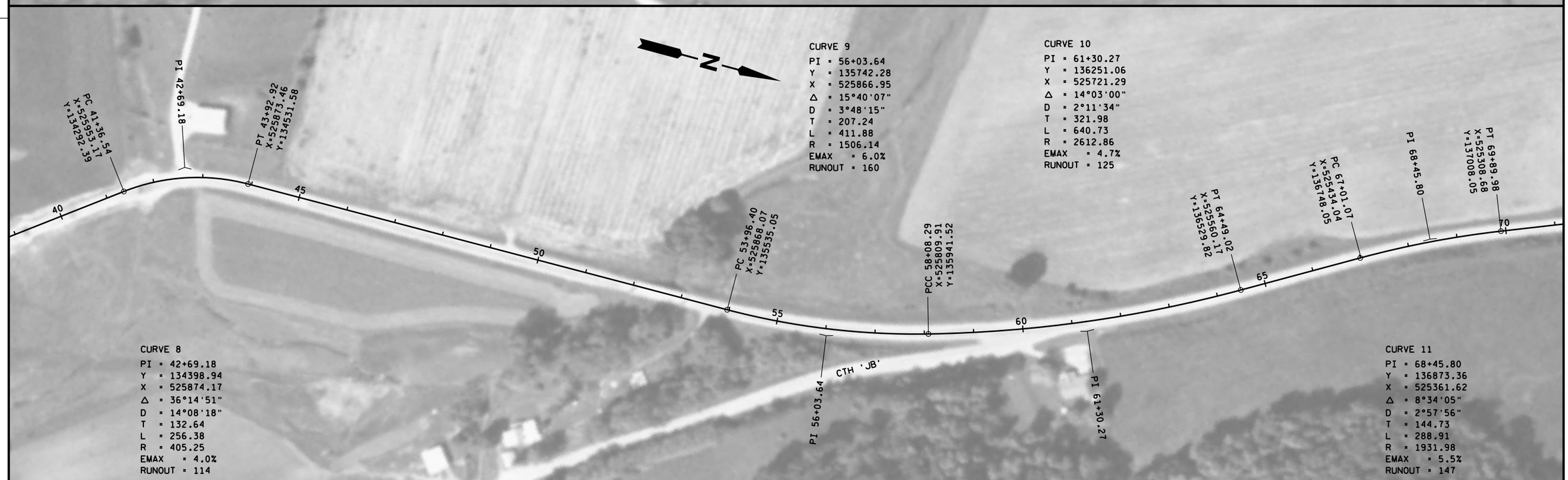
PC 41+36.54
X=525553.17
Y=134292.39
PI 42+69.18
PT 43+92.92
X=525873.46
Y=134531.58
PC 53+96.40
X=525868.07
Y=135535.05
PCC 58+08.29
X=525809.91
Y=135941.52
PT 64+49.02
X=525560.17
Y=136529.82
PC 67+01.07
X=525434.04
Y=136748.05
PI 68+45.80
PT 69+89.98
X=525308.68
Y=137008.05
CTH 'JB'
PI 56+03.64
PI 61+30.27
40
45
50
55
60
65
70
N
CURVE 8
PI = 42+69.18
Y = 134398.94
X = 525874.17
Δ = 36°14'51"
D = 14°08'18"
T = 132.64
L = 256.38
R = 405.25
EMAX = 4.0%
RUNOUT = 114
CURVE 9
PI = 56+03.64
Y = 135742.28
X = 525866.95
Δ = 15°40'07"
D = 3°48'15"
T = 207.24
L = 411.88
R = 1506.14
EMAX = 6.0%
RUNOUT = 160
CURVE 10
PI = 61+30.27
Y = 136251.06
X = 525721.29
Δ = 14°03'00"
D = 2°11'34"
T = 321.98
L = 640.73
R = 2612.86
EMAX = 4.7%
RUNOUT = 125
CURVE 11
PI = 68+45.80
Y = 136873.36
X = 525361.62
Δ = 8°34'05"
D = 2°57'56"
T = 144.73
L = 288.91
R = 1931.98
EMAX = 5.5%
RUNOUT = 147


CURVE 14
PI = 85+42.16
Y = 138358.47
X = 524562.02
Δ = 13°14'47"
D = 4°42'24"
T = 141.35
L = 281.45
R = 1217.36
EMAX = 6.0%
RUNOUT = 111
N
PT 69+89.98
70
PC 72+57.45
X=525210.83
Y=137256.97
74+47.53 =
74'JJ'+47.53
X=525124.15
Y=137425.79
PRC 76+27.85
X=525012.50
Y=137567.04
PI 77+96.25
PT 79+62.11
X=524820.89
Y=137839.39
75
80
PC 84+00.81
X=524625.11
Y=138231.98
PT 86+82.25
X=524471.63
Y=138467.15
85
90
PC 92+40.52
X=524114.64
Y=138896.35
PI 94+16.95
95
PCC 95+91.66
X=523924.83
Y=139190.75
PI 97+92.57
X=523761.74
Y=139557.73
PT 99+93.33
100
75'JJ'
76'JJ'+00.00
X=525268.52
Y=137474.82
PI 74+45.02
CTH 'JJ'
PI 85+42.16
CURVE 12
PI = 74+45.02
Y = 137431.54
X = 525142.21
Δ = 22°17'30"
D = 6°01'06"
T = 187.57
L = 370.40
R = 952.03
EMAX = 6.0%
RUNOUT = 144
CURVE 13
PI = 77+96.25
Y = 137688.69
X = 524896.05
Δ = 17°14'41"
D = 5°09'32"
T = 168.41
L = 334.27
R = 1110.60
EMAX = 6.0%
RUNOUT = 153
CURVE 15
PI = 94+16.95
Y = 139032.00
X = 524001.82
Δ = 13°52'47"
D = 3°57'10"
T = 176.44
L = 351.15
R = 1449.54
EMAX = 4.0%
RUNOUT = 122
CURVE 16
PI = 97+92.57
Y = 139371.52
X = 523837.16
Δ = 3°49'28"
D = 0°57'08"
T = 200.91
L = 401.66
R = 6017.32
EMAX = 2.6%
RUNOUT = 69

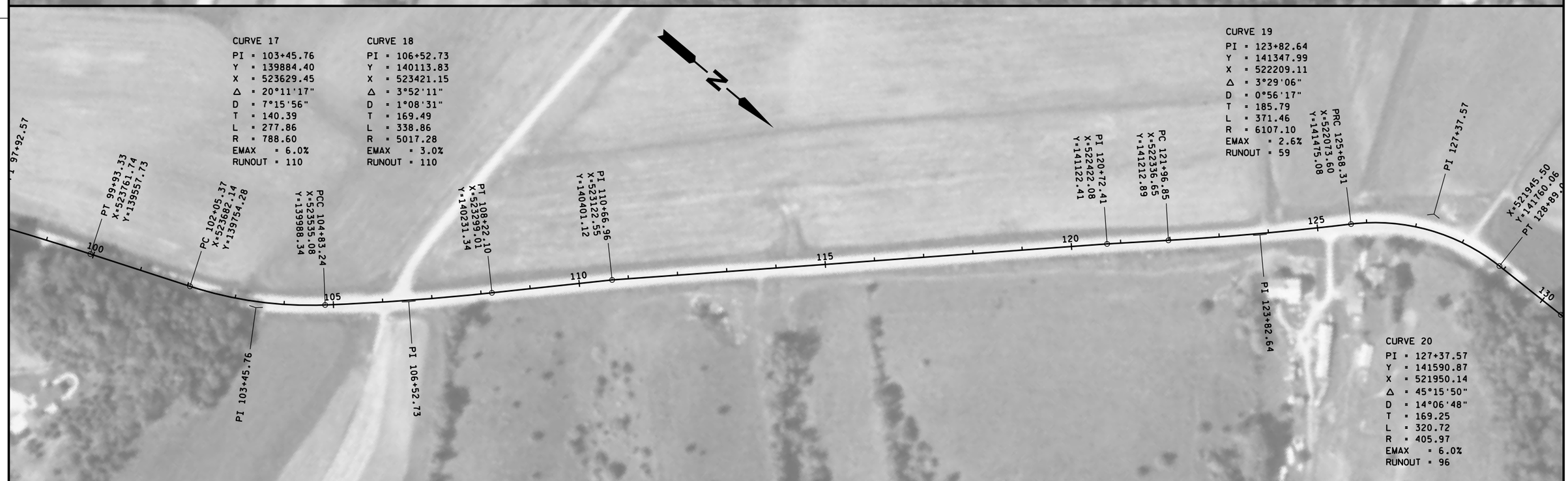
CURVE 17
PI = 103+45.76
Y = 139884.40
X = 523629.45
Δ = 20°11'17"
D = 7°15'56"
T = 140.39
L = 277.86
R = 788.60
EMAX = 6.0%
RUNOUT = 110
CURVE 18
PI = 106+52.73
Y = 140113.83
X = 523421.15
Δ = 3°52'11"
D = 1°08'31"
T = 169.49
L = 338.86
R = 5017.28
EMAX = 3.0%
RUNOUT = 110
N
PT 97+92.57
PT 99+93.33
X=523761.74
Y=139557.73
100
PC 102+05.37
X=523682.14
Y=139754.28
PCC 104+83.24
X=523535.08
Y=139988.34
105
PI 103+45.76
PI 106+52.73
PT 108+22.10
X=523299.01
Y=140231.34
PI 110+66.96
X=523122.55
Y=140401.12
110
115
PI 120+72.41
X=522422.08
Y=141122.41
120
PC 121+96.85
X=522336.65
Y=141212.89
PI 123+82.64
125
PRC 125+68.31
X=522073.60
Y=141475.08
PI 127+37.57
X=521945.50
Y=141760.06
PT 128+89.0
130
CURVE 19
PI = 123+82.64
Y = 141347.99
X = 522209.11
Δ = 3°29'06"
D = 0°56'17"
T = 185.79
L = 371.46
R = 6107.10
EMAX = 2.6%
RUNOUT = 59
CURVE 20
PI = 127+37.57
Y = 141590.87
X = 521950.14
Δ = 45°15'50"
D = 14°06'48"
T = 169.25
L = 320.72
R = 405.97
EMAX = 6.0%
RUNOUT = 96

PROJECT NO:5820-01-62	HWY:STH 162	COUNTY:LA CROSSE	ALIGNMENT DIAGRAM	SHEET 37	E

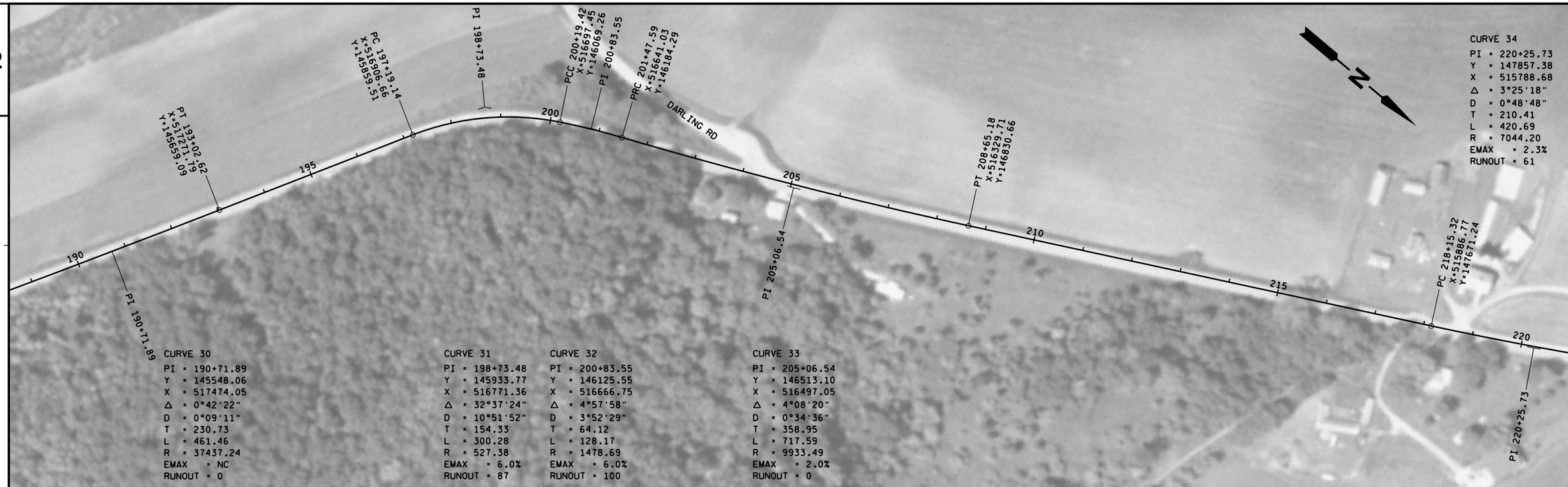

CURVE 30
PI = 190+71.89
Y = 145548.06
X = 517474.05
Δ = 0°42'22"
D = 0°09'11"
T = 230.73
L = 461.46
R = 37437.24
EMAX = NC
RUNOUT = 0

CURVE 31
PI = 198+73.48
Y = 145933.77
X = 516771.36
Δ = 32°37'24"
D = 10°51'52"
T = 154.33
L = 300.28
R = 527.38
EMAX = 6.0%
RUNOUT = 87

CURVE 32
PI = 200+83.55
Y = 146125.55
X = 516666.75
Δ = 4°57'58"
D = 3°52'29"
T = 64.12
L = 128.17
R = 1478.69
EMAX = 6.0%
RUNOUT = 100

CURVE 33
PI = 205+06.54
Y = 146513.10
X = 516497.05
Δ = 4°08'20"
D = 0°34'36"
T = 358.95
L = 717.59
R = 9933.49
EMAX = 2.0%
RUNOUT = 0

CURVE 34
PI = 220+25.73
Y = 147857.38
X = 515788.68
Δ = 3°25'18"
D = 0°48'48"
T = 210.41
L = 420.69
R = 7044.20
EMAX = 2.3%
RUNOUT = 61

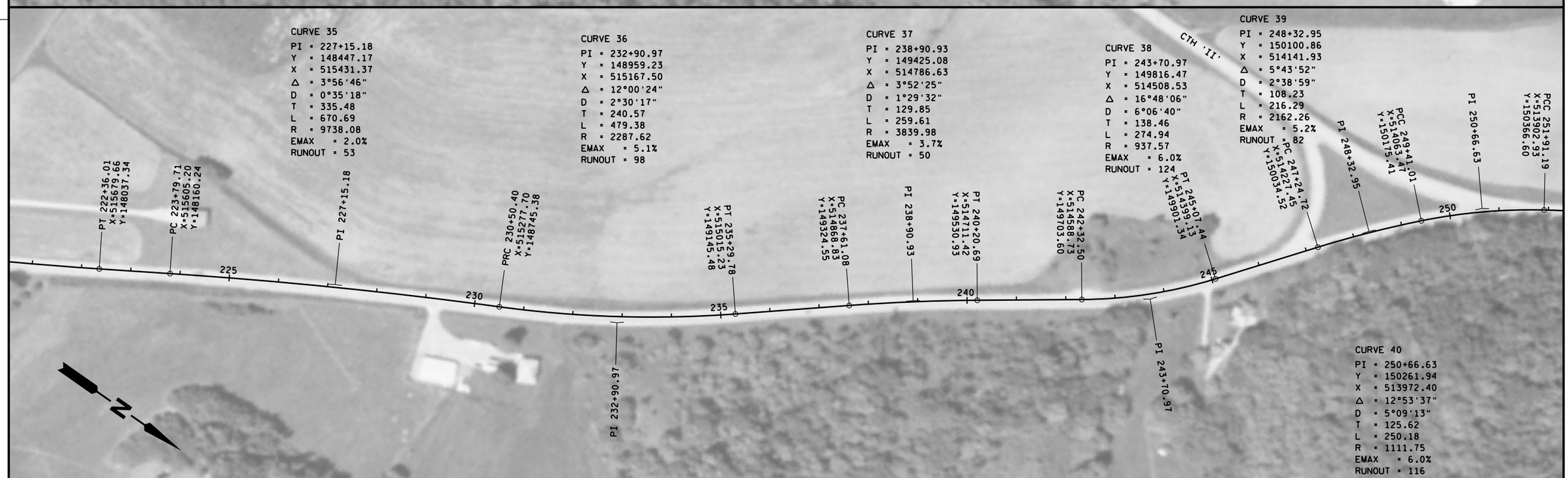

CURVE 35
PI = 227+15.18
Y = 148447.17
X = 515431.37
Δ = 3°56'46"
D = 0°35'18"
T = 335.48
L = 670.69
R = 9738.08
EMAX = 2.0%
RUNOUT = 53

CURVE 36
PI = 232+90.97
Y = 148959.23
X = 515167.50
Δ = 12°00'24"
D = 2°30'17"
T = 240.57
L = 479.38
R = 2287.62
EMAX = 5.1%
RUNOUT = 98

CURVE 37
PI = 238+90.93
Y = 149425.08
X = 514786.63
Δ = 3°52'25"
D = 1°29'32"
T = 129.85
L = 259.61
R = 3839.98
EMAX = 3.7%
RUNOUT = 50

CURVE 38
PI = 243+70.97
Y = 149816.47
X = 514508.53
Δ = 16°48'06"
D = 6°06'40"
T = 138.46
L = 274.94
R = 937.57
EMAX = 6.0%
RUNOUT = 124

CURVE 39
PI = 248+32.95
Y = 150100.86
X = 514141.93
Δ = 5°43'52"
D = 2°38'59"
T = 108.23
L = 216.29
R = 2162.26
EMAX = 5.2%
RUNOUT = 82

CURVE 40
PI = 250+66.63
Y = 150261.94
X = 513972.40
Δ = 12°53'37"
D = 5°09'13"
T = 125.62
L = 250.18
R = 1111.75
EMAX = 6.0%
RUNOUT = 116

PROJECT NO:5820-01-62	HWY:STH 162	COUNTY:LA CROSSE	ALIGNMENT DIAGRAM	SHEET 38	E

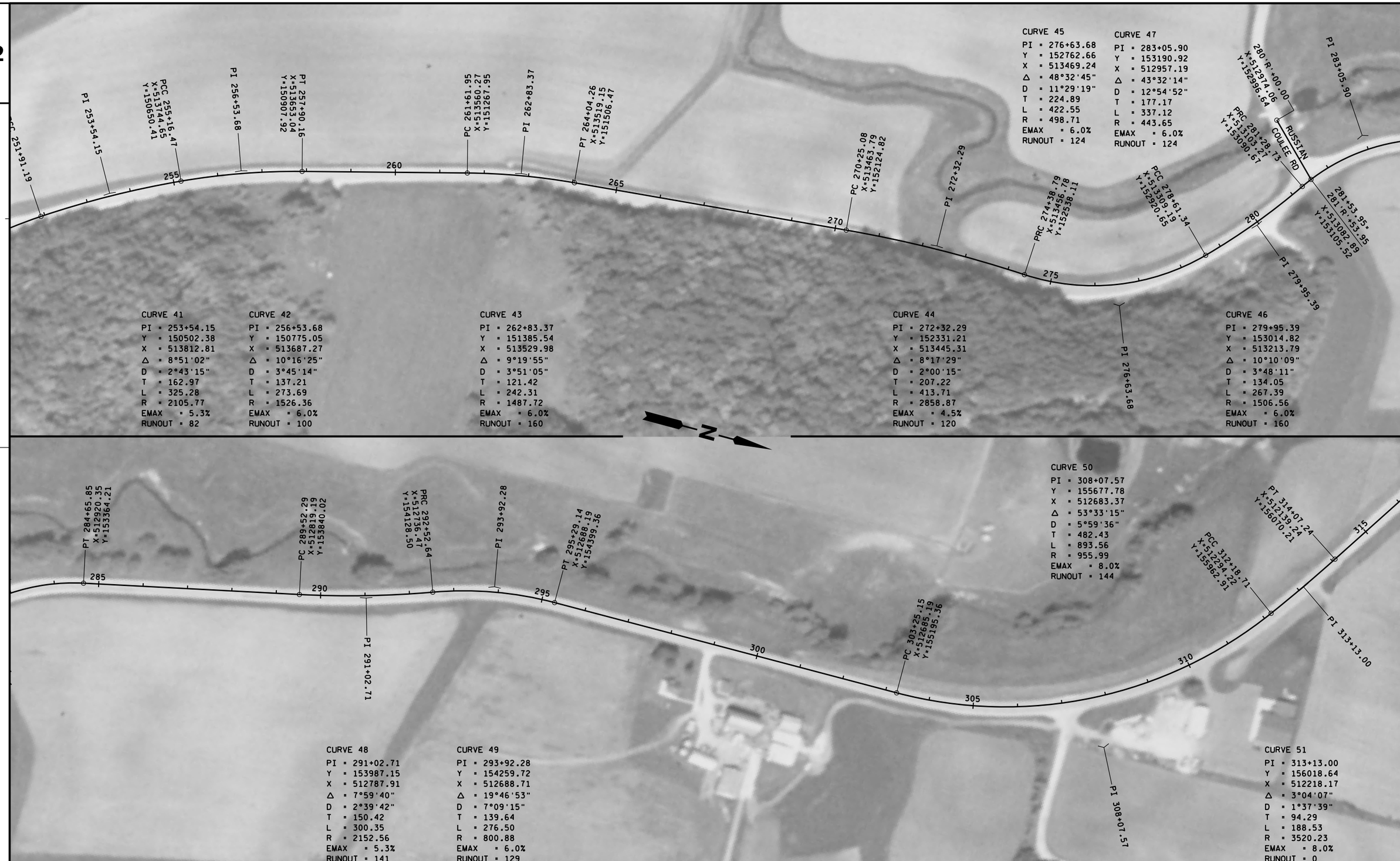
PC 251+91.19
PI 253+54.15
PCC 255+16.47
X=513744.65
Y=150650.41
PI 256+53.68
PT 257+90.16
X=513653.04
Y=150901.92
PC 261+61.95
X=513560.27
Y=151267.95
PI 262+83.37
PT 264+04.26
X=513519.15
Y=151506.47
PC 270+25.08
X=513463.79
Y=152124.82
PI 272+32.29
PRC 274+38.79
X=513456.78
Y=152538.11
PCC 278+61.34
X=513309.19
Y=152920.65
PRC 281+28.73
X=513103.21
Y=153090.67
280+R+00.00
X=512974.06
Y=152996.64
RUSSIAN COULEE RD
PI 283+05.90
281+53.95=
281+R+53.95
X=513082.89
Y=153105.52
PI 279+95.39
PI 276+63.68
CURVE 45
PI = 276+63.68
Y = 152762.66
X = 513469.24
Δ = 48°32'45"
D = 11°29'19"
T = 224.89
L = 422.55
R = 498.71
EMAX = 6.0%
RUNOUT = 124
CURVE 47
PI = 283+05.90
Y = 153190.92
X = 512957.19
Δ = 43°32'14"
D = 12°54'52"
T = 177.17
L = 337.12
R = 443.65
EMAX = 6.0%
RUNOUT = 124
CURVE 41
PI = 253+54.15
Y = 150502.38
X = 513812.81
Δ = 8°51'02"
D = 2°43'15"
T = 162.97
L = 325.28
R = 2105.77
EMAX = 5.3%
RUNOUT = 82
CURVE 42
PI = 256+53.68
Y = 150775.05
X = 513687.27
Δ = 10°16'25"
D = 3°45'14"
T = 137.21
L = 273.69
R = 1526.36
EMAX = 6.0%
RUNOUT = 100
CURVE 43
PI = 262+83.37
Y = 151385.54
X = 513529.98
Δ = 9°19'55"
D = 3°51'05"
T = 121.42
L = 242.31
R = 1487.72
EMAX = 6.0%
RUNOUT = 160
CURVE 44
PI = 272+32.29
Y = 152331.21
X = 513445.31
Δ = 8°17'29"
D = 2°00'15"
T = 207.22
L = 413.71
R = 2858.87
EMAX = 4.5%
RUNOUT = 120
CURVE 46
PI = 279+95.39
Y = 153014.82
X = 513213.79
Δ = 10°10'09"
D = 3°48'11"
T = 134.05
L = 267.39
R = 1506.56
EMAX = 6.0%
RUNOUT = 160
N
PT 284+65.85
X=512920.35
Y=153364.21
PC 289+52.29
X=512819.19
Y=153840.02
PRC 292+52.64
X=512736.47
Y=154128.50
PI 293+92.28
PT 295+29.14
X=512688.19
Y=154399.36
PC 303+25.15
X=512685.19
Y=155195.36
PT 314+07.24
X=512139.24
Y=156070.21
PCC 312+18.71
X=512294.22
Y=155962.91
PI 313+13.00
PI 308+07.57
PI 291+02.71
CURVE 50
PI = 308+07.57
Y = 155677.78
X = 512683.37
Δ = 53°33'15"
D = 5°59'36"
T = 482.43
L = 893.56
R = 955.99
EMAX = 8.0%
RUNOUT = 144
CURVE 48
PI = 291+02.71
Y = 153987.15
X = 512787.91
Δ = 7°59'40"
D = 2°39'42"
T = 150.42
L = 300.35
R = 2152.56
EMAX = 5.3%
RUNOUT = 141
CURVE 49
PI = 293+92.28
Y = 154259.72
X = 512688.71
Δ = 19°46'53"
D = 7°09'15"
T = 139.64
L = 276.50
R = 800.88
EMAX = 6.0%
RUNOUT = 129
CURVE 51
PI = 313+13.00
Y = 156018.64
X = 512218.17
Δ = 3°04'07"
D = 1°37'39"
T = 94.29
L = 188.53
R = 3520.23
EMAX = 8.0%
RUNOUT = 0


FRITZ SCHROEDER RD
PI 323+19.15
PC 318+98.83
X=511727.71
Y=156539.11
PT 326+70.63
X=511372.12
Y=156989.33
PI 330+87.69
X=511368.43
Y=157406.36
PI 331+99.60
X=511373.13
Y=157518.18
X=511375.50
Y=158019.48
PI 337+00.91
PI 337+66.78
X=511370.70
Y=158085.18
CURVE 52
PI = 323+19.15
Y = 156569.03
X = 511375.85
Δ = 56°19'49"
D = 7°17'55"
T = 420.31
L = 771.80
R = 785.03
EMAX = 8%
RUNOUT = 131
315
320
325
330
335
340
IH 90 EB
IH 90 WB
N
356+B'+50.00
X=511597.79
Y=158703.25
CTH B'
OL HESS RD
PI 359+19.84
PC 357+83.89
X=511344.56
Y=160101.65
PI 356+40.92
X=511348.76
Y=159958.74
PI 354+40.45
X=511361.95
Y=159758.70
PI 353+06.58
X=511367.43
Y=159624.94
PI 350+77.10
X=511371.28
Y=159395.50
PT 360+55.73
X=511343.39
Y=160373.46
PC 363+07.77
X=511348.63
Y=160625.44
359+20.65 =
359+B'+20.65
X=511861.94
Y=158762.19
CURVE 53
PI = 359+19.84
Y = 160237.54
X = 511340.57
Δ = 2°52'26"
D = 1°03'26"
T = 135.95
L = 271.84
R = 5419.62
EMAX = NC
RUNOUT = 0
345
350
355
360

PROJECT NO:5820-01-62	HWY:STH 162	COUNTY:LA CROSSE	ALIGNMENT DIAGRAM	SHEET 41	E

PROJECT NO:5820-01-62	HWY:STH 162	COUNTY:LA CROSSE	ALIGNMENT DIAGRAM	SHEET 42	E

3

DATE 18SEP15 E S T I M A T E O F Q U A N T I T I E S

LINE NUMBER	ITEM	ITEM DESCRIPTION	UNIT	TOTAL	5820-01-62 QUANTITY
0010	204.0110	Removing Asphaltic Surface	SY	5,807.000	5,807.000
0020	204.0150	Removing Curb & Gutter	LF	2,672.000	2,672.000
0030	204.0155	Removing Concrete Sidewalk	SY	143.000	143.000
0040	204.0165	Removing Guardrail	LF	5,269.000	5,269.000
0050	211.0100	Prepare Foundation for Asphaltic Paving (project) 01. 5820-01-62	LS	1.000	1.000
0060	213.0100	Finishing Roadway (project) 01. 5820-01-62	EACH	1.000	1.000
0070	305.0110	Base Aggregate Dense 3/4-Inch	TON	15,849.000	15,849.000
0080	330.0100	Mill and Relay	SY	129,205.000	129,205.000
0090	416.1010	Concrete Surface Drains	CY	26.000	26.000
0100	440.4410.S	Incentive IRI Ride	DOL	34,400.000	34,400.000
0110	455.0105	Asphaltic Material PG58-28	TON	1,786.000	1,786.000
0120	455.0605	Tack Coat	GAL	11,564.000	11,564.000
0130	460.1101	HMA Pavement Type E-1	TON	31,832.500	31,832.500
0140	460.2000	Incentive Density HMA Pavement	DOL	20,410.000	20,410.000
0150	460.4110.S	Reheating HMA Pavement Longitudinal Joints	LF	83,767.000	83,767.000
0160	465.0120	Asphaltic Surface Driveways and Field Entrances	TON	120.000	120.000
0170	465.0475	Asphalt Center Line Rumble Strips 2-Lane Rural	LF	32,358.000	32,358.000
0180	490.0200	Salvaged Asphaltic Pavement Milling	SY	31,918.000	31,918.000
0190	601.0120	Concrete Curb Type J	LF	100.000	100.000
0200	601.0411	Concrete Curb & Gutter 30-Inch Type D	LF	978.000	978.000
0210	601.0415	Concrete Curb & Gutter 6-Inch Sloped 30-Inch Type J	LF	25,648.000	25,648.000
0220	601.0557	Concrete Curb & Gutter 6-Inch Sloped 36-Inch Type D	LF	5,592.000	5,592.000
0230	602.0405	Concrete Sidewalk 4-Inch	SF	1,413.000	1,413.000
0240	602.0415	Concrete Sidewalk 6-Inch	SF	20,261.000	20,261.000
0250	602.0505	Curb Ramp Detectable Warning Field Yellow	SF	72.000	72.000
0260	611.0535	Manhole Covers Type J-Special	EACH	1.000	1.000
0270	611.8110	Adjusting Manhole Covers	EACH	5.000	5.000
0280	611.8115	Adjusting Inlet Covers	EACH	5.000	5.000
0290	611.8120.S	Cover Plates Temporary	EACH	5.000	5.000
0300	614.0200	Steel Thrie Beam Structure Approach	LF	84.000	84.000
0310	614.0230	Steel Thrie Beam	LF	200.000	200.000
0320	614.0305	Steel Plate Beam Guard Class A	LF	88.000	88.000
0330	614.0345	Steel Plate Beam Guard Short Radius	LF	25.000	25.000
0340	614.0370	Steel Plate Beam Guard Energy Absorbing Terminal	EACH	3.000	3.000
0350	614.0390	Steel Plate Beam Guard Short Radius Terminal	EACH	1.000	1.000
0360	614.0920	Salvaged Rail	LF	232.000	232.000
0370	614.0925	Salvaged Guardrail End Treatments	EACH	4.000	4.000
0380	614.2300	MGS Guardrail 3	LF	8,007.000	8,007.000
0390	614.2330	MGS Guardrail 3 K	LF	5,913.000	5,913.000
0400	614.2500	MGS Thrie Beam Transition	LF	210.000	210.000
0410	614.2610	MGS Guardrail Terminal EAT	EACH	60.000	60.000
0420	618.0100	Maintenance And Repair of Haul Roads (project) 01. 5820-01-62	EACH	1.000	1.000
0430	619.1000	Mobilization	EACH	1.000	1.000
0440	624.0100	Water	MGAL	485.000	485.000
0450	628.7015	Inlet Protection Type C	EACH	5.000	5.000

3

3

DATE 18SEP15 E S T I M A T E O F Q U A N T I T I E S

LINE NUMBER	ITEM	ITEM DESCRIPTION	UNIT	TOTAL	5820-01-62 QUANTITY
0460	634.0612	Posts Wood 4x6-Inch X 12-FT	EACH	50.000	50.000
0470	634.0614	Posts Wood 4x6-Inch X 14-FT	EACH	108.000	108.000
0480	634.0616	Posts Wood 4x6-Inch X 16-FT	EACH	81.000	81.000
0490	634.0618	Posts Wood 4x6-Inch X 18-FT	EACH	27.000	27.000
0500	634.0620	Posts Wood 4x6-Inch X 20-FT	EACH	2.000	2.000
0510	637.2210	Signs Type II Reflective H	SF	1,223.020	1,223.020
0520	637.2230	Signs Type II Reflective F	SF	811.640	811.640
0530	638.2602	Removing Signs Type II	EACH	239.000	239.000
0540	638.3000	Removing Small Sign Supports	EACH	246.000	246.000
0550	642.5201	Field Office Type C	EACH	1.000	1.000
0560	643.0100	Traffic Control (project) 01. 5820-01-62	EACH	1.000	1.000
0570	643.0300	Traffic Control Drums	DAY	3,049.000	3,049.000
0580	643.0410	Traffic Control Barricades Type II	DAY	135.000	135.000
0590	643.0420	Traffic Control Barricades Type III	DAY	135.000	135.000
0600	643.0705	Traffic Control Warning Lights Type A	DAY	225.000	225.000
0610	643.0715	Traffic Control Warning Lights Type C	DAY	275.000	275.000
0620	643.0900	Traffic Control Signs	DAY	4,556.000	4,556.000
0630	646.0106	Pavement Marking Epoxy 4-Inch	LF	88,819.000	88,819.000
0640	646.0126	Pavement Marking Epoxy 8-Inch	LF	450.000	450.000
0650	646.0406	Pavement Marking Same Day Epoxy 4-Inch	LF	73,237.000	73,237.000
0660	647.0110	Pavement Marking Railroad Crossings Epoxy	EACH	2.000	2.000
0670	647.0156	Pavement Marking Arrows Epoxy Type 1	EACH	6.000	6.000
0680	647.0166	Pavement Marking Arrows Epoxy Type 2	EACH	3.000	3.000
0690	647.0456	Pavement Marking Curb Epoxy	LF	402.000	402.000
0700	647.0566	Pavement Marking Stop Line Epoxy 18-Inch	LF	122.000	122.000
0710	647.0726	Pavement Marking Diagonal Epoxy 12-Inch	LF	30.000	30.000
0720	647.0776	Pavement Marking Crosswalk Epoxy 12-Inch	LF	163.000	163.000
0730	648.0100	Locating No-Passing Zones	MI	9.000	9.000
0740	649.0100	Temporary Pavement Marking 4-Inch	LF	65,176.000	65,176.000
0750	649.1200	Temporary Pavement Marking Stop Line Removable Tape 18-Inch	LF	80.000	80.000
0760	650.8000	Construction Staking Resurfacing Reference	LF	46,800.000	46,800.000
0770	650.9910	Construction Staking Supplemental Control (project) 01. 5820-01-62	LS	1.000	1.000
0780	690.0150	Sawing Asphalt	LF	1,170.000	1,170.000
0790	690.0250	Sawing Concrete	LF	103.000	103.000
0800	SPV.0060	Special 01. Adjusting Water Valve Box	EACH	3.000	3.000
0810	SPV.0060	Special 02. Temporary Curb Ramp	EACH	7.000	7.000
0820	SPV.0090	Special 01. Steel Thrie Beam Structure Approach Special	LF	42.000	42.000
0830	SPV.0090	Special 02. Temporary Pedestrian Safety Barrier	LF	422.000	422.000
0840	SPV.0090	Special 03. Removing HMA Pavement Notched Wedge Longitudinal Joint	LF	45,047.000	45,047.000
0850	SPV.0180	Special 01. Temporary Pedestrian Surface	SY	4.000	4.000

3

3

REMOVING ASPHALTIC SURFACE

CATEGORY	STATION TO STATION	LOCATION	APPROXIMTE LENGTH FT	APPROXIMTE WIDTH FT	204.0110 SY	REMARKS
0010	18+05	LT	16	5	9	PE
0010	21+05	RT	16	5	9	PE
0010	59+00 - 60+40	RT	140	50	780	CTH 'JB'
0010	74+00 - 74+60	RT	60	50	350	CTH 'JJ'
0010	138+00	RT	16	5	9	PE
0010	244+85	RT	16	5	9	PE
0010	155+00 - 155+60	RT	60	50	350	SOUCHEK RD
0010	184+60 - 184+90	LT	30	50	200	COLEMAN RD
0010	204+00 - 205+00	LT	100	50	560	DARLING RD
0010	246+40 - 247+20	LT	80	50	450	CTH 'II'
0010	250+20 - 251+00	LT	80	50	450	CTH 'II'
0010	261+00 - 262+00	LT	100	50	560	RUSSIAN COULEE RD
0010	310+30	RT	25	5	14	CE
0010	323+80 - 324+30	LT	50	50	280	FRITZ SCHROEDER RD
0010	324+00	RT	25	5	14	CE
0010	329+00	RT	25	5	14	CE
0010	333+50	RT	25	5	14	CE
0010	333+50	LT	25	5	14	CE
0010	359+00	LT			1,247	CTH 'B'
0010	364+50 - 365+00	LT	50	24 - 35	290	JONES RD
0010	368+93	RT	16	5	9	PE
0010	370+16	RT	16	5	9	PE
0010	370+77	RT	16	5	9	PE
0010	371+40	RT	16	5	9	PE
0010	379+75	RT	25	5	14	CE
0010	394+00	RT	25	5	14	CE
0010	433+99 - 434+26	LT	25	20	60	GASLITE RD
0010	439+24 - 439+48	LT	25	20	60	GASLITE RD
	TOTAL 0010				5,807	

REMOVING CONCRETE SIDEWALK

CATEGORY	STATION TO STATION	LOCATION	204.0155 SY	REMARKS
0010	391+70 - 391+74	RT	10.0	CURB RAMP 1 SW CORNER STH 162/ 17TH AVE S
0010	392+22 - 392+37	LT	6.0	CURB RAMP 4 NW CORNER STH 162/ 17TH AVE S
0010	392+00	RT	16.5	CURB RAMP 2 SE CORNER STH 162/ 17TH AVE S
0010	392+20 - 392+39	RT	21.5	CURB RAMP 3 NE CORNER STH 162/ PEARL ST
0010	393+78 - 393+82	RT	3.0	CURB RAMP 5 SE CORNER STH 162/ OAK ST
0010	394+16 - 394+22	RT	3.0	CURB RAMP 6 NE CORNER STH 162/ OAK ST
0010	394+61 - 394+67	RT	3.0	CURB RAMP 7 SE CORNER STH 162/ BADGER ST
0010	395+05 - 395+26	RT	32.0	CURB RAMP 8 NE CORNER STH 162/ BADGER ST
0010	397+30 - 397+42	RT	48.0	CURB RAMP 9 SE CORNER STH 162/ BOSSHARD ST
	TOTAL 0010		143.0	

3

REMOVING CURB & GUTTER

CATEGORY	STATION TO STATION	LOCATION	204.0150 LF	REMARKS
0010	330+87 - 333+46	CL	538	MEDIAN C&G
0010	333+87 - 337+00	CL	758	MEDIAN C&G
0010	349+97 - 356+48	CL	862	MEDIAN C&G
0010	391+50 - 391+80	RT	43	*CURB RAMP 1 SW CORNER STH 162/ 17TH AVE S
0010	392+22 - 392+37	LT	20	*CURB RAMP 4 NW CORNER STH 162/ 17TH AVE S
0010	392+00	RT	45	*CURB RAMP 2 SE CORNER STH 162/ 17TH AVE S
0010	392+20 - 392+37	RT	27	*CURB RAMP 3 NE CORNER STH 162/ PEARL ST
0010	393+72 - 393+83	RT	25	*CURB RAMP 5 SE CORNER STH 162/ OAK ST
0010	394+15 - 394+28	RT	25	*CURB RAMP 6 NE CORNER STH 162/ OAK ST
0010	394+56 - 394+70	RT	25	*CURB RAMP 7 SE CORNER STH 162/ BADGER ST
0010	395+05 - 395+26	RT	25	*CURB RAMP 8 NE CORNER STH 162/ BADGER ST
0010	395+77 - 396+29	LT	52	
0010	396+96 - 397+44	LT	48	
0010	397+28 - 398+36	RT	108	
0010	397+79 - 397+89	LT	10	
0010	398+87 - 399+23	LT	36	
0010	399+59 - 399+84	RT	25	
		TOTAL 0010	2,672	

*SEE CONSTRUCTION DETAILS - CURB RAMPS

MILL AND RELAY

CATEGORY	STATION TO STATION	RELAID WIDTH LF	LENGTH LF	REFERENCE ONLY DEPTH IN	330.0100 SY	REMARKS
0010	12+28 - 13+33	34	225	5	400	
0010	13+33 - 13+83	34-30	50	5	180	
0010	13+83 - 50+35	30	3,652	5	12,180	
0010	50+35 - 50+85	30-34	50	5	180	
0010	50+85 - 52+05	34	120	5	455	
0010	53+08 - 54+01	34	93	5	355	
0010	54+01 - 54+51	34-30	50	5	180	
0010	54+51 - 201+80	30	14,729	5	52,370	
0010	201+80 - 202+30	29	50	5	165	
0010	202+30 - 204+16	28	186	5	580	
0010	204+16 - 204+66	29	50	5	165	
0010	204+66 - 311+95	30	10,729	5	35,770	
0010	311+95 - 312+45	32	50	5	180	
0010	312+45 - 314+60	34	215	5	820	
0010	314+60 - 317+78	34	318	5	1,205	
0010	318+90 - 320+00	34	110	5	420	
0010	320+00 - 320+50	34-30	50	5	180	
0010	360+00 - 362+91	30	291	5	970	
0010	360+00 - 362+95	32	295	5	1,050	
0010	400+50 - 419+00	30	1,850	5	6,200	
0010	421+43 - 467+00	30	4,557	5	15,200	
				TOTAL 0010	129,205	

REMOVING GUARDRAIL

CATEGORY	STATION TO STATION	LOCATION	204.0165 LF	REMARKS
0010	12+28 - 13+16	LT	88	B-32-160
0010	12+28 - 13+33	RT	105	B-32-160
0010	51+01 - 52+05	LT	105	B-32-12
0010	51+01 - 52+05	RT	105	B-32-12
0010	53+08 - 53+45	RT	37	B-32-12
0010	53+08 - 55+24	LT	216	B-32-12
0010	313+64 - 314+60	LT	96	B-32-15
0010	313+19 - 314+15	RT	96	B-32-15
0010	315+72 - 317+05	LT	133	B-32-15
0010	315+27 - 317+10	RT	183	B-32-15
0010	386+91 - 387+75	LT	84	B-32-0070
0010	386+91 - 387+75	RT	84	B-32-0070
0010	400+50 - 415+00	LT	1,450	CABLE GUARD SYSTEM
0010	401+50 - 413+00	RT	1,150	CABLE GUARD SYSTEM
0010	414+00 - 415+00	RT	100	CABLE GUARD SYSTEM
0010	415+70 - 419+00	RT	330	CABLE GUARD SYSTEM
0010	422+58 - 425+53	RT	295	CABLE GUARD SYSTEM
0010	422+58 - 424+00	LT	142	CABLE GUARD SYSTEM
0010	424+30 - 429+00	LT	470	CABLE GUARD SYSTEM
		TOTAL 0010	5,269	

PREPARE FOUNDATION FOR ASPHALTIC PAVING (5820-01-62)

CATEGORY	STATION TO STATION	LOCATION	211.0100 LS	REMARKS
0010	326+50 - 400+50	CL	1	SALVAGED ASPHALTING MILLING AREA & JONES RD
		TOTAL 0010	1	

3

3

ASPHALTIC SURFACE DRIVEWAYS AND FIELD ENTRANCES

CATEGORY	STATION	LOCATION	LENGTH FT	WIDTH FT	465.0120 TON	REMARKS
0010	18+24	LT	16	10	4.0	PE
0010	21+24	RT	16	10	4.0	PE
0010	138+08	RT	16	10	4.0	PE
0010	244+82	RT	16	10	4.0	PE
0010	310+20	RT	25	10	6.5	CE
0010	324+08	RT	25	10	6.5	CE
0010	328+92	RT	25	10	6.5	CE
0010	333+60	Ll	25	10	6.5	CE
0010	333+66	RT	25	10	6.5	CE
0010	364+00	LT	20	10	5.5	CE
0010	368+93	RT	16	10	4.0	PE
0010	370+12	RT	16	10	4.0	PE
0010	370+75	RT	16	10	4.0	PE
0010	371+38	RT	16	10	4.0	PE
0010	376+10	LT	25	10	7.0	CE
0010	380+30	RT	25	10	7.0	CE
0010	384+00	RT	25	10	7.0	CE
0010	416+05	LT	22	10	6.5	CE
0010	417+38	LT	22	10	6.5	CE
0010	426+00	RT	35	10	10.0	CE
0010	446+18	LT	16	10	6.0	PE
		TOTAL 0010			120.0	

BASE AGGREGATE DENSE 3/4-INCH

CATEGORY	STATION TO STATION	LOCATION	305.0110 TON	REMARKS
0010	20+22 - 45+00	LT	300	*
0010	36+50	RT	3	FE
0010	41+90	RT	3	FE
0010	42+57	LT	5	PE
0010	45+00 - 60+00	LT & RT	115	**
0010	49+30	LT	3	FE
0010	53+50	RT	3	FE
0010	60+00 - 74+18	RT	175	*
0010	70+38 - 74+79	LT	55	*
0010	72+39	LT	5	PE
0010	73+65	LT	6	PE
0010	74+51 - 138+28	RT	770	*
0010	74+51 - 138+28	LT	240	**
0010	76+69	LT	5	PE
0010	86+51	RT	5	PE
0010	106+00	RT	3	FE
0010	106+05	LT	10	PE
0010	125+15	RT	5	PE
0010	126+00	RT	5	PE
0010	128+10	LT	3	FE
0010	139+94 - 155+07	RT	230	*
0010	139+94 - 147+65	LT	30	**
0010	146+92	LT	5	PE
0010	147+65 - 149+71	LT	18	FARM
0010	149+71 - 155+07	LT	20	**
0010	150+68	RT	5	PE
0010	151+24	LT	5	FE
0010	151+68	RT	5	FE
0010	155+31 - 275+42	RT	1,800	*
0010	155+31 - 325+00	LT	650	**
0010	183+20	RT	5	FE
0010	184+13	RT	5	PE
0010	204+56	RT	5	PE
0010	217+92	RT	5	PE
0010	218+71	LT	10	PE
0010	229+20	RT	10	PE
0010	280+19	RT	10	FE
0010	281+80 - 300+33	RT	140	*
0010	298+95	RT	10	PE
0010	307+00	RT	10	CE
0010	357+08	LT & RT	15	PE
0010	358+39 - 358+84	LT	5	*
0010	359+70 - 363+12	LT	20	*
0010	360+46	LT	5	PE
0010	363+43 - 379+74	RT	85	*
0010	363+43 - 364+67	LT	8	*
0010	364+50	LT	8	* ADDITIONAL TO LEVEL AREA OUT
0010	364+87 - 365+59	LT	8	*
0010	365+98	RT	5	PE
0010	367+35	RT	5	PE
0010	372+18	RT	5	PE
0010	372+86	RT	5	PE
0010	373+90	RT	5	PE
0010	375+17	RT	5	PE
0010	378+12	RT	5	PE
0010	386+28	RT	10	CE
0010	389+14	RT	10	CE
0010	400+92	RT	5	PE
0010	424+48	LT	3	FE
0010	430+24	LT	5	PE
0010	432+44	LT	5	PE
0010	433+05	RT	5	PE
0010	434+78	RT	5	PE
0010	430+00 - 467+00	LT & RT	275	**
0010	441+77	RT	10	CE
0010	449+86	RT	5	PE
0010	451+26	LT	5	PE
0010	459+76	RT	10	CE
0010	463+35	RT	10	CE
0010	12+28 - 315+00	CL	10,000	TRANSITION WEDGING AREA
0010			600	IH 90 MEDIAN AREA
		TOTAL 0010	15,849	

* Note this is for the area behind the curb & gutter or underneath to level out.
** Note This is for shoulder in rural area where there is no curb and gutter.

3

3

CONCRETE SURFACE DRAINS

CATEGORY	STATION	LOCATION	WIDTH FT	LENGTH FT	DEPTH IN	416.1010 CY	REMARKS
0010	27+43	LT	5	5	6	0.5	
0010	31+98	LT	5	5	6	0.5	
0010	39+23	LT	5	5	6	0.5	
0010	60+13	RT	5	5	6	0.5	
0010	61+71	RT	5	5	6	0.5	
0010	63+70	RT	5	5	6	0.5	
0010	73+72	RT	5	5	6	0.5	
0010	74+59	LT	5	5	6	0.5	
0010	75+06	RT	5	5	6	0.5	
0010	76+20	RT	5	5	6	0.5	
0010	84+00	RT	5	5	6	0.5	
0010	95+83	RT	5	5	6	0.5	
0010	99+00	RT	5	5	6	0.5	
0010	108+56	RT	5	5	6	0.5	
0010	124+71	RT	5	5	6	0.5	
0010	125+27	RT	5	5	6	0.5	
0010	126+00	RT	5	5	6	0.5	
0010	137+09	RT	5	5	6	0.5	
0010	139+88	RT	5	5	6	0.5	
0010	153+63	RT	5	5	6	0.5	
0010	154+29	RT	5	5	6	0.5	
0010	154+72	RT	5	5	6	0.5	
0010	155+78	RT	5	5	6	0.5	
0010	158+62	RT	5	5	6	0.5	
0010	163+58	RT	5	5	6	0.5	
0010	172+58	RT	5	5	6	0.5	
0010	179+69	RT	5	5	6	0.5	
0010	182+66	RT	5	5	6	0.5	
0010	189+04	RT	5	5	6	0.5	
0010	193+70	RT	5	5	6	0.5	
0010	212+74	RT	5	5	6	0.5	
0010	217+35	RT	5	5	6	0.5	
0010	217+99	RT	5	5	6	0.5	
0010	232+01	RT	5	5	6	0.5	
0010	242+38	RT	5	5	6	0.5	
0010	244+09	RT	5	5	6	0.5	
0010	244+68	RT	5	5	6	0.5	
0010	261+73	RT	5	5	6	0.5	
0010	264+39	RT	5	5	6	0.5	
0010	274+53	RT	5	5	6	0.5	
0010	281+80	RT	5	5	6	0.5	
0010	292+57	RT	5	5	6	0.5	
0010	293+16	RT	5	5	6	0.5	
0010	297+80	RT	5	5	6	0.5	
0010	359+52	LT	5	5	6	0.5	
0010	359+87	LT	5	5	6	0.5	
0010	360+28	LT	5	5	6	0.5	
0010	360+86	LT	5	5	6	0.5	
0010	363+55	LT	5	5	6	0.5	
0010	363+55	RT	5	5	6	0.5	
0010	373+77	RT	5	5	6	0.5	
0010	374+00	RT	5	5	6	0.5	
	TOTAL 0010					26	

ASPHALT CENTER LINE RUMBLE STRIP 2-LANE RURAL

CATEGORY	STATION TO STATION	LOCATION	465.0475 LF
0010	12+55 - 51+26	CL	3,871
0010	53+53 - 57+00	CL	347
0010	63+00 - 72+00	CL	900
0010	77+00 - 153+00	CL	7,600
0010	157+00 - 182+00	CL	2,500
0010	187+00 - 202+00	CL	1,500
0010	207+00 - 244+00	CL	3,700
0010	253+00 - 279+00	CL	2,600
0010	284+00 - 317+50	CL	3,350
0010	403+00 - 418+50	CL	1,550
0010	421+60 - 466+00	CL	4,440
	TOTAL 0010		32,358

CONCRETE CURB TYPE J

CATEGORY	STATION	LOCATION	601.0120 LF	REMARKS
0010	359+00	LT	100	CTH 'B' ISLAND
		TOTAL 0010	100	

INLET PROTECTION TYPE C

CATEGORY	STATION	LOCATION	628.7015 EACH	REMARKS
0010	342+00	LT	2	MEDIAN
0010	354+00	LT	1	MEDIAN
0010	388+53	RT	1	B-32-0070 IN BANGOR
0010	388+67	LT	1	B-32-0070 IN BANGOR
		TOTAL 0010	5	

3

3

ASPHALTIC ITEMS

CATEGORY	STATION TO STATION	LOCATION	APPROXIMATE WIDTH FT	DEPTH IN	455.0105 ASPHALTIC MATERIAL PG58-28 TON	455.0605 TACK COAT GAL	460.1101 HMA PAVEMENT TYPE E-1 TON	460.4110.S REHEATING HMA LONGITUDINAL JOINT LF	SPV.0090.03 REMOVING HMA PAVEMENT NOTCHED WEDGE LONGITUDINAL JOINT LF	REMARKS
0010	12+27.71 - 13+33	CL	34	3.5	5	30	80	* 210	+ 105	
0010	13+33 - 13+83	CL	34-30	3.5	2	15	35	* 100	+ 50	SHOULDER TAPERS FROM 6 FT - 4 FT
0010	13+83 - 50+35	CL	30	3.5	135	855	2,410	* 7,304	+ 3,652	
0010	50+35 - 50+85	CL	30-34	3.5	2	15	35	* 100	+ 50	SHOULDER TAPERS FROM 4 FT - 6 FT
0010	50+85 - 52+05	CL	34	3.5	5	35	90	* 240	+ 120	
0010	53+08 - 54+01	CL	34	3.5	4	25	70	* 186	+ 93	
0010	54+01 - 54+51	CL	34-30	3.5	2	15	35	* 100	+ 50	SHOULDER TAPERS FROM 6 FT - 4 FT
0010	54+51 - 201+80	CL	30	3.5	540	3,440	9,710	* 29,458	+ 14,729	
0010	201+80 - 202+30	CL	29	3.5	2	15	32	* 100	+ 50	
0010	202+30 - 204+16	CL	28	3.5	7	40	115	* 372	+ 186	
0010	204+16 - 204+66	CL	29	3.5	2	15	32	* 100	+ 50	
0010	204+66 - 311+95	CL	30	3.5	390	2,510	7,080	* 21,458	+ 10,729	
0010	311+95 - 312+45	CL	32	3.5	2	15	35	* 100	+ 50	SHOULDER TAPERS FROM 4 FT - 6 FT
0010	312+45 - 314+60	CL	34	3.5	9	60	160	* 430	+ 215	
0010	315+72 - 317+78	CL	34	3.5	9	55	155	* 412	+ 206	
0010	318+90 - 320+00	CL	34	3.5	5	30	85	* 220	+ 110	
0010	320+00 - 320+50	CL	34-30	3.5	2	15	35	* 100	+ 50	SHOULDER TAPERS FROM 6 FT - 4 FT
0010	320+50 - 326+69	CL	30	3.5	23	145	410	* 1,238	+ 619	
0010	326+69 - 330+87	CL	44-57	3.5	26	165	470	+ 418	+ 418	IH 90 AREA BEFORE MEDIAN
0010	330+87 - 333+46	CL	44	3.5	14	90	252	+ 259	+ 259	IH 90 AREA WITH MEDIAN
0010	333+46 - 333+87	CL	64	3.5	4	20	60	+ 41	+ 41	GAP BETWEEN MEDIANS
0010	333+87 - 337+00	CL	44	3.5	18	110	305	+ 313	+ 313	IH 90 AREA WITH MEDIAN
0010	337+00 - 339+06	TURN LANE	0-10	3.5	2	10	25	+ 206		IH 90 AREA WITH MEDIAN LEFT TURN LANE
0010	337+00 - 339+06	CL	44	3.5	9	55	155	+ 206	+ 206	IH 90 AREA WITH MEDIAN
0010	339+06 - 339+65	CL	64	3.5	5	30	85	+ 59	+ 59	GAP BETWEEN MEDIANS
0010	339+65 - 347+00	CL	44	3.5	39	255	710	+ 735	+ 735	IH 90 AREA WITH MEDIAN
0010	347+00 - 349+50	TURN LANE	0-10	3.5	2	10	30	+ 250		IH 90 AREA WITH MEDIAN LEFT TURN LANE
0010	347+00 - 349+50	CL	44	3.5	14	90	250	+ 250	+ 250	IH 90 AREA WITH MEDIAN
0010	349+50 - 349+97	CL	64	3.5	4	25	70	+ 47	+ 47	GAP BETWEEN MEDIANS
0010	349+97 - 354+00	CL	44	3.5	22	140	390	+ 403	+ 403	IH 90 AREA WITH MEDIAN
0010	354+00 - 359+00	TURN LANE	0-10	3.5	3	20	55	+ 500		IH 90 AREA WITH MEDIAN
0010	354+00 - 359+00	CL	44	3.5	27	175	485	+ 500	+ 500	IH 90 AREA WITH MEDIAN
0010	359+00 - 361+00	CL	44-30	3.5	9	60	165	+ 200	+ 200	
0010	361+00 - 363+12	CL	30	3.5	8	55	150	+ 212	+ 212	
0010	363+43 - 387+75	CL	30	3.5	90	570	1,610	+ 2,432	+ 2,432	RURAL - VILLAGE OF BANGOR
0010	388+42 - 388+90	CL	34	3.5	2	15	36	+ 48	+ 48	RURAL - VILLAGE OF BANGOR
0010	388+90 - 400+50	CL	24	3.5	35	220	615	+ 1,160	+ 1,160	URBAN - VILLAGE OF BANGOR
0010	400+50 - 467+00	CL	30	3.5	245	1,555	4,390	* 13,300	+ 6,650	RURAL
0010	59+00 - 60+40	RT		2.0	5	55	90			CTH 'JB'
0010	74+00 - 74+60	RT		2.0	2	25	40			CTH 'JJ'
0010	155+00 - 155+60	RT		2.0	2	25	40			SOUCHEK RD
0010	184+60 - 184+90	LT		2.0	2	15	20			COLEMAN RD
0010	204+00 - 205+00	LT		2.0	4	40	65			DARLING RD
0010	246+40 - 247+20	LT		2.0	3	35	50			CTH 'II'
0010	250+20 - 251+00	LT		2.0	3	35	50			CTH 'II'
0010	261+00 - 262+00	LT		2.0	4	40	65			RUSSIAN COULEE RD
0010	323+80 - 324+30	LT		2.0	2	20	35			FRITZ SCHROEDER RD
0010	359+00	LT		2.0	8	88	145			CTH 'B'
0010	364+25 - 365+00	LT		3.5	2	25	35			JONES RD
0010	388+50 - 389+40	RT	6	2.0	0.5	5.0	7			URBAN - VILLAGE OF BANGOR
0010	389+50 - 389+87	LT	6	2.0	0.5	2.0	3			URBAN - VILLAGE OF BANGOR
0010	390+47 - 393+32	LT	6	2.0	1.5	14.0	22			URBAN - VILLAGE OF BANGOR
0010	390+80 - 392+57	RT	6	2.0	1.0	9.0	14			URBAN - VILLAGE OF BANGOR
0010	392+00	RT		3.5	2.5	14	40			17TH AVE N
0010	392+00	RT		3.5	2.5	14	40			PEARL ST
0010	393+57 - 394+52	RT	6	2.0	0.5	5.0	7.5			URBAN - VILLAGE OF BANGOR
0010	393+72 - 394+14	LT	6	2.0	0.5	2.0	3.5			URBAN - VILLAGE OF BANGOR
0010	394+54 - 394+78	LT	6	2.0	0.5	1.0	2.0			URBAN - VILLAGE OF BANGOR
0010	395+18 - 395+34	LT	6	2.0	0.5	2.0	1.5			URBAN - VILLAGE OF BANGOR
0010	395+86 - 396+14	LT	6	2.0	0.5	2.0	2.5			URBAN - VILLAGE OF BANGOR
0010	395+10 - 395+34	LT	6	2.0	0.5	2.0	2.0			URBAN - VILLAGE OF BANGOR
0010	395+32 396+30	RT	6	2.0	0.5	5.0	7.5			URBAN - VILLAGE OF BANGOR
0010	395+74 - 396+14	LT	6	2.0	0.5	2.0	3.0			URBAN - VILLAGE OF BANGOR
0010	396+54 - 396+77	LT	6	2.0	0.5	2.0	2.0			URBAN - VILLAGE OF BANGOR
0010	397+37 - 400+50	LT	6	2.0	1.5	15.0	24.0			URBAN - VILLAGE OF BANGOR
0010	399+30 399+90	RT	6	2.0	0.5	3.0	4.5			URBAN - VILLAGE OF BANGOR
0010	433+99 - 434+26	LT		2.0	1.0	5	10			GASLITE RD
0010	439+24 - 439+48	LT		2.0	1	5	10			GASLITE RD
		TOTAL 0010			1,778.0	11,512.0	31,752.5	83,767.0	45,047.0	

* BOTH LAYERS
\+ UPPER LAYER ONLY

3

STATE PROJECT NO: 5820-01-62	HWY STH 162	COUNTY: LA CROSSE	MISCELLANEOUS QUANTITIES	SHEET NO: 49	E

3

ASPHALTIC ITEMS - CONTINUED

CATEGORY	STATION TO STATION	LOCATION	APPROXIMATE WIDTH FT	DEPTH IN	455.0105 ASPHALTIC MATERIAL PG58-28 TON	455.0605 TACK COAT GAL	460.1101 HMA PAVEMENT TYPE E-1 TON	460.4110.S REHEATING HMA LONGITUDINAL JOINT LF	SPV.0090.03 REMOVING HMA PAVEMENT NOTCHED WEDGE LONGITUDINAL JOINT LF	REMARKS
0020	388+90 - 389+50	LT	6	2.0	0.5	3.0	4.5			URBAN - VILLAGE OF BANGOR PARKING
0020	389+40 - 390+80	RT	6	2.0	1.0	7	10.5			URBAN - VILLAGE OF BANGOR PARKING
0020	389+87 - 390+47	LT	6	2.0	0.5	3.0	4.5			URBAN - VILLAGE OF BANGOR PARKING
0020	392+57 - 393+57	RT	6	2.0	0.5	5.0	7.5			URBAN - VILLAGE OF BANGOR PARKING
0020	393+32 - 393+72	LT	6	2.0	0.5	2.0	3.0			URBAN - VILLAGE OF BANGOR PARKING
0020	394+14 - 394+54	LT	6	2.0	0.5	2.0	3.0			URBAN - VILLAGE OF BANGOR PARKING
0020	394+52 - 395+32	RT	6	2.0	0.5	4.0	6.0			URBAN - VILLAGE OF BANGOR PARKING
0020	396+30 - 399+30	RT	6	2.0	1.5	14.0	23.0			URBAN - VILLAGE OF BANGOR PARKING
0020	399+90 - 400+50	RT	6	2.0	0.5	3.0	4.5			URBAN - VILLAGE OF BANGOR PARKING
0020	394+78 - 395+18	LT	6	2.0	0.5	2.0	3.0			URBAN - VILLAGE OF BANGOR PARKING
0020	395+34 - 395+74	LT	6	2.0	0.5	2.0	3.0			URBAN - VILLAGE OF BANGOR PARKING
0020	396+14 - 396+54	LT	6	2.0	0.5	2.0	3.0			URBAN - VILLAGE OF BANGOR PARKING
0020	396+77 - 397+37	LT	6	2.0	0.5	3.0	4.5			URBAN - VILLAGE OF BANGOR PARKING
		TOTAL 0020			8	52	80.0	0.0	0.0	
		GRAND TOTAL			1,786	11,564.0	31,832.5	83,767.0	45,047.0	

3

3

SALVAGED ASPHALTIC PAVEMENT MILLING

CATEGORY	STATION TO STATION	LOCATION	WIDTH FT	LENGTH FT	DEPTH IN	490.0200 SY	REMARKS
0010	326+50 - 363+12	CL	44	3,350	3.5	17,900	IH 90 INTERCHANGE AREA
0010	363+43 - 387+75	CL	32	2,430	3.5	8,700	IH 90 INTERCHANGE AREA
0010	388+43 - 389+00	CL	32	50	3.5	210	IH 90 INTERCHANGE AREA
0010	389+00 - 400+50	CL	24	1,250	3.5	3,070	URBAN - VILLAGE OF BANGOR
0010	388+50 - 389+40	RT	6	90	2.0	60	URBAN - VILLAGE OF BANGOR
0010	389+50 - 389+87	LT	6	37	2.0	25	URBAN - VILLAGE OF BANGOR
0010	390+47 - 393+32	LT	6	285	2.0	190	URBAN - VILLAGE OF BANGOR
0010	390+80 - 392+57	RT	6	177	2.0	120	URBAN - VILLAGE OF BANGOR
0010	392+00	RT	36	50	3.5	200	17TH AVE S
0010	392+00	RT	36	50	3.5	200	PEARL ST
0010	393+57 - 394+52	RT	6	95	2.0	65	URBAN - VILLAGE OF BANGOR
0010	393+72 - 394+14	LT	6	42	2.0	28	URBAN - VILLAGE OF BANGOR
0010	394+54 - 394+78	LT	6	24	2.0	16	URBAN - VILLAGE OF BANGOR
0010	395+18 - 395+34	LT	6	16	2.0	11	URBAN - VILLAGE OF BANGOR
0010	395+86 - 396+14	LT	6	28	2.0	19	URBAN - VILLAGE OF BANGOR
0010	395+10 - 395+34	LT	6	24	2.0	16	URBAN - VILLAGE OF BANGOR
0010	395+32 396+30	RT	6	98	2.0	66	URBAN - VILLAGE OF BANGOR
0010	395+74 - 396+14	LT	6	40	2.0	27	URBAN - VILLAGE OF BANGOR
0010	396+54 - 396+77	LT	6	23	2.0	16	URBAN - VILLAGE OF BANGOR
0010	397+37 - 400+50	LT	6	313	2.0	209	URBAN - VILLAGE OF BANGOR
0010	399+30 399+90	RT	6	60	2.0	40	URBAN - VILLAGE OF BANGOR
					TOTAL 0010	31,188	
0020	388+90 - 389+52	LT	6	62	2	42	URBAN - VILLAGE OF BANGOR PARKING
0020	389+40 - 390+92	RT	6	152	2	102	URBAN - VILLAGE OF BANGOR PARKING
0020	389+87 - 390+45	LT	6	58	2	40	URBAN - VILLAGE OF BANGOR PARKING
0020	392+57 - 393+52	RT	6	95	2	64	URBAN - VILLAGE OF BANGOR PARKING
0020	393+32 - 393+72	LT	6	40	2	28	URBAN - VILLAGE OF BANGOR PARKING
0020	394+14 - 394+60	LT	6	46	2	31	URBAN - VILLAGE OF BANGOR PARKING
0020	394+52 - 395+34	RT	6	82	2	55	URBAN - VILLAGE OF BANGOR PARKING
0020	396+30 - 399+30	RT	6	300	2	200	URBAN - VILLAGE OF BANGOR PARKING
0020	399+86 - 400+50	RT	6	64	2	43	URBAN - VILLAGE OF BANGOR PARKING
0020	394+78 - 395+10	LT	6	32	2	22	URBAN - VILLAGE OF BANGOR PARKING
0020	395+34 - 395+86	LT	6	52	2	35	URBAN - VILLAGE OF BANGOR PARKING
0020	396+14 - 396+52	LT	6	38	2	26	URBAN - VILLAGE OF BANGOR PARKING
0020	396+77 - 397+40	LT	6	63	2	42	URBAN - VILLAGE OF BANGOR PARKING
					TOTAL 0020	730	

GRAND TOTAL 31,918

3

3

CONCRETE CURB AND GUTTER 6-INCH SLOPED 36-INCH TYPE D

CATEGORY	STATION TO STATION	LOCATION	601.0557 LF	REMARKS
0010	73+71 - 74+18	RT	60	CTH 'JJ' - TYPE "B" INTERSECTION
0010	74+68 - 74+80	RT	40	CTH 'JJ' - TYPE "B" INTERSECTION
0010	154+75 - 155+17	RT	60	SOUCHEK RD
0010	155+44 - 155+75	RT	40	SOUCHEK RD
0010	330+87 - 333+46	CL	538	IH 90 AREA MEDIAN
0010	337+00 - 339+06	CL	758	IH 90 AREA MEDIAN
0010	346+00 - 349+50	CL	700	IH 90 AREA MEDIAN WITH LEFT TURN LANE
0010	349+97 - 356+48	CL	862	IH 90 AREA MEDIAN
0010	358+39 - 358+84	LT	58	CTH 'B'
0010	359+70 - 363+12	LT	403	CTH 'B'
0010	363+52 - 374+00	RT	1048	
0010	363+52 - 364'J'+30	LT	138	RR TRACKS TO JONES RD
0010	364'J'+30 - 365+59	LT	140	
0010	426+20 - 429+33	RT	313	
0010	429+33 - 431+50	LT & RT	434	
		TOTAL 0010	5,592	

CONCRETE CURB & GUTTER 6-INCH SLOPED 30-INCH TYPE J

CATEGORY	STATION TO STATION	LOCATION	CL TO FLAG LF	601.0415 LF	REMARKS
0010	20+22 - 45+00	LT	16	2,478	
0010	60+13 - 73+72	RT	16	1,359	
0010	70+38 - 74+79	LT	16	441	
0010	75+06 - 138+28	RT	16	6,322	
0010	139+88 - 154+72	RT	16	1,484	
0010	155+78 - 201+80	RT	16	4,602	
0010	201+80 - 202+30	RT	16-14	50	SHOULDER TAPER
0010	202+30 - 204+16	RT	14	186	
0010	204+16 - 204+66	RT	14-16	50	SHOULDER TAPER
0010	204+66 - 275+42	RT	16	7,076	
0010	281+80 - 297+80	RT	16	1,600	
		TOTAL 0010		25,648	

3

CONCRETE CURB & GUTTER 30-INCH TYPE D

CATEGORY	STATION TO STATION	LOCATION	OFFSET FROM CL TO FLAG LF	601.0411 LF	REMARKS
0010	388+47 - 389+73	RT	18	126	
0010	389+08 - 389+41	LT	18	33	
0010	391+39 - 392+41	LT	18	102	SE CORNER 17TH AVE
0010	391+50 - 391+80	RT	18 - 14	55	SW CORNER 17TH AVE
0010	392+22 - 392+37	RT	18	25	NW CORNER 17TH AVE/ STH 162
0010	392+20 - 392+37	RT	16.5 - 20	55	NW CORNER PEARL ST/ STH 162
0010	392+76 - 392+95	RT	18	19	
0010	393+44 - 393+83	RT	18	50	SE CORNER OAK ST
0010	393+63 - 394+15	LT	18	52	
0010	394+15 - 394+28	RT	18	25	NE CORNER OAK ST
0010	394+45 - 395+23	LT	18	78	
0010	394+56 - 394+70	RT	18	25	SE CORNER BADGER ST
0010	395+05 - 395+26	RT	18	54	NE CORNER BADGER ST
0010	395+77 - 396+29	LT	18	52	
0010	396+96 - 397+44	LT	18	48	
0010	397+28 - 398+36	RT	18	108	
0010	397+79 - 397+89	LT	18	10	
0010	398+87 - 399+23	LT	18	36	
0010	399+59 - 399+84	RT	18	25	
			TOTAL 0010	978	

PAVEMENT MARKING RAILROAD CROSSINGS EPOXY

CATEGORY	STATION STATION	LOCATION	647.0110 EACH	REMARKS
0010	360+70 - 363+20	RT	1	
0010	363+44 - 365+94	LT	1	
		TOTAL 0010	2	

ADJUSTING INLET COVERS

CATEGORY	STATION	LOCATION	611.8115 EACH	REMARKS
0010	342+00	LT	2	INLETS IN MEDIAN
0010	354+30	LT	1	INLET IN MEDIAN
0010	388+53	RT	1	B-32-0070 IN BANGOR
0010	388+67	LT	1	B-32-0070 IN BANGOR
		TOTAL 0010	5	

3

CONCRETE SIDEWALK 4-INCH

CATEGORY	STATION TO STATION	LOCATION	602.0405 SF	*EXCAVATION COMMON CY	REMARKS
0010	391+50 - 391+80	RT	275	1.5	CURB RAMP 1 SW CORNER STH 162/ 17TH AVE S
0010	392+22 - 392+37	LT	55		CURB RAMP 4 NW CORNER STH 162/ 17TH AVE S
0010	392+00	RT	345	3.0	CURB RAMP 2 SE CORNER STH 162/ 17TH AVE S
0010	392+20 - 392+37	RT	200	1.0	CURB RAMP 3 NE CORNER STH 162/ PEARL ST
0010	393+72 - 393+83	RT	30		CURB RAMP 5 SE CORNER STH 162/ OAK ST
0010	394+15 - 394+28	RT	30		CURB RAMP 6 NE CORNER STH 162/ OAK ST
0010	394+56 - 394+62	RT	30		CURB RAMP 7 SE CORNER STH 162/ BADGER ST
0010	395+05 - 395+26	RT	400		CURB RAMP 8 NE CORNER STH 162/ BADGER ST
0010	397+30 - 397+42	RT	48		CURB RAMP 9 END OF SIDEWALK AT BOSSHARD ST
		TOTAL 0010	1,413		SEE CONSTRUCTION DETAILS, CURB RAMP

* EXCAVATION COMMON IS REFERENCE ONLY AND FOR THE TERRACE AREAS. SEE SPECIAL PROVISIONS FOR CONCRETE SIDEWALK.

CONCRETE SIDEWALK 6-INCH

CATEGORY	STATION TO STATION	LOCATION	602.0415 SF	REMARKS
0010	330+80 - 333+45	MEDIAN	2,742	IH 90 AREA MEDIAN
0010	333+91 - 337+85	MEDIAN	5,297	IH 90 AREA MEDIAN
0010	346+00 - 349+50	MEDIAN	4,700	IH 90 AREA MEDIAN WITH LEFT TURN LANE
0010	349+93 - 356+50	MEDIAN	7,372	IH 90 AREA MEDIAN
0010	454+84 - 455+00	LT	150	P.E.
		TOTAL 0010	20,261	

CURB RAMP DETECTABLE WARNING FIELD YELLOW

CATEGORY	STATION TO STATION	LT/RT	602.0505 SF	REMARKS
0010	391+50 - 391+80	RT	8	CURB RAMP 1 SW CORNER STH 162/ 17TH AVE S
0010	392+22 - 392+37	LT	8	CURB RAMP 4 NW CORNER STH 162/ 17TH AVE S
0010	392+00	RT	8	CURB RAMP 2 SE CORNER STH 162/ 17TH AVE S
0010	392+20 - 392+37	RT	8	CURB RAMP 3 NE CORNER STH 162/ PEARL ST
0010	393+72 - 393+83	RT	8	CURB RAMP 5 SE CORNER STH 162/ OAK ST
0010	394+15 - 394+28	RT	8	CURB RAMP 6 NE CORNER STH 162/ OAK ST
0010	394+56 - 394+62	RT	8	CURB RAMP 7 SE CORNER STH 162/ BADGER ST
0010	395+05 - 395+26	RT	8	CURB RAMP 8 NE CORNER STH 162/ BADGER ST
0010	397+42	RT	8	CURB RAMP 9 END OF SIDEWALK AT BOSSHARD ST
		TOTAL 0010	72	

ADJUSTING MANHOLE COVERS

CATEGORY	STATION	LOCATION	CL TO MH FT	611.8110 EACH	REMARKS
0020	388+77	RT	18	1	FIBER OPTIC MH
0020	391+88	RT	14	1	WATER MH
0020	394+00	CL	0	1	SAN MH
0020	395+86	CL	0	1	SAN MH
0020	397+55	CL	0	1	SAN MH
			TOTAL 0020	5	

COVER PLATES TEMPORARY

CATEGORY	STATION	LOCATION	CL TO MH FT	611.8120.S EACH	REMARKS
0020	388+77	RT	18	1	FIBER OPTIC MH
0020	391+88	RT	14	1	WATER MH
0020	394+00	CL	0	1	SAN MH
0020	395+86	CL	0	1	SAN MH
0020	397+55	CL	0	1	SAN MH
		TOTAL 0020		5	

WATER

CATEGORY	STATION TO STATION	LOCATION	624.0100 MGAL	REMARKS
0010	12+28 - 14+53	ML	3	
0010	14+53 - 16+53	ML	2	TAPER 34 FT TO 30 FT
0010	16+53 - 51+00	ML	30	
0010	51+00 - 52+05	ML	1	
0010	53+08 - 55+24	ML	2	
0010	55+24 - 57+24	ML	2	TAPER 34 FT TO 30 FT
0010	57+24 - 311+64	ML	212	
0010	311+64 - 313+64	ML	2	TAPER 30 FT TO 34 FT
0010	313+64 - 314+60	ML	1	
0010	315+27 - 318+30	ML	3	
0010	318+30 - 320+30	ML	2	TAPER 34 FT TO 30 FT
0010	320+30 - 467+50	ML	125	
0010		VARIOUS	50	PE, CE, FE, SIDE ROADS
0010			50	UNDISTRIBUTED
		TOTAL 0010	485	

3

3

STEEL PLATE BEAM GUARD

CATEGORY	STATION	TO	STATION	LOCATION	614.0200 STEEL THRIE BEAM STRUCTURE APPROACH LF	614.0230 STEEL THRIE BEAM LF	614.0305 STEEL PLATE BEAM GUARD CLASS A LF	614.0345 STEEL PLATE BEAM GUARD SHORT RADIUS LF	614.0370 STEEL PLATE BEAM GUARD ENERGY ABSORBING TERMINAL EACH	614.0390 STEEL PLATE BEAM GUARD SHORT RADIUS TERMINAL EACH	REMARKS
0010	50+85	-	51+35	RT					1		B-32-12
0010	51+23	-	51+72	LT					1		B-32-12
0010	51+35	-	51+85	RT			50				B-32-12
0010	51+72	-	51+85	LT			13				B-32-12
0010	51+85	-	52+06	LT	21						B-32-12
0010	51+85	-	52+06	RT	21						B-32-12
0010	52+06	-	53+06	RT							B-32-12
0010	52+06	-	53+06	LT		100					B-32-12
0010	53+06	-	53+26	RT	21	100					B-32-12
0010	53+06	-	53+26	LT	21						B-32-12
0010	53+26	-	53+51	LT			25				B-32-12
0010	53+26	-	53+28	RT				25			B-32-12: RADIUS 8 FT
0010	53+28	-	53+29	RT						1	B-32-12
0010	53+51	-	54+01	LT					1		B-32-12
				TOTAL 0010	84	200	88	25	3	1	

SALVAGED RAIL

CATEGORY	STATION	TO	STATION	LOCATION	614.0920 LF	REMARKS
0010	419+00	-	419+58	LT	58	B-32-288 *
0010	419+00	-	419+58	RT	58	B-32-288 *
0010	422+00	-	422+58	LT	58	B-32-288 *
0010	422+00	-	422+58	RT	58	B-32-288 *
					232	

* PROPERTY OF THE STATE. CONTACT TIM HAMMES, PATROL SUPERINTENDENT FOR LA CROSSE COUNTY HIGHWAY DEPARTMENT, (608) 792-1216

SALVAGED GUARDRAIL END TREATMENTS

CATEGORY	STATION	LOCATION	614.0925 EACH	REMARKS
0010	419+00	LT	1	B-32-288 *
0010	419+00	RT	1	B-32-288 *
0010	422+00	LT	1	B-32-288 *
0010	422+00	RT	1	B-32-288 *
		TOTAL 0010	4	

* PROPERTY OF THE STATE. CONTACT TIM HAMMES, PATROL SUPERINTENDENT FOR LA CROSSE COUNTY HIGHWAY DEPARTMENT, (608) 792-1216

MANHOLE COVERS TYPE J-SPECIAL

CATEGORY	STATION	LOCATION	611.0535 EACH	REMARKS
0010	391+99	CL	1	
		TOTAL 0010	1	

3

MGS GUARDRAIL

CATEGORY	STATION TO STATION	LT/RT	614.2300 MGS GUARDRAIL 3 LF	614.2330 MGS GUARDRAIL 3K LF	614.2500 MGS THRIE BEAM TRANSITION LF	614.2610 MGS GUARDRAIL EAT EACH	SPV.0090.01 STEEL THRIE BEAM STRUCTURE APPROACH SPECIAL LF	REMARKS
0010	12+28 - 12+48	LT			21			B-32-160
0010	12+28 - 12+48	RT			21			B-32-160
0010	12+48 - 12+91	LT	43					B-32-160
0010	12+48 - 13+08	RT	60					B-32-160
0010	12+91 - 13+44	LT				1		B-32-160
0010	13+08 - 13+61	RT				1		B-32-160
0010	60+70 - 61+23	LT				1		18 FT TO FACE OF GUARD RAIL
0010	61+23 - 66+48	LT	525					18 FT TO FACE OF GUARD RAIL
0010	66+48 - 67+01	LT				1		18 FT TO FACE OF GUARD RAIL
0010	77+69 - 78+22	LT				1		18 FT TO FACE OF GUARD RAIL
0010	78+22 - 101+47	LT		2,325				18 FT TO FACE OF GUARD RAIL
0010	101+47 - 102+00	LT				1		18 FT TO FACE OF GUARD RAIL
0010	139+78 - 140+31	LT				1		18 FT TO FACE OF GUARD RAIL
0010	140+31 - 145+56	LT	525					18 FT TO FACE OF GUARD RAIL
0010	145+56 - 146+09	LT				1		18 FT TO FACE OF GUARD RAIL
0010	167+10 - 167+63	LT				1		18 FT TO FACE OF GUARD RAIL
0010	167+63 - 181+88	LT		1,425				18 FT TO FACE OF GUARD RAIL
0010	181+88 - 182+41	LT				1		18 FT TO FACE OF GUARD RAIL
0010	192+94 - 193+47	LT				1		18 FT TO FACE OF GUARD RAIL
0010	193+47 - 203+09.5	LT		963				18 FT TO FACE OF GUARD RAIL
0010	203+09.5 - 203+62.5	LT				1		18 FT TO FACE OF GUARD RAIL
0010	205+17 - 205+70	LT				1		18 FT TO FACE OF GUARD RAIL
0010	205+70 - 217+70	LT		1,200				18 FT TO FACE OF GUARD RAIL
0010	217+70 - 218+23	LT				1		18 FT TO FACE OF GUARD RAIL
0010	232+00 - 232+53	LT				1		18 FT TO FACE OF GUARD RAIL
0010	232+53 - 241+66	LT	913					18 FT TO FACE OF GUARD RAIL
0010	241+66 - 242+19	LT				1		18 FT TO FACE OF GUARD RAIL
0010	251+50 - 252+03	LT				1		18 FT TO FACE OF GUARD RAIL
0010	252+03 - 260+03	LT	800					18 FT TO FACE OF GUARD RAIL
0010	260+03 - 260+56	LT				1		18 FT TO FACE OF GUARD RAIL
0010	272+50 - 273+03	LT				1		18 FT TO FACE OF GUARD RAIL
0010	273+03 - 279+53	LT	650					18 FT TO FACE OF GUARD RAIL
0010	279+53 - 280+06	LT				1		18 FT TO FACE OF GUARD RAIL
0010	290+00 - 290+53	LT				1		18 FT TO FACE OF GUARD RAIL
0010	290+53 - 295+03	LT	450					18 FT TO FACE OF GUARD RAIL
0010	295+03 - 295+56	LT				1		18 FT TO FACE OF GUARD RAIL
	SUBTOTAL		3,966	5,913	42	22	0	

3

3

MGS GUARDRAIL CONTINUED

CATEGORY	STATION	TO	STATION	LT/RT	614.2300 MGS GUARDRAIL 3 LF	614.2330 MGS GUARDRAIL 3K LF	614.2500 MGS THRIE BEAM TRANSITION LF	614.2610 MGS GUARDRAIL EAT EACH	SPV.0090.01 STEEL THRIE BEAM STRUCTURE APPROACH SPECIAL LF		REMARKS
0010	316+64	-	317+17	LT				1		B-32-0015	
0010	317+17	-	317+42	LT	25					B-32-0015	
0010	317+42	-	317+63	LT			21			B-32-0015	
0010	316+85	-	317+58	RT				1		B-32-0015	
0010	317+58	-	317+63	RT	25					B-32-0015	
0010	317+63	-	317+84	RT			21			B-32-0015	
0010	318+72	-	318+93	LT			21			B-32-0015	
0010	318+93	-	319+56	LT	63					B-32-0015	
0010	319+56	-	320+06	LT				1		B-32-0015	
0010	318+02	-	318+23	RT			21			B-32-0015	
0010	318+23	-	319+36	RT	113					B-32-0015	
0010	319+36	-	319+89	RT				1		B-32-0015	
0010	386+38	-	386+91	LT				1		B-32-0070	
0010	386+91	-	387+54	LT	63					B-32-0070	
0010	387+54	-	387+75	LT					21	B-32-0070	
0010	386+38	-	386+91	RT				1		B-32-0070	
0010	386+91	-	387+54	RT	63					B-32-0070	
0010	387+54	-	387+75	RT					21	B-32-0070	
0010	400+50	-	401+03	LT				1			
0010	401+03	-	414+78	LT	1,375						
0010	414+78	-	415+31	LT				1			
0010	401+57	-	402+10	RT				1			
0010	402+10	-	404+47.5	RT	238						
0010	404+47.5	-	405+00.5	RT				1			
0010	405+20.5	-	405+73.5	RT				1			
0010	405+73.5	-	414+48.5	RT	875						
0010	414+48.5	-	415+01.5	RT				1			
0010	415+32.5	-	415+85.5	RT				1			
0010	415+85.5	-	418+48	RT	263						
0010	418+48	-	419+00	RT			21			B-32-288	
0010	417+97	-	418+50	LT				1		B-32-288	
0010	418+50	-	418+75	LT	25					B-32-288	
0010	418+75	-	419+00	LT			21			B-32-288	
0010	421+43	-	421+64	LT			21			B-32-288	
0010	421+64	-	423+64	LT	200						
0010	423+64	-	424+17	LT				1			
0010	424+37	-	424+90	LT				1			
0010	424+90	-	428+76.5	LT	388						
0010	428+76.5	-	429+29.5	LT				1			
0010	421+43	-	421+64	RT			21			B-32-288	
0010	421+64	-	424+89	RT	325					B-32-288	
0010	424+89	-	425+42	RT				1		B-32-288	
			SUBTOTAL		4,041	0	168	18	42		
			GRAND TOTAL 0010		**8,007**	**5,913**	**210**	**60**	**42**		

3

3

TRAFFIC CONTROL DRUMS

CATEGORY	STATION	TO	STATION	LOCATION	LENGTH	NO DRUMS	643.0300 DAY	REMARKS
0010	7+83	-	13+33	RT	550	10	10	B-32-160 BEAM GUARD REMOVAL
0010	7+83	-	13+33	RT	550	10	10	B-32-160 BEAM GUARD INSTALL
0010	12+28	-	17+78	LT	550	10	10	B-32-160 BEAM GUARD REMOVAL
0010	12+28	-	17+78	LT	550	10	10	B-32-160 BEAM GUARD INSTALL
0010	20+22	-	49+45	LT	2,923	33	33	C&G INSTALL
0010	46+55	-	53+45	RT	660	11	11	B-32-12 BEAM GUARD REMOVAL
0010	46+55	-	53+45	RT	660	11	11	B-32-12 BEAM GUARD INSTALL
0010	51+01	-	59+69	LT	868	13	26	B-32-12 BEAM GUARD REMOVAL
0010	51+01	-	59+69	LT	868	13	26	B-32-12 BEAM GUARD INSTALL
0010	60+70	-	71+43	LT	1,073	15	30	BEAM GUARD INSTALL
0010	60+00	-	74+50	RT	1,450	15	15	C&G INSTALL
0010	70+38	-	79+40	LT	902	9	9	C&G INSTALL
0010	74+51	-	155+07	RT	8,069	82	246	C&G INSTALL
0010	77+69	-	106+14	LT	2,845	33	132	BEAM GUARD INSTALL
0010	139+78	-	150+23	LT	1,045	15	30	BEAM GUARD INSTALL
0010	155+31	-	275+42	RT	12,011	126	504	C&G INSTALL
0010	167+10	-	184+40	LT	1,730	22	44	BEAM GUARD INSTALL
0010	192+94	-	204+10	LT	1,116	14	28	BEAM GUARD INSTALL
0010	205+17	-	222+35	LT	1,718	21	63	BEAM GUARD INSTALL
0010	232+00	-	265+01	LT	3,301	37	185	BEAM GUARD INSTALL
0010	272+50	-	281+00	LT	850	15	30	BEAM GUARD INSTALL
0010	277+35	-	300+33	RT	2,298	29	29	C&G INSTALL
0010	290+00	-	300+01	LT	1,001	15	30	BEAM GUARD INSTALL
0010	308+74	-	317+30	RT	856	13	13	B-32-15 BEAM GUARD REMOVAL
0010	308+74	-	317+30	RT	856	13	13	B-32-15 BEAM GUARD INSTALL
0010	313+44	-	321+50	LT	806	13	13	B-32-15 BEAM GUARD REMOVAL
0010	313+44	-	321+50	LT	806	13	13	B-32-15 BEAM GUARD INSTALL
0010	390+76	-	392+00	RT		10	50	TRAFFIC CONTROL: PEDESTRIAN ACCOMMODATION 1
0010	391'X'+09	-	391'X'+87	RT		18	90	TRAFFIC CONTROL: PEDESTRIAN ACCOMMODATION 2
0010	PEARL ST	-	392+64	RT		15	75	TRAFFIC CONTROL: PEDESTRIAN ACCOMMODATION 3
0010	392+30	-	393+09	LT		15	75	TRAFFIC CONTROL: PEDESTRIAN ACCOMMODATION 3
0010	391+48	-	393+09	LT		18	90	TRAFFIC CONTROL: PEDESTRIAN ACCOMMODATION 4
0010	392+10	-	392+62	RT		11	55	TRAFFIC CONTROL: PEDESTRIAN ACCOMMODATION 4
0010	393+15	-	393+85	RT		11	55	TRAFFIC CONTROL: PEDESTRIAN ACCOMMODATION 5&6
0010	394+12	-	394+42	RT		7	35	TRAFFIC CONTROL: PEDESTRIAN ACCOMMODATION 5&6
0010	394+98	-	395+68	RT		11	55	TRAFFIC CONTROL: PEDESTRIAN ACCOMMODATION 7
0010	395+20	-	395+60	RT		5	25	TRAFFIC CONTROL: PEDESTRIAN ACCOMMODATION 8
0010	395+90	-	396+41	RT		24	120	TRAFFIC CONTROL: PEDESTRIAN ACCOMMODATION 8
0010	397+00	-	397+40	RT		5	25	PARKING LANE NEAR CURB RAMP 9
0010	393+00	-	400+50	LT	750	20	60	CURB & GUTTER BANGOR
0010	396+50	-	401+00	RT	450	15	45	CURB & GUTTER BANGOR
0010	399+50	-	433+00	LT	3,350	38	190	BEAM GUARD REMOVAL
0010	399+50	-	433+00	LT	3,350	38	190	BEAM GUARD INSTALL
0010	400+00	-	425+50	RT	2,550	30	120	BEAM GUARD REMOVAL
0010	400+00	-	425+50	RT	2,550	30	120	BEAM GUARD INSTALL
				TOTAL 0010			3,049	

3

3

TRAFFIC CONTROL WARNING LIGHTS TYPE C

CATEGORY	STATION	STATION	LOCATION	NO. LIGHTS	643.0715 DAY	REMARKS
0010	391+10	- 391+50	RT	5	25	TRAFFIC CONTROL: PEDESTRIAN ACCOMMODATION 1
0010	391'X'+09	- 391'X'+50	RT	5	25	TRAFFIC CONTROL: PEDESTRIAN ACCOMMODATION 2
0010	PEARL ST PARKING LANE		LT	5	25	TRAFFIC CONTROL: PEDESTRIAN ACCOMMODATION 3
0010	392+10	- 392+31	RT	5	25	TRAFFIC CONTROL: PEDESTRIAN ACCOMMODATION 4
0010	392+69	- 393+09	LT	5	25	TRAFFIC CONTROL: PEDESTRIAN ACCOMMODATION 3
0010	392+69	- 393+09	LT	5	25	TRAFFIC CONTROL: PEDESTRIAN ACCOMMODATION 4
0010	393+15	- 393+55	RT	5	25	TRAFFIC CONTROL: PEDESTRIAN ACCOMMODATION 5&6
0010	394+98	- 395+38	RT	5	25	TRAFFIC CONTROL: PEDESTRIAN ACCOMMODATION 7
0010	395+20	- 395+60	RT	5	25	TRAFFIC CONTROL: PEDESTRIAN ACCOMMODATION 8
0010	BADGER ST PARKING LANE		RT	5	25	TRAFFIC CONTROL: PEDESTRIAN ACCOMMODATION 8
0010	397+00	- 397+40	RT	5	25	TRAFFIC CONTROL: PEDESTRIAN ACCOMMODATION 9
			TOTAL 0010		275	

646.0406 PAVEMENT MARKING SAME DAY EPOXY 4 - INCH

CATEGORY	STATION TO	STATION	C/L DASHED YELLOW LF	C/L DASHED YELLOW LT. LF	C/L DASHED YELLOW RT. LF	C/L SOLID NO PASSING YELLOW LT. LF	C/L SOLID NO PASSING YELLOW RT. LF	REMARKS
0010	12+28	- 47+00				3,472	3,472	
0010	47+00	- 50+80			88	380		
0010	50+80	- 54+00	75					
0010	54+00	- 60+70		163			670	
0010	60+70	- 182+10				12,140	12,140	
0010	182+10	- 212+50			750	3,040		
0010	212+50	- 216+00	88					
0010	216+00	- 231+00			375	1,500		
0010	231+00	- 244+00		325			1,300	
0010	244+00	- 326+00				8,200	8,200	
0010	326+00	- 331+00				1,000	1,000	APPROACH TO IH 90 MEDIAN
0010	331+00	- 333+43				243	243	MEDIAN
0010	333+43	- 359+80				2,637	2,637	IH 90 AREA
0010	359+80	- 364+50				470		
0010	364+50	- 373+70			230		920	
0010	373+70	- 381+00		175			730	
0010	381+00	- 391+90				1,090	1,090	
0010	392+50	- 397+50			125	500		
0010	397+50	- 425+70	700					
0010	425+70	- 432+90		175			720	
0010	432+90	- 440+50			188	760		
0010	440+50	- 462+00	538					
0010	462+00	- 467+50		138			550	
		SUBTOTAL	1,401	976	1,756	35,432	33,672	
					GRAND TOTAL 0010	73,237		

3

3

TRAFFIC CONTROL BARRICADES TYPE II

CATEGORY	STATION	LOCATION	NO. BARRICADES	643.0410 DAY	REMARKS
0010	391+70	LT	1	5	TRAFFIC CONTROL: PESDESTRIAN ACCOMMODATION 1
0010		COMMERCIAL ST/ 17TH AVE S LT	1	5	TRAFFIC CONTROL: PESDESTRIAN ACCOMMODATION 1
0010	391'x'+75	RT	1	5	TRAFFIC CONTROL: PESDESTRIAN ACCOMMODATION 1
0010		COMMERCIAL ST/ 17TH AVE S RT	1	5	TRAFFIC CONTROL: PESDESTRIAN ACCOMMODATION 2
0010	391+73	17TH AVE S/ STH 162	1	5	TRAFFIC CONTROL: PESDESTRIAN ACCOMMODATION 2
0010		PEARL ST/ 16TH AVE	1	5	TRAFFIC CONTROL: PESDESTRIAN ACCOMMODATION 2
0010	391+74	LT	1	5	TRAFFIC CONTROL: PESDESTRIAN ACCOMMODATION 3
0010	391'x'+73	RT	1	5	TRAFFIC CONTROL: PESDESTRIAN ACCOMMODATION 3
0010	392+60	LT	1	10	TRAFFIC CONTROL: PESDESTRIAN ACCOMMODATION 3
0010	392+60	RT	1	5	TRAFFIC CONTROL: PESDESTRIAN ACCOMMODATION 3
0010	392+64	LT	1	10	TRAFFIC CONTROL: PESDESTRIAN ACCOMMODATION 3
0010	392+80	LT	1	10	TRAFFIC CONTROL: PESDESTRIAN ACCOMMODATION 3
0010	393+80	LT	1	10	TRAFFIC CONTROL: PESDESTRIAN ACCOMMODATION 3
0010		PEARL ST/ 16TH AVE	1	5	TRAFFIC CONTROL: PESDESTRIAN ACCOMMODATION 3
0010	391'x'+75	LT	1	5	TRAFFIC CONTROL: PESDESTRIAN ACCOMMODATION 4
0010	392+25	RT	1	5	TRAFFIC CONTROL: PESDESTRIAN ACCOMMODATION 4
0010	392+55	RT	1	5	TRAFFIC CONTROL: PESDESTRIAN ACCOMMODATION 4
0010	392+65	RT	1	5	TRAFFIC CONTROL: PESDESTRIAN ACCOMMODATION 4
0010	392+55	LT	1	5	TRAFFIC CONTROL: PESDESTRIAN ACCOMMODATION 4
0010	392+65	LT	1	5	TRAFFIC CONTROL: PESDESTRIAN ACCOMMODATION 4
0010	392+80	RT	1	5	TRAFFIC CONTROL: PESDESTRIAN ACCOMMODATION 4
0010	393+55	RT	1	5	TRAFFIC CONTROL: PESDESTRIAN ACCOMMODATION 4
0010	396+20	RT	1	5	TRAFFIC CONTROL: PESDESTRIAN ACCOMMODATION 9
		TOTAL 0010		135	

PAVEMENT MARKING ARROWS EPOXY TYPE 1

CATEGORY	STATION	647.0156 EACH	REMARKS
0010	338+70	1	LEFT TURN LANE ONTO IH 90 EB
0010	348+22	1	LEFT TURN LANE ONTO IH 90 WB
0010	348+62	1	LEFT TURN LANE ONTO IH 90 WB
0010	357+40	1	THROUGH LANE IH 90
0010	358+20	1	THROUGH LANE IH 90
0010	359+00	1	THROUGH LANE IH 90
	TOTAL 0010	6	

PAVEMENT MARKING ARROWS EPOXY TYPE 2

CATEGORY	STATION	647.0166 EACH	REMARKS
0010	357+40	1	LEFT TURN LANE ONTO CTH 'B'
0010	358+20	1	LEFT TURN LANE ONTO CTH 'B'
0010	359+00	1	LEFT TURN LANE ONTO CTH 'B'
	TOTAL 0010	3	

3

3

TRAFFIC CONTROL WARNING LIGHTS TYPE A

CATEGORY	STATION TO	STATION	LOCATION	NO. LIGHTS	643.0705 DAY	REMARKS
0010		391'X'+47	LT	2	10	TRAFFIC CONTROL: PEDESTRIAN ACCOMMODATION 1
0010	COMMERCIAL ST / 17TH AVE S		LT	1	5	TRAFFIC CONTROL: PEDESTRIAN ACCOMMODATION 1
0010		391+70	LT	1	5	TRAFFIC CONTROL: PEDESTRIAN ACCOMMODATION 1
0010		391'X'+69	RT	1	5	TRAFFIC CONTROL: PEDESTRIAN ACCOMMODATION 1
0010	COMMERCIAL ST / 17TH AVE S		RT	1	5	TRAFFIC CONTROL: PEDESTRIAN ACCOMMODATION 2
		391+73	RT	1	5	TRAFFIC CONTROL: PEDESTRIAN ACCOMMODATION 2
0010		391'X'+50	RT	2	10	TRAFFIC CONTROL: PEDESTRIAN ACCOMMODATION 2
	PEARL ST / 17TH AVE		LT	2	10	TRAFFIC CONTROL: PEDESTRIAN ACCOMMODATION 2
0010	PEARL ST / 16TH AVE		RT	1	5	TRAFFIC CONTROL: PEDESTRIAN ACCOMMODATION 2
0010		391+71	LT	1	5	TRAFFIC CONTROL: PEDESTRIAN ACCOMMODATION 3
0010		391'X'+73	RT	1	5	TRAFFIC CONTROL: PEDESTRIAN ACCOMMODATION 3
0010	PEARL ST / 17TH AVE		LT	2	10	TRAFFIC CONTROL: PEDESTRIAN ACCOMMODATION 3
0010		392+42	RT	2	10	TRAFFIC CONTROL: PEDESTRIAN ACCOMMODATION 3
0010		392+60	RT	2	10	TRAFFIC CONTROL: PEDESTRIAN ACCOMMODATION 3
0010		392+60	LT	2	10	TRAFFIC CONTROL: PEDESTRIAN ACCOMMODATION 3
0010		392+64	LT	2	10	TRAFFIC CONTROL: PEDESTRIAN ACCOMMODATION 3
0010		392+80	LT	1	5	TRAFFIC CONTROL: PEDESTRIAN ACCOMMODATION 3
0010		393+80	LT	1	5	TRAFFIC CONTROL: PEDESTRIAN ACCOMMODATION 3
0010		391+58	LT	2	10	TRAFFIC CONTROL: PEDESTRIAN ACCOMMODATION 4
0010		391+74	RT	1	5	TRAFFIC CONTROL: PEDESTRIAN ACCOMMODATION 4
0010		392+25	RT	1	5	TRAFFIC CONTROL: PEDESTRIAN ACCOMMODATION 4
0010		392+64	RT	1	5	TRAFFIC CONTROL: PEDESTRIAN ACCOMMODATION 4
0010		392+80	RT	1	5	TRAFFIC CONTROL: PEDESTRIAN ACCOMMODATION 4
0010		393+55	RT	1	5	TRAFFIC CONTROL: PEDESTRIAN ACCOMMODATION 4
0010		393+63	RT	2	10	TRAFFIC CONTROL: PEDESTRIAN ACCOMMODATION 5&6
0010		394+35	RT	2	10	TRAFFIC CONTROL: PEDESTRIAN ACCOMMODATION 5&6
0010		395+44	RT	2	10	TRAFFIC CONTROL: PEDESTRIAN ACCOMMODATION 7
0010		BADGER ST	RT	2	10	TRAFFIC CONTROL: PEDESTRIAN ACCOMMODATION 8
0010		396+48	RT	2	10	TRAFFIC CONTROL: PEDESTRIAN ACCOMMODATION 8
0010		397+22	RT	2	10	TRAFFIC CONTROL: PEDESTRIAN ACCOMMODATION 9
			TOTAL 0010		225	

TEMPORARY PEDESTRIAN SURFACE

CATEGORY	STATION	LOCATION	SPV.0180.01 SY	REMARKS
0010	392+52	RT	1	TRAFFIC CONTROL: PEDESTRIAN ACCOMMODATION 3 & TRAFFIC CONTROL: PEDESTRIAN ACCOMMODATION 4
0010	393+55	RT	1	TRAFFIC CONTROL: PEDESTRIAN ACCOMMODATION 5&6
0010	394+40	RT	1	TRAFFIC CONTROL: PEDESTRIAN ACCOMMODATION 5&6
0010	395+42	RT	1	TRAFFIC CONTROL: PEDESTRIAN ACCOMMODATION 7
		TOTAL 0010	4	

3

PAVEMENT MARKING CURB EPOXY

CATEGORY	STATION TO	STATION	LOCATION	647.0456 LF	REMARKS
0010	330+80 -	330+84	MEDIAN	8	IH 90 INTERCHANGE AREA
0010	333+35 -	333+50	MEDIAN	24	IH 90 INTERCHANGE AREA
0010	333+90 -	333+98	MEDIAN	24	IH 90 INTERCHANGE AREA
0010	339+00 -	339+08	MEDIAN	16	IH 90 INTERCHANGE AREA
0010	339+56 -	340+00	MEDIAN	66	IH 90 INTERCHANGE AREA
0010	349+42 -	349+50	MEDIAN	16	IH 90 INTERCHANGE AREA
0010	349+92 -	350+70	MEDIAN	66	IH 90 INTERCHANGE AREA
0010	355+74 -	356+48	MEDIAN	82	IH 90 INTERCHANGE AREA
0010		359+00	LT	100	ON CTH 'B' RIGHT TURN ISLAND
			TOTAL 0010	402	

PAVEMENT MARKING STOP LINE EPOXY 18-INCH

CATEGORY	STATION	LOCATION	647.0566 LF	REMARKS
0010	358+90	LT	20	STOP BAR ON CTH 'B' RIGHT TURN LANE
0010	359+10	LT	16	STOP BAR ON CTH 'B' LEFT TURN LANE
0010	364+80	LT	24	STOP BAR ON JONES RD
0010	391+68	RT	14	STH 162 EAST/NORTH BOUND
0010	391+98	RT	16	17TH AVE NORTH BOUND
0010	392+00	LT	16	PEARL ST WEST BOUND
0010	465+00	RT	16	STH 162/STH 16
		TOTAL 0010	122	

PAVEMENT MARKING DIAGONAL EPOXY 12-INCH

CATEGORY	STATION TO	STATION	LOCATION	647.0726 LF	REMARKS
0010	359+81 -	360+90	RT	30	IH 90 BY CTH 'B'
			TOTAL 0010	30	

PAVEMENT MARKING CROSSWALK EPOXY 12-INCH

CATEGORY	STATION	647.0776 LF	REMARKS
0010	392+25	84	NORTH HALF OF STH 162/17TH AVE N INTERSECTION
0010	392+00	79	EAST HALF OF STH 162/PEARL ST INTERSECTION
		163	

3

ADJUSTING WATER VALVE BOX

CATEGORY	STATION	LOCATION	SPV.0060.01 EACH	REMARKS
0020	391+97	RT	1	TERRACE AREA
0020	396+37	LT	1	18 FT FROM CL
0020	397+92	LT	1	17 FT FROM CL
		TOTAL 0020	3	

PAVEMENT MARKING EPOXY 8-INCH

CATEGORY	STATION TO	STATION	LOCATION	646.0126 LF	REMARKS
0010	338+52 -	339+08	LT	50	LEFT TURN LANE FROM STH 162 ONTO IH 90 EB
0010	347+50 -	349+50	LT	200	LEFT TURN LANE FROM STH 162 ONTO IH 90 WB
0010	357+22 -	359+22	LT	200	LEFT TURN LANE FROM STH 162 ONTO CTH 'B'
			TOTAL 0010	450	

649.0100

TEMPORARY PAVEMENT MARKING 4-INCH

CATEGORY	STATION TO STATION	C/L DASHED YELLOW LF	C/L DASHED YELLOW LT. LF	C/L DASHED YELLOW RT. LF	C/L SOLID NO PASSING YELLOW LT. LF	C/L SOLID NO PASSING YELLOW RT. LF	REMARKS
0010	12+28 - 47+00				3,472	3,472	
0010	47+00 - 50+80			31	380		
0010	50+80 - 54+00	31					
0010	54+00 - 60+70		54			670	
0010	60+70 - 182+10				12,140	12,140	
0010	182+10 - 212+50			244	3,040		
0010	212+50 - 216+00	28					
0010	216+00 - 231+00			120	1,500		
0010	231+00 - 244+00		104			1,300	
0010	244+00 - 326+00				8,200	8,200	
0010	326+00 - 331+00				1,000	1,000	APPROACH TO IH 90 MEDIAN
0010	331+00 - 333+43				243	243	MEDIAN
0010	359+80 - 364+50				470		
0010	364+50 - 373+70			74		920	
0010	373+70 - 381+00		59			730	
0010	381+00 - 391+90				1,090	1,090	
0010	392+50 - 397+50			40	500		
0010	397+50 - 425+70	226					
0010	425+70 - 432+90		58			720	
0010	432+90 - 440+50			61	760		
0010	440+50 - 462+00	172					
0010	462+00 - 467+50		44			550	
	SUBTOTALS	457	319	570	32,795	31,035	

GRAND TOTAL 0010 65,176

CONSTRUCTION STAKING RESURFACING REFERENCE

CATEGORY	STATION TO STATION	LOCATION	650.8000 LF	REMARKS
0010	12+28 - 466+00	ML	46,800	
		TOTAL 0010	46,800	

TEMPORARY PAVEMENT MARKING STOP LINE REMOVABLE TAPE 18-INCH

CATEGORY	STATION TO STATION	LOCATION	649.1200 LF	REMARKS
0010	392+47 - 392+61	STH 162	40	SEE TRAFFIC CONTROL, PEDESTRIAN ACCOMMODATION 3 & 4
0010	392+00	PEARL ST	40	SEE TRAFFIC CONTROL, PEDESTRIAN ACCOMMODATION 3 & 4
		TOTAL 0010	80	

3

SAWING ASPHALT

CATEGORY	STATION	LOCATION	690.0150 LF	REMARKS
0010	18+24	24 FT LT OF STH 162 CL	16	PE
0010	21+24	26 FT RT OF STH 162 CL	16	PE
0010	58+88	118 FT RT OF STH 162 CL	22	CTH 'JB'
0010	74+20	124 FT RT OF STH 162 CL	22	CTH 'JJ'
0010	138+20	26 FT RT OF STH 162 CL	16	PE
0010	155+12	99 FT RT OF STH 162 CL	22	SOUCHEK RD
0010	184+60	16 FT LT OF STH 162 CL	22	COLEMAN RD
0010	204+10	56 FT LT OF STH 162 CL	22	DARLING RD
0010	244+82	26 FT RT OF STH 162 CL	16	PE
0010	247+16	LT	22	CTH 'II'
0010	250+16	LT	22	CTH 'II'
0010	261+61	72 FT LT OF STH 162 CL	22	RUSSIAN COULEE RD
0010	310+20	26 FT LT OF STH 162 CL	25	CE
0010	323+63	LT	22	FRITZ SCHROEDER RD
0010	324+08	26 FT RT OF STH 162 CL	25	CE
0010	329+00	32 FT RT OF STH 162 CL	25	CE
0010	333+60	52 FT LT OF STH 162 CL	25	CE
0010	333+66	32 FT RT OF STH 162 CL	25	CE
0010	359+18	75 FT LT OF STH 162 CL	22	CTH 'B'
0010	361+15	16 FT LT OF STH 162 CL	20	OL HESS RD
0010	363+12	CL	22	APPROACH TO RR
0010	363+43	CL	22	APPROACH TO RR
0010	365+00	16 FT LT OF STH 162 CL	60	JONES RD
0010	368+93	26 FT RT OF STH 162 CL	16	PE
0010	369+40	LT	103	HATTAN RD
0010	370+12	26 FT RT OF STH 162 CL	21	PE
0010	370+75	26 FT RT OF STH 162 CL	13	PE
0010	371+38	26 FT RT OF STH 162 CL	14	PE
0010	376+10	RT	25	19TH AVE S
0010	376+10	26 FT LT OF STH 162 CL	25	CE
0010	379+56	LT	60	18TH AVE N
0010	379+81	RT	24	18TH AVE S
0010	380+30	26 FT RT OF STH 162 CL	24	CE
0010	384+00	26 FT RT OF STH 162 CL	20	CE
0010	391+97	42 FT RT OF STH 162 CL	36	17TH AVE
0010	392+00	46 FT RT OF STH 162 CL	36	PEARL ST
0010	394+01	38 FT RT OF STH 162 CL	25	OAK ST
0010	395+87	52 FT RT OF STH 162 CL	32	BADGER ST
0010	416+05	26 FT LT OF STH 162 CL	21	CE
0010	417+38	26 FT LT OF STH 162 CL	22	CE
0010	426+00	26 FT RT OF STH 162 CL	35	CE
0010	434+10	LT	25	GASLITE RD
0010	439+34	LT	22	GASLITE RD
0010	446+18	26 FT LT OF STH 162 CL	16	PE
0010	467+00	CL	22	END OF PROJECT
		TOTAL 0010	1,170	

SAWING CONCRETE

CATEGORY	STATION	LOCATION	690.0250 LF	REMARKS
0010	391+99	43 FT RT/SOUTH OF STH 162 CL ON 17TH AVE N	12	SIDEWALK AND C&G
0010	391+68	20 FT LT OF STH 162 CL	6	SIDEWALK AND C&G
0010	392+00	43 FT RT/SOUTH OF STH 162 CL ON 17TH AVE N	11	SIDEWALK AND C&G
0010	392+00	45 FT RT/EAST OF STH 162 CL ON PEARL ST	11	SIDEWALK AND C&G
0010	392+37	20 FT LT OF STH 162 CL	12	SIDEWALK AND C&G
0010	392+37	20 FT RT OF STH 162 CL	11	SIDEWALK AND C&G
0010	393+74	20 FT RT OF STH 162 CL	4	SIDEWALK
0010	394+27	20 FT RT OF STH 162 CL	4	SIDEWALK
0010	394+57	20 FT RT OF STH 162 CL	4	SIDEWALK
0010	395+04	51 FT RT/EAST OF STH 162 CL ON BADGER ST	6	SIDEWALK AND C&G
0010	395+27	20 FT RT OF STH 162 CL	6	SIDEWALK AND C&G
0010	454+92	26 FT LT OF STH 162 CL	16	CONCRETE P.E.
		TOTAL 0010	103	

TEMPORARY PEDESTRIAN SAFETY BARRIER

CATEGORY	STATION	LOCATION	SPV.0090.02 LF	REMARKS
0010	392+52	RT	16	TRAFFIC CONTROL: PEDESTRIAN ACCOMMODATION 3 & TRAFFIC CONTROL: PEDESTRIAN ACCOMMODATION 4
0010	392+52	LT	16	TRAFFIC CONTROL: PEDESTRIAN ACCOMMODATION 3 & TRAFFIC CONTROL: PEDESTRIAN ACCOMMODATION 4
0010	391+58	LT	70	TRAFFIC CONTROL: PEDESTRIAN ACCOMMODATION 4
0010	393+55	RT	55	TRAFFIC CONTROL: PEDESTRIAN ACCOMMODATION 5&6
0010	394+44	RT	55	TRAFFIC CONTROL: PEDESTRIAN ACCOMMODATION 5&6
0010	395+38	RT	55	TRAFFIC CONTROL: PEDESTRIAN ACCOMMODATION 7
0010	395+90	RT	155	TRAFFIC CONTROL: PEDESTRIAN ACCOMMODATION 8
		TOTAL 0010	422	

ALL LOCATIONS ARE APPROXIMATE

3

3

TEMPORARY CURB RAMP

CATEGORY	STATION	LOCATION	SPV.0060.02 EACH	REMARKS
0010	392+78	LT	1	TRAFFIC CONTROL: PEDESTRIAN ACCOMMODATION 3 & 4
0010	392+78	RT	1	TRAFFIC CONTROL: PEDESTRIAN ACCOMMODATION 3 & 4
0010	393+55	RT	1	TRAFFIC CONTROL: PEDESTRIAN ACCOMMODATION 5&6
0010	394+40	RT	1	TRAFFIC CONTROL: PEDESTRIAN ACCOMMODATION 5&6
0010	395+38	RT	1	TRAFFIC CONTROL: PEDESTRIAN ACCOMMODATION 7
0010	396+28	RT	1	TRAFFIC CONTROL: PEDESTRIAN ACCOMMODATION 8
0010	BADGER ST	RT	1	TRAFFIC CONTROL: PEDESTRIAN ACCOMMODATION 8
		TOTAL 0010	7	

LOCATIONS ARE APPROXIMATE

646.0106 PAVEMENT MARKING EPOXY 4-INCH

CATEGORY	STATION TO	STATION	EDGE LINE SOLID WHITE LT. L.F.	EDGE LINE SOLID WHITE RT. L.F.	REMARKS
0010	12+28 -	389+00	37,672	37,672	
0010	399+50 -	467+50	6,800		
0010	400+75 -	467+50		6,675	
		SUBTOTAL	44,472	44,347	
		GRAND TOTAL 0010		**88,819**	

3

TRAFFIC CONTROL BARRICADES TYPE III

CATEGORY	STATION	LOCATION	NO. BARRICADES	643.0420 DAY	REMARKS
0010	391'x'+50	17TH AVE S LT	2	10	TRAFFIC CONTROL: PEDESTRIAN ACCOMMODATION 1
0010	391'X'+50	17TH AVE S RT	2	10	TRAFFIC CONTROL: PEDESTRIAN ACCOMMODATION 2
0010		PEARL ST RT	2	10	TRAFFIC CONTROL: PEDESTRIAN ACCOMMODATION 2
0010		PEARL ST LT	2	10	TRAFFIC CONTROL: PEDESTRIAN ACCOMMODATION 3
	392+41	RT	2	10	TRAFFIC CONTROL: PEDESTRIAN ACCOMMODATION 3
0010	392+42	RT	2	10	TRAFFIC CONTROL: PEDESTRIAN ACCOMMODATION 3
0010	391+53	LT	2	10	TRAFFIC CONTROL: PEDESTRIAN ACCOMMODATION 4
0010	393+63	RT	2	10	TRAFFIC CONTROL: PEDESTRIAN ACCOMMODATION 5&6
0010	394+35	RT	2	10	TRAFFIC CONTROL: PEDESTRIAN ACCOMMODATION 5&6
0010	395+48	RT	2	10	TRAFFIC CONTROL: PEDESTRIAN ACCOMMODATION 7
0010	396+28	RT	2	10	TRAFFIC CONTROL: PEDESTRIAN ACCOMMODATION 8
0010	Badger St	RT	3	15	TRAFFIC CONTROL: PEDESTRIAN ACCOMMODATION 8
0010	397+22	RT	2	10	TRAFFIC CONTROL: PEDESTRIAN ACCOMMODATION 9
		TOTAL 0010		135	

3

TRAFFIC CONTROL SIGNS

CATEGORY	LOCATION	MAINLINE STATION	LT/RT	643.0900 DAY	NO. SIGNS	SIGN
0010	ML-START OF PROJECT		LT	79	1	ROAD WORK AHEAD
0010	ML-START OF PROJECT		LT	79	1	ROAD WORK 1000 FT
0010	ML-START OF PROJECT		LT	79	1	ROAD WORK 500 FT
0010	ML-START OF PROJECT		RT	79	1	END ROAD WORK
0010	ML-START OF PROJECT		LT	79	1	ROAD WORK NEXT 9 MILES
0010	ML-START OF PROJECT		LT	79	1	FINES DOUBLE IN WORK ZONES
0010	ML-START OF PROJECT		LT	79	1	END ROAD WORK
0010	CTH JB	59+60	RT	79	1	ROAD WORK AHEAD
0010	CTH JJ	74+50	RT	79	1	ROAD WORK AHEAD
0010	SOUCHEK RD	155+40	RT	79	1	ROAD WORK AHEAD
0010	COLEMAN RD	184+70	LT	79	1	ROAD WORK AHEAD
0010	DARLING RD	204+20	LT	79	1	ROAD WORK AHEAD
0010	CTH II	247+00	LT	79	1	ROAD WORK AHEAD
0010	RUSSIAN COULEE RD	281+50	LT	79	1	ROAD WORK AHEAD
0010	FRITZ SCHROEDER RD	324+00	LT	79	1	ROAD WORK AHEAD
0010	IH 90 OFF RAMP	338+50	LT	79	1	ROAD WORK AHEAD
0010	IH 90 OFF RAMP	349+00	LT	79	1	ROAD WORK AHEAD
0010	CTH B	359+00	LT	79	1	ROAD WORK AHEAD
0010	OL HESS RD	361+20	LT	79	1	ROAD WORK AHEAD
0010	JONES RD	364+50	LT	79	1	ROAD WORK AHEAD
0010	HATTAN ST	369+00	LT	79	1	ROAD WORK AHEAD
0010	19TH AVE S	376+00	RT	79	1	ROAD WORK AHEAD
0010	18TH AVE N	379+40	LT	79	1	ROAD WORK AHEAD
0010	17TH AVE S	391+90	RT	79	1	ROAD WORK AHEAD
0010	PEARL ST	392+05	RT	79	1	ROAD WORK AHEAD
0010	OAK ST	394+00	RT	79	1	ROAD WORK AHEAD
0010	BADGER ST	395+90	RT	79	1	ROAD WORK AHEAD
0010	BOSSHARD ST	397+60	RT	79	1	ROAD WORK AHEAD
0010	GASLITE RD	434+00	LT	79	1	ROAD WORK AHEAD
0010	GASLITE RD	439+00	LT	79	1	ROAD WORK AHEAD
0010	STH 16 (EAST)		RT	79	1	STH 162
0010	STH 16 (EAST)		RT	79	1	ROAD WORK 500 FT
0010	STH 16 (EAST)		RT	79	1	ROAD WORK 1000 FT
0010	STH 16 (EAST)		RT	79	1	ROAD WORK AHEAD
0010	STH 16 (WEST)		LT	79	1	STH 162
0010	STH 16 (WEST)		LT	79	1	ROAD WORK 500 FT
0010	STH 16 (WEST)		LT	79	1	ROAD WORK 1000 FT
0010	STH 16 (WEST)		LT	79	1	ROAD WORK AHEAD
0010	PLACED AT 2 MILE INTERVALS		RT	316	4	NO CENTER STRIPE
0010	PLACED AT 2 MILE INTERVALS		LT	316	4	NO CENTER STRIPE
			SUBTOTAL	3,634		

CONTINUED ON NEXT PAGE

TRAFFIC CONTROL SIGNS CONT.

CATEGORY	LOCATION	MAINLINE STATION	LT/RT	643.0900 DAY	NO. SIGNS	SIGN NO.	SIGN	COMMENT
0010	PLACED AT 2 MILE INTERVALS		RT	316	4		LOOSE GRAVEL	
0010	PLACED AT 2 MILE INTERVALS		LT	316	4		LOOSE GRAVEL	
0010	COMMERCIAL ST / 17TH AVE S		LT	5	1	R9-11	SIDEWALK CLOSED AHEAD ARROW CROSS HERE	TRAFFIC CONTROL: PEDESTRIAN ACCOMMODATION 1
0010	COMMERCIAL ST / 17TH AVE S	391'X'+47	LT	5	1	R9-9	SIDEWALK CLOSED	TRAFFIC CONTROL: PEDESTRIAN ACCOMMODATION 1
0010	17TH AVE S	391'X'+74	RT	5	1	R9-11	SIDEWALK CLOSED AHEAD ARROW CROSS HERE	TRAFFIC CONTROL: PEDESTRIAN ACCOMMODATION 1
0010	STH 162	391+69	LT	5	1	R9-11	SIDEWALK CLOSED AHEAD ARROW CROSS HERE	TRAFFIC CONTROL: PEDESTRIAN ACCOMMODATION 1
0010	COMMERCIAL ST / 17TH AVE S		RT	5	1	R9-11	SIDEWALK CLOSED AHEAD ARROW CROSS HERE	TRAFFIC CONTROL: PEDESTRIAN ACCOMMODATION 2
0010	17TH AVE S	391'X'+50	RT	5	1	R9-9	SIDEWALK CLOSED	TRAFFIC CONTROL: PEDESTRIAN ACCOMMODATION 2
0010	STH 162	391+73	RT	5	1	R9-11	SIDEWALK CLOSED AHEAD ARROW CROSS HERE	TRAFFIC CONTROL: PEDESTRIAN ACCOMMODATION 2
0010	PEARL ST/ 17TH AVE		RT	5	1	R9-9	SIDEWALK CLOSED	TRAFFIC CONTROL: PEDESTRIAN ACCOMMODATION 2
0010	PEARL ST/ 16TH AVE		RT	5	1	R9-11	SIDEWALK CLOSED AHEAD ARROW CROSS HERE	TRAFFIC CONTROL: PEDESTRIAN ACCOMMODATION 2
0010	17TH AVE S	391'X'+74	RT	5	1	R9-11	SIDEWALK CLOSED AHEAD ARROW CROSS HERE	TRAFFIC CONTROL: PEDESTRIAN ACCOMMODATION 3
0010	STH 162	391+74	LT	5	1	R9-11	SIDEWALK CLOSED ARROW CROSS HERE	TRAFFIC CONTROL: PEDESTRIAN ACCOMMODATION 3
0010	PEARL ST / 16TH AVE		LT	5	1	R9-11	SIDEWALK CLOSED AHEAD ARROW CROSS HERE	TRAFFIC CONTROL: PEDESTRIAN ACCOMMODATION 3
0010	PEARL ST		LT	5	1	R9-9	SIDEWALK CLOSED	TRAFFIC CONTROL: PEDESTRIAN ACCOMMODATION 3
0010	STH 162	392+42	RT	5	1	R9-9	SIDEWALK CLOSED	TRAFFIC CONTROL: PEDESTRIAN ACCOMMODATION 3
0010	STH 162	392+57	RT	5	1	R9-11A	SIDEWALK CLOSED	TRAFFIC CONTROL: PEDESTRIAN ACCOMMODATION 3
0010	STH 162	392+60	LT	5	1	R9-8	PEDESTRIAN CROSSWALK	TRAFFIC CONTROL: PEDESTRIAN ACCOMMODATION 3
0010	STH 162	392+64	LT	5	1	R9-8	PEDESTRIAN CROSSWALK	TRAFFIC CONTROL: PEDESTRIAN ACCOMMODATION 3
0010	STH 162	392+80	LT	5	1	W16-7L	ARROW	TRAFFIC CONTROL: PEDESTRIAN ACCOMMODATION 3
0010	STH 162	392+80	LT	5	1	W11-2		TRAFFIC CONTROL: PEDESTRIAN ACCOMMODATION 3
0010	STH 162	393+80	LT	5	1	W16-9P	AHEAD	TRAFFIC CONTROL: PEDESTRIAN ACCOMMODATION 3
0010	STH 162	393+80	LT	5	1	W11-2		TRAFFIC CONTROL: PEDESTRIAN ACCOMMODATION 3
			SUBTOTAL	737				

CONTINUED ON NEXT PAGE

TRAFFIC CONTROL SIGNS CONT.

CATEGORY	LOCATION	MAINLINE STATION	LT/RT	643.0900 DAY	NO. SIGNS	SIGN NO.	SIGN	COMMENT
0010	STH 162	391+53	LT	5	1	R9-11A	SIDEWALK CLOSED AHEAD ARROW CROSS HERE	TRAFFIC CONTROL: PEDESTRIAN ACCOMMODATION 4
0010	STH 162	391+53	LT	5	1	R9-9	SIDEWALK CLOSED	TRAFFIC CONTROL: PEDESTRIAN ACCOMMODATION 4
0010	17TH AVE	391'X'+75	LT	5	1	R9-11	SIDEWALK CLOSED AHEAD ARROW CROSS HERE	TRAFFIC CONTROL: PEDESTRIAN ACCOMMODATION 4
0010	STH 162	392+25	RT	5	1	R9-11	SIDEWALK CLOSED AHEAD ARROW CROSS HERE	TRAFFIC CONTROL: PEDESTRIAN ACCOMMODATION 4
0010	STH 162	392+55	RT	5	1	R9-8	PEDESTRIAN CROSSWALK	TRAFFIC CONTROL: PEDESTRIAN ACCOMMODATION 4
0010	STH 162	392+60	LT	5	1	R9-8	PEDESTRIAN CROSSWALK	TRAFFIC CONTROL: PEDESTRIAN ACCOMMODATION 4
0010	STH 162	392+65	RT	5	1	R9-8	PEDESTRIAN CROSSWALK	TRAFFIC CONTROL: PEDESTRIAN ACCOMMODATION 4
0010	STH 162	392+64	LT	5	1	R9-8	PEDESTRIAN CROSSWALK	TRAFFIC CONTROL: PEDESTRIAN ACCOMMODATION 4
0010	STH 162	392+80	LT	5	1	W16-7L	ARROW	TRAFFIC CONTROL: PEDESTRIAN ACCOMMODATION 4
0010	STH 162	392+80	LT	5	1	W11-2		TRAFFIC CONTROL: PEDESTRIAN ACCOMMODATION 4
0010	STH 162	393+55	LT	5	1	W16-9P	AHEAD	TRAFFIC CONTROL: PEDESTRIAN ACCOMMODATION 4
0010	STH 162	393+55	LT	5	1	W11-2		TRAFFIC CONTROL: PEDESTRIAN ACCOMMODATION 4
0010	STH 162	392+80	RT	5	1	W16-7R	ARROW	TRAFFIC CONTROL: PEDESTRIAN ACCOMMODATION 4
0010	STH 162	392+80	RT	5	1	W11-2		TRAFFIC CONTROL: PEDESTRIAN ACCOMMODATION 4
0010	STH 162	393+55	RT	5	1	W16-9P	AHEAD	TRAFFIC CONTROL: PEDESTRIAN ACCOMMODATION 4
0010	STH 162	393+55	RT	5	1	W11-2		TRAFFIC CONTROL: PEDESTRIAN ACCOMMODATION 4
0010	STH 162	393+63	RT	5	1	R9-9	SIDEWALK CLOSED	TRAFFIC CONTROL: PEDESTRIAN ACCOMMODATION 5&6
0010	STH 162	393+63	RT	5	1	R9-11A	SIDEWALK CLOSED ARROW CROSS HERE	TRAFFIC CONTROL: PEDESTRIAN ACCOMMODATION 5&6
0010	STH 162	394+35	RT	5	1	R9-9	SIDEWALK CLOSED	TRAFFIC CONTROL: PEDESTRIAN ACCOMMODATION 5&6
0010	STH 162	394+35	RT	5	1	R9-11A	SIDEWALK CLOSED ARROW CROSS HERE	TRAFFIC CONTROL: PEDESTRIAN ACCOMMODATION 5&6
0010	STH 162	395+44	RT	5	1	R9-9	SIDEWALK CLOSED	TRAFFIC CONTROL: PEDESTRIAN ACCOMMODATION 7
0010	STH 162	395+44	RT	5	1	R9-11A	SIDEWALK CLOSED ARROW CROSS HERE	TRAFFIC CONTROL: PEDESTRIAN ACCOMMODATION 7
0010	STH 162	396+28	RT	5	1	R9-9	SIDEWALK CLOSED	TRAFFIC CONTROL: PEDESTRIAN ACCOMMODATION 8
0010	STH 162	396+28	RT	5	1	R9-11A	SIDEWALK CLOSED ARROW CROSS HERE	TRAFFIC CONTROL: PEDESTRIAN ACCOMMODATION 8
0010	BADGER ST		LT	5	1	R9-9	SIDEWALK CLOSED	TRAFFIC CONTROL: PEDESTRIAN ACCOMMODATION 8
0010	BADGER ST		LT	5	1	R9-11A	SIDEWALK CLOSED ARROW CROSS HERE	TRAFFIC CONTROL: PEDESTRIAN ACCOMMODATION 8
0010	STH 162	396+30	RT	5	1	R9-11	SIDEWALK CLOSED AHEAD	TRAFFIC CONTROL: PEDESTRIAN ACCOMMODATION 9
0010	STH 162	397+22	RT	5	1	R9-9	SIDEWALK CLOSED	TRAFFIC CONTROL: PEDESTRIAN ACCOMMODATION 9
0010	BIKE TRAIL		LT	10	1		ROAD WORK AHEAD	
0010	BIKE TRAIL		RT	35	1		ROAD WORK AHEAD	
			SUBTOTAL	185				

TOTAL 0010 4,556

*SEE TRAFFIC CONTROL, PEDESTRIAN ACCOMMODATION DETAILS AND S.D.D. 15D30 TRAFFIC CONTROL, PEDESTRIAN ACCOMMODATION

3

SIGN NUMBER	STATION	LOCATION	SIGN CODE	SIGN DESCRIPTION	SIGN MESSAGE	SIGN SIZE IN INCHES	634.0612 POSTS WOOD 4 x 6 INCH 12 FOOT EACH	634.0614 POSTS WOOD 4 x 6 INCH 14 FOOT EACH	634.0616 POSTS WOOD 4 x 6 INCH 16 FOOT EACH	634.0618 POSTS WOOD 4 x 6 INCH 18 FOOT EACH	634.0620 POSTS WOOD 4 x 6 INCH 20 FOOT EACH	637.2210 SIGNS TYPE II REFLECTIVE H SF	637.2230 SIGNS TYPE II REFLECTIVE F SF	638.2602 REMOVING SIGNS TYPE II EACH	638.3000 REMOVING SMALL SIGN SUPPORTS EACH	MOUNTED ON SAME POST AS SIGN NUMBER	REMARKS
1-01R	8+50	Right	W1-2-L	Left Curve 45 MPH		30 x 30								1	1		
1-02R	11+40	Left	W1-2-R	Right Curve 45 MPH		30 x 30								1	1		
1-03	11+95	Left	W5-52-L	Clearance Striper Down Right		12 x 36	1						3.00				Use 4' Mounting Height
1-04R	11+95	Left	W5-52-L	Clearance Striper Down Right		12 x 36								1	1		
1-05	12+00	Right	W5-52-R	Clearance Striper Down Left		12 x 36	1						3.00				Use 4' Mounting Height
1-06R	12+00	Right	W5-52-R	Clearance Striper Down Left		12 x 36								1	1		
1-07	12+30	Right	W5-52-L	Clearance Striper Down Right		12 x 36	1						3.00				Use 4' Mounting Height
1-08R	12+30	Right	W5-52-L	Clearance Striper Down Right		12 x 36								1	1		
1-09	12+25	Left	W5-52-R	Clearance Striper Down Left		12 x 36	1						3.00				Use 4' Mounting Height
1-10R	12+25	Left	W5-52-R	Clearance Striper Down Left		12 x 36								1	1		
1-11R	15+00	Right	W1-4-R	Right Reverse Curve 45 MPH		30 x 30								1	1		
1-12	16+45	Right	W1-4-R	Right Reverse Curve		30 x 30			1				6.25				
1-13R	18+05	Left	W1-2-L	Left Curve 45 MPH		30 x 30								1	1		
1-14R	22+00	Right	W1-6	Large Single (Night) Arrow		48 x 24								1	1		
1-15R	22+95	Right	W1-6	Large Single (Night) Arrow		48 x 24								1	1		
1-16R	26+20	Right	W1-3-L	Left Reverse Turn 30 MPH		36 x 36								1	1		
1-17R	28+15	Left	W1-4-R	Right Reverse Curve 45 MPH		30 x 30								1	1		
1-18	28+55	Left	W1-4-R	Right Reverse Curve		30 x 30			1				6.25				
1-19	28+55	Left	W13-1	Speed Advisory Plate	45 MPH	18 x 18							2.25			1-18	
1-20	30+00	Right	W1-3-L	Left Reverse Turn		36 x 36				1			9.00				
1-21	30+00	Right	W13-1	Speed Advisory Plate	30 MPH	24 x 24							4.00			1-20	
1-22	34+40	Right	W1-8	Chevron		18 x 24	1						3.00				Use 4' Mounting Height
1-23	34+40	Right	W1-8	Chevron		18 x 24							3.00			1-22	
1-24	35+20	Right	W1-8	Chevron		18 x 24	1						3.00				Use 4' Mounting Height
1-25	35+20	Right	W1-8	Chevron		18 x 24							3.00			1-24	
1-26R	36+00	Right	W1-6	Large Single (Night) Arrow		48 x 24								1	1		
1-27	36+00	Right	W1-8	Chevron		18 x 24	1						3.00				Use 4' Mounting Height
1-28	36+00	Right	W1-8	Chevron		18 x 24							3.00			1-27	
1-29R	36+20	Right	W1-6	Large Single (Night) Arrow		48 x 24								1	1		
1-30	36+80	Right	W1-8	Chevron		18 x 24	1						3.00				Use 4' Mounting Height
1-31	36+80	Right	W1-8	Chevron		18 x 24							3.00			1-30	
1-32	37+60	Right	W1-8	Chevron		18 x 24	1						3.00				Use 4' Mounting Height
1-33	37+60	Right	W1-8	Chevron		18 x 24							3.00			1-32	
1-34	38+40	Right	W1-8	Chevron		18 x 24	1						3.00				Use 4' Mounting Height
1-35	38+40	Right	W1-8	Chevron		18 x 24							3.00			1-34	
2-01	40+80	Left	W1-8	Chevron		18 x 24	1						3.00				Use 4' Mounting Height
2-02	40+80	Left	W1-8	Chevron		18 x 24							3.00			2-01	
2-03	41+60	Left	W1-8	Chevron		18 x 24	1						3.00				Use 4' Mounting Height
2-04	41+60	Left	W1-8	Chevron		18 x 24							3.00			2-03	
2-05	42+30	Left	W1-8	Chevron		18 x 24	1						3.00				Use 4' Mounting Height
2-06	42+30	Left	W1-8	Chevron		18 x 24							3.00			2-05	
2-07	43+10	Left	W1-8	Chevron		18 x 24	1						3.00				Use 4' Mounting Height
2-08	43+10	Left	W1-8	Chevron		18 x 24							3.00			2-07	
2-19R	43+10	Left	W1-6	Large Single (Night) Arrow		48 x 24								1	1		
2-10R	43+10	Left	W1-6	Large Single (Night) Arrow		48 x 24										2-09R	
2-11	43+90	Left	W1-8	Chevron		18 x 24	1						3.00				Use 4' Mounting Height
2-12	43+90	Left	W1-8	Chevron		18 x 24							3.00			2-11	
2-13R	48+00	Right	J1-1	Junction, JB		24 x 39								1	1		
2-14	48+20	Left	W1-3-L	Left Reverse Turn		36 x 36				1			9.00				
2-15	48+20	Left	W13-1	Speed Advisory Plate	30 MPH	24 x 24							4.00			2-14	
2-16	49+00	Right	J1-1	Junction Assembly	JCT JB	24 x 39			1			6.50					
2-17	51+50	Right	W14-3	No Passing Zone Pennant		48 x 36		1					6.00				
2-18R	51+50	Right	W14-3	No Passing Zone Pennant		48 x 36								1	1		
					Sheet Sub Totals		15	1	3	2	0	6.50	124.75	17	17		

3

STATE PROJECT NO: 5820-01-62	HWY STH 162	COUNTY: LA CROSSE	MISCELLANEOUS QUANTITIES	SHEET NO: 68	E

3

SIGN NUMBER	STATION	LOCATION	SIGN CODE	SIGN DESCRIPTION	SIGN MESSAGE	SIGN SIZE IN INCHES	634.0612 POSTS WOOD 4 x 6 INCH 12 FOOT EACH	634.0614 POSTS WOOD 4 x 6 INCH 14 FOOT EACH	634.0616 POSTS WOOD 4 x 6 INCH 16 FOOT EACH	634.0618 POSTS WOOD 4 x 6 INCH 18 FOOT EACH	634.0620 POSTS WOOD 4 x 6 INCH 20 FOOT EACH	637.2210 SIGNS TYPE II REFLECTIVE H SF	637.2230 SIGNS TYPE II REFLECTIVE F SF	638.2602 REMOVING SIGNS TYPE II EACH	638.3000 REMOVING SMALL SIGN SUPPORTS EACH	MOUNTED ON SAME POST AS SIGN NUMBER	REMARKS
2-19	53+05	Right	W5-52-R	Clearance Striper Down Left		12 x 36	1						3.00				Use 4' Mounting Height
2-20R	53+05	Right	W5-52-R	Clearance Striper Down Left		12 x 36								1	1		
2-21	53+05	Left	W5-52-L	Clearance Striper Down Right		12 x 36	1						3.00				Use 4' Mounting Height
2-22R	53+05	Left	W5-52-L	Clearance Striper Down Right		12 x 36								1	1		
2-23	54+10	Right	W5-52-R	Clearance Striper Down Left		12 x 36	1						3.00				Use 4' Mounting Height
2-24R	54+10	Right	W5-52-R	Clearance Striper Down Left		12 x 36								1	1		
2-25	54+10	Left	W5-52-L	Clearance Striper Down Right		12 x 36	1						3.00				Use 4' Mounting Height
2-26R	54+10	Left	W5-52-L	Clearance Striper Down Right		12 x 36								1	1		
2-27	53+85	Left	W14-3	No Passing Zone Pennant		48 x 36			1				6.00				
2-28R	53+85	Left	W14-3	No Passing Zone Pennant		48 x 36										2-29R	
2-29R	53+85	Left	W1-3-L	Left Reverse Turn 30 MPH		36 x 36								1	1		
2-30	58+15	Left	J4-1	Reassurance Assembly	SOUTH	24 x 36			1			6.00					
					162												
2-31	58+75	Right	J13-1	Route Turn Without Cardinal	JB	24 x 45		1				7.50					
					Right Arrow												
2-32R	58+75	Right	J13-1	JB, Right Arrow		24 x 45								1	1		
2-33	59+80	Right	R1-1	Stop		30 x 30		1				5.18					CTH JB
2-34R	59+80	Right	R1-1	Stop		30 x 30								1	1		
2-35	59+80	Right	J13-1	Route Turn Without Cardinal	162	24 x 45		1				7.50					
					Left and Ahead Arrow												
2-36R	59+80	Right	J13-1	162, Left and Ahead Arrow		24 x 45								1	1		
2-37	60+05	Left	W1-7	Large Double (Night) Arrow		48 x 24		1					8.00				
2-38	60+60	Left	J13-1	Route Turn Without Cardinal	JB	24 x 45			1			7.50					
					Tilt Left Arrow												
2-39R	60+60	Left	J13-1	JB, Tilt Left Arrow		24 x 45								1	1		
2-40	61+90	Right	J4-1	Reassurance Assembly	NORTH	24 x 36			1			6.00					
					162												
2-41R	63+40	Right	J1-1	Junction, JJ		24 x 39								1	1		
2-42R	63+40	Right	W1-2-R	Right Curve 45 MPH		30 x 30								1	1		
2+43	64+00	Right	J1-1	Junction Assembly	JCT	24 x 39			1			6.50					
					JJ												
2-44	66+35	Left	W1-2-R	Right Curve		30 x 30			1				6.25				
2-45R	67+00	Right	W1-5-R	Right Winding Road 45 MPH		30 x 30								1	1		
3-01	70+00	Right	W1-5-L	Left Winding Road		30 x 30			1				6.25				
3-02	70+00	Right	W13-1	Speed Advisory Plate	45 MPH	18 x 18							2.25			3-01	
3-03	70+05	Left	J1-1	Junction Assembly	JCT	24 x 39		1				6.50					
					JB												
3-04R	71+30	Left	J1-1	Junction, JB		24 x 39								1	1		
3-05	71+60	Left	W1-2-L	Left Curve		30 x 30			1				6.25				
3-06	73+00	Left	J4-1	Reassurance Assembly	SOUTH	24 x 36		1				6.00					
					162												
3-07	74+00	Right	J13-1	Route Turn Without Cardinal	JJ	24 x 45			1			7.50					
					Right Arrow												
3-08R	74+00	Right	J13-1	JJ, Right Arrow		24 x 45								1	1		
3-09	74+60	Left	W1-7	Large Double (Night) Arrow		48 x 24		1					8.00				
3-10R	74+60	Left	W1-7	Large Double (Night) Arrow		48 x 24								1	1		
3-11	74+70	Right	R1-1	Stop		30 x 30		1				5.18					CTH JJ
3-12R	74+70	Right	R1-1	Stop		30 x 30								1	1		
3-13	74+75	Right	J13-1	Route Turn Without Cardinal	162	24 x 45		1				7.50					
					Left and Right Arrow												
3-14R	74+75	Right	J13-1	162, Left and Right Arrow		24 x 45								1	1		
3-15	74+90	Left	J13-1	Route Turn Without Cardinal	JJ	24 x 45			1			7.50					
					Left Arrow												
					Sheet Sub Totals		4	9	10	0	0	86.36	55	17	17		

3

3

SIGN NUMBER	STATION	LOCATION	SIGN CODE	SIGN DESCRIPTION	SIGN MESSAGE	SIGN SIZE IN INCHES	634.0612 POSTS WOOD 4 x 6 INCH 12 FOOT EACH	634.0614 POSTS WOOD 4 x 6 INCH 14 FOOT EACH	634.0616 POSTS WOOD 4 x 6 INCH 16 FOOT EACH	634.0618 POSTS WOOD 4 x 6 INCH 18 FOOT EACH	634.0620 POSTS WOOD 4 x 6 INCH 20 FOOT EACH	637.2210 SIGNS TYPE II REFLECTIVE H SF	637.2230 SIGNS TYPE II REFLECTIVE F SF	638.2602 REMOVING SIGNS TYPE II EACH	638.3000 REMOVING SMALL SIGN SUPPORTS EACH	MOUNTED ON SAME POST AS SIGN NUMBER	REMARKS
3-16R	74+90	Left	J13-1	JJ, Left Arrow		24 x 45								1	1		
3-17	75+35	Right	J4-1	Reassurance Assembly	NORTH 162	24 x 36		1				6.00					
3-18	82+00	Left	W2-2	Side Road Warning Symbol		30 x 30			1				6.25				
3-19R	83+00	Left	J1-1	Junction, JJ		24 x 39								1	1		
3-20	84+50	Left	J1-1	Junction Assembly	JCT JJ	24 x 39			1			6.50					
3-21R	85+50	Left	W1-5-R	Right Winding Road 45 MPH		30 x 30								1	1		
3-22R	86+00	Right	W1-2-R	Right Curve 45 MPH		30 x 30								1	1		
3-23	90+00	Right	W1-2-R	Right Curve		30 x 30		1					6.25				
3-24	90+00	Left	W1-5-R	Right Winding Road		30 x 30				1			6.25				
3-25	90+00	Left	W13-1	Speed Advisory Plate	50 MPH	18 x 18							2.25			3-24	
3-26R	90+90	Left	W1-2-R	Right Curve 45 MPH		30 x 30								1	1		
3-27R	97+80	Right	W1-2-L	Left Curve 40 MPH		30 x 30								1	1		
3-28	99+00	Right	W1-2-L	Left Curve		30 x 30			1				6.25				
3-29	99+00	Right	W13-1	Speed Advisory Plate	45 MPH	18 x 18							2.25			3-29	
4-01R	102+35	Left	W1-2-L	Left Curve 45 MPH		30 x 30								1	1		
4-02	111+00	Left	W1-2-R	Right Curve		30 x 30				1			6.25				
4-03	111+00	Left	W13-1	Speed Advisory Plate	45 MPH	18 x 18							2.25			4-02	
4-04R	113+20	Left	W1-2-R	Right Curve 40 MPH		30 x 30								1	1		
4-05	120+00	Right	W1-4-R	Right Reverse Curve		30 x 30			1				6.25				
4-06	120+00	Right	W13-1	Speed Advisory Plate	35 MPH	18 x 18							2.25			4-05	
4-07R	120+00	Right	W1-1-R	Right Turn 30 MPH		36 x 36								1	1		
4-08	125+00	Left	W1-8	Chevron		18 x 24	1						3.00				Use 4' Mounting Height
4-09	125+00	Left	W1-8	Chevron		18 x 24							3.00			4-08	
4-10	126+20	Left	W1-8	Chevron		18 x 24	1						3.00				Use 4' Mounting Height
4-11	126+20	Left	W1-8	Chevron		18 x 24							3.00			4-10	
4-12	127+40	Left	W1-8	Chevron		18 x 24	1						3.00				Use 4' Mounting Height
4-13	127+40	Left	W1-8	Chevron		18 x 24							3.00			4-12	
4-14R	127+40	Left	W1-6	Large Single (Night) Arrow		48 x 24								1	1		
4-15R	127+60	Left	W1-6	Large Single (Night) Arrow		48 x 24								1	1		
4-16	128+60	Left	W1-8	Chevron		18 x 24	1						3.00				Use 4' Mounting Height
4-17	128+60	Left	W1-8	Chevron		18 x 24							3.00			4-16	
4-18	129+80	Left	W1-8	Chevron		18 x 24	1						3.00				Use 4' Mounting Height
4-19	129+80	Left	W1-8	Chevron		18 x 24							3.00			4-18	
5-01R	131+65	Right	W1-1-L	Left Turn 30 MPH		36 x 36								1	1		
5-02R	132+60	Left	W1-1-L	Left Turn 30 MPH		36 x 36								1	1		
5-03	135+00	Right	W1-8	Chevron		18 x 24	1						3.00				Use 4' Mounting Height
5-04	135+00	Right	W1-8	Chevron		18 x 24							3.00			5-03	
5-05	136+20	Right	W1-8	Chevron		18 x 24	1						3.00				Use 4' Mounting Height
5-06	136+20	Right	W1-8	Chevron		18 x 24							3.00			5-05	
5-07	137+40	Right	W1-8	Chevron		18 x 24	1						3.00				Use 4' Mounting Height
5-08	137+40	Right	W1-8	Chevron		18 x 24							3.00			5-07	
5-09	138+60	Right	W1-8	Chevron		18 x 24	1						3.00				Use 4' Mounting Height
5-10	138+60	Right	W1-8	Chevron		18 x 24							3.00			5-09	
5-11R	138+60	Right	W1-6	Large Single (Night) Arrow		48 x 24								1	1		
5-12R	139+00	Right	W1-6	Large Single (Night) Arrow		48 x 24								1	1		
5-13	139+80	Right	W1-8	Chevron		18 x 24	1						3.00				Use 4' Mounting Height
5-14	139+80	Right	W1-8	Chevron		18 x 24							3.00			5-13	
5-15	141+00	Right	W1-8	Chevron		18 x 24	1						3.00				Use 4' Mounting Height
5-16	141+00	Right	W1-8	Chevron		18 x 24							3.00			5-15	
5-17R	143+20	Right	W1-2-L	Left Curve		30 x 30								1	1		
5-18	144+40	Left	W1-4-R	Right Reverse Curve		30 x 30				1			6.25				
5-19	144+40	Left	W13-1	Speed Advisory Plate	35 MPH	18 x 18							2.25			5-18	
					Sheet Sub Totals		11	2	4	3	0	12.50	121.00	16	16		

3

3

SIGN NUMBER	STATION	LOCATION	SIGN CODE	SIGN DESCRIPTION	SIGN MESSAGE	SIGN SIZE IN INCHES	634.0612 POSTS WOOD 4 x 6 INCH 12 FOOT EACH	634.0614 POSTS WOOD 4 x 6 INCH 14 FOOT EACH	634.0616 POSTS WOOD 4 x 6 INCH 16 FOOT EACH	634.0618 POSTS WOOD 4 x 6 INCH 18 FOOT EACH	634.0620 POSTS WOOD 4 x 6 INCH 20 FOOT EACH	637.2210 SIGNS TYPE II REFLECTIVE H SF	637.2230 SIGNS TYPE II REFLECTIVE F SF	638.2602 REMOVING SIGNS TYPE II EACH	638.3000 REMOVING SMALL SIGN SUPPORTS EACH	MOUNTED ON SAME POST AS SIGN NUMBER	REMARKS
5-20R	146+70	Left	W1-1-R	Right Turn 30 MPH		36 x 36								1	1		
5-21	152+35	Right	W1-4-R	Right Reverse Curve		30 x 30			1				6.25				
5-22	152+35	Right	W13-1	Speed Advisory Plate	50 MPH	18 x 18							2.25			5-21	
5-23R	152+35	Right	W1-4-R	Right Reverse Curve 45 MPH		30 x 30								1	1		
5-24	155+35	Right	R1-1	Stop		30 x 30		1				5.18					Souchek Rd
5-25R	155+35	Right	R1-1	Stop		30 x 30								1	1		
5-26R	156+60	Left	W1-2-R	Right Curve										1	1		
6-01R	162+10	Left	W2-2	Side Road Warning Symbol		30 x 30								1	1		
6-02R	162+50	Right	W1-4-R	Right Reverse Curve		30 x 30								1	1		
6-03	163+00	Left	W2-2	Side Road Warning Symbol		30 x 30			1				6.25				
6-04	164+50	Right	W1-2-R	Right Curve		30 x 30		1					6.25				
6-05	165+00	Left	W1-4-R	Right Reverse Curve		30 x 30				1			6.25				
6-06	165+00	Left	W13-1	Speed Advisory Plate	50 MPH	18 x 18							2.25			6-05	
6-07R	167+00	Left	W1-4-R	Right Reverse Curve 45 MPH		30 x 30								1	1		
6-08	184+45	Left	R1-1	Stop		30 x 30		1				5.18					Coleman Rd
6-09R	184+45	Left	R1-1	Stop		30 x 30								1	1		
6-10R	186+10	Left	W1-4-R	Right Reverse Curve		30 x 30								1	1		
6-11R	187+00	Right	W1-1-R	Right Turn 30 MPH		36 x 36								1	1		
7-01	194+00	Right	W1-2-R	Right Curve		30 x 30			1				6.25				
7-02	194+00	Right	W13-1	Speed Advisory Plate	40 MPH	18 x 18							2.25			7-01	
7-03R	195+20	Right	W2-2	Side Road Warning Symbol		30 x 30								1	1		
7-04	196+30	Right	W2-2	Side Road Warning Symbol		30 x 30		1					6.25				
7-05	199+00	Left	W1-6	Large Single (Night) Arrow		48 x 24		1					8.00				
7-06R	199+00	Left	W1-6	Large Single (Night) Arrow		48 x 24								1	1		
7-07	199+40	Left	W1-6	Large Single (Night) Arrow		48 x 24		1					8.00				
7-08R	199+40	Left	W1-6	Large Single (Night) Arrow		48 x 24								1	1		
7-09	203+75	Left	R1-1	Stop		30 x 30		1				5.18					Darling Rd
7-10R	203+75	Left	R1-1	Stop		30 x 30								1	1		
7-11	206+00	Left	W1-2-L	Left Curve		30 x 30				1			6.25				
7-12	206+00	Left	W13-1	Speed Advisory Plate	40 MPH	18 x 18							2.25			7-01	
7-13R	210+00	Left	W2-2	Side Road Warning Symbol		30 x 30								1	1		
7-14	211+40	Right	W14-3	No Passing Zone Pennant		48 x 36		1					6.00				
7-15R	211+40	Right	W14-3	No Passing Zone Pennant		48 x 36								1	1		
7-16	212+50	Left	W2-2	Side Road Warning Symbol		30 x 30			1				6.25				
7-17R	212+85	Left	W1-1-L	Left Turn 30 MPH		36 x 36								1	1		
7-18	214+80	Left	W14-3	No Passing Zone Pennant		48 x 36			1				6.00				
7-19R	214+80	Left	W14-3	No Passing Zone Pennant		48 x 36								1	1		
8-01R	224+35	Right	W1-2-L	Left Curve		30 x 30								1	1		
8-02	230+75	Right	W14-3	No Passing Zone Pennant		48 x 36		1					6.00				
8-03R	230+75	Right	W14-3	No Passing Zone Pennant		48 x 36								1	1		
8-04	231+50	Left	W14-3	No Passing Zone Pennant		48 x 36			1				6.00				
8-05R	231-50	Left	W14-3	No Passing Zone Pennant		48 x 36								1	1		
8-06R	235+35	Right	W1-4-L	Left Reverse Curve 45 MPH		30 x 30								1	1		
8-07	236+00	Right	J1-1	Junction Assembly	JCT II	24 x 39		1				6.50					
8-08	238+00	Right	W2-2	Side Road Warning Symbol		30 x 30		1					6.25				
8-09R	239+00	Right	J1-1	Junction, II		24 x 39								1	1		
8-10R	239+00	Left	W1-2-R	Right Curve		30 x 30								1	1		
8-11	240+00	Right	W1-4-L	Left Reverse Curve		30 x 30			1				6.25				
8-12	240+00	Right	W13-1	Speed Advisory Plate	50 MPH	18 x 18							2.25			8-11	
8-13	245+40	Left	J4-1	Reassurance Assembly	SOUTH 162	24 x 36		1				6.00					
8-14R	245+40	Left	J4-1	SOUTH, 162		24 x 36								1	1		
					Sheet Sub Totals		0	12	7	2	0	28.04	113.75	25	25		

3

STATE PROJECT NO: 5820-01-62	HWY STH 162	COUNTY: LA CROSSE	MISCELLANEOUS QUANTITIES	SHEET NO: 71	E

3

SIGN NUMBER	STATION	LOCATION	SIGN CODE	SIGN DESCRIPTION	SIGN MESSAGE	SIGN SIZE IN INCHES	634.0612 POSTS WOOD 4 x 6 INCH 12 FOOT EACH	634.0614 POSTS WOOD 4 x 6 INCH 14 FOOT EACH	634.0616 POSTS WOOD 4 x 6 INCH 16 FOOT EACH	634.0618 POSTS WOOD 4 x 6 INCH 18 FOOT EACH	634.0620 POSTS WOOD 4 x 6 INCH 20 FOOT EACH	637.2210 SIGNS TYPE II REFLECTIVE H SF	637.2230 SIGNS TYPE II REFLECTIVE F SF	638.2602 REMOVING SIGNS TYPE II EACH	638.3000 REMOVING SMALL SIGN SUPPORTS EACH	MOUNTED ON SAME POST AS SIGN NUMBER	REMARKS
8-15	246+35	Right	J13-1	Route Turn Without Cardinal	II Left Arrow	24 x 45		1				7.50					
8-16R	246+35	Right	J13-1	II, Left Arrow		24 x 45								1	1		
8-17	246+80	Left	R1-1	Stop		30 x 30		1				5.18					CTH II (South)
8-18R	246+80	Left	R1-1	Stop		30 x 30								1	1		
8-19	248+90	Right	I55-56	Adopt A Highway	Bangor Public School Teachers And Staff	30 x 36		1				7.50					
8-20R	248+90	Right	I55-56	Adopt A Highway		30 x 36								1	1		
8-21	249+80	Left	R1-1	Stop		30 x 30		1				5.18					CTH II (North)
8-22R	249+80	Left	R1-1	Stop		30 x 30								1	1		
8-23	251+75	Left	J13-1	Route Turn Without Cardinal	II Right Arrow	24 x 45			1			7.50					
8-24R	251+75	Left	J13-1	II, Right Arrow		24 x 45								1	1		
9-01	253+00	Right	J4-1	Reassurance Assembly	NORTH 162	24 x 36		1				6.00					
9-02R	253+00	Right	J4-1	NORTH, 162		24 x 36								1	1		
9-03R	257+00	Right	W1-2-R	Right Curve 50 MPH		30 x 30								1	1		
9-04R	258+50	Left	J1-1	Junction, II		24 x 39								1	1		
9-05	259+00	Left	W2-1	Side Road Warning Symbol		30 x 30			1				6.25				
9-06	260+50	Left	W1-4-L	Left Reverse Curve		30 x 30				1			6.25				
9-07	260+50	Left	W13-1	Speed Advisory Plate	50 MPH	18 x 18							2.25			9-06	
9-08R	260+50	Left	W1-4-L	Left Reverse Curve 45 MPH		30 x 30								1	1		
9-09	262+00	Left	J1-1	Junction Assembly	JCT II	24 x 39			1			6.50					
9-10R	265+30	Right	W1-3-L	Left Reverse Turn 30 MPH		36 x 36								1	1		
9-11	269+00	Right	W1-4-L	Left Reverse Curve		30 x 30			1				6.25				
9-12	269+00	Right	W13-1	Speed Advisory Plate	35 MPH	18 x 18							2.25			9-11	
9-13R	270+75	Left	W1-2-L	Left Curve 50 MPH		30 x 30								1	1		
9-14	273+40	Right	W2-1	Side Road Warning Symbol		30 x 30		1					6.25				
9-15	275+10	Right	W1-8	Chevron		18 x 24	1						3.00				Use 4' Mounting Height
9-16	275+10	Right	W1-8	Chevron		18 x 24							3.00			9-15	
9-17	276+30	Right	W1-8	Chevron		18 x 24	1						3.00				Use 4' Mounting Height
9-18R	276+30	Right	W1-6	Large Single (Night) Arrow		48 x 24								1	1		
9-19	276+30	Right	W1-8	Chevron		18 x 24							3.00			9-17	
9-20R	277+10	Right	W1-6	Large Single (Night) Arrow		48 x 24								1	1		
9-21	277+50	Right	W1-8	Chevron		18 x 24	1						3.00				Use 4' Mounting Height
9-22	277+50	Right	W1-8	Chevron		18 x 24							3.00			9-21	
9-23	278+70	Right	W1-8	Chevron		18 x 24	1						3.00				Use 4' Mounting Height
9-24	278+70	Right	W1-8	Chevron		18 x 24							3.00			9-23	
9-25	279+90	Right	W1-8	Chevron		18 x 24	1						3.00				Use 4' Mounting Height
9-26	279+90	Right	W1-8	Chevron		18 x 24							3.00			9-25	
9-27	281+00	Left	W1-8	Chevron		18 x 24	1						3.00				Use 4' Mounting Height
9-28	281+00	Left	W1-8	Chevron		18 x 24							3.00			9-27	
9-29	281+15	Left	R1-1	Stop		30 x 30		1				5.18					Russian Coulee Rd
9-30	281+15	Left	R1-1	Stop		30 x 30								1	1		
9-31	282+20	Left	W1-8	Chevron		18 x 24	1						3.00				Use 4' Mounting Height
9-32	282+20	Left	W1-8	Chevron		18 x 24							3.00			9-31	
10-01	283+40	Left	W1-8	Chevron		18 x 24	1						3.00				Use 4' Mounting Height
10-02	283+40	Left	W1-8	Chevron		18 x 24							3.00			10-01	
10-03	284+60	Left	W1-8	Chevron		18 x 24	1						3.00				Use 4' Mounting Height
10-04	284+60	Left	W1-8	Chevron		18 x 24							3.00			10-03	
10-05R	285+00	Right	W1-4-L	Left Reverse Curve 35 MPH		30 x 30								1	1		
10-06	289+00	Left	W2-1	Side Road Warning Symbol		30 x 30		1					6.25				
					Sheet Sub Totals		9	8	4	1	0	50.54	89.75	15	15		

3

STATE PROJECT NO: 5820-01-62	HWY STH 162	COUNTY: LA CROSSE	MISCELLANEOUS QUANTITIES	SHEET NO: 72	E

3

SIGN NUMBER	STATION	LOCATION	SIGN CODE	SIGN DESCRIPTION	SIGN MESSAGE	SIGN SIZE IN INCHES	634.0612 POSTS WOOD 4 x 6 INCH 12 FOOT EACH	634.0614 POSTS WOOD 4 x 6 INCH 14 FOOT EACH	634.0616 POSTS WOOD 4 x 6 INCH 16 FOOT EACH	634.0618 POSTS WOOD 4 x 6 INCH 18 FOOT EACH	634.0620 POSTS WOOD 4 x 6 INCH 20 FOOT EACH	637.2210 SIGNS TYPE II REFLECTIVE H SF	637.2230 SIGNS TYPE II REFLECTIVE F SF	638.2602 REMOVING SIGNS TYPE II EACH	638.3000 REMOVING SMALL SIGN SUPPORTS EACH	MOUNTED ON SAME POST AS SIGN NUMBER	REMARKS
10-07	291+00	Left	W1-4-L	Left Reverse Curve		30 x 30			1				6.25				
10-08	291+00	Left	W13-1	Speed Advisory Plate	35 MPH	18 x 18							2.25			10-07	
10-09R	291+00	Left	W1-3-L	Left Reverse Turn 30 MPH		36 x 36								1	1		
10-10	291+50	Right	W1-2-R	Right Curve		30 x 30			1				6.25				
10-11	291+50	Right	W13-1	Speed Advisory Plate	45 MPH	18 x 18							2.25			10-10	
10-12R	297+10	Right	W1-2-L	Left Curve 45 MPH		30 x 30								1	1		
10-13	297+60	Left	W1-2-L	Left Curve		30 x 30			1				6.25				
10-14	297+60	Left	W13-1	Speed Advisory Plate	45 MPH	18 x 18							2.25			10-13	
10-15R	301+00	Left	W1-4-L	Left Reverse Curve 35 MPH		30 x 30								1	1		
10-16R	313+55	Right	W1-2-R	Right Curve 40 MPH		30 x 30								1	1		
11-01R	316+70	Left	W1-2-R	Right Curve 40 MPH		30 x 30								1	1		
11-02R	317+30	Left	W5-52-L	Clearance Striper Down Right		12 x 36								1	1		
11-03R	317+30	Right	W5-52-R	Clearance Striper Down Left		12 x 36								1	1		
11-04R	318+50	Left	W5-52-R	Clearance Striper Down Left		12 x 36								1	1		
11-05R	318+50	Right	W5-52-L	Clearance Striper Down Right		12 x 36								1	1		
11-06R	322+35	Right	W6-1	Divided Highway Begins Symbol		36 x 36								1	1		
11-07R	323+55	Left	R1-1	Stop		30 x 30								1	1		Fritz Schroeder Rd
11-08R	325+60	Left	D2-2	Coon Valley 20, Stoddard 33		78 x 24								1	2		
11-09R	326+00	Right	J1-1	Junction, 90		24 x 39								1	1		
11-10R	331+00	Median	R4-7	Keep Right		24 x 30								1	1		
11-11R	333+00	Left	J4-1	SOUTH, 162		24 x 36								1	1		
11-12R	333+00	Left	W1-2-L	Left Curve 40 MPH		30 x 30								1	1		
11-13R	333+95	Median	R4-7	Keep Right		24 x 30								1	1		
11-14R	334+05	Right	J2-3	Advance Route Turn Assembly	EAST NORTH WEST 90 162 90 Lt Turn Arrow, Ahead Arrow, Ahead Arrow	72 x 57								1	2		
11-15R	335+35	Left	W6-2	Divided Highway Ends Symbol		36 x 36								1	1		
11-16R	336+90	Left	R2-1	Speed Limit (55)	55 MPH	24 x 30								1	1		
11-17R	336+95	Right	D1-3	Destinations Arrows	(Ahead Arrow) Bangor (Ahead Arrow) La Crosse (Left Arrow) Madison	36 x 72								1	2		
11-18R	338+10	Left	R1-1	Stop		36 x 36								1	1		I-90 East Bound Off Ramp
11-19R	338+65	Island	J3-3	Route Turn Assembly	NORTH ALTERNATE SOUTH 162 90 162 Left Arrow, Left Arrow, Right Arrow	72 x 57								1	2		
11-20R	338+70	Island	R1-1	Stop		36 x 36								1	1		
11-21R	339+00	Left	R1-1	Stop		36 x 36								1	1		
11-22R	339+15	Left	R4-7	Keep Right		24 x 30								1	1		
11-23R	339+10	Left	R5-1	Do Not Enter		30 x 30								1	1		
11-24R	339+10	Right	J3-1	EAST, 90, Left Arrow		24 x 57								1	1		
11-25R	339+15	Right	R6-2-L	One Way (Left Arrow)		24 x 30								1	1		
11-26R	339+85	Median	R4-7	Keep Right		24 x 30								1	1		
11-27R	339+95	Left	R5-1	Do Not Enter		30 x 30										11-28R	
11-28R	339+95	Left	J3-1	EAST, 90, Right Arrow		24 x 57								1	1		
12-01R	341+25	Right	J2-1	WEST, 90, Left Turn Arrow		24 x 57								1	1		
12-02R	341+25	Right	J4-2	Reassurance Assembly	NORTH ALTERNATE 162 90	48 x 36								1	1		
12-03R	342+20	Left	R5-1-A	Wrong Way		36 x 24								1	1		
12-04R	342+35	Median	D1-1	Madison (Right Arrow)		72 x 15								1	1		
12-05R	345+00	Left	J2-1	EAST, 90, Right Turn Arrow		24 x 57								1	1		
12-06R	346+35	Right	D1-1	(Left Arrow) La Crosse		78 x 15								1	2		
12-07R	348+00	Right	W6-2	Divided Highway Ends Symbol		36 x 36								1	1		
12-08R	348+10	Left	J4-1	SOUTH, 162		24 x 36								1	1		
12-09R	348+65	Left	R1-1	Stop		36 x 36								1	1		I-90 West Bound Off Ramp
					Sheet Sub Totals		0	0	3	0	0	0.00	25.50	40	45		

3

3

SIGN NUMBER	STATION	LOCATION	SIGN CODE	SIGN DESCRIPTION	SIGN MESSAGE	SIGN SIZE IN INCHES	634.0612 POSTS WOOD 4 x 6 INCH 12 FOOT EACH	634.0614 POSTS WOOD 4 x 6 INCH 14 FOOT EACH	634.0616 POSTS WOOD 4 x 6 INCH 16 FOOT EACH	634.0618 POSTS WOOD 4 x 6 INCH 18 FOOT EACH	634.0620 POSTS WOOD 4 x 6 INCH 20 FOOT EACH	637.2210 SIGNS TYPE II REFLECTIVE H SF	637.2230 SIGNS TYPE II REFLECTIVE F SF	638.2602 REMOVING SIGNS TYPE II EACH	638.3000 REMOVING SMALL SIGN SUPPORTS EACH	MOUNTED ON SAME POST AS SIGN NUMBER	REMARKS
12-10R	348+95	Island	R1-1	Stop		36 x 36								1	1		
12-11R	349+00	Island	J3-3	Route Turn Assembly	NORTH ALTERNATE SOUTH 162 90 162 Left Arrow, Left Arrow, Right Arrow	72 x 57								1	2		
12-12R	349+40	Left	R1-1	Stop		36 x 36								1	1		
12-13R	349+45	Left	R4-7	Keep Right		24 x 30								1	1		
12-14R	349+50	Left	R5-1	Do Not Enter		30 x 30								1	1		
12-15R	349+70	Right	J3-2	Route Turn Assembly	WEST ALTERNATE 90 90 Left Arrow, Ahead Arrow	48 x 57								1	1		
12-16R	349+70	Right	J1-1	Junction, B		24 x 39								1	1		
12-17R	350+00	Right	R6-2-L	One Way (Left Arrow)		24 x 30								1	1		
12-18R	350+20	Median	R4-7	Keep Right		24 x 30								1	1		
12-19R	350+65	Left	J3-1	WEST, 90, Right Arrow		24 x 57								1	1		
12-20R	351+15	Right	W3-5	Speed Limit (30) Ahead	30 MPH	36 x 36								1	1		
12-21R	352+05	Left	D1-3	Destinations Arrows	(Ahead Arrow) Coon Valley (Ahead Arrow) Madison La Crosse (Right Arrow)	78 x 36								1	2		
12-22R	353+00	Right	J3-1	ALTERNATE, 90, Ahead Arrow		24 x 57								1	1		
12-23R	354+00	Median	R4-7	Keep Right		24 x 30								1	1		
12-24R	354+00	Left	I55-56	Adopt A Highway		30 x 36								1	1		
12-25R	356+00	Left	J2-3	Advance Route Turn Assembly	EAST SOUTH WEST 90 162 90 Ahead Arrow, Ahead Arrow, Rt Turn Arrow	72 x 57								1	2		
12-26R	357+30	Left	R2-1	Speed Limit (55)	55 MPH	24 x 30								1	1		
12-27R	357+25	Right	R2-1	Speed Limit (30)	30 MPH	24 x 30								1	1		
12-28R	358+15	Right	W1-1-R	Right Turn 20 MPH		36 x 36								1	1		
12-29R	358+25	Left	J1-1	Junction, 90		24 x 39								1	1		
12-30R	358+35	Left	J3-1	ALTERNATE, 90, Right Arrow		24 x 57								1	1		
12-31R	358+40	Left	R1-1	Stop		30 x 30								1	1		CTH B
12-32R	358+90	Island	R1-1	Stop		30 x 30								1	1		
12-33R	358+35	Left	R5-1	Do Not Enter		30 x 30								1	1		
12-34R	358+85	Right	J13-1	B, Left and Ahead Arrow		24 x 45								1	1		
12-35R	358+85	Right	J32-1	ALTERNATE, WEST, 90, Left Arrow		24 x 69								1	1		
12-36R	358+85	Right	J32-1	ALTERNATE, EAST, 90, Ahead Arrow		24 x 69								1	1		
12-37R	359+05	Right	W1-7	162, Large Double (Night) Arrow		48 x 24								1	1		
12-38R	359+75	Right	R7-1-L	No Parking Any Time (Left Arrow)		18 x 24								1	1		
12-39R	359+75	Left	R7-1-R	No Parking Any Time (Right Arrow)		18 x 24								1	1		
12-40R	359+75	Left	J13-1	B, Right Arrow		24 x 45								1	1		
12-41R	360+65	Left	W6-1	Divided Highway Begins Symbol		36 x 36								1	1		
12-42R	361+00	Left	R1-1	Stop		30 x 30								1	1		Ol Hess Rd
12-43R	361+00	Right	W10-1	Railroad Crossing Symbol		36 x 36								1	1		
12-44R	361+65	Right	R7-1-D	No Parking Any Time (Double Arrow)		18 x 24								1	1		
12-45R	362+05	Left	R7-1-D	No Parking Any Time (Double Arrow)		18 x 24								1	1		
12-46R	362+45	Right	J4-1	ALTERNATE, 90		24 x 36								1	1		
13-01	314+35	Right	W2-1	Side Road Warning Symbol		30 x 30		1					6.25				
13-02	316+45	Right	W1-2-R	Right Curve		30 x 30			1				6.25				
13-03	316+45	Right	W13-1	Speed Advisory Plate	45 MPH	18 x 18							2.25			13-02	
13-04	317+80	Left	W5-52-L	Clearance Striper Down Right		12 x 36	1						3.00				Use 4' Mounting Height
13-05	317+90	Right	W5-52-R	Clearance Striper Down Left		12 x 36	1						3.00				Use 4' Mounting Height
13-06	317+95	Left	W5-52-R	Clearance Striper Down Left		12 x 36	1						3.00				Use 4' Mounting Height
13-07	318+05	Right	W5-52-L	Clearance Striper Down Right		12 x 36	1						3.00				Use 4' Mounting Height
13-08	323+00	Right	W6-1	Divided Highway Begins Symbol		36 x 36			1				9.00				
					Sheet Sub Totals		4	1	2	0	0	0	35.75	37	40		

3

SIGN NUMBER	STATION	LOCATION	SIGN CODE	SIGN DESCRIPTION	SIGN MESSAGE	SIGN SIZE IN INCHES	634.0612 POSTS WOOD 4 x 6 INCH 12 FOOT EACH	634.0614 POSTS WOOD 4 x 6 INCH 14 FOOT EACH	634.0616 POSTS WOOD 4 x 6 INCH 16 FOOT EACH	634.0618 POSTS WOOD 4 x 6 INCH 18 FOOT EACH	634.0620 POSTS WOOD 4 x 6 INCH 20 FOOT EACH	637.2210 SIGNS TYPE II REFLECTIVE H SF	637.2230 SIGNS TYPE II REFLECTIVE F SF	638.2602 REMOVING SIGNS TYPE II EACH	638.3000 REMOVING SMALL SIGN SUPPORTS EACH	MOUNTED ON SAME POST AS SIGN NUMBER	REMARKS
13-09	323+40	Left	R1-1	Stop		30 x 30		1				5.18					Fritz Schroeder Rd
13-10	326+00	Right	D2-2	Destinations Distances	Coon Valley 16	90 x 24						15.00					
					Stoddard 30												
13-11	328+00	Left	W6-3	Two Way Traffic Symbol		36 x 36			1				9.00				
13-12	328+20	Right	J1-1	Junction Assembly	JCT	24 x 39		1				6.50					
					90												
13-13	331-05	Median	R4-7	Keep Right		24 x 30		1				5.00					Box Out Required
13-14	331-05	Median	W5-54	Clearance Marker		18 x 18							2.25			13-13	
13-15	331-05	Left	R5-1	Do Not Enter		36 x 36						9.00				13-16	
13-16	331-05	Left	W1-2-L	Left Curve		30 x 30			1				6.25				
13-17	331-05	Left	W13-1	Speed Advisory Plate	45 MPH	18 x 18							2.25			13-16	
13-18	332+00	Right	J2-3	Advance Route Turn Assembly	EAST WEST NORTH	72 x 57				2		28.50					
					90 90 162												
					Lt Turn Arrow, Ahead Arrow, Ahead Arrow												
13-19	333+00	Left	R2-1	Speed Limit (55)	55 MPH	24 x 30		1				5.00					
13-20	333+20	Left	R6-2-L	One Way (Left Arrow)		24 x 30		1				5.00					
13-21	333+90	Right	R6-2-L	One Way (Left Arrow)		24 x 30		1				5.00					
13-22	334+00	Left	R5-1	Do Not Enter		30 x 30		1				6.25					
13-23	335+00	Left	W6-2	Divided Highway Ends Symbol		36 x 36			1				9.00				
13-24	335+00	Right	D1-3	Destinations Arrows	(Ahead Arrow) Bangor	72 x 36		1	1			18.00					
					(Ahead Arrow) La Crosse												
					(Left Arrow) Madison												
13-25	337+40	Left	J4-1	Reassurance Assembly	SOUTH	24 x 36		1				6.00					
					162												
13-26	338+10	Left	R1-1	Stop		36 x 36		1				7.46					I-90 East Bound Off Ramp
13-27	338+50	Island	J3-3	Route Turn Assembly	NORTH ALTERNATE SOUTH	72 x 57			2			28.50					
					162 90 162												
					Left Arrow, Left Arrow, Right Arrow												
13-28	338+55	Island	R1-1	Stop		36 x 36			1			7.46					
13-29	338+55	Island	R6-3-A	Divided Highway T Intersection		30 x 24						5.00				13-28	
13-30	339+00	Left	R1-1	Stop		36 x 36			1			7.46					
13-31	339+00	Left	R6-3-A	Divided Highway T Intersection		30 x 24						5.00				13-30	
13-23	339+05	Left	R5-1	Do Not Enter		30 x 30		1				6.25					
13-33	339+10	Left	R4-7	Keep Right		24 x 30		1				5.00					
13-34	339+00	Right	J3-1	Route Turn Assembly	EAST	24 x 57			1			9.50					
					90												
					Left Arrow												
13-35	339+00	Right	R5-1	Do Not Enter		30 x 30						6.25				13-34	
13-36	339+10	Right	R6-2-L	One Way (Left Arrow)		24 x 30		1				5.00					
13-37	339+85	Median	R4-7	Keep Right		24 x 30		1				5.00					Box Out Required
14-01	340+00	Left	R5-1	Do Not Enter		30 x 30						6.25				14-02	
14-02	340+00	Left	J3-1	Route Turn Assembly	EAST	24 x 57			1			9.50					
					90												
					Right Arrow												
14-03	341+00	Right	J2-3	Advance Route Turn Assembly	WEST NORTH ALTERNATE	72 x 57				2		28.50					
					90 162 90												
					Lt Turn Arrow, Ahead Arrow, Ahead Arrow												
14-04	342+00	Left	R5-1-A	Wrong Way		36 x 24		1				6.00					
14-05	343+00	Right	I2-3	Community Population	Bangor	60 x 24		1	1			10.00					
					Population 1459												
14-06	345+00	Right	D1-1	Destination Arrow	(Left Arrow) La Crosse	72 x 15		2				7.50					
14-07	345+00	Left	D1-1	Destination Arrow	Madison (Right Arrow)	60 x 15		2				6.25					
14-08	346+50	Right	W3-5	Speed Limit (30) Ahead	30 MPH	36 x 36			1				9.00				
					Sheet Sub Totals		0	20	12	4	0	286.31	37.75	0	0		

3

3

3

SIGN NUMBER	STATION	LOCATION	SIGN CODE	SIGN DESCRIPTION	SIGN MESSAGE	SIGN SIZE IN INCHES	634.0612 POSTS WOOD 4 x 6 INCH 12 FOOT EACH	634.0614 POSTS WOOD 4 x 6 INCH 14 FOOT EACH	634.0616 POSTS WOOD 4 x 6 INCH 16 FOOT EACH	634.0618 POSTS WOOD 4 x 6 INCH 18 FOOT EACH	634.0620 POSTS WOOD 4 x 6 INCH 20 FOOT EACH	637.2210 SIGNS TYPE II REFLECTIVE H SF	637.2230 SIGNS TYPE II REFLECTIVE F SF	638.2602 REMOVING SIGNS TYPE II EACH	638.3000 REMOVING SMALL SIGN SUPPORTS EACH	MOUNTED ON SAME POST AS SIGN NUMBER	REMARKS
14-09	347+00	Left	J2-2	Advance Route Turn Assembly	SOUTH EAST	48 x 57				1		19.00					
					162 90												
					Ahead Arrow, Rt Turn Arrow												
14-10	348+00	Right	J1-1	Junction Assembly	JCT	24 x 39											
					B												
14-11	348+55	Left	R1-1	Stop		36 x 36		1				7.46					
14-12	349+00	Island	J3-3	Route Turn Assembly	NORTH ALTERNATE SOUTH	72 x 57			2			28.50					
					162 90 162												
					Left Arrow, Left Arrow, Right Arrow												
14-13	349+05	Island	R1-1	Stop		36 x 36			1			7.46					
14-14	349+05	Island	R6-3-A	Divided Highway T Intersection		30 x 24						5.00				14-13	
14-15	349+10	Left	R1-1	Stop		36 x 36			1			7.46					
14-16	349+10	Left	R6-3-A	Divided Highway T Intersection		30 x 24						5.00				14-15	
14-17	349+15	Left	R5-1	Do Not Enter		30 x 30		1				6.25					
14-18	349+20	Left	R4-7	Keep Right		24 x 30		1				5.00					
14-19	349+10	Right	J3-1	Route Turn Assembly	WEST	24 x 57				1		9.50					
					90												
					Left Arrow												
14-20	349+10	Right	R5-1	Do Not Enter		30 x 30						6.25				14-19	
14-21	349+70	Right	R6-2-L	One Way (Left Arrow)		24 x 30		1				5.00					
14-22	350+10	Median	R4-7	Keep Right		24 x 30		1				5.00					Box Out Required
14-23	350+50	Left	R5-1	Do Not Enter		30 x 30						6.25				14-24	
14-24	350+50	Left	J3-1	Route Turn Assembly	WEST	24 x 57			1			9.50					
					90												
					Right Arrow												
14-25	351+00	Right	W6-2	Divided Highway Ends Symbol		36 x 36			1				9.00				
14-26	351+00	Right	R5-1-A	Wrong Way		36 x 24						6.00				14-25	
14-27	352+50	Right	R2-1	Speed Limit (30)	30 MPH	24 x 30		1				5.00					
14-28	352+50	Median	R2-1	Speed Limit (30)	30 MPH	24 x 30		1				5.00					Box Out Required
14-29	352+50	Left	R2-1	Speed Limit (55)	55 MPH	24 x 30		1				5.00					
14-30	354+80	Left	I55-56	Adopt A Highway	Bangor Public	30 x 36		1				7.50					
					School Teachers												
					And Staff												
14-31	356+10	Median	R4-7	Keep Right		24 x 30		1				5.00					Box Out Required
14-32	356+10	Median	W5-54	Clearance Marker		18 x 18							2.25			14-31	
14-33	356+10	Right	W6-3	Two Way Traffic Symbol		36 x 36			1				9.00				
14-34	356+10	Right	R5-1	Do Not Enter		30 x 30						6.25				14-33	
14-35	356+40	Left	D1-3	Destinations Arrows	(Ahead Arrow) Coon Valley	78 x 36		1	1			19.50					
					(Ahead Arrow) Madison												
					La Crosse (Right Arrow)												
14-36	358+00	Left	J2-3	Advance Route Turn Assembly	EAST SOUTH WEST	72 x 57				2		28.50					
					90 162 90												
					Ahead Arrow, Ahead Arrow, Rt Turn Arrow												
14-37	358+40	Left	R5-1	Do Not Enter		30 x 30		1									
14-38	358+50	CTH B	J3-1	Route Turn Assembly	ALTERNATE	24 x 57				1		9.50					Place 100' West on CTH B
					90												
					Right Arrow												
14-39	358+45	Left	R1-1	Stop		30 x 30		1				5.18					CTH B
14-40	358+55	Island	J13-2	Route Turn Without Cardinals	B, 162	48 x 45			1			15.00					Box Out Required
					Left Arrow, Left and Right Arrow												
14-41	358+60	Island	R1-1	Stop		30 x 30		1				5.18					Box Out Required
14-42	358+40	Right	J13-1	Route Turn Without Cardinal	B	24 x 45			1			7.50					
					Left and Ahead Arrow												
					Sheet Sub Totals		0	14	10	5	0	262.74	20.25	0	0		

3

3

SIGN NUMBER	STATION	LOCATION	SIGN CODE	SIGN DESCRIPTION	SIGN MESSAGE	SIGN SIZE IN INCHES	634.0612 POSTS WOOD 4 x 6 INCH 12 FOOT EACH	634.0614 POSTS WOOD 4 x 6 INCH 14 FOOT EACH	634.0616 POSTS WOOD 4 x 6 INCH 16 FOOT EACH	634.0618 POSTS WOOD 4 x 6 INCH 18 FOOT EACH	634.0620 POSTS WOOD 4 x 6 INCH 20 FOOT EACH	637.2210 SIGNS TYPE II REFLECTIVE H SF	637.2230 SIGNS TYPE II REFLECTIVE F SF	638.2602 REMOVING SIGNS TYPE II EACH	638.3000 REMOVING SMALL SIGN SUPPORTS EACH	MOUNTED ON SAME POST AS SIGN NUMBER	REMARKS
14-43	358+40	Right	J32-2	Trail Blazing Route Turn Assembly	ALTERNATE ALTERNATE	48 x 69					1	23.00					
					WEST EAST												
					90 90												
					Left Arrow, Ahead Arrow												
14-44	359+00	Right	W1-7	Large Double (Night) Arrow		48 x 24		1					8.00				
14-45	359+65	Right	W1-1-R	Right Turn		36 x 36				1			9.00				
14-46	359+65	Right	W13-1	Speed Advisory Plate	20 MPH	24 x 24							4.00			14-45	
14-47	359+70	Left	J13-1	Route Turn Without Cardinal	B	24 x 45			1			7.50					
					Right Arrow												
14-48	360+90	Right	W10-1	Railroad Crossing Symbol		36 x 36			1				7.07				
14-49	360+90	Left	W6-1	Divided Highway Begins Symbol		36 x 36			1				9.00				
14-50	362+00	Left	R7-1-R	No Parking Any Time (Right Arrow)		18 x 24		1				3.00					
14-51	362+00	Right	R2-1	Speed Limit (30)	30 MPH	24 x 30			1			5.00					
14-52	362+00	Right	R7-1-L	No Parking Any Time (Left Arrow)		18 x 24						3.00				14-51	
14-53	362+45	Left	J1-1	Junction Assembly	JCT	24 x 39			1			6.50					
					90												
15-01R	362+95	Left	J12-1	B, Right Turn Arrow		24 x 45								1	1		
15-02R	363+80	Left	R7-1-D	No Parking Any Time (Double Arrow)		18 x 24								1	1		
15-03R	363+80	Right	R7-1-D	No Parking Any Time (Double Arrow)		18 x 24								1	1		
15-04R	364+90	Right	R7-1-R	No Parking Any Time (Right Arrow)		18 x 24								1	1		
15-05R	364+90	Island	R1-1	No Parking Any Time (Left Arrow)		30 x 30								1	1		Jones Rd
15-06R	364+90	Island	R7-1-L	No Parking Any Time (Left Arrow)		18 x 24										15-05R	
15-07R	364+95	Left	W1-6	162, Large Single (Night) Arrow		48 x 24								1	1		
15-08R	365+00	Left	W1-6	162, Large Single (Night) Arrow		48 x 24								1	1		
15-09R	366+55	Right	R2-1	Speed Limit (30)	30 MPH	24 x 30								1	1		
15-10R	366+55	Right	I2-3	Bangor, Population 1459		66 x 24								1	2		
15-11R	367+35	Left	W10-1	Railroad Crossing Symbol		36 x 36								1	1		
15-12R	358+80	Left	R1-1	Stop		30 x 30								1	1		Hattan St
15-13R	371+00	Left	W1-1-L	Left Turn 20 MPH		36 x 36								1	1		
15-14R	373+25	Right	W1-3-L	Left Reverse Turn		36 x 36								1	1		
15-15R	373+25	Right	W14-3	No Passing Zone Pennant		48 x 36										15-14R	
15-16R	374+30	Left	W14-3	No Passing Zone Pennant		48 x 36								1	1		
15-17R	376+20	Right	R1-1	Stop		30 x 30								1	1		19th Ave
15-18R	377+40	Left	R2-1	Speed Limit (30)	30 MPH	24 x 30								1	1		
15-19R	379+40	Left	R1-1	Stop		30 x 30								1	1		18th Ave
15-20R	379+95	Right	R1-1	Stop		30 x 30								1	1		18th Ave
15-21R	381+20	Right	W1-6	Large Single (Night) Arrow		48 x 24								1	1		
15-22R	381+75	Right	W1-6	Large Single (Night) Arrow		48 x 24								1	1		
15-23R	385+75	Right	R2-1	Speed Limit (30)	30 MPH	24 x 30								1	1		
15-24R	386+05	Left	W1-6	Large Single (Night) Arrow		48 x 24								1	1		
15-25R	386+25	Left	W1-6	Large Single (Night) Arrow		48 x 24								1	1		
16-04R	390+85	Right	R7-1-L	No Parking Any Time (Left Arrow)		18 x 24								1	1		
16-05R	391+00	Left	R2-1	Speed Limit (30) No Parking (Right Arrow)	30 MPH	24 x 30								1	1		
16-06R	391+50	Right	J3-1	ALTERNATE, 90, Left Arrow		24 x 57								1	1		
16-07R	391+50	Right	J3-2	Route Turn Assembly	NORTH Blank	48 x 57								1	1		
					162 B												
					Left Arrow, Right Arrow												
16-08R	391+50	Right	R1-1	Stop		36 x 36								1	1		
16-09R	391+55	Right	J3-1	ALTERNATE, 90, Right Arrow		24 x 57								1			
16-10R	392+00	Right	J13-1	162, Left and Ahead Arrow		24 x 45								1			
16-11R	392+20	Right	R1-1	Stop		30 x 30								1	1		Pearl St
					Sheet Sub Totals		0	2	5	1	1	48	37.07	31	30		

3

3

SIGN NUMBER	STATION	LOCATION	SIGN CODE	SIGN DESCRIPTION	SIGN MESSAGE	SIGN SIZE IN INCHES	634.0612 POSTS WOOD 4 x 6 INCH 12 FOOT EACH	634.0614 POSTS WOOD 4 x 6 INCH 14 FOOT EACH	634.0616 POSTS WOOD 4 x 6 INCH 16 FOOT EACH	634.0618 POSTS WOOD 4 x 6 INCH 18 FOOT EACH	634.0620 POSTS WOOD 4 x 6 INCH 20 FOOT EACH	637.2210 SIGNS TYPE II REFLECTIVE H SF	637.2230 SIGNS TYPE II REFLECTIVE F SF	638.2602 REMOVING SIGNS TYPE II EACH	638.3000 REMOVING SMALL SIGN SUPPORTS EACH	MOUNTED ON SAME POST AS SIGN NUMBER	REMARKS
16-12R	392+60	Left	JV	Vertically Arranged Route Assembly	B	24 x 90								1	1		
					Ahead and Right Arrow												
					162												
					Right Arrow												
15-26R	387+35	Left	J4-1	ALTERNATE, 90		24 x 36								1	1		
16-01R	387+65	Right	W3-1	Stop Ahead		36 x 36								1	1		
16-02R	389+45	Right	J2-2	Advance Route Turn Assembly	NORTH Blank	48 x 57								1	1		
					162 B												
					Lt Turn Arrow, Rt Turn Arrow												
16-03R	389+55	Left	W1-3-L	Left Reverse Turn		36 x 36								1	1		
16-13R	392+75	Right	J4-1	ALTERNATE, 90		24 x 36								1	1		
16-14R	394+15	Right	R1-1	Stop		30 x 30								1	1		Oak St
16-15R	394+30	Right	R2-1	Speed Limit (25)	25 MPH	24 x 30								1	1		
16-16R	394+40	Left	J2-2	Advance Route Turn Assembly	SOUTH ALTERNATE	48 x 57								1	1		
					162 90												
					Rt Turn Arrow, Rt Turn Arrow												
16-17R	396+15	Right	R1-1	Stop		30 x 30								1	1		Badger St
16-18R	396+30	Left	J1-1	Junction, B		24 x 39								1	1		
16-19R	397+35	Right	W14-3	No Passing Zone Pennant		48 x 36								1			
16-20R	397+60	Right	R1-1	Stop		30 x 30								1	1		Bosshard St
16-21R	398+25	Left	R2-1	Speed Limit (25)	25 MPH	24 x 30								1	1		
16-22R	401+05	Right	I55-56	Adopt A Highway		30 x 36								1	1		
16-23R	402+75	Right	R2-1	Speed Limit (55)	55 MPH	24 x 30								1	1		
16-24R	402+75	Right	J4-1	NORTH, 162										1	1		
16-25R	402+75	Left	R2-1	Speed Limit (25)	25 MPH	24 x 30								1	1		
16-26R	408+25	Left	I2-3	Bangor, Population 1459		66 x 24								1	1		
16-27R	408+25	Left	W3-5	Speed Limit (25) Ahead	25 MPH	36 x 36								1	1		
17-01	363+80	Left	J12-1	Advance Route Turn Without Cardinals	B	24 x 45			1			7.50					
					Rt Turn Arrow												
17-02	364+80	Left	R7-1-L	No Parking Any Time (Left Arrow)		18 x 24		1									
17-03	364+80	Left	R1-1	Stop		30 x 30		1				5.18					Jones Rd, Right
17-03A	364+80	Left	R1-1	Stop		30 x 30		1				5.18					Jones Rd, Left
17-04	364+90	Right	R7-1-R	No Parking Any Time (Right Arrow)		18 x 24		1									
17-05	365+00	Left	W1-6	Large Single (Night) Arrow		48 x 24		1					8.00				
17-06	365+00	Left	W1-6	Large Single (Night) Arrow		48 x 24		1					8.00				
17-07	366+00	Left	W10-1	Railroad Crossing Symbol		36 x 36		1					7.07				
17-08	366+60	Right	J4-3	Reassurance Assembly	NORTH Blank ALTERNATE	72 x 36		1	1			18.00					
17-09	368+85	Left	R1-1	Stop		30 x 30		1				5.18					Hattan St
17-10	370+10	Left	W1-1-L	Left Turn		36 x 36				1			9.00				
17-11	370+10	Left	W13-1	Speed Advisory Plate	20 MPH	24 x 24							4.00			17-10	
17-12	371+00	Right	R2-1	Speed Limit (30)	30 MPH	24 x 30		1				5.00					
17-13	372+50	Left	R2-1	Speed Limit (30)	30 MPH	24 x 30		1				5.00					
17-14	373+45	Right	W14-3	No Passing Zone Pennant		48 x 36			1				6.00				
17-15	374+25	Left	W14-3	No Passing Zone Pennant		48 x 36			1				6.00				
17-16	376+20	Right	R1-1	Stop		30 x 30		1				5.18					19th Ave
17-17	379+35	Left	R1-1	Stop		30 x 30		1				5.18					18th Ave
17-18	380+00	Right	R1-1	Stop		30 x 30		1				5.18					18th Ave
17-19	381+30	Right	W1-6	Large Single (Night) Arrow		48 x 24		1					8.00				
17-20	381+60	Right	W1-6	Large Single (Night) Arrow		48 x 24		1					8.00				
17-21	383+00	Left	R2-1	Speed Limit (30)	30 MPH	24 x 30		1				5.00					
17-22	384+50	Right	R2-1	Speed Limit (30)	30 MPH	24 x 30		1				5.00					
17-23	385+95	Left	W1-6	Large Single (Night) Arrow		48 x 24		1					8.00				
17-24	386+15	Left	W1-6	Large Single (Night) Arrow		48 x 24		1					8.00				
17-25	387+50	Left	J4-1	Reassurance Assembly	ALTERNATE	24 x 36			1								
					90												
					Sheet Sub Totals		0	20	5	1	0	76.58	80.07	20	19		

3

STATE PROJECT NO: 5820-01-62	HWY STH 162	COUNTY: LA CROSSE	MISCELLANEOUS QUANTITIES	SHEET NO: 78	E

3

SIGN NUMBER	STATION	LOCATION	SIGN CODE	SIGN DESCRIPTION	SIGN MESSAGE	SIGN SIZE IN INCHES	634.0612 POSTS WOOD 4 x 6 INCH 12 FOOT EACH	634.0614 POSTS WOOD 4 x 6 INCH 14 FOOT EACH	634.0616 POSTS WOOD 4 x 6 INCH 16 FOOT EACH	634.0618 POSTS WOOD 4 x 6 INCH 18 FOOT EACH	634.0620 POSTS WOOD 4 x 6 INCH 20 FOOT EACH	637.2210 SIGNS TYPE II REFLECTIVE H SF	637.2230 SIGNS TYPE II REFLECTIVE F SF	638.2602 REMOVING SIGNS TYPE II EACH	638.3000 REMOVING SMALL SIGN SUPPORTS EACH	MOUNTED ON SAME POST AS SIGN NUMBER	REMARKS
18-01	387+50	Right	J2-2	Advance Route Turn Assembly	NORTH Blank	48 x 57				1		19.00					
					162 B												
					Lt Turn Arrow, Rt Turn Arrow												
18-02	389+50	Right	W3-1	Stop Ahead		36 x 36			1				9.00				
18-03	389+55	Left	J4-2	Reassurance Assembly	SOUTH Blank	48 x 36		1				12.00					
					162 B												
					162 B 90												
18-04	390+95	Right	J3-3	Route Turn Assembly	NORTH ALTERNATE Blank	72 x 57				2		28.50					
					162 90 B												
					Left Arrow, Left Arrow, Right Arrow												
18-05	391+05	Right	R7-51-L	No Parking Here to Corner (Left Arrow)		18 x 24		1				3.00					
18-06	391+00	Left	R2-1	Speed Limit (30)	30 MPH	24 x 30			1			5.00					Box Out Required
18-07	391+00	Left	R7-51-R	No Parking Here to Corner (Right Arrow)		18 x 24						3.00				18-07	
18-08	391+60	Right	R1-1	Stop		36 x 36		1				7.46					CTH B
18-09	392+00	Right	J13-2	Route Turn Without Cardinals	B 162	48 x 45			1			15.00					
					Left Arrow, Left and Ahead Arrow												
18-10	392+20	Right	R1-1	Stop		30 x 30		1				5.18					Pearl St
18-11	393+00	Right	J4-2	Reassurance Assembly	NORTH ALTERNATE	48 x 36		1				12.00					
					162 90												
18-12	393+75	Left	J3-2	Route Turn Assembly	Blank SOUTH	48 x 57				1		19.00					
					B 162												
					Ahead and Right Arrow, Right Arrow												
18-13	394+15	Right	R1-1	Stop		30 x 30		1				5.18					Oak St
18-14	394+20	Right	R2-1	Speed Limit (25)	25 MPH	24 x 30						5.00					Band to Utility Pole
18-15	395+50	Left	J2-2	Advance Route Turn Assembly	SOUTH ALTERNATE	48 x 57				1		19.00					
					162 90												
					Rt Turn Arrow, Rt Turn Arrow												
18-16	396+15	Right	R1-1	Stop		30 x 30		1				5.18					Badger St
18-17	397+10	Left	J1-1	Junction Assembly	JCT	24 x 39		1				6.50					
					B												
18-18	397+25	Right	W14-3	No Passing Zone Pennant		48 x 36			1				6.00				
18-19	398+90	Right	R2-1	Speed Limit (25)	25 MPH	24 x 30		1				5.00					
18-20	399+25	Left	R2-1	Speed Limit (25)	25 MPH	24 x 30		1				5.00					
18-21	401+10	Right	I55-56	Adopt A Highway	Bangor	30 x 36			1			7.50					
					Knights of												
					Columbus												
18-22	402+55	Right	R2-1	Speed Limit (55)	55 MPH	24 x 30		1				5.00					
18-23	402+55	Left	R2-1	Speed Limit (25)	25 MPH	24 x 30		1				5.00					
18-24	405+00	Right	J4-2	Reassurance Assembly	NORTH ALTERNATE	48 x 36		1				12.00					
					162 90												
18-25	409+00	Left	W3-5	Speed Limit (25) Ahead	25 MPH	36 x 36			1				9.00				
19-01	415+30	Left	I2-3	Community Population	Bangor	60 x 24		1	1			10.00					
					Population 1459												
19-02	419+45	Right	W5-52-R	Clearance Striper Down Left		12 x 36	1						3.00				Use 4' Mounting Height
19-03R	419+45	Right	W5-52-R	Clearance Striper Down Left		12 x 36								1	1		
19-04	419+45	Right	I3-1	Lake River or Stream Name	La Crosse	36 x 21	1					5.25					
					River												
19-05R	419+45	Right	I3-1	La Crosse River		36 x 21								1	1		
19-06	419+50	Left	W5-52-L	Clearance Striper Down Right		12 x 36	1						3.00				Use 4' Mounting Height
19-07R	419+50	Left	W5-52-L	Clearance Striper Down Right		12 x 36								1	1		
19-08	420+95	Right	W5-52-L	Clearance Striper Down Right		12 x 36	1						3.00				Use 4' Mounting Height
19-09R	420+95	Right	W5-52-L	Clearance Striper Down Right		12 x 36								1	1		
19-10	421+00	Left	I3-1	Lake River or Stream Name	La Crosse	36 x 21	1					5.25					
					River												
					Sheet Sub Totals		5	14	7	5	0	230.00	33.00	4	4		

3

STATE PROJECT NO: 5820-01-62	HWY STH 162	COUNTY: LA CROSSE	MISCELLANEOUS QUANTITIES	SHEET NO: 79	E

3

SIGN NUMBER	STATION	LOCATION	SIGN CODE	SIGN DESCRIPTION	SIGN MESSAGE	SIGN SIZE IN INCHES	634.0612 POSTS WOOD 4 x 6 INCH 12 FOOT EACH	634.0614 POSTS WOOD 4 x 6 INCH 14 FOOT EACH	634.0616 POSTS WOOD 4 x 6 INCH 16 FOOT EACH	634.0618 POSTS WOOD 4 x 6 INCH 18 FOOT EACH	634.0620 POSTS WOOD 4 x 6 INCH 20 FOOT EACH	637.2210 SIGNS TYPE II REFLECTIVE H SF	637.2230 SIGNS TYPE II REFLECTIVE F SF	638.2602 REMOVING SIGNS TYPE II EACH	638.3000 REMOVING SMALL SIGN SUPPORTS EACH	MOUNTED ON SAME POST AS SIGN NUMBER	REMARKS
19-11R	421+00	Left	I3-1	La Crosse River		36 x 21								1	1		
19-12	421+00	Left	W5-52-R	Clearance Striper Down Left		12 x 36	1						3.00				Use 4' Mounting Height
19-13R	421+00	Left	W5-52-R	Clearance Striper Down Left		12 x 36								1	1		
19-14	425+75	Left	W14-3	No Passing Zone Pennant		48 x 36			1				6.00				
19-15R	425+75	Left	W14-3	No Passing Zone Pennant		48 x 36								1	1		
19-16	433+95	Left	R1-1	Stop		30 x 30		1				5.18					Gaslite Rd (South)
19-17R	433+95	Left	R1-1	Stop		30 x 30								1	1		
19-18	439+15	Left	R1-1	Stop		30 x 30		1				5.18					Gaslite Rd (North)
19-19R	439+15	Left	R1-1	Stop		30 x 30								1	1		
20-01	441+15	Right	W14-3	No Passing Zone Pennant		48 x 36			1				6.00				
20-02R	441+15	Right	W14-3	No Passing Zone Pennant		48 x 36								1	1		
20-03R	452+50	Right	J1-1	Junction, 16		24 x 39								1	1		
20-04R	455+00	Right	W3-1	Stop Ahead		36 x 36								1	1		
20-05R	457+00	Right	J2-1	NORTH, 162, Left Turn Arrow		24 x 57								1	1		
20-06	457+00	Right	J1-1	Junction Assembly	JCT 16	24 x 39			1			6.50					
20-07	459+00	Left	D2-1	Destination Distance	Bangor 1	54 x 15	1	1				5.63					
20-08	459+20	Right	W3-1	Stop Ahead		36 x 36			1				9.00				
20-09	461+20	Right	J2-4	Advance Route Turn Assembly	WEST NORTH EAST ALTERNATE 16 162 16 90 Lt Turn Arrow, Lt Turn Arrow, Rt Turn Arrow, Rt Turn Arrow	96 x 57				2		38.00					
20-10R	461+20	Right	D1-3	Destinations Arrows	(Left Arrow) La Crosse (Left Arrow) Melrose Sparta (Right Arrow)	72 x 36								1	1		
20-11	461+95	Left	W14-3	No Passing Zone Pennant		48 x 36			1				6.00				
20-12R	462+00	Left	W14-3	No Passing Zone Pennant		48 x 36								1	1		
20-13R	462+00	Left	D2-1	Destination Distance	Bangor 1	60 x 15										20-12R	
20-14	463+75	Right	D1-3	Destinations Arrows	(Left Arrow) West Salem (Left Arrow) Melrose Sparta (Right Arrow)	78 x 36			2			19.50					
20-15	464+00	Left	I55-56	Adopt A Highway	Bangor Knights of Columbus	30 x 36			1			7.50					
20-16R	464+80	Left	I55-56	Adopt A Highway										1	1		
20-17R	466+00	Left	J4-1	ALTERNATE, 90										1	1		
20-18R	466+00	Left	J4-1	SOUTH, 162										1	1		
20-19	466+75	Left	J4-2	Reassurance Assembly	SOUTH ALTERNATE 162 90	48 x 36			1			12.00					
20-20	467+40	Right	R1-1	Stop		36 x 36		1				7.46					
20-21R	467+40	Right	R1-1	Stop		36 x 36								1	1		
20-22	467+40	Right	J3-3	Route Turn Assembly	WEST NORTH EAST 16 162 16 Left Arrow, Left Arrow, Right Arrow	72 x 57				1	1	28.50					
20-23R	467+40	Right	J3-1	Route Turn Assembly	ALTERNATE, 90, Right Arrow	24 x 57								1	1		
20-24	468+20	Ahead	W1-7	Large Double (Night) Arrow		48 x 24		1					8.00				
20-25R	468+20	Ahead	J3-3	Route Turn Assembly	WEST NORTH EAST 16 162 16 Left Arrow, Left Arrow, Right Arrow Large Double (Night) Arrow	72 x 57								1	2		
					Sheet Sub Totals		2	5	9	3	1	135.45	38	17	18		

3

STATE PROJECT NO: 5820-01-62	HWY STH 162	COUNTY: LA CROSSE	MISCELLANEOUS QUANTITIES	SHEET NO: 80	E

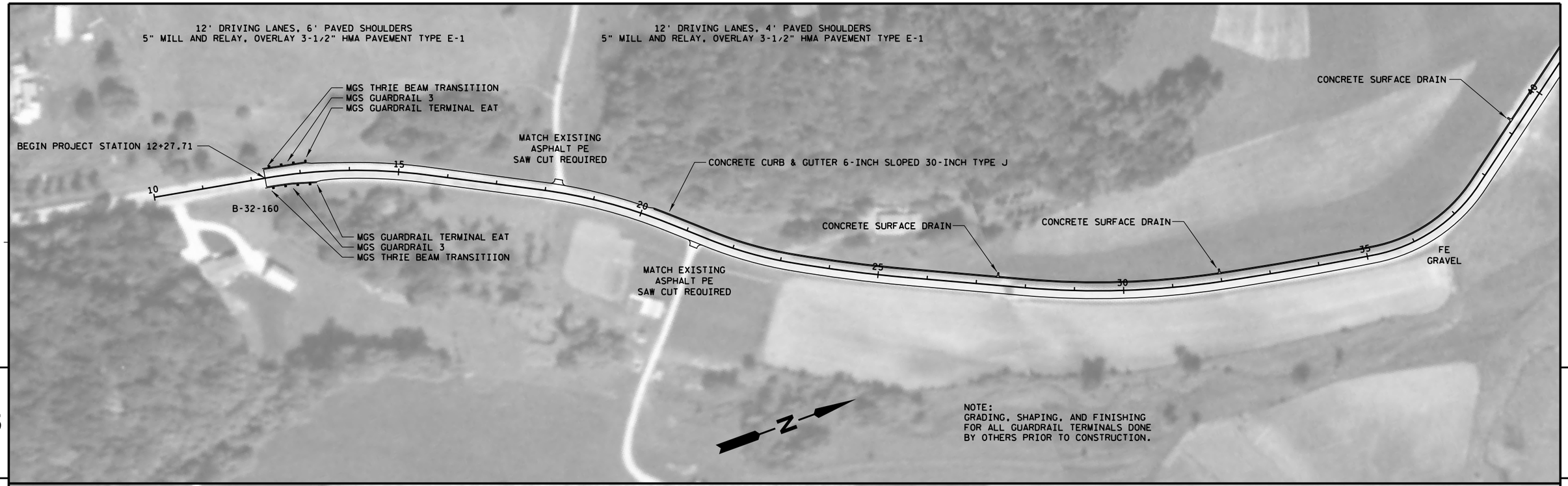

PROJECT NO: 5820-01-62	HWY: STH 162	COUNTY: LA CROSSE	SPLIT PLAN SHEET	SHEET 81	E

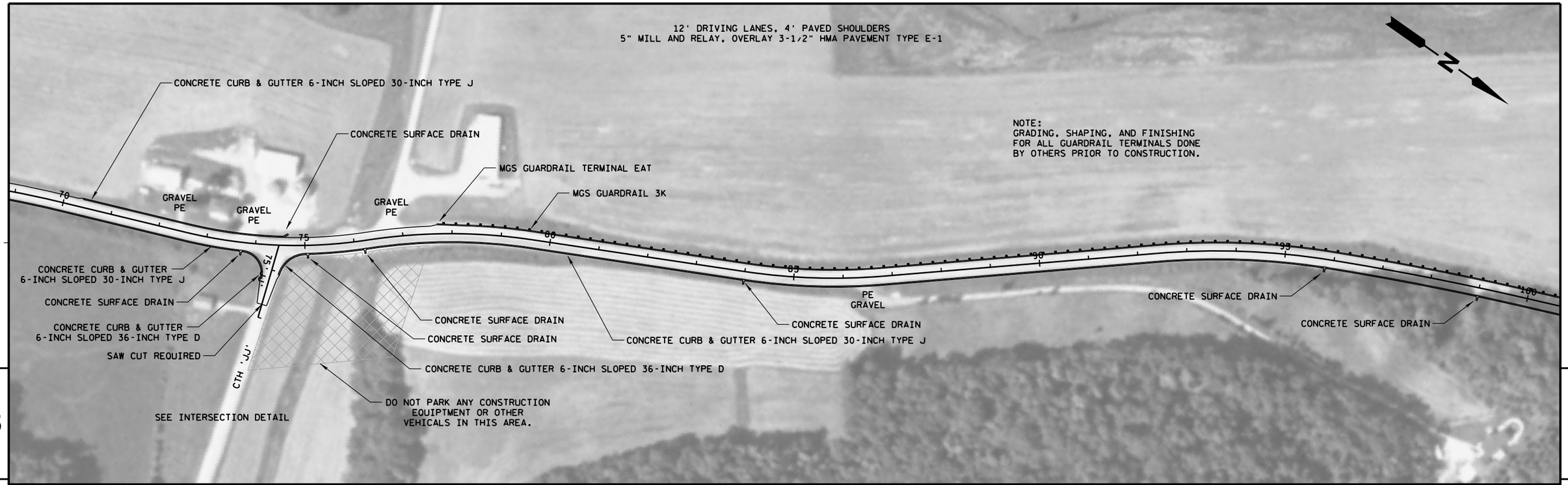

5

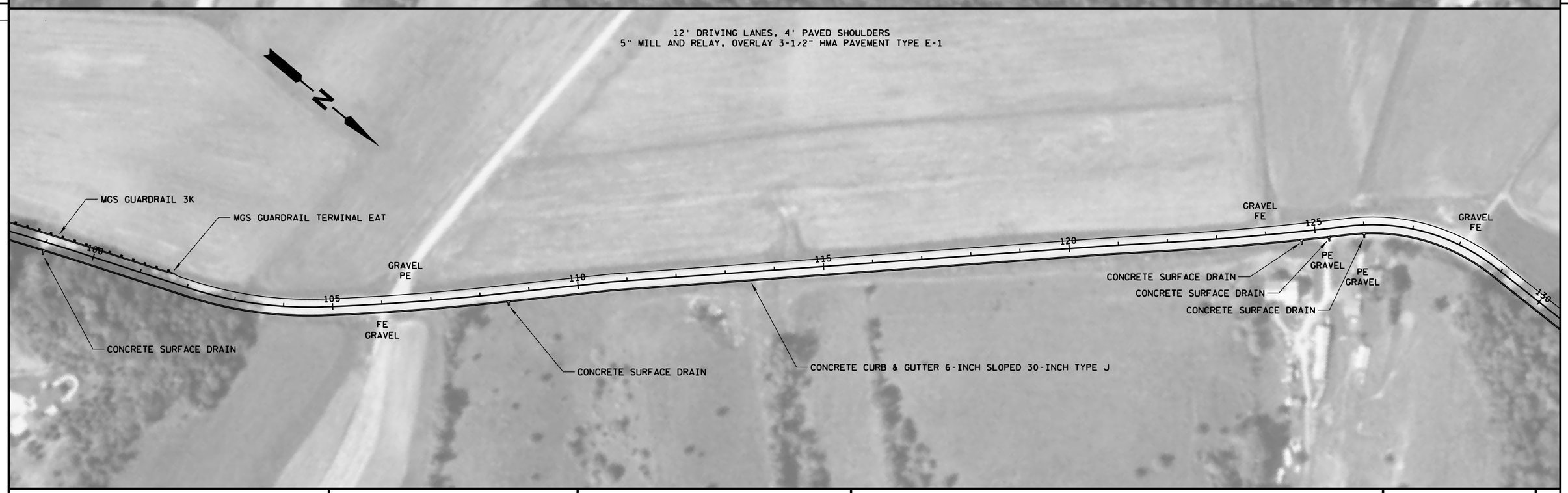

5

PROJECT NO: 5820-01-62	HWY: STH 162	COUNTY: LA CROSSE	SPLIT PLAN SHEET	SHEET 82	E

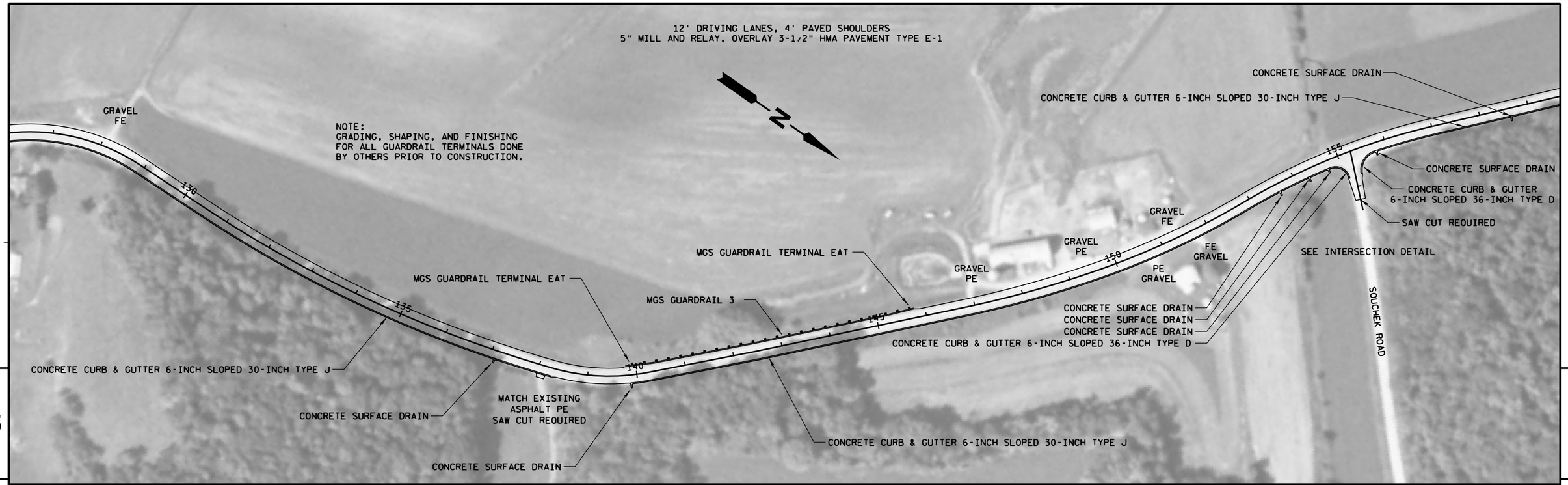

PROJECT NO: 5820-01-62	HWY: STH 162	COUNTY: LA CROSSE	SPLIT PLAN SHEET	SHEET 83	E

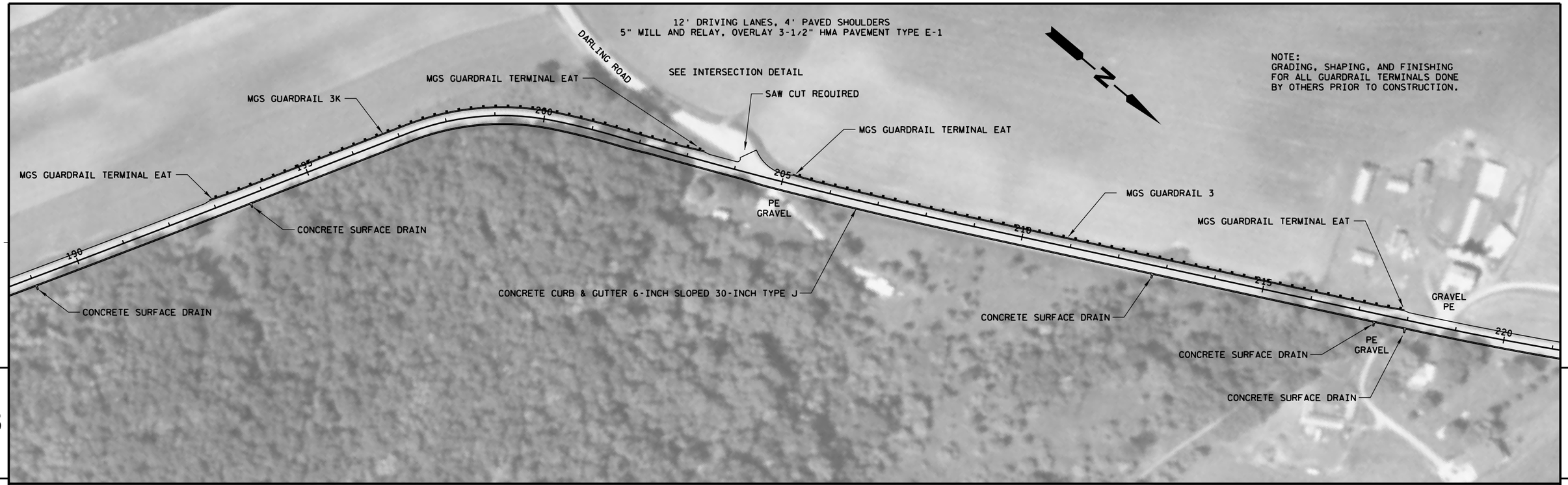

5

5

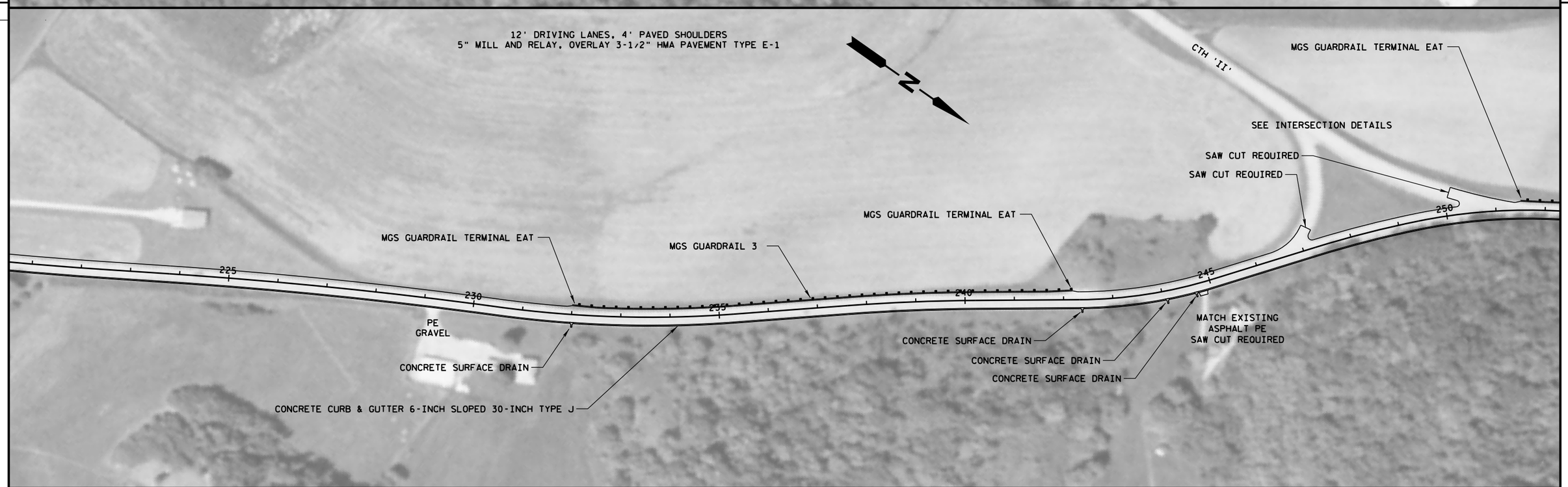

PROJECT NO: 5820-01-62	HWY: STH 162	COUNTY: LA CROSSE	SPLIT PLAN SHEET	SHEET 84	E

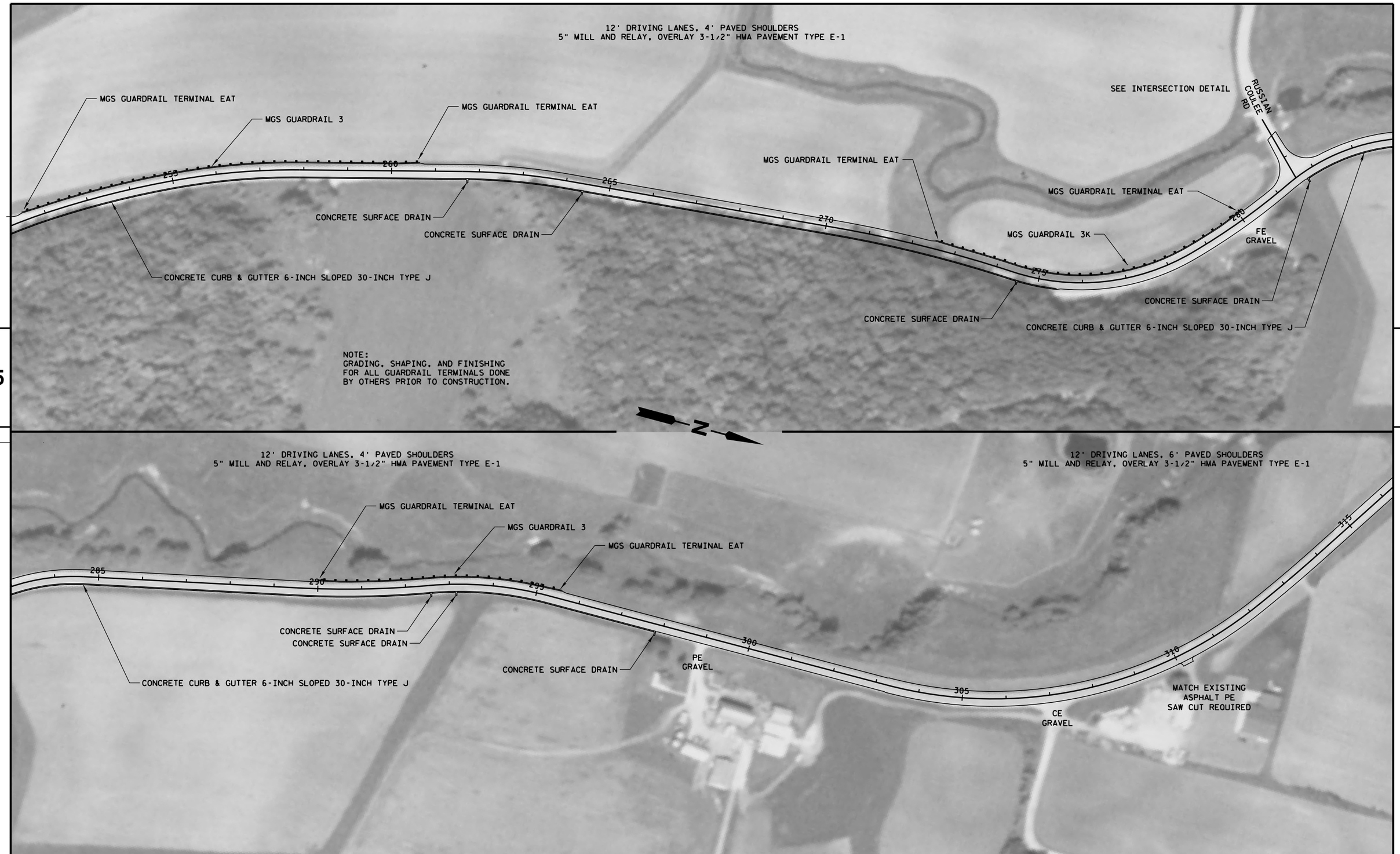

PROJECT NO: 5820-01-62	HWY: STH 162	COUNTY: LA CROSSE	SPLIT PLAN SHEET	SHEET 85	E

5

5

PROJECT NO: 5820-01-62	HWY: STH 162	COUNTY: LA CROSSE	SPLIT PLAN SHEET	SHEET 86	E

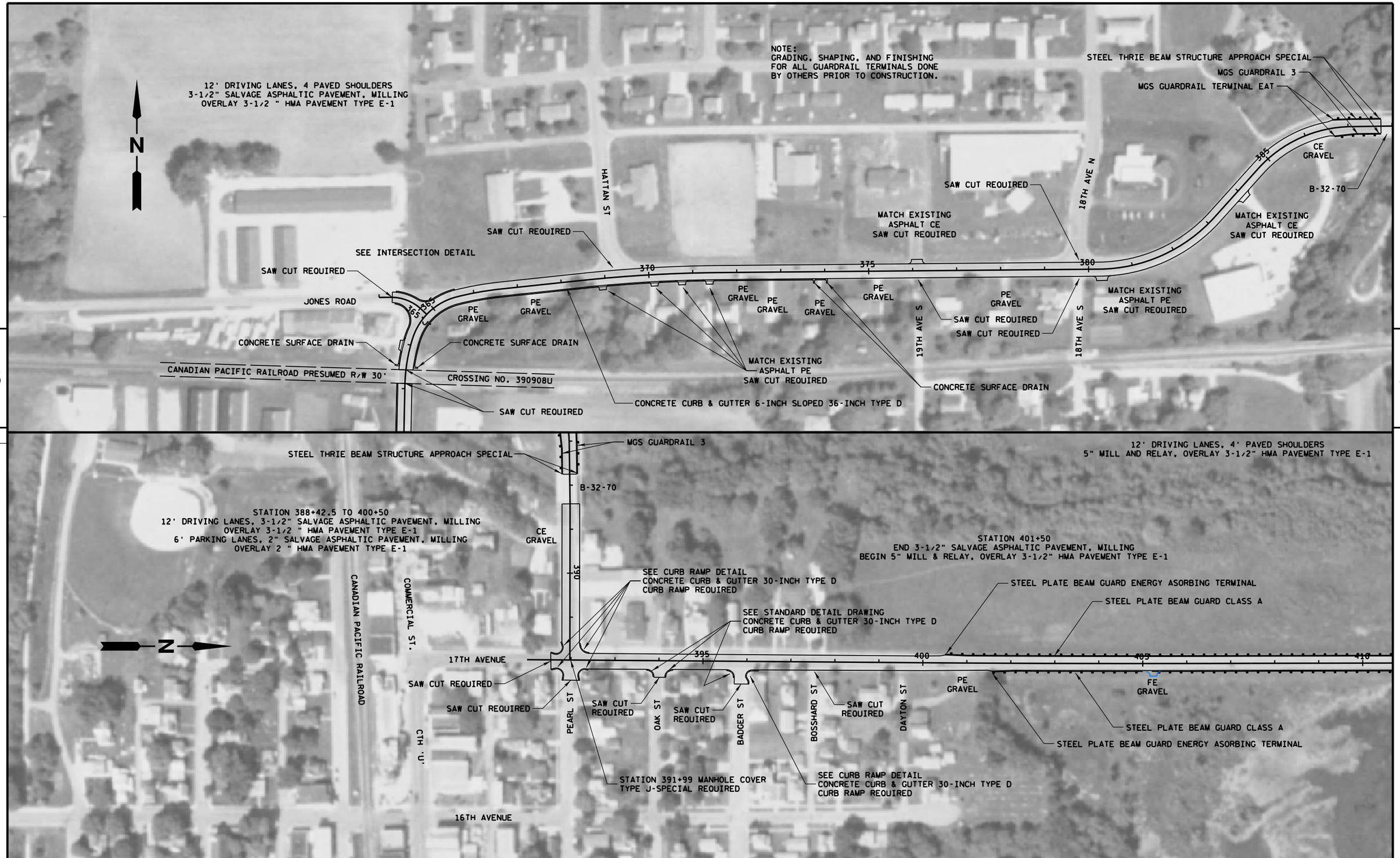

PROJECT NO: 5820-01-62	HWY: STH 162	COUNTY: LA CROSSE	SPLIT PLAN SHEET	SHEET 87	E

PROJECT NO: 5820-01-62	HWY: STH 162	COUNTY: LA CROSSE	SPLIT PLAN SHEET	SHEET 88	E

Standard Detail Drawing List

08A05-19D	INLET COVER TYPE BW, MANHOLE COVERS, TYPE K, J, J-S, L & M
08D01-17	CONCRETE CURB, CONCRETE CURB AND GUTTER AND TIES
08D04-05	CONCRETE SURFACE DRAINS & ASPHALTIC FLUMES
08D05-15A	CURB RAMPS TYPES 1 AND 1-A
08D05-15B	CURB RAMPS TYPES 2 AND 3
08D05-15C	CURB RAMPS TYPES 4A AND 4A1
08D05-15D	CURB RAMPS TYPE 4B AND 4B1
08D05-15E	CURB RAMPS TYPES 5, 6, 7A, 7B & 8
08E10-02	INLET PROTECTION TYPE A, B, C AND D
09A01-13A	AT-GRADE SIDE ROAD INTERSECTION, TYPES "B1", "B2", "C" AND D AND TEE INTERSECTION BYPASS LANE
09A01-13B	AT-GRADE SIDE ROAD INTERSECTION, TYPE "A1" & "A2"
13A11-02A	2-LANE RURAL CENTER LINE RUMBLE STRIP, MILLING
13A11-02B	2-LANE RURAL CENTER LINE RUMBLE STRIP, MILLING
13B01-10	PAVEMENT DETAILS FOR RAILROAD APPROACH
14B15-08A	STEEL PLATE BEAM GUARD, CLASS "A" INSTALLATION & ELEMENTS
14B15-08B	STEEL PLATE BEAM GUARD, CLASS "A" INSTALLATION & ELEMENTS
14B15-08C	STEEL PLATE BEAM GUARD, CLASS "A", INSTALLATION & ELEMENTS
14B16-04A	ANCHORAGE FOR STEEL PLATE BEAM GUARD TYPE 2
14B20-11A	STEEL THRIE BEAM STRUCTURE APPROACH
14B20-11G	STEEL THRIE BEAM STRUCTURE APPROACH, CONNECTOR PLATE DETAIL
14B24-07A	STEEL PLATE BEAM GUARD ENERGY ABSORBING TERMINAL
14B24-07B	STEEL PLATE BEAM GUARD ENERGY ABSORBING TERMINAL
14B24-07C	STEEL PLATE BEAM GUARD ENERGY ABSORBING TERMINAL
14B24-08A	STEEL PLATE BEAM GUARD ENERGY ABSORBING TERMINAL
14B24-08B	STEEL PLATE BEAM GUARD ENERGY ABSORBING TERMINAL
14B24-08C	STEEL PLATE BEAM GUARD ENERGY ABSORBING TERMINAL
14B27-01A	STEEL PLATE BEAM GUARD SHORT RADIUS TERMINAL
14B27-01B	STEEL PLATE BEAM GUARD SHORT RADIUS TERMINAL
14B27-01C	STEEL PLATE BEAM GUARD SHORT RADIUS TERMINAL
14B42-03A	MIDWEST GUARDRAIL SYSTEM (MGS) GUARDRAIL
14B42-03B	MIDWEST GUARDRAIL SYSTEM (MGS) GUARDRAIL
14B42-03C	MIDWEST GUARDRAIL SYSTEM (MGS) GUARDRAIL
14B44-02A	MIDWEST GUARDRAIL SYSTEM ENERGY ABSORBING TERMINAL (MGS)
14B44-02B	MIDWEST GUARDRAIL SYSTEM ENERGY ABSORBING TERMINAL (MGS)
14B44-02C	MIDWEST GUARDRAIL SYSTEM ENERGY ABSORBING TERMINAL (MGS)
14B45-03A	MIDWEST GUARDRAIL SYSTEM THRIE BEAM TRANSITION (MGS)
14B45-03B	MIDWEST GUARDRAIL SYSTEM THRIE BEAM TRANSITION (MGS)
14B45-03C	MIDWEST GUARDRAIL SYSTEM THRIE BEAM TRANSITION (MGS)
14B45-03D	MIDWEST GUARDRAIL SYSTEM THRIE BEAM TRANSITION (MGS)
14B45-03E	MIDWEST GUARDRAIL SYSTEM THRIE BEAM TRANSITION (MGS)
14B45-03F	MIDWEST GUARDRAIL SYSTEM THRIE BEAM TRANSITION (MGS)
14B45-03G	MIDWEST GUARDRAIL SYSTEM THRIE BEAM TRANSITION (MGS)
14B45-03H	MIDWEST GUARDRAIL SYSTEM THRIE BEAM TRANSITION (MGS)
14B45-03I	MIDWEST GUARDRAIL SYSTEM THRIE BEAM TRANSITION (MGS)
14B45-03J	MIDWEST GUARDRAIL SYSTEM THRIE BEAM TRANSITION (MGS)
15C04-02	TRAFFIC CONTROL, ADVANCE WARNING SIGNS 45 M.P.H. OR GREATER TWO-WAY UNDIVIDED ROAD OPEN TO TRAFFIC
15C07-12C	PAVEMENT MARKING ARROWS
15C08-16A	PAVEMENT MARKING (MAINLINE)
15C08-16B	PAVEMENT MARKING (INTERSECTIONS)
15C08-16E	PAVEMENT MARKING (LEFT TURN LANE)
15C08-16F	PAVEMENT MARKING (ISLANDS)
15C09-09A	SIGNING AND PAVEMENT MARKING DETAILS FOR RAILROAD-HIGHWAY GRADE CROSSINGS
15C12-04	TRAFFIC CONTROL FOR LANE CLOSURE (SUITABLE FOR MOVING OPERATIONS)
15C18-03	MEDIAN ISLAND MARKING
15C19-02A	MOVING PAVEMENT MARKING OPERATION TWO-LANE TWO-WAY ROADWAY
15C33-01	STOP LINE AND CROSSWALK PAVEMENT MARKING
15D27-02	TRAFFIC CONTROL, SHOULDER CLOSURE ON DIVIDED ROADWAY, SPEEDS GREATER THAN 40 MPH
15D28-02	TRAFFIC CONTROL, WORK ON SHOULDER OR PARKING LANE, UNDIVIDED ROADWAY
15D30-01	TRAFFIC CONTROL, SIDEWALK CLOSURE
15D30-02A	TRAFFIC CONTROL, PEDESTRIAN ACCOMMODATION
15D30-02B	TRAFFIC CONTROL, TEMPORARY ADA COMPLIANT PEDESTRIAN ACCOMMODATION
15D30-02C	TRAFFIC CONTROL, PEDESTRIAN ACCOMMODATION
16A01-06	LANDMARK REFERENCE MONUMENTS AND COVERS

6

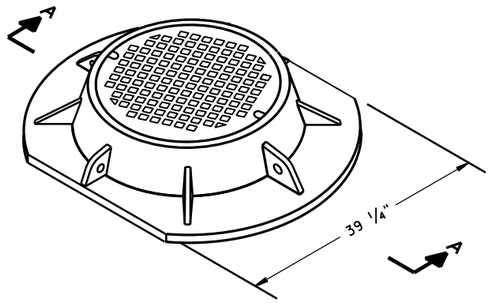

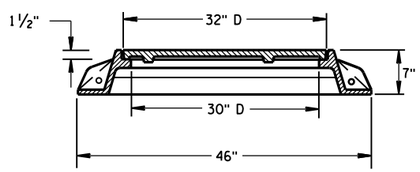

SECTION A-A
TYPE "K"

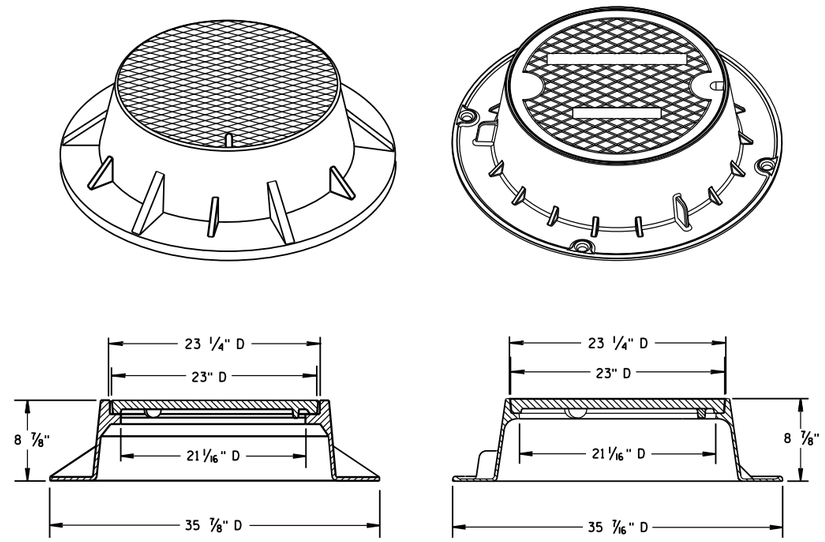

TYPE "J"
NOTE: EITHER CASTING IS ACCEPTABLE

GENERAL NOTES

DETAILS OF CONSTRUCTION, MATERIALS AND WORKMANSHIP NOT SHOWN ON THIS DRAWING SHALL CONFORM TO THE PERTINENT REQUIREMENTS OF THE STANDARD SPECIFICATIONS AND THE APPLICABLE SPECIAL PROVISIONS.

DETAIL DRAWINGS FOR PROPOSED ALTERNATE DESIGNS FOR MANHOLE COVERS SHALL BE SUBMITTED TO THE ENGINEER FOR APPROVAL PROVIDING THAT SUCH ALTERNATE DESIGNS MAKE PROVISION FOR EQUIVALENT CAPACITY AND STRENGTH.

ROUND FRAMES AND COVERS SHALL HAVE CONTINUOUSLY MACHINED BEARING SURFACES TO PREVENT ROCKING AND RATTLING.

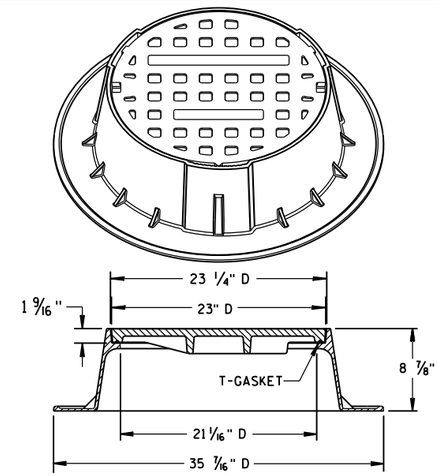

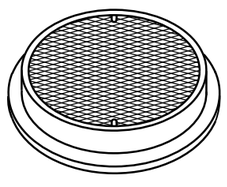

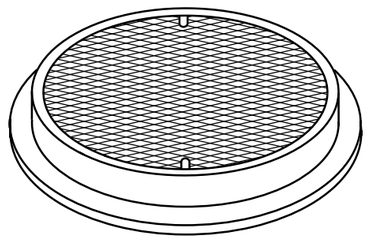

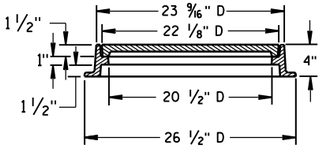

TYPE "L"

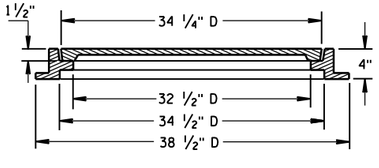

TYPE "M"

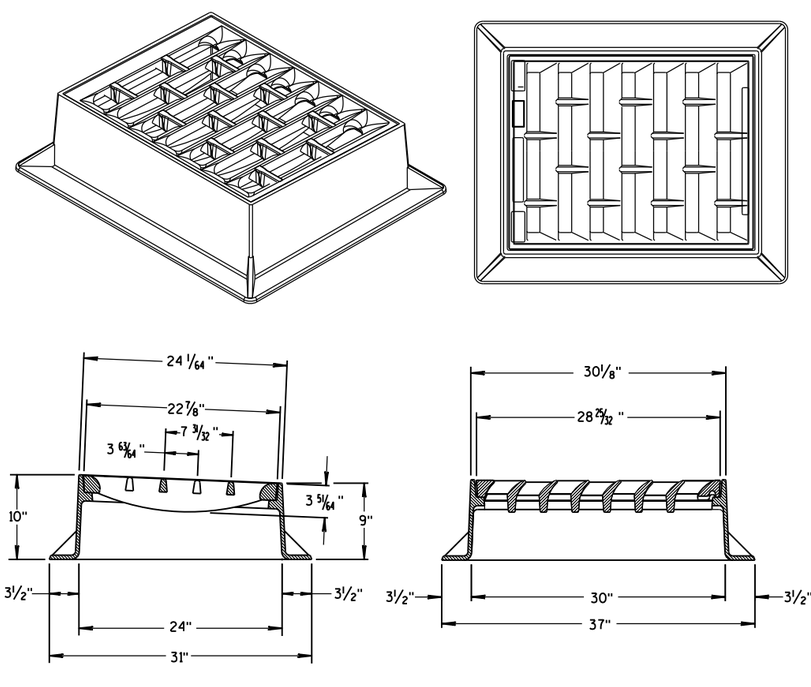

INLET COVER TYPE "BW"

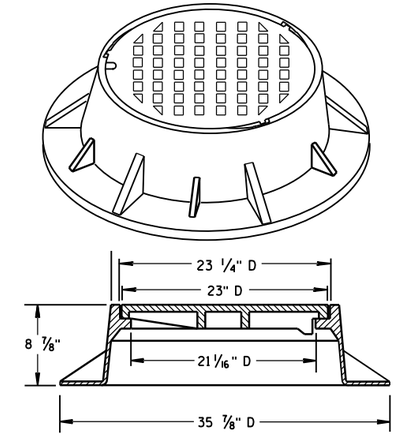

TYPE "J" SPECIAL
TYPE "B" NON-ROCKING SELF-SEAL LID
(NOTED AS TYPE J-S ON THE DRAINAGE TABLE)
NOTE: EITHER CASTING IS ACCEPTABLE

INLET COVER TYPE BW MANHOLE COVERS, TYPE K, J, J-S, L & M	
STATE OF WISCONSIN DEPARTMENT OF TRANSPORTATION	
APPROVED 11/27/2013 DATE FHWA	/S/ Jerry H. Zogg ROADWAY STANDARDS DEVELOPMENT ENGINEER

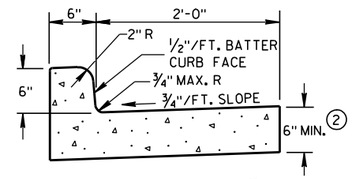

TYPES A & D ①

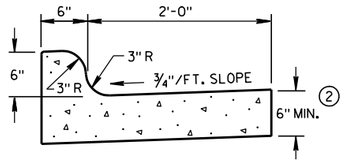

TYPES K & L ①

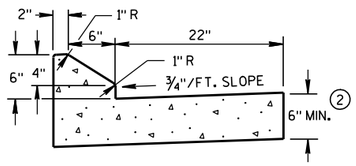

6" SLOPED CURB TYPES G & J ①

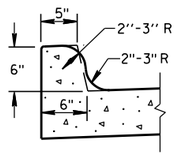

OPTIONAL CURB SHAPE FOR TYPES K & L ①

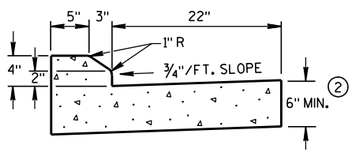

4" SLOPED CURB TYPES G & J ①

CONCRETE CURB & GUTTER 30"

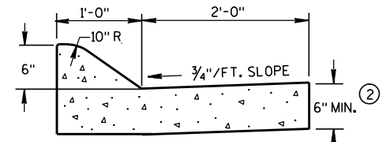

(6" SLOPED CURB)

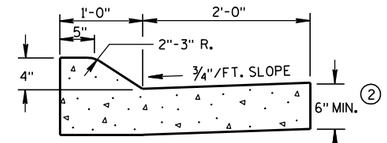

(4" SLOPED CURB)

TYPES A & D ①

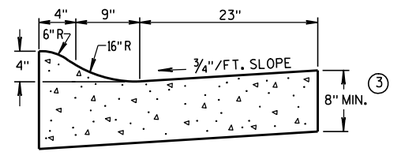

4" SLOPED CURB TYPES R & T ① ④

CONCRETE CURB & GUTTER 36"

GENERAL NOTES

DETAILS OF CONSTRUCTION, MATERIALS AND WORKMANSHIP NOT SHOWN ON THIS DRAWING SHALL CONFORM TO THE PERTINENT REQUIREMENTS OF THE CONTRACT.

PAVEMENT TIES AND TIE BARS SHALL BE EPOXY COATED IN CONFORMANCE WITH SUBSECTION 505.2.6.2 OF THE STANDARD SPECIFICATIONS.

INTEGRAL CURB & GUTTER SHALL CONFORM TO THE DETAILS SHOWN FOR CONCRETE CURB & GUTTER INCLUDING THE TRANSVERSE GUTTER SLOPE. A LONGITUDINAL CONSTRUCTION JOINT IS NOT REQUIRED WITH INTEGRAL CURB AND GUTTER.

WHERE THE TRANSVERSE JOINTS IN THE PAVEMENT ARE REQUIRED TO BE SEALED, THE JOINTS IN THE INTEGRAL CURB AND GUTTER SHALL BE SEALED TO THE FACE OF CURB WITH THE SAME TYPE OF SEALANT. THE COST OF FURNISHING AND INSTALLING THIS SEALANT SHALL BE INCIDENTAL TO THE ITEM CONCRETE CURB AND GUTTER.

UNLESS OTHERWISE SHOWN ON THE TYPICAL CROSS SECTIONS, THE BASE AGGREGATE AND COMMON EXCAVATION LIMITS ARE 2'-0" BEHIND THE BACK OF CURBS.

① TIE BARS ARE REQUIRED FOR CURB AND GUTTER TYPES A, G, K AND R.

② THE BOTTOM OF CURB AND GUTTER MAY BE CONSTRUCTED EITHER LEVEL OR PARALLEL TO THE SLOPE OF THE SUBGRADE OR BASE AGGREGATE PROVIDED A 6" MINIMUM GUTTER THICKNESS IS MAINTAINED.

③ THE BOTTOM OF CURB AND GUTTER MAY BE CONSTRUCTED EITHER LEVEL OR PARALLEL TO THE SLOPE OF THE SUBGRADE OR BASE AGGREGATE PROVIDED A 8" MINIMUM GUTTER THICKNESS IS MAINTAINED.

④ THE FACE OF CURB IS 6" FROM THE BACK OF CURB.

⑤ WHEN REVERSE SLOPE GUTTER IS REQUIRED, THE LOCATION(S) WILL BE SHOWN ELSEWHERE IN THE PLAN.

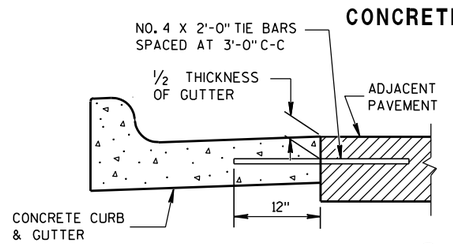

TYPICAL TIE BAR LOCATION ①

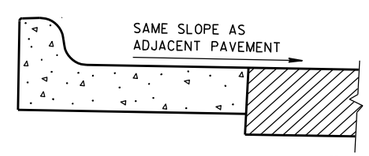

REVERSE SLOPE GUTTER ⑤
(TYPICAL FOR ALL CURB & GUTTER TYPES)

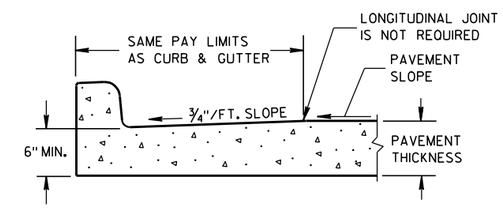

PARTIAL SECTION OF PAVEMENT WITH INTEGRAL CURB & GUTTER

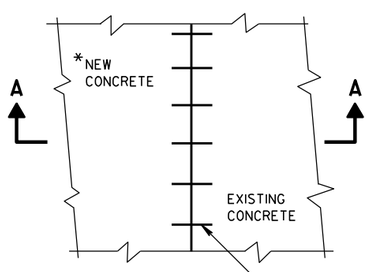

*NEW CURB & GUTTER, SURFACE DRAINS, CONCRETE PAVEMENT OR OTHER NEW CONCRETE.

PLAN VIEW

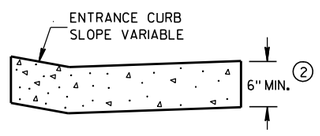

DRIVEWAY ENTRANCE CURB
(WHEN DIRECTED BY THE ENGINEER)

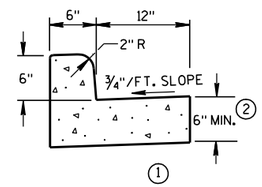

① TYPES A & D

CONCRETE CURB & GUTTER 18"

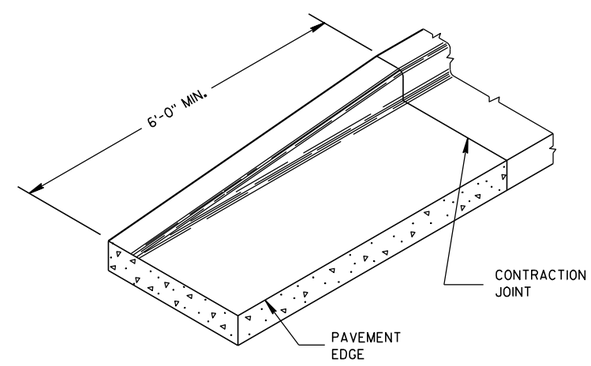

END SECTION CURB & GUTTER

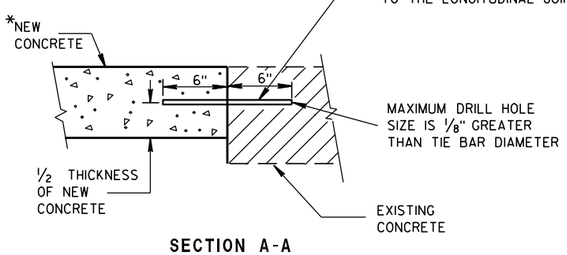

SECTION A-A

TIE BARS DRILLED INTO EXISTING PAVEMENT

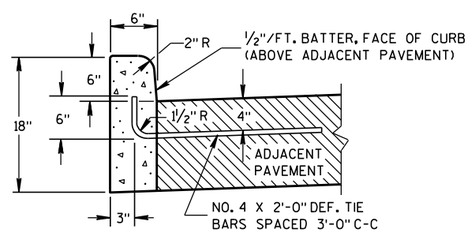

① TYPES A & D

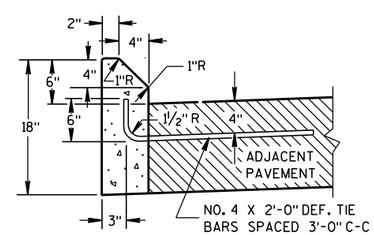

① TYPES G & J

CONCRETE CURB

CONCRETE CURB, CONCRETE CURB & GUTTER AND TIES

STATE OF WISCONSIN
DEPARTMENT OF TRANSPORTATION

APPROVED
9/4/08 — DATE
/S/ Jerry H. ---- — ROADWAY STANDARDS ENGINEER
ENT
FHWA

6

S.D.D. 8 D 1-17

GENERAL NOTES

DETAILS OF CONSTRUCTION, MATERIALS AND WORKMANSHIP NOT SHOWN ON THIS DRAWING SHALL CONFORM TO PERTINENT REQUIREMENTS OF THE STANDARD SPECIFICATIONS AND APPLICABLE SPECIAL PROVISIONS.

WELDED STEEL WIRE FABRIC SHALL BE IN ACCORDANCE WITH AASHTO SPECIFICATION M55.

① JOINTS SHALL BE 1/8 TO 1/4 INCH WIDE BY 1 1/2 INCHES DEEP AND SPACED AT UNIFORM INTERVALS OF APPROXIMATELY 4 FEET.

② GEOTEXTILE FABRIC TYPE "R" SHALL UNDERLAY THE FULL LENGTH AND WIDTH OF THE CONCRETE SURFACE DRAIN AND RIPRAP.

③ CONCRETE SURFACE DRAIN WITHOUT CURB AND GUTTER MAY BE USED ON BACKSLOPES WHEN SPECIFIED

ASPHALTIC FLUME

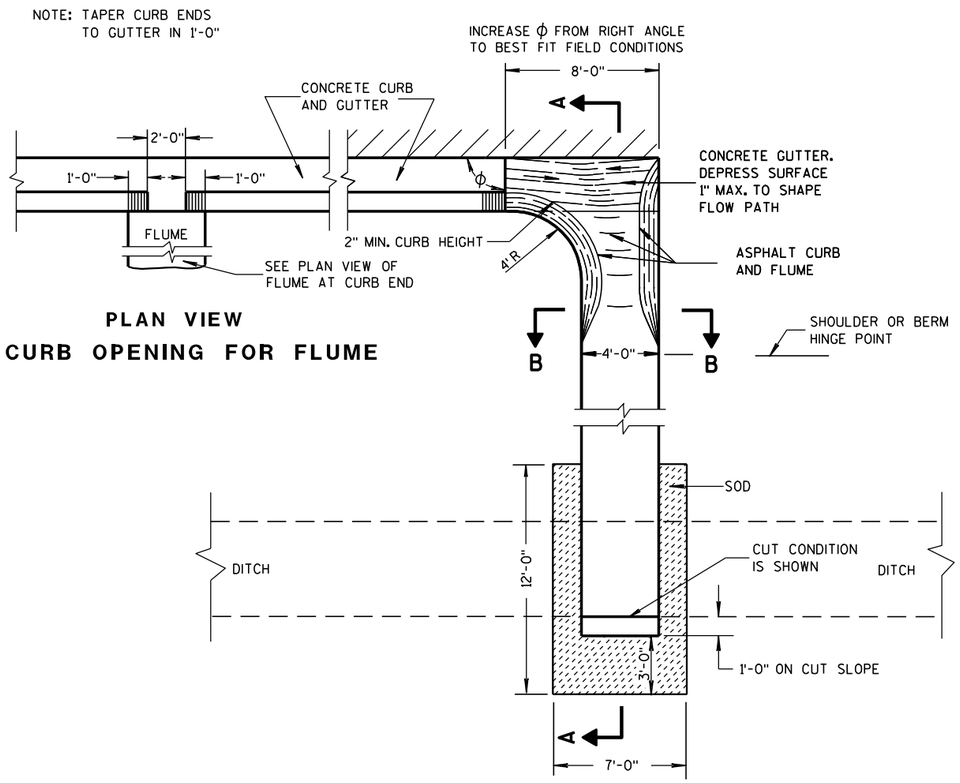

PLAN VIEW
CURB OPENING FOR FLUME

PLAN VIEW
FLUME AT CURB END

③ CONCRETE SURFACE DRAIN

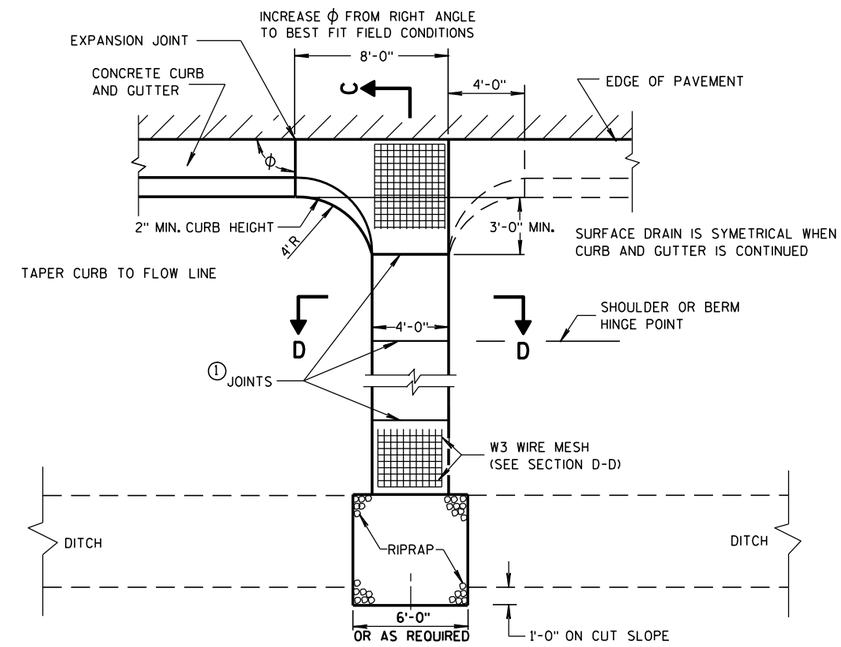

PLAN VIEW

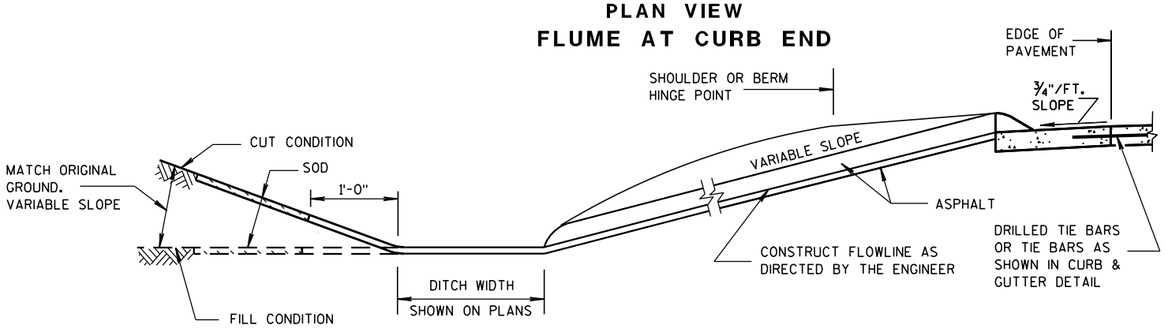

SECTION A-A

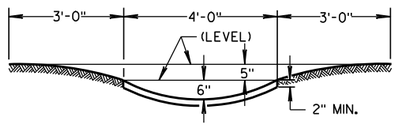

SECTION B-B

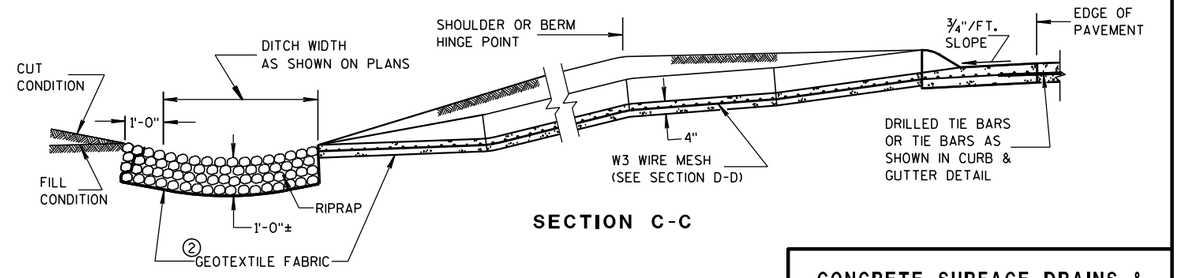

SECTION C-C

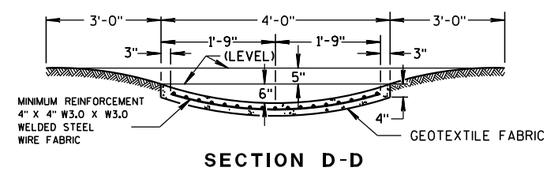

SECTION D-D

CONCRETE SURFACE DRAINS & ASPHALTIC FLUMES

STATE OF WISCONSIN
DEPARTMENT OF TRANSPORTATION

APPROVED
9-4-08 /S/ Jerry H. Zogg
DATE ROADWAY STANDARDS ENGINEER
FHWA

6

S.D.D. 8 D 4-5

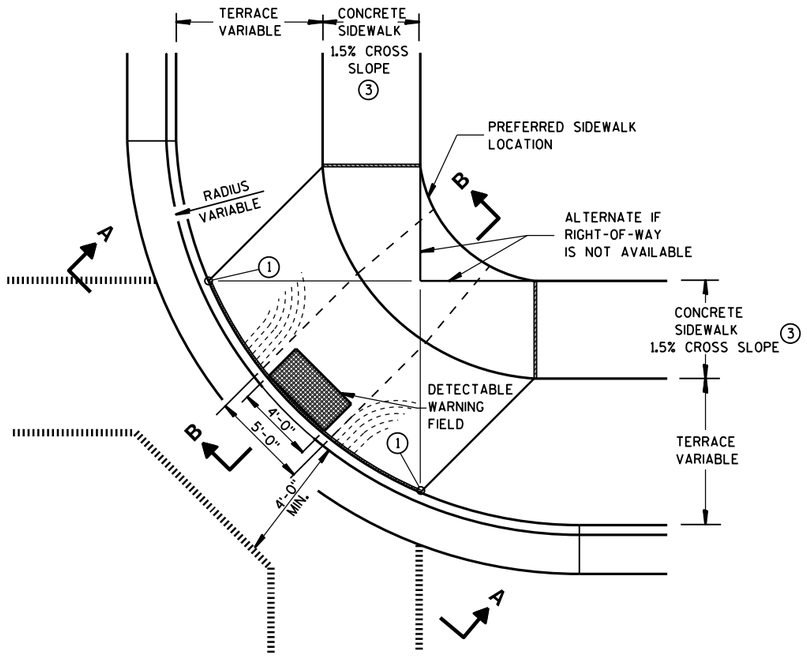

PLAN VIEW

TYPE 1 RAMP

(CENTER OF CORNER RADIUS)

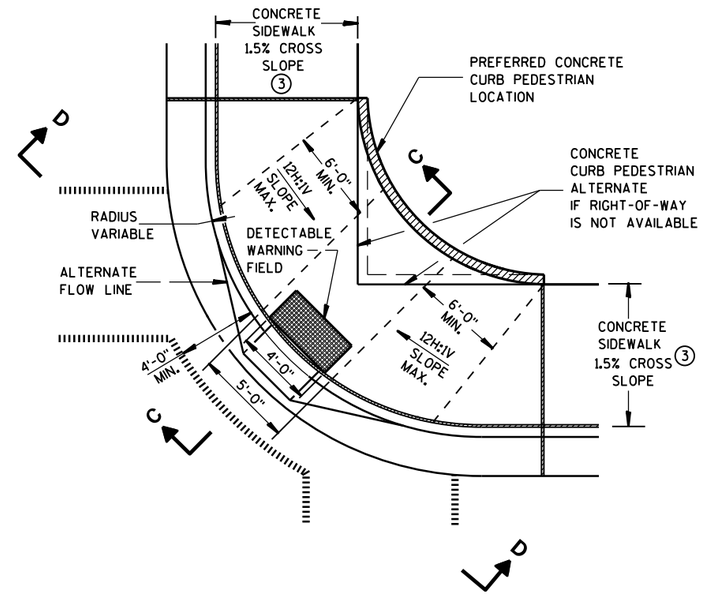

PLAN VIEW

TYPE 1-A RAMP

(NO TERRACE)

GENERAL NOTES

DETAILS OF CONSTRUCTION, MATERIALS AND WORKMANSHIP NOT SHOWN ON THIS DRAWING SHALL CONFORM TO THE PERTINENT REQUIREMENTS OF THE STANDARD SPECIFICATIONS AND THE APPLICABLE SPECIAL PROVISIONS.

RAMPS SHALL BE BUILT AT 12H:1V OR FLATTER. WHEN NECESSARY, THE SIDEWALK ELEVATION MAY BE LOWERED TO MEET THE HIGH POINT ON THE RAMP.

TYPE 1 RAMPS SHALL HAVE A NORMAL SIDEWALK APRON AND CURB ON BOTH SIDES OF RAMP.

DETECTABLE WARNING FIELD SHALL BE MEASURED AND PAID BY THE SQUARE FOOT AS "CURB RAMP DETECTABLE WARNING FIELD". THE CONCRETE PEDESTRIAN CURB, IF NEEDED, SHALL BE MEASURED AND PAID BY THE LINEAL FOOT AS "CONCRETE CURB PEDESTRIAN". CONCRETE SIDEWALK IN THE CURB RAMP AREA SHALL BE MEASURED AND PAID BY THE SQUARE FOOT AS CONCRETE SIDEWALK, INCLUDING THE AREA UNDER THE DETECTABLE WARNING FIELD.

SELECT CURB RAMP DETECTABLE WARNING FIELD MATERIALS AND DEVICES FROM THE DEPARTMENT'S APPROVED MATERIALS LIST. THE COLOR OF THE DETECTABLE WARNING FIELD IS SPECIFIED ELSEWHERE AND IS INCIDENTAL TO THE BID ITEM OF "CURB RAMP DETECTABLE WARNING FIELD".

DETECTABLE WARNING FIELDS THAT ARE INSTALLED AS A GROUP OR SIDE BY SIDE, SHALL BE FROM THE SAME MANUFACTURER.

SURFACE TEXTURE OF THE RAMP SHALL BE OBTAINED BY COARSE BROOMING TRANSVERSE TO THE SLOPE OF THE RAMP.

① THIS POINT IS AN EXTENSION OF OUTSIDE EDGE OF APPROACHING SIDEWALK WHERE IT MEETS THE BACK OF CONCRETE CURB.

② GRADE CHANGE BETWEEN GUTTER FLAG SLOPE AND THE CURB RAMP SLOPE SHALL NOT EXCEED 11%. PROVIDE DRAINAGE AWAY FROM CURB RAMP AT GUTTER FLAG INTERFACE.

③ ±0.5% CONSTRUCTION TOLERANCE IN SIDEWALK CROSS SLOPE. THE SIDEWALK CROSS SLOPE SHALL NOT EXCEED 2% WITHOUT PRIOR APPROVAL FROM THE ENGINEER.

LEGEND

- ½" EXPANSION JOINT-SIDEWALK
- CONTRACTION JOINT FIELD LOCATED
- PAVEMENT MARKING CROSSWALK (WHITE)
- ALTERNATIVE LAYOUT

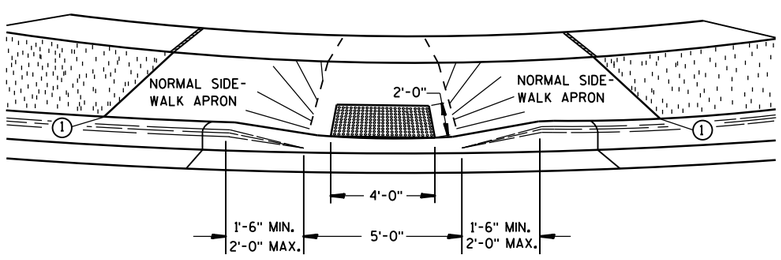

VIEW A-A

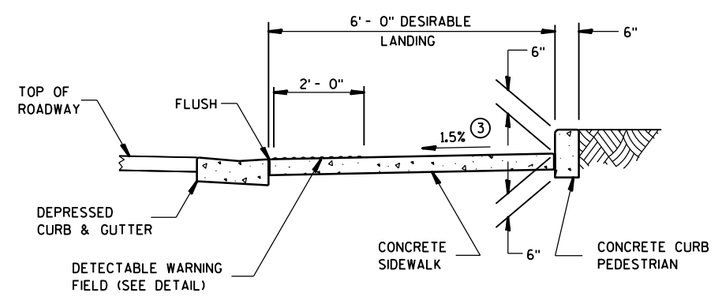

SECTION C-C

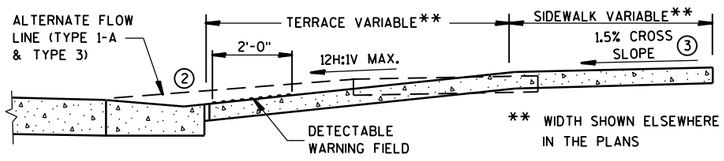

SECTION B-B

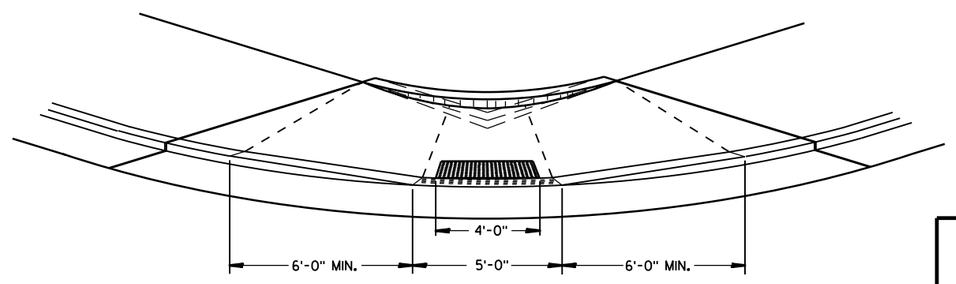

VIEW D-D

CURB RAMPS
TYPES 1 AND 1-A

STATE OF WISCONSIN
DEPARTMENT OF TRANSPOR

6

S.D.D. 8 D 5-15a

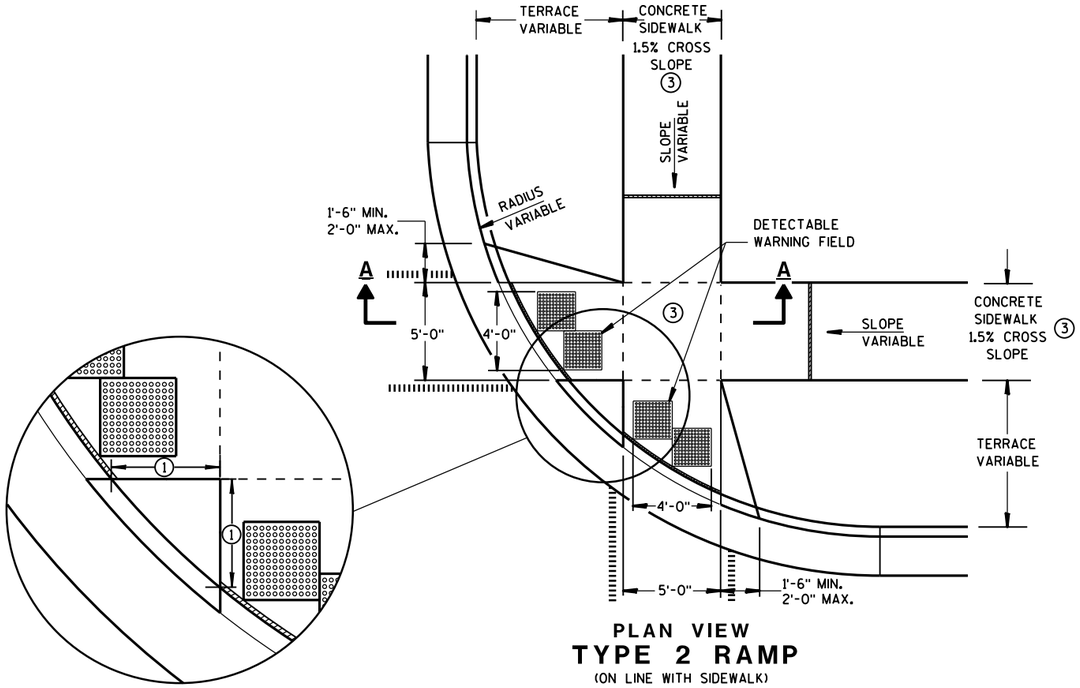

PLAN VIEW
TYPE 2 RAMP
(ON LINE WITH SIDEWALK)

GENERAL NOTES

USE THE TYPE 3 RAMP ONLY WHEN A TYPE 1 OR TYPE 2 CANNOT BE ACHIEVED BECAUSE OF FIELD CONDITIONS.

DETECTABLE WARNING FIELDS THAT ARE INSTALLED AS A GROUP OR SIDE BY SIDE, SHALL BE FROM THE SAME MANUFACTURER.

① WHEN THIS DISTANCE IS LESS THAN 6'-0" IT MAY BE DIFFICULT TO ACHIEVE A 12H:1V SLOPE, OR FLATTER, ON THE RAMP. REDUCE CURB HEIGHT IN TRIANGLE AREA TO ACHIEVE 12H:1V SLOPE, OR FLATTER, ON RAMP. 2" MINIMUM CURB HEIGHT.

② GRADE CHANGE BETWEEN GUTTER FLAG SLOPE AND THE CURB RAMP SLOPE SHALL NOT EXCEED 11%. PROVIDE DRAINAGE AWAY FROM CURB RAMP AT GUTTER FLAG INTERFACE.

③ ±0.5% CONSTRUCTION TOLERANCE IN SIDEWALK CROSS SLOPE. THE SIDEWALK CROSS SLOPE SHALL NOT EXCEED 2% WITHOUT PRIOR APPROVAL FROM THE ENGINEER.

LEGEND

- ½" EXPANSION JOINT-SIDEWALK
- CONTRACTION JOINT FIELD LOCATED
- PAVEMENT MARKING CROSSWALK (WHITE)
- ALTERNATIVE LAYOUT

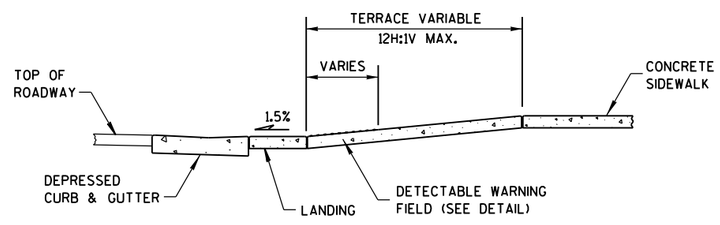

SECTION A-A

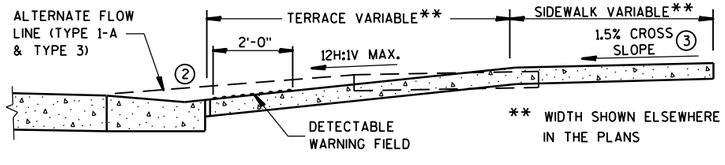

SECTION B-B

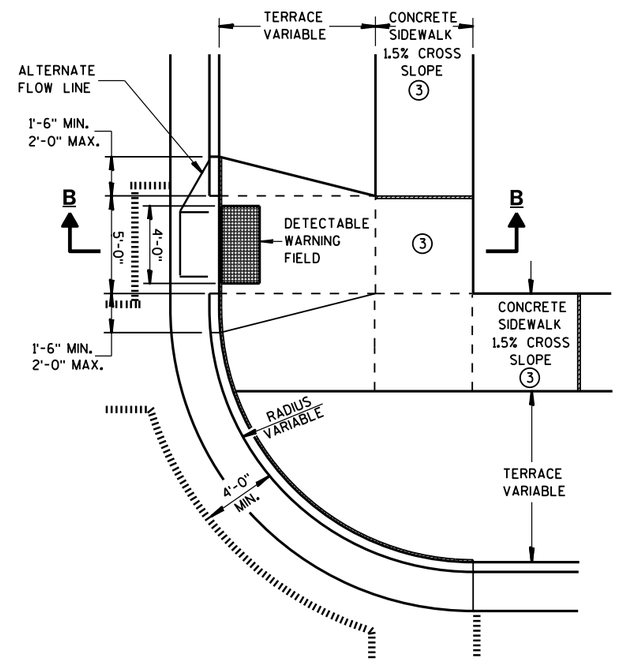

PLAN VIEW
TYPE 3 RAMP
(OUTSIDE OF CROSSWALK AREA)

6

6

CURB RAMPS
TYPES 2 AND 3

STATE OF WISCONSIN
DEPARTMENT OF TRANSPO

S.D.D. 8 D 5-15b

S.D.D. 8 D 5-15b

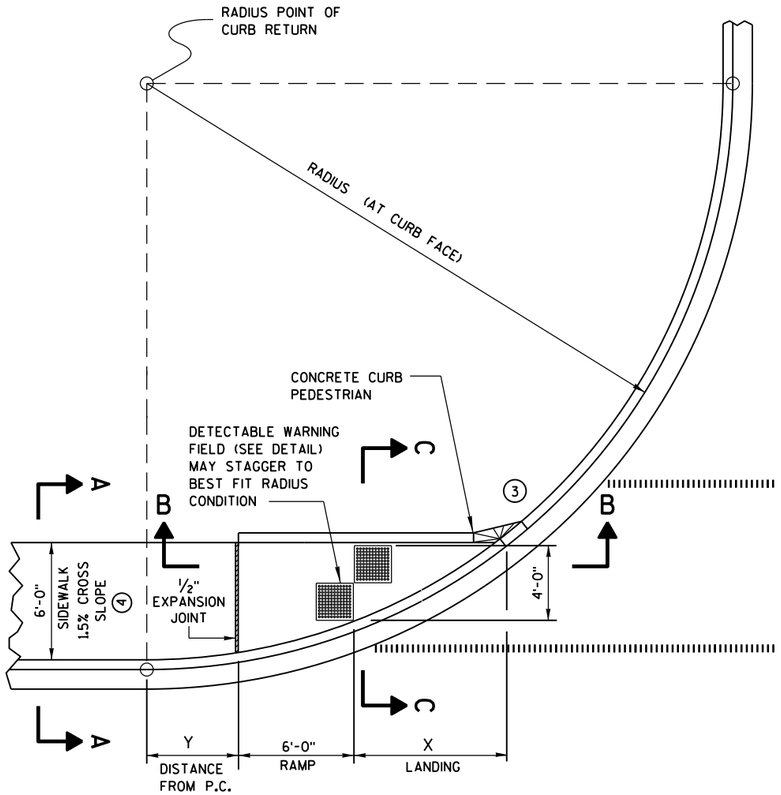

CURB RAMP TYPE 4A
PLAN VIEW

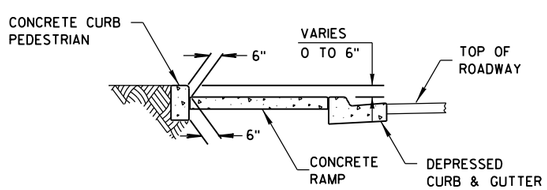

SECTION C-C FOR TYPE 4A

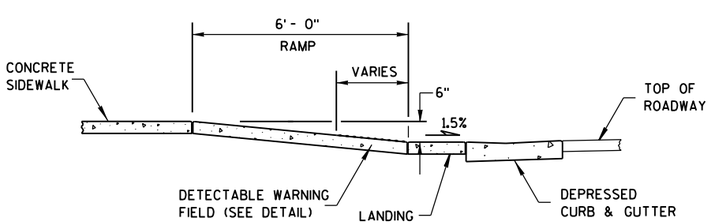

SECTION B-B FOR TYPE 4A

RADIUS (AT CURB FACE)	X	Y
20 FEET	6'-1¾"	2'-7¼"
30 FEET	7'-11¾"	4'-8¼"
40 FEET	9'-5¼"	6'-5"
50 FEET	10'-8¾"	7'-11¼"
60 FEET	11'-10¼"	9'-3½"

INTERMEDIATE RADII CAN BE INTERPOLATED

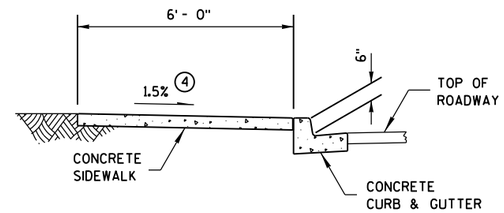

SECTION A-A FOR TYPE 4A

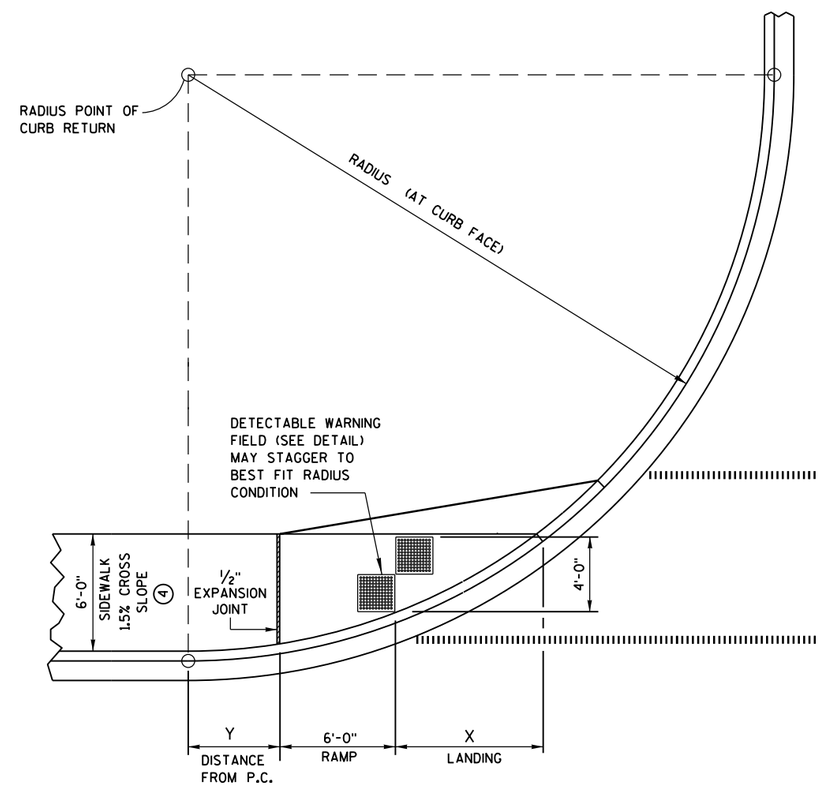

CURB RAMP TYPE 4A1
PLAN VIEW

GENERAL NOTES

AVOID PLACING DRAINAGE STRUCTURES, JUNCTION BOXES OR OTHER OBSTRUCTIONS IN FRONT OF RAMP ACCESS AREAS.

RAMP SLOPES SHALL NOT BE STEEPER THAN 12:1.

DETECTABLE WARNING FIELDS THAT ARE INSTALLED AS A GROUP OR SIDE BY SIDE, SHALL BE FROM THE SAME MANUFACTURER.

(3) INSTALL TRANSITION NOSE. (INCIDENTAL TO OTHER PAY ITEMS.) DO NOT MARK TRANSITION NOSE.

(4) ±0.5% CONSTRUCTION TOLERANCE IN SIDEWALK CROSS SLOPE. THE SIDEWALK CROSS SLOPE SHALL NOT EXCEED 2% WITHOUT PRIOR APPROVAL FROM THE ENGINEER.

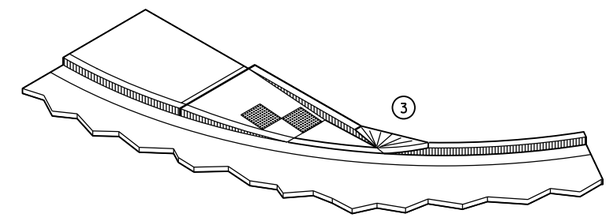

ISOMETRIC VIEW FOR TYPE 4A

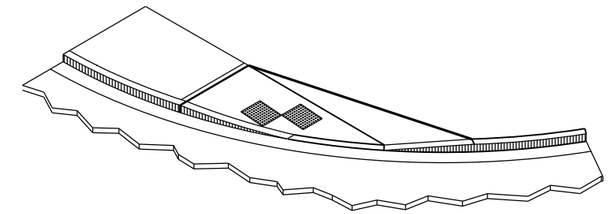

ISOMETRIC VIEW FOR TYPE 4A1

LEGEND

- ½" EXPANSION JOINT-SIDEWALK
- CONTRACTION JOINT FIELD LOCATED
- PAVEMENT MARKING CROSSWALK (WHITE)

CURB RAMPS
TYPES 4A AND 4A1

STATE OF WISCONSIN
DEPARTMENT OF TRANSPOR

6

S.D.D. 8 D 5-15c

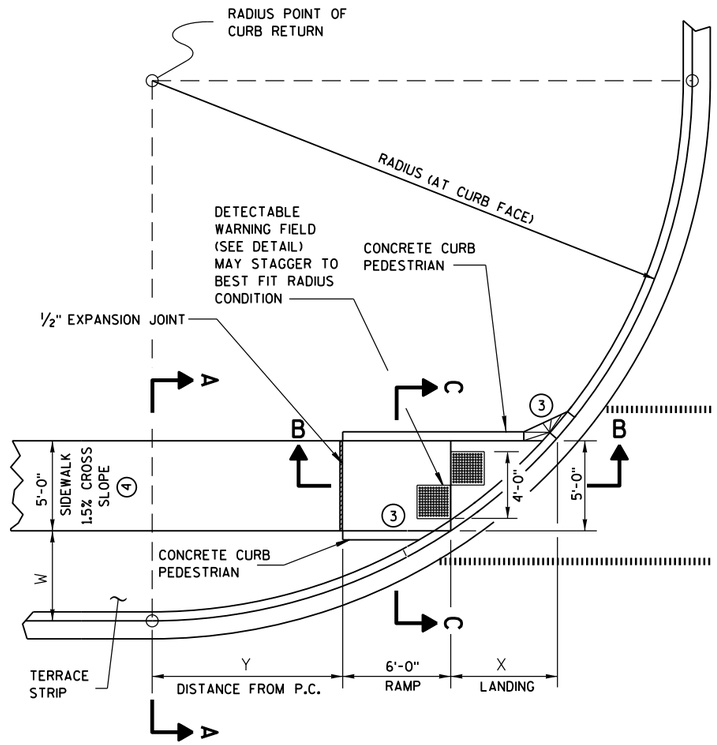

CURB RAMP TYPE 4B
PLAN VIEW

LEGEND

- ½" EXPANSION JOINT-SIDEWALK
- CONTRACTION JOINT FIELD LOCATED
- PAVEMENT MARKING CROSSWALK (WHITE)

RADIUS (AT CURB FACE)	W = 3' - 0"		W = 4' - 0"		W = 5' - 0"		W = 6' - 0"		W = 7' - 0"	
	X	Y	X	Y	X	Y	X	Y	X	Y
20 FEET	5'-5½"	4'-6½"	4'-8½"	6'-0"	4'-1"	7'-2¾"	3'-7"	8'-3½"	3'-1½"	9'-2½"
30 FEET	7'-3¾"	7'-1"	6'-5½"	8'-11½"	5'-9¼"	10'-7"	5'-2½"	12'-0"	4'-8¾"	13'-3¼"
40 FEET	8'-9½"	9'-2½"	7'-10"	11'-5¼"	7'-1"	13'-4½"	6'-5¾"	15'-¾"	5'-11½"	16'-7¼"
50 FEET	10'-¾"	11'-¾"	9'-¼"	13'-7¼"	8'-2½"	15'-9½"	7'-6½"	17'-9"	6'-11¾"	19'-6¼"
60 FEET	11'-2½"	12'-8¾"	10'-¾"	15'-6½"	9'-2¼"	17'-11¾"	8'-5¾"	20'-1¾"	7'-10½"	22'-1½"

INTERMEDIATE RADII CAN BE INTERPOLATED

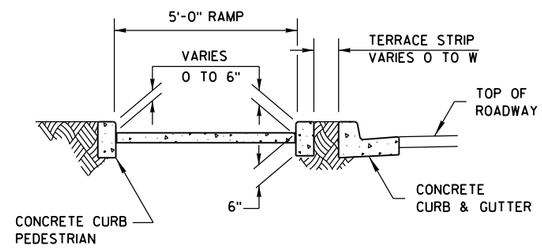

SECTION C-C FOR TYPE 4B

GENERAL NOTES

AVOID PLACING DRAINAGE STRUCTURES, JUNCTION BOXES OR OTHER OBSTRUCTIONS IN FRONT OF RAMP ACCESS AREAS.

RAMP SLOPES SHALL NOT BE STEEPER THAN 12:1.

DETECTABLE WARNING FIELDS THAT ARE INSTALLED AS A GROUP OR SIDE BY SIDE, SHALL BE FROM THE SAME MANUFACTURER.

(3) INSTALL TRANSITION NOSE. (INCIDENTAL TO OTHER PAY ITEMS.) DO NOT MARK TRANSITION NOSE.

(4) ±0.5% CONSTRUCTION TOLERANCE IN SIDEWALK CROSS SLOPE. THE SIDEWALK CROSS SLOPE SHALL NOT EXCEED 2% WITHOUT PRIOR APPROVAL FROM THE ENGINEER.

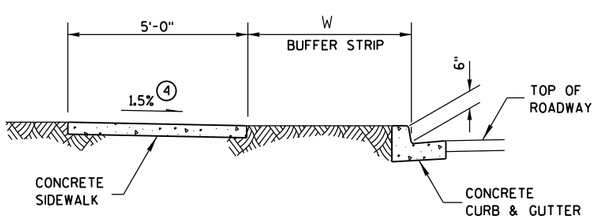

SECTION A-A FOR TYPE 4B

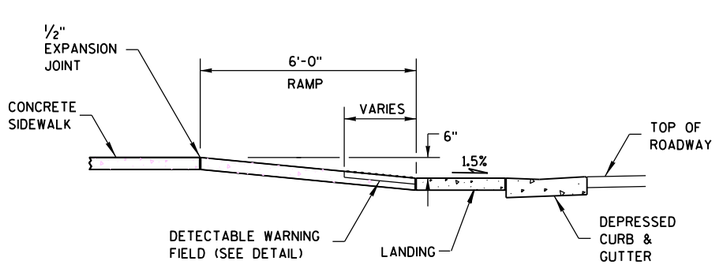

SECTION B-B FOR TYPE 4B

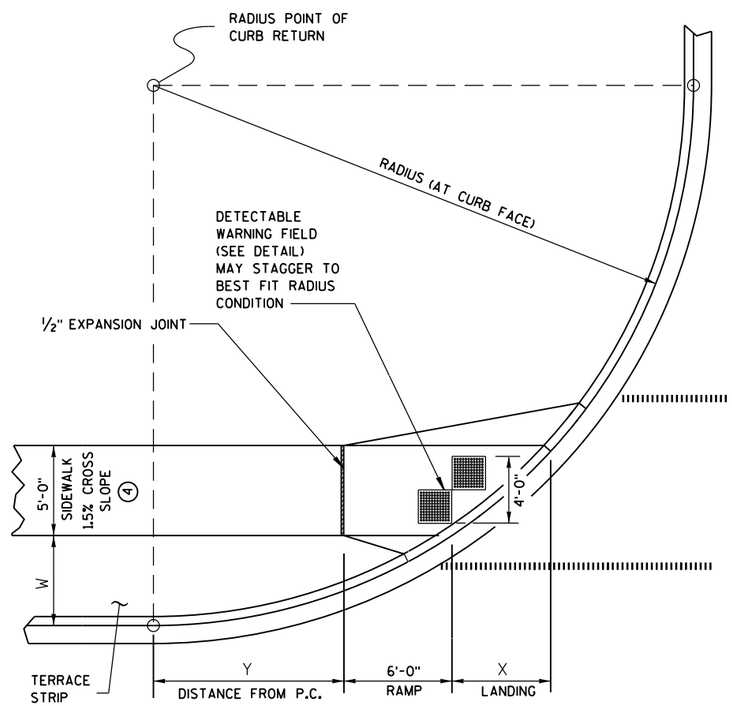

CURB RAMP TYPE 4B1
PLAN VIEW

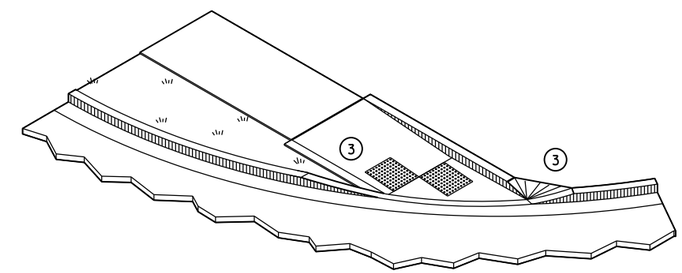

ISOMETRIC VIEW FOR TYPE 4B

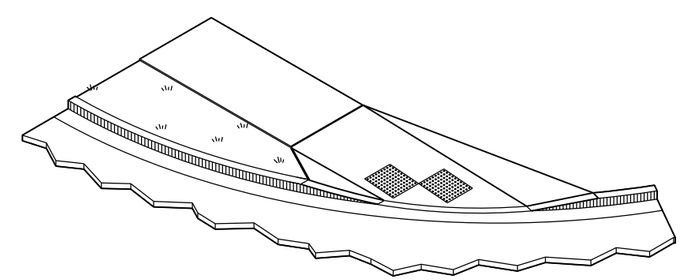

ISOMETRIC VIEW FOR TYPE 4B1

CURB RAMPS
TYPE 4B AND 4B1

STATE OF WISCONSIN
DEPARTMENT OF TRANSPOR

6

S.D.D. 8 D 5-15d

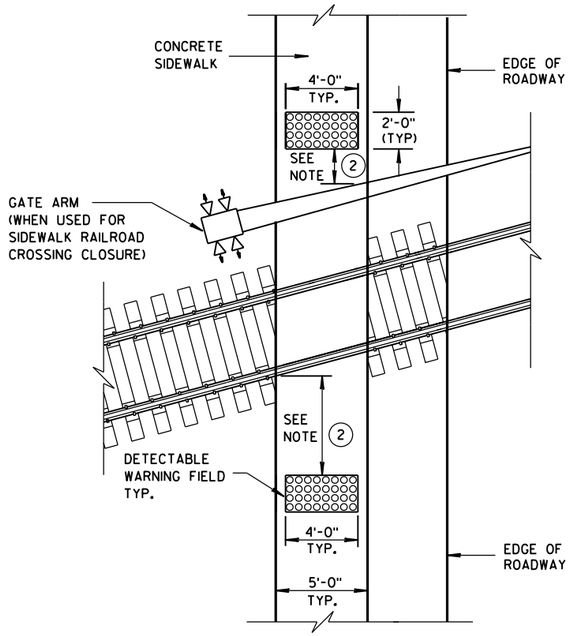

TYPE 8
DETECTABLE WARNINGS AT RAILROAD CROSSING

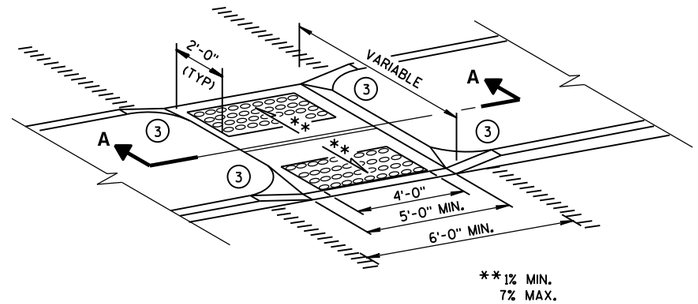

MEDIAN ISLAND
NON-ELEVATED CROSSING
TYPE 5

GENERAL NOTES

SIDEWALK CROSS SLOPE SHALL NOT EXCEED 2%.

DETECTABLE WARNING FIELDS THAT ARE INSTALLED AS A GROUP OR SIDE BY SIDE, SHALL BE FROM THE SAME MANUFACTURER.

1. SLOPE SIDEWALK TOWARD LANDING AS SHOWN WHERE THERE IS NO TERRACE OR WHERE THE TERRACE WIDTH IS LESS THAN 6 FEET WIDE.
2. THE EDGE OF THE DETECTABLE WARNING FIELD NEAREST TO A RAILROAD CROSSING SHALL BE 1.5 FEET ± 0.1' FROM THE FACE OF THE GATE ARM IF THE GATE ARM EXTENDS ACROSS THE SIDEWALK. WHERE THERE IS NO PEDESTRIAN GATE, THE EDGE OF THE DETECTABLE WARNING FIELD NEAREST TO THE RAILROAD CROSSING SHALL BE 15 FEET FROM THE NEAREST RAIL.
3. INSTALL TRANSITION NOSE. (INCIDENTAL TO OTHER PAY ITEMS.) DO NOT MARK TRANSITION NOSE.
4. ±0.5% CONSTRUCTION TOLERANCE IN SIDEWALK CROSS SLOPE. THE SIDEWALK CROSS SLOPE SHALL NOT EXCEED 2% WITHOUT PRIOR APPROVAL FROM THE ENGINEER.

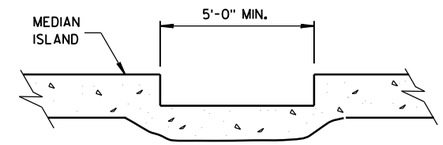

SECTION A-A

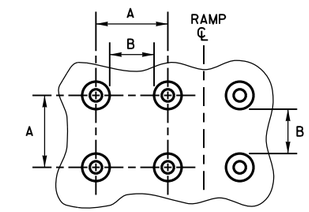

PLAN VIEW

	MIN.	MAX.
A	1.6"	2.4"
B	0.65"	1.5"
C	*	*
D	0.9"	1.4"

* THE C DIMENSION IS 50% TO 65% OF THE D DIMENSION.

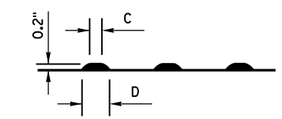

ELEVATION VIEW

TRUNCATED DOMES
DETECTABLE WARNING PATTERN DETAIL

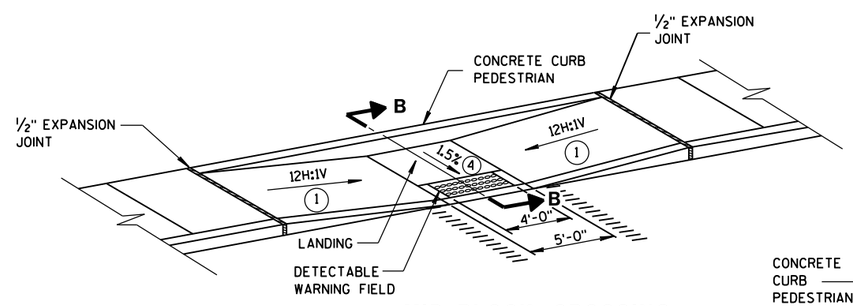

MID-BLOCK CROSSING
TYPE 7A

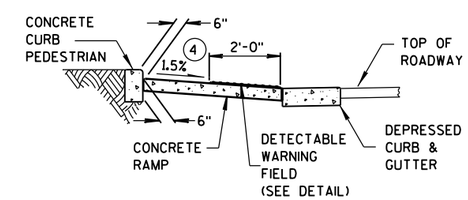

SECTION B-B

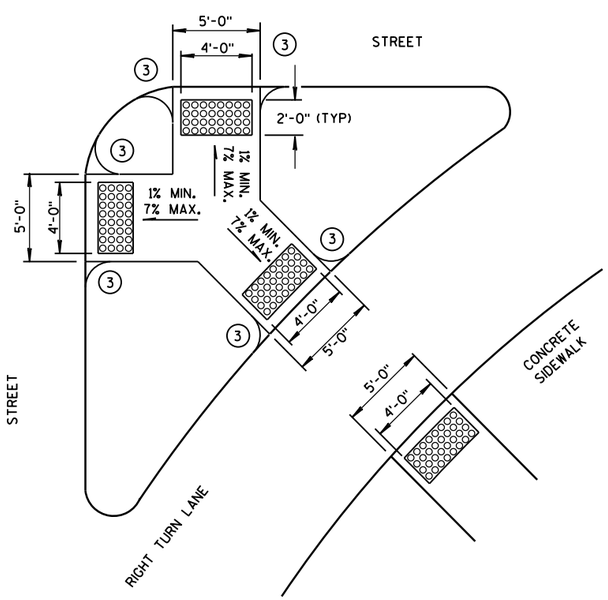

TYPE 6
DETECTABLE WARNING AT ISLANDS

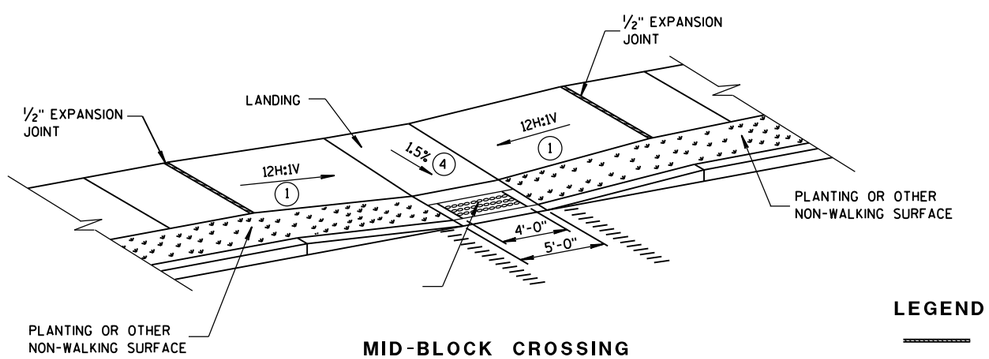

MID-BLOCK CROSSING
TYPE 7B

NOTE: THESE PARALLEL AND PARALLEL/PERPENDICULAR CURB RAMPS MAY BE USED AT INTERSECTIONS AND MID BLOCK LOCATIONS.

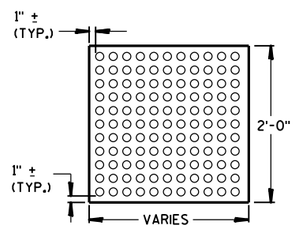

PLAN VIEW

DETECTABLE WARNING FIELD (TYPICAL)

LEGEND

- ½" EXPANSION JOINT-SIDEWALK
- CONTRACTION JOINT FIELD LOCATED
- PAVEMENT MARKING CROSSWALK (WHITE)

CURB RAMPS
TYPES 5, 6, 7A, 7B & 8

STATE OF WISCONSIN
DEPARTMENT OF TRANSPORTATION

APPROVED
2-6-2013 — DATE
/S/ Jerry H. Zogg — ROADWAY STANDARDS DEVELOPMENT ENGINEER
FHWA

6

6

S.D.D. 8 D 5-15e

S.D.D. 8 D 5-15e

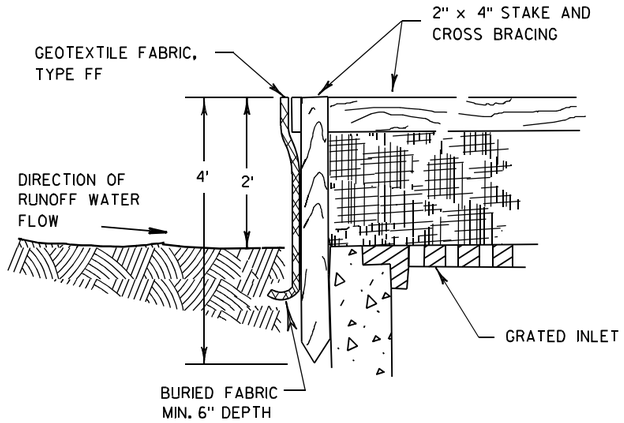

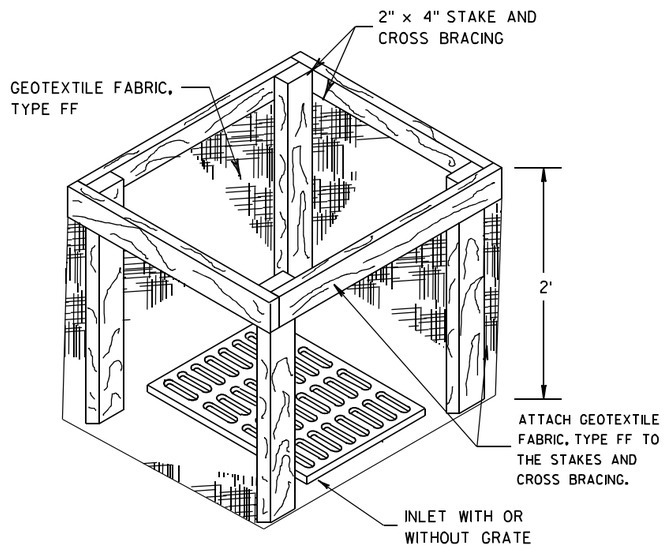

INLET PROTECTION, TYPE A

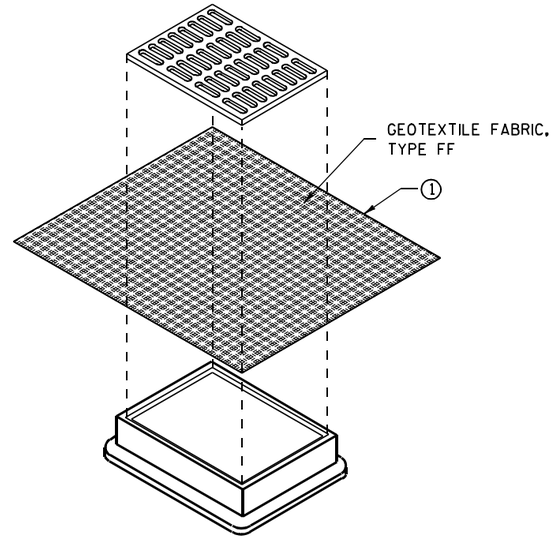

INLET PROTECTION, TYPE B (WITHOUT CURB BOX)

(CAN BE INSTALLED IN ANY INLET WITHOUT A CURB BOX)

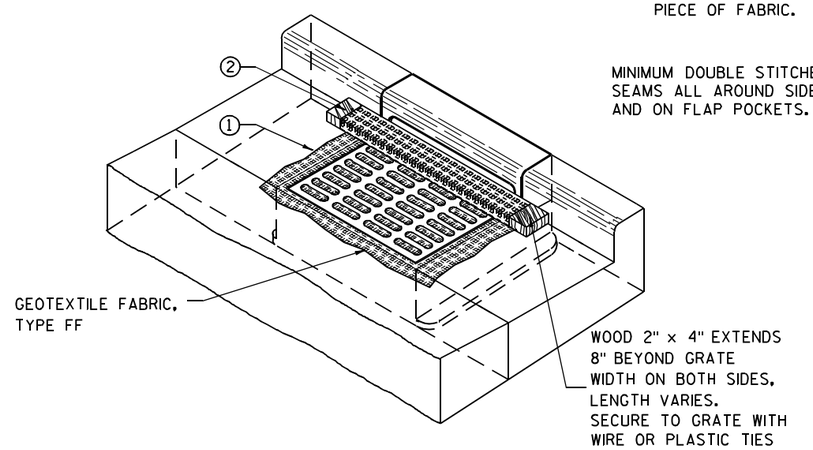

INLET PROTECTION, TYPE C (WITH CURB BOX)

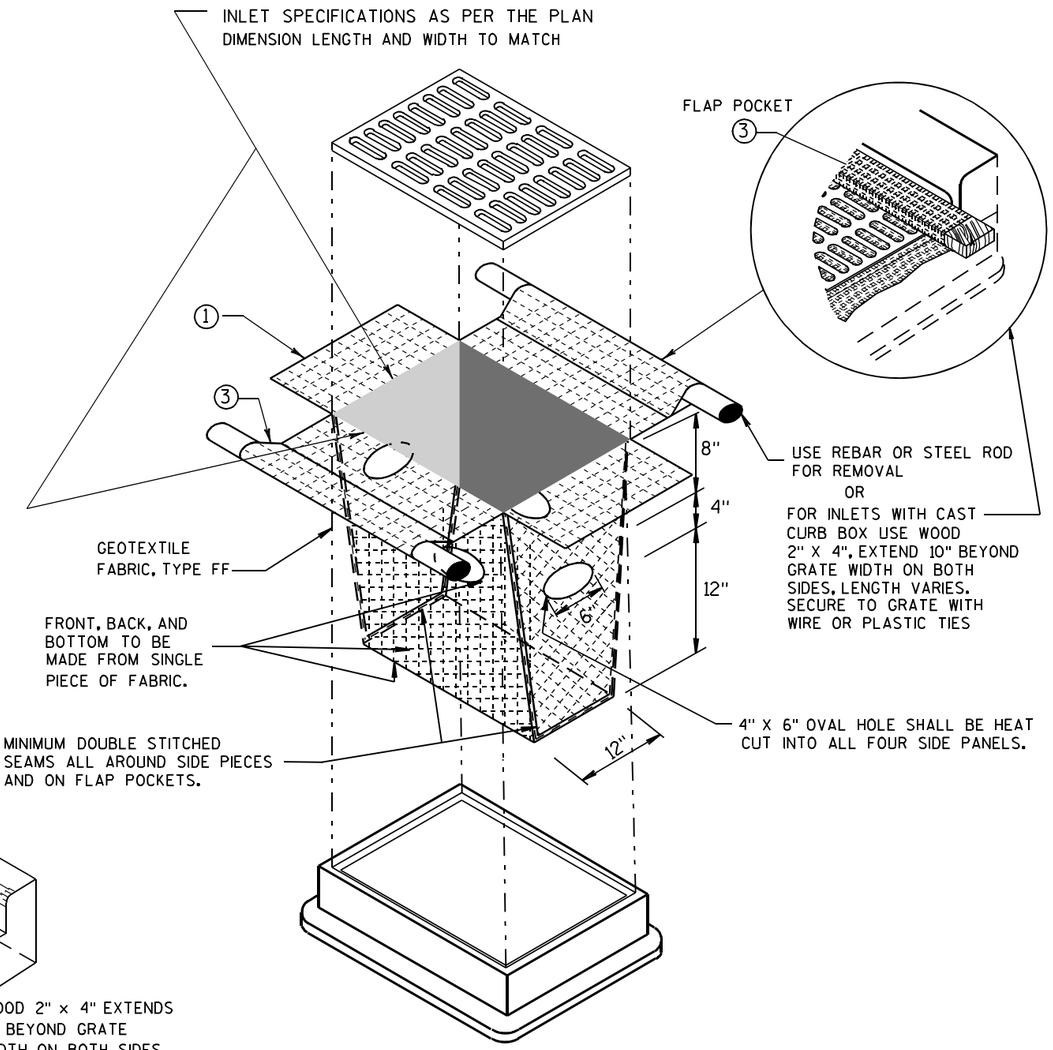

INLET PROTECTION, TYPE D

(CAN BE INSTALLED IN ANY INLET TYPE WITH OR WITHOUT A CURB BOX AS PER NOTE 2)

GENERAL NOTES

INLET PROTECTION DEVICES SHALL BE MAINTAINED OR REPLACED AT THE DIRECTION OF THE ENGINEER.

MANUFACTURED ALTERNATIVES APPROVED AND LISTED ON THE DEPARTMENT'S EROSION CONTROL PRODUCT ACCEPTABILITY LIST MAY BE SUBSTITUTED.

WHEN REMOVING OR MAINTAINING INLET PROTECTION, CARE SHALL BE TAKEN SO THAT THE SEDIMENT TRAPPED ON THE GEOTEXTILE FABRIC DOES NOT FALL INTO THE INLET. ANY MATERIAL FALLING INTO THE INLET SHALL BE REMOVED IMMEDIATELY.

1. FINISHED SIZE, INCLUDING FLAP POCKETS WHERE REQUIRED, SHALL EXTEND A MINIMUM OF 10" AROUND THE PERIMETER TO FACILITATE MAINTENANCE OR REMOVAL.
2. FOR INLET PROTECTION, TYPE C (WITH CURB BOX), AN ADDITIONAL 18" OF FABRIC IS WRAPPED AROUND THE WOOD AND SECURED WITH STAPLES. THE WOOD SHALL NOT BLOCK THE ENTIRE HEIGHT OF THE CURB BOX OPENING.
3. FLAP POCKETS SHALL BE LARGE ENOUGH TO ACCEPT WOOD 2X4.

INSTALLATION NOTES

TYPE B & C

TRIM EXCESS FABRIC IN THE FLOW LINE TO WITHIN 3" OF THE GRATE.

THE CONTRACTOR SHALL DEMONSTRATE A METHOD OF MAINTENANCE, USING A SEWN FLAP, HAND HOLDS OR OTHER METHOD TO PREVENT ACCUMULATED SEDIMENT FROM ENTERING THE INLET.

TYPE D

DO NOT INSTALL INLET PROTECTION TYPE D IN INLETS SHALLOWER THAN 30", MEASURED FROM THE BOTTOM OF THE INLET TO THE TOP OF THE GRATE.

TRIM EXCESS FABRIC IN THE FLOW LINE TO WITHIN 3" OF THE GRATE.

THE INSTALLED BAG SHALL HAVE A MINIMUM SIDE CLEARANCE, BETWEEN THE INLET WALLS AND THE BAG, MEASURED AT THE BOTTOM OF THE OVERFLOW HOLES, OF 3". WHERE NECESSARY THE CONTRACTOR SHALL CINCH THE BAG, USING PLASTIC ZIP TIES, TO ACHIEVE THE 3" CLEARANCE. THE TIES SHALL BE PLACED AT A MAXIMUM OF 4" FROM THE BOTTOM OF THE BAG.

INLET PROTECTION TYPE A, B, C, AND D

STATE OF WISCONSIN
DEPARTMENT OF TRANSPORTATION

APPROVED
10/16/02 — DATE
/S/ Beth Cannestra — CHIEF ROADWAY DEVELOPMENT ENGINEER
FHWA

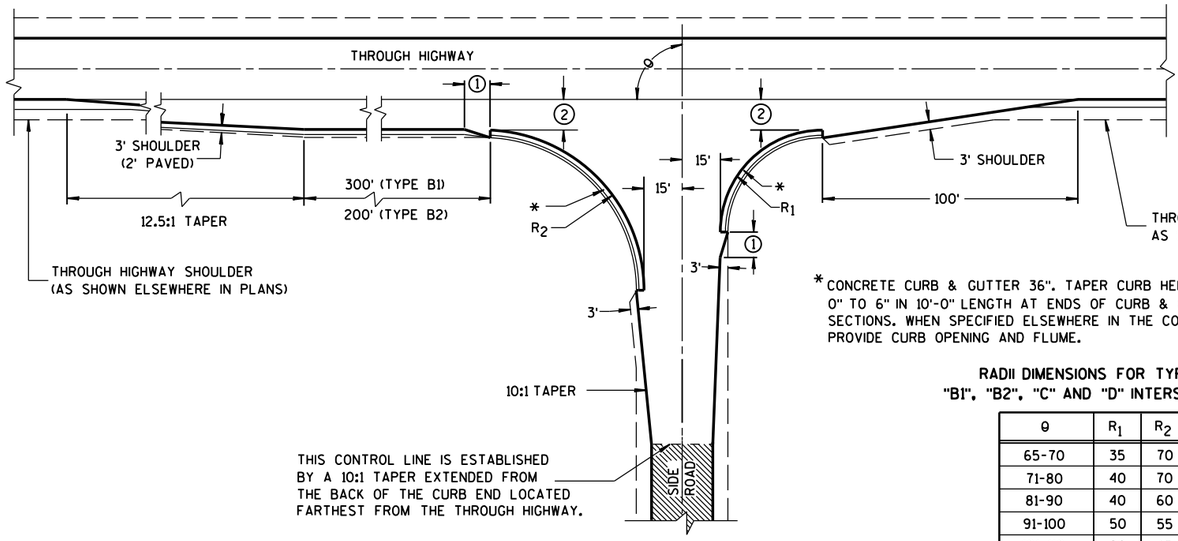

TYPE "B1" AND "B2"

*CONCRETE CURB & GUTTER 36". TAPER CURB HEIGHT 0" TO 6" IN 10'-0" LENGTH AT ENDS OF CURB & GUTTER SECTIONS. WHEN SPECIFIED ELSEWHERE IN THE CONTRACT, PROVIDE CURB OPENING AND FLUME.

RADII DIMENSIONS FOR TYPES "B1", "B2", "C" AND "D" INTERSECTIONS

θ	R_1	R_2
65-70	35	70
71-80	40	70
81-90	40	60
91-100	50	55
101-110	60	45

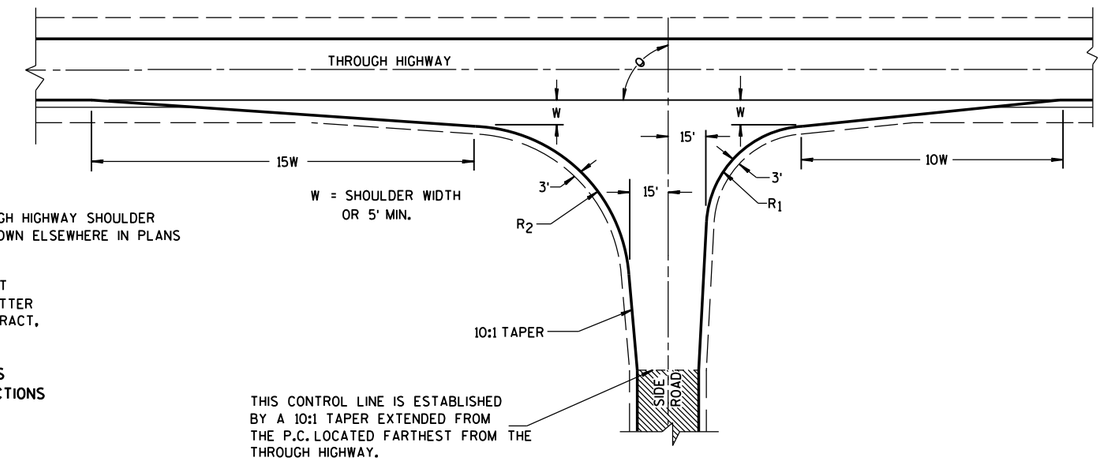

TYPE "C"

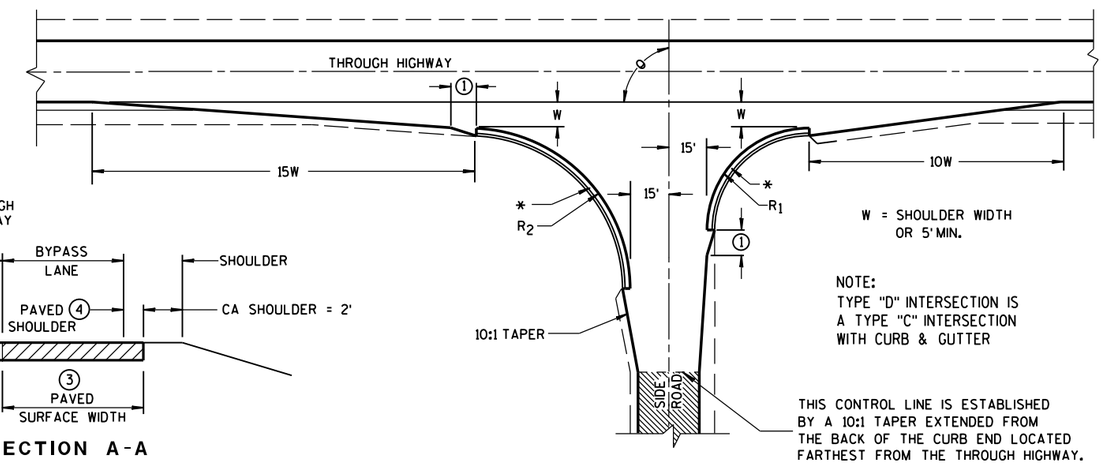

NOTE:
TYPE "D" INTERSECTION IS A TYPE "C" INTERSECTION WITH CURB & GUTTER

TYPE "D"

GENERAL NOTES

DESIGNS MAY BE USED INTERCHANGEABLY IN COMBINATION OR SEPARATELY FOR ANY ONE COMPLETE INTERSECTION DEPENDING UPON INTERSECTION ANGLE AND SURFACING OF EACH APPROACH ROADWAY.

SIDE ROAD SURFACING NOTE

WHEN THE SIDE ROAD IS NOT PRESENTLY PAVED, PAVEMENT SHALL BE PLACED TO THE LIMITS SHOWN UNLESS OTHERWISE PROVIDED IN THE CONTRACT. WHERE THE CONSTRUCTION LIMITS ARE BEYOND THE PAVING LIMITS, CRUSHED AGGREGATE SURFACING SHALL BE PLACED BETWEEN THE PAVING LIMITS AND CONSTRUCTION LIMITS.

WHEN THE SIDE ROAD IS PRESENTLY PAVED, NEW PAVEMENT SHALL BE PLACED TO THE LIMITS OF DESIGN AS SHOWN AND BEYOND, IF NECESSARY, TO MEET EXISTING PAVEMENT.

WHEN THE SIDE ROAD IS THE CONSTRUCTION PROJECT, THE INTERSECTION SURFACING SHALL BE THE SAME AS FOR THE PROJECT.

EXISTING PAVED SURFACE

BYPASS LANE

(1) 10-FT TYPICAL.

(2) 12-FT** PLUS ADDITIONAL WIDTH FOR BIKE LANE IF SHOWN ELSEWHERE IN THE PLAN.

**10-FT MAY BE USED ON TYPE B2 ON RESURFACING PROJECTS IF SPECIFIED IN THE CONTRACT.

(3) BYPASS LANE PAVED SURFACE WIDTH OUTSIDE OF TRAVEL LANE
-ASPHALT = 12-FT PLUS PAVED SHOULDER WIDTH.
-PC CPNCRETE = 13-FT PLUS PAVED SHOULDER WIDTH.

(4) BYPASS LANE PAVED SHOULDER WIDTH = THE GREATER OF 1-FT OR THE PAVED SHOULDER WIDTH OF THE THROUGH HIGHWAY.

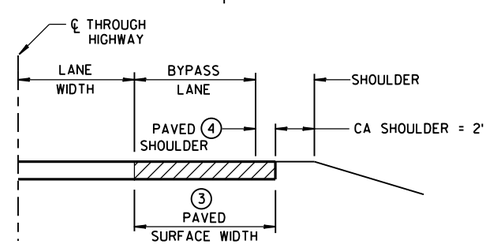

SECTION A-A
(SHOWING BYPASS LANE AND SHOULDER)

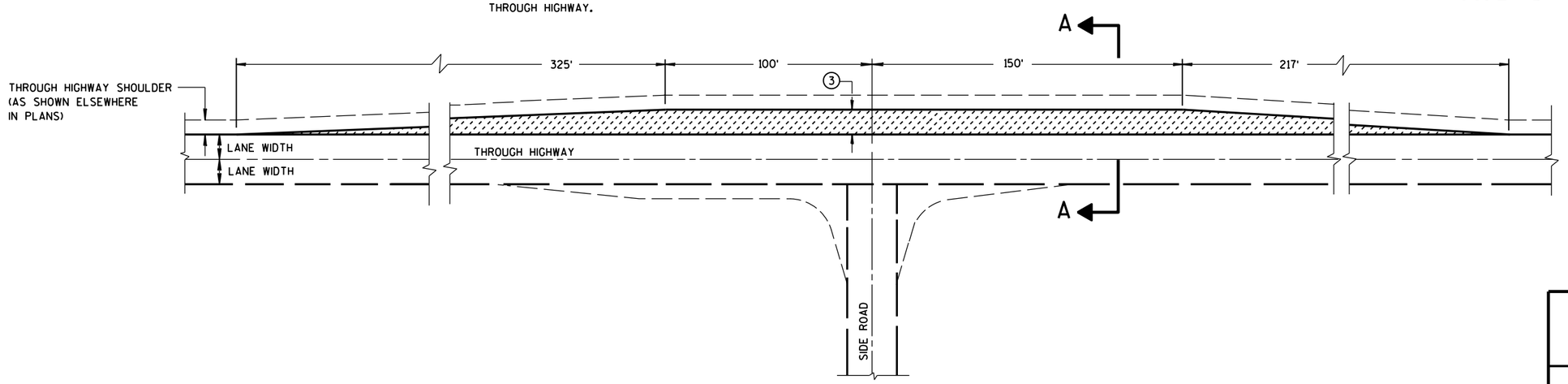

TEE INTERSECTION BYPASS LANE DETAIL

AT-GRADE SIDE ROAD INTERSECTION, TYPES "B1", "B2", "C" AND "D" AND TEE INTERSECTION BYPASS LANE

STATE OF WISCONSIN
DEPARTMENT OF TRANSPO

6

S.D.D. 9 A 1-13a

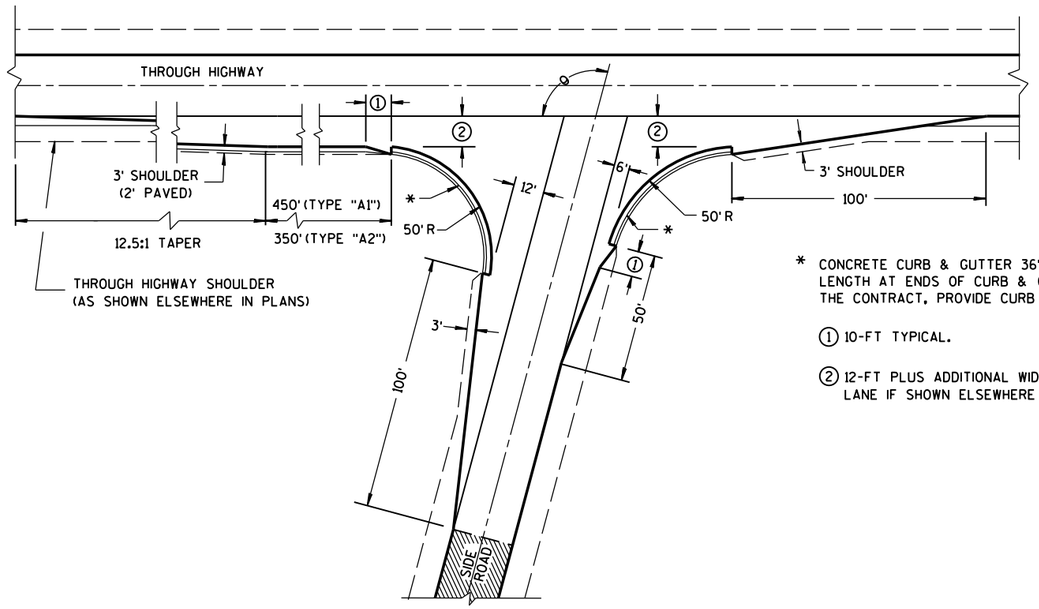

θ = MORE THAN 80°

* CONCRETE CURB & GUTTER 36". TAPER CURB HEIGHT 0" TO 6" IN 10'-0" LENGTH AT ENDS OF CURB & GUTTER SECTIONS. WHEN SPECIFIED ELSEWHERE IN THE CONTRACT, PROVIDE CURB OPENING AND FLUME.

① 10-FT TYPICAL.

② 12-FT PLUS ADDITIONAL WIDTH FOR BIKE LANE IF SHOWN ELSEWHERE IN THE PLANS.

EXISTING PAVED SURFACE

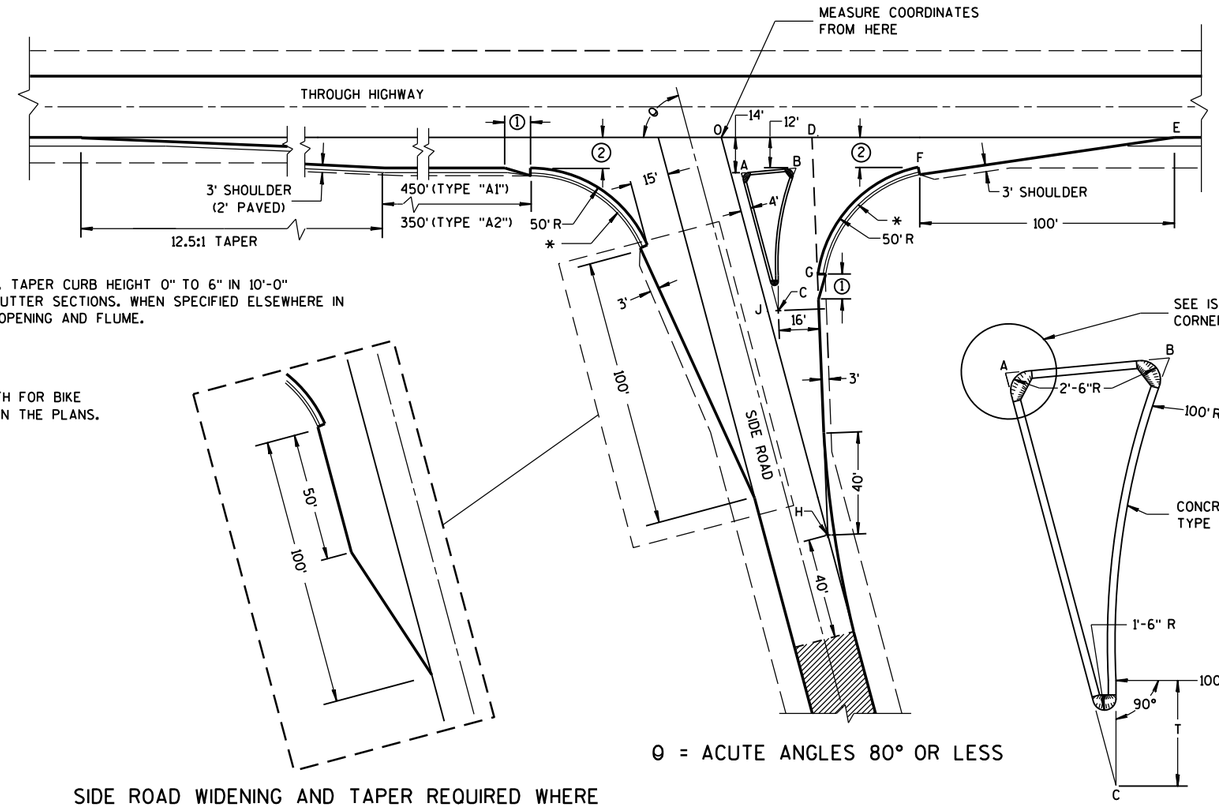

θ = ACUTE ANGLES 80° OR LESS

SIDE ROAD WIDENING AND TAPER REQUIRED WHERE
THE THROUGH HIGHWAY CARRIES TWO-WAY TRAFFIC
θ = ACUTE ANGLES 70° OR LESS

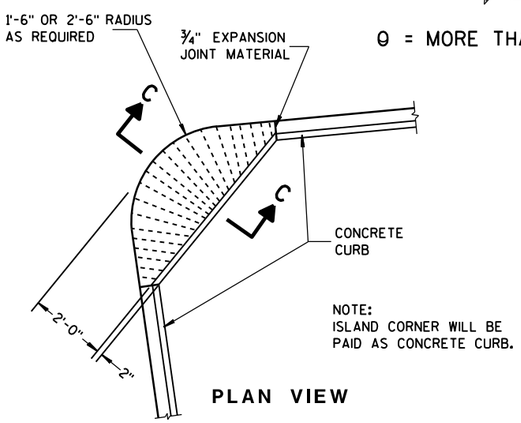

PLAN VIEW

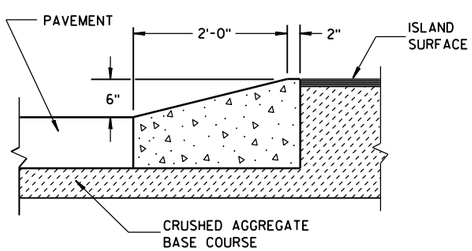

SECTION C-C

ISLAND CORNER DETAIL

(TO BE CONSTRUCTED AT ALL ISLAND CORNERS)

TABLE OF DIMENSIONS FOR
VARIABLE SIDE ROAD INTERSECTION ANGLES
(INTERPOLATE VALUES FOR ANGLES NOT SHOWN)

ANGLE θ DEGREES	COORDINATES IN FEET (MEASURED FROM POINT "O") X/Y								LENGTH IN FEET				
	A	B	C	D	E	F	G	H	AB	AC	T	OJ	OH
60	12.7/-14.0	44.9/-12.0	46.4/-72.4	41.9/0.0	205.0/0.0	104.6/-12.0	64.0/-75.5	85.0/-147.1	32.3	67.4	4.9	85.9	169.9
65	10.9/-14.0	39.0/-12.0	37.8/-71.6	39.4/0.0	196.1/0.0	95.7/-12.0	54.1/-71.5	70.5/-151.3	28.2	63.6	8.5	80.9	166.9
70	9.4/-14.0	33.9/-12.0	29.8/-70.1	37.4/0.0	188.3/0.0	87.8/-12.0	45.6/-67.5	56.1/-154.2	24.6	59.7	11.5	76.1	164.1
75	7.9/-14.0	29.3/-12.0	22.3/-67.9	35.7/0.0	181.2/0.0	80.7/-12.0	38.2/-63.4	41.8/-155.9	21.5	55.8	13.8	71.4	161.4
80	6.5/-14.0	25.4/-12.0	15.6/-65.2	34.4/0.0	174.8/0.0	74.4/-12.0	31.8/-59.3	27.6/-156.5	18.9	52.0	15.6	66.9	158.9

TYPE "A1" & "A2" SIDE ROAD INTERSECTION DETAILS

AT-GRADE SIDE ROAD
INTERSECTION, TYPE "A1" & "A2"

STATE OF WISCONSIN
DEPARTMENT OF TRANSPORTATION

APPROVED
12/18/12 — DATE
/S/ Jerry H. Zogg — ROADWAY STANDARDS DEVELOPMENT ENGINEER
FHWA

6

S.D.D. 9 A 1-13b

GENERAL NOTES

DETAILS OF CONSTRUCTION SHOWN ON THIS DRAWING SHALL CONFORM TO THE PERTINENT REQUIREMENTS OF THE STANDARD SPECIFICATIONS AND APPLICABLE SPECIAL PROVISIONS.

DO NOT MILL CENTER LINE GROOVES THROUGH ANY INTERSECTION, MARKED CROSSWALK, NON-MOTORIZED PATH CROSSING, OR SNOWMOBILE CROSSING.

INSTALL PAVEMENT MARKING AFTER THE GROOVES ARE INSTALLED.

SEE SIGNING PLAN FOR SIGN REQUIREMENTS THAT MAY BE NEEDED.

(1) CENTERLINE GROOVES MAY BE OMITTED IN AREAS WITH HIGH CONCENTRATIONS OF DRIVEWAYS, WHEN DIRECTED BY THE ENGINEER.

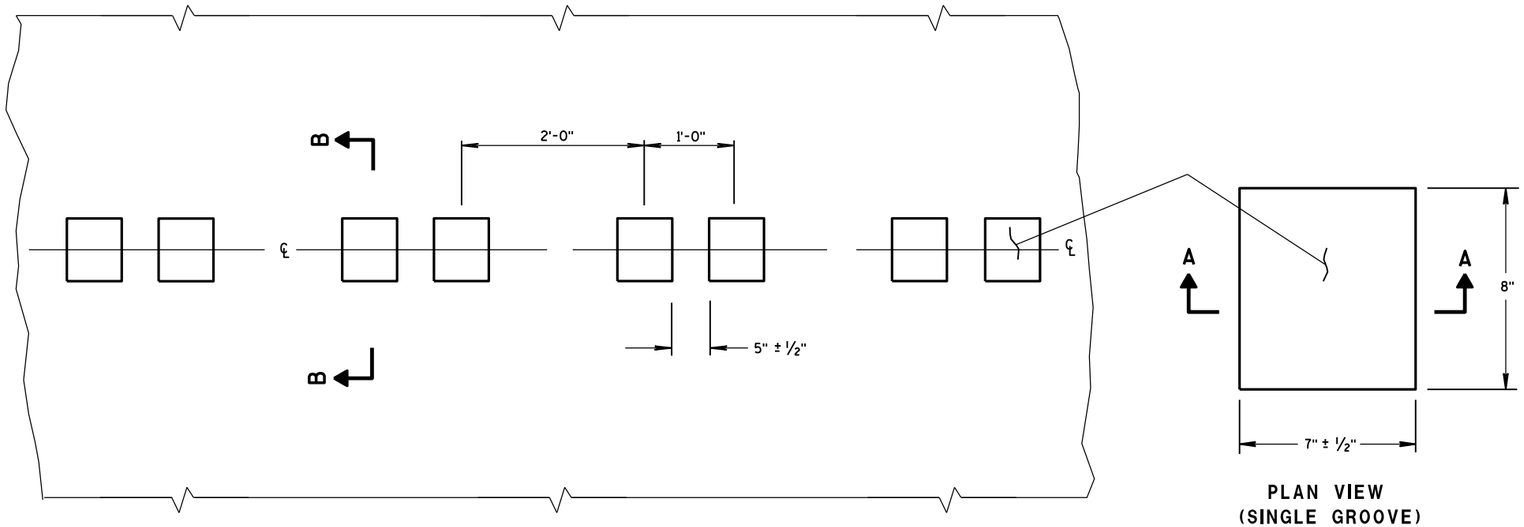

PLAN VIEW
CENTER LINE WITH GROOVES

PLAN VIEW
(SINGLE GROOVE)

PLACEMENT DETAIL FOR MILLED RUMBLE STRIP

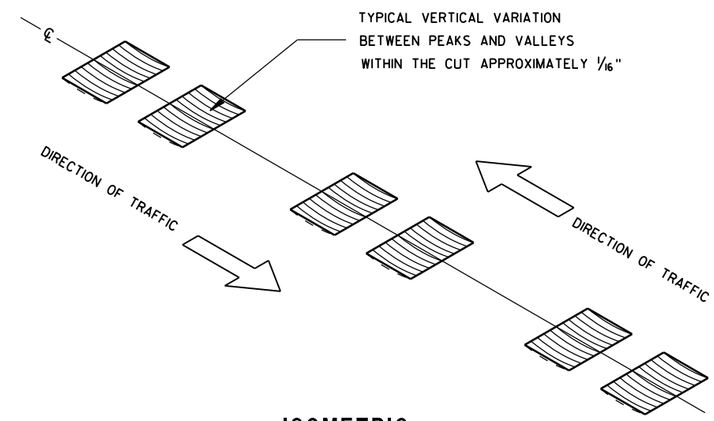

ISOMETRIC

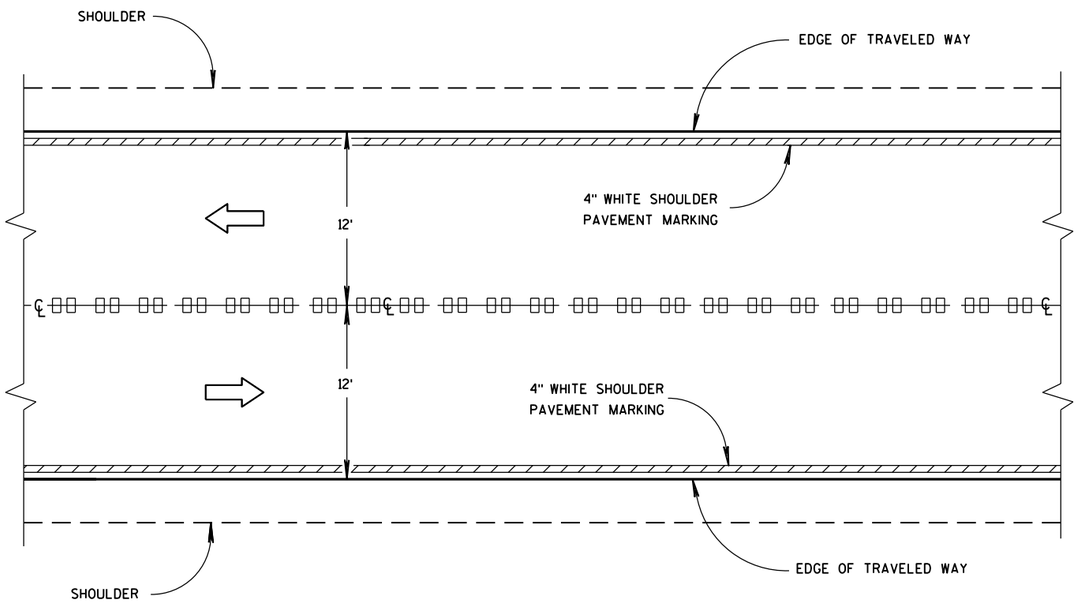

CENTER LINE GROOVES ON TWO-WAY ROADWAYS

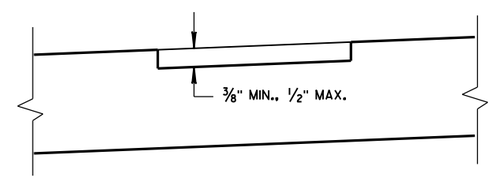

SECTION B-B
SUPERELEVATED ROADWAY

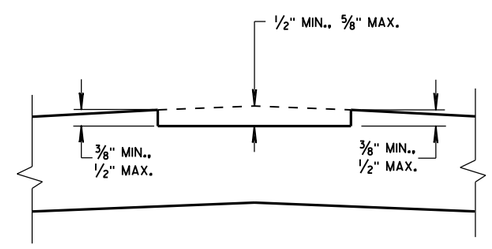

SECTION B-B
CROWNED ROADWAY

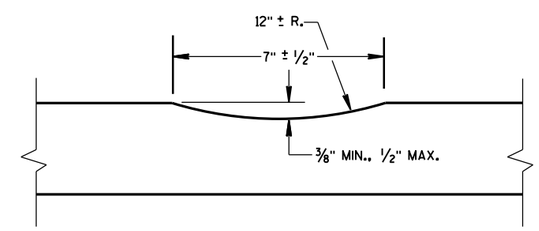

SECTION A-A

6

6

S.D.D. 13 A 11-2a

S.D.D. 13 A 11-2a

2-LANE RURAL
CENTER LINE RUMBLE STRIP,
MILLING

STATE OF WISCONSIN
DEPARTMENT OF TRANSPOI

(1) CENTERLINE GROOVES MAY BE OMITTED IN AREAS WITH HIGH CONCENTRATIONS OF DRIVEWAYS, WHEN DIRECTED BY THE ENGINEER.

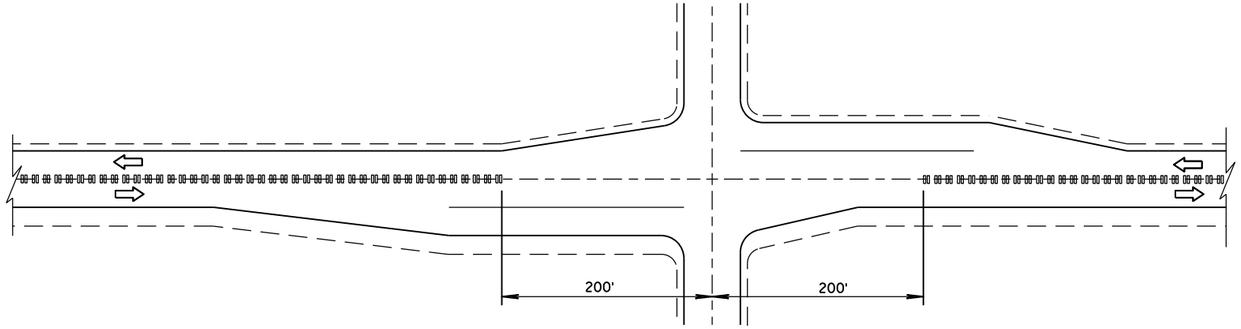

CENTER LINE GROOVES AT INTERSECTIONS

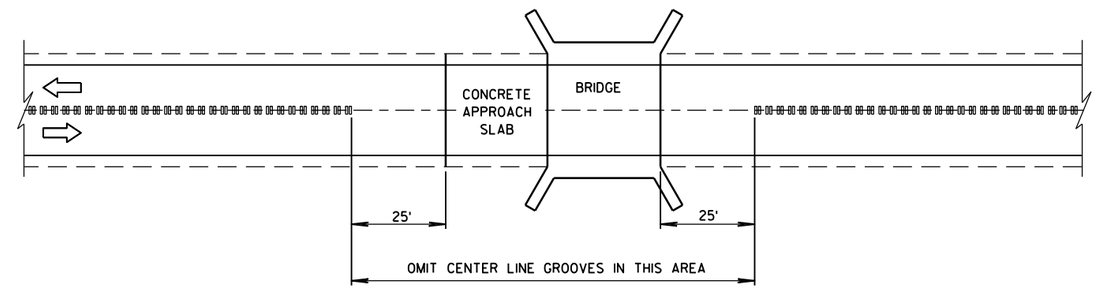

CENTER LINE GROOVES AT BRIDGES

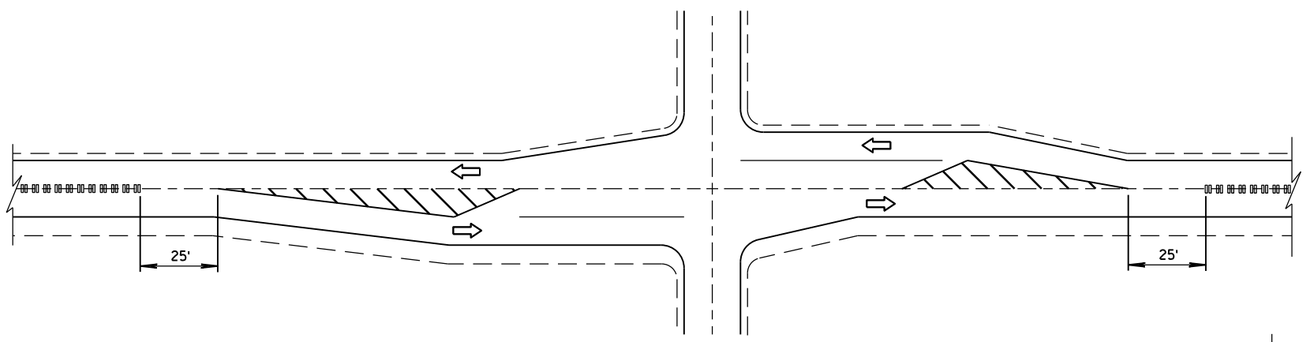

CENTER LINE GROOVES AT INTERSECTIONS
(WITH LEFT TURN LANES)

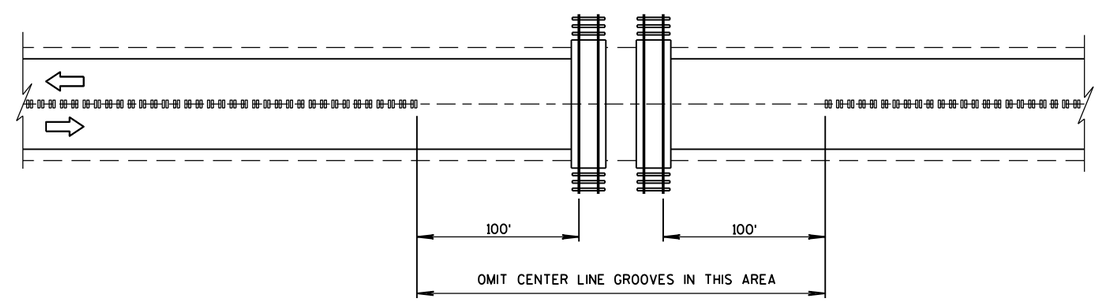

CENTER LINE GROOVES AT RAILROADS

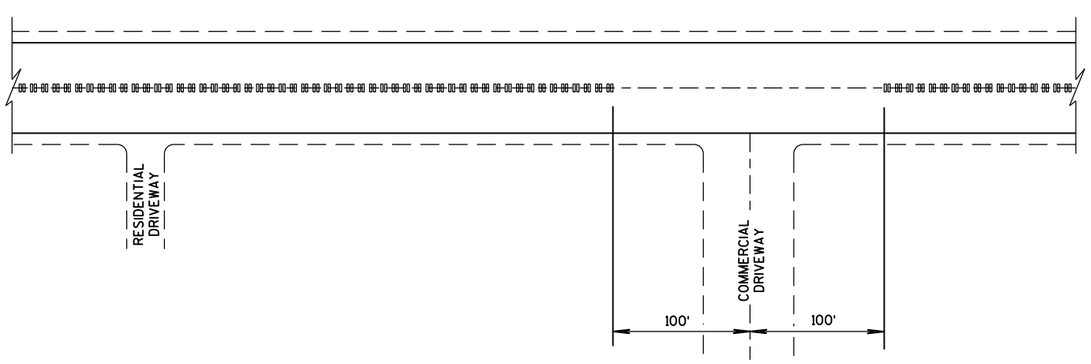

CENTER LINE GROOVES AT DRIVEWAYS (1)

2-LANE RURAL CENTER LINE RUMBLE STRIP, MILLING	
STATE OF WISCONSIN DEPARTMENT OF TRANSPORTATION	
APPROVED 5/15/2013 DATE FHWA	/S/ Jerry H. Zoda ROADWAY STANDARDS DEVELOPMENT ENGINEER NT

6

6

S.D.D. 13 A 11-2b

S.D.D. 13 A 11-2b

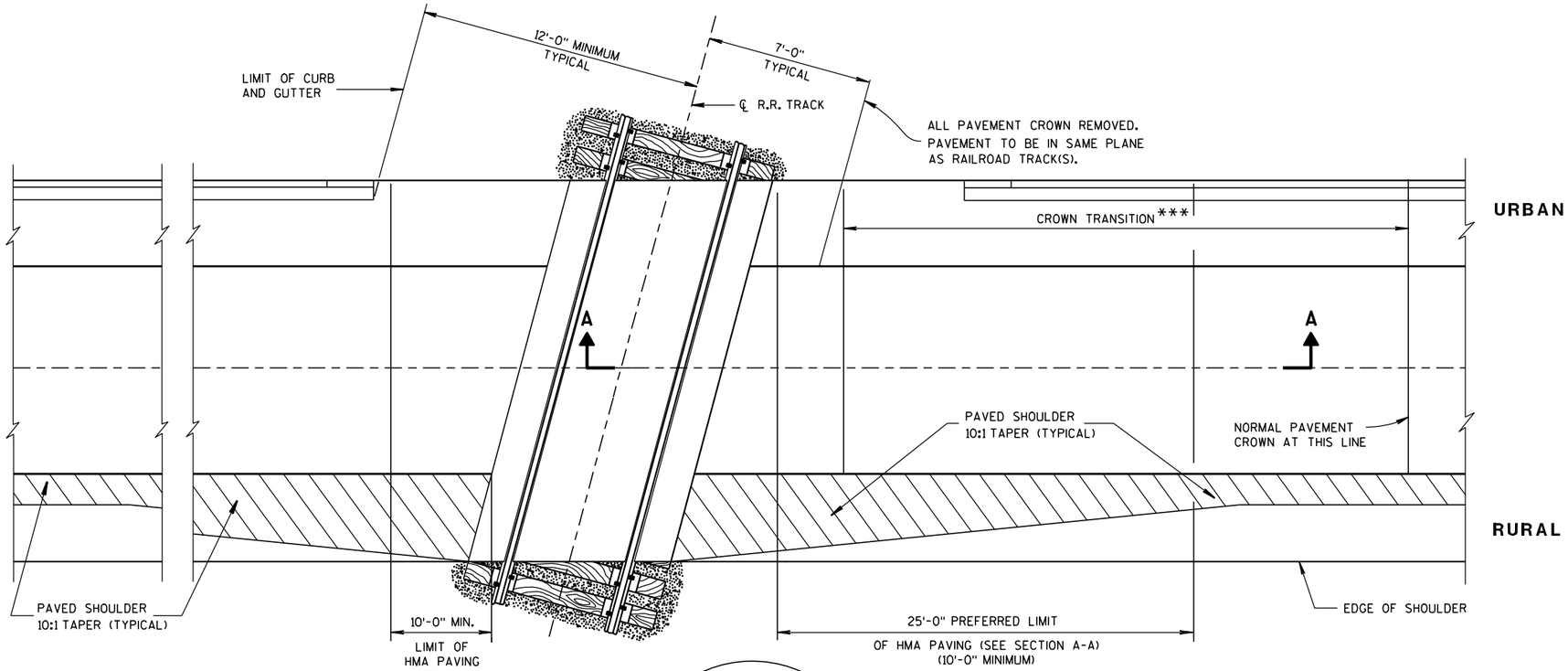

GENERAL NOTES

DETAILS OF CONSTRUCTION, MATERIALS AND WORKMANSHIP NOT SHOWN ON THIS DRAWING SHALL CONFORM TO THE PERTINENT REQUIREMENTS OF THE STANDARD SPECIFICATIONS AND THE APPLICABLE SPECIAL PROVISIONS.

TIMBER, CONCRETE OR RUBBER CROSSING SURFACE MATERIAL, RAILS, TIES, BALLAST, GEOTEXTILE FABRIC AND CROSSING DRAINAGE SYSTEM BY OTHERS UNLESS OTHERWISE PROVIDED.

HMA PAVEMENT APPROACHES AND HMA PAVEMET CROSSING SURFACES TO BE PLACED BY CONTRACTOR UNLESS OTHERWISE PROVIDED.

HMA FLANGEWAY AND FIELD FILLERS TO BE PLACED AND THOROUGHLY HAND COMPACTED BY THE CONTRACTOR WHEN NOT PROVIDED BY OTHERS. SEE DETAIL B. HMA FILLERS NOT REQUIRED WHEN RUBBER FILLERS ARE PROVIDED.

HMA PAVEMENT SHALL BE ROLLED PARALLEL TO THE TRACK.

** CROSSING SURFACE MAY BE TIMBER, RUBBER, CONCRETE, HMA PAVEMENT OR A COMBINATION OF SUCH MATERIALS.

*** CROWN TRANSITION LENGTH SHOWN ELSEWHERE IN THE PLAN.

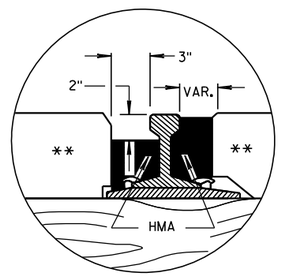

DETAIL B

HMA FLANGEWAY AND FIELD FILLERS

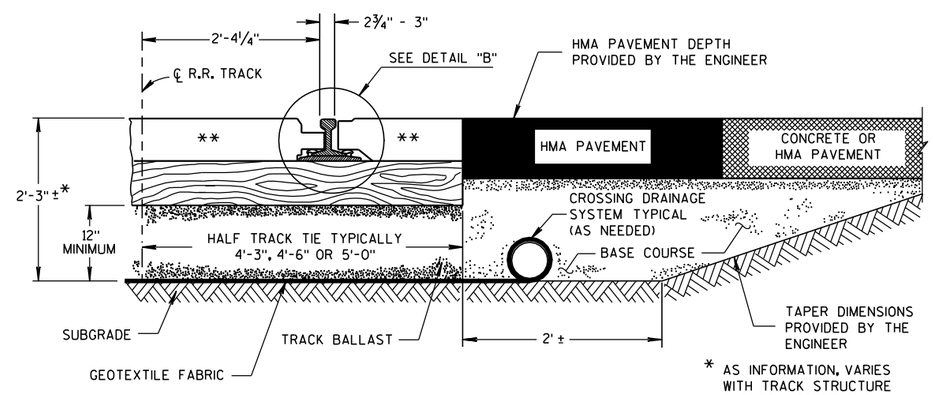

* AS INFORMATION, VARIES WITH TRACK STRUCTURE AND SOIL CONDITIONS

TYPICAL HALF SECTION

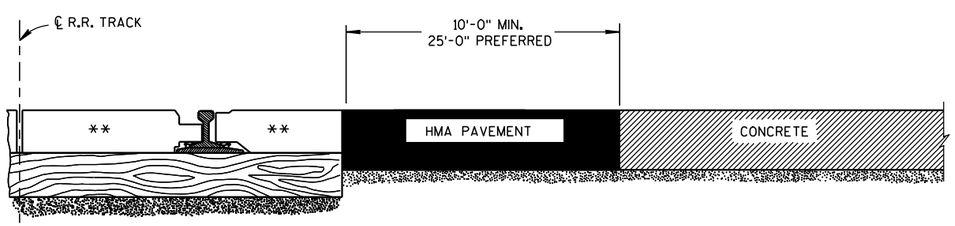

SECTION A-A

CONCRETE PAVEMENT APPROACH

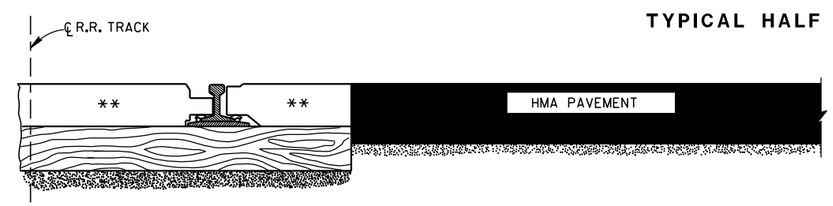

SECTION A-A

HMA PAVEMENT APPROACH

EXAMPLES OF PAVEMENT APPROACHES

PAVEMENT DETAILS FOR RAILROAD APPROACH

STATE OF WISCONSIN
DEPARTMENT OF TRANSPORTATION

APPROVED
8-28-09 /S/ Ronald E. Adams
DATE CHIEF, RAILROADS & HAF SECTION
FHWA

6

6

S.D.D. 13 B 1-10

S.D.D. 13 B 1-10

GENERAL NOTES

DETAILS OF CONSTRUCTION, MATERIALS AND WORKMANSHIP NOT SHOWN ON THIS DRAWING SHALL CONFORM TO THE PERTINENT REQUIREMENTS OF THE STANDARD SPECIFICATIONS, AND THE APPLICABLE SPECIAL PROVISIONS.

1. W6 X 9 OR W6 X 8.5 STEEL POSTS AND NOTCHED PLASTIC BLOCKOUTS ARE ACCEPTABLE ALTERNATIVES FOR 6" X 8" WOOD POSTS WITH WOOD OR PLASTIC BLOCKOUTS. USE APPROVED NOTCHED PLASTIC BLOCKOUTS WITH STEEL POSTS. APPROVED PLASTIC BLOCKOUT DESIGNS MAY VARY FROM THIS TYPICAL DETAIL WHEN USED IN CONJUNCTION WITH STEEL POSTS.

   DO NOT MIX STEEL POSTS AND WOOD POSTS IN A SINGLE INSTALLATION.
2. USE STRUCTURAL STEEL POSTS CONFORMING TO ASTM A 36. GALVANIZED POSTS ACCORDING TO AASHTO M 111. EITHER SET THE POSTS IN DRILLED HOLES OR DRIVE TO GRADE. REMOVE MUSHROOMING CAUSED BY DRIVING AND REPAIR DAMAGED SPELTER COATING ON GALVANIZED POSTS.
3. INSTALL STEEL POSTS WITH HOLES ON APPROACHING TRAFFIC SIDE.
4. USE EITHER WOOD OR APPROVED PLASTIC BLOCKOUTS ON WOOD POSTS.
5. IF THE DISTANCE FROM BACK OF POST TO SHOULDER HINGE POINT IS LESS THAN 2 FEET INSTALL LONGER POST AT HALF POST SPACING, W BEAM (LHW).
6. IF ROCK IS ENCOUNTERED DURING EXCAVATION, THE ENGINEER MAY APPROVE USING A 12 INCH DIAMETER POST HOLE EXTENDING 20 INCHES DEEP INTO THE ROCK. PLACE GRANULAR MATERIAL IN THE BOTTOM OF THE HOLE APPROXIMATELY 2½ INCHES DEEP. CUT THE POSTS TO LENGTH AND PLACE IN YHE HOLE. BACKFILL WITH MATERIAL EXCAVATED FROM THE HOLE AND COMPACT ADEQUATEY.
7. WHEN USING STEEL POSTS AND WOOD BLOCKOUTS INSTALL FOUR 16D GALVANIZED NAILS. INSTALL NAILS AT THE BACK CORNERS OF THE BLOCK AND BEND THE NAILS OVER THE FLANGE OF THE STEEL POST.

INSTALL BEAM GUARD SECTIONS AND ALL NECESSARY HARDWARE ACCORDING TO THE APPLICABLE PLAN AND CURRENT STANDARD AND SUPPLEMENTAL SPECIFICATIONS.

ALL DIMENSIONS ARE SUBJECT TO MANUFACTURER'S TOLERANCES EXCEPT WHERE ALLOWABLE TOLERANCES ARE SHOWN.

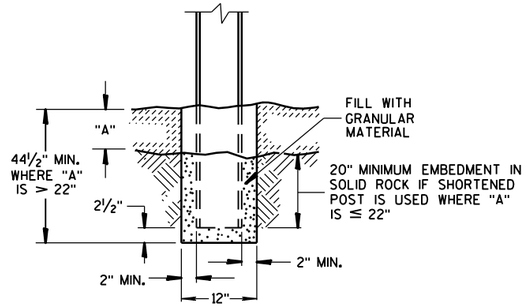

END VIEW
SETTING STEEL OR WOOD POST IN ROCK (6)

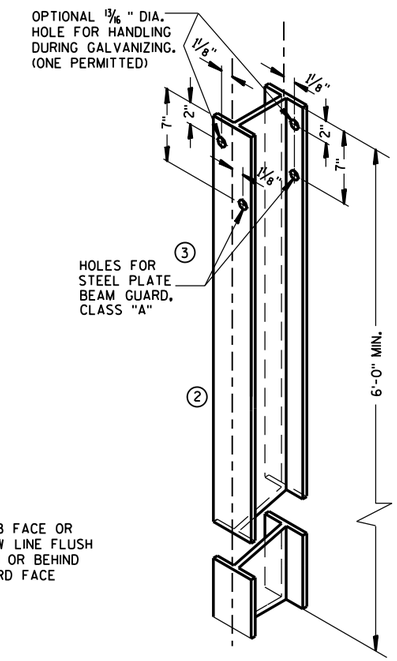

STEEL POST & HOLE PUNCHING DETAIL (W6 X 9) (1)

ALL HOLES 13/16" DIAMETER EXCEPT AS NOTED

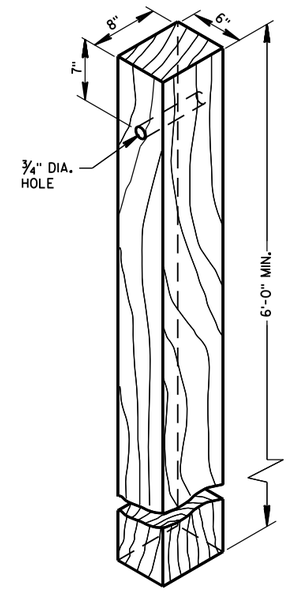

WOOD POST (6"X8") NOMINAL

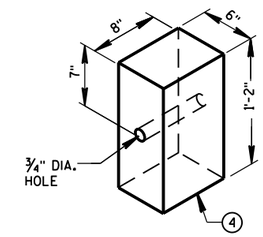

WOOD OR PLASTIC BLOCKOUT FOR WOOD POSTS

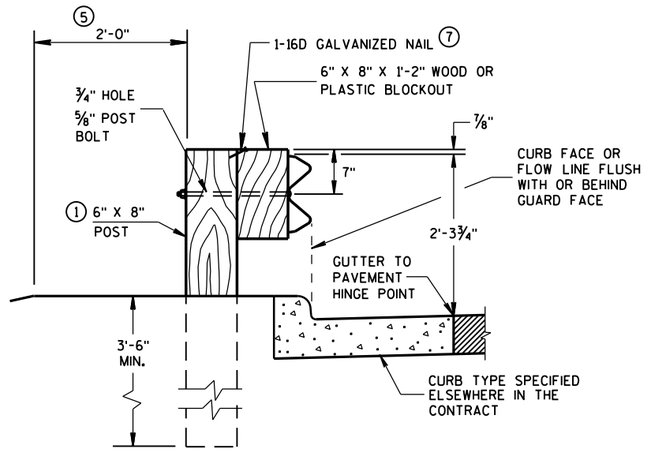

END VIEW
LOCATED ALONG A CURBED ROADWAY

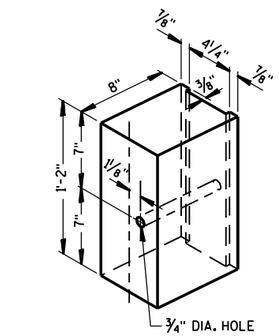

TYPICAL NOTCHED PLASTIC BLOCKOUT FOR STEEL POSTS (1)

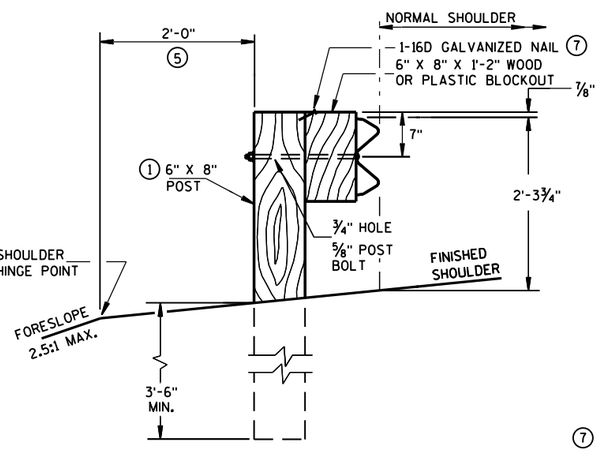

END VIEW
LOCATED ALONG A ROADWAY SHOULDER
STANDARD INSTALLATION

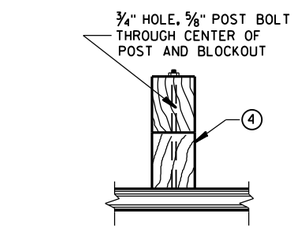

PLAN VIEW
WOOD POST, BLOCKOUT & BEAM

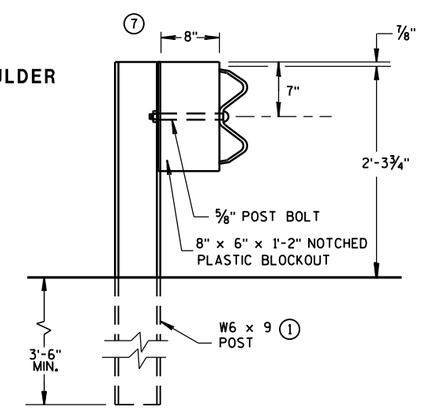

END VIEW
STEEL POST & NOTCHED
PLASTIC BLOCKOUT ALTERNATIVE
STANDARD INSTALLATION

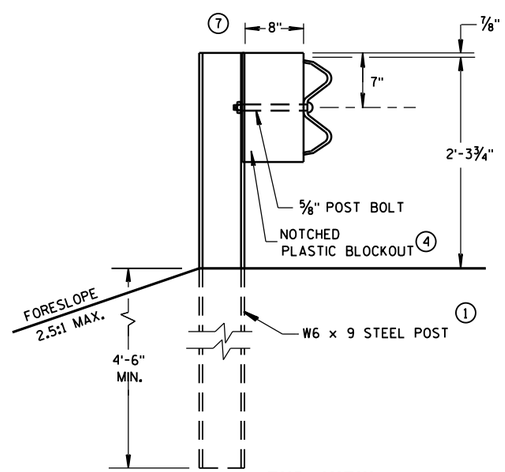

END VIEW
LONGER POST AT HALF
POST SPACING W BEAM
(LHW)

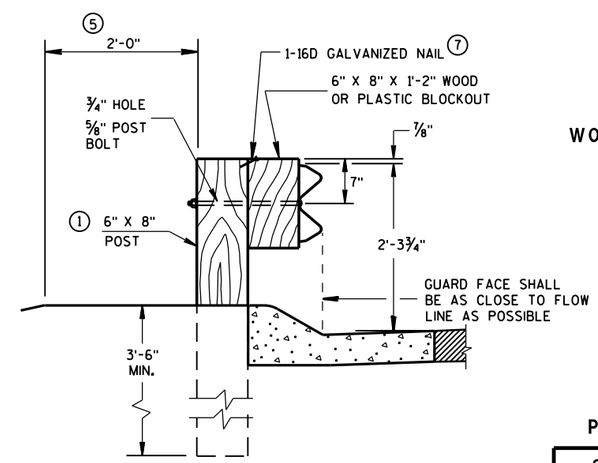

END VIEW
LOCATED ALONG A
MOUNTABLE CURBED ROADWAY

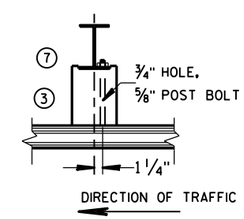

PLAN VIEW
STEEL POST, NOTCHED
PLASTIC BLOCKOUT & BEAM

TYPICAL INSTALLATION OF STEEL PLATE BEAM GUARD

STEEL PLATE BEAM GUARD, CLASS "A"
INSTALLATION & ELEMENTS

STATE OF WISCONSIN
DEPARTMENT OF TRANSPO

6
S.D.D. 14 B 15-8a

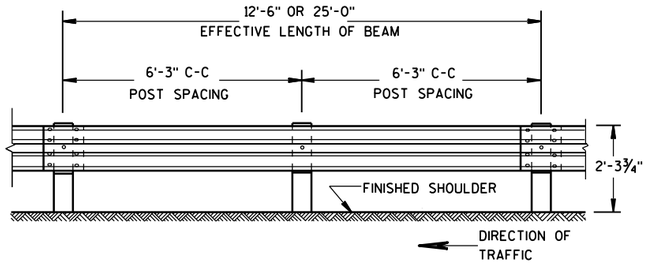

FRONT VIEW

POST SPACING STANDARD INSTALLATION

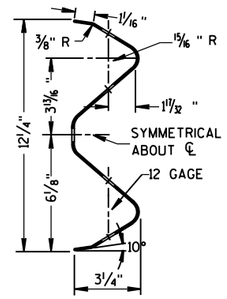

SECTION THRU W BEAM

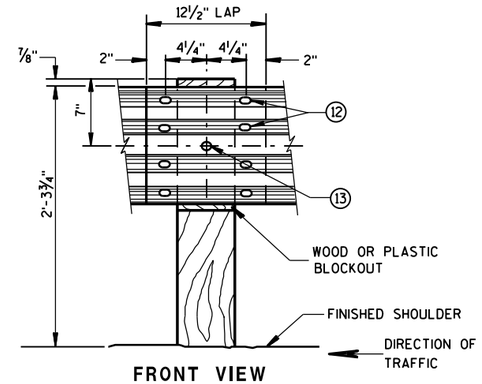

FRONT VIEW

BEAM SPLICE AT WOOD POST AND POST MOUNTING DETAIL

GENERAL NOTES

⑧ PROVIDE SILVER REFLECTIVE SHEETING ON ALL REFLECTORS EXCEPT THOSE LOCATED ALONG THE LEFT EDGE OF ONE-WAY ROADWAYS, WHICH SHALL BE PROVIDED WITH YELLOW REFLECTIVE SHEETING. SHEETING IS TYPE H. SEE STANDARD SPECIFICATION 637.

⑨ DO NOT INSTALL REFLECTORS ON THE FIRST 50 FEET OF THE APPROACH END OF THE ENERGY ABSORBING TERMINAL.

⑩ REVERSE EVERY OTHER REFLECTOR FOR 2-WAY VISIBILITY. THE CONTRACTOR MAY FURNISH TWO-SIDED REFLECTORS IN LIEU OF ONE-SIDED REFLECTORS.

⑪ PROVIDE AN ANGLE OF BEND OF 90° ± 1° FOR TWO-SIDED REFLECTORS.

⑫ 8 -⅝" ϕ X 2" BUTTON HEAD BOLTS WITH OVAL SHOULDERS & RECESS NUTS.

⑬ ⅝" DIA. BUTTON HEAD BOLT AND RECESS NUT WITH ⅝" DIA. F844 FLAT WASHER UNDER NUT.

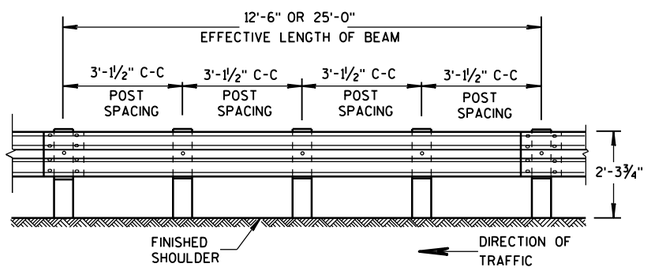

FRONT VIEW

POST SPACING FOR LONGER POST AT HALF POST SPACING W BEAM (LHW)

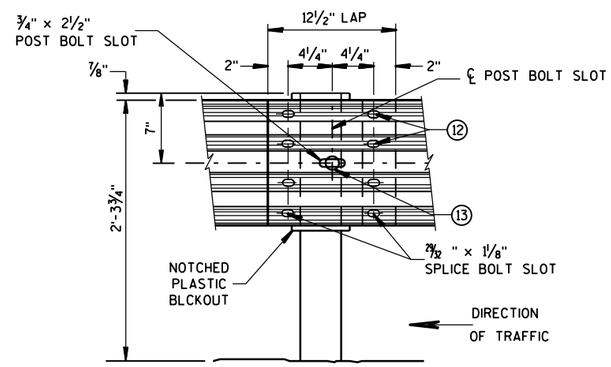

FRONT VIEW

BEAM SPLICE AT STEEL POST

TYPICAL SPLICING DETAILS OF STEEL PLATE BEAM GUARD

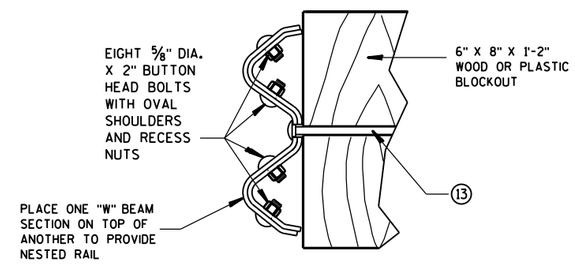

NESTED W BEAM (NW)

USE ALL OTHER STANDARD BEAM GUARD DETAILS FOR CONSTRUCTING NESTED W BEAM (NW)

REFLECTOR SPACING ⑨

	BEAM GUARD LENGTH	REFLECTOR SPACING	NO. SURFACES REFLECTORIZED	MIN. NO. REFLECTORS
ONE WAY TRAFFIC	< 200' > 200'	50' C-C 100' C-C	1 1	3
TWO WAY TRAFFIC	< 200' > 200'	25' C-C 50' C-C	1 ⑩ 1	6
TWO WAY TRAFFIC	< 200' > 200'	50' C-C 100' C-C	2 ⑪ 2	3

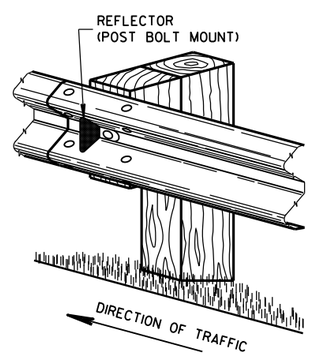

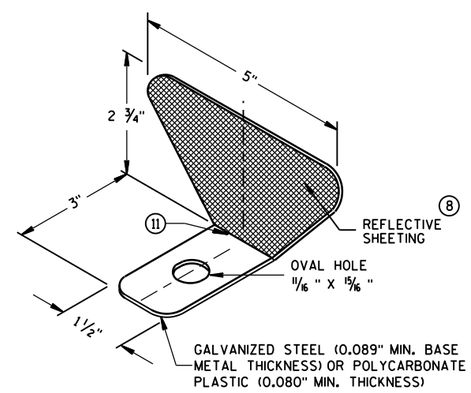

ONE SIDED REFLECTOR DETAIL AND TYPICAL INSTALLATION ⑧

STEEL PLATE BEAM GUARD, CLASS "A", INSTALLATION & ELEMENTS

STATE OF WISCONSIN
DEPARTMENT OF TRANSPOR

6

6

S.D.D. 14 B 15-8b

S.D.D. 14 B 15-8b

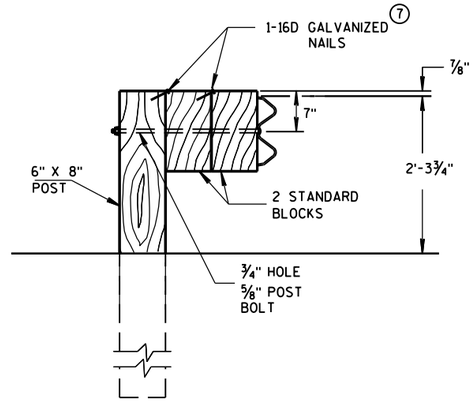

DETAIL FOR DOUBLE BLOCKS

THE NUMBER OF DOUBLE BLOCK POSTS WITHIN A BARRIER RUN IS UNLIMITED

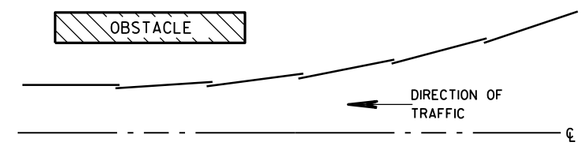

PLAN VIEW
BEAM LAPPING DETAIL

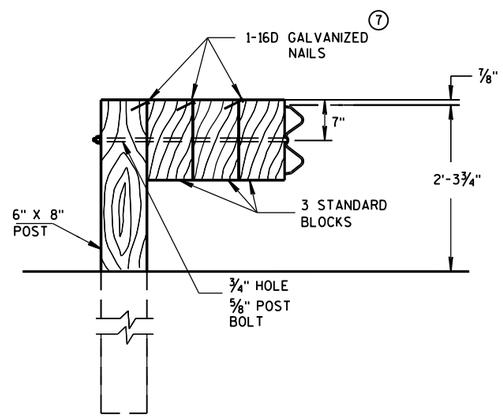

DETAIL FOR TRIPLE BLOCKS

TRIPLE BLOCK DETAIL IS LIMITED TO ONE LOCATION WITHIN A BEAM GUARD RUN.

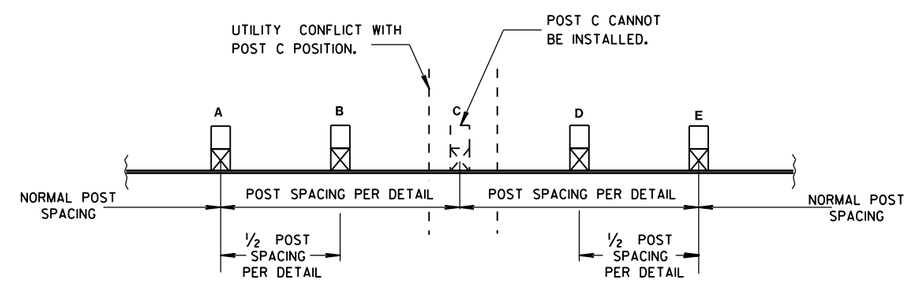

POST DRIVING FOR CONTINUOUS UNDERGROUND OBSTRUCTION

NOTES: USE DOUBLE OR TRIPLE BLOCKS WHEN UNDERGROUND OBSTACLES PREVENT THE POST FROM BEING INSTALLED.

DO NOT USE EXTRA BLOCKOUTS IF IT CAUSES THE POST TO BE DRIVEN BEYOND SHOULDER HINGE POINT OR CAUSES A FIXED OBJECT TO BE WITHIN THE DEFLECTION DISTANCE OF THE BARRIER.

STEEL PLATE BEAM GUARD, CLASS "A", INSTALLATION & ELEMENTS

STATE OF WISCONSIN
DEPARTMENT OF TRANSPORTATION

APPROVED
June 2014 — DATE
/S/ Jerry H. Zogg — ROADWAY STANDARDS DEVELOPMENT ENGINEER
FHWA

6

S.D.D. 14 B 15-8c

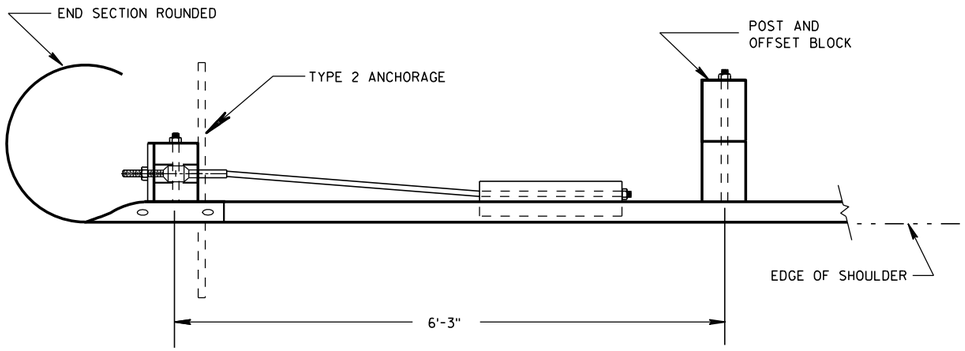

PLAN VIEW

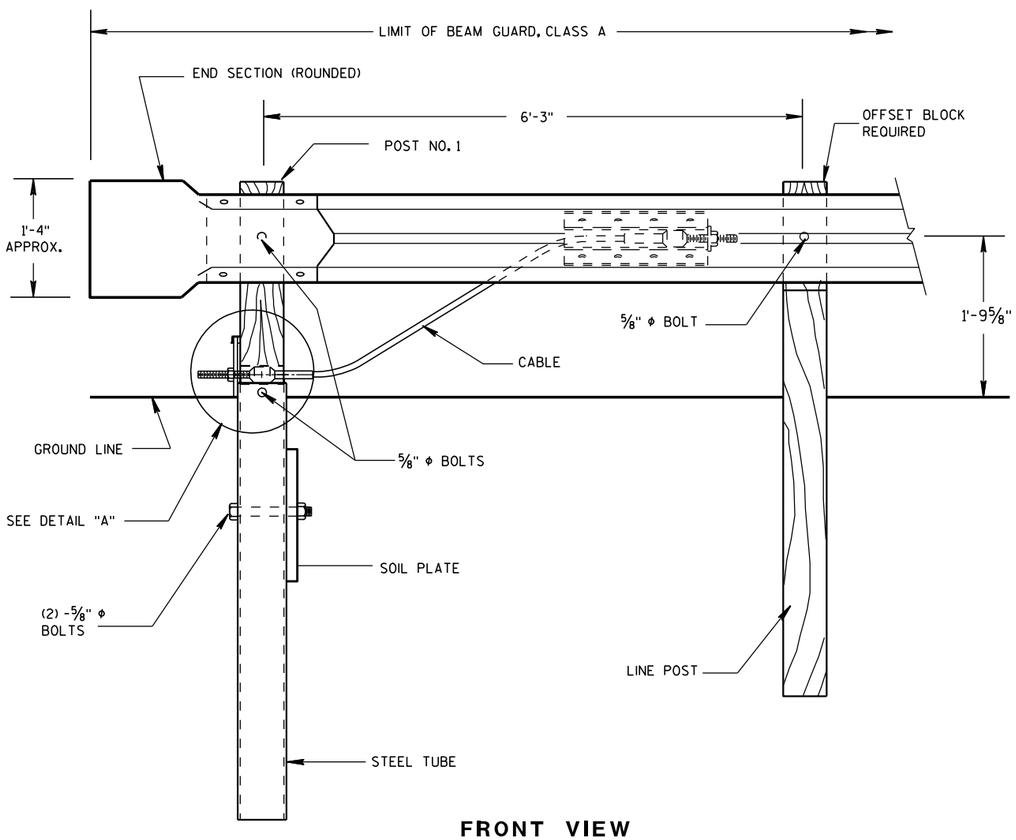

FRONT VIEW

END TREATMENT WITH TYPE 2 ANCHORAGE

(USE ON ONE-WAY ROADWAYS ONLY - DEPARTING END)

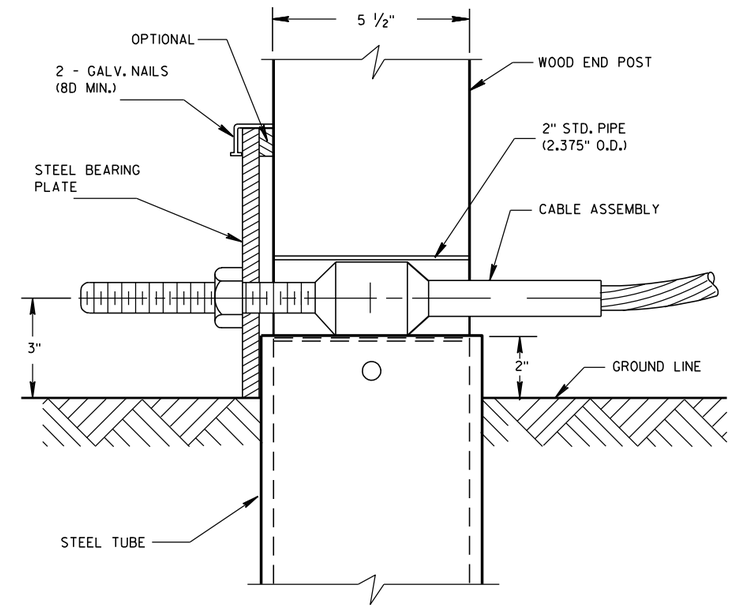

DETAIL "A"

POST NO. 1

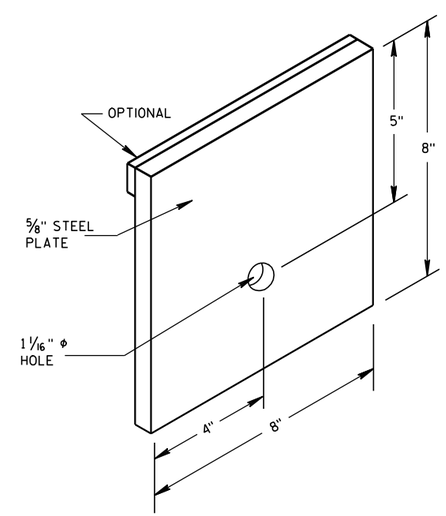

STEEL BEARING PLATE

ANCHORAGE FOR STEEL
PLATE BEAM GUARD
TYPE 2

STATE OF WISCONSIN
DEPARTMENT OF TRANSPORTATION

6

6

S.D.D. 14 B 16-4a

S.D.D. 14 B 16-4a

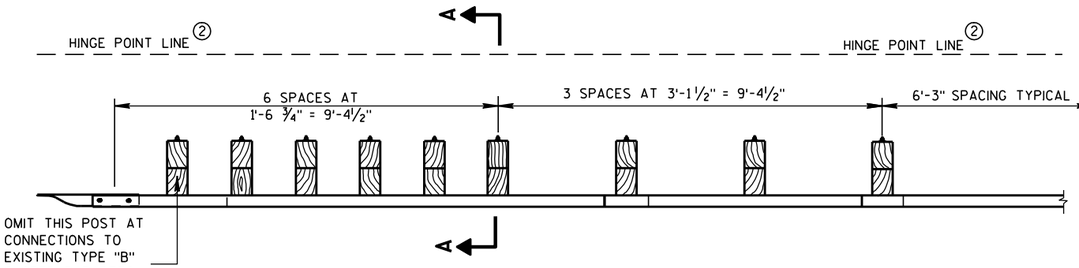

PLAN VIEW

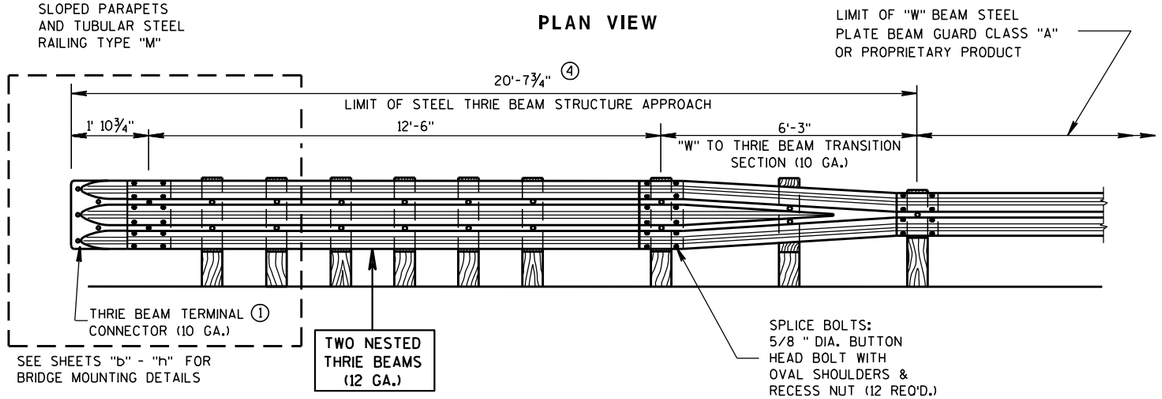

FRONT VIEW

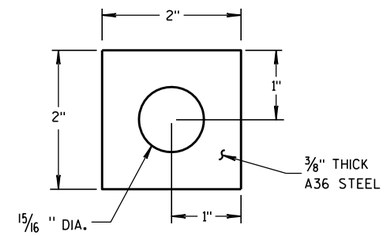

PLATE WASHER DETAIL

GENERAL NOTES

BOLT THE THRIE BEAM TO ALL POSTS AND BLOCKOUTS. DRILL OR PUNCH BOLT HOLES IN THE BEAM IF THE POST SPACING IS LESS THAN 6'-3".

DO NOT USE STEEL POSTS AND NOTCHED PLASTIC BLOCKOUTS IN THE STEEL THRIE BEAM STRUCTURAL APPROACH AND THE TRANSITION SECTION OF STEEL PLATE BEAM GUARD, CLASS "A" INSTALLATIONS.

IF ROCK IS ENCOUNTERED, REMOVE ROCK TO FULL DEPTH OF POST PLUS 2 1/2", AND 12" DIAMETER AROUND POST. SEE 14B15 FOR MORE DETAILS.

① BRIDGE RAILING TYPE "W" DOES NOT REQUIRE A TERMINAL CONNECTOR.

② MINIMUM EMBEDMENT SHALL BE 4'-0". WHERE EXISTING CONDITIONS DO NOT PERMIT THE APPROPRIATE EARTHWORK SHOWN ON THE PLAN TYPICAL SECTIONS OR DETAILS, THE ENGINEER MAY ALLOW THE REDUCTION OR ELIMINATION OF THE 2 FOOT DISTANCE TO THE HINGE POINT. OTHERWISE BUILD AS THE PLAN SHOWS OR AS THE ENGINEER DIRECTS. IF THE 2 FOOT DISTANCE TO THE HINGE POINT IS REDUCED OR ELIMINATED, INCREASE THE POST EMBEDMENT DEPTH TO 4'-6" OR MORE.

③ POST BOLTS ARE 5/8" DIAMETER ASTM A307 BUTTON HEAD BOLT. A POST BOLT REQUIRES A 5/8" DIAMETER A563A DOUBLE RECESSED (DR) HEAVY HEX AND A 5/8" DIAMETER F844 FLAT WASHER. LENGTH OF POST BOLT MAY VARY.

④ ALL WOOD POSTS MUST BE 6" X 8" AND AT LEAST 7'-0" LONG.

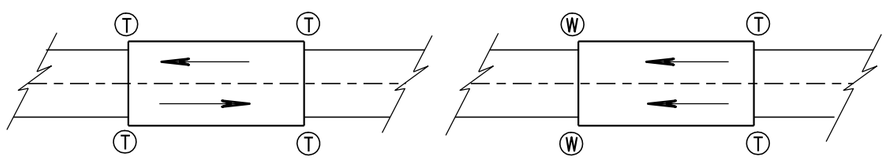

TWO WAY TRAFFIC

ONE WAY TRAFFIC

Ⓣ THRIE BEAM CONNECTION

Ⓦ W-BEAM CONNECTION WHEN REQUIRED

TYPICAL LOCATIONS OF THRIE BEAM AND W-BEAM CONNECTIONS TO BRIDGE

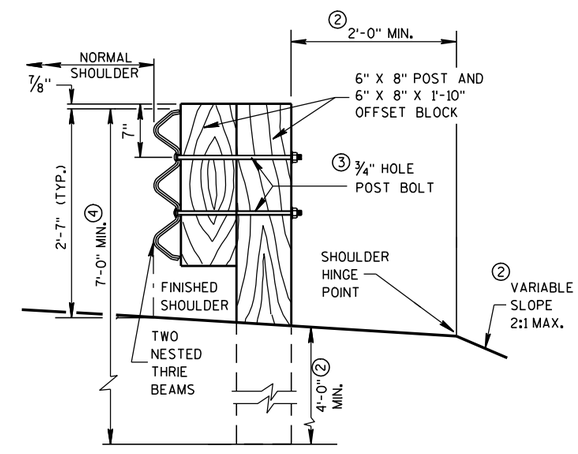

SECTION A-A

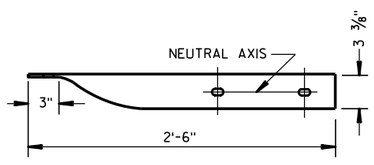

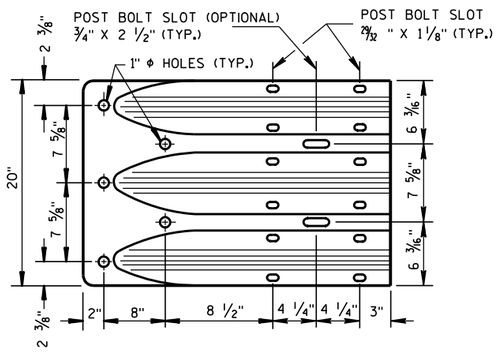

THRIE BEAM TERMINAL CONNECTOR

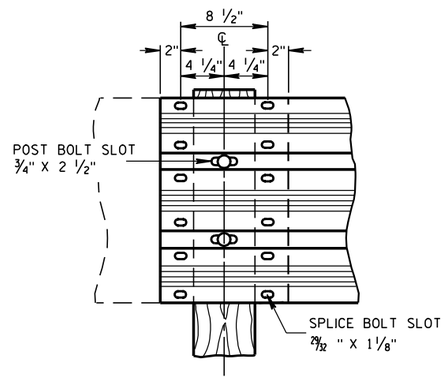

THRIE BEAM SPLICE

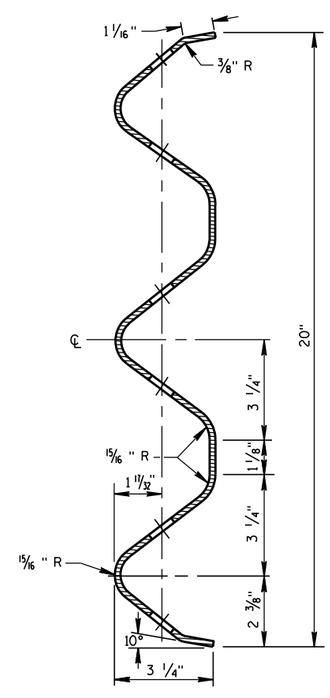

SECTION THRU THRIE BEAM RAIL ELEMENT

STEEL THRIE BEAM STRUCTURE APPROACH

STATE OF WISCONSIN
DEPARTMENT OF TRANSPORTATION

APPROVED

8/31/2012 — DATE

/S/ Jerry H. Zogg — ROADWAY STANDARDS DEVELOPMENT ENGINEER

FHWA

6

6

S.D.D. 14 B 20-11a

S.D.D. 14 B 20-11a

GENERAL NOTES

COVER PLATE PANELS ARE 3/16" THICK.

ALL STIFFENERS ARE 1/4" THICK.

CONNECTOR PLATE SHALL BE FABRICATED FROM ASTM GRADE A36 STEEL AND GALVANIZED.

FOR GALVANIZED REQUIREMENTS, SEE SECTION 614 OF THE STANDARD SPECIFICATIONS.

ALL HOLE DIAMETERS SHALL BE 1".

FOR OPPOSITE SIDE INSTALLATION MIRROR DRAWINGS.

(1) STIFFENERS LOCATED AT THE OUTSIDE EDGES OF THE COVER PLATES SHALL BE WELDED AS FOLLOWS:
SINGLE BEVEL GROOVE WELD ON EXTERNAL SIDES AND 3/16" FILLET WELD BY 1" LONG SPACED AT 2" ON INTERNAL SIDES.

(2) STIFFENERS LOCATED ON THE INSIDE OF THE COVER PLATE SHALL BE WELDED AS FOLLOWS:
3/16" FILLET WELD BY 1" LONG SPACED AT 2".

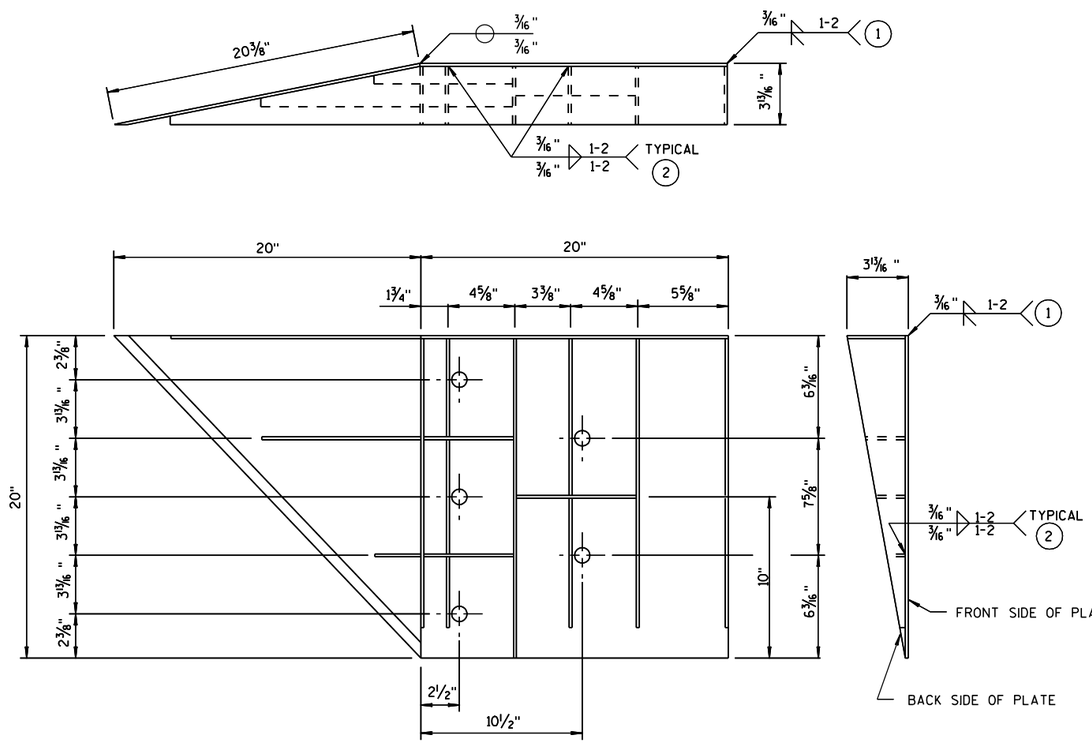

WELDING INSTRUCTION

(VIEWED FROM BACK SIDE OF PLATE)

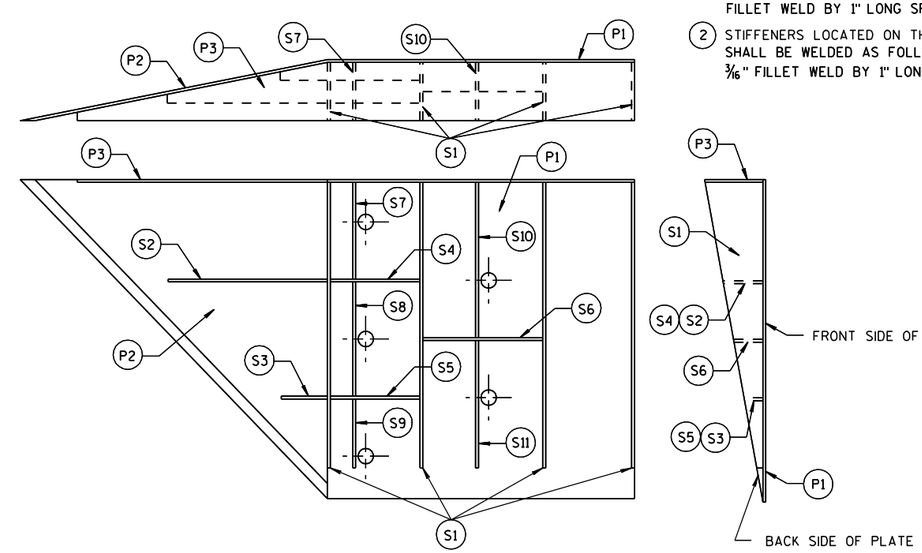

PLATE AND STIFFENER IDENTIFICATION

(VIEWED FROM BACK SIDE OF PLATE)

CONNECTOR PLATE DIMENSION (PER ASSEMBLY)

PLATE	QUANTITY	SHAPE	SIZE (A x B x C x D)	THICKNESS
P1	1		20" x 20"	3/16"
P2	1		20" x 20" x 28 9/16"	3/16"
P3	1		39" x 3 5/8" x 20" x 19 5/16"	3/16"
S1	4		18 7/16" x 3 5/8" x 18 3/4"	1/4"
S2	1		10 1/4" x 2 7/16" x 10 3/8" x 1/2"	1/4"
S3	1		3" x 1 1/16" x 3 1/8" x 1/2"	1/4"
S4	1		6 1/8" x 2 7/16"	1/4"
S5	1		6 1/8" x 1 1/16"	1/4"
S6	1		7 3/4" x 1 3/4"	1/4"
S7	1		2 9/16" x 6" x 3 5/8" x 5 7/8"	1/4"
S8	1		1 5/32" x 7 1/2" x 2 1/2" x 7 3/8"	1/4"
S9	1		6 1/16" x 6 3/16" x 1 3/32"	1/4"
S10	1		1 7/8" x 9 7/8" x 3 5/8" x 9 11/16"	1/4"
S11	1		8 1/2" x 8 3/4" x 1 13/16"	1/4"

STEEL THRIE BEAM STRUCTURE APPROACH

STEEL THRIE BEAM STRUCTURE APPROACH, CONNECTOR PLATE DETAIL

STATE OF WISCONSIN
DEPARTMENT OF TRANSPORTATION

APPROVED
8/31/2012 — DATE
/S/ Jerry H. [illegible] — ROADWAY STANDARDS DEVELOPMENT ENGINEER
FHWA

6

S.D.D. 14 B 20-11g

BILL OF MATERIALS

NOTE NO.	QTY.	DESCRIPTION
1	4	WOOD BREAKAWAY TERMINAL POST: 5½" X 7½" X 3'-9"
2	**	STEEL TUBE: OPTION 1 - QUANITY OF 4 TS 8" X 6" X 0.188", 4'-6" LONG OR OPTION 2 - QUANITY OF 2 TS 8" X 6" X 0.188", 6'-0" AND 2 TS 8" X 6" X 0.188", 4'-6" LONG
3	2	SOIL PLATE: 2'-0" X 1'-6" X ¼" **
4	4	WOOD BREAKAWAY CRT POST: 6" X 8" X 6'-0"
5	6	WOOD OFFSET BLOCKS: 6' X 8" X 1'-2"
6	1	PIPE SLEEVE: 2" X 5 ½" STANDARD PIPE
7	1	BEARING PLATE
8	1	BCT CABLE ASSEMBLY
9	1	CABLE ANCHOR BOX
10	1	STRUT & YOKE
11	1	STEEL PLATE BEAM, END PANEL 12 GA. 13'-6½" LONG FOR SKT-350, ET-2000 AND ET-2000 PLUS
12	3	STEEL PLATE BEAM: 12 GA. 13'-6½"
13	1	ET-2000/ET-2000 PLUS GUARDRAIL EXTRUDER OR SKT-350 IMPACT HEAD: AS FURNISHED BY MANUFACTURER
14	1	REFLECTIVE SHEETING TYPE H: 18" X 18"
15	1	E.A.T. MARKER POST

GENERAL NOTES

FOLLOW MANUFACTURE'S BOLTING RECOMMENDATIONS. IF NONE ARE AVAILABLE, INSTALL ⅝" ø X 1'-6" BUTTON HEAD BOLTS AT ALL POSTS EXCEPT FOR POST 1.

(A) THE SLOPE IN THE AREA BOUNDED BY THE EXTENDED VEHICLE RUNOUT PATH (EVRP), THE HINGE POINT LINE (HPL), AND THE CLEAR ZONE LIMITS (CZL) SHALL BE 4:1 OR FLATTER.

(B) AFTER FINAL ASSEMBLY, RECHECK CABLE TO BE SURE IT IS TAUT AND HAS NOT RELAXED.

(C) THE 13 SLOT FIRST RAIL PANEL MAY BE USED IN LIEU OF THE 3 SLOT RAIL PANEL ON SKT-350 ONLY.

(D) THE TOP OF THE STEEL TUBE ON POSTS 1 THROUGH 4 SHALL NOT BE MORE THAN 3" ABOVE THE FINISH GROUND ELEVATION.

(E) THE CENTER OF THE UPPER 3½" DIAMETER HOLE ON POST 5 THROUGH 8 SHALL BE ¾" ABOVE THE FINISHED GROUND LINE.

(F) SHEETING IS ATTACHED TO 0.040 ALUMINUM SHEET AND ATTACHED TO E.A.T. HEAD USING 4 STAINLESS STEEL SELF-TAPPING SCREWS. ONE SCREW PER CORNER OF E.A.T.

STEEL POSTS SHALL NOT BE ALLOWED FOR USE WITH ENERGY ABSORBING TERMINALS.

DO NOT INSTALL REFLECTORS ON THE FIRST 50 FEET OF THE APPROACH END OF THE ENERGY ABSORBING TERMINAL.

* DO NOT ATTACH BLOCKOUTS TO POSTS 1 AND 2.

** SDD SHOWS 4 - 54 INCH STEEL TUBES WITH SOIL PLATES INSTALLED ON POST 1 AND POST 2. POST 3 AND 4 DO NOT NEED SOIL PLATES. AN ALTERNATIVE INSTALLATION WOULD CONSIST OF 2 - 72 INCH STEEL TUBES ON POST 1 AND POST 2 AND 54 INCH SOIL TUBES ON POSTS 3 AND 4. THE ALTERNATIVE INSTALLATION DOES NOT REQUIRE SOIL PLATES.

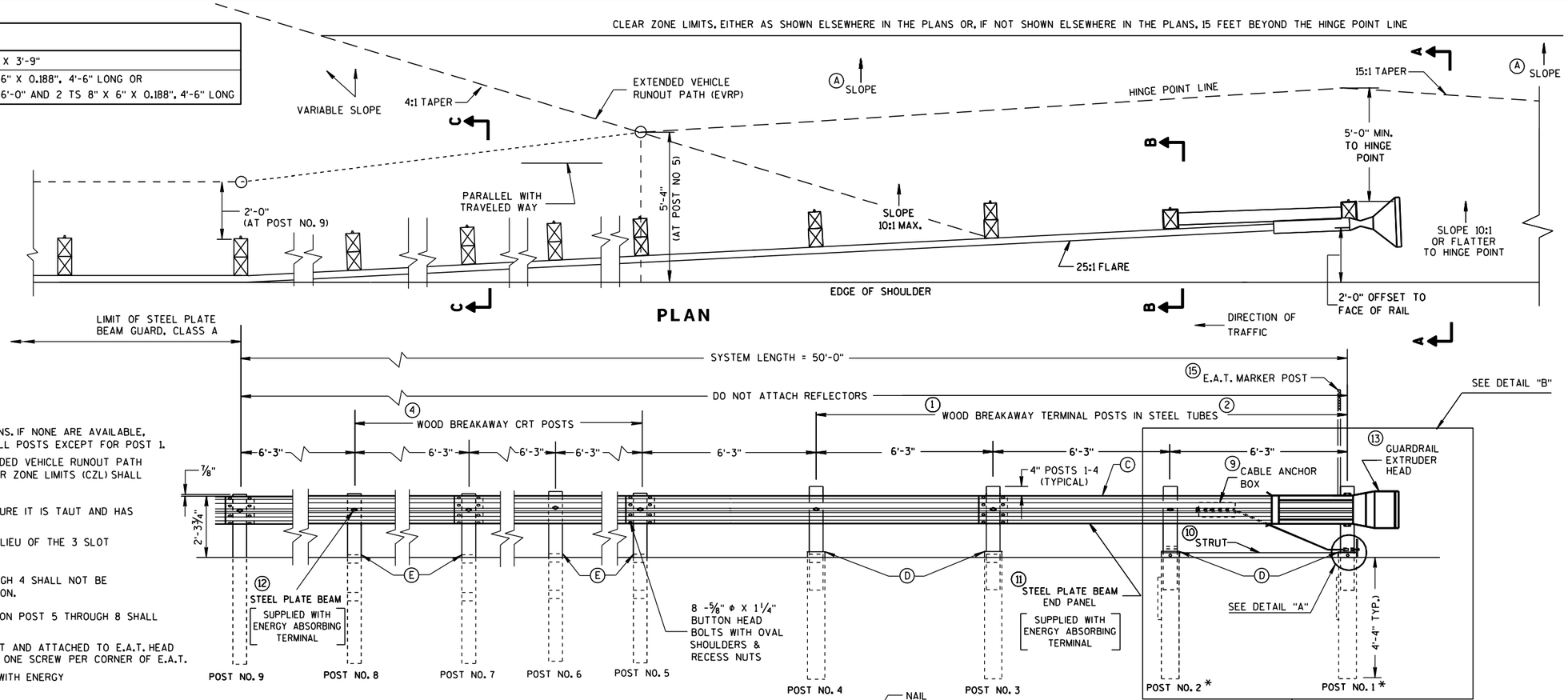

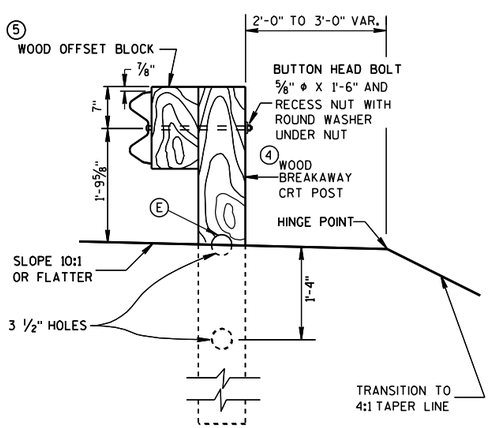

SECTION C-C
TYPICAL AT POST NOS. 6, 8

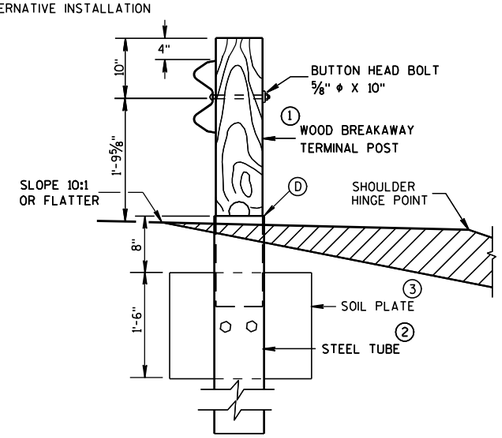

SECTION B-B
TYPICAL AT POST NO. 2*

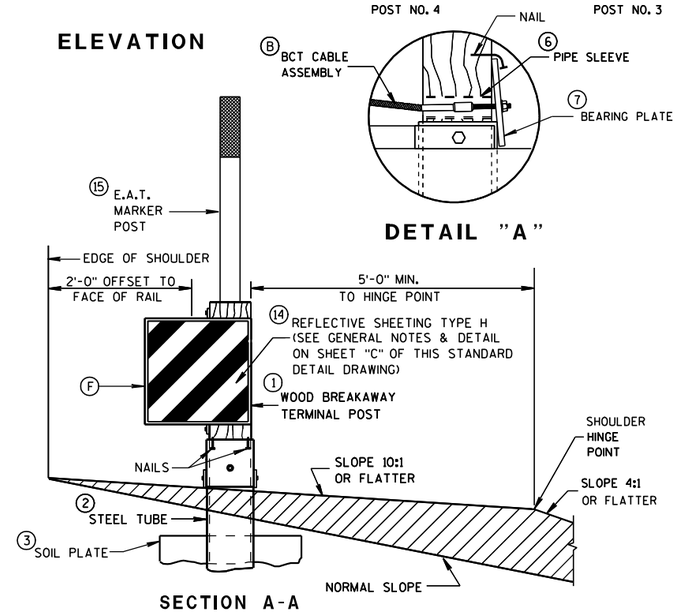

SECTION A-A
TYPICAL AT POST NO. 1*

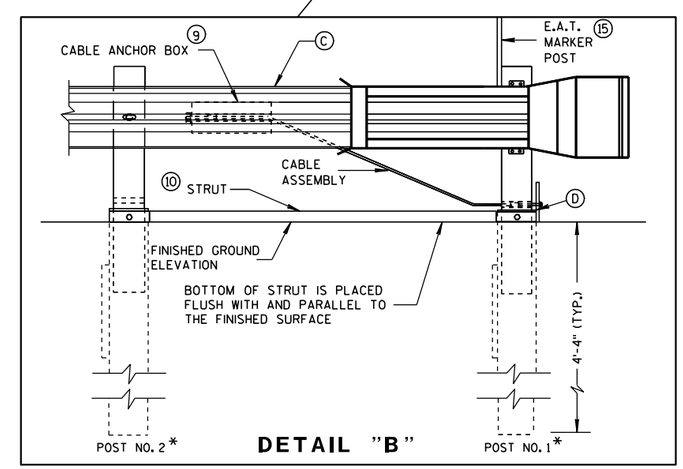

STEEL PLATE BEAM GUARD ENERGY ABSORBING TERMINAL

STATE OF WISCONSIN
DEPARTMENT OF TRANSPORTATION

6

S.D.D. 14 B 24-7a

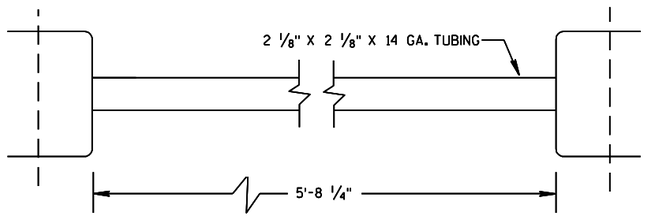

⑩ STRUT DETAIL (SKT-350)

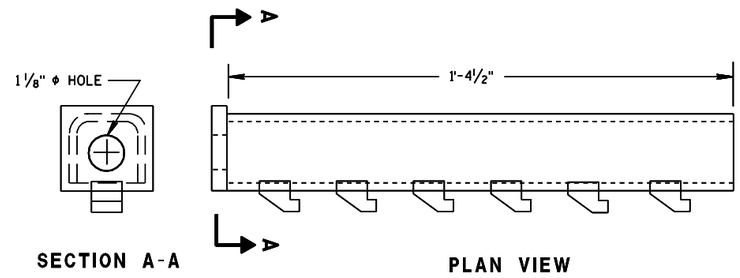

⑨ CABLE ANCHOR BOX (ET-2000/ET-2000 PLUS)

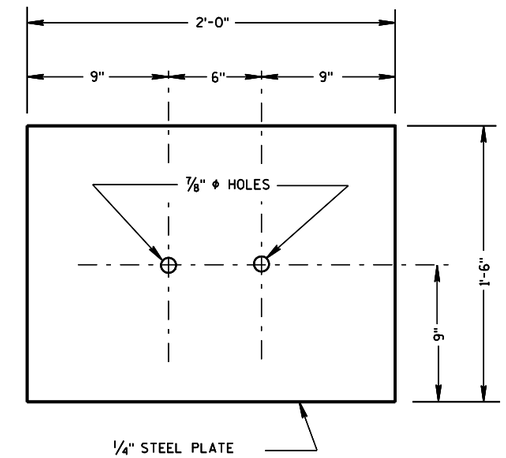

③ SOIL PLATE

(SKT-350, ET-2000/ET-2000 PLUS)

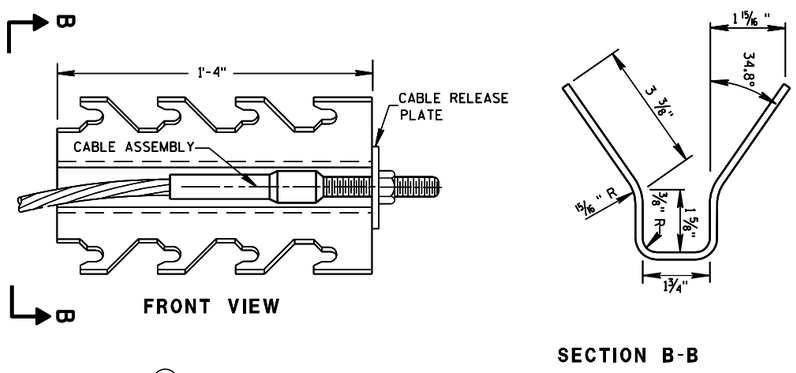

⑨ CABLE ANCHOR BOX (SKT-350)

(SKT-350)

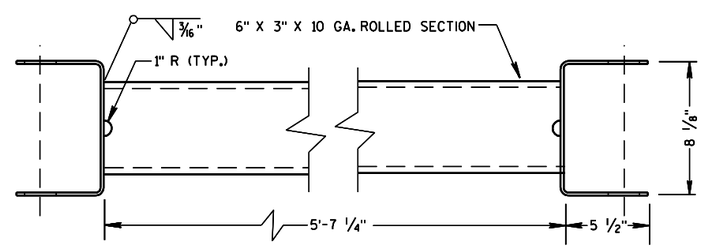

⑩ STRUT DETAIL (ET-2000/ET-2000 PLUS)

(ET-2000/ET-2000 PLUS)

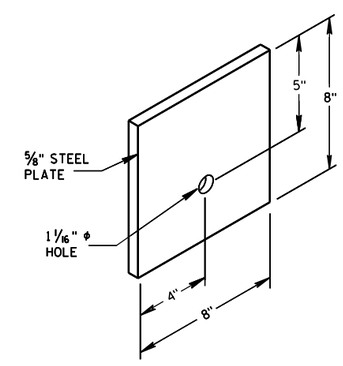

⑦ STEEL BEARING PLATE

(SKT-350, ET-2000/ET-2000 PLUS)

6

6

S.D.D. 14 B 24-7b

S.D.D. 14 B 24-7b

STEEL PLATE BEAM GUARD
ENERGY ABSORBING TERMINAL

STATE OF WISCONSIN
DEPARTMENT OF TRANSPORTATION

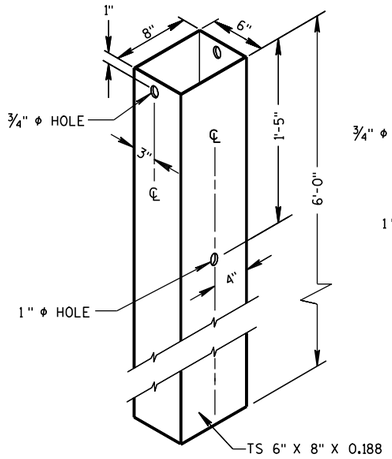

② 72" STEEL TUBE
(POSTS NO. 1-4

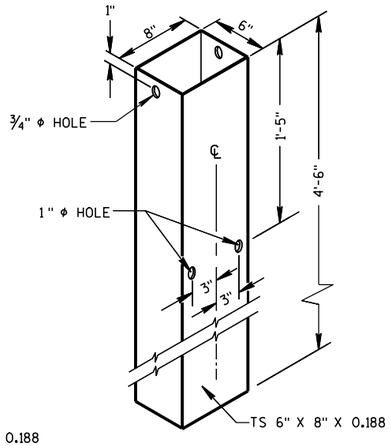

② 54" STEEL TUBE
(POSTS NO. 1-4

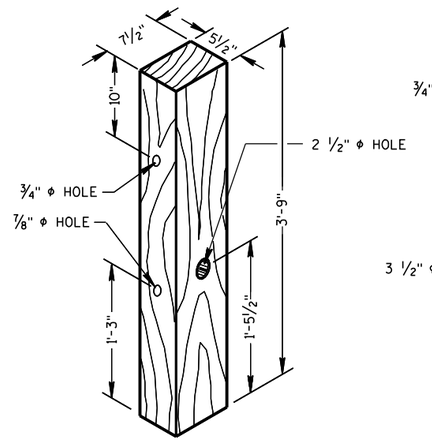

① TERMINAL POST
(POSTS NO. 1-4

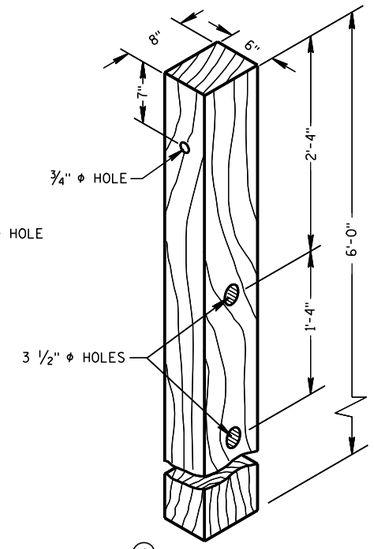

④ CRT POST
(POSTS NO'S 5-8

WOOD BREAKAWAY POSTS

GENERAL NOTES

STEEL PLATE BEAM GUARD, ENERGY ABSORBING TERMINAL SHALL BE PAID FOR AT THE CONTRACT UNIT PRICE EACH, WHICH SHALL INCLUDE HARDWARE, STEEL PLATE BEAM GUARD, POSTS, REFLECTIVE SHEETING AND INSTALLATION AS SHOWN.

WHEN ROCK IS ENCOUNTERED DURING EXCAVATION, A 12 INCH DIA. POST HOLE EXTENDING 20 INCHES DEEP INTO THE ROCK MAY BE USED IF APPROVED BY THE ENGINEER. GRANULAR MATERIAL SHALL BE PLACED IN THE BOTTOM OF THE HOLE APPROXIMATELY 2 ½" INCHES DEEP TO PROVIDE DRAINAGE. THE SOIL TUBES SHALL BE FIELD CUT TO LENGTH, PLACED IN THE HOLE AND BACKFILLED WITH ADEQUATELY COMPACTED MATERIAL EXCAVATED FROM THE HOLE.

SEE APPROVED PRODUCTS LIST FOR ACCEPTABLE E. A. T. MARKER POST.

Ⓖ ½" DIA. X 3" LAG BOLT WITH WASHER.

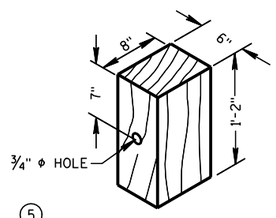

⑤ WOOD OFFSET BLOCK
REQ'D. AT ALL POSTS EXCEPT POST NO'S 1 & 2

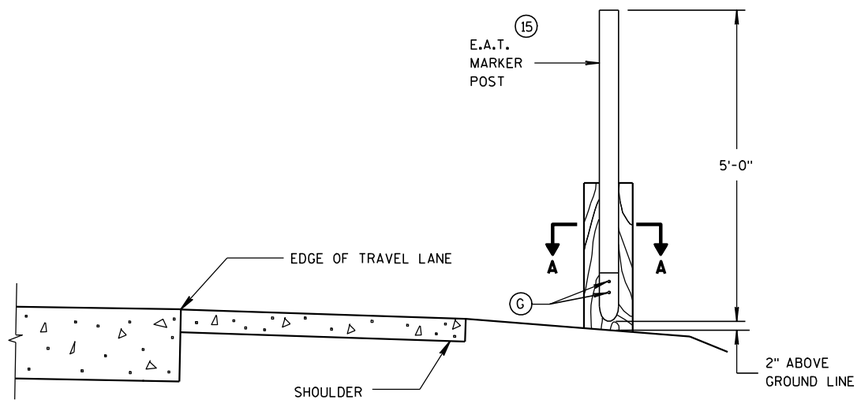

TYPICAL INSTALLATION OF E.A.T.
MARKER POST BACKSIDE OF POST NO. 1
(E.A.T. AND RAIL REMOVED FOR CLARITY)

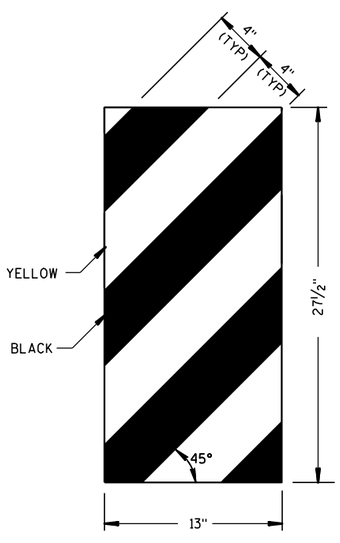

ET-2000 PLUS ONLY

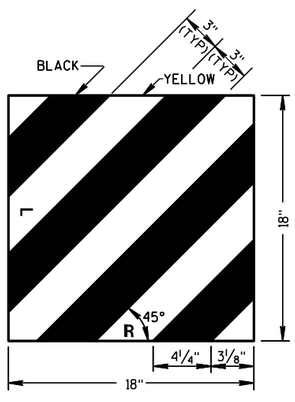

ET-2000 AND SKT-350

⑭ REFLECTIVE SHEETING DETAILS

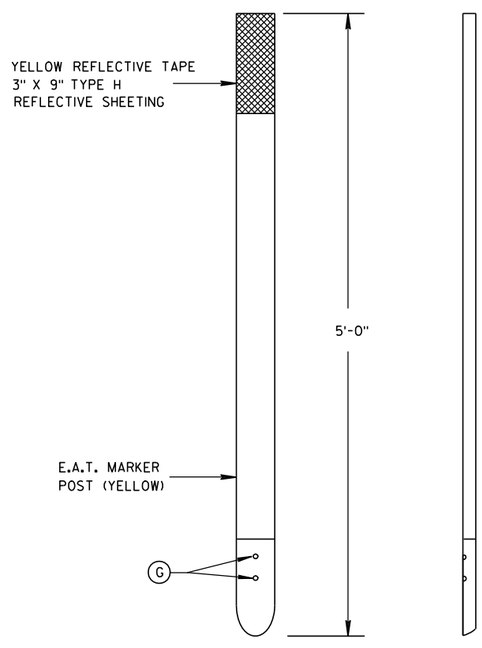

FRONT VIEW SIDE VIEW

⑮ E.A.T. MARKER POST

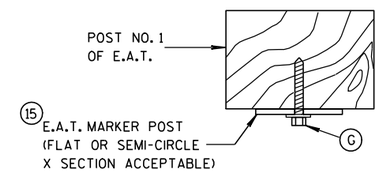

SECTION A-A

STEEL PLATE BEAM GUARD
ENERGY ABSORBING TERMINAL

STATE OF WISCONSIN
DEPARTMENT OF TRANSPORTATION

APPROVED
4-12-10 DATE
/S/ Jerry H. Zogg
ROADWAY STANDARDS ENGINEER
FHWA

6

6

S.D.D. 14 B 24-7c

S.D.D. 14 B 24-7c

BILL OF MATERIALS

NOTE NO.	QTY.	DESCRIPTION
1	4	WOOD BREAKAWAY TERMINAL POST: 5½" X 7½" X 3'-9"
2	**	STEEL TUBE: OPTION 1 - QUANITY OF 4 TS 8" X 6" X 0.188", 4'-6" LONG OR OPTION 2 - QUANITY OF 2 TS 8" X 6" X 0.188", 6'-0" AND 2 TS 8" X 6" X 0.188", 4'-6" LONG
3	2	SOIL PLATE: 2'-0" X 1'-6" X ¼" **
4	4	WOOD BREAKAWAY CRT POST: 6" X 8" X 6'-0"
5	6	WOOD OFFSET BLOCKS: 6" X 8" X 1'-2"
6	1	PIPE SLEEVE: 2" X 5 ½" STANDARD PIPE
7	1	BEARING PLATE
8	1	BCT CABLE ASSEMBLY
9	1	CABLE ANCHOR BOX
10	1	STRUT & YOKE
11	1	STEEL PLATE BEAM, END PANEL 12 GA. 13'-6½" LONG FOR SKT-350, ET-2000 AND ET-2000 PLUS
12	3	STEEL PLATE BEAM: 12 GA. 13'-6½"
13	1	ET-2000/ET-2000 PLUS GUARDRAIL EXTRUDER OR SKT-350 IMPACT HEAD: AS FURNISHED BY MANUFACTURER
14	1	0.040" ALUMINUM SHEET WITH REFLECTIVE SHEETING TYPE F PER SECTION 637 OF THE STANDARD SPECIFICATIONS
15	1	E.A.T. MARKER POST

GENERAL NOTES

FOLLOW MANUFACTURE'S BOLTING RECOMMENDATIONS. IF NONE ARE AVAILABLE, INSTALL ⅝" ø X 1'-6" BUTTON HEAD BOLTS AT ALL POSTS EXCEPT FOR POST 1.

(A) THE SLOPE IN THE AREA BOUNDED BY THE GRADELINE, THE HINGE POINT LINE (HPL), AND THE CLEAR ZONE LIMITS (CZL) SHALL BE 4:1 OR FLATTER.

(B) AFTER FINAL ASSEMBLY, RECHECK CABLE TO BE SURE IT IS TAUT AND HAS NOT RELAXED.

(C) THE 13 SLOT FIRST RAIL PANEL MAY BE USED IN LIEU OF THE 3 SLOT RAIL PANEL ON SKT-350 ONLY.

(D) THE TOP OF THE STEEL TUBE ON POSTS 1 THROUGH 4 SHALL NOT BE MORE THAN 3" ABOVE THE FINISH GROUND ELEVATION.

(E) THE CENTER OF THE UPPER 3½" DIAMETER HOLE ON POST 5 THROUGH 8 SHALL BE ¾" ABOVE THE FINISHED GROUND LINE.

(F) ATTACH ALUMINUM SHEET TO E.A.T. HEAD USING 4 STAINLESS STEEL SELF-TAPPING SCREWS. ONE SCREW PER CORNER.

STEEL POSTS SHALL NOT BE ALLOWED FOR USE WITH ENERGY ABSORBING TERMINALS.

DO NOT INSTALL REFLECTORS ON THE FIRST 50 FEET OF THE APPROACH END OF THE ENERGY ABSORBING TERMINAL.

* DO NOT ATTACH BLOCKOUTS TO POSTS 1 AND 2.

** SDD SHOWS 4 - 54 INCH STEEL TUBES WITH SOIL PLATES INSTALLED ON POST 1 AND POST 2. POST 3 AND 4 DO NOT NEED SOIL PLATES. AN ALTERNATIVE INSTALLATION WOULD CONSIST OF 2 - 72 INCH STEEL TUBES ON POST 1 AND POST 2 AND 54 INCH SOIL TUBES ON POSTS 3 AND 4. THE ALTERNATIVE INSTALLATION DOES NOT REQUIRE SOIL PLATES.

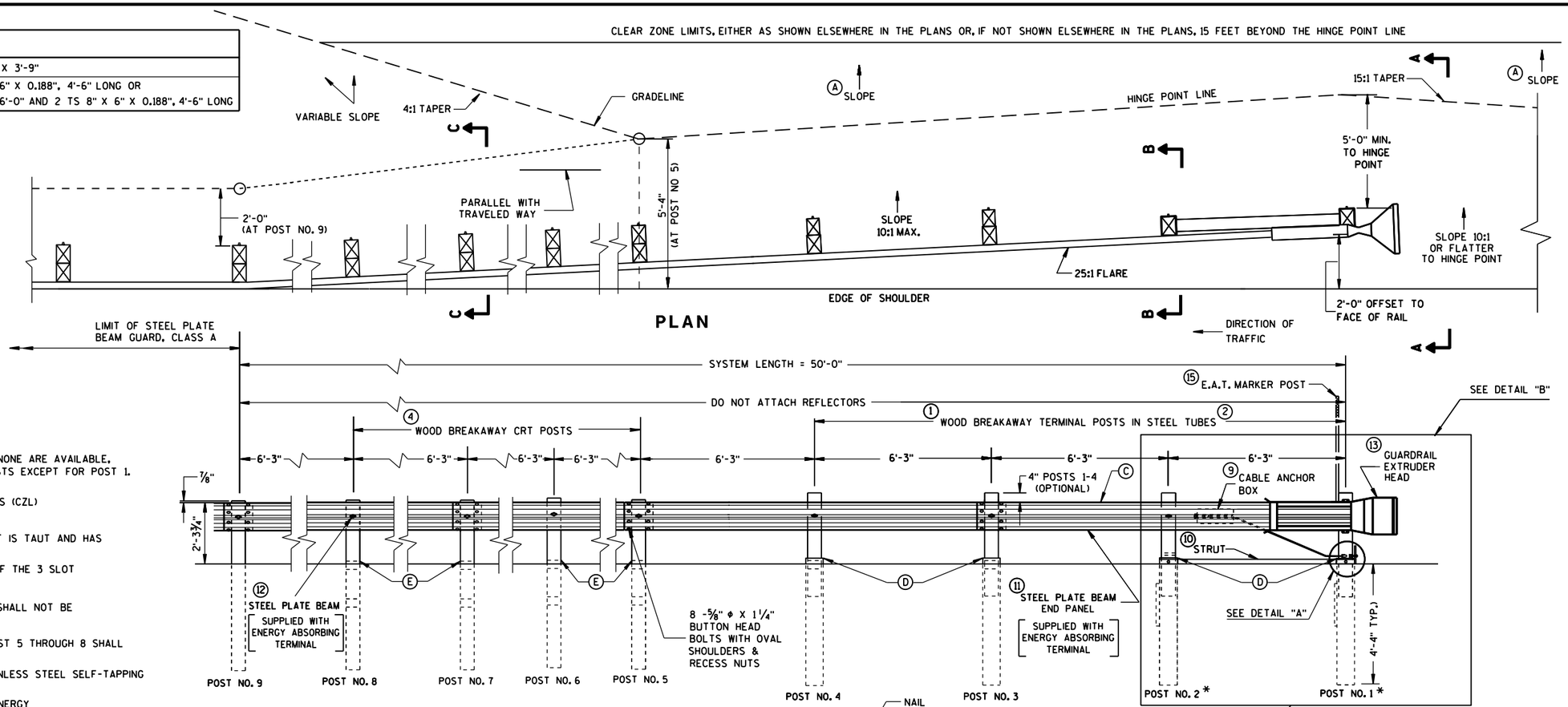

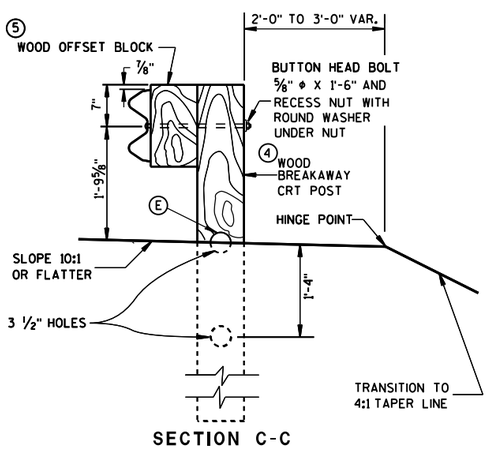

SECTION C-C
TYPICAL AT POST NOS. 6, 8

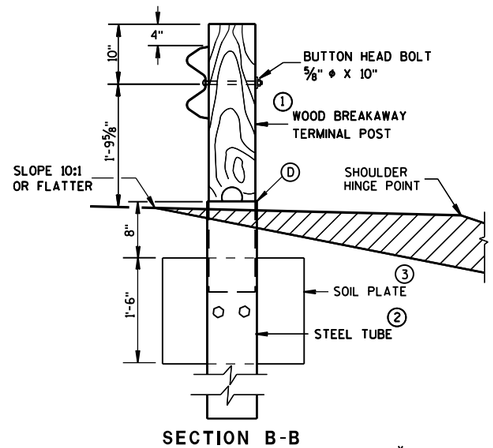

SECTION B-B
TYPICAL AT POST NO. 2*

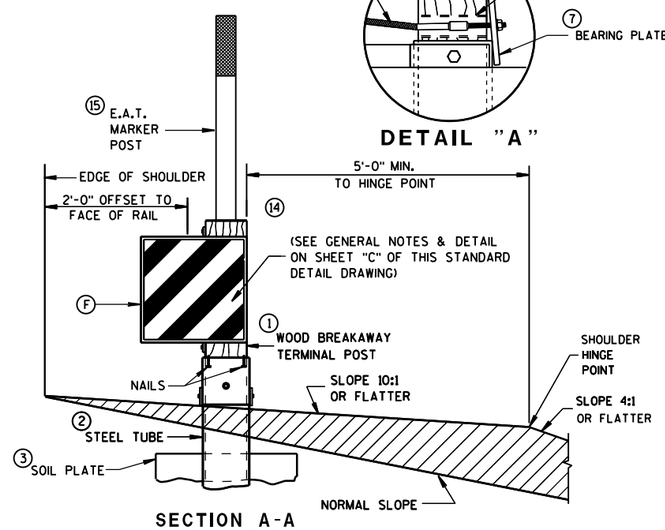

SECTION A-A
TYPICAL AT POST NO. 1*

STEEL PLATE BEAM GUARD
ENERGY ABSORBING TERMINAL

STATE OF WISCONSIN
DEPARTMENT OF TRANSPORTATION

6

S.D.D. 14 B 24-8a

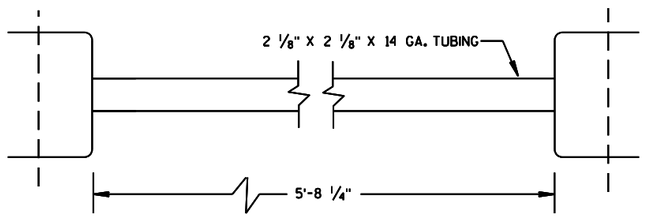

⑩ STRUT DETAIL (SKT-350)

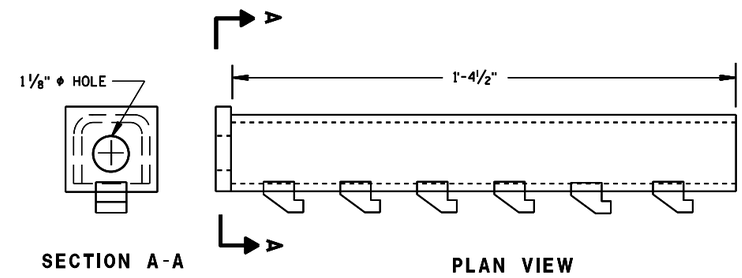

⑨ CABLE ANCHOR BOX (ET-2000/ET-2000 PLUS)

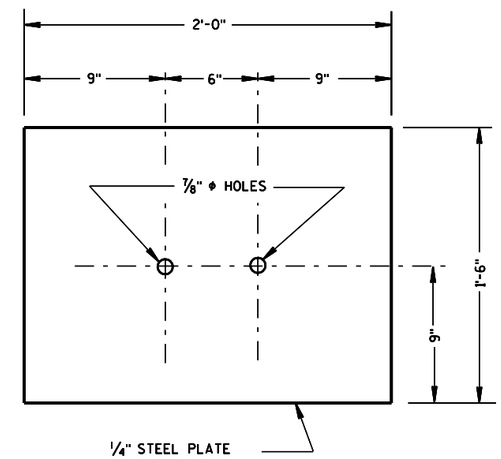

③ SOIL PLATE

(SKT-350, ET-2000/ET-2000 PLUS)

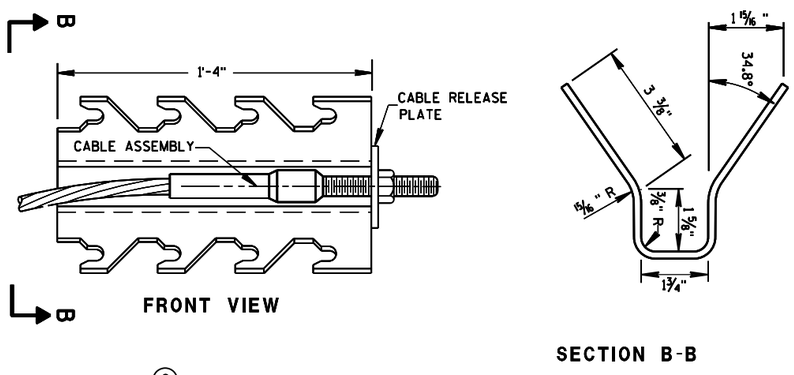

⑨ CABLE ANCHOR BOX (SKT-350)

(SKT-350)

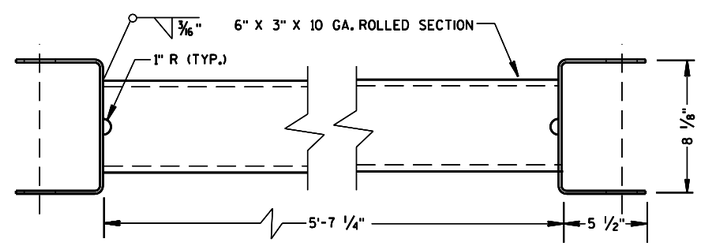

⑩ STRUT DETAIL (ET-2000/ET-2000 PLUS)

(ET-2000/ET-2000 PLUS)

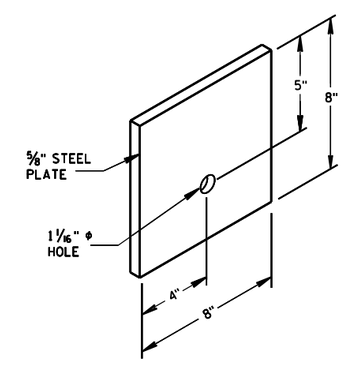

⑦ STEEL BEARING PLATE

(SKT-350, ET-2000/ET-2000 PLUS)

STEEL PLATE BEAM GUARD
ENERGY ABSORBING TERMINAL

STATE OF WISCONSIN
DEPARTMENT OF TRANSPO

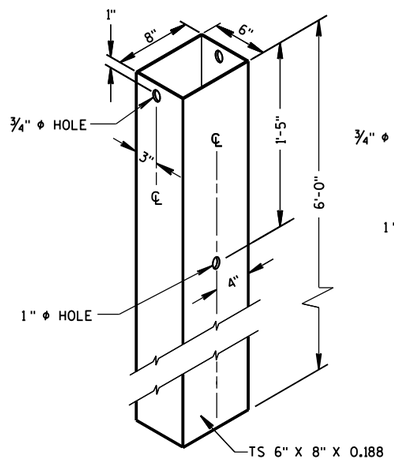

② 72" STEEL TUBE
(POSTS NO. 1-4

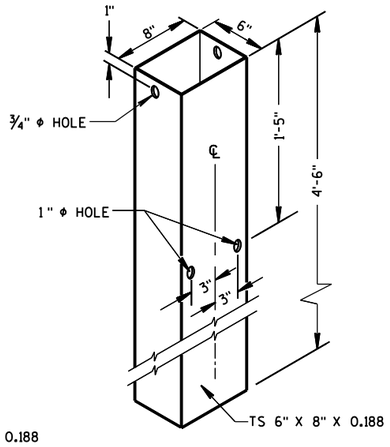

② 54" STEEL TUBE
(POSTS NO. 1-4

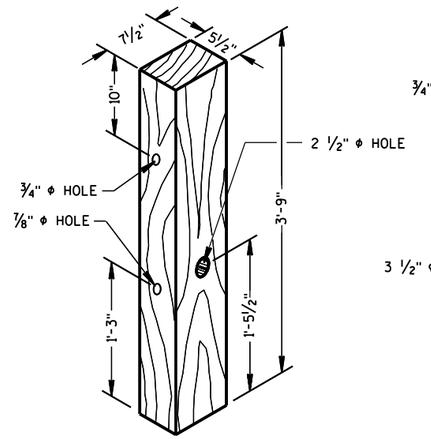

① TERMINAL POST
(POSTS NO. 1-4

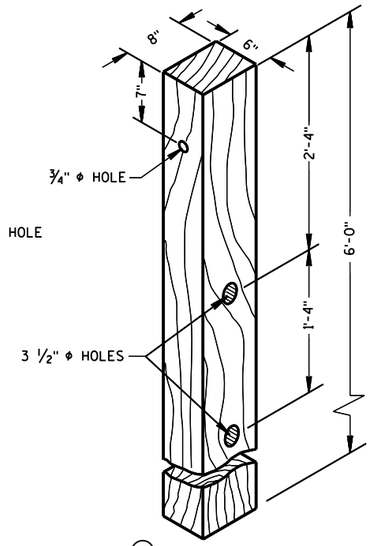

④ CRT POST
(POSTS NO'S 5-8

WOOD BREAKAWAY POSTS

GENERAL NOTES

WHEN ROCK IS ENCOUNTERED DURING EXCAVATION, A 12 INCH DIA. POST HOLE EXTENDING 20 INCHES DEEP INTO THE ROCK MAY BE USED IF APPROVED BY THE ENGINEER. GRANULAR MATERIAL SHALL BE PLACED IN THE BOTTOM OF THE HOLE APPROXIMATELY 2 ½" INCHES DEEP TO PROVIDE DRAINAGE. THE SOIL TUBES SHALL BE FIELD CUT TO LENGTH, PLACED IN THE HOLE AND BACKFILLED WITH ADEQUATELY COMPACTED MATERIAL EXCAVATED FROM THE HOLE.

SEE APPROVED PRODUCTS LIST FOR ACCEPTABLE E. A. T. MARKER POST.

Ⓖ ½" DIA. X 3" LAG BOLT WITH WASHER.

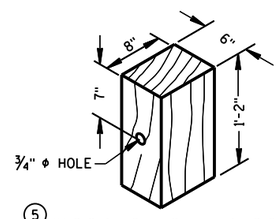

⑤ WOOD OFFSET BLOCK
REQ'D. AT ALL POSTS EXCEPT POST NO'S 1 & 2

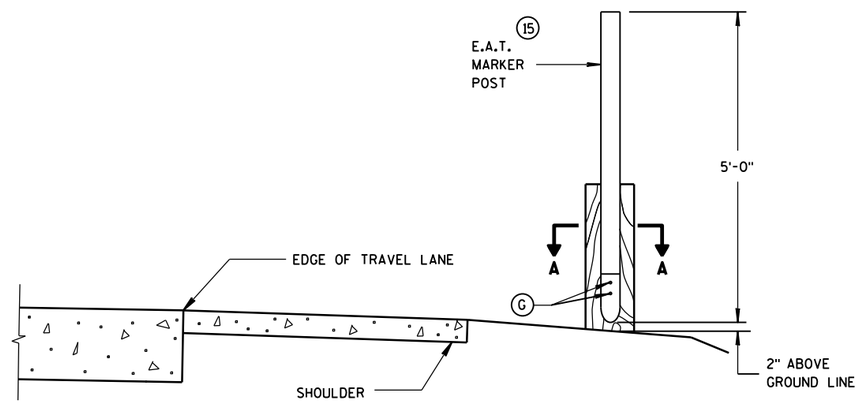

TYPICAL INSTALLATION OF E.A.T. MARKER POST BACKSIDE OF POST NO. 1

(E.A.T. AND RAIL REMOVED FOR CLARITY)

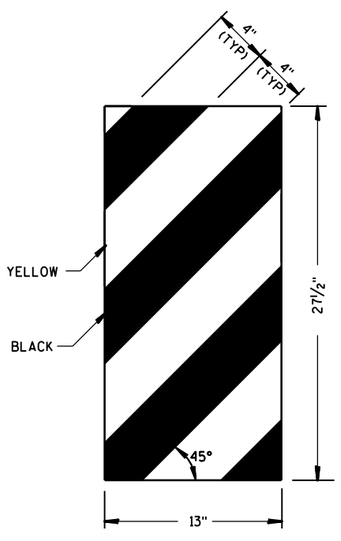

ET-2000 PLUS ONLY

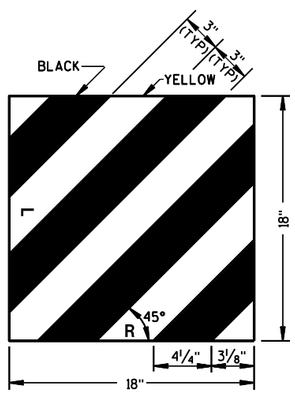

ET-2000 AND SKT-350

⑭ REFLECTIVE SHEETING DETAILS

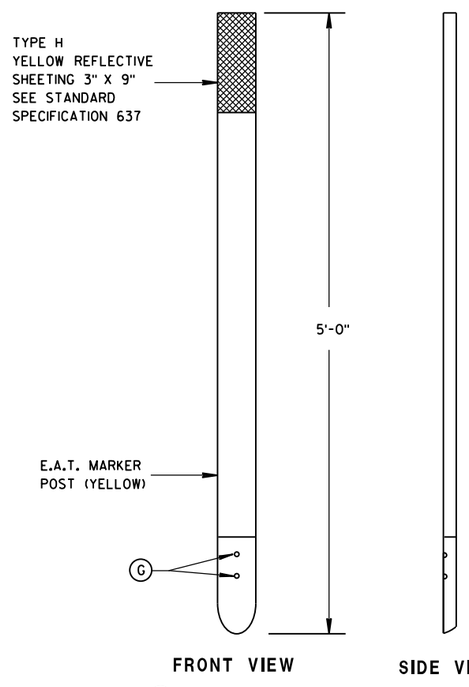

⑮ E.A.T. MARKER POST

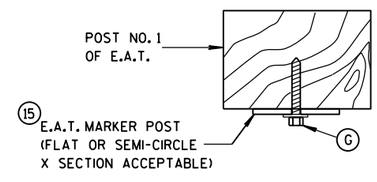

SECTION A-A

STEEL PLATE BEAM GUARD
ENERGY ABSORBING TERMINAL

STATE OF WISCONSIN
DEPARTMENT OF TRANSPORTATION

APPROVED
June 2014 — DATE
/S/ Jerry H. Zogg — ROADWAY STANDARDS DEVELOPMENT ENGINEER
FHWA

6

6

S.D.D. 14 B 24-8c

S.D.D. 14 B 24-8c

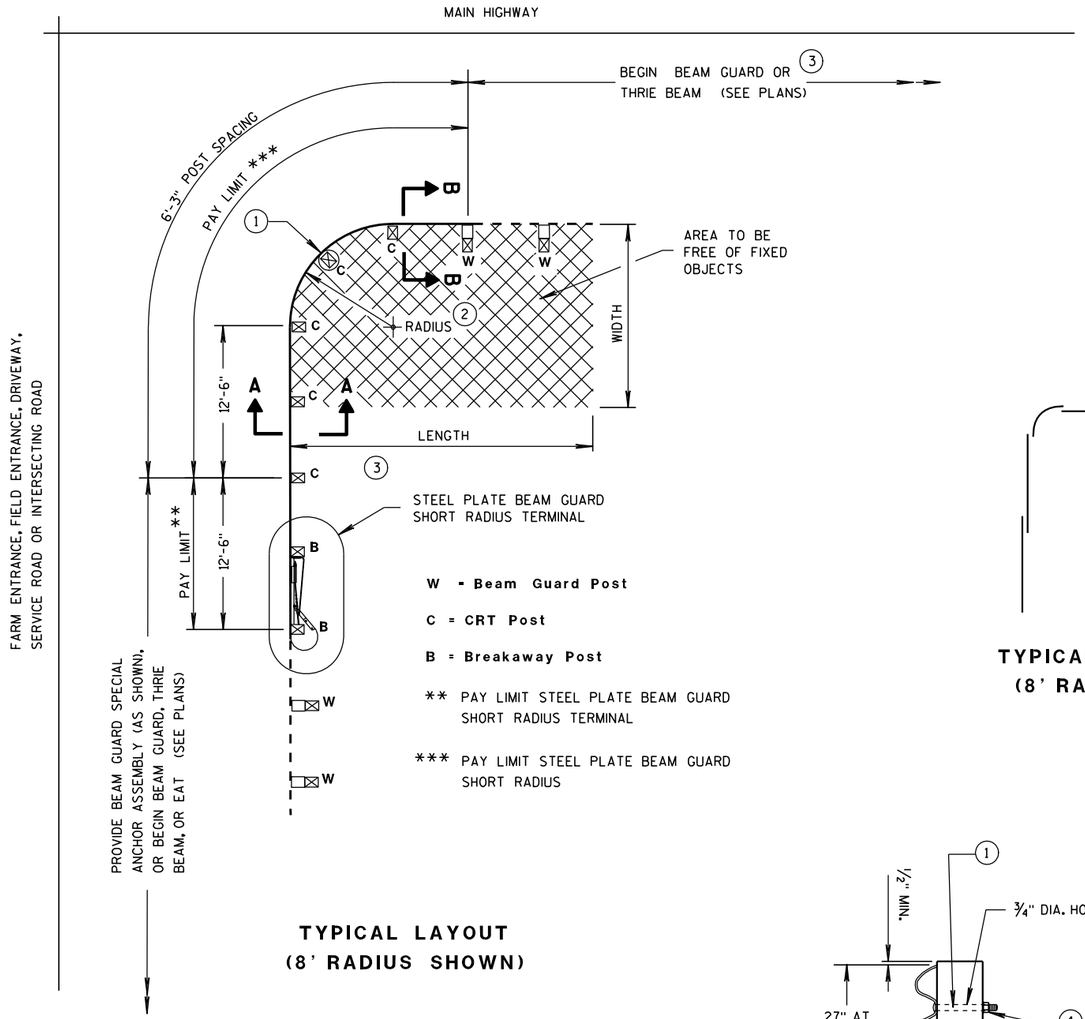

TYPICAL LAYOUT
(8' RADIUS SHOWN)

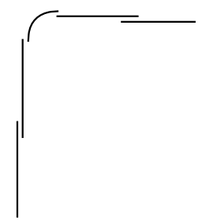

TYPICAL LAP SPLICES
(8' RADIUS SHOWN)

GENERAL NOTES

ALL ANGLES, CHANNELS, AND PLATES SHALL CONFORM TO THE REQUIREMENTS OF ASTM A36 AND THE STRUCTURAL TUBING SHALL CONFORM TO ASTM A 500. WELDING SHALL MEET THE CURRENT REQUIREMENTS OF THE AMERICAN WELDING SOCIETY STRUCTURAL WELDING CODE ANSI/AWS D1.1. ALL STRUCTURAL STEEL SHALL BE GALVANIZED IN ACCORDANCE WITH ASTM A 123. PUNCHING, DRILLING, CUTTING, OR WELDING WILL NOT BE PERMITTED AFTER GALVANIZING. FURNISH AND INSTALL HARDWARE PER STANDARD SPECIFICATION 614.2. UNLESS NOTED OTHERWISE.

SHOP BEND CURVED RAIL SECTIONS.

SEE STANDARD DETAIL DRAWING 14 B 15 FOR OTHER DETAIL.

1. ON THE 8 FOOT RADIUS INSTALLATION, DO NOT INSTALL BUTTON HEAD BOLT AT CENTER CRT POST.
2. RADIUS FROM 8' - 36'. SEE PLAN.
3. HEIGHT TRANSITION MAY BE REQUIRED. SEE PLAN OR PROJECT ENGINEER.
4. 5/8" ø X 1'-6" BUTTON HEAD BOLT AND RECESS NUT WITH ROUND WASHER UNDER NUT.

RADIUS	NUMBER OF CRT POSTS	* NUMBER AND LENGTH OF CURVED RAILS	REQUIRED AREA FREE OF FIXED OBJECTS (LENGTH x WIDTH)
8'	5	1 at 12.5'	25' x 15'
16'	7	1 at 25'	30' x 15'
24'	9	1 at 25' and 1 at 12.5'	40' x 20'
32'	11	2 at 25'	50' x 20'

* THE NUMBER OF RAILS IS BASED ON A 90° INTERSECTION. SEE PLAN FOR NON 90° INSTALLATIONS.

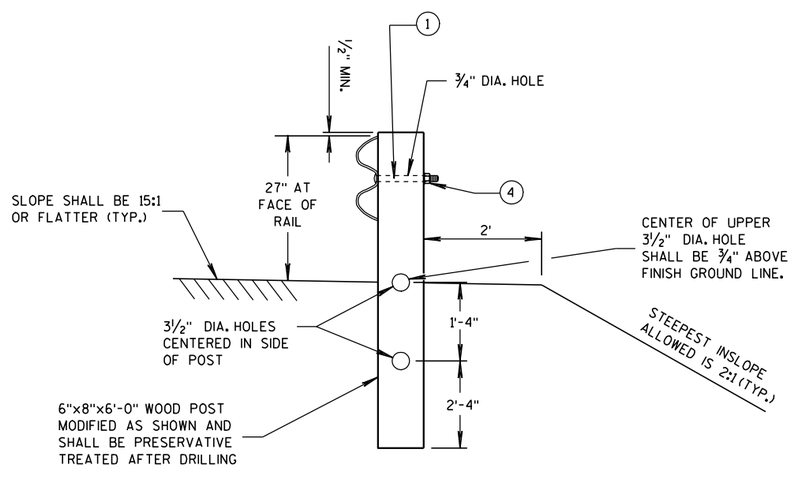

SECTION A-A
(CRT POST)

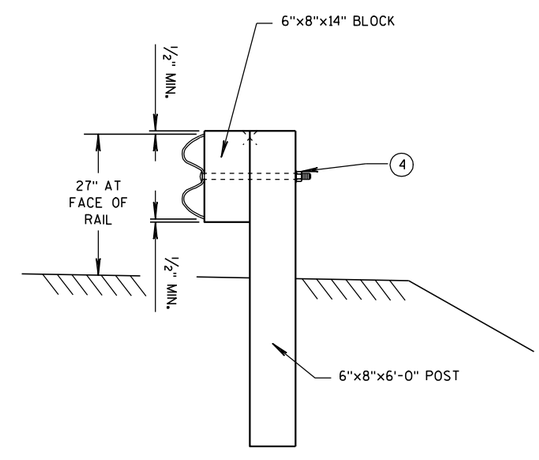

SECTION B-B
(BEAM GUARD POST)

STEEL PLATE BEAM GUARD SHORT RADIUS TERMINAL

STEEL PLATE BEAM GUARD SHORT RADIUS TERMINAL

STATE OF WISCONSIN
DEPARTMENT OF TRANSPORTATION

6

S.D.D. 14 B 27-1a

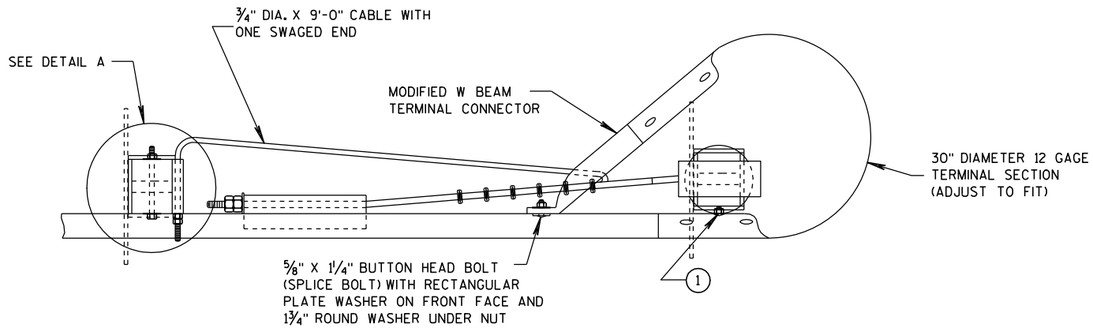

PLAN VIEW

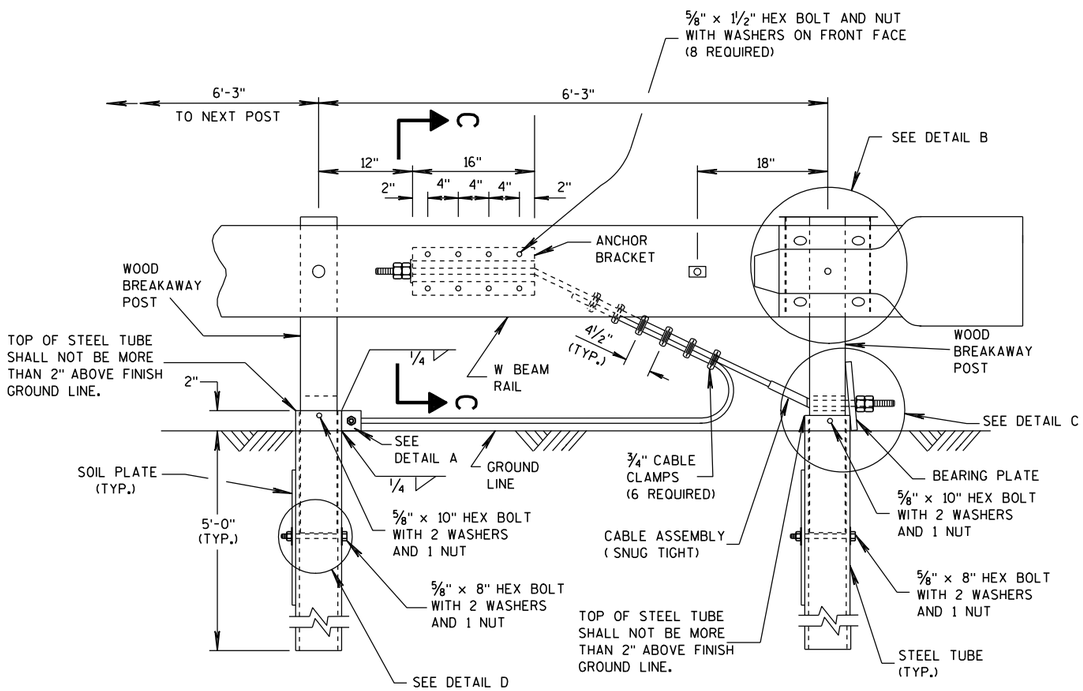

ELEVATION VIEW

STEEL PLATE BEAM GUARD SHORT RADIUS TERMINAL

GENERAL NOTES

(1) ATTACH W BEAM RAIL TO THE STEEL PIPE WITH A 5/8" X 2" BUTTON HEAD BOLT WITH NO WASHER. CONNECTION TO THE POST IS NOT REQUIRED.

INSTALL GALVANIZED 3/4" (6X19) PREFORMED WIRE OR INDEPENDENT WIRE ROPE CORE CONFORMING TO AASHTO M 30. MANUFACTURE WIRE ROPE OUT OF IMPROVED PLOW STEEL WITH A MINIMUM BREAKING STRENGTH OF 42,800 PSI.

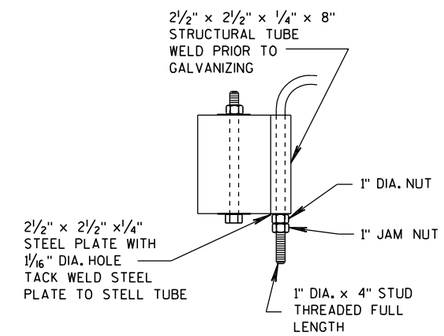

DETAIL A

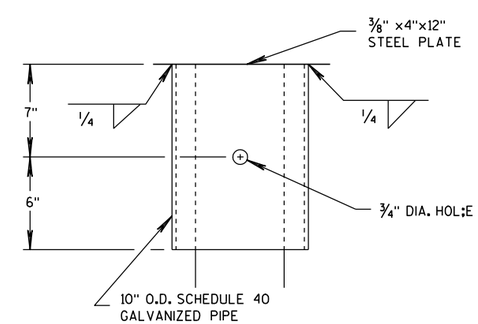

DETAIL B

(BEAM GUARD AND TERMINAL SECTION NOT SHOWN)

STEEL PLATE BEAM GUARD SHORT RADIUS TERMINAL

STATE OF WISCONSIN
DEPARTMENT OF TRANSPORTATION

6

S.D.D. 14 B 27-1b

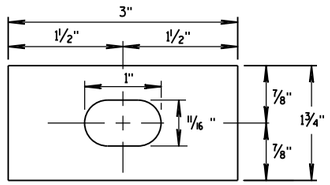

RECTANGULAR PLATE WASHER

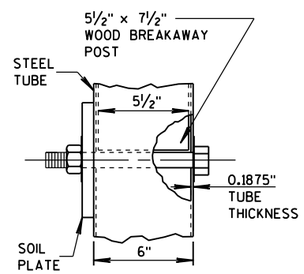

DETAIL D

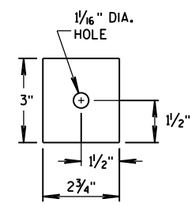

END PLATE

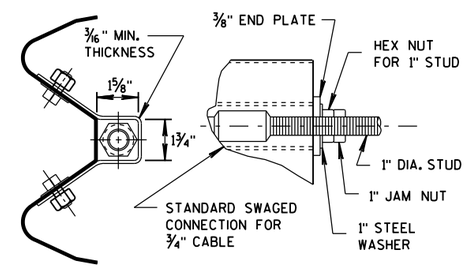

SECTION C-C
(END PLATE REMOVED)

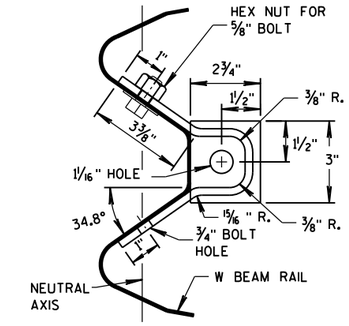

ANCHOR BRACKET

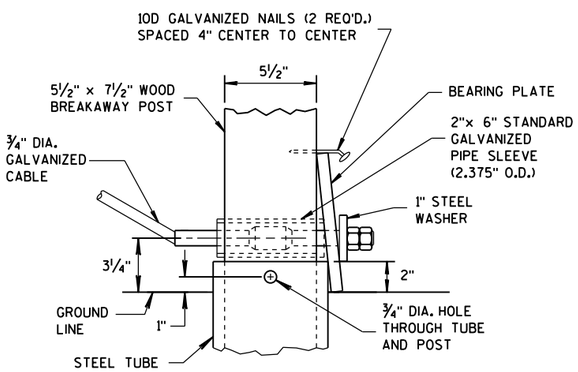

DETAIL C

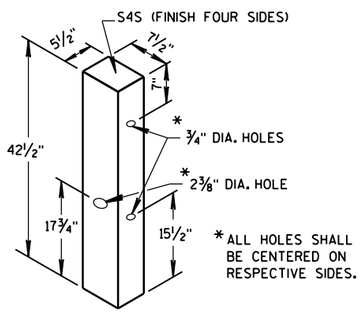

WOOD BREAKAWAY POST

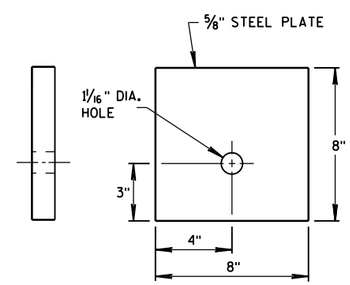

BEARING PLATE

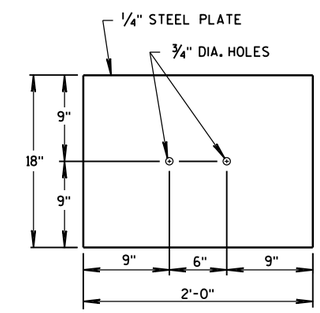

SOIL PLATE

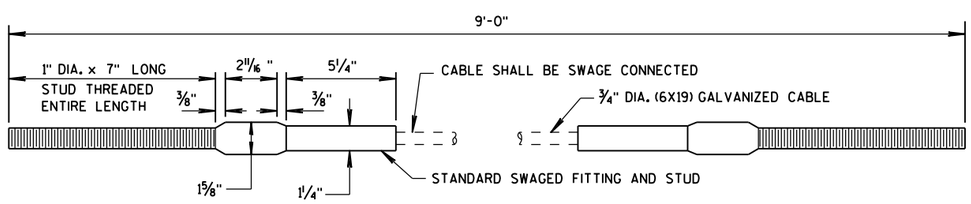

CABLE ASSEMBLY

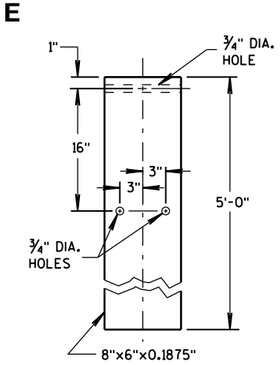

STEEL TUBE

STEEL PLATE BEAM GUARD
SHORT RADIUS TERMINAL

STATE OF WISCONSIN
DEPARTMENT OF TRANSPORTATION

APPROVED
12/18/08 — DATE
/S/ Jerry H. Zogg — ROADWAY STANDARDS DEVELOPMENT ENGINEER
FHWA

6

S.D.D. 14 B 27-1c

GENERAL NOTES

1. WOOD OR STEEL POSTS (w6X9 OR w6X8.5) MAY BE USED. DO NOT INTERMIX WOOD AND STEEL POSTS. INSTALL STEEL POSTS WITH HOLES ON APPROACHING TRAFFIC SIDE.

2. USE WOOD OR APPROVED PLASTIC BLOCKOUTS. WOOD BLOCKOUTS MAY BE CONSTRUCTED OUT OF TWO OR MORE WOOD BLOCKOUTS. SEE ALTERNATE WOOD BLOCKOUT DETAIL. DIMENSIONS OF APPROVED PLASTIC BLOCKOUTS MAY VARY.

3. IF ROCK IS ENCOUNTERED DURING EXCAVATION, PROVIDE A HOLE 12 INCHES IN DIAMETER EXTENDING 20 INCHES DEEP INTO THE ROCK. PLACE APPROXIMATELY 2½ INCHES OF GRANULAR MATERIAL IN THE BOTTOM OF THE HOLE. CUT THE POSTS THE TO LENGTH AMD INSTALL. BACKFILL WITH EXCAVATED MATERIAL AND COMPACT. BACKFILL IS TO BE FREE OF LARGE ROCKS.

4. WHEN THE DISTANCE FROM BACK OF POST TO SHOULDER HINGE POINT IS LESS THAN 2 FEET INSTALL LONGER POST AT HALF POST SPACING (K).

5. FOR NEW MGS INSTALLATION TOP OF W-BEAM RAIL TOLERANCE IS ± 1". FOR EXISTING MGS INSTALLATION TOP OF W-BEAM IS BETWEEN 27¾" TO 32".

6. WHEN USING STEEL POST AND WOOD BLOCKOUTS INSTALL FOUR 16D GALVANIZED NAILS. INSTALL NAILS AT THE BACK CORNERS OF THE BLOCK AND BEND THE NAILS OVER THE FLANGE OF THE STEEL POST.

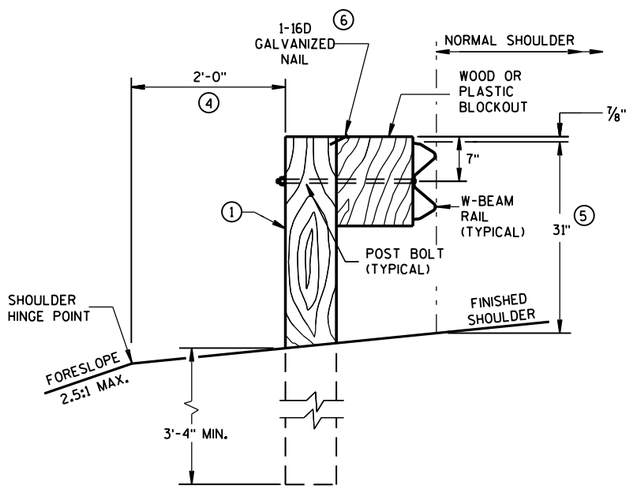

END VIEW

LOCATED ALONG A ROADWAY SHOULDER STANDARD INSTALLATION

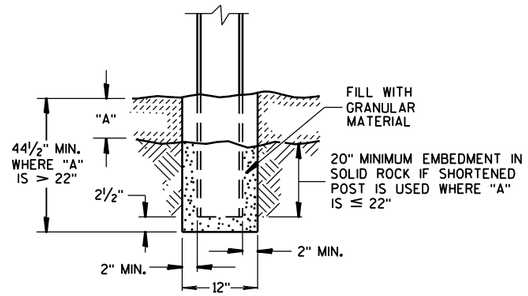

END VIEW

SETTING STEEL OR WOOD POST IN ROCK (3)

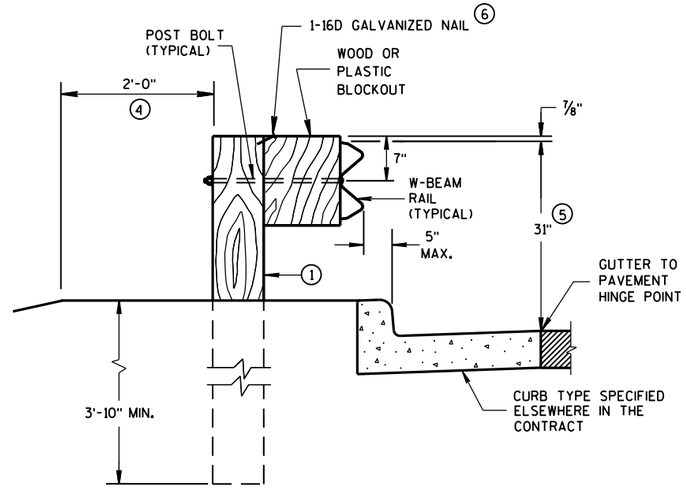

END VIEW

LOCATED ALONG A CURBED ROADWAY

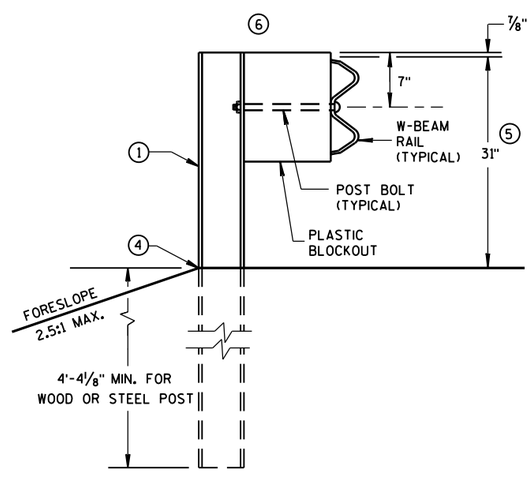

END VIEW

MGS LONGER POST AT HALFPOST SPACING W BEAM (K)

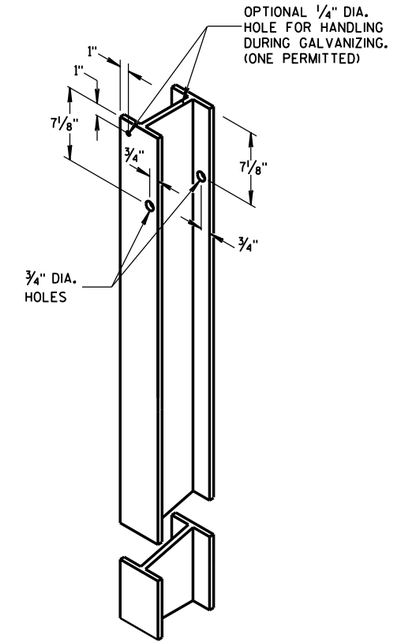

STEEL POST & HOLE PUNCHING DETAIL (w6X9) (1)

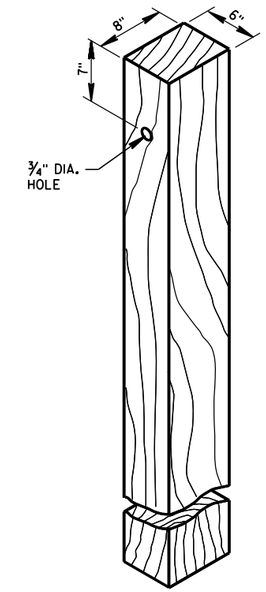

WOOD POST (6" X 8") NOMINAL (1)

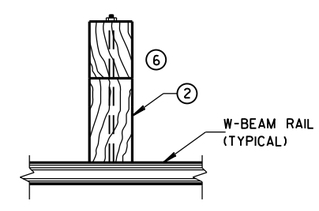

PLAN VIEW

WOOD POST, BLOCKOUT & BEAM

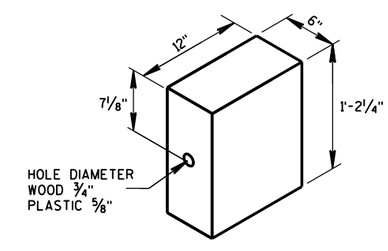

WOOD OR PLASTIC BLOCKOUT (2)

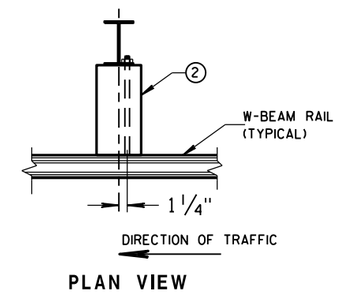

PLAN VIEW

STEEL POST, PLASTIC BLOCKOUT & BEAM

MIDWEST GUARDRAIL SYSTEM (MGS) GUARDRAIL

STATE OF WISCONSIN
DEPARTMENT OF TRANSPOI

6

S.D.D. 14 B 42-3a

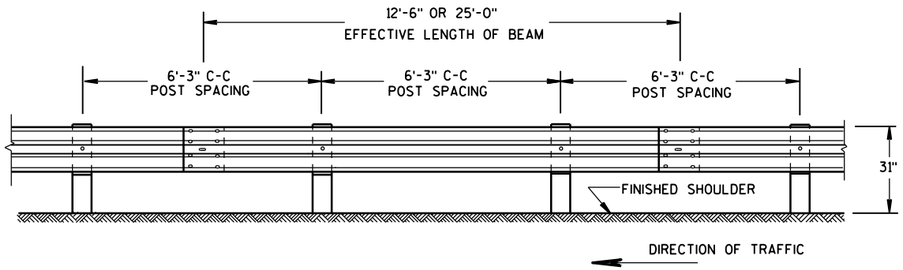

FRONT VIEW

POST SPACING STANDARD INSTALLATION

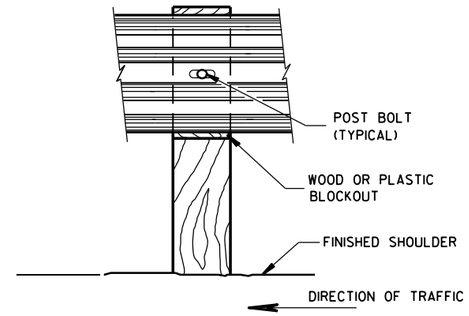

FRONT VIEW AT WOOD POST

GENERAL NOTES

(7) PROVIDE SILVER REFLECTIVE SHEETING ON ALL REFLECTORS EXCEPT THOSE LOCATED ALONG THE LEFT EDGE OF ONE-WAY ROADWAYS, WHICH SHALL BE PROVIDED WITH YELLOW REFLECTIVE SHEETING. SHEETING IS TYPE H. SEE STANDARD SPECIFICATION 637.

(8) DO NOT INSTALL REFLECTORS ON THE FIRST 50 FEET OF THE APPROACH END OF THE ENERGY ABSORBING TERMINAL. RAIL SPLICE LOCATIONS ARE THE ONLY ACCEPTABLE LOCATIONS FOR REFLECTORS.

(9) REVERSE EVERY OTHER REFLECTOR FOR 2-WAY VISIBILITY. THE CONTRACTOR MAY FURNISH TWO-SIDED REFLECTORS IN LIEU OF ONE-SIDED REFLECTORS.

(10) PROVIDE AN ANGLE OF BEND OF 90° ± 1° FOR TWO-SIDED REFLECTORS.

(11) 25 FEET OF HALF POST SPACING IS REQUIRED ON APPROACH AND DEPARTURE ENDS OF QUARTER POST SPACING.

POST BOLTS ARE A 5/8" DIAMETER ASTM A307 GUARDRAIL BOLT. A POST BOLT REQUIRES 5/8" DIAMETER A563A DOUBLE RECESSED (DR) HEAVY HEX NUT AND 5/8" DIAMETER F844 FLAT WASHER. POST BOLTS MAY BE LONGER IF MULTIPLE BLOCKOUTS ARE BEING USED.

GUARD RAIL SPLICE BOLTS ARE A 5/8" DIAMETER ASTM A307 GUARDRAIL HEAD BOLT. A GUARDRAIL SPLICE BOLT REQUIRES 5/8" DIAMETER A563A DOUBLE RECESSED (DR) HEAVY HEX NUT.

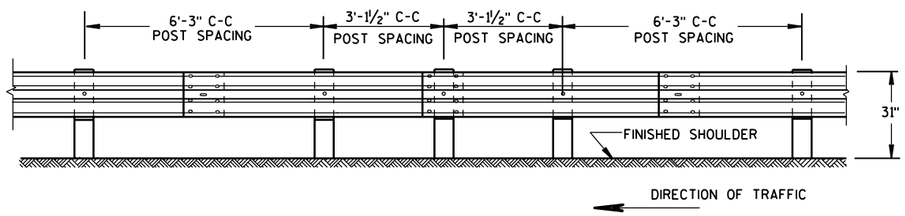

FRONT VIEW

HALF POST SPACING (HS) AND HALF POST SPACING WITH LONGER POSTS (K)

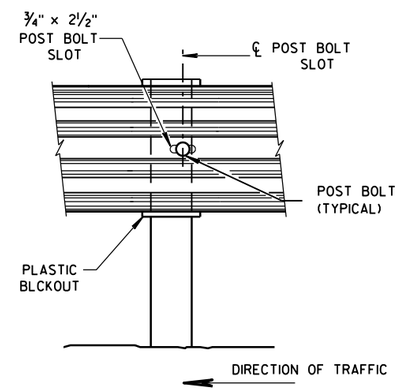

FRONT VIEW AT STEEL POST

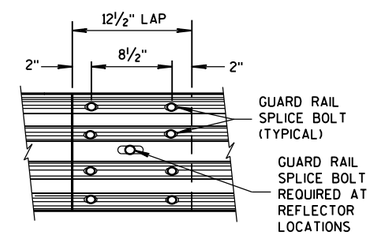

FRONT VIEW

MID-SPAN BEAM SPLICE

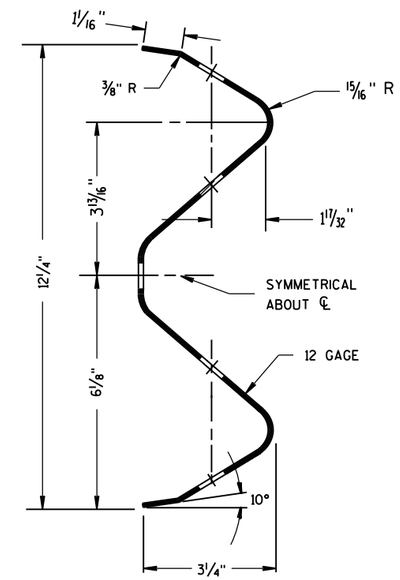

SECTION THRU W-BEAM RAIL

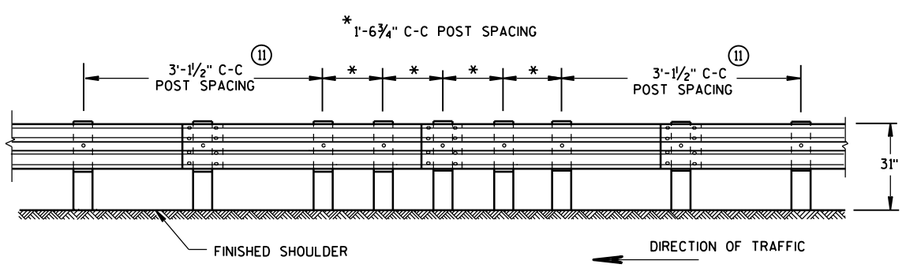

FRONT VIEW

QUARTER POST SPACING (QS)

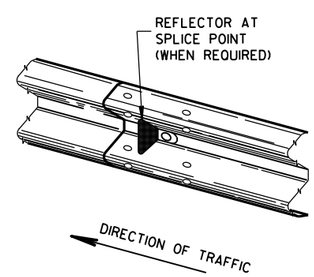

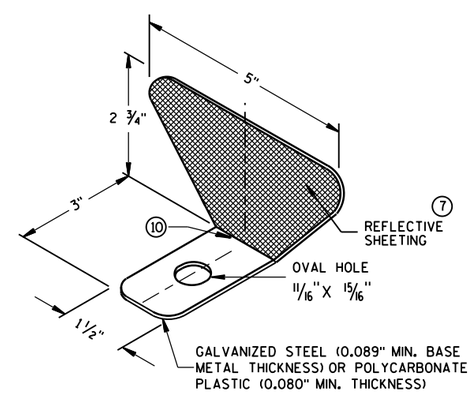

ONE SIDED REFLECTOR DETAIL AND TYPICAL INSTALLATION (7)

REFLECTOR SPACING (8)

	BEAM GUARD LENGTH	REFLECTOR SPACING	NO. SURFACES REFLECTORIZED	MIN. NO. REFLECTORS
ONE WAY TRAFFIC	< 200' > 200'	50' C-C 100' C-C	1 1	3
TWO WAY TRAFFIC	< 200' > 200'	25' C-C 50' C-C	1 (9) 1	6
TWO WAY TRAFFIC	< 200' > 200'	50' C-C 100' C-C	2 (10) 2	3

MIDWEST GUARDRAIL SYSTEM (MGS) GUARDRAIL

STATE OF WISCONSIN
DEPARTMENT OF TRANSPOR

6

S.D.D. 14 B 42-3b

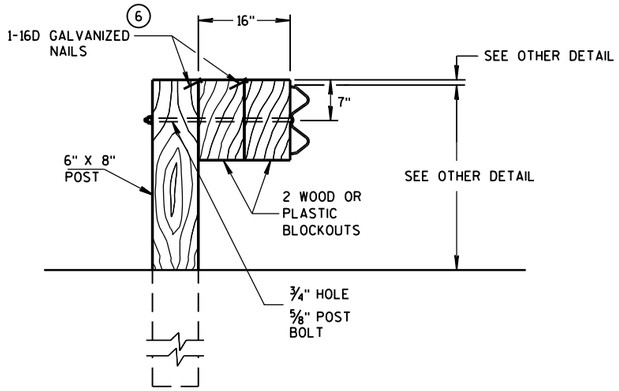

DETAIL FOR 16" BLOCKOUT DEPTH

IT IS ACCEPTABLE TO USE BLOCKOUTS UP TO 16" DEEP TO INCREASE THE POST OFFSET TO AVOID UNDERGROUND OBSTACLES. THERE IS NO LIMIT TO THE NUMBER OF POSTS THAT CAN HAVE ADDITIONAL BLOCKOUTS UP TO 16" DEEP.

NOTE: 1. ALL FILLETS SHALL HAVE A MINIMUM RADIUS OF 1/16".
2. IF THE BOLT EXTENDS MORE THAN 1/4" FROM THE NUT THE BOLT SHOULD BE TRIMMED BACK.

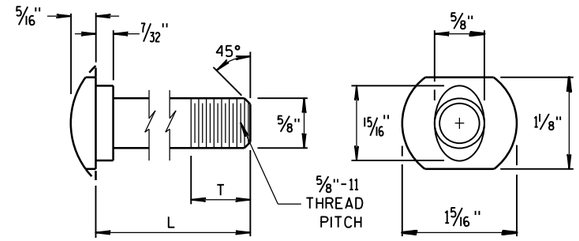

POST BOLT TABLE

L	T (MIN.)
1 1/4"	1 1/8"
2"	1 3/4"
10"	4"
14"	4 1/16"
18"	4"
21"	4 1/16"
25"	4"

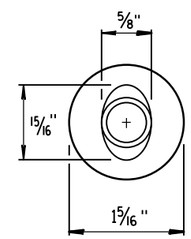

ALTERNATE BOLT HEAD

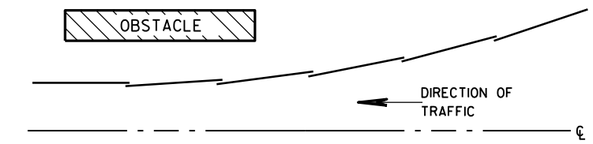

PLAN VIEW

BEAM LAPPING DETAIL

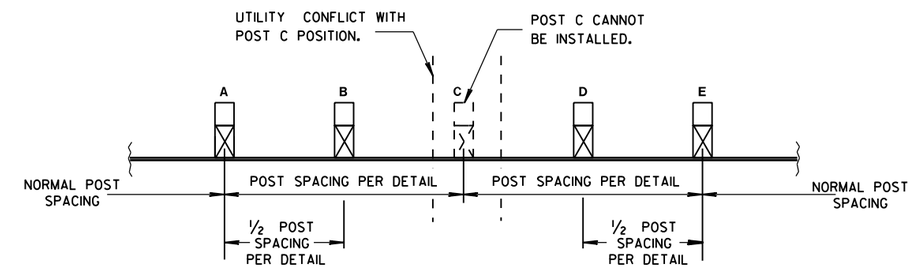

POST DRIVING FOR CONTINUOUS UNDERGROUND OBSTRUCTION

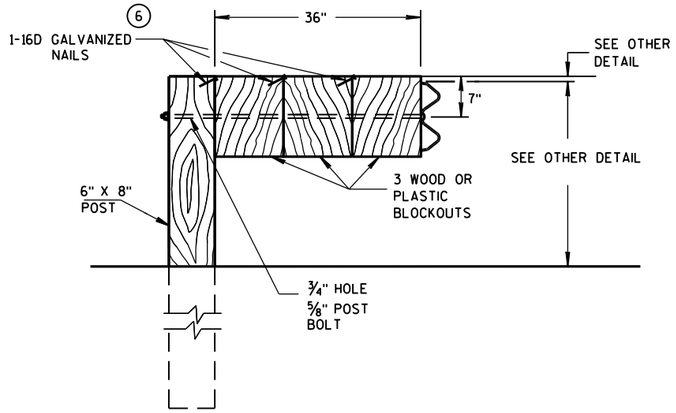

DETAIL FOR 36" BLOCKOUT DEPTH

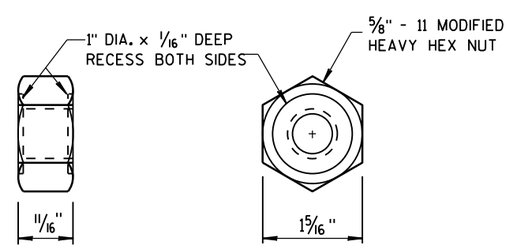

POST BOLT AND RECESS NUT

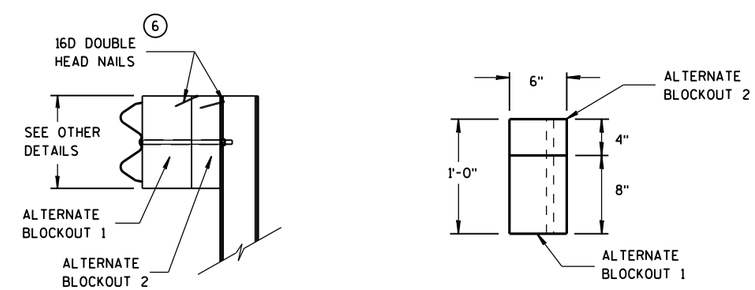

SIDE VIEW TOP VIEW

ALTERNATE WOOD BLOCKOUT DETAIL

NOTES: UNDER SPECIAL CIRCUMSTANCES, SUCH AS AVOIDING OBSTACLES THAT ARE NOT RELOCATED, IT IS ACCEPTABLE TO INSTALL ADDITIONAL BLOCKOUTS TO OBTAIN UP TO 36" DEPTH FOR ONE OR TWO POSTS IN A SECTION OF GUARDRAIL.

DO NOT USE 16" OR 36" BLOCKOUTS IF IT CAUSES THE POST TO BE DRIVEN BEYOND SHOULDER HINGE POINT OR CAUSES A FIXED OBJECT TO BE WITHIN THE DEFLECTION DISTANCE OF THE BARRIER.

MIDWEST GUARDRAIL SYSTEM (MGS) GUARDRAIL

STATE OF WISCONSIN
DEPARTMENT OF TRANSPORTATION

APPROVED
June 2014 — DATE
/S/ Jerry H. Zogg — ROADWAY STANDARDS DEVELOPMENT ENGINEER
FHWA

6

S.D.D. 14 B 42-3c

GENERAL NOTES

(A) THE SLOPE IN THE AREA BOUNDED BY THE GRADELINE, THE HINGE POINT LINE (HPL), AND THE CLEAR ZONE LIMITS (CZL) SHALL BE 4:1 OR FLATTER.

(B) AFTER FINAL ASSEMBLY, RECHECK CABLE TO BE SURE IT IS TAUT AND HAS NOT RELAXED.

(C) DIFFERENT MANUFACTURES REQUIRE DIFFERENT PERFORATED W-BEAM RAIL END PANELS. SEE MANUFACTURES INFORMATION.

(D) THE TOP OF THE STEEL TUBE ON POST 1 AND POST 2 SHALL NOT BE MORE THAN 3" ABOVE THE FINISH GROUND ELEVATION.

(F) ATTACH ALUMINUM SHEET TO E.A.T. HEAD USING 4 STAINLESS STEEL SELF-TAPPING SCREWS. ONE SCREW PER CORNER.

(G) 1/2" DIAMETER X 3" LONG LAG BOLT AND WASHER.

(H) HARDWARE VARIES BETWEEN DIFFERENT MANUFACTURES. SEE MANUFACTURE'S DRAWING FOR INFORMATION.

(I) DIMENSIONS MAY VARY. SEE MANUFACTURE'S INFORMATION.

SEE SDD 14B42 FOR MORE INFORMATION.

* DO NOT ATTACH BLOCKOUTS TO POSTS 1 AND 2.

DO NOT INSTALL REFLECTORS ON THE FIRST 50 FEET OF THE APPROACH END OF THE ENERGY ABSORBING TERMINAL.

W-BEAM RAIL SPLICES ARE LOCATED AT POST NUMBER 3, AND BETWEEN POST 5 AND 6, BETWEEN POSTS 7 AND 8, AND MIDDLE OF THE SPAN AFTER POST 9.

THE CENTER OF THE UPPER 3 1/2" DIAMETER HOLE ON POST NUMBER 3 THROUGH POST 9 IS TO BE FLUSH WITH THE GROUND LINE UP TO A MAXIMUM OF 2" ABOVE GROUND LINE.

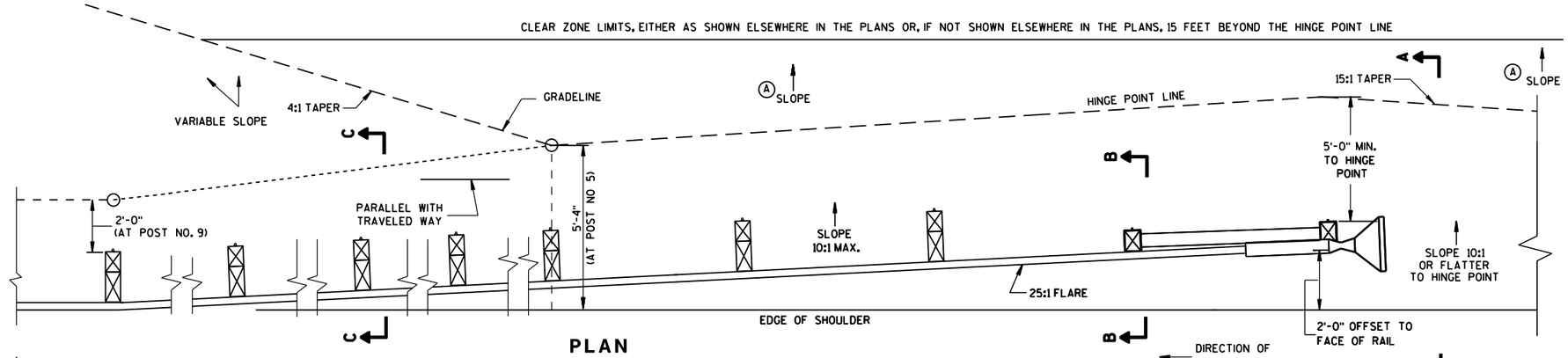

PLAN

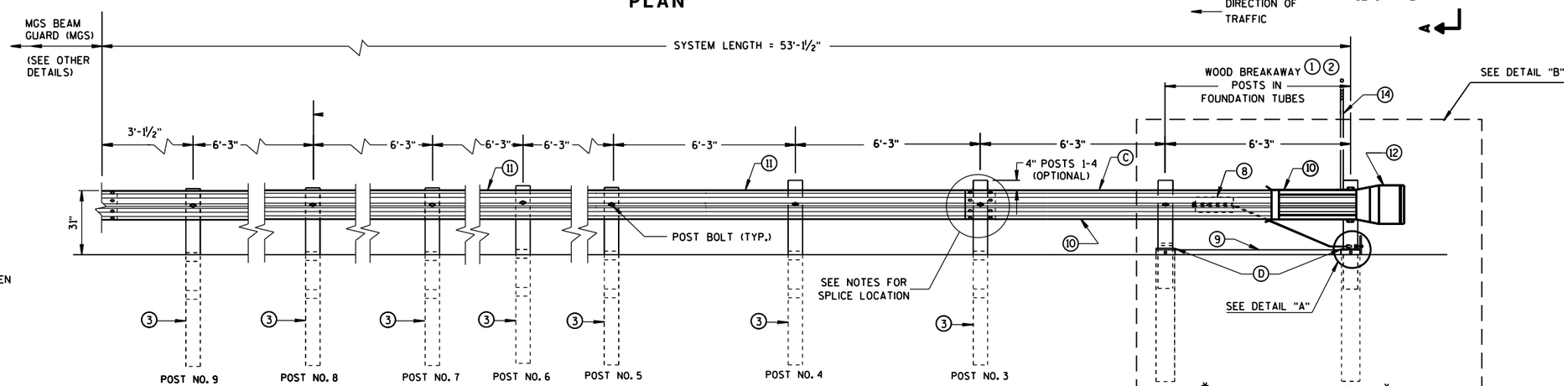

ELEVATION

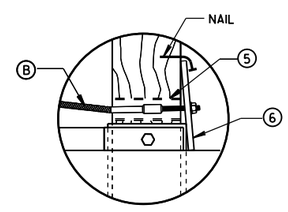

DETAIL "A"

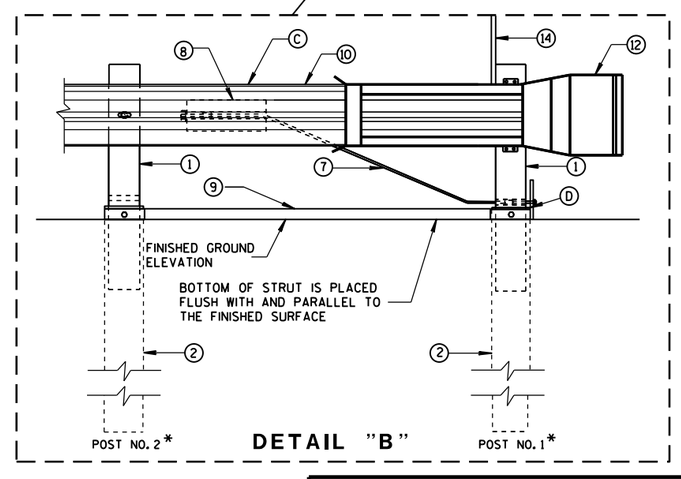

DETAIL "B"

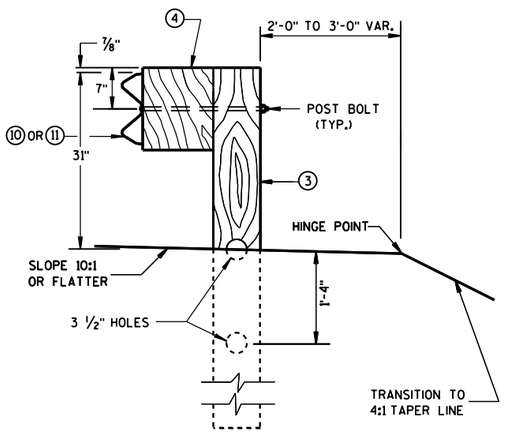

SECTION C-C
TYPICAL AT POST NOS. 3-9

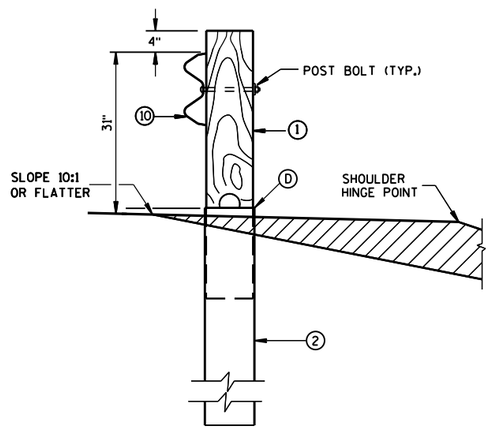

SECTION B-B
TYPICAL AT POST NO. 2*

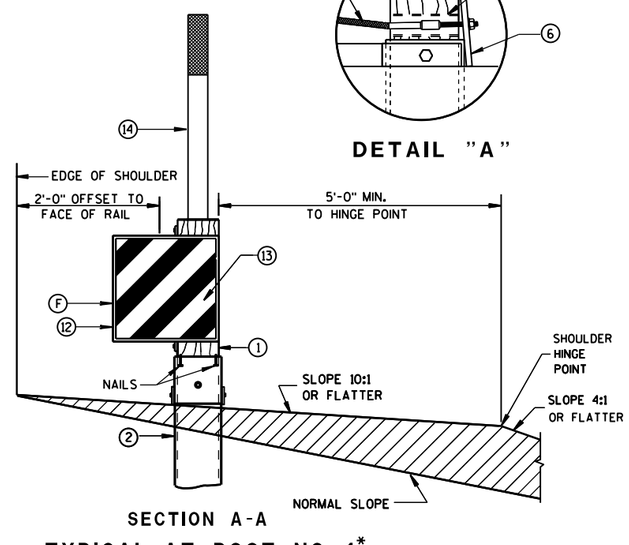

SECTION A-A
TYPICAL AT POST NO. 1*

MIDWEST GUARDRAIL SYSTEM ENERGY ABSORBING TERMINAL (MGS)

STATE OF WISCONSIN
DEPARTMENT OF TRANSPO

S.D.D. 14 B 44-2a

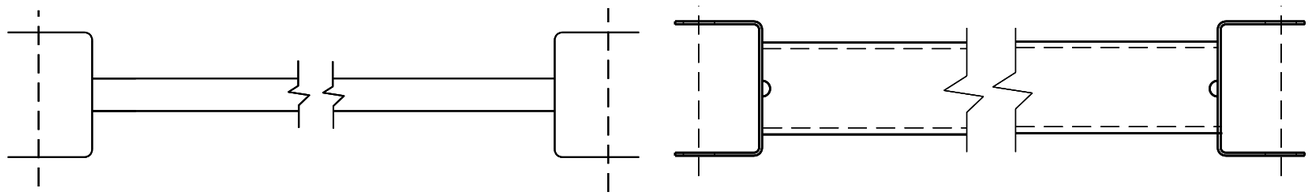

GENERIC GROUND STRUT (9) (H)

BILL OF MATERIALS

PART NO.	DESCRIPTION MATERIALS PROVIDED BY MGS EAT MANUFACTURER. SEE MANUFACTURER'S DETAILS FOR MORE INFORMATION.
1	WOOD BREAKAWAY POST
2	6" X 8" X 0.188", 6'-0" LONG FOUNDATION TUBE AT POSTS 1 AND 2
3	WOOD CRT
4	WOOD BLOCKOUT
5	PIPE SLEEVE
6	BEARING PLATE
7	BCT CABLE ASSEMBLY
8	ANCHOR CABLE BOX
9	GROUND STRUT
10	PERFORATED W-BEAM RAIL END PANEL, 12'-6" LONG.
11	STANDARD W-BEAM RAIL. MULTIPLE SECTIONS REQUIRED. SECTIONS VARY IN LENGTH.
12	END SECTION EAT
13	0.040" ALUMINUM SHEET WITH REFLECTIVE SHEETING TYPE F PER SECTION 637 OF THE STANDARD SPECIFICATIONS
14	EAT MARKER POST - YELLOW (SEE APPROVED PRODUCTS LIST)

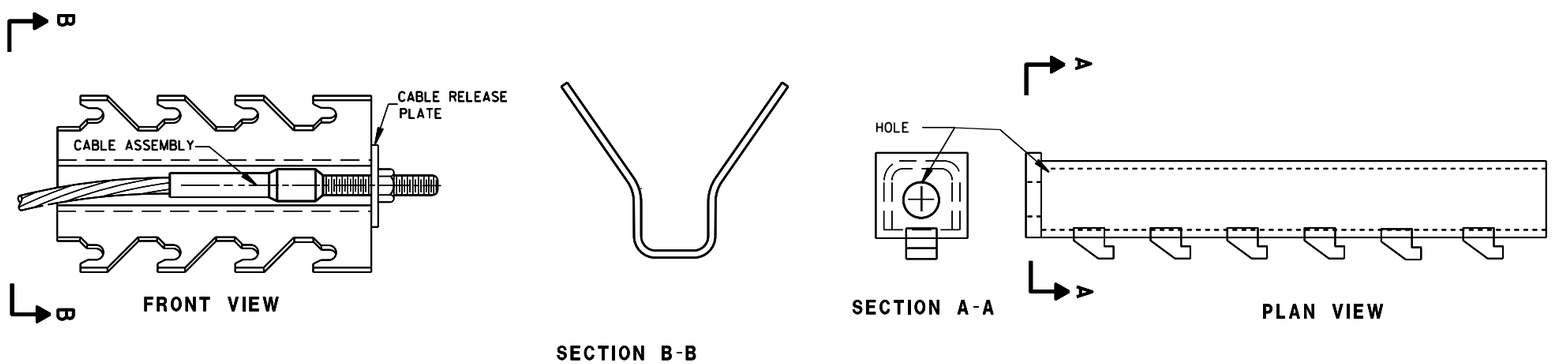

GENERIC ANCHOR CABLE BOX (8) (H)

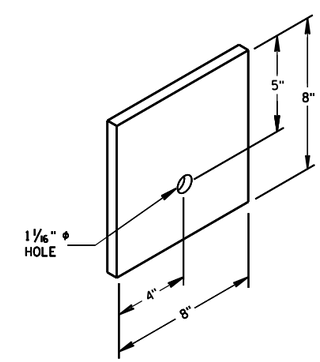

BEARING PLATE (6)

6

6

S.D.D. 14 B 44-2b

S.D.D. 14 B 44-2b

MIDWEST GUARDRAIL SYSTEM
ENERGY ABSORBING TERMINAL
(MGS)

STATE OF WISCONSIN
DEPARTMENT OF TRANSPOI

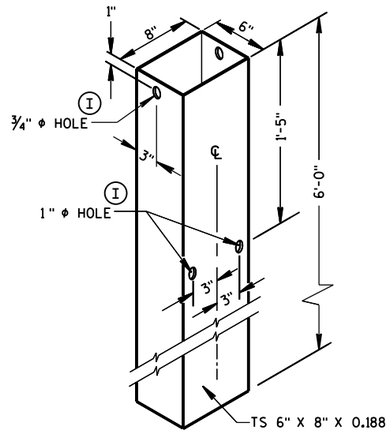

FOUNDATION TUBE (2)

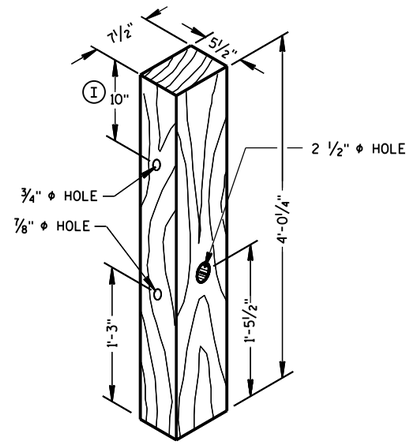

POSTS NUMBER 1 AND 2

WOOD BREAKAWAY POST (1)

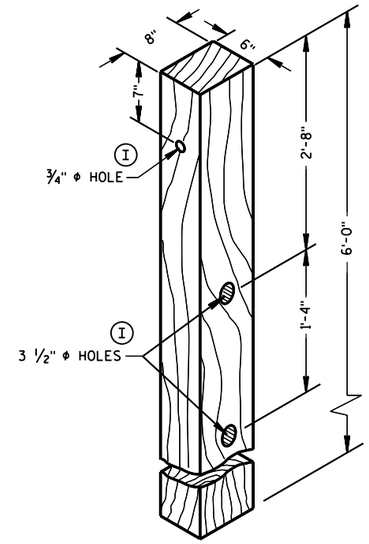

POSTS NUMBER 3-9

WOOD CRT POST (3)

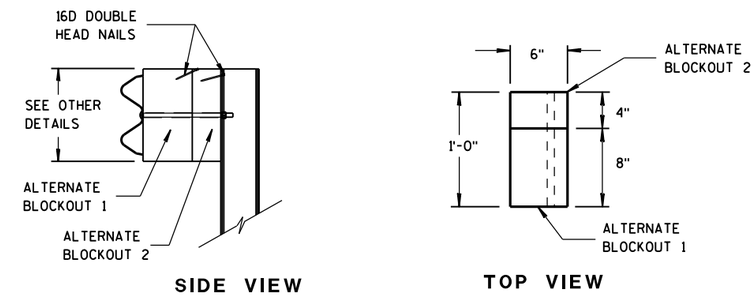

ALTERNATE WOOD BLOCKOUT DETAIL

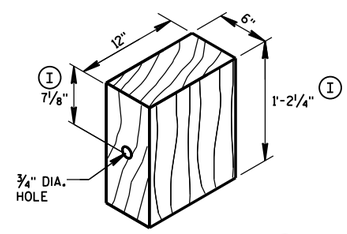

WOOD BLOCKOUT (4)

REQ'D. AT ALL POSTS EXCEPT POST NO'S 1 & 2

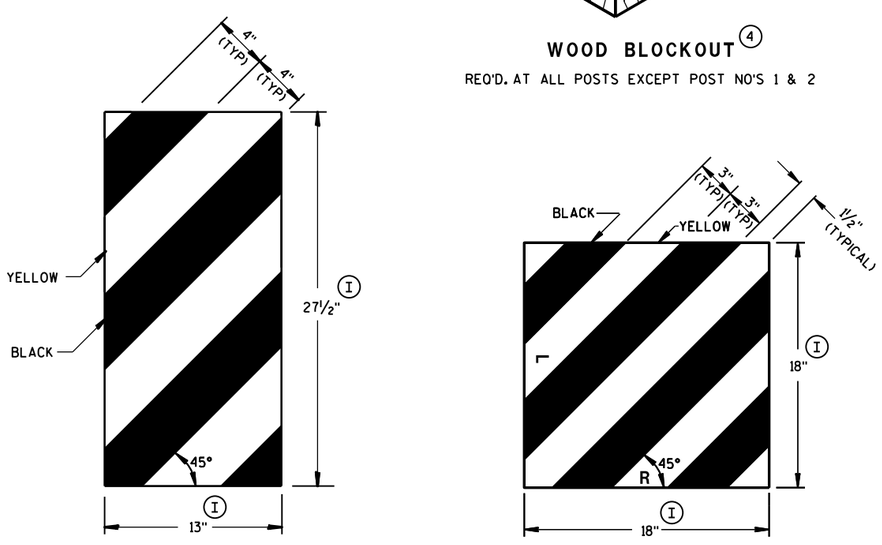

GENERIC REFLECTIVE SHEETING (13) (H)

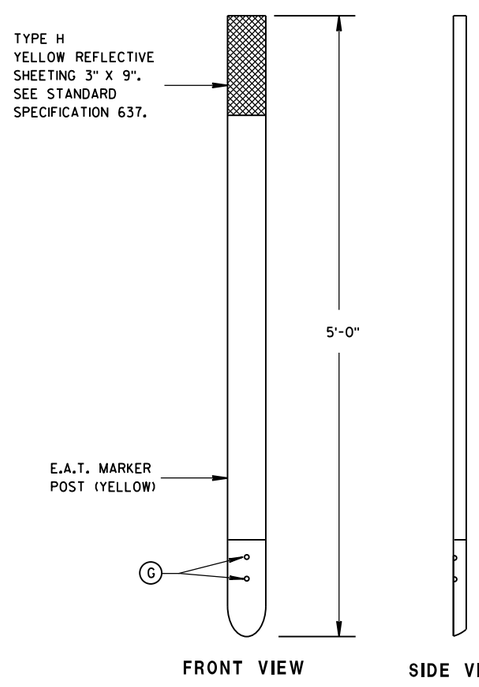

E.A.T. MARKER POST (14)

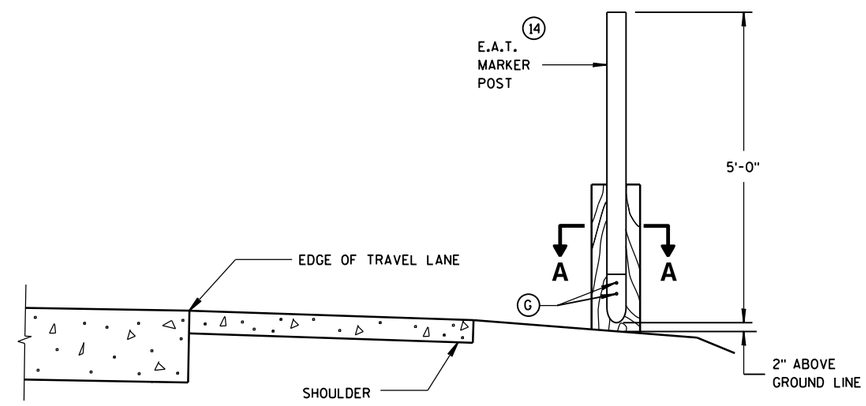

TYPICAL INSTALLATION OF E.A.T. MARKER POST BACKSIDE OF POST NO. 1

(E.A.T. AND RAIL REMOVED FOR CLARITY)

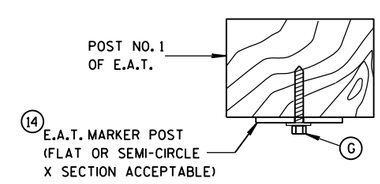

SECTION A-A

MIDWEST GUARDRAIL SYSTEM ENERGY ABSORBING TERMINAL (MGS)

STATE OF WISCONSIN
DEPARTMENT OF TRANSPORTATION

APPROVED
June 2014 — DATE
/S/ Jerry H. Zogg — ROADWAY STANDARDS DEVELOPMENT ENGINEER
FHWA

6

6

S.D.D. 14 B 44-2c

S.D.D. 14 B 44-2c

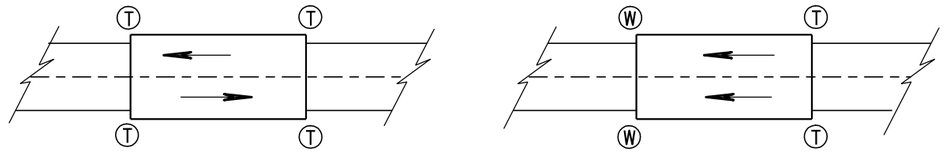

TWO WAY TRAFFIC

ONE WAY TRAFFIC

(T) THRIE BEAM CONNECTION

(W) W-BEAM CONNECTION WHEN REQUIRED

TYPICAL LOCATIONS OF THRIE BEAM AND W-BEAM CONNECTIONS TO BRIDGE

GENERAL NOTES

BOLT THE THRIE BEAM TO ALL POSTS AND BLOCKOUTS. DRILL OR PUNCH BOLT HOLES IN THE BEAM IF THE POST SPACING IS LESS THAN 6'-3.

IF ROCK IS ENCOUNTERED, REMOVE ROCK TO FULL DEPTH OF POST PLUS 2½", AND 12" DIAMETER AROUND POST. SEE 14B42 FOR MORE DETAILS.

TRANSITION USES STEEL POSTS ONLY.

SEE STANDARD DETAIL DRAWING 14 B 42 FOR MORE INFORMATION.

(A) BRIDGE RAILING TYPE "W" DOES NOT REQUIRE A TERMINAL CONNECTOR.

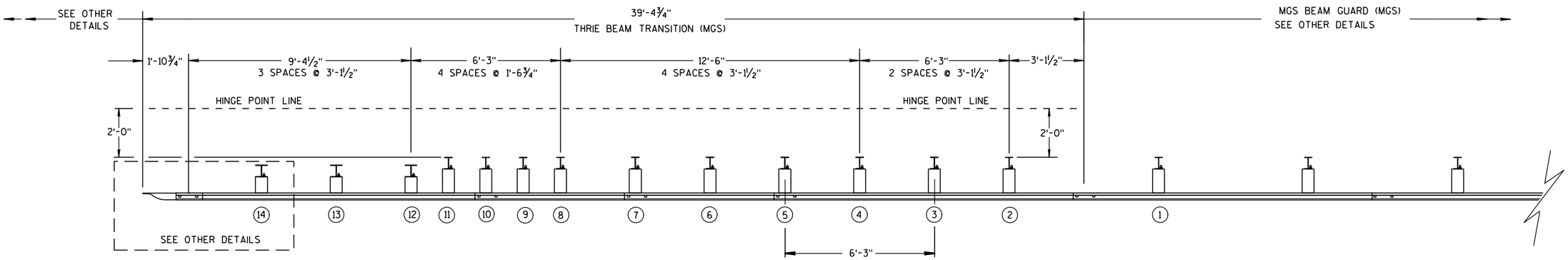

PLAN VIEW

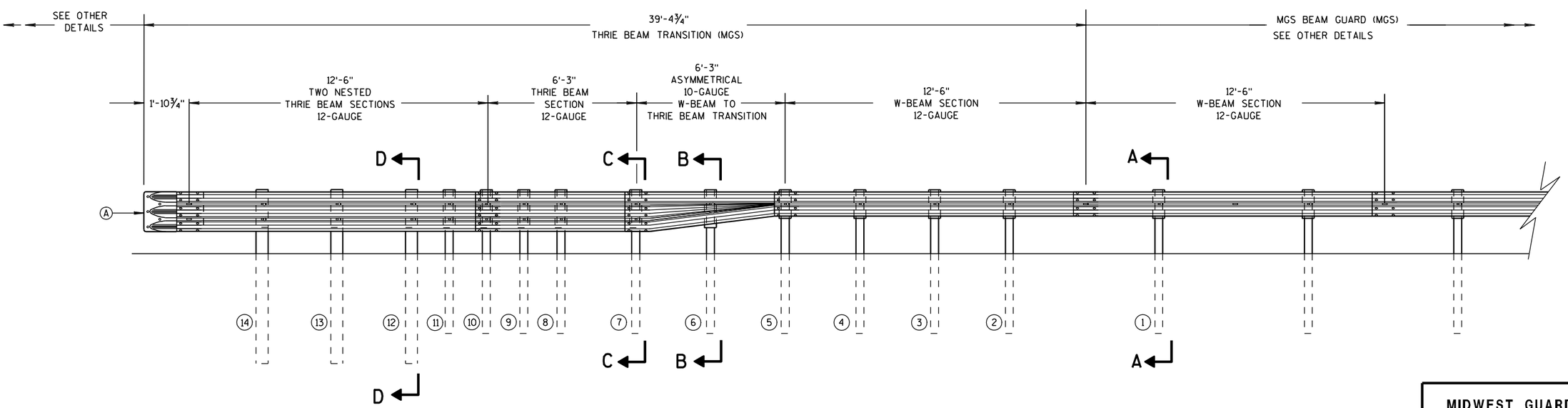

ELEVATION VIEW

MIDWEST GUARDRAIL SYSTEM THRIE BEAM TRANSITION

MIDWEST GUARDRAIL SYSTEM
THRIE BEAM TRANSITION (MGS)

STATE OF WISCONSIN
DEPARTMENT OF TRANSPORTATION

6

S.D.D. 14 B 45-3a

GENERAL NOTES

(B) TOLERANCE FOR TOP OF W-BEAM RAIL IS ± 1".

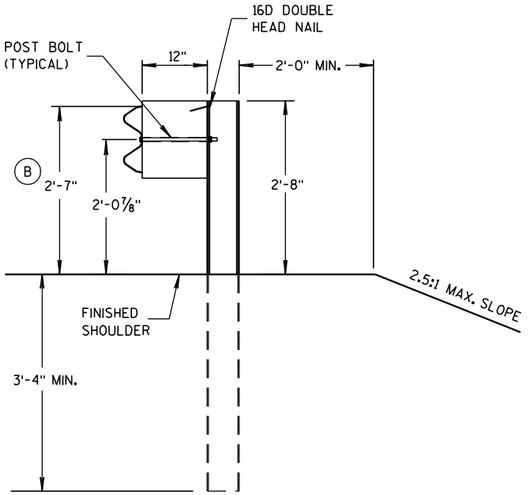

SECTION A-A

POSTS 1-5

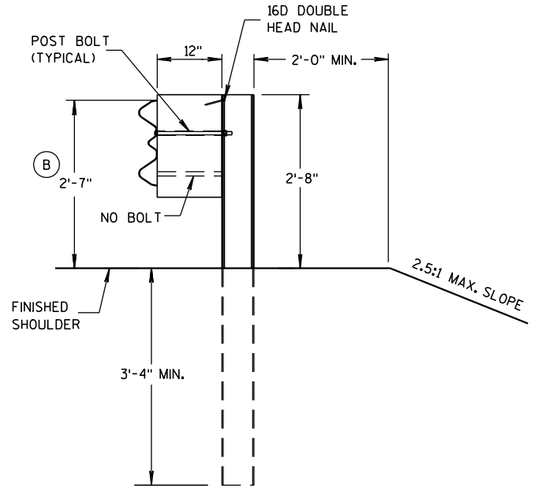

SECTION B-B

POST 6

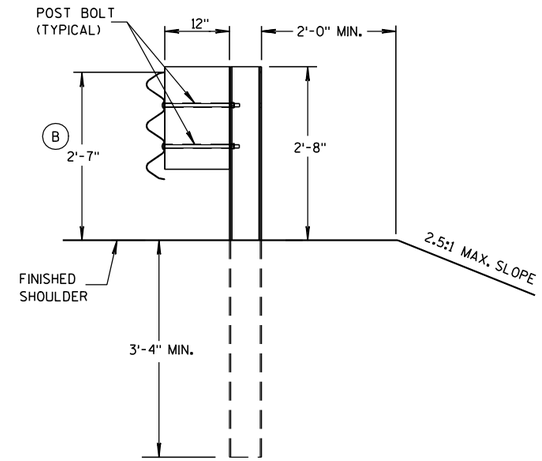

SECTION C-C

POSTS 7-11

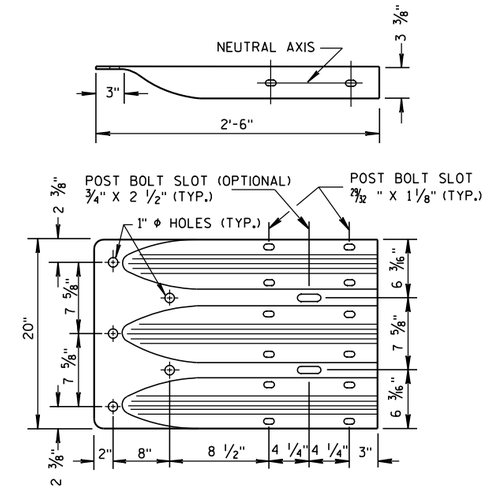

THRIE BEAM TERMINAL CONNECTOR

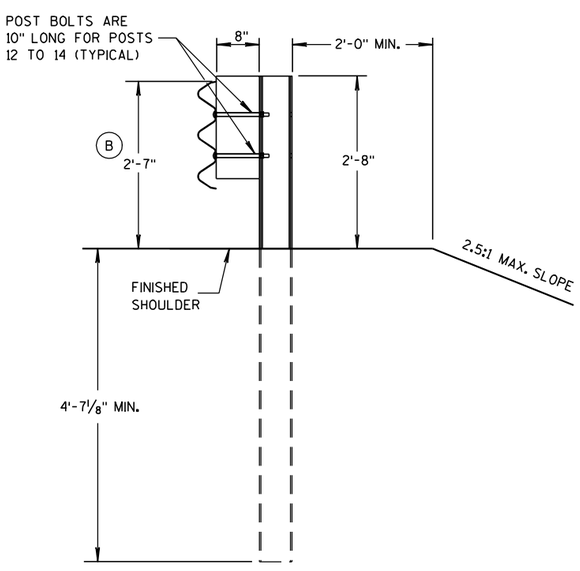

SECTION D-D

POSTS 12-14

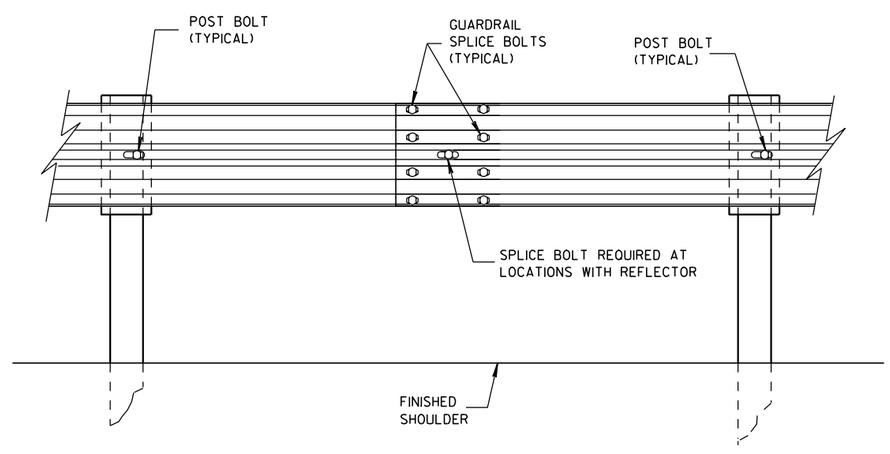

SPLICE DETAIL

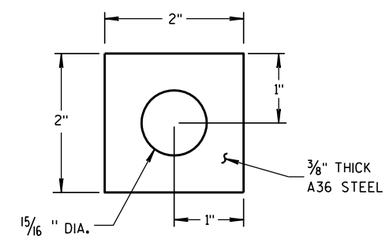

PLATE WASHER DETAIL

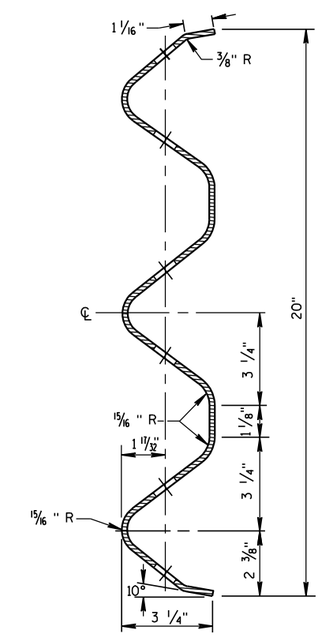

SECTION THRU THRIE BEAM RAIL ELEMENT

MIDWEST GUARDRAIL SYSTEM
THRIE BEAM TRANSITION (MGS)

STATE OF WISCONSIN
DEPARTMENT OF TRANSPORTATION

6

6

S.D.D. 14 B 45-3b

S.D.D. 14 B 45-3b

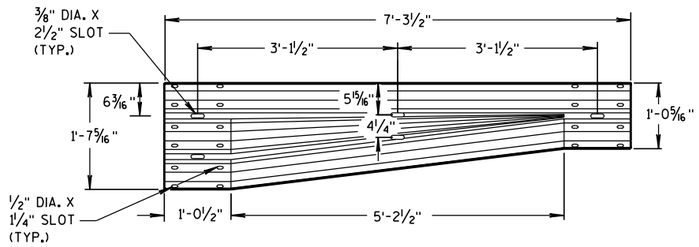

W-BEAM TO THRIE BEAM TRANSITION SECTION

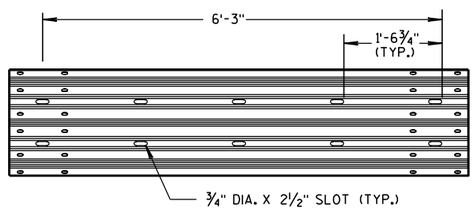

6'-3" THRIE BEAM SECTION

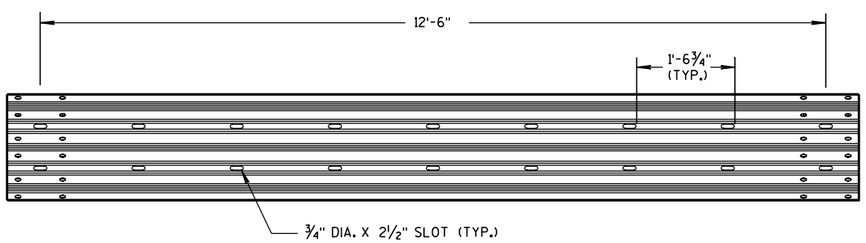

12'-6" THRIE BEAM SECTION

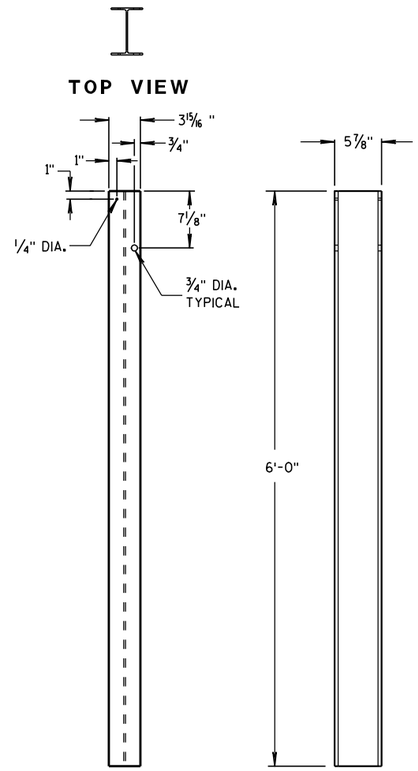

STEEL POSTS 1-5

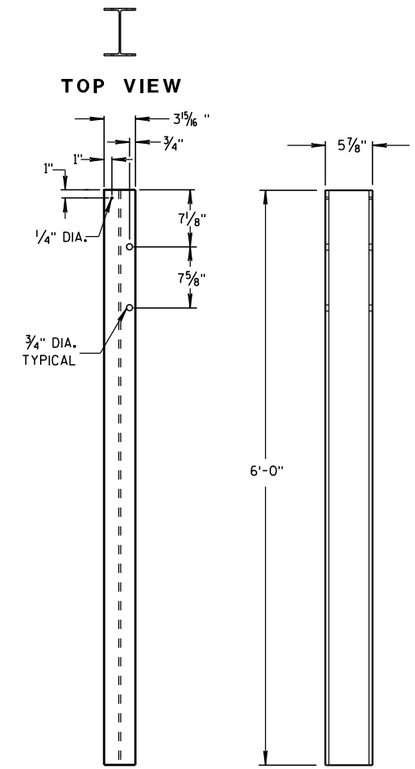

STEEL POSTS 6-11

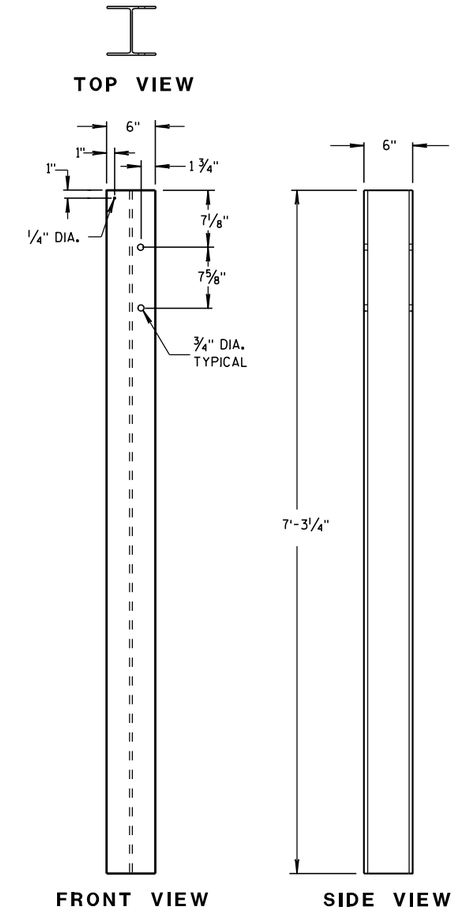

STEEL POSTS 12-14

(1) WOOD BLOCKS MAY BE CONSTRUCTED OUT OF 2 WOOD BLOCKS. SEE ALTERNATE WOOD BLOCK DETAIL.

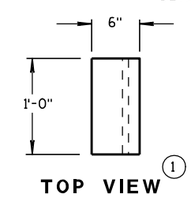

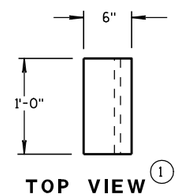

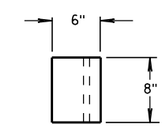

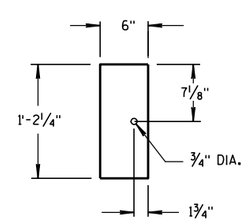

BLOCKOUT POSTS 1-5

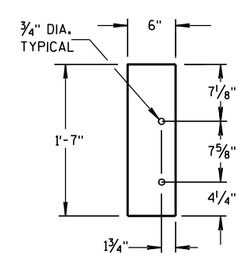

BLOCKOUT POSTS 6-11

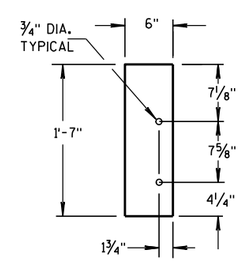

BLOCKOUT POSTS 12-14

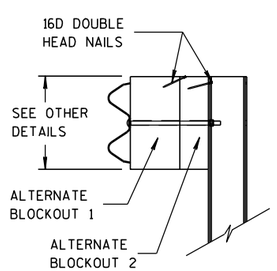

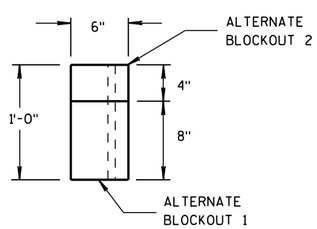

ALTERNATE WOOD BLOCKOUT DETAIL

STEEL POST SIZES

POST NUMBER	SECTION TYPE	LENGTH
1	W6x9	72"
2	W6x9	72"
3	W6x9	72"
4	W6x9	72"
5	W6x9	72"
6	W6x9	72"
7	W6x9	72"
8	W6x9	72"
9	W6x9	72"
10	W6x9	72"
11	W6x9	72"
12	W6x15	87 1/8"
13	W6x15	87 1/8"
14	W6x15	87 1/8"

MIDWEST GUARDRAIL SYSTEM
THRIE BEAM TRANSITION (MGS)

STATE OF WISCONSIN
DEPARTMENT OF TRANSPORTATION

6

6

S.D.D. 14 B 45-3c

S.D.D. 14 B 45-3c

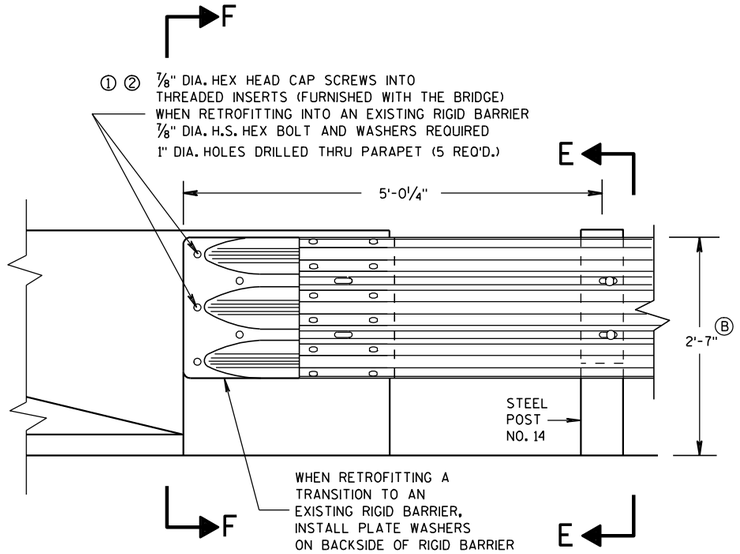

FRONT VIEW

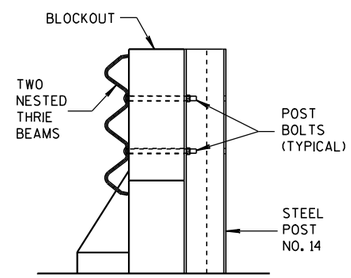

SECTION E-E

THRIE BEAM CONNECTION TO BRIDGE PARAPET WITH SQUARE ENDS

GENERAL NOTES

THESE ARE TYPICAL CONNECTION DETAILS. ADJUST THE POSTION OF CONNECTIONS TO EXISTING BRIDGES TO FIT THE ACTUAL BRIDGE AND SITE DIMENSIONS.

① DRILLING BOLT HOLES THROUGH THE PARAPET, BOLTS, NUTS, WASHERS AND REPAIRING DAMAGED CONCRETE ARE INCIDENTAL TO THE CONTRACT.

② BOLTS MAY BE A325 BOLTS OR A449 BOLTS. BOLT LENGTH AND THREADING LENGTH ARE TO ALLOW FOR A TIGHT CONNECTION BETWEEN RIGID BARRIER AND THRIE BEAM CONNECTION PLATE. CONTRACTOR IS TO FIELD VERIFY BOLT LENGTH AND THREAD LENGTH. ONE ROUND WASHER REQUIRED BETWEEN BOLT HEAD AND THRIE BEAM CONNECTOR PLATE. BOLTS THAT EXTEND THROUGH THE PARAPET AND OUT THE BACK FACE REQUIRE A HARDENED ROUND STEEL WASHER THAT IS 2" O.D. X 5/8" THICK AND ONE PLATE WASHER. REPAIR ANY DAMAGED CONCRETE FROM BOLT INSTALLATION.

③ THE RECESS FOR A W-BEAM CONNECTION, WHICH EXISTS ON SOME PARAPETS OF THIS TYPE, SHALL BE FILLED WITH A TREATED TIMBER BLOCKOUT. BLOCKOUT SIZE IS 1'-6" X 2'-0" X 3 1/2".

Ⓑ TOLERANCE FOR TOP OF BEAM IS ± 1".

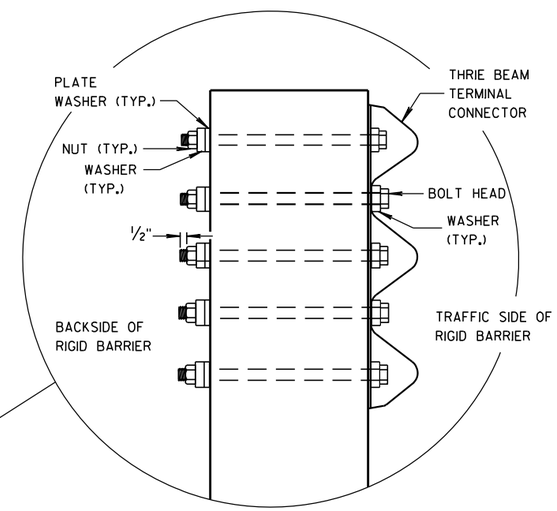

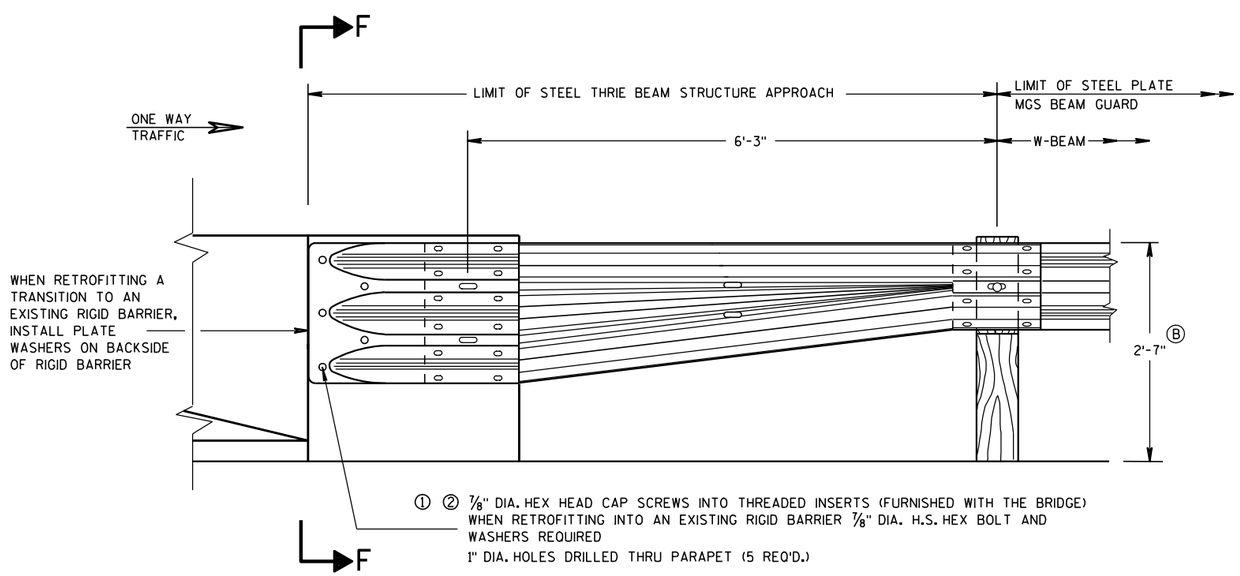

FRONT VIEW

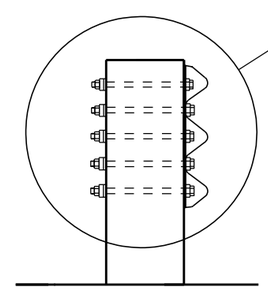

SECTION F-F

W BEAM TRANSITION AND CONNECTION TO BRIDGE PARAPETS WITH SQUARE ENDS

(USE ONLY ON THE TRAFFIC EXIT END OF ONE WAY BRIDGES)

MIDWEST GUARDRAIL SYSTEM THRIE BEAM TRANSITION (MGS)

STATE OF WISCONSIN
DEPARTMENT OF TRANSPORTATION

APPROVED
8/31/2012 — DATE
/S/ Jerry H. [illegible] — ROADWAY STANDARDS DEVELOPMENT ENGINEER
FHWA

6

S.D.D. 14 B 45-3d

GENERAL NOTES

THESE ARE TYPICAL CONNECTION DETAILS. ADJUST THE POSTION OF CONNECTIONS TO EXISTING BRIDGES TO FIT THE ACTUAL BRIDGE AND SITE DIMENSIONS.

① DRILLING BOLT HOLES THROUGH THE PARAPET, BOLTS, NUTS, WASHERS AND REPAIRING DAMAGED CONCRETE ARE INCIDENTAL TO THE CONTRACT.

② BOLTS MAY BE A325 BOLTS OR A449 BOLTS. BOLT LENGTH AND THREADING LENGTH ARE TO ALLOW FOR A TIGHT CONNECTION BETWEEN RIGID BARRIER AND THRIE BEAM CONNECTION PLATE. CONTRACTOR IS TO FIELD VERIFY BOLT LENGTH AND THREAD LENGTH. ONE ROUND WASHER REQUIRED BETWEEN BOLT HEAD AND THRIE BEAM CONNECTOR PLATE. BOLTS THAT EXTEND THROUGH THE PARAPET AND OUT THE BACK FACE REQUIRE A HARDENED ROUND STEEL WASHER THAT IS 2" O.D. X 5/8" THICK AND ONE PLATE WASHER. REPAIR ANY DAMAGED CONCRETE FROM BOLT INSTALLATION.

③ THE RECESS FOR A W-BEAM CONNECTION, WHICH EXISTS ON SOME PARAPETS OF THIS TYPE, SHALL BE FILLED WITH A TREATED TIMBER BLOCKOUT. BLOCKOUT SIZE IS 1'-6" X 2'-0" X 3 1/2". BLOCK IS INCIDENTAL TO THE CONTRACT.

④ BOLT, NUT AND WASHERS NOT REQUIRED FOR THIS LOCATION WHEN RETROFITTING AN EXISTING PAPAPET AND THE HOLE IS EITHER ABOVE PARAPET OR WITHIN 4 INCHES OF THE EDGE OF PARAPET.

Ⓑ TOLERANCE FOR TOP OF BEAM IS ± 1".

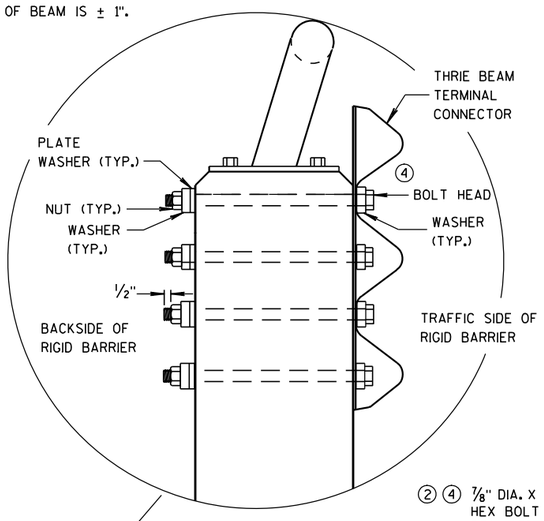

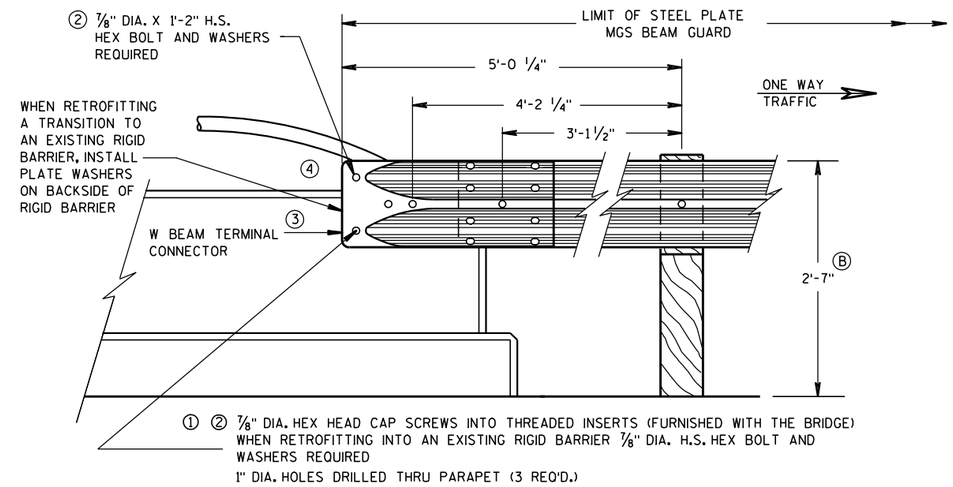

FRONT VIEW

W BEAM CONNECTION TO VERTICAL FACE PARAPET

(USE ONLY ON THE TRAFFIC EXIT END OF ONE WAY BRIDGES)

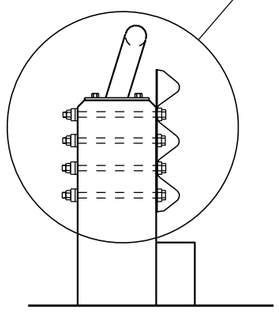

SECTION G-G

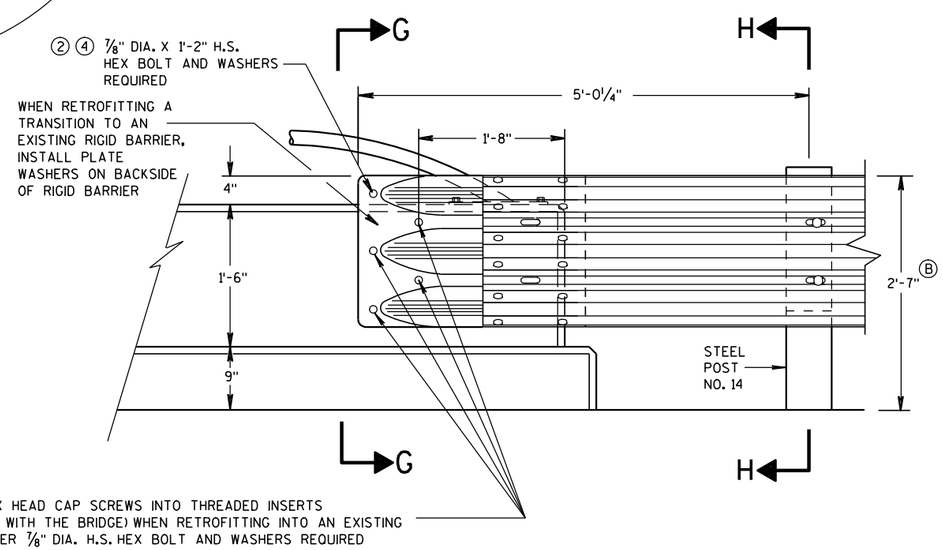

FRONT VIEW

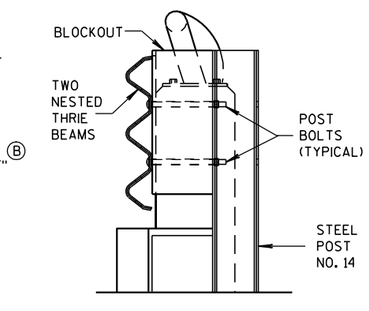

SECTION H-H

THRIE BEAM CONNECTION TO VERTICAL FACED PARAPETS

MIDWEST GUARDRAIL SYSTEM THRIE BEAM TRANSITION (MGS)	
STATE OF WISCONSIN DEPARTMENT OF TRANSPORTATION	
APPROVED 8-31-2012 DATE	/S/ Jerry H. Zogg ROADWAY STANDARDS DEVELOPMENT ENGINEER
FHWA	

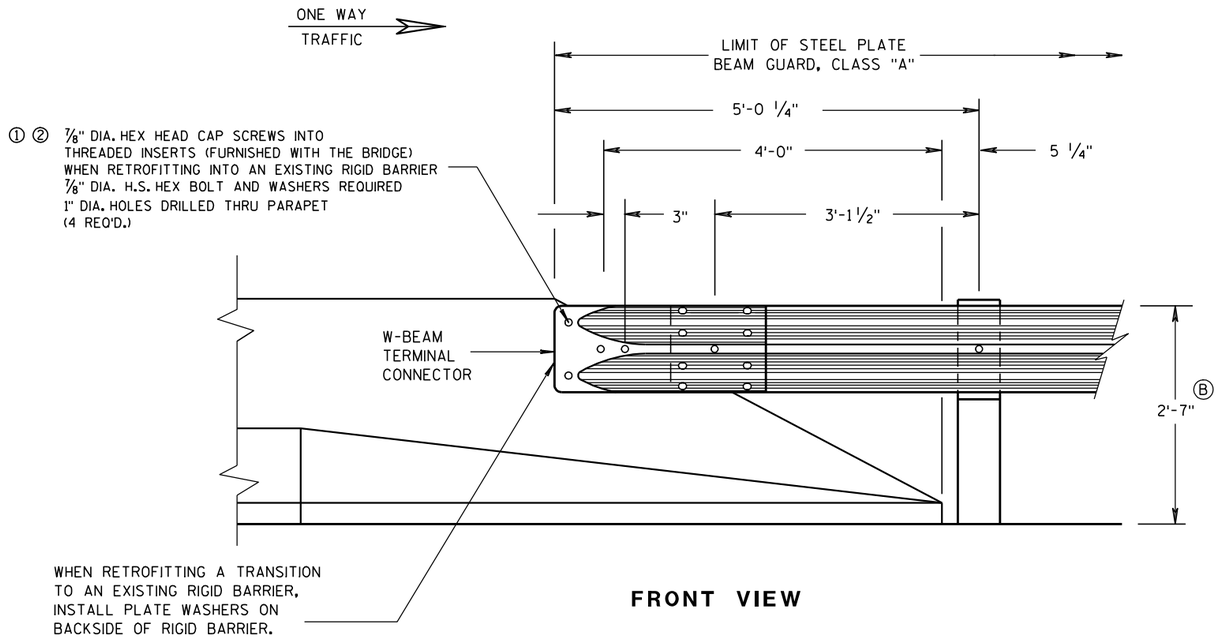

FRONT VIEW

W BEAM CONNECTION TO PARAPETS WITH SLOPED ENDS

(USE ONLY AT TRAFFIC EXIT END OF ONE WAY BRIDGE)

GENERAL NOTES

① DRILLING BOLT HOLES THROUGH THE PARAPET, BOLTS, NUTS, WASHERS AND REPAIRING DAMAGED CONCRETE ARE INCIDENTAL TO THE CONTRACT.

② BOLTS MAY BE A325 BOLTS OR A449 BOLTS. BOLT LENGTH AND THREADING LENGTH ARE TO ALLOW FOR A TIGHT CONNECTION BETWEEN RIGID BARRIER AND THRIE BEAM CONNECTION PLATE. CONTRACTOR IS TO FIELD VERIFY BOLT LENGTH AND THREAD LENGTH. ONE ROUND WASHER REQUIRED BETWEEN BOLT HEAD AND THRIE BEAM CONNECTOR PLATE. BOLTS THAT EXTEND THROUGH THE PARAPET AND OUT THE BACK FACE REQUIRE A HARDENED ROUND STEEL WASHER THAT IS 2" O.D. X 5/8" THICK AND ONE PLATE WASHER. REPAIR ANY DAMAGED CONCRETE FROM BOLT INSTALLATION.

Ⓑ TOLERANCE FOR TOP OF BEAM IS ± 1".

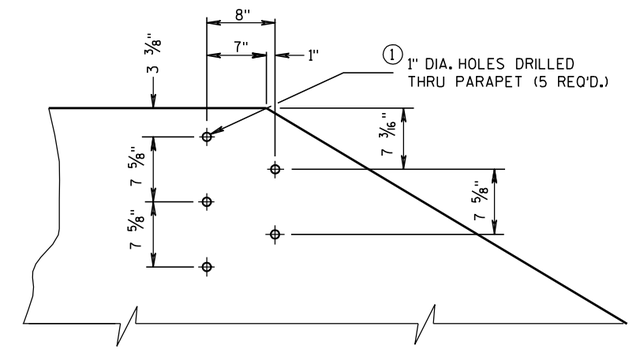

DRILL HOLE LOCATION AND PATTERN FOR THRIE BEAM CONNECTION

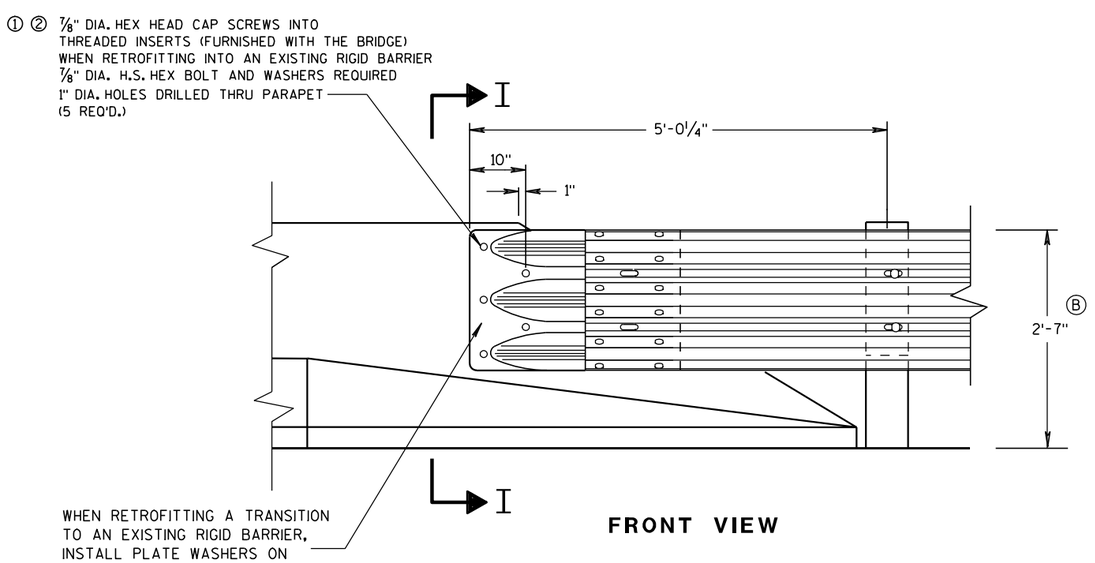

FRONT VIEW

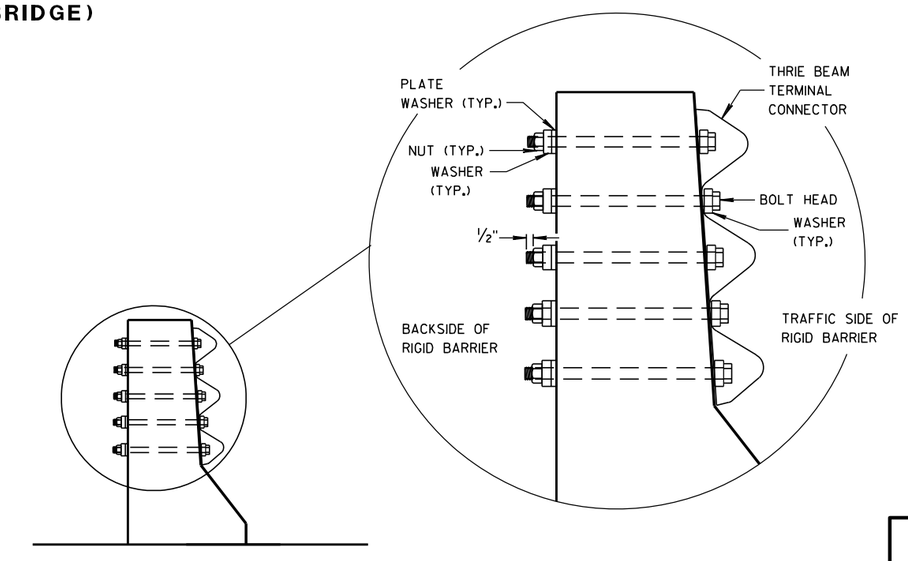

SECTION I-I

THRIE BEAM CONNECTION TO BRIDGE PARAPETS WITH SLOPED ENDS

MIDWEST GUARDRAIL SYSTEM
THRIE BEAM TRANSITION (MGS)

STATE OF WISCONSIN
DEPARTMENT OF TRANSPORTATION

APPROVED
8/31/2012 — DATE
/S/ Jerry H. Zogg — ROADWAY STANDARDS ENGINEER
ENT
FHWA

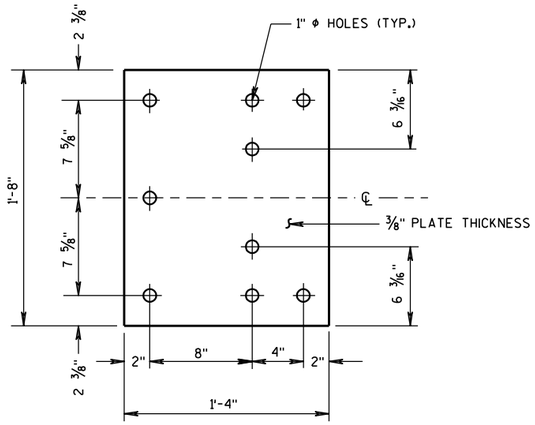

BACK-UP PLATE DETAIL

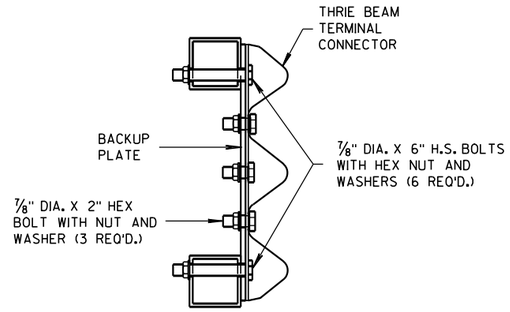

SECTION J-J

GENERAL NOTES

(1) DRILLING HOLES THROUGH THE PAPRPET, BOLTS, NUTS, WASHERS AND REPAIRING DAMAGED CONCRETE ARE INCIDENTAL TO THE CONTRACT.

(B) TOLERANCE FOR TOP OF BEAM IS ± 1".

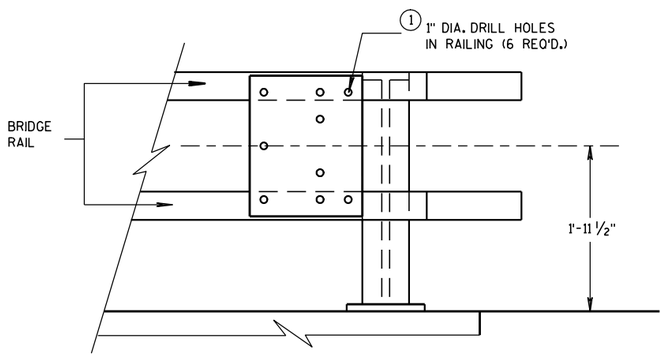

BACK-UP PLATE MOUNTING ONTO BRIDGE RAILING

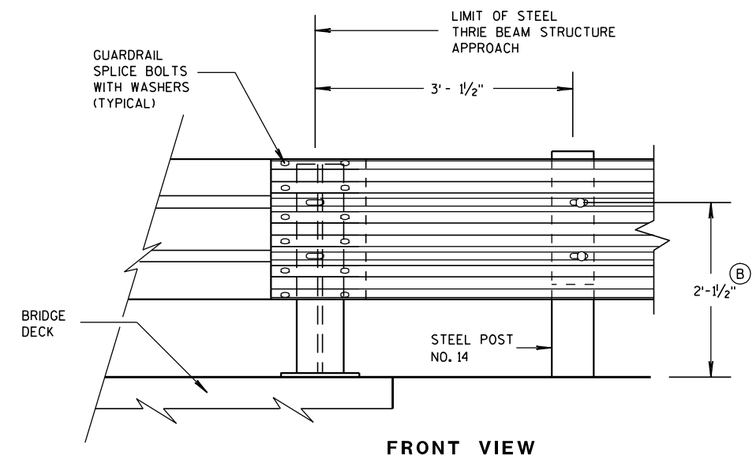

FRONT VIEW

THRIE BEAM CONNECTION TO STEEL RAILING TYPE "W"

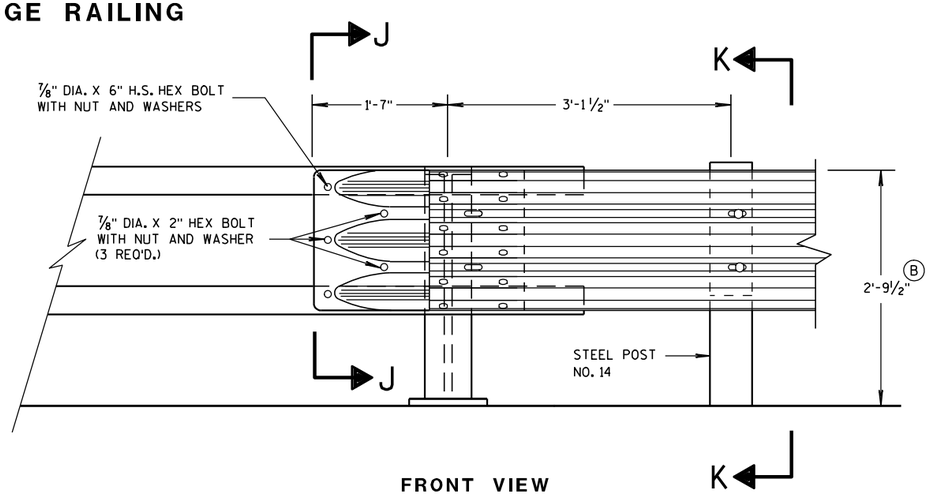

FRONT VIEW

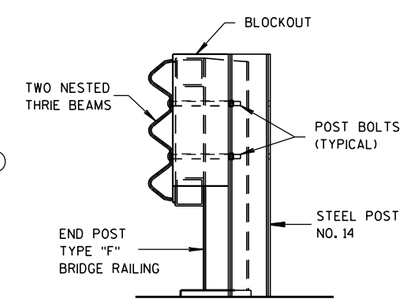

SECTION K-K

THRIE BEAM CONNECTION TO TUBULAR RAILING TYPE "F"

MIDWEST GUARDRAIL SYSTEM
THRIE BEAM TRANSITION (MGS)

STATE OF WISCONSIN
DEPARTMENT OF TRANSPORTATION

APPROVED
8/31/2012 — DATE
/S/ Jerry H. Zogg — ROADWAY STANDARDS DEVELOPMENT ENGINEER
FHWA

6

6

S.D.D. 14 B 45-3g

S.D.D. 14 B 45-3g

GENERAL NOTES

(B) TOLERANCE FOR TOP OF W-BEAM RAIL IS ± 1".

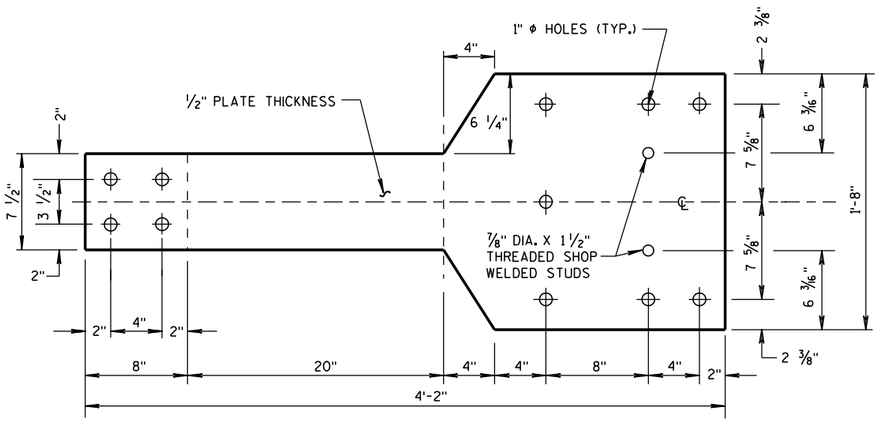

FRONT VIEW

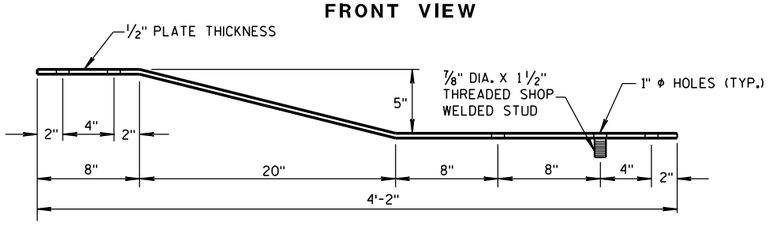

PLAN VIEW

BACK-UP PLATE DETAIL, TYPE "M"

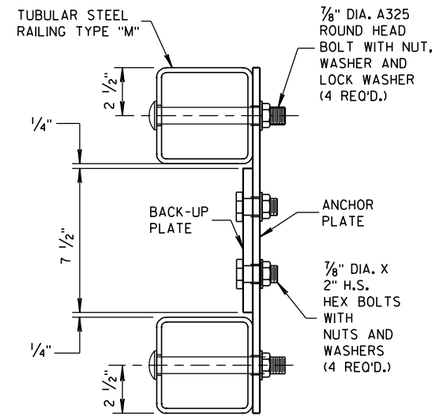

SECTION L-L

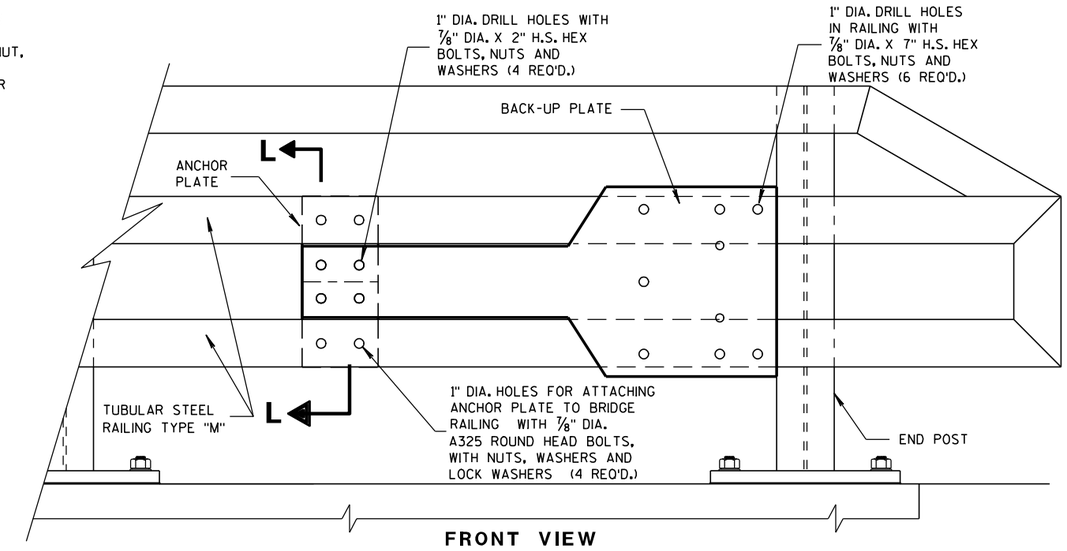

FRONT VIEW

ANCHOR AND BACK-UP PLATE MOUNTING TO BRIDGE RAILING, TYPE "M"

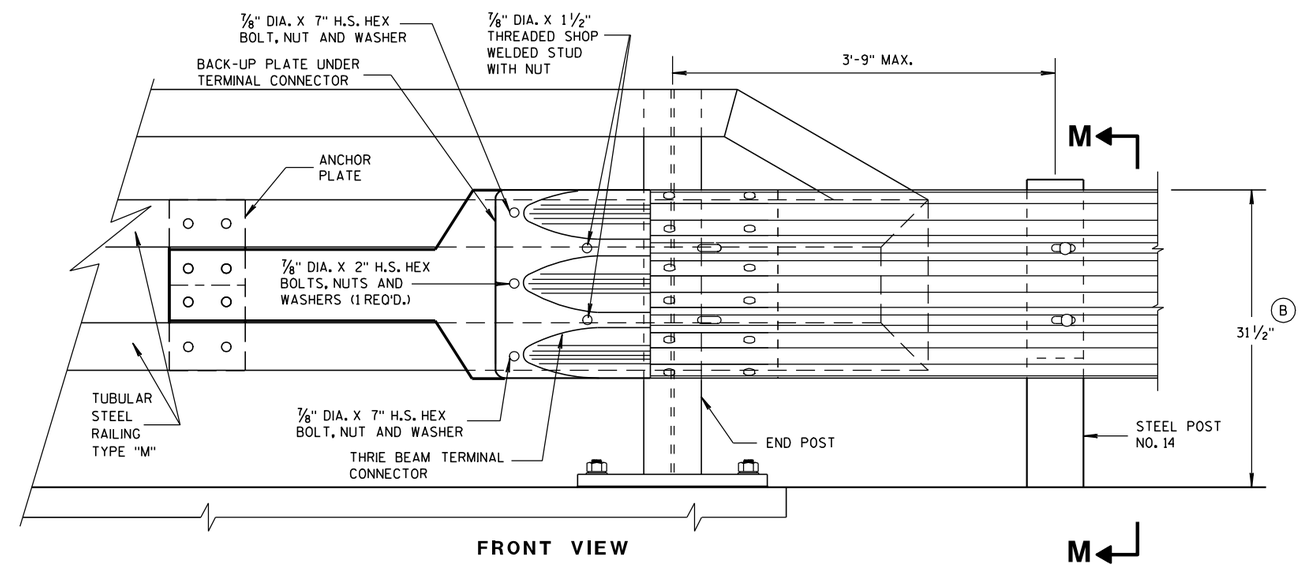

FRONT VIEW

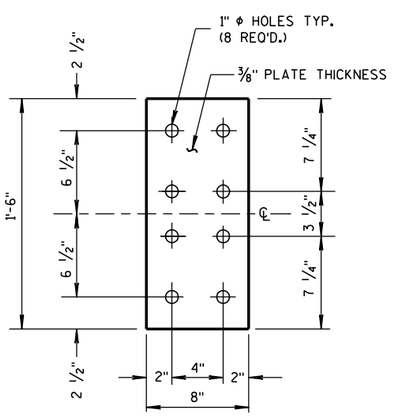

FRONT VIEW

ANCHOR PLATE DETAIL, TYPE "M"

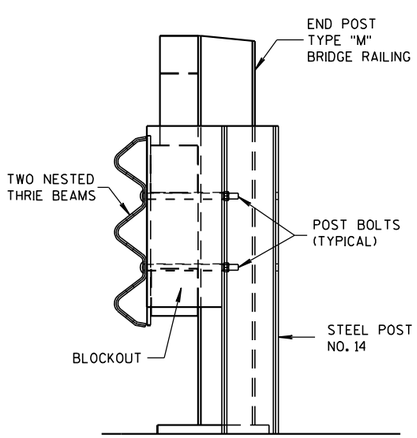

SECTION M-M

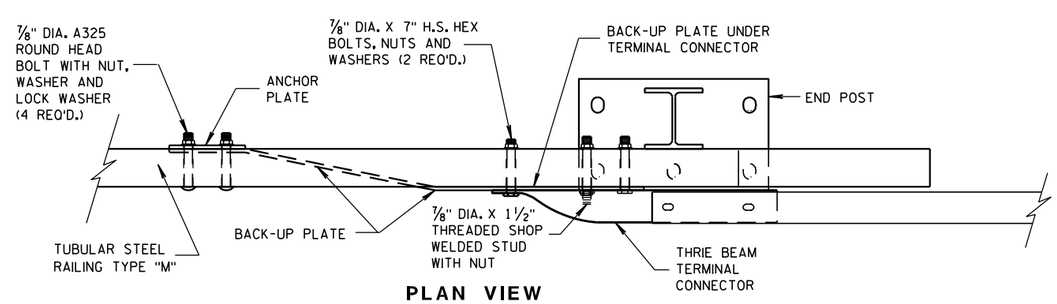

PLAN VIEW

THRIE BEAM CONNECTION TO TUBULAR RAILING, TYPE "M"

MIDWEST GUARDRAIL SYSTEM THRIE BEAM TRANSITION (MGS)

STATE OF WISCONSIN
DEPARTMENT OF TRANSPORTATION

APPROVED

8-31-2012	/S/ Jerry H. Zogg	
DATE	ROADWAY STANDARDS ENGINEER	ENT

FHWA

GENERAL NOTES

COVER PLATE PANELS ARE 3/16" THICK.

ALL STIFFENERS ARE 1/4" THICK.

CONNECTOR PLATE SHALL BE FABRICATED FROM ASTM GRADE A36 STEEL AND GALVANIZED.

FOR GALVANIZED REQUIREMENTS, SEE SECTION 614 OF THE STANDARD SPECIFICATIONS.

ALL HOLE DIAMETERS SHALL BE 1".

FOR OPPOSITE SIDE INSTALLATION MIRROR DRAWINGS.

(1) STIFFENERS LOCATED AT THE OUTSIDE EDGES OF THE COVER PLATES SHALL BE WELDED AS FOLLOWS:
SINGLE BEVEL GROOVE WELD ON EXTERNAL SIDES AND 3/16" FILLET WELD BY 1" LONG SPACED AT 2" ON INTERNAL SIDES.

(2) STIFFENERS LOCATED ON THE INSIDE OF THE COVER PLATE SHALL BE WELDED AS FOLLOWS:
3/16" FILLET WELD BY 1" LONG SPACED AT 2".

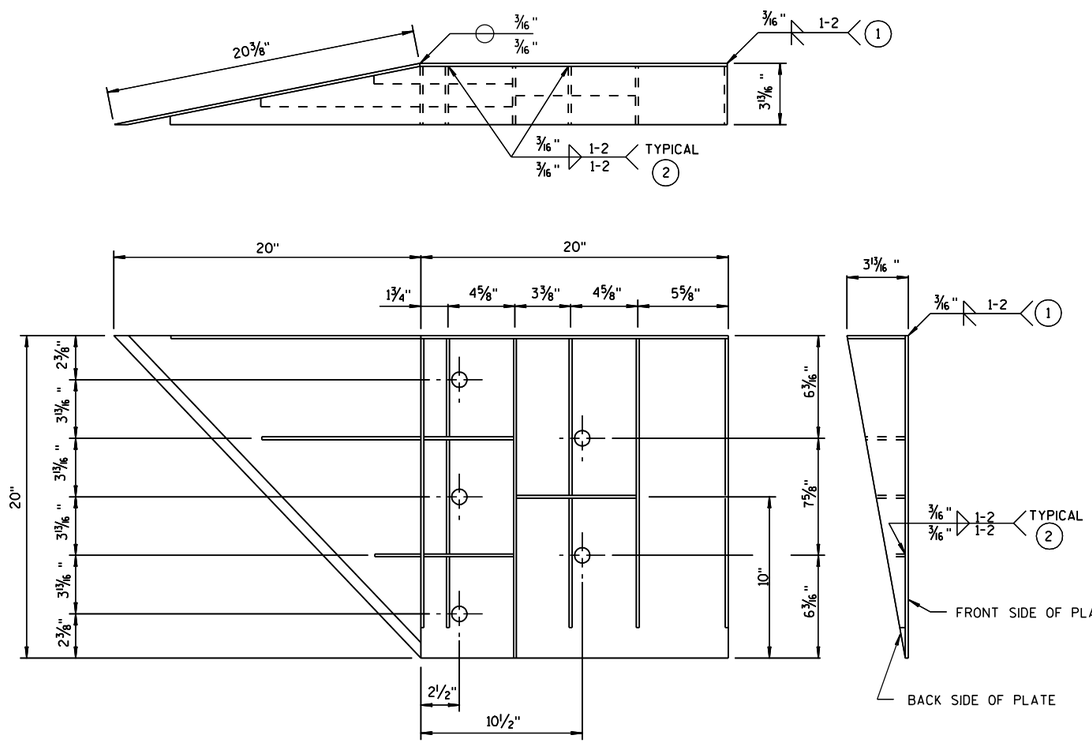

WELDING INSTRUCTION

(VIEWED FROM BACK SIDE OF PLATE)

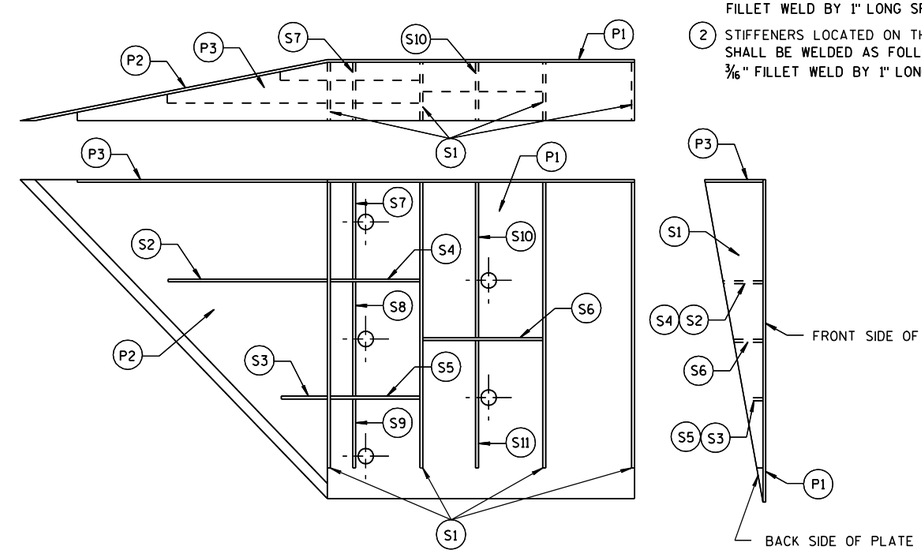

PLATE AND STIFFENER IDENTIFICATION

(VIEWED FROM BACK SIDE OF PLATE)

CONNECTOR PLATE DIMENSION (PER ASSEMBLY)

PLATE	QUANTITY	SHAPE	SIZE (A x B x C x D)	THICKNESS
P1	1		20" x 20"	3/16"
P2	1		20" x 20" x 28 9/16"	3/16"
P3	1		39" x 3 5/8" x 20" x 19 5/16"	3/16"
S1	4		18 7/16" x 3 5/8" x 18 3/4"	1/4"
S2	1		10 1/4" x 2 7/16" x 10 3/8" x 1/2"	1/4"
S3	1		3" x 1 1/16" x 3 1/8" x 1/2"	1/4"
S4	1		6 1/8" x 2 7/16"	1/4"
S5	1		6 1/8" x 1 1/16"	1/4"
S6	1		7 3/4" x 1 3/4"	1/4"
S7	1		2 9/16" x 6" x 3 5/8" x 5 7/8"	1/4"
S8	1		1 5/32" x 7 1/2" x 2 1/2" x 7 3/8"	1/4"
S9	1		6 1/16" x 6 3/16" x 1 3/32"	1/4"
S10	1		1 7/8" x 9 7/8" x 3 5/8" x 9 11/16"	1/4"
S11	1		8 1/2" x 8 3/4" x 1 13/16"	1/4"

SINGLE SLOPE CONNECTION PLATE

MIDWEST GUARDRAIL SYSTEM
THRIE BEAM TRANSITION (MGS)

STATE OF WISCONSIN
DEPARTMENT OF TRANSPORTATION

APPROVED

8/31/2012 — DATE

/S/ Jerry H. [illegible] — ROADWAY STANDARDS DEVELOPMENT ENGINEER

FHWA

GENERAL NOTES

CONNECTOR PLATE, DRILLING BOLT HOLES THROUGH THE PARAPET, BOLTS, NUTS, WASHERS AND REPAIRING DAMAGED CONCRETE ARE INCIDENTAL TO THE CONTRACT.

(1) BOLTS MAY BE A325 BOLTS OR A449 BOLTS. BOLT LENGTH AND THREADING LENGTH ARE TO ALLOW FOR A TIGHT CONNECTION BETWEEN RIGID BARRIER AND THRIE BEAM CONNECTION PLATE. CONTRACTOR IS TO FIELD VERIFY BOLT LENGTH AND THREAD LENGTH. ONE ROUND WASHER REQUIRED BETWEEN BOLT HEAD AND THRIE BEAM CONNECTOR PLATE. BOLTS THAT EXTEND THROUGH THE PARAPET AND OUT THE BACK FACE REQUIRE A HARDENED ROUND STEEL WASHER THAT IS 2" O.D. X 5/8" THICK AND ONE PLATE WASHER. REPAIR ANY DAMAGED CONCRETE FROM BOLT INSTALLATION.

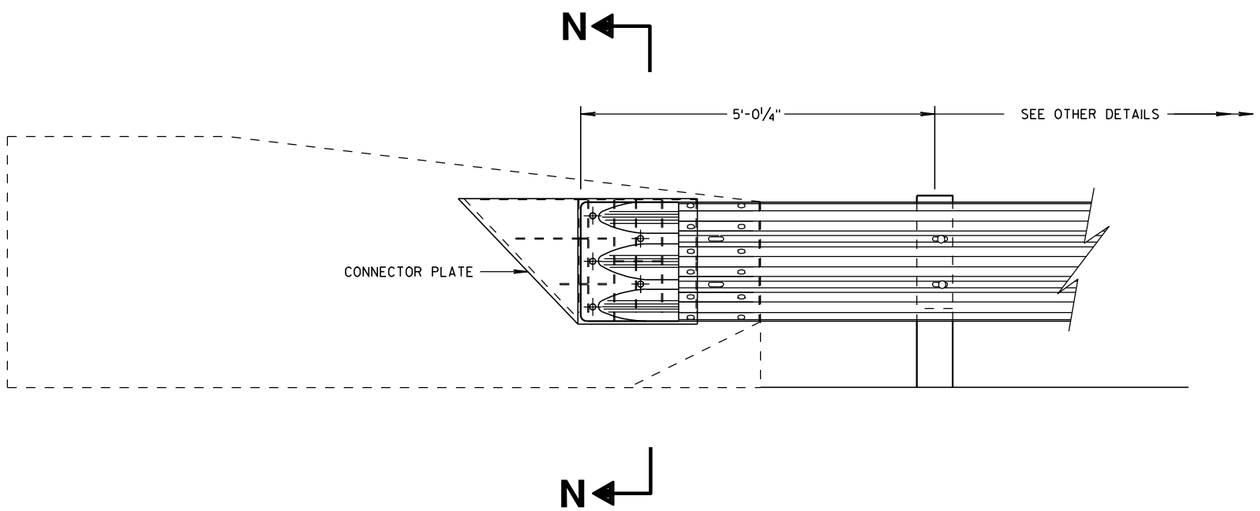

THRIE BEAM CONNECTION TO SINGLE SLOPE BARRIER

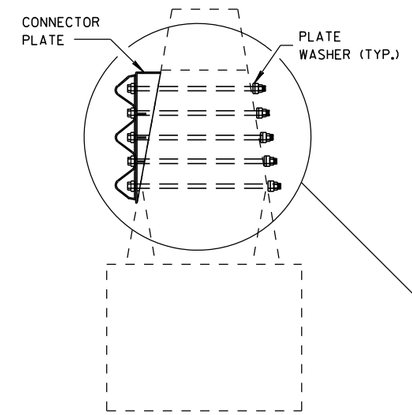

SECTION N-N

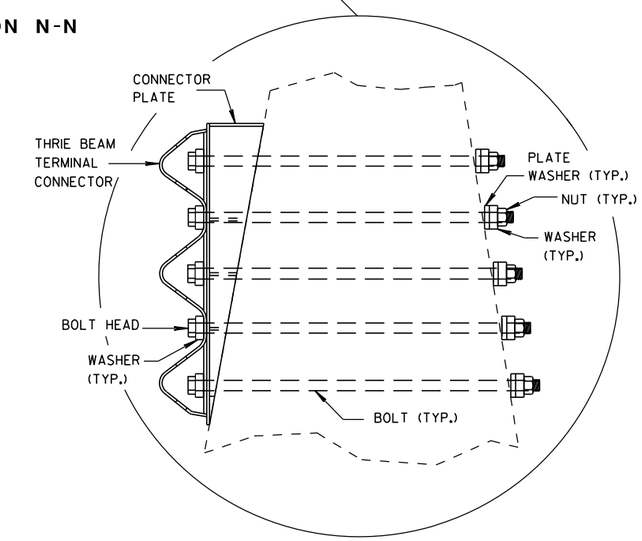

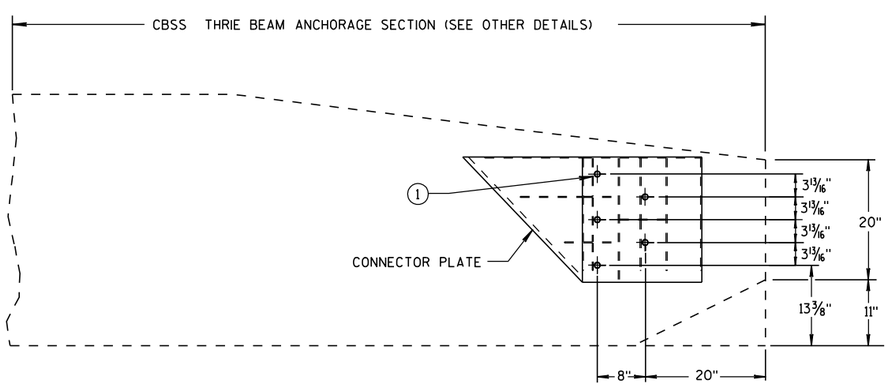

SINGLE SLOPE CONNECTION PLATE PLACEMENT

MIDWEST GUARDRAIL SYSTEM THRIE BEAM TRANSITION (MGS)

STATE OF WISCONSIN
DEPARTMENT OF TRANSPORTATION

APPROVED

8/31/2012 — DATE

/S/ Jerry H. [illegible] — ROADWAY STANDARDS DEVELOPMENT ENGINEER

FHWA

6

S.D.D. 14 B 45-3j

TYPICAL SIDEROAD APPROACH WARNING SIGN DETAIL

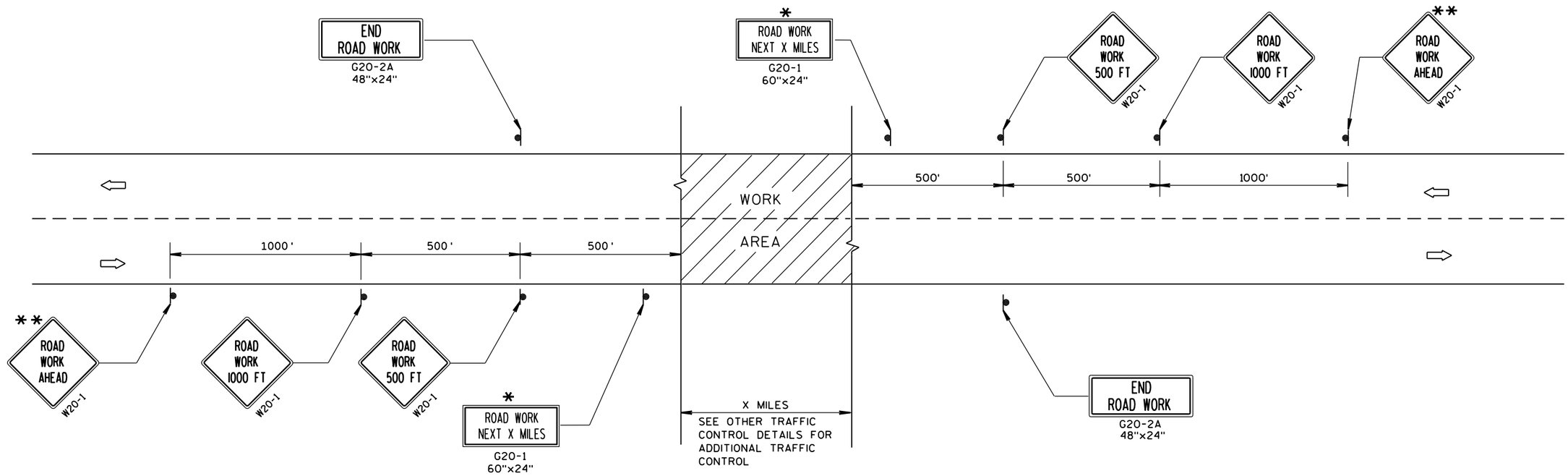

GENERAL NOTES

THE EXACT NUMBER, LOCATION, AND SPACING OF ALL SIGNS AND DEVICES SHALL BE ADJUSTED TO FIT FIELD CONDITIONS.

THE SPACING BETWEEN TRAFFIC CONTROL SIGNS SHOULD BE ADJUSTED TO NOT CONFLICT WITH AND SHOULD PROVIDE A MINIMUM OF 200 FEET (500 FEET DESIRABLE) CLEARANCE TO EXISTING SIGNS THAT WILL REMAIN IN PLACE.

ALL SIGNS ARE 48"x48" UNLESS OTHERWISE NOTED.

SIGNS THAT WILL BE IN PLACE LESS THAN 7 CONTINUOUS DAYS AND NIGHTS MAY BE MOUNTED ON PORTABLE SUPPORTS.

IF A "STOP" SIGN MUST BE REMOVED FOR A WORK OPERATION, A TEMPORARY "STOP" SIGN SHALL BE PLACED PRIOR TO THE SIGN REMOVAL, OR A FLAGGER SHALL BE PROVIDED UNTIL THE SIGN IS RE-ESTABLISHED.

* OMIT G20-1 SIGNS IF LENGTH OF WORK AREA IS 2 MILES OR LESS.

** PLACE ADDITIONAL W20-1 "ROAD WORK AHEAD" SIGN IF WORK AREA WITHIN THE PROJECT IS SEPARATED BY MORE THAN 2 MILES FROM PREVIOUS WORK AREA.

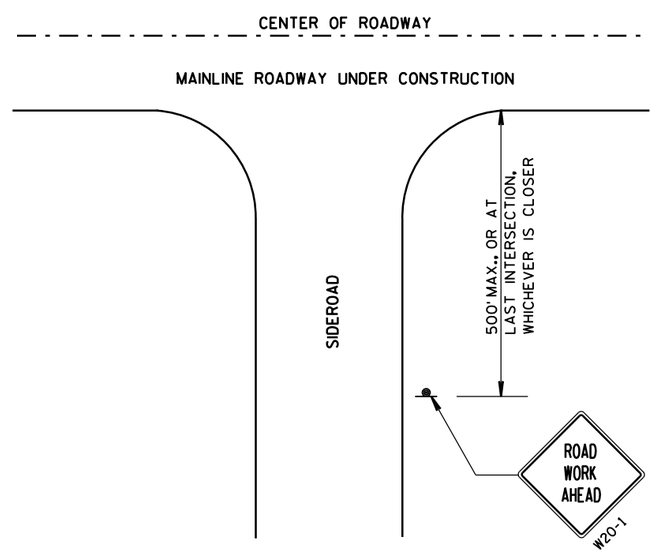

LEGEND

- SIGN ON PERMANENT SUPPORT
- DIRECTION OF TRAFFIC
- WORK AREA

TRAFFIC CONTROL, ADVANCE WARNING SIGNS 45 M.P.H. OR GREATER TWO-WAY UNDIVIDED ROAD OPEN TO TRAFFIC

STATE OF WISCONSIN
DEPARTMENT OF TRANSPORTATION

APPROVED
8/2013 — DATE
/S/ Travis Feltes — STATE TRAFFIC ENGINEER
FHWA

S.D.D. 15 C 4-2
6

GENERAL NOTES

DETAILS OF INSTALLATION, MATERIALS AND WORKMANSHIP NOT SHOWN ON THIS DRAWING SHALL CONFORM TO THE PERTINENT REQUIREMENTS OF THE STANDARD SPECIFICATIONS AND APPLICABLE SPECIAL PROVISIONS.

ALL LETTERS, ARROWS AND SYMBOLS SHALL BE IN CONFORMANCE WITH REQUIREMENTS INCLUDED IN "STANDARD ALPHABETS FOR HIGHWAY SIGNS AND PAVEMENT MARKING" BOOK BY THE FEDERAL HIGHWAY ADMINISTRATION. ALL LETTERS, ARROWS AND SYMBOLS SHALL BE WHITE AND REFLECTORIZED. SMALL DIFFERENCES IN DIMENSIONS WITHIN THE TOLERANCES OF THAT BOOK ARE ACCEPTABLE.

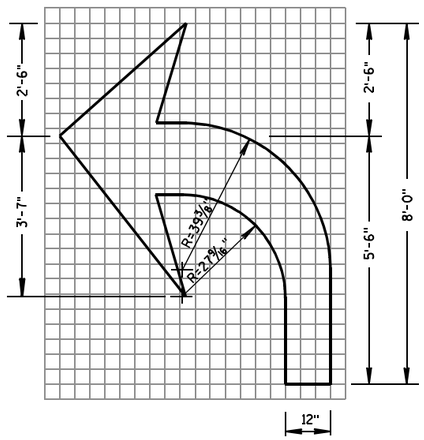

TYPE 2

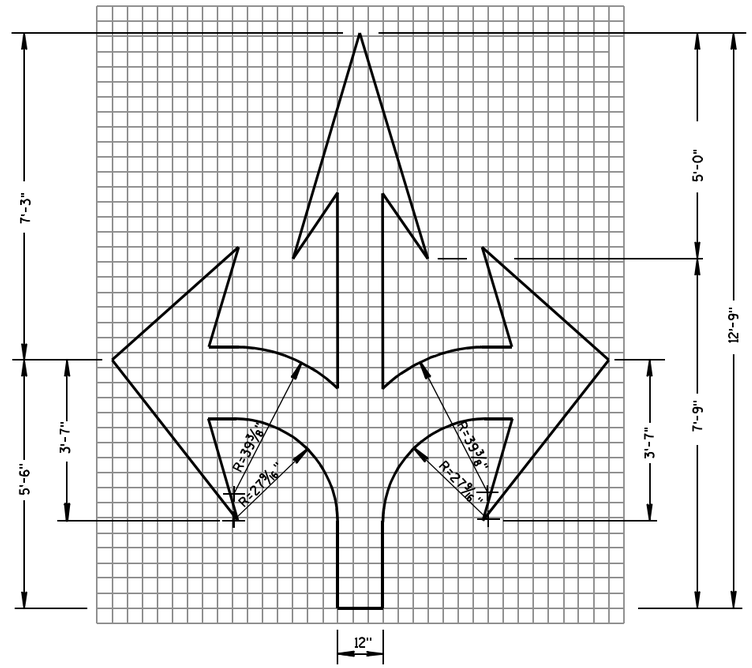

TYPE 6

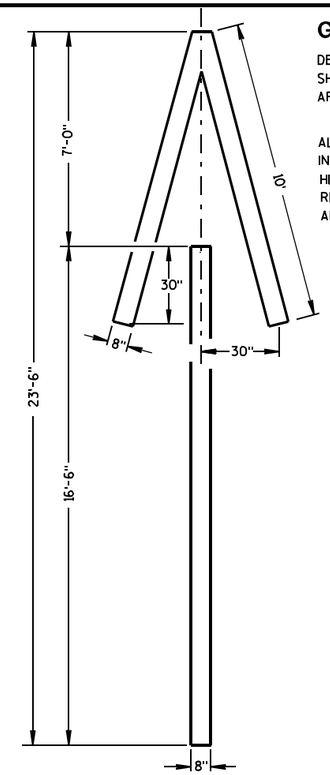

TYPE 4

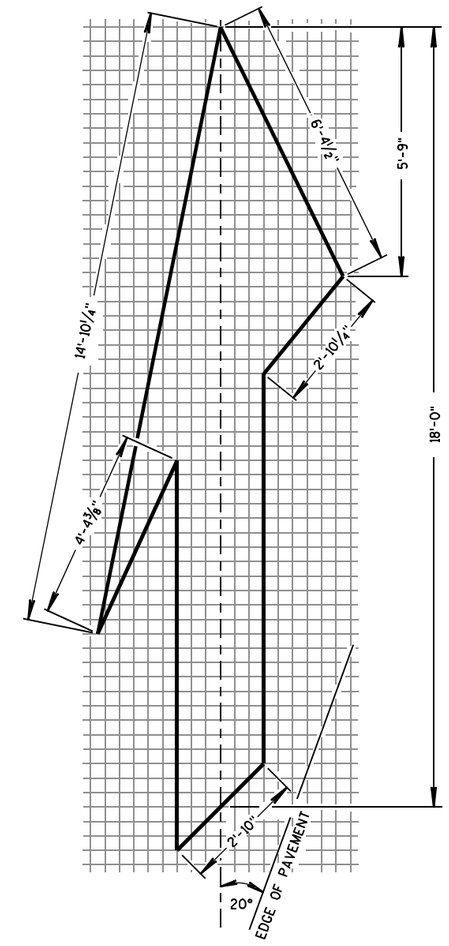

TYPE 5 LANE DROP ARROW

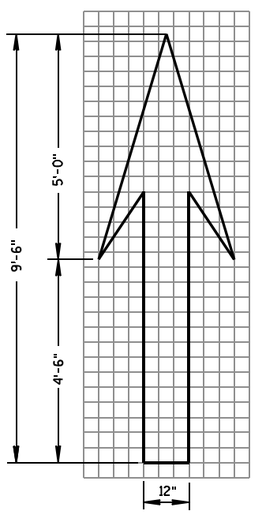

TYPE 1

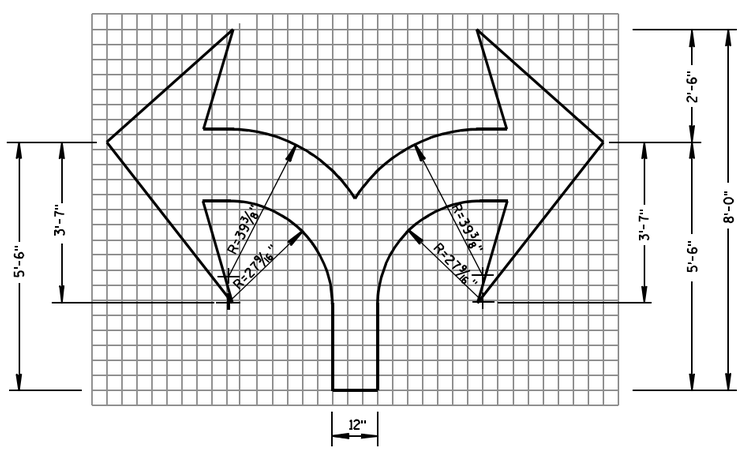

TYPE 7

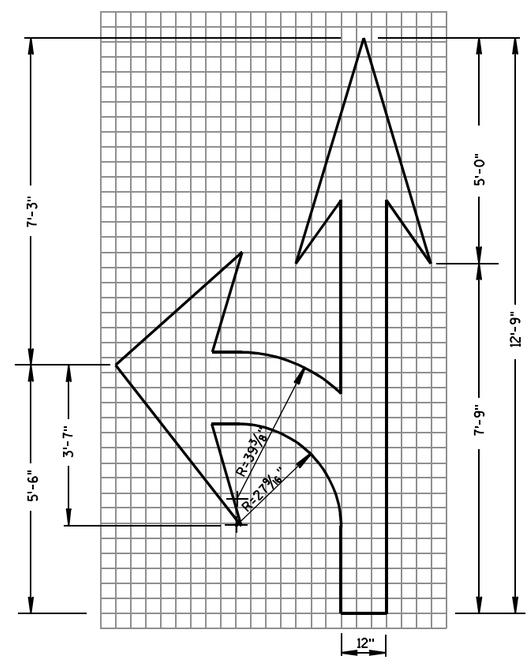

TYPE 3

PAVEMENT MARKING ARROWS

STATE OF WISCONSIN
DEPARTMENT OF TRANSPORTATION

APPROVED

7/1/11	/S/ Thomas N. Nothohm
DATE	STATE TRAFFIC ENGINEER

FHWA

6

6

S.D.D. 15 C 7-12c

S.D.D. 15 C 7-12c

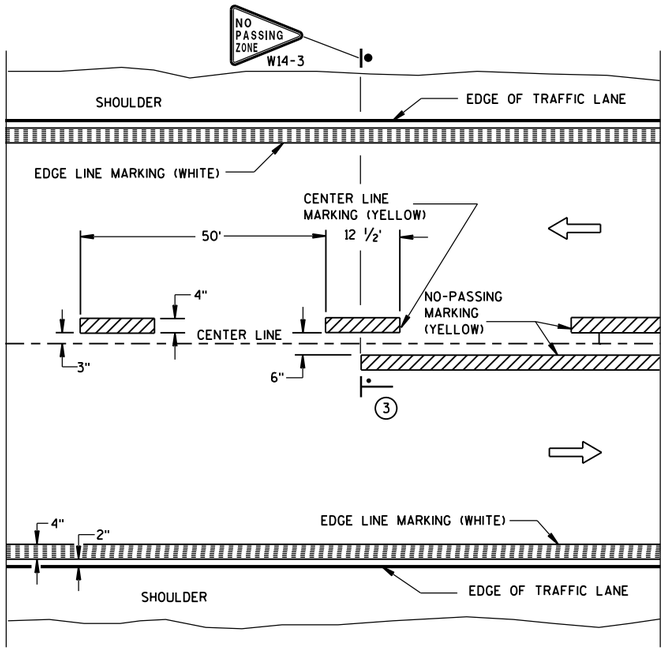

TWO WAY TRAFFIC

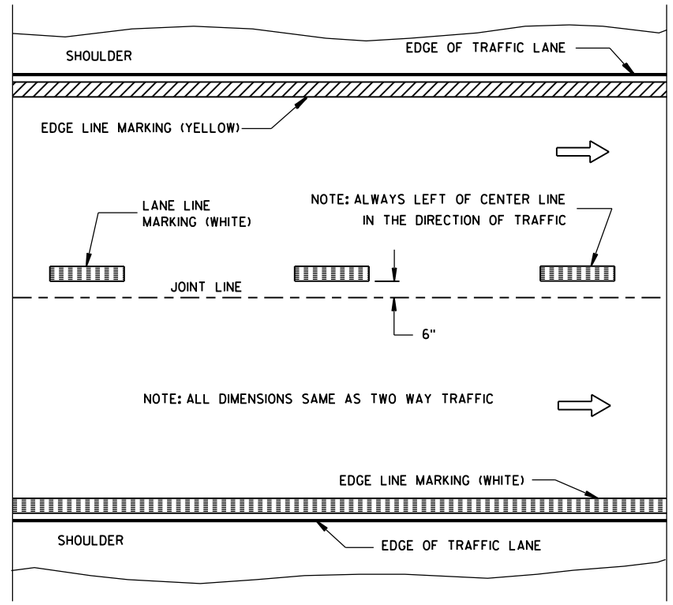

ONE WAY TRAFFIC

PERMANENT PAVEMENT MARKING

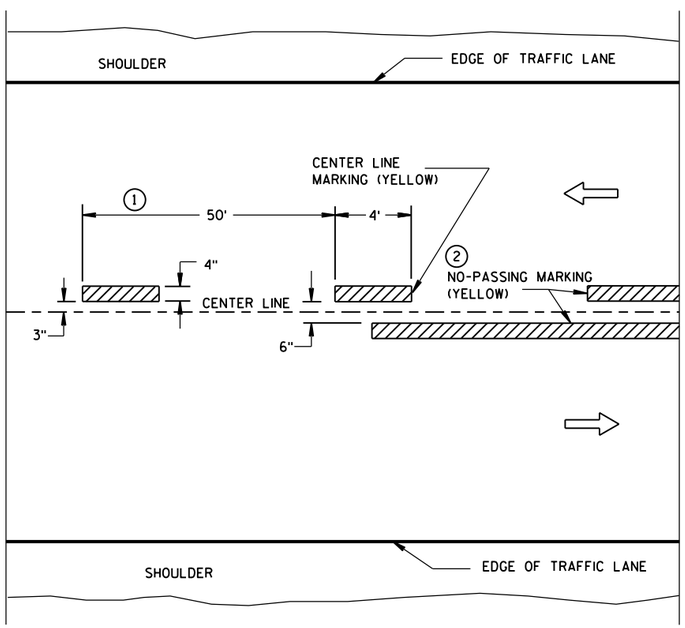

TWO WAY TRAFFIC

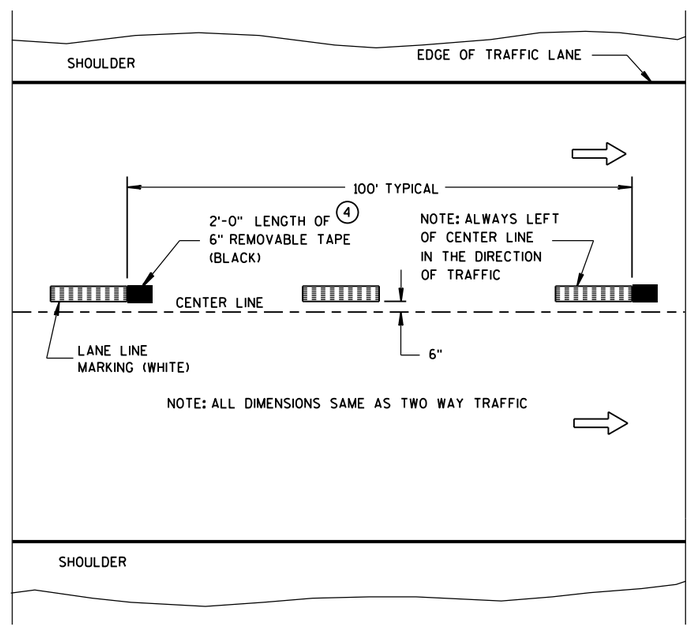

ONE WAY TRAFFIC

TEMPORARY (INTERMEDIATE) PAVEMENT MARKING

(SHOWS CYCLE FOR TEMPORARY CENTER LINE OR TEMPORARY LANE LINE MARKING)

GENERAL NOTES

DETAILS OF CONSTRUCTION NOT SHOWN ON THIS DRAWING SHALL CONFORM TO STANDARD SPECIFICATIONS AND SPECIAL PROVISIONS.

1. HALF CYCLE LENGTHS (25'±) WITH 2' MINIMUM STRIPE LENGTHS SHALL BE PROVIDED ON ROADWAYS (INCLUDING TEMPORARY TRAVELED WAYS) WITH REVERSE CURVATURE, CURVATURE OF OVER 5 DEGREES OR WHEN DIRECTED BY THE ENGINEER TO MARK UNUSUAL ALIGNMENT OF THE TRAVELED WAY.
2. NO PASSING ZONE TEMPORARY PAVEMENT MARKING IS REQUIRED TO BE PLACED, WHERE APPROPRIATE, ALONG WITH CENTERLINE TEMPORARY PAVEMENT MARKING WHEN A SAME DAY PERMANENT PAVEMENT MARKING ITEM IS INCLUDED IN THE CONTRACT.
3. NO PASSING ZONE MARKINGS ARE PLACED ACCORDING TO "T" MARKINGS. IF EXISTING NO PASSING ZONE W14-3 SIGNS ARE BEYOND 50 FEET IN EITHER DIRECTION, THE SIGNS SHALL BE MOVED TO THE "T" MARKINGS.
4. CONCRETE ONLY.

NOTE

ARROW SYMBOL (⇨) SHOWS DIRECTION OF TRAVEL

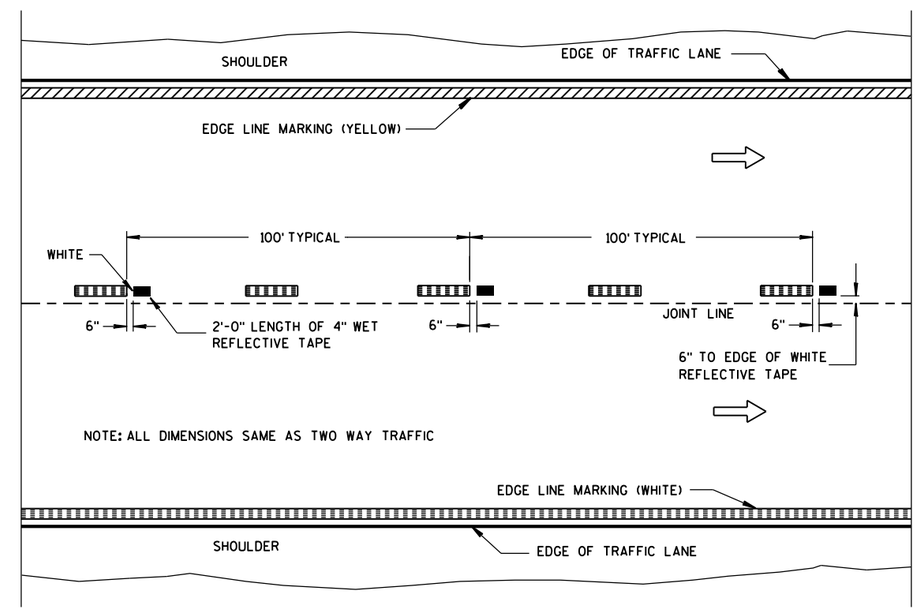

WET REFLECTIVE TAPE SUPPLEMENT TO SPRAYED OR NON WET REFLECTIVE TAPE LANE LINE

LEGEND

"T" MARKING

POST MOUNTED SIGN

PAVEMENT MARKING (MAINLINE)

STATE OF WISCONSIN
DEPARTMENT OF TRANSPORTATION

APPROVED
5-13-2013 — DATE
/S/ Travis Feltes — STATE TRAFFIC E
FHWA

6

S.D.D. 15 C 8-16a

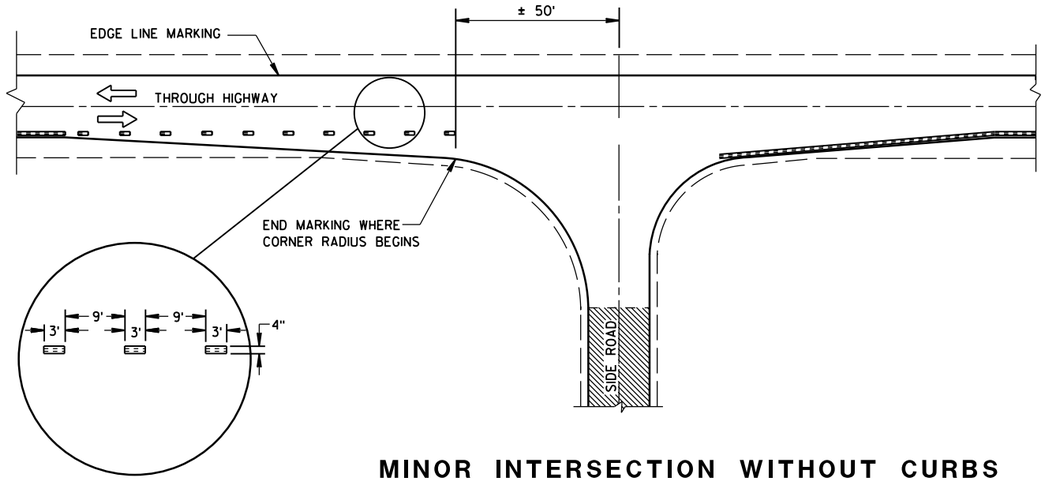

MINOR INTERSECTION WITHOUT CURBS

GENERAL NOTES

EDGE LINES SHALL BE OMITTED THROUGH INTERSECTIONS. EDGE LINES SHALL BE CONTINUED THROUGH DRIVEWAYS.

(1) WHEN DISTANCE "A" IS LESS THAN 250 FEET, OMIT LANE LINE.

(2) WHEN DISTANCE "B" IS LESS THAN 100 FEET, OMIT CHANNELIZING LANE LINE.

(3) ALTERNATIVE MARKING SHALL BE PROVIDED WHEN SPECIFIED IN THE CONTRACT. TYPICAL SITUATIONS WHERE THIS MARKING MAY BE REQUIRED ARE WHERE THE INTERSECTION IS ON A SHARP HORIZONTAL CURVE OR CREST VERTICAL CURVE IN AN UNLIGHTED AREA SUCH THAT THE EDGE LINE MAY BE MISLEADING TO THE MOTORIST OR DISAPPEAR FROM SIGHT.

(4) THE EDGE LINE IN THE TAPER AREAS OF THE BYPASS LANE AND THE BYPASS LANE SHALL BE LOCATED 1-FOOT FROM EDGE OF PAVEMENT TO THE OUTSIDE EDGE OF EDGE LINE.

(5) BARRIER LINE ENDS AT SIDE ROAD PAVEMENT/SURFACE EDGE EXTENSION.

(6) BARRIER LINE STARTS 500 FEET PRIOR TO THE BYPASS TAPER.

(7) IF THE DISTANCE BETWEEN 2 SUCCESSIVE NO-PASSING ZONES IS LESS THAN THE MINIMUM DISTANCE BETWEEN ZONES, CONNECT THE 2 ZONES.

(8) 3' LINE 9' GAP, EXCEPT RETRACE THE EXISTING LINE - GAP PATTERN WHERE EXISTING MARKINGS ARE IN PLACE.

ARROW SYMBOL (⇨) SHOWS DIRECTION OF TRAVEL

(7)

POSTED SPEED (MPH)	MINIMUM DISTANCE BETWEEN ZONES (FEET)
25 - 30	528
35 - 40	528
45 - 50	686
55	792

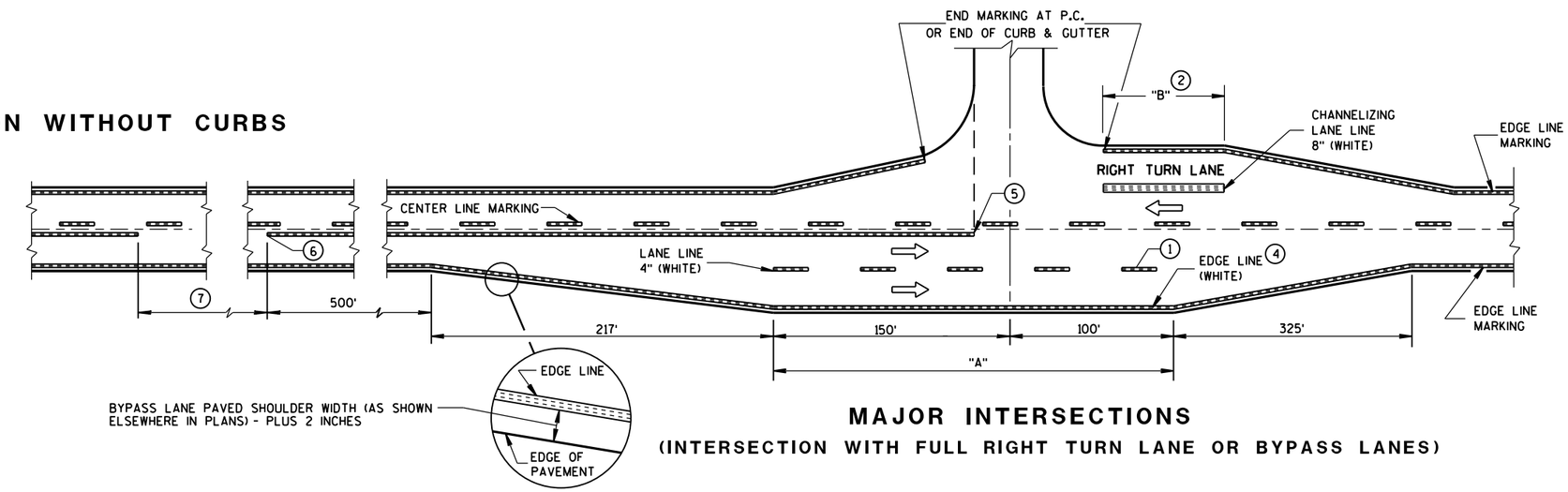

MAJOR INTERSECTIONS

(INTERSECTION WITH FULL RIGHT TURN LANE OR BYPASS LANES)

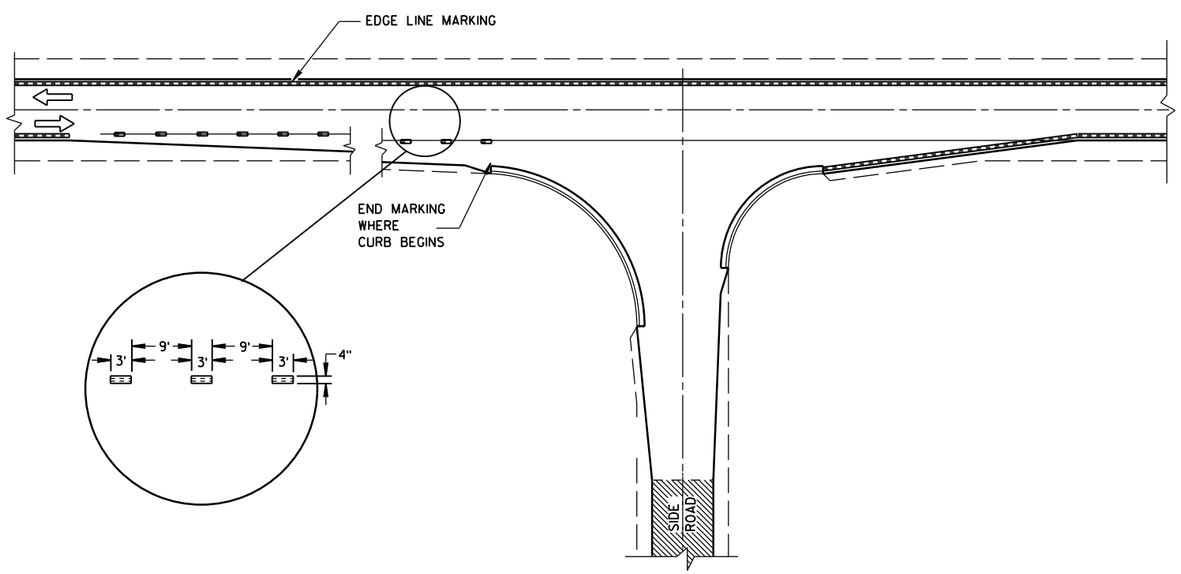

MINOR INTERSECTION WITH CURBS

(TYPICAL MARKING)

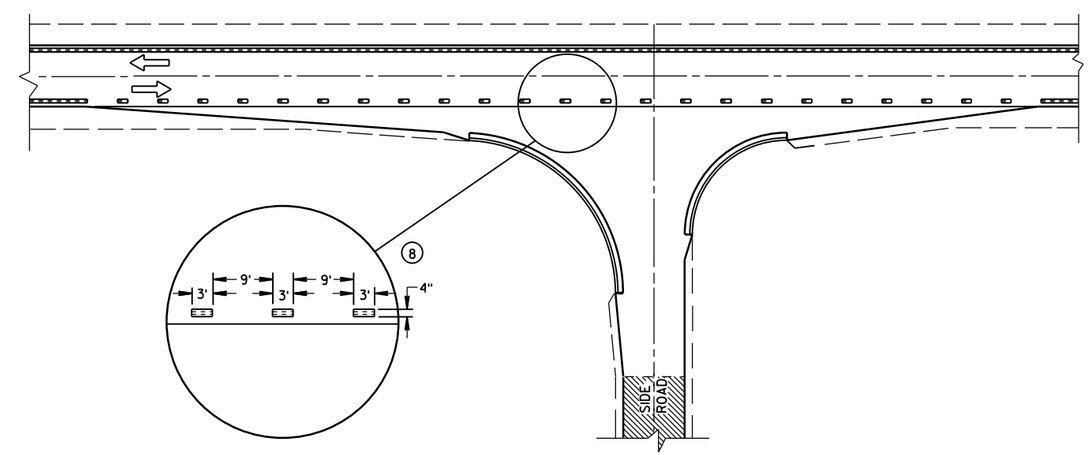

MINOR INTERSECTION WITH CURBS

(3) (FOR SPECIAL CONDITIONS AS SPECIFIED)

PAVEMENT MARKING
(INTERSECTIONS)

STATE OF WISCONSIN
DEPARTMENT OF TRANSPO

6

S.D.D. 15 C 8-16b

6

S.D.D. 15 C 8-16b

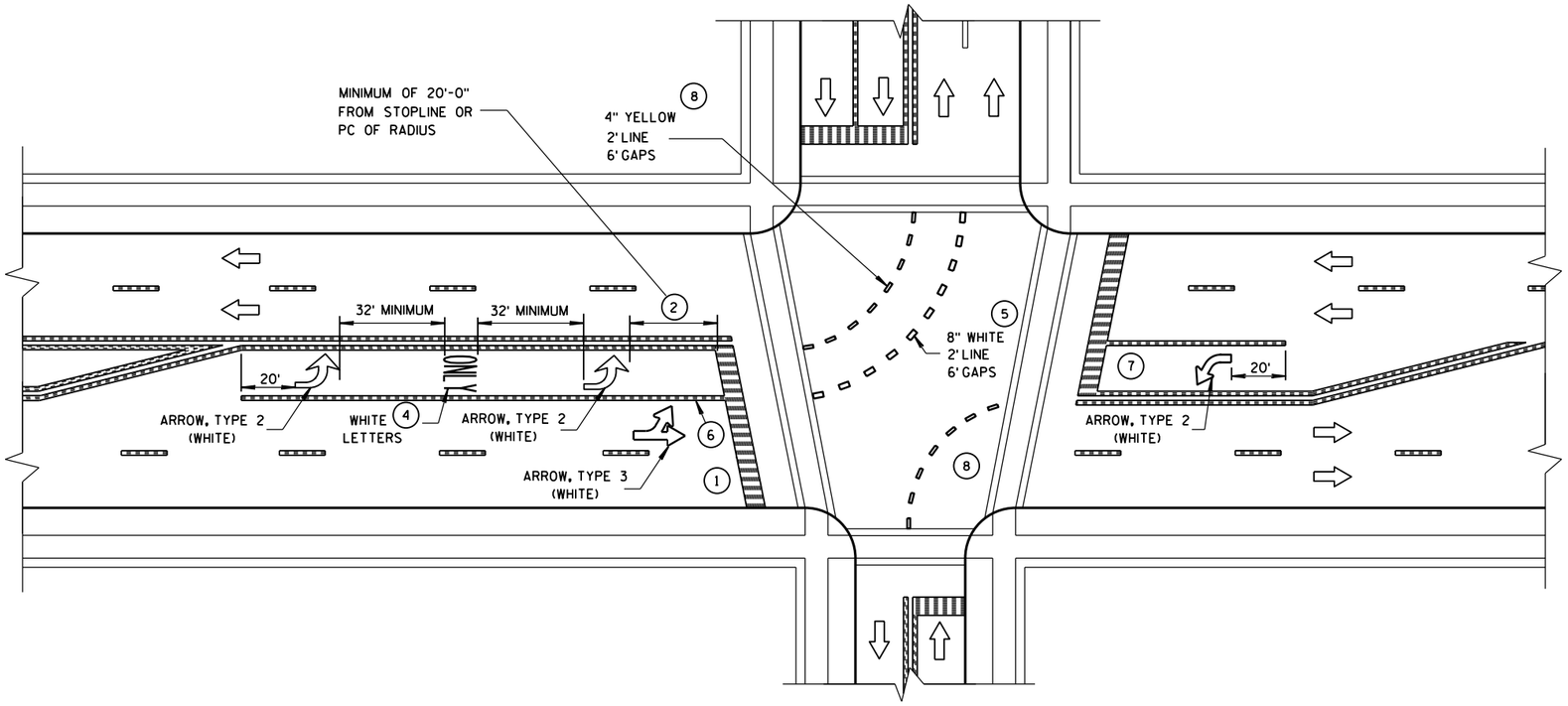

GENERAL NOTES

1. STOP BAR IS REQUIRED ONLY WHEN SPECIFIED IN THE CONTRACT.
2. DISTANCE MAY BE ADJUSTED TO ACCOMODATE SHORT LEFT TURN LANES. AS APPROVED BY THE ENGINEER.
3. A SET OF ARROWS IS REQUIRED EVERY 400 FEET OR NEAR INTERSECTIONS OR DRIVEWAYS WITH TURNING TRAFFIC.
4. ADD EXTRA SETS OF ONE ARROW AND ONE ONLY PER 160 FEET OR WHEN ON A CURVE.
5. 8" WHITE WITH 2' LINE 6' GAPS FOR DUAL TURN LANE.
6. 8" WHITE
7. ADD SECOND ARROW WHEN TURN BAY IS GREATER THAN OR EQUAL TO 108 FEET.
8. REQUIRED ONLY WHEN SPECIFIED IN THE CONTRACT.

NOTE:
ARROW SYMBOL (⇨)
SHOWS DIRECTION OF TRAVEL

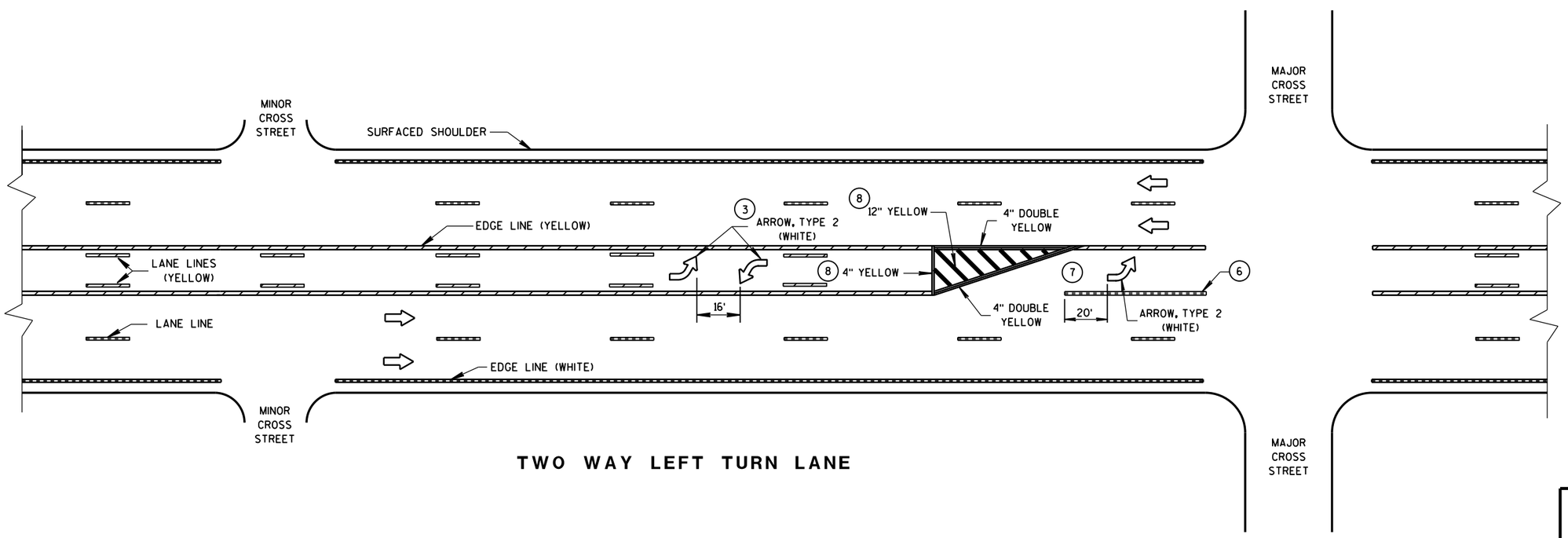

TWO WAY LEFT TURN LANE

PAVEMENT MARKING
(LEFT TURN LANE)

STATE OF WISCONSIN
DEPARTMENT OF TRANSPORTATION

6

S.D.D. 15 C 8-16e

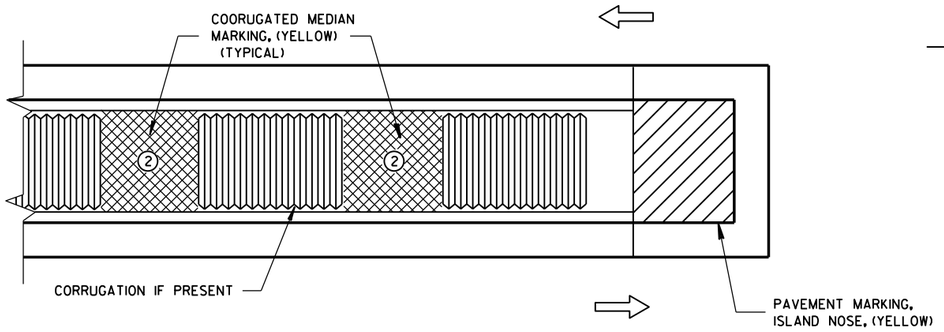

MEDIAN ISLAND WITH SQUARE BLUNT NOSE

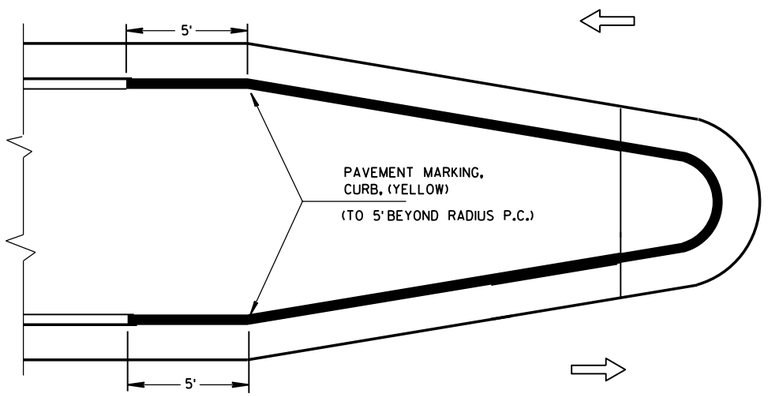

MEDIAN ISLAND WITH ROUND BLUNT NOSE

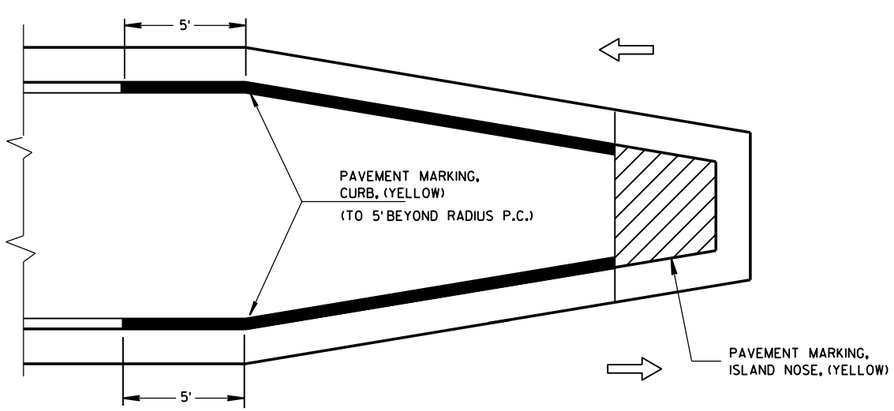

MEDIAN ISLAND WITH SLOPED NOSE

TYPICAL PLACEMENT OF PAVEMENT MARKING ON MEDIAN ISLANDS

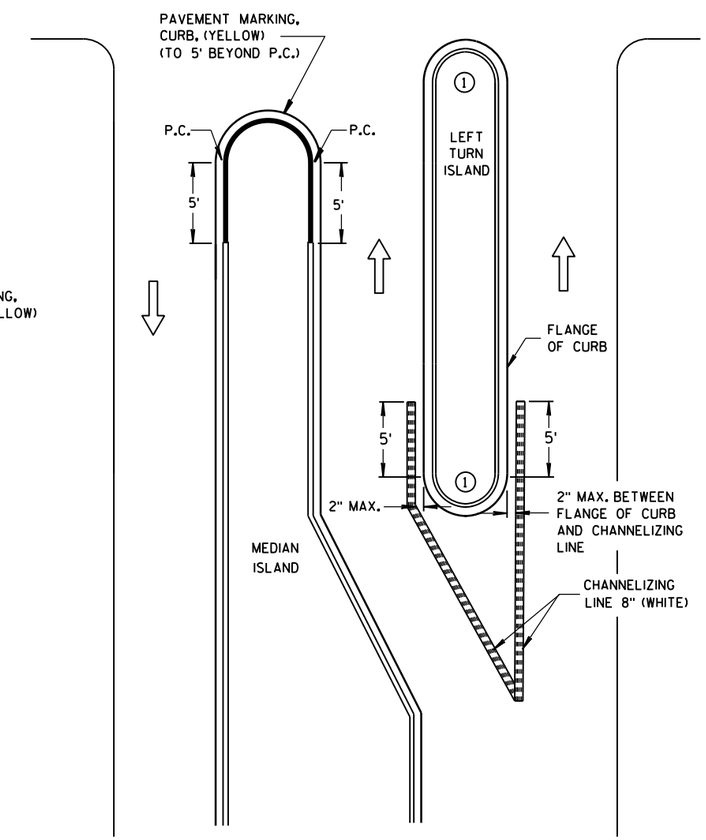

LEFT TURN & MEDIAN ISLAND

GENERAL NOTES

1. DO NOT MARK CURB NOSES THAT SEPARATE LANES OF TRAFFIC TRAVELING IN THE SAME DIRECTION.
2. WHEN CONCRETE CORRUGATED MEDIAN IS CONSTRUCTED TO SEPARATE TRAFFIC OPERATING IN THE OPPOSING DIRECTION YELLOW PAVEMENT MARKING SHALL BE APPLIED TO THE FLAT PORTION OF THE CONCRETE CORRUGATED MEDIAN. THE ITEM OF PAVEMENT MARKING, CONCRETE CORRUGATED MEDIAN, WILL BE MEASURED IN PLACE AND AND ACCEPTED IN ACCORDANCE WITH THE CONTRACT AND PAID FOR AT THE CONTRACT UNIT PRICE PER SQUARE FOOT.

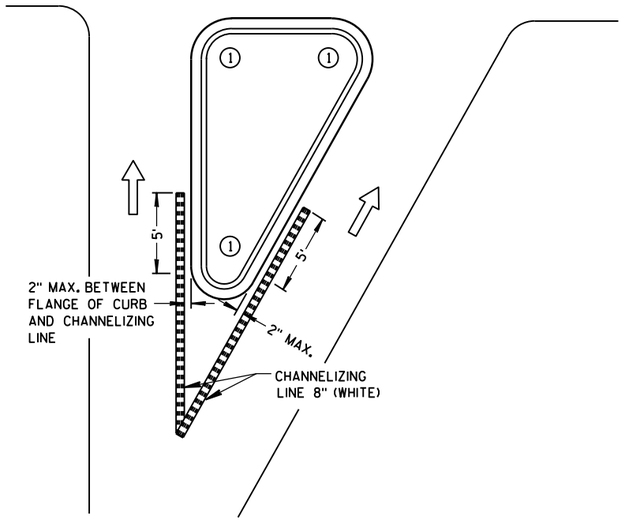

RIGHT TURN ISLAND

LEGEND

- ISLAND NOSE MARKING
- CURB MARKING
- CORRUGATED MEDIAN MARKING
- DIRECTION OF TRAVEL

PAVEMENT MARKING (ISLANDS)

STATE OF WISCONSIN
DEPARTMENT OF TRANSPOI

6

S.D.D. 15 C 8-16f

6

S.D.D. 15 C 8-16f

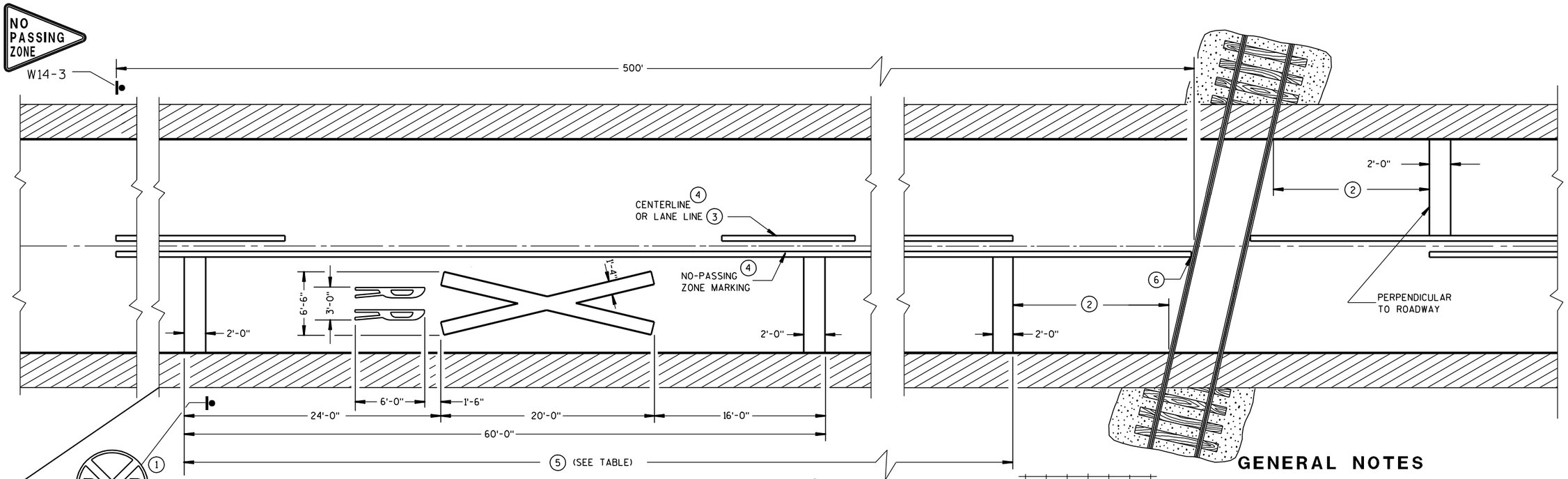

PREFERRED PAVEMENT MARKING 3

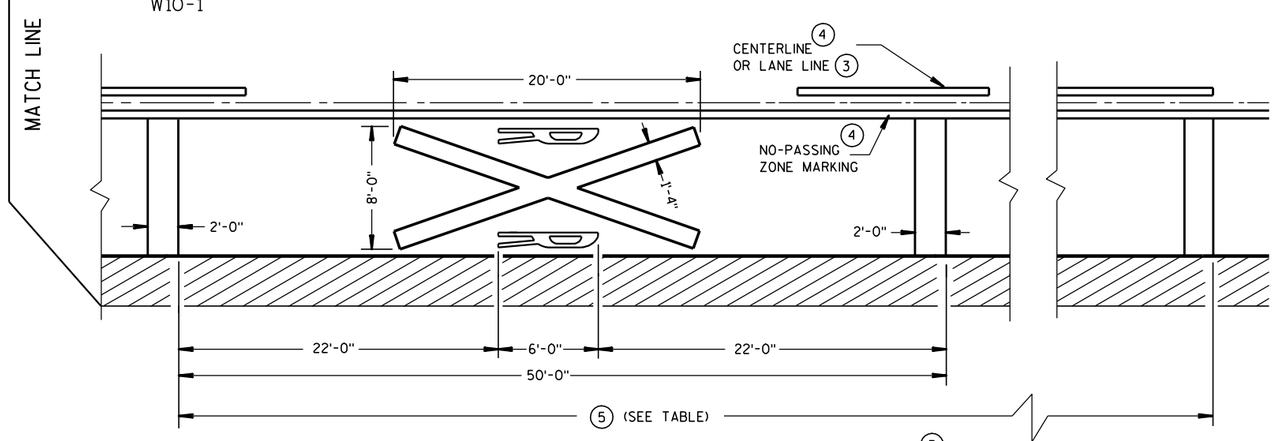

ALTERNATE PAVEMENT MARKING 3

5

Posted Speed (M.P.H.)	Dimension Range (Feet)
25	150*- 250
30	200*- 300
35	250*- 450
40	300*- 500
45	400*- 650
50	550*- 800
55	750*- 1000
60	1000*- 1250
65	1000*- 1250

* THE MINIMUM DISTANCES IN THE TABLE ARE DESIRABLE AND SHOULD BE USED. THE DISTANCES MAY BE INCREASED UP TO THE MAXIMUM TO ALLOW FOR FIELD CONDITIONS SUCH AS THE CLOSE PROXIMITY OF DRIVEWAYS, BRIDGES, SIDEROADS OR OTHER FEATURES THAT WOULD PROHIBIT THE MINIMUM DISTANCES FROM BEING USED.

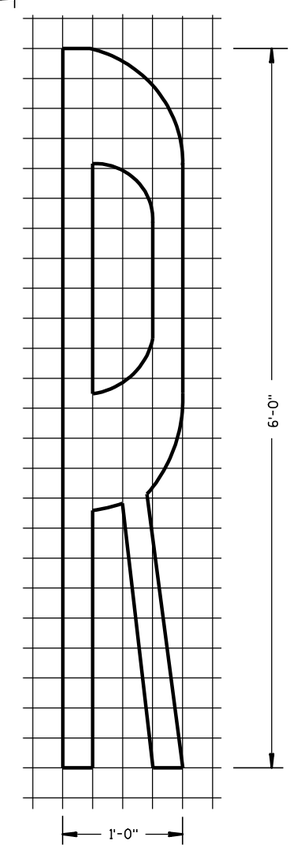

GENERAL NOTES

DETAILS OF CONSTRUCTION, MATERIALS, AND WORKMANSHIP NOT SHOWN ON THIS DRAWING SHALL CONFORM TO THE PERTINENT REQUIREMENTS OF THE STANDARD SPECIFICATIONS AND THE APPLICABLE SPECIAL PROVISIONS.

A THREE-LANE ROADWAY SHOULD BE MARKED WITH A CENTERLINE FOR TWO-LANE APPROACH OPERATION ON THE APPROACH TO A CROSSING.

ON MULTI-LANE ROADS THE TRANSVERSE BANDS SHOULD EXTEND ACROSS ALL APPROACH LANES, AND INDIVIDUAL R X R SYMBOLS SHOULD BE USED IN EACH APPROACH LANE. ALL LETTERS AND SYMBOLS SHALL BE IN CONFORMANCE WITH THE "STANDARD ALPHABETS FOR HIGHWAY SIGNS AND PAVEMENT MARKINGS" (ADOPTED BY THE FEDERAL HIGHWAY ADMINISTRATION).

CENTER OR LANE LINES AND NO-PASSING ZONE MARKINGS SHOWN ON THIS DRAWING ARE REQUIRED AND PAID FOR UNDER OTHER ITEMS IN THE CONTRACT.

1. A PORTION OF THE PAVEMENT MARKING SYMBOL SHOULD BE DIRECTLY OPPOSITE THE ADVANCE WARNING SIGN (W10-1).
2. MINIMUM 8' FROM ANY RAILROAD WARNING DEVICES (SIGNALS, GATES, ETC.) OR 25' FROM THE NEAREST RAIL, WHICHEVER DISTANCE IS GREATER.
3. REFLECTIVE WHITE.
4. REFLECTIVE YELLOW 500' MINIMUM. MARKING LIMITS MAY BE EXTENDED AS DIRECTED BY THE ENGINEER TO MEET ADJACENT NO-PASSING ZONE MARKINGS.
5. TABLE BASED UPON 2C-4 WISCONSIN SUPPLEMENT OF MANUAL ON UNIFORM TRAFFIC CONTROL DEVICES.
6. FOR MULTIPLE TRACK CROSSINGS, THE BARRIER LINE SHALL EXTEND TO THE NEAR RAIL OF THE FURTHEST TRACK IN THE DIRECTION OF HIGHWAY TRAVEL.

SIGNING AND PAVEMENT MARKING DETAILS FOR RAILROAD-HIGHWAY GRADE CROSSINGS

STATE OF WISCONSIN
DEPARTMENT OF TRANSPORTATION

APPROVED

1-9-2012 — DATE

/S/ Thomas N. [illegible] — STATE TRAFFIC ENGINEER DESIGN

FHWA

S.D.D. 15 C 9-9a

LEGEND

SIGN ON PORTABLE OR PERMANENT SUPPORT

DIRECTION OF TRAFFIC

WORK AREA

FLAGGER, EQUIPPED WITH STOP/SLOW PADDLE FASTENED ON SUPPORT STAFF

SIGN SPACING TABLE

SPEED LIMIT	SIGN SPACING A,B,C
25-35 MPH	200'
35-40 MPH	350'
45-55 MPH	500'

USE OF THE "BE PREPARED TO STOP" SIGN IS OPTIONAL. WHEN USED, THIS SIGN SHALL BE LOCATED BETWEEN THE W20-7a AND W20-4 SIGNS. A 500' TYPICAL SPACING SHALL BE PROVIDED BETWEEN THE SIGNS.

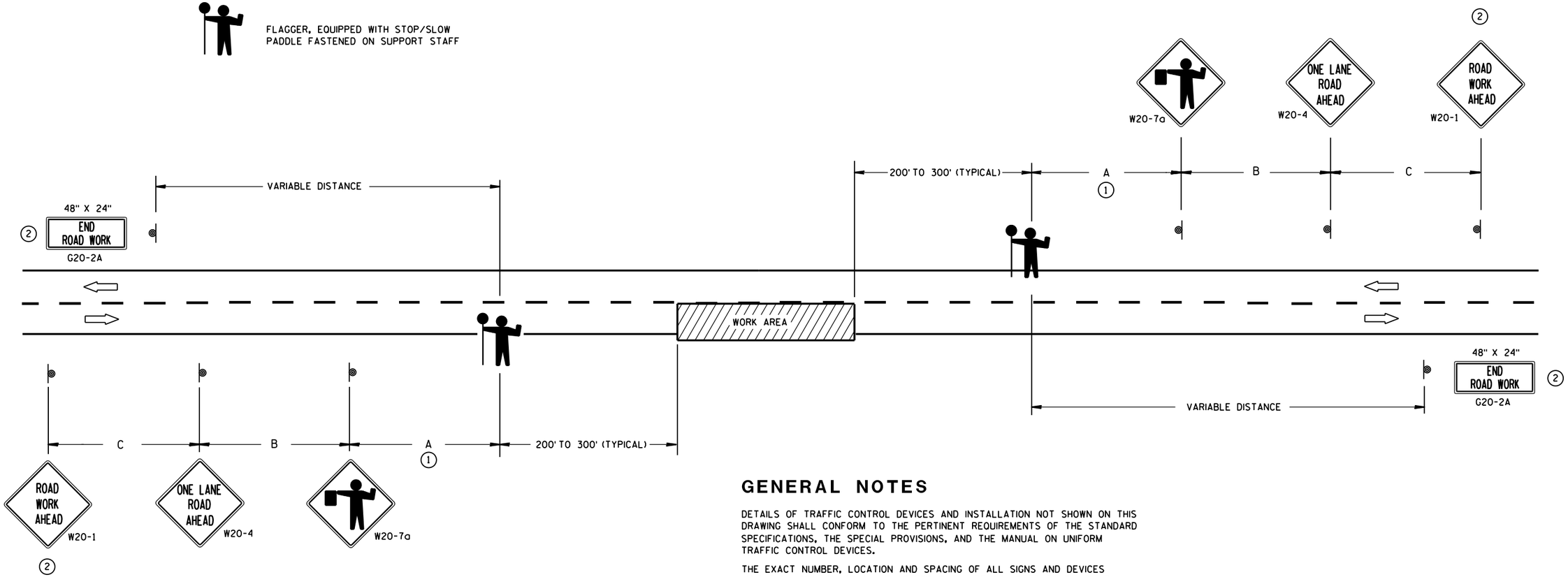

1. FOR A MOVING WORK OPERATION, SIGNING FOR BOTH DIRECTIONS SHALL BE REESTABLISHED (AS SIMULTANEOUSLY AS PRACTICAL) AT APPROXIMATELY 3500 FOOT INTERVALS IN THE MOVING WORK OPERATION OR AS APPROVED BY THE ENGINEER.

2. SIGN NOT REQUIRED IF FLAGGING OPERATION OCCURS WITHIN A SIGNED ROAD WORK ZONE AREA.

GENERAL NOTES

DETAILS OF TRAFFIC CONTROL DEVICES AND INSTALLATION NOT SHOWN ON THIS DRAWING SHALL CONFORM TO THE PERTINENT REQUIREMENTS OF THE STANDARD SPECIFICATIONS, THE SPECIAL PROVISIONS, AND THE MANUAL ON UNIFORM TRAFFIC CONTROL DEVICES.

THE EXACT NUMBER, LOCATION AND SPACING OF ALL SIGNS AND DEVICES (AND THE LOCATION OF ALL FLAGGERS) SHALL BE ADJUSTED TO FIT FIELD CONDITIONS AS APPROVED BY THE ENGINEER.

THE FIRST ADVANCE WARNING SIGN SHOULD TYPICALLY BE LOCATED IN ADVANCE OF THE ANTICIPATED TRAFFIC BACKUP OR QUEUE.

WHEN A SIDE ROAD OR RAMP INTERSECTS THE FACILITY ON WHICH THE WORK IS BEING PERFORMED, ADDITIONAL TRAFFIC CONTROLS SHALL BE PROVIDED AS SPECIFIED IN THE PLANS AND/OR THE SPECIAL PROVISIONS OR AS APPROVED BY THE ENGINEER.

FLAGGERS SHALL BE IN SIGHT OF EACH OTHER OR IN DIRECT COMMUNICATION AT ALL TIMES. THEY SHALL BE EQUIPPED WITH STOP/SLOW PADDLES FASTENED ON SUPPORT STAFFS. WHEN THE FLAGGING OPERATION IS NOT IN EFFECT, COVER OR REMOVE ALL TEMPORARY TRAFFIC CONTROL SIGNS.

ALL SIGNS ARE 48" X 48" UNLESS OTHERWISE NOTED.

TRAFFIC CONTROL FOR LANE CLOSURE (SUITABLE FOR MOVING OPERATIONS)

STATE OF WISCONSIN
DEPARTMENT OF TRANSPORTATION

APPROVED
8/2013 — DATE
/S/ Travis Feltes — STATE TRAFFIC ENGINEER
DESIGN
FHWA

6

S.D.D. 15 C 12-4

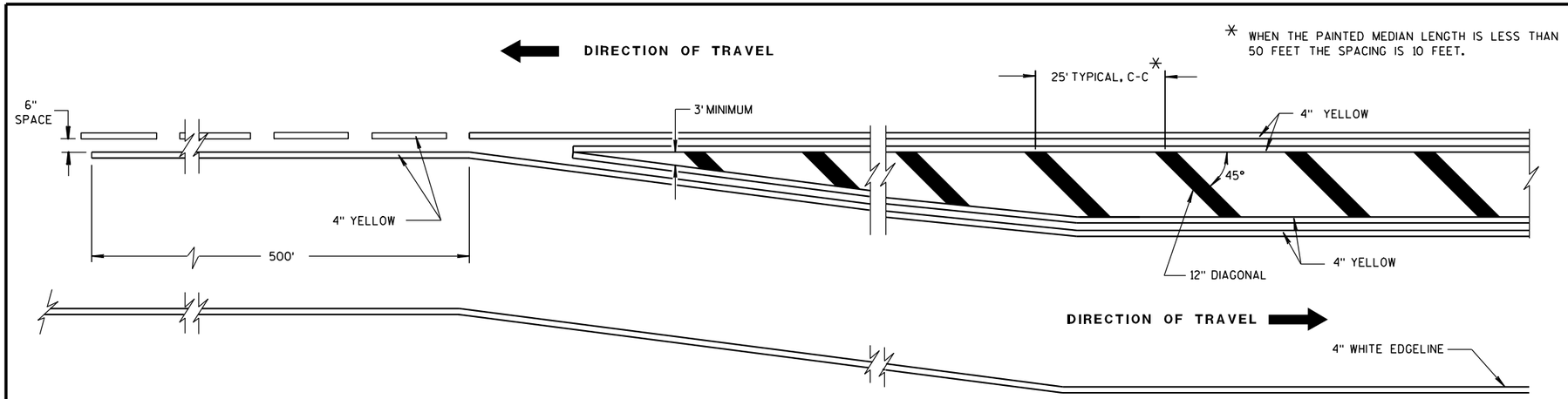

MEDIAN ISLAND DETAIL

GENERAL NOTE

DIAGONALS ARE OPTIONAL WHEN PAINTED ISLAND IS LESS THAN 6 FEET AT WIDEST POINT.

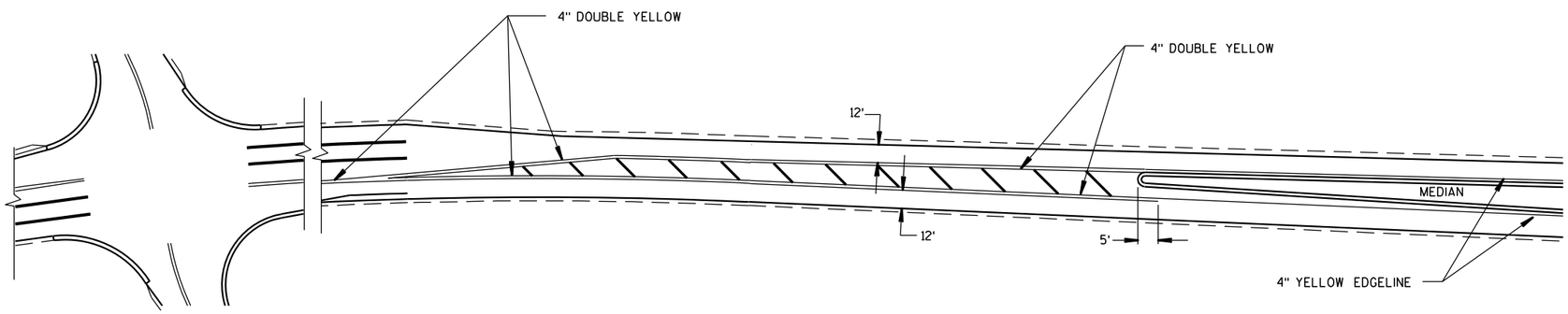

APPROACH MARKINGS FOR OTHER MEDIAN TYPES

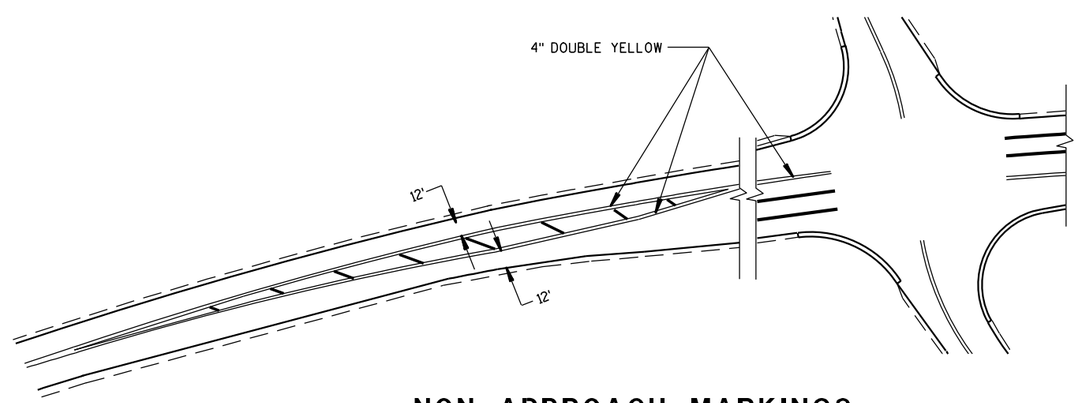

NON APPROACH MARKINGS

6

6

S.D.D. 15 C 18-3

S.D.D. 15 C 18-3

MEDIAN ISLAND MARKING

STATE OF WISCONSIN
DEPARTMENT OF TRANSPORTATION

APPROVED

2-5-09	/S/ Thomas N. Nothohm
DATE	STATE TRAFFIC ENGINEER

FHWA

IGN

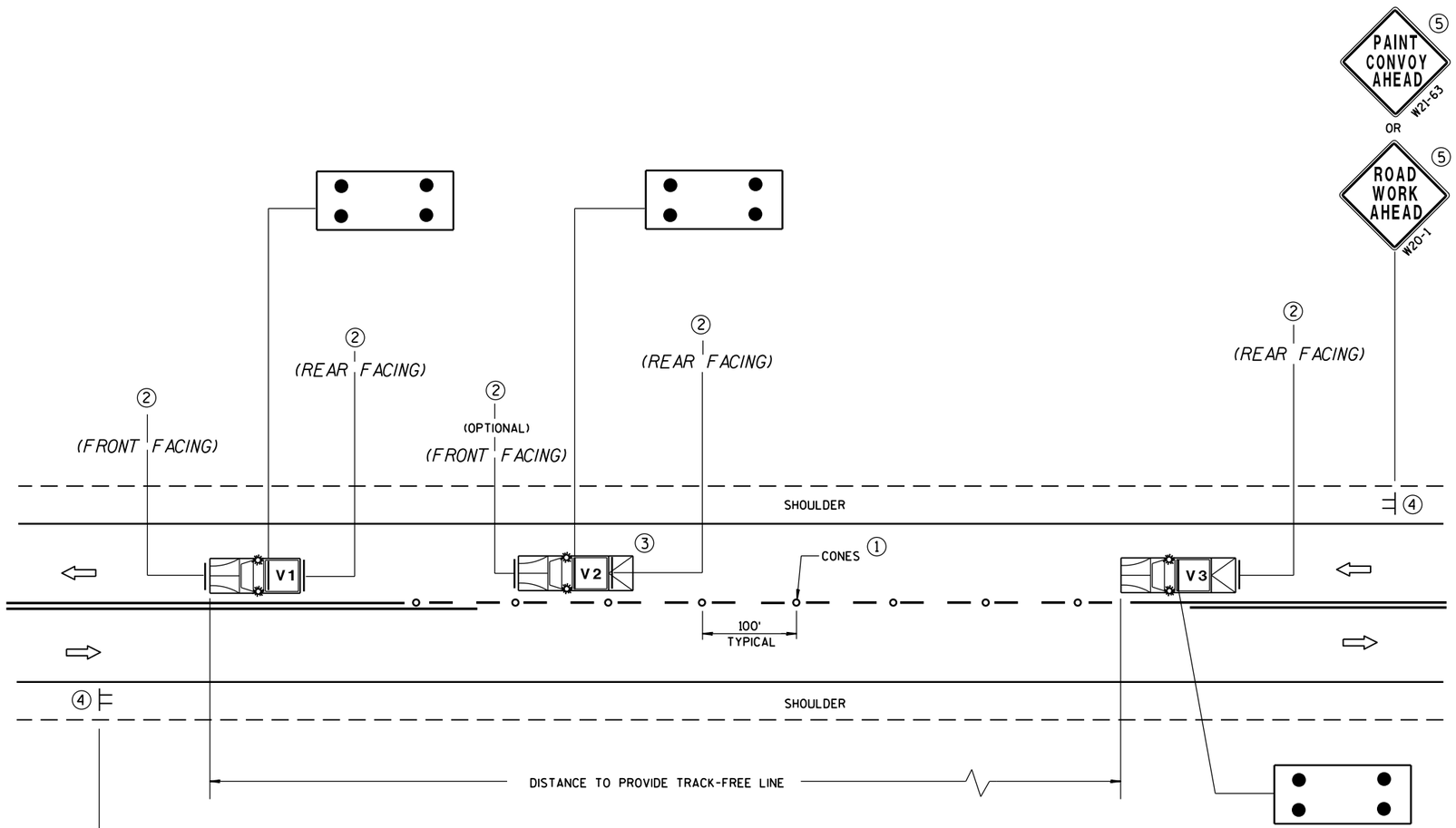

MOVING PAVEMENT MARKING OPERATIONS
TWO-LANE TWO-WAY ROADWAY

GENERAL NOTES

ALL VEHICLES SHALL BE EQUIPPED WITH TWO 360 DEGREE HIGH INTENSITY YELLOW FLASHING LIGHTS OR STROBE LIGHTS AND OPERATED WITH HEADLIGHTS TURNED ON.

VEHICLES SHALL BE EQUIPPED WITH REAR FACING TYPE B OR C FLASHING ARROW PANEL OPERATING IN CAUTION MODE. SIGNS PLACED ON VEHICLES MUST NOT OBSCURE THE ARROW PANEL.

ALL SIGNS ARE 48" X 48" UNLESS OTHERWISE SPECIFIED.

IF SPEED LIMIT IS 40 MPH OR LESS STATIONARY SIGNS MAY BE OMITTED IF CONES ARE USED.

ALTERNATE SIGN MESSAGES, SUCH AS "PAINT CREW AHEAD" OR "ROAD PAINTING AHEAD" MAY BE USED.

DISTANCE BETWEEN VEHICLES MAY VARY ACCORDING TO TERRAIN, SIGHT DISTANCE, PAINT DRYING TIME, AND OTHER FACTORS. WHENEVER ADEQUATE STOPPING SIGHT DISTANCE EXISTS TO THE REAR, SHADOW VEHICLES SHOULD MAINTAIN THE MINIMUM DISTANCE FROM THE WORK VEHICLE AND PROCEED AT THE SAME SPEED AS THE WORK VEHICLE. SHADOW VEHICLES SHOULD SLOW DOWN IN ADVANCE OF VERTICAL OR HORIZONTAL CURVES THAT RESTRICT SIGHT DISTANCE.

THE WORK AND SHADOW VEHICLES SHOULD PULL OVER PERIODICALLY TO ALLOW TRAFFIC TO PASS.

THIS DRAWING SHALL BE USED FOR CENTERLINE OR EDGELINE MARKING.

WHEN NO WORK ACTIVITY IS TAKING PLACE, REMOVE OR TURN THE STATIONARY WARNING SIGNS AWAY FROM TRAFFIC.

1. CONES MAY BE OMITTED ON PAINTED LINE IF APPROVED BY THE ENGINEER. CONSIDER PAVEMENT MARKING DRY OR CURE TIMES AND TRAFFIC VOLUME.
2. USE STANDARD SIGN W21-64 WITH APPROPRIATE ARROW.

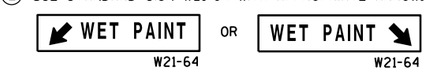

3. OPTIONAL TRUCK-MOUNTED ATTENUATOR.
4. SIGNS SHALL BE REPEATED APPROXIMATELY EVERY THREE MILES.
5. IF CONSTRUCTION WORK ZONE SIGNS ARE IN PLACE, W20-1 OR W21-63 ARE NOT REQUIRED.

LEGEND

V1	LEAD VEHICLE
V2	SHADOW VEHICLE
V3	TRAIL VEHICLE WITH TMA
TMA	TRUCK-MOUNTED ATTENUATOR
	SIGN ON TEMPORARY SUPPORT
	DIRECTION OF TRAFFIC
	CONES
	FLASHING ARROW PANEL (CAUTION)

MOVING PAVEMENT MARKING OPERATION
TWO-LANE TWO-WAY ROADWAY

STATE OF WISCONSIN
DEPARTMENT OF TRANSPORTATION

APPROVED
5/3/2013 — DATE
/S/ Travis Feltes — STATE TRAFFIC E
FHWA

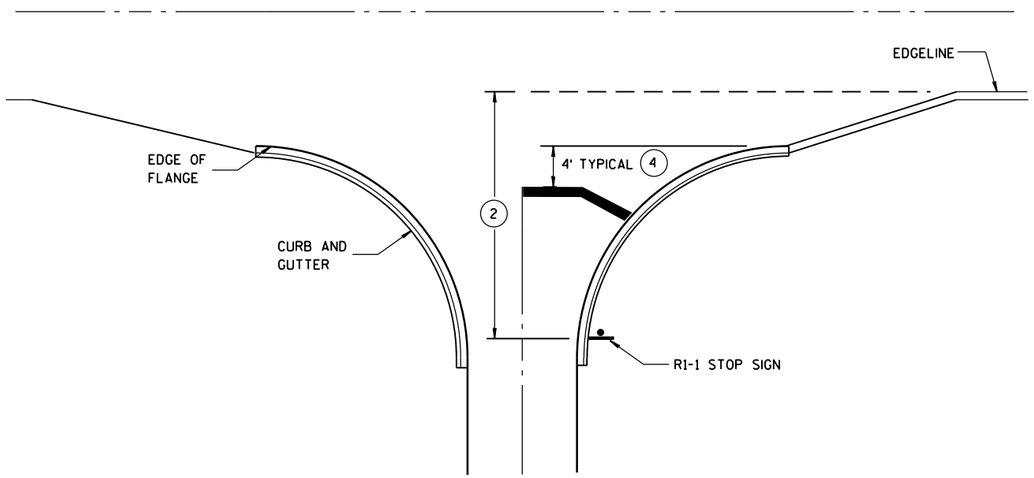

TYPICAL STOP LINE PAVEMENT MARKING WITH CURB AND GUTTER

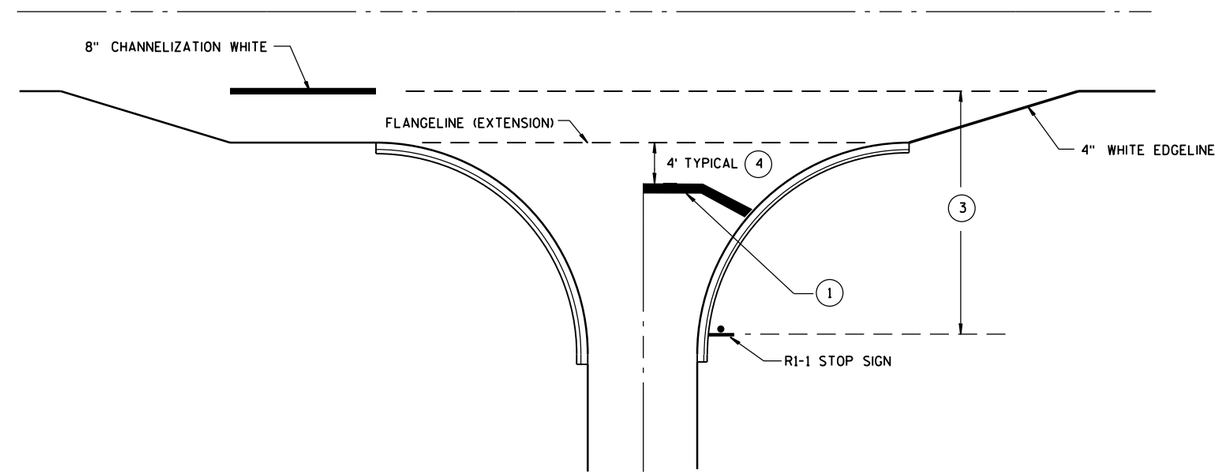

TYPICAL STOP LINE PAVEMENT MARKING FOR SIDEROADS WITH RIGHT TURN LANE

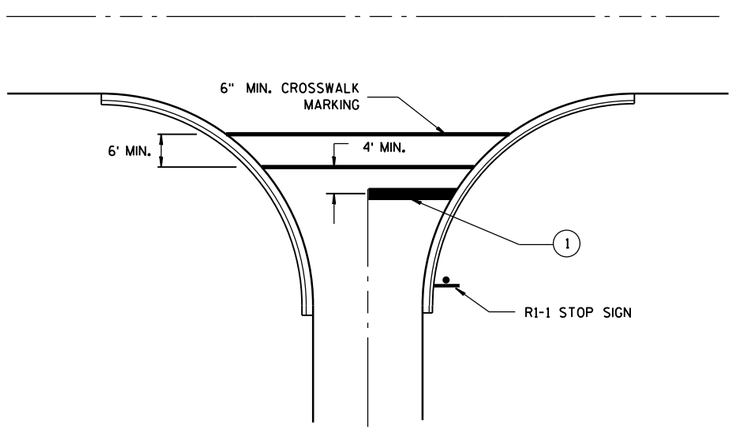

TYPICAL STOP LINE PAVEMENT MARKING FOR SIDEROADS WITH CROSSWALK MARKING

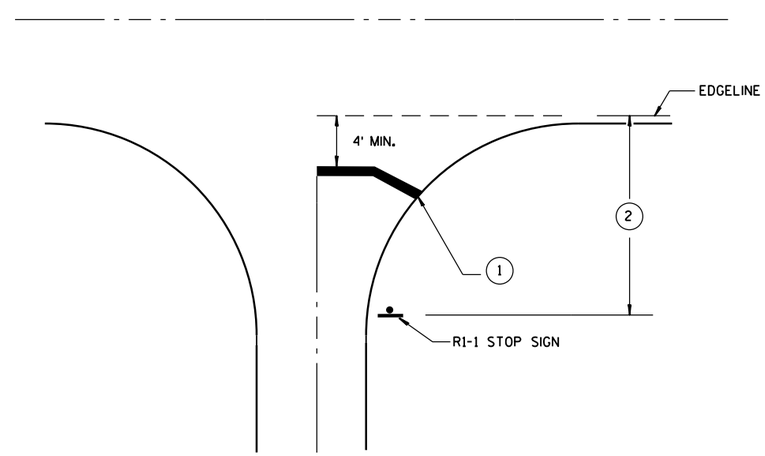

TYPICAL STOP LINE PAVEMENT MARKING WITHOUT CURB AND GUTTER

GENERAL NOTES

1. 18-INCH STOP LINES MAY BE DELETED OR ADDED BY THE PROJECT ENGINEER BASED ON VISIBILITY AND SIGHT LINES.
2. IF STOP SIGN IS LESS THAN OR EQUAL TO 40 FEET FROM THE EDGELINE THAN NO STOP LINE IS REQUIRED.
3. IF STOP SIGN IS LESS THAN OR EQUAL TO 30 FEET FROM THE FLANGELINE EXTENSION THAN NO STOP LINE IS REQUIRED.
4. MOVE CLOSER TO EDGE OF TRAVEL LANE AS NEEDED FOR VISIBILITY AND SIGHT LINES.

STOP LINE AND CROSSWALK PAVEMENT MARKING

STATE OF WISCONSIN
DEPARTMENT OF TRANSPORTATION

APPROVED
4/30/2013 — DATE
/S/ Travis Feltes — STATE TRAFFIC E
FHWA

6

S.D.D. 15 C 33-1

LEGEND

- TRAFFIC CONTROL DRUM
- SIGN ON PERMANENT SUPPORT
- DIRECTION OF TRAFFIC
- FLASHING ARROW BOARD
- WORK AREA

GENERAL NOTES

THIS DETAIL IS TYPICAL FOR CLOSING THE RIGHT SHOULDER. FOR CLOSING THE LEFT SHOULDER, REVERSE THE TRAFFIC CONTROL.

THIS DETAIL MAY BE USED FOR DIVIDED ROADWAYS WITH ANY NUMBER OF TRAVEL LANES.

THE EXACT NUMBER, LOCATION AND SPACING OF ALL SIGNS AND DEVICES SHALL BE ADJUSTED TO FIT FIELD CONDITIONS AS APPROVED BY THE ENGINEER.

ALL SIGNS ARE 48" X 48" UNLESS OTHERWISE NOTED.

SIGN LAYOUTS SHALL BE IN ACCORDANCE WITH THE FHWA'S MANUAL OF STANDARD HIGHWAY SIGNS OR THE WISCONSIN STANDARD SIGN PLATES.

SIGNS THAT WILL BE IN PLACE LESS THAN 7 CONTINUOUS DAYS AND NIGHTS MAY BE MOUNTED ON PORTABLE SUPPORTS.

ANY SIGNS TEMPORARY OR EXISTING, WHICH CONFLICT WITH TRAFFIC CONTROL "IN USE" SHALL BE REMOVED OR COVERED AS NEEDED AND AS APPROVED BY THE ENGINEER.

CHANNELIZING DEVICES PLACED ADJACENT TO THE WORK AREA SHALL BE PULLED BACK FROM THE TRAVEL LANE WHEN WORK IS NOT IN PROGRESS.

WHEN A RAMP INTERSECTS THE FACILITY ON WHICH THE WORK IS BEING PERFORMED, ADDITIONAL TRAFFIC CONTROLS SHALL BE PROVIDED AS SPECIFIED IN THE PLANS AND/OR THE SPECIAL PROVISIONS OR AS APPROVED BY THE ENGINEER.

*FOR SHORT DURATION SHOULDER WORK OF LESS THAN ONE HOUR, THE W21-5a SIGN MAY BE OMITTED.

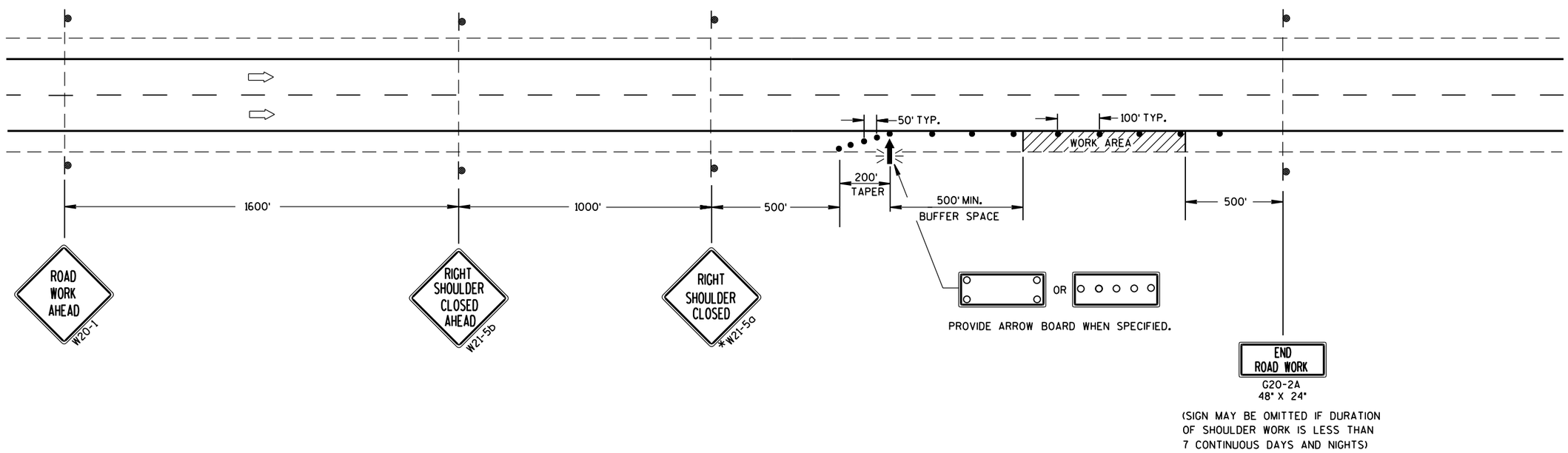

TRAFFIC CONTROL SHOULDER CLOSURE ON DIVIDED ROADWAY, SPEEDS GREATER THAN 40 MPH

STATE OF WISCONSIN
DEPARTMENT OF TRANSPORTATION

APPROVED

8/2013 — DATE

/S/ Travis Feltes — STATE TRAFFIC ENGINE ESIGN

FHWA

6

S.D.D. 15 D 27-2

GENERAL NOTES

THE EXACT NUMBER, LOCATION AND SPACING OF ALL SIGNS AND DEVICES SHALL BE ADJUSTED TO FIT FIELD CONDITIONS AS APPROVED BY THE ENGINEER.

ALL SIGNS ARE 48" X 48" UNLESS OTHERWISE NOTED. IF NECESSARY DUE TO SPACE CONSTRAINTS IN URBAN AREAS, 36" X 36" SIGNS MAY BE USED IF APPROVED BY DISTRICT TRAFFIC UNIT.

"WO" SIGNS ARE THE SAME AS "W" SIGNS EXCEPT THE BACKGROUND IS ORANGE.

SIGNS THAT WILL BE IN PLACE LESS THAN 7 CONTINUOUS DAYS AND NIGHTS MAY BE MOUNTED ON PORTABLE SUPPORTS.

ANY SIGNS TEMPORARY OR EXISTING, WHICH CONFLICT WITH TRAFFIC CONTROL "IN USE" SHALL BE REMOVED OR COVERED AS NEEDED AND AS APPROVED BY THE ENGINEER.

W20-1 AND G20-2A SIGNS ARE NOT REQUIRED IF THE WORK AREA IS WITHIN A LARGER WORK ZONE WHERE THESE SIGNS ARE ALREADY PRESENT. G20-2A SIGNS MAY ALSO BE OMITTED IF DURATION OF WORK IS LESS THAN 7 CONTINUOUS DAYS AND NIGHTS.

CHANNELIZING DEVICES PLACED ADJACENT TO THE WORK AREA SHALL BE PULLED BACK FROM THE TRAVEL LANE WHEN WORK IS NOT IN PROGRESS.

TABLE A

S \ W	SHOULDER TAPER LENGTH (FEET) 4	6	8	10	BUFFER SPACE (FEET)
30	20	30	40	50	85
35	30	45	55	70	120
40	40	55	75	90	170
45	60	90	120	150	220
50	70	100	135	170	280
55	75	110	150	185	335

W = SHOULDER WIDTH (FEET)
S = NON-CONSTRUCTION SPEED LIMIT (MPH)

SHOULDER TAPER LENGTH
= WS AT 45 MPH OR GREATER

$= \frac{WS^2}{60}$ AT 40 MPH OR LESS

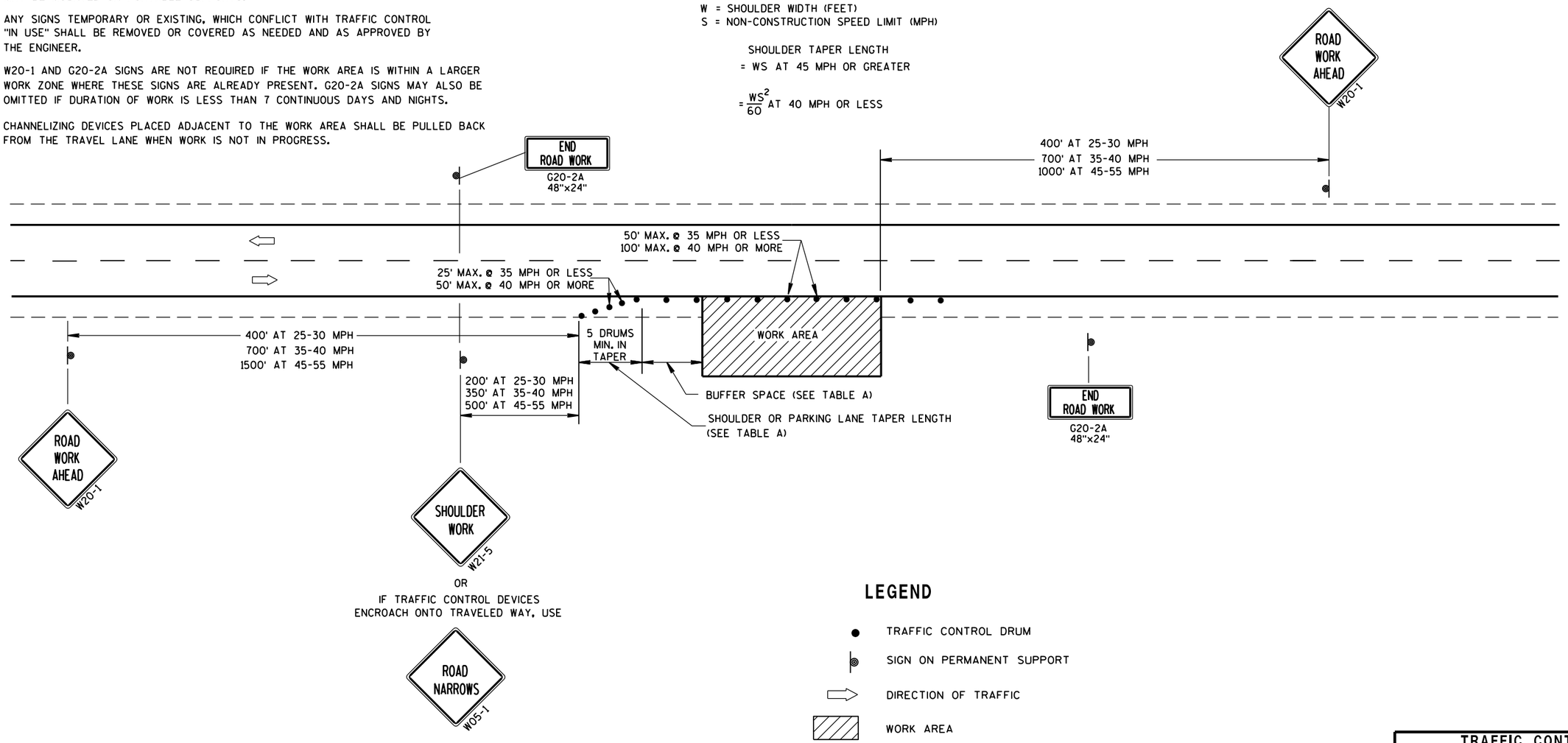

LEGEND

- TRAFFIC CONTROL DRUM
- SIGN ON PERMANENT SUPPORT
- DIRECTION OF TRAFFIC
- WORK AREA

TRAFFIC CONTROL, WORK ON SHOULDER OR PARKING LANE, UNDIVIDED ROADWAY

STATE OF WISCONSIN
DEPARTMENT OF TRANSPORTATION

APPROVED
8/2013 — DATE
/S/ Travis Feltes — STATE TRAFFIC ENGINE
FHWA

6

S.D.D. 15 D 28-2

WARNING OF LOCALIZED SIDEWALK WORK AREAS

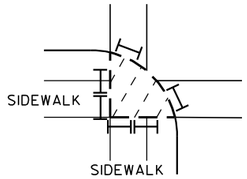

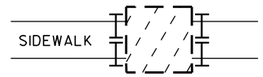

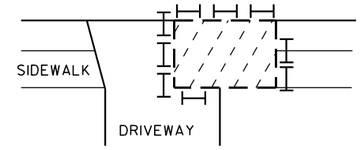

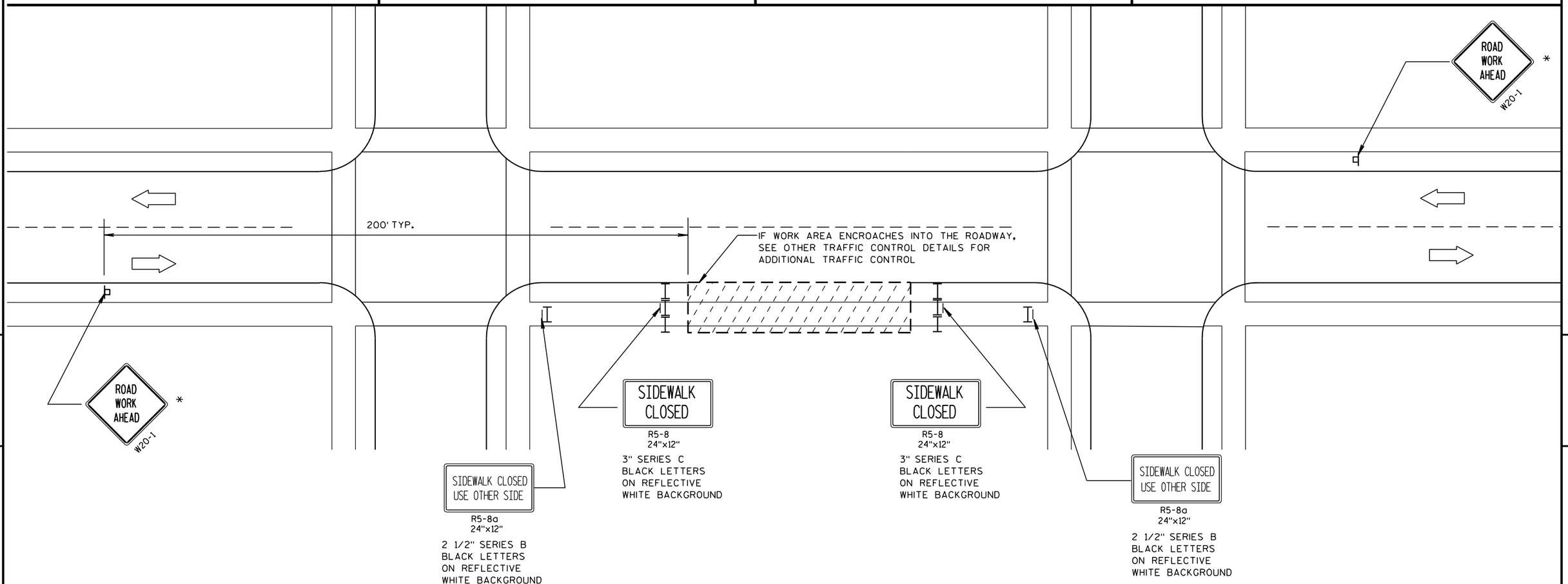

LEGEND

- POST MOUNTED SIGN
- TYPE II BARRICADE WITH/WITHOUT SIGN (ALL WITH ONE WARNING LIGHT, TYPE A, LOW-INTENSITY FLASHING)
- WORK AREA
- DIRECTION OF TRAFFIC FLOW

GENERAL NOTES :

ALL SIGNS ARE 48"x48" UNLESS OTHERWISE NOTED. IF NECESSARY DUE TO SPACE CONSTRAINTS, 36"x36" SIGNS MAY BE USED INSTEAD OF 48"x48" SIGNS, IF APPROVED BY DISTRICT TRAFFIC UNIT.

THE EXACT LOCATION AND PLACEMENT OF ALL SIGNS AND DEVICES SHALL BE ADJUSTED TO FIT FIELD CONDITIONS.

"WO" SIGNS ARE THE SAME AS "W" SIGNS EXCEPT THE BACKGROUND IS ORANGE.

* "ROAD WORK AHEAD" SIGNS ARE NOT REQUIRED IF THE SIDEWALK CLOSURE OCCURS WITHIN A LARGER WORK ZONE WHERE ADVANCE WARNING SIGNS ARE ALREADY PRESENT, OR IF THE WORK AREA AND EQUIPMENT ARE MORE THAN 2 FEET BEHIND THE CURB.

WARNING SIGNS THAT WILL BE IN PLACE LESS THAN 7 CONTINUOUS DAYS AND NIGHTS MAY BE MOUNTED ON PORTABLE SUPPORTS.

TRAFFIC CONTROL, SIDEWALK CLOSURE

TRAFFIC CONTROL, SIDEWALK CLOSURE

STATE OF WISCONSIN
DEPARTMENT OF TRANSPORTATION

APPROVED
5/23/2000 /S/ Chester J. [illegible]
DATE CHIEF SIGNS AND MARK[illegible]NEER
FHWA

NOTE: MAY BE USED ON ROADWAY WITH POSTED SPEED OF LESS THAN 40 MPH.

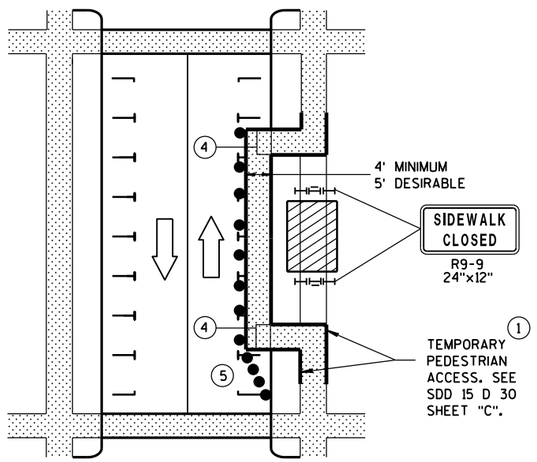

MID-BLOCK SIDEWALK CLOSURE IN PARKING LANE

NOTE: LAYOUT SAME AS ABOVE.

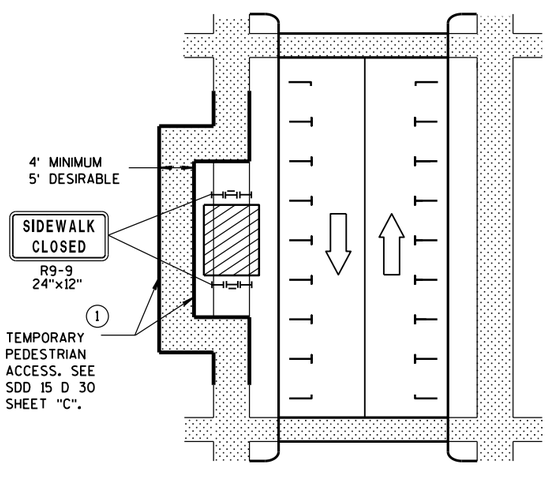

SIDEWALK DIVERSION

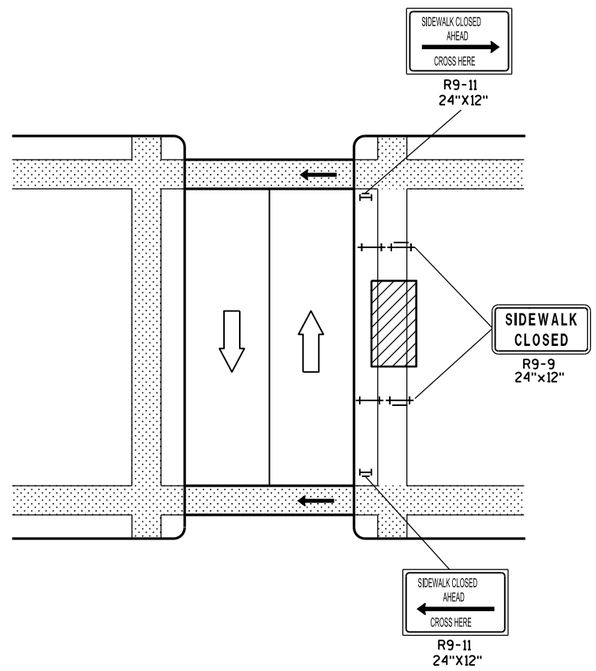

MID-BLOCK SIDEWALK CLOSURE

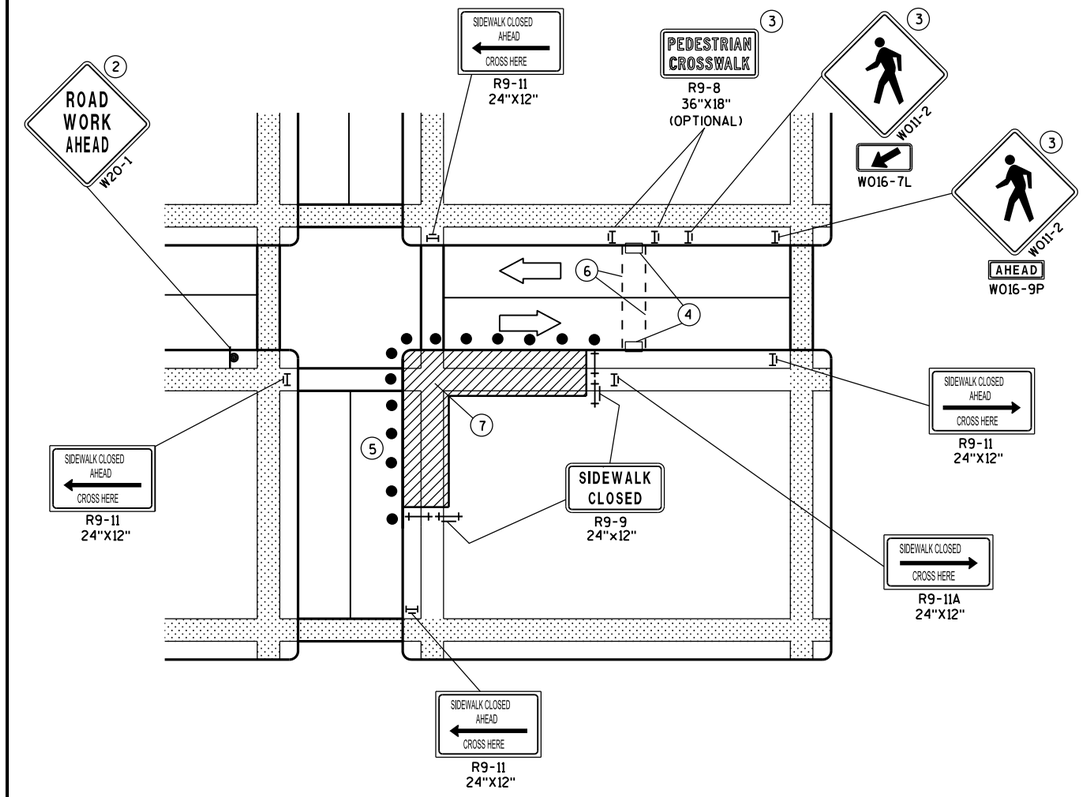

CORNER SIDEWALK CLOSURE WITH TEMPORARY CROSSWALK

GENERAL NOTES

WHEN CLOSING OR RELOCATING CROSSWALKS OR SIDEWALKS, PROVIDE DETECABLE TEMPORARY FACILITIES AND INCLUDE ACCESSIBILITY FEATURES CONSISTENT WITH EXISTING PEDESTRIAN FACILITIES.

TEMPORARY TRAFFIC CONTROL DEVICES FOR PEDESTRIANS ARE SHOWN. OTHER DEVICES MAY BE NECESSARY TO CONTROL VEHICULAR TRAFFIC. STAGE WORK, AS NECESSARY, TO PROVIDE A TEMPORARY PEDESTRIAN ACCESS ROUTE AT ALL TIMES. FOR ROADWAYS WITH NO AVAILABLE DETOURS, MAINTAIN ONE OPEN SIDEWALK AT ALL TIMES.

"WO" SIGN IS THE SAME AS "W" SIGN EXCEPT THE BACKGROUND IS ORANGE.

FOR NIGHTTIME CLOSURE USE TYPE "A" FLASHING WARNING LIGHTS ON BARRICADES, SUPPORTING SIGNS AND CLOSING SIDEWALK. USE TYPE "C" STEADY BURN LIGHTS ON CHANNELIZING DEVICES SEPARATING THE WORK AREA FROM VEHICULAR TRAFFIC.

PEDESTRIAN TRAFFIC SIGNAL DISPLAY CONTROLLING CLOSED CROSSWALK SHALL BE COVERED OR DEACTIVATED.

POST MOUNTED SIGNS LOCATED ADJACENT TO A SIDEWALK SHALL HAVE A 7 FOOT MINIMUM CLEARANCE FROM THE BOTTOM OF THE SIGN TO THE SIDEWALK SURFACE.

ALTERNATE SIDEWALK WORK BETWEEN LEFT AND RIGHT SIDE OF ROADWAY TO MAINTAIN PEDESTRIAN ACCESS.

1. IF SIDEWALK CLOSURE AFFECTS AN ACCESSIBLE AND DETECTABLE FACILITY, MAINTAIN ACCESSIBILITY AND DETECTABILITY ALONG THE ALTERNATE PEDESTRIAN ROUTE.
2. "ROAD WORK AHEAD" SIGNS ARE NOT REQUIRED IF THE SIDEWALK CLOSURE OCCURS WITHIN A LARGER WORK ZONE WHERE ADVANCE WARNING SIGNS ARE ALREADY PRESENT, OR IF THE WORK AREA AND EQUIPMENT ARE MORE THAN 2 FEET BEHIND THE CURB.
3. IF TEMPORARY PEDESTRIAN CROSSWALK IS NOT PROVIDED, OMIT R9-8 AND W011-2 SIGN ASSEMBLIES. IF PROVIDED INCLUDE ON BOTH SIDES OF THE CROSSWALK.
4. TEMPORARY CURB RAMPS. SEE SDD 15 D 30 SHEET "B".
5. DRUMS OR BARRICADES AT 25 FOOT SPACING. STREET PARKING SHALL BE PROHIBITED FOR AT LEAST 50 FEET IN ADVANCE OF THE MID-BLOCK CROSSWALK.
6. TEMPORARY PAVEMENT MARKING FOR CROSSWALK LINES.
7. LIMIT WORK TO ONE QUADRANT AT A TIME TO MINIMIZE PEDESTRIAN DISRUPTION.

LEGEND

- SIGN ON PERMANENT SUPPORT
- UNDER PEDESTRIAN TRAFFIC
- WORK AREA
- PEDESTRIAN CHANNELIZATION DEVICE
- TYPE II BARRICADE WITH/WITHOUT SIGN (ALL WITH ONE WARNING LIGHT, TYPE A, LOW-INTENSITY FLASHING)
- TYPE III BARRICADE WITH/WITHOUT SIGN (ALL WITH ONE WARNING LIGHT, TYPE A, LOW-INTENSITY FLASHING)
- DIRECTION OF TRAFFIC
- TRAFFIC CONTOL DRUM

TRAFFIC CONTROL, PEDESTRIAN ACCOMMODATION

STATE OF WISCONSIN
DEPARTMENT OF TRANSPOI

6

S.D.D. 15 D 30-2a

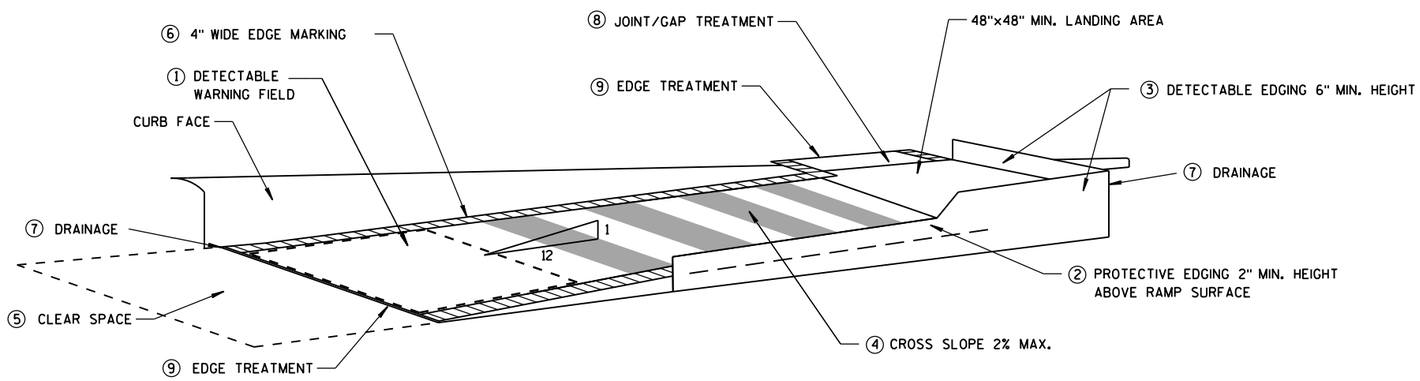

TEMPORARY CURB RAMP PARALLEL TO CURB

GENERAL NOTES

NOTIFY THE BUS COMPANY 7 DAYS IN ADVANCE OF THE BUS STOP RELOCATION.

ALTERNATE SIDEWALK WORK BETWEEN LEFT AND RIGHT SIDE OF ROADWAY TO MAINTAIN PEDESTRIAN ACCESS.

① CURB RAMPS SHALL BE 48" MIN. WIDTH WITH A FIRM, STABLE AND SLIP RESISTANT SURFACE. INSTALL CONTRASTING DETECTABLE WARNING FIELD AT PEDESTRIAN STREET CROSSINGS. REFER TO SDD 8D5 SHEET "E".

② PROTECTIVE EDGING WITH A 2" MIN. HEIGHT SHALL BE INSTALLED WHEN A CURB RAMP OR LANDING PLATFORM HAS A VERTICAL DROP OF 6" OR GREATER OR HAS A SIDE APRON SLOPE STEEPER THAN 1:3 (33%). PROTECTIVE EDGING SHOULD BE CONSIDERED WHEN CURB RAMPS OR LANDING PLATFORMS HAVE A VERTICAL DROP OF 3" OR MORE.

③ DETECTABLE EDGING WITH 6" MIN. HEIGHT AND CONTRASTING COLOR SHALL BE INSTALLED ON ALL CURB RAMP LANDINGS WHERE THE WALKWAY CHANGES DIRECTION (TURNS).

④ CURB RAMPS AND LANDINGS SHALL HAVE A 1:50 (2%) MAX. CROSS-SLOPE.

⑤ CLEAR SPACE OF 48"X48" MIN. SHALL BE PROVIDED ABOVE AND BELOW THE CURB RAMP.

⑥ THE CURB RAMP WALKWAY EDGE SHALL BE MARKED WITH A YELLOW COLOR, 4" WIDE MARKING, UNLESS A CONTRASTING DETECTABLE WARNING FIELD IS PROVIDED.

⑦ DO NOT RESTRICT WATER FLOW IN THE GUTTER SYSTEM.

⑧ LATERAL JOINTS OR GAPS BETWEEN SURFACES SHALL BE LESS THAN 1/2" WIDTH.

⑨ CHANGES BETWEEN SURFACE HEIGHTS SHALL NOT EXCEED 1/2". LATERAL EDGES SHALL BE VERTICAL UP TO 1/4" HIGH, AND BEVELED AT 1:2 BETWEEN 1/4" AND 1/2".

⑩ 5' WIDE MIN. WITH PEDSETRIAN SAFETY FENCE, 10' WIDE MIN. WITHOUT PEDESTRIAN SAFETY FENCE.

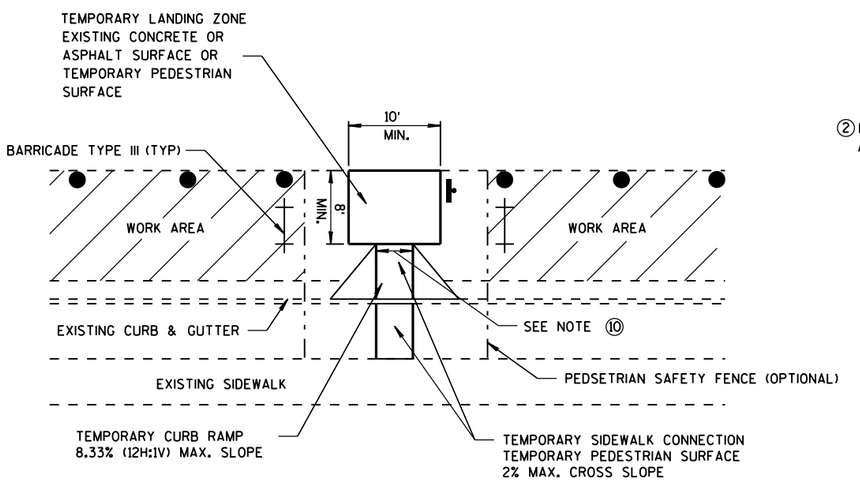

TEMPORARY BUS STOP PAD

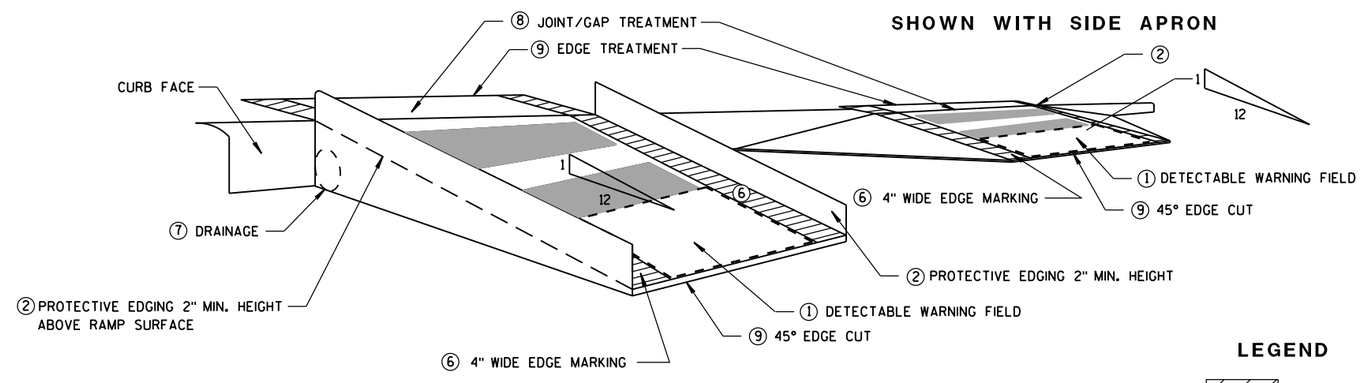

SHOWN WITH PROTECTIVE EDGE

TEMPORARY CURB RAMP PERPENDICULAR TO CURB

LEGEND

- WORK AREA
- TYPE III BARRICADE
- TRAFFIC CONTOL DRUM

TRAFFIC CONTROL, TEMPORARY ADA COMPLIANT PEDESTRIAN ACCOMMODATION

STATE OF WISCONSIN
DEPARTMENT OF TRANSPORTATION

APPROVED

March 2015 — DATE

/S/ Travis Feltes — STATE TRAFFIC ENGINEER — SIGN

FHWA

6

S.D.D. 15 D 30-2b

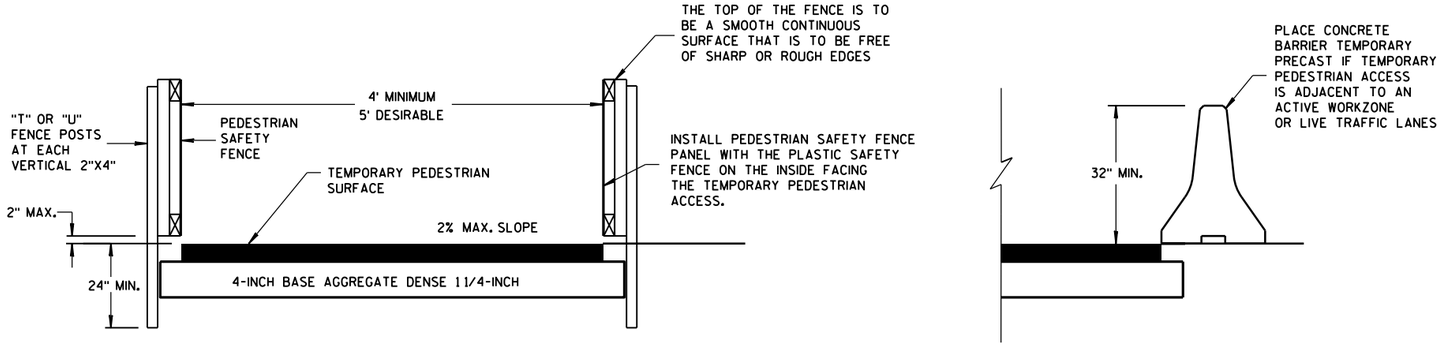

TEMPORARY PEDESTRIAN ACCESS

GENERAL NOTES

1. INTERCHANGEABLE WITH THE PEDESTRIAN SAFETY FENCE.

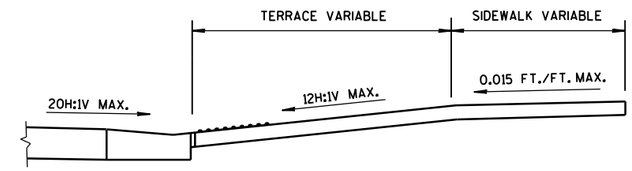

SECTION A-A

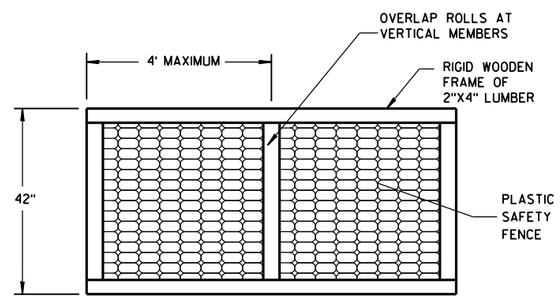

PEDESTRIAN SAFETY FENCE

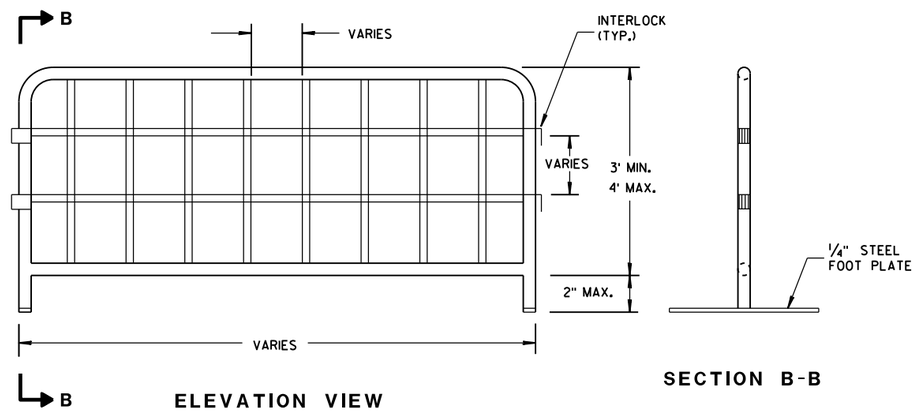

TEMPORARY PEDESTRIAN STEEL BARRICADE (1)

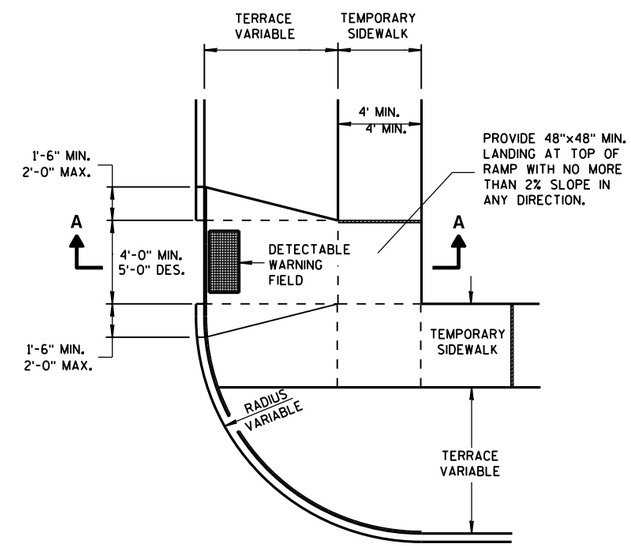

PLAN VIEW

TEMPORARY TYPE 3 RAMP

(OUTSIDE OF CROSSWALK AREA)

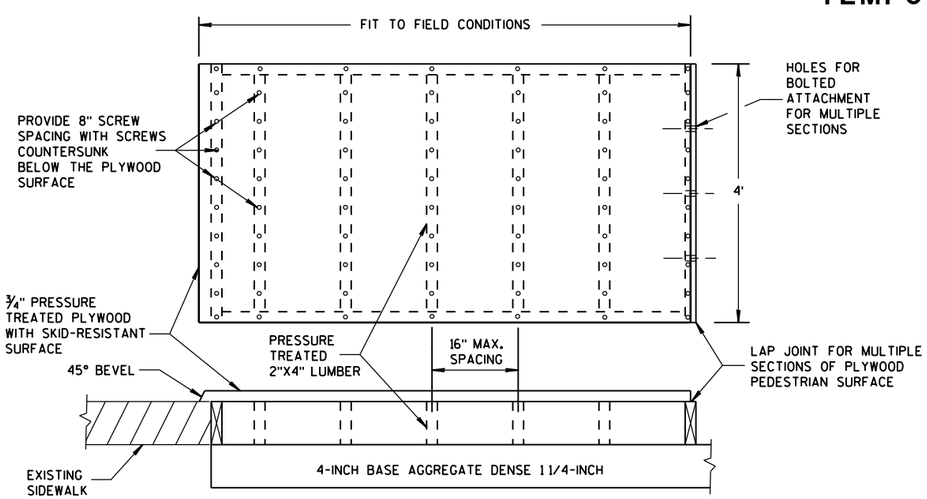

TEMPORARY PEDESTRIAN SURFACE PLYWOOD

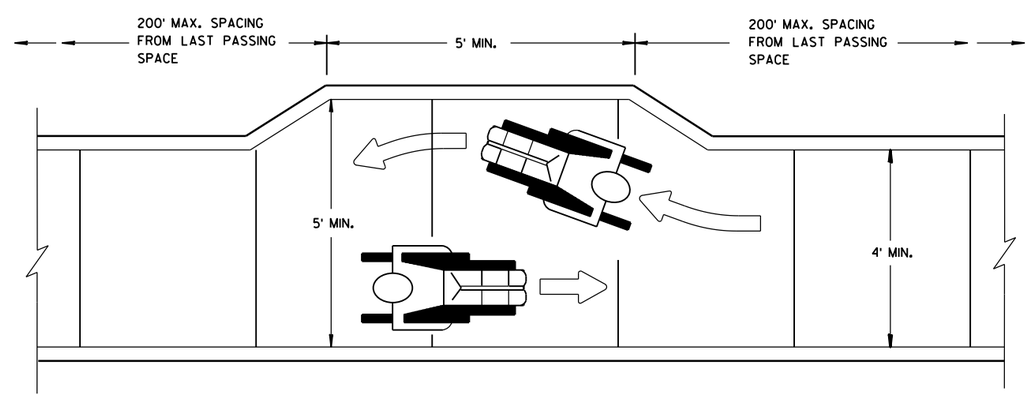

NARROW SIDEWALK PASSING DETAIL

TRAFFIC CONTROL, PEDESTRIAN ACCOMMODATION

STATE OF WISCONSIN
DEPARTMENT OF TRANSPORTATION

APPROVED
March 2015 — DATE
/S/ Travis Feltes — STATE TRAFFIC ENGINEER — SIGN
FHWA

6

S.D.D. 15 D 30-2c

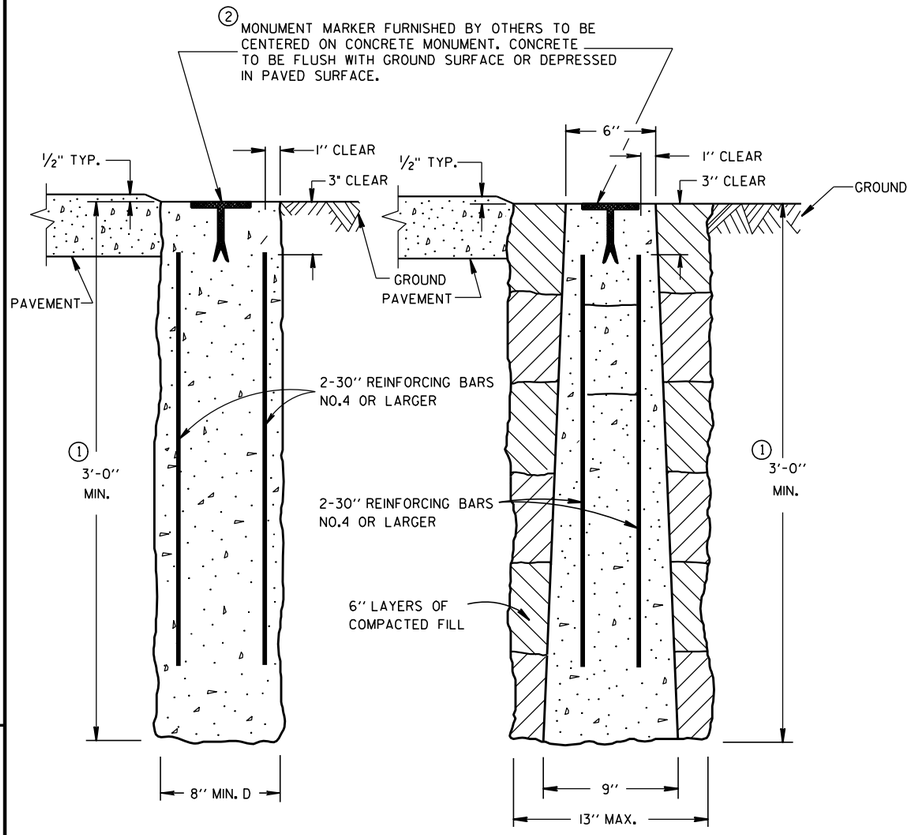

CAST-IN-PLACE PRECAST

CONCRETE MONUMENTS

TYPE A

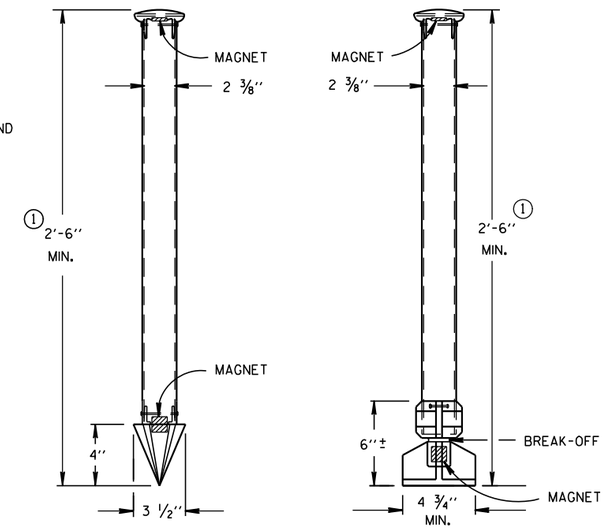

TYPE C TYPE D

DRIVE-IN MONUMENT BREAK-OFF MONUMENT

ALUMINUM MONUMENTS

(INCLUDES MARKER)

GENERAL NOTES

DETAILS OF CONSTRUCTION, MATERIALS AND WORKMANSHIP NOT SHOWN ON THIS DRAWING SHALL CONFORM TO THE PERTINENT REQUIREMENTS OF THE STANDARD SPECIFICATIONS AND THE APPLICABLE SPECIAL PROVISIONS.

DETAILED DRAWINGS OF PROPOSED ALTERNATE DESIGNS FOR METAL MONUMENTS OR MONUMENT COVERS SHALL BE SUBMITTED TO THE ENGINEER FOR APPROVAL.

INSTALLED METAL MONUMENTS MUST BE EASILY DETECTED WITH A DIP NEEDLE. INSERT PERMANENT MAGNETS SHALL BE ATTACHED NEAR THE TOP AND BOTTOM OF THOSE MONUMENTS CONSTRUCTED OF A METAL ALLOY WHICH IS NOT ATTRACTIVE TO A DIP NEEDLE.

THE CAST IRON MONUMENT COVER SHALL BE A "NON-ROCKING" TYPE. ADJUSTMENT OF THE COVER TO GRADE MAY BE ACCOMPLISHED BY THE USE OF MORTAR AND BRICK, OR BY EITHER PRECAST OR CAST-IN-PLACE REINFORCED CONCRETE GRADE RINGS.

MONUMENTS SHALL BE LOCATED AND PLACED AT THE DIRECTION OF THE ENGINEER.

ALUMINUM MONUMENTS AND MONUMENT COVERS SHALL BE MADE FROM AN ALUMINUM AND MAGNESIUM ALLOY AS DETERMINED BY THE MANUFACTURER.

THE MONUMENT COVERS DETAILED ON THIS DRAWING ARE NOT EQUAL ALTERNATES. MONUMENT COVERS SHALL BE CAST IRON UNLESS ALUMINUM IS SPECIFIED ELSEWHERE IN THE CONTRACT.

MONUMENT SHALL BE CAST-IN-PLACE CONCRETE UNLESS PRECAST CONCRETE OR ALUMINUM MONUMENTS ARE SPECIFIED IN THE CONTRACT OR PERMITTED BY THE ENGINEER.

① MINIMUM LENGTH SHALL BE 4'-0" FOR MONUMENTS INSTALLED IN PAVED AREAS.

② AN OFFICIAL COUNTY MONUMENT MARKER SUPPLIED BY A COUNTY MAY BE REQUIRED FOR SOME SECTION CORNERS AND WITNESS MONUMENTS INSTEAD OF THIS WIS DOT MARKER.

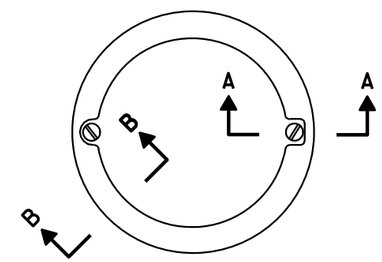

TOP VIEW

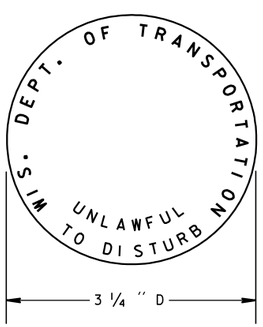

② WIS DOT MONUMENT MARKER LOGO

FOR TYPES "A", "C" & "D"

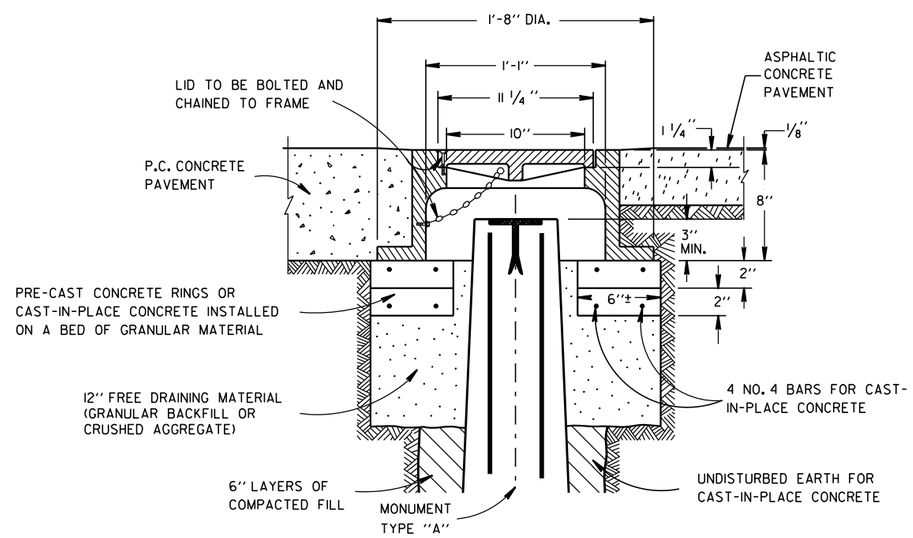

CAST IRON MONUMENT COVER

(APPROXIMATE WEIGHT - 95 LBS.)

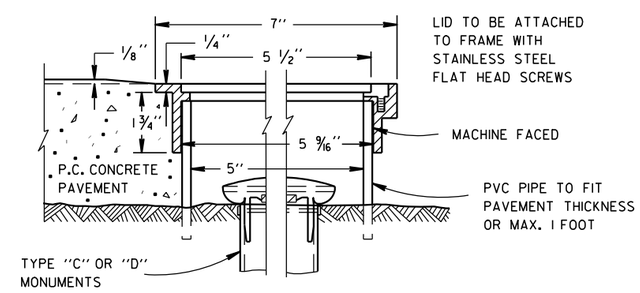

SECTION B-B SECTION A-A

ALUMINUM MONUMENT COVER

(APPROXIMATE WEIGHT 2 LBS)

(FOR CONCRETE PAVEMENT ONLY)

LANDMARK REFERENCE MOUNMENTS AND COVERS

STATE OF WISCONSIN
DEPARTMENT OF TRANSPORTATION

APPROVED

9/22/1999 /S/ Rory L. Rhinesmith

DATE CHIEF ROADWAY DEVELOPMENT ENGINEER

FHWA

NOTES

1. All Signs Type II - Type H Reflective
2. Color:
   Background - GREEN
   Message - WHITE
3. Message Series - E

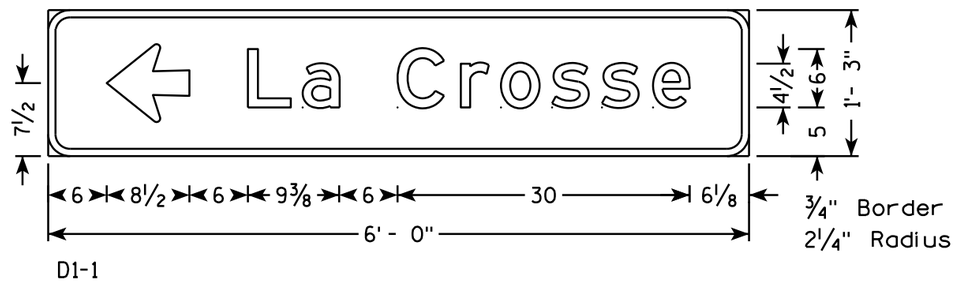

D1-1

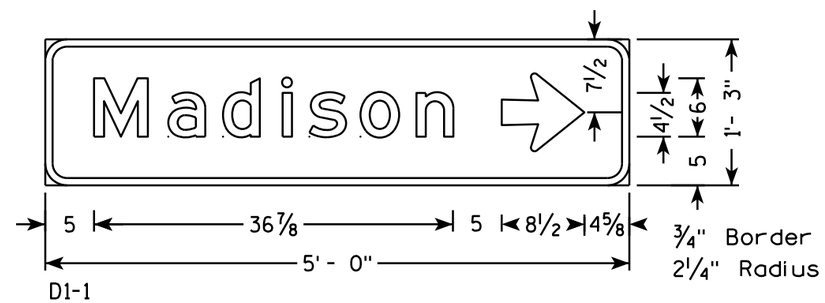

D1-1

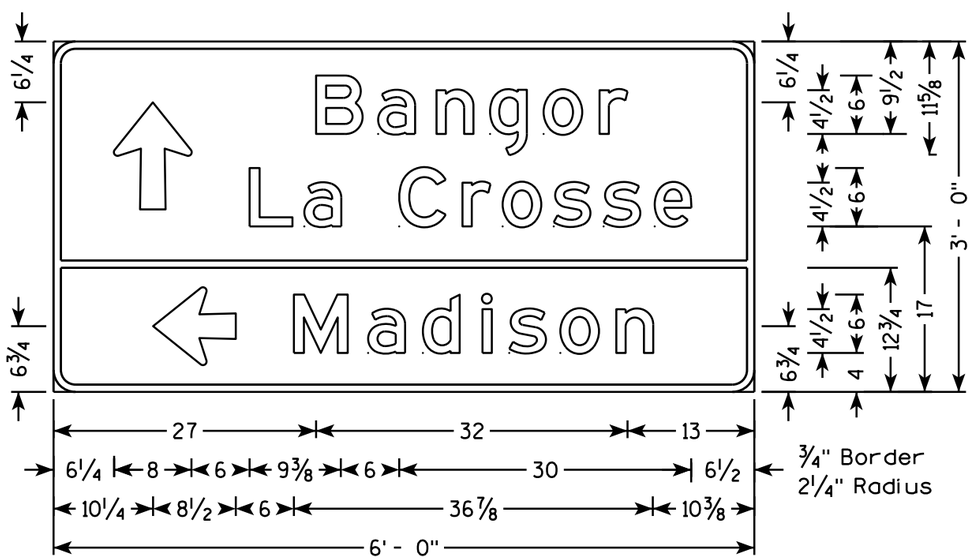

D1-3

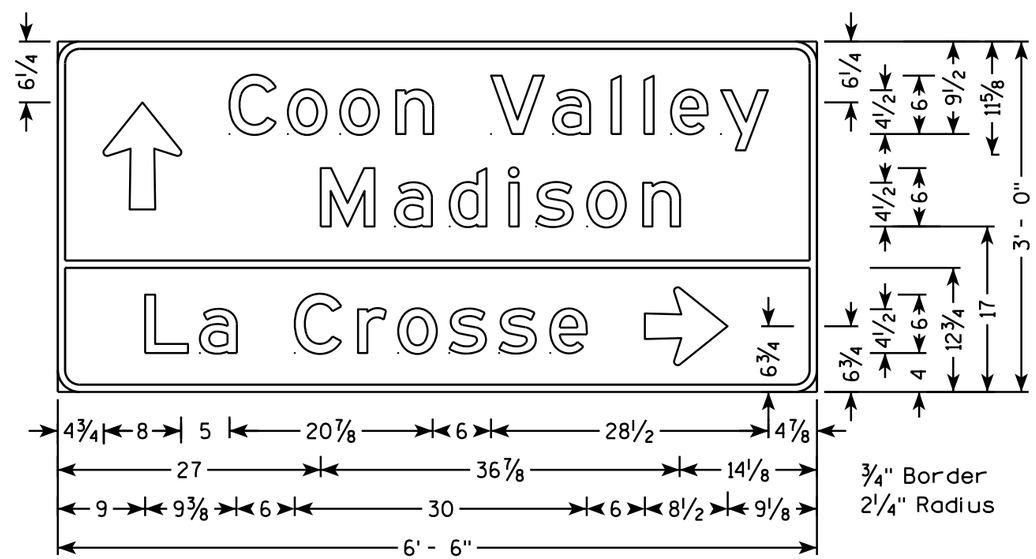

D1-3

7

7

PROJECT NO: 5820-01-62	HWY: STH 162	COUNTY: LA CROSSE	PERMANENT SIGNING	SHEET NO:	E

NOTES

1. All Signs Type II - Type H Reflective
2. Color:
   Background - GREEN
   Message - WHITE
3. Message Series - E except as Shown

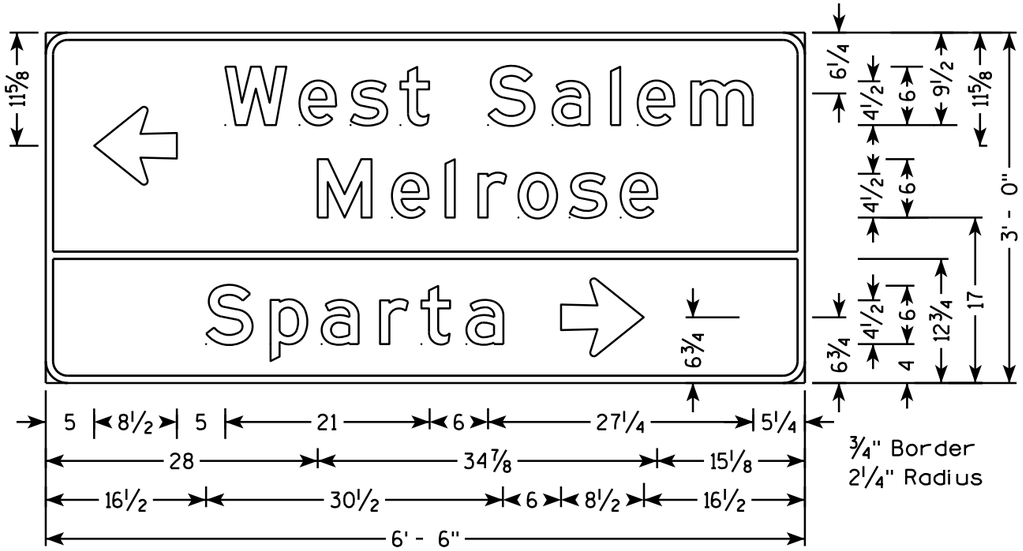

D1-3

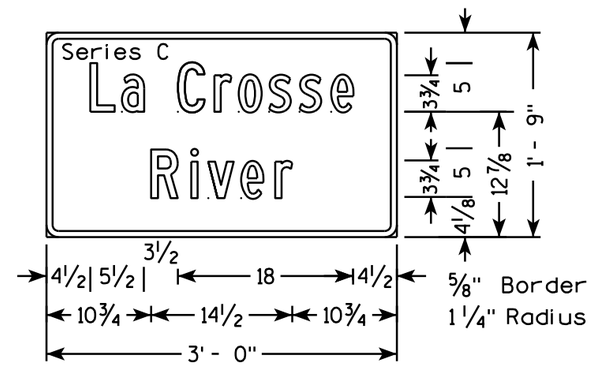

I3-1

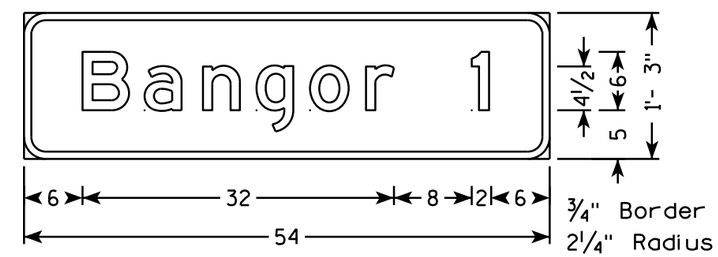

D2-1

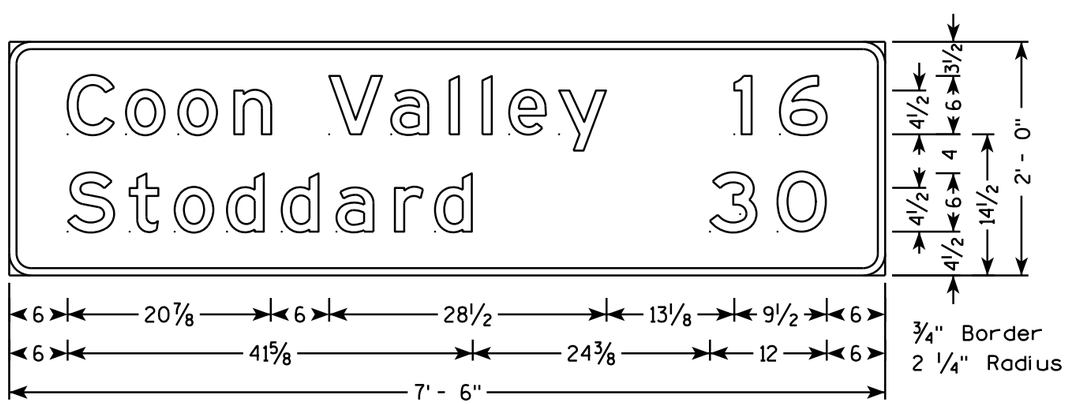

D2-2

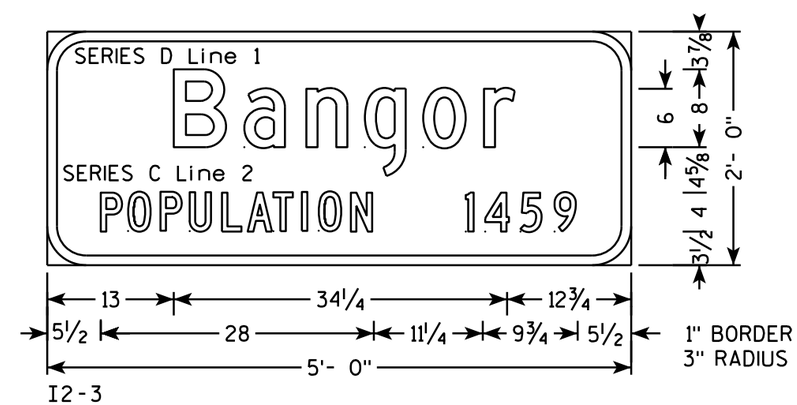

I2-3

PROJECT NO: 5820-01-62	HWY: STH 162	COUNTY: LA CROSSE	PERMANENT SIGNING	SHEET NO:	E

TYPICAL ASSEMBLIES

J1-1

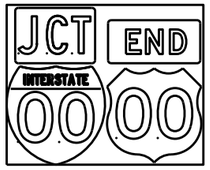

J1-2

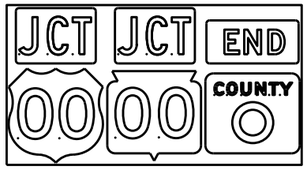

J1-3

J2-1

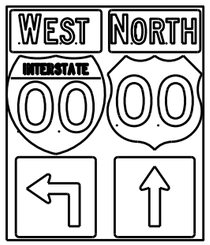

J2-2

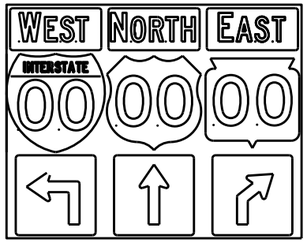

J2-3

JV

(Typical Vertical J-Assembly
See Note 10 and 11)

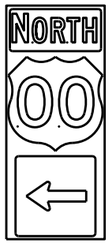

J3-1

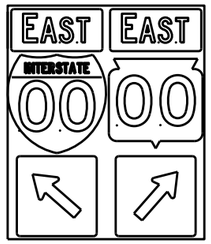

J3-2

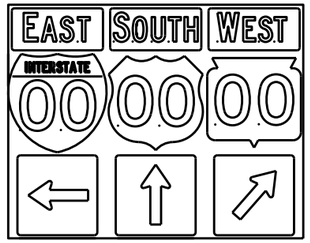

J3-3

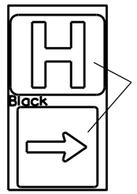

Blue Background

JH-1

J4-1

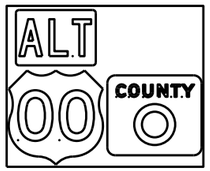

J4-2

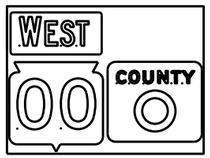

J4-2

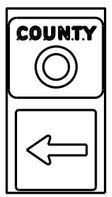

J13-1

J12-1

J32-1

J33-1

J23-1

J22-1

blue background
with interstate

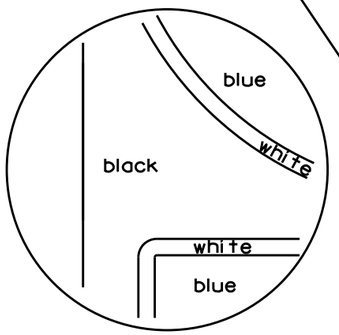

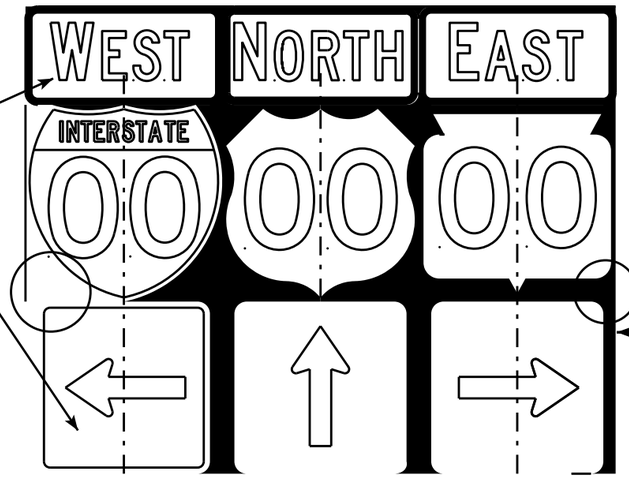

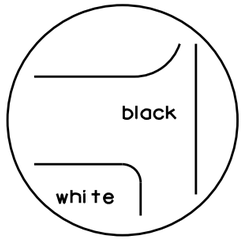

[black background]

NOTES

1. Signs are Type II - Type H Reflective - reference WIS DOT Standard Specification for HIGHWAY and STRUCTURE CONSTRUCTION latest edition.
2. Color:
   Background - Black Non-reflective
   Message - see Note 5
3. Message Series - See Note 5
4. Corners shall be square or rounded if base material is plywood. If base material is metal the corners shall be rounded.
5. The colors and message spacing on each marker shall be according to the applicable route marker panel specifications.
6. Certain marker heads require the component pieces to be the same color. As an example, all the components used with an M1-1 Interstate marker shall be blue.
7. Single panel j-assemblies shall only be used with route marker shields that are same size. If the route marker shields are different size use multiple piece component.
8. Route assemblies that have 24 inch route shields and have dimensions greater than 48 inches (both vertical and horizontal) shall have one horizontal splice between the arrows and route shields. Vertical splices shall not be used on route assemblies with a horizontal dimension of 144 inches or less. The contractor shall not use more than one vertical joint per sign and the joint shall be between route shields.
9. Route assemblies that have 36 inch shields and have dimensions greater than 48 inchs (both vertical and horizontal) shall have two horizontal splices. One horizontal splice shall be between the cardinal direction and route shields and the other horizontal splice shall be between the arrows and route shields. Vertical splices shall not be used on route assemblies with a horizontal dimension of 144 or less. The contractor shall not use more than one vertical joint per sign and the joint shall be between route shields.
10. All Vertical J Assemblies are given a Sign Code of JV
11. For JV Assemblies that have a mixture of Interstate and non Interstate shields, arrows and cardinals shall be white on blue.

ROUTE MARKERS & COMPONENTS
IN TYPICAL ASSEMBLIES

WISCONSIN DEPT OF TRANSPORTATION

APPROVED Matthew R Rauch
for State Traffic Engineer

DATE 2/06/14 PLATE A2-1S.8

PROJECT NO: | SHEET NO: E

URBAN AREA

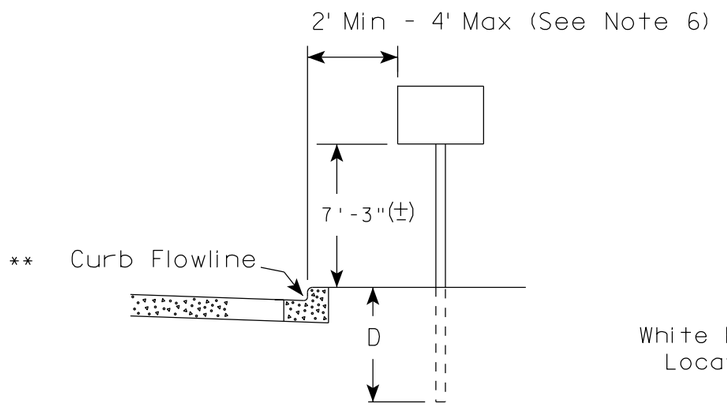

RURAL AREA (See Note 2)

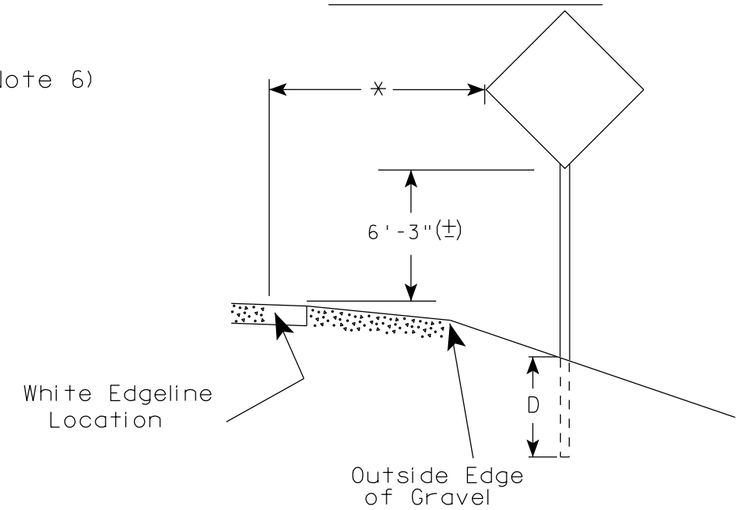

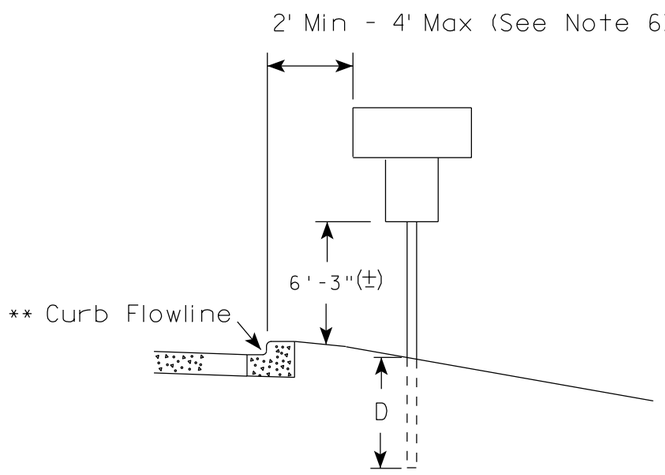

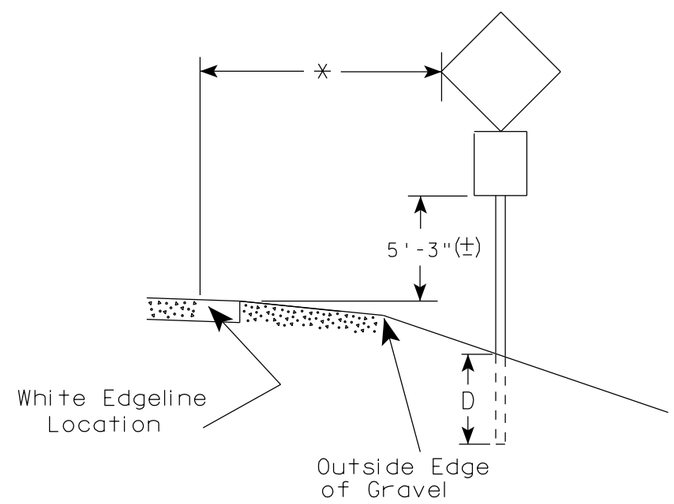

** The existence of curb and gutter does not in itself mandate the vertical clearance illustrated. That height is typically measured where there is sidewalk adjacent to the roadway or parking is permitted. In the absence of sidewalk vertical clearance is measured from the top of the curb. Offset of signs is measured from the flow line.

* 6 feet from edge of a paved shoulder or 12 feet from the edge of pavement (edge line location) or 2 feet from outside edge of gravel, whichever is greater unless directed by project engineer.

GENERAL NOTES

1. Signs wider than 4 feet, 20 sq.ft or larger, shall be mounted on multiple posts. Refer to plate A4-4.
2. If signs are mounted on barrier wall, see A4-10 sign plate.
3. For expressways and freeways, mounting height is 7'- 3" (±) or 6'-3" (±) depending upon existence of a sub-sign.
4. Minimum mounting height for J assemblies (A2-1S) is 7'-3" (±) or 6'-3" (±) per urban or rural detail respectively.
5. Minimum mounting height for signs mounted on traffic signal poles is 5'- 3" (±).
6. Offset distance shall be consistent with existing signs or consistent throughout length of project.
7. The (±) tolerance for mounting height is 3 inches.
8. Folding signs shall be mounted at a height of 5'-3" (±) or as directd by the Engineer.
9. The Double Arrow sign (W12-1) shall be mounted at a height of 2'-3" (±). The Chevron sign (W1-8), Roundabout Chevron panel (R6-4B), Enhanced Reference Markers, Clearance Markers (W5-52), Mile Markers (D10 series), In Road Object Markers (W5-54) & End of Road Markers (W5-56) shall be mounted at a height of 4'-3" (±).

POST EMBEDMENT DEPTH

Area of Sign Installation (Sq. Ft.)	D (Min)
20 or Less	4'
Greater than 20	5'

TYPICAL INSTALLATION OF PERMANENT TYPE II SIGNS ON SINGLE POSTS

WISCONSIN DEPT OF TRANSPORTATION

APPROVED Matthew R Rauch for State Traffic Engineer

DATE 11/12/14 PLATE NO. A4-3.19

PROJECT NO:	HWY:	COUNTY:		SHEET NO:	E

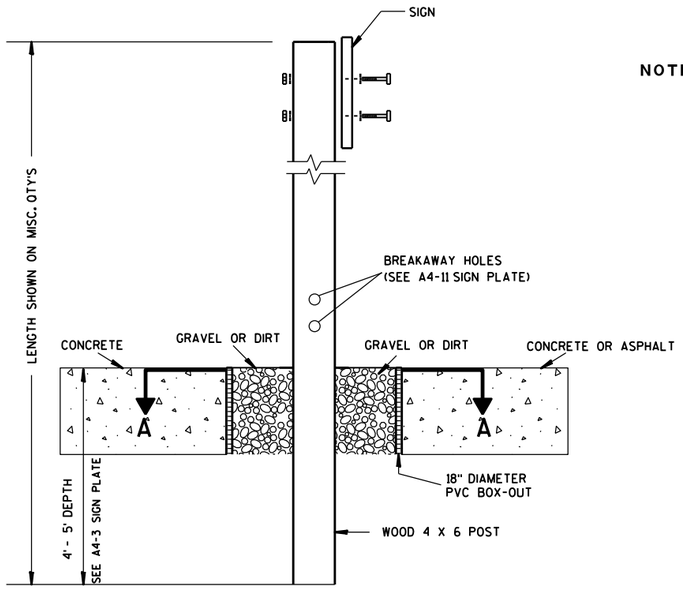

ELEVATION VIEW

DETAIL OF WOOD 4 X 6 SIGN POST IN BOX-OUT

NOTES:
1. ALL MATERIAL TO BE APPROVED BY ENGINEER PRIOR TO INSTALLATION
2. SEE SIGN PLATE A4-8 FOR SIGN HARDWARE REQUIREMENTS
3. 18 INCH X 18 INCH SQUARE BOX-OUTS MAY BE USED FOR INSTALLATIONS IN EXISTING CONCRETE OR ASPHALT LOCATIONS.

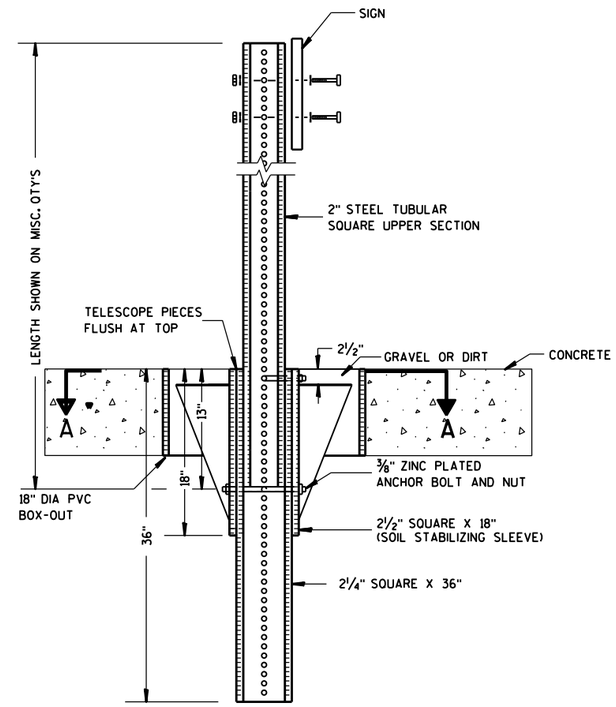

ELEVATION VIEW

DETAIL OF STEEL 2 X 2 SIGN POST IN BOX-OUT

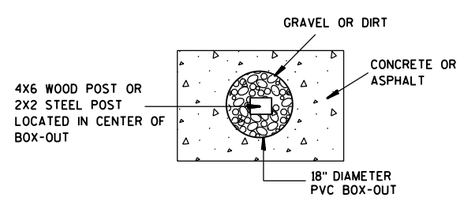

PLAN VIEW

FOR NEW CONCRETE/ASPHALT INSTALLATIONS

SIGN POST
BOX-OUTS
A4-3B

WISCONSIN DEPT OF TRANSPORTATION

APPROVED Matthew R Rauch
for State Traffic Engineer

DATE 1/27/14 PLATE NO. A4-3B.1

PROJECT NO:	HWY:	COUNTY:		SHEET NO:	E

URBAN AREA

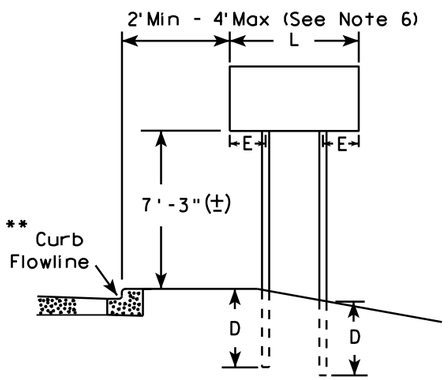

RURAL AREA (See Note 3)

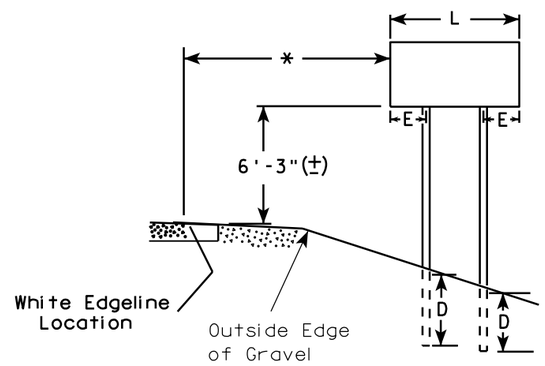

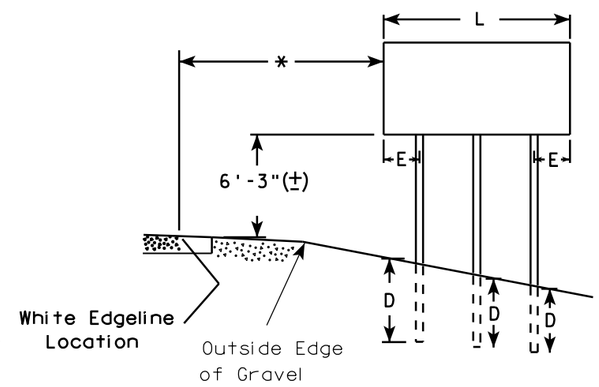

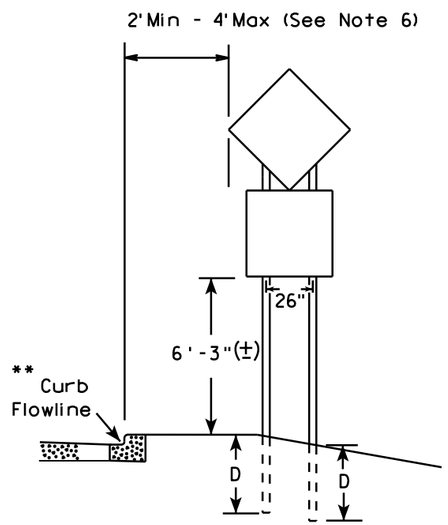

48" DIAMOND WARNING SIGN

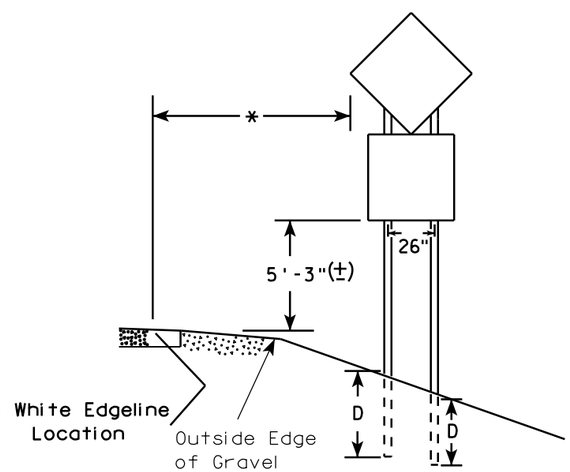

48" DIAMOND WARNING SIGN

GENERAL NOTES

1. For 3 or 4 post installations, individual post spacing shall be greater than 3'-6".
2. See tables below for required number of posts.
3. For expressways and freeways, mounting height is 7'-3" (±) or 6'-3" (±) depending upon existence of sub-sign.
4. The (±) tolerance for mounting height is 3 inches.
5. Minimum mounting height for J assemblies (A2-1S) is 7'-3" (±) or 6'-3" (±) per urban or rural detail respectively.
6. Offset distance shall be consistent with existing signs or consistent throughout length of project.
7. Folding signs shall be mounted at a height of 5'-3" (±) or as directed by the engineer.
8. The Double Arrow sign (W12-1) shall be mounted at a height of 2'-3" (±). The Chevron sign (W1-8), Roundabout Chevron panel (R6-4B), Clearance Markers (W5-52), Mile Markers (D10 series), In Road Object Markers (W5-54) & End of Road Markers (W5-56) shall be mounted at a height of 4"-3" (±).

* 6 feet from edge of a paved shoulder or 12 feet from the edge of pavement (edge line location) or 2 feet from outside edge of gravel, whichever is greater unless directed by project engineer.

** The existence of curb and gutter does not in itself mandate the vertical clearance illustrated. That height is typically measured where there is sidewalk adjacent to the roadway or parking is permitted. In the absence of sidewalk vertical clearance is measured from the top of the curb. Offset of signs is measured from the flow line.

*** See A4-3 sign plate for signs 4' or less in width or less than 20 S.F. in area.

SIGN SHAPE OTHER THAN DIAMOND (TWO POSTS REQUIRED)	
L	E
*** Greater than 48" Less than 60"	12"
60" to 120"	L/5

SIGN SHAPE OTHER THAN DIAMOND (THREE POSTS REQUIRED)	
L	E
Greater than 120" less than 168"	12"

SIGN SHAPE OTHER THAN DIAMOND (FOUR POSTS REQUIRED)	
L	E
168" and greater	12"

POST EMBEDMENT DEPTH

Area of Sign Installation (Sq. Ft.)	D (Min)
20 or Less	4'
Greater than 20	5'

TYPICAL INSTALLATION OF TYPE II SIGNS ON MULTIPLE POSTS

WISCONSIN DEPT OF TRANSPORTATION

APPROVED Matthew R Rauch
for State Traffic Engineer

DATE 11/12/14 PLATE NO. A4-4 13

PROJECT NO:	HWY:	COUNTY:		SHEET NO:	E

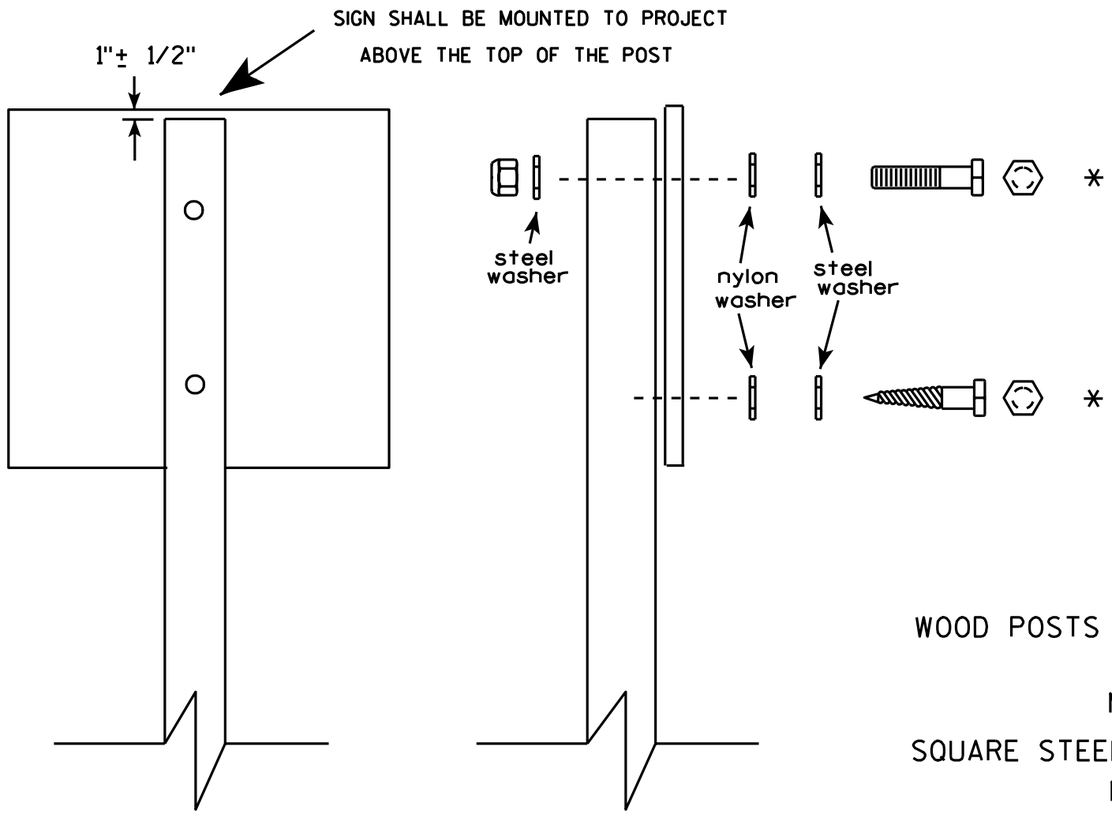

Nuts, bolts and lags used for mounting signs shall have hexagonal heads and shall be either :

a. Hot dip galvanized in accordance with ASTM Designation: A 153, Class D, or SC 3

b. Electro-galvanized in accordance with ASTM Designation : B 633, TYPE III, SC 3.

Threads on bolts and nuts shall be manufactured with sufficient allowance for the cadmium plate or galvanized coating to permit the nuts to run freely on the bolts.

WOOD POSTS (4" x 4" or 4" x 6")

LAG SCREWS - 3/8" X 3"

MACHINE BOLTS - 5/16" X 6-1/2" or 7" Length w/ nuts

SQUARE STEEL POSTS (2" x 2")

MACHINE BOLTS - 3/8" X 3-1/4" Length w/ nuts

RIVETS - 9/32" (6605-9-6) BULB-TITE, TRI-FOLD, ALUMINUM BODY/MANDREL O.D. FLANGE .720-.765 INCH, GRIP RANGE .042-.375 INCH

WASHERS (ALL POSTS) -

1-1/4" O.D. X 3/8" I.D. X 1/16" STEEL

1-1/4" O.D. X 3/8" I.D. X .080 NYLON for all Type H signs.

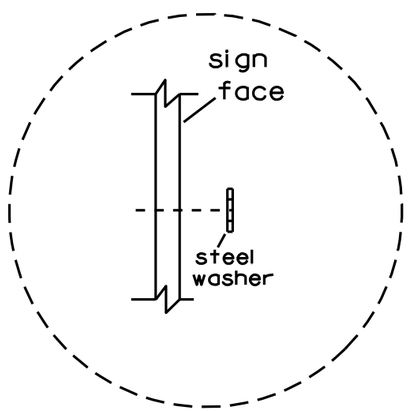

Washer Placement when Sign Has Other Than Type H or Type F Face

* Two different fastening systems are shown for illustration purposes. On any individual sign, either one or the other system shall be used. Actual number of fasteners per sign varies with the sign area, but normally there are two. For a single post installation, all signs greater than 9 sq. ft. require the use of 3 fasteners.

ATTACHMENT OF SIGNS TO POSTS

WISCONSIN DEPT OF TRANSPORTATION

APPROVED Matthew R Rauch
for State Traffic Engineer

DATE 3/23/10 PLATE NO. A4-8.7

TELESCOPIC TUBING ANCHORS
TWO PIECE SYSTEM

2 1/4" SQUARE
12 GAUGE
PERFORATED
GALVANIZED FINISH

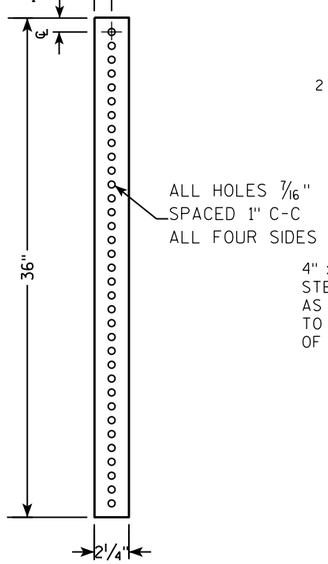

2 1/2" SQUARE
12 GAUGE
OMNI-DIRECTIONAL
PERFORATED
SOIL STABILIZING SLEEVE
GALVANIZED FINISH

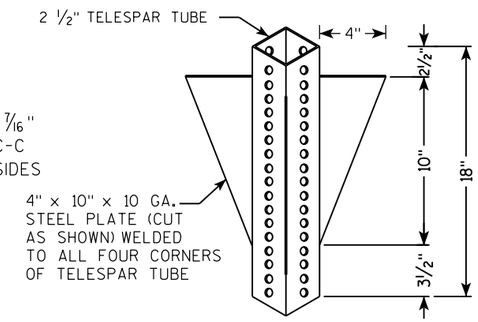

DETAIL OF TUBULAR STEEL SIGN POST
(IN POURED CONCRETE OR ASPHALT)

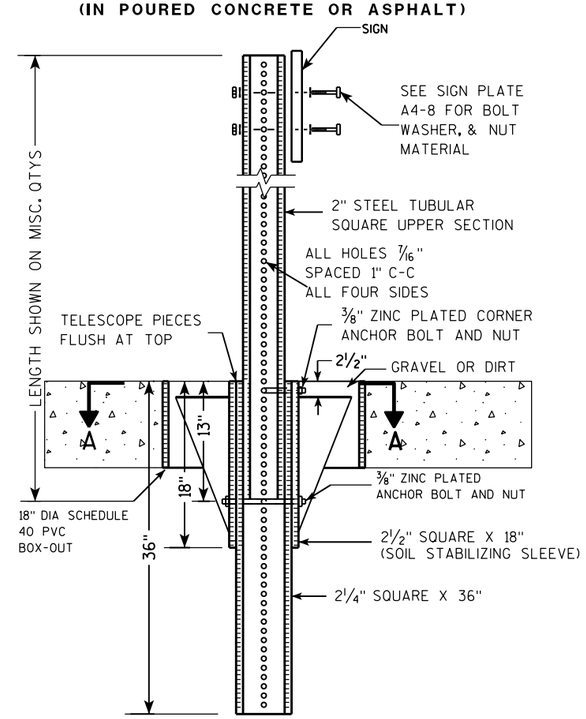

DETAIL OF TUBULAR STEEL SIGN POST
(IN LOCATIONS OTHER THAN POURED CONCRETE OR ASPHALT)

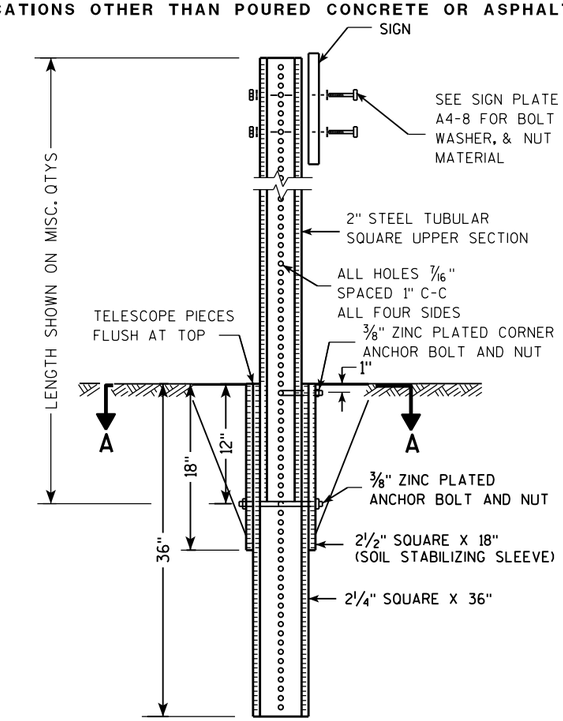

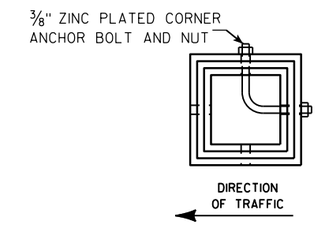

SECTION A-A

Area of Sign Installation (Sq. Ft.)	Number of Required Posts
9 or less	1
Greater than 9 less than or equal to 18	2
Greater than 18 less than or equal to 27	3

Signs wider than 3 feet or larger than 9 sq. ft shall be mounted on multiple posts (see above table).

TUBULAR STEEL
SIGN POST
A4-9

WISCONSIN DEPT OF TRANSPORTATION

APPROVED Matthew R Rauch
for State Traffic Engineer

DATE 2/05/15 PLATE A4-9.9

7 7

PROJECT NO:	HWY:	COUNTY:		SHEET NO:	E

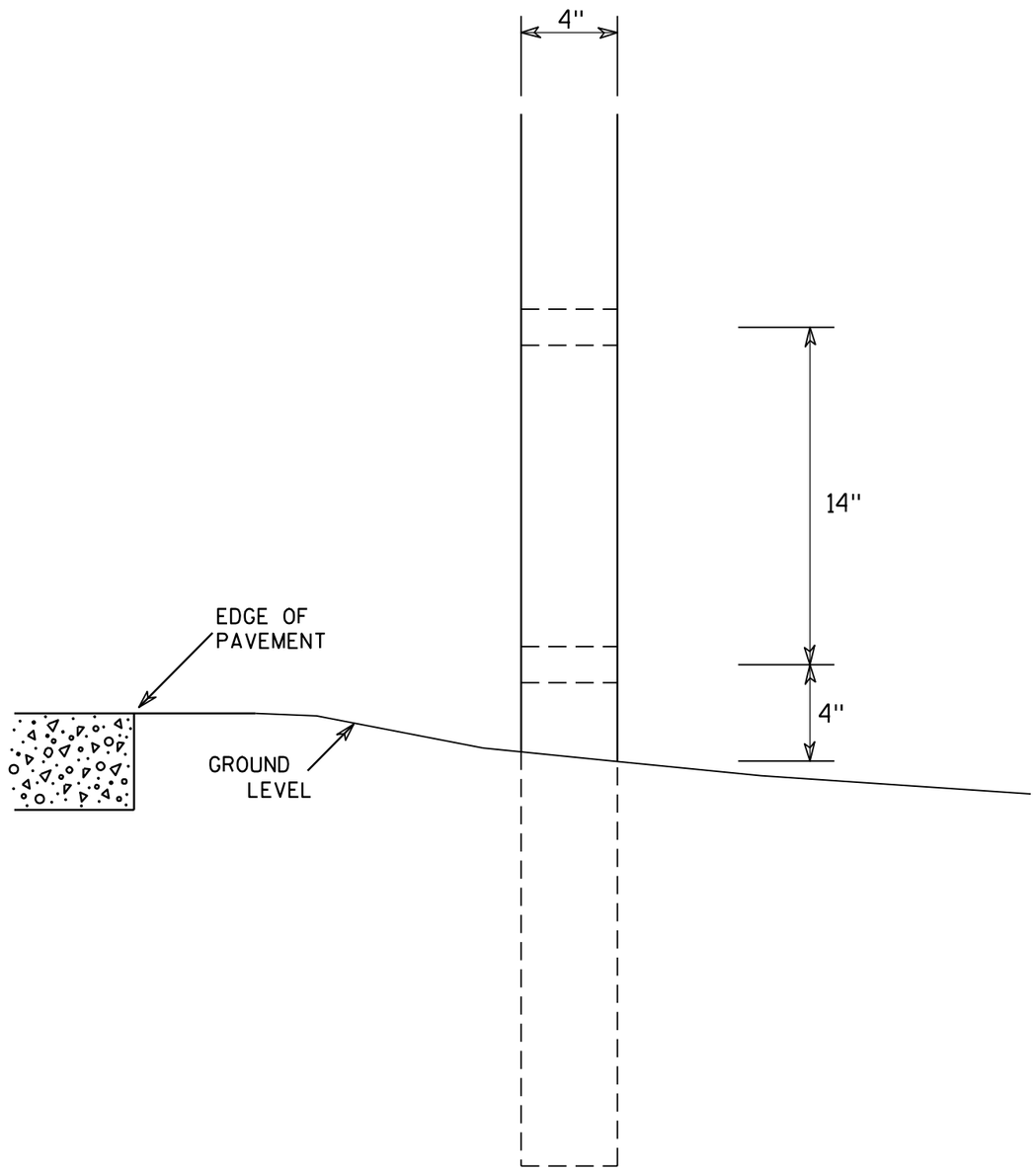

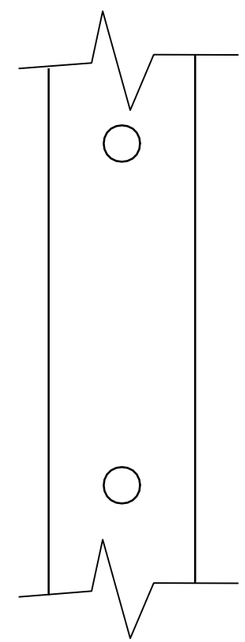

SIDE VIEW

GENERAL NOTES

1. All 4 x 6 Wood Posts shall be modified by having two 1½" diameter holes drilled perpendicular to the roadway centerline.

7

7

4 X 6 WOOD POST MODIFICATIONS

WISCONSIN DEPT OF TRANSPORTATION

APPROVED Chester J Spang for State Traffic Engineer

DATE 3/27/97 PLATE NO. A4-11.2

PROJECT NO:	HWY:	COUNTY:		SHEET NO: 161	E

NOTES

1. Sign is Type II - Type H Reflective - reference WIS DOT Standard Specification for HIGHWAY and STRUCTURE CONSTRUCTION latest edition.
2. Color:
   Background - White
   Message - (See Note 5)
3. Message Series - (See Note 6)
4. Corners may be square or rounded when base material is plywood but borders shall be rounded as shown. When base material is metal, the corners and borders shall be rounded.
5. Border - Blue
   Line 1 - Red
   Line 2 - Black
   Line 3-5 - Blue
6. Line 1 - Dutch 8011L
   Line 2 - Series E
   Line 3-5 - Series C
7. Contractor shall provide and install a new post bracket in accordance with the I55-56B sign detail.

Background Colors of Symbol*

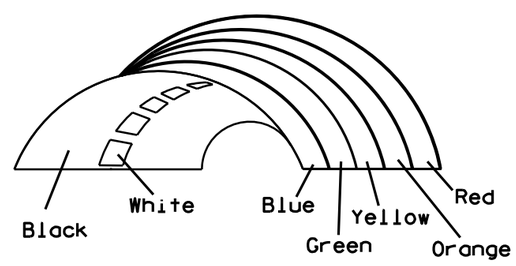

*1/4" Black Border between each color of rainbow and border of rainbow

SIZE	A	B	C	D	E	F	G	H	I	J	K	L	M	N	O	P	Q	R	S	T	U	V	W	X	Y	Z	Area sq. ft.
1																											
2	30	36	1 1/2	1/2	5/8	3	2	3 1/2	2 7/8	1	8	2 1/8	11 1/4	11 1/8	9 3/8	1 1/4		3/4	12 5/8	7 1/2							7.5
3																											
4																											
5																											

STANDARD SIGN
I55-56

WISCONSIN DEPT OF TRANSPORTATION

APPROVED Matthew R Rauch
for State Traffic Engineer

DATE 4/27/11 PLATE NO. 155-56.3

PROJECT NO: | HWY: | COUNTY: | SHEET NO: 162

ISOMETRIC VIEW

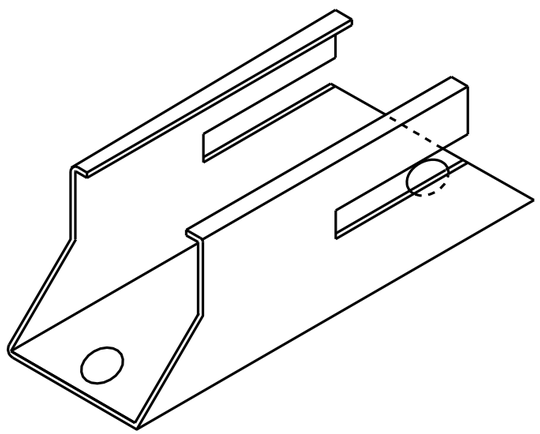

TOP VIEW

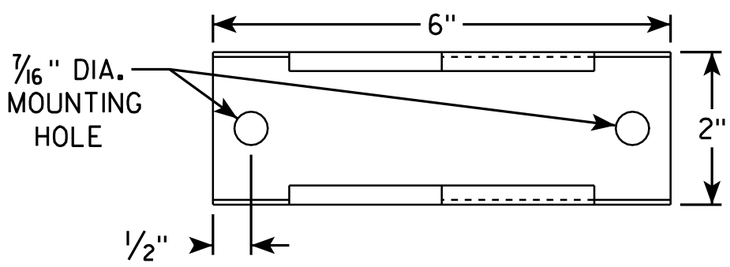

SIDE VIEW

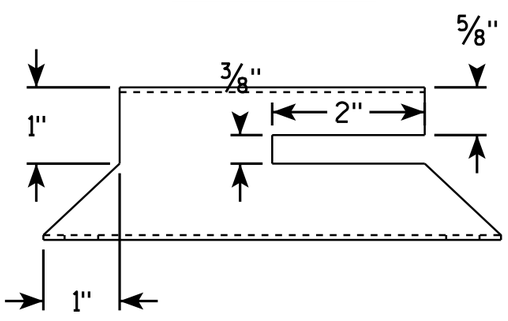

END VIEW

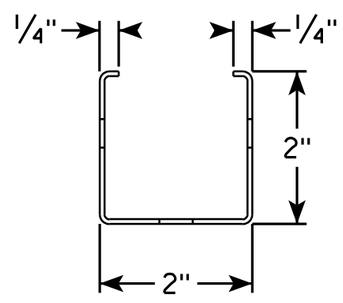

NOTES

1. Must be capable of permanent attachment to a wood or steel channel sign post utilizing the fastening hardware specified on the A4-8 sign plate.
2. Shall be entirely primed and painted with two coats of a black powder coated enamel paint.
3. Shall be made with 12 gauge steel, and incorporate no welds, no hinged components, no threaded lock-type components, and no parts which are loose or can be separated from the main body.
4. Shall have rounded edges with at least 1/8" radii.
5. Shall not have unrounded and uncoated metal edges which can contact the back surface of the roll-up sign.
6. Top of bracket shall be mounted 2' below the bottom of the I55-56 sign.
7. Cost of bracket and fastening hardware shall be incidental to the I55-56 sign.

SIDE VIEW

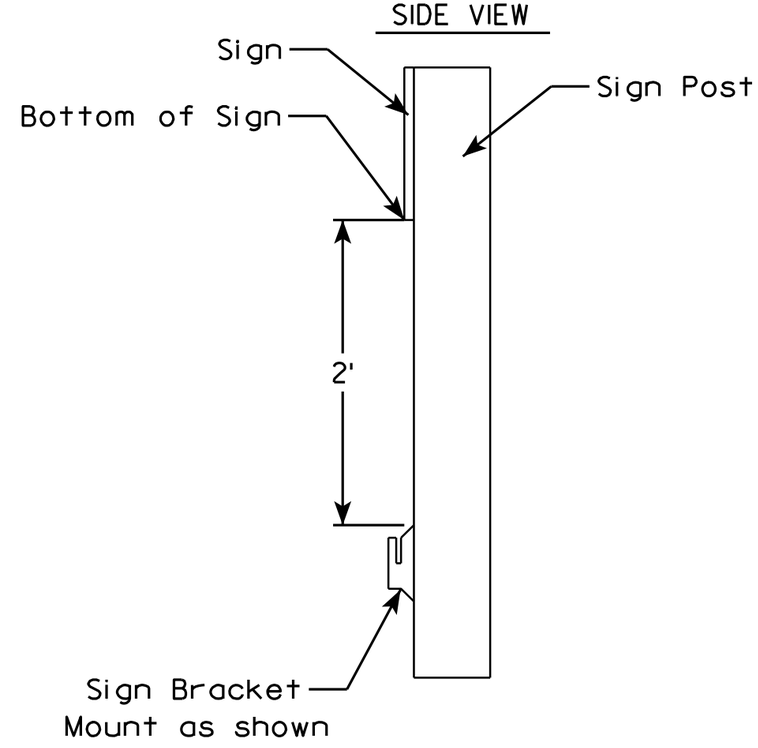

7

7

ROLLUP SIGN BRACKET
I55-56B

WISCONSIN DEPT OF TRANSPORTATION

APPROVED Matthew R Rauch
for State Traffic Engineer

DATE 2/5/10 PLATE NO. I55-56B.1

PROJECT NO:	HWY:	COUNTY:		SHEET NO: 163	E

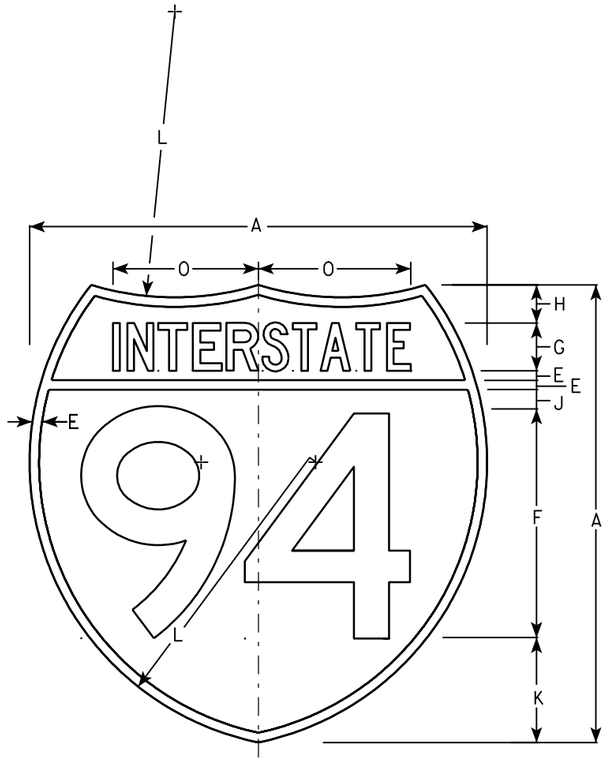

M1-1

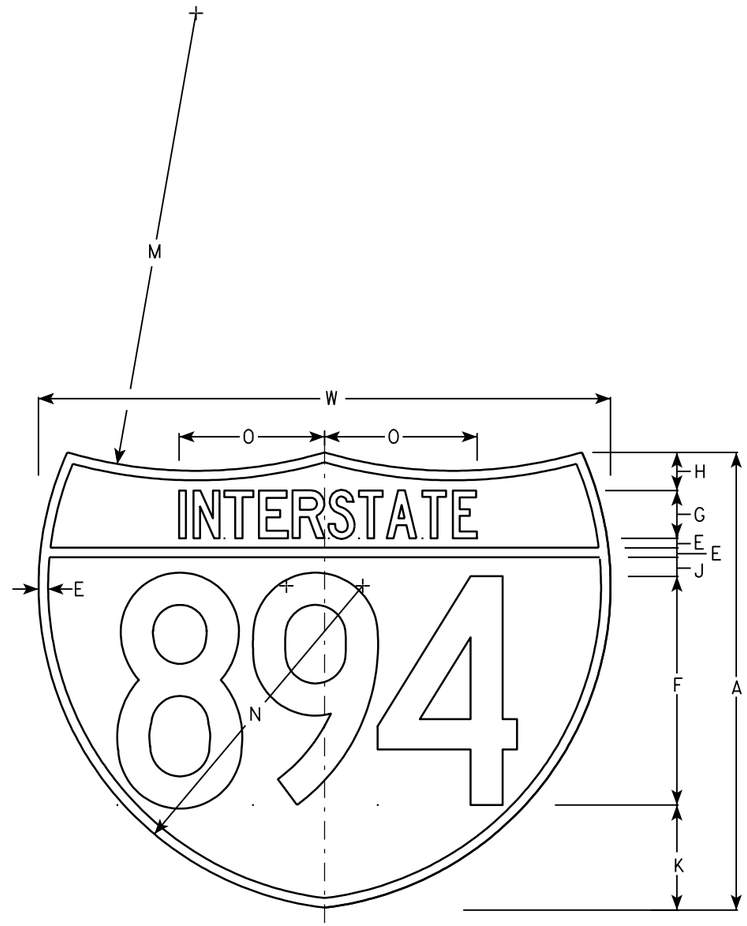

M1-1A

NOTES

1. Sign is Type II - See Note 6 - reference WIS DOT Standard Specification for HIGHWAY and STRUCTURE CONSTRUCTION latest edition.
2. Color:
   Background - Top Red - Bottom Blue (See Note 6)
   Message - White - See Note 6
3. Message Series - See note 5
4. Substitute appropriate numerals & ajust spacing as per plate A10-1.
5. M1-1 - Numerals - D
   Interstate - C
   M1-1A - All copy - C
6. Permanent Signs
   Message - Type H Reflective
   Detour or other temporary signs
   Background - Reflective
   Message - Reflective

Metric equivalent for these signs are:

SIZE	M1-1	SIZE	M1-1A
1			
2	600 mm X 600 mm	2	600 mm X 750 mm
3	900 mm X 900 mm	3	900 mm X 1125 mm
4	900 mm X 900 mm	4	900 mm X 1125 mm
5	900 mm X 900 mm	5	900 mm X 1125 mm

SIZE	A	B	C	D	E	F	G	H	I	J	K	L	M	N	O	P	Q	R	S	T	U	V	W	X	Y	M1-1 Area sq. ft.	M1-1A Area sq. ft.	M1-1 Area m2	M1-1A Area m2
1																													
2	24				1/2	12	2 1/2	2		1	5 1/2	15	24	17	7 7/8								30			3.13	3.91	.36	.46
3	36				3/4	18	3 3/4	3		1 1/2	8 1/4	22 1/2	36	25 1/2	11 3/4								45			7.03	8.79	.81	1.05
4	36				3/4	18	3 3/4	3		1 1/2	8 1/4	22 1/2	36	25 1/2	11 3/4								45			7.03	8.79	.81	1.05
5	36				3/4	18	3 3/4	3		1 1/2	8 1/4	22 1/2	36	25 1/2	11 3/4								45			7.03	8.79	.81	1.05

INTERSTATE ROUTE MARKER
M1-1 FOR ASSEMBLIES

WISCONSIN DEPT OF TRANSPORTATION

APPROVED Matthew R Rauch
for State Traffic Engineer

DATE 08/23/05 PLATE NO. M1-1.8

PROJECT NO:	HWY:	COUNTY:		SHEET NO: 164	E

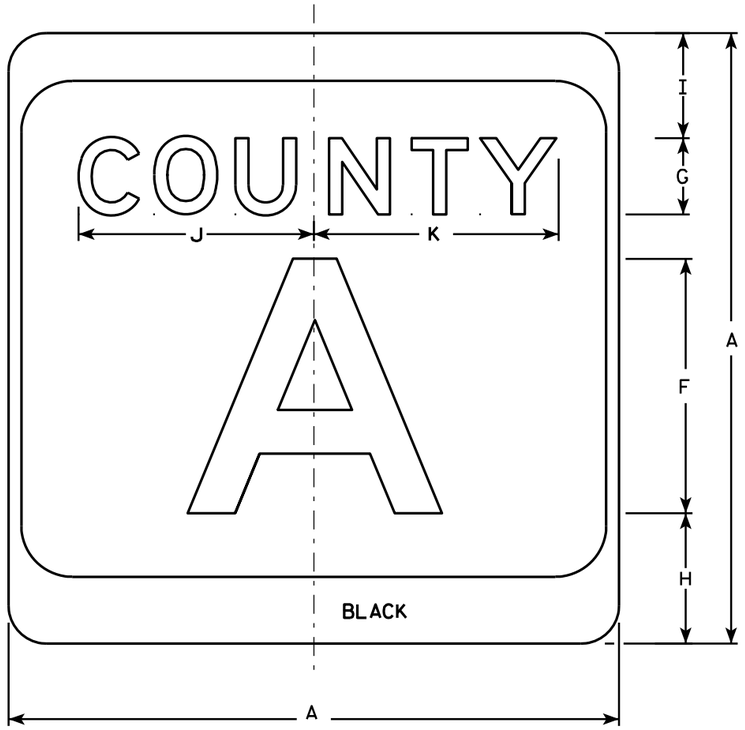

M1-5A

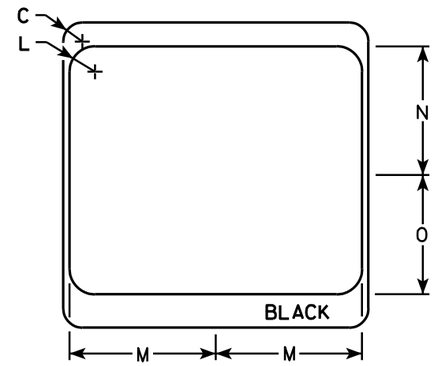

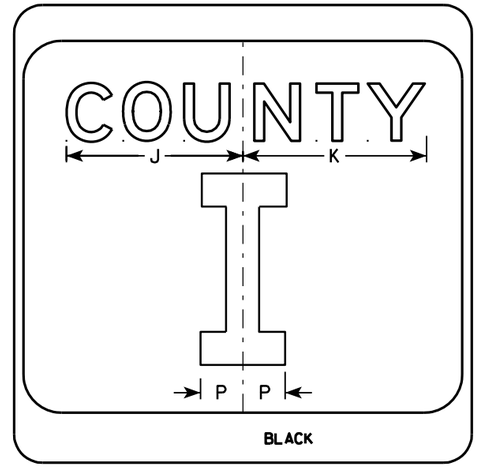

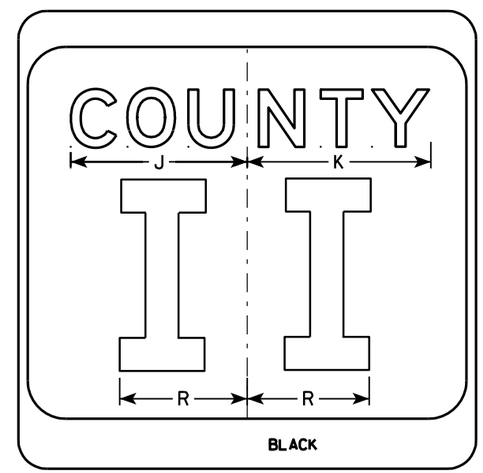

NOTES

1. Sign is Type II - see Note 7 - reference WIS DOT Standard Specification for HIGHWAY and STRUCTURE CONSTRUCTION latest edition.
2. Color:
   Background - White & Black - See Note 7
   Message - Black
3. Message Series - see Note 5
4. Corners may be square or rounded when base material is plywood but borders shall be rounded as shown. When base material is metal, the corners and borders shall be rounded.
5. Message Series E for 1 letter.
   Message Series D for 2 letters unless message is too big then Series C.
   Message Series C for 3 letters unless message is too big then Series B.
6. Substitute appropriate letters & optically center to achieve proper balance.
7. Permanent Signs
   Background - Type H Reflective
   Detour or temporary Signs
   Background - Reflective

SIZE	A	B	C	D	E	F	G	H	I	J	K	L	M	N	O	P	Q	R	S	T	U	V	W	X	Y	Z	Area sq. ft.
1																											
2	24		1 1/2			10	3	5 1/8	4 1/8	9 1/4	9 5/8	2	11 1/2	10 1/8	9 3/8	2 1/4		6 5/8									4.0
3	36		2 1/4			16	4	7 5/8	5 5/8	12 1/4	12 7/8	3	17 1/8	15 1/4	14	3 3/8		10									9.0
4	36		2 1/4			16	4	7 5/8	5 5/8	12 1/4	12 7/8	3	17 1/8	15 1/4	14	3 3/8		10									9.0
5	36		2 1/4			16	4	7 5/8	5 5/8	12 1/4	12 7/8	3	17 1/8	15 1/4	14	3 3/8		10									9.0

CTH MARKER
M1-5A FOR ASSEMBLIES

WISCONSIN DEPT OF TRANSPORTATION

APPROVED Matthew R Rauch
for State Traffic Engineer

DATE 9/27/11 PLATE NO. M1-5A.8

PROJECT NO:	HWY:	COUNTY:		SHEET NO: 165	E

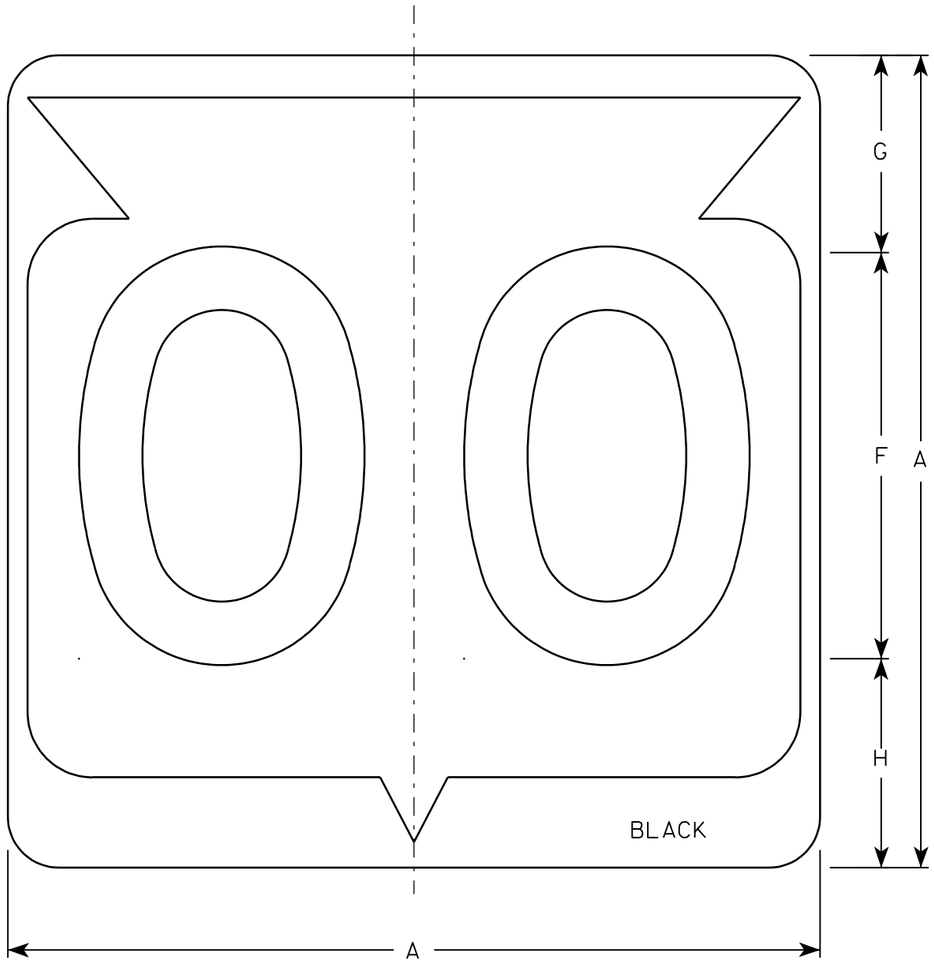

M1-6

NOTES

1. Sign is Type II - See Note 6 - reference WIS DOT Standard Specification for HIGHWAY and STRUCTURE CONSTRUCTION latest edition.
2. Color:
   Background - White & Black - See Note 6
   Message - Black
3. Message Series - See note 5
4. Corners may be square or rounded when base material is plywood but borders shall be rounded as shown. When base material is metal, the corners and borders shall be rounded.
5. Substitute appropriate Series numerals and adjust spacing as per plate A10-1.
6. Permanent Signs
   Background - Type H Reflective
   Detour or temporary Signs
   Background - Reflective

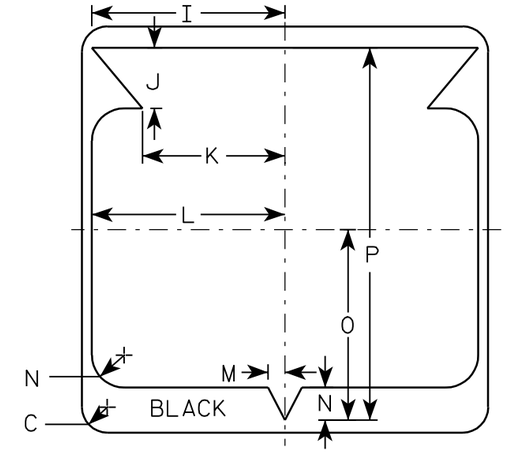

Metric equivalent for this sign is:

SIZE	
1	
2	600 mm X 600 mm
3	900 mm X 900 mm
4	900 mm X 900 mm
5	900 mm X 900 mm

SIZE	A	B	C	D	E	F	G	H	I	J	K	L	M	N	O	P	Q	R	S	T	U	V	W	X	Y	Z	Area sq. ft.	Area m2
1																												
2	24		1 1/2			12	5 1/2	6 1/2	10 1/4	2 1/2	8 7/8	11 1/2	1	1 7/8	11 1/4	21 7/8											4.0	.36
3	36		2 1/4			18	8 3/4	9 1/4	15 3/8	5 3/8	12 5/8	17 1/8	1 1/2	2 7/8	16 7/8	33											9.0	.81
4	36		2 1/4			18	8 3/4	9 1/4	15 3/8	5 3/8	12 5/8	17 1/8	1 1/2	2 7/8	16 7/8	33											9.0	.81
5	36		2 1/4			18	8 3/4	9 1/4	15 3/8	5 3/8	12 5/8	17 1/8	1 1/2	2 7/8	16 7/8	33											9.0	.81

STATE ROUTE MARKER
M1-6 FOR ASSEMBLIES

WISCONSIN DEPT OF TRANSPORTATION

APPROVED Chester J Spang
for State Traffic Engineer

DATE 3/20/02 PLATE NO. M1-6.9

PROJECT NO: | HWY: | COUNTY: | SHEET NO: 166 | E

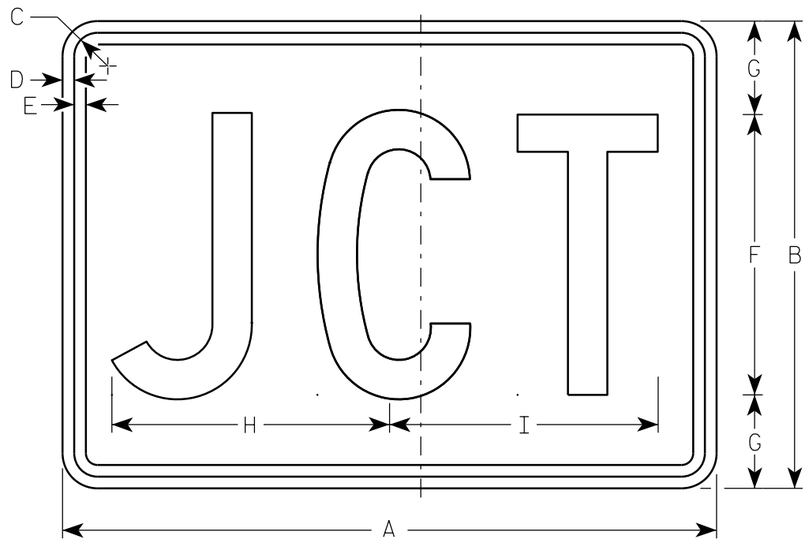

M2-1
MK2-1
MM2-1
MN2-1
MR2-1

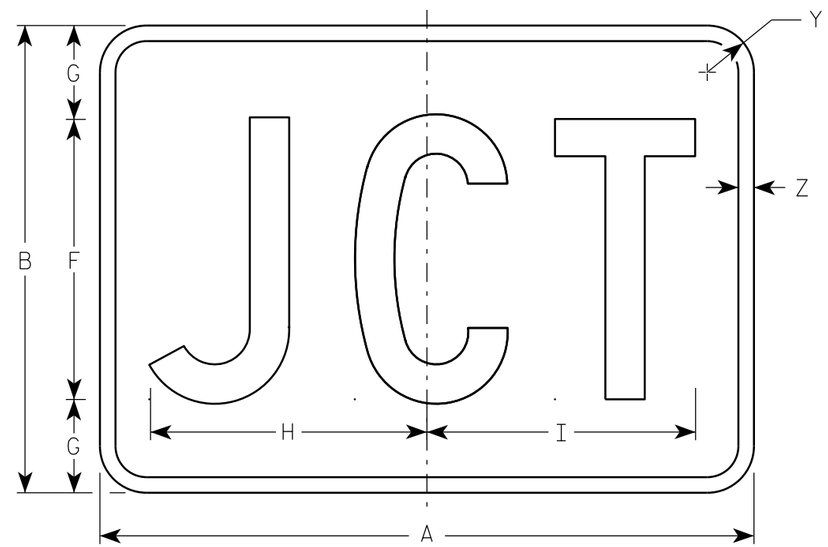

MB2-1

NOTES

1. Sign is Type II - Type H
2. Color:
   Background - See note 5
   Message - See note 5
3. Message Series - C
4. Corners may be square or rounded when base material is plywood but borders shall be rounded as shown. When base material is metal, the corners and borders shall be rounded.
5. M2-1 Background - White
   Message - Black
   MB2-1 Background - Blue
   Message - White
   MK2-1 Background - Green
   Message - White
   MM2-1 Background - White
   Message - Green
   MN2-1 Background - Brown
   Message - White
   MR2-1 Background - Brown
   Message - Yellow

SIZE	A	B	C	D	E	F	G	H	I	J	K	L	M	N	O	P	Q	R	S	T	U	V	W	X	Y	Z	Area sq. ft.
1																											
2	21	15	1 1/8	3/8	3/8	9	3	8 7/8	8 5/8																1 1/2	1/2	2.20
3	30	21	1 1/8	3/8	3/8	13	4	12 7/8	12 3/8																1 1/2	1/2	4.40
4	30	21	1 1/8	3/8	3/8	13	4	12 7/8	12 3/8																1 1/2	1/2	4.40
5	30	21	1 1/8	3/8	3/8	13	4	12 7/8	12 3/8																1 1/2	1/2	4.40

STANDARD SIGN
M2-1

WISCONSIN DEPT OF TRANSPORTATION

APPROVED Matthew R Rauch
For State Traffic Engineer

DATE 6/30/14 PLATE 167 M2-1.11

PROJECT NO:	HWY:	COUNTY:		SHEET NO:	E

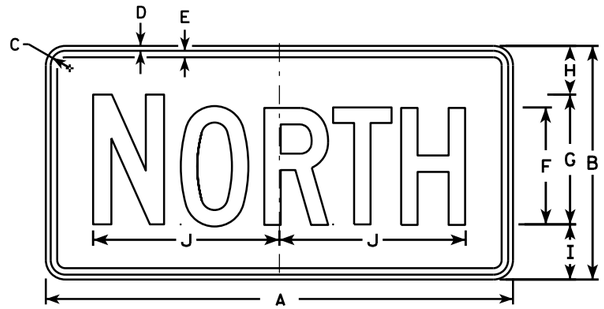

M3-1
MK3-1
MM3-1
MN3-1

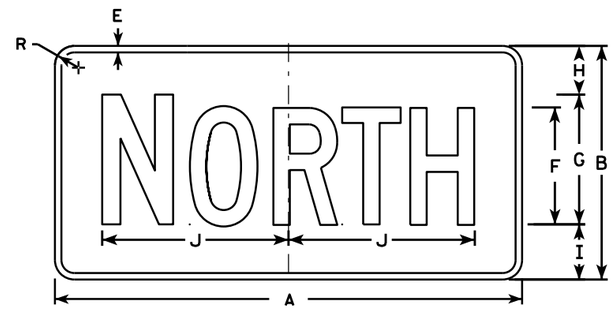

MB3-1

M3-2
MK3-2
MM3-2
MN3-2

MB3-2

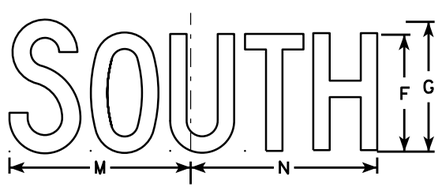

M3-3
MK3-3
MM3-3
MN3-3

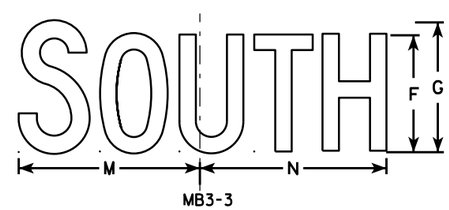

MB3-3

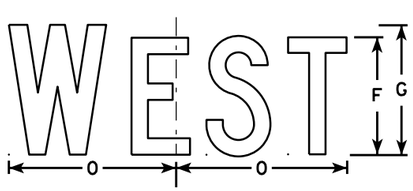

M3-4
MK3-4
MM3-4
MN3-4

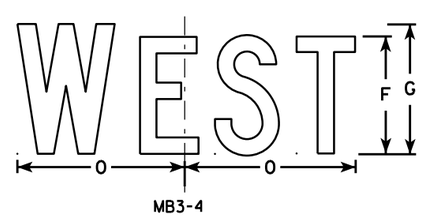

MB3-4

NOTES

1. All Signs Type II - Type H
2. Color:
   Background - See note 5
   Message - See note 5
3. Message Series - C
4. Corners may be square or rounded when base material is plywood but borders shall be rounded as shown. When base material is metal, the corners and borders shall be rounded.
5. M3-1 thru M3-4 Background - White
   Message - Black
   MB3-1 thru MB3-4 Background - Blue
   Message - White
   MK3-1 thru MK3-4 Background - Green
   Message - White
   MM3-1 thru MM3-4 Background - White
   Message - Green
   MN3-1 thru MN3-4 Background - Brown
   Message - White
6. Note the first letter of each direction is larger than the remainder of the message.

SIZE	A	B	C	D	E	F	G	H	I	J	K	L	M	N	O	P	Q	R	S	T	U	V	W	X	Y	Z	Area sq. ft.
1																											
2	24	12	1 1/8	3/8	3/8	6	7	2 1/4	2 3/4	10 1/4	7 7/8	8 3/8	10 1/4	9 3/4	8 3/4			1 1/2									2.00
3	36	18	1 1/8	3/8	1/2	9	10	3 3/4	4 1/4	14 3/8	12	12 1/8	14	14 1/8	13			1 1/2									4.5
4	36	18	1 1/8	3/8	1/2	9	10	3 3/4	4 1/4	14 3/8	12	12 1/8	14	14 1/8	13			1 1/2									4.5
5	36	18	1 1/8	3/8	1/2	9	10	3 3/4	4 1/4	14 3/8	12	12 1/8	14	14 1/8	13			1 1/2									4.5

STANDARD SIGNS
M3-1 thur M3-4
SERIES

WISCONSIN DEPT OF TRANSPORTATION

APPROVED Matthew R Rauch
for State Traffic Engineer

DATE 6/30/14 PLATE NO M3-1.13

PROJECT NO: | HWY: | COUNTY: | SHEET NO: | E

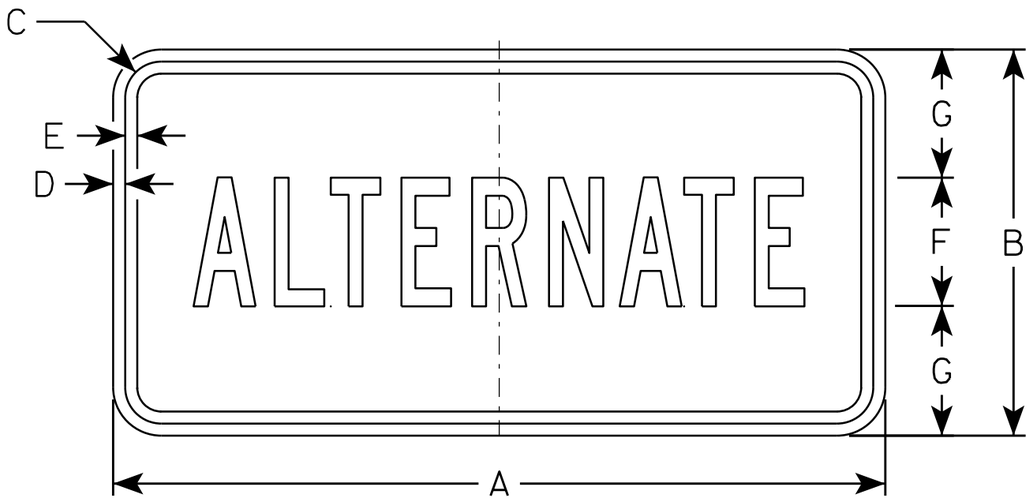

M4 - 1
M04 - 1

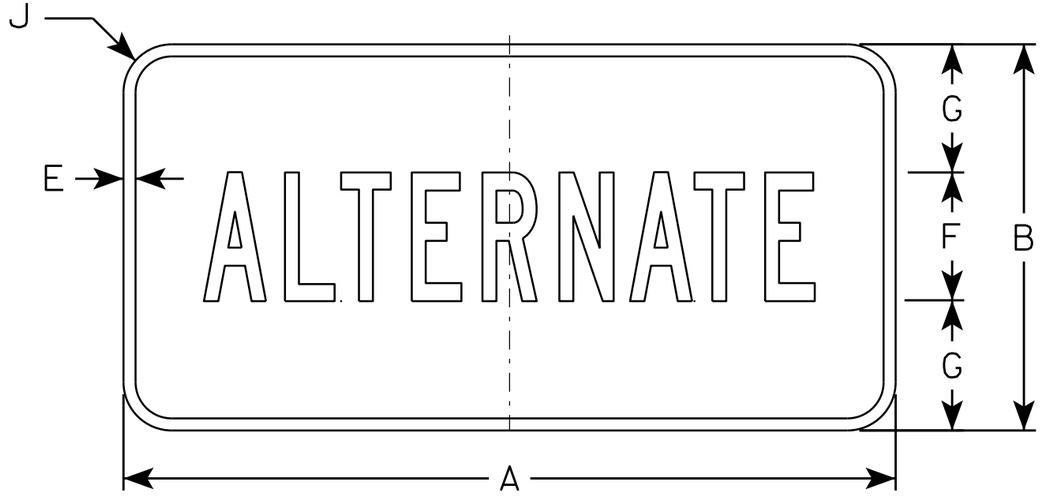

MB4 - 1

NOTES

1. Sign is Type II - Type H except as Shown
2. Color:
   Background - See Note 5
   Message - See note 5
3. Message Series - B
4. Corners may be square or rounded when base material is plywood but borders shall be rounded as shown. When base material is metal, the corners and borders shall be rounded.
5. M4-1 Background - White
   Message - Black

   MB4-1 Background - Blue
   Message - White

   M04-1 Background - Orange - Type F
   Message - Black

SIZE	A	B	C	D	E	F	G	H	I	J	K	L	M	N	O	P	Q	R	S	T	U	V	W	X	Y	Z	Area sq. ft.
1																											
2	24	12	1 1/8	3/8	3/8	4	4	9 3/4	9 1/2	1 1/2																	2.00
3	36	18	1 1/8	3/8	1/2	7	5 1/2	16 3/8	16 1/2	1 1/2																	4.5
4	36	18	1 1/8	3/8	1/2	7	5 1/2	16 3/8	16 1/2	1 1/2																	4.5
5	36	18	1 1/8	3/8	1/2	7	5 1/2	16 3/8	16 1/2	1 1/2																	4.5

STANDARD SIGN
M4 - 1

WISCONSIN DEPT OF TRANSPORTATION

APPROVED Matthew R Rauch
for State Traffic Engineer

DATE 6/30/14 PLATE '14-1.8

PROJECT NO:	HWY:	COUNTY:		SHEET NO:	E

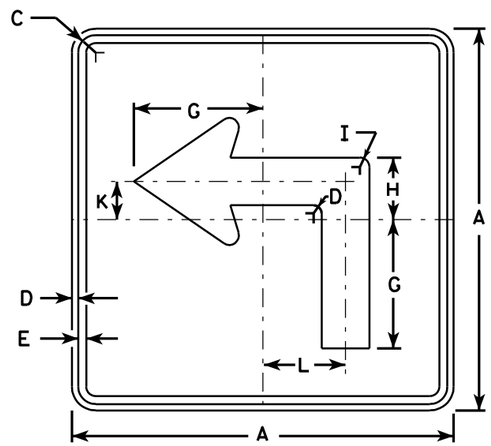

M5-1L
MK5-1L
MM5-1L
MO5-1L
MP5-1L
MR5-1L

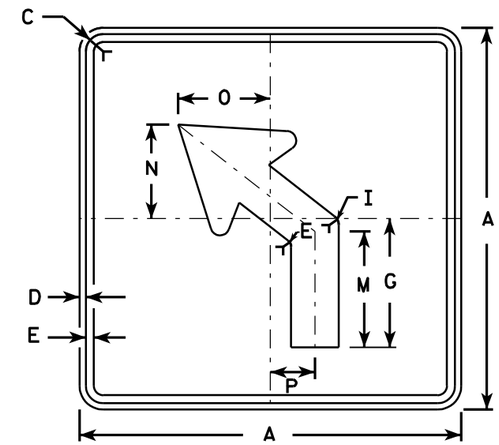

M5-2L
MK5-2L
MM5-2L
MO5-2L
MP5-2L
MR5-2L

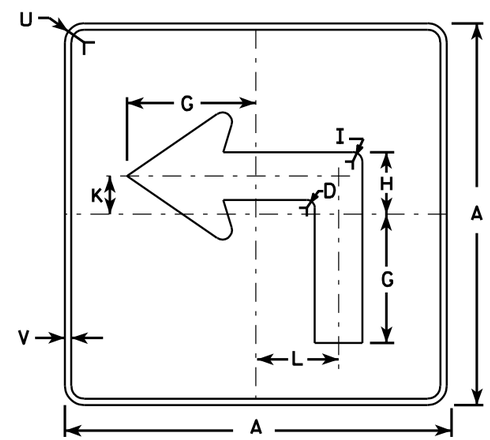

MB5-1L
MG5-1L
MN5-1L

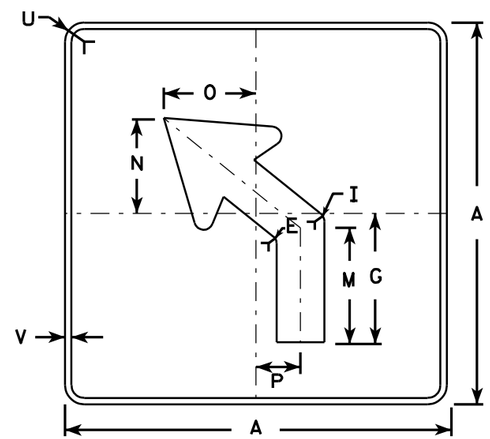

MB5-2L
MG5-2L
MN5-2L

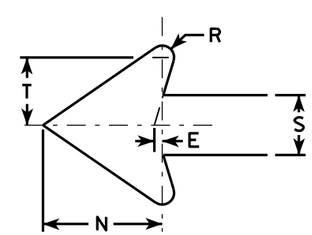

NOTES

1. Signs are Type II - See Note 4 - reference WIS DOT Standard Specification for HIGHWAY and STRUCTURE CONSTRUCTION latest edition.
2. Color:
   Background - See note 4
   Message - See note 4
3. Corners may be square or rounded when base material is plywood but borders shall be rounded as shown. When base material is metal, the corners and borders shall be rounded.
4. M5-1 and M5-2 Background - White - Type H Reflective
   Message - Black
   MB5-1 and MB5-2 Background - Blue
   Message - White - Type H Reflective
   MG5-1 and MG5-2 Background - Green
   Message - White - Type H Reflective
   MK5-1 and MK5-2 Background - Green
   Message - White Type H Reflective
   MM5-1 and MM5-2 Background - White - Type H Reflective
   Message - Green
   MN5-1 and MN5-2 Background - Brown
   Message - White - Type H Reflective
   MO5-1 and MO5-2 Background - Orange - Type F Reflective
   Message - Black
   MP5-1 and MP5-2 Background - White - Type H Reflective
   Message - Blue
   MR5-1 and MR5-2 Background - Brown
   Message - Yellow - Type H Reflective
5. M5-1R same as M5-1L except arrow points right.
6. M5-2R same as M5-2L except arrow tilts right.

SIZE	A	B	C	D	E	F	G	H	I	J	K	L	M	N	O	P	Q	R	S	T	U	V	W	X	Y	Z	Area sq. ft.
1																											
2	21		1 1/8	3/8	3/8		7	3 3/8	5/8		2 1/8	4 1/2	6 3/8	5 1/4	5	2 1/2		1/2	2 5/8	3	1 1/2	1/2					3.06
3	30		1 3/8	1/2	5/8		10 1/8	4 7/8	7/8		3	6 1/2	9 1/8	7 1/2	7 1/4	3 1/2		3/4	3 3/4	4 1/4	1 7/8	1/2					6.25
4	30		1 3/8	1/2	5/8		10 1/8	4 7/8	7/8		3	6 1/2	9 1/8	7 1/2	7 1/4	3 1/2		3/4	3 3/4	4 1/4	1 7/8	1/2					6.25
5	30		1 3/8	1/2	5/8		10 1/8	4 7/8	7/8		3	6 1/2	9 1/8	7 1/2	7 1/4	3 1/2		3/4	3 3/4	4 1/4	1 7/8	1/2					6.25

STANDARD SIGN
M5-1 & M5-2

WISCONSIN DEPT OF TRANSPORTATION

APPROVED Matthew R Rauch
for State Traffic Engineer

DATE 7/29/13 PLATE NO. M5-1.12

PROJECT NO: | HWY: | COUNTY: | SHEET NO: 170 | E

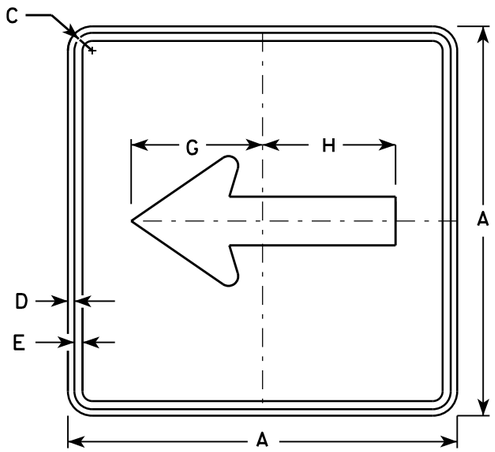

M6-1
MK6-1
MM6-1
MN6-1
MO6-1
MP6-1
MR6-1

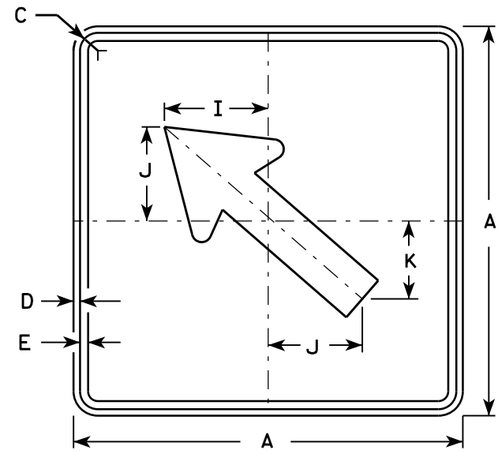

M6-2
MK6-2
MM6-2
MN6-2
MO6-2
MP6-2
MR6-2

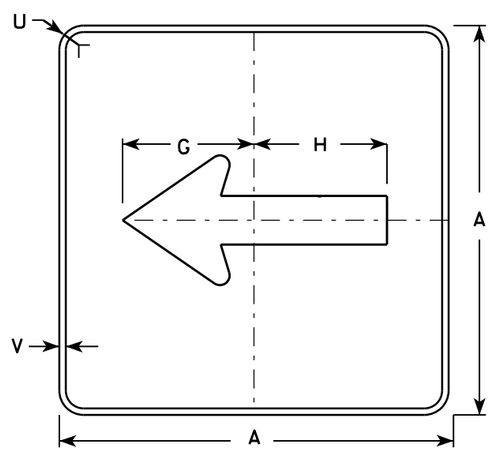

MB6-1

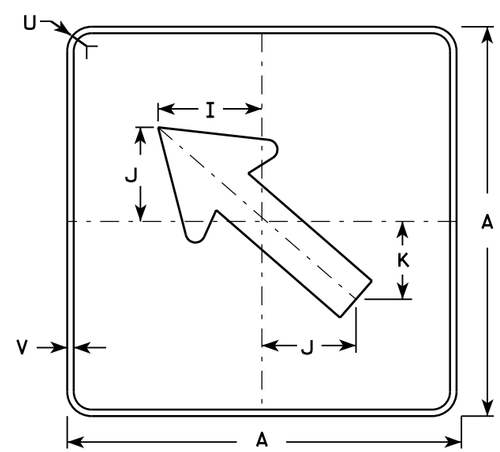

MB6-2

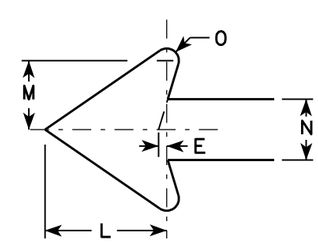

NOTES

1. Signs are Type II - Type H except as Shown
2. Color:
   Background - See note 4
   Message - See note 4
3. Corners may be square or rounded when base material is plywood but borders shall be rounded as shown. When base material is metal, the corners and borders shall be rounded.
4. M6-1 and M6-2 Background - White
   Message - Black

   MB6-1 and MB6-2 Background - Blue
   Message - White

   MG6-1 and MG6-2 Background - Green
   Message - White

   MK6-1 and MK6-2 Background - Green
   Message - White

   MM6-1 and MM6-2 Background - White
   Message - Green

   MN6-1 and MN6-2 Background - Brown
   Message - White

   MO6-1 and MO6-2 Background - Orange - Type F Reflective
   Message - Black

   MP6-1 and MP6-2 Background - White
   Message - Blue

   MR6-1 and MR6-2 Background - Brown
   Message - Yellow

SIZE	A	B	C	D	E	F	G	H	I	J	K	L	M	N	O	P	Q	R	S	T	U	V	W	X	Y	Z	Area sq. ft.
1																											
2	21		1 1/8	3/8	3/8		7 1/2	7 1/8	5 5/8	5	4 1/4	5 1/4	3	2 5/8	1/2						1 1/2	1/2					3.06
3	30		1 3/8	1/2	5/8		10 3/4	10 1/4	8	7 1/4	6	7 1/2	4 1/4	3 3/4	3/4						1 7/8	1/2					6.25
4	30		1 3/8	1/2	5/8		10 3/4	10 1/4	8	7 1/4	6	7 1/2	4 1/4	3 3/4	3/4						1 7/8	1/2					6.25
5	30		1 3/8	1/2	5/8		10 3/4	10 1/4	8	7 1/4	6	7 1/2	4 1/4	3 3/4	3/4						1 7/8	1/2					6.25

STANDARD SIGN
M6-1 & M6-2
SERIES

WISCONSIN DEPT OF TRANSPORTATION

APPROVED Matthew R Rauch
for State Traffic Engineer

DATE 7/03/14 PLATE M6-1.14

PROJECT NO: | HWY: | COUNTY: | SHEET NO: | E

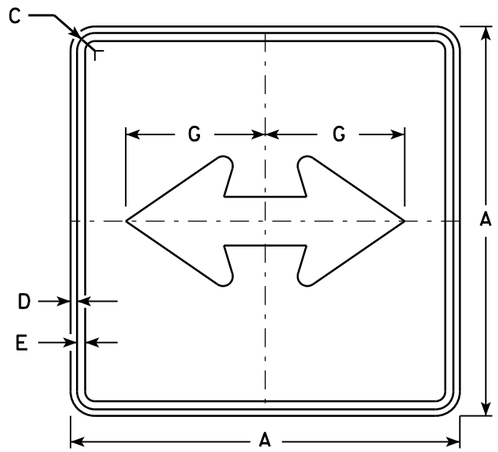

M6-4
MK6-4
MM6-4
MN6-4
MO6-4
MP6-4
MR6-4

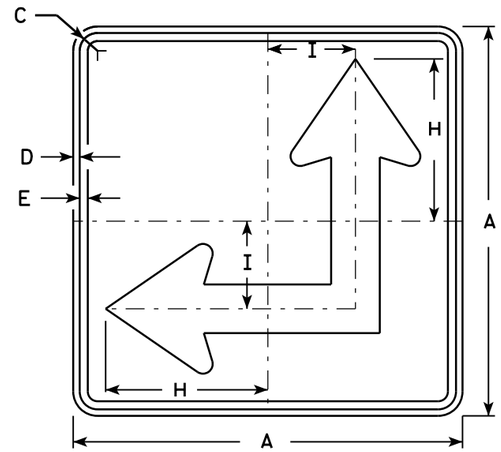

M6-6
MK6-6
MM6-6
MN6-6
MO6-6
MP6-6
MR6-6

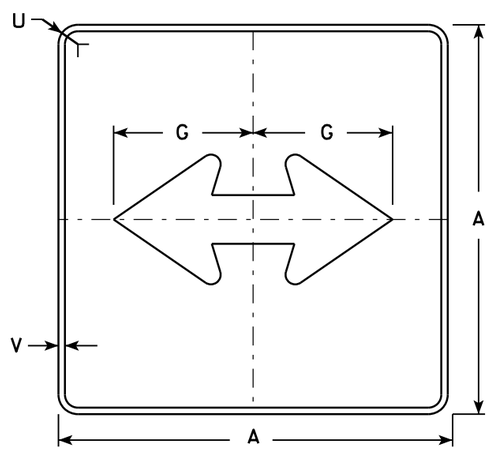

MB6-4

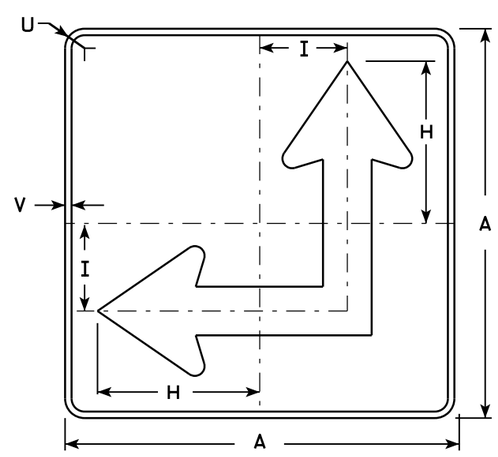

MB6-6

NOTES

1. Signs are Type II - Type H except as Shown
2. Color:
   Background - See Note 4
   Message - See Note 4
3. Corners may be square or rounded when base material is plywood but borders shall be rounded as shown. When base material is metal, the corners and borders shall be rounded.
4. M6-4 and M6-6 Background - White
   Message - Black
   MB6-4 and MB6-6 Background - Blue
   Message - White
   MK6-4 and MK6-6 Background - Green
   Message - White
   MM6-4 and MM6-6 Background - White
   Message - Green
   MN6-4 and MN6-6 Background - Brown
   Message - White
   MO6-4 and MO6-6 Background - Orange - Type F Reflective
   Message - Black
   MP6-4 and MP6-6 Background - White
   Message - Blue
   MR6-4 and MR6-6 Background - Brown
   Message - Yellow
5. M6-6R same as M6-6L except arrow points ahead and right.

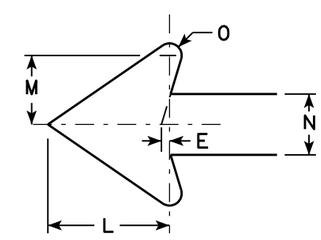

SIZE	A	B	C	D	E	F	G	H	I	J	K	L	M	N	O	P	Q	R	S	T	U	V	W	X	Y	Z	Area sq. ft.
1																											
2	21		1 1/8	3/8	3/8		7 1/2	8 3/4	4 1/4			5 1/4	3	2 5/8	1/2						1 1/2	1/2					3.06
3	30		1 3/8	1/2	5/8		10 3/4	12 1/2	6 3/4			7 1/2	4 1/4	3 3/4	3/4						1 7/8	1/2					6.25
4	30		1 3/8	1/2	5/8		10 3/4	12 1/2	6 3/4			7 1/2	4 1/4	3 3/4	3/4						1 7/8	1/2					6.25
5	30		1 3/8	1/2	5/8		10 3/4	12 1/2	6 3/4			7 1/2	4 1/4	3 3/4	3/4						1 7/8	1/2					6.25

STANDARD SIGN
M6-4 & M6-6
SERIES

WISCONSIN DEPT OF TRANSPORTATION

APPROVED Matthew R Rauch
for State Traffic Engineer

DATE 7/03/14 PLATE M6-4.9

PROJECT NO: | HWY: | COUNTY: | SHEET NO: | E

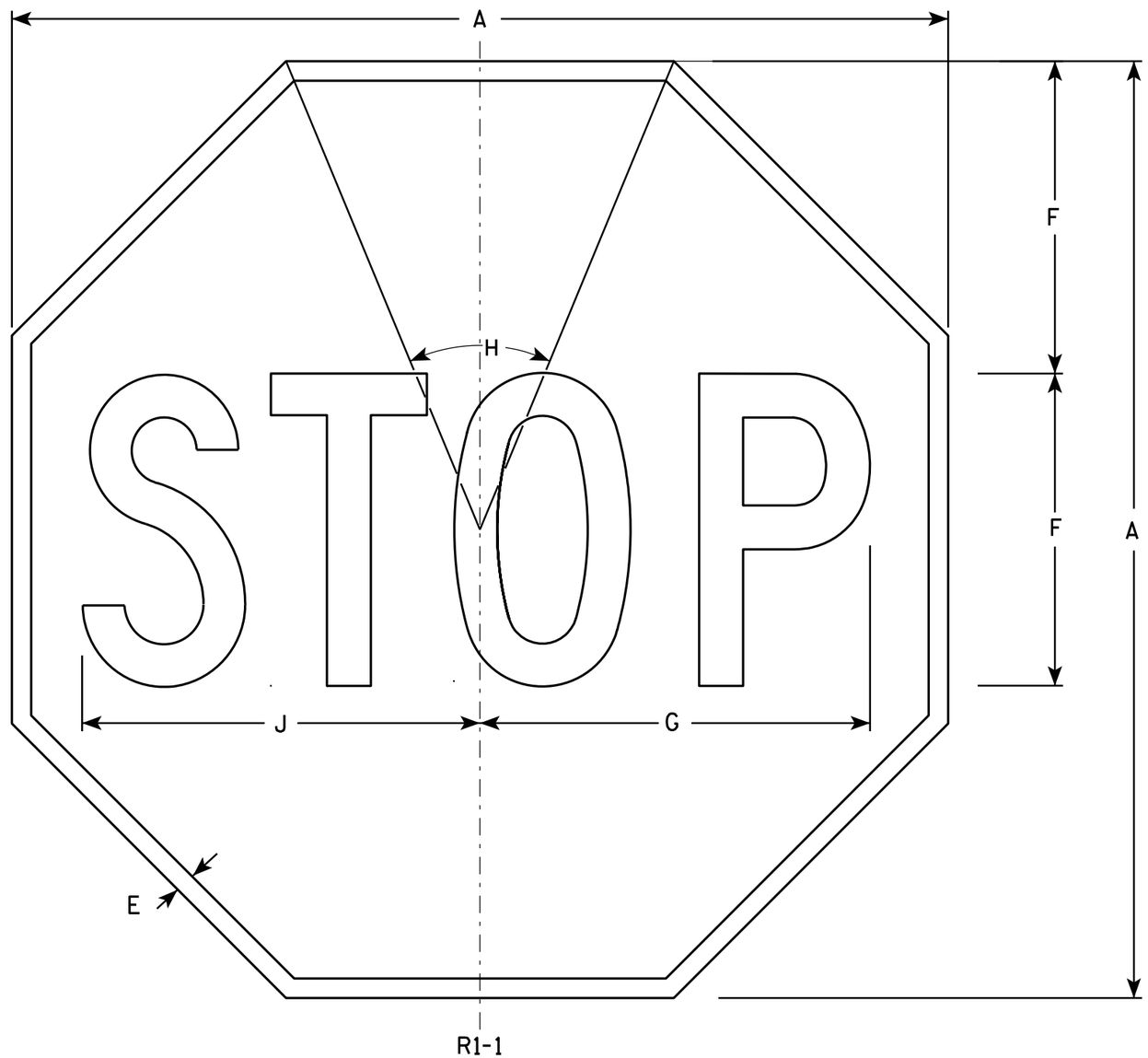

NOTES

1. Sign is Type II - Type H Reflective - reference WIS DOT Standard Specification for HIGHWAY and STRUCTURE CONSTRUCTION latest edition.
2. Color:
   Background - Red
   Message - White
3. Message Series - C

SIZE	A	B	C	D	E	F	G	H	I	J	K	L	M	N	O	P	Q	R	S	T	U	V	W	X	Y	Z	Area sq. ft.
1	24				3/8	8	10	45°		10 1/4																	3.31
2S	30				5/8	10	12 1/2	45°		12 3/4																	5.18
2M	36				3/4	12	15	45°		15 3/8																	7.46
3	36				3/4	12	15	45°		15 3/8																	7.46
4	48				1	16	20	45°		20 1/2																	13.25
5	48				1	16	20	45°		20 1/2																	13.25
6	18				3/8	6	7 3/4	45°		7 3/4																	1.86
7	12				1/4	4	5	45°		5 1/8																	0.78

STANDARD SIGN
R1-1

WISCONSIN DEPT OF TRANSPORTATION

APPROVED Matthew R Rauch
for State Traffic Engineer

DATE 12/03/10 PLATE NO. R1-1.12

PROJECT NO: | HWY: | COUNTY: | SHEET NO: 173 | E

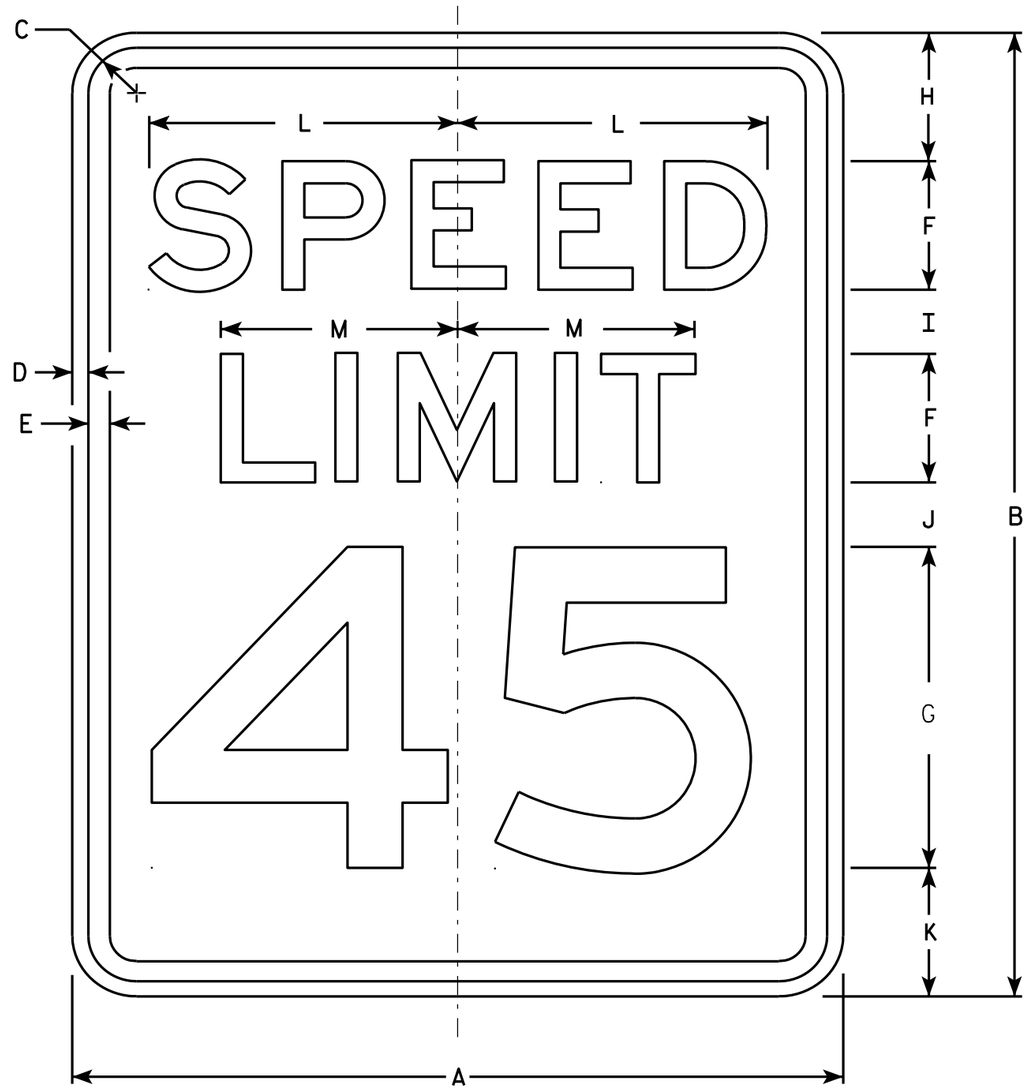

R2-1

NOTES

1. Sign is Type II - Type H Reflective - reference WIS DOT Standard Specification for HIGHWAY and STRUCTURE CONSTRUCTION latest edition.
2. Color:
   Background - White
   Message - Black
3. Message Series - E
4. Corners may be square or rounded when base material is plywood but borders shall be rounded as shown. When base material is metal, the corners and borders shall be rounded.
5. Substitute appropriate numerals and optically adjust spacing to achieve proper balance.

SIZE	A	B	C	D	E	F	G	H	I	J	K	L	M	N	O	P	Q	R	S	T	U	V	W	X	Y	Z	Area sq. ft.
1	18	24	1 1/8	3/8	1/2	3	8	3	2	2	3	7 1/4	5 1/2														3.0
2S	24	30	1 1/8	3/8	1/2	4	10	3	2 1/4	3 3/8	3 3/8	9 5/8	7 3/8														5.0
2M	30	36	1 3/8	1/2	5/8	5	12	5	2 1/2	2 1/2	4	12	9 1/4														7.5
3	36	48	1 3/8	1/2	5/8	6	14	6	5	5	6	14 3/8	11														12.0
4	36	48	1 3/8	1/2	5/8	6	14	6	5	5	6	14 3/8	11														12.0
5	48	60	2 1/4	3/4	1	8	20	6	4 1/2	6 3/4	6 3/4	19 1/4	14 5/8														20.0

STANDARD SIGN
R2-1

WISCONSIN DEPT OF TRANSPORTATION

APPROVED Matthew R Rauch
for State Traffic Engineer

DATE 5/26/10 PLATE NO. R2-1.13

PROJECT NO: | HWY: | COUNTY: | SHEET NO: 174 | E

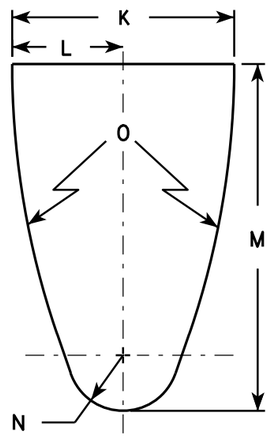

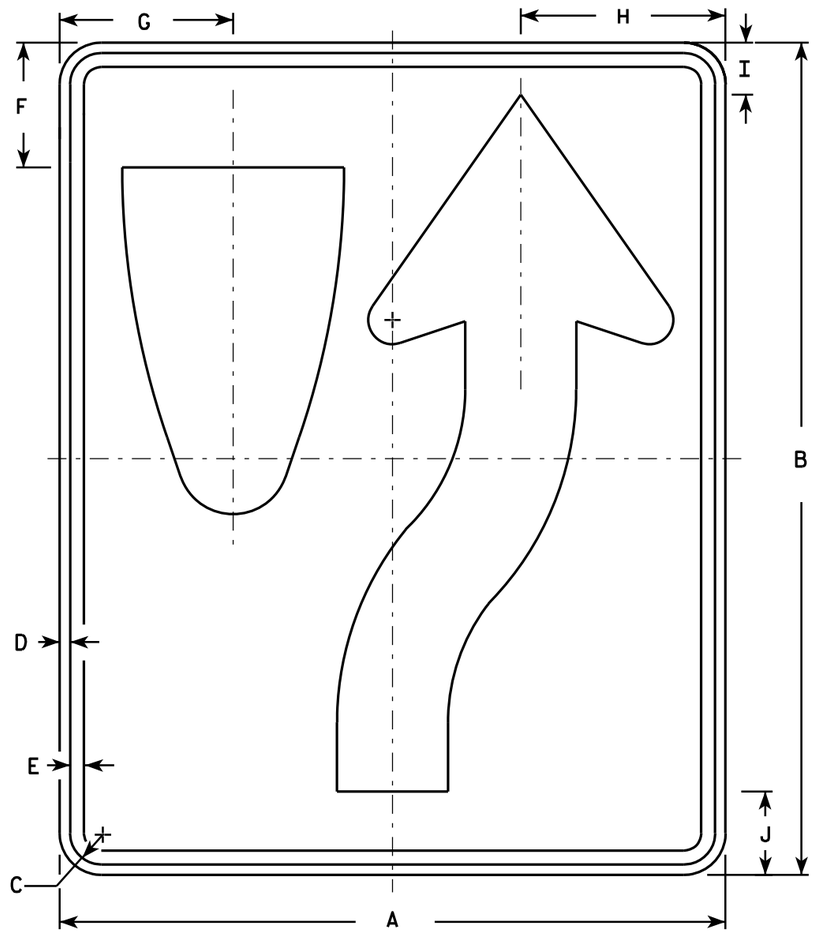

R4-7

NOTES

1. Sign is Type II - Type H Reflective - reference WIS DOT Standard Specification for HIGHWAY and STRUCTURE CONSTRUCTION latest edition. material is plywood but borders shall be rounded
2. Color:
   Background - White
   Message - Black
3. Corners may be square or rounded when base as shown. When base material is metal, the corners and borders shall be rounded.
4. R4-8 is the same as R4-7 except Legend is reversed.

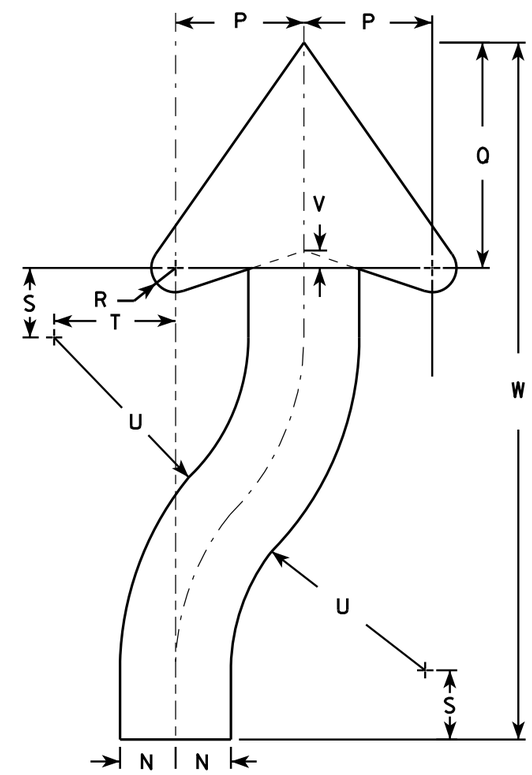

ARROW DETAIL

SIZE	A	B	C	D	E	F	G	H	I	J	K	L	M	N	O	P	Q	R	S	T	U	V	W	X	Y	Z	Area sq. ft.
1	18	24	1 1/8	3/8	1/2	3 3/8	4 3/4	5 1/2	1 3/8	2 1/4	6	3	9 3/8	1 1/2	22 1/2	3 1/2	6 1/8	5/8	1 7/8	3 1/4	6 3/4	1/2	20 3/8				3.0
2S	24	30	1 1/8	3/8	1/2	4 1/2	6 1/4	7 3/8	1 7/8	3	8	4	12 1/2	2	30	4 5/8	8 1/8	7/8	2 1/2	4 3/8	9	5/8	25 1/8				5.0
2M	24	30	1 1/8	3/8	1/2	4 1/2	6 1/4	7 3/8	1 7/8	3	8	4	12 1/2	2	30	4 5/8	8 1/8	7/8	2 1/2	4 3/8	9	5/8	25 1/8				5.0
3	36	48	1 3/4	1/2	5/8	6 3/4	9 3/8	11 1/8	2 7/8	4 1/2	12	6	18 3/4	3	45	6 7/8	12 1/4	1 1/4	3 3/4	6 5/8	13 1/2	1	40 3/4				12.0
4	36	48	1 3/4	1/2	5/8	6 3/4	9 3/8	11 1/8	2 7/8	4 1/2	12	6	18 3/4	3	45	6 7/8	12 1/4	1 1/4	3 3/4	6 5/8	13 1/2	1	40 3/4				12.0
5	48	60	2 1/4	3/4	1	9	12 1/2	14 3/4	3 3/4	6	16	8	25	4	60	9 1/4	16 1/4	1 5/8	5	8 3/4	18	1 1/4	50 1/4				20.0

STANDARD SIGN
R4-7 & R4-8

WISCONSIN DEPT OF TRANSPORTATION

APPROVED Matthew R Rauch for State Traffic Engineer

DATE 3/25/2011 PLATE NO. R4-7.8

PROJECT NO:	HWY:	COUNTY:		SHEET NO: 175	E

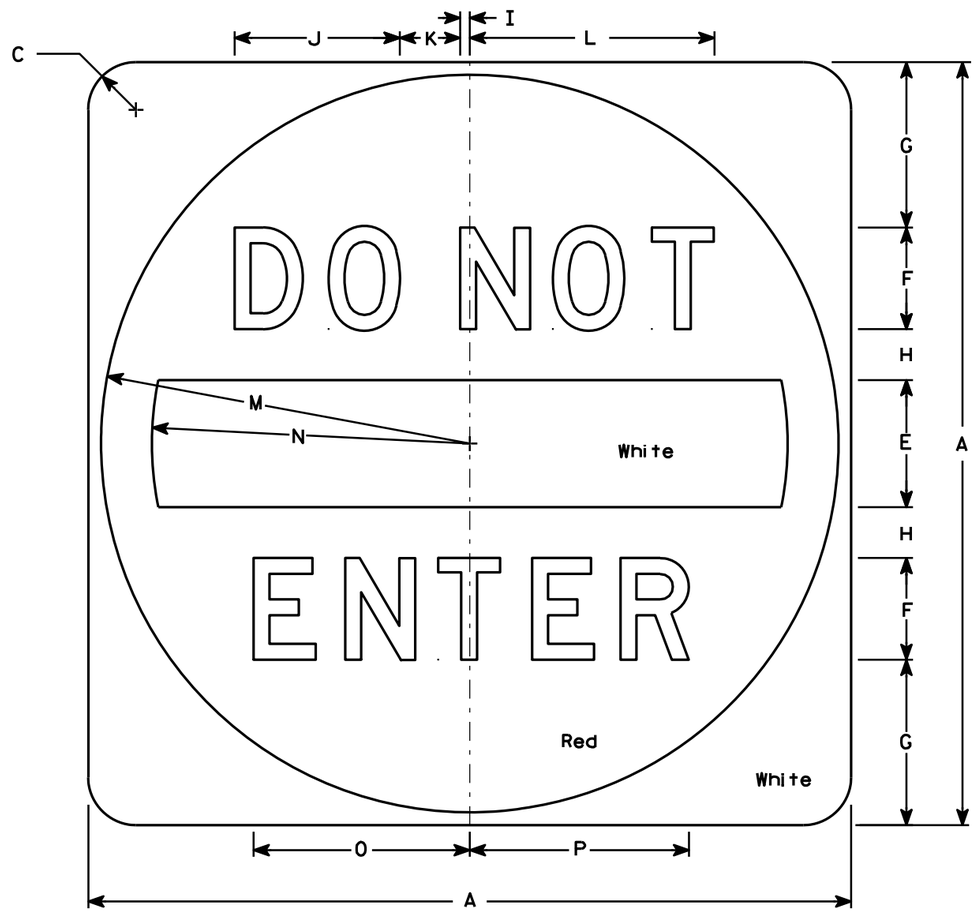

R5-1

NOTES

1. Sign is Type II - Type H Reflective - reference WIS DOT Standard Specification for HIGHWAY and STRUCTURE CONSTRUCTION latest edition.
2. Color:
   Background - See detail
   Message - White - Type H Reflective
3. Message Series - D
4. Corners may be square or rounded when base material is plywood but when base material is metal, the cornors shall be rounded.

SIZE	A	B	C	D	E	F	G	H	I	J	K	L	M	N	O	P	Q	R	S	T	U	V	W	X	Y	Z	Area sq. ft.
1																											
2S	30		1 7/8		5	4	6 1/2	2	3/8	6 1/2	2 3/8	9 5/8	14 1/2	12 1/2	8 1/2	8 5/8											6.26
2M	36		2 1/4		6	5	7 1/2	2 1/2	1/2	8 1/8	3	12 1/8	17 1/2	15	10 5/8	10 3/4											9.0
3	36		2 1/4		6	5	7 1/2	2 1/2	1/2	8 1/8	3	12 1/8	17 1/2	15	10 5/8	10 3/4											9.0
4	36		2 1/4		6	5	7 1/2	2 1/2	1/2	8 1/8	3	12 1/8	17 1/2	15	10 5/8	10 3/4											9.0
5	48		3		8	6	11	3	5/8	9 3/4	3 5/8	14 1/2	23 1/2	20	12 3/4	12 7/8											16.0

STANDARD SIGN
R5-1

WISCONSIN DEPT OF TRANSPORTATION

APPROVED Matthew R Rauch
for State Traffic Engineer

DATE 12/17/10 PLATE NO. R5-1.15

PROJECT NO: | HWY: | COUNTY: | SHEET NO: 176 | E

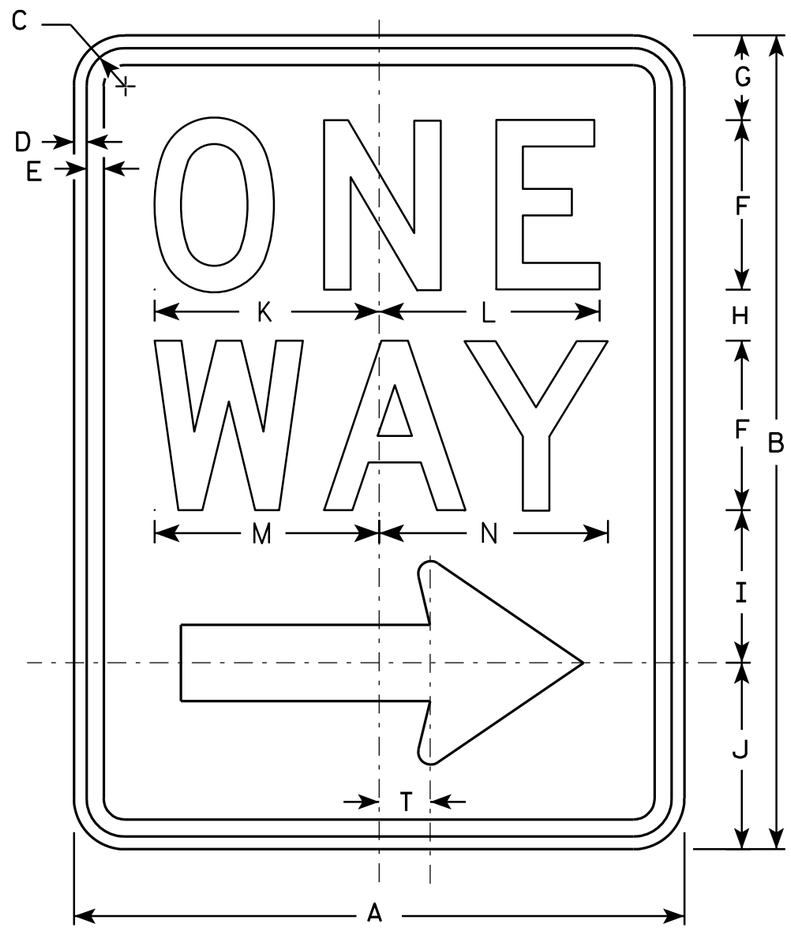

R6-2R

NOTES

1. Sign is Type II - Type H Reflective - reference WIS DOT Standard Specification for HIGHWAY and STRUCTURE CONSTRUCTION latest edition.
2. Color:
   Background - White
   Message - Black
3. Message Series - D
4. Corners may be square or rounded when base material is plywood but borders shall be rounded as shown. When base material is metal, the corners and borders shall be rounded.
5. R6-2L same as R6-2R except arrow points to the left.

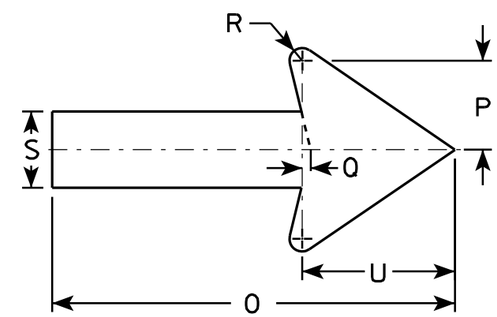

SIZE	A	B	C	D	E	F	G	H	I	J	K	L	M	N	O	P	Q	R	S	T	U	V	W	X	Y	Z
1	18	24	1 1/8	3/8	1/2	5	2 1/2	1 1/2	4 1/2	5 1/2	6 5/8	6 1/2	6 5/8	6 3/4	11 7/8	2 5/8	1/4	3/8	2 1/4	1 1/2	4 1/2					
2S	24	30	1 1/8	3/8	1/2	6	3	2 1/2	5 1/2	7	8 1/8	8 1/8	8 1/2	8 5/8	16	3 1/2	3/8	1/2	3	2	6					
2M	30	36	1 3/8	1/2	5/8	8	2 1/2	2 5/8	6 7/8	8	10 1/2	10 1/2	11 1/4	11 1/4	20	4 3/8	1/2	5/8	3 3/4	2 1/2	7 1/2					
3	36	48	1 7/8	1/2	5/8	10	5 1/4	3 1/4	9	10 1/2	12 3/4	12 3/4	13 1/4	13 1/2	24	5 5/8	1/2	3/4	4 3/4	3	9					
4	36	48	1 7/8	1/2	5/8	10	5 1/4	3 1/4	9	10 1/2	12 3/4	12 3/4	13 1/4	13 1/2	24	5 5/8	1/2	3/4	4 3/4	3	9					
5																										

STANDARD SIGN
R6-2 R&L

WISCONSIN DEPT OF TRANSPORTATION

APPROVED Matthew R Rauch
for State Traffic Engineer

DATE 11/2/10 PLATE NO. R6-2.8

PROJECT NO:	HWY:	COUNTY:		SHEET NO: 177	E

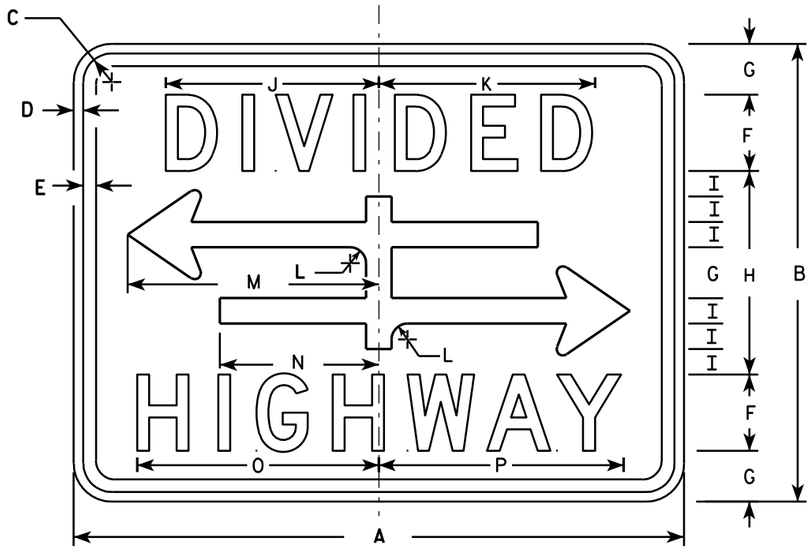

R6-3

NOTES

1. Sign is Type II - Type H Reflective - reference WIS DOT Standard Specification for HIGHWAY and STRUCTURE CONSTRUCTION latest edition.
2. Color:
   Background - White
   Message - Black
3. Message Series - D
4. Corners may be square or rounded when base material is plywood but borders shall be rounded as shown. When base material is metal, the corners and borders shall be rounded.

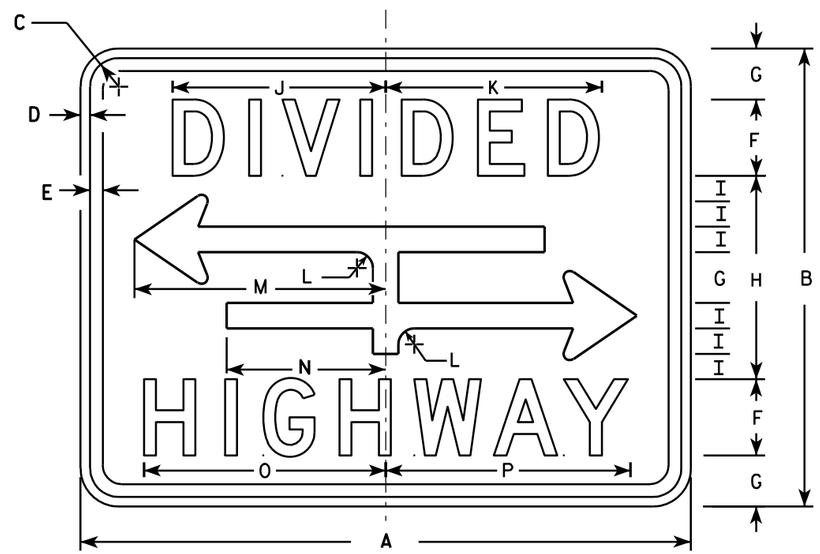

R6-3A

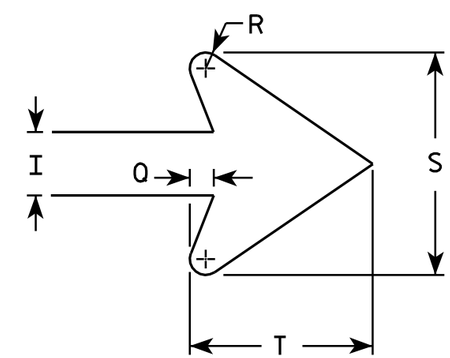

ARROW DETAIL

SIZE	A	B	C	D	E	F	G	H	I	J	K	L	M	N	O	P	Q	R	S	T	U	V	W	X	Y	Z	Area sq. ft.
1	24	18	1 1/8	3/8	3/8	3	2	8	1	8 3/8	8 1/2	5/8	9 7/8	6 1/4	9 1/2	9 5/8	3/8	1/4	3 1/2	2 3/4							3.0
2S	30	24	1 1/8	3/8	1/2	4	2 5/8	10 3/4	1 3/8	10 1/2	10 5/8	7/8	12 1/2	7 7/8	12 1/4	12 3/8	1/2	3/8	4 5/8	3 5/8							5.0
2M	30	24	1 1/8	3/8	1/2	4	2 5/8	10 3/4	1 3/8	10 1/2	10 5/8	7/8	12 1/2	7 7/8	12 1/4	12 3/8	1/2	3/8	4 5/8	3 5/8							5.0
3																											
4																											
5																											

STANDARD SIGN
R6-3 & R6-3A

WISCONSIN DEPT OF TRANSPORTATION

APPROVED Matthew R Rauch
for State Traffic Engineer

DATE 3/31/2011 PLATE NO. R6-3.5

PROJECT NO:

SHEET NO: 178 E

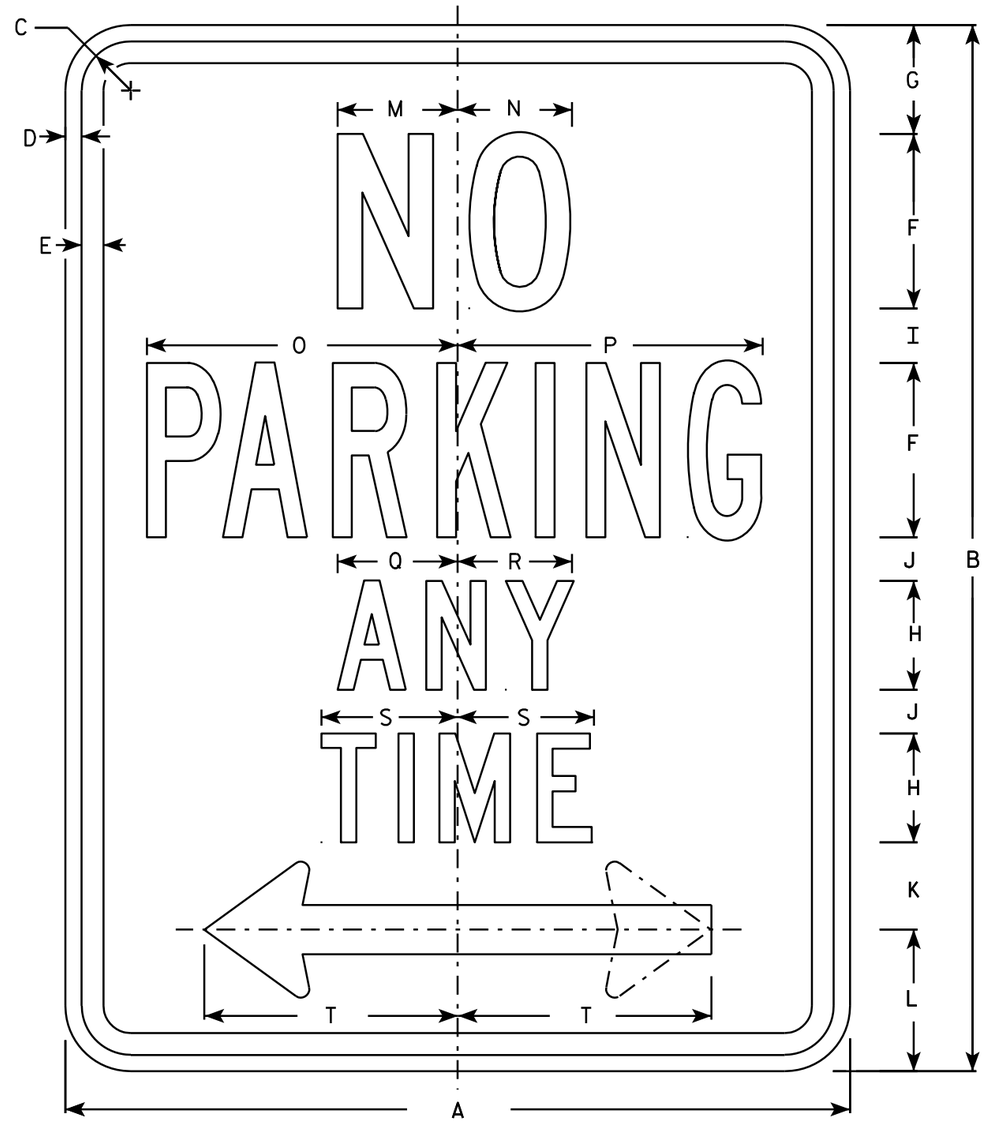

R7-1

NOTES

1. Sign is Type II - Type H Reflective - reference WIS DOT Standard Specification for HIGHWAY and STRUCTURE CONSTRUCTION latest edition.
2. Color:
   Background - White
   Message - Red
3. Message Series - See Note 5
4. Corners may be square or rounded when base material is plywood but borders shall be rounded as shown. When base material is metal, the corners and borders shall be rounded.
5. Lines 1, 3 and 4 are series C, line 2 is series B.
6. R7-1D (double arrow)
   R7-1L (left arrow)
   R7-1R (right arrow)

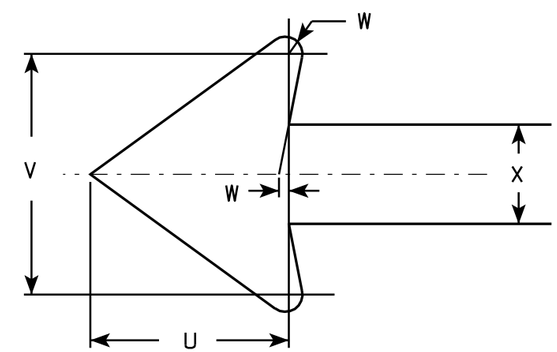

SIZE	A	B	C	D	E	F	G	H	I	J	K	L	M	N	O	P	Q	R	S	T	U	V	W	X	Y	Z	Area sq. ft.
1	12	18	1 1/8	3/8	3/8	3	1 7/8	2	7/8	5/8	1 1/2	2 1/2	2	2	4 7/8	4 7/8	2 1/4	2 1/8	2 1/2	3 7/8	1 1/2	1 3/4	1/8	3/4			1.5
2S	18	24	1 1/8	3/8	1/2	4	2 1/2	2 1/2	1 1/4	1	2	3 1/4	2 3/4	2 5/8	7 1/8	7	2 3/4	2 5/8	3 1/8	5 7/8	2 1/4	2 5/8	1/4	1 1/8			3.0
2M	24	30	1 1/8	3/8	1/2	5	3	3	2	1 1/4	2 1/2	4	3 1/4	3 3/8	9 1/4	9 1/4	3 1/4	3 1/4	3 3/4	7 3/4	3	3 1/2	1/4	1 1/2			5.0
3	24	30	1 1/8	3/8	1/2	5	3	3	2	1 1/4	2 1/2	4	3 1/4	3 3/8	9 1/4	9 1/4	3 1/4	3 1/4	3 3/4	7 3/4	3	3 1/2	1/4	1 1/2			5.0
4																											
5																											

STANDARD SIGN
R7-1

WISCONSIN DEPT OF TRANSPORTATION

APPROVED Matthew R Rauch
for State Traffic Engineer

DATE 3/31/2011 PLATE NO. R7-1.9

PROJECT NO:	HWY:	COUNTY:		SHEET NO: 179	E

R7-51

NOTES

1. Sign is Type II - Type H Reflective - reference WIS DOT Standard Specification for HIGHWAY and STRUCTURE CONSTRUCTION latest edition.
2. Color:
   Background - White
   Message - Red
3. Message Series - See Note 6
4. Corners may be square or rounded when base material is plywood but borders shall be rounded as shown. When base material is metal, the corners and borders shall be rounded.
5. R7-51D (double arrow)
   R7-51R (right arrow)
   R7-51L (left arrow)
6. Lines 1, 3 and 4 are Series C.
   Line 2 is Series B.

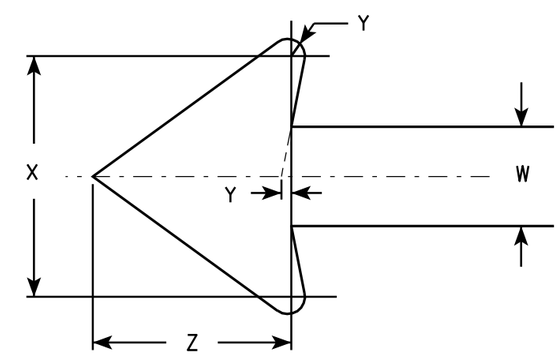

ARROW DETAIL

SIZE	A	B	C	D	E	F	G	H	I	J	K	L	M	N	O	P	Q	R	S	T	U	V	W	X	Y	Z	Area sq. ft.
1	12	18	1 1/8	3/8	3/8	3	1 7/8	2	7/8	5/8	1 1/2	2 1/2	2	2	4 7/8	4 7/8	4 7/8	5/8	1 3/4	2 1/2	4 3/8	3 7/8	3/4	1 3/4	1/8	1 1/2	1.5
2S	18	24	1 1/8	3/8	1/2	4	2 1/2	2 1/2	1 1/4	1	2	3 1/4	2 3/4	2 5/8	7 1/8	7	5 3/4	1 1/8	1 1/2	3 1/8	5 1/2	5 7/8	1 1/8	2 5/8	1/4	2 1/4	3.0
2M	24	30	1 1/8	3/8	1/2	5	3	3	2	1 1/4	2 1/2	4	3 1/4	3 3/8	9 1/4	9 1/4	7 1/8	1 1/4	2	3 3/4	6 1/2	7 3/4	1 1/2	3 1/2	1/4	3	5.0
3	24	30	1 1/8	3/8	1/2	5	3	3	2	1 1/4	2 1/2	4	3 1/4	3 3/8	9 1/4	9 1/4	7 1/8	1 1/4	2	3 3/4	6 1/2	7 3/4	1 1/2	3 1/2	1/4	3	5.0
4																											
5																											

STANDARD SIGN
R7-51

WISCONSIN DEPT OF TRANSPORTATION

APPROVED Matthew R Rauch
for State Traffic Engineer

DATE 3/31/2011 PLATE NO. R7-51.6

PROJECT NO:	HWY:	COUNTY:			SHEET NO: 180	E

R9-9

NOTES

1. Sign is Type II - Type H Reflective - reference WIS DOT Standard Specification for HIGHWAY and STRUCTURE CONSTRUCTION latest edition.
2. Color:
   Background - White
   Message - Black
3. Message Series - C
4. Corners may be square or rounded when base material is plywood but borders shall be rounded as shown. When base material is metal, the corners and borders shall be rounded.

SIZE	A	B	C	D	E	F	G	H	I	J	K	L	M	N	O	P	Q	R	S	T	U	V	W	X	Y	Z	Area sq. ft.
1																											
2S	30	18	1 3/4	1/2	1/2	4	3 1/2	3	10 3/4	8 1/8																	3.75
2M	30	18	1 3/4	1/2	1/2	4	3 1/2	3	10 3/4	8 1/8																	3.75
3																											
4																											
5																											

STANDARD SIGN
R9-9

WISCONSIN DEPT OF TRANSPORTATION

APPROVED Matthew R Rauch
for State Traffic Engineer

DATE 4/1/2011 PLATE NO. R9-9.5

PROJECT NO: | HWY: | COUNTY: | SHEET NO: 181 | E

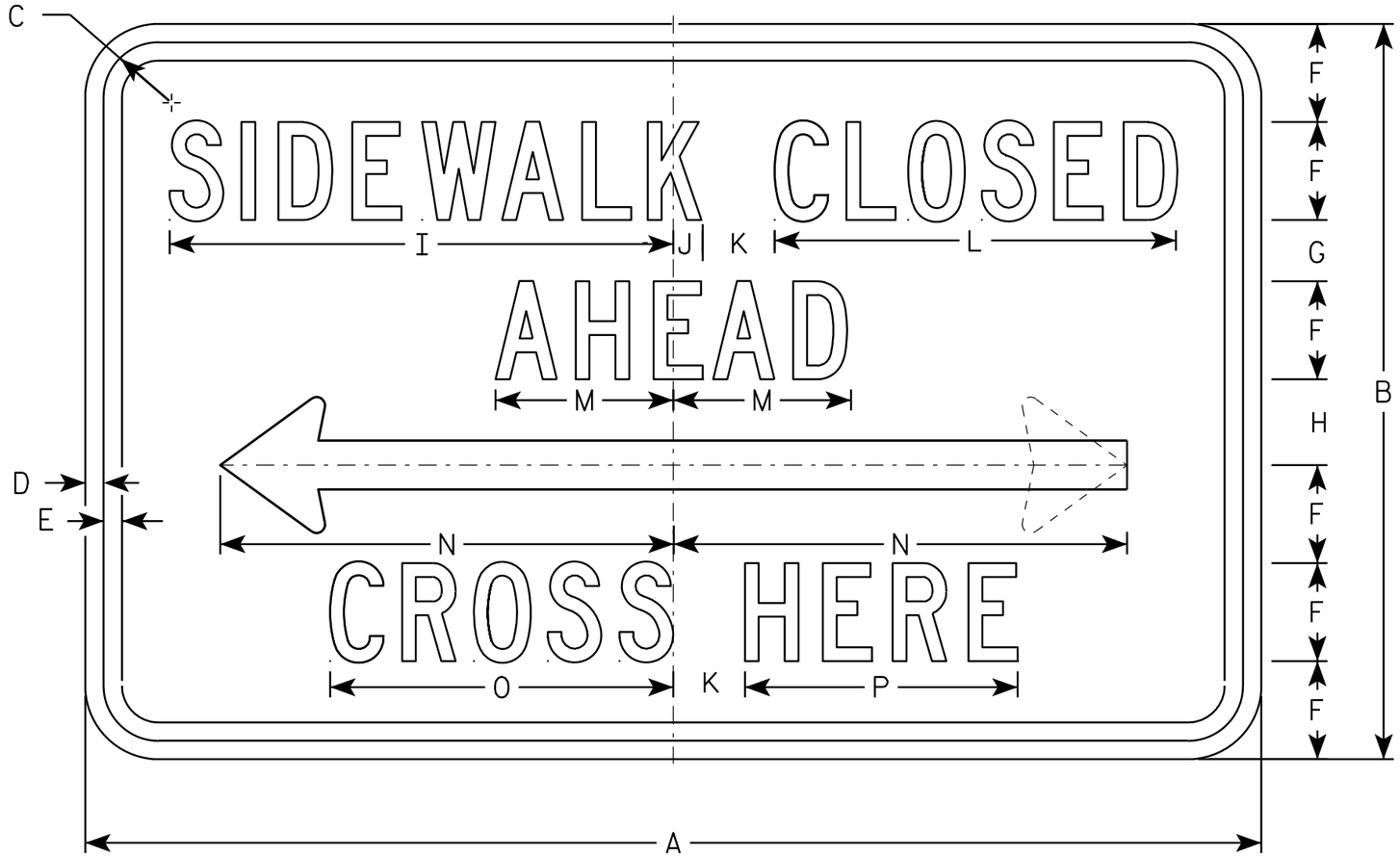

R9-11

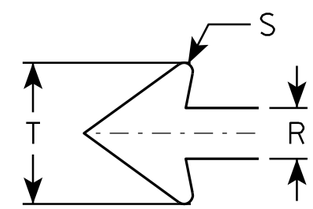

NOTES

1. Sign is Type II - Type H Reflective - reference WIS DOT Standard Specification for HIGHWAY and STRUCTURE CONSTRUCTION latest edition.
2. Color:
   Background - White
   Message - Black
3. Message Series - C except Size 1 is Series D
4. Corners may be square or rounded when base material is plywood but borders shall be rounded as shown. When base material is metal, the corners and borders shall be rounded.

SIZE	A	B	C	D	E	F	G	H	I	J	K	L	M	N	O	P	Q	R	S	T	U	V	W	X	Y	Z	Area sq. ft.
1	24	12	1 1/8	3/8	3/8	1 1/2	1 1/2	1 1/2	9 3/4	5/8	1 1/2	7 5/8	3 1/2	9 1/4	6 5/8	5 1/8		1	1/8	2 3/4							2.0
2S	48	30	2 3/4	3/4	3/4	4	2 1/2	3 1/2	20 1/2	1 1/4	3	16 3/8	7 1/4	18 1/2	14	11 1/8		2	3/8	5 1/2							10.0
2M	48	30	2 3/4	3/4	3/4	4	2 1/2	3 1/2	20 1/2	1 1/4	3	16 3/8	7 1/4	18 1/2	14	11 1/8		2	3/8	5 1/2							10.0
3																											
4																											
5																											

STANDARD SIGN
R9-11

WISCONSIN DEPT OF TRANSPORTATION

APPROVED Matthew R Rauch
for State Traffic Engineer

DATE 8/17/2012 PLATE NO. R9-11.2

PROJECT NO: | HWY: | COUNTY: | SHEET NO: 182 | E

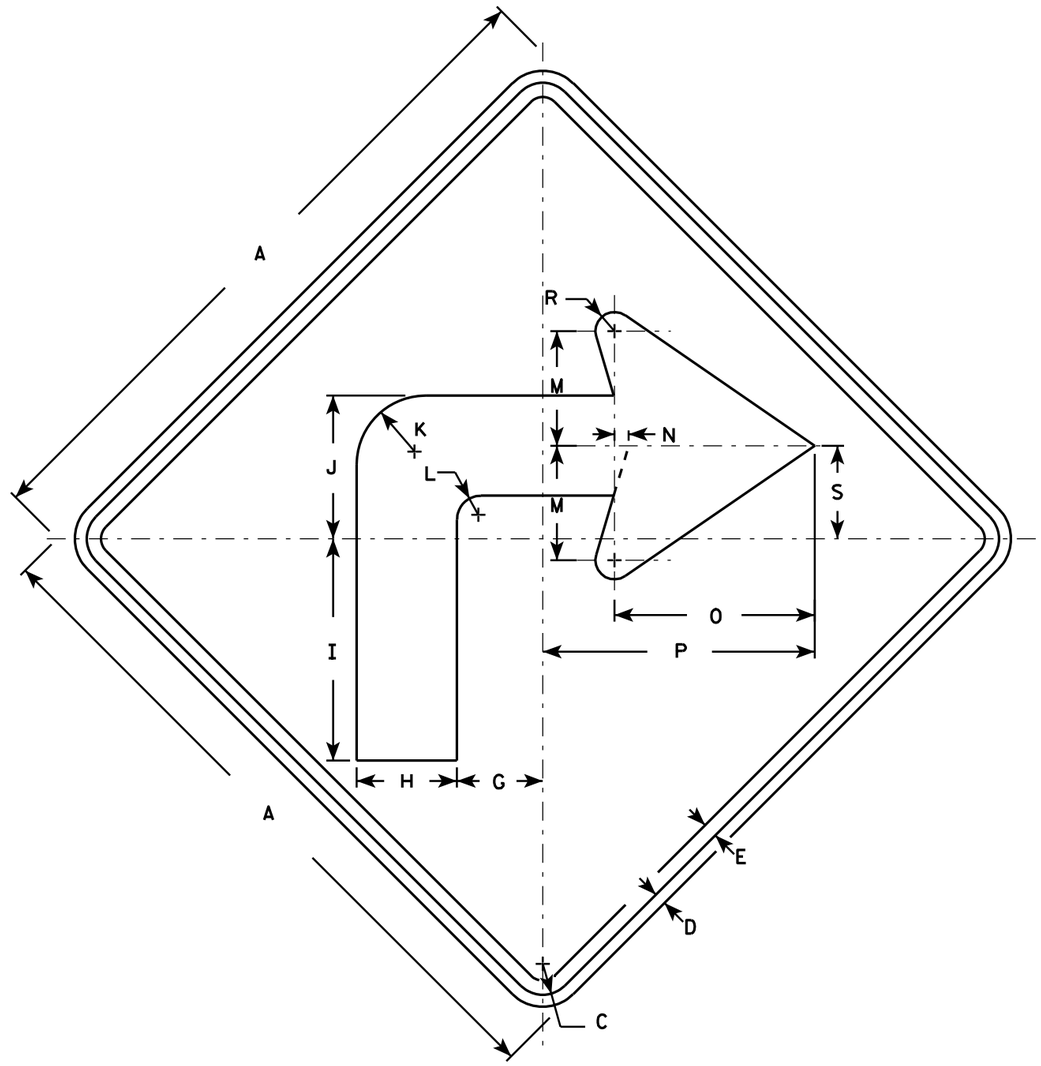

W1-1R

NOTES

1. Sign is Type II - Type F Reflective - reference WIS DOT Standard Specification for HIGHWAY and STRUCTURE CONSTRUCTION latest edition.
2. Color:
   Background - Yellow
   Message - Black
3. Corners may be square or rounded when base material is plywood but borders shall be rounded as shown. When base material is metal, the corners and borders shall be rounded.
4. W1-1L is the same as W1-1R except the arrow is reversed along the vertical centerline.

SIZE	A	B	C	D	E	F	G	H	I	J	K	L	M	N	O	P	Q	R	S	T	U	V	W	X	Y	Z	Area sq. ft.
1	24		1 1/8	3/8	1/2		3	3 1/2	7 3/4	5	2 1/2	7/8	4	1/2	7	9 1/2		5/8	3 1/4								4.0
2S	36		1 5/8	5/8	3/4		4 1/2	5 1/4	11 5/8	7 1/2	3 5/8	1 1/4	6	3/4	10 1/2	14 1/4		1	4 7/8								9.0
2M	36		1 5/8	5/8	3/4		4 1/2	5 1/4	11 5/8	7 1/2	3 5/8	1 1/4	6	3/4	10 1/2	14 1/4		1	4 7/8								9.0
3	36		1 5/8	5/8	3/4		4 1/2	5 1/4	11 5/8	7 1/2	3 5/8	1 1/4	6	3/4	10 1/2	14 1/4		1	4 7/8								9.0
4	48		2 1/4	3/4	1		6	7	15 1/2	10	4 7/8	1 5/8	8	1	14	19		1 1/4	6 1/2								16.0
5	48		2 1/4	3/4	1		6	7	15 1/2	10	4 7/8	1 5/8	8	1	14	19		1 1/4	6 1/2								16.0

STANDARD SIGN
W1-1

WISCONSIN DEPT OF TRANSPORTATION

APPROVED Matthew R Rauch
for State Traffic Engineer

DATE 5/15/12 PLATE NO. W1-1.11

PROJECT NO: | HWY: | COUNTY: | SHEET NO: 183 | E

NOTES

1. Sign is Type II - Type F Reflective - reference WIS DOT Standard Specification for HIGHWAY and STRUCTURE CONSTRUCTION latest edition.
2. Color:
   Background - Yellow
   Message - Black
3. Corners may be square or rounded when base material is plywood but borders shall be rounded as shown. When base material is metal, the corners and borders shall be rounded.
4. W1-2L is the same as W1-2R except the arrow is reversed along the vertical centerline.

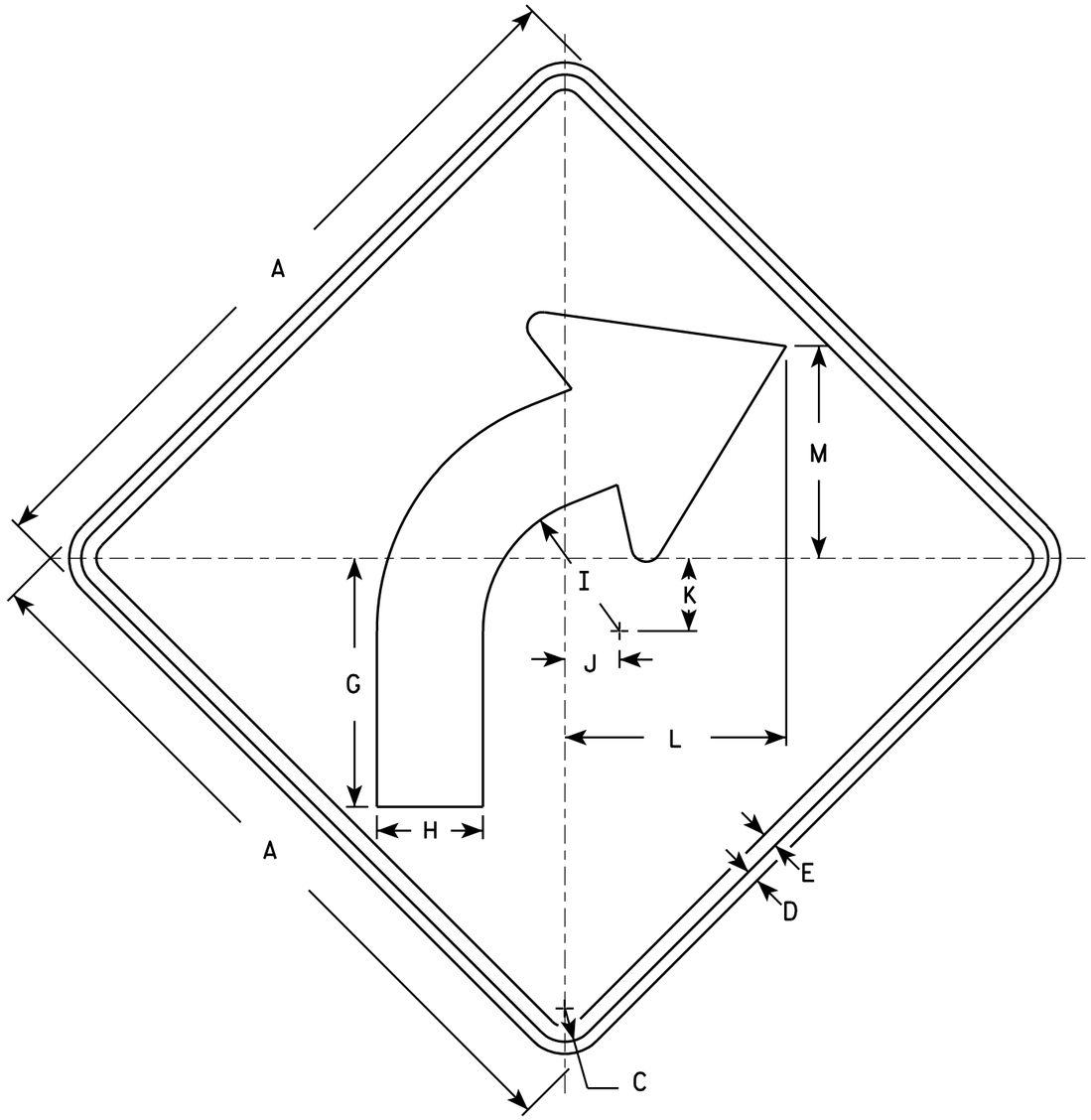

W1-2R

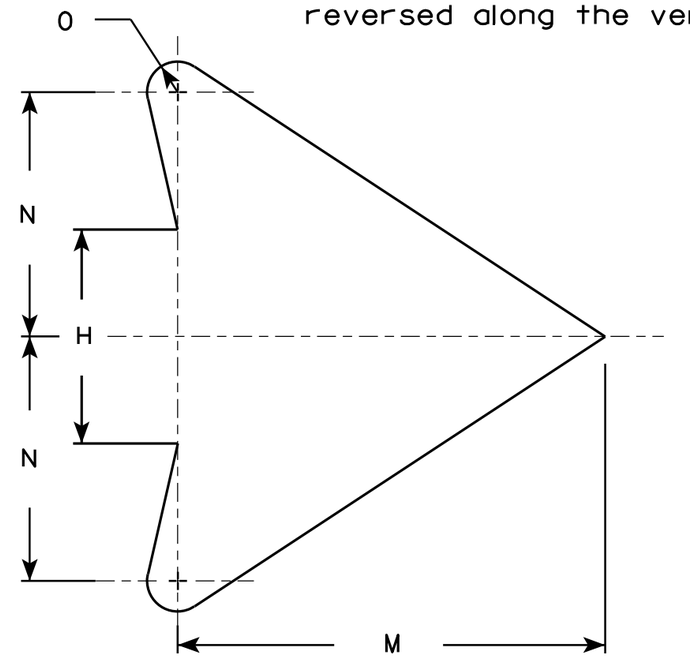

ARROW DETAIL

SIZE	A	B	C	D	E	F	G	H	I	J	K	L	M	N	O	P	Q	R	S	T	U	V	W	X	Y	Z	Area sq. ft.
1	24		1 1/8	3/8	1/2		8 1/4	3 1/2	4 1/2	1 3/4	2 3/8	7 1/4	7	4	1/2												4.0
2S	30		1 3/8	1/2	5/8		10 1/4	4 3/8	5 5/8	2 1/4	3	9 1/8	8 3/4	5	5/8												6.25
2M	36		1 5/8	5/8	3/4		12 3/8	5 1/4	6 3/4	2 5/8	3 1/2	10 7/8	10 1/2	6	3/4												9.0
3	36		1 5/8	5/8	3/4		12 3/8	5 1/4	6 3/4	2 5/8	3 1/2	10 7/8	10 1/2	6	3/4												9.0
4	36		1 5/8	5/8	3/4		12 3/8	5 1/4	6 3/4	2 5/8	3 1/2	10 7/8	10 1/2	6	3/4												9.0
5	48		2 1/4	3/4	1		16 1/2	7	9	3 1/2	4 5/8	14 1/2	14	8	1												16.0

STANDARD SIGN
W1-2

WISCONSIN DEPT OF TRANSPORTATION

APPROVED Matthew R Rauch
for State Traffic Engineer

DATE 5/15/12 PLATE NO. W1-2.10

PROJECT NO:	HWY:	COUNTY:		SHEET NO: 184	E

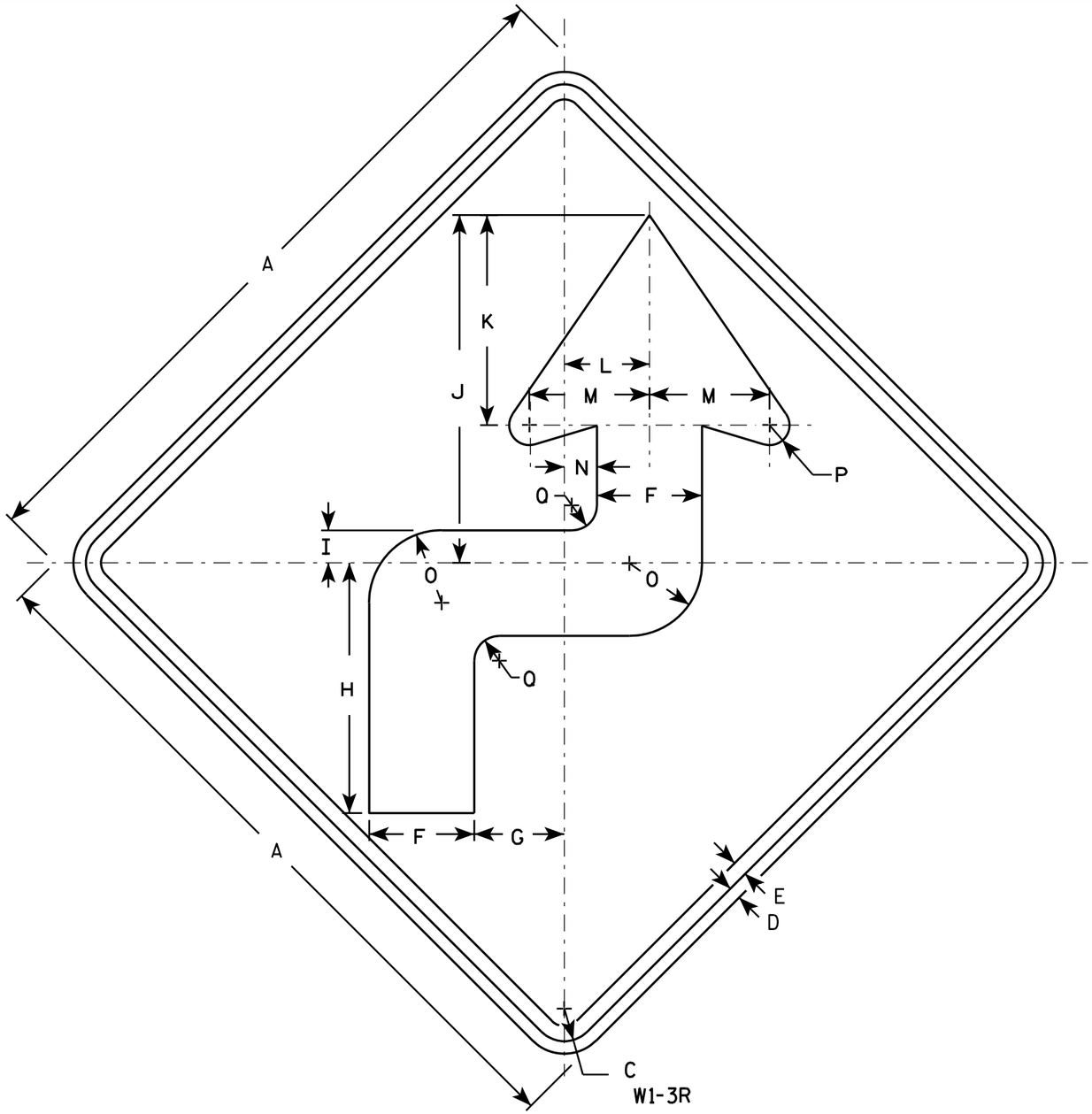

NOTES

1. Sign is Type II - Type F Reflective - reference WIS DOT Standard Specification for HIGHWAY and STRUCTURE CONSTRUCTION latest edition.
2. Color:
   Background - Yellow
   Message - Black
3. Corners may be square or rounded when base material is plywood but borders shall be rounded as shown. When base material is metal, the corners and borders shall be rounded.
4. W1-3L is the same as W1-3R except the arrow is reversed along the vertical centerline.

SIZE	A	B	C	D	E	F	G	H	I	J	K	L	M	N	O	P	Q	R	S	T	U	V	W	X	Y	Z	Area sq. ft.
1	24		1 1/8	3/8	1/2	3 1/2	3	8 3/8	1 1/8	11 5/8	7	2 3/4	4	1 1/8	2 1/2	5/8	7/8										4.0
2S	36		1 5/8	5/8	3/4	5 1/4	4 1/2	12 1/2	1 5/8	17 3/8	10 1/2	4 1/4	6	1 5/8	3 5/8	1	1 1/4										9.0
2M	36		1 5/8	5/8	3/4	5 1/4	4 1/2	12 1/2	1 5/8	17 3/8	10 1/2	4 1/4	6	1 5/8	3 5/8	1	1 1/4										9.0
3	36		1 5/8	5/8	3/4	5 1/4	4 1/2	12 1/2	1 5/8	17 3/8	10 1/2	4 1/4	6	1 5/8	3 5/8	1	1 1/4										9.0
4	36		1 5/8	5/8	3/4	5 1/4	6	12 1/2	1 5/8	17 3/8	10 1/2	4 1/4	6	1 5/8	3 5/8	1	1 1/4										9.0
5	48		2 1/4	3/4	1	7	6	16 5/8	2 1/4	23 1/4	14	5 5/8	8	2 1/8	4 7/8	1 1/4	1 5/8										16.0

STANDARD SIGN
W1-3

WISCONSIN DEPT OF TRANSPORTATION

APPROVED Matthew R Rauch
for State Traffic Engineer
DATE 5/17/12 PLATE NO. W1-3.8

PROJECT NO: | HWY: | COUNTY: | SHEET NO: 185 | E

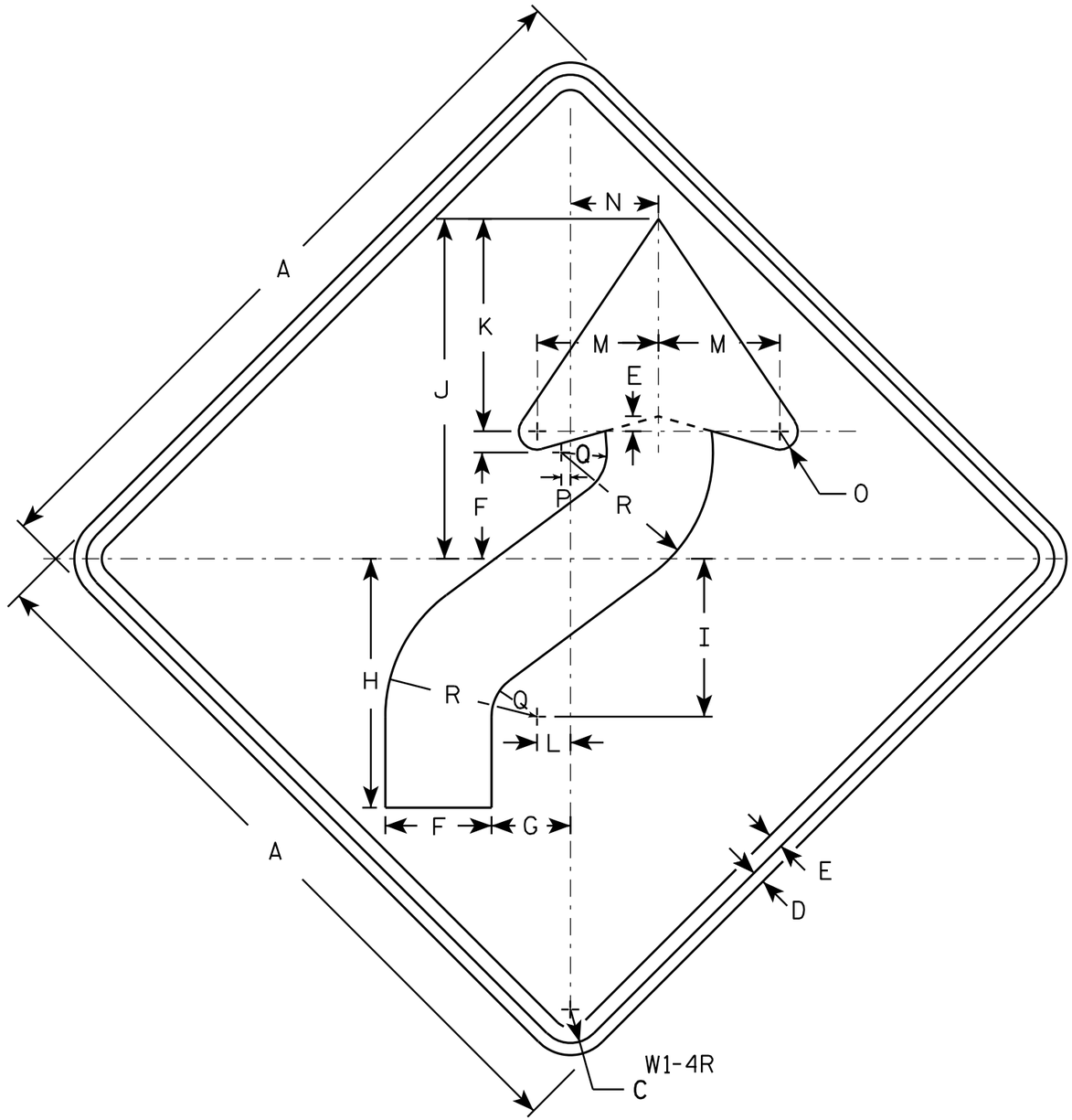

NOTES

1. Sign is Type II - Type F Reflective - reference WIS DOT Standard Specification for HIGHWAY and STRUCTURE CONSTRUCTION latest edition.
2. Color:
   Background - Yellow
   Message - Black
3. Corners may be square or rounded when base material is plywood but borders shall be rounded as shown. When base material is metal, the corners and borders shall be rounded.
4. W1-4L is the same as W1-4R except the arrow is reversed along the vertical centerline.

SIZE	A	B	C	D	E	F	G	H	I	J	K	L	M	N	O	P	Q	R	S	T	U	V	W	X	Y	Z	Area sq. ft.
1	24		1 1/8	3/8	1/2	3 1/2	2 5/8	8 1/4	5 1/4	11 1/4	7	1 1/8	4	3	5/8	1/4	1 1/2	5									4.0
2S	30		1 3/8	1/2	5/8	4 3/8	3 1/4	10 1/4	6 1/2	14	8 3/4	1 3/8	5	3 5/8	3/4	3/8	1 7/8	6 1/4									6.25
2M	36		1 5/8	5/8	3/4	5 1/4	4	12 3/8	7 7/8	16 7/8	10 1/2	1 5/8	6	4 1/2	1	1/2	2 1/4	7 1/2									9.0
3	36		1 5/8	5/8	3/4	5 1/4	4	12 3/8	7 7/8	16 7/8	10 1/2	1 5/8	6	4 1/2	1	1/2	2 1/4	7 1/2									9.0
4	36		1 5/8	5/8	3/4	5 1/4	4	12 3/8	7 7/8	16 7/8	10 1/2	1 5/8	6	4 1/2	1	1/2	2 1/4	7 1/2									9.0
5	48		2 1/4	3/4	1	7	5 1/4	16 1/2	10 1/2	22 1/2	14	2 1/4	8	6	1 1/4	5/8	3	10									16.0

STANDARD SIGN
W1-4

WISCONSIN DEPT OF TRANSPORTATION

APPROVED Matthew R Rauch
for State Traffic Engineer

DATE 5/17/12 PLATE NO. W1-4.11

PROJECT NO: | HWY: | COUNTY: | SHEET NO: 186 | E

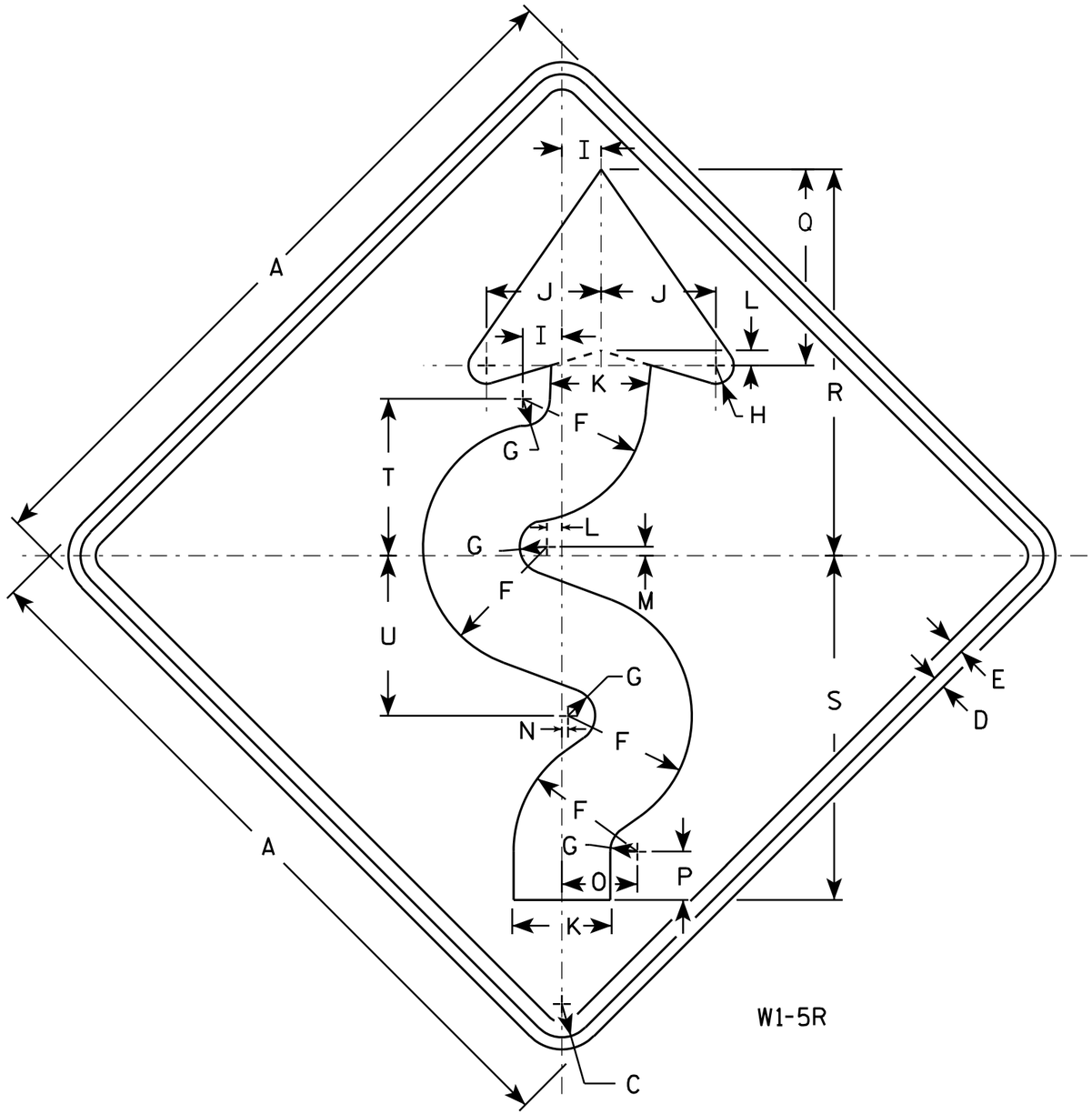

W1-5R

NOTES

1. Sign is Type II - Type F Reflective - reference WIS DOT Standard Specification for HIGHWAY and STRUCTURE CONSTRUCTION latest edition.
2. Color:
   Background - Yellow
   Message - Black
3. Corners may be square or rounded when base material is plywood but borders shall be rounded as shown. When base material is metal, the corners and borders shall be rounded.
4. W1-5L is the same as W1-5R except the arrow is reversed along the vertical centerline.

SIZE	A	B	C	D	E	F	G	H	I	J	K	L	M	N	O	P	Q	R	S	T	U	V	W	X	Y	Z	Area sq. ft.
1	24		1 1/8	3/8	1/2	4 1/8	7/8	5/8	1 1/4	3 3/4	3 1/4	1/2	1/4	1/8	2 1/2	1 5/8	6 1/2	12 3/4	11 3/8	5 1/4	5 1/4						4.0
2S	30		1 3/8	1/2	5/8	5 1/8	1 1/8	3/4	1 5/8	4 3/4	4 1/8	5/8	3/8	1/4	3 1/8	2	8 1/8	16	14 1/4	6 1/2	6 5/8						6.25
2M	36		1 5/8	5/8	3/4	6 1/4	1 3/8	1	1 7/8	5 5/8	4 7/8	3/4	3/8	1/4	3 3/4	2 7/8	9 3/4	19 1/8	17 1/8	7 3/4	7 7/8						9.0
3	36		1 5/8	5/8	3/4	6 1/4	1 3/8	1	1 7/8	5 5/8	4 7/8	3/4	3/8	1/4	3 3/4	2 7/8	9 3/4	19 1/8	17 1/8	7 3/4	7 7/8						9.0
4	36		1 5/8	5/8	3/4	6 1/4	1 3/8	1	1 7/8	5 5/8	4 7/8	3/4	3/8	1/4	3 3/4	2 7/8	9 3/4	19 1/8	17 1/8	7 3/4	7 7/8						9.0
5	48		2 1/4	3/4	1	8 1/4	1 3/4	1 1/4	2 1/2	7 1/2	6 1/2	1	1/2	3/8	5	3 1/4	13	25 1/2	22 3/4	10 3/8	10 1/2						16.0

STANDARD SIGN
W1-5

WISCONSIN DEPT OF TRANSPORTATION

APPROVED Matthew R Rauch
for State Traffic Engineer

DATE 5/18/12 PLATE NO. W1-5.8

PROJECT NO: | HWY: | COUNTY: | SHEET NO: 187 | E

NOTES

1. Sign is Type II - Type F Reflective - reference WIS DOT Standard Specification for HIGHWAY and STRUCTURE CONSTRUCTION latest edition.
2. Color:
   Background - Yellow
   Message - Black
3. Corners may be square or rounded when base material is plywood but borders shall be rounded as shown. When base material is metal, the corners and borders shall be rounded.

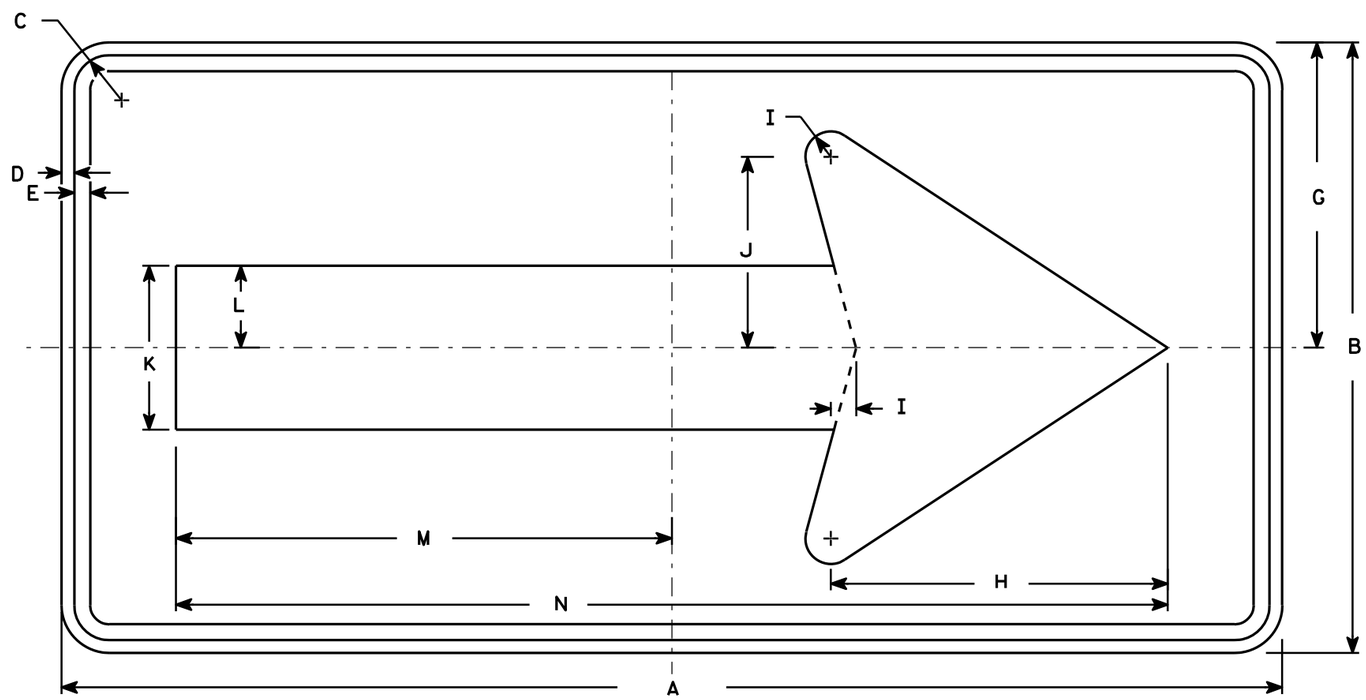

W1-6

SIZE	A	B	C	D	E	F	G	H	I	J	K	L	M	N	O	P	Q	R	S	T	U	V	W	X	Y	Z	Area sq. ft.
1	36	18	1 1/8	3/8	3/8		9	10	3/4	5 5/8	4 3/4	2 3/8	14 5/8	29 1/4													4.5
2S	48	24	1 3/8	1/2	5/8		12	13 1/4	1	7 1/2	6 1/2	3 1/4	19 1/2	39													8.0
2M	48	24	1 3/8	1/2	5/8		12	13 1/4	1	7 1/2	6 1/2	3 1/4	19 1/2	39													8.0
3	60	30	1 3/8	1/2	5/8		15	16 1/4	1 1/4	9 1/4	8	4	24 3/8	48 3/4													12.5
4	60	30	1 3/8	1/2	5/8		15	16 1/4	1 1/4	9 1/4	8	4	24 3/8	48 3/4													12.5
5	96	48	2 1/4	3/4	1		24	26 1/2	2	15	13	6 1/2	39	78													32.0

STANDARD SIGN
W1-6

WISCONSIN DEPT OF TRANSPORTATION

APPROVED Matthew R Rauch
for State Traffic Engineer

DATE 6/7/10 PLATE NO. W1-6.8

PROJECT NO:	HWY:	COUNTY:		SHEET NO: 188	E

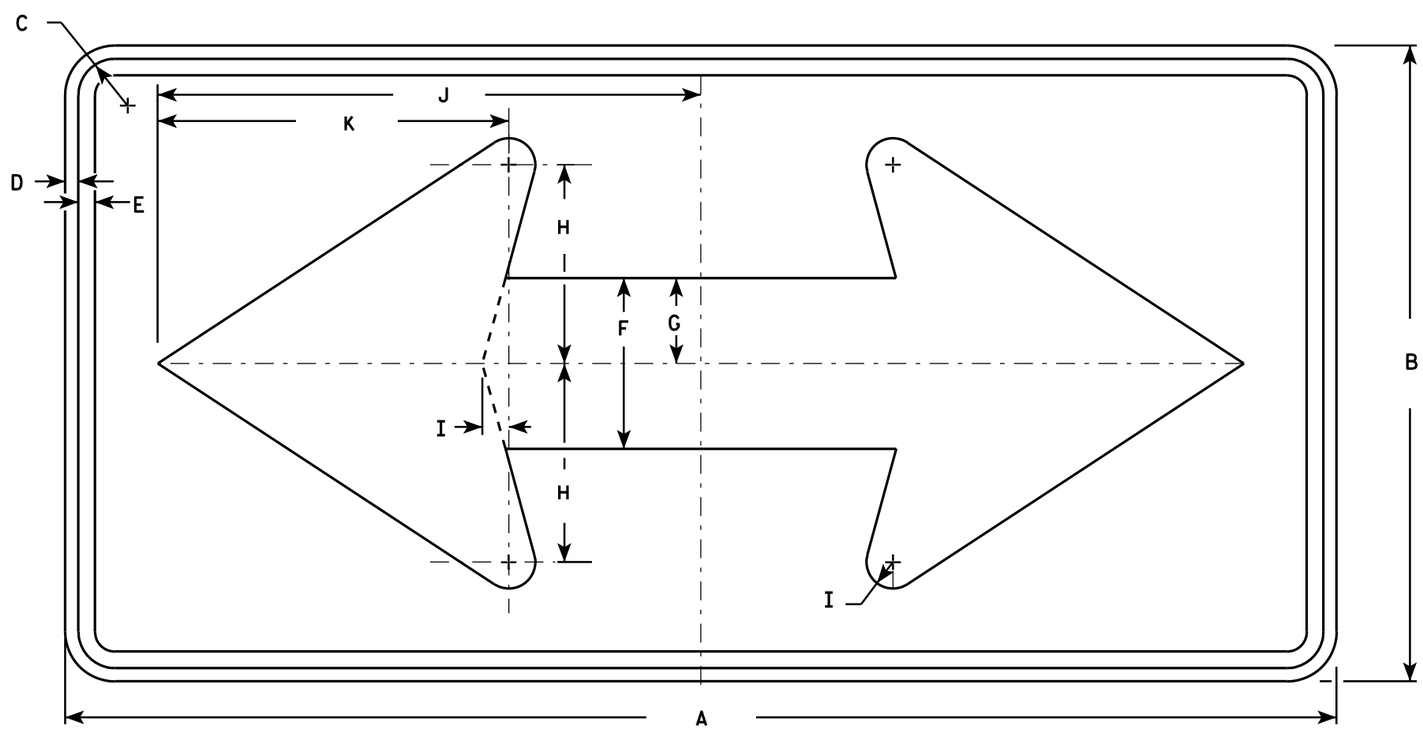

W1-7

NOTES

1. Sign is Type II - Type F Reflective - reference WIS DOT Standard Specification for HIGHWAY and STRUCTURE CONSTRUCTION latest edition.
2. Color:
   Background - Yellow
   Message - Black
3. Corners may be square or rounded when base material is plywood but borders shall be rounded as shown. When base material is metal, the corners and borders shall be rounded.

SIZE	A	B	C	D	E	F	G	H	I	J	K	L	M	N	O	P	Q	R	S	T	U	V	W	X	Y	Z	Area sq. ft.
1	36	18	1 1/8	3/8	1/2	5	2 1/2	5 3/4	3/4	15 5/8	10 1/8																4.5
2S	48	24	1 3/8	1/2	5/8	6 1/2	3 1/4	7 1/2	1	20 1/2	13 1/4																8.0
2M	48	24	1 3/8	1/2	5/8	6 1/2	3 1/4	7 1/2	1	20 1/2	13 1/4																8.0
3	60	30	1 3/8	1/2	5/8	8	4	9 1/4	1 1/4	25 3/8	16 1/4																12.5
4	60	30	1 3/8	1/2	5/8	8	4	9 1/4	1 1/4	25 3/8	16 1/4																12.5
5	96	48	2 1/4	3/4	1	13	6 1/2	15	2	41	26 1/2																32.0

STANDARD SIGN
W1-7

WISCONSIN DEPT OF TRANSPORTATION

APPROVED Matthew R Rauch
for State Traffic Engineer

DATE 6/7/10 PLATE NO. W1-7.7

PROJECT NO: | HWY: | COUNTY: | SHEET NO: 189 | E

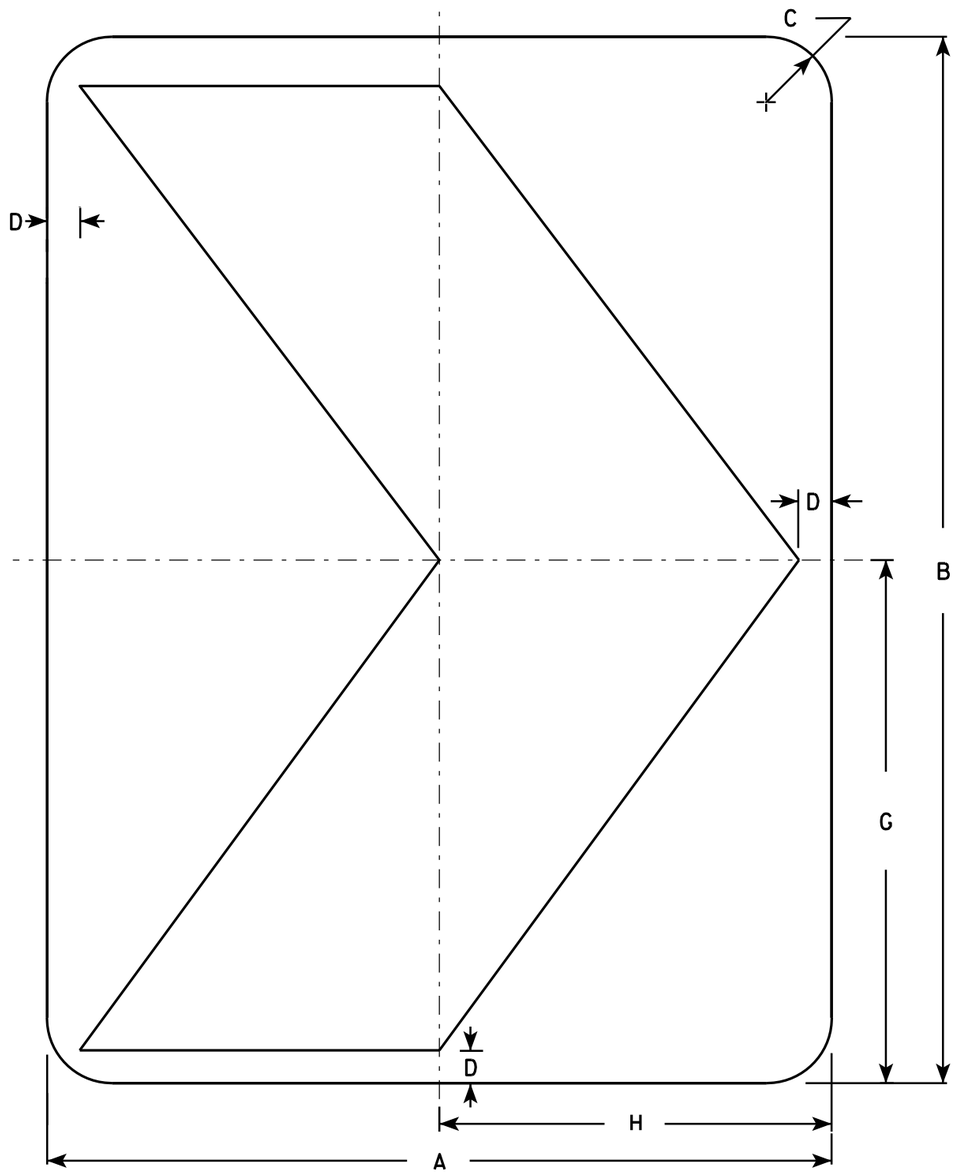

W1-8

NOTES

1. Sign is Type II - Type F Reflective - reference WIS DOT Standard Specification for HIGHWAY and STRUCTURE CONSTRUCTION latest edition.
2. Color:
   Background - Yellow
   Message - Black
3. Corners may be square or rounded when base material is plywood but borders shall be rounded as shown. When base material is metal, the corners and borders shall be rounded.

SIZE	A	B	C	D	E	F	G	H	I	J	K	L	M	N	O	P	Q	R	S	T	U	V	W	X	Y	Z	Area sq. ft.
1	12	18	1 1/2	1/2			9	6																			1.5
2S	18	24	1 1/2	3/4			12	9																			3.0
2M	18	24	1 1/2	3/4			12	9																			3.0
3	24	30	1 1/2	1			15	12																			5.0
4	30	36	1 7/8	1 1/4			18	15																			7.5
5	36	48	2 1/4	1 1/2			24	18																			12.0

STANDARD SIGN
W1-8

WISCONSIN DEPT OF TRANSPORTATION

APPROVED Matthew R Rauch for State Traffic Engineer

DATE 6/7/10 PLATE NO. W1-8.6

PROJECT NO:

SHEET NO: 190 E

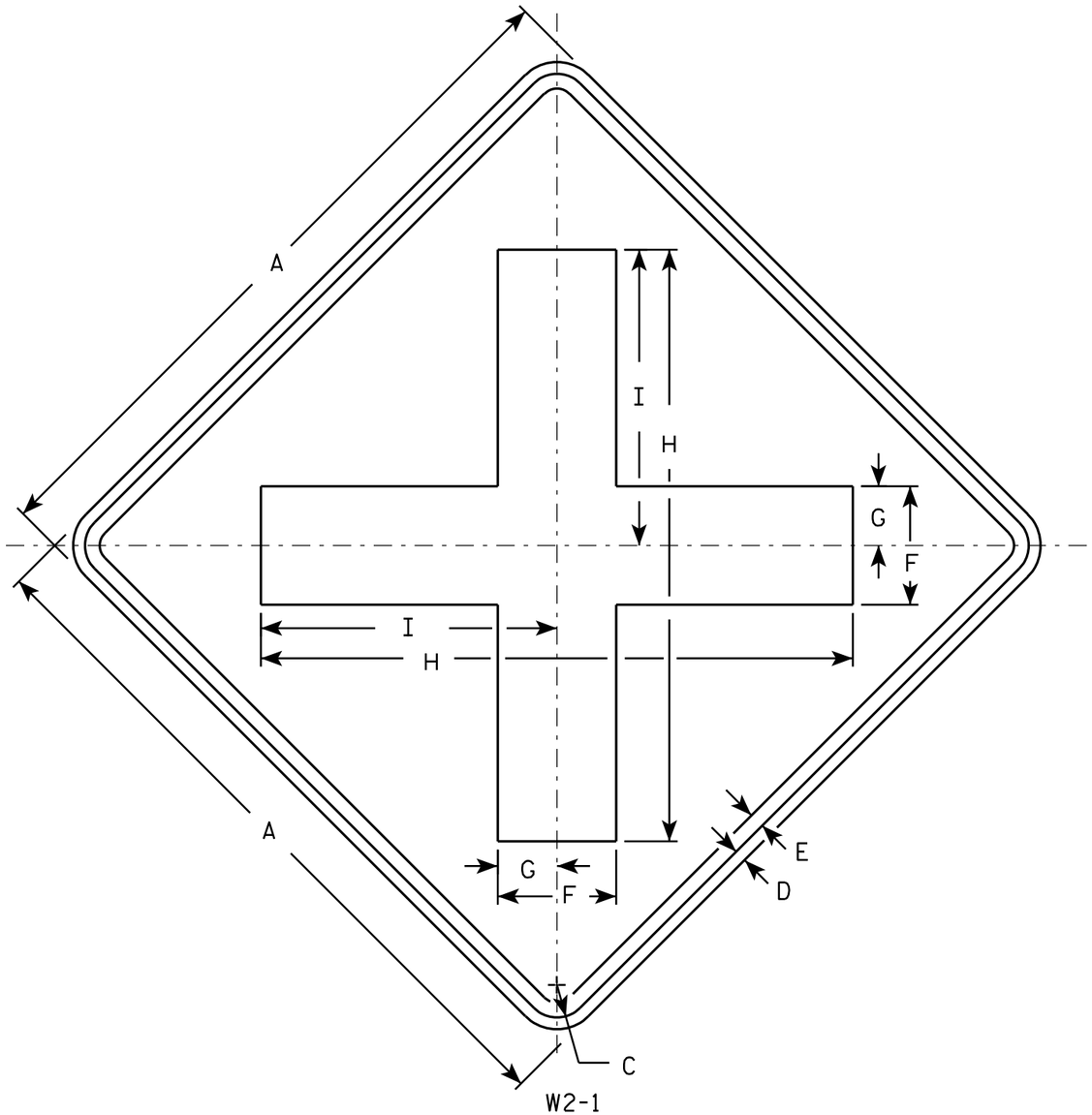

NOTES

1. Sign is Type II - Type F Reflective - reference WIS DOT Standard Specification for HIGHWAY and STRUCTURE CONSTRUCTION latest edition.
2. Color:
   Background - Yellow
   Message - Black
3. Corners may be square or rounded when base material is plywood but borders shall be rounded as shown. When base material is metal, the corners and borders shall be rounded.

SIZE	A	B	C	D	E	F	G	H	I	J	K	L	M	N	O	P	Q	R	S	T	U	V	W	X	Y	Z	Area sq. ft.
1	24		1 1/8	3/8	1/2	4	2	20	10																		4.0
2S	30		1 3/8	1/2	5/8	5	2 1/2	25	12 1/2																		6.25
2M	30		1 3/8	1/2	5/8	5	2 1/2	25	12 1/2																		6.25
3	36		1 5/8	5/8	3/4	6	3	30	15																		9.0
4	48		2 1/4	3/4	1	8	4	40	20																		16.0
5																											

STANDARD SIGN
W2-1

WISCONSIN DEPT OF TRANSPORTATION

APPROVED Matthew R Rauch
for State Traffic Engineer

DATE 5/29/12 PLATE NO. W2-1.9

PROJECT NO:	HWY:	COUNTY:		SHEET NO: 191	E

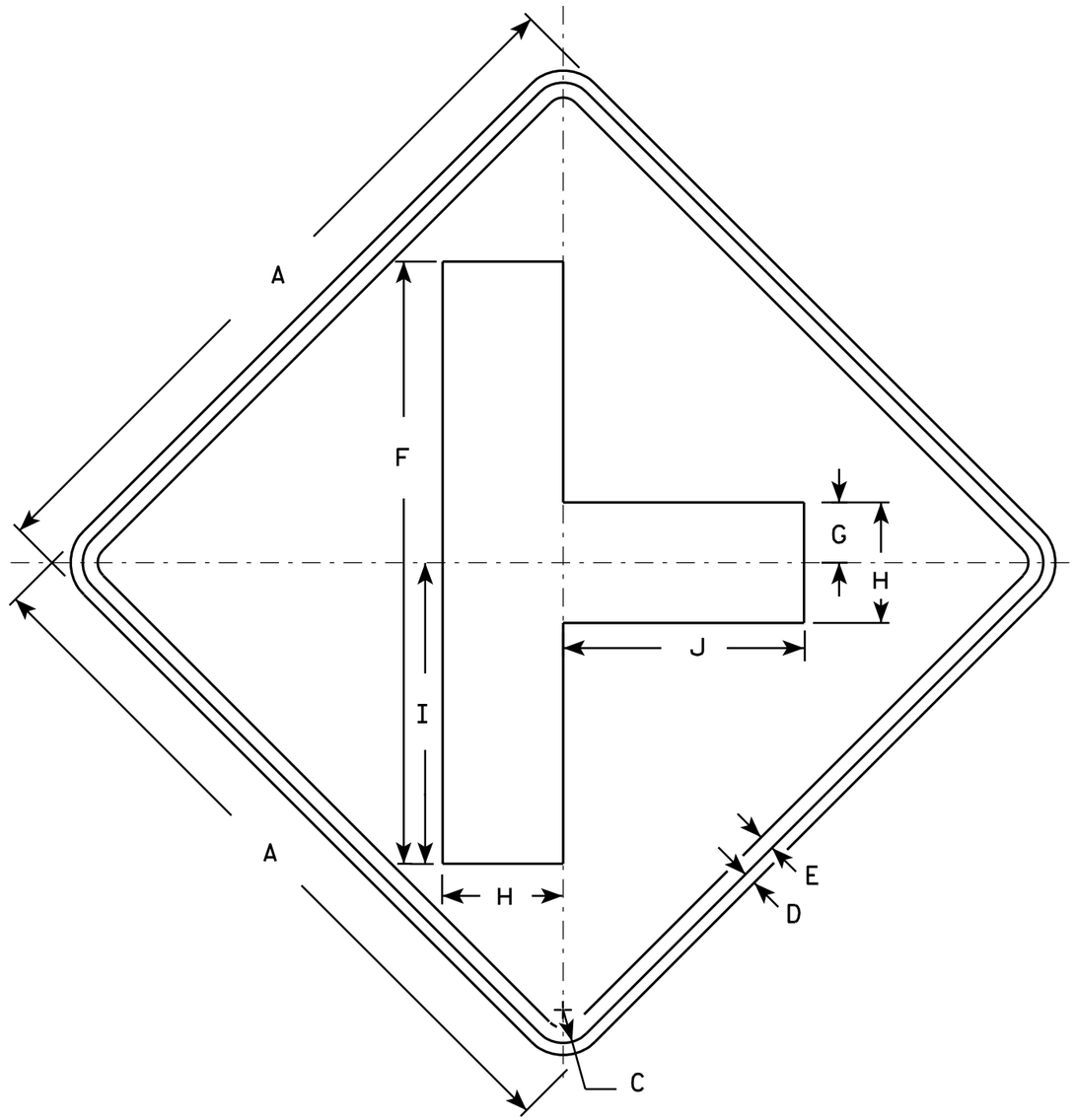

W2-2

NOTES

1. Sign is Type II - Type F Reflective - reference WIS DOT Standard Specification for HIGHWAY and STRUCTURE CONSTRUCTION latest edition.
2. Color:
   Background - Yellow
   Message - Black
3. Corners may be square or rounded when base material is plywood but borders shall be rounded as shown. When base material is metal, the corners and borders shall be rounded.

SIZE	A	B	C	D	E	F	G	H	I	J	K	L	M	N	O	P	Q	R	S	T	U	V	W	X	Y	Z	Area sq. ft.
1	24		1 1/8	3/8	1/2	20	2	4	10	8																	4.0
2S	30		1 3/8	1/2	5/8	25	2 1/2	5	12 1/2	10																	6.25
2M	30		1 3/8	1/2	5/8	25	2 1/2	5	12 1/2	10																	6.25
3	36		1 5/8	5/8	3/4	30	3	6	15	12																	9.0
4	48		2 1/4	3/4	1	40	4	8	20	16																	16.0
5																											

STANDARD SIGN
W2-2

WISCONSIN DEPT OF TRANSPORTATION

APPROVED Matthew R Rauch
for State Traffic Engineer

DATE 5/29/12 PLATE NO. W2-2.6

PROJECT NO:	HWY:	COUNTY:		SHEET NO: 192	E

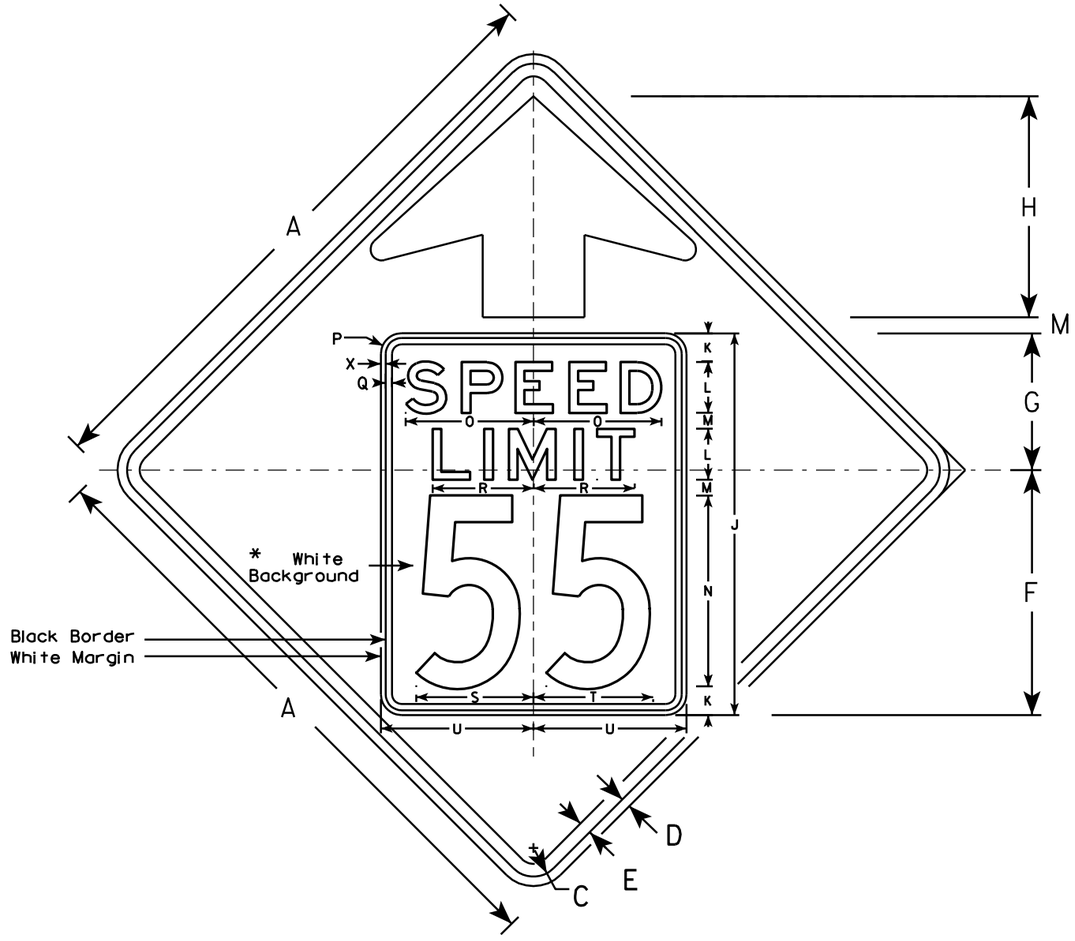

W3-5

NOTES

1. Sign is Type II - Type F Reflective - reference WIS DOT Standard Specification for HIGHWAY and STRUCTURE CONSTRUCTION latest edition.
2. Color: *
   Background - YELLOW*
   Message - BLACK
3. Message Series - C for numbers Series E for wording
4. Substitute appropriate numerals and optically adjust spacing to achieve proper balance

*Speed Limit Sign shall have a White Background

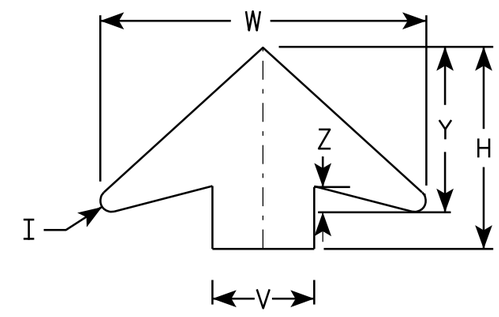

ARROW DETAIL

SIZE	A	B	C	D	E	F	G	H	I	J	K	L	M	N	O	P	Q	R	S	T	U	V	W	X	Y	Z	Area sq. ft.
1																											
2S	36		1 5/8	5/8	3/4	14 1/2	9 1/2	11 1/2	5/8	24	2	3	1	12	7 1/8	1 1/2	3/8	5 3/4	7 1/4	7 1/8	9	6	19 1/4	3/8	9 3/4	1 5/8	9.0
2M	36		1 5/8	5/8	3/4	14 1/2	9 1/2	11 1/2	5/8	24	2	3	1	12	7 1/8	1 1/2	3/8	5 3/4	7 1/4	7 1/8	9	6	19 1/4	3/8	9 3/4	1 5/8	9.0
3	36		1 5/8	5/8	3/4	14 1/2	9 1/2	11 1/2	5/8	24	2	3	1	12	7 1/8	1 1/2	3/8	5 3/4	7 1/4	7 1/8	9	6	19 1/4	3/8	9 3/4	1 5/8	9.0
4	48		2 1/4	3/4	1	19 1/4	10 3/4	17 3/8	7/8	30	2 1/4	4	1 1/4	15	10	1 5/8	1/2	8	9 1/4	9 3/8	12	8	25 5/8	3/8	13	2	16.0
5	48		2 1/4	3/4	1	19 1/4	10 3/4	17 3/8	7/8	30	2 1/4	4	1 1/4	15	10	1 5/8	1/2	8	9 1/4	9 3/8	12	8	25 5/8	3/8	13	2	16.0

STANDARD SIGN
W3-5

WISCONSIN DEPT OF TRANSPORTATION

APPROVED Matthew R Rauch
for State Traffic Engineer

DATE 5/29/12 PLATE NO. W3-5.5

PROJECT NO:

SHEET NO: 193 E

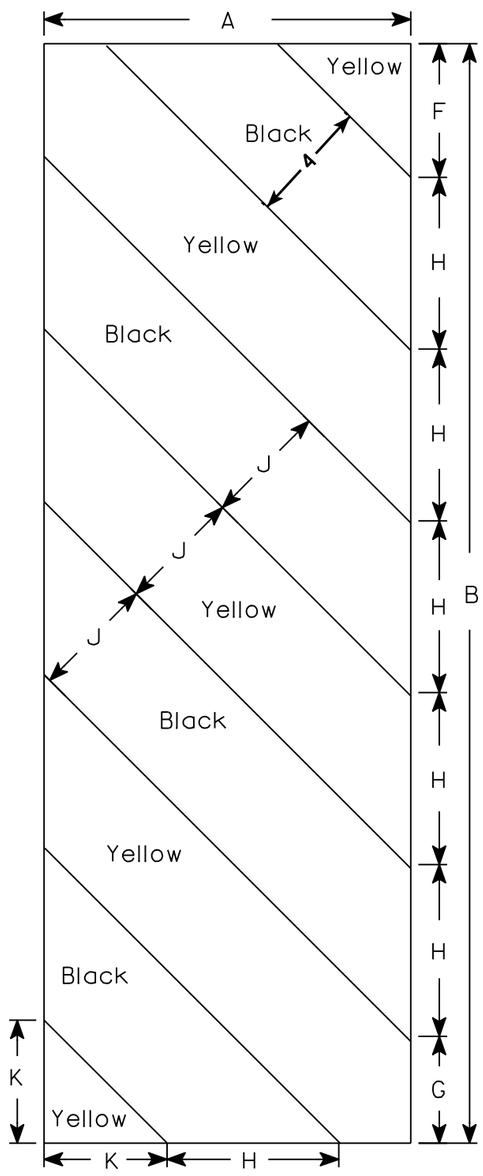

W5-52L

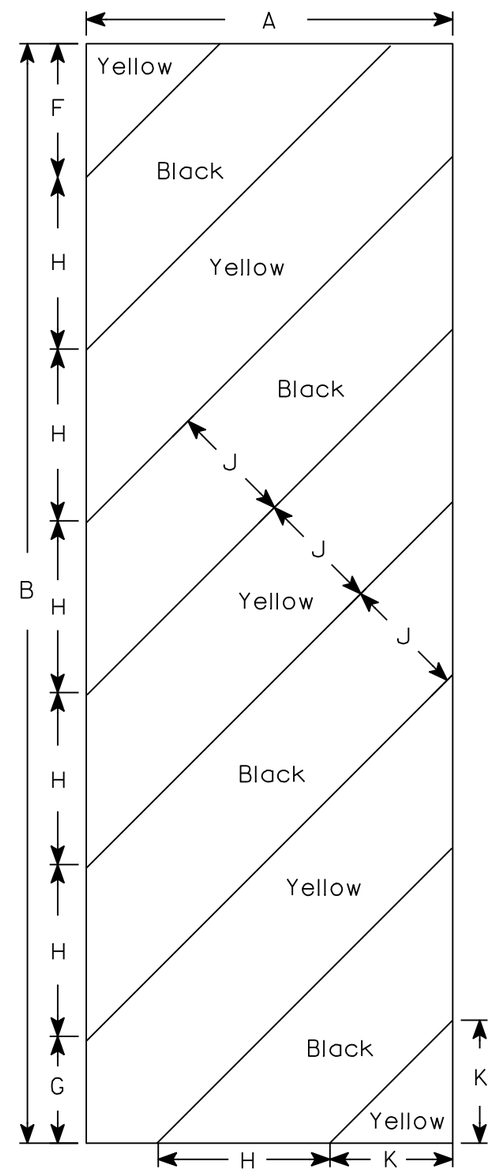

W5-52R

NOTES

1. Sign is Type II - Type F Reflective - reference WIS DOT Standard Specification for HIGHWAY and STRUCTURE CONSTRUCTION latest edition.
2. Color:
   Background - Yellow
   Message - Black
3. Corners may be square or rounded when base material is plywood but borders shall be rounded as shown. When base material is metal, the corners and borders shall be rounded.
4. Alternate colors of stripes as shown.

SIZE	A	B	C	D	E	F	G	H	I	J	K	L	M	N	O	P	Q	R	S	T	U	V	W	X	Y	Z	Area sq. ft.
1																											
2S	12	36				4 3/8	3 1/2	5 5/8	45°	4	4																3.0
2M	12	36				4 3/8	3 1/2	5 5/8	45°	4	4																3.0
3	18	54				6	5 1/2	8 1/2	45°	6	6 9/16																6.75
4																											
5																											

STANDARD SIGN
W5-52L & W5-52R

WISCONSIN DEPT OF TRANSPORTATION

APPROVED Matthew R Rauch
for State Traffic Engineer

DATE 5/29/12 PLATE NO. W5-52.9

PROJECT NO: | HWY: | COUNTY: | SHEET NO: 194 | E

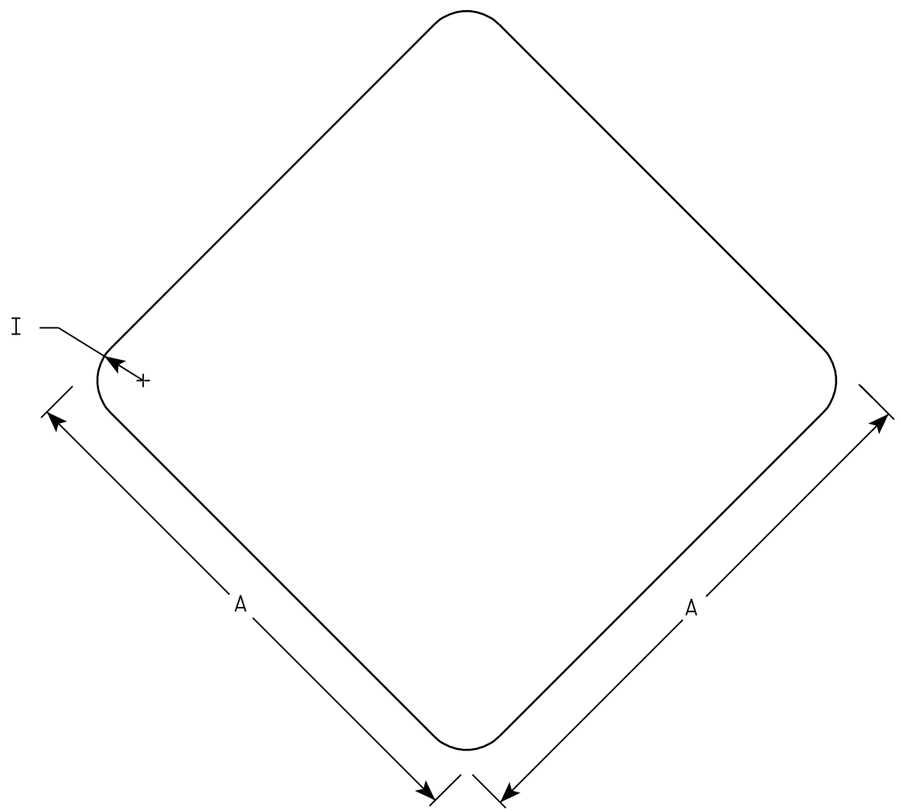

W5-54

NOTES

1. Sign is Type II - Type F Reflective - reference WIS DOT Standard Specification for HIGHWAY and STRUCTURE CONSTRUCTION latest edition.
2. Color:
   Background - Yellow
3. Corners may be square or rounded when base material is plywood. When base material is metal the corners shall be rounded.

SIZE	A	B	C	D	E	F	G	H	I	J	K	L	M	N	O	P	Q	R	S	T	U	V	W	X	Y	Z	Area sq. ft.
1	12								1																		1.0
2S	18								1 ½																		2.25
2M	18								1 ½																		2.25
3																											
4																											
5																											

STANDARD SIGN
W5-54

WISCONSIN DEPT OF TRANSPORTATION

APPROVED Matthew R Rauch
for State Traffic Engineer

DATE 11/3/10 PLATE NO. W5-54.8

PROJECT NO:	HWY:	COUNTY:		SHEET NO: 195	E

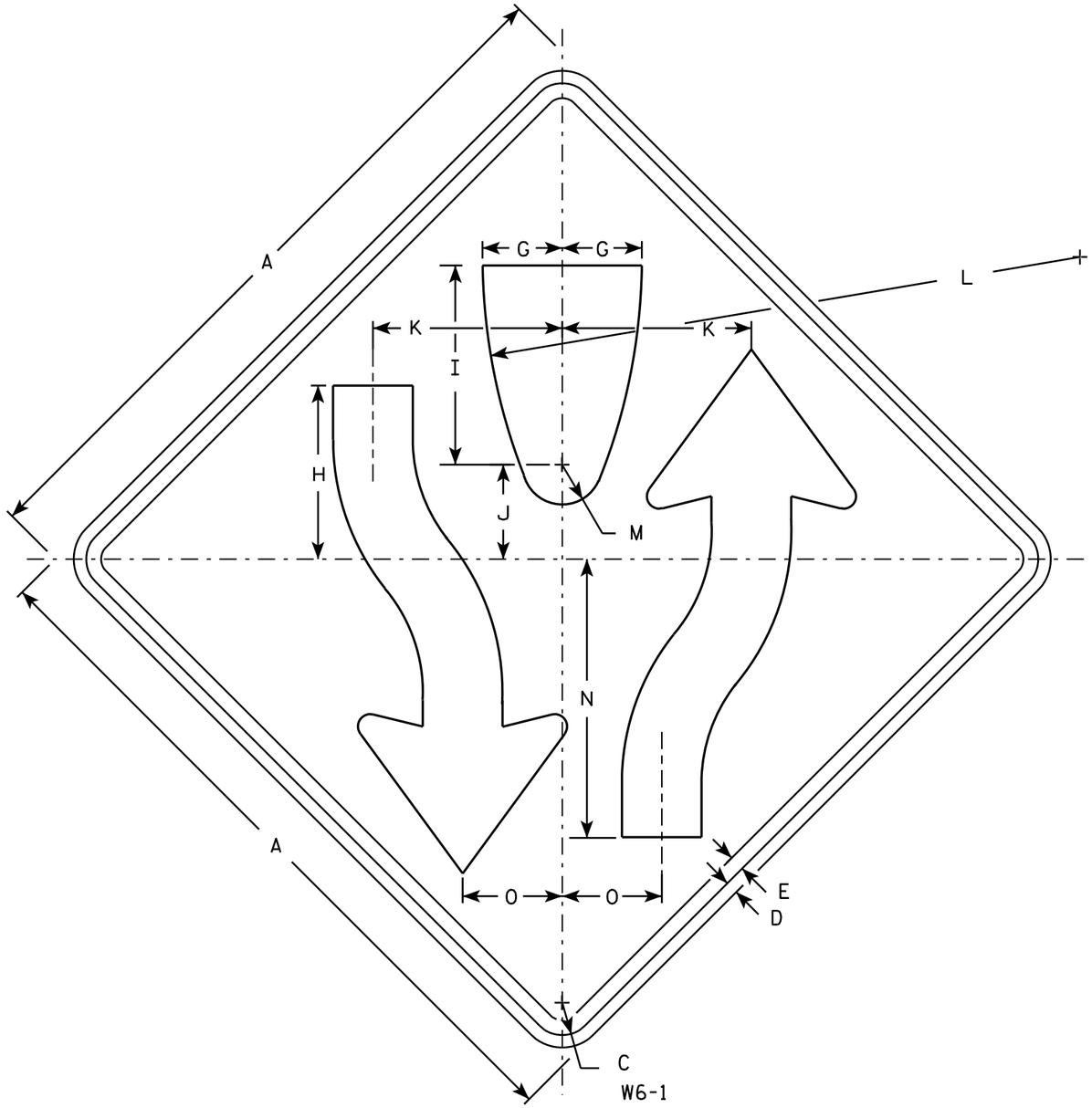

NOTES

1. Sign is Type II - Type F Reflective - reference WIS DOT Standard Specification for HIGHWAY and STRUCTURE CONSTRUCTION latest edition.
2. Color:
   Background - Yellow
   Message - Black
3. Corners may be square or rounded when base material is plywood but borders shall be rounded as shown. When base material is metal, the corners and borders shall be rounded.
4. W6-2 same as W6-1 but is rotated 180° when mounted.

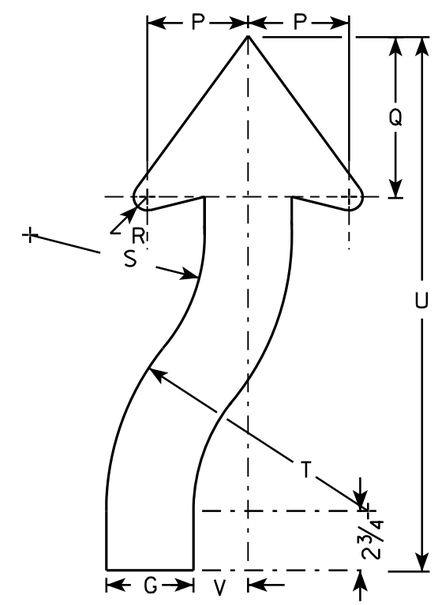

ARROW DETAIL

SIZE	A	B	C	D	E	F	G	H	I	J	K	L	M	N	O	P	Q	R	S	T	U	V	W	X	Y	Z	Area sq. ft.
1	30		1 3/8	1/2	5/8		3 1/4	8	8 1/4	4 1/8	7 7/8	25	1 3/4	11 5/8	4 1/8	3 7/8	6 3/4	5/8	6 5/8	9 7/8	21 5/8	2					6.25
2S	36		1 5/8	5/8	3/4		4	8 3/4	10	4 3/4	9 1/2	30	2	14	5	4 5/8	7 3/8	7/8	8	12	24 1/2	2 1/2					9.0
2M	36		1 5/8	5/8	3/4		4	8 3/4	10	4 3/4	9 1/2	30	2	14	5	4 5/8	7 3/8	7/8	8	12	24 1/2	2 1/2					9.0
3																											
4	48		2 1/4	3/4	1		5 3/8	11 5/8	13 3/8	6 3/8	12 5/8	40	2 5/8	18 5/8	6 5/8	6 1/4	9 7/8	1 1/4	10 5/8	16	32 5/8	3 3/8					16.0
5	48		2 1/4	3/4	1		5 3/8	11 5/8	13 3/8	6 3/8	12 5/8	40	2 5/8	18 5/8	6 5/8	6 1/4	9 7/8	1 1/4	10 5/8	16	32 5/8	3 3/8					16.0

STANDARD SIGN
W6-1 & W6-2

WISCONSIN DEPT OF TRANSPORTATION

APPROVED Matthew R Rauch
for State Traffic Engineer

DATE 03/12/13 PLATE NO. W6-1.14

PROJECT NO:	HWY:	COUNTY:		SHEET NO: 196	E

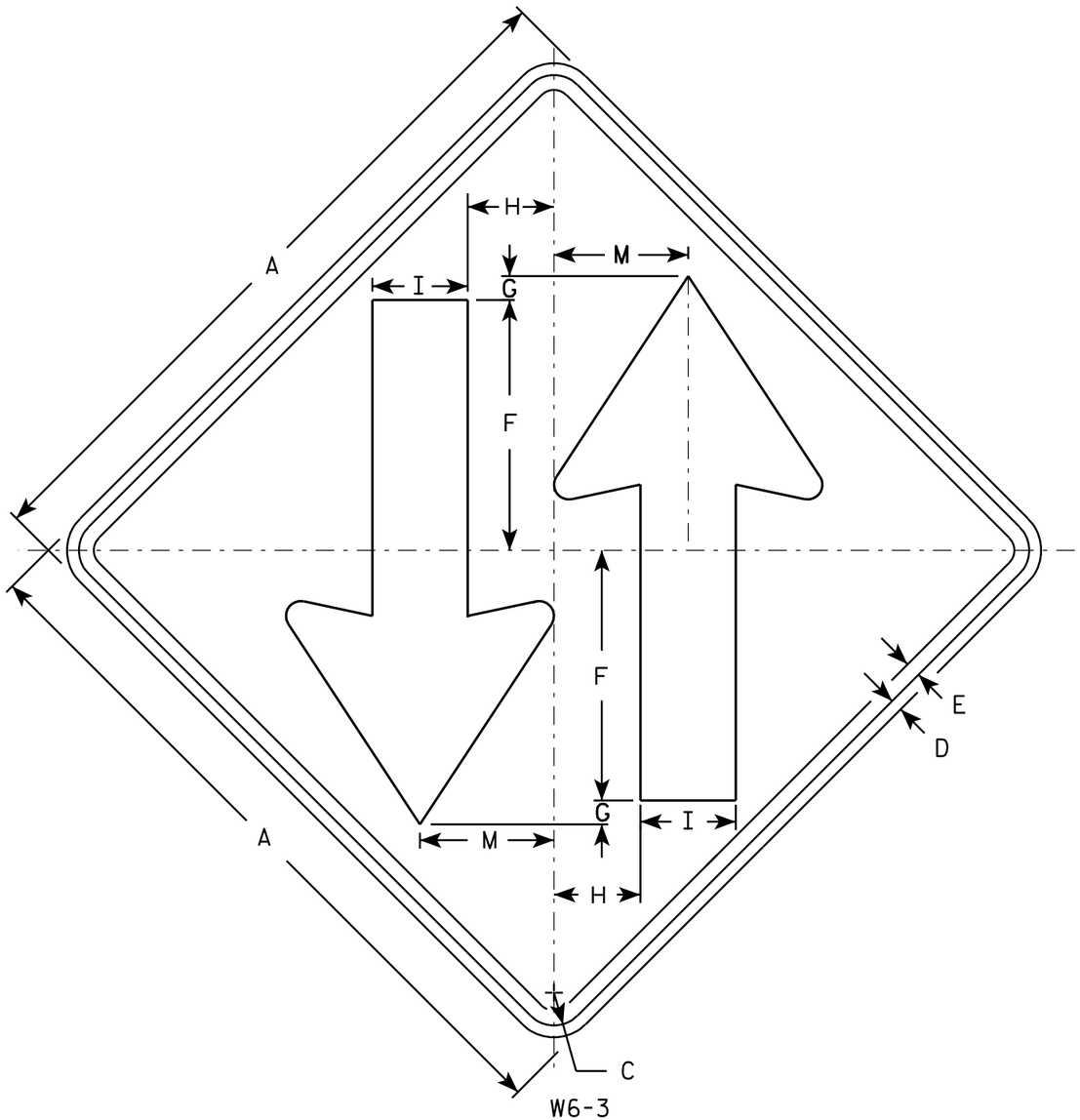

W6-3

NOTES

1. Sign is Type II - Type F Reflective - reference WIS DOT Standard Specification for HIGHWAY and STRUCTURE CONSTRUCTION latest edition.
2. Color:
   Background - Yellow
   Message - Black
3. Corners may be square or rounded when base material is plywood but borders shall be rounded as shown. When base material is metal, the corners and borders shall be rounded.

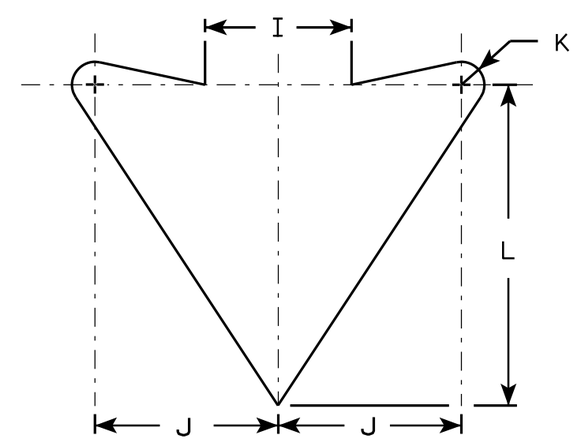

ARROW DETAIL

SIZE	A	B	C	D	E	F	G	H	I	J	K	L	M	N	O	P	Q	R	S	T	U	V	W	X	Y	Z	Area sq. ft.
1	30		1 3/8	1/2	5/8	10 1/2	1	3 5/8	4	5	5/8	8 3/4	5 5/8														6.25
2S	36		1 5/8	5/8	3/4	12	1	4 1/4	5	6	3/4	10 1/2	6 3/4														9.0
2M	36		1 5/8	5/8	3/4	12	1	4 1/4	5	6	3/4	10 1/2	6 3/4														9.0
3																											
4	48		2 1/4	3/4	1	15 1/2	1	6	6	8	1	14	9														16.0
5	48		2 1/4	3/4	1	15 1/2	1	6	6	8	1	14	9														16.0

STANDARD SIGN
W6-3

WISCONSIN DEPT OF TRANSPORTATION

APPROVED Matthew R Rauch
for State Traffic Engineer

DATE 03/12/13 PLATE NO. W6-3.10

PROJECT NO: | HWY: | COUNTY: | SHEET NO: 197 | E

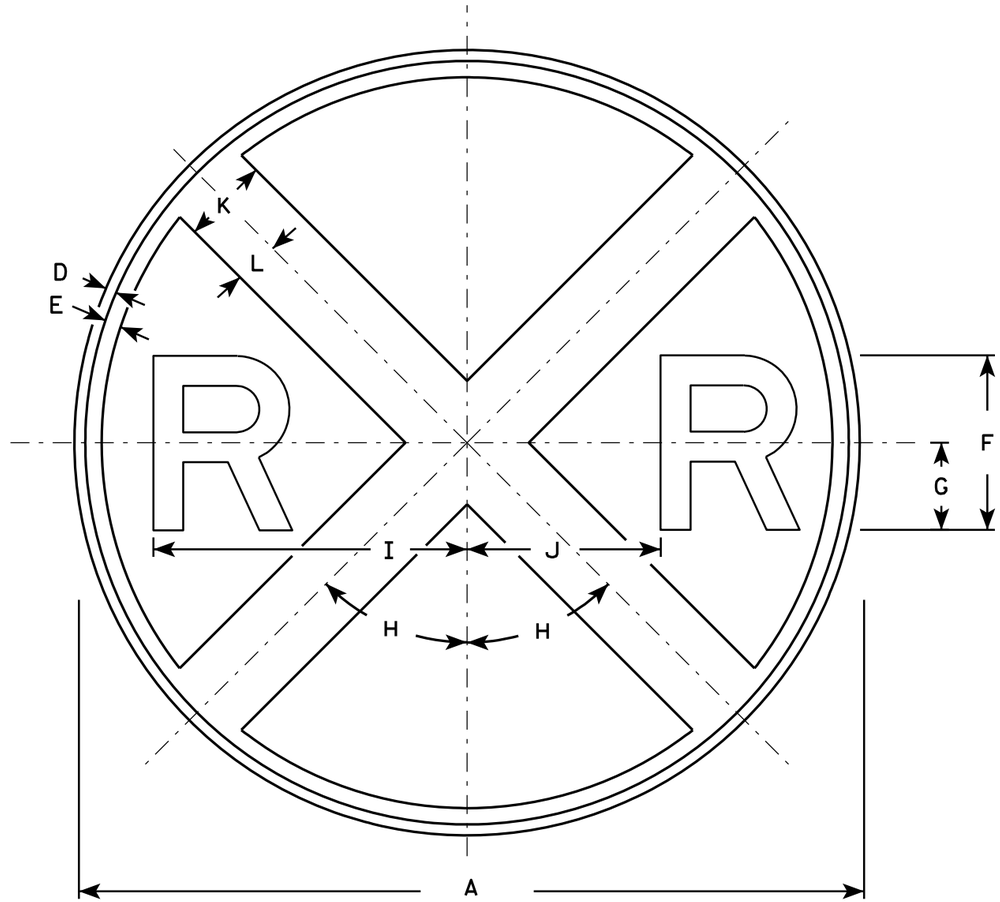

W10-1

NOTES

1. Sign is Type II - Type F Reflective - reference WIS DOT Standard Specification for HIGHWAY and STRUCTURE CONSTRUCTION latest edition.
2. Color:
   Background - Yellow
   Message - Black
3. Message Series - E

SIZE	A	B	C	D	E	F	G	H	I	J	K	L	M	N	O	P	Q	R	S	T	U	V	W	X	Y	Z	Area sq. ft.
1	30			3/8	5/8	7	3 1/2	45°	12 3/8	7 1/8	3	1 1/2															4.91
2S	36			5/8	3/4	8	4	45°	14 3/8	8 5/8	4	2															7.07
2M	36			5/8	3/4	8	4	45°	14 3/8	8 5/8	4	2															7.07
3																											
4	48			3/4	1 1/4	10	5	45°	18 3/8	11 5/8	5	2 1/2															12.57
5																											

STANDARD SIGN
W10-1

WISCONSIN DEPT OF TRANSPORTATION

APPROVED Matthew R Rauch for State Traffic Engineer
DATE 3/13/13 PLATE NO. W10-1.8

PROJECT NO: | HWY: | COUNTY: | SHEET NO: 198 | E

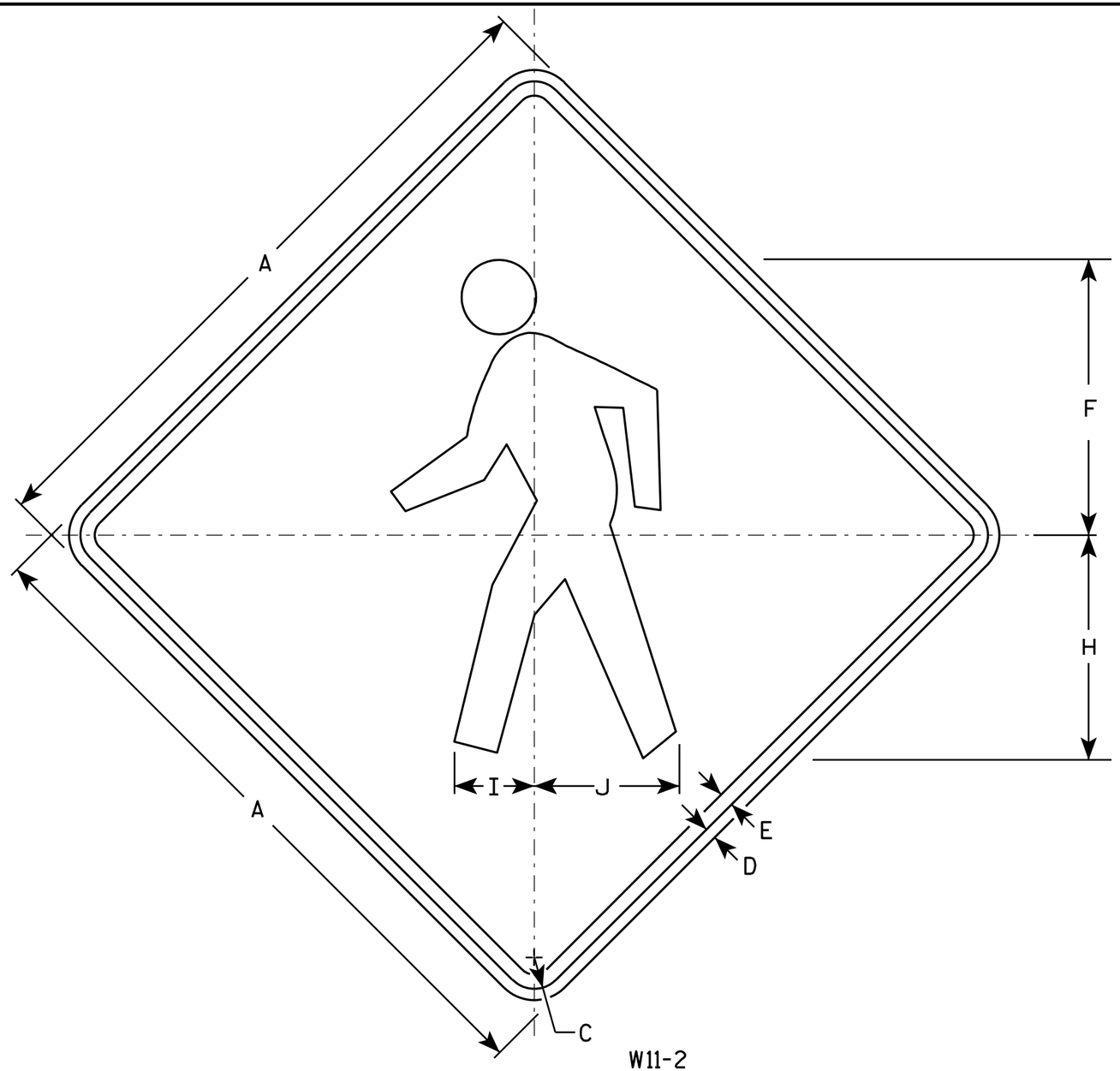

W11-2

NOTES

1. Sign is Type II - Type F Reflective - reference WIS DOT Standard Specification for HIGHWAY and STRUCTURE CONSTRUCTION latest edition.
2. Color:
   Background - Yellow
   Message - Black
3. Corners may be square or rounded when base material is plywood but borders shall be rounded as shown. When base material is metal, the corners and borders shall be rounded.

SIZE	A	B	C	D	E	F	G	H	I	J	K	L	M	N	O	P	Q	R	S	T	U	V	W	X	Y	Z	Area sq. ft.
1	24		1 1/8	3/8	1/2	9 3/4		7 7/8	2 7/8	5 1/8																	4.0
2S	30		1 3/8	1/2	5/8	12 1/8		9 7/8	3 1/2	6 3/8																	6.25
2M	36		1 5/8	5/8	3/4	14 1/2		11 7/8	4 1/4	7 5/8																	9.0
3	36		1 5/8	5/8	3/4	14 1/2		11 7/8	4 1/4	7 5/8																	9.0
4	48		2 1/4	3/4	1	19 3/8		15 3/4	5 5/8	10 1/4																	16.0
5																											

STANDARD SIGN
W11-2

WISCONSIN DEPT OF TRANSPORTATION

APPROVED Matthew R Rauch
for State Traffic Engineer

DATE 6/7/10 PLATE NO. W11-2.7

PROJECT NO:	HWY:	COUNTY:		SHEET NO: 199	E

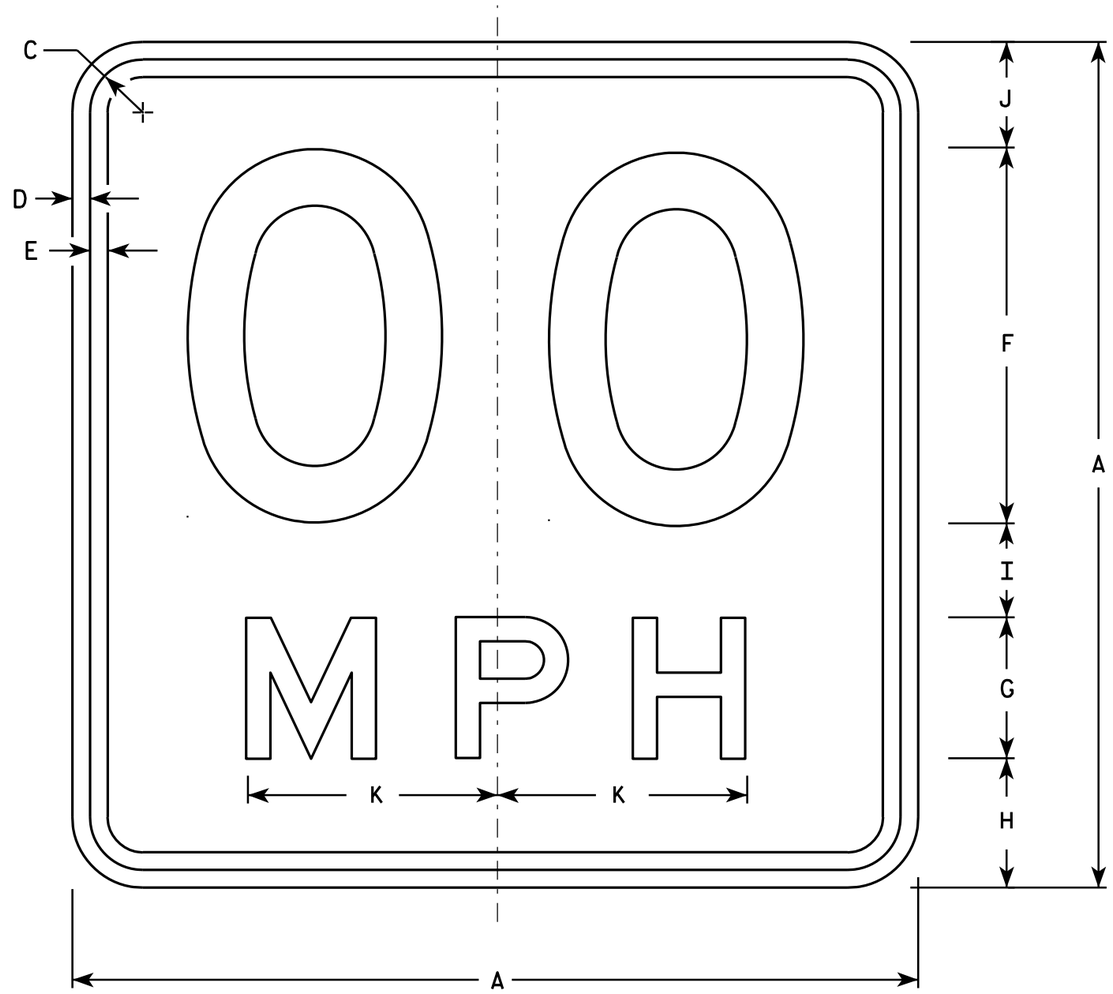

W13-1

* For 30" x 30" Warning Signs, use 18" x 18" W13-1 signs.
For 36" x 36" Warning Signs, use 24" x 24" W13-1 signs.

NOTES

1. Sign is Type II - Type F Reflective - reference WIS DOT Standard Specification for HIGHWAY and STRUCTURE CONSTRUCTION latest edition.
2. Color:
   Background - Yellow
   Message - Black
3. Message Series - See Note 6
4. Corners may be square or rounded when base material is plywood but borders shall be rounded as shown. When base material is metal, the corners and borders shall be rounded.
5. Substitute appropriate numerals and optically space about centerline to achieve proper balance.
6. Line 1 is Series D
   Line 2 is Series E

SIZE	A	B	C	D	E	F	G	H	I	J	K	L	M	N	O	P	Q	R	S	T	U	V	W	X	Y	Z	Area sq. ft.
1	18		1 1/8	3/8	3/8	8	3	2 3/4	2	2 1/4	5 3/8																2.25
* 2S	18		1 1/8	3/8	3/8	8	3	2 3/4	2	2 1/4	5 3/8																2.25
* 2M	18		1 1/8	3/8	3/8	8	3	2 3/4	2	2 1/4	5 3/8																2.25
3	24		1 1/8	3/8	1/2	10	4	4	2 3/4	3 1/4	6 5/8																4.00
4	36		1 5/8	5/8	3/4	16	6	5 1/2	4	4 1/2	10 5/8																9.00
5	36		1 5/8	5/8	3/4	16	6	5 1/2	4	4 1/2	10 5/8																9.00

STANDARD SIGN
W13-1

WISCONSIN DEPT OF TRANSPORTATION

APPROVED Matthew R Rauch
For State Traffic Engineer

DATE 5/31/12 PLATE NO. W13-1.16

PROJECT NO:	HWY:	COUNTY:		SHEET NO: 200	E

NOTES

1. Sign is Type II - Type F Reflective - reference WIS DOT Standard Specification for HIGHWAY and STRUCTURE CONSTRUCTION latest edition.
2. Color:
   Background - Yellow
   Message - Black
3. Message Series - See note 5
4. Corners and borders shall be rounded on all base materials for this sign.
5. Lines 1 and 2 are Series D.
   Line 3 is series C.

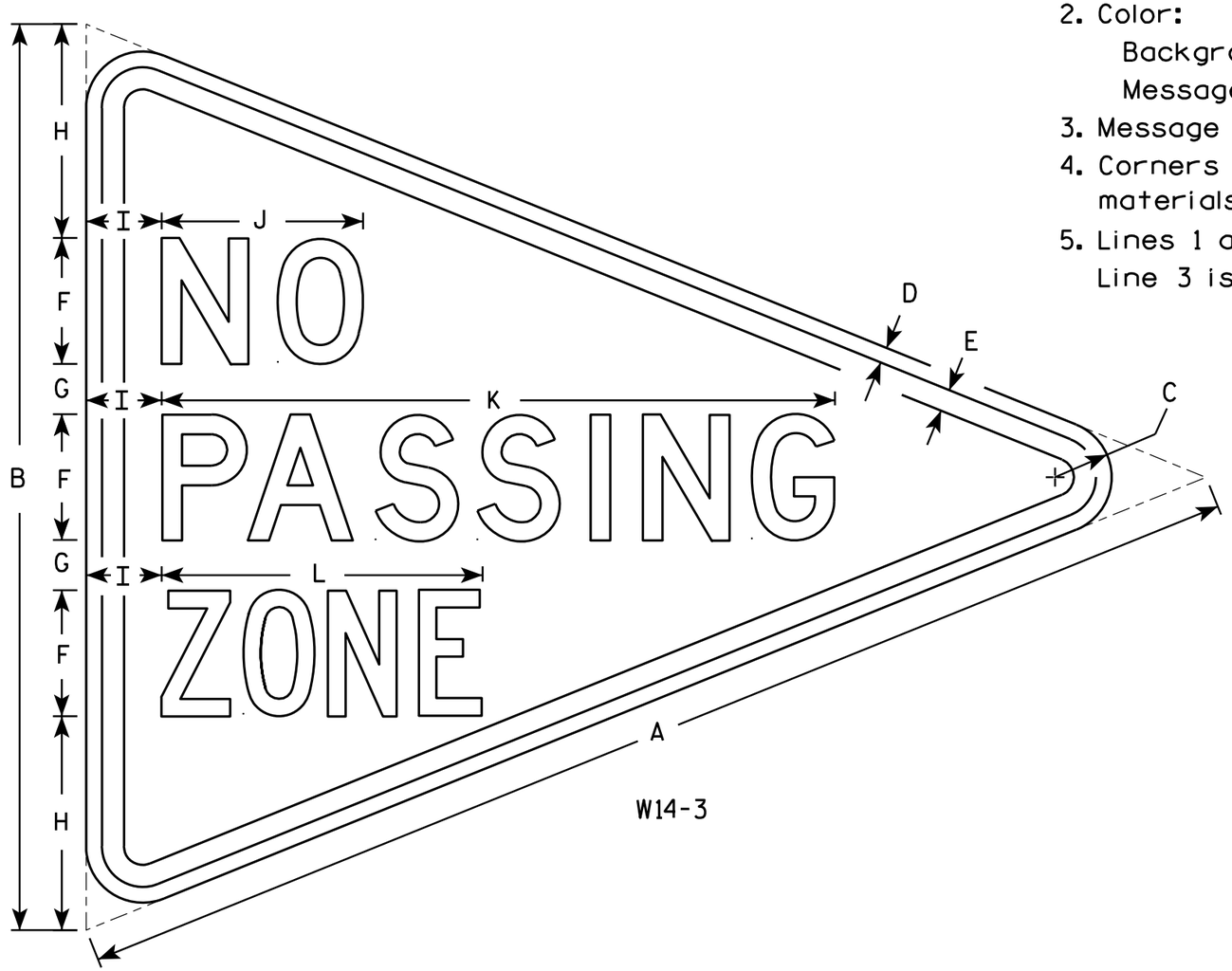

W14-3

SIZE	A	B	C	D	E	F	G	H	I	J	K	L	M	N	O	P	Q	R	S	T	U	V	W	X	Y	Z	Area sq. ft.
1																											
2S	48	36	2 1/4	5/8	7/8	5	2	8 1/2	3	8	26 3/4	12 3/4															6.0
2M	48	36	2 1/4	5/8	7/8	5	2	8 1/2	3	8	26 3/4	12 3/4															6.0
3	64	48	3	3/4	1 1/4	6	3	12	4	10 3/4	33 5/8	16 1/2															10.7
4																											
5																											

STANDARD SIGN
W14-3

WISCONSIN DEPT OF TRANSPORTATION

APPROVED Matthew R Rauch
for State Traffic Engineer
DATE 6/7/10 PLATE NO. W14-3.9

PROJECT NO: | HWY: | COUNTY: | SHEET NO: 201 | E

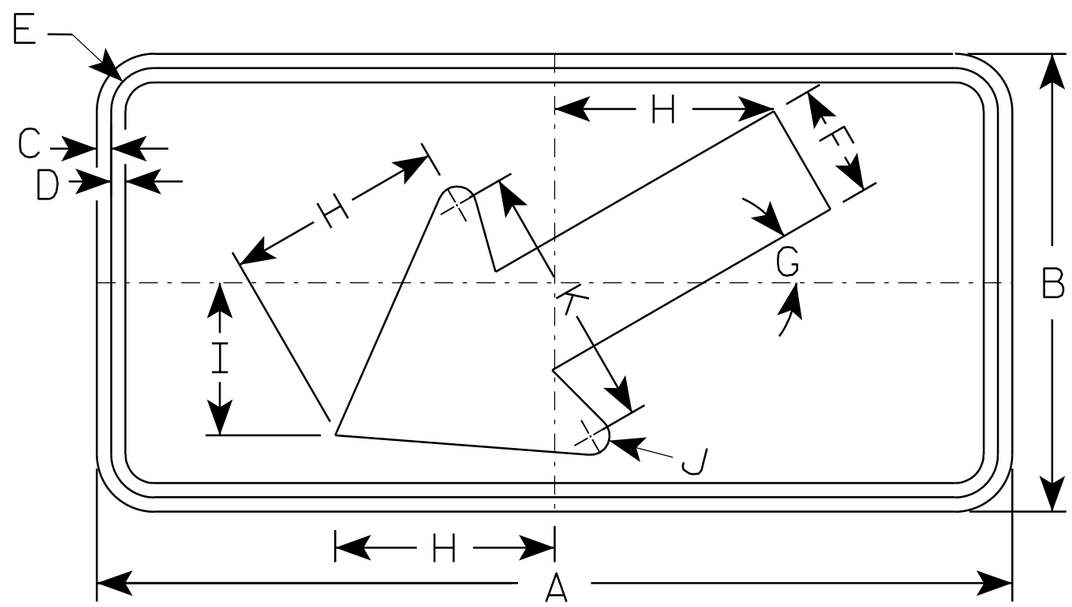

W16-7L

NOTES

1. Sign is Type II - Type F Reflective - reference WIS DOT Standard Specification for HIGHWAY and STRUCTURE CONSTRUCTION latest edition.
2. Color:
   Background - Yellow
   Message - Black
3. Corners may be square or rounded when base material is plywood but borders shall be rounded as shown. When base material is metal, the corners and borders shall be rounded.
4. W16-7R is the same as W16-L except the arrow is reversed along the vertical centerline.

SIZE	A	B	C	D	E	F	G	H	I	J	K	L	M	N	O	P	Q	R	S	T	U	V	W	X	Y	Z	Area sq. ft.
1																											
2S	24	12	3/8	3/8	1 1/8	3	30°	5 3/4	4	1/2	7																2.0
2M	30	18	3/8	1/2	1 1/8	4 1/2	30°	8 1/2	6	5/8	10 1/4																3.75
3	30	18	3/8	1/2	1 1/8	4 1/2	30°	8 1/2	6	5/8	10 1/4																3.75
4																											8
5																											8

STANDARD SIGN
W16-7

WISCONSIN DEPT OF TRANSPORTATION

APPROVED Matthew R Rauch
for State Traffic Engineer

DATE 11/02/10 PLATE NO. W16-7.5

PROJECT NO: | HWY: | COUNTY: | SHEET NO: 202 | E

NOTES

1. Sign is Type II - Type F Reflective - reference WIS DOT Standard Specification for HIGHWAY and STRUCTURE CONSTRUCTION latest edition.
2. Color:
   Background - Yellow
   Message - Black
3. Message Series - C
4. Corners may be square or rounded when base material is plywood but borders shall be rounded as shown. When base material is metal, the corners and borders shall be rounded.

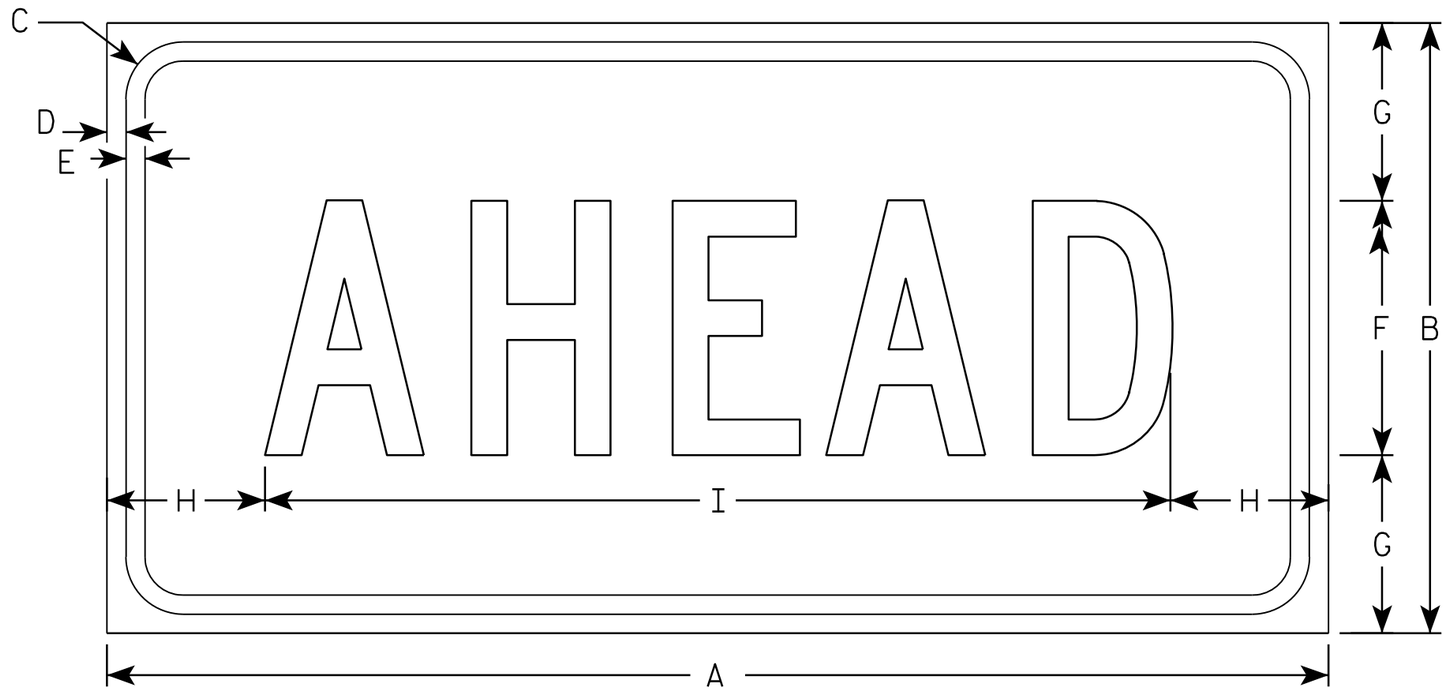

W16-9P

SIZE	A	B	C	D	E	F	G	H	I	J	K	L	M	N	O	P	Q	R	S	T	U	V	W	X	Y	Z	Area sq. ft.
1																											
2S	24	12	1 1/8	3/8	3/8	5	3 1/2	3 1/8	17 3/4																		2.0
2M	30	18	1 1/8	3/8	1/2	7	5 1/2	2 3/4	24 1/2																		3.75
3	30	18	1 1/8	3/8	1/2	7	3 1/2	2 3/4	24 1/2																		3.75
4	48	24	1 3/8	1/2	5/8	10	7	6 1/8	35 3/4																		8.0
5																											

STANDARD SIGN
W16-9P

WISCONSIN DEPT OF TRANSPORTATION

APPROVED Matthew R Rauch
for State Traffic Engineer

DATE 12/28/10 PLATE NO. W16-9P.6

PROJECT NO: | HWY: | COUNTY: | SHEET NO: 203 | E

Wisconsin Department of Transportation

Dedicated people creating transportation solutions through innovation and exceptional service.

http://www.dot.wisconsin.gov