MAD NOVEMBER 2015

PROJECT ID: 3364-03-72
WITH: 3364-03-73

COUNTY: DODGE

03

ORDER OF SHEETS

TOTAL SHEETS = 176

STATE OF WISCONSIN
DEPARTMENT OF TRANSPORTATION

PLAN OF PROPOSED IMPROVEMENT

MILWAUKEE STREET, VILLAGE OF LOMIRA

CHURCH STREET TO MAPLE STREET

STH 175

DODGE COUNTY

STATE PROJECT	FEDERAL PROJECT	
	PROJECT	CONTRACT
3364-03-72	WISC 2015569	1

STATE PROJECT NUMBER
3364-03-72

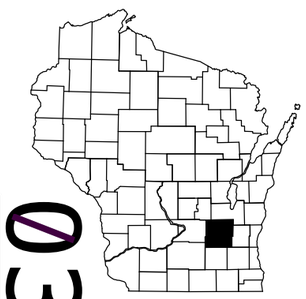

N

DESIGN DESIGNATION

A.A.D.T.	2015	=	3000
A.A.D.T.	2035	=	3800
D.H.V.		=	376
D.D.		=	62/38
T.		=	12.3%
DESIGN SPEED		=	40 MPH
ESALS		=	723,503

CONVENTIONAL SYMBOLS

PLAN
- CORPORATE LIMITS
- PROPERTY LINE
- LOT LINE
- LIMITED HIGHWAY EASEMENT
- EXISTING RIGHT OF WAY
- PROPOSED OR NEW R/W LINE
- SLOPE INTERCEPT
- REFERENCE LINE
- EXISTING CULVERT
- PROPOSED CULVERT (Box or Pipe)
- COMBUSTIBLE FLUIDS — CAUTION
- MARSH AREA
- WOODED OR SHRUB AREA

PROFILE
- GRADE LINE
- ORIGINAL GROUND
- MARSH OR ROCK PROFILE (To be noted as such) — ROCK
- SPECIAL DITCH — LABEL
- GRADE ELEVATION — 95.36
- CULVERT (Profile View)

UTILITIES
- ELECTRIC — E
- FIBER OPTIC — FO
- GAS — G
- SANITARY SEWER — SAN
- STORM SEWER — SS
- TELEPHONE — T
- WATER — W
- UTILITY PEDESTAL
- POWER POLE
- TELEPHONE POLE

R-17-E

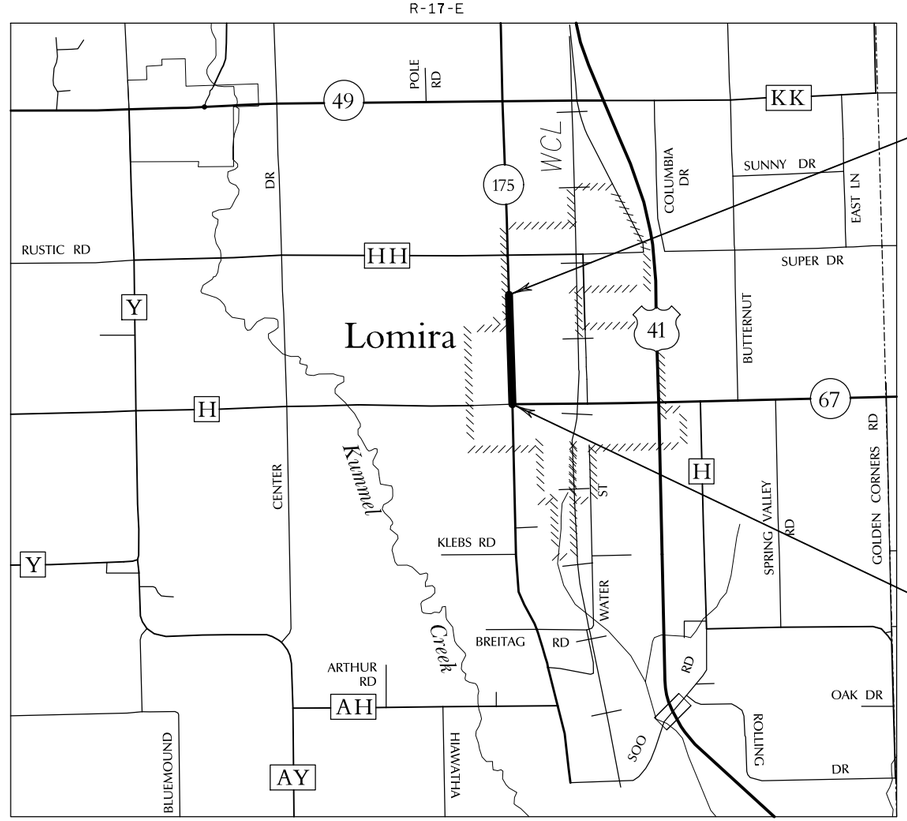

END PROJECT
STA 384+50.03

BEGIN PROJECT
STA 346+01.26
Y = 770,997.54
X = 950,091.03

LAYOUT
SCALE 0 ½ MI.

TOTAL NET LENGTH OF CENTERLINE = 0.729 MI.

COORDINATES ON THIS PLAN ARE REFERENCED TO THE WISCONSIN COUNTY COORDINATE SYSTEM (WCCS), DODGE COUNTY - NAD 1983(1991).
ELEVATIONS SHOWN ON THIS PLAN ARE REFERENCED TO NGVD 1929(1988)

ACCEPTED FOR
Village of Lomira

3-25-15 — Village President
(Date) — (Signature & Title of Official)

ORIGINAL PLANS PREPARED BY

gai consultants
transforming ideas into reality®

WISCONSIN PROFESSIONAL ENGINEER
MICHAEL C. GASPER
E-39041
PORT WASHINGTON, WISCONSIN

Revised 04 April 2015
3/30/2015

(Date) — (Signature)

STATE OF WISCONSIN
DEPARTMENT OF TRANSPORTATION

PREPARED BY

Surveyor	WISDOT/GAI CONSULTANTS
Designer	GAI CONSULTANTS
Project Manager	LALITHA BALACHANDRAN
Regional Examiner	
Regional Supervisor	WILLIAM STROBEL
C.O. Examiner	

APPROVED FOR THE DEPARTMENT
DATE: 3/30/2015 William Strobel
(Signature)

E

2

GENERAL NOTES

1. NO SHRUBS OR TREES ARE TO BE REMOVED WITHOUT APPROVAL OF THE ENGINEER.
2. ALL CURB & GUTTER RADII ARE MEASURED TO THE FLANGE OF CURB.
3. CURB AND GUTTER PLAN GRADES ARE AT THE FLANGE LINE UNLESS OTHERWISE NOTED.
4. PIPE AND INLET ELEVATIONS AS SHOWN ON THE PLANS MAY BE ADJUSTED BY THE ENGINEER.
5. EROSION CONTROL DEVICES AS SHOWN ON THE PLANS ARE AT SUGGESTED LOCATIONS AND SHALL BE ADJUSTED TO MEET FIELD CONDITIONS AS APPROVED BY THE ENGINEER.
6. EROSION CONTROL DEVICES SHALL BE PLACED IN SEQUENCE WITH CONSTRUCTION OPERATIONS OR AS ADJUSTED BY THE ENGINEER.
7. THE LOCATIONS OF EXISTING AND PROPOSED UTILITY INSTALLATIONS AS SHOWN ON THE PLANS ARE APPROXIMATE. THERE MAY BE OTHER UTILITY INSTALLATIONS WITHIN THE PROJECT AREA THAT ARE NOT SHOWN. THE CONTRACTOR SHALL COORDINATE HIS CONSTRUCTION ACTIVITIES WITH A CALL TO DIGGERS HOTLINE AND/OR A DIRECT CALL TO THE UTILITIES THAT HAVE FACILITIES IN THE AREA. NOT ALL UTILITIES ARE MEMBERS OF DIGGERS HOTLINE.
8. ALL OPENINGS OF HOLES BELOW SUBGRADE RESULTING FROM REMOVALS OR ABANDONMENTS SHALL BE BACKFILLED WITH SELECT CRUSHED MATERIAL. EXCAVATION BELOW SUBGRADE WILL BE DETERMINED IN THE FIELD BY THE ENGINEER.
9. THE EXACT LOCATION OF PRIVATE ENTRANCES AND DRIVEWAYS IS TO BE VERIFIED IN THE FIELD BY THE ENGINEER.
10. STATIONING, DISTANCES, AND OFFSETS FOR SIGNS SHOWN ON THE PLANS ARE APPROXIMATE AND THE LOCATIONS OF SIGNS ARE TO BE DETERMINED IN THE FIELD BY THE ENGINEER.
11. DISTURBED AREAS WITHIN THE RIGHT OF WAY, EXCEPT THE AREAS WITHIN THE FINISHED SHOULDER POINTS, SHALL BE RESTORED WITHIN 7 CALENDAR DAYS AFTER PLACEMENT OF TOPSOIL.
12. PAVEMENT REMOVAL WILL BE TO THE NEAREST JOINT, OR AS DIRECTED BY THE ENGINEER.
13. CONCRETE DRIVEWAY REMOVAL WILL BE PAID AS REMOVING CONCRETE SIDEWALK.
14. THE CONTRACTOR'S PAVING OPERATIONS SHALL BE CONSISTENT WITH THE PLAN TYPICAL SECTIONS AND CONSTRUCTED TO PREVENT HMA LONGITUDINAL JOINTS FROM BEING LOCATED WITHIN A DRIVING, TURNING, PASSING OR PARKING LANE.
15. FERTILIZER SHALL NOT BE USED WITHIN 100' OF WETLANDS OR NAVIGABLE WATERWAYS.
16. USE CAUTION DURING EXCAVATING OPERATIONS. CROWN OF STORM SEWER IS ABOVE BOTTOM OF ROADWAY EXCAVATION. PLACE BACKFILL AROUND EXPOSED PIPE AS SHOWN IN CONSTRUCTION DETAIL. CONTRACTOR IS RESPONSIBLE FOR COSTS INCURRED TO REPAIR DAMAGE TO PVC OR CONCRETE STORM SEWER PIPES. SEE CROSS SECTIONS FOR APPROXIMATE LOCATIONS.
17. EXISTING ROADWAY AND SIDEWALK ELEVATIONS AT MATCH POINTS ARE TO BE FIELD VERIFIED BY CONTRACTOR PRIOR TO CONSTRUCTION. NOTIFY ENGINEER OF DISCREPANCIES BETWEEN PLANS AND FIELD CONDITIONS.
18. ALL PIPE UNDERDRAIN 6-INCH SPECIAL TO DRAIN TO INLETS.
19. PRIOR TO PLACING NEW SIDEWALK IN AREAS WHERE SIDEWALK WILL ABUT CURB & GUTTER, COORDINATE WITH VILLAGE TO PLACE POST SLEEVES (VILLAGE SUPPLIED) FOR VILLAGE SIGN POSTS IN CONCRETE SIDEWALK (COST OF PLACING SLEEVES IS INCIDENTAL TO THE ITEM OF CONCRETE SIDEWALK 5-INCH).
20. HMA PAVEMENT WEIGHT CALCULATIONS ARE BASED ON 112 LB/SY/IN.
21. QUANTITIES FOR EROSION CONTROL AND RESTORATION OF A MATERIAL DISPOSAL SITE ARE INCLUDED AS UNDISTRIBUTED.
22. USE CLASS "B" BEDDING (SEE SDD "CLASS 'B' BEDDING FOR CULVERT PIPE OR STORM SEWER") FOR ALL PIPES; COST INCIDENTAL TO PIPE.
23. PLACE FINAL CONCRETE SIDEWALK WHERE EXISTING WAS REMOVED FOR UTILITY CONSTRUCTION AS SOON AS PRACTICAL WITH CONTINUING CONSTRUCTION OPERATIONS. SEE TRAFFIC CONTROL PLAN SHEETS FOR TEMPORARY PEDESTRIAN ACCOMMODATIONS.
24. WHERE TEMPORARY PEDESTRIAN SURFACE PLATE IS PLACED OUTSIDE OF THE PROJECT GRADING LIMITS, RESTORE THE GROUND SURFACE WITH TOPSOIL, SODDING, AND FERTILIZER, AND WATER AS NEEDED, ONCE THE PLATE IS REMOVED.
25. HMA PAVEMENT TYPE E-1 SHALL BE CONSTRUCTED WITH THE FOLLOWING LAYERS & GRADATIONS:

THICKNESS	LAYERS	NOM. MAX SIZE GRADATION
5¼-INCHES	2¼" UPPER LAYER (PG64-28)	12.5MM
	3" LOWER LAYER (PG64-28)	19.0MM

STANDARD ABBREVIATIONS

AADT	ANNUAL AVERAGE DAILY TRAFFIC
ADT	AVERAGE DAILY TRAFFIC
AH	AHEAD
ASPH	ASPHALTIC
BAD	BASE AGGREGATE DENSE
BK	BACK
BM	BENCH MARK
BOC	BACK OF CURB
CB	CATCH BASIN
C&G	CURB & GUTTER
CL	CENTER LINE
CONC	CONCRETE
CP	CULVERT PIPE
CTH	COUNTY TRUNK HIGHWAY
CY	CUBIC YARDS
DHV	DESIGN HOUR VOLUME
DWY	DRIVEWAY
EL	ELEVATION
EW	ENDWALL
ESALS	EQUIVALENT SINGLE AXLE LOADS
FO	FIBEROPTIC
FT	FOOT
CWT	HUNDRED WEIGHT
HYD	HYDRANT
LT	LEFT
LF	LINEAR FOOT
MH	MANHOLE
PI	POINT OF INTERSECTION
PL	PROPERTY LINE
LB	POUNDS
R	RADIUS
RT	RIGHT
R/W	RIGHT-OF-WAY
SF	SQUARE FEET
SY	SQUARE YARDS
SDD	STANDARD DETAIL DRAWINGS
STA	STATION
SS	STORM SEWER
SSD	STOPPING SIGNT DISTANCE
STH	STATE TRUNCK HIGHWAY
TEL	TELEPHONE
TL	TRANSIT LINE
TLE	TEMPORARY LIMITED EASEMENT
TYP	TYPICAL

INDEX OF TYPICAL SECTION & DETAIL SHEETS

UTILITIES

ALLIANT ENERGY (GAS/PETROLEUM)
MR. STEVEN PAUTZ
883 W SCOTT STREET
FOND DU LAC, WI 54937
(920) 322-6683
stevepautz@alliantenergy.com

PACKERLAND BROADBAND (COMMUNICATION LINE)
MR. WAYNE CRETTON (CONSTRUCTION MANAGER)
105 KENT ST
IRON MOUNTAIN, MI 49801
(906) 282-3768
wayne.cretton@packerlandbroadband.com

CHARTER COMMUNICATIONS (COMMUNICATION LINE)
MR. BRUCE HENRY
1623 BROADWAY AVE
SHEBOYGAN, WI 53081
(920) 263-0074
bruce.henry@charter.com

WE ENERGIES (ELECTRIC)
MR. AL SCHMITT
245 SAND DR.
WEST BEND, WI 53095
(262) 338-7662 OFFICE
(262) 322-1824 MOBILE
alan.schmitt@we-energies.com

FRONTIER COMMUNICATIONS (COMMUNICATION LINE)
MR. RUSS RYAN
315 OAK STREET
OAKFIELD, WI 53065
(920) 583-3275 OFFICE
(920) 737-9662 MOBILE
russell.w.ryan@ftr.com

VILLAGE OF LOMIRA
DEPARTMENT OF PUBLIC WORKS (SEWER & WATER)
MR. NICKOLAS ROSKOPF
423 WATER STREET
LOMIRA, WI 53048
(920) 269-8155
nroskopf@villageoflomira.com

OTHER AGENCIES

WISDOT CONTACT
MS. LALITHA BALACHANDRAN, PE
2101 WRIGHT STREET
MADISON, WI 53704
(608) 243-3382
lalitha.balachandran@dot.wi.gov

DNR LIAISON
DEPARTMENT OF NATURAL RESOURCES
MR. ERIC HEGGELUND
DNR SOUTH CENTRAL REGION HEADQUARTERS
3911 FISH HATCHERY ROAD
FITCHBURG, WI 53711
(608) 275-3301

GAI CONSULTANTS CONTACT
MR. MICHAEL GASPER, PE
W175 N11081 STONEWOOD DR.
SUITE 103
GERMANTOWN, WI 53022
(262) 250-8000
m.gasper@gaiconsultants.com

VILLAGE OF LOMIRA
DEPARTMENT OF PUBLIC WORKS
MR. JAMES KOENIGS
423 WATER STREET
LOMIRA, WI 53048
(920) 269-8155 (OFFICE)
(920) 948-3946 (MOBILE)
jkoenigs@villageoflomira.com

DIGGERS HOTLINE
Dial 811 or (800)242-8511
www.DiggersHotline.com

WISCONSIN STATUTE 182.0175 (1974)
REQUIRES MIN. OF 3 WORK DAYS
NOTICE BEFORE YOU EXCAVATE.

NOTE: UNNAMED STREAM IS IMMEDIATE RECEIVING WATER

N

ST. MARY'S CATHOLIC CHURCH, SCHOOL, AND CEMETARY (HISTORIC PARCEL)

SETTLING BASIN

BEGIN PROJECT
3364-03-72
STA 346+01.26

345 350 355 360 365 370

STH 175 / MILWAUKEE STREET

CHURCH STREET

SCHOOL STREET

MAIN STREET

NORTH AVENUE

N

TOWN OF LOMIRA
VILLAGE OF LOMIRA

VILLAGE OF LOMIRA
TOWN OF LOMIRA

WETLANDS

END PROJECT
3364-03-72
STA. 384+50.03

375 380 385 390 395 398

STH 175 / MILWAUKEE STREET

MAPLE STREET

VILLAGE OF LOMIRA
TOWN OF LOMIRA

PROJECT NO: 3364-03-72	HWY: STH 175	COUNTY: DODGE	PROJECT OVERVIEW	SHEET 3	E

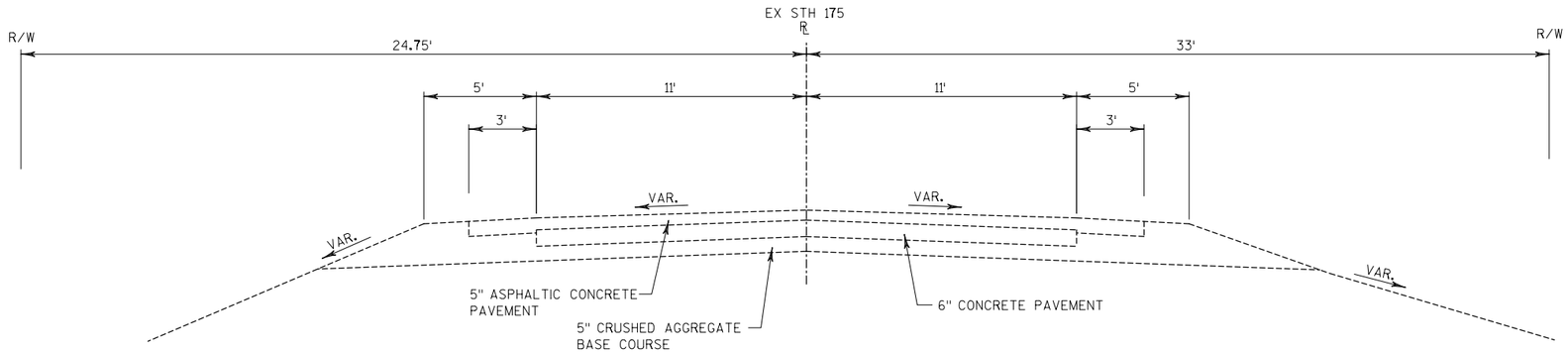

EXISTING TYPICAL SECTION - STH 175

STA 372+26 TO STA 384+50

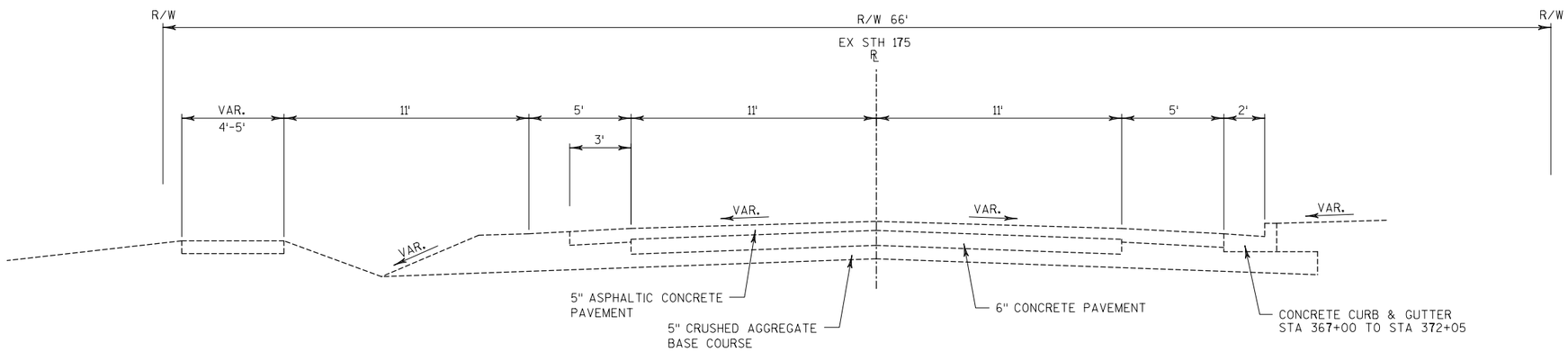

EXISTING TYPICAL SECTION - STH 175

STA 367+00 TO STA 372+26

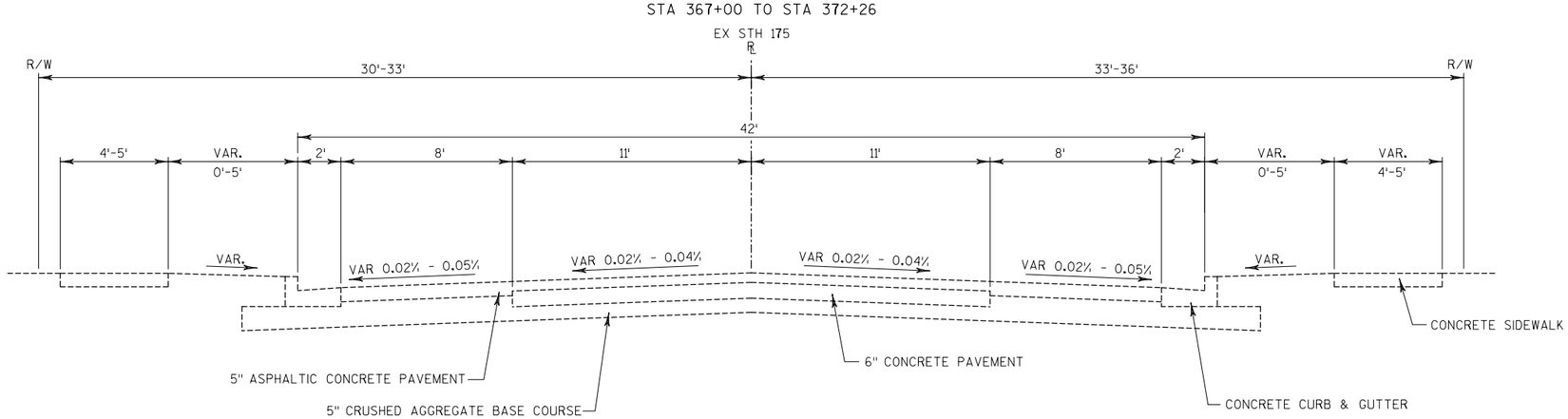

EXISTING TYPICAL SECTION - STH 175

STA 346+01 TO STA 367+00

PROJECT NO: 3364-03-72	HWY: STH 175	COUNTY: DODGE	TYPICAL SECTIONS	SHEET 4	E

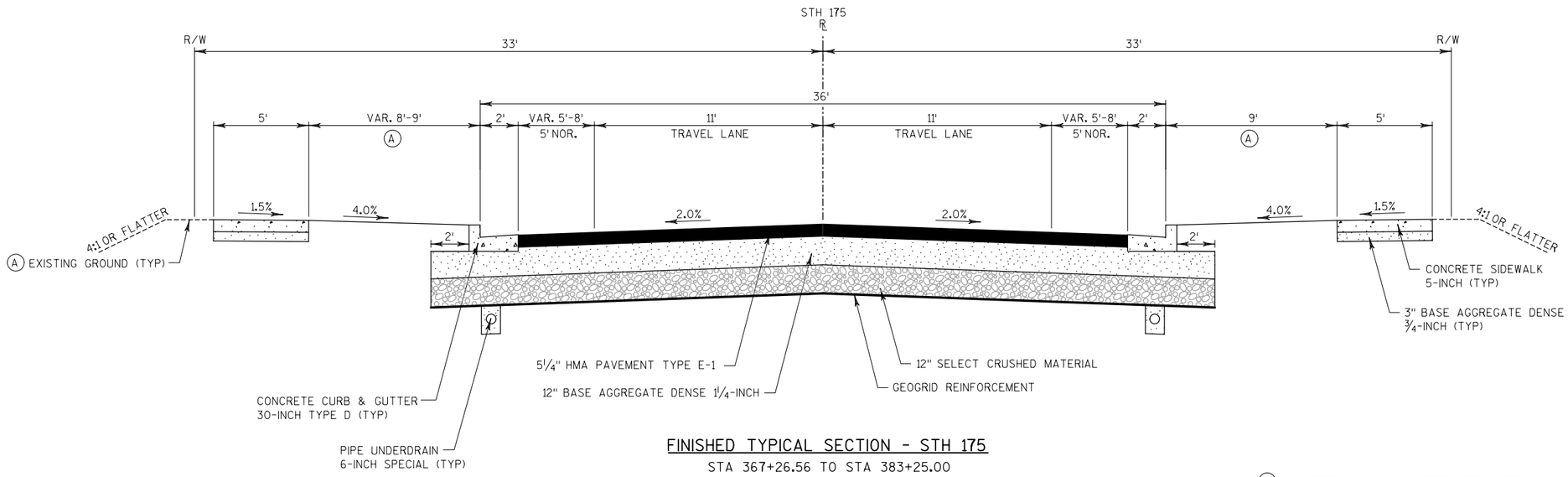

FINISHED TYPICAL SECTION - STH 175

STA 367+26.56 TO STA 383+25.00

Ⓐ 4" TOPSOIL, SOD LAWN, FERTILIZER TYPE A

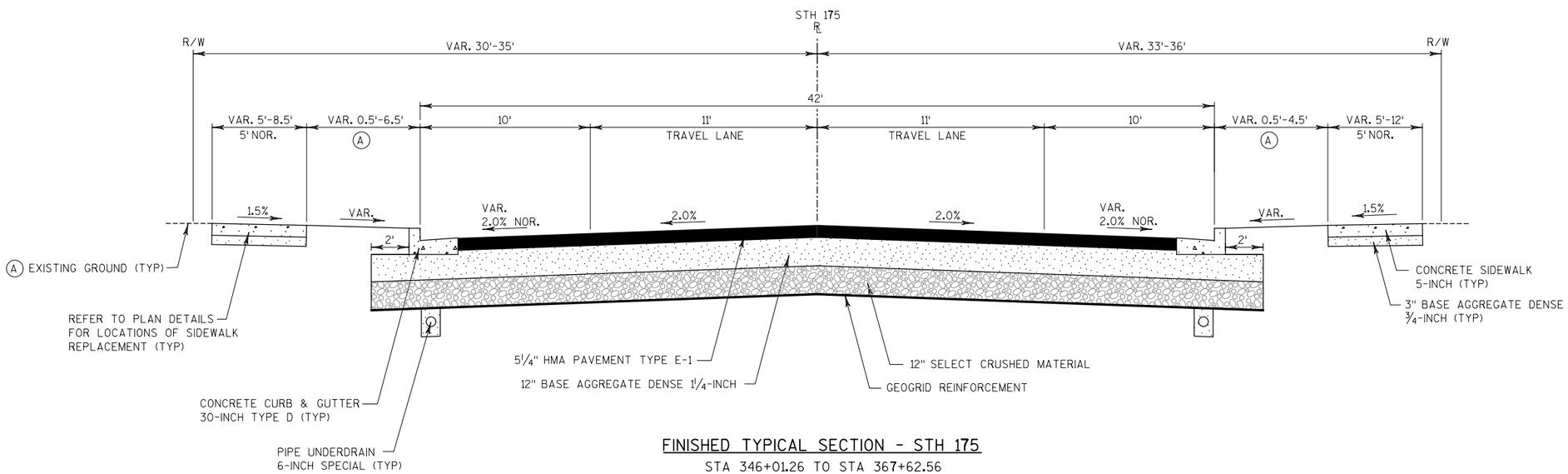

FINISHED TYPICAL SECTION - STH 175

STA 346+01.26 TO STA 367+62.56

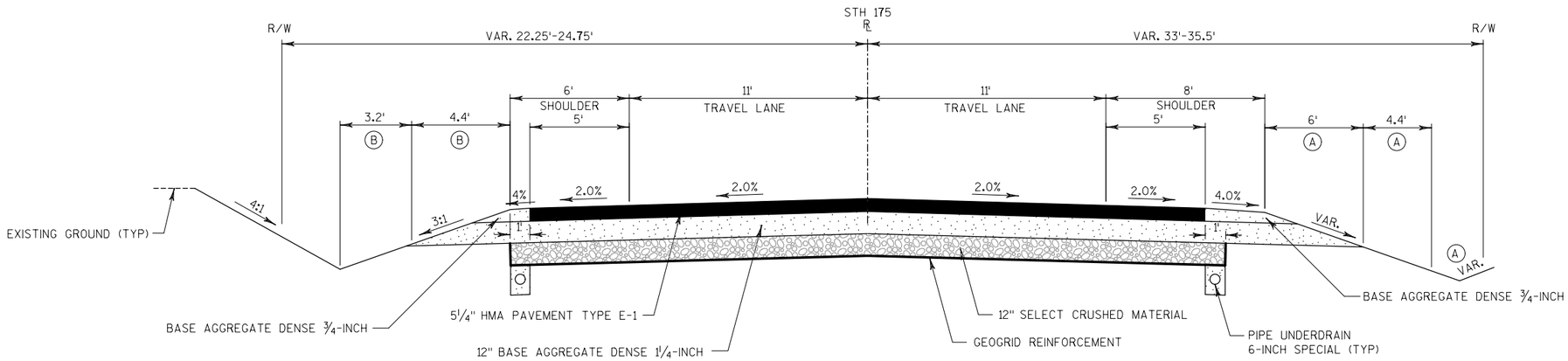

FINISHED TYPICAL SECTION - STH 175

STA 383+25.00 TO STA 384+50.03

(A) 4" TOPSOIL, SOD LAWN, FERTILIZER TYPE A

(B) 4" TOPSOIL, SOD LAWN

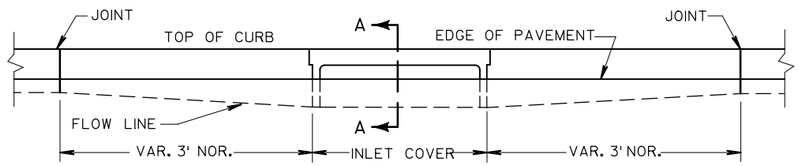

ELEVATION

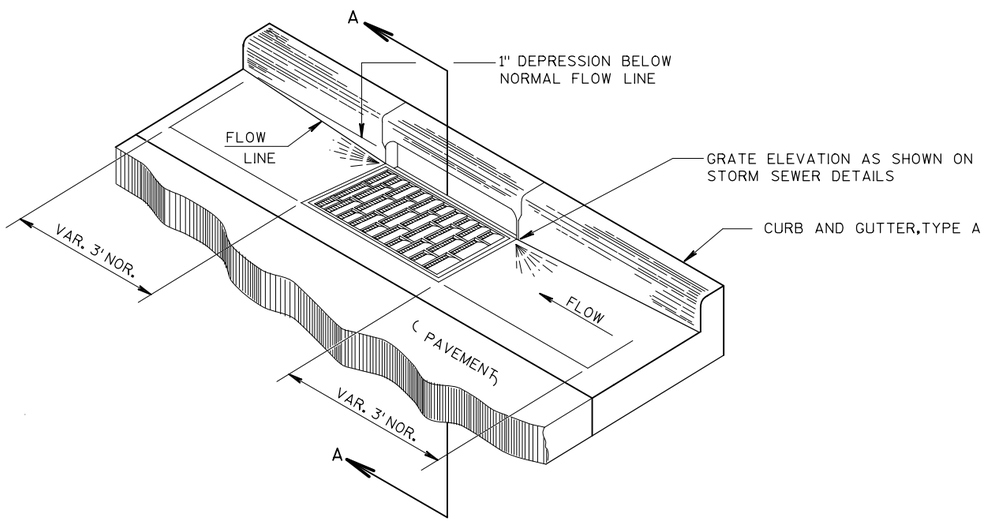

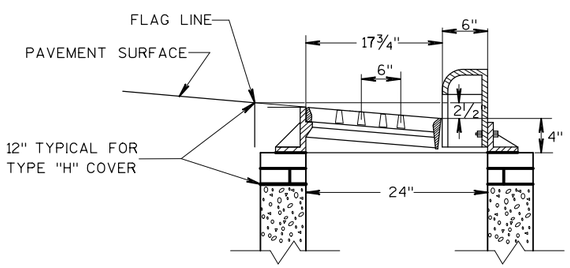

SECTION A-A

DETAIL OF CURB AND GUTTER AT CATCH BASINS

(TYPE 2x3-FT H-S CATCH BASIN SHOWN)

LOCATED AT:

STA 346+07 RT	STA 359+35 LT	STA 367+13 RT
STA 346+20 LT & RT	STA 362+18 RT	STA 369+78 LT & RT
STA 350+00 LT & RT	STA 362+23 LT	STA 373+11 LT & RT
STA 352+61 RT	STA 362+47 RT	STA 380+00 LT & RT
STA 353+02 LT	STA 362+69 RT	STA 382+56 LT & RT
STA 353+06 RT	STA 363+03 RT	STA 382+66 LT & RT
STA 353+20 RT	STA 366+50 RT	STA 383+26 RT
STA 355+91 LT & RT	STA 366+98 RT	STA 383+59 RT
STA 358+86 RT	STA 367+12 LT	

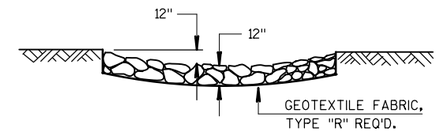

SECTION A-A

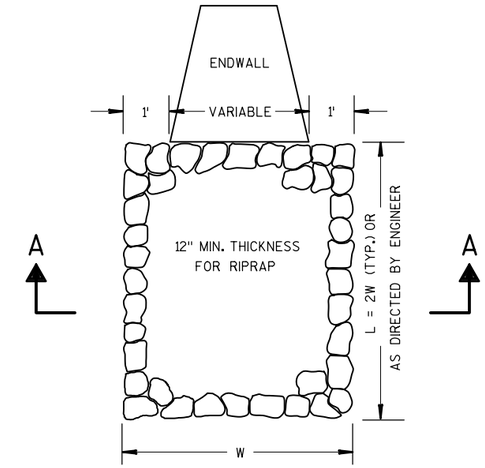

RIPRAP TREATMENT AT CULVERTS

STA 383+55 LT

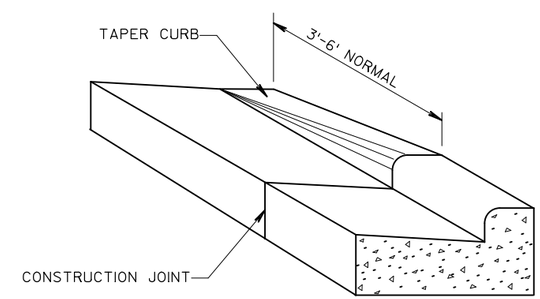

DETAIL OF CURB & GUTTER TERMINI

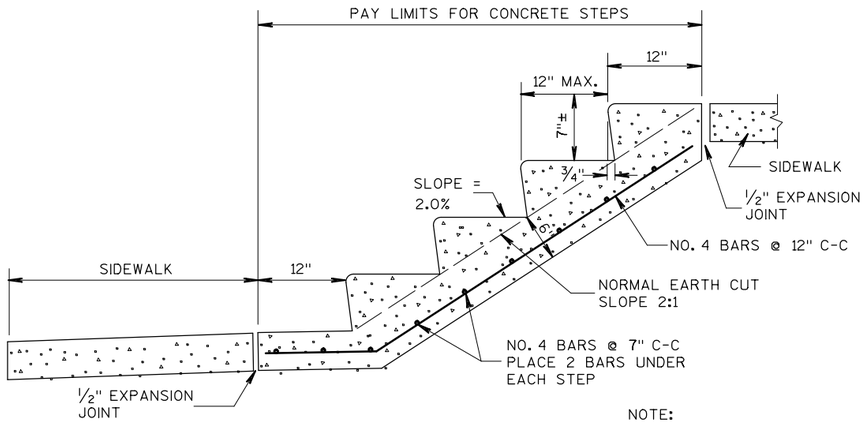

NOTE:

THE EXACT LOCATION, WIDTHS, & NUMBER OF STEPS TO BE DETERMINED BY THE ENGINEER IN THE FIELD.

STEEL REINFORCEMENT NOT REQUIRED ON STEPS WITH 2 RISERS OR LESS.

MATCH STEP WIDTH TO EXISTING SIDEWALK.

CONCRETE STEPS DETAIL

STA 359+35 RT

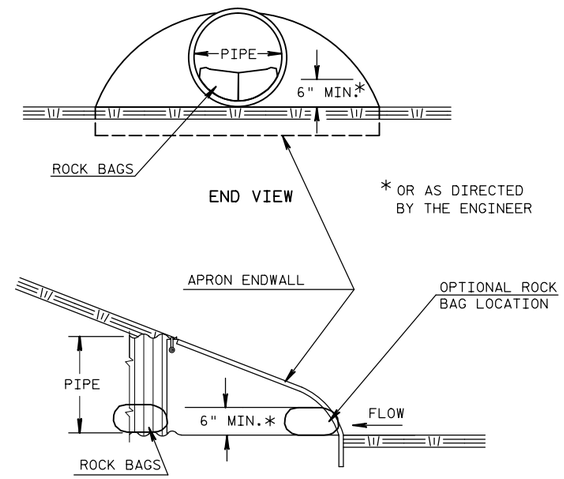

ESTIMATED BAG SIZE = 18" X 12" X 6"	
PIPE SIZE	ESTIMATED NO. OF BAGS
12"	1
15"	2
18"	2
21"	3
14" X 23"	3
24"	3
27"	4
30"	5
19" X 30"	5
36"	7
24" X 38"	8
42"	8
29" X 45"	10
48"	10
34" X 53"	10
38" X 60"	13
60"	13
66"	15
53" X 83"	19

CULVERT PIPE CHECKS

SEE EROSION CONTROL SHEETS FOR LOCATIONS

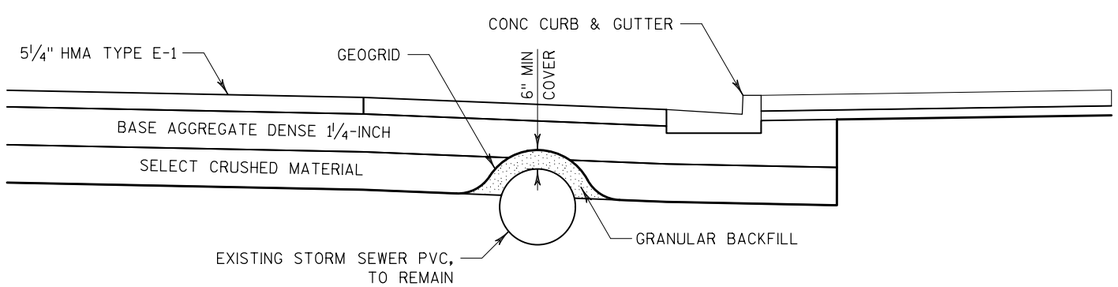

BACKFILL OVER EXISTING PVC STORM SEWER PIPE

STA 347+00 TO 356+00

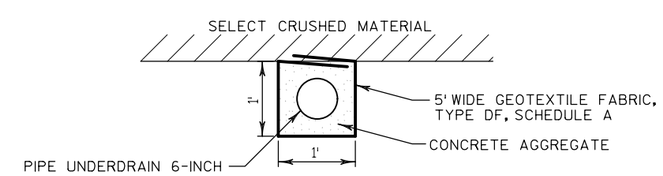

PIPE UNDERDRAIN 6-INCH SPECIAL

NOTE:
GEOTEXTILE FABRIC AND CONCRETE AGGREGATE, AND EACH CONNECTION TO STORM SEWER ARE INCIDENTAL TO THE PAY ITEM OF "PIPE UNDERDRAIN 6-INCH SPECIAL."

UNDERDRAIN TO DISCHARGE INTO STORM SEWER CATCH BASINS.

CONFIRM STORM SEWER DISCHARGE ELEVATION FOR EACH SECTION OF PIPE UNDERDRAIN PRIOR TO INSTALLATION.

DRIVEWAY ENTRANCE DETAIL WITH SIDEWALK, CURB & GUTTER

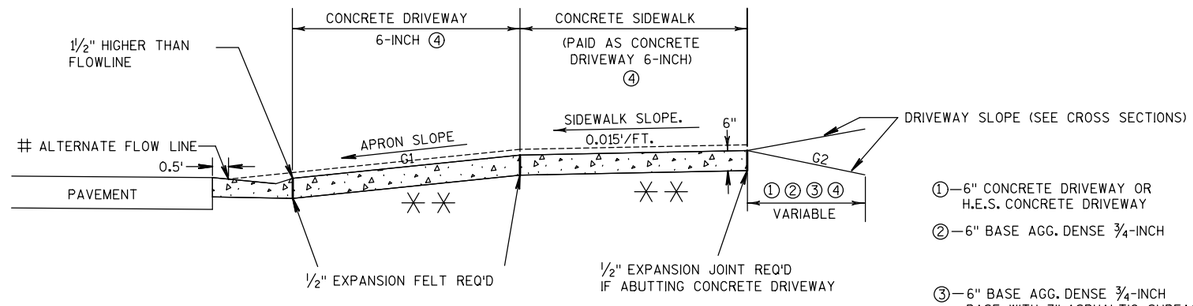

TYPICAL DRIVEWAY SECTION

①—6" CONCRETE DRIVEWAY OR H.E.S. CONCRETE DRIVEWAY

②—6" BASE AGG. DENSE ¾-INCH

③—6" BASE AGG. DENSE ¾-INCH BASE WITH 3" ASPHALTIC SURFACE DRIVEWAYS AND FIELD ENTRANCES

④— STA 362+50 - STA 365+00 CONCRETE DRIVEWAY 9-INCH

✳ ✳ = 6" BASE AGG. DENSE ¾-INCH REQ'D UNDER CONCRETE DRIVEWAY

= ALTERNATE FLOW LINE:
STA 357+84 RT
STA 358+50 RT

NOTE: ALGEBRAIC DIFFERENCE BETWEEN TANGENT GRADES G1 & G2 TO NOT EXCEED 15%

DEPRESS SIDEWALK PROFILE IF DRIVEWAY APRON EXCEEDS MAX SLOPE

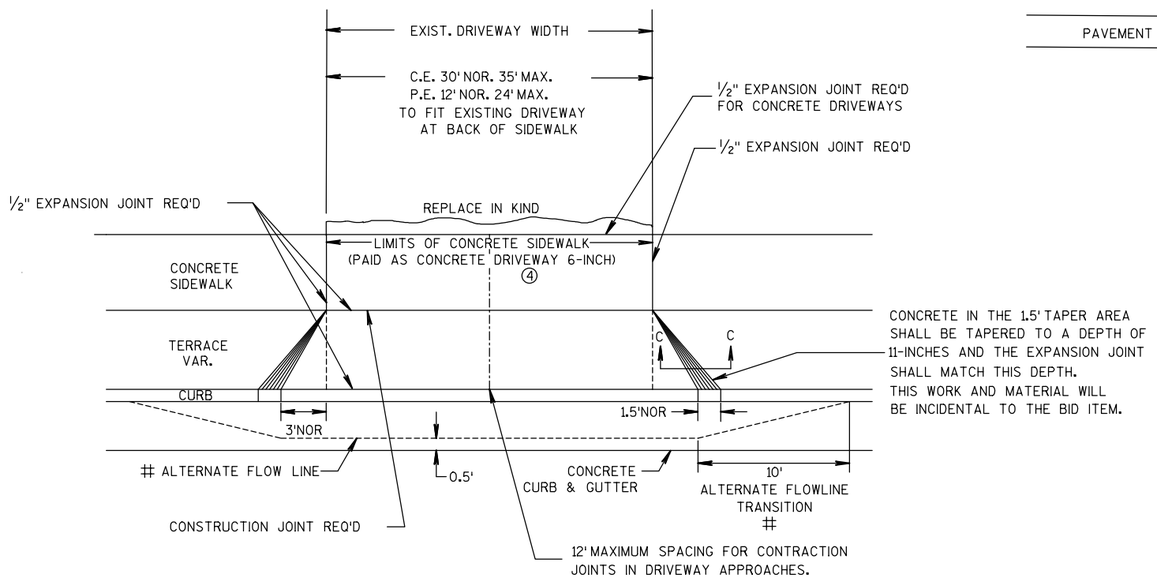

PLAN VIEW

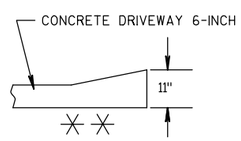

SECTION C-C

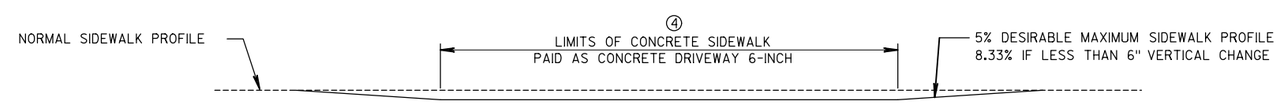

DEPRESSED SIDEWALK PROFILE DETAIL

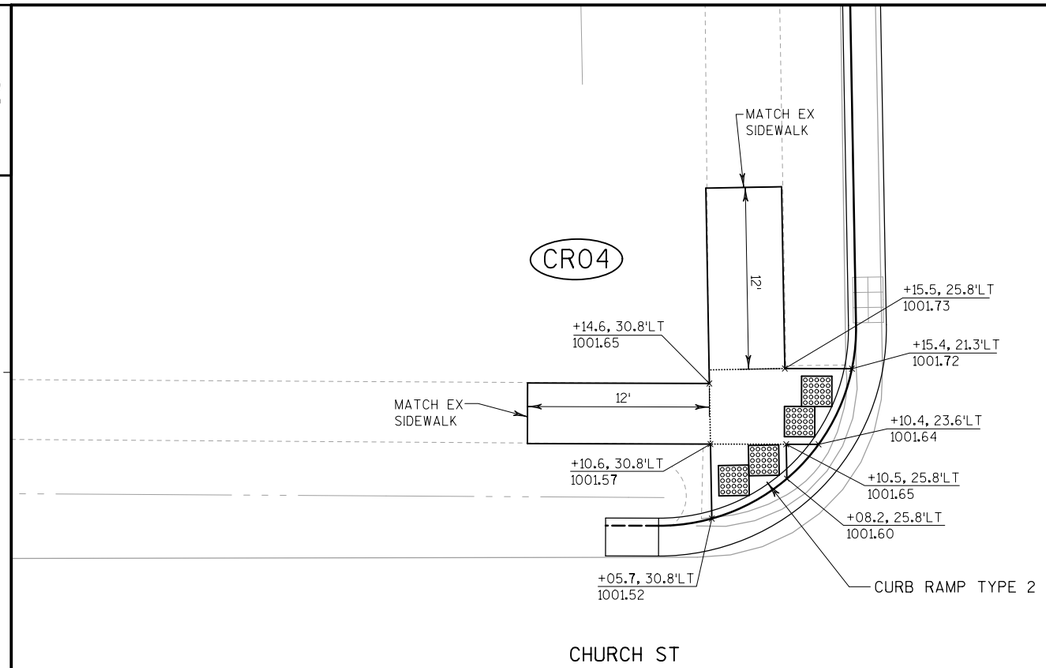

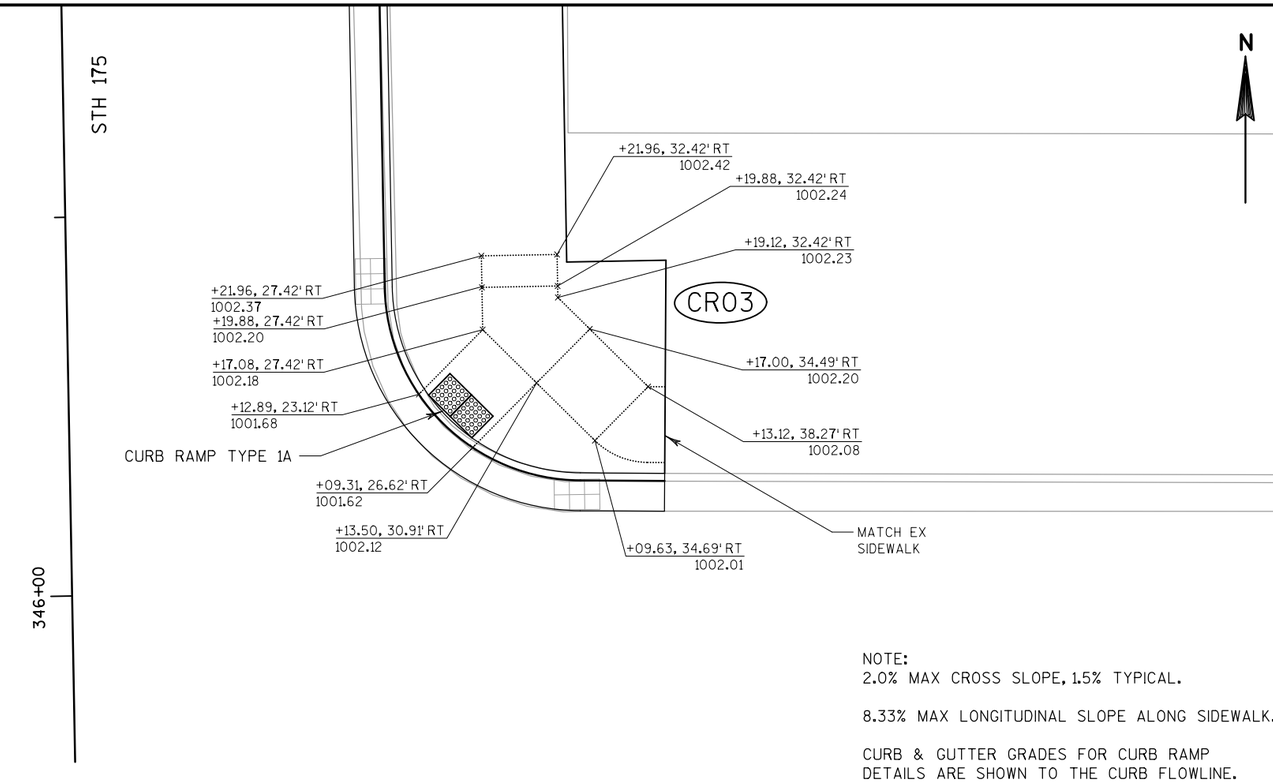

NOTE:
2.0% MAX CROSS SLOPE, 1.5% TYPICAL.

8.33% MAX LONGITUDINAL SLOPE ALONG SIDEWALK.

CURB & GUTTER GRADES FOR CURB RAMP DETAILS ARE SHOWN TO THE CURB FLOWLINE.

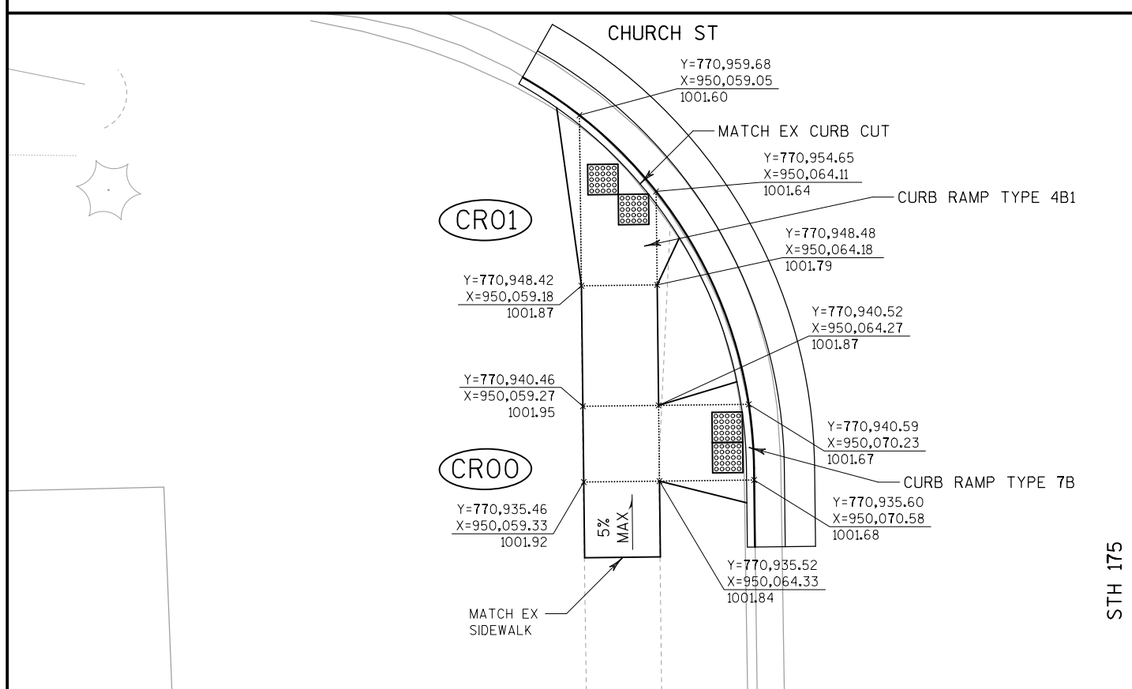

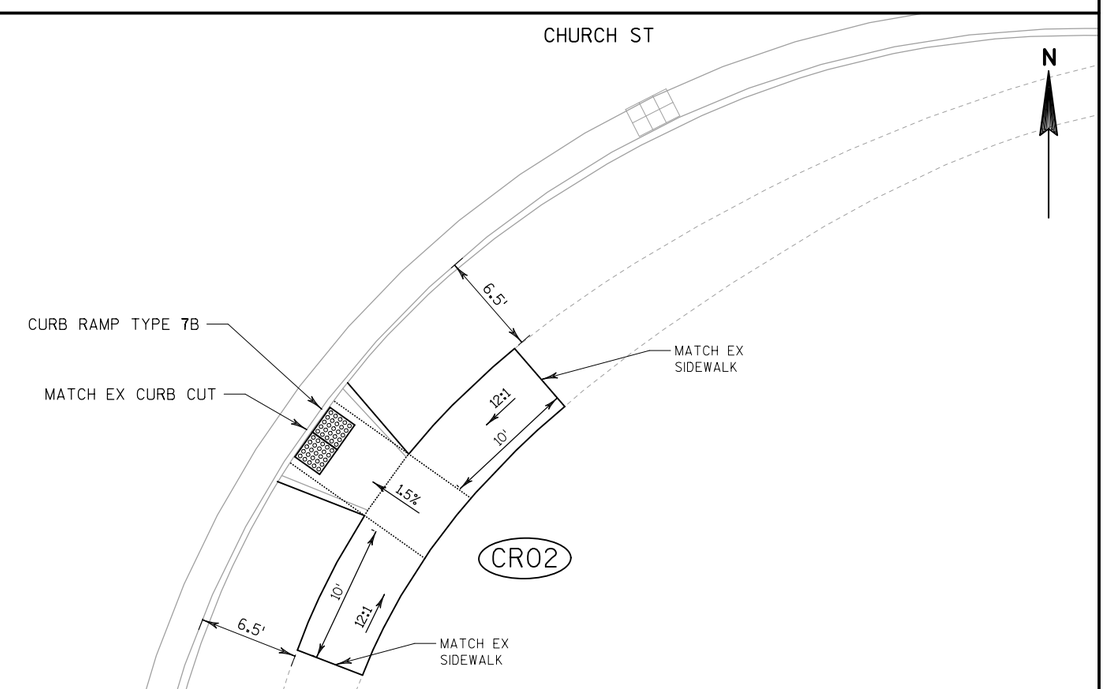

PROJECT NO:3364-03-72	HWY:STH 175	COUNTY:DODGE	CURB RAMP DETAILS	SHEET 10	E

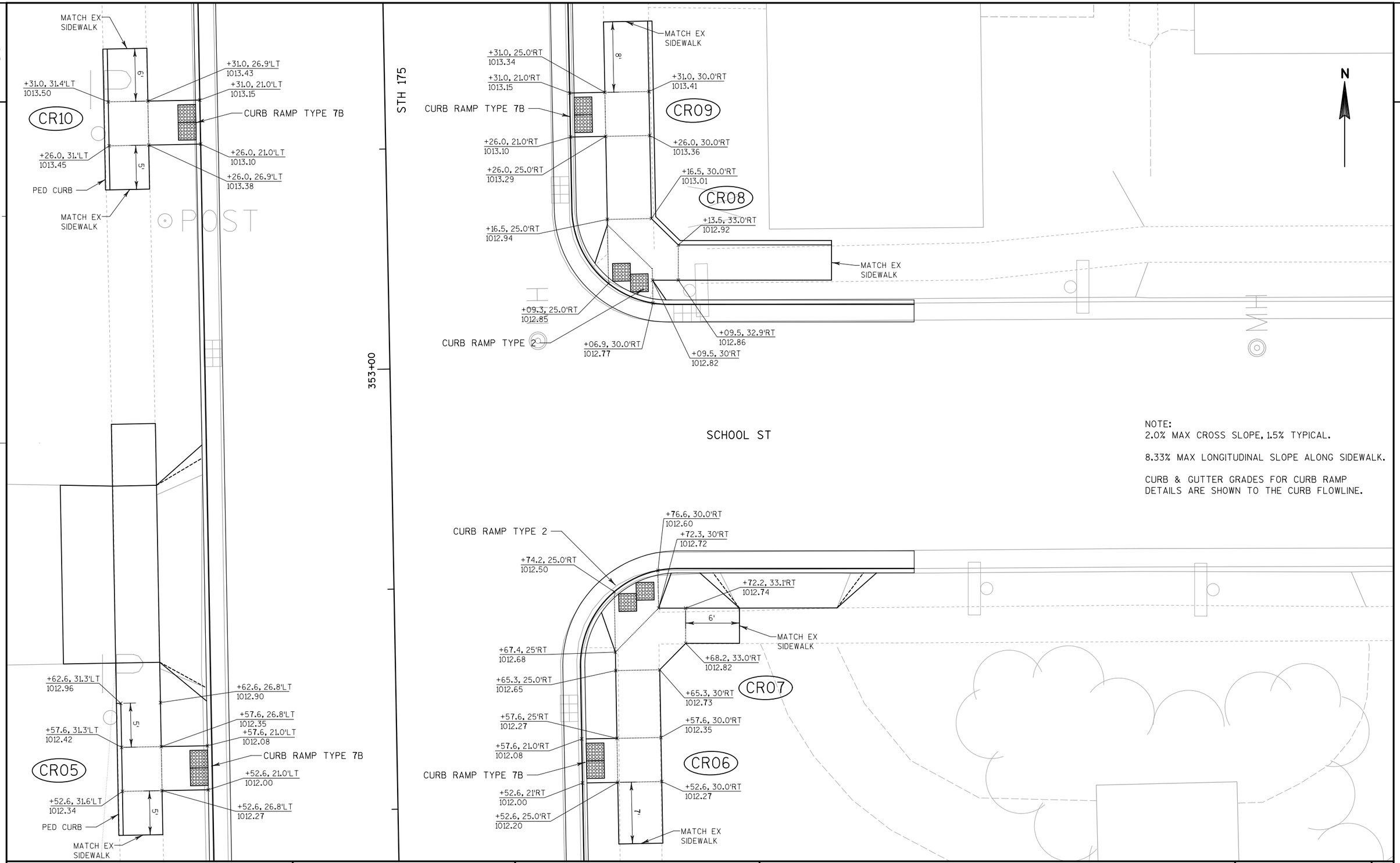

PROJECT NO:3364-03-72	HWY:STH 175	COUNTY:DODGE	CURB RAMP DETAILS	SHEET 11	E

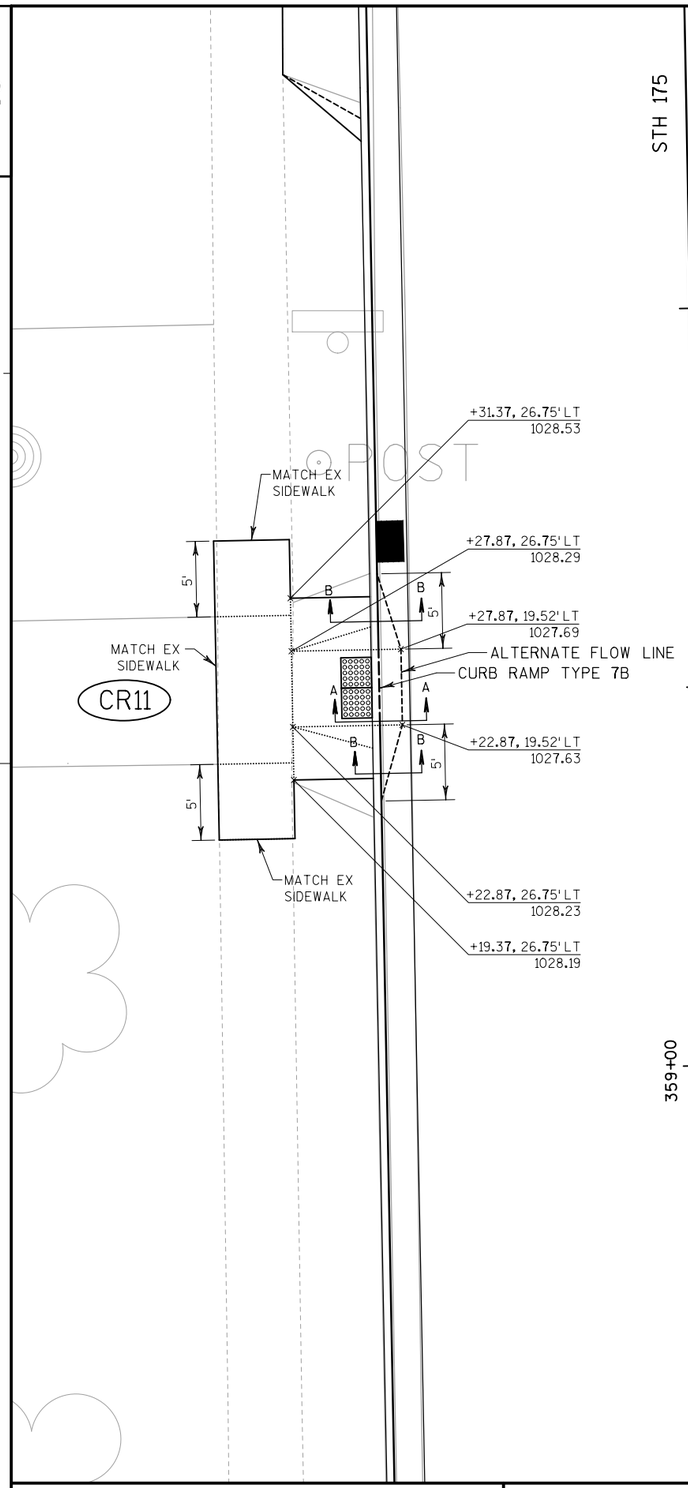

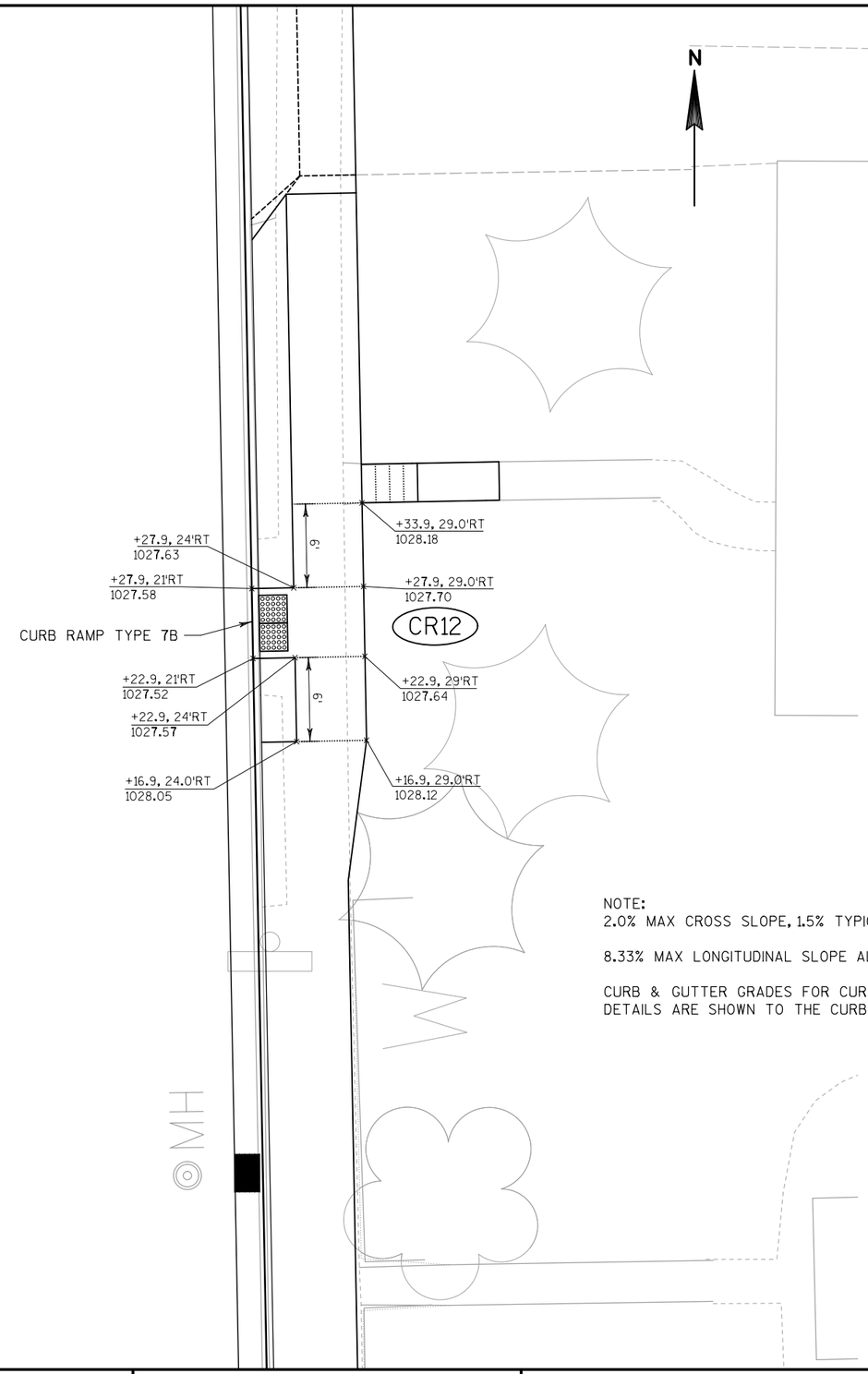

NOTE:
2.0% MAX CROSS SLOPE, 1.5% TYPICAL.

8.33% MAX LONGITUDINAL SLOPE ALONG SIDEWALK.

CURB & GUTTER GRADES FOR CURB RAMP DETAILS ARE SHOWN TO THE CURB FLOWLINE.

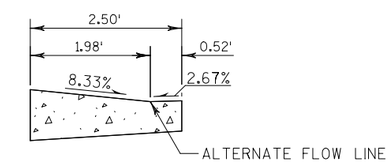

SECTION A-A
ALTERNATE FLOW LINE
CURB & GUTTER

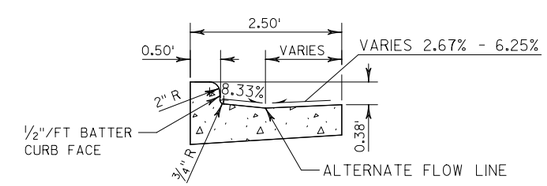

SECTION B-B
ALTERNATE FLOW LINE TRANSITION
CURB & GUTTER

2

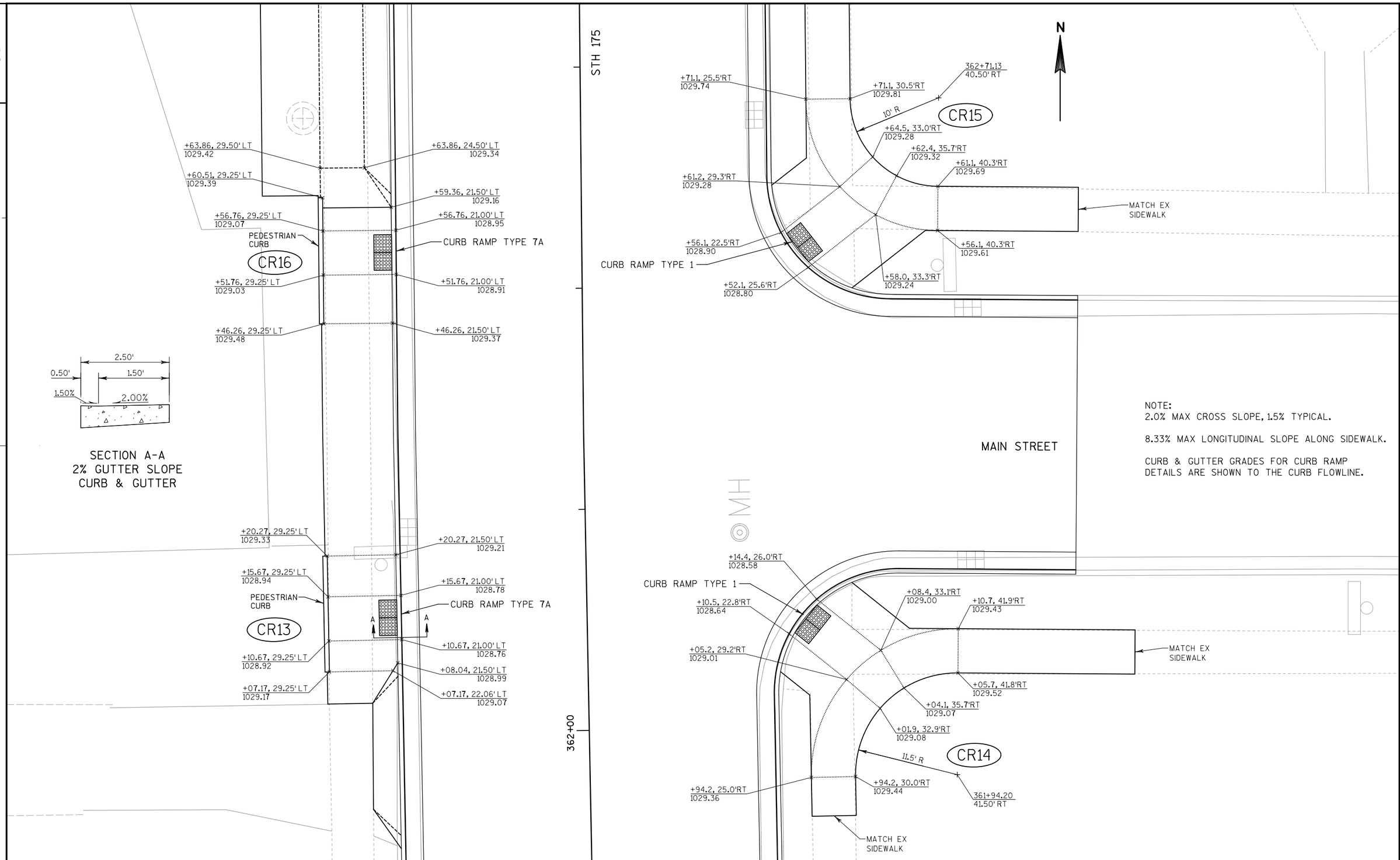

NOTE:
2.0% MAX CROSS SLOPE, 1.5% TYPICAL.

8.33% MAX LONGITUDINAL SLOPE ALONG SIDEWALK.

CURB & GUTTER GRADES FOR CURB RAMP DETAILS ARE SHOWN TO THE CURB FLOWLINE.

2

PROJECT NO:3364-03-72	HWY:STH 175	COUNTY:DODGE	CURB RAMP DETAILS	SHEET 13	E

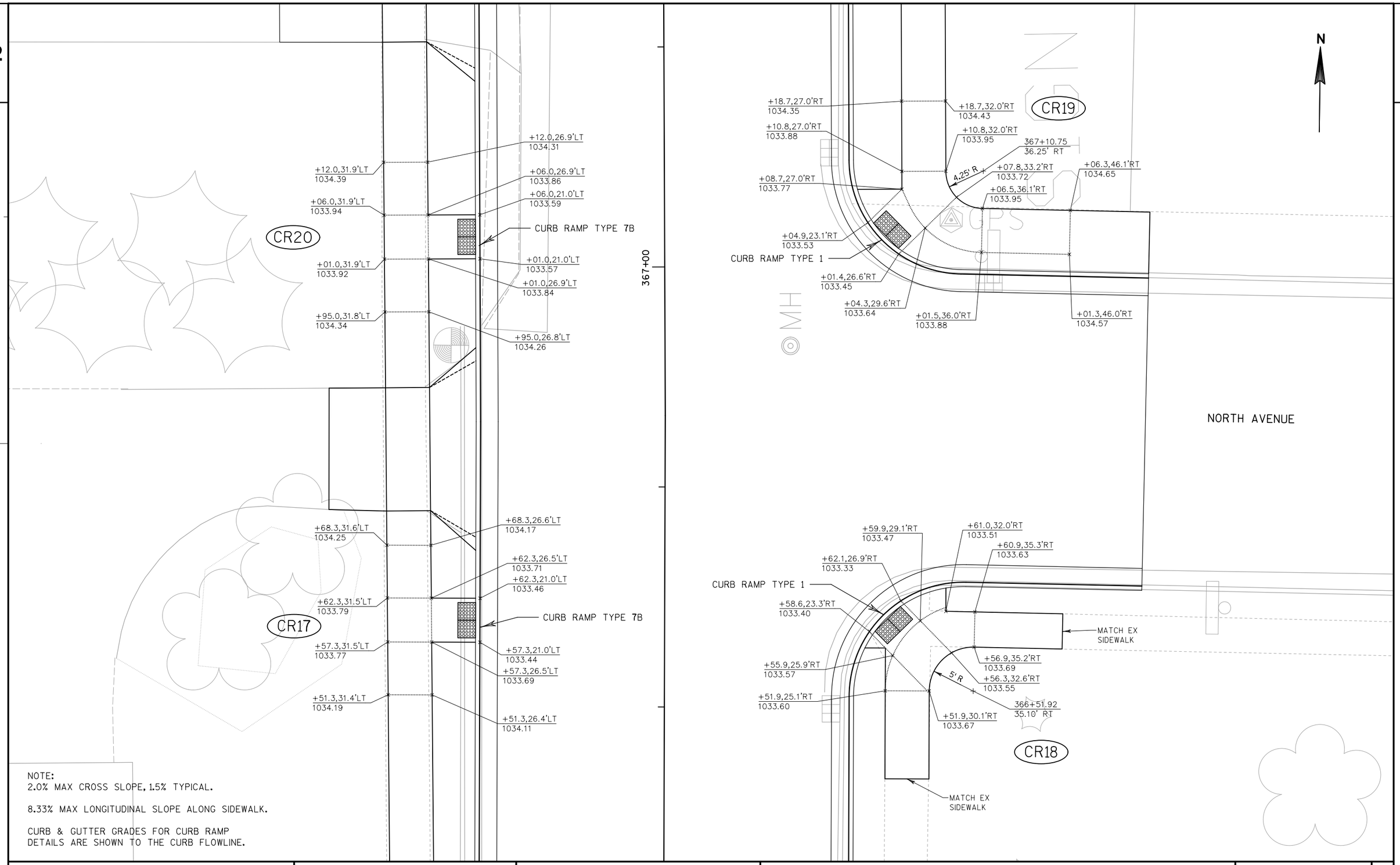

NOTE:
2.0% MAX CROSS SLOPE, 1.5% TYPICAL.

8.33% MAX LONGITUDINAL SLOPE ALONG SIDEWALK.

CURB & GUTTER GRADES FOR CURB RAMP DETAILS ARE SHOWN TO THE CURB FLOWLINE.

PROJECT NO:3364-03-72	HWY:STH 175	COUNTY:DODGE	CURB RAMP DETAILS	SHEET 14	E

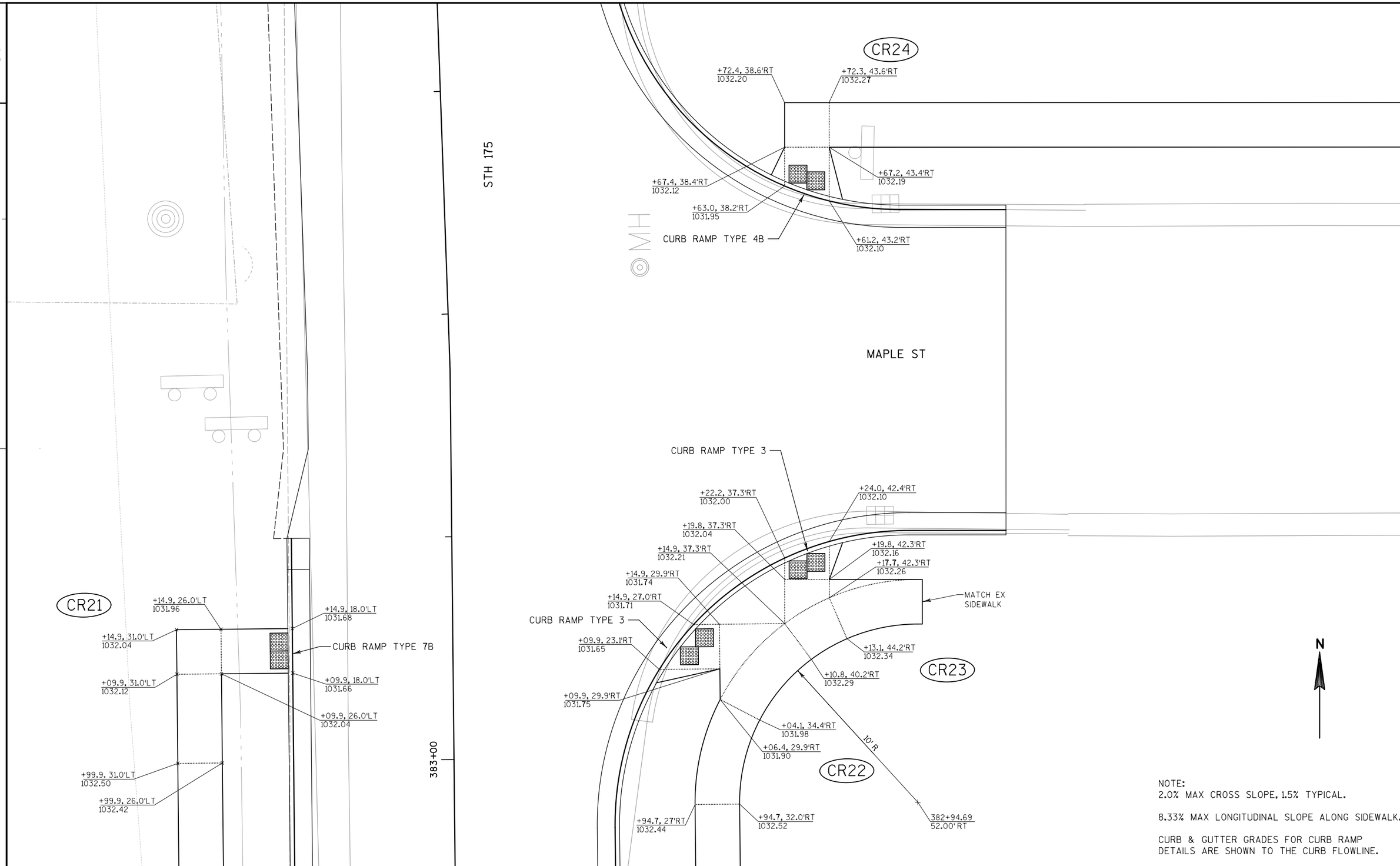

NOTE:
2.0% MAX CROSS SLOPE, 1.5% TYPICAL.

8.33% MAX LONGITUDINAL SLOPE ALONG SIDEWALK.

CURB & GUTTER GRADES FOR CURB RAMP DETAILS ARE SHOWN TO THE CURB FLOWLINE.

PROJECT NO:3364-03-72	HWY: STH 175	COUNTY: DODGE	CURB RAMP DETAILS	SHEET 15	E

2

LEGEND

- AG01 BASE AGGREGATE DENSE ¾-INCH
- AP05 HMA PAVEMENT TYPE E-1, 5.25-INCH
- CG01 CONCRETE CURB AND GUTTER 30-INCH TYPE D
- CG02 CONCRETE CURB PEDESTRIAN
- CRXX CURB RAMP XX (SEE DETAIL)
- CS05 CONCRETE SIDEWALK, 5-INCH
- CSST CONCRETE STEPS
- DR01 CONCRETE DRIVEWAY 6-INCH
- DR02 ASPHALTIC SURFACE DRIVEWAY AND FIELD ENTRANCES, 3-INCH
- DR03 AGGREGATE DRIVEWAY, BASE AGGREGATE DENSE ¾-INCH, 6-INCH
- DR04 CONCRETE DRIVEWAY 9-INCH
- SCA SAWING ASPHALT
- SCC SAWING CONCRETE
- XXXXX SAWCUT

N

2

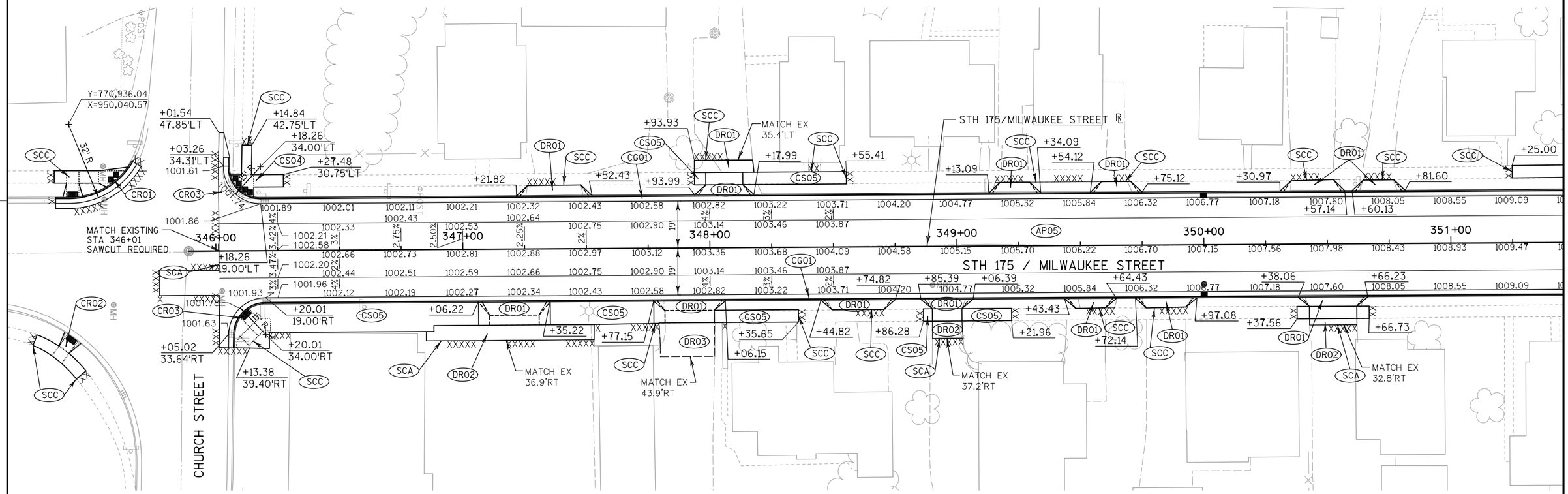

PROJECT NO:3364-03-72	HWY:STH 175	COUNTY:DODGE	PLAN DETAIL	SHEET 16	E

FILE NAME : P:\GMT\WisDOT\R11-0319-102 STH 175\graphics\021201_pd.dgn PLOT DATE : 4/29/2015 PLOT BY : gaspemc PLOT NAME : PLOT SCALE : 1:40

WISDOT/CADDS SHEET 42

2

LEGEND

- AG01 BASE AGGREGATE DENSE ¾-INCH
- AP05 HMA PAVEMENT TYPE E-1, 5.25-INCH
- CG01 CONCRETE CURB AND GUTTER 30-INCH TYPE D
- CG02 CONCRETE CURB PEDESTRIAN
- CRXX CURB RAMP XX (SEE DETAIL)
- CS05 CONCRETE SIDEWALK, 5-INCH
- CSST CONCRETE STEPS
- DR01 CONCRETE DRIVEWAY 6-INCH
- DR02 ASPHALTIC SURFACE DRIVEWAY AND FIELD ENTRANCES, 3-INCH
- DR03 AGGREGATE DRIVEWAY, BASE AGGREGATE DENSE ¾-INCH, 6-INCH
- DR04 CONCRETE DRIVEWAY 9-INCH
- SCA SAWING ASPHALT
- SCC SAWING CONCRETE
- XXXX SAWCUT

N

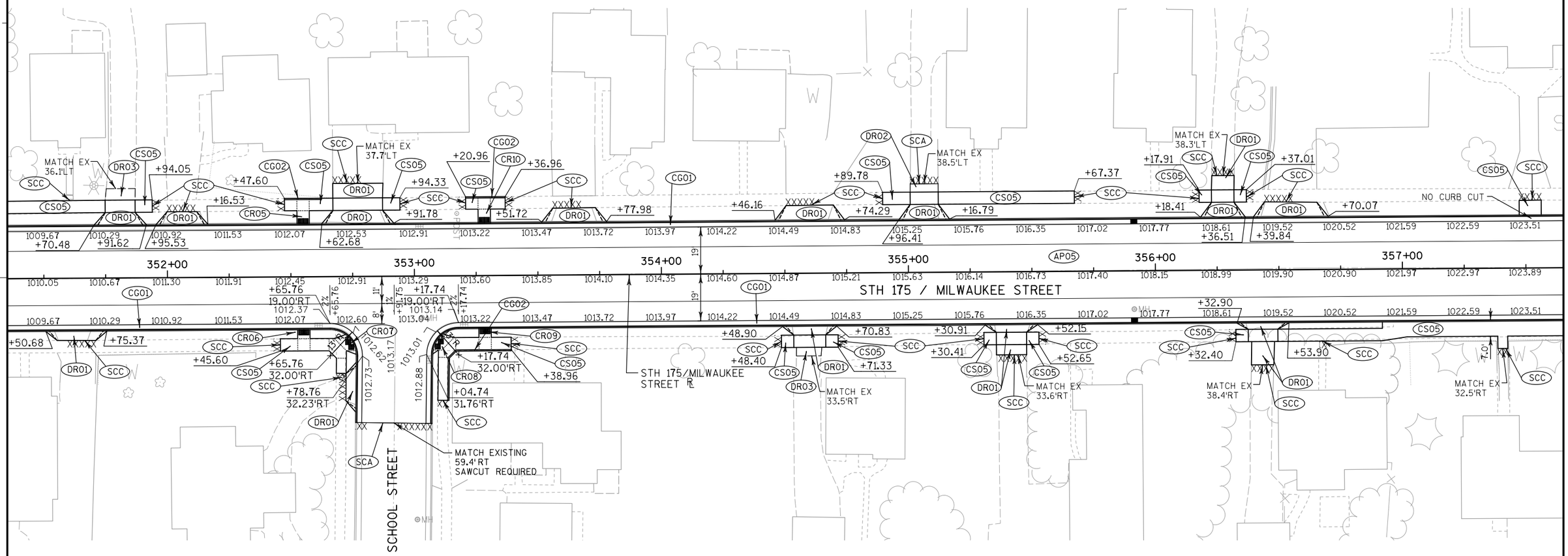

2

PROJECT NO:3364-03-72	HWY:STH 175	COUNTY:DODGE	PLAN DETAIL	SHEET 17	E

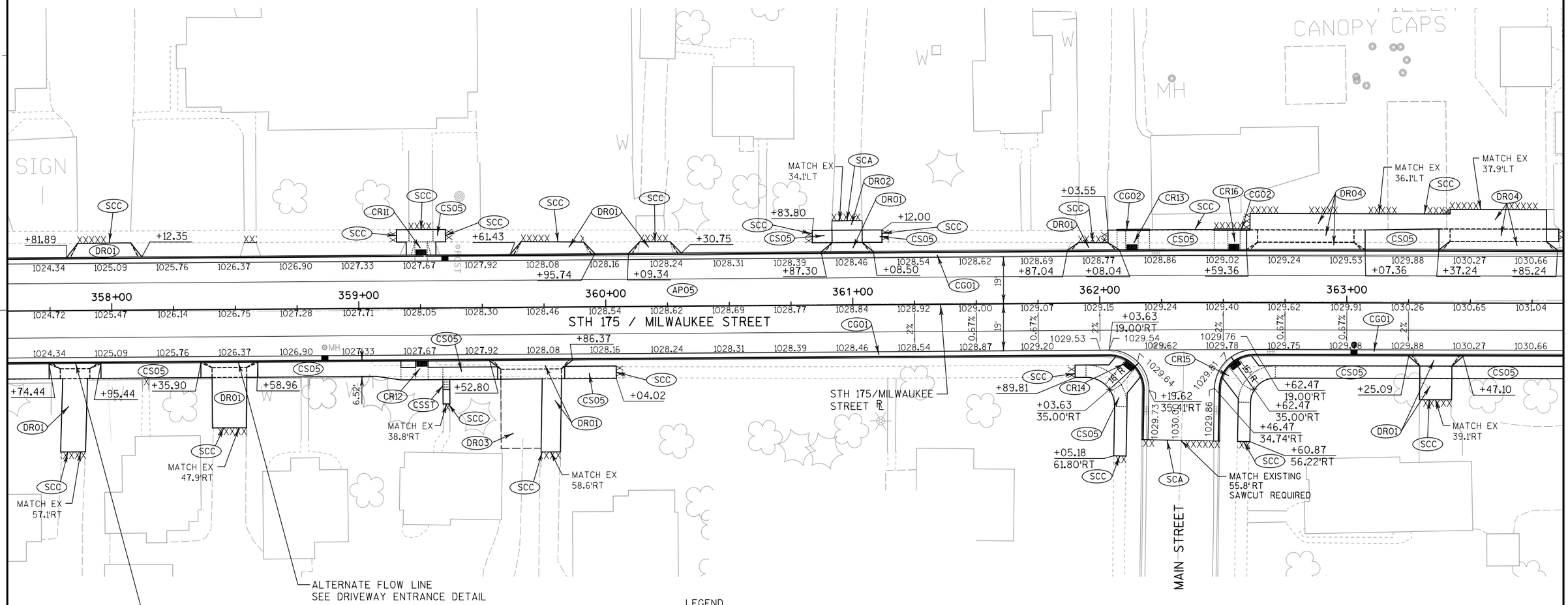

LEGEND

- AG01 BASE AGGREGATE DENSE ¾-INCH
- AP05 HMA PAVEMENT TYPE E-1, 5.25-INCH
- CG01 CONCRETE CURB AND GUTTER 30-INCH TYPE D
- CG02 CONCRETE CURB PEDESTRIAN
- CRXX CURB RAMP XX (SEE DETAIL)
- CS05 CONCRETE SIDEWALK, 5-INCH
- CSST CONCRETE STEPS
- DR01 CONCRETE DRIVEWAY 6-INCH
- DR02 ASPHALTIC SURFACE DRIVEWAY AND FIELD ENTRANCES, 3-INCH
- DR03 AGGREGATE DRIVEWAY, BASE AGGREGATE DENSE ¾-INCH, 6-INCH
- DR04 CONCRETE DRIVEWAY 9-INCH
- SCA SAWING ASPHALT
- SCC SAWING CONCRETE
- XXXX SAWCUT

PROJECT NO:3364-03-72	HWY: STH 175	COUNTY: DODGE	PLAN DETAIL	SHEET 18	E

2

LEGEND

- AG01 BASE AGGREGATE DENSE ¾-INCH
- AP05 HMA PAVEMENT TYPE E-1, 5.25-INCH
- CG01 CONCRETE CURB AND GUTTER 30-INCH TYPE D
- CG02 CONCRETE CURB PEDESTRIAN
- CRXX CURB RAMP XX (SEE DETAIL)
- CS05 CONCRETE SIDEWALK, 5-INCH
- CSST CONCRETE STEPS
- DR01 CONCRETE DRIVEWAY 6-INCH
- DR02 ASPHALTIC SURFACE DRIVEWAY AND FIELD ENTRANCES, 3-INCH
- DR03 AGGREGATE DRIVEWAY, BASE AGGREGATE DENSE ¾-INCH, 6-INCH
- DR04 CONCRETE DRIVEWAY 9-INCH
- SCA SAWING ASPHALT
- SCC SAWING CONCRETE
- XXXX SAWCUT

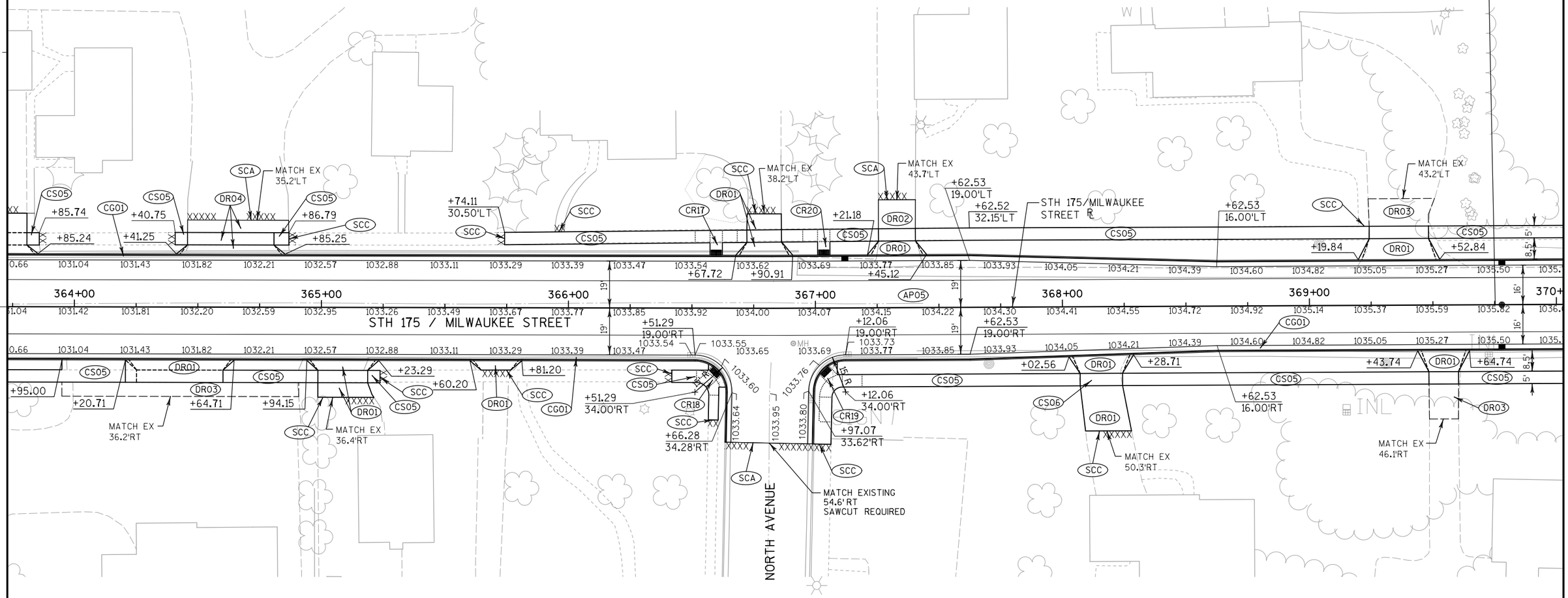

PROJECT NO:3364-03-72	HWY:STH 175	COUNTY:DODGE	PLAN DETAIL	SHEET 19	E

FILE NAME : P:\GMT\WisDOT\R11-0319-102 STH 175\graphics\021204_pd.dgn PLOT DATE : 4/29/2015 PLOT BY : gaspemc PLOT NAME : PLOT SCALE : 1:40

WISDOT/CADDS SHEET 42

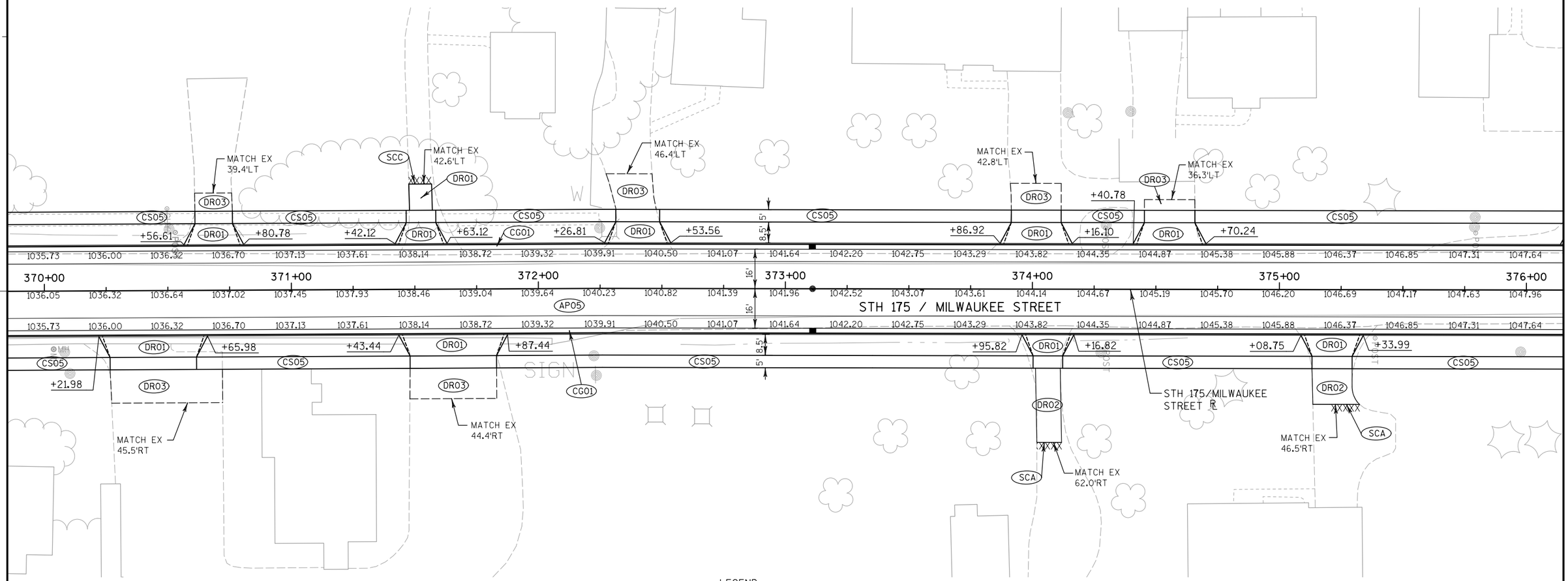

LEGEND

- AG01 BASE AGGREGATE DENSE ¾-INCH
- AP05 HMA PAVEMENT TYPE E-1, 5.25-INCH
- CG01 CONCRETE CURB AND GUTTER 30-INCH TYPE D
- CG02 CONCRETE CURB PEDESTRIAN
- CRXX CURB RAMP XX (SEE DETAIL)
- CS05 CONCRETE SIDEWALK, 5-INCH
- CST CONCRETE STEPS
- DR01 CONCRETE DRIVEWAY 6-INCH
- DR02 ASPHALTIC SURFACE DRIVEWAY AND FIELD ENTRANCES, 3-INCH
- DR03 AGGREGATE DRIVEWAY, BASE AGGREGATE DENSE ¾-INCH, 6-INCH
- DR04 CONCRETE DRIVEWAY 9-INCH
- SCA SAWING ASPHALT
- SCC SAWING CONCRETE
- XXXX SAWCUT

PROJECT NO:3364-03-72	HWY:STH 175	COUNTY:DODGE	PLAN DETAIL	SHEET 20	E

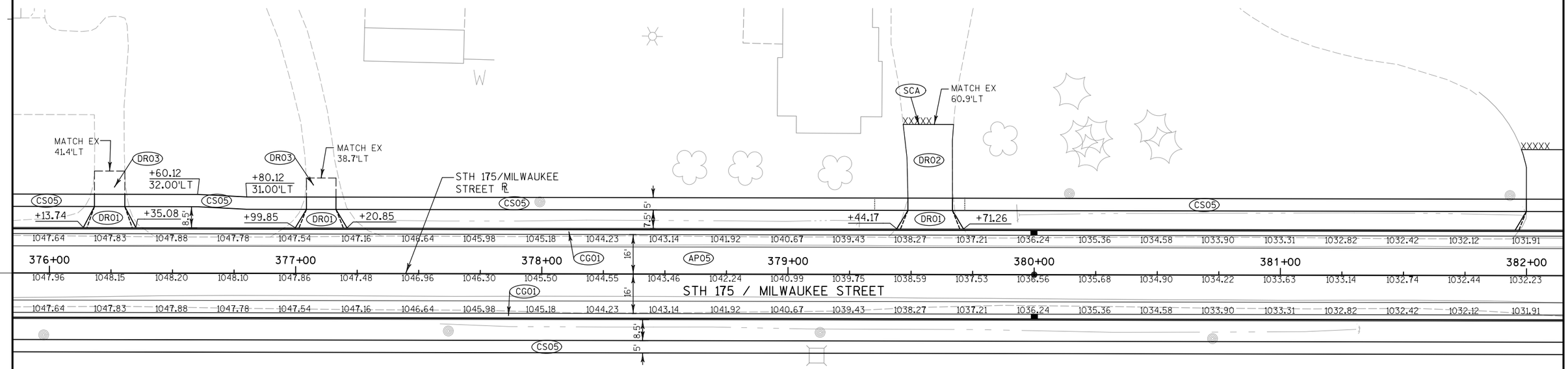

LEGEND

- AG01 BASE AGGREGATE DENSE ¾-INCH
- AP05 HMA PAVEMENT TYPE E-1, 5.25-INCH
- CG01 CONCRETE CURB AND GUTTER 30-INCH TYPE D
- CG02 CONCRETE CURB PEDESTRIAN
- CRXX CURB RAMP XX (SEE DETAIL)
- CS05 CONCRETE SIDEWALK, 5-INCH
- CSST CONCRETE STEPS
- DR01 CONCRETE DRIVEWAY 6-INCH
- DR02 ASPHALTIC SURFACE DRIVEWAY AND FIELD ENTRANCES, 3-INCH
- DR03 AGGREGATE DRIVEWAY, BASE AGGREGATE DENSE ¾-INCH, 6-INCH
- DR04 CONCRETE DRIVEWAY 9-INCH
- SCA SAWING ASPHALT
- SCC SAWING CONCRETE
- XXXX SAWCUT

PROJECT NO:3364-03-72	HWY:STH 175	COUNTY:DODGE	PLAN DETAIL	SHEET 21	E

2

LEGEND

- AG01 BASE AGGREGATE DENSE ¾-INCH
- AP05 HMA PAVEMENT TYPE E-1, 5.25-INCH
- CG01 CONCRETE CURB AND GUTTER 30-INCH TYPE D
- CG02 CONCRETE CURB PEDESTRIAN
- CRXX CURB RAMP XX (SEE DETAIL)
- CS05 CONCRETE SIDEWALK, 5-INCH
- CSST CONCRETE STEPS
- DR01 CONCRETE DRIVEWAY 6-INCH
- DR02 ASPHALTIC SURFACE DRIVEWAY AND FIELD ENTRANCES, 3-INCH
- DR03 AGGREGATE DRIVEWAY, BASE AGGREGATE DENSE ¾-INCH, 6-INCH
- DR04 CONCRETE DRIVEWAY 9-INCH
- SCA SAWING ASPHALT
- SCC SAWING CONCRETE
- XXXXX SAWCUT

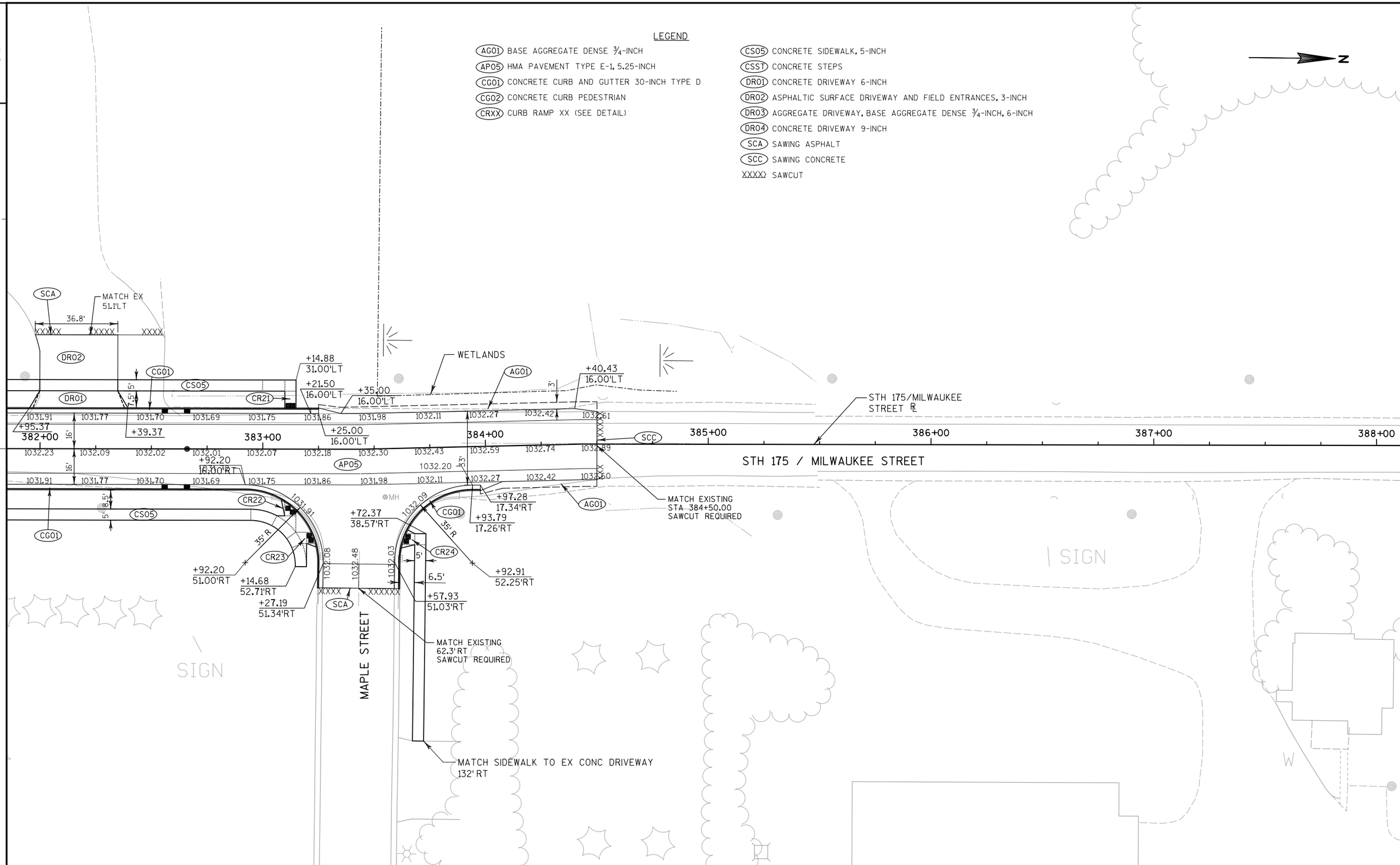

2

PROJECT NO:3364-03-72	HWY:STH 175	COUNTY:DODGE	PLAN DETAIL	SHEET 22	E

FILE NAME : P:\GMT\WisDOT\R11-0319-102 STH 175\graphics\021207_pd.dgn PLOT DATE : 4/29/2015 PLOT BY : gaspemc PLOT NAME : PLOT SCALE : 1:40

WISDOT/CADDS SHEET 42

2

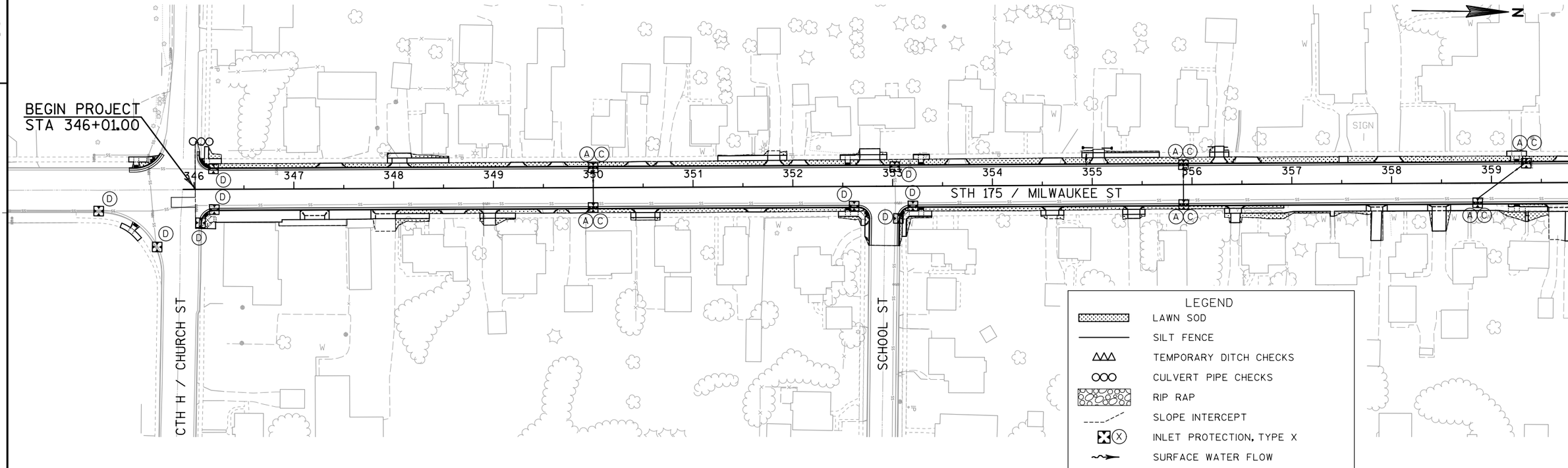

2

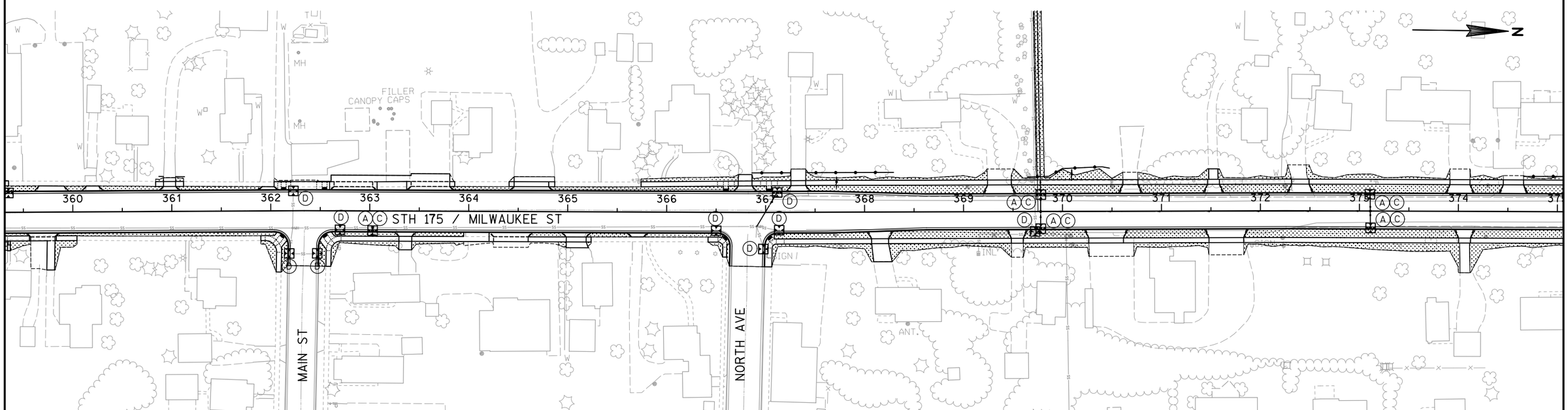

PROJECT NO: 3364-03-72	HWY: STH 175	COUNTY: DODGE	EROSION CONTROL	SHEET 23	E

2

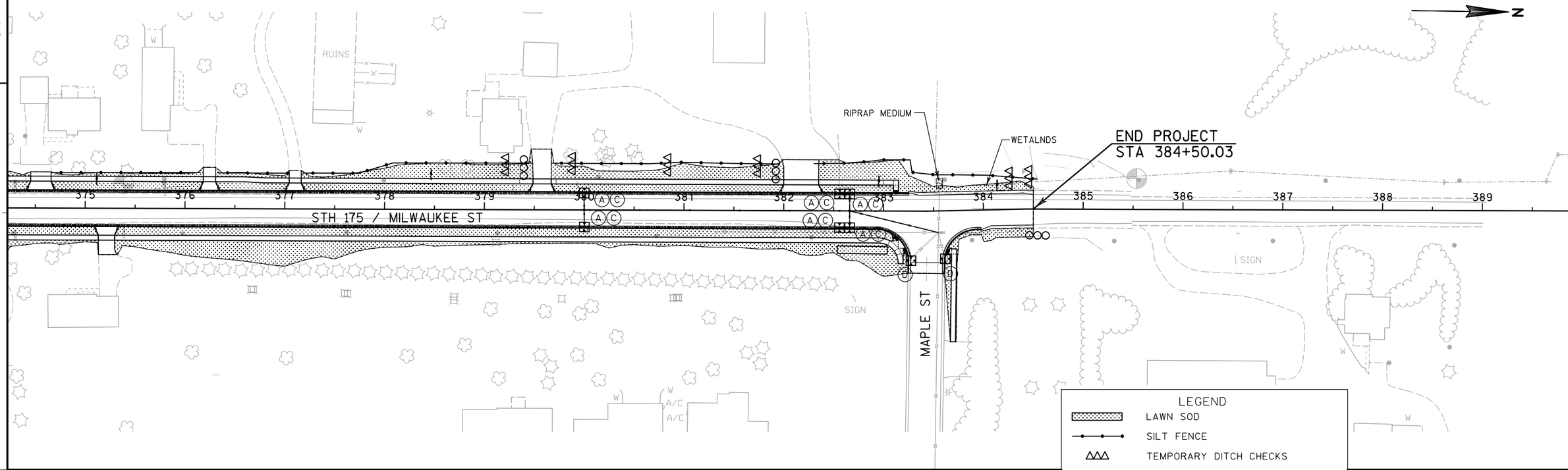

LEGEND

- LAWN SOD
- SILT FENCE
- TEMPORARY DITCH CHECKS
- CULVERT PIPE CHECKS
- RIP RAP
- SLOPE INTERCEPT
- INLET PROTECTION, TYPE X
- SURFACE WATER FLOW

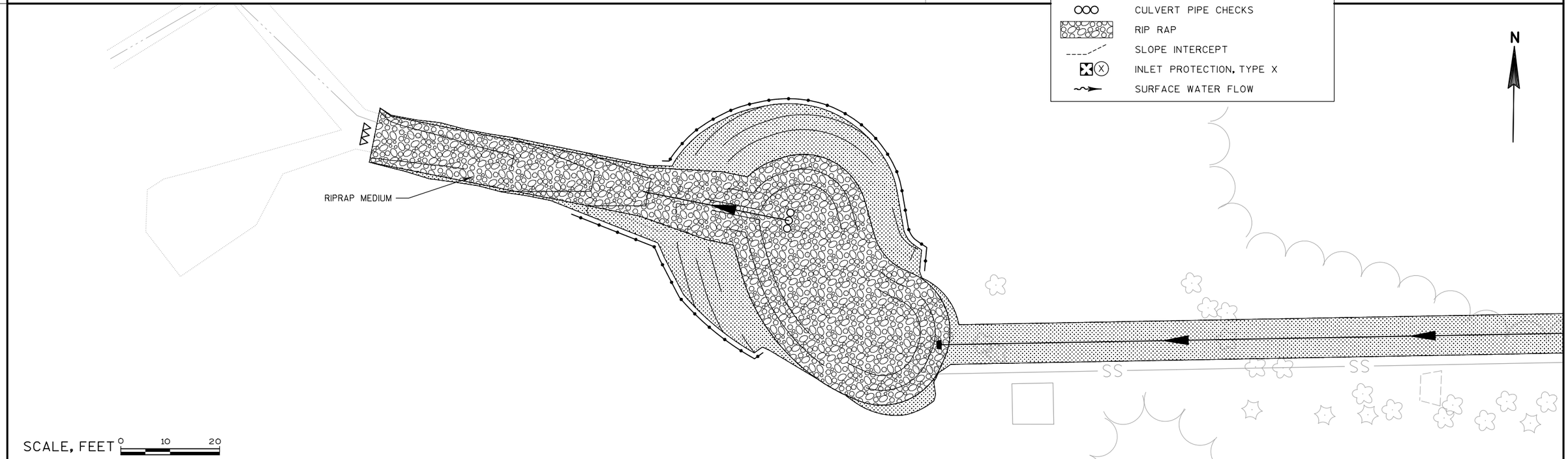

SCALE, FEET 0 10 20

PROJECT NO: 3364-03-72	HWY: STH 175	COUNTY: DODGE	EROSION CONTROL	SHEET 24	E

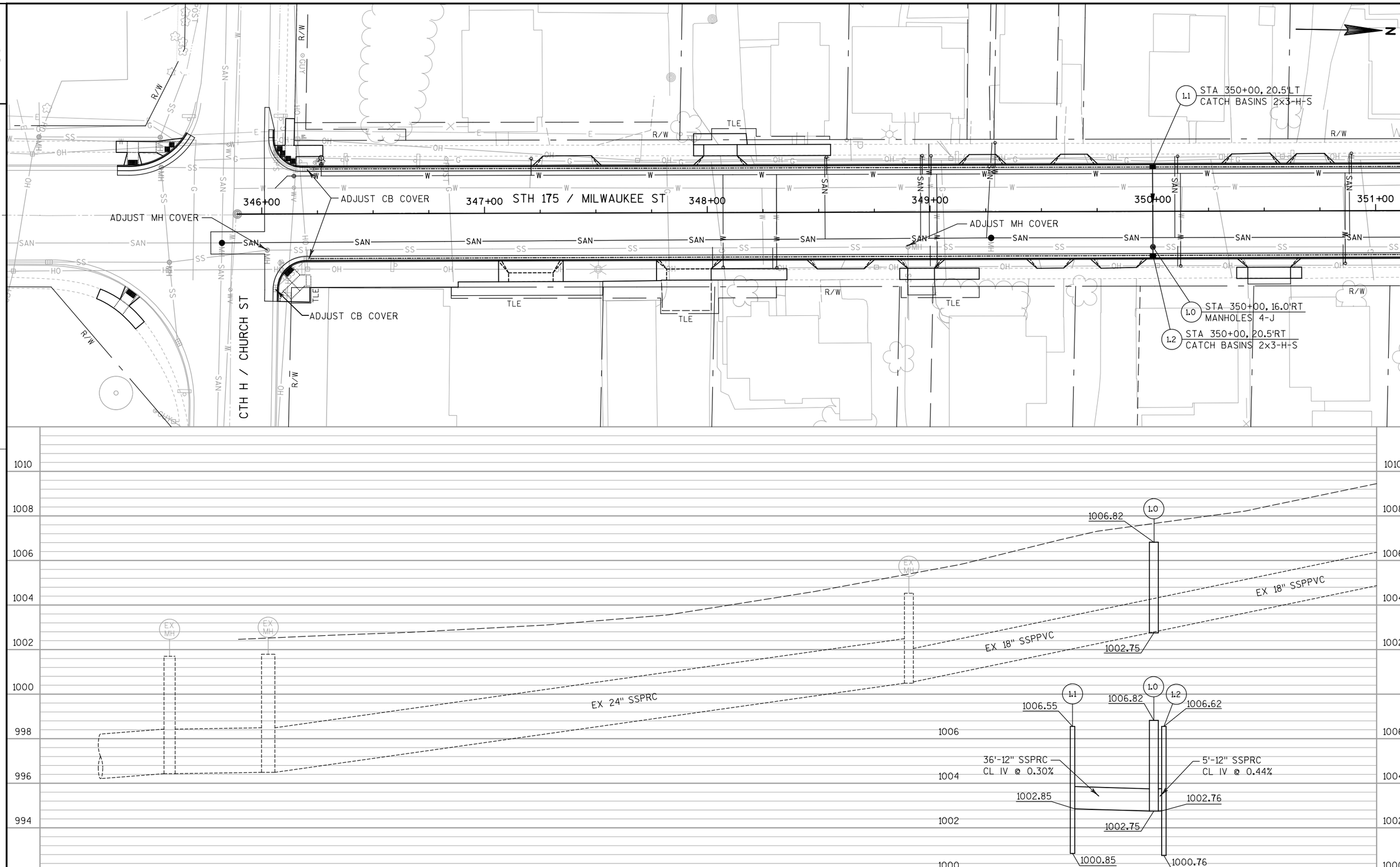

PROJECT NO:3364-03-72	HWY:STH 175	COUNTY:DODGE	STORM SEWER	SHEET 25	E

FILE NAME : P:\GMT\WisDOT\R11-0319-102 STH 175\graphics\022501_ss.dgn PLOT DATE : 4/29/2015 PLOT BY : gaspemc PLOT NAME : PLOT SCALE : 1:40

2

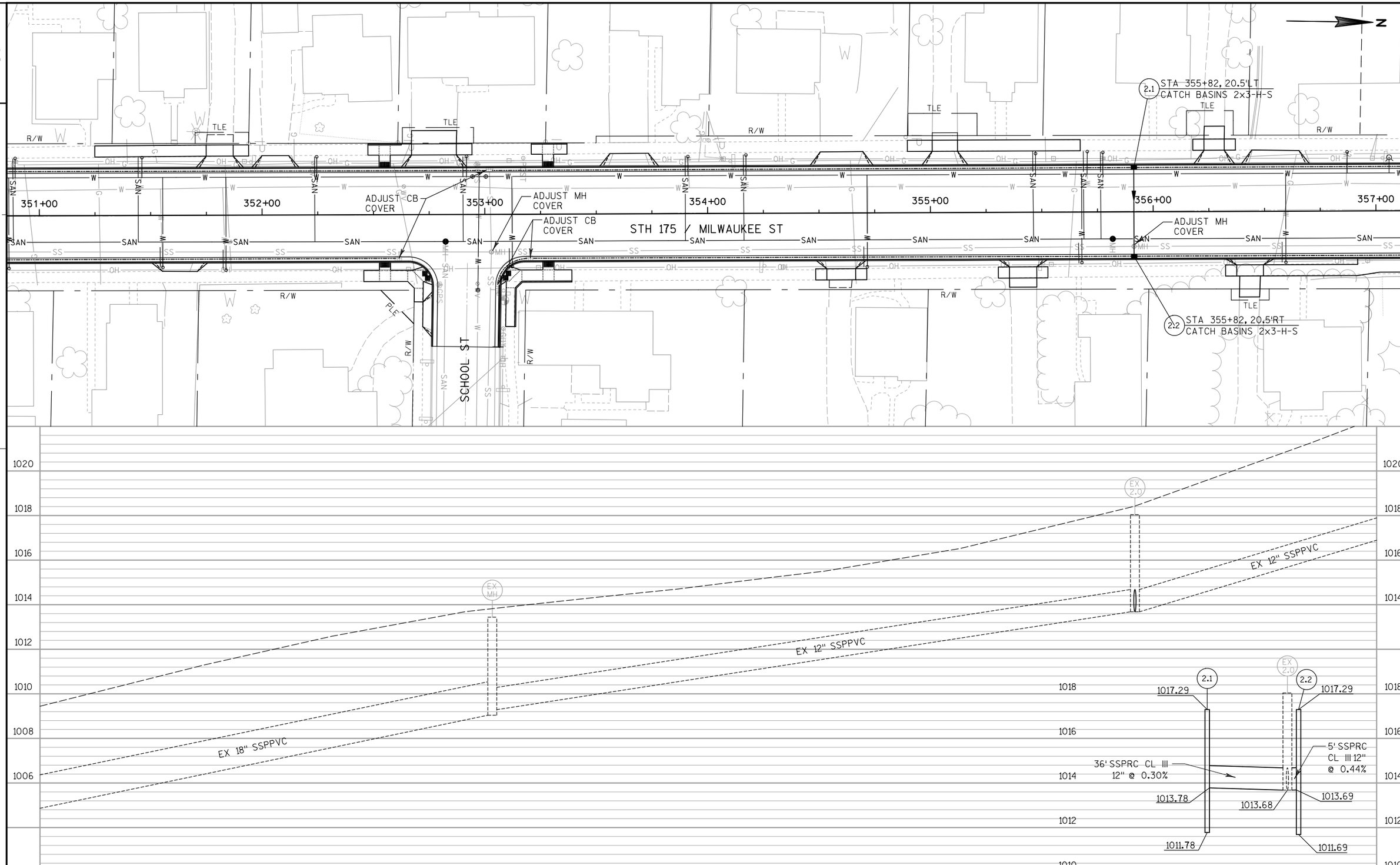

2

PROJECT NO: 3364-03-72	HWY: STH 175	COUNTY: DODGE	STORM SEWER	SHEET 26	E

FILE NAME : P:\GMT\WisDOT\R11-0319-102 STH 175\graphics\022502_ss.dgn PLOT DATE : 4/29/2015 PLOT BY : gaspemc PLOT NAME : PLOT SCALE : 1:40

2

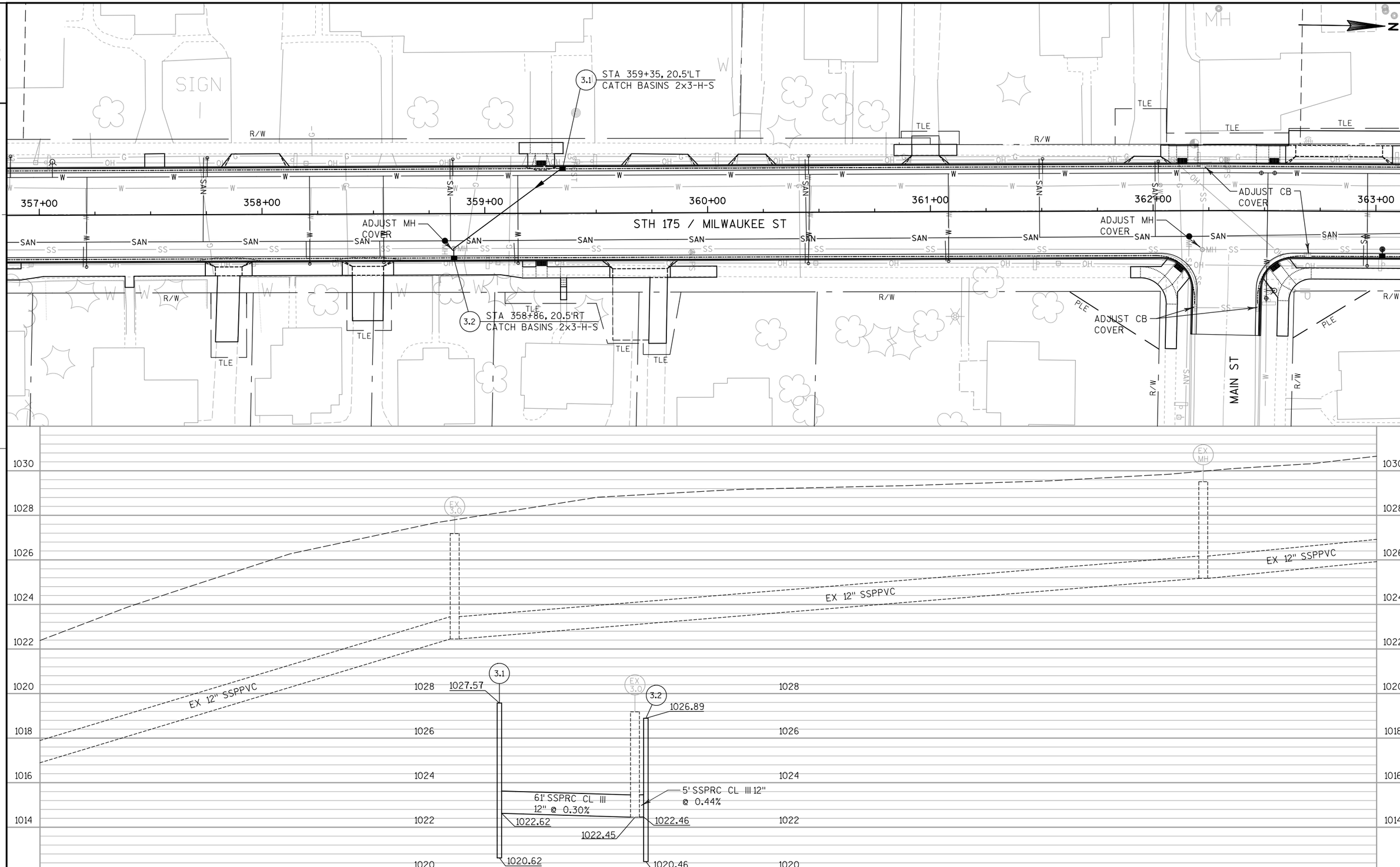

2

PROJECT NO: 3364-03-72	HWY: STH 175	COUNTY: DODGE	STORM SEWER	SHEET 27	E

2

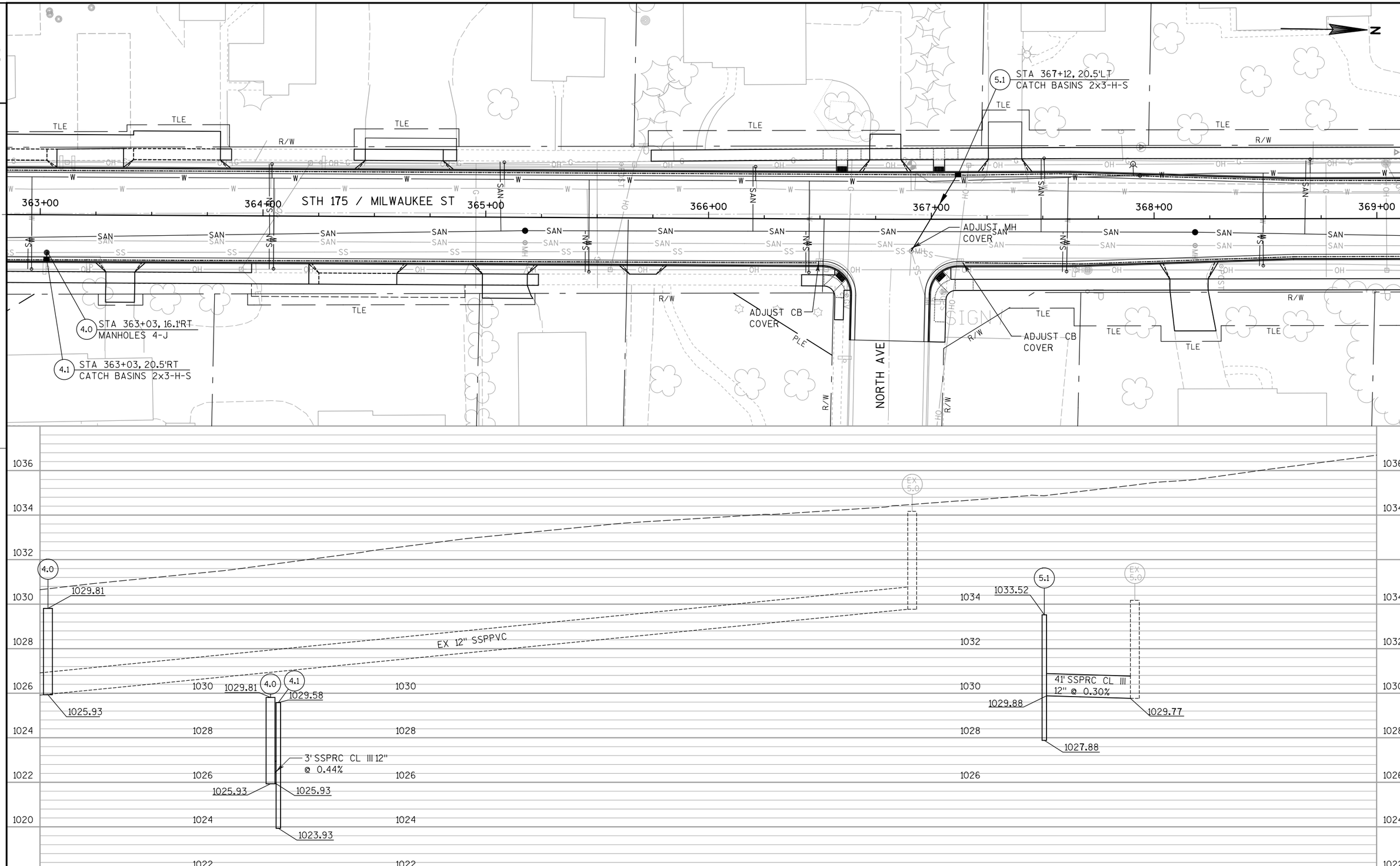

PROJECT NO:3364-03-72	HWY:STH 175	COUNTY:DODGE	STORM SEWER	SHEET 28	E

FILE NAME : P:\GMT\WisDOT\R11-0319-102 STH 175\graphics\022504_ss.dgn PLOT DATE : 4/29/2015 PLOT BY : gaspemc PLOT NAME : PLOT SCALE : 1:40

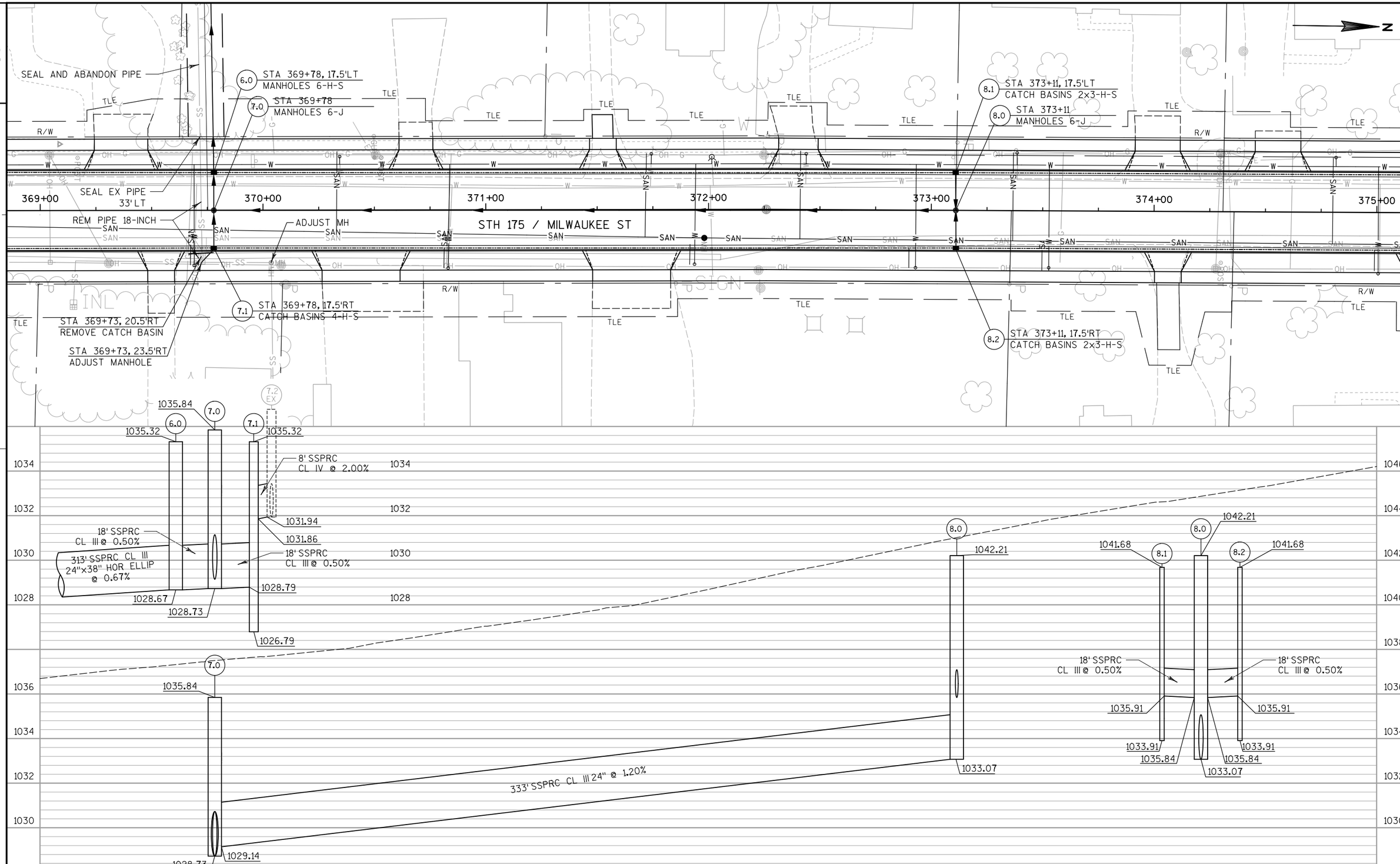

PROJECT NO:3364-03-72	HWY:STH 175	COUNTY:DODGE	STORM SEWER	SHEET 29	E

FILE NAME : P:\GMT\WisDOT\R11-0319-102 STH 175\graphics\022505_ss.dgn PLOT DATE : 4/29/2015 PLOT BY : gaspemc PLOT NAME : PLOT SCALE : 1:40

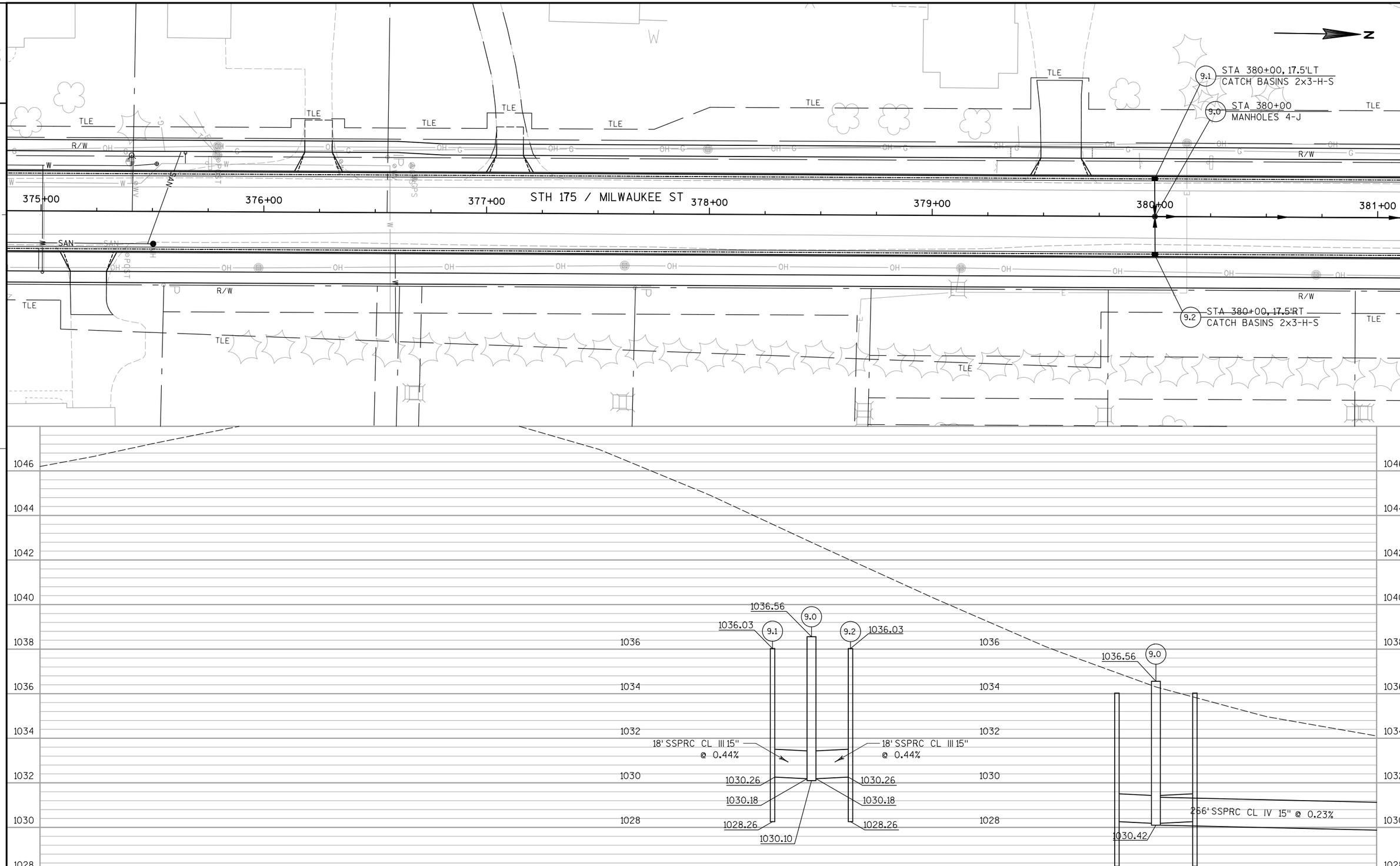

PROJECT NO: 3364-03-72	HWY: STH 175	COUNTY: DODGE	STORM SEWER	SHEET 30	E

2

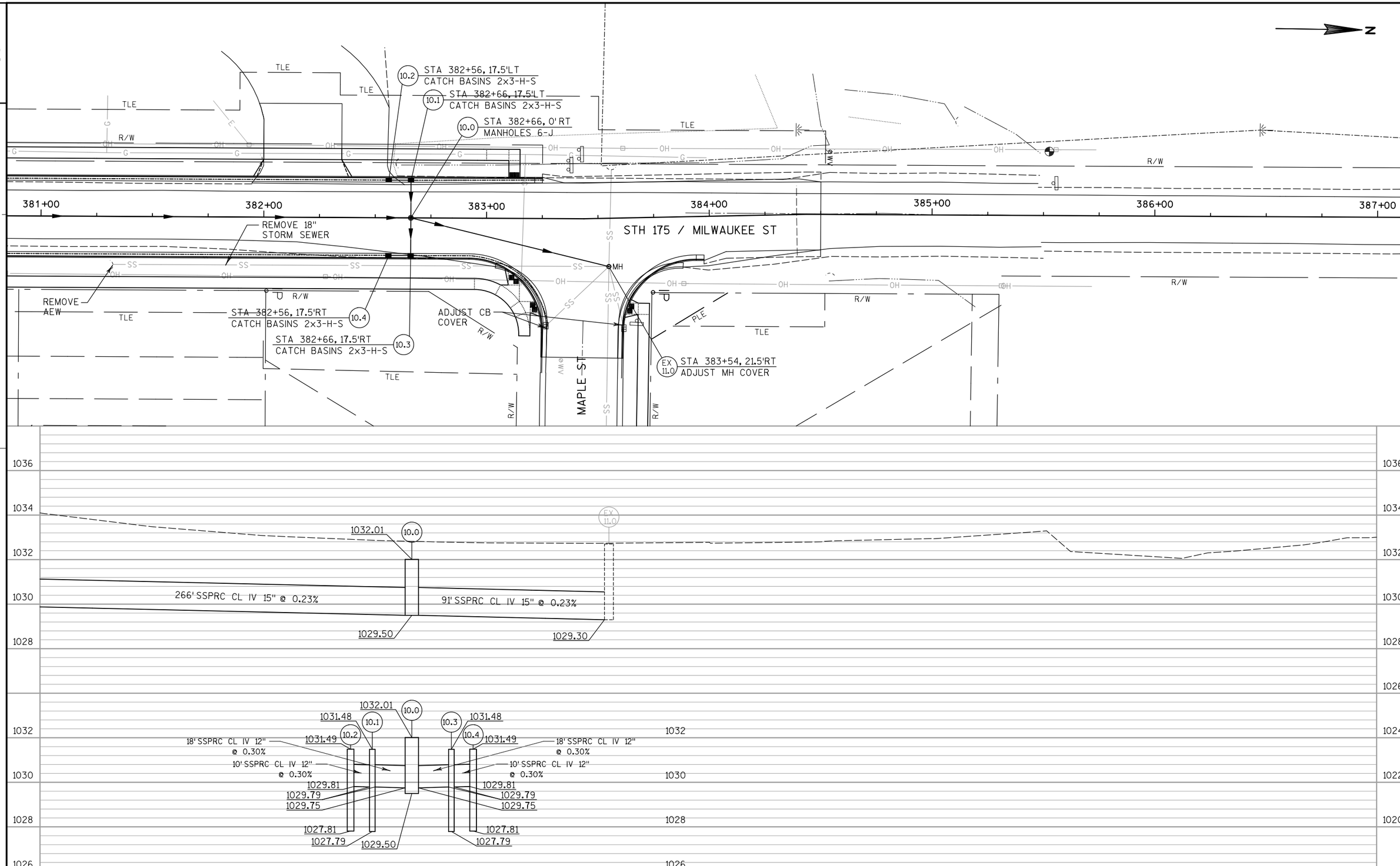

PROJECT NO:3364-03-72	HWY:STH 175	COUNTY:DODGE	STORM SEWER	SHEET 31	E

FILE NAME : P:\GMT\WisDOT\R11-0319-102 STH 175\graphics\022507_ss.dgn PLOT DATE : 7/24/2015 PLOT BY : gaspemc PLOT NAME : PLOT SCALE : 1:40

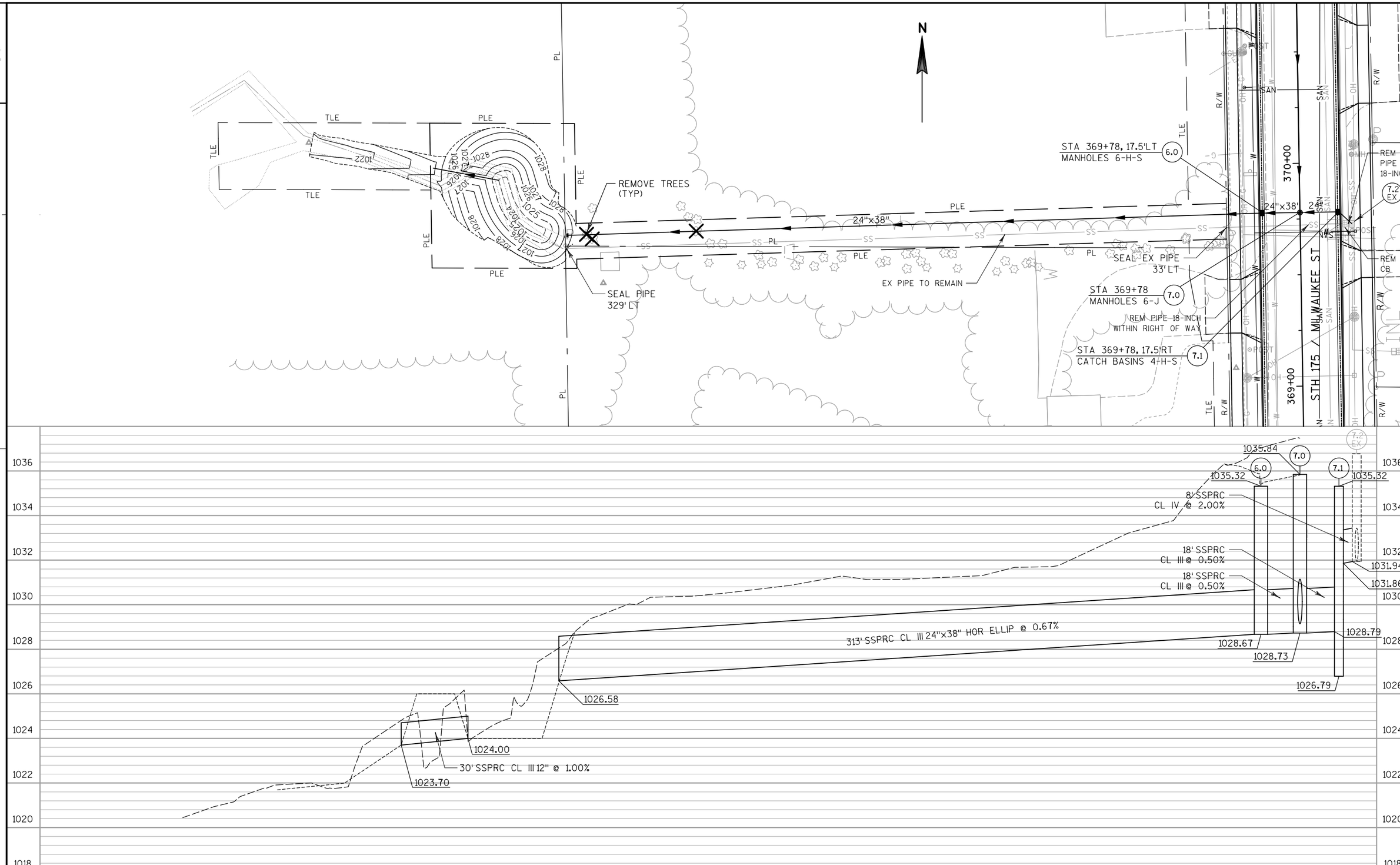

PROJECT NO: 3364-03-72	HWY: STH 175	COUNTY: DODGE	STORM SEWER	SHEET 32	E

FILE NAME : P:\GMT\WisDOT\R11-0319-102 STH 175\graphics\022508_ss.dgn PLOT DATE : 4/29/2015 PLOT BY : gaspemc PLOT NAME : PLOT SCALE : 1:40

WISDOT/CADDS SHEET 41

2

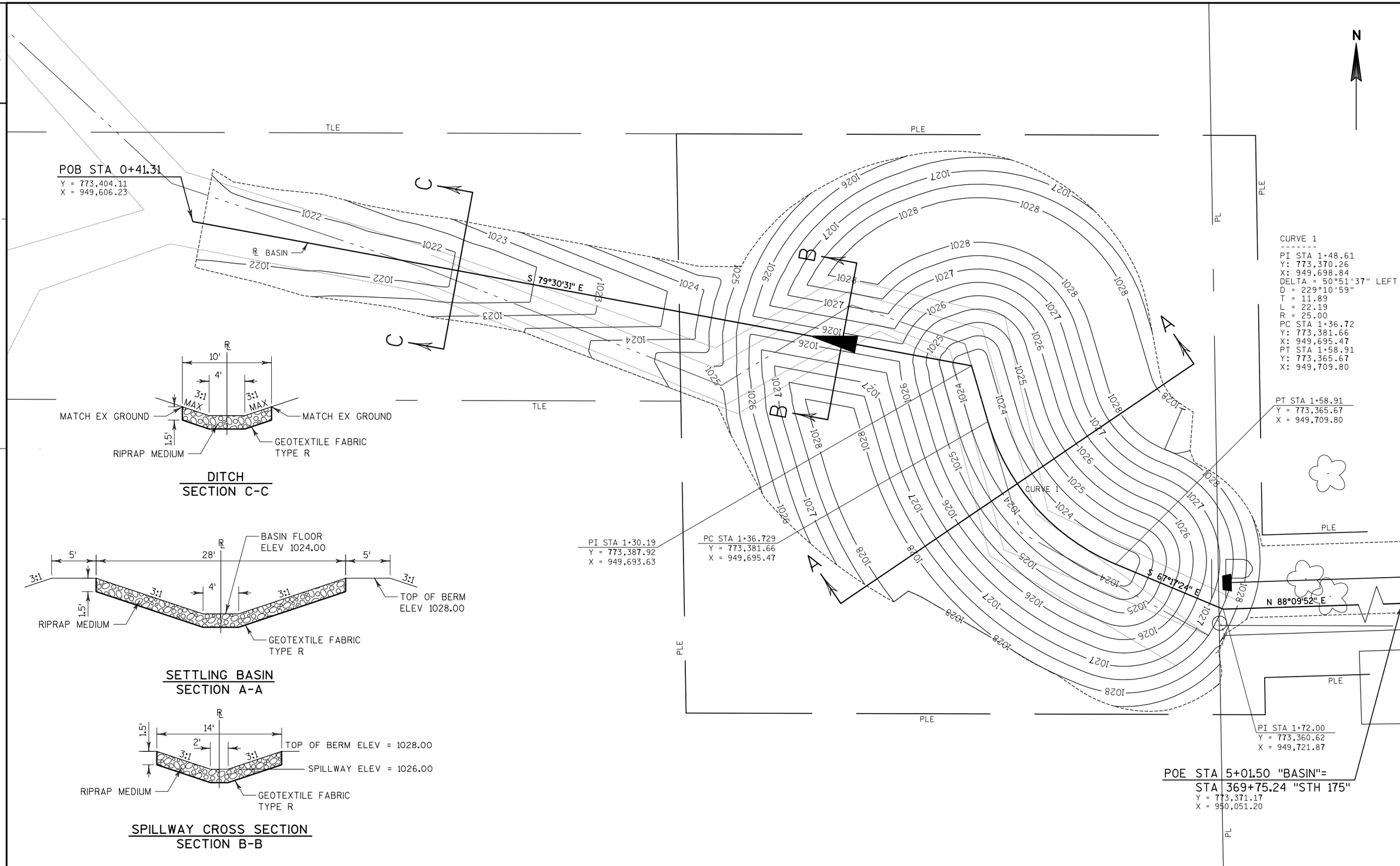

PROJECT NO:3364-03-72	HWY:STH 175	COUNTY:DODGE	SETTLING BASIN	SHEET 33	E

FILE NAME : P:\GMT\WisDOT\R11-0319-102 STH 175\graphics\022509_ss.dgn PLOT DATE : 4/29/2015 PLOT BY : gaspemc PLOT NAME : PLOT SCALE : 1:10

WISDOT/CADDS SHEET 42

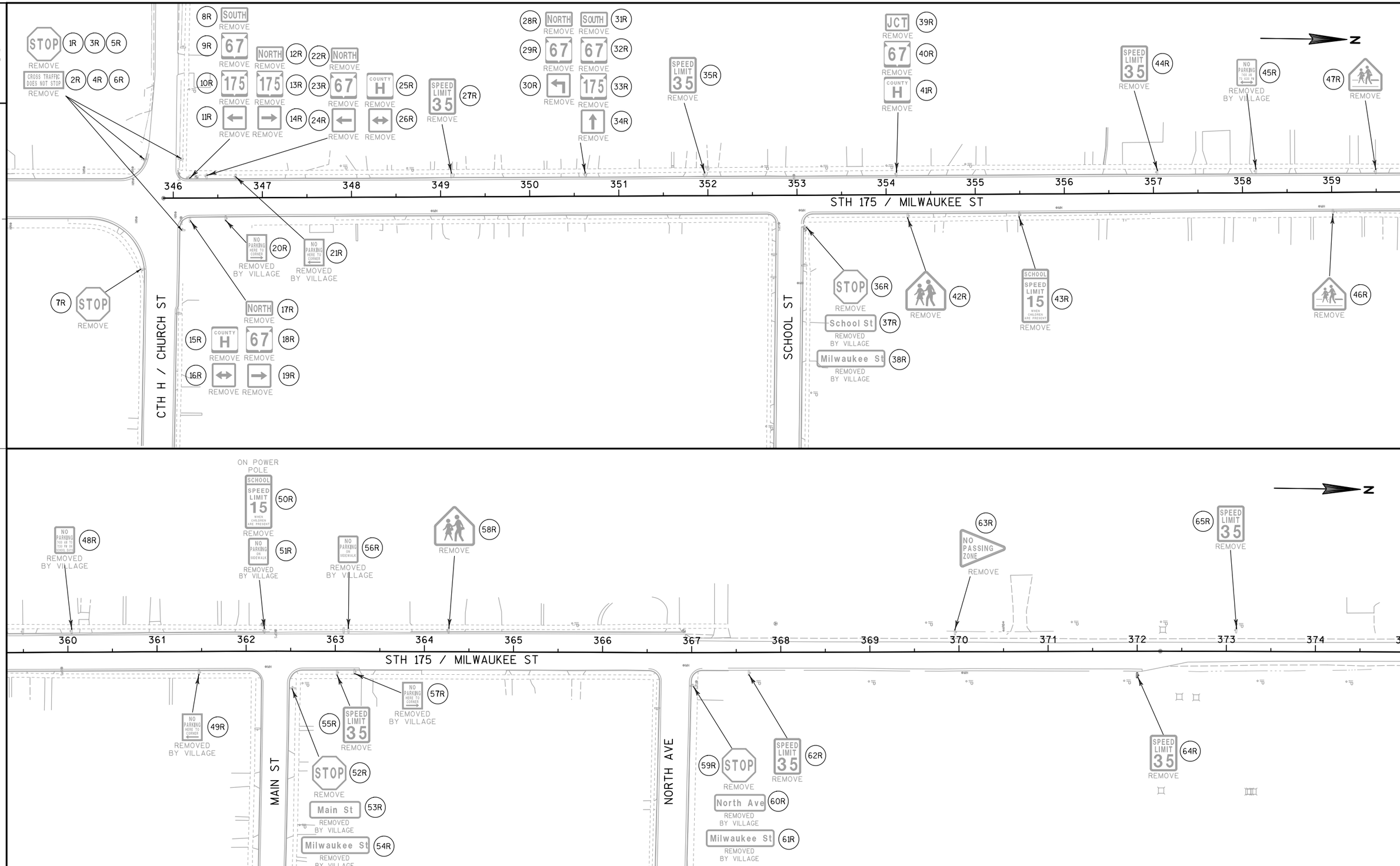

PROJECT NO: 3364-03-72	HWY: STH 175	COUNTY: DODGE	SIGNING REMOVALS	SHEET 34	E

FILE NAME : P:\GMT\WisDOT\R11-0319-102 STH 175\graphics\023201_ps.dgn PLOT DATE : 4/29/2015 PLOT BY : gaspemc PLOT NAME : PLOT SCALE : 1:100

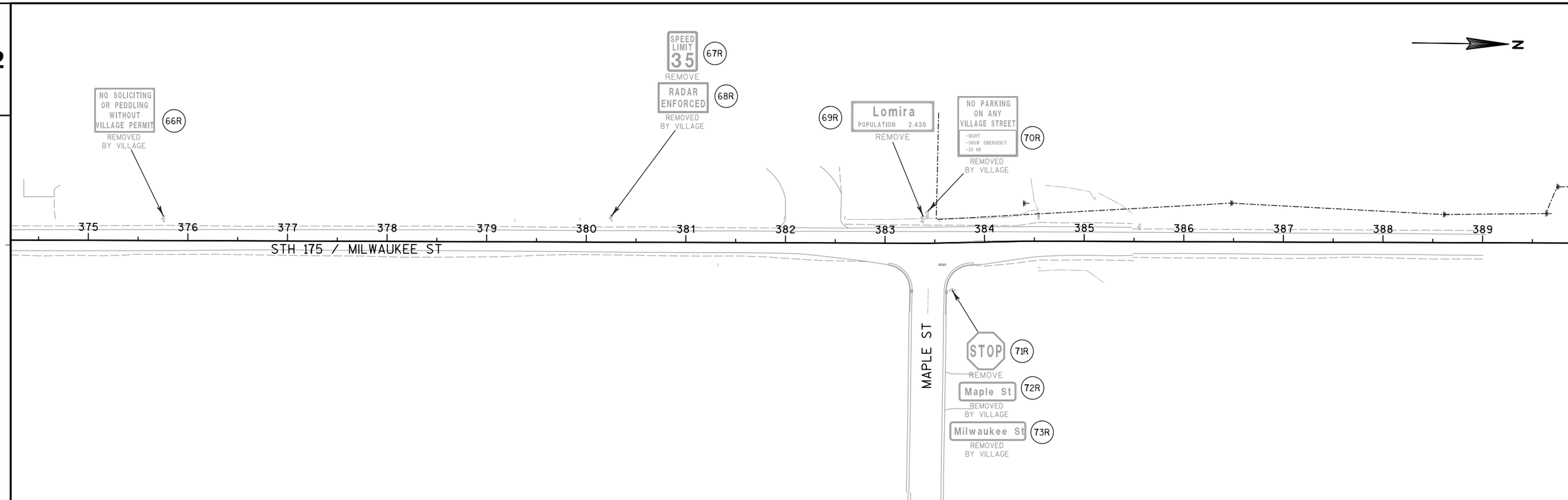
N
NO SOLICITING OR PEDDLING WITHOUT VILLAGE PERMIT
66R
REMOVED BY VILLAGE
SPEED LIMIT 35
67R
REMOVE
RADAR ENFORCED
68R
REMOVED BY VILLAGE
69R
Lomira
POPULATION 2,430
REMOVE
NO PARKING ON ANY VILLAGE STREET
• NIGHT
• SNOW EMERGENCY
• 24 HR
70R
REMOVED BY VILLAGE
375
376
377
378
379
380
381
382
383
384
385
386
387
388
389
STH 175 / MILWAUKEE ST
MAPLE ST
STOP
71R
REMOVE
Maple St
72R
REMOVED BY VILLAGE
Milwaukee St
73R
REMOVED BY VILLAGE

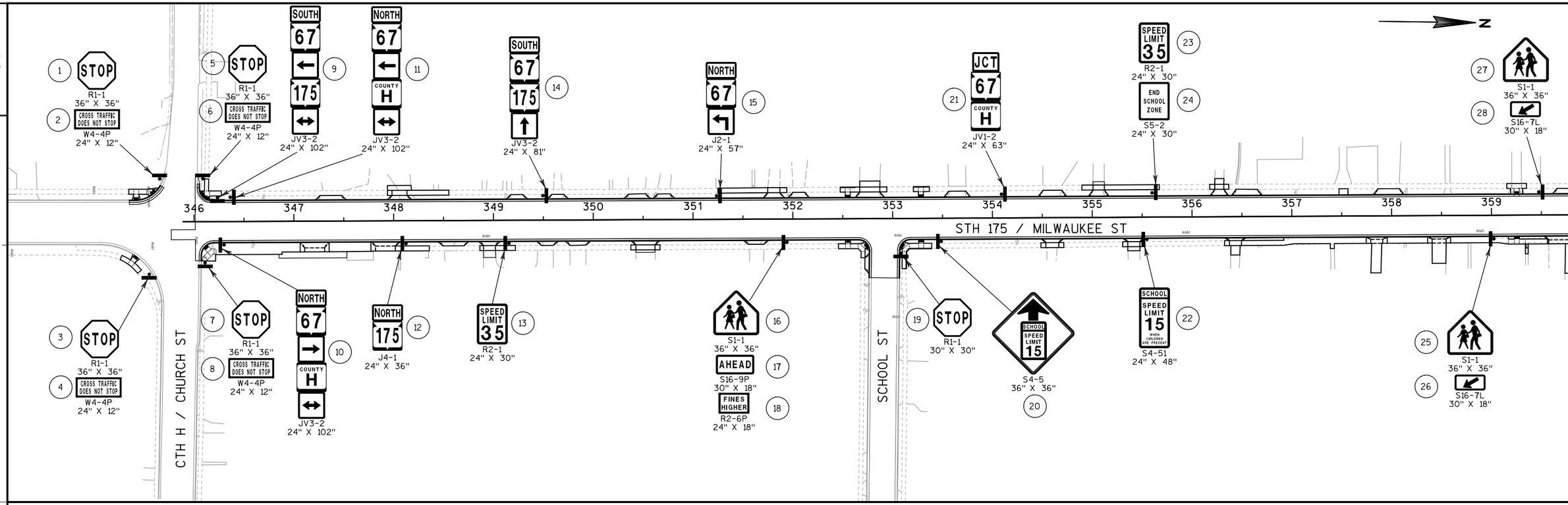

PROJECT NO: 3364-03-72	HWY: STH 175	COUNTY: DODGE	PERMANENT SIGNING	SHEET 36	E

FILE NAME : P:\GMT\WisDOT\R11-0319-102 STH 175\graphics\023203_ps.dgn PLOT DATE : 4/29/2015 PLOT BY : gaspemc PLOT NAME : PLOT SCALE : 1:100

WISDOT/CADDS SHEET 42

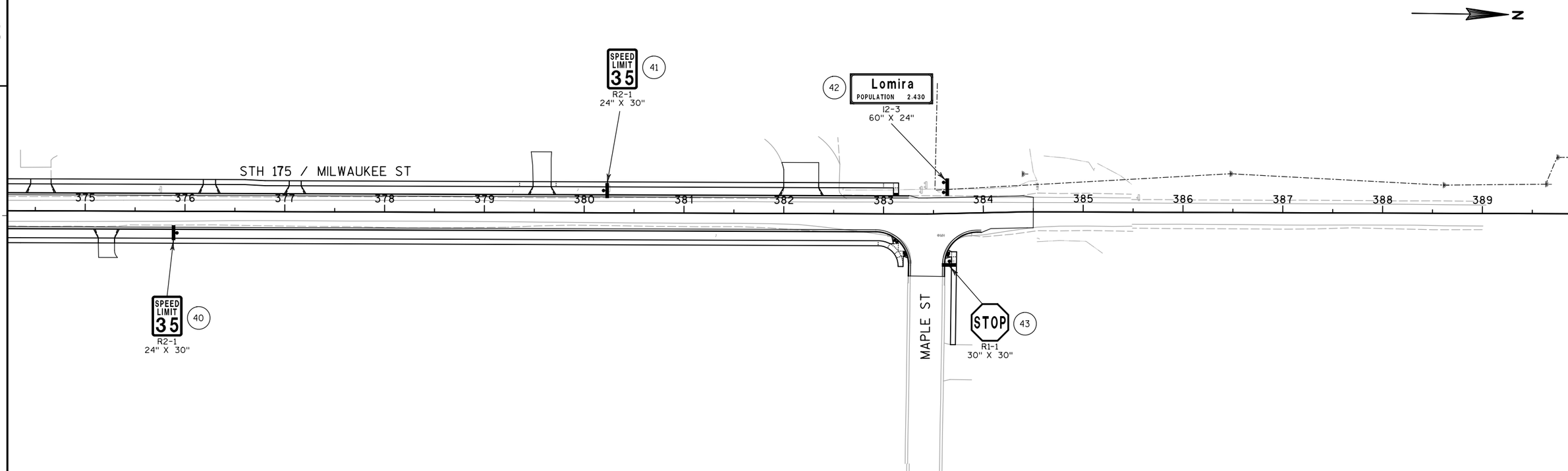

2

PROJECT NO: 3364-03-72	HWY: STH 175	COUNTY: DODGE	PERMANENT SIGNING	SHEET 37	E

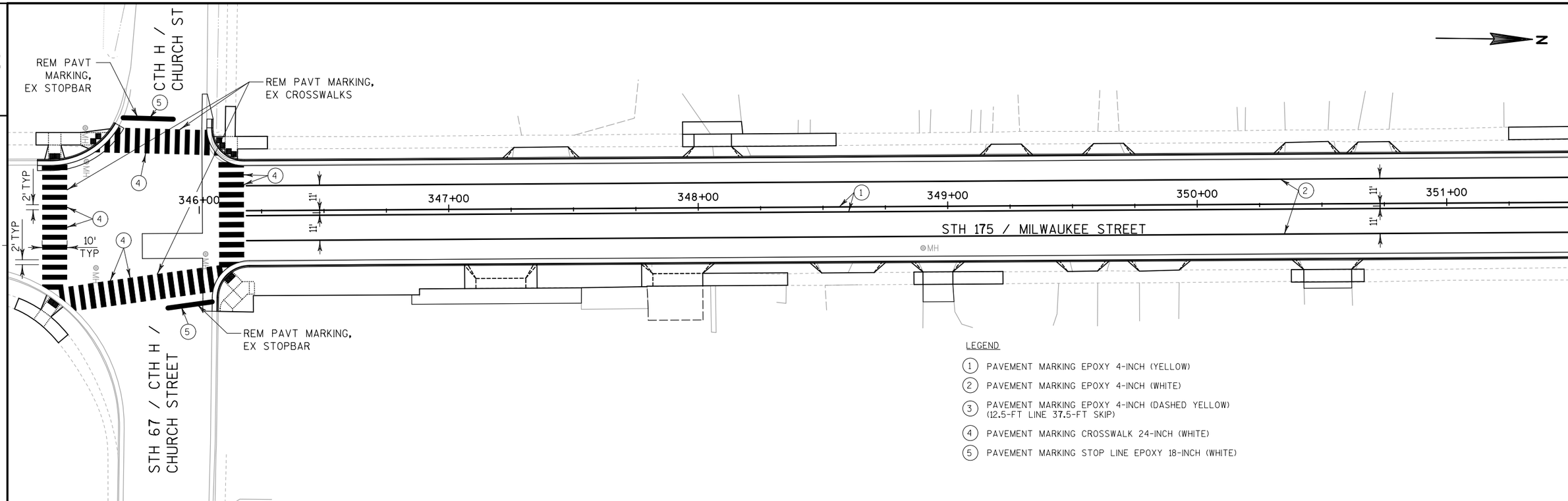

LEGEND

1. PAVEMENT MARKING EPOXY 4-INCH (YELLOW)
2. PAVEMENT MARKING EPOXY 4-INCH (WHITE)
3. PAVEMENT MARKING EPOXY 4-INCH (DASHED YELLOW) (12.5-FT LINE 37.5-FT SKIP)
4. PAVEMENT MARKING CROSSWALK 24-INCH (WHITE)
5. PAVEMENT MARKING STOP LINE EPOXY 18-INCH (WHITE)

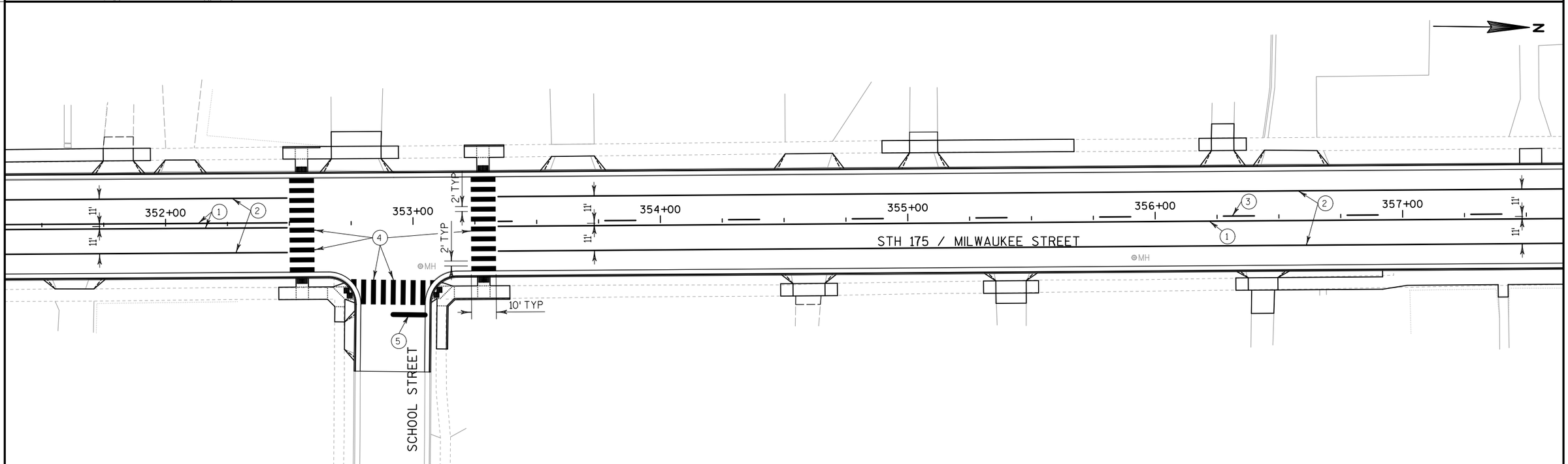

PROJECT NO:3364-03-72	HWY:STH 175	COUNTY:DODGE	PAVEMENT MARKING	SHEET 38	E

2

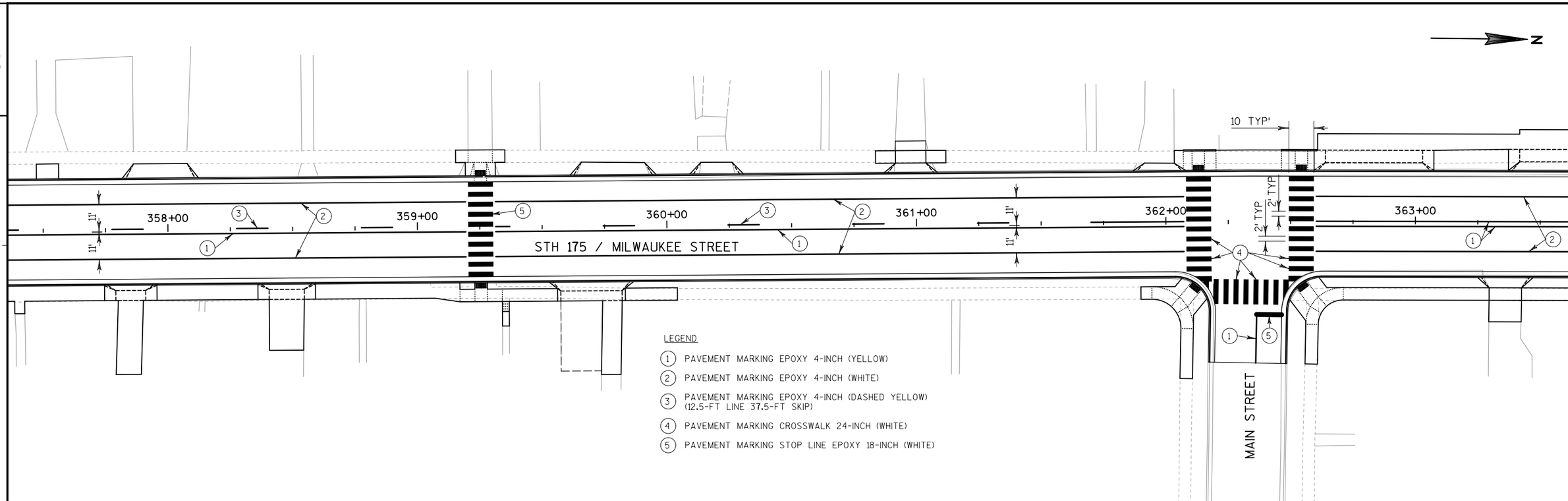

LEGEND

1. PAVEMENT MARKING EPOXY 4-INCH (YELLOW)
2. PAVEMENT MARKING EPOXY 4-INCH (WHITE)
3. PAVEMENT MARKING EPOXY 4-INCH (DASHED YELLOW) (12.5-FT LINE 37.5-FT SKIP)
4. PAVEMENT MARKING CROSSWALK 24-INCH (WHITE)
5. PAVEMENT MARKING STOP LINE EPOXY 18-INCH (WHITE)

2

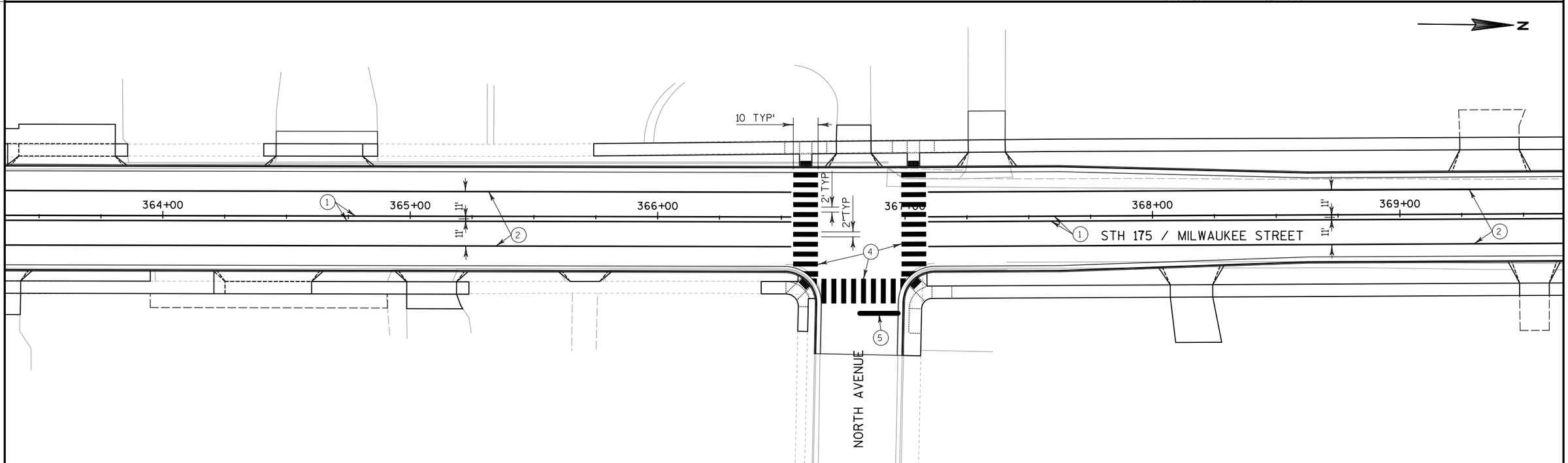

PROJECT NO:3364-03-72	HWY:STH 175	COUNTY:DODGE	PAVEMENT MARKING	SHEET 39	E

2

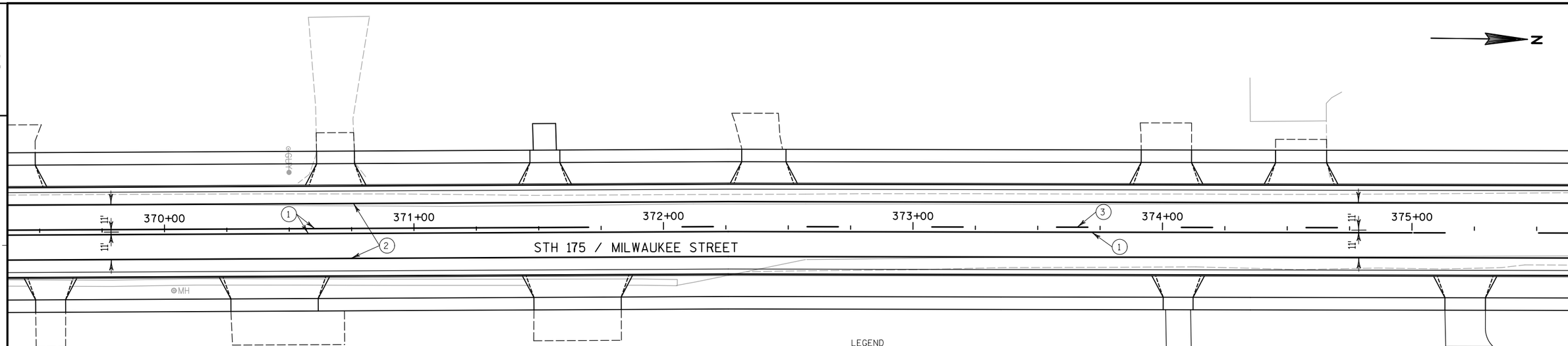

LEGEND

1. PAVEMENT MARKING EPOXY 4-INCH (YELLOW)
2. PAVEMENT MARKING EPOXY 4-INCH (WHITE)
3. PAVEMENT MARKING EPOXY 4-INCH (DASHED YELLOW) (12.5-FT LINE 37.5-FT SKIP)
4. PAVEMENT MARKING CROSSWALK 24-INCH (WHITE)
5. PAVEMENT MARKING STOP LINE EPOXY 18-INCH (WHITE)

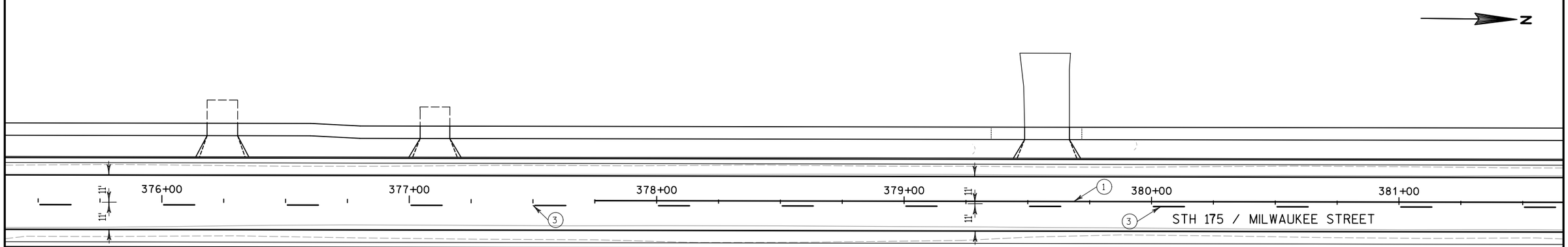

PROJECT NO:3364-03-72	HWY:STH 175	COUNTY:DODGE	PAVEMENT MARKING	SHEET 40	E

LEGEND

1. PAVEMENT MARKING EPOXY 4-INCH (YELLOW)
2. PAVEMENT MARKING EPOXY 4-INCH (WHITE)
3. PAVEMENT MARKING EPOXY 4-INCH (DASHED YELLOW) (12.5-FT LINE 37.5-FT SKIP)
4. PAVEMENT MARKING CROSSWALK 24-INCH (WHITE)
5. PAVEMENT MARKING STOP LINE EPOXY 18-INCH (WHITE)

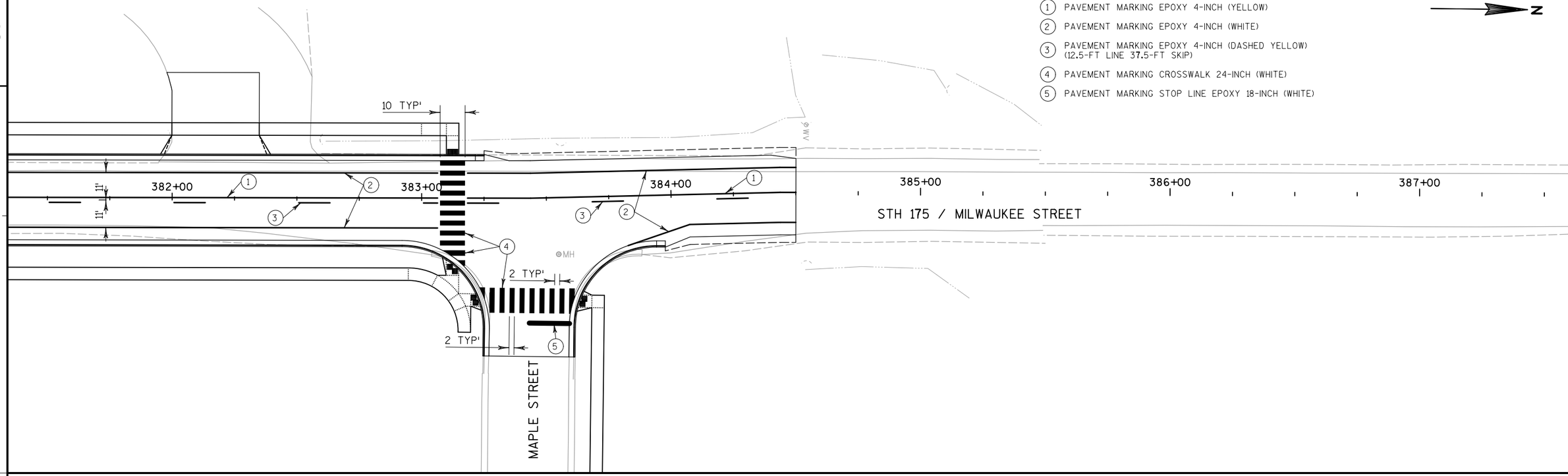

2

PROJECT NO:3364-03-72	HWY:STH 175	COUNTY:DODGE	PAVEMENT MARKING	SHEET 41	E

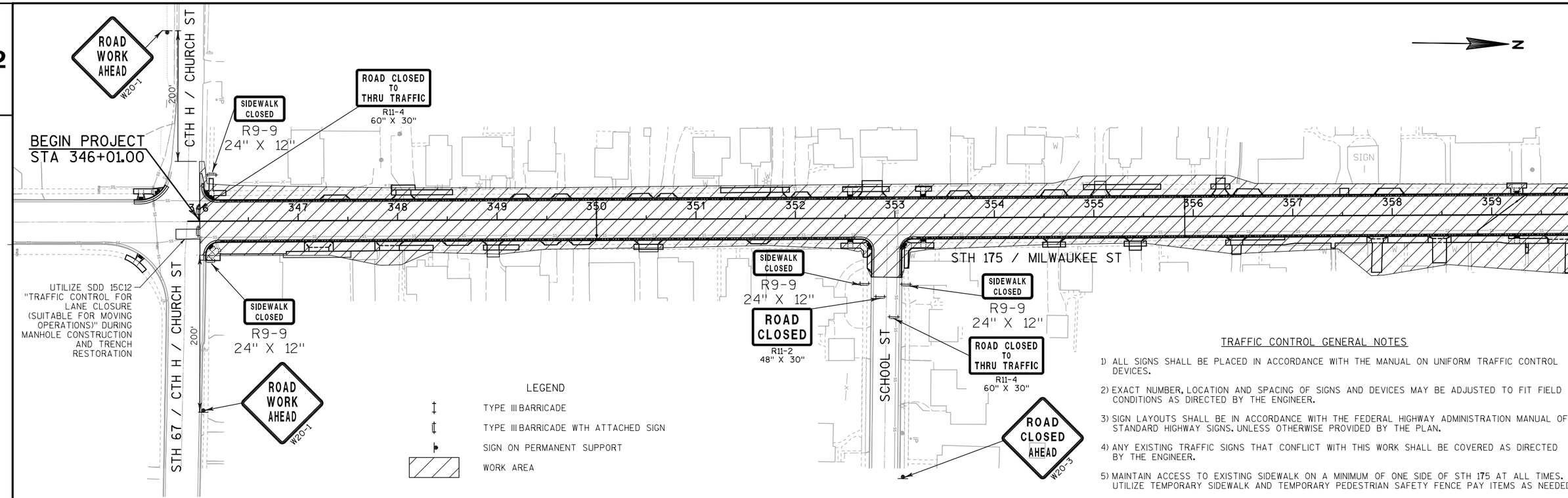

LEGEND

- TYPE III BARRICADE
- TYPE III BARRICADE WTH ATTACHED SIGN
- SIGN ON PERMANENT SUPPORT
- WORK AREA

TRAFFIC CONTROL GENERAL NOTES

1) ALL SIGNS SHALL BE PLACED IN ACCORDANCE WITH THE MANUAL ON UNIFORM TRAFFIC CONTROL DEVICES.
2) EXACT NUMBER, LOCATION AND SPACING OF SIGNS AND DEVICES MAY BE ADJUSTED TO FIT FIELD CONDITIONS AS DIRECTED BY THE ENGINEER.
3) SIGN LAYOUTS SHALL BE IN ACCORDANCE WITH THE FEDERAL HIGHWAY ADMINISTRATION MANUAL OF STANDARD HIGHWAY SIGNS. UNLESS OTHERWISE PROVIDED BY THE PLAN.
4) ANY EXISTING TRAFFIC SIGNS THAT CONFLICT WITH THIS WORK SHALL BE COVERED AS DIRECTED BY THE ENGINEER.
5) MAINTAIN ACCESS TO EXISTING SIDEWALK ON A MINIMUM OF ONE SIDE OF STH 175 AT ALL TIMES. UTILIZE TEMPORARY SIDEWALK AND TEMPORARY PEDESTRIAN SAFETY FENCE PAY ITEMS AS NEEDED.

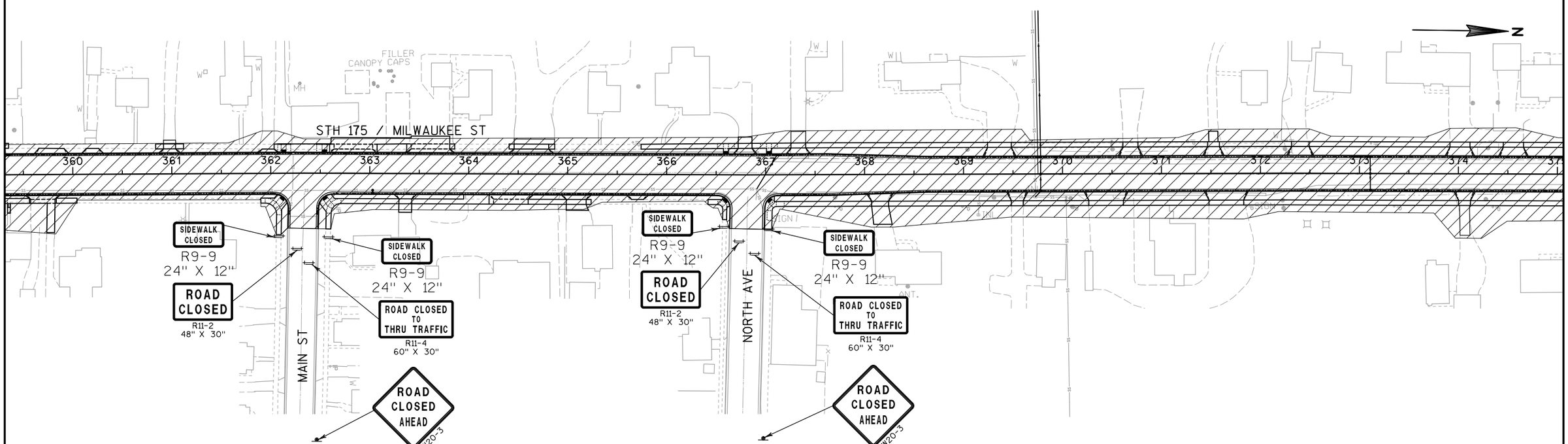

PROJECT NO: 3364-03-72	HWY: STH 175	COUNTY: DODGE	TRAFFIC CONTROL	SHEET 42	E

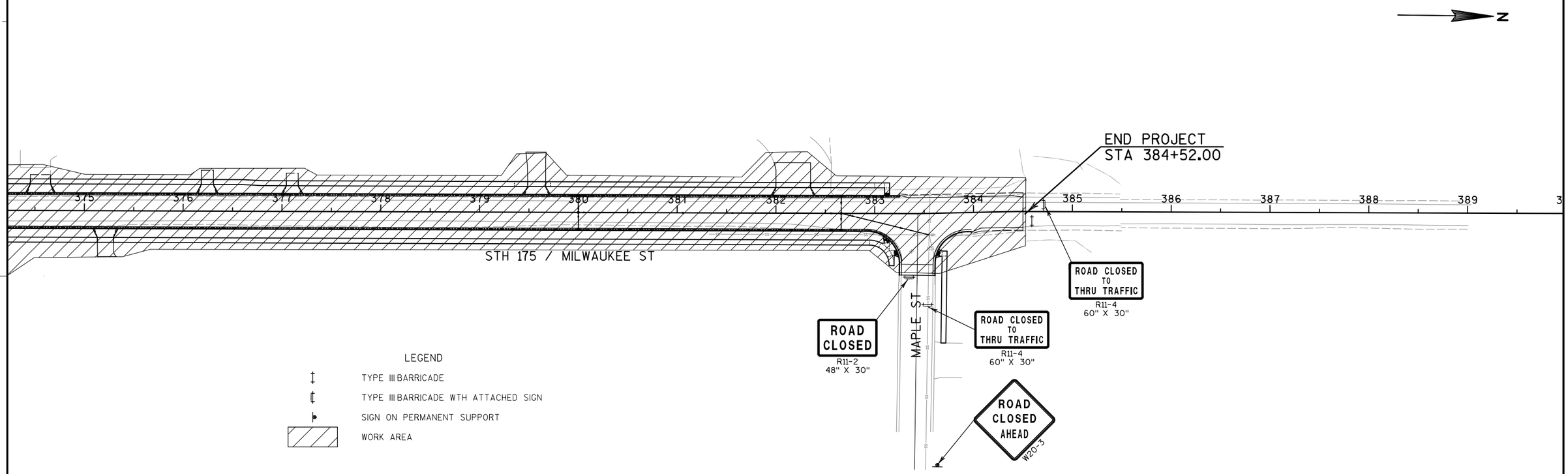

LEGEND

- TYPE III BARRICADE
- TYPE III BARRICADE WTH ATTACHED SIGN
- SIGN ON PERMANENT SUPPORT
- WORK AREA

TRAFFIC CONTROL GENERAL NOTES

1) ALL SIGNS SHALL BE PLACED IN ACCORDANCE WITH THE MANUAL ON UNIFORM TRAFFIC CONTROL DEVICES.

2) EXACT NUMBER, LOCATION AND SPACING OF SIGNS AND DEVICES MAY BE ADJUSTED TO FIT FIELD CONDITIONS AS DIRECTED BY THE ENGINEER.

3) SIGN LAYOUTS SHALL BE IN ACCORDANCE WITH THE FEDERAL HIGHWAY ADMINISTRATION MANUAL OF STANDARD HIGHWAY SIGNS. UNLESS OTHERWISE PROVIDED BY THE PLAN.

4) ANY EXISTING TRAFFIC SIGNS THAT CONFLICT WITH THIS WORK SHALL BE COVERED AS DIRECTED BY THE ENGINEER.

5) MAINTAIN ACCESS TO EXISTING SIDEWALK ON A MINIMUM OF ONE SIDE OF STH 175 AT ALL TIMES. UTILIZE TEMPORARY SIDEWALK AND TEMPORARY PEDESTRIAN SAFETY FENCE PAY ITEMS AS NEEDED.

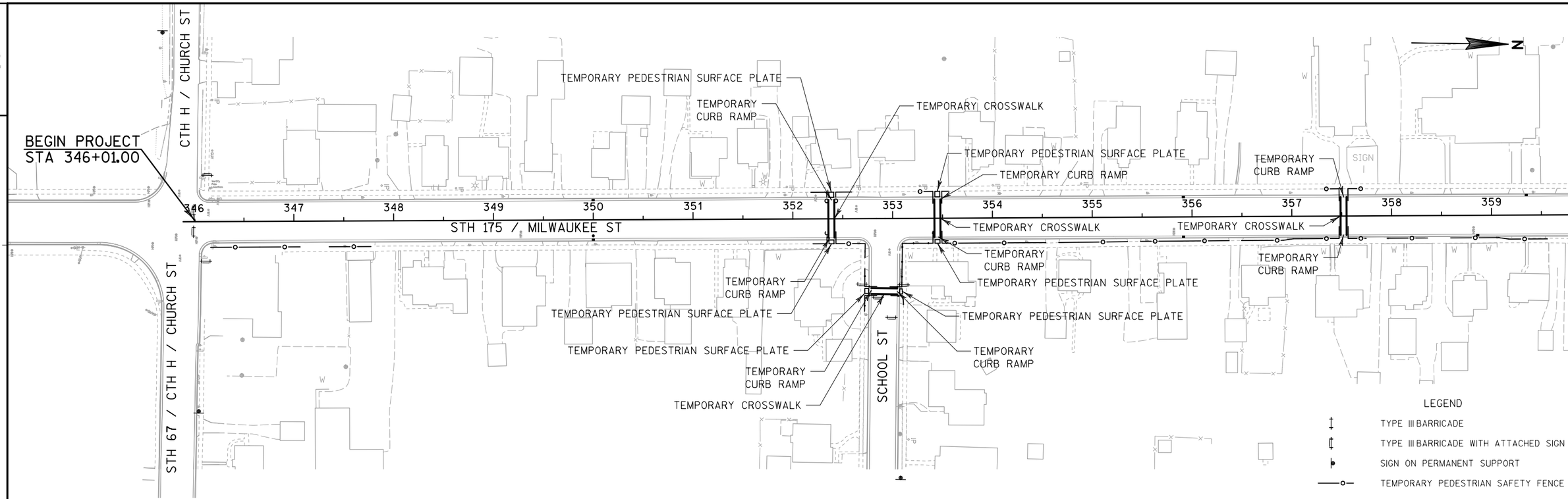

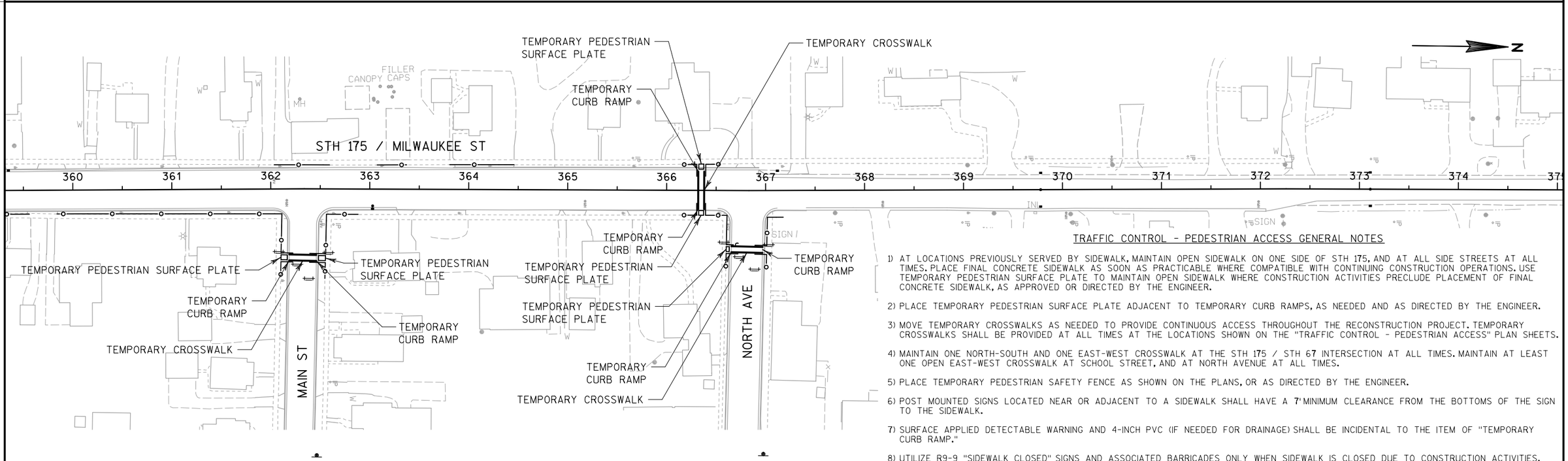

TRAFFIC CONTROL - PEDESTRIAN ACCESS GENERAL NOTES

1) AT LOCATIONS PREVIOUSLY SERVED BY SIDEWALK, MAINTAIN OPEN SIDEWALK ON ONE SIDE OF STH 175, AND AT ALL SIDE STREETS AT ALL TIMES. PLACE FINAL CONCRETE SIDEWALK AS SOON AS PRACTICABLE WHERE COMPATIBLE WITH CONTINUING CONSTRUCTION OPERATIONS. USE TEMPORARY PEDESTRIAN SURFACE PLATE TO MAINTAIN OPEN SIDEWALK WHERE CONSTRUCTION ACTIVITIES PRECLUDE PLACEMENT OF FINAL CONCRETE SIDEWALK, AS APPROVED OR DIRECTED BY THE ENGINEER.

2) PLACE TEMPORARY PEDESTRIAN SURFACE PLATE ADJACENT TO TEMPORARY CURB RAMPS, AS NEEDED AND AS DIRECTED BY THE ENGINEER.

3) MOVE TEMPORARY CROSSWALKS AS NEEDED TO PROVIDE CONTINUOUS ACCESS THROUGHOUT THE RECONSTRUCTION PROJECT. TEMPORARY CROSSWALKS SHALL BE PROVIDED AT ALL TIMES AT THE LOCATIONS SHOWN ON THE "TRAFFIC CONTROL - PEDESTRIAN ACCESS" PLAN SHEETS.

4) MAINTAIN ONE NORTH-SOUTH AND ONE EAST-WEST CROSSWALK AT THE STH 175 / STH 67 INTERSECTION AT ALL TIMES. MAINTAIN AT LEAST ONE OPEN EAST-WEST CROSSWALK AT SCHOOL STREET, AND AT NORTH AVENUE AT ALL TIMES.

5) PLACE TEMPORARY PEDESTRIAN SAFETY FENCE AS SHOWN ON THE PLANS, OR AS DIRECTED BY THE ENGINEER.

6) POST MOUNTED SIGNS LOCATED NEAR OR ADJACENT TO A SIDEWALK SHALL HAVE A 7' MINIMUM CLEARANCE FROM THE BOTTOMS OF THE SIGN TO THE SIDEWALK.

7) SURFACE APPLIED DETECTABLE WARNING AND 4-INCH PVC (IF NEEDED FOR DRAINAGE) SHALL BE INCIDENTAL TO THE ITEM OF "TEMPORARY CURB RAMP."

8) UTILIZE R9-9 "SIDEWALK CLOSED" SIGNS AND ASSOCIATED BARRICADES ONLY WHEN SIDEWALK IS CLOSED DUE TO CONSTRUCTION ACTIVITIES.

PROJECT NO: 3364-03-72	HWY: STH 175	COUNTY: DODGE	TRAFFIC CONTROL - PEDESTRIAN ACCESS	SHEET 44	E

NOTE: USE TEMPORARY PEDESTRIAN ACCESS FACILITIES AS DIRECTED BY THE ENGINEER.

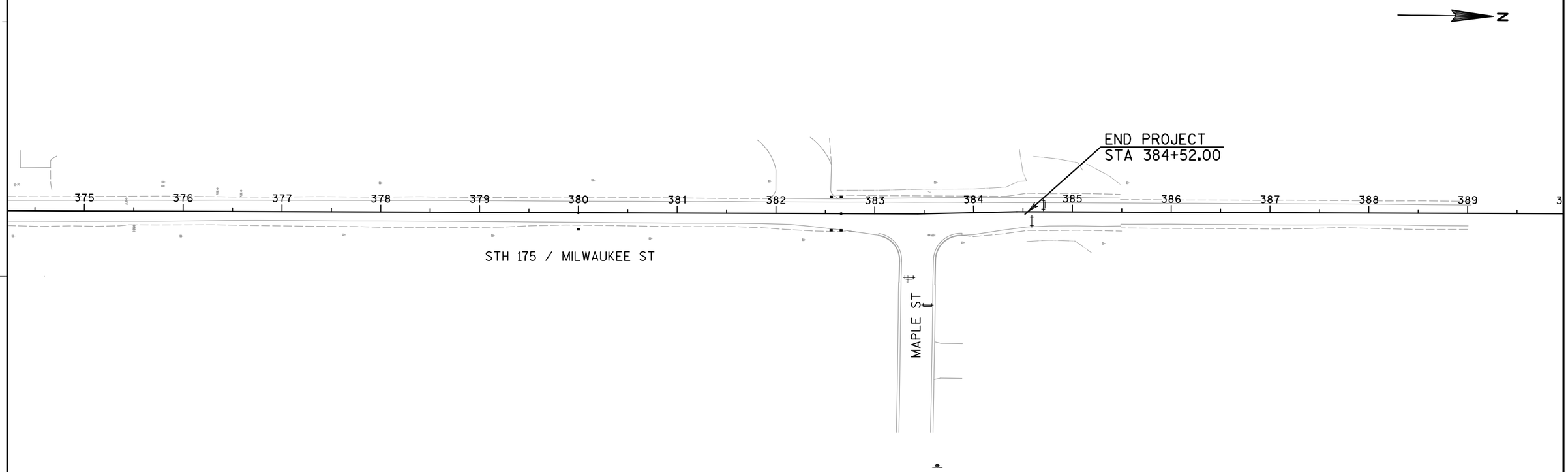

LEGEND

- TYPE III BARRICADE
- TYPE III BARRICADE WITH ATTACHED SIGN
- SIGN ON PERMANENT SUPPORT
- TEMPORARY PEDESTRIAN SAFETY FENCE

TRAFFIC CONTROL - PEDESTRIAN ACCESS GENERAL NOTES

1) AT LOCATIONS PREVIOUSLY SERVED BY SIDEWALK, MAINTAIN OPEN SIDEWALK ON ONE SIDE OF STH 175, AND AT ALL SIDE STREETS AT ALL TIMES. PLACE FINAL CONCRETE SIDEWALK AS SOON AS PRACTICABLE WHERE COMPATIBLE WITH CONTINUING CONSTRUCTION OPERATIONS. USE TEMPORARY PEDESTRIAN SURFACE PLATE TO MAINTAIN OPEN SIDEWALK WHERE CONSTRUCTION ACTIVITIES PRECLUDE PLACEMENT OF FINAL CONCRETE SIDEWALK, AS APPROVED OR DIRECTED BY THE ENGINEER.

2) PLACE TEMPORARY PEDESTRIAN SURFACE PLATE ADJACENT TO TEMPORARY CURB RAMPS, AS NEEDED AND AS DIRECTED BY THE ENGINEER.

3) MOVE TEMPORARY CROSSWALKS AS NEEDED TO PROVIDE CONTINUOUS ACCESS THROUGHOUT THE RECONSTRUCTION PROJECT. TEMPORARY CROSSWALKS SHALL BE PROVIDED AT ALL TIMES AT THE LOCATIONS SHOWN ON THE "TRAFFIC CONTROL - PEDESTRIAN ACCESS" PLAN SHEETS.

4) MAINTAIN ONE NORTH-SOUTH AND ONE EAST-WEST CROSSWALK AT THE STH 175 / STH 67 INTERSECTION AT ALL TIMES. MAINTAIN AT LEAST ONE OPEN EAST-WEST CROSSWALK AT SCHOOL STREET, AND AT NORTH AVENUE AT ALL TIMES.

5) PLACE TEMPORARY PEDESTRIAN SAFETY FENCE AS SHOWN ON THE PLANS, OR AS DIRECTED BY THE ENGINEER.

6) POST MOUNTED SIGNS LOCATED NEAR OR ADJACENT TO A SIDEWALK SHALL HAVE A 7' MINIMUM CLEARANCE FROM THE BOTTOMS OF THE SIGN TO THE SIDEWALK.

7) SURFACE APPLIED DETECTABLE WARNING AND 4-INCH PVC (IF NEEDED FOR DRAINAGE) SHALL BE INCIDENTAL TO THE ITEM OF "TEMPORARY CURB RAMP."

8) UTILIZE R9-9 "SIDEWALK CLOSED" SIGNS AND ASSOCIATED BARRICADES ONLY WHEN SIDEWALK IS CLOSED DUE TO CONSTRUCTION ACTIVITIES.

2

2 DETOUR
M4-8
24" X 12"
36" X 18" (FREEWAY)

3 175
M1-6
24" X 24"
36" X 36" (FREEWAY)

4 M06-1
21" X 21"

5 M05-1L
21" X 21"

6 DETOUR AHEAD
W20-2

7 DETOUR
M4-9R
30" X 24"

8 ROAD CLOSED TO THRU TRAFFIC
R11-4
60" X 30"

9 TYPE III BARRICADE

10 M06-1
21" X 21"

11 ROAD CLOSED 500 FT
W20-3

12 M05-1R
21" X 21"

13 ROAD CLOSED AHEAD
W20-3

14 SIDEWALK CLOSED
R9-9
24" X 12"

15 ROAD CLOSED 1000 FT
W20-3

16 R11-3
60" X 30"
ROAD CLOSED
0.25 MILES AHEAD
LOCAL TRAFFIC ONLY
TYPE III BARRICADE

17 NORTH
M3-1
24" X 12"
36" X 18" (FREEWAY)

18 SOUTH
M3-3
24" X 12"
36" X 18" (FREEWAY)

19 M06-1
21" X 21"
30" X 30" (FREEWAY)

20 END DETOUR
M4-8A
24" X 18"

21 R11-3
60" X 30"
ROAD CLOSED
1.25 MILES AHEAD
LOCAL TRAFFIC ONLY
TYPE III BARRICADE

22 ROAD CLOSED
R11-2
48" X 30"

23 M4-9L
30" X 24"
DETOUR
TYPE III BARRICADE

24 M06-2
21" X 21"
30" X 30" (FREEWAY)

25 M05-2R
21" X 21"
30" X 30" (FREEWAY)

DETOUR GENERAL NOTES

1) ALL SIGNS SHALL BE PLACED IN ACCORDANCE WITH THE MANUAL ON UNIFORM TRAFFIC CONTROL DEVICES.

2) EXACT NUMBER, LOCATION AND SPACING OF SIGNS AND DEVICES MAY BE ADJUSTED TO FIT FIELD CONDITIONS AS DIRECTED BY THE ENGINEER.

3) SIGN LAYOUTS SHALL BE IN ACCORDANCE WITH THE FEDERAL HIGHWAY ADMINISTRATION MANUAL OF STANDARD HIGHWAY SIGNS. UNLESS OTHERWISE PROVIDED BY THE PLAN.

4) ANY EXISTING TRAFFIC SIGNS THAT CONFLICT WITH THIS WORK SHALL BE COVERED AS DIRECTED BY THE ENGINEER.

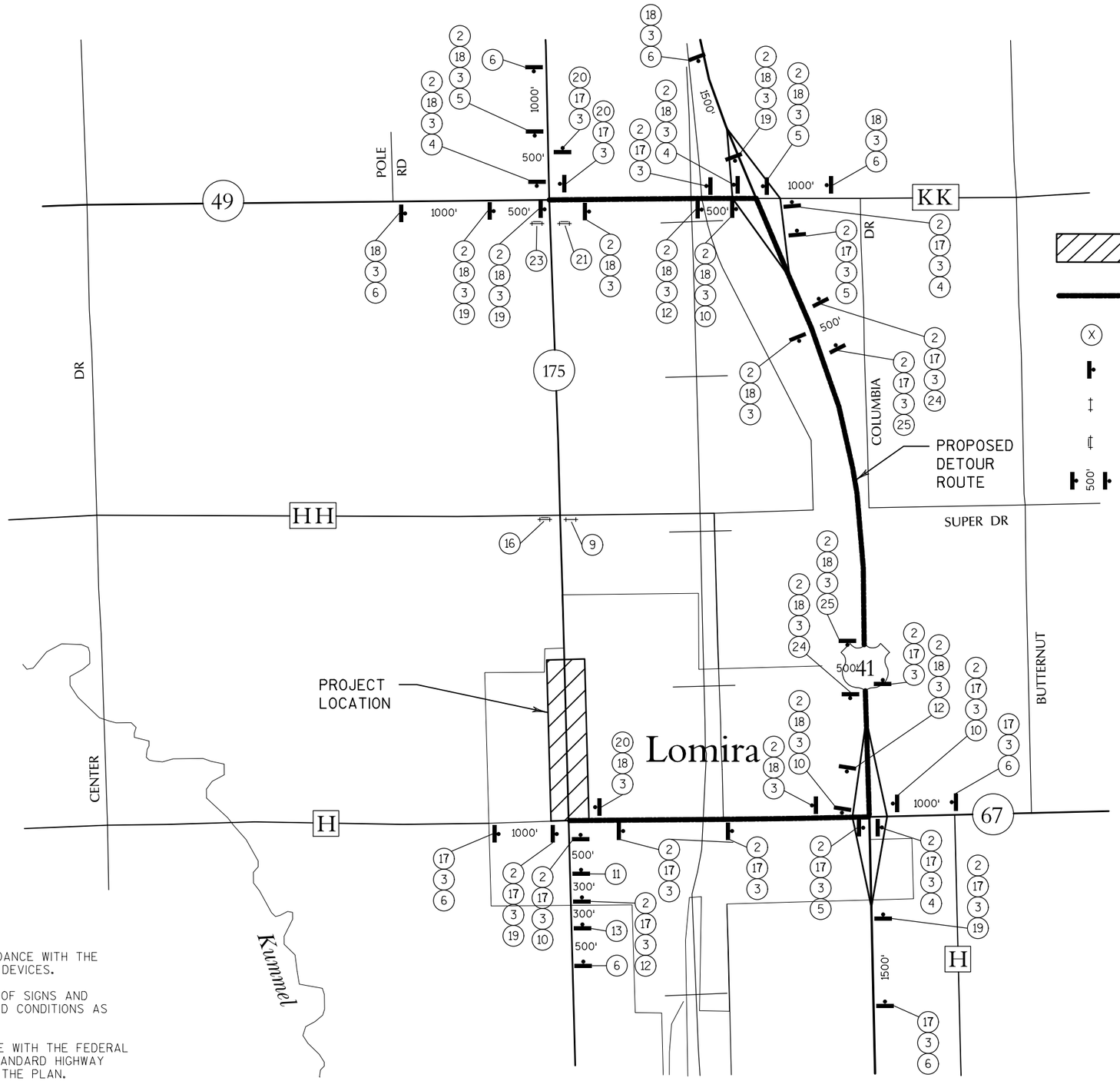

LEGEND

- WORK ZONE, CLOSED TO TRAFFIC
- DETOUR ROUTE
- (X) PROPOSED SIGN
- POST MOUNTED SIGN
- TYPE III BARRICADE
- TYPE III BARRICADE WITH ATTACHED SIGN
- 500' DISTANCE BETWEEN SIGNS

PROJECT NO: 3364-03-72	HWY: STH 175	COUNTY: DODGE	DETOUR	SHEET 46	E

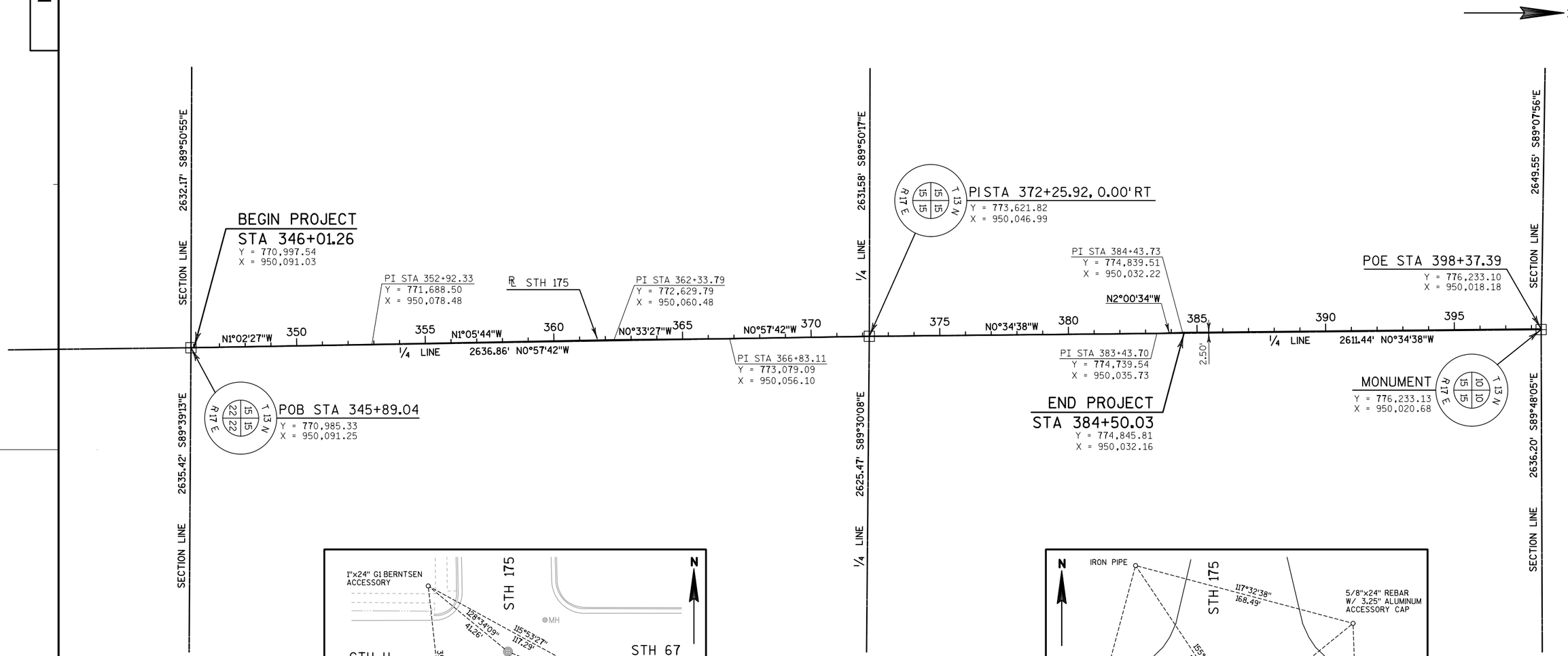

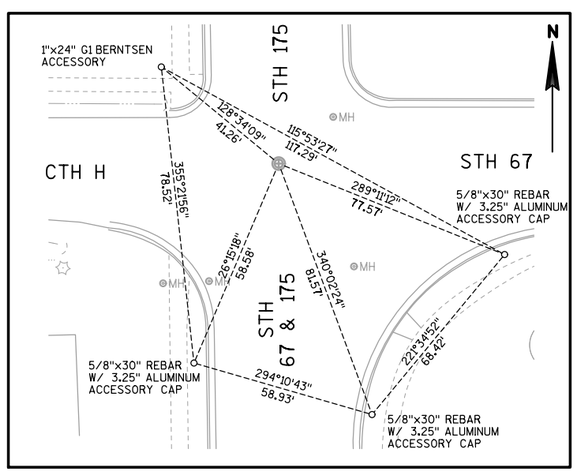

T 13 N
15 15 22 22
R 17 E

STA 345+89.04, 0.00' RT
Y = 770,985.33
X = 950,091.25

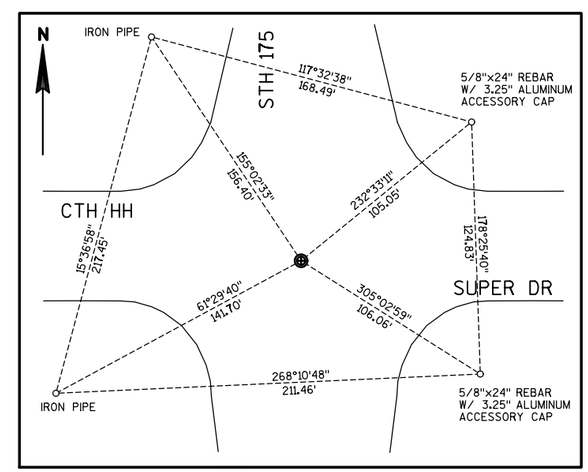

T 13 N
10 10 15 15
R 17 E

STA 398+37.39, 2.50' RT
Y = 776,233.13
X = 950,020.68

PROJECT NO: 3364-03-72	HWY: STH 175	COUNTY: DODGE	ALIGNMENT	SHEET 47	E

3

DATE 11AUG15 E S T I M A T E O F Q U A N T I T I E S

LINE NUMBER	ITEM	ITEM DESCRIPTION	UNIT	TOTAL	3364-03-72 QUANTITY
0010	201.0110	Clearing	SY	360.000	360.000
0020	201.0120	Clearing	ID	67.000	67.000
0030	201.0210	Grubbing	SY	360.000	360.000
0040	201.0220	Grubbing	ID	67.000	67.000
0050	203.0100	Removing Small Pipe Culverts	EACH	3.000	3.000
0060	204.0100	Removing Pavement	SY	9,414.000	9,414.000
0070	204.0150	Removing Curb & Gutter	LF	4,698.000	4,698.000
0080	204.0155	Removing Concrete Sidewalk	SY	1,508.000	1,508.000
0090	204.0245	Removing Storm Sewer (size) 01. 18-Inch	LF	277.000	277.000
0100	204.0280	Sealing Pipes	EACH	2.000	2.000
0110	205.0100	Excavation Common	CY	22,174.000	22,174.000
0130	209.0100	Backfill Granular	CY	42.000	42.000
0140	213.0100	Finishing Roadway (project) 01. 3364-03-72	EACH	1.000	1.000
0150	305.0110	Base Aggregate Dense 3/4-Inch	TON	1,500.000	1,500.000
0160	305.0120	Base Aggregate Dense 1 1/4-Inch	TON	13,190.000	13,190.000
0170	312.0110	Select Crushed Material	TON	15,929.000	15,929.000
0180	416.0160	Concrete Driveway 6-Inch	SY	1,345.000	1,345.000
0190	416.0190	Concrete Driveway 9-Inch	SY	235.000	235.000
0200	440.4410.S	Incentive IRI Ride	DOL	2,916.000	2,916.000
0210	455.0120	Asphaltic Material PG64-28	TON	254.000	254.000
0220	455.0605	Tack Coat	GAL	939.000	939.000
0230	460.1101	HMA Pavement Type E-1	TON	4,604.000	4,604.000
0240	460.2000	Incentive Density HMA Pavement	DOL	2,950.000	2,950.000
0250	460.4000	HMA Cold Weather Paving	TON	1,152.000	1,152.000
0260	465.0120	Asphaltic Surface Driveways and Field Entrances	TON	49.000	49.000
0270	521.0112	Culvert Pipe Corrugated Steel 12-Inch	LF	83.000	83.000
0280	521.1012	Apron Endwalls for Culvert Pipe Steel 12-Inch	EACH	4.000	4.000
0290	523.0524	Apron Endwalls for Culvert Pipe Reinforced Concrete Horizontal Elliptical 24x38-Inch	EACH	1.000	1.000
0300	601.0411	Concrete Curb & Gutter 30-Inch Type D	LF	7,627.000	7,627.000
0310	601.0600	Concrete Curb Pedestrian	LF	107.000	107.000
0320	602.0410	Concrete Sidewalk 5-Inch	SF	24,131.000	24,131.000
0330	602.0515	Curb Ramp Detectable Warning Field Natural Patina	SF	208.000	208.000
0340	602.1500	Concrete Steps	SF	11.000	11.000
0350	606.0200	Riprap Medium	CY	126.000	126.000
0360	608.0312	Storm Sewer Pipe Reinforced Concrete Class III 12-Inch	LF	181.000	181.000
0370	608.0315	Storm Sewer Pipe Reinforced Concrete Class III 15-Inch	LF	72.000	72.000
0380	608.0324	Storm Sewer Pipe Reinforced Concrete Class III 24-Inch	LF	351.000	351.000
0390	608.0412	Storm Sewer Pipe Reinforced Concrete Class IV 12-Inch	LF	96.000	96.000
0400	608.0415	Storm Sewer Pipe Reinforced Concrete Class IV 15-Inch	LF	358.000	358.000
0410	608.0418	Storm Sewer Pipe Reinforced Concrete Class IV 18-Inch	LF	8.000	8.000
0420	610.0124	Storm Sewer Pipe Reinforced Concrete Horizontal Elliptical Class HE-III 24x38-Inch	LF	331.000	331.000
0430	611.0530	Manhole Covers Type J	EACH	6.000	6.000

3

3

DATE 11AUG15 E S T I M A T E O F Q U A N T I T I E S

LINE NUMBER	ITEM	ITEM DESCRIPTION	UNIT	TOTAL	3364-03-72 QUANTITY
0440	611.0639	Inlet Covers Type H-S	EACH	18.000	18.000
0450	611.1004	Catch Basins 4-FT Diameter	EACH	1.000	1.000
0460	611.1230	Catch Basins 2x3-FT	EACH	16.000	16.000
0470	611.2004	Manholes 4-FT Diameter	EACH	3.000	3.000
0480	611.2006	Manholes 6-FT Diameter	EACH	4.000	4.000
0490	611.8105	Adjusting Catch Basin Covers	EACH	17.000	17.000
0500	611.8110	Adjusting Manhole Covers	EACH	9.000	9.000
0510	619.1000	Mobilization	EACH	0.710	0.710
0520	624.0100	Water	MGAL	295.000	295.000
0530	625.0100	Topsoil	SY	7,900.000	7,900.000
0540	627.0200	Mulching	SY	4,450.000	4,450.000
0550	628.1504	Silt Fence	LF	2,107.000	2,107.000
0560	628.1520	Silt Fence Maintenance	LF	2,107.000	2,107.000
0570	628.1905	Mobilizations Erosion Control	EACH	11.000	11.000
0580	628.1910	Mobilizations Emergency Erosion Control	EACH	6.000	6.000
0590	628.7005	Inlet Protection Type A	EACH	9.000	9.000
0600	628.7015	Inlet Protection Type C	EACH	9.000	9.000
0610	628.7020	Inlet Protection Type D	EACH	25.000	25.000
0620	628.7504	Temporary Ditch Checks	LF	48.000	48.000
0630	628.7555	Culvert Pipe Checks	EACH	11.000	11.000
0640	628.7570	Rock Bags	EACH	71.000	71.000
0650	629.0205	Fertilizer Type A	CWT	11.000	11.000
0660	630.0130	Seeding Mixture No. 30	LB	80.000	80.000
0670	631.0300	Sod Water	MGAL	180.000	180.000
0680	631.1000	Sod Lawn	SY	7,900.000	7,900.000
0690	634.0614	Posts Wood 4x6-Inch X 14-FT	EACH	7.000	7.000
0700	634.0616	Posts Wood 4x6-Inch X 16-FT	EACH	17.000	17.000
0710	634.0618	Posts Wood 4x6-Inch X 18-FT	EACH	4.000	4.000
0720	634.0620	Posts Wood 4x6-Inch X 20-FT	EACH	3.000	3.000
0730	637.2210	Signs Type II Reflective H	SF	197.060	197.060
0740	637.2230	Signs Type II Reflective F	SF	90.000	90.000
0750	638.2602	Removing Signs Type II	EACH	29.000	29.000
0760	638.3000	Removing Small Sign Supports	EACH	29.000	29.000
0770	642.5001	Field Office Type B	EACH	1.000	1.000
0780	643.0200	Traffic Control Surveillance and Maintenance (project) 01. 3364-03-72	DAY	320.000	320.000
0790	643.0420	Traffic Control Barricades Type III	DAY	8,960.000	8,960.000
0800	643.0705	Traffic Control Warning Lights Type A	DAY	10,240.000	10,240.000
0810	643.0900	Traffic Control Signs	DAY	7,680.000	7,680.000
0820	643.1050	Traffic Control Signs PCMS	DAY	14.000	14.000
0830	643.2000	Traffic Control Detour (project) 01. 3364-03-72	EACH	1.000	1.000
0840	643.3000	Traffic Control Detour Signs	DAY	48,320.000	48,320.000
0850	644.1430.S	Temporary Pedestrian Surface Plate	SF	1,275.000	1,275.000
0860	644.1601.S	Temporary Curb Ramp	EACH	16.000	16.000
0870	644.1616.S	Temporary Pedestrian Safety Fence	LF	3,000.000	3,000.000
0880	645.0130	Geotextile Fabric Type R	SY	307.000	307.000
0890	646.0106	Pavement Marking Epoxy 4-Inch	LF	12,650.000	12,650.000
0900	646.0600	Removing Pavement Markings	LF	230.000	230.000
0910	647.0566	Pavement Marking Stop Line Epoxy 18-Inch	LF	93.000	93.000
0920	647.0796	Pavement Marking Crosswalk Epoxy 24-Inch	LF	1,630.000	1,630.000
0930	648.0100	Locating No-Passing Zones	MI	0.730	0.730
0940	650.4000	Construction Staking Storm Sewer	EACH	49.000	49.000
0950	650.4500	Construction Staking Subgrade	LF	3,851.000	3,851.000

3

DATE 11AUG15 E S T I M A T E O F Q U A N T I T I E S

LINE NUMBER	ITEM	ITEM DESCRIPTION	UNIT	TOTAL	3364-03-72 QUANTITY
0960	650.5000	Construction Staking Base	LF	3,851.000	3,851.000
0970	650.5500	Construction Staking Curb Gutter and Curb & Gutter	LF	7,728.000	7,728.000
0980	650.6000	Construction Staking Pipe Culverts	EACH	2.000	2.000
0990	650.9910	Construction Staking Supplemental Control (project) 01. 3364-03-72	LS	1.000	1.000
1000	650.9920	Construction Staking Slope Stakes	LF	3,851.000	3,851.000
1010	690.0150	Sawing Asphalt	LF	525.000	525.000
1020	690.0250	Sawing Concrete	LF	850.000	850.000
1030	ASP.1T0A	On-the-Job Training Apprentice at $5.00/HR	HRS	700.000	700.000
1040	ASP.1T0G	On-the-Job Training Graduate at $5.00/HR	HRS	400.000	400.000
1050	SPV.0045	Special 01. Temporary Crosswalk	DAY	1,650.000	1,650.000
1150	SPV.0060	Special 15. Construction Staking Curb Ramps	EACH	23.000	23.000
1270	SPV.0090	Special 20. Pipe Underdrain 6-Inch Special	LF	7,627.000	7,627.000
1290	SPV.0180	Special 02. Geogrid Reinforcement	SY	19,784.000	19,784.000

3

3

3

CLEARING AND GRUBBING ITEMS

CATEGORY	ROADWAY	STATION	TO	STATION	201.0110 CLEARING SY	201.0120 CLEARING ID	201.0210 GRUBBING SY	201.0220 GRUBBING ID
0010								
	STH 175	378+50	-	379+50	--	48	--	48
				SUBTOTAL	--	48	--	48
0030								
	SETTLING BASIN				360	19	360	19
				SUBTOTAL	360	19	360	19
	TOTAL				360	67	360	67

MISC REMOVALS

CATEGORY	ROADWAY	STATION	TO	STATION	O/S	203.0100 REMOVING SMALL PIPE CULVERTS EA	204.0245 REMOVING STORM SEWER 18" LF
0010	STH 175	369+72				--	53
	STH 175	396+73			RT	--	3
	STH 175	379+29	-	379+93	LT	1	--
	STH 175	381+99	-	382+34	LT	1	--
	STH 175	382+59	-	382+94	LT	1	--
	STH 175	381+32		383+53	RT	--	221
	SUBTOTAL					3	277

REMOVING CURB AND GUTTER

CATEGORY	ROADWAY	STATION	TO	STATION	O/S	204.0150 REMOVING CURB AND GUTTER LF
0010	STH 175	346+07	-	352+77	RT	670
	STH 175	353+06	-	362+17	RT	911
	STH 175	362+48	-	366+65	RT	417
	STH 175	366+98	-	372+06	RT	508
	STH 175	346+07	-	366+98	LT	2091
	STH 175	352+48	-	352+63	LT	15
	STH 175	353+21	-	353+37	LT	16
	STH 175	353+13	-	353+39	RT	44
	STH 175	362+07	-	362+20	LT	13
	STH 175	362+48	-	362+61	LT	13
	TOTAL					4,698

REMOVING PAVEMENT

CATEGORY	ROADWAY	STATION	TO	STATION	O/S	204.0100 REMOVING PAVEMENT SY
0010	STH 175	346+01	-	384+52	11' LT TO 11' RT	9,414
	TOTAL					9,414

REMOVING CONCRETE SIDEWALK

CATEGORY	ROADWAY	STATION	TO	STATION	O/S	204.0155 REMOVING CONCRETE SIDEWALK SY
0010	STH 175	SW CORNER OF CHURCH AND 175				12.7
	STH 175	SE CORNER OF CHURCH AND 175				19.2
	STH 175	346+04	-	346+27	LT	18.3
	STH 175	346+07	-	347+06	RT	123.1
	STH 175	347+35	-	347+77	RT	42.4
	STH 175	347+94	-	347+99	LT	2.6
	STH 175	348+13	-	348+55	LT	22.3
	STH 175	348+01	-	348+36	RT	18.9
	STH 175	348+86	-	348+90	RT	2.0
	STH 175	349+02	-	349+22	RT	11.1
	STH 175	350+38	-	350+43	RT	2.8
	STH 175	350+62	-	350+67	RT	2.8
	STH 175	351+26	-	351+75	LT	27.8
	STH 175	351+87	-	351+94	LT	3.9
	STH 175	352+48	-	352+67	LT	13.9
	STH 175	352+87	-	352+94	LT	3.9
	STH 175	353+21	-	353+37	LT	11.0
	STH 175	352+46	-	352+76	RT	24.3
	STH 175	353+07	-	353+39	RT	29.1
	STH 175	354+48	-	354+53	RT	2.8
	STH 175	354+66	-	354+71	RT	2.8
	STH 175	355+30	-	355+35	RT	2.8
	STH 175	355+48	-	355+53	RT	2.8
	STH 175	354+90	-	355+01	LT	6.2
	STH 175	355+12	-	355+67	LT	30.6
	STH 175	356+18	-	356+23	LT	2.8
	STH 175	356+32	-	356+37	LT	2.8
	STH 175	356+32	-	356+37	RT	2.8
	STH 175	356+49	-	357+74	RT	81.7
	STH 175	357+47	-	357+57	LT	5.9
	STH 175	357+95	-	358+36	RT	27.0
	STH 175	358+52	-	358+60	LT	4.0
	STH 175	358+59	-	359+56	RT	62.9
	STH 175	359+34	-	359+36	RT	1.8
	STH 175	359+15	-	359+35	LT	14.8
	STH 175	359+83	-	360+04	RT	11.6
	STH 175	360+84	-	360+92	LT	4.4
	STH 175	361+04	-	361+12	LT	4.4
	STH 175	361+90	-	362+16	RT	34.7
	STH 175	362+03	-	362+59	LT	48.3
	STH 175	362+50	-	363+30	RT	66.4
	STH 175	363+08	-	363+37	LT	27.4
	STH 175	363+81	-	363+86	LT	2.8
	STH 175	363+42	-	364+21	RT	54.8
	STH 175	364+41	-	364+46	LT	2.8
	STH 175	364+81	-	364+87	LT	3.3
	STH 175	364+60	-	364+98	RT	21.3
	STH 175	365+19	-	365+24	RT	2.8
	STH 175	365+74	-	366+73	LT	58.1
	STH 175	366+47	-	366+63	RT	14.4
	STH 175	366+87	-	367+26	LT	25.7
	STH 175	367+41	-	369+24	LT	102.1
	STH 175	366+99	-	368+07	RT	80.0
	STH 175	368+24	-	369+48	RT	68.9
	STH 175	369+48	-	370+61	LT	62.7
	STH 175	370+76	-	371+47	LT	39.1
	STH 175	369+60	-	370+27	RT	36.8
	STH 175	370+62	-	371+48	RT	48.0
	STH 175	371+59	-	372+31	LT	40.4
	TOTAL					1,508

SEALING PIPES

CATEGORY	ROADWAY	STATION	O/S	204.0280 SEALING PIPES EA
0010	STH 175	369+67	329' LT	1
	STH 175	369+72	33' LT	1
	SUBTOTAL			2

3

BACKFILL GRANULAR

CATEGORY	ROADWAY	STATION	TO	STATION	209.0100 CY
0010					
	STH 175	347+00	-	356+00	42
	TOTAL				42

FINISHING ROADWAY

CATEGORY	ROADWAY	213.0100 FINISHING ROADWAY 3364-03-72 EA
0010		
	PROJECT	1
	TOTAL	1

3

EARTHWORK SUMMARY

CATEGORY	STA TO STA	LOCATION	205.0100 COMMON EXCAVATION CUT (2) CY	EBS (3) CY	SALVAGED/ UNUSABLE PAVEMENT MATERIAL (4) CY	AVAILABLE MATERIAL (5) CY	UNEXPANDED FILL CY	EXPANDED FILL (13) FACTOR 1.42 CY	MASS ORDINATE +/- (14) CY	WASTE CY	208.0100 BORROW CY	COMMENT:
0010	346+01 TO 384+50	MAINLINE	16,234	--	3,572	12,662	711	1,009	11,653			
		UNDISTRIBUTED	--	1,623	--	--	--	--	--			10% OF CUT
		CATEGORY 0010 SUBTOTAL	16,234	1,623	3,572	12,662	711	1,009	11,653	11,653	--	
			17,857									
0020	346+01 TO 368+00	PARKING LANE	3,778	--	543	3,235	8	12	3,223			
		UNDISTRIBUTED	--	378	--	--	--	--	--			10% OF CUT
		CATEGORY 0020 SUBTOTAL	3,778	378	543	3,235	8	12	3,223	3,223	--	
			4,156									
0030		SETTLING BASIN	161	--	--	161	47	67	94			
			161	--	--	161	47	67	94	94	--	
			161									
		GRAND TOTALS	20,173	2,001	4,115	16,058	766	1,088	14,970	14,970	--	
		TOTALS	22,174								--	

1) Common Excavation is the sum of the Cut and EBS Excavation columns. Item number 205.0100
2) Salvaged/Unsuable Pavement Material is included in Cut.
3) EBS Excavation to be backfilled w ith Select Crushed material, is to be w asted, and is not included in the Mass Ordinate.
4) Salvaged/Unusable Pavement Material
5) Available Material = Cut - Salvaged/Unusuable Pavement Material
13) Expanded Fill. Factor = 1.42 (Recommended by Soils Report)

Expanded Fill = Unexpanded Fill * Fill Factor

14) The Mass Ordinate + or - Qty calculated for the Division. Plus quantity indicates an excess of material w ithin the Division. Minus indicates a shortage of material w ithin the Division.

3

BASE AGGREGATE ITEMS

CATEGORY	ROADWAY	STATION	TO	STATION	O/S	305.0110 BASE AGGREGATE DENSE ¾-Inch TON	305.0120 BASE AGGREGATE DENSE 1¼-INCH TON	312.0110 SELECT CRUSHED MATERIAL TON	624.0100 WATER MGAL
0010	STH 175	346+01	-	384+52	LT/RT		10,587	10,058	195.23
	SIDEWALKS	SW CORNER OF CHURCH AND 175			--	4	--	--	0.04
	" "	SE CORNER OF CHURCH AND 175			--	7	--	--	0.07
	" "	346+04	-	346+27	LT	6	--	--	0.06
	" "	346+07	-	347+06	RT	43	--	--	0.40
	" "	347+35	-	347+77	RT	15	--	--	0.14
	" "	347+94	-	347+99	LT	1	--	--	0.01
	" "	348+13	-	348+55	LT	8	--	--	0.08
	" "	348+01	-	348+36	RT	7	--	--	0.07
	" "	348+86	-	348+90	RT	1	--	--	0.01
	" "	349+02	-	349+22	RT	4	--	--	0.04
	" "	350+38	-	350+43	RT	1	--	--	0.01
	" "	350+62	-	350+67	RT	1	--	--	0.01
	" "	351+26	-	351+75	LT	10	--	--	0.10
	" "	351+87	-	351+94	LT	1	--	--	0.01
	" "	352+48	-	352+67	LT	5	--	--	0.05
	" "	352+87	-	352+94	LT	1	--	--	0.01
	" "	353+21	-	353+37	LT	4	--	--	0.04
	" "	352+46	-	352+76	RT	9	--	--	0.09
	" "	353+07	-	353+39	RT	10	--	--	0.10
	" "	354+48	-	354+53	RT	1	--	--	0.01
	" "	354+66	-	354+71	RT	1	--	--	0.01
	" "	355+30	-	355+35	RT	1	--	--	0.01
	" "	355+48	-	355+53	RT	1	--	--	0.01
	" "	354+90	-	355+01	LT	2	--	--	0.02
	" "	355+12	-	355+67	LT	11	--	--	0.11
	" "	356+18	-	356+23	LT	1	--	--	0.01
	" "	356+32	-	356+37	LT	1	--	--	0.01
	" "	356+32	-	356+37	RT	1	--	--	0.01
	" "	356+49	-	357+74	RT	29	--	--	0.28
	" "	357+47	-	357+57	LT	2	--	--	0.02
	" "	357+95	-	358+36	RT	9	--	--	0.09
	" "	358+59	-	359+56	RT	22	--	--	0.21
	" "	359+34	-	359+36	RT	1	--	--	0.01
	" "	359+15	-	359+35	LT	5	--	--	0.05
	" "	359+83	-	360+04	RT	4	--	--	0.04
	" "	360+84	-	360+92	LT	2	--	--	0.02
	" "	361+04	-	361+12	LT	2	--	--	0.02
	" "	361+90	-	362+16	RT	12	--	--	0.12
	" "	362+03	-	362+59	LT	17	--	--	0.16
	" "	362+50	-	363+30	RT	23	--	--	0.22
	" "	363+08	-	363+37	LT	10	--	--	0.10
	" "	363+81	-	363+86	LT	1	--	--	0.01
	" "	363+42	-	364+21	RT	19	--	--	0.18
	" "	364+41	-	364+46	LT	1	--	--	0.01
	" "	364+81	-	364+87	LT	1	--	--	0.01
	" "	364+60	-	364+98	RT	7	--	--	0.07
	" "	365+19	-	365+24	RT	1	--	--	0.01
	" "	365+74	-	366+73	LT	20	--	--	0.19
	" "	366+47	-	366+63	RT	5	--	--	0.05
	" "	366+87	-	367+26	LT	9	--	--	0.09
	" "	367+41	-	369+24	LT	36	--	--	0.34
	" "	366+99	-	368+07	RT	28	--	--	0.27
	" "	368+24	-	369+48	RT	24	--	--	0.23
	" "	369+48	-	370+61	LT	22	--	--	0.21

3

BASE AGGREGATE ITEMS

CATEGORY	ROADWAY	STATION	TO	STATION	O/S	305.0110 BASE AGGREGATE DENSE ¾-Inch TON	305.0120 BASE AGGREGATE DENSE 1¼-INCH TON	312.0110 SELECT CRUSHED MATERIAL TON	624.0100 WATER MGAL
0010	SIDEWALKS	370+76	-	371+47	LT	14	--	--	0.13
	" "	369+60	-	370+27	RT	13	--	--	0.12
	" "	370+62	-	371+48	RT	17	--	--	0.16
	" "	371+59	-	372+31	LT	14	--	--	0.13
	" "	372+49	-	373+92	LT	28	--	--	0.27
	" "	371+83	-	374+00	RT	42	--	--	0.39
	" "	374+12	-	374+45	LT	7	--	--	0.07
	" "	374+66	-	376+18	LT	30	--	--	0.29
	" "	374+12	-	375+13	RT	20	--	--	0.19
	" "	376+31	-	377+04	LT	14	--	--	0.13
	" "	375+29	-	383+26	RT	161	--	--	1.53
	" "	377+17	-	379+49	LT	45	--	--	0.42
	" "	379+67	-	382+00	LT	45	--	--	0.42
	" "	382+35	-	383+17	LT	17	--	--	0.16
	" "	383+64	-	383+74	RT	4	--	--	0.04
	" "			347+21	RT	10	--	--	0.10
	" "			347+37	LT	4	--	--	0.04
	" "			348+00	LT	11	--	--	0.11
	" "			348+00	RT	9	--	--	0.09
	" "			348+60	RT	4	--	--	0.04
	" "			349+00	RT	5	--	--	0.05
	" "			349+22	LT	3	--	--	0.03
0010	DRIVEWAYS			349+55	RT	2	--	--	0.02
	" "			349+64	LT	3	--	--	0.03
	" "			349+85	RT	3	--	--	0.03
	" "			350+50	RT	7	--	--	0.07
	" "			350+44	LT	4	--	--	0.04
	" "			350+70	LT	3	--	--	0.03
	" "			351+63	RT	3	--	--	0.03
	" "			351+82	LT	6	--	--	0.06
	" "			352+06	LT	3	--	--	0.03
	" "			352+77	LT	14	--	--	0.13
	" "			352+77	RT	2	--	--	0.02
	" "			353+65	LT	5	--	--	0.05
	" "			354+60	LT	5	--	--	0.05
	" "			354+60	RT	5	--	--	0.05
	" "			355+05	LT	6	--	--	0.06
	" "			355+42	RT	6	--	--	0.06
	" "			356+27	LT	7	--	--	0.07
	" "			356+55	LT	6	--	--	0.06
	" "			356+43	RT	7	--	--	0.07
	" "			357+84	RT	17	--	--	0.16
	" "			357+92	LT	6	--	--	0.06
	" "			358+50	RT	16	--	--	0.15
	" "			359+62	RT	17	--	--	0.16
	" "			359+77	LT	6	--	--	0.06
	" "			360+19	LT	3	--	--	0.03
	" "			361+00	LT	5	--	--	0.05
	" "			361+97	LT	2	--	--	0.02
	" "			363+36	RT	10	--	--	0.10
	" "			364+50	RT	14	--	--	0.13
	" "			365+00	RT	13	--	--	0.12
	" "			365+71	RT	2	--	--	0.02
	" "			366+79	LT	10	--	--	0.10
	" "			367+33	LT	7	--	--	0.07

3

BASE AGGREGATE ITEMS

CATEGORY	ROADWAY	STATION	TO	STATION	O/S	305.0110 BASE AGGREGATE DENSE ¾-Inch TON	305.0120 BASE AGGREGATE DENSE 1¼-INCH TON	312.0110 SELECT CRUSHED MATERIAL TON	624.0100 WATER MGAL
0010	DRIVEWAYS			368+16	RT	22	--	--	0.21
	" "			369+37	LT	14	--	--	0.13
	" "			369+50	RT	8	--	--	0.08
	" "			370+50	RT	20	--	--	0.19
	" "			370+63	LT	9	--	--	0.09
	" "			371+66	RT	20	--	--	0.19
	" "			371+50	LT	12	--	--	0.12
	" "			372+39	LT	11	--	--	0.11
	" "			374+05	LT	12	--	--	0.12
	" "			374+05	RT	8	--	--	0.08
	" "			374+50	LT	12	--	--	0.12
	" "			375+21	RT	10	--	--	0.10
	" "			376+24	LT	8	--	--	0.08
	" "			377+11	LT	7	--	--	0.07
	" "			379+50	LT	10	--	--	0.10
	" "			381+17	LT	18	--	--	0.17
	" "			363+75	LT	62	--	--	0.59
	" "			364+62	LT	12	--	--	0.12
	SHOULDERS	383+25	-	384+50	LT	7	--	--	0.07
	" "	383+97	-	384+50	RT	6	--	--	0.06
	STH 175	EBS		UNDISTRIBUTED		--	--	2,466	23.32
	" "	DUST CONTROL		UNDISTRIBUTED		--	--	--	5.00
	SUBTOTAL					1,500	10,587	12,524	238.00
0020									
	STH 175	346+01	-	368+62	11' LT TO 19' LT	--	1,301	1,236	24.07
	STH 175	346+01	-	368+62	11' RT TO 19' RT	--	1,301	1,236	24.07
	STH 175	EBS		UNDISTRIBUTED		--	--	933	8.85
	SUBTOTAL					--	2,603	3,405	57.00
	TOTAL					1,500	13,190	15,929	295.00

ASPHALTIC PAVING

CATEGORY	ROADWAY	STATION	TO	STATION	O/S	455.0120 ASPHALTIC MATERIAL PG64-28 TON	455.0605 TACK COAT GAL	460.1101 HMA PAVEMENT TYPE E-1 TON	460.4000 HMA COLD WEATHER PAVING TON	465.0120 ASPHALTIC SURFACE DRIVEWAYS AND FIELD ENTRANCES TON
0010										
	STH 175	346+01	-	384+52	LT/RT	186	689	3,376	844	--
	STH 175	346+01	-	346+18	RT	--	1	4	1	--
	STH 175	346+01	-	346+18	LT	--	1	4	1	--
	SCHOOL STREET	352+66	-	353+17	RT	2	7	37	9	--
	MAIN STREET	362+04	-	362+62	RT	2	7	35	9	--
	DRIVEWAYS	346+85	-	347+53	RT	--	--	--	--	8
		348+90	-	349+02	RT	--	--	--	--	2
		350+43	-	350+62	RT	--	--	--	--	1
		355+01	-	355+12	LT	--	--	--	--	1
		360+92	-	361+04	LT	--	--	--	--	1
		367+26	-	367+41	LT	--	--	--	--	3
		374+01	-	374+11	RT	--	--	--	--	6
		375+13	-	375+33	RT	--	--	--	--	4
		379+47	-	379+67	LT	--	--	--	--	10
		381+98	-	382+35	LT	--	--	--	--	13
	SUBTOTAL					190	705	3,456	864	49
0020										
	STH 175	346+01	-	368+00	11' LT TO 19' LT	32	117	574	144	--
	STH 175	346+01	-	368+00	11' RT TO 19' RT	32	117	574	144	--
	SUBTOTAL					64	234	1,148	288	--
	TOTAL					254	939	4,604	1,152	49

CULVERT PIPE ITEMS

CATEGORY	ROADWAY	STATION	O/S	TO	STATION	O/S	521.0112 CULVERT PIPE CORRUGATED STEEL 12-INCH LF	MINIMUM STEEL PIPE THICKNESS IN	521.1012 APRON ENDWALLS FOR CULVERT PIPE STEEL 12-INCH EA	523.0524 APRON ENDWALLS FOR CULVERT PIPE CONCRETE HORIZONTAL ELLIPTICAL 24x38-INCH EA
0010										
	STH 175	369+73.16	329.5' LT				--	--	--	1
	STH 175	379+75	38.3' LT	TO	379+41	42.0' LT	34	0.064	2	--
	STH 175	381+93	39.7' LT	TO	382+42	39.7' LT	49	0.064	2	--
	TOTAL						83		4	1

NOTE: USE CLASS "B" BEDDING (SEE SDD "CLASS 'B' BEDDING FOR CULVERT PIPE OR STORM SEWER") FOR ALL PIPES; COST INCIDENTAL TO PIPE.

3

CONCRETE ITEMS

CATEGORY	ROADWAY	STATION TO STATION	O/S	416.0160 CONCRETE DRIVEWAY 6-INCH SY	416.0190 CONCRETE DRIVEWAY 9-INCH SY	601.0411 CONCRETE CURB & GUTTER 30-INCH TYPE D LF	601.0600 CONCRETE CURB PEDESTRIAN LF	602.0410 CONCRETE SIDEWALK 5-INCH SF
0010	STH 175	346+07 - 352+77	RT	--	--	716	--	--
	STH 175	353+06 - 362+17	RT	--	--	973	--	--
	STH 175	362+48 - 366+65	RT	--	--	472	--	--
	STH 175	366+98 - 383+27	RT	--	--	1677	--	--
	STH 175	383+63 - 383+99	RT	--	--	58	--	--
	STH 175	346+07 - 383+25	LT	--	--	3731	--	--
	STH 175	352+48 - 352+63	LT	--	--	--	15	--
	STH 175	353+21 - 353+37	LT	--	--	--	16	--
	STH 175	353+13 - 353+39	RT	--	--	--	44	--
	STH 175	362+07 - 362+20	LT	--	--	--	13	--
	STH 175	362+42 - 362+61	LT	--	--	--	19	--
	SIDEWALK	SW CORNER OF CHUR	--	--	--	--	--	114
	" "	SE CORNER OF CHURC	--	--	--	--	--	173
	" "	346+04 - 346+27	LT	--	--	--	--	165
	" "	346+07 - 347+06	RT	--	--	--	--	1108
	" "	347+35 - 347+77	RT	--	--	--	--	382
	" "	347+94 - 347+99	LT	--	--	--	--	23
	" "	348+13 - 348+55	LT	--	--	--	--	201
	" "	348+01 - 348+36	RT	--	--	--	--	170
	" "	348+86 - 348+90	RT	--	--	--	--	18
	" "	349+02 - 349+22	RT	--	--	--	--	100
	" "	350+38 - 350+43	RT	--	--	--	--	25
	" "	350+62 - 350+67	RT	--	--	--	--	25
	" "	351+26 - 351+75	LT	--	--	--	--	250
	" "	351+87 - 351+94	LT	--	--	--	--	35
	" "	352+48 - 352+67	LT	--	--	--	--	125
	" "	352+87 - 352+94	LT	--	--	--	--	35
	" "	353+21 - 353+37	LT	--	--	--	--	99
	" "	352+46 - 352+76	RT	--	--	--	--	219
	" "	353+07 - 353+39	RT	--	--	--	--	262
	" "	354+48 - 354+53	RT	--	--	--	--	25
	" "	354+66 - 354+71	RT	--	--	--	--	25
	" "	355+30 - 355+35	RT	--	--	--	--	25
	" "	355+48 - 355+53	RT	--	--	--	--	25
	" "	354+90 - 355+01	LT	--	--	--	--	56
	" "	355+12 - 355+67	LT	--	--	--	--	275
	" "	356+18 - 356+23	LT	--	--	--	--	25
	" "	356+32 - 356+37	LT	--	--	--	--	25
	" "	356+32 - 356+37	RT	--	--	--	--	25
	" "	356+49 - 357+74	RT	--	--	--	--	735
	" "	357+47 - 357+57	LT	--	--	--	--	53
	" "	357+95 - 358+36	RT	--	--	--	--	243
	" "	358+59 - 359+56	RT	--	--	--	--	566
	" "	359+34 - 359+36	RT	--	--	--	--	16
	" "	359+15 - 359+35	LT	--	--	--	--	133
	" "	359+83 - 360+04	RT	--	--	--	--	104
	" "	360+84 - 360+92	LT	--	--	--	--	40
	" "	361+04 - 361+12	LT	--	--	--	--	40
	" "	361+90 - 362+16	RT	--	--	--	--	312
	" "	362+03 - 362+59	LT	--	--	--	--	435
	" "	362+50 - 363+30	RT	--	--	--	--	598
	" "	363+08 - 363+37	LT	--	--	--	--	247
	" "	363+81 - 363+86	LT	--	--	--	--	25
	" "	363+42 - 364+21	RT	--	--	--	--	493

CONCRETE ITEMS

CATEGORY	ROADWAY	STATION TO STATION	O/S	416.0160 CONCRETE DRIVEWAY 6-INCH SY	416.0190 CONCRETE DRIVEWAY 9-INCH SY	601.0411 CONCRETE CURB & GUTTER 30-INCH TYPE D LF	601.0600 CONCRETE CURB PEDESTRIAN LF	602.0410 CONCRETE SIDEWALK 5-INCH SF
0010	SIDEWALK	364+41 - 364+46	LT	--	--	--	--	25
	" "	364+81 - 364+87	LT	--	--	--	--	30
	" "	364+60 - 364+98	RT	--	--	--	--	192
	" "	365+19 - 365+24	RT	--	--	--	--	25
	" "	365+74 - 366+73	LT	--	--	--	--	523
	" "	366+47 - 366+63	RT	--	--	--	--	130
	" "	366+87 - 367+26	LT	--	--	--	--	231
	" "	367+41 - 369+24	LT	--	--	--	--	919
	" "	366+99 - 368+07	RT	--	--	--	--	720
	" "	368+24 - 369+48	RT	--	--	--	--	620
	" "	369+48 - 370+61	LT	--	--	--	--	564
	" "	370+76 - 371+47	LT	--	--	--	--	352
	" "	369+60 - 370+27	RT	--	--	--	--	331
	" "	370+62 - 371+48	RT	--	--	--	--	432
	" "	371+59 - 372+31	LT	--	--	--	--	364
	" "	372+49 - 373+92	LT	--	--	--	--	712
	" "	371+83 - 374+00	RT	--	--	--	--	1086
	" "	374+12 - 374+45	LT	--	--	--	--	168
	" "	374+66 - 376+18	LT	--	--	--	--	763
	" "	374+12 - 375+13	RT	--	--	--	--	505
	" "	376+31 - 377+04	LT	--	--	--	--	369
	" "	375+29 - 383+26	RT	--	--	--	--	4120
	" "	377+17 - 379+49	LT	--	--	--	--	1162
	" "	379+67 - 382+00	LT	--	--	--	--	1166
	" "	382+35 - 383+17	LT	--	--	--	--	449
	" "	383+64 - 383+74	RT	--	--	--	--	98
	DRIVEWAYS	347+21	RT	29.8	--	--	--	--
	" "	347+37	LT	12.2	--	--	--	--
	" "	348+00	LT	30.1	--	--	--	--
	" "	348+00	RT	24.8	--	--	--	--
	" "	348+60	RT	11.0	--	--	--	--
	" "	349+00	RT	13.6	--	--	--	--
	" "	349+22	LT	7.8	--	--	--	--
	" "	349+55	RT	7.1	--	--	--	--
	" "	349+64	LT	7.8	--	--	--	--
	" "	349+85	RT	8.7	--	--	--	--
	" "	350+50	RT	20.6	--	--	--	--
	" "	350+44	LT	10.4	--	--	--	--
	" "	350+70	LT	8.0	--	--	--	--
	" "	351+63	RT	8.2	--	--	--	--
	" "	351+82	LT	16.0	--	--	--	--
	" "	352+06	LT	9.4	--	--	--	--
	" "	352+77	LT	38.8	--	--	--	--
	" "	352+77	RT	6.9	--	--	--	--
	" "	353+65	LT	13.6	--	--	--	--
	" "	354+60	LT	15.7	--	--	--	--
	" "	354+60	RT	14.0	--	--	--	--
	" "	355+05	LT	16.9	--	--	--	--
	" "	355+42	RT	18.0	--	--	--	--
	" "	356+27	LT	20.0	--	--	--	--
	" "	356+55	LT	16.8	--	--	--	--
	" "	356+43	RT	20.8	--	--	--	--
	" "	357+84	RT	47.2	--	--	--	--
	" "	357+92	LT	16.4	--	--	--	--

3

3

CONCRETE ITEMS

CATEGORY	ROADWAY	STATION TO STATION	O/S	416.0160 CONCRETE DRIVEWAY 6-INCH SY	416.0190 CONCRETE DRIVEWAY 9-INCH SY	601.0411 CONCRETE CURB & GUTTER 30-INCH TYPE D LF	601.0600 CONCRETE CURB PEDESTRIAN LF	602.0410 CONCRETE SIDEWALK 5-INCH SF
0010	DRIVEWAYS	358+50	RT	46.8	--	--	--	--
	" "	359+62	RT	49.3	--	--	--	--
	" "	359+77	LT	16.2	--	--	--	--
	" "	360+19	LT	8.8	--	--	--	--
	" "	361+00	LT	13.8	--	--	--	--
	" "	361+97	LT	5.4	--	--	--	--
	" "	363+36	RT	27.4	--	--	--	--
	" "	363+75	LT	--	176.7	--	--	--
	" "	364+50	RT	40.6	--	--	--	--
	" "	364+62	LT	--	58.6	--	--	--
	" "	365+00	RT	36.1	--	--	--	--
	" "	365+71	RT	6.8	--	--	--	--
	" "	366+79	LT	28.6	--	--	--	--
	" "	367+33	LT	20.2	--	--	--	--
	" "	368+16	RT	63.0	--	--	--	--
	" "	369+37	LT	40.2	--	--	--	--
	" "	369+50	RT	22.2	--	--	--	--
	" "	370+50	RT	56.8	--	--	--	--
	" "	370+63	LT	27.0	--	--	--	--
	" "	371+66	RT	56.8	--	--	--	--
	" "	371+50	LT	33.2	--	--	--	--
	" "	372+39	LT	30.9	--	--	--	--
	" "	374+05	LT	34.6	--	--	--	--
	" "	374+05	RT	22.2	--	--	--	--
	" "	374+50	LT	34.9	--	--	--	--
	" "	375+21	RT	28.6	--	--	--	--
	" "	376+24	LT	22.8	--	--	--	--
	" "	377+11	LT	20.4	--	--	--	--
	" "	379+50	LT	28.9	--	--	--	--
	" "	381+17	LT	52.3	--	--	--	--
TOTAL				1,345	235	7,627	107	24,131

CURB RAMP DETECTABLE WARNING FIELD NATURAL PATINA

CATEGORY	ROADWAY	STATION	602.0515 CURB RAMP DETECTABLE WARNING FIELD NATURAL PATINA SF
0010			
	CHURCH STREET		48
	SCHOOL STREET		48
	STH 175	359+25	16
	MAIN STREET		32
	NORTH AVENUE		32
	MAPLE STREET		32
	TOTAL		208

CONCRETE STEPS

CATEGORY	ROADWAY	STATION	O/S	602.1500 CONCRETE STEPS SF
0010				
	STH 175	359+35	RT	11
	TOTAL			11

3

STORM SEWER

CATEGORY	STRUCT ID	STATION	OFFSET	611.1004 CATCH BASINS 4-FT DIA EA	611.1230 CATCH BASINS 2x3-FT EA	611.2004 MANHOLES 4-FT DIA EA	611.2006 MANHOLES 6-FT DIA EA	611.0530 COVERS MANHOLE TYPE J EA	611.0639 COVERS INLET TYPE H-S EA	611.8105 ADJUSTING COVERS CATCH BASIN EA	611.8110 ADJUSTING COVERS MANHOLE EA	RIM ELEV	STRUCT DEPTH	PIPE ID	STRUCTURE FROM	STRUCTURE TO	ELEVATION INLET	ELEVATION DISCH	608.0312 STORM SEWER PIPE REINFORCED CONCRETE CLASS III 12-INCH LF	608.0315 CLASS III 15-INCH LF	608.0324 CLASS III 24-INCH LF	608.0412 CLASS IV 12-INCH LF	608.0415 CLASS IV 15-INCH LF	608.0418 CLASS IV 18-INCH LF	610.0124 HOR ELLIP CLASS HE-III 24x38-INCH LF	SLOPE
0010	EX MH	346+02.4	16.2' RT	--	--	--	--	--	--	--	1	1001.94	--	--	--	--	--	--	--	--	--	--	--	--	--	
	EX CB	346+06.5	33.5' RT	--	--	--	--	--	--	1	--	1001.55	--	--	--	--	--	--	--	--	--	--	--	--	--	
	EX CB	346+19.9	20.5' LT	--	--	--	--	--	--	1	--	1001.66	--	--	--	--	--	--	--	--	--	--	--	--	--	
	EX CB	346+20.4	20.5' RT	--	--	--	--	--	--	1	--	1001.73	--	--	--	--	--	--	--	--	--	--	--	--	--	
	EX MH	348+90.0	20.5' RT	--	--	--	--	--	--	--	1	1004.60	--	--	--	--	--	--	--	--	--	--	--	--	--	
	1.0	350+00.0	16.0' RT	--	--	1	--	1	--	--	--	1006.82	3.32	EX	1.0	EX MH	1002.75		--	--	--	--	--	--	--	
	1.1	350+00.0	20.5' LT	--	1	--	--	--	1	--	--	1006.55	5.29	P1.1	1.1	1.0	1002.85	1002.75	--	--	--	36	--	--	--	0.30%
	1.2	350+00.0	20.5' RT	--	1	--	--	--	1	--	--	1006.55	5.38	P1.2	1.2	1.0	1002.76	1002.75	--	--	--	5	--	--	--	0.44%
	EX CB	352+61.1	20.5' RT	--	--	--	--	--	--	1	--	1012.08	--	--	--	--	--	--	--	--	--	--	--	--	--	
	EX CB	353+02.2	20.5' LT	--	--	--	--	--	--	1	--	1012.74	--	--	--	--	--	--	--	--	--	--	--	--	--	
	EX MH	353+02.9	16.9' RT	--	--	--	--	--	--	--	1	1013.09	--	--	--	--	--	--	--	--	--	--	--	--	--	
	EX CB	353+06.2	33.9' RT	--	--	--	--	--	--	1	--	1012.71	--	--	--	--	--	--	--	--	--	--	--	--	--	
	EX CB	353+20.0	20.5' RT	--	--	--	--	--	--	1	--	1012.96	--	--	--	--	--	--	--	--	--	--	--	--	--	
	2.0 (EX)	355+91.4	15.5' RT	--	--	--	--	--	--	--	1	1017.57	--	EX					--	--	--	--	--	--	--	--
	2.1	355+91.4	20.5' LT	--	1	--	--	--	1	--	--	1017.29	5.10	P2.1	2.1	2.0 (EX)	1013.78	1013.68	36	--	--	--	--	--	--	0.30%
	2.2	355+91.4	20.5' RT	--	1	--	--	--	1	--	--	1017.29	5.19	P2.2	2.2	2.0 (EX)	1013.69	1013.68	5	--	--	--	--	--	--	0.44%
	3.0 (EX)	358+86.0	15.6' RT	--	--	--	--	--	--	--	1	1027.17	--	EX					--	--	--	--	--	--	--	--
	3.1	359+35.0	20.5' LT	--	1	--	--	--	1	--	--	1027.57	6.54	P3.1	3.1	3.0 (EX)	1022.62	1022.45	61	--	--	--	--	--	--	0.30%
	3.2	358+86.0	20.5' RT	--	1	--	--	--	1	--	--	1026.89	6.02	P3.2	3.2	3.0 (EX)	1022.46	1022.45	5	--	--	--	--	--	--	0.44%
	EX CB	362+17.9	43.5' RT	--	--	--	--	--	--	1	--	1029.65	--	--	--	--	--	--	--	--	--	--	--	--	--	
	EX MH	362+22.0	17.4' RT	--	--	--	--	--	--	--	1	1029.58	--	--	--	--	--	--	--	--	--	--	--	--	--	
	EX CB	362+22.8	20.5' LT	--	--	--	--	--	--	1	--	1028.65	--	--	--	--	--	--	--	--	--	--	--	--	--	
	EX CB	362+47.8	43.6' RT	--	--	--	--	--	--	1	--	1029.82	--	--	--	--	--	--	--	--	--	--	--	--	--	
	EX CB	362+69.4	20.5' RT	--	--	--	--	--	--	1	--	1029.54	--	--	--	--	--	--	--	--	--	--	--	--	--	
	4.0	363+03.0	17.0' RT	--	--	1	--	1	--	--	--	1029.81	3.13	EX	4.0	3.0 (EX)	1025.93									--
	4.1	363+03.0	20.5' RT	--	1	--	--	--	1	--	--	1029.58	5.24	P4.1	4.1	4.0	1025.93	1025.93	3	--	--	--	--	--	--	0.44%
	EX CB	366+49.8	20.5' RT	--	--	--	--	--	--	1	--	1033.34	--	--	--	--	--	--	--	--	--	--	--	--	--	
	5.0 (EX)	366+91.0	14.3' RT	--	--	--	--	--	--	--	1	1033.76	--	--	--	--	--	--	--	--	--	--	--	--	--	--
	5.1	367+12.0	20.5' LT	--	1	--	--	--	1	--	--	1033.52	5.23	P5.1	5.1	5.0 (EX)	1029.88	1029.77	41	--	--	--	--	--	--	0.30%
	EX CB	367+12.9	20.5' RT	--	--	--	--	--	--	1	--	1033.53	--	--	--	--	--	--	--	--	--	--	--	--	--	
	EX CB	369+72.4	23.3' RT	--	--	--	--	--	--	1	--	1036.04	--	--	--	--	--	--	--	--	--	--	--	--	--	
	EX CB	369+72.6	20.1' RT	--	--	--	--	--	--	1	--	1035.91	--	--	--	--	--	--	--	--	--	--	--	--	--	
	6.0	369+77.9	17.5' LT	--	--	--	1	--	1	--	--	1035.32	6.24	P6.0	6.0	OUTFALL	1028.67	1026.58	--	--	--	--	--	--	313	0.67%
	7.0	369+78.0	0.0' RT	--	--	--	1	1	--	--	--	1035.84	6.36	P7.0	7.0	6.0	1028.73	1028.67	--	--	--	--	--	--	18	0.50%
	7.1	369+78.0	17.5' RT	1	--	--	--	--	1	--	--	1035.32	8.12	P7.1	7.1	7.0	1028.79	1028.73	--	--	18	--	--	--	--	0.50%
	7.2 (EX)	369+72.4	23.3' RT	--	--	--	--	--	--	--	1	1036.77	--	P7.2	7.2	7.1	1031.94	1031.86	--	--	--	--	--	8	--	2.00%
	8.0	373+11.0	0.0' RT	--	--	--	1	1	--	--	--	1042.21	8.39	P8.0	8.0	7.0	1033.07	1029.14	--	--	333	--	--	--	--	1.20%
	8.1	373+11.0	17.5' LT	--	1	--	--	--	1	--	--	1041.68	7.36	P8.1	8.1	8.0	1035.91	1035.84	--	18	--	--	--	--	--	0.50%
	8.2	373+11.0	17.5' RT	--	1	--	--	--	1	--	--	1041.68	7.36	P8.2	8.2	8.0	1035.91	1035.84	--	18	--	--	--	--	--	0.50%
	9.0	380+00.0	0.0' RT	--	--	1	--	1	--	--	--	1036.56	5.71	P9.0	9.0	10.0	1030.10	1029.50	--	--	--	--	266	--	--	0.23%
	9.1	380+00.0	17.5' LT	--	1	--	--	--	1	--	--	1036.03	7.36	P9.1	9.1	9.0	1030.26	1030.18	--	18	--	--	--	--	--	0.44%
	9.2	380+00.0	17.5' RT	--	1	--	--	--	1	--	--	1036.03	7.36	P9.2	9.2	9.0	1030.26	1030.18	--	18	--	--	--	--	--	0.44%
	10.0	382+66.0	0.0' RT	--	--	--	1	1	--	--	--	1032.01	1.76	P10.0	10.0	11.0 (EX)	1029.50	1029.30	--	--	--	--	92	--	--	0.23%
	10.1	382+66.0	17.5' LT	--	1	--	--	--	1	--	--	1031.48	3.28	P10.1	10.1	10.0	1029.79	1029.75	--	--	--	18	--	--	--	0.30%
	10.2	382+56.0	17.5' LT	--	1	--	--	--	1	--	--	1031.49	3.27	P10.2	10.2	10.1	1029.81	1029.79	--	--	--	10	--	--	--	0.30%
	10.3	382+66.0	17.5' RT	--	1	--	--	--	1	--	--	1031.48	3.28	P10.3	10.3	10.0	1029.79	1029.75	--	--	--	18	--	--	--	0.30%
	10.4	382+56.0	17.5' RT	--	1	--	--	--	1	--	--	1031.49	3.27	P10.4	10.4	10.3	1029.81	1029.79	--	--	--	10	--	--	--	0.30%
	EX CB	383+26.0	48.1' RT	--	--	--	--	--	--	1	--	1031.90	--	--	--	--	--	--	--	--	--	--	--	--	--	
	11.0 (EX)	383+54.5	21.7' RT	--	--	--	--	--	--	--	1	1032.01	--	--	--	--	--	--	--	--	--	--	--	--	--	
	EX CB	383+59.6	49.5' RT	--	--	--	--	--	0	1	--	1031.94	--	--	--	--	--	--	--	--	--	--	--	--	--	
	SUBTOTAL CATEGORY 0010			1	16	3	4	6	18	17	9								151	72	351	96	358	8	331	
0030	SETTLING BASIN PIPE			--	--	--	--	--	--	--	--	--	--	--	--	--	1024.00	1023.70	30	--	--	--	--	--	--	1.00%
	TOTAL			1	16	3	4	6	18	17	9								181	72	351	96	358	8	331	

NOTE: USE CLASS "B" BEDDING (SEE SDD "CLASS 'B' BEDDING FOR CULVERT PIPE OR STORM SEWER") FOR ALL PIPES; COST INCIDENTAL TO PIPE.

PIPE UNDERDRAIN

CATEGORY	ROADWAY	STATION TO STATION O/S	SPV.0090.20 PIPE UNDERDRAIN 6-INCH SPECIAL LF
0010			
	STH 175	-	7,627
	TOTAL		7,627

RESTORATION

CATEGORY	ROADWAY	STATION TO STATION O/S	625.0100 TOPSOIL SY	627.0200 MULCHING SY	629.0205 FERTILIZER TYPE A CWT	630.0130 SEEDING MIXTURE NO. 30 LB	631.0300 SOD WATER MGAL	631.1000 SOD LAWN SY
0010	STH 175	-	7,046	--	6	--	158	7,046
	UNDISTRIBUTED		740	4,450	4	80	19	740
	SUBTOTAL CATEGORY 0010		7,786	4,450	10	80	177	7,786
0030	SETTLING BASIN	-	114	--	1	--	3	114
	TOTAL		7,900	4,450	11	80	180	7,900

EROSION CONTROL

CATEGORY	ROADWAY	STATION	TO	STATION	O/S	606.0200 RIP RAP MEDIUM CY	628.1504 SILT FENCE LF	628.1520 SILT FENCE MAINTENANCE LF	628.1905 MOBILIZATIONS EROSION CONTROL EA	628.1910 MOBILIZATIONS EMERGENCY EROSION CONTROL EA	628.7005 INLET PROTECTION TYPE A EA	628.7015 INLET PROTECTION TYPE C EA	628.7020 INLET PROTECTION TYPE D EA	628.7504 TEMPORARY DITCH CHECKS LF	628.7555 CULVERT PIPE CHECKS EA	628.7570 ROCK BAGS EA	645.0130 GEOTEXTILE FABRIC TYPE R SY
0010	STH 175	346+01	-	384+52	LT & RT	2	1,176	1,176	11	6	9	9	25	36	10	71	10
	UNDISTRIBUTED					--	800	800	--	--	--	--	--	--	--	--	--
	SUBTOTAL CATEGORY 0010					2	1,976	1,976	11	6	9	9	25	36	10	71	10
0030	SETTLING BASIN		-			124	131	131	--	--	--	--	--	12	1	--	297
	TOTAL					126	2,107	2,107	11	6	9	9	25	48	11	71	307

SIGN REMOVAL (1 OF 2)

CATEGORY	SIGN NO.	SIGN CODE	SIGN MESSAGE	638.2602 REMOVING SIGNS TYPE II EA	638.3000 REMOVING SMALL SIGN SUPPORT EA	MOUNTED ON SAME POST AS SIGN NO.	REMARKS
0010	1R	R1-1	STOP	1	1		
	2R	W4-4P	CROSS TRAFFIC DOES NOT STOP	-	-	1R	
	3R	R1-1	STOP	1	1		
	4R	W4-4P	CROSS TRAFFIC DOES NOT STOP	-	-	3R	
	5R	R1-1	STOP	1	1		
	6R	W4-4P	CROSS TRAFFIC DOES NOT STOP	-	-	5R	
	7R	R1-1	STOP	1	1		
	8R	M3-3	SOUTH	1	1		
	9R	M1-6	STH 67	-	-	8R	
	10R	M1-6	STH 175	-	-	8R	
	11R	M6-1	LEFT ARROW	-	-	8R	
	12R	M3-1	NORTH	-	-	8R	
	13R	M1-6	STH 175	-	-	8R	
	14R	M6-1	RIGHT ARROW	-	-	8R	
	15R	M1-5A	CTH H	1	1		
	16R	M6-4	DOUBLE DIRECTIONAL ARROW	-	-	15R	
	17R	M3-1	NORTH	-	-	15R	
	18R	M1-6	STH 67	-	-	15R	
	19R	M6-1	RIGHT ARROW	-	-	15R	
	20R	R7-51R	NO PARKING HERE TO CORNER	-	-		SIGN AND POST TO BE REMOVED BY VILLAGE
	21R	R7-51L	NO PARKING HERE TO CORNER	-	-		SIGN AND POST TO BE REMOVED BY VILLAGE
	22R	M3-1	NORTH	1	1		
	23R	M1-6	STH 67	-	-	22R	
	24R	M6-1	LEFT ARROW	-	-	22R	
	25R	M1-5A	CTH H	-	-	22R	
	26R	M6-4	DOUBLE DIRECTIONAL ARROW	-	-	22R	
	27R	R2-1	SPEED LIMIT 35	1	1		
	28R	M3-1	NORTH	1	1		
	29R	M1-6	STH 67	-	-	28R	
	30R	M5-1L	ADVANCE LEFT ARROW	-	-	28R	
	31R	M3-3	SOUTH	-	-	28R	
	32R	M1-6	STH 67	-	-	28R	
	33R	M1-6	STH 175	-	-	28R	
	34R	M6-1	AHEAD ARROW	-	-	28R	
	35R	R2-1	SPEED LIMIT 35	1	1		
	36R	R1-1	STOP	1	1		
	37R	M1-94	SCHOOL ST	-	-	36R	SIGN TO BE REMOVED BY VILLAGE
	38R	M1-94	MILWAUKEE ST	-	-	36R	SIGN TO BE REMOVED BY VILLAGE
	39R	M2-1	JCT	1	1		
	40R	M1-6	STH 67	-	-	39R	
	41R	M1-5A	CTH H	-	-	39R	
	42R	S1-1	SCHOOL ZONE	1	1		
	43R	S4-51	SCHOOL SPEED LIMIT 15	1	1		
	44R	R2-1	SPEED LIMIT 35	1	1		
	45R	R7-52D (MOD)	NO PARKING 7:30 AM TO 4:30 PM	-	-		SIGN AND POST TO BE REMOVED BY VILLAGE
	46R	S1-1	SCHOOL ZONE	1	1		
	47R	S1-1	SCHOOL ZONE	1	1		
	48R	R7-11 (MOD)	NO PARKING 7:30 AM TO 7:30 PM ON SCHOOL DAYS	-	-		SIGN AND POST TO BE REMOVED BY VILLAGE
	49R	R7-51L	NO PARKING HERE TO CORNER	-	-		SIGN AND POST TO BE REMOVED BY VILLAGE
	50R	S4-51	SCHOOL SPEED LIMIT 15	1	-		ON POWER POLE
			SUBTOTAL SHEET 1	18	17		

SIGN REMOVAL (2 OF 2)

CATEGORY	SIGN NO.	SIGN CODE	SIGN MESSAGE	638.2602 REMOVING SIGNS TYPE II EA	638.3000 REMOVING SMALL SIGN SUPPORT EA	MOUNTED ON SAME POST AS SIGN NO.	REMARKS
0010	51R	R7-1 (MOD)	NO PARKING ON SIDEWALK	-	-	50R	SIGN TO BE REMOVED BY VILLAGE
	52R	R1-1	STOP	1	1		
	53R	M1-94	MAIN ST	-	-	52R	SIGN TO BE REMOVED BY VILLAGE
	54R	M1-94	MILWAUKEE ST	-	-	52R	SIGN TO BE REMOVED BY VILLAGE
	55R	R2-1	SPEED LIMIT 35	1	1		
	56R	R7-1 (MOD)	NO PARKING ON SIDEWALK	-	-		SIGN AND POST TO BE REMOVED BY VILLAGE
	57R	R7-51R	NO PARKING HERE TO CORNER	-	-		SIGN AND POST TO BE REMOVED BY VILLAGE
	58R	S1-1	SCHOOL ZONE	1	1		
	59R	R1-1	STOP	1	1		
	60R	M1-94	NORTH AVE	-	-	59R	SIGN TO BE REMOVED BY VILLAGE
	61R	M1-94	MILWAUKEE ST	-	-	59R	SIGN TO BE REMOVED BY VILLAGE
	62R	R2-1	SPEED LIMIT 35	1	1		
	63R	W14-3	NO PASSING ZONE	1	1		
	64R	R2-1	SPEED LIMIT 35	1	1		
	65R	R2-1	SPEED LIMIT 35	1	1		
	66R	-	NO SOLICITING OR PEDDLING WITHOUT VILLAGE PERMIT	-	-		ON POWER POLE / SIGN TO BE REMOVED BY VILLAGE
	67R	R2-1	SPEED LIMIT 35	1	1		
	68R	-	RADAR ENFORCED	-	-	67R	SIGN TO BE REMOVED BY VILLAGE
	69R	I2-3	LOMIRA POPULATION 2,430	1	2		
	70R	-	NO PARKING ON ANY VILLAGE STREET	-	-		SIGN AND POSTS TO BE REMOVED BY VILLAGE
	71R	R1-1	STOP	1	1		
	72R	M1-94	MAPLE ST	-	-	71R	SIGN TO BE REMOVED BY VILLAGE
	73R	M1-94	MILWAUKEE ST	-	-	71R	SIGN TO BE REMOVED BY VILLAGE
			SUBTOTAL SHEET 2	11	12		
			SUBTOTAL SHEET 1	18	17		
			TOTAL	29	29		

PERMANENT SIGNING (1 OF 2)

CATEGORY	SIGN NO.	SIGN CODE	SIZE	SIGN MESSAGE	SIGN SIZE W IN X H IN	637.2210 SIGNS TYPE II REFLECTIVE H SF	637.2230 SIGNS TYPE II REFLECTIVE F SF	634.0614 POSTS WOOD 4x6-INCH x 14-FT EA	634.0616 POSTS WOOD 4x6-INCH x 16-FT EA	634.0618 POSTS WOOD 4x6-INCH x 18-FT EA	634.0620 POSTS WOOD 4x6-INCH x 20-FT EA	ON SAME POST AS SIGN NO.	REMARKS / NEW SIGN LOCATION
0010	1	R1-1	3	STOP	36 X 36	7.46	-	-	1	-	-		
	2	W4-4P	2S	CROSS TRAFFIC DOES NOT STOP	24 X 12	-	2.00	-	-	-	-	1	
	3	R1-1	3	STOP	36 X 36	7.46	-	-	1	-	-		
	4	W4-4P	2S	CROSS TRAFFIC DOES NOT STOP	24 X 12	-	2.00	-	-	-	-	3	
	5	R1-1	3	STOP	36 X 36	7.46	-	-	1	-	-		
	6	W4-4P	2S	CROSS TRAFFIC DOES NOT STOP	24 X 12	-	2.00	-	-	-	-	5	
	7	R1-1	3	STOP	36 X 36	7.46	-	-	1	-	-		
	8	W4-4P	2S	CROSS TRAFFIC DOES NOT STOP	24 X 12	-	2.00	-	-	-	-	7	
	9	JV3-2	2S		24 X 102	17.00	-	-	-	-	1		
		M3-3		SOUTH									
		M1-6		STH 67									
		M6-1		LEFT ARROW									
		M1-6		STH 175									
		M6-4		DOUBLE DIRECTION ARROW									
	10	JV3-2	2S		24 X 102	17.00	-	-	-	-	1		
		M3-1		NORTH									
		M1-6		STH 67									
		M6-1		RIGHT ARROW									
		M1-5A		CTH H									
		M6-4		DOUBLE DIRECTIONAL ARROW									
	11	JV3-2	2S		24 X 102	17.00	-	-	-	-	1		
		M3-1		NORTH									
		M1-6		STH 67									
		M6-1		LEFT ARROW									
		M1-5A		CTH H									
		M6-4		DOUBLE DIRECTIONAL ARROW									
	12	J4-1	2S		24 X 36	6.00	-	-	1	-	-		
		M3-1		NORTH									
		M1-6		STH 175									
	13	R2-1	2S	SPEED LIMIT 35	24 X 30	5.00	-	1	-	-	-		
	14	JV3-2	2S		24 X 81	13.50	-	-	-	1	-		
		M3-3		SOUTH									
		M1-6		STH 67									
		M1-6		STH 175									
		M6-1		AHEAD ARROW									
	15	J2-1	2S		24 X 57	9.50	-	-	1	-	-		
		M3-1		NORTH									
		M1-6		STH 67									
		M5-1L		ADVANCE LEFT ARROW									
	16	S1-1	2	SCHOOL ZONE	36 X 36	-	6.75	-	-	1	-		
	17	S16-9P	2S	AHEAD	30 X 18	-	3.75	-	-	-	-	16	
	18	R2-6P	2S	FINES HIGHER	24 X 18	3.00	-	-	-	-	-	16	
	19	R1-1	2S	STOP	30 X 30	5.18	-	1	-	-	-		
	20	S4-5	2	REDUCED SPEED (SCHOOL) ZONE AHEAD 15	36 X 36	-	9.00	-	1	-	-		
	21	JV1-2			24 X 63	10.50	-	-	-	1	-		
		M2-1		JCT									
		M1-6		STH 67									
		M1-5A		CTH H									
	22	S4-51	2	SCHOOL SPEED LIMIT 15	24 X 48	-	8.00	-	1	-	-		
	23	R2-1	2S	SPEED LIMIT 35	24 X 30	5.00	-	-	1	-	-		
	24	S5-2	2	END SCHOOL ZONE	24 X 30	5.00	-	-	-	-	-	23	
	25	S1-1	2	SCHOOL ZONE	36 X 36	-	6.75	-	1	-	-		
					SUBOTAL SHEET 1	143.52	42.25	2	10	3	3		

PERMANENT SIGNING (2 OF 2)

CATEGORY	SIGN NO.	SIGN CODE	SIZE	SIGN MESSAGE	SIGN SIZE W IN X H IN	637.2210 SIGNS TYPE II REFLECTIVE H SF	637.2230 SIGNS TYPE II REFLECTIVE F SF	634.0614 POSTS WOOD 4x6-INCH x 14-FT EA	634.0616 POSTS WOOD 4x6-INCH x 16-FT EA	634.0618 POSTS WOOD 4x6-INCH x 18-FT EA	634.0620 POSTS WOOD 4x6-INCH x 20-FT EA	ON SAME POST AS SIGN NO.	REMARKS / NEW SIGN LOCATION
0010	26	S16-7L	2S	DOWN ARROW SYMBOL	30 X 18	-	3.75	-	-	-	-	25	
	27	S1-1	2	SCHOOL ZONE	36 X 36	-	6.75	-	1	-	-		
	28	S16-7L	2S	DOWN ARROW SYMBOL	30 X 18	-	3.75	-	-	-	-	27	
	29	S4-51	2	SCHOOL SPEED LIMIT 15	24 X 48	-	8.00	-	1	-	-		
	30	R1-1	2S	STOP	30 X 30	5.18	-	1	-	-	-		
	31	R2-1	2S	SPEED LIMIT 35	24 X 30	5.00	-	-	1	-	-		
	32	S5-2	2	END SCHOOL ZONE	24 X 30	5.00	-	-	-	-	-	31	
	33	S4-5	2	REDUCED SPEED (SCHOOL) ZONE AHEAD 15	36 X 36	-	9.00	-	1	-	-		
	34	S1-1	2	SCHOOL ZONE	36 X 36	-	6.75	-	-	1	-		
	35	S16-9P	2S	AHEAD	30 X 18	-	3.75	-	-	-	-	34	
	36	R2-6P	2S	FINES HIGHER	24 X 18	3.00	-	-	-	-	-	34	
	37	R1-1	2S	STOP	30 X 30	5.18	-	1	-	-	-		
	38	W14-3	2S	NO PASSING ZONE	48 X 36	-	6.00	-	1	-	-		
	39	R2-1	2S	SPEED LIMIT 35	24 X 30	5.00	-	-	-	-	-	38	
	40	R2-1	2S	SPEED LIMIT 35	24 X 30	5.00	-	1	-	-	-		
	41	R2-1	2S	SPEED LIMIT 35	24 X 30	5.00	-	1	-	-	-		
	42	I2-3	2	LOMIRA POPULATION 2,430	60 X 24	10.00	-	-	2	-	-		
	43	R1-1	2S	STOP	30 X 30	5.18	-	1	-	-	-		
				SUBOTAL SHEET 2		53.54	47.75	5	7	1	-		
				SUBOTAL SHEET 1		143.52	42.25	2	10	3	3		
				TOTAL		197.06	90.00	7	17	4	3		

3

3

3

FIELD OFFICE

CATEGORY	ROADWAY	642.5001 FIELD OFFICE TYPE B EA
0010		
	PROJECT	1
	TOTAL	1

TRAFFIC CONTROL

CATEGORY	ROADWAY	643.0200 SURVEILLANCE & MAINTENANCE DAY	643.0420 BARRICADES TYPE III DAY	643.0705 WARNING LIGHTS TYPE A DAY	643.0900 SIGNS DAY	643.1050 SIGNS PCMS DAY	643.2000 DETOUR 3364-03-72 EA	643.3000 DETOUR SIGNS DAY
0010								
	STH 175	320	8,960	10,240	7,680	14	1	48,320
	TOTAL	320	8,960	10,240	7,680	14	1	48,320

3

PAVEMENT MARKING

CATEGORY	ROADWAY	STATION	TO	STATION	O/S	646.0106 PAVEMENT MARKING EPOXY 4-INCH (WHITE) LF	646.0106 PAVEMENT MARKING EPOXY 4-INCH (YELLOW) LF	647.0566 PAVEMENT MARKING EPOXY STOP LINE 18-INCH LF	647.0796 PAVEMENT MARKING EPOXY CROSSWALK 24-INCH LF	646.0600 REMOVING PAVEMENT MARKINGS LF
0010	STH 175	346+01	-	384+50		7,207	5,443	93	1,630	230
	TOTAL					12,650		93	1,630	230

LOCATING NO PASSING ZONES

CATEGORY	ROADWAY	648.0100 MI
0010		
	PROJECT	0.73
	TOTAL	0.73

CONSTRUCTION STAKING

CATEGORY	ROADWAY	STATION	TO	STATION	O/S	650.4000 CONSTRUCTION STAKING STORM SEWER EA	650.4500 CONSTRUCTION STAKING SUBGRADE LF	650.5000 CONSTRUCTION STAKING BASE LF	650.5500 CONSTRUCTION STAKING CURB AND GUTTER LF	650.9910 CONSTRUCTION STAKING SUPPLEMENTAL CONTROL LS	650.9920 CONSTRUCTION STAKING SLOPE STAKES LF	650.6000 CONSTRUCTION STAKING PIPE CULVERTS EA	SPV.0060.15 CONSTRUCTION STATKING CURB RAMPS EA
0010	STH 175	346+01	-	384+52	LT & RT	49	3,851	3,851	7,728	1	3,851	2	23
	TOTAL					49	3,851	3,851	7,728	1	3,851	2	23

SAWCUTS

CATEGORY	ROADWAY	STATION	TO	STATION	O/S	690.0150 SAWING ASPHALT LF	690.0250 SAWING CONCRETE LF
0010	STH 175	346+01	-	350+00	LT AND RT	211	157
	STH 175	350+00	-	355+00	LT AND RT	26	205
	STH 175	355+00	-	360+00	LT AND RT	9	198
	STH 175	360+00	-	365+00	LT AND RT	89	182
	STH 175	365+00	-	370+00	LT AND RT	47	91
	STH 175	370+00	-	375+00	LT AND RT	12	11
	STH 175	375+00	-	380+00	LT AND RT	38	--
	STH 175	380+00	-	384+52	LT AND RT	93	6
	TOTAL					525	850

TEMPORARY PEDESTRIAN ACCESS

CATEGORY	ROADWAY	644.1430.S TEMPORARY PEDESTRIAN SURFACE PLATE SF	644.1601.S TEMPORARY CURB RAMP EA	644.1616.S TEMPORARY PEDESTRIAN SAFETY FENCE LF	SPV.0045.01 TEMPORARY CROSSWALK DAY
0010					
	UNDISTRIBUTED	1,275	16	3,000	1,650
	TOTAL	1,275	16	3,000	1,650

GEOGRID REINFORCEMENT

CATEGORY	ROADWAY	SPV.0180.02 GEOGRID REINFORCEMENT SY
0010	STH 175 TRAVEL LANES	15,880
0020	STH 175 PARKING LANES	3,904
	TOTAL	19,784

STATE OF WISCONSIN
DEPARTMENT OF TRANSPORTATION
TRANSPORTATION PROJECT PLAT TITLE SHEET
PROJECT NO. 3364-03-22
MILWAUKEE STREET, VILLAGE OF LOMIRA
(CHURCH STREET TO MAPLE STREET)
STH 175
DODGE COUNTY

4

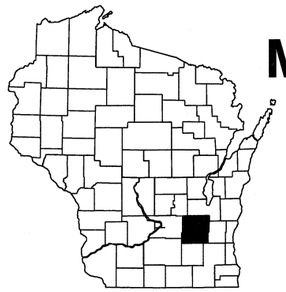

CONVENTIONAL ABBREVIATIONS

ACCESS POINT/ DRIVEWAY CONNECTION	AP	RELEASE OF RIGHTS	ROR
ACCESS RIGHTS	AR	REMAINING	REM
ACRES	AC	RIGHT	RT
AND OTHERS	ET.AL.	RIGHT-OF-WAY	R/W
BUILDING	BLD	SECTION	SEC
CONSTRUCTION CENTERLINE	CL	SECTION LINE	S/L
CERTIFIED SURVEY MAP	CSM	SQUARE FEET	SF
CORNER	COR	SUBDIVISION	SUBD
DOCUMENT	DOC.	STATION	STA
EASEMENT	EASE	TEMPORARY LIMITED EASEMENT	TLE
HIGHWAY EASEMENT	H.E.	TRAVERSE POINT	TP
LAND CONTRACT	LC	VOLUME	V.
LEFT	LT		
MONUMENT	MON		
NUMBER	NO.		
PAGE	P.		
PERMANENT LIMITED EASEMENT	PLE		
PROPERTY LINE	PL		
RECORDED AS	(XXX)		
REFERENCE LINE	R/L		

CURVE DATA

LONG CHORD	LCH
LONG CHORD BEARING	LCB
RADIUS	R
DEGREE OF CURVE	D
CENTRAL ANGLE OR DELTA	DELTA
LENGTH OF CURVE	L
TANGENT	TAN

CONVENTIONAL SYMBOLS

FOUND IRON PIPE/PIN	(1" UNLESS NOTED)	BUILDING
NEW R/W MONUMENT	*(SET)	PROPOSED R/W LINE
R/W STANDARD	▲(SET)	EXISTING H.E. LINE
SIGN	SIGN	PROPERTY LINE
SECTION CORNER MONUMENT		LOT & TIE LINES
SECTION CORNER SYMBOL		SLOPE INTERCEPTS
		CORPORATE LIMITS
FEE (HATCH VARIES)		NO ACCESS (BY PREVIOUS ACQUISITION/CONTROL)
TEMPORARY LIMITED EASEMENT		NO ACCESS (BY ACQUISTION)
PERMANENT LIMITED EASEMENT		NO ACCESS (BY STATUTORY AUTHORITY)
R/W BOUNDARY POINT	100	SECTION LINE
TLE BOUNDARY POINT	T10	QUARTER LINE
PARCEL NUMBER	10	SIXTEENTH LINE
UTILITY PARCEL NUMBER	800	EXISTING CENTERLINE
		PROPOSED REFERENCE LINE
SIGN NUMBER (OFF PREMISE)	21	PARALLEL OFFSET

CONVENTIONAL UTILITY SYMBOLS

WATER	W
GAS	G
TELEPHONE	T
OVERHEAD TRANSMISSION LINES	OH
ELECTRIC	E
CABLE TELEVISION	TV
FIBER OPTIC	FO
SANITARY SEWER	SAN
STORM SEWER	SS

	NON COMPENSABLE	COMPENSABLE
POWER POLE		
TELEPHONE POLE		
TELEPHONE PEDESTAL		
ELECTRIC TOWER		

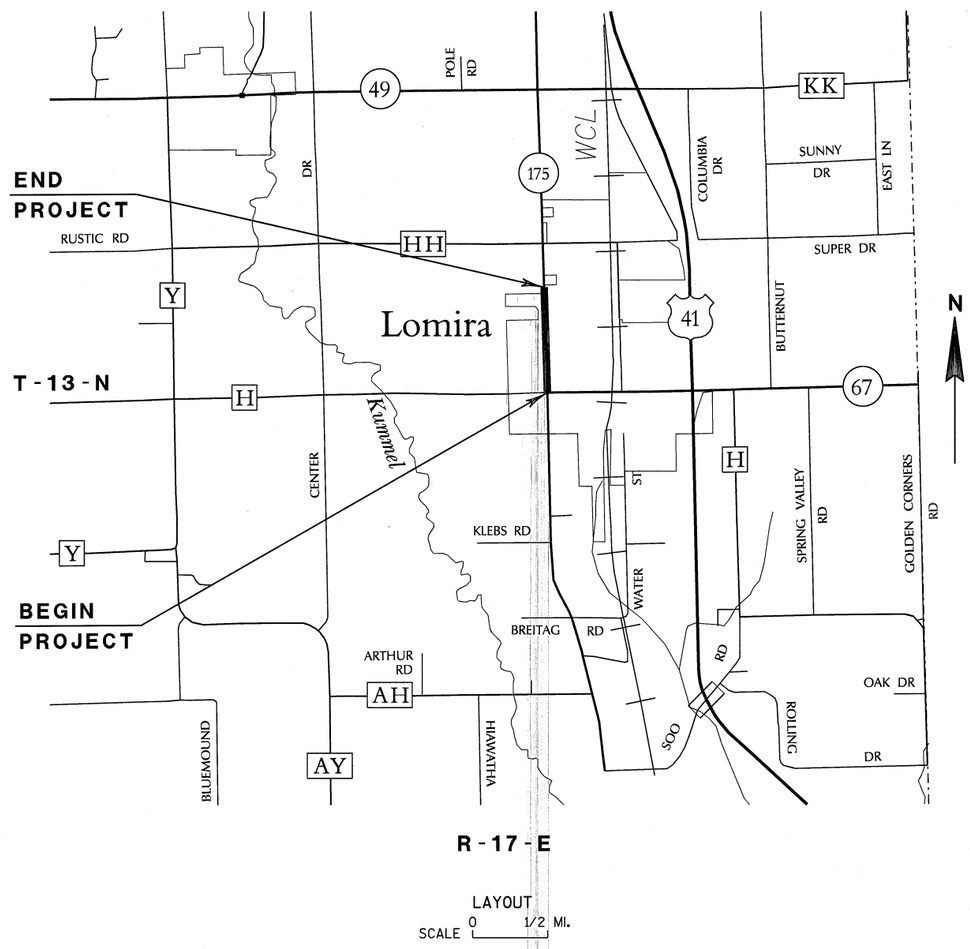

NOTES AND CONVENTIONAL ABBREVIATIONS AND SYMBOLS ARE ASSOCIATED WITH EACH TRANSPORTATION PROJECT PLAT FOR PROJECT 3364-03-22

NOTES:

ALL NEW RIGHT-OF-WAY MONUMENTS WILL BE TYPE 2 (TYPICALLY ¾" x 24" IRON REBARS), UNLESS OTHERWISE NOTED, AND WILL BE PLACED PRIOR TO THE COMPLETION OF THE PROJECT.

ALL RIGHT-OF-WAY LINES DEPICTED IN NON ACQUISITION AREAS ARE INTENDED TO RE-ESTABLISH EXISTING RIGHT-OF-WAY LINES AS DETERMINED FROM PREVIOUS PROJECTS, OTHER RECORDED DOCUMENTS, OR FROM CENTERLINE OF EXISTING PAVEMENTS.

RIGHT-OF-WAY BOUNDARIES ARE DEFINED WITH COURSES OF THE PERIMETER OF THE HIGHWAY LANDS REFERENCED TO THE U.S. PUBLIC LAND SURVEY SYSTEM OR OTHER "SURVEYS OF PUBLIC RECORD".

EXISTING HIGHWAY RIGHT-OF-WAY SHOWN HEREIN IS BASED ON THE FOLLOWING POINTS OF REFERENCE:
EXISTING HIGHWAY RIGHT-OF-WAY FOR STH 175 ESTABLISHED FROM ORIGINAL PLAT OF THE VILLAGE OF LOMIRA, MAP OF OUTLOTS AND REPLAT OF VILLAGE OF LOMIRA, WIS., NORTH HILLS ESTATES, NORTH HILLS ESTATES ADDITION NO. 1, NORTH HILLS ESTATES ADDITION NO. 2, CSM 186, CSM 4225, CSM 5517 AND CSM 6334.

EXISTING HIGHWAY RIGHT-OF-WAY FOR SCHOOL STREET ESTABLISHED FROM WOLF'S 2ND SUBDIVISION OF LOTS 12, 13 & 14, BLOCK C & LOTS 10 & 15, BLOCK D OF THE ORIGINAL PLAT OF THE VILLAGE OF LOMIRA.

EXISTING HIGHWAY RIGHT-OF-WAY FOR MAIN STREET ESTABLISHED FROM ORIGINAL PLAT OF THE VILLAGE OF LOMIRA.

EXISTING HIGHWAY RIGHT-OF-WAY FOR NORTH AVENUE ESTABLISHED FROM NORTHWEST ADDITION TO THE VILLAGE OF LOMIRA, DODGE COUNTY, WISCONSIN, WARRANTY DEED, V.366, P.505, DOC. 529373 AND WARRANTY DEED, V.366, P.506, DOC. 529374.

EXISTING HIGHWAY RIGHT-OF-WAY FOR MAPLE STREET ESTABLISHED FROM NORTH HILLS ESTATES ADDITION NO. 2.

EXISTING ACCESS CONTROL ALONG STH 175 AND MAPLE STREET ESTABLISHED FROM NORTH HILLS ESTATES, NORTH HILLS ESTATES ADDITION NO. 1, NORTH HILLS ESTATES ADDITION NO. 2 AND CSM 4225.

DIMENSIONING FOR THE NEW RIGHT-OF-WAY IS MEASURED ALONG AND PERPENDICULAR TO NEW REFERENCE LINES.

A TEMPORARY LIMITED EASEMENT (TLE) IS A RIGHT FOR CONSTRUCTION PURPOSES, AS DEFINED HEREIN, INCLUDING THE RIGHT TO OPERATE NECESSARY EQUIPMENT THEREON, AND THE RIGHT OF INGRESS AND EGRESS, AS LONG AS REQUIRED FOR SUCH PUBLIC PURPOSE, INCLUDING THE RIGHT TO PRESERVE, PROTECT, REMOVE, OR PLANT THEREON ANY VEGETATION THAT THE HIGHWAY AUTHORITIES MAY DEEM DESIRABLE. ALL (TLEs) ON THIS PLAT EXPIRE AT THE COMPLETION OF THE CONSTRUCTION PROJECT FOR WHICH THIS INSTRUMENT IS GIVEN.

A PERMANENT LIMITED EASEMENT (PLE) IS A RIGHT FOR CONSTRUCTION AND MAINTENANCE PURPOSES, AS DEFINED HEREIN, INCLUDING THE RIGHT TO OPERATE NECESSARY EQUIPMENT THEREON AND THE RIGHT OF INGRESS AND EGRESS, AS LONG AS REQUIRED FOR SUCH PUBLIC PURPOSE, INCLUDING THE RIGHT TO PRESERVE, PROTECT, REMOVE, OR PLANT THEREON ANY VEGETATION THAT THE HIGHWAY AUTHORITIES MAY DEEM NECESSARY OR DESIRABLE. BUT WITHOUT PREJUDICE TO THE OWNER'S RIGHT TO MAKE OR CONSTRUCT IMPROVEMENT ON SAID LANDS OR TO FLATTEN THE SLOPES, PROVIDING SAID ACTIVITIES WILL NOT IMPAIR OR OTHERWISE ADVERSELY AFFECT THE HIGHWAY FACILITIES.

PROPERTY LINES SHOWN ON THIS PLAT ARE DRAWN FROM DATA DERIVED FROM MAPS AND DOCUMENTS OF PUBLIC RECORD AND/OR EXISTING OCCUPATIONAL LINES. THIS PLAT MAY NOT BE A TRUE REPRESENTATION OF EXISTING PROPERTY LINES, EXCLUDING RIGHT-OF-WAY LINES, AND SHOULD NOT BE USED AS A SUBSTITUTE FOR AN ACCURATE FIELD SURVEY.

FOR THE LATEST ACCESS/DRIVEWAY INFORMATION, CONTACT THE PLANNING UNIT OF THE WISCONSIN DEPARTMENT OF TRANSPORTATION OFFCIE IN MADISON.

PARCEL IDENTIFICATION NUMBERS MAY NOT POINT TO ALL AREAS OF ACQUISITION, AS NOTED ON THE SCHEDULE OF LANDS & INTERESTS REQUIRED.

POSITIONS SHOWN ON THIS PLAT ARE WISCONSIN COUNTY COORDINATES, DODGE COUNTY, NAD83 (1991) IN U.S. SURVEY FEET. VALUES SHOWN ARE GRID COORDINATES, GRID BEARINGS AND GRID DISTANCES. GRID DISTANCES MAY BE USED AS GROUND DISTANCES.

TPP NUMBER 3364-03-22-4.01
SHEET 2 OF 2
AMENDMENT NO:

HIGHWAY	BASIS OF EXISTING R/W	YEAR	WIDTH
STH 175	ORIGINAL PLAT OF THE VILLAGE OF LOMIRA	1883	66'
CHURCH STREET	ORIGINAL PLAT OF THE VILLAGE OF LOMIRA	1883	50'
SCHOOL STREET	WOLF'S 2ND SUBD OF LOTS 12, 13 & 14, BLOCK C & LOTS 10 & 15, BLOCK D OF THE ORIGINAL PLAT OF THE VILLAGE OF LOMIRA	1896	50'

TRANSPORTATION PROJECT PLAT NO: 3364-03-22-4.01 AMENDMENT NO. 2

AMENDS PARCEL 8 OF TRANSPORTATION PROJECT PLAT 3364-03-22-4.01 AMENDMENT NO. 1, RECORDED AS DOCUMENT NO. 1203270

THAT PART OF LOTS 1, 2, 5, 9, 12, 13 AND 14, BLOCK D OF THE ORIGINAL PLAT OF THE VILLAGE OF LOMIRA, LOCATED IN AND INCLUDING PARTS OF THE SW 1/4 OF THE SE 1/4 OF SECTION 15; PART OF LOTS 1, 2, 5, 6, 9, 10 AND 11, BLOCK E OF THE ORIGINAL PLAT OF THE VILLAGE OF LOMIRA, LOCATED IN AND INCLUDING PART OF THE SE 1/4 OF THE SW 1/4 OF SECTION 15, ALL IN TOWN 13 NORTH, RANGE 17 EAST, VILLAGE OF LOMIRA, DODGE COUNTY, WISCONSIN.

RELOCATION ORDER MILWAUKEE STREET, VILLAGE OF LOMIRA (CHURCH STREET TO MAPLE STREET)

TO PROPERLY ESTABLISH, LAY OUT, WIDEN, ENLARGE, EXTEND, CONSTRUCT, RECONSTRUCT, IMPROVE, OR MAINTAIN A PORTION OF THE HIGHWAY DESIGNATED ABOVE, THE STATE OF WISCONSIN DEPARTMENT OF TRANSPORTATION DEEMS IT NECESSARY TO RELOCATE OR CHANGE SAID HIGHWAY AND ACQUIRE CERTAIN LANDS AND INTERESTS OR RIGHTS IN LANDS FOR THE ABOVE PROJECT.

TO EFFECT THIS CHANGE, PURSUANT TO AUTHORITY GRANTED UNDER SECTION 84.02 (3) AND 84.09, WISCONSIN STATUTES, THE DEPARTMENT OF TRANSPORTATION

1. THAT PORTION OF SAID HIGHWAY AS SHOWN ON THIS PLAT IS LAID OUT AND ESTABLISHED TO THE LINES AND WIDTHS AS SO SHOWN FOR THE ABOVE PROJECT.
2. THE LANDS OR INTERESTS OR RIGHTS IN LANDS AS SHOWN ON THIS PLAT ARE REQUIRED BY THE DEPARTMENT FOR THE ABOVE PROJECT AND SHALL BE ACQUIRED IN THE NAME OF THE STATE OF WISCONSIN, PURSUANT TO THE PROVISIONS OF SECTION 84.09 (1) OR (2), WISCONSIN STATUTES.

SCALE, FEET
0 50' 100'

LOCATION SKETCH
NOT TO SCALE

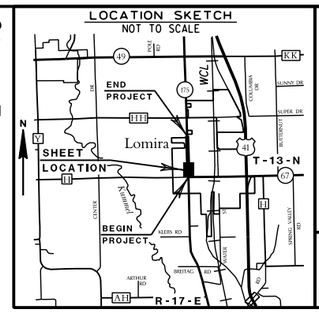

ACCEPTED FOR RECORDING AND FILING IN THE OFFICE OF THE REGISTER OF DEEDS IN DODGE COUNTY, WISCONSIN AT
_:__ _M ON _____
AS DOCUMENT #_____ AND FILED IN _____

_____
SIGNATURE OF REGISTER OF DEEDS

RESERVED FOR REGISTER OF DEEDS
PROJECT NUMBER 3364-03-22-4.01
AMENDMENT NO. 2

EXISTING EASEMENTS ON NON-PLAT PARCELS:

PRIVATE R/W EASE FOR INGRESS/EGRESS OVER EXISTING DRIVE ON LOT 3, BLOCK E, ORIGINAL PLAT V. 763 P. 959, DOC. 769588 & V. 840, P. 843, DOC. 806892

WE ENERGIES - ELECTRIC LOT 4, BLOCK E, ORIGINAL PLAT POLES ALONG MILWAUKEE STREET V. 27, P. 251, DOC. 261997

12' PRIVATE R/W GRANT FOR ALL PURPOSES ON LOT 4, BLOCK E, ORIGINAL PLAT V. 258 P. 614, DOC. 411237

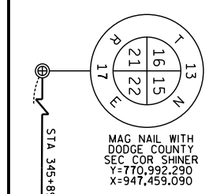

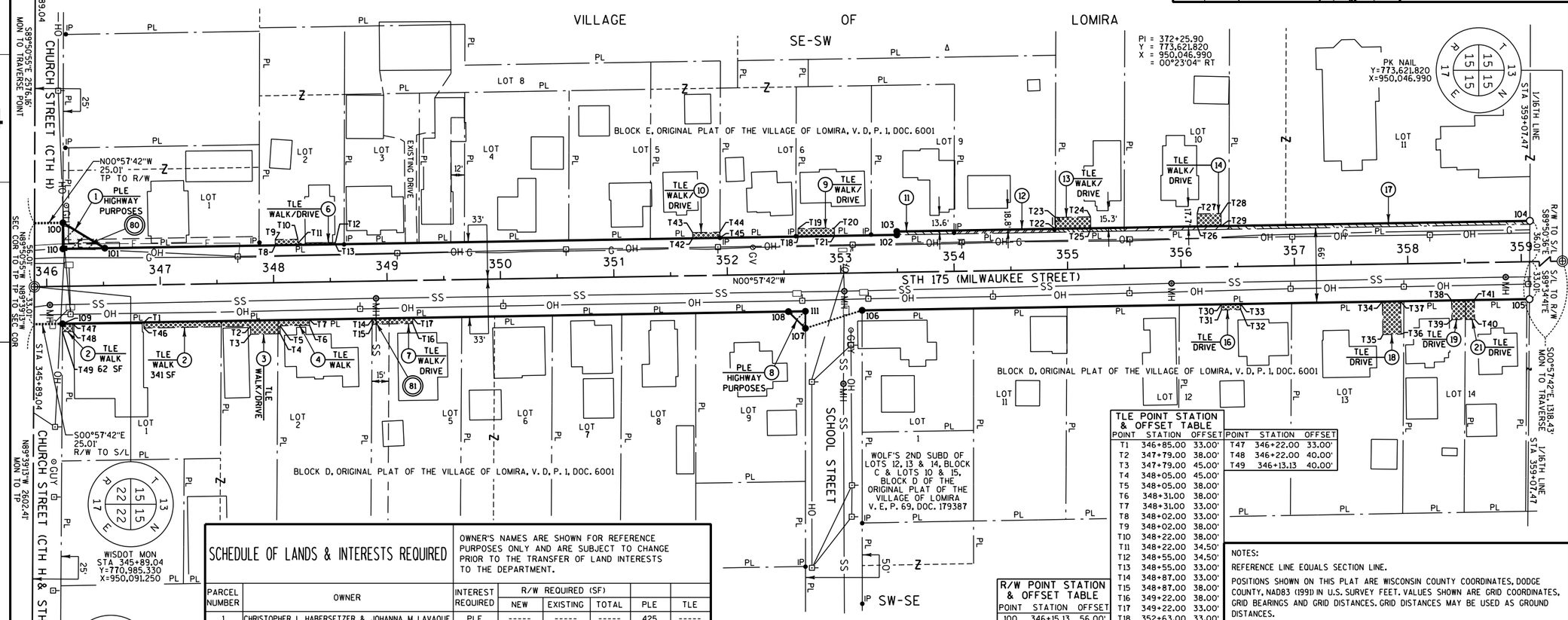

SCHEDULE OF LANDS & INTERESTS REQUIRED

OWNER'S NAMES ARE SHOWN FOR REFERENCE PURPOSES ONLY AND ARE SUBJECT TO CHANGE PRIOR TO THE TRANSFER OF LAND INTERESTS TO THE DEPARTMENT.

PARCEL NUMBER	OWNER	INTEREST REQUIRED	R/W REQUIRED (SF) NEW	EXISTING	TOTAL	PLE	TLE
1	CHRISTOPHER L. HABERSETZER & JOHANNA M. LAVAQUE	PLE	-----	-----	-----	425	-----
2	THOMAS J. PHILIPSKY & BEVERLY A. PHILIPSKY	TLE	-----	-----	-----	-----	403
3	LEE R. GOFF	TLE	-----	-----	-----	-----	419
4	US BANK NATIONAL ASSOCIATION	TLE	-----	-----	-----	-----	152
6	MARK H. HERMAN & SANDRA A. HERMAN	TLE	-----	-----	-----	-----	150
7	KATHERINE A. PETERSON	TLE	-----	-----	-----	-----	175
8	RICK MOEGENBERG & SHERRY L. MOEGENBERG	PLE	-----	-----	-----	112	-----
9	TERESA M. FLASCH	TLE	-----	-----	-----	-----	224
10	MICHAEL W. ELACK & ANNA M. ELACK	TLE	-----	-----	-----	-----	120
11	HEATHER J. PETERS	FEE	151	-----	151	-----	-----
12	KARLA J. DIETRICH	FEE	268	-----	268	-----	-----
13	ROBERT J. WENINGER	FEE/TLE	182	-----	182	-----	310
14	FEDERAL HOME LOAN MORTGAGE CORPORATION	FEE/TLE	277	-----	277	-----	231
16	STEVEN ABITZ & KERIL. ABITZ	TLE	-----	-----	-----	-----	85
17	ST. MARY'S CONGREGATION	FEE	796	-----	796	-----	-----
18	ANN R. HOFF	TLE	-----	-----	-----	-----	464
19	THOMAS J. MISCHO & RUTH A. MISCHO	TLE	-----	-----	-----	-----	204
21	DUSTIN G. GASSNER & ASHLEY R. GASSNER	TLE	-----	-----	-----	-----	136

UTILITY SCHEDULE & INTERESTS REQUIRED

UTILITY NUMBER	OWNER	INTEREST REQUIRED
80	WE ENERGIES - ELECTRIC	ROR
81	SCHOOL DISTRICT OF LOMIRA	ROR

WE ENERGIES - ELECTRIC
V. 505, P. 177, DOC. 619335 & DOC. 990070 - PARCEL 1

V. 27, P. 333, DOC. 262273 - PARCEL 2
POLES ALONG CHURCH STREET
(NOT WITHIN TLE ACQUISITION)

V. 27, P. 334, DOC. 262274 - PARCEL 3
POLES ALONG CHURCH STREET
(NOT WITHIN TLE ACQUISITION)

V. 27, P. 249, DOC. 261995 - PARCEL 10
POLES ALONG MILWAUKEE STREET
(NOT WITHIN TLE ACQUISITION)

SCHOOL DISTRICT OF LOMIRA
V. 845, P. 137, DOC. 808992 - PARCEL 7
15' UTILITY & DRAINAGE EASE

R/W POINT STATION & OFFSET TABLE

POINT	STATION	OFFSET
100	346+15.13	56.00'
101	346+51.69	33.00'
102	353+50.00	33.00'
103	353+50.00	36.00'
104	359+08.17	36.00'
105	359+06.67	33.00'
106	353+18.28	33.00'
107	352+68.02	48.00'
108	352+53.27	33.00'
109	346+13.29	33.00'
110	346+14.69	33.00'
111	352+68.27	33.00'

R/W COURSE TABLE

COURSE	BEARING	DISTANCE
100-110	S89°50'55"E	23.00'
110-101	N00°57'42"W	37.00'
101-102	N00°57'42"W	698.31'
102-103	S89°02'18"W	3.00'
103-104	N00°57'42"W	558.17'
105-106	S00°57'42"E	588.40'
106-107	S17°34'47"E	52.44'
107-111	S89°58'33"W	15.00'
111-108	S00°57'42"E	15.00'
108-109	S00°57'42"E	639.98'
100-101	N31°12'45"E	43.19'
107-108	S44°30'26"W	21.04'

TLE POINT STATION & OFFSET TABLE

POINT	STATION	OFFSET	POINT	STATION	OFFSET
T1	346+85.00	33.00'	T47	346+22.00	33.00'
T2	347+79.00	38.00'	T48	346+22.00	40.00'
T3	347+79.00	45.00'	T49	346+13.13	40.00'
T4	348+05.00	45.00'			
T5	348+05.00	38.00'			
T6	348+31.00	38.00'			
T7	348+31.00	33.00'			
T8	348+02.00	33.00'			
T9	348+02.00	38.00'			
T10	348+22.00	38.00'			
T11	348+22.00	34.50'			
T12	348+55.00	34.50'			
T13	348+55.00	33.00'			
T14	348+87.00	33.00'			
T15	348+87.00	38.00'			
T16	349+22.00	38.00'			
T17	349+22.00	33.00'			
T18	352+63.00	33.00'			
T19	352+63.00	40.00'			
T20	352+95.00	40.00'			
T21	352+95.00	33.00'			
T22	354+90.00	36.00'			
T23	354+90.00	46.00'			
T24	355+21.00	46.00'			
T25	355+21.00	36.00'			
T26	356+15.00	36.00'			
T27	356+15.00	47.00'			
T28	356+36.00	47.00'			
T29	356+36.00	36.00'			
T30	356+35.00	33.00'			
T31	356+35.00	38.00'			
T32	356+52.00	38.00'			
T33	356+52.00	33.00'			
T34	357+77.00	33.00'			
T35	357+77.00	62.00'			
T36	357+93.00	62.00'			
T37	357+93.00	33.00'			
T38	358+38.00	33.00'			
T39	358+38.00	50.00'			
T40	358+58.00	50.00'			
T41	358+58.00	33.00'			
T42	351+70.00	33.00'			
T43	351+70.00	38.00'			
T44	351+94.00	38.00'			
T45	351+94.00	33.00'			
T46	346+85.00	38.00'			

NOTES:

REFERENCE LINE EQUALS SECTION LINE.

POSITIONS SHOWN ON THIS PLAT ARE WISCONSIN COUNTY COORDINATES, DODGE COUNTY, NAD83 (1991) IN U.S. SURVEY FEET. VALUES SHOWN ARE GRID COORDINATES, GRID BEARINGS AND GRID DISTANCES. GRID DISTANCES MAY BE USED AS GROUND DISTANCES.

FOR THE LATEST ACCESS/DRIVEWAY INFORMATION, CONTACT THE PLANNING UNIT OF THE WISCONSIN DEPARTMENT OF TRANSPORTATION OFFICE IN MADISON.

FOR ADDITIONAL INFORMATION REFER TO THE TITLE SHEET, RECORDED AS SHEET 2 OF 2 OF DOC. NO. 1200789, FILED IN CABINET C, PAGE 103 OF PLATS IN THE OFFICE OF THE REGISTER OF DEEDS FOR DODGE COUNTY.

gai consultants
transforming ideas into reality®
700 GENEVA PARKWAY
LAKE GENEVA, WI 53147
262.348.5600 Fax 262.348.9979

I, TERRANCE E. PISAREK, REGISTERED LAND SURVEYOR, HEREBY CERTIFY THAT IN FULL COMPLIANCE WITH THE PROVISIONS OF SECTION 84.095 OF THE WISCONSIN STATUTES AND UNDER THE DIRECTION OF THE WISCONSIN DEPARTMENT OF TRANSPORTATION, I HAVE SURVEYED TRANSPORTATION PROJECT PLAT 3364-03-22-4.01 AMENDMENT NO. 2 AND THAT SUCH PLAT CORRECTLY REPRESENTS ALL EXTERIOR BOUNDARIES OF THE SURVEYED LAND.

WISCONSIN TERRANCE E. PISAREK S-1930 EAGLE WISCONSIN LAND SURVEYOR
SEAL

DATE 10/30/14

TERRANCE E. PISAREK S-1930

THIS PLAT AND RELOCATION ORDER ARE APPROVED FOR THE WISCONSIN DEPARTMENT OF TRANSPORTATION.

DATE _____

TRANSPORTATION PROJECT PLAT NO: 3364-03-22-4.02
AMENDMENT NO. 1

AMENDS PARCELS 26, 31 AND 33 AND THE LOCATION DESCRIPTION OF TRANSPORTATION PROJECT PLAT 3364-03-22-4.02, RECORDED AS DOCUMENT NO. 1201947

THAT PART OF LOTS 1 AND 2 OF CSM 5464 AND OUTLOTS 63-69 OF THE MAP OF OUTLOTS AND REPLAT OF THE VILLAGE OF LOMIRA, WIS., LOCATED IN AND INCLUDING PART OF THE NE 1/4 OF THE SW 1/4 OF SECTION 15; PART OF LOTS 1 AND 2 OF CSM 6334, LOT 14, BLOCK C OF THE ORIGINAL PLAT OF THE VILLAGE OF LOMIRA, OUTLOTS 61 AND 62 OF THE MAP OF OUTLOTS AND REPLAT OF THE VILLAGE OF LOMIRA, WIS., LOTS 31, 36, 37, 42, 43, 48, 49, 54, 55, 60, 61, 66, 67, AND 72 OF THE NORTHWEST ADDITION TO THE VILLAGE OF LOMIRA, DODGE COUNTY, WISCONSIN, LOCATED IN AND INCLUDING PART OF THE NW 1/4 OF THE SE 1/4 OF SECTION 15, ALL IN TOWN 13 NORTH, RANGE 17 EAST, VILLAGE OF LOMIRA, DODGE COUNTY, WISCONSIN.

RELOCATION ORDER MILWAUKEE STREET, VILLAGE OF LOMIRA (CHURCH STREET TO MAPLE STREET)

TO PROPERLY ESTABLISH, LAY OUT, WIDEN, ENLARGE, EXTEND, CONSTRUCT, RECONSTRUCT, IMPROVE, OR MAINTAIN A PORTION OF THE HIGHWAY DESIGNATED ABOVE, THE STATE OF WISCONSIN DEPARTMENT OF TRANSPORTATION DEEMS IT NECESSARY TO RELOCATE OR CHANGE SAID HIGHWAY AND ACQUIRE CERTAIN LANDS AND INTERESTS OR RIGHTS IN LANDS FOR THE ABOVE PROJECT.

TO EFFECT THIS CHANGE, PURSUANT TO AUTHORITY GRANTED UNDER SECTION 84.02 (3) AND 84.09, WISCONSIN STATUTES, THE DEPARTMENT OF TRANSPORTATION

1. THAT PORTION OF SAID HIGHWAY AS SHOWN ON THIS PLAT IS LAID OUT AND ESTABLISHED TO THE LINES AND WIDTHS AS SO SHOWN FOR THE ABOVE PROJECT.
2. THE LANDS OR INTERESTS OR RIGHTS IN LANDS AS SHOWN ON THIS PLAT ARE REQUIRED BY THE DEPARTMENT FOR THE ABOVE PROJECT AND SHALL BE ACQUIRED IN THE NAME OF THE STATE OF WISCONSIN, PURSUANT TO THE PROVISIONS OF SECTION 84.09 (1) OR (2), WISCONSIN STATUTES.

LOCATION SKETCH
NOT TO SCALE

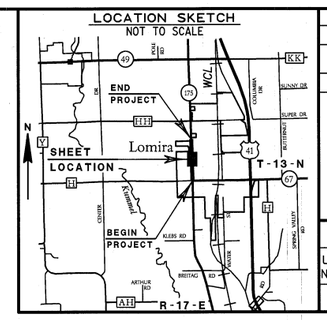

HIGHWAY	BASIS OF EXISTING R/W	YEAR	WIDTH
STH 175	ORIGINAL PLAT OF THE VILLAGE OF LOMIRA	1883	66'
STH 175	MAP OF OUTLOTS AND REPLAT OF VILLAGE OF LOMIRA WIS.	1908	66'
MAIN STREET	ORIGINAL PLAT OF THE VILLAGE OF LOMIRA	1883	60'
NORTH AVENUE	NORTHWEST ADDITION TO THE VILLAGE OF LOMIRA, DODGE COUNTY, WISCONSIN	1922	50'
	WARRANTY DEED, V.366, P.505, DOC. 529373 CONVEYS TO THE VILLAGE OF LOMIRA, THE SOUTH 5' OF LOTS 71 AND 72 OF THE NORTHWEST ADDITION TO THE VILLAGE OF LOMIRA.	1968	LAND EXCHANGE. THE OVERALL R/W WIDTH REMAINS AT 50'.
	WARRANTY DEED, V.366, P.506, DOC. 529374 CONVEYS THE SOUTH 5' OF NORTH AVENUE TO THE PARCEL LYING SOUTH OF AND ADJACENT TO NORTH AVENUE.	1968	

UTILITY SCHEDULE & INTERESTS REQUIRED

UTILITY NUMBER	OWNER	INTEREST REQUIRED
82	VILLAGE OF LOMIRA	ROR

VILLAGE OF LOMIRA
STORM SEWER
NO EASEMENT OF RECORD - PARCELS 39, 41 & 43

WE ENERGIES - ELECTRIC
V. 27, P. 355, DOC. 262300 - PARCEL 26
POLES ALONG MAIN STREET
(NOT LOCATED WITHIN PLE ACQUISITION)

ACCEPTED FOR RECORDING AND FILING IN THE OFFICE OF THE REGISTER OF DEEDS IN DODGE COUNTY, WISCONSIN AT 3:31 PM ON October 9, 2013 AS DOCUMENT #1203271 AND FILED IN Cabinet C Page 108 of Plats

CHRIS PLANASCH
SIGNATURE OF REGISTER OF DEEDS

RESERVED FOR REGISTER OF DEEDS
PROJECT NUMBER 3364-03-22-4.02
AMENDMENT NO. 1

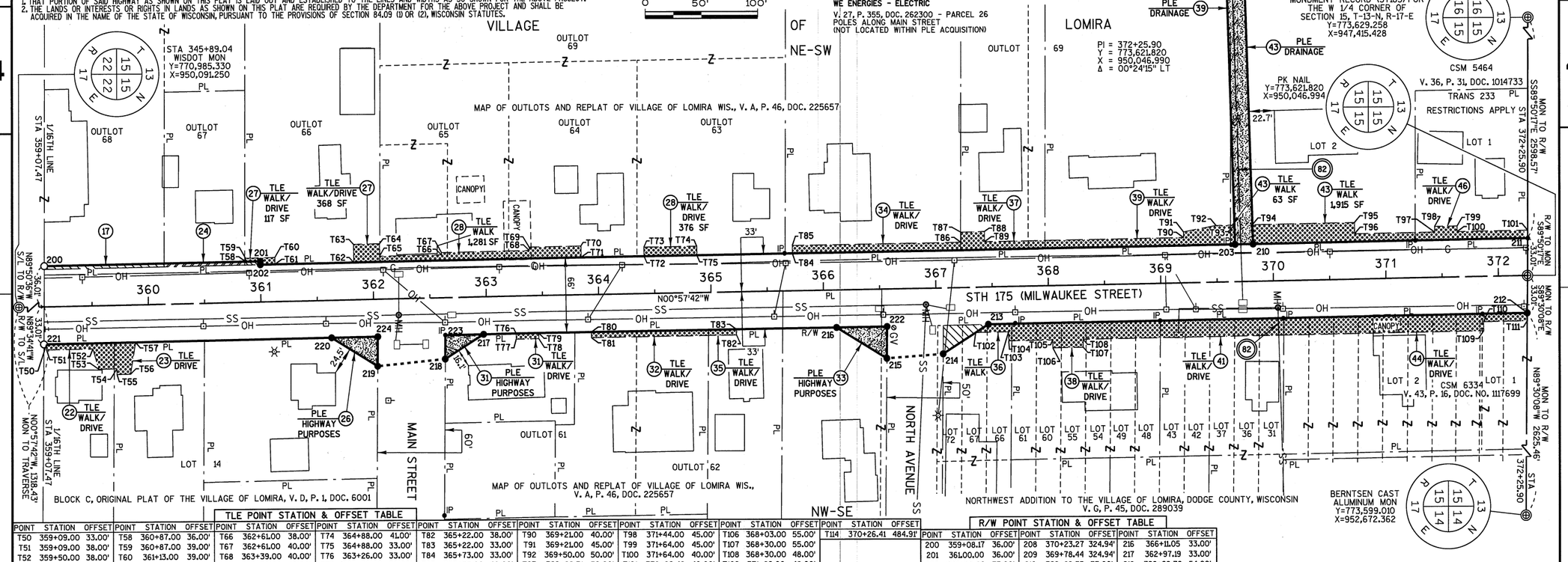

TLE POINT STATION & OFFSET TABLE

POINT	STATION	OFFSET	POINT	STATION	OFFSET	POINT	STATION	OFFSET	POINT	STATION	OFFSET	POINT	STATION	OFFSET	POINT	STATION	OFFSET	POINT	STATION	OFFSET	POINT	STATION	OFFSET
T50	359+09.00	33.00'	T58	360+87.00	36.00'	T66	362+61.00	38.00'	T74	364+88.00	41.00'	T82	365+22.00	38.00'	T90	369+21.00	40.00'	T98	371+44.00	45.00'	T106	368+03.00	55.00'
T51	359+09.00	38.00'	T59	360+87.00	39.00'	T67	362+61.00	40.00'	T75	364+88.00	33.00'	T83	365+22.00	33.00'	T91	369+21.00	45.00'	T99	371+64.00	45.00'	T107	368+30.00	55.00'
T52	359+50.00	38.00'	T60	361+13.00	39.00'	T68	363+39.00	40.00'	T76	363+26.00	33.00'	T84	365+73.00	33.00'	T92	369+50.00	50.00'	T100	371+64.00	40.00'	T108	368+30.00	48.00'
T53	359+55.00	56.00'	T61	361+13.00	33.00'	T69	363+39.00	43.00'	T77	363+26.00	38.00'	T85	365+73.00	40.00'	T93	369+66.31	50.00'	T101	372+26.42	40.00'	T109	371+86.00	48.00'
T54	359+71.00	56.00'	T62	361+83.00	33.00'	T70	363+85.00	43.00'	T78	363+46.00	38.00'	T86	367+23.00	40.00'	T94	369+82.31	50.00'	T102	367+34.69	40.00'	T110	371+86.00	40.00'
T55	359+71.00	61.00'	T63	361+83.00	49.00'	T71	363+85.00	33.00'	T79	363+46.00	33.00'	T87	367+23.00	49.00'	T95	370+73.00	50.00'	T103	367+64.00	40.00'	T111	372+24.88	40.00'
T56	359+83.00	61.00'	T64	362+06.00	49.00'	T72	364+41.00	33.00'	T80	363+93.00	33.00'	T88	367+44.00	49.00'	T96	370+73.00	40.00'	T104	367+64.00	48.00'	T112	369+94.55	389.93'
T57	359+88.00	33.00'	T65	362+06.00	38.00'	T73	364+41.00	41.00'	T81	363+93.00	38.00'	T89	367+44.00	40.00'	T97	371+44.00	40.00'	T105	368+03.00	48.00'	T113	369+96.41	484.91'
																					T114	370+26.41	484.91'

R/W POINT STATION & OFFSET TABLE

POINT	STATION	OFFSET	POINT	STATION	OFFSET	POINT	STATION	OFFSET
200	359+08.17	36.00'	208	370+23.27	324.94'	216	366+11.05	33.00'
201	361.00.00	36.00'	209	369+78.44	324.94'	217	362+97.19	33.00'
202	361+00.00	33.00'	210	369+82.55	33.00'	218	362+62.70	54.00'
203	369+66.55	33.00'	211	372+26.33	33.00'	219	362+02.56	59.00'
204	369+62.44	324.94'	212	372+25.06	33.00'	220	361+62.18	33.00'
205	369+58.27	324.94'	213	367+46.07	33.00'	221	359+06.67	33.00'
206	369+59.55	389.93'	214	367+05.43	58.00'	222	366+56.05	33.00'
207	370+24.55	389.93'	215	366+55.34	61.00'	223	362+63.19	33.00'
						224	362+03.18	33.00'

SCHEDULE OF LANDS & INTERESTS REQUIRED

OWNER'S NAMES ARE SHOWN FOR REFERENCE PURPOSES ONLY AND ARE SUBJECT TO CHANGE PRIOR TO THE TRANSFER OF LAND INTERESTS TO THE DEPARTMENT.

PARCEL NUMBER	OWNER	INTEREST REQUIRED	R/W REQUIRED (SF) NEW	EXISTING	TOTAL	PLE	TLE
17	ST. MARY'S CONGREGATION	FEE	319	-----	319	-----	-----
22	JOSEPH STEINBACH	TLE	-----	-----	-----	-----	595
23	SCOTT A. FIDELER & AMY L. FIDELER	TLE	-----	-----	-----	-----	454
24	DOUGLAS JUNG	FEE	215	-----	215	-----	-----
26	SCOTT E. PRIEST & STEPHANY A. PRIEST	PLE	-----	-----	-----	533	-----
27	ROBERT L. SCHARSCHMIDT & JULIE L. SCHARSCHMIDT	FEE/TLE	42	-----	42	-----	485
28	COLE OIL COMPANY, INC.	TLE	-----	-----	-----	-----	1,657
31	FREDERICK J. STRIZEK & REBECCA T. STRIZEK	PLE/TLE	-----	-----	-----	357	100
32	THOMAS J. SCHARSCHMIDT JR. & NATALIE E. SCHARSCHMIDT	TLE	-----	-----	-----	-----	521
33	ALFRED G. RATZLAFF & MICHELE C. RATZLAFF	PLE	-----		-----	630	-----
34	RALPH LANGENECKER & JANE LANGENECKER	TLE	-----	-----	-----	-----	1,047

SCHEDULE OF LANDS & INTERESTS REQUIRED

OWNER'S NAMES ARE SHOWN FOR REFERENCE PURPOSES ONLY AND ARE SUBJECT TO CHANGE PRIOR TO THE TRANSFER OF LAND INTERESTS TO THE DEPARTMENT.

PARCEL NUMBER	OWNER	INTEREST REQUIRED	R/W REQUIRED (SF) NEW	EXISTING	TOTAL	PLE	TLE
35	RICHARD C. GUTHRIE & ELLEN K. GUTHRIE	TLE	-----	———	-----	-----	124
36	BRUCE J. BINTZLER & DEBRA A. BINTZLER	FEE/TLE	500	-----	500	-----	209
37	NICHOLAS A. PHILIPSKY	TLE	-----	-----	-----	-----	714
38	MICHAEL D. HARMEYER & LINDA C. BRYFCZYNSKI	TLE	-----	-----	-----	-----	2,169
39	NICHOLAS R. ROSKOPF & KATEY L. ROSKOPF	PLE/TLE	-----	-----	-----	555	1,500
40	IRMA JUSTMAN	PLE/TLE	-----	-----	-----	3,899	2,849
41	THOMAS E. WALSH & KIMBERLY J. WALSH	TLE	-----	-----	-----	-----	1,645
43	JACOB PETRICK & KATIE LEB	PLE/TLE	-----	-----	-----	4,441	1,978
44	CHARLES F. PAVLIS	TLE	-----	-----	-----	-----	2,934
46	PETER J. DOMAN & COURTNEY A. LEWIS	TLE	-----	-----	-----	-----	800

R/W COURSE TABLE

COURSE	BEARING	DISTANCE	COURSE	BEARING	DISTANCE
200-201	N00°57'42"W	191.83'	205-206	N89°50'17"W	65.00'
201-202	N89°02'18"E	3.00'	206-207	N00°57'42"W	65.00'
202-203	N00°57'42"W	866.55'	207-208	S89°50'17"E	65.00'
203-210	N00°57'42"W	15.00'	208-209	S00°57'42"E	44.83'
210-211	N00°57'42"W	244.00'	209-210	N88°13'57"E	291.97'
212-213	S00°57'42"E	478.99'	215-216	S31°20'28"W	52.40'
213-214	S32°33'42"E	47.71'	217-218	S32°17'42"E	40.38'
214-215	S04°23'20"E	50.18'	219-220	S31°48'34"W	48.03'
215-222	N89°30'08"W	28.01'			
222-216	S00°57'42"E	45.00'			
216-217	S00°57'42"E	313.86'			
217-223	S00°57'42"E	34.00'			
223-218	S89°36'53"E	21.01'			
218-219	S05°42'53"E	60.34'			
219-224	N89°36'53"W	26.01'			
224-220	S00°57'42"E	41.00'			
220-221	S00°57'42"E	255.50'			
203-204	S88°13'57"W	291.97'			
204-205	S00°57'42"E	4.17'			

NOTES:

THE REFERENCE LINE EQUALS THE SECTION LINE.

POSITIONS SHOWN ON THIS PLAT ARE WISCONSIN COUNTY COORDINATES, DODGE COUNTY, NAD83 (1991) IN U.S. SURVEY FEET. VALUES SHOWN ARE GRID COORDINATES, GRID BEARINGS AND GRID DISTANCES. GRID DISTANCES MAY BE USED AS GROUND DISTANCES.

FOR THE LATEST ACCESS/DRIVEWAY INFORMATION, CONTACT THE PLANNING UNIT OF THE WISCONSIN DEPARTMENT OF TRANSPORTATION OFFICE IN MADISON.

FOR ADDITIONAL INFORMATION REFER TO THE TITLE SHEET, RECORDED AS SHEET 2 OF 2 OF DOC. NO. 1200789, FILED IN CABINET C, PAGE 103 OF PLATS IN THE OFFICE OF THE REGISTER OF DEEDS FOR DODGE COUNTY.

I, TERRANCE E. PISAREK, REGISTERED LAND SURVEYOR, HEREBY CERTIFY THAT IN FULL COMPLIANCE WITH THE PROVISIONS OF SECTION 84.095 OF THE WISCONSIN STATUTES AND UNDER THE DIRECTION OF THE WISCONSIN DEPARTMENT OF TRANSPORTATION, I HAVE SURVEYED TRANSPORTATION PROJECT PLAT 3364-03-22-4.02 AMENDMENT NO. 1 AND THAT SUCH PLAT CORRECTLY REPRESENTS ALL EXTERIOR BOUNDARIES OF THE SURVEYED LAND.

DATE 9/26/2013
TERRANCE E. PISAREK S-1930

THIS PLAT AND RELOCATION ORDER ARE APPROVED FOR THE WISCONSIN DEPARTMENT OF TRANSPORTATION.
DATE 10/2/13
JENNIFER QUERAM

SEAL

CRISPELL-SNYDER, INC.
PROFESSIONAL CONSULTANTS | A GAI COMPANY
Lake Geneva, WI (262) 348-5600
Racine, WI (262) 554-8530
Madison, WI (608) 244-6277
Milw. Regional, WI (262) 250-8000
Fox Valley, WI (715) 752-4620

HIGHWAY	BASIS OF EXISTING R/W	YEAR	WIDTH
STH 175	CSM 186	1976	49.5'
STH 175	CSM 4225	1997	66'
STH 175	CSM 5517	2004	66'
STH 175	CSM 6334	2008	66'
STH 175	NORTH HILLS ESTATES	1992	66'
STH 175	NORTH HILLS ESTATES ADDITION NO. 1	1994	66'
STH 175	NORTH HILLS ESTATES ADDITION NO. 2	1995	66'
MAPLE STREET	NORTH HILLS ESTATES ADDITION NO. 2	1995	66'

TRANSPORTATION PROJECT PLAT NO: 3364-03-22-4.03 AMENDMENT NO. 2

AMENDS PARCEL 58 OF TRANSPORTATION PROJECT PLAT 3364-03-22-4.03, RECORDED AS DOCUMENT NO. 1201948

THAT PART OF LOT 1 OF CSM 186, LOCATED IN AND INCLUDING PART OF THE SE 1/4 OF THE NW 1/4 OF SECTION 15; PART OF LOT 38 OF CSM 4225, LOT 1 OF CSM 5517, LOT 1 OF CSM 6334, LOTS 4-6 OF NORTH HILLS ESTATES, LOTS 21-23 OF NORTH HILLS ESTATES ADDITION NO. 1, LOT 24 OF NORTH HILLS ESTATES ADDITION NO. 2, LOCATED IN AND INCLUDING PART OF THE SW 1/4 OF THE NE 1/4 OF SECTION 15, ALL IN TOWN 13 NORTH, RANGE 17 EAST, VILLAGE OF LOMIRA; ALSO THAT PART OF THE SE 1/4 OF THE NW 1/4 OF SECTION 15, TOWN 13 NORTH, RANGE 17 EAST, TOWN OF LOMIRA, DODGE COUNTY, WISCONSIN.

RELOCATION ORDER MILWAUKEE STREET, VILLAGE OF LOMIRA (CHURCH STREET TO MAPLE STREET)

TO PROPERLY ESTABLISH, LAY OUT, WIDEN, ENLARGE, EXTEND, CONSTRUCT, RECONSTRUCT, IMPROVE, OR MAINTAIN A PORTION OF THE HIGHWAY DESIGNATED ABOVE, THE STATE OF WISCONSIN DEPARTMENT OF TRANSPORTATION DEEMS IT NECESSARY TO RELOCATE OR CHANGE SAID HIGHWAY AND ACQUIRE CERTAIN LANDS AND INTERESTS OR RIGHTS IN LANDS FOR THE ABOVE PROJECT.

TO EFFECT THIS CHANGE, PURSUANT TO AUTHORITY GRANTED UNDER SECTION 84.02 (3) AND 84.09, WISCONSIN STATUTES, THE DEPARTMENT OF TRANSPORTATION

1. THAT PORTION OF SAID HIGHWAY AS SHOWN ON THIS PLAT IS LAID OUT AND ESTABLISHED TO THE LINES AND WIDTHS AS SO SHOWN FOR THE ABOVE PROJECT.
2. THE LANDS OR INTERESTS OR RIGHTS IN LANDS AS SHOWN ON THIS PLAT ARE REQUIRED BY THE DEPARTMENT FOR THE ABOVE PROJECT AND SHALL BE ACQUIRED IN THE NAME OF THE STATE OF WISCONSIN, PURSUANT TO THE PROVISIONS OF SECTION 84.09 (1) OR (2), WISCONSIN STATUTES.

SCALE, FEET
0 50' 100'

R/W POINT STATION & OFFSET TABLE		
POINT	STATION	OFFSET
300	372+26.33	33.00'
301	383.25.00	33.00'
302	383+25.00	24.75'
303	385+32.10	24.75'
304	385+31.20	33.00'
305	384+08.36	33.00'
306	383+74.15	54.00'
307	383+14.10	58.00'
308	382+74.13	33.00'
309	372+25.06	33.00'
310	383+74.36	33.00'

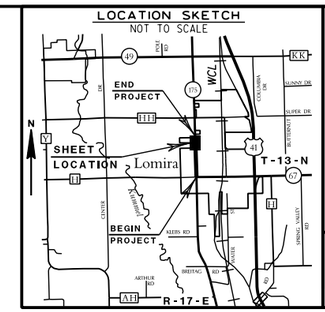

ACCEPTED FOR RECORDING AND FILING IN THE OFFICE OF THE REGISTER OF DEEDS IN DODGE COUNTY, WISCONSIN AT
_:__ _M ON _____
AS DOCUMENT #_____ AND FILED IN _____

_____
SIGNATURE OF REGISTER OF DEEDS

RESERVED FOR REGISTER OF DEEDS
PROJECT NUMBER 3364-03-22-4.03
AMENDMENT NO. 2

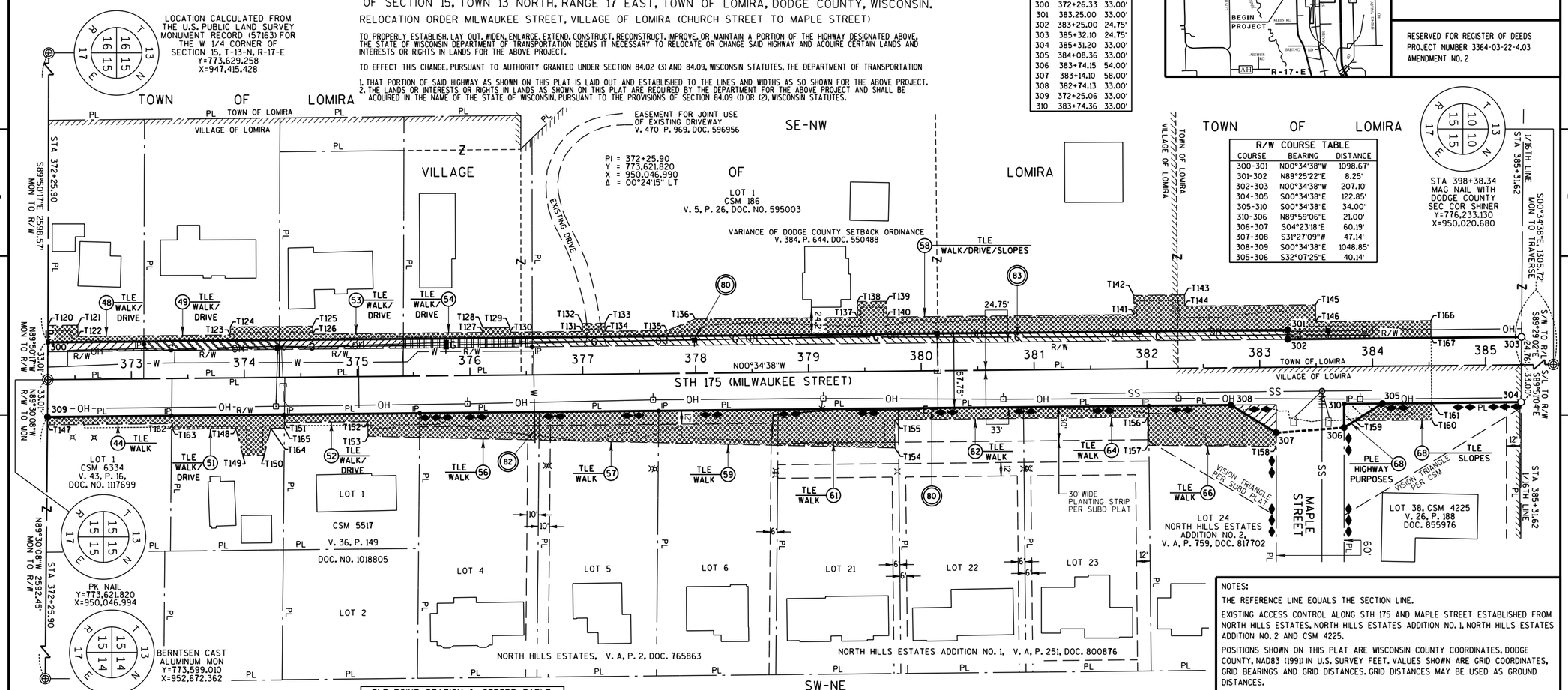

R/W COURSE TABLE		
COURSE	BEARING	DISTANCE
300-301	N00°34'38"W	1098.67'
301-302	N89°25'22"E	8.25'
302-303	N00°34'38"W	207.10'
304-305	S00°34'38"E	122.85'
305-310	S00°34'38"E	34.00'
310-306	N89°59'06"E	21.00'
306-307	S04°23'18"E	60.19'
307-308	S31°27'09"W	47.14'
308-309	S00°34'38"E	1048.85'
305-306	S32°07'25"E	40.14'

TLE POINT STATION & OFFSET TABLE																							
POINT	STATION	OFFSET	POINT	STATION	OFFSET	POINT	STATION	OFFSET	POINT	STATION	OFFSET	POINT	STATION	OFFSET	POINT	STATION	OFFSET	POINT	STATION	OFFSET	POINT	STATION	OFFSET
T120	372+26.52	48.00'	T126	374+61.00	38.00'	T132	377+00.00	45.00'	T138	379+44.00	62.00'	T144	382+34.00	55.00'	T150	374+17.00	69.00'	T156	382+00.00	43.00'	T162	373+36.00	40.00'
T121	372+53.00	48.00'	T127	376+12.00	38.00'	T133	377+20.00	45.00'	T139	379+70.00	62.00'	T145	383+50.00	55.00'	T151	374+35.00	40.00'	T157	382+00.00	68.00'	T163	373+36.00	45.00'
T122	372+53.00	38.00'	T128	376+12.00	42.00'	T134	377+20.00	38.00'	T140	379+70.00	48.00'	T146	383+50.00	40.00'	T152	375+09.00	40.00'	T158	383+13.97	70.00'	T164	374+23.00	45.00'
T123	373+88.00	38.00'	T129	376+36.00	42.00'	T135	377+75.00	38.00'	T141	381+89.00	48.00'	T147	372+24.88	40.00'	T153	375+09.00	53.00'	T159	383+83.93	48.00'	T165	374+35.00	45.00'
T124	373+88.00	45.00'	T130	376+36.00	38.00'	T136	378+00.00	48.00'	T142	381+89.00	65.00'	T148	373+92.00	45.00'	T154	379+76.00	68.00'	T160	384+52.00	48.00'	T166	384+52.00	40.00'
T125	374+61.00	45.00'	T131	377+00.00	38.00'	T137	379+44.00	48.00'	T143	382+34.00	65.00'	T149	373+98.00	69.00'	T155	379+76.00	43.00'	T161	384+52.00	33.00'	T167	384+52.00	24.75'

SCHEDULE OF LANDS & INTERESTS REQUIRED

OWNER'S NAMES ARE SHOWN FOR REFERENCE PURPOSES ONLY AND ARE SUBJECT TO CHANGE PRIOR TO THE TRANSFER OF LAND INTERESTS TO THE DEPARTMENT.

PARCEL NUMBER	OWNER	INTEREST REQUIRED	R/W REQUIRED (SF) NEW	EXISTING	TOTAL	PLE	TLE
44	CHARLES F. PAVLIS	TLE	-----	-----	-----	-----	770
48	WALTER J. BETZ, JR. & MARY ANN BETZ	FEE/TLE	701	2,104	2,805	-----	690
49	DENNIS V. BAUER & DARLENE M. BAUER	FEE/TLE	990	2,970	3,960	-----	904
51	ADAM WANIE & HEATHER AGGEN	TLE	-----	-----	-----	-----	1,795
52	TIMOTHY J. BRATH & MELISSA A. BRATH	TLE	-----	-----	-----	-----	1,472
53	STEVEN J. JUNGWIRTH	FEE/TLE	908	2,723	3,631	-----	757
54	KENNETH M. BUERGER & MARY K. BUERGER	FEE/TLE	943	2,830	3,773	-----	667
56	ROBERT J. SCHRAUFNAGEL & MARYLYNN SCHRAUFNAGEL	TLE	-----	-----	-----	-----	2,452
57	ERIC C. BUBLITZ & LAURA K. BUBLITZ	TLE	-----	-----	-----	-----	2,812

SCHEDULE OF LANDS & INTERESTS REQUIRED

OWNER'S NAMES ARE SHOWN FOR REFERENCE PURPOSES ONLY AND ARE SUBJECT TO CHANGE PRIOR TO THE TRANSFER OF LAND INTERESTS TO THE DEPARTMENT.

PARCEL NUMBER	OWNER	INTEREST REQUIRED	R/W REQUIRED (SF) NEW	EXISTING	TOTAL	PLE	TLE
58	LAWRENCE M. FLEISCHMAN & MARY J. FLEISCHMAN	FEE/TLE	5,523	21,692	27,215	-----	12,940
59	GARY W. UIBEL & CYLA J. UIBEL	TLE	-----	-----	-----	-----	3,171
61	DANIEL J. WAAS & PATRICIA A. WAAS	TLE	-----	-----	-----	-----	3,484
62	ANDREW M. PRESTON & CECELIA L. PRESTON	TLE	-----	-----	-----	-----	1,109
64	JAMES H. UNDERBERG	TLE	-----	-----	-----	-----	1,134
66	CATHERINE CASPARY	FEE/TLE	503	-----	503	-----	3,572
68	RONALD J. COLE & KAREN L. COLE	PLE/TLE	-----	-----	-----	357	838

UTILITY SCHEDULE & INTERESTS REQUIRED

UTILITY NUMBER	OWNER	INTEREST REQUIRED
80	WE ENERGIES - ELECTRIC	ROR
82	VILLAGE OF LOMIRA	ROR
83	ALLIANT ENERGY - GAS/PETROLEUM	ROR

WE ENERGIES - ELECTRIC

V. 27, P. 241, DOC. 261985 - PARCELS 48, 49, 53, 54 & 58
POLES ALONG FOND DU LAC ROAD (MILWAUKEE STREET)

NORTH HILLS ESTATES - 12' PUBLIC UTILITY EASE - PARCELS 56, 57

NORTH HILLS ESTATES - 12' & 6' PUBLIC UTILITY EASE - PARCEL 59

NORTH HILLS ESTATES ADDITION NO. 1 - 12' & 6' ELECTRICAL EASE
PARCELS 61, 62 & 64 (NOT LOCATED WITHIN TLE ACQUISITION)

CSM 4455 - 12' ELECTRICAL EASE
PARCEL 68 (NOT LOCATED WITHIN TLE ACQUISITION)

VILLAGE OF LOMIRA

NORTH HILLS ESTATES - 10' WATER MAIN - PARCELS 56 & 57

ALLIANT ENERGY - GAS/PETROLEUM

NO EASEMENT OF RECORD - PARCELS 48, 49, 53, 54 & 58

NOTES:

THE REFERENCE LINE EQUALS THE SECTION LINE.

EXISTING ACCESS CONTROL ALONG STH 175 AND MAPLE STREET ESTABLISHED FROM NORTH HILLS ESTATES, NORTH HILLS ESTATES ADDITION NO. 1, NORTH HILLS ESTATES ADDITION NO. 2 AND CSM 4225.

POSITIONS SHOWN ON THIS PLAT ARE WISCONSIN COUNTY COORDINATES, DODGE COUNTY, NAD83 (1991) IN U.S. SURVEY FEET. VALUES SHOWN ARE GRID COORDINATES, GRID BEARINGS AND GRID DISTANCES. GRID DISTANCES MAY BE USED AS GROUND DISTANCES.

FOR THE LATEST ACCESS/DRIVEWAY INFORMATION, CONTACT THE PLANNING UNIT OF THE WISCONSIN DEPARTMENT OF TRANSPORTATION OFFICE IN MADISON.

FOR ADDITIONAL INFORMATION REFER TO THE TITLE SHEET, RECORDED AS SHEET 2 OF 2 OF DOC. NO. 1200789, FILED IN CABINET C, PAGE 103 OF PLATS IN THE OFFICE OF THE REGISTER OF DEEDS FOR DODGE COUNTY.

gai consultants
transforming ideas into reality®
700 GENEVA PARKWAY
LAKE GENEVA, WI 53147
262.348.5600 Fax 262.348.9979

I, TERRANCE E. PISAREK, PROFESSIONAL LAND SURVEYOR, HEREBY CERTIFY THAT IN FULL COMPLIANCE WITH THE PROVISIONS OF SECTION 84.095 OF THE WISCONSIN STATUTES AND UNDER THE DIRECTION OF THE WISCONSIN DEPARTMENT OF TRANSPORTATION, I HAVE SURVEYED TRANSPORTATION PROJECT PLAT 3364-03-22-4.03 AMENDMENT NO. 2 AND THAT SUCH PLAT CORRECTLY REPRESENTS ALL EXTERIOR BOUNDARIES OF THE SURVEYED LAND.

WISCONSIN TERRANCE E. PISAREK S-1930 EAGLE, WISCONSIN LAND SURVEYOR

DATE 1/13/2015

TERRANCE E. PISAREK S-1930

THIS PLAT AND RELOCATION ORDER ARE APPROVED FOR THE WISCONSIN DEPARTMENT OF TRANSPORTATION.

DATE _____

SEAL

R/W MONUMENT POINT NUMBER AND COORDINATE TABLE

4

R/W MONUMENT POINT NUMBER AND COORDINATE TABLE		
POINT	Y	X
100	771010.479	950034.824
101	771047.413	950057.203
102	771745.629	950045.483
103	771745.579	950042.483
104	772303.673	950033.115
105	772303.332	950102.131
106	771715.016	950112.006
107	771665.029	950142.845
108	771618.023	950113.634
109	771010.133	950123.838
110	771010.418	950057.824
111	771665.017	950112.845

R/W MONUMENT POINT NUMBER AND COORDINATE TABLE		
POINT	Y	X
200	772303.673	950033.115
201	772495.473	950029.896
202	772495.523	950032.895
203	773361.948	950018.352
204	773352.943	949726.524
205	773348.777	949726.594
206	773348.961	949661.594
207	773413.952	949660.503
208	773413.768	949725.503
209	773368.943	949726.255
210	773377.948	950018.083
211	773621.913	950013.990
212	773621.533	950080.001
213	773142.609	950088.043
214	773102.397	950113.721
215	773052.362	950117.561
216	773007.612	950090.309
217	772693.796	950095.576
218	772659.659	950117.152
219	772599.617	950123.161
220	772558.798	950097.842
221	772303.332	950102.131
222	772052.605	950089.553
223	772659.800	950096.147
224	772599.792	950097.154

R/W MONUMENT POINT NUMBER AND COORDINATE TABLE		
POINT	Y	X
300	773621.913	950013.990
301	774720.530	950002.921
302	774720.613	950011.170
303	774927.698	950009.083
304	774927.389	950066.840
305	774804.551	950068.077
306	774770.558	950089.420
307	774710.543	950094.026
308	774670.331	950069.430
309	773621.533	950080.001
310	774770.553	950068.420

4

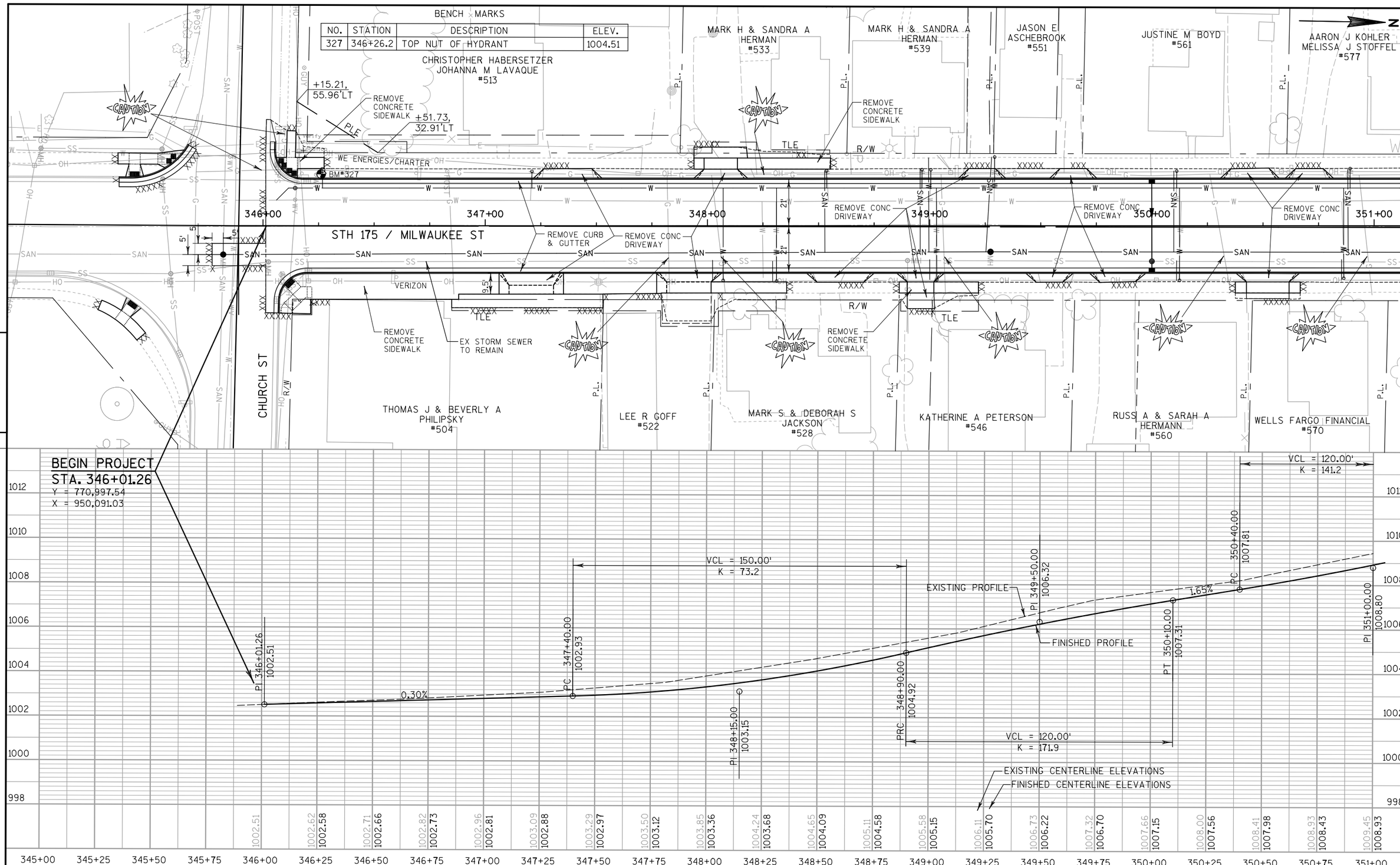

PROJECT NO: 3364-03-72	HWY: STH 175	COUNTY: DODGE	PLAN & PROFILE	SHEET 69	E

FILE NAME : P:\GMT\WisDOT\R11-0319-102 STH 175\graphics\050101_pp.dgn PLOT DATE : 4/29/2015 PLOT BY : gaspemc PLOT NAME : PLOT SCALE : 1:40.1853

WISDOT/CADDS SHEET 30

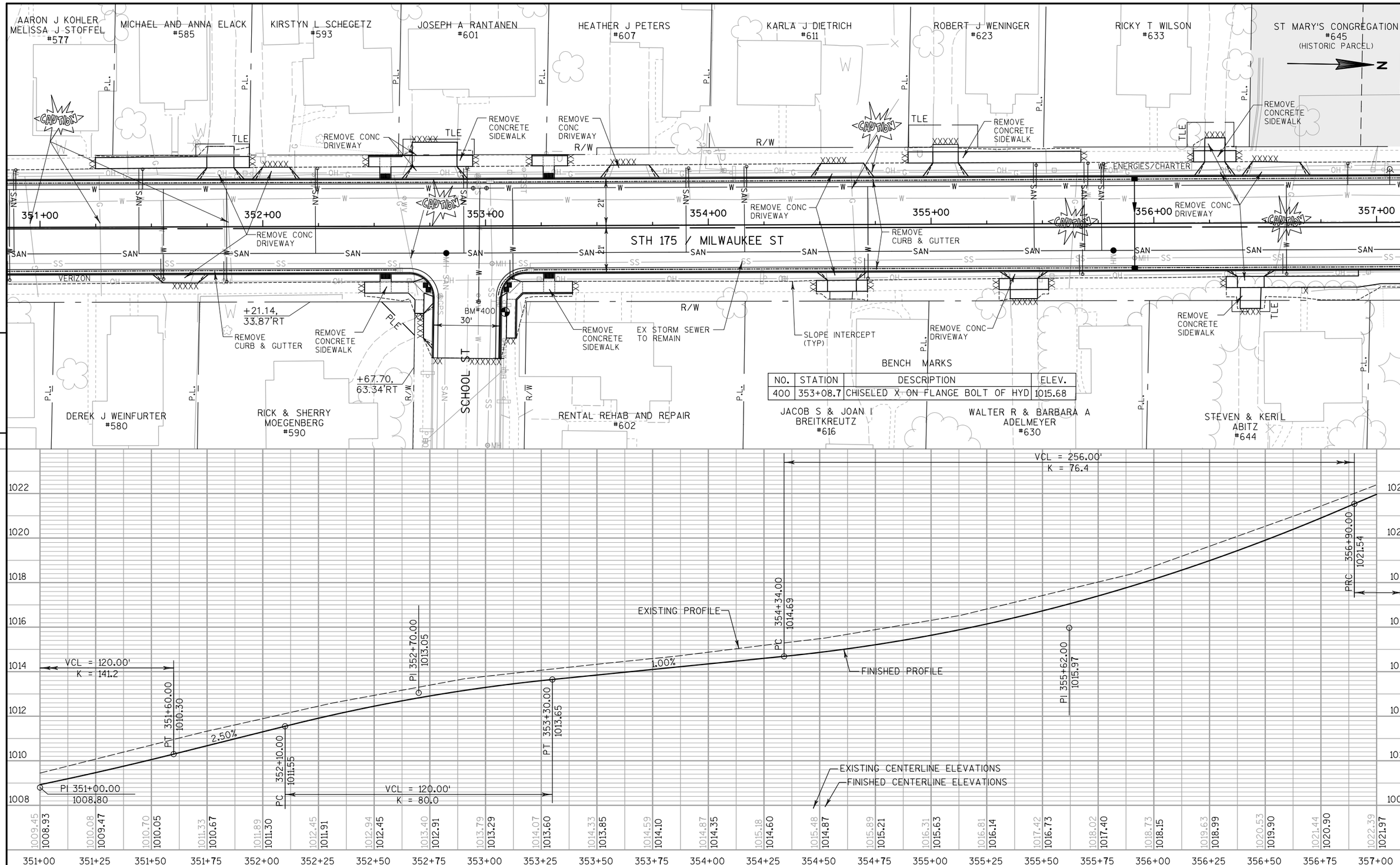

5

5

PROJECT NO: 3364-03-72	HWY: STH 175	COUNTY: DODGE	PLAN & PROFILE	SHEET 70	E

BENCH MARKS			
NO.	STATION	DESCRIPTION	ELEV.
401	362+18.5	CHISELED SQUARE SE COR CONC PAD	1029.55

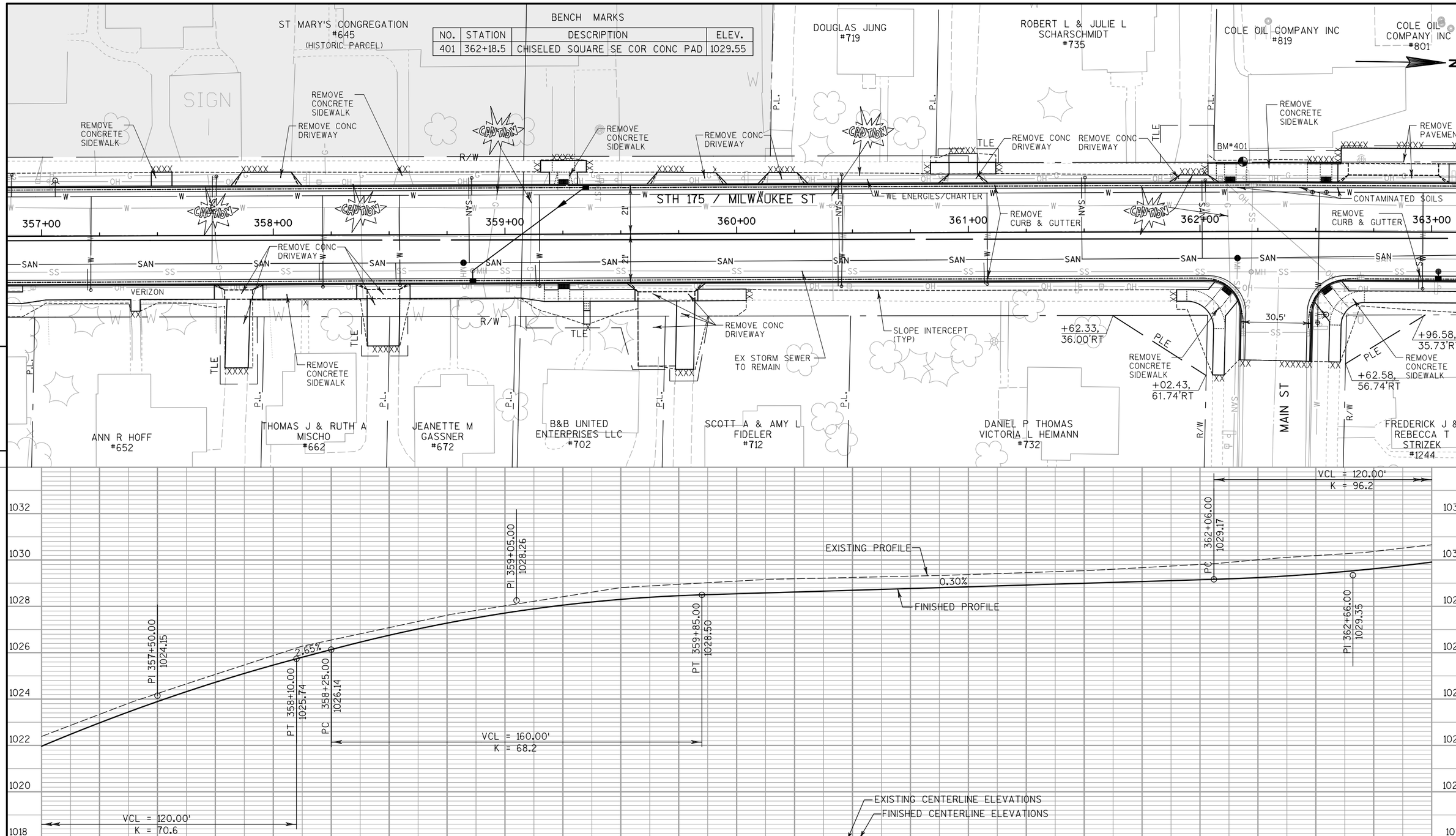

PROJECT NO: 3364-03-72	HWY: STH 175	COUNTY: DODGE	PLAN & PROFILE	SHEET 71	E

FILE NAME : P:\GMT\WisDOT\R11-0319-102 STH 175\graphics\050103_pp.dgn PLOT DATE : 4/29/2015 PLOT BY : gaspemc PLOT NAME : PLOT SCALE : 1:40

WISDOT/CADDS SHEET 30

BENCH MARKS

NO.	STATION	DESCRIPTION	ELEV.
402	366+91.1	CHISELED X SE FLANGE BOLT OF HYD	1035.72

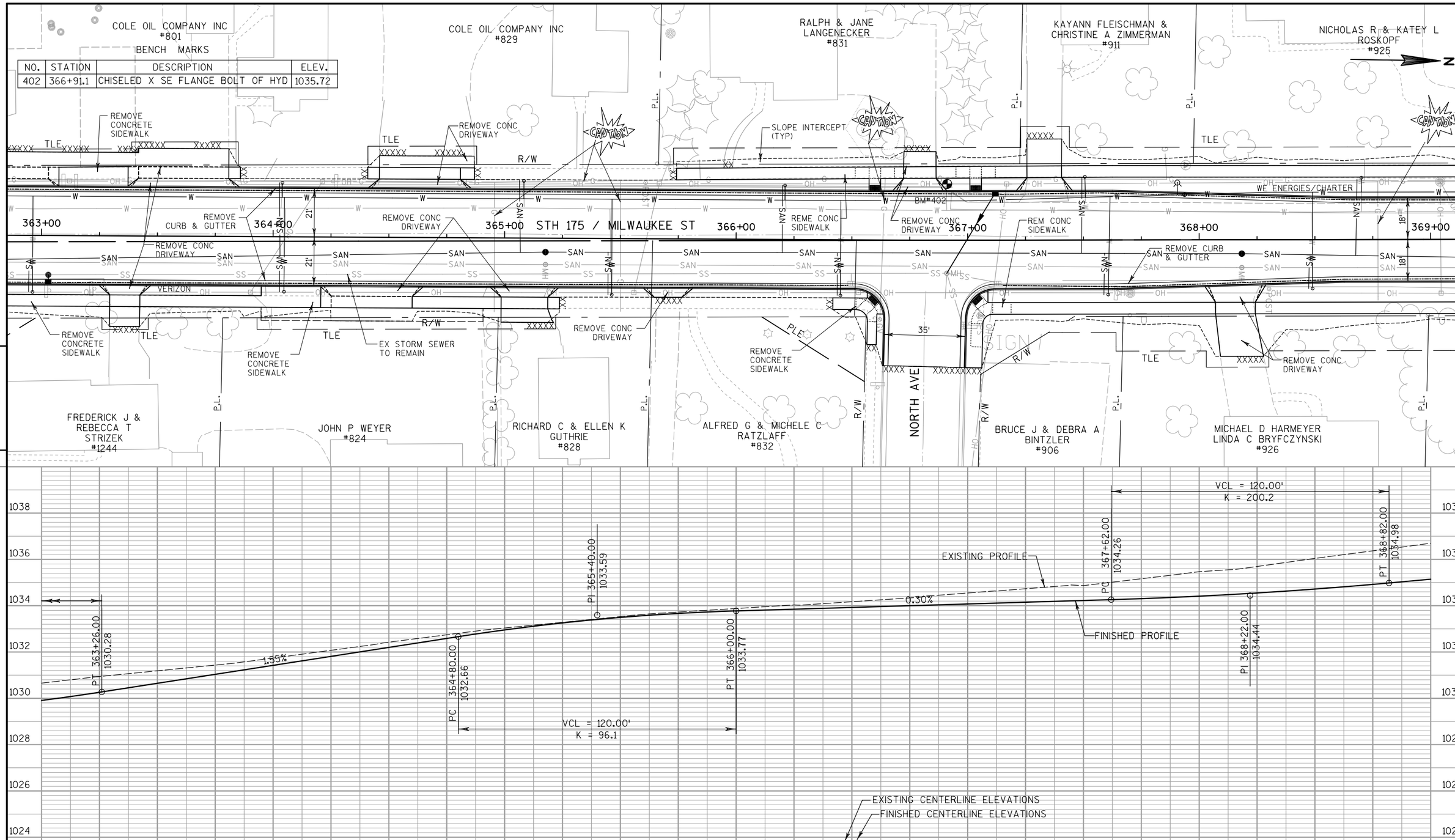

PROJECT NO: 3364-03-72	HWY: STH 175	COUNTY: DODGE	PLAN & PROFILE	SHEET 72	E

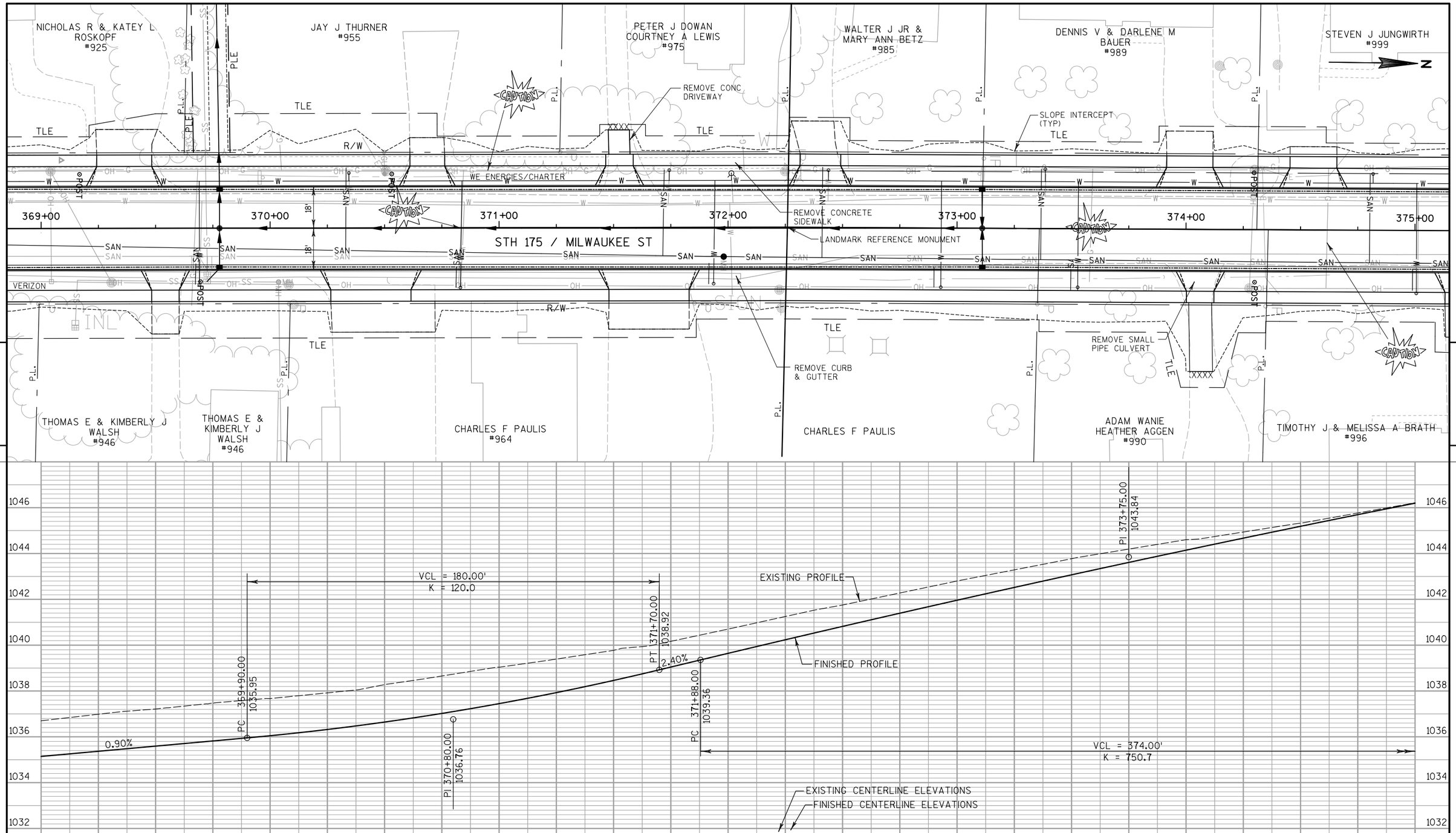

PROJECT NO: 3364-03-72	HWY: STH 175	COUNTY: DODGE	PLAN & PROFILE	SHEET 73	E

FILE NAME : P:\GMT\WisDOT\R11-0319-102 STH 175\graphics\050105_pp.dgn PLOT DATE : 4/29/2015 PLOT BY : gaspemc PLOT NAME : PLOT SCALE : 1:40

WISDOT/CADDS SHEET 30

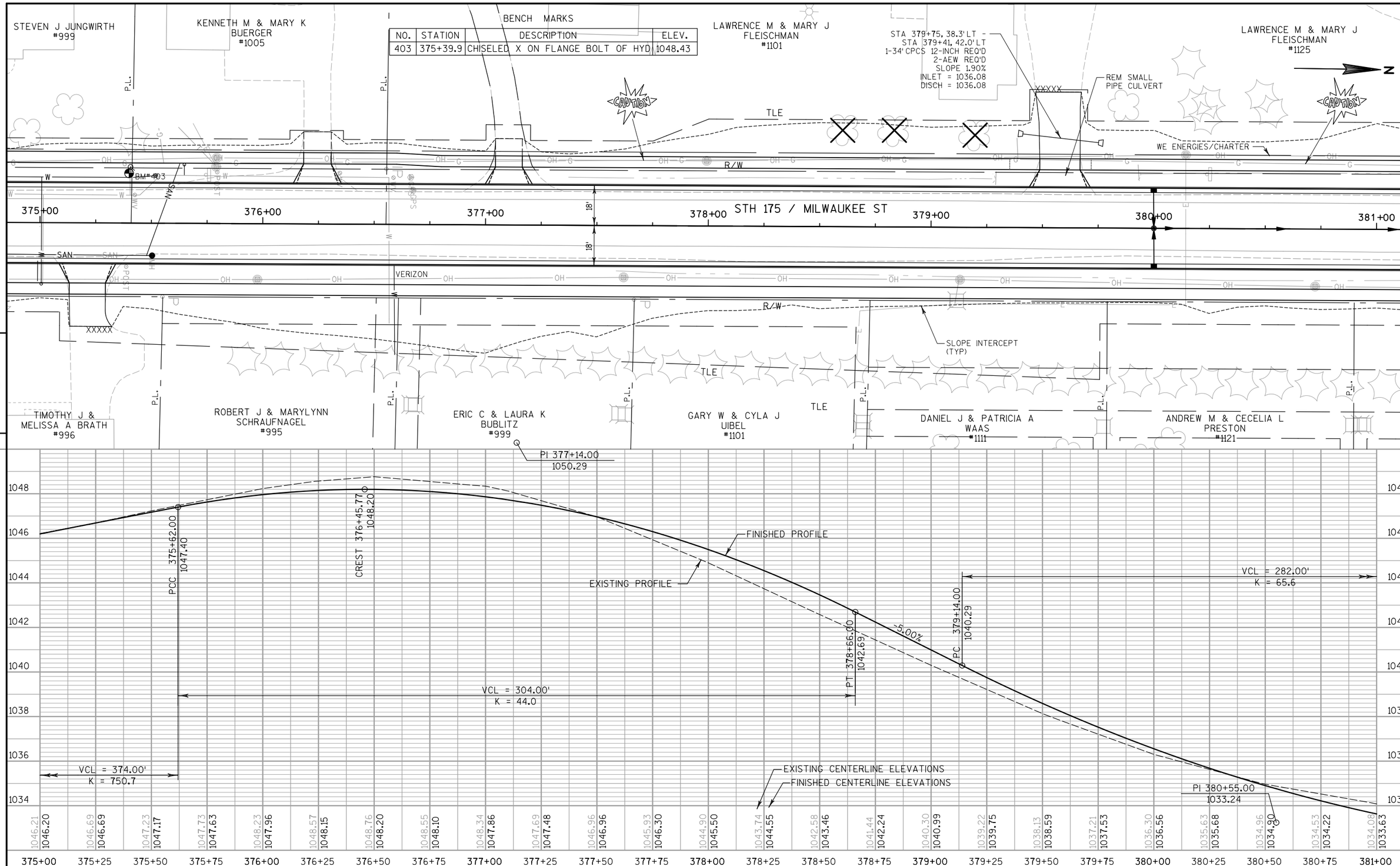

BENCH MARKS

NO.	STATION	DESCRIPTION	ELEV.
403	375+39.9	CHISELED X ON FLANGE BOLT OF HYD	1048.43

5

5

PROJECT NO: 3364-03-72	HWY: STH 175	COUNTY: DODGE	PLAN & PROFILE	SHEET 74	E

BENCH MARKS			
NO.	STATION	DESCRIPTION	ELEV.
404	385+52.6	RR PIKE IN E FACE OF PP#E62-9781	1030.48

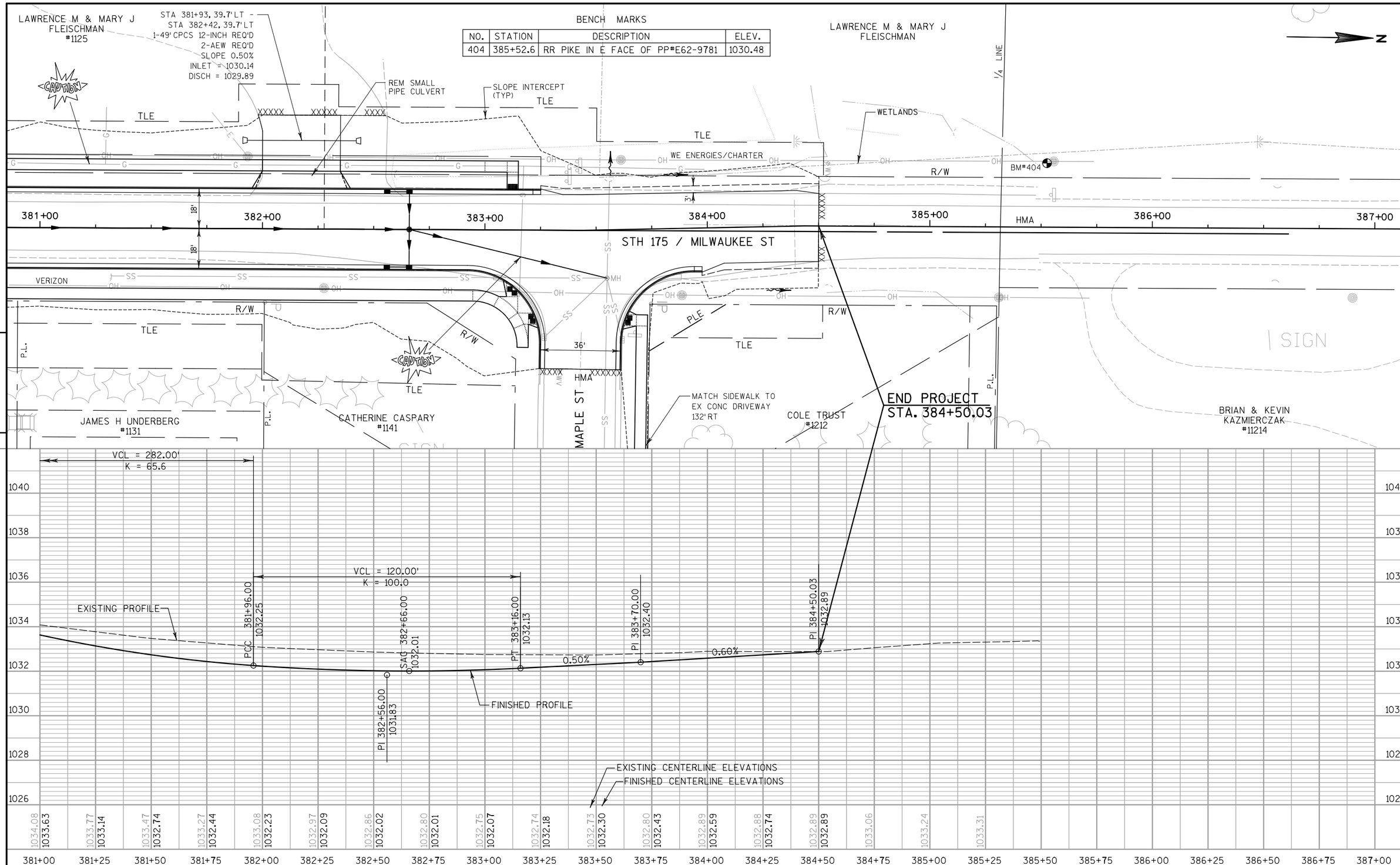

PROJECT NO: 3364-03-72	HWY: STH 175	COUNTY: DODGE	PLAN & PROFILE	SHEET 75	E

Standard Detail Drawing List

08A05-19A	INLET COVERS TYPE A, H, A-S, H-S & Z
08A05-19D	INLET COVER TYPE BW, MANHOLE COVERS, TYPE K, J, J-S, L & M
08A08-01	CATCH BASINS 3-FT, 4-FT, 5-FT AND 6-FT DIAMETER
08A09-01	CATCH BASINS 2X3-FT AND 2.5X3-FT
08B09-01	MANHOLES 3-FT, 4-FT, 5-FT, 6-FT, 7-FT AND 8-FT DIAMETER
08D01-17	CONCRETE CURB, CONCRETE CURB AND GUTTER AND TIES
08D05-15A	CURB RAMPS TYPES 1 AND 1-A
08D05-15B	CURB RAMPS TYPES 2 AND 3
08D05-15C	CURB RAMPS TYPES 4A AND 4A1
08D05-15D	CURB RAMPS TYPE 4B AND 4B1
08D05-15E	CURB RAMPS TYPES 5, 6, 7A, 7B & 8
08D15-04B	EDGEDRAIN AND BASE AGGREGATE OPEN GRADED
08D15-04C	EDGEDRAIN AND BASE AGGREGATE OPEN GRADED
08E08-03	TYPICAL INSTALLATIONS OF EROSION BALES / TEMPORARY DITCH CHECKS
08E09-06	SILT FENCE
08E10-02	INLET PROTECTION TYPE A, B, C AND D
08F01-11	APRON ENDWALLS FOR CULVERT PIPE
08F02-01	APRON ENDWALLS FOR PIPE ARCH AND ELLIPTICAL PIPE
08F05-01	CLASS "B" BEDDING FOR CULVERT PIPE OR STORM SEWER
15C02-05A	BARRICADES AND SIGNS FOR MAINLINE CLOSURES
15C02-05B	BARRICADES AND SIGNS FOR MAINLINE CLOSURES
15C02-05C	DETOUR SIGNING FOR MAINLINE CLOSURES
15C03-02	BARRICADES AND SIGNS FOR SIDEROAD CLOSURES
15C04-02	TRAFFIC CONTROL, ADVANCE WARNING SIGNS 45 M.P.H. OR GREATER TWO-WAY UNDIVIDED ROAD OPEN TO TRAFFIC
15C08-16A	PAVEMENT MARKING (MAINLINE)
15C12-04	TRAFFIC CONTROL FOR LANE CLOSURE (SUITABLE FOR MOVING OPERATIONS)
15C33-01	STOP LINE AND CROSSWALK PAVEMENT MARKING
15D12-05A	TRAFFIC CONTROL, LANE CLOSURE
15D12-05B	TRAFFIC CONTROL, LANE CLOSURE, SPEED REDUCTION
15D30-02A	TRAFFIC CONTROL, PEDESTRIAN ACCOMMODATION
15D30-02B	TRAFFIC CONTROL, TEMPORARY ADA COMPLIANT PEDESTRIAN ACCOMMODATION
15D30-02C	TRAFFIC CONTROL, PEDESTRIAN ACCOMMODATION

6

6

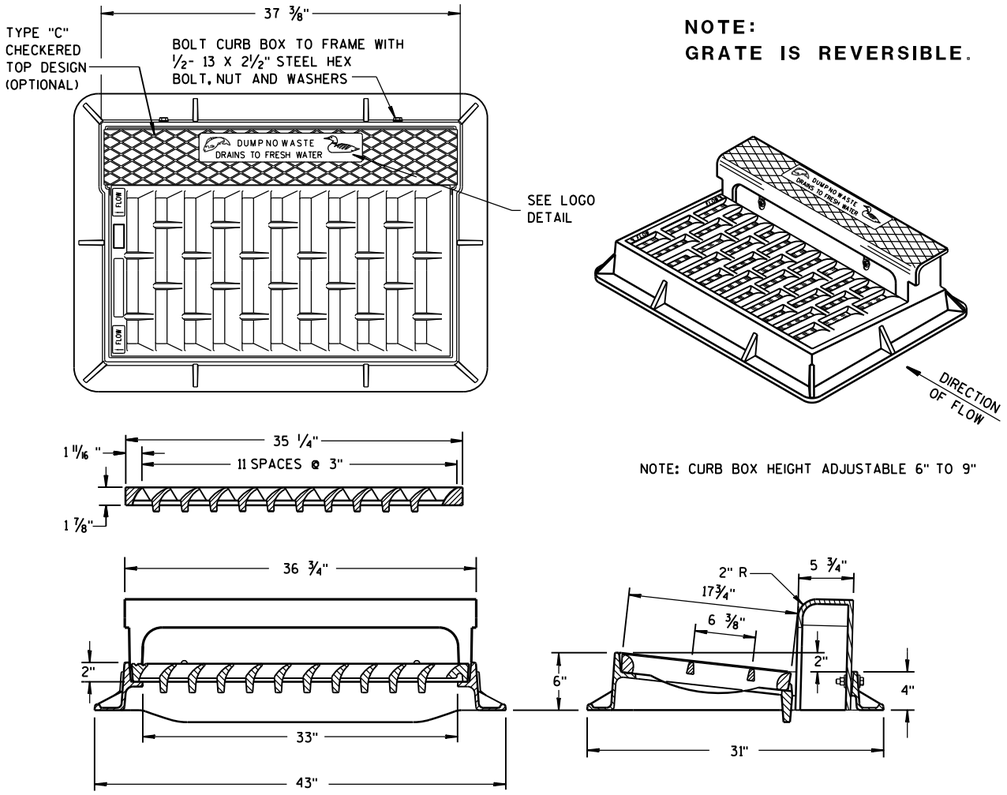

NOTE:
GRATE IS REVERSIBLE.

NOTE: CURB BOX HEIGHT ADJUSTABLE 6" TO 9"

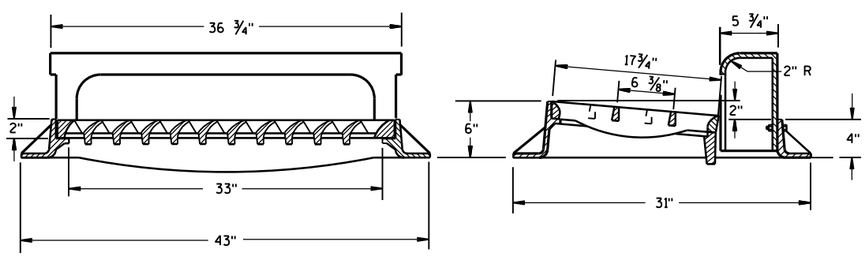

TYPE "H"

NOTE: EITHER CASTING IS ACCEPTABLE

1 1/8" DIAGONAL BARS WITH 1 5/8" OPENINGS

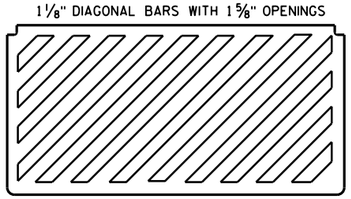

SPECIAL GRATE FOR TYPE "H" COVER

(MEASURES 35 1/4" X 17 3/4" X 2")

(NOTED AS TYPE H-S ON DRAINAGE TABLE)

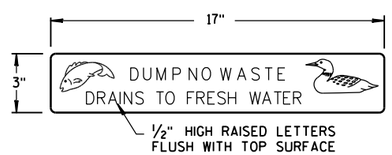

LOGO DETAIL

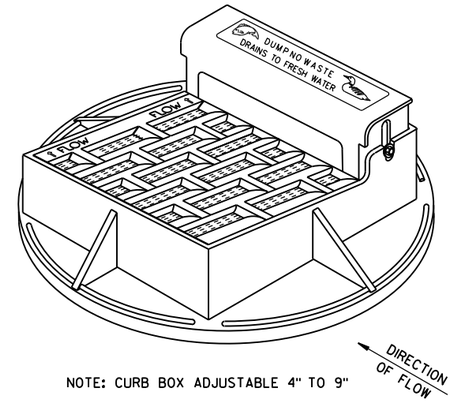

NOTE: CURB BOX ADJUSTABLE 4" TO 9"

NOTE:
GRATE IS REVERSIBLE.

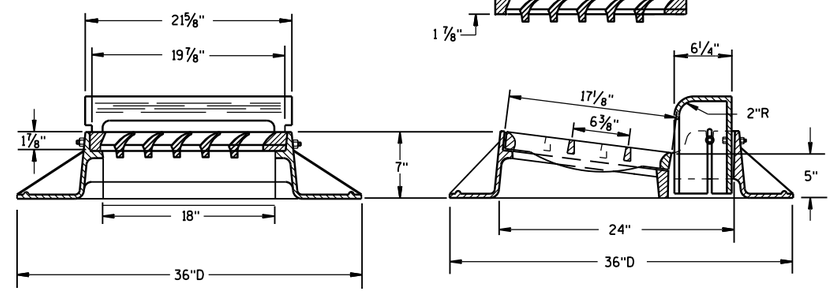

TYPE "A"

GENERAL NOTES

DETAILS OF CONSTRUCTION, MATERIALS AND WORKMANSHIP NOT SHOWN ON THIS DRAWING SHALL CONFORM TO THE PERTINENT REQUIREMENTS OF THE STANDARD SPECIFICATIONS AND THE APPLICABLE SPECIAL PROVISIONS.

DETAIL DRAWINGS FOR PROPOSED ALTERNATE DESIGNS FOR CATCH BASIN, MANHOLE AND INLET COVERS SHALL BE SUBMITTED TO THE ENGINEER FOR APPROVAL PROVIDING THAT SUCH ALTERNATE DESIGNS MAKE PROVISION FOR EQUIVALENT CAPACITY AND STRENGTH.

ROUND FRAMES AND COVERS SHALL HAVE CONTINUOUSLY MACHINED BEARING SURFACES TO PREVENT ROCKING AND RATTLING.

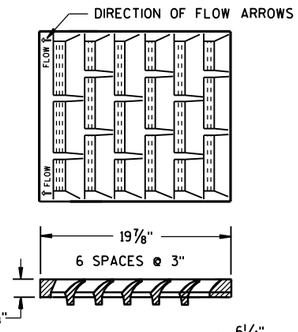

1" DIAGONAL BARS WITH 1 1/2" OPENINGS

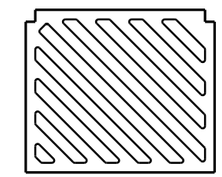

SPECIAL GRATE FOR TYPE "A" COVER

(MEASURES 19 3/4" X 17" X 1 7/8")

(NOTED AS TYPE A-S ON DRAINAGE TABLE)

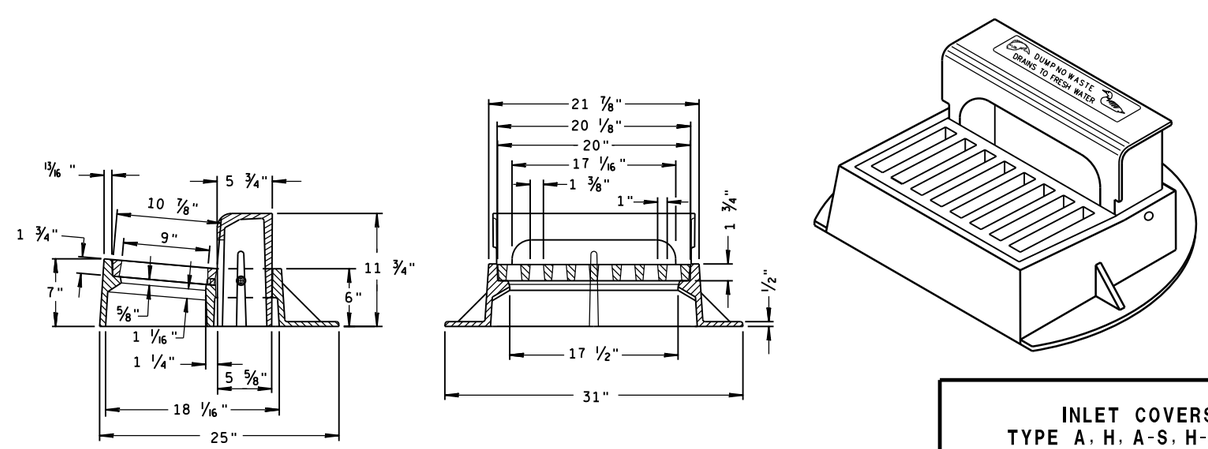

TYPE "Z"

INLET COVERS
TYPE A, H, A-S, H-S & Z

STATE OF WISCONSIN
DEPARTMENT OF TRANSPORTATION

APPROVED
11-27-13 /S/ Jerry H. Zogg
DATE ROADWAY STANDARDS DEVELOPMENT ENGINEER
FHWA

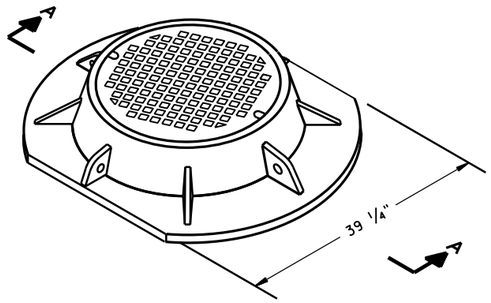

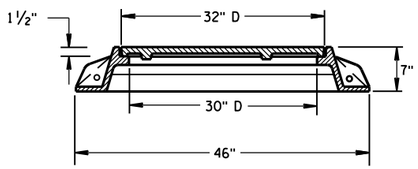

SECTION A-A
TYPE "K"

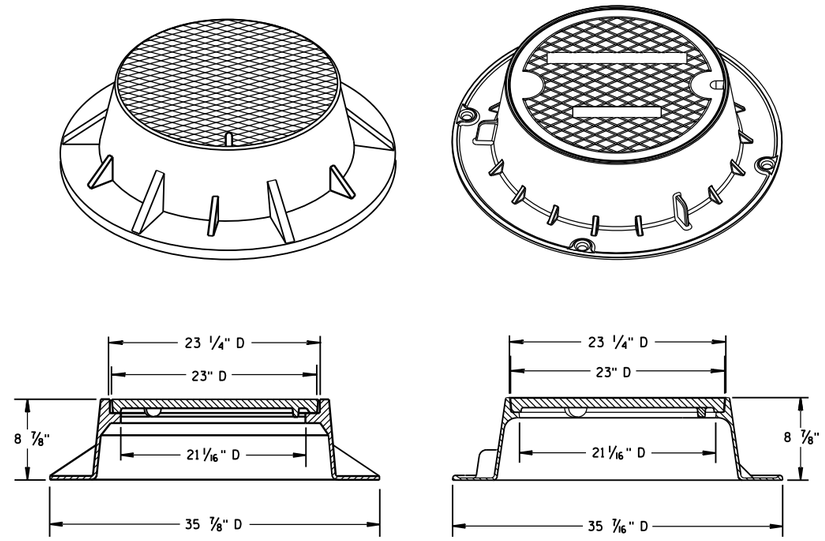

TYPE "J"
NOTE: EITHER CASTING IS ACCEPTABLE

GENERAL NOTES

DETAILS OF CONSTRUCTION, MATERIALS AND WORKMANSHIP NOT SHOWN ON THIS DRAWING SHALL CONFORM TO THE PERTINENT REQUIREMENTS OF THE STANDARD SPECIFICATIONS AND THE APPLICABLE SPECIAL PROVISIONS.

DETAIL DRAWINGS FOR PROPOSED ALTERNATE DESIGNS FOR MANHOLE COVERS SHALL BE SUBMITTED TO THE ENGINEER FOR APPROVAL PROVIDING THAT SUCH ALTERNATE DESIGNS MAKE PROVISION FOR EQUIVALENT CAPACITY AND STRENGTH.

ROUND FRAMES AND COVERS SHALL HAVE CONTINUOUSLY MACHINED BEARING SURFACES TO PREVENT ROCKING AND RATTLING.

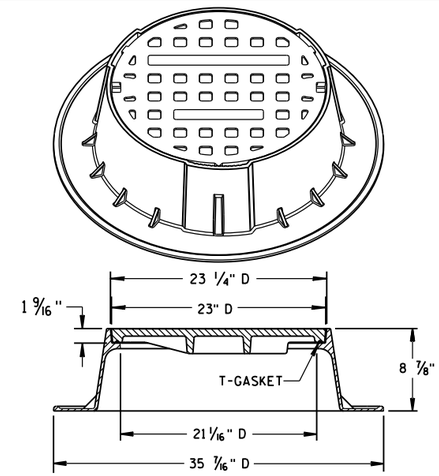

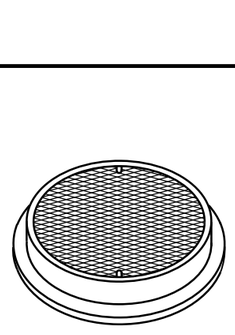

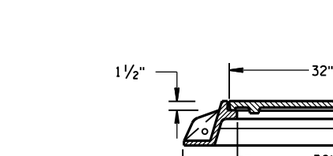

TYPE "L"

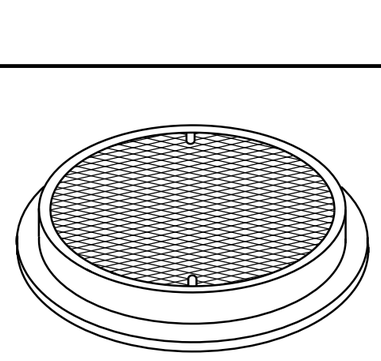

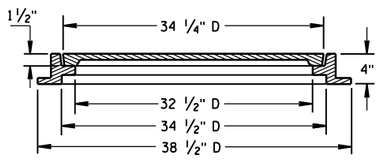

TYPE "M"

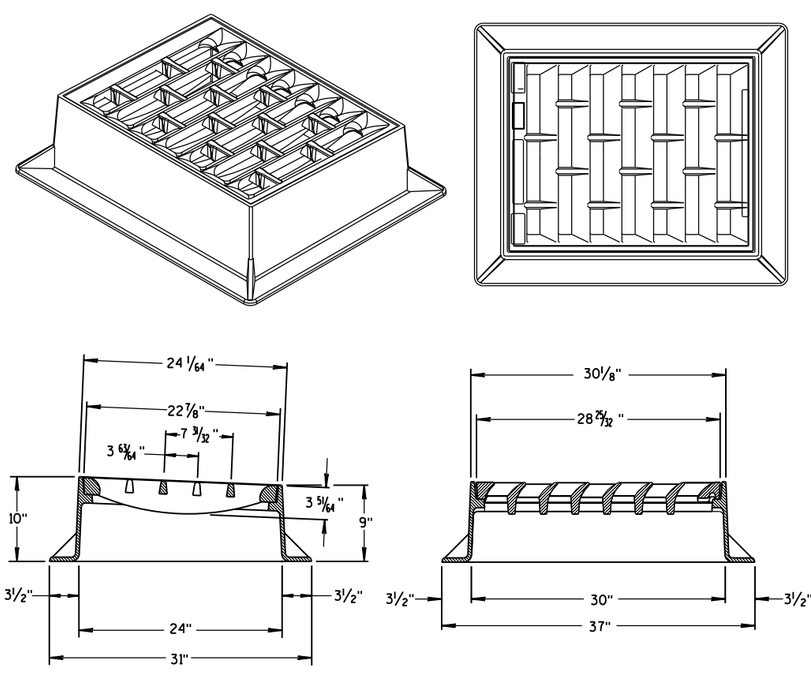

INLET COVER TYPE "BW"

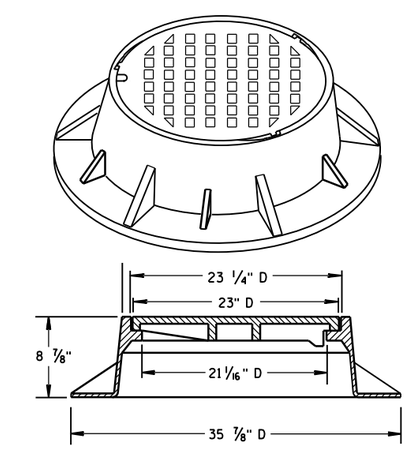

TYPE "J" SPECIAL
TYPE "B" NON-ROCKING SELF-SEAL LID
(NOTED AS TYPE J-S ON THE DRAINAGE TABLE)
NOTE: EITHER CASTING IS ACCEPTABLE

INLET COVER TYPE BW MANHOLE COVERS, TYPE K, J, J-S, L & M	
STATE OF WISCONSIN DEPARTMENT OF TRANSPORTATION	
APPROVED 11/27/2013 DATE FHWA	/S/ Jerry H. Zogg ROADWAY STANDARDS DEVELOPMENT ENGINEER

6
S.D.D. 8 A 5-19d

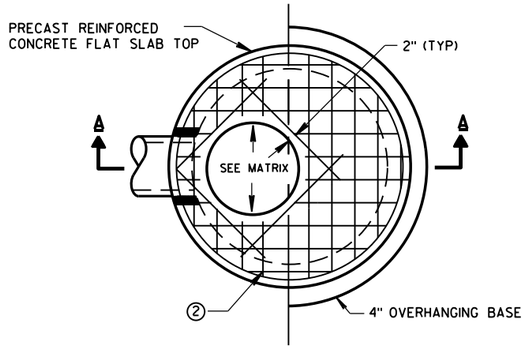

PLAN VIEW CIRCULAR OPENING

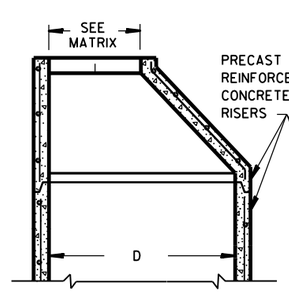

OPTIONAL PRECAST REINFORCED CONCRETE ECCENTRIC TOP

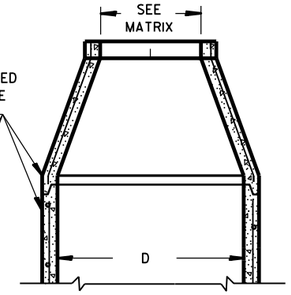

OPTIONAL PRECAST REINFORCED CONCRETE CONCENTRIC TOP

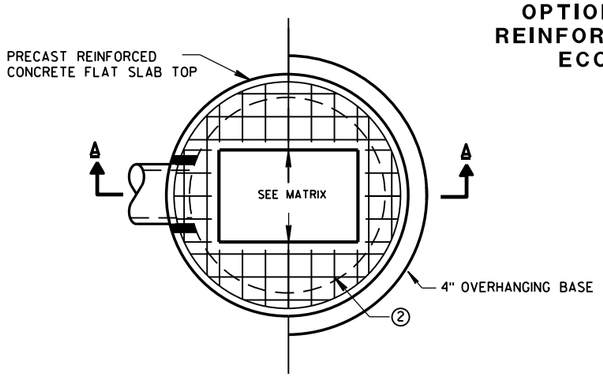

PLAN VIEW RECTANGULAR OPENING

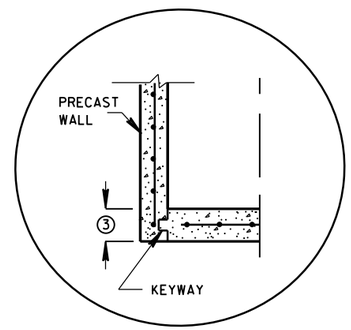

PRECAST REINFORCED CONCRETE WITH INTEGRAL BASE OPTION

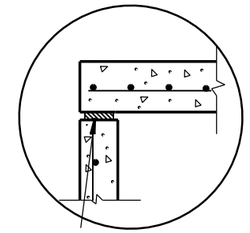

TOP WITH PLAIN END JOINT

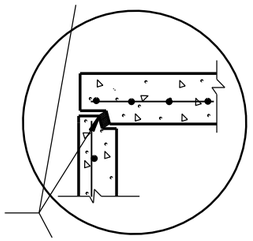

TOP WITH TONGUE AND GROOVE JOINT

JOINTS TO BE SEALED WITH A BUTYL RUBBER SEAL PER SEALANT MANUFACTURERS RECOMMENDATIONS CONFORMING TO ASTM C 990 (TYP)

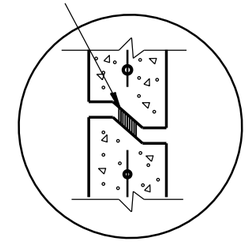

RISER WITH TONGUE AND GROOVE JOINT

DETAIL "B"

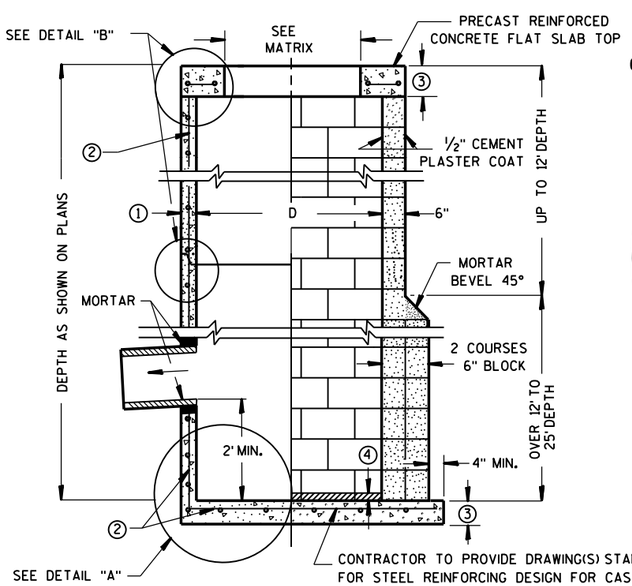

SECTION A-A

PRECAST REINFORCED CONCRETE WITH MONOLITHIC BASE

CONCRETE BLOCK WITH CAST-IN-PLACE OR PRECAST REINFORCED CONCRETE BASE ②

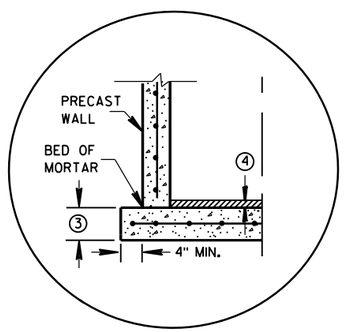

SEPARATE PRECAST REINFORCED CONCRETE BASE OPTION

DETAIL "A"

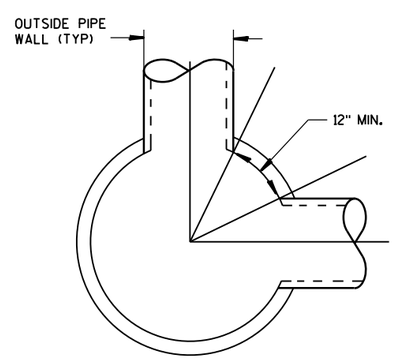

DETAIL "C"

GENERAL NOTES

DETAILS OF CONSTRUCTION, MATERIALS AND WORKMANSHIP NOT SHOWN ON THIS DRAWING SHALL CONFORM TO THE PERTINENT REQUIREMENTS OF THE STANDARD SPECIFICATIONS AND THE APPLICABLE SPECIAL PROVISIONS.

UNLESS OTHERWISE AUTHORIZED IN WRITING BY THE ENGINEER, THE CONTRACTOR SHALL NOT ORDER AND DELIVER PRECAST CATCH BASIN UNITS REQUIRED FOR THE PROJECT UNTIL A LIST OF SIZES IS FURNISHED BY THE ENGINEER.

DETAILED DRAWINGS FOR PROPOSED ALTERNATE DESIGNS FOR UNDERGROUND DRAINAGE STRUCTURES SHALL BE SUBMITTED TO THE ENGINEER FOR APPROVAL PROVIDING THAT SUCH ALTERNATE DESIGNS MAKE PROVISION FOR EQUIVALENT CAPACITY AND STRENGTH.

ALL DRAINAGE STRUCTURES ARE DESIGNATED ON THE PLANS AS "MANHOLES 3X3-L", "CATCH BASINS 4-B", "INLETS 2X3-H", ETC. THE FIRST NUMBERS DESIGNATE THE SIZE OF THE STRUCTURE, AND THE FOLLOWING LETTER DESIGNATES THE TYPE OF COVER TO BE USED TO COMPRISE THE COMPLETE UNIT.

BASES SHALL BE PLACED ON A BED OF MATERIAL AT LEAST 6 INCHES IN DEPTH, WHICH MEETS THE REQUIREMENTS OF GRANULAR BACKFILL. THIS BEDDING SHALL BE COMPACTED AND PROVIDE UNIFORM SUPPORT FOR THE ENTIRE AREA OF THE BASE.

PRECAST REINFORCED CONCRETE CONE TOPS (ECCENTRIC OR CONCENTRIC) OR PRECAST REINFORCED CONCRETE FLAT SLAB TOPS MAY BE USED ON CONCRETE BLOCK STRUCTURES. THE TOPS SHALL BE INSTALLED ON A BED OF MORTAR.

ECCENTRIC CONE TOPS MAY BE USED ON ALL STRUCTURES, AND CONCENTRIC CONE TOPS SHALL BE USED ONLY ON STRUCTURES 5 FEET OR LESS IN DEPTH, UNLESS OTHERWISE DIRECTED BY THE ENGINEER.

STEPS MEETING AASHTO M199 AND THE FOLLOWING REQUIREMENTS SHALL BE INSTALLED IN ALL STRUCTURES OVER 5 FEET IN DEPTH: 16 INCH C-C MAXIMUM SPACING; PROJECT A MINIMUM CLEAR DISTANCE OF 4 INCHES FROM THE WALL AT THE POINT OF EMBEDMENT; MINIMUM LENGTH OF 10 INCHES; MINIMUM WALL EMBEDMENT OF 3 INCHES. FERROUS METAL STEPS NOT PAINTED OR TREATED TO RESIST CORROSION SHALL HAVE A MINIMUM CROSS SECTIONAL DIMENSION OF 1 INCH.

STEPS OF APPROVED POLYPROPYLENE PLASTIC COATED REINFORCEMENT BAR ARE ACCEPTABLE. REINFORCING BAR MUST BE A MINIMUM OF 1/2 INCH AND MEET THE REQUIREMENTS OF ASTM A615.

CERTIFICATION SHALL BE PROVIDED THAT INSTALLED STEPS WHEN TESTED IN ACCORDANCE WITH SECTION 10 OF AASHTO T280 CAN WITHSTAND A VERTICAL LOAD OF 800 LBS. AND A HORIZONTAL LOAD OF 400 LBS.

ALL BAR STEEL REINFORCEMENT SHALL BE EMBEDDED 2 INCHES CLEAR UNLESS OTHERWISE SHOWN OR NOTED.

ALL PRECAST INLET UNITS SHALL CONFORM TO THE PERTINENT REQUIREMENTS OF AASHTO DESIGNATION M199.

PRECAST REINFORCED RISERS SHALL HAVE A TONGUE AND GROOVE JOINT WITH TONGUE UP OR DOWN.

CONCRETE BLOCK WILL NOT BE PERMITED FOR STRUCTURES GREATER THAN 4 FEET IN DIAMETER.

4" OVERHANGING BASES ARE REQUIRED FOR ALL CONCRETE BLOCK INSTALLATIONS. 4" OVERHANG IS REQUIRED WHEN SEPARATE PRECAST BASE IS PROVIDED. OVERHANG IS NOT REQUIRED ON PRECAST STRUCTURES WITH AN INTEGRAL OR MONOLITHIC BASE.

FOR ADDITIONAL CONFIGURATIONS, MAINTAIN A MINIMUM OF 12 INCHES AS MEASURED FROM THE INSIDE OF THE STRUCTURE WALL BETWEEN THE OUTSIDE PIPE WALLS OF ADJACENT PIPES. SEE DETAIL "C".

① MINIMUM WALL THICKNESS SHALL BE 4 INCHES FOR 3-FT, 5 INCHES FOR 4-FT, 6 INCHES FOR 5-FT AND 7 INCHES FOR 6-FT DIAMETER PRECAST CATCH BASINS.

② FOR PRECAST CATCH BASINS PROVIDE REINFORCING STEEL IN ACCORDANCE TO AASHTO M199.

③ PRECAST FLAT SLAB TOPS AND BASES WITH A DIAMETER OF 48" AND LESS SHALL HAVE A MINIMUM THICKNESS OF 6". PRECAST FLAT SLAB TOPS AND BASES WITH A DIAMETER LARGER THAN 48" SHALL HAVE A MINIMUM THICKNESS OF 8".

④ 1" CONCRETE KEY POURED AFTER INSTALLATION. 2' SUMP MEASURED FROM TOP OF KEY.

CATCH BASIN COVER OPENING MATRIX

CATCH BASIN SIZE	INLET COVER TYPE	ALL A'S	ALL B'S	BW	C	F	ALL H'S	S	T	V	WM	Z
	OPENING SIZE (FT)											
3-FT	2X2	X	X					X		X		
	2 DIA.				X							X
4-FT-6-FT	2X2	X	X					X		X		
	2X2.5			X				X	X	X	X	
	2 DIA.				X							X
	2X3						X					
	2.5X3					X						

PIPE MATRIX

CATCH BASIN SIZE	MAXIMUM INSIDE PIPE DIAMETER FOR TWO PIPES	
	180° SEPARATION (IN)	90° SEPARATION (IN)
3-FT	15	12
4-FT	24	18
5-FT	36	24
6-FT	42	30

CATCH BASINS 3-FT, 4-FT, 5-FT AND 6-FT DIAMETER

CATCH BASINS 3-FT, 4-FT, 5-FT AND 6-FT DIAMETER

STATE OF WISCONSIN
DEPARTMENT OF TRANSPORTATION

APPROVED
6/5/2012 — DATE
/S/ Jerry H. Zogg — ROADWAY STANDARDS DEVELOPMENT ENGINEER
FHWA

6

S.D.D. 8 A 8-1

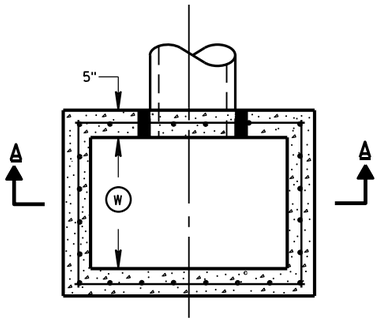

PLAN VIEW

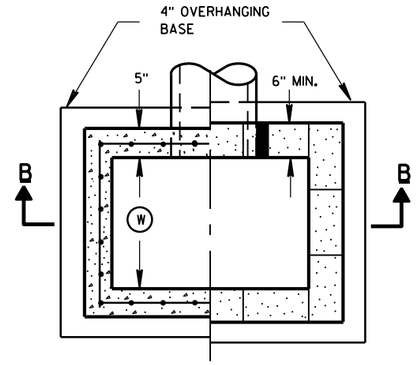

PLAN VIEW

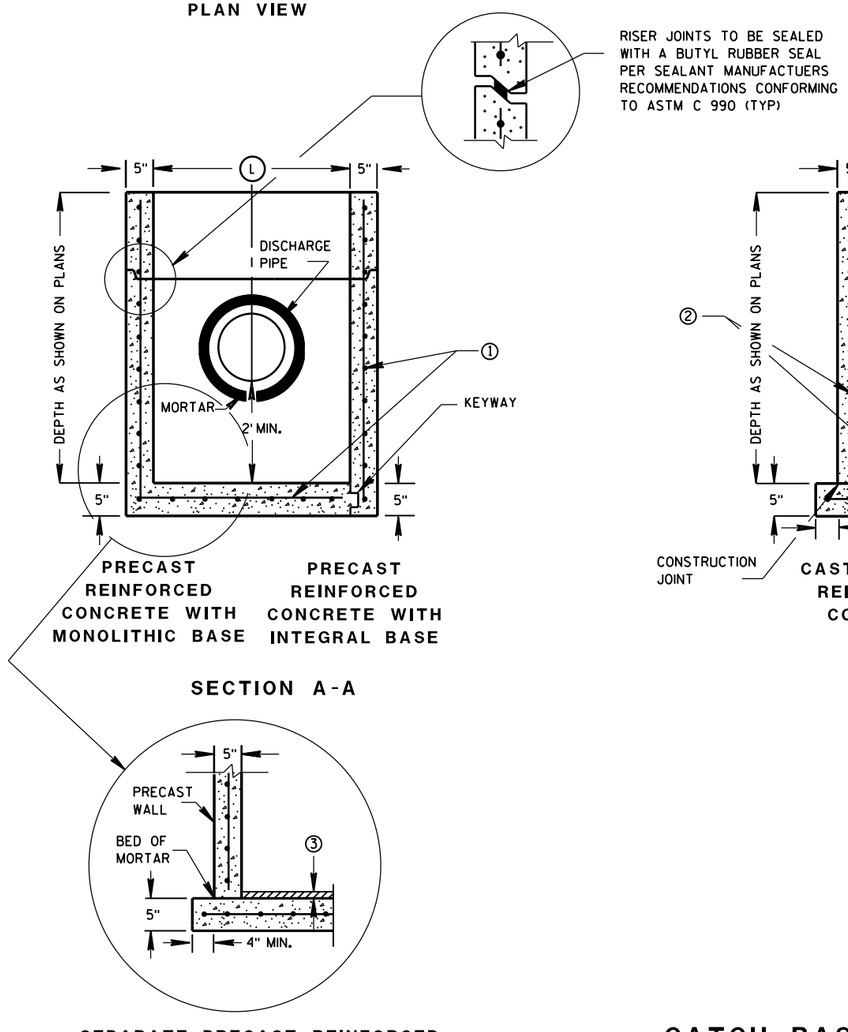

SECTION A-A

SEPARATE PRECAST REINFORCED CONCRETE BASE OPTION

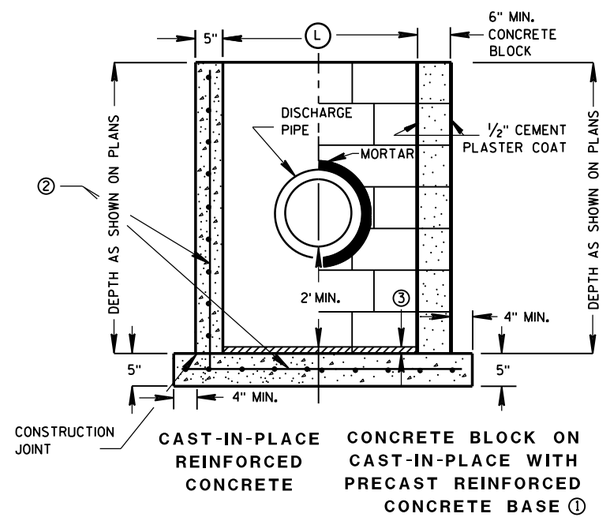

SECTION B-B

GENERAL NOTES

DETAILS OF CONSTRUCTION, MATERIALS AND WORKMANSHIP NOT SHOWN ON THIS DRAWING SHALL CONFORM TO THE PERTINENT REQUIREMENTS OF THE STANDARD SPECIFICATIONS AND THE APPLICABLE SPECIAL PROVISIONS.

UNLESS OTHERWISE AUTHORIZED IN WRITING BY THE ENGINEER, THE CONTRACTOR SHALL NOT ORDER AND DELIVER PRECAST CATCH BASIN UNITS REQUIRED FOR THE PROJECT UNTIL A LIST OF SIZES IS FURNISHED BY THE ENGINEER.

DETAILED DRAWINGS FOR PROPOSED ALTERNATE DESIGNS FOR UNDERGROUND DRAINAGE STRUCTURES SHALL BE SUBMITTED TO THE ENGINEER FOR APPROVAL PROVIDING THAT SUCH ALTERNATE DESIGNS MAKE PROVISION FOR EQUIVALENT CAPACITY AND STRENGTH.

ALL PRECAST CATCH BASIN UNITS SHALL CONFORM TO THE PERTINENT REQUIREMENTS OF ASTM C 913.

ALL DRAINAGE STRUCTURES ARE DESIGNATED ON THE PLANS AS "MANHOLES 3X3-L", "CATCH BASINS 4-B", "INLETS 2X3-H", ETC. THE FIRST NUMBERS DESIGNATES THE SIZE OF THE STRUCTURE, AND THE FOLLOWING LETTER DESIGNATES THE TYPE OF COVER TO BE USED TO COMPRISE THE COMPLETE UNIT.

BASES SHALL BE PLACED ON A BED OF MATERIAL AT LEAST 6 INCHES IN DEPTH, WHICH MEETS THE REQUIREMENTS OF GRANULAR BACKFILL. THIS BEDDING SHALL BE COMPACTED AND PROVIDE UNIFORM SUPPORT FOR THE ENTIRE AREA OF THE BASE.

ALL BAR STEEL REINFORCEMENT SHALL BE EMBEDDED 2 INCHES CLEAR UNLESS OTHERWISE SHOWN OR NOTED.

PRECAST REINFORCED RISERS SHALL HAVE A TONGUE AND GROOVE JOINT WITH TONGUE UP OR DOWN.

4" OVERHANGING BASES ARE REQUIRED FOR CAST-IN-PLACE REINFORCED CONCRETE AND CONCRETE BLOCK INSTALLATIONS.
4" OVERHANG IS REQUIRED WHEN SEPARATE PRECAST BASE IS PROVIDED.
OVERHANG IS NOT REQUIRED ON PRECAST STRUCTURES WITH AN INTEGRAL OR MONOLITHIC BASE.

MAXIMUM INSIDE PIPE DIAMETER DETERMINED BY 3" CLEARANCE ON EACH SIDE OF THE OUTSIDE WALL OF THE PIPE. SEE DETAIL "A". ASSUMES PIPE ENTERS PERPENDICULAR TO THE STRUCTURE.

① FOR PRECAST CATCH BASINS PROVIDE REINFORCING STEEL IN ACCORDANCE TO ASTM C 913.

② CONTRACTOR TO PROVIDE DRAWING(S) STAMPED BY A PROFESSIONAL ENGINEER FOR STEEL REINFORCING DESIGN FOR CAST-IN-PLACE STRUCTURES.

③ 1" CONCRETE KEY POURED AFTER INSTALLATION. 2' SUMP MEASURED FROM TOP OF KEY.

CATCH BASIN COVER MATRIX

CATCH BASIN SIZE		INLET COVER TYPE	F	ALL H'S
	WIDTH (W) (FT)	LENGTH (L) (FT)		
2X3-FT	2	3		X
2.5X3-FT	2.5	3	X	

PIPE MATRIX

CATCH BASIN SIZE	MAXIMUM INSIDE PIPE DIAMETER FOR TWO PIPES	
	WIDTH (IN)	LENGTH (IN)
2X3-FT	12	24
2.5X3-FT	18	24

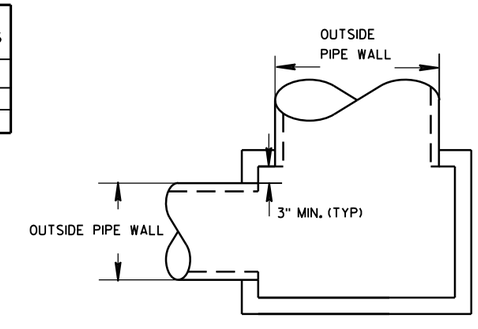

DETAIL "A"

CATCH BASINS 2X3-FT AND 2.5X3-FT

CATCH BASINS 2X3-FT AND 2.5X3-FT

STATE OF WISCONSIN
DEPARTMENT OF TRANSPORTATION

APPROVED
6/5/2012 — DATE
/S/ Jerry H. Zogg — ROADWAY STANDARDS ENGINEER
FHWA
NT

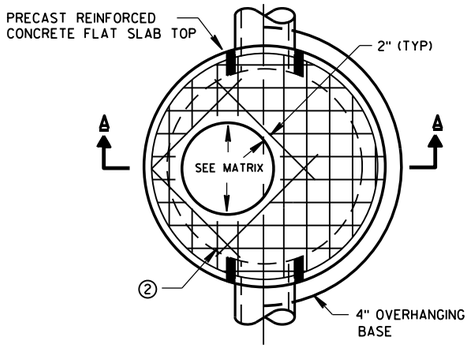

PLAN VIEW CIRCULAR OPENING

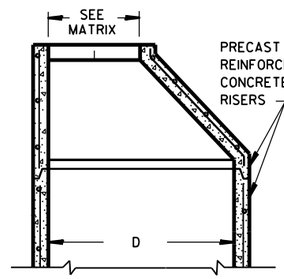

OPTIONAL PRECAST REINFORCED CONCRETE ECCENTRIC TOP

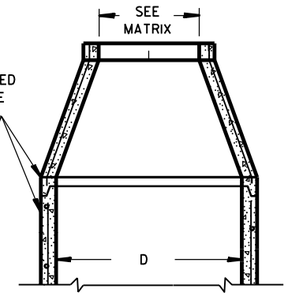

OPTIONAL PRECAST REINFORCED CONCRETE CONCENTRIC TOP

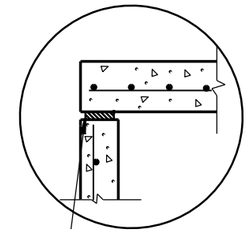

TOP WITH PLAIN END JOINT

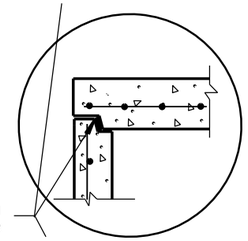

JOINTS TO BE SEALED WITH A BUTYL RUBBER SEAL PER SEALANT MANUFACTURERS RECOMMENDATIONS CONFORMING TO ASTM C990 (TYP)

TOP WITH TONGUE AND GROOVE JOINT

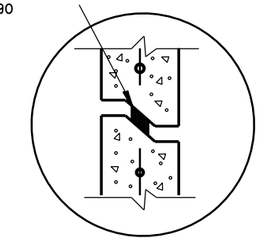

RISER WITH TONGUE AND GROOVE JOINT

DETAIL "B"

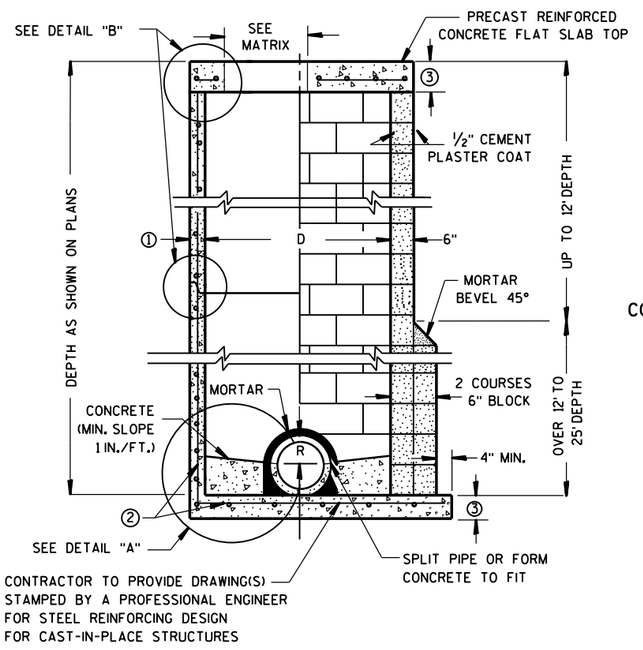

PRECAST REINFORCED CONCRETE WITH MONOLITHIC BASE

CONCRETE BLOCK WITH CAST-IN-PLACE OR PRECAST REINFORCED CONCRETE BASE ②

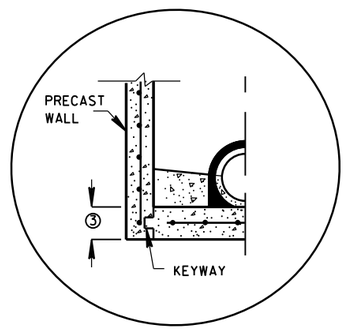

PRECAST REINFORCED CONCRETE WITH INTEGRAL BASE OPTION

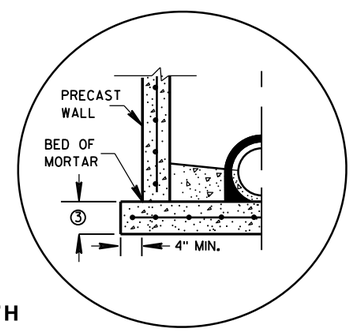

SEPARATE PRECAST REINFORCED CONCRETE BASE OPTION

DETAIL "A"

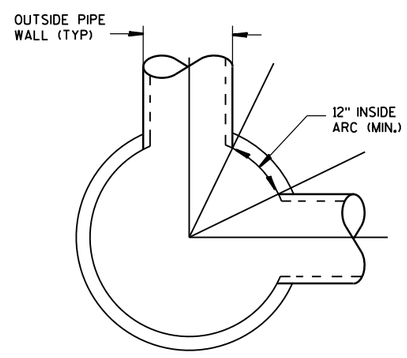

DETAIL "C"

GENERAL NOTES

DETAILS OF CONSTRUCTION, MATERIALS AND WORKMANSHIP NOT SHOWN ON THIS DRAWING SHALL CONFORM TO THE PERTINENT REQUIREMENTS OF THE STANDARD SPECIFICATIONS AND THE APPLICABLE SPECIAL PROVISIONS.

UNLESS OTHERWISE AUTHORIZED IN WRITING BY THE ENGINEER, THE CONTRACTOR SHALL NOT ORDER AND DELIVER PRECAST MANHOLE UNITS REQUIRED FOR THE PROJECT UNTIL A LIST OF SIZES IS FURNISHED BY THE ENGINEER.

DETAILED DRAWINGS FOR PROPOSED ALTERNATE DESIGNS FOR UNDERGROUND DRAINAGE STRUCTURES SHALL BE SUBMITTED TO THE ENGINEER FOR APPROVAL PROVIDING THAT SUCH ALTERNATE DESIGNS MAKE PROVISION FOR EQUIVALENT CAPACITY AND STRENGTH.

ALL DRAINAGE STRUCTURES ARE DESIGNATED ON THE PLANS AS "MANHOLES 3X3-L", "CATCH BASINS 4-B", "INLETS 2X3-H", ETC. THE FIRST NUMBERS DESIGNATE THE SIZE OF THE STRUCTURE, AND THE FOLLOWING LETTER DESIGNATES THE TYPE OF COVER TO BE USED TO COMPRISE THE COMPLETE UNIT.

BASES SHALL BE PLACED ON A BED OF MATERIAL AT LEAST 6 INCHES IN DEPTH, WHICH MEETS THE REQUIREMENTS OF GRANULAR BACKFILL. THIS BEDDING SHALL BE COMPACTED AND PROVIDE UNIFORM SUPPORT FOR THE ENTIRE AREA OF THE BASE.

PRECAST REINFORCED CONE TOPS (ECCENTRIC OR CONCENTRIC) OR PRECAST REINFORCED FLAT SLAB TOPS MAY BE USED ON CONCRETE BLOCK STRUCTURES. THE CONE TOPS SHALL BE INSTALLED ON A BED OF MORTAR.

ECCENTRIC CONE TOPS MAY BE USED ON ALL STRUCTURES, AND CONCENTRIC CONE TOPS SHALL BE USED ONLY ON STRUCTURES 5 FEET OR LESS IN DEPTH, UNLESS OTHERWISE DIRECTED BY THE ENGINEER.

STEPS MEETING AASHTO M199 AND THE FOLLOWING REQUIREMENTS SHALL BE INSTALLED IN ALL STRUCTURES OVER 5 FEET IN DEPTH: 16 INCH C-C MAXIMUM SPACING; PROJECT A MINIMUM CLEAR DISTANCE OF 4 INCHES FROM THE WALL AT THE POINT OF EMBEDMENT; MINIMUM LENGTH OF 10 INCHES; MINIMUM WALL EMBEDMENT OF 3 INCHES. FERROUS METAL STEPS NOT PAINTED OR TREATED TO RESIST CORROSION SHALL HAVE A MINIMUM CROSS SECTIONAL DIMENSION OF 1 INCH.

STEPS OF APPROVED POLYPROPYLENE PLASTIC COATED REINFORCEMENT BAR ARE ACCEPTABLE. REINFORCING BAR MUST BE A MINIMUM OF ½" AND MEET THE REQUIREMENTS OF ASTM A615.

CERTIFICATION SHALL BE PROVIDED THAT INSTALLED STEPS WHEN TESTED IN ACCORDANCE WITH SECTION 10 OF AASHTO T280 CAN WITHSTAND A VERTICAL LOAD OF 800 LBS. AND A HORIZONTAL LOAD OF 400 LBS.

ALL BAR STEEL REINFORCEMENT SHALL BE EMBEDDED 2 INCHES CLEAR UNLESS OTHERWISE SHOWN OR NOTED.

CONCRETE BLOCK WILL NOT BE PERMITED FOR STRUCTURES GREATER THAN 4 FEET IN DIAMETER.

PRECAST REINFORCED RISERS SHALL HAVE A TONGUE AND GROOVE JOINT WITH TONGUE UP OR DOWN.

ALL PRECAST MANHOLE UNITS SHALL CONFORM TO THE PERTINENT REQUIREMENTS OF AASHTO DESIGNATION M 199.

4" OVERHANGING BASES ARE REQUIRED FOR ALL CONCRETE BLOCK INSTALLATIONS. 4" OVERHANG IS REQUIRED WHEN SEPARATE PRECAST BASE IS PROVIDED. OVERHANG IS NOT REQUIRED ON PRECAST STRUCTURES WITH AN INTEGRAL OR MONOLITHIC BASE.

FOR ADDITIONAL CONFIGURATIONS, MAINTAIN A MINIMUM OF 12 INCHES AS MEASURED FROM THE INSIDE OF THE STRUCTURE WALL BETWEEN THE OUTSIDE PIPE WALLS OF ADJACENT PIPES. SEE DETAIL "C".

① MINIMUM WALL THICKNESS SHALL BE 4 INCHES FOR 3-FT, 5 INCHES FOR 4-FT, 6 INCHES FOR 5-FT, 7 INCHES FOR 6-FT, 8 INCHES FOR 7-FT AND 9 INCHES FOR 8-FT DIAMETER PRECAST MANHOLES.

② FOR PRECAST MANHOLES PROVIDE REINFORCING STEEL IN ACCORDANCE TO AASHTO M199.

③ PRECAST FLAT SLAB TOPS AND BASES WITH A DIAMETER OF 48" AND LESS SHALL HAVE A MINIMUM THICKNESS OF 6". PRECAST FLAT SLAB TOPS AND BASES WITH A DIAMETER LARGER THAN 48" SHALL HAVE A MINIMUM THICKNESS OF 8".

MANHOLE COVER OPENING MATRIX

MANHOLE COVER TYPE	C	ALL J'S	K	L	M
OPENING SIZE (FT)					
2 DIA.	X	X		X	
3 DIA.			X		X

PIPE MATRIX

MANHOLE SIZE	MAXIMUM INSIDE PIPE DIAMETER FOR TWO PIPES	
	180° SEPARATION (IN)	90° SEPARATION (IN)
3-FT	15	12
4-FT	24	18
5-FT	36	24
6-FT	42	36
7-FT	48	36
8-FT	60	42

MANHOLES 3-FT, 4-FT, 5-FT, 6-FT, 7-FT AND 8-FT DIAMETER

STATE OF WISCONSIN
DEPARTMENT OF TRANSPORTATION

APPROVED
6/5/2012 — DATE
/S/ Jerry H. Zogg
ROADWAY STANDARDS DEVELOPMENT ENGINEER
FHWA

MANHOLES 3-FT, 4-FT, 5-FT, 6-FT, 7-FT AND 8-FT DIAMETER

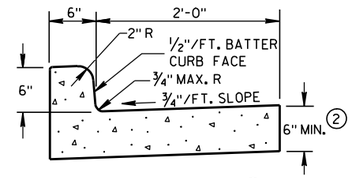

TYPES A & D ①

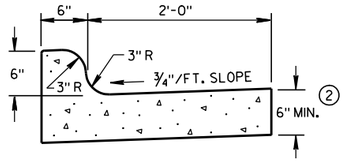

TYPES K & L ①

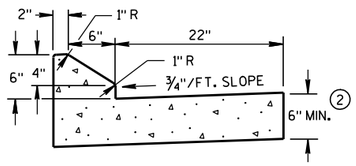

6" SLOPED CURB TYPES G & J ①

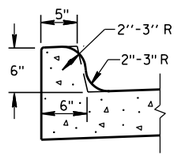

OPTIONAL CURB SHAPE FOR TYPES K & L ①

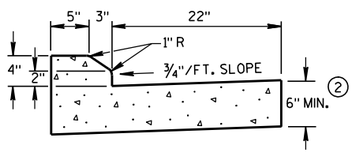

4" SLOPED CURB TYPES G & J ①

CONCRETE CURB & GUTTER 30"

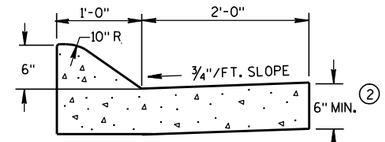

(6" SLOPED CURB)

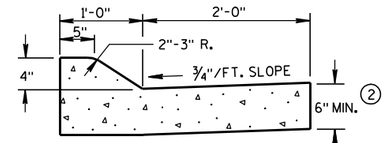

(4" SLOPED CURB)

TYPES A & D ①

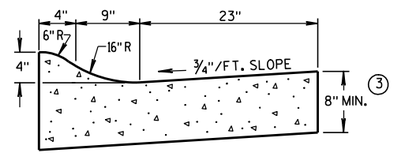

4" SLOPED CURB TYPES R & T ① ④

CONCRETE CURB & GUTTER 36"

GENERAL NOTES

DETAILS OF CONSTRUCTION, MATERIALS AND WORKMANSHIP NOT SHOWN ON THIS DRAWING SHALL CONFORM TO THE PERTINENT REQUIREMENTS OF THE CONTRACT.

PAVEMENT TIES AND TIE BARS SHALL BE EPOXY COATED IN CONFORMANCE WITH SUBSECTION 505.2.6.2 OF THE STANDARD SPECIFICATIONS.

INTEGRAL CURB & GUTTER SHALL CONFORM TO THE DETAILS SHOWN FOR CONCRETE CURB & GUTTER INCLUDING THE TRANSVERSE GUTTER SLOPE. A LONGITUDINAL CONSTRUCTION JOINT IS NOT REQUIRED WITH INTEGRAL CURB AND GUTTER.

WHERE THE TRANSVERSE JOINTS IN THE PAVEMENT ARE REQUIRED TO BE SEALED, THE JOINTS IN THE INTEGRAL CURB AND GUTTER SHALL BE SEALED TO THE FACE OF CURB WITH THE SAME TYPE OF SEALANT. THE COST OF FURNISHING AND INSTALLING THIS SEALANT SHALL BE INCIDENTAL TO THE ITEM CONCRETE CURB AND GUTTER.

UNLESS OTHERWISE SHOWN ON THE TYPICAL CROSS SECTIONS, THE BASE AGGREGATE AND COMMON EXCAVATION LIMITS ARE 2'-0" BEHIND THE BACK OF CURBS.

① TIE BARS ARE REQUIRED FOR CURB AND GUTTER TYPES A, G, K AND R.

② THE BOTTOM OF CURB AND GUTTER MAY BE CONSTRUCTED EITHER LEVEL OR PARALLEL TO THE SLOPE OF THE SUBGRADE OR BASE AGGREGATE PROVIDED A 6" MINIMUM GUTTER THICKNESS IS MAINTAINED.

③ THE BOTTOM OF CURB AND GUTTER MAY BE CONSTRUCTED EITHER LEVEL OR PARALLEL TO THE SLOPE OF THE SUBGRADE OR BASE AGGREGATE PROVIDED A 8" MINIMUM GUTTER THICKNESS IS MAINTAINED.

④ THE FACE OF CURB IS 6" FROM THE BACK OF CURB.

⑤ WHEN REVERSE SLOPE GUTTER IS REQUIRED, THE LOCATION(S) WILL BE SHOWN ELSEWHERE IN THE PLAN.

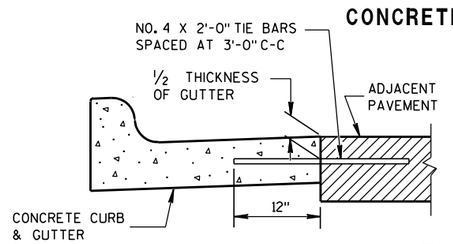

TYPICAL TIE BAR LOCATION ①

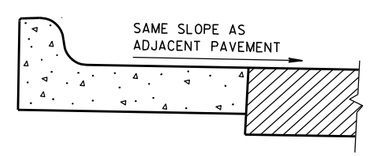

REVERSE SLOPE GUTTER ⑤
(TYPICAL FOR ALL CURB & GUTTER TYPES)

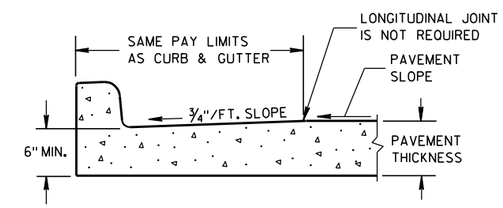

PARTIAL SECTION OF PAVEMENT WITH INTEGRAL CURB & GUTTER

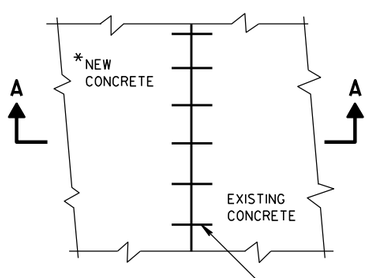

*NEW CURB & GUTTER, SURFACE DRAINS, CONCRETE PAVEMENT OR OTHER NEW CONCRETE.

PLAN VIEW

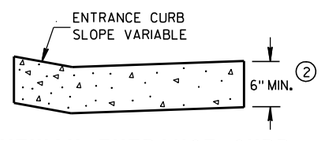

DRIVEWAY ENTRANCE CURB
(WHEN DIRECTED BY THE ENGINEER)

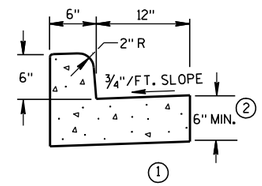

① TYPES A & D

CONCRETE CURB & GUTTER 18"

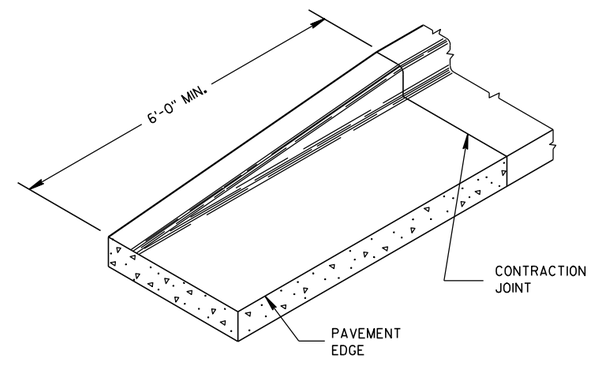

END SECTION CURB & GUTTER

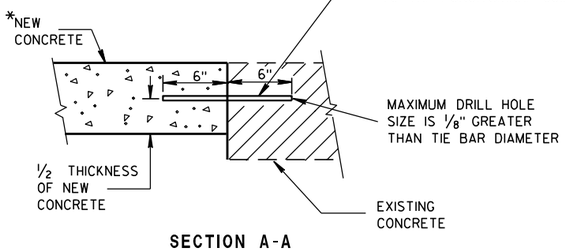

SECTION A-A

TIE BARS DRILLED INTO EXISTING PAVEMENT

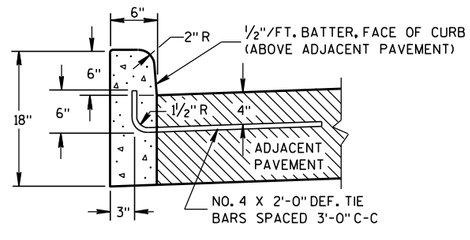

① TYPES A & D

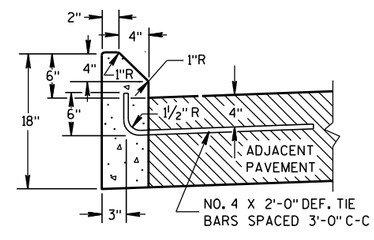

① TYPES G & J

CONCRETE CURB

CONCRETE CURB, CONCRETE CURB & GUTTER AND TIES

STATE OF WISCONSIN
DEPARTMENT OF TRANSPORTATION

APPROVED
9/4/08 — DATE
/S/ Jerry H. ---- — ROADWAY STANDARDS ENGINEER
ENT
FHWA

6

S.D.D. 8 D 1-17

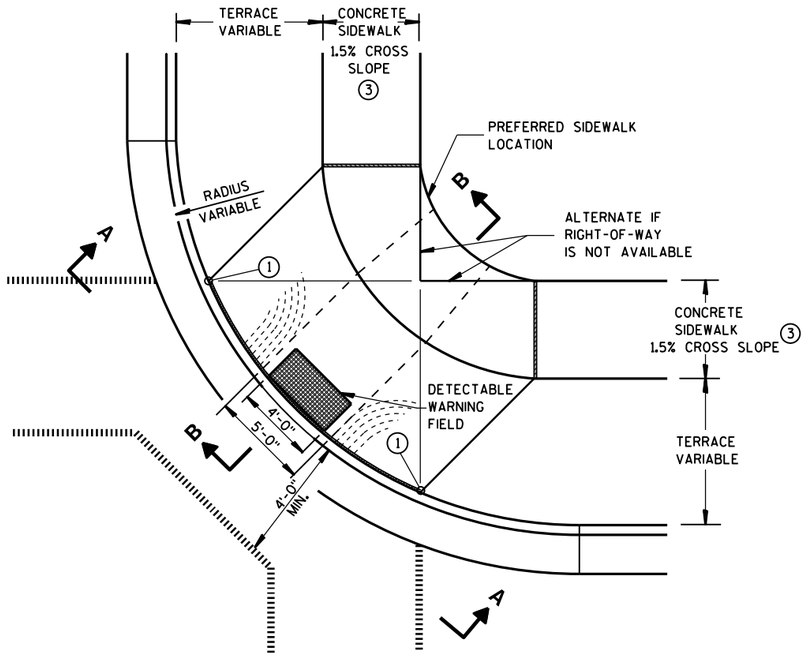

PLAN VIEW

TYPE 1 RAMP

(CENTER OF CORNER RADIUS)

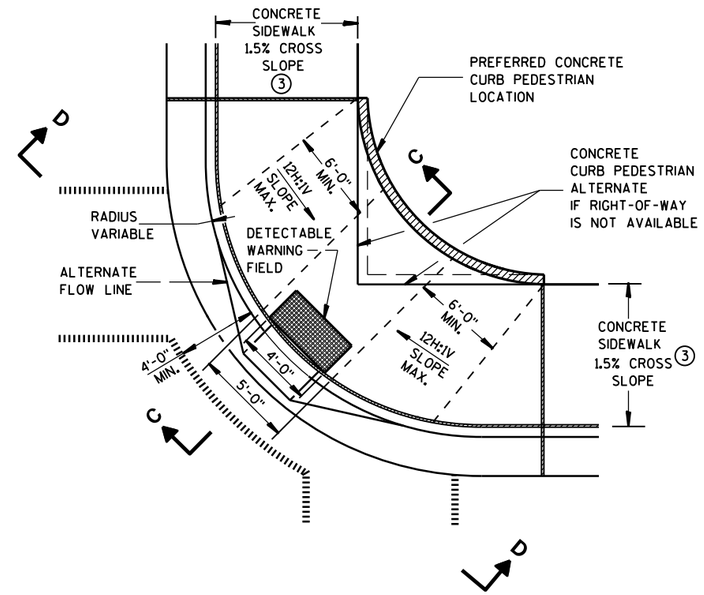

PLAN VIEW

TYPE 1-A RAMP

(NO TERRACE)

GENERAL NOTES

DETAILS OF CONSTRUCTION, MATERIALS AND WORKMANSHIP NOT SHOWN ON THIS DRAWING SHALL CONFORM TO THE PERTINENT REQUIREMENTS OF THE STANDARD SPECIFICATIONS AND THE APPLICABLE SPECIAL PROVISIONS.

RAMPS SHALL BE BUILT AT 12H:1V OR FLATTER. WHEN NECESSARY, THE SIDEWALK ELEVATION MAY BE LOWERED TO MEET THE HIGH POINT ON THE RAMP.

TYPE 1 RAMPS SHALL HAVE A NORMAL SIDEWALK APRON AND CURB ON BOTH SIDES OF RAMP.

DETECTABLE WARNING FIELD SHALL BE MEASURED AND PAID BY THE SQUARE FOOT AS "CURB RAMP DETECTABLE WARNING FIELD". THE CONCRETE PEDESTRIAN CURB, IF NEEDED, SHALL BE MEASURED AND PAID BY THE LINEAL FOOT AS "CONCRETE CURB PEDESTRIAN". CONCRETE SIDEWALK IN THE CURB RAMP AREA SHALL BE MEASURED AND PAID BY THE SQUARE FOOT AS CONCRETE SIDEWALK, INCLUDING THE AREA UNDER THE DETECTABLE WARNING FIELD.

SELECT CURB RAMP DETECTABLE WARNING FIELD MATERIALS AND DEVICES FROM THE DEPARTMENT'S APPROVED MATERIALS LIST. THE COLOR OF THE DETECTABLE WARNING FIELD IS SPECIFIED ELSEWHERE AND IS INCIDENTAL TO THE BID ITEM OF "CURB RAMP DETECTABLE WARNING FIELD".

DETECTABLE WARNING FIELDS THAT ARE INSTALLED AS A GROUP OR SIDE BY SIDE, SHALL BE FROM THE SAME MANUFACTURER.

SURFACE TEXTURE OF THE RAMP SHALL BE OBTAINED BY COARSE BROOMING TRANSVERSE TO THE SLOPE OF THE RAMP.

① THIS POINT IS AN EXTENSION OF OUTSIDE EDGE OF APPROACHING SIDEWALK WHERE IT MEETS THE BACK OF CONCRETE CURB.

② GRADE CHANGE BETWEEN GUTTER FLAG SLOPE AND THE CURB RAMP SLOPE SHALL NOT EXCEED 11%. PROVIDE DRAINAGE AWAY FROM CURB RAMP AT GUTTER FLAG INTERFACE.

③ ±0.5% CONSTRUCTION TOLERANCE IN SIDEWALK CROSS SLOPE. THE SIDEWALK CROSS SLOPE SHALL NOT EXCEED 2% WITHOUT PRIOR APPROVAL FROM THE ENGINEER.

LEGEND

- ½" EXPANSION JOINT-SIDEWALK
- CONTRACTION JOINT FIELD LOCATED
- PAVEMENT MARKING CROSSWALK (WHITE)
- ALTERNATIVE LAYOUT

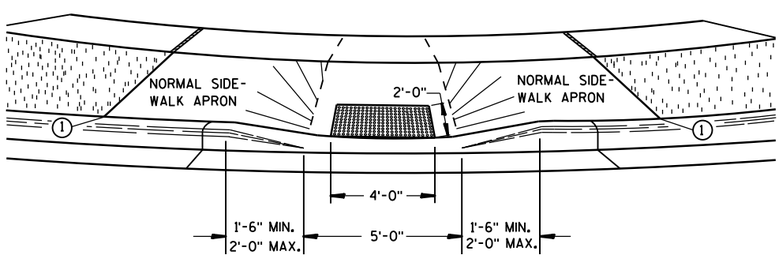

VIEW A-A

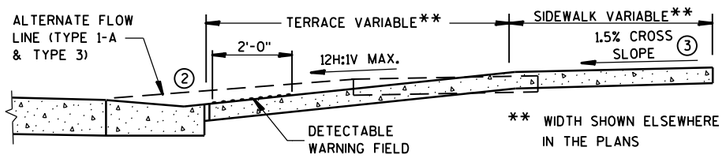

SECTION B-B

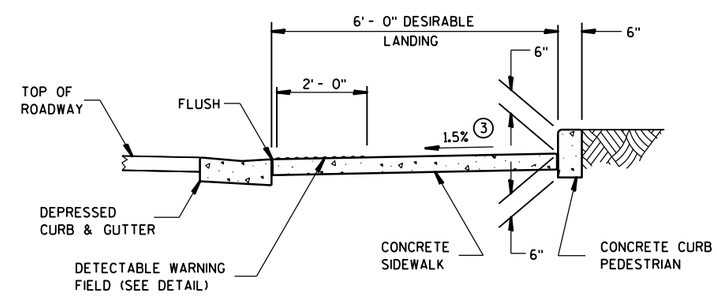

SECTION C-C

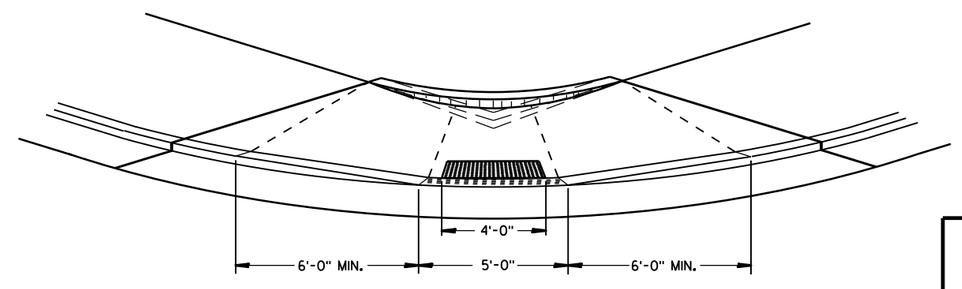

VIEW D-D

CURB RAMPS TYPES 1 AND 1-A

STATE OF WISCONSIN
DEPARTMENT OF TRANSPORTATION

6

6

S.D.D. 8 D 5-15a

S.D.D. 8 D 5-15a

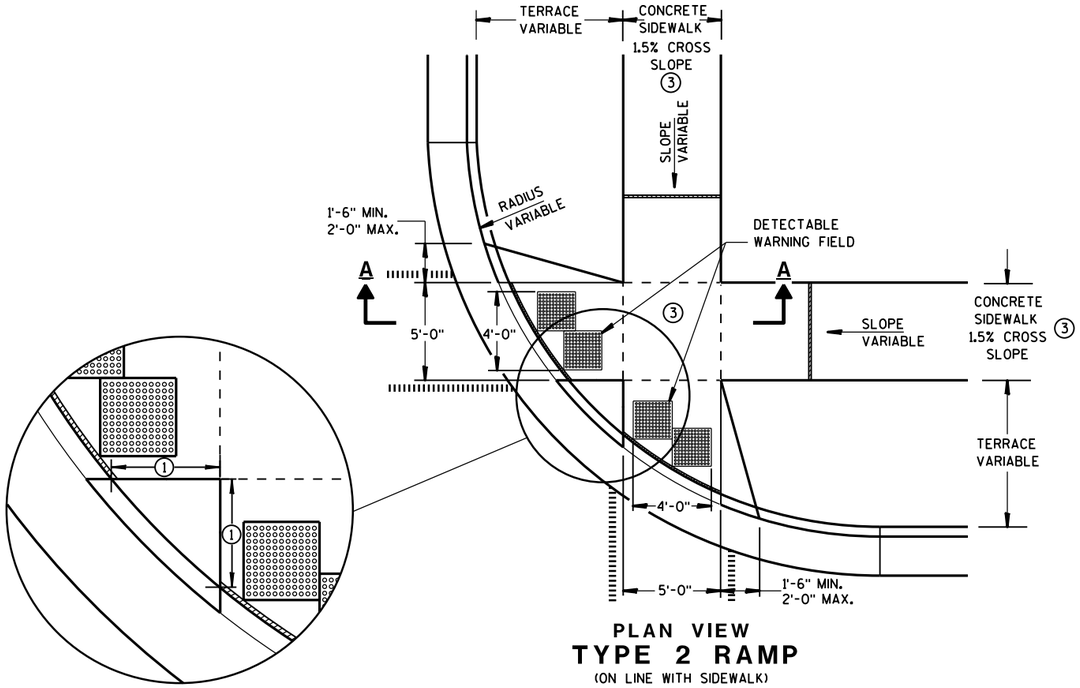

PLAN VIEW
TYPE 2 RAMP
(ON LINE WITH SIDEWALK)

GENERAL NOTES

USE THE TYPE 3 RAMP ONLY WHEN A TYPE 1 OR TYPE 2 CANNOT BE ACHIEVED BECAUSE OF FIELD CONDITIONS.

DETECTABLE WARNING FIELDS THAT ARE INSTALLED AS A GROUP OR SIDE BY SIDE, SHALL BE FROM THE SAME MANUFACTURER.

1. WHEN THIS DISTANCE IS LESS THAN 6'-0" IT MAY BE DIFFICULT TO ACHIEVE A 12H:1V SLOPE, OR FLATTER, ON THE RAMP. REDUCE CURB HEIGHT IN TRIANGLE AREA TO ACHIEVE 12H:1V SLOPE, OR FLATTER, ON RAMP. 2" MINIMUM CURB HEIGHT.

2. GRADE CHANGE BETWEEN GUTTER FLAG SLOPE AND THE CURB RAMP SLOPE SHALL NOT EXCEED 11%. PROVIDE DRAINAGE AWAY FROM CURB RAMP AT GUTTER FLAG INTERFACE.

3. ±0.5% CONSTRUCTION TOLERANCE IN SIDEWALK CROSS SLOPE. THE SIDEWALK CROSS SLOPE SHALL NOT EXCEED 2% WITHOUT PRIOR APPROVAL FROM THE ENGINEER.

LEGEND

- ½" EXPANSION JOINT-SIDEWALK
- CONTRACTION JOINT FIELD LOCATED
- PAVEMENT MARKING CROSSWALK (WHITE)
- ALTERNATIVE LAYOUT

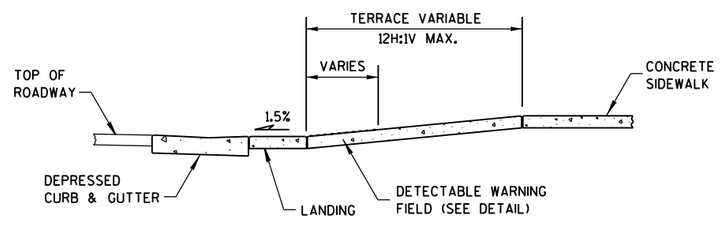

SECTION A-A

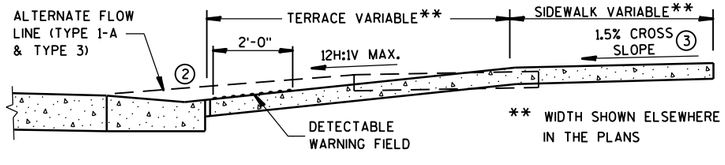

SECTION B-B

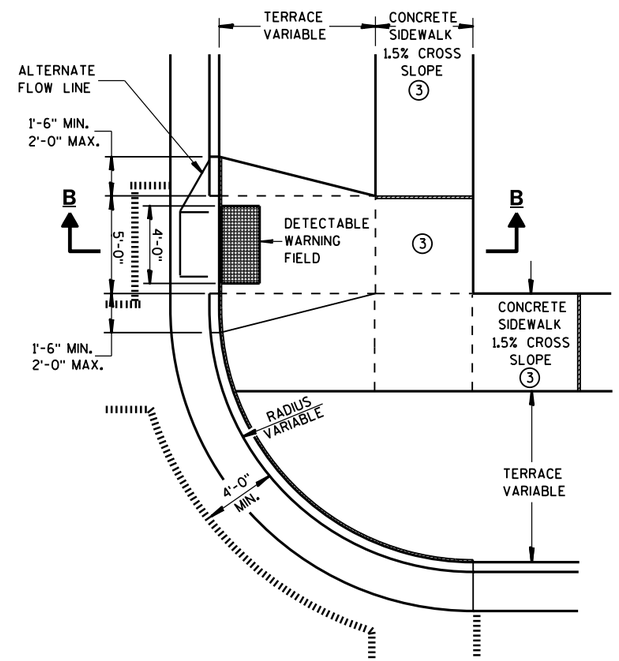

PLAN VIEW
TYPE 3 RAMP
(OUTSIDE OF CROSSWALK AREA)

6

6

CURB RAMPS
TYPES 2 AND 3

STATE OF WISCONSIN
DEPARTMENT OF TRANSPO

S.D.D. 8 D 5-15b

S.D.D. 8 D 5-15b

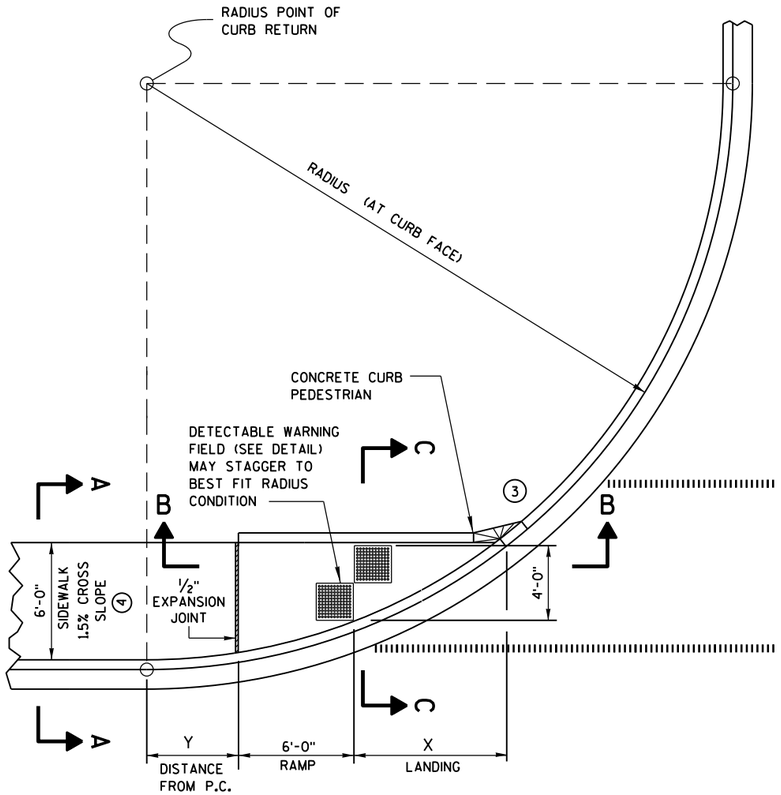

CURB RAMP TYPE 4A
PLAN VIEW

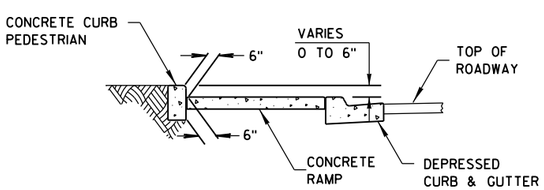

SECTION C-C FOR TYPE 4A

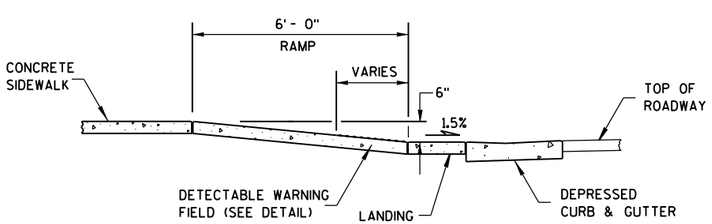

SECTION B-B FOR TYPE 4A

RADIUS (AT CURB FACE)	X	Y
20 FEET	6'-1¾"	2'-7¼"
30 FEET	7'-11¾"	4'-8¼"
40 FEET	9'-5¼"	6'-5"
50 FEET	10'-8¾"	7'-11¼"
60 FEET	11'-10¼"	9'-3½"

INTERMEDIATE RADII CAN BE INTERPOLATED

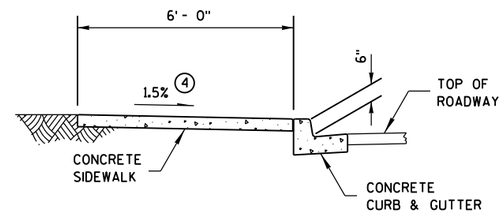

SECTION A-A FOR TYPE 4A

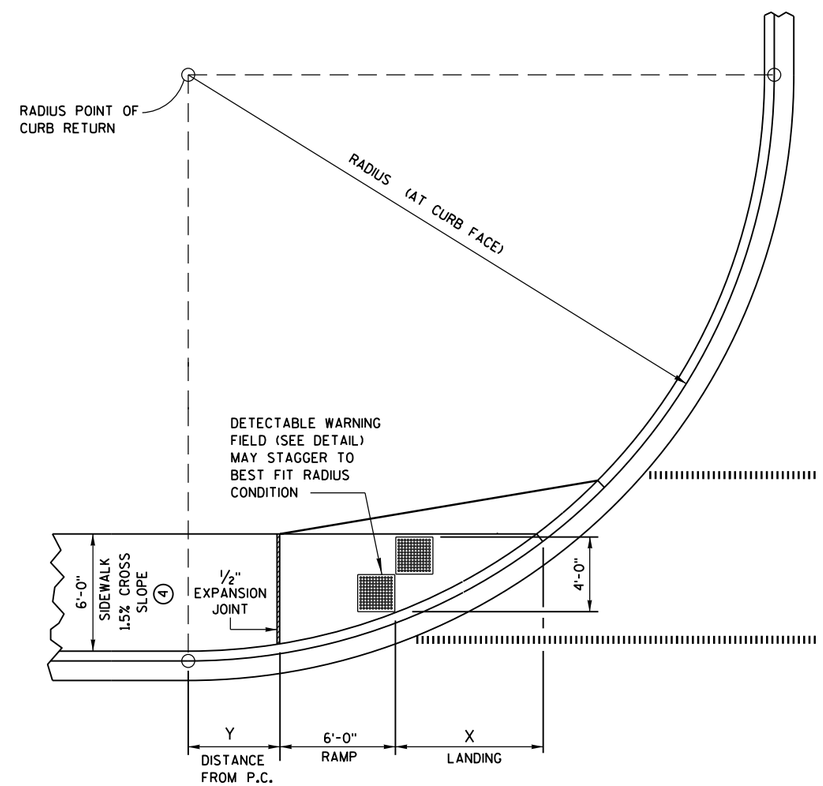

CURB RAMP TYPE 4A1
PLAN VIEW

GENERAL NOTES

AVOID PLACING DRAINAGE STRUCTURES, JUNCTION BOXES OR OTHER OBSTRUCTIONS IN FRONT OF RAMP ACCESS AREAS.

RAMP SLOPES SHALL NOT BE STEEPER THAN 12:1.

DETECTABLE WARNING FIELDS THAT ARE INSTALLED AS A GROUP OR SIDE BY SIDE, SHALL BE FROM THE SAME MANUFACTURER.

(3) INSTALL TRANSITION NOSE. (INCIDENTAL TO OTHER PAY ITEMS.) DO NOT MARK TRANSITION NOSE.

(4) ±0.5% CONSTRUCTION TOLERANCE IN SIDEWALK CROSS SLOPE. THE SIDEWALK CROSS SLOPE SHALL NOT EXCEED 2% WITHOUT PRIOR APPROVAL FROM THE ENGINEER.

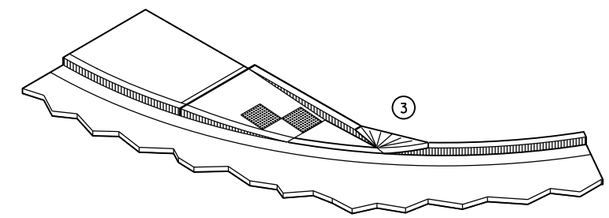

ISOMETRIC VIEW FOR TYPE 4A

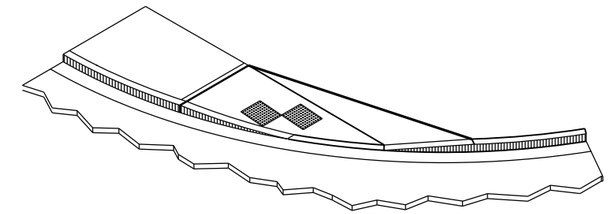

ISOMETRIC VIEW FOR TYPE 4A1

LEGEND

- ½" EXPANSION JOINT-SIDEWALK
- CONTRACTION JOINT FIELD LOCATED
- PAVEMENT MARKING CROSSWALK (WHITE)

CURB RAMPS
TYPES 4A AND 4A1

STATE OF WISCONSIN
DEPARTMENT OF TRANSPO

6

S.D.D. 8 D 5-15c

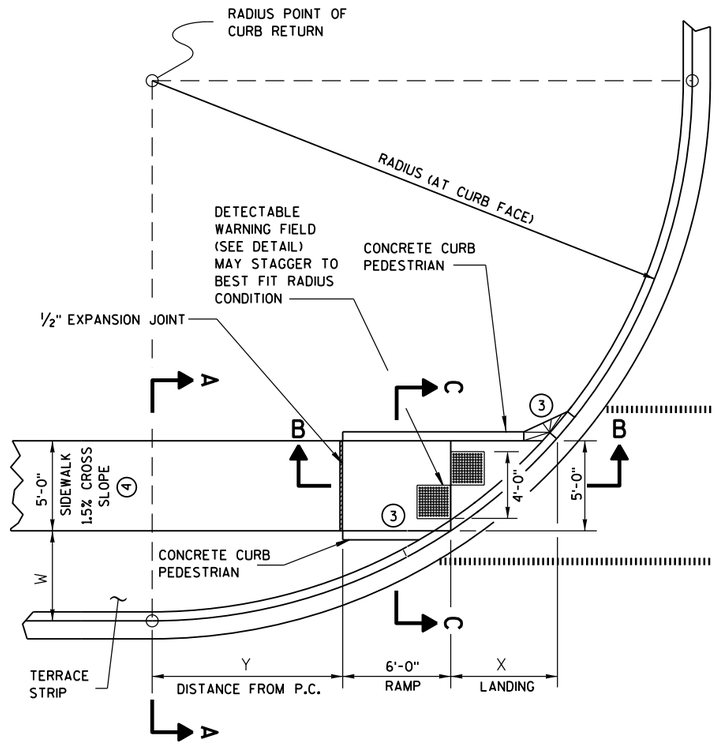

CURB RAMP TYPE 4B
PLAN VIEW

LEGEND

- ½" EXPANSION JOINT-SIDEWALK
- CONTRACTION JOINT FIELD LOCATED
- PAVEMENT MARKING CROSSWALK (WHITE)

RADIUS (AT CURB FACE)	W = 3' - 0"		W = 4' - 0"		W = 5' - 0"		W = 6' - 0"		W = 7' - 0"	
	X	Y	X	Y	X	Y	X	Y	X	Y
20 FEET	5'-5½"	4'-6½"	4'-8½"	6'-0"	4'-1"	7'-2¾"	3'-7"	8'-3½"	3'-1½"	9'-2½"
30 FEET	7'-3¾"	7'-1"	6'-5½"	8'-11½"	5'-9¼"	10'-7"	5'-2½"	12'-0"	4'-8¾"	13'-3¼"
40 FEET	8'-9½"	9'-2½"	7'-10"	11'-5¼"	7'-1"	13'-4½"	6'-5¾"	15'-¾"	5'-11½"	16'-7¼"
50 FEET	10'-¾"	11'-¾"	9'-¼"	13'-7¼"	8'-2½"	15'-9½"	7'-6½"	17'-9"	6'-11¾"	19'-6¼"
60 FEET	11'-2½"	12'-8¾"	10'-¾"	15'-6½"	9'-2¼"	17'-11¾"	8'-5¾"	20'-1¾"	7'-10½"	22'-1½"

INTERMEDIATE RADII CAN BE INTERPOLATED

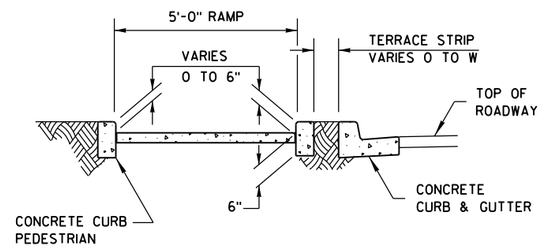

SECTION C-C FOR TYPE 4B

GENERAL NOTES

AVOID PLACING DRAINAGE STRUCTURES, JUNCTION BOXES OR OTHER OBSTRUCTIONS IN FRONT OF RAMP ACCESS AREAS.

RAMP SLOPES SHALL NOT BE STEEPER THAN 12:1.

DETECTABLE WARNING FIELDS THAT ARE INSTALLED AS A GROUP OR SIDE BY SIDE, SHALL BE FROM THE SAME MANUFACTURER.

(3) INSTALL TRANSITION NOSE. (INCIDENTAL TO OTHER PAY ITEMS.) DO NOT MARK TRANSITION NOSE.

(4) ±0.5% CONSTRUCTION TOLERANCE IN SIDEWALK CROSS SLOPE. THE SIDEWALK CROSS SLOPE SHALL NOT EXCEED 2% WITHOUT PRIOR APPROVAL FROM THE ENGINEER.

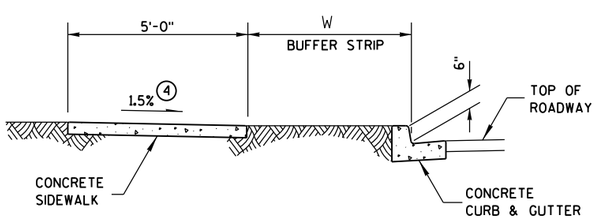

SECTION A-A FOR TYPE 4B

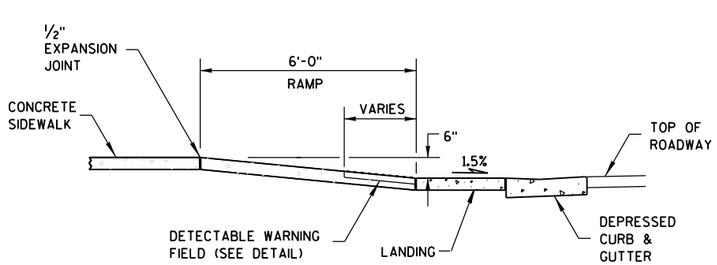

SECTION B-B FOR TYPE 4B

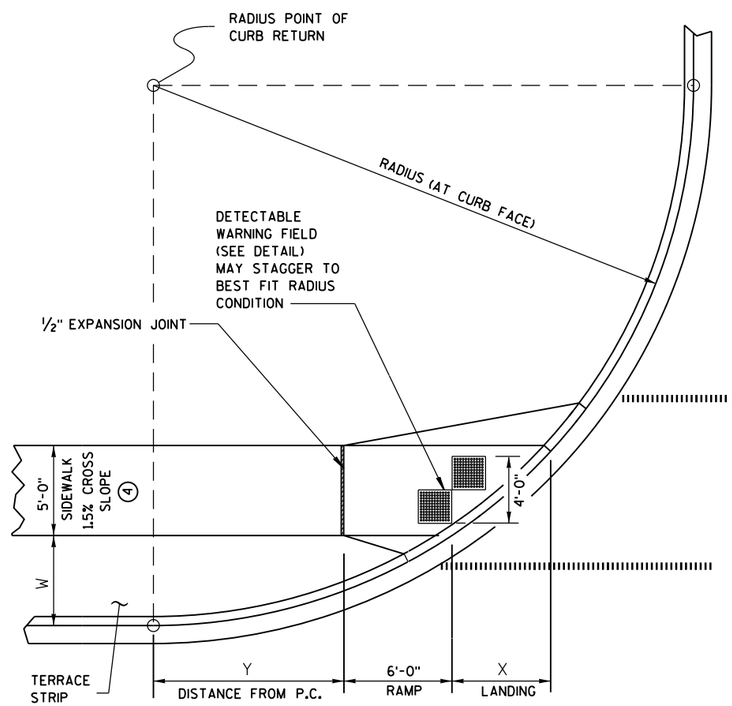

CURB RAMP TYPE 4B1
PLAN VIEW

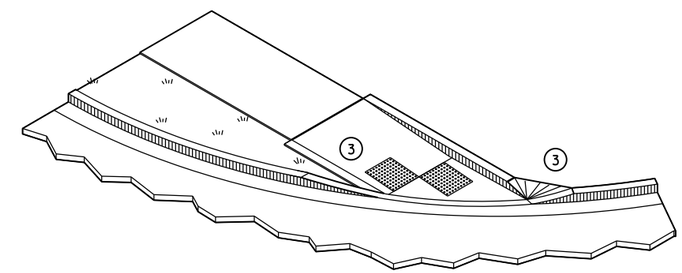

ISOMETRIC VIEW FOR TYPE 4B

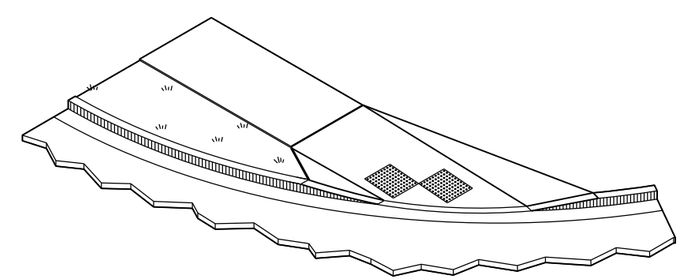

ISOMETRIC VIEW FOR TYPE 4B1

CURB RAMPS
TYPE 4B AND 4B1

STATE OF WISCONSIN
DEPARTMENT OF TRANSPORTATION

6

S.D.D. 8 D 5-15d

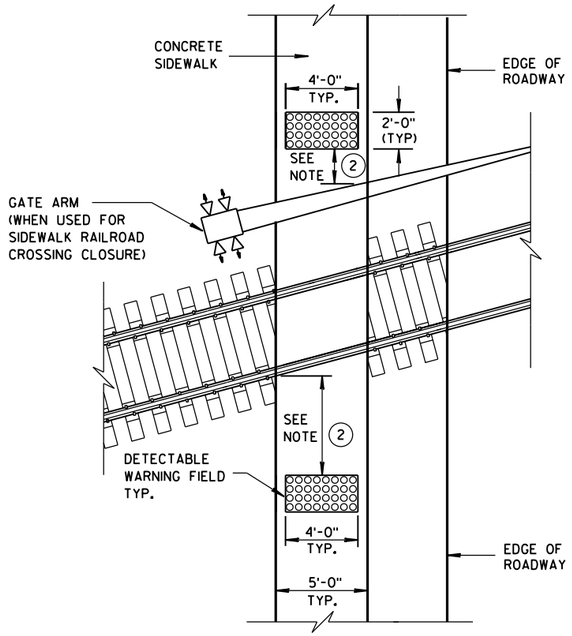

TYPE 8
DETECTABLE WARNINGS AT RAILROAD CROSSING

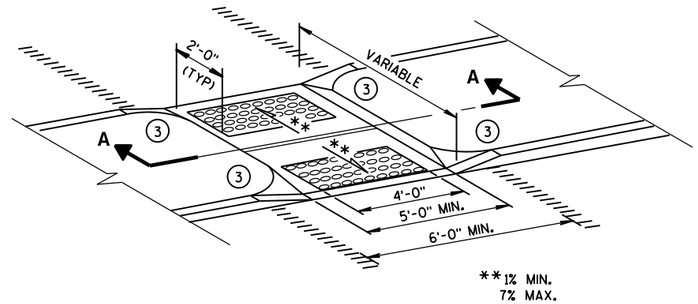

MEDIAN ISLAND
NON-ELEVATED CROSSING
TYPE 5

GENERAL NOTES

SIDEWALK CROSS SLOPE SHALL NOT EXCEED 2%.

DETECTABLE WARNING FIELDS THAT ARE INSTALLED AS A GROUP OR SIDE BY SIDE, SHALL BE FROM THE SAME MANUFACTURER.

1. SLOPE SIDEWALK TOWARD LANDING AS SHOWN WHERE THERE IS NO TERRACE OR WHERE THE TERRACE WIDTH IS LESS THAN 6 FEET WIDE.
2. THE EDGE OF THE DETECTABLE WARNING FIELD NEAREST TO A RAILROAD CROSSING SHALL BE 1.5 FEET ± 0.1' FROM THE FACE OF THE GATE ARM IF THE GATE ARM EXTENDS ACROSS THE SIDEWALK. WHERE THERE IS NO PEDESTRIAN GATE, THE EDGE OF THE DETECTABLE WARNING FIELD NEAREST TO THE RAILROAD CROSSING SHALL BE 15 FEET FROM THE NEAREST RAIL.
3. INSTALL TRANSITION NOSE. (INCIDENTAL TO OTHER PAY ITEMS.) DO NOT MARK TRANSITION NOSE.
4. ±0.5% CONSTRUCTION TOLERANCE IN SIDEWALK CROSS SLOPE. THE SIDEWALK CROSS SLOPE SHALL NOT EXCEED 2% WITHOUT PRIOR APPROVAL FROM THE ENGINEER.

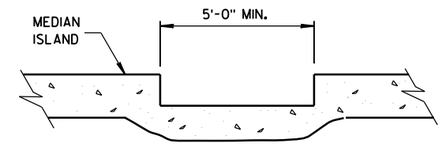

SECTION A-A

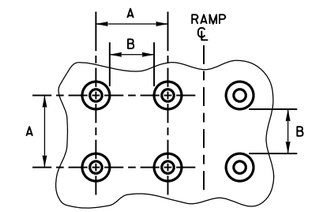

PLAN VIEW

	MIN.	MAX.
A	1.6"	2.4"
B	0.65"	1.5"
C	*	*
D	0.9"	1.4"

* THE C DIMENSION IS 50% TO 65% OF THE D DIMENSION.

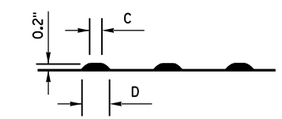

ELEVATION VIEW

TRUNCATED DOMES
DETECTABLE WARNING PATTERN DETAIL

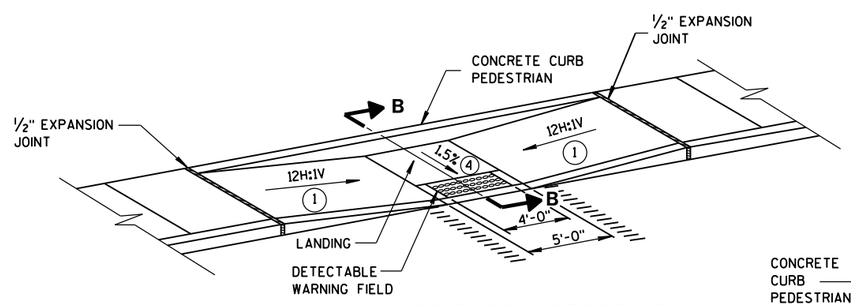

MID-BLOCK CROSSING
TYPE 7A

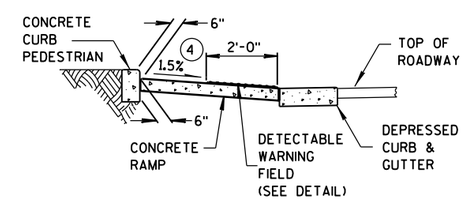

SECTION B-B

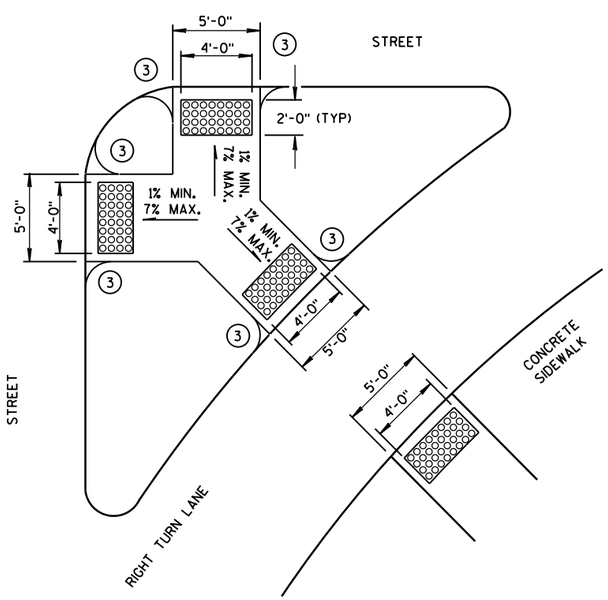

TYPE 6
DETECTABLE WARNING AT ISLANDS

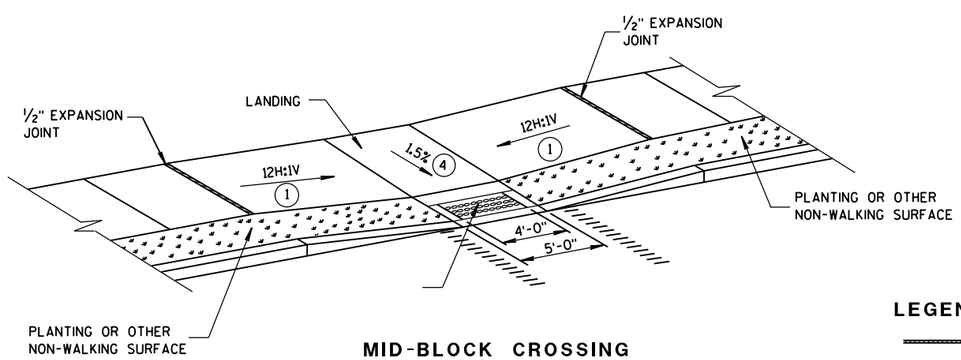

MID-BLOCK CROSSING
TYPE 7B

NOTE: THESE PARALLEL AND PARALLEL/PERPENDICULAR CURB RAMPS MAY BE USED AT INTERSECTIONS AND MID BLOCK LOCATIONS.

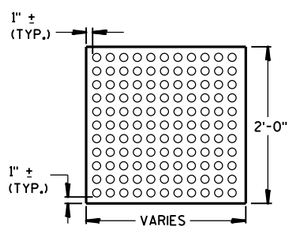

PLAN VIEW
DETECTABLE WARNING FIELD (TYPICAL)

LEGEND

- ½" EXPANSION JOINT-SIDEWALK
- CONTRACTION JOINT FIELD LOCATED
- PAVEMENT MARKING CROSSWALK (WHITE)

CURB RAMPS
TYPES 5, 6, 7A, 7B & 8

STATE OF WISCONSIN
DEPARTMENT OF TRANSPORTATION

APPROVED
2-6-2013 — DATE
/S/ Jerry H. Zogg — ROADWAY STANDARDS DEVELOPMENT ENGINEER
FHWA

6

6

S.D.D. 8 D 5-15e

S.D.D. 8 D 5-15e

GENERAL NOTES

THE DIMENSIONS SHOWN ON THE TYPICAL CROSS SECTIONS WILL GOVERN IN THE EVENT THERE IS A CONFLICT WITH THE DETAILS SHOWN ON THIS DRAWING.

PIPE UNDERDRAIN SHALL BE LAID PARALLEL TO THE GRADE OF THE ROADWAY.

① TRENCH BACKFILL WILL BE PAID FOR AS BASE AGGREGATE OPEN GRADED.

② FOLD OVER EXCESS GEOTEXTILE FABRIC AT THIS LOCATION.

③ TOTAL FABRIC WIDTH IS 6'-3" FOR PAYMENT.

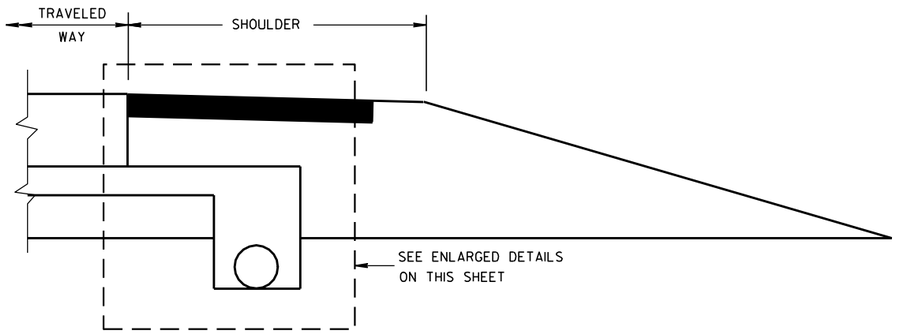

RURAL CROSS SECTION

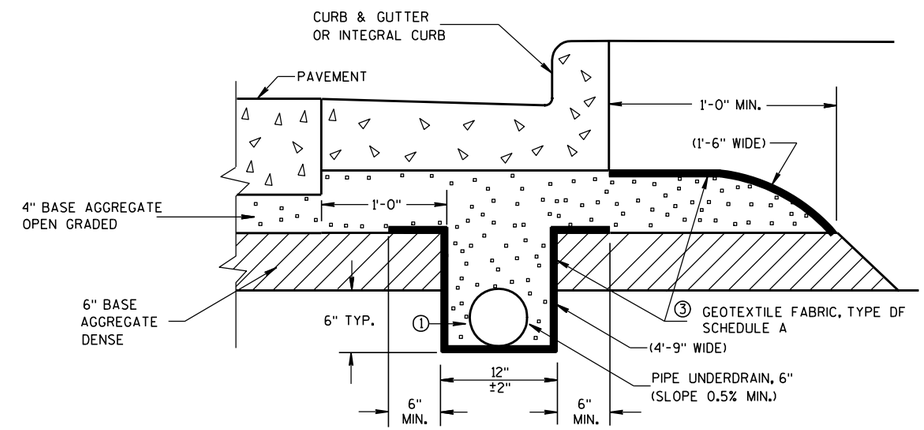

EDGEDRAIN IN URBAN ROADWAY

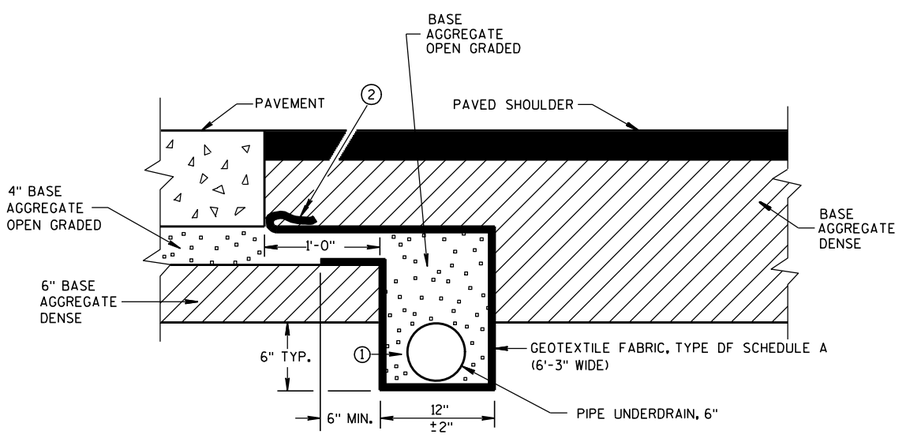

POST PAVING INSTALLATION
(QUANTITIES ARE BASED ON THIS DETAIL)

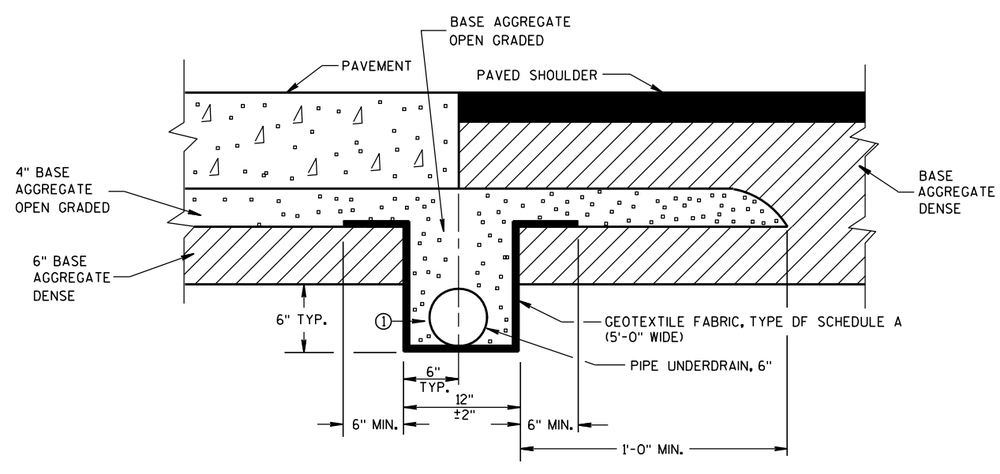

PRE-PAVING INSTALLATION ALTERNATE

EDGEDRAIN IN RURAL ROADWAY

6

6

S.D.D. 8 D 15-4b

S.D.D. 8 D 15-4b

EDGEDRAIN AND BASE AGGREGATE OPEN GRADED

STATE OF WISCONSIN
DEPARTMENT OF TRANSPORTATION

APPROVED

3/21/07 — DATE

/S/ Steven W. [illegible] — CHIEF MATERIALS MANAGER

FHWA

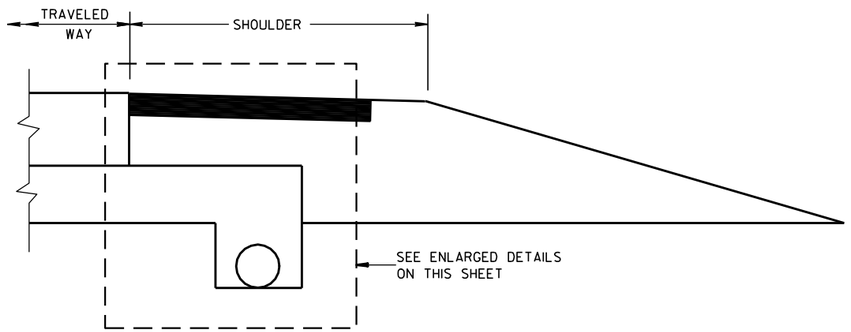

RURAL CROSS SECTION

GENERAL NOTES

THE DIMENSIONS SHOWN ON THE TYPICAL CROSS SECTIONS WILL GOVERN IN THE EVENT THERE IS A CONFLICT WITH THE DETAILS SHOWN ON THIS DRAWING.

PIPE UNDERDRAIN SHALL BE LAID PARALLEL TO THE GRADE OF THE ROADWAY.

(1) TRENCH BACKFILL WILL BE PAID FOR AS BASE AGGREGATE OPEN GRADED.

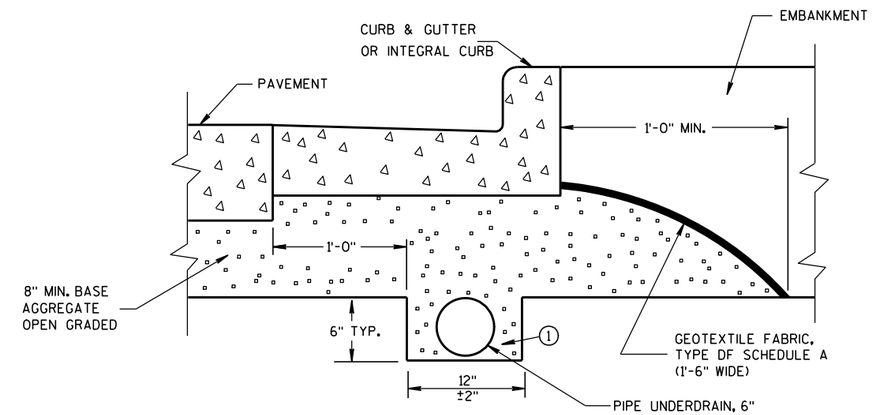

EDGEDRAIN IN URBAN ROADWAY

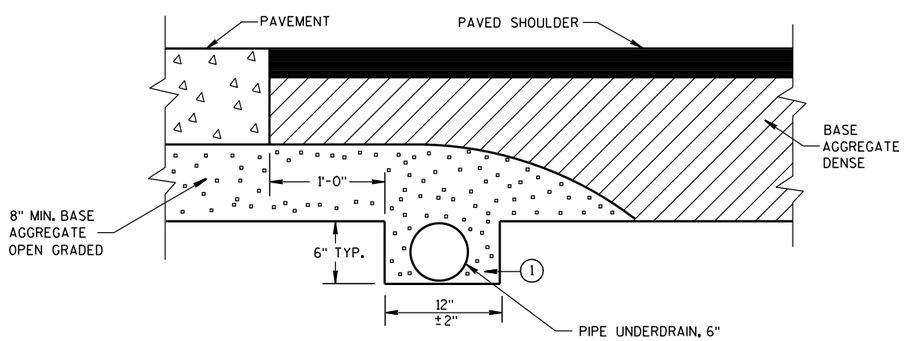

POST PAVING INSTALLATION
(QUANTITIES ARE BASED ON THIS DETAIL)

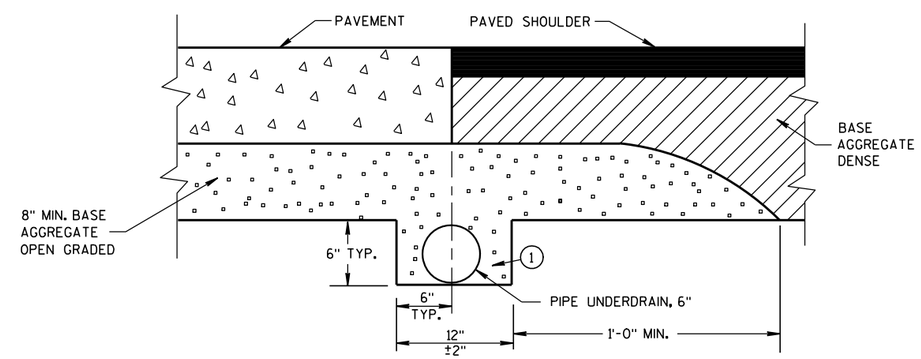

PRE-PAVING INSTALLATION ALTERNATIVE

EDGEDRAIN IN RURAL ROADWAY

EDGEDRAIN AND BASE AGGREGATE OPEN GRADED

STATE OF WISCONSIN
DEPARTMENT OF TRANSPORTATION

APPROVED
3/21/07 /S/ Steven W. Krahn
DATE CHIEF MATERIALS MANAGI ENGINEER
FHWA

S.D.D. 8 D 15-4c

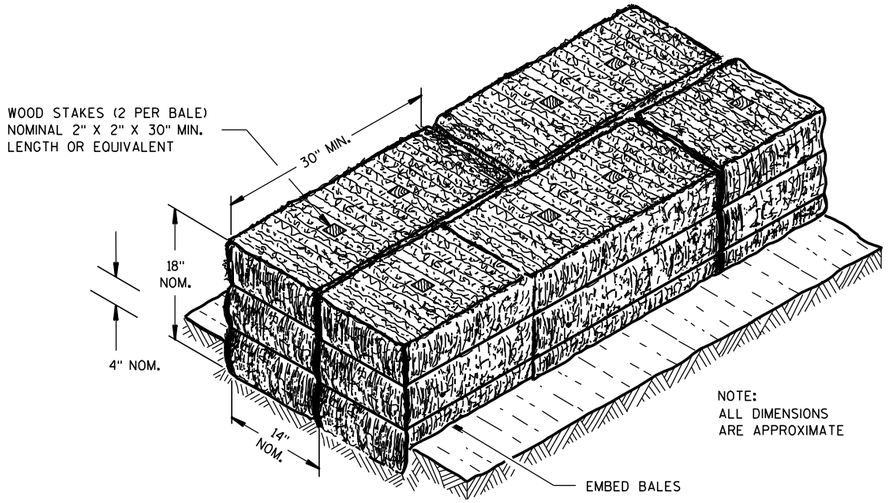

SECTION A-A

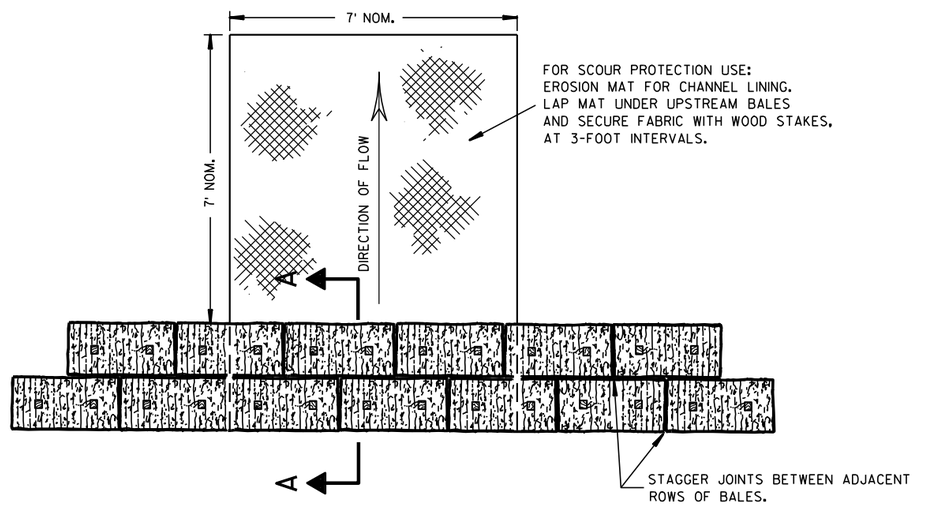

PLAN VIEW

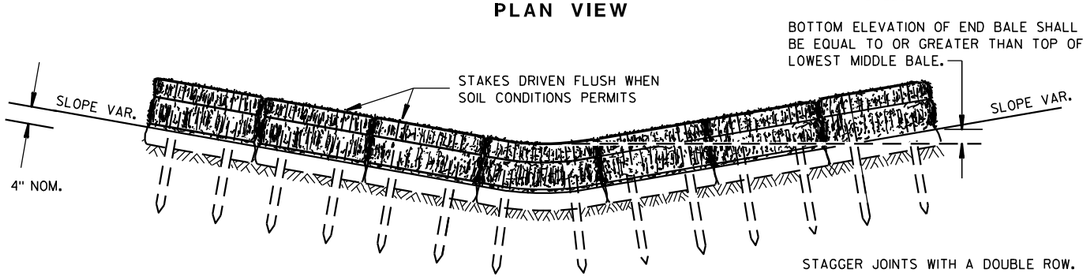

FRONT ELEVATION

TEMPORARY DITCH CHECK USING EROSION BALES ①

GENERAL NOTES

DETAILS OF CONSTRUCTION, MATERIALS AND WORKMANSHIP NOT SHOWN ON THIS DRAWING SHALL CONFORM TO THE PERTINENT REQUIREMENTS OF THE STANDARD SPECIFICATIONS AND THE APPLICABLE SPECIAL PROVISIONS.

① TEMPORARY DITCH CHECKS EITHER EROSION BALES OR MANUFACTURED SHALL BE PAID FOR UNDER THE BID ITEM OF TEMPORARY DITCH CHECK. THE DEPARTMENT WILL NOT PAY FOR TEMPORARY DITCH CHECKS CONSTRUCTED OF A SINGLE ROW OF EROSION BALES.

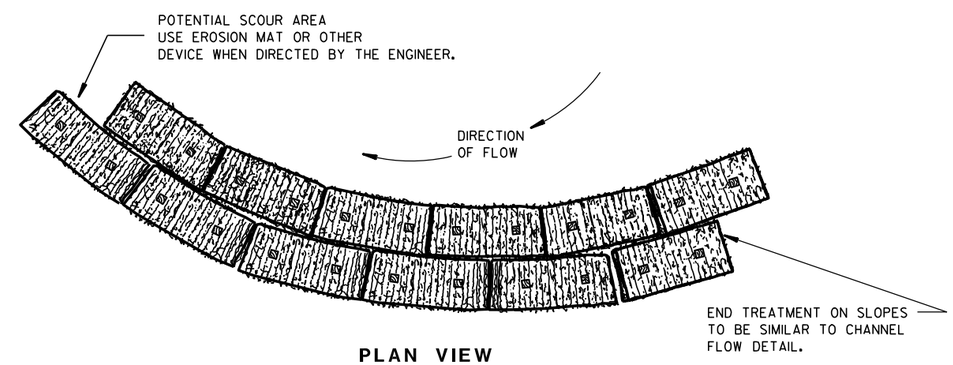

PLAN VIEW

WHEN ALTERING THE DIRECTION OF FLOW

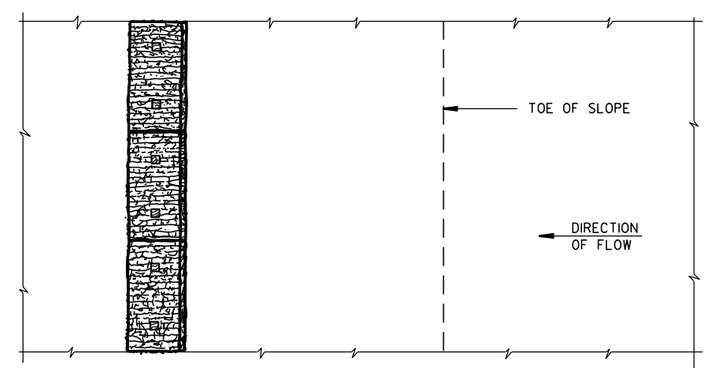

PLAN VIEW

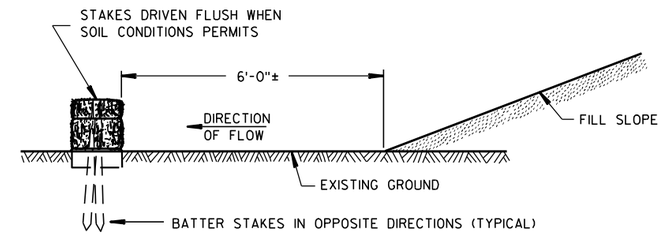

FRONT ELEVATION

WHEN EXISTING GROUND SLOPES AWAY FROM FILL SLOPE

EROSION BALES FOR SHEET FLOW

TYPICAL INSTALLATIONS OF EROSION BALES / TEMPORARY DITCH CHECKS

STATE OF WISCONSIN
DEPARTMENT OF TRANSPORTATION

APPROVED
6/04/02 — DATE
/S/ Beth Cann — CHIEF ROADWAY DEVELOPMENT ENGINEER
FHWA

6

6

S.D.D. 8 E 8-3

S.D.D. 8 E 8-3

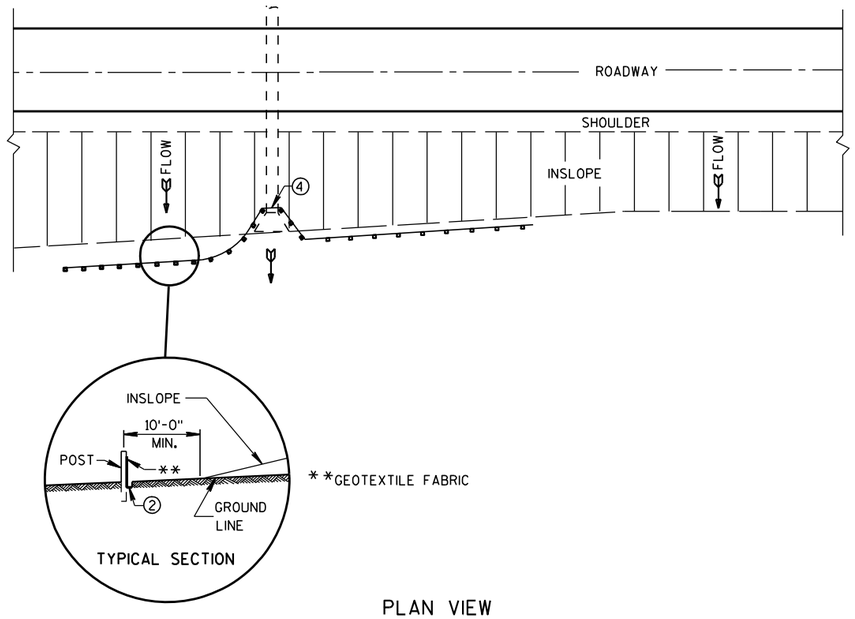

PLAN VIEW

TYPICAL APPLICATION OF SILT FENCE

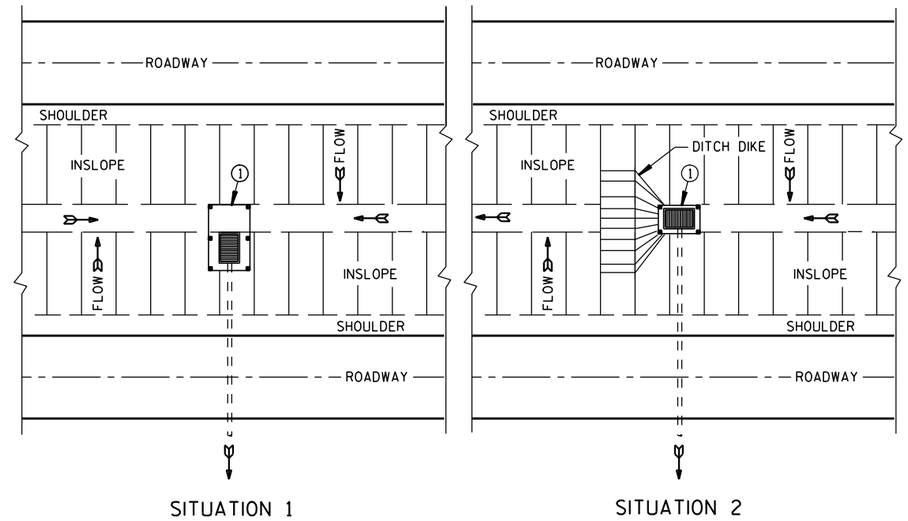

PLAN VIEW

SILT FENCE AT MEDIAN SURFACE DRAINS

GENERAL NOTES

DETAILS OF CONSTRUCTION NOT SHOWN ON THIS DRAWING SHALL CONFORM TO THE PERTINENT REQUIREMENTS OF THE STANDARD SPECIFICATIONS AND APPLICABLE SPECIAL PROVISIONS.

① HORIZONTAL BRACE REQUIRED WITH 2" X 4" WOODEN FRAME OR EQUIVALENT AT TOP OF POSTS.

② FOR MANUAL INSTALLATIONS THE TRENCH SHALL BE A MINIMUM OF 4" WIDE & 6" DEEP TO BURY AND ANCHOR THE GEOTEXTILE FABRIC. FOLD MATERIAL TO FIT TRENCH AND BACKFILL & COMPACT TRENCH WITH EXCAVATED SOIL.

③ WOOD POSTS SHALL BE A MINIMUM SIZE OF 1⅛" X 1⅛" OF OAK OR HICKORY.

④ SILT FENCE TO EXTEND ACROSS THE TOP OF THE PIPE.

⑤ CONSTRUCT SILT FENCE FROM A CONTINUOUS ROLL IF POSSIBLE BY CUTTING LENGTHS TO AVOID JOINTS. IF A JOINT IS NECESSARY USE ONE OF THE FOLLOWING TWO METHODS; A) OVERLAP THE END POSTS AND TWIST, OR ROTATE, AT LEAST 180 DEGREES. B) HOOK THE END OF EACH SILT FENCE LENGTH.

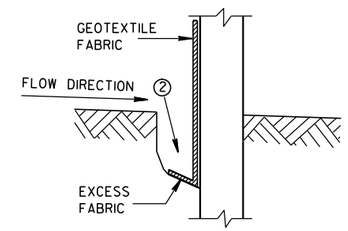

TRENCH DETAIL

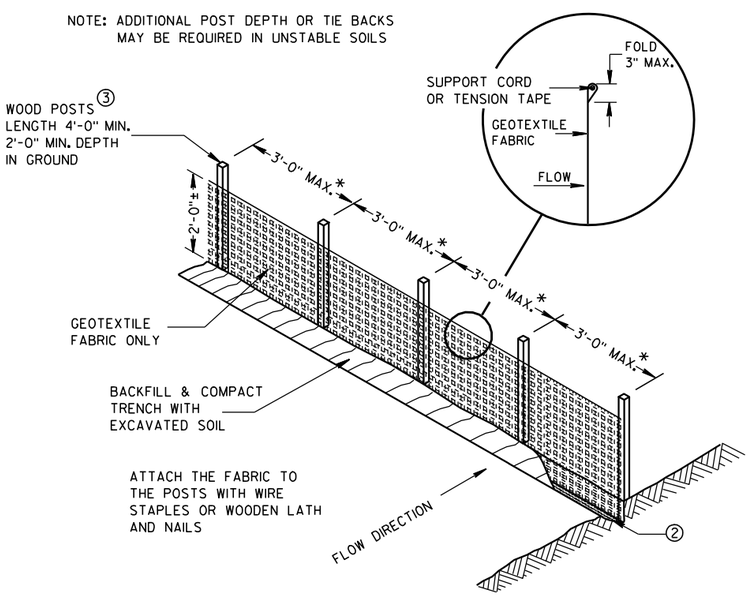

*NOTE: 8'-0" POST SPACING ALLOWED IF A WOVEN GEOTEXTILE FABRIC IS USED.

SILT FENCE

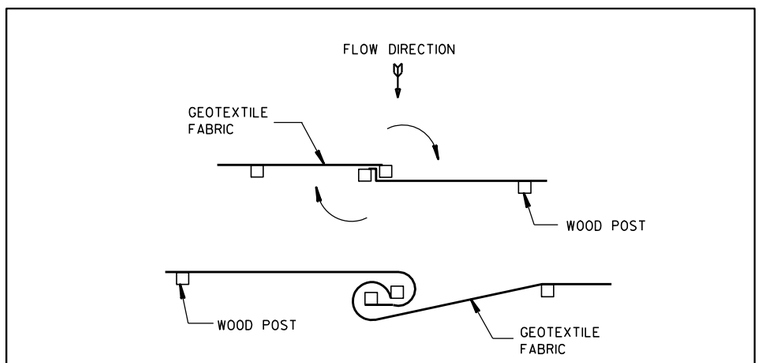

TWIST METHOD

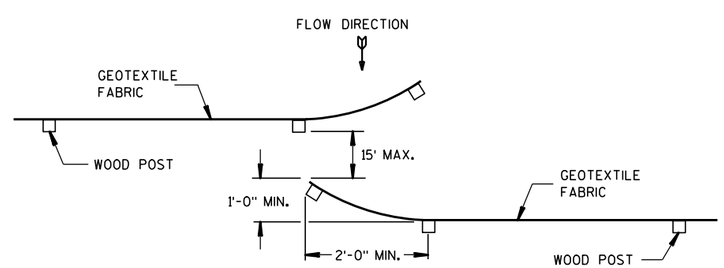

HOOK METHOD

JOINING TWO LENGTHS OF SILT FENCE ⑤

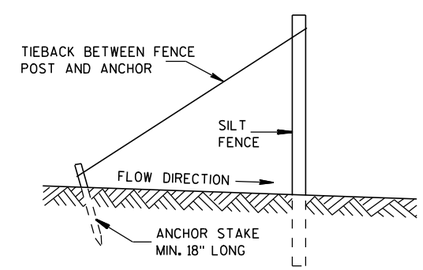

SILT FENCE TIE BACK

(WHEN REQUIRED BY THE ENGINEER)

SILT FENCE

STATE OF WISCONSIN
DEPARTMENT OF TRANSPORTATION

APPROVED
4-29-05 /S/ Beth Cann-
DATE CHIEF ROADWAY DEVELOP ENGINEER
FHWA

6

6

S.D.D. 8 E 9-6

S.D.D. 8 E 9-6

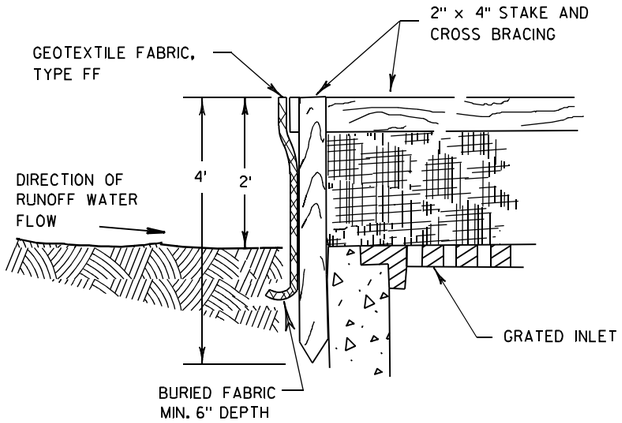

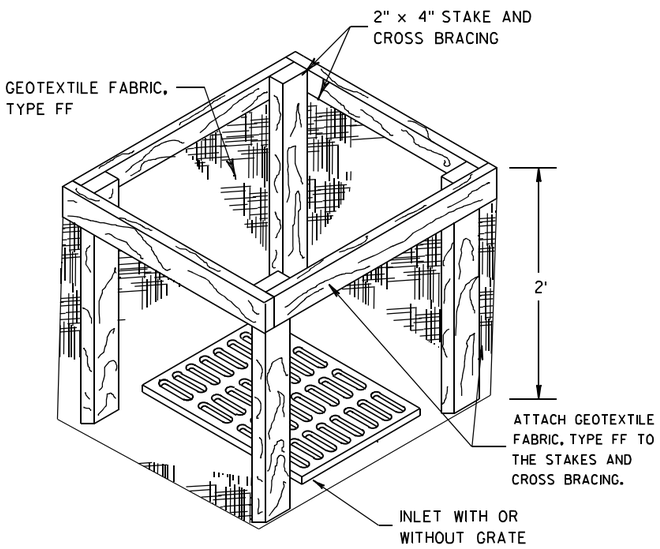

INLET PROTECTION, TYPE A

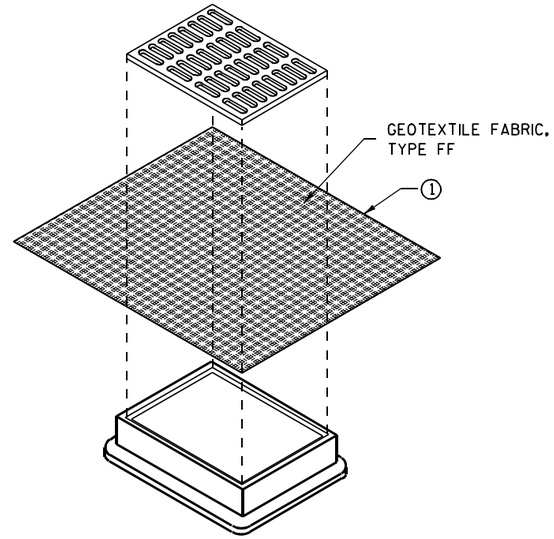

INLET PROTECTION, TYPE B (WITHOUT CURB BOX)

(CAN BE INSTALLED IN ANY INLET WITHOUT A CURB BOX)

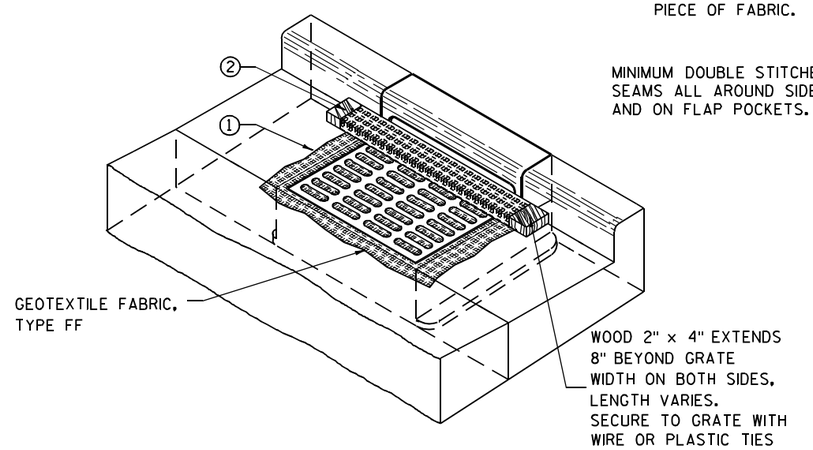

INLET PROTECTION, TYPE C (WITH CURB BOX)

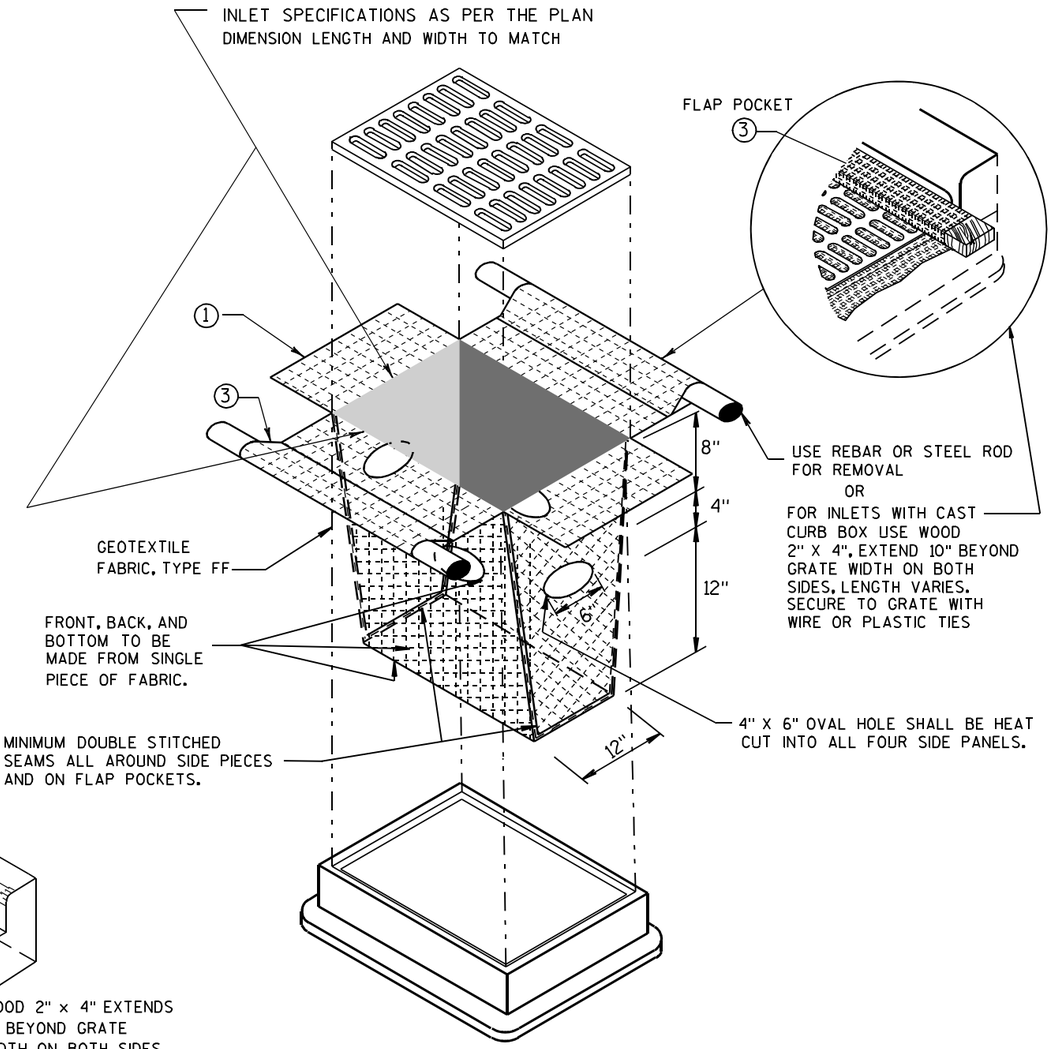

INLET PROTECTION, TYPE D

(CAN BE INSTALLED IN ANY INLET TYPE WITH OR WITHOUT A CURB BOX AS PER NOTE ②)

GENERAL NOTES

INLET PROTECTION DEVICES SHALL BE MAINTAINED OR REPLACED AT THE DIRECTION OF THE ENGINEER.

MANUFACTURED ALTERNATIVES APPROVED AND LISTED ON THE DEPARTMENT'S EROSION CONTROL PRODUCT ACCEPTABILITY LIST MAY BE SUBSTITUTED.

WHEN REMOVING OR MAINTAINING INLET PROTECTION, CARE SHALL BE TAKEN SO THAT THE SEDIMENT TRAPPED ON THE GEOTEXTILE FABRIC DOES NOT FALL INTO THE INLET. ANY MATERIAL FALLING INTO THE INLET SHALL BE REMOVED IMMEDIATELY.

① FINISHED SIZE, INCLUDING FLAP POCKETS WHERE REQUIRED, SHALL EXTEND A MINIMUM OF 10" AROUND THE PERIMETER TO FACILITATE MAINTENANCE OR REMOVAL.

② FOR INLET PROTECTION, TYPE C (WITH CURB BOX), AN ADDITIONAL 18" OF FABRIC IS WRAPPED AROUND THE WOOD AND SECURED WITH STAPLES. THE WOOD SHALL NOT BLOCK THE ENTIRE HEIGHT OF THE CURB BOX OPENING.

③ FLAP POCKETS SHALL BE LARGE ENOUGH TO ACCEPT WOOD 2X4.

INSTALLATION NOTES

TYPE B & C

TRIM EXCESS FABRIC IN THE FLOW LINE TO WITHIN 3" OF THE GRATE.

THE CONTRACTOR SHALL DEMONSTRATE A METHOD OF MAINTENANCE, USING A SEWN FLAP, HAND HOLDS OR OTHER METHOD TO PREVENT ACCUMULATED SEDIMENT FROM ENTERING THE INLET.

TYPE D

DO NOT INSTALL INLET PROTECTION TYPE D IN INLETS SHALLOWER THAN 30", MEASURED FROM THE BOTTOM OF THE INLET TO THE TOP OF THE GRATE.

TRIM EXCESS FABRIC IN THE FLOW LINE TO WITHIN 3" OF THE GRATE.

THE INSTALLED BAG SHALL HAVE A MINIMUM SIDE CLEARANCE, BETWEEN THE INLET WALLS AND THE BAG, MEASURED AT THE BOTTOM OF THE OVERFLOW HOLES, OF 3". WHERE NECESSARY THE CONTRACTOR SHALL CINCH THE BAG, USING PLASTIC ZIP TIES, TO ACHIEVE THE 3" CLEARANCE. THE TIES SHALL BE PLACED AT A MAXIMUM OF 4" FROM THE BOTTOM OF THE BAG.

INLET PROTECTION
TYPE A, B, C, AND D

STATE OF WISCONSIN
DEPARTMENT OF TRANSPORTATION

APPROVED
10/16/02 — DATE
/S/ Beth Cannestra — CHIEF ROADWAY DEVELOPMENT ENGINEER
FHWA

6

S.D.D. 8 E 10-2

METAL APRON ENDWALLS

PIPE DIA. (IN.)	MIN. THICK. (Inches) STEEL	MIN. THICK. (Inches) ALUM.	DIMENSIONS (Inches) A (±1")	B (MAX.)	H (±1")	L (±1 1/2")	L1 ①	L2 ①	W (±2")	APPROX. SLOPE	BODY
12	.064	.060	6	6	6	21	12	17 1/2	24	2 1/2 to 1	1 Pc.
15	.064	.060	7	8	6	26	14	21 3/4	30	2 1/2 to 1	1 Pc.
18	.064	.060	8	10	6	31	15	28 1/4	36	2 1/2 to 1	1 Pc.
21	.064	.060	9	12	6	36	18	29 5/8	42	2 1/2 to 1	1 Pc.
24	.064	.075	10	13	6	41	18	37 1/4	48	2 1/2 to 1	1 Pc.
30	.079	.075	12	16	8	51	18	52 1/4	60	2 1/2 to 1	1 Pc.
36	.079	.105	14	19	9	60	24	59 3/4	72	2 1/2 to 1	2 Pc.
42	.109	.105	16	22	11	69	24	75 5/8	84	2 1/2 to 1	2 Pc.
48	.109	.105	18	27	12	78	24	81	90	2 1/4 to 1	3 Pc.
54	.109	.105	18	30	12	84	30	85 1/2	102	2 1/4 to 1	3 Pc.
60	.109×	.105×	18	33	12	87	—	—	114	2 to 1	3 Pc.
66	.109×	.105×	18	36	12	87	—	—	120	2 to 1	3 Pc.
72	.109×	.105×	18	39	12	87	—	—	126	2 to 1	3 Pc.
78	.109×	.105×	18	42	12	87	—	—	132	1 1/2 to 1	3 Pc.
84	.109×	.105×	18	45	12	87	—	—	138	1 1/2 to 1	3 Pc.
90	.109×	.105×	18	37	12	87	—	—	144	1 1/2 to 1	3 Pc.
96	.109×	.105×	18	35	12	87	—	—	150	1 1/2 to 1	3 Pc.

× EXCEPT CENTER PANEL
SEE GENERAL NOTES

REINFORCED CONCRETE APRON ENDWALLS

PIPE DIA. (IN.)	DIMENSIONS (Inches) T	A	B	C	D	E	G	APPROX. SLOPE
12	2	4	24	48 7/8	72 7/8	24	2	3 to 1
15	2 1/4	6	27	46	73	30	2 1/4	3 to 1
18	2 1/2	9	27	46	73	36	2 1/2	3 to 1
21	2 3/4	9	36	37 1/2	73 1/2	42	2 3/4	3 to 1
24	3	9 1/2	43 1/2	30	73 1/2	48	3	3 to 1
27	3 1/4	10 1/2	49 1/2	24	73 1/2	54	3 1/4	3 to 1
30	3 1/2	12	54	19 3/4	73 1/2	60	3 1/2	3 to 1
36	4	15	63	34 3/4	97 3/4	72	4	3 to 1
42	4 1/2	21	63	35	98	78	4 1/2	3 to 1
48	5	24	72	26	98	84	5	3 to 1
54	5 1/2	27	65	*33 1/4-**35	*98 1/4-**100	90	5 1/2	2 2/5 to 1
60	6	*30-**35	60	39	99	96	5	2 to 1
66	6 1/2	*24-**30	*72-**78	*21-**27	99	102	5 1/2	2 to 1
72	7	*24-**36	78	21	99	108	6	2 to 1
78	7 1/2	*24-**36	78	21	99	114	6 1/2	2 to 1
84	8	36	90 1/2	21	111 1/2	120	6 1/2	1 1/2 to 1
90	8 1/2	41	87 1/2	24	111 1/2	132	6 1/2	1 1/2 to 1

*MINIMUM
**MAXIMUM

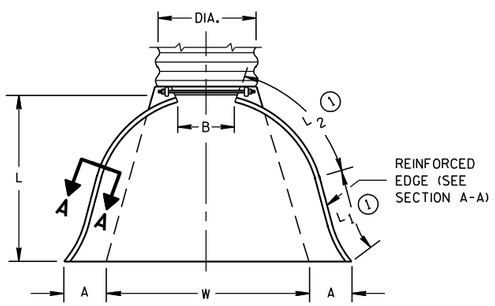

PLAN VIEW

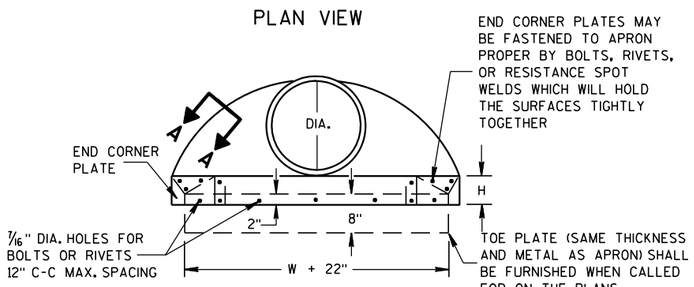

END VIEW

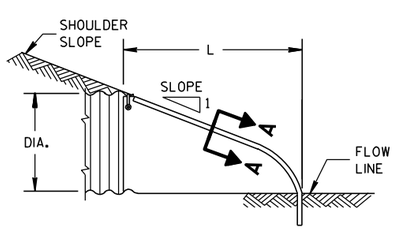

SIDE ELEVATION

METAL ENDWALLS

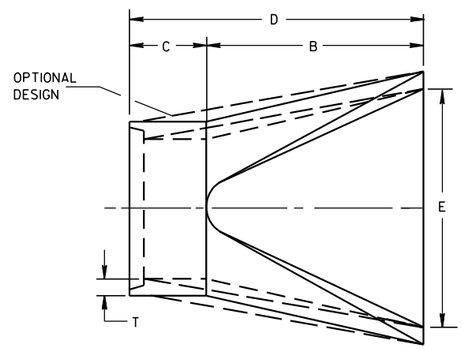

PLAN

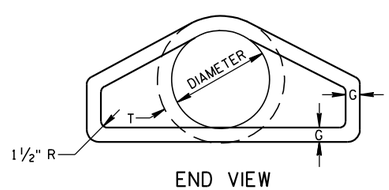

END VIEW

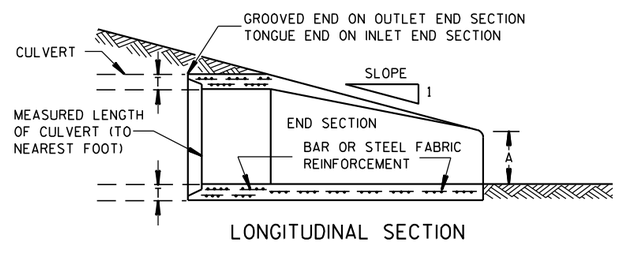

LONGITUDINAL SECTION

CONCRETE ENDWALLS

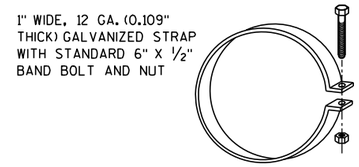

ALTERNATE FOR TYPE 1 CONNECTION

END SECTION CONNECTOR STRAP

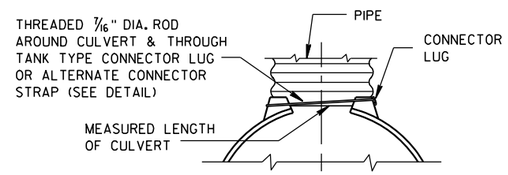

TYPE 1
FOR 12" THRU 24" CORR. PIPE

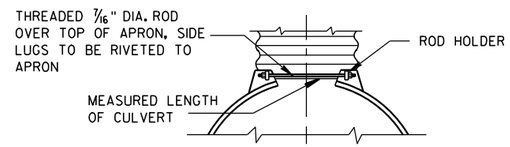

TYPE 2
FOR 30" THRU 96" CORR. PIPE

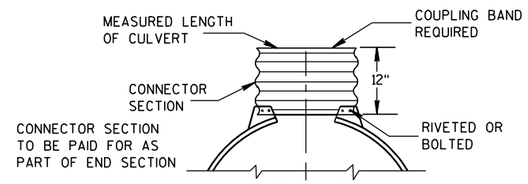

TYPE 3
FOR 42" THRU 96" CORR. PIPE

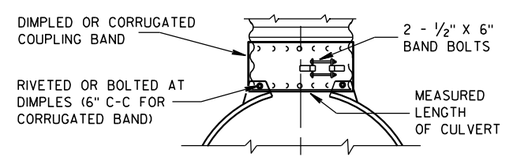

TYPE 5
ALTERNATE FOR:
ALL SIZES CORRUGATED CIRCULAR PIPE

NOTE: DIMPLED BAND FITS OVER OUTSIDE OF ENDWALL, AND CORRUGATED BAND FITS INSIDE ENDWALL. DIMPLED BAND MAY BE USED WITH HELICALLY CORRUGATED PIPE.

FOR CIRCUMFERENTIALLY CORRUGATED PIPE USE ENDWALL CONNECTION DETAILS 1, 2, 3 OR 5 AS APPLICABLE.

FOR HELICALLY CORRUGATED PIPE USE ENDWALL CONNECTION DETAILS 1, 2 OR 5.

FOR HELICALLY CORRUGATED PIPES WITH TWO CIRCUMFERENTIAL CORRUGATIONS AT EACH END USE ENDWALL CONNECTION DETAILS 1, 2 OR 3.

CONNECTION DETAILS

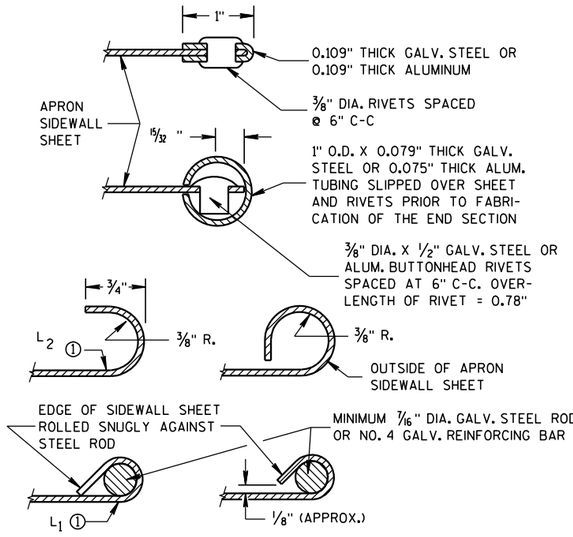

SECTION A-A

GENERAL NOTES

DETAILS OF CONSTRUCTION, MATERIALS AND WORKMANSHIP NOT SHOWN ON THIS DRAWING SHALL CONFORM TO THE PERTINENT REQUIREMENTS OF THE STANDARD SPECIFICATIONS AND THE APPLICABLE SPECIAL PROVISIONS.

CONCRETE CULVERT ENDWALLS MAY NOT BE USED WITH GALVANIZED STEEL OR ALUMINUM CULVERT PIPE OR VISE VERSA. GALVANIZED STEEL OR ALUMINUM ENDWALLS SHALL NORMALLY BE INSTALLED ON CULVERT PIPE OF THE SAME METAL.

ALL THREE PIECE STEEL APRON ENDWALLS FOR 60" DIAMETER PIPE AND LARGER SHALL HAVE 0.109" SIDES AND 0.138" CENTER PANELS. ALL THREE PIECE ALUMINUM APRON ENDWALLS FOR 60" DIAMETER PIPE AND LARGER SHALL HAVE 0.105" SIDES AND 0.134" CENTER PANELS. THE WIDTH OF CENTER PANELS SHALL BE GREATER THAN 20 PERCENT OF THE PIPE PERIMETER.

LAP SEAMS SHALL BE TIGHTLY JOINED BY GALVANIZED RIVETS OR BOLTS FOR STEEL UNITS AND ALUMINUM RIVETS AND BOLTS FOR ALUMINUM UNITS. FOR THE 60" THROUGH 96" DIAMETER APRON ENDWALL SIZES, THE REINFORCED EDGES AND CENTER PANEL SEAMS SHALL BE FURTHER REINFORCED WITH GALVANIZED STEEL OR ALUMINUM STIFFENER ANGLES. THE ANGLES SHALL BE ATTACHED BY GALVANIZED NUTS AND BOLTS FOR STEEL UNITS AND ALUMINUM NUTS AND BOLTS FOR ALUMINUM UNITS.

WHERE TWO OR MORE PIPES WITH APRON ENDWALLS ARE LAID ADJACENT TO EACH OTHER, THEY SHALL BE SEPARATED BY A DISTANCE SUFFICIENT TO PROVIDE A MINIMUM CLEARANCE OF 6 INCHES BETWEEN APRON ENDWALLS.

① FOR PIPE SIZES UP TO 60" DIAMETER, A 180° ROLLED EDGE MAY BE USED INSTEAD OF STEEL ROD REINFORCEMENT. SEE SECTION A-A.

APRON ENDWALLS FOR CULVERT PIPE

STATE OF WISCONSIN
DEPARTMENT OF TRANSPORTATION

APPROVED
11/30/94 — DATE
/S/ Rory L. Rhinesmith — CHIEF ROADWAY DEVELOPMENT ENGINEER
FHWA

6
S.D.D. 8 F 1-11

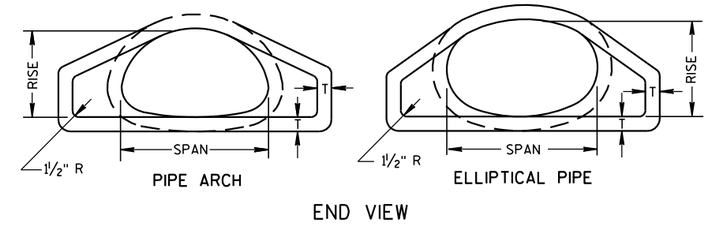

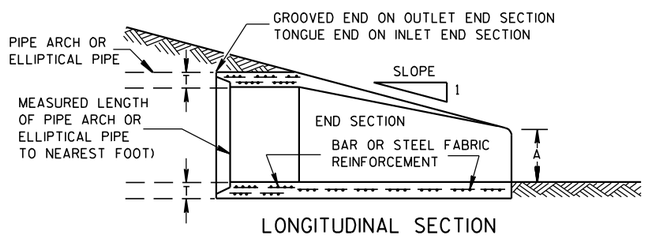

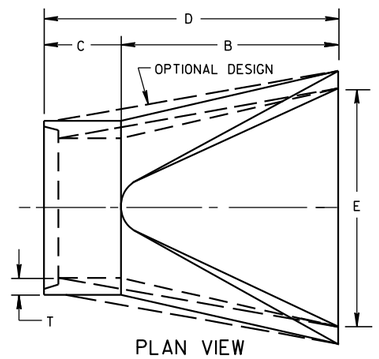

CONCRETE ENDWALLS

2- ⅔" X ½" CORRUGATIONS														
EQUIV. DIA. (Inches)	(Inches)		MIN. THICK. (Inches)		DIMENSIONS (Inches)							APPROX. SLOPE	BODY
	SPAN	RISE	STEEL	ALUM.	A (±1")	B (MAX.)	H (±1")	L (±1½")	L1 ①	L2 ①	W (±2")		
15	17	13	.064	.060	7	9	6	19	14	16	30	2½ to 1	1 Pc.
18	21	15	.064	.060	7	10	6	23	14	19⅜	36	2½ to 1	1 Pc.
21	24	18	.064	.060	8	12	6	28	18	21¾	42	2½ to 1	1 Pc.
24	28	20	.064	.060	9	14	6	32	18	27½	48	2½ to 1	1 Pc.
30	35	24	.079	.075	10	16	6	39	18	37⅝	60	2½ to 1	1 Pc.
36	42	29	.079	.075	12	18	8	46	24	45⅜	75	2½ to 1	1 Pc.
42	49	33	.109	.105	13	21	9	53	24	54¾	85	2½ to 1	2 Pc.
48	57	38	.109	.105	18	26	12	63	24	68	90	2½ to 1	3 Pc.
54	64	43	.109	.105	18	30	12	70	24	72¾	102	2¼ to 1	3 Pc.
60	71	47	.109*	.105*	18	33	12	77	30	82¼	114	2¼ to 1	3 Pc.
66	77	52	.109*	.105*	18	36	12	77	—	—	126	2 to 1	3 Pc.
72	83	57	.109*	.105*	18	39	12	77	—	—	138	2 to 1	3 Pc.

3" X 1" CORRUGATIONS														
EQUIV. DIA. (Inches)	(Inches)		MIN. THICK. (Inches)		DIMENSIONS (Inches)							APPROX. SLOPE	BODY
	SPAN	RISE	STEEL	ALUM.	A (±1")	B (MAX.)	H (±1")	L (±1½")	L1 ①	L2 ①	W (±2")		
48	53	41	.109	.105	18	26	12	63	24	72¾	90	2½ to 1	2 Pc.
54	60	46	.109	.105	18	30	12	70	30	82¼	102	2 to 1	2 Pc.
60	66	51	.109*	.105*	18	33	12	77	—	—	114	1½ to 1	3 Pc.
66	73	55	.109*	.105*	18	36	12	77	—	—	126	1½ to 1	3 Pc.
72	81	59	.109*	.105*	18	39	12	77	—	—	138	2 to 1	3 Pc.
78	87	63	.109*	.105*	22	38	12	77	—	—	148	1½ to 1	3 Pc.
84	95	67	.109*	.105*	22	34	12	77	—	—	162	1½ to 1	3 Pc.
90	103	71	.109*	.105*	22	38	12	77	—	—	174	1½ to 1	3 Pc.
96	112	75	.109*	.105*	24	40	12	77	—	—	174	1½ to 1	3 Pc.

NOTE: ALL SPLICES TO BE LAP RIVETED OR BOLTED.

* EXCEPT CENTER PANEL SEE GENERAL NOTES

REINFORCED CONCRETE PIPE ARCH									
EQUIV. DIA. (Inches)	DIMENSIONS (Inches)								APPROX. SLOPE
	** SPAN	** RISE	T	A	B	C	D	E	
24	29	18	3	8½	39	33	72	48	3 to 1
30	36	22	3½	9½	50	46	96	60	3 to 1
36	44	27	4	11⅛	60	36	96	72	3 to 1
42	51	31	4½	15 13/16	60	36	96	78	3 to 1
48	58	36	5	21	60	36	96	84	3 to 1
54	65	40	5½	25½	60	36	96	90	3 to 1
60	73	45	6	31	60	36	96	96	3 to 1
72	88	54	7	31	60	39	99	120	2 to 1
84	102	62	8	28½	83	19	102	144	2 to 1

REINFORCED CONCRETE ELLIPTICAL PIPE									
EQUIV. DIA. (Inches)	DIMENSIONS (Inches)								APPROX. SLOPE
	** SPAN	** RISE	T	A	B	C	D	E	
24	30	19	3¼	8½	39	33	72	48	3 to 1
30	38	24	3¾	9½	54	18	72	60	3 to 1
36	45	29	4½	11⅛	60	24	84	72	2½ to 1
42	53	34	5	15¾	60	36	96	78	2½ to 1
48	60	38	5½	21	60	36	96	84	2½ to 1
54	68	43	6	25½	60	36	96	90	2½ to 1
60	76	48	6½	30	60	36	96	96	2½ to 1

**NOMINAL SIZE

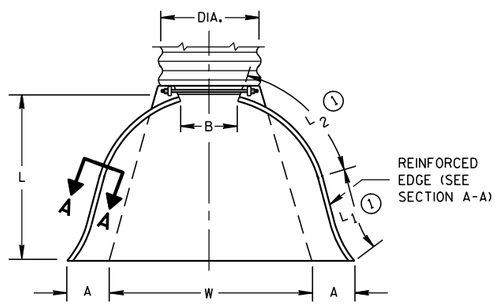

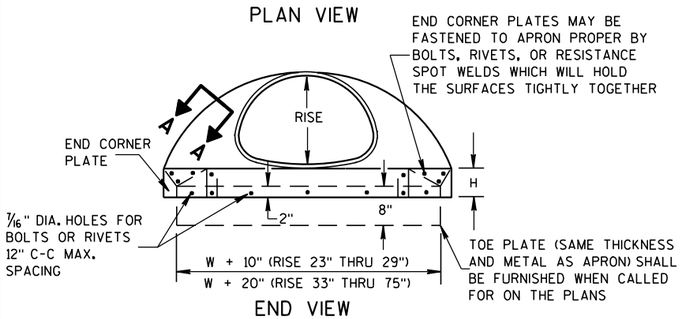

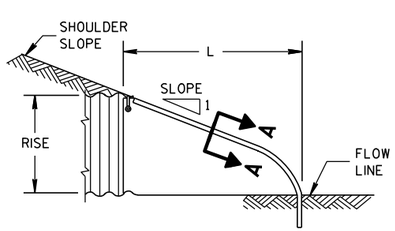

SIDE ELEVATION

METAL ENDWALLS

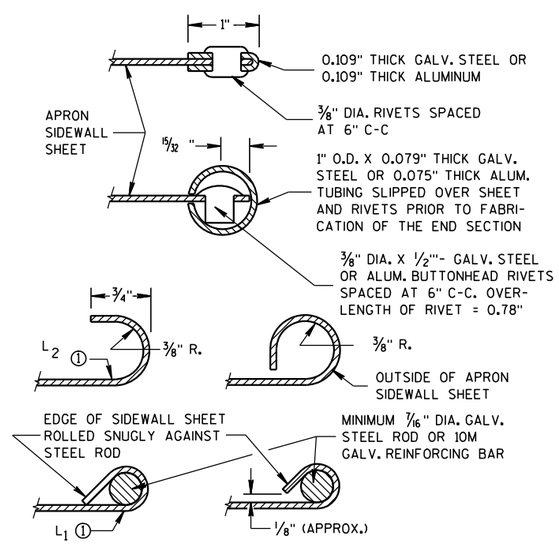

SECTION A-A

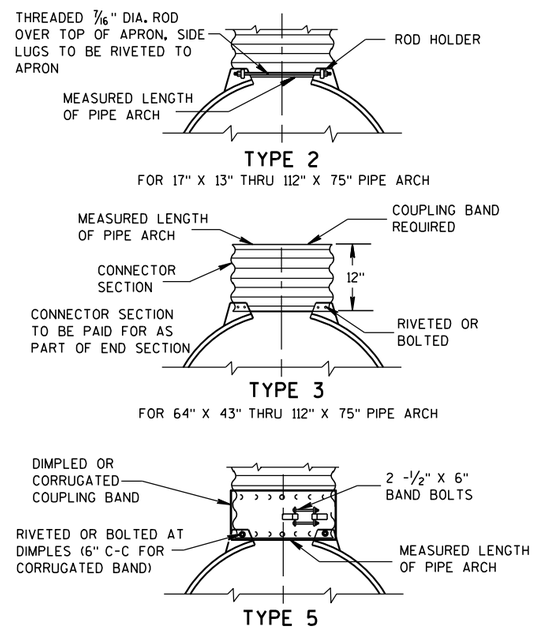

NOTE: DIMPLED BAND FITS OVER OUTSIDE OF ENDWALL, AND CORRUGATED BAND FITS INSIDE ENDWALL.

CONNECTION DETAILS

GENERAL NOTES

DETAILS OF CONSTRUCTION, MATERIALS AND WORKMANSHIP NOT SHOWN ON THIS DRAWING SHALL CONFORM TO THE PERTINENT REQUIREMENTS OF THE STANDARD SPECIFICATIONS AND THE APPLICABLE SPECIAL PROVISIONS.

CONCRETE APRON ENDWALLS MAY NOT BE USED WITH GALVANIZED STEEL OR ALUMINUM CULVERT PIPE OR VISE VERSA. GALVANIZED STEEL OR ALUMINUM APRON ENDWALLS SHALL NORMALLY BE INSTALLED ON CULVERT PIPE OF THE SAME METAL.

ALL THREE PIECE STEEL APRON ENDWALLS FOR 66" X 51" PIPE ARCH AND LARGER SHALL HAVE 0.109" SIDES AND 0.138" CENTER PANELS. ALL THREE PIECE ALUMINUM APRON ENDWALLS FOR 66" X 51" PIPE ARCH AND LARGER SHALL HAVE 0.105" SIDES AND 0.134" CENTER PANELS. THE WIDTH OF CENTER PANELS SHALL BE GREATER THAN 20 PERCENT OF THE PIPE ARCH PERIMETER.

LAP SEAMS SHALL BE TIGHTLY JOINED BY GALVANIZED RIVETS OR BOLTS FOR STEEL UNITS AND ALUMINUM RIVETS AND BOLTS FOR ALUMINUM UNITS. FOR THE 77" X 52" THROUGH 112" X 75" APRON ENDWALL SIZES, THE REINFORCED EDGES AND CENTER PANEL SEAMS SHALL BE FURTHER REINFORCED WITH GALVANIZED STEEL OR ALUMINUM STIFFENER ANGLES. THE ANGLES SHALL BE ATTACHED BY GALVANIZED NUTS AND BOLTS FOR STEEL UNITS AND ALUMINUM NUTS AND BOLTS FOR ALUMINUM UNITS.

WHERE TWO OR MORE PIPES WITH APRON ENDWALLS ARE LAID ADJACENT TO EACH OTHER, THEY SHALL BE SEPARATED BY A DISTANCE SUFFICIENT TO PROVIDE A MINIMUM CLEARANCE OF 6 INCHES BETWEEN APRON ENDWALLS.

① FOR PIPE ARCH SIZES UP TO 73" X 55" A 180° ROLLED EDGE MAY BE USED INSTEAD OF STEEL ROD REINFORCEMENT. SEE SECTION A-A.

APRON ENDWALLS FOR PIPE ARCH AND ELLIPTICAL PIPE

STATE OF WISCONSIN
DEPARTMENT OF TRANSPORTATION

APPROVED
11/30/94 — DATE
/S/ Rory L. Rhinesmith — CHIEF ROADWAY DEVELOPMENT ENGINEER
FHWA

GENERAL NOTES

DETAILS OF CONSTRUCTION, MATERIALS AND WORKMANSHIP NOT SHOWN ON THIS DRAWING SHALL CONFORM TO THE STANDARD SPECIFICATIONS AND THE APPLICABLE SPECIAL PROVISIONS.

THE SHAPED SUBGRADE WITH GRANULAR FOUNDATION IS AN EQUAL ALTERNATE TO THE GRANULAR FOUNDATION EXCEPT WHERE ROCK IS ENCOUNTERED.

① WHERE ROCK, HARD PAN OR FRAGMENTED MATERIAL IS ENCOUNTERED, THE TRENCH SHALL BE EXCAVATED BELOW THE BOTTOM OF THE PIPE AN AMOUNT EQUAL TO ½ INCH PER FOOT OF PROPOSED EMBANKMENT ABOVE THE TOP OF THE PIPE, BUT NOT LESS THAN 6 INCHES.

② TRENCH SHALL BE BACKFILLED AS REQUIRED BY STANDARD SPECIFICATIONS; SECTION 520 FOR PIPE CULVERTS AND SECTION 607 FOR STORM SEWERS.

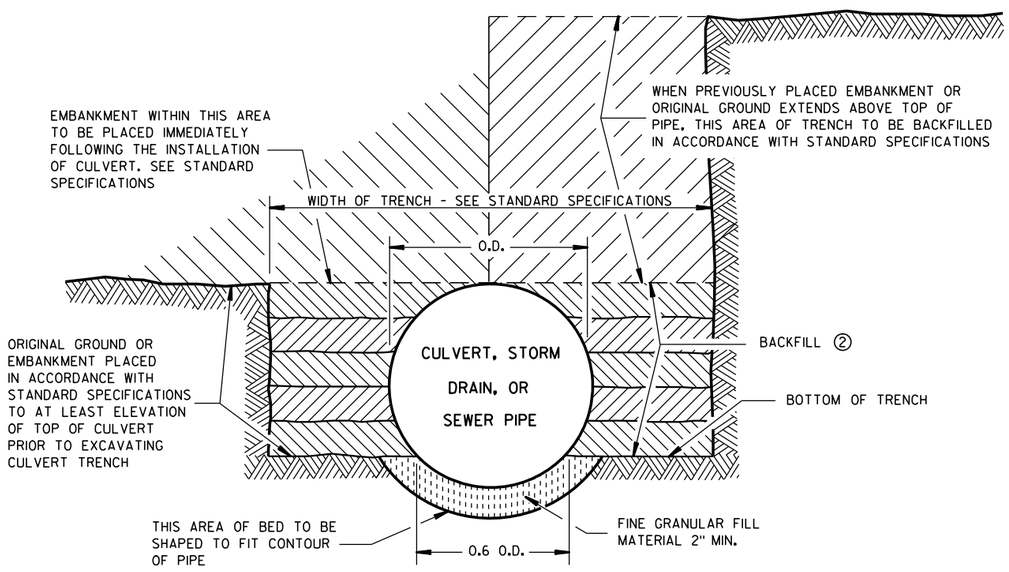

SHAPED SUBGRADE WITH GRANULAR FOUNDATION

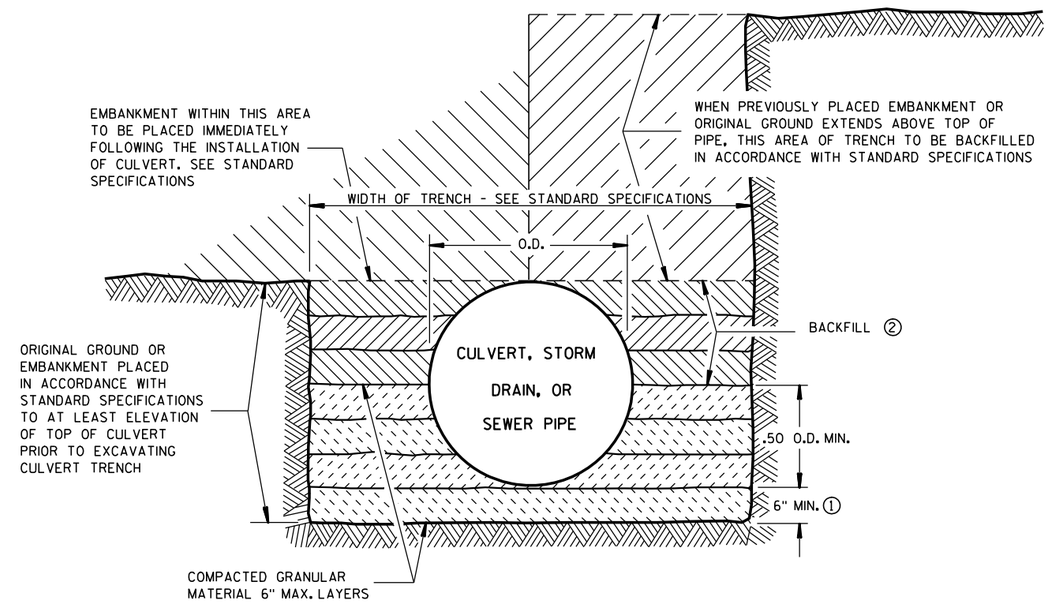

GRANULAR FOUNDATION

CLASS "B" BEDDING

CLASS "B" BEDDING FOR CULVERT PIPE OR STORM SEWER	
STATE OF WISCONSIN DEPARTMENT OF TRANSPORTATION	
APPROVED	
4/7/83 DATE	/S/ D. L. Str--- STATE DESIGN ENGINE 95 HWYS
FHWA	

6

S.D.D. 8 F 5-1

6

S.D.D. 8 F 5-1

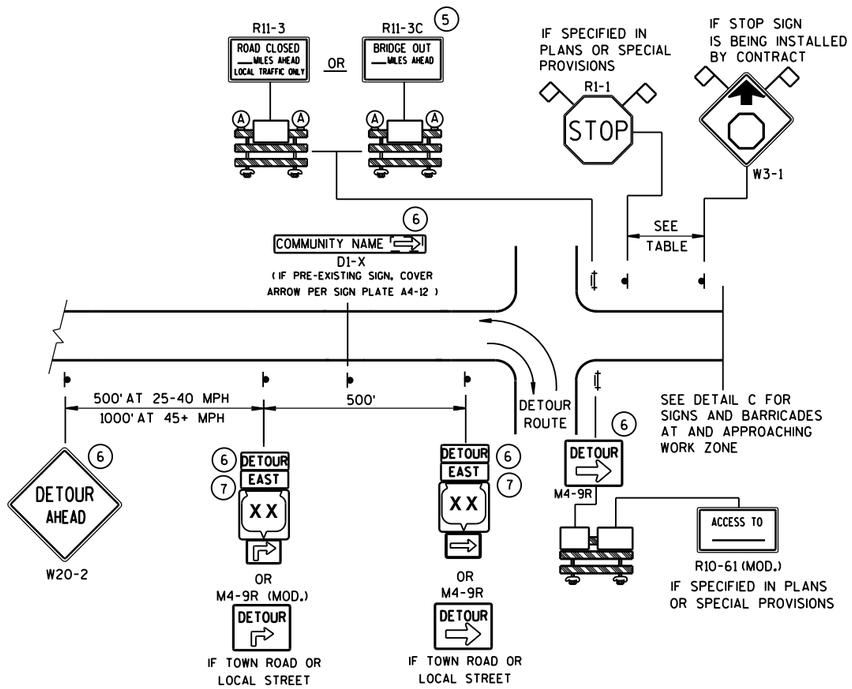

DETAIL A
MAINLINE CLOSURE WITH POSTED DETOUR

WORK ZONE GREATER THAN ½ MILE FROM DETOUR ROUTE (1000 FEET IF URBAN)

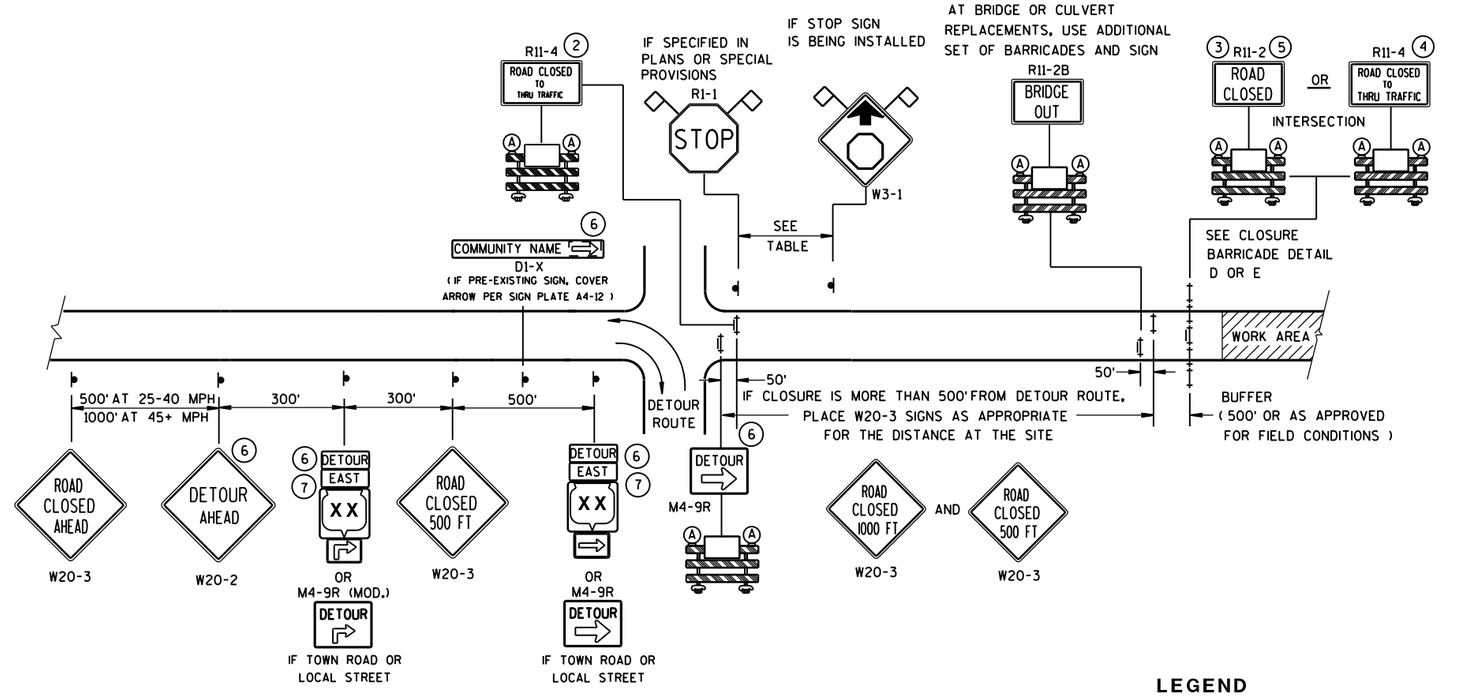

DETAIL B
MAINLINE CLOSURE WITH POSTED DETOUR

WORK ZONE LESS THAN ½ MILE FROM DETOUR ROUTE (1000 FEET IF URBAN)

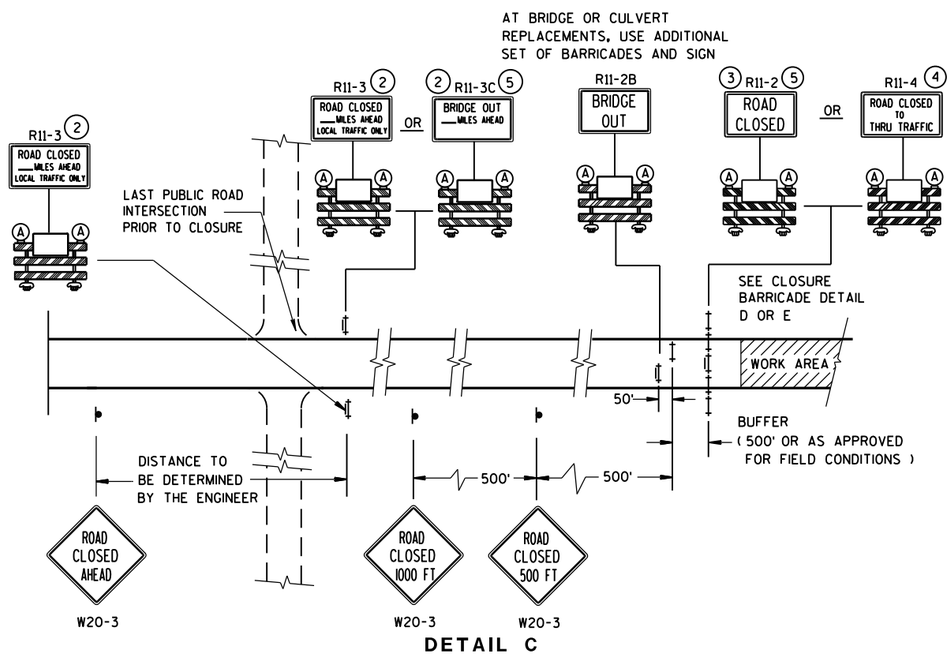

DETAIL C
MAINLINE CLOSURE, NO POSTED DETOUR

SPEED LIMIT (MPH)	"STOP AHEAD" ADVANCE WARNING DISTANCE (FT)
25	200
30	200
35	350
40	350
45	500
50	550
55	750

LEGEND

- SIGN ON PERMANENT SUPPORT
- TYPE III BARRICADE
- TYPE III BARRICADE WITH ATTACHED SIGN
- (A) TYPE "A" WARNING LIGHT (FLASHING)
- WORK AREA
- DETOUR EAST — M4-8, M3-X
- XX (M1-4) OR COUNTY XX (M1-5A) OR XX (M1-6)
- M05-1 OR M06-1
- FLAGS, 16" X 16" MIN., (ORANGE)

SEE SDD 15C2-SHEET "**b**" FOR GENERAL NOTES AND FOOTNOTES (1) THROUGH (7)

BARRICADES AND SIGNS FOR MAINLINE CLOSURES

STATE OF WISCONSIN
DEPARTMENT OF TRANSPORTATION

8/2013 — DATE
/S/ Travis Feltes — STATE TRAFFIC ENGINEER
FHWA

6

S.D.D. 15 C 2-5a

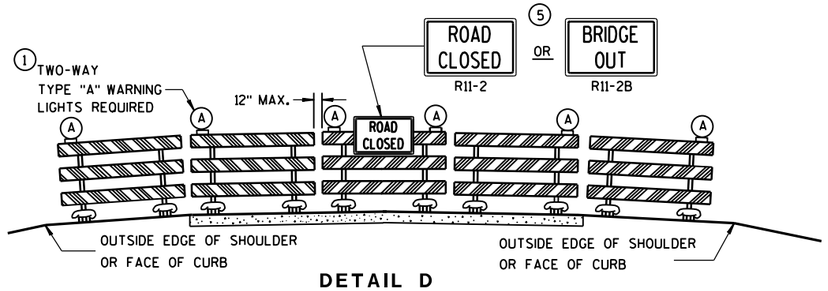

DETAIL D

ROAD CLOSURE BARRICADE DETAIL

APPROACH VIEW

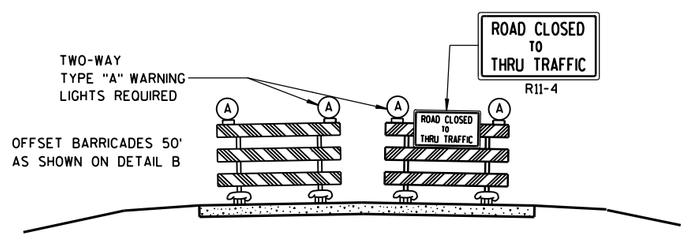

DETAIL E

LANE CLOSURE BARRICADE DETAIL

APPROACH VIEW

SEE SDD 15C2-SHEET "**a**" FOR LEGEND

GENERAL NOTES

THE EXACT NUMBER, LOCATION, AND SPACING OF ALL SIGNS AND BARRICADES SHALL BE ADJUSTED TO FIT FIELD CONDITIONS AS APPROVED BY THE ENGINEER.

ANY SIGNS TEMPORARY OR EXISTING, WHICH CONFLICT WITH TRAFFIC CONTROL "IN USE" SHALL BE REMOVED OR COVERED AS NEEDED AND AS APPROVED BY THE ENGINEER.

THE SPACING BETWEEN TRAFFIC CONTROL SIGNS SHOULD BE ADJUSTED TO NOT CONFLICT WITH AND SHOULD PROVIDE A DESIRABLE MINIMUM OF 200 FEET CLEARANCE TO EXISTING SIGNS THAT WILL REMAIN IN PLACE.

BARRICADES THAT MUST BE MOVED FOR A WORK OPERATION SHALL BE IMMEDIATELY RE-ESTABLISHED UPON COMPLETION OF THE OPERATION OR, FOR CONTINUING OPERATIONS, AT THE END OF EACH WORKING DAY.

SIGNS THAT WILL BE IN PLACE LESS THAN 7 CONTINUOUS DAYS AND NIGHTS MAY BE MOUNTED ON PORTABLE SUPPORTS.

ALL TYPE III BARRICADES SHALL HAVE RAILS REFLECTORIZED ON BOTH FACES. STRIPES SHALL BE PROPERLY SLOPED DOWN TOWARD THE TRAFFIC SIDE OR AS SHOWN IN THE ROAD CLOSURE BARRICADE DETAIL D FOR FULL ROAD CLOSURES.

TYPE "A" LOW-INTENSITY FLASHING WARNING LIGHTS SHALL BE VISIBLE ON BOTH SIDES OF THE BARRICADE.

THE R11-2, R11-3, M4-9, R11-4 AND R10-61 SIGNS PLACED ON BARRICADES SHALL COVER NO MORE THAN THE TOP RAIL. THE SIGNS SHALL NOT COVER ANY PORTION OF THE MIDDLE OR BOTTOM RAILS.

"WO AND "MO" SIGNS ARE THE SAME AS "W" AND "M" SIGNS EXCEPT THE BACKGROUND IS ORANGE.

ALL SIGNS SHALL BE 48" X 48" UNLESS OTHERWISE NOTED BELOW:

R11-2 SHALL BE 48" X 30".
R11-3, R11-4 AND R10-61 SHALL BE 60" X 30".
M4-9 SHALL BE 30" X 24".
M3-X SHALL BE 24" X 12". (36" X 18" IF NEEDED TO MATCH EXISTING SIGNS.)
M4-8 SHALL BE 24" X 12". (30" X 15" IF NEEDED TO MATCH EXISTING SIGNS.)
M1-4, M1-5A, AND M1-6 SHALL BE 24" X 24". (36" X 36" IF NEEDED TO MATCH EXISTING SIGNS.)
M05-1 AND M06-1 SHALL BE 21" X 21". (30" X 30" IF NEEDED TO MATCH EXISTING SIGNS.)
D1-X SHALL BE AS SHOWN ON SPECIFIC PROJECT SIGNING DETAIL SHEETS.
R1-1 SHALL BE 36" X 36".

1. TWO WARNING LIGHTS SHALL BE PROVIDED ON THE CENTER BARRICADE AND A MINIMUM OF ONE WARNING LIGHT SHALL BE PROVIDED ON EACH OF THE OTHER BARRICADES WITHIN THE ROADWAY LIMITS. SPACING OF THE WARNING LIGHTS SHALL BE UNIFORM TO THE EDGE OF ROADWAY AS SHOWN (APPROX. 8-FOOT LIGHT SPACING).
2. THESE SIGNS AND BARRICADES ARE NOT REQUIRED IF ROAD CLOSURE BEGINS AT INTERSECTION.
3. FOR ROAD CLOSURE WITHOUT LOCAL ACCESS TO PROJECT, SEE ROAD CLOSURE BARRICADE DETAIL D.
4. FOR ROAD CLOSURE WITH LOCAL ACCESS TO PROJECT, SEE LANE CLOSURE BARRICADE DETAIL E.
5. FOR BRIDGE OR CULVERT REPLACEMENTS, SUBSTITUTE "BRIDGE OUT" INSTEAD OF "ROAD CLOSED" ON R11-2 AND R11-3 SIGNS.
6. INSTALL DETOUR AND COMMUNITY GUIDE SIGNS AND ARROWS ONLY IF SPECIFIED IN THE CONTRACT. IF THERE ARE EXISTING ROUTE MARKER ASSEMBLIES THAT WILL REMAIN IN PLACE, ADJUST THE LOCATION OF THE DETOUR ROUTE SIGNS TO CORRESPOND WITH THE EXISTING ASSEMBLIES. MODIFY EXISTING SIGNS WHERE POSSIBLE. SEE SPECIFIC PROJECT DETOUR SIGNING DETAIL SHEETS. IF DETOUR SIGNS ARE BEING INSTALLED BY OTHERS, PLACE THE CONTRACTED TRAFFIC CONTROL SIGNS TO ALLOW FOR PLACEMENT OF ALL WARNING, DETOUR AND GUIDE SIGNS AS SHOWN.
7. "EAST" CARDINAL DIRECTION MARKERS AND RIGHT TURN ARROWS ARE SHOWN. USE OTHER CARDINAL DIRECTIONS AND ARROWS AS APPROPRIATE.

BARRICADES AND SIGNS FOR MAINLINE CLOSURES

STATE OF WISCONSIN
DEPARTMENT OF TRANSPORTATION

8/2013 — DATE
/S/ Travis Feltes — STATE TRAFFIC ENGINEER
FHWA

6

S.D.D. 15 C 2-5b

THIS DRAWING PROVIDES GENERAL GUIDANCE ON TYPICAL DETOUR SIGN LAYOUT AND SPACING. SEE PROJECT DETOUR SIGNING SHEETS FOR SPECIFIC DETAILS FOR EACH PROJECT.

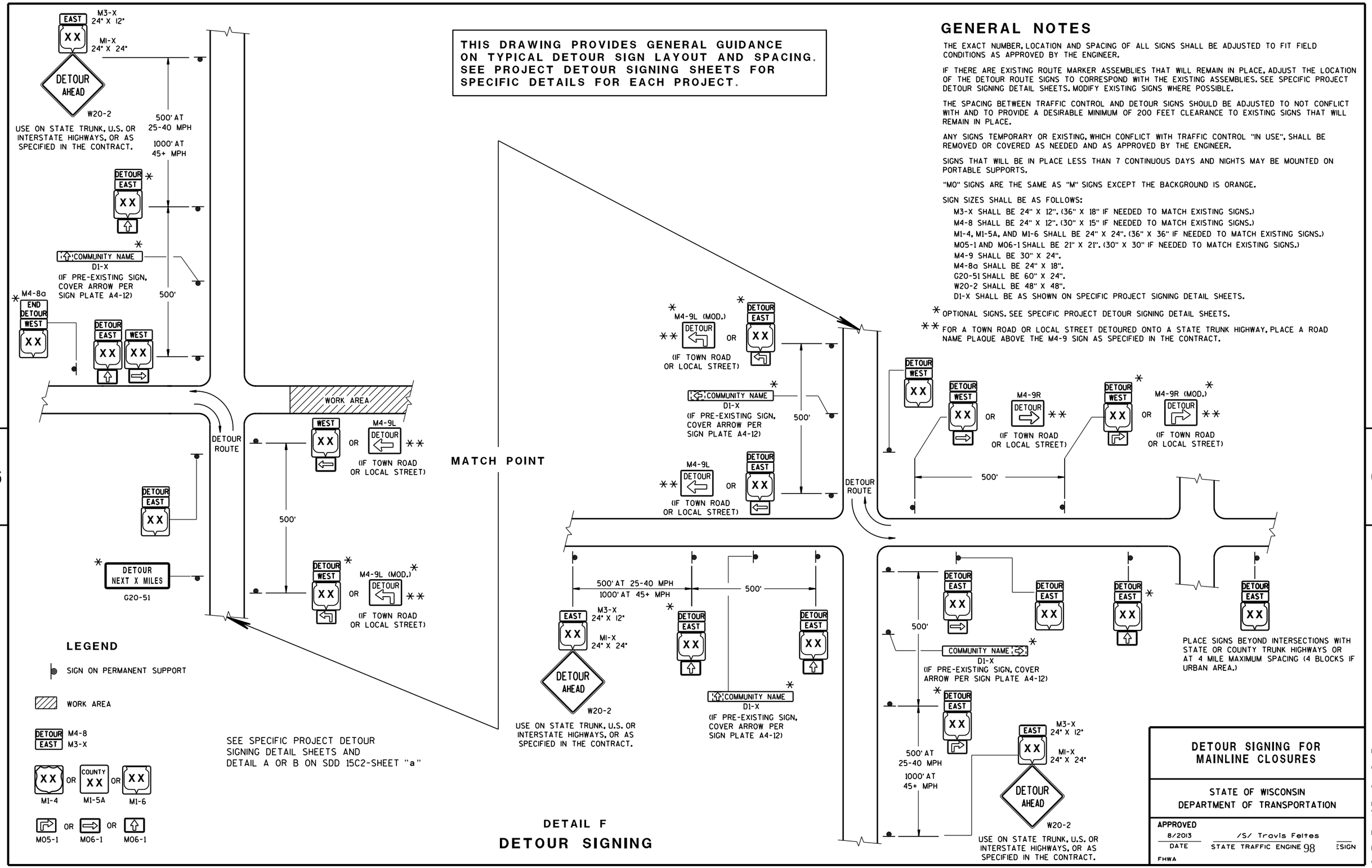

DETAIL F

DETOUR SIGNING

GENERAL NOTES

THE EXACT NUMBER, LOCATION AND SPACING OF ALL SIGNS SHALL BE ADJUSTED TO FIT FIELD CONDITIONS AS APPROVED BY THE ENGINEER.

IF THERE ARE EXISTING ROUTE MARKER ASSEMBLIES THAT WILL REMAIN IN PLACE, ADJUST THE LOCATION OF THE DETOUR ROUTE SIGNS TO CORRESPOND WITH THE EXISTING ASSEMBLIES. SEE SPECIFIC PROJECT DETOUR SIGNING DETAIL SHEETS. MODIFY EXISTING SIGNS WHERE POSSIBLE.

THE SPACING BETWEEN TRAFFIC CONTROL AND DETOUR SIGNS SHOULD BE ADJUSTED TO NOT CONFLICT WITH AND TO PROVIDE A DESIRABLE MINIMUM OF 200 FEET CLEARANCE TO EXISTING SIGNS THAT WILL REMAIN IN PLACE.

ANY SIGNS TEMPORARY OR EXISTING, WHICH CONFLICT WITH TRAFFIC CONTROL "IN USE", SHALL BE REMOVED OR COVERED AS NEEDED AND AS APPROVED BY THE ENGINEER.

SIGNS THAT WILL BE IN PLACE LESS THAN 7 CONTINUOUS DAYS AND NIGHTS MAY BE MOUNTED ON PORTABLE SUPPORTS.

"MO" SIGNS ARE THE SAME AS "M" SIGNS EXCEPT THE BACKGROUND IS ORANGE.

SIGN SIZES SHALL BE AS FOLLOWS:

- M3-X SHALL BE 24" X 12". (36" X 18" IF NEEDED TO MATCH EXISTING SIGNS.)
- M4-8 SHALL BE 24" X 12". (30" X 15" IF NEEDED TO MATCH EXISTING SIGNS.)
- M1-4, M1-5A, AND M1-6 SHALL BE 24" X 24". (36" X 36" IF NEEDED TO MATCH EXISTING SIGNS.)
- M05-1 AND M06-1 SHALL BE 21" X 21". (30" X 30" IF NEEDED TO MATCH EXISTING SIGNS.)
- M4-9 SHALL BE 30" X 24".
- M4-8a SHALL BE 24" X 18".
- G20-51 SHALL BE 60" X 24".
- W20-2 SHALL BE 48" X 48".
- D1-X SHALL BE AS SHOWN ON SPECIFIC PROJECT SIGNING DETAIL SHEETS.

* OPTIONAL SIGNS. SEE SPECIFIC PROJECT DETOUR SIGNING DETAIL SHEETS.

** FOR A TOWN ROAD OR LOCAL STREET DETOURED ONTO A STATE TRUNK HIGHWAY, PLACE A ROAD NAME PLAQUE ABOVE THE M4-9 SIGN AS SPECIFIED IN THE CONTRACT.

DETOUR SIGNING FOR MAINLINE CLOSURES

STATE OF WISCONSIN
DEPARTMENT OF TRANSPORTATION

APPROVED
8/2013 — DATE
/S/ Travis Feltes — STATE TRAFFIC ENGINEER
FHWA

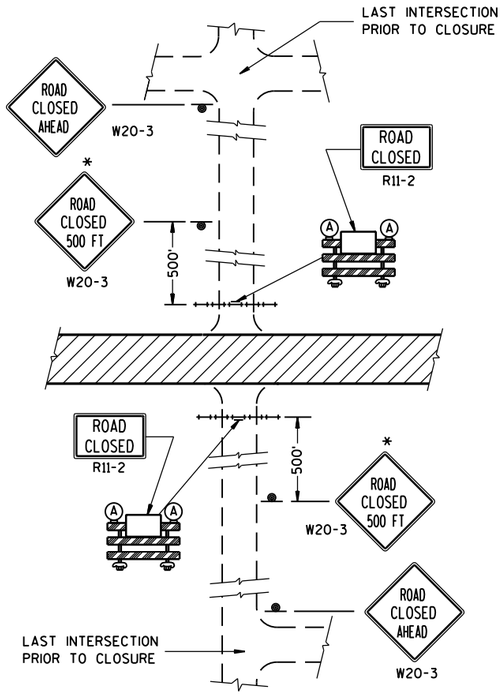

DETAIL 1

(NO ACCESS TO PROJECT)

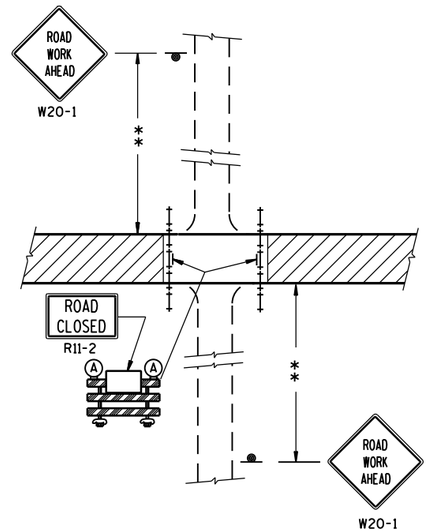

DETAIL 2

(PUBLIC CROSS-TRAFFIC MAINTAINED.
NO ACCESS TO PROJECT).

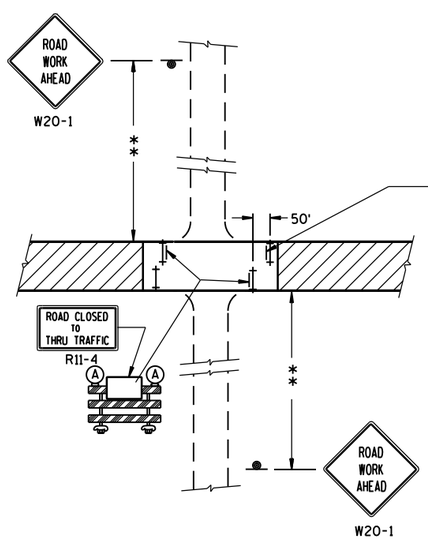

DETAIL 3

(PUBLIC CROSS-TRAFFIC MAINTAINED. CONTRACTOR,
LOCAL BUSINESS AND RESIDENT ACCESS).

FOR BRIDGE OR CULVERT
REPLACEMENT, USE ADDITIONAL
SIGN ON BARRICADE

BRIDGE OUT
XX MILES AHEAD
R11-3C

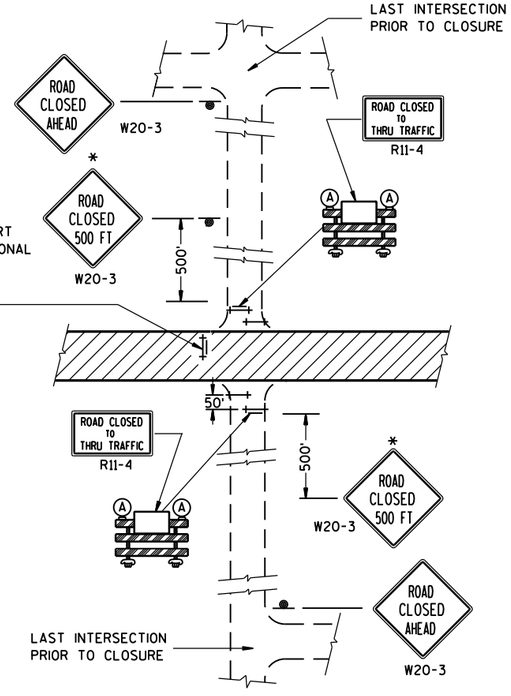

DETAIL 4

(CONTRACTOR, LOCAL BUSINESS AND
RESIDENT ACCESS TO PROJECT)

GENERAL NOTES

THE EXACT NUMBER, LOCATION, AND SPACING OF ALL SIGNS AND BARRICADES SHALL BE ADJUSTED TO FIT FIELD CONDITIONS AS APPROVED BY THE ENGINEER.

ANY SIGNS TEMPORARY OR EXISTING, WHICH CONFLICT WITH TRAFFIC CONTROL "IN USE" SHALL BE REMOVED OR COVERED AS NEEDED AND AS APPROVED BY THE ENGINEER.

THE SPACING BETWEEN TRAFFIC CONTROL SIGNS SHOULD BE ADJUSTED TO NOT CONFLICT WITH AND SHOULD PROVIDE A DESIRABLE MINIMUM OF 200 FEET CLEARANCE TO EXISTING SIGNS THAT WILL REMAIN IN PLACE.

IF A "STOP" SIGN MUST BE REMOVED FOR A WORK OPERATION, A TEMPORARY "STOP" SIGN SHALL BE PLACED PRIOR TO THE SIGN REMOVAL, OR A FLAGGER SHALL BE PROVIDED UNTIL THE SIGN IS RE-ESTABLISHED.

BARRICADES THAT MUST BE MOVED FOR A WORK OPERATION SHALL BE IMMEDIATELY RE-ESTABLISHED UPON COMPLETION OF THE OPERATION OR, FOR CONTINUING OPERATIONS, AT THE END OF EACH WORKING DAY.

SIGNS THAT WILL BE IN PLACE LESS THAN 7 CONTINUOUS DAYS AND NIGHTS MAY BE MOUNTED ON PORTABLE SUPPORTS.

ALL TYPE III BARRICADES SHALL HAVE RAILS REFLECTORIZED ON BOTH FACES. STRIPES SHALL BE PROPERLY SLOPED DOWN TOWARD THE TRAFFIC SIDE OR AS SHOWN IN THE ROAD CLOSURE BARRICADE DETAIL D FOR FULL ROAD CLOSURES.

TYPE "A" LOW-INTENSITY FLASHING WARNING LIGHTS SHALL BE VISIBLE ON BOTH SIDES OF THE BARRICADE.

THE R11-2, R11-3 AND R11-4 SIGNS PLACED ON BARRICADES SHALL COVER NO MORE THAN THE TOP RAIL. THE SIGNS SHALL NOT COVER ANY PORTION OF THE MIDDLE OR BOTTOM RAILS.

ALL SIGNS SHALL BE 48" X 48" UNLESS OTHERWISE NOTED BELOW:
R11-2 SHALL BE 48" X 30".
R11-4 AND R11-3 SHALL BE 60" X 30".

*OMIT THE "ROAD CLOSED 500 FT." SIGN IF THE LAST INTERSECTION IS 500 FT. OR LESS FROM THE WORK ZONE.

**500' MAX. OR AT LAST INTERSECTION WHICHEVER IS CLOSER.

LEGEND

- SIGN ON PERMANENT SUPPORT
- TYPE III BARRICADE
- TYPE III BARRICADE WITH ATTACHED SIGN
- (A) TYPE "A" WARNING LIGHT (FLASHING)
- WORK AREA

BARRICADES AND SIGNS FOR SIDEROAD CLOSURES

STATE OF WISCONSIN
DEPARTMENT OF TRANSPORTATION

APPROVED
8/2013 — DATE
/S/ Travis Feltes — STATE TRAFFIC ENGINEER
FHWA

6

S.D.D. 15 C 3-2

TYPICAL SIDEROAD APPROACH WARNING SIGN DETAIL

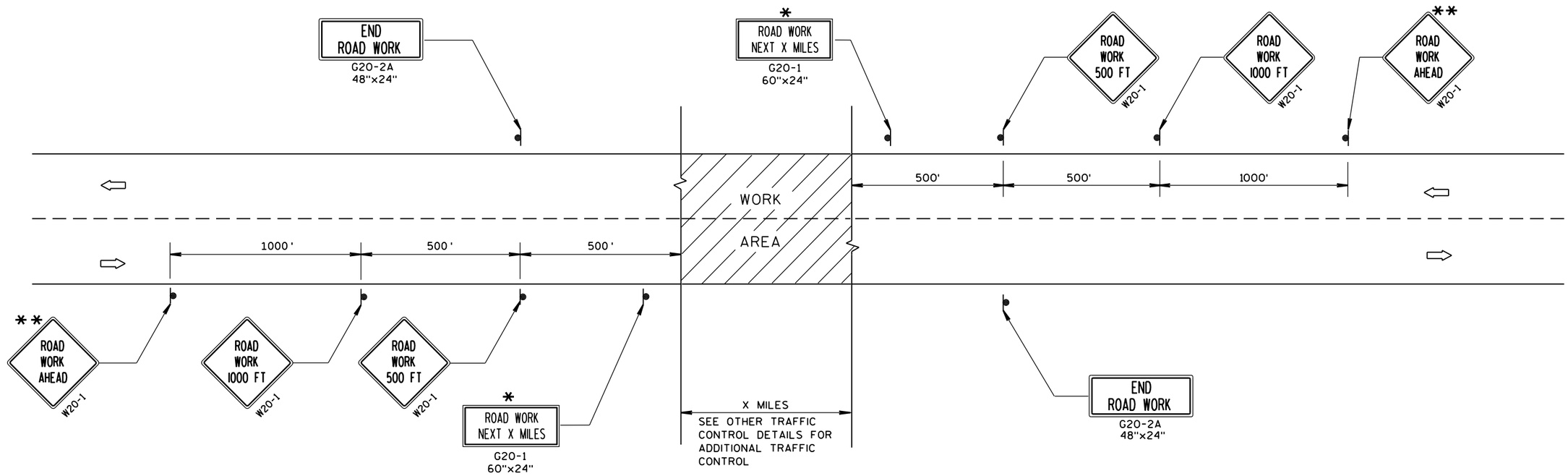

GENERAL NOTES

THE EXACT NUMBER, LOCATION, AND SPACING OF ALL SIGNS AND DEVICES SHALL BE ADJUSTED TO FIT FIELD CONDITIONS.

THE SPACING BETWEEN TRAFFIC CONTROL SIGNS SHOULD BE ADJUSTED TO NOT CONFLICT WITH AND SHOULD PROVIDE A MINIMUM OF 200 FEET (500 FEET DESIRABLE) CLEARANCE TO EXISTING SIGNS THAT WILL REMAIN IN PLACE.

ALL SIGNS ARE 48"x48" UNLESS OTHERWISE NOTED.

SIGNS THAT WILL BE IN PLACE LESS THAN 7 CONTINUOUS DAYS AND NIGHTS MAY BE MOUNTED ON PORTABLE SUPPORTS.

IF A "STOP" SIGN MUST BE REMOVED FOR A WORK OPERATION, A TEMPORARY "STOP" SIGN SHALL BE PLACED PRIOR TO THE SIGN REMOVAL, OR A FLAGGER SHALL BE PROVIDED UNTIL THE SIGN IS RE-ESTABLISHED.

* OMIT G20-1 SIGNS IF LENGTH OF WORK AREA IS 2 MILES OR LESS.

** PLACE ADDITIONAL W20-1 "ROAD WORK AHEAD" SIGN IF WORK AREA WITHIN THE PROJECT IS SEPARATED BY MORE THAN 2 MILES FROM PREVIOUS WORK AREA.

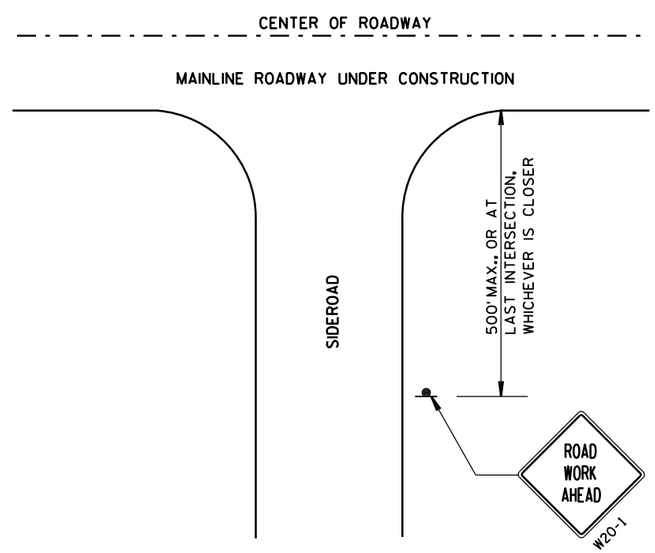

LEGEND

- SIGN ON PERMANENT SUPPORT
- DIRECTION OF TRAFFIC
- WORK AREA

TRAFFIC CONTROL, ADVANCE WARNING SIGNS 45 M.P.H. OR GREATER TWO-WAY UNDIVIDED ROAD OPEN TO TRAFFIC

STATE OF WISCONSIN
DEPARTMENT OF TRANSPORTATION

APPROVED
8/2013 — DATE
/S/ Travis Feltes — STATE TRAFFIC ENGINEER
FHWA

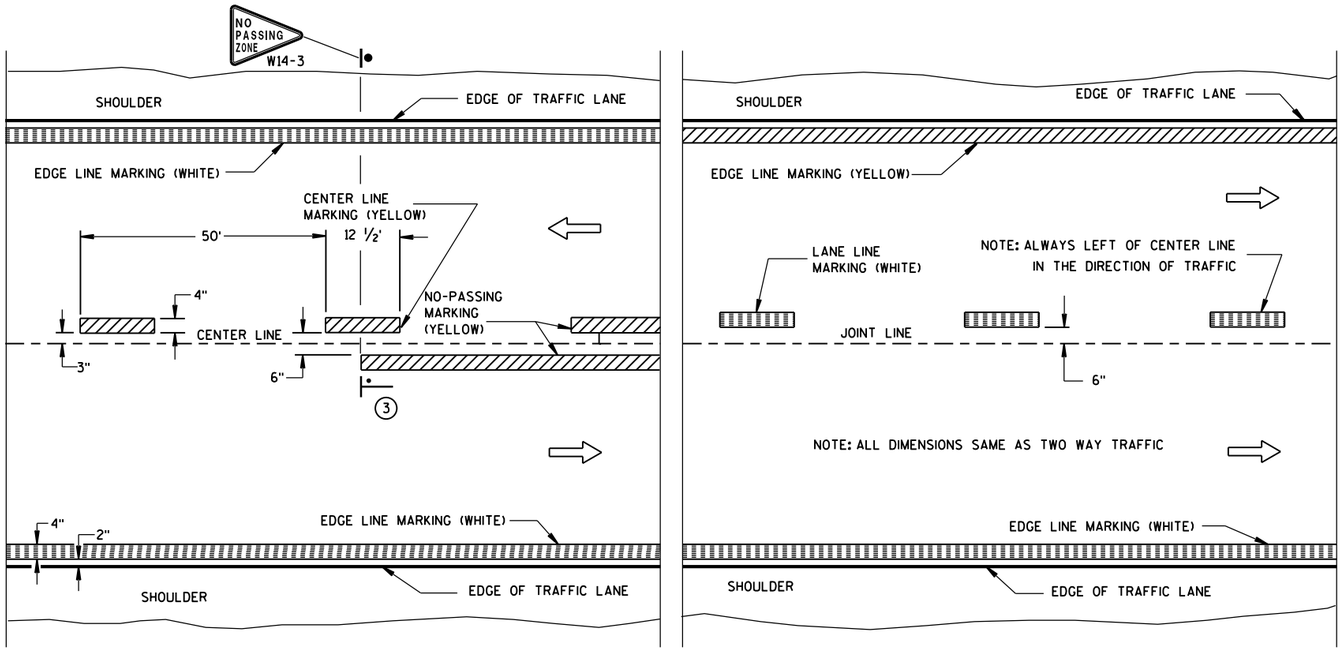

TWO WAY TRAFFIC

ONE WAY TRAFFIC

PERMANENT PAVEMENT MARKING

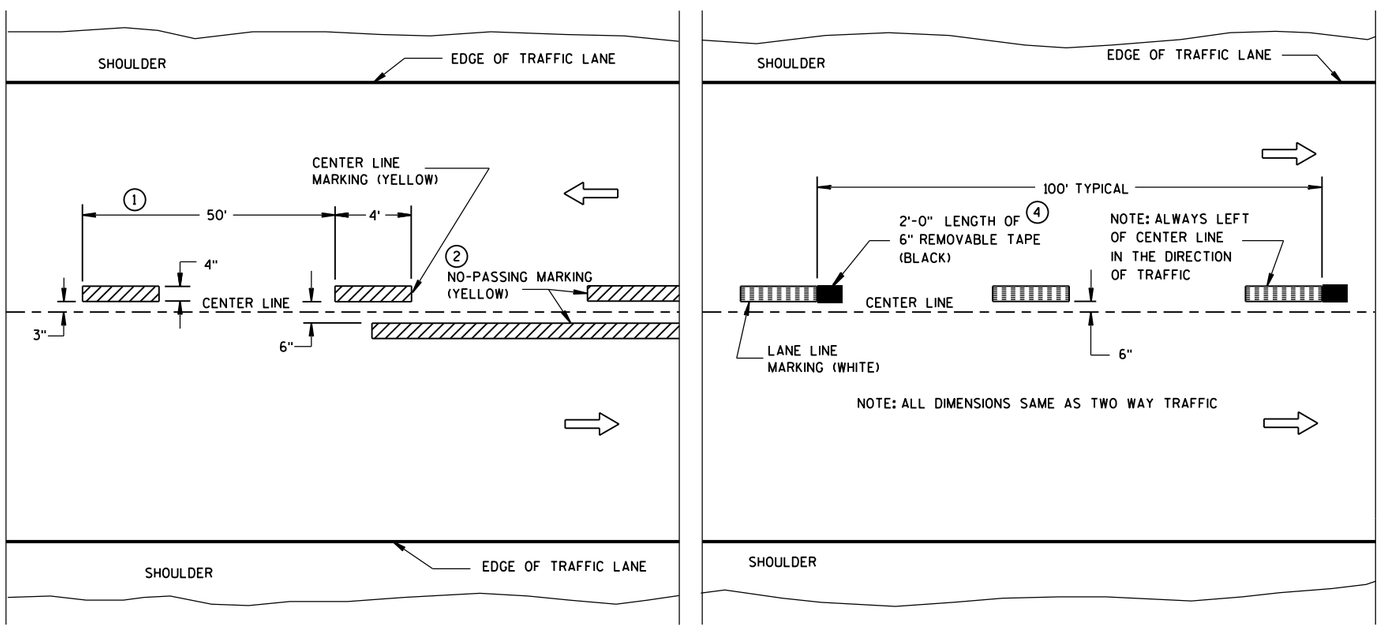

TWO WAY TRAFFIC

ONE WAY TRAFFIC

TEMPORARY (INTERMEDIATE) PAVEMENT MARKING

(SHOWS CYCLE FOR TEMPORARY CENTER LINE OR TEMPORARY LANE LINE MARKING)

GENERAL NOTES

DETAILS OF CONSTRUCTION NOT SHOWN ON THIS DRAWING SHALL CONFORM TO STANDARD SPECIFICATIONS AND SPECIAL PROVISIONS.

1. HALF CYCLE LENGTHS (25'±) WITH 2' MINIMUM STRIPE LENGTHS SHALL BE PROVIDED ON ROADWAYS (INCLUDING TEMPORARY TRAVELED WAYS) WITH REVERSE CURVATURE, CURVATURE OF OVER 5 DEGREES OR WHEN DIRECTED BY THE ENGINEER TO MARK UNUSUAL ALIGNMENT OF THE TRAVELED WAY.
2. NO PASSING ZONE TEMPORARY PAVEMENT MARKING IS REQUIRED TO BE PLACED, WHERE APPROPRIATE, ALONG WITH CENTERLINE TEMPORARY PAVEMENT MARKING WHEN A SAME DAY PERMANENT PAVEMENT MARKING ITEM IS INCLUDED IN THE CONTRACT.
3. NO PASSING ZONE MARKINGS ARE PLACED ACCORDING TO "T" MARKINGS. IF EXISTING NO PASSING ZONE W14-3 SIGNS ARE BEYOND 50 FEET IN EITHER DIRECTION, THE SIGNS SHALL BE MOVED TO THE "T" MARKINGS.
4. CONCRETE ONLY.

NOTE

ARROW SYMBOL (⇨) SHOWS DIRECTION OF TRAVEL

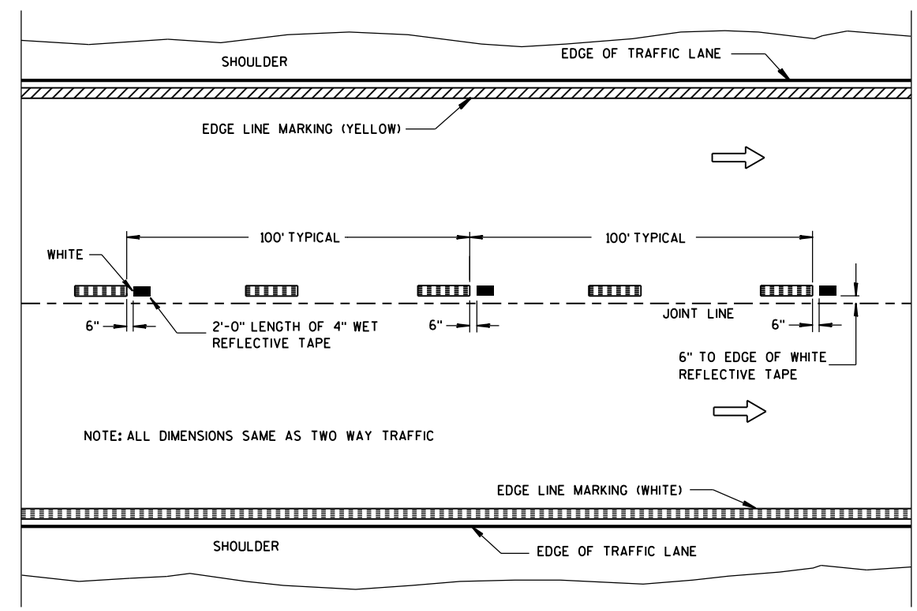

WET REFLECTIVE TAPE SUPPLEMENT TO SPRAYED OR NON WET REFLECTIVE TAPE LANE LINE

LEGEND

"T" MARKING

POST MOUNTED SIGN

PAVEMENT MARKING (MAINLINE)

STATE OF WISCONSIN
DEPARTMENT OF TRANSPORTATION

APPROVED

5-13-2013 — DATE

/S/ Travis Feltes — STATE TRAFFIC E

FHWA

6

S.D.D. 15 C 8-16a

LEGEND

SIGN ON PORTABLE OR PERMANENT SUPPORT

DIRECTION OF TRAFFIC

WORK AREA

FLAGGER, EQUIPPED WITH STOP/SLOW PADDLE FASTENED ON SUPPORT STAFF

SIGN SPACING TABLE

SPEED LIMIT	SIGN SPACING A,B,C
25-35 MPH	200'
35-40 MPH	350'
45-55 MPH	500'

USE OF THE "BE PREPARED TO STOP" SIGN IS OPTIONAL. WHEN USED, THIS SIGN SHALL BE LOCATED BETWEEN THE W20-7a AND W20-4 SIGNS. A 500' TYPICAL SPACING SHALL BE PROVIDED BETWEEN THE SIGNS.

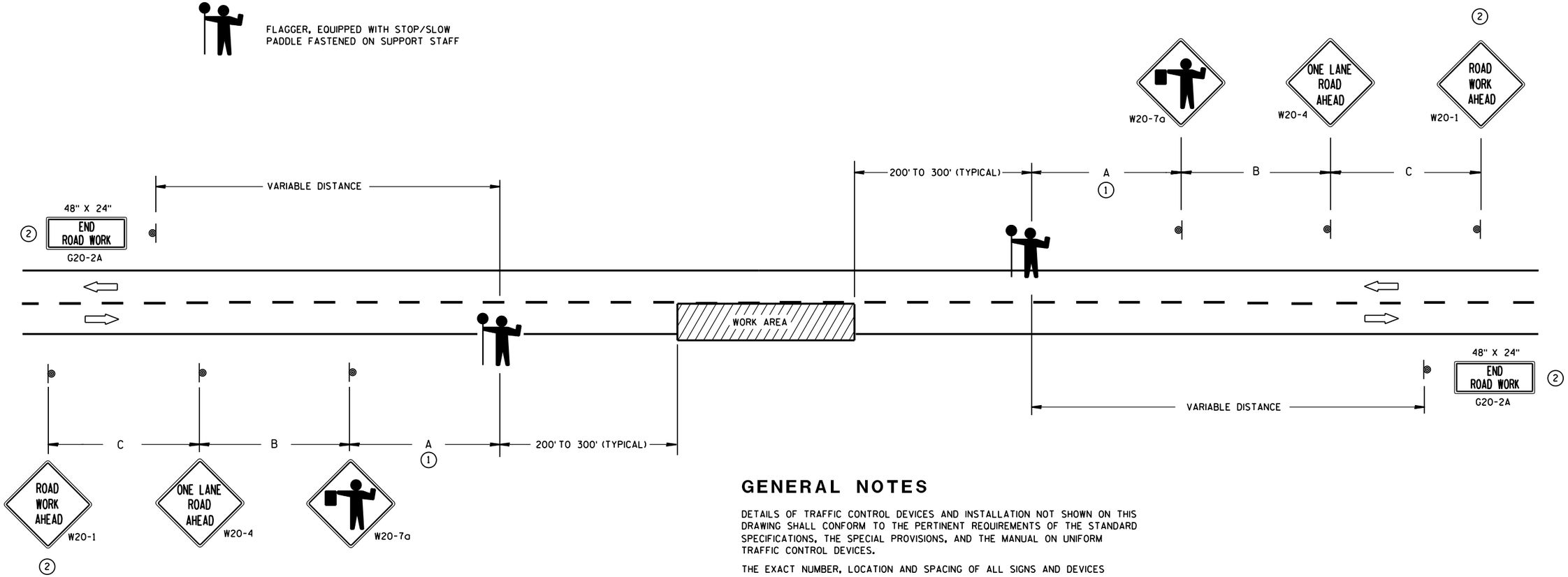

(1) FOR A MOVING WORK OPERATION, SIGNING FOR BOTH DIRECTIONS SHALL BE REESTABLISHED (AS SIMULTANEOUSLY AS PRACTICAL) AT APPROXIMATELY 3500 FOOT INTERVALS IN THE MOVING WORK OPERATION OR AS APPROVED BY THE ENGINEER.

(2) SIGN NOT REQUIRED IF FLAGGING OPERATION OCCURS WITHIN A SIGNED ROAD WORK ZONE AREA.

GENERAL NOTES

DETAILS OF TRAFFIC CONTROL DEVICES AND INSTALLATION NOT SHOWN ON THIS DRAWING SHALL CONFORM TO THE PERTINENT REQUIREMENTS OF THE STANDARD SPECIFICATIONS, THE SPECIAL PROVISIONS, AND THE MANUAL ON UNIFORM TRAFFIC CONTROL DEVICES.

THE EXACT NUMBER, LOCATION AND SPACING OF ALL SIGNS AND DEVICES (AND THE LOCATION OF ALL FLAGGERS) SHALL BE ADJUSTED TO FIT FIELD CONDITIONS AS APPROVED BY THE ENGINEER.

THE FIRST ADVANCE WARNING SIGN SHOULD TYPICALLY BE LOCATED IN ADVANCE OF THE ANTICIPATED TRAFFIC BACKUP OR QUEUE.

WHEN A SIDE ROAD OR RAMP INTERSECTS THE FACILITY ON WHICH THE WORK IS BEING PERFORMED, ADDITIONAL TRAFFIC CONTROLS SHALL BE PROVIDED AS SPECIFIED IN THE PLANS AND/OR THE SPECIAL PROVISIONS OR AS APPROVED BY THE ENGINEER.

FLAGGERS SHALL BE IN SIGHT OF EACH OTHER OR IN DIRECT COMMUNICATION AT ALL TIMES. THEY SHALL BE EQUIPPED WITH STOP/SLOW PADDLES FASTENED ON SUPPORT STAFFS. WHEN THE FLAGGING OPERATION IS NOT IN EFFECT, COVER OR REMOVE ALL TEMPORARY TRAFFIC CONTROL SIGNS.

ALL SIGNS ARE 48" X 48" UNLESS OTHERWISE NOTED.

TRAFFIC CONTROL FOR LANE CLOSURE (SUITABLE FOR MOVING OPERATIONS)

STATE OF WISCONSIN
DEPARTMENT OF TRANSPORTATION

APPROVED
8/2013 — DATE
/S/ Travis Feltes — STATE TRAFFIC ENGINEER
FHWA

6

S.D.D. 15 C 12-4

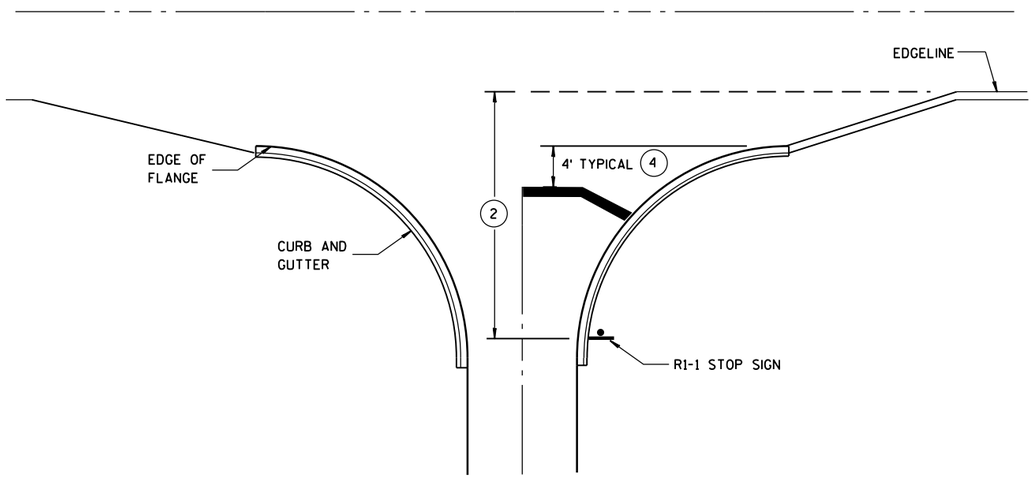

TYPICAL STOP LINE PAVEMENT MARKING WITH CURB AND GUTTER

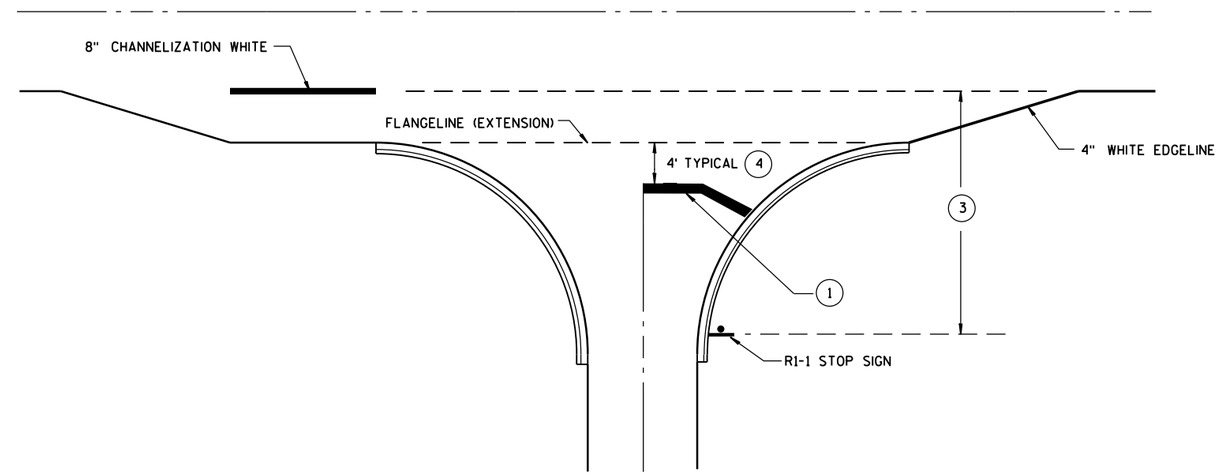

TYPICAL STOP LINE PAVEMENT MARKING FOR SIDEROADS WITH RIGHT TURN LANE

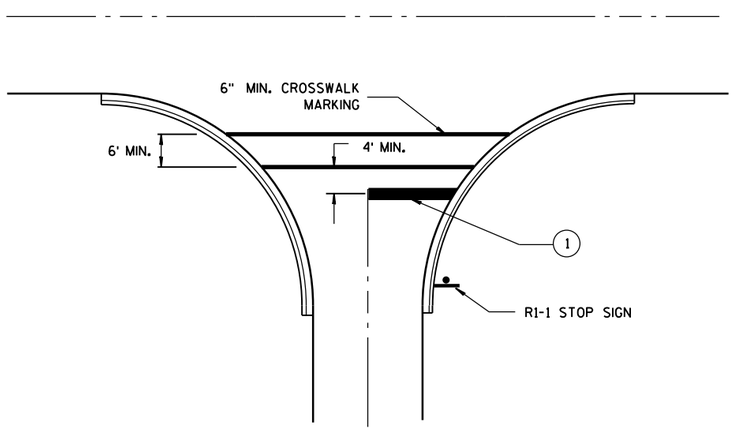

TYPICAL STOP LINE PAVEMENT MARKING FOR SIDEROADS WITH CROSSWALK MARKING

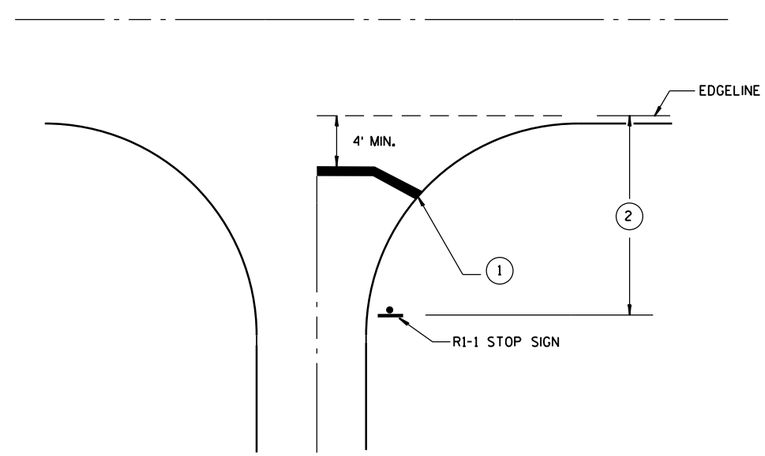

TYPICAL STOP LINE PAVEMENT MARKING WITHOUT CURB AND GUTTER

GENERAL NOTES

1. 18-INCH STOP LINES MAY BE DELETED OR ADDED BY THE PROJECT ENGINEER BASED ON VISIBILITY AND SIGHT LINES.
2. IF STOP SIGN IS LESS THAN OR EQUAL TO 40 FEET FROM THE EDGELINE THAN NO STOP LINE IS REQUIRED.
3. IF STOP SIGN IS LESS THAN OR EQUAL TO 30 FEET FROM THE FLANGELINE EXTENSION THAN NO STOP LINE IS REQUIRED.
4. MOVE CLOSER TO EDGE OF TRAVEL LANE AS NEEDED FOR VISIBILITY AND SIGHT LINES.

STOP LINE AND CROSSWALK PAVEMENT MARKING

STATE OF WISCONSIN
DEPARTMENT OF TRANSPORTATION

APPROVED
4/30/2013 — DATE
/S/ Travis Feltes — STATE TRAFFIC E
FHWA

LEGEND

- TYPE III BARRICADE WITH ATTACHED SIGN
- SIGN ON PERMENENT SUPPORT
- TRAFFIC CONTROL DRUM WITH TYPE "C" STEADY BURN LIGHT
- TRAFFIC CONTROL DRUM
- FLASHING ARROW BOARD
- TYPE "A" WARNING LIGHT (FLASHING)
- REMOVING PAVEMENT MARKING
- DIRECTION OF TRAFFIC
- WORK AREA

GENERAL NOTES

THE EXACT NUMBER, LOCATION, AND SPACING OF ALL SIGNS AND DEVICES SHALL BE ADJUSTED TO FIT FIELD CONDITIONS AS APPROVED BY THE ENGINEER.

THE SPACING BETWEEN SIGNS SHOULD BE ADJUSTED TO NOT CONFLICT WITH AND TO PROVIDE A MINIMUM OF 200 FEET, (500 FEET DESIREABLE) DISTANCE TO EXISTING SIGNS.

THIS LANE CLOSURE IS TYPICAL FOR CLOSING RIGHT LANE - REVERSE FOR CLOSING LEFT LANE.

ALL SIGNS ARE 48"×48" UNLESS OTHERWISE NOTED.

"WO" IS THE SAME AS "W" EXCEPT THE BACKGROUND IS ORANGE.

ANY SIGNS TEMPORARY OR EXISTING, WHICH CONFLICT WITH TRAFFIC CONTROL "IN USE" SHALL BE REMOVED OR COVERED AS NEEDED AND AS APPROVED BY THE ENGINEER. NO WARNING LIGHTS SHALL BE WORKING ON "COVERED" OR "DOWNED" SIGNS.

CONSIDER GEOMETRICS WHEN LOCATING SIGNS AND ARROW BOARD SO THE DRIVER HAS A CLEAR VIEW OF THE ARROW BOARD AND LANE CLOSURE DRUMS FOR A MINIMUM 1500 FEET IN FRONT OF DRUMS.

FOR A LANE CLOSURE THAT IS IN PLACE LESS THAN 7 CONTINUOUS DAYS AND NIGHTS, THE ADVANCED WARNING SIGNS MAY BE MOUNTED ON PORTABLE SUPPORTS.

REMOVE PAVEMENT MARKINGS IF LANE CLOSURE IS TO BE IN PLACE FOR LONGER THAN 4 OR MORE DAYS AND NIGHTS.

WARNING LIGHTS ARE NOT REQUIRED IF THE LANE CLOSURE IS A DAYTIME ONLY OPERATION.

IF THE HORIZONTAL ALIGNMENT IS SUCH THAT A CURVE MAY REQUIRE ADDITIONAL DELINEATION, THE DEVICE SPACING MAY BE DECREASED TO 50 FEET.

ADJUSTMENTS IN BUFFER SPACE NEED TO BE INCORPORATED WHEN THE LANE CLOSURE OCCURS NEAR AN INTERCHANGE EXIT OR ENTRANCE RAMP. THE LANE CLOSURE MUST MUST TAKE PLACE FAR ENOUGH IN ADVANCE OF AN EXIT OR ENTRANCE RAMP TO STILL ALLOW FOR ADEQUATE BUFFER SPACE. THE MINIMUM LENGTH OF THE BUFFER SPACE BEFORE AN EXIT RAMP SHOULD BE 1/2 THE LENGTH OF THE TRANSITION AREA. THE ENTRANCE RAMP SHOULD BE FOLLOWED BY THE ORIGINAL BUFFER SPACE LENGTH OF 800 FEET DESIRABLE PRIOR TO ANOTHER TRAFFIC CONTROL CHANGE SUCH AS A CROSSOVER MANEUVER.

* THE LEFT REVERSE CURVE SIGN (WO1-4L) IS ONLY REQUIRED WHEN THIS DETAIL IS USED IN COMBINATION WITH "SINGLE LANE CROSSOVER" DETAIL.

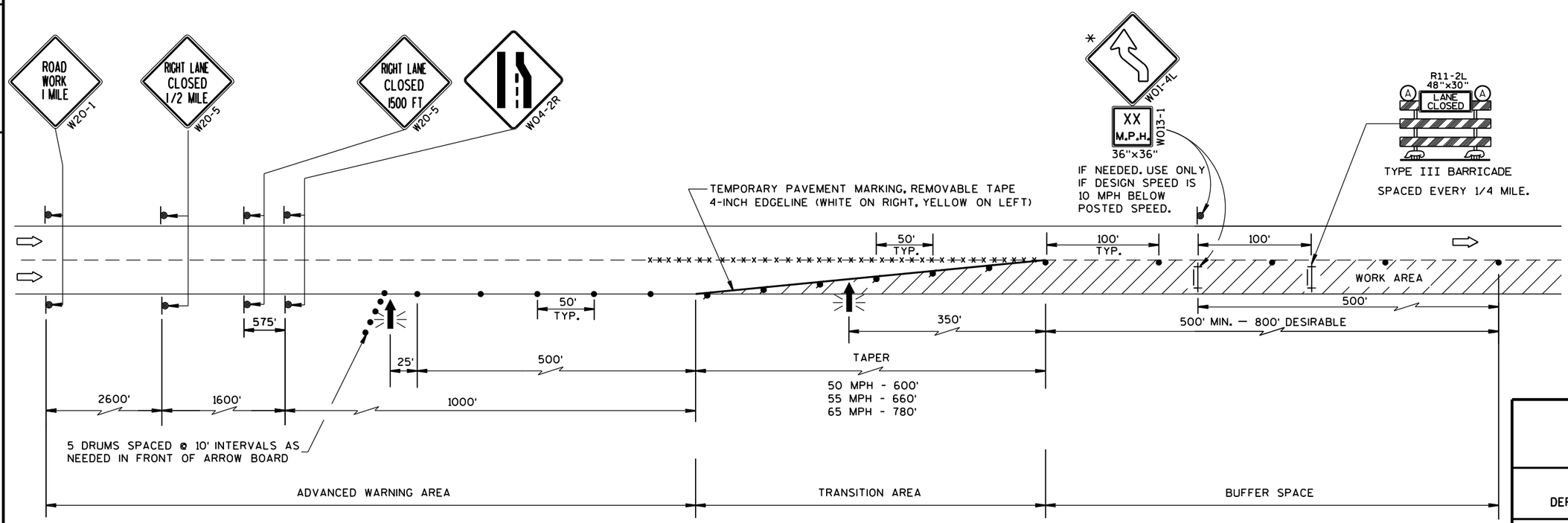

TRAFFIC CONTROL, LANE CLOSURE

STATE OF WISCONSIN
DEPARTMENT OF TRANSPORTATION

APPROVED
Feb. 2015 — DATE
/S/ Travis Feltes — STATE TRAFFIC ENGINEER
FHWA

6

S.D.D. 15 D 12-5a

LEGEND

- TYPE III BARRICADE WITH ATTACHED SIGN
- SIGN ON PERMENENT SUPPORT
- TRAFFIC CONTROL DRUM WITH TYPE "C" STEADY BURN LIGHT
- TRAFFIC CONTROL DRUM
- FLASHING ARROW BOARD
- TYPE "A" WARNING LIGHT (FLASHING)
- REMOVING PAVEMENT MARKING
- DIRECTION OF TRAFFIC
- WORK AREA

GENERAL NOTES

THE EXACT NUMBER, LOCATION, AND SPACING OF ALL SIGNS AND DEVICES SHALL BE ADJUSTED TO FIT FIELD CONDITIONS AS APPROVED BY THE ENGINEER.

THE SPACING BETWEEN SIGNS SHOULD BE ADJUSTED TO NOT CONFLICT WITH AND TO PROVIDE A MINIMUM OF 200 FEET, (500 FEET DESIREABLE) DISTANCE TO EXISTING SIGNS.

THIS LANE CLOSURE IS TYPICAL FOR CLOSING RIGHT LANE - REVERSE FOR CLOSING LEFT LANE.

ALL SIGNS ARE 48"×48" UNLESS OTHERWISE NOTED.

"WO" IS THE SAME AS "W" EXCEPT THE BACKGROUND IS ORANGE.

ANY SIGNS TEMPORARY OR EXISTING, WHICH CONFLICT WITH TRAFFIC CONTROL "IN USE" SHALL BE REMOVED OR COVERED AS NEEDED AND AS APPROVED BY THE ENGINEER. NO WARNING LIGHTS SHALL BE WORKING ON "COVERED" OR "DOWNED" SIGNS.

CONSIDER GEOMETRICS WHEN LOCATING SIGNS AND ARROW BOARD SO THE DRIVER HAS A CLEAR VIEW OF THE ARROW BOARD AND LANE CLOSURE DRUMS FOR A MINIMUM 1500 FEET IN FRONT OF DRUMS.

FOR A LANE CLOSURE THAT IS IN PLACE LESS THAN 7 CONTINUOUS DAYS AND NIGHTS, THE ADVANCED WARNING SIGNS MAY BE MOUNTED ON PORTABLE SUPPORTS.

REMOVE PAVEMENT MARKINGS IF LANE CLOSURE IS TO BE IN PLACE FOR LONGER THAN 4 OR MORE DAYS AND NIGHTS.

WARNING LIGHTS ARE NOT REQUIRED IF THE LANE CLOSURE IS A DAYTIME ONLY OPERATION.

IF THE HORIZONTAL ALIGNMENT IS SUCH THAT A CURVE MAY REQUIRE ADDITIONAL DELINEATION, THE DEVICE SPACING MAY BE DECREASED TO 50 FEET.

ADJUSTMENTS IN BUFFER SPACE NEED TO BE INCORPORATED WHEN THE LANE CLOSURE OCCURS NEAR AN INTERCHANGE EXIT OR ENTRANCE RAMP. THE LANE CLOSURE MUST MUST TAKE PLACE FAR ENOUGH IN ADVANCE OF AN EXIT OR ENTRANCE RAMP TO STILL ALLOW FOR ADEQUATE BUFFER SPACE. THE MINIMUM LENGTH OF THE BUFFER SPACE BEFORE AN EXIT RAMP SHOULD BE 1/2 THE LENGTH OF THE TRANSITION AREA. THE ENTRANCE RAMP SHOULD BE FOLLOWED BY THE ORIGINAL BUFFER SPACE LENGTH OF 800 FEET DESIRABLE PRIOR TO ANOTHER TRAFFIC CONTROL CHANGE SUCH AS A CROSSOVER MANEUVER.

* THE LEFT REVERSE CURVE SIGN (WO1-4L) IS ONLY REQUIRED WHEN THIS DETAIL IS USED IN COMBINATION WITH "SINGLE LANE CROSSOVER" DETAIL.

** A SPEED LIMIT SIGN SHALL BE LOCATED 1500 FEET BEYOND THE END OF THE ACCELERATION LANE OF EACH ENTRANCE RAMP. THERE SHOULD BE A SPEED LIMIT SIGN INCORPORATED A MINIMUM OF EVERY 2 OR 3 MILES. INCLUDE A 65 MPH RESUME SPEED LIMIT SIGN 200 FEET MINIMUM (500 FEET DESIREABLE) BEYOND THE "END OF ROADWORK" SIGN.

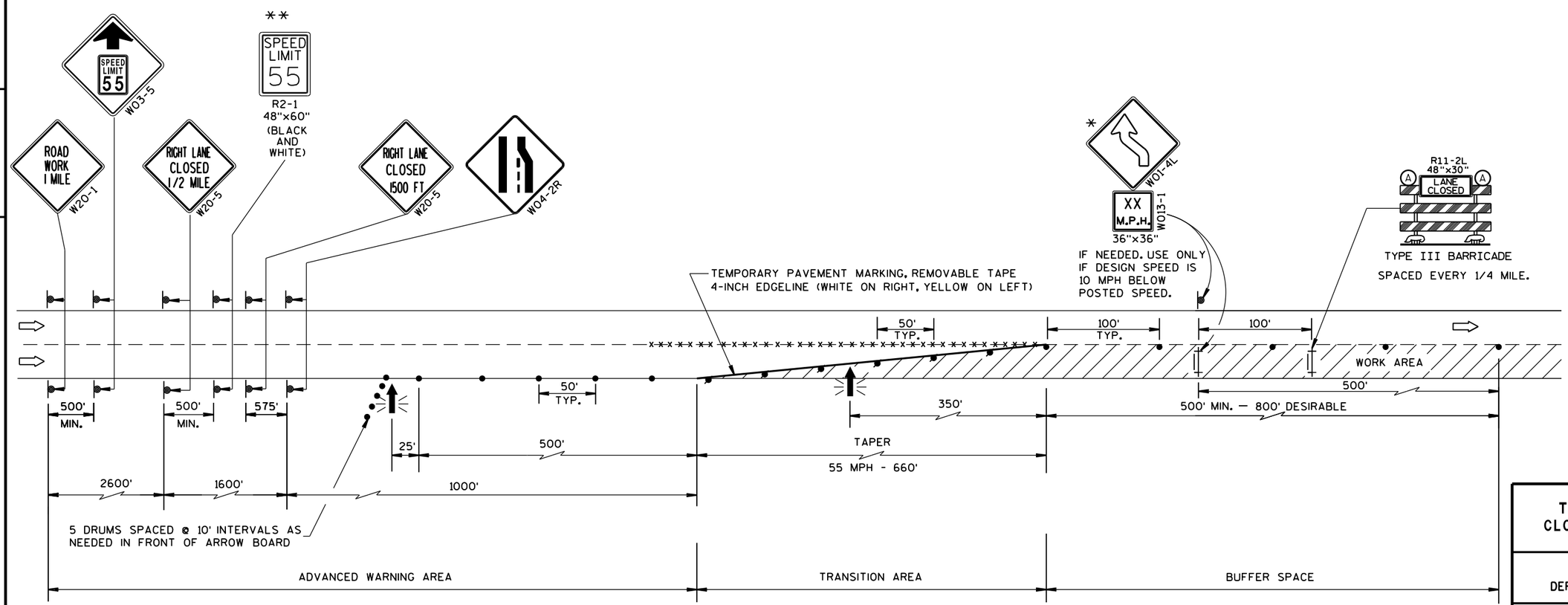

TRAFFIC CONTROL, LANE CLOSURE, SPEED REDUCTION

STATE OF WISCONSIN
DEPARTMENT OF TRANSPORTATION

APPROVED
Feb. 2015 — DATE
/S/ Travis Feltes — STATE TRAFFIC ENGINEER
FHWA

6

S.D.D. 15 D 12-5b

NOTE: MAY BE USED ON ROADWAY WITH POSTED SPEED OF LESS THAN 40 MPH.

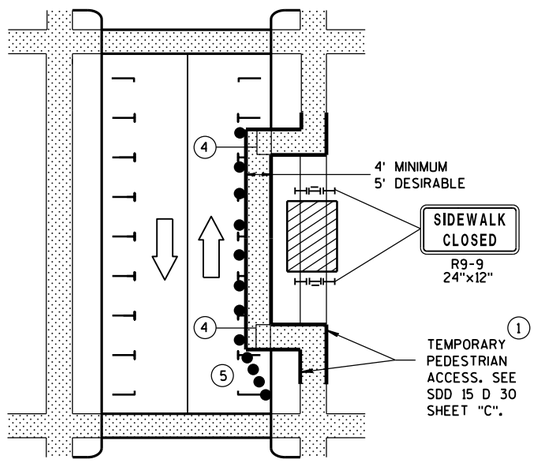

MID-BLOCK SIDEWALK CLOSURE IN PARKING LANE

NOTE: LAYOUT SAME AS ABOVE.

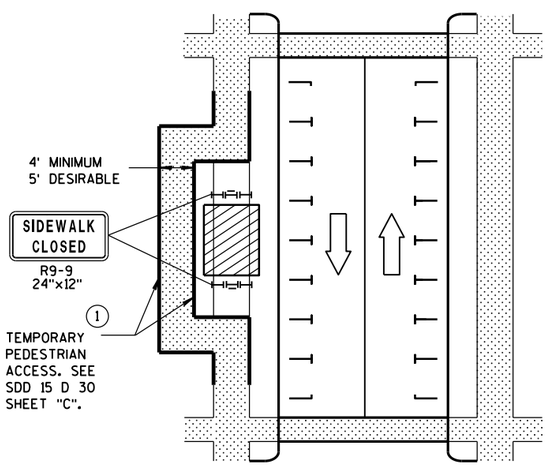

SIDEWALK DIVERSION

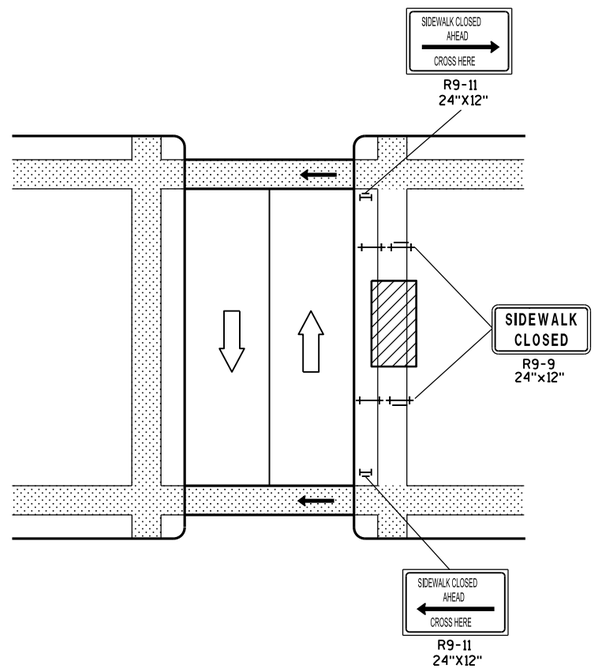

MID-BLOCK SIDEWALK CLOSURE

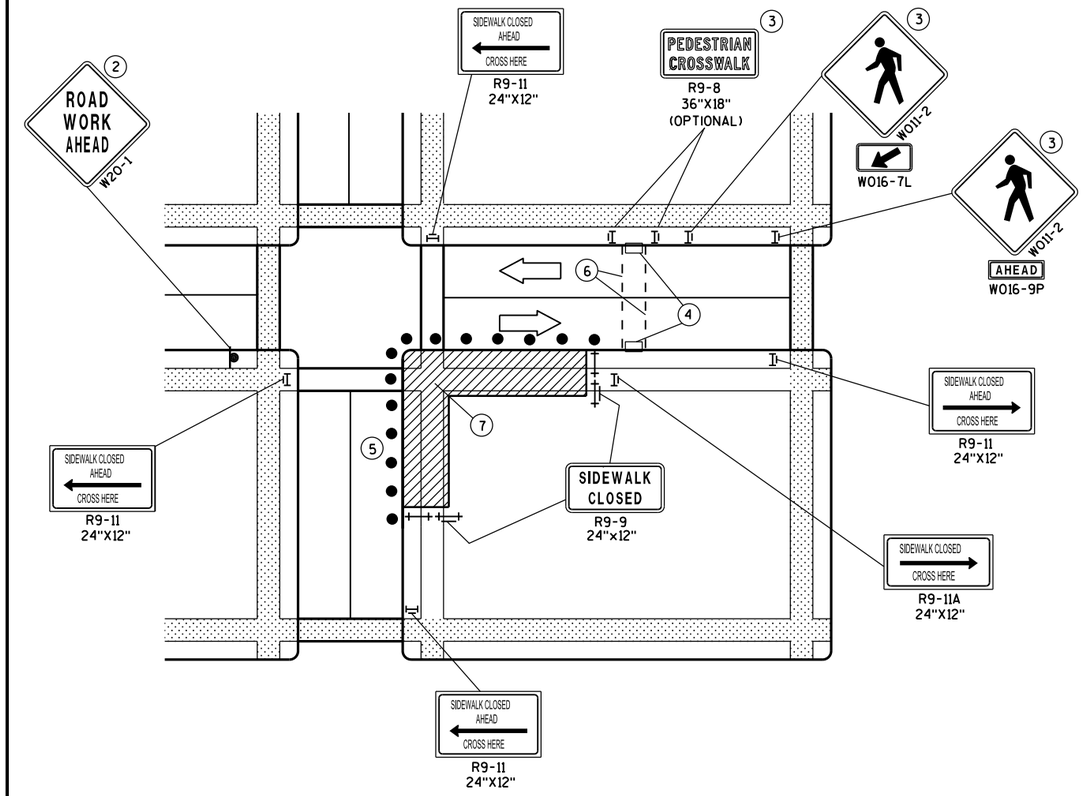

CORNER SIDEWALK CLOSURE WITH TEMPORARY CROSSWALK

GENERAL NOTES

WHEN CLOSING OR RELOCATING CROSSWALKS OR SIDEWALKS, PROVIDE DETECABLE TEMPORARY FACILITIES AND INCLUDE ACCESSIBILITY FEATURES CONSISTENT WITH EXISTING PEDESTRIAN FACILITIES.

TEMPORARY TRAFFIC CONTROL DEVICES FOR PEDESTRIANS ARE SHOWN. OTHER DEVICES MAY BE NECESSARY TO CONTROL VEHICULAR TRAFFIC. STAGE WORK, AS NECESSARY, TO PROVIDE A TEMPORARY PEDESTRIAN ACCESS ROUTE AT ALL TIMES. FOR ROADWAYS WITH NO AVAILABLE DETOURS, MAINTAIN ONE OPEN SIDEWALK AT ALL TIMES.

"WO" SIGN IS THE SAME AS "W" SIGN EXCEPT THE BACKGROUND IS ORANGE.

FOR NIGHTTIME CLOSURE USE TYPE "A" FLASHING WARNING LIGHTS ON BARRICADES, SUPPORTING SIGNS AND CLOSING SIDEWALK. USE TYPE "C" STEADY BURN LIGHTS ON CHANNELIZING DEVICES SEPARATING THE WORK AREA FROM VEHICULAR TRAFFIC.

PEDESTRIAN TRAFFIC SIGNAL DISPLAY CONTROLLING CLOSED CROSSWALK SHALL BE COVERED OR DEACTIVATED.

POST MOUNTED SIGNS LOCATED ADJACENT TO A SIDEWALK SHALL HAVE A 7 FOOT MINIMUM CLEARANCE FROM THE BOTTOM OF THE SIGN TO THE SIDEWALK SURFACE.

ALTERNATE SIDEWALK WORK BETWEEN LEFT AND RIGHT SIDE OF ROADWAY TO MAINTAIN PEDESTRIAN ACCESS.

1. IF SIDEWALK CLOSURE AFFECTS AN ACCESSIBLE AND DETECTABLE FACILITY, MAINTAIN ACCESSIBILITY AND DETECTABILITY ALONG THE ALTERNATE PEDESTRIAN ROUTE.
2. "ROAD WORK AHEAD" SIGNS ARE NOT REQUIRED IF THE SIDEWALK CLOSURE OCCURS WITHIN A LARGER WORK ZONE WHERE ADVANCE WARNING SIGNS ARE ALREADY PRESENT, OR IF THE WORK AREA AND EQUIPMENT ARE MORE THAN 2 FEET BEHIND THE CURB.
3. IF TEMPORARY PEDESTRIAN CROSSWALK IS NOT PROVIDED, OMIT R9-8 AND W011-2 SIGN ASSEMBLIES. IF PROVIDED INCLUDE ON BOTH SIDES OF THE CROSSWALK.
4. TEMPORARY CURB RAMPS. SEE SDD 15 D 30 SHEET "B".
5. DRUMS OR BARRICADES AT 25 FOOT SPACING. STREET PARKING SHALL BE PROHIBITED FOR AT LEAST 50 FEET IN ADVANCE OF THE MID-BLOCK CROSSWALK.
6. TEMPORARY PAVEMENT MARKING FOR CROSSWALK LINES.
7. LIMIT WORK TO ONE QUADRANT AT A TIME TO MINIMIZE PEDESTRIAN DISRUPTION.

LEGEND

- SIGN ON PERMANENT SUPPORT
- UNDER PEDESTRIAN TRAFFIC
- WORK AREA
- PEDESTRIAN CHANNELIZATION DEVICE
- TYPE II BARRICADE WITH/WITHOUT SIGN (ALL WITH ONE WARNING LIGHT, TYPE A, LOW-INTENSITY FLASHING)
- TYPE III BARRICADE WITH/WITHOUT SIGN (ALL WITH ONE WARNING LIGHT, TYPE A, LOW-INTENSITY FLASHING)
- DIRECTION OF TRAFFIC
- TRAFFIC CONTOL DRUM

TRAFFIC CONTROL, PEDESTRIAN ACCOMMODATION

STATE OF WISCONSIN
DEPARTMENT OF TRANSPOI

6

S.D.D. 15 D 30-2a

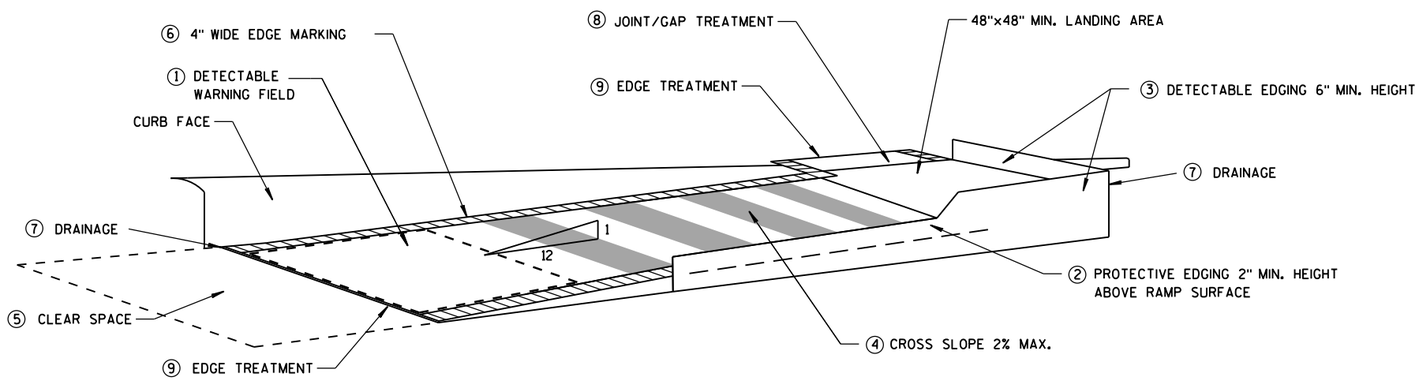

TEMPORARY CURB RAMP PARALLEL TO CURB

GENERAL NOTES

NOTIFY THE BUS COMPANY 7 DAYS IN ADVANCE OF THE BUS STOP RELOCATION.

ALTERNATE SIDEWALK WORK BETWEEN LEFT AND RIGHT SIDE OF ROADWAY TO MAINTAIN PEDESTRIAN ACCESS.

① CURB RAMPS SHALL BE 48" MIN. WIDTH WITH A FIRM, STABLE AND SLIP RESISTANT SURFACE. INSTALL CONTRASTING DETECTABLE WARNING FIELD AT PEDESTRIAN STREET CROSSINGS. REFER TO SDD 8D5 SHEET "E".

② PROTECTIVE EDGING WITH A 2" MIN. HEIGHT SHALL BE INSTALLED WHEN A CURB RAMP OR LANDING PLATFORM HAS A VERTICAL DROP OF 6" OR GREATER OR HAS A SIDE APRON SLOPE STEEPER THAN 1:3 (33%). PROTECTIVE EDGING SHOULD BE CONSIDERED WHEN CURB RAMPS OR LANDING PLATFORMS HAVE A VERTICAL DROP OF 3" OR MORE.

③ DETECTABLE EDGING WITH 6" MIN. HEIGHT AND CONTRASTING COLOR SHALL BE INSTALLED ON ALL CURB RAMP LANDINGS WHERE THE WALKWAY CHANGES DIRECTION (TURNS).

④ CURB RAMPS AND LANDINGS SHALL HAVE A 1:50 (2%) MAX. CROSS-SLOPE.

⑤ CLEAR SPACE OF 48"X48" MIN. SHALL BE PROVIDED ABOVE AND BELOW THE CURB RAMP.

⑥ THE CURB RAMP WALKWAY EDGE SHALL BE MARKED WITH A YELLOW COLOR, 4" WIDE MARKING, UNLESS A CONTRASTING DETECTABLE WARNING FIELD IS PROVIDED.

⑦ DO NOT RESTRICT WATER FLOW IN THE GUTTER SYSTEM.

⑧ LATERAL JOINTS OR GAPS BETWEEN SURFACES SHALL BE LESS THAN 1/2" WIDTH.

⑨ CHANGES BETWEEN SURFACE HEIGHTS SHALL NOT EXCEED 1/2". LATERAL EDGES SHALL BE VERTICAL UP TO 1/4" HIGH, AND BEVELED AT 1:2 BETWEEN 1/4" AND 1/2".

⑩ 5' WIDE MIN. WITH PEDSETRIAN SAFETY FENCE, 10' WIDE MIN. WITHOUT PEDESTRIAN SAFETY FENCE.

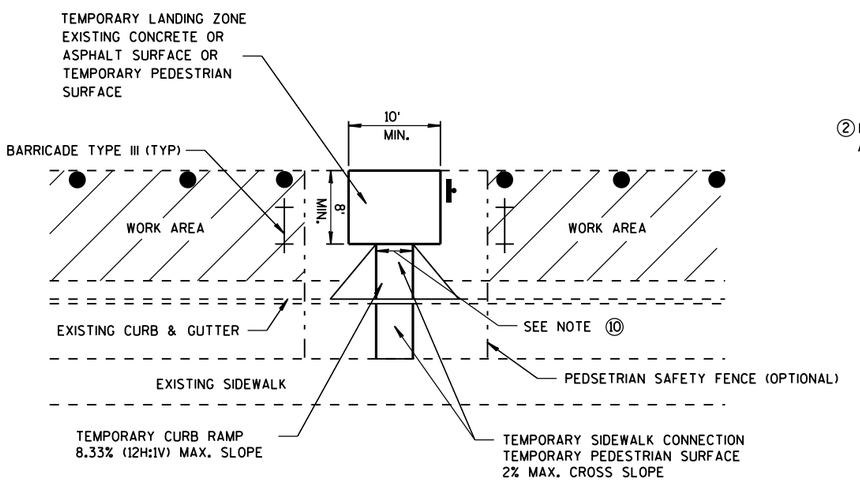

TEMPORARY BUS STOP PAD

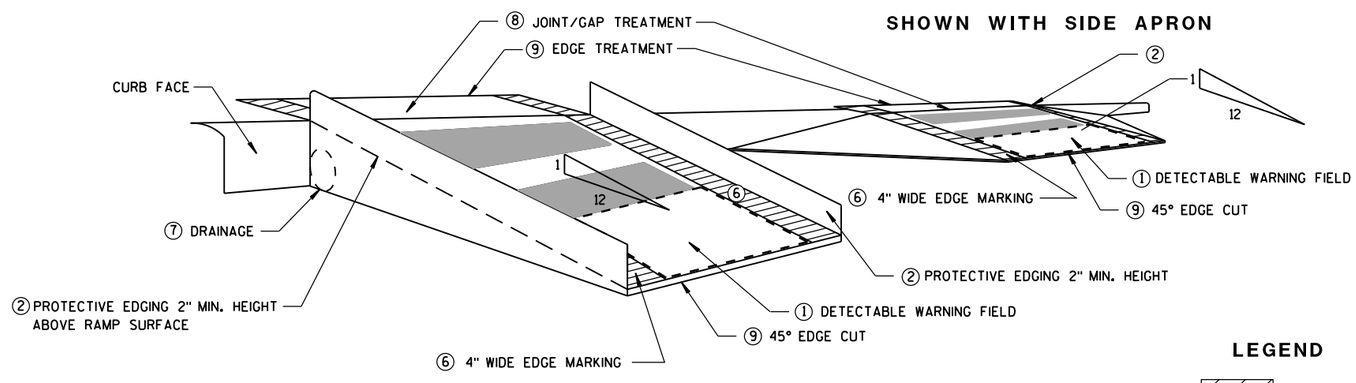

TEMPORARY CURB RAMP PERPENDICULAR TO CURB

LEGEND

- WORK AREA
- TYPE III BARRICADE
- TRAFFIC CONTOL DRUM

TRAFFIC CONTROL, TEMPORARY ADA COMPLIANT PEDESTRIAN ACCOMMODATION

STATE OF WISCONSIN
DEPARTMENT OF TRANSPORTATION

APPROVED

March 2015 — DATE

/S/ Travis Feltes — STATE TRAFFIC ENGINEER — SIGN

FHWA

6

S.D.D. 15 D 30-2b

6

S.D.D. 15 D 30-2b

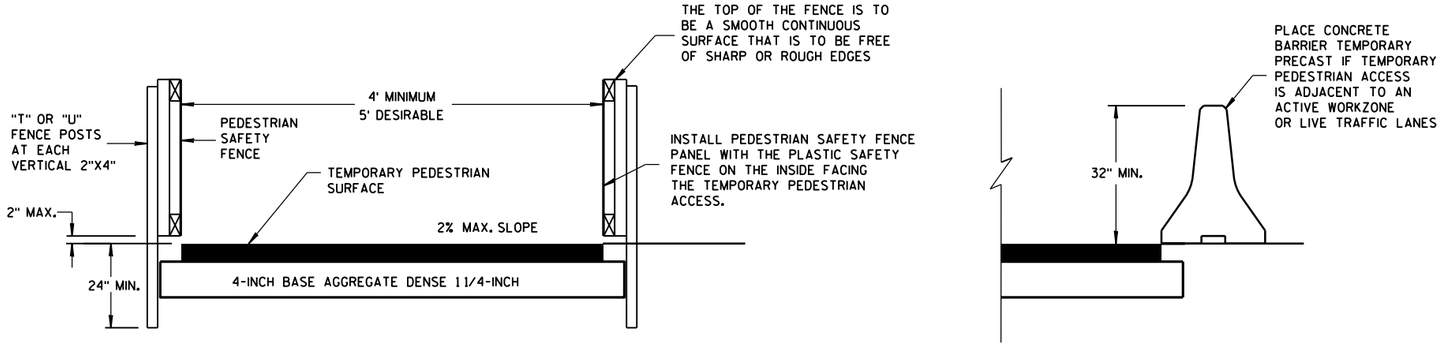

TEMPORARY PEDESTRIAN ACCESS

GENERAL NOTES

1. INTERCHANGEABLE WITH THE PEDESTRIAN SAFETY FENCE.

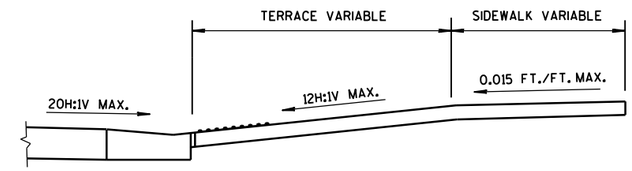

SECTION A-A

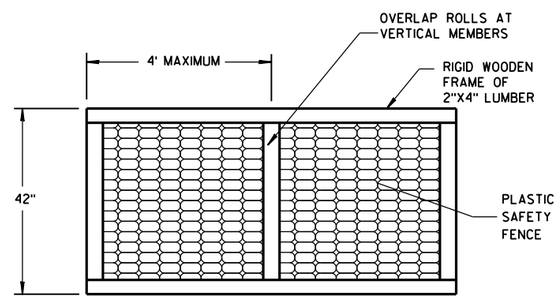

PEDESTRIAN SAFETY FENCE

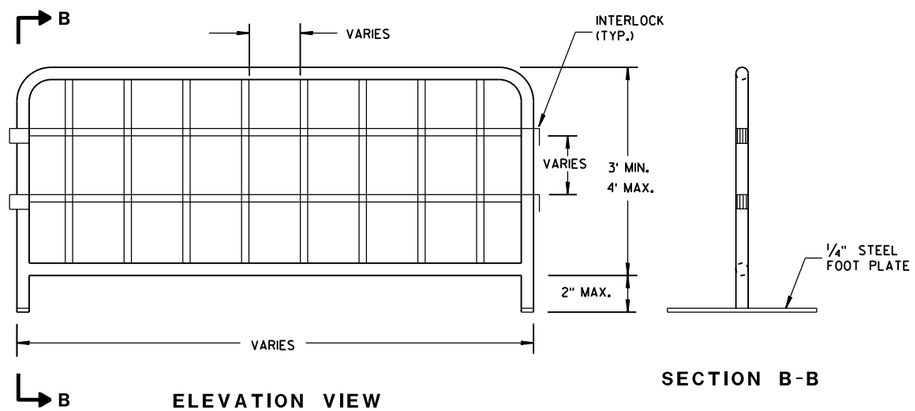

TEMPORARY PEDESTRIAN STEEL BARRICADE (1)

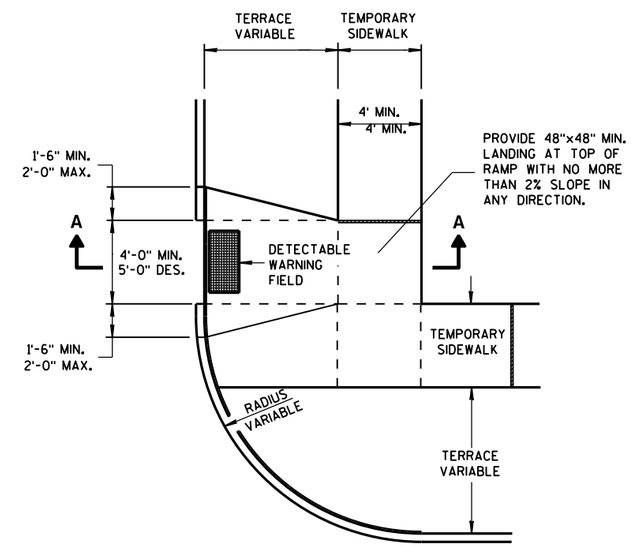

PLAN VIEW

TEMPORARY TYPE 3 RAMP

(OUTSIDE OF CROSSWALK AREA)

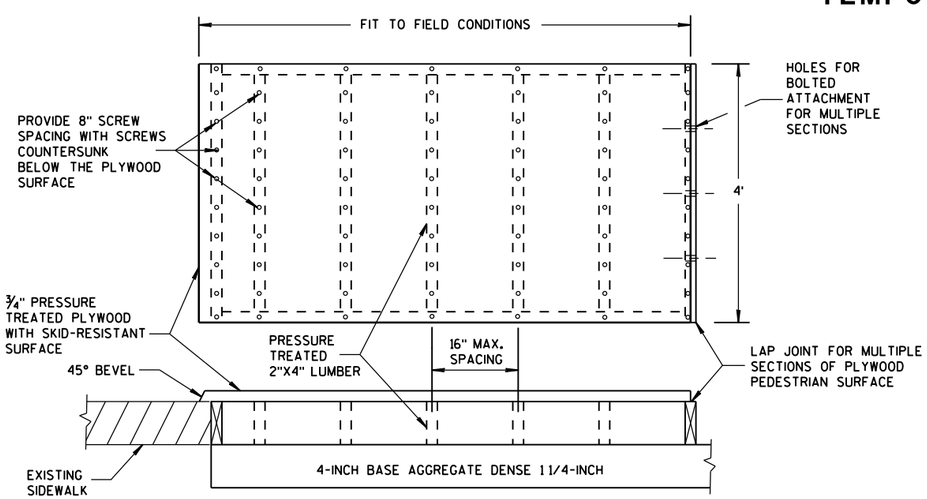

TEMPORARY PEDESTRIAN SURFACE PLYWOOD

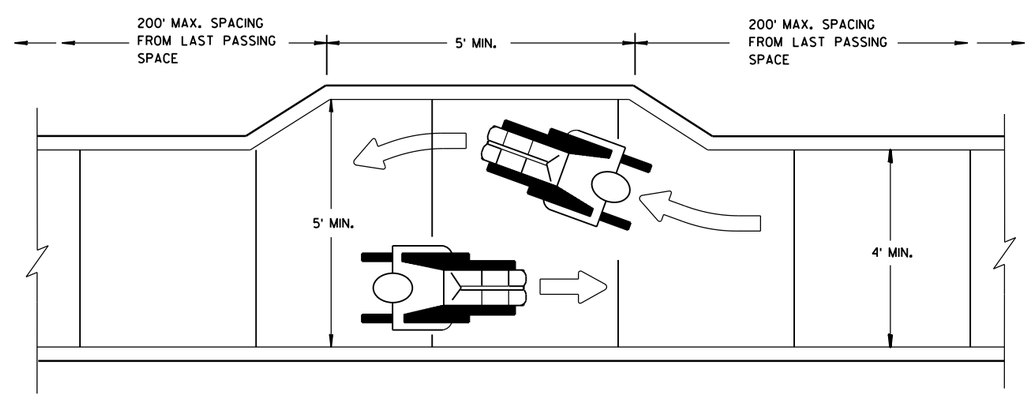

NARROW SIDEWALK PASSING DETAIL

TRAFFIC CONTROL, PEDESTRIAN ACCOMMODATION

STATE OF WISCONSIN
DEPARTMENT OF TRANSPORTATION

APPROVED
March 2015 — DATE
/S/ Travis Feltes — STATE TRAFFIC ENGINEER — SIGN
FHWA

6

S.D.D. 15 D 30-2c

NOTES

1. All Signs Type II - Type H Reflective
2. Color:
   Background - GREEN
   Message - WHITE
3. Message Series - As shown

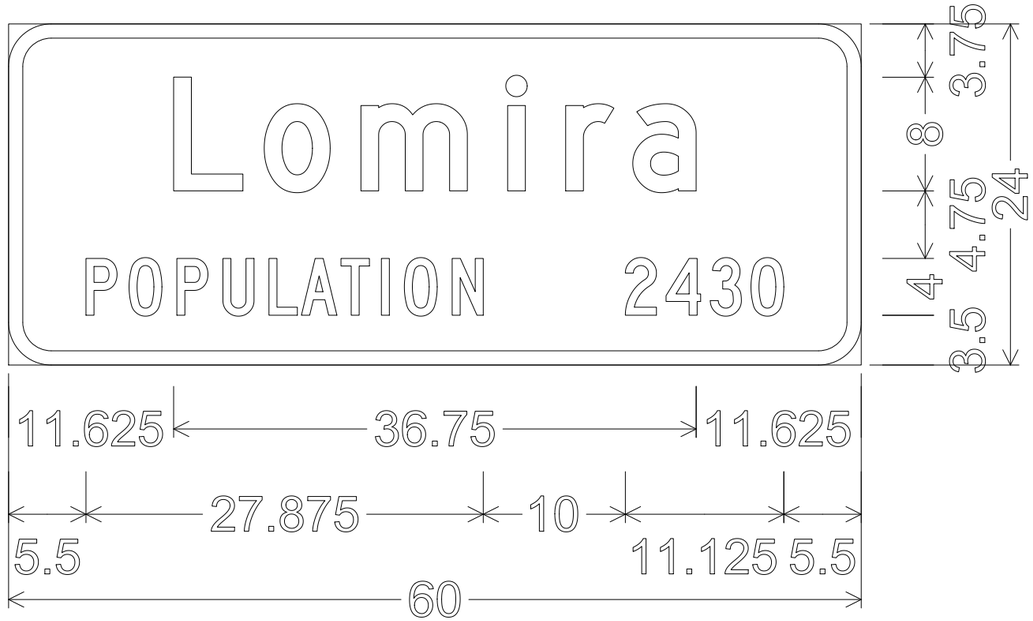

I2-3;

3.000" Radius, 1.000" Border

"Lomira" D;

"POPULATION" C

"2430" C

7

7

PROJECT NO:3364-03-72	HWY:STH 175	COUNTY:DODGE	PERMANENT SIGNING	SHEET NO: 109	E

TYPICAL ASSEMBLIES

J1-1

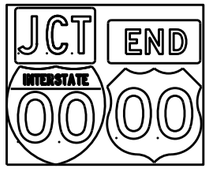

J1-2

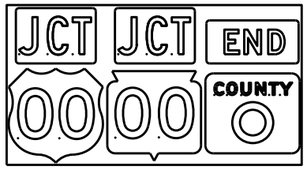

J1-3

J2-1

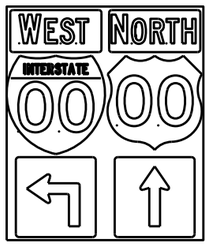

J2-2

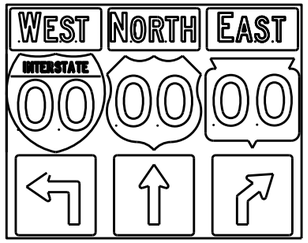

J2-3

JV

(Typical Vertical J-Assembly
See Note 10 and 11)

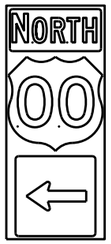

J3-1

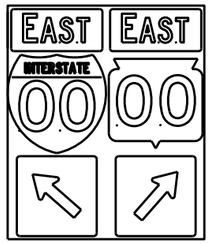

J3-2

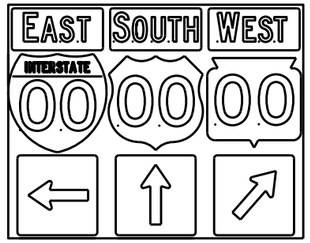

J3-3

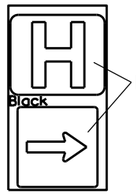

Blue Background

JH-1

J4-1

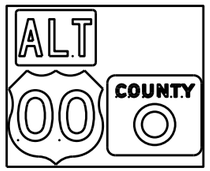

J4-2

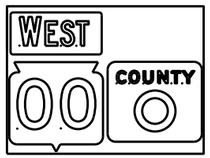

J4-2

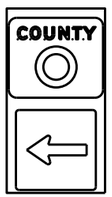

J13-1

J12-1

J32-1

J33-1

J23-1

J22-1

blue background
with interstate

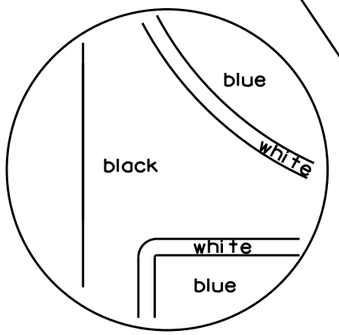

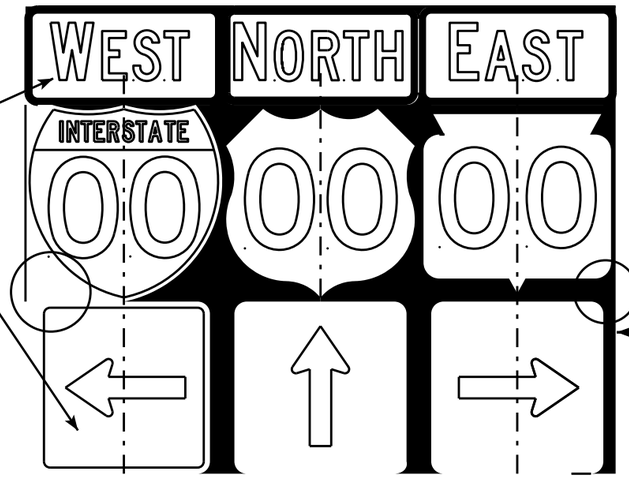

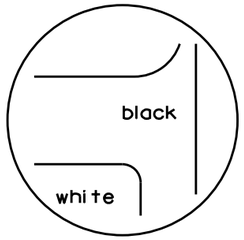

black background

NOTES

1. Signs are Type II - Type H Reflective - reference WIS DOT Standard Specification for HIGHWAY and STRUCTURE CONSTRUCTION latest edition.
2. Color:
   Background - Black Non-reflective
   Message - see Note 5
3. Message Series - See Note 5
4. Corners shall be square or rounded if base material is plywood. If base material is metal the corners shall be rounded.
5. The colors and message spacing on each marker shall be according to the applicable route marker panel specifications.
6. Certain marker heads require the component pieces to be the same color. As an example, all the components used with an M1-1 Interstate marker shall be blue.
7. Single panel j-assemblies shall only be used with route marker shields that are same size. If the route marker shields are different size use multiple piece component.
8. Route assemblies that have 24 inch route shields and have dimensions greater than 48 inches (both vertical and horizontal) shall have one horizontal splice between the arrows and route shields. Vertical splices shall not be used on route assemblies with a horizontal dimension of 144 inches or less. The contractor shall not use more than one vertical joint per sign and the joint shall be between route shields.
9. Route assemblies that have 36 inch shields and have dimensions greater than 48 inchs (both vertical and horizontal) shall have two horizontal splices. One horizontal splice shall be between the cardinal direction and route shields and the other horizontal splice shall be between the arrows and route shields. Vertical splices shall not be used on route assemblies with a horizontal dimension of 144 or less. The contractor shall not use more than one vertical joint per sign and the joint shall be between route shields.
10. All Vertical J Assemblies are given a Sign Code of JV
11. For JV Assemblies that have a mixture of Interstate and non Interstate shields, arrows and cardinals shall be white on blue.

ROUTE MARKERS & COMPONENTS
IN TYPICAL ASSEMBLIES

WISCONSIN DEPT OF TRANSPORTATION

APPROVED Matthew R Rauch
for State Traffic Engineer

DATE 2/06/14 PLATE A2-1S.8

PROJECT NO: | SHEET NO: E

URBAN AREA

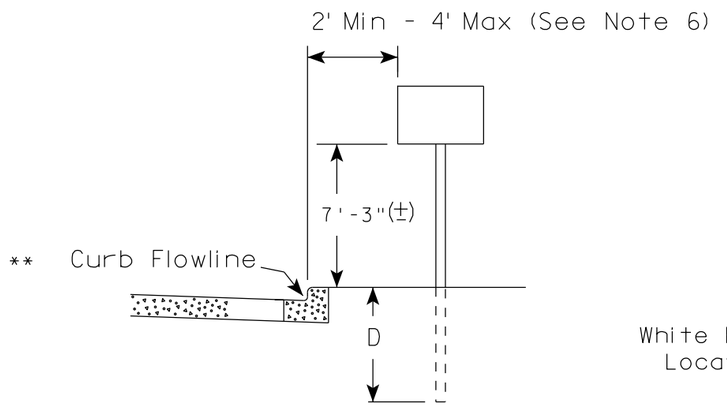

RURAL AREA (See Note 2)

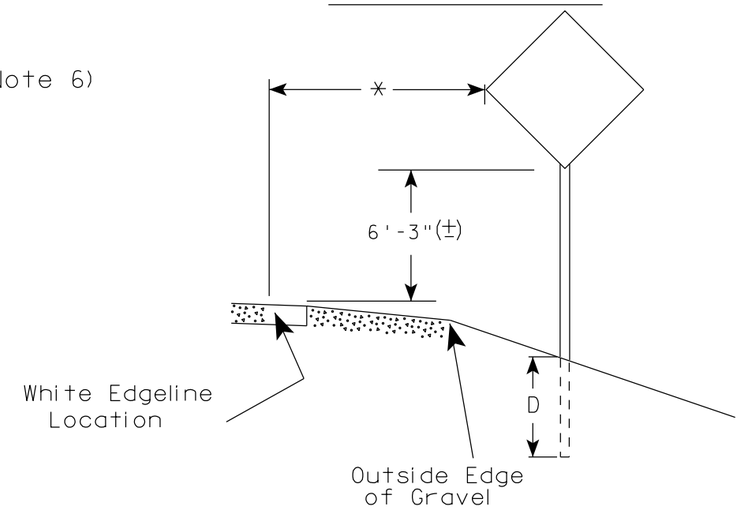

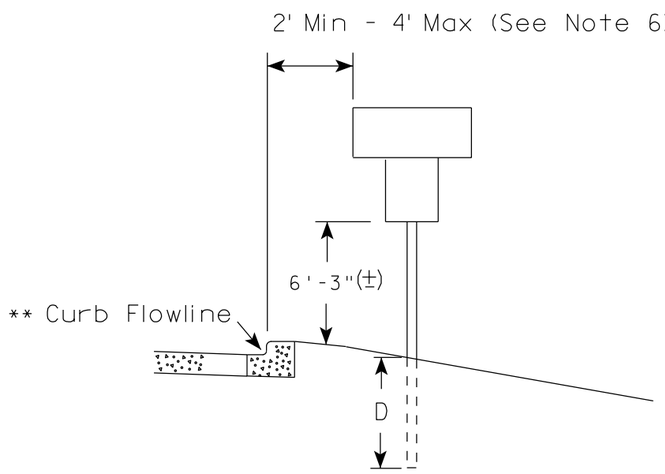

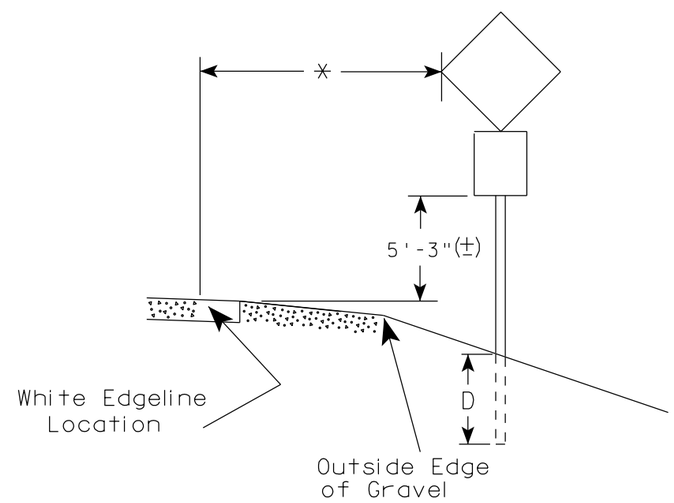

** The existence of curb and gutter does not in itself mandate the vertical clearance illustrated. That height is typically measured where there is sidewalk adjacent to the roadway or parking is permitted. In the absence of sidewalk vertical clearance is measured from the top of the curb. Offset of signs is measured from the flow line.

* 6 feet from edge of a paved shoulder or 12 feet from the edge of pavement (edge line location) or 2 feet from outside edge of gravel, whichever is greater unless directed by project engineer.

GENERAL NOTES

1. Signs wider than 4 feet, 20 sq.ft or larger, shall be mounted on multiple posts. Refer to plate A4-4.
2. If signs are mounted on barrier wall, see A4-10 sign plate.
3. For expressways and freeways, mounting height is 7'- 3" (±) or 6'-3" (±) depending upon existence of a sub-sign.
4. Minimum mounting height for J assemblies (A2-1S) is 7'-3" (±) or 6'-3" (±) per urban or rural detail respectively.
5. Minimum mounting height for signs mounted on traffic signal poles is 5'- 3" (±).
6. Offset distance shall be consistent with existing signs or consistent throughout length of project.
7. The (±) tolerance for mounting height is 3 inches.
8. Folding signs shall be mounted at a height of 5'-3" (±) or as directd by the Engineer.
9. The Double Arrow sign (W12-1) shall be mounted at a height of 2'-3" (±). The Chevron sign (W1-8), Roundabout Chevron panel (R6-4B), Enhanced Reference Markers, Clearance Markers (W5-52), Mile Markers (D10 series), In Road Object Markers (W5-54) & End of Road Markers (W5-56) shall be mounted at a height of 4'-3" (±).

POST EMBEDMENT DEPTH

Area of Sign Installation (Sq. Ft.)	D (Min)
20 or Less	4'
Greater than 20	5'

TYPICAL INSTALLATION OF PERMANENT TYPE II SIGNS ON SINGLE POSTS

WISCONSIN DEPT OF TRANSPORTATION

APPROVED Matthew R Rauch for State Traffic Engineer

DATE 11/12/14 PLATE NO. A4-3.19

PROJECT NO:	HWY:	COUNTY:		SHEET NO:	E

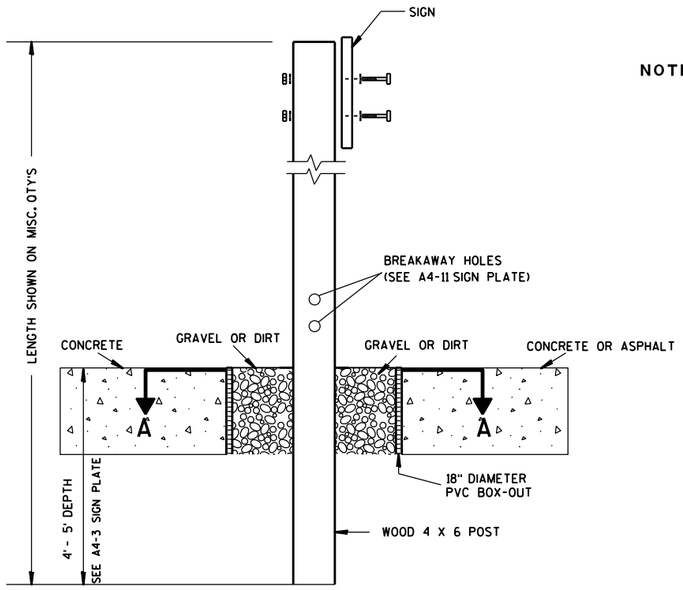

ELEVATION VIEW

DETAIL OF WOOD 4 X 6 SIGN POST IN BOX-OUT

NOTES:
1. ALL MATERIAL TO BE APPROVED BY ENGINEER PRIOR TO INSTALLATION
2. SEE SIGN PLATE A4-8 FOR SIGN HARDWARE REQUIREMENTS
3. 18 INCH X 18 INCH SQUARE BOX-OUTS MAY BE USED FOR INSTALLATIONS IN EXISTING CONCRETE OR ASPHALT LOCATIONS.

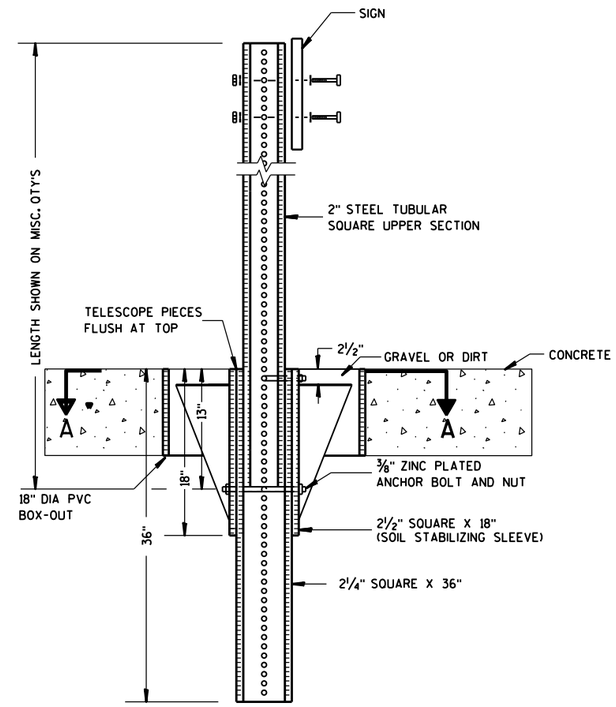

ELEVATION VIEW

DETAIL OF STEEL 2 X 2 SIGN POST IN BOX-OUT

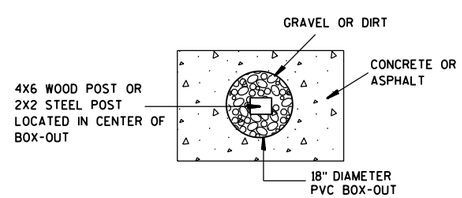

PLAN VIEW

FOR NEW CONCRETE/ASPHALT INSTALLATIONS

SIGN POST
BOX-OUTS
A4-3B

WISCONSIN DEPT OF TRANSPORTATION

APPROVED Matthew R Rauch
for State Traffic Engineer

DATE 1/27/14 PLATE NO. A4-3B.1

PROJECT NO:	HWY:	COUNTY:		SHEET NO:	E

URBAN AREA

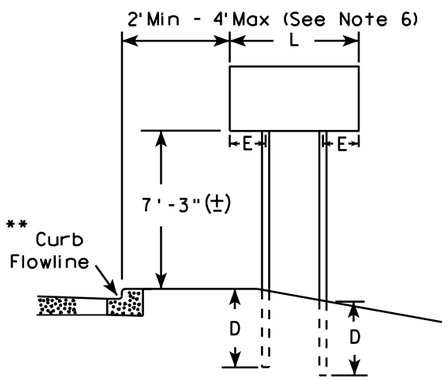

RURAL AREA (See Note 3)

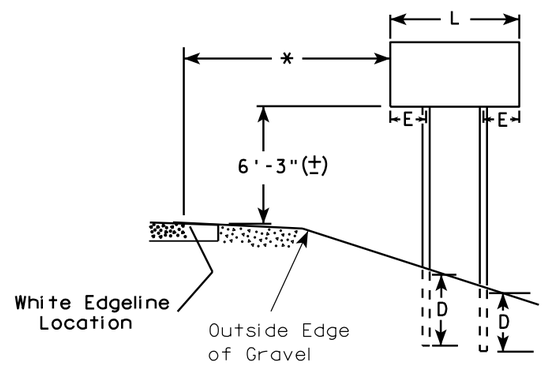

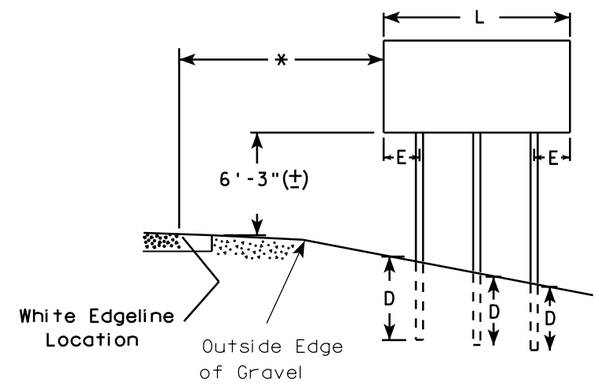

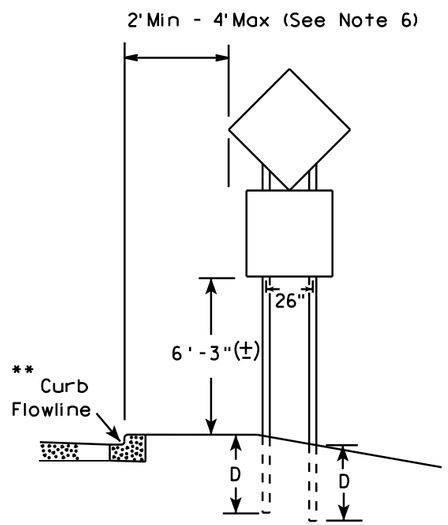

48" DIAMOND WARNING SIGN

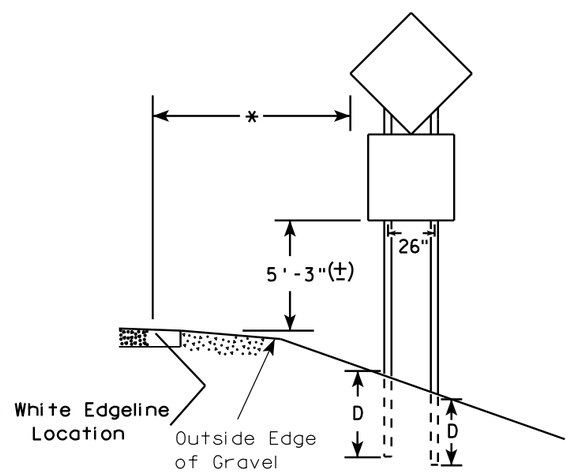

48" DIAMOND WARNING SIGN

GENERAL NOTES

1. For 3 or 4 post installations, individual post spacing shall be greater than 3'-6".
2. See tables below for required number of posts.
3. For expressways and freeways, mounting height is 7'-3" (±) or 6'-3" (±) depending upon existence of sub-sign.
4. The (±) tolerance for mounting height is 3 inches.
5. Minimum mounting height for J assemblies (A2-1S) is 7'-3" (±) or 6'-3" (±) per urban or rural detail respectively.
6. Offset distance shall be consistent with existing signs or consistent throughout length of project.
7. Folding signs shall be mounted at a height of 5'-3" (±) or as directed by the engineer.
8. The Double Arrow sign (W12-1) shall be mounted at a height of 2'-3" (±). The Chevron sign (W1-8), Roundabout Chevron panel (R6-4B), Clearance Markers (W5-52), Mile Markers (D10 series), In Road Object Markers (W5-54) & End of Road Markers (W5-56) shall be mounted at a height of 4"-3" (±).

* 6 feet from edge of a paved shoulder or 12 feet from the edge of pavement (edge line location) or 2 feet from outside edge of gravel, whichever is greater unless directed by project engineer.

** The existence of curb and gutter does not in itself mandate the vertical clearance illustrated. That height is typically measured where there is sidewalk adjacent to the roadway or parking is permitted. In the absence of sidewalk vertical clearance is measured from the top of the curb. Offset of signs is measured from the flow line.

*** See A4-3 sign plate for signs 4' or less in width or less than 20 S.F. in area.

SIGN SHAPE OTHER THAN DIAMOND (TWO POSTS REQUIRED)	
L	E
*** Greater than 48" Less than 60"	12"
60" to 120"	L/5

SIGN SHAPE OTHER THAN DIAMOND (THREE POSTS REQUIRED)	
L	E
Greater than 120" less than 168"	12"

SIGN SHAPE OTHER THAN DIAMOND (FOUR POSTS REQUIRED)	
L	E
168" and greater	12"

POST EMBEDMENT DEPTH

Area of Sign Installation (Sq. Ft.)	D (Min)
20 or Less	4'
Greater than 20	5'

TYPICAL INSTALLATION OF TYPE II SIGNS ON MULTIPLE POSTS

WISCONSIN DEPT OF TRANSPORTATION

APPROVED Matthew R Rauch
for State Traffic Engineer

DATE 11/12/14 PLATE NO. A4-4 13

PROJECT NO:	HWY:	COUNTY:		SHEET NO:	E

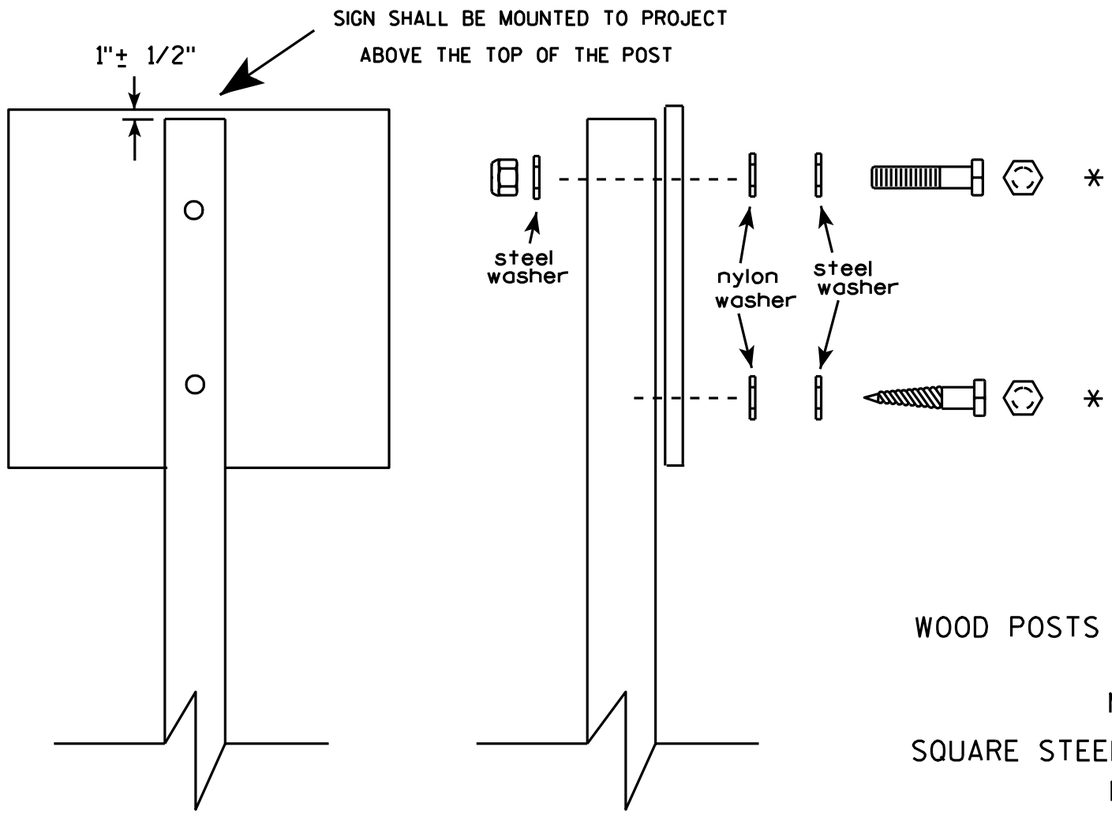

Nuts, bolts and lags used for mounting signs shall have hexagonal heads and shall be either :

a. Hot dip galvanized in accordance with ASTM Designation: A 153, Class D, or SC 3

b. Electro-galvanized in accordance with ASTM Designation : B 633, TYPE III, SC 3.

Threads on bolts and nuts shall be manufactured with sufficient allowance for the cadmium plate or galvanized coating to permit the nuts to run freely on the bolts.

WOOD POSTS (4" x 4" or 4" x 6")

LAG SCREWS - 3/8" X 3"

MACHINE BOLTS - 5/16" X 6-1/2" or 7" Length w/ nuts

SQUARE STEEL POSTS (2" x 2")

MACHINE BOLTS - 3/8" X 3-1/4" Length w/ nuts

RIVETS - 9/32 " (6605-9-6) BULB-TITE, TRI-FOLD, ALUMINUM BODY/MANDREL O.D. FLANGE .720-.765 INCH, GRIP RANGE .042-.375 INCH

WASHERS (ALL POSTS) -

1-1/4" O.D. X 3/8" I.D. X 1/16" STEEL

1-1/4" O.D. X 3/8" I.D. X .080 NYLON for all Type H signs.

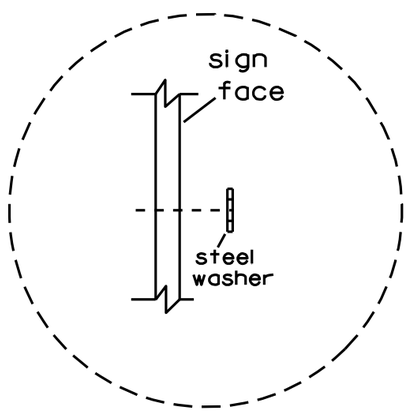

Washer Placement when Sign Has Other Than Type H or Type F Face

* Two different fastening systems are shown for illustration purposes. On any individual sign, either one or the other system shall be used. Actual number of fasteners per sign varies with the sign area, but normally there are two. For a single post installation, all signs greater than 9 sq. ft. require the use of 3 fasteners.

ATTACHMENT OF SIGNS TO POSTS

WISCONSIN DEPT OF TRANSPORTATION

APPROVED Matthew R Rauch
for State Traffic Engineer

DATE 3/23/10 PLATE NO. A4-8.7

7

7

PROJECT NO:

SHEET NO: 114 E

TELESCOPIC TUBING ANCHORS
TWO PIECE SYSTEM

2 1/4" SQUARE
12 GAUGE
PERFORATED
GALVANIZED FINISH

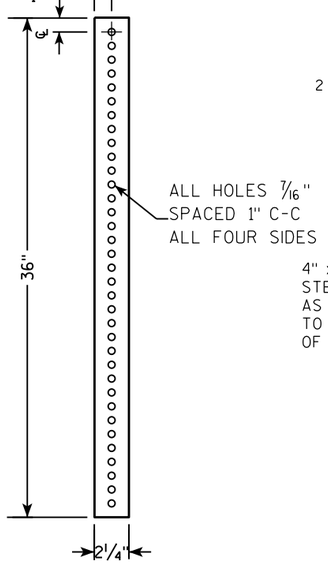

2 1/2" SQUARE
12 GAUGE
OMNI-DIRECTIONAL
PERFORATED
SOIL STABILIZING SLEEVE
GALVANIZED FINISH

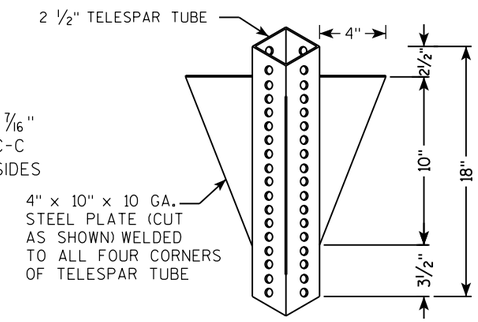

DETAIL OF TUBULAR STEEL SIGN POST
(IN POURED CONCRETE OR ASPHALT)

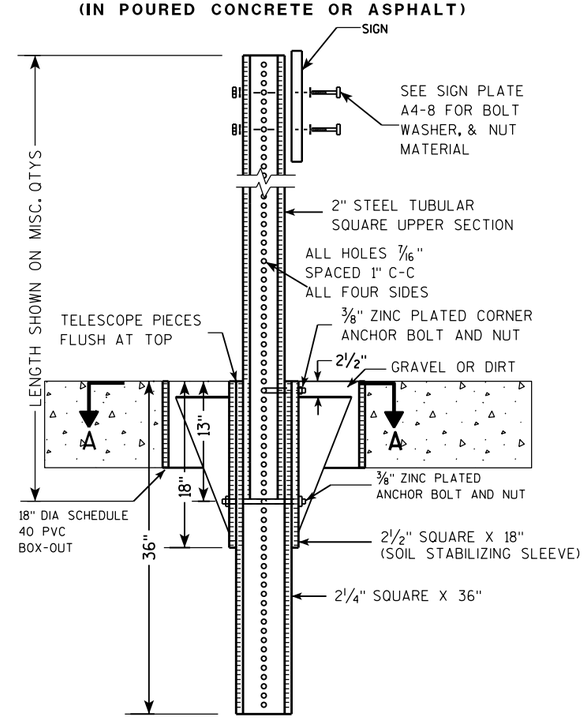

DETAIL OF TUBULAR STEEL SIGN POST
(IN LOCATIONS OTHER THAN POURED CONCRETE OR ASPHALT)

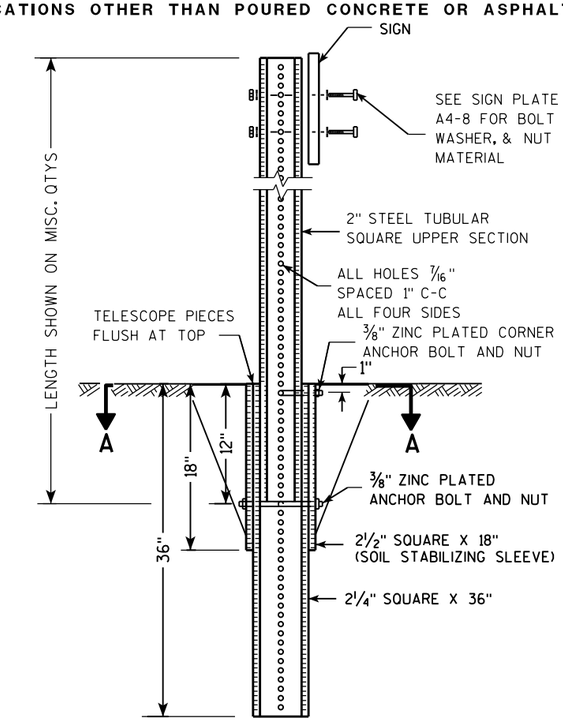

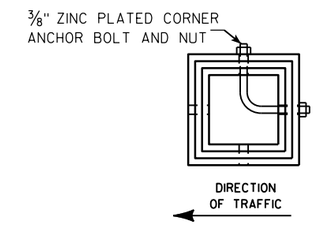

SECTION A-A

Area of Sign Installation (Sq. Ft.)	Number of Required Posts
9 or less	1
Greater than 9 less than or equal to 18	2
Greater than 18 less than or equal to 27	3

Signs wider than 3 feet or larger than 9 sq. ft shall be mounted on multiple posts (see above table).

TUBULAR STEEL
SIGN POST
A4-9

WISCONSIN DEPT OF TRANSPORTATION

APPROVED Matthew R Rauch
for State Traffic Engineer

DATE 2/05/15 PLATE A4-9.9

7 7

PROJECT NO:	HWY:	COUNTY:		SHEET NO:	E

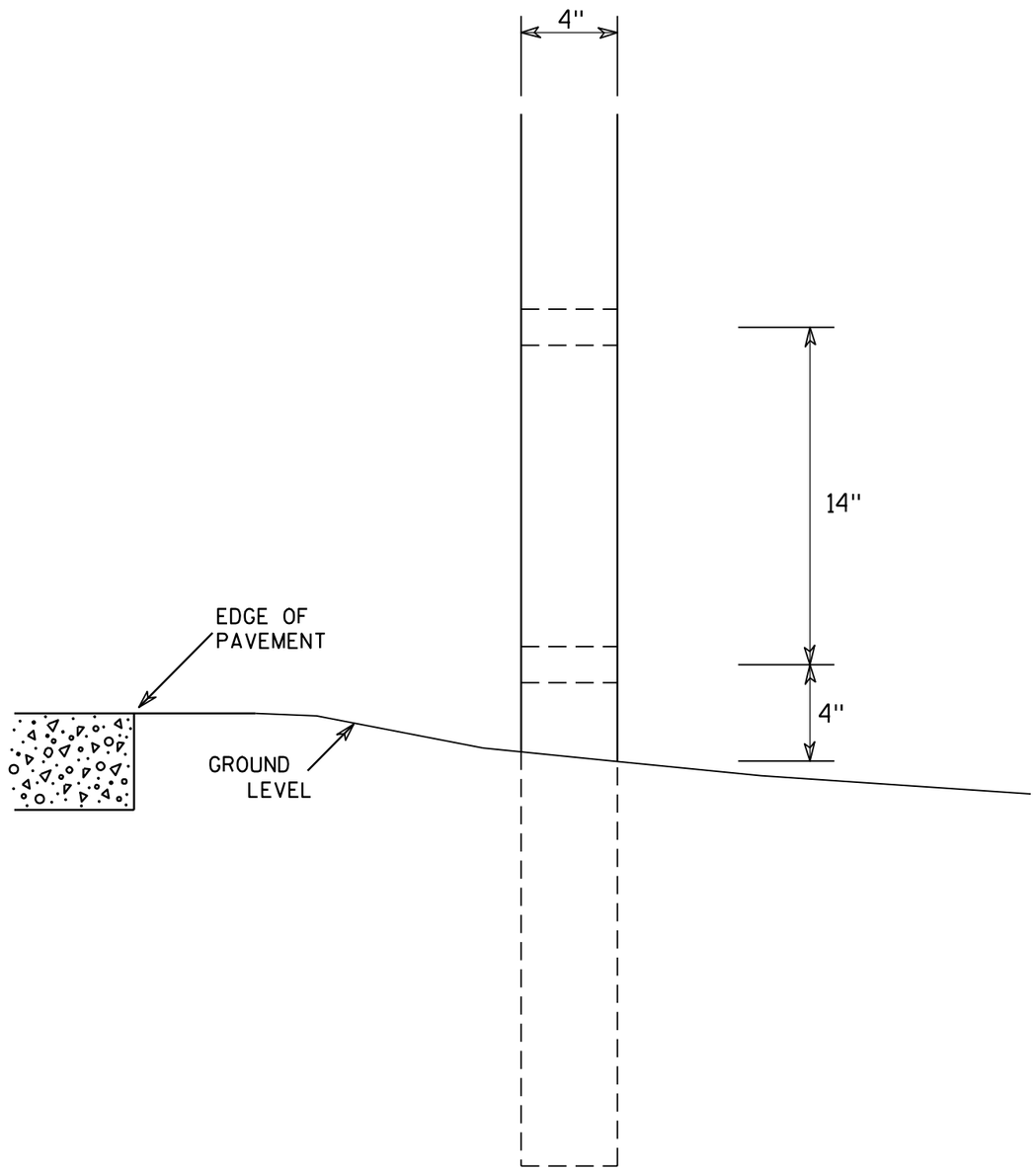

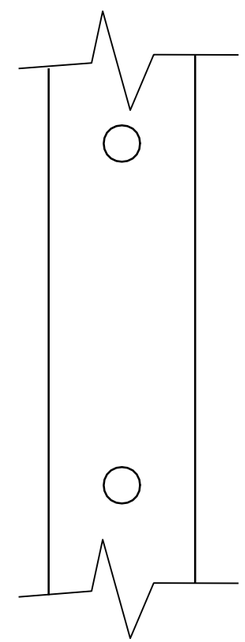

SIDE VIEW

GENERAL NOTES

1. All 4 x 6 Wood Posts shall be modified by having two 1½" diameter holes drilled perpendicular to the roadway centerline.

4 X 6 WOOD POST MODIFICATIONS

WISCONSIN DEPT OF TRANSPORTATION

APPROVED Chester J Spang for State Traffic Engineer

DATE 3/27/97 PLATE NO. A4-11.2

PROJECT NO:	HWY:	COUNTY:		SHEET NO: 116	E

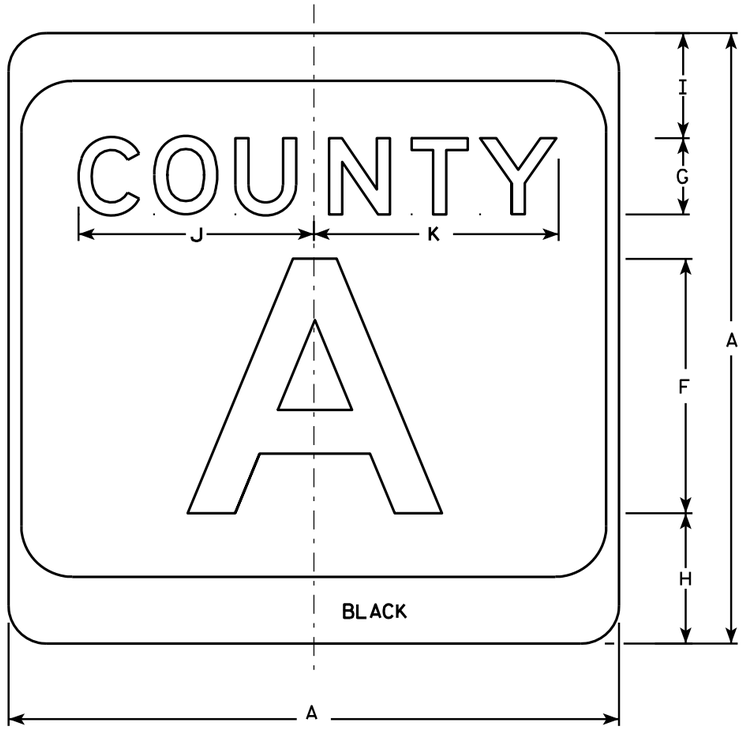

M1-5A

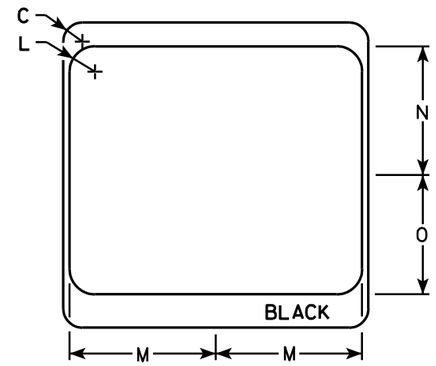

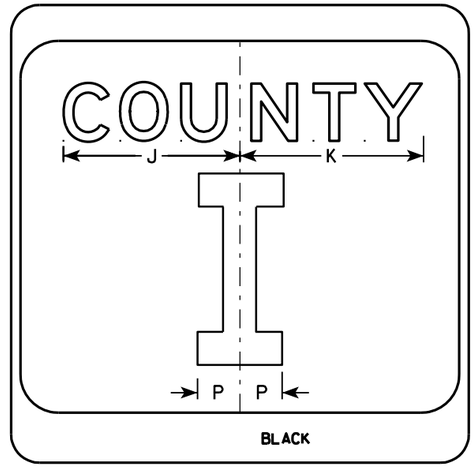

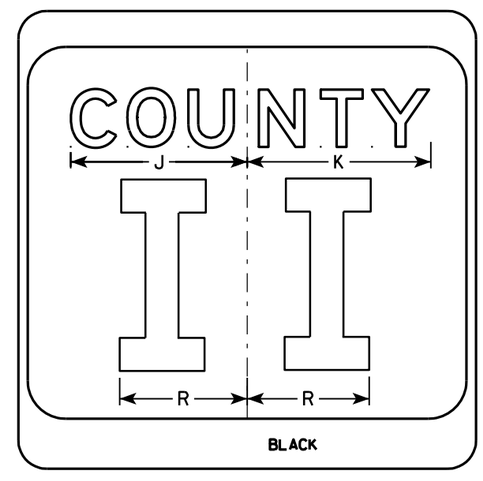

NOTES

1. Sign is Type II - see Note 7 - reference WIS DOT Standard Specification for HIGHWAY and STRUCTURE CONSTRUCTION latest edition.
2. Color:
   Background - White & Black - See Note 7
   Message - Black
3. Message Series - see Note 5
4. Corners may be square or rounded when base material is plywood but borders shall be rounded as shown. When base material is metal, the corners and borders shall be rounded.
5. Message Series E for 1 letter.
   Message Series D for 2 letters unless message is too big then Series C.
   Message Series C for 3 letters unless message is too big then Series B.
6. Substitute appropriate letters & optically center to achieve proper balance.
7. Permanent Signs
   Background - Type H Reflective
   Detour or temporary Signs
   Background - Reflective

SIZE	A	B	C	D	E	F	G	H	I	J	K	L	M	N	O	P	Q	R	S	T	U	V	W	X	Y	Z	Area sq. ft.
1																											
2	24		1 1/2			10	3	5 1/8	4 1/8	9 1/4	9 5/8	2	11 1/2	10 1/8	9 3/8	2 1/4		6 5/8									4.0
3	36		2 1/4			16	4	7 5/8	5 5/8	12 1/4	12 7/8	3	17 1/8	15 1/4	14	3 3/8		10									9.0
4	36		2 1/4			16	4	7 5/8	5 5/8	12 1/4	12 7/8	3	17 1/8	15 1/4	14	3 3/8		10									9.0
5	36		2 1/4			16	4	7 5/8	5 5/8	12 1/4	12 7/8	3	17 1/8	15 1/4	14	3 3/8		10									9.0

CTH MARKER
M1-5A FOR ASSEMBLIES

WISCONSIN DEPT OF TRANSPORTATION

APPROVED Matthew R Rauch
for State Traffic Engineer

DATE 9/27/11 PLATE NO. M1-5A.8

PROJECT NO:	HWY:	COUNTY:		SHEET NO: 117	E

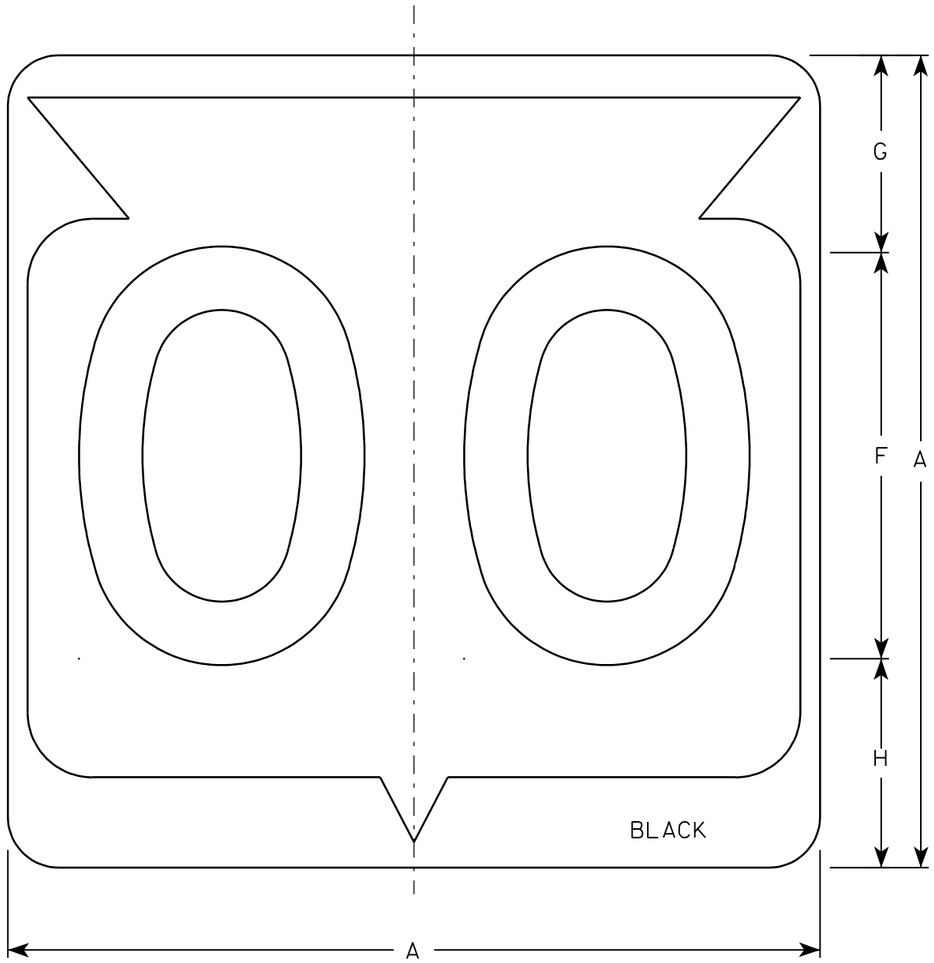

M1-6

NOTES

1. Sign is Type II - See Note 6 - reference WIS DOT Standard Specification for HIGHWAY and STRUCTURE CONSTRUCTION latest edition.
2. Color:
   Background - White & Black - See Note 6
   Message - Black
3. Message Series - See note 5
4. Corners may be square or rounded when base material is plywood but borders shall be rounded as shown. When base material is metal, the corners and borders shall be rounded.
5. Substitute appropriate Series numerals and adjust spacing as per plate A10-1.
6. Permanent Signs
   Background - Type H Reflective
   Detour or temporary Signs
   Background - Reflective

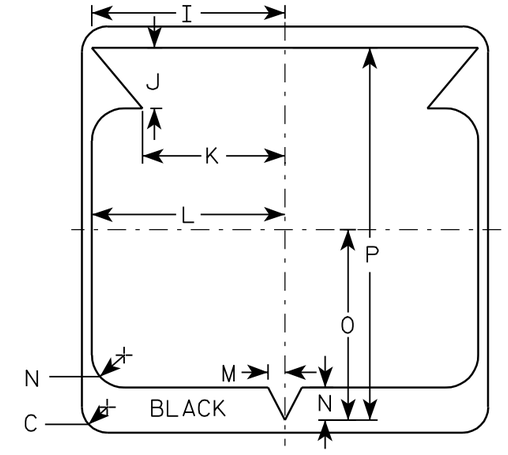

Metric equivalent for this sign is:

SIZE	
1	
2	600 mm X 600 mm
3	900 mm X 900 mm
4	900 mm X 900 mm
5	900 mm X 900 mm

SIZE	A	B	C	D	E	F	G	H	I	J	K	L	M	N	O	P	Q	R	S	T	U	V	W	X	Y	Z	Area sq. ft.	Area m2
1																												
2	24		1 1/2			12	5 1/2	6 1/2	10 1/4	2 1/2	8 7/8	11 1/2	1	1 7/8	11 1/4	21 7/8											4.0	.36
3	36		2 1/4			18	8 3/4	9 1/4	15 3/8	5 3/8	12 5/8	17 1/8	1 1/2	2 7/8	16 7/8	33											9.0	.81
4	36		2 1/4			18	8 3/4	9 1/4	15 3/8	5 3/8	12 5/8	17 1/8	1 1/2	2 7/8	16 7/8	33											9.0	.81
5	36		2 1/4			18	8 3/4	9 1/4	15 3/8	5 3/8	12 5/8	17 1/8	1 1/2	2 7/8	16 7/8	33											9.0	.81

STATE ROUTE MARKER
M1-6 FOR ASSEMBLIES

WISCONSIN DEPT OF TRANSPORTATION

APPROVED Chester J Spang
for State Traffic Engineer

DATE 3/20/02 PLATE NO. M1-6.9

PROJECT NO: | HWY: | COUNTY: | SHEET NO: 118 | E

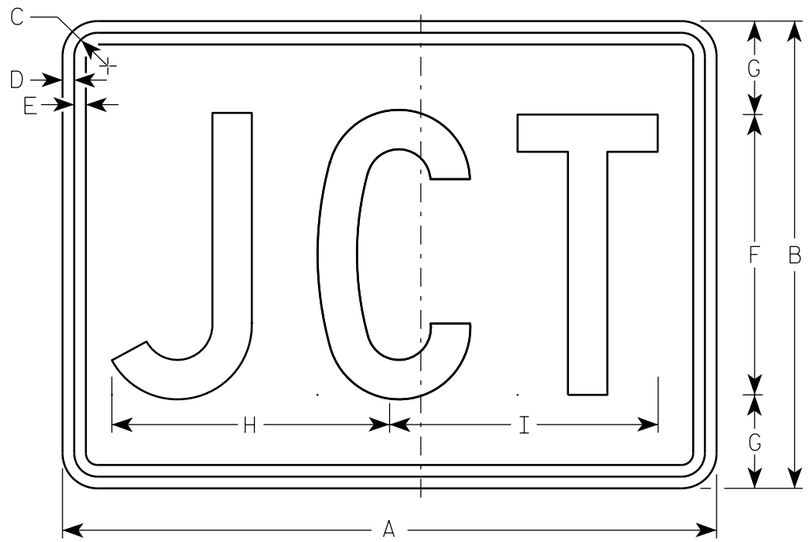

M2-1
MK2-1
MM2-1
MN2-1
MR2-1

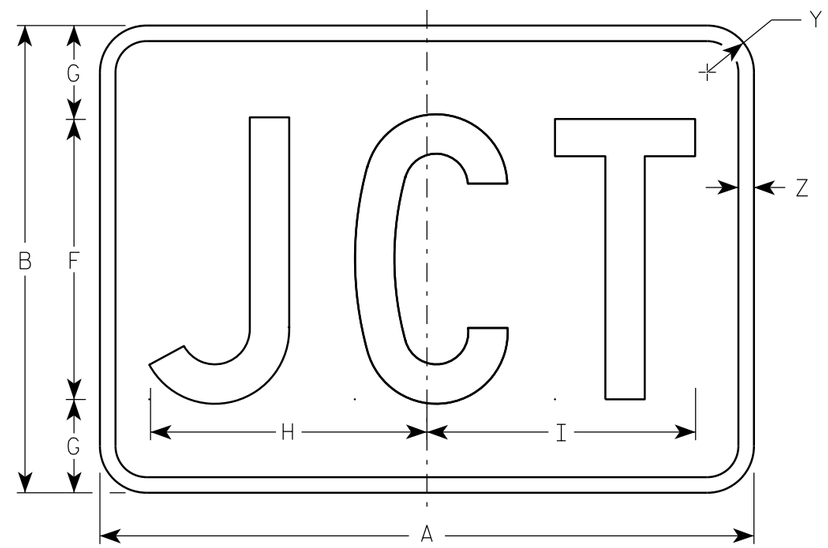

MB2-1

NOTES

1. Sign is Type II - Type H
2. Color:
   Background - See note 5
   Message - See note 5
3. Message Series - C
4. Corners may be square or rounded when base material is plywood but borders shall be rounded as shown. When base material is metal, the corners and borders shall be rounded.
5. M2-1 Background - White
   Message - Black
   MB2-1 Background - Blue
   Message - White
   MK2-1 Background - Green
   Message - White
   MM2-1 Background - White
   Message - Green
   MN2-1 Background - Brown
   Message - White
   MR2-1 Background - Brown
   Message - Yellow

SIZE	A	B	C	D	E	F	G	H	I	J	K	L	M	N	O	P	Q	R	S	T	U	V	W	X	Y	Z	Area sq. ft.
1																											
2	21	15	1 1/8	3/8	3/8	9	3	8 7/8	8 5/8																1 1/2	1/2	2.20
3	30	21	1 1/8	3/8	3/8	13	4	12 7/8	12 3/8																1 1/2	1/2	4.40
4	30	21	1 1/8	3/8	3/8	13	4	12 7/8	12 3/8																1 1/2	1/2	4.40
5	30	21	1 1/8	3/8	3/8	13	4	12 7/8	12 3/8																1 1/2	1/2	4.40

STANDARD SIGN
M2-1

WISCONSIN DEPT OF TRANSPORTATION

APPROVED Matthew R Rauch
For State Traffic Engineer

DATE 6/30/14 PLATE 119 12-1.11

PROJECT NO:	HWY:	COUNTY:		SHEET NO:	E

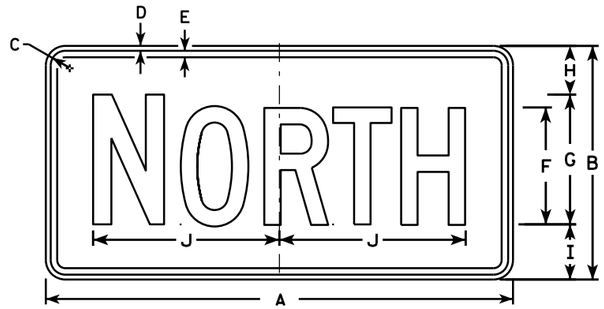

M3-1
MK3-1
MM3-1
MN3-1

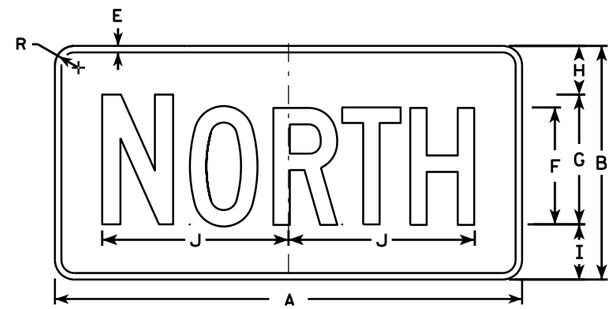

MB3-1

M3-2
MK3-2
MM3-2
MN3-2

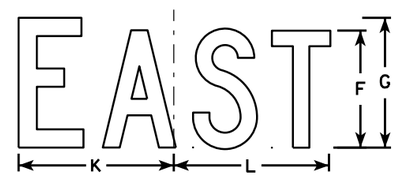

MB3-2

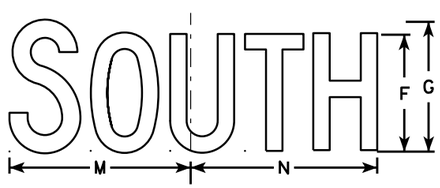

M3-3
MK3-3
MM3-3
MN3-3

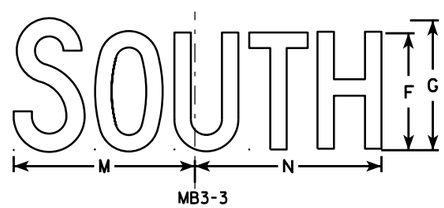

MB3-3

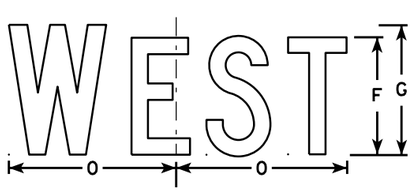

M3-4
MK3-4
MM3-4
MN3-4

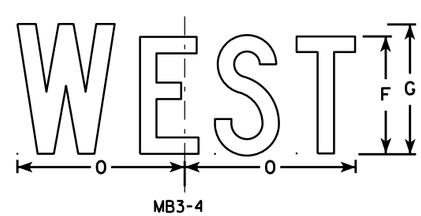

MB3-4

NOTES

1. All Signs Type II - Type H
2. Color:
   Background - See note 5
   Message - See note 5
3. Message Series - C
4. Corners may be square or rounded when base material is plywood but borders shall be rounded as shown. When base material is metal, the corners and borders shall be rounded.
5. M3-1 thru M3-4 Background - White
   Message - Black
   MB3-1 thru MB3-4 Background - Blue
   Message - White
   MK3-1 thru MK3-4 Background - Green
   Message - White
   MM3-1 thru MM3-4 Background - White
   Message - Green
   MN3-1 thru MN3-4 Background - Brown
   Message - White
6. Note the first letter of each direction is larger than the remainder of the message.

SIZE	A	B	C	D	E	F	G	H	I	J	K	L	M	N	O	P	Q	R	S	T	U	V	W	X	Y	Z	Area sq. ft.
1																											
2	24	12	1 1/8	3/8	3/8	6	7	2 1/4	2 3/4	10 1/4	7 7/8	8 3/8	10 1/4	9 3/4	8 3/4			1 1/2									2.00
3	36	18	1 1/8	3/8	1/2	9	10	3 3/4	4 1/4	14 3/8	12	12 1/8	14	14 1/8	13			1 1/2									4.5
4	36	18	1 1/8	3/8	1/2	9	10	3 3/4	4 1/4	14 3/8	12	12 1/8	14	14 1/8	13			1 1/2									4.5
5	36	18	1 1/8	3/8	1/2	9	10	3 3/4	4 1/4	14 3/8	12	12 1/8	14	14 1/8	13			1 1/2									4.5

STANDARD SIGNS
M3-1 thur M3-4
SERIES

WISCONSIN DEPT OF TRANSPORTATION

APPROVED Matthew R Rauch
for State Traffic Engineer

DATE 6/30/14 PLATE NO M3-1.13

PROJECT NO: | HWY: | COUNTY: | SHEET NO: | E

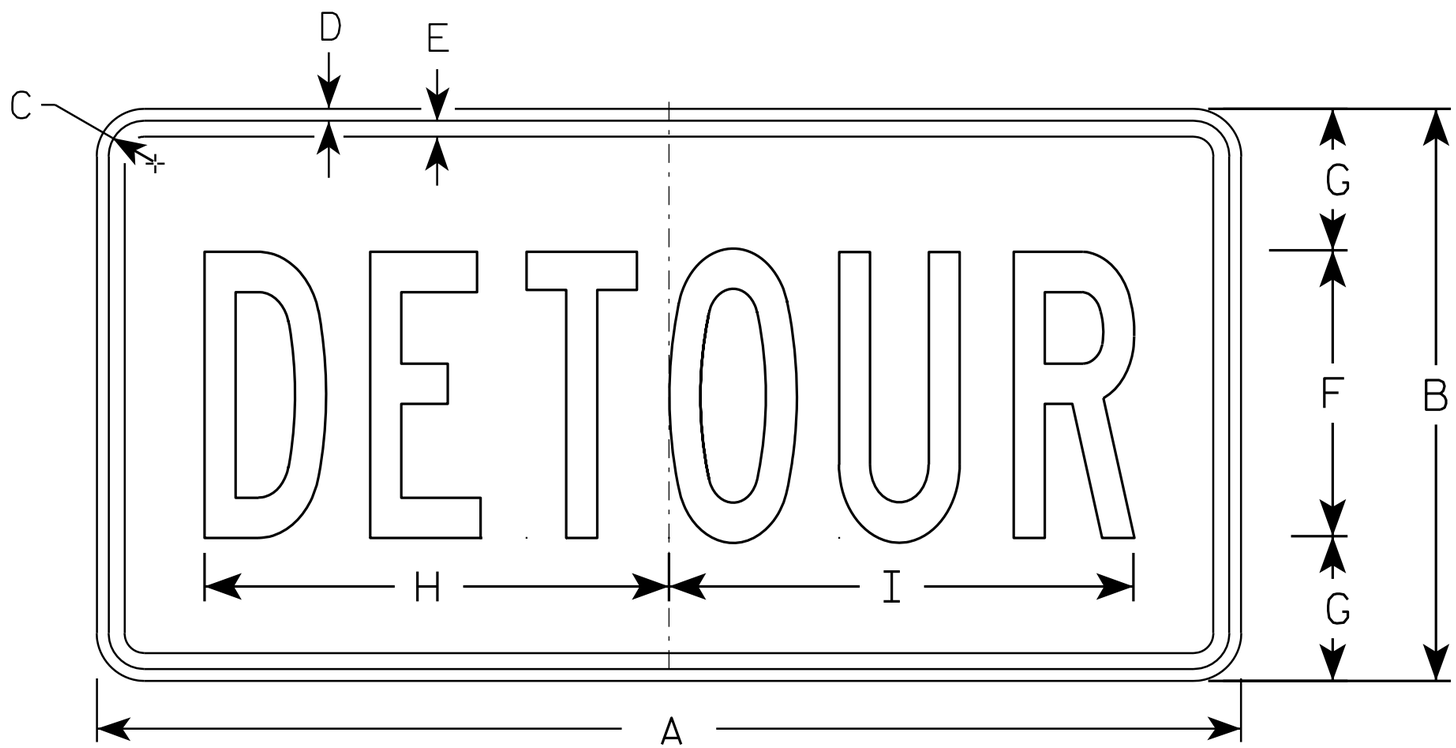

M4-8

NOTES

1. Sign is Type II - Type F Reflective - reference WIS DOT Standard Specification for HIGHWAY and STRUCTURE CONSTRUCTION latest edition.
2. Color:
   Background - Orange
   Message - Black
3. Message Series - B
4. Corners may be square or rounded when base material is plywood but borders shall be rounded as shown. When base material is metal, the corners and borders shall be rounded.

SIZE	A	B	C	D	E	F	G	H	I	J	K	L	M	N	O	P	Q	R	S	T	U	V	W	X	Y	Z	Area sq. ft.
1																											
2	24	12	1 1/8	3/8	3/8	6	3	10	10 1/4																		2.0
3	36	18	1 1/8	3/8	1/2	9	4 1/2	14 5/8	14 1/2																		4.5
4																											
5																											

STANDARD SIGN
M4-8

WISCONSIN DEPT OF TRANSPORTATION

APPROVED Matthew R Rauch
for State Traffic Engineer

DATE 11/10/10 PLATE NO. M4-8.2

PROJECT NO: | HWY: | COUNTY: | SHEET NO: 121 | E

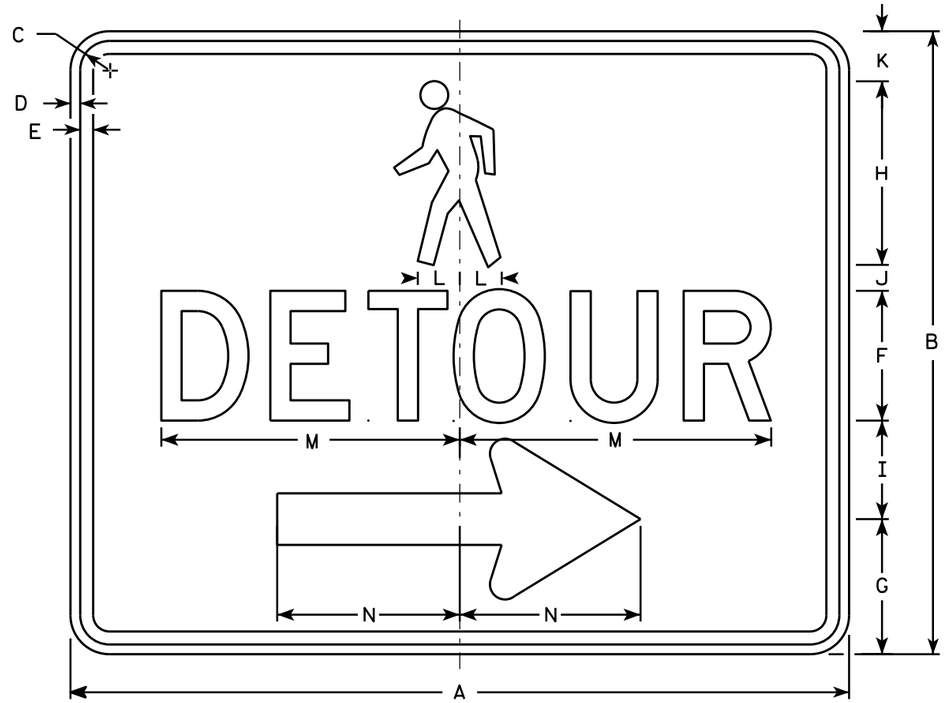

M4-9BR

NOTES

1. Sign is Type II - Type F Reflective - reference WIS DOT Standard Specification for HIGHWAY and STRUCTURE CONSTRUCTION latest edition.
2. Color:
   Background - Orange
   Message - Black
3. Message Series - D
4. Corners may be square or rounded when base material is plywood but borders shall be rounded as shown. When base material is metal, the corners and borders shall be rounded.
5. M4-9BL is the same as M4-9BR except the arrow is reversed.

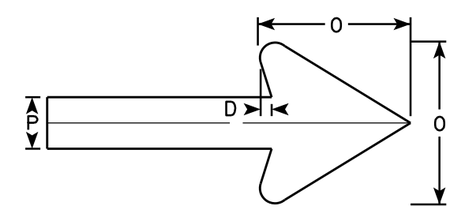

Arrow Detail

SIZE	A	B	C	D	E	F	G	H	I	J	K	L	M	N	O	P	Q	R	S	T	U	V	W	X	Y	Z	Area sq. ft.
1																											
2	30	24	1 1/8	3/8	1/2	5	5 1/4	7 1/8	3 3/4	1	1 1/8	1 5/8	11 3/4	7	6	2											5.00
3																											
4																											
5																											

STANDARD SIGN
M4-9B L&R

WISCONSIN DEPT OF TRANSPORTATION

APPROVED Matthew R Rauch
for State Traffic Engineer

DATE 9/30/13 PLATE NO. M4-9B.1

PROJECT NO: | HWY: | COUNTY: | SHEET NO: E

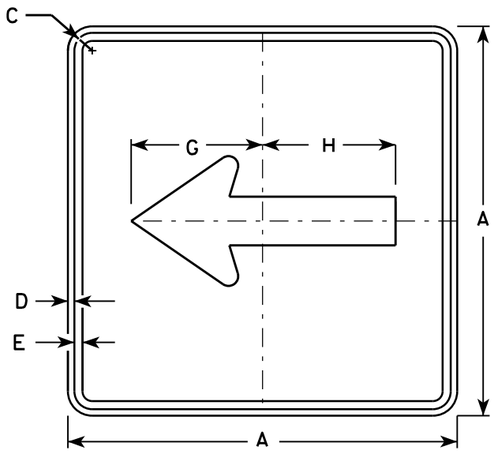

M6-1
MK6-1
MM6-1
MN6-1
MO6-1
MP6-1
MR6-1

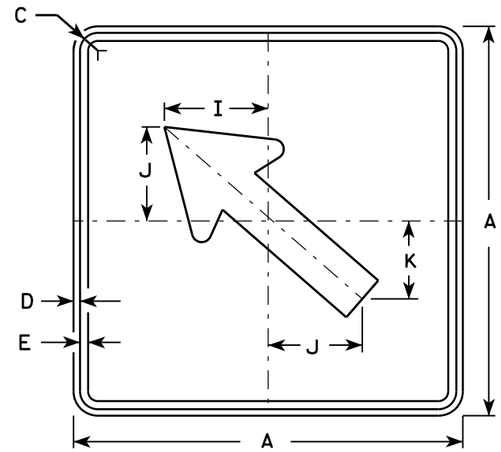

M6-2
MK6-2
MM6-2
MN6-2
MO6-2
MP6-2
MR6-2

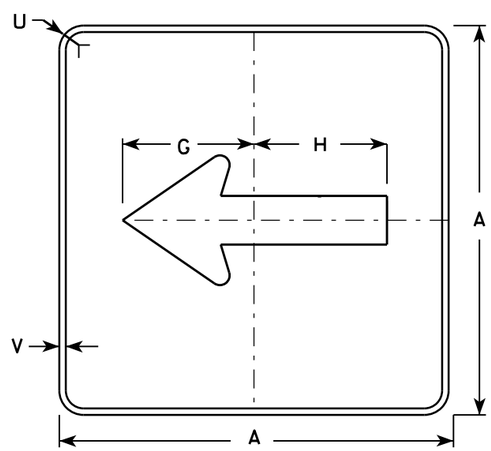

MB6-1

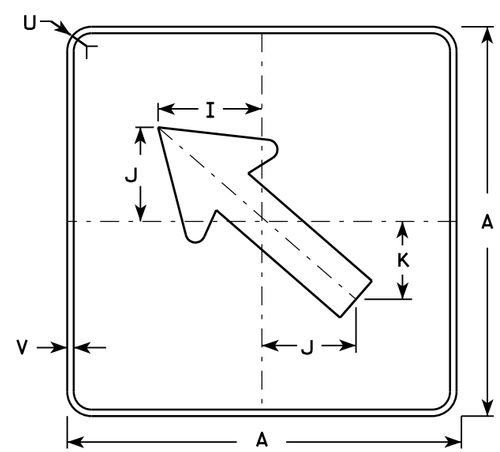

MB6-2

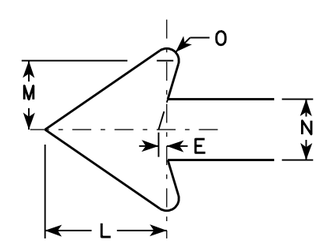

NOTES

1. Signs are Type II - Type H except as Shown
2. Color:
   Background - See note 4
   Message - See note 4
3. Corners may be square or rounded when base material is plywood but borders shall be rounded as shown. When base material is metal, the corners and borders shall be rounded.
4. M6-1 and M6-2 Background - White
   Message - Black
   MB6-1 and MB6-2 Background - Blue
   Message - White
   MG6-1 and MG6-2 Background - Green
   Message - White
   MK6-1 and MK6-2 Background - Green
   Message - White
   MM6-1 and MM6-2 Background - White
   Message - Green
   MN6-1 and MN6-2 Background - Brown
   Message - White
   MO6-1 and MO6-2 Background - Orange - Type F Reflective
   Message - Black
   MP6-1 and MP6-2 Background - White
   Message - Blue
   MR6-1 and MR6-2 Background - Brown
   Message - Yellow

SIZE	A	B	C	D	E	F	G	H	I	J	K	L	M	N	O	P	Q	R	S	T	U	V	W	X	Y	Z	Area sq. ft.
1																											
2	21		1 1/8	3/8	3/8		7 1/2	7 1/8	5 5/8	5	4 1/4	5 1/4	3	2 5/8	1/2						1 1/2	1/2					3.06
3	30		1 3/8	1/2	5/8		10 3/4	10 1/4	8	7 1/4	6	7 1/2	4 1/4	3 3/4	3/4						1 7/8	1/2					6.25
4	30		1 3/8	1/2	5/8		10 3/4	10 1/4	8	7 1/4	6	7 1/2	4 1/4	3 3/4	3/4						1 7/8	1/2					6.25
5	30		1 3/8	1/2	5/8		10 3/4	10 1/4	8	7 1/4	6	7 1/2	4 1/4	3 3/4	3/4						1 7/8	1/2					6.25

STANDARD SIGN
M6-1 & M6-2
SERIES

WISCONSIN DEPT OF TRANSPORTATION

APPROVED Matthew R Rauch
for State Traffic Engineer

DATE 7/03/14 PLATE M6-1.14

PROJECT NO: | HWY: | COUNTY: | SHEET NO: | E

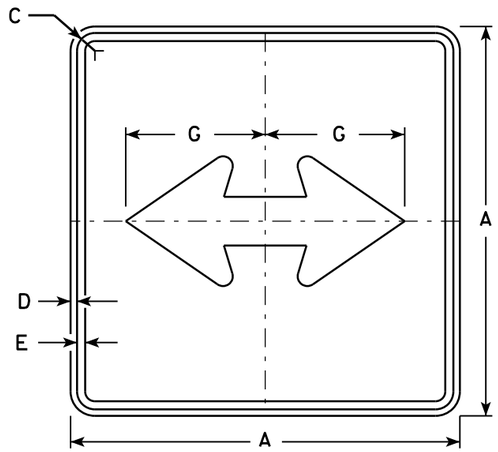

M6-4
MK6-4
MM6-4
MN6-4
MO6-4
MP6-4
MR6-4

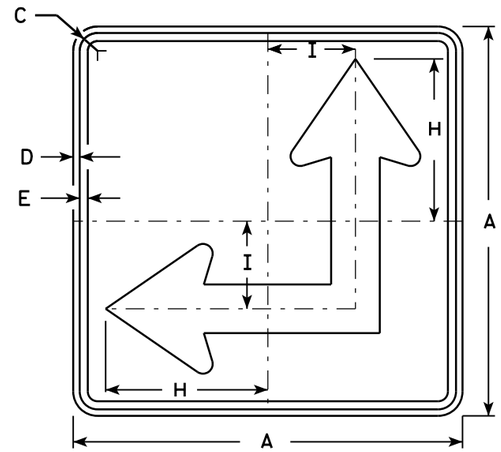

M6-6
MK6-6
MM6-6
MN6-6
MO6-6
MP6-6
MR6-6

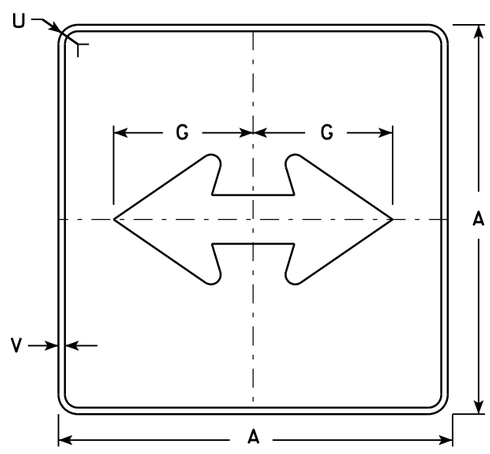

MB6-4

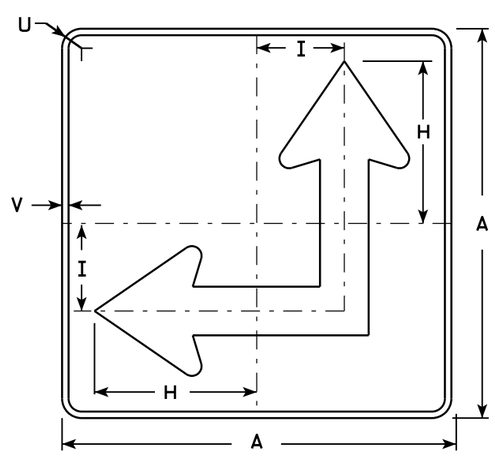

MB6-6

NOTES

1. Signs are Type II - Type H except as Shown
2. Color:
   Background - See Note 4
   Message - See Note 4
3. Corners may be square or rounded when base material is plywood but borders shall be rounded as shown. When base material is metal, the corners and borders shall be rounded.
4. M6-4 and M6-6 Background - White
   Message - Black
   MB6-4 and MB6-6 Background - Blue
   Message - White
   MK6-4 and MK6-6 Background - Green
   Message - White
   MM6-4 and MM6-6 Background - White
   Message - Green
   MN6-4 and MN6-6 Background - Brown
   Message - White
   MO6-4 and MO6-6 Background - Orange - Type F Reflective
   Message - Black
   MP6-4 and MP6-6 Background - White
   Message - Blue
   MR6-4 and MR6-6 Background - Brown
   Message - Yellow
5. M6-6R same as M6-6L except arrow points ahead and right.

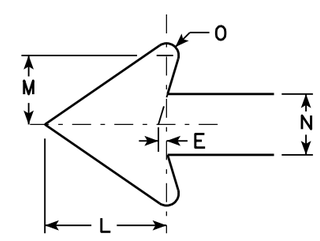

SIZE	A	B	C	D	E	F	G	H	I	J	K	L	M	N	O	P	Q	R	S	T	U	V	W	X	Y	Z	Area sq. ft.
1																											
2	21		1 1/8	3/8	3/8		7 1/2	8 3/4	4 1/4			5 1/4	3	2 5/8	1/2						1 1/2	1/2					3.06
3	30		1 3/8	1/2	5/8		10 3/4	12 1/2	6 3/4			7 1/2	4 1/4	3 3/4	3/4						1 7/8	1/2					6.25
4	30		1 3/8	1/2	5/8		10 3/4	12 1/2	6 3/4			7 1/2	4 1/4	3 3/4	3/4						1 7/8	1/2					6.25
5	30		1 3/8	1/2	5/8		10 3/4	12 1/2	6 3/4			7 1/2	4 1/4	3 3/4	3/4						1 7/8	1/2					6.25

STANDARD SIGN
M6-4 & M6-6
SERIES

WISCONSIN DEPT OF TRANSPORTATION

APPROVED Matthew R Rauch
for State Traffic Engineer

DATE 7/03/14 PLATE M6-4.9

PROJECT NO: HWY: COUNTY: SHEET NO: E

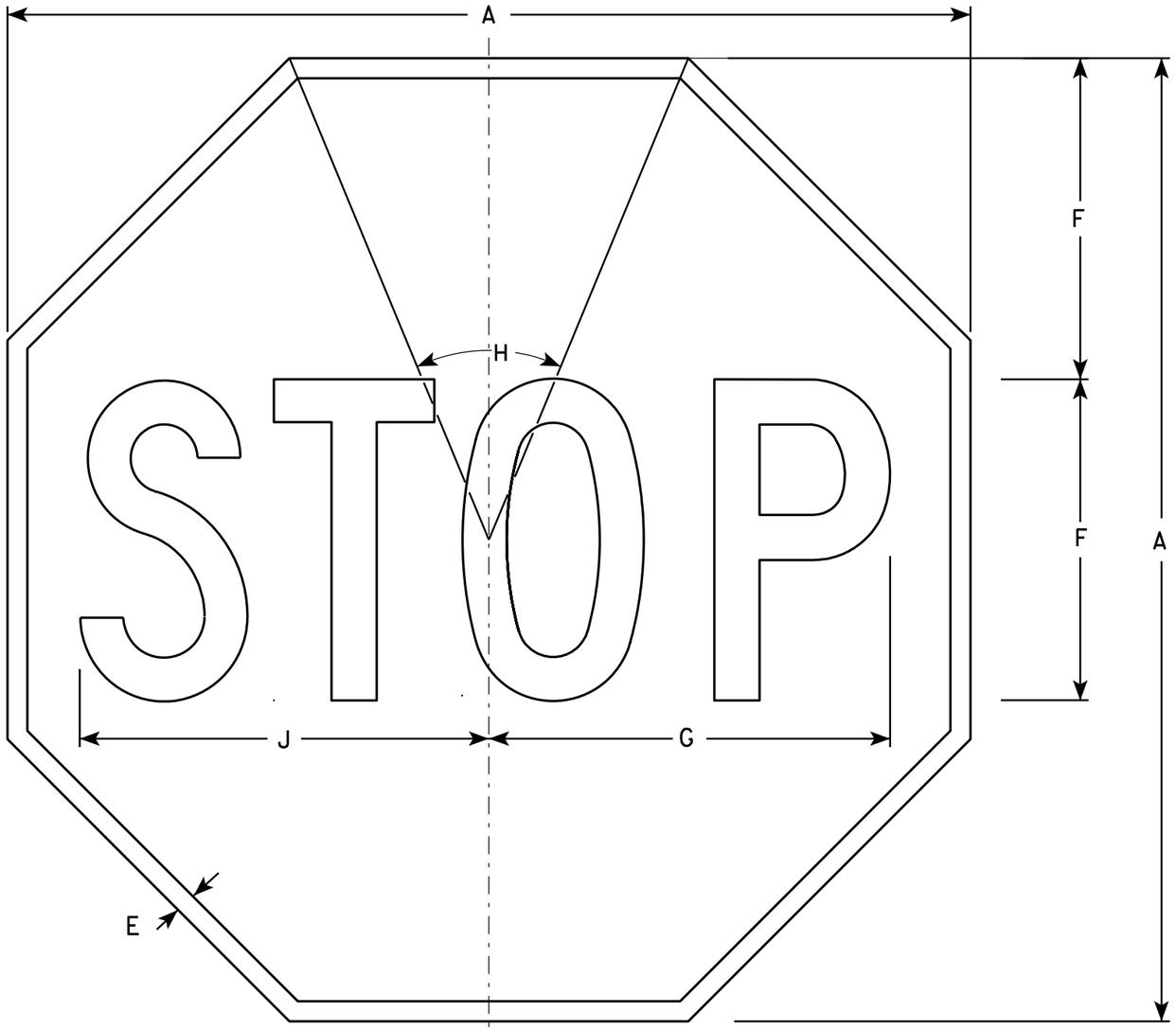

R1-1

NOTES

1. Sign is Type II - Type H Reflective - reference WIS DOT Standard Specification for HIGHWAY and STRUCTURE CONSTRUCTION latest edition.
2. Color:
   Background - Red
   Message - White
3. Message Series - C

SIZE	A	B	C	D	E	F	G	H	I	J	K	L	M	N	O	P	Q	R	S	T	U	V	W	X	Y	Z	Area sq. ft.
1	24				3/8	8	10	45°		10 1/4																	3.31
2S	30				5/8	10	12 1/2	45°		12 3/4																	5.18
2M	36				3/4	12	15	45°		15 3/8																	7.46
3	36				3/4	12	15	45°		15 3/8																	7.46
4	48				1	16	20	45°		20 1/2																	13.25
5	48				1	16	20	45°		20 1/2																	13.25
6	18				3/8	6	7 3/4	45°		7 3/4																	1.86
7	12				1/4	4	5	45°		5 1/8																	0.78

STANDARD SIGN
R1-1

WISCONSIN DEPT OF TRANSPORTATION

APPROVED Matthew R Rauch
for State Traffic Engineer

DATE 12/03/10 PLATE NO. R1-1.12

PROJECT NO: | HWY: | COUNTY: | SHEET NO: 125 | E

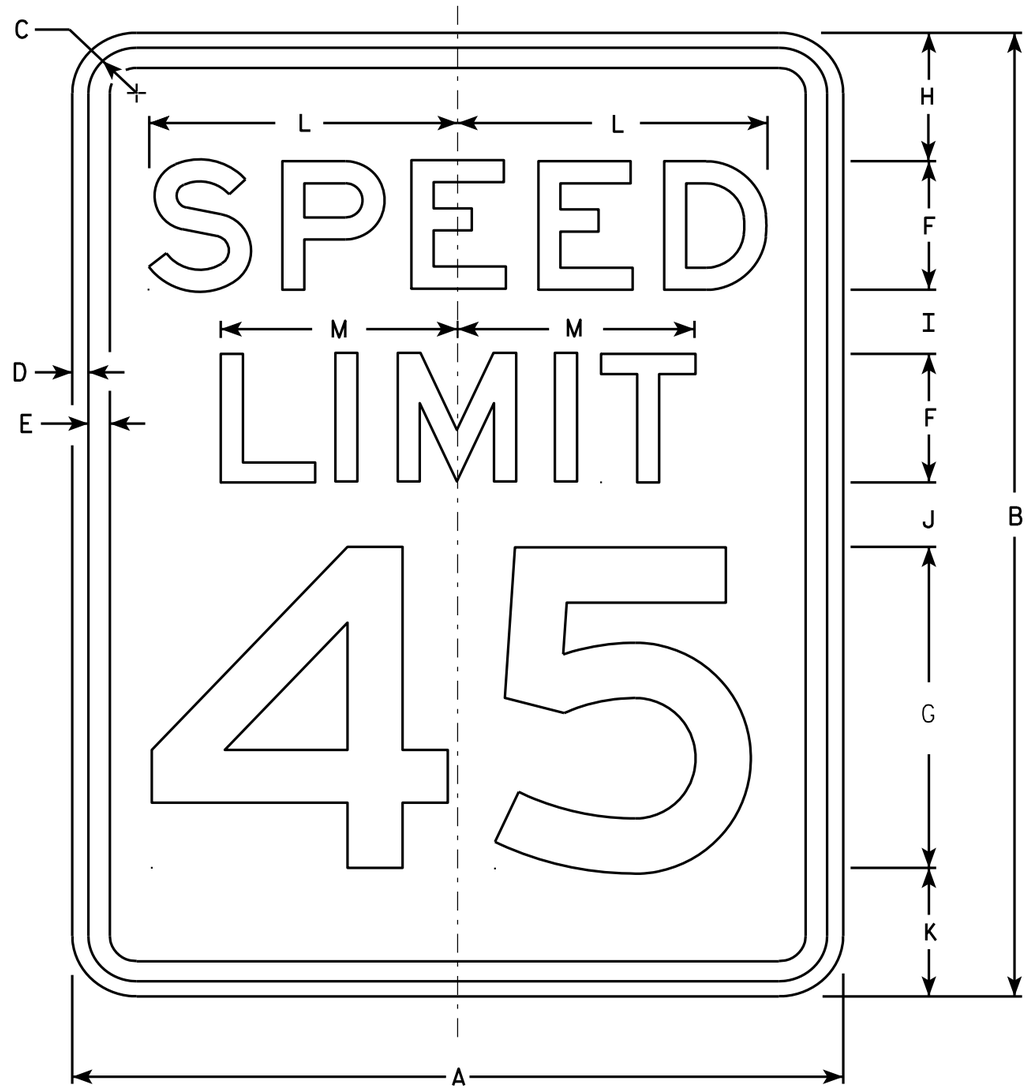

R2-1

NOTES

1. Sign is Type II - Type H Reflective - reference WIS DOT Standard Specification for HIGHWAY and STRUCTURE CONSTRUCTION latest edition.
2. Color:
   Background - White
   Message - Black
3. Message Series - E
4. Corners may be square or rounded when base material is plywood but borders shall be rounded as shown. When base material is metal, the corners and borders shall be rounded.
5. Substitute appropriate numerals and optically adjust spacing to achieve proper balance.

SIZE	A	B	C	D	E	F	G	H	I	J	K	L	M	N	O	P	Q	R	S	T	U	V	W	X	Y	Z	Area sq. ft.
1	18	24	1 1/8	3/8	1/2	3	8	3	2	2	3	7 1/4	5 1/2														3.0
2S	24	30	1 1/8	3/8	1/2	4	10	3	2 1/4	3 3/8	3 3/8	9 5/8	7 3/8														5.0
2M	30	36	1 3/8	1/2	5/8	5	12	5	2 1/2	2 1/2	4	12	9 1/4														7.5
3	36	48	1 3/8	1/2	5/8	6	14	6	5	5	6	14 3/8	11														12.0
4	36	48	1 3/8	1/2	5/8	6	14	6	5	5	6	14 3/8	11														12.0
5	48	60	2 1/4	3/4	1	8	20	6	4 1/2	6 3/4	6 3/4	19 1/4	14 5/8														20.0

STANDARD SIGN
R2-1

WISCONSIN DEPT OF TRANSPORTATION

APPROVED Matthew R Rauch
for State Traffic Engineer

DATE 5/26/10 PLATE NO. R2-1.13

PROJECT NO: | HWY: | COUNTY: | SHEET NO: 126 | E

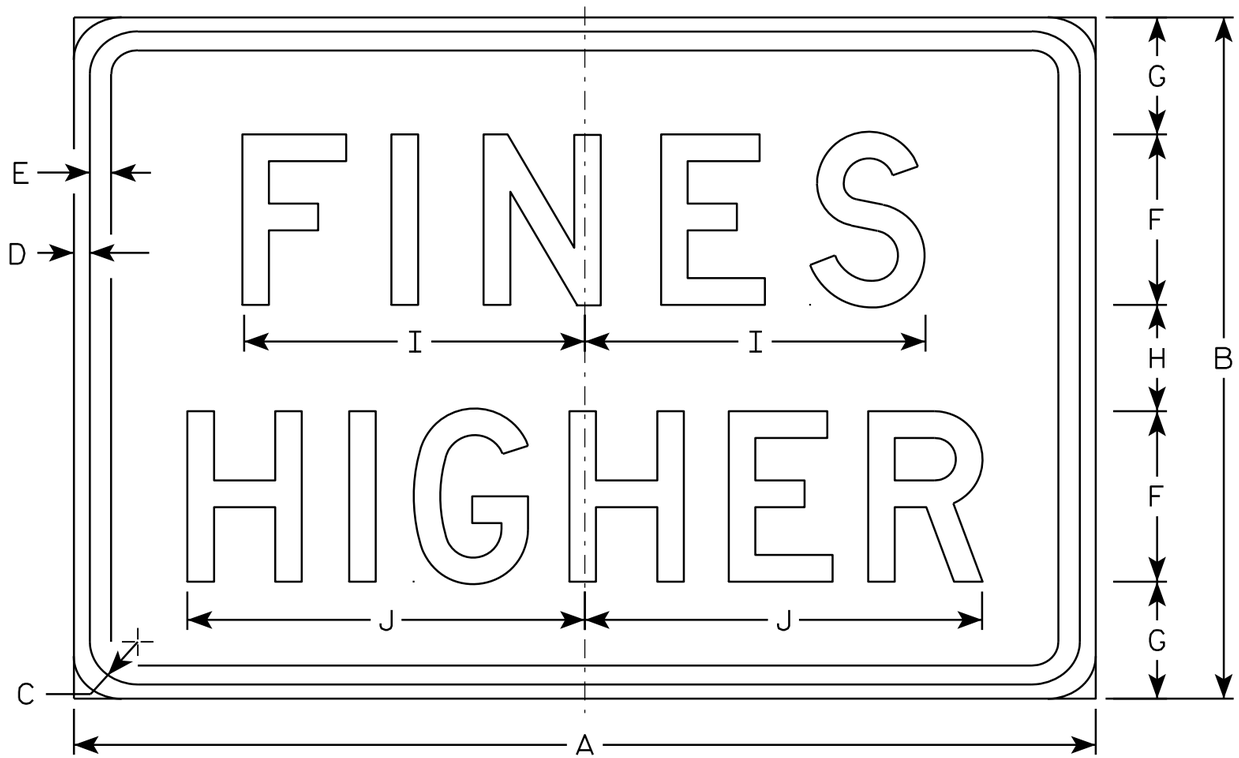

R2-6P

NOTES

1. Sign is Type II - Type H Reflective - reference WIS DOT Standard Specification for HIGHWAY and STRUCTURE CONSTRUCTION latest edition.
2. Color:
   Background - White
   Message - Black
3. Message Series - D
4. Corners may be square or rounded when base material is plywood but borders shall be rounded as shown. When base material is metal, the corners and borders shall be rounded.

SIZE	A	B	C	D	E	F	G	H	I	J	K	L	M	N	O	P	Q	R	S	T	U	V	W	X	Y	Z	Area sq. ft.
1																											
2S	24	18	1 1/8	3/8	3/8	4	3 1/2	3	7 5/8	9 1/4																	3.0
2M	24	18	1 1/8	3/8	3/8	4	3 1/2	3	7 5/8	9 1/4																	3.0
3	36	24	1 1/8	3/8	1/2	6	4 1/8	3 3/4	12	14																	6.0
4	36	24	1 1/8	3/8	1/2	6	4 1/8	3 3/4	12	14																	6.0
5	48	36	1 3/8	1/2	5/8	8	7	6	15 1/8	19																	12.0

STANDARD SIGN
R2-6P

WISCONSIN DEPT OF TRANSPORTATION

APPROVED Matthew R Rauch
for State Traffic Engineer

DATE 12/20/10 PLATE NO. R2-6P.2

PROJECT NO:	HWY:	COUNTY:		SHEET NO: 127	E

R9-9

NOTES

1. Sign is Type II - Type H Reflective - reference WIS DOT Standard Specification for HIGHWAY and STRUCTURE CONSTRUCTION latest edition.
2. Color:
   Background - White
   Message - Black
3. Message Series - C
4. Corners may be square or rounded when base material is plywood but borders shall be rounded as shown. When base material is metal, the corners and borders shall be rounded.

SIZE	A	B	C	D	E	F	G	H	I	J	K	L	M	N	O	P	Q	R	S	T	U	V	W	X	Y	Z	Area sq. ft.
1																											
2S	30	18	1 3/4	1/2	1/2	4	3 1/2	3	10 3/4	8 1/8																	3.75
2M	30	18	1 3/4	1/2	1/2	4	3 1/2	3	10 3/4	8 1/8																	3.75
3																											
4																											
5																											

STANDARD SIGN
R9-9

WISCONSIN DEPT OF TRANSPORTATION

APPROVED Matthew R Rauch
for State Traffic Engineer

DATE 4/1/2011 PLATE NO. R9-9.5

PROJECT NO: | HWY: | COUNTY: | SHEET NO: 128 | E

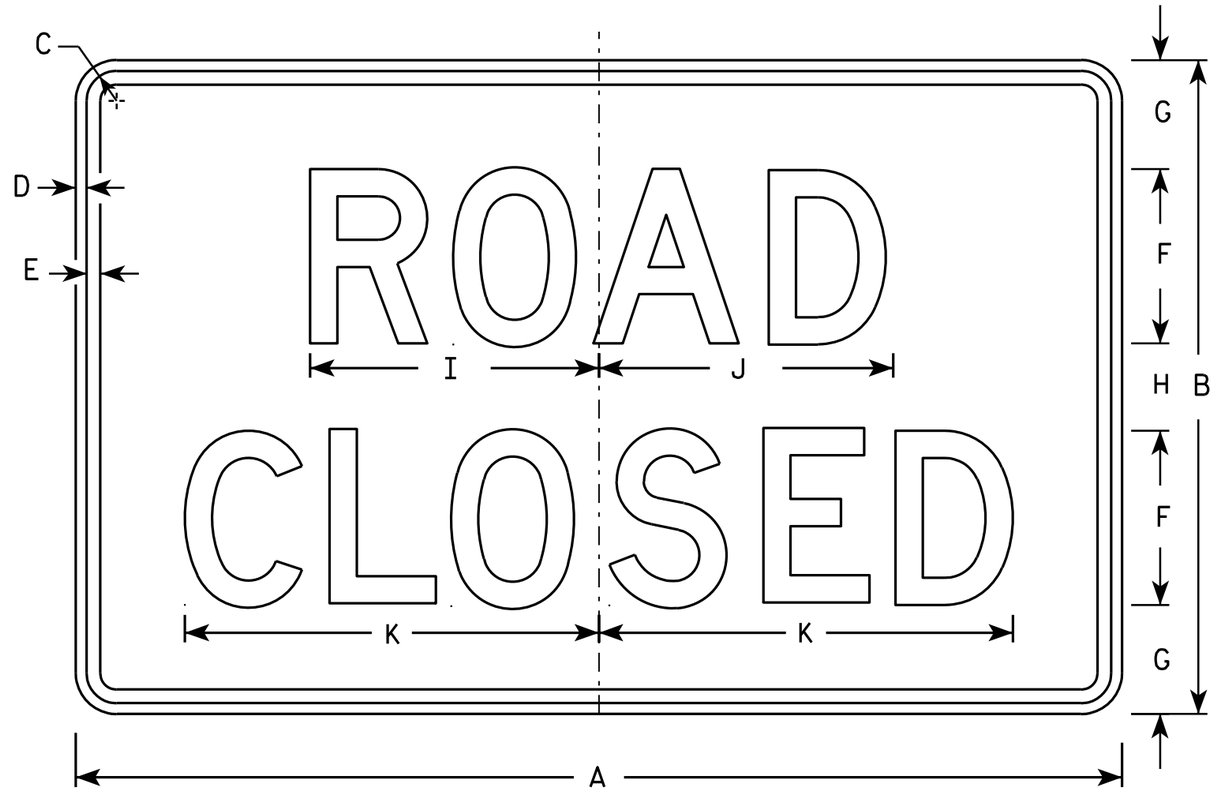

R11-2

NOTES

1. Sign is Type II - Type H Reflective - reference WIS DOT Standard Specification for HIGHWAY and STRUCTURE CONSTRUCTION latest edition.
2. Color:
   Background - White
   Message - Black
3. Message Series - D
4. Corners may be square or rounded when base material is plywood but borders shall be rounded as shown. When base material is metal, the corners and borders shall be rounded.
5. Modify the message as required.

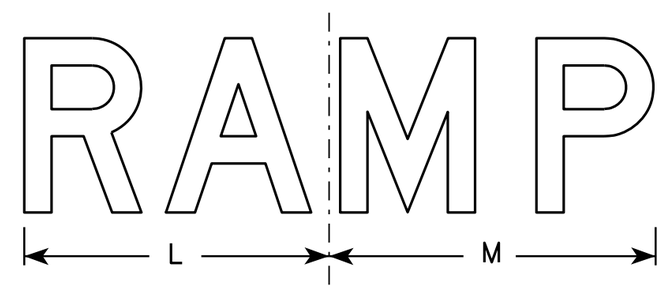

R11-2R

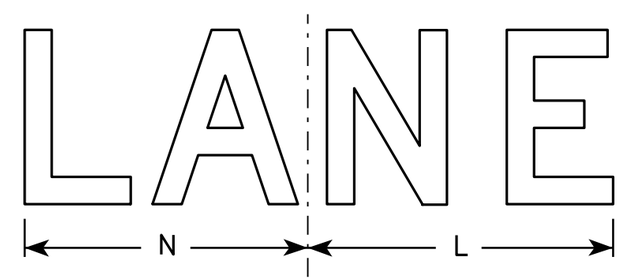

R11-2L

SIZE	A	B	C	D	E	F	G	H	I	J	K	L	M	N	O	P	Q	R	S	T	U	V	W	X	Y	Z	Area sq. ft.
1																											
2S	48	30	1 3/8	1/2	5/8	8	5	4	13 1/4	13 1/2	19	14	15	13													10.0
2M	48	30	1 3/8	1/2	5/8	8	5	4	13 1/4	13 1/2	19	14	15	13													10.0
3	48	30	1 3/8	1/2	5/8	8	5	4	13 1/4	13 1/2	19	14	15	13													10.0
4	48	30	1 3/8	1/2	5/8	8	5	4	13 1/4	13 1/2	19	14	15	13													10.0
5	48	30	1 3/8	1/2	5/8	8	5	4	13 1/4	13 1/2	19	14	15	13													10.0

STANDARD SIGN
R11-2

WISCONSIN DEPT OF TRANSPORTATION

APPROVED Matthew R Rauch
for State Traffic Engineer

DATE 4/1/11 PLATE NO. R11-2.10

PROJECT NO: | HWY: | COUNTY: | SHEET NO: 129 | E

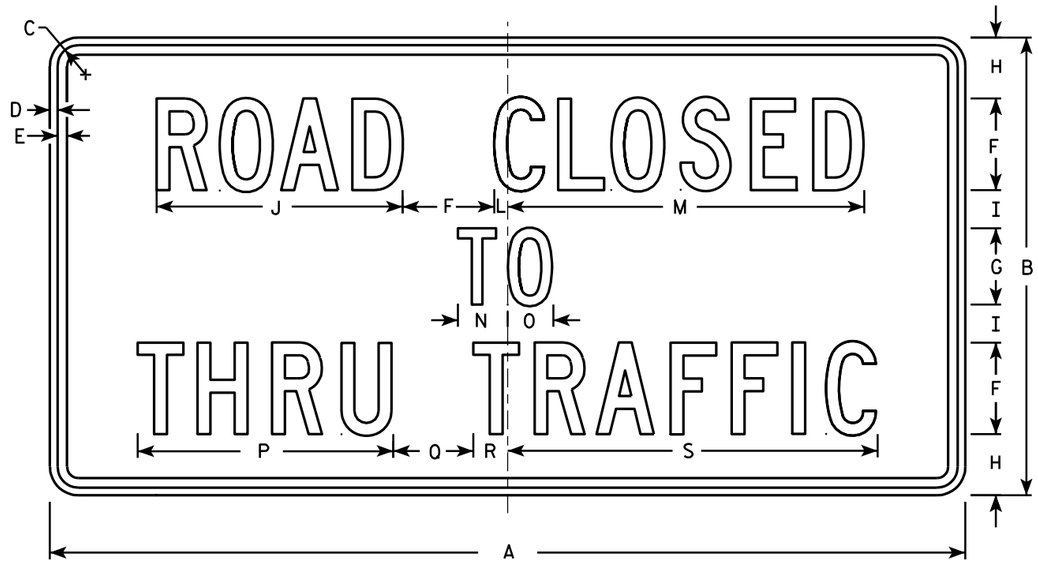

R11-4

NOTES

1. Sign is Type II - Type H Reflective - reference WIS DOT Standard Specification for HIGHWAY and STRUCTURE CONSTRUCTION latest edition.
2. Color:
   Background - White
   Message - Black
3. Message Series - C
4. Corners may be square or rounded when base material is plywood but borders shall be rounded as shown. When base material is metal, the corners and borders shall be rounded.

SIZE	A	B	C	D	E	F	G	H	I	J	K	L	M	N	O	P	Q	R	S	T	U	V	W	X	Y	Z	Area sq. ft.
1																											
2S	60	30	1 3/8	1/2	5/8	6	5	4	2 1/2	16 1/8		7/8	23 3/8	3 1/4	3	16 3/4	5 1/4	2 1/4	24 1/4								12.5
2M	60	30	1 3/8	1/2	5/8	6	5	4	2 1/2	16 1/8		7/8	23 3/8	3 1/4	3	16 3/4	5 1/4	2 1/4	24 1/4								12.5
3																											
4																											
5																											

STANDARD SIGN
R11 - 4

WISCONSIN DEPT OF TRANSPORTATION

APPROVED Matthew R Rauch for State Traffic Engineer

DATE 4/1/11 PLATE NO. R11-4.3

PROJECT NO: | HWY: | COUNTY: | SHEET NO: 130 | E

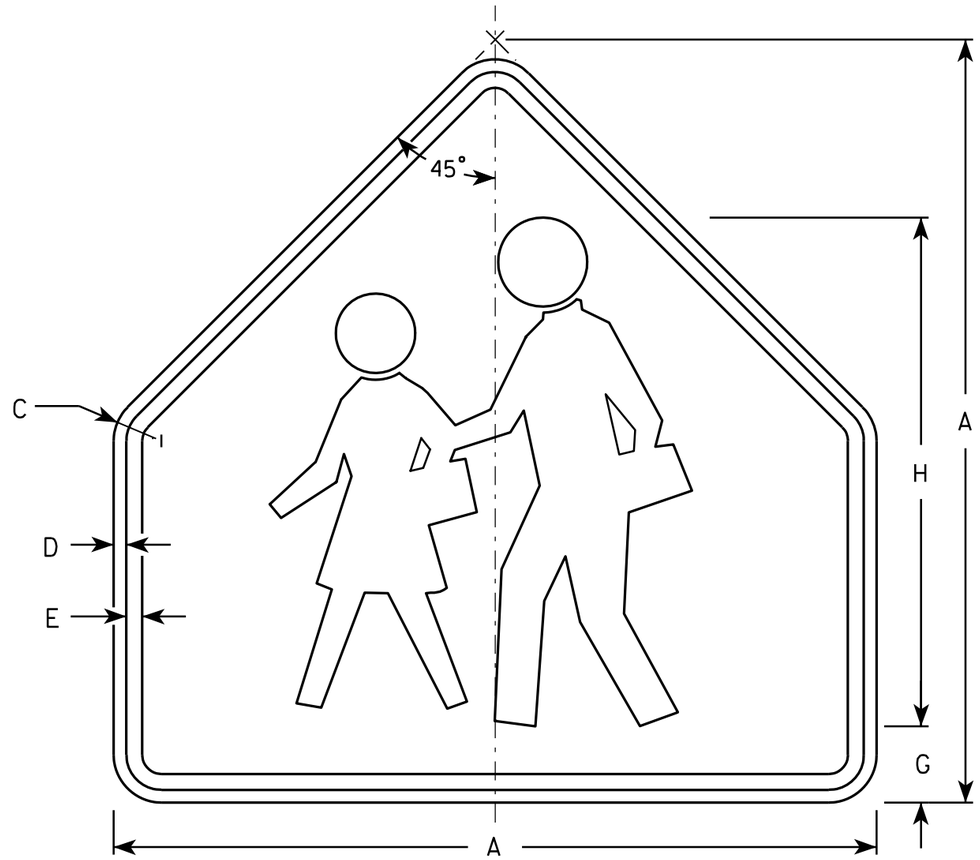

S1-1

NOTES

1. Sign is Type II - Type F Reflective - reference WIS DOT Standard Specification for HIGHWAY and STRUCTURE CONSTRUCTION latest edition.
2. Color:
   Background - Yellow-Green
   Message - Black
3. Corners may be square or rounded when base material is plywood but borders shall be rounded as shown. When base material is metal, the corners and borders shall be rounded.

SIZE	A	B	C	D	E	F	G	H	I	J	K	L	M	N	O	P	Q	R	S	T	U	V	W	X	Y	Z	Area sq. ft.
1	30		1 3/8	1/2	5/8		3	20																			4.69
2	36		1 5/8	5/8	3/4		3 1/2	24																			6.75
3	36		1 5/8	5/8	3/4		3 1/2	24																			6.75
4	48		2 1/4	3/4	1		4 3/4	32																			12
5																											

STANDARD SIGN
S1-1

WISCONSIN DEPT OF TRANSPORTATION

APPROVED Matthew R Rauch
for State Traffic Engineer
DATE 6/30/05 PLATE NO. S1-1.8

PROJECT NO:	HWY:	COUNTY:		SHEET NO: 131	E

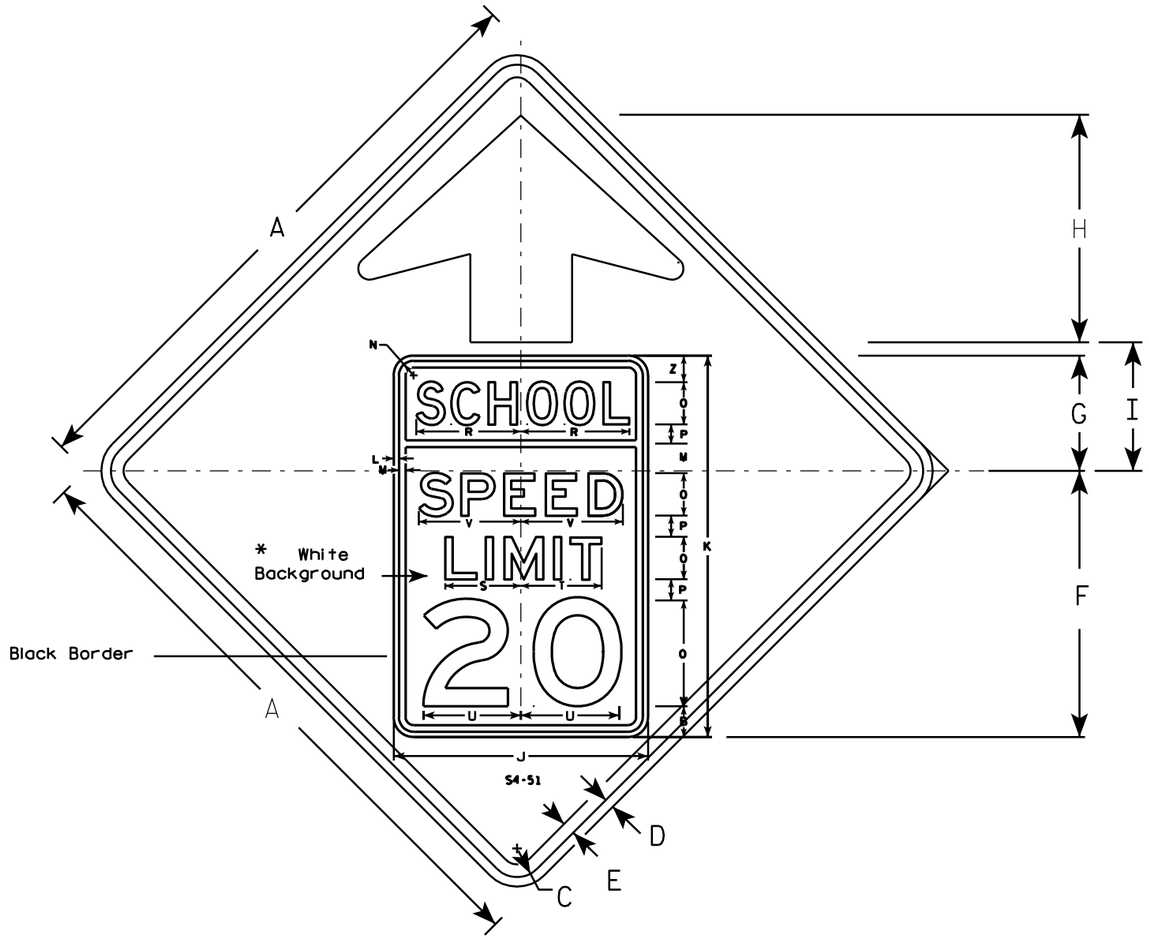

S4-5

NOTES

1. All Signs Type II - Type F Reflective - reference WIS DOT Standard Specification for HIGHWAY and STRUCTURE CONSTRUCTION latest edition.
2. Color: See Note 5
   Background - Flourescent Yellow Green
   Message - BLACK
3. Message Series - See note 6
4. Substitute appropriate numerals and optically adjust spacing to achieve proper balance
5. SCHOOL background - Yellow Green -Type F Reflective.
   Speed Limit panel background - White -Type H Reflective.
6. From top to bottom:
   School is series D
   All other lines are series E
7. Corners may be square or rounded when base material is plywood but borders shall be rounded as shown. When base material is metal, the corners and borders shall be rounded.

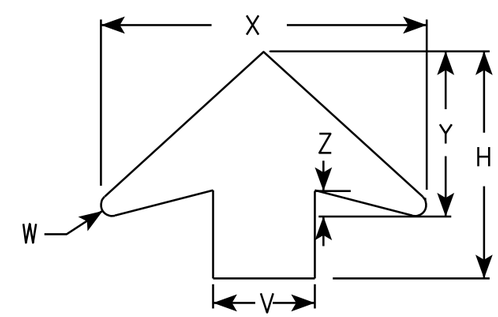

ARROW DETAIL

SIZE	A	B	C	D	E	F	G	H	I	J	K	L	M	N	O	P	Q	R	S	T	U	V	W	X	Y	Z	Area sq. ft.
1																											
2	36	1 7/8	1 5/8	5/8	3/4	15 3/4	6 3/4	13 3/8	7 5/8	15	22 1/2	1/4	3/8	7/8	6 1/4	1 1/4	2 1/2	6 3/8	4 1/2	4 3/4	5 3/4	6	5/8	19 1/4	9 3/4	1 5/8	9.0
3	48	2 3/8	2 1/4	3/4	1	18 3/4	10 1/8	17 7/8	10 1/8	20	30	3/8	1/2	1 1/8	8 3/8	1 5/8	3 3/8	8 1/2	5 7/8	6 3/8	7 3/4	8	7/8	25 5/8	13	2	16.0
4	48	2 3/8	2 1/4	3/4	1	18 3/4	10 1/8	17 7/8	10 1/8	20	30	3/8	1/2	1 1/8	8 3/8	1 5/8	3 3/8	8 1/2	5 7/8	6 3/8	7 3/4	8	7/8	25 5/8	13	2	16.0
5																											

STANDARD SIGN
S4-5

WISCONSIN DEPT OF TRANSPORTATION

APPROVED Matthew R Rauch
for State Traffic Engineer

DATE 12/21/10 PLATE NO. S4-5.3

PROJECT NO:

SHEET NO: 132 E

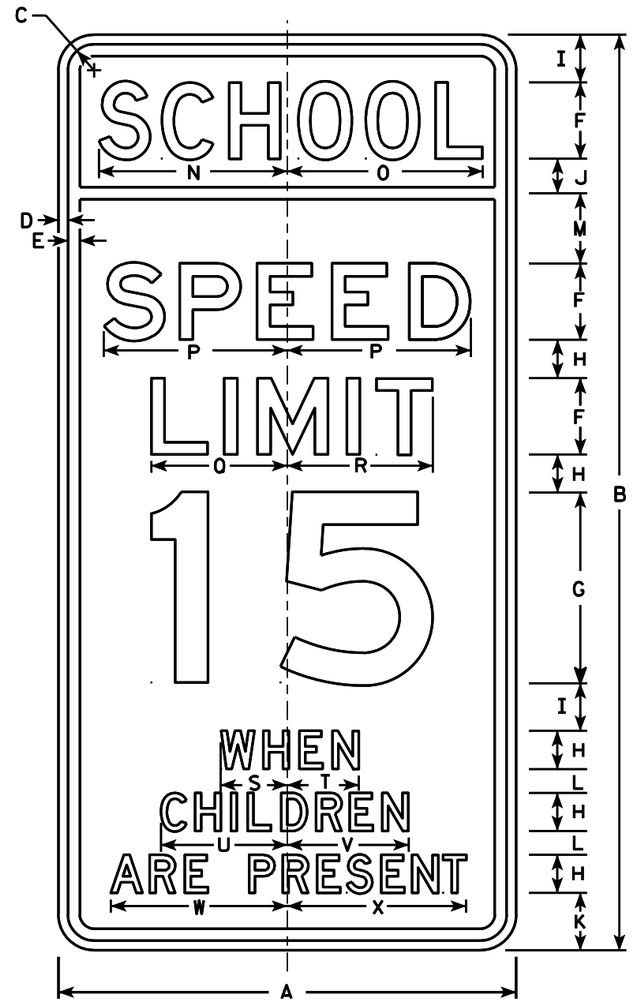

S4-51

NOTES

1. Sign is Type II - reference WIS DOT Standard Specification for HIGHWAY and STRUCTURE CONSTRUCTION latest edition. (See note 5).
2. Color:
   Background - See note 5
   Message - Black
3. Message Series - See note 6
4. Corners may be square or rounded when base material is plywood but borders shall be rounded as shown. When base material is metal, the corners and borders shall be rounded.
5. Top panel (SCHOOL) background - Yellow Green -Type F Reflective. Lower panel background - White -Type H Reflective.
6. From top to bottom:
   Lines 1, 5, 6 & 7 are series D
   Lines 2, 3 & 4 are series E
7. Line 4 substitute appropriate numerals and adjust spacing to achieve proper balance.

Metric equivalent for this sign is:

SIZE	
1	
2	600 mm X 1200 mm
3	900 mm X 1800 mm
4	
5	

SIZE	A	B	C	D	E	F	G	H	I	J	K	L	M	N	O	P	Q	R	S	T	U	V	W	X	Y	Z	Area sq. ft.	Area m2
1																												
2	24	48	1 3/8	1/2	5/8	4	10	2	2 1/2	1 3/4	3	1 1/4	3 3/4	9 7/8	10 1/4	9 5/8	7 1/8	7 5/8	3 1/2	3 3/8	6 5/8	6 3/8	9 1/4	9 3/8			8.00	0.72
3	36	72	2 1/4	3/4	1	6	15	3	3 3/4	2 3/4	4 1/2	1 7/8	5 1/2	15	15 1/4	14 1/2	11 1/4	11 1/2	5 1/2	5 3/4	10	9 3/4	14	14 1/8			18.00	1.62
4																												
5																												

STANDARD SIGN
S4-51

WISCONSIN DEPT OF TRANSPORTATION

APPROVED Matthew R Rauch
for State Traffic Engineer

DATE 4/26/10 PLATE NO. S4-51.9

PROJECT NO: | HWY: | COUNTY: | SHEET NO: 133 | E

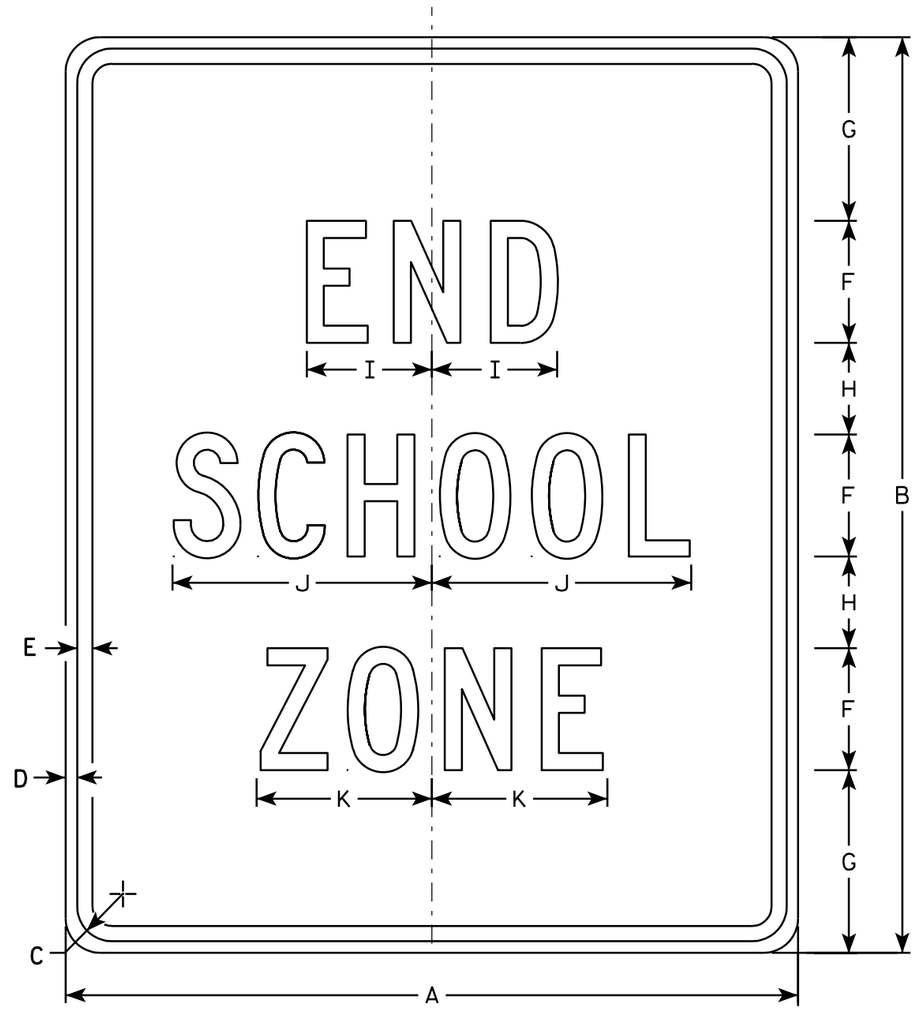

S5-2

NOTES

1. Sign is Type II - Type H Reflective - reference WIS DOT Standard Specification for HIGHWAY and STRUCTURE CONSTRUCTION latest edition.
2. Color:
   Background - White
   Message - Black
3. Message Series - C
4. Corners may be square or rounded when base material is plywood but borders shall be rounded as shown. When base material is metal, the corners and borders shall be rounded.

SIZE	A	B	C	D	E	F	G	H	I	J	K	L	M	N	O	P	Q	R	S	T	U	V	W	X	Y	Z	Area sq. ft.
1																											
2	24	30	1 1/8	3/8	1/2	4	6	3	4 1/8	8 1/2	5 3/4																5.0
3	36	42	1 5/8	5/8	3/4	6	7	5	6 1/8	12 5/8	8 5/8																10.5
4																											
5																											

STANDARD SIGN
S5-2

WISCONSIN DEPT OF TRANSPORTATION

APPROVED Matthew R Rauch
for State Traffic Engineer

DATE 3/8/11 PLATE NO. S5-2.2

PROJECT NO: | HWY: | COUNTY: | SHEET NO: 134 | E

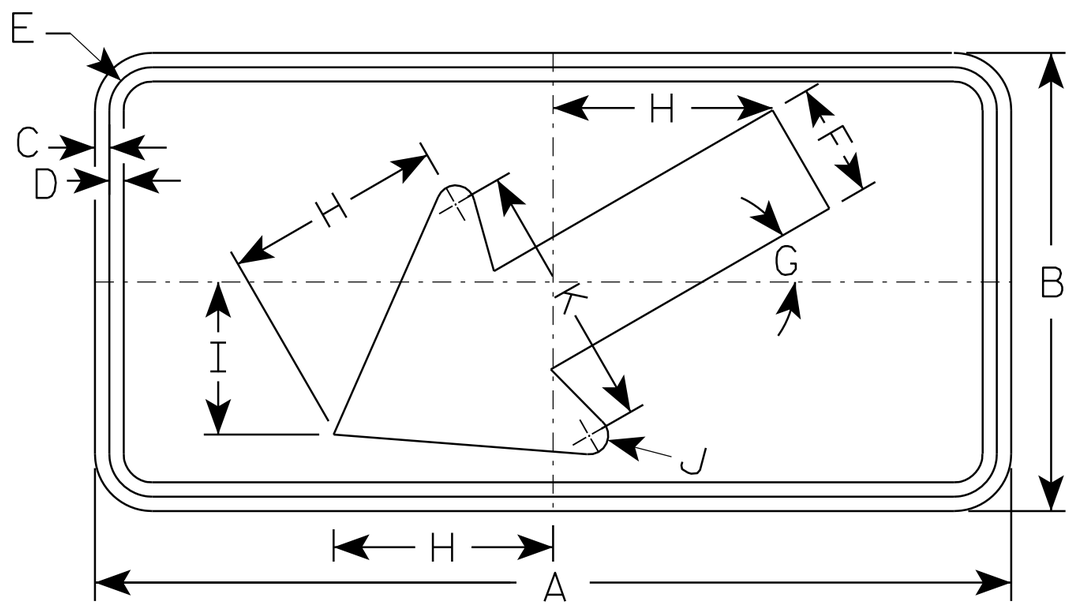

S16-7L

NOTES

1. Sign is Type II - Type F Reflective - reference WIS DOT Standard Specification for HIGHWAY and STRUCTURE CONSTRUCTION latest edition.
2. Color:
   Background - Yellow-Green
   Message - Black
3. Corners may be square or rounded when base material is plywood but borders shall be rounded as shown. When base material is metal, the corners and borders shall be rounded.
4. S16-7R are the same as S16-7L except the arrow is reversed along the vertical centerline.

SIZE	A	B	C	D	E	F	G	H	I	J	K	L	M	N	O	P	Q	R	S	T	U	V	W	X	Y	Z	Area sq. ft.
1	24	12	3/8	3/8	1 1/8	3	30°	5 3/4	4	1/2	7																2.0
2S	30	18	3/8	1/2	1 1/8	4 1/2	30°	8 1/2	6	5/8	10 1/4																3.75
2M	30	18	3/8	1/2	1 1/8	4 1/2	30°	8 1/2	6	5/8	10 1/4																3.75
3	30	18	3/8	1/2	1 1/8	4 1/2	30°	8 1/2	6	5/8	10 1/4																3.75
4	48	24	1/2	5/8	1 3/8	6	30°	11 1/2	8	1	14																8.0
5																											

STANDARD SIGN
S16-7

WISCONSIN DEPT OF TRANSPORTATION

APPROVED Matthew R Rauch
for State Traffic Engineer

DATE 7/22/13 PLATE NO. S16-7.1

PROJECT NO: | HWY: | COUNTY: | SHEET NO: 135 | E

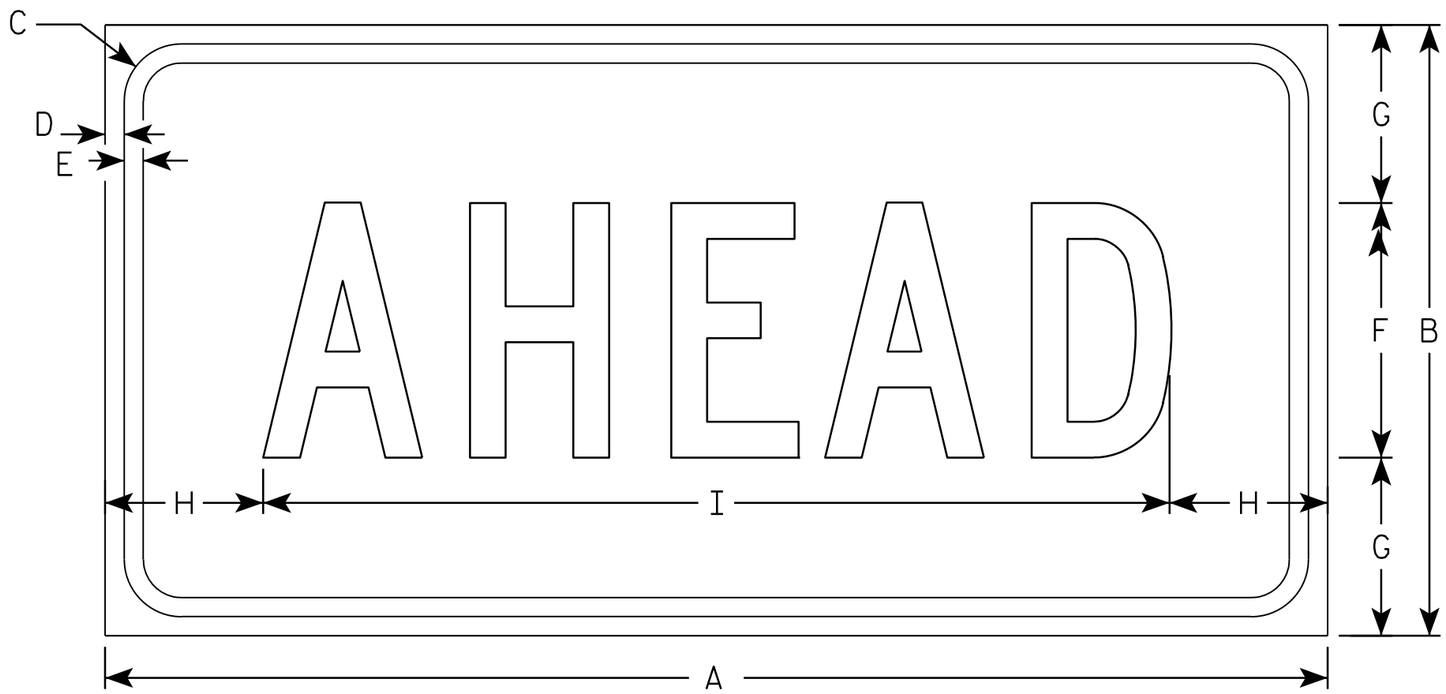

S16-9P

NOTES

1. Sign is Type II - Type F Reflective - reference WIS DOT Standard Specification for HIGHWAY and STRUCTURE CONSTRUCTION latest edition.
2. Color:
   Background - Yellow-Green
   Message - Black
3. Message Series - C
4. Corners may be square or rounded when base material is plywood but borders shall be rounded as shown. When base material is metal, the corners and borders shall be rounded.

SIZE	A	B	C	D	E	F	G	H	I	J	K	L	M	N	O	P	Q	R	S	T	U	V	W	X	Y	Z	Area sq. ft.
1	24	12	1 1/8	3/8	3/8	5	3 1/2	3 1/8	17 3/4																		2.0
2S	30	18	1 1/8	3/8	1/2	7	5 1/2	2 3/4	24 1/2																		3.75
2M	30	18	1 1/8	3/8	1/2	7	5 1/2	2 3/4	24 1/2																		3.75
3	30	18	1 1/8	3/8	1/2	7	3 1/2	2 3/4	24 1/2																		3.75
4	48	24	1 3/8	1/2	5/8	10	7	6 1/8	35 3/4																		8.0
5																											

STANDARD SIGN
S16-9P

WISCONSIN DEPT OF TRANSPORTATION

APPROVED Matthew R Rauch
for State Traffic Engineer

DATE 7/22/13 PLATE NO. S16-9P.1

PROJECT NO:	HWY:	COUNTY:		SHEET NO: 136	E

W4-4P

NOTES

1. Sign is Type II - Type F Reflective - reference WIS DOT Standard Specification for HIGHWAY and STRUCTURE CONSTRUCTION latest edition.
2. Color:
   Background - Yellow
   Message - Black
3. Message Series - B
4. Corners may be square or rounded when base material is plywood but borders shall be rounded as shown. When base material is metal, the corners and borders shall be rounded.

SIZE	A	B	C	D	E	F	G	H	I	J	K	L	M	N	O	P	Q	R	S	T	U	V	W	X	Y	Z	Area sq. ft.
1																											
2S	24	12	1 1/8	3/8	3/8	3	2 1/4	1 1/2	8	1 1/2	3/8	10	6 1/4	2 1/4	2 1/4	6 1/4											2.0
2M	24	12	1 1/8	3/8	3/8	3	2 1/4	1 1/2	8	1 1/2	3/8	10	6 1/4	2 1/4	2 1/4	6 1/4											2.0
3	36	15	1 1/8	3/8	1/2	4	2 5/8	1 3/4	10 3/4	2 3/8	3/8	13 1/2	8 3/8	3	3 1/8	8 3/8											3.75
4	42	18	1 1/8	3/8	1/2	5	3	2	13 3/8	3 1/8	3/8	16 7/8	10 1/2	3 5/8	3 7/8	10 3/8											5.25
5																											

STANDARD SIGN
W4-4P

WISCONSIN DEPT OF TRANSPORTATION

APPROVED Matthew R Rauch for State Traffic Engineer

DATE 03/12/13 PLATE NO. W4-4P.2

PROJECT NO:	HWY:	COUNTY:		SHEET NO: 137	E

NOTES

1. Sign is Type II - Type F Reflective - reference WIS DOT Standard Specification for HIGHWAY and STRUCTURE CONSTRUCTION latest edition.
2. Color:
   Background - Yellow
   Message - Black
3. Message Series - See note 5
4. Corners and borders shall be rounded on all base materials for this sign.
5. Lines 1 and 2 are Series D.
   Line 3 is series C.

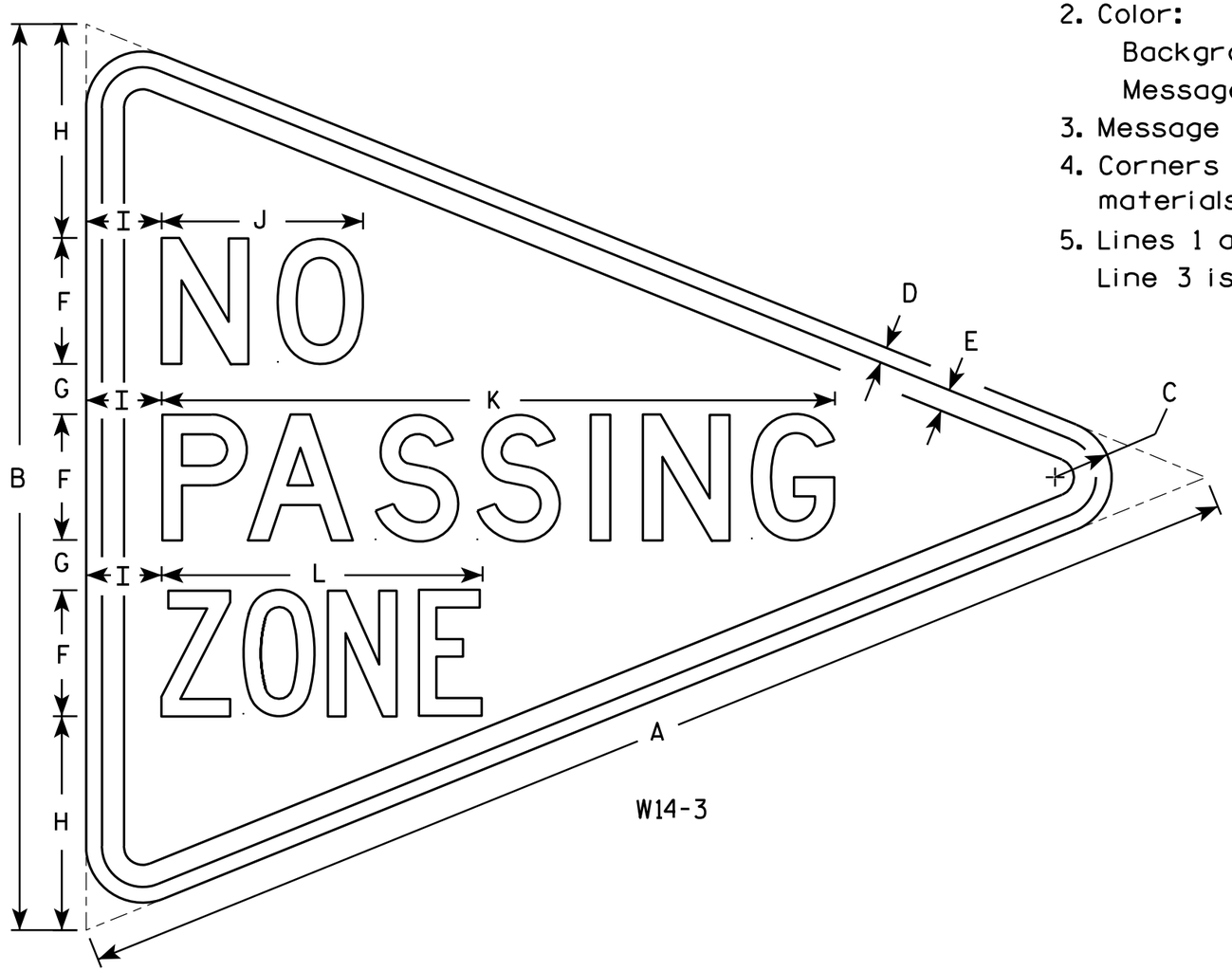

W14-3

SIZE	A	B	C	D	E	F	G	H	I	J	K	L	M	N	O	P	Q	R	S	T	U	V	W	X	Y	Z	Area sq. ft.
1																											
2S	48	36	2 1/4	5/8	7/8	5	2	8 1/2	3	8	26 3/4	12 3/4															6.0
2M	48	36	2 1/4	5/8	7/8	5	2	8 1/2	3	8	26 3/4	12 3/4															6.0
3	64	48	3	3/4	1 1/4	6	3	12	4	10 3/4	33 5/8	16 1/2															10.7
4																											
5																											

STANDARD SIGN
W14-3

WISCONSIN DEPT OF TRANSPORTATION

APPROVED Matthew R Rauch
for State Traffic Engineer
DATE 6/7/10 PLATE NO. W14-3.9

PROJECT NO: | HWY: | COUNTY: | SHEET NO: 138 | E

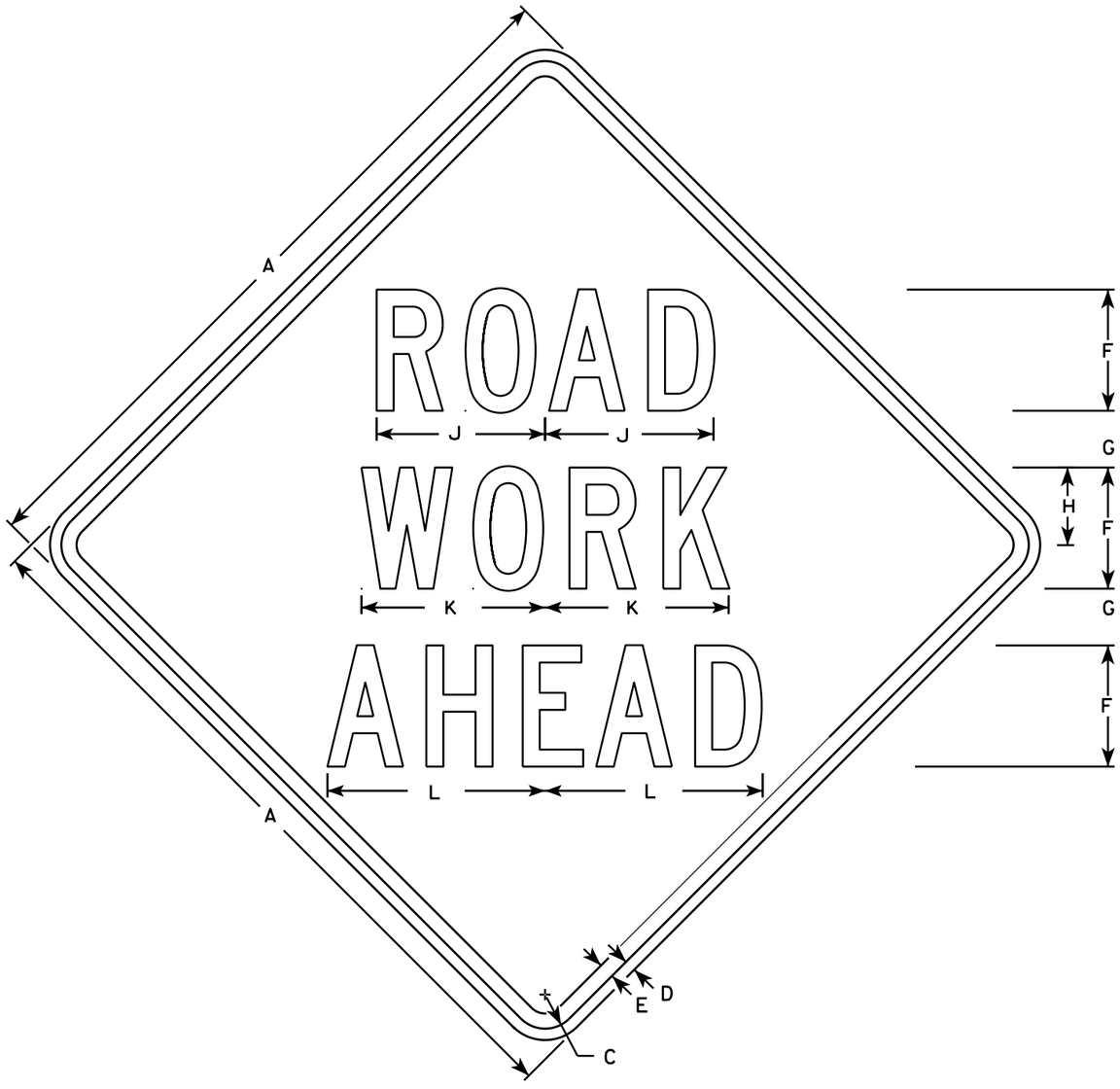

W20-1A

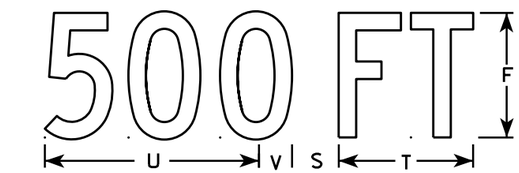

W20-1D

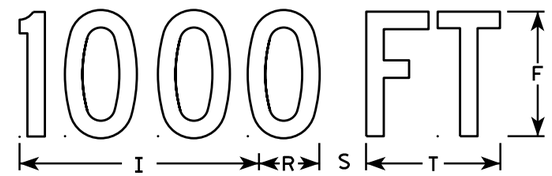

W20-1C

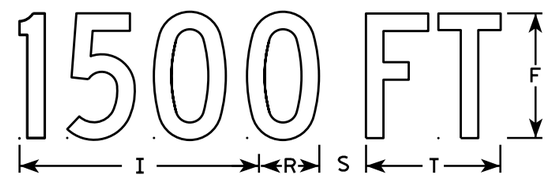

W20-1B

W20-1G

W20-1F

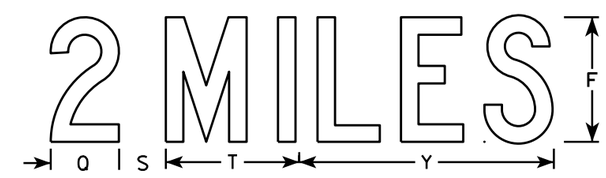

W20-1E

NOTES

1. Sign is Type II - Type F Reflective
2. Color:
   Background - Orange
   Message - Black
3. Message Series - C
4. Corners may be square or rounded when base material is plywood but borders shall be rounded as shown. When base material is metal, the corners and borders shall be rounded.

SIZE	A	B	C	D	E	F	G	H	I	J	K	L	M	N	O	P	Q	R	S	T	U	V	W	X	Y	Z	Area sq. ft.
1	36		1 3/8	1/2	5/8	5	2 5/8	3 1/4	10 1/8	7	7 5/8	8 7/8	1 1/8	4 1/2	3 1/2	9		2 1/2	2 1/4	5 5/8	9	1 3/8	8	1 3/4	10 3/4	6	9.0
2S	48		2 1/4	3/4	1	8	3 3/4	5 1/8	15 3/8	11 1/8	12 1/8	14 3/8	1 5/8	6 7/8	5 3/8	13 7/8	4 3/8	3 7/8	3	8 5/8	13 3/4	2 1/8	11 7/8	2 3/4	16 3/8	9	16.0
2M	48		2 1/4	3/4	1	8	3 3/4	5 1/8	15 3/8	11 1/8	12 1/8	14 3/8	1 5/8	6 7/8	5 3/8	13 7/8	4 3/8	3 7/8	3	8 5/8	13 3/4	2 1/8	11 7/8	2 3/4	16 3/8	9	16.0
3	48		2 1/4	3/4	1	8	3 3/4	5 1/8	15 3/8	11 1/8	12 1/8	14 3/8	1 5/8	6 7/8	5 3/8	13 7/8	4 3/8	3 7/8	3	8 5/8	13 3/4	2 1/8	11 7/8	2 3/4	16 3/8	9	16.0
4	48		2 1/4	3/4	1	8	3 3/4	5 1/8	15 3/8	11 1/8	12 1/8	14 3/8	1 5/8	6 7/8	5 3/8	13 7/8	4 3/8	3 7/8	3	8 5/8	13 3/4	2 1/8	11 7/8	2 3/4	16 3/8	9	16.0
5	48		2 1/4	3/4	1	8	3 3/4	5 1/8	15 3/8	11 1/8	12 1/8	14 3/8	1 5/8	6 7/8	5 3/8	13 7/8	4 3/8	3 7/8	3	8 5/8	13 3/4	2 1/8	11 7/8	2 3/4	16 3/8	9	16.0

STANDARD SIGN
W20-1A, B, C, D, F & G

WISCONSIN DEPT OF TRANSPORTATION

APPROVED

State Traffic Engineer

DATE 5/07/15 PLATE NO. W20-1.10

PROJECT NO:

SHEET NO: E

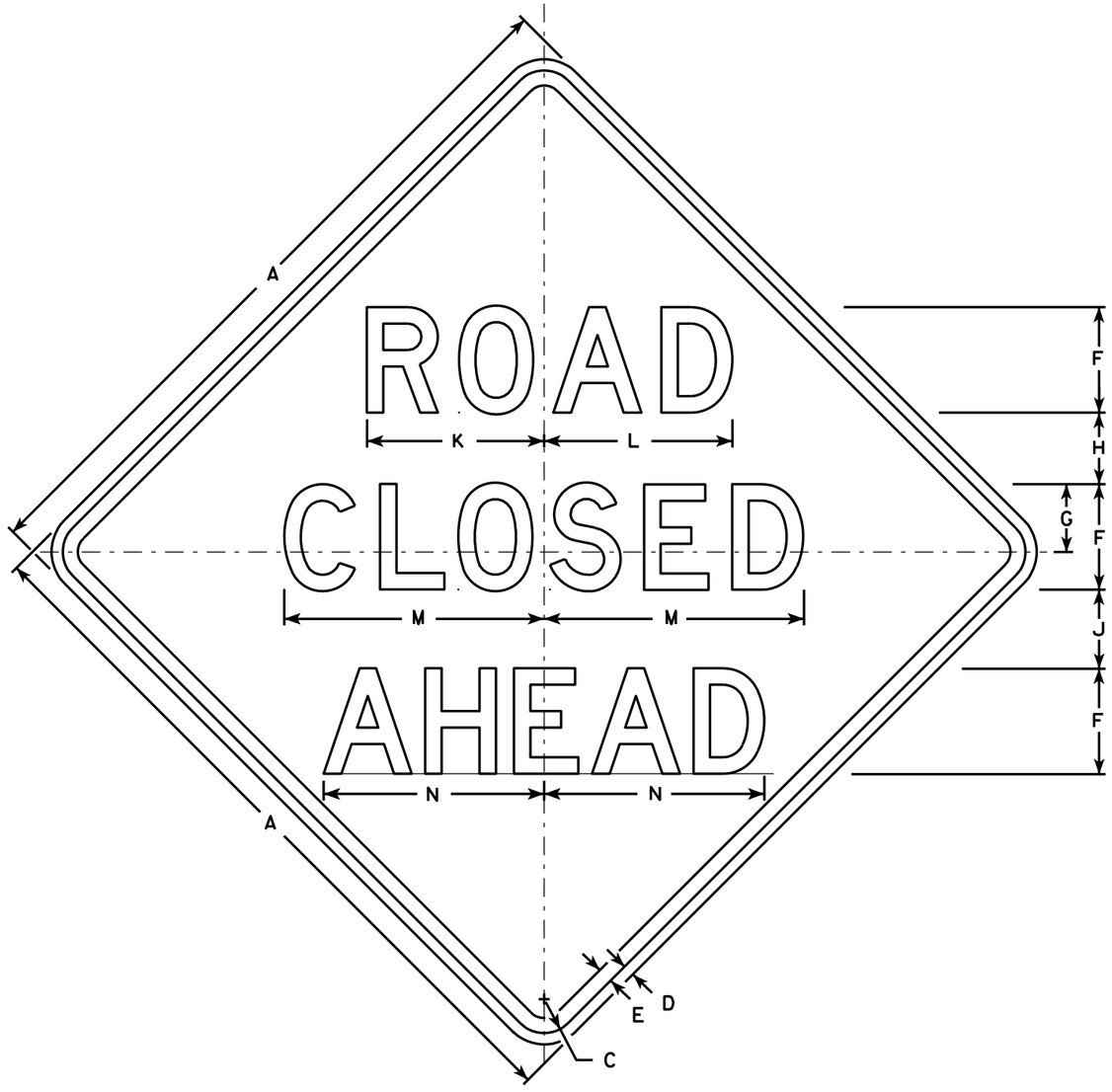

W20-3A

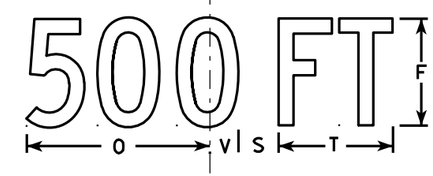

W20-3D

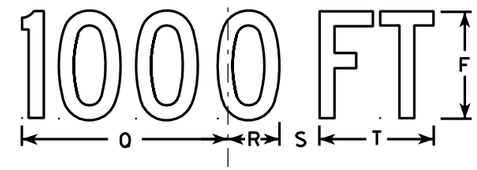

W20-3C

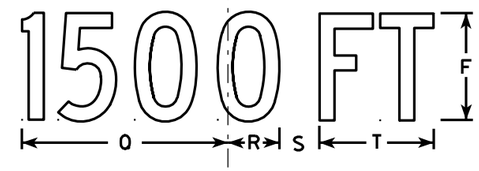

W20-3B

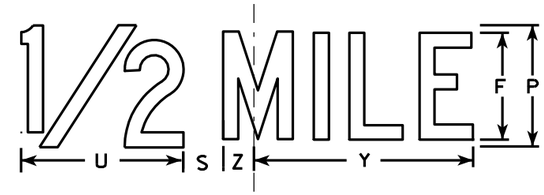

W20-3G

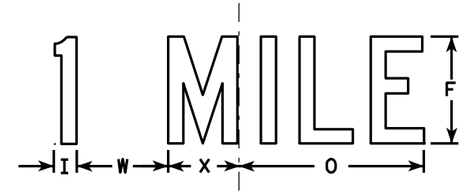

W20-3F

NOTES

1. Sign is Type II - Type F Reflective - reference WIS DOT Standard Specification for HIGHWAY and STRUCTURE CONSTRUCTION latest edition.
2. Color:
   Background - Orange
   Message - Black
3. Message Series - see note 5
4. Corners may be square or rounded when base material is plywood but borders shall be rounded as shown. When base material is metal, the corners and borders shall be rounded.
5. Lines 1 and 2 are Series D.
   Line 3 is Series D for AHEAD and Series C for all other distances.

SIZE	A	B	C	D	E	F	G	H	I	J	K	L	M	N	O	P	Q	R	S	T	U	V	W	X	Y	Z	Area sq. ft.
1	36		1 5/8	5/8	3/4	5	3 3/8	3 1/2	1 1/8	4	8 3/8	8 7/8	12 1/2	11	9	6	10 1/8	2 1/2	1 7/8	5 5/8	8	1 3/8	4 1/2	3 1/2	10 3/4	1 3/4	9.0
2S	48		2 1/4	3/4	1	7	4 1/2	4 3/4	1 1/2	5 1/4	11 3/4	12 1/2	17 1/4	14 5/8	12	8	13 1/2	3 3/8	2 5/8	7 1/2	10 5/8	1 7/8	6	4 5/8	14 3/8	2 3/8	16.0
2M	48		2 1/4	3/4	1	7	4 1/2	4 3/4	1 1/2	5 1/4	11 3/4	12 1/2	17 1/4	14 5/8	12	8	13 1/2	3 3/8	2 5/8	7 1/2	10 5/8	1 7/8	6	4 5/8	14 3/8	2 3/8	16.0
3	48		2 1/4	3/4	1	7	4 1/2	4 3/4	1 1/2	5 1/4	11 3/4	12 1/2	17 1/4	14 5/8	12	8	13 1/2	3 3/8	2 5/8	7 1/2	10 5/8	1 7/8	6	4 5/8	14 3/8	2 3/8	16.0
4	48		2 1/4	3/4	1	7	4 1/2	4 3/4	1 1/2	5 1/4	11 3/4	12 1/2	17 1/4	14 5/8	12	8	13 1/2	3 3/8	2 5/8	7 1/2	10 5/8	1 7/8	6	4 5/8	14 3/8	2 3/8	16.0
5	48		2 1/4	3/4	1	7	4 1/2	4 3/4	1 1/2	5 1/4	11 3/4	12 1/2	17 1/4	14 5/8	12	8	13 1/2	3 3/8	2 5/8	7 1/2	10 5/8	1 7/8	6	4 5/8	14 3/8	2 3/8	16.0

STANDARD SIGN
W20-3A, B, C, D, F & G

WISCONSIN DEPT OF TRANSPORTATION

APPROVED Matthew R Rauch
for State Traffic Engineer
DATE 3/18/11 PLATE NO. W20-3.7

7

7

PROJECT NO: | HWY: | COUNTY: | SHEET NO: 140 | E

STATION	DISTANCE	AREA (SF) CUT	AREA (SF) SALVAGED/ UNUSABLE PAVEMENT MATERIAL	AREA (SF) FILL	Incremental Vol (CY) (Unadjusted) Note 1 CUT	Incremental Vol (CY) (Unadjusted) Note 2 SALVAGED/ UNUSABLE PAVEMENT MATERIAL	Incremental Vol (CY) (Unadjusted) Note 3 FILL	Cumulative Vol (CY) Note 1 CUT 1.00	Cumulative Vol (CY) Note 1 EXPANDED FILL 1.42	Note 8 MASS ORDINATE
346+01.3		177.9	--	--	--	--	--	--	--	--
346+50.0	48.7	118.1	--	0.1	266.9	--	0.1	266.9	0.1	266.8
347+00.0	50.0	125.6	--	0.1	225.6	--	0.2	492.5	0.4	492.1
347+50.0	50.0	133.9	--	0.1	240.3	--	0.2	732.8	0.7	732.1
348+00.0	50.0	163.2	--	--	275.1	--	0.1	1,007.9	0.8	1,007.1
348+50.0	50.0	134.6	--	--	275.7	--	--	1,283.6	0.8	1,282.8
349+00.0	50.0	137.3	--	--	251.8	--	--	1,535.4	0.8	1,534.6
349+50.0	50.0	125.1	--	0.2	243.0	--	0.2	1,778.4	1.1	1,777.3
350+00.0	50.0	123.8	--	0.2	230.5	--	0.4	2,008.9	1.7	2,007.2
350+50.0	50.0	132.8	--	--	237.6	--	0.2	2,246.5	2.0	2,244.5
351+00.0	50.0	126.2	--	--	239.8	--	--	2,486.3	2.0	2,484.3
351+50.0	50.0	134.5	--	--	241.4	--	--	2,727.7	2.0	2,725.7
352+00.0	50.0	130.7	--	0.4	245.6	--	0.4	2,973.3	2.6	2,970.7
352+50.0	50.0	134.2	--	0.2	245.3	--	0.6	3,218.6	3.5	3,215.1
353+00.0	50.0	221.3	--	0.1	329.2	--	0.3	3,547.8	3.9	3,543.9
353+50.0	50.0	128.6	--	--	324.0	--	0.1	3,871.8	4.0	3,867.8
354+00.0	50.0	128.1	--	0.1	237.7	--	0.1	4,109.5	4.1	4,105.4
354+50.0	50.0	132.1	--	0.5	240.9	--	0.6	4,350.4	5.0	4,345.4
355+00.0	50.0	132.8	--	0.8	245.3	--	1.2	4,595.7	6.7	4,589.0
355+50.0	50.0	140.8	--	--	253.3	--	0.7	4,849.0	7.7	4,841.3
356+00.0	50.0	130.6	--	--	251.3	--	--	5,100.3	7.7	5,092.6
356+50.0	50.0	139.9	--	--	250.5	--	--	5,350.8	7.7	5,343.1
357+00.0	50.0	125.4	--	0.2	245.6	--	0.2	5,596.4	8.0	5,588.4
357+50.0	50.0	120.4	--	0.3	227.6	--	0.5	5,824.0	8.7	5,815.3
358+00.0	50.0	127.4	--	--	229.4	--	0.3	6,053.4	9.1	6,044.3
358+50.0	50.0	144.8	--	0.1	252.0	--	0.1	6,305.4	9.2	6,296.2
359+00.0	50.0	121.8	--	0.4	246.9	--	0.5	6,552.3	9.9	6,542.4
359+50.0	50.0	135.5	--	0.1	238.2	--	0.5	6,790.5	10.6	6,779.9
360+00.0	50.0	135.0	--	--	250.5	--	0.1	7,041.0	10.7	7,030.3
360+50.0	50.0	129.4	--	--	244.8	--	--	7,285.8	10.7	7,275.1
361+00.0	50.0	138.6	--	--	248.1	--	--	7,533.9	10.7	7,523.2
361+50.0	50.0	124.8	--	--	243.9	--	--	7,777.8	10.7	7,767.1
362+00.0	50.0	126.9	--	0.8	233.1	--	0.7	8,010.9	11.7	7,999.2
362+50.0	50.0	97.9	--	2.6	208.1	--	3.1	8,219.0	16.1	8,202.9
363+00.0	50.0	160.9	--	--	239.6	--	2.4	8,458.6	19.5	8,439.1
363+50.0	50.0	157.2	--	--	294.5	--	--	8,753.1	19.5	8,733.6
364+00.0	50.0	130.5	--	--	266.4	--	--	9,019.5	19.5	9,000.0
364+50.0	50.0	144.8	--	--	254.9	--	--	9,274.4	19.5	9,254.9
365+00.0	50.0	135.0	--	--	259.1	--	--	9,533.5	19.5	9,514.0
365+50.0	50.0	120.2	--	--	236.3	--	--	9,769.8	19.5	9,750.3
366+00.0	50.0	129.8	--	--	231.5	--	--	10,001.3	19.5	9,981.8
366+50.0	50.0	139.6	--	--	249.4	--	--	10,250.7	19.5	10,231.2
367+00.0	50.0	141.4	--	3.6	260.2	--	3.3	10,510.9	24.2	10,486.7
367+50.0	50.0	156.1	--	1.7	275.5	--	4.9	10,786.4	31.2	10,755.2
368+00.0	50.0	180.3	--	0.1	311.5	--	1.7	11,097.9	33.6	11,064.3
368+50.0	50.0	186.1	--	--	339.3	--	0.1	11,437.2	33.7	11,403.5
369+00.0	50.0	187.5	--	--	345.9	--	--	11,783.1	33.7	11,749.4
369+50.0	50.0	210.7	--	--	368.7	--	--	12,151.8	33.7	12,118.1
370+00.0	50.0	184.0	--	1.9	365.5	--	1.8	12,517.3	36.3	12,481.0
370+50.0	50.0	206.9	--	--	361.9	--	1.8	12,879.2	38.9	12,840.3
371+00.0	50.0	187.1	--	--	364.8	--	--	13,244.0	38.9	13,205.1
371+50.0	50.0	207.7	--	--	365.6	--	--	13,609.6	38.9	13,570.7
372+00.0	50.0	156.6	--	0.1	337.3	--	0.1	13,946.9	39.0	13,907.9
372+50.0	50.0	153.2	--	--	286.9	--	0.1	14,233.8	39.1	14,194.7
373+00.0	50.0	149.5	--	0.2	280.3	--	0.2	14,514.1	39.4	14,474.7
373+50.0	50.0	150.0	--	--	277.3	--	0.2	14,791.4	39.7	14,751.7
374+00.0	50.0	172.3	--	--	298.4	--	--	15,089.8	39.7	15,050.1
374+50.0	50.0	124.3	--	1.6	274.6	--	1.5	15,364.4	41.8	15,322.6
375+00.0	50.0	103.0	--	7.2	210.5	--	8.1	15,574.9	53.3	15,521.6
375+50.0	50.0	114.3	--	2.7	201.2	--	9.2	15,776.1	66.4	15,709.7
376+00.0	50.0	171.9	--	1.8	265.0	--	4.2	16,041.1	72.4	15,968.7
376+50.0	50.0	202.2	--	1.8	346.4	--	3.3	16,387.5	77.1	16,310.4
377+00.0	50.0	174.4	--	0.3	348.7	--	1.9	16,736.2	79.8	16,656.4
377+50.0	50.0	125.0	--	3.7	277.2	--	3.7	17,013.4	85.1	16,928.3
378+00.0	50.0	76.5	--	23.0	186.6	--	24.7	17,200.0	120.2	17,079.8
378+50.0	50.0	60.4	--	64.0	126.8	--	80.6	17,326.8	234.7	17,092.1
379+00.0	50.0	69.8	--	51.4	120.6	--	106.9	17,447.4	386.5	17,060.9
379+50.0	50.0	85.9	--	18.8	144.2	--	65.0	17,591.6	478.8	17,112.8
380+00.0	50.0	85.4	--	50.6	158.6	--	64.3	17,750.2	570.1	17,180.1
380+50.0	50.0	100.3	--	46.8	171.9	--	90.2	17,922.1	698.2	17,223.9
381+00.0	50.0	116.9	--	40.3	201.1	--	80.6	18,123.2	812.7	17,310.5
381+50.0	50.0	133.2	--	22.3	231.6	--	58.0	18,354.8	895.1	17,459.7
382+00.0	50.0	160.2	--	0.1	271.7	--	20.7	18,626.5	924.5	17,702.0
382+50.0	50.0	145.8	--	4.9	283.3	--	4.6	18,909.8	931.0	17,978.8
383+00.0	50.0	147.4	--	29.5	271.5	--	31.9	19,181.3	976.3	18,205.0
383+50.0	50.0	222.3	--	--	342.3	--	27.3	19,523.6	1,015.1	18,508.5
384+00.0	50.0	105.5	--	2.4	303.5	--	2.2	19,827.1	1,018.2	18,808.9
384+50.0	50.0	94.4	--	--	185.1	--	2.2	20,012.2	1,021.3	18,990.9
384+50.0	--	94.3	--	--	--	--	--	20,012.2	1,021.3	18,990.9
				COLUMN TOTAL	20,012.2	--	719.1			

1 - Cut	Cut includes Salvaged/Unusable Pavement material	
2 - Salvaged/Unusable Pavement Material	This does not show up in cross sections	
3 - Fill	Does not include Unusable Pavement Exc volume	
8 - Mass Ordinate	If Marsh and EBS to be backfilled with Granular: [(Cut) - ((Fill - Expanded Rock) * Fill Factor))]	Marsh and EBS are not usable outside the 1:1 slopes

9

9

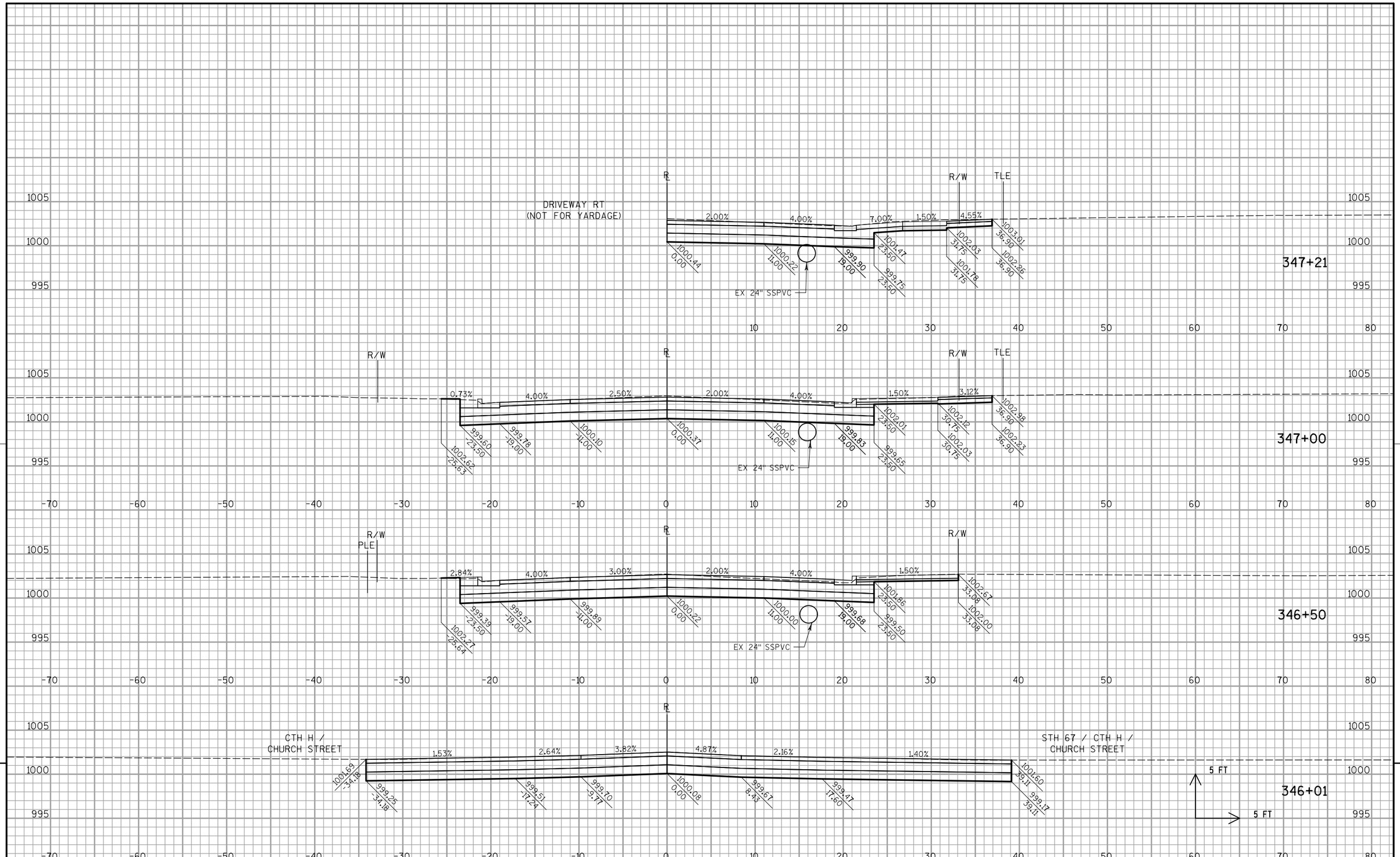

PROJECT NO: 3364-03-72	HWY: STH 175	COUNTY: DODGE	CROSS SECTIONS: STA 346+01 TO STA 347+21	SHEET 142	E

FILE NAME : P:\GMT\WisDOT\R11-0319-102 STH 175\graphics\090201_xs.dgn PLOT DATE : 4/29/2015 PLOT BY : gaspemc PLOT NAME : PLOT SCALE : 1:10

WISDOT/CADDS SHEET 21

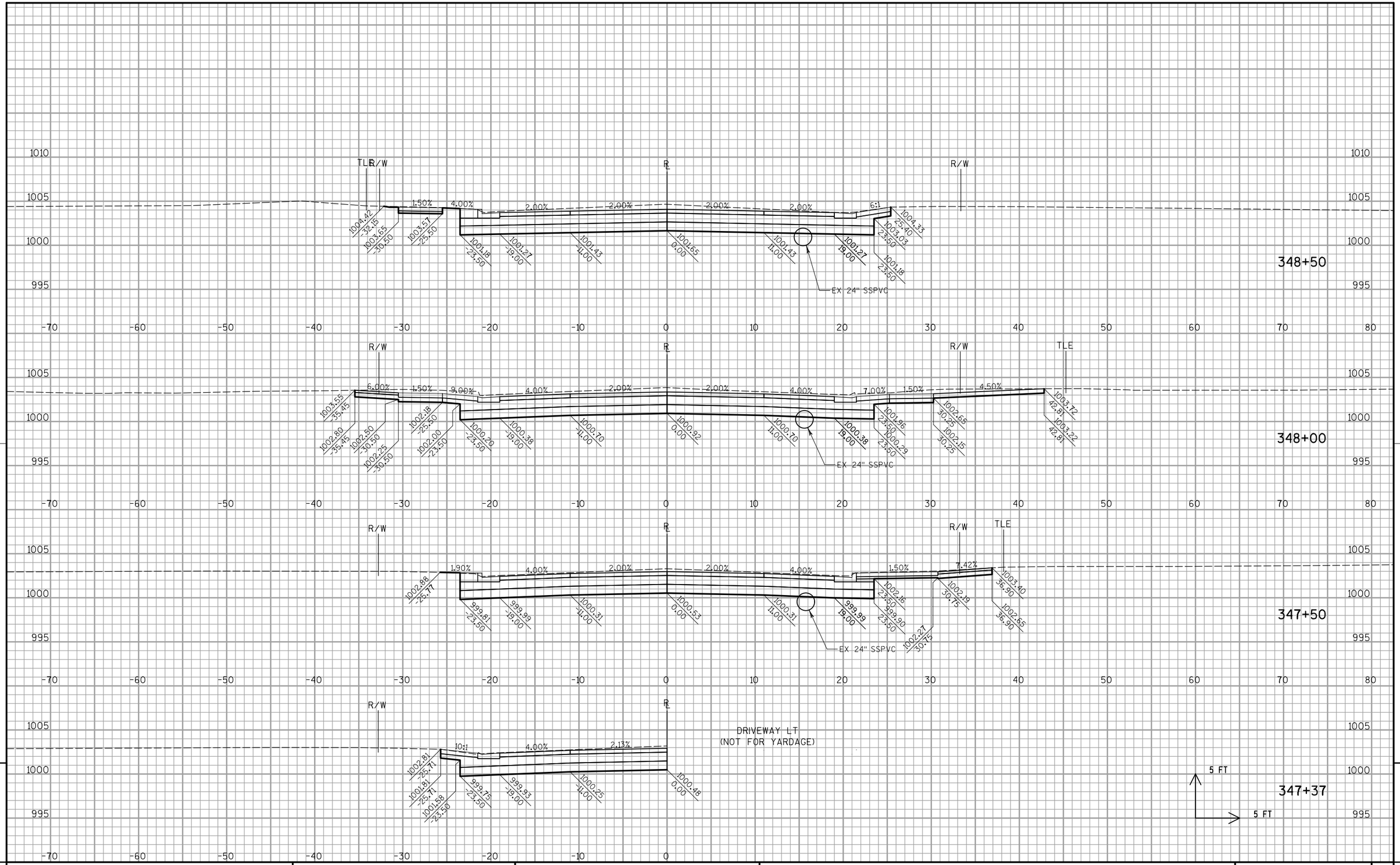

PROJECT NO: 3364-03-72	HWY: STH 175	COUNTY: DODGE	CROSS SECTIONS: STA 347+37 TO STA 348+50	SHEET 143	E

FILE NAME : P:\GMT\WisDOT\R11-0319-102 STH 175\graphics\090201_xs.dgn PLOT DATE : 4/29/2015 PLOT BY : gaspemc PLOT NAME : PLOT SCALE : 1:10

WISDOT/CADDS SHEET 21

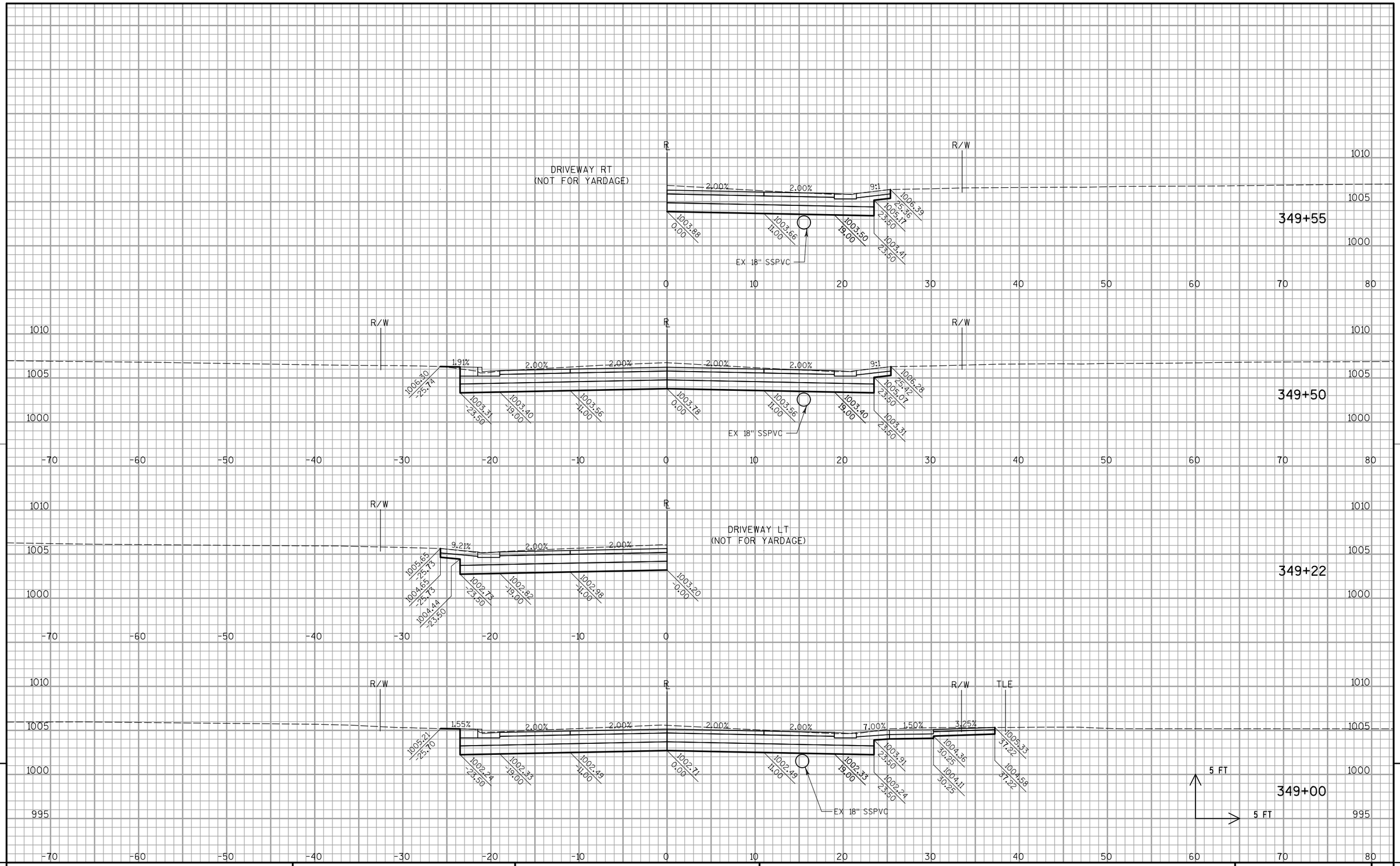

PROJECT NO: 3364-03-72	HWY: STH 175	COUNTY: DODGE	CROSS SECTIONS: STA 349+00 TO STA 349+55	SHEET 144	E

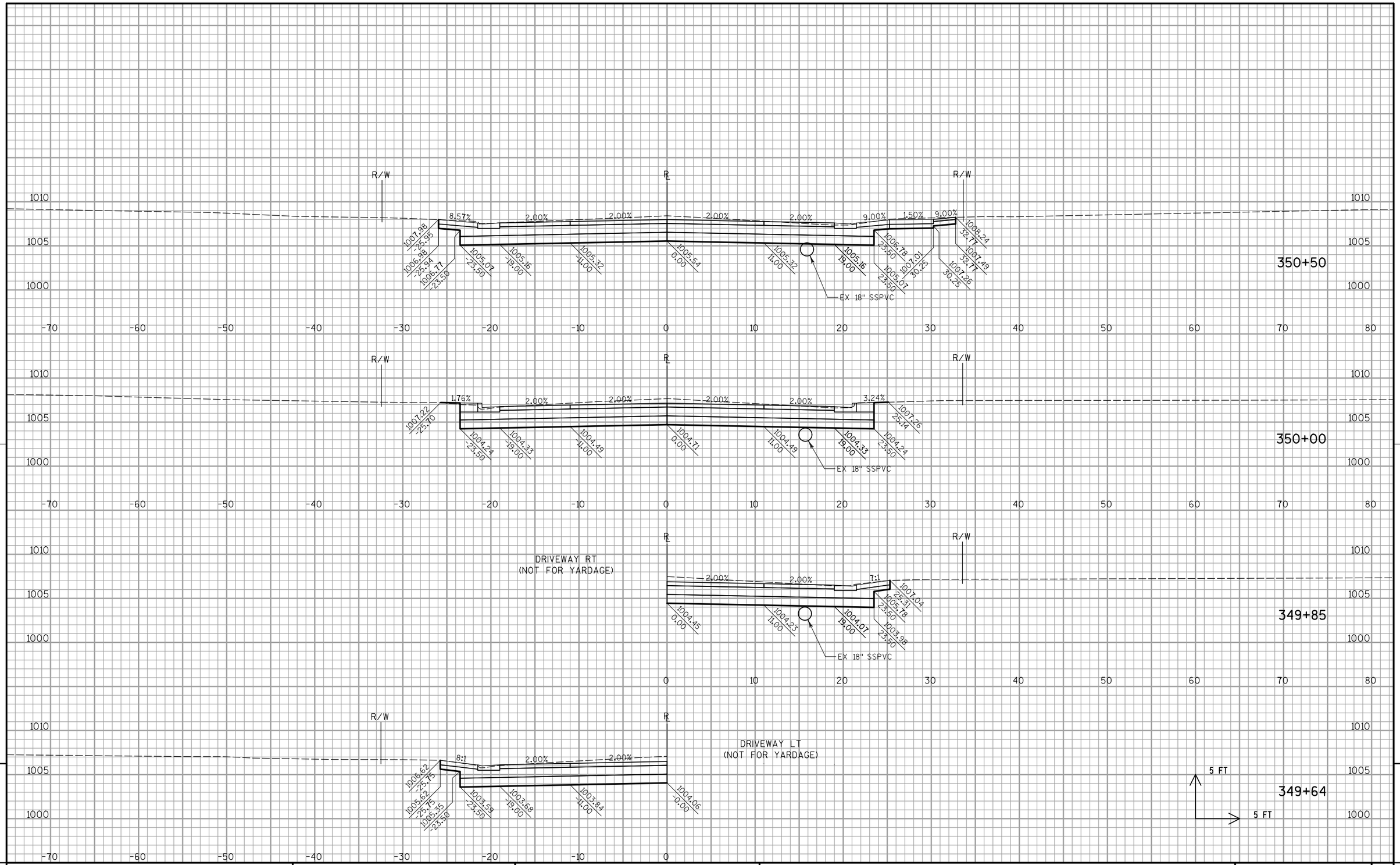

9

9

PROJECT NO: 3364-03-72	HWY: STH 175	COUNTY: DODGE	CROSS SECTIONS: STA 349+64 TO STA 350+50	SHEET 145	E

FILE NAME : P:\GMT\WisDOT\R11-0319-102 STH 175\graphics\090201_xs.dgn PLOT DATE : 4/29/2015 PLOT BY : gaspemc PLOT NAME : PLOT SCALE : 1:10

WISDOT/CADDS SHEET 21

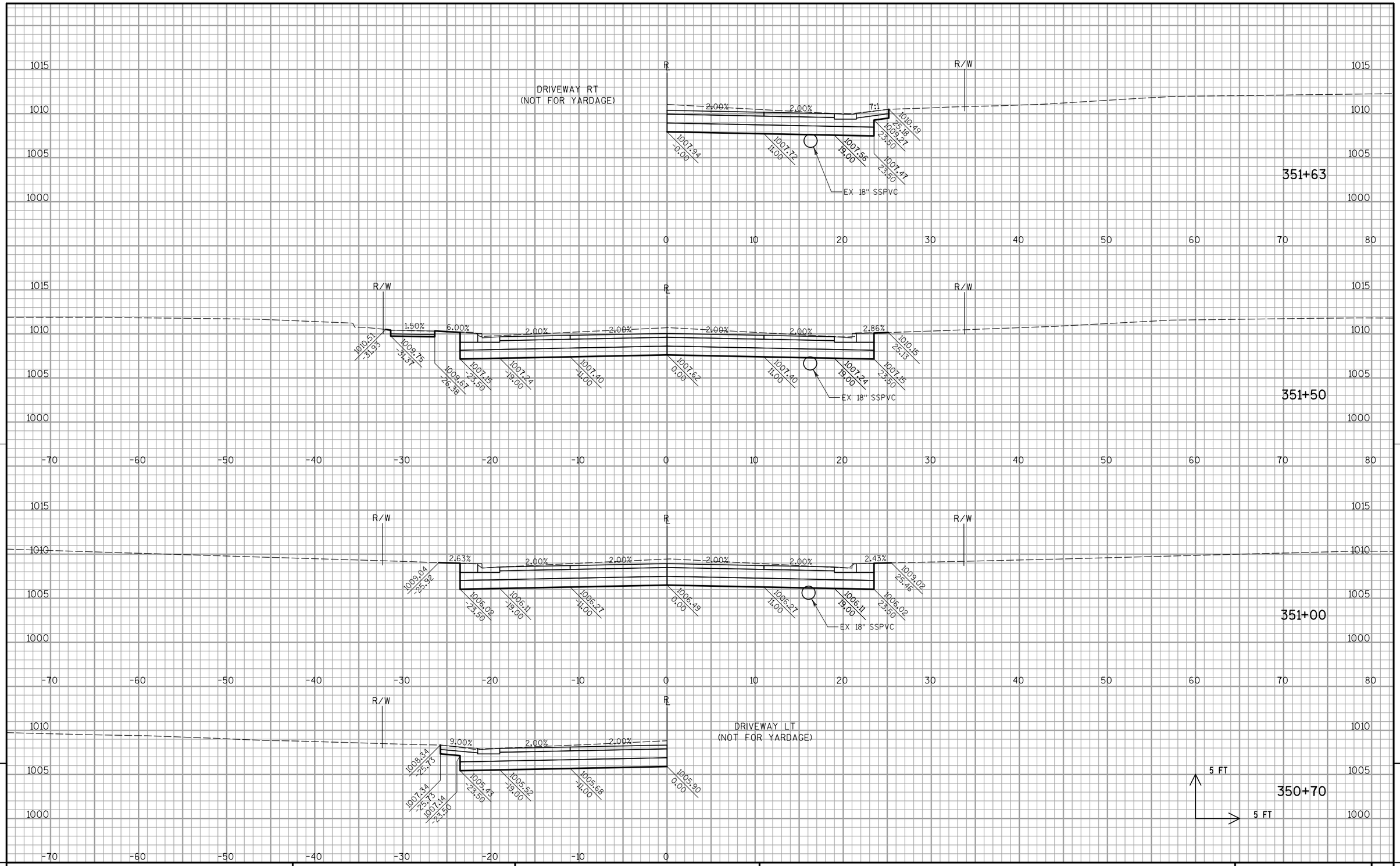

PROJECT NO: 3364-03-72	HWY: STH 175	COUNTY: DODGE	CROSS SECTIONS: STA 350+70 TO STA 351+63	SHEET 146	E

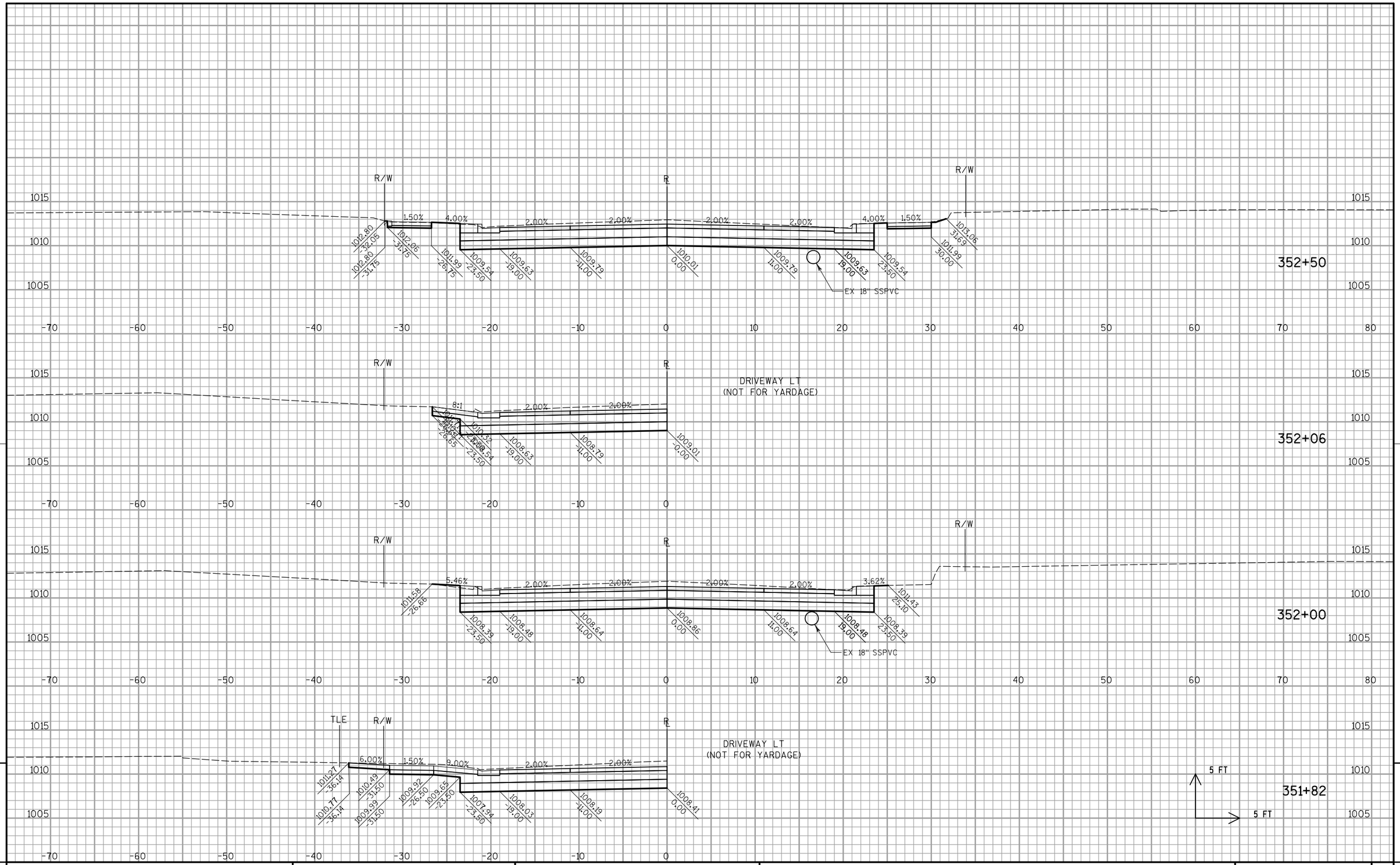

9

9

PROJECT NO: 3364-03-72	HWY: STH 175	COUNTY: DODGE	CROSS SECTIONS: STA 351+82 TO STA 352+50	SHEET 147	E

FILE NAME : P:\GMT\WisDOT\R11-0319-102 STH 175\graphics\090201_xs.dgn PLOT DATE : 4/29/2015 PLOT BY : gaspemc PLOT NAME : PLOT SCALE : 1:10

WISDOT/CADDS SHEET 21

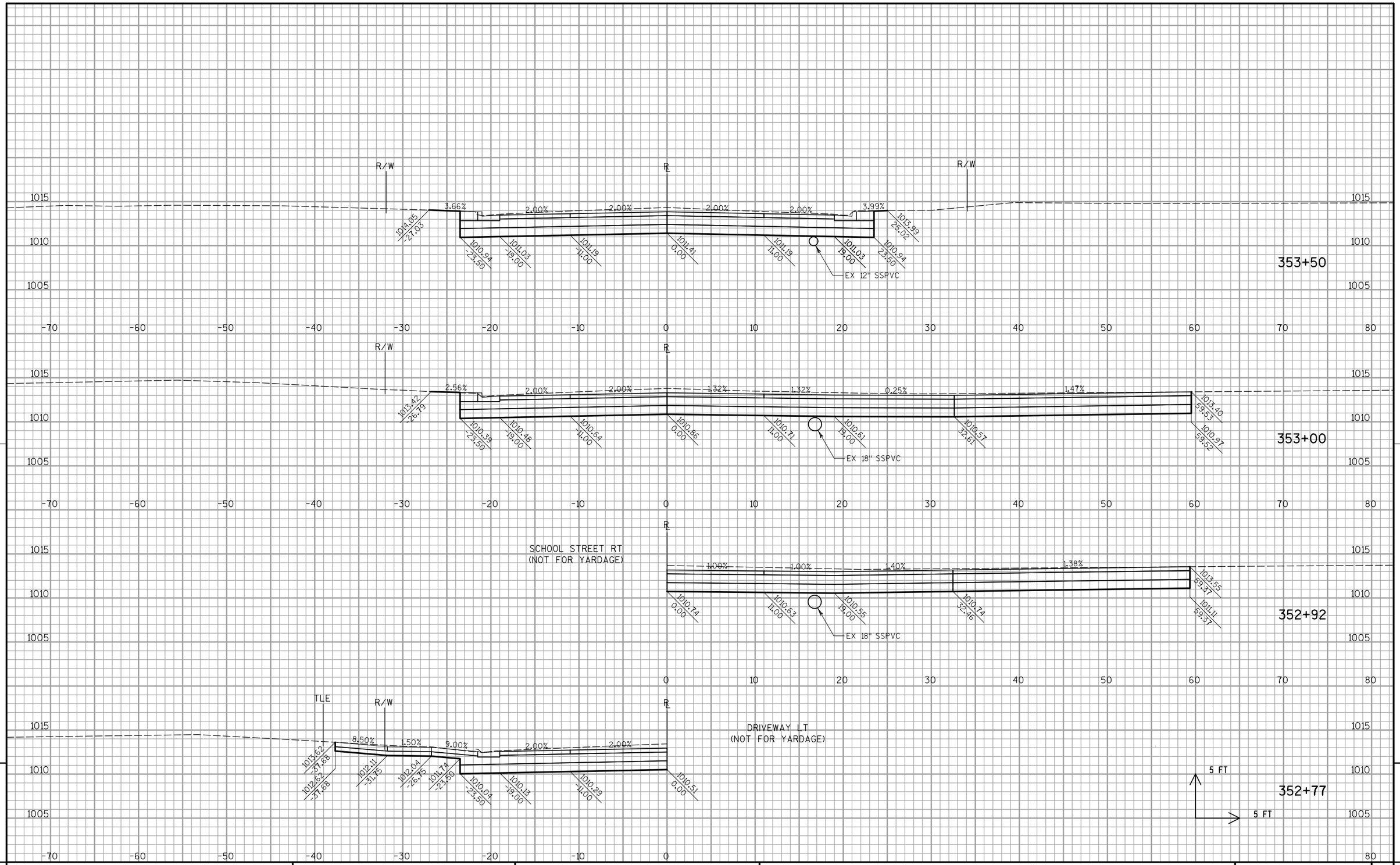

9

9

PROJECT NO: 3364-03-72	HWY: STH 175	COUNTY: DODGE	CROSS SECTIONS: STA 352+77 TO STA 353+50	SHEET 148	E

FILE NAME : P:\GMT\WisDOT\R11-0319-102 STH 175\graphics\090201_xs.dgn PLOT DATE : 4/29/2015 PLOT BY : gaspemc PLOT NAME : PLOT SCALE : 1:10

WISDOT/CADDS SHEET 21

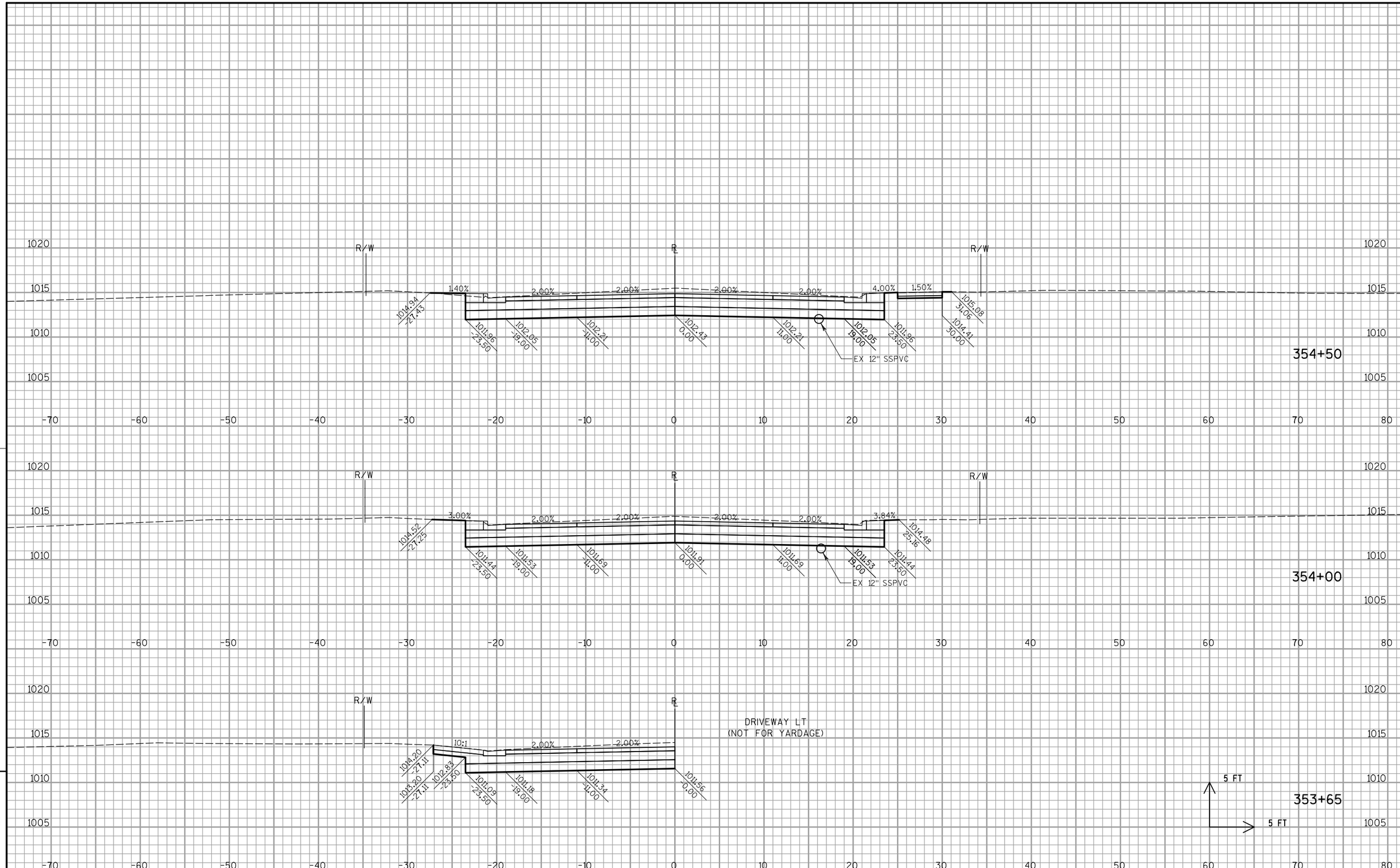

9

9

PROJECT NO: 3364-03-72	HWY: STH 175	COUNTY: DODGE	CROSS SECTIONS: STA 353+65 TO STA 354+50	SHEET 149	E

FILE NAME : P:\GMT\WisDOT\R11-0319-102 STH 175\graphics\090201_xs.dgn PLOT DATE : 4/29/2015 PLOT BY : gaspemc PLOT NAME : PLOT SCALE : 1:10

WISDOT/CADDS SHEET 21

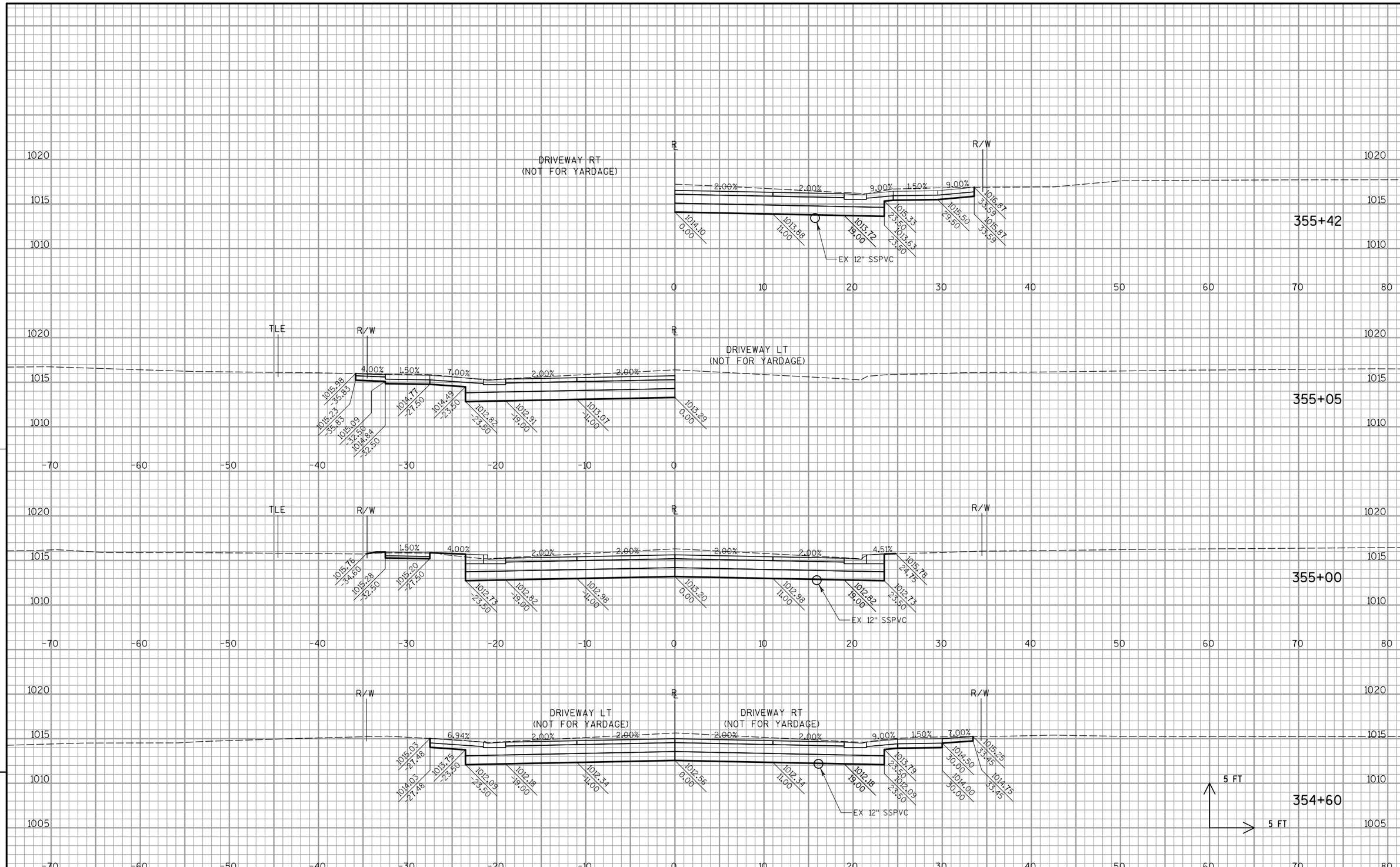

9

9

PROJECT NO: 3364-03-72	HWY: STH 175	COUNTY: DODGE	CROSS SECTIONS: STA 354+60 TO STA 355+42	SHEET 150	E

FILE NAME : P:\GMT\WisDOT\R11-0319-102 STH 175\graphics\090201_xs.dgn PLOT DATE : 4/29/2015 PLOT BY : gaspemc PLOT NAME : PLOT SCALE : 1:10

WISDOT/CADDS SHEET 21

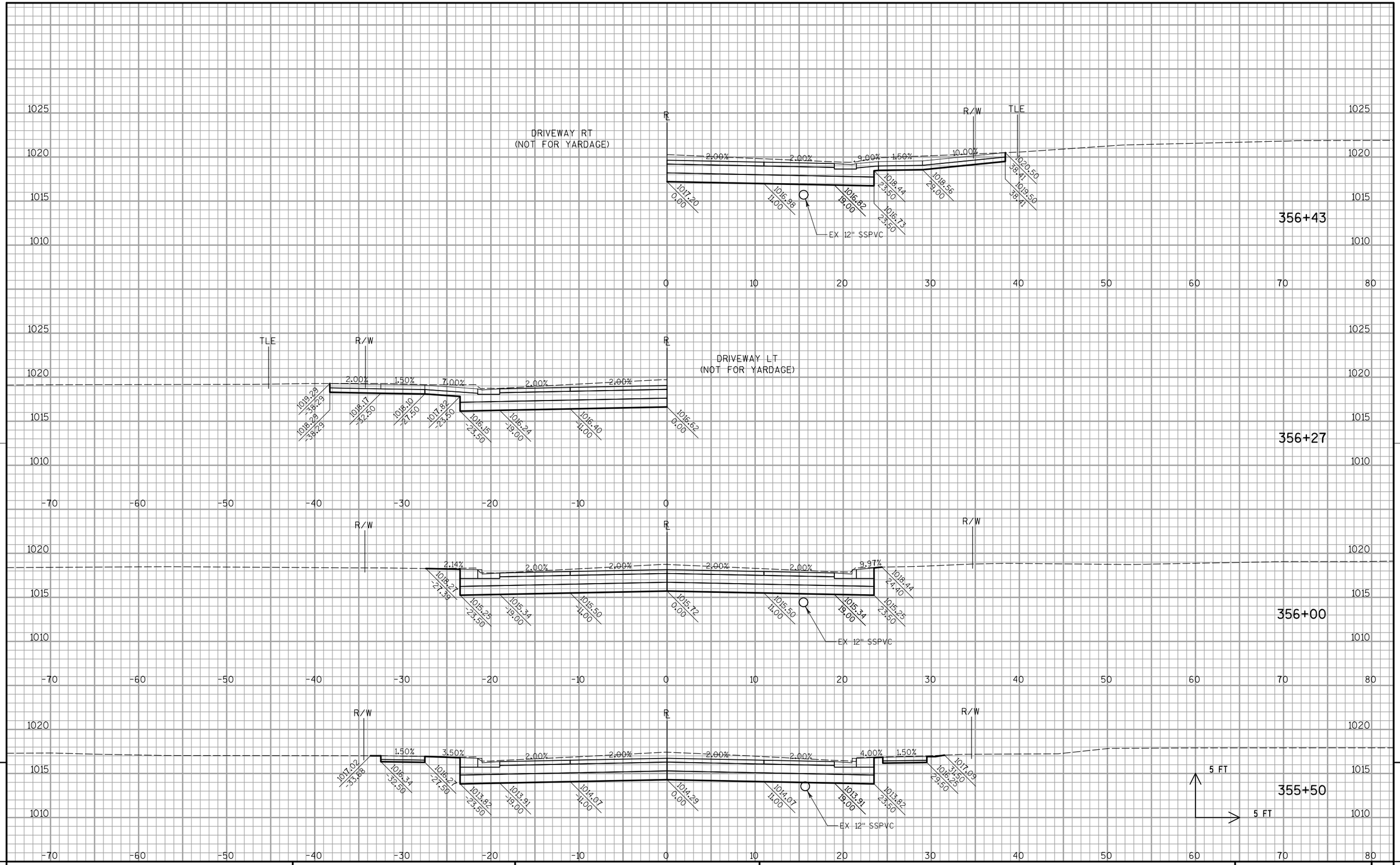

PROJECT NO: 3364-03-72	HWY: STH 175	COUNTY: DODGE	CROSS SECTIONS: STA 355+50 TO STA 356+43	SHEET 151	E

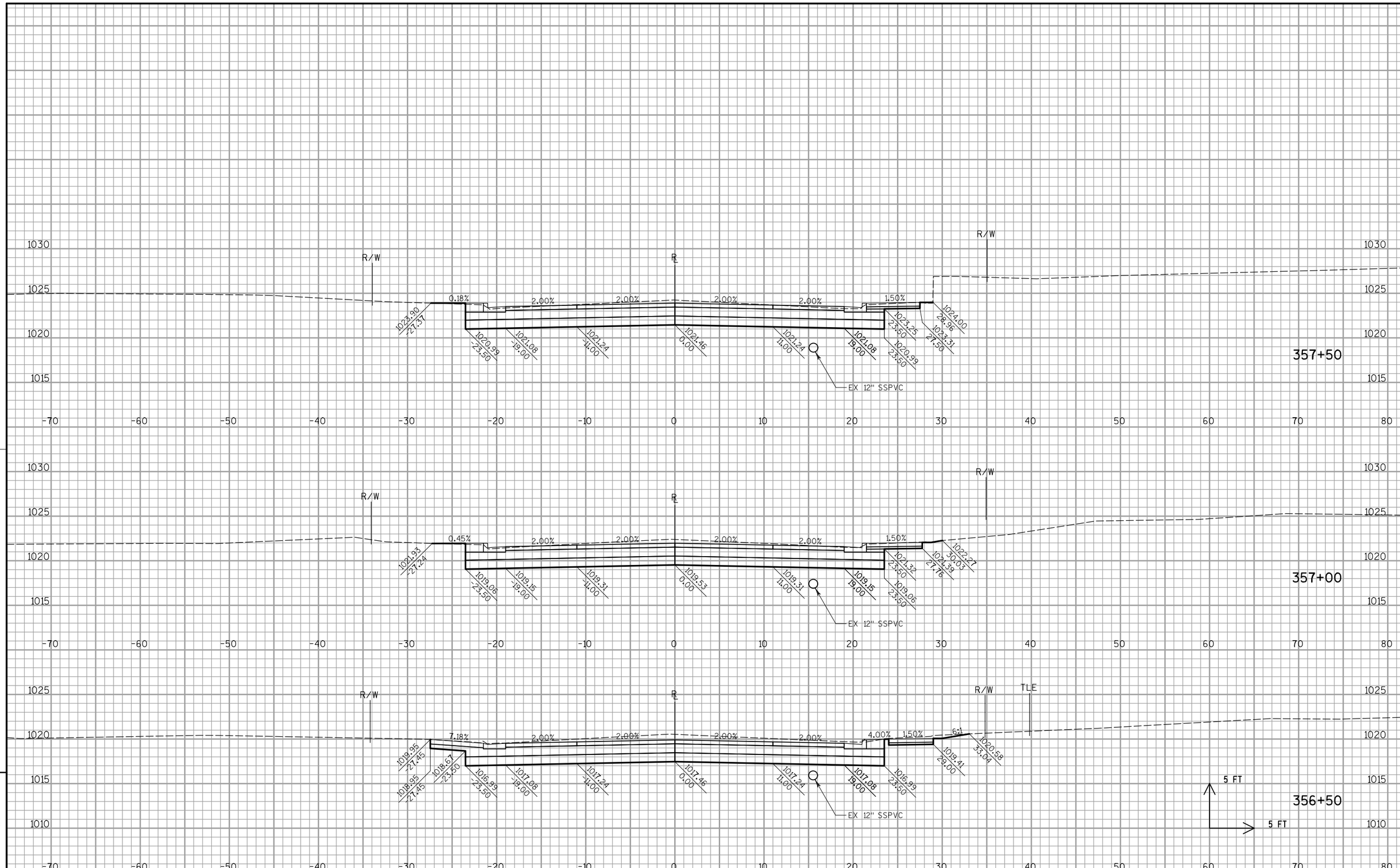

PROJECT NO: 3364-03-72	HWY: STH 175	COUNTY: DODGE	CROSS SECTIONS: STA 356+50 TO STA 357+50	SHEET 152	E

FILE NAME : P:\GMT\WisDOT\R11-0319-102 STH 175\graphics\090201_xs.dgn PLOT DATE : 4/29/2015 PLOT BY : gaspemc PLOT NAME : PLOT SCALE : 1:10

WISDOT/CADDS SHEET 21

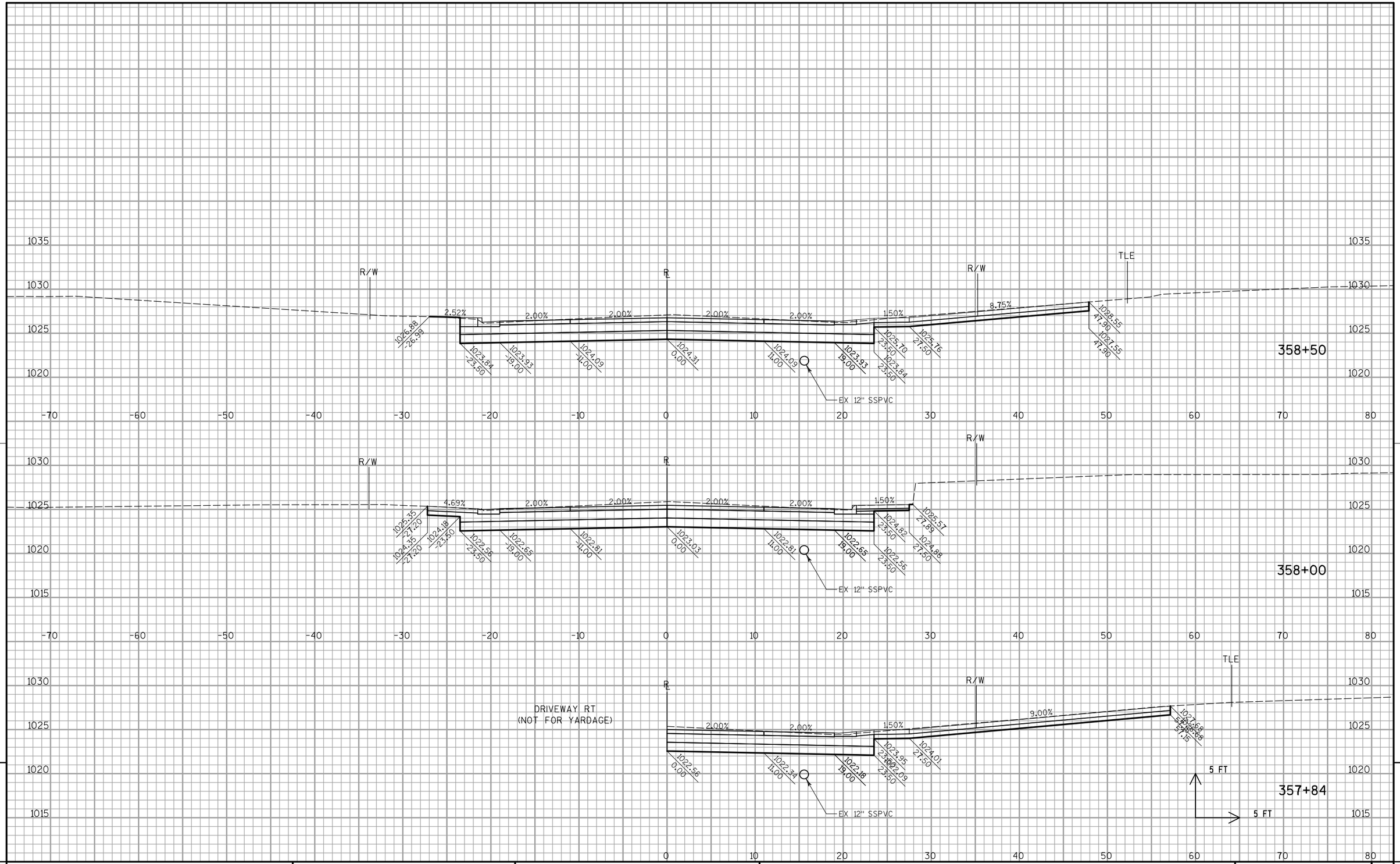

PROJECT NO: 3364-03-72	HWY: STH 175	COUNTY: DODGE	CROSS SECTIONS: STA 357+84 TO STA 358+50	SHEET 153	E

FILE NAME : P:\GMT\WisDOT\R11-0319-102 STH 175\graphics\090201_xs.dgn PLOT DATE : 4/29/2015 PLOT BY : gaspemc PLOT NAME : PLOT SCALE : 1:10

WISDOT/CADDS SHEET 21

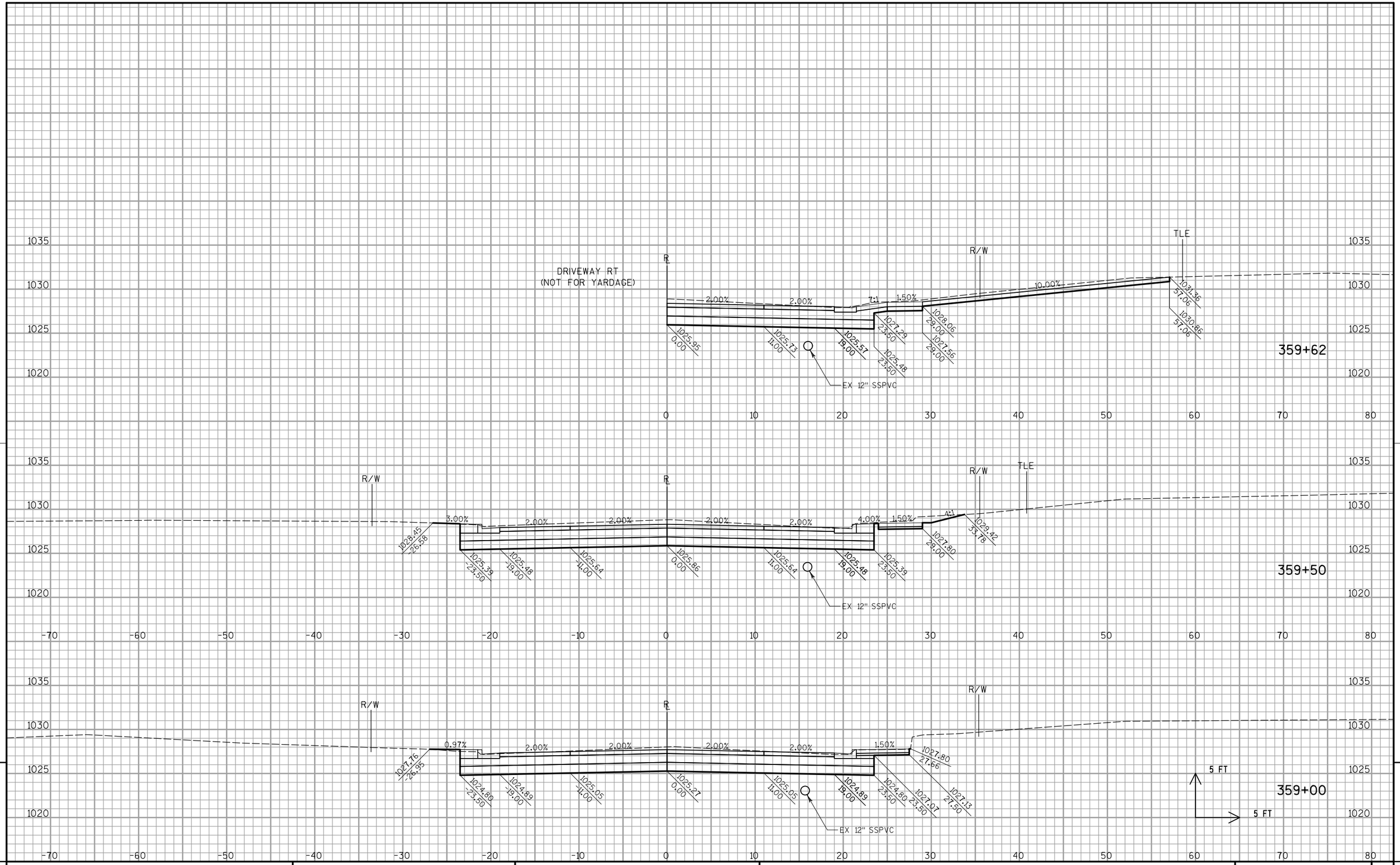

9

9

PROJECT NO: 3364-03-72	HWY: STH 175	COUNTY: DODGE	CROSS SECTIONS: STA 359+00 TO STA 359+62	SHEET 154	E

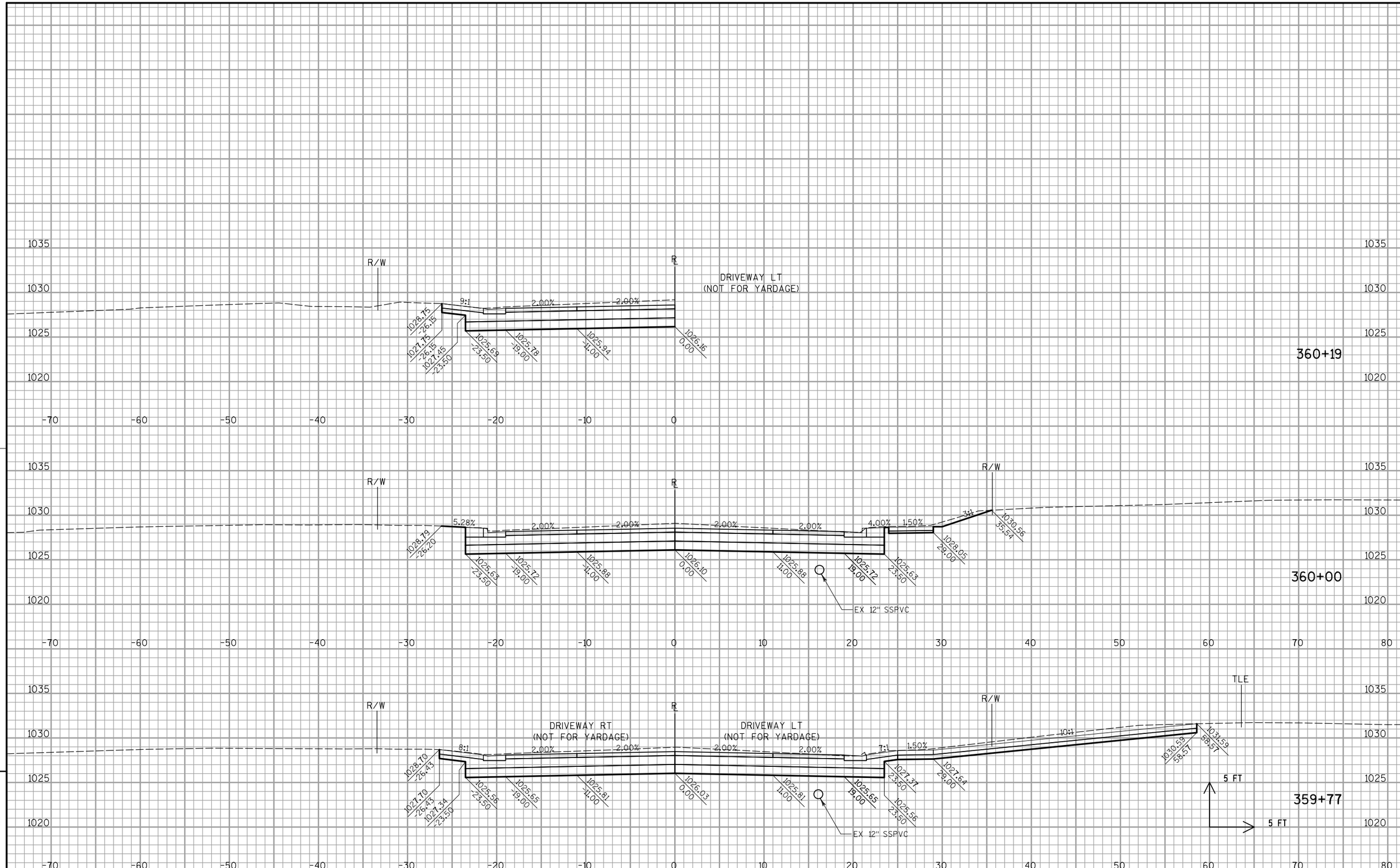

9

9

PROJECT NO: 3364-03-72	HWY: STH 175	COUNTY: DODGE	CROSS SECTIONS: STA 359+77 TO STA 360+19	SHEET 155	E

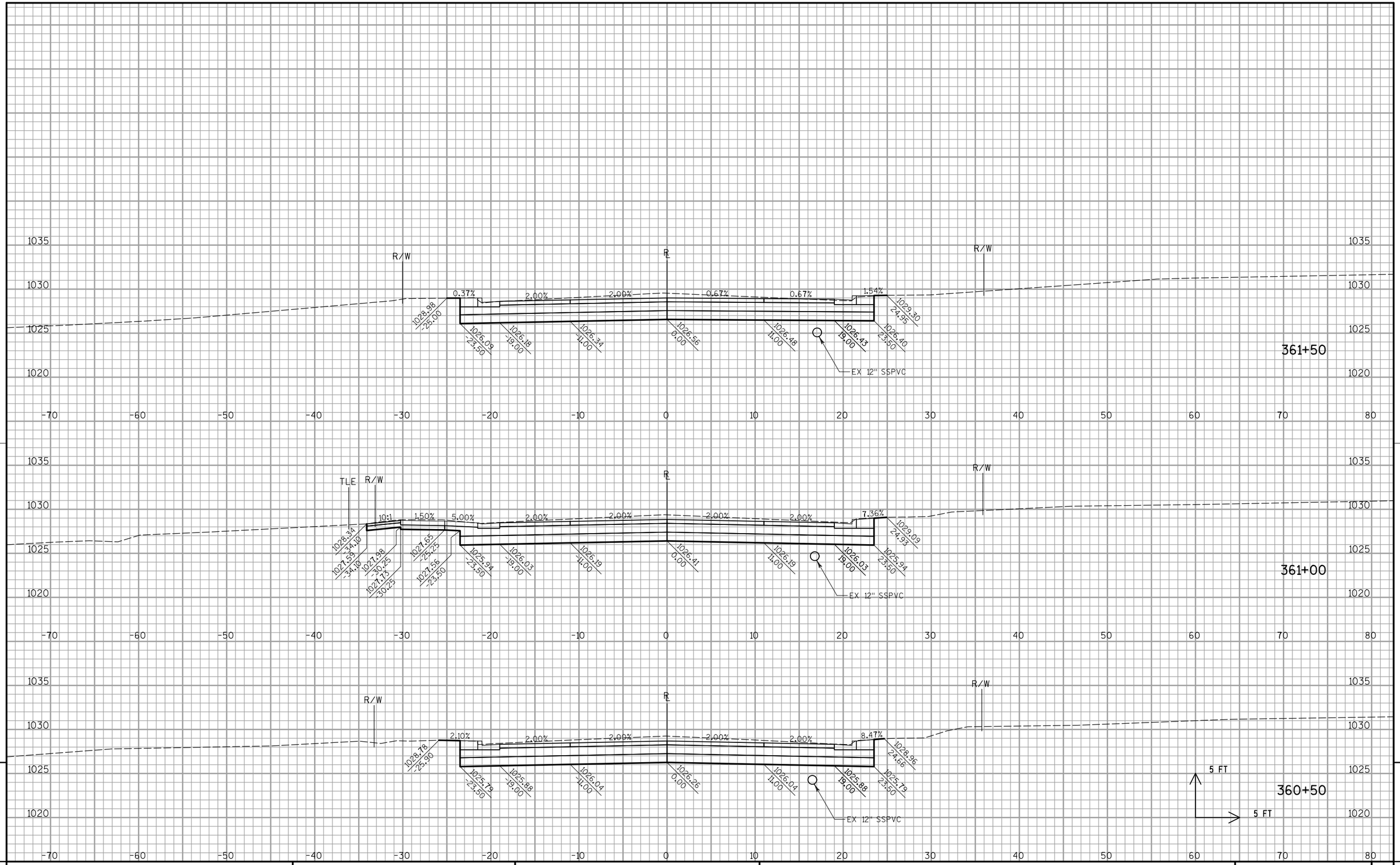

PROJECT NO: 3364-03-72	HWY: STH 175	COUNTY: DODGE	CROSS SECTIONS: STA 360+50 TO STA 361+50	SHEET 156	E

FILE NAME : P:\GMT\WisDOT\R11-0319-102 STH 175\graphics\090201_xs.dgn PLOT DATE : 4/29/2015 PLOT BY : gaspemc PLOT NAME : PLOT SCALE : 1:10

WISDOT/CADDS SHEET 21

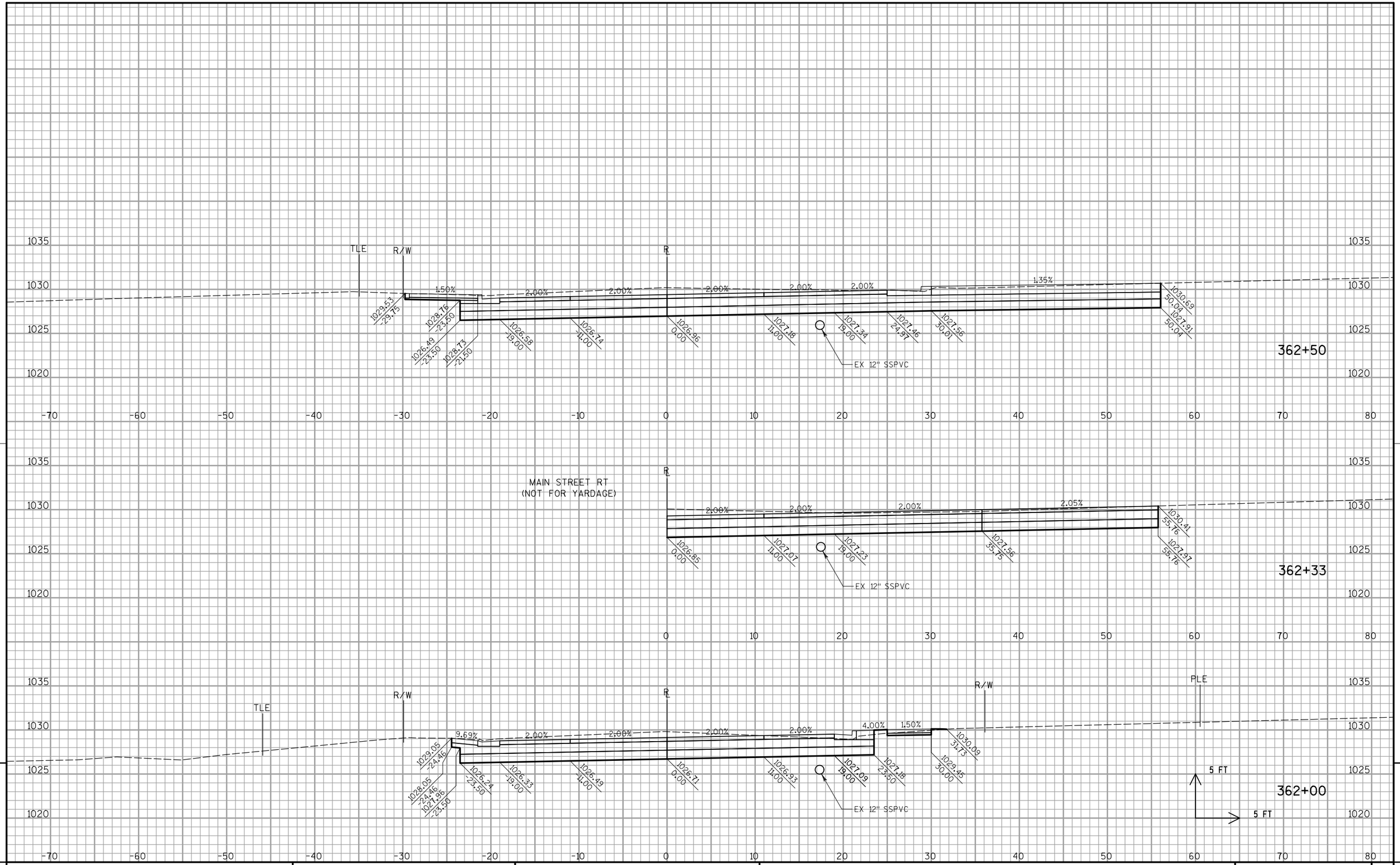

PROJECT NO: 3364-03-72	HWY: STH 175	COUNTY: DODGE	CROSS SECTIONS: STA 362+00 TO STA 362+50	SHEET 157	E

FILE NAME : P:\GMT\WisDOT\R11-0319-102 STH 175\graphics\090201_xs.dgn PLOT DATE : 4/29/2015 PLOT BY : gaspemc PLOT NAME : PLOT SCALE : 1:10

WISDOT/CADDS SHEET 21

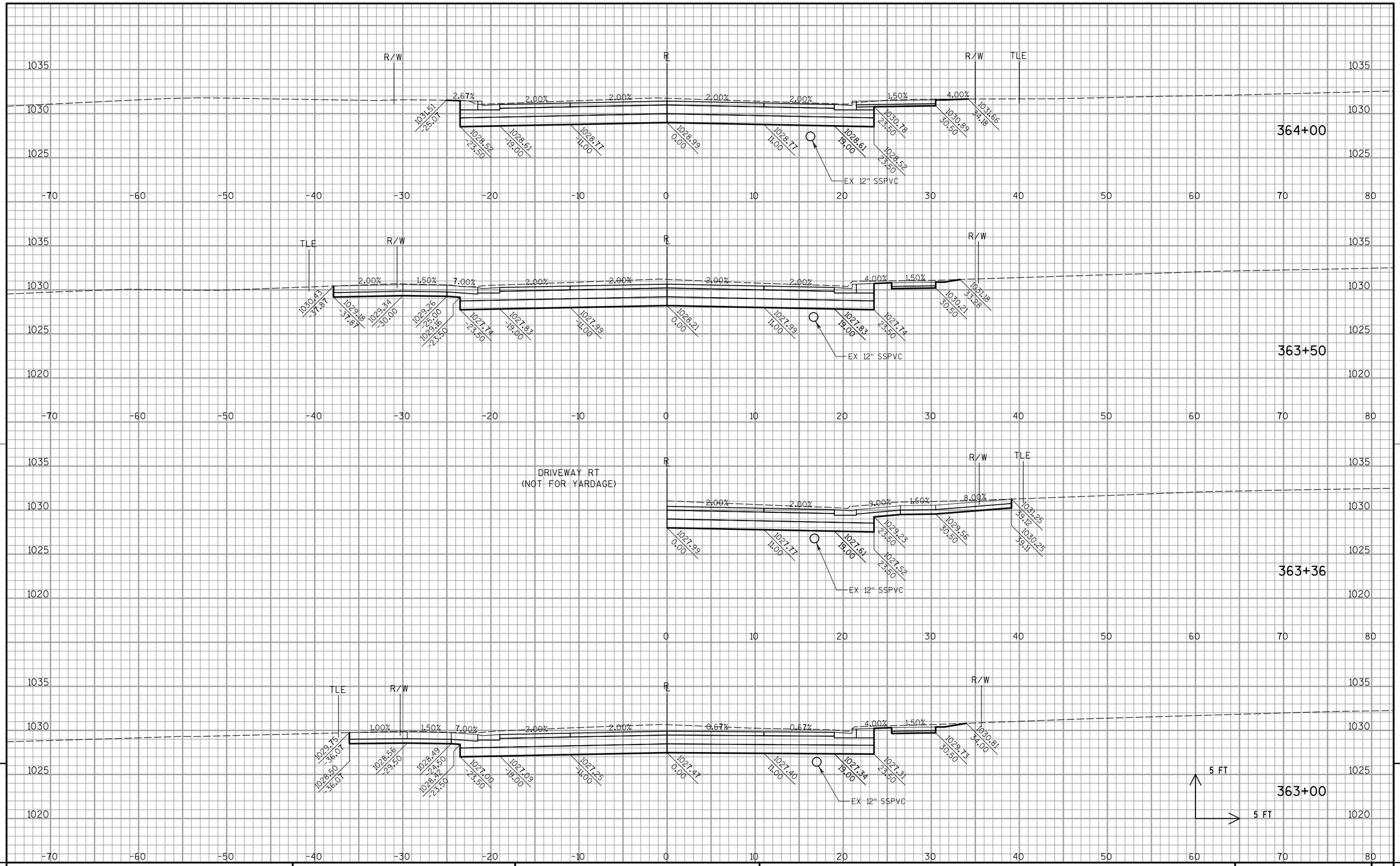

PROJECT NO: 3364-03-72	HWY: STH 175	COUNTY: DODGE	CROSS SECTIONS: STA 363+00 TO STA 364+00	SHEET 158	E

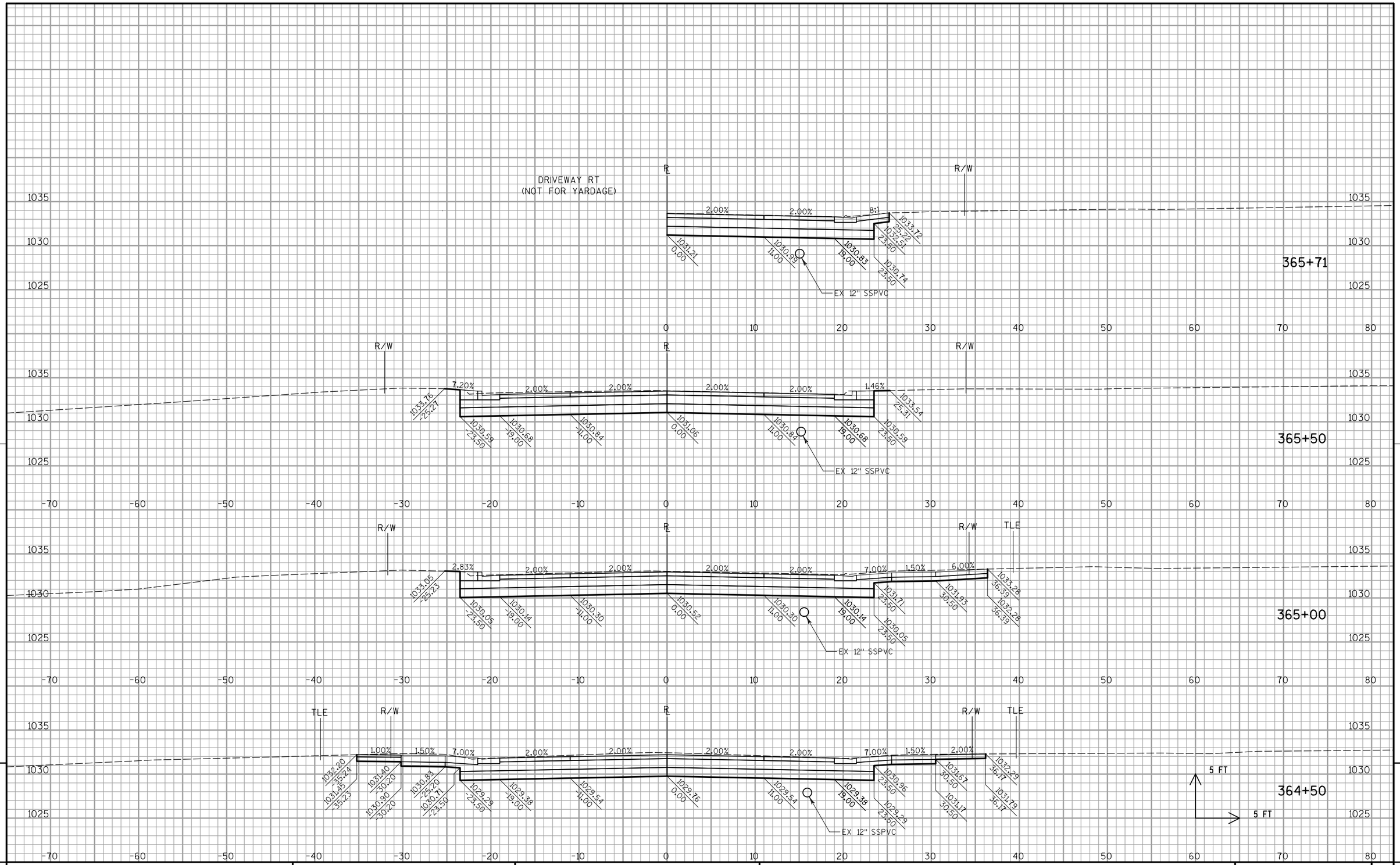

PROJECT NO: 3364-03-72	HWY: STH 175	COUNTY: DODGE	CROSS SECTIONS: STA 364+50 TO STA 365+71	SHEET 159	E

FILE NAME : P:\GMT\WisDOT\R11-0319-102 STH 175\graphics\090201_xs.dgn PLOT DATE : 4/29/2015 PLOT BY : gaspemc PLOT NAME : PLOT SCALE : 1:10

WISDOT/CADDS SHEET 21

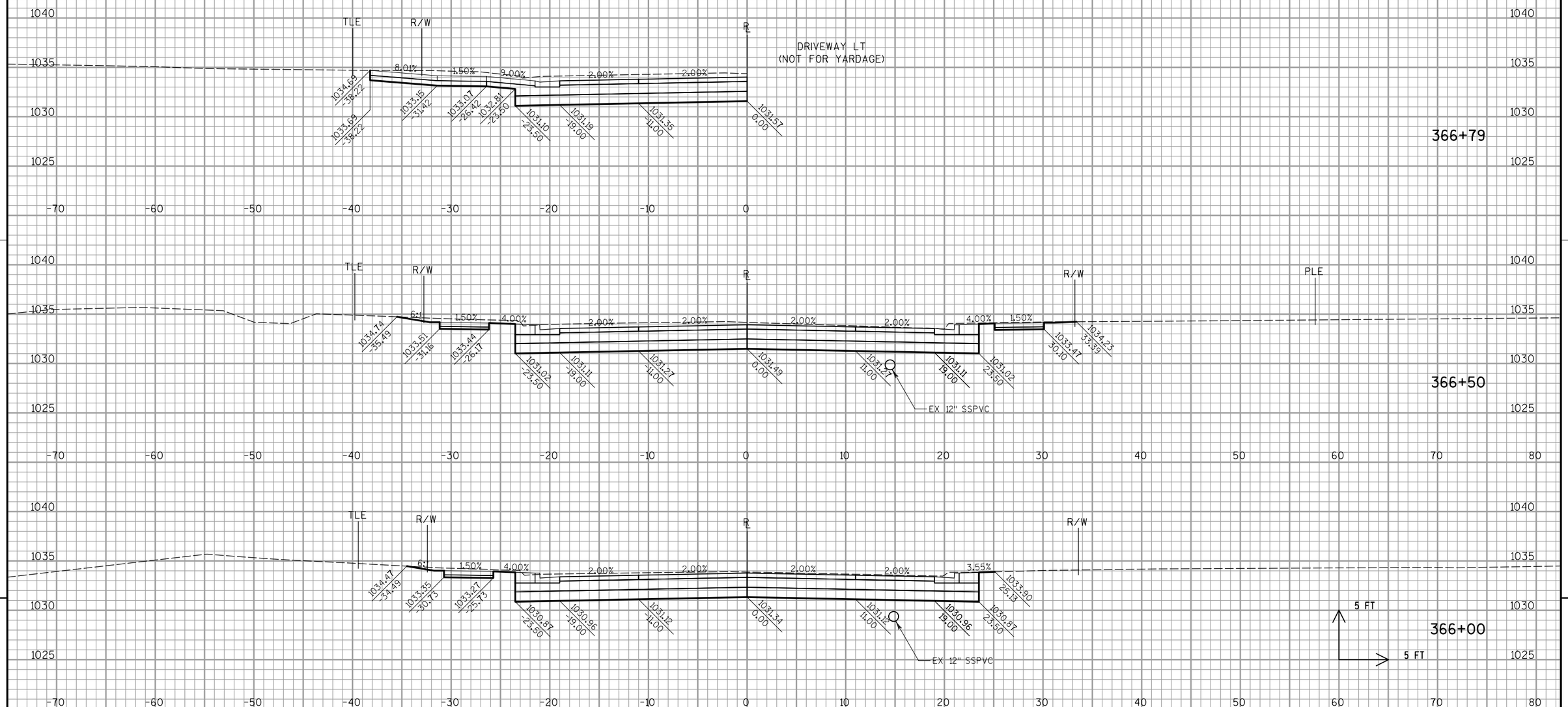

9

9

PROJECT NO: 3364-03-72	HWY: STH 175	COUNTY: DODGE	CROSS SECTIONS: STA 366+00 TO STA 366+79	SHEET 160	E

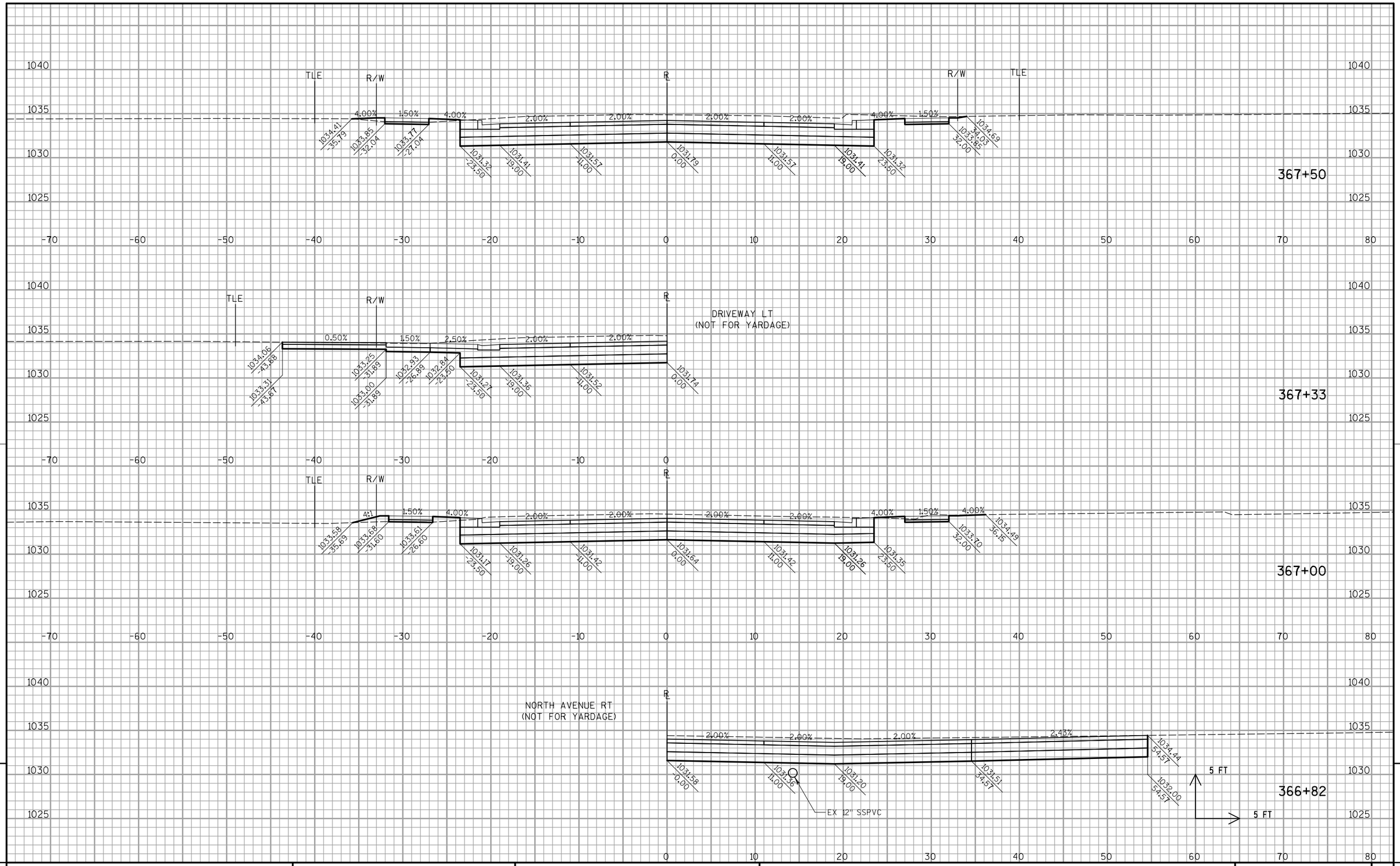

PROJECT NO: 3364-03-72	HWY: STH 175	COUNTY: DODGE	CROSS SECTIONS: STA 366+82 TO STA 367+50	SHEET 161	E

FILE NAME : P:\GMT\WisDOT\R11-0319-102 STH 175\graphics\090201_xs.dgn PLOT DATE : 4/29/2015 PLOT BY : gaspemc PLOT NAME : PLOT SCALE : 1:10

WISDOT/CADDS SHEET 21

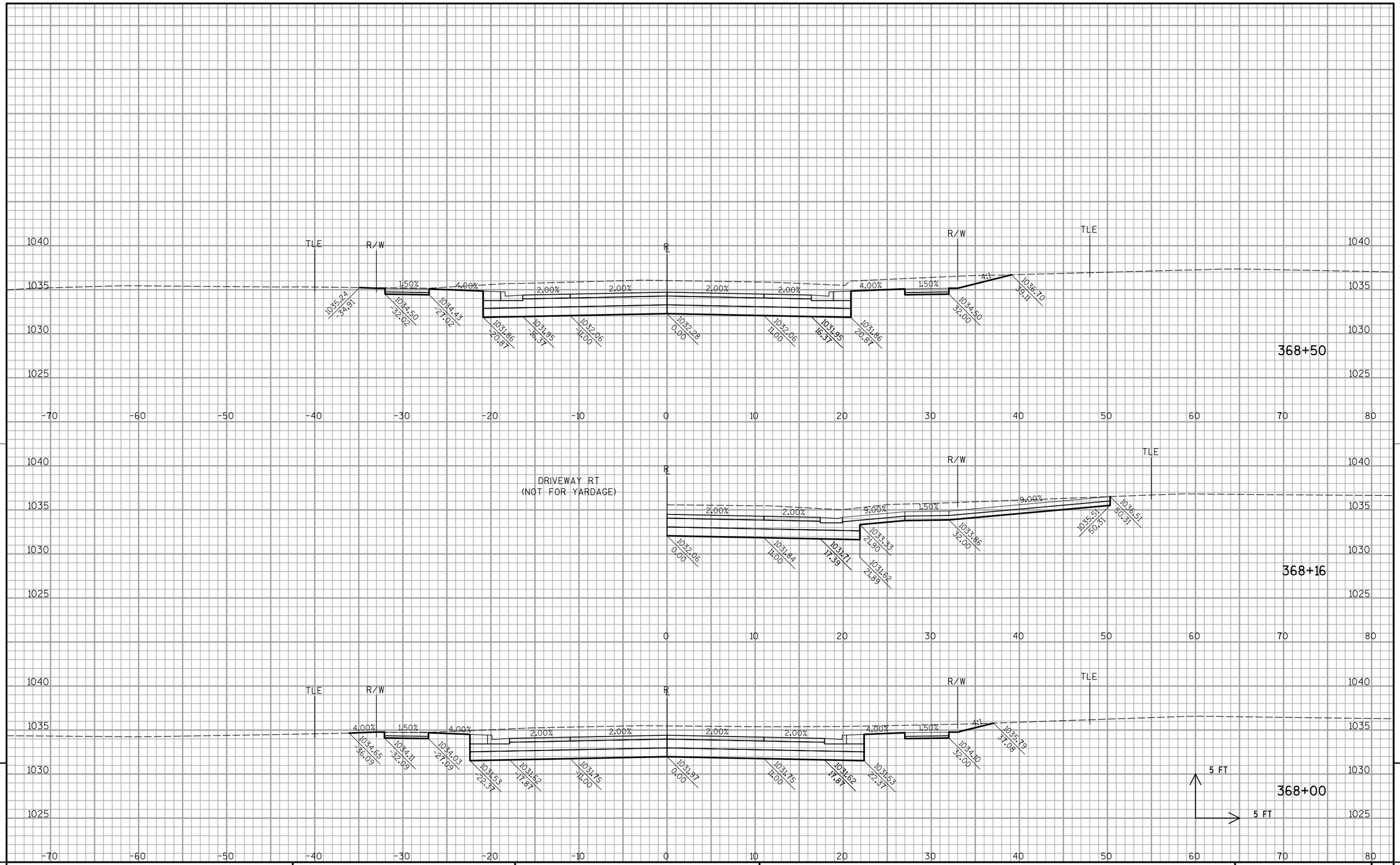

9

9

PROJECT NO: 3364-03-72	HWY: STH 175	COUNTY: DODGE	CROSS SECTIONS: STA 368+00 TO STA 368+50	SHEET 162	E

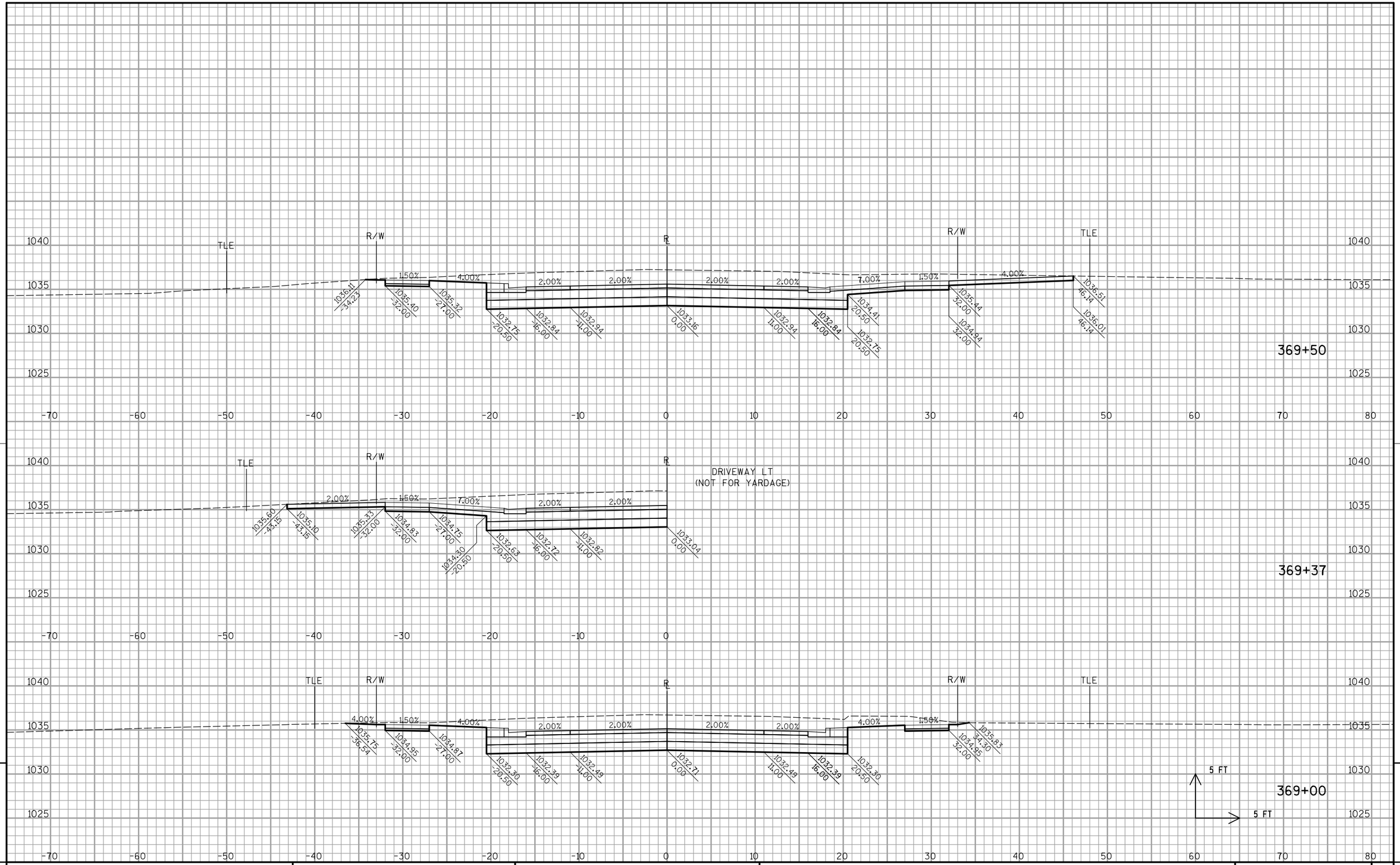

9

9

PROJECT NO: 3364-03-72	HWY: STH 175	COUNTY: DODGE	CROSS SECTIONS: STA 369+00 TO STA 369+50	SHEET 163	E

FILE NAME : P:\GMT\WisDOT\R11-0319-102 STH 175\graphics\090201_xs.dgn PLOT DATE : 4/29/2015 PLOT BY : gaspemc PLOT NAME : PLOT SCALE : 1:10

WISDOT/CADDS SHEET 21

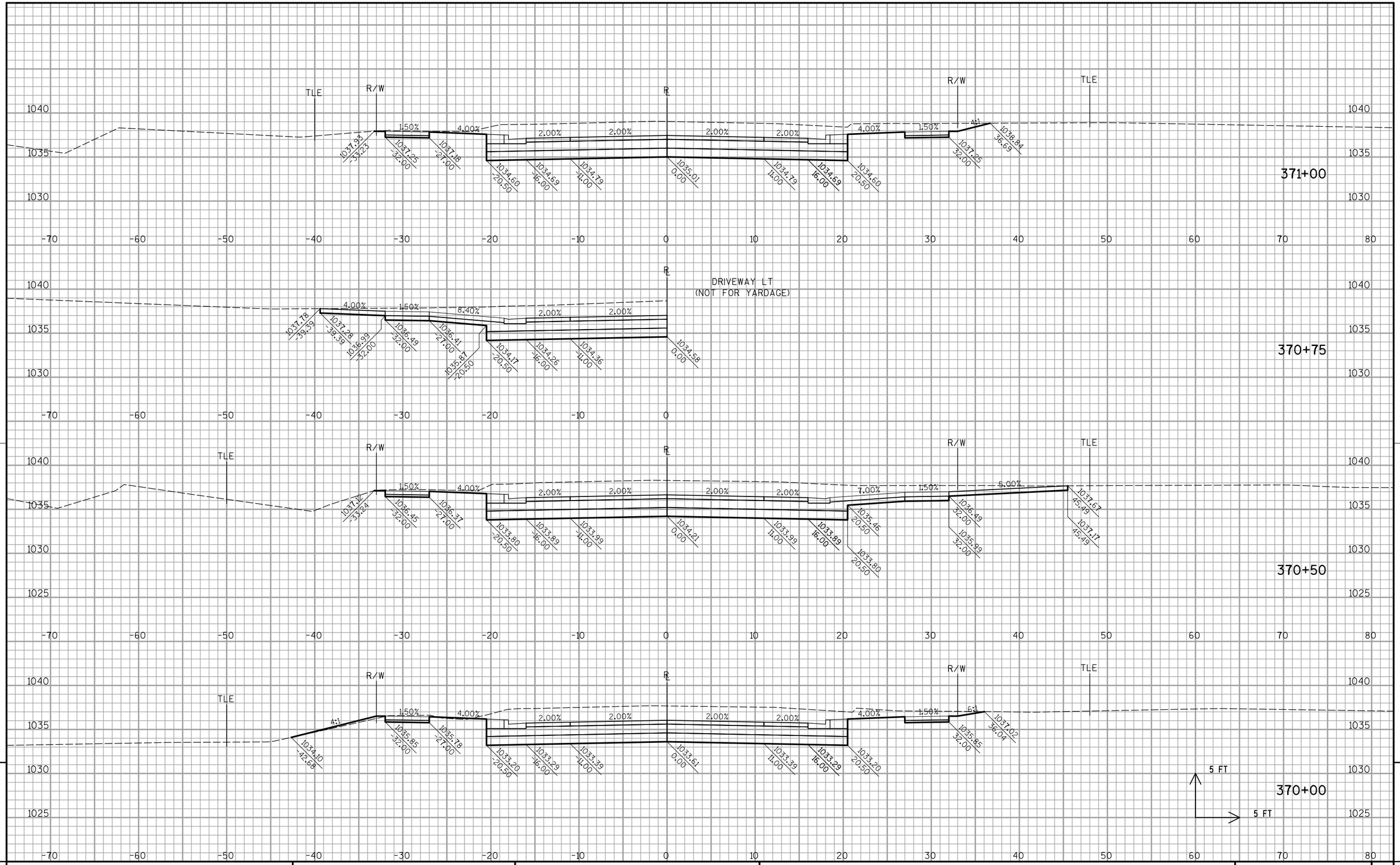

9

PROJECT NO: 3364-03-72	HWY: STH 175	COUNTY: DODGE	CROSS SECTIONS: STA 370+00 TO STA 371+00	SHEET 164	E

FILE NAME : P:\GMT\WisDOT\R11-0319-102 STH 175\graphics\090201_xs.dgn PLOT DATE : 4/29/2015 PLOT BY : gaspemc PLOT NAME : PLOT SCALE : 1:10

WISDOT/CADDS SHEET 21

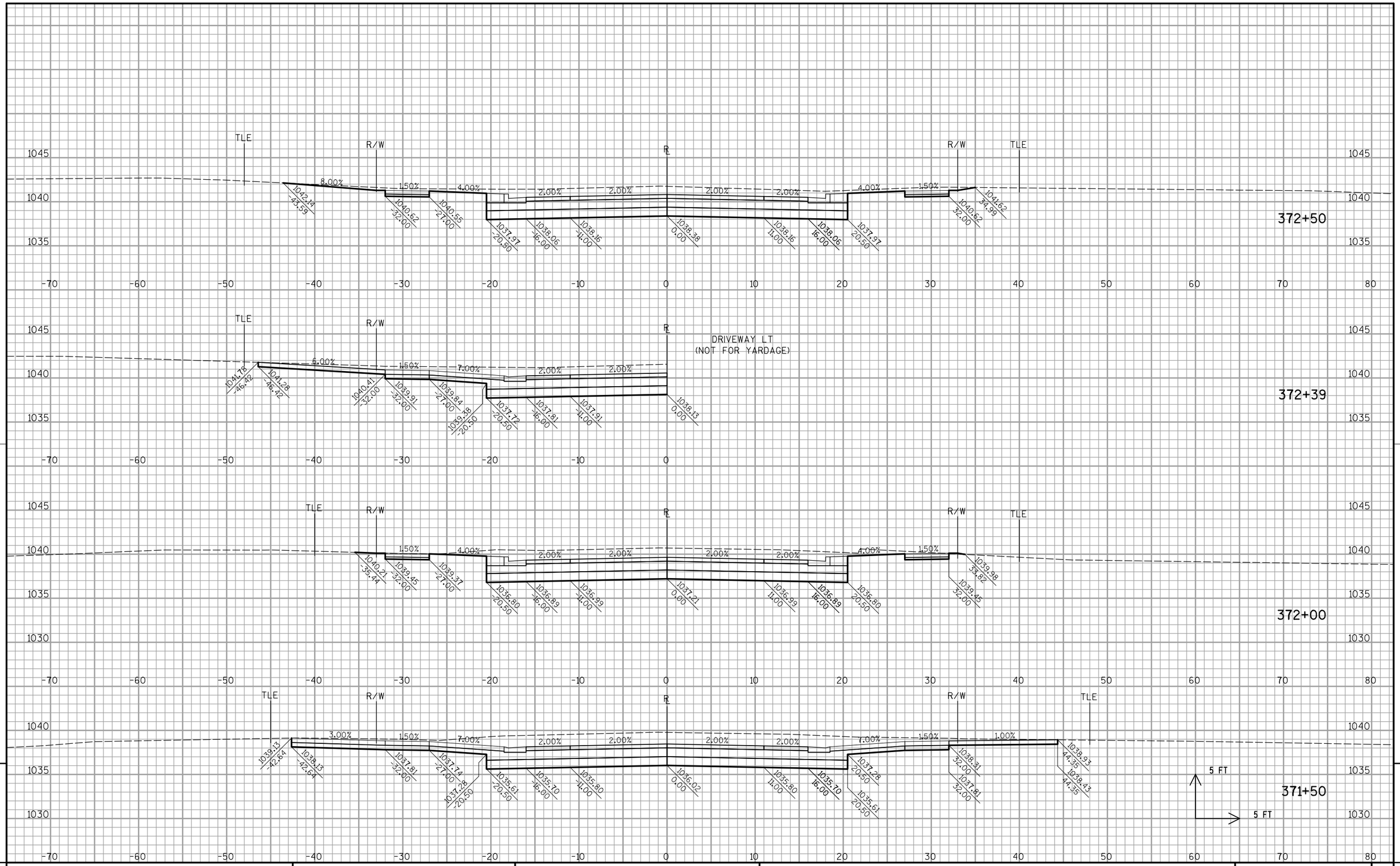

9

PROJECT NO: 3364-03-72	HWY: STH 175	COUNTY: DODGE	CROSS SECTIONS: STA 371+50 TO STA 372+50	SHEET 165	E

FILE NAME : P:\GMT\WisDOT\R11-0319-102 STH 175\graphics\090201_xs.dgn PLOT DATE : 4/29/2015 PLOT BY : gaspemc PLOT NAME : PLOT SCALE : 1:10

WISDOT/CADDS SHEET 21

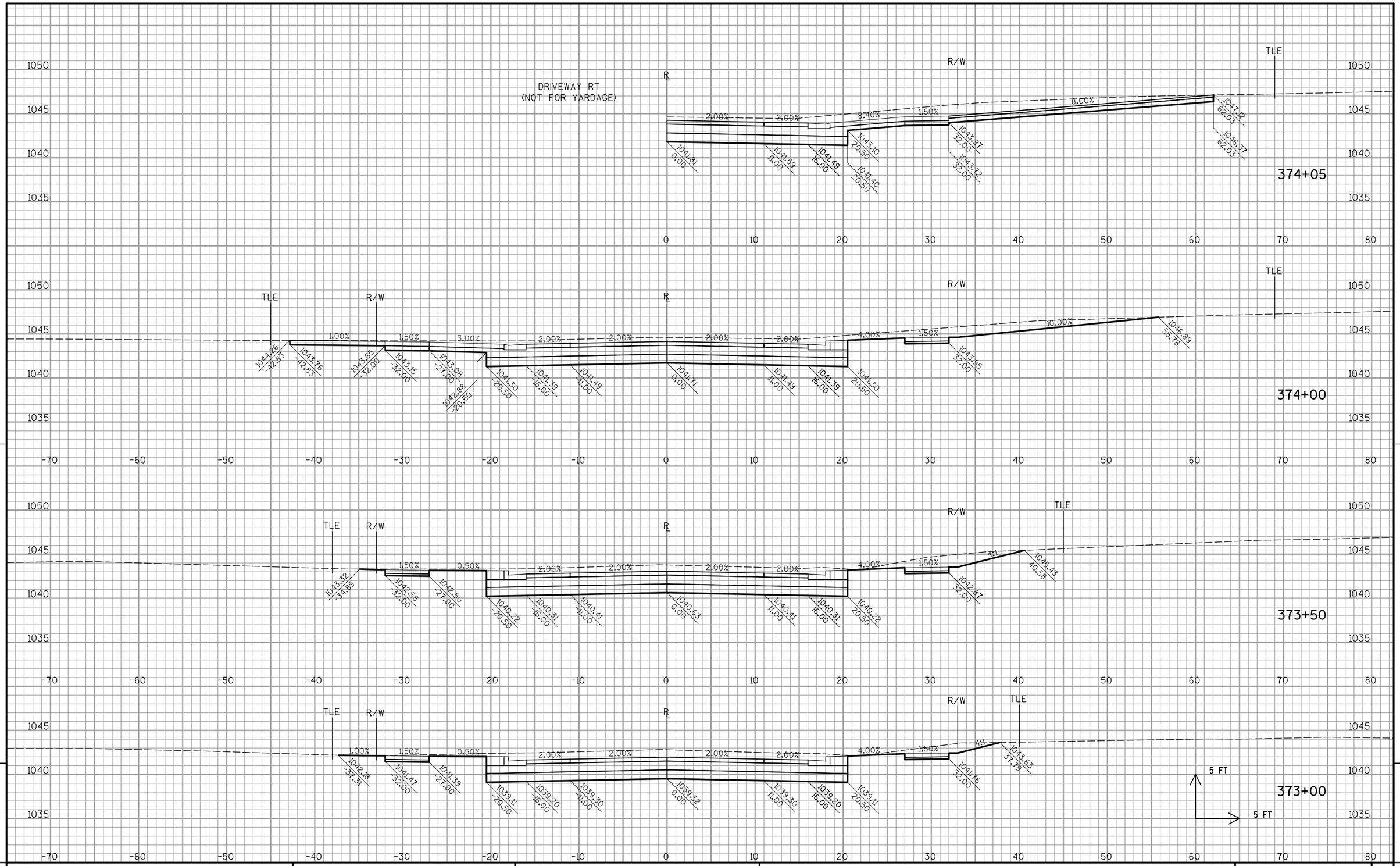

PROJECT NO: 3364-03-72	HWY: STH 175	COUNTY: DODGE	CROSS SECTIONS: STA 373+00 TO STA 374+05	SHEET 166	E

FILE NAME : P:\GMT\WisDOT\R11-0319-102 STH 175\graphics\090201_xs.dgn PLOT DATE : 4/29/2015 PLOT BY : gaspemc PLOT NAME : PLOT SCALE : 1:10

WISDOT/CADDS SHEET 21

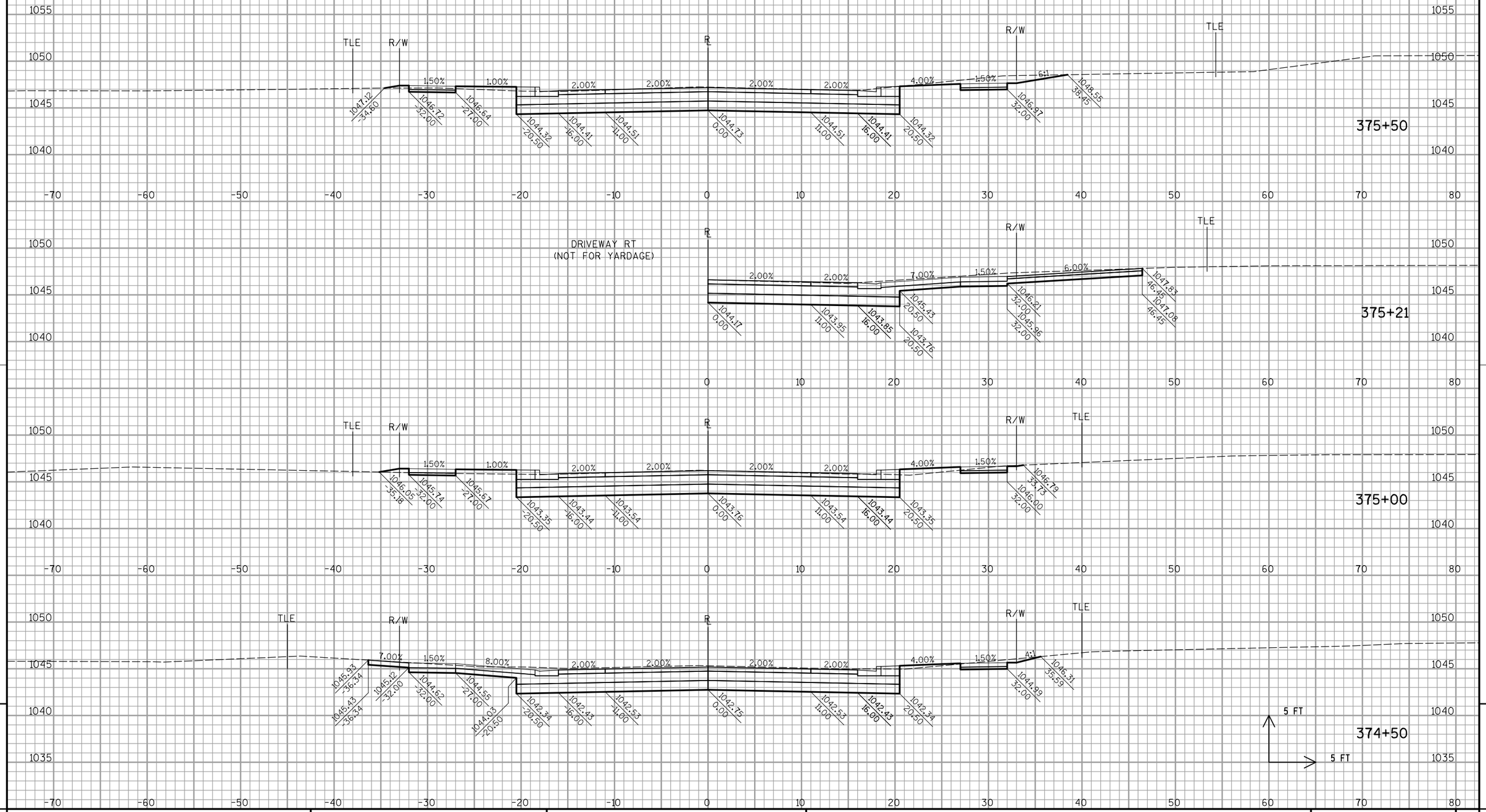

9

9

PROJECT NO: 3364-03-72	HWY: STH 175	COUNTY: DODGE	CROSS SECTIONS: STA 374+50 TO STA 375+50	SHEET 167	E

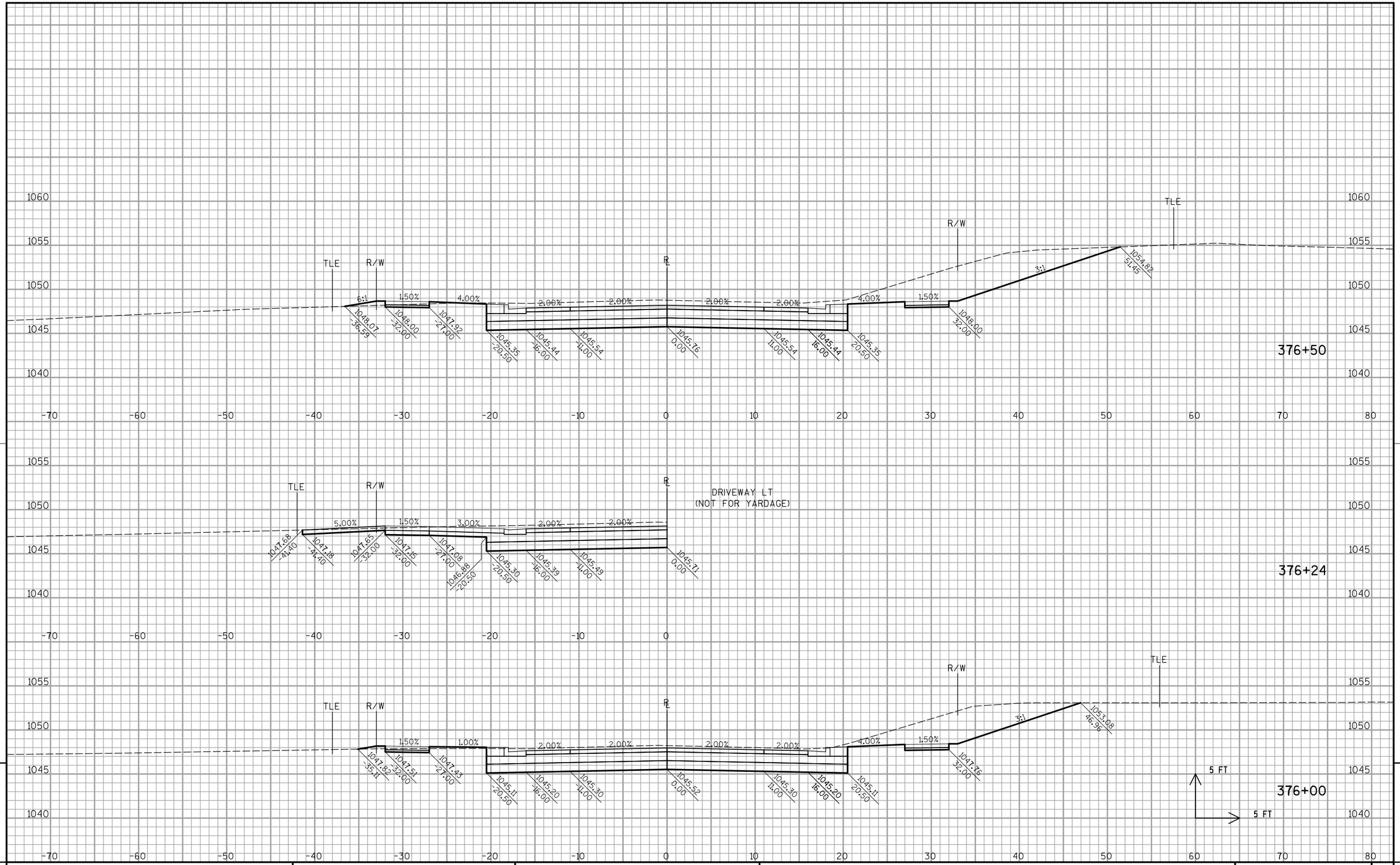

9

9

PROJECT NO: 3364-03-72	HWY: STH 175	COUNTY: DODGE	CROSS SECTIONS: STA 376+00 TO STA 376+50	SHEET 168	E

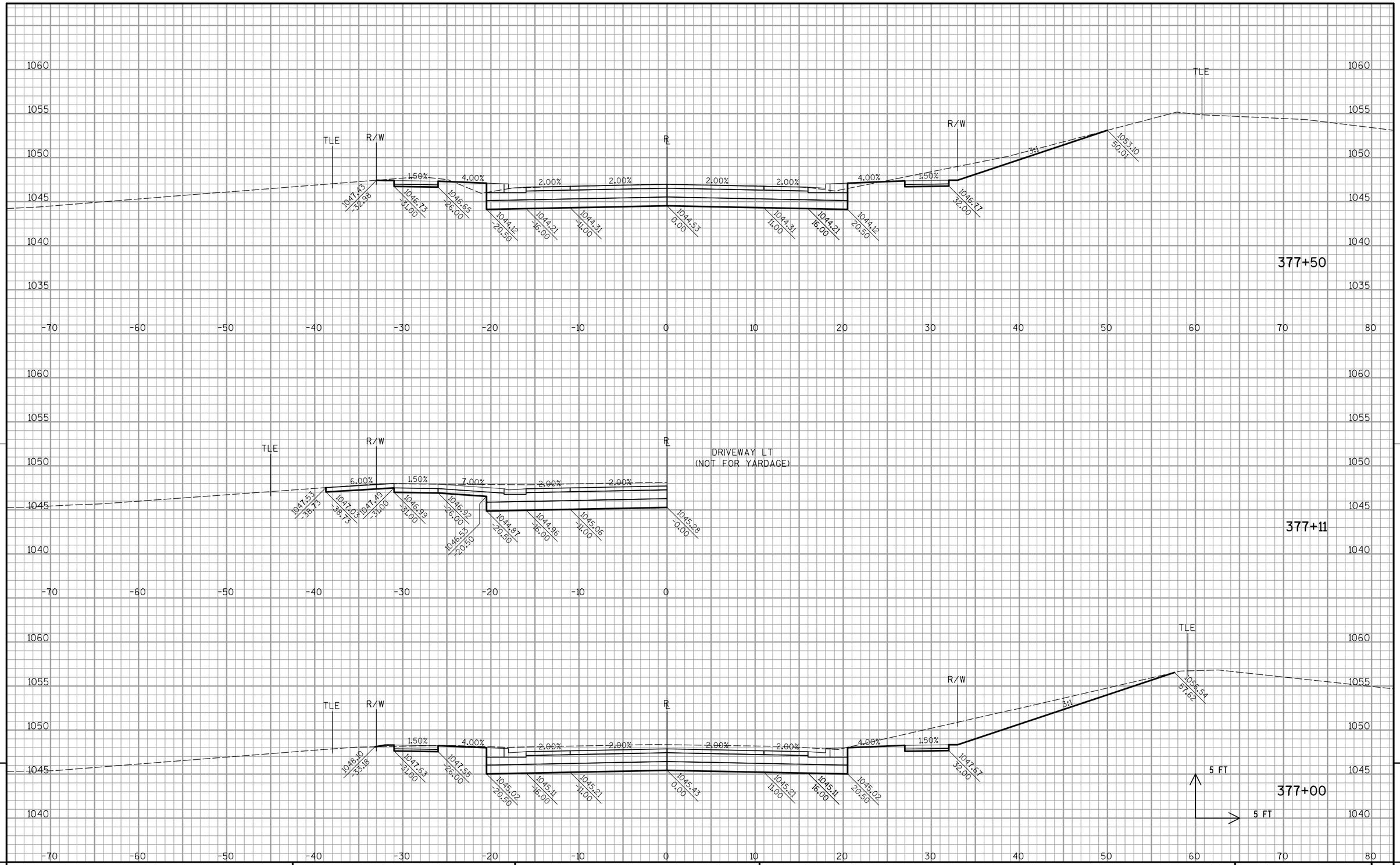

9

9

PROJECT NO: 3364-03-72	HWY: STH 175	COUNTY: DODGE	CROSS SECTIONS: STA 377+00 TO STA 377+50	SHEET 169	E

FILE NAME : P:\GMT\WisDOT\R11-0319-102 STH 175\graphics\090201_xs.dgn PLOT DATE : 4/29/2015 PLOT BY : gaspemc PLOT NAME : PLOT SCALE : 1:10

WISDOT/CADDS SHEET 21

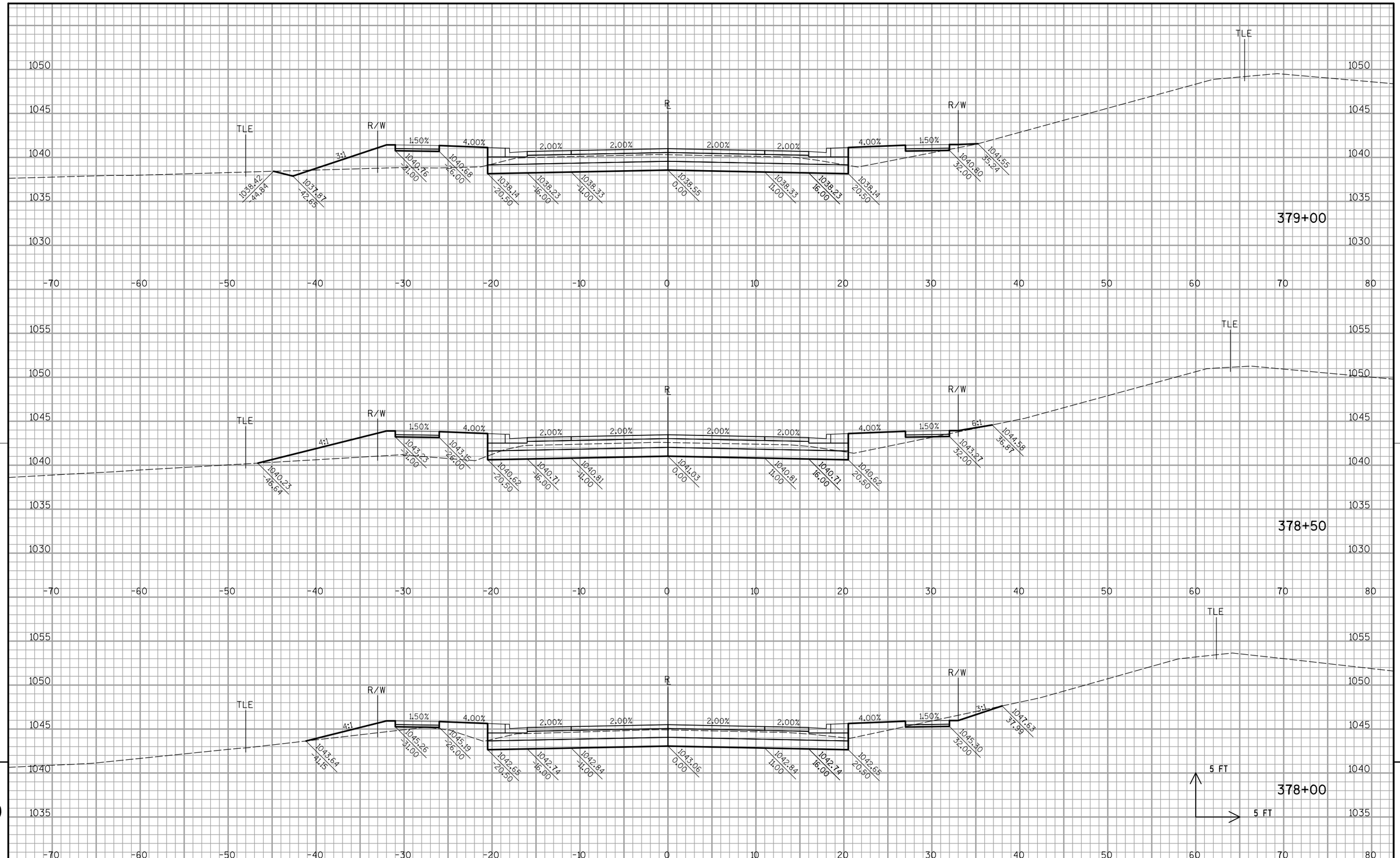

9

PROJECT NO: 3364-03-72	HWY: STH 175	COUNTY: DODGE	CROSS SECTIONS: STA 378+00 TO STA 379+00	SHEET 170	E

FILE NAME : P:\GMT\WisDOT\R11-0319-102 STH 175\graphics\090201_xs.dgn PLOT DATE : 4/29/2015 PLOT BY : gaspemc PLOT NAME : PLOT SCALE : 1:10

WISDOT/CADDS SHEET 21

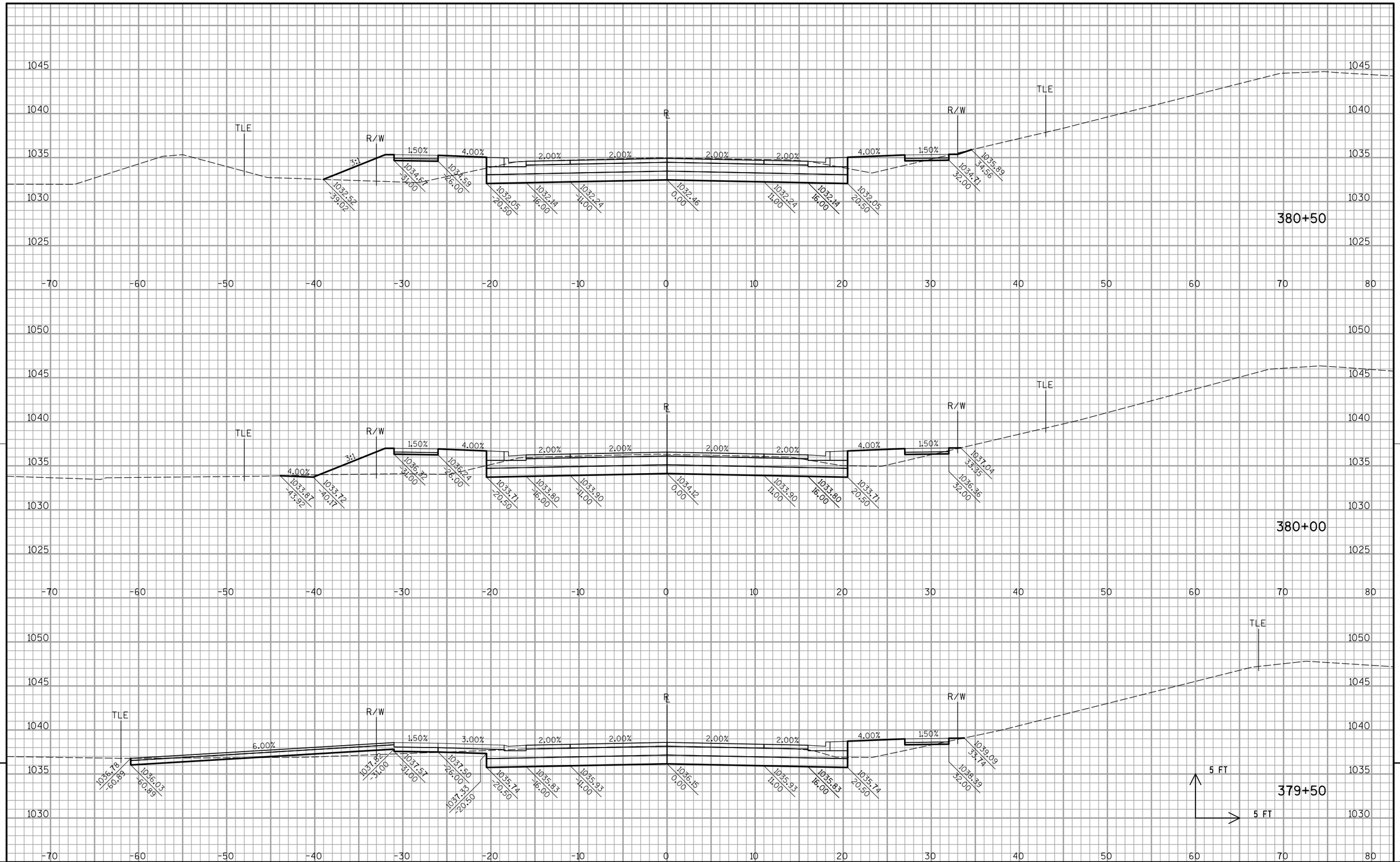

9

PROJECT NO: 3364-03-72	HWY: STH 175	COUNTY: DODGE	CROSS SECTIONS: STA 379+50 TO STA 380+50	SHEET 171	E

FILE NAME : P:\GMT\WisDOT\R11-0319-102 STH 175\graphics\090201_xs.dgn PLOT DATE : 4/29/2015 PLOT BY : gaspemc PLOT NAME : PLOT SCALE : 1:10

WISDOT/CADDS SHEET 21

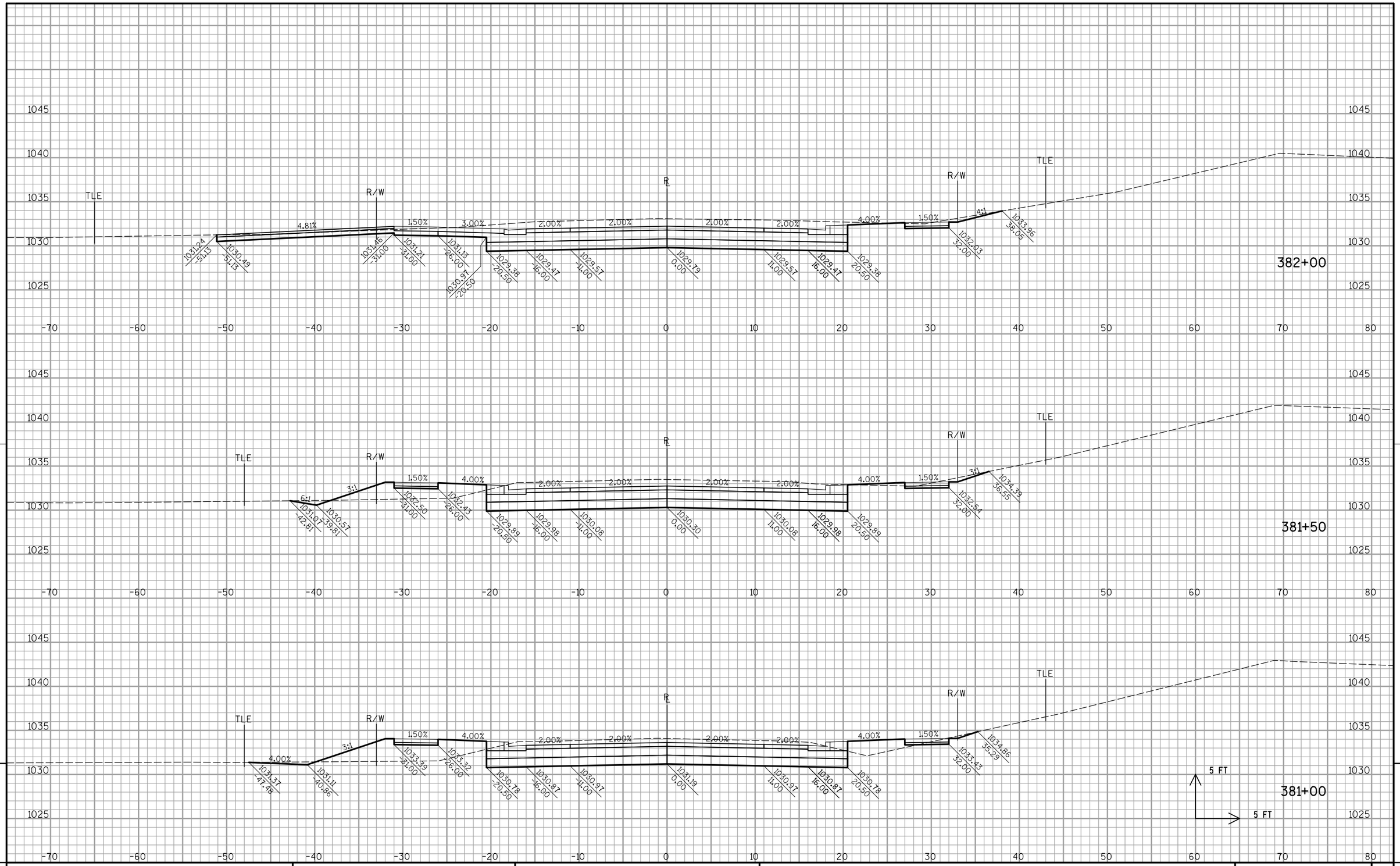

9

9

PROJECT NO: 3364-03-72	HWY: STH 175	COUNTY: DODGE	CROSS SECTIONS: STA 381+00 TO STA 382+00	SHEET 172	E

FILE NAME : P:\GMT\WisDOT\R11-0319-102 STH 175\graphics\090201_xs.dgn PLOT DATE : 4/29/2015 PLOT BY : gaspemc PLOT NAME : PLOT SCALE : 1:10

WISDOT/CADDS SHEET 21

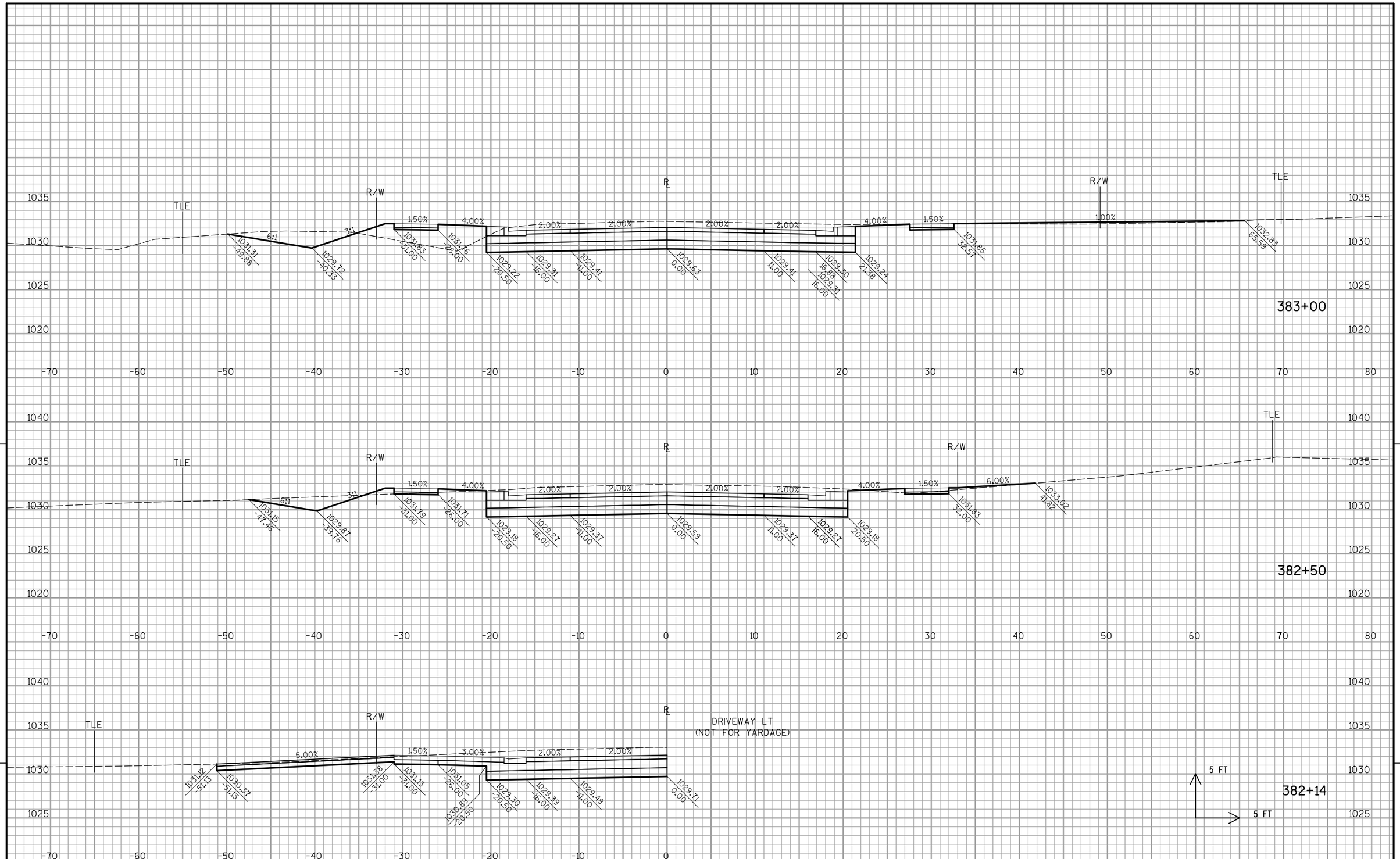

9

PROJECT NO: 3364-03-72	HWY: STH 175	COUNTY: DODGE	CROSS SECTIONS: STA 382+14 TO STA 383+00	SHEET 173	E

FILE NAME : P:\GMT\WisDOT\R11-0319-102 STH 175\graphics\090201_xs.dgn PLOT DATE : 4/29/2015 PLOT BY : gaspemc PLOT NAME : PLOT SCALE : 1:10

WISDOT/CADDS SHEET 21

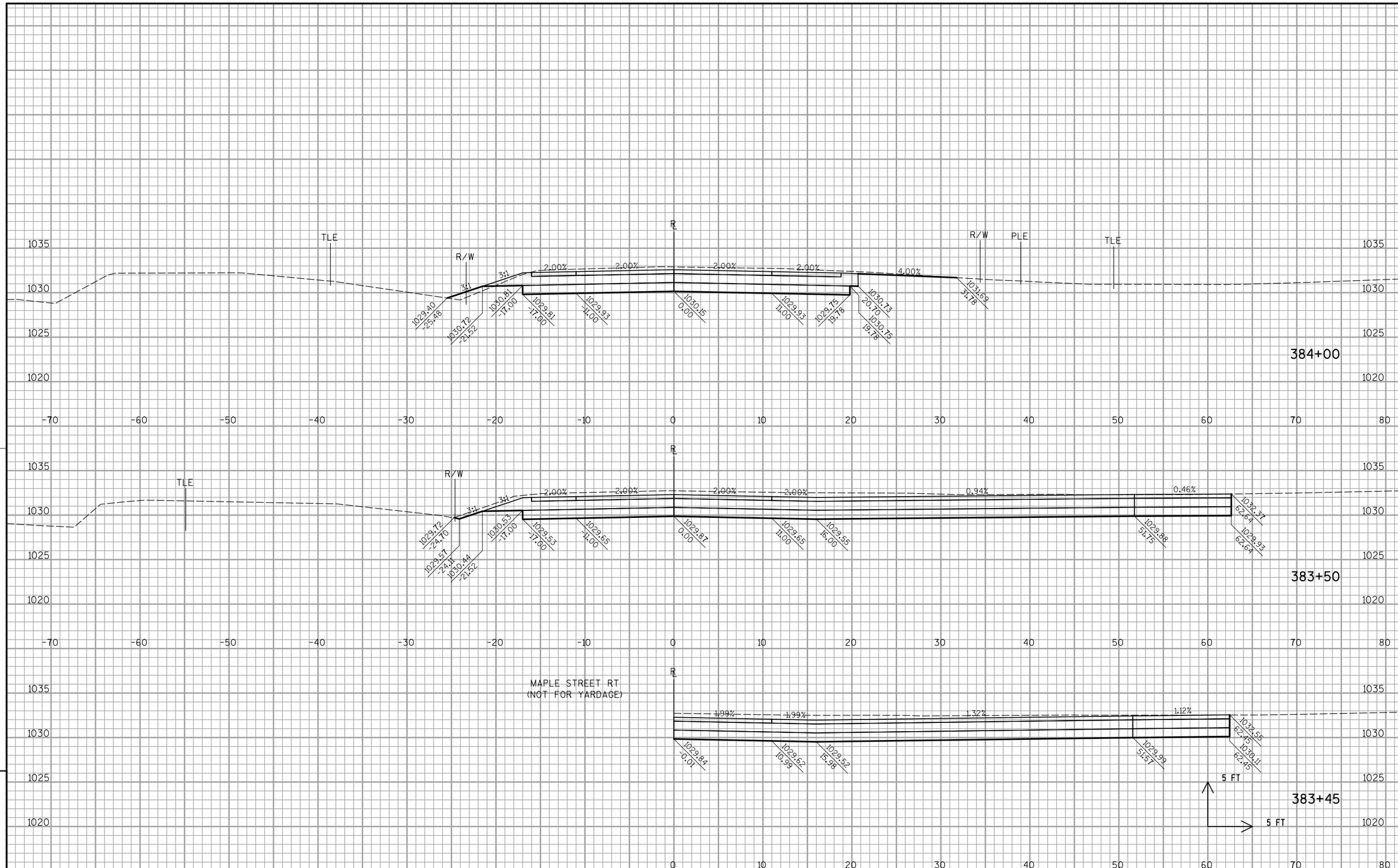

PROJECT NO: 3364-03-72	HWY: STH 175	COUNTY: DODGE	CROSS SECTIONS: STA 383+45 TO STA 384+00	SHEET 174	E

FILE NAME : P:\GMT\WisDOT\R11-0319-102 STH 175\graphics\090201_xs.dgn PLOT DATE : 4/29/2015 PLOT BY : gaspemc PLOT NAME : PLOT SCALE : 1:10

WISDOT/CADDS SHEET 21

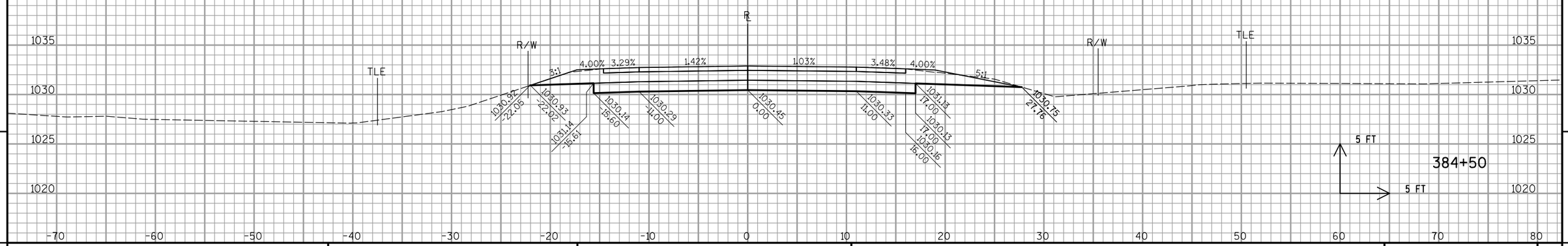

9

9

PROJECT NO: 3364-03-72	HWY: STH 175	COUNTY: DODGE	CROSS SECTIONS: STA 384+50 TO STA 384+50	SHEET 175	E

Wisconsin Department of Transportation

Dedicated people creating transportation solutions through innovation and exceptional service.

http://www.dot.wisconsin.gov

MAD NOVEMBER 2015

PROJECT ID: 3364-03-73
WITH: 3364-03-72

COUNTY: DODGE

03

ORDER OF SHEETS

TOTAL SHEETS = 14

STATE OF WISCONSIN
DEPARTMENT OF TRANSPORTATION

PLAN OF PROPOSED IMPROVEMENT
WATER MAIN AND SANITARY SEWER REPLACEMENTS

MILWAUKEE STREET, VILLAGE OF LOMIRA

CHURCH STREET TO MAPLE STREET

STH 175

DODGE COUNTY

STATE PROJECT	FEDERAL PROJECT	
	PROJECT	CONTRACT
3364-03-73	—	—

STATE PROJECT NUMBER
3364-03-73

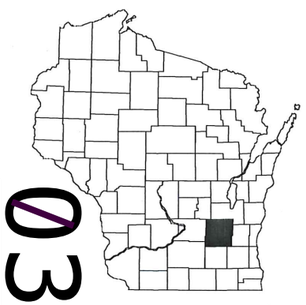

N

DESIGN DESIGNATION

A.A.D.T. 2015	=	3000
A.A.D.T. 2035	=	3800
D.H.V.	=	376
D.D.	=	62/38
T.	=	12.3%
DESIGN SPEED	=	40 MPH
ESALS	=	723,503

CONVENTIONAL SYMBOLS

PLAN
- CORPORATE LIMITS
- PROPERTY LINE
- LOT LINE
- LIMITED HIGHWAY EASEMENT
- EXISTING RIGHT OF WAY
- PROPOSED OR NEW R/W LINE
- SLOPE INTERCEPT
- REFERENCE LINE
- EXISTING CULVERT
- PROPOSED CULVERT (Box or Pipe)
- COMBUSTIBLE FLUIDS — CAUTION
- MARSH AREA
- WOODED OR SHRUB AREA

PROFILE
- GRADE LINE
- ORIGINAL GROUND
- MARSH OR ROCK PROFILE (To be noted as such) — ROCK
- SPECIAL DITCH — LABEL
- GRADE ELEVATION — 95.36
- CULVERT (Profile View)

UTILITIES
- ELECTRIC — E
- FIBER OPTIC — FO
- GAS — G
- SANITARY SEWER — SAN
- STORM SEWER — SS
- TELEPHONE — T
- WATER — W
- UTILITY PEDESTAL
- POWER POLE
- TELEPHONE POLE

R-17-E

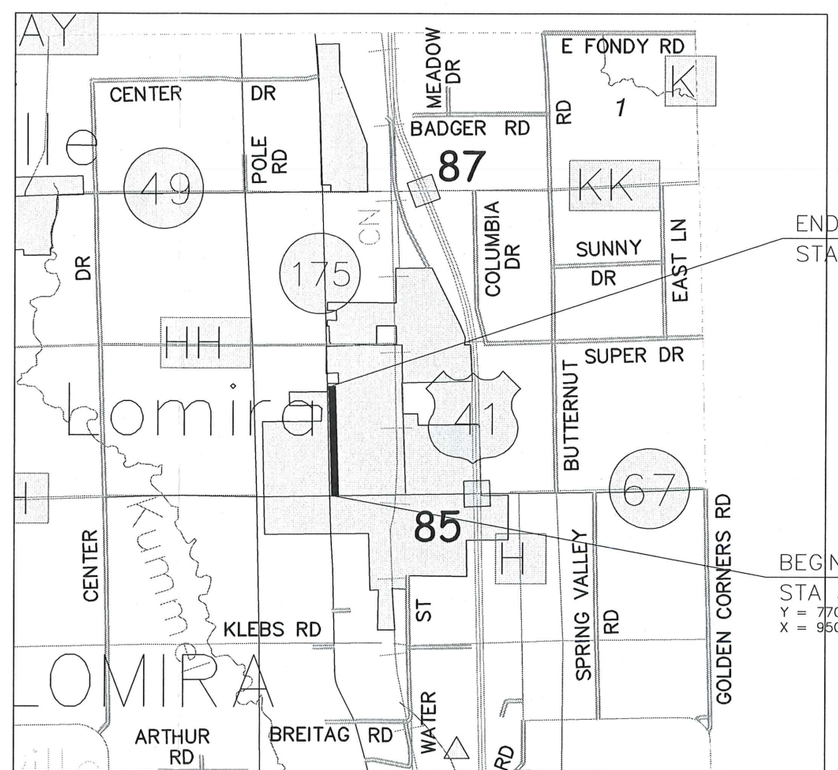

END PROJECT
STA 384+50.03

T-13-N

BEGIN PROJECT
STA 346+01.26
Y = 770,997.54
X = 950,091.03

LAYOUT
SCALE 0 1 MI.

TOTAL NET LENGTH OF CENTERLINE = 0.729 MI.

COORDINATES ON THIS PLAN ARE REFERENCED TO THE WISCONSIN COUNTY COORDINATE SYSTEM (WCCS), DODGE COUNTY – NAD 1983(1991).

ELEVATIONS SHOWN ON THIS PLAN ARE REFERENCED TO NGVD 1929(1988)

ACCEPTED FOR
Village of Lomira

4.15.15 (Date) (Signature & Title of Official)

ORIGINAL PLANS PREPARED BY
McMAHON ENGINEERS ARCHITECTS

WISCONSIN JENNIFER L. SCHAFF E-36179 APPLETON WI PROFESSIONAL ENGINEER

4-15-15 (Date) (Signature)

STATE OF WISCONSIN
DEPARTMENT OF TRANSPORTATION

PREPARED BY

Surveyor	WISDOT/GAI CONSULTANTS
Designer	McMAHON
Project Manager	LALITHA BALACHANDRAN
Regional Examiner	
Regional Supervisor	WILLIAM STROBEL
C.O. Examiner	

APPROVED FOR THE DEPARTMENT
DATE: 5/5/2015 William Strobel (Signature)

E

W:\PROJECTS\L0002\920675\00\ACAD\00TITLE.DWG

WISDOT/CADDS SHEET 10

2

STANDARD ABBREVIATIONS

AC	ACRE
AGG	AGGREGATE
AH	AHEAD
ASPH	ASPHALT PAVEMENT
AVG	AVERAGE
B–B	BACK TO BACK
BEG	BEGIN
BIT	BITUMINOUS
BK	BACK
B/L	BASE LINE
BLDG	BUILDING
BM	BENCH MARK
BOC	BACK OF CURB
BRG	BEARING
C–C	CENTER TO CENTER
CY	CUBIC YARD
C&G	CURB AND GUTTER
CB	CATCH BASIN
CE	COMMERCIAL ENTRANCE
CHD	CHORD
C/L	CENTER LINE
CL	CLASS (FOR CONC PIPE)
CMP	CORRUGATED METAL PIPE
CO	CLEAN OUT
CONC	CONCRETE
CORR	CORRUGATED
CP	CONTROL POINT
CR	CRUSHED
CS	CURB STOP
CSW	CONCRETE SIDEWALK
CTH	COUNTY TRUNK HIGHWAY
CULV	CULVERT
D	DEPTH OR DELTA
DI	DUCTILE IRON
DIA	DIAMETER
DIS	DISCHARGE
EA	EACH
EB	EASTBOUND
EBS	EXCAVATION BELOW SUBGRADE
EG	EDGE OF GRAVEL
ELEV	ELEVATION
ELEC	ELECTRIC
EMB	EMBANKMENT
EMAT	EROSION MAT
ENT	ENTRANCE
EOR	END OF RADIUS
EP	EDGE OF PAVEMENT
EXC	EXCAVATION
EX	EXISTING
EW	ENDWALL
F–F	FACE TO FACE
FDN	FOUNDATION
FE	FIELD ENTRANCE
FERT	FERTILIZER
FG	FINISHED GRADE
F/L	FLOW LINE
FT	FOOT
FTG	FOOTING
GRAV	GRAVEL
GN	GRID NORTH
GV	GAS VALVE
HDPE	HIGH DENSITY POLYETHYLENE
HE	HIGHWAY EASEMENT
HMA	HOT MIX ASPHALT
HP	HIGH POINT
HT	HEIGHT
HYD	HYDRANT
ID	INSIDE DIAMETER
IN	INCH
INL	INLET
INV	INVERT
IP	IRON PIPE
JCT	JUNCTION
LB	POUND
LF	LINEAR FOOT
LP	LIGHT POLE
LT	LEFT
LVC	LENGTH OF VERTICAL CURVE
MAINT	MAINTENANCE
MAT'L	MATERIAL
MAX	MAXIMUM
MIN	MINIMUM
MH	MANHOLE
MP	MILE POST
NB	NORTHBOUND
NO	NUMBER
NOR	NORMAL
OD	OUTSIDE DIAMETER
OBLIT	OBLITERATE
PAV'T	PAVEMENT
PC	POINT OF CURVATURE
PCC	PORTLAND CEMENT CONCRETE OR POINT OF COMPOUND CURVATURE
PE	PRIVATE ENTRANCE
PED	PEDESTAL
PGL	PROFILE GRADE LINE
PI	POINT OF INTERSECTION
P/L	PROPERTY LINE
PLE	PERMANENT LIMITED EASEMENT
PP	POWER POLE
PRC	POINT OF REVERSE CURVATURE
PROP	PROPOSED
PSD	PASSING SIGHT DISTANCE
PSI	POUNDS PER SQUARE INCH
PT	POINT OF TANGENCY
PVC	POLYVINYL CHLORIDE OR POINT OF VERTICAL CURVATURE
PVI	POINT OF VERTICAL INTERSECTION
PVT	POINT OF VERTICAL TANGENCY
R	RADIUS
RCP	REINFORCED CONCRETE PIPE
RD	ROAD
REBAR	REINFORCEMENT ROD
REM	REMOVE
RECON	RECONSTRUCT
REQ'D	REQUIRED
R/L	REFERENCE LINE
RP	RADIUS POINT
RR	RAILROAD
RT	RIGHT
R/W	RIGHT–OF–WAY
SB	SOUTHBOUND
SE	SUPERELEVATION
SF	SQUARE FEET
SI	SLOPE INTERCEPT
STH	STATE TRUNK HIGHWAY
SY	SQUARE YARD
SALV	SALVAGED
SAN	SANITARY
SEC	SECTION
SHLDR	SHOULDER
S/L	SURVEY LINE
SQ	SQUARE
STA	STATION
STD	STANDARD
STO	STORM
SW	SIDEWALK
TC	TOP OF CURB
TEL	TELEPHONE
TEMP	TEMPORARY
TLE	TEMPORARY LIMITED EASEMENT
TV	TELEVISION
TYP	TYPICAL
UG	UNDERGROUND
USH	U.S. HIGHWAY
VAR	VARIES
VC	VERTICAL CURVE
VERT	VERTICAL
WB	WESTBOUND
WM	WATER MAIN
WV	WATER VALVE

GENERAL NOTES

1. THE UTILITIES SHOWN IN PLAN AND PROFILE ARE INDICATED IN ACCORDANCE WITH AVAILABLE RECORDS. THE CONTRACTOR SHALL BE RESPONSIBLE FOR OBTAINING EXACT LOCATIONS AND ELEVATIONS OF ALL UTILITIES, INCLUDING ANY PRIVATE UTILITIES, FROM THE OWNERS OF THE RESPECTIVE UTILITIES. ALL UTILITIES SHALL BE NOTIFIED 72 HRS. PRIOR TO EXCAVATION.
2. PRIOR TO CONSTRUCTION, THE CONTRACTOR SHALL VERIFY PROPOSED SITE GRADES BY FIELD CHECKING TWO (2) BENCHMARKS AND A MINIMUM OF ONE (1) SITE FEATURE AS SHOWN ON THESE PLANS. THE CONTRACTOR SHALL IMMEDIATELY NOTIFY MCMAHON OF ANY VERTICAL DISCREPANCY.
3. THE PROPERTY LINES, RIGHT–OF–WAY LINES AND OTHER PROPERTY INFORMATION ON THIS DRAWING WERE DEVELOPED OR OBTAINED AS PART OF THE COUNTY GEOGRAPHIC INFORMATION SYSTEM OR THROUGH THE COUNTY PROPERTY TAX MAPPING FUNCTION. McMAHON DOES NOT GUARANTEE THIS INFORMATION TO BE CORRECT, CURRENT OR COMPLETE. THE PROPERTY AND RIGHT–OF–WAY INFORMATION ARE INTENDED FOR USE AS A GENERAL REFERENCE AND ARE NOT INTENDED OR SUITABLE FOR SITE–SPECIFIC USES. ANY USE TO THE CONTRARY OF THE ABOVE STATED USES IS THE RESPONSIBILITY OF THE USER AND SUCH USE IS AT THE USER'S OWN RISK.
4. NO TREES OR SHRUBS ARE TO BE REMOVED WITHOUT PRIOR APPROVAL FROM THE OWNER.
5. A SAWED JOINT IS REQUIRED WHERE NEW HMA PAVEMENT MATCHES EXISTING ASPHALTIC CONCRETE SURFACE.

UTILITIES

ALLIANT ENERGY (GAS/PETROLEUM)
MR. STEVEN PAUTZ
883 W SCOTT STREET
FOND DU LAC, WI 54937
(920) 322–6683
stevepautz@alliantenergy.com

PACKERLAND BROADBAND (COMMUNICATION LINE)
MR. WAYNE CRETTON (CONSTRUCTION MANAGER)
105 KENT ST
IRON MOUNTAIN, MI 49801
(906) 282–3768
wayne.cretton@packerlandbroadband.com

CHARTER COMMUNICATIONS (COMMUNICATION LINE)
MR. BRUCE HENRY
1623 BROADWAY AVE
SHEBOYGAN, WI 53081
(920) 263–0074
bruce.henry@charter.com

WE ENERGIES (ELECTRIC)
MR. AL SCHMITT
245 SAND DR.
WEST BEND, WI 53095
(262) 338–7662 OFFICE
(262) 322–1824 MOBILE
alan.schmitt@we–energies.com

FRONTIER COMMUNICATIONS (COMMUNICATION LINE)
MR. RUSS RYAN
315 OAK STREET
OAKFIELD, WI 53065
(920) 583–3275 OFFICE
(920) 737–9662 MOBILE
russell.w.ryan@ftr.com

VILLAGE OF LOMIRA
DEPARTMENT OF PUBLIC WORKS (SEWER & WATER)
MR. NICKOLAS ROSKOPF
423 WATER STREET
LOMIRA, WI 53048
(920) 269–8155 OFFICE
(920) 948–3946
nroskopf@lomiragov.com

OTHER AGENCIES

WISDOT CONTACT
MS. LALITHA BALACHANDRAN, PE
2101 WRIGHT STREET
MADISON, WI 53704
(608) 243–3382
lalitha.balachandran@dot.wi.gov

DNR LIAISON
DEPARTMENT OF NATURAL RESOURCES
MR. ERIC HEGGELUND
DNR SOUTH CENTRAL REGION HEADQUARTERS
3911 FISH HATCHERY ROAD
FITCHBURG, WI 53711
(608) 275–3301

VILLAGE OF LOMIRA
DEPARTMENT OF PUBLIC WORKS
MR. JIM KOENIGS
423 WATER STREET
LOMIRA, WI 53048
(920) 269–8155 OFFICE
(920) 948–3946

McMAHON
MS. JENNIFER SCHAFF, PE
1445 McMAHON DRIVE
NEENAH, WI 54956
(920) 751–4200
JSchaff@mcmgrp.com

DIGGERS HOTLINE
Dial 811 or (800)242-8511
www.DiggersHotline.com

WISCONSIN STATUTE 182.0175 (1974)
REQUIRES MIN. OF 3 WORK DAYS
NOTICE BEFORE YOU EXCAVATE.

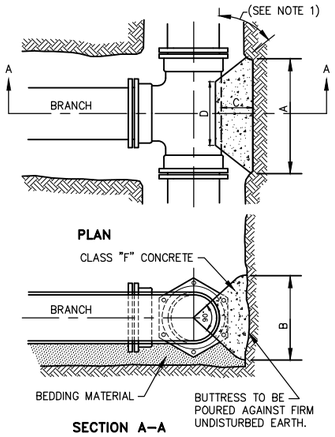

BLOCKING FOR TEES

BUTTRESS DIMENSIONS				
B.D.	A	B	C	D
6"	1'–3"	1'–0"	SEE NOTE 1	SEE NOTE 2
8"	1'–6"	1'–4"		
12"	2'–3"	2'–0"		
16"	3'–2"	2'–6"		
20"	4'–0"	3'–0"		
24"	5'–3"	3'–4"		
30"	6'–6"	4'–3"		

B.D. = BRANCH DIAMETER

NOTES:
1. DIMENSION "C" SHOULD BE LARGE ENOUGH TO MAKE ANGLE EQUAL TO OR LARGER THAN 45°.
2. DIMENSION "D" EQUALS APPROX. I.D. OF PIPE LESS 2". AN EFFORT SHOULD BE MADE TO PREVENT THE CONCRETE FROM COVERING THE M.J. BOLTS.
3. WHERE BUTTRESSES ARE NOT POSSIBLE BECAUSE OF POOR SOIL CONDITIONS OR LACK OF ROOM, STRAPPING SHALL BE PERMITTED.
4. DIMENSIONS IN TABLE ARE BASED ON A WATER PRESSURE OF 150 P.S.I. AND ON EARTH RESISTANCE OF 2 TONS PER SQ. FT.
5. ALL IRON PIPE AND FITTINGS SHALL BE WRAPPED IN POLYETHYLENE.

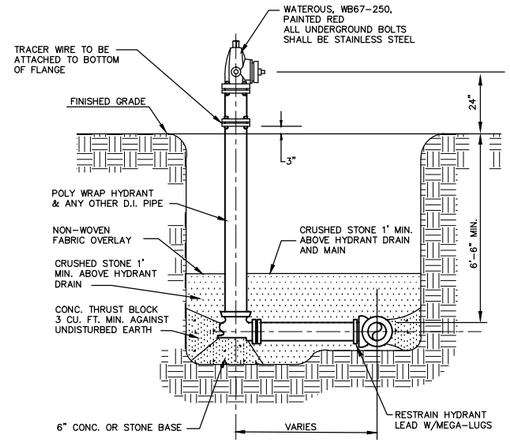

HYDRANT DETAIL

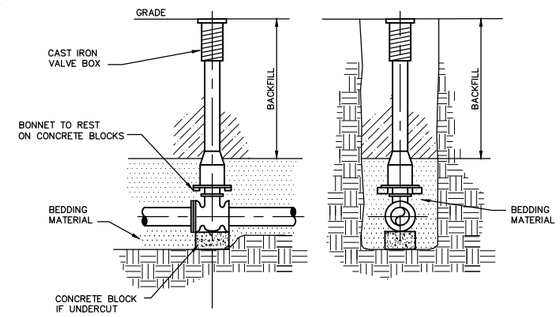

STANDARD VALVE & VALVE BOX SETTING

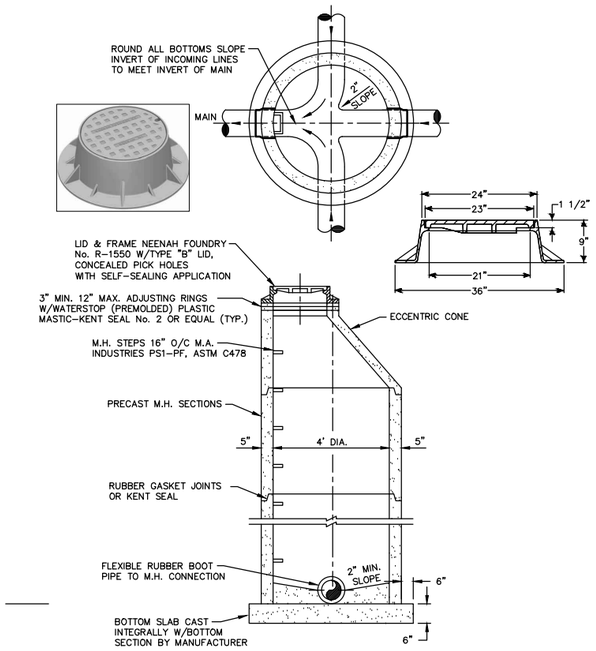

STANDARD PRECAST MANHOLE

NOTES:
1. ALL IRON PIPE AND FITTINGS SHALL BE WRAPPED IN POLYETHYLENE.
2. ALL BENDS AND TEES SHALL BE RESTRAINED WITH MEGALUG JOINT RESTRAINTS.

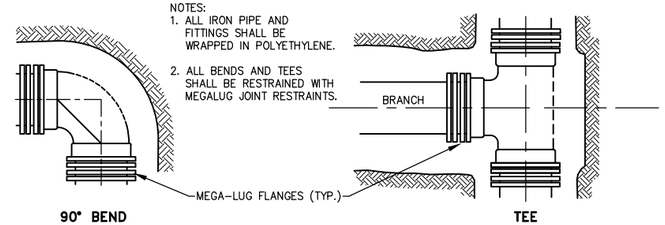

RESTRAINT FOR BENDS & TEES

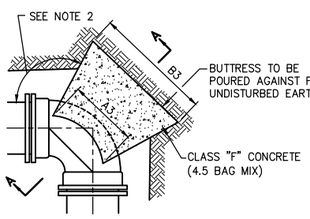

NOTES:
1. DIMENSIONS IN TABLE ARE BASED ON A WATER PRESSURE OF 150 P.S.I. AND ON EARTH RESISTANCE OF 2 TONS PER SQ. FT.
2. DIMENSION C1–3 SHOULD BE LARGE ENOUGH TO MAKE ANGLE EQUAL TO OR LARGER THAN 45°.
3. DIMENSION A1–3 SHOULD BE AS LARGE AS POSSIBLE WITHOUT INTERFERING WITH M.J. BOLTS.
4. SHAPE OF BACK OF BUTTRESS MAY VARY AS LONG AS POUR IS AGAINST FIRM UNDISTURBED EARTH.
5. ALL IRON PIPE AND FITTINGS SHALL BE WRAPPED IN POLYETHYLENE.

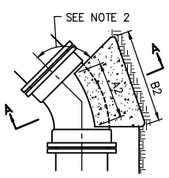

BUTTRESS DIMENSIONS						
PIPE SIZE	22–1/2° BENDS		45° BENDS		90° BENDS	
	B1	D1	B2	D2	B3	D3
6"	1'–0"	1'–0"	1'–0"	1'–0"	1'–4"	1'–2"
8"	1'–0"	1'–0"	1'–4"	1'–2"	1'–10"	1'–6"
12"	1'–4"	1'–4"	1'–10"	1'–10"	2'–0"	2'–3"
16"	1'–10"	1'–8"	2'–6"	2'–4"	3'–10"	2'–10"
20"	2'–4"	2'–0"	3'–3"	2'–10"	3'–0"	3'–4"
24"	2'–10"	2'–4"	4'–0"	3'–3"	6'–4"	3'–10"
30"	3'–6"	3'–0"	5'–4"	3'–10"	8'–0"	4'–8"

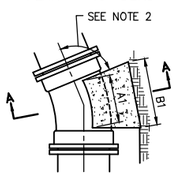

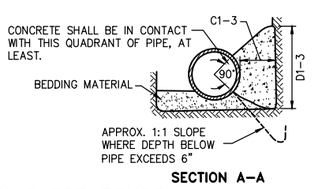

BLOCKING FOR BENDS

Minimum Restraint Length (ft) on both sides of the Fitting				
Fitting Type/Nominal Size	6"	8"	12"	16"
11 1/4° Bend	2	2	3	3
22 1/2° Bend	3	3	5	6
45° Bend	5	6	9	11
90° Bend	11	15	21	27
Dead End	30	40	56	73
Top Side of a Vertical Offset [1]	13	17	24	31
Tee Run x Branch 6"BY	14			
Tee Run x Branch 8"BY	10	24		
Tee Run x Branch 12"BY	1	15	40	
Tee Run x Branch 16"BY	1	7	33	56

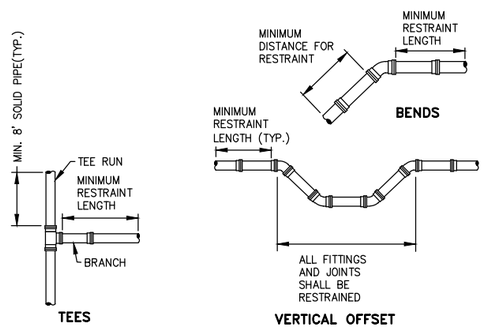

WATER MAIN RESTRAINT DETAIL

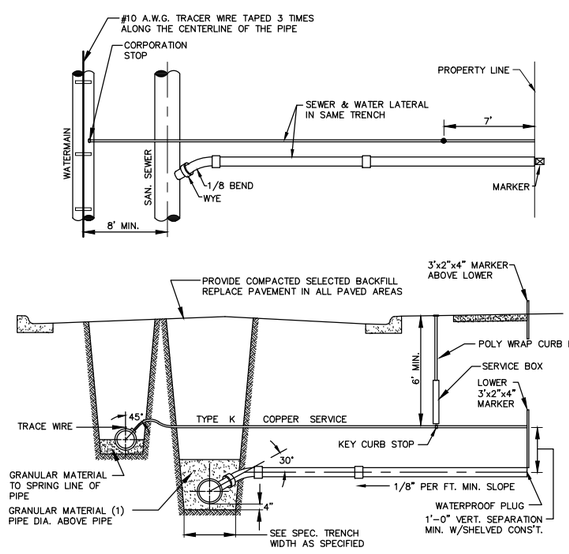

TYPICAL CONNECTION SEWER & WATER

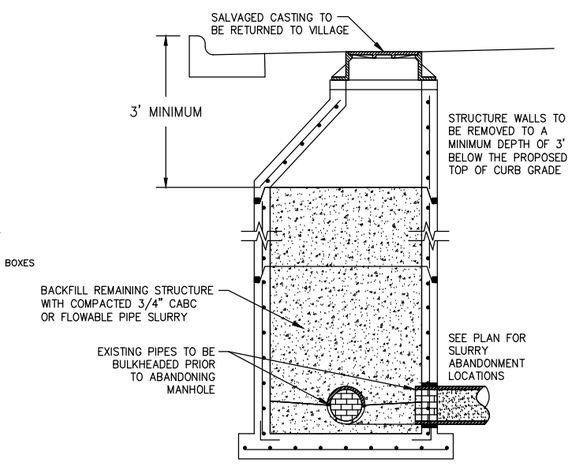

ABANDON SANITARY MANHOLE

DATE 11AUG15 E S T I M A T E O F Q U A N T I T I E S

LINE NUMBER	ITEM	ITEM DESCRIPTION	UNIT	TOTAL	3364-03-73 QUANTITY
0120	205.0501.S	Excavation, Hauling, and Disposal of Petroleum Contaminated Soil	TON	169.000	169.000
0510	619.1000	Mobilization	EACH	0.290	0.290
1060	SPV.0060	Special 01. Abandon Sanitary Manhole	EACH	2.000	2.000
1070	SPV.0060	Special 02. Remove Hydrant	EACH	6.000	6.000
1080	SPV.0060	Special 03. Valve and Box, 6-Inch	EACH	1.000	1.000
1090	SPV.0060	Special 04. Valve and Box, 8-Inch	EACH	2.000	2.000
1100	SPV.0060	Special 05. Valve and Box, 12-Inch	EACH	7.000	7.000
1110	SPV.0060	Special 06. Water Services 1-Inch Curb Stop and Stop Box	EACH	61.000	61.000
1120	SPV.0060	Special 07. Water Services 1-Inch Tap and Corporation	EACH	61.000	61.000
1130	SPV.0060	Special 08. Sanitary Sewer Manhole Casting	EACH	10.000	10.000
1140	SPV.0060	Special 09. Hydrant	EACH	6.000	6.000
1160	SPV.0090	Special 02. Hydrant Lead, 6-Inch PVC	LF	32.000	32.000
1170	SPV.0090	Special 03. Water Main, 6-Inch PVC	LF	4.000	4.000
1180	SPV.0090	Special 04. Water Main, 8-Inch PVC	LF	89.000	89.000
1190	SPV.0090	Special 05. Water Main, 12-Inch PVC	LF	2,870.000	2,870.000
1200	SPV.0090	Special 06. Water Main, 12-Inch DI	LF	115.000	115.000
1210	SPV.0090	Special 07. Water Service, 1-Inch Poly	LF	1,415.000	1,415.000
1220	SPV.0090	Special 08. Sanitary Lateral, 6-Inch PVC	LF	1,481.000	1,481.000
1230	SPV.0090	Special 09. Sanitary Sewer, 10-Inch PVC	LF	2,968.000	2,968.000
1240	SPV.0090	Special 10. Abandon Sanitary Sewer	LF	623.000	623.000
1250	SPV.0090	Special 11. Water Service, 1-Inch Copper	LF	46.000	46.000
1260	SPV.0090	Special 12. Water Main, 8-Inch DI	LF	20.000	20.000
1280	SPV.0180	Special 01. Insulation 2-Inch	SY	47.000	47.000
1300	SPV.0200	Special 01. Sanitary Manhole 48-Inch	VF	103.060	103.060

3

WATER MAIN SUMMARY

FROM STATION	TO STATION	OFFSET	SPV. 0090.03 6 INCH PVC L.F.	SPV. 0090.04 8 INCH PVC L.F.	SPV.0090.12 8 INCH DI L.F.	SPV. 0090.05 12 INCH PVC L.F.	SPV.0090.06 12 INCH DI L.F.	REMARKS
346+06	346+10	12' LT - 14' LT	4	0	0	0	0	MILWAUKEE ST
346+10	346+12	14' LT - 17' LT	0	0	0	4	0	MILWAUKEE ST
346+12	361+85	17' LT	0	0	0	1574	0	MILWAUKEE ST
361+85	363+00	17' LT	0	0	0	0	115	MILWAUKEE ST
363+00	366+99	17' LT	0	0	0	399	0	MILWAUKEE ST
366+99	368+30	17' LT - 20.5' LT	0	0	0	130	0	MILWAUKEE ST
368+30	375+52	20.5' LT - 21.5' LT	0	0	0	723	0	MILWAUKEE ST
376+59		18.5' RT - 58.5' RT	0	0	0	40	0	MILWAUKEE ST
352+97		17' LT - 34' RT	0	51		0	0	SCHOOL ST
362+51		17' LT - 41' RT	0	38	20	0	0	MAIN ST
TOTAL			4	89	20	2870	115	

HYDRANT AND LEAD SUMMARY

STATION	OFFSET	SPV. 0060.09 HYDRANT EACH	SPV. 0090.02 HYDRANT LEAD 6-INCH PVC L.F.	REMARKS
346+27	25' LT	1	8	MILWAUKEE ST
357+06	24' LT	1	7	MILWAUKEE ST
362+55	36' RT	1	4	MAIN ST
367+91	25' LT	1	5	MILWAUKEE ST
372+01	24' LT	1	3	MILWAUKEE ST
375+41	25' LT	1	5	MILWAUKEE ST
TOTAL		6	32	

VALVE AND BOX SUMMARY

STATION	OFFSET	SPV. 0060.03 6 INCH EACH	SPV. 0060.04 8 INCH EACH	SPV. 0060.05 12 INCH EACH	REMARKS
346+14	17' LT	0	0	1	MILWAUKEE ST
346+27	22' LT	1	0	0	MILWAUKEE ST
352+94	17' LT	0	0	1	MILWAUKEE ST
352+97	34' RT	0	1	0	SCHOOL ST
353+01	17' LT	0	0	1	MILWAUKEE ST
362+48	17' LT	0	0	1	MILWAUKEE ST
362+51	39' RT	0	1	0	MAIN ST
362+54	17' LT	0	0	1	MILWAUKEE ST
367+94	20' LT	0	0	1	MILWAUKEE ST
375+52	21' LT	0	0	1	MILWAUKEE ST
TOTAL		1	2	7	

INSULATION - 2 INCH

STATION	OFFSET	SPV. 0180.01 S.Y.	REMARKS
376+59	18.5' LT - 18.5' RT	12	WATER MAIN CROSSING
375+59 - 376+59	21.5' LT - 22.5' LT	35	WATER MAIN
TOTAL		47	

WATER SERVICES SUMMARY

STATION	SPV.0060.07 1 INCH TAP & CORPORATION EACH	SPV. 0060.06 1 INCH CURB STOP & STOP BOX EACH	SPV. 0090.07 1 INCH POLY L.F.	SPV.0090.11 1 INCH COPPER L.F.	ADDRESS	STREET
347+21	1	1	8	0	513	MILWAUKEE
348+07	1	1	42	0	522	MILWAUKEE
348+31	1	1	42	0	528	MILWAUKEE
348+54	1	1	8	0	533	MILWAUKEE
348+97	1	1	8	0	539	MILWAUKEE
349+01	1	1	8	0	539	MILWAUKEE
349+03	1	1	41	0	546	MILWAUKEE
349+29	1	1	14	0	551	MILWAUKEE
350+11	1	1	8	0	561	MILWAUKEE
350+12	1	1	42	0	560	MILWAUKEE
350+86	1	1	41	0	570	MILWAUKEE
350+89	1	1	9	0	577	MILWAUKEE
351+46	1	1	9	0	585	MILWAUKEE
351+55	1	1	40	0	580	MILWAUKEE
351+84	1	1	42	0	590	MILWAUKEE
352+25	1	1	9	0	593	MILWAUKEE
352+92	1	1	9	0	601	MILWAUKEE
353+12	1	1	40	0	602	MILWAUKEE
353+91	1	1	9	0	607	MILWAUKEE
354+17	1	1	9	0	611	MILWAUKEE
354+72	1	1	41	0	616	MILWAUKEE
355+47	1	1	10	0	623	MILWAUKEE
355+68	1	1	40	0	630	MILWAUKEE
355+71	1	1	10	0	633	MILWAUKEE
355+77	1	1	10	0	633	MILWAUKEE
356+59	1	1	40	0	644	MILWAUKEE
356+87	1	1	10	0	645	MILWAUKEE
357+21	1	1	40	0	652	MILWAUKEE
357+76	1	1	9	0	645	MILWAUKEE
358+21	1	1	39	0	662	MILWAUKEE
358+55	1	1	39	0	672	MILWAUKEE
358+86	1	1	7	0	645	MILWAUKEE
359+15	1	1	39	0	702	MILWAUKEE
360+45	1	1	8	0	719	MILWAUKEE
360+46	1	1	40	0	712	MILWAUKEE
361+08	1	1	39	0	732	MILWAUKEE
361+50	1	1	7	0	735	MILWAUKEE
362+02	1	1	0	5	819	MILWAUKEE
362+96	1	1	0	41	1244	MAIN
364+04	1	1	6	0	801	MILWAUKEE
364+05	1	1	41	0	824	MILWAUKEE
365+08	1	1	8	0	829	MILWAUKEE
365+46	1	1	41	0	828	MILWAUKEE
366+21	1	1	6	0	831	MILWAUKEE
366+45	1	1	41	0	832	MILWAUKEE
367+51	1	1	9	0	911	MILWAUKEE
367+61	1	1	42	0	906	MILWAUKEE
368+49	1	1	42	0	926	MILWAUKEE
368+70	1	1	6	0	925	MILWAUKEE
369+69	1	1	45	0	946	MILWAUKEE
370+34	1	1	4	0	955	MILWAUKEE
370+84	1	1	47	0	964	MILWAUKEE
371+74	1	1	5	0	975	MILWAUKEE
371+94	1	1	45	0	964	MILWAUKEE
372+44	1	1	5	0	985	MILWAUKEE
372+93	1	1	46	0	990	MILWAUKEE
373+38	1	1	5	0	989	MILWAUKEE
373+53	1	1	47	0	990	MILWAUKEE
374+82	1	1	5	0	999	MILWAUKEE
375+01	1	1	48	0	996	MILWAUKEE
375+65	1	1	5	0	1005	MILWAUKEE
TOTAL	61	61	1415	46		

3

3

EXCAVATION, HAULING & DISPOSAL SUMMARY

FROM STATION	TO STATION	OFFSET	205.0501.S PETROLEUM CONTAMINATED SOIL TON	REMARKS
361+85	363+00	C/L - 29' LT	169	MILWAUKEE ST
TOTAL			169	

SANITARY SEWER PIPE

FROM STRUCTURE	TO STRUCTURE	INLET ELEVATION	OUTLET ELEVATION	SPV. 0090.09 10-INCH PVC L.F.	SLOPE %
1	2	992.16	995.62	345	1.00%
2	3	995.62	1003.68	355	2.27%
3	4	1003.68	1007.87	300	1.40%
4	5	1007.87	1015.89	300	2.67%
5	6	1015.99	1017.61	334	0.49%
6	7	1017.71	1022.31	301	1.53%
7	8	1022.31	1025.16	301	0.95%
8	9	1025.226	1030.03	380	1.26%
9	10	1030.53	1034.32	352	1.08%
TOTAL				2968	

SANITARY LATERAL SUMMARY

STATION	SPV. 0090.08 6 INCH PVC L.F.	ADDRESS	STREET
348+02	12	522	MILWAUKEE
348+29	13	528	MILWAUKEE
348+53	37	533	MILWAUKEE
348+96	38	539	MILWAUKEE
349+00	42	539	MILWAUKEE
349+00	12	546	MILWAUKEE
349+26	43	551	MILWAUKEE
350+10	36	561	MILWAUKEE
350+11	13	560	MILWAUKEE
350+85	12	570	MILWAUKEE
350+88	37	577	MILWAUKEE
351+44	38	585	MILWAUKEE
351+54	11	580	MILWAUKEE
351+82	13	590	MILWAUKEE
352+24	38	593	MILWAUKEE
352+90	38	601	MILWAUKEE
353+11	12	602	MILWAUKEE
353+90	38	607	MILWAUKEE
354+16	38	611	MILWAUKEE
354+70	12	616	MILWAUKEE
355+46	39	623	MILWAUKEE
355+66	11	630	MILWAUKEE
355+69	39	633	MILWAUKEE
355+77	39	633	MILWAUKEE
356+59	11	644	MILWAUKEE
357+20	11	652	MILWAUKEE
357+74	38	645	MILWAUKEE
358+20	7	662	MILWAUKEE
358+53	7	672	MILWAUKEE
358+85	37	645	MILWAUKEE
359+13	10	702	MILWAUKEE

STATION	SPV. 0090.08 6 INCH PVC L.F.	ADDRESS	STREET
360+44	11	712	MILWAUKEE
360+44	36	719	MILWAUKEE
361+07	10	732	MILWAUKEE
361+49	35	735	MILWAUKEE
362+01	34	819	MILWAUKEE
362+95	14	1244	MAIN
364+03	16	801	MILWAUKEE
364+03	32	824	MILWAUKEE
365+07	31	829	MILWAUKEE
365+45	18	828	MILWAUKEE
366+20	29	831	MILWAUKEE
366+44	18	832	MILWAUKEE
367+49	33	911	MILWAUKEE
367+59	18	906	MILWAUKEE
368+48	15	926	MILWAUKEE
368+68	33	925	MILWAUKEE
369+68	16	946	MILWAUKEE
370+33	36	955	MILWAUKEE
370+82	15	964	MILWAUKEE
371+72	38	975	MILWAUKEE
371+92	12	964	MILWAUKEE
372+41	39	985	MILWAUKEE
372+90	12	990	MILWAUKEE
373+37	40	989	MILWAUKEE
373+50	13	990	MILWAUKEE
374+80	39	999	MILWAUKEE
374+99	12	996	MILWAUKEE
375+48	44	1005	MILWAUKEE
TOTAL	1481		

REMOVE HYDRANT SUMMARY

STATION	OFFSET	SPV. 0060.02 EACH	REMARKS
346+27	23' LT	1	MILWAUKEE ST
357+06	24' LT	1	MILWAUKEE ST
362+54	36' RT	1	MAIN ST
366+91	24' LT	1	MILWAUKEE ST
372+01	24' LT	1	MILWAUKEE ST
375+41	24' LT	1	MILWAUKEE ST
TOTAL		6	

ABANDON SANITARY SEWER

FROM STATION	OFFSET	END STATION	OFFSET	SPV. 0090.10 L.F.
363+84	11.5	365+18	11	133
365+18	11	368+18	12	301
368+18	12	370+08	12	189
TOTAL				623

ABANDON SANITARY MANHOLE SUMMARY

STRUCTURE	STATION	OFFSET	SPV. 0060.01 EACH
121E	365+18	11' RT	1
122E	368+18	12' RT	1
TOTAL			2

SANITARY MANHOLE SUMMARY

STRUCTURE	STATION	OFFSET	INVERT	TOP OF RIM	TOP OF STRUCTURE	SPV. 0200.01 SANITARY MANHOLE 48-INCH V.F.	SPV.0060.08 SANITARY SEWER MANHOLE CASTING EACH
1	345+82	13' RT	992.09	1002.12	1000.92	10.03	1
2	349+27	12' RT	995.62	1005.52	1004.32	9.90	1
3	352+82	12' RT	1003.68	1012.79	1011.59	9.11	1
4	355+82	12' RT	1007.87	1017.36	1016.16	9.49	1
5	358+82	12' RT	1015.89	1027.17	1025.97	11.28	1
6	362+16	11' RT	1017.61	1028.98	1027.78	11.37	1
7	365+18	6' RT	1022.31	1033.05	1031.85	10.74	1
8	368+18	6' RT	1025.16	1034.39	1033.19	9.23	1
9	371+98	12' RT	1030.03	1039.36	1038.16	9.33	1
10	375+50	14' RT	1034.32	1046.90	1045.70	12.58	1
TOTAL						103.06	10

GENERAL NOTES:
- STATION AND OFFSET REFER TO THE CENTER OF STRUCTURE
- ELEVATIONS REFER TO THE CENTER OF STRUCTURE
- INVERTS OF EXISTING PIPES AND STRUCTURES SHALL BE VERIFIED BY THE CONTRACTOR AND APPROVED BY THE ENGINEER PRIOR TO ORDERING STRUCTURE
- DEPTH REFERS TO FINISHED RIM GRADE MINUS THE INVERT ELEVATION

NOTE:
THE UTILITIES SHOWN IN PLAN AND PROFILE ARE INDICATED IN ACCORDANCE WITH AVAILABLE RECORDS. THE CONTRACTOR SHALL BE RESPONSIBLE FOR OBTAINING EXACT LOCATIONS AND ELEVATIONS OF ALL UTILITIES FROM THE OWNERS OF THE RESPECTIVE UTILITIES. ALL UTILITIES SHALL BE NOTIFIED 72 HRS. PRIOR TO EXCAVATION.

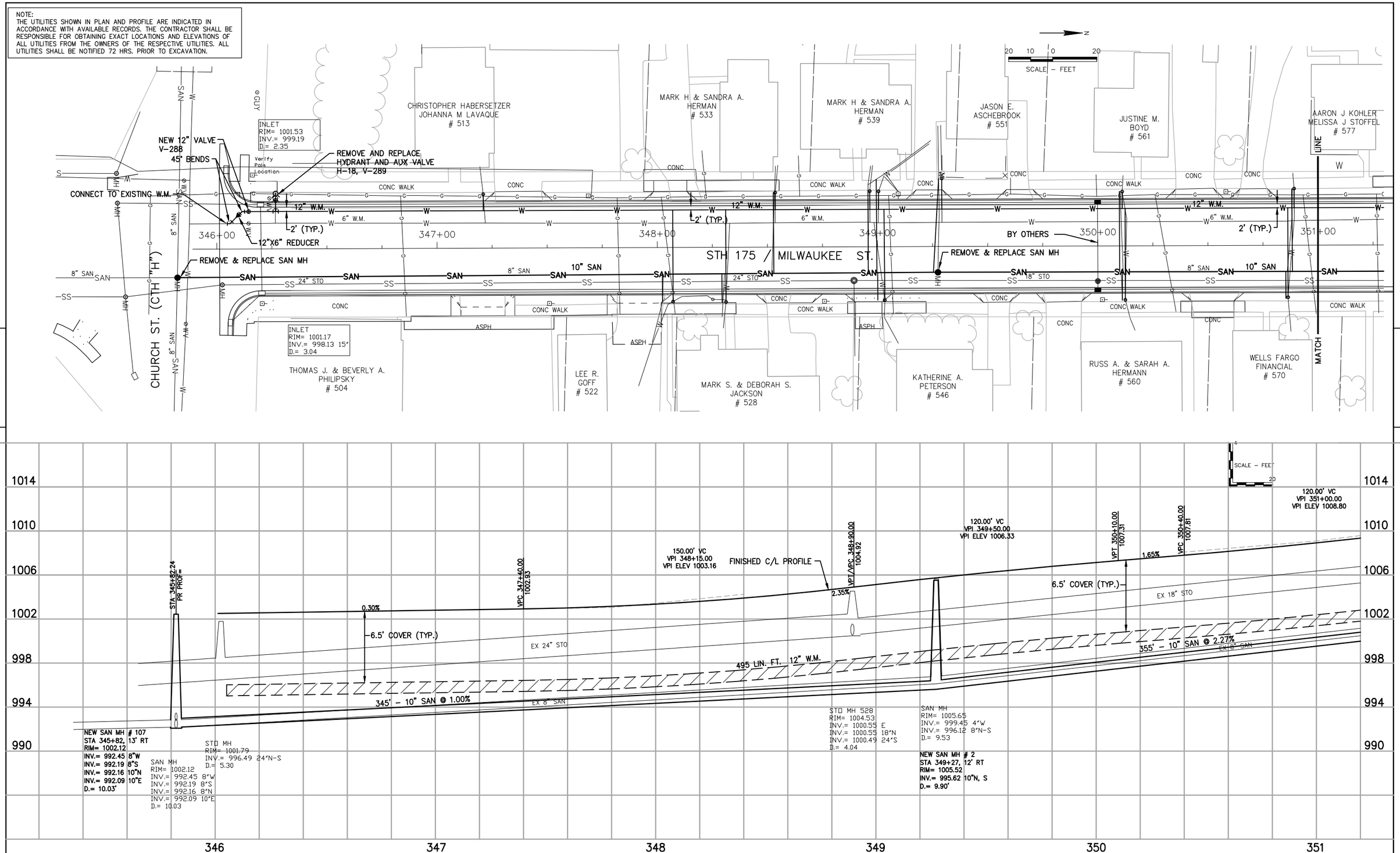

PROJECT NO: 3364-03-73	HWY: STH 175	COUNTY: DODGE	SANITARY SEWER AND WATERMAIN	SHEET 7	E

NOTE:
THE UTILITIES SHOWN IN PLAN AND PROFILE ARE INDICATED IN ACCORDANCE WITH AVAILABLE RECORDS. THE CONTRACTOR SHALL BE RESPONSIBLE FOR OBTAINING EXACT LOCATIONS AND ELEVATIONS OF ALL UTILITIES FROM THE OWNERS OF THE RESPECTIVE UTILITIES. ALL UTILITIES SHALL BE NOTIFIED 72 HRS. PRIOR TO EXCAVATION.

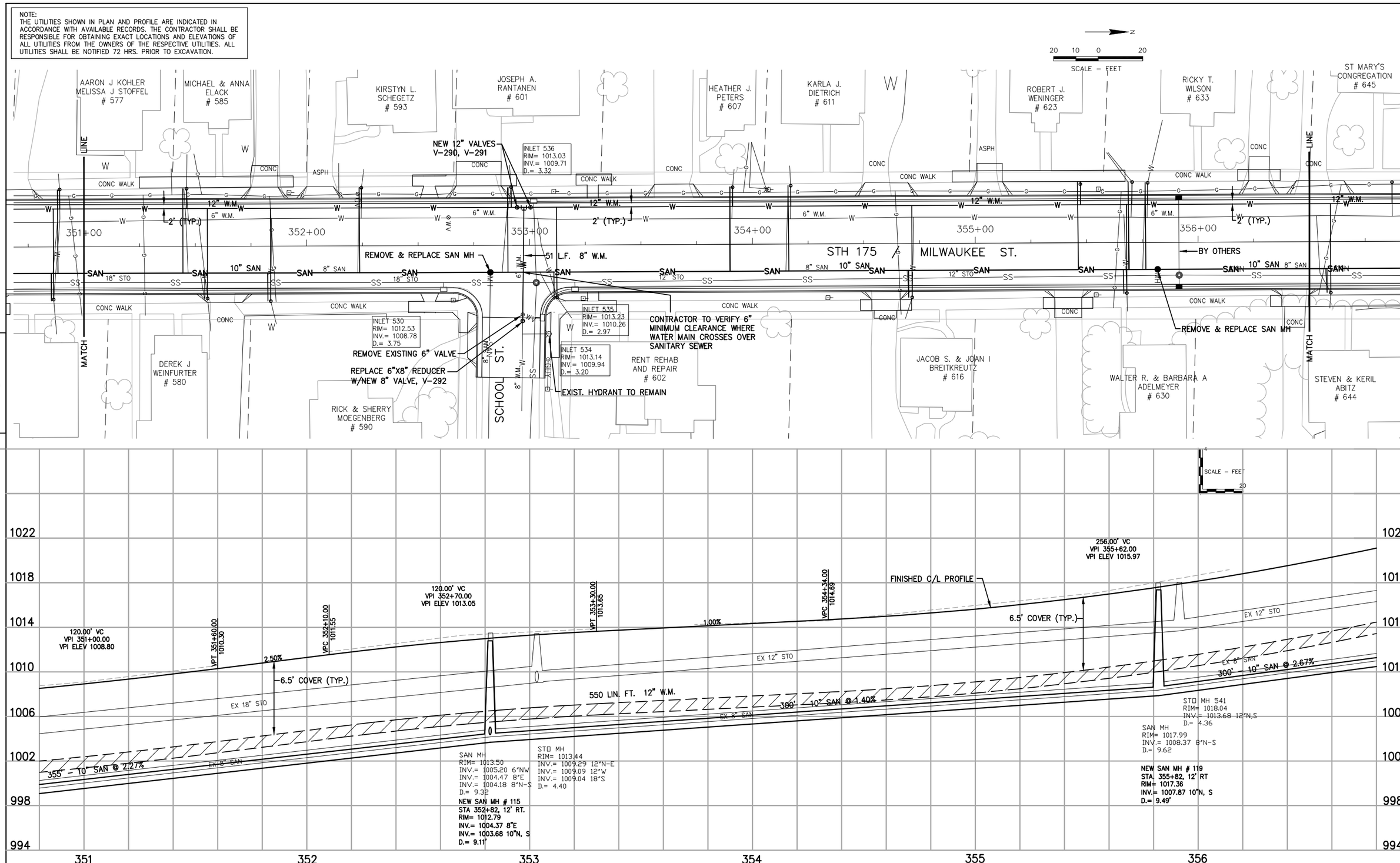

PROJECT NO: 3364-03-73	HWY: STH 175	COUNTY: DODGE	SANITARY SEWER AND WATERMAIN	SHEET 8	E

NOTE:
THE UTILITIES SHOWN IN PLAN AND PROFILE ARE INDICATED IN ACCORDANCE WITH AVAILABLE RECORDS. THE CONTRACTOR SHALL BE RESPONSIBLE FOR OBTAINING EXACT LOCATIONS AND ELEVATIONS OF ALL UTILITIES FROM THE OWNERS OF THE RESPECTIVE UTILITIES. ALL UTILITIES SHALL BE NOTIFIED 72 HRS. PRIOR TO EXCAVATION.

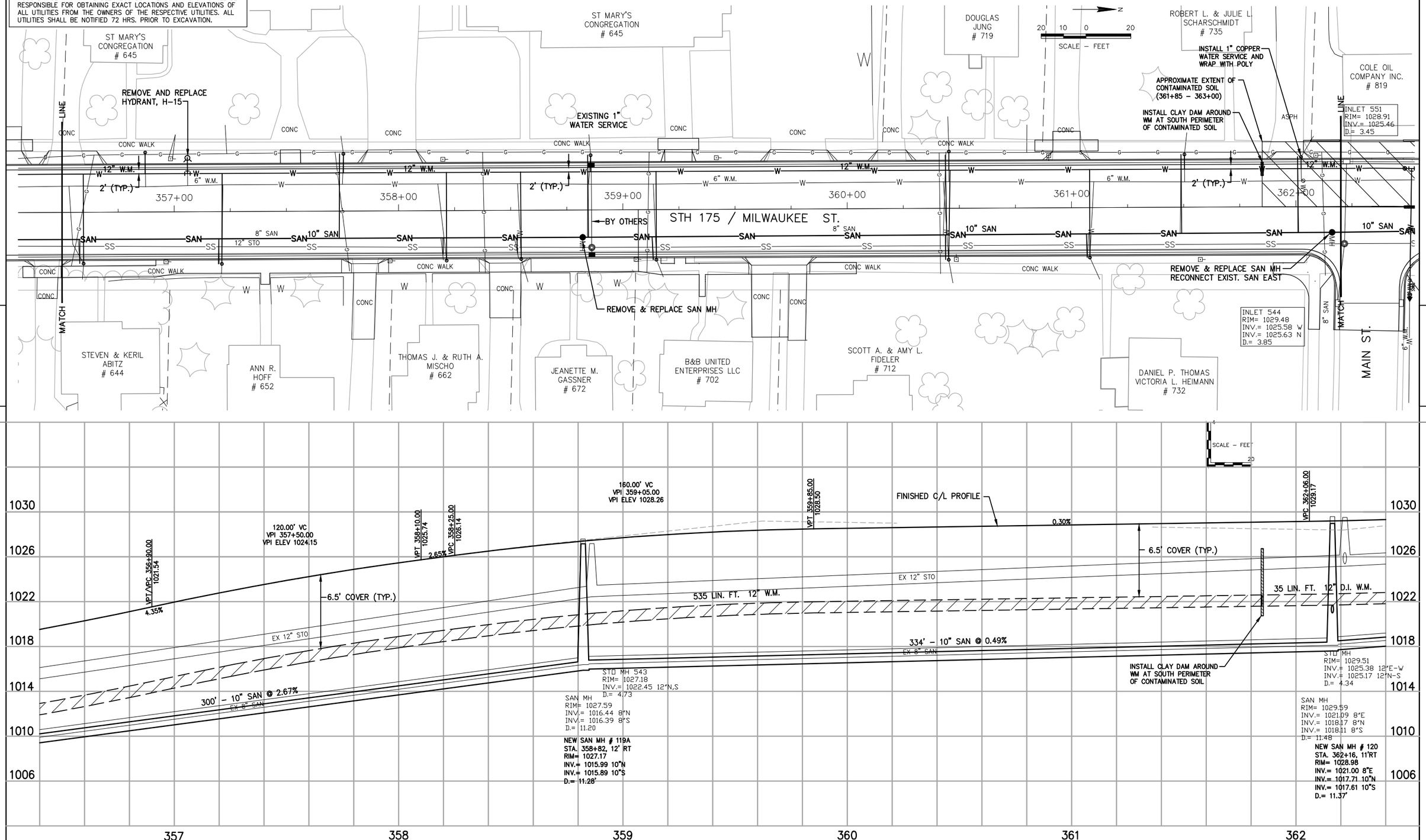

PROJECT NO: 3364-03-73	HWY: STH 175	COUNTY: DODGE	SANITARY SEWER AND WATERMAIN	SHEET 9	E

jee, W:\PROJECTS\L0002\920675\00\Acad\05-STH 175.dwg, model, Plot Date: 4/16/2015 11:24 AM, xrefs: (x-175 utility, x-finished cl profile, utility pts milwaukee st, x-curb gutter, x-lots rw 2007)

WISDOT/CADDS SHEET 40

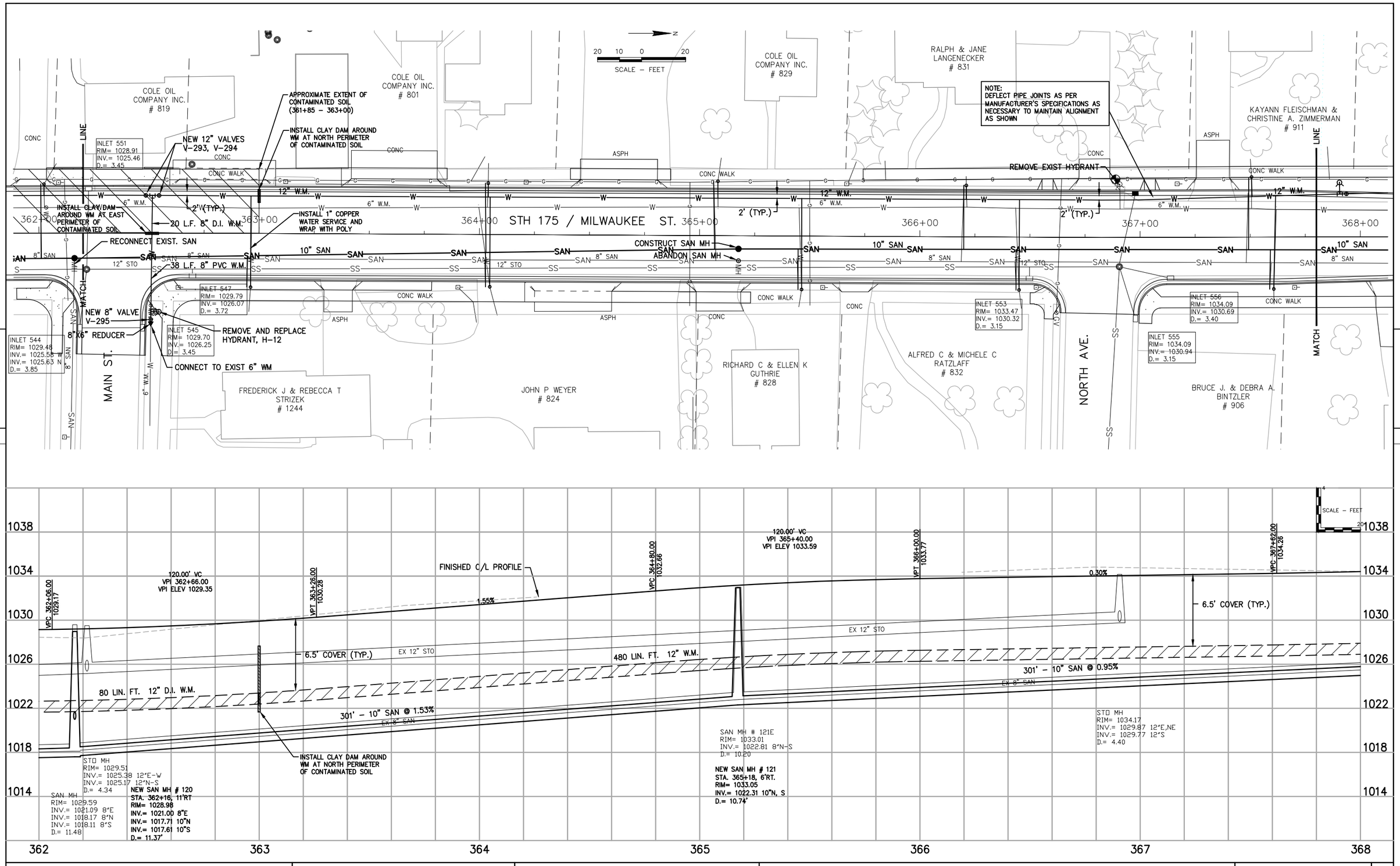

PROJECT NO: 3364-03-73	HWY: STH 175	COUNTY: DODGE	SANITARY SEWER AND WATERMAIN	SHEET 10	E

jee, W:\PROJECTS\L0002\920675\00\Acad\06-STH 175.dwg, model, Plot Date: 4/16/2015 11:21 AM, xrefs: (x-175 utility, x-finished cl profile, utility pts milwaukee st, x-curb gutter, x-lots rw 2007)

WISDOT/CADDS SHEET 40

KAYANN FLEISCHMAN & CHRISTINE A. ZIMMERMAN # 911

NICHOLAS R & KATEY L ROSKOPF # 925

JAY J THURNER # 955

PETER J DOWAN COURTNEY A LEWIS # 975

WALTER J JR & MARY ANN BETZ # 985

DENNIS V & DARLENE M BEUER # 989

N

20 10 0 20

SCALE – FEET

NOTE:
DEFLECT PIPE JOINTS AS PER MANUFACTURER'S SPECIFICATIONS AS NECESSARY TO MAINTAIN ALIGNMENT AS SHOWN

NEW HYDRANT H–154

NEW 12" VALVE V–296

CONSTRUCT SAN MH

ABANDON SAN MH

STORM SEWER (BY OTHERS)

REMOVE AND REPLACE HYDRANT H–155

2' OFF BOC (TYP.)

2' (TYP.)

BY OTHERS

STH 175 / MILWAUKEE ST.

REMOVE & REPLACE SAN MH

LATERAL LOCATIONS TO BE APPROVED BY ENGINEER

MATCH LINE

368+00 369+00 370+00 371+00 372+00 373+00

10" SAN 8" SAN 12" W.M. 6" WM 18" STO

CONC WALK CONC ASPH

INLET 558
RIM= 1035.19
INV.= 1032.19
D.= 2.30

MICHAEL D HARMEYER & LINDA C BRYFCZYNSKI # 926

THOMAS E & KIMBERLY J WALSH # 946

CHARLES F PAUL'S # 964

CHARLES F PAUL'S

ADAM WANIE & HEATHER AGGEN #990

NOTE:
THE UTILITIES SHOWN IN PLAN AND PROFILE ARE INDICATED IN ACCORDANCE WITH AVAILABLE RECORDS. THE CONTRACTOR SHALL BE RESPONSIBLE FOR OBTAINING EXACT LOCATIONS AND ELEVATIONS OF ALL UTILITIES FROM THE OWNERS OF THE RESPECTIVE UTILITIES. ALL UTILITIES SHALL BE NOTIFIED 72 HRS. PRIOR TO EXCAVATION.

5

1042 1038 1034 1030 1026 1022

VPC 367+82.00 1034.26

120.00' VC
VPI 368+22.00
VPI ELEV 1034.44

VPT 368+82.00 1034.98

0.90%

VPC 369+90.00 1035.95

FINISHED C/L PROFILE

180.00' VC
VPI 370+80.00
VPI ELEV 1036.76

VPT 371+70.00 1038.92

2.40%

VPC 371+88.00 1039.36

6.5' COVER (TYP.)

EX 18" STO

18" (MIN)

560 LIN. FT. 12" W.M.

380' – 10" SAN @ 1.26%

333' – 30" STO @ 1.18% (BY OTHERS)

352' – 10" SAN @ 1.08%

EX 8" SAN

SAN MH # 122E
RIM= 1035.50
INV.= 1025.72 8"N
INV.= 1025.66 8"S
D.= 9.84

NEW SAN MH # 122
STA. 368+18, 6'RT
RIM= 1034.39
INV.= 1025.26 10"N
INV.= 1025.16 10"S
D.= 9.23'

STO MH #7
(BY OTHERS)
RIM 1042.21
INV 1029.48 15"E
INV 1029.14 30"N
INV 1029.08 19"X30"W
D 13.13

STO MH 561
RIM= 1037.18
INV.= 1032.48 18"E
INV.= 1032.13 18"S
D.= 5.05

SAN MH
RIM= 1040.39
INV.= 1033.54 4"NE
INV.= 1031.03 8"N
INV.= 1030.53 8"S
D.= 9.86

NEW SAN MH # 123
STA. 371+98, 12' RT.
RIM= 1039.36
INV.= 1033.54 4"NE
INV.= 1030.53 10"N
INV.= 1030.03 10"S
D.= 9.33'

STO MH #8
(BY OTHERS)
RIM 1042.21
INV 1035.84 15"E,W
INV 1033.07 30"S
D 9.14

4 SCALE – FEET 20

368 369 370 371 372 373

PROJECT NO: 3364–03–73	HWY: STH 175	COUNTY: DODGE	SANITARY SEWER AND WATERMAIN	SHEET 11	E

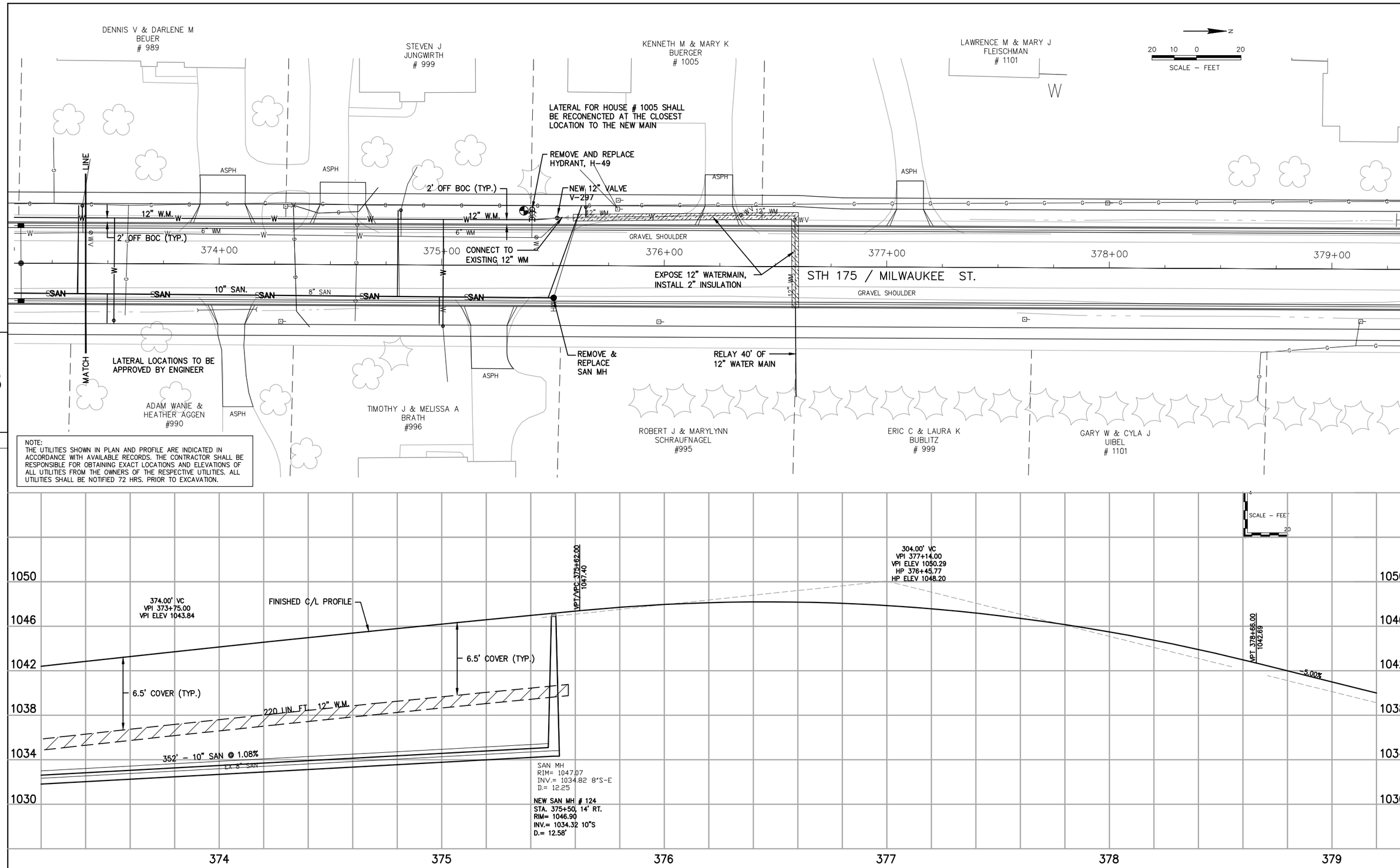

PROJECT NO: 3364-03-73	HWY: STH 175	COUNTY: DODGE	SANITARY SEWER AND WATERMAIN	SHEET 12	E

jee, W:\PROJECTS\L0002\920675\00\Acad\08-STH 175.dwg, model, Plot Date: 4/15/2015 2:09 PM, xrefs: (x-175 utility, x-finished cl profile, utility pts milwaukee st, x-curb gutter, x-lots rw 2007)

WISDOT/CADDS SHEET 40

Notes

Wisconsin Department of Transportation

Dedicated people creating transportation solutions through innovation and exceptional service.

http://www.dot.wisconsin.gov