WIS JUL 2015

PROJECT ID: 1166-07-62
WITH: N/A

COUNTY: MARATHON

ORDER OF SHEETS

TOTAL SHEETS = 232

STATE PROJECT	FEDERAL PROJECT	
	PROJECT	CONTRACT
1166-07-62	WISC 2014343	1

STATE OF WISCONSIN
DEPARTMENT OF TRANSPORTATION

STATE HIGHWAY REHABILITATION MAINTENANCE

STEVENS POINT - MERRILL
B-37-157, 161, 162, 165, 166

USH 51
MARATHON COUNTY

STATE PROJECT NUMBER
1166-07-62

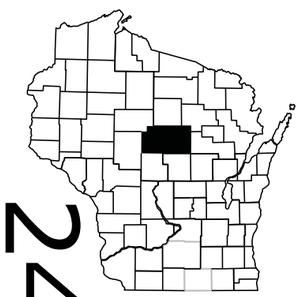

24

N

DESIGN DESIGNATION 1166-07-62

A.A.D.T.	(2015)	=	19,000
A.A.D.T.	(2035)	=	24,300
D.H.V.	(2035)	=	3,600
D.D.		=	67/33
T. (DHV)		=	14.7
DESIGN SPEED		=	70 MPH
ESALS		=	9,869,800

CONVENTIONAL SYMBOLS

PLAN
- CORPORATE LIMITS
- PROPERTY LINE
- LOT LINE
- LIMITED HIGHWAY EASEMENT
- EXISTING RIGHT OF WAY
- PROPOSED OR NEW R/W LINE
- SLOPE INTERCEPT
- REFERENCE LINE
- EXISTING CULVERT
- PROPOSED CULVERT (Box or Pipe)
- COMBUSTIBLE FLUIDS — CAUTION
- MARSH AREA
- WOODED OR SHRUB AREA

PROFILE
- GRADE LINE
- ORIGINAL GROUND
- MARSH OR ROCK PROFILE (To be noted as such) — ROCK
- SPECIAL DITCH — LABEL
- GRADE ELEVATION — 95.36
- CULVERT (Profile View)

UTILITIES
- ELECTRIC — E
- FIBER OPTIC — FO
- GAS — G
- SANITARY SEWER — SAN
- STORM SEWER — SS
- TELEPHONE — T
- WATER — W
- UTILITY PEDESTAL
- POWER POLE
- TELEPHONE POLE

B-37-165 USH 51 NB
B-37-166 USH 51 SB

B-37-161 USH 51 NB
B-37-162 USH 51 SB

B-37-157 FALCON DR

BEGIN PROJECT
STA 154N+64.74

END PROJECT
STA 530N+33.39

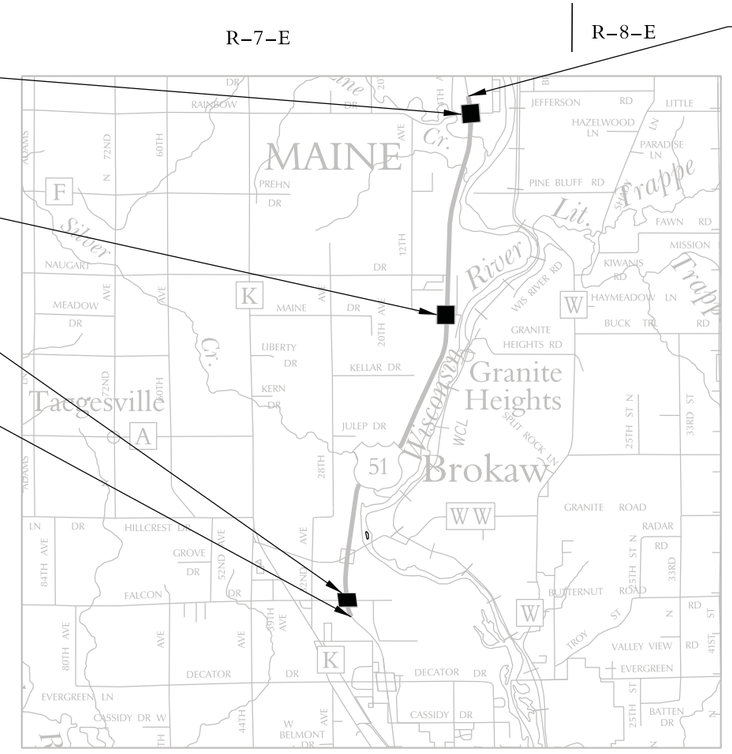

LAYOUT
SCALE 0 1 MI.

TOTAL NET LENGTH OF CENTERLINE = 1.767 MI.

COORDINATES ON THIS PLAN ARE REFERENCED TO THE WISCONSIN COUNTY COORDINATE SYSTEM (WCCS), MARATHON COUNTY, NAD 83 (2007)

ELEVATIONS SHOWN ON THIS PLAN ARE REFERENCED TO THE NORTH AMERICAN VERTICAL DATUM 1988 (91) OF NAVD 88 (91).

ORIGINAL PLANS PREPARED BY
BLOOM COMPANIES, LLC
Architectural Services and Engineering

WISCONSIN PROFESSIONAL ENGINEER
CHAD R. EVEN
E-40861
Greenville, Wisconsin

1-30-15 (Date) (Signature)

STATE OF WISCONSIN
DEPARTMENT OF TRANSPORTATION

PREPARED BY

Surveyor	N/A
Designer	BLOOM COMPANIES, LLC
Project Manager	MICHAEL GRAGE
Regional Examiner	
Regional Supervisor	
C.O. Examiner	

APPROVED FOR THE DEPARTMENT
DATE: 5/1/15 (Signature)

E

2

GENERAL NOTES

THE LOCATIONS OF EXISTING UTILITY INSTALLATION AS SHOWN ON THE PLANS ARE APPROXIMATE. THERE MAY BE OTHER UTILITY INSTALLATIONS WITHIN THE PROJECT AREA THAT ARE NOT SHOWN.

THE CONTRACTOR SHALL NOTIFY DIGGERS HOTLINE AND AFFECTED UTILITIES PRIOR TO START OF WORK. ANY UTILITY WHICH IS NOT A MEMBER OF DIGGERS HOTLINE MUST BE CONTACTED SEPARATELY.

STORAGE OF ANY MATERIAL WILL NOT BE PERMITTED IN WETLANDS

NO TREES OR SHRUBS ARE TO BE REMOVED WITH PRIOR APPROVAL OF THE ENGINEER.

BENCHMARK LOCATIONS SHOWN ON THE PLANS ARE APPROXIMATE AND SHOULD BE VERIFIED.

ALL TYPES OF HMA PAVEMENT SHALL BE CONSTRUCTED WITH THE FOLLOWING LAYERS AND GRADATIONS:

TOTAL LAYER PAVEMENT THICKNESS	LAYERS	NOMINAL MAXIMUM SIZE GRADATION
5”	2” UPPER LAYER 3” LOWER LAYER	12.5 mm 19.0 mm

DIGGERS HOTLINE
Dial 811 or (800) 242-8511
www.DiggersHotline.com

UTILITY CONTACTS

FRONTIER COMMUNICATIONS OF WI, LLC
CALVIN KLADE
1851 N 14TH AVE
WAUSAU, WI 54401
PHONE: (715) 847-1525
Calvin.klade@ftr.com

WISCONSIN PUBLIC SERVICE CORPORATION – ELECTRICITY
CLAYTON VIRCKS
PO BOX 1166
WAUSAU, WI 54402
PHONE: (715) 848-7317
chvircks@wisconsinpublicservice.com

OTHER AGENCIES

WISCONSIN DNR
MR. MARC HERSHFIELD
WDNR EA LIASION
473 GRIFFITH DRIVE
WISCONSIN RAPIDS, WI 54494
PHONE: (715) 421-7867
Marc.hershfield@wisconsin.gov

SECTION 2 ORDER OF SHEETS

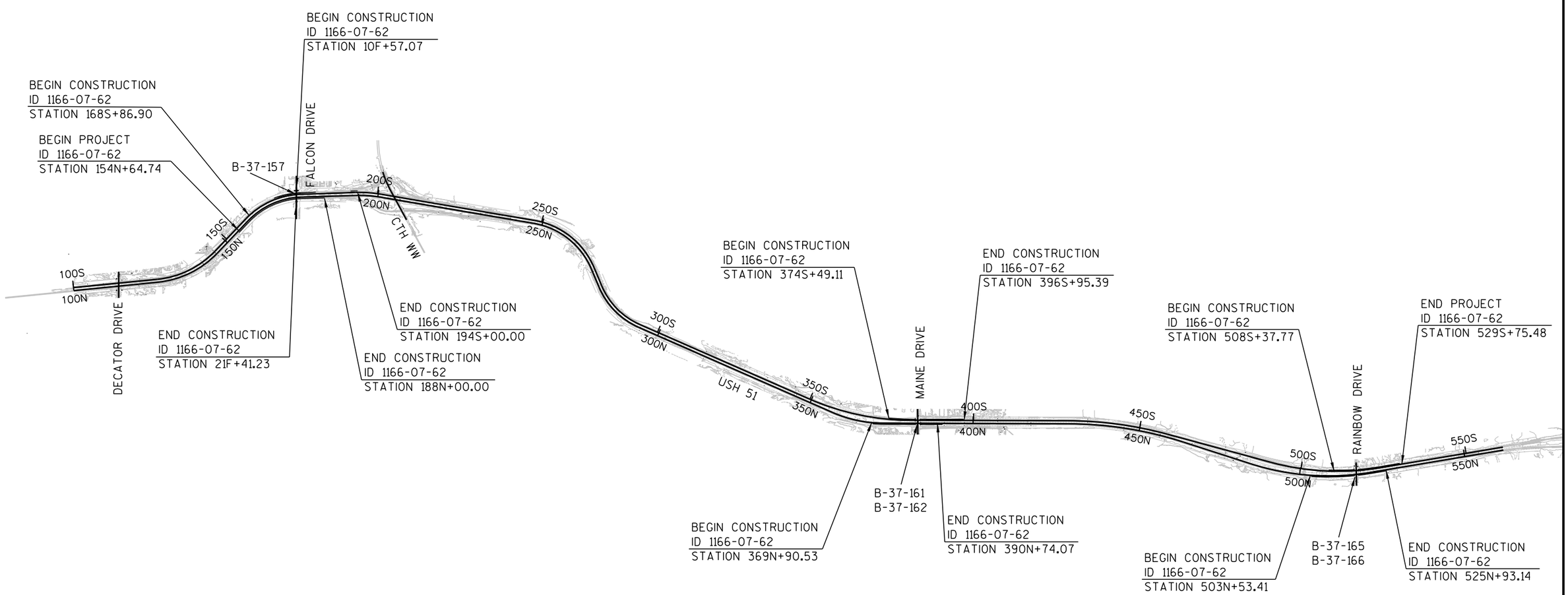

PROJECT NO:1166-07-62	HWY:USH 51	COUNTY:MARATHON	PROJECT OVERVIEW	SHEET 3	E

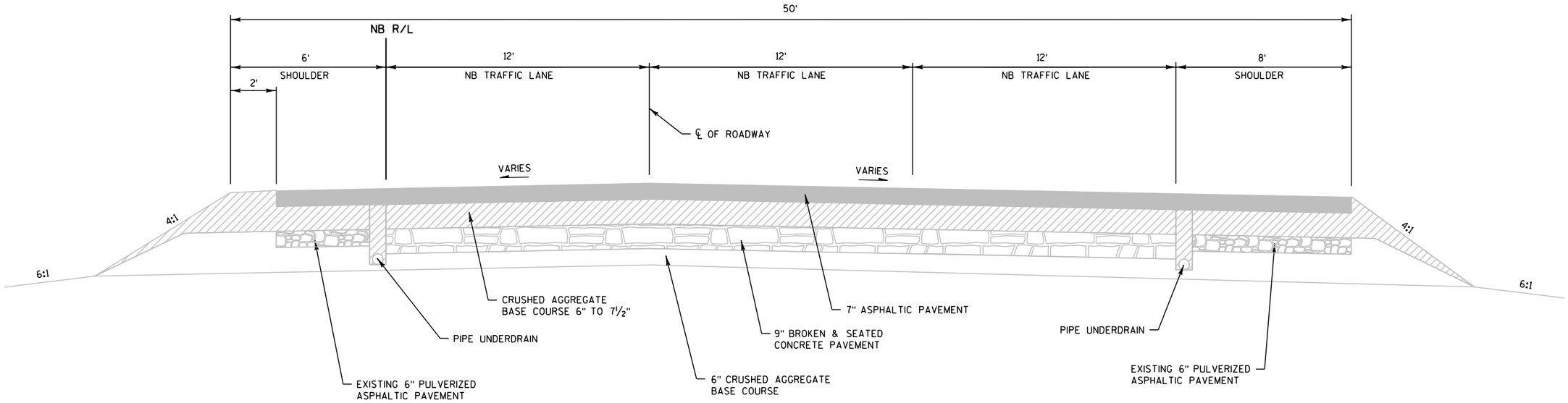

EXISTING TYPICAL SECTION

USH 51 NORTHBOUND

STA 154N+65 TO STA 188N+00

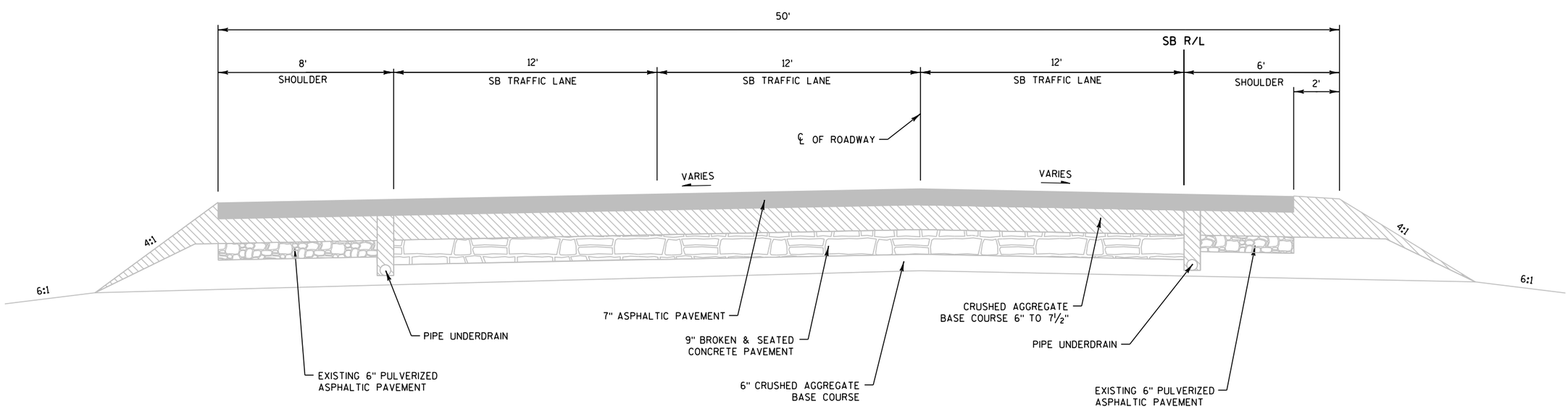

EXISTING TYPICAL SECTION

USH 51 SOUTHBOUND

STA 168S+87 TO STA 194S+00

PROJECT NO:1166-07-62	HWY:USH 51	COUNTY:MARATHON	TYPICAL SECTIONS	SHEET 4	E

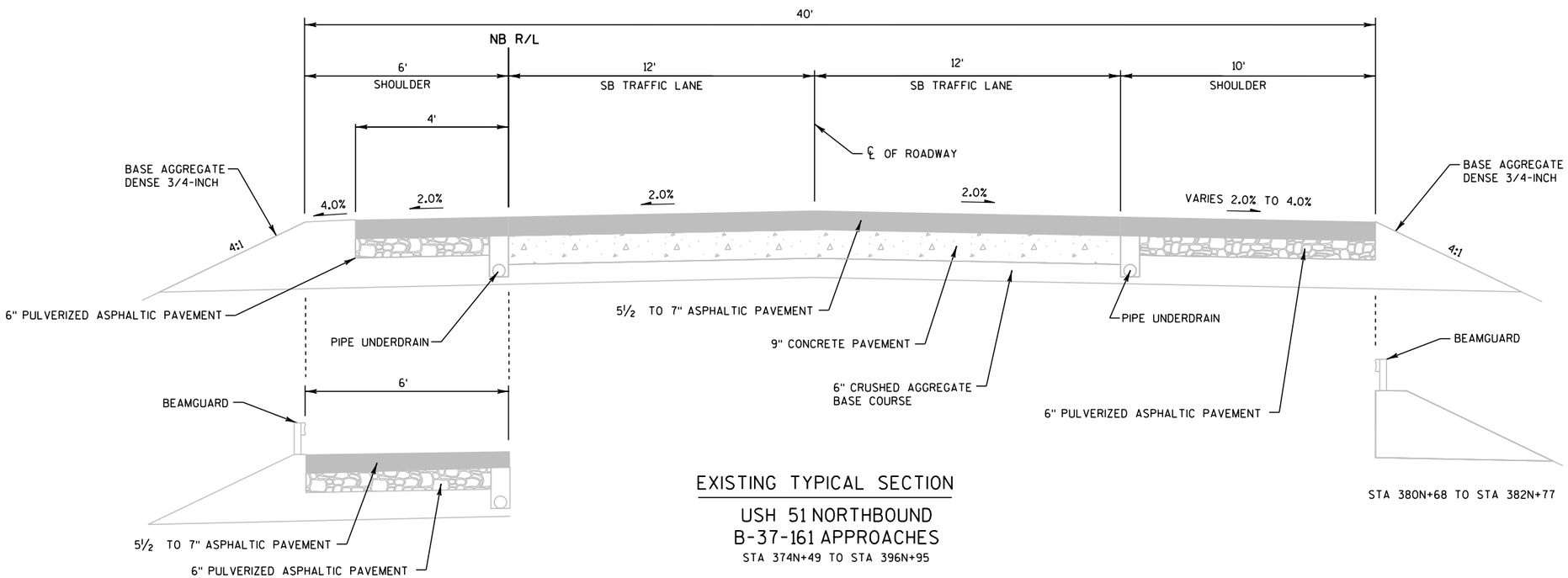

EXISTING TYPICAL SECTION

USH 51 NORTHBOUND
B-37-161 APPROACHES
STA 374N+49 TO STA 396N+95

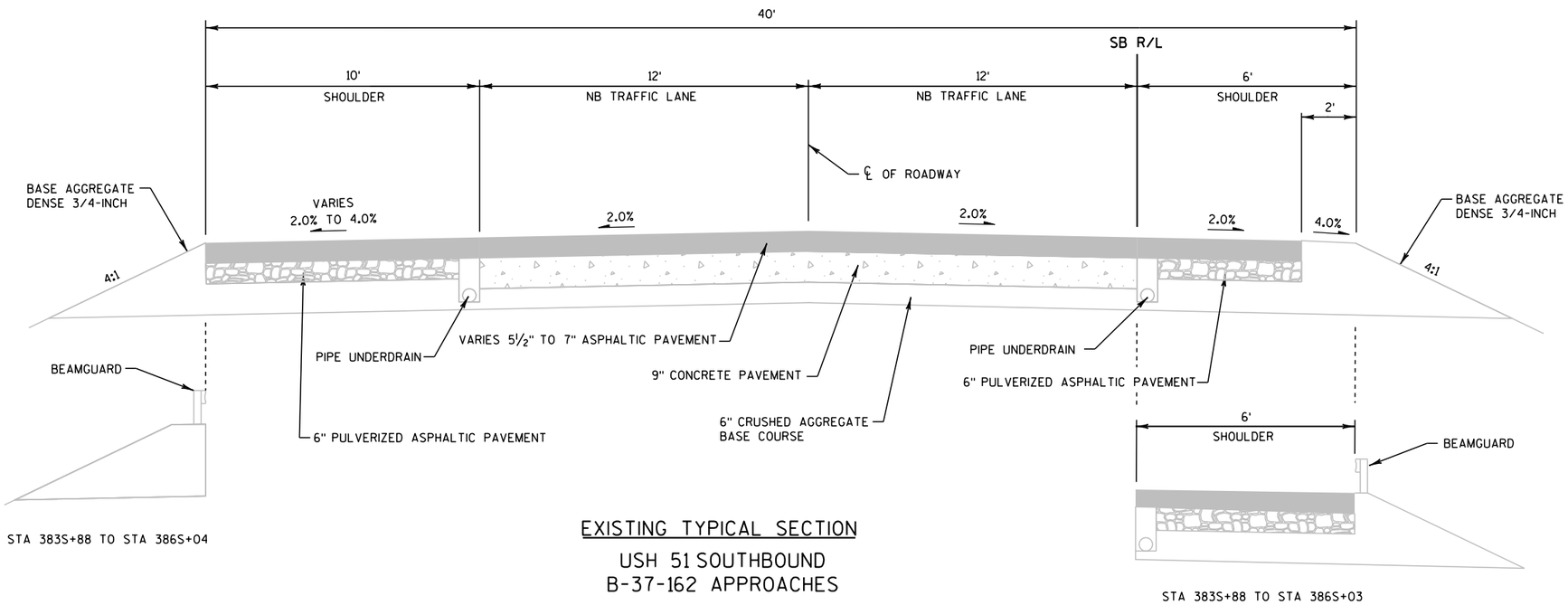

EXISTING TYPICAL SECTION

USH 51 SOUTHBOUND
B-37-162 APPROACHES

STA 369S+91 TO STA 390S+74

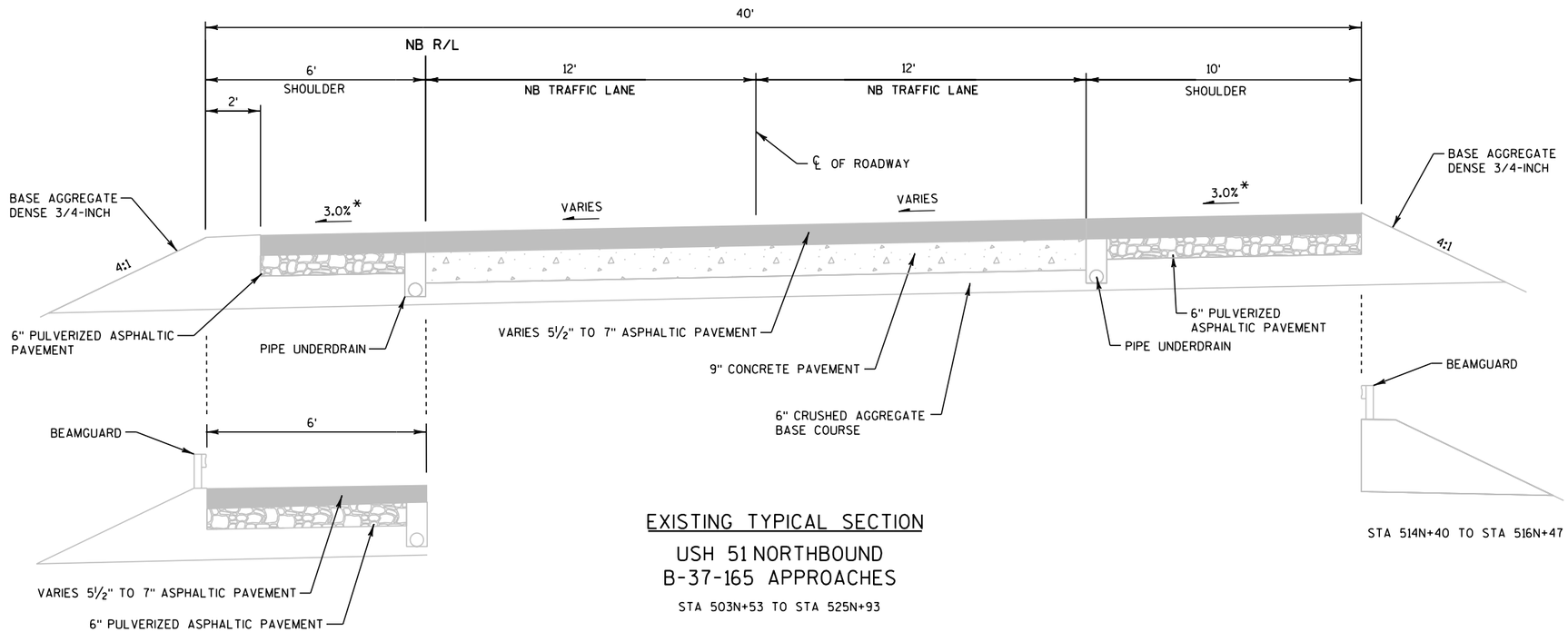

EXISTING TYPICAL SECTION

USH 51 NORTHBOUND
B-37-165 APPROACHES

STA 503N+53 TO STA 525N+93

*VARIES WITH SUPERELEVATION

PROJECT NO:1166-07-62	HWY:USH 51	COUNTY:MARATHON	TYPICAL SECTIONS	SHEET 7	E

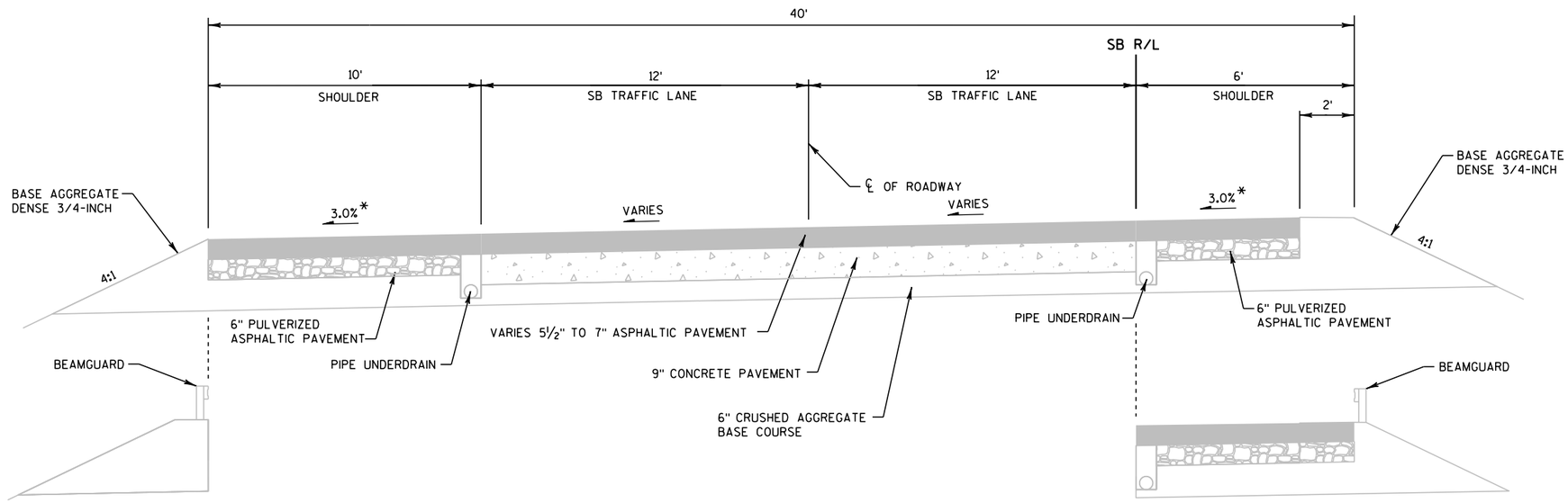

STA 517S+18 TO STA 519S+20

STA 517S+18 TO STA 519S+21

EXISTING TYPICAL SECTION

USH 51 SOUTHBOUND
B-37-166 APPROACHES

STA 508S+38 TO STA 530S+33

*VARIES WITH SUPERELEVATION

PROJECT NO:1166-07-62	HWY:USH 51	COUNTY:MARATHON	TYPICAL SECTIONS	SHEET 8	E

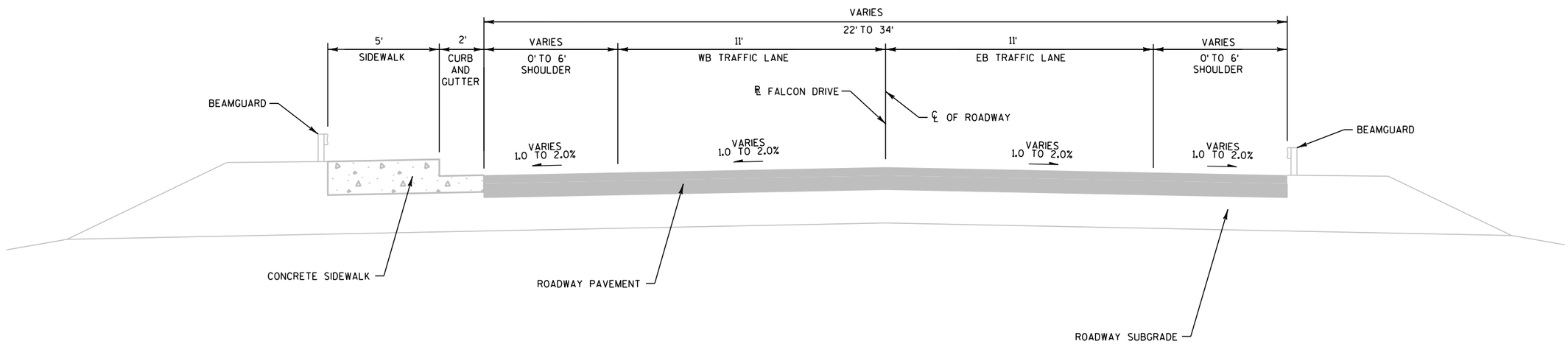

EXISTING TYPICAL SECTION

FALCON DRIVE
B-37-157 APPROACHES

STA 10F+57 TO STA 21F+43

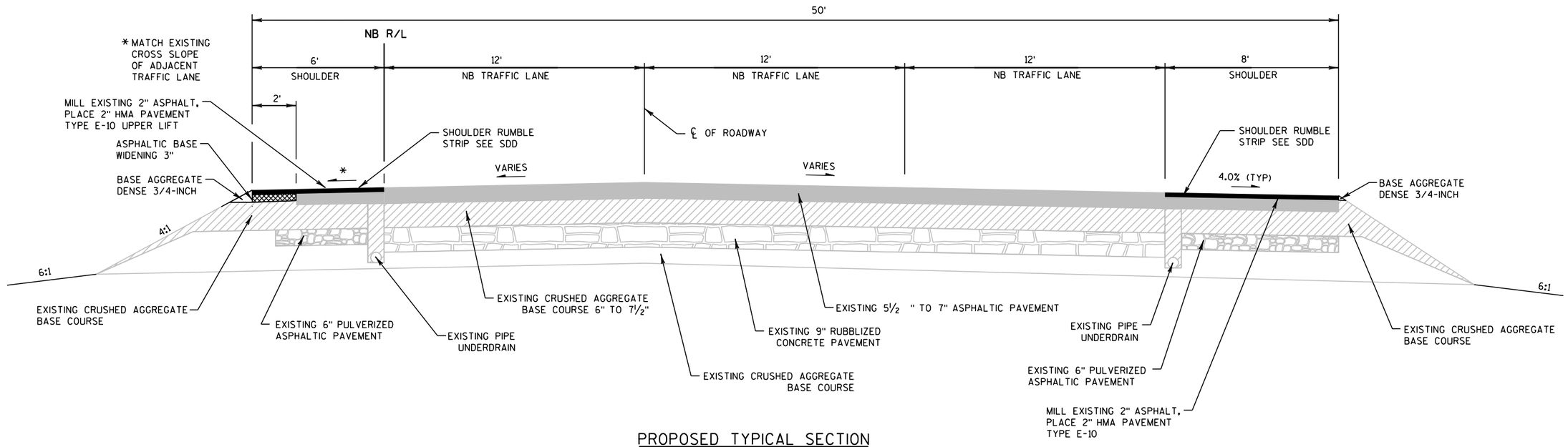

PROPOSED TYPICAL SECTION

USH 51 NORTHBOUND

STA 154N+65 TO STA 188N+00

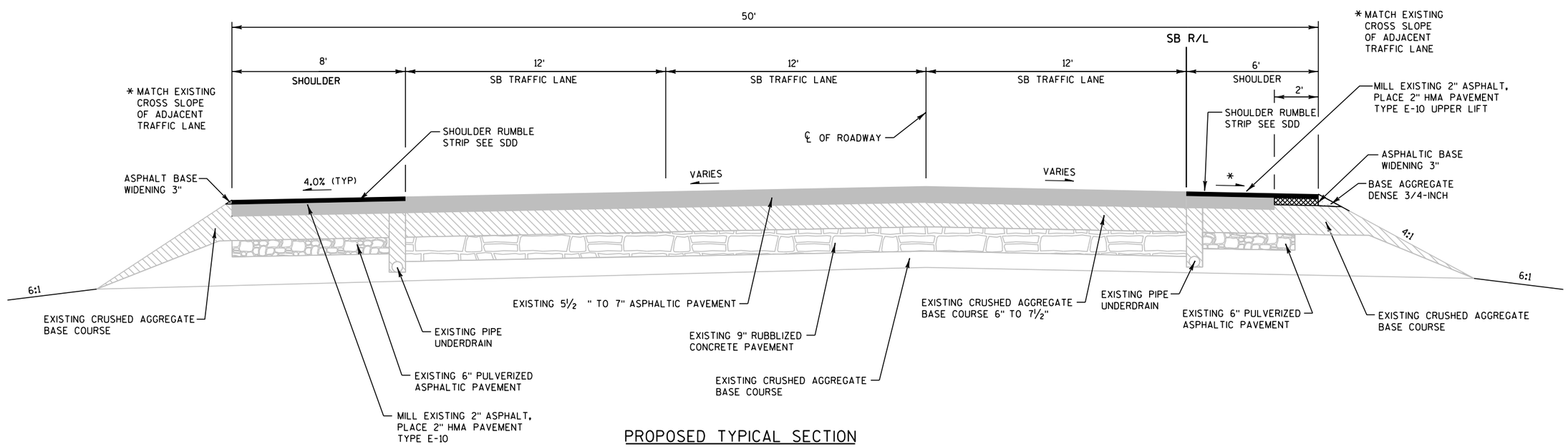

PROPOSED TYPICAL SECTION

USH 51 SOUTHBOUND

STA 168S+87 TO STA 194S+00

PROJECT NO:1166-07-62	HWY:USH 51	COUNTY:MARATHON	TYPICAL SECTIONS	SHEET 10	E

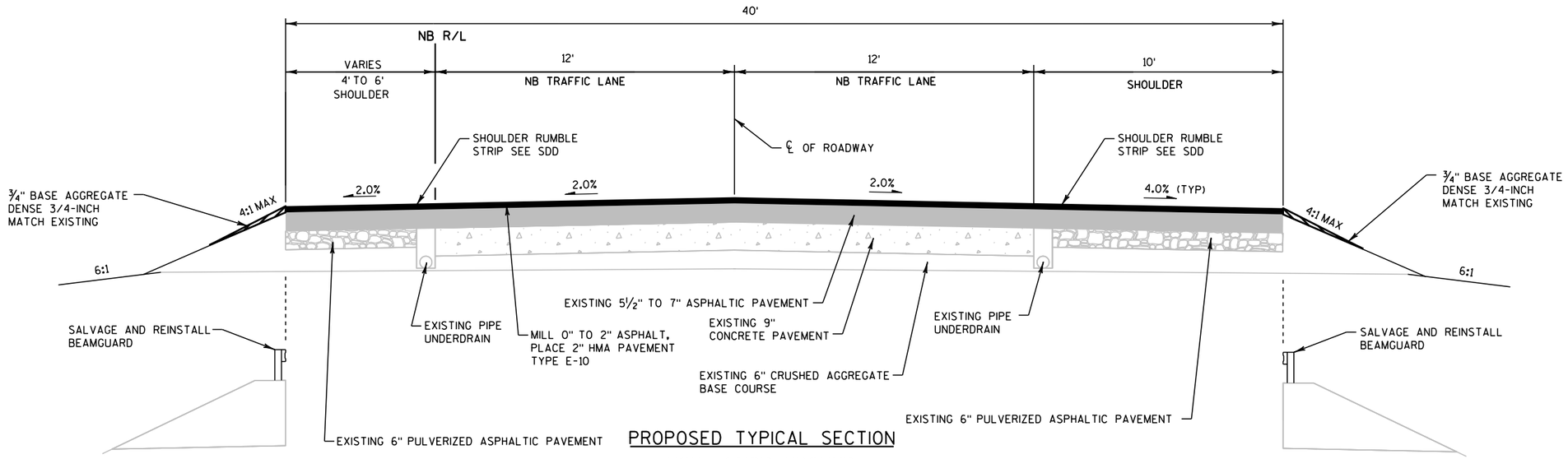

PROPOSED TYPICAL SECTION

USH 51 NORTHBOUND
B-37-161 APPROACHES
STAGE 3

STA 380N+77 TO STA 382N+77
STA 384N+03 TO STA 386N+03

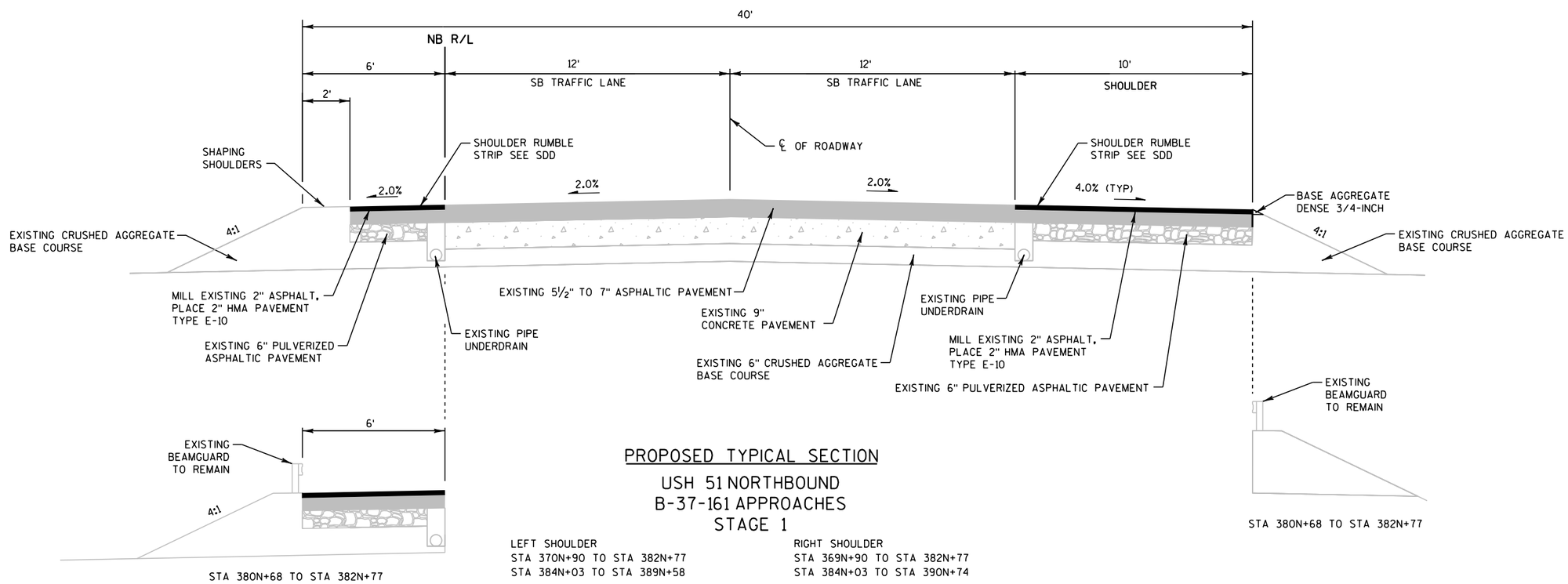

PROPOSED TYPICAL SECTION

USH 51 NORTHBOUND
B-37-161 APPROACHES
STAGE 1

LEFT SHOULDER
STA 370N+90 TO STA 382N+77
STA 384N+03 TO STA 389N+58

RIGHT SHOULDER
STA 369N+90 TO STA 382N+77
STA 384N+03 TO STA 390N+74

PROJECT NO:1166-07-62	HWY:USH 51	COUNTY:MARATHON	TYPICAL SECTIONS	SHEET 11	E

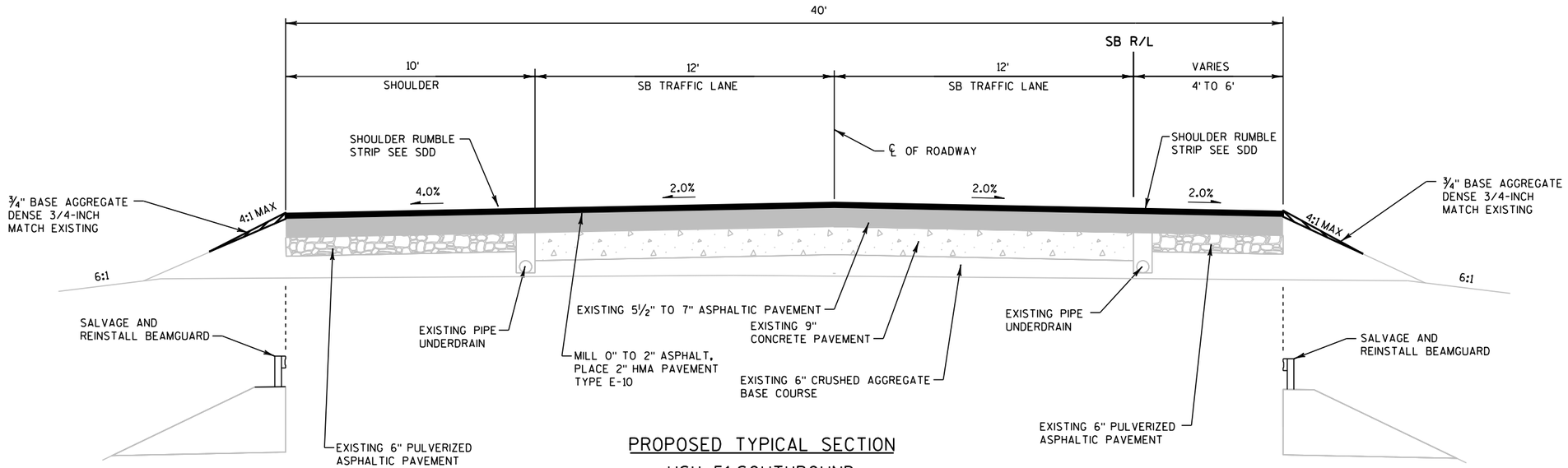

PROPOSED TYPICAL SECTION

USH 51 SOUTHBOUND
B-37-162 APPROACHES
STAGE 3

STA 380S+62 TO STA 382S+62
STA 383S+88 TO STA 385S+88

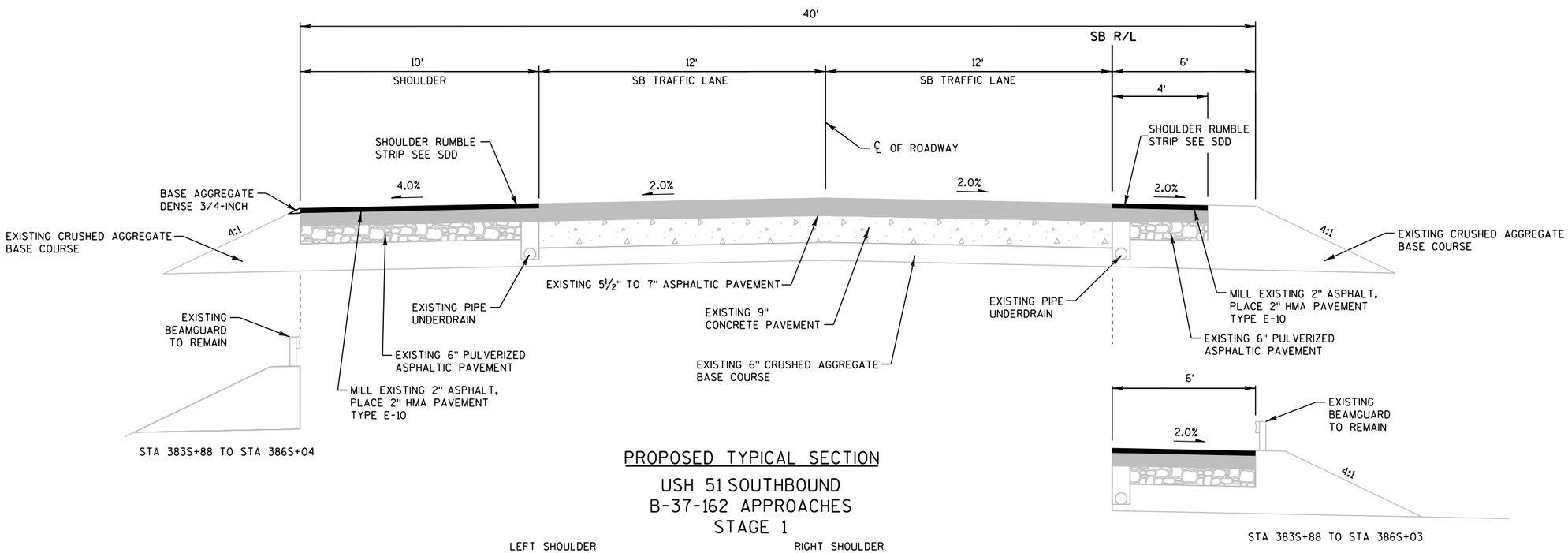

PROPOSED TYPICAL SECTION

USH 51 SOUTHBOUND
B-37-162 APPROACHES
STAGE 1

LEFT SHOULDER
STA 374S+49 TO STA 382S+62
STA 383S+88 TO STA 396S+12

RIGHT SHOULDER
STA 375S+64 TO STA 380S+62
STA 383S+88 TO STA 396S+95

PROJECT NO:1166-07-62	HWY:USH 51	COUNTY:MARATHON	TYPICAL SECTIONS	SHEET 12	E

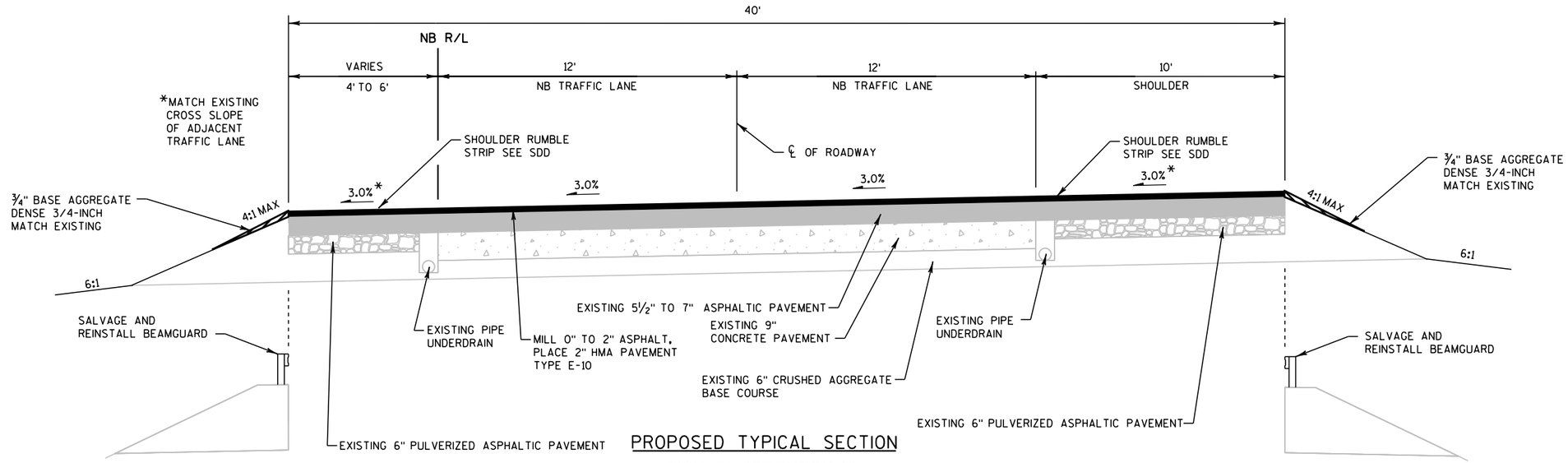

PROPOSED TYPICAL SECTION

USH 51 NORTHBOUND
B-37-165 APPROACHES
STAGE 3

STA 514N+47 TO STA 516N+47
STA 517N+60 TO STA 519N+60

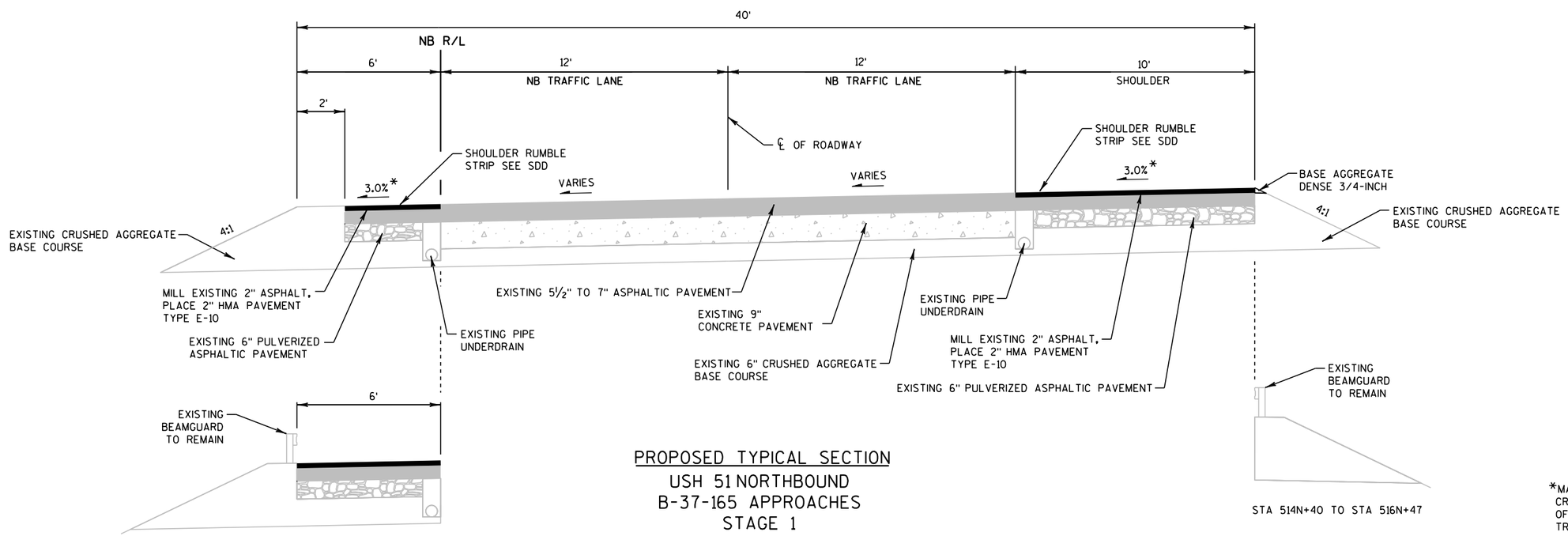

PROPOSED TYPICAL SECTION

USH 51 NORTHBOUND
B-37-165 APPROACHES
STAGE 1

LEFT SHOULDER
STA 504N+86 TO STA 503N+53
STA 517N+60 TO STA 523N+64

RIGHT SHOULDER
STA 504N+86 TO STA 516N+47
STA 517N+60 TO STA 525N+93

*MATCH EXISTING CROSS SLOPE OF ADJACENT TRAFFIC LANE

PROJECT NO:1166-07-62	HWY:USH 51	COUNTY:MARATHON	TYPICAL SECTIONS	SHEET 13	E

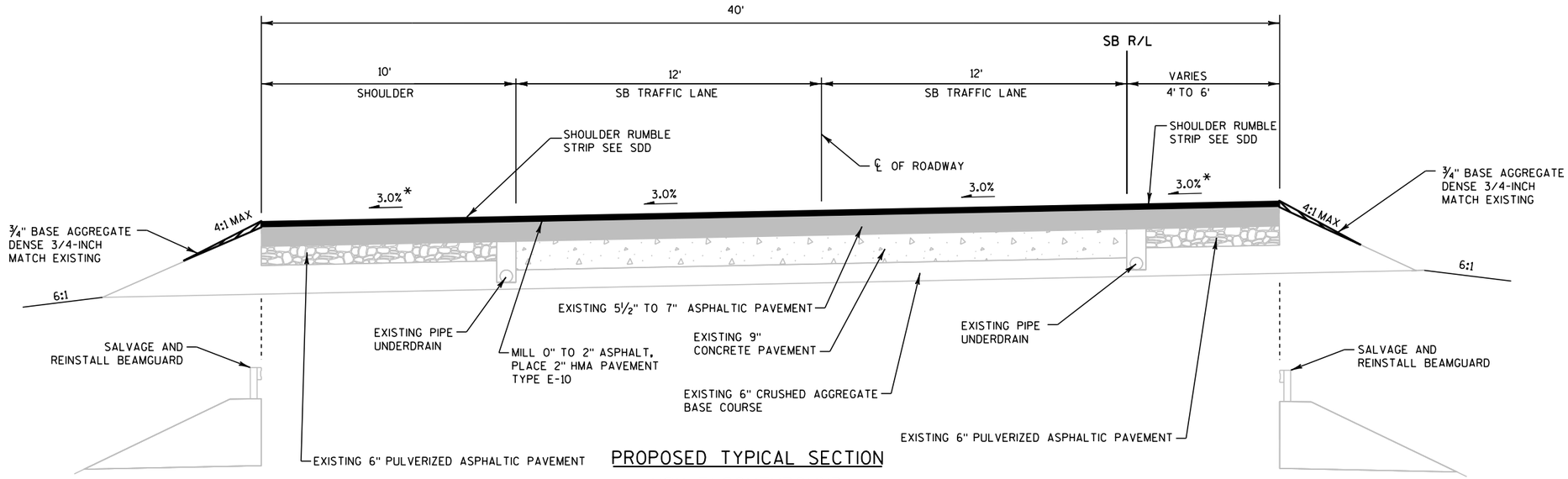

PROPOSED TYPICAL SECTION

USH 51 SOUTHBOUND
B-37-166 APPROACHES
STAGE 3

STA 514S+05 TO STA 516S+05
STA 517S+18 TO STA 519S+18

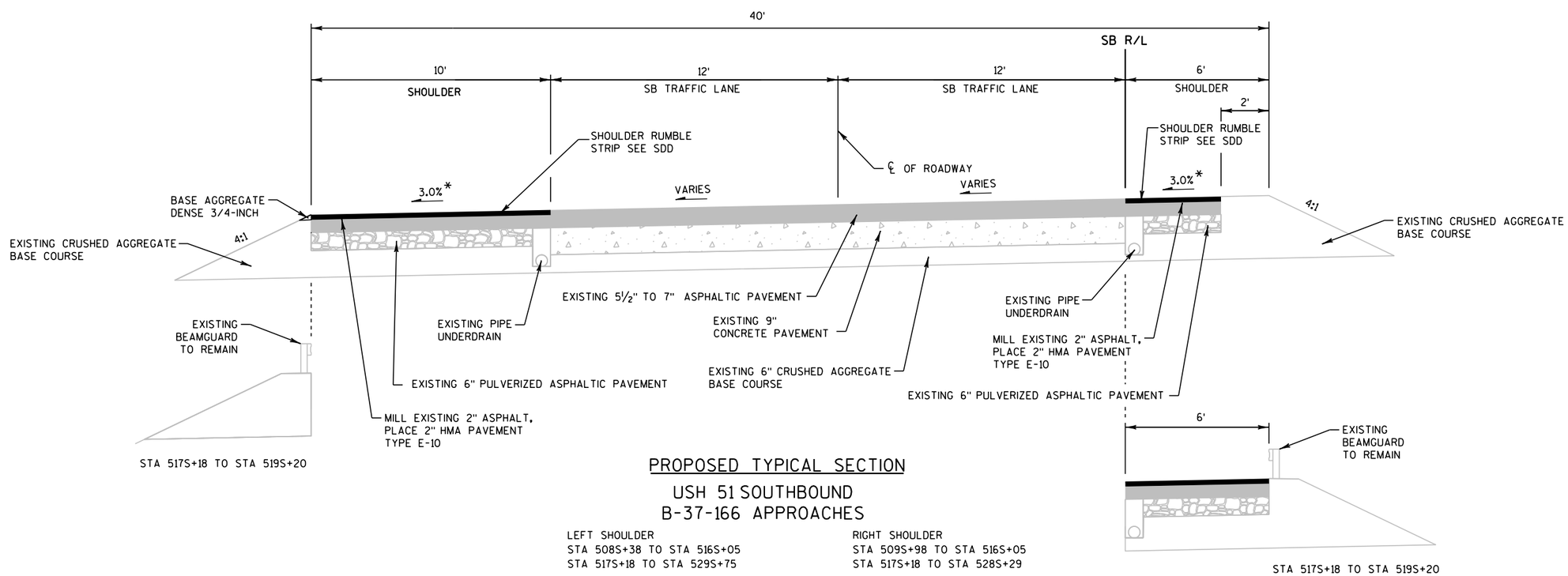

PROPOSED TYPICAL SECTION

USH 51 SOUTHBOUND
B-37-166 APPROACHES

LEFT SHOULDER
STA 508S+38 TO STA 516S+05
STA 517S+18 TO STA 529S+75

RIGHT SHOULDER
STA 509S+98 TO STA 516S+05
STA 517S+18 TO STA 528S+29

*MATCH EXISTING CROSS SLOPE OF ADJACENT TRAFFIC LANE

PROJECT NO:1166-07-62	HWY:USH 51	COUNTY:MARATHON	TYPICAL SECTIONS	SHEET 14	E

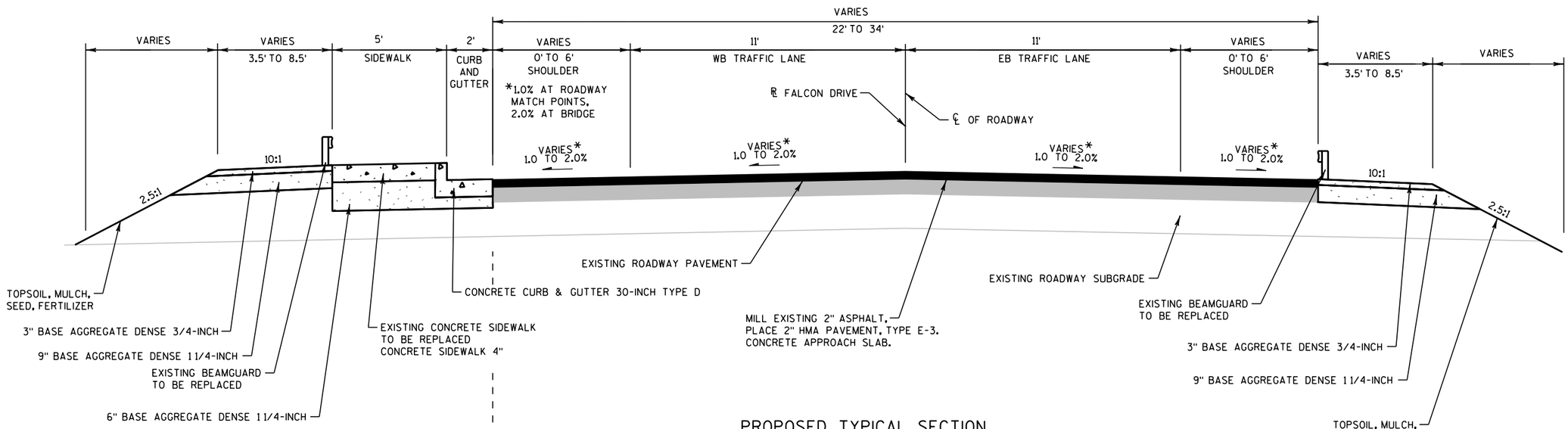

PROPOSED TYPICAL SECTION

FALCON DRIVE
B-37-157 APPROACHES
STA 13F+25 TO STA 19F+00

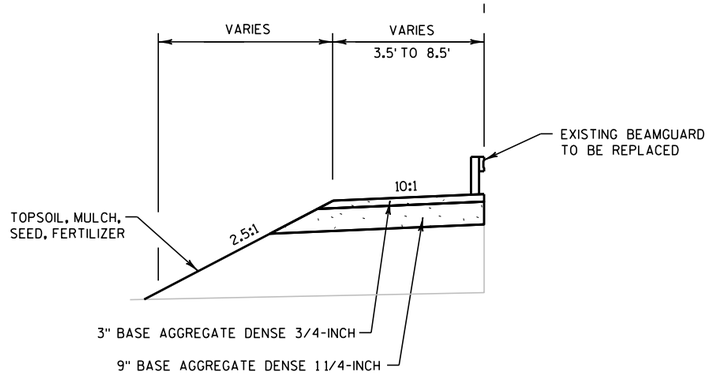

STA 13F+25 TO STA 14F+33
STA 17F+78 TO STA 19F+00

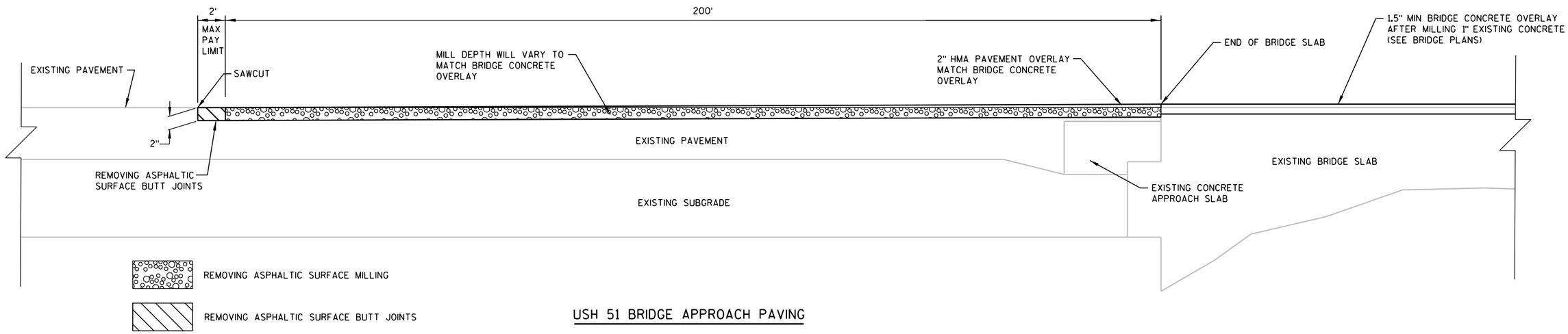

USH 51 BRIDGE APPROACH PAVING

STA 380N+77 TO STA 382N+77
STA 384N+03 TO STA 386N+03
STA 514N+47 TO STA 516N+47
STA 517N+60 TO STA 519N+60

STA 380S+62 TO STA 382S+62
STA 383S+88 TO STA 385S+88
STA 514S+04 TO STA 516S+04
STA 517S+18 TO STA 519S+18

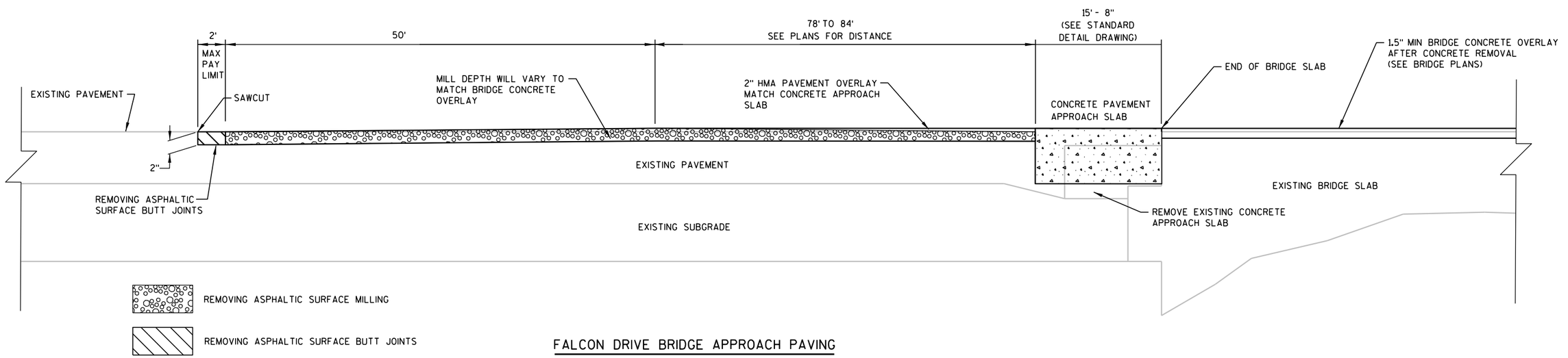

FALCON DRIVE BRIDGE APPROACH PAVING

STA 13F+25 TO STA 14F+53
STA 17F+66 TO STA 19F+00

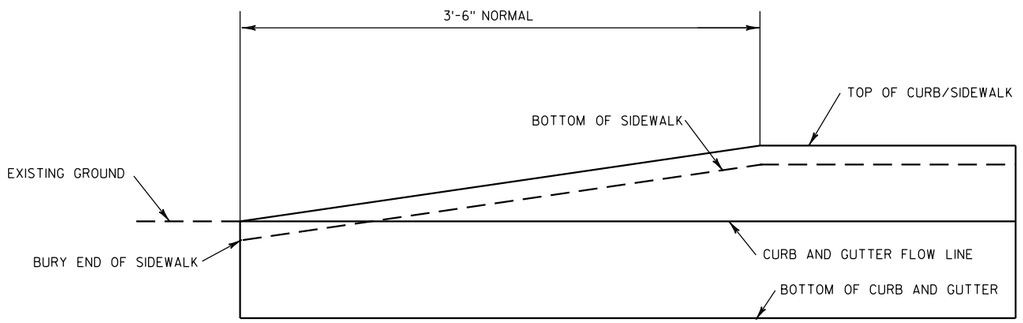

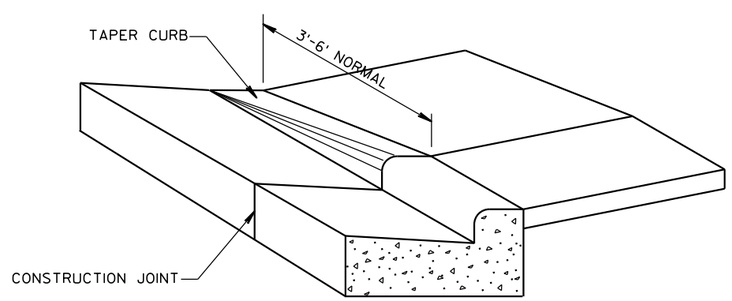

DETAIL OF CURB & GUTTER TERMINI

STA 14F+33 TO STA 14F+68, LT
STA 17F+49 TO STA 17F+78, LT

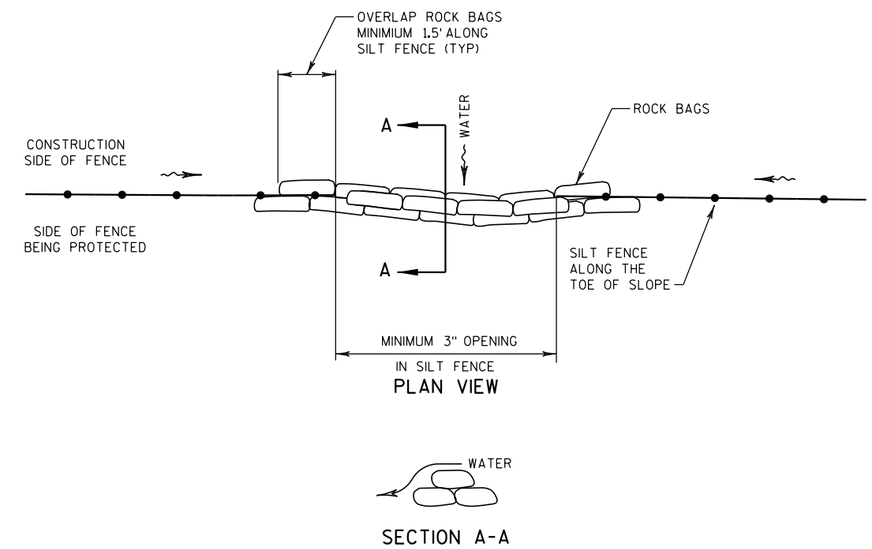

SILT FENCE DRAINAGE OUTLET, ROCK BAGS

RUNOFF COEFFICIENT TABLE

	HYDROLOGIC SOIL GROUP											
	A			B			C			D		
	SLOPE RANGE (PERCENT)			SLOPE RANGE (PERCENT)			SLOPE RANGE (PERCENT)			SLOPE RANGE (PERCENT)		
LAND USE:	0-2	2-6	6 & OVER	0-2	2-6	6 & OVER	0-2	2-6	6 & OVER	0-2	2-6	6 & OVER
ROW CROPS	.08 .22	.16 .30	.22 .38	.12 .26	.20 .34	.27 .44	.15 .30	.24 .37	.33 .50	.19 .34	.28 .41	.38 .56
MEDIAN STRIP-TURF	.19 .24	.20 .26	.24 .30	.19 .25	.22 .28	.26 .33	.20 .26	.23 .30	.30 .37	.20 .27	.25 .32	.30 .40
SIDE SLOPE-TURF			.25 .32			.27 .34			.28 .36			.30 .38
PAVEMENT:												
ASPHALT	.70 - .95											
CONCRETE	.80 - .95											
BRICK	.70 - .80											
DRIVES, WALKS	.75 - .85											
ROOFS	.75 - .95											
GRAVEL ROADS, SHOULDERS	.40 - .60											

TOTAL PROJECT AREA = ACRES
TOTAL AREA EXPECTED TO BE DISTURBED BY CONSTRUCTION ACTIVITIES = ACRES

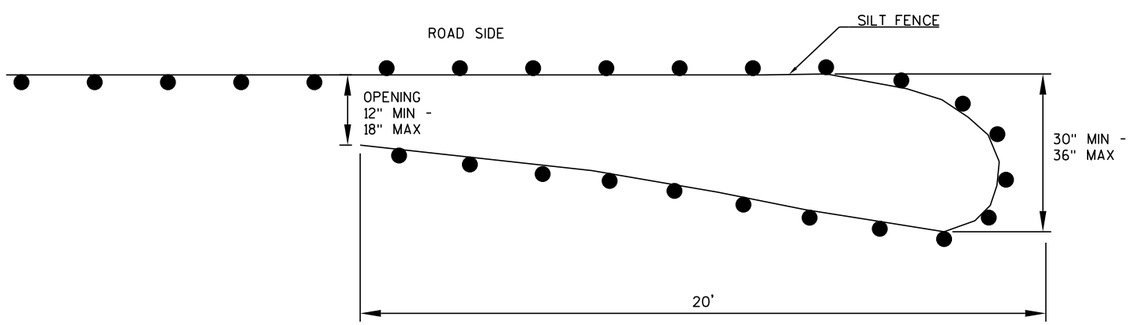

PLAN VIEW

GENERAL NOTES:

SILT FENCE POSTS FOR THE TURN-AROUND SHOULD BE ON THE OUTSIDE OF THE TURN-AROUND AND TRENCHED IN ACCORDING TO SILT FENCE REQUIREMENTS

TEMPORARY SMALL ANIMAL TURN-AROUND

STA 10F+40 TO STA 14F+46
STA 17F+68 TO STA 21F+61
STA 11F+34 TO STA 14F+46
STA 17F+68 TO STA 21F+18

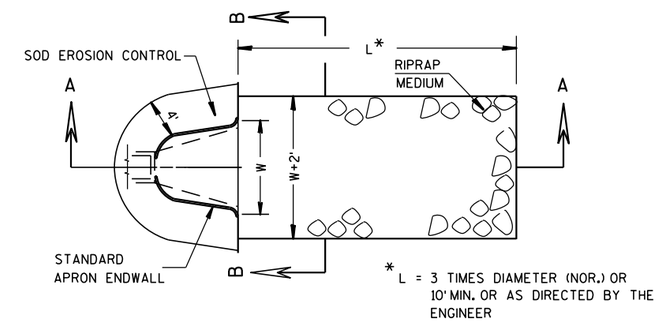

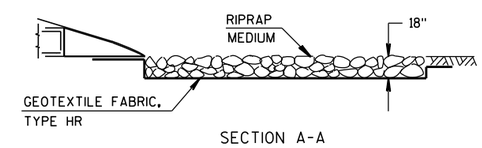

SECTION A-A

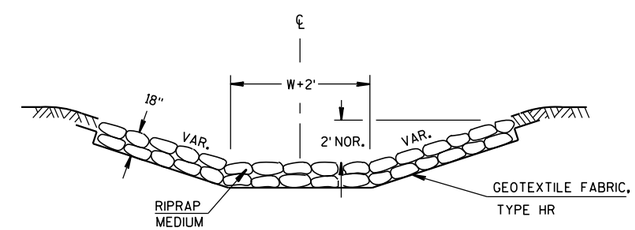

SECTION B-B

RIPRAP MEDIUM AND GEOTEXTILE FABRIC

DETAIL AT APRON ENDWALLS

STA 14F+46, LT

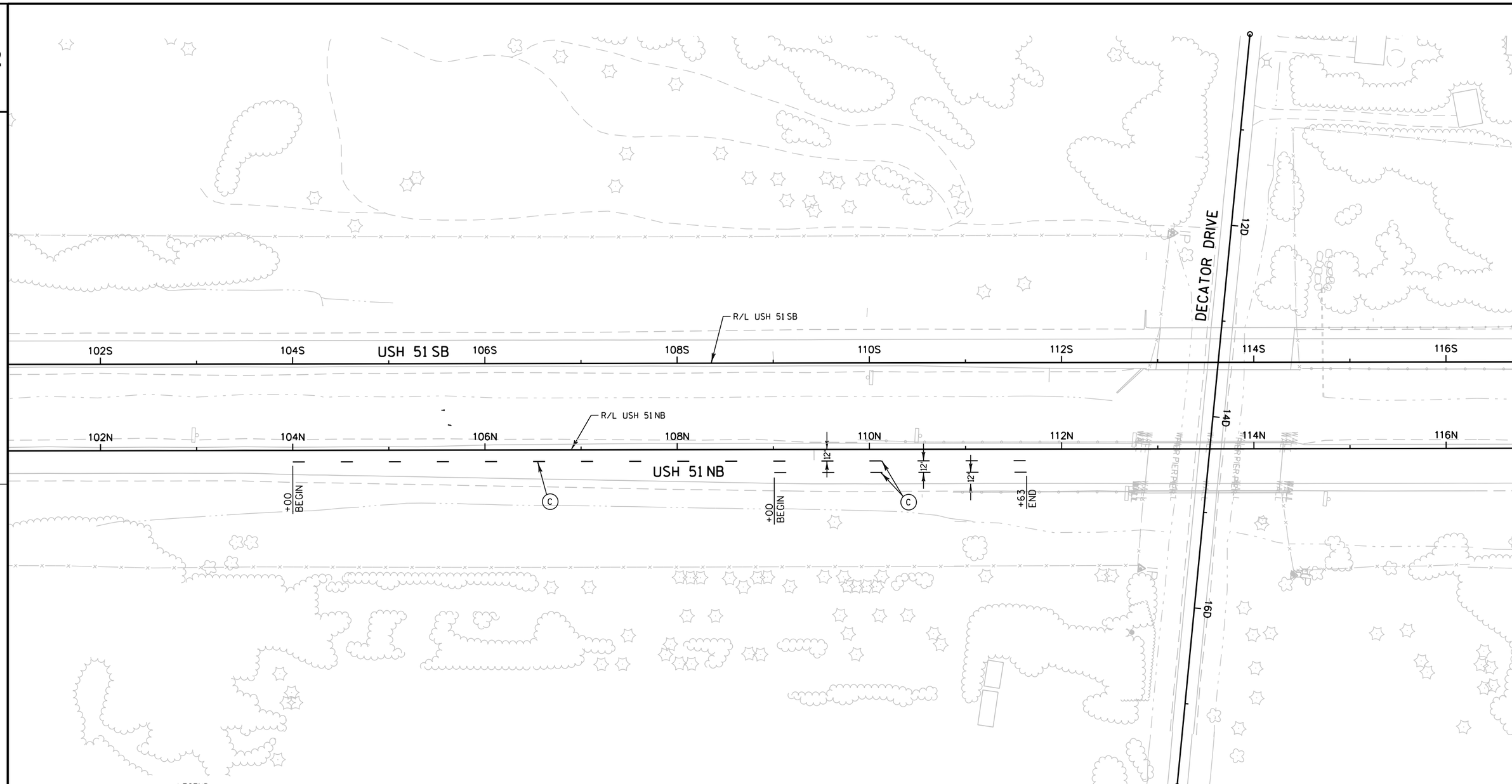

LEGEND

(A) PAVEMENT MARKING EPOXY 4-INCH (YELLOW)

(B) PAVEMENT MARKING EPOXY 4-INCH (WHITE)

(C) PAVEMENT MARKING EPOXY 4-INCH (DASHED WHITE 12.5 FT LINE 37.5 FT SKIP)

(D) PAVEMENT MARKING EPOXY 8-INCH (CHANNELIZING WHITE)

PROJECT NO: 1166-07-62	HWY: USH 51	COUNTY: MARATHON	PAVEMENT MARKING AND SIGNING PLAN	SHEET 19	E

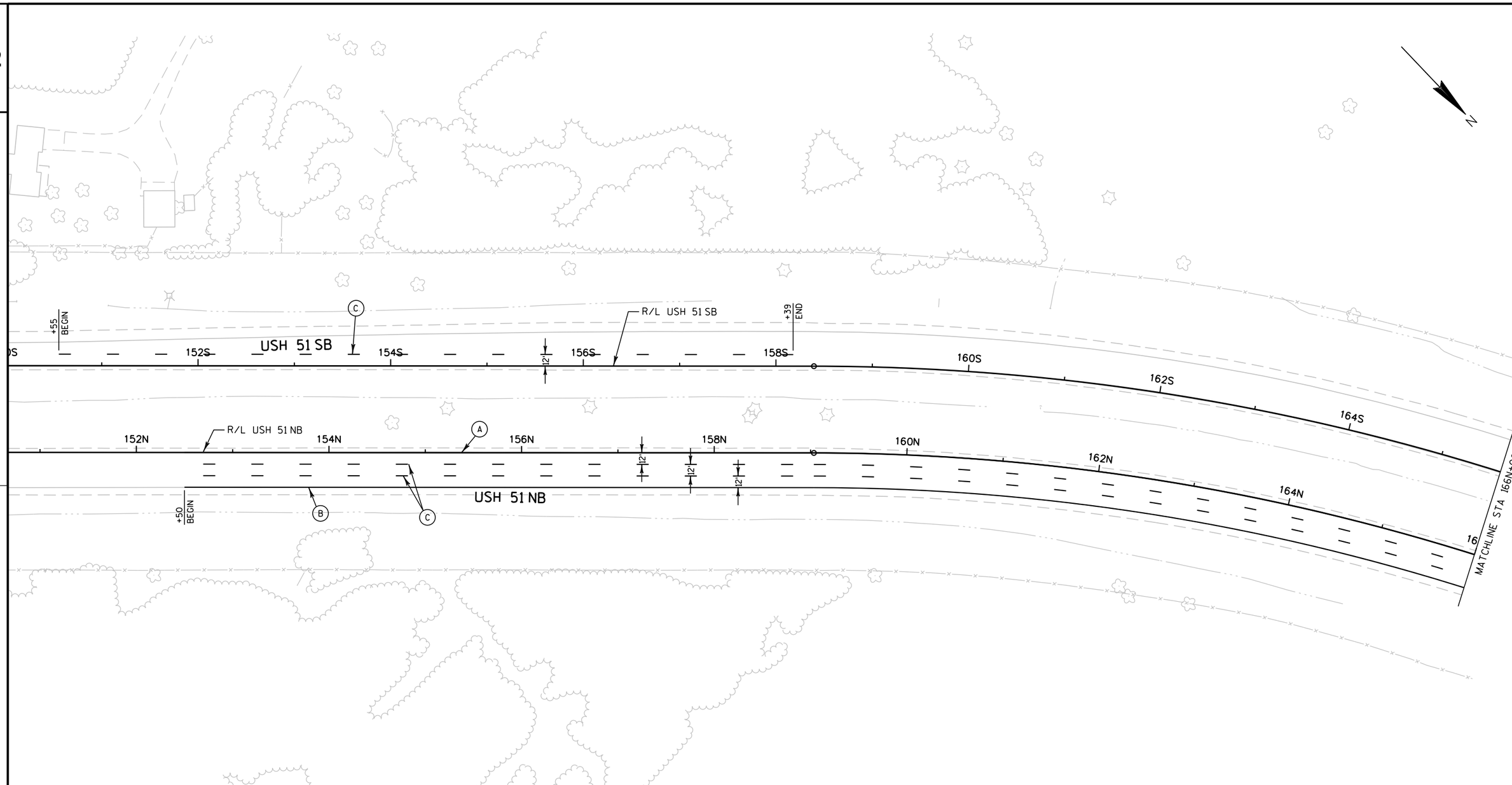

LEGEND

(A) PAVEMENT MARKING EPOXY 4-INCH (YELLOW)

(B) PAVEMENT MARKING EPOXY 4-INCH (WHITE)

(C) PAVEMENT MARKING EPOXY 4-INCH (DASHED WHITE 12.5 FT LINE 37.5 FT SKIP)

(D) PAVEMENT MARKING EPOXY 8-INCH (CHANNELIZING WHITE)

PROJECT NO: 1166-07-62	HWY: USH 51	COUNTY: MARATHON	PAVEMENT MARKING AND SIGNING PLAN	SHEET 20	E

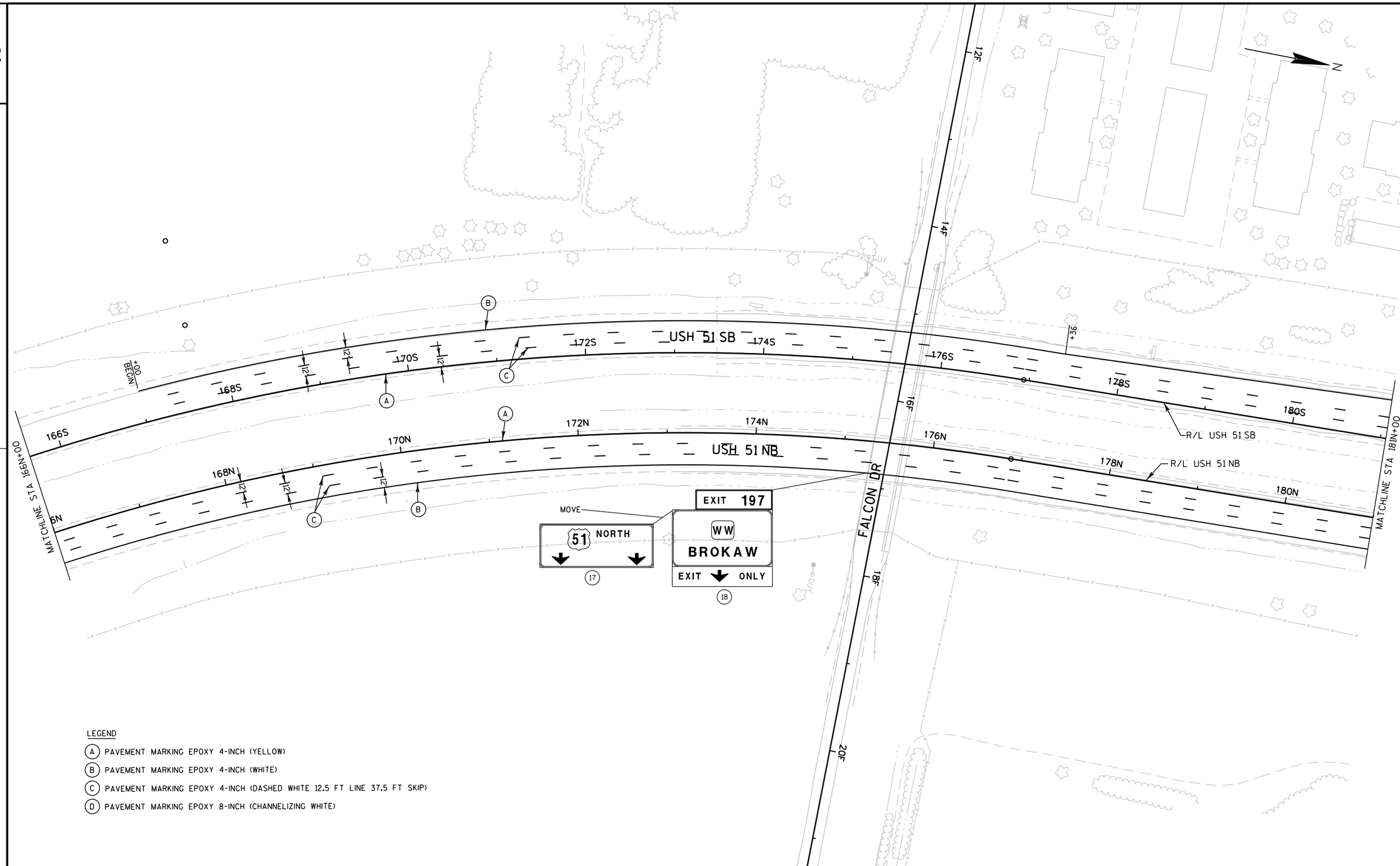

LEGEND

(A) PAVEMENT MARKING EPOXY 4-INCH (YELLOW)

(B) PAVEMENT MARKING EPOXY 4-INCH (WHITE)

(C) PAVEMENT MARKING EPOXY 4-INCH (DASHED WHITE 12.5 FT LINE 37.5 FT SKIP)

(D) PAVEMENT MARKING EPOXY 8-INCH (CHANNELIZING WHITE)

PROJECT NO: 1166-07-62	HWY: USH 51	COUNTY: MARATHON	PAVEMENT MARKING AND SIGNING PLAN	SHEET 21	E

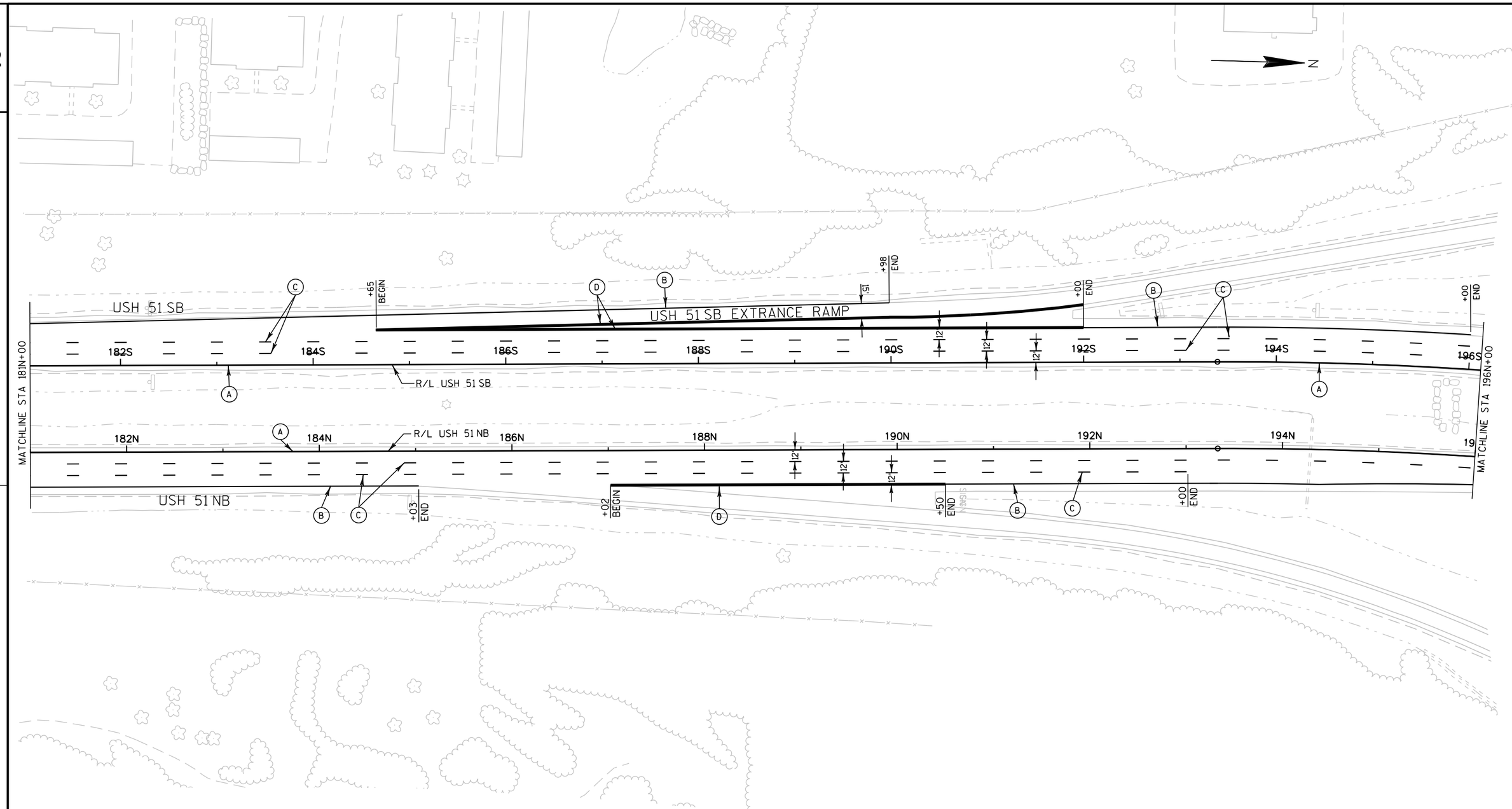

LEGEND

(A) PAVEMENT MARKING EPOXY 4-INCH (YELLOW)

(B) PAVEMENT MARKING EPOXY 4-INCH (WHITE)

(C) PAVEMENT MARKING EPOXY 4-INCH (DASHED WHITE 12.5 FT LINE 37.5 FT SKIP)

(D) PAVEMENT MARKING EPOXY 8-INCH (CHANNELIZING WHITE)

PROJECT NO: 1166-07-62	HWY: USH 51	COUNTY: MARATHON	PAVEMENT MARKING AND SIGNING PLAN	SHEET 22	E

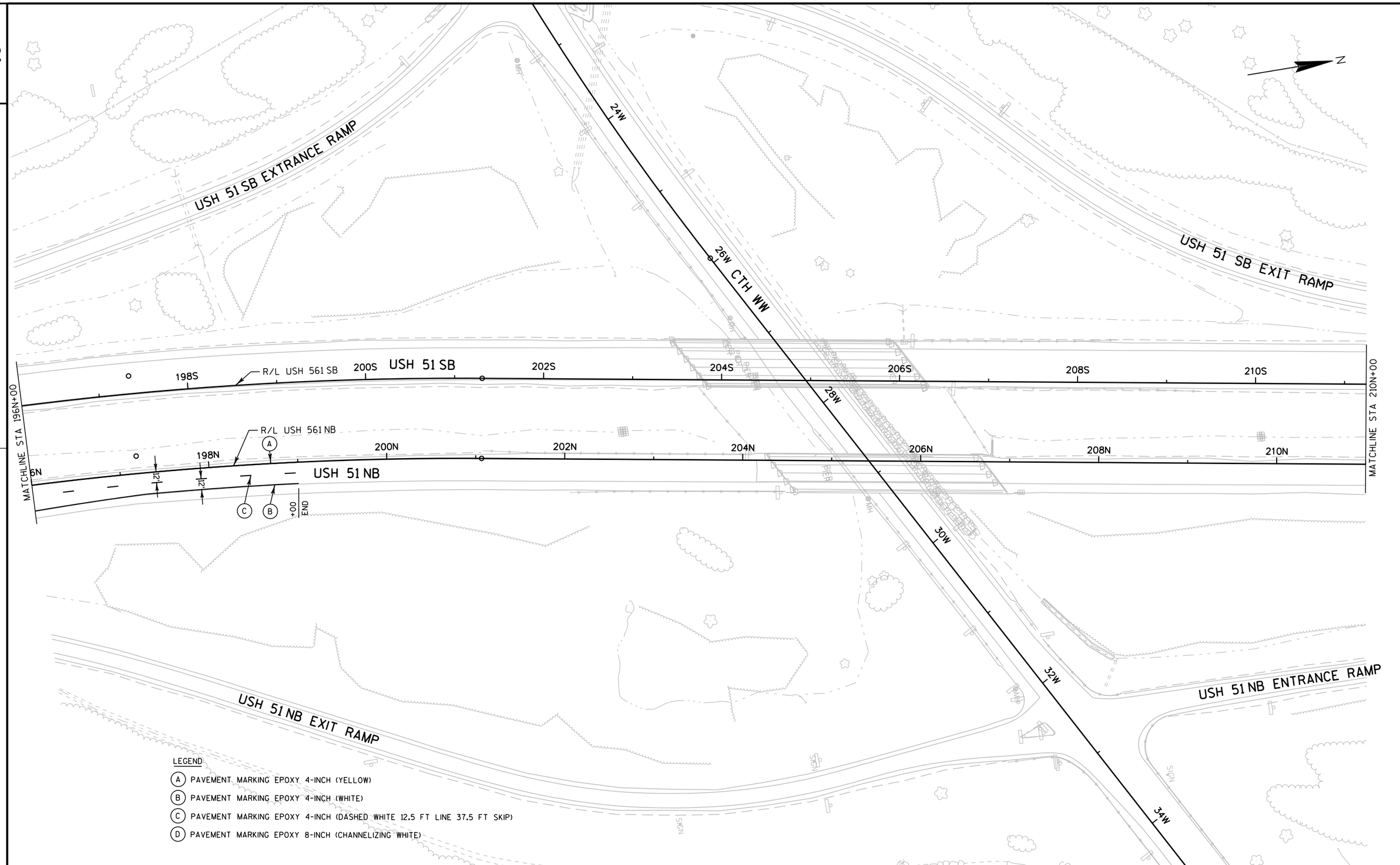

PROJECT NO: 1166-07-62	HWY: USH 51	COUNTY: MARATHON	PAVEMENT MARKING AND SIGNING PLAN	SHEET 23	E

FILE NAME : F:\BM1-3212 USH 51 Marathon Co Structures\Roads\cds\1166-07-32\024505_pm.dgn PLOT DATE : 30-JAN-2015 09:14 PLOT BY : cfranzen PLOT NAME : 024505_pm PLOT SCALE : 100:1

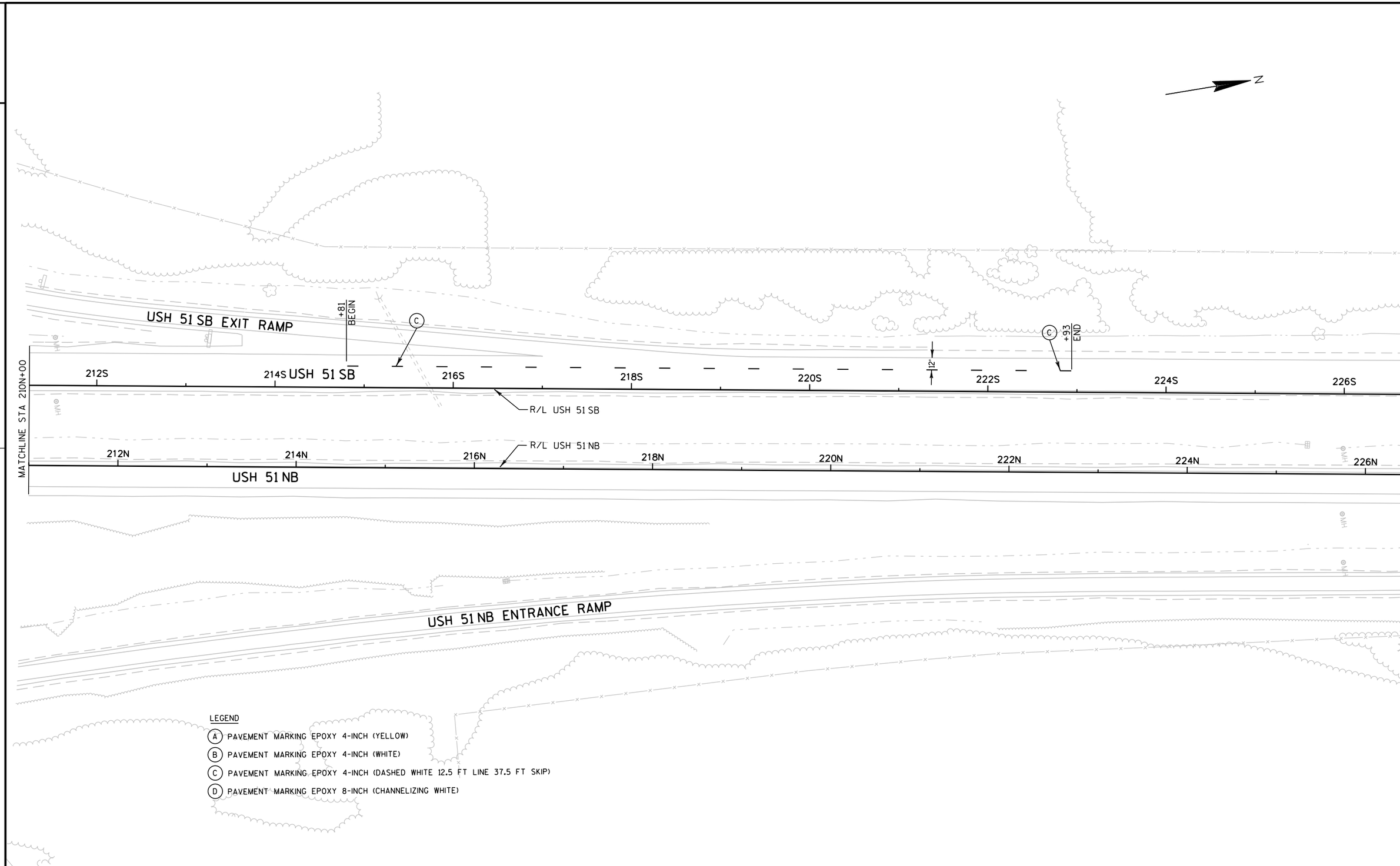

PROJECT NO: 1166-07-62	HWY: USH 51	COUNTY: MARATHON	PAVEMENT MARKING AND SIGNING PLAN	SHEET 24	E

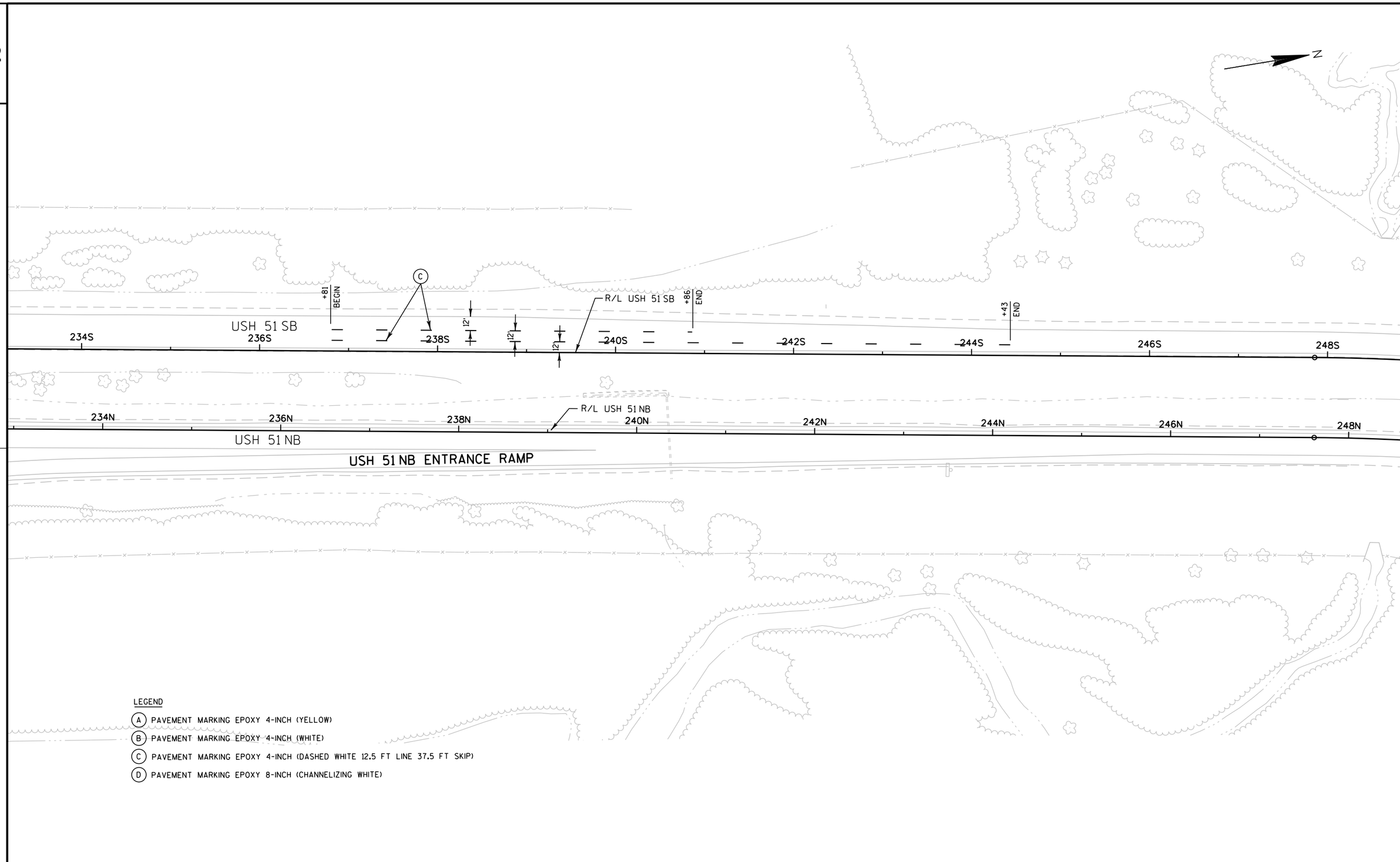

LEGEND

(A) PAVEMENT MARKING EPOXY 4-INCH (YELLOW)

(B) PAVEMENT MARKING EPOXY 4-INCH (WHITE)

(C) PAVEMENT MARKING EPOXY 4-INCH (DASHED WHITE 12.5 FT LINE 37.5 FT SKIP)

(D) PAVEMENT MARKING EPOXY 8-INCH (CHANNELIZING WHITE)

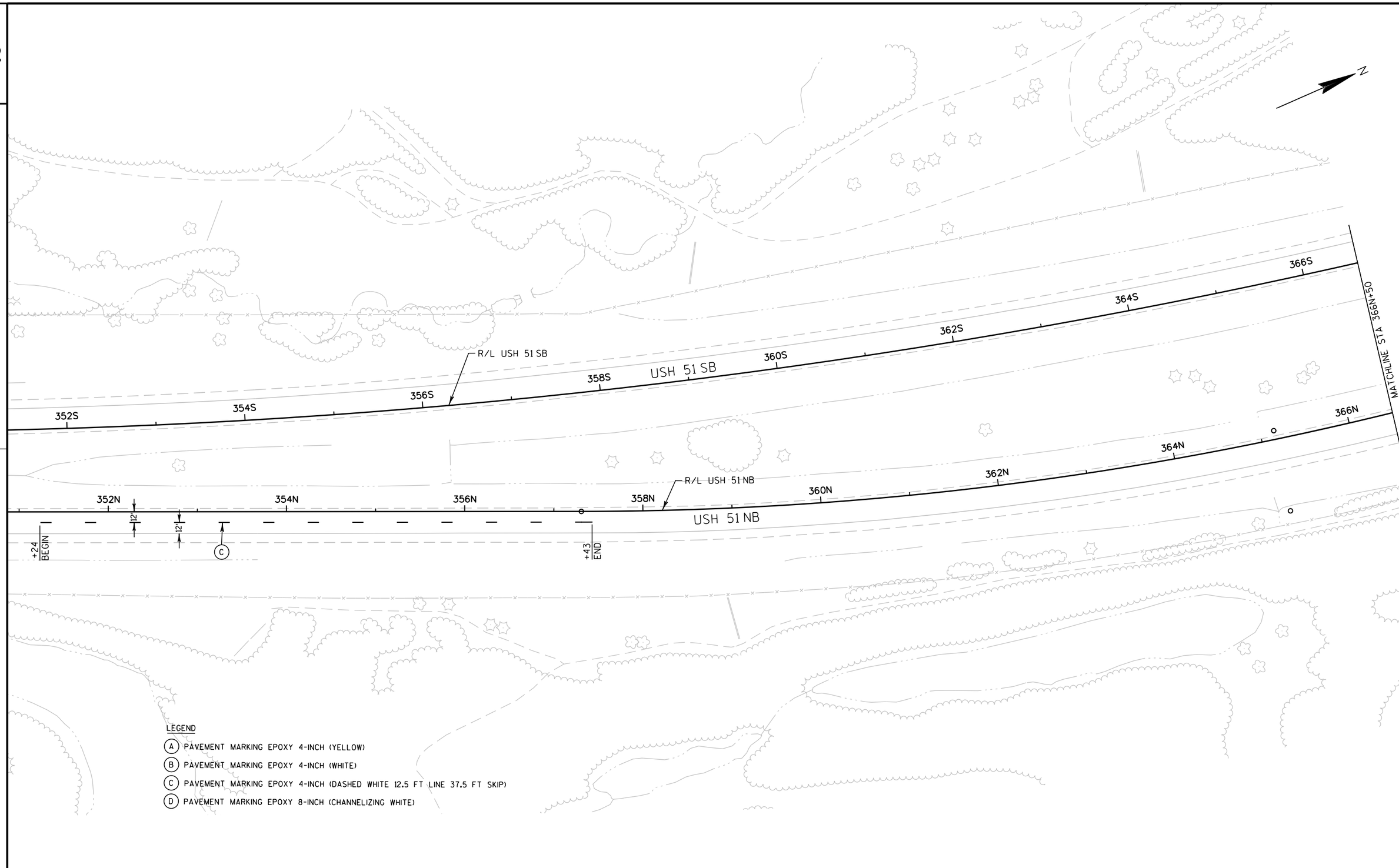

LEGEND

(A) PAVEMENT MARKING EPOXY 4-INCH (YELLOW)

(B) PAVEMENT MARKING EPOXY 4-INCH (WHITE)

(C) PAVEMENT MARKING EPOXY 4-INCH (DASHED WHITE 12.5 FT LINE 37.5 FT SKIP)

(D) PAVEMENT MARKING EPOXY 8-INCH (CHANNELIZING WHITE)

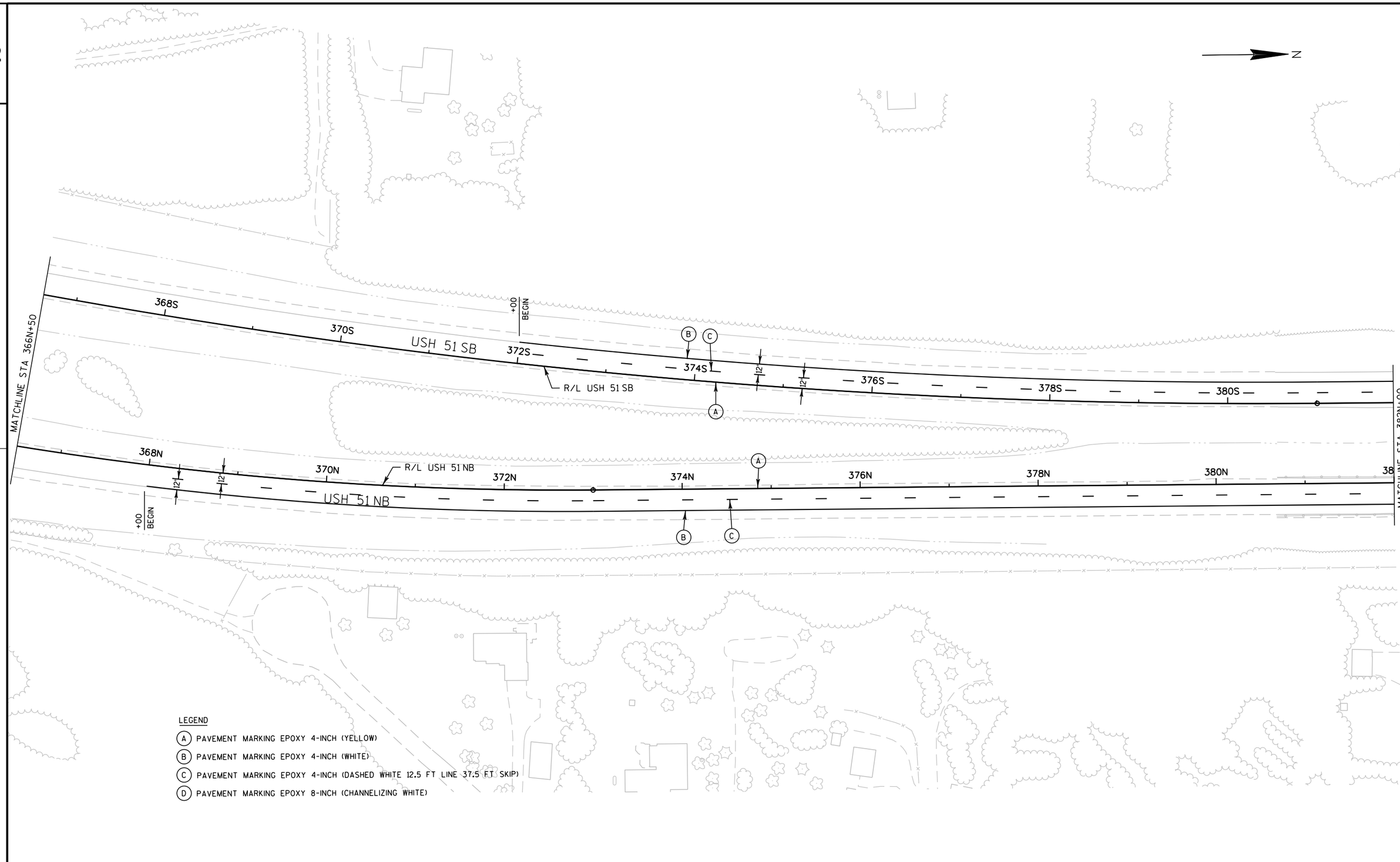

LEGEND

(A) PAVEMENT MARKING EPOXY 4-INCH (YELLOW)

(B) PAVEMENT MARKING EPOXY 4-INCH (WHITE)

(C) PAVEMENT MARKING EPOXY 4-INCH (DASHED WHITE 12.5 FT LINE 37.5 FT SKIP)

(D) PAVEMENT MARKING EPOXY 8-INCH (CHANNELIZING WHITE)

PROJECT NO: 1166-07-62	HWY: USH 51	COUNTY: MARATHON	PAVEMENT MARKING AND SIGNING PLAN	SHEET 27	E

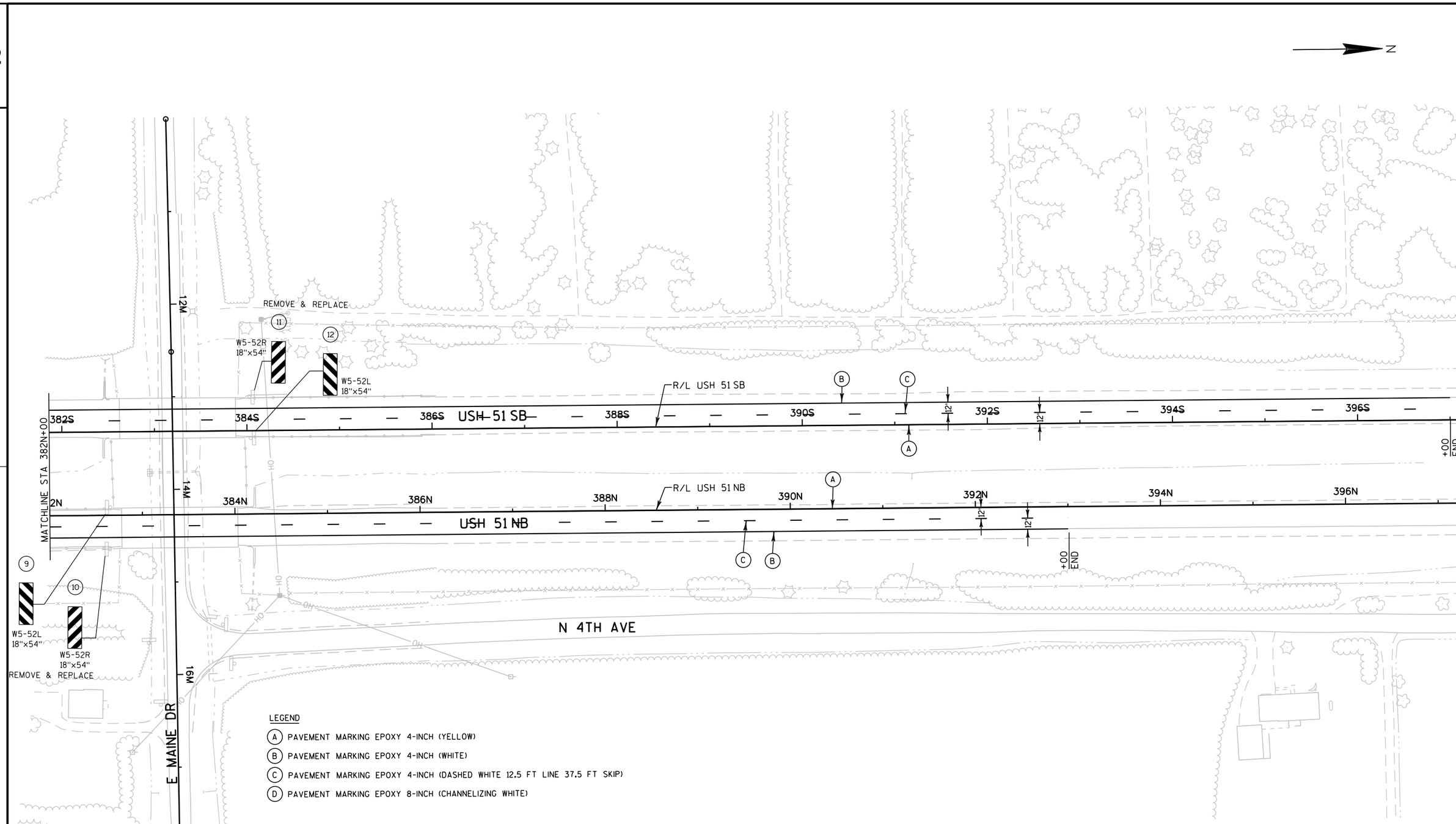

LEGEND

(A) PAVEMENT MARKING EPOXY 4-INCH (YELLOW)

(B) PAVEMENT MARKING EPOXY 4-INCH (WHITE)

(C) PAVEMENT MARKING EPOXY 4-INCH (DASHED WHITE 12.5 FT LINE 37.5 FT SKIP)

(D) PAVEMENT MARKING EPOXY 8-INCH (CHANNELIZING WHITE)

PROJECT NO: 1166-07-62	HWY: USH 51	COUNTY: MARATHON	PAVEMENT MARKING AND SIGNING PLAN	SHEET 28	E

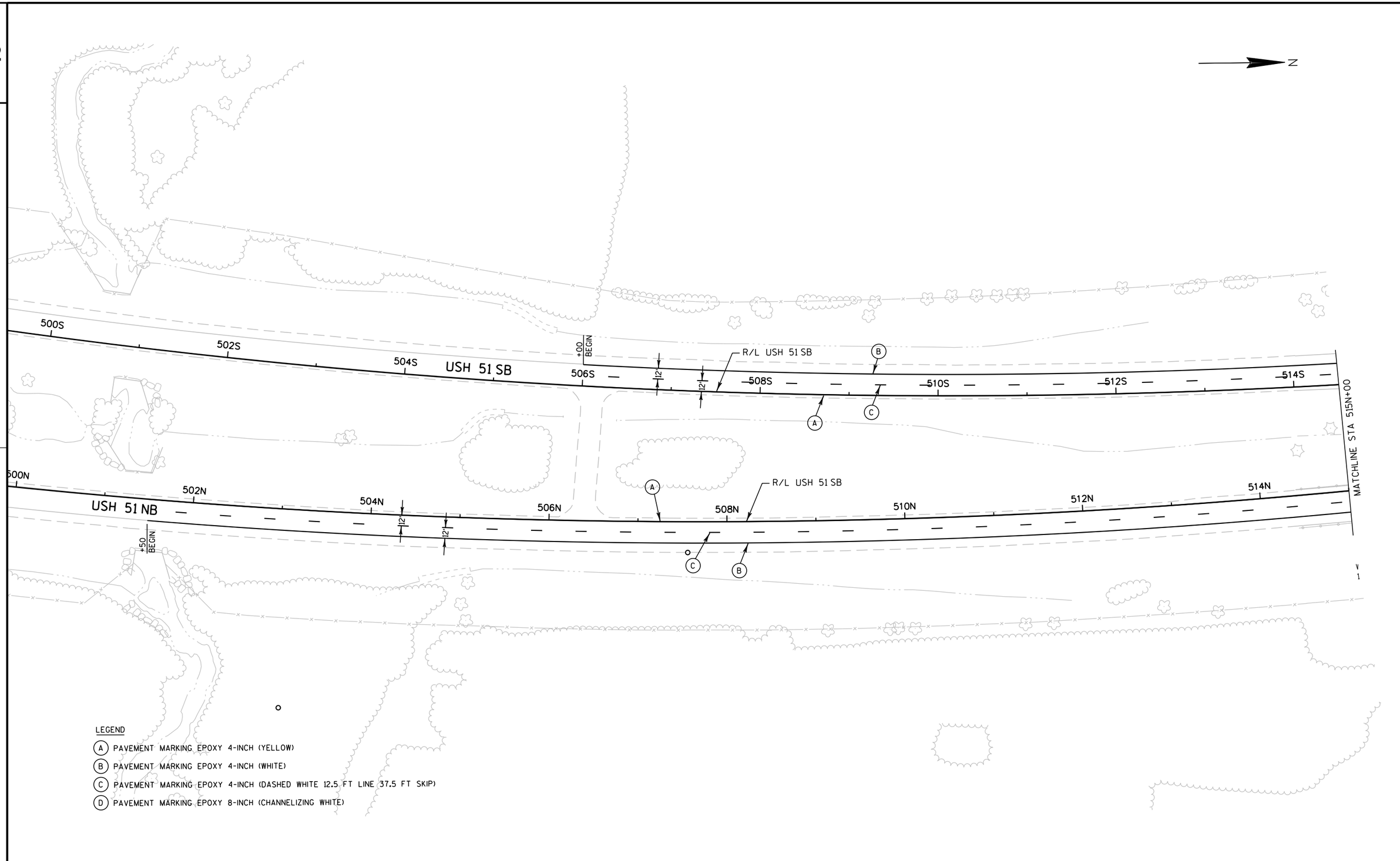

PROJECT NO: 1166-07-62	HWY: USH 51	COUNTY: MARATHON	PAVEMENT MARKING AND SIGNING PLAN	SHEET 29	E

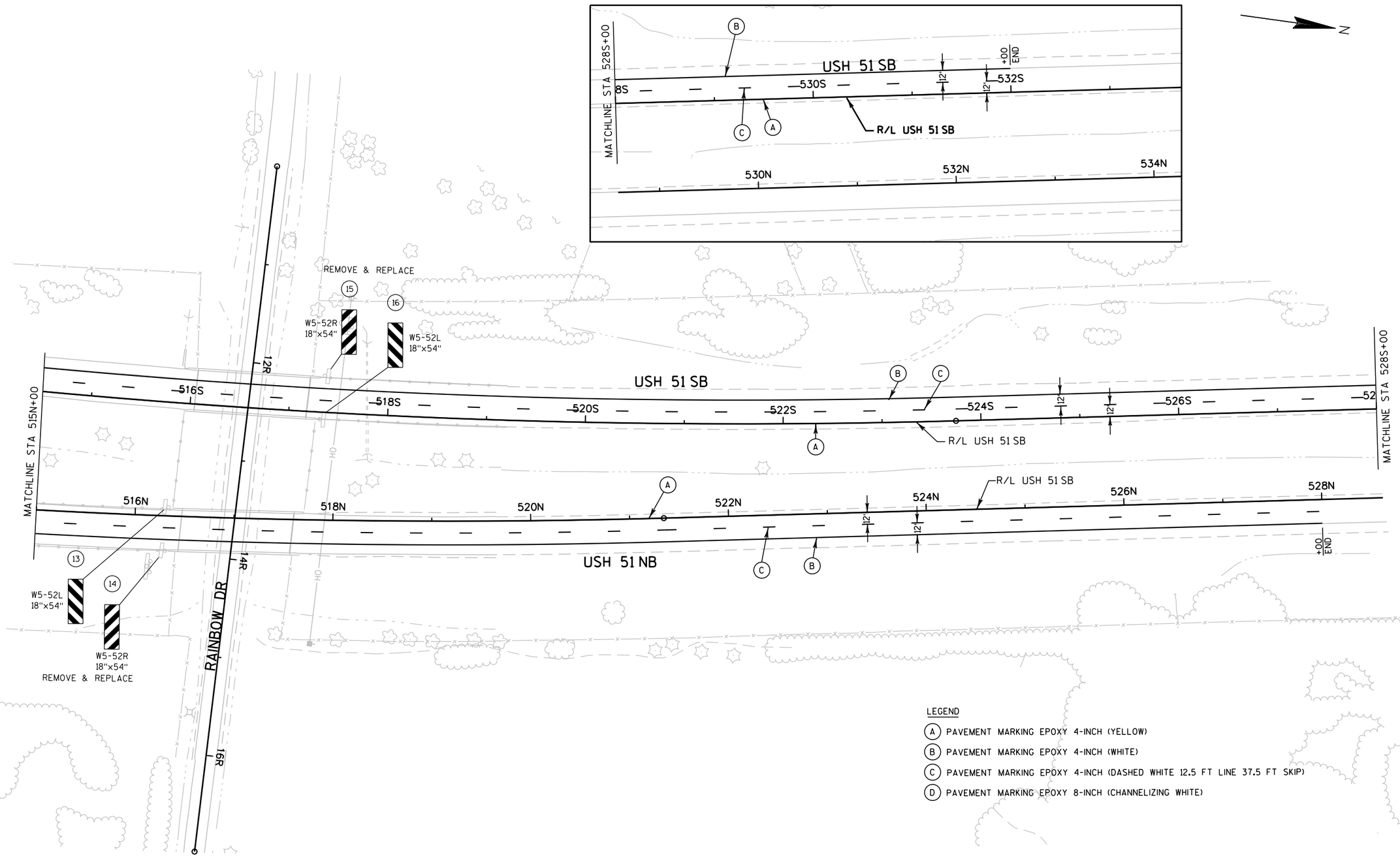

LEGEND

(A) PAVEMENT MARKING EPOXY 4-INCH (YELLOW)

(B) PAVEMENT MARKING EPOXY 4-INCH (WHITE)

(C) PAVEMENT MARKING EPOXY 4-INCH (DASHED WHITE 12.5 FT LINE 37.5 FT SKIP)

(D) PAVEMENT MARKING EPOXY 8-INCH (CHANNELIZING WHITE)

PROJECT NO: 1166-07-62	HWY: USH 51	COUNTY: MARATHON	PAVEMENT MARKING AND SIGNING PLAN	SHEET 30	E

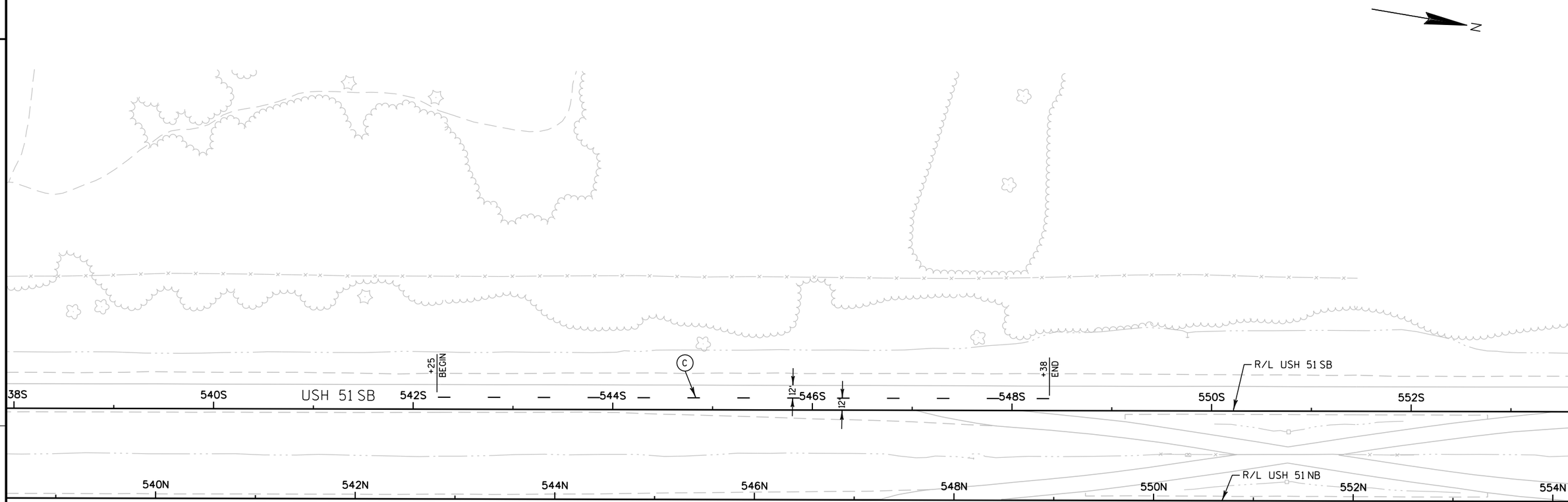

LEGEND

(A) PAVEMENT MARKING EPOXY 4-INCH (YELLOW)

(B) PAVEMENT MARKING EPOXY 4-INCH (WHITE)

(C) PAVEMENT MARKING EPOXY 4-INCH (DASHED WHITE 12.5 FT LINE 37.5 FT SKIP)

(D) PAVEMENT MARKING EPOXY 8-INCH (CHANNELIZING WHITE)

PROJECT NO: 1166-07-62	HWY: USH 51	COUNTY: MARATHON	PAVEMENT MARKING AND SIGNING PLAN	SHEET 31	E

LEGEND

- TYPE III BARRICADE WITH WARNING LIGHTS TYPE A
- TYPE III BARRICADE WTH WARNING LIGHTS TYPE A AND ATTACHED SIGN
- TRAFFIC CONTROL DRUM
- TRAFFIC CONTROL DRUM WITH TYPE C STEADY BURN LIGHT
- FLASHING ARROW BOARD
- SIGN ON PERMANENT SUPPORT
- SIGN ON TEMPORARY SUPPORT
- TEMPORARY PRECAST CONCRETE BARRIER
- CC — CRASH CUSION TEMPORARY
- WORK AREA
- DIRECTION OF TRAFFIC
- CMS — TRAFFIC CONTROL SIGNS PCMS
- Y — CONTINUOUS YELLOW, 4-INCH
- W — CONTINUOUS WHITE, 4-INCH
- B — 4-INCH BLACK
- WD — DASHED WHITE, 4-INCH (37.5' SKIP 12.5' DASH)
- W8 — CONTINUOUS WHITE, 8-INCH
- TPM — TEMPORARY PAVEMENT MARKING
- TPMRT — TEMPORARY PAVEMENT MARKING REMOVABLE TAPE

GENERAL NOTES FOR CONSTRUCTION STAGING AND TRAFFIC CONTROL

1. ALL TRAFFIC CONTROL SIGNS SHALL BE 48" X 48" UNLESS OTHERWISE NOTED IN THE PLANS.
2. "WO" SIGNS ARE THE SAME AS "W" SIGNS EXCEPT THE BACKGROUND IS REFLECTIVE ORANGE.
3. TRAFFIC CONTROL DRUMS IN TAPERS, SHALL BE EQUIPPED WITH TRAFFIC CONTROL WARNING LIGHTS, TYPE "C", ONE WAY LIGHTS IN TAPERS ONLY, UNLESS OTHERWISE SHOWN, DRUMS SHALL BE SPACED AT 50-FT OC IN TAPERS AND 100-FT OC ON TANGENTS OR AS OTHERWISE SHOWN.
4. SIGN LOCATIONS ARE APPROXIMATE. THE ACTUAL LOCATION SPACING MAY BE ADJUSTED AS DIRECTED BY THE ENGINEER TO MEET FIELD CONDITIONS.
5. ALL SIGNS, TEMPORARY OR EXISTING, WHICH CONFLICT WITH THE TRAFFIC CONTROL "IN USE" SHALL BE REMOVED AS NEEDED AND/OR AS DIRECTED BY THE ENGINEER.
6. ALL EXISTING CONFLICTING PAVEMENT MARKING SHALL BE REMOVED.
7. CONTRACTOR SHALL INSTALL PERMANENT PAVEMENT MARKING WHEN APPROPRIATE DURING CONSTRUCTION STAGING AS SHOWN ON PLANS OR AS DIRECTED BY THE ENGINEER
8. BARRICADE STRIPES ARE TO BE SLOPED DOWNWARD IN THE DIRECTION OF TRAFFIC FLOW.
9. ALL SUBSEQUENT MOVING SIGNS AFTER INITIAL INSTALLATION, INCLUDING ALL ASSOCIATED LABOR AND MATERIALS, SHALL BE INCLUDED IN THE COST OF THE "TRAFFIC CONTROL (1166-07-62)" ITEM.

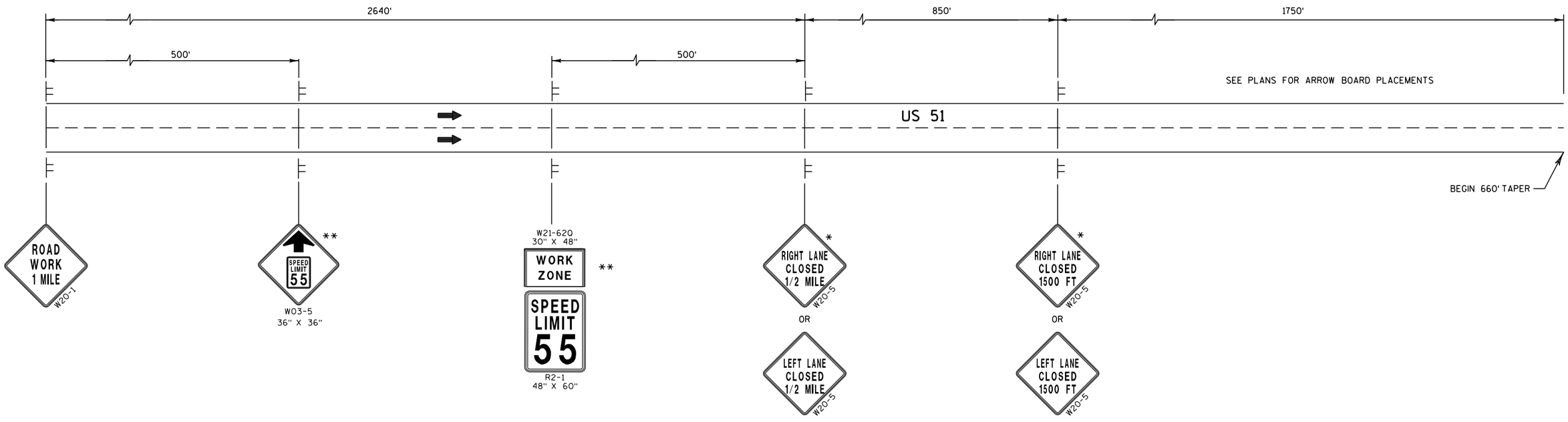

* DO NOT PLACE SIGNS IN STAGES 1B AND 2B

** SIGNS TO BE USED IN STAGES 2A, 2B, 3A, & 3B
DO NOT PLACE IN STAGE 1A, 1B, & 2C, 3C

PROJECT NO: 1166-07-62	HWY: USH 51	COUNTY: MARATHON	LANE CLOSURE DETAIL	SCALE, FEET 0 100 200	SHEET 33	E

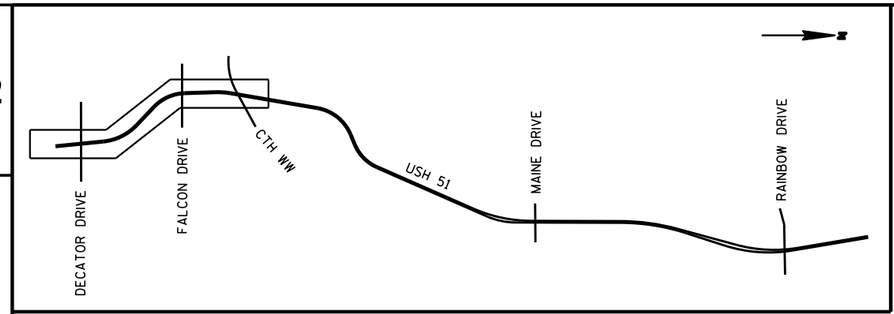

CONSTRUCTION STAGE 1A

STAGE 1A - CONSTRUCTION: REMOVE AND REPLACE ASPHALTIC SURFACE ON RIGHT SHOULDER

STAGE 1A - TRAFFIC: RIGHT LANE CLOSED

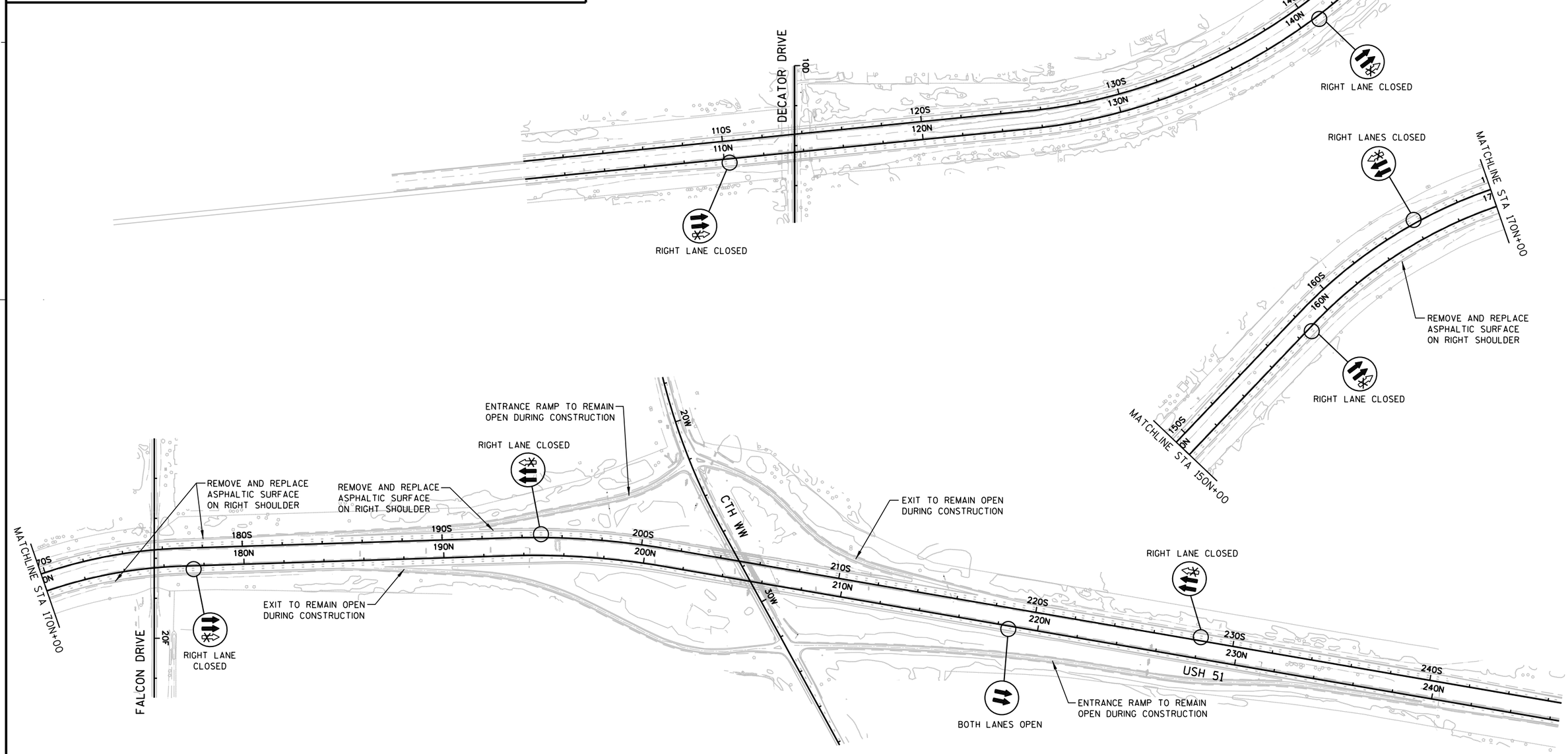

PROJECT NO: 1166-07-62	HWY: USH 51	COUNTY: MARATHON	TRAFFIC CONTROL OVERVIEW - STAGE 1A	SHEET 34	E

2

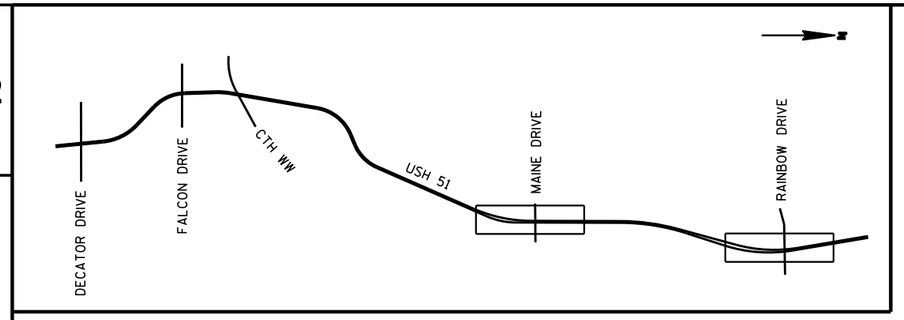

CONSTRUCTION STAGE 1A

STAGE 1A - CONSTRUCTION: REMOVE AND REPLACE ASPHALTIC SURFACE ON RIGHT SHOULDER

STAGE 1A - TRAFFIC: RIGHT LANE CLOSED

N

2

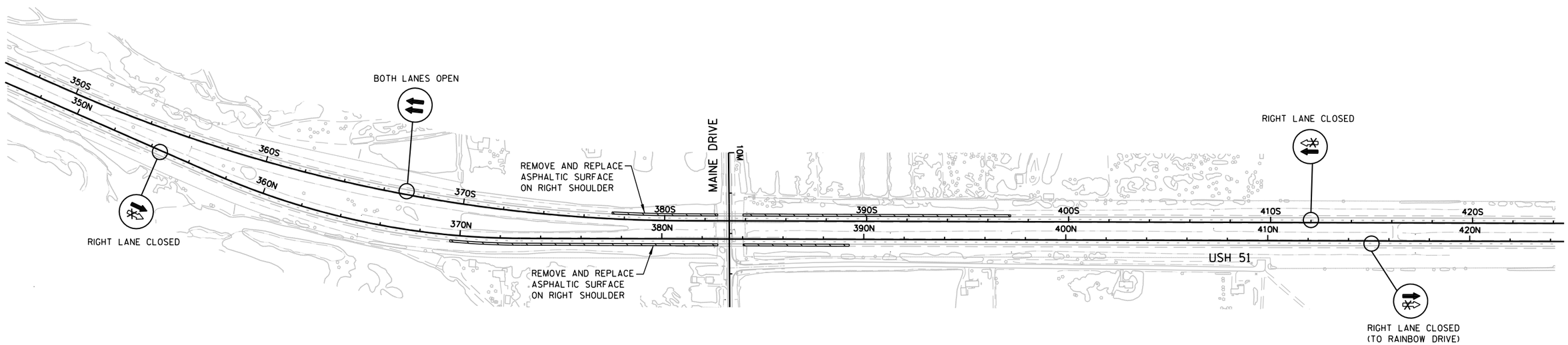

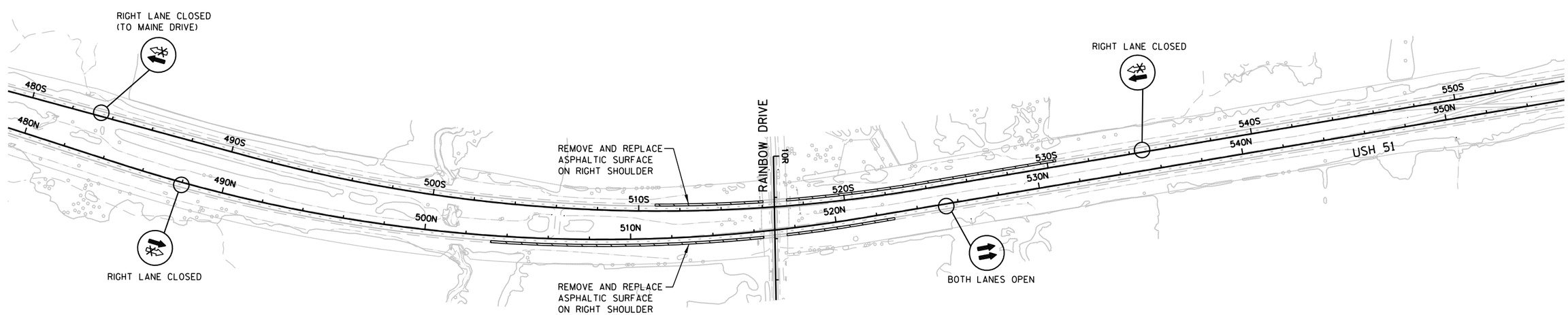

PROJECT NO: 1166-07-62	HWY: USH 51	COUNTY: MARATHON	TRAFFIC CONTROL OVERVIEW - STAGE 1A	SHEET 35	E

FILE NAME : F:\BM1-3212 USH 51 Marathon Co Structures\Roads\cds\1166-07-32\026102_S1a.dgn PLOT DATE : 30-JAN-2015 15:47 PLOT BY : cfranzen PLOT NAME : PLOT SCALE : 500:1

WISDOT/CADDS SHEET 42

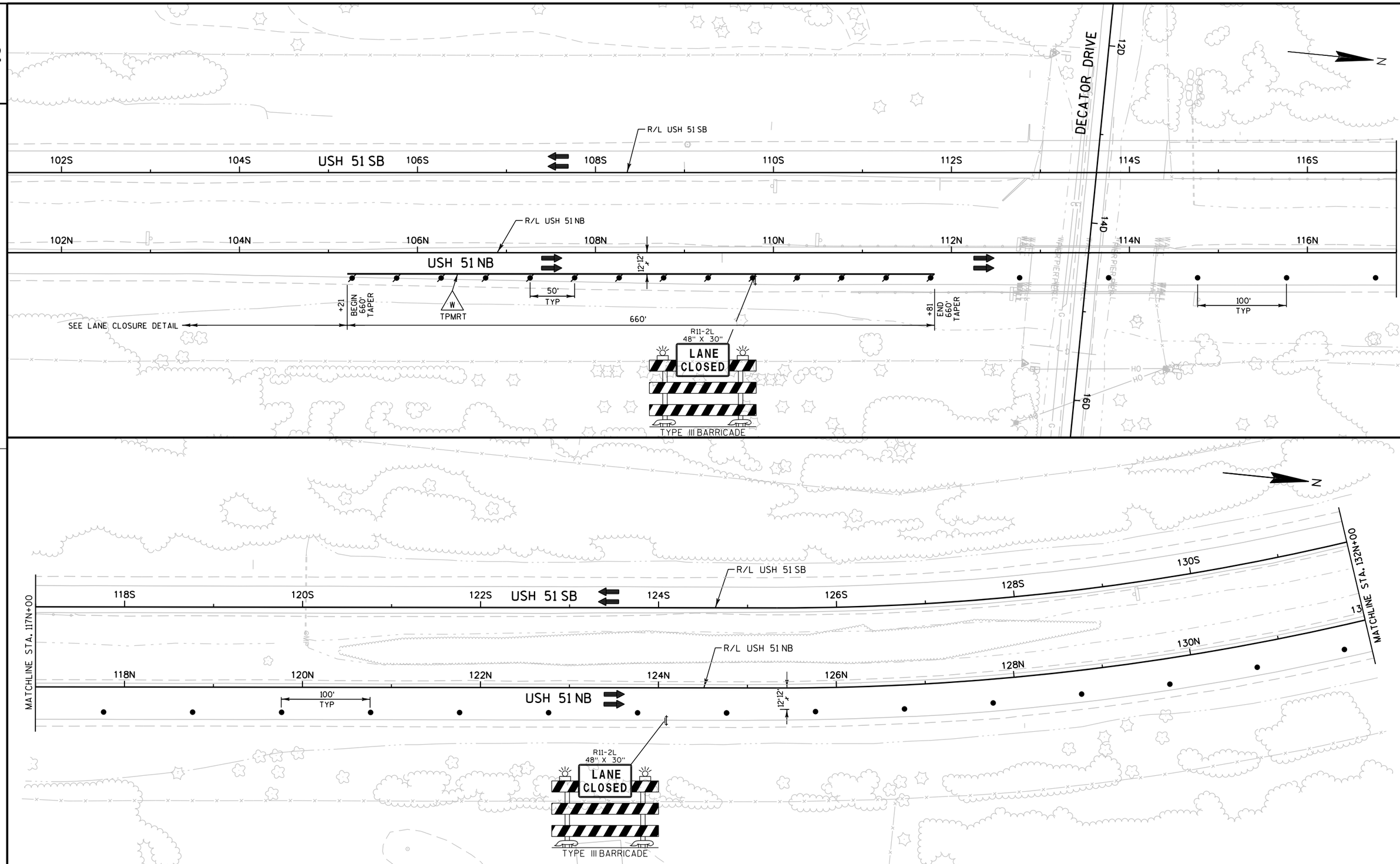

PROJECT NO: 1166-07-62	HWY: USH 51	COUNTY: MARATHON	TRAFFIC CONTROL - STAGE 1A	SCALE, FEET 0 100 200	SHEET 36	E

FILE NAME : F:\BM1-3212 USH 51 Marathon Co Structures\Roads\cds\1166-07-32\026103_S1a.dgn PLOT DATE : 30-JAN-2015 15:47 PLOT BY : cfranzen PLOT NAME : 026103_S1a PLOT SCALE : 100:1

WISDOT/CADDS SHEET 42

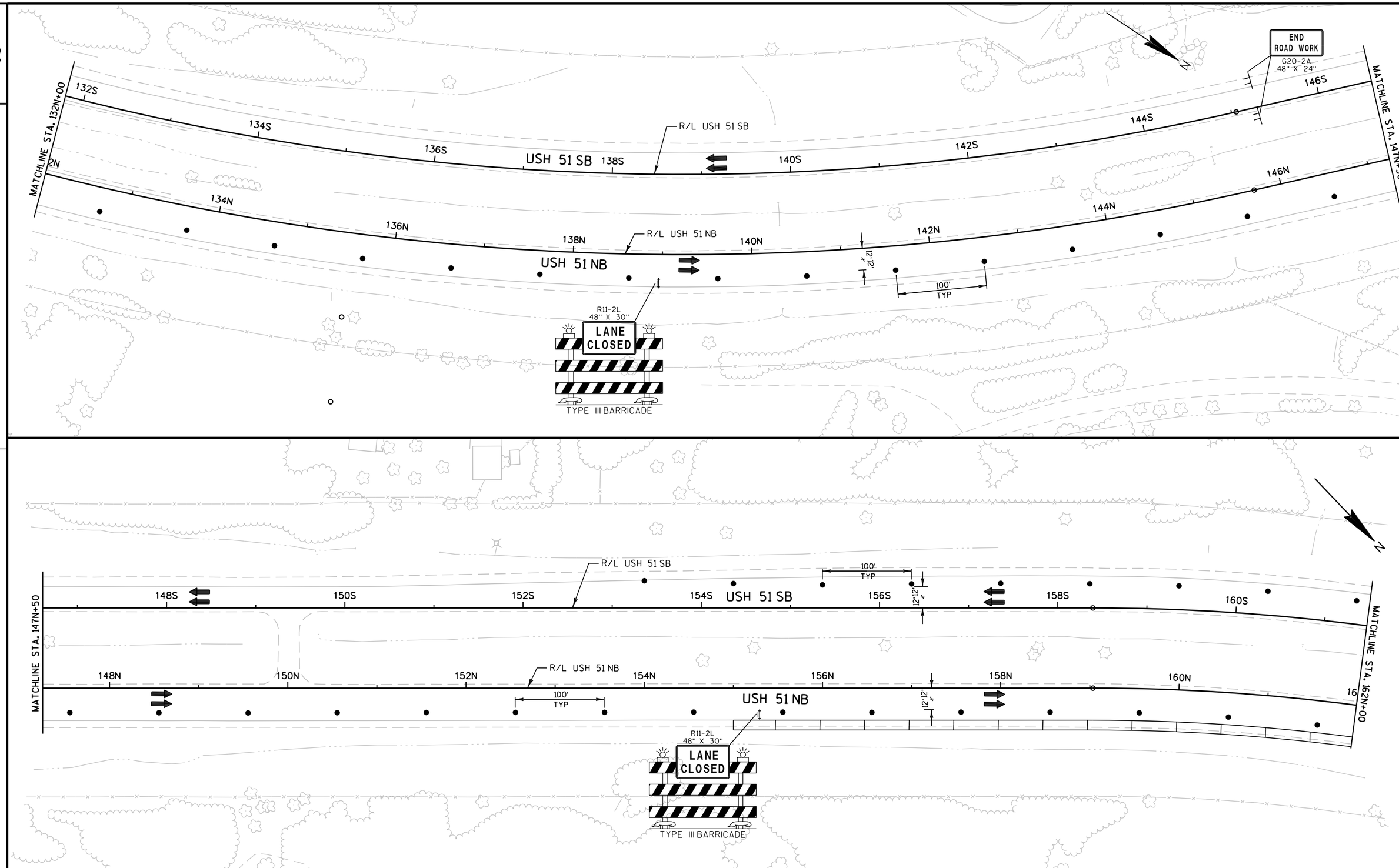

PROJECT NO: 1166-07-62	HWY: USH 51	COUNTY: MARATHON	TRAFFIC CONTROL - STAGE 1A	SCALE, FEET 0 100 200	SHEET 37	E

FILE NAME : F:\BM1-3212 USH 51 Marathon Co Structures\Roads\cds\1166-07-32\026104_S1a.dgn PLOT DATE : 30-JAN-2015 15:47 PLOT BY : cfranzen PLOT NAME : 026104_S1a PLOT SCALE : 100:1

WISDOT/CADDS SHEET 42

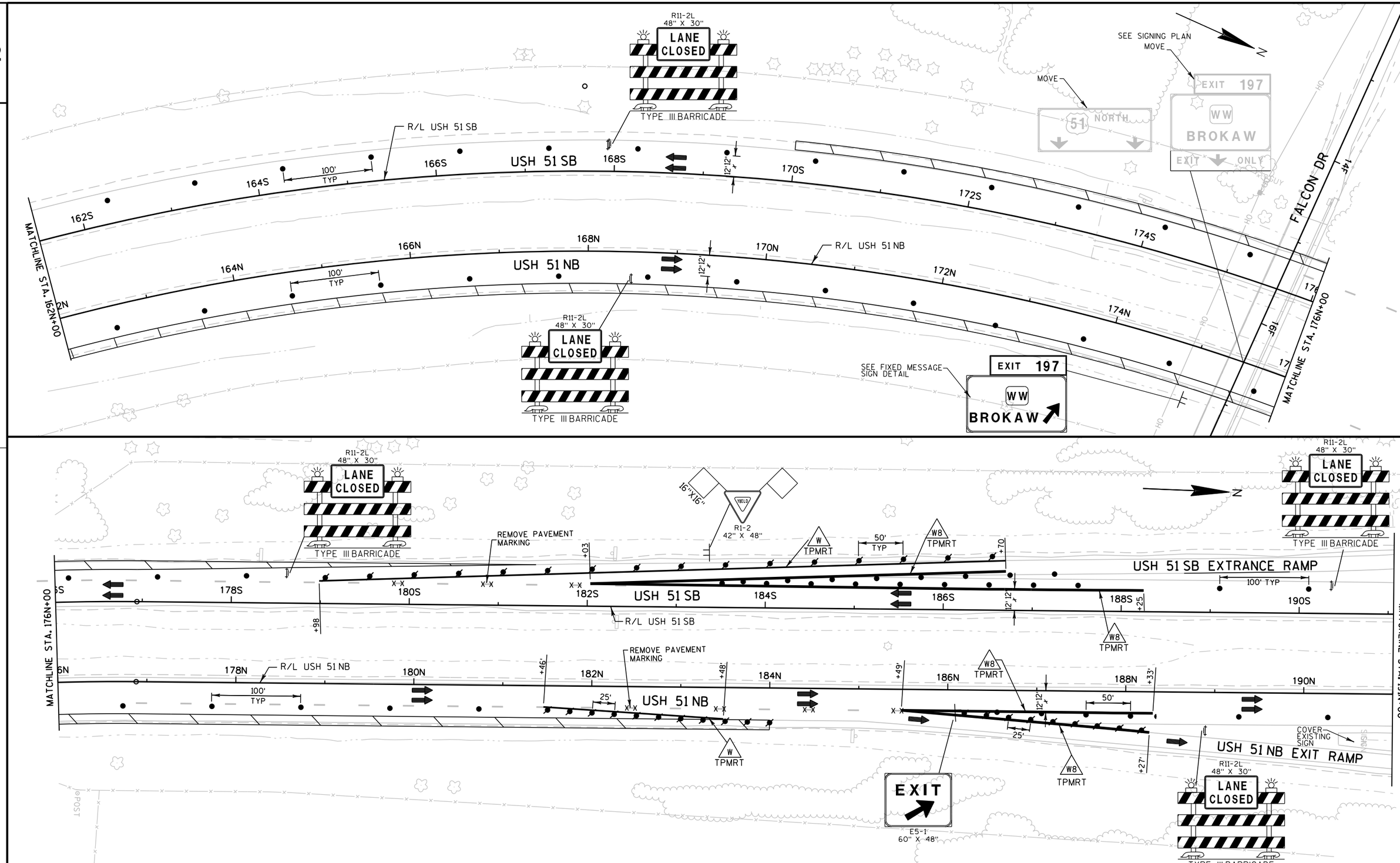

PROJECT NO: 1166-07-62	HWY: USH 51	COUNTY: MARATHON	TRAFFIC CONTROL - STAGE 1A	SCALE, FEET 0 100 200	SHEET 38	E

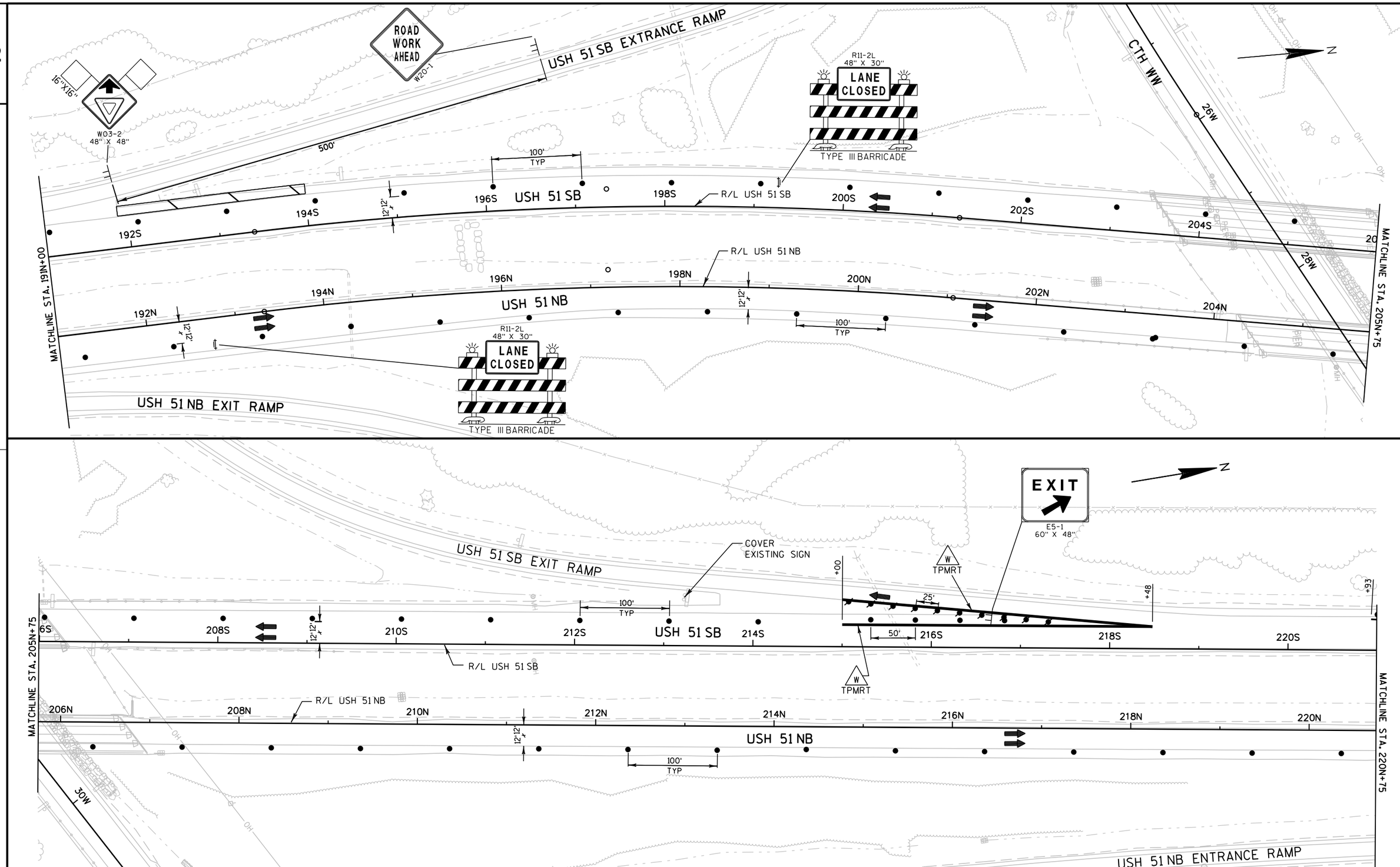

PROJECT NO: 1166-07-62	HWY: USH 51	COUNTY: MARATHON	TRAFFIC CONTROL - STAGE 1A	SCALE, FEET 0 100 200	SHEET 39	E

FILE NAME : F:\BM1-3212 USH 51 Marathon Co Structures\Roads\cds\1166-07-32\026106_S1a.dgn PLOT DATE : 30-JAN-2015 15:47 PLOT BY : cfranzen PLOT NAME : 026106_S1a PLOT SCALE : 100:1

WISDOT/CADDS SHEET 42

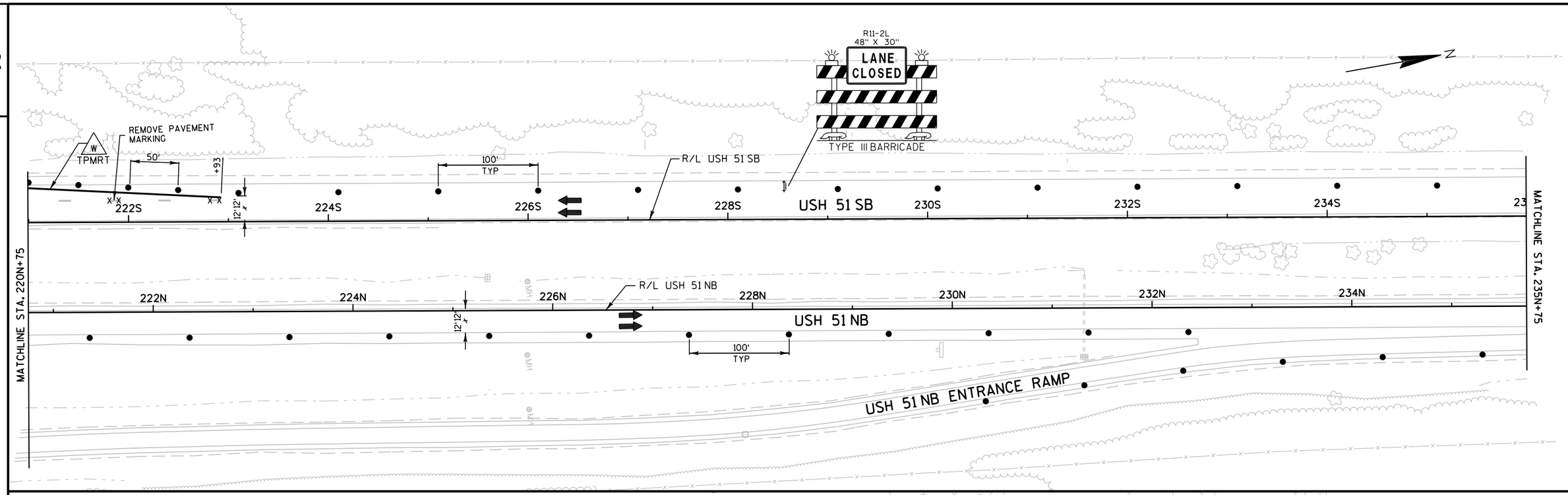

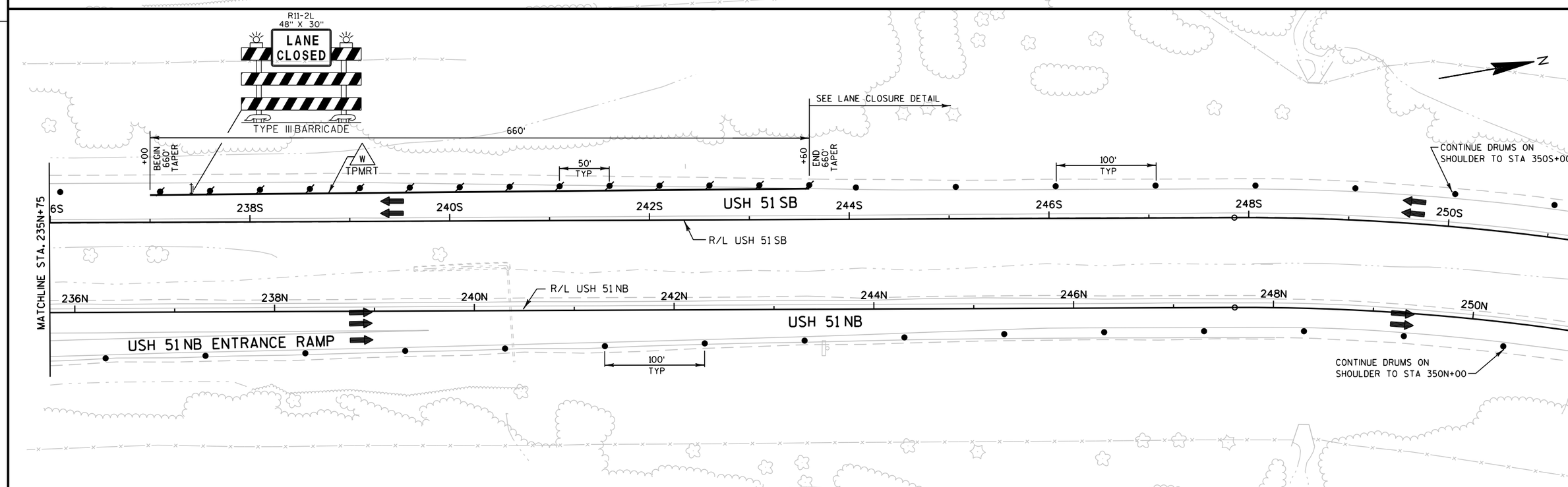

PROJECT NO: 1166-07-62	HWY: USH 51	COUNTY: MARATHON	TRAFFIC CONTROL - STAGE 1A	SCALE, FEET 0 100 200	SHEET 40	E

FILE NAME : F:\BM1-3212 USH 51 Marathon Co Structures\Roads\cds\1166-07-32\026107_S1a.dgn PLOT DATE : 30-JAN-2015 15:47 PLOT BY : cfranzen PLOT NAME : 026107_S1a PLOT SCALE : 100:1

WISDOT/CADDS SHEET 42

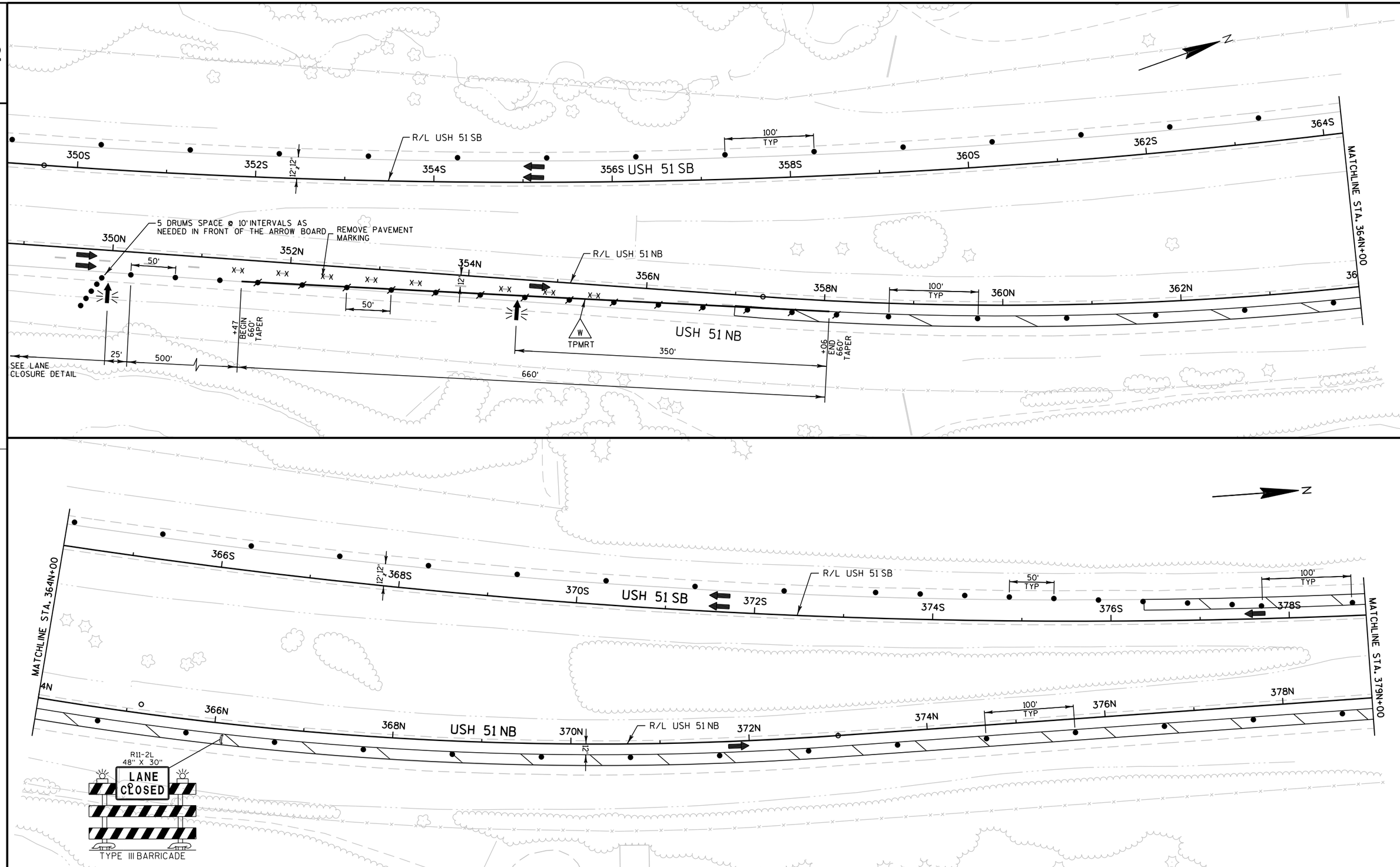

PROJECT NO: 1166-07-62	HWY: USH 51	COUNTY: MARATHON	TRAFFIC CONTROL - STAGE 1A	SCALE, FEET 0 100 200	SHEET 41	E

FILE NAME : F:\BM1-3212 USH 51 Marathon Co Structures\Roads\cds\1166-07-32\026108_S1a.dgn PLOT DATE : 30-JAN-2015 15:47 PLOT BY : cfranzen PLOT NAME : 026108_S1a PLOT SCALE : 100:1

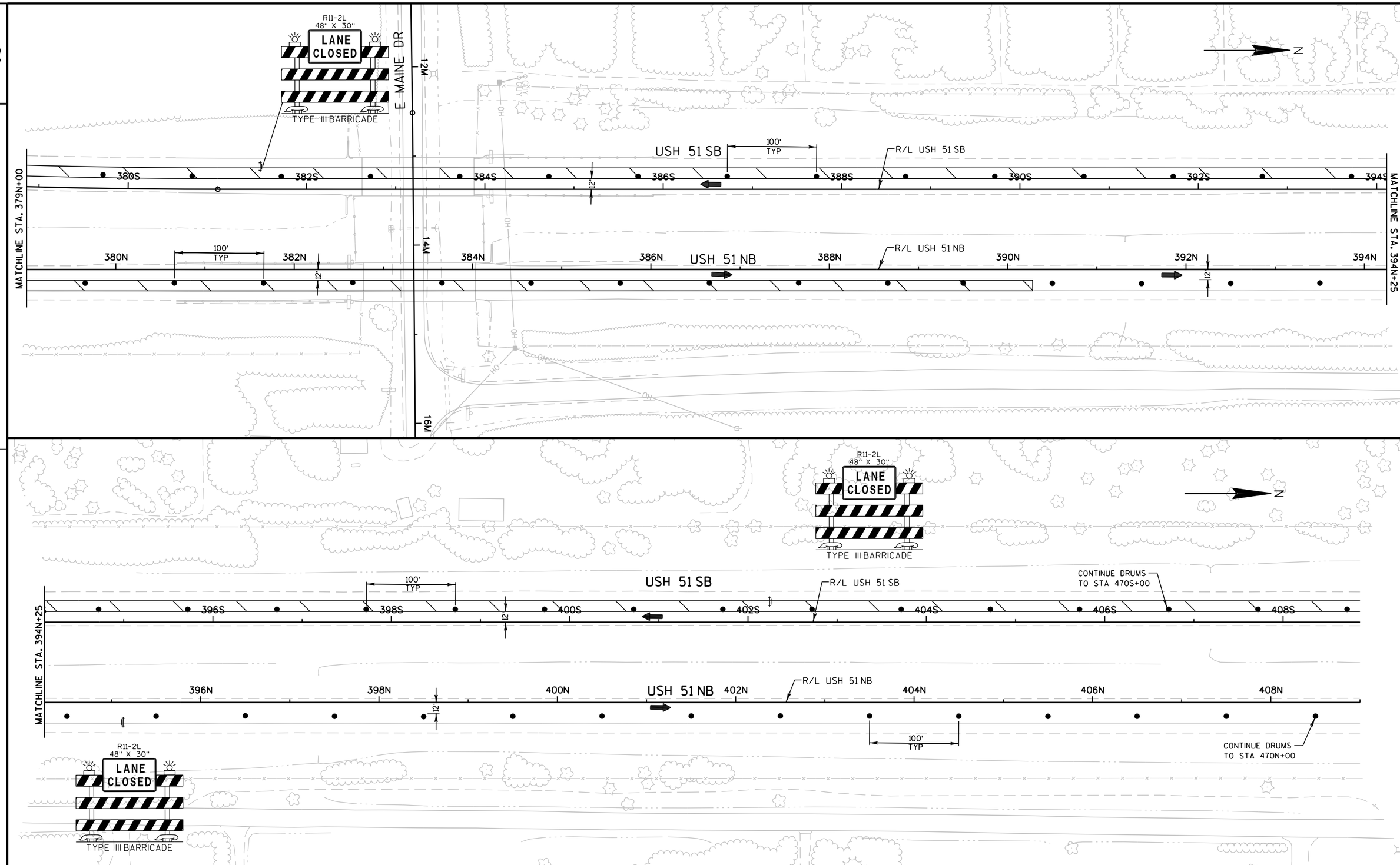

PROJECT NO: 1166-07-62	HWY: USH 51	COUNTY: MARATHON	TRAFFIC CONTROL - STAGE 1A	SCALE, FEET 0 100 200	SHEET 42	E

FILE NAME : F:\BM1-3212 USH 51 Marathon Co Structures\Roads\cds\1166-07-32\026109_S1a.dgn PLOT DATE : 30-JAN-2015 15:47 PLOT BY : cfranzen PLOT NAME : 026109_S1a PLOT SCALE : 100:1

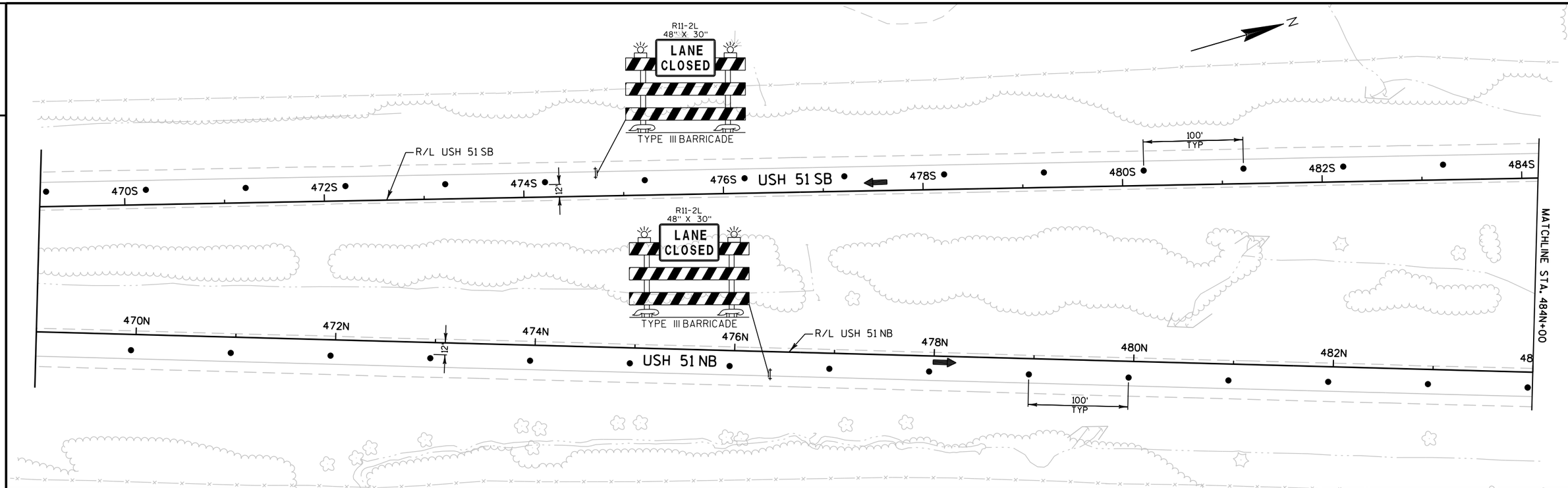

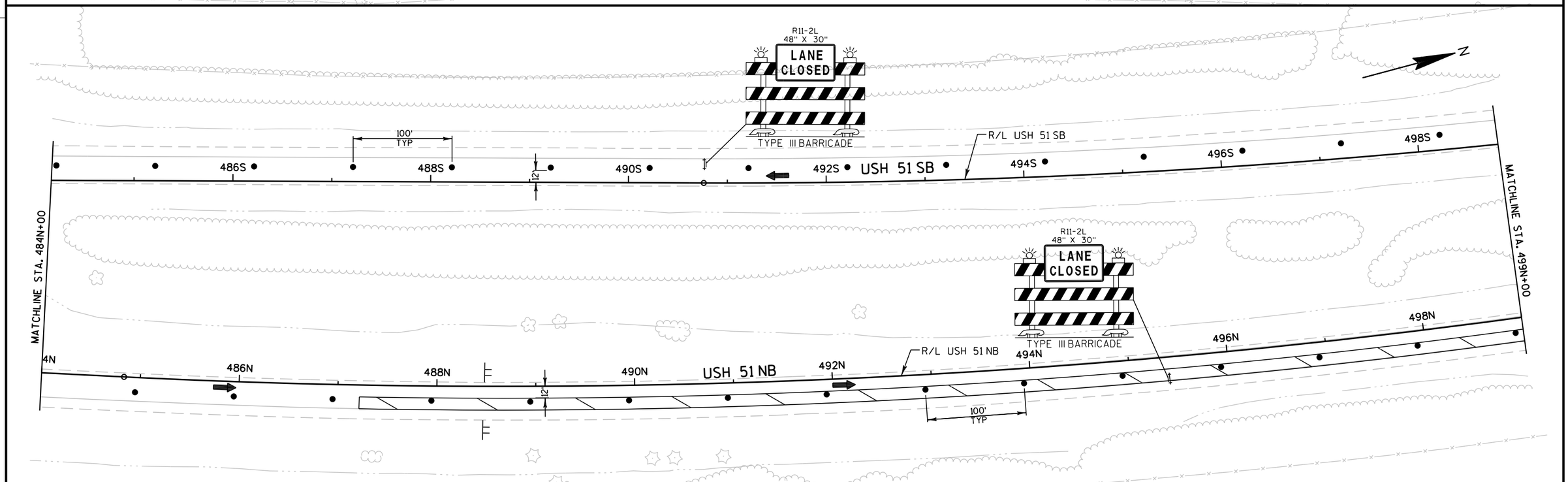

PROJECT NO: 1166-07-62	HWY: USH 51	COUNTY: MARATHON	TRAFFIC CONTROL - STAGE 1A	SCALE, FEET 0 100 200	SHEET 43	E

2

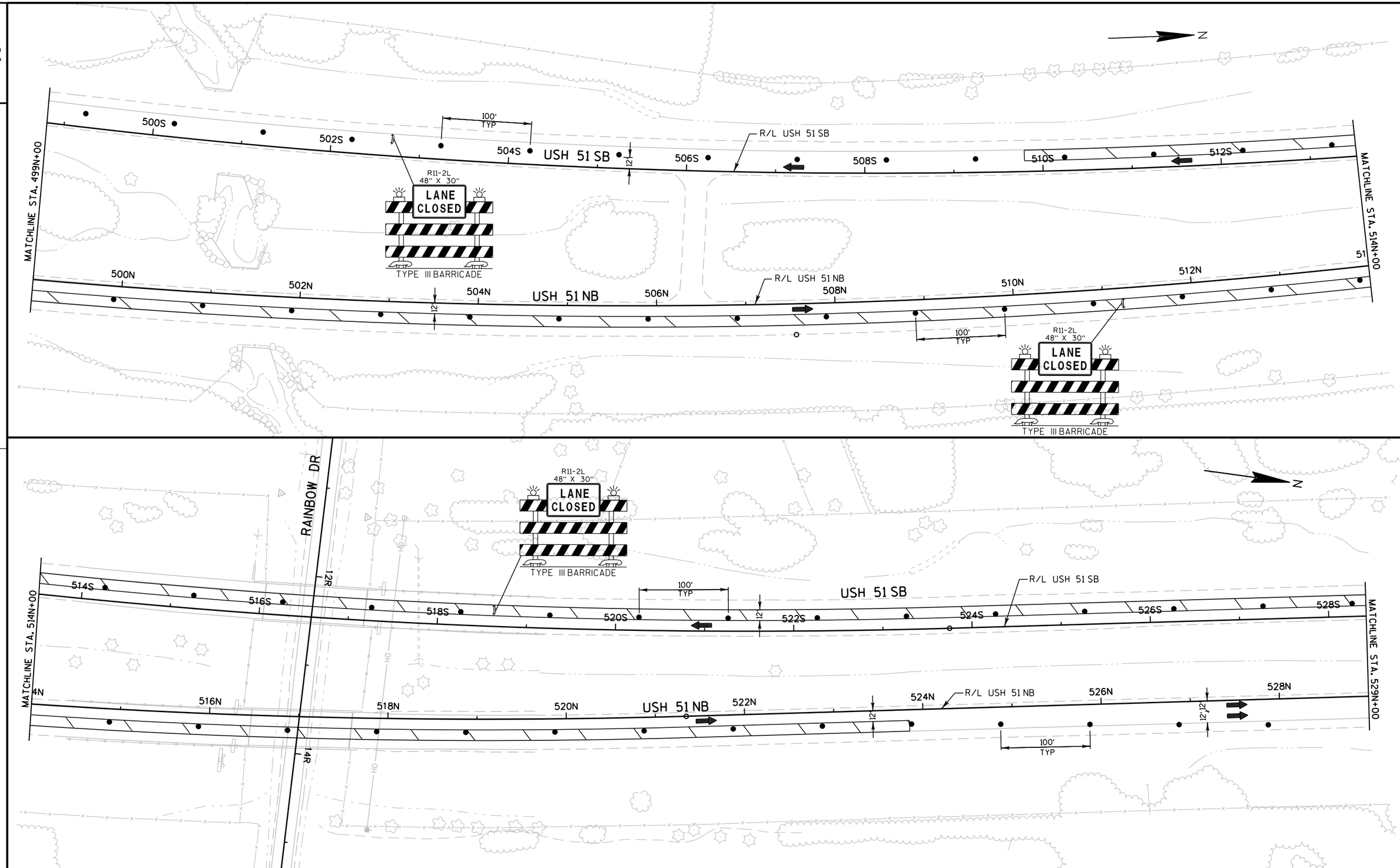

2

PROJECT NO: 1166-07-62	HWY: USH 51	COUNTY: MARATHON	TRAFFIC CONTROL - STAGE 1A	SCALE, FEET 0 100 200	SHEET 44	E

FILE NAME : F:\BM1-3212 USH 51 Marathon Co Structures\Roads\cds\1166-07-32\026111_S1a.dgn PLOT DATE : 30-JAN-2015 15:47 PLOT BY : cfranzen PLOT NAME : 026111_S1a PLOT SCALE : 100:1

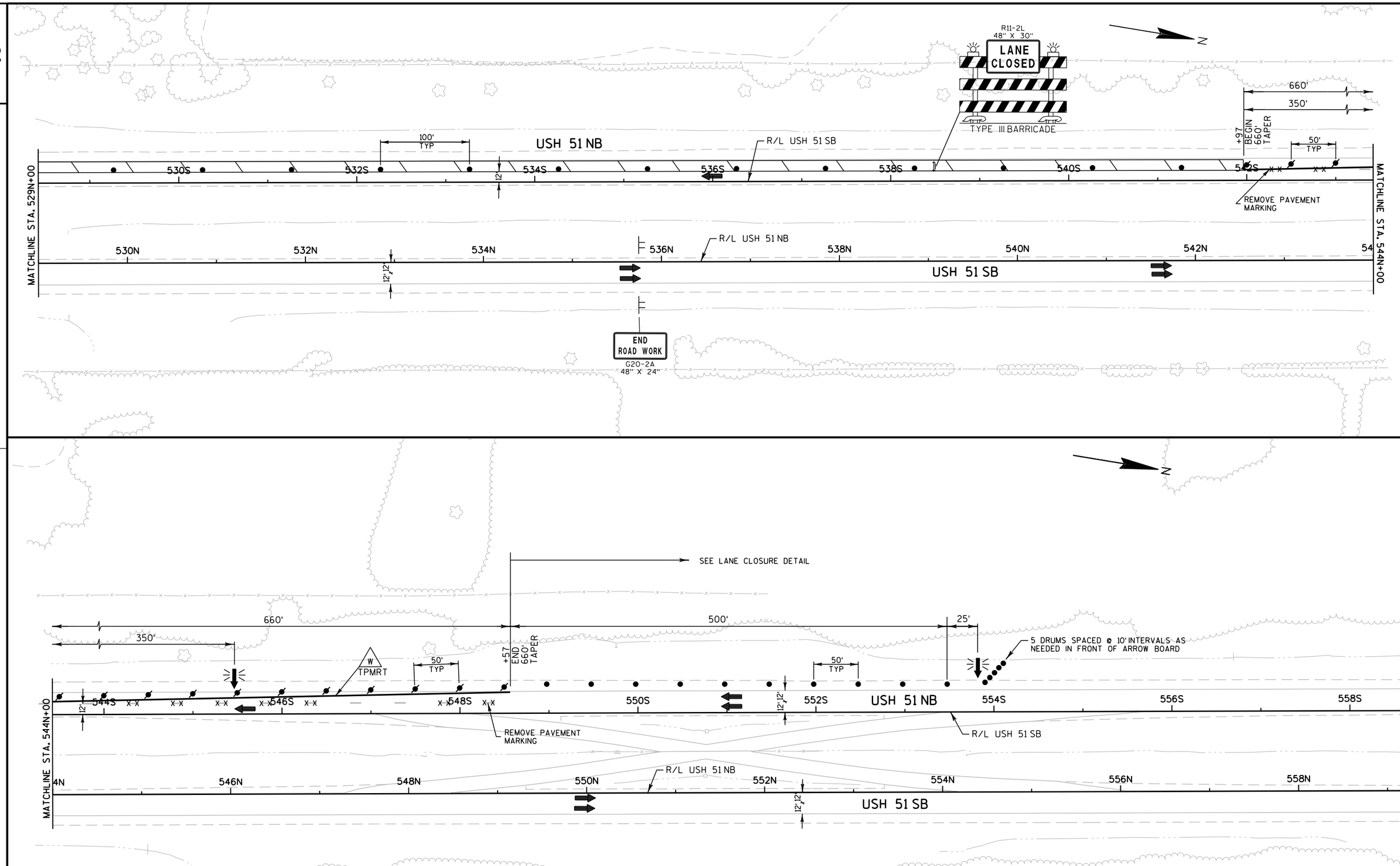

PROJECT NO: 1166-07-62	HWY: USH 51	COUNTY: MARATHON	TRAFFIC CONTROL - STAGE 1A	SCALE, FEET 0 100 200	SHEET 45	E

FILE NAME : F:\BM1-3212 USH 51 Marathon Co Structures\Roads\cds\1166-07-32\026112_S1a.dgn PLOT DATE : 30-JAN-2015 15:47 PLOT BY : cfranzen PLOT NAME : 026112_S1a PLOT SCALE : 100:1

2

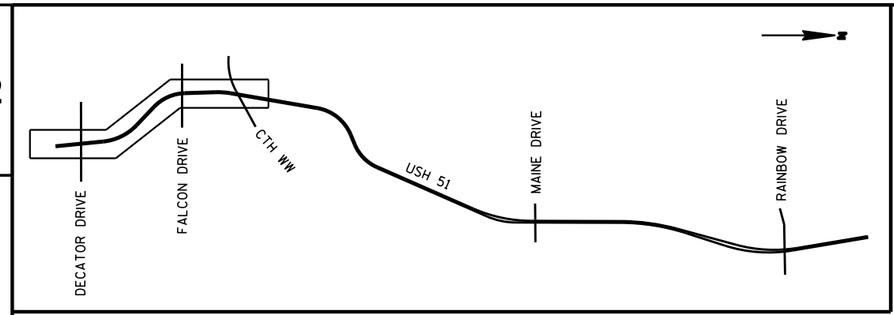

CONSTRUCTION STAGE 1B

STAGE 1B - CONSTRUCTION: REMOVE AND REPLACE ASPHALTIC SURFACE ON LEFT SHOULDER

STAGE 1B - TRAFFIC: LEFT LANE CLOSED

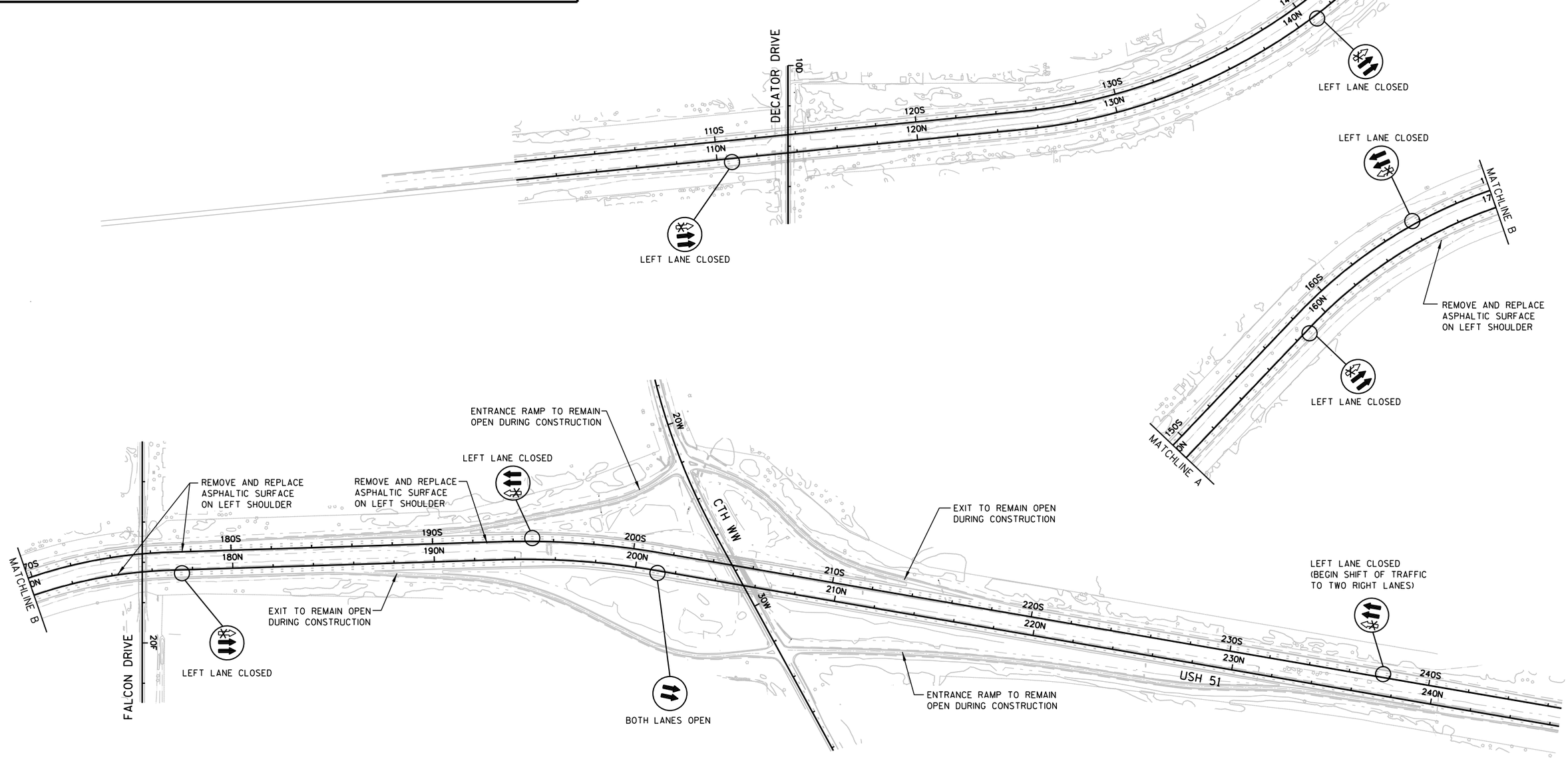

2

PROJECT NO: 1166-07-62	HWY: USH 51	COUNTY: MARATHON	TRAFFIC CONTROL OVERVIEW - STAGE 1B	SHEET 46	E

2

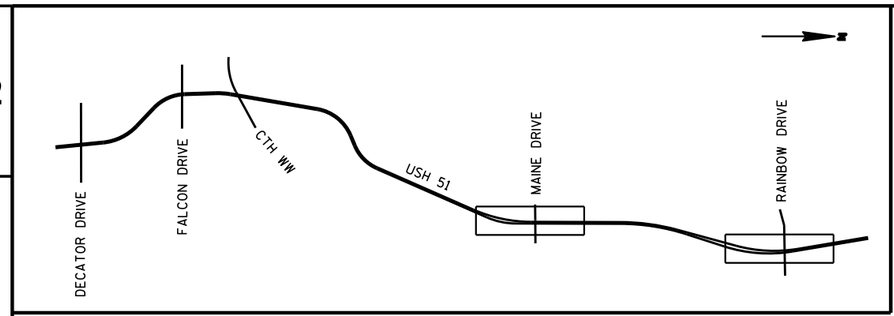

CONSTRUCTION STAGE 1B

STAGE 1B - CONSTRUCTION: REMOVE AND REPLACE ASPHALTIC SURFACE ON LEFT SHOULDER

STAGE 1B - TRAFFIC: LEFT LANE CLOSED

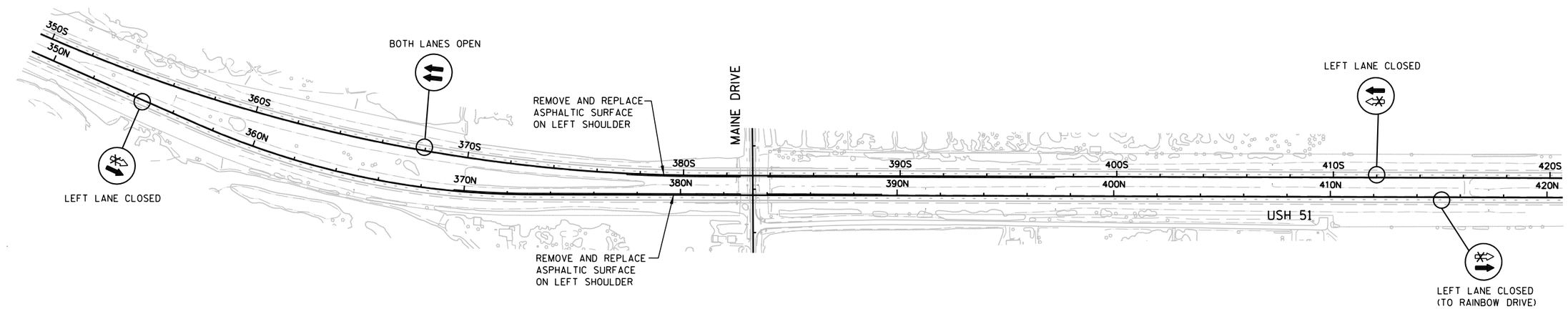

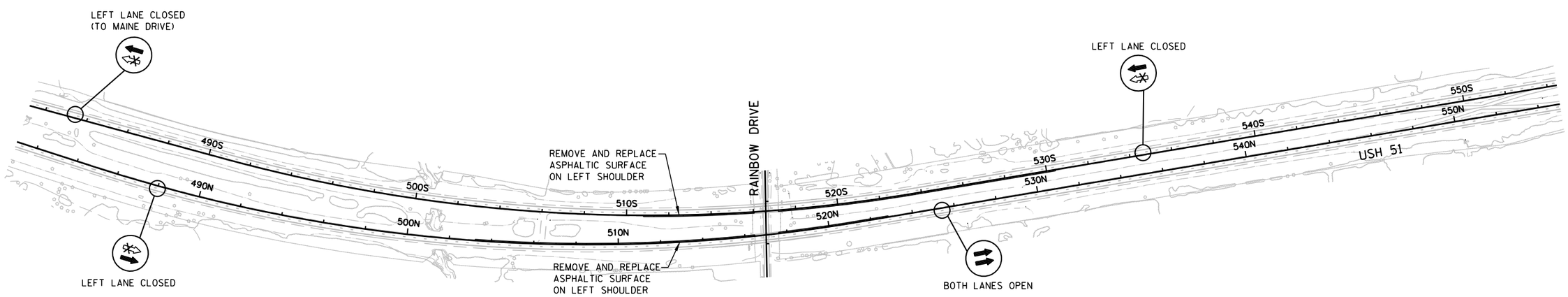

PROJECT NO: 1166-07-62	HWY: USH 51	COUNTY: MARATHON	TRAFFIC CONTROL OVERVIEW - STAGE 1B	SHEET 47	E

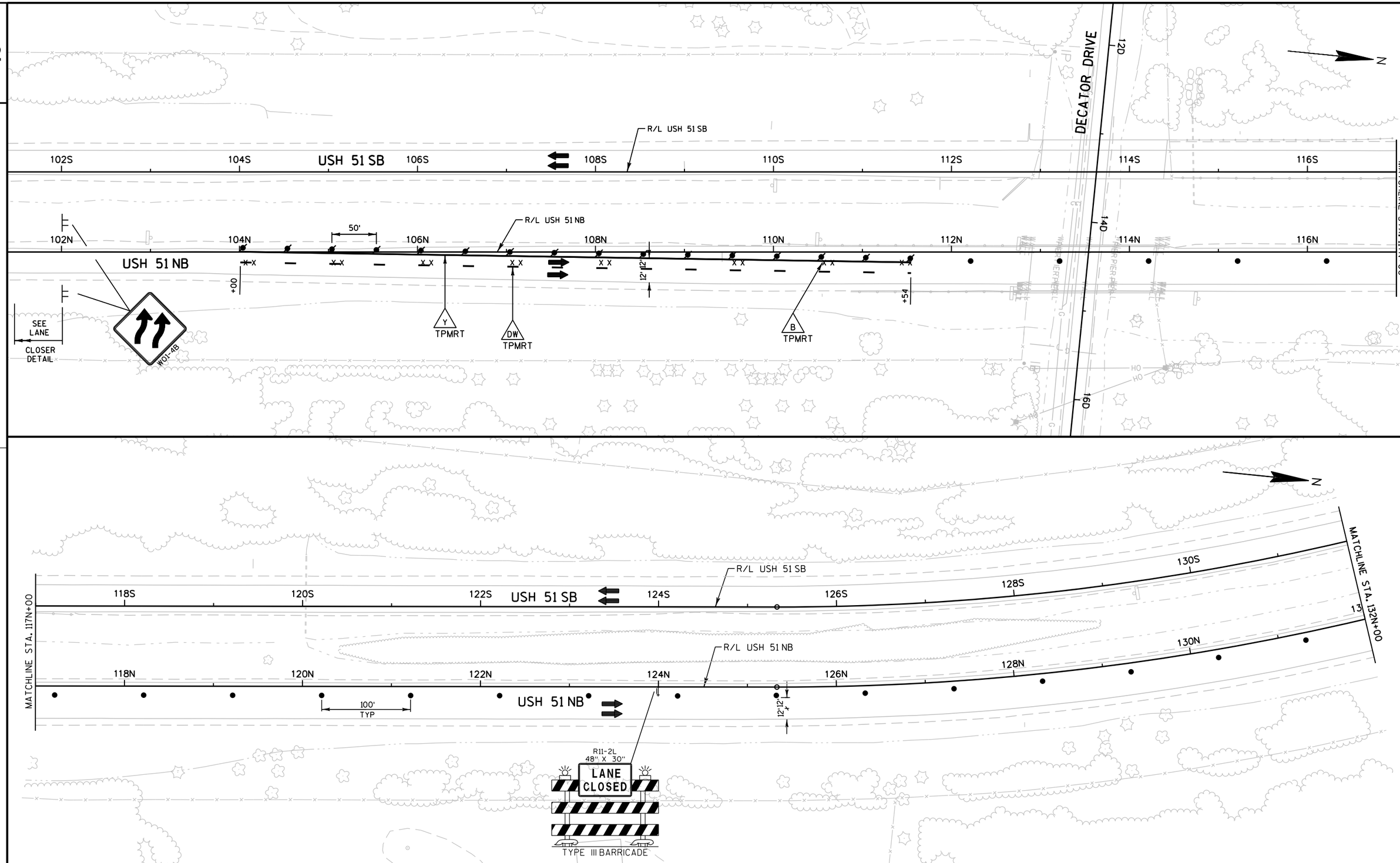

PROJECT NO: 1166-07-62	HWY: USH 51	COUNTY: MARATHON	TRAFFIC CONTROL - STAGE 1B	SCALE, FEET 0 100 200	SHEET 48	E

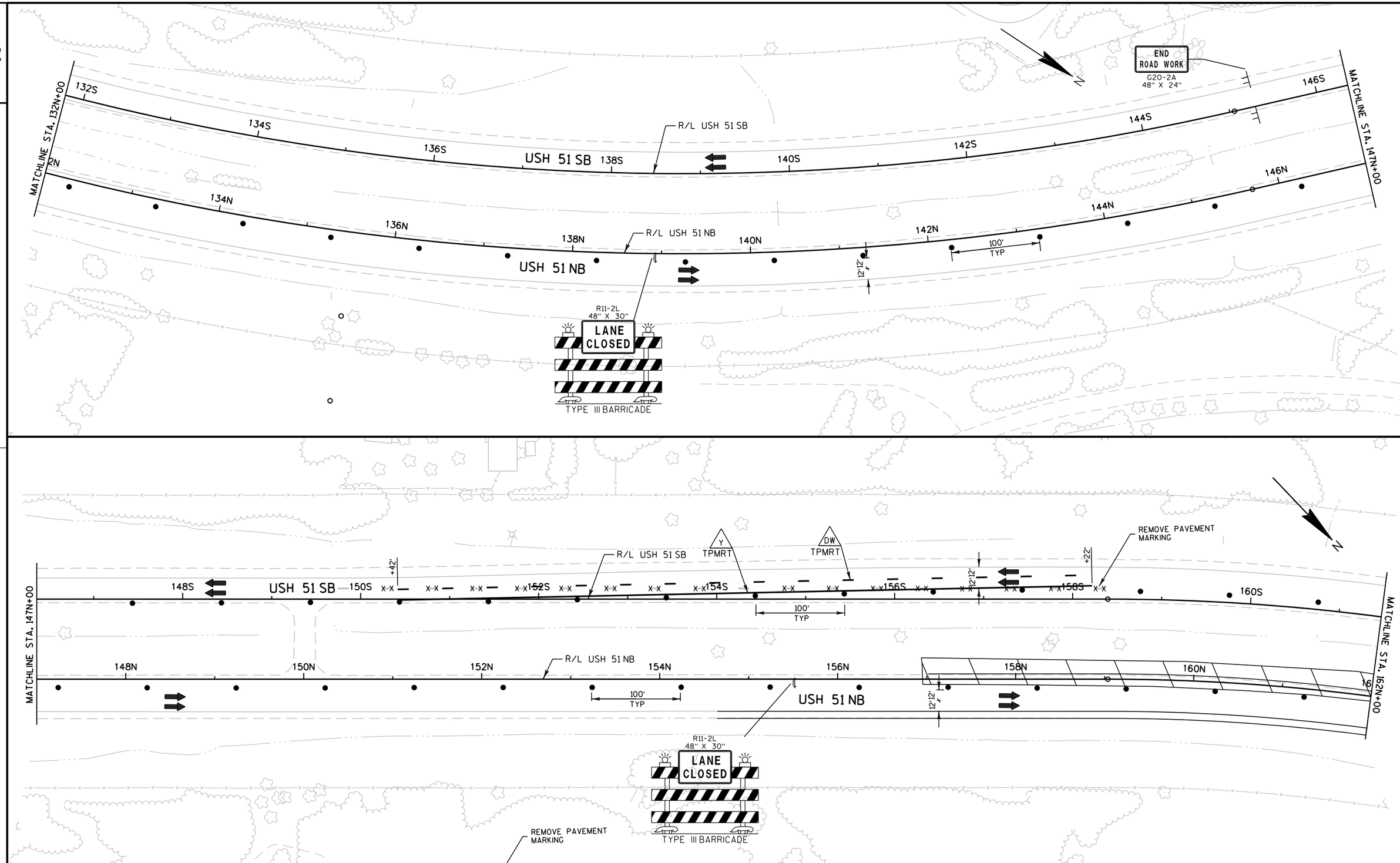

PROJECT NO: 1166-07-62	HWY: USH 51	COUNTY: MARATHON	TRAFFIC CONTROL - STAGE 1B	SCALE, FEET 0 100 200	SHEET 49	E

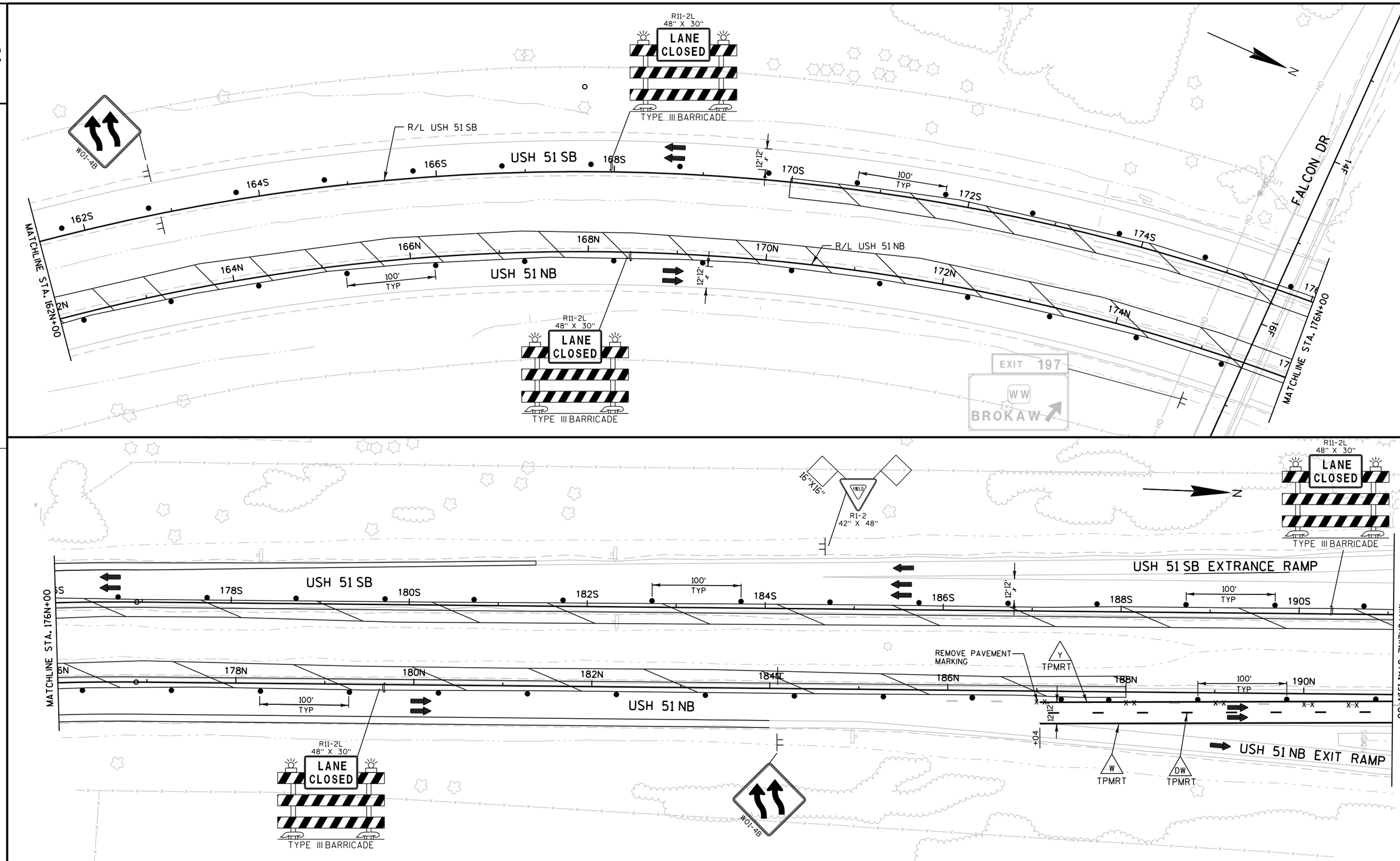

PROJECT NO: 1166-07-62	HWY: USH 51	COUNTY: MARATHON	TRAFFIC CONTROL - STAGE 1B	SCALE, FEET 0 100 200	SHEET 50	E

FILE NAME : F:\BM1-3212 USH 51 Marathon Co Structures\Roads\cds\1166-07-32\026119_S1b.dgn PLOT DATE : 30-JAN-2015 15:48 PLOT BY : cfranzen PLOT NAME : 026119_S1b PLOT SCALE : 100:1

WISDOT/CADDS SHEET 42

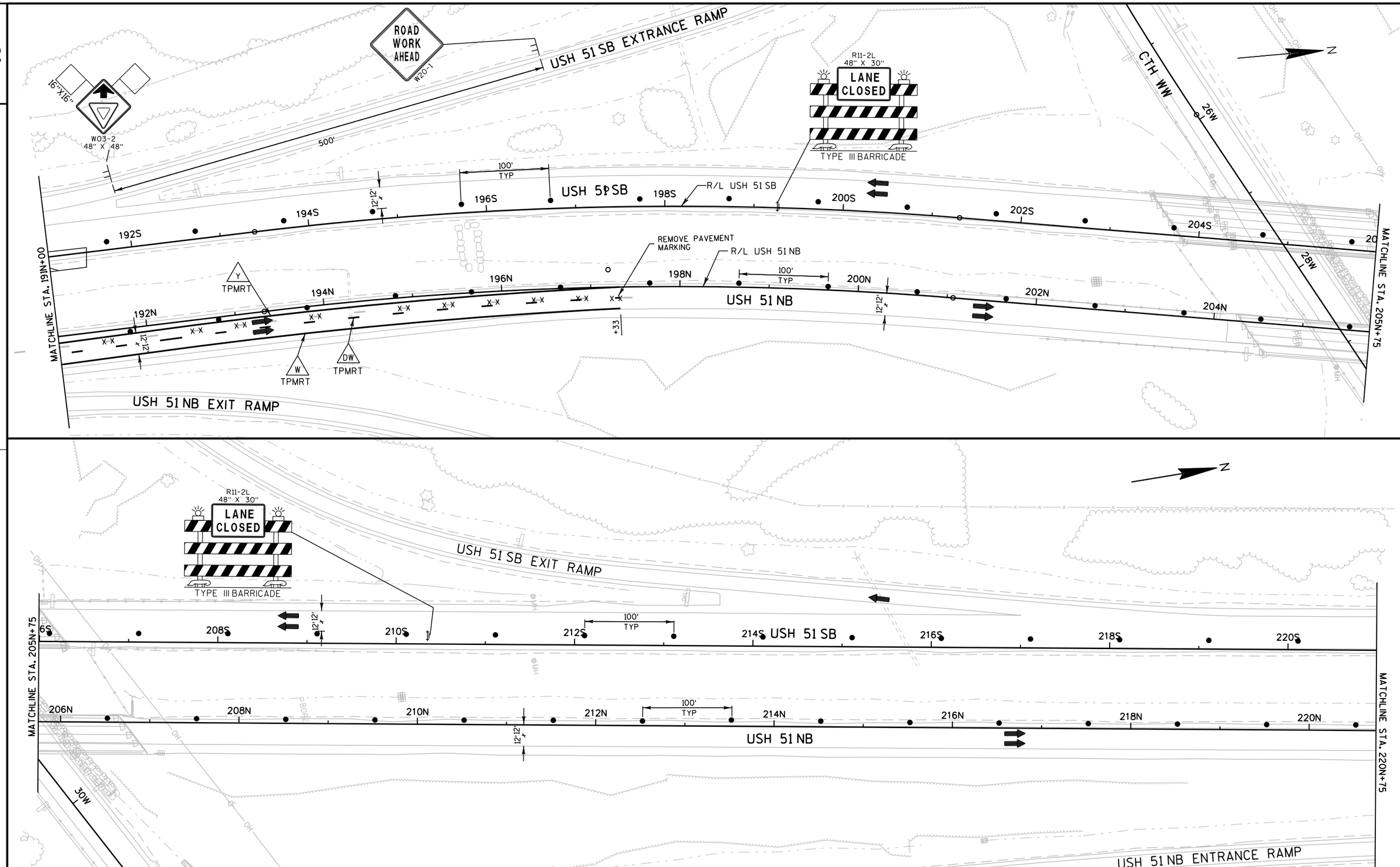

PROJECT NO: 1166-07-62	HWY: USH 51	COUNTY: MARATHON	TRAFFIC CONTROL - STAGE 1B	SCALE, FEET 0 100 200	SHEET 51	E

FILE NAME : F:\BM1-3212 USH 51 Marathon Co Structures\Roads\cds\1166-07-32\026120_S1b.dgn PLOT DATE : 30-JAN-2015 15:48 PLOT BY : cfranzen PLOT NAME : 026120_S1b PLOT SCALE : 100:1

WISDOT/CADDS SHEET 42

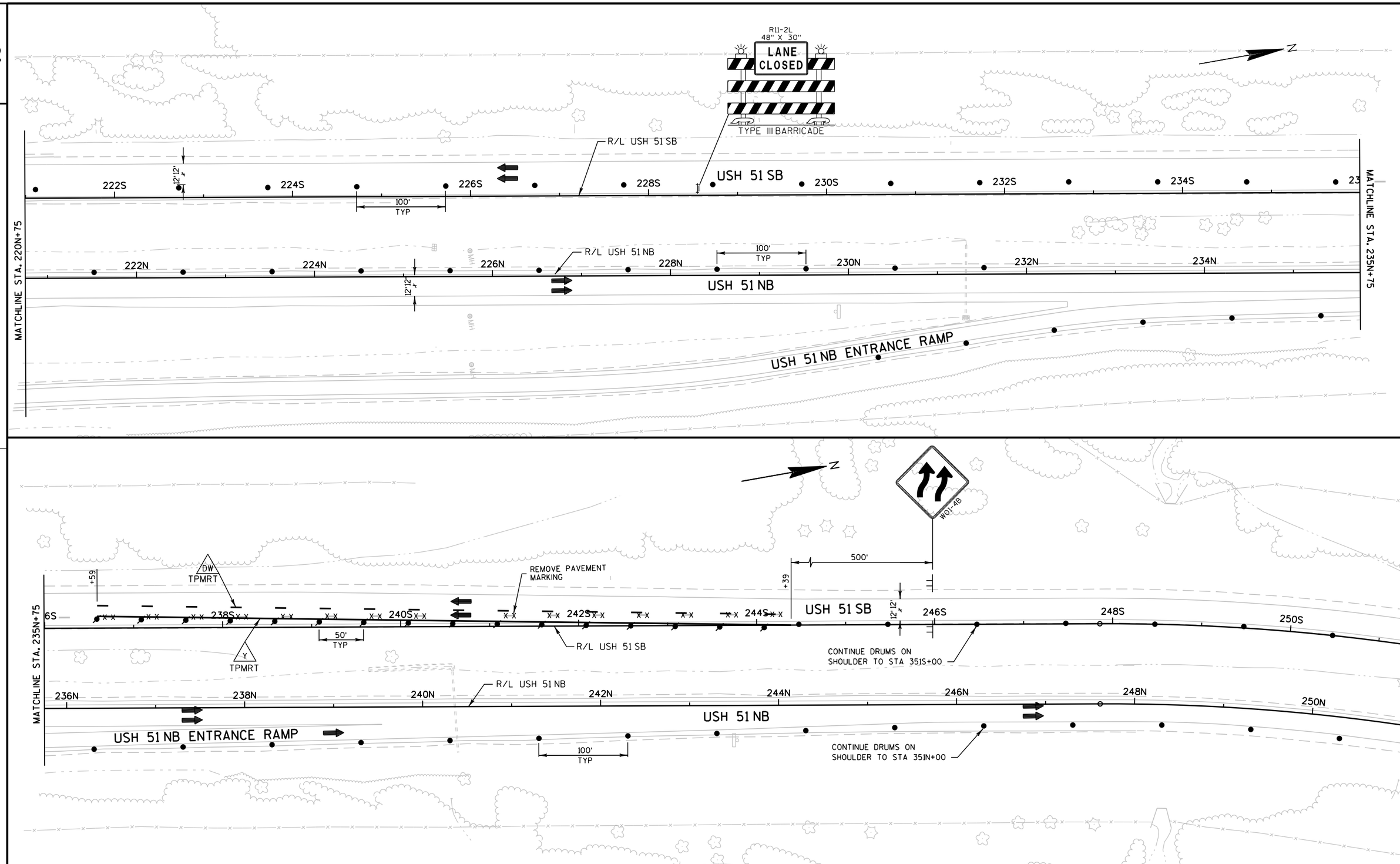

PROJECT NO: 1166-07-62	HWY: USH 51	COUNTY: MARATHON	TRAFFIC CONTROL - STAGE 1B	SCALE, FEET 0 100 200	SHEET 52	E

FILE NAME : F:\BM1-3212 USH 51 Marathon Co Structures\Roads\cds\1166-07-32\026121_S1b.dgn PLOT DATE : 30-JAN-2015 15:48 PLOT BY : cfranzen PLOT NAME : 026121_S1b PLOT SCALE : 100:1

WISDOT/CADDS SHEET 42

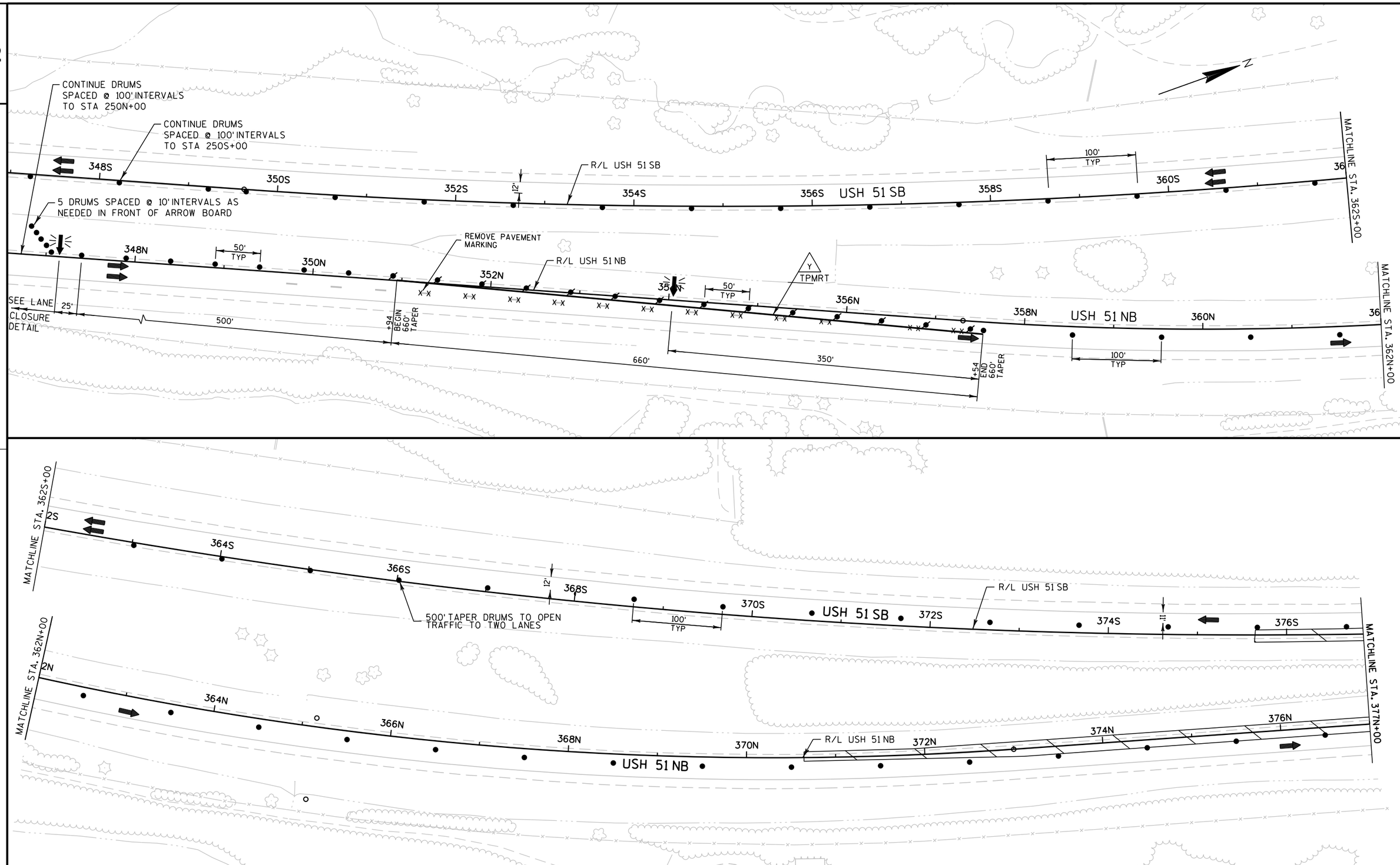

PROJECT NO: 1166-07-62	HWY: USH 51	COUNTY: MARATHON	TRAFFIC CONTROL - STAGE 1B	SCALE, FEET 0 100 200	SHEET 53	E

FILE NAME : F:\BM1-3212 USH 51 Marathon Co Structures\Roads\cds\1166-07-32\026122_S1b.dgn PLOT DATE : 30-JAN-2015 15:48 PLOT BY : cfranzen PLOT NAME : 026122_S1b PLOT SCALE : 100:1

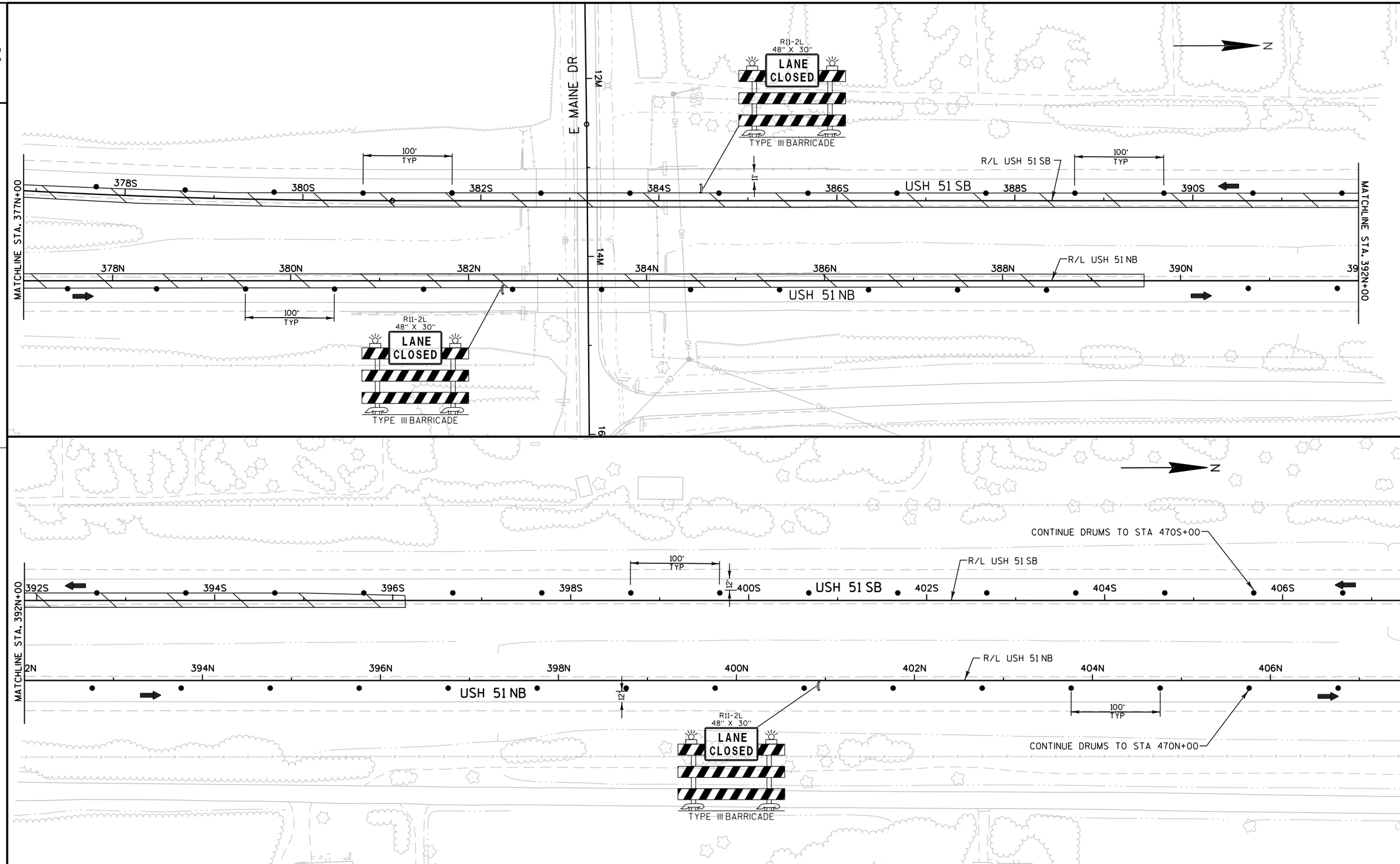

PROJECT NO: 1166-07-62	HWY: USH 51	COUNTY: MARATHON	TRAFFIC CONTROL - STAGE 1B	SCALE, FEET 0 100 200	SHEET 54	E

FILE NAME : F:\BM1-3212 USH 51 Marathon Co Structures\Roads\cds\1166-07-32\026123_S1b.dgn PLOT DATE : 30-JAN-2015 15:48 PLOT BY : cfranzen PLOT NAME : 026123_S1b PLOT SCALE : 100:1

WISDOT/CADDS SHEET 42

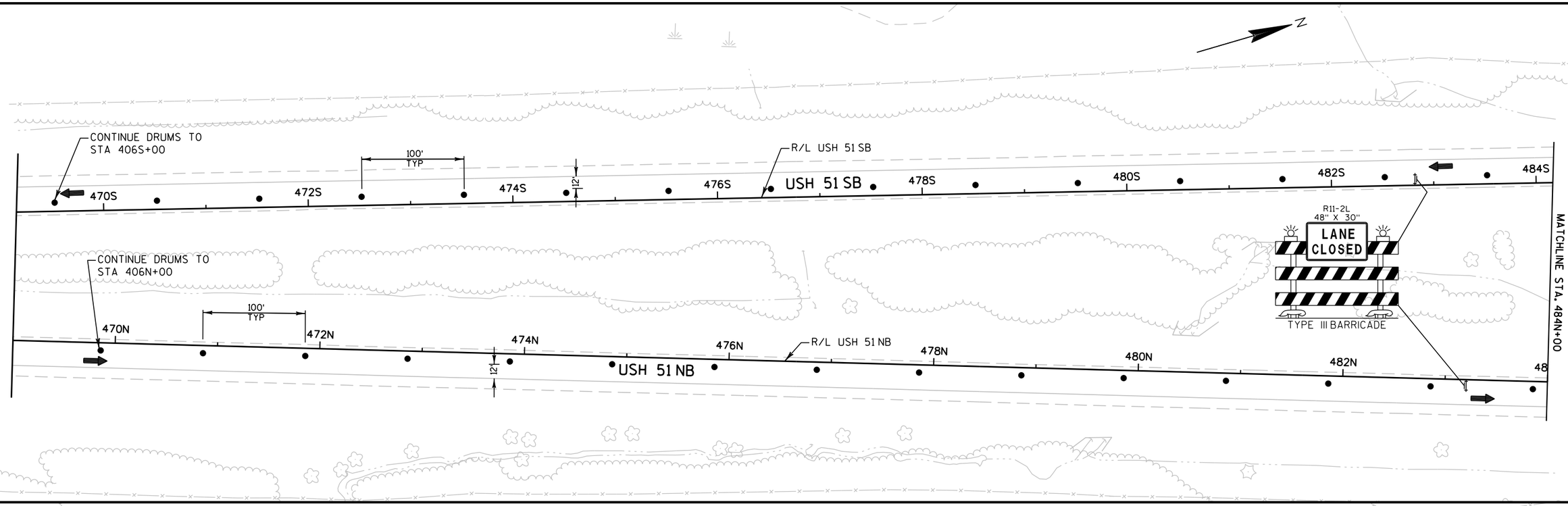

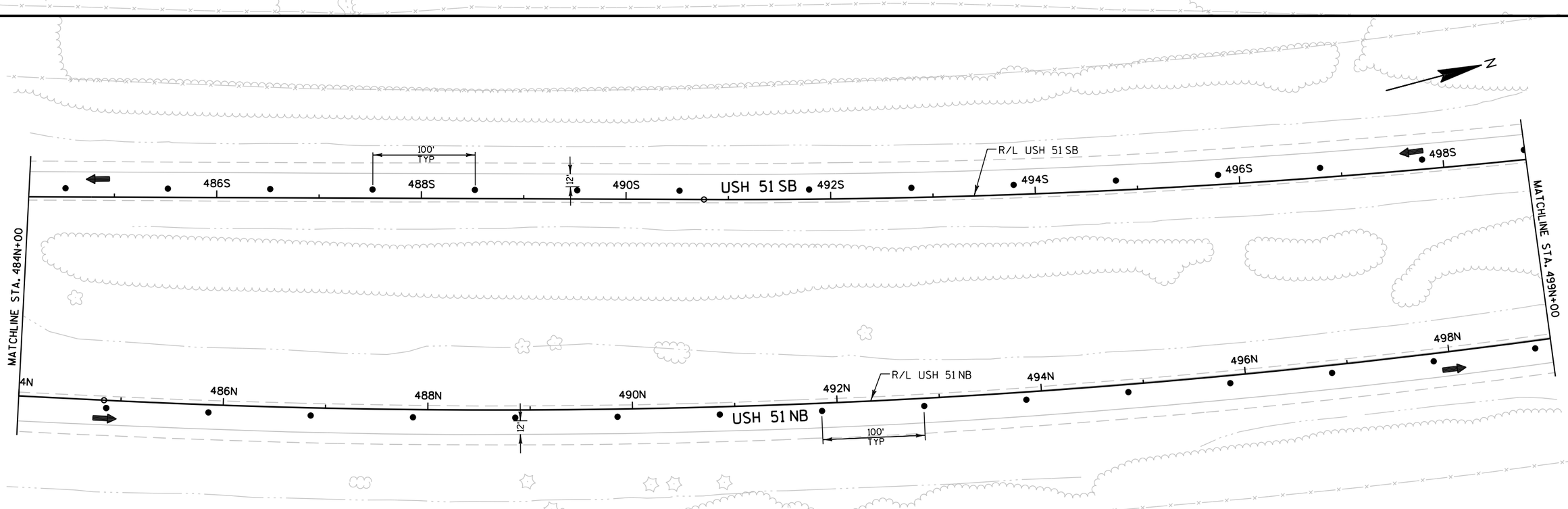

PROJECT NO: 1166-07-62	HWY: USH 51	COUNTY: MARATHON	TRAFFIC CONTROL - STAGE 1B	SCALE, FEET 0 100 200	SHEET 55	E

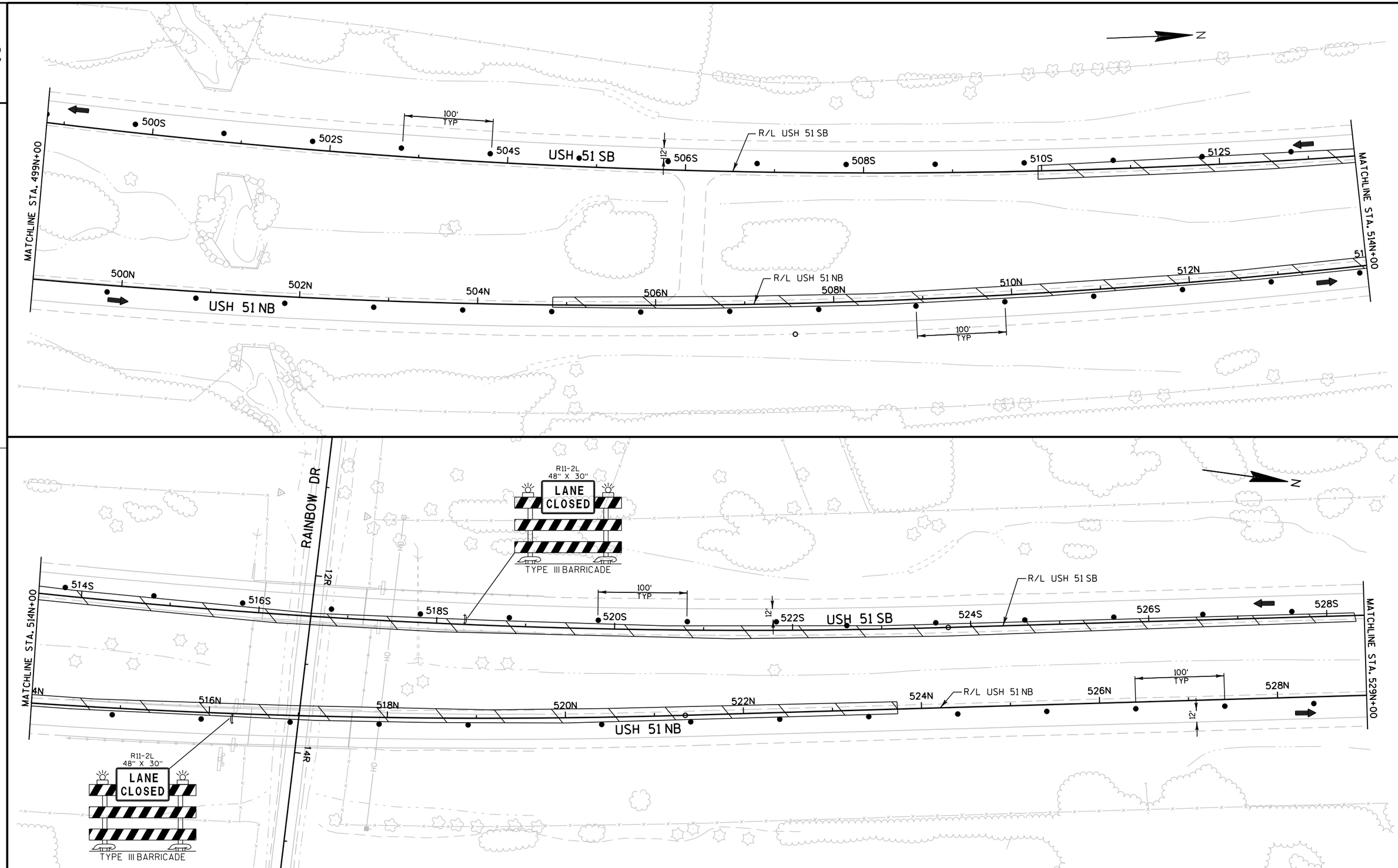

PROJECT NO: 1166-07-62	HWY: USH 51	COUNTY: MARATHON	TRAFFIC CONTROL - STAGE 1B	SCALE, FEET 0 100 200	SHEET 56	E

FILE NAME : F:\BM1-3212 USH 51 Marathon Co Structures\Roads\cds\1166-07-32\026125_S1b.dgn PLOT DATE : 30-JAN-2015 15:48 PLOT BY : cfranzen PLOT NAME : 026125_S1b PLOT SCALE : 100:1

WISDOT/CADDS SHEET 42

2

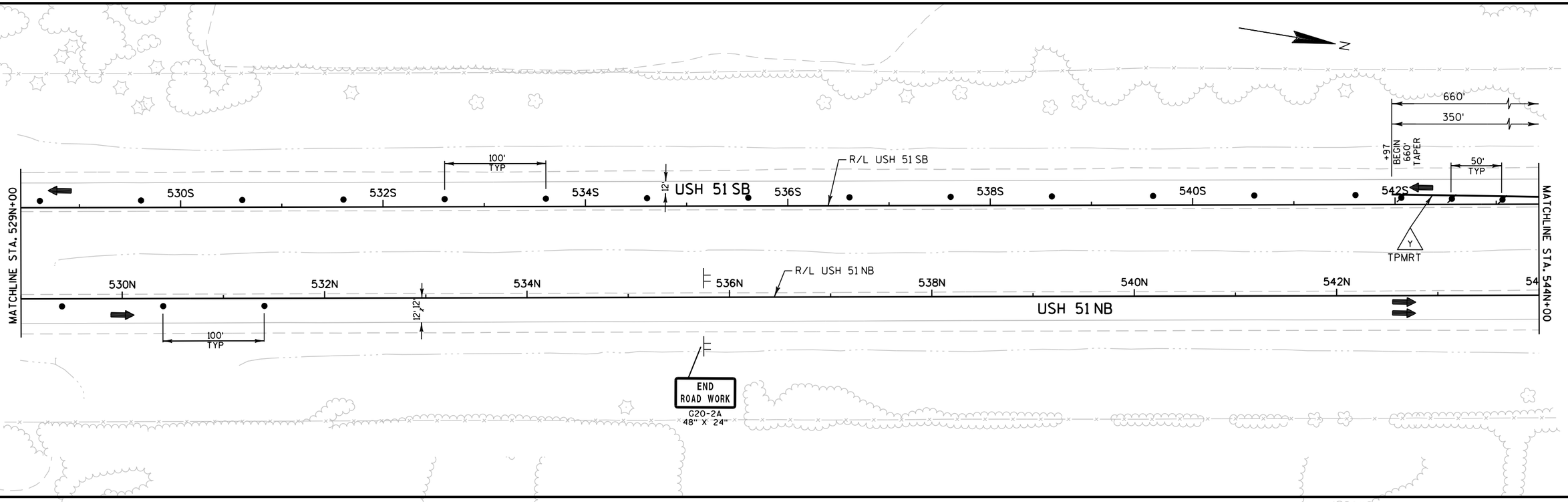

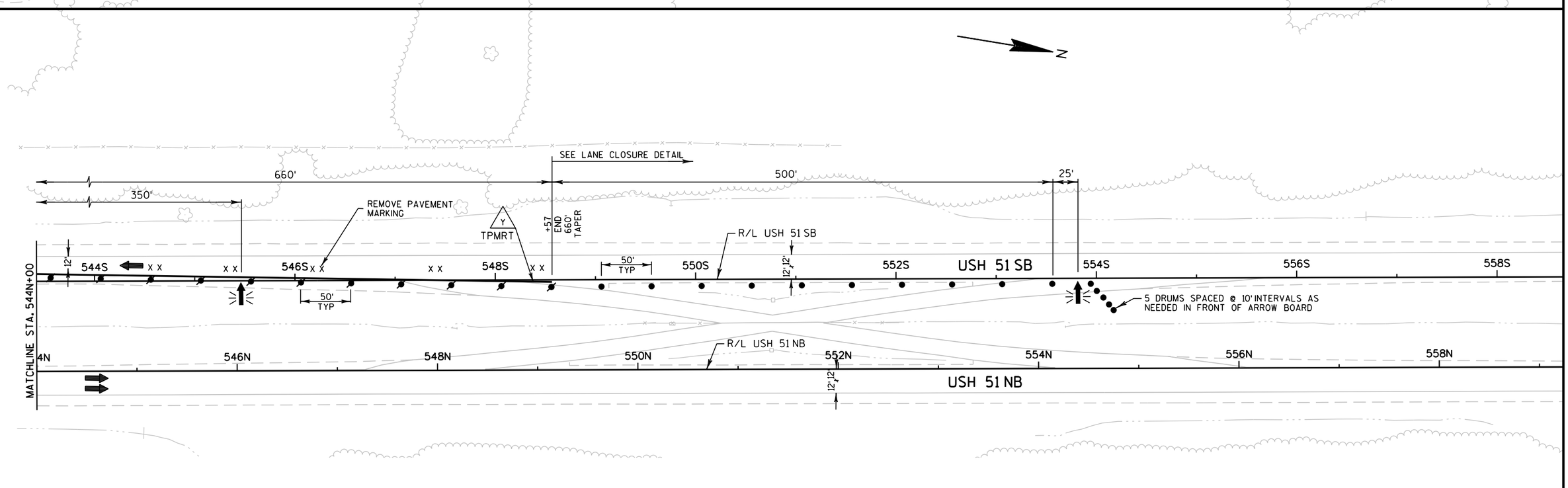

PROJECT NO: 1166-07-62	HWY: USH 51	COUNTY: MARATHON	TRAFFIC CONTROL - STAGE 1B	SCALE, FEET 0 100 200	SHEET 57	E

2

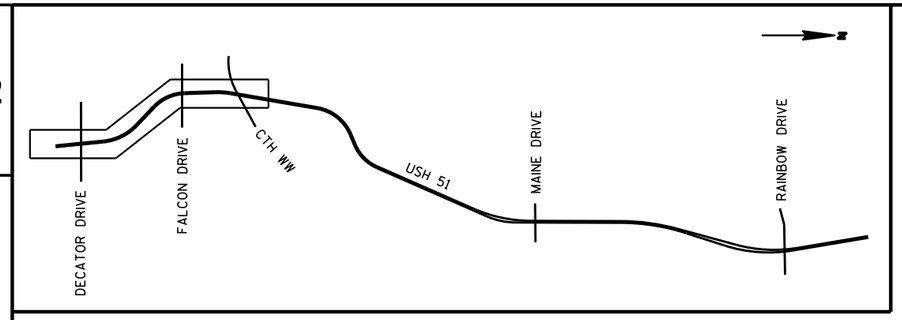

CONSTRUCTION STAGE 2A

STAGE 2A - CONSTRUCTION: PAINT FALCON DRIVE BRIDGE GIRDERS OVER USH 51 INSIDE LANES

STAGE 2A - TRAFFIC: TWO 10' LANES OF USH 51 TRAFFIC SHIFTED TO OUTSIDE LANES USING PAVED RIGHT SHOULDER

NOTE: SHIFTED TRAFFIC LANES WILL BE 10' WIDE INSIDE LANE AND 11' WIDE OUTSIDE LANE WITH AN ADVISORY SPEED OF 55 MPH.

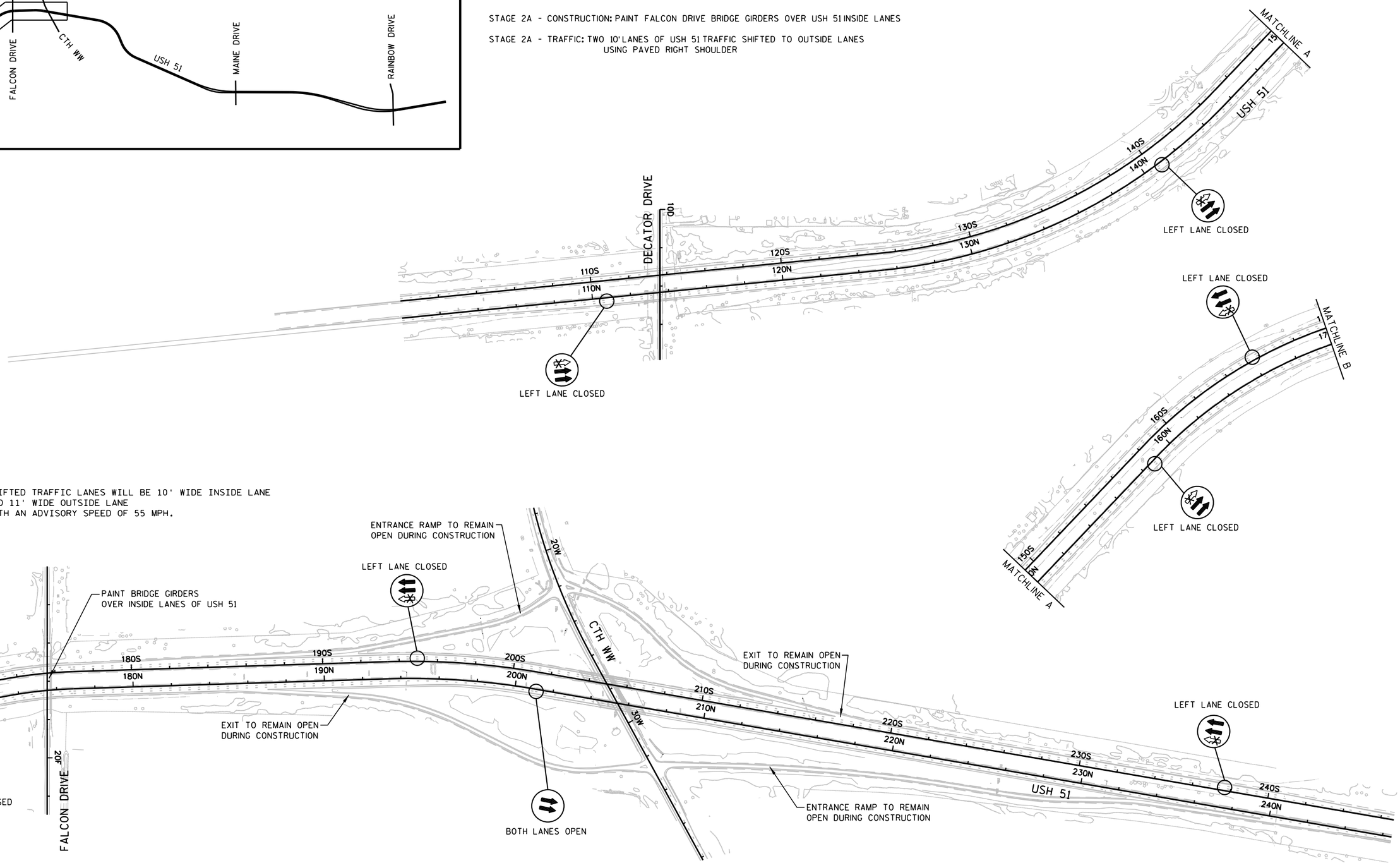

2

PROJECT NO: 1166-07-62	HWY: USH 51	COUNTY: MARATHON	TRAFFIC CONTROL OVERVIEW - STAGE 2A	SHEET 58	E

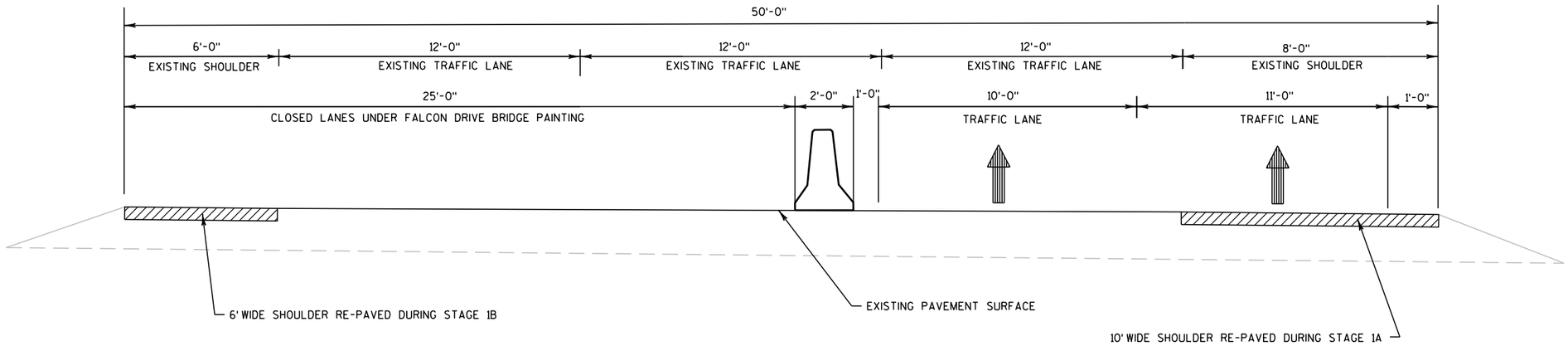

STAGE 2A TRAFFIC CONTROL

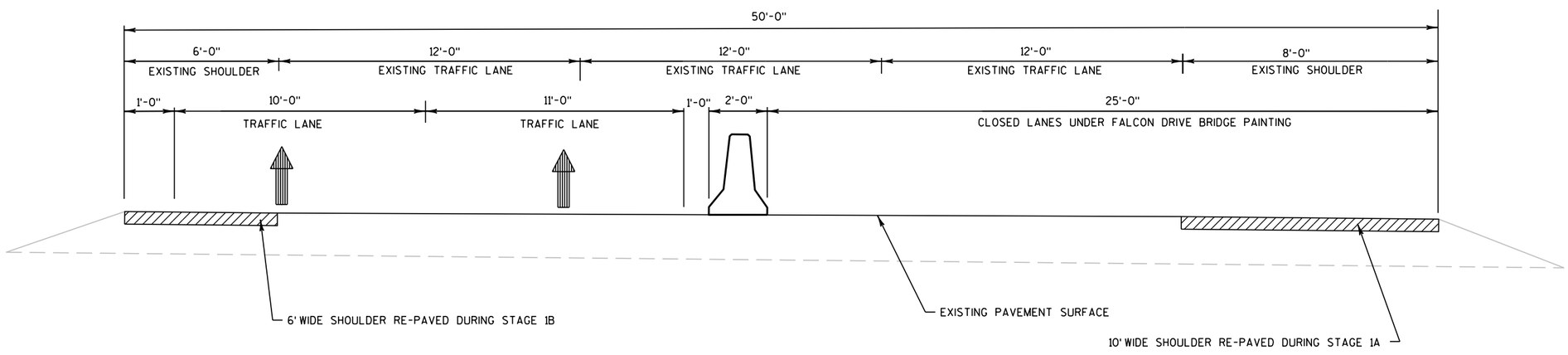

STAGE 2B TRAFFIC CONTROL

TRAFFIC CONTROL NOTES

1. TRAFFIC SHALL NOT BE SHIFTED TO THE SHOULDER UNTIL AFTER THE SHOULDER ASPHALT HAS BEEN REPLACED.
2. AT NO TIME DURING CONSTRUCTION CAN THERE BE BOTH A LEFT LANE CLOSURE AND A RIGHT LANE CLOSURE SIMULTANEOUSLY IN THE SAME DIRECTION OF TRAVEL.

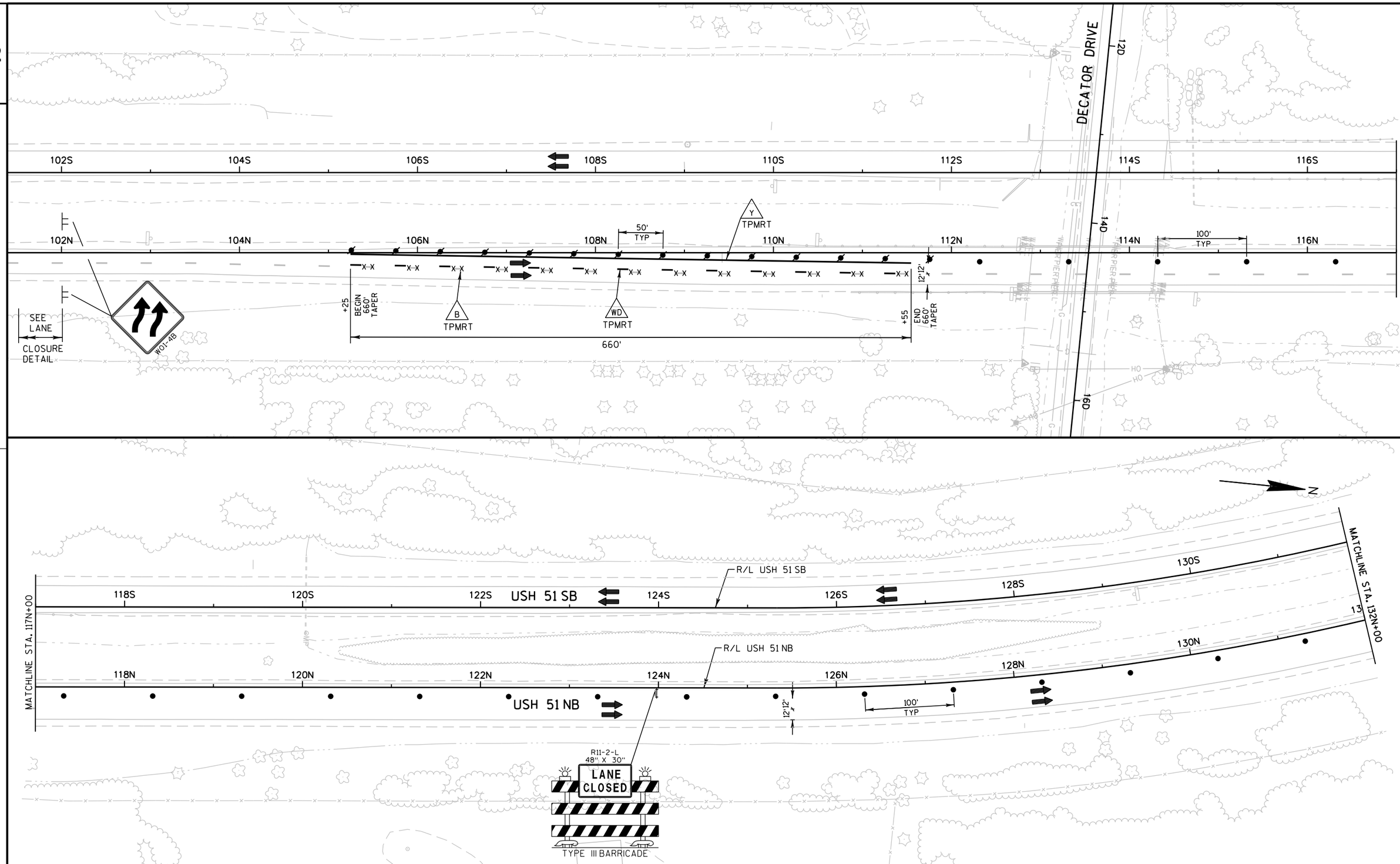

PROJECT NO: 1166-07-62	HWY: USH 51	COUNTY: MARATHON	TRAFFIC CONTROL - STAGE 2A	SCALE, FEET 0 100 200	SHEET 60	E

FILE NAME : F:\BM1-3212 USH 51 Marathon Co Structures\Roads\cds\1166-07-32\026202_S2a.dgn PLOT DATE : 30-JAN-2015 15:48 PLOT BY : cfranzen PLOT NAME : 026202_S2a PLOT SCALE : 100:1

WISDOT/CADDS SHEET 42

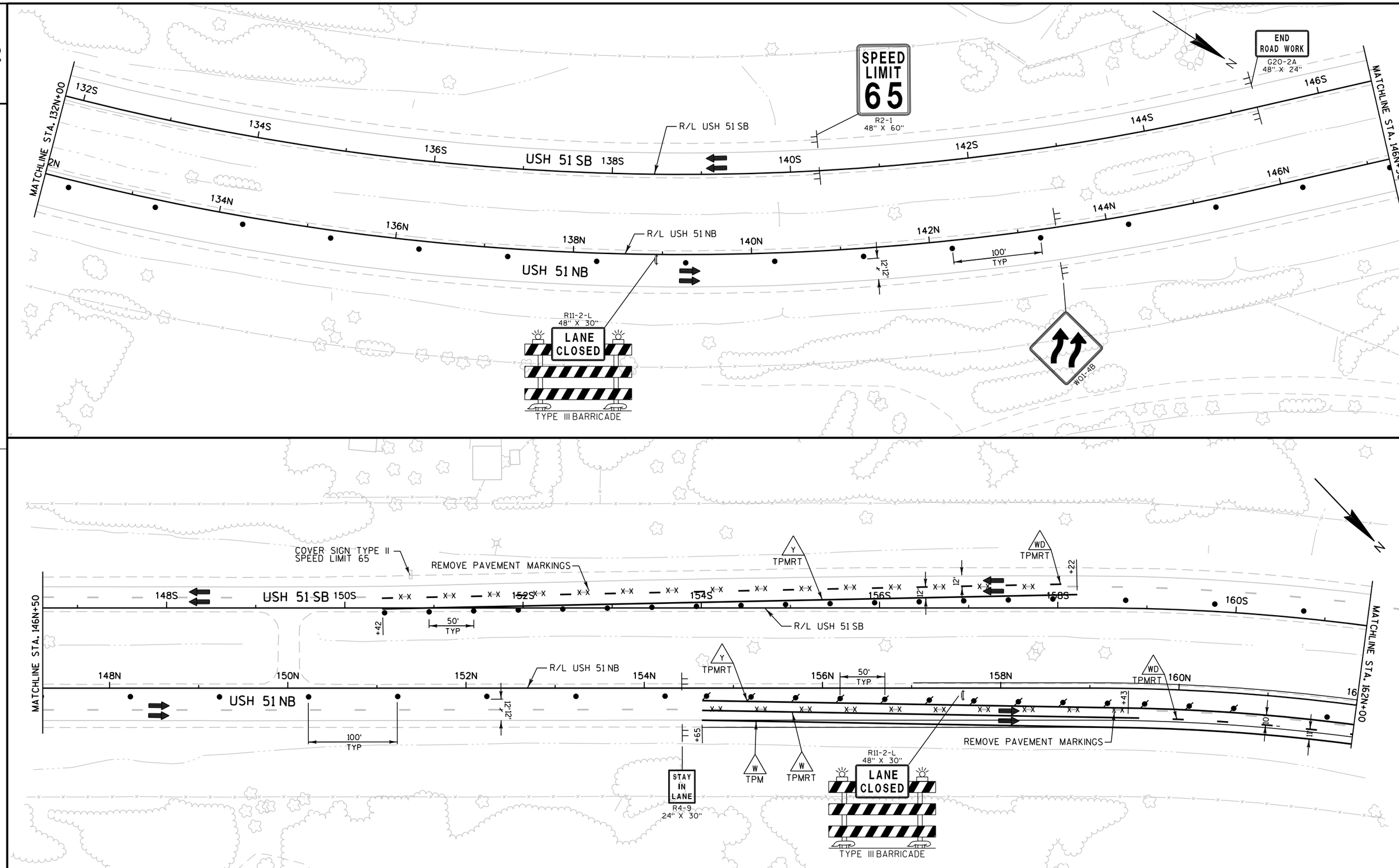

PROJECT NO: 1166-07-62	HWY: USH 51	COUNTY: MARATHON	TRAFFIC CONTROL - STAGE 2A	SCALE, FEET 0 100 200	SHEET 61	E

FILE NAME : F:\BM1-3212 USH 51 Marathon Co Structures\Roads\cds\1166-07-32\026203_S2a.dgn PLOT DATE : 30-JAN-2015 15:48 PLOT BY : cfranzen PLOT NAME : 026203_S2a PLOT SCALE : 100:1

WISDOT/CADDS SHEET 42

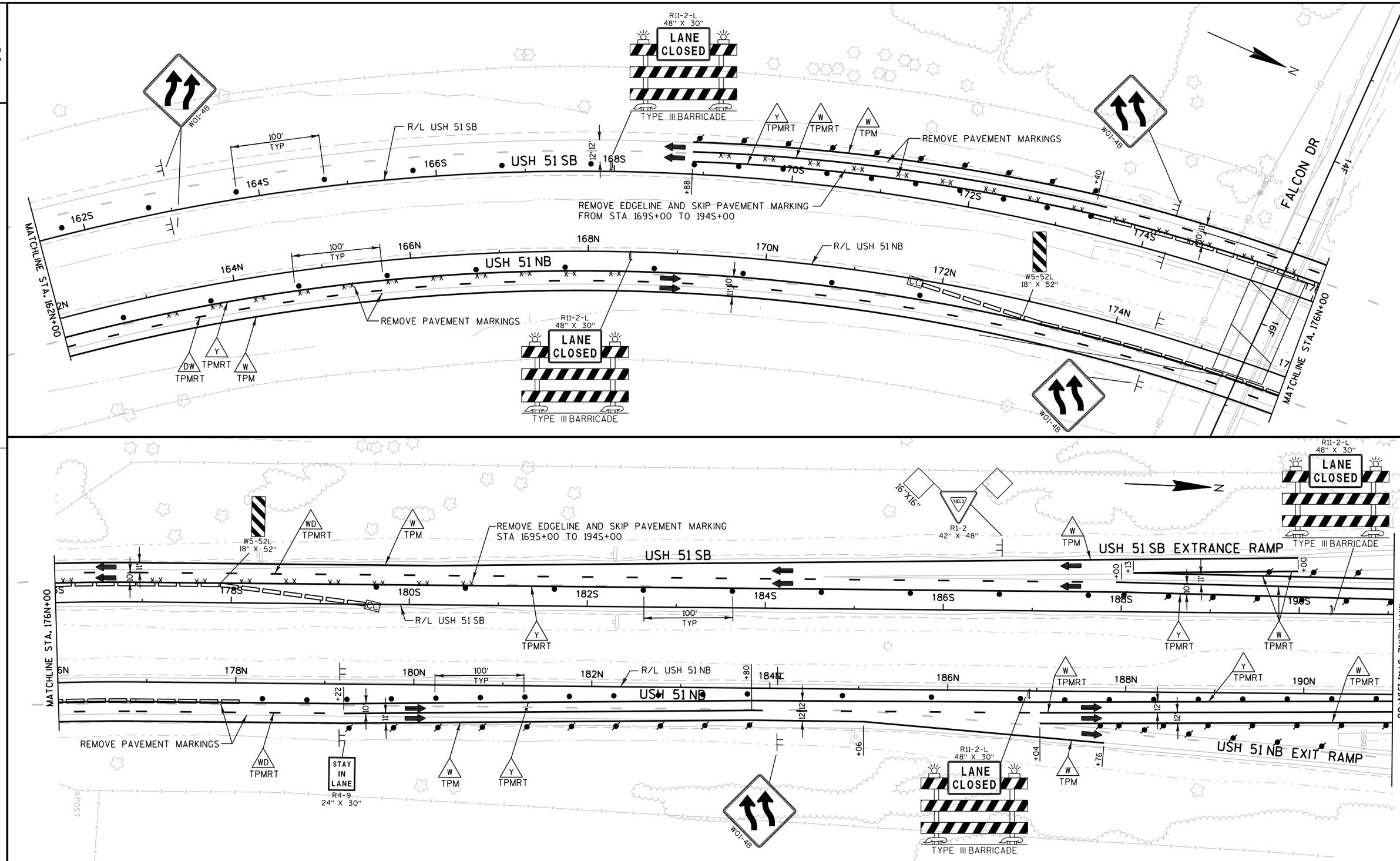

PROJECT NO: 1166-07-62	HWY: USH 51	COUNTY: MARATHON	TRAFFIC CONTROL - STAGE 2A	SCALE, FEET 0 100 200	SHEET 62	E

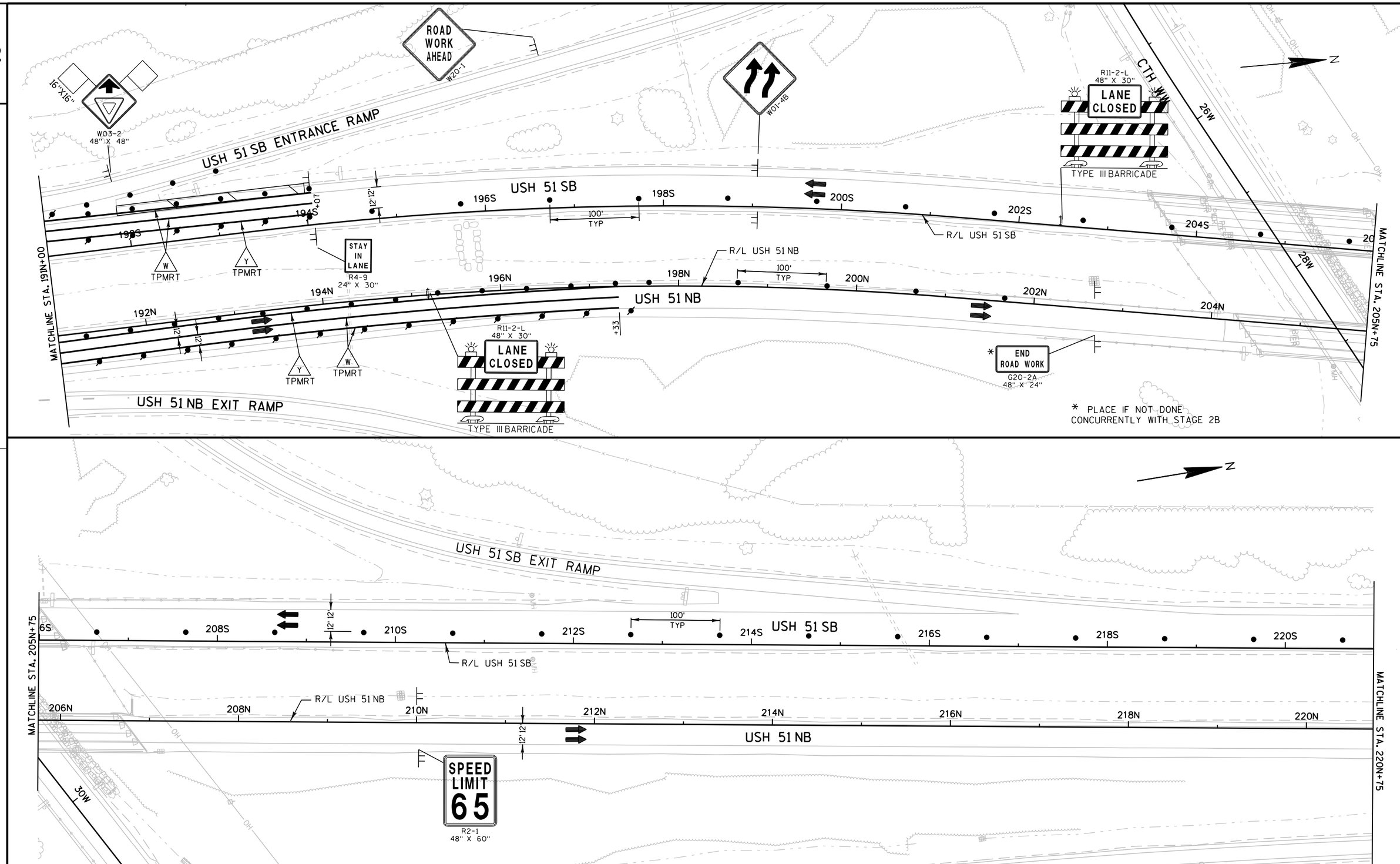

PROJECT NO: 1166-07-62	HWY: USH 51	COUNTY: MARATHON	TRAFFIC CONTROL - STAGE 2A	SCALE, FEET 0 100 200	SHEET 63	E

FILE NAME : F:\BM1-3212 USH 51 Marathon Co Structures\Roads\cds\1166-07-32\026205_S2a.dgn PLOT DATE : 30-JAN-2015 15:48 PLOT BY : cfranzen PLOT NAME : 026205_S2a PLOT SCALE : 100:1

WISDOT/CADDS SHEET 42

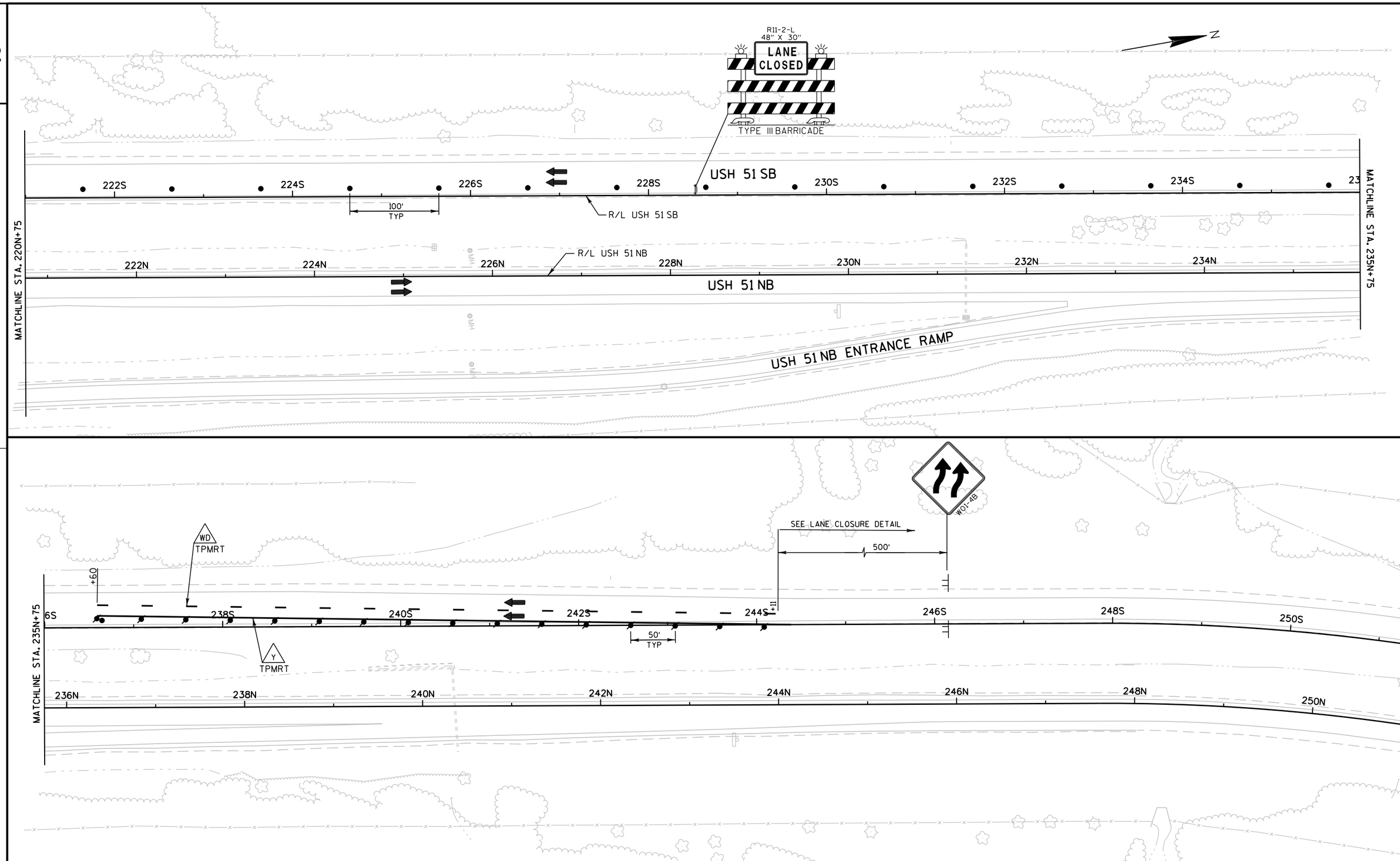

PROJECT NO: 1166-07-62	HWY: USH 51	COUNTY: MARATHON	TRAFFIC CONTROL - STAGE 2A	SCALE, FEET 0 100 200	SHEET 64	E

2

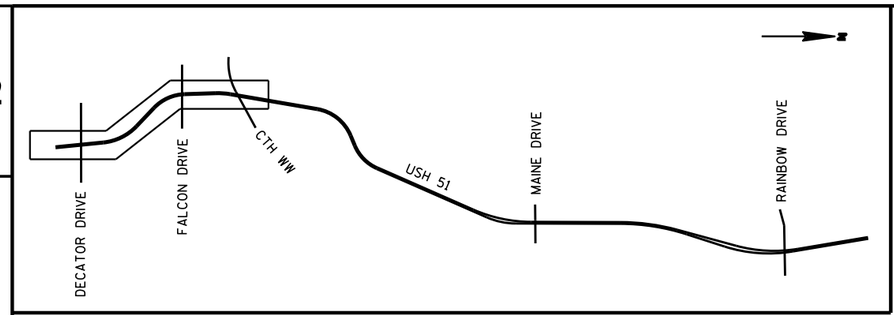

CONSTRUCTION STAGE 2B

STAGE 2B - CONSTRUCTION: PAINT FALCON DRIVE BRIDGE GIRDERS OVER USH 51 OUTSIDE LANES

STAGE 2B - TRAFFIC: TWO 10' LANES OF USH 51 TRAFFIC SHIFTED TO INSIDE LANES USING PAVED LEFT SHOULDER

NOTE

SHIFTED TRAFFIC LANES WILL BE 10' WIDE WITH AN ADVISORY SPEED OF 55 MPH.

MATCHLINE A

USH 51

140S
140N
130S
130N
120S
120N
110S
110N

DECATOR DRIVE

100

RIGHT LANE CLOSED

RIGHT LANE CLOSED

ALL LANES OPEN

MATCHLINE B

170

160S
160N

RIGHT LANE CLOSED

150S
150N

MATCHLINE A

RIGHT LANE CLOSED

ENTRANCE RAMP TO REMAIN OPEN DURING CONSTRUCTION

20W

CTH WW

30W

PAINT BRIDGE GIRDERS OVER OUTSIDE LANES OF USH 51

180S
180N
190S
190N
200S
200N
210S
210N
220S
220N
230S
230N
240S
240N

EXIT TO REMAIN OPEN DURING CONSTRUCTION

70S
70N

MATCHLINE B

RIGHT LANE CLOSED

EXIT TO REMAIN OPEN DURING CONSTRUCTION

20F

FALCON DRIVE

BOTH LANES OPEN

ENTRANCE RAMP TO REMAIN OPEN DURING CONSTRUCTION

USH 51

RIGHT LANE CLOSED

2

PROJECT NO: 1166-07-62	HWY: USH 51	COUNTY: MARATHON	TRAFFIC CONTROL OVERVIEW - STAGE 2B	SHEET 65	E

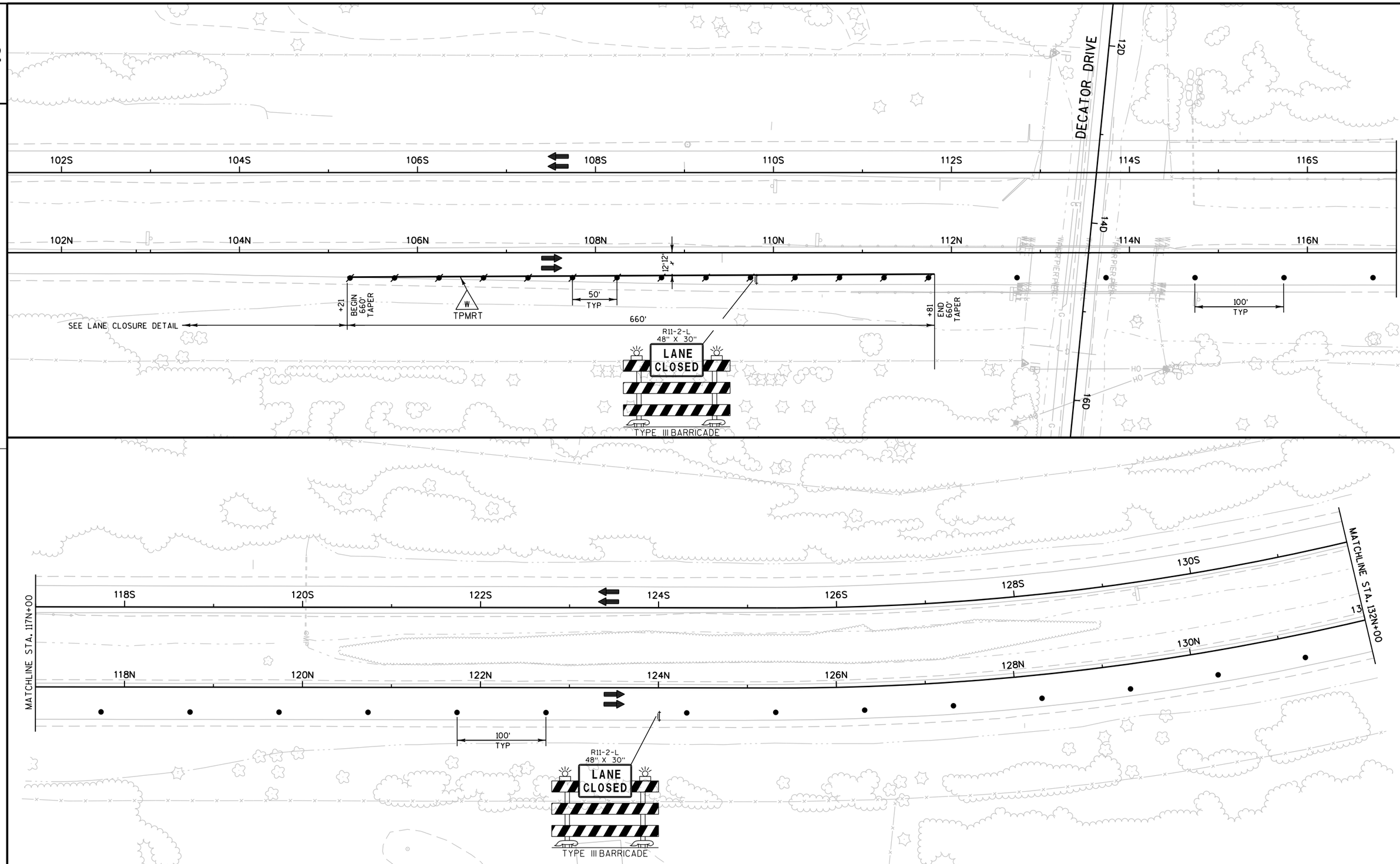

PROJECT NO: 1166-07-62	HWY: USH 51	COUNTY: MARATHON	TRAFFIC CONTROL - STAGE 2B	SCALE, FEET 0 100 200	SHEET 66	E

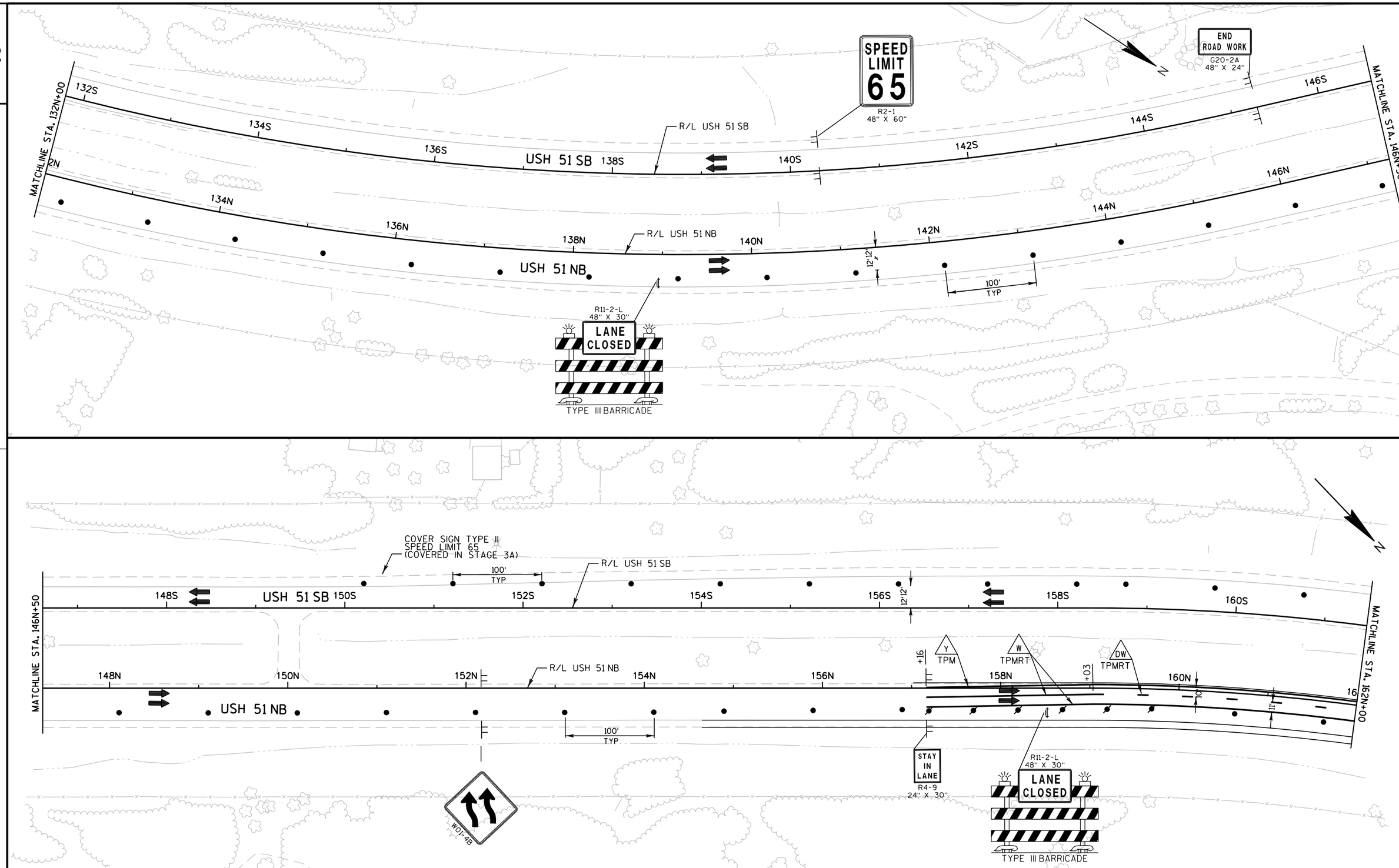

PROJECT NO: 1166-07-62	HWY: USH 51	COUNTY: MARATHON	TRAFFIC CONTROL - STAGE 2B	SCALE, FEET 0 100 200	SHEET 67	E

FILE NAME : F:\BM1-3212 USH 51 Marathon Co Structures\Roads\cds\1166-07-32\026209_S2b.dgn PLOT DATE : 30-JAN-2015 15:48 PLOT BY : cfranzen PLOT NAME : 026209_S2b PLOT SCALE : 100:1

WISDOT/CADDS SHEET 42

2

R11-2-L
48" X 30"
LANE CLOSED
TYPE III BARRICADE

R/L USH 51 SB

100' TYP

USH 51 SB

162S 164S 166S 168S 170S 172S 174S

MATCHLINE STA. 162N+00

Y TPM

W TPMRT

DW TPMRT

164N 166N 168N 170N 172N 174N

USH 51 NB

R/L USH 51 NB

R11-2-L
48" X 30"
LANE CLOSED
TYPE III BARRICADE

CC

W5-52R
18" X 52"

EXIT 197
WW
BROKAW

WORK ZONE

W01-4B

FALCON DR

MATCHLINE STA. 176N+00

N

W5-52R
18" X 52"

CC

100' TYP

R/L USH 51 SB

W TPMRT

16" X 16"
YIELD
R1-2
42" X 48"

50' TYP

USH 51 SB EXTRANCE RAMP

W TPM

178S 180S 182S 184S 186S 188S 190S

USH 51 SB

MATCHLINE STA. 176N+00

MATCHLINE STA. 191N+00

178N 180N 182N 184N 186N 188N 190N

USH 51 NB

USH 51 NB EXIT RAMP

R/L USH 51 NB

100' TYP

COVER SIGN

STAY IN LANE
R4-9
24" X 30"

EXIT
E5-1
60" X 48"

R11-2-L
48" X 30"
LANE CLOSED
TYPE III BARRICADE

W01-4B

PROJECT NO: 1166-07-62	HWY: USH 51	COUNTY: MARATHON	TRAFFIC CONTROL - STAGE 2B	SCALE, FEET 0 100 200	SHEET 68	E

2

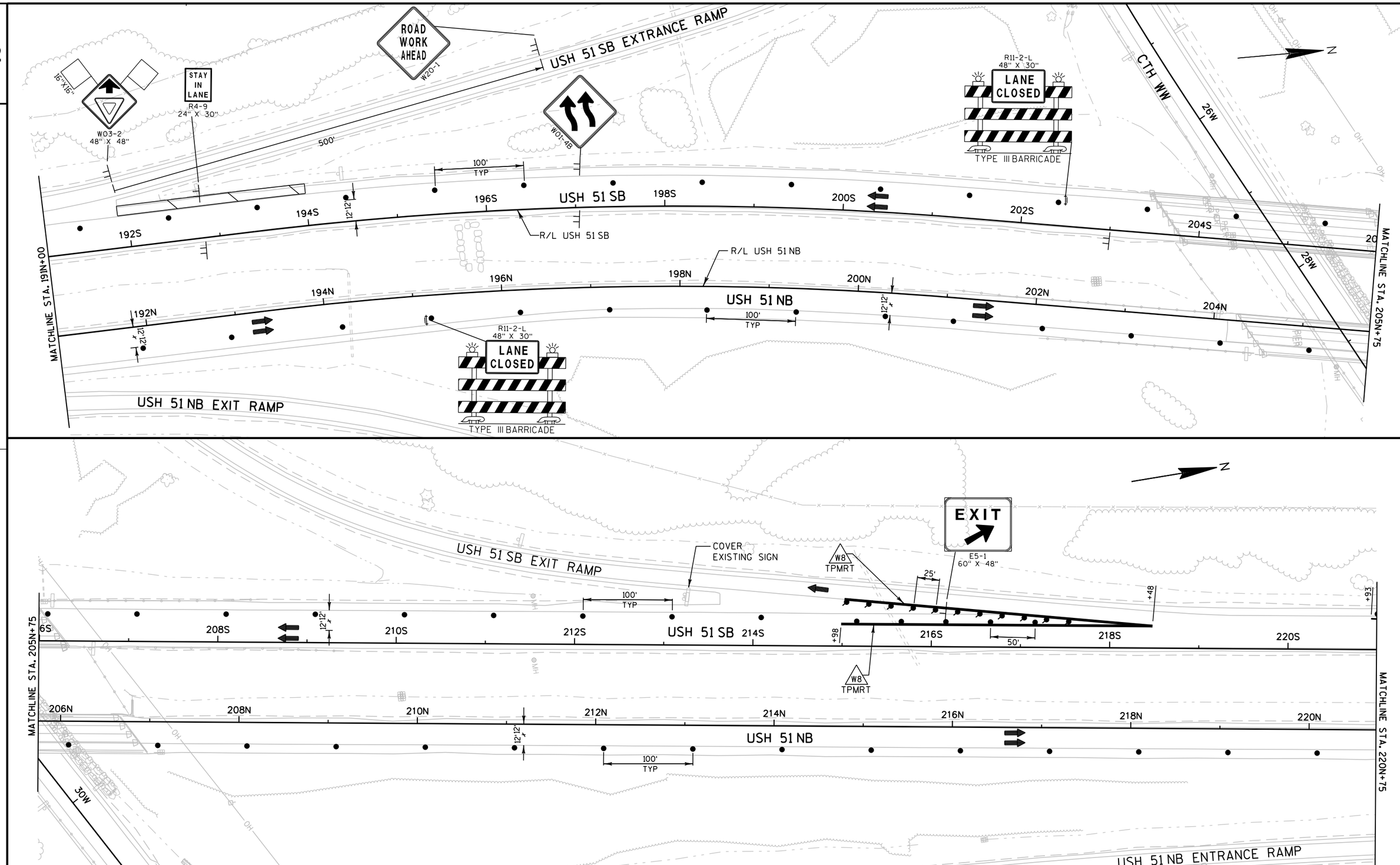

PROJECT NO: 1166-07-62	HWY: USH 51	COUNTY: MARATHON	TRAFFIC CONTROL - STAGE 2B	SCALE, FEET 0 100 200	SHEET 69	E

FILE NAME : F:\BM1-3212 USH 51 Marathon Co Structures\Roads\cds\1166-07-32\026211_S2b.dgn PLOT DATE : 30-JAN-2015 15:48 PLOT BY : cfranzen PLOT NAME : 026211_S2b PLOT SCALE : 100:1

WISDOT/CADDS SHEET 42

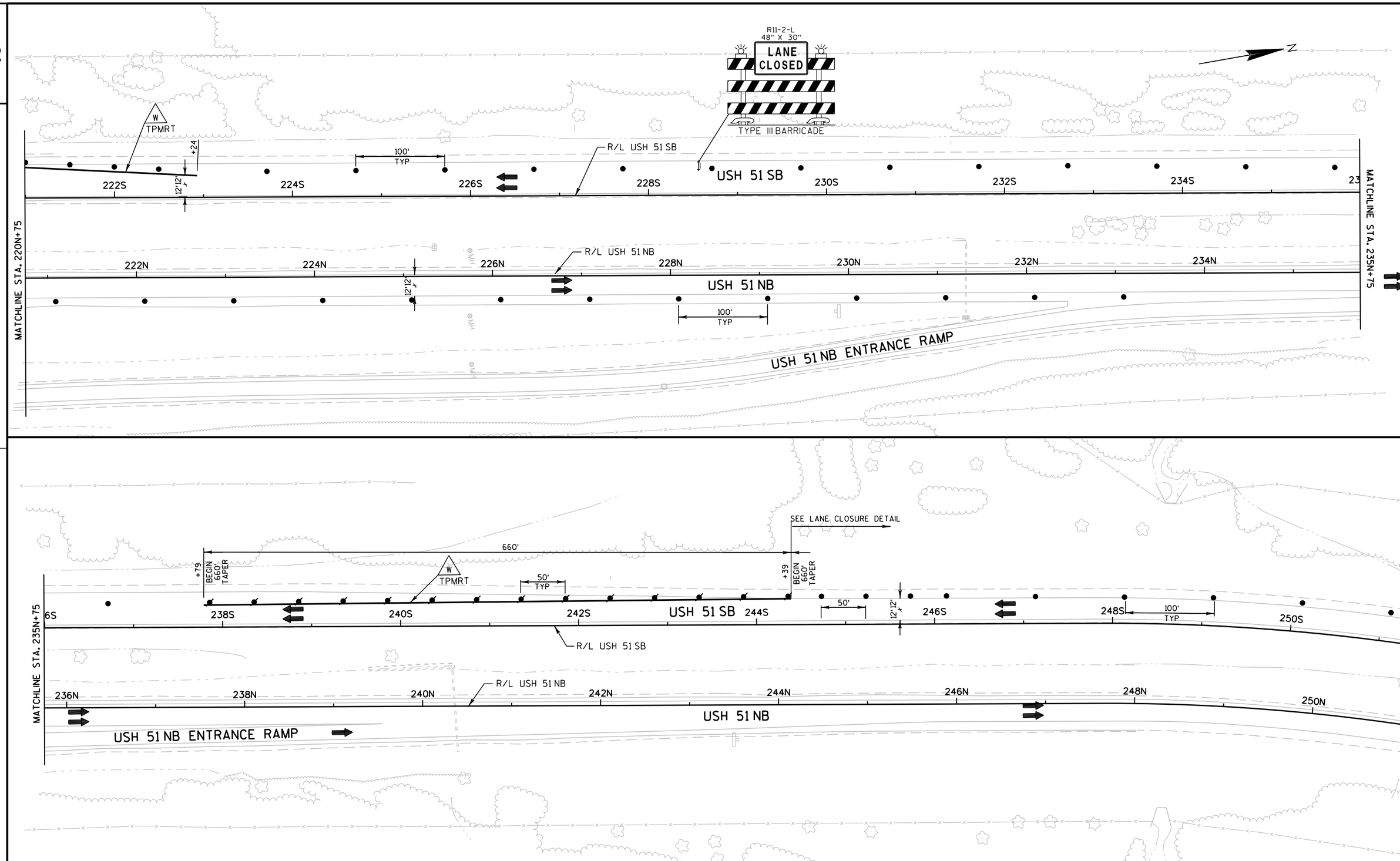

PROJECT NO: 1166-07-62	HWY: USH 51	COUNTY: MARATHON	TRAFFIC CONTROL - STAGE 2B	SCALE, FEET 0 100 200	SHEET 70	E

FILE NAME : F:\BM1-3212 USH 51 Marathon Co Structures\Roads\cds\1166-07-32\026212_S2b.dgn PLOT DATE : 30-JAN-2015 15:48 PLOT BY : cfranzen PLOT NAME : 026212_S2b PLOT SCALE : 100:1

WISDOT/CADDS SHEET 42

2

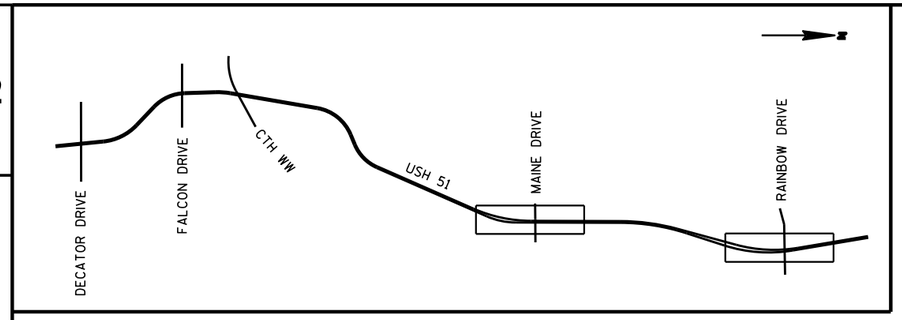

CONSTRUCTION STAGE 3A

STAGE 3A - CONSTRUCTION: CONCRETE OVERLAY ON BRIDGE IN LEFT LANE AND LEFT SHOULDER, ASPHALT BUTT JOINT PLACED ON BRIDGE APPROACHES IN LEFT LANE AND LEFT SHOULDER

STAGE 3A - TRAFFIC: LEFT LANE CLOSED

2

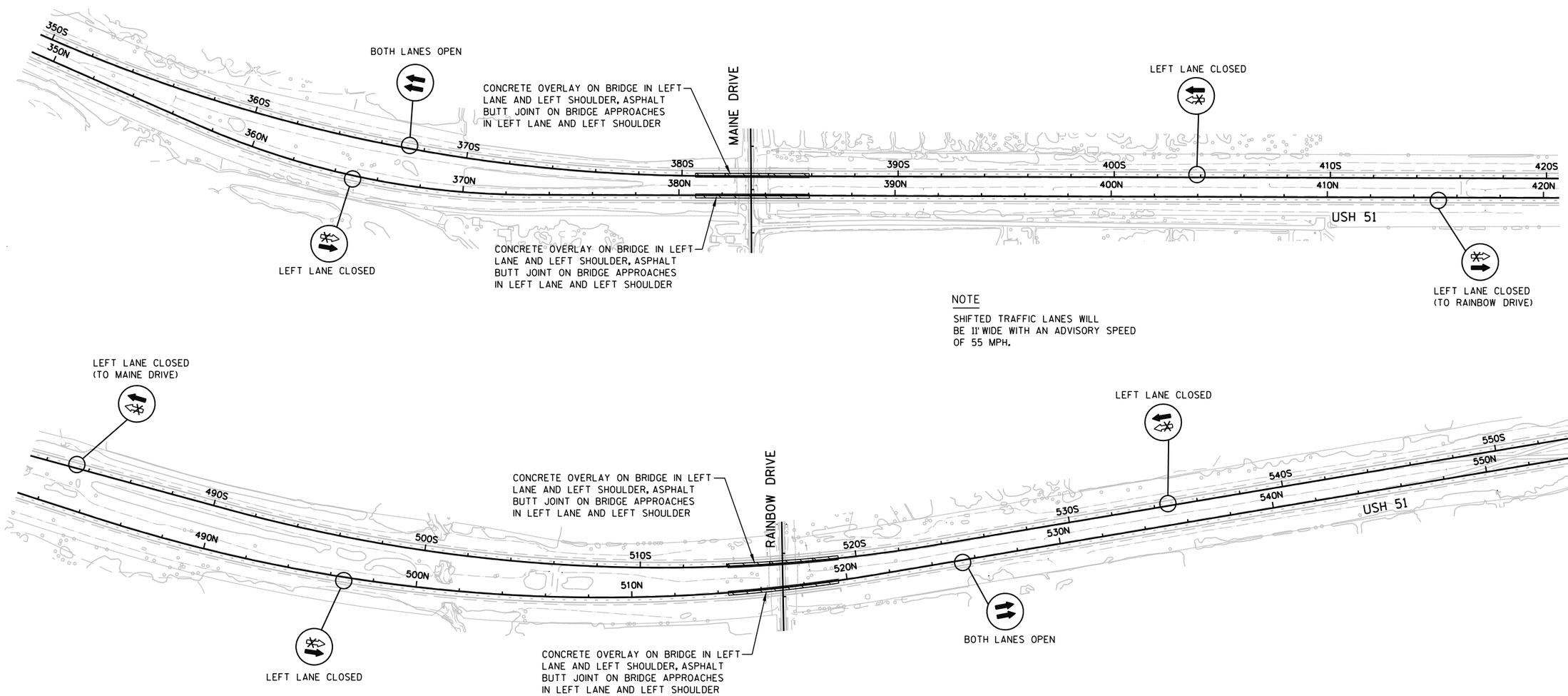

NOTE

SHIFTED TRAFFIC LANES WILL BE 11' WIDE WITH AN ADVISORY SPEED OF 55 MPH.

PROJECT NO: 1166-07-62	HWY: USH 51	COUNTY: MARATHON	TRAFFIC CONTROL OVERVIEW - STAGE 3A	SHEET 71	E

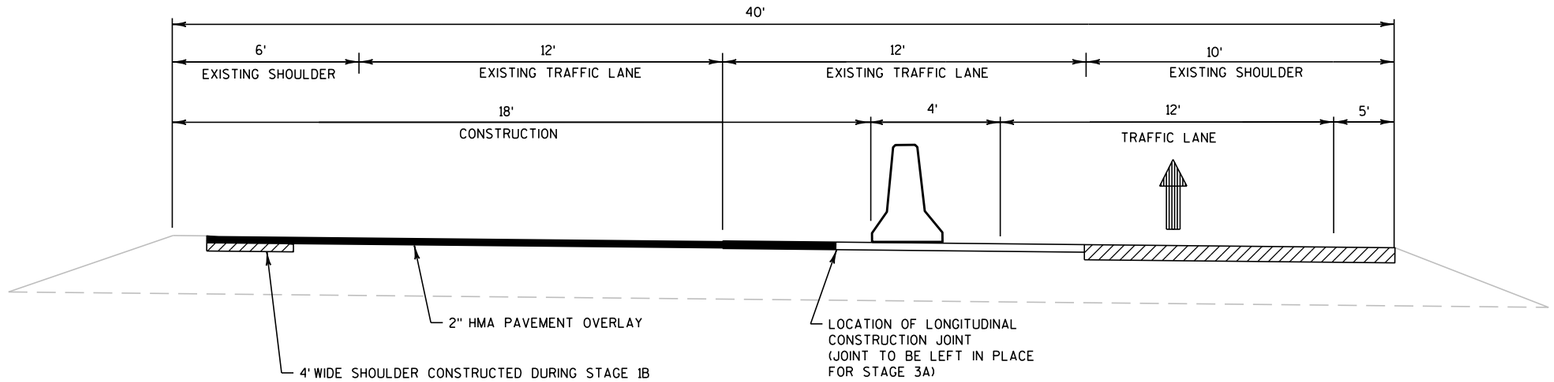

STAGE 3A TRAFFIC CONTROL

TRAFFIC CONTROL NOTES

1. TRAFFIC SHALL NOT BE SHIFTED TO THE SHOULDER UNTIL AFTER THE SHOULDER ASPHALT HAS BEEN REPLACED.
2. AT NO TIME DURING CONSTRUCTION CAN THERE BE BOTH A LEFT LANE CLOSURE AND A RIGHT LANE CLOSURE SIMULTANEOUSLY IN THE SAME DIRECTION OF TRAVEL.

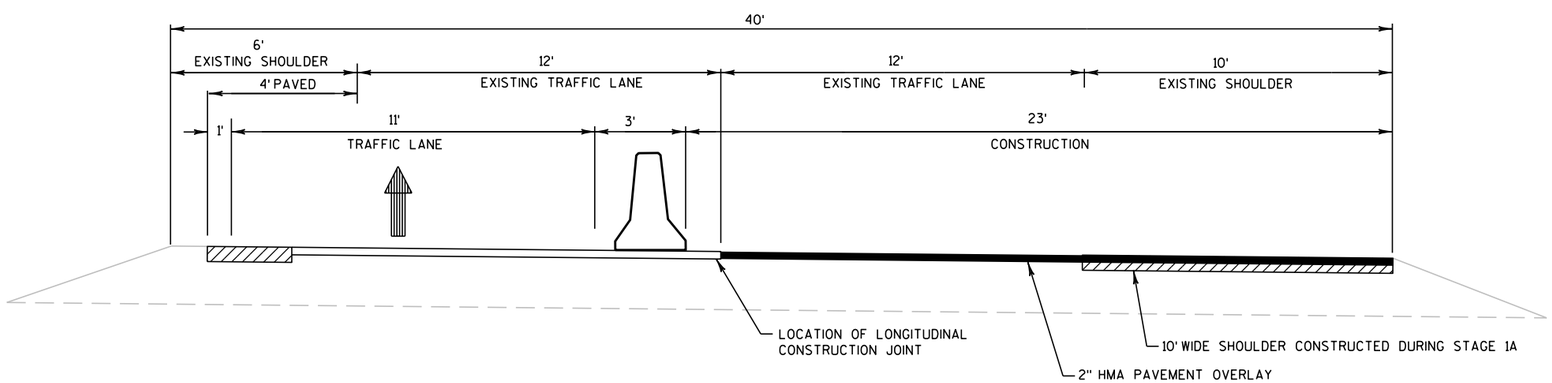

STAGE 3B TRAFFIC CONTROL

PROJECT NO:1166-07-62	HWY:USH 51	COUNTY:MARATHON	TRAFFIC CONTROL DETAILS	SHEET 72	E

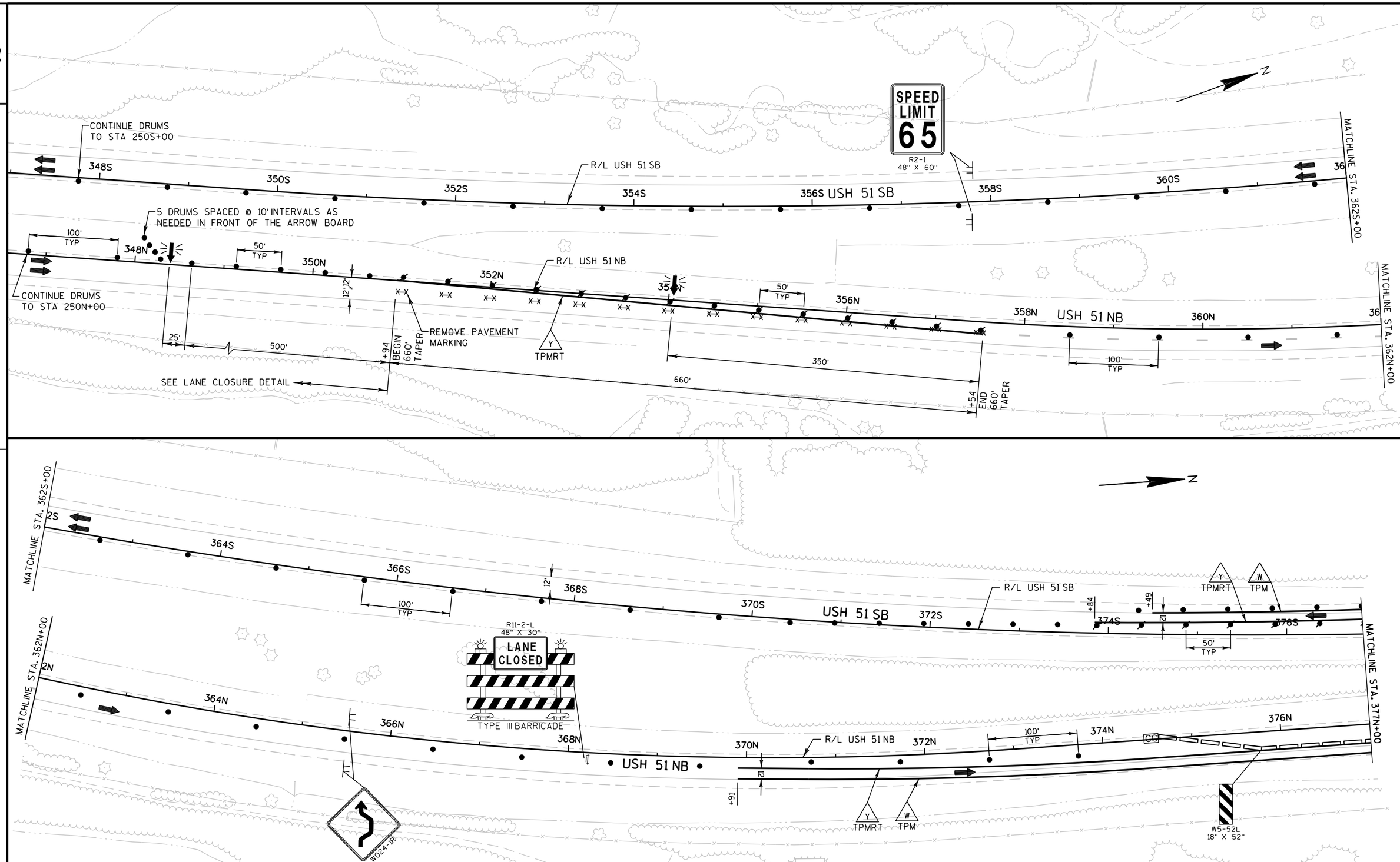

PROJECT NO: 1166-07-62	HWY: USH 51	COUNTY: MARATHON	TRAFFIC CONTROL - STAGE 3A	SCALE, FEET 0 100 200	SHEET 73	E

FILE NAME : F:\BM1-3212 USH 51 Marathon Co Structures\Roads\cds\1166-07-32\026302_S3a.dgn PLOT DATE : 30-JAN-2015 15:48 PLOT BY : cfranzen PLOT NAME : 026302_S3a PLOT SCALE : 100:1

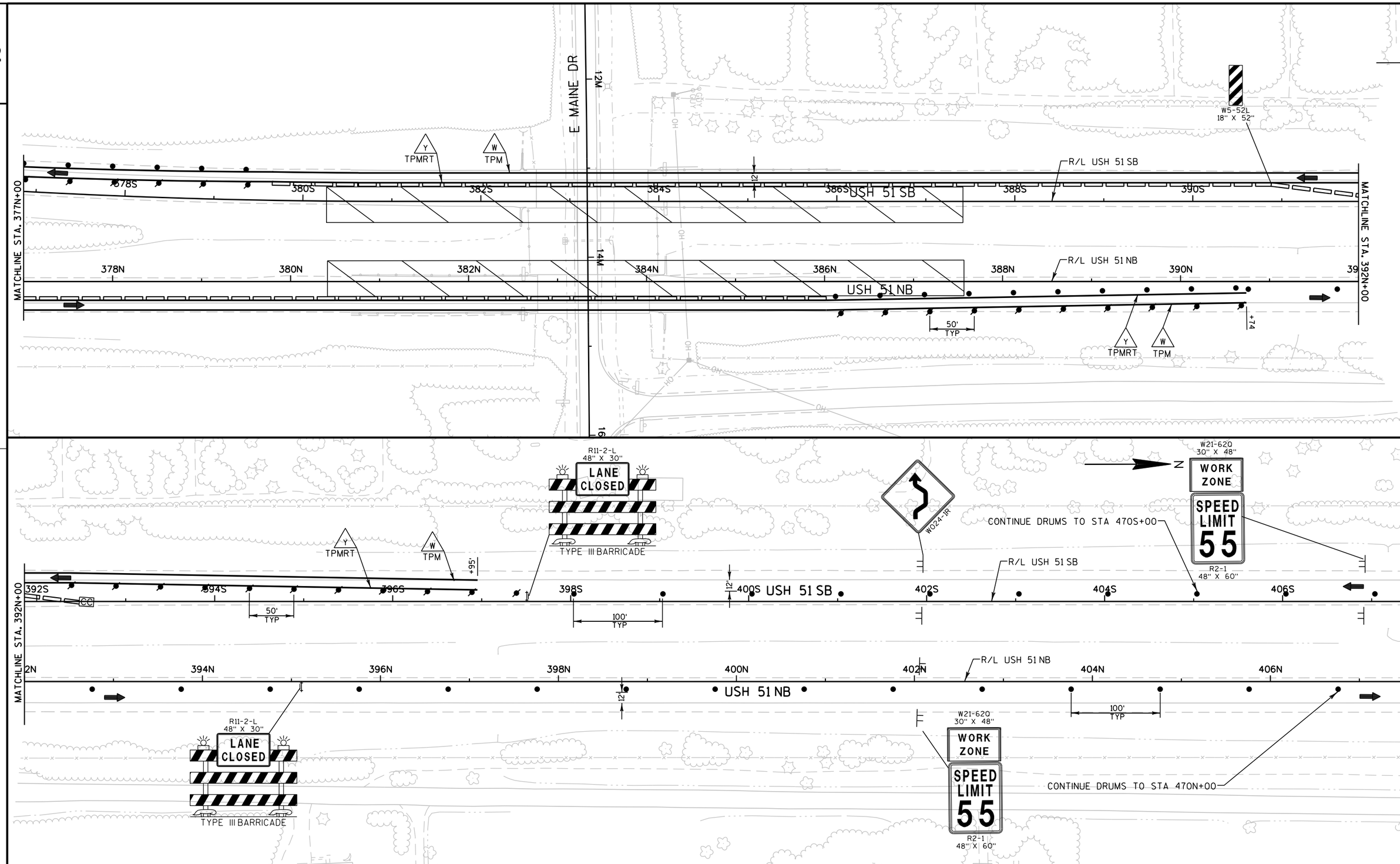

PROJECT NO: 1166-07-62	HWY: USH 51	COUNTY: MARATHON	TRAFFIC CONTROL - STAGE 3A	SCALE, FEET 0 100 200	SHEET 74	E

FILE NAME : F:\BM1-3212 USH 51 Marathon Co Structures\Roads\cds\1166-07-32\026303_S3a.dgn PLOT DATE : 30-JAN-2015 15:48 PLOT BY : cfranzen PLOT NAME : 026303_S3a PLOT SCALE : 100:1

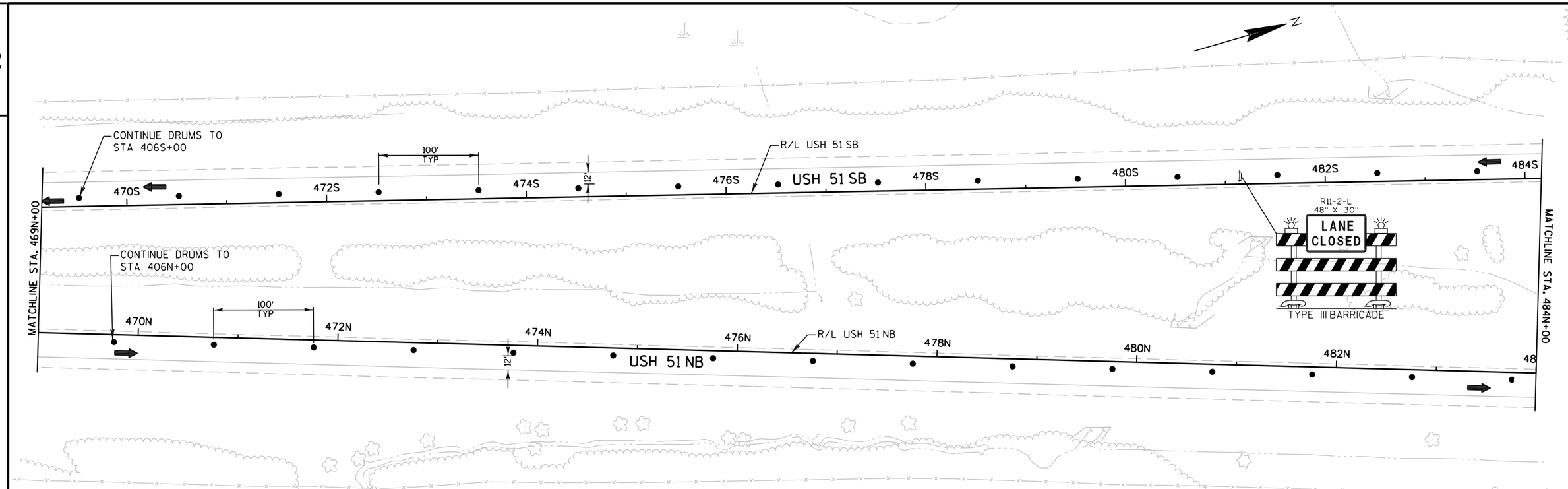

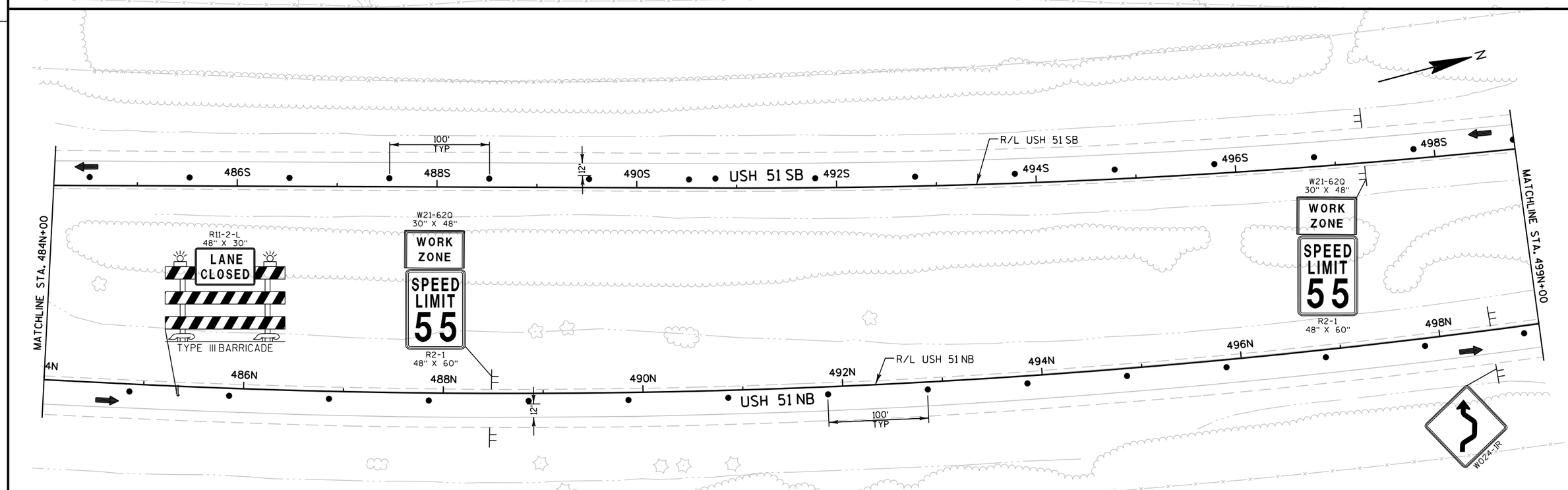

PROJECT NO: 1166-07-62	HWY: USH 51	COUNTY: MARATHON	TRAFFIC CONTROL - STAGE 3A	SCALE, FEET 0 100 200	SHEET 75	E

2

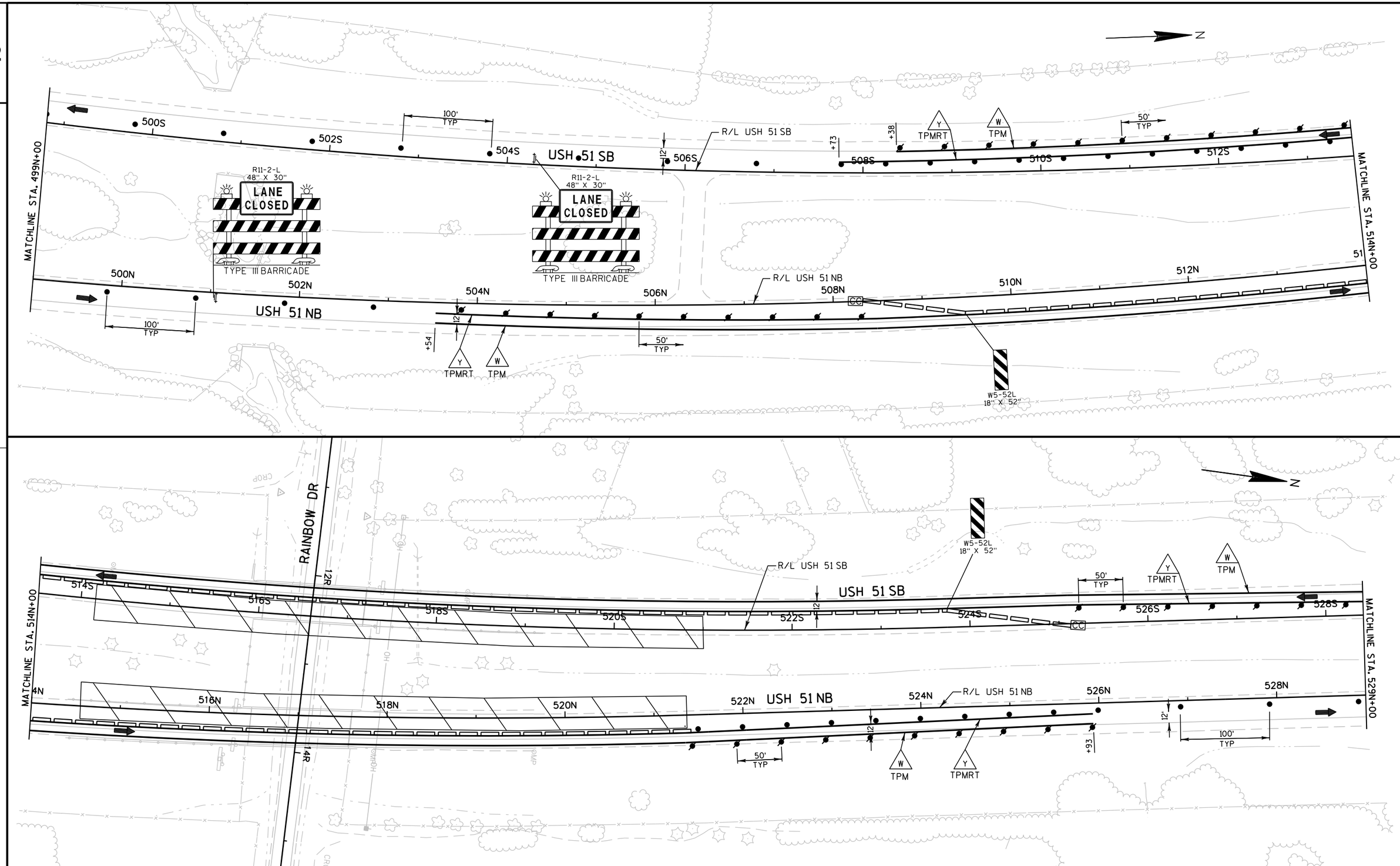

PROJECT NO: 1166-07-62	HWY: USH 51	COUNTY: MARATHON	TRAFFIC CONTROL - STAGE 3A	SCALE, FEET 0 100 200	SHEET 76	E

FILE NAME : F:\BM1-3212 USH 51 Marathon Co Structures\Roads\cds\1166-07-32\026305_S3a.dgn PLOT DATE : 30-JAN-2015 15:48 PLOT BY : cfranzen PLOT NAME : 026305_S3a PLOT SCALE : 100:1

WISDOT/CADDS SHEET 42

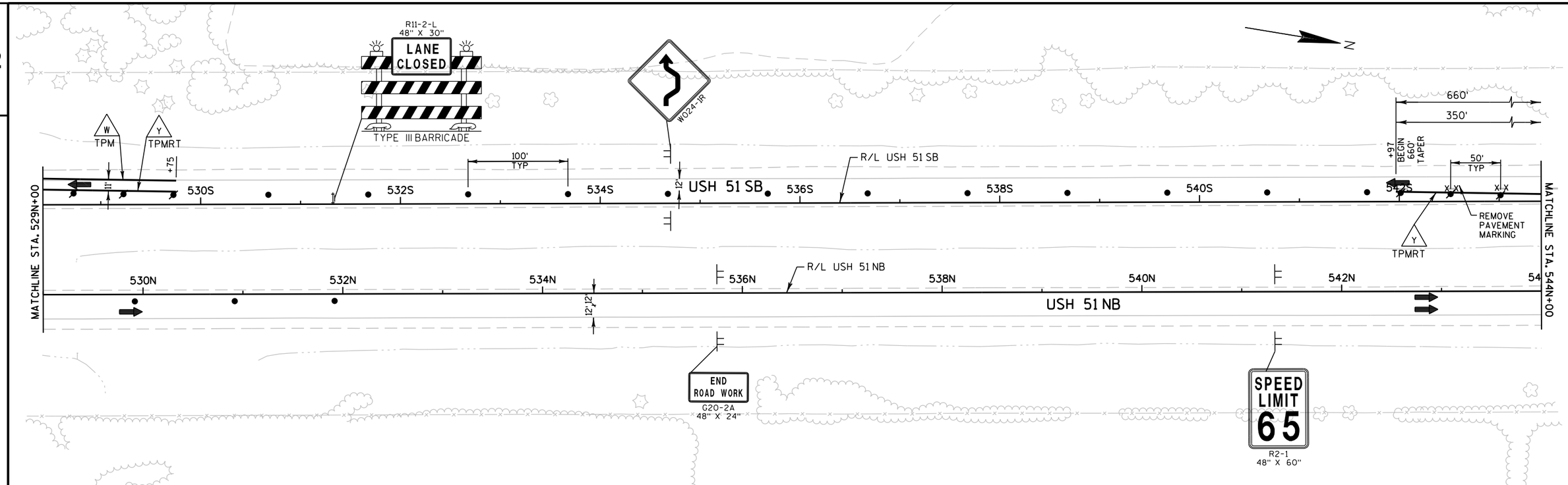

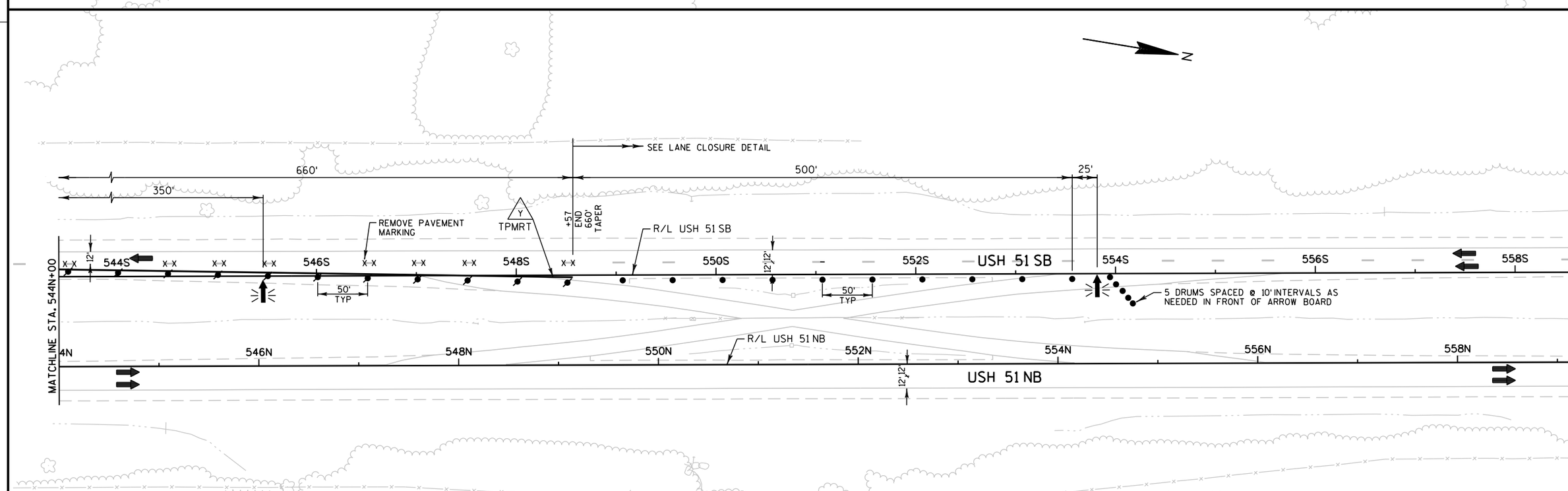

PROJECT NO: 1166-07-62	HWY: USH 51	COUNTY: MARATHON	TRAFFIC CONTROL - STAGE 3A	SCALE, FEET 0 100 200	SHEET 77	E

2

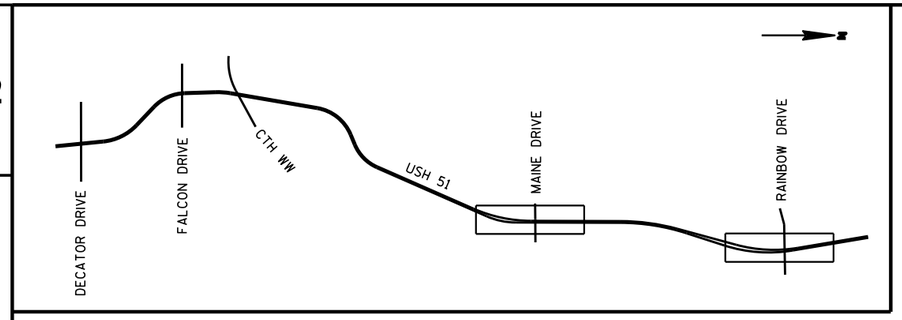

CONSTRUCTION STAGE 3B

STAGE 3B - CONSTRUCTION: CONCRETE OVERLAY ON BRIDGE IN RIGHT LANE AND RIGHT SHOULDER, ASPHALT BUTT JOINT PLACED ON BRIDGE APPROACHES IN RIGHT LANE AND RIGHT SHOULDER. PLACE RUMBLE STRIPS AND PAVEMENT MARKING IN RIGHT SHOULDER.

STAGE 3B - TRAFFIC: RIGHT LANE CLOSED

N

2

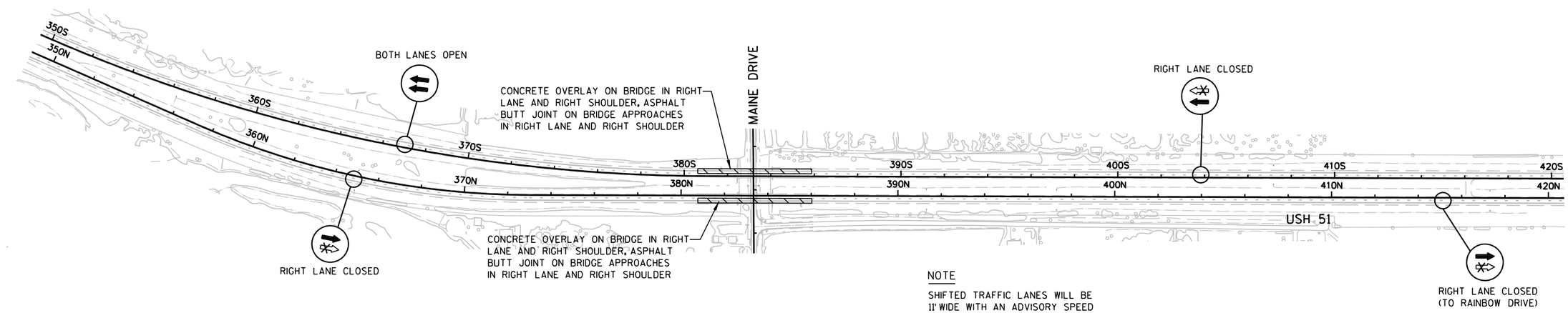

NOTE

SHIFTED TRAFFIC LANES WILL BE 11' WIDE WITH AN ADVISORY SPEED OF 55 MPH.

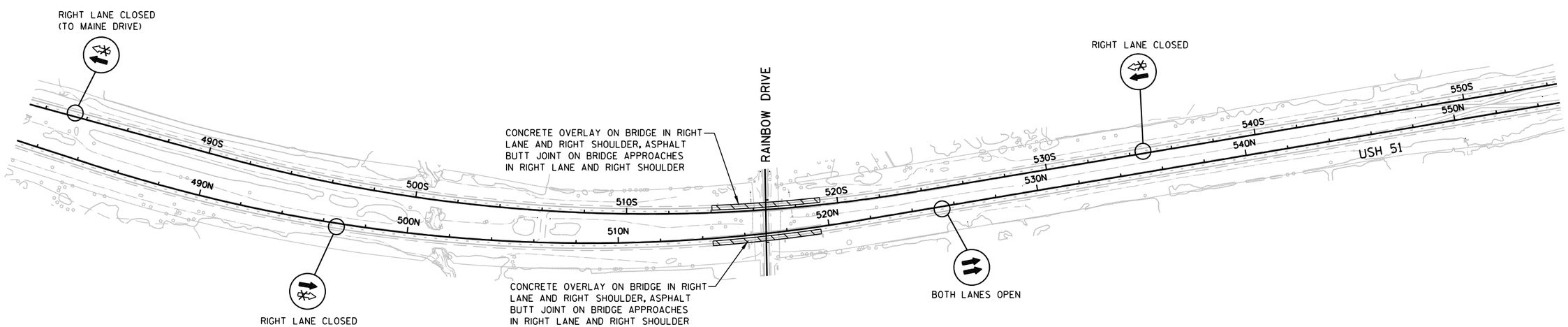

PROJECT NO: 1166-07-62	HWY: USH 51	COUNTY: MARATHON	TRAFFIC CONTROL OVERVIEW - STAGE 3B	SHEET 78	E

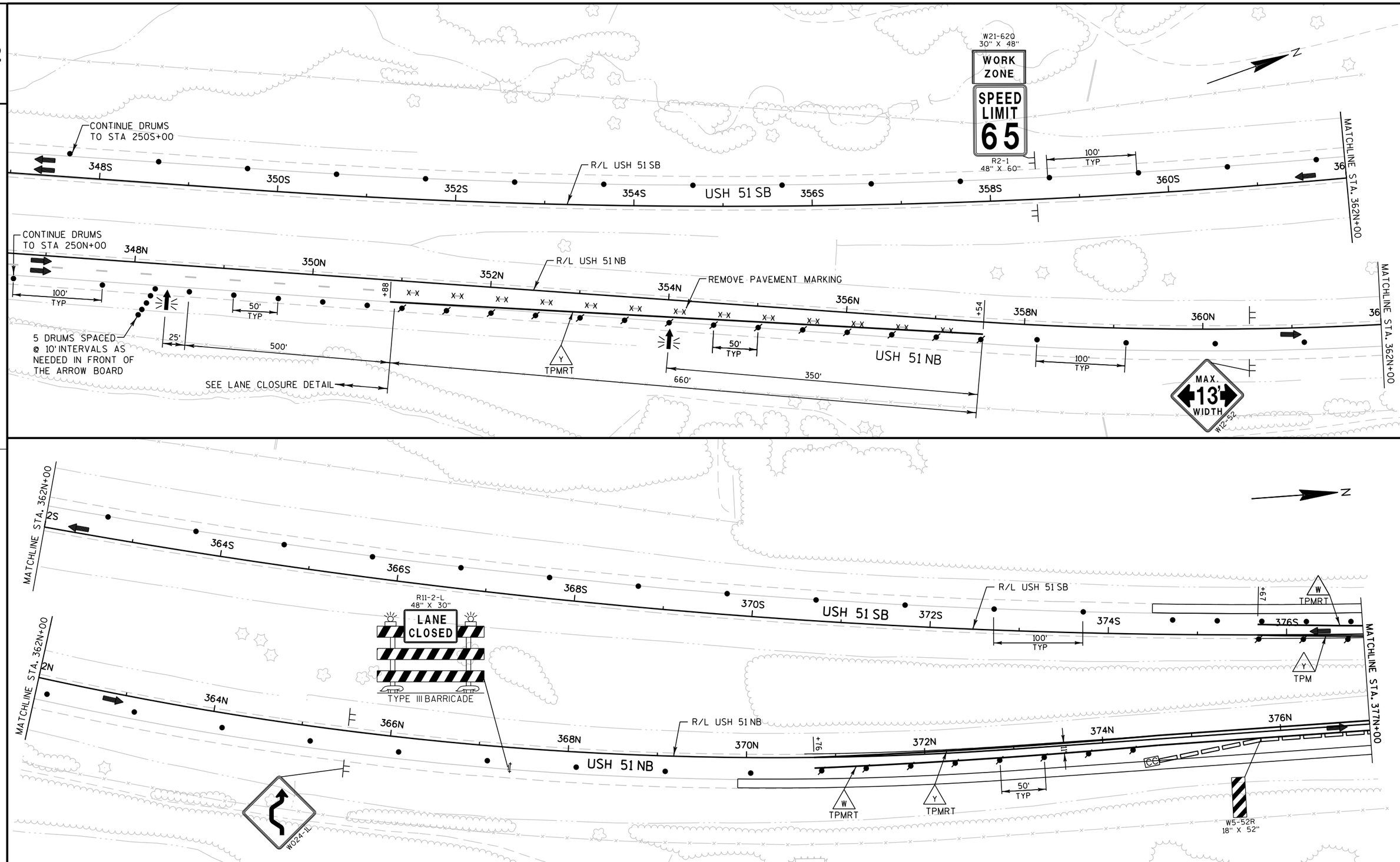

PROJECT NO: 1166-07-62	HWY: USH 51	COUNTY: MARATHON	TRAFFIC CONTROL - STAGE 3B	SCALE, FEET 0 100 200	SHEET 79	E

FILE NAME : F:\BM1-3212 USH 51 Marathon Co Structures\Roads\cds\1166-07-32\026308_S3b.dgn PLOT DATE : 30-JAN-2015 15:48 PLOT BY : cfranzen PLOT NAME : 026308_S3b PLOT SCALE : 100:1

WISDOT/CADDS SHEET 42

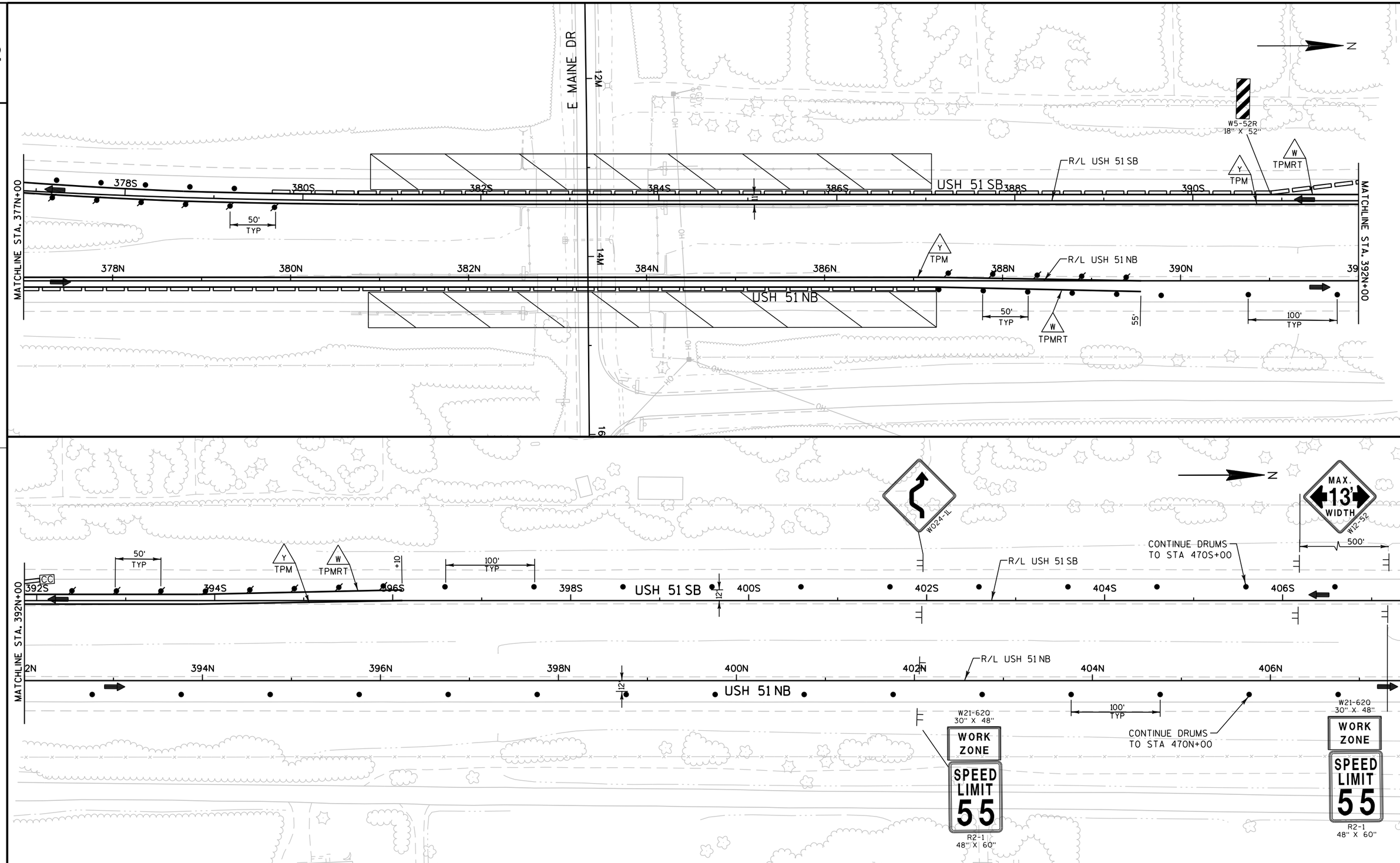

PROJECT NO: 1166-07-62	HWY: USH 51	COUNTY: MARATHON	TRAFFIC CONTROL - STAGE 3B	SCALE, FEET 0 100 200	SHEET 80	E

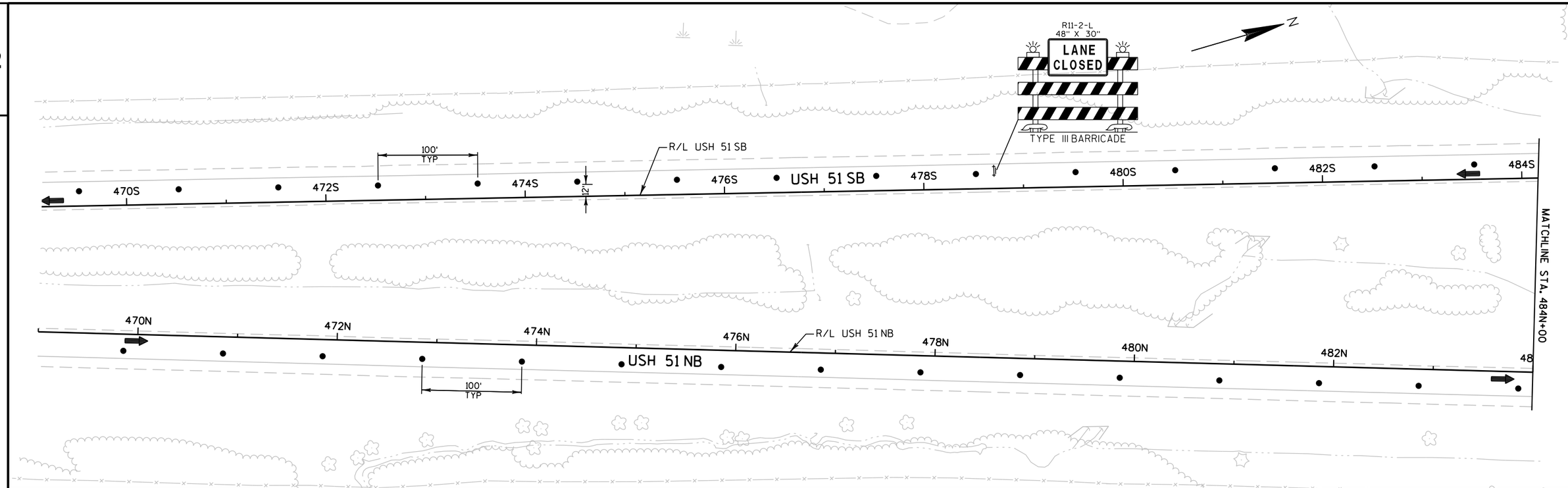

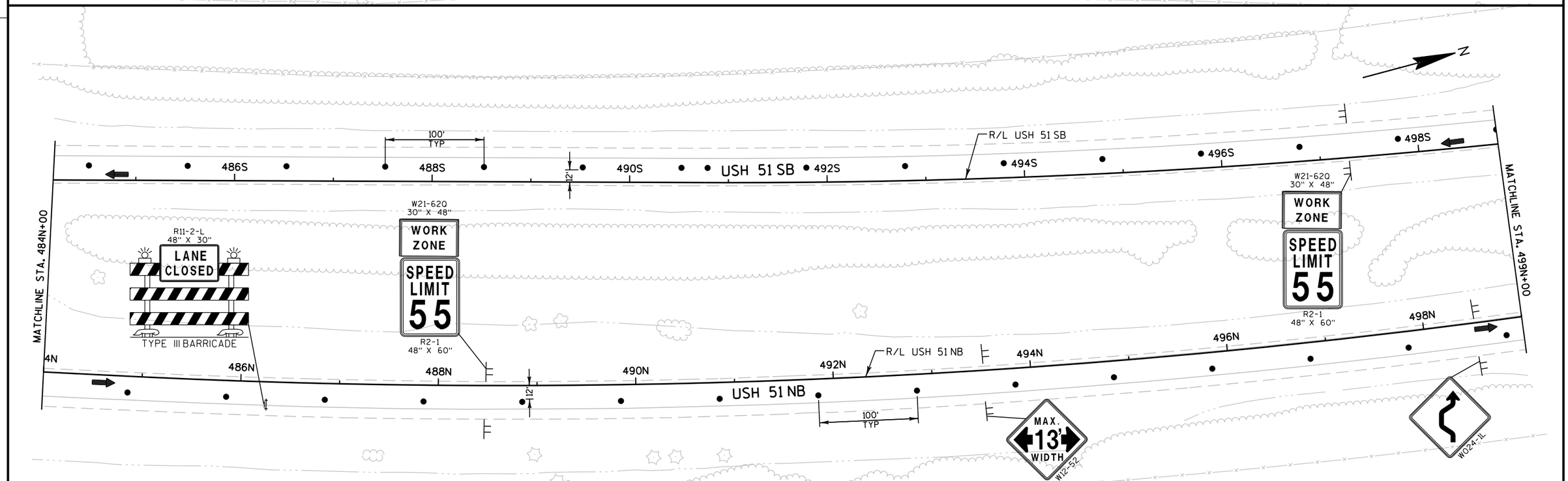

PROJECT NO: 1166-07-62	HWY: USH 51	COUNTY: MARATHON	TRAFFIC CONTROL - STAGE 3B	SCALE, FEET 0 100 200	SHEET 81	E

PROJECT NO: 1166-07-62	HWY: USH 51	COUNTY: MARATHON	TRAFFIC CONTROL - STAGE 3B	SCALE, FEET 0 100 200	SHEET 82	E

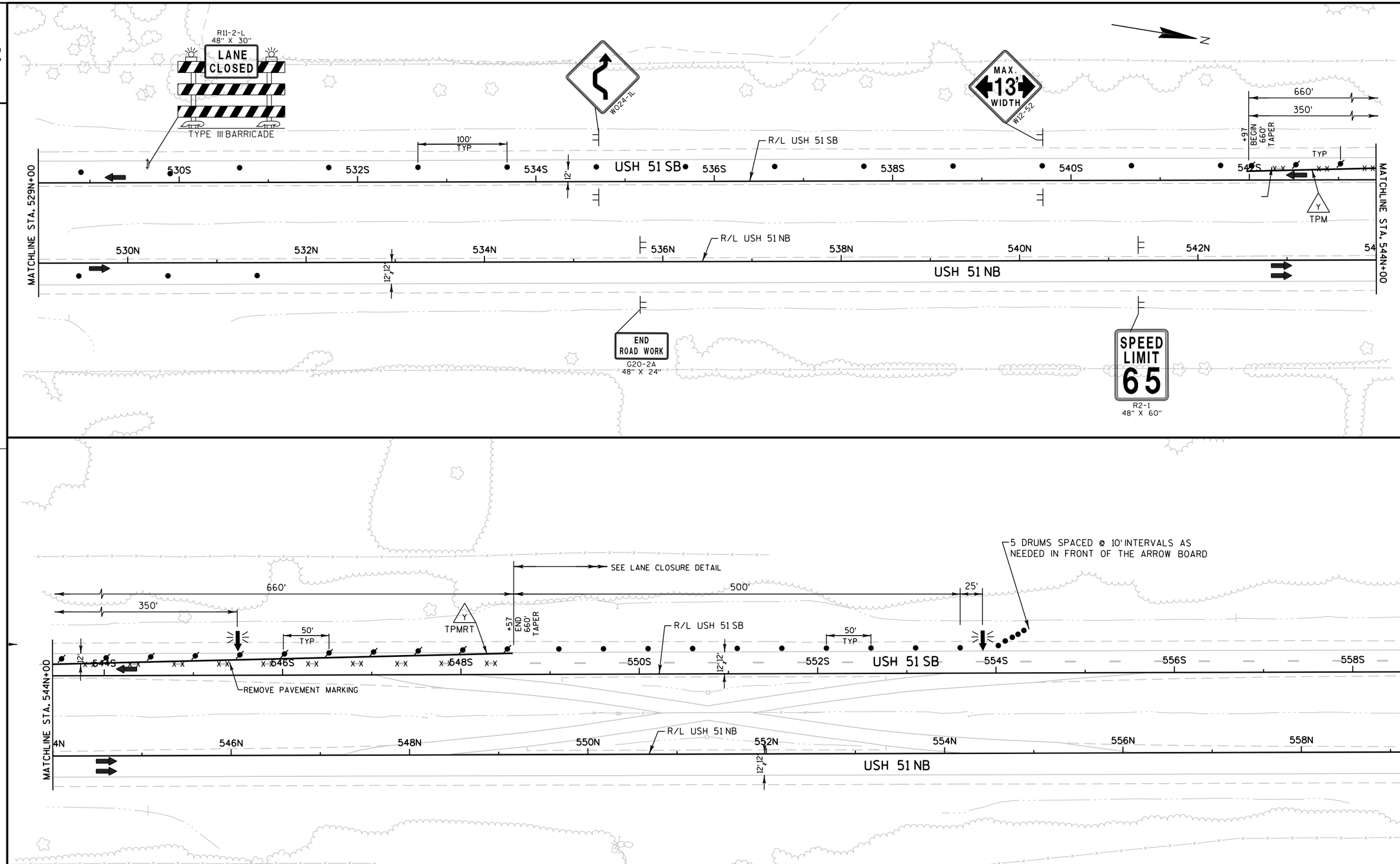

PROJECT NO: 1166-07-62	HWY: USH 51	COUNTY: MARATHON	TRAFFIC CONTROL - STAGE 3B	SCALE, FEET 0 100 200	SHEET 83	E

2

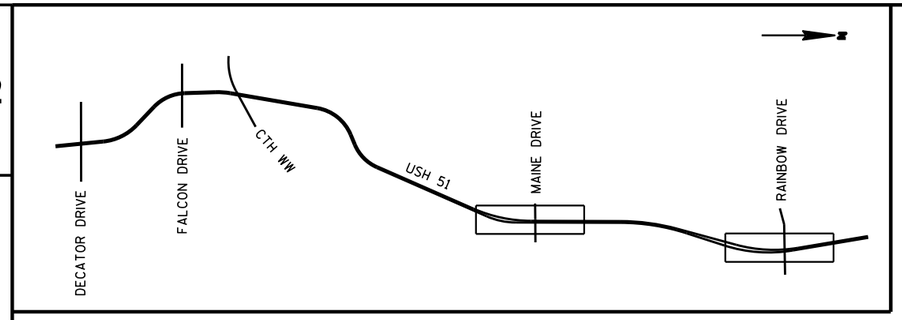

CONSTRUCTION STAGE 3C

STAGE 3C - CONSTRUCTION: PLACE RUMBLE STRIPS AND PAVEMENT MARKING IN LEFT SHOULDER.
CONCRETE SURFACE REPAIR ON FASCIAS.

STAGE 3C - TRAFFIC: LEFT LANE CLOSED (CONCRETE SURFACE REPAIR OF THE FASCIAS TO BE PERFORMED UNDER FLAGGING OPERATIONS, SEE WISDOT S.D.D.)

2

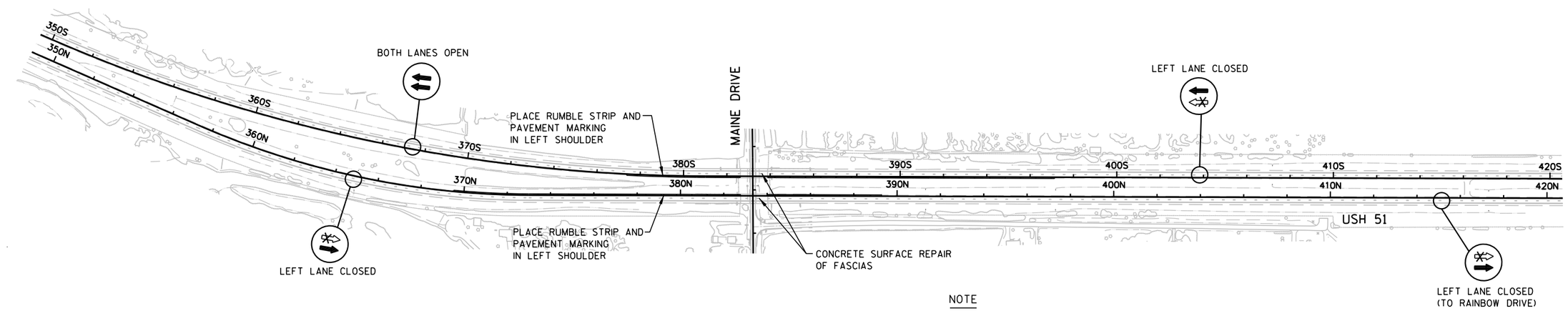

NOTE

SHIFTED TRAFFIC LANES WILL BE 11' WIDE WITH AN ADVISORY SPEED OF 55 MPH.

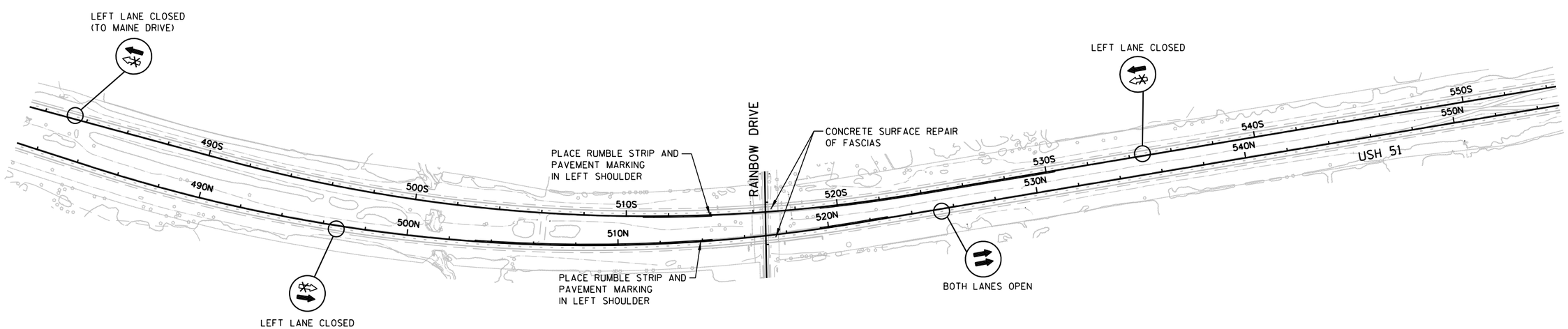

PROJECT NO:1166-07-62	HWY:USH 51	COUNTY:MARATHON	TRAFFIC CONTROL OVERVIEW - STAGE 3C	SHEET 84	E

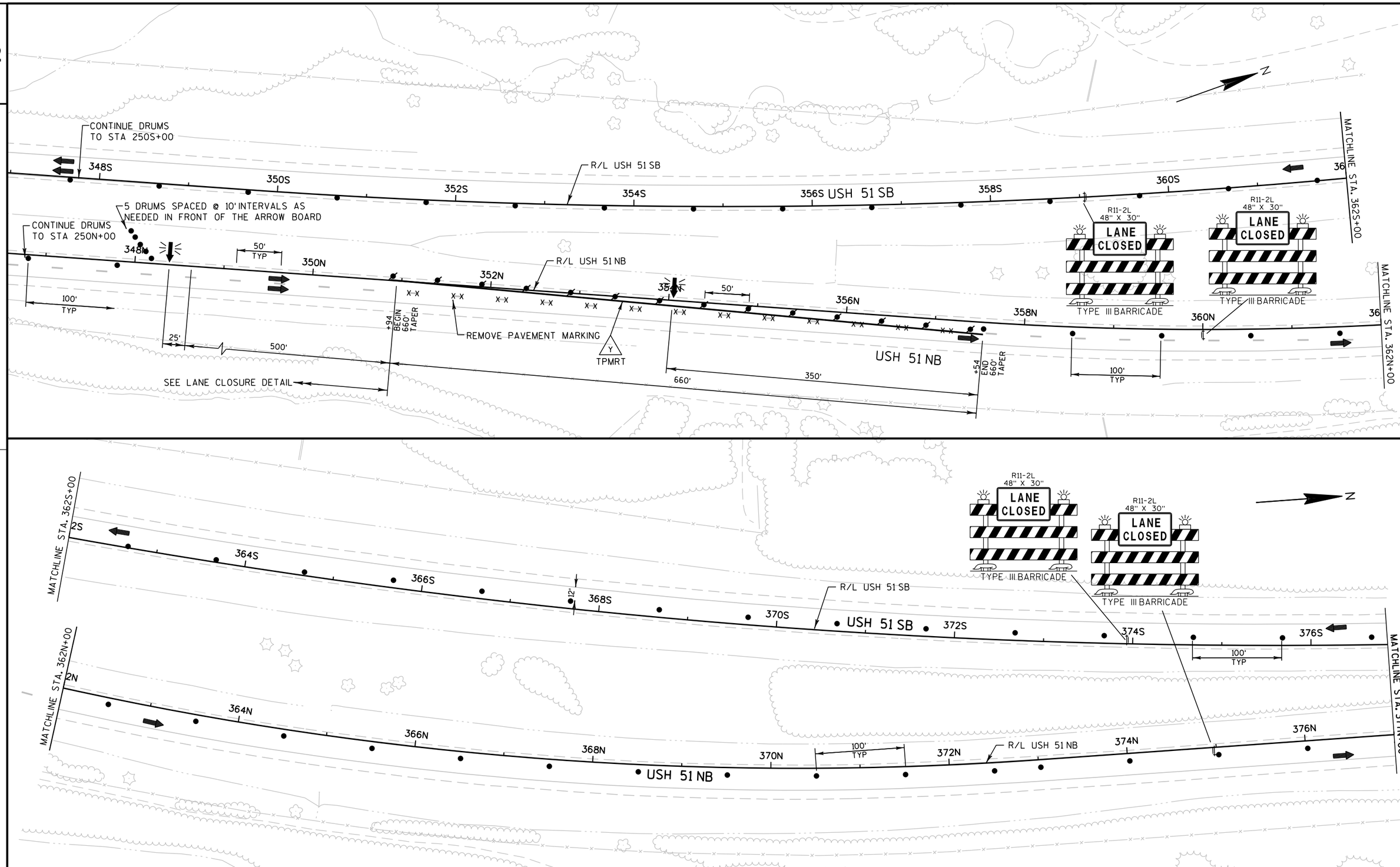

PROJECT NO: 1166-07-62	HWY: USH 51	COUNTY: MARATHON	TRAFFIC CONTROL - STAGE 3C	SCALE, FEET 0 100 200	SHEET 85	E

FILE NAME : F:\BM1-3212 USH 51 Marathon Co Structures\Roads\cds\1166-07-32\026314_S3c.dgn PLOT DATE : 30-JAN-2015 15:49 PLOT BY : cfranzen PLOT NAME : 026314_S3c PLOT SCALE : 100:1

WISDOT/CADDS SHEET 42

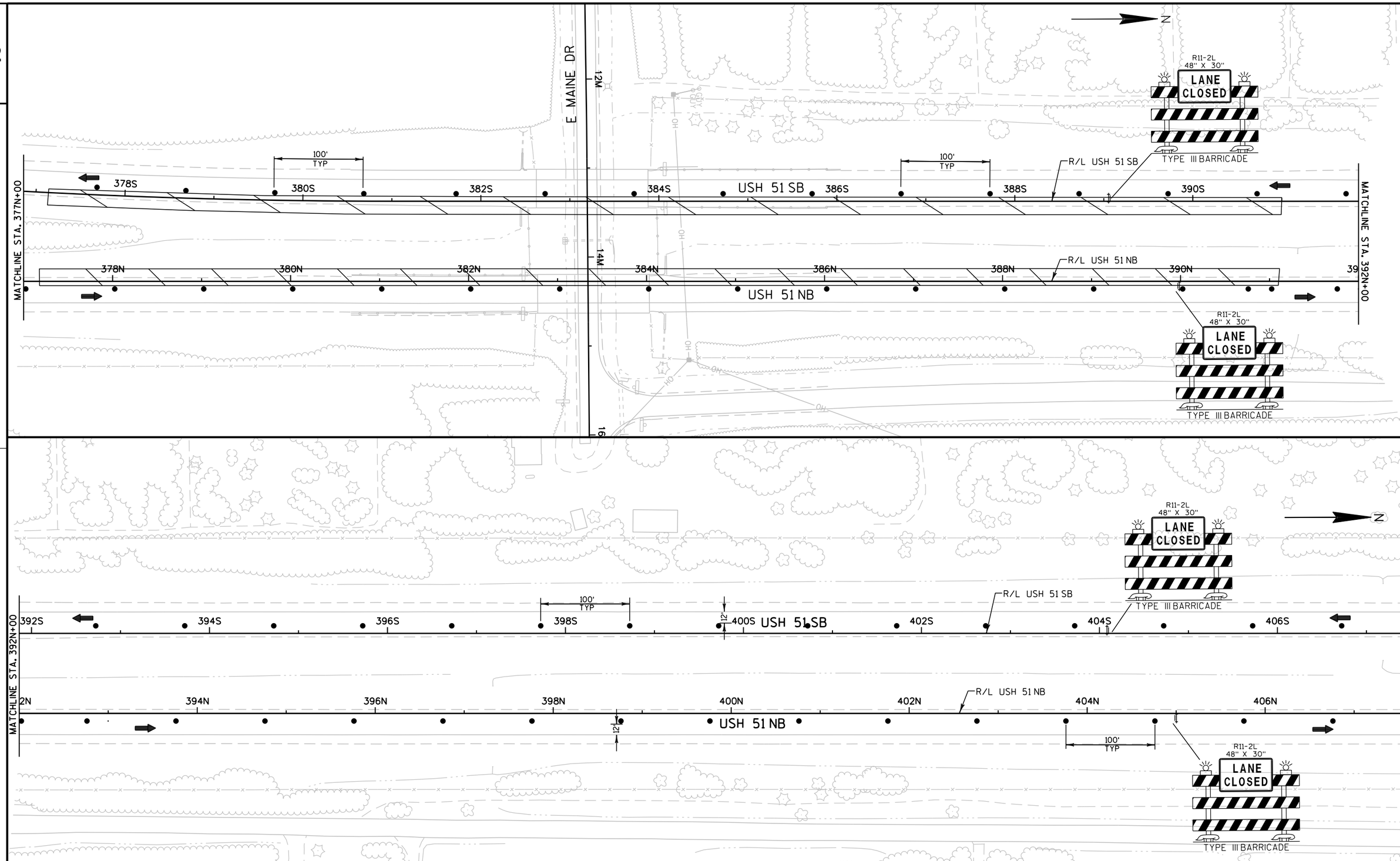

PROJECT NO: 1166-07-62	HWY: USH 51	COUNTY: MARATHON	TRAFFIC CONTROL - STAGE 3C	SCALE, FEET 0 100 200	SHEET 86	E

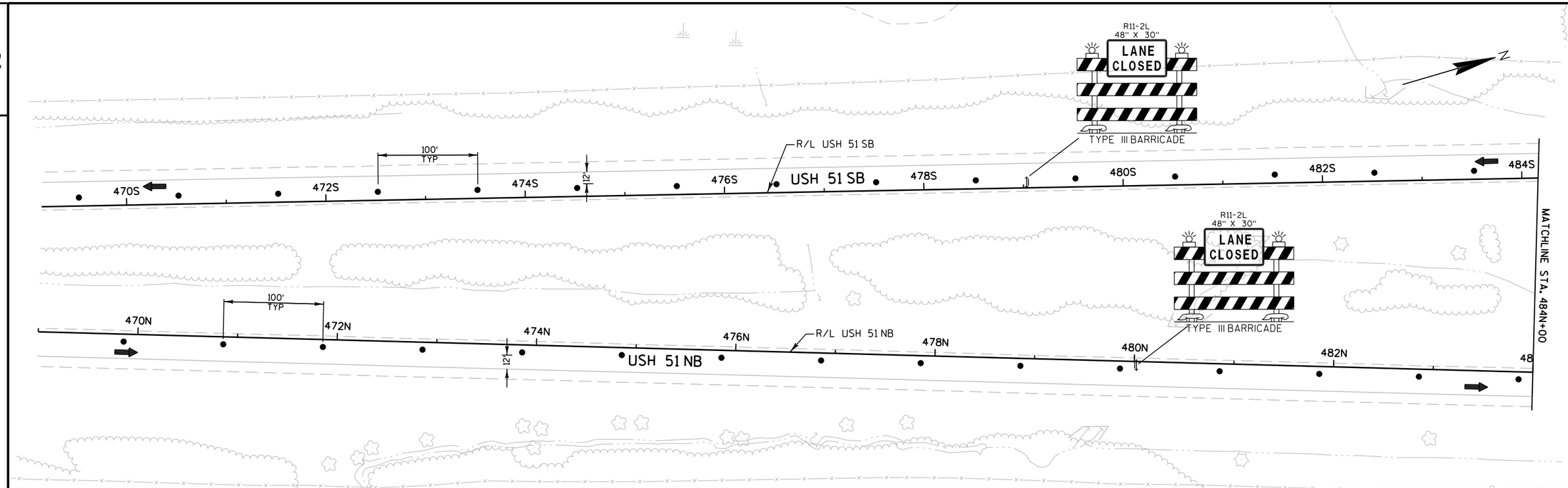

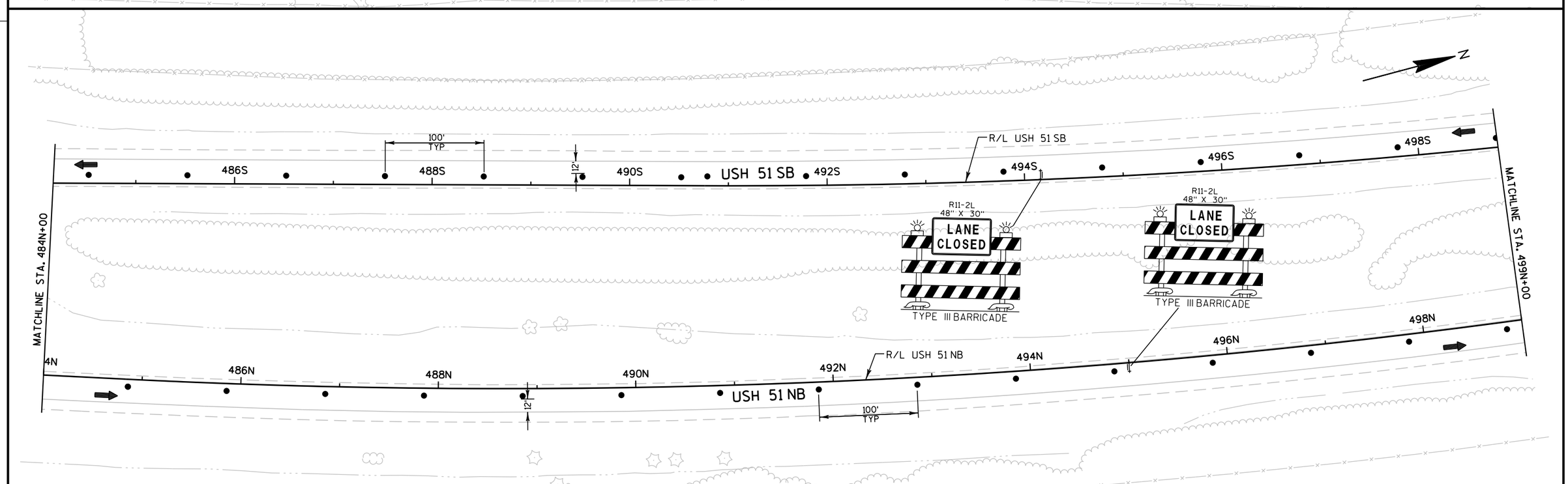

PROJECT NO: 1166-07-62	HWY: USH 51	COUNTY: MARATHON	TRAFFIC CONTROL - STAGE 3C	SCALE, FEET 0 100 200	SHEET 87	E

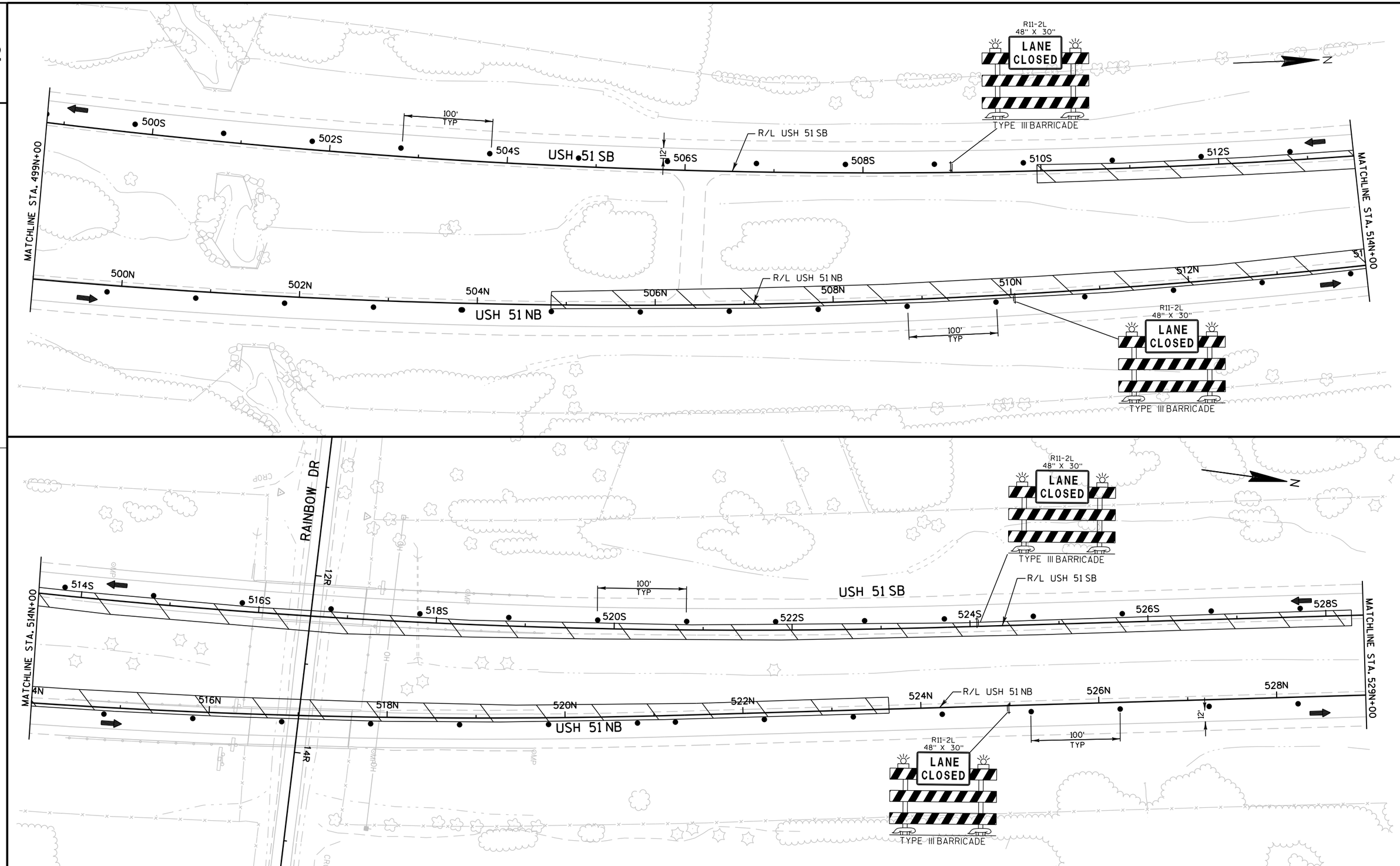

PROJECT NO: 1166-07-62	HWY: USH 51	COUNTY: MARATHON	TRAFFIC CONTROL - STAGE 3C	SCALE, FEET 0 100 200	SHEET 88	E

FILE NAME : F:\BM1-3212 USH 51 Marathon Co Structures\Roads\cds\1166-07-32\026319_S3c.dgn PLOT DATE : 30-JAN-2015 15:49 PLOT BY : cfranzen PLOT NAME : 026319_S3c PLOT SCALE : 100:1

WISDOT/CADDS SHEET 42

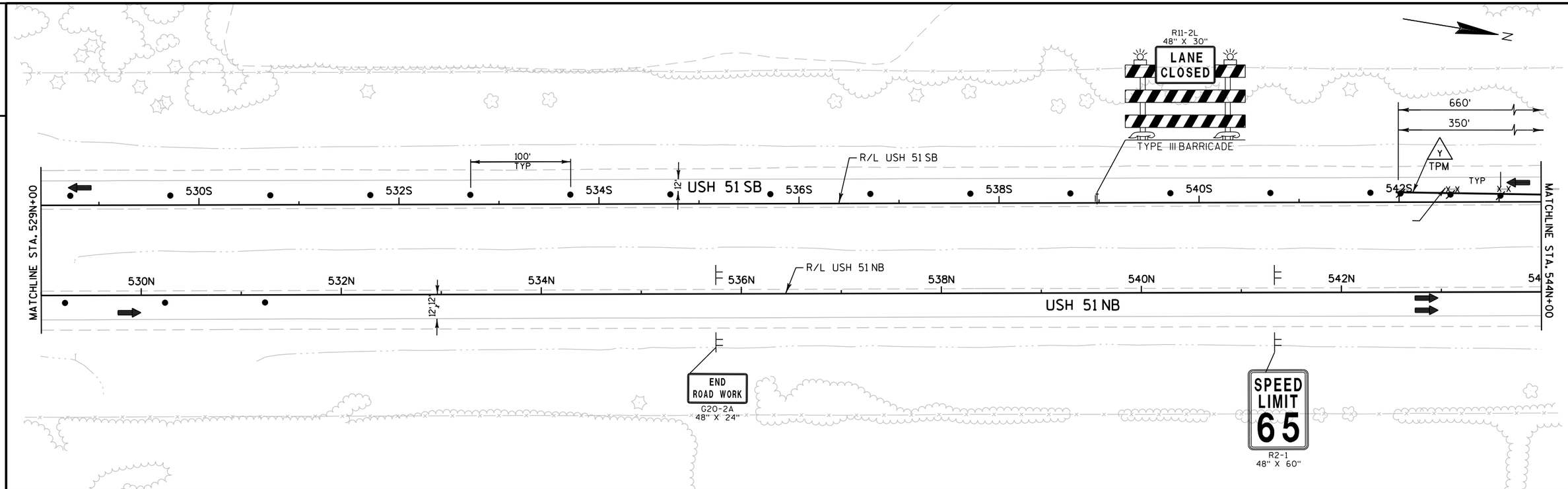

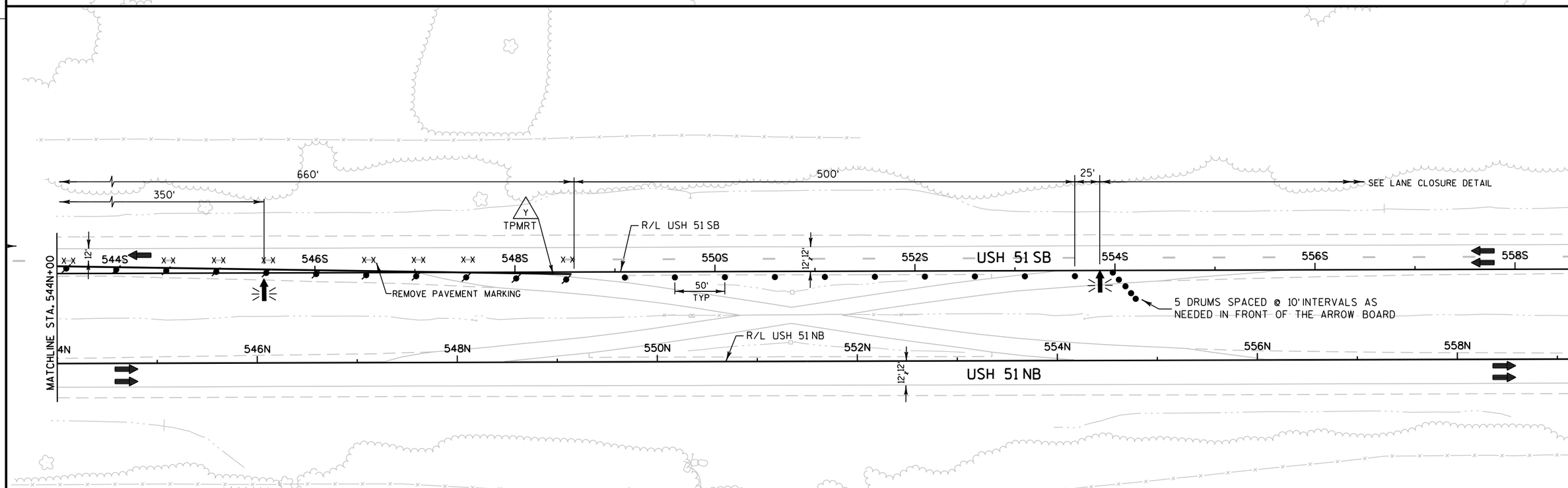

PROJECT NO: 1166-07-62	HWY: USH 51	COUNTY: MARATHON	TRAFFIC CONTROL - STAGE 3C	SCALE, FEET 0 100 200	SHEET 89	E

2

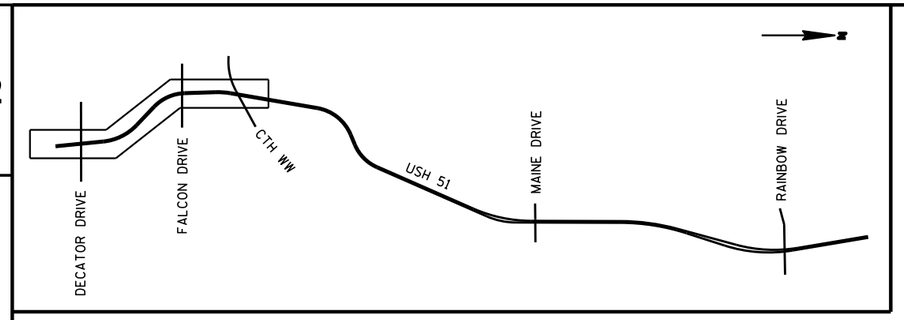

CONSTRUCTION STAGE 4 (FALCON DRIVE)

STAGE 4A (FALCON) - CONSTRUCTION: INSTALL TEMPORARY SIGNAL AT ENDS OF BRIDGE (SEE WISDOT S.D.D.)
STAGE 4B (FALCON) - CONSTRUCTION: CONSTRUCT FALCON DRIVE SOUTH SHOULDER
STAGE 4C (FALCON) - CONSTRUCTION: CONSTRUCT FALCON DRIVE NORTH SHOULDER
STAGE 4D (FALCON) - CONSTRUCTION: OVERLAY NORTH HALF OF FALCON DRIVE BRIDGE
STAGE 4E (FALCON) - CONSTRUCTION: OVERLAY SOUTH HALF OF FALCON DRIVE BRIDGE

STAGE 4 - TRAFFIC: BI-DIRECTIONAL LANE CONTROLLED BY TEMPORARY TRAFFIC SIGNAL

SDD'S ASSOCIATED IN THIS STAGE

BRIDGE TEMPL TRAFFIC SIGNAL INSTALLATION AND TRAFFIC CONTROL, ONE LANE ROAD WITH TEMP. SIGNALS

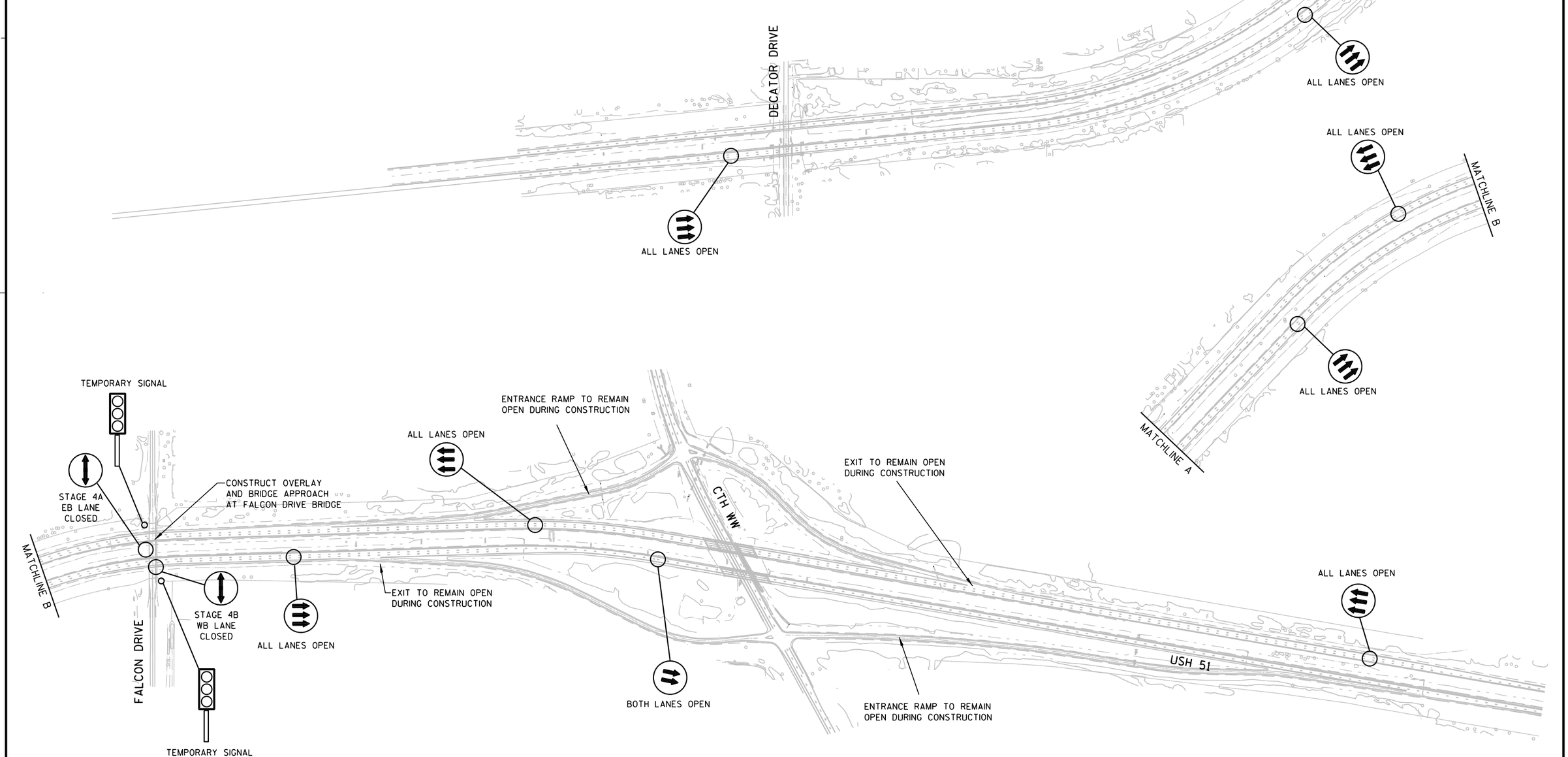

PROJECT NO: 1166-07-62	HWY: USH 51	COUNTY: MARATHON	TRAFFIC CONTROL OVERVIEW - STAGE 4 (FALCON DRIVE)	SHEET 90	E

2

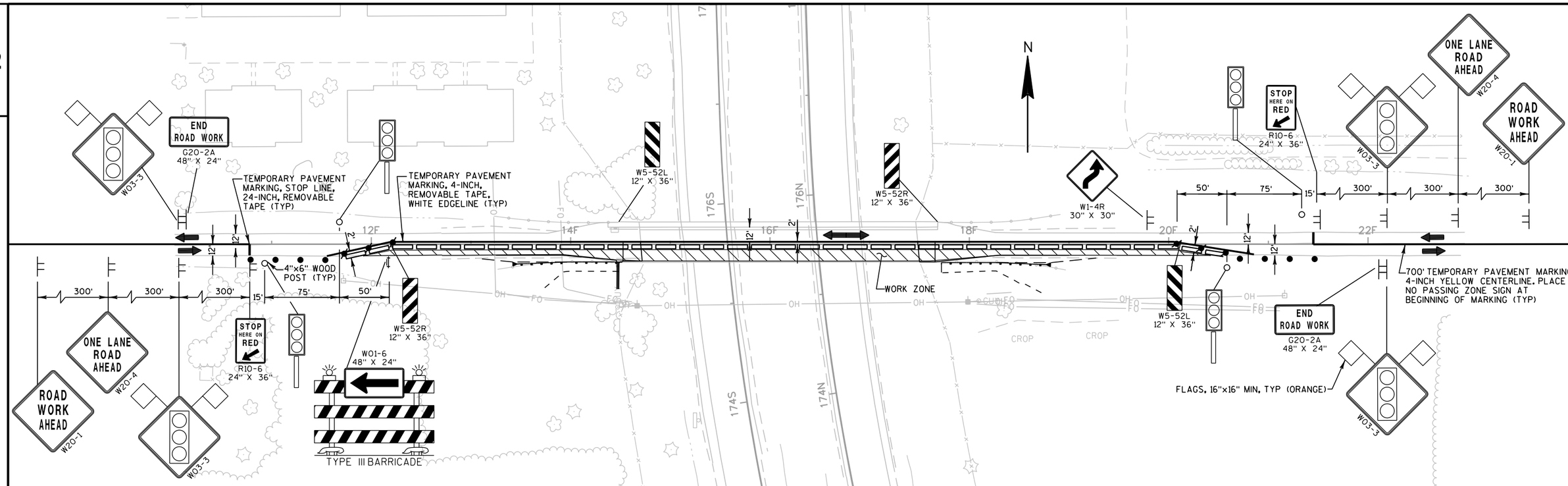

SIGNAL TIMING TABLE

EB	WB	YELLOW	ALL RED	GREEN
RED	RED		34.0 SEC	
GREEN	RED			10.0 SEC
YELLOW	RED	4.0 SEC		
RED	RED		34.0 SEC	
RED	GREEN			10.0 SEC
RED	YELLOW	4.0 SEC		

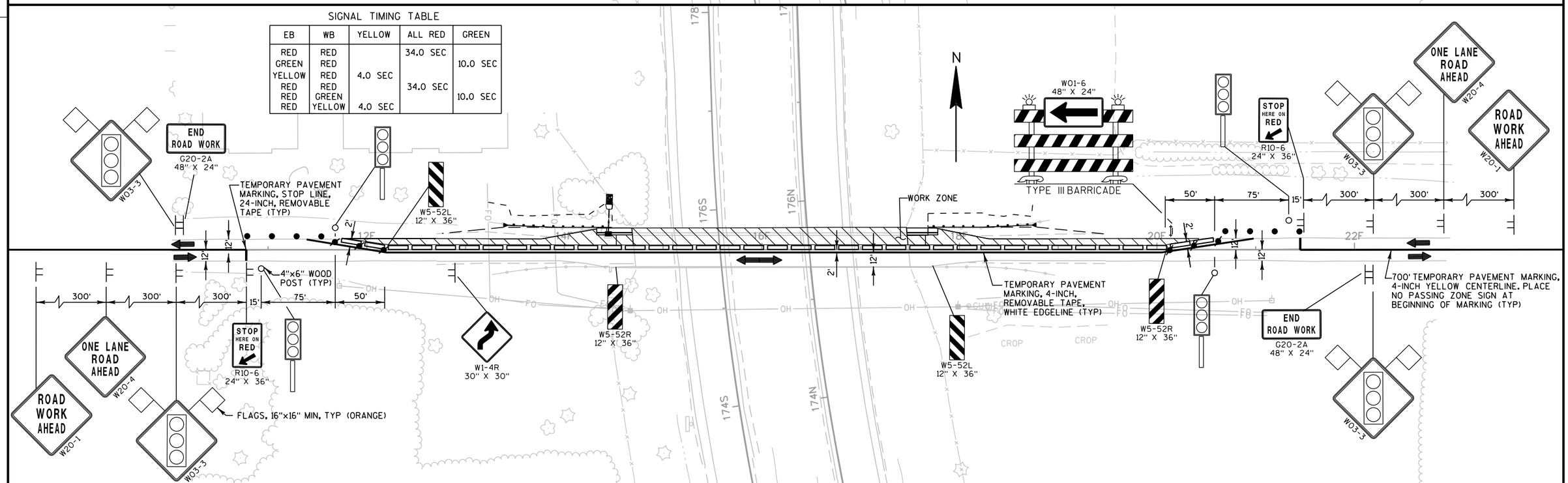

PROJECT NO: 1166-07-62	HWY: USH 51	COUNTY: MARATHON	TRAFFIC CONTROL - STAGE 4	SCALE, FEET 0 100 200	SHEET 91	E

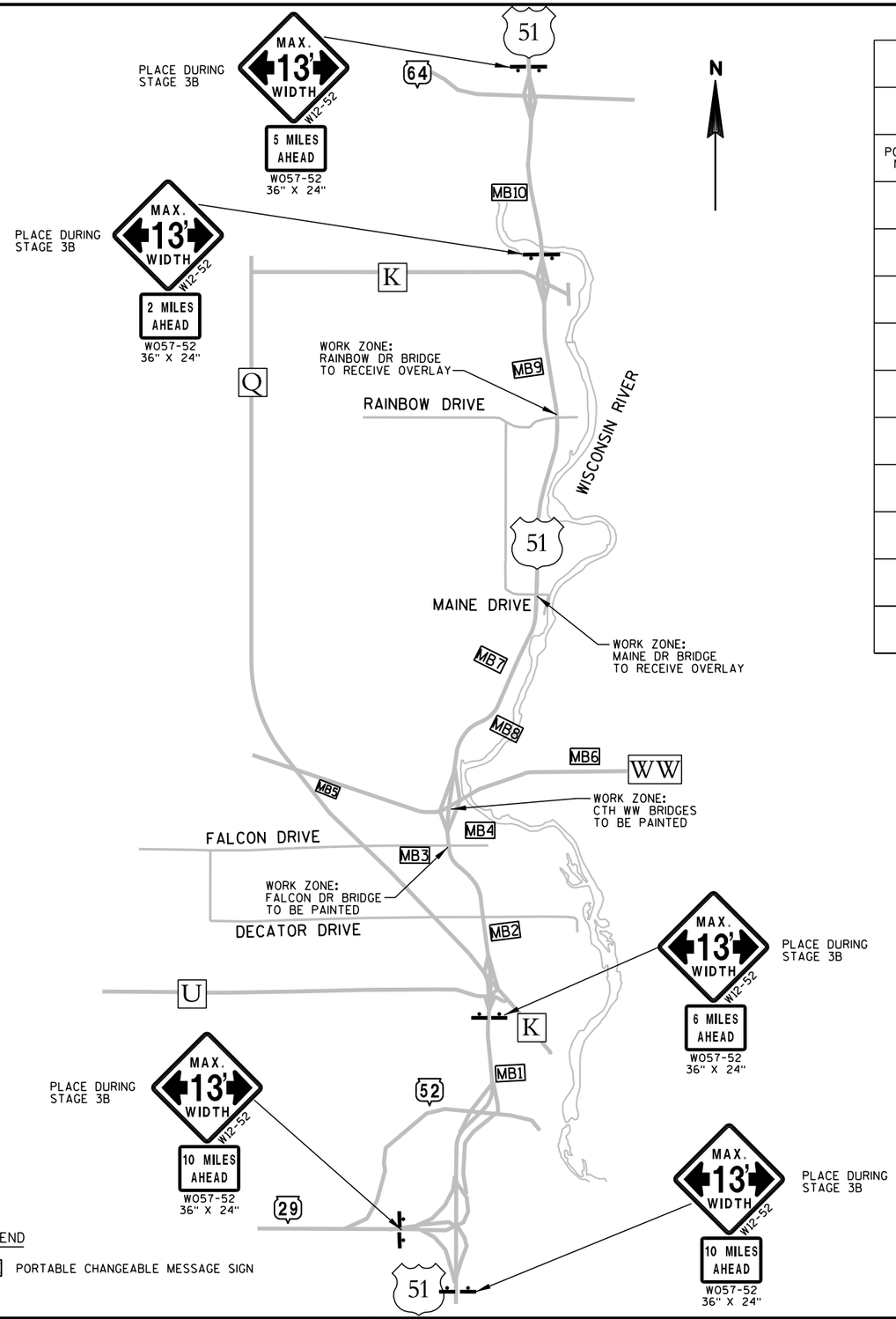

LEGEND

MBX PORTABLE CHANGEABLE MESSAGE SIGN

TRAFFIC CONTROL SIGNS PCMS MESSAGES

		PRIOR TO CONSTRUCTION		DURING INSIDE LANE CLOSURE		DURING OUTSIDE LANE CLOSURE		DURING TRAFFIC SHIFT TO LEFT LANES		DURING TRAFFIC SHIFT TO RIGHT LANES		DURING TEMPORARY SIGNAL AT BRIDGE		EMERGENCY MESSAGE	
PCMS SIGN NUMBER	PCMS SIGN LOCATION	PHASE 1 (3 SEC)	PHASE 2 (3 SEC)	PHASE 1 (3 SEC)	PHASE 2 (3 SEC)	PHASE 1 (3 SEC)	PHASE 2 (3 SEC)	PHASE 1 (3 SEC)	PHASE 2 (3 SEC)	PHASE 1 (3 SEC)	PHASE 2 (3 SEC)	PHASE 1 (3 SEC)	PHASE 2 (3 SEC)	PHASE 1 (3 SEC)	PHASE 2 (3 SEC)
MB1	NB US 51 1 MILE SOUTH OF CTH K	N/A	N/A	N/A	N/A	N/A	N/A	N/A	N/A	N/A	N/A	N/A	N/A	TRAFFIC STOPPED AHEAD	ALT ROUTE K TO Q
MB2	NB US 51 1/2 MILE SOUTH OF DECATOR DR	BRIDGE WORK STARTS	APRIL 1ST	LEFT LANE CLOSED	1 MILE MERGE RIGHT	RIGHT LANE CLOSED	1 MILE MERGE LEFT	TRAFFIC SHIFT AHEAD	1 MILE SHIFT LEFT	TRAFFIC SHIFT AHEAD	1 MILE SHIFT RIGHT	N/A	N/A	N/A	N/A
MB3	FALCON DR 1000 FT WEST OF USH 51	BRIDGE WORK STARTS	APRIL 1ST	N/A	N/A	N/A	N/A	N/A	N/A	N/A	N/A	SIGNAL AHEAD	ONE LANE ROAD	N/A	N/A
MB4	FALCON DR 1000 FT EAST OF USH 51	BRIDGE WORK STARTS	APRIL 1ST	N/A	N/A	N/A	N/A	N/A	N/A	N/A	N/A	SIGNAL AHEAD	ONE LANE ROAD	N/A	N/A
MB5	CTH WW 200 FT WEST OF 32ND AVE	BRIDGE WORK STARTS	APRIL 1ST	N/A	N/A	N/A	N/A	TRAFFIC SHIFT AHEAD	1/2 MILE SHIFT LEFT	TRAFFIC SHIFT AHEAD	1/2 MILE SHIFT RIGHT	N/A	N/A	N/A	N/A
MB6	CTH WW 2000 FT EAST OF USH 51	BRIDGE WORK STARTS	APRIL 1ST	N/A	N/A	N/A	N/A	TRAFFIC SHIFT AHEAD	1/2 MILE SHIFT LEFT	TRAFFIC SHIFT AHEAD	1/2 MILE SHIFT RIGHT	N/A	N/A	N/A	N/A
MB7	SB US 51 2 MILES NORTH OF CTH WW	BRIDGE WORK STARTS	APRIL 1ST	LEFT LANE CLOSED	2 MILES MERGE RIGHT	RIGHT LANE CLOSED	2 MILES MERGE LEFT	TRAFFIC SHIFT AHEAD	2 MILES SHIFT LEFT	TRAFFIC SHIFT AHEAD	2 MILES SHIFT RIGHT	N/A	N/A	N/A	N/A
MB8	NB US 51 2 MILES SOUTH OF MAINE DR	BRIDGE WORK STARTS	APRIL 1ST	LEFT LANE CLOSED	2 MILES MERGE RIGHT	RIGHT LANE CLOSED	2 MILES MERGE LEFT	N/A	N/A	N/A	N/A	N/A	N/A	N/A	N/A
MB9	NB US 51 1 MILE NORTH OF RAINBOW DR	BRIDGE WORK STARTS	APRIL 1ST	LEFT LANE CLOSED	1 MILE MERGE RIGHT	RIGHT LANE CLOSED	1 MILE MERGE LEFT	N/A	N/A	N/A	N/A	N/A	N/A	N/A	N/A
MB10	SB US 51 1 MILE NORTH OF CTH Q	N/A	N/A	N/A	N/A	N/A	N/A	N/A	N/A	N/A	N/A	N/A	N/A	TRAFFIC STOPPED AHEAD	ALT ROUTE Q TO K

PCMS NOTES

1) ADJUST TRAFFIC CONTROL PCMS MESSAGE AS NEEDED BASED ON WORK ZONE AREAS

2) CONSIDER GEOMETRICS WHEN LOCATING MESSAGE BOARDS SO THE DRIVER HAS A CLEAR VIEW OF THE BOARD FOR A MINIMUM OF 1000 FT IN FRONT OF THE MESSAGE BOARD

3) PLACE MESSAGE BOARDS AS FAR AWAY FROM LIVE TRAFFIC LANES AS POSSIBLE WITHOUT HAMPERING VISIBILITY. IN ADVANCE OF HIGHWAY CONSTRUCTION PROJECTS, THE SIGNS SHOULD BE PLACED ON THE BACKSLOPE BEYOND THE DITCH. THE LOCATION SELECTED SHOULD BE AT OR SLIGHTLY ABOVE THE ELEVATION OF THE ROADWAY. FOR INTERMITTENT WORK SUCH AS A LANE CLOSURE OR WHERE SITE CONDITIONS DO NOT ALLOW OTHERWISE, THE SIGNS MAY BE PLACED ON THE SHOULDER. THE SITE SHOULD BE VISITED TO ASSURE VISIBILITY, SAFETY AND MAINTENANCE CONSIDERATIONS. A TAPER OF REFLECTORIZED DRUMS OR BARRICADES SHOULD BE PLACED AHEAD OF THE PCMS PLACED ON A SHOULDER IF IT IS NOT SHIELDED BY A BARRIER.

4) DISPLAY THE "PRIOR TO CONSTRUCTION" MESSAGES 10 DAYS PRIOR TO THE EXPECTED START OF THE PROPOSED WORK THAT WILL REQUIRE LANE CLOSURES. ADJUST THE MESSAGE DATE ACCORDINGLY.

5) PCMS SIGNS MB1 AND MB10 ARE NOT TO BE MOVED. THESE ARE FOR EMERGENCY MESSAGES.

NOTES

1) ALL SIGNS TO HAVE STANDARD REFLECTIVE SHEETING - REFERENCE: "WISDOT STANDARD SPECIFICATIONS FOR ROAD AND BRIDGE CONSTRUCTION." LATEST EDITION.

2) AFTER SIGNS HAVE BEEN LOCATED IN THE FIELD, BUT BEFORE INSTALLATION, THE SIGNING AND MARKING SUPERVISOR, MARK WENDT, (715-365-5798) SHALL VERIFY EACH SIGN LOCATION.

3) SIGNS ON THIS SHEET TO BE PAID UNDER THE ITEM "TRAFFIC CONTROL SIGNS FIXED MESSAGE".

4) SIGNS SHALL BE BLACK NON-REFLECTIVE MESSAGE ON ORANGE REFLECTIVE BACKGROUND PER STANDARD SPECIFICATIONS AND SPECIAL PROVISIONS UNLESS OTHERWISE NOTED.

5) SIGN BASE MATERIAL SHALL BE ACCORDING TO SECTION 637.2.1.2.AND 643.2.9.3.

6) DIMENSIONS ARE IN INCHES UNLESS OTHERWISE NOTED.

7) ALL SIGNS TO BE MOUNTED ON WOODEN POST SUPPORTS (4"X6") MAY BE USED FOR SIGNS ON SURFACE STREETS. SIGN POSTS USED NEED TO BE SELECTED FROM FHWA LIST OF ACCEPTED BREAKAWAY SUPPORTS.

8) POSTS SHALL MEEET THE BREAKAWAY REQUIREMENTS OF SECTION 643.2.9.1 OF THE STANDARD SPECIFICATIONS AND SIGN PLATE A4-11.

9) ALL SIGNS SHALL HAVE CAPITAL LETTERS AND NUMERALS: 12" CAPS SHALL BE SERIES "D", 6" CAPS SHALL BE SERIES "C".

10) CONTRACTOR SHALL SUBMIT SHOP DRAWINGS TO ENGINEER FOR REVIEW PRIOR TO MANUFACTURING.

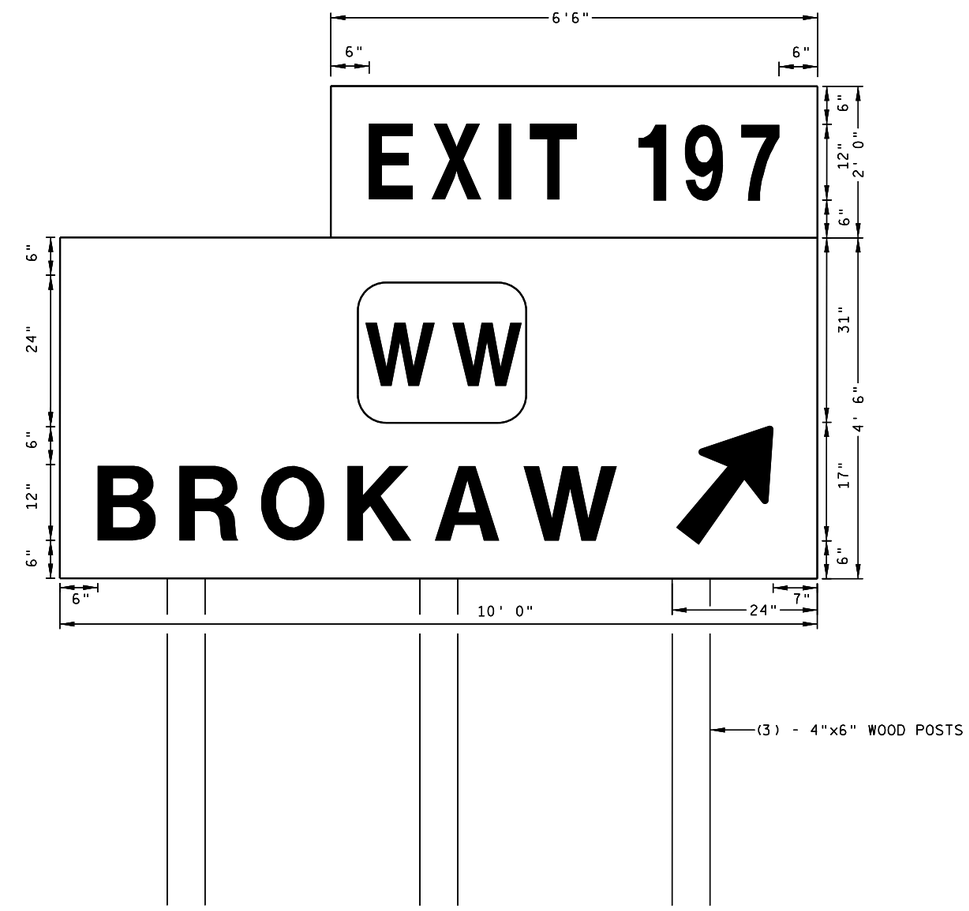

PROJECT NO: 1166-07-62	HWY: USH 51	COUNTY: MARATHON	FIXED MESSAGE SIGN	SHEET 93	E

3

DATE 29APR15 E S T I M A T E O F Q U A N T I T I E S

LINE NUMBER	ITEM	ITEM DESCRIPTION	UNIT	TOTAL	1166-07-62 QUANTITY
0010	203.0210.S	Abatement of Asbestos Containing Material (structure) 01. B-37-157	LS	1.000	1.000
0020	204.0100	Removing Pavement	SY	120.000	120.000
0030	204.0115	Removing Asphaltic Surface Butt Joints	SY	81.000	81.000
0040	204.0120	Removing Asphaltic Surface Milling	SY	27,595.000	27,595.000
0050	204.0155	Removing Concrete Sidewalk	SY	35.000	35.000
0060	204.0165	Removing Guardrail	LF	512.000	512.000
0070	204.0220	Removing Inlets	EACH	1.000	1.000
0080	204.0245	Removing Storm Sewer (size) 01. 12-Inch	LF	25.000	25.000
0090	205.0100	Excavation Common	CY	228.000	228.000
0100	213.0100	Finishing Roadway (project) 01. 1166-07-62	EACH	1.000	1.000
0110	305.0110	Base Aggregate Dense 3/4-Inch	TON	388.000	388.000
0120	305.0120	Base Aggregate Dense 1 1/4-Inch	TON	450.000	450.000
0130	305.0500	Shaping Shoulders	STA	68.000	68.000
0140	315.0200	Asphaltic Base Widening	TON	200.000	200.000
0150	415.0410	Concrete Pavement Approach Slab	SY	124.000	124.000
0160	416.1010	Concrete Surface Drains	CY	1.500	1.500
0170	455.0105	Asphaltic Material PG58-28	TON	175.000	175.000
0180	455.0605	Tack Coat	GAL	1,630.000	1,630.000
0190	460.1103	HMA Pavement Type E-3	TON	90.000	90.000
0200	460.1110	HMA Pavement Type E-10	TON	3,090.000	3,090.000
0210	460.2000	Incentive Density HMA Pavement	DOL	5,310.000	5,310.000
0220	460.4110.S	Reheating HMA Pavement Longitudinal Joints	LF	1,600.000	1,600.000
0230	465.0400	Asphaltic Shoulder Rumble Strips	LF	24,825.000	24,825.000
0240	502.0100	Concrete Masonry Bridges	CY	4.000	4.000
0250	502.3100	Expansion Device (structure) 01. B-37-157	LS	1.000	1.000
0260	502.3200	Protective Surface Treatment	SY	3,493.000	3,493.000
0270	502.5002	Masonry Anchors Type L No. 4 Bars	EACH	117.000	117.000
0280	502.5005	Masonry Anchors Type L No. 5 Bars	EACH	82.000	82.000
0290	505.0605	Bar Steel Reinforcement HS Coated Bridges	LB	3,840.000	3,840.000
0300	505.0904	Bar Couplers No. 4	EACH	8.000	8.000
0310	505.0905	Bar Couplers No. 5	EACH	6.000	6.000
0320	505.0906	Bar Couplers No. 6	EACH	64.000	64.000
0330	509.0301	Preparation Decks Type 1	SY	465.000	465.000
0340	509.0302	Preparation Decks Type 2	SY	209.000	209.000
0350	509.0500	Cleaning Decks	SY	1,030.000	1,030.000
0360	509.1000	Joint Repair	SY	37.000	37.000
0370	509.1500	Concrete Surface Repair	SF	102.000	102.000
0380	509.2500	Concrete Masonry Overlay Decks	CY	326.000	326.000
0390	509.5100.S	Polymer Overlay	SY	560.000	560.000
0400	509.9005.S	Removing Concrete Masonry Deck Overlay (structure) 02. B-37-161	SY	560.000	560.000
0410	509.9005.S	Removing Concrete Masonry Deck Overlay (structure) 03. B-37-162	SY	560.000	560.000
0420	509.9005.S	Removing Concrete Masonry Deck Overlay (structure) 04. B-37-165	SY	502.000	502.000
0430	509.9005.S	Removing Concrete Masonry Deck Overlay (structure) 05. B-37-166	SY	502.000	502.000
0440	509.9050.S	Cleaning Parapets	LF	1,120.000	1,120.000
0450	517.0900.S	Preparation and Coating of Top Flanges (structure) 01. B-37-157	LS	1.000	1.000

3

DATE 29APR15 E S T I M A T E O F Q U A N T I T I E S

LINE NUMBER	ITEM	ITEM DESCRIPTION	UNIT	TOTAL	1166-07-62 QUANTITY
0460	517.1800.S	Structure Repainting Recycled Abrasive (structure) 01. B-37-157	LS	1.000	1.000
0470	517.4500.S	Negative Pressure Containment and Collection of Waste Materials (structure) 01. B-37-157	LS	1.000	1.000
0480	517.6001.S	Portable Decontamination Facility 01. B-37-157	EACH	1.000	1.000
0490	522.1012	Apron Endwalls for Culvert Pipe Reinforced Concrete 12-Inch	EACH	1.000	1.000
0500	601.0411	Concrete Curb & Gutter 30-Inch Type D	LF	73.000	73.000
0510	602.0405	Concrete Sidewalk 4-Inch	SF	365.000	365.000
0520	603.8000	Concrete Barrier Temporary Precast Delivered	LF	6,925.000	6,925.000
0530	603.8125	Concrete Barrier Temporary Precast Installed	LF	13,750.000	13,750.000
0540	604.9010.S	Slope Paving Repair Crushed Aggregrate	CY	20.000	20.000
0550	604.9015.S	Reseal Crushed Aggregate Slope Paving	SY	1,604.000	1,604.000
0560	606.0200	Riprap Medium	CY	4.000	4.000
0570	608.0212	Storm Sewer Pipe Reinforced Concrete Class II 12-Inch	LF	25.000	25.000
0580	611.0600	Inlet Covers Type A	EACH	1.000	1.000
0590	611.3220	Inlets 2x2-FT	EACH	1.000	1.000
0600	614.0905	Crash Cushions Temporary	EACH	12.000	12.000
0610	614.2300	MGS Guardrail 3	LF	52.000	52.000
0620	614.2500	MGS Thrie Beam Transition	LF	156.000	156.000
0630	614.2610	MGS Guardrail Terminal EAT	EACH	4.000	4.000
0640	618.0100	Maintenance And Repair of Haul Roads (project) 01. 1166-07-62	EACH	1.000	1.000
0650	619.1000	Mobilization	EACH	1.000	1.000
0660	624.0100	Water	MGAL	5.000	5.000
0670	625.0100	Topsoil	SY	1,225.000	1,225.000
0680	627.0200	Mulching	SY	1,225.000	1,225.000
0690	628.1504	Silt Fence	LF	1,015.000	1,015.000
0700	628.1520	Silt Fence Maintenance	LF	650.000	650.000
0710	628.1905	Mobilizations Erosion Control	EACH	2.000	2.000
0720	628.1910	Mobilizations Emergency Erosion Control	EACH	2.000	2.000
0730	628.7005	Inlet Protection Type A	EACH	1.000	1.000
0740	628.7015	Inlet Protection Type C	EACH	1.000	1.000
0750	628.7504	Temporary Ditch Checks	LF	30.000	30.000
0760	628.7570	Rock Bags	EACH	60.000	60.000
0770	629.0210	Fertilizer Type B	CWT	0.800	0.800
0780	630.0130	Seeding Mixture No. 30	LB	23.000	23.000
0790	631.1100	Sod Erosion Control	SY	3.000	3.000
0800	634.0612	Posts Wood 4x6-Inch X 12-FT	EACH	8.000	8.000
0810	637.2230	Signs Type II Reflective F	SF	54.000	54.000
0820	638.2101	Moving Signs Type I	EACH	2.000	2.000
0830	638.2602	Removing Signs Type II	EACH	8.000	8.000
0840	638.3000	Removing Small Sign Supports	EACH	8.000	8.000
0850	642.5001	Field Office Type B	EACH	1.000	1.000
0860	643.0100	Traffic Control (project) 01. 1166-07-62	EACH	1.000	1.000
0870	643.0300	Traffic Control Drums	DAY	37,395.000	37,395.000
0880	643.0420	Traffic Control Barricades Type III	DAY	1,135.000	1,135.000
0890	643.0705	Traffic Control Warning Lights Type A	DAY	2,290.000	2,290.000
0900	643.0715	Traffic Control Warning Lights Type C	DAY	6,160.000	6,160.000
0910	643.0800	Traffic Control Arrow Boards	DAY	155.000	155.000

3

3

DATE 29APR15 E S T I M A T E O F Q U A N T I T I E S

LINE NUMBER	ITEM	ITEM DESCRIPTION	UNIT	TOTAL	1166-07-62 QUANTITY
0920	643.0900	Traffic Control Signs	DAY	6,110.000	6,110.000
0930	643.0920	Traffic Control Covering Signs Type II	EACH	1.000	1.000
0940	643.1000	Traffic Control Signs Fixed Message	SF	58.000	58.000
0950	643.1050	Traffic Control Signs PCMS	DAY	222.000	222.000
0960	645.0120	Geotextile Fabric Type HR	SY	10.000	10.000
0970	646.0106	Pavement Marking Epoxy 4-Inch	LF	42,575.000	42,575.000
0980	646.0126	Pavement Marking Epoxy 8-Inch	LF	1,825.000	1,825.000
0990	646.0600	Removing Pavement Markings	LF	71,260.000	71,260.000
1000	649.0100	Temporary Pavement Marking 4-Inch	LF	27,060.000	27,060.000
1010	649.0400	Temporary Pavement Marking Removable Tape 4-Inch	LF	52,095.000	52,095.000
1020	649.0801	Temporary Pavement Marking Removable Tape 8-Inch	LF	4,245.000	4,245.000
1030	649.1400	Temporary Pavement Marking Stop Line Removable Tape 24-Inch	LF	72.000	72.000
1040	650.4000	Construction Staking Storm Sewer	EACH	2.000	2.000
1050	650.5500	Construction Staking Curb Gutter and Curb & Gutter	LF	67.000	67.000
1060	650.6500	Construction Staking Structure Layout (structure) 01. B-37-157	LS	1.000	1.000
1070	650.6500	Construction Staking Structure Layout (structure) 02. B-37-161	LS	1.000	1.000
1080	650.6500	Construction Staking Structure Layout (structure) 03. B-37-162	LS	1.000	1.000
1090	650.6500	Construction Staking Structure Layout (structure) 04. B-37-165	LS	1.000	1.000
1100	650.6500	Construction Staking Structure Layout (structure) 05. B-37-166	LS	1.000	1.000
1110	650.7000	Construction Staking Concrete Pavement	LF	34.000	34.000
1120	650.8000	Construction Staking Resurfacing Reference	LF	14,750.000	14,750.000
1130	650.9910	Construction Staking Supplemental Control (project) 01. 1166-07-62	LS	1.000	1.000
1140	650.9920	Construction Staking Slope Stakes	LF	770.000	770.000
1150	661.0100	Temporary Traffic Signals for Bridges (structure) 01. B-37-157	LS	1.000	1.000
1160	690.0150	Sawing Asphalt	LF	600.000	600.000
1170	715.0415	Incentive Strength Concrete Pavement	DOL	500.000	500.000
1180	ASP.1T0A	On-the-Job Training Apprentice at $5.00/HR	HRS	1,200.000	1,200.000
1190	ASP.1T0G	On-the-Job Training Graduate at $5.00/HR	HRS	600.000	600.000
1200	SPV.0045	Special 01. Portable Changeable Message Sign (PCMS) Cellular Communications	DAY	222.000	222.000
1210	SPV.0060	Special 02. Abutment End Repair B-37-161	EACH	4.000	4.000
1220	SPV.0060	Special 03. Abutment End Repair B-37-162	EACH	4.000	4.000
1230	SPV.0060	Special 04. Abutment End Repair B-37-165	EACH	3.000	3.000
1240	SPV.0060	Special 05. Abutment End Repair B-37-166	EACH	2.000	2.000
1250	SPV.0060	Special 06. Cleaning and Painting Bearings	EACH	12.000	12.000
1260	SPV.0090	Special 01. Salvage and Reinstall Beam Guard	LF	1,590.000	1,590.000
1270	SPV.0105	Special 01. Remove and Reset Tubular Railing	LS	1.000	1.000
1280	SPV.0165	Special 01. Cleaning Parapets, Curbs, and Sidewalks	SF	3,530.000	3,530.000

3

3

REMOVING ASPHALTIC SURFACE BUTT JOINTS

CATEGORY	STAGE	LOCATION	204.0115 SY
0010			
	3	380S+62	9
	3	380N+77	9
	3	385S+88	9
	3	386N+03	8
	3	514S+04	9
	3	514N+47	9
	3	519S+18	9
	3	519N+60	9
		B-37-157	
	4	13F+25	5
	4	19F+00	5
		TOTAL	81

REMOVING CONCRETE SIDEWALK

CATEGORY	LOCATION	STAGE	STA	TO	STA	204.0155 SY
0010	FALCON DRIVE					
		4	13F+25	-	16F+00	17
		4	16F+00	-	19F+00	18
	TOTAL					35

REMOVING STORM SEWER

CATEGORY	STAGE	LOCATION	204.0245 (12-INCH) LF
0010	4	FALCON DRIVE	
			25
		TOTAL	25

REMOVING ASPHALTIC SURFACE MILLING

CATEGORY	LOCATION	STAGE	STA	TO	STA		204.0120 SY
0010	FALCON DRIVE						
		4	13F+25	-	16F+00		375
		4	16F+00	-	19F+00		385
	USH 51 & FALCON DR						
		1	154N+64	-	184N+00	RT	2,600
		1	157N+00	-	188N+00	LT	2,070
		1	168S+87	-	181S+42	LT	1,060
		1	170S+00	-	191S+44	RT	1,430
		1	191S+88	-	194S+00	LT	250
	USH 51 & MAINE DR						
		1	369N+90	-	380N+77	RT	1,430
		1	370N+90	-	382N+77	LT	600
		1	384N+03	-	389N+58	LT	250
		1	384N+03	-	390N+74	RT	750
		3	380N+77	-	382N+77		900
		3	384N+03	-	386N+03		860
		1	374S+49	-	382S+62	LT	900
		1	375S+64	-	380S+62	RT	350
		1	383S+88	-	396S+12	RT	550
		1	383S+88	-	396S+95	LT	1,450
		3	380S+62	-	382S+62		870
		3	383S+88	-	385S+88		850
	USH 51 & RAINBOW DR						
		1	504N+86	-	516N+47	LT	550
		1	503N+53	-	516N+47	RT	1,450
		1	517N+60	-	523N+64	LT	270
		1	517N+60	-	525N+93	RT	925
		3	514N+47	-	516N+47		900
		3	517N+60	-	519N+60		850
		1	508S+38	-	516S+05	LT	850
		1	509S+98	-	516S+05	RT	270
		1	517S+18	-	529S+75	LT	1,400
		1	517S+18	-	528S+29	RT	500
		3	514S+05	-	516S+05		850
		3	517S+18	-	519S+18		850
TOTAL							27,595

REMOVING INLETS

CATEGORY	STAGE	LOCATION	204.0220 EACH
0010	4	FALCON DRIVE	
			1
		TOTAL	1

REMOVING PAVEMENT

CATEGORY	STAGE	LOCATION	STA	TO	STA	204.0100 SY
0010	4	FALCON DRIVE				
			14F+52	-	14F+69	60
			17F+50	-	17F+67	60
		TOTAL				120

REMOVING GUARDRAIL

CATEGORY	STAGE	LOCATION	STA	TO	STA	LOCATION	204.0165 LF
0010		FALCON DR					
	4		13F+23	-	14F+51	LT	128
	4		13F+26	-	14F+54	RT	128
	4		17F+66	-	18F+94	LT	128
	4		17F+69	-	18F+97	RT	128
		TOTAL					512

3

EARTHWORK SUMMARY

CATEGORY	ROADWAY	FROM / TO STATION	(2) CUT	(1) 205.0100 EXCAVATION COMMOM CY (3) EBS EXCAVATION	(4) SALVAGED UNUSABLE PAVEMENT MATERIAL CY	(5) AVAILABLE MATERIAL CY	(6) REDUCED EBS IN FILL CY	(7) EXPANDED EBS IN BACKFILL CY	(8) UNEXPANDED FILL CY	(9) EXPANDED FILL CY	(10) MASS ORDINATE + CUT - (FILL)	(11) WASTE CY
0010							FACTOR 0.80	FACTOR 1.30		FACTOR 1.20		
	FALCON DRIVE	12+75 TO 14+71	173	--	--	173	--	--	38	46	127	127
	FALCON DRIVE	17+48 TO 19+50	54	--	--	54	--	--	99	118	(64)	(64)
	TOTALS		228	0	0	228	0	0	137	164	63	63
	TOTAL EXCAVATION COMMON			228								

1) COMMON EXCAVATION IS THE SUM OF THE CUT AND EBS EXCAVATION COLUMNS. ITEM NUMBER 205.0100
2) SALVAGED / UNUSABLE PAVEMENT MATERIAL IS INCLUDED IN CUT UNLESS EXISTING PAVEMENT IS BELOW SUBGRADE.
3) EBS TO BE BACKFILLED WITH SELECT BORROW.
4) EXISTING PAVEMENT VOLUME (CY), NOT AVAILABLE FOR FILL.
5) AVAILABLE MATERIAL = CUT - SALVAGED/UNUSABLE PAVEMENT MATERIAL
6) REDUCED EBS IN FILL - FOR INFORMATION ONLY.
7) EXPANDED EBS BACKFILL
8) UNEXPANDED FILL - FILL FROM END AREA EARTHWORK VOLUMES
9) EXPANDED FILL FACTOR = 1.20
10) MASS ORDINATE = AVAILABLE MATERIAL - EXPANDED FILL.
11) WASTE = MASS ORDINATE IF POSITIVE (FOR INFORMATION ONLY - BORROW = MASS ORDINATE IF NEGATIVE)

3

CONCRETE PAVEMENT APPROACH SLAB

CATEGORY	STAGE	ROADWAY	LOCATION	415.0410 SY
0010	4	FALCON DR		
			B-37-157	124
			TOTAL	124

CONCRETE SURFACE DRAINS

CATEGORY	STAGE	ROADWAY	LOCATION	416.1010 CY
0010	4	FALCON DRIVE		
			14F+47.5 18.1 RT	1.5
			TOTAL	1.5

CONCRETE SIDEWALK 4-INCH

CATEGORY	STAGE	ROADWAY	LOCATION	602.0405 SF
0010	4	FALCON DR		
			B-37-157	365
			TOTAL	365

SHAPING SHOULDERS

CATEGORY	LOCATION	STAGE	STA	TO	STA		305.0500 STA
0010	USH 51 & MAINE DR						
		1	370N+90	-	380N+77	LT	10
		1	384N+03	-	389N+58	LT	6
		1	375S+64	-	382S+62	RT	7
		1	385S+88	-	396S+12	RT	11
	USH 51 & RAINBOW DR						
		1	504N+86	-	514N+47	LT	10
		1	517N+60	-	523N+64	LT	7
		1	509S+98	-	516S+05	RT	7
		1	519S+18	-	528S+29	RT	10
	TOTAL						68

ASPHALTIC BASE WIDENING

CATEGORY	LOCATION	STAGE	STA	TO	STA		315.0200 TON
0010	USH 51 & FALCON DR						
		1	157N+00	-	188N+00	LT	120
		1	170S+00	-	191S+44	RT	80
	TOTAL						200

BASE AGGREGATE DENSE

CATEGORY	STAGE	LOCATION	STA	TO	STA	LOCATION	305.0110 3/4-INCH TON	305.0120 1 1/4-INCH TON
0010		USH 51 & FALCON DR						
	1		154N+65	-	184N+00	RT SHLDR	14	--
	1		157N+02	-	188N+00	LT SHLDR	87	--
	1		168S+87	-	181S+42	LT SHLDR	6	--
	1		191S+88	-	194S+00	LT SHLDR	1	--
	1		170S+00	-	191S+45	RT SHLDR	60	--
		USH 51 & MAINE DR						
	1		369N+91	-	382N+78	RT SHLDR	6	--
	1		371N+90	-	382N+78	LT SHLDR	6	--
	1		384N+03	-	390N+74	RT SHLDR	3	--
	1		384N+03	-	389N+58	LT SHLDR	3	--
	1		374S+49	-	382S+62	LT SHLDR	4	--
	1		375S+64	-	382S+62	RT SHLDR	4	--
	1		383S+88	-	396S+95	LT SHLDR	6	--
	1		383S+88	-	396S+12	RT SHLDR	6	--
		USH 51 & RAINBOW DR						
	1		503N+53	-	516N+47	RT SHLDR	6	--
	1		504N+86	-	516N+47	LT SHLDR	6	--
	1		517N+60	-	525N+93	RT SHLDR	4	--
	1		517N+60	-	523N+64	LT SHLDR	3	--
	1		508S+38	-	516S+05	LT SHLDR	4	--
	1		509S+98	-	516S+05	RT SHLDR	3	--
	1		517S+18	-	529S+76	LT SHLDR	6	--
	1		517S+18	-	528S+29	RT SHLDR	5	--
		FALCON DRIVE						
	4		12F+75	-	14F+69		70	215
	4		17F+50	-	19F+50		75	235
		TOTAL					388	450

EROSION CONTROL ITEMS

CATEGORY	LOCATION	STAGE	STA	TO	STA	628.1504 SILT FENCE LF	628.1520 SILT FENCE MAINTENANCE LF	628.1905 MOBILIZATIONS EROSION CONTROL EACH	628.1910 MOBILIZATIONS EMERGENCY EROSION CONTROL EACH	628.7005 INLET PROTECTION TYPE A EACH	628.7015 INLET PROTECTION TYPE C EACH	628.7504 TEMPORARY DITCH CHECKS LF	628.7570 ROCK BAGS EACH
0010	FALCON DR	4	13F+00	-	14F+46	340	200	--	--	1	1	30	25
		4	17F+68	-	19F+50	425	200	--	--	--	--	--	25
	UNDISTRIBUTED					250	250	2	2	--	--	--	10
	TOTAL					1,015	650	2	2	1	1	30	60

3

ASPHALT PAVEMENT ITEMS

CATEGORY	STAGE	LOCATION	STA	TO	STA	LOCATION	455.0105 ASPHALTIC MATERIAL PG58-28 TON	455.0605 TACK COAT GAL	460.1103 HMA PAVEMENT TYPE E-3 TON	460.1110 HMA PAVEMENT TYPE E-10 TON
0010		USH 51 & FALCON DR								
	1		154N+64	-	184N+00	RT SHLDR	17	160	--	300
	1		157N+00	-	188N+00	LT SHLDR	13	120	--	238
	1		168S+87	-	181S+42	LT SHLDR	6	60	--	117
	1		191S+88	-	194S+00	LT SHLDR	1	10	--	27
	1		170S+00	-	191S+44	RT SHLDR	9	90	--	164
		USH 51 & MAINE DR								
	1		369N+91	-	382N+77	RT SHLDR	9	90	--	164
	1		370N+90	-	382N+77	LT SHLDR	4	40	--	69
	3		380N+77	-	382N+77	MAINLINE	6	50	--	102
	3		384N+03	-	386N+03	MAINLINE	6	50	--	102
	1		384N+03	-	390N+74	RT SHLDR	5	40	--	86
	1		384N+03	-	389N+58	LT SHLDR	2	10	--	28
	1		374S+49	-	382S+62	LT SHLDR	6	50	--	104
	1		375S+64	-	382S+62	RT SHLDR	2	20	--	41
	3		380S+62	-	382S+62	MAINLINE	6	50	--	102
	3		383S+88	-	385S+88	MAINLINE	6	50	--	102
	1		383S+88	-	396S+95	LT SHLDR	9	90	--	167
	1		383S+88	-	396S+12	RT SHLDR	3	30	--	63
		USH 51 & RAINBOW DR								
	1		503N+53	-	516N+47	RT SHLDR	9	90	--	165
	1		504N+86	-	516N+47	LT SHLDR	4	30	--	66
	3		514N+47	-	516N+47	MAINLINE	6	50	--	104
	3		517N+60	-	519N+60	MAINLINE	5	50	--	97
	1		517N+60	-	525N+93	RT SHLDR	6	60	--	106
	1		517N+60	-	523N+64	LT SHLDR	2	20	--	31
	1		508S+38	-	516S+05	LT SHLDR	5	50	--	98
	1		509S+98	-	516S+05	RT SHLDR	2	20	--	31
	3		514S+05	-	516S+05	MAINLINE	5	50	--	97
	3		517S+18	-	519S+18	MAINLINE	6	50	--	102
	1		517S+18	-	529S+75	LT SHLDR	9	80	--	161
	1		517S+18	-	528S+29	RT SHLDR	3	30	--	57
		FALCON DRIVE								
	4		13F+25	-	16F+00		2	20	45	--
	4		16F+00	-	19F+00		2	20	45	--
		TOTAL					175	1,630	90	3,090

ASPHALTIC SHOULDER RUMBLE STRIPS

CATEGORY	STAGE	LOCATION	STA	TO	STA		465.0400 STA
0010		USH 51 & FALCON DR					
	2		154N+64	-	184N+00	RT	2,950
	2		157N+00	-	188N+00	LT	3,100
	2		168S+87	-	181S+42	LT	1,250
	2		170S+00	-	191S+44	RT	2,150
	2		191S+88	-	194S+00	LT	200
		USH 51 & MAINE DR					
	3		369N+90	-	382N+77	RT	1,300
	3		370N+90	-	382N+77	LT	1,200
	3		384N+03	-	389N+58	LT	550
	3		384N+03	-	390N+74	RT	675
	3		374S+49	-	382S+62	LT	800
	3		375S+64	-	380S+62	RT	500
	3		383S+88	-	396S+12	LT	1,225
	3		383S+88	-	396S+95	RT	1,300
		USH 51 & RAINBOW DR					
	3		504N+86	-	516N+47	RT	1,150
	3		503N+53	-	516N+47	LT	1,300
	3		517N+60	-	523N+64	LT	600
	3		517N+60	-	525N+93	RT	850
	3		508S+38	-	516S+05	LT	775
	3		509S+98	-	516S+05	RT	600
	3		517S+18	-	529S+75	LT	1,250
	3		517S+18	-	528S+29	RT	1,100
		TOTAL					24,825

CONCRETE CURB & GUTTER 30-INCH TYPE D

CATEGORY	STAGE	ROADWAY	LOCATION	601.0411 LF
0010	4	FALCON DR		
			B-37-157	73
			TOTAL	73

3

REHEATING HMA PAVEMENT LONGITUDINAL JOINTS

CATEGORY	STAGE	ROADWAY	STA	TO	STA	460.4110.S LF
0010		USH 51 & MAINE DR				
	3		380N+78	-	382N+78	200
	3		384N+03	-	386N+03	200
	3		380S+62	-	382S+62	200
	3		383S+88	-	385S+88	200
		USH 51 & RAINBOW DR				
	3		514N+47	-	516N+47	200
	3		517N+60	-	519N+60	200
	3		514S+05	-	516S+05	200
	3		517S+18	-	519S+18	200
		TOTAL				1600

RIPRAP ITEMS

CATEGORY	STAGE	ROADWAY	LOCATION	606.0200 RIPRAP MEDIUM CY	631.1100 SOD EROSION CONTROL SY	645.0120 GEOTEXTILE FABRIC TYPE HR SY
0010	4	FALCON DRIVE				
			14F+46 48' LT	3	3	7
			14F+47 52' RT	1	--	3
			TOTAL	4	3	10

WATER

CATEGORY	STAGE	LOCATION	624.0100 MGAL
0010	ALL		
		UNDISTRIBUTED	5
		TOTAL	5

3

CONCRETE BARRIER & CRASH CUSHIONS TEMPORARY

CATEGORY	STAGE	ROADWAY	STA - STA	603.8000 CONCRETE BARRIER TEMPORARY PRECAST DELIVERED LF	603.8125 CONCRETE BARRIER TEMPORARY PRECAST INSTALLED LF	614.0905 CRASH CUSHIONS TEMPORARY EACH	* BACK WIDTH	* OBJECT MARKING PATTERN	* CRASH TEST LEVEL	* TRAFFIC DIRECTION	* TRAFFIC LOCATION	* CRASH CUSHION SHIELDS
0010	3A	USH 51	372N+90	--	--	1	4	OM-3L	TL-3	UNIDIRECTIONAL	R	TEMPORARY CONC. BARRIER
	3A	USH 51	373N+00 - 387N+25	1,425	1,425	--	--	--	--	--	--	--
	3A	USH 51	379S+45 - 393S+70	1,425	1,425	--	--	--	--	--	--	--
	3A	USH 51	393S+80	--	--	1	4	OM-3L	TL-3	UNIDIRECTIONAL	R	TEMPORARY CONC. BARRIER
	3A	USH 51	506N+80	--	--	1	4	OM-3L	TL-3	UNIDIRECTIONAL	R	TEMPORARY CONC. BARRIER
	3A	USH 51	506N+90 - 521N+40	1,450	1,450	--	--	--	--	--	--	--
	3A	USH 51	513S+50 - 526S+50	1,325	1,325	--	--	--	--	--	--	--
	3A	USH 51	526S+60	--	--	1	4	OM-3L	TL-3	UNIDIRECTIONAL	R	TEMPORARY CONC. BARRIER
	3B	USH 51	372N+90	--	--	1	4	OM-3R	TL-3	UNIDIRECTIONAL	L	TEMPORARY CONC. BARRIER
	3B	USH 51	373N+00 - 387N+25	--	1,425	--	--	--	--	--	--	--
	3B	USH 51	379S+45 - 393S+70	--	1,425	--	--	--	--	--	--	--
	3B	USH 51	393S+80	--	--	1	4	OM-3R	TL-3	UNIDIRECTIONAL	L	TEMPORARY CONC. BARRIER
	3B	USH 51	507N+80	--	--	1	4	OM-3R	TL-3	UNIDIRECTIONAL	L	TEMPORARY CONC. BARRIER
	3B	USH 51	507N+90 - 521N+40	--	1,350	--	--	--	--	--	--	--
	3B	USH 51	512S+75 - 526S+00	--	1,325	--	--	--	--	--	--	--
	3B	USH 51	526S+10	--	--	1	4	OM-3R	TL-3	UNIDIRECTIONAL	L	TEMPORARY CONC. BARRIER
	2A	USH 51	171N+80	--	--	1	4	OM-3L	TL-3	UNIDIRECTIONAL	R	TEMPORARY CONC. BARRIER
	2A	USH 51	171N+90 '- 178N+00	650	650	--	--	--	--	--	--	--
	2A	USH 51	173S+40 - 179S+50	650	650	--	--	--	--	--	--	--
	2A	USH 51	179S+60	--	--	1	4	OM-3L	TL-3	UNIDIRECTIONAL	R	TEMPORARY CONC. BARRIER
	2B	USH 51	171N+50	--	--	1	4	OM-3R	TL-3	UNIDIRECTIONAL	L	TEMPORARY CONC. BARRIER
	2B	USH 51	171N+60 '- 178N+00	--	650	--	--	--	--	--	--	--
	2B	USH 51	173S+40 - 179S+90	--	650	--	--	--	--	--	--	--
	2B	USH 51	180S+00	--	--	1	4	OM-3R	TL-3	UNIDIRECTIONAL	L	TEMPORARY CONC. BARRIER
TOTALS				6,925	13,750	12						

* FOR INFORMATION ONLY

3

SALVAGE AND REINSTALL BEAM GUARD

CATEGORY	STAGE	ROADWAY	STA	TO	STA	SPV.0090.01 LF
0010		USH 51 & MAINE DR				
	3		380N+68	-	382N+68	400
	3		383S+98	-	386S+03	410
		USH 51 & RAINBOW DR				
	3		514N+40	-	516N+37	395
	3		517S+28	-	519S+20	385
		TOTAL				1590

PERMANENT SIGNING

CATEGORY	ROADWAY	SIGN #	SIGN CODE	SIGN SIZE	637.2230 SIGNS TYPE II REFLECTIVE F SF	634.0612 POSTS WOOD 4X6-INCH 12-FT EACH	638.2101 MOVING SIGNS TYPE I EACH	638.2602 REMOVING SIGNS TYPE II EACH	638.3000 REMOVING SMALL SIGN SUPPORTS EACH	REMARKS
0010	USH 51	9	W5-52L	18X54	6.75	1	--	1	1	BRIDGE HASH MARKS
		10	W5-52R	18X54	6.75	1	--	1	1	BRIDGE HASH MARKS
		11	W5-52R	18X54	6.75	1	--	1	1	BRIDGE HASH MARKS
		12	W5-52L	18X54	6.75	1	--	1	1	BRIDGE HASH MARKS
		13	W5-52L	18X54	6.75	1	--	1	1	BRIDGE HASH MARKS
		14	W5-52R	18X54	6.75	1	--	1	1	BRIDGE HASH MARKS
		15	W5-52R	18X54	6.75	1	--	1	1	BRIDGE HASH MARKS
		16	W5-52L	18X54	6.75	1	--	1	1	BRIDGE HASH MARKS
		17	--	--	--	--	1	--	--	ON FALCON OVERPASS
		18	--	--	--	--	1	--	--	ON FALCON OVERPASS
	TOTAL				54.00	8	2	8	8	

MGS GUARDRAIL ITEMS

CATEGORY	STAGE	LOCATION	STA	TO	STA	LOCATION	614.2300 MGS GUARDRAIL 3 LF	614.2500 MGS THRIE BEAM TRANSITION LF	614.2610 MGS GUARDRAIL TERMINAL EAT EACH
0010		FALCON DR							
	4		13F+43	-	13F+96	24.7' LT	--	--	1
	4		13F+46	-	13F+99	19.8' RT	--	--	1
	4		13F+96	-	14F+09	LT	13	--	--
	4		13F+99	-	14F+12	RT	13	--	--
	4		14F+09	-	14F+48	LT	--	39	--
	4		14F+12	-	14F+51	RT	--	39	--
	4		17F+68	-	18F+07	LT	--	39	--
	4		17F+72	-	18F+11	RT	--	39	--
	4		18F+07	-	18F+20	LT	13	--	--
	4		18F+11	-	18F+24	RT	13	--	--
	4		18F+20	-	18F+73	24.9' LT	--	--	1
	4		18F+24	-	18F+77	20.4' RT	--	--	1
		TOTAL					52	156	4

3

STORM SEWER ITEMS

CATEGORY	LOCATION	LOCATION	522.1012 APRON ENDWALLS FOR CULVERT PIPE REINFORCED CONCRETE 12-INCH EACH	* 608.0212 STORM SEWER PIPE REINFORCED CONCRETE CLASS II 12-INCH LF	611.0600 INLET COVERS TYPE A EACH	611.3220 INLETS 2X2-FT EACH	DEPTH FEET	RIM ELEVATION	INVERT ELEVATION
0010	FALCON DRIVE								
		B-37-157	1	25	1	1	5.60	1429.27	1422.75
	TOTAL		1	25	1	1			

* FIELD VERIFY PIPE LENGTH BEFORE ORDERING

RESTORATION ITEMS

CATEGORY	STAGE	LOCATION	STA	TO	STA	625.0100 TOPSOIL SY	627.0200 MULCHING SY	629.0210 FERTILIZER TYPE B CWT	630.0130 SEEDING MIXTURE NO. 30 LB
0010	4	FALCON DR							
			12F+75	-	14F+69	575	575	0.4	11
			17F+50	-	19F+50	650	650	0.4	12
		TOTAL				1,225	1,225	0.8	23

3

TRAFFIC CONTROL

CATEGORY	LOCATION	* STAGE DURATION DAYS	643.0300 TRAFFIC CONTROL DRUMS EACH*	DAYS	643.0420 TRAFFIC CONTROL BARRICADES TYPE III EACH*	DAYS	643.0705 TRAFFIC CONTROL WARNING LIGHTS TYPE A EACH*	DAYS	643.0800 TRAFFIC CONTROL ARROW BOARDS EACH*	DAYS	643.0715 TRAFFIC CONTROL WARNING LIGHTS TYPE C EACH*	DAYS	643.0900 TRAFFIC CONTROL SIGNS EACH*	DAYS	643.0920 TRAFFIC CONTROL COVERING SIGNS TYPE II EACH	# CYCLES	# SIGNS	643.1050 TRAFFIC CONTROL SIGNS PCMS EACH*	DAY	SPV.0045.01 PORTABLE CHANGEABLE MESSAGE SIGN (PCMS) CELLULAR COMMUNICATIONS EACH*	DAY
0010																					
	STAGE 1A	6																			
	USH 51 NB, Sta. 51N+00 - 103N+00		--	--	--	--	--	--	--	--	--	--	12	70	--	--	--	1	5	1	5
	USH 51 NB, Sta. 103N+00 - 181N+00		72	430	5	30	10	60	--	--	--	--	5	30	--	--	--	--	--	--	--
	USH 51 NB, Sta. 181N+00 - 189N+00		23	140	1	5	2	10	--	--	18	110	2	10	--	--	--	--	--	--	--
	USH 51 NB, Sta. 189N+00 - 299N+00		114	685	1	5	2	10	--	--	--	--	5	30	--	--	--	1	5	1	5
	USH 51 NB, Sta. 299N+00 - 341N+50		43	260	--	--	--	--	--	--	--	--	12	70	--	--	--	--	--	--	--
	USH 51 NB, Sta. 341N+50 - 542N+00		190	1,140	8	50	16	95	2	10	--	--	18	110	--	--	--	--	--	--	--
	USH 51 SB, Sta. 140S+00 - 181S+25		29	175	2	10	4	25	--	--	--	--	6	35	--	--	--	--	--	--	--
	USH 51 SB, Sta. 181S+25 - 189S+00		22	130	--	--	--	--	--	--	10	60	3	20	--	--	--	--	--	--	--
	USH 51 SB, Sta. 189S+00 - 215S+00		26	155	2	10	4	25	--	--	--	--	2	10	--	--	--	--	--	--	--
	USH 51 SB, Sta. 215S+00 - 220S+00		15	90	--	--	--	--	--	--	10	60	--	--	--	--	--	--	--	--	--
	USH 51 SB, Sta. 220S+00 - 548S+50		235	1,410	9	55	18	110	2	10	14	85	23	140	--	--	--	1	5	1	5
	USH 51 SB. Sta. 548S+50 - 597S+00		--	--	--	--	--	--	--	--	--	--	14	85	--	--	--	1	5	1	5
	STAGE 1A SUBTOTAL			4,615		165		335		20		315		610	0	0	0		20		20
	STAGE 1B	4																			
	USH 51 NB, Sta. 51N+00 - 103N+00		--	--	--	--	--	--	--	--	--	--	12	50	--	--	--	1	5	1	5
	USH 51 NB, Sta. 103N+00 - 351N+00		258	1,030	5	20	10	40	--	--	16	65	11	45	--	--	--	1	5	1	5
	USH 51 NB, Sta. 351N+00 - 542N+00		152	610	4	15	8	30	2	10	23	90	18	70	--	--	--	--	--	--	--
	USH 51 SB, Sta. 140S+00 - 246S+00		105	420	4	15	8	30	--	--	16	65	14	55	--	--	--	--	--	--	--
	USH 51 SB, Sta. 246S+00 - 554S+00		259	1,035	3	10	6	25	2	10	29	115	27	110	--	--	--	1	5	1	5
	USH 51 SB, Sta. 554S+00 - 607S+00		--	--	--	--	--	--	--	--	--	--	14	55	--	--	--	1	5	1	5
	STAGE 1B SUBTOTAL			3,095		60		125		20		335		385	0	0	0		20		20

* FOR INFORMATION ONLY

3

TRAFFIC CONTROL

CATEGORY	LOCATION	* STAGE DURATION DAYS	643.0300 TRAFFIC CONTROL DRUMS EACH*	643.0300 DAYS	643.0420 TRAFFIC CONTROL BARRICADES TYPE III EACH*	643.0420 DAYS	643.0705 TRAFFIC CONTROL WARNING LIGHTS TYPE A EACH*	643.0705 DAYS	643.0800 TRAFFIC CONTROL ARROW BOARDS EACH*	643.0800 DAYS	643.0715 TRAFFIC CONTROL WARNING LIGHTS TYPE C EACH*	643.0715 DAYS	643.0900 TRAFFIC CONTROL SIGNS EACH*	643.0900 DAYS	643.0920 TRAFFIC CONTROL COVERING SIGNS TYPE II EACH	# CYCLES	# SIGNS	643.1050 TRAFFIC CONTROL SIGNS PCMS EACH*	643.1050 DAY	SPV.0045.01 PORTABLE CHANGEABLE MESSAGE SIGN (PCMS) CELLULAR COMMUNICATIONS EACH*	SPV.0045.01 DAY
0010	STAGE 2A	12																			
	USH 51 NB, Sta. 100N+00 - 185N+00		103	1,235	4	50	8	95	--	--	37	445	27	325	1	1	1	1	10	1	10
	USH 51 NB, Sta. 185N+00 - 248N+00		67	805	2	25	4	50	--	--	26	310	6	70	--	--	--	--	--	--	--
	USH 51 SB, Sta. 140S+00 - 182S+00		49	590	1	10	2	25	--	--	10	120	10	120	--	--	--	--	--	--	--
	USH 51 SB, Sta. 182S+00 - 220S+00		91	1,090	3	35	6	70	--	--	33	395	27	325	--	--	--	1	10	1	10
	STAGE 2A SUBTOTAL			3,720		120		240		0		1,270		840	1	1	1		20		20
	STAGE 2B	17																			
	USH 51 NB, Sta. 100N+00 - 178N+00		76	1,290	5	85	10	170	--	--	20	340	20	340	--	--	--	1	15	1	15
	USH 51 NB, Sta. 178N+00 - 234N+00		69	1,175	2	35	4	70	--	--	13	220	7	120	--	--	--	--	--	--	--
	USH 51 SB, Sta. 140S+00 - 181S+00		38	645	1	15	2	35	--	--	7	120	8	135	--	--	--	--	--	--	--
	USH 51 SB, Sta. 181S+00 - 255S+00		120	2,040	2	35	4	70	--	--	42	715	22	375	--	--	--	1	15	1	15
	STAGE 2B SUBTOTAL			5,150		170		345		0		1,395		970	0	0	0		30		30
	STAGE 3A	12																			
	USH 51 NB, Sta. 250N+00 - 349N+00		102	1,225	--	--	--	--	1	10	--	--	12	145	--	--	--	1	10	1	10
	USH 51 NB, Sta. 349N+00 - 390N+00		50	600	1	10	2	25	1	10	22	265	4	50	--	--	--	--	--	--	--
	USH 51 NB, Sta. 390N+00 - 525N+00		143	1,715	6	70	12	145	--	--	20	240	14	170	--	--	--	--	--	--	--
	USH 51 NB, Sta. 525N+00 - 542N+00		10	120	--	--	--	--	--	--	2	25	4	50	--	--	--	--	--	--	--
	USH 51 SB, Sta. 250S+00 - 393S+00		153	1,835	--	--	--	--	--	--	14	170	5	60	--	--	--	--	--	--	--
	USH 51 SB, Sta. 393S+00 - 529S+00		168	2,015	9	110	18	215	--	--	28	335	17	205	--	--	--	--	--	--	--
	USH 51 SB, Sta. 529S+00 - 554S+00		40	480	1	10	2	25	2	25	16	190	3	35	--	--	--	--	--	--	--
	USH 51 SB, Sta. 554S+00 - 608S+00		--	--	--	--	--	--	--	--	--	--	14	170	--	--	--	1	10	1	10
	STAGE 3A SUBTOTAL			7,990		200		410		45		1,225		885	0	0	0		20		20
	STAGE 3B	12																			
	USH 51 NB, Sta. 250N+00 - 349N+00		102	1,225	--	--	--	--	1	10	--	--	12	145	--	--	--	1	10	1	10
	USH 51 NB, Sta. 349N+00 - 390N+00		50	600	1	10	2	25	1	10	27	325	6	70	--	--	--	--	--	--	--
	USH 51 NB, Sta. 390N+00 - 521N+00		131	1,570	8	95	16	190	--	--	8	95	21	250	--	--	--	--	--	--	--
	USH 51 NB, Sta. 521N+00 - 542N+00		18	215	--	--	--	--	--	--	--	--	4	50	--	--	--	--	--	--	--
	USH 51 SB, Sta. 250S+00 - 392S+00		142	1,705	1	10	2	25	--	--	--	--	6	70	--	--	--	--	--	--	--
	USH 51 SB, Sta. 392S+00 - 525S+00		136	1,630	7	85	14	170	--	--	15	180	20	240	--	--	--	--	--	--	--
	USH 51 SB, Sta. 525S+00 - 554S+00		47	565	1	10	2	25	2	25	20	240	5	60	--	--	--	--	--	--	--
	USH 51 SB, Sta. 554S+00 - 608S+00		--	--	--	--	--	--	--	--	--	--	12	145	--	--	--	1	10	1	10
	ADVANCED WARNING SIGNS		--	--	--	--	--	--	--	--	--	--	20	240	--	--	--	--	--	--	--
	STAGE 3B SUBTOTAL			7,510		210		435		45		840		1,270	0	0	0		20		20
	STAGE 3C	3																			
	USH 51 NB, Sta. 250N+00 - 345N+00		95	285	--	--	--	--	--	--	--	--	12	35	--	--	--	1	5	1	5
	USH 51 NB, Sta. 345N+00 - 542N+00		198	595	12	35	24	70	2	5	14	40	12	35	--	--	--	--	--	--	--
	USH 51 SB, Sta. 358S+00 - 554S+00		198	595	13	40	26	80	2	5	14	40	13	40	--	--	--	--	--	--	--
	USH 51 SB, Sta. 554S+00 - 608S+00		--	--	--	--	--	--	--	--	--	--	12	35	--	--	--	1	5	1	5
	STAGE 3C SUBTOTAL			1,475		75		150		10		80		145	0	0	0		10		10

* FOR INFORMATION ONLY

3

3

TRAFFIC CONTROL

CATEGORY	LOCATION	* STAGE DURATION DAYS	643.0300 TRAFFIC CONTROL DRUMS EACH*	643.0300 DAYS	643.0420 TRAFFIC CONTROL BARRICADES TYPE III EACH*	643.0420 DAYS	643.0705 TRAFFIC CONTROL WARNING LIGHTS TYPE A EACH*	643.0705 DAYS	643.0800 TRAFFIC CONTROL ARROW BOARDS EACH*	643.0800 DAYS	643.0715 TRAFFIC CONTROL WARNING LIGHTS TYPE C EACH*	643.0715 DAYS	643.0900 TRAFFIC CONTROL SIGNS EACH*	643.0900 DAYS	643.0920 TRAFFIC CONTROL COVERING SIGNS TYPE II EACH	643.0920 # CYCLES	643.0920 # SIGNS	643.1050 TRAFFIC CONTROL SIGNS PCMS EACH*	643.1050 DAY	SPV.0045.01 PORTABLE CHANGEABLE MESSAGE SIGN (PCMS) CELLULAR COMMUNICATIONS EACH*	SPV.0045.01 DAY
0010	STAGE 4A	1																			
	FALCON DR EB, Sta. 7F+29 - 24F+90		17	--	--	--	--	--	--	--	--	--	3	5	--	--	--	1	1	1	1
	FALCON DR WB, Sta. 7F+29 - 24F+90		17	--	--	--	--	--	--	--	--	--	3	5	--	--	--	1	1	1	1
	STAGE 4A SUBTOTAL			0		0		0		0		0		10	0	0	0		2		2
	STAGE 4B	3																			
	FALCON DR EB, Sta. 7F+29 - 24F+90		10	30	1	5	2	5	--	--	3	10	10	30	--	--	--	1	5	1	5
	FALCON DR WB, Sta. 7F+29 - 24F+90		10	30	--	--	--	--	--	--	3	10	10	30	--	--	--	1	5	1	5
	STAGE 4B SUBTOTAL			60		5		5		0		20		60	0	0	0		10		10
	STAGE 4C	3																			
	FALCON DR EB, Sta. 7F+29 - 24F+90		10	30	--	--	--	--	--	--	3	10	10	30	--	--	--	1	5	1	5
	FALCON DR WB, Sta. 7F+29 - 24F+90		10	30	1	5	2	5	--	--	3	10	10	30	--	--	--	1	5	1	5
	STAGE 4C SUBTOTAL			60		5		5		0		20		60	0	0	0		10		10
	STAGE 4D	8																			
	FALCON DR EB, Sta. 7F+29 - 24F+90		10	80	--	--	--	--	--	--	3	25	10	80	--	--	--	1	10	1	10
	FALCON DR WB, Sta. 7F+29 - 24F+90		10	80	1	10	2	15	--	--	3	25	10	80	--	--	--	1	10	1	10
	STAGE 4D SUBTOTAL			160		10		15		0		50		160	0	0	0		20		20
	STAGE 4E	8																			
	FALCON DR EB, Sta. 7F+29 - 24F+90		10	80	1	10	2	15	--	--	3	25	10	80	--	--	--	1	10	1	10
	FALCON DR WB, Sta. 7F+29 - 24F+90		10	80	--	--	--	--	--	--	3	25	10	80	--	--	--	1	10	1	10
	STAGE 4E SUBTOTAL			160		10		15		0		50		160	0	0	0		20		20
	UNDISTRIBUTED			3,400		105		210		15		560		555	--	--	--		20		20
	TOTALS			37,395		1,135		2,290		155		6,160		6,110	1				222		222

* FOR INFORMATION ONLY

SEE SDD "LANE CLOSURE SPEEDS GREATER THAN 40MPH" FOR PLACEMENT OF TRAFFIC CONTROL DEVICES

3

TRAFFIC CONTROL SIGNS FIXED MESSAGE

CATEGORY	ROADWAY			643.1000 TRAFFIC CONTROL SIGNS FIXED MESSAGE SF	REMARKS
0010	USH 51				
		STA 175N+25	RT	58	SEE FIXED MESSAGE SIGN DETAIL
	TOTAL			58	

TRAFFIC CONTROL ITEMS

CATEGORY	PROJECT	643.0100.01 TRAFFIC CONTROL ID 1166-07-62 EACH
0010	1166-07-62	1
		1

SAWING ASPHALT

CATEGORY	LOCATION	STAGE	STA	TO	STA		690.0150 LF
0010	FALCON DRIVE						
		4	13F+25				25
		4	19F+00				25
	USH 51 & FALCON DR						
		1	154N+64			RT	8
		1	157N+06			LT	4
		1	184N+00			RT	8
		1	188N+00			LT	4
		1	168S+87			LT	8
		1	170S+00			RT	4
		1	181S+42			LT	4
		1	191S+44			RT	4
		1	191S+88			LT	10
		1	194S+00			LT	10
	USH 51 & MAINE DR						
		1	369N+90			RT	10
		1	370N+65			LT	4
		1	389N+58			LT	4
		1	390N+74			RT	10
		3	380N+77			LT/RT	40
		3	386N+03			LT/RT	40
		1	374S+49			LT	10
		1	375S+64			RT	4
		1	396S+12			RT	4
		1	396S+95			LT	10
		3	380S+62			LT/RT	40
		3	385S+88			LT/RT	40
	USH 51 & RAINBOW DR						
		1	503N+53			RT	10
		1	504N+86			LT	4
		1	506N+11	-	506N+67	LT	54
		1	523N+64			LT	4
		1	525N+93			RT	10
		3	514N+47			LT/RT	40
		3	519N+60			LT/RT	40
		1	508S+38			LT	10
		1	509S+98			RT	4
		1	528S+29			RT	4
		1	529S+75			LT	10
		3	514S+05			LT/RT	40
		3	519S+18			LT/RT	40
TOTAL							600

PAVEMENT MARKING

CATEGORY	ROADWAY	LOCATION			* 646.0600 REMOVING PAVEMENT MARKINGS LF	646.0106 PAVEMENT MARKING EPOXY 4-INCH YELLOW SOLID LF	646.0106 PAVEMENT MARKING EPOXY 4-INCH YELLOW 12.5' DASH LF	646.0106 PAVEMENT MARKING EPOXY 4-INCH WHITE SOLID LF	646.0126 PAVEMENT MARKING EPOXY 8-INCH WHITE LF
		104N+00	-	112N+00	275	--	275	--	--
0010	USH 51	152N+50	-	199N+00	11450	4650	2175	4250	350
		150S+50	-	158S+50	200	--	200	--	--
		167S+00	-	196S+00	8350	2900	1475	2725	1475
		214S+80	-	223S+00	200	--	200	--	--
		236S+80	-	244S+50	300	--	300	--	--
		351N+00	-	357N+50	175	--	175	--	--
		368N+00	-	393N+00	5625	2500	625	2500	--
		372S+00	-	397S+00	5625	2500	625	2500	--
		501N+50	-	528N+00	5975	2650	675	2650	--
		506S+00	-	532S+00	5850	2600	650	2600	--
		542S+00	-	548S+50	175	--	175	--	--
TOTALS					44,200		42,575		1,825

* QUANTITIES FOUND ELSEWHERE

TEMPORARY TRAFFIC SIGNALS FOR BRIDGES B-37-157

CATEGORY	STAGE	LOCATION	661.0100 LS
0010	4		
		FALCON DRIVE	1
		TOTAL	1

PROJECT NO: 1166-07-62	HWY: USH 51	COUNTY: MARATHON	MISCELLANEOUS QUANTITIES	SHEET NO: 105	E

3

TEMPORARY PAVEMENT MARKING FOR TRAFFIC CONTROL

CATEGORY	PHASE	ROADWAY	STA - STA	* 646.0600 REMOVING PAVEMENT MARKINGS LF	649.0100 TEMPORARY PAVEMENT MARKING 4-INCH WHITE LF	649.0100 YELLOW LF	649.0400 TEMPORARY PAVEMENT MARKING REMOVABLE TAPE 4-INCH BLACK LF	649.0400 WHITE LF	649.0400 YELLOW LF	649.0801 TEMPORARY PAVEMENT MARKING REMOVABLE TAPE 8-INCH WHITE LF	649.1000 TEMPORARY PAVEMENT MARKING STOP LINE REMOVABLE TAPE 12-INCH LF
0010	1A	USH 51	105N+20 - 111N+80	--	--	--	--	660	--	--	--
			181N+45 - 183N+45	--	--	--	--	200	--	--	--
			179S+00 - 186S+70	--	--	--	--	770	--	--	--
			182S+00 - 186S+70	--	--	--	--	--	--	470	--
			182S+00 - 188S+30	--	--	--	--	--	--	630	--
			185N+45 - 188N+30	--	--	--	--	--	--	570	--
			215S+00 - 218S+50	--	--	--	--	--	--	700	--
			220S+90 - 222S+90	--	--	--	--	200	--	--	--
			237S+00 - 243S+60	--	--	--	--	630	--	--	--
			351N+45 - 358N+05	--	--	--	--	660	--	--	--
			541S+95 - 548S+55	--	--	--	--	660	--	--	--
	1B	USH 51	104N+00 - 111N+50	--	--	--	200	200	750	--	--
			150S+40 - 158S+20	--	--	--	--	200	780	--	--
			187N+00 - 197N+35	--	--	--	--	1,280	1,030	--	--
			236S+55 - 244S+35	--	--	--	--	200	780	--	--
			350N+90 - 357N+50	--	--	--	--	--	660	--	--
			542S+00 - 548S+60	--	--	--	--	--	660	--	--
	2A	USH 51	104N+00 - 111N+50	--	--	--	160	190	750	--	--
			150S+40 - 158S+25	--	--	--	--	200	785	--	--
			154N+65 - 159N+65	--	--	--	--	500	--	--	--
			154N+65 - 183N+80	2,915	2,915	--	--	--	2,915	--	--
			159N+65 - 179N+20	--	--	--	--	490	--	--	--
			179N+20 - 183N+80	--	--	--	--	460	--	--	--
			168S+85 - 173S+50	--	--	--	--	465	--	--	--
			168S+85 - 190S+00	2,115	2,115	--	--	--	--	--	--
			168S+85 - 194S+10	--	--	--	--	--	2,525	--	--
			173S+50 - 187S+90	--	--	--	--	365	--	--	--
			187S+90 - 194S+10	--	--	--	--	620	--	--	--
			188S+10 - 190S+00	--	--	--	--	--	--	380	--
			190S+00 - 194S+10	--	--	--	--	410	--	--	--
			236S+55 - 244S+25	--	--	--	--	190	770	--	--
	2B	USH 51	105N+20 - 111N+80	--	--	--	--	660	--	--	--
			157N+20 - 159N+20	--	--	--	--	200	--	--	--
			157N+20 - 183N+10	--	--	--	--	2,590	--	--	--
			157N+20 - 187N+50	3,030	--	3,030	--	--	--	--	--
			159N+20 - 184N+90	--	--	--	--	640	--	--	--
			184N+90 - 186N+90	--	--	--	--	--	--	400	--
			184N+90 - 187N+50	--	--	--	--	260	--	--	--
			186N+90 - 187N+50	--	--	--	--	60	--	--	--
			170S+20 - 173S+50	--	--	--	--	330	--	--	--
			170S+20 - 186S+75	--	--	--	--	1,655	--	--	--
			170S+20 - 191S+30	2,110	--	2,110	--	--	--	--	--
			173S+50 - 187S+90	--	--	--	--	360	--	--	--
			183S+70 - 185S+70	--	--	--	--	--	--	400	--
			185S+70 - 191S+30	560	560	--	--	--	--	--	--
			187S+90 - 191S+30	--	--	--	--	340	--	--	--
			215S+00 - 218S+50	--	--	--	--	--	--	695	--
			236S+60 - 244S+40	--	--	--	--	780	--	--	--

* QUANTITIES FOUND ELSEWHERE

CONTINUED ON NEXT PAGE

3

TEMPORARY PAVEMENT MARKING FOR TRAFFIC CONTROL

CATEGORY	PHASE	ROADWAY	STA - STA	* 646.0600 REMOVING PAVEMENT MARKINGS LF	649.0100 TEMPORARY PAVEMENT MARKING 4-INCH WHITE LF	649.0100 TEMPORARY PAVEMENT MARKING 4-INCH YELLOW LF	649.0400 TEMPORARY PAVEMENT MARKING REMOVABLE TAPE 4-INCH BLACK LF	649.0400 TEMPORARY PAVEMENT MARKING REMOVABLE TAPE 4-INCH WHITE LF	649.0400 TEMPORARY PAVEMENT MARKING REMOVABLE TAPE 4-INCH YELLOW LF	649.0801 TEMPORARY PAVEMENT MARKING REMOVABLE TAPE 8-INCH WHITE LF	649.1000 TEMPORARY PAVEMENT MARKING STOP LINE REMOVABLE TAPE 12-INCH LF
0010	3A	USH 51	369N+90 - 390N+75	2,085	2,085	--	--	--	2,085	--	--
			373S+85 - 396S+95	--	--	--	--	--	2,310	--	--
			374S+50 - 396S+95	2,245	2,245	--	--	--	--	--	--
			503N+50 - 525N+90	2,240	2,240	--	--	--	2,240	--	--
			507S+75 - 529S+75	--	--	--	--	--	2,200	--	--
			508S+40 - 529S+75	2,135	2,135	--	--	--	--	--	--
	3B	USH 51	350N+90 - 357N+50	--	--	--	--	660	--	--	--
			370N+75 - 389N+60	1,885	--	1,885	--	1,885	--	--	--
			375S+70 - 396S+10	2,040	--	2,040	--	2,040	--	--	--
			504N+90 - 523N+65	1,875	--	1,875	--	1,875	--	--	--
			510S+00 - 528S+25	1,825	--	1,825	--	1,825	--	--	--
			542S+00 - 548S+60	--	--	--	--	660	--	--	--
	3C	USH 51	350N+90 - 357N+50	--	--	--	--	--	660	--	--
			542S+00 - 548S+60	--	--	--	--	--	660	--	--
	FALCON DRIVE		4A	--	--	--	--	935	--	--	24
			4B	--	--	--	--	--	--	--	--
			4C	--	--	--	--	935	--	--	24
			4D	--	--	--	--	--	--	--	--
			4E	--	--	--	--	935	--	--	24
TOTALS				27,060	27,060			52,095		4,245	72

* QUANTITIES FOUND ELSEWHERE

CONTINUED ON NEXT PAGE

3

3

CONSTRUCTION STAKING

CATEGORY	STAGE	LOCATION	STA	TO	STA	650.4000 STORM SEWER EACH	650.5500 CURB GUTTER AND CURB & GUTTER LF	650.6500.01 STRUCTURE LAYOUT LS	650.6500.02 STRUCTURE LAYOUT LS	650.6500.03 STRUCTURE LAYOUT LS	650.6500.04 STRUCTURE LAYOUT LS	650.6500.05 STRUCTURE LAYOUT LS	650.7000 CONCRETE PAVEMENT LF	650.8000 RESURFACING REFERENCE LF	650.9910 SUPPLEMENTAL CONTROL 1166-07-62 LS	650.9920 SLOPE STAKES LF
0010		PROJECT 1166-07-62	--	-	--	--	--	--	--	--	--	--	--	--	1	--
		USH 51 & FALCON DR														
	3		154N+64	-	188N+00	--	--	--	--	--	--	--	--	3,336	--	--
			168S+87	-	200S+72	--	--	--	--	--	--	--	--	3,185	--	--
		USH 51 & MAINE DR														
	3		369N+90	-	382N+77	--	--	--	--	--	--	--	--	1,287	--	--
		B-37-161	382N+77	-	384N+03	--	--	--	1	--	--	--	--	--	--	--
			384N+03	-	390N+74	--	--	--	--	--	--	--	--	671	--	--
			374S+49	-	382S+62	--	--	--	--	--	--	--	--	813	--	--
		B-37-162	382S+62	-	383S+88	--	--	--	--	1	--	--	--	--	--	--
			383S+88	-	396S+95	--	--	--	--	--	--	--	--	1,307	--	--
		USH 51 & RAINBOW DR														
	3		502N+54	-	516N+47	--	--	--	--	--	--	--	--	1,293	--	--
		B-37-165	516N+47	-	517N+60	--	--	--	--	--	1	--	--	--	--	--
			517N+60	-	525N+93	--	--	--	--	--	--	--	--	833	--	--
			508S+38	-	516S+05	--	--	--	--	--	--	--	--	767	--	--
		B-37-166	516S+05	-	517S+05	--	--	--	--	--	--	1	--	--	--	--
			517S+18	-	529S+76	--	--	--	--	--	--	--	--	1,258	--	--
		FALCON DR														
	4		10F+57	-	14F+52	--	--	--	--	--	--	--	--	--	--	395
			14F+32	-	14F+68	--	36	--	--	--	--	--	--	--	--	--
			14F+44	16'LT		1	--	--	--	--	--	--	--	--	--	--
			14F+45	47' LT		1	--	--	--	--	--	--	--	--	--	--
			14F+52	-	14F+69	--	--	--	--	--	--	--	17	--	--	--
		B-37-157	14F+69	-	17F+50	--	--	1	--	--	--	--	--	--	--	--
			17F+47	-	17F+78	--	31	--	--	--	--	--	--	--	--	--
			17F+50	-	17F+67	--	--	--	--	--	--	--	17	--	--	--
			17F+67	-	21F+41	--	--	--	--	--	--	--	--	--	--	375
		TOTAL				2	67	1	1	1	1	1	34	14,750	1	770

USH 51 SB2

PI = 168S+16.61
Y = 222210.33
X = 271200.51
△ = 44°36'46"
D = 2°24'19"
R = 2381.83
T = 977.17
L = 1854.59
X = 192.66
PC = 158S+39.44
Y = 221536.75
X = 271908.43
PT = 176S+94.03
Y = 223187.01
X = 271169.62

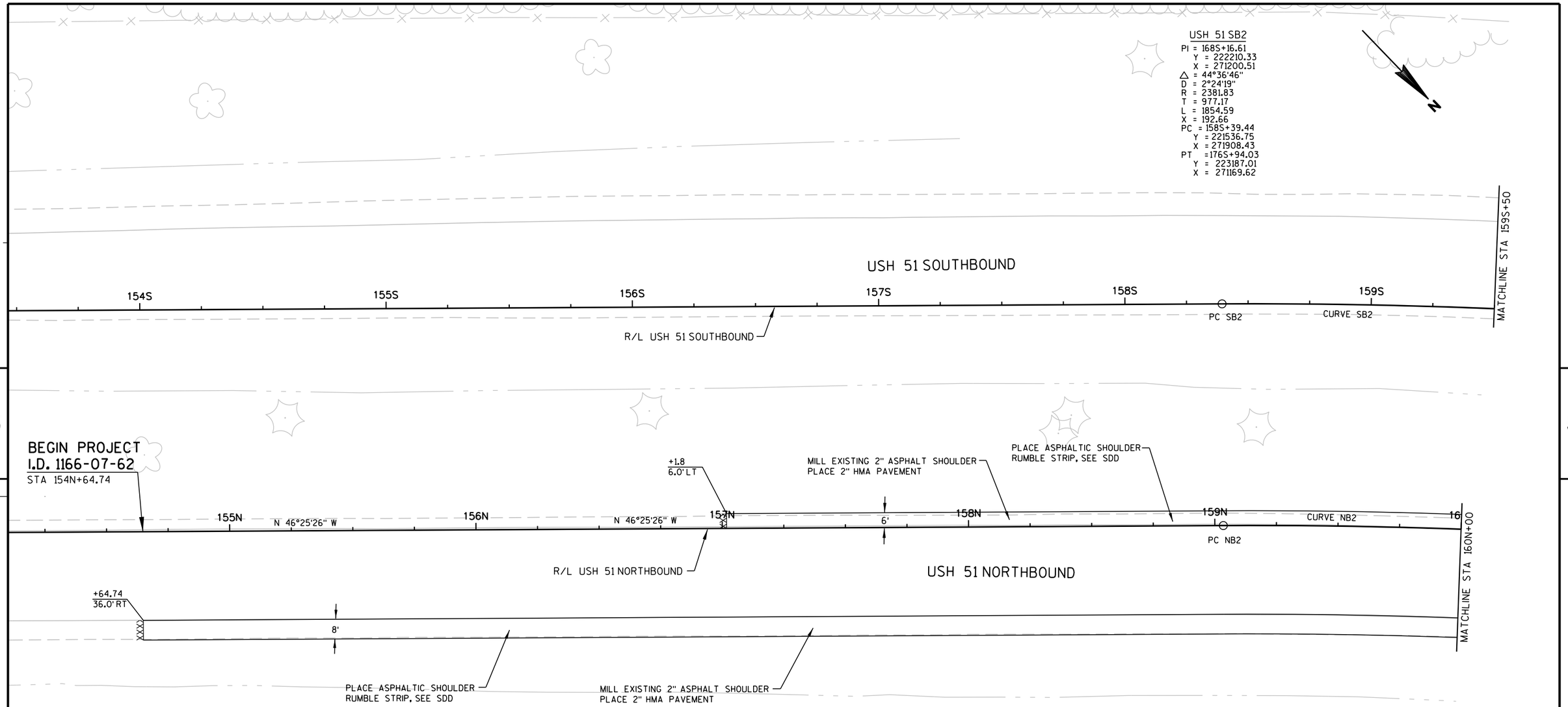

USH 51 NB2

PI = 168N+43.70
Y = 222250.08
X = 271289.29
△ = 44°36'46"
D = 2°30'00"
R = 2291.83
T = 940.25
L = 1784.51
X = 185.38
PC = 159N+03.45
Y = 221601.95
X = 271970.47
PT = 176N+87.96
Y = 223189.86
X = 271259.58

CONSTRUCTION NOTES

1. EXISTING 4' WIDE SHOULDERS ARE TO BE REPLACED WITH A 6' WIDE SHOULDER. MILL 2" OF EXISTING ASPHALT SHOULDER. REMOVAL OF BASE AGGREGATE 2' WIDE X 5" DEEP. TO BE PAID FOR AS COMMON EXCAVATION.
2. RUMBLE STRIPS TO BE INSTALLED AFTER TRAFFIC IS NO LONGER USING THE SHOULDERS.

LEGEND

XXX SAWING ASPHALT

PROJECT NO:1166-07-62	HWY: USH 51	COUNTY: MARATHON	PLAN	SHEET 109	E

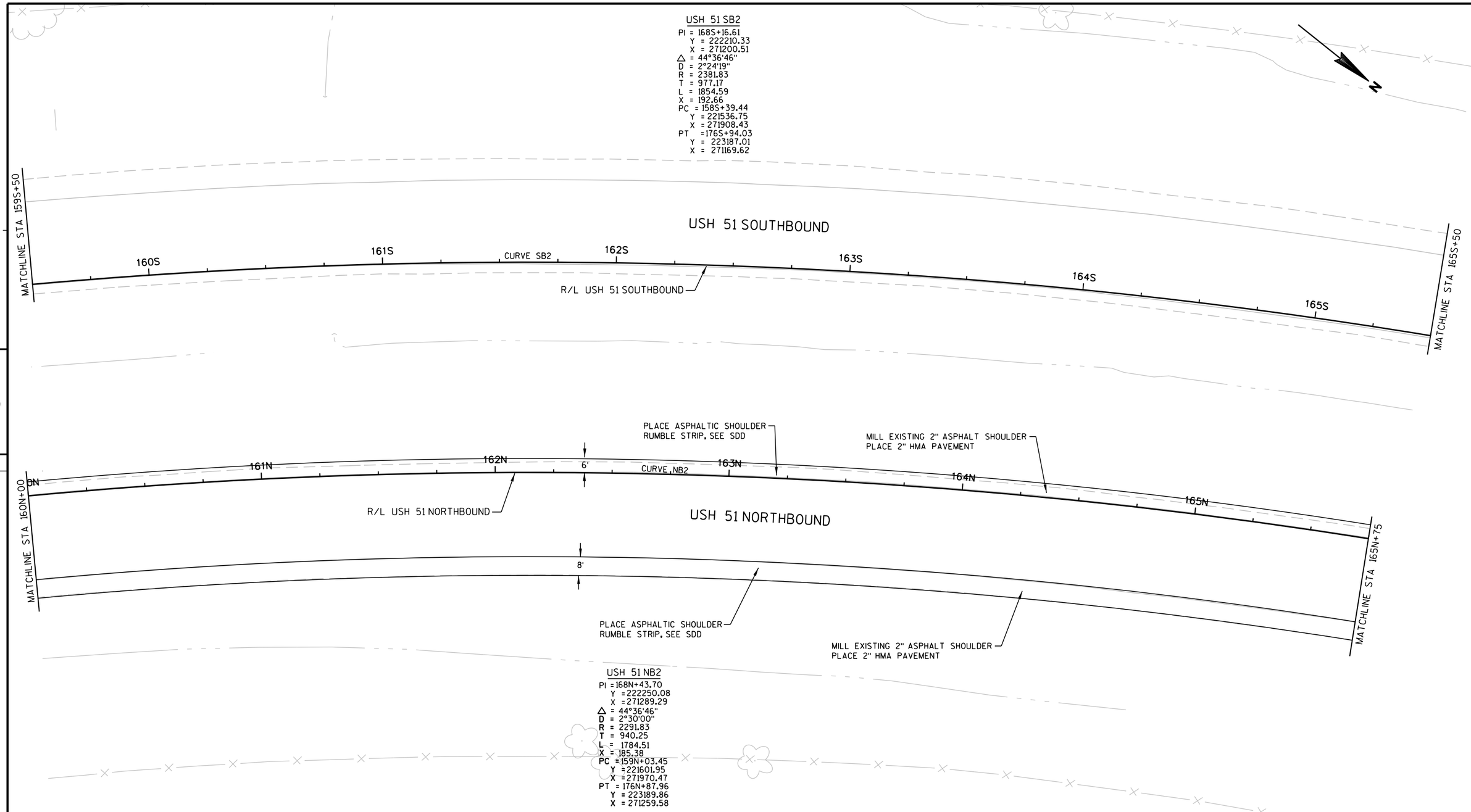

5

5

LEGEND

XXX SAWING ASPHALT

CONSTRUCTION NOTES

1. EXISTING 4' WIDE SHOULDERS ARE TO BE REPLACED WITH A 6' WIDE SHOULDER. MILL 2" OF EXISTING ASPHALT SHOULDER. REMOVAL OF BASE AGGREGATE 2' WIDE X 5" DEEP. TO BE PAID FOR AS COMMON EXCAVATION.
2. RUMBLE STRIPS TO BE INSTALLED AFTER TRAFFIC IS NO LONGER USING THE SHOULDERS.

PROJECT NO: 1166-07-62	HWY: USH 51	COUNTY: MARATHON	PLAN	SHEET 110	E

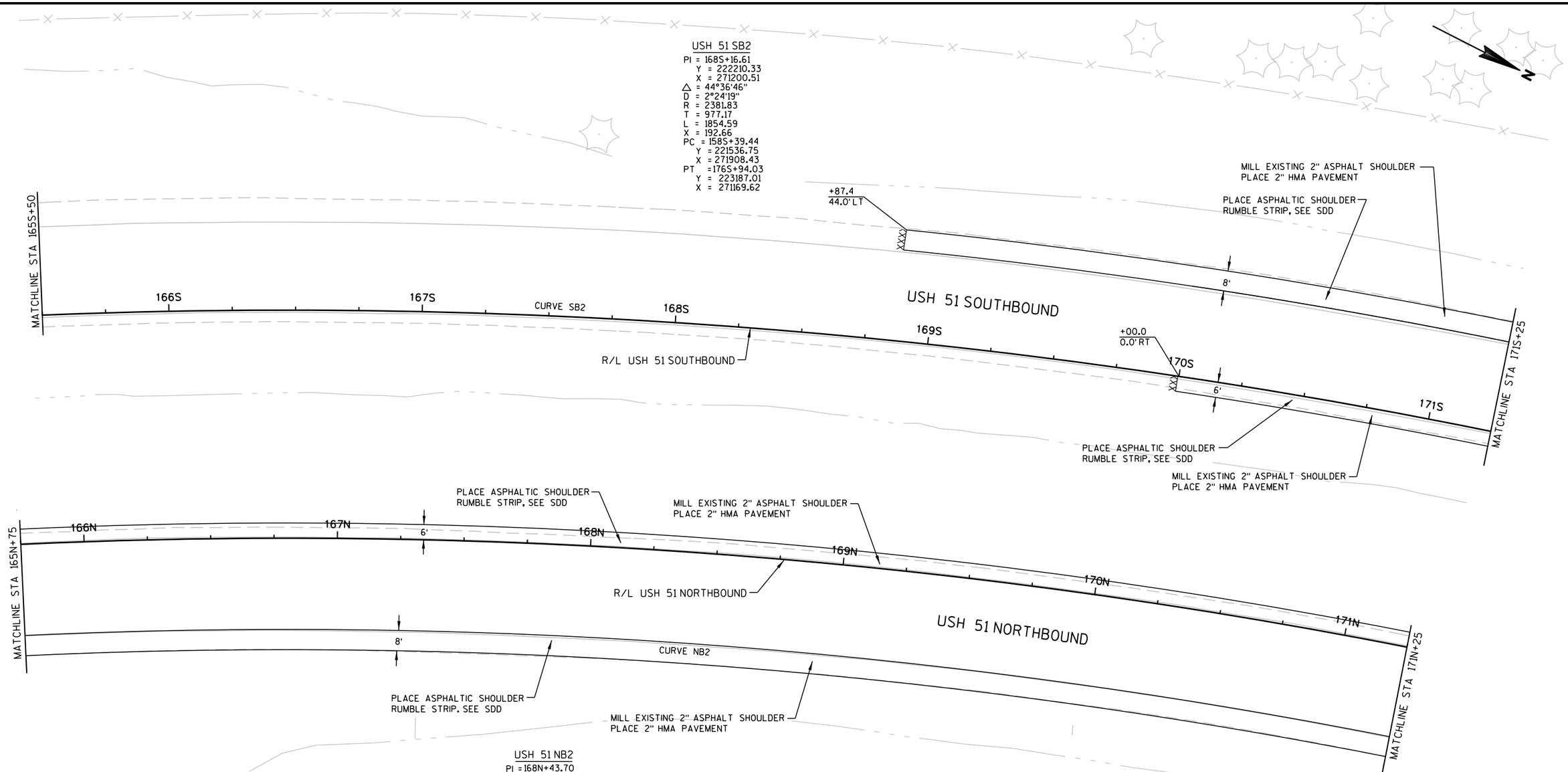

PROJECT NO:1166-07-62	HWY: USH 51	COUNTY: MARATHON	PLAN	SHEET 111	E

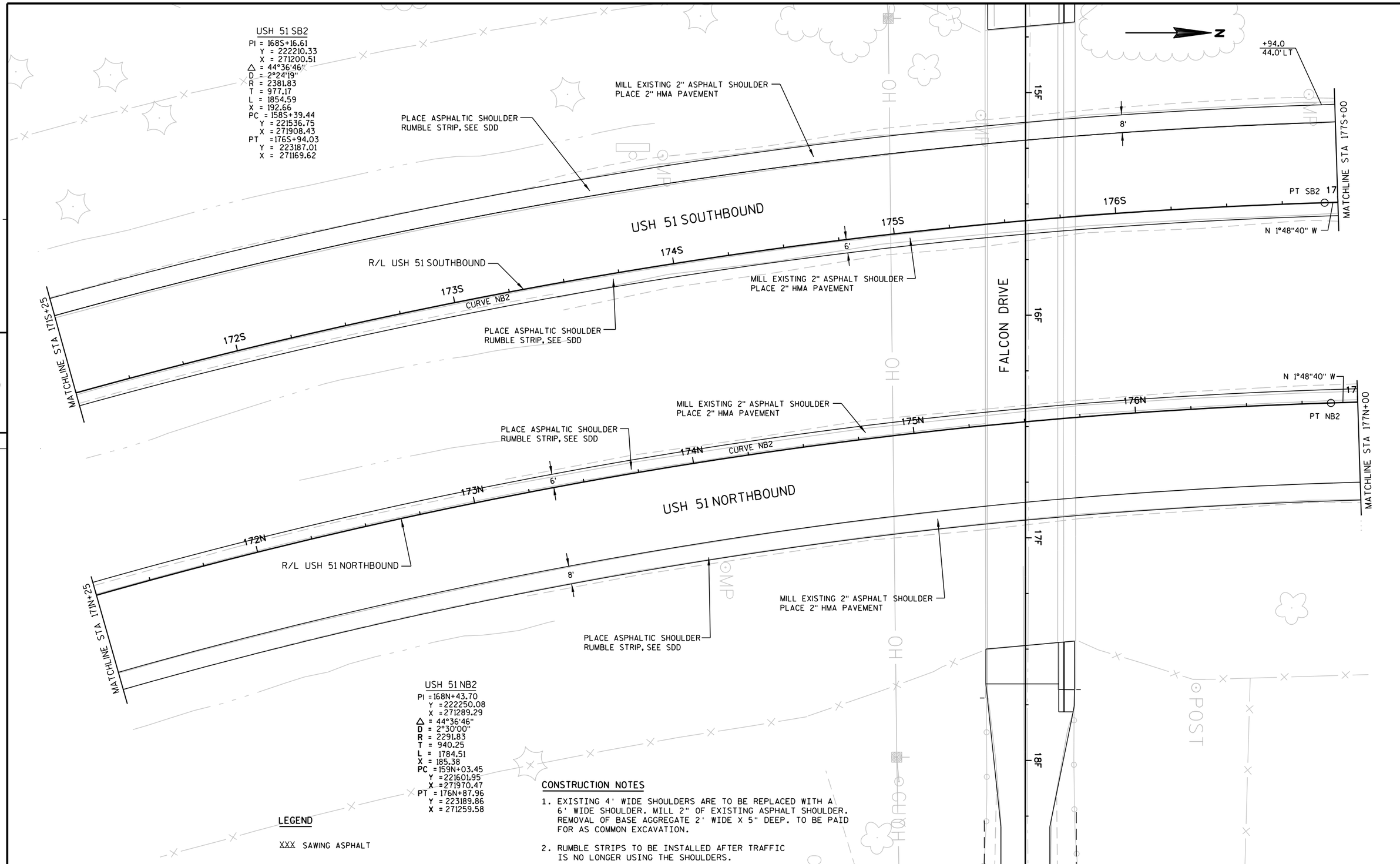

PROJECT NO:1166-07-62	HWY: USH 51	COUNTY: MARATHON	PLAN	SHEET 112	E

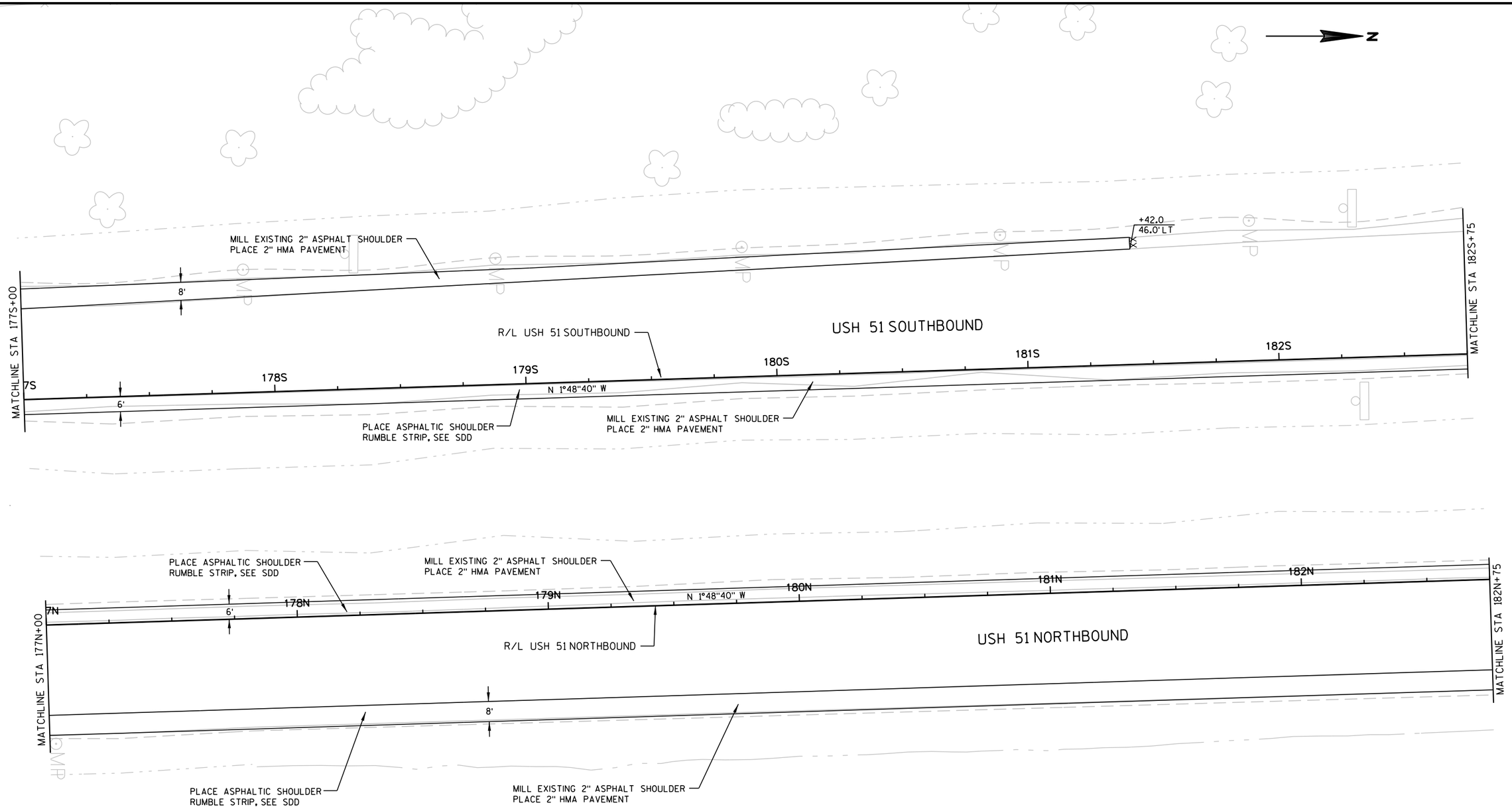

LEGEND

XXX SAWING ASPHALT

CONSTRUCTION NOTES

1. EXISTING 4' WIDE SHOULDERS ARE TO BE REPLACED WITH A 6' WIDE SHOULDER. MILL 2" OF EXISTING ASPHALT SHOULDER. REMOVAL OF BASE AGGREGATE 2' WIDE X 5" DEEP. TO BE PAID FOR AS COMMON EXCAVATION.
2. RUMBLE STRIPS TO BE INSTALLED AFTER TRAFFIC IS NO LONGER USING THE SHOULDERS.

PROJECT NO: 1166-07-62	HWY: USH 51	COUNTY: MARATHON	PLAN	SHEET 113	E

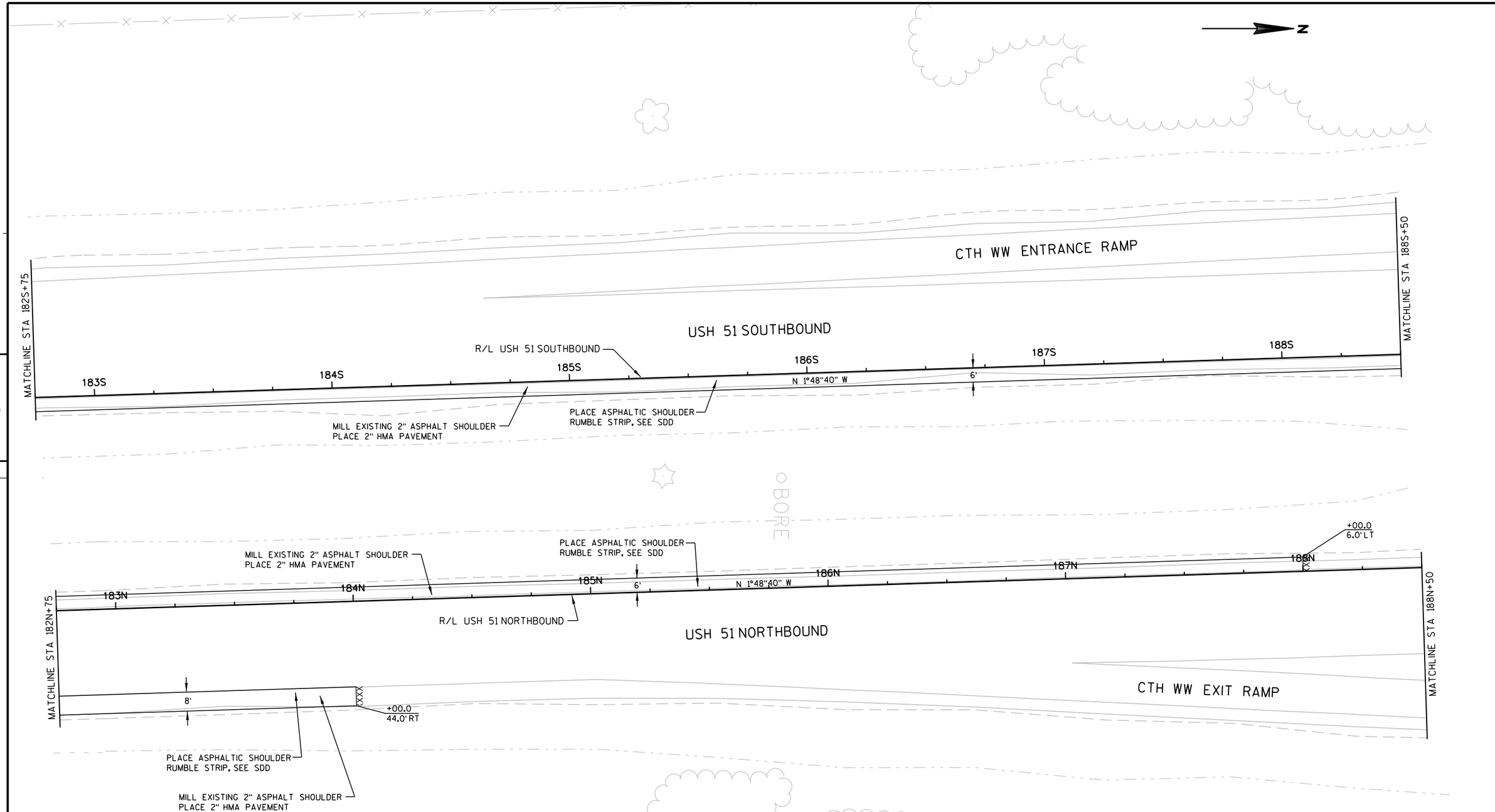

LEGEND

XXX SAWING ASPHALT

CONSTRUCTION NOTES

1. EXISTING 4' WIDE SHOULDERS ARE TO BE REPLACED WITH A 6' WIDE SHOULDER. MILL 2" OF EXISTING ASPHALT SHOULDER. REMOVAL OF BASE AGGREGATE 2' WIDE X 5" DEEP. TO BE PAID FOR AS COMMON EXCAVATION.
2. RUMBLE STRIPS TO BE INSTALLED AFTER TRAFFIC IS NO LONGER USING THE SHOULDERS.

PROJECT NO: 1166-07-62	HWY: USH 51	COUNTY: MARATHON	PLAN	SHEET 114	E

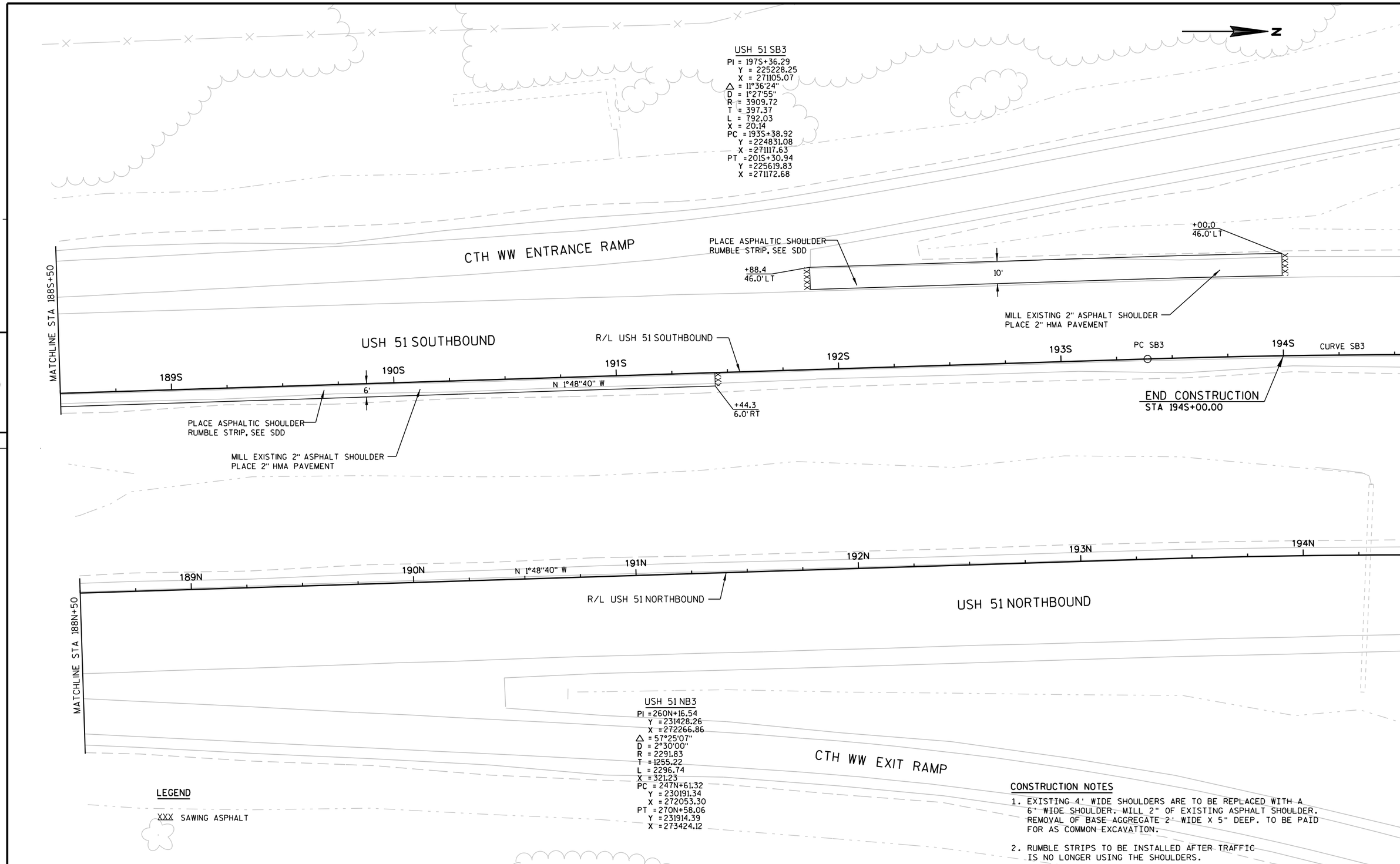

PROJECT NO: 1166-07-62	HWY: USH 51	COUNTY: MARATHON	PLAN	SHEET 115	E

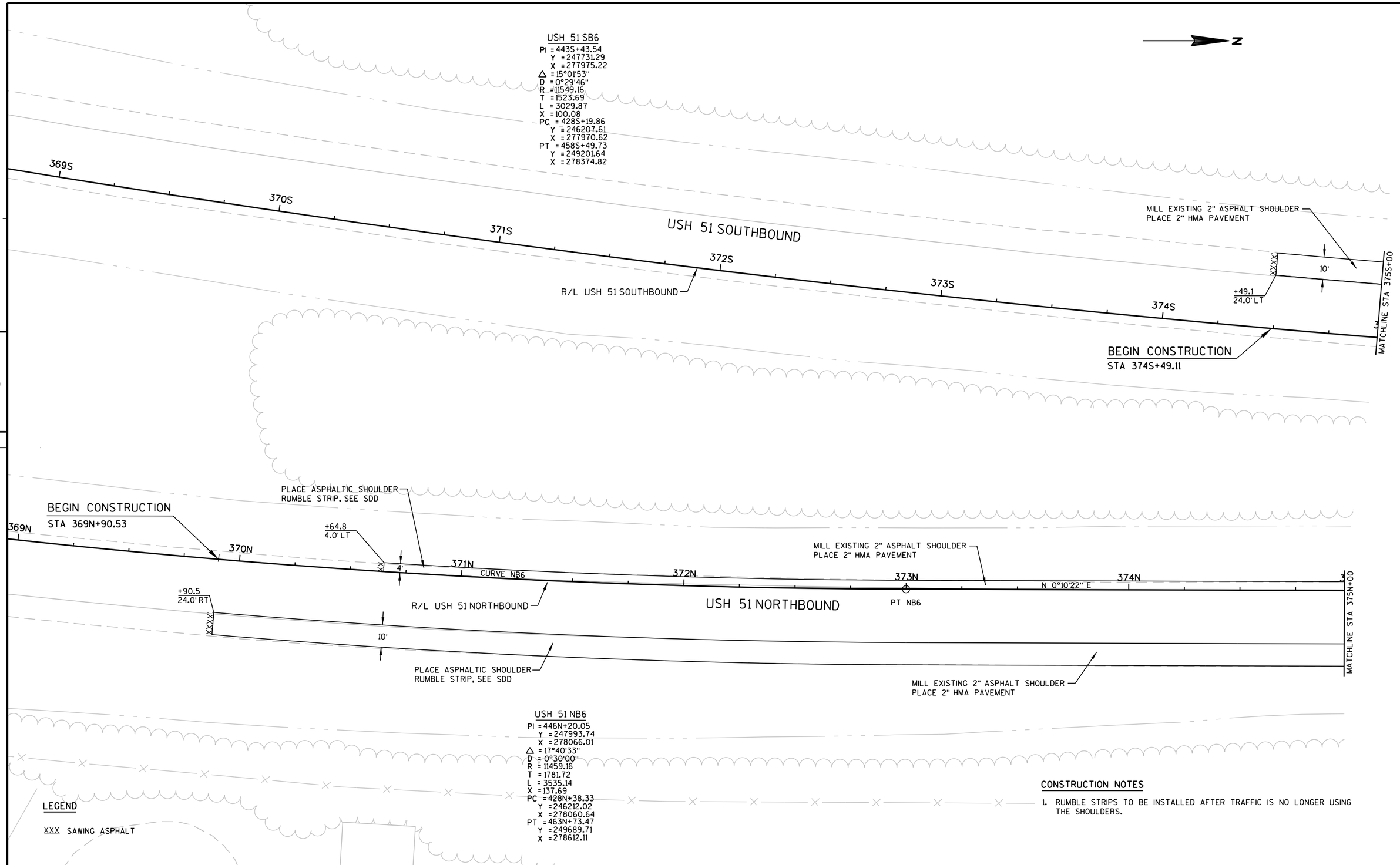

PROJECT NO:1166-07-62	HWY: USH 51	COUNTY: MARATHON	PLAN	SHEET 116	E

USH 51 SB6
PI = 443S+43.54
Y = 247731.29
X = 277975.22
Δ = 15°01'53"
D = 0°29'46"
R = 11549.16
T = 1523.69
L = 3029.87
X = 100.08
PC = 428S+19.86
Y = 246207.61
X = 277970.62
PT = 458S+49.73
Y = 249201.64
X = 278374.82

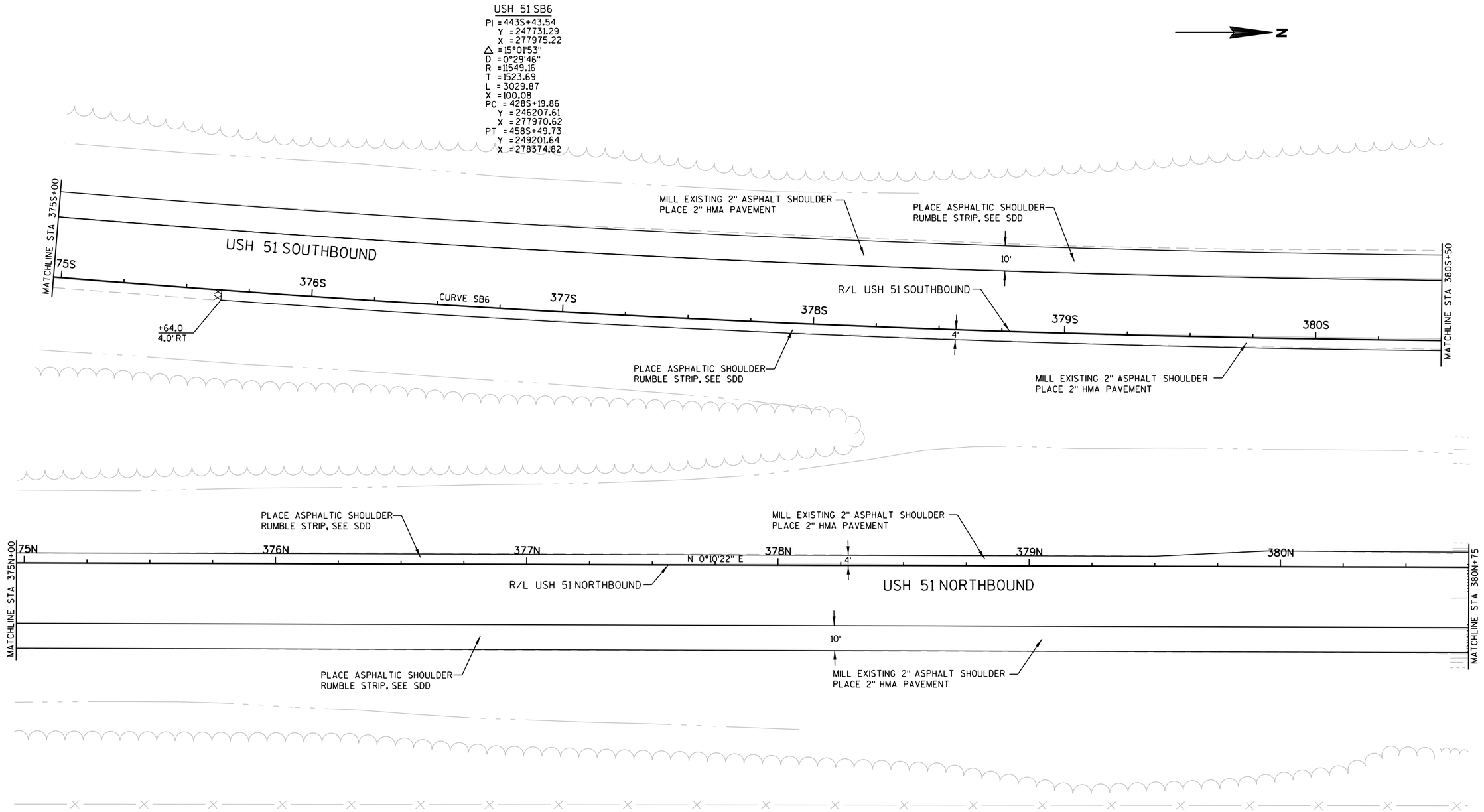

5

5

LEGEND

XXX SAWING ASPHALT

CONSTRUCTION NOTES

1. RUMBLE STRIPS TO BE INSTALLED AFTER TRAFFIC IS NO LONGER USING THE SHOULDERS.

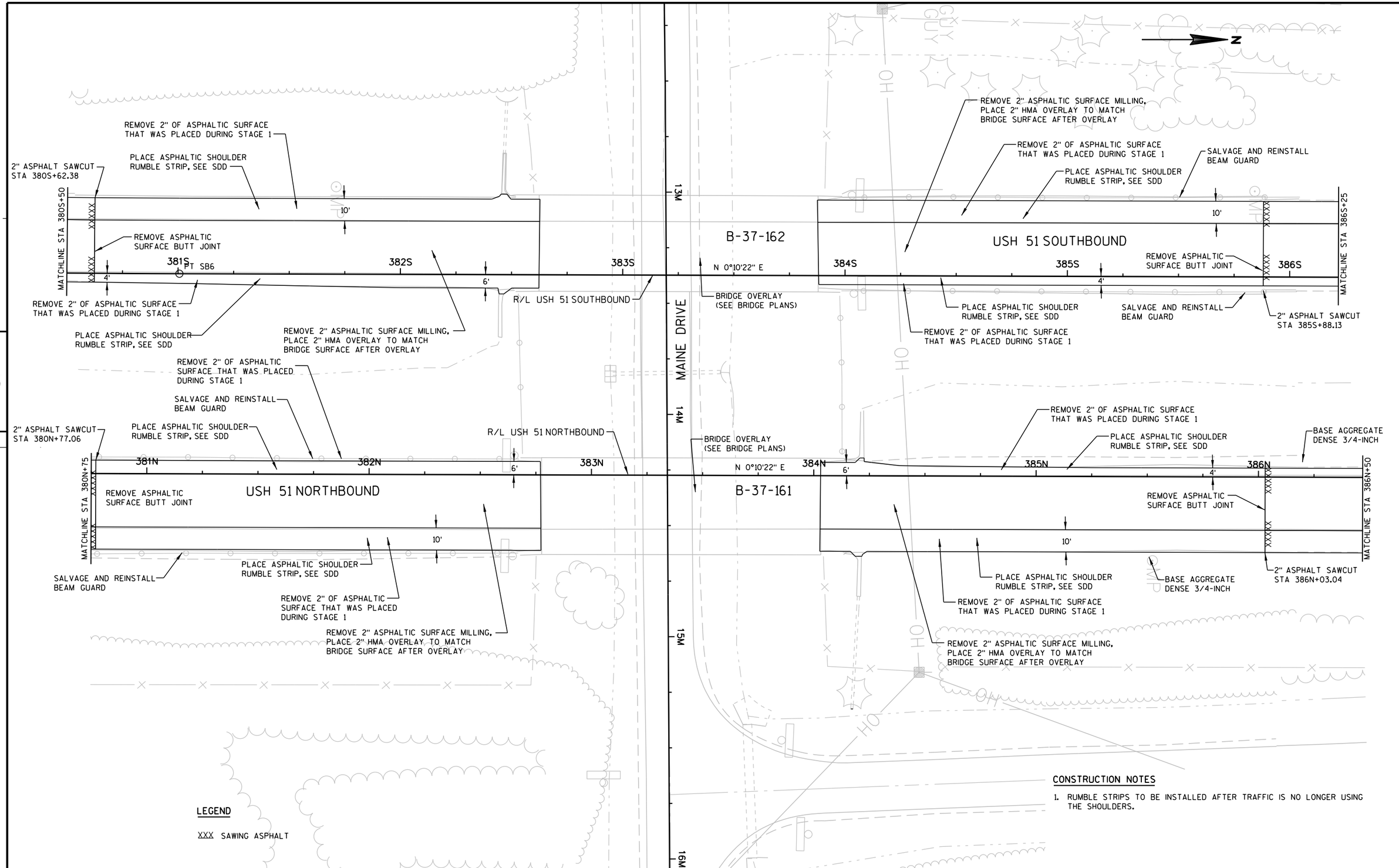

5

5

PROJECT NO:1166-07-62	HWY: USH 51	COUNTY: MARATHON	PLAN	SHEET 118	E

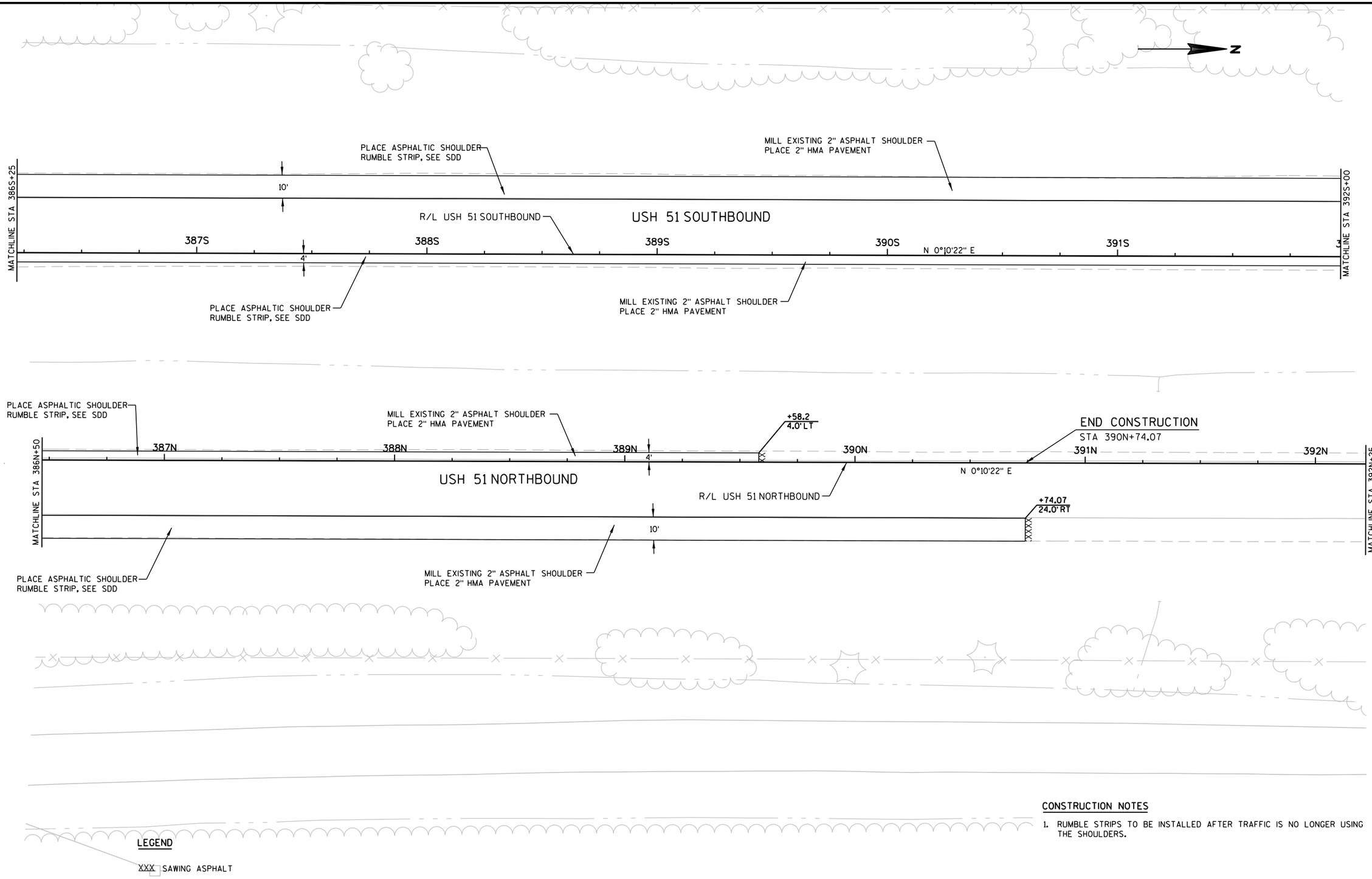

CONSTRUCTION NOTES

1. RUMBLE STRIPS TO BE INSTALLED AFTER TRAFFIC IS NO LONGER USING THE SHOULDERS.

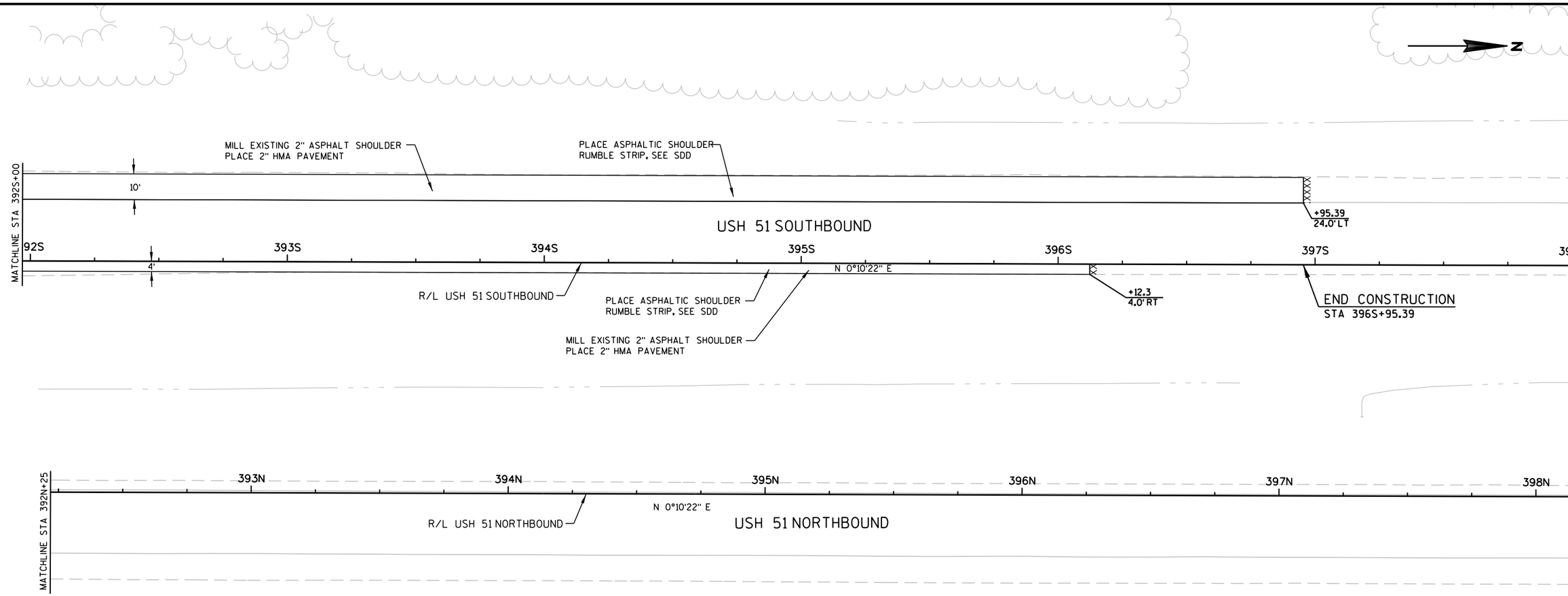

5

5

LEGEND

XXX SAWING ASPHALT

CONSTRUCTION NOTES

1. RUMBLE STRIPS TO BE INSTALLED AFTER TRAFFIC IS NO LONGER USING THE SHOULDERS.

PROJECT NO:1166-07-62	HWY: USH 51	COUNTY: MARATHON	PLAN	SHEET 120	E

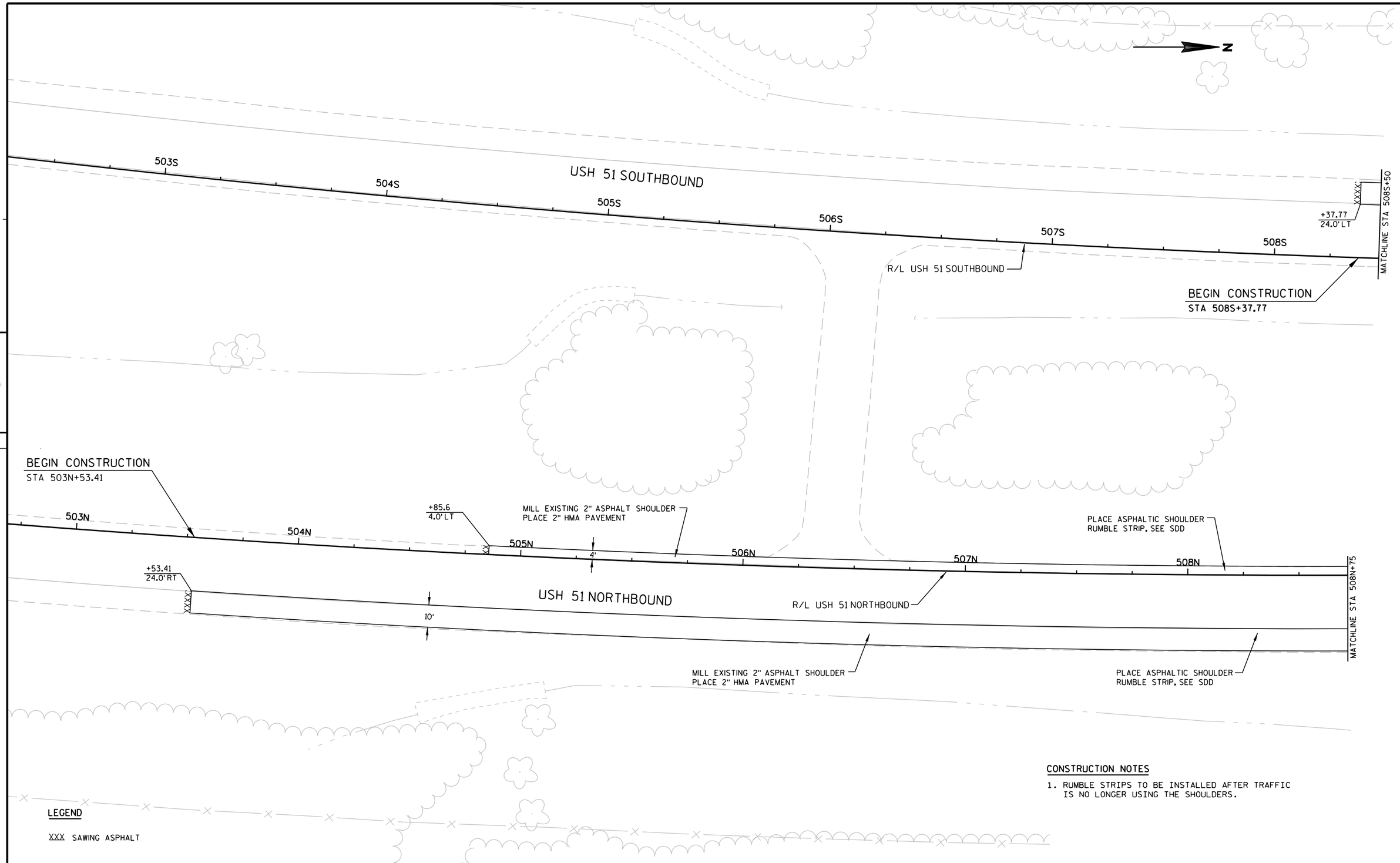

CONSTRUCTION NOTES

1. RUMBLE STRIPS TO BE INSTALLED AFTER TRAFFIC IS NO LONGER USING THE SHOULDERS.

PROJECT NO: 1166-07-62	HWY: USH 51	COUNTY: MARATHON	PLAN	SHEET 121	E

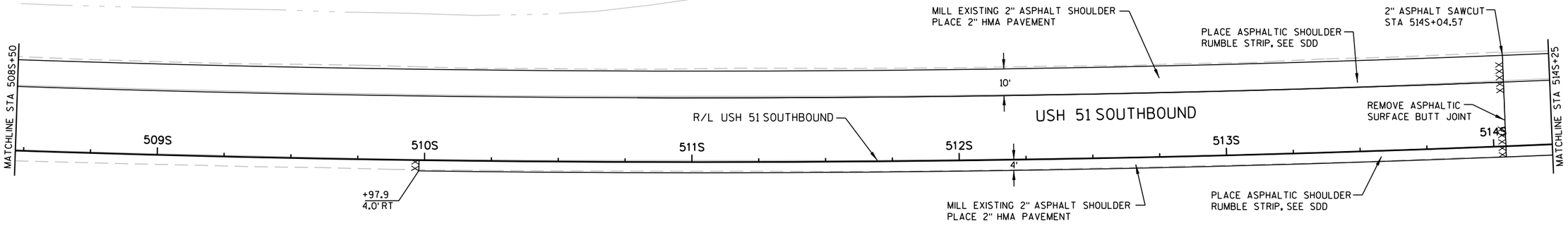

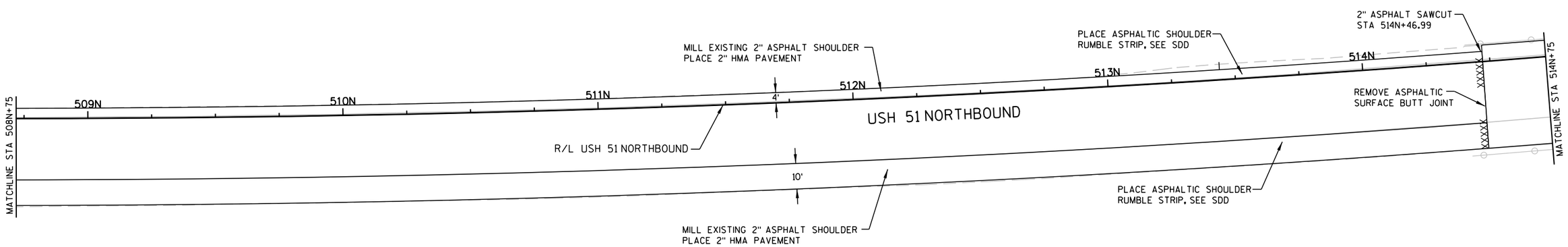

LEGEND

XXX SAWING ASPHALT

CONSTRUCTION NOTES

1. RUMBLE STRIPS TO BE INSTALLED AFTER TRAFFIC IS NO LONGER USING THE SHOULDERS.

PROJECT NO: 1166-07-62	HWY: USH 51	COUNTY: MARATHON	PLAN	SHEET 122	E

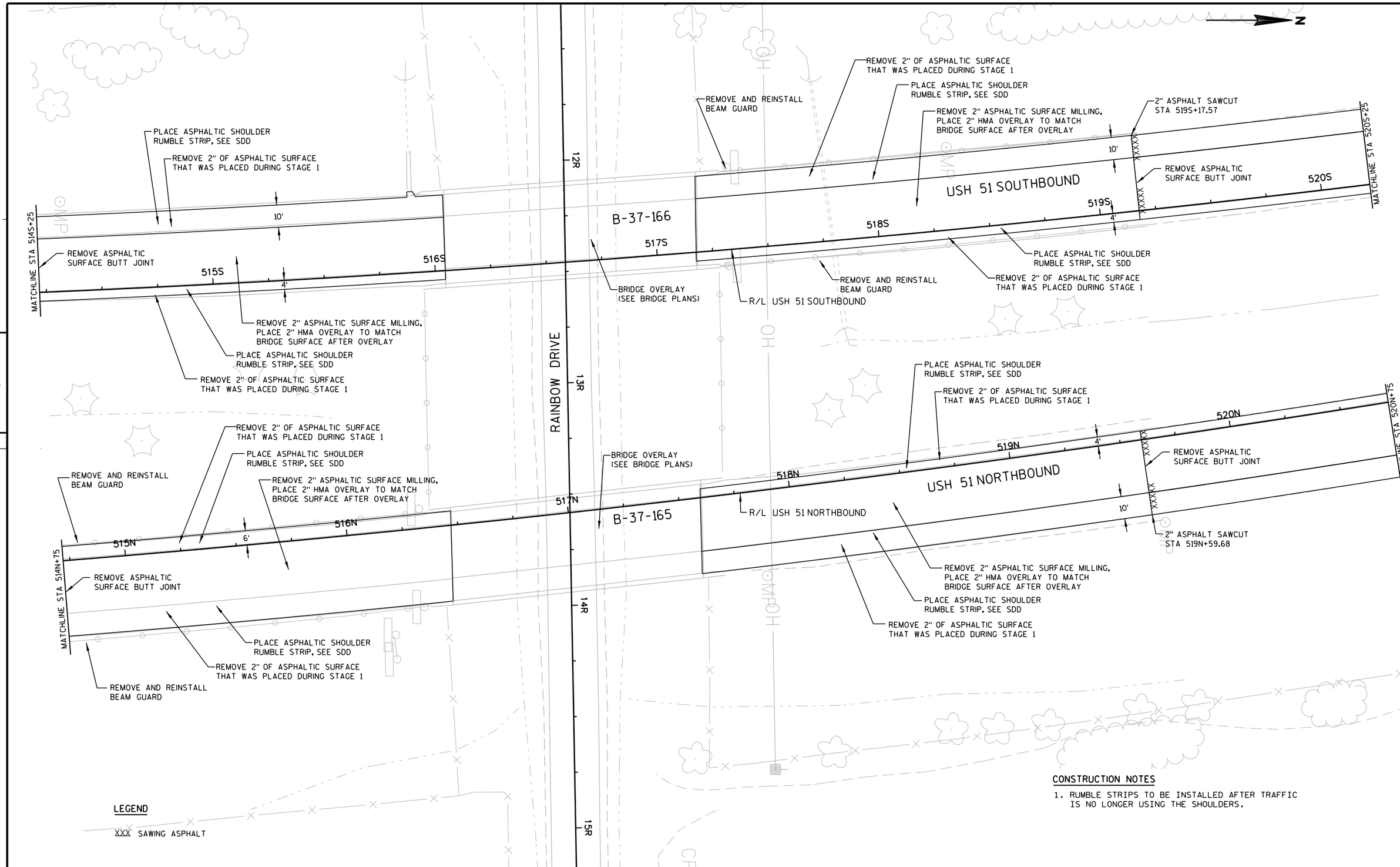

CONSTRUCTION NOTES

1. RUMBLE STRIPS TO BE INSTALLED AFTER TRAFFIC IS NO LONGER USING THE SHOULDERS.

5 5

PROJECT NO:1166-07-62	HWY: USH 51	COUNTY: MARATHON	PLAN	SHEET 123	E

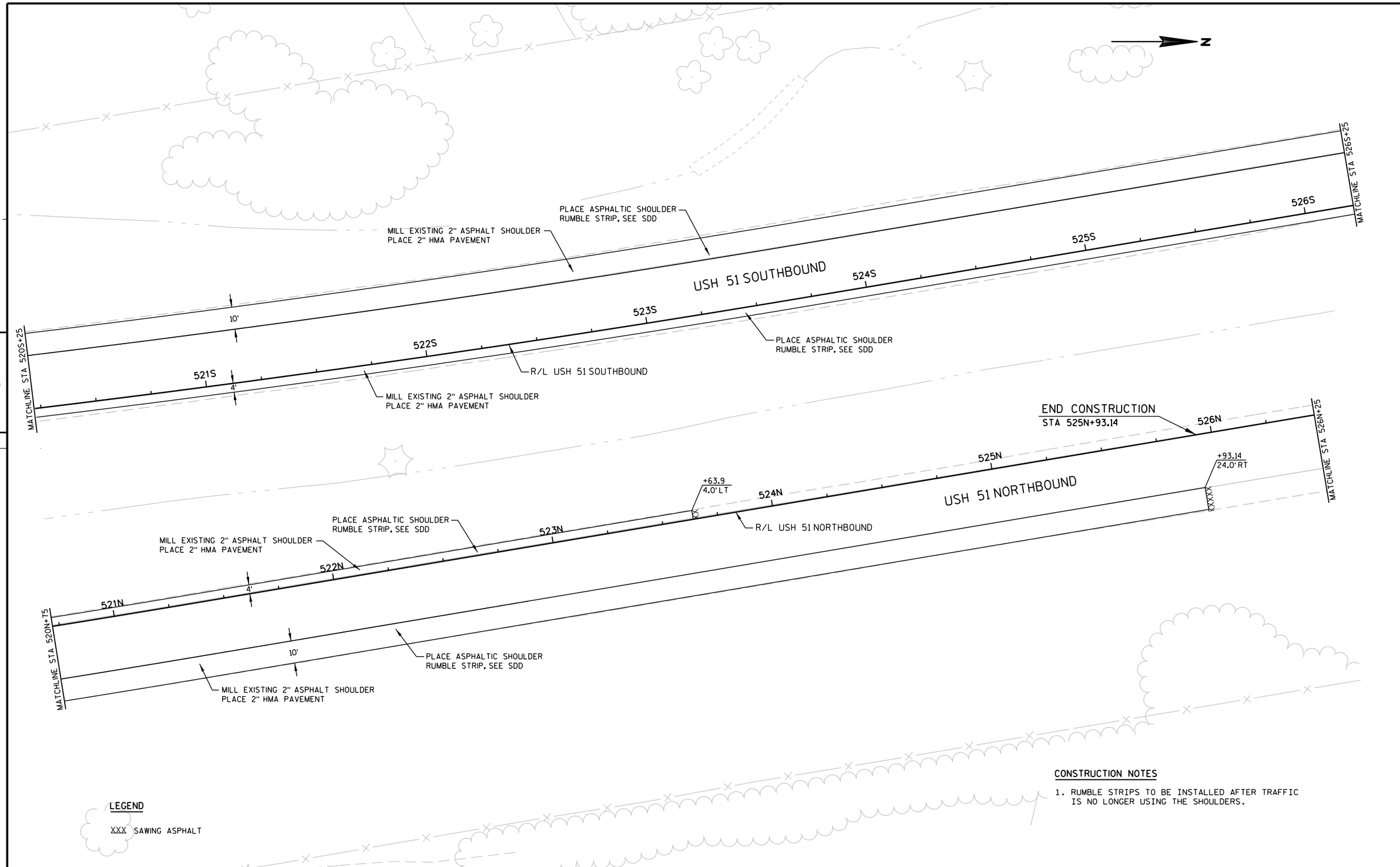

LEGEND

XXX SAWING ASPHALT

CONSTRUCTION NOTES

1. RUMBLE STRIPS TO BE INSTALLED AFTER TRAFFIC IS NO LONGER USING THE SHOULDERS.

5

5

PROJECT NO: 1166-07-62	HWY: USH 51	COUNTY: MARATHON	PLAN	SHEET 124	E

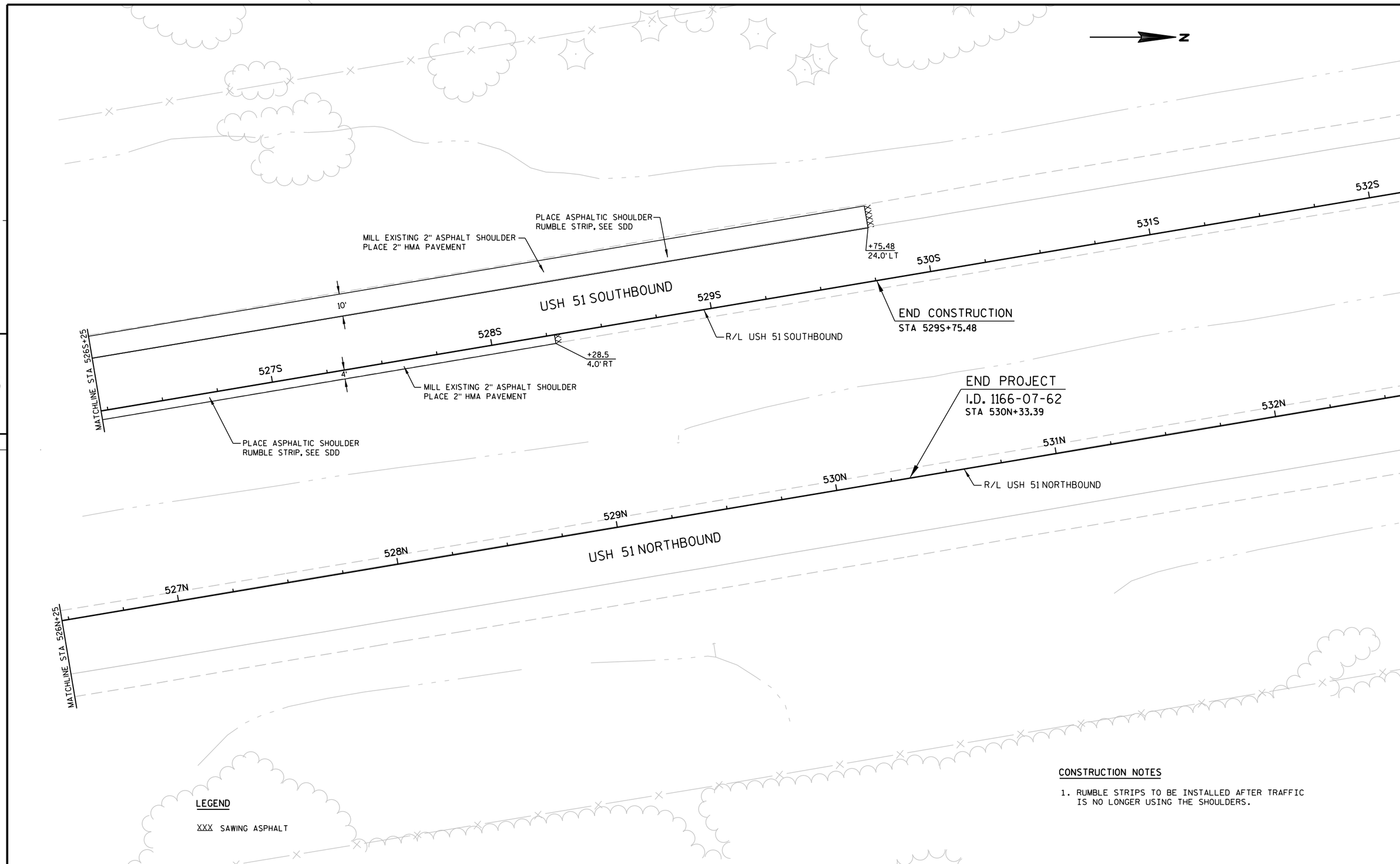

5

5

PROJECT NO:1166-07-62	HWY: USH 51	COUNTY: MARATHON	PLAN	SHEET 125	E

WISDOT TOTAL TARGETS

NO.	COORDINATES	DESCRIPTION	ELEVATION
TGT 174	223052.31 270233.21	MAG NAIL	1399.08
TGT 178	223053.21 271471.73	MAG NAIL	1435.47

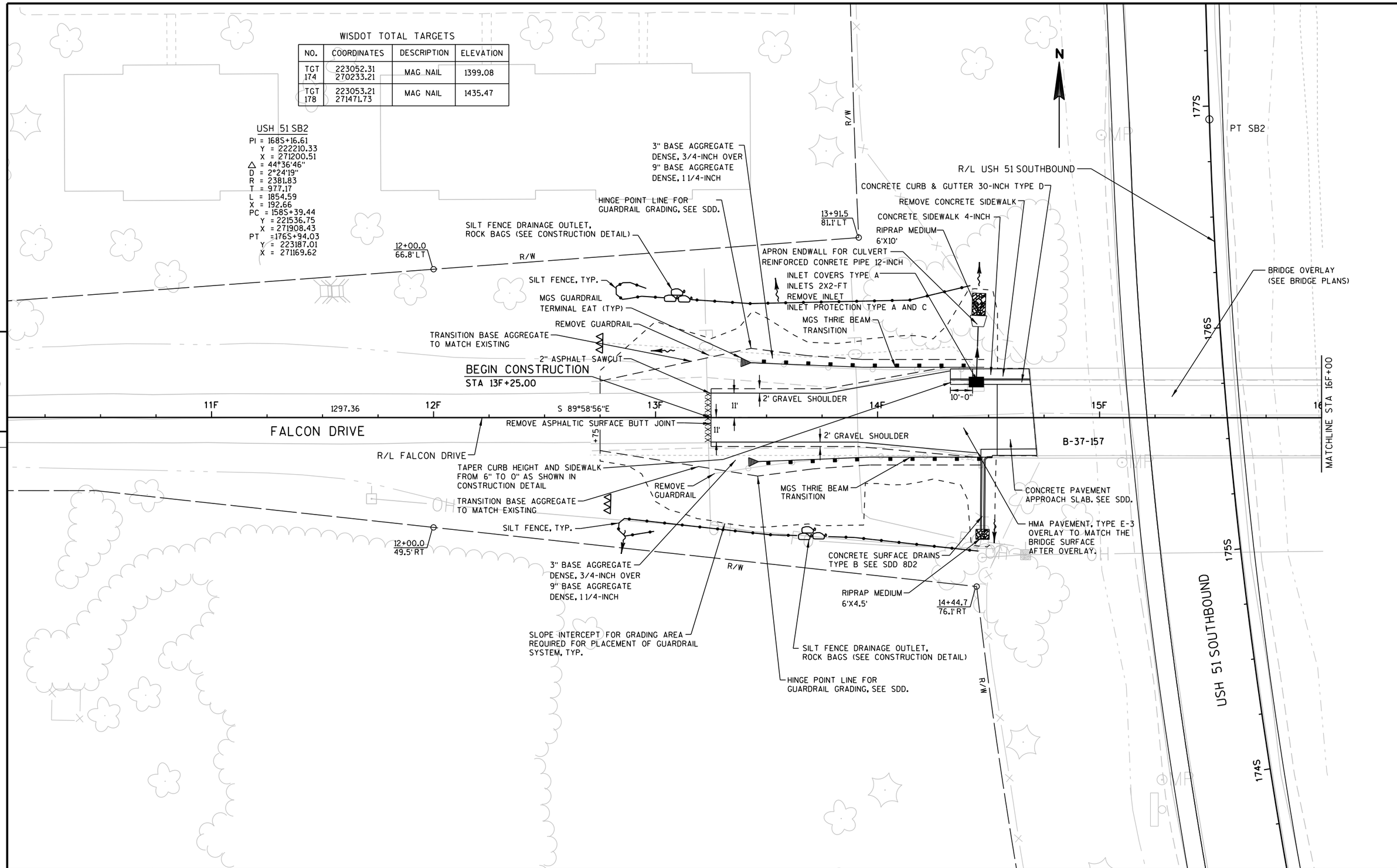

PROJECT NO: 1166-07-62	HWY: USH 51	COUNTY: MARATHON	PLAN	SHEET 126	E

FILE NAME : F:\BM1-3212 USH 51 Marathon Co Structures\Roads\cds\1166-07-32\050118_pp.dgn PLOT DATE : 29-APR-2015 08:49 PLOT BY : ceven PLOT NAME : PLOT SCALE : 40:1

WISDOT TOTAL TARGETS

NO.	COORDINATES	DESCRIPTION	ELEVATION
TGT 174	223052.31 270233.21	MAG NAIL	1399.08
TGT 178	223053.21 271471.73	MAG NAIL	1435.47

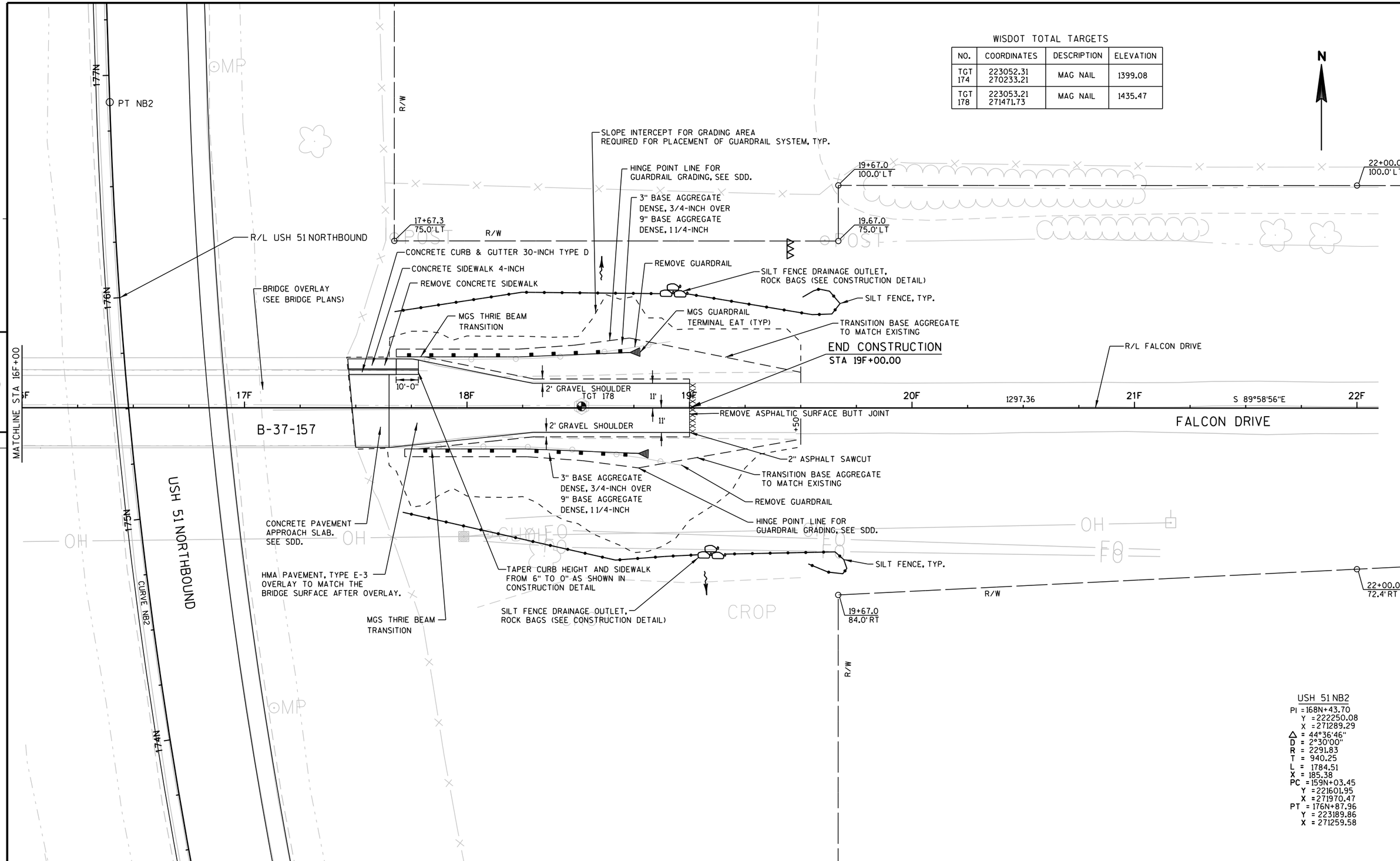

PROJECT NO: 1166-07-62	HWY: USH 51	COUNTY: MARATHON	PLAN	SHEET 127	E

FILE NAME : F:\BM1-3212 USH 51 Marathon Co Structures\Roads\cds\1166-07-32\050119_pp.dgn PLOT DATE : 29-APR-2015 08:49 PLOT BY : ceven PLOT NAME : PLOT SCALE : 40:1

WISDOT/CADDS SHEET 44

Standard Detail Drawing List

08A05-19A	INLET COVERS TYPE A, H, A-S, H-S & Z
08C07-01	INLETS 2X2-FT, 2X2.5-FT, 2X3-FT AND 2.5X3-FT
08D01-17	CONCRETE CURB, CONCRETE CURB AND GUTTER AND TIES
08D02-06	CONCRETE SURFACE DRAINS FLUME TYPE AT STRUCTURES
08E09-06	SILT FENCE
08E10-02	INLET PROTECTION TYPE A, B, C AND D
08F01-11	APRON ENDWALLS FOR CULVERT PIPE
08F04-07	JOINT TIES FOR CONCRETE PIPE AND CONCRETE COLLAR DETAIL
09G02-03A	BRIDGE TEMPORARY TRAFFIC SIGNAL INSTALLATION
09G02-03B	BRIDGE TEMPORARY TRAFFIC SIGNAL INSTALLATION
09G02-03C	BRIDGE TEMPORARY TRAFFIC SIGNAL INSTALLATION
13A05-05A	SHOULDER RUMBLE STRIP, MILLING
13A05-05B	SHOULDER RUMBLE STRIP, MILLING
13B02-07A	CONCRETE BRIDGE APPROACH
14B07-14A	CONCRETE BARRIER TEMPORARY PRECAST, 12'-6"
14B07-14B	CONCRETE BARRIER TEMPORARY PRECAST, 12'-6"
14B07-14C	CONCRETE BARRIER TEMPORARY PRECAST, 12'-6"
14B07-14D	CONCRETE BARRIER TEMPORARY PRECAST, 12'-6"
14B07-14E	CONCRETE BARRIER TEMPORARY PRECAST, 12'-6"
14B07-14F	CONCRETE BARRIER TEMPORARY PRECAST, 12'-6"
14B07-14G	CONCRETE BARRIER TEMPORARY PRECAST, 12'-6"
14B07-14H	CONCRETE BARRIER TEMPORARY PRECAST, 12'-6"
14B08-01A	CRASH CUSHION/SAND BARREL ARRAY AND OTHER TEMPORARY BARRIER LAYOUT DETAILS
14B08-01B	CRASH CUSHION/SAND BARREL ARRAY AND OTHER TEMPORARY BARRIER LAYOUT DETAILS
14B08-01C	CRASH CUSHION/SAND BARREL ARRAY AND OTHER TEMPORARY BARRIER LAYOUT DETAILS
14B08-01D	CRASH CUSHION/SAND BARREL ARRAY AND OTHER TEMPORARY BARRIER LAYOUT DETAILS
14B08-01E	CRASH CUSHION/SAND BARREL ARRAY AND OTHER TEMPORARY BARRIER LAYOUT DETAILS
14B42-03A	MIDWEST GUARDRAIL SYSTEM (MGS) GUARDRAIL
14B42-03B	MIDWEST GUARDRAIL SYSTEM (MGS) GUARDRAIL
14B42-03C	MIDWEST GUARDRAIL SYSTEM (MGS) GUARDRAIL
14B44-02A	MIDWEST GUARDRAIL SYSTEM ENERGY ABSORBING TERMINAL (MGS)
14B44-02B	MIDWEST GUARDRAIL SYSTEM ENERGY ABSORBING TERMINAL (MGS)
14B44-02C	MIDWEST GUARDRAIL SYSTEM ENERGY ABSORBING TERMINAL (MGS)
14B45-03A	MIDWEST GUARDRAIL SYSTEM THRIE BEAM TRANSITION (MGS)
14B45-03B	MIDWEST GUARDRAIL SYSTEM THRIE BEAM TRANSITION (MGS)
14B45-03C	MIDWEST GUARDRAIL SYSTEM THRIE BEAM TRANSITION (MGS)
14B45-03E	MIDWEST GUARDRAIL SYSTEM THRIE BEAM TRANSITION (MGS)
15C08-16A	PAVEMENT MARKING (MAINLINE)
15C19-02C	MOVING PAVEMENT MARKING OPERATION MULTI-LANE DIVIDED ROADWAY
15C31-01A	PAVEMENT MARKING (RAMPS AND GORES)
15D03-02	TRAFFIC CONTROL, LANE CLOSURE, SPEEDS GREATER THAN 40 M.P.H. WITH BARRIER
15D12-04	TRAFFIC CONTROL, LANE CLOSURE, SPEED REDUCTION
15D15-01	TRAFFIC CONTROL, EXIT AND ENTRANCE RAMP WITHIN LANE CLOSURE
15D27-02	TRAFFIC CONTROL, SHOULDER CLOSURE ON DIVIDED ROADWAY, SPEEDS GREATER THAN 40 MPH
15D30-01	TRAFFIC CONTROL, SIDEWALK CLOSURE
15D33-03	TRAFFIC CONTROL, ONE LANE ROAD WITH TEMPORARY SIGNALS

6

6

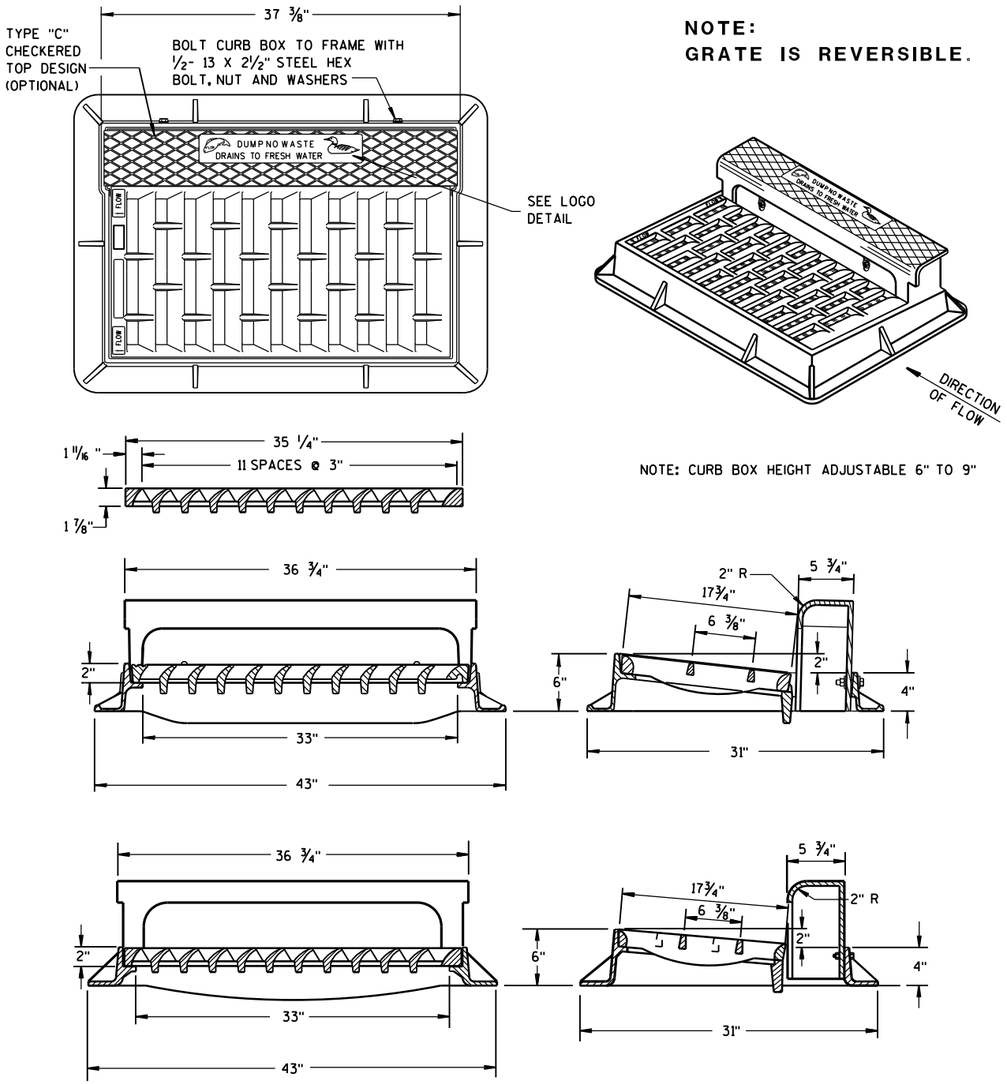

NOTE:
GRATE IS REVERSIBLE.

NOTE: CURB BOX HEIGHT ADJUSTABLE 6" TO 9"

TYPE "H"

NOTE: EITHER CASTING IS ACCEPTABLE

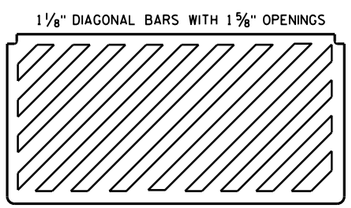

SPECIAL GRATE FOR TYPE "H" COVER

(MEASURES 35 1/4" X 17 3/4" X 2")

(NOTED AS TYPE H-S ON DRAINAGE TABLE)

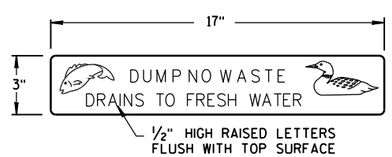

LOGO DETAIL

GENERAL NOTES

DETAILS OF CONSTRUCTION, MATERIALS AND WORKMANSHIP NOT SHOWN ON THIS DRAWING SHALL CONFORM TO THE PERTINENT REQUIREMENTS OF THE STANDARD SPECIFICATIONS AND THE APPLICABLE SPECIAL PROVISIONS.

DETAIL DRAWINGS FOR PROPOSED ALTERNATE DESIGNS FOR CATCH BASIN, MANHOLE AND INLET COVERS SHALL BE SUBMITTED TO THE ENGINEER FOR APPROVAL PROVIDING THAT SUCH ALTERNATE DESIGNS MAKE PROVISION FOR EQUIVALENT CAPACITY AND STRENGTH.

ROUND FRAMES AND COVERS SHALL HAVE CONTINUOUSLY MACHINED BEARING SURFACES TO PREVENT ROCKING AND RATTLING.

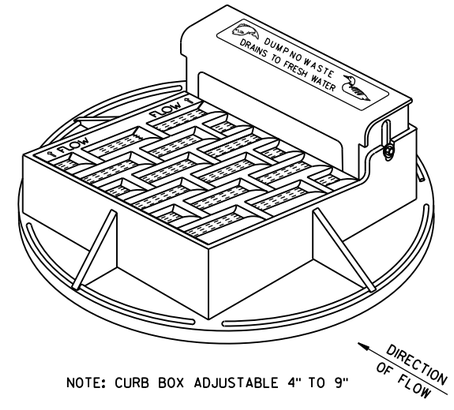

NOTE: CURB BOX ADJUSTABLE 4" TO 9"

NOTE:
GRATE IS REVERSIBLE.

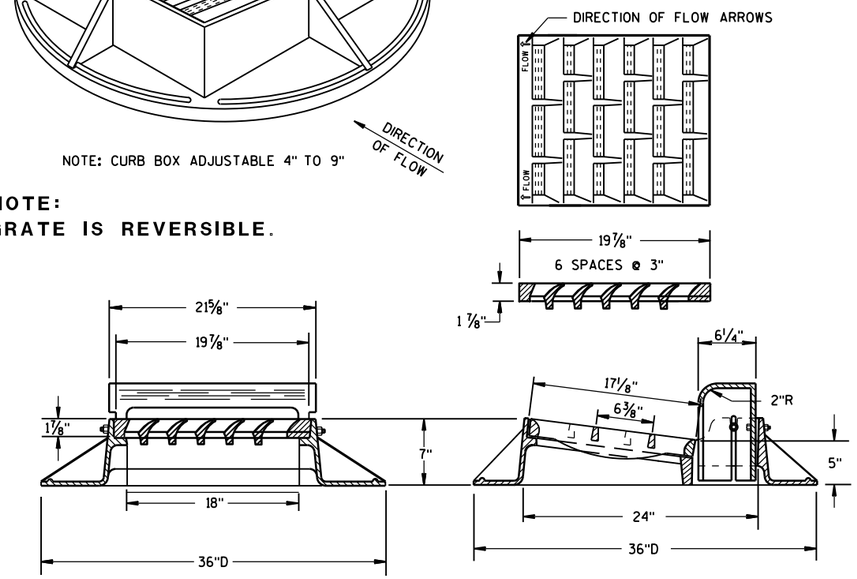

TYPE "A"

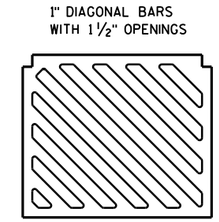

SPECIAL GRATE FOR TYPE "A" COVER

(MEASURES 19 3/4" X 17" X 1 7/8")

(NOTED AS TYPE A-S ON DRAINAGE TABLE)

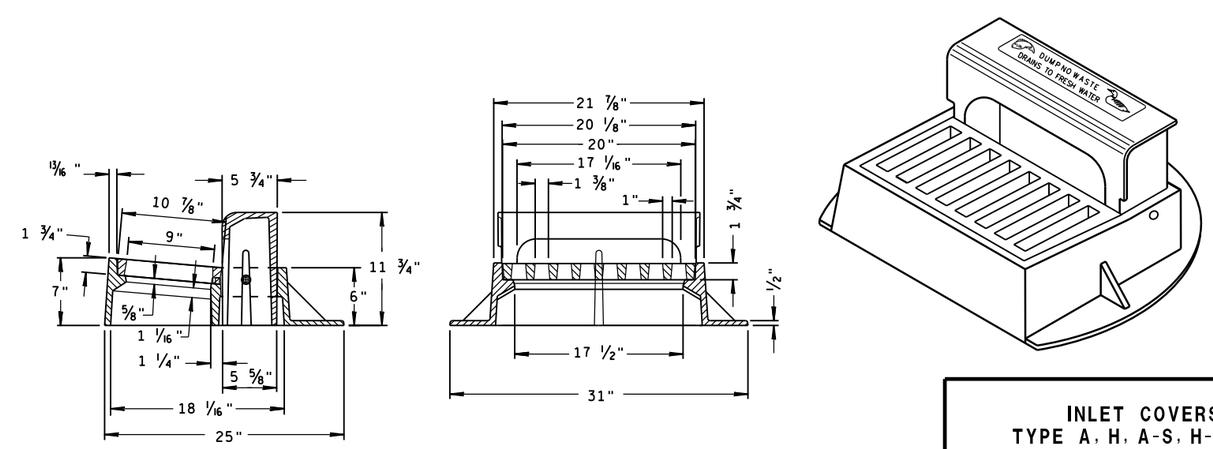

TYPE "Z"

INLET COVERS
TYPE A, H, A-S, H-S & Z

STATE OF WISCONSIN
DEPARTMENT OF TRANSPORTATION

APPROVED
11-27-13 /S/ Jerry H. Zogg
DATE ROADWAY STANDARDS DEVELOPMENT ENGINEER
FHWA

6

S.D.D. 8 A 5-19a

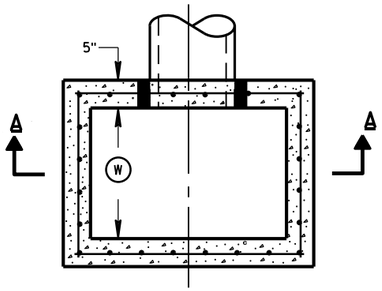

PLAN VIEW

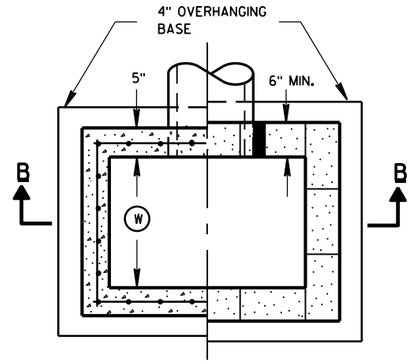

PLAN VIEW

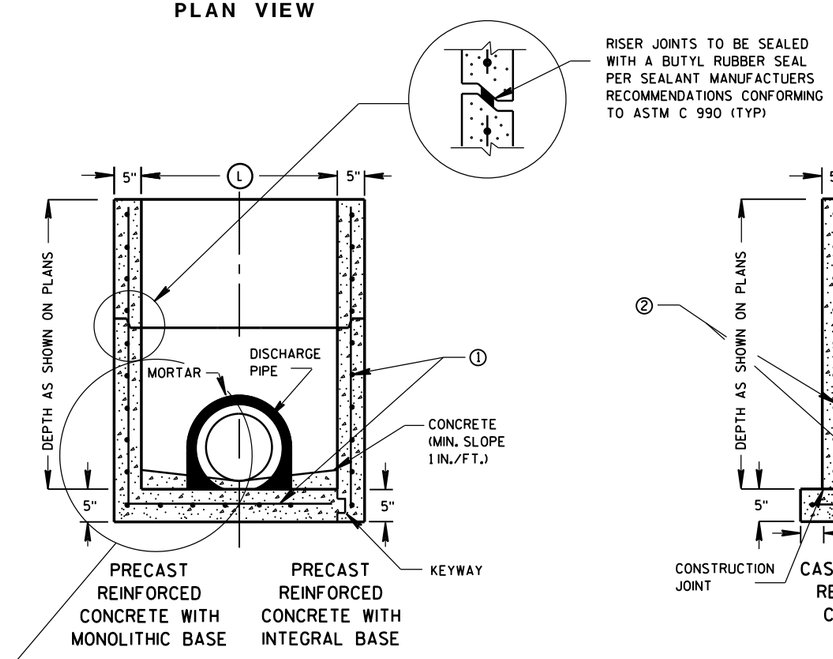

SECTION A-A

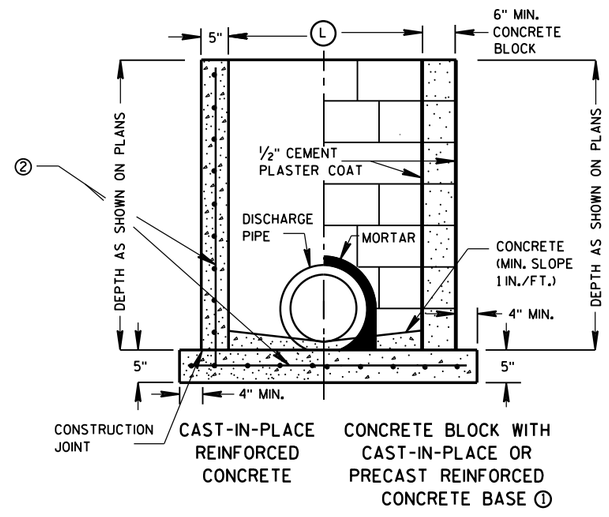

SECTION B-B

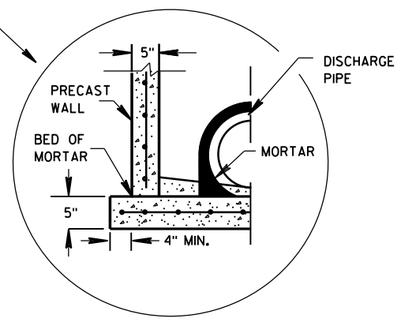

SEPARATE PRECAST REINFORCED CONCRETE BASE OPTION

GENERAL NOTES

DETAILS OF CONSTRUCTION, MATERIALS AND WORKMANSHIP NOT SHOWN ON THIS DRAWING SHALL CONFORM TO THE PERTINENT REQUIREMENTS OF THE STANDARD SPECIFICATIONS AND THE APPLICABLE SPECIAL PROVISIONS.

UNLESS OTHERWISE AUTHORIZED IN WRITING BY THE ENGINEER, THE CONTRACTOR SHALL NOT ORDER AND DELIVER PRECAST INLET UNITS REQUIRED FOR THE PROJECT UNTIL A LIST OF SIZES IS FURNISHED BY THE ENGINEER.

DETAILED DRAWINGS FOR PROPOSED ALTERNATE DESIGNS FOR UNDERGROUND DRAINAGE STRUCTURES SHALL BE SUBMITTED TO THE ENGINEER FOR APPROVAL PROVIDING THAT SUCH ALTERNATE DESIGNS MAKE PROVISION FOR EQUIVALENT CAPACITY AND STRENGTH.

ALL PRECAST INLET UNITS SHALL CONFORM TO THE PERTINENT REQUIREMENTS OF ASTM C 913.

ALL DRAINAGE STRUCTURES ARE DESIGNATED ON THE PLANS AS "MANHOLES 3X3-L", "CATCH BASINS 4-B", "INLETS 2X3-H", ETC. THE FIRST NUMBERS DESIGNATES THE SIZE OF THE STRUCTURE, AND THE FOLLOWING LETTER DESIGNATES THE TYPE OF COVER TO BE USED TO COMPRISE THE COMPLETE UNIT.

BASES SHALL BE PLACED ON A BED OF MATERIAL AT LEAST 6 INCHES IN DEPTH, WHICH MEETS THE REQUIREMENTS OF GRANULAR BACKFILL. THIS BEDDING SHALL BE COMPACTED AND PROVIDE UNIFORM SUPPORT FOR THE ENTIRE AREA OF THE BASE.

ALL BAR STEEL REINFORCEMENT SHALL BE EMBEDDED 2 INCHES CLEAR UNLESS OTHERWISE SHOWN OR NOTED.

PRECAST REINFORCED RISERS SHALL HAVE A TONGUE AND GROOVE JOINT WITH TONGUE UP OR DOWN.

4" OVERHANGING BASES ARE REQUIRED FOR CAST-IN-PLACE REINFORCED CONCRETE AND CONCRETE BLOCK INSTALLATIONS.
4" OVERHANG IS REQUIRED WHEN SEPARATE PRECAST BASE IS PROVIDED.
OVERHANG IS NOT REQUIRED ON PRECAST STRUCTURES WITH AN INTEGRAL OR MONOLITHIC BASE.

MAXIMUM INSIDE PIPE DIAMETER DETERMINED BY 3 INCH CLEARANCE ON EACH SIDE OF THE OUTSIDE WALL OF THE PIPE. SEE DETAIL "A". ASSUMES PIPE ENTERS PERPENDICULAR TO THE STRUCTURE.

① FOR PRECAST INLETS PROVIDE REINFORCING STEEL IN ACCORDANCE TO ASTM C 913.

② CONTRACTOR TO PROVIDE DRAWING(S) STAMPED BY A PROFESSIONAL ENGINEER FOR STEEL REINFORCING DESIGN FOR CAST-IN-PLACE STRUCTURES.

INLET COVER MATRIX

INLET SIZE		INLET COVER TYPE	ALL A'S	ALL B'S	BW	F	ALL H'S	S	T	V	WM
	WIDTH (W) (FT)	LENGTH (L) (FT)									
2X2-FT	2	2	X	X				X		X	
2X2.5-FT	2	2.5			X			X	X	X	X
2X3-FT	2	3					X				
2.5X3-FT	2.5	3				X					

PIPE MATRIX

INLET SIZE	MAXIMUM INSIDE PIPE DIAMETER	
	WIDTH (IN)	LENGTH (IN)
2X2-FT	12	12
2X2.5-FT	12	18
2X3-FT	12	24
2.5X3-FT	18	24

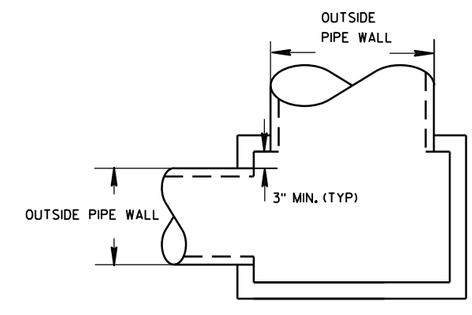

DETAIL "A"

INLETS 2X2-FT, 2X2.5-FT, 2X3-FT AND 2.5X3-FT

INLETS 2X2-FT, 2X2.5-FT, 2X3-FT AND 2.5X3-FT

STATE OF WISCONSIN
DEPARTMENT OF TRANSPORTATION

APPROVED
6/5/2012 — DATE
/S/ Jerry H. Zogg — ROADWAY STANDARDS DE ENGINEER
FHWA

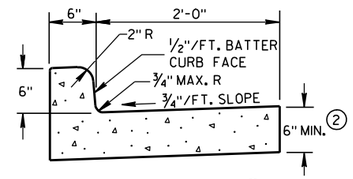

TYPES A & D ①

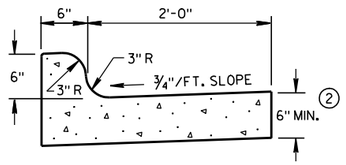

TYPES K & L ①

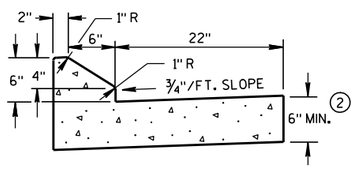

6" SLOPED CURB TYPES G & J ①

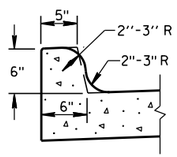

OPTIONAL CURB SHAPE FOR TYPES K & L ①

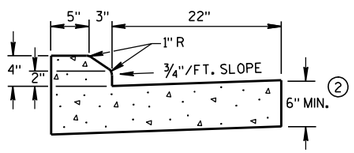

4" SLOPED CURB TYPES G & J ①

CONCRETE CURB & GUTTER 30"

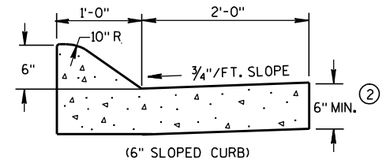

(6" SLOPED CURB)

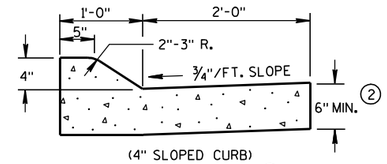

(4" SLOPED CURB)

TYPES A & D ①

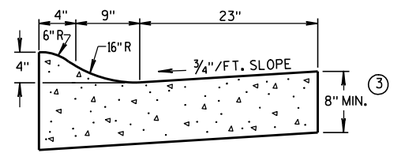

4" SLOPED CURB TYPES R & T ① ④

CONCRETE CURB & GUTTER 36"

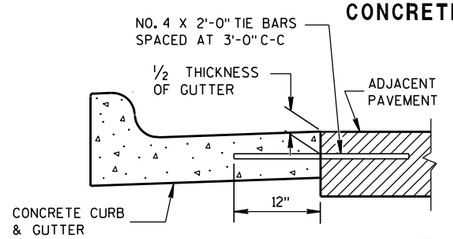

TYPICAL TIE BAR LOCATION ①

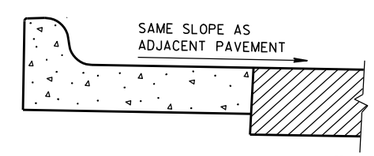

REVERSE SLOPE GUTTER ⑤
(TYPICAL FOR ALL CURB & GUTTER TYPES)

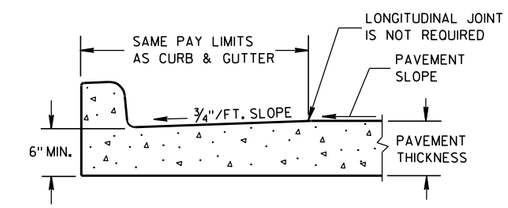

PARTIAL SECTION OF PAVEMENT WITH INTEGRAL CURB & GUTTER

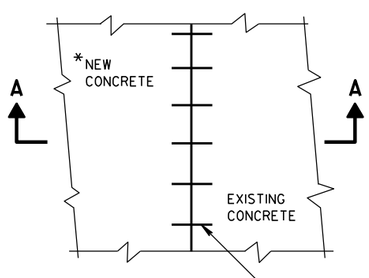

*NEW CURB & GUTTER, SURFACE DRAINS, CONCRETE PAVEMENT OR OTHER NEW CONCRETE.

PLAN VIEW

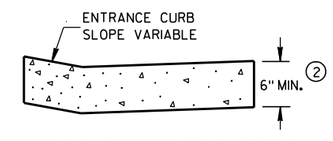

DRIVEWAY ENTRANCE CURB
(WHEN DIRECTED BY THE ENGINEER)

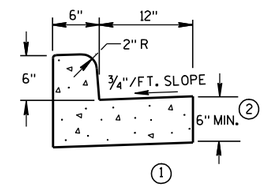

① TYPES A & D

CONCRETE CURB & GUTTER 18"

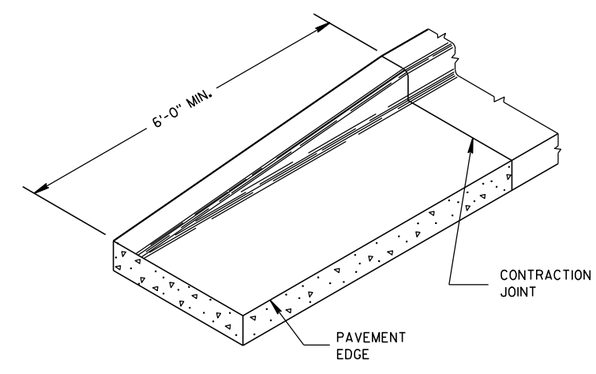

END SECTION CURB & GUTTER

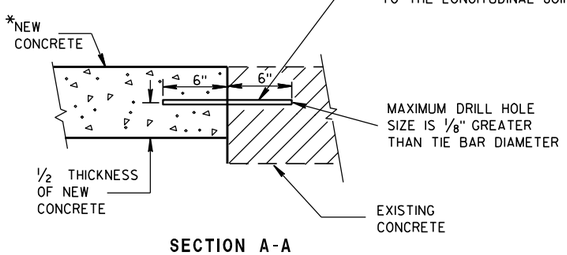

SECTION A-A

TIE BARS DRILLED INTO EXISTING PAVEMENT

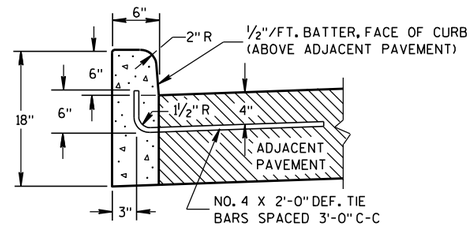

① TYPES A & D

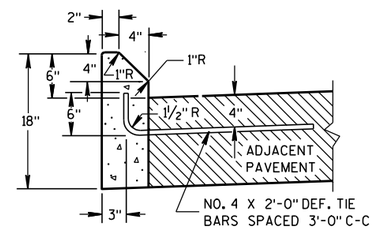

① TYPES G & J

CONCRETE CURB

GENERAL NOTES

DETAILS OF CONSTRUCTION, MATERIALS AND WORKMANSHIP NOT SHOWN ON THIS DRAWING SHALL CONFORM TO THE PERTINENT REQUIREMENTS OF THE CONTRACT.

PAVEMENT TIES AND TIE BARS SHALL BE EPOXY COATED IN CONFORMANCE WITH SUBSECTION 505.2.6.2 OF THE STANDARD SPECIFICATIONS.

INTEGRAL CURB & GUTTER SHALL CONFORM TO THE DETAILS SHOWN FOR CONCRETE CURB & GUTTER INCLUDING THE TRANSVERSE GUTTER SLOPE. A LONGITUDINAL CONSTRUCTION JOINT IS NOT REQUIRED WITH INTEGRAL CURB AND GUTTER.

WHERE THE TRANSVERSE JOINTS IN THE PAVEMENT ARE REQUIRED TO BE SEALED, THE JOINTS IN THE INTEGRAL CURB AND GUTTER SHALL BE SEALED TO THE FACE OF CURB WITH THE SAME TYPE OF SEALANT. THE COST OF FURNISHING AND INSTALLING THIS SEALANT SHALL BE INCIDENTAL TO THE ITEM CONCRETE CURB AND GUTTER.

UNLESS OTHERWISE SHOWN ON THE TYPICAL CROSS SECTIONS, THE BASE AGGREGATE AND COMMON EXCAVATION LIMITS ARE 2'-0" BEHIND THE BACK OF CURBS.

① TIE BARS ARE REQUIRED FOR CURB AND GUTTER TYPES A, G, K AND R.

② THE BOTTOM OF CURB AND GUTTER MAY BE CONSTRUCTED EITHER LEVEL OR PARALLEL TO THE SLOPE OF THE SUBGRADE OR BASE AGGREGATE PROVIDED A 6" MINIMUM GUTTER THICKNESS IS MAINTAINED.

③ THE BOTTOM OF CURB AND GUTTER MAY BE CONSTRUCTED EITHER LEVEL OR PARALLEL TO THE SLOPE OF THE SUBGRADE OR BASE AGGREGATE PROVIDED A 8" MINIMUM GUTTER THICKNESS IS MAINTAINED.

④ THE FACE OF CURB IS 6" FROM THE BACK OF CURB.

⑤ WHEN REVERSE SLOPE GUTTER IS REQUIRED, THE LOCATION(S) WILL BE SHOWN ELSEWHERE IN THE PLAN.

CONCRETE CURB, CONCRETE CURB & GUTTER AND TIES

STATE OF WISCONSIN
DEPARTMENT OF TRANSPORTATION

APPROVED
9/4/08 — DATE
/S/ Jerry H. [illegible] — ROADWAY STANDARDS ENGINEER
FHWA

6

S.D.D. 8 D 1-17

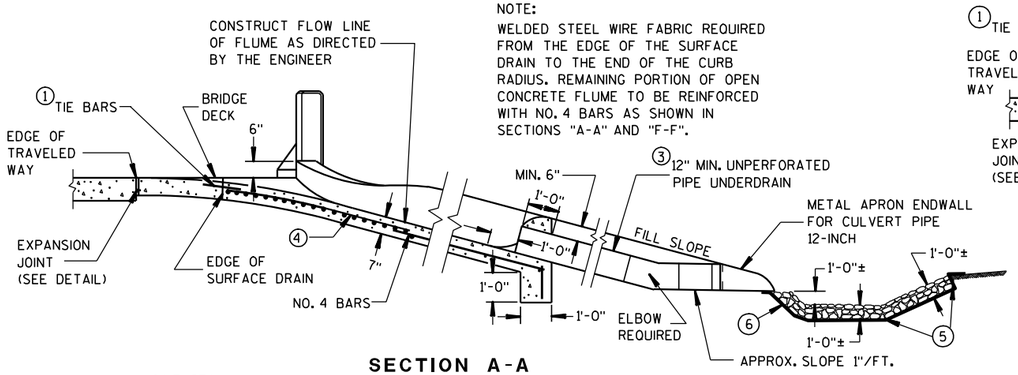

NOTE:
WELDED STEEL WIRE FABRIC REQUIRED FROM THE EDGE OF THE SURFACE DRAIN TO THE END OF THE CURB RADIUS. REMAINING PORTION OF OPEN CONCRETE FLUME TO BE REINFORCED WITH NO. 4 BARS AS SHOWN IN SECTIONS "A-A" AND "F-F".

SECTION A-A

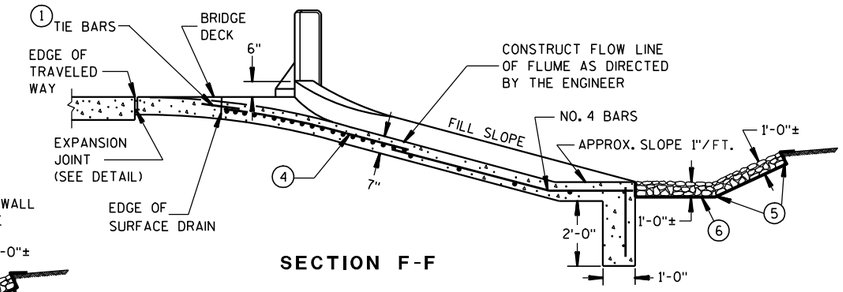

SECTION F-F

GENERAL NOTES

DETAILS OF CONSTRUCTION, MATERIALS, AND WORKMANSHIP NOT SHOWN ON THIS DRAWING SHALL CONFORM TO THE PERTINENT REQUIREMENTS OF THE STANDARD SPECIFICATIONS AND THE APPLICABLE SPECIAL PROVISIONS.

ALL STEEL REINFORCEMENT SHALL BE EMBEDDED 2 INCHES CLEAR UNLESS OTHERWISE SHOWN OR NOTED.

1. NO. 4 X 2'-0" TIE BARS SPACED AT 3'-0" CENTERS TO BE USED ONLY WHEN ADJACENT TO P.C. CONCRETE.
2. NO. 4 X 2'-0" TIE BARS SPACED AT 12" CENTERS TO BE PLACED BY BRIDGE CONTRACTOR, OR DRILLED TIE BARS PLACED AS DIRECTED BY THE ENGINEER.
3. PIPE UNDERDRAIN MAY BE ANY OF THE MATERIALS LISTED IN SECTION 612.2 OF THE STANDARD SPECIFICATIONS EXCEPT DRAIN TILE.
4. MINIMUM REINFORCEMENT SHALL BE 6" X 6" - W4.0 X W4.0 OR NO. 3 BARS LONGITUDINAL AND TRANSVERSE SPACING 12" C-C.
5. LIMITS OF ADDITIONAL RIPRAP WHEN SPECIAL DITCH IS REQUIRED.
6. GEOTEXTILE FABRIC, TYPE 'R'
7. HOT POURED SEALANT UNLESS OTHERWISE SPECIFIED.
8. THIS DIMENSION MAY VARY DEPENDING ON THE SPACING OF POSTS FOR THE STEEL PLATE BEAM GUARD. THE TYPICAL LOCATION FOR THE SURFACE DRAIN IS WHERE THE POST SPACING WIDENS TO 3'-1½".

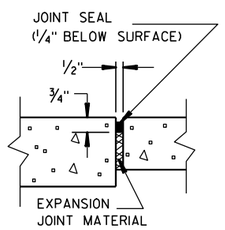

EXPANSION JOINT DETAIL

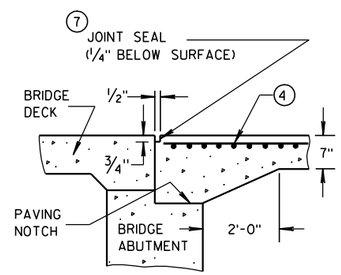

SECTION D-D

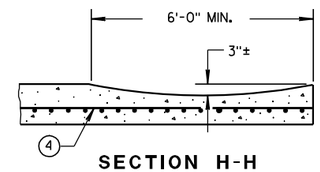

SECTION H-H

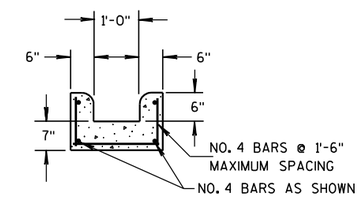

SECTION E-E

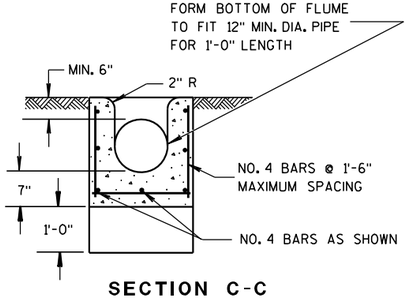

SECTION C-C

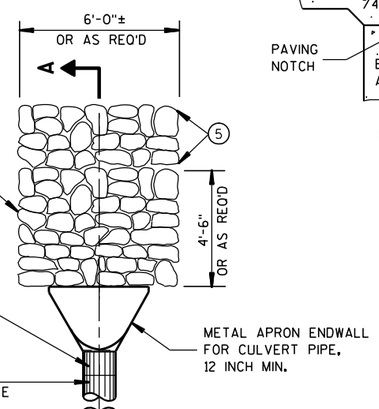

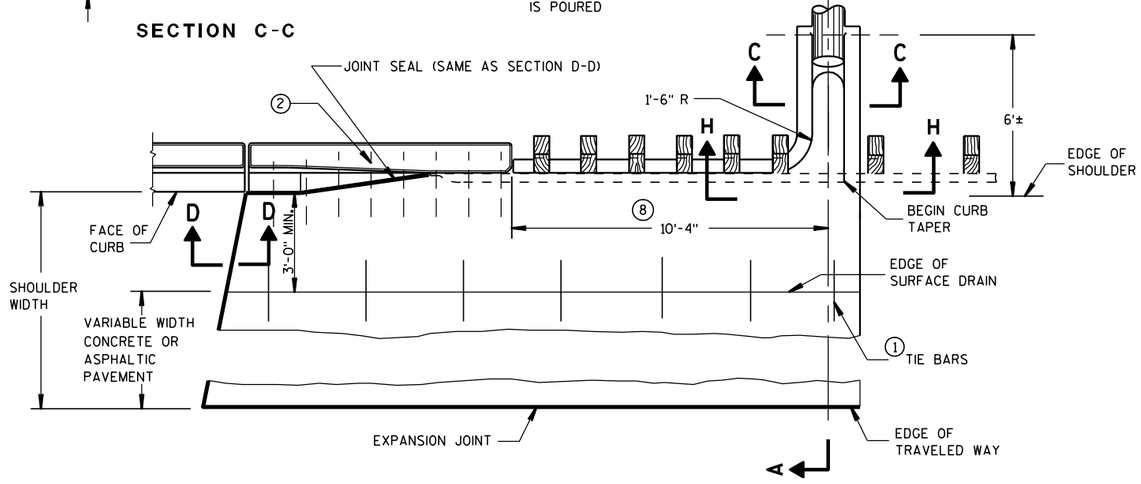

PLAN VIEW
SURFACE DRAIN WITH PIPE
TYPE "A"

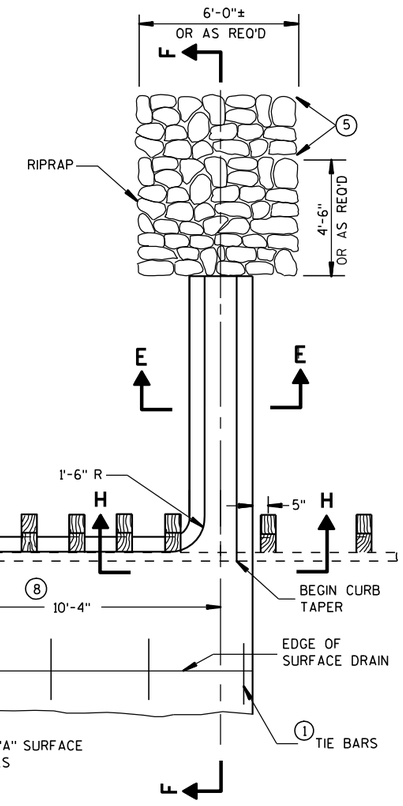

*SEE PLAN VIEW FOR TYPE "A" SURFACE DRAIN FOR ADDITIONAL DETAILS

*PARTIAL PLAN VIEW
SURFACE DRAIN WITHOUT PIPE
TYPE "B"

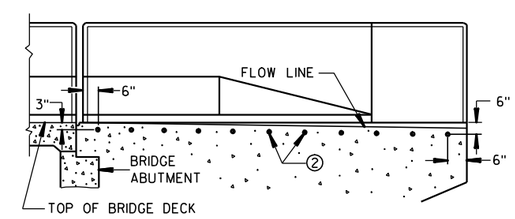

LOCATION OF
TIE BARS IN WINGWALL

CONCRETE SURFACE DRAINS FLUME TYPE AT STRUCTURES	
STATE OF WISCONSIN DEPARTMENT OF TRANSPORTATION	
APPROVED 9/4/08 DATE	/S/ Jerry H. Zogg ROADWAY STANDARDS ENGINEER
FHWA	

6

S.D.D. 8 D 2-6

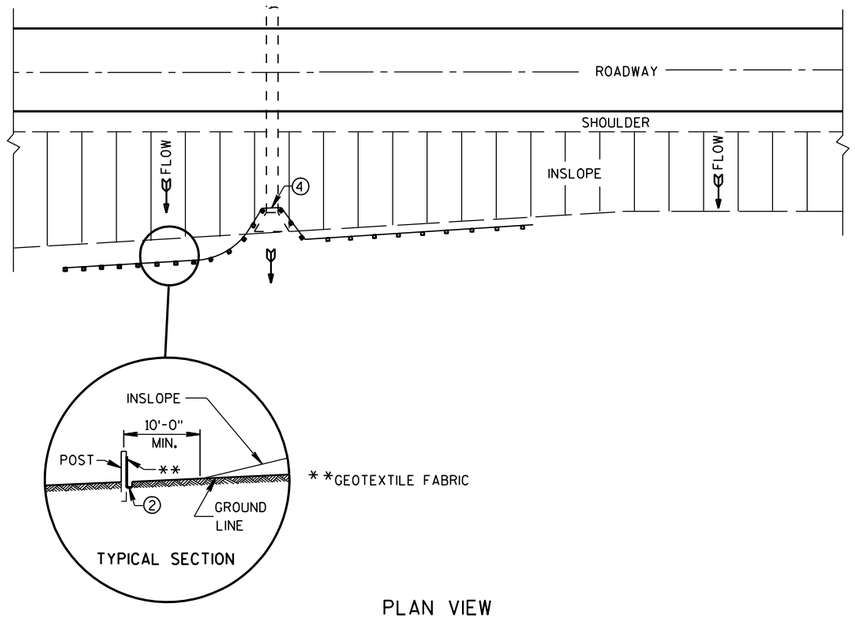

PLAN VIEW

TYPICAL APPLICATION OF SILT FENCE

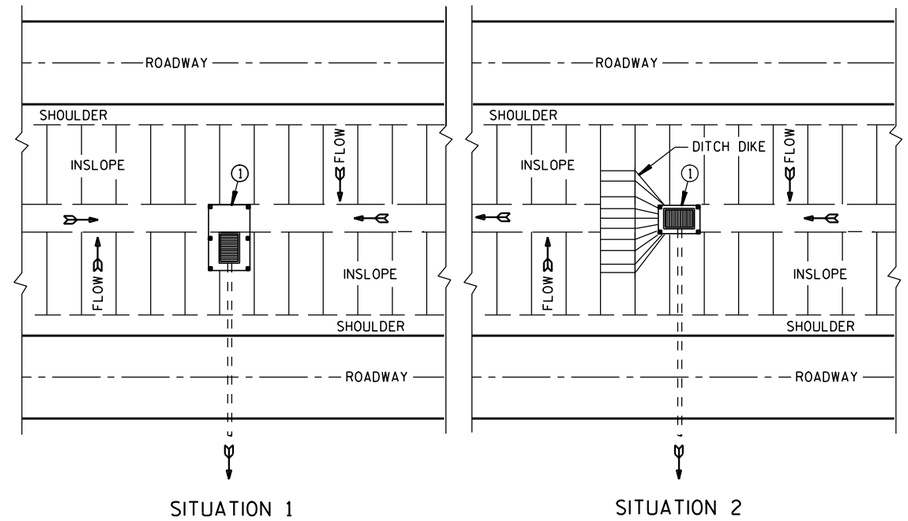

PLAN VIEW

SILT FENCE AT MEDIAN SURFACE DRAINS

GENERAL NOTES

DETAILS OF CONSTRUCTION NOT SHOWN ON THIS DRAWING SHALL CONFORM TO THE PERTINENT REQUIREMENTS OF THE STANDARD SPECIFICATIONS AND APPLICABLE SPECIAL PROVISIONS.

① HORIZONTAL BRACE REQUIRED WITH 2" X 4" WOODEN FRAME OR EQUIVALENT AT TOP OF POSTS.

② FOR MANUAL INSTALLATIONS THE TRENCH SHALL BE A MINIMUM OF 4" WIDE & 6" DEEP TO BURY AND ANCHOR THE GEOTEXTILE FABRIC. FOLD MATERIAL TO FIT TRENCH AND BACKFILL & COMPACT TRENCH WITH EXCAVATED SOIL.

③ WOOD POSTS SHALL BE A MINIMUM SIZE OF 1⅛" X 1⅛" OF OAK OR HICKORY.

④ SILT FENCE TO EXTEND ACROSS THE TOP OF THE PIPE.

⑤ CONSTRUCT SILT FENCE FROM A CONTINUOUS ROLL IF POSSIBLE BY CUTTING LENGTHS TO AVOID JOINTS. IF A JOINT IS NECESSARY USE ONE OF THE FOLLOWING TWO METHODS; A) OVERLAP THE END POSTS AND TWIST, OR ROTATE, AT LEAST 180 DEGREES. B) HOOK THE END OF EACH SILT FENCE LENGTH.

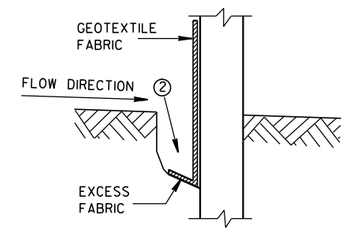

TRENCH DETAIL

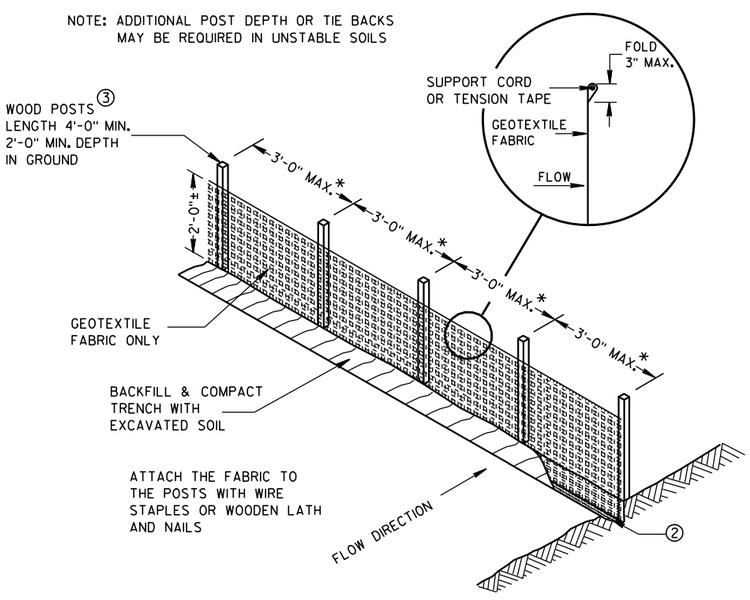

*NOTE: 8'-0" POST SPACING ALLOWED IF A WOVEN GEOTEXTILE FABRIC IS USED.

SILT FENCE

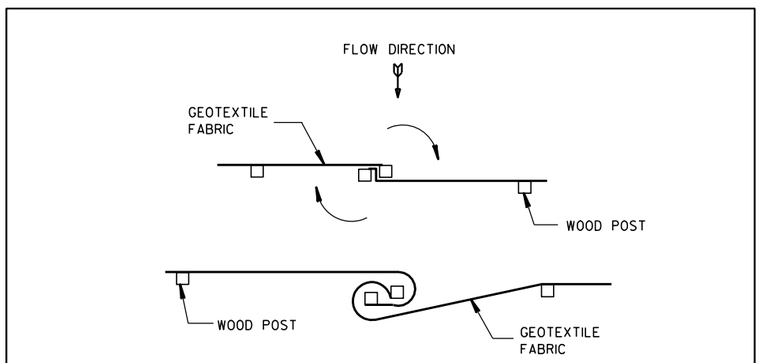

TWIST METHOD

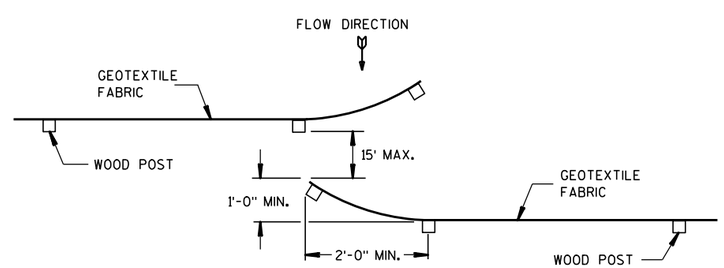

HOOK METHOD

JOINING TWO LENGTHS OF SILT FENCE ⑤

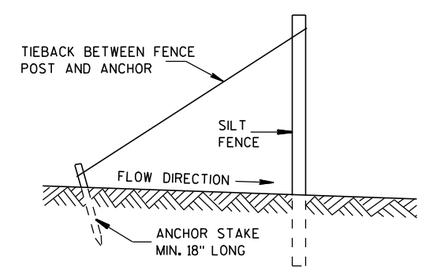

SILT FENCE TIE BACK

(WHEN REQUIRED BY THE ENGINEER)

SILT FENCE
STATE OF WISCONSIN DEPARTMENT OF TRANSPORTATION
APPROVED 4-29-05 DATE — /S/ Beth Cann-- CHIEF ROADWAY DEVELOP ENGINEER FHWA

6

6

S.D.D. 8 E 9-6

S.D.D. 8 E 9-6

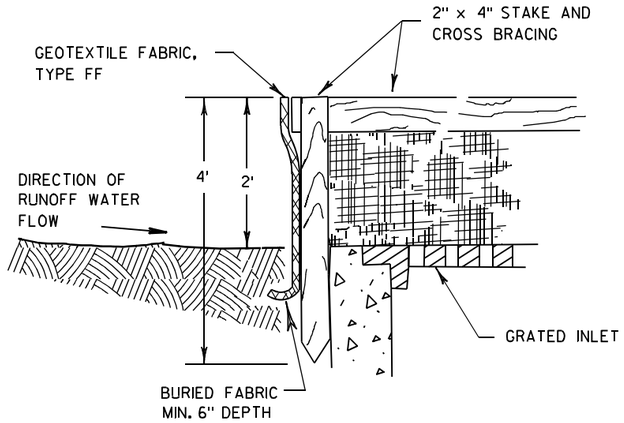

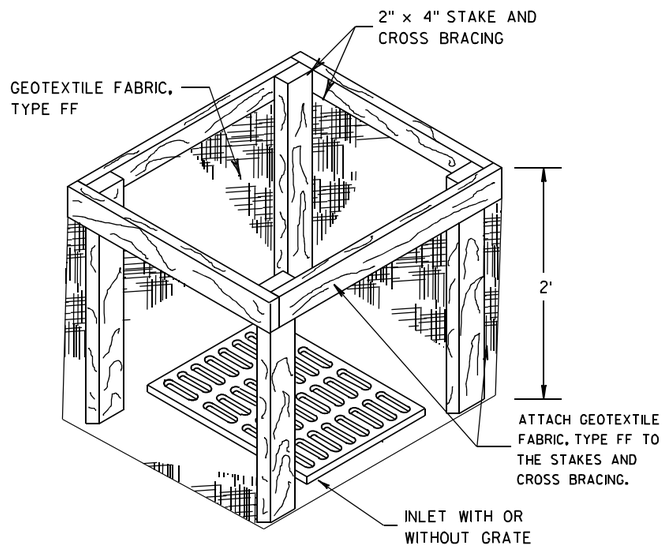

INLET PROTECTION, TYPE A

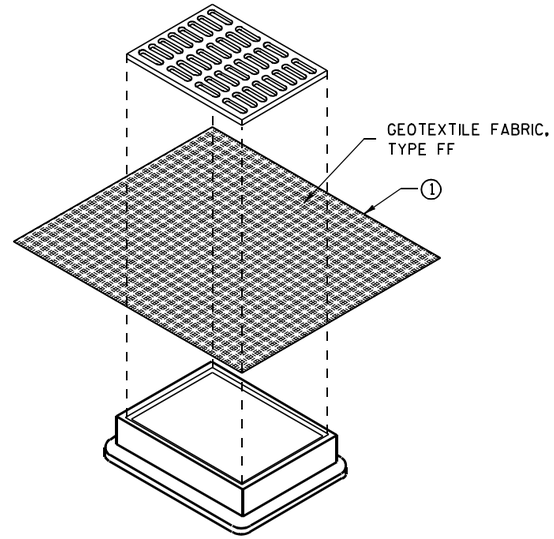

INLET PROTECTION, TYPE B (WITHOUT CURB BOX)

(CAN BE INSTALLED IN ANY INLET WITHOUT A CURB BOX)

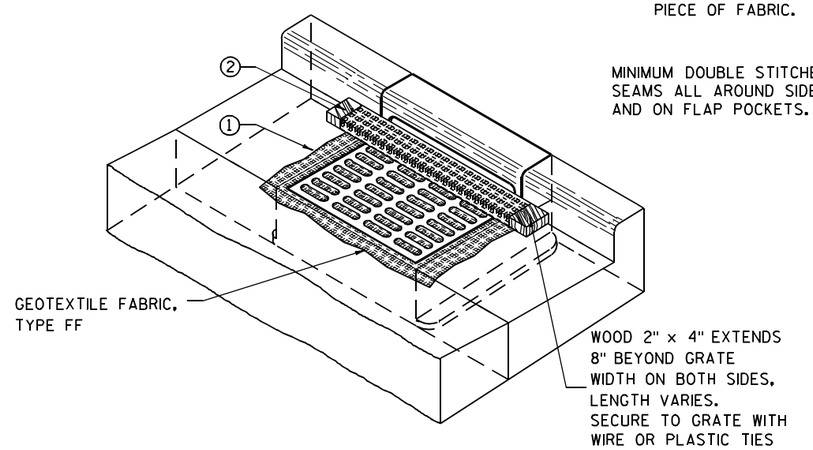

INLET PROTECTION, TYPE C (WITH CURB BOX)

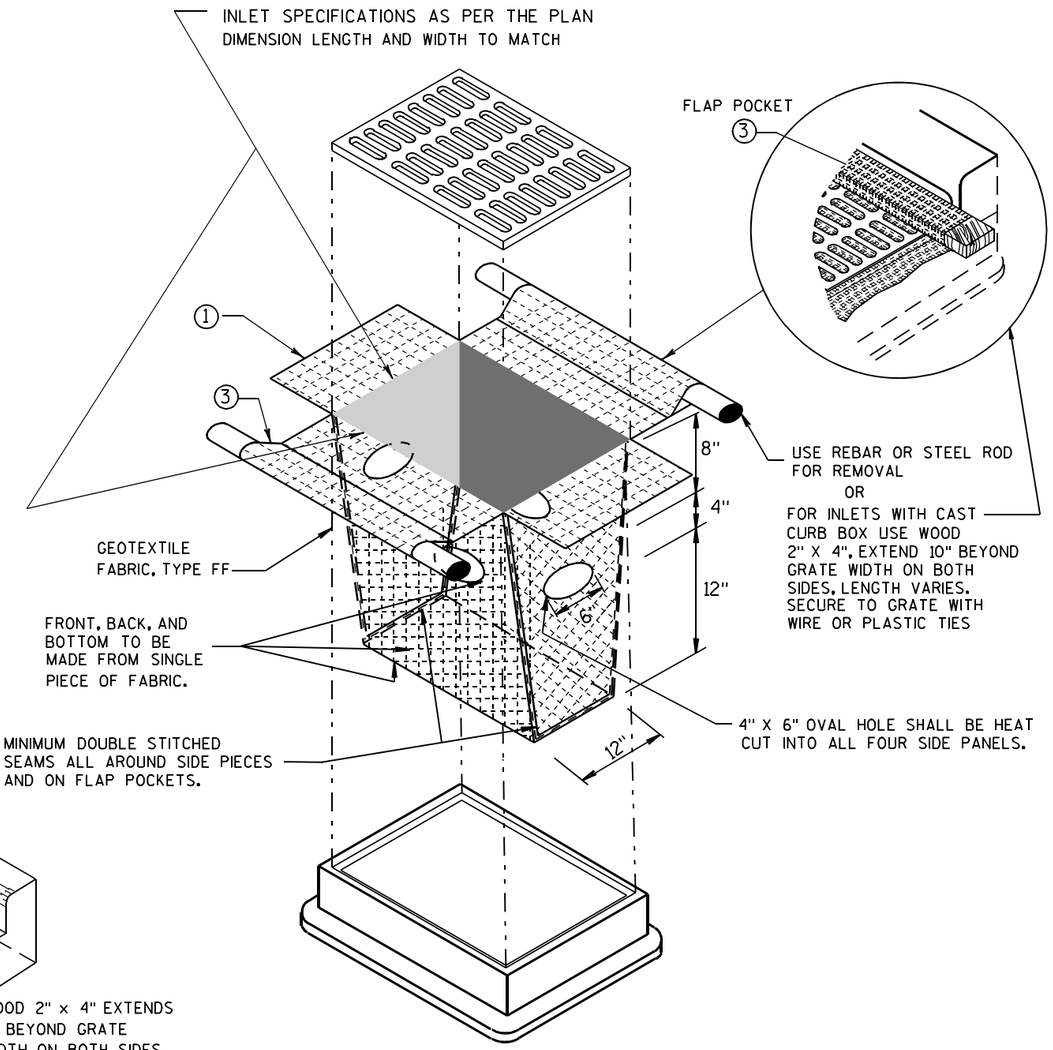

INLET PROTECTION, TYPE D

(CAN BE INSTALLED IN ANY INLET TYPE WITH OR WITHOUT A CURB BOX AS PER NOTE 2)

GENERAL NOTES

INLET PROTECTION DEVICES SHALL BE MAINTAINED OR REPLACED AT THE DIRECTION OF THE ENGINEER.

MANUFACTURED ALTERNATIVES APPROVED AND LISTED ON THE DEPARTMENT'S EROSION CONTROL PRODUCT ACCEPTABILITY LIST MAY BE SUBSTITUTED.

WHEN REMOVING OR MAINTAINING INLET PROTECTION, CARE SHALL BE TAKEN SO THAT THE SEDIMENT TRAPPED ON THE GEOTEXTILE FABRIC DOES NOT FALL INTO THE INLET. ANY MATERIAL FALLING INTO THE INLET SHALL BE REMOVED IMMEDIATELY.

1 FINISHED SIZE, INCLUDING FLAP POCKETS WHERE REQUIRED, SHALL EXTEND A MINIMUM OF 10" AROUND THE PERIMETER TO FACILITATE MAINTENANCE OR REMOVAL.

2 FOR INLET PROTECTION, TYPE C (WITH CURB BOX), AN ADDITIONAL 18" OF FABRIC IS WRAPPED AROUND THE WOOD AND SECURED WITH STAPLES. THE WOOD SHALL NOT BLOCK THE ENTIRE HEIGHT OF THE CURB BOX OPENING.

3 FLAP POCKETS SHALL BE LARGE ENOUGH TO ACCEPT WOOD 2X4.

INSTALLATION NOTES

TYPE B & C

TRIM EXCESS FABRIC IN THE FLOW LINE TO WITHIN 3" OF THE GRATE.

THE CONTRACTOR SHALL DEMONSTRATE A METHOD OF MAINTENANCE, USING A SEWN FLAP, HAND HOLDS OR OTHER METHOD TO PREVENT ACCUMULATED SEDIMENT FROM ENTERING THE INLET.

TYPE D

DO NOT INSTALL INLET PROTECTION TYPE D IN INLETS SHALLOWER THAN 30", MEASURED FROM THE BOTTOM OF THE INLET TO THE TOP OF THE GRATE.

TRIM EXCESS FABRIC IN THE FLOW LINE TO WITHIN 3" OF THE GRATE.

THE INSTALLED BAG SHALL HAVE A MINIMUM SIDE CLEARANCE, BETWEEN THE INLET WALLS AND THE BAG, MEASURED AT THE BOTTOM OF THE OVERFLOW HOLES, OF 3". WHERE NECESSARY THE CONTRACTOR SHALL CINCH THE BAG, USING PLASTIC ZIP TIES, TO ACHIEVE THE 3" CLEARANCE. THE TIES SHALL BE PLACED AT A MAXIMUM OF 4" FROM THE BOTTOM OF THE BAG.

INLET PROTECTION TYPE A, B, C, AND D

STATE OF WISCONSIN
DEPARTMENT OF TRANSPORTATION

APPROVED
10/16/02 — DATE
/S/ Beth Cannatine
CHIEF ROADWAY DEVELOPMENT ENGINEER
FHWA

6

S.D.D. 8 E 10-2

METAL APRON ENDWALLS

PIPE DIA. (IN.)	MIN. THICK. (Inches) STEEL	MIN. THICK. (Inches) ALUM.	DIMENSIONS (Inches) A (±1")	B (MAX.)	H (±1")	L (±1 1/2")	L1 ①	L2 ①	W (±2")	APPROX. SLOPE	BODY
12	.064	.060	6	6	6	21	12	17 1/2	24	2 1/2 to 1	1 Pc.
15	.064	.060	7	8	6	26	14	21 3/4	30	2 1/2 to 1	1 Pc.
18	.064	.060	8	10	6	31	15	28 1/4	36	2 1/2 to 1	1 Pc.
21	.064	.060	9	12	6	36	18	29 5/8	42	2 1/2 to 1	1 Pc.
24	.064	.075	10	13	6	41	18	37 1/4	48	2 1/2 to 1	1 Pc.
30	.079	.075	12	16	8	51	18	52 1/4	60	2 1/2 to 1	1 Pc.
36	.079	.105	14	19	9	60	24	59 3/4	72	2 1/2 to 1	2 Pc.
42	.109	.105	16	22	11	69	24	75 5/8	84	2 1/2 to 1	2 Pc.
48	.109	.105	18	27	12	78	24	81	90	2 1/4 to 1	3 Pc.
54	.109	.105	18	30	12	84	30	85 1/2	102	2 1/4 to 1	3 Pc.
60	.109×	.105×	18	33	12	87	—	—	114	2 to 1	3 Pc.
66	.109×	.105×	18	36	12	87	—	—	120	2 to 1	3 Pc.
72	.109×	.105×	18	39	12	87	—	—	126	2 to 1	3 Pc.
78	.109×	.105×	18	42	12	87	—	—	132	1 1/2 to 1	3 Pc.
84	.109×	.105×	18	45	12	87	—	—	138	1 1/2 to 1	3 Pc.
90	.109×	.105×	18	37	12	87	—	—	144	1 1/2 to 1	3 Pc.
96	.109×	.105×	18	35	12	87	—	—	150	1 1/2 to 1	3 Pc.

× EXCEPT CENTER PANEL
SEE GENERAL NOTES

REINFORCED CONCRETE APRON ENDWALLS

PIPE DIA. (IN.)	DIMENSIONS (Inches) T	A	B	C	D	E	G	APPROX. SLOPE
12	2	4	24	48 7/8	72 7/8	24	2	3 to 1
15	2 1/4	6	27	46	73	30	2 1/4	3 to 1
18	2 1/2	9	27	46	73	36	2 1/2	3 to 1
21	2 3/4	9	36	37 1/2	73 1/2	42	2 3/4	3 to 1
24	3	9 1/2	43 1/2	30	73 1/2	48	3	3 to 1
27	3 1/4	10 1/2	49 1/2	24	73 1/2	54	3 1/4	3 to 1
30	3 1/2	12	54	19 3/4	73 1/2	60	3 1/2	3 to 1
36	4	15	63	34 3/4	97 3/4	72	4	3 to 1
42	4 1/2	21	63	35	98	78	4 1/2	3 to 1
48	5	24	72	26	98	84	5	3 to 1
54	5 1/2	27	65	*33 1/4-**35	*98 1/4-**100	90	5 1/2	2 2/5 to 1
60	6	*30-**35	60	39	99	96	5	2 to 1
66	6 1/2	*24-**30	*72-**78	*21-**27	99	102	5 1/2	2 to 1
72	7	*24-**36	78	21	99	108	6	2 to 1
78	7 1/2	*24-**36	78	21	99	114	6 1/2	2 to 1
84	8	36	90 1/2	21	111 1/2	120	6 1/2	1 1/2 to 1
90	8 1/2	41	87 1/2	24	111 1/2	132	6 1/2	1 1/2 to 1

*MINIMUM
**MAXIMUM

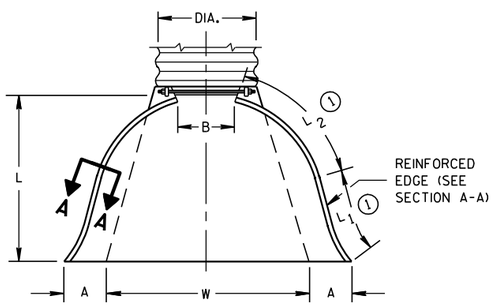

PLAN VIEW

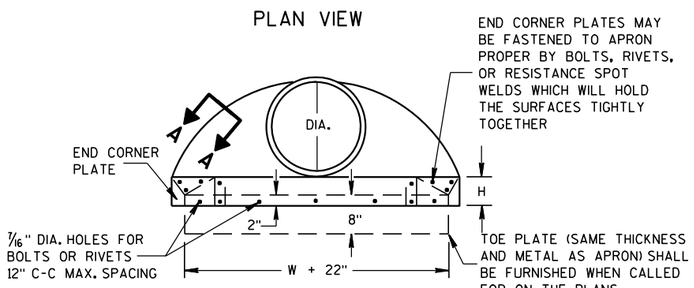

END VIEW

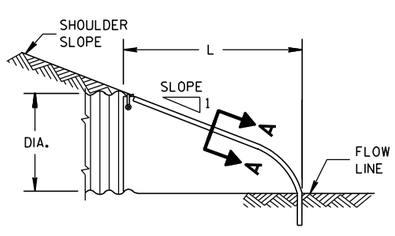

SIDE ELEVATION

METAL ENDWALLS

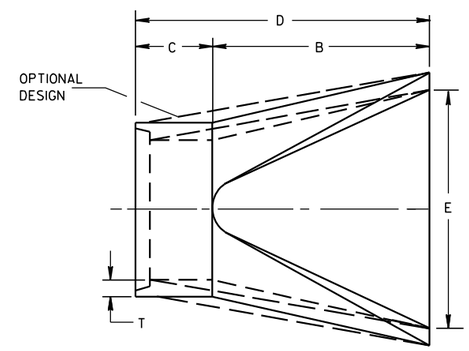

PLAN

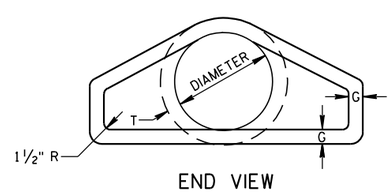

END VIEW

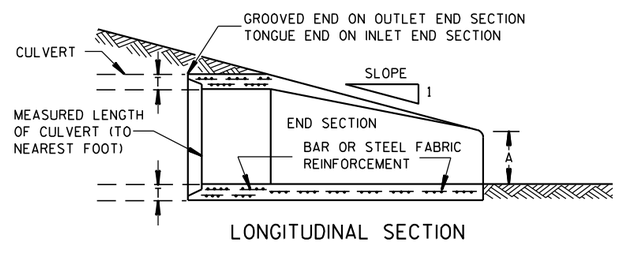

LONGITUDINAL SECTION

CONCRETE ENDWALLS

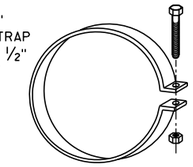

ALTERNATE FOR TYPE 1 CONNECTION

END SECTION CONNECTOR STRAP

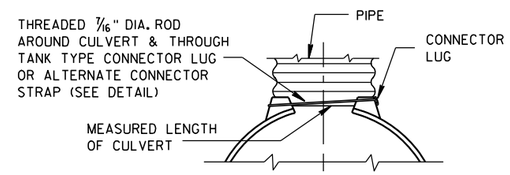

TYPE 1
FOR 12" THRU 24" CORR. PIPE

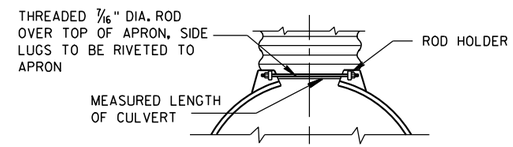

TYPE 2
FOR 30" THRU 96" CORR. PIPE

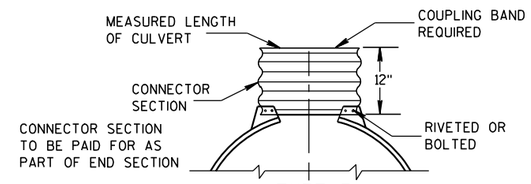

TYPE 3
FOR 42" THRU 96" CORR. PIPE

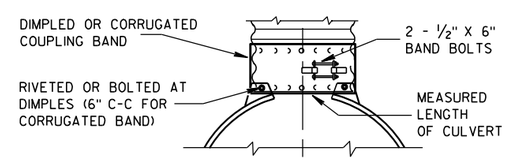

TYPE 5
ALTERNATE FOR:
ALL SIZES CORRUGATED CIRCULAR PIPE

NOTE: DIMPLED BAND FITS OVER OUTSIDE OF ENDWALL, AND CORRUGATED BAND FITS INSIDE ENDWALL. DIMPLED BAND MAY BE USED WITH HELICALLY CORRUGATED PIPE.

FOR CIRCUMFERENTIALLY CORRUGATED PIPE USE ENDWALL CONNECTION DETAILS 1, 2, 3 OR 5 AS APPLICABLE.

FOR HELICALLY CORRUGATED PIPE USE ENDWALL CONNECTION DETAILS 1, 2 OR 5.

FOR HELICALLY CORRUGATED PIPES WITH TWO CIRCUMFERENTIAL CORRUGATIONS AT EACH END USE ENDWALL CONNECTION DETAILS 1, 2 OR 3.

CONNECTION DETAILS

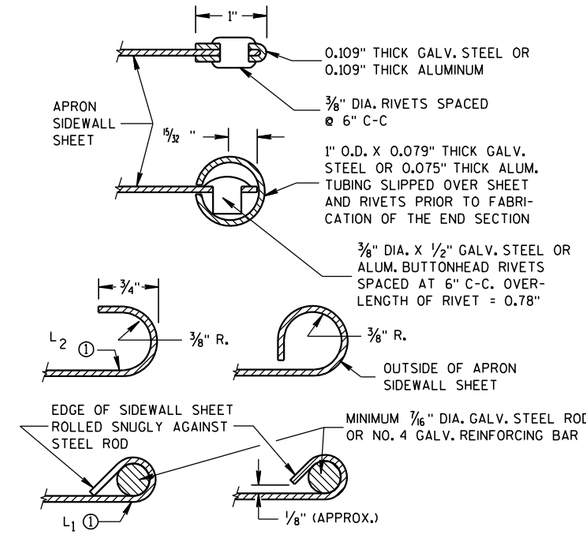

SECTION A-A

GENERAL NOTES

DETAILS OF CONSTRUCTION, MATERIALS AND WORKMANSHIP NOT SHOWN ON THIS DRAWING SHALL CONFORM TO THE PERTINENT REQUIREMENTS OF THE STANDARD SPECIFICATIONS AND THE APPLICABLE SPECIAL PROVISIONS.

CONCRETE CULVERT ENDWALLS MAY NOT BE USED WITH GALVANIZED STEEL OR ALUMINUM CULVERT PIPE OR VISE VERSA. GALVANIZED STEEL OR ALUMINUM ENDWALLS SHALL NORMALLY BE INSTALLED ON CULVERT PIPE OF THE SAME METAL.

ALL THREE PIECE STEEL APRON ENDWALLS FOR 60" DIAMETER PIPE AND LARGER SHALL HAVE 0.109" SIDES AND 0.138" CENTER PANELS. ALL THREE PIECE ALUMINUM APRON ENDWALLS FOR 60" DIAMETER PIPE AND LARGER SHALL HAVE 0.105" SIDES AND 0.134" CENTER PANELS. THE WIDTH OF CENTER PANELS SHALL BE GREATER THAN 20 PERCENT OF THE PIPE PERIMETER.

LAP SEAMS SHALL BE TIGHTLY JOINED BY GALVANIZED RIVETS OR BOLTS FOR STEEL UNITS AND ALUMINUM RIVETS AND BOLTS FOR ALUMINUM UNITS. FOR THE 60" THROUGH 96" DIAMETER APRON ENDWALL SIZES, THE REINFORCED EDGES AND CENTER PANEL SEAMS SHALL BE FURTHER REINFORCED WITH GALVANIZED STEEL OR ALUMINUM STIFFENER ANGLES. THE ANGLES SHALL BE ATTACHED BY GALVANIZED NUTS AND BOLTS FOR STEEL UNITS AND ALUMINUM NUTS AND BOLTS FOR ALUMINUM UNITS.

WHERE TWO OR MORE PIPES WITH APRON ENDWALLS ARE LAID ADJACENT TO EACH OTHER, THEY SHALL BE SEPARATED BY A DISTANCE SUFFICIENT TO PROVIDE A MINIMUM CLEARANCE OF 6 INCHES BETWEEN APRON ENDWALLS.

① FOR PIPE SIZES UP TO 60" DIAMETER, A 180° ROLLED EDGE MAY BE USED INSTEAD OF STEEL ROD REINFORCEMENT. SEE SECTION A-A.

APRON ENDWALLS FOR CULVERT PIPE

STATE OF WISCONSIN
DEPARTMENT OF TRANSPORTATION

APPROVED
11/30/94 — DATE
/S/ Rory L. Rhinesmith — CHIEF ROADWAY DEVELOPMENT ENGINEER
FHWA

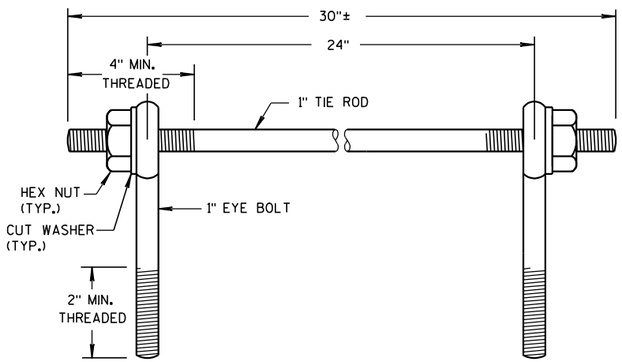

EYE BOLTS AND TIE ROD

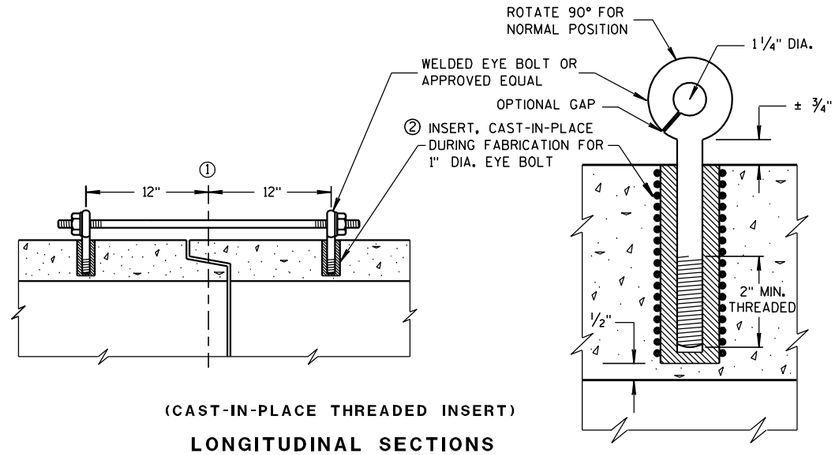

(CAST-IN-PLACE THREADED INSERT)

LONGITUDINAL SECTIONS

EYE BOLT AND TIE ROD ASSEMBLY (ALTERNATE NO. 1)

GENERAL NOTES

DETAILS OF CONSTRUCTION, MATERIALS, AND WORKMANSHIP NOT SHOWN ON THIS DRAWING SHALL CONFORM TO THE PERTINENT REQUIREMENTS OF THE STANDARD SPECIFICATIONS AND APPLICABLE SPECIAL PROVISIONS.

CONCRETE CULVERT AND STORM SEWER PIPE SHALL BE TIED TOGETHER IN THE MANNER ILLUSTRATED BY THIS DETAIL AT LOCATIONS DESIGNATED IN THE STANDARD SPECIFICATIONS AND THE PLAN. THE CONTRACTOR MAY USE EITHER ALTERNATE 1, 2 OR 3 FOR DRAINAGE STRUCTURES. ONLY ALTERNATE 1 AND 3 MAY BE USED FOR CATTLE PASSES, UNLESS OTHERWISE STATED IN THE CONTRACT. THE MATERIALS, FABRICATION AND WORK NECESSARY TO TIE THE PIPE BY THIS DETAIL WILL BE CONSIDERED INCIDENTAL TO THE PIPE AND APRON ENDWALLS IF REQUIRED.

DETAILED DRAWINGS FOR PROPOSED ALTERNATE DESIGNS FOR JOINT TIES SHALL BE SUBMITTED TO THE ENGINEER FOR APPROVAL.

JOINT TIES TO BE HOT-DIP GALVANIZED PER ASTM A 153.

① ℄ OF TONGUE AND GROOVE OR BELL AND SPIGOT JOINTS.

② THE INSIDE OF THE THREADED INSERTS SHALL BE CLEAN TO ALLOW THE INSERTION OF THREADED EYE BOLTS.

③ HOLES SHALL BE CAST-IN-PLACE OR DRILLED 12 INCHES FROM ℄ OF TONGUE AND GROOVE.

④ BOLT PROJECTION INSIDE OF PIPE SHALL NOT EXCEED 2 INCHES.

⑤ OPENING TO BE ROD DIAMETER PLUS 1 INCH.

⑥ LENGTH ADEQUATE TO EXTEND TO WITHIN 1/2 INCH OF THE INNER SURFACE OF THE PIPE.

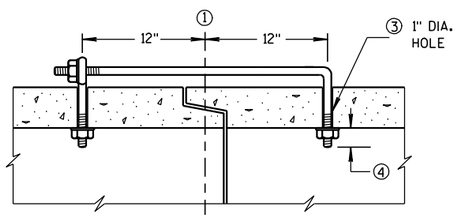

(TONGUE & GROOVE PIPE)

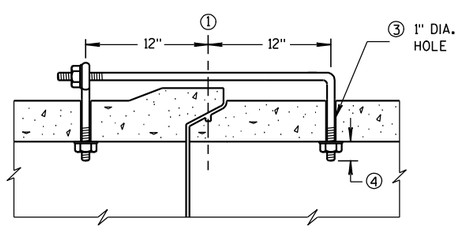

(MODIFIED BELL PIPE)

LONGITUDINAL SECTION

EYE BOLT DIMENSION TABLE

PIPE SIZE	L = LENGTH	
	TONGUE & GROOVE PIPE	MODIFIED BELL PIPE
18" TO 24"	4 1/2"	6 1/4"
30"	5"	7"
36"	5 1/2"	7"
42"	6"	
48"	6 1/2"	
60"	7 1/2"	
66"	8"	

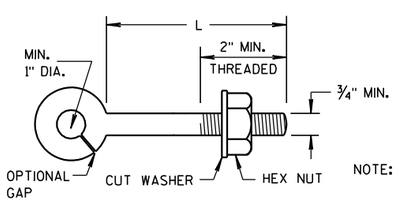

EYE BOLT

NOTE:

NOTE: TWO EYE BOLTS MAY BE USED WITH A 30" LONG THREADED ROD IN LIEU OF THE 90° BENT TIE ROD.

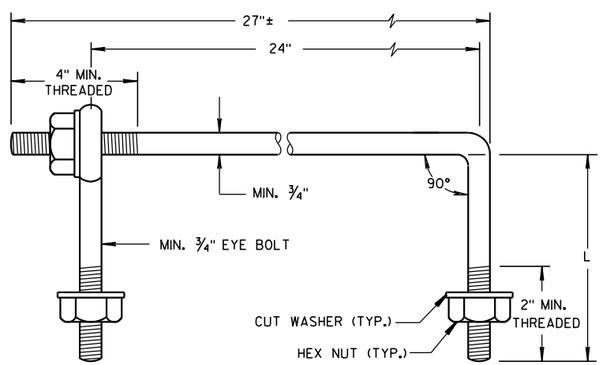

EYE BOLT AND TIE ROD

(JOINT TIES FOR 18" TO 66" DIA. CONCRETE PIPE)

EYE BOLT AND TIE ROD ASSEMBLY (ALTERNATE NO. 2)

ADJUSTABLE TIE ROD TABLE

PIPE DIAMETER	TIE ROD DIAMETER	D	L_1	N
12-60	5/8	5/8	5	1/2
66-84	3/4	3/4	5	1/2
90-108	1	1	7	1 7/16

DIMENSIONS SHOWN ARE IN INCHES

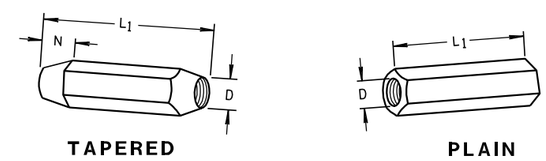

TAPERED PLAIN

RIGHT AND LEFT THREADS

SLEEVE NUTS

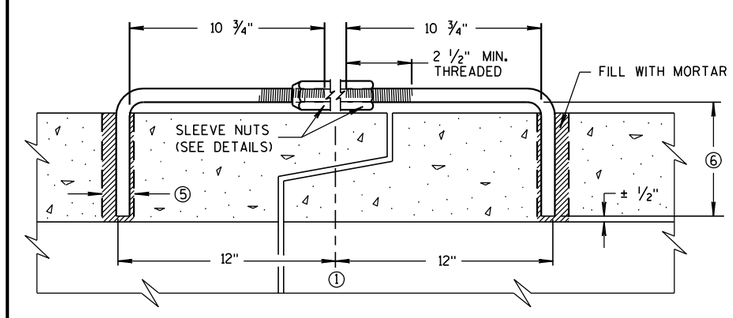

LONGITUDINAL SECTION

(JOINT TIES FOR 12" TO 108" DIA. CONCRETE PIPE)

ADJUSTABLE TIE ROD (ALTERNATE NO. 3)

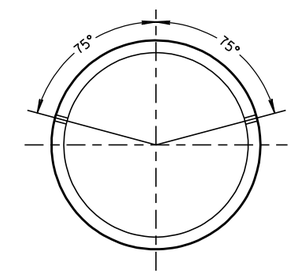

PLACEMENT OF (2) CAST-IN-PLACE INSERTS OR HOLES DURING FABRICATION FOR PIPE SECTIONS REQUIRING TIE RODS

TRANSVERSE SECTION

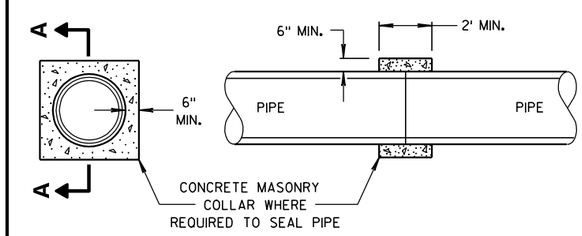

SECTION A-A

CONCRETE COLLAR DETAIL

JOINT TIES FOR CONCRETE PIPE AND CONCRETE COLLAR DETAIL

STATE OF WISCONSIN
DEPARTMENT OF TRANSPORTATION

APPROVED
6/5/2012 /S/ Jerry H. Zogg
DATE ROADWAY STANDARDS DEVELOPMENT ENGINEER
FHWA

6

6

S.D.D. 8 F 4-7

S.D.D. 8 F 4-7

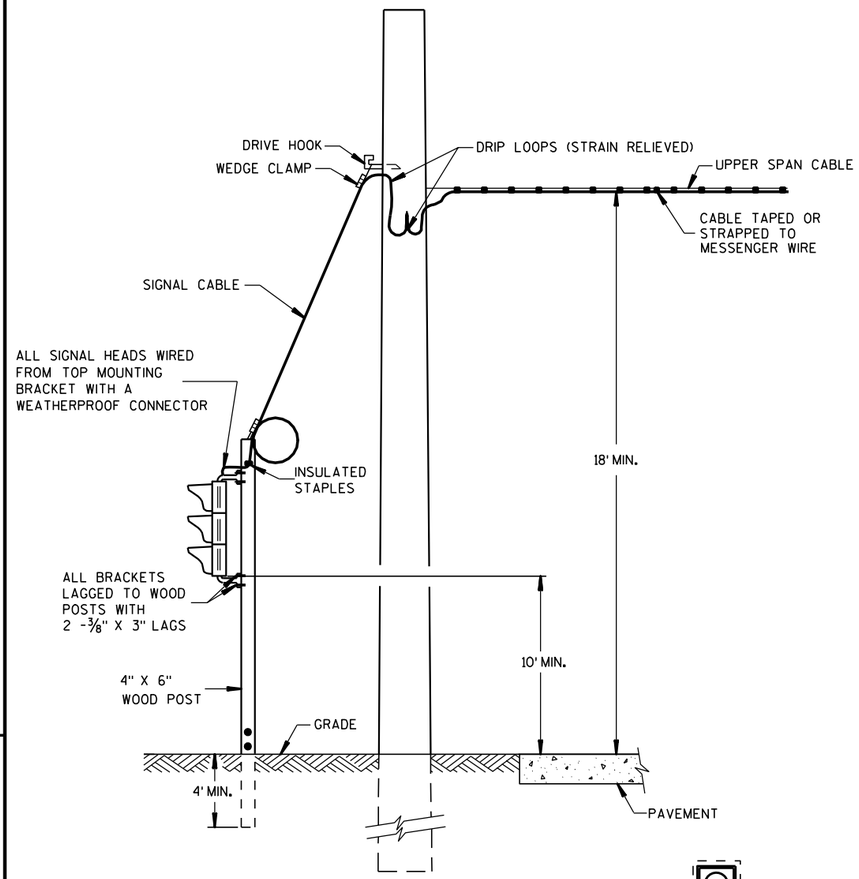

TYPICAL DROP TO TRAFFIC SIGNAL FACE

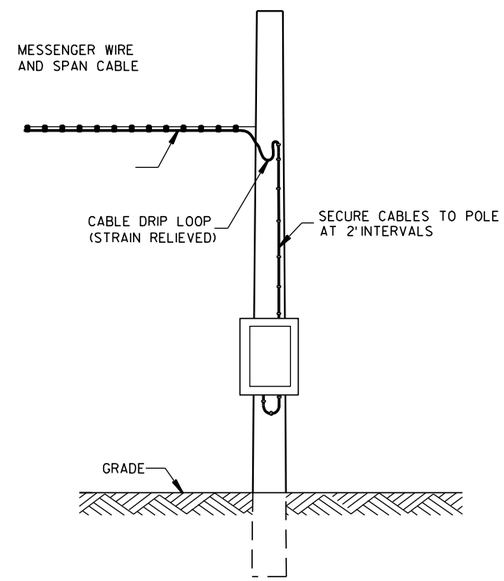

POLE MOUNT CABINET INSTALLATION

GENERAL NOTES

DETAILS OF CONSTRUCTION, MATERIALS AND WORKMANSHIP NOT SHOWN ON THIS DRAWING SHALL CONFORM TO THE PERTINENT REQUIREMENTS OF THE CONTRACT.

POLE MOUNTED TRAFFIC SIGNAL CONTROL CABINET MAYBE MOUNTED ON THE SERVICE POLE IF THE ELECTRICAL UTILITY ALLOWS THE INSTALLATION.

WHEN UTILITY PLOLES ARE USED TO SPAN THE TEMPORARY OVERHEAD CABLE, WRITTEN PERMISSION MUST BE OBTAINED FROM THE OWNER OF THE POLES AND GIVEN TO THE PROJECT MANAGER. ALL PERTINENT UTILITY AND CODE CLEARANCES SHALL BE MAINTAINED.

WOOD POLES (NONBREAKAWAY) SHALL BE NO CLOSER TO EDGE OF PAVEMENT THAN OFFSET DISTANCE CHART ALLOWS OR 4 FEET BEHIND PROTECTIVE BARRIER (BEAMGUARD, ETC.).

WOOD POSTS (BREAKAWAY) SHALL BE NO CLOSER THAN 2 FEET OUTSIDE OF SHOULDER.

VERTICAL CLEARANCE ETC. PER NEC.

TRAFFIC SIGNAL FACES SHALL BE TYPICALLY PLACED 12 FEET FROM EDGE OF PAVEMENT.

EACH TRAFFIC SIGNAL FACE SHALL HAVE A BACKPLATE.

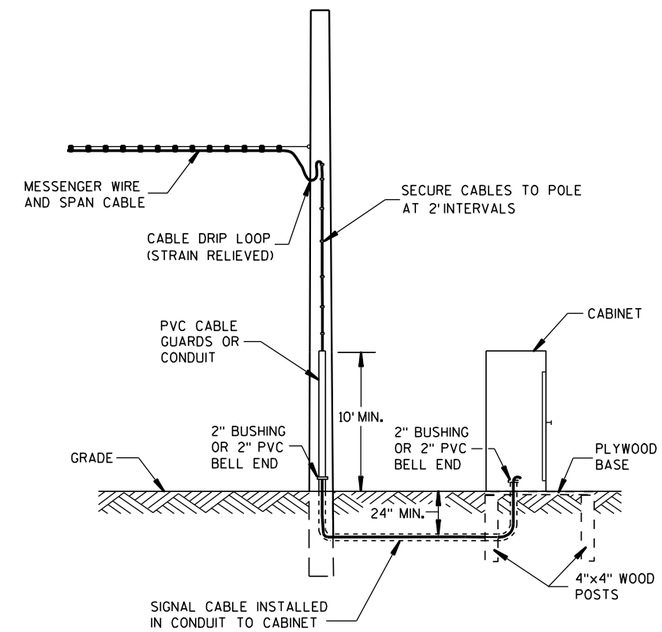

GROUND MOUNT CABINET INSTALLATION

OFFSET DISTANCES FOR TEMPORARY NON-BREAKAWAY POLES	
SPEED LIMIT	OFFSET DISTANCE**
GREATER THAN 45 MPH	18 FT
45 MPH OR LESS	12 FT
45 MPH OR LESS W/ CURBS	2 FT

**NOTE: OFFSET MEASURED FROM OUTER EDGE OF OUTSIDE THRU LANE.

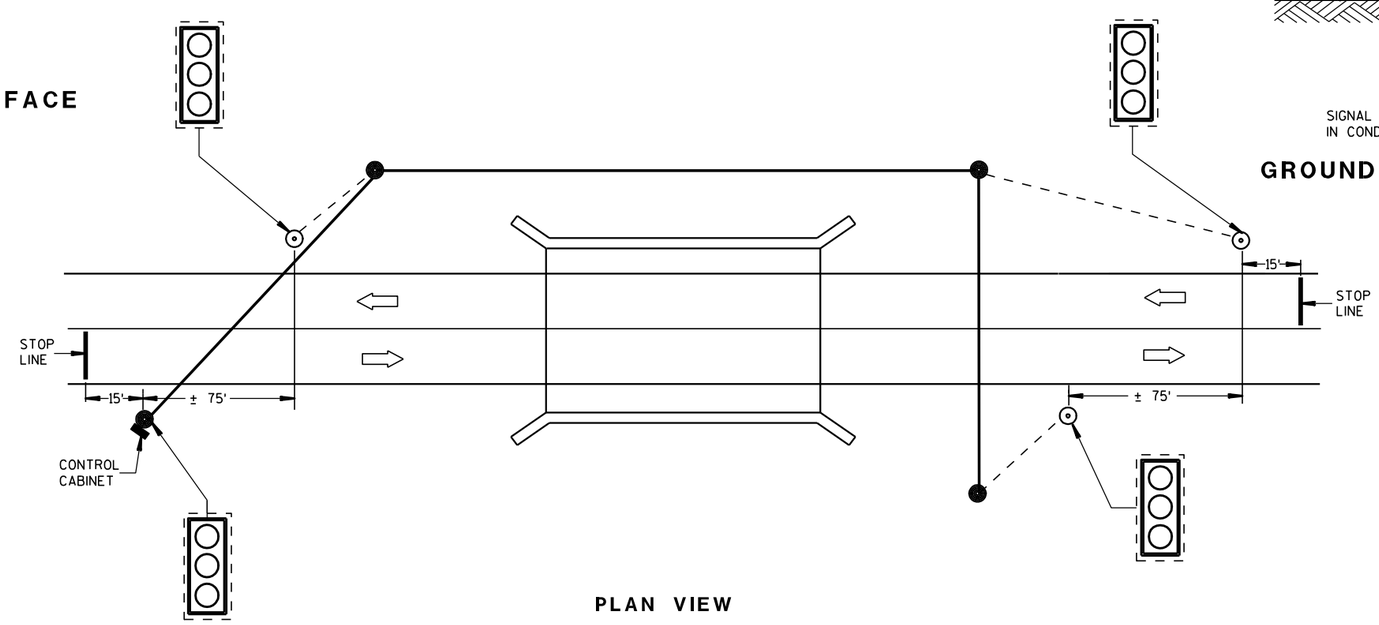

PLAN VIEW

TYPICAL BRIDGE TEMPORARY TRAFFIC SIGNAL LOCATION

LEGEND

- WOOD POLE (NONBREAKAWAY)
- WOOD POST (BREAKAWAY)
- SIGNAL CABLE
- SIGNAL CABLE W/MESSENGER
- LED TRAFFIC SIGNAL FACE WITH BACKPLATE (3-12")
- DIRECTION OF TRAFFIC

MINIMUM POLE LENGHTS	CLASS	MINIMUM BURIAL DEPTHS
25 FEET	V	5 FEET
30 FEET	V	6 FEET
35 FEET	IV	7 FEET
40 FEET	IV	8 FEET
45 FEET	IV	9 FEET

BRIDGE TEMPORARY TRAFFIC SIGNAL INSTALLATION

STATE OF WISCONSIN
DEPARTMENT OF TRANSPORTATION

APPROVED
3/2/2011 — DATE
/S/ Thomas J. G[illegible] — STATE ELECTRICAL ENGI
HWYS
FHWA

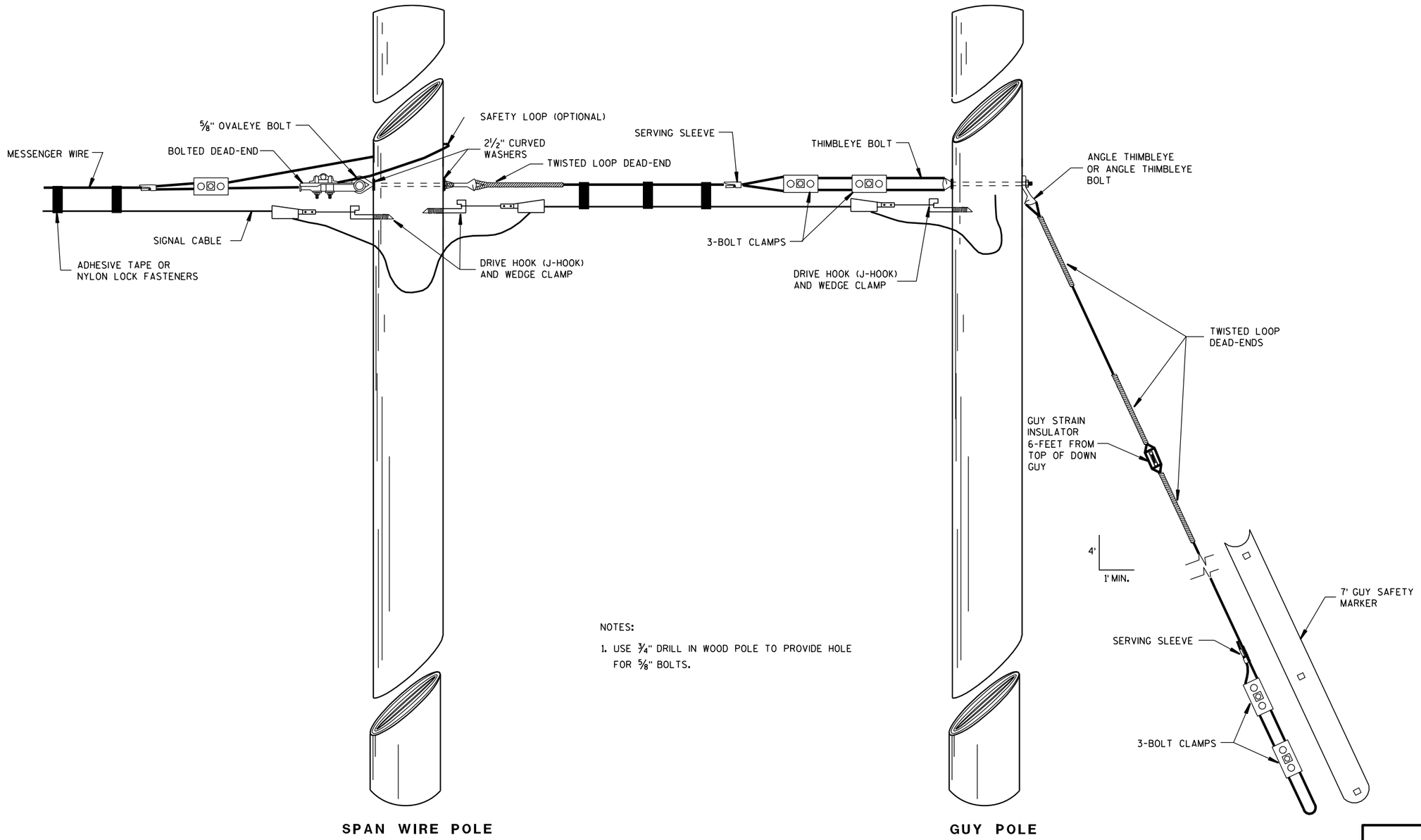

NOTES:

1. USE 3/4" DRILL IN WOOD POLE TO PROVIDE HOLE FOR 5/8" BOLTS.

TYPICAL DEAD-ENDINGS OR GUYING

BRIDGE TEMPORARY TRAFFIC SIGNAL INSTALLATION

STATE OF WISCONSIN
DEPARTMENT OF TRANSPORTATION

APPROVED

3/2/2011 — DATE

/S/ Thomas J. G[illegible] — STATE ELECTRICAL ENGI[illegible]

HWYS

FHWA

6

S.D.D. 9 G 2-3b

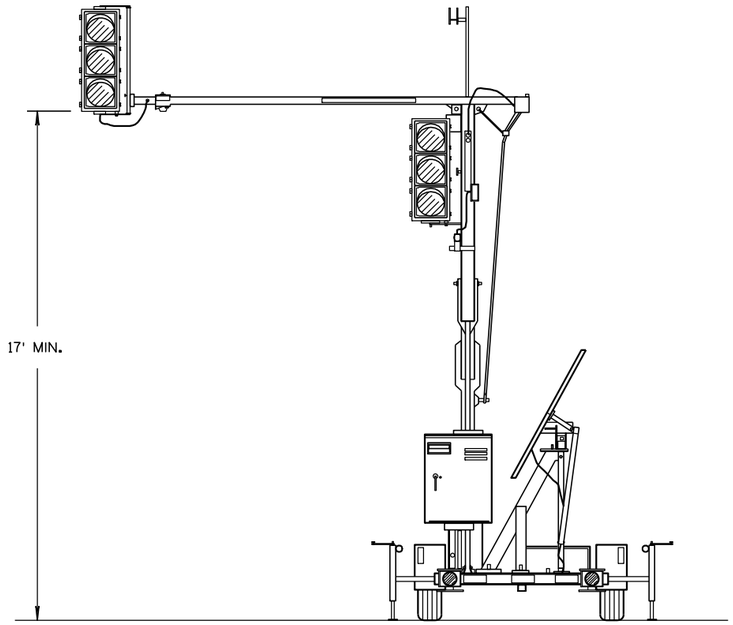

TRAILER MOUNTED TRAFFIC SIGNAL

GENERAL NOTES

DETAILS OF CONSTRUCTION, MATERIALS AND WORKMANSHIP NOT SHOWN ON THIS DRAWING SHALL CONFORM TO THE PERTINENT REQUIREMENTS OF THE CONTRACT.

SIGNING, PAVEMENT MARKING AND LANE CONTROL REQUIREMENTS SHALL CONFORM TO STANDARD DETAIL DRAWING 15 D 33.

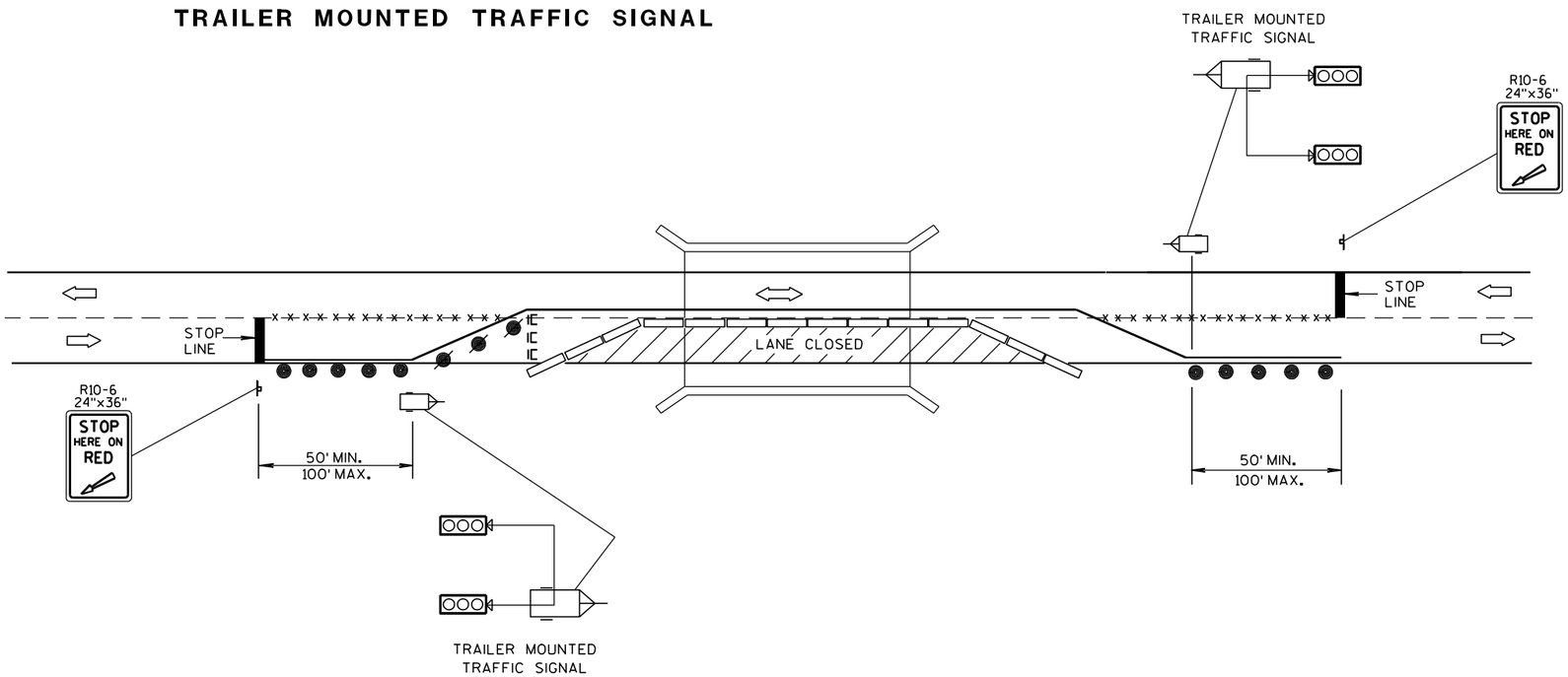

TYPICAL TRAILER MOUNTED TRAFFIC SIGNAL LOCATION

LEGEND

- POST MOUNTED SIGN
- REMOVING PAVEMENT MARKING
- TYPE III BARRICADE WITH SIGN
- DRUM WITH/WITHOUT WARNING LIGHT, TYPE C (STEADY-BURN)
- TEMPORARY PRECAST CONCRETE BARRIER
- TRAILER MOUNTED TRAFFIC SIGNAL
- DIRECTION OF TRAFFIC FLOW

BRIDGE TEMPORARY TRAFFIC SIGNAL INSTALLATION

STATE OF WISCONSIN
DEPARTMENT OF TRANSPORTATION

APPROVED

3/2/2011 — DATE

/S/ Thomas J. Gosling — STATE ELECTRICAL ENGI

FHWA — HWYS

6

S.D.D. 9 G 2-3c

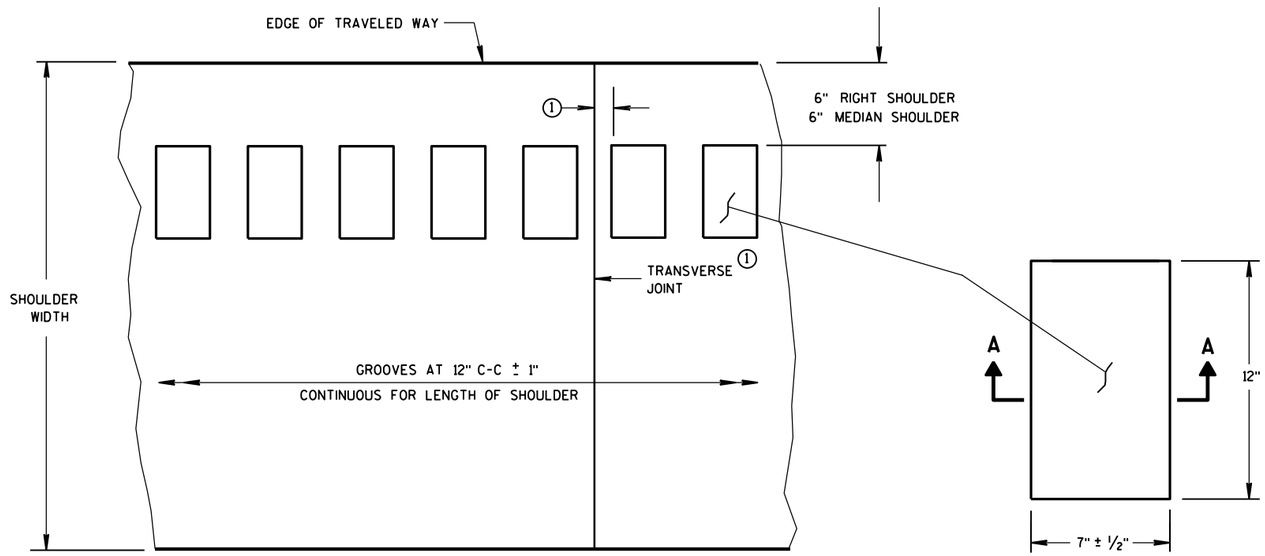

PLAN VIEW
SHOULDER WITH GROOVES

PLAN VIEW
(SINGLE GROOVE)

PLACEMENT DETAIL FOR MILLED RUMBLE STRIP

GENERAL NOTES

DETAILS OF CONSTRUCTION SHOWN ON THIS DRAWING SHALL CONFORM TO THE PERTINENT REQUIREMENTS OF THE STANDARD SPECIFICATIONS AND APPLICABLE SPECIAL PROVISIONS.

RUMBLE STRIPS ON EXPRESSWAYS

DO NOT INSTALL RUMBLE STRIPS ACROSS SIDE ROAD INTERSECTIONS, COMMERCIAL DRIVEWAYS, PRIVATE DRIVEWAYS OR ADJACENT TO RIGHT TURN LANES, LEFT TURN LANES, TURN LANE TAPERS, BRIDGE DECKS, BRIDGE APPROACHES, OR 100 FEET IN ADVANCE OF RAILROAD CROSSING. THE ATTACHED STANDARD DETAIL DRAWING SHOWS THE LOCATION OF THE RUMBLE STRIPS AT INTERCHANGE AREAS.

(1) CONCRETE PAVEMENT - RUMBLE STRIPS SHALL BE A MINIMUM OF 6" AWAY FROM TRANSVERSE JOINTS.

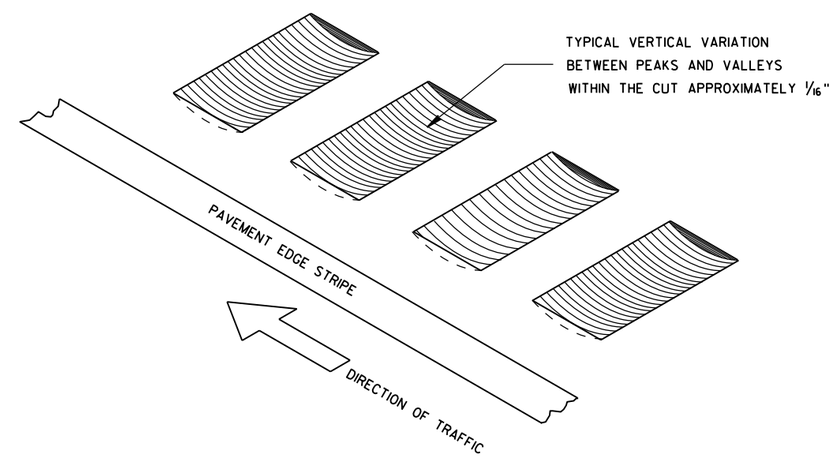

ISOMETRIC

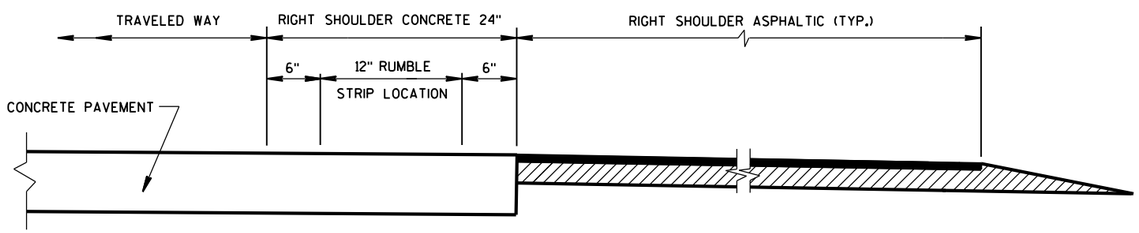

SECTION VIEW
CONCRETE PAVEMENT EXTENDS INTO RIGHT SHOULDER)

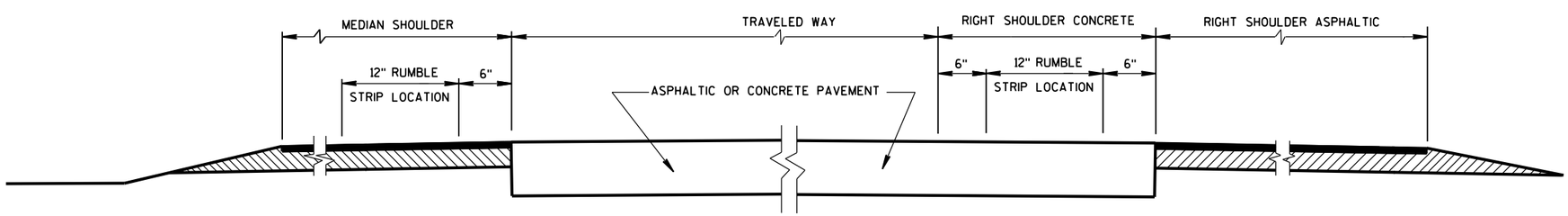

SECTION VIEW

TYPICAL LOCATIONS OF SHOULDER RUMBLE STRIPS
IN RURAL DIVIDED HIGHWAYS

(ONE ROADWAY IS SHOWN)

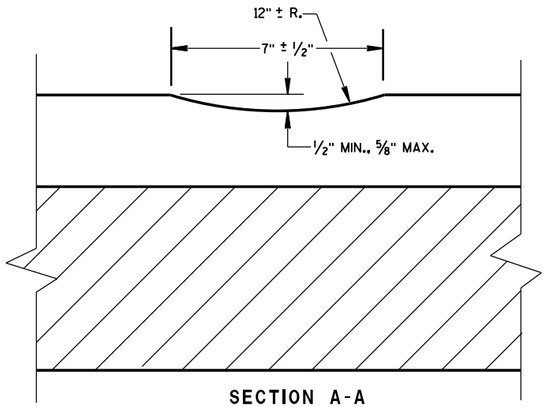

SECTION A-A

SHOULDER RUMBLE STRIP, MILLING

STATE OF WISCONSIN
DEPARTMENT OF TRANSPOI

6

S.D.D. 13 A 5-5a

6

S.D.D. 13 A 5-5a

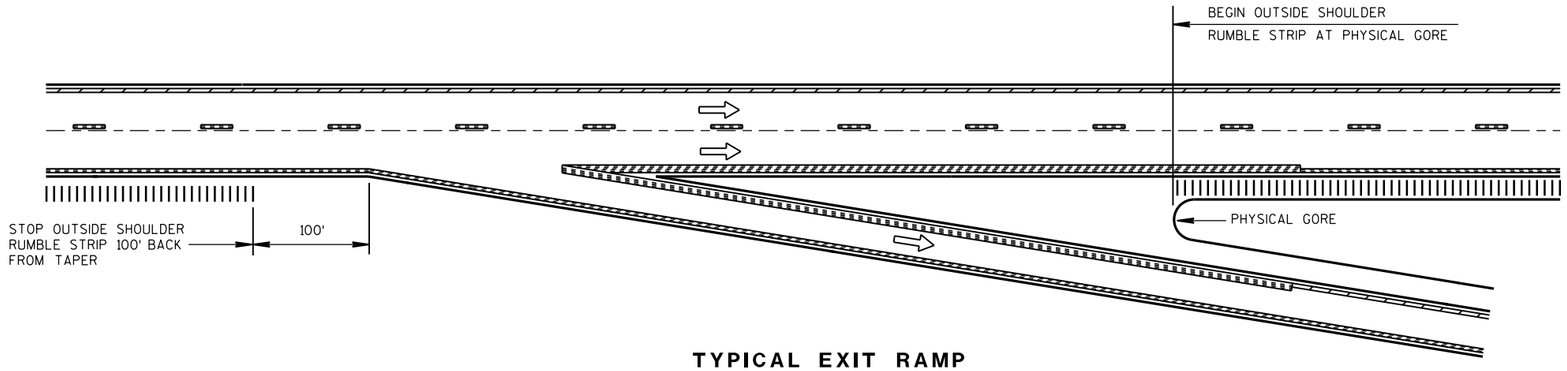

TYPICAL EXIT RAMP

NOTES:

NO RUMBLE STRIP ON EXIT, DIRECTIONAL, OR ENTRANCE RAMPS, EXCEPT NEAR THE ENTRANCE TAPER END AND ALONG THE PARALLEL RAMP AREA AS SHOWN.

PAVEMENT MARKING DETAILS AND SPECIFICATIONS ARE PROVIDED ELSEWHERE IN THE CONTRACT.

NOTE:
ARROW SYMBOL (⇨)
SHOWS DIRECTION OF TRAVEL

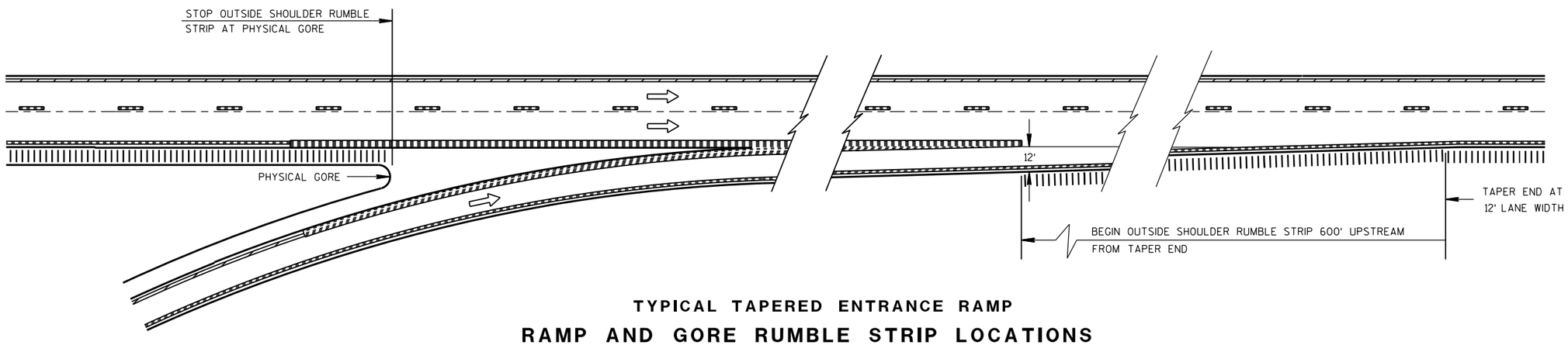

TYPICAL TAPERED ENTRANCE RAMP

RAMP AND GORE RUMBLE STRIP LOCATIONS

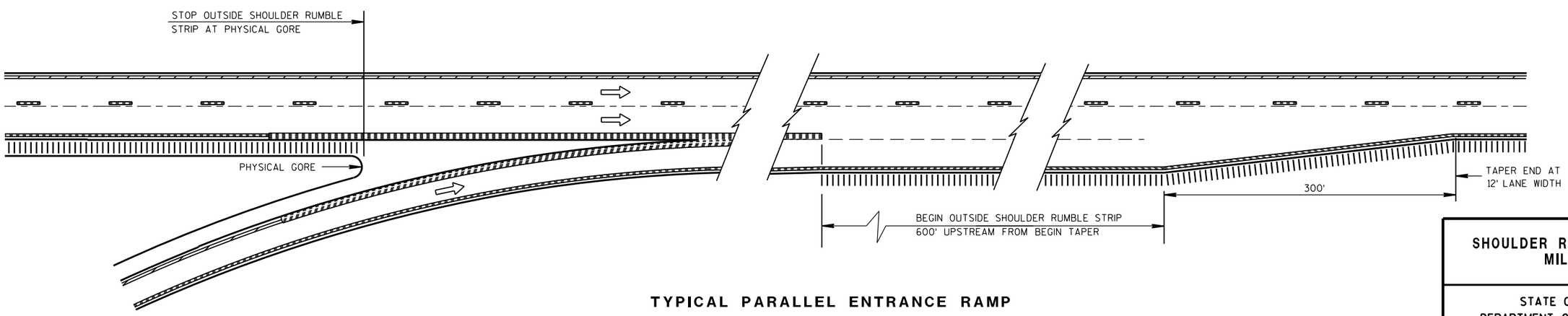

TYPICAL PARALLEL ENTRANCE RAMP

RAMP AND GORE RUMBLE STRIP LOCATIONS

SHOULDER RUMBLE STRIP, MILLING

STATE OF WISCONSIN
DEPARTMENT OF TRANSPORTATION

APPROVED
12/17/2012 — DATE
/S/ Jerry H. Zogg — ROADWAY STANDARDS DEVELOPMENT ENGINEER
FHWA

6

6

S.D.D. 13 A 5-5b

S.D.D. 13 A 5-5b

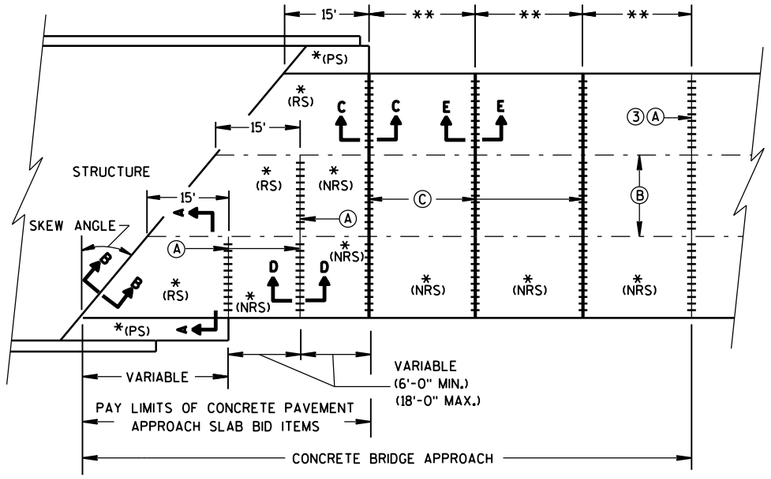

SKEWED APPROACH
(PAVEMENT MORE THAN 2 LANES)

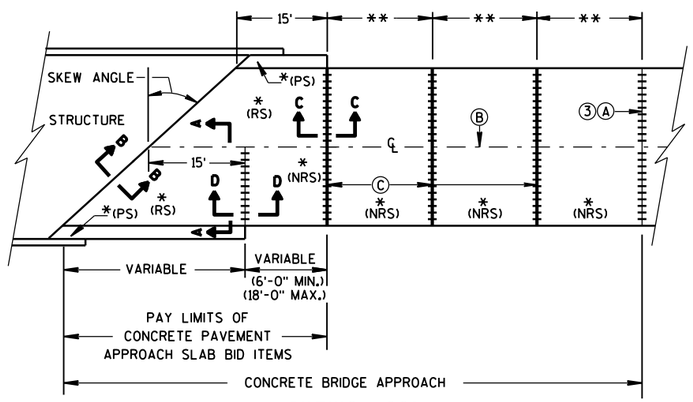

SKEWS >30°
(PAVEMENT WIDTH ≤30')

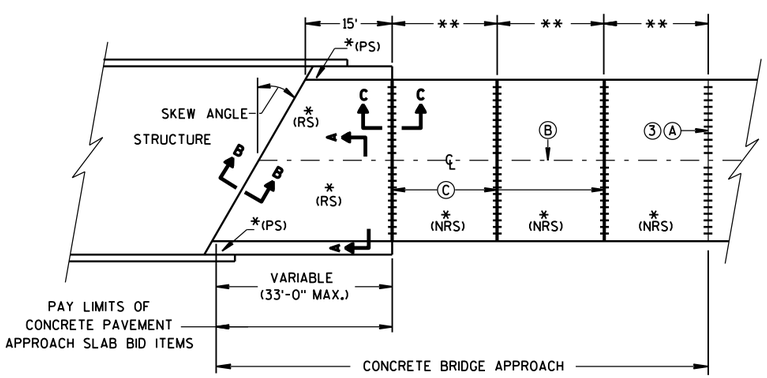

SKEWS ≤30°
(PAVEMENT WIDTH ≤30')

APPROACH SLAB AND ADJACENT PAVEMENT

*(RS) = REINFORCED CONCRETE SLAB
*(PS) = PAVED CONCRETE SHOULDER: CONCRETE PAVEMENT, OR CONCRETE SURFACE DRAIN (SEE DETAILS ELSEWHERE IN THE PLAN)
*(NRS) = NON-REINFORCED CONCRETE SLAB

**STANDARD TRANSVERSE JOINT SPACING (SEE SDD 13C4, SDD 13C11, & SDD 13C13)
***STANDARD DOWEL BAR DIAMETER (SEE SDD 13C11, & SDD 13C13)

Ⓐ STANDARD CONTRACTION JOINT NORMAL TO ℞ OR ℄
Ⓑ STANDARD LONGITUDINAL JOINT AND TIE BARS.
Ⓒ 1½" EXPANSION JOINT WITH DOWEL BARS NORMAL TO ℞ OR ℄

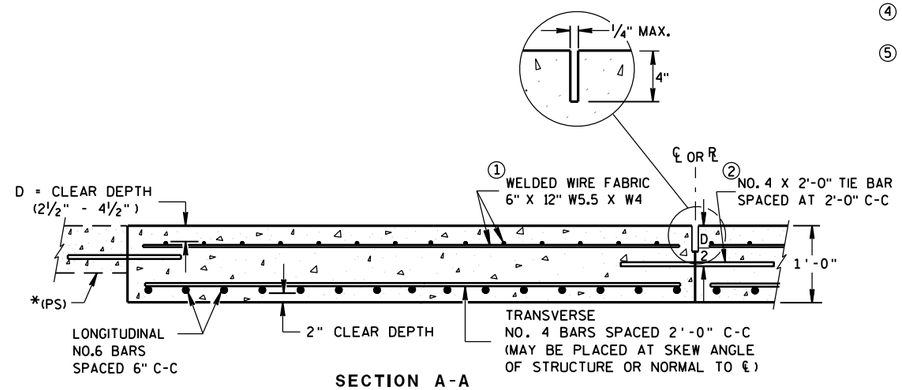

SECTION A-A
REINFORCEMENT POSITIONING DETAIL

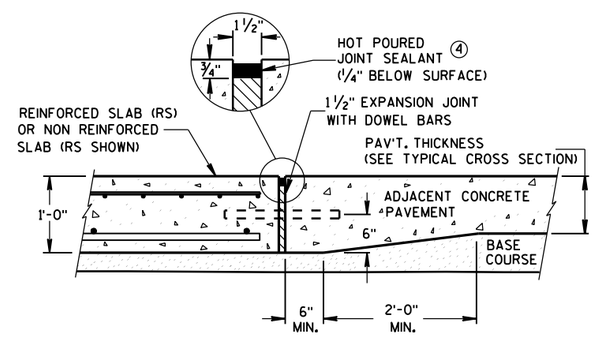

SECTION C-C
TRANSITION DETAIL
APPROACH SLAB TO ADJACENT PAVEMENT

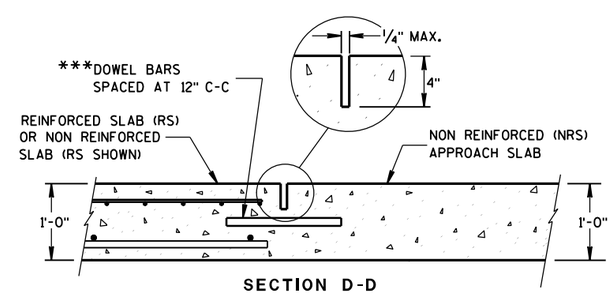

SECTION D-D
CONTRACTION JOINT

GENERAL NOTES

THE CONTRACTOR MAY SPLICE NO. 6 BARS IN THE APPROACH SLAB FOR SKEWED STRUCTURES ONLY. STAGGER SPLICES WITH A MAXIMUM OF ONE SPLICE PER BAR. THE LENGTH OF LAP IS 20 INCHES.

TACK WELD DOWEL BARS TO THE BASKETS ON ALTERNATE ENDS.

① THE CONTRACTOR MAY USE NO. 4 BARS SPACED AT 2'-0" C-C IN BOTH THE LONGITUDINAL AND TRANSVERSE DIRECTIONS FOR TOP REINFORCEMENT AS AN ALTERNATIVE TO THE WELDED WIRE FABRIC.

② THE CONTRACTOR MAY OMIT TIE BARS BETWEEN REINFORCED SLABS WHERE SLAB REINFORCEMENT BARS EXTEND ACROSS THE CENTERLINE OR REFERENCE LINE.

③ DO NOT DOWEL A CONTRACTION JOINT THAT ABUTS AN HMA PAVEMENT.

④ USE A JOINT SEALANT MEETING THE REQUIREMENTS OF ASTM D6690.

⑤ PLACE EXPANSION CAP ON THE END OF THE DOWEL THAT IS NOT TACK WELDED TO THE BASKET. DO NOT FORCE DOWEL BAR PAST THE DOWEL STOP.

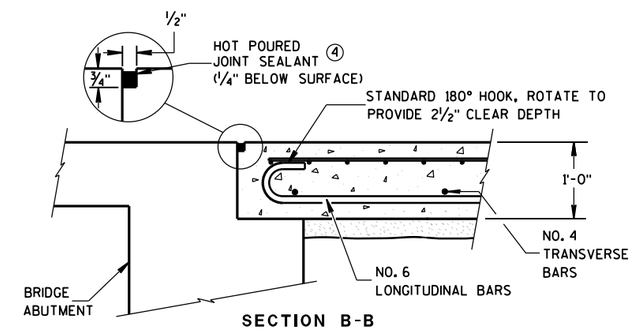

SECTION B-B
BEND DETAIL
BOTTOM REINFORCEMENT

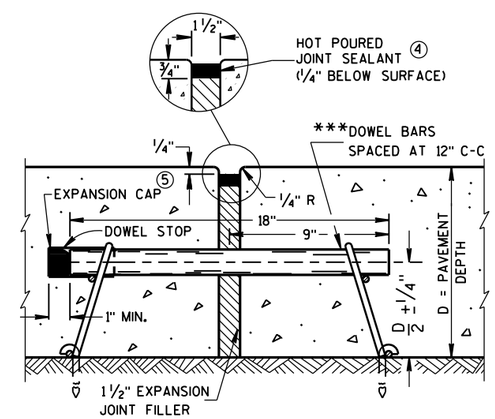

SECTION E-E
EXPANSION JOINT

CONCRETE BRIDGE APPROACH	
STATE OF WISCONSIN DEPARTMENT OF TRANSPORTATION	
APPROVED June, 2014 DATE	/S/ Deb Bischoff PAVEMENT POLICY & DE EER
FHWA	

6
S.D.D. 13 B 2-7a

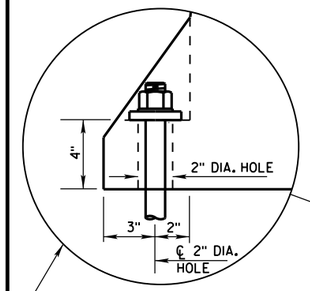

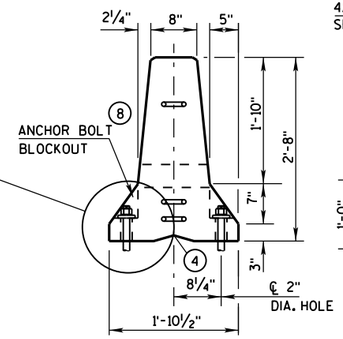

END VIEW

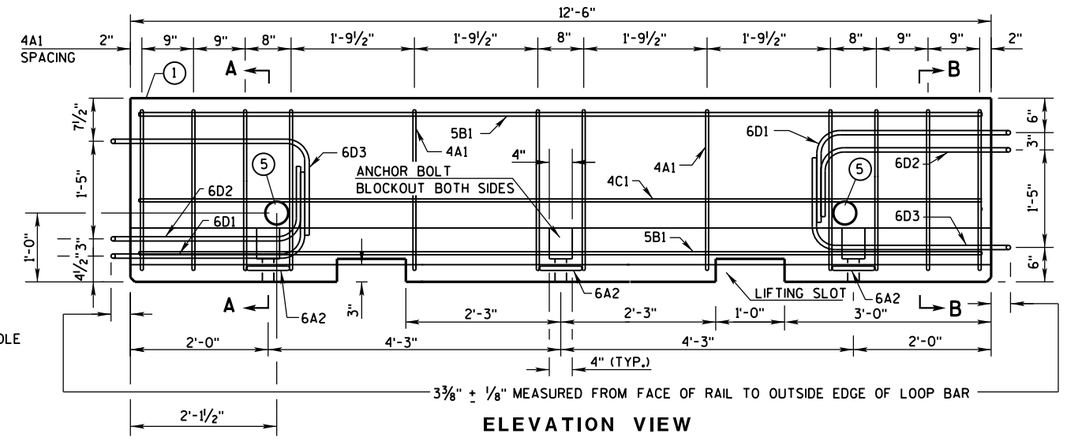

ELEVATION VIEW

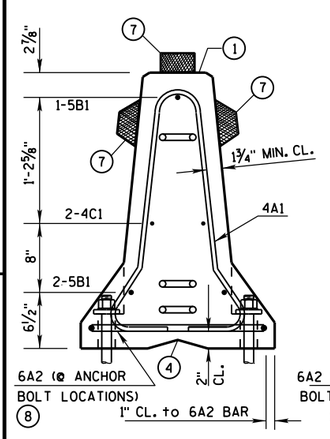

SECTION A-A
(STIRRUP PLACEMENT)

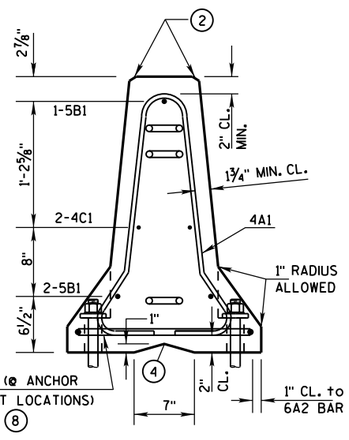

SECTION B-B
(STIRRUP PLACEMENT)

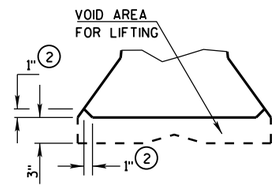

DETAIL "B"
LIFTING SLOT DETAIL

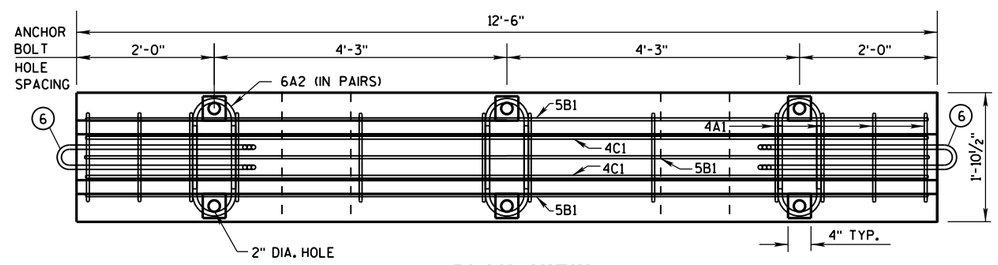

PLAN VIEW

DETAILS OF BARRIER SECTION

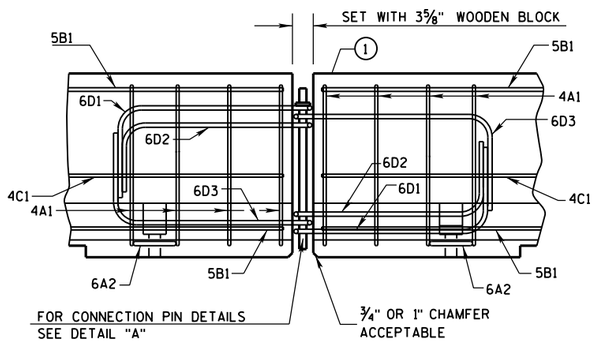

DETAILS OF BARRIER CONNECTION

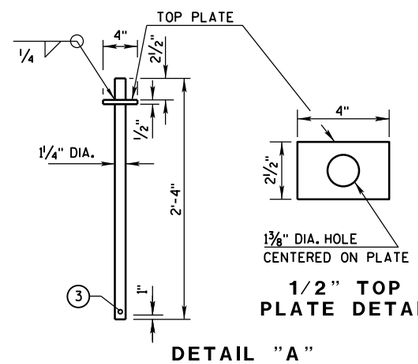

1/2" TOP PLATE DETAIL

DETAIL "A"
CONNECTION PIN
(A36 STEEL (10.9 LB EACH))

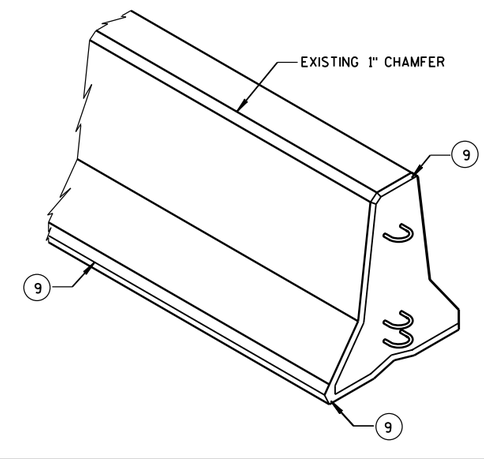

GENERAL NOTES

THESE GENERAL NOTES APPLY TO SHEETS 14B7-14(a) THRU 14B7-14(h).

DO NOT INTERMIX CONCRETE BARRIER TEMPORARY PRCAST, 12'-6" (CBTP12.5) WITH OTHER TEMPORARY CONCRETE BARRIERS.

USE ASTM A-615, GRADE 60, DEFORMED STEEL BARS FOR BARS 4A1, 6A2, 5B1 AND 4C1 IN THE BARRIER SECTION AND FOR 4V1, 4V2, 4V3, 4V4, 4V5, 4V6, 4F1, 4F2 AND 5F3 IN THE BARRIER TAPER SECTION.

LOOP BARS 6D1, 6D2 AND 6D3 SHALL BE ¾" SMOOTH STEEL BARS WITH A MINIMUM YIELD STRENGTH OF 60 KSI, A TENSILE STRENGTH OF NOT LESS THAN 1.25 TIMES THE YIELD STRENGTH BUT A MINIMUM OF 80 KSI, A MINIMUM 14% ELONGATION IN 8 INCHES AND PASSING A 180 DEGREE BEND TEST USING A 3-½" PIN BEND DIAMETER FOR BEND TESTS. THE LOOPS SHALL BE INSTALLED WITHIN ⅛" OF THE PLAN DIMENSION.

CONSTRUCT LIFTING SLOTS AS SPECIFIED ON THE PLANS TO FACILITATE THE DRAINAGE OF WATER AFTER INSTALLATION.

PLACE BARRIER ON A PAVED SURFACE. REMOVE ALL LOOSE DIRT AND SAND FROM THE ROADWAY SURFACE PRIOR TO PLACEMENT OF THE BARRIER.

INSTALL MECHANICAL OR EPOXY ANCHORS PER MANUFACTURER'S RECOMMENDATIONS. PROVIDE MANUFACTURER'S INFORMATION TO PROJECT ENGINEER.

1. MARK ONE END OF EACH BARRIER PERMANENTLY BY FORMING INTO THE BARRIER THE FOLLOWING INFORMATION:
   - a. TYPE: WI CBTP
   - b. MANUFACTURER
   - c. DATE MANUFACTURED (MONTH AND YEAR)
2. 1" CHAMFER TO PREVENT SPALLING.
3. A ⅜" HOLE IN THE CONNECTION PIN, AT THE LOCATION SHOWN, IS ACCEPTABLE, BUT NOT REQUIRED..
4. "V" NOTCH IS OPTIONAL.
5. THE 4" DIAMETER, 11 GAUGE STEEL, ROUND MECHANICAL TUBING SLEEVE FOR LIFTING (OPTIONAL).
6. NEVER USE LOOP BARS (6D1, 6D2 OR 6D3) TO LIFT, MOVE OR REPOSITION THE BARRIER.
7. USE DELINEATORS CONFORMING TO SECTION 633 OF THE STANDARD SPECIFICATIONS. CONTRACTOR MAY USE ALTERNATE SHAPES AND HOUSING. INSTALL DELINEATORS ACCORDING TO MANUFACTURES INSTRUCTION. INSTALL YELLOW REFLECTORS WHEN BARRIER IS LOCATED TO THE LEFT OF TRAFFIC AND WHITE REFLECTORS WHEN BARRIER IS LOCATED TO THE RIGHT OF TRAFFIC. SPACE DELINEATORS A MAXIMUM OF 25 FEET APART. PROVIDE TOP MOUNTED DELINEATORS IN ADDITION TO THE SIDE MOUNTED DELINEATORS ON ALL BARRIER INSTALLATIONS LOCATED ON A CURVED ALIGNMENT LONGER THAN 200 FEET AND ON BARRIERS USED TO SEPARATE OPPOSING TRAFFIC.
8. SEE SHEET D FOR ANCHORING CRITERIA.
9. 1" CHAMFER OPTIONAL.

CONCRETE BARRIER
TEMPORARY PRECAST, 12'-6"

STATE OF WISCONSIN
DEPARTMENT OF TRANSPOI

6

S.D.D. 14 B 7-14a

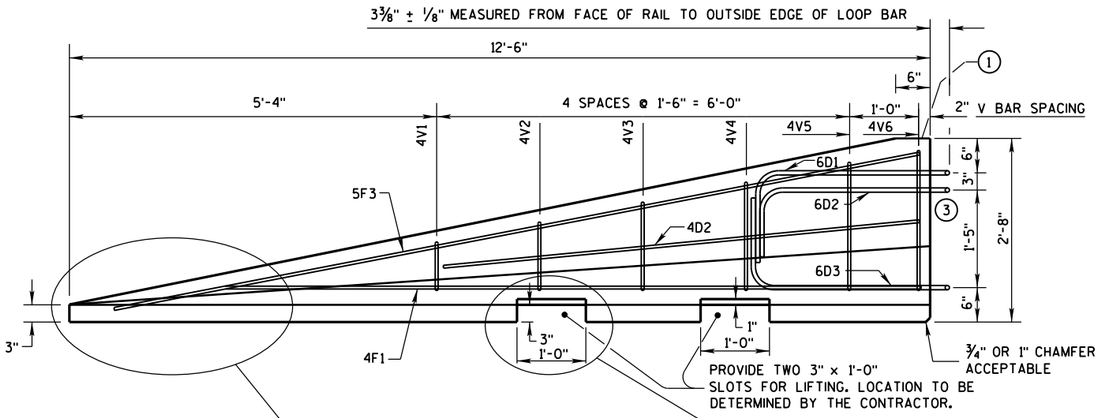

SIDE ELEVATION

(FOR CONNECTION TO LEFT END OF BARRIER)

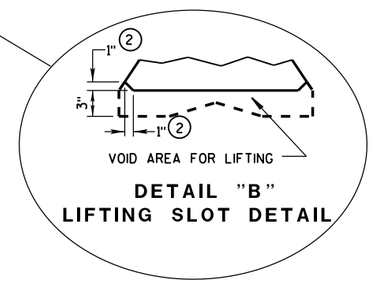

DETAIL "B"
LIFTING SLOT DETAIL

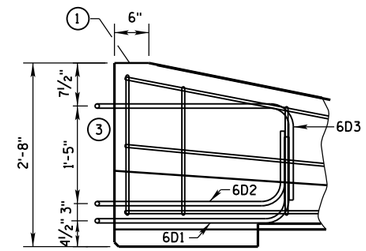

SIDE ELEVATION

LOOP BAR ASSEMBLY INVERTED
FOR OPPOSITE END.
(FOR CONNECTION TO RIGHT END OF BARRIER)

GENERAL NOTES

1. MARK ONE END OF EACH BARRIER PERMANENTLY BY FORMING INTO THE BARRIER THE FOLLOWING INFORMATION:
   a. TYPE WICBTP
   b. MANUFACTURER
   c. DATE MANUFACTURED (MONTH AND YEAR)
2. 1" CHAMFER TO PREVENT SPALLING.
3. NEVER USE LOOP BARS (6D1, 6D2 OR 6D3) TO LIFT, MOVE OR REPOSITION THE BARRIER.

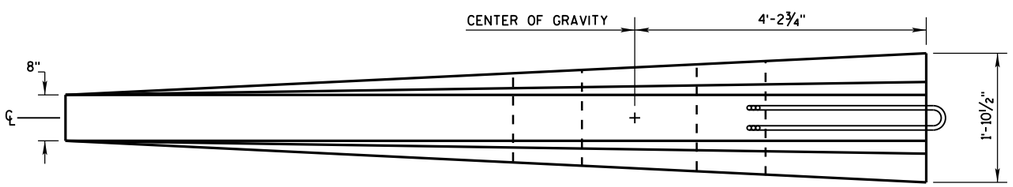

PLAN VIEW

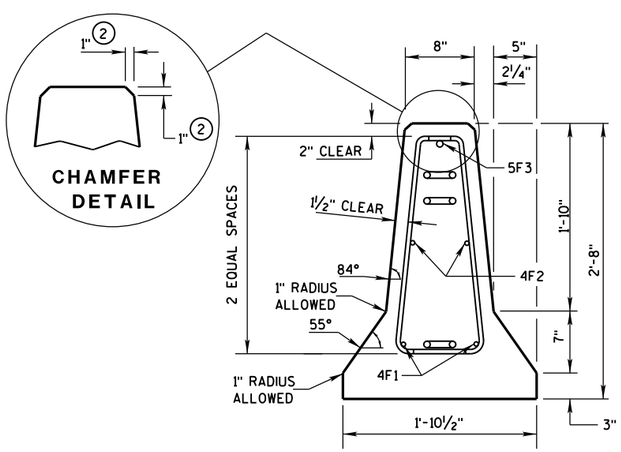

END SECTION

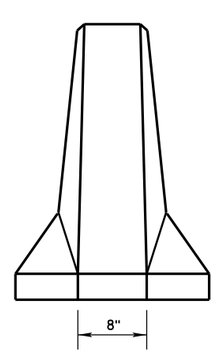

FRONT ELEVATION

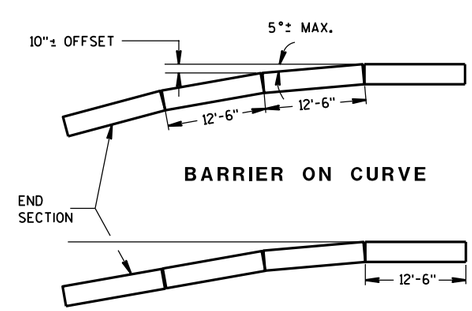

BARRIER ON CURVE

FLARE AT BARRIER END

POSTED SPEED, (MPH)	FLARE RATE
40 OR LESS	6:1
45 OR GREATER	8:1

DETAILS OF BARRIER TAPER SECTION

CONCRETE BARRIER
TEMPORARY PRECAST, 12'-6"

STATE OF WISCONSIN
DEPARTMENT OF TRANSPOI

6

S.D.D. 14 B 7-14b

GENERAL NOTES

(1) NEVER USE LOOP BARS (6D1, 6D2 OR 6D3) TO LIFT, MOVE OR REPOSITION THE BARRIER.

BARRIER TAPER SECTION BILL OF MATERIALS

(PER 12'-6" BARRIER TAPER SECTION)

BAR	BAR SIZE	NO. OF BARS	LENGTH FT.
4V1	4	2	1'-11"
4V2	4	2	2'-2"
4V3	4	2	2'-6"
4V4	4	2	2'-9"
4V5	4	2	3'-2"
4V6	4	2	3'-4"
4F1	4	2	12'-0"
4F2	4	2	7'-6"
5F3	5	1	11'-9"
LOOP ASSEMBLY			
6D1	6	1	8'-5"
6D2	6	1	7'-7"
6D3	6	1	8'-6"

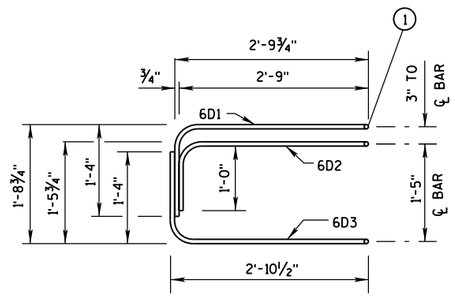

ELEVATION
LOOP BAR ASSEMBLY

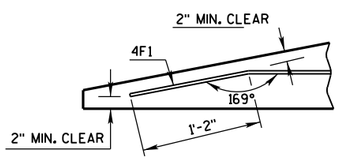

DETAIL "C"
BENT BAR DETAIL

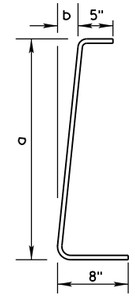

BAR	a	b
V1	10"	1"
V2	1'-1"	1¼"
V3	1'-5"	1⅝"
V4	1'-8"	1⅞"
V5	2'-0½"	2⅜"
V6	2'-3"	2¾"

4V BARS
2 AT EACH SIZE REQUIRED
FOR STIRRUP ASSEMBLY

TAPER BARRIER SECTION

BARRIER SECTION BILL OF MATERIALS

(PER 12'-6" BARRIER SECTION)

BAR	BAR SIZE	NO. OF BARS	LENGTH FT.
4A1	4	12	6'-0"
6A2	6	6	2'-11"
5B1	5	3	12'-2"
4C1	4	2	12'-2"
LOOP ASSEMBLY			
6D1	6	2	8'-5"
6D2	6	2	7'-7"
6D3	6	2	8'-6"

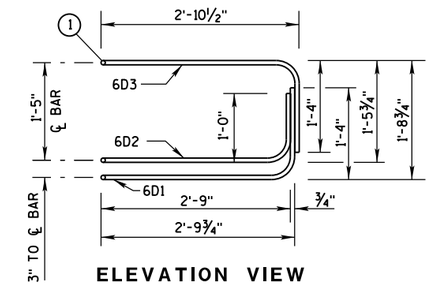

ELEVATION VIEW

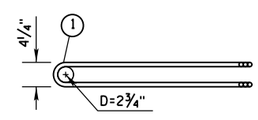

PLAN VIEW
LOOP BAR ASSEMBLY
(MARKED END SHOWN, INVERT FOR OTHER END)

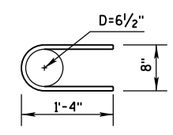

6A2

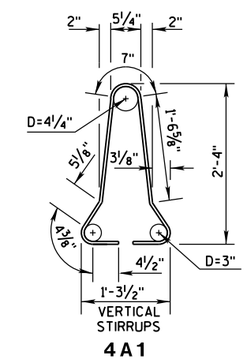

VERTICAL STIRRUPS
4A1

BARRIER SECTION

6

6

S.D.D. 14 B 7-14c

S.D.D. 14 B 7-14c

CONCRETE BARRIER
TEMPORARY PRECAST, 12'-6"

STATE OF WISCONSIN
DEPARTMENT OF TRANSPOR

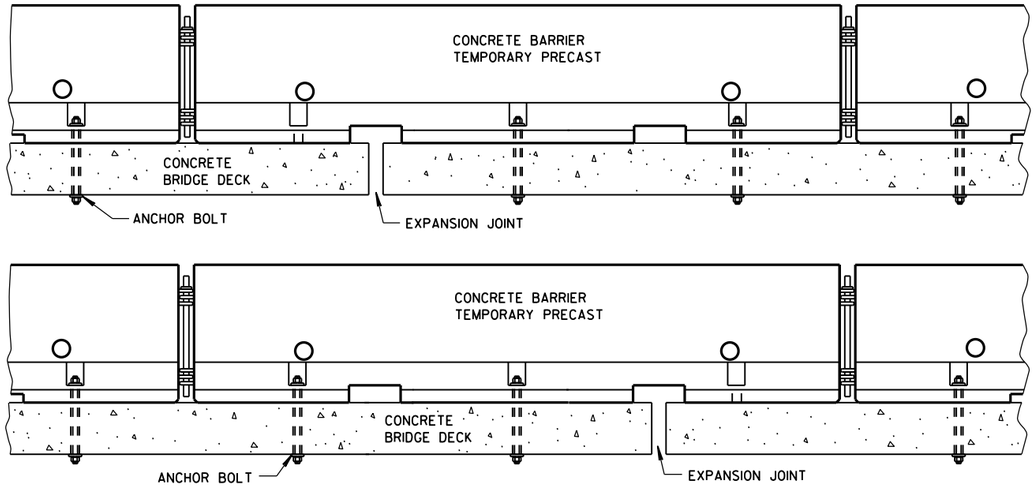

TREATMENT AT BRIDGE DECK EXPANSION JOINTS

(NO SINGLE CONCRETE BARRIER SECTION SHALL BE ANCHORED TO BOTH THE BRIDGE DECK AND THE APPROACH SLAB. ALL ANCHOR BOLT LOCATIONS SHALL BE ANCHORED TO THE DECK IN ACCORDANCE WITH THE DETAIL. NO MORE THAN ONE ANCHOR BOLT SHALL BE ELIMINATED FROM A BARRIER SECTION WHEN SPANNING AN EXPANSION JOINT.)

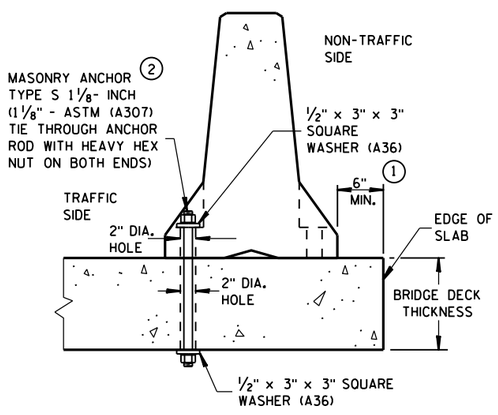

THROUGH BOLTED ANCHOR INSTALLATION ON BRIDGE DECK

(DO NOTUSE ON CONCRETE BRIDGE DECK WITH ASPHALT OVERLAY)

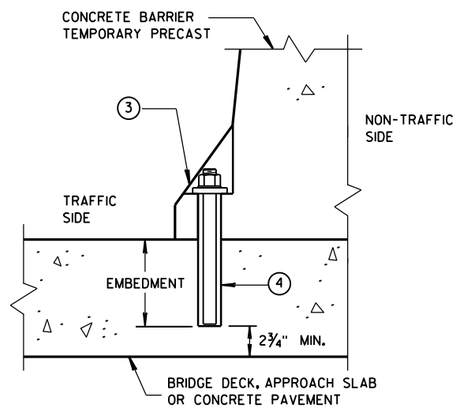

REMOVABLE ADHESIVE BONDED ANCHOR INSTALLATION ON CONCRETE BRIDGE DECK, CONCRETE APPROACH SLAB, OR CONCRETE PAVEMENT 2

(DO NOT USE ON CONCRETE WITH AN ASPHALTIC OVERLAY)

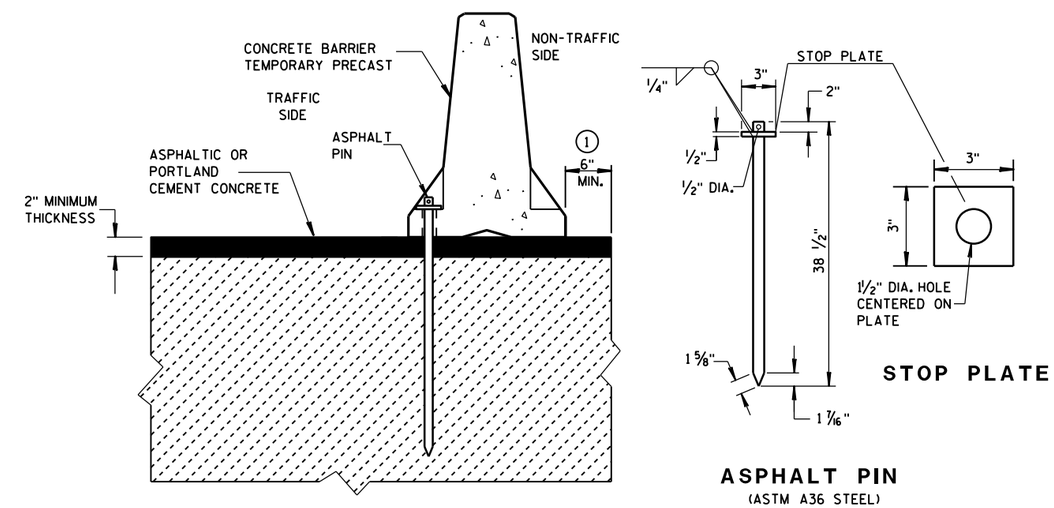

ASPHALT PIN

(ASTM A36 STEEL)

STAKE DOWN INSTALLATION FOR ASPHALTIC OR PORTLAND CEMENT CONCRETE SURFACE

(STAKING IS INCIDENTAL TO CONCRETE BARRIER TEMPORARY PRECAST)

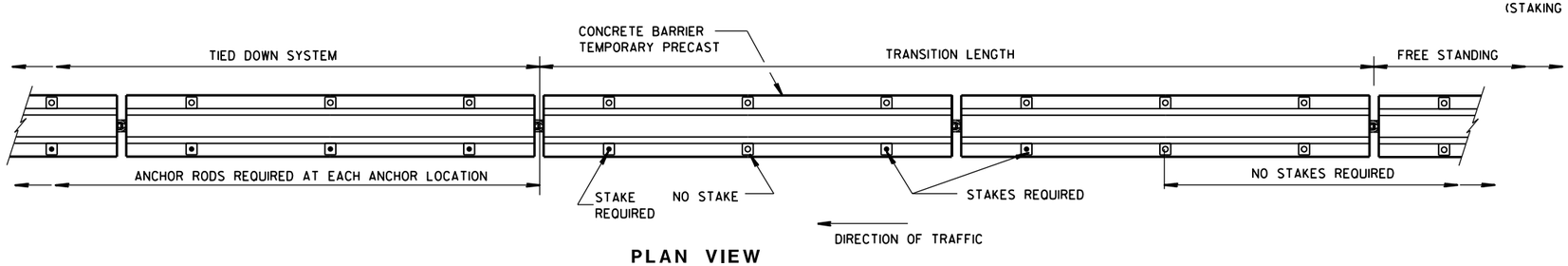

PLAN VIEW

FREE STANDING TRANSITION TO TIED-DOWN SYSTEM

(PLACE TRANSITION IN A TANGENT SECTION OF BARRIER PARALLEL TO THE ROADWAY. IF TRANSITION OCCURS ON STRUCTURAL SLAB, ANCHOR AS SHOWN.)

GENERAL NOTES

1. CONCRETE BARRIER TEMPORARY PRECAST, 12'-6" SHALL BE ANCHORED IF:
   THE DISTANCE TO A 2 FOOT OR GREATER DROPOFF THAT IS STEEPER THAN 3H : 1V, FOR EXAMPLE THE EDGE OF A BRIDGE DECK OR A DROPOFF AT THE EDGE OF PAVEMENT, IS LESS THAN 4 FEET FROM THE SIDE OF THE BARRIER CLOSEST TO THE DROPOFF AND THE POSTED SPEED IS 45 MPH OR GREATER, OR

   THE DISTANCE TO A 2 FOOT OR GREATER DROPOFF THAT IS STEEPER THAN 3H : 1V, FOR EXAMPLE THE EDGE OF A BRIDGE DECK OR A DROPOFF AT THE EDGE OF PAVEMENT, IS LESS THAN 2 FEET FROM THE SIDE OF THE BARRIER CLOSEST TO THE DROPOFF AND THE POSTED SPEED IS 40 MPH OR LESS.

2. ANCHORING IS INCIDENTAL TO CONCRETE BARRIER TEMPORARY PRECAST.

   WITH THE APPROVAL OF THE ENGINEER, REMOVABLE ADHESIVE BONDED (EPOXY) ANCHOR BOLT INSTALLATION MAY BE USED IN LIEU OF THROUGH BOLTED ANCHOR INSTALLATION. THE ADHESIVE BONDED ANCHOR BOLT MUST BE REMOVABLE. USE ASTM (A307) MASONRY ANCHORS TYPE S 1 1/8-INCH, EMBEDDED TO A DEPTH SUFFICIENT TO DEVELOP THE ULTIMATE CAPACITY OF THE ANCHOR BOLT AND PROVIDE DOCUMENTATION TO CONFIRM THIS.

   UPON REMOVAL OR RELOCATION OF THE BARRIER UNITS, REMOVE ALLANCHOR BOLTS AND COMPLETELY FILL IN THE REMAINING HOLES IN CONCRETE BRIDGE DECKS, CONCRETE APPROACH SLABS AND CONCRETE PAVEMENTS THAT ARE TO REMAIN, WITH A NON-SHRINK COMMERICAL GROUT OR EPOXY MATERIAL IDENTIFIED ON THE CURRENT WISDOT APPROVED PRODUCTS LIST.

3. 1 1/8" DIAMENTER A307 THREADED ROD, 1/2" X 3" X 3" SQUARE PLATE WASHER WITH ASTM A36 STEEL, ASTM A563A HEAVY HEX NUT.

4. ADHESIVE ANCHORS WITH A MINIMUM BOND STRENGTH OF 1,800 PSI AND 5 1/4" EMBEDMENT. SEE 603.2 AND 603.3.1.2 OF THE WISCONSIN STANDARD SPECIFICATIONS FOR MORE INFORMATION ON ADHESIVE ANCHORS.

CONCRETE BARRIER TEMPORARY PRECAST, 12'-6"

STATE OF WISCONSIN
DEPARTMENT OF TRANSPOI

6

S.D.D. 14 B 7-14d

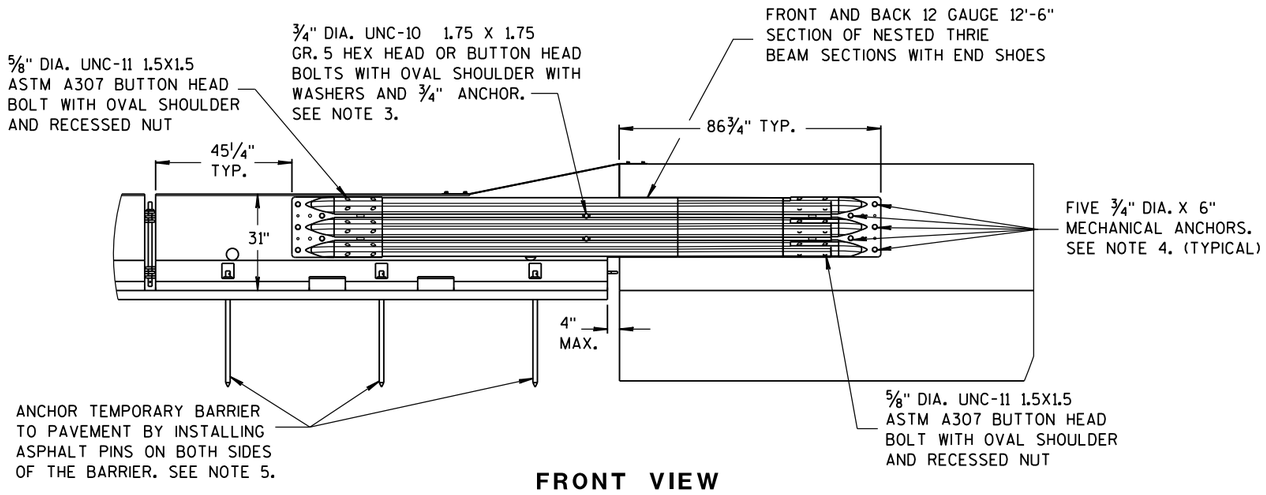

FRONT VIEW

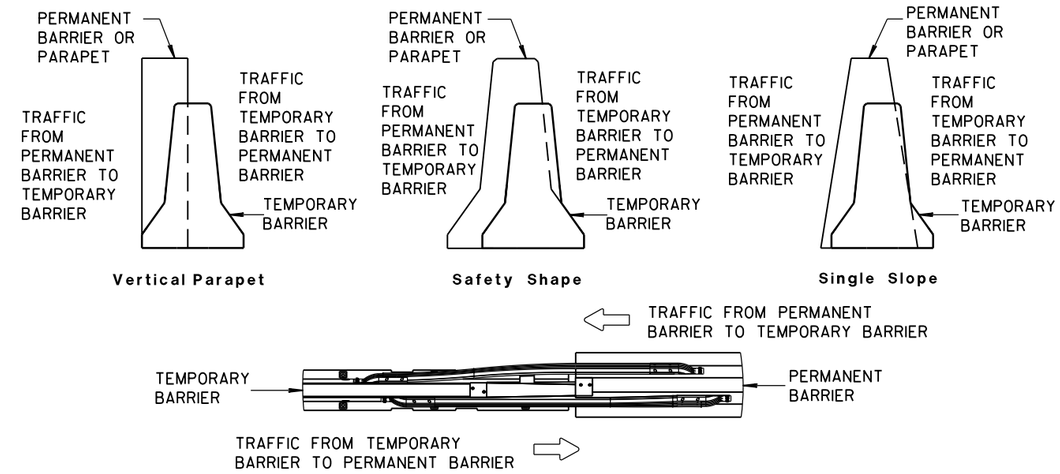

TEMPORARY BARRIER PLACEMENT FOR BI-DIRECTIONAL TRANSITION TO TIED-DOWN SYSTEM

NOTES

NESTED THRIE BEAM IS REQUIRED ON BOTH SIDES OF THE TEMPORARY BARRIER FOR ALL INSTALLATIONS.

1. CAP END PLATE PLACED FLUSH WITH UPSTREAM END OF PERMANENT BARRIER OR PARAPET.
2. THRIE BEAM PIECES ARE OFFSET 15 1/4" TO PREVENT INTERFERENCE FROM THE ANCHORS ON OPPOSING SIDES.
3. MINIMUM MECHANICAL OR EPOXY ANCHOR STRENGTH REQUIREMENTS: ULTIMATE TENSILE LOAD 9.48 KIPS AND ULTIMATE SHEAR LOAD 10.48 KIPS.
4. MINIMUM MECHANICAL OR EPOXY ANCHOR STRENGTH REQUIREMENTS: ULTIMATE TENSILE LOAD 17.9 KIPS AND ULTIMATE SHEAR LOAD 21.96 KIPS.
5. MAY BE USED ON CONCRETE OR ASPHALT PAVEMENTS. ASPHALT OPTION SHOWN. FOR CONCRETE OPTION SEE OTHER DETAILS.
6. MINIMUM MECHANICAL OR EPOXY ANCHOR STRENGTH REQUIREMENTS: ULTIMATE TENSILE LOAD 12.14 KIPS AND ULTIMATE SHEAR LOAD 17.5 KIPS.

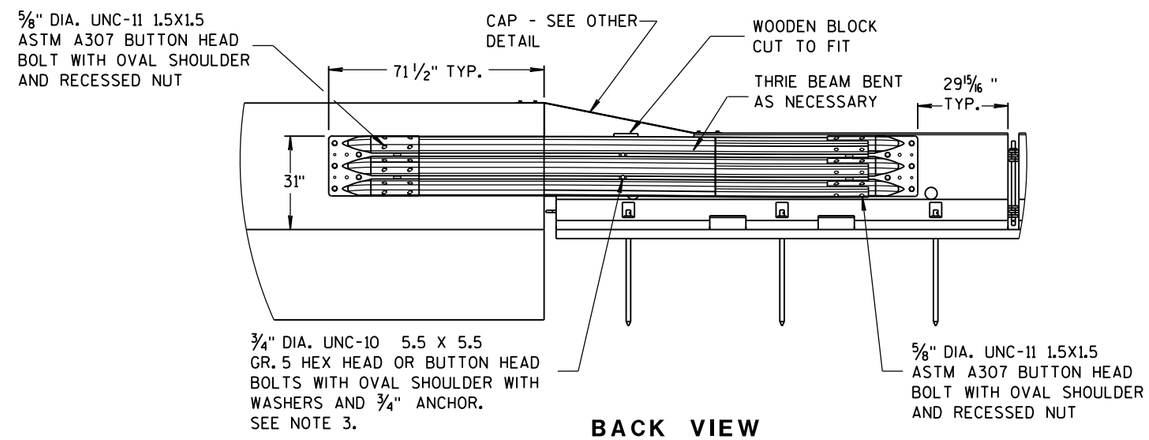

BACK VIEW

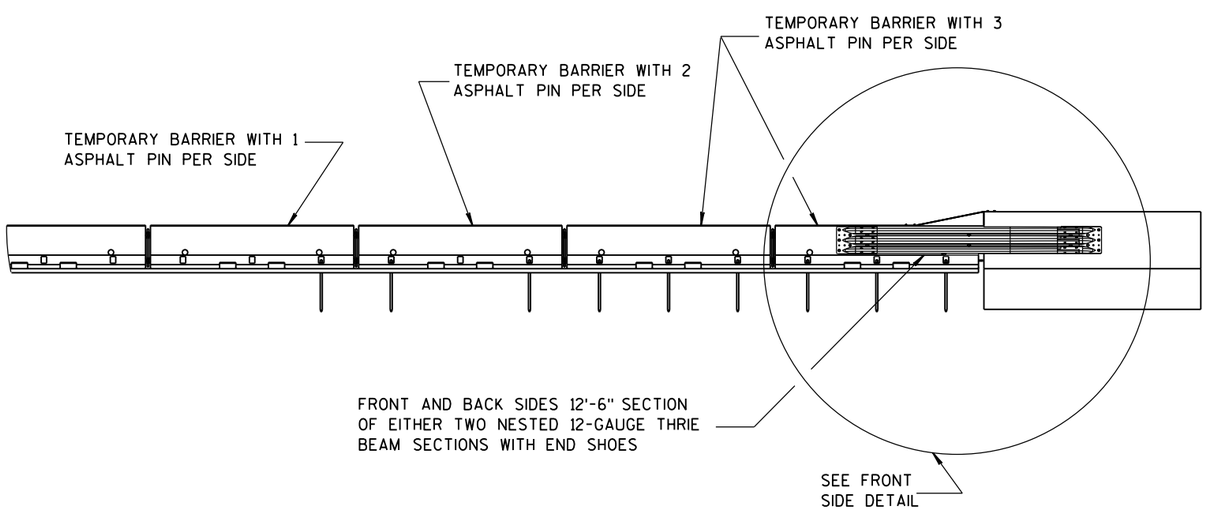

FRONT VIEW

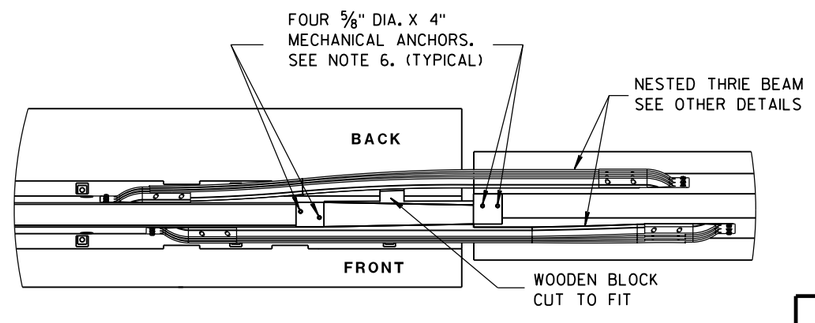

PLAN VIEW

BI-DIRECTIONAL TRANSITION TO TIED-DOWN SYSTEM

CONCRETE BARRIER
TEMPORARY PRECAST, 12'-6"

STATE OF WISCONSIN
DEPARTMENT OF TRANSPO

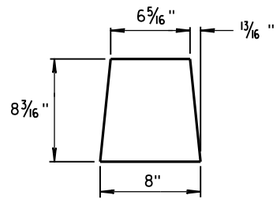

GUSSET 1

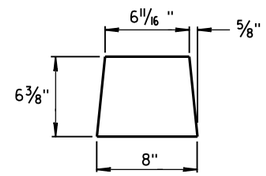

GUSSET 2

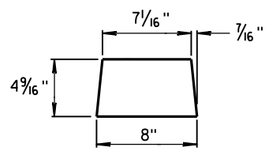

GUSSET 3

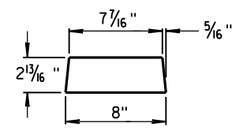

GUSSET 4

GUSSETS

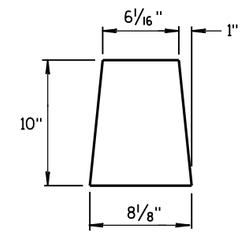

END PLATE

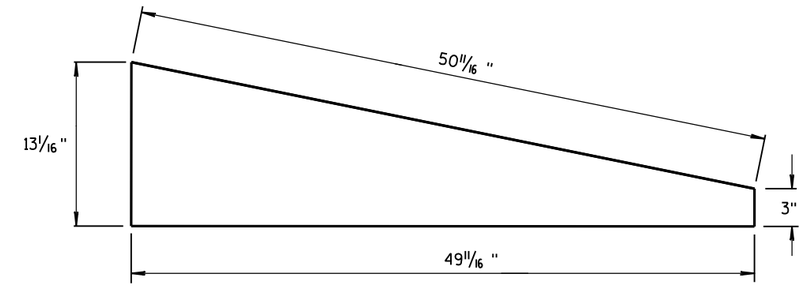

SIDE PLATE

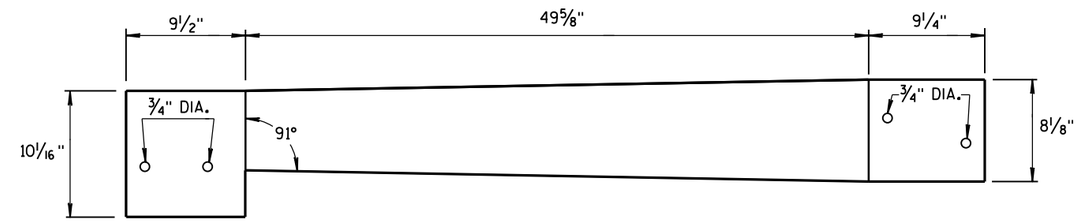

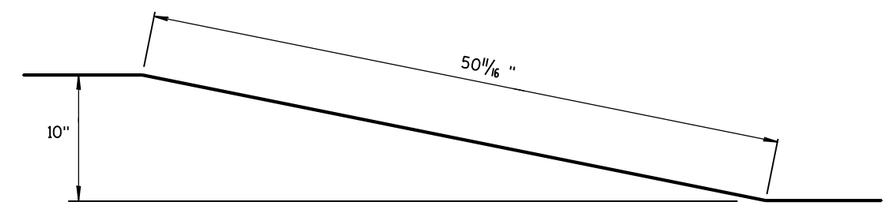

TOP PLATE

SIDE, TOP AND END PLATES FOR CAP FROM TEMPORARY CONCRETE BARRIER TO 42" PERMANENT CONCRETE BARRIER

SIDE PLATES, TOP PLATE, END PLATE AND GUSSETS ARE 12 GAUGE ASTM A36 GALVANIZED STEEL.

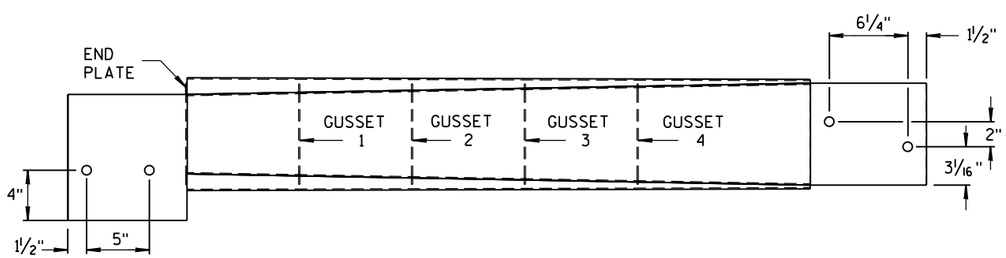

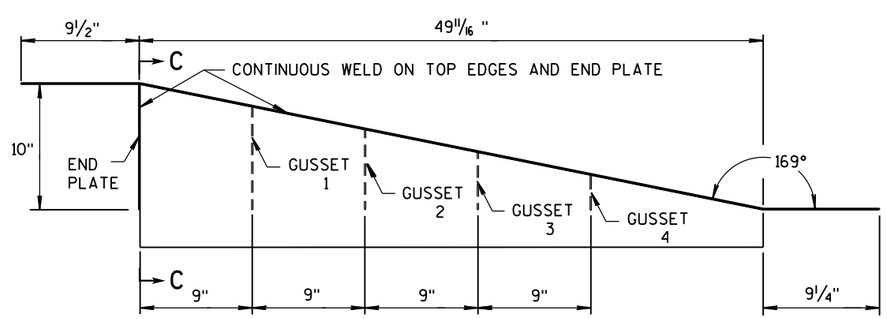

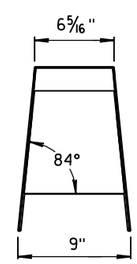

SECTION C-C

NOTES

1. FOUR GUSSETS AND END PLATE ARE STITCH WELDED ON THREE SIDES.
2. TWO TRIANGULAR SIDE PLATES ARE STITCH WELDED TO TOP PLATE, END PLATE, AND GUSSETS.

CAP DETAILS FOR TEMPORARY CONCRETE BARRIER TO 42" PERMANENT CONCRETE BARRIER

CONCRETE BARRIER
TEMPORARY PRECAST, 12'-6"

STATE OF WISCONSIN
DEPARTMENT OF TRANSPOR

6

S.D.D. 14 B 7-14f

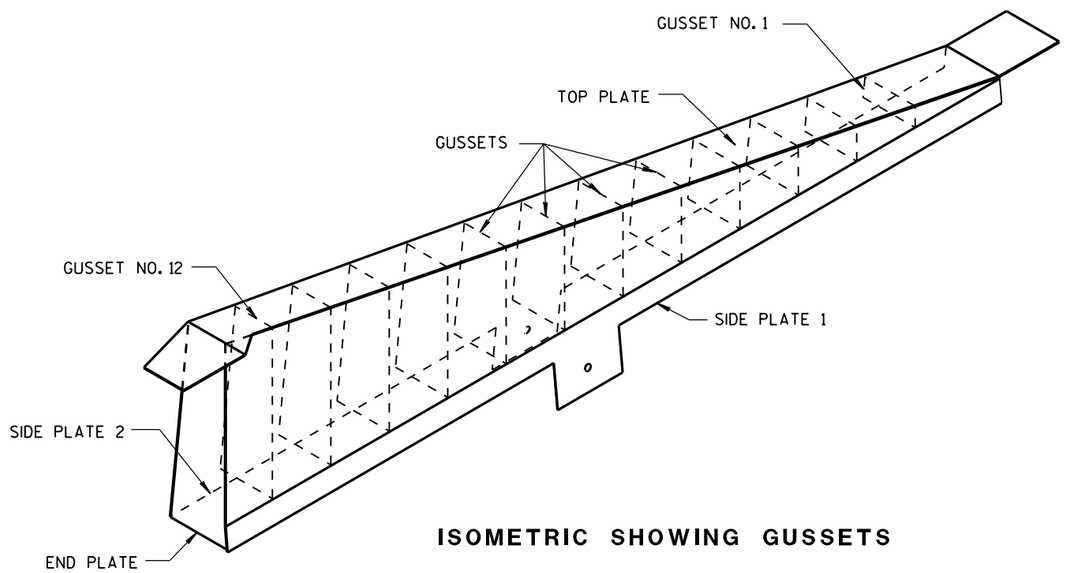

ISOMETRIC SHOWING GUSSETS

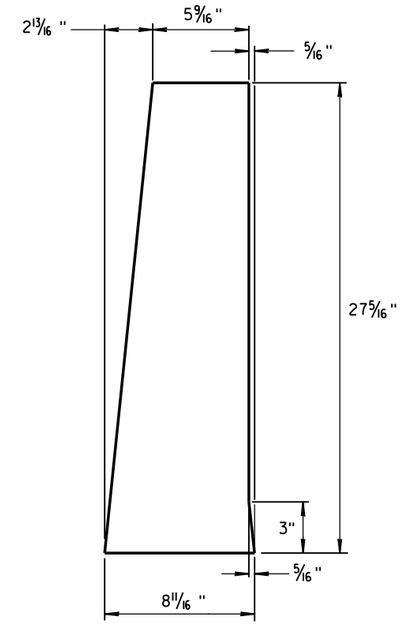

END PLATE

1/8" STEEL PLATE

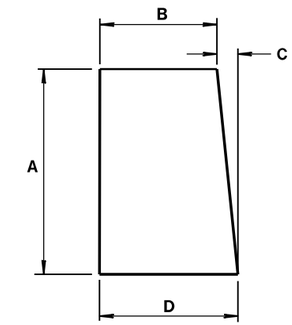

GUSSETS 1 - 12

ALL GUSSETS 1/8" STEEL PLATE

GUSSET DIMENSIONS				
GUSSET NO.	A	B	C	D
1	2 7/8"	7 3/4"	1/4"	8
2	4 11/16 "	7 9/16 "	1/2"	8
3	6 1/2"	7 3/8"	11/16 "	8 1/16 "
4	8 5/16 "	7 3/16 "	7/8"	8 1/16 "
5	10 1/8"	7"	1 1/16 "	8 1/16 "
6	11 15/16 "	6 13/16 "	1 1/4"	8 1/16 "
7	13 3/4"	6 5/8"	1 7/16 "	8 1/16 "
8	15 9/16 "	6 7/16 "	1 9/16 "	8 1/16 "
9	17 3/8"	6 1/4"	1 13/16 "	8 1/16 "
10	19 3/16 "	6 1/16 "	1 15/16 "	8 1/16 "
11	21"	5 7/8"	2 3/16 "	8 1/16 "
12	22 13/16 "	5 11/16 "	2 5/16 "	8 1/16 "

SIDE PLATES, TOP PLATE, END PLATE AND GUSSETS ARE 12 GAUGE ASTM A36 STEEL AND GALVANIZED.

GUSSETS AND END PLATE ARE STITCH WELDED ON 3 SIDES. TWO TRIANGULAR SIDE PLATES ARE STITCH WELDED TO TOP PLATE, END PLATE AND GUSSETS.

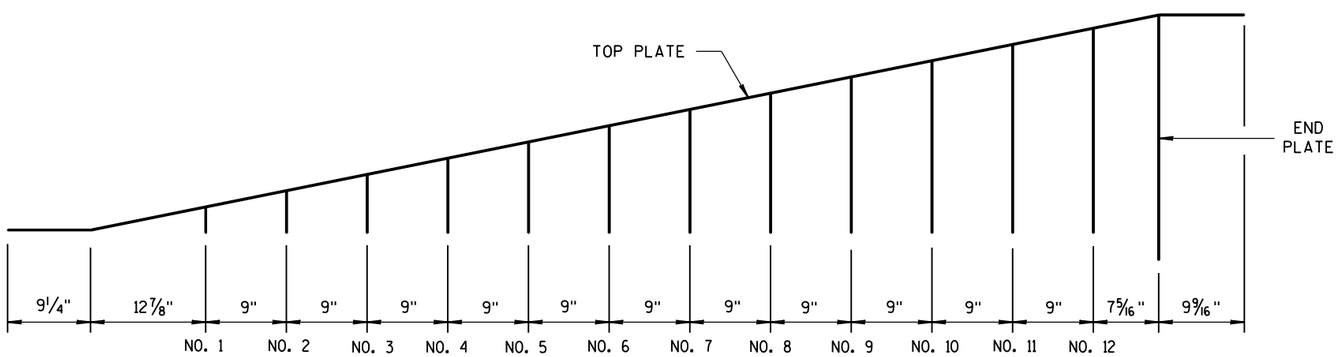

GUSSET LOCATION

CAP DETAILS FOR TEMPORARY CONCRETE BARRIER TO 56" PERMANENT CONCRETE BARRIER

CONCRETE BARRIER
TEMPORARY PRECAST, 12'-6"

STATE OF WISCONSIN
DEPARTMENT OF TRANSPOI

6

S.D.D. 14 B 7-14g

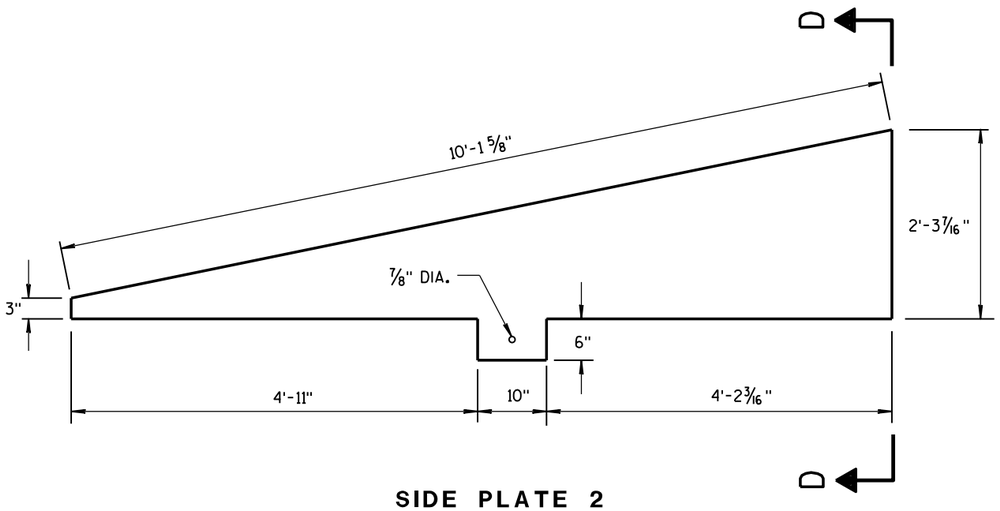

SIDE PLATE 2

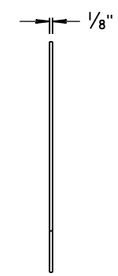

END VIEW

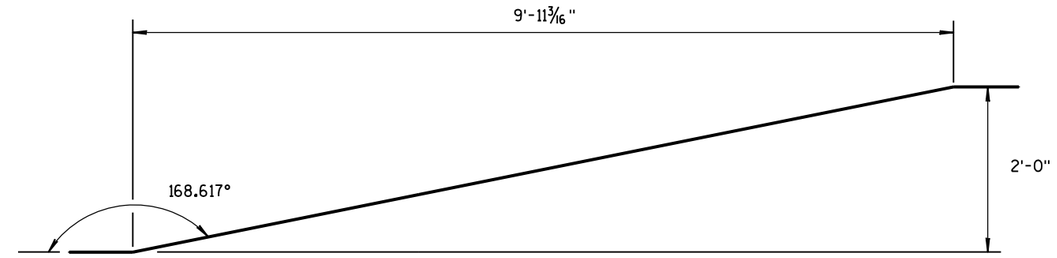

SIDE VIEW

TOP PLATE

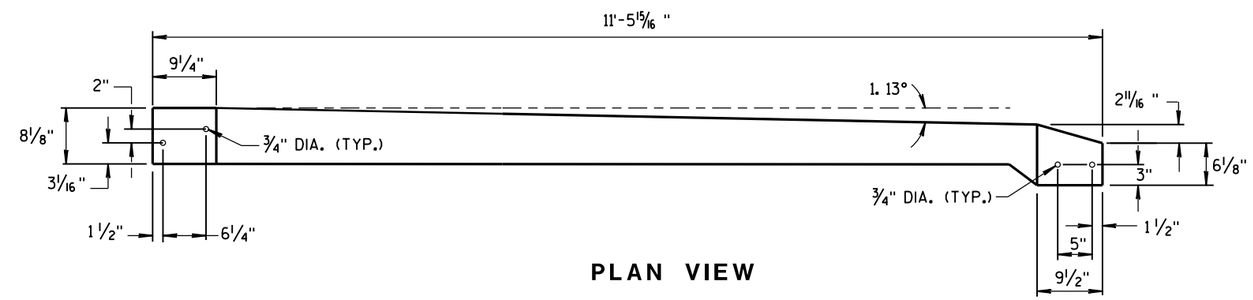

PLAN VIEW

TOP PLATE

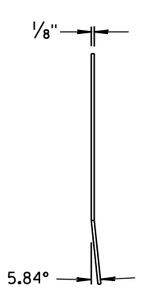

END VIEW

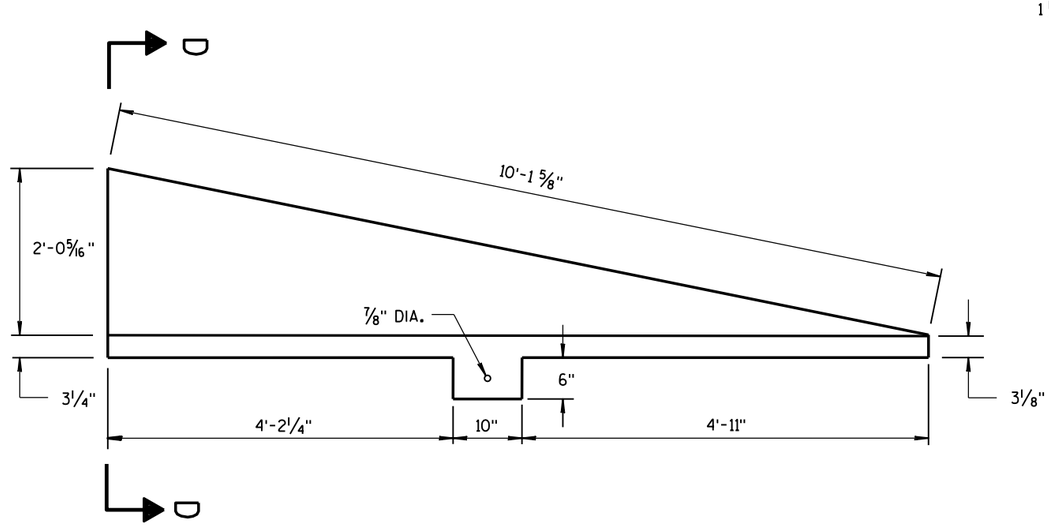

SIDE PLATE 1

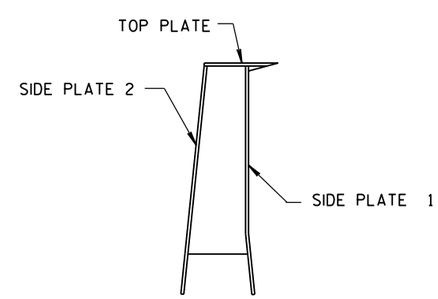

SECTION D-D

CAP DETAILS FOR TEMPORARY CONCRETE BARRIER TO 56" PERMANENT CONCRETE BARRIER

CONCRETE BARRIER
TEMPORARY PRECAST, 12'-6"

STATE OF WISCONSIN
DEPARTMENT OF TRANSPORTATION

APPROVED

June 2014 — DATE

/S/ Jerry H. Zogg — ROADWAY STANDARD DEVELOPMENT ENGINEER

FHWA

6

S.D.D. 14 B 7-14h

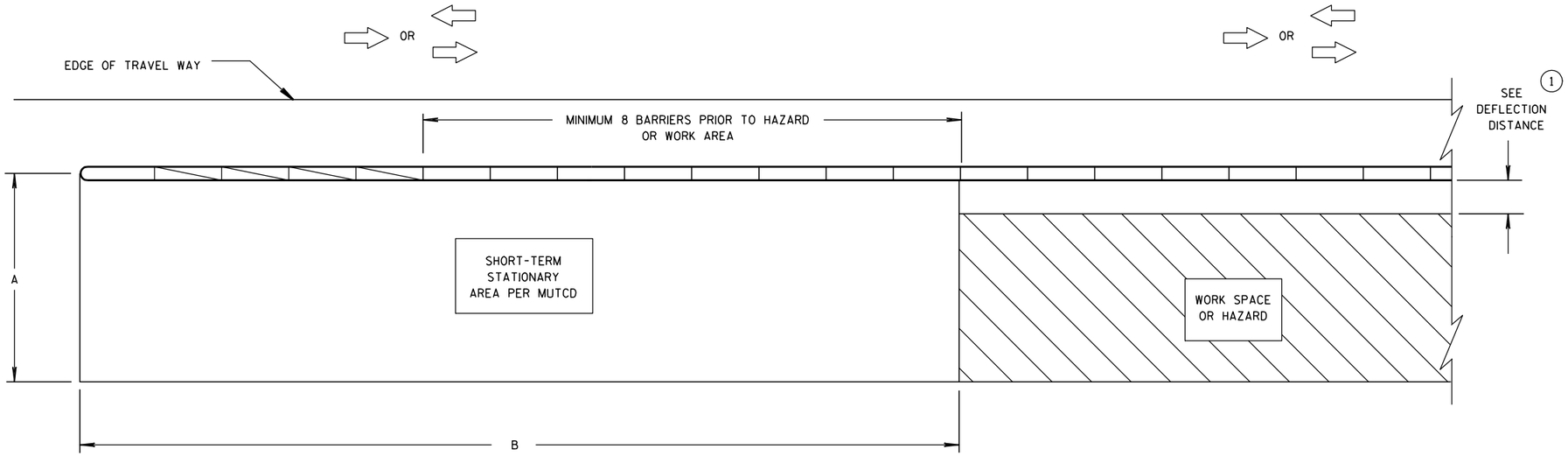

CRASH CUSHION/SAND BARREL ARRAY AND TEMPORARY BARRIER INSTALLATION FOR TRAFFIC ON ONE SIDE OF BARRIER

DIMENSION A TABLE (2)

FACILITY	POSTED SPEED MPH	DIMENSION A MIN. FT	DIMENSION A MAX. FT
FREEWAY/EXPRESSWAY	ALL	15	20
NON-FREEWAY/EXPRESSWAY	GREATER THAN OR EQUAL TO 45	10	15
NON-FREEWAY/EXPRESSWAY	LESS THAN 45	8	10
AADT LESS THAN 1,500	ALL	8	10

DIMENSION B TABLE (2)

POSTED SPEEDS MPH	DIMENSION B FT
20	115
25	155
30	200
35	250
40	305
45	360
50	425
55	495
60	570
65	645

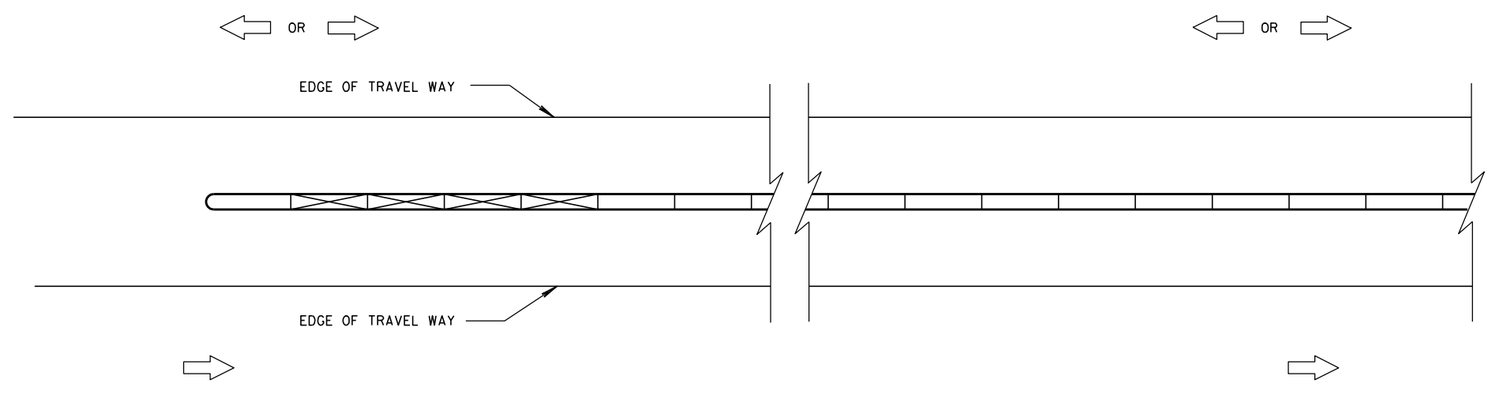

CRASH CUSHION/SAND BARREL ARRAY AND TEMPORARY BARRIER INSTALLATION FOR TRAFFIC ON BOTH SIDES OF BARRIER

LEGEND

- DIRECTION OF TRAVEL
- CRASH CUSHION OR SAND BARREL ARRAY
- SEE FREE STANDING TRANSITION TO TIED-DOWN SYSTEM DETAILS
- SEE BI-DIRECTIONAL TRANSITION TO TIED-DOWN SYSTEM DETAILS
- 3 PINS PLACED ON TRAFFIC SIDE OF BARRIER
- PERMANENT CONCRETE BARRIER OR CONCRETE PARAPET
- FREE STANDING TEMPORARY BARRIER

GENERAL NOTES

SEE STANDARD DETAIL DRAWING 14B7 FOR MORE INFORMATION.

DETAILS PROVIDE A GENERAL LAYOUT OF TEMPORARY CONCRETE BARRIER, CRASH CUSHIONS, SAND BARREL ARRAYS AND TIE DOWN TRANSITIONS. DETAILS PROVIDED MAY NOT FIT ALL POSSIBLE SITUATIONS OR SITE CONDITIONS. SEE OTHER SECTIONS OF THE CONTRACT OR PROJECT ENGINEER FOR MORE DETAILS.

ADDITIONAL TEMPORARY BARRIER MAY BE REQUIRED TO PROTECT TRAVELING PUBLIC FROM HAZARDS, CONTRACTOR'S OPERATIONS OR TO CONTROL TRAFFIC.

TEMPORARY BARRIER MAY BE REQUIRED TO BE ANCHORED TO PAVEMENT OR BRIDGE DECK.

FOR DETAILS ON CRASH CUSHION OR SAND BARREL ARRAYS SEE OTHER SECTIONS OF THE PLAN AND MANUFACTURE'S DETAILS.

SLOPES LEADING TO TEMPORARY BARRIER, CRASH CUSHION OR SAND BARREL ARRAY ARE 10:1 OR LESS.

(1) FOR DEFLECTION INFORMATION SEE STANDARD DETAIL DRAWING 14B7.

(2) VALUES PROVIDED MAY NOT FIT ALL POSSIBLE SITUATIONS OR SITE CONDITIONS. SEE OTHER SECTIONS OF THE CONTRACT OR PROJECT ENGINEER FOR MORE DETAILS.

CRASH CUSHION/SAND BARREL ARRAY AND OTHER TEMPORARY BARRIER LAYOUT DETAILS

STATE OF WISCONSIN
DEPARTMENT OF TRANSPORTATION

6

S.D.D. 14 B 8-1a

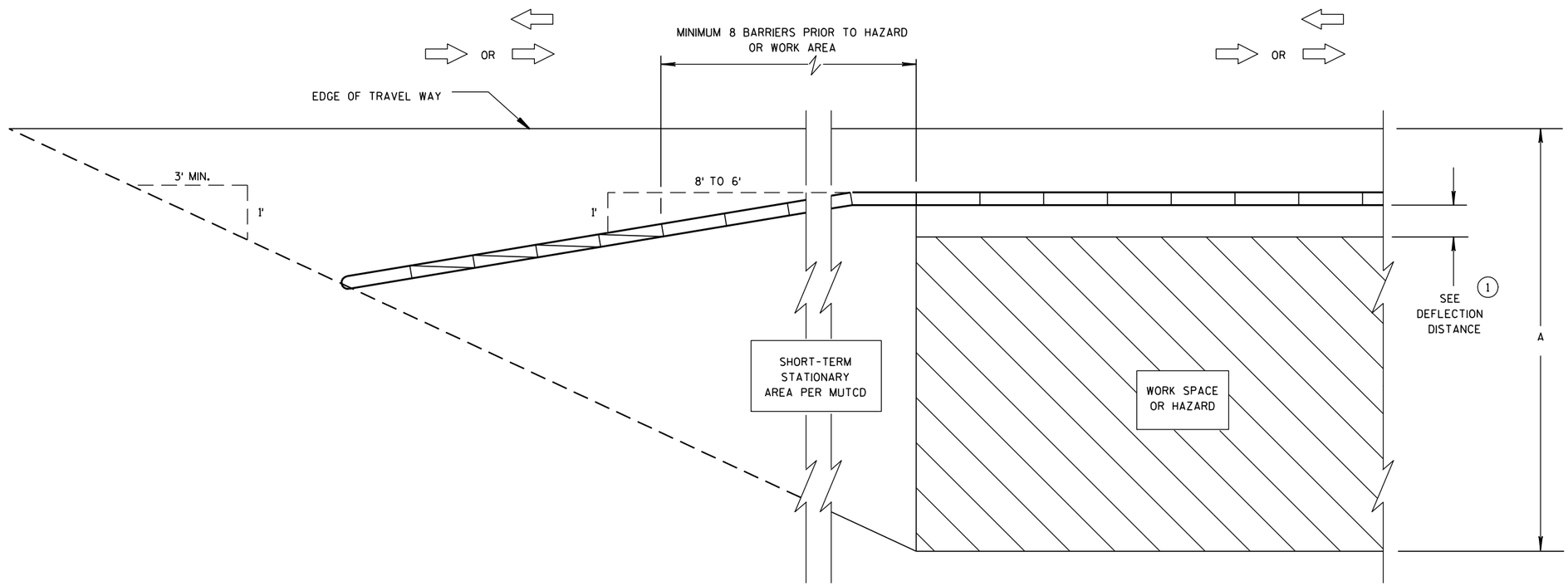

CRASH CUSHION/SAND BARREL ARRAY AND TEMPORARY BARRIER INSTALLATION FOR TRAFFIC ON ONE SIDE - FLARED INSTALLATION

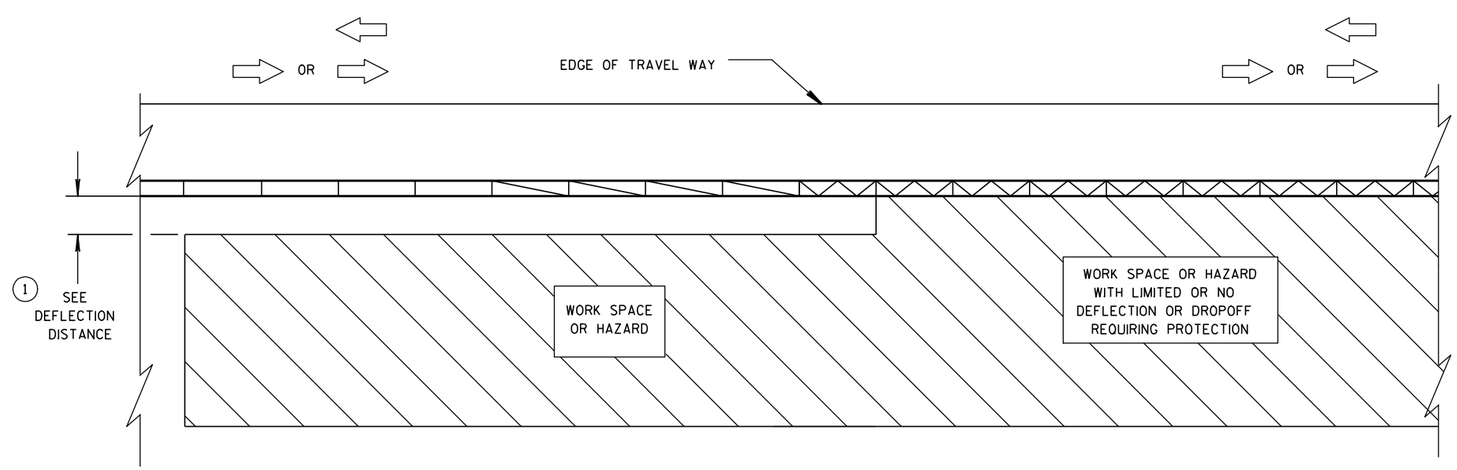

TRANSITION FROM FREE STANDING TEMPORARY BARRIER TO ANCHORED BARRIER

LEGEND

- DIRECTION OF TRAVEL
- CRASH CUSHION OR SAND BARREL ARRAY
- SEE FREE STANDING TRANSITION TO TIED-DOWN SYSTEM DETAILS
- SEE BI-DIRECTIONAL TRANSITION TO TIED-DOWN SYSTEM DETAILS
- 3 PINS PLACED ON TRAFFIC SIDE OF BARRIER
- PERMANENT CONCRETE BARRIER OR CONCRETE PARAPET
- FREE STANDING TEMPORARY BARRIER

CRASH CUSHION/SAND BARREL ARRAY AND OTHER TEMPORARY BARRIER LAYOUT DETAILS

STATE OF WISCONSIN
DEPARTMENT OF TRANSPORTATION

6

6

S.D.D. 14 B 8-1b

S.D.D. 14 B 8-1b

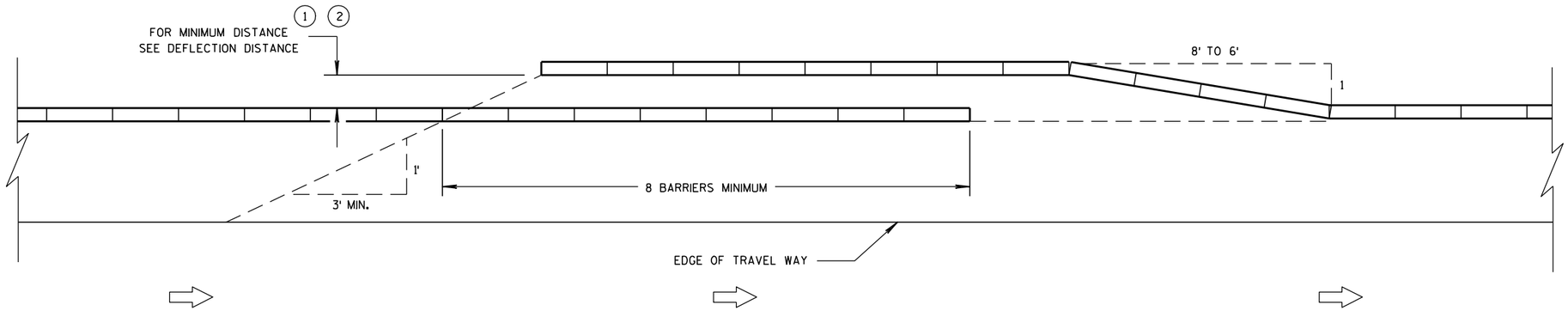

TEMPORARY BARRIER OVERLAP - ONE-WAY TRAFFIC

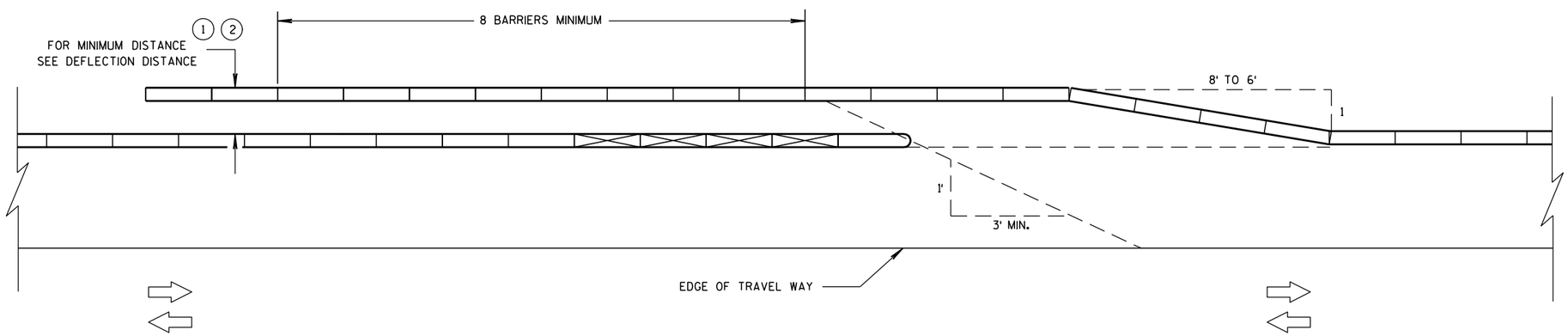

TEMPORARY BARRIER OVERLAP - TWO-WAY TRAFFIC

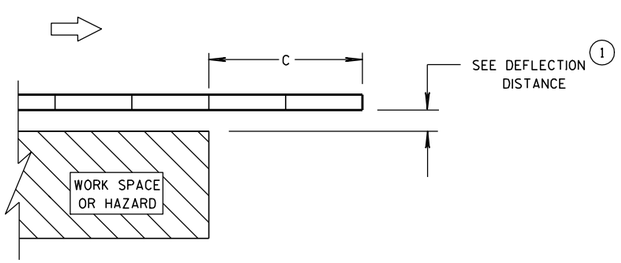

ENDING TEMPORARY BARRIER DOWNSTREAM - UNANCHORED

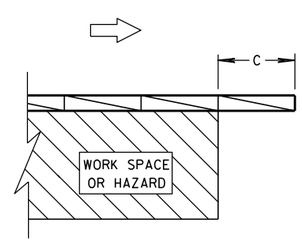

ENDING TEMPORARY BARRIER DOWNSTREAM - ANCHORED

LEGEND

- DIRECTION OF TRAVEL
- CRASH CUSHION OR SAND BARREL ARRAY
- SEE FREE STANDING TRANSITION TO TIED-DOWN SYSTEM DETAILS
- SEE BI-DIRECTIONAL TRANSITION TO TIED-DOWN SYSTEM DETAILS
- 3 PINS PLACED ON TRAFFIC SIDE OF BARRIER
- PERMANENT CONCRETE BARRIER OR CONCRETE PARAPET
- FREE STANDING TEMPORARY BARRIER

CRASH CUSHION/SAND BARREL ARRAY AND OTHER TEMPORARY BARRIER LAYOUT DETAILS

STATE OF WISCONSIN
DEPARTMENT OF TRANSPORTATION

6

6

S.D.D. 14 B 8-1c

S.D.D. 14 B 8-1c

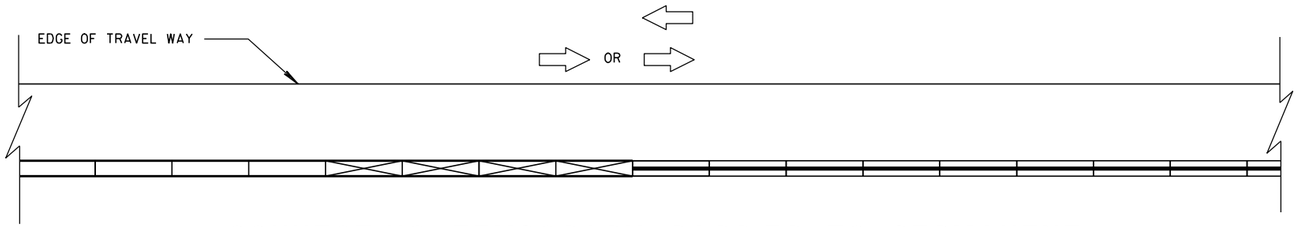

CONNECTING TEMPORARY BARRIER TO PERMANENT CONCRETE BARRIER-TRAFFIC ON ONE SIDE

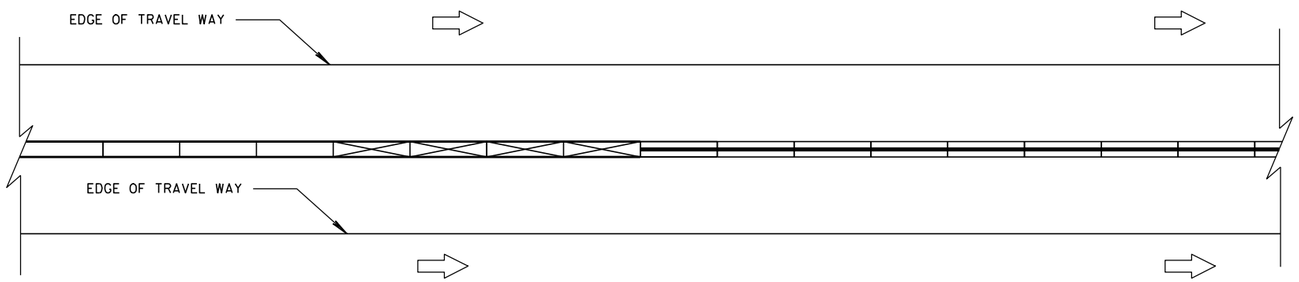

CONNECTING TEMPORARY BARRIER TO PERMANENT CONCRETE BARRIER-TRAFFIC ON BOTH SIDES

LEGEND

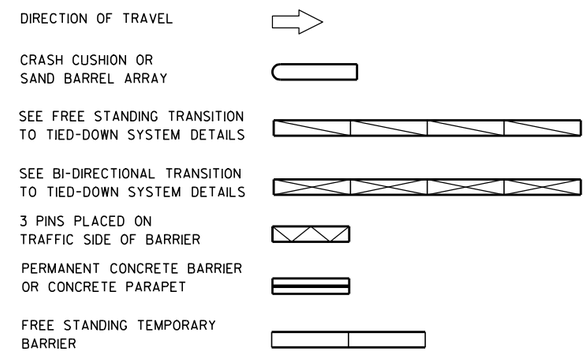

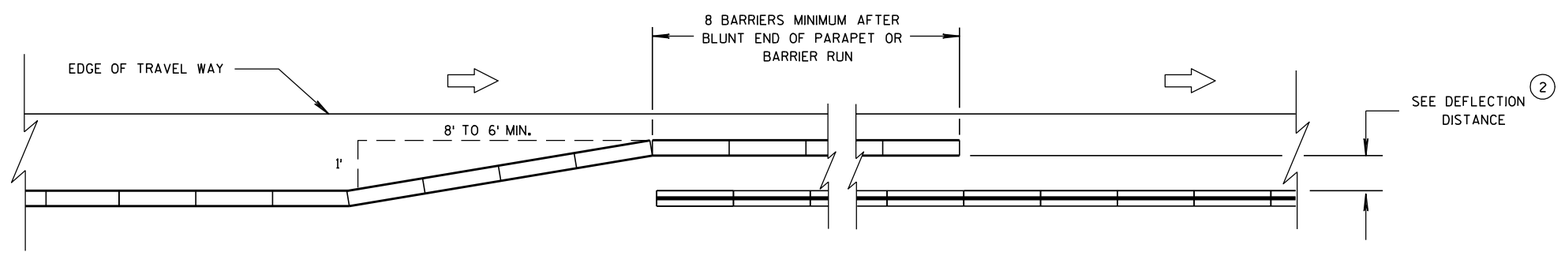

OVERLAPPING TEMPORARY BARRIER AND PERMANENT BARRIER - ONE WAY TRAFFIC

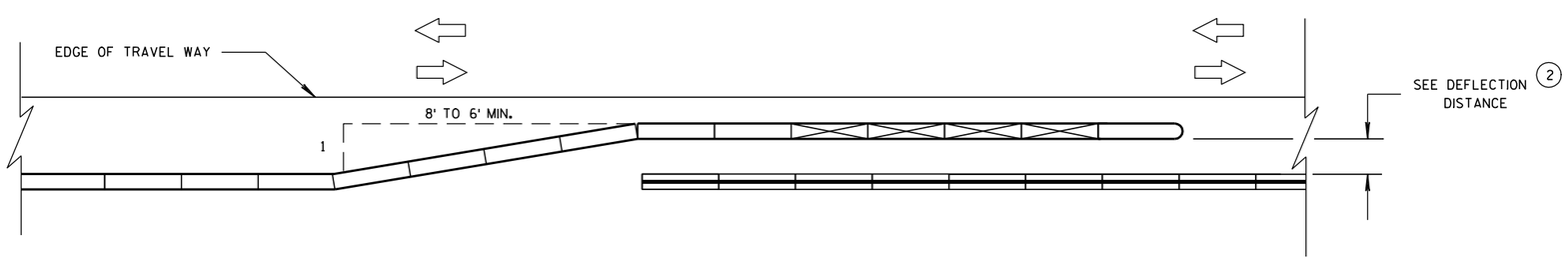

OVERLAPPING TEMPORARY BARRIER AND PERMANENT BARRIER - TWO WAY TRAFFIC

CRASH CUSHION/SAND BARREL ARRAY AND OTHER TEMPORARY BARRIER LAYOUT DETAILS

STATE OF WISCONSIN
DEPARTMENT OF TRANSPORTATION

6

6

S.D.D. 14 B 8-1d

S.D.D. 14 B 8-1d

LEGEND

DIRECTION OF TRAVEL

CRASH CUSHION OR SAND BARREL ARRAY

SEE FREE STANDING TRANSITION TO TIED-DOWN SYSTEM DETAILS

SEE BI-DIRECTIONAL TRANSITION TO TIED-DOWN SYSTEM DETAILS

3 PINS PLACED ON TRAFFIC SIDE OF BARRIER

PERMANENT CONCRETE BARRIER OR CONCRETE PARAPET

FREE STANDING TEMPORARY BARRIER

DIMENSION C TABLE (2)

AVAILABLE DEFLECTION DISTANCE	MINIMUM LENGTH OF BARRIER BEYOND HAZARD FT
GREATER THAN 8'	12.5
LESS THAN OR EQUAL TO 8' BUT GREATER THAN 4'	50
LESS THAN OR EQUAL TO 4'	100

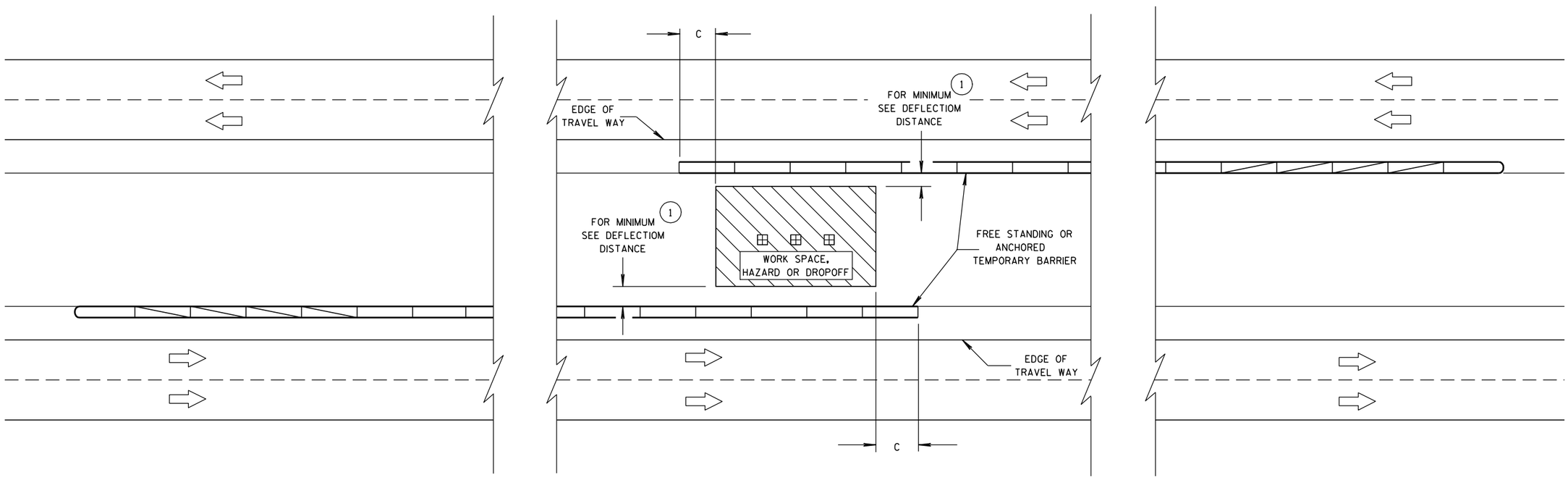

6

6

CRASH CUSHION/SAND BARREL ARRAY AND OTHER TEMPORARY BARRIER LAYOUT DETAILS

STATE OF WISCONSIN
DEPARTMENT OF TRANSPORTATION

APPROVED

8/31/2012 — DATE

/S/ Jerry H. Zogg — ROADWAY STANDARDS DEVELOPMENT ENGINEER

FHWA

S.D.D. 14 B 8-1e

GENERAL NOTES

1. WOOD OR STEEL POSTS (w6X9 OR w6X8.5) MAY BE USED. DO NOT INTERMIX WOOD AND STEEL POSTS. INSTALL STEEL POSTS WITH HOLES ON APPROACHING TRAFFIC SIDE.

2. USE WOOD OR APPROVED PLASTIC BLOCKOUTS. WOOD BLOCKOUTS MAY BE CONSTRUCTED OUT OF TWO OR MORE WOOD BLOCKOUTS. SEE ALTERNATE WOOD BLOCKOUT DETAIL. DIMENSIONS OF APPROVED PLASTIC BLOCKOUTS MAY VARY.

3. IF ROCK IS ENCOUNTERED DURING EXCAVATION, PROVIDE A HOLE 12 INCHES IN DIAMETER EXTENDING 20 INCHES DEEP INTO THE ROCK. PLACE APPROXIMATELY 2½ INCHES OF GRANULAR MATERIAL IN THE BOTTOM OF THE HOLE. CUT THE POSTS THE TO LENGTH AMD INSTALL. BACKFILL WITH EXCAVATED MATERIAL AND COMPACT. BACKFILL IS TO BE FREE OF LARGE ROCKS.

4. WHEN THE DISTANCE FROM BACK OF POST TO SHOULDER HINGE POINT IS LESS THAN 2 FEET INSTALL LONGER POST AT HALF POST SPACING (K).

5. FOR NEW MGS INSTALLATION TOP OF W-BEAM RAIL TOLERANCE IS ± 1". FOR EXISTING MGS INSTALLATION TOP OF W-BEAM IS BETWEEN 27¾" TO 32".

6. WHEN USING STEEL POST AND WOOD BLOCKOUTS INSTALL FOUR 16D GALVANIZED NAILS. INSTALL NAILS AT THE BACK CORNERS OF THE BLOCK AND BEND THE NAILS OVER THE FLANGE OF THE STEEL POST.

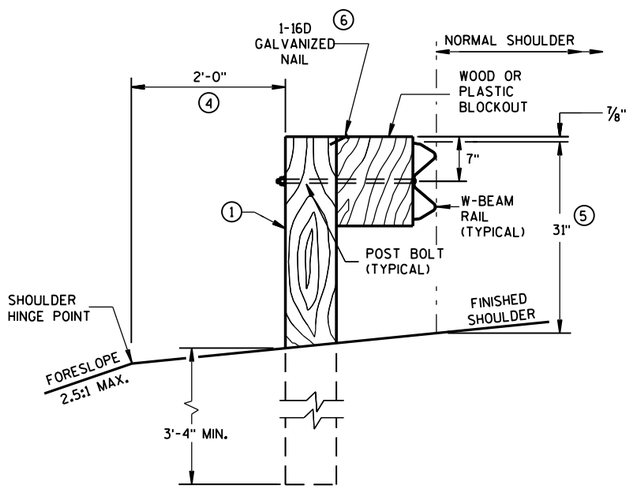

END VIEW

LOCATED ALONG A ROADWAY SHOULDER STANDARD INSTALLATION

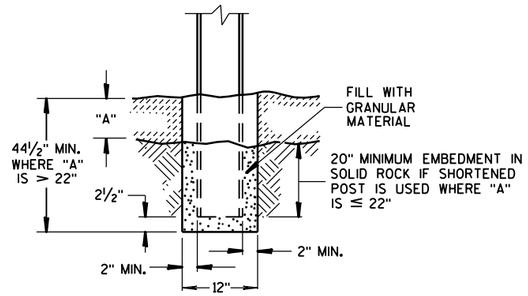

END VIEW

SETTING STEEL OR WOOD POST IN ROCK (3)

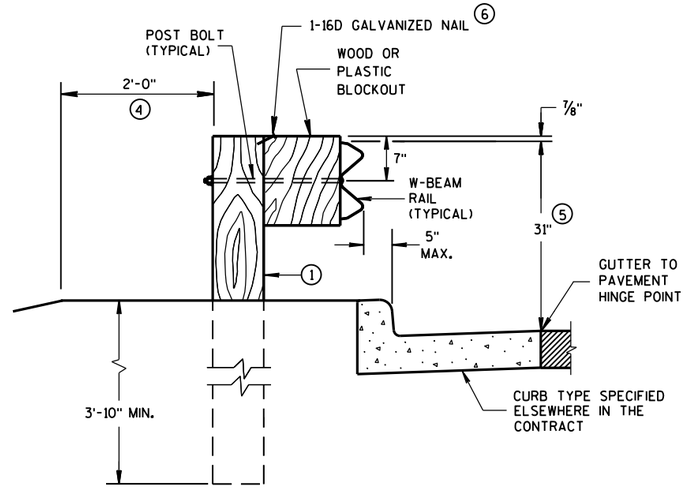

END VIEW

LOCATED ALONG A CURBED ROADWAY

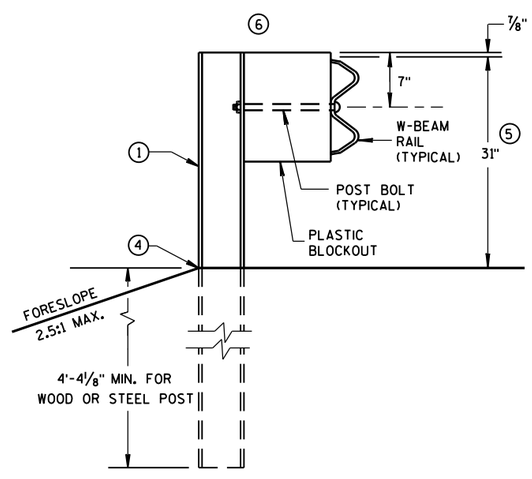

END VIEW

MGS LONGER POST AT HALFPOST SPACING W BEAM (K)

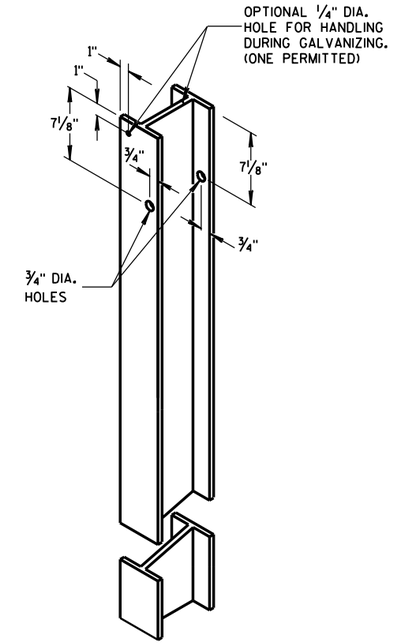

STEEL POST & HOLE PUNCHING DETAIL (w6X9) (1)

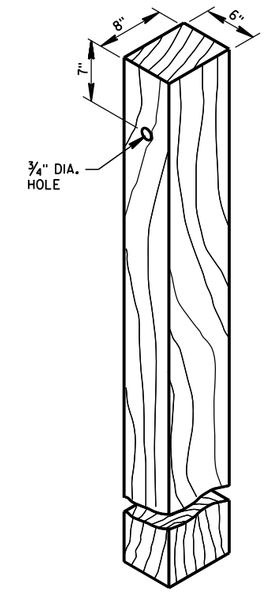

WOOD POST (6" X 8") NOMINAL (1)

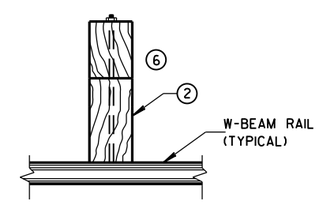

PLAN VIEW

WOOD POST, BLOCKOUT & BEAM

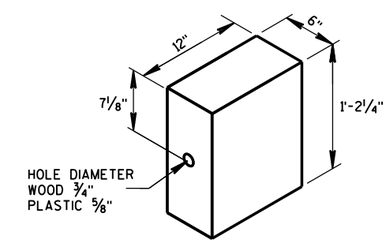

WOOD OR PLASTIC BLOCKOUT (2)

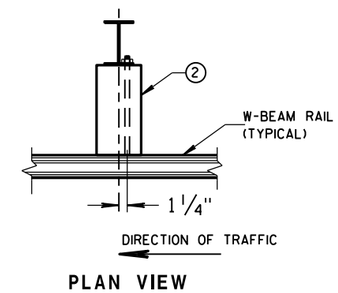

PLAN VIEW

STEEL POST, PLASTIC BLOCKOUT & BEAM

MIDWEST GUARDRAIL SYSTEM (MGS) GUARDRAIL

STATE OF WISCONSIN
DEPARTMENT OF TRANSPOI

6

S.D.D. 14 B 42-3a

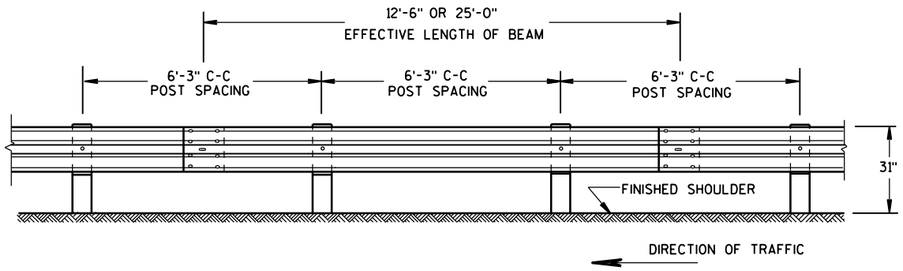

FRONT VIEW

POST SPACING STANDARD INSTALLATION

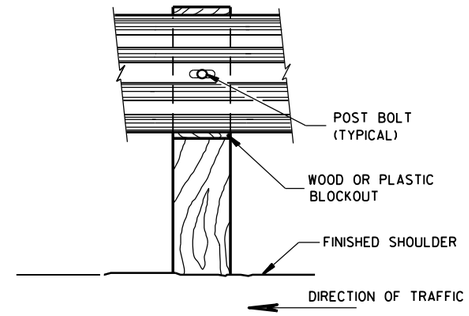

FRONT VIEW AT WOOD POST

GENERAL NOTES

7. PROVIDE SILVER REFLECTIVE SHEETING ON ALL REFLECTORS EXCEPT THOSE LOCATED ALONG THE LEFT EDGE OF ONE-WAY ROADWAYS, WHICH SHALL BE PROVIDED WITH YELLOW REFLECTIVE SHEETING. SHEETING IS TYPE H. SEE STANDARD SPECIFICATION 637.

8. DO NOT INSTALL REFLECTORS ON THE FIRST 50 FEET OF THE APPROACH END OF THE ENERGY ABSORBING TERMINAL. RAIL SPLICE LOCATIONS ARE THE ONLY ACCEPTABLE LOCATIONS FOR REFLECTORS.

9. REVERSE EVERY OTHER REFLECTOR FOR 2-WAY VISIBILITY. THE CONTRACTOR MAY FURNISH TWO-SIDED REFLECTORS IN LIEU OF ONE-SIDED REFLECTORS.

10. PROVIDE AN ANGLE OF BEND OF 90° ± 1° FOR TWO-SIDED REFLECTORS.

11. 25 FEET OF HALF POST SPACING IS REQUIRED ON APPROACH AND DEPARTURE ENDS OF QUARTER POST SPACING.

POST BOLTS ARE A 5/8" DIAMETER ASTM A307 GUARDRAIL BOLT. A POST BOLT REQUIRES 5/8" DIAMETER A563A DOUBLE RECESSED (DR) HEAVY HEX NUT AND 5/8" DIAMETER F844 FLAT WASHER. POST BOLTS MAY BE LONGER IF MULTIPLE BLOCKOUTS ARE BEING USED.

GUARD RAIL SPLICE BOLTS ARE A 5/8" DIAMETER ASTM A307 GUARDRAIL HEAD BOLT. A GUARDRAIL SPLICE BOLT REQUIRES 5/8" DIAMETER A563A DOUBLE RECESSED (DR) HEAVY HEX NUT.

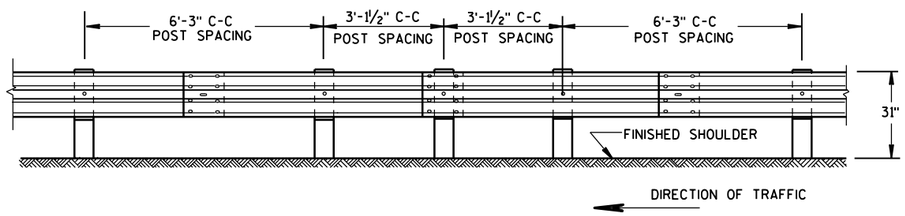

FRONT VIEW

HALF POST SPACING (HS) AND HALF POST SPACING WITH LONGER POSTS (K)

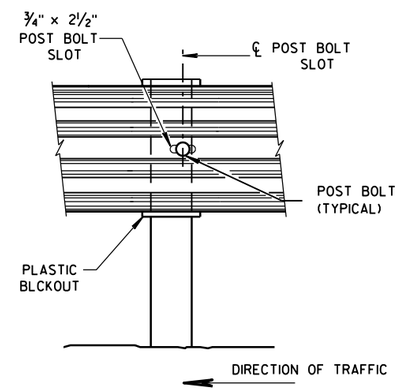

FRONT VIEW AT STEEL POST

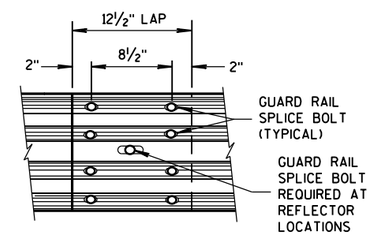

FRONT VIEW

MID-SPAN BEAM SPLICE

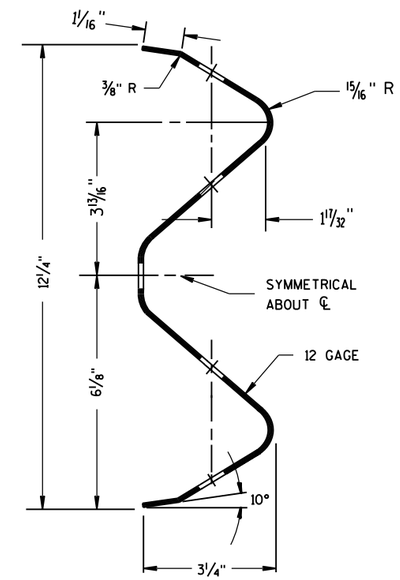

SECTION THRU W-BEAM RAIL

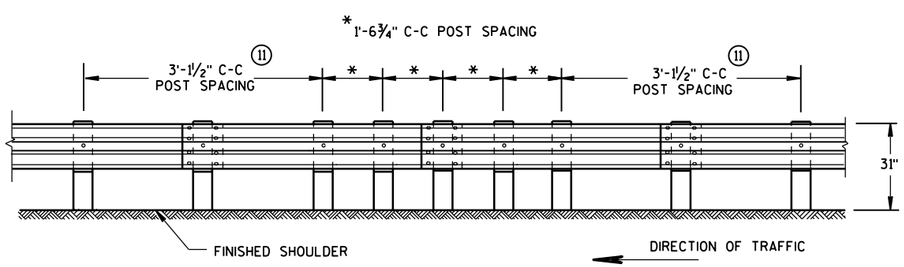

FRONT VIEW

QUARTER POST SPACING (QS)

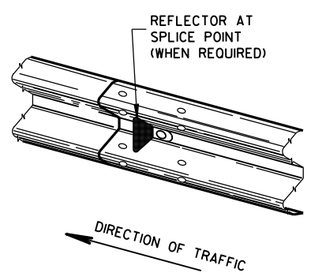

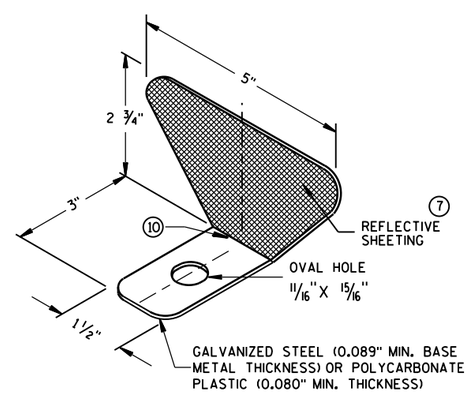

ONE SIDED REFLECTOR DETAIL AND TYPICAL INSTALLATION 7

REFLECTOR SPACING 8

	BEAM GUARD LENGTH	REFLECTOR SPACING	NO. SURFACES REFLECTORIZED	MIN. NO. REFLECTORS
ONE WAY TRAFFIC	< 200' > 200'	50' C-C 100' C-C	1 1	3
TWO WAY TRAFFIC	< 200' > 200'	25' C-C 50' C-C	1 9 1	6
TWO WAY TRAFFIC	< 200' > 200'	50' C-C 100' C-C	2 2 10	3

MIDWEST GUARDRAIL SYSTEM
(MGS) GUARDRAIL

STATE OF WISCONSIN
DEPARTMENT OF TRANSPOR

6

6

S.D.D. 14 B 42-3b

S.D.D. 14 B 42-3b

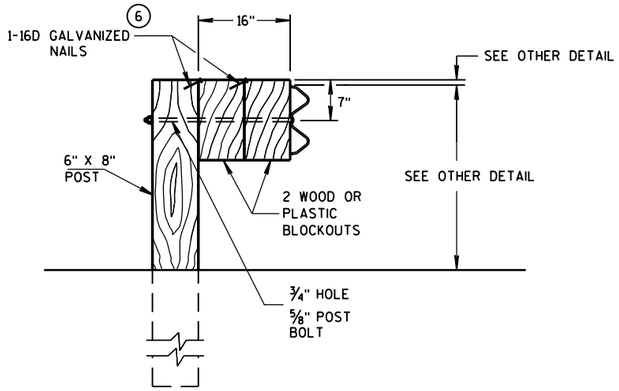

DETAIL FOR 16" BLOCKOUT DEPTH

IT IS ACCEPTABLE TO USE BLOCKOUTS UP TO 16" DEEP TO INCREASE THE POST OFFSET TO AVOID UNDERGROUND OBSTACLES. THERE IS NO LIMIT TO THE NUMBER OF POSTS THAT CAN HAVE ADDITIONAL BLOCKOUTS UP TO 16" DEEP.

NOTE: 1. ALL FILLETS SHALL HAVE A MINIMUM RADIUS OF 1/16".
2. IF THE BOLT EXTENDS MORE THAN 1/4" FROM THE NUT THE BOLT SHOULD BE TRIMMED BACK.

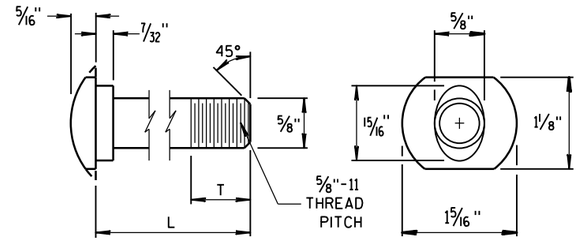

POST BOLT TABLE

L	T (MIN.)
1 1/4"	1 1/8"
2"	1 3/4"
10"	4"
14"	4 1/16"
18"	4"
21"	4 1/16"
25"	4"

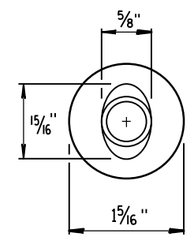

ALTERNATE BOLT HEAD

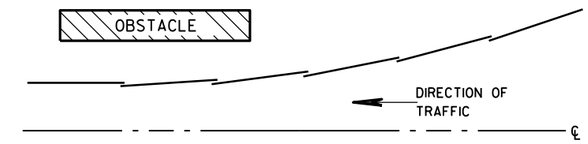

PLAN VIEW

BEAM LAPPING DETAIL

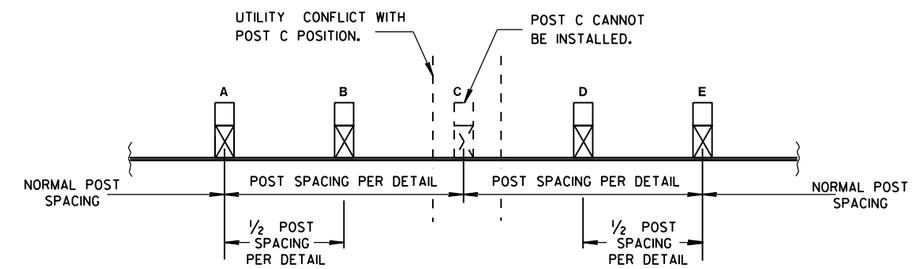

POST DRIVING FOR CONTINUOUS UNDERGROUND OBSTRUCTION

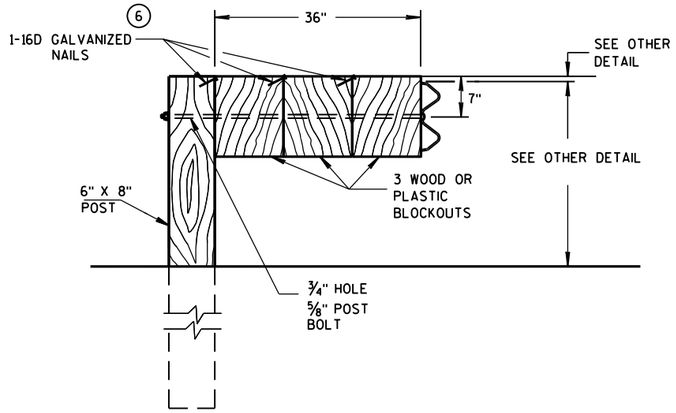

DETAIL FOR 36" BLOCKOUT DEPTH

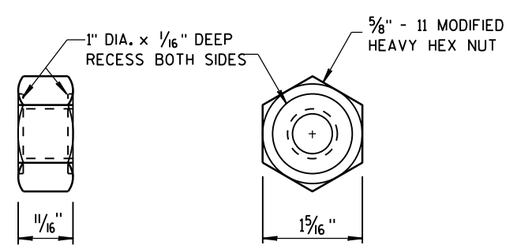

POST BOLT AND RECESS NUT

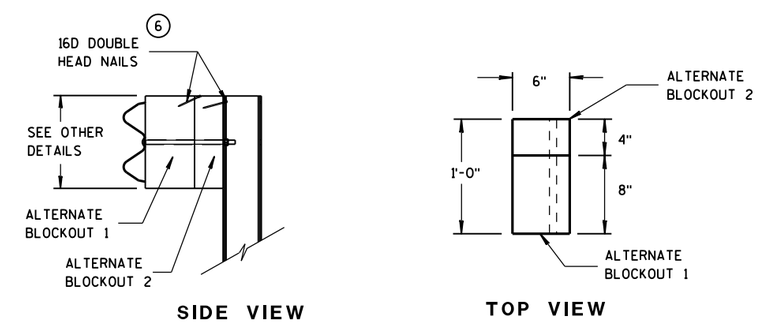

SIDE VIEW TOP VIEW

ALTERNATE WOOD BLOCKOUT DETAIL

NOTES: UNDER SPECIAL CIRCUMSTANCES, SUCH AS AVOIDING OBSTACLES THAT ARE NOT RELOCATED, IT IS ACCEPTABLE TO INSTALL ADDITIONAL BLOCKOUTS TO OBTAIN UP TO 36" DEPTH FOR ONE OR TWO POSTS IN A SECTION OF GUARDRAIL.

DO NOT USE 16" OR 36" BLOCKOUTS IF IT CAUSES THE POST TO BE DRIVEN BEYOND SHOULDER HINGE POINT OR CAUSES A FIXED OBJECT TO BE WITHIN THE DEFLECTION DISTANCE OF THE BARRIER.

MIDWEST GUARDRAIL SYSTEM (MGS) GUARDRAIL

STATE OF WISCONSIN
DEPARTMENT OF TRANSPORTATION

APPROVED
June 2014 — DATE
/S/ Jerry H. Zogg — ROADWAY STANDARDS DEVELOPMENT ENGINEER
FHWA

6

S.D.D. 14 B 42-3c

GENERAL NOTES

(A) THE SLOPE IN THE AREA BOUNDED BY THE GRADELINE, THE HINGE POINT LINE (HPL), AND THE CLEAR ZONE LIMITS (CZL) SHALL BE 4:1 OR FLATTER.

(B) AFTER FINAL ASSEMBLY, RECHECK CABLE TO BE SURE IT IS TAUT AND HAS NOT RELAXED.

(C) DIFFERENT MANUFACTURES REQUIRE DIFFERENT PERFORATED W-BEAM RAIL END PANELS. SEE MANUFACTURES INFORMATION.

(D) THE TOP OF THE STEEL TUBE ON POST 1 AND POST 2 SHALL NOT BE MORE THAN 3" ABOVE THE FINISH GROUND ELEVATION.

(F) ATTACH ALUMINUM SHEET TO E.A.T. HEAD USING 4 STAINLESS STEEL SELF-TAPPING SCREWS. ONE SCREW PER CORNER.

(G) 1/2" DIAMETER X 3" LONG LAG BOLT AND WASHER.

(H) HARDWARE VARIES BETWEEN DIFFERENT MANUFACTURES. SEE MANUFACTURE'S DRAWING FOR INFORMATION.

(I) DIMENSIONS MAY VARY. SEE MANUFACTURE'S INFORMATION.

SEE SDD 14B42 FOR MORE INFORMATION.

* DO NOT ATTACH BLOCKOUTS TO POSTS 1 AND 2.

DO NOT INSTALL REFLECTORS ON THE FIRST 50 FEET OF THE APPROACH END OF THE ENERGY ABSORBING TERMINAL.

W-BEAM RAIL SPLICES ARE LOCATED AT POST NUMBER 3, AND BETWEEN POST 5 AND 6, BETWEEN POSTS 7 AND 8, AND MIDDLE OF THE SPAN AFTER POST 9.

THE CENTER OF THE UPPER 3 1/2" DIAMETER HOLE ON POST NUMBER 3 THROUGH POST 9 IS TO BE FLUSH WITH THE GROUND LINE UP TO A MAXIMUM OF 2" ABOVE GROUND LINE.

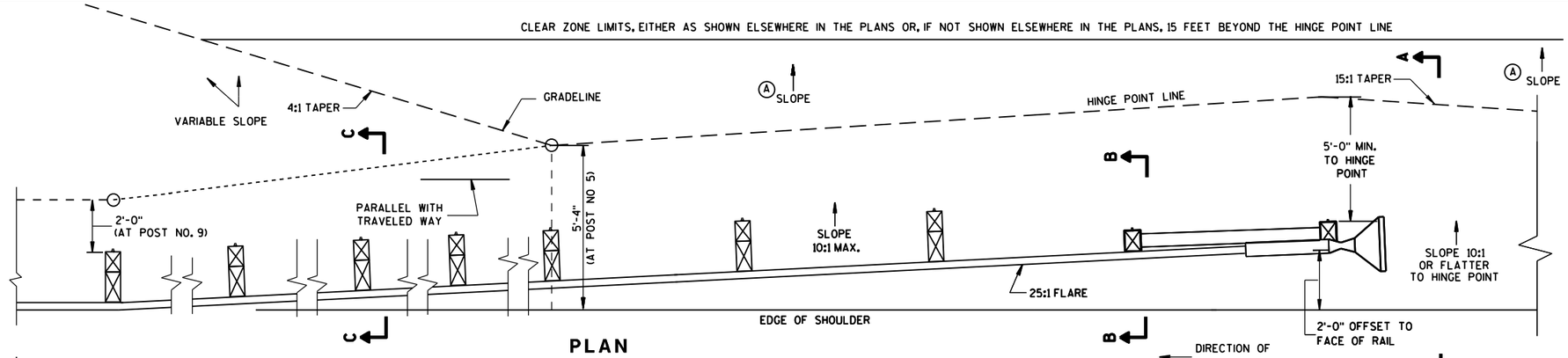

PLAN

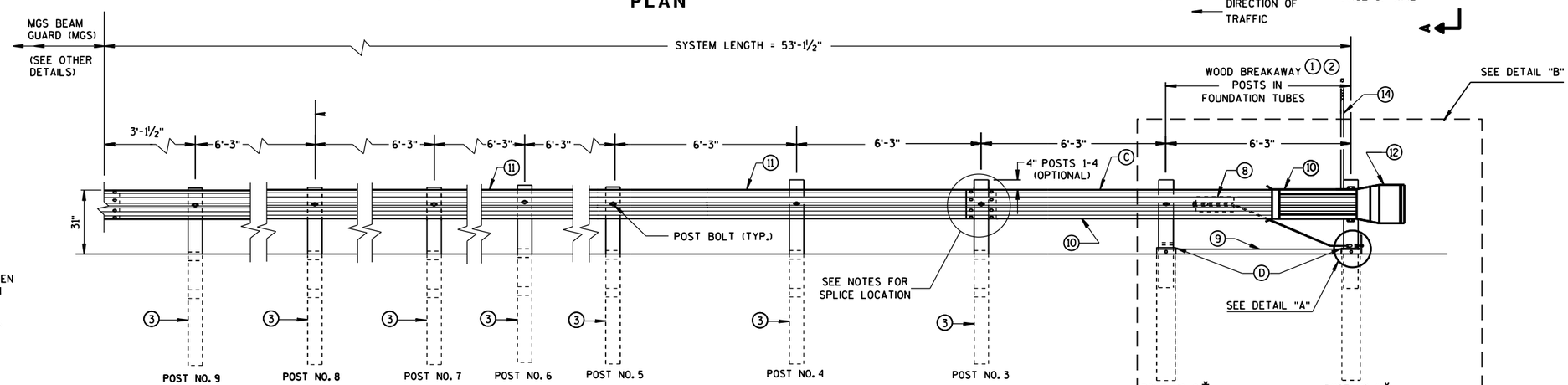

ELEVATION

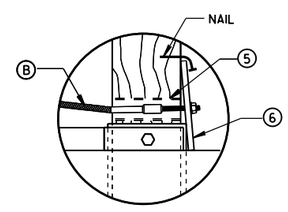

DETAIL "A"

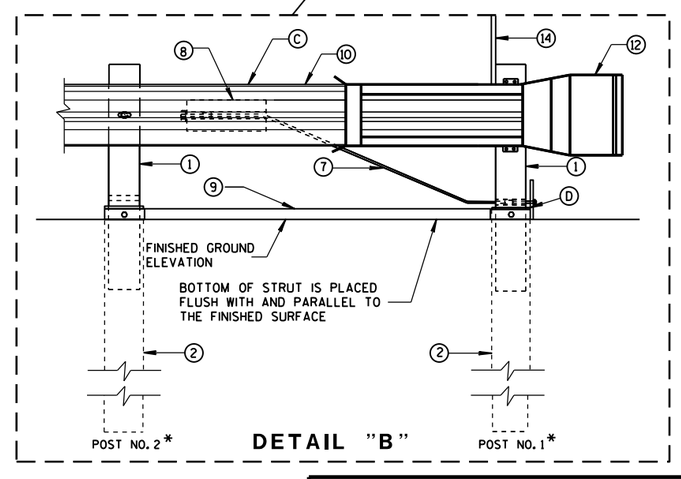

DETAIL "B"

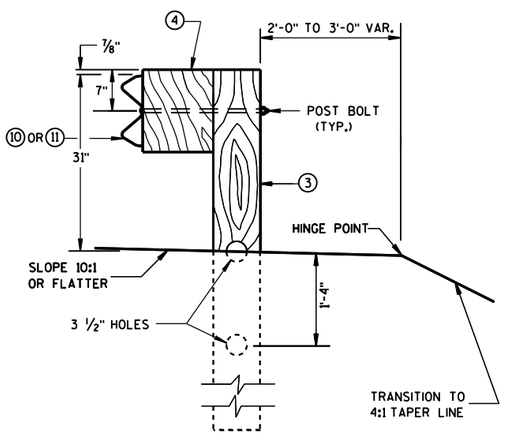

SECTION C-C
TYPICAL AT POST NOS. 3-9

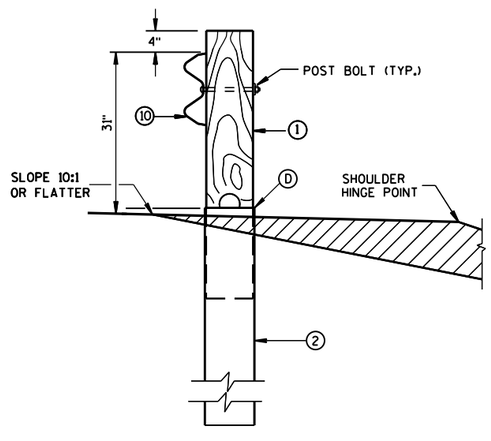

SECTION B-B
TYPICAL AT POST NO. 2*

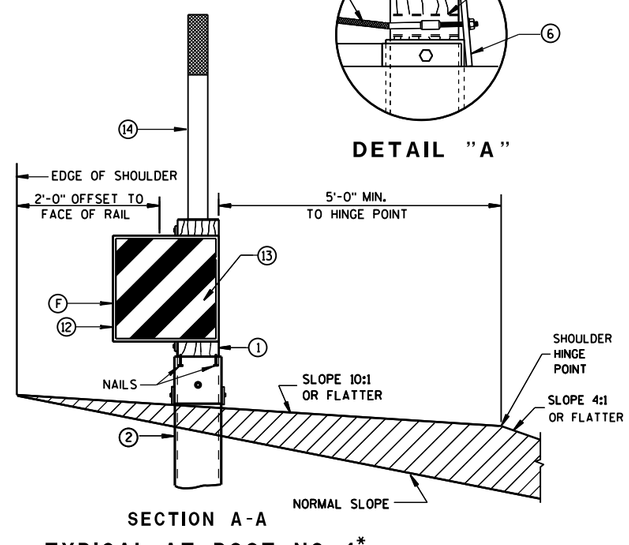

SECTION A-A
TYPICAL AT POST NO. 1*

MIDWEST GUARDRAIL SYSTEM ENERGY ABSORBING TERMINAL (MGS)

STATE OF WISCONSIN
DEPARTMENT OF TRANSPO

S.D.D. 14 B 44-2a

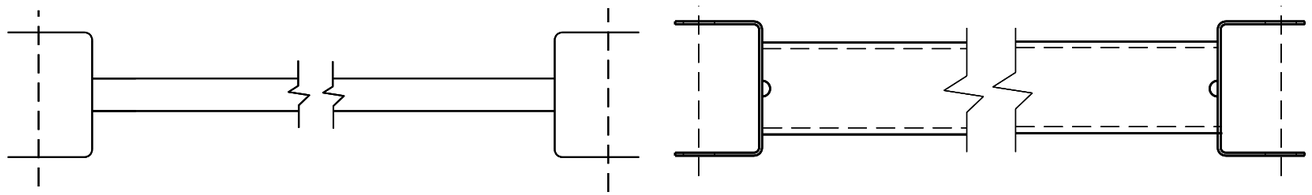

GENERIC GROUND STRUT (9) (H)

BILL OF MATERIALS

PART NO.	DESCRIPTION MATERIALS PROVIDED BY MGS EAT MANUFACTURER. SEE MANUFACTURER'S DETAILS FOR MORE INFORMATION.
1	WOOD BREAKAWAY POST
2	6" X 8" X 0.188", 6'-0" LONG FOUNDATION TUBE AT POSTS 1 AND 2
3	WOOD CRT
4	WOOD BLOCKOUT
5	PIPE SLEEVE
6	BEARING PLATE
7	BCT CABLE ASSEMBLY
8	ANCHOR CABLE BOX
9	GROUND STRUT
10	PERFORATED W-BEAM RAIL END PANEL, 12'-6" LONG.
11	STANDARD W-BEAM RAIL. MULTIPLE SECTIONS REQUIRED. SECTIONS VARY IN LENGTH.
12	END SECTION EAT
13	0.040" ALUMINUM SHEET WITH REFLECTIVE SHEETING TYPE F PER SECTION 637 OF THE STANDARD SPECIFICATIONS
14	EAT MARKER POST - YELLOW (SEE APPROVED PRODUCTS LIST)

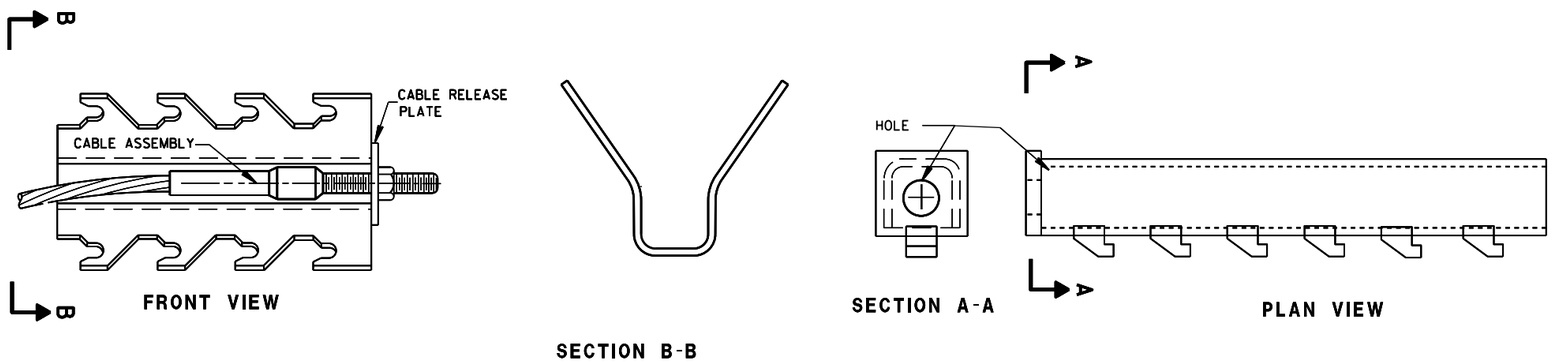

GENERIC ANCHOR CABLE BOX (8) (H)

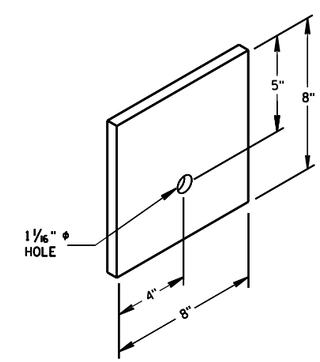

BEARING PLATE (6)

6

6

S.D.D. 14 B 44-2b

S.D.D. 14 B 44-2b

MIDWEST GUARDRAIL SYSTEM
ENERGY ABSORBING TERMINAL
(MGS)

STATE OF WISCONSIN
DEPARTMENT OF TRANSPOI

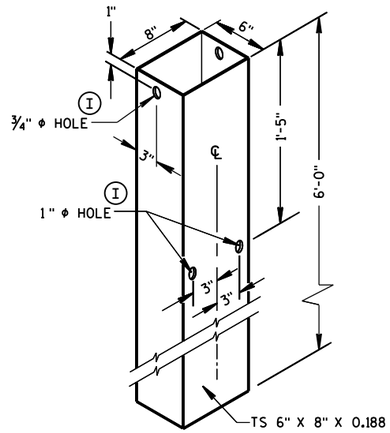

FOUNDATION TUBE (2)

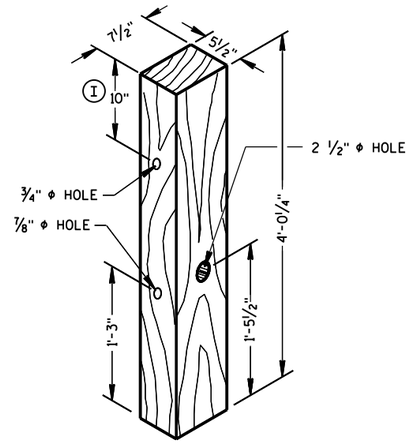

POSTS NUMBER 1 AND 2

WOOD BREAKAWAY POST (1)

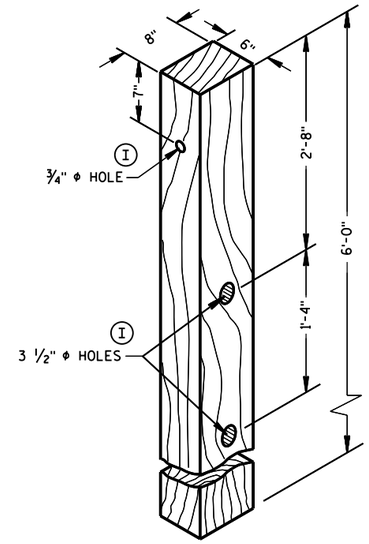

POSTS NUMBER 3-9

WOOD CRT POST (3)

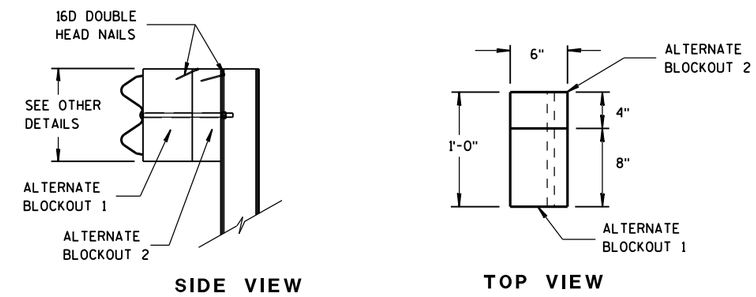

ALTERNATE WOOD BLOCKOUT DETAIL

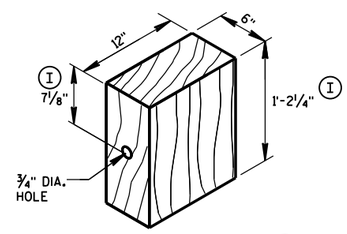

WOOD BLOCKOUT (4)

REQ'D. AT ALL POSTS EXCEPT POST NO'S 1 & 2

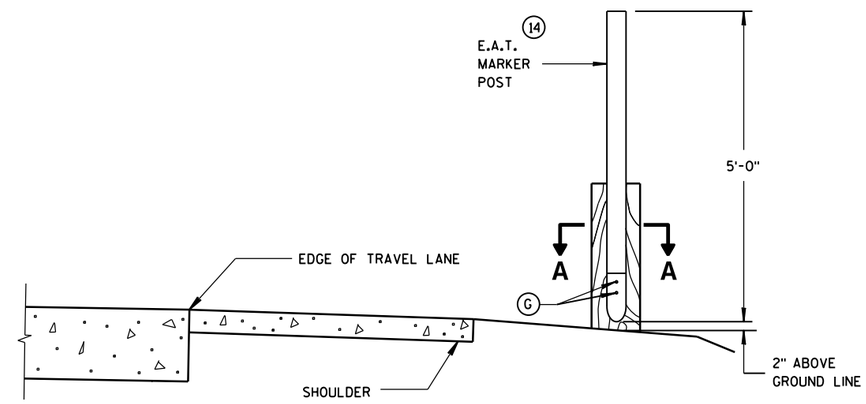

TYPICAL INSTALLATION OF E.A.T. MARKER POST BACKSIDE OF POST NO. 1

(E.A.T. AND RAIL REMOVED FOR CLARITY)

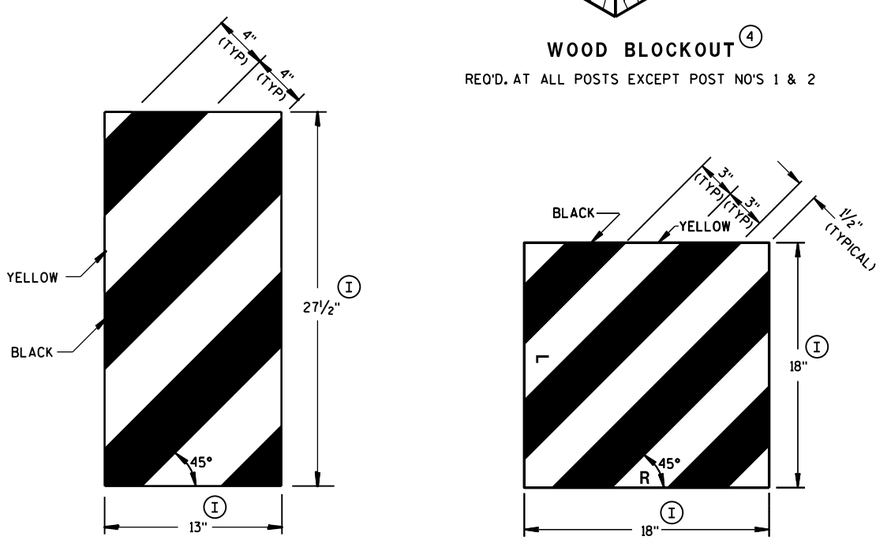

GENERIC REFLECTIVE SHEETING (13) (H)

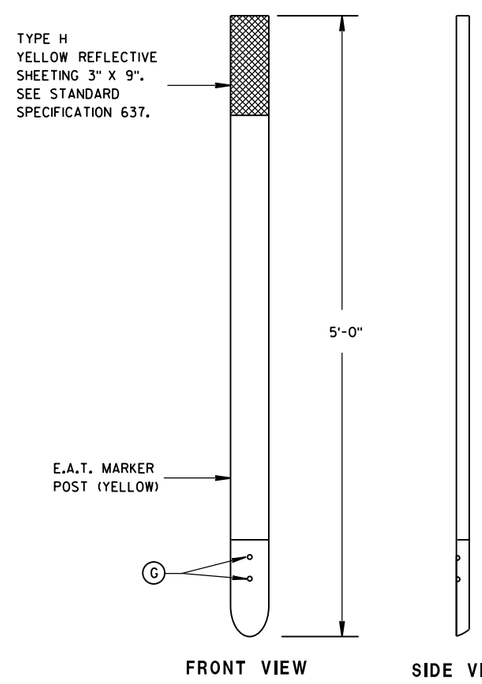

E.A.T. MARKER POST (14)

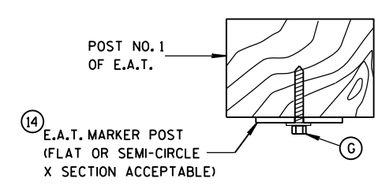

SECTION A-A

MIDWEST GUARDRAIL SYSTEM ENERGY ABSORBING TERMINAL (MGS)

STATE OF WISCONSIN
DEPARTMENT OF TRANSPORTATION

APPROVED
June 2014 — DATE
/S/ Jerry H. Zogg — ROADWAY STANDARDS DEVELOPMENT ENGINEER
FHWA

6

6

S.D.D. 14 B 44-2c

S.D.D. 14 B 44-2c

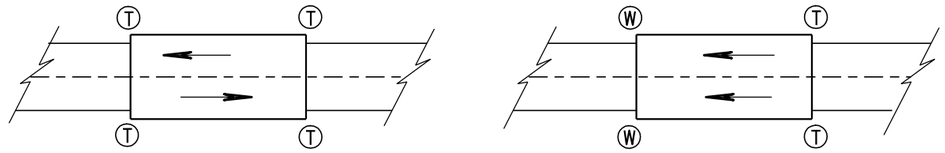

TWO WAY TRAFFIC

ONE WAY TRAFFIC

(T) THRIE BEAM CONNECTION

(W) W-BEAM CONNECTION WHEN REQUIRED

TYPICAL LOCATIONS OF THRIE BEAM AND W-BEAM CONNECTIONS TO BRIDGE

GENERAL NOTES

BOLT THE THRIE BEAM TO ALL POSTS AND BLOCKOUTS. DRILL OR PUNCH BOLT HOLES IN THE BEAM IF THE POST SPACING IS LESS THAN 6'-3.

IF ROCK IS ENCOUNTERED, REMOVE ROCK TO FULL DEPTH OF POST PLUS 2½", AND 12" DIAMETER AROUND POST. SEE 14B42 FOR MORE DETAILS.

TRANSITION USES STEEL POSTS ONLY.

SEE STANDARD DETAIL DRAWING 14 B 42 FOR MORE INFORMATION.

(A) BRIDGE RAILING TYPE "W" DOES NOT REQUIRE A TERMINAL CONNECTOR.

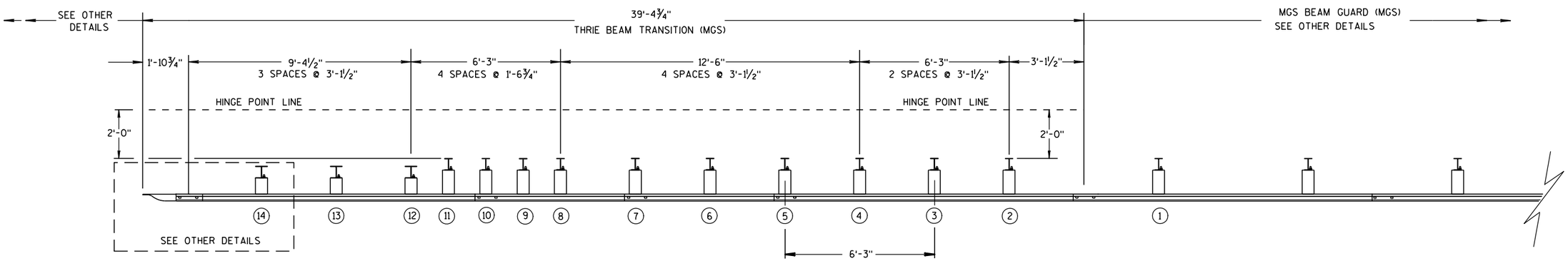

PLAN VIEW

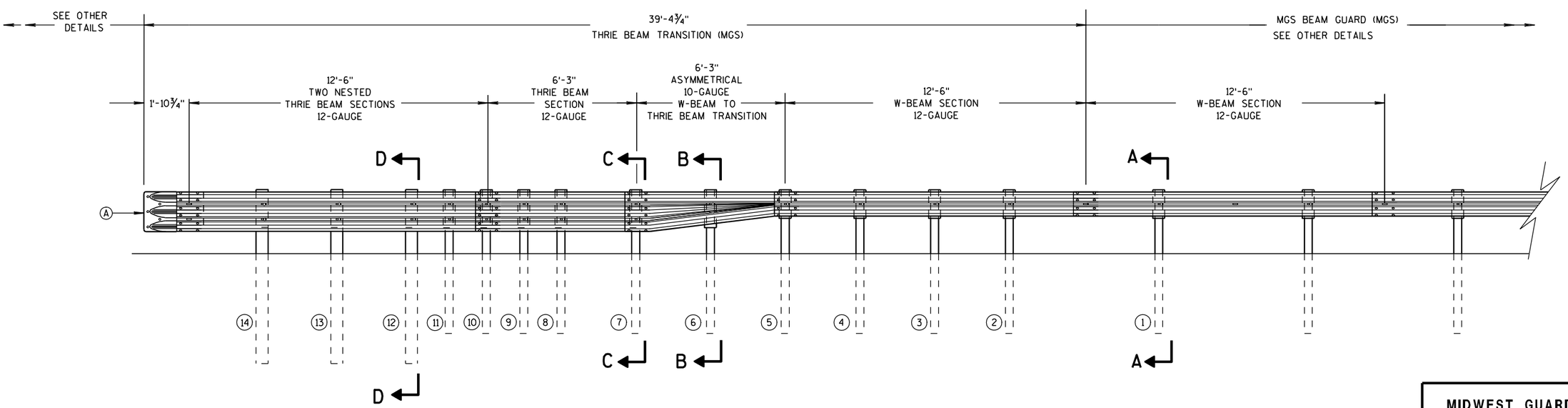

ELEVATION VIEW

MIDWEST GUARDRAIL SYSTEM THRIE BEAM TRANSITION

MIDWEST GUARDRAIL SYSTEM
THRIE BEAM TRANSITION (MGS)

STATE OF WISCONSIN
DEPARTMENT OF TRANSPORTATION

6

S.D.D. 14 B 45-3a

GENERAL NOTES

(B) TOLERANCE FOR TOP OF W-BEAM RAIL IS ± 1".

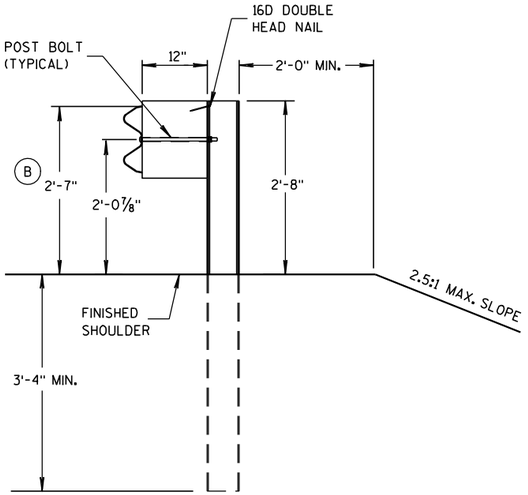

SECTION A-A

POSTS 1-5

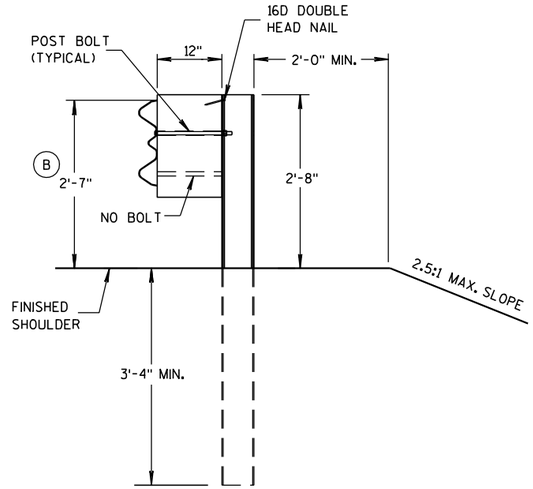

SECTION B-B

POST 6

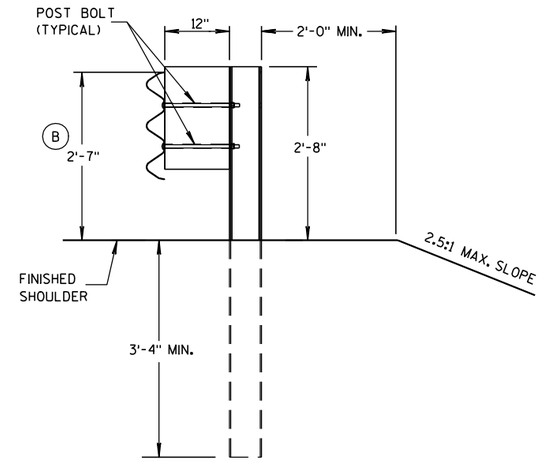

SECTION C-C

POSTS 7-11

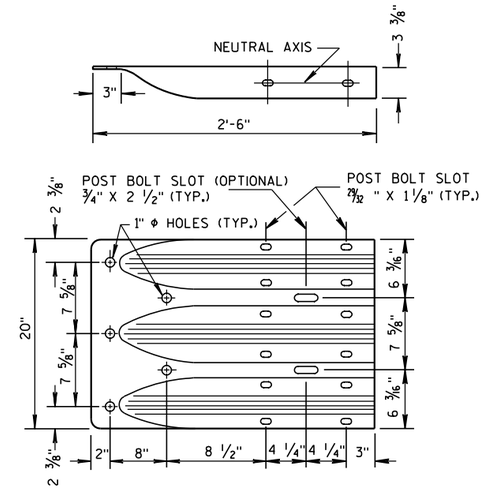

THRIE BEAM TERMINAL CONNECTOR

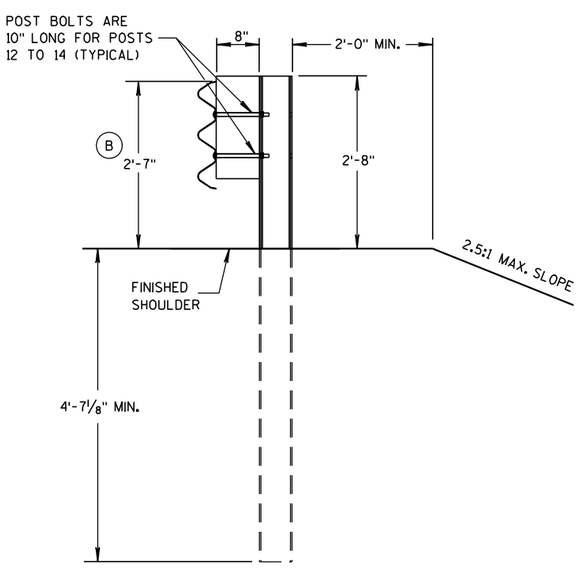

SECTION D-D

POSTS 12-14

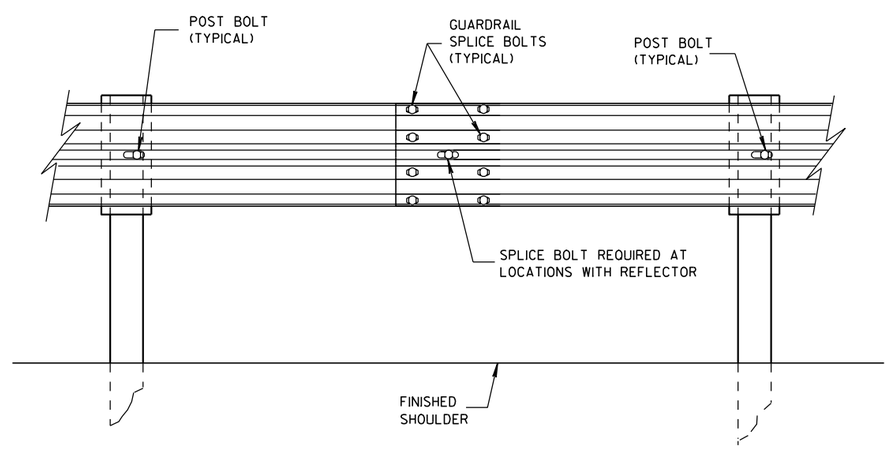

SPLICE DETAIL

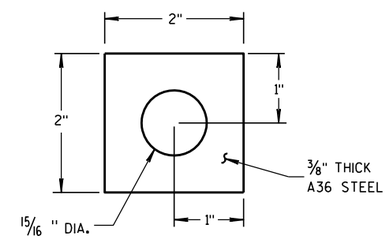

PLATE WASHER DETAIL

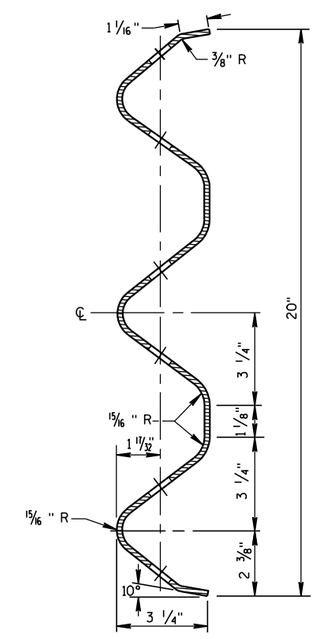

SECTION THRU THRIE BEAM RAIL ELEMENT

6

6

S.D.D. 14 B 45-3b

S.D.D. 14 B 45-3b

MIDWEST GUARDRAIL SYSTEM
THRIE BEAM TRANSITION (MGS)

STATE OF WISCONSIN
DEPARTMENT OF TRANSPORTATION

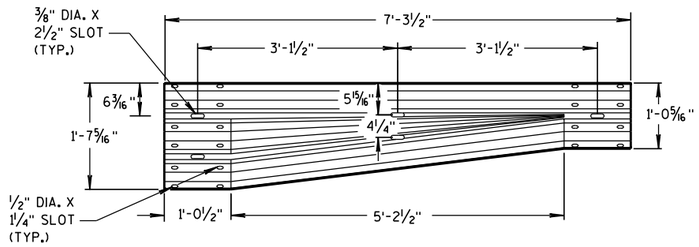

W-BEAM TO THRIE BEAM TRANSITION SECTION

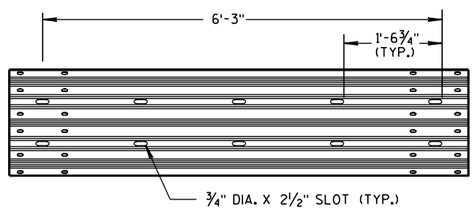

6'-3" THRIE BEAM SECTION

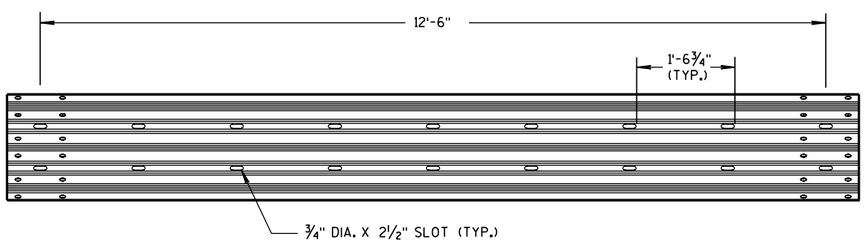

12'-6" THRIE BEAM SECTION

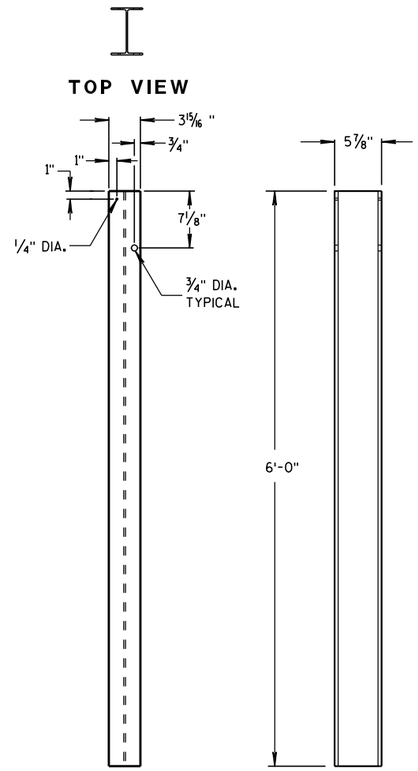

STEEL POSTS 1-5

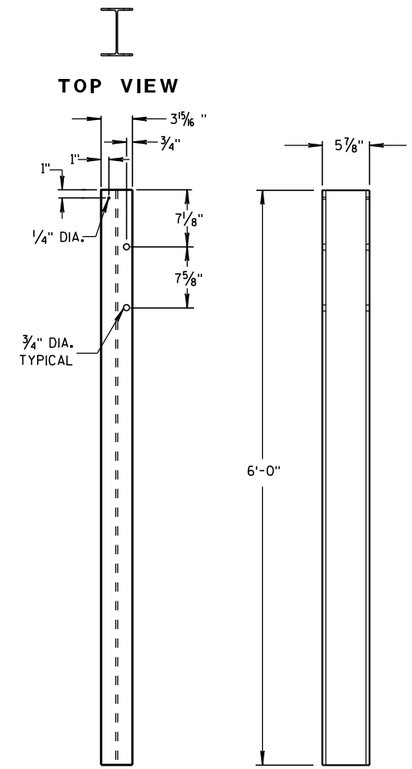

STEEL POSTS 6-11

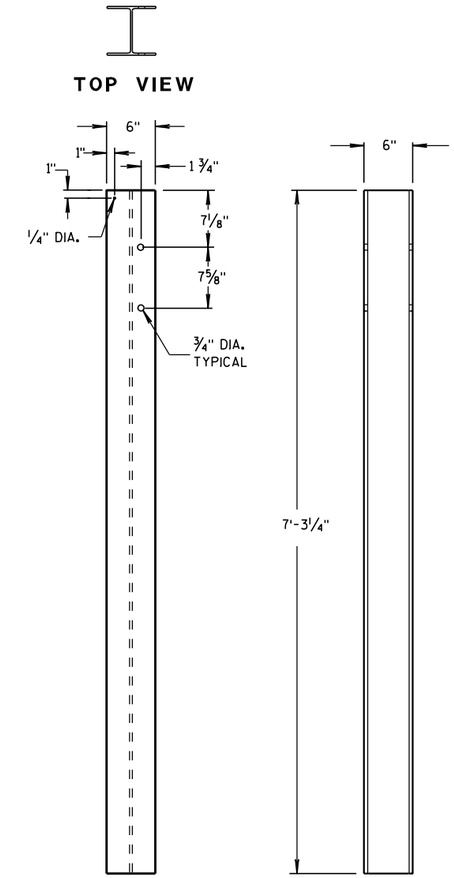

STEEL POSTS 12-14

(1) WOOD BLOCKS MAY BE CONSTRUCTED OUT OF 2 WOOD BLOCKS. SEE ALTERNATE WOOD BLOCK DETAIL.

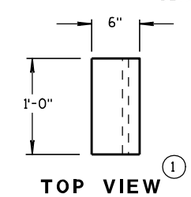

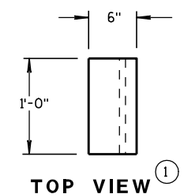

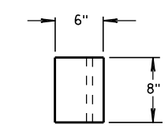

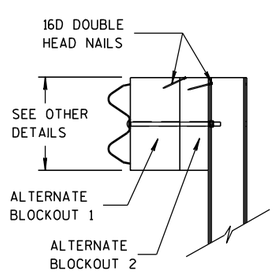

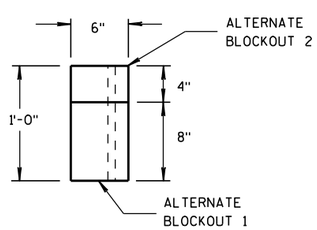

ALTERNATE WOOD BLOCKOUT DETAIL

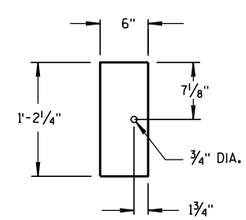

BLOCKOUT POSTS 1-5

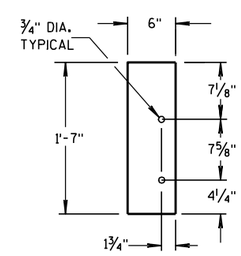

BLOCKOUT POSTS 6-11

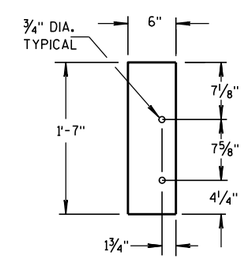

BLOCKOUT POSTS 12-14

STEEL POST SIZES

POST NUMBER	SECTION TYPE	LENGTH
1	W6x9	72"
2	W6x9	72"
3	W6x9	72"
4	W6x9	72"
5	W6x9	72"
6	W6x9	72"
7	W6x9	72"
8	W6x9	72"
9	W6x9	72"
10	W6x9	72"
11	W6x9	72"
12	W6x15	87 1/8"
13	W6x15	87 1/8"
14	W6x15	87 1/8"

MIDWEST GUARDRAIL SYSTEM
THRIE BEAM TRANSITION (MGS)

STATE OF WISCONSIN
DEPARTMENT OF TRANSPORTATION

6

6

S.D.D. 14 B 45-3c

S.D.D. 14 B 45-3c

GENERAL NOTES

THESE ARE TYPICAL CONNECTION DETAILS. ADJUST THE POSTION OF CONNECTIONS TO EXISTING BRIDGES TO FIT THE ACTUAL BRIDGE AND SITE DIMENSIONS.

① DRILLING BOLT HOLES THROUGH THE PARAPET, BOLTS, NUTS, WASHERS AND REPAIRING DAMAGED CONCRETE ARE INCIDENTAL TO THE CONTRACT.

② BOLTS MAY BE A325 BOLTS OR A449 BOLTS. BOLT LENGTH AND THREADING LENGTH ARE TO ALLOW FOR A TIGHT CONNECTION BETWEEN RIGID BARRIER AND THRIE BEAM CONNECTION PLATE. CONTRACTOR IS TO FIELD VERIFY BOLT LENGTH AND THREAD LENGTH. ONE ROUND WASHER REQUIRED BETWEEN BOLT HEAD AND THRIE BEAM CONNECTOR PLATE. BOLTS THAT EXTEND THROUGH THE PARAPET AND OUT THE BACK FACE REQUIRE A HARDENED ROUND STEEL WASHER THAT IS 2" O.D. X 5/8" THICK AND ONE PLATE WASHER. REPAIR ANY DAMAGED CONCRETE FROM BOLT INSTALLATION.

③ THE RECESS FOR A W-BEAM CONNECTION, WHICH EXISTS ON SOME PARAPETS OF THIS TYPE, SHALL BE FILLED WITH A TREATED TIMBER BLOCKOUT. BLOCKOUT SIZE IS 1'-6" X 2'-0" X 3 1/2". BLOCK IS INCIDENTAL TO THE CONTRACT.

④ BOLT, NUT AND WASHERS NOT REQUIRED FOR THIS LOCATION WHEN RETROFITTING AN EXISTING PAPAPET AND THE HOLE IS EITHER ABOVE PARAPET OR WITHIN 4 INCHES OF THE EDGE OF PARAPET.

Ⓑ TOLERANCE FOR TOP OF BEAM IS ± 1".

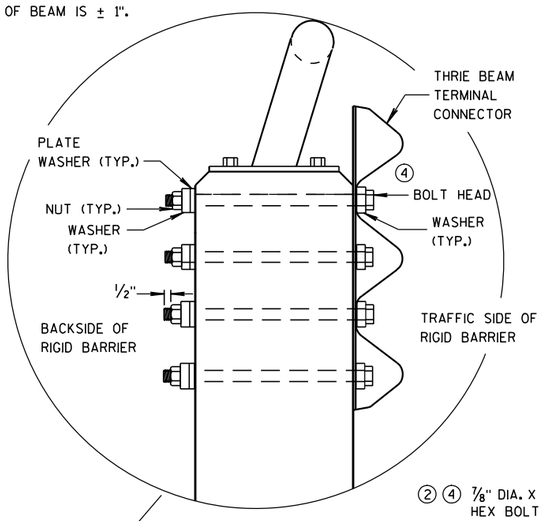

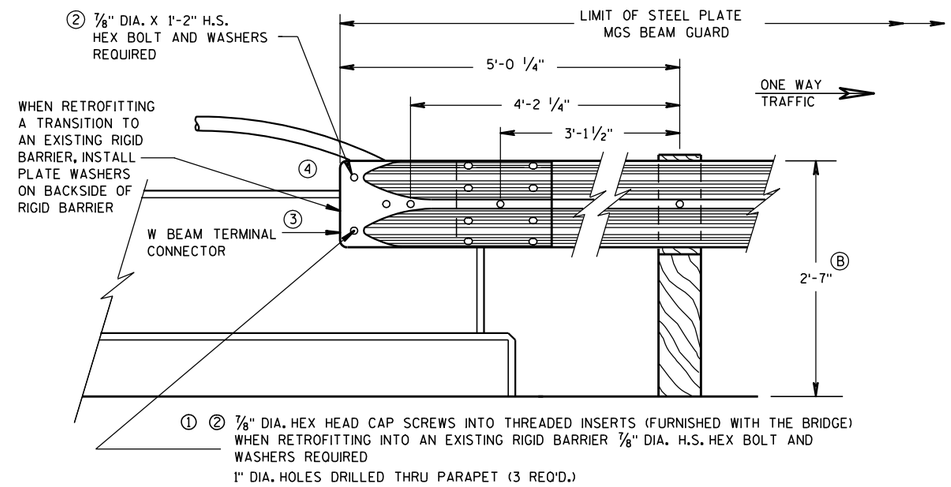

FRONT VIEW

W BEAM CONNECTION TO VERTICAL FACE PARAPET

(USE ONLY ON THE TRAFFIC EXIT END OF ONE WAY BRIDGES)

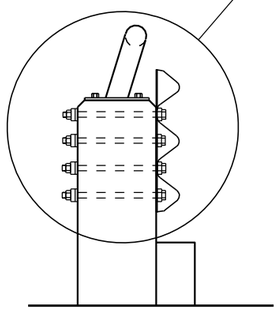

SECTION G-G

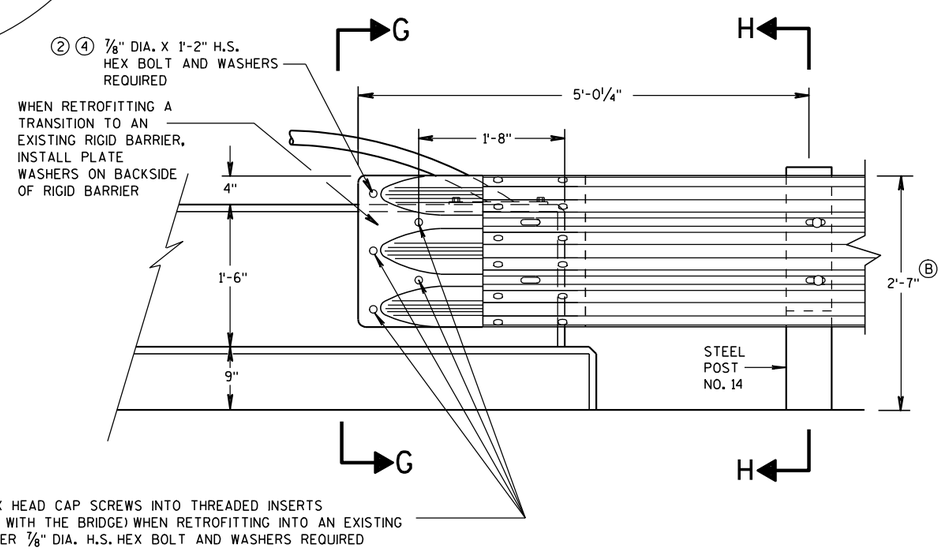

FRONT VIEW

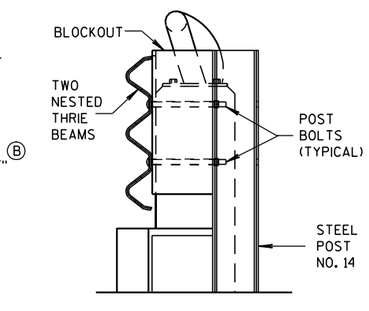

SECTION H-H

THRIE BEAM CONNECTION TO VERTICAL FACED PARAPETS

MIDWEST GUARDRAIL SYSTEM THRIE BEAM TRANSITION (MGS)	
STATE OF WISCONSIN DEPARTMENT OF TRANSPORTATION	
APPROVED	
8-31-2012 DATE	/S/ Jerry H. Zogg ROADWAY STANDARDS DEVELOPMENT ENGINEER
FHWA	

6

S.D.D. 14 B 45-3e

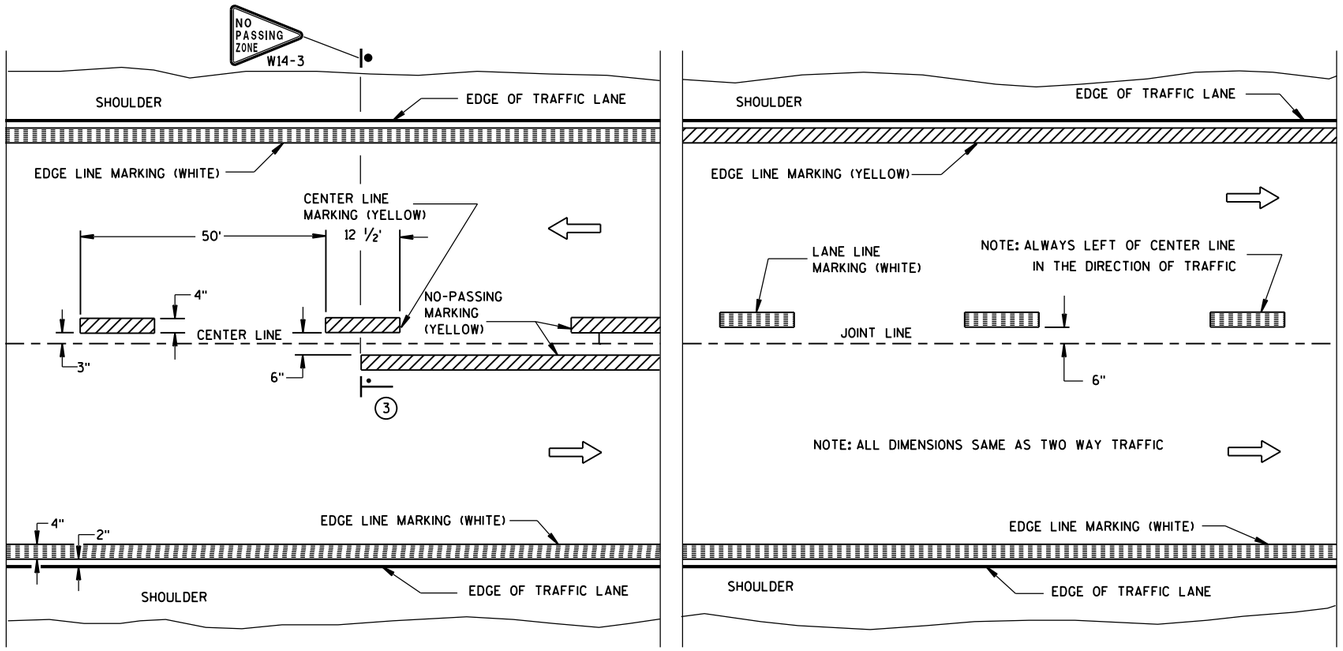

TWO WAY TRAFFIC

ONE WAY TRAFFIC

PERMANENT PAVEMENT MARKING

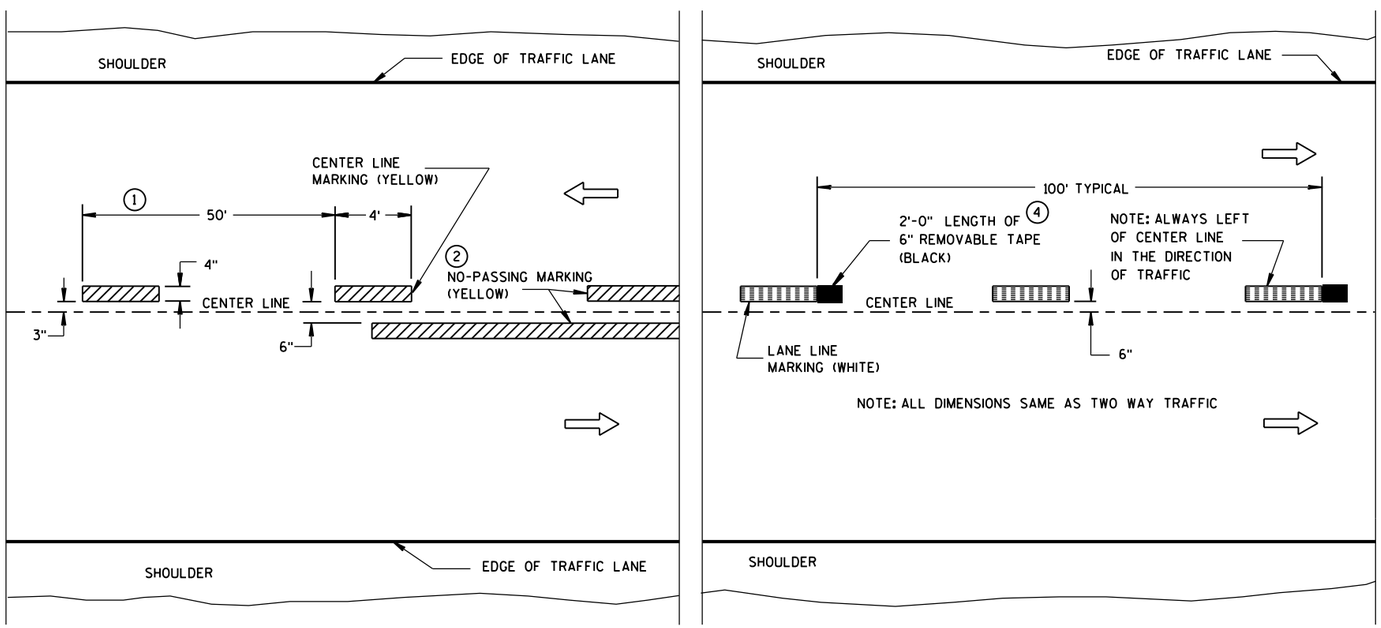

TWO WAY TRAFFIC

ONE WAY TRAFFIC

TEMPORARY (INTERMEDIATE) PAVEMENT MARKING

(SHOWS CYCLE FOR TEMPORARY CENTER LINE OR TEMPORARY LANE LINE MARKING)

GENERAL NOTES

DETAILS OF CONSTRUCTION NOT SHOWN ON THIS DRAWING SHALL CONFORM TO STANDARD SPECIFICATIONS AND SPECIAL PROVISIONS.

1. HALF CYCLE LENGTHS (25'±) WITH 2' MINIMUM STRIPE LENGTHS SHALL BE PROVIDED ON ROADWAYS (INCLUDING TEMPORARY TRAVELED WAYS) WITH REVERSE CURVATURE, CURVATURE OF OVER 5 DEGREES OR WHEN DIRECTED BY THE ENGINEER TO MARK UNUSUAL ALIGNMENT OF THE TRAVELED WAY.
2. NO PASSING ZONE TEMPORARY PAVEMENT MARKING IS REQUIRED TO BE PLACED, WHERE APPROPRIATE, ALONG WITH CENTERLINE TEMPORARY PAVEMENT MARKING WHEN A SAME DAY PERMANENT PAVEMENT MARKING ITEM IS INCLUDED IN THE CONTRACT.
3. NO PASSING ZONE MARKINGS ARE PLACED ACCORDING TO "T" MARKINGS. IF EXISTING NO PASSING ZONE W14-3 SIGNS ARE BEYOND 50 FEET IN EITHER DIRECTION, THE SIGNS SHALL BE MOVED TO THE "T" MARKINGS.
4. CONCRETE ONLY.

NOTE

ARROW SYMBOL (⇨) SHOWS DIRECTION OF TRAVEL

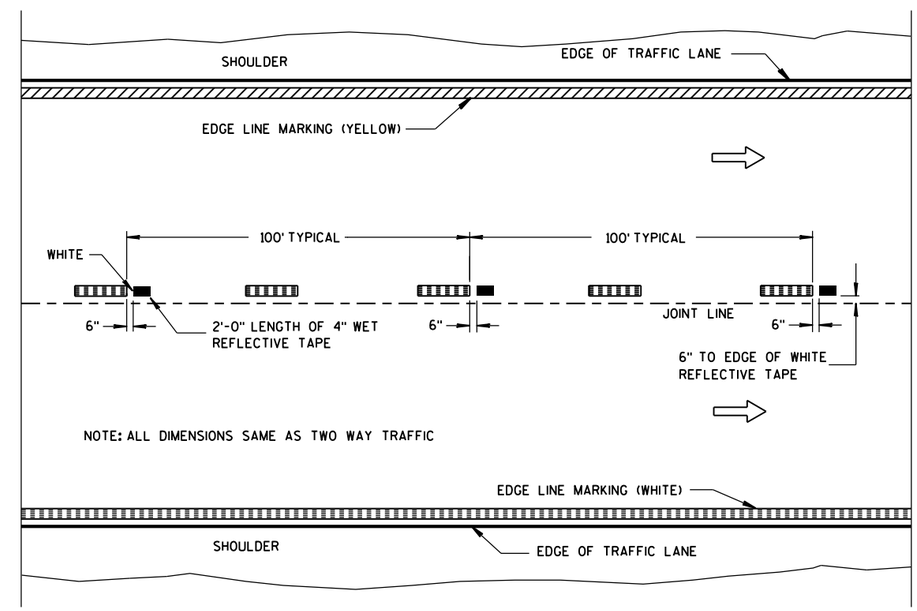

WET REFLECTIVE TAPE SUPPLEMENT TO SPRAYED OR NON WET REFLECTIVE TAPE LANE LINE

LEGEND

"T" MARKING

POST MOUNTED SIGN

PAVEMENT MARKING (MAINLINE)

STATE OF WISCONSIN
DEPARTMENT OF TRANSPORTATION

APPROVED
5-13-2013 — DATE
/S/ Travis Feltes — STATE TRAFFIC E
FHWA

6

S.D.D. 15 C 8-16a

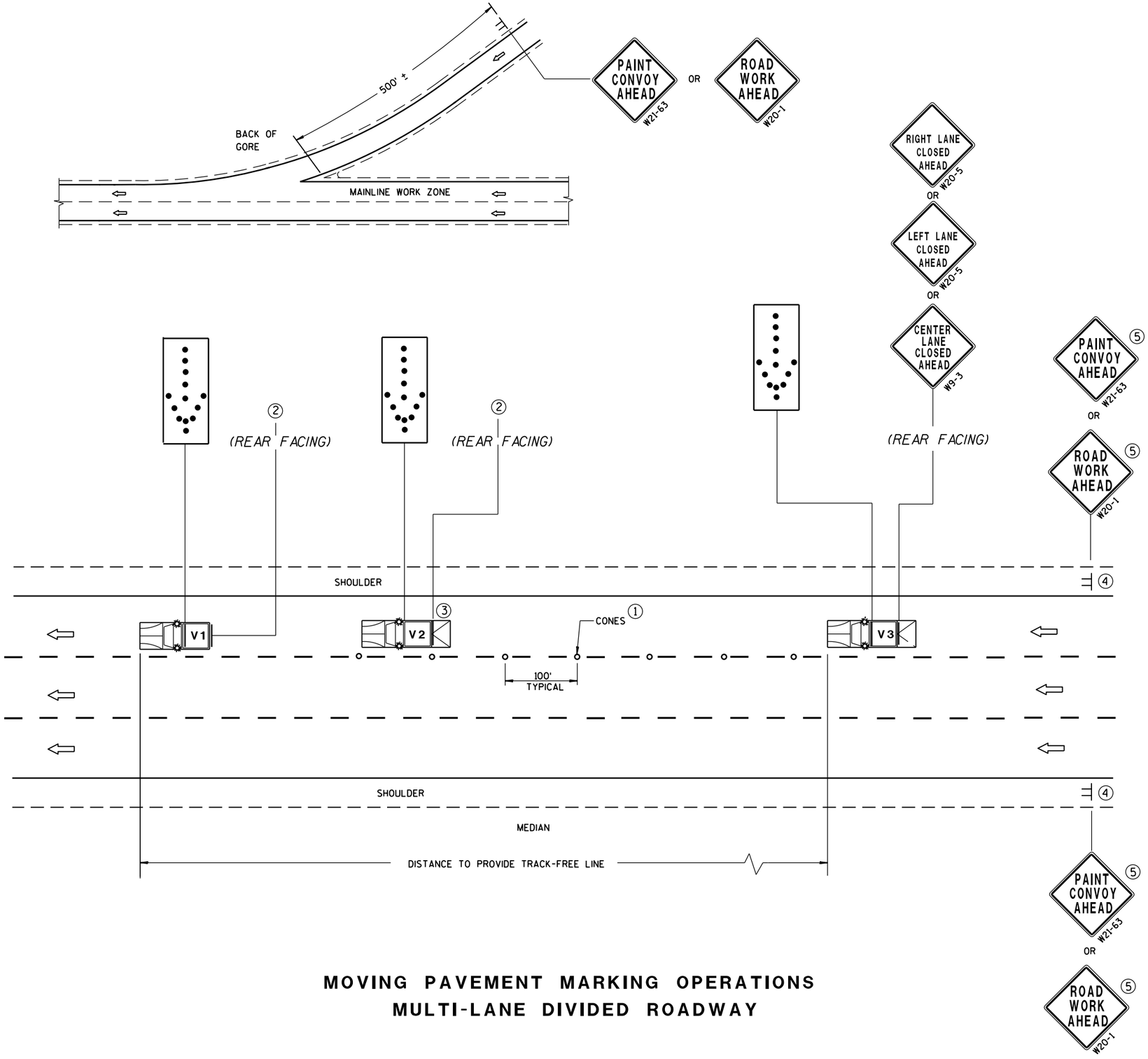

MOVING PAVEMENT MARKING OPERATIONS
MULTI-LANE DIVIDED ROADWAY

GENERAL NOTES

ALL VEHICLES SHALL BE EQUIPPED WITH TWO 360 DEGREE HIGH INTENSITY YELLOW FLASHING LIGHTS OR STROBE LIGHTS AND OPERATED WITH HEADLIGHTS TURNED ON.

ALL VEHICLES SHALL BE EQUIPPED WITH REAR FACING TYPE B OR C FLASHING ARROW PANEL. SIGNS PLACED ON VEHICLES MUST NOT OBSCURE THE ARROW PANEL.

ALL SIGNS ARE 48" X 48" UNLESS OTHERWISE SPECIFIED.

IF SPEED LIMIT IS 40 MPH OR LESS STATIONARY SIGNS MAY BE OMITTED IF CONES ARE USED.

ALTERNATE SIGN MESSAGES, SUCH AS "PAINT CREW AHEAD" OR "ROAD PAINTING AHEAD" MAY BE USED.

DISTANCE BETWEEN VEHICLES MAY VARY ACCORDING TO TERRAIN, SIGHT DISTANCE, PAINT DRYING TIME, AND OTHER FACTORS. WHENEVER ADEQUATE STOPPING SIGHT DISTANCE EXISTS TO THE REAR, SHADOW VEHICLES SHOULD MAINTAIN THE MINIMUM DISTANCE FROM THE WORK VEHICLE AND PROCEED AT THE SAME SPEED AS THE WORK VEHICLE. SHADOW VEHICLES SHOULD SLOW DOWN IN ADVANCE OF VERTICAL OR HORIZONTAL CURVES THAT RESTRICT SIGHT DISTANCE.

WHEN WORK ACTIVITY BLOCKS THE LEFT LANE, REVERSE TRAFFIC CONTROL.

WHEN A RAMP INTERSECTS THE FACILITY ON WHICH THE WORK IS BEING PERFORMED, PROVIDE ADDITIONAL TRAFFIC CONTROLS AS SPECIFIED IN THE CONTRACT OR AS APPROVED BY THE ENGINEER.

USE AN ATTENUATOR ON THE REARMOST VEHICLE THAT BLOCKS ALL OR PART OF THE TRAFFIC LANE.

FOR EDGELINE MARKING OR IF CONES ARE NOT USED, POSITION THE REARMOST SHADOW VEHICLE ON THE SHOULDER AS SHOWN IN THE MUTCD IF THE SHOULDER HAS ADEQUATE WIDTH. USE DOUBLE ARROWS WHEN CONVOY IS IN CENTER LANE ONLY.

WHEN NO WORK ACTIVITY IS TAKING PLACE, REMOVE OR TURN THE STATIONARY WARNING SIGNS AWAY FROM TRAFFIC.

THIS DRAWING SHALL BE USED FOR EDGELINE OR LANELINE MARKING FOR MULTILANE DIVIDED ROADWAYS.

① CONES MAY BE OMITTED ON PAINTED LINE IF APPROVED BY THE ENGINEER. CONSIDER PAVEMENT MARKING DRY OR CURE TIMES AND TRAFFIC VOLUME.

② USE STANDARD SIGN W21-64 WITH APPROPRIATE ARROW.

WET PAINT W21-64 OR WET PAINT W21-64

③ OPTIONAL TRUCK-MOUNTED ATTENUATOR.

④ SIGNS SHALL BE REPEATED AFTER EVERY ON RAMP OR EVERY THREE MILES.

⑤ IF CONSTRUCTION WORK ZONE SIGNS ARE IN PLACE, W20-1 OR W21-63 ARE NOT REQUIRED.

LEGEND

V1	LEAD VEHICLE
V2	SHADOW VEHICLE
V3	TRAIL VEHICLE WITH TMA
TMA	TRUCK-MOUNTED ATTENUATOR
	SIGN ON TEMPORARY SUPPORT
	DIRECTION OF TRAFFIC
	CONES
	FLASHING ARROW PANEL (MERGE)

MOVING PAVEMENT MARKING OPERATION MULTI-LANE DIVIDED ROADWAY

STATE OF WISCONSIN
DEPARTMENT OF TRANSPORTATION

APPROVED
5/3/2013 — DATE
/S/ Travis Feltes — STATE TRAFFIC E
FHWA

6

S.D.D. 15 C 19-2c

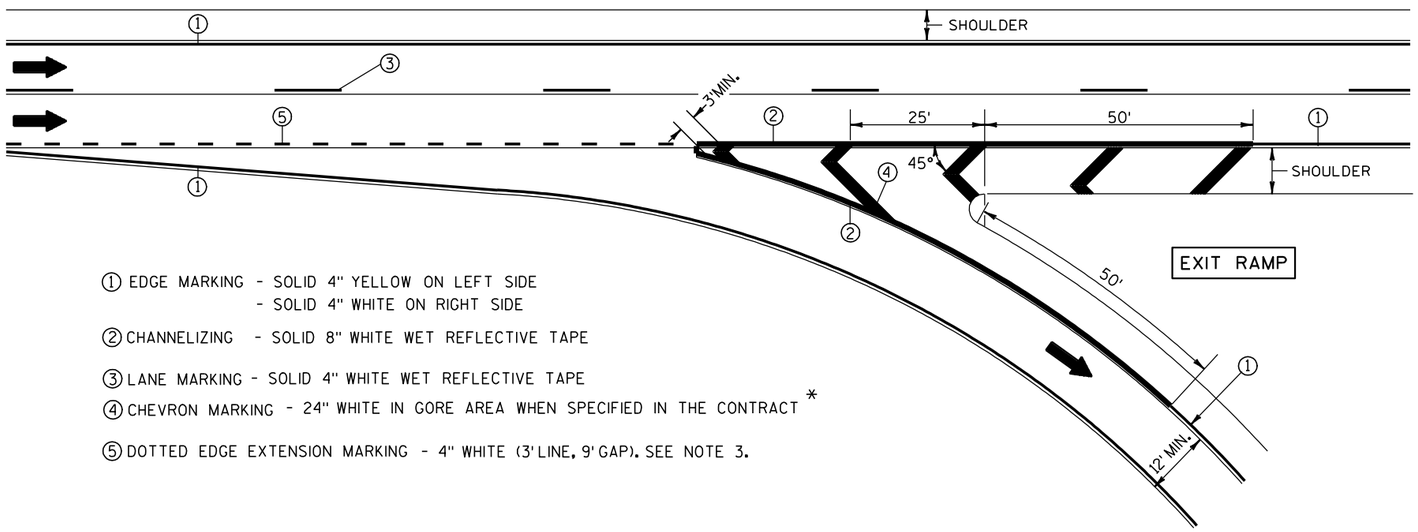

① EDGE MARKING - SOLID 4" YELLOW ON LEFT SIDE
- SOLID 4" WHITE ON RIGHT SIDE

② CHANNELIZING - SOLID 8" WHITE WET REFLECTIVE TAPE

③ LANE MARKING - SOLID 4" WHITE WET REFLECTIVE TAPE

④ CHEVRON MARKING - 24" WHITE IN GORE AREA WHEN SPECIFIED IN THE CONTRACT *

⑤ DOTTED EDGE EXTENSION MARKING - 4" WHITE (3' LINE, 9' GAP). SEE NOTE 3.

NOTES:

1. ARROWS SHOWN ON THIS MARKING PLAN DESIGNATE TRAFFIC FLOW, AND SHALL NOT BE TAKEN AS PROPOSED PAVEMENT MARKINGS.

2. PLACE WHITE EDGE OF TAPE 6" LEFT FROM JOINT.

3. 3' LINE 9' GAP, EXCEPT RETRACE THE EXISTING LINE-GAP PATTERN WHERE EXISTING MARKINGS ARE IN PLACE.

4. RETRACE EXISTING DIAGONAL MARKINGS.

* REFER TO DESIGN NOTES.

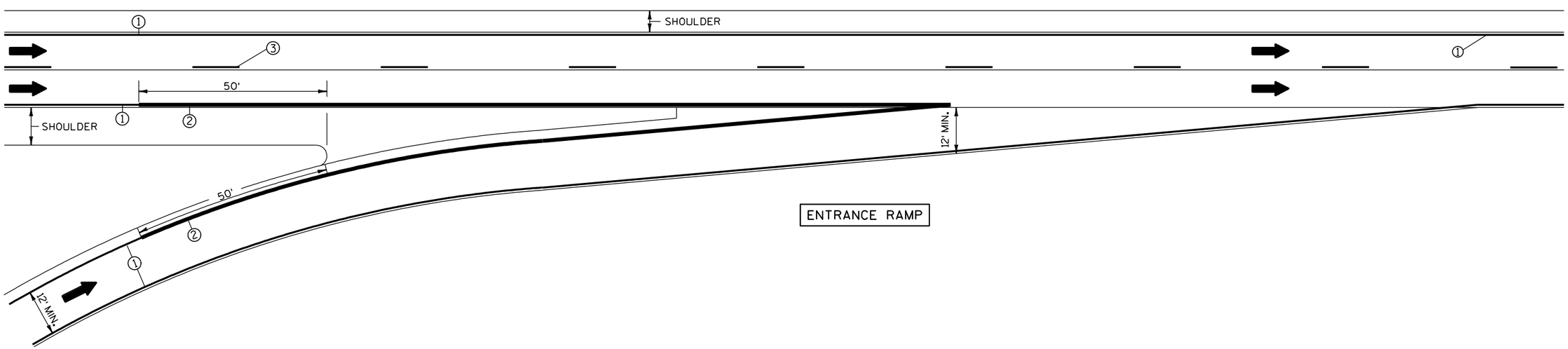

6

6

S.D.D. 15 C 31-1a

S.D.D. 15 C 31-1a

PAVEMENT MARKING
(RAMPS AND GORES)

STATE OF WISCONSIN
DEPARTMENT OF TRANSPORTATION

LEGEND

- SIGN ON PERMANENT SUPPORT
- TRAFFIC CONTROL DRUM WITH TYPE "C" STEADY BURN LIGHT
- TRAFFIC CONTROL DRUM
- FLASHING ARROW BOARD
- REMOVING PAVEMENT MARKING
- CONCRETE BARRIER TEMPORARY PRECAST
- DIRECTION OF TRAFFIC
- WORK AREA

W057-52
36"x24"

INSTALL ON EACH APPROACH AT THE CLOSEST INTERSECTION WITH A STATE OR COUNTY TRUNK HIGHWAY, OR AS DIRECTED BY THE ENGINEER. WIDTH ON SIGN TO BE APPROX. 1 FOOT LESS THAN AVAILABLE WIDTH (OMIT IF AVAILABLE WIDTH IS MORE THAN 16 FEET).

LOCATED 500 FEET IN ADVANCE OF R2-1 SIGN AND 500 FEET BEYOND THE "ROAD WORK 1 MILE" SIGN.

R2-1
48"x60"
(BLACK AND WHITE)

IF THE REGULATORY SPEED HAS BEEN REDUCED, A SPEED LIMIT SIGN SHALL BE LOCATED 1500 FEET BEYOND THE END OF THE ACCELERATION LANE OF EACH ENTRANCE RAMP. THERE SHOULD BE A SPEED LIMIT SIGN INCORPORATED A MINIMUM OF EVERY 2 OR 3 MILES.

* INCLUDE RESUME SPEED LIMIT SIGN A MINIMUM OF 200 FEET (500 FEET DESIRABLE) AFTER END ROAD WORK SIGNS.

GENERAL NOTES

THIS LANE CLOSURE IS TYPICAL FOR CLOSING RIGHT LANE - REVERSE FOR CLOSING LEFT LANE.

THE EXACT NUMBER, LOCATION, AND SPACING OF ALL SIGNS AND DEVICES SHALL BE ADJUSTED TO FIT FIELD CONDITIONS AS APPROVED BY THE ENGINEER.

THE SPACING BETWEEN SIGNS SHOULD BE ADJUSTED TO NOT CONFLICT WITH AND TO PROVIDE A MINIMUM OF 200 FEET (500 FEET DESIRABLE) CLEARANCE TO EXISTING SIGNS.

ALL SIGNS ARE 48"x48" UNLESS OTHERWISE NOTED.

"WO" IS THE SAME AS "W" EXCEPT THE BACKGROUND IS ORANGE.

ANY SIGNS TEMPORARY OR EXISTING, WHICH CONFLICT WITH TRAFFIC CONTROL "IN USE" SHALL BE REMOVED OR COVERED AS NEEDED OR AS APPROVED BY THE ENGINEER.

(1) CONSIDER ROADWAY GEOMETRICS WHEN LOCATING SIGNS AND ARROW BOARD SO THE DRIVER HAS A CLEAR VIEW OF THE ARROW BOARD AND LANE CLOSURE DRUMS FOR A MINIMUM 1500 FEET IN FRONT OF DRUM TAPER.

FOR A LANE CLOSURE THAT IS IN PLACE LESS THAN 7 CONTINUOUS DAYS AND NIGHTS, THE ADVANCED WARNING SIGNS MAY BE MOUNTED ON PORTABLE SUPPORTS.

REMOVE PAVEMENT MARKINGS IF LANE CLOSURE IS TO BE IN PLACE FOR 4 OR MORE CONTINUOUS DAYS AND NIGHTS.

IF THE HORIZONTAL ALIGNMENT IS SUCH THAT A CURVE MAY REQUIRE ADDITIONAL DELINEATION, THE DEVICE SPACING MAY BE DECREASED TO 50 FEET.

ADJUSTMENTS IN BUFFER SPACE NEED TO BE INCORPORATED WHEN THE LANE CLOSURE OCCURS NEAR AN INTERCHANGE EXIT OR ENTRANCE RAMP OR INTERSECTION. THE LANE CLOSURE MUST TAKE PLACE FAR ENOUGH IN ADVANCE OF AN EXIT OR ENTRANCE RAMP TO STILL ALLOW FOR ADEQUATE BUFFER SPACE. THE MINIMUM LENGTH OF THE BUFFER SPACE BEFORE AN EXIT RAMP SHOULD BE 1/2 THE LENGTH OF THE TRANSITION AREA. THE ENTRANCE RAMP SHOULD BE FOLLOWED BY THE ORIGINAL BUFFER SPACE LENGTH OF 800 FEET DESIRABLE PRIOR TO ANOTHER TRAFFIC CONTROL CHANGE SUCH AS A CROSSOVER MANEUVER.

TYPICAL SECTION

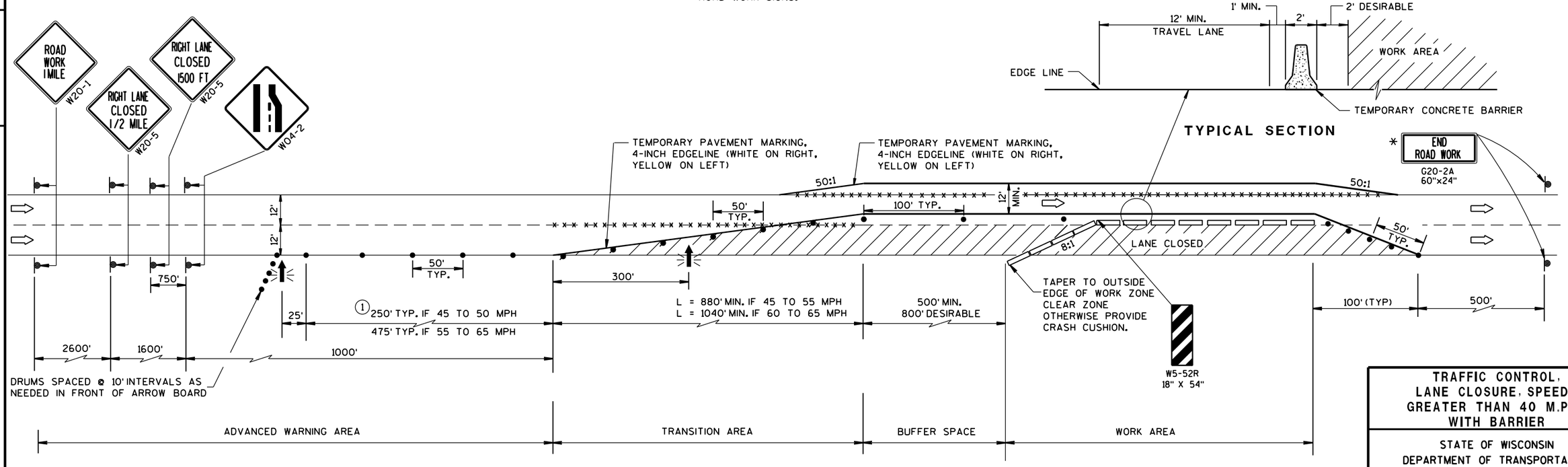

TRAFFIC CONTROL, LANE CLOSURE, SPEEDS GREATER THAN 40 M.P.H. WITH BARRIER	
STATE OF WISCONSIN DEPARTMENT OF TRANSPORTATION	
APPROVED 8/2013 DATE	/S/ Travis Feltes STATE TRAFFIC ENGINEER SIGN
FHWA	

6

S.D.D. 15 D 3-2

LEGEND

- TYPE III BARRICADE WITH ATTACHED SIGN
- SIGN ON PERMENENT SUPPORT
- TRAFFIC CONTROL DRUM WITH TYPE "C" STEADY BURN LIGHT
- TRAFFIC CONTROL DRUM
- FLASHING ARROW BOARD
- TYPE "A" WARNING LIGHT (FLASHING)
- REMOVING PAVEMENT MARKING
- DIRECTION OF TRAFFIC
- WORK AREA

GENERAL NOTES

THE EXACT NUMBER, LOCATION, AND SPACING OF ALL SIGNS AND DEVICES SHALL BE ADJUSTED TO FIT FIELD CONDITIONS AS APPROVED BY THE ENGINEER.

THE SPACING BETWEEN SIGNS SHOULD BE ADJUSTED TO NOT CONFLICT WITH AND TO PROVIDE A MINIMUM OF 200 FEET, (500 FEET DESIREABLE) DISTANCE TO EXISTING SIGNS.

THIS LANE CLOSURE IS TYPICAL FOR CLOSING RIGHT LANE - REVERSE FOR CLOSING LEFT LANE.

ALL SIGNS ARE 48"×48" UNLESS OTHERWISE NOTED.

"WO" IS THE SAME AS "W" EXCEPT THE BACKGROUND IS ORANGE.

ANY SIGNS TEMPORARY OR EXISTING, WHICH CONFLICT WITH TRAFFIC CONTROL "IN USE" SHALL BE REMOVED OR COVERED AS NEEDED AND AS APPROVED BY THE ENGINEER. NO WARNING LIGHTS SHALL BE WORKING ON "COVERED" OR "DOWNED" SIGNS.

CONSIDER GEOMETRICS WHEN LOCATING SIGNS AND ARROW BOARD SO THE DRIVER HAS A CLEAR VIEW OF THE ARROW BOARD AND LANE CLOSURE DRUMS FOR A MINIMUM 1500 FEET IN FRONT OF DRUMS.

FOR A LANE CLOSURE THAT IS IN PLACE LESS THAN 7 CONTINUOUS DAYS AND NIGHTS, THE ADVANCED WARNING SIGNS MAY BE MOUNTED ON PORTABLE SUPPORTS.

REMOVE PAVEMENT MARKINGS IF LANE CLOSURE IS TO BE IN PLACE FOR LONGER THAN 4 OR MORE DAYS AND NIGHTS.

WARNING LIGHTS ARE NOT REQUIRED IF THE LANE CLOSURE IS A DAYTIME ONLY OPERATION.

IF THE HORIZONTAL ALIGNMENT IS SUCH THAT A CURVE MAY REQUIRE ADDITIONAL DELINEATION, THE DEVICE SPACING MAY BE DECREASED TO 50 FEET.

ADJUSTMENTS IN BUFFER SPACE NEED TO BE INCORPORATED WHEN THE LANE CLOSURE OCCURS NEAR AN INTERCHANGE EXIT OR ENTRANCE RAMP. THE LANE CLOSURE MUST MUST TAKE PLACE FAR ENOUGH IN ADVANCE OF AN EXIT OR ENTRANCE RAMP TO STILL ALLOW FOR ADEQUATE BUFFER SPACE. THE MINIMUM LENGTH OF THE BUFFER SPACE BEFORE AN EXIT RAMP SHOULD BE 1/2 THE LENGTH OF THE TRANSITION AREA. THE ENTRANCE RAMP SHOULD BE FOLLOWED BY THE ORIGINAL BUFFER SPACE LENGTH OF 800 FEET DESIRABLE PRIOR TO ANOTHER TRAFFIC CONTROL CHANGE SUCH AS A CROSSOVER MANEUVER.

* THE LEFT REVERSE CURVE SIGN (WO1-4L) IS ONLY REQUIRED WHEN THIS DETAIL IS USED IN COMBINATION WITH "SINGLE LANE CROSSOVER" DETAIL.

** A SPEED LIMIT SIGN SHALL BE LOCATED 1500 FEET BEYOND THE END OF THE ACCELERATION LANE OF EACH ENTRANCE RAMP. THERE SHOULD BE A SPEED LIMIT SIGN INCORPORATED A MINIMUM OF EVERY 2 OR 3 MILES. INCLUDE A 65 MPH RESUME SPEED LIMIT SIGN 200 FEET MINIMUM (500 FEET DESIREABLE) BEYOND THE "END OF ROADWORK" SIGN.

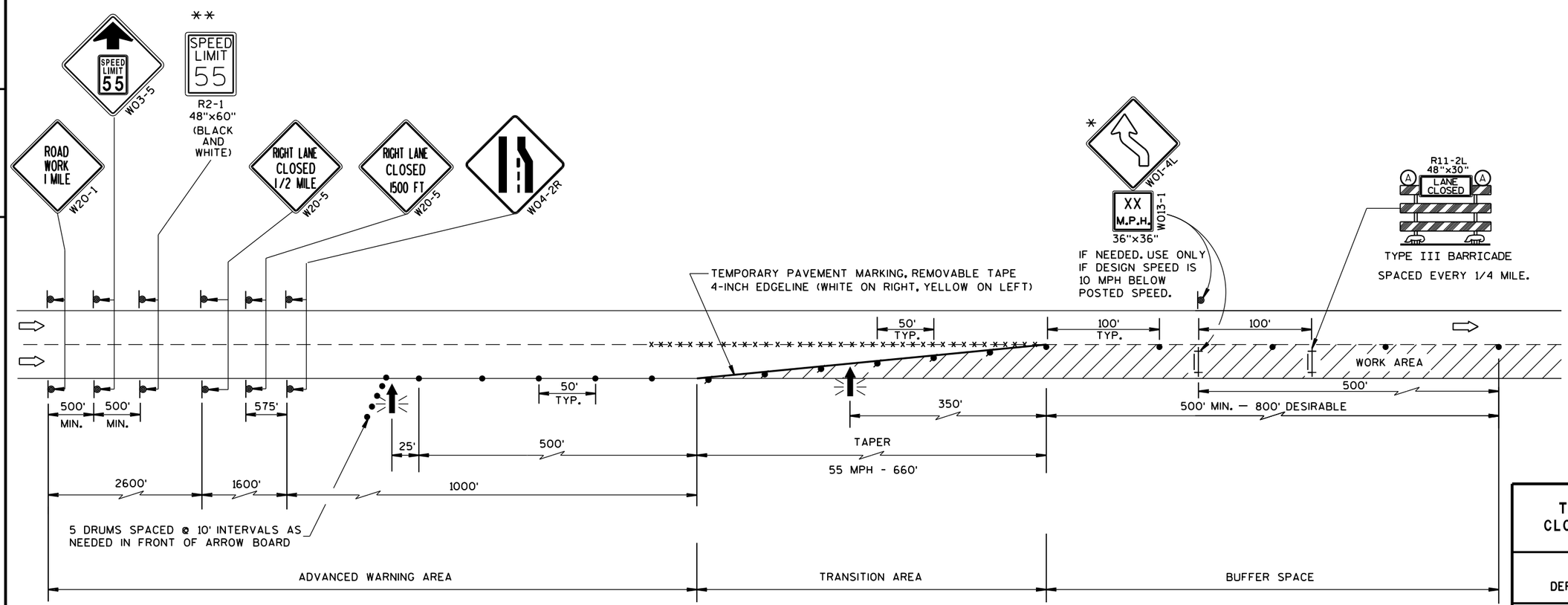

TRAFFIC CONTROL, LANE CLOSURE, SPEED REDUCTION

STATE OF WISCONSIN
DEPARTMENT OF TRANSPORTATION

APPROVED
3-2014 — DATE
/S/ Travis Feltes — STATE TRAFFIC ENGINEER
FHWA

6

S.D.D. 15 D 12-4

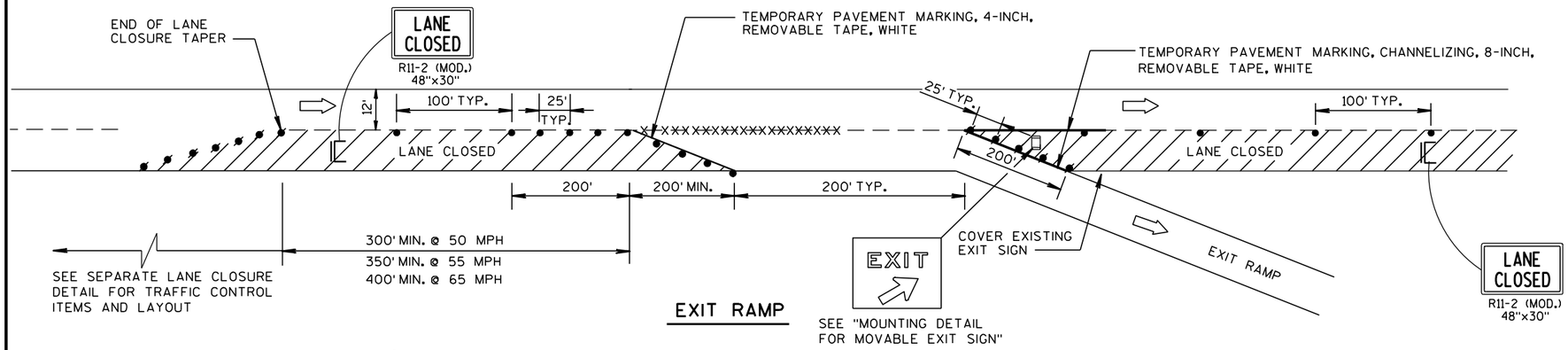

EXIT RAMP

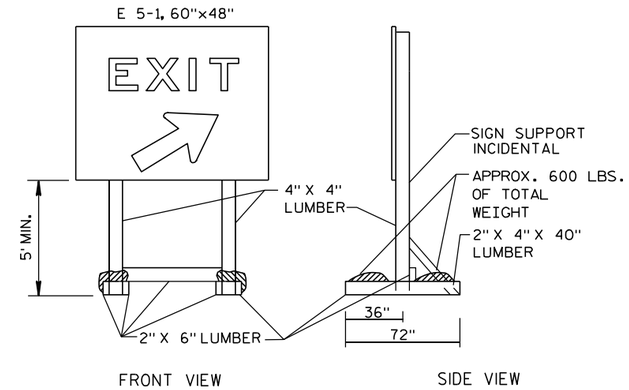

NOTE: ALL LUMBER DIMENSIONS ARE NOMINAL

MOUNTING DETAIL FOR MOVABLE EXIT SIGN

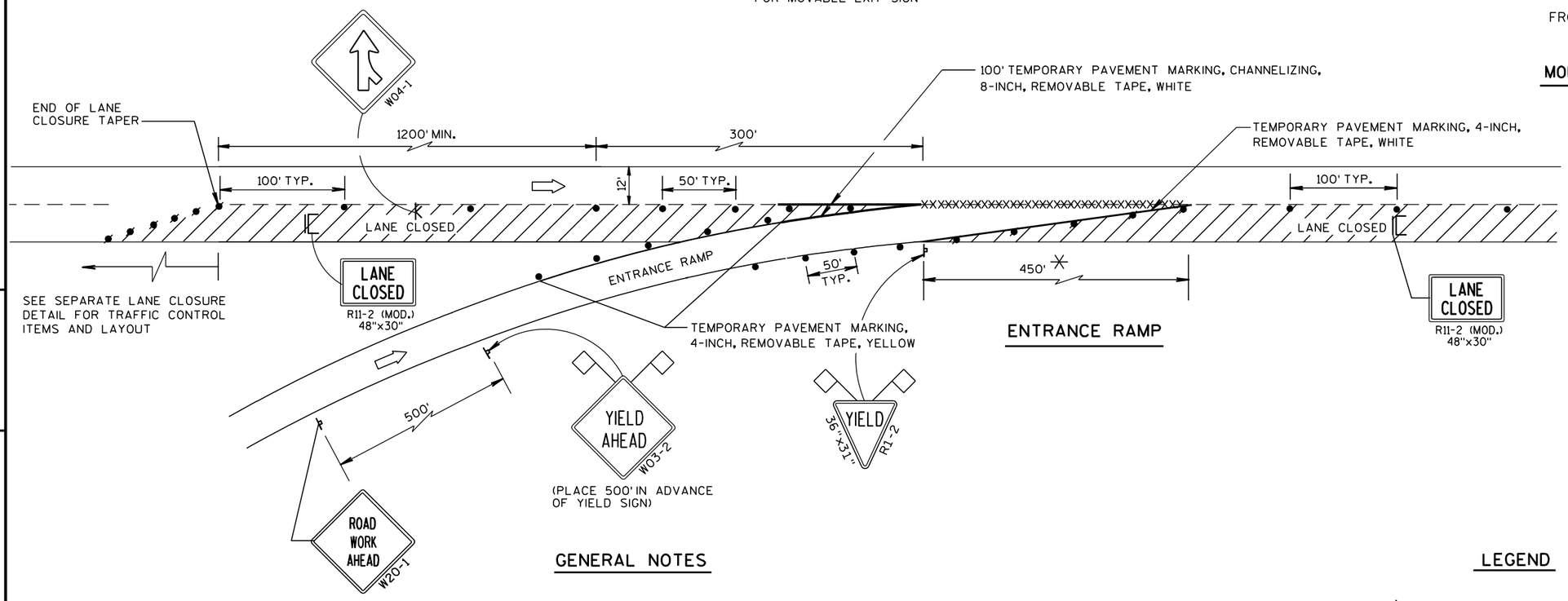

ENTRANCE RAMP

GENERAL NOTES

THE INSTALLATIONS SHOWN ON THIS SHEET ARE TYPICAL EXAMPLES AND ARE NOT INTENDED TO REPRESENT ANY PARTICULAR RAMP. AT SPECIFIC FIELD LOCATIONS, SIMILAR INSTALLATIONS SHALL BE USED AND ADJUSTED TO THE GEOMETRICS OF THE RAMP AS COORDINATED WITH THE ENGINEER.

THE EXACT NUMBER, LOCATION, AND SPACING OF ALL SIGNS AND DEVICES SHALL BE ADJUSTED TO FIT FIELD CONDITIONS AS APPROVED BY THE ENGINEER.

THE SPACING BETWEEN TRAFFIC CONTROL SIGNS SHOULD BE ADJUSTED TO NOT CONFLICT WITH AND SHOULD PROVIDE A MINIMUM OF 200 FEET, (500 FEET DESIRABLE) CLEARANCE TO EXISTING SIGNS THAT WILL REMAIN IN PLACE.

ALL SIGNS ARE 48"x48" UNLESS OTHERWISE NOTED.

"WO" IS THE SAME AS "W" EXCEPT THE BACKGROUND IS ORANGE.

SEE SEPARATE LANE CLOSURE DETAIL FOR TYPICAL SPACING OF TYPE III BARRICADES AND R11-2 (MOD.) "LANE CLOSED" SIGNS.

YIELD SIGN AND WARNING SIGNS ON ENTRANCE RAMP ARE ALSO APPROPRIATE FOR CLOSURE OF THE MAINLINE LEFT LANE. OMIT THE YIELD SIGN IF MORE THAN ONE LANE REMAINS OPEN ON THE MAINLINE AND THE RAMP TAPER IS AT LEAST AS LONG AS THE NORMAL ENTRANCE RAMP TAPER AT THE SITE.

SIGNS THAT WILL BE IN PLACE LESS THAN 7 CONTINUOUS DAYS AND NIGHTS, OR THAT WILL BE PLACED IN A CLOSED LANE, MAY BE MOUNTED ON PORTABLE SUPPORTS.

IF INDICATED IN MISCELLANEOUS QUANTITIES, SUBSTITUTE FLEXIBLE TUBULAR MARKERS FOR DRUMS IN THE GORE BETWEEN THE ENTRANCE RAMP AND MAINLINE TRAFFIC.

ANY SIGNS TEMPORARY OR EXISTING, WHICH CONFLICT WITH TRAFFIC CONTROL "IN USE" SHALL BE REMOVED OR COVERED AS NEEDED AND AS APPROVED BY THE ENGINEER.

REMOVE PAVEMENT MARKINGS AND PLACE TEMPORARY PAVEMENT MARKING, REMOVABLE TAPE IF LANE CLOSURE IS TO BE IN PLACE FOR 7 OR MORE CONTINUOUS DAYS AND NIGHTS.

WARNING LIGHTS ARE NOT REQUIRED IF THE LANE CLOSURE IS A DAYTIME ONLY OPERATION.

* LENGTH OF OPENING MAY BE REDUCED TO 150 FEET DURING STAGING OF WORK IN IMMEDIATE AREA OF RAMP TAPER.

LEGEND

- POST MOUNTED SIGN
- SIGN ON PORTABLE SUPPORT
- TRAFFIC CONTROL, DRUM
- TRAFFIC CONTROL, DRUM WITH WARNING LIGHT, TYPE C (STEADY-BURN)
- REMOVING PAVEMENT MARKING (SEE GENERAL NOTES)
- TYPE III BARRICADE (8' EQUIVALENT) WITH SIGN
- FLAGS, 16"x16" MIN., ORANGE
- DIRECTION OF TRAFFIC FLOW

TRAFFIC CONTROL, EXIT AND ENTRANCE RAMP WITHIN LANE CLOSURE

STATE OF WISCONSIN
DEPARTMENT OF TRANSPORTATION

APPROVED
5/24/2000 — DATE
/S/ Chester J. [illegible] — CHIEF SIGNS AND MAR[illegible]INEER
FHWA

6

S.D.D. 15 D 15-1

LEGEND

- TRAFFIC CONTROL DRUM
- SIGN ON PERMANENT SUPPORT
- DIRECTION OF TRAFFIC
- FLASHING ARROW BOARD
- WORK AREA

GENERAL NOTES

THIS DETAIL IS TYPICAL FOR CLOSING THE RIGHT SHOULDER. FOR CLOSING THE LEFT SHOULDER, REVERSE THE TRAFFIC CONTROL.

THIS DETAIL MAY BE USED FOR DIVIDED ROADWAYS WITH ANY NUMBER OF TRAVEL LANES.

THE EXACT NUMBER, LOCATION AND SPACING OF ALL SIGNS AND DEVICES SHALL BE ADJUSTED TO FIT FIELD CONDITIONS AS APPROVED BY THE ENGINEER.

ALL SIGNS ARE 48" X 48" UNLESS OTHERWISE NOTED.

SIGN LAYOUTS SHALL BE IN ACCORDANCE WITH THE FHWA'S MANUAL OF STANDARD HIGHWAY SIGNS OR THE WISCONSIN STANDARD SIGN PLATES.

SIGNS THAT WILL BE IN PLACE LESS THAN 7 CONTINUOUS DAYS AND NIGHTS MAY BE MOUNTED ON PORTABLE SUPPORTS.

ANY SIGNS TEMPORARY OR EXISTING, WHICH CONFLICT WITH TRAFFIC CONTROL "IN USE" SHALL BE REMOVED OR COVERED AS NEEDED AND AS APPROVED BY THE ENGINEER.

CHANNELIZING DEVICES PLACED ADJACENT TO THE WORK AREA SHALL BE PULLED BACK FROM THE TRAVEL LANE WHEN WORK IS NOT IN PROGRESS.

WHEN A RAMP INTERSECTS THE FACILITY ON WHICH THE WORK IS BEING PERFORMED, ADDITIONAL TRAFFIC CONTROLS SHALL BE PROVIDED AS SPECIFIED IN THE PLANS AND/OR THE SPECIAL PROVISIONS OR AS APPROVED BY THE ENGINEER.

*FOR SHORT DURATION SHOULDER WORK OF LESS THAN ONE HOUR, THE W21-5a SIGN MAY BE OMITTED.

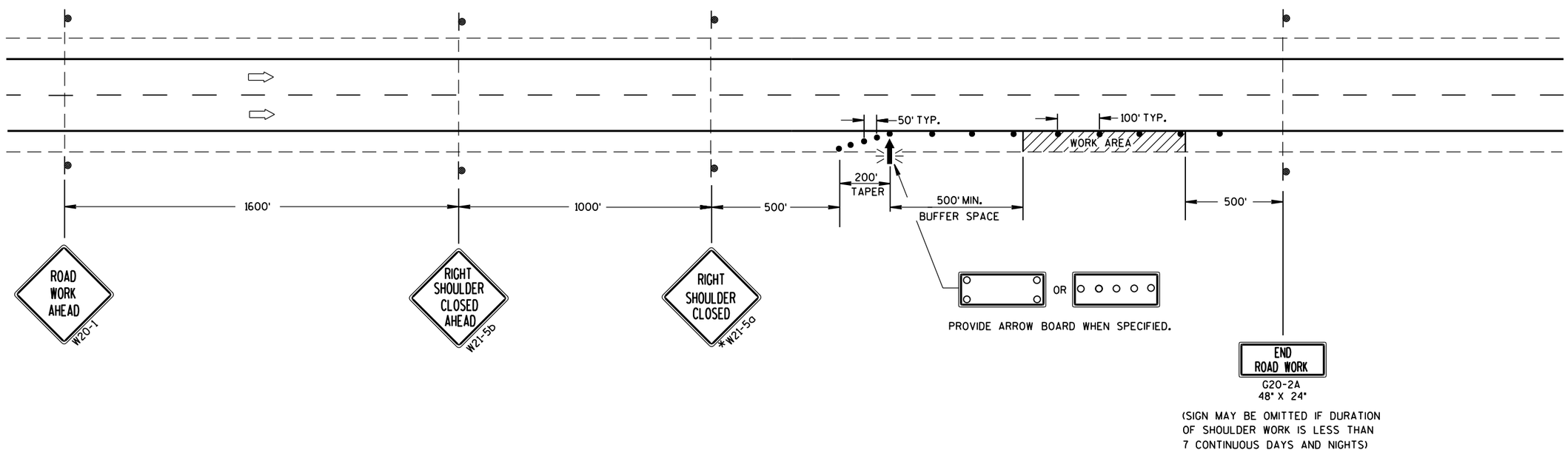

TRAFFIC CONTROL SHOULDER CLOSURE ON DIVIDED ROADWAY, SPEEDS GREATER THAN 40 MPH

STATE OF WISCONSIN
DEPARTMENT OF TRANSPORTATION

APPROVED

8/2013 — DATE

/S/ Travis Feltes — STATE TRAFFIC ENGINE ESIGN

FHWA

6

S.D.D. 15 D 27-2

WARNING OF LOCALIZED SIDEWALK WORK AREAS

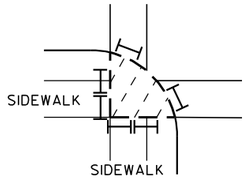

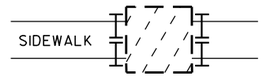

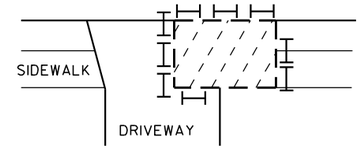

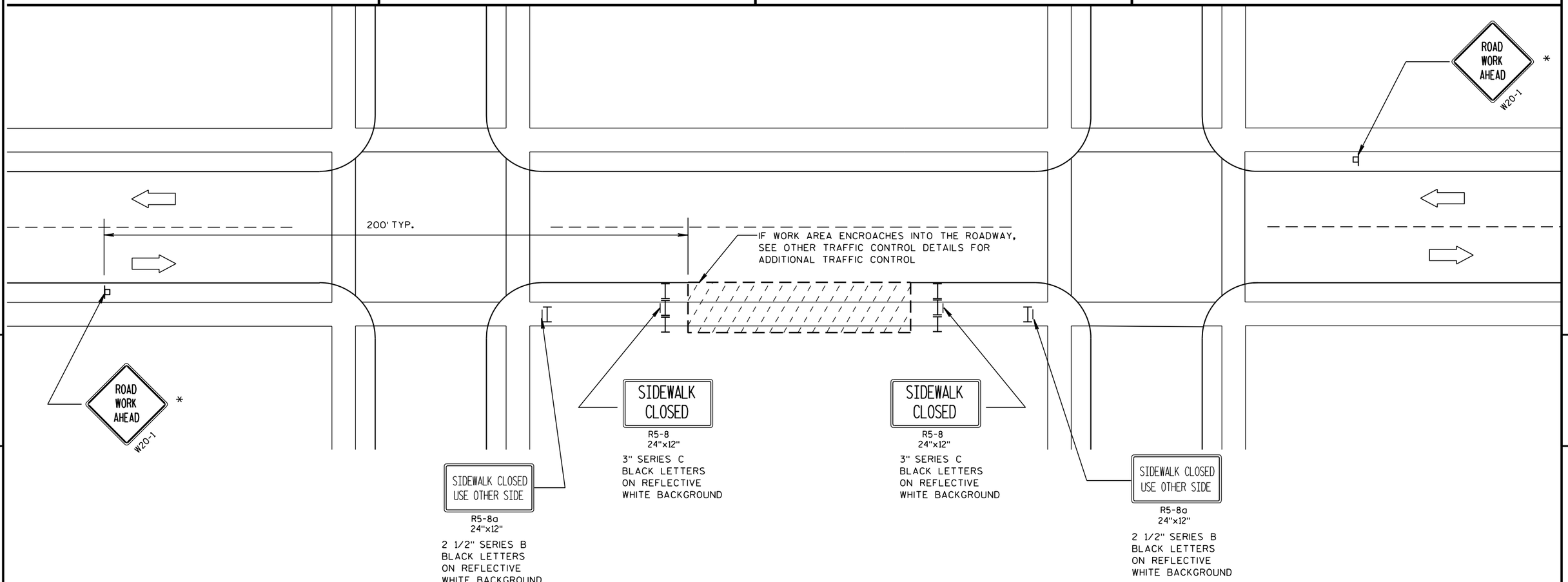

LEGEND

- POST MOUNTED SIGN
- TYPE II BARRICADE WITH/WITHOUT SIGN (ALL WITH ONE WARNING LIGHT, TYPE A, LOW-INTENSITY FLASHING)
- WORK AREA
- DIRECTION OF TRAFFIC FLOW

GENERAL NOTES :

ALL SIGNS ARE 48"x48" UNLESS OTHERWISE NOTED. IF NECESSARY DUE TO SPACE CONSTRAINTS, 36"x36" SIGNS MAY BE USED INSTEAD OF 48"x48" SIGNS, IF APPROVED BY DISTRICT TRAFFIC UNIT.

THE EXACT LOCATION AND PLACEMENT OF ALL SIGNS AND DEVICES SHALL BE ADJUSTED TO FIT FIELD CONDITIONS.

"WO" SIGNS ARE THE SAME AS "W" SIGNS EXCEPT THE BACKGROUND IS ORANGE.

* "ROAD WORK AHEAD" SIGNS ARE NOT REQUIRED IF THE SIDEWALK CLOSURE OCCURS WITHIN A LARGER WORK ZONE WHERE ADVANCE WARNING SIGNS ARE ALREADY PRESENT, OR IF THE WORK AREA AND EQUIPMENT ARE MORE THAN 2 FEET BEHIND THE CURB.

WARNING SIGNS THAT WILL BE IN PLACE LESS THAN 7 CONTINUOUS DAYS AND NIGHTS MAY BE MOUNTED ON PORTABLE SUPPORTS.

TRAFFIC CONTROL, SIDEWALK CLOSURE

TRAFFIC CONTROL, SIDEWALK CLOSURE

STATE OF WISCONSIN
DEPARTMENT OF TRANSPORTATION

APPROVED
5/23/2000 /S/ Chester J. [illegible]
DATE CHIEF SIGNS AND MARK[illegible]NEER
FHWA

6

S.D.D. 15 D 30-1

LEGEND

- SIGN ON PERMANENT SUPPORT
- REMOVING PAVEMENT MARKING
- TYPE III BARRICADE WITH ATTACHED SIGN
- CONCRETE BARRIER TEMPORARY PRECAST
- FLAGS, 16" × 16" MIN., (ORANGE)
- TRAFFIC CONTROL DRUM
- TRAFFIC CONTROL DRUM WITH TYPE "C" STEADY BURN LIGHT
- ASPHALTIC PAVEMENT WIDENING
- DIRECTION OF TRAFFIC
- 4" X 6" WOOD POST
- TEMPORARY SIGNAL WITH BACKPLATE AND 12-INCH LENSES ON BREAKAWAY POLE

W057-52
36"x24"

INSTALL ON EACH APPROACH AT THE CLOSEST INTERSECTION WITH A STATE OR COUNTY TRUNK HIGHWAY, OR AS DIRECTED BY THE ENGINEER. WIDTH ON SIGN TO BE APPROX. 1-FOOT LESS THAN AVAILABLE WIDTH. (OMIT IF AVAILABLE WIDTH IS MORE THAN 16 FEET.)

GENERAL NOTES

THE EXACT NUMBER, LOCATION AND SPACING OF ALL SIGNS AND DEVICES SHALL BE ADJUSTED TO FIT FIELD CONDITIONS.

THE SPACING BETWEEN TRAFFIC CONTROL SIGNS SHOULD BE ADJUSTED TO NOT CONFLICT WITH AND SHOULD PROVIDE A MINIMUM OF 200 FEET (500 FEET DESIRABLE) CLEARANCE TO EXISTING SIGNS THAT WILL REMAIN IN PLACE.

ALL SIGNS ARE 48"×48" UNLESS OTHERWISE NOTED.

"WO" IS THE SAME AS "W" EXCEPT THE BACKGROUND IS ORANGE.

SIGN LAYOUTS SHALL BE IN ACCORDANCE WITH THE FHWA'S MANUAL OF STANDARD HIGHWAY SIGNS OR THE WISCONSIN STANDARD SIGN PLATES.

ANY SIGNS TEMPORARY OR EXISTING, WHICH CONFLICT WITH TRAFFIC CONTROL "IN USE" SHALL BE REMOVED OR COVERED AS NEEDED AND AS APPROVED BY THE ENGINEER.

PLACE TEMPORARY PAVEMENT MARKING EDGELINE AND CENTERLINE, AND REMOVE EXISTING PAVEMENT MARKINGS IF LANE CLOSURE IS TO BE IN PLACE FOR 4 OR MORE CONTINUOUS DAYS AND NIGHTS OR AS NOTED ON DETAIL.

* 500-FOOT SPACING SHOWN IS FOR ROADWAYS WITH A PRE-CONSTRUCTION REGULATORY SPEED LIMIT OF 45 MPH OR MORE. FOR 35-40 MPH, USE 350-FOOT TYPICAL SPACING. FOR 25-30 MPH, USE 200-FOOT TYPICAL SPACING.

** USE 300' SPACING IF PRE-CONSTRUCTION REGULATORY SPEED LIMIT IS 35 MPH OR LESS.

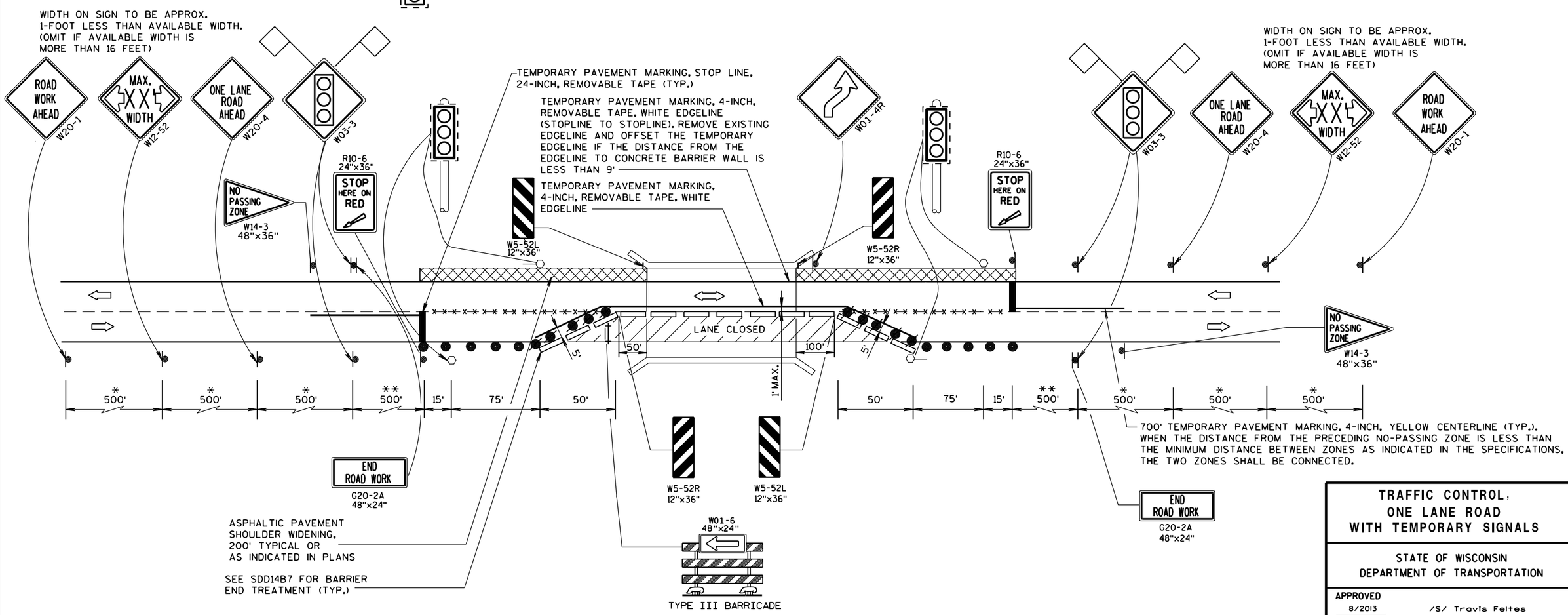

TRAFFIC CONTROL, ONE LANE ROAD WITH TEMPORARY SIGNALS

STATE OF WISCONSIN
DEPARTMENT OF TRANSPORTATION

APPROVED
8/2013 — DATE
/S/ Travis Feltes — STATE TRAFFIC ENGINEER
FHWA — SIGN

6

S.D.D. 15 D 33-3

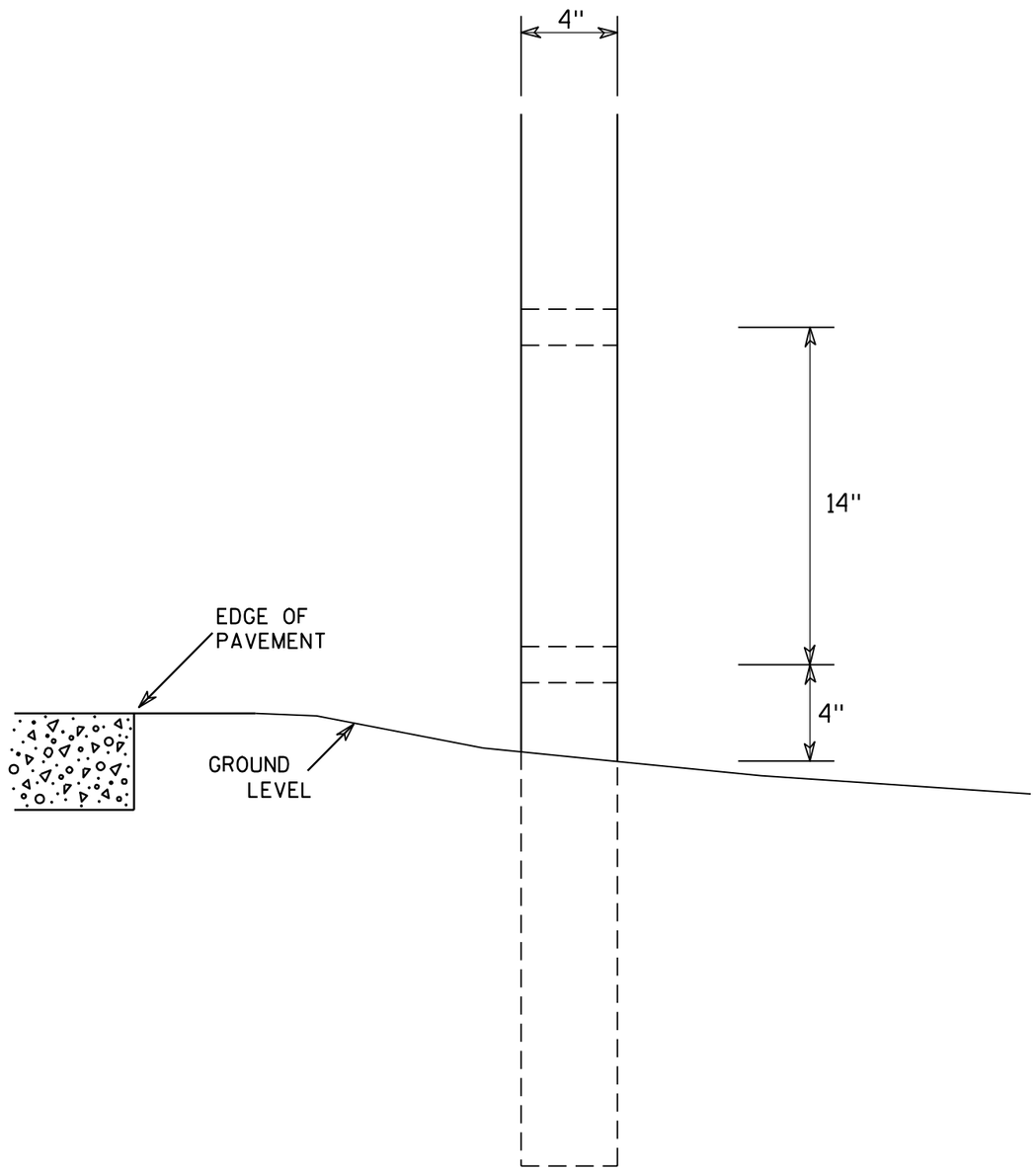

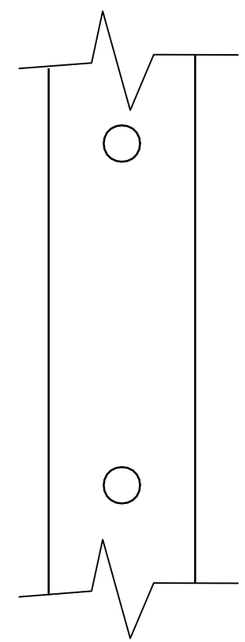

SIDE VIEW

GENERAL NOTES

1. All 4 x 6 Wood Posts shall be modified by having two 1½" diameter holes drilled perpendicular to the roadway centerline.

7

7

4 X 6 WOOD POST MODIFICATIONS

WISCONSIN DEPT OF TRANSPORTATION

APPROVED Chester J Spang for State Traffic Engineer

DATE 3/27/97 PLATE NO. A4-11.2

PROJECT NO:	HWY:	COUNTY:		SHEET NO: 175	E

URBAN AREA

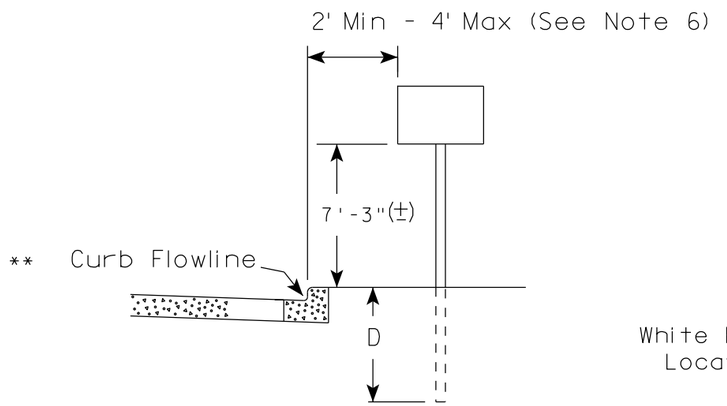

RURAL AREA (See Note 2)

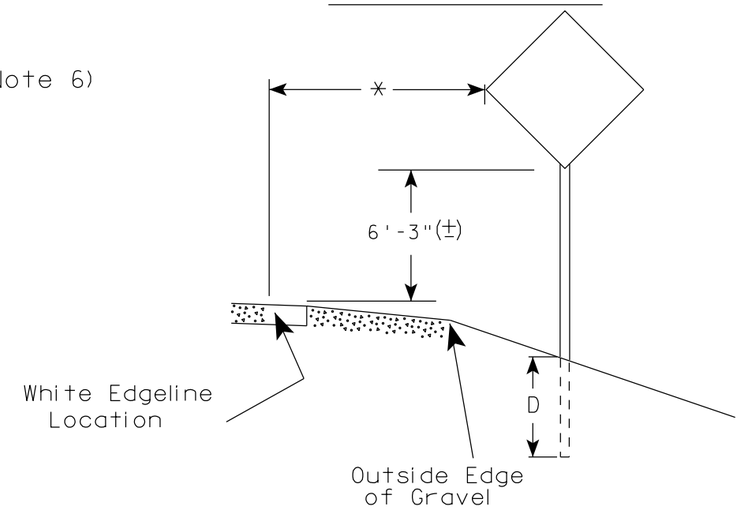

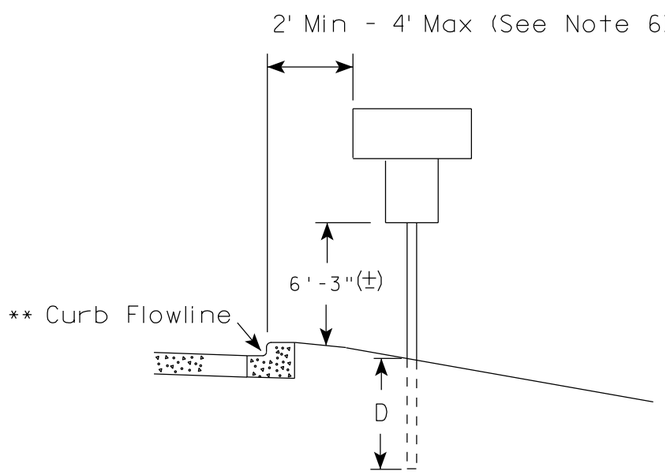

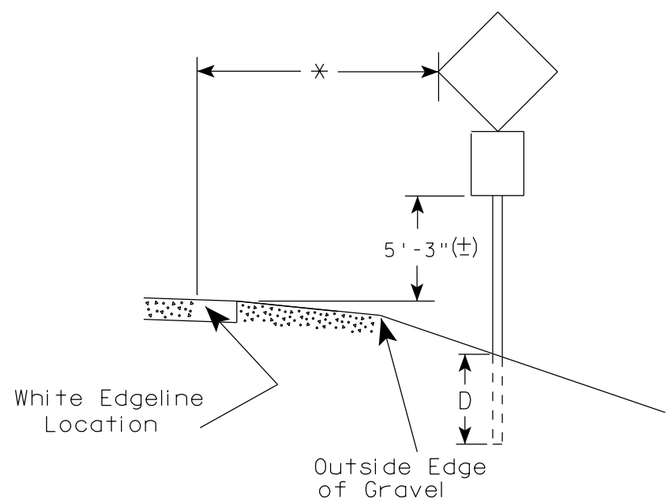

** The existence of curb and gutter does not in itself mandate the vertical clearance illustrated. That height is typically measured where there is sidewalk adjacent to the roadway or parking is permitted. In the absence of sidewalk vertical clearance is measured from the top of the curb. Offset of signs is measured from the flow line.

* 6 feet from edge of a paved shoulder or 12 feet from the edge of pavement (edge line location) or 2 feet from outside edge of gravel, whichever is greater unless directed by project engineer.

GENERAL NOTES

1. Signs wider than 4 feet, 20 sq.ft or larger, shall be mounted on multiple posts. Refer to plate A4-4.
2. If signs are mounted on barrier wall, see A4-10 sign plate.
3. For expressways and freeways, mounting height is 7'- 3" (±) or 6'-3" (±) depending upon existence of a sub-sign.
4. Minimum mounting height for J assemblies (A4-5) is 7'-3" (±) or 6'-3" (±) per urban or rural detail respectively.
5. Minimum mounting height for signs mounted on traffic signal poles is 5'- 3" (±).
6. Offset distance shall be consistent with existing signs or consistent throughout length of project.
7. The (±) tolerance for mounting height is 3 inches.
8. Folding stop signs (R1-1F) shall be mounted at a height of 5'-3" (±) or as directed by the Engineer.
9. The Double Arrow sign (W12-1) shall be mounted at a height of 2'-3" (±). The Chevron sign (W1-8), Roundabout Chevron panel (R6-4B), Enhanced Reference Markers, Clearance Markers (W5-52), Mile Markers (D10 series) & End of Rod Markers (W5-56 & W5-56A) shall be mounted at a height of 4'-3" (+).

POST EMBEDMENT DEPTH

Area of Sign Installation (Sq. Ft.)	D (Min)
20 or Less	4'
Greater than 20	5'

TYPICAL INSTALLATION OF PERMANENT TYPE II SIGNS ON SINGLE POSTS

WISCONSIN DEPT OF TRANSPORTATION

APPROVED Matthew R Rauch for State Traffic Engineer

DATE 9/30/13 PLATE NO. A4-3.18

PROJECT NO:	HWY:	COUNTY:		SHEET NO:	E

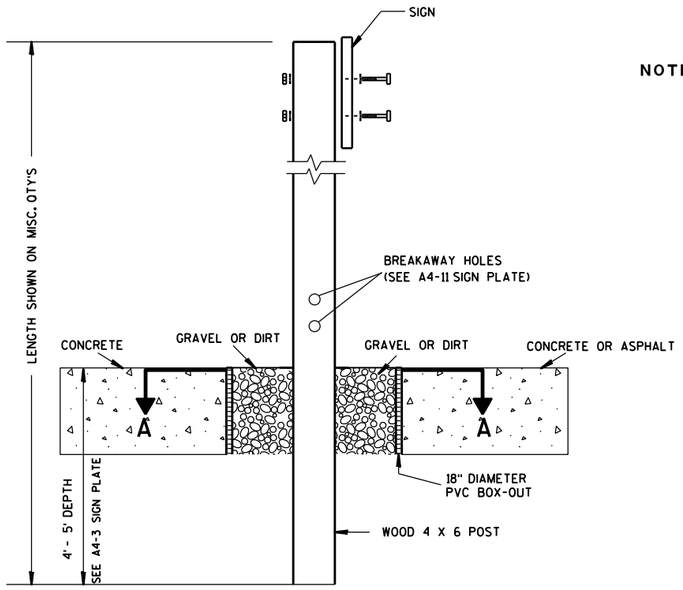

ELEVATION VIEW

DETAIL OF WOOD 4 X 6 SIGN POST IN BOX-OUT

NOTES:
1. ALL MATERIAL TO BE APPROVED BY ENGINEER PRIOR TO INSTALLATION
2. SEE SIGN PLATE A4-8 FOR SIGN HARDWARE REQUIREMENTS
3. 18 INCH X 18 INCH SQUARE BOX-OUTS MAY BE USED FOR INSTALLATIONS IN EXISTING CONCRETE OR ASPHALT LOCATIONS.

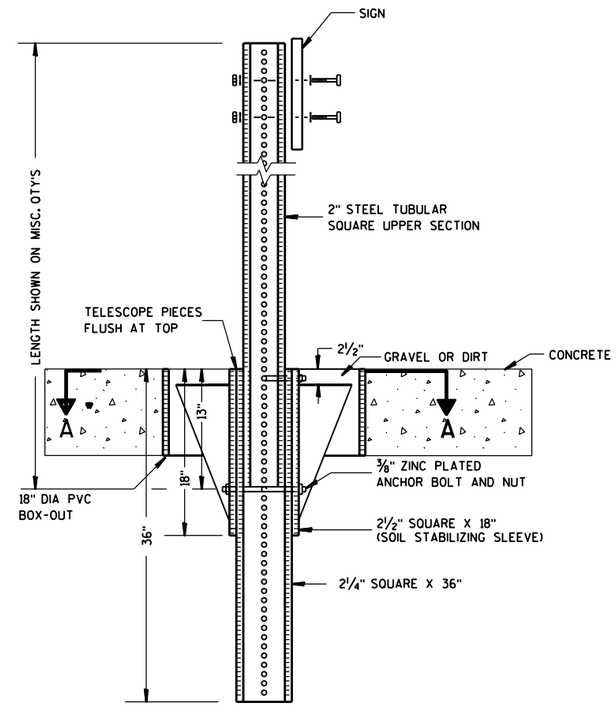

ELEVATION VIEW

DETAIL OF STEEL 2 X 2 SIGN POST IN BOX-OUT

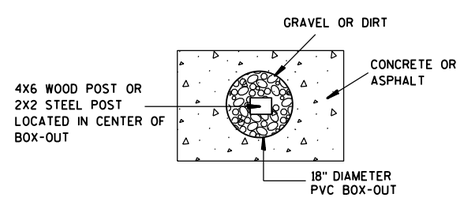

PLAN VIEW

FOR NEW CONCRETE/ASPHALT INSTALLATIONS

SIGN POST
BOX-OUTS
A4-3B

WISCONSIN DEPT OF TRANSPORTATION

APPROVED Matthew R Rauch
for State Traffic Engineer

DATE 1/27/14 PLATE NO. A4-3B.1

PROJECT NO:	HWY:	COUNTY:		SHEET NO:	E

URBAN AREA

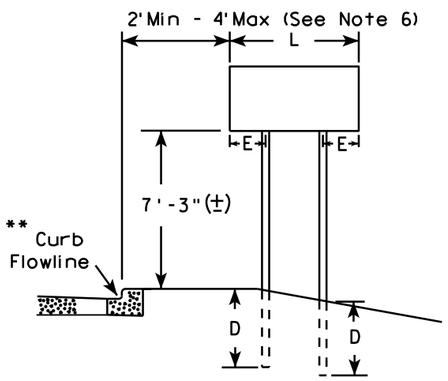

RURAL AREA (See Note 3)

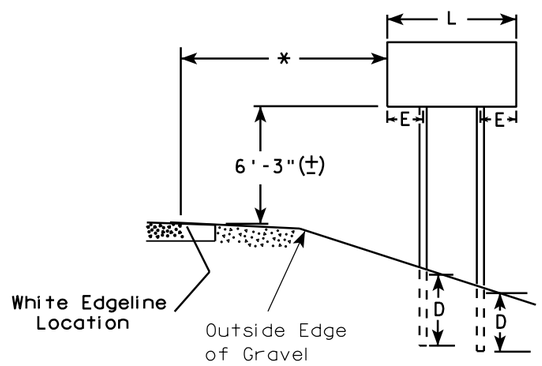

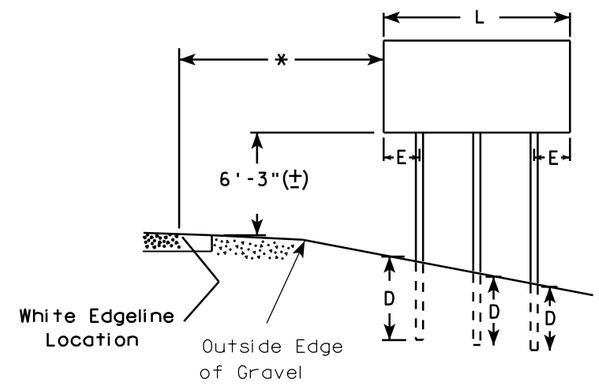

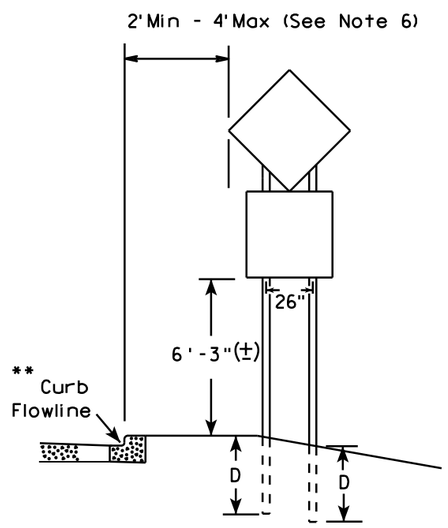

48" DIAMOND WARNING SIGN

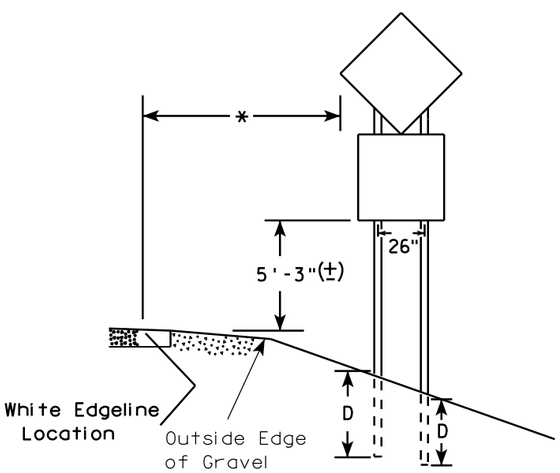

48" DIAMOND WARNING SIGN

GENERAL NOTES

1. For 3 or 4 post installations, individual post spacing shall be greater than 3'-6".
2. See tables below for required number of posts.
3. For expressways and freeways, mounting height is 7'-3" (±) or 6'-3" (±) depending upon existence of sub-sign.
4. The (±) tolerance for mounting height is 3 inches.
5. Minimum mounting height for J assemblies (A4-5) is 7'-3" (±) or 6'-3" (±) per urban or rural detail respectively.
6. Offset distance shall be consistent with existing signs or consistent throughout length of project.
7. Folding stop signs (R1-1F) shall be mounted at a height of 5'-3" (±) or as directed by the engineer.
8. The Double Arrow sign (W12-1) shall be mounted at a height of 2'-3" (±). The Chevron sign (W1-8), Roundabout Chevron panel (R6-4B), Clearance Markers (W5-52), Mile Markers (D10 series) & End of Road Markers (W5-56 & W5-56A) shall be mounted at a height of 4"-3" (±).

* 6 feet from edge of a paved shoulder or 12 feet from the edge of pavement (edge line location) or 2 feet from outside edge of gravel, whichever is greater unless directed by project engineer.

** The existence of curb and gutter does not in itself mandate the vertical clearance illustrated. That height is typically measured where there is sidewalk adjacent to the roadway or parking is permitted. In the absence of sidewalk vertical clearance is measured from the top of the curb. Offset of signs is measured from the flow line.

*** See A4-3 sign plate for signs 4' or less in width or less than 20 S.F. in area.

SIGN SHAPE OTHER THAN DIAMOND (TWO POSTS REQUIRED)	
L	E
*** Greater than 48" Less than 60"	12"
60" to 120"	L/5

SIGN SHAPE OTHER THAN DIAMOND (THREE POSTS REQUIRED)	
L	E
Greater than 120" less than 168"	12"

SIGN SHAPE OTHER THAN DIAMOND (FOUR POSTS REQUIRED)	
L	E
168" and greater	12"

POST EMBEDMENT DEPTH

Area of Sign Installation (Sq. Ft.)	D (Min)
20 or Less	4'
Greater than 20	5'

TYPICAL INSTALLATION OF TYPE II SIGNS ON MULTIPLE POSTS

WISCONSIN DEPT OF TRANSPORTATION

APPROVED Matthew R Rauch
for State Traffic Engineer

DATE 4/29/14 PLATE NO. A4-4 13

PROJECT NO:	HWY:	COUNTY:		SHEET NO:	E

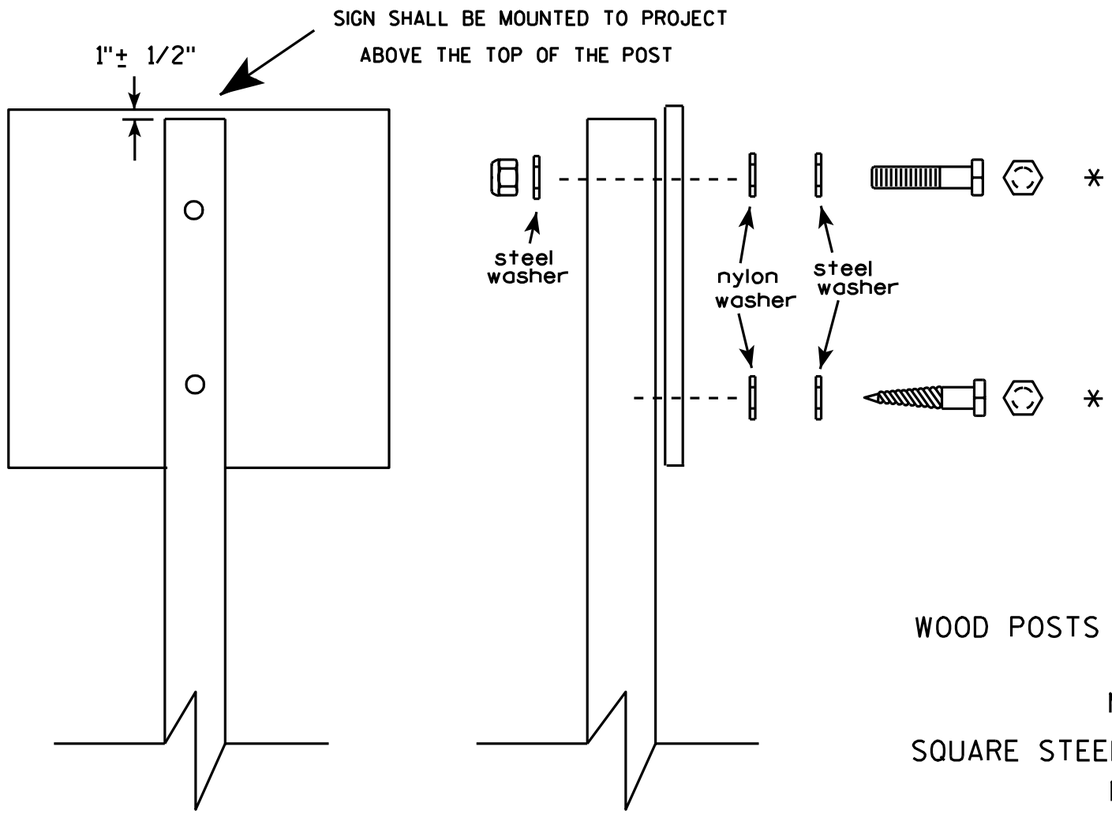

Nuts, bolts and lags used for mounting signs shall have hexagonal heads and shall be either :

a. Hot dip galvanized in accordance with ASTM Designation: A 153, Class D, or SC 3

b. Electro-galvanized in accordance with ASTM Designation : B 633, TYPE III, SC 3.

Threads on bolts and nuts shall be manufactured with sufficient allowance for the cadmium plate or galvanized coating to permit the nuts to run freely on the bolts.

WOOD POSTS (4" x 4" or 4" x 6")

LAG SCREWS - 3/8" X 3"

MACHINE BOLTS - 5/16" X 6-1/2" or 7" Length w/ nuts

SQUARE STEEL POSTS (2" x 2")

MACHINE BOLTS - 3/8" X 3-1/4" Length w/ nuts

RIVETS - 9/32 " (6605-9-6) BULB-TITE, TRI-FOLD, ALUMINUM BODY/MANDREL O.D. FLANGE .720-.765 INCH, GRIP RANGE .042-.375 INCH

WASHERS (ALL POSTS) -

1-1/4" O.D. X 3/8" I.D. X 1/16" STEEL

1-1/4" O.D. X 3/8" I.D. X .080 NYLON for all Type H signs.

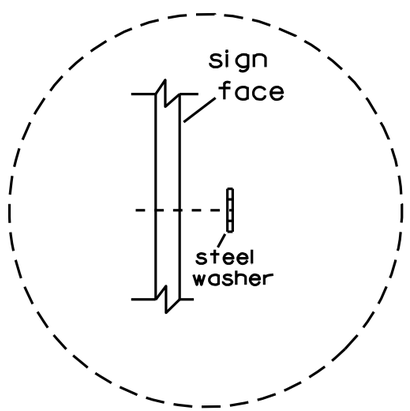

Washer Placement when Sign Has Other Than Type H or Type F Face

* Two different fastening systems are shown for illustration purposes. On any individual sign, either one or the other system shall be used. Actual number of fasteners per sign varies with the sign area, but normally there are two. For a single post installation, all signs greater than 9 sq. ft. require the use of 3 fasteners.

ATTACHMENT OF SIGNS TO POSTS

WISCONSIN DEPT OF TRANSPORTATION

APPROVED Matthew R Rauch
for State Traffic Engineer

DATE 3/23/10 PLATE NO. A4-8.7

7

7

PROJECT NO:

SHEET NO: 179 E

BANDING

SINGLE SIGN

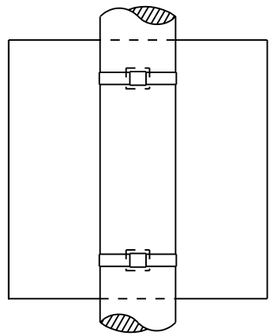

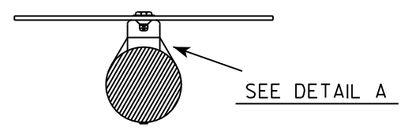

"J" ASSEMBLY

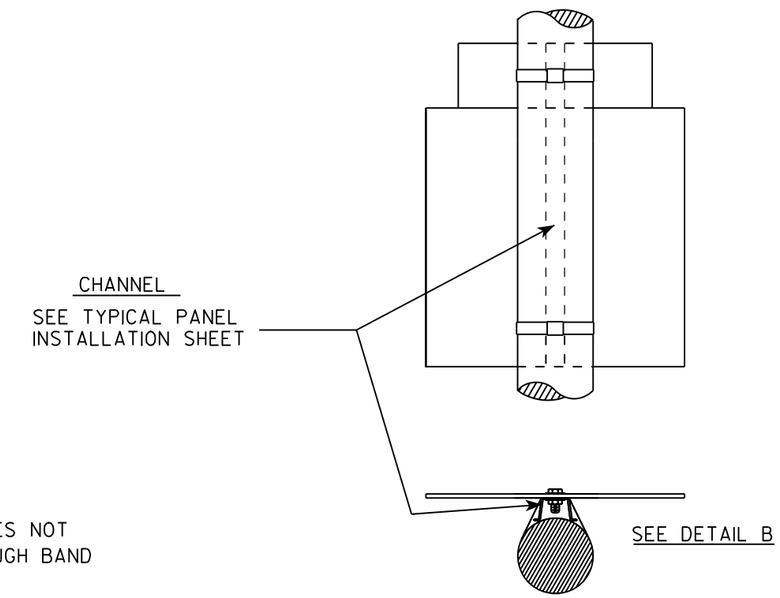

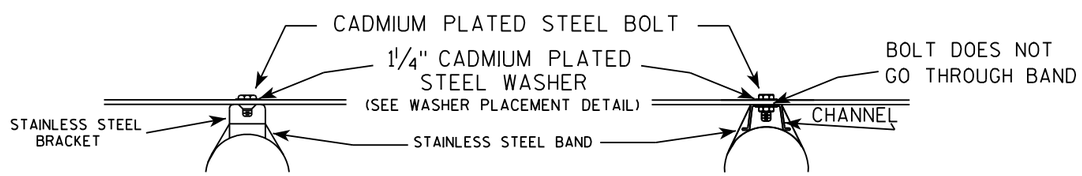

WASHER PLACEMENT

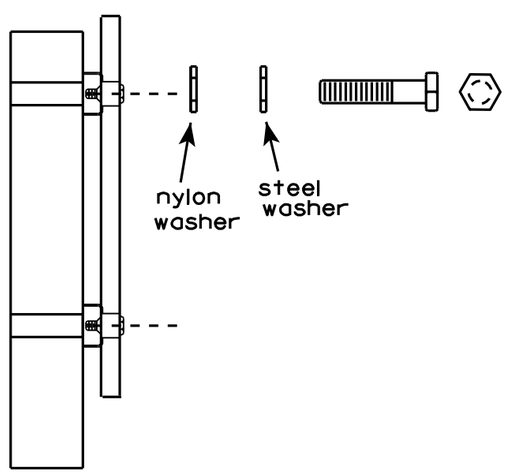

WASHERS (ALL POSTS) -

1-1/4" O.D. X 3/8" I.D. X 1/16" STEEL

1-1/4" O.D. X 3/8" I.D. X .080 NYLON

FOR ALL TYPE H SIGNS

GENERAL NOTES

1. Any sign over 3 feet in width shall use the V-Block banding method. See A5-10 standard plate.
2. Signs 3 feet or greater in height shall have three bracket bands installed. Signs less than 3 feet in height shall have two bracket bands installed.
3. Banding and assembly bracket shall be stainless steel. All bands shall be ¾" in width and 0.025" thickness.

STANDARD SIGN

SIGN BANDING DETAILS

WISCONSIN DEPT OF TRANSPORTATION

APPROVED Matthew R Rauch for State Traffic Engineer

DATE 8/16/13 PLATE NO. A5-9.3

PROJECT NO:	HWY:	COUNTY:		SHEET NO: 180	E

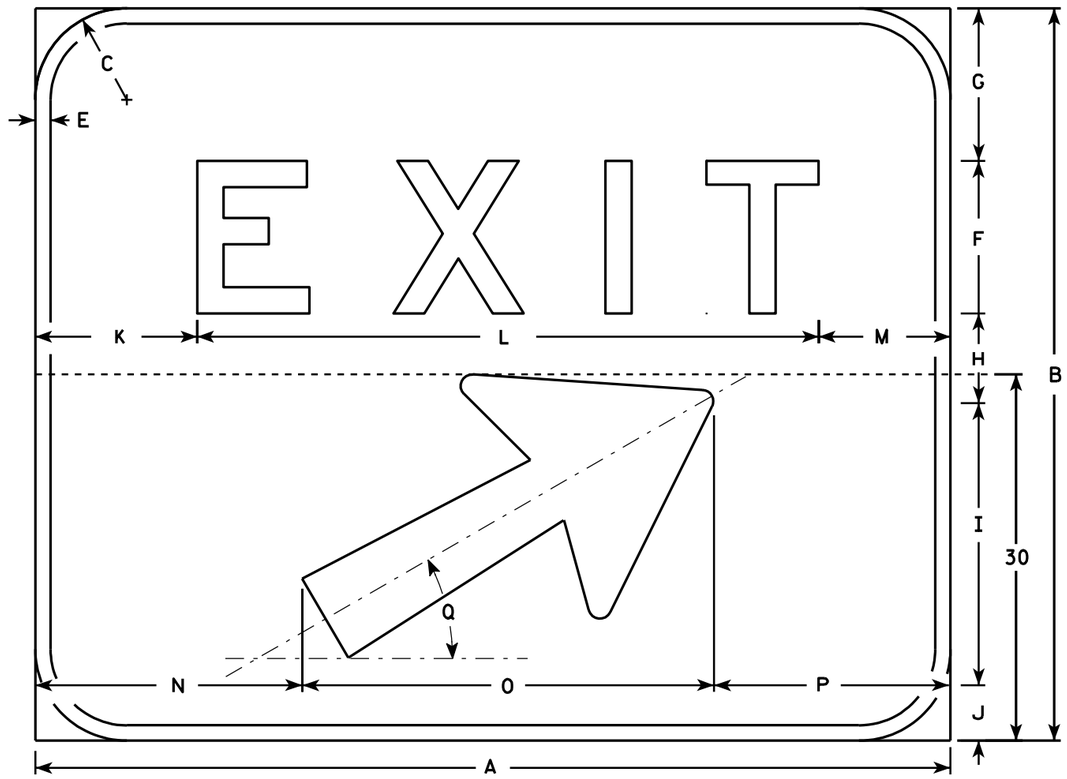

E5-1

NOTES

1. Sign is Type II - Type H reflective - reference WIS DOT Standard Specification for HIGHWAY and STRUCTURE CONSTRUCTION latest edition.
2. Color:
   Background - Green
   Message - White (Type H reflective)
3. Message Series - E
4. Corners may be square or rounded but borders shall be rounded as shown.
5. Base material for this sign shall be plywood and shall be split into two seperate pieces for the 72 x 60 size as shown on the detail by the dashed line (----------).
6. Arrow is Type "A" from sign plate A1-1.
7. As per the Standard Spec's, this sign shall not have a vertical joint.

Metric equivalent for this sign is:

SIZE	
1	
2	
3	
4	1500 mm X 1200 mm
5	1800 mm X 1500 mm

SIZE	A	B	C	D	E	F	G	H	I	J	K	L	M	N	O	P	Q	R	S	T	U	V	W	X	Y	Z	Area sq. ft.	Area m2
1																												
2																												
3																												
4	60	48	6		1	10	10	5 7/8	18 1/2	3 5/8	10 5/8	40 3/4	8 5/8	17 1/2	27	15 1/2	30°										20.0	1.80
5	72	60	6		1	12	12	10	18 1/2	7 1/2	13 1/4	48 1/2	10 1/4	23 1/2	27	21 1/2	30°										30.0	2.70

STANDARD SIGN
E5 - 1

WISCONSIN DEPT OF TRANSPORTATION

APPROVED Chester J Spang
for State Traffic Engineer

DATE 6/22/00 PLATE NO. E5-1.8

PROJECT NO:	HWY:	COUNTY:		SHEET NO: 181	E

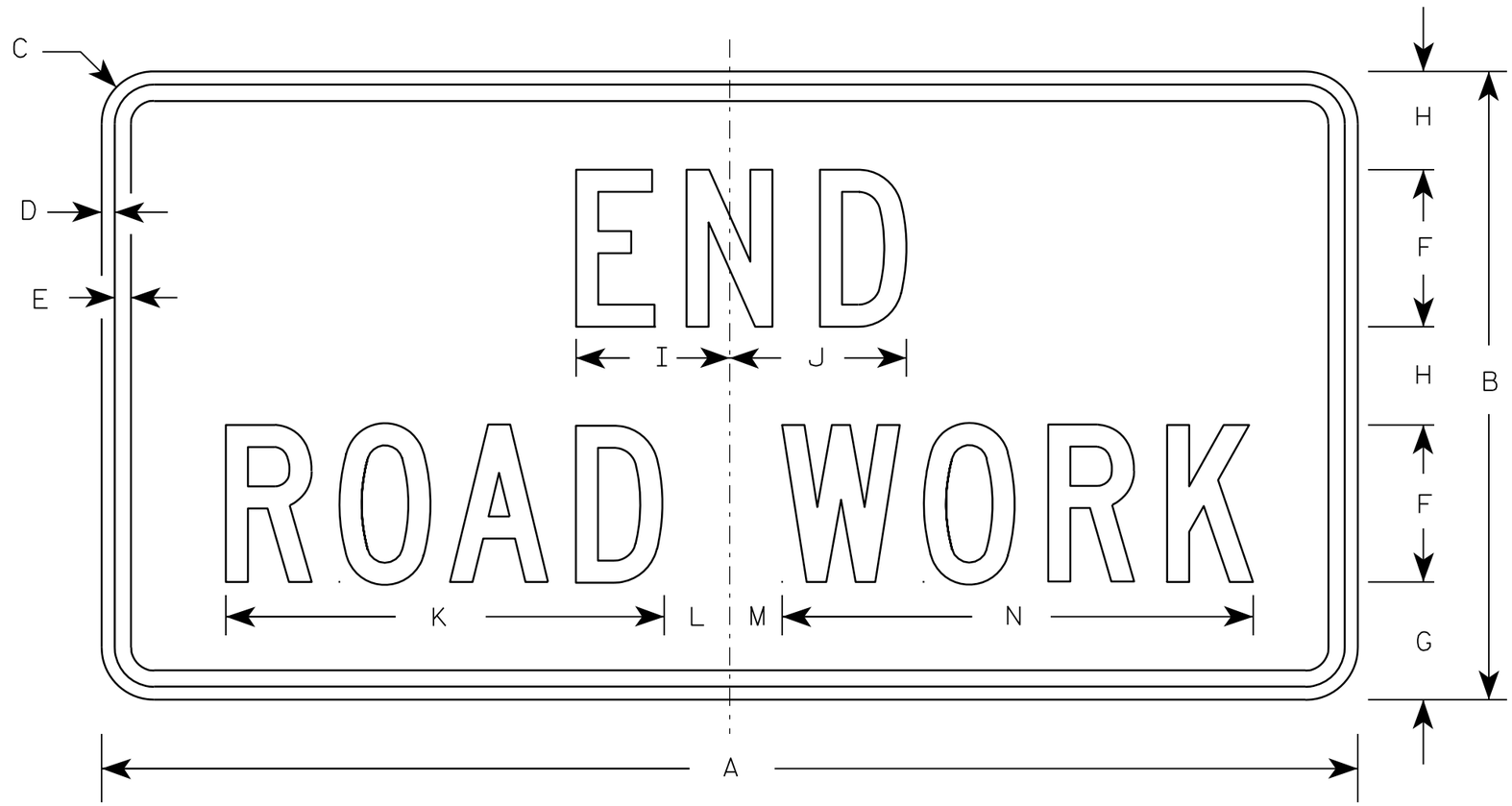

G20-2A

NOTES

1. Sign is Type II - Type F Reflective - reference WIS DOT Standard Specification for HIGHWAY and STRUCTURE CONSTRUCTION latest edition.
2. Color:
   Background - Orange
   Message - Black
3. Message Series - C
4. Corners may be square or rounded when base material is plywood but borders shall be rounded as shown. When base material is metal, the corners and borders shall be rounded.

Metric equivalent for this sign is:

SIZE	
1	900 mm X 450 mm
2	1200 mm X 600 mm
3	1200 mm X 600 mm
4	1200 mm X 600 mm
5	1200 mm X 600 mm

SIZE	A	B	C	D	E	F	G	H	I	J	K	L	M	N	O	P	Q	R	S	T	U	V	W	X	Y	Z	Area sq. ft.	Area m2
1	36	18	1 1/8	3/8	1/2	4	3 3/4	2 1/2	4 1/8	4 1/8	11 1/8	2	1	12 1/8													4.5	0.41
2	48	24	1 1/2	1/2	5/8	6	4 1/2	3 3/4	5 7/8	6 3/4	16 3/4	2 1/2	1 3/4	18 1/2													8.0	0.72
3	48	24	1 1/2	1/2	5/8	6	4 1/2	3 3/4	5 7/8	6 3/4	16 3/4	2 1/2	1 3/4	18 1/2													8.0	0.72
4	48	24	1 1/2	1/2	5/8	6	4 1/2	3 3/4	5 7/8	6 3/4	16 3/4	2 1/2	1 3/4	18 1/2													8.0	0.72
5	48	24	1 1/2	1/2	5/8	6	4 1/2	3 3/4	5 7/8	6 3/4	16 3/4	2 1/2	1 3/4	18 1/2													8.0	0.72

STANDARD SIGN

G20-2A

WISCONSIN DEPT OF TRANSPORTATION

APPROVED Matthew R Rauch
for State Traffic Engineer

DATE 9/30/09 PLATE NO. G20-2A.8

PROJECT NO:	HWY:	COUNTY:		SHEET NO: 182	E

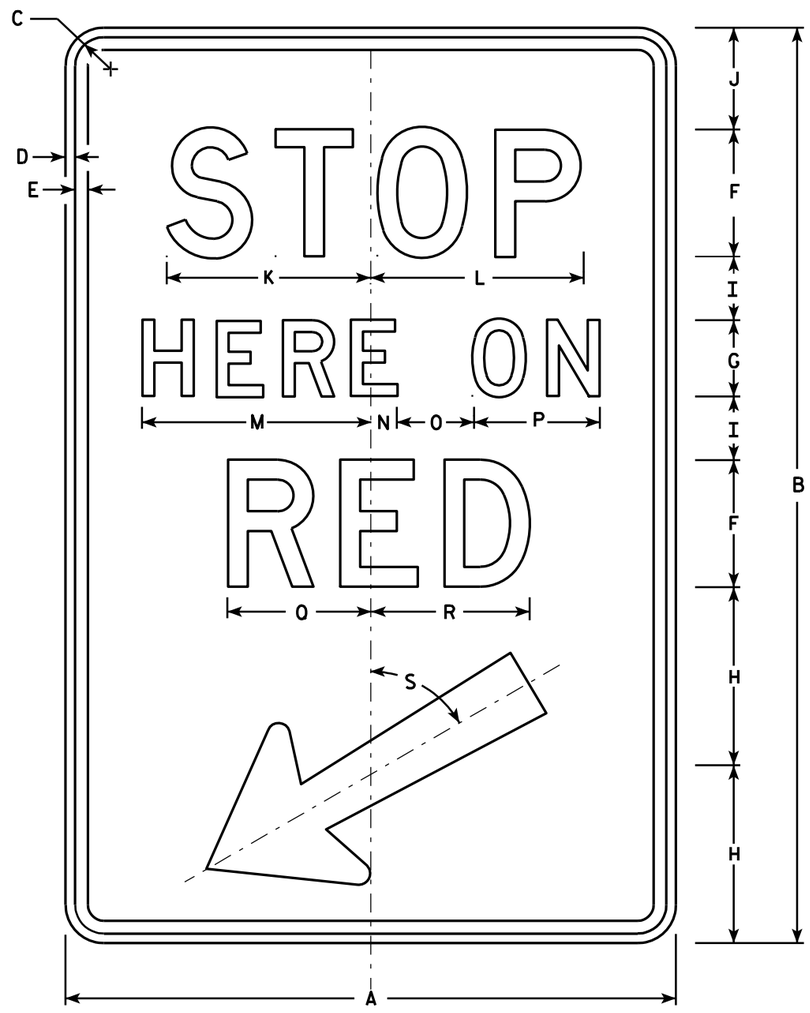

R10-6

NOTES

1. Sign is Type II - Type H Reflective - reference WIS DOT Standard Specification for HIGHWAY and STRUCTURE CONSTRUCTION latest edition.
2. Color:
   Background - White
   Message - Black
3. Message Series - D
4. Corners may be square or rounded when base material is plywood but borders shall be rounded as shown. When base material is metal, the corners and borders shall be rounded.

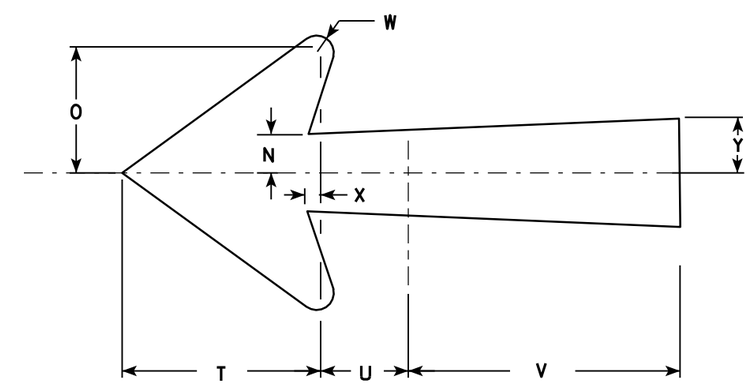

Arrow Detail

SIZE	A	B	C	D	E	F	G	H	I	J	K	L	M	N	O	P	Q	R	S	T	U	V	W	X	Y	Z	Area sq. ft.
1																											
2S	24	36	1 1/8	3/8	1/2	5	3	7	2 1/2	4	8	8 3/8	9	1	3	5	5 5/8	6 1/4	60°	5 1/4	2 1/4	7 1/8	1/2	3/8	1 3/8		6.0
2M	24	36	1 1/8	3/8	1/2	5	3	7	2 1/2	4	8	8 3/8	9	1	3	5	5 5/8	6 1/4	60°	5 1/4	2 1/4	7 1/8	1/2	3/8	1 3/8		6.0
3																											
4																											
5																											

STANDARD SIGN
R10-6

WISCONSIN DEPT OF TRANSPORTATION

APPROVED Matthew R Rauch
for State Traffic Engineer

DATE 4/5/11 PLATE NO. R10-6.6

PROJECT NO:	HWY:	COUNTY:		SHEET NO: 183	E

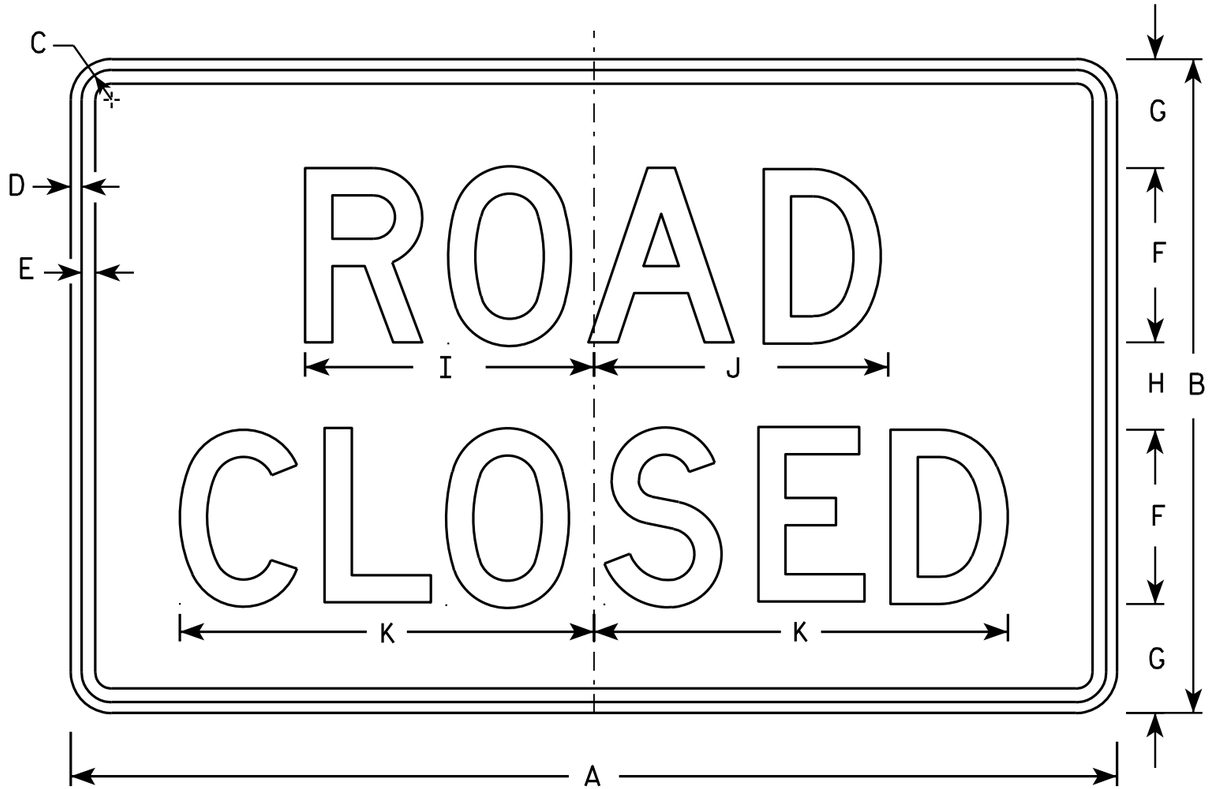

R11-2

NOTES

1. Sign is Type II - Type H Reflective - reference WIS DOT Standard Specification for HIGHWAY and STRUCTURE CONSTRUCTION latest edition.
2. Color:
   Background - White
   Message - Black
3. Message Series - D
4. Corners may be square or rounded when base material is plywood but borders shall be rounded as shown. When base material is metal, the corners and borders shall be rounded.
5. Modify the message as required.

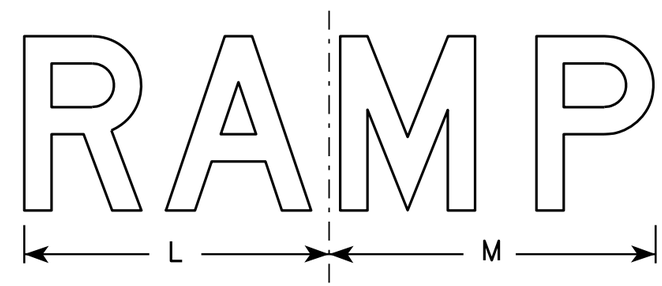

R11-2R

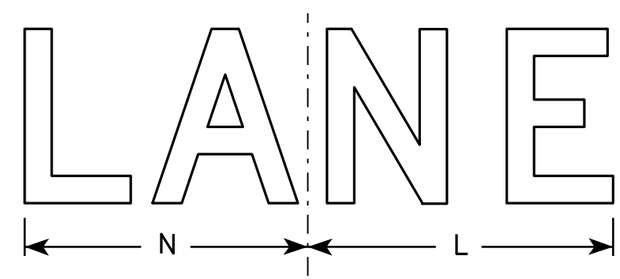

R11-2L

SIZE	A	B	C	D	E	F	G	H	I	J	K	L	M	N	O	P	Q	R	S	T	U	V	W	X	Y	Z	Area sq. ft.
1																											
2S	48	30	1 3/8	1/2	5/8	8	5	4	13 1/4	13 1/2	19	14	15	13													10.0
2M	48	30	1 3/8	1/2	5/8	8	5	4	13 1/4	13 1/2	19	14	15	13													10.0
3	48	30	1 3/8	1/2	5/8	8	5	4	13 1/4	13 1/2	19	14	15	13													10.0
4	48	30	1 3/8	1/2	5/8	8	5	4	13 1/4	13 1/2	19	14	15	13													10.0
5	48	30	1 3/8	1/2	5/8	8	5	4	13 1/4	13 1/2	19	14	15	13													10.0

STANDARD SIGN
R11-2

WISCONSIN DEPT OF TRANSPORTATION

APPROVED Matthew R Rauch
for State Traffic Engineer

DATE 4/1/11 PLATE NO. R11-2.10

PROJECT NO: | HWY: | COUNTY: | SHEET NO: 184 | E

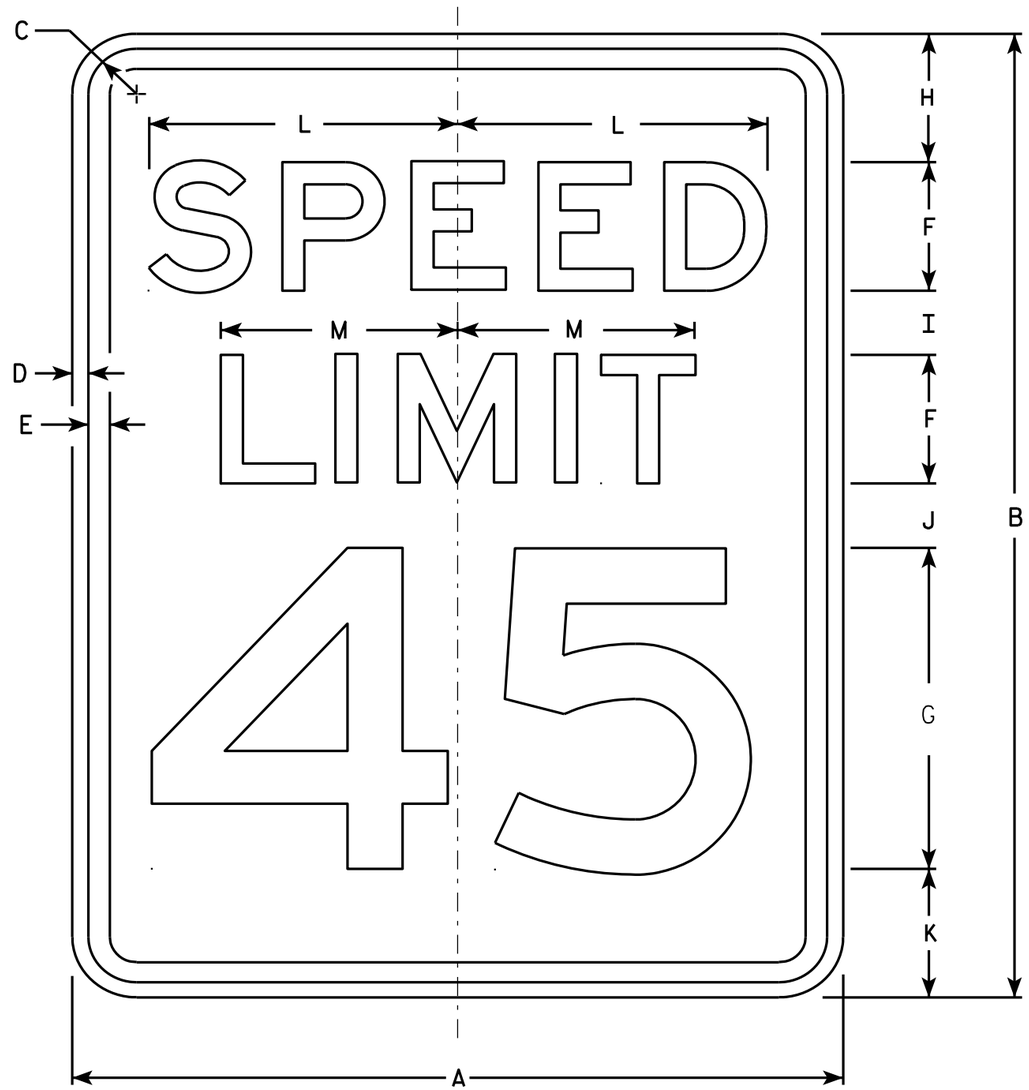

R2-1

NOTES

1. Sign is Type II - Type H Reflective - reference WIS DOT Standard Specification for HIGHWAY and STRUCTURE CONSTRUCTION latest edition.
2. Color:
   Background - White
   Message - Black
3. Message Series - E
4. Corners may be square or rounded when base material is plywood but borders shall be rounded as shown. When base material is metal, the corners and borders shall be rounded.
5. Substitute appropriate numerals and optically adjust spacing to achieve proper balance.

SIZE	A	B	C	D	E	F	G	H	I	J	K	L	M	N	O	P	Q	R	S	T	U	V	W	X	Y	Z	Area sq. ft.
1	18	24	1 1/8	3/8	1/2	3	8	3	2	2	3	7 1/4	5 1/2														3.0
2S	24	30	1 1/8	3/8	1/2	4	10	3	2 1/4	3 3/8	3 3/8	9 5/8	7 3/8														5.0
2M	30	36	1 3/8	1/2	5/8	5	12	5	2 1/2	2 1/2	4	12	9 1/4														7.5
3	36	48	1 3/8	1/2	5/8	6	14	6	5	5	6	14 3/8	11														12.0
4	36	48	1 3/8	1/2	5/8	6	14	6	5	5	6	14 3/8	11														12.0
5	48	60	2 1/4	3/4	1	8	20	6	4 1/2	6 3/4	6 3/4	19 1/4	14 5/8														20.0

STANDARD SIGN
R2-1

WISCONSIN DEPT OF TRANSPORTATION

APPROVED Matthew R Rauch
for State Traffic Engineer

DATE 5/26/10 PLATE NO. R2-1.13

PROJECT NO: | HWY: | COUNTY: | SHEET NO: 185 | E

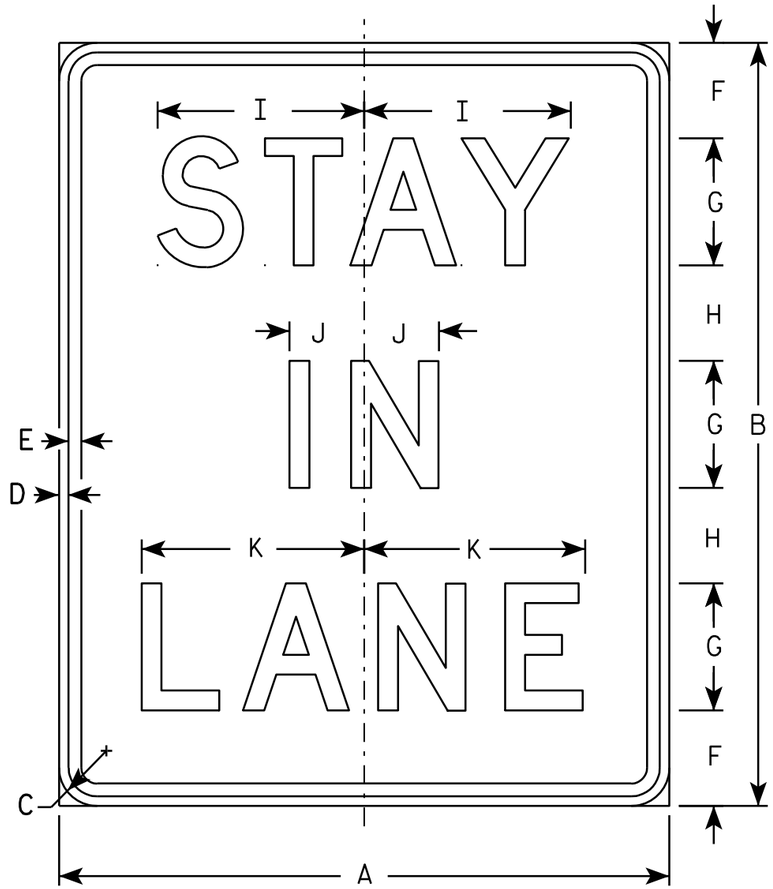

R4-9

NOTES

1. Sign is Type II - Type H Reflective - reference WIS DOT Standard Specification for HIGHWAY and STRUCTURE CONSTRUCTION latest edition.
2. Color:
   Background - WHITE
   Message - BLACK
3. Message Series - D
4. Corners may be square or rounded when base material is plywood but borders shall be rounded as shown. When base material is metal, the corners and borders shall be rounded.

SIZE	A	B	C	D	E	F	G	H	I	J	K	L	M	N	O	P	Q	R	S	T	U	V	W	X	Y	Z	Area sq. ft.
1	18	24	1 1/8	3/8	3/8	3	4	3	6 1/2	2 3/8	7																3.0
2S	24	30	1 1/8	3/8	1/2	3 5/8	5	3 7/8	8 1/8	3	8 3/4																5.0
2M	24	30	1 1/8	3/8	1/2	3 5/8	5	3 7/8	8 1/8	3	8 3/4																5.0
3	36	48	1 3/8	1/2	5/8	8 1/4	7	5 1/4	11 3/8	4 1/8	12 1/4																12.0
4	36	48	1 3/8	1/2	5/8	8 1/4	7	5 1/4	11 3/8	4 1/8	12 1/4																12.0
5	48	60	2 1/4	3/4	1	7 1/2	10	7 1/2	16 1/4	5 7/8	17 1/2																20.0

STANDARD SIGN
R4-9

WISCONSIN DEPT OF TRANSPORTATION

APPROVED Matthew R Rauch
for State Traffic Engineer

DATE 3/25/2011 PLATE NO. R4-9.2

PROJECT NO:

SHEET NO: 186 E

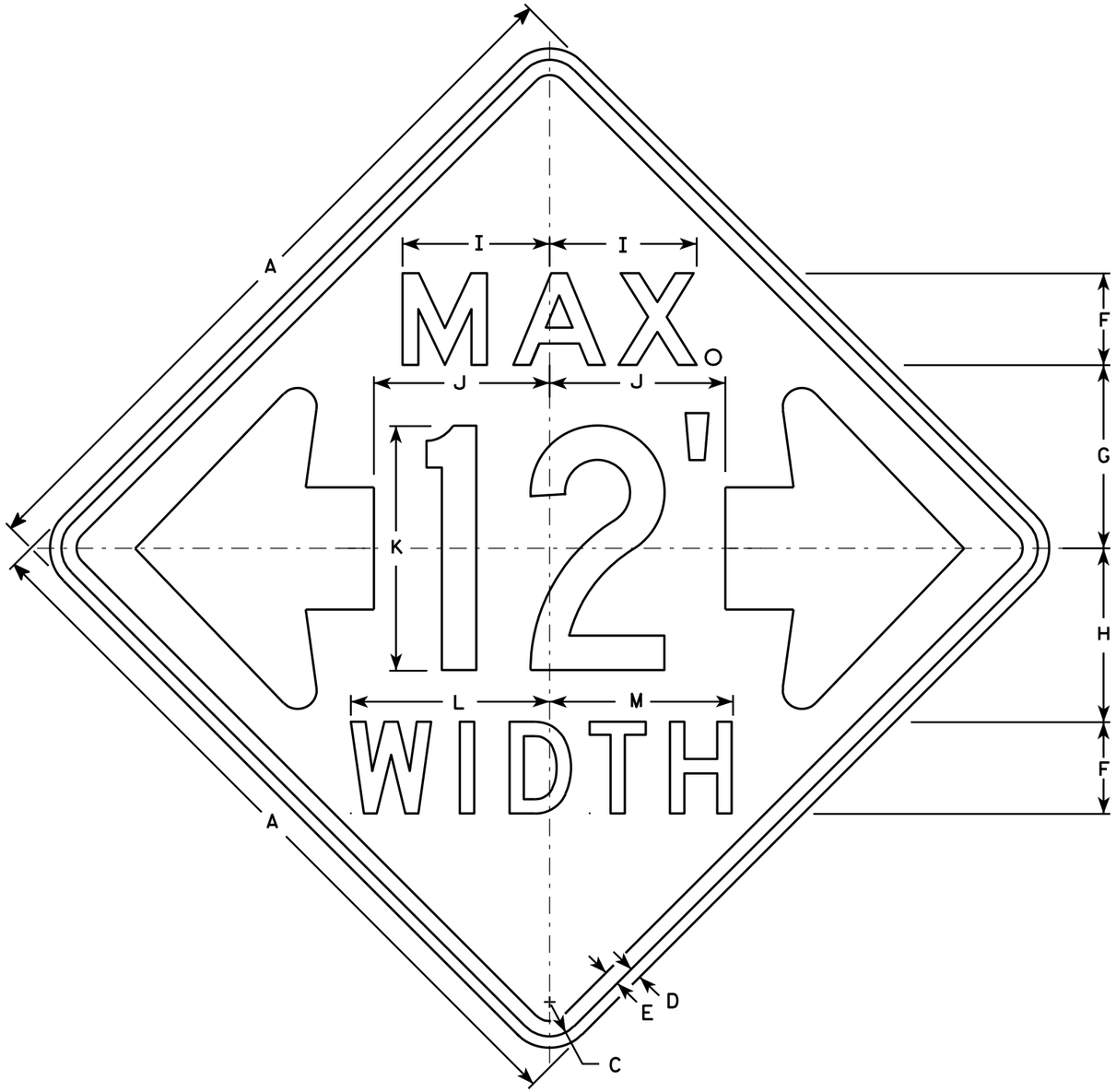

W12-52

NOTES

1. Sign is Type II - Type F Reflective - reference WIS DOT Standard Specification for HIGHWAY and STRUCTURE CONSTRUCTION latest edition.
2. Color:
   Background - Orange
   Message - Black
3. Message Series - See note 5
4. Corners may be square or rounded when base material is plywood but borders shall be rounded as shown. When base material is metal, the corners and borders shall be rounded.
5. The top line is series E, the numerals are series C, and the bottom line is series D.
6. Substitute appropriate numerals and adjust spacing as required.

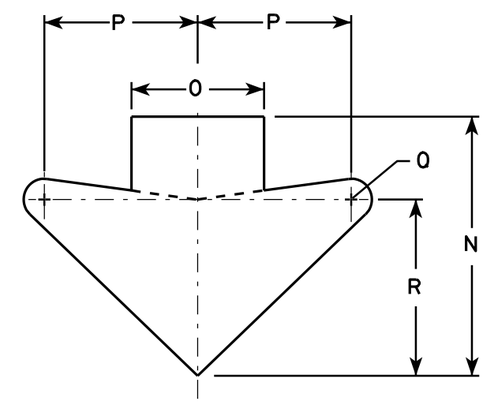

ARROW DETAIL

SIZE	A	B	C	D	E	F	G	H	I	J	K	L	M	N	O	P	Q	R	S	T	U	V	W	X	Y	Z	Area sq. ft.
1																											
2S	48		2 1/4	3/4	1	6	12	11 3/8	9 5/8	11 1/2	16	13	12	15 5/8	8	9 1/4	1 1/4	10 5/8									16.0
2M	48		2 1/4	3/4	1	6	12	11 3/8	9 5/8	11 1/2	16	13	12	15 5/8	8	9 1/4	1 1/4	10 5/8									16.0
3																											
4																											
5																											

STANDARD SIGN
W12-52

WISCONSIN DEPT OF TRANSPORTATION

APPROVED Matthew R Rauch
for State Traffic Engineer

DATE 3/16/11 PLATE NO. W12-52.7

PROJECT NO: | HWY: | COUNTY: | SHEET NO: 187 | E

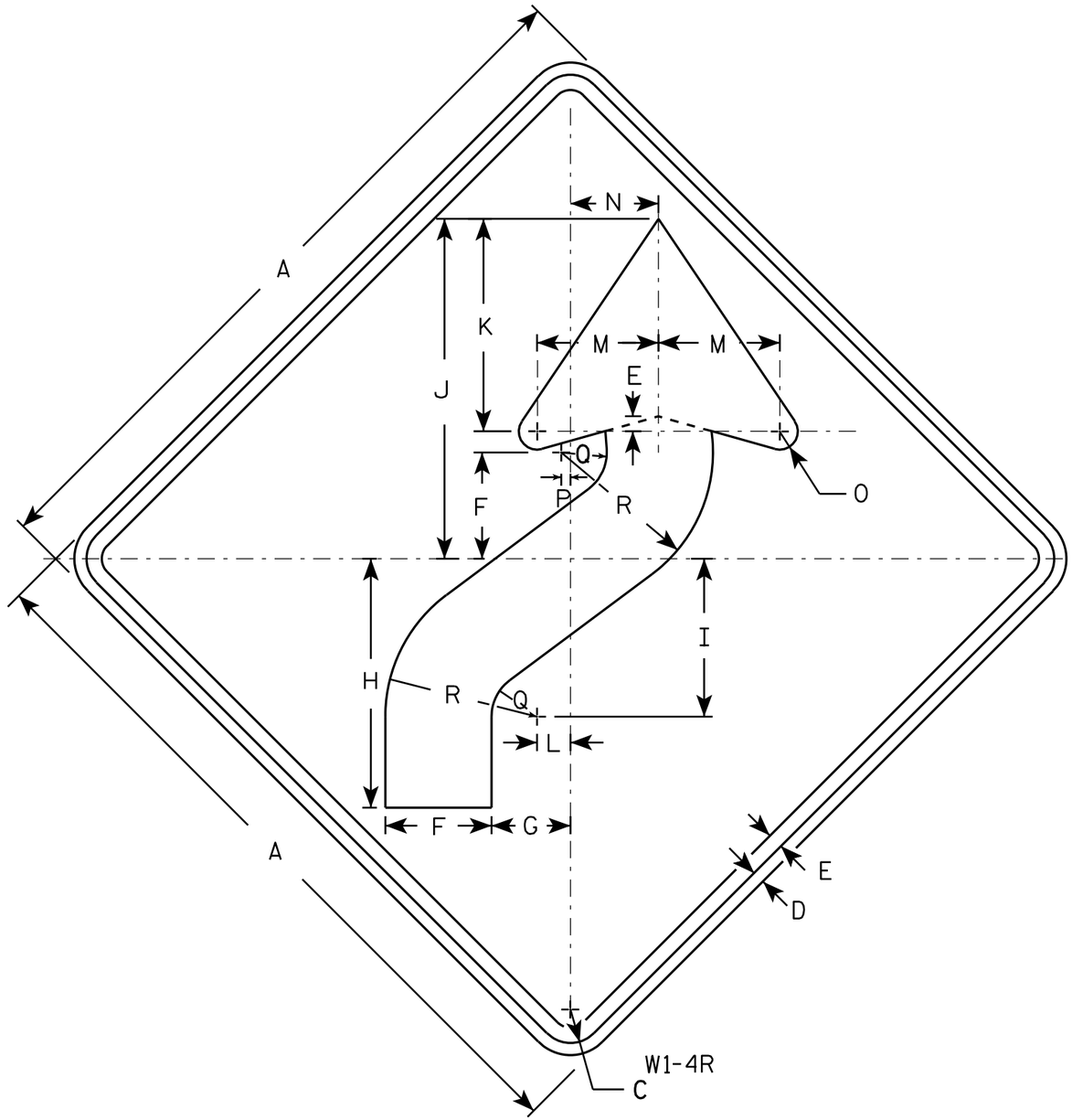

NOTES

1. Sign is Type II - Type F Reflective - reference WIS DOT Standard Specification for HIGHWAY and STRUCTURE CONSTRUCTION latest edition.
2. Color:
   Background - Yellow
   Message - Black
3. Corners may be square or rounded when base material is plywood but borders shall be rounded as shown. When base material is metal, the corners and borders shall be rounded.
4. W1-4L is the same as W1-4R except the arrow is reversed along the vertical centerline.

SIZE	A	B	C	D	E	F	G	H	I	J	K	L	M	N	O	P	Q	R	S	T	U	V	W	X	Y	Z	Area sq. ft.
1	24		1 1/8	3/8	1/2	3 1/2	2 5/8	8 1/4	5 1/4	11 1/4	7	1 1/8	4	3	5/8	1/4	1 1/2	5									4.0
2S	30		1 3/8	1/2	5/8	4 3/8	3 1/4	10 1/4	6 1/2	14	8 3/4	1 3/8	5	3 5/8	3/4	3/8	1 7/8	6 1/4									6.25
2M	36		1 5/8	5/8	3/4	5 1/4	4	12 3/8	7 7/8	16 7/8	10 1/2	1 5/8	6	4 1/2	1	1/2	2 1/4	7 1/2									9.0
3	36		1 5/8	5/8	3/4	5 1/4	4	12 3/8	7 7/8	16 7/8	10 1/2	1 5/8	6	4 1/2	1	1/2	2 1/4	7 1/2									9.0
4	36		1 5/8	5/8	3/4	5 1/4	4	12 3/8	7 7/8	16 7/8	10 1/2	1 5/8	6	4 1/2	1	1/2	2 1/4	7 1/2									9.0
5	48		2 1/4	3/4	1	7	5 1/4	16 1/2	10 1/2	22 1/2	14	2 1/4	8	6	1 1/4	5/8	3	10									16.0

STANDARD SIGN
W1-4

WISCONSIN DEPT OF TRANSPORTATION

APPROVED Matthew R Rauch
for State Traffic Engineer

DATE 5/17/12 PLATE NO. W1-4.11

PROJECT NO: | HWY: | COUNTY: | SHEET NO: 188 | E

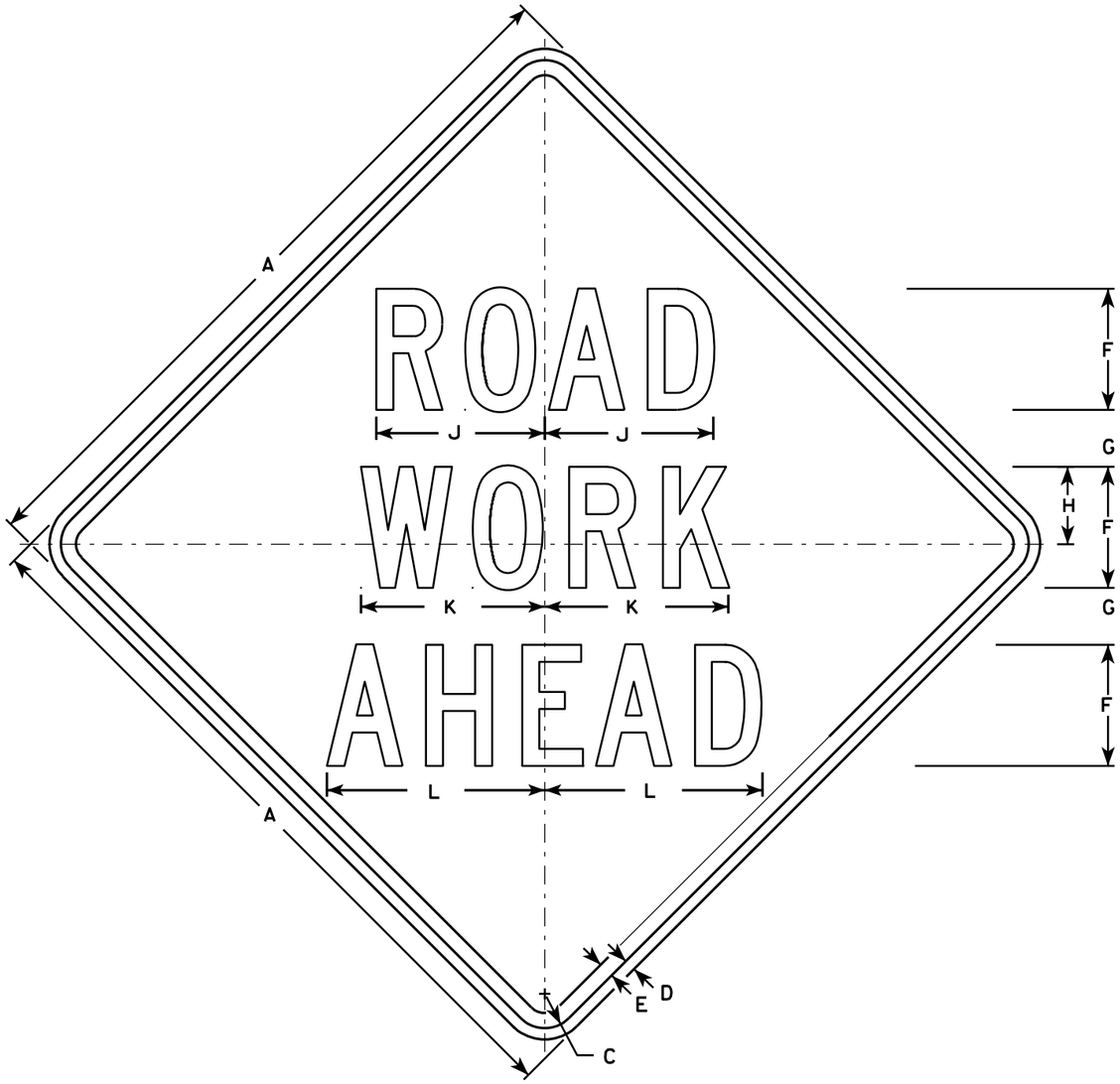

W20-1A

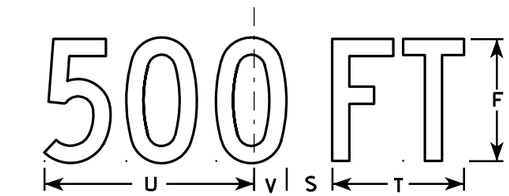

W20-1D

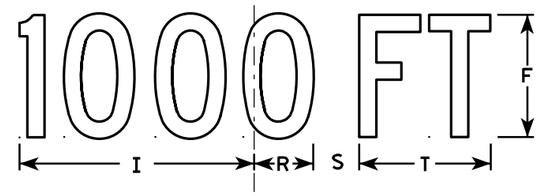

W20-1C

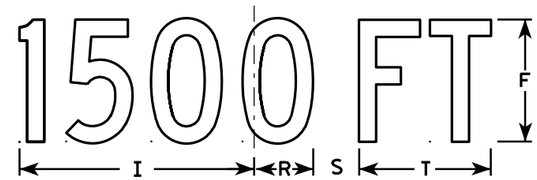

W20-1B

W20-1G

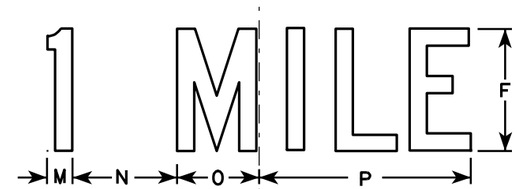

W20-1F

NOTES

1. Sign is Type II - Type F Reflective - reference WIS DOT Standard Specification for HIGHWAY and STRUCTURE CONSTRUCTION latest edition.
2. Color:
   Background - Orange
   Message - Black
3. Message Series - C
4. Corners may be square or rounded when base material is plywood but borders shall be rounded as shown. When base material is metal, the corners and borders shall be rounded.

SIZE	A	B	C	D	E	F	G	H	I	J	K	L	M	N	O	P	Q	R	S	T	U	V	W	X	Y	Z	Area sq. ft.
1	36		1 3/8	1/2	5/8	5	2 5/8	3 1/4	10 1/8	7	7 5/8	8 7/8	1 1/8	4 1/2	3 1/2	9		2 1/2	1 7/8	5 5/8	9	1 3/8	8	1 3/4	10 3/4	6	9.0
2S	48		2 1/4	3/4	1	8	3 3/4	5 1/8	15 3/8	11 1/8	12 1/8	14 3/8	1 5/8	6 7/8	5 3/8	13 7/8		3 7/8	3	8 5/8	13 3/4	2 1/8	11 7/8	2 3/4	16 3/8	9	16.0
2M	48		2 1/4	3/4	1	8	3 3/4	5 1/8	15 3/8	11 1/8	12 1/8	14 3/8	1 5/8	6 7/8	5 3/8	13 7/8		3 7/8	3	8 5/8	13 3/4	2 1/8	11 7/8	2 3/4	16 3/8	9	16.0
3	48		2 1/4	3/4	1	8	3 3/4	5 1/8	15 3/8	11 1/8	12 1/8	14 3/8	1 5/8	6 7/8	5 3/8	13 7/8		3 7/8	3	8 5/8	13 3/4	2 1/8	11 7/8	2 3/4	16 3/8	9	16.0
4	48		2 1/4	3/4	1	8	3 3/4	5 1/8	15 3/8	11 1/8	12 1/8	14 3/8	1 5/8	6 7/8	5 3/8	13 7/8		3 7/8	3	8 5/8	13 3/4	2 1/8	11 7/8	2 3/4	16 3/8	9	16.0
5	48		2 1/4	3/4	1	8	3 3/4	5 1/8	15 3/8	11 1/8	12 1/8	14 3/8	1 5/8	6 7/8	5 3/8	13 7/8		3 7/8	3	8 5/8	13 3/4	2 1/8	11 7/8	2 3/4	16 3/8	9	16.0

STANDARD SIGN
W20-1A, B, C, D, F & G

WISCONSIN DEPT OF TRANSPORTATION

APPROVED Matthew R Rauch
for State Traffic Engineer

DATE 3/18/11 PLATE NO. W20-1.9

PROJECT NO:

SHEET NO: 189 E

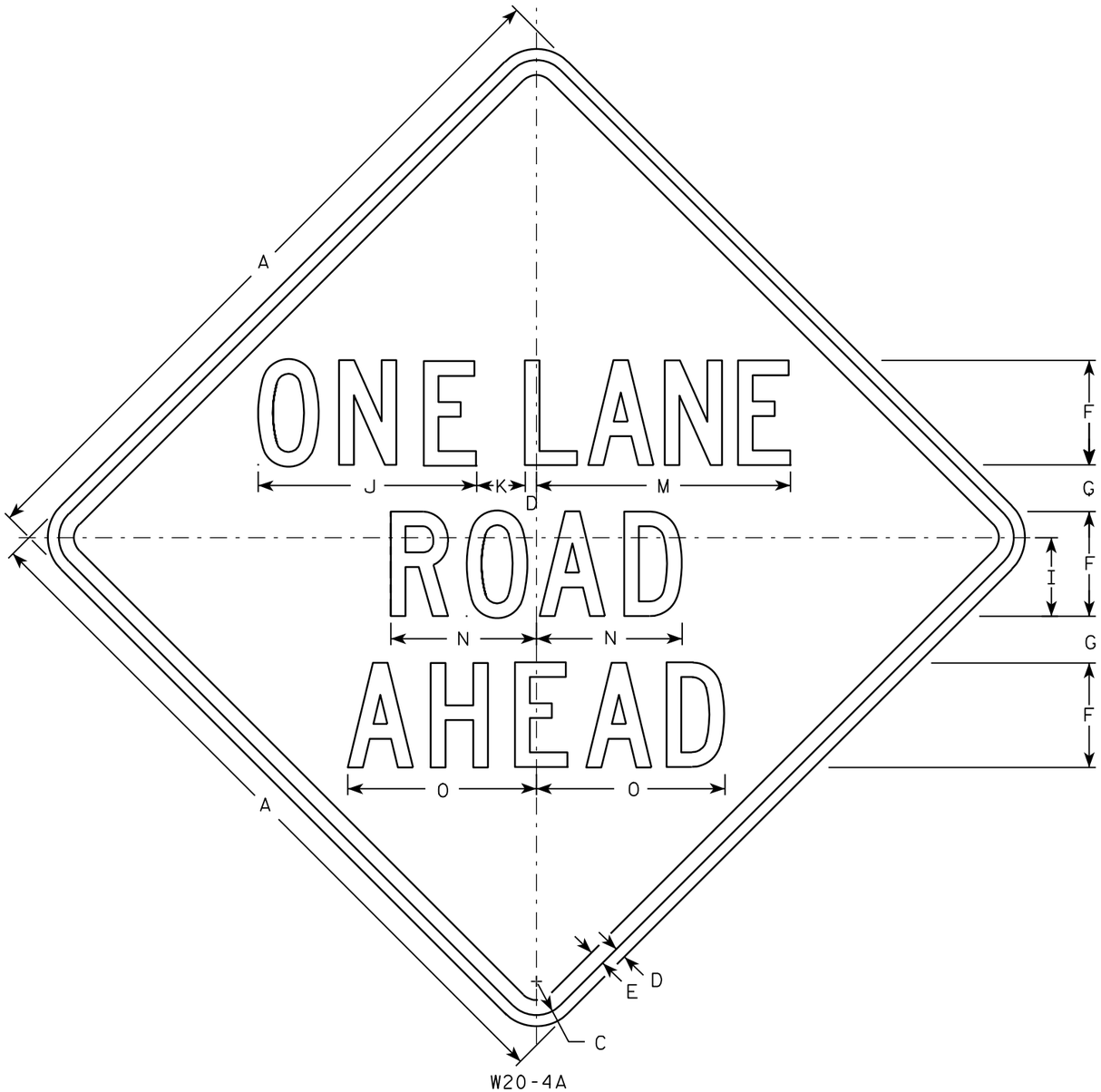

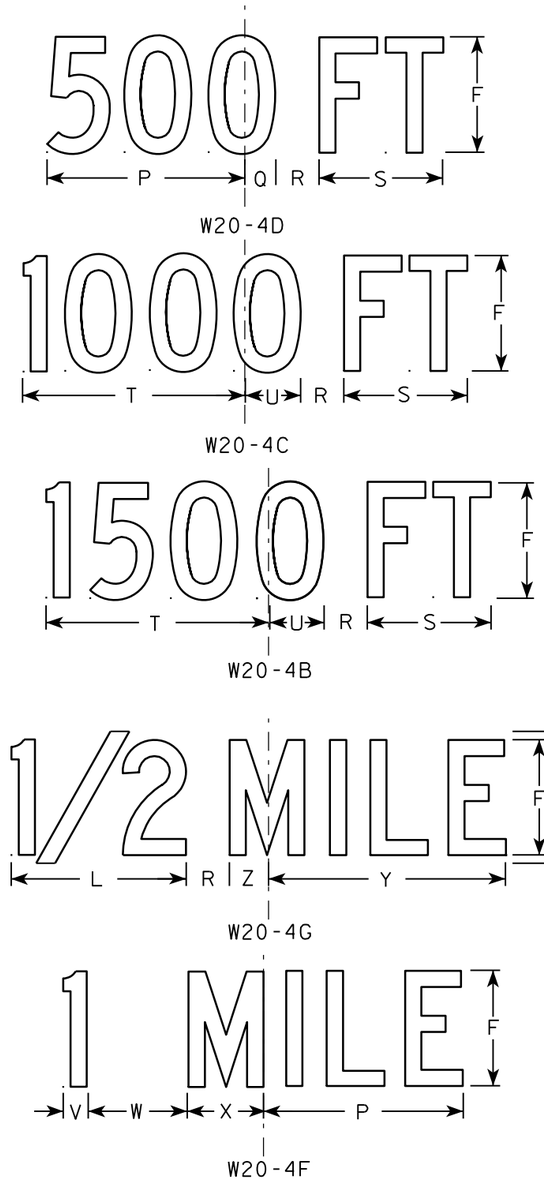

NOTES

1. Sign is Type II - Type F Reflective - reference WIS DOT Standard Specification for HIGHWAY and STRUCTURE CONSTRUCTION latest edition.
2. Color:
   Background - Orange
   Message - Black
3. Message Series - C
4. Corners may be square or rounded when base material is plywood but borders shall be rounded as shown. When base material is metal, the corners and borders shall be rounded.

SIZE	A	B	C	D	E	F	G	H	I	J	K	L	M	N	O	P	Q	R	S	T	U	V	W	X	Y	Z	Area sq. ft.
1	36		1 5/8	5/8	3/4	5	2 3/8	6	3 3/4	10 3/8	2 3/8	8	13 1/2	7	8 7/8	9	1 3/8	1 7/8	5 5/8	10 1/8	2 1/2	1 1/8	4 1/2	3 1/2	10 3/4	1 3/4	9.0
2S	48		2 1/4	3/4	1	7	3 1/8	8	5 1/4	14 5/8	3 1/4	10 5/8	17 3/4	9 3/4	12 5/8	12	1 7/8	2 5/8	7 1/2	13 1/2	3 3/8	1 1/2	6	4 5/8	14 3/8	2 3/8	16.0
2M	48		2 1/4	3/4	1	7	3 1/8	8	5 1/4	14 5/8	3 1/4	10 5/8	17 3/4	9 3/4	12 5/8	12	1 7/8	2 5/8	7 1/2	13 1/2	3 3/8	1 1/2	6	4 5/8	14 3/8	2 3/8	16.0
3	48		2 1/4	3/4	1	7	3 1/8	8	5 1/4	14 5/8	3 1/4	10 5/8	17 3/4	9 3/4	12 5/8	12	1 7/8	2 5/8	7 1/2	13 1/2	3 3/8	1 1/2	6	4 5/8	14 3/8	2 3/8	16.0
4	48		2 1/4	3/4	1	7	3 1/8	8	5 1/4	14 5/8	3 1/4	10 5/8	17 3/4	9 3/4	12 5/8	12	1 7/8	2 5/8	7 1/2	13 1/2	3 3/8	1 1/2	6	4 5/8	14 3/8	2 3/8	16.0
5	48		2 1/4	3/4	1	7	3 1/8	8	5 1/4	14 5/8	3 1/4	10 5/8	17 3/4	9 3/4	12 5/8	12	1 7/8	2 5/8	7 1/2	13 1/2	3 3/8	1 1/2	6	4 5/8	14 3/8	2 3/8	16.0

STANDARD SIGN
W20-4A, B, C, D, F & G

WISCONSIN DEPT OF TRANSPORTATION

APPROVED Matthew R Rauch
for State Traffic Engineer

DATE 3/18/11 PLATE NO. W20-4.9

PROJECT NO:

SHEET NO: 190 E

W20-56A

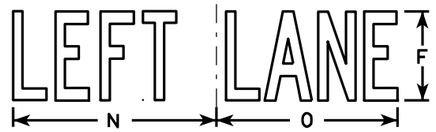

W20-55A

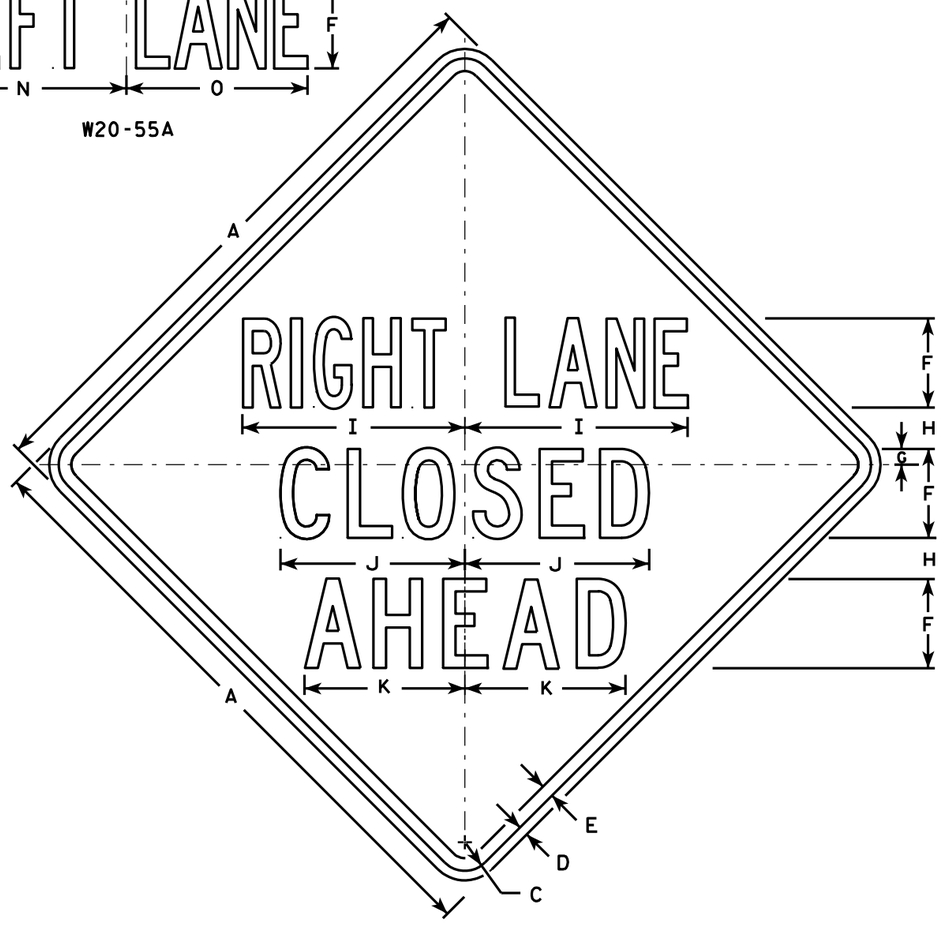

W20-5A

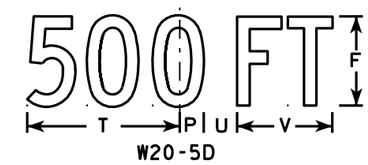

W20-5D

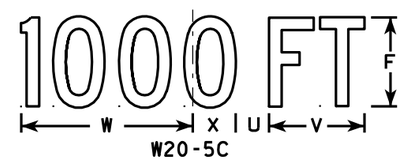

W20-5C

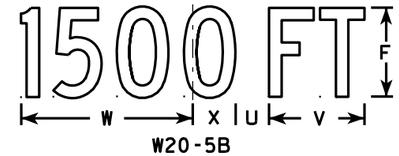

W20-5B

W20-5G

W20-5F

NOTES

1. Sign is Type II - Type F Reflective - reference WIS DOT Standard Specification for HIGHWAY and STRUCTURE CONSTRUCTION latest edition.
2. Color:
   Background - Orange
   Message - Black
3. Message Series - See Note 5
4. Corners may be square or rounded when base material is plywood but borders shall be rounded as shown. When base material is metal, the corners and borders shall be rounded.
5. " ------- LANE" is Series B.
   All other copy is Series C.

SIZE	A	B	C	D	E	F	G	H	I	J	K	L	M	N	O	P	Q	R	S	T	U	V	W	X	Y	Z	Area sq. ft.
1	36	6	1 5/8	5/8	3/4	5	7/8	2 1/2	13 1/8	10 3/4	9 1/2	14 1/4	13 5/8	12	12	1 3/8	1 1/8	4 1/2	3 1/2	9	1 7/8	5 5/8	10 1/8	2 1/2	1 3/4	8	9.0
2S	48	8	2 1/4	3/4	1	7	1 1/4	3 1/4	17 1/2	14 3/8	12 5/8	19	18 3/8	16	14 1/4	1 7/8	1 1/2	6	4 5/8	12	2 5/8	7 1/2	13 1/2	3 3/8	2 3/8	10 5/8	16.0
2M	48	8	2 1/4	3/4	1	7	1 1/4	3 1/4	17 1/2	14 3/8	12 5/8	19	18 3/8	16	14 1/4	1 7/8	1 1/2	6	4 5/8	12	2 5/8	7 1/2	13 1/2	3 3/8	2 3/8	10 5/8	16.0
3	48	8	2 1/4	3/4	1	7	1 1/4	3 1/4	17 1/2	14 3/8	12 5/8	19	18 3/8	16	14 1/4	1 7/8	1 1/2	6	4 5/8	12	2 5/8	7 1/2	13 1/2	3 3/8	2 3/8	10 5/8	16.0
4	48	8	2 1/4	3/4	1	7	1 1/4	3 1/4	17 1/2	14 3/8	12 5/8	19	18 3/8	16	14 1/4	1 7/8	1 1/2	6	4 5/8	12	2 5/8	7 1/2	13 1/2	3 3/8	2 3/8	10 5/8	16.0
5	48	8	2 1/4	3/4	1	7	1 1/4	3 1/4	17 1/2	14 3/8	12 5/8	19	18 3/8	16	14 1/4	1 7/8	1 1/2	6	4 5/8	12	2 5/8	7 1/2	13 1/2	3 3/8	2 3/8	10 5/8	16.0

STANDARD SIGN
W20-5A, B, C, D, F & G

WISCONSIN DEPT OF TRANSPORTATION

APPROVED Matthew R Rauch
for State Traffic Engineer

DATE 3/18/11 PLATE NO. W20-5.11

PROJECT NO:	HWY:	COUNTY:		SHEET NO: 191	E

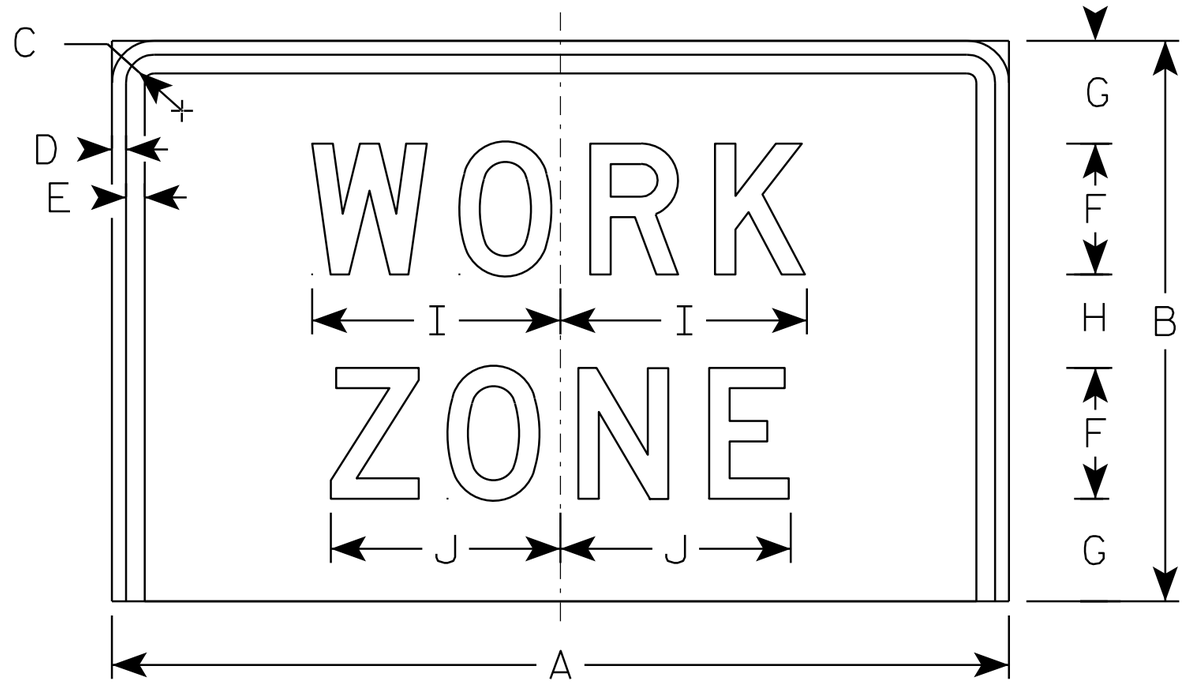

W21-62Q

NOTES

1. Sign is Type II - Type F - reference WIS DOT Standard Specification for HIGHWAY and STRUCTURE CONSTRUCTION latest edition.
2. Color:
   Background - Orange
   Message - Black
3. Message Series - D

SIZE	A	B	C	D	E	F	G	H	I	J	K	L	M	N	O	P	Q	R	S	T	U	V	W	X	Y	Z	Area sq. ft.
1																											
2S	48	30	2 1/4	3/4	1	7	5 1/2	5	13 1/4	12 1/4																	10.0
2M	48	30	2 1/4	3/4	1	7	5 1/2	5	13 1/4	12 1/4																	10.0
3																											
4																											
5																											

STANDARD SIGN
W21-62Q

WISCONSIN DEPT OF TRANSPORTATION

APPROVED Matthew R Rauch
for State Traffic Engineer

DATE 3/21/11 PLATE NO. W21-620.2

PROJECT NO: | HWY: | COUNTY: | SHEET NO: 192 | E

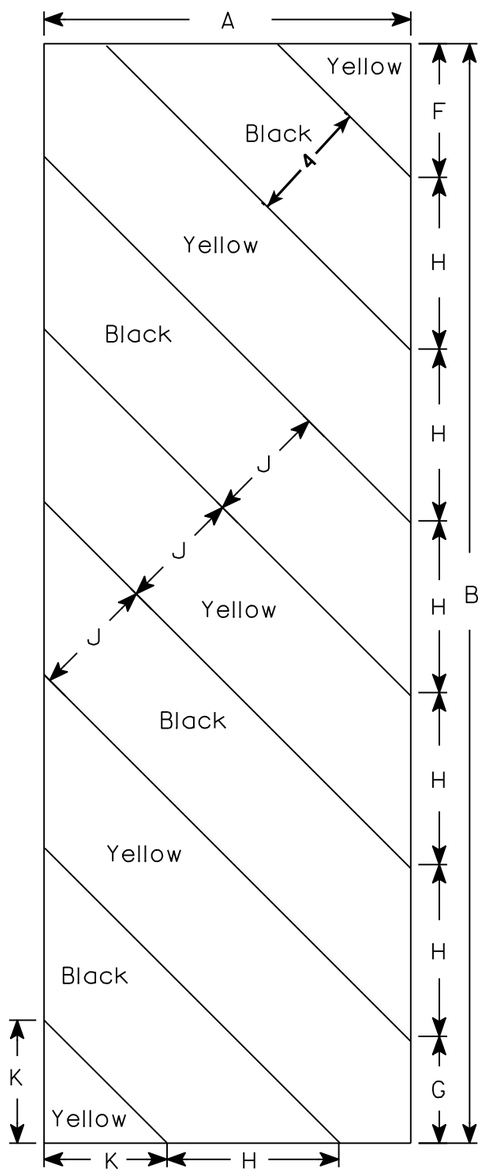

W5-52L

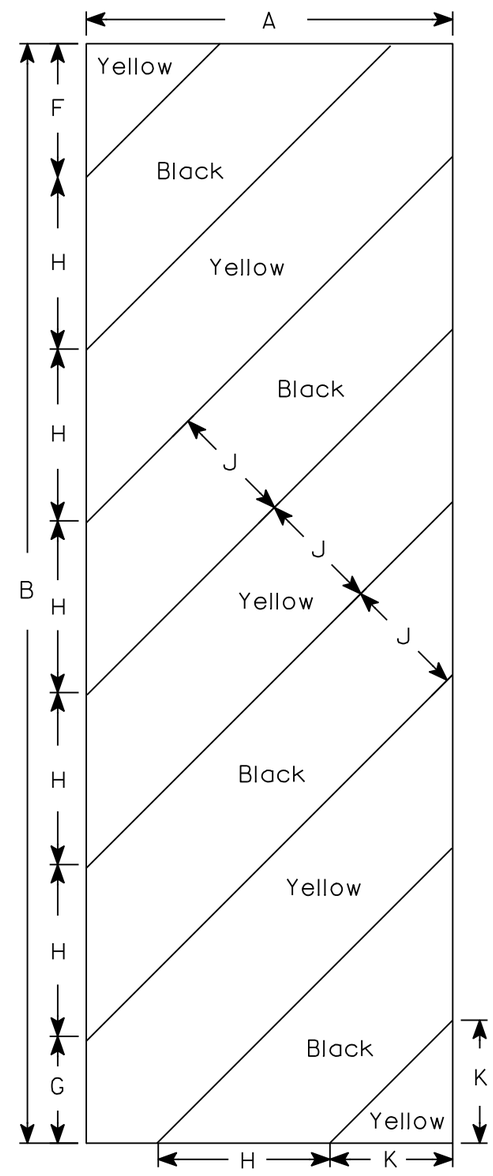

W5-52R

NOTES

1. Sign is Type II - Type F Reflective - reference WIS DOT Standard Specification for HIGHWAY and STRUCTURE CONSTRUCTION latest edition.
2. Color:
   Background - Yellow
   Message - Black
3. Corners may be square or rounded when base material is plywood but borders shall be rounded as shown. When base material is metal, the corners and borders shall be rounded.
4. Alternate colors of stripes as shown.

SIZE	A	B	C	D	E	F	G	H	I	J	K	L	M	N	O	P	Q	R	S	T	U	V	W	X	Y	Z	Area sq. ft.
1																											
2S	12	36				4 3/8	3 1/2	5 5/8	45°	4	4																3.0
2M	12	36				4 3/8	3 1/2	5 5/8	45°	4	4																3.0
3	18	54				6	5 1/2	8 1/2	45°	6	6 9/16																6.75
4																											
5																											

STANDARD SIGN
W5-52L & W5-52R

WISCONSIN DEPT OF TRANSPORTATION

APPROVED Matthew R Rauch
for State Traffic Engineer

DATE 5/29/12 PLATE NO. W5-52.9

PROJECT NO: | HWY: | COUNTY: | SHEET NO: 193 | E

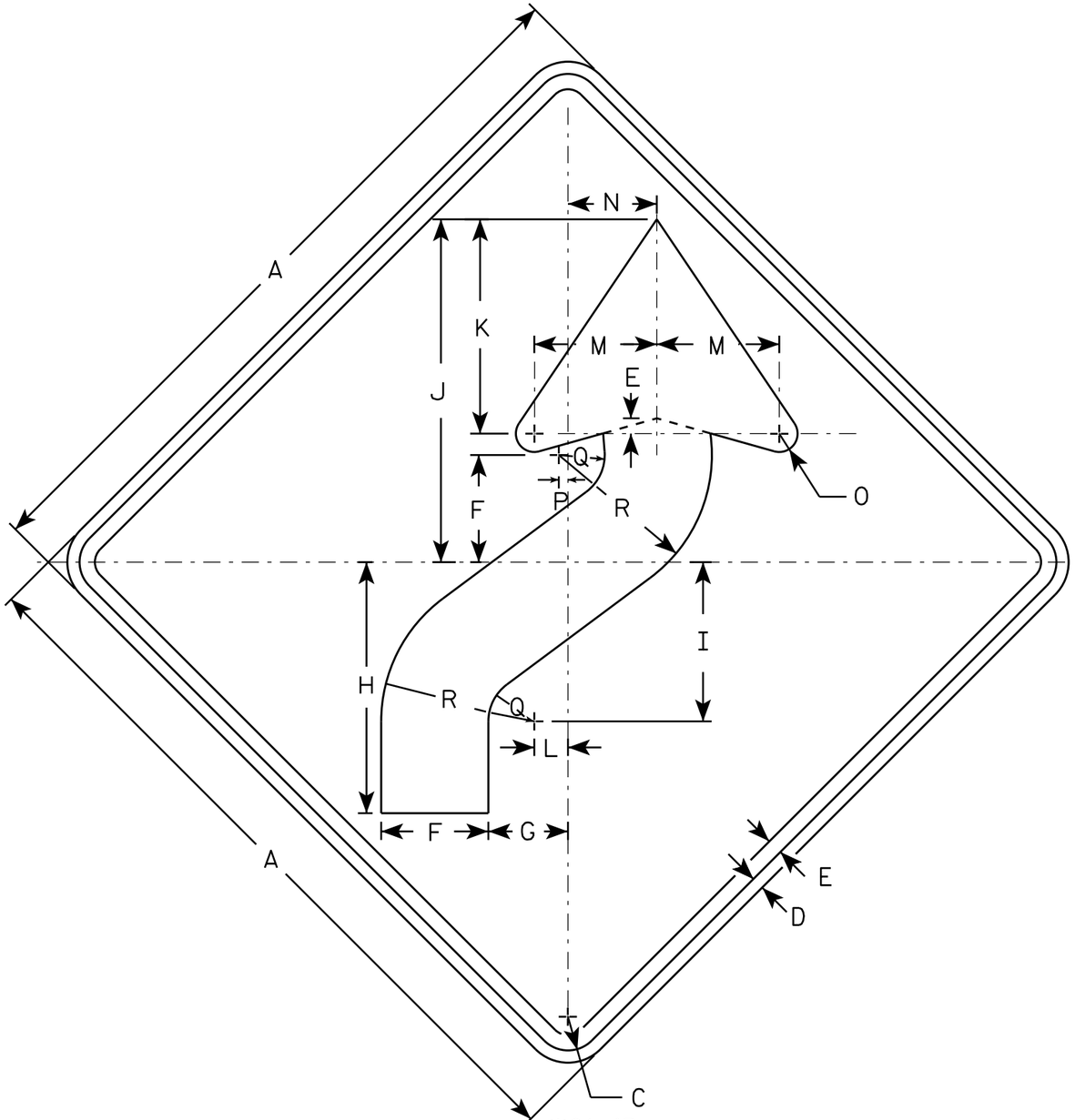

W01-4R

NOTES

1. Sign is Type II - Type F Reflective - reference WIS DOT Standard Specification for HIGHWAY and STRUCTURE CONSTRUCTION latest edition.
2. Color:
   Background - Orange
   Message - Black
3. Corners may be square or rounded when base material is plywood but borders shall be rounded as shown. When base material is metal, the corners and borders shall be rounded.
4. W01-4L is the same as W01-4R except the arrow is reversed along the vertical centerline.

SIZE	A	B	C	D	E	F	G	H	I	J	K	L	M	N	O	P	Q	R	S	T	U	V	W	X	Y	Z	Area sq. ft.
1	36		1 5/8	5/8	3/4	5 1/4	4	12 3/8	7 7/8	16 7/8	10 1/2	1 5/8	6	4 1/2	1	1/2	2 1/4	7 1/2									9.0
2S	48		2 1/4	3/4	1	7	5 1/4	16 1/2	10 1/2	22 1/2	14	2 1/4	8	6	1 1/4	5/8	3	10									16.0
2M	48		2 1/4	3/4	1	7	5 1/4	16 1/2	10 1/2	22 1/2	14	2 1/4	8	6	1 1/4	5/8	3	10									16.0
3	48		2 1/4	3/4	1	7	5 1/4	16 1/2	10 1/2	22 1/2	14	2 1/4	8	6	1 1/4	5/8	3	10									16.0
4	48		2 1/4	3/4	1	7	5 1/4	16 1/2	10 1/2	22 1/2	14	2 1/4	8	6	1 1/4	5/8	3	10									16.0
5	48		2 1/4	3/4	1	7	5 1/4	16 1/2	10 1/2	22 1/2	14	2 1/4	8	6	1 1/4	5/8	3	10									16.0

STANDARD SIGN
W01-4

WISCONSIN DEPT OF TRANSPORTATION

APPROVED Matthew R Rauch
for State Traffic Engineer

DATE 11/18/13 PLATE NO W01-4.1

PROJECT NO:	HWY:	COUNTY:		SHEET NO:	E

NOTES

1. Sign is Type II - Type F Reflective - reference WIS DOT Standard Specification for HIGHWAY and STRUCTURE CONSTRUCTION latest edition.
2. Color:
   Background - Orange
   Message - Black
3. Corners may be square or rounded when base material is plywood but borders shall be rounded as shown. When base material is metal, the corners and borders shall be rounded.

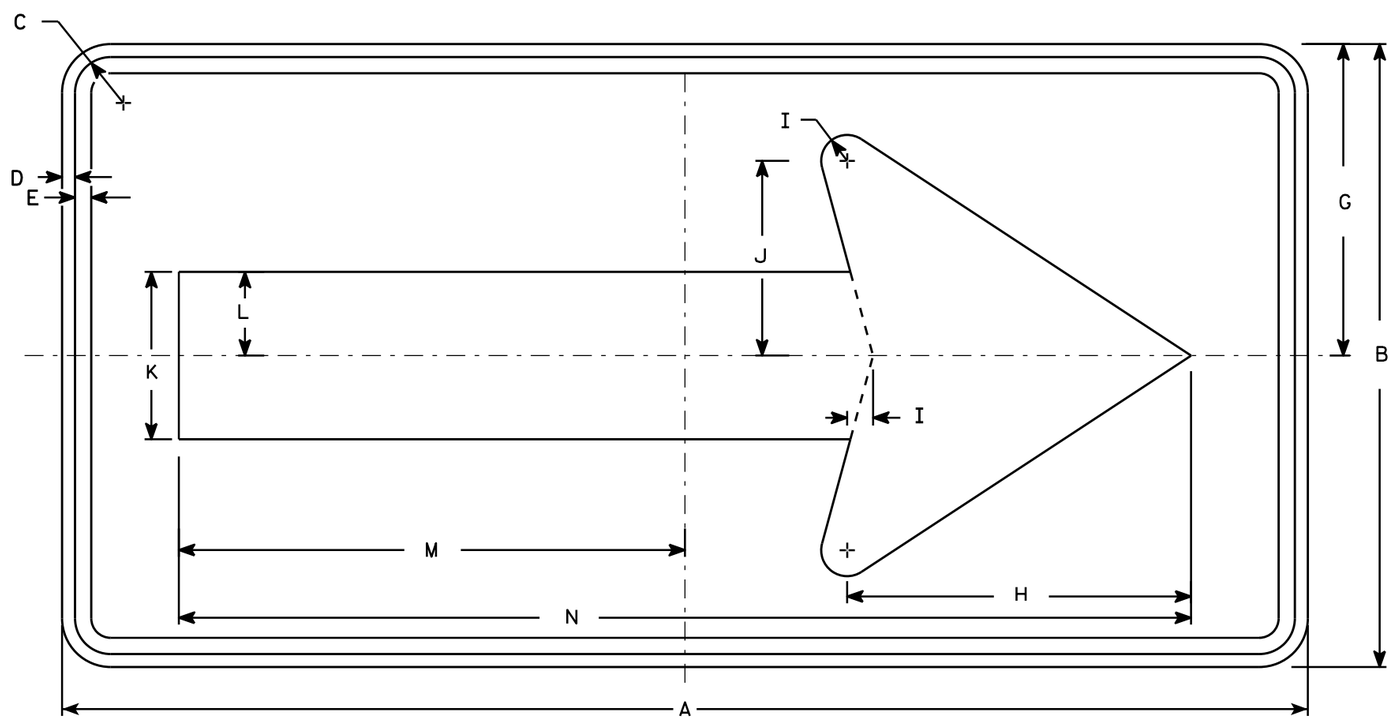

W01-6

SIZE	A	B	C	D	E	F	G	H	I	J	K	L	M	N	O	P	Q	R	S	T	U	V	W	X	Y	Z	Area sq. ft.
1																											
2S	48	24	1 3/8	1/2	5/8		12	13 1/4	1	7 1/2	6 1/2	3 1/4	19 1/2	39													8.0
2M	48	24	1 3/8	1/2	5/8		12	13 1/4	1	7 1/2	6 1/2	3 1/4	19 1/2	39													8.0
3	60	30	1 3/8	1/2	5/8		15	16 1/4	1 1/4	9 1/4	8	4	24 3/8	48 3/4													12.5
4	60	30	1 3/8	1/2	5/8		15	16 1/4	1 1/4	9 1/4	8	4	24 3/8	48 3/4													12.5
5	60	30	1 3/8	1/2	5/8		15	16 1/4	1 1/4	9 1/4	8	4	24 3/8	48 3/4													12.5

STANDARD SIGN
W01-6

WISCONSIN DEPT OF TRANSPORTATION

APPROVED Matthew R Rauch
for State Traffic Engineer

DATE 11/18/13 PLATE NO. W01-6.1

PROJECT NO: | HWY: | COUNTY: | SHEET NO: | E

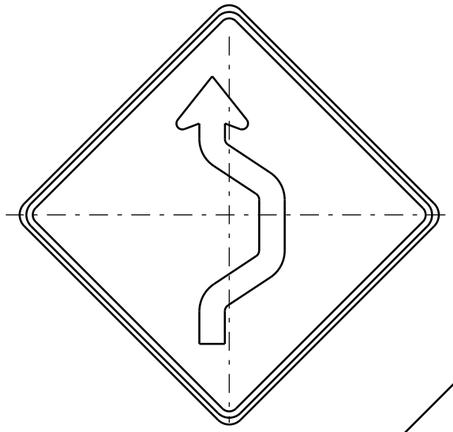

W024-1R

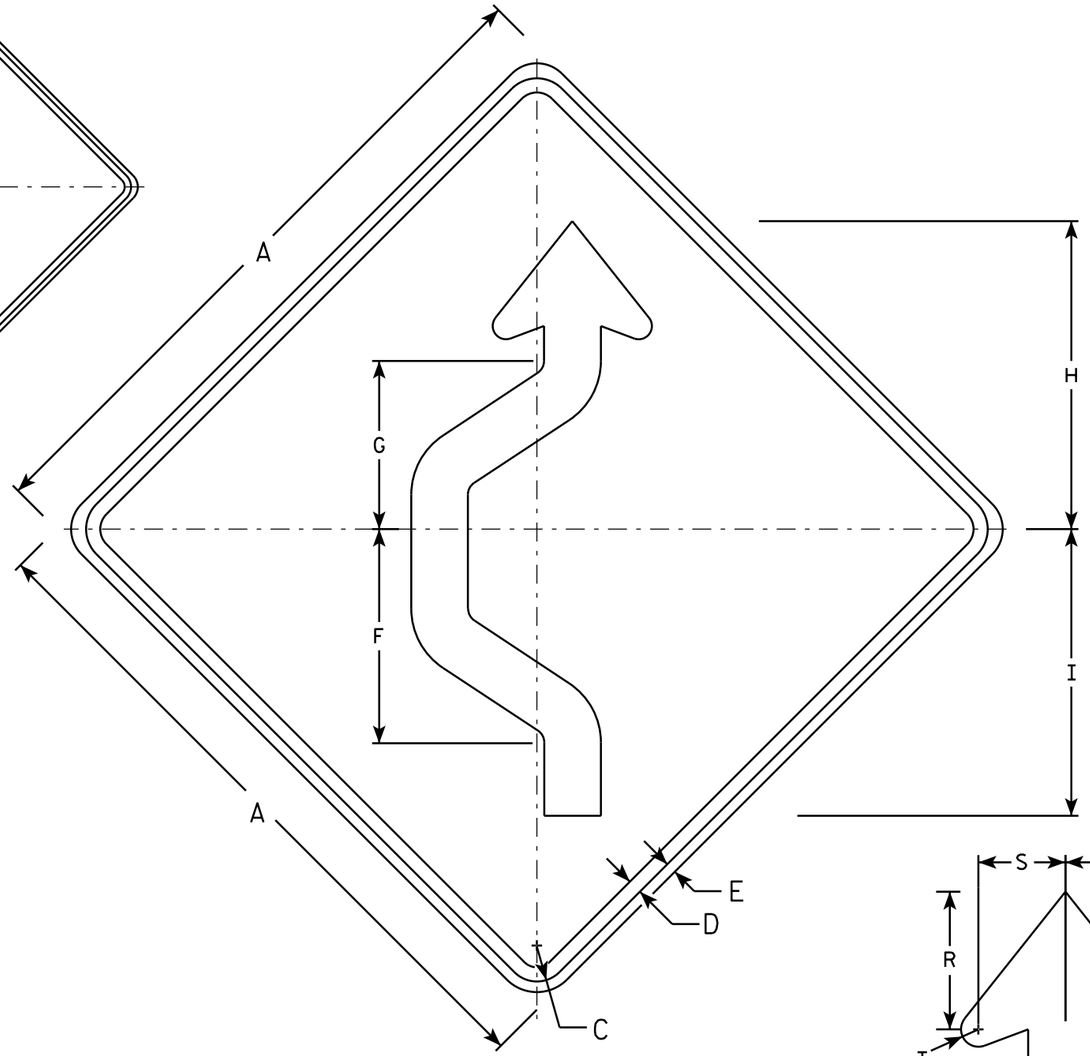

W024-1L

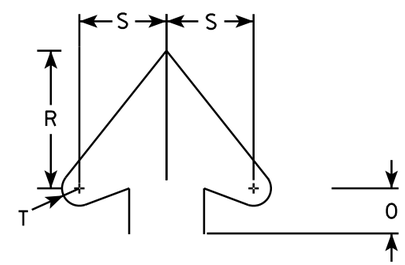

Arrowhead Detail

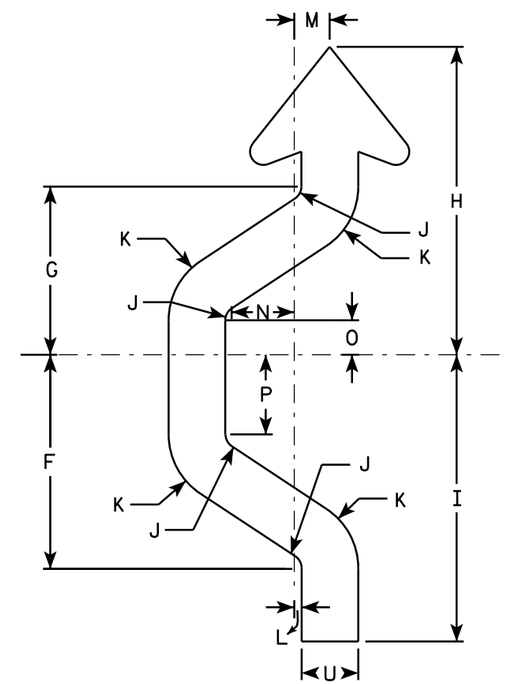

Arrow Detail

NOTES

1. Sign is Type II - Type F Reflective - reference WIS DOT Standard Specification for HIGHWAY and STRUCTURE CONSTRUCTION latest edition.
2. Color:
   Background - Orange
   Message - Black
3. Corners may be square or rounded when base material is plywood but borders shall be rounded as shown. When base material is metal, the corners and borders shall be rounded.
4. W024-1R is the same as W024-1L except reversed along the vertical centerline.

SIZE	A	B	C	D	E	F	G	H	I	J	K	L	M	N	O	P	Q	R	S	T	U	V	W	X	Y	Z	Area sq. ft.
1	36		1 3/8	5/8	1/2	11 3/8	8 7/8	16 3/8	15 1/4	3/4	3 3/4	3/8	2	3 3/8	1 7/8	4 1/4		5 1/2	3 1/2	5/8	3						9
2S	48		2 1/4	1	3/4	15 1/8	11 7/8	21 3/4	20 1/4	1	5	1/2	2 1/2	4 3/8	2 3/8	5 5/8		7 3/8	4 3/4	7/8	4						16
2M	48		2 1/4	1	3/4	15 1/8	11 7/8	21 3/4	20 1/4	1	5	1/2	2 1/2	4 3/8	2 3/8	5 5/8		7 3/8	4 3/4	7/8	4						16
3	48		2 1/4	1	3/4	15 1/8	11 7/8	21 3/4	20 1/4	1	5	1/2	2 1/2	4 3/8	2 3/8	5 5/8		7 3/8	4 3/4	7/8	4						16
4	48		2 1/4	1	3/4	15 1/8	11 7/8	21 3/4	20 1/4	1	5	1/2	2 1/2	4 3/8	2 3/8	5 5/8		7 3/8	4 3/4	7/8	4						16
5	48		2 1/4	1	3/4	15 1/8	11 7/8	21 3/4	20 1/4	1	5	1/2	2 1/2	4 3/8	2 3/8	5 5/8		7 3/8	4 3/4	7/8	4						16

STANDARD SIGN
W024-1 L & R

WISCONSIN DEPT OF TRANSPORTATION

APPROVED Matthew R Rauch
for State Traffic Engineer

DATE 9/25/2013 PLATE NO. W024-1.1

PROJECT NO: | HWY: | COUNTY: | SHEET NO: | E

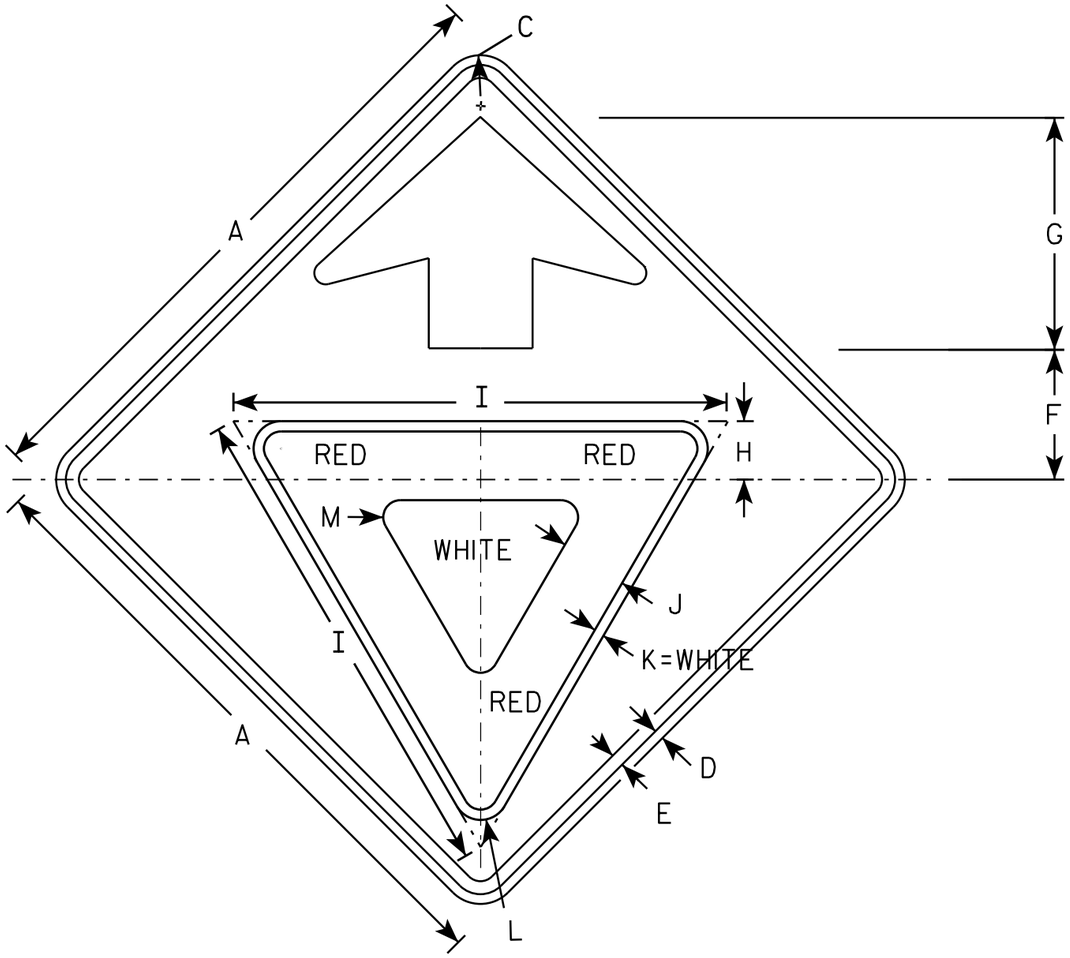

W03-2

NOTES

1. All Signs Type II - Type F Reflective - reference WIS DOT Standard Specification for HIGHWAY and STRUCTURE CONSTRUCTION latest edition.
2. Color:
   Background - ORANGE
   Arrow & Border - BLACK
   Yield Symbol - WHITE BORDER ON RED BACKGROUND

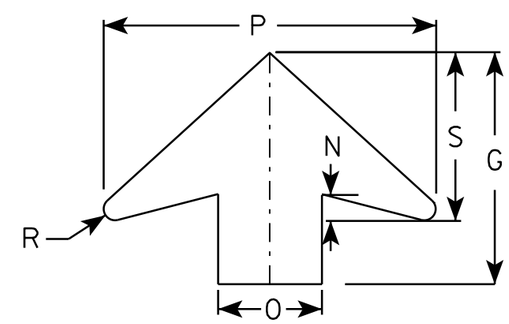

ARROW DETAIL

SIZE	A	B	C	D	E	F	G	H	I	J	K	L	M	N	O	P	Q	R	S	T	U	V	W	X	Y	Z	Area sq. ft.
1	36		1 5/8	5/8	3/4	7 1/2	13 1/2	3 3/8	28	3 3/4	5/8	1 1/2	1	1 5/8	6	19 1/4		5/8	9 3/4								9.0
2S	48		2 1/4	3/4	1	10	17 7/8	4 1/2	38	5	3/4	2 1/8	1 3/8	2	8	25 5/8		7/8	13								16.0
2M	48		2 1/4	3/4	1	10	17 7/8	4 1/2	38	5	3/4	2 1/8	1 3/8	2	8	25 5/8		7/8	13								16.0
3	48		2 1/4	3/4	1	10	17 7/8	4 1/2	38	5	3/4	2 1/8	1 3/8	2	8	25 5/8		7/8	13								16.0
4	48		2 1/4	3/4	1	10	17 7/8	4 1/2	38	5	3/4	2 1/8	1 3/8	2	8	25 5/8		7/8	13								16.0
5	48		2 1/4	3/4	1	10	17 7/8	4 1/2	38	5	3/4	2 1/8	1 3/8	2	8	25 5/8		7/8	13								16.0

STANDARD SIGN
W03-2

WISCONSIN DEPT OF TRANSPORTATION

APPROVED Matthew R Rauch
for State Traffic Engineer

DATE 11/20/13 PLATE NO. W03-2.1

PROJECT NO:

SHEET NO: E

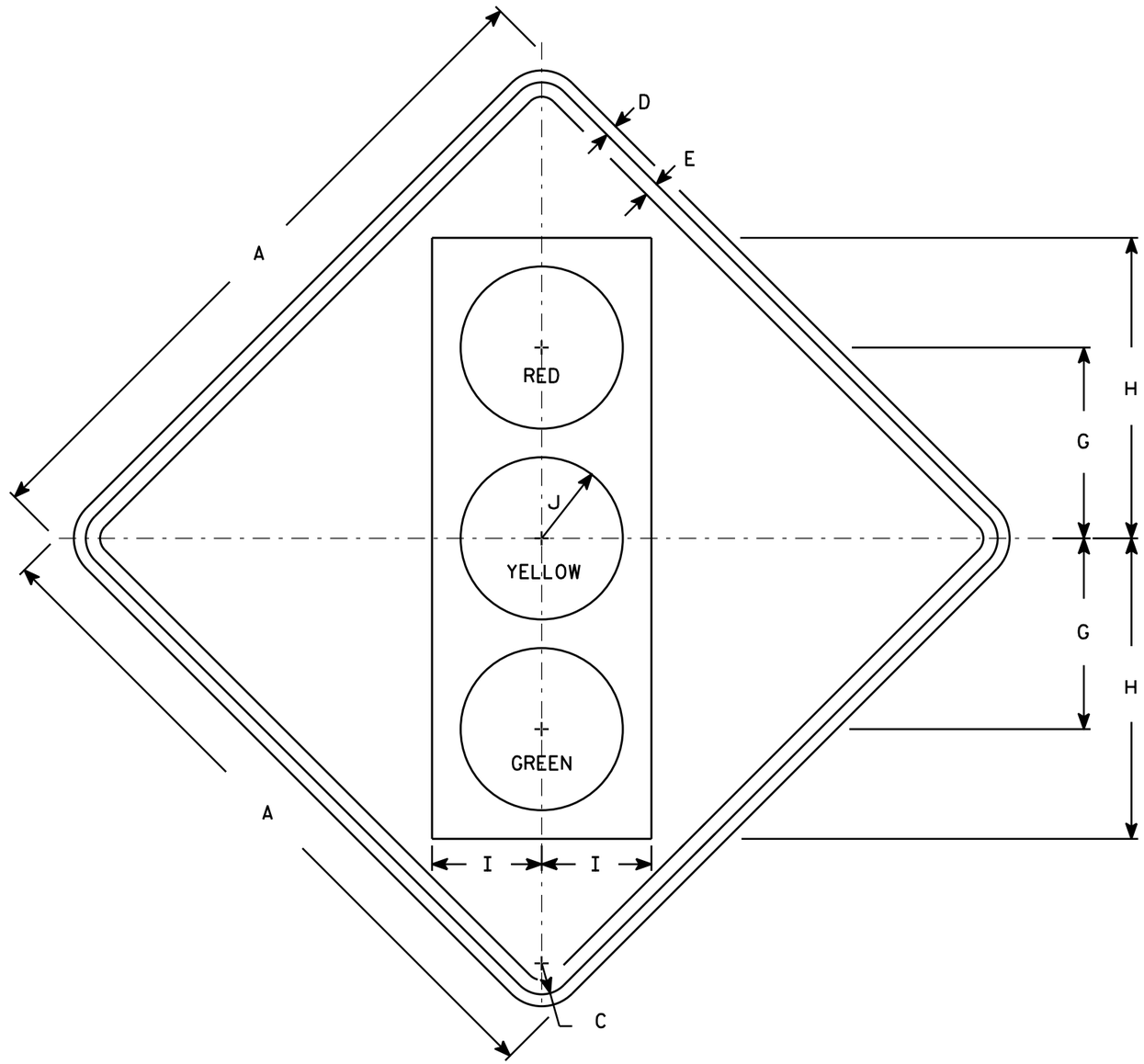

W03-3

NOTES

1. Sign is Type II - Type F Reflective - reference WIS DOT Standard Specification for HIGHWAY and STRUCTURE CONSTRUCTION latest edition.
2. Color:
   Background - Orange
   Message - See Note 4
3. Corners may be square or rounded when base material is plywood but borders shall be rounded as shown. When base material is metal, the corners and borders shall be rounded.
4. Symbol and border are non-reflective black.
   Top circle - Type H Reflectorized Red
   Center circle - Same as background
   Bottom circle - Type H Reflectorized Green

SIZE	A	B	C	D	E	F	G	H	I	J	K	L	M	N	O	P	Q	R	S	T	U	V	W	X	Y	Z	Area sq. ft.
1	36		1 5/8	5/8	3/4		10	15 3/4	5 3/4	4 1/4																	9.0
2S	48		2 1/4	3/4	1		12 1/2	20	7 1/2	5																	16.0
2M	48		2 1/4	3/4	1		12 1/2	20	7 1/2	5																	16.0
3	48		2 1/4	3/4	1		12 1/2	20	7 1/2	5																	16.0
4	48		2 1/4	3/4	1		12 1/2	20	7 1/2	5																	16.0
5	48		2 1/4	3/4	1		12 1/2	20	7 1/2	5																	16.0

STANDARD SIGN
W03-3

WISCONSIN DEPT OF TRANSPORTATION

APPROVED Matthew R Rauch
for State Traffic Engineer

DATE 11/20/13 PLATE 198 W03-3.1

PROJECT NO: | HWY: | COUNTY: | SHEET NO: E

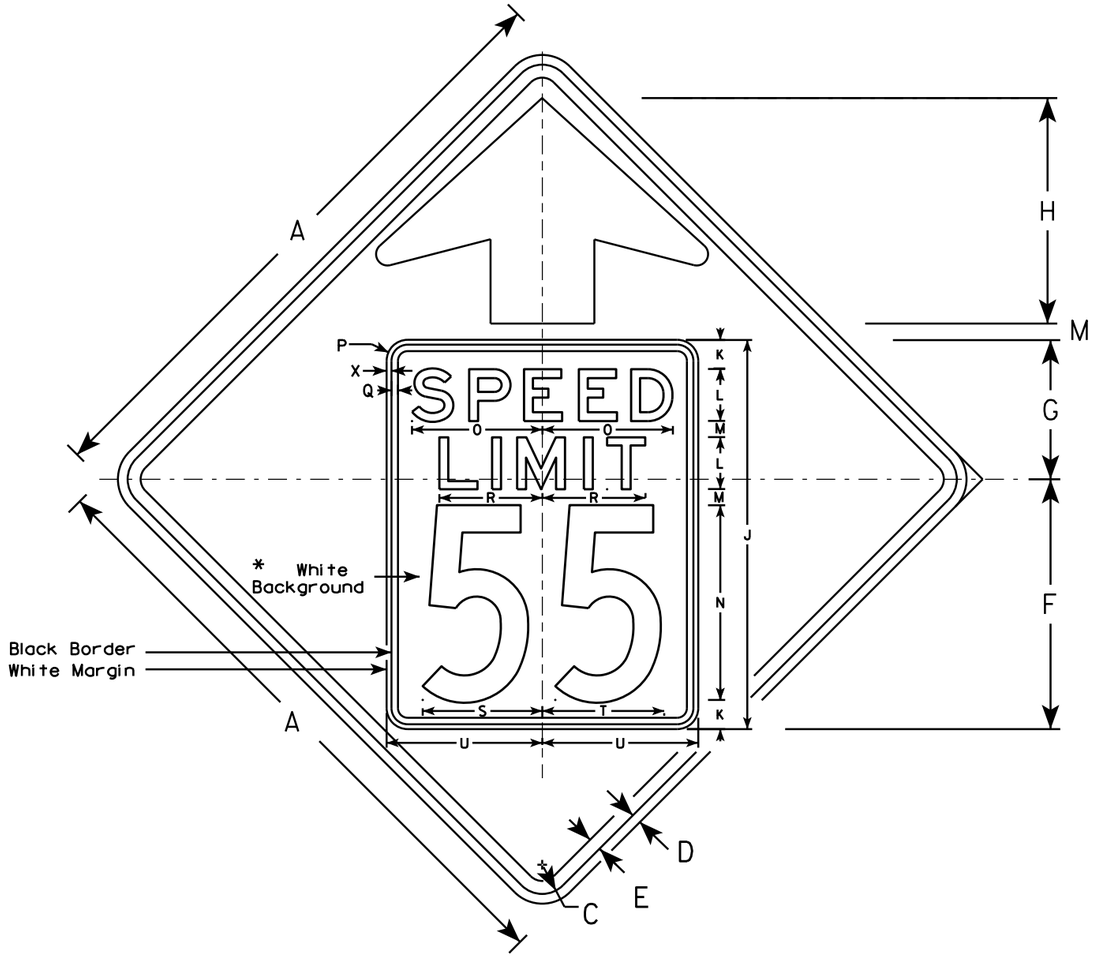

W03-5

NOTES

1. Sign is Type II - Type F Reflective - reference WIS DOT Standard Specification for HIGHWAY and STRUCTURE CONSTRUCTION latest edition.
2. Color: *
   Background - ORANGE*
   Message - BLACK
3. Message Series - C for numbers Series E for wording
4. Substitute appropriate numerals and optically adjust spacing to achieve proper balance

*Speed Limit Sign shall have a White Background

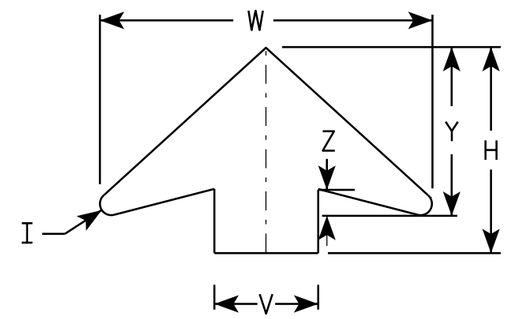

ARROW DETAIL

SIZE	A	B	C	D	E	F	G	H	I	J	K	L	M	N	O	P	Q	R	S	T	U	V	W	X	Y	Z	Area sq. ft.
1	36		1 5/8	5/8	3/4	14 1/2	9 1/2	11 1/2	5/8	24	2	3	1	12	7 1/8	1 1/2	3/8	5 3/4	7 1/4	7 1/8	9	6	19 1/4	3/8	9 3/4	1 5/8	9.0
2S	48		2 1/4	3/4	1	19 1/4	10 3/4	17 3/8	7/8	30	2 1/4	4	1 1/4	15	10	1 5/8	1/2	8	9 1/4	9 3/8	12	8	25 5/8	3/8	13	2	16.0
2M	48		2 1/4	3/4	1	19 1/4	10 3/4	17 3/8	7/8	30	2 1/4	4	1 1/4	15	10	1 5/8	1/2	8	9 1/4	9 3/8	12	8	25 5/8	3/8	13	2	16.0
3	48		2 1/4	3/4	1	19 1/4	10 3/4	17 3/8	7/8	30	2 1/4	4	1 1/4	15	10	1 5/8	1/2	8	9 1/4	9 3/8	12	8	25 5/8	3/8	13	2	16.0
4	48		2 1/4	3/4	1	19 1/4	10 3/4	17 3/8	7/8	30	2 1/4	4	1 1/4	15	10	1 5/8	1/2	8	9 1/4	9 3/8	12	8	25 5/8	3/8	13	2	16.0
5	48		2 1/4	3/4	1	19 1/4	10 3/4	17 3/8	7/8	30	2 1/4	4	1 1/4	15	10	1 5/8	1/2	8	9 1/4	9 3/8	12	8	25 5/8	3/8	13	2	16.0

STANDARD SIGN
W03-5

WISCONSIN DEPT OF TRANSPORTATION

APPROVED Matthew R Rauch
for State Traffic Engineer

DATE 11/20/13 PLATE W03-5.1

PROJECT NO: SHEET NO: E

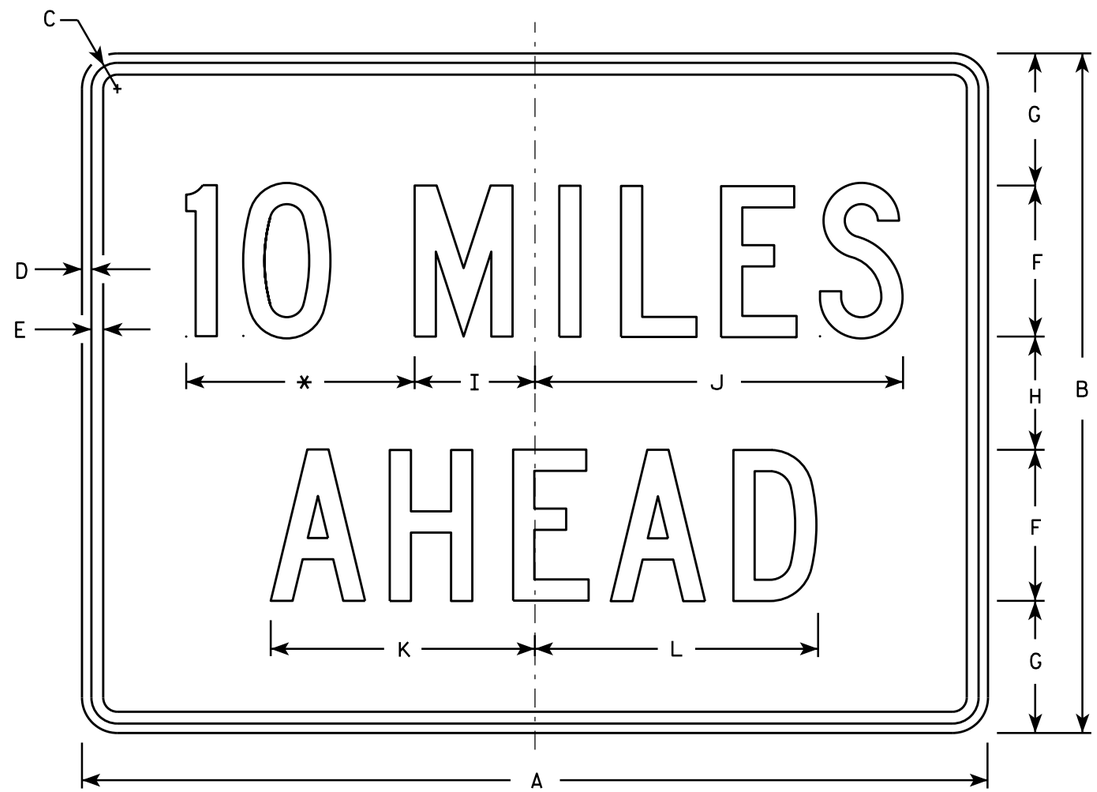

W057-52

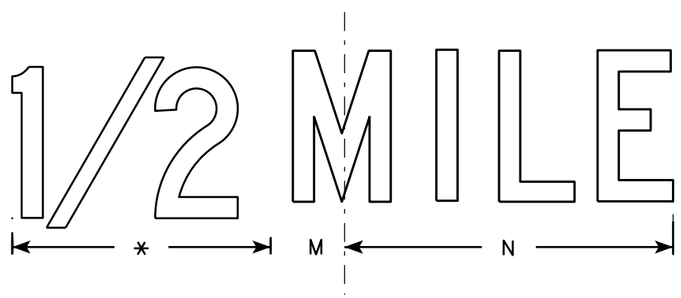

NOTES

1. Sign is Type II - Type F Reflective - reference WIS DOT Standard Specification for HIGHWAY and STRUCTURE CONSTRUCTION latest edition.
2. Color:
   Background - Orange
   Message - Black
3. Message Series - C
4. Corners may be square or rounded when base material is plywood but borders shall be rounded as shown. When base material is metal, the corners and borders shall be rounded.
5. Substitute appropriate numerals and optically adjust spacing to achieve proper balance.

* See note 5

SIZE	A	B	C	D	E	F	G	H	I	J	K	L	M	N	O	P	Q	R	S	T	U	V	W	X	Y	Z	Area sq. ft.
1	36	24	1 1/8	3/8	1/2	6	4 1/2	3	4 3/4	14 5/8	10 5/8	11 3/8	2	13													6.0
2S	48	36	1 3/8	1/2	5/8	8	7	6	6 3/8	19 1/2	14	15	2 3/4	17 3/8													12.0
2M	48	36	1 3/8	1/2	5/8	8	7	6	6 3/8	19 1/2	14	15	2 3/4	17 3/8													12.0
3	48	36	1 3/8	1/2	5/8	8	7	6	6 3/8	19 1/2	14	15	2 3/4	17 3/8													12.0
4	48	36	1 3/8	1/2	5/8	8	7	6	6 3/8	19 1/2	14	15	2 3/4	17 3/8													12.0
5	48	36	1 3/8	1/2	5/8	8	7	6	6 3/8	19 1/2	14	15	2 3/4	17 3/8													12.0

STANDARD SIGN
W057-52

WISCONSIN DEPT OF TRANSPORTATION

APPROVED Matthew R Rauch
for State Traffic Engineer

DATE 11/20/13 PLATE W057-52.1

PROJECT NO: | HWY: | COUNTY: | SHEET NO: | E

STATE PROJECT NUMBER
1166-07-62

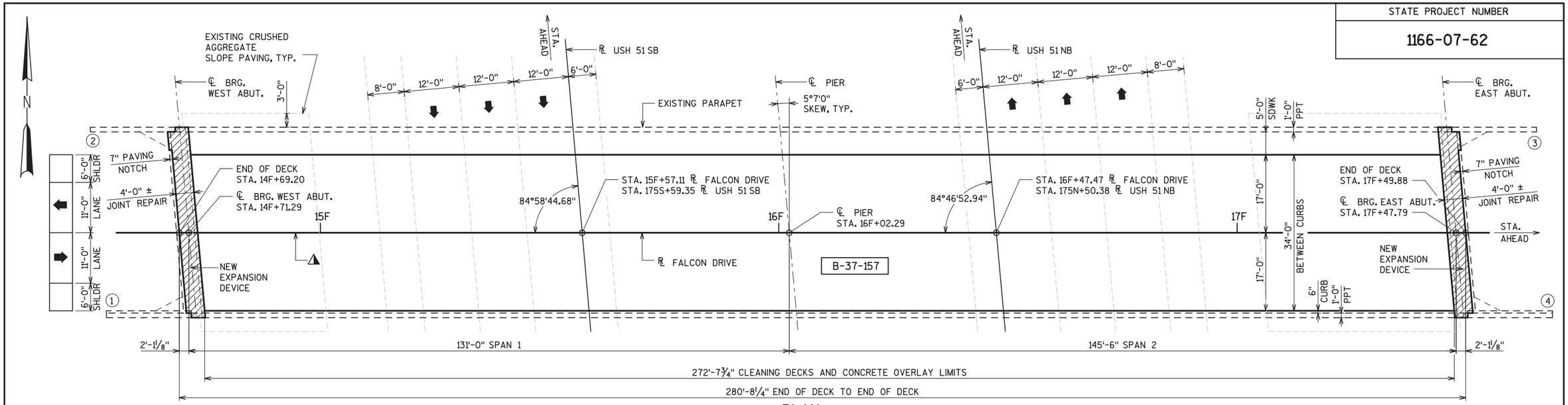

PLAN

(2 SPAN HAUNCHED STEEL GIRDER BRIDGE)

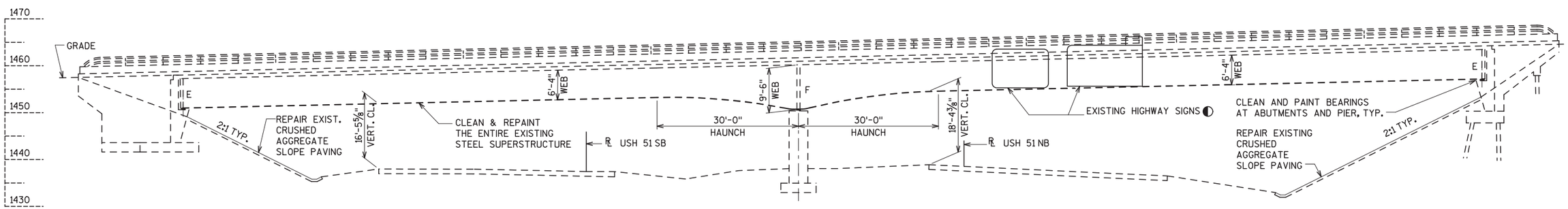

ELEVATION

(LOOKING NORTH)

DESIGN DATA

LIVE LOAD

DESIGN LOAD: HS-20
INVENTORY RATING: HS-21
OPERATIONAL RATING: HS-31
WISCONSIN STANDARD PERMIT VEHICLE LOAD (WIS-SPV): 210 KIPS

ULTIMATE DESIGN STRESSES

CONCRETE MASONRY OVERLAY DECKS ..... f'c = 4,000 psi

HIGH STRENGTH BAR STEEL REINFORCEMENT, GRADE 60 ..... fy = 60,000 psi

TRAFFIC DATA

FALCON DRIVE

A.D.T. = 200 (2004)

USH 51

A.D.T. = 17,700 (2010)
A.D.T. = 24,300 (2035)
R.D.S. = 70 MPH

LEGEND

◭ LONGITUDINAL CONST. JOINT. SEAL WITH CRACK SEALER PER SECTION 502.3.13 OF STANDARD SPECIFICATIONS. SEE DETAIL ON SHEET3. COST INCLUDED IN BID ITEM "CONCRETE MASONRY OVERLAY DECKS".

◐ EXISTING HIGHWAY SIGNS ATTACHED TO THE BRIDGE SHALL REMAIN FUNCTIONAL DURING CONSTRUCTION. THE SIGNS SHALL BE OUTSIDE THE ENCLOSURE FOR CLEANING AND PAINTING THE BRIDGE STEEL. PROTECT ANY SUPPORTS AND CONNECTIONS OF THE SIGNS THAT FALL WITHIN THE ENCLOSURE DURING CLEANING AND PAINTING OPERATIONS. COST INCLUDED IN BID ITEM "NEGATIVE PRESSURE CONTAINMENT AND COLLECTION OF WASTE MATERIALS B-37-157".

(X) DENOTES WING NUMBER

WISCONSIN
BABU D. THENGANAKUNNEL
E-35905
MILWAUKEE, WI
PROFESSIONAL ENGINEER
5-27-2014

WISCONSIN
THOMAS A. ZALEWSKI
E-26972
MADISON WI
PROFESSIONAL ENGINEER
5/27/14

LIST OF DRAWINGS

1. GENERAL PLAN AND ELEVATION
2. TYPICAL SECTION AND NOTES
3. CONSTRUCTION STAGING
4. REMOVAL DETAILS
5. JOINT REPAIR 1
6. JOINT REPAIR 2
7. JOINT REPIAR 3
8. EXPANSION DEVICE
9. COVER PLATE DETAILS
10. PARAPET AND RAILING DETAILS
11. BAR COUPLERS

STRUCTURE DESIGN CONTACTS

BUREAU OF STRUCTURES CONTACT:
WILLIAM DREHER
(608) 266-8489

CONSULTANT CONTACT:
TOM ZALEWSKI
(608) 515-3525

NO.	DATE	REVISION	BY

BLOOM COMPANIES, LLC
Infrastructure Innovation and Ingenuity
10501 W. Research Drive • Milwaukee, WI 53226
Phone: (414) 771-3390 Fax: (414) 771-4490

STATE OF WISCONSIN
DEPARTMENT OF TRANSPORTATION

ACCEPTED William C. Dreher 6/19/14
CHIEF STRUCTURES DESIGN ENGINEER DATE

STRUCTURE B-37-157

FALCON DRIVE OVER USH 51

COUNTY	MARATHON	TOWN	MAINE
DESIGN SPEC.	REHABILITATION		N/A

DESIGNED BY	BDT	DESIGN CK'D.	JRS	DRAWN BY	TB	PLANS CK'D.	BDT/JRS

GENERAL PLAN AND ELEVATION

SHEET 1 OF 11
201

I.D. 1166-07-32 MARCH 2014

8

8

STATE PROJECT NUMBER
1166-07-62

LEGEND

◭ LONGITUDINAL CONST. JOINT. SEAL WITH CRACK SEALER PER SECTION 502.3.13 OF STANDARD SPECIFICATIONS. SEE DETAIL ON SHEET 3.

⧗ EXISTING CROSS SLOPE IS 1%

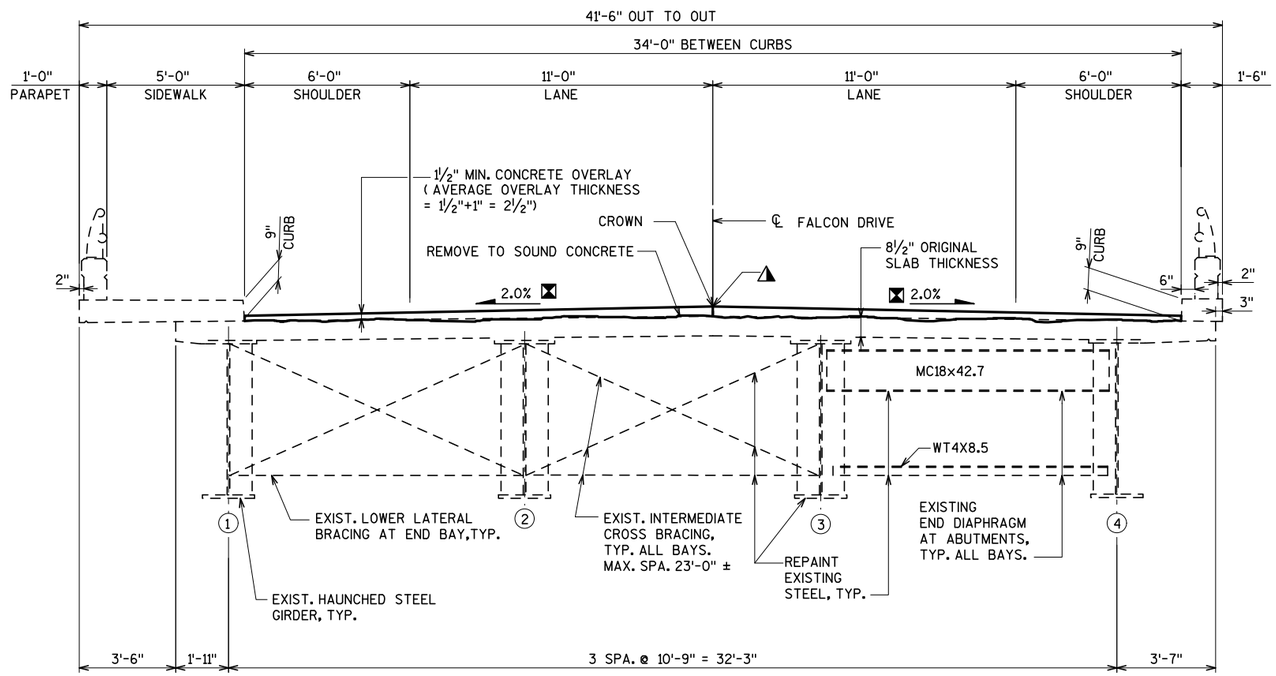

CROSS SECTION THRU ROADWAY

(LOOKING EAST)

GENERAL NOTES

DRAWINGS SHALL NOT BE SCALED.

DIMENSIONS SHOWN ARE BASED ON THE ORIGINAL STRUCTURE PLANS.

ALL STATIONS AND ELEVATIONS ARE IN FEET.

ALL DIMENSIONS ARE IN FEET AND INCHES UNLESS NOTED OTHERWISE.

A MINIMUM OF 1 INCH OF CONCRETE SHALL BE REMOVED FROM THE ENTIRE BRIDGE DECK UNDER THE BID ITEM "CLEANING DECKS".

PROFILE GRADE LINE IS DETERMINED BASED ON A CROSS SLOPE OF 2% FOR THE OVERLAY. MINIMUM THICKNESS OF OVERLAY ABOVE THE CONCRETE DECK AFTER CLEANING IS 1½" AT THE CURB. THE EXPECTED AVERAGE OVERLAY THICKNESS IS 3 INCHES. IF THE EXPECTED OVERLAY THICKNESS IS EXCEEDED BY MORE THAN ½", CONTACT THE STRUCTURES DESIGN SECTION.

ANY EXCAVATION REQUIRED TO COMPLETE THE OVERLAY OR PAVING BLOCK AT THE ABUTMENTS IS INCIDENTAL TO THE BID ITEM "CONCRETE MASONRY OVERLAY DECKS".

ALL CONCRETE REMOVALS NOT COVERED WITH A CONCRETE OVERLAY SHALL BE DEFINED BY A 1-INCH DEEP SAWCUT.

BEVEL EXPOSED EDGES OF CONCRETE ¾" UNLESS OTHERWISE NOTED.

BAR STEEL REINFORCEMENT SHALL BE EMBEDDED 2" CLEAR UNLESS OTHERWISE SHOWN OR NOTED.

THE FIRST DIGIT OF A THREE DIGIT BAR MARK AND THE FIRST TWO DIGITS OF A FOUR DIGIT BAR MARK SIGNIFY THE BAR SIZE.

UTILIZE EXISTING BARSTEEL REINFORCEMENT WHERE SHOWN AND EXTEND 24 BAR DIAMETERS INTO NEW WORK.

DECK PREPARATION TYPE 1 AND TYPE 2 REQUIRED IN AREAS DESIGNATED BY THE FIELD ENGINEER.

APPLY PROTECTIVE SURFACE TREATMENT TO THE TOP OF OVERLAY, TOP AND SIDES OF CURBS, TOP OF SIDEWALK, AND TOP AND INSIDE FACES OF PARAPETS.

CLEAN ALL EXISTING CONCRETE SURFACES TO RECEIVE PROTECTIVE SURFACE TREATMENT, INCLUDING THE PARAPETS ON WINGS, UNDER BID ITEM "CLEANING PARAPETS, CURBS, AND SIDEWALKS".

PERFORM CRUSHED AGGREGATE SLOPE PAVING REPAIR ON BOTH THE ABUTMENTS. LIMITS TO BE DETERMINED BY THE FIELD ENGINEER.

CLEAN AND PAINT ALL EXISTING BEARINGS AT ABUTMENTS AND PIER.

APPLY BRIDGE SEAT PROTECTION, PER SECTION 502.3.12 OF THE STANDARD SPECIFICATIONS, TO THE TOP SURFACES OF BOTH ABUTMENTS BELOW EXPANSION DEVICES. POWERWASH AND ADEQUATELY DRY SURFACES BEFORE APPLICATION. WORK INCIDENTAL TO BID ITEM "JOINT REPAIR".

THE FINISH PAINT COLOR FOR STRUCTURE REPAINTING IS GRAY (LIGHT GRAY), FEDERAL COLOR NUMBER 26293.

8

8

NO.	DATE	REVISION	BY

STATE OF WISCONSIN
DEPARTMENT OF TRANSPORTATION
STRUCTURES DESIGN SECTION

STRUCTURE B-37-157

DRAWN BY TB | PLANS CK'D. BDT/JRS

TYPICAL SECTION AND NOTES

SHEET 2 OF 11

STATE PROJECT NUMBER
1166-07-62

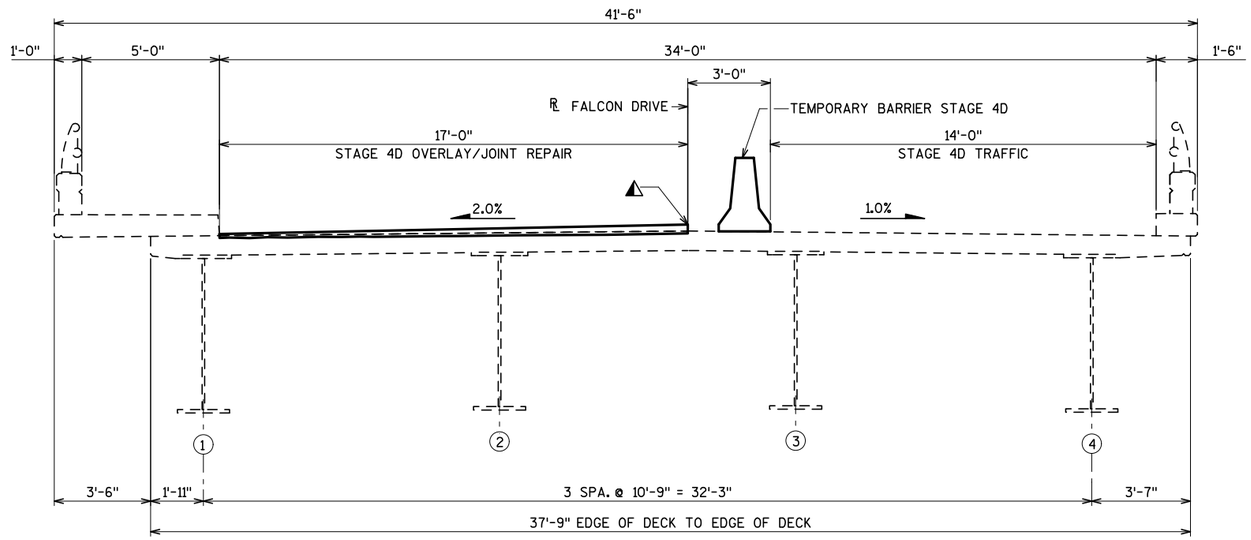

CONSTRUCTION STAGE 4D

(LOOKING EAST- ALL DIMENSIONS NORMAL TO ℄)

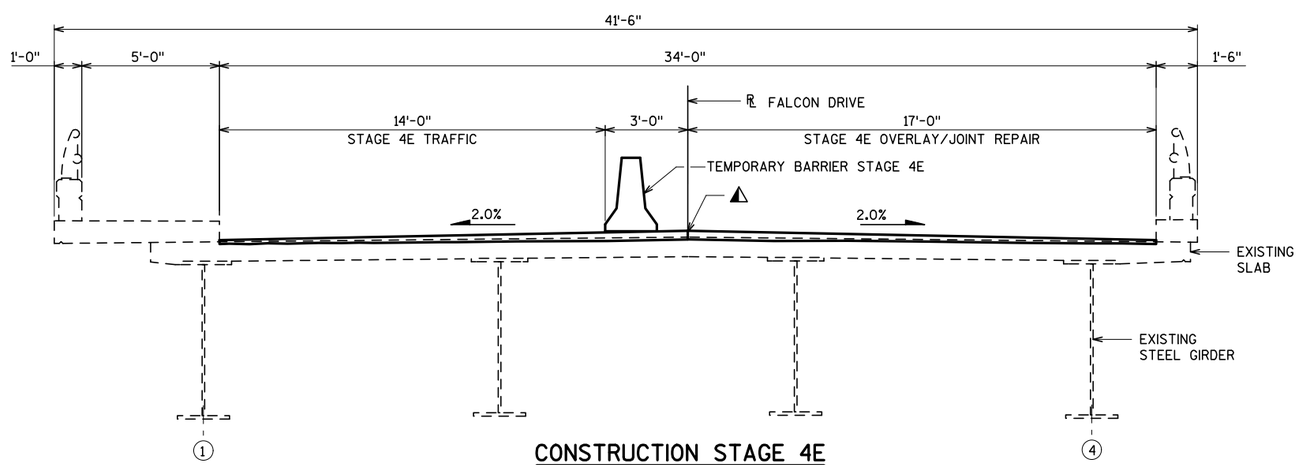

CONSTRUCTION STAGE 4E

(LOOKING EAST- ALL DIMENSIONS NORMAL TO ℄)

TOTAL ESTIMATED QUANTITIES

BID ITEM NUMBER	BID ITEMS	UNIT	TOTAL
203.0210.S	ABATEMENT OF ASBESTOS CONTAINING MATERIAL B-37-157	LS	1
502.3100	EXPANSION DEVICE B-37-157	LS	1
502.3200	PROTECTIVE SURFACE TREATMENT	SY	1,465
502.5005	MASONRY ANCHORS TYPE L NO.5 BARS	EACH	82
505.0605	BAR STEEL REINFORCEMENT HS COATED BRIDGES	LB	3,400
505.0904	BAR COUPLERS NO.4	EACH	8
505.0905	BAR COUPLERS NO.5	EACH	6
505.0906	BAR COUPLERS NO.6	EACH	64
509.0301	PREPARATION DECKS TYPE 1	SY	67
509.0302	PREPARATION DECKS TYPE 2	SY	33
509.0500	CLEANING DECKS	SY	1,030
509.1000	JOINT REPAIR	SY	37
509.2500	CONCRETE MASONRY OVERLAY DECKS	CY	107
517.0900.S	PREPARATION AND COATING OF TOP FLANGES B-37-157	LS	1
517.1800.S	STRUCTURE REPAINTING RECYCLED ABRASIVE B-37-157	LS	1
517.4500.S	NEGATIVE PRESSURE CONTAINMENT AND COLLECTION OF WASTE MATERIALS B-37-157	LS	1
517.6001.S	PORTABLE DECONTAMINATION FACILITY	EACH	1
604.9010.S	SLOPE PAVING REPAIR CRUSHED AGGREGATE	CY	20
SPV.0060.06	CLEANING AND PAINTING BEARINGS	EACH	12
SPV.0105.01	REMOVE AND RESET TUBULAR RAILING	LS	1
SPV.0165.01	CLEANING PARAPETS, CURBS, AND SIDEWALKS	SF	3,530
	NON-BID ITEMS		
	BRIDGE SEAT PROTECTION	LS	1

ALL ITEMS ARE CATEGORY 0020

NOTES

TEMPORARY BARRIER IS NOT TO BE ANCHORED TO THE DECK.

A SINGLE LANE OF TRAFFIC IS OPEN IN STAGES 4D AND 4E

LEGEND

△ LONGITUDINAL CONST. JOINT. SEAL WITH CRACK SEALER PER SECTION 502.3.13 OF STANDARD SPECIFICATIONS. SEE DETAIL ON THIS SHEET. COST INCLUDED IN BID ITEM " CONCRETE MASONRY OVERLAY DECKS".

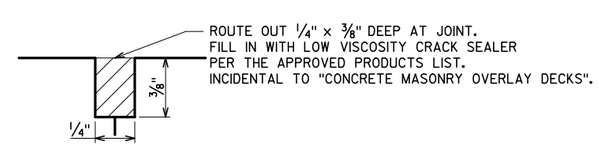

LONGITUDINAL CONSTRUCTION JOINT DETAIL

NO.	DATE	REVISION	BY

STATE OF WISCONSIN
DEPARTMENT OF TRANSPORTATION
STRUCTURES DESIGN SECTION

STRUCTURE B-37-157

DRAWN BY TB | PLANS CK'D. BDT/JRS

CONSTRUCTION STAGING

SHEET 3 OF 11

8

8

STATE PROJECT NUMBER
1166-07-62

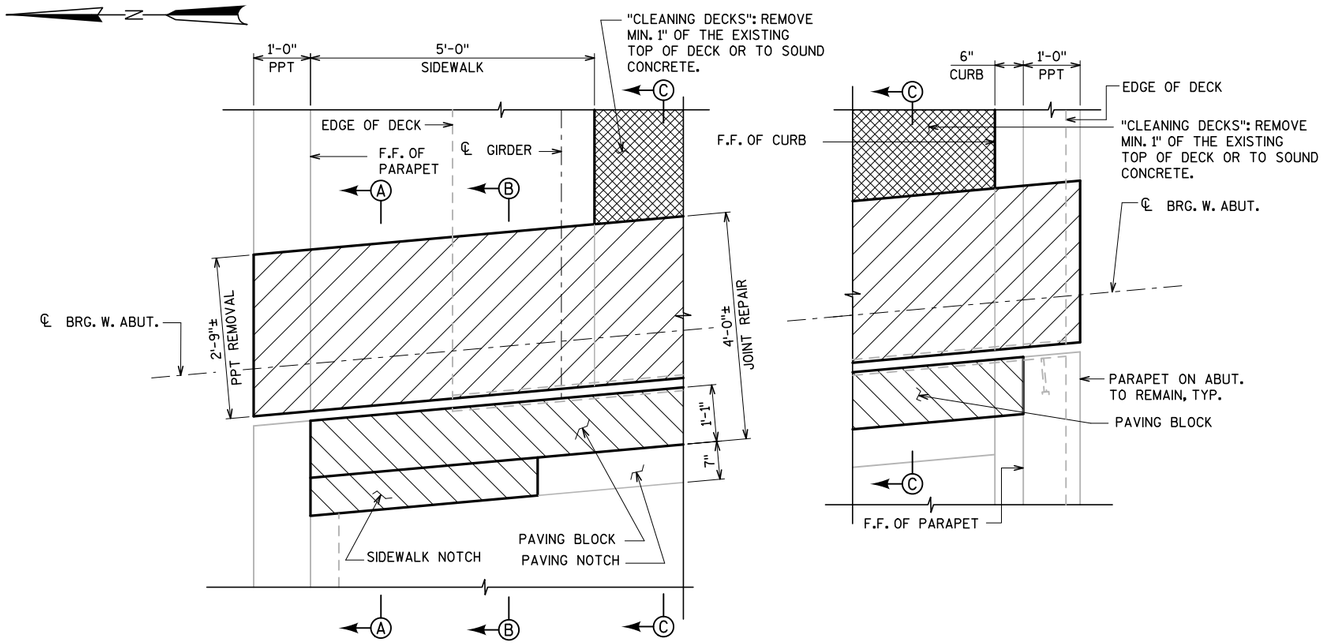

PLAN AT JOINT REPAIR

SHOWING REMOVAL.
WEST JOINT SHOWN, EAST JOINT SIMILAR

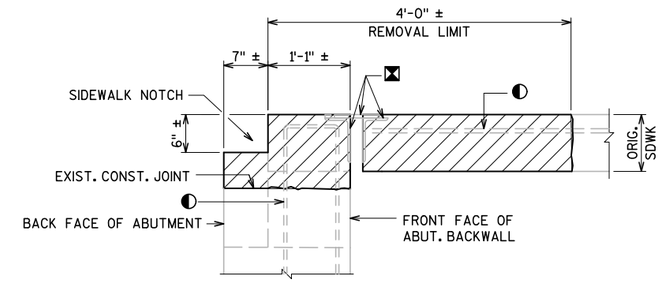

SECTION A-A

SHOWING REMOVAL

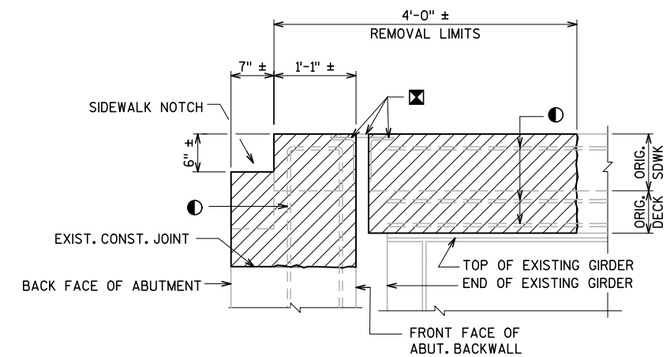

SECTION B-B

SHOWING REMOVAL

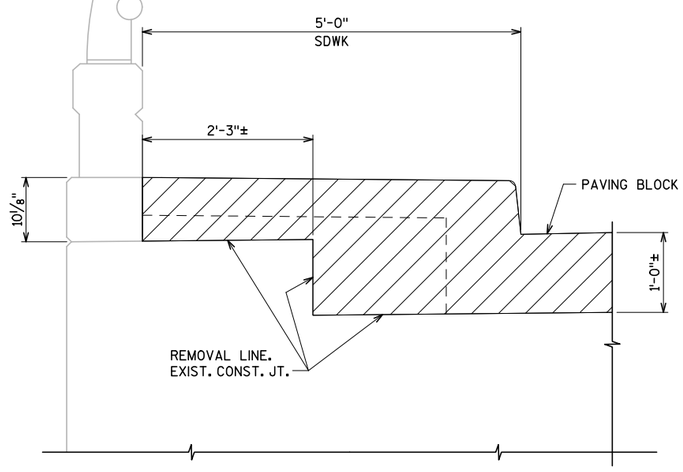

SECTION THRU SIDEWALK JOINT REPAIR

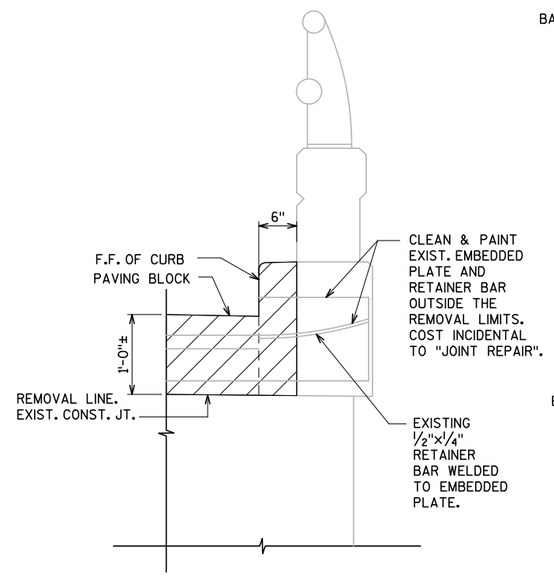

SECTION THRU CURB JOINT REPAIR

AT ABUTMENT/PAVING BLOCK

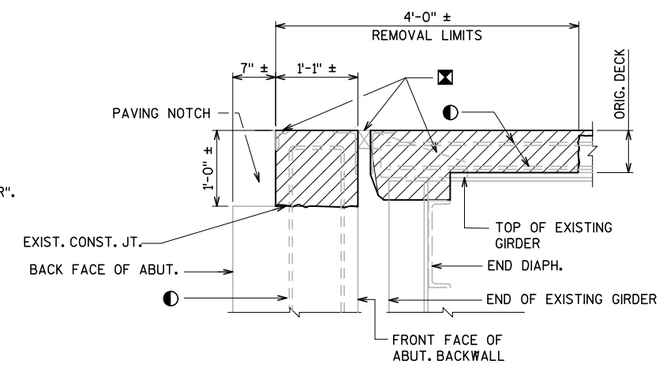

SECTION C-C

SHOWING REMOVAL

LEGEND

◐ SALVAGE AND CLEAN EXISTING REINFORCEMENT AND EXTEND FULL LENGTH INTO NEW WORK

⊠ REMOVE EXISTING EXPANSION JOINT ANGLES, HARDWARE ATTACHED TO GIRDER, COMPRESSION SEAL, SIDEWALK PLATES, AND PAVING BLOCK ARMOR ANGLE. COST INCIDENTAL TO BID ITEM " JOINT REPAIR".

F.F- FRONT FACE

NO.	DATE	REVISION	BY

STATE OF WISCONSIN
DEPARTMENT OF TRANSPORTATION
STRUCTURES DESIGN SECTION

STRUCTURE B-37-157

DRAWN BY TB | PLANS CK'D. BDT/JRS

REMOVAL DETAILS

SHEET 4 OF 11

8

8

STATE PROJECT NUMBER
1166-07-62

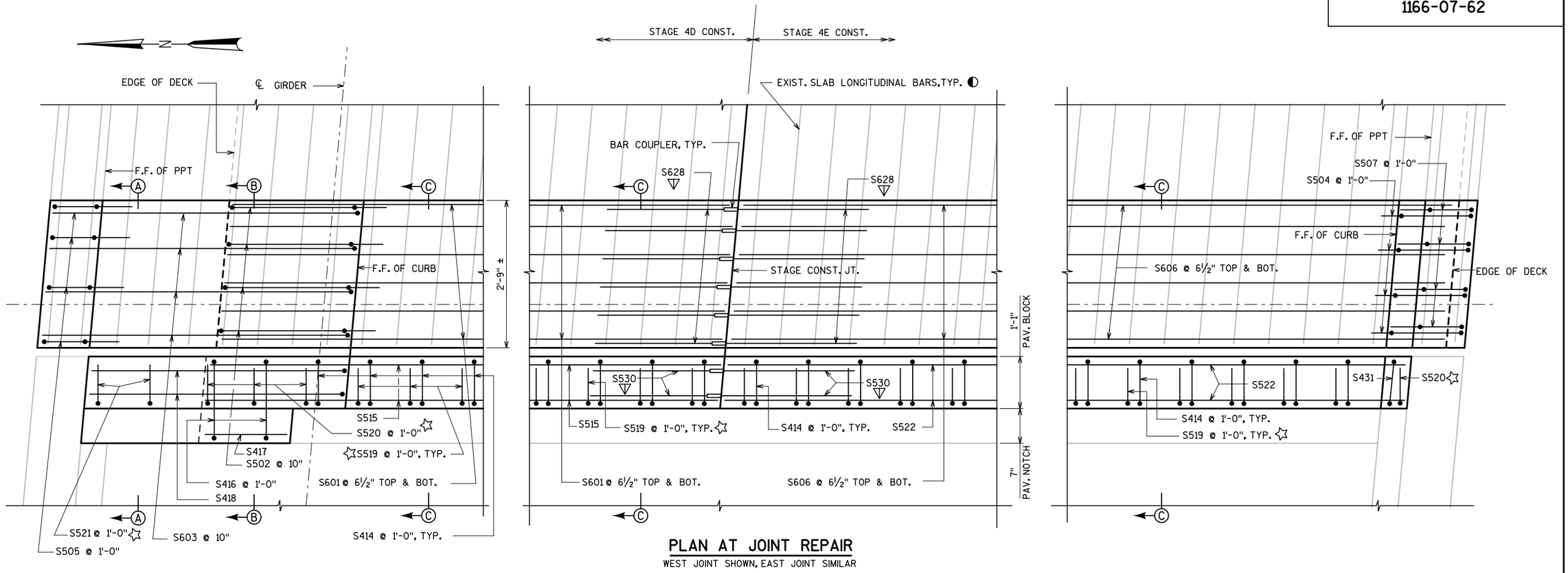

PLAN AT JOINT REPAIR

WEST JOINT SHOWN, EAST JOINT SIMILAR

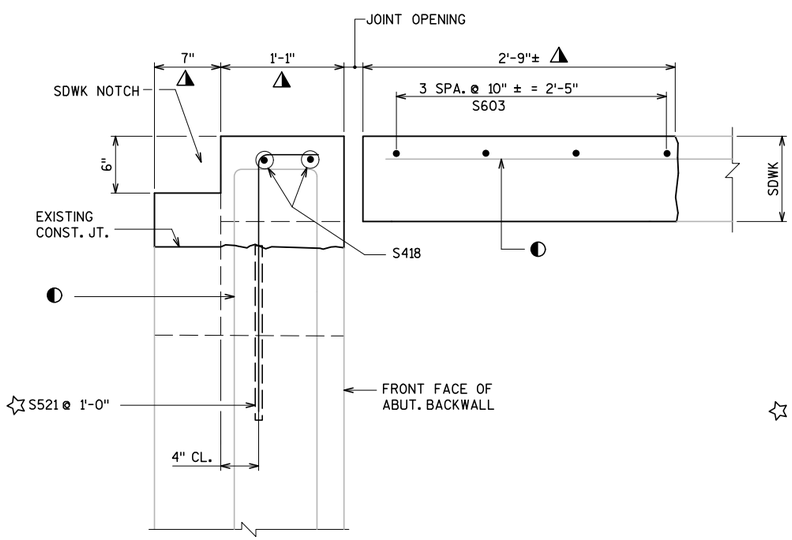

SECTION A-A

(NOTE: EXPANSION DEVICE AND SIDEWALK COVER PLATE NOT SHOWN FOR CLARITY)

◐ SALVAGE AND CLEAN EXISTING REINFORCEMENT AND EXTEND FULL LENGTH INTO NEW WORK. EXISTING BARS ARE LIKELY TO BE CORRODED AND/OR DAMAGED DURING CONCRETE REMOVAL. PRESERVE AND INCORPORATE AS MUCH REBAR AS PRACTICAL. SUPPLEMENT WITH THE BARS INDICATED BY ☆

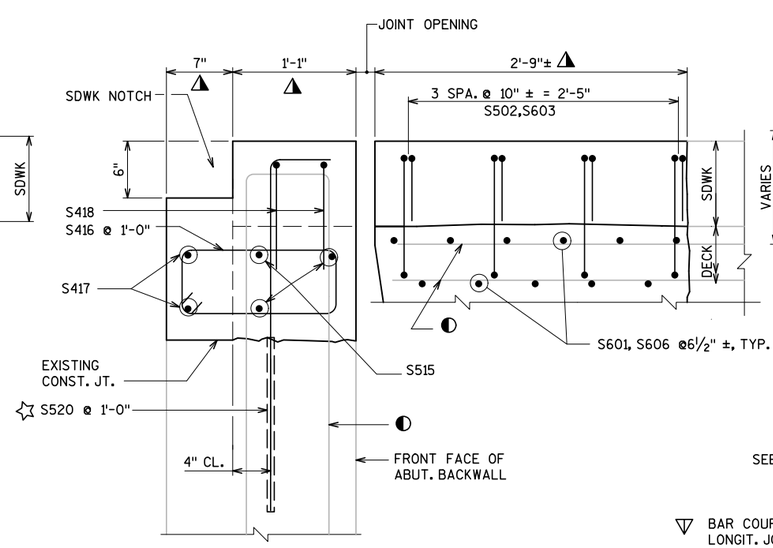

SECTION B-B

(NOTE: EXPANSION DEVICE AND SIDEWALK COVER PLATE NOT SHOWN FOR CLARITY)

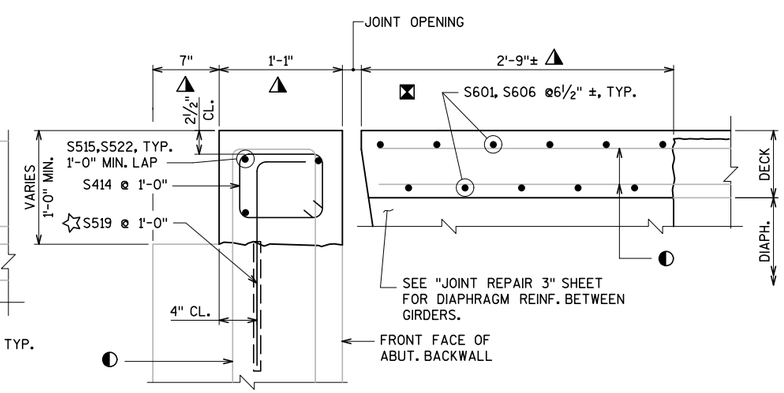

SECTION C-C

(NOTE: EXPANSION DEVICE NOT SHOWN FOR CLARITY. SEE "EXPANSION DEVICE" SHEET FOR BARS S424 THRU S427)

▽ BAR COUPLERS USED. BAR LENGTH COMPUTED TO ℄ OF LONGIT. JOINT AND SHALL BE MODIFIED TO THE BAR COUPLER MANUFACTURER'S RECOMMENDATIONS.

☆ CONCRETE MASONRY ANCHORS TYPE L NO.5 BARS. EMBED A MINIMUM OF 1'-6" INTO EXISTING CONCRETE. SPACE AT 1'-0" AND TURN HOOK AS NECESSARY TO FIT.

◭ DIMENSION NORMAL TO ℄ SUBSTRUCTURE UNIT

NO.	DATE	REVISION	BY

STATE OF WISCONSIN
DEPARTMENT OF TRANSPORTATION
STRUCTURES DESIGN SECTION

STRUCTURE B-37-157

DRAWN BY TB | PLANS CK'D. BDT/JRS

JOINT REPAIR 1

SHEET 5 OF 11

8

8

STATE PROJECT NUMBER
1166-07-62

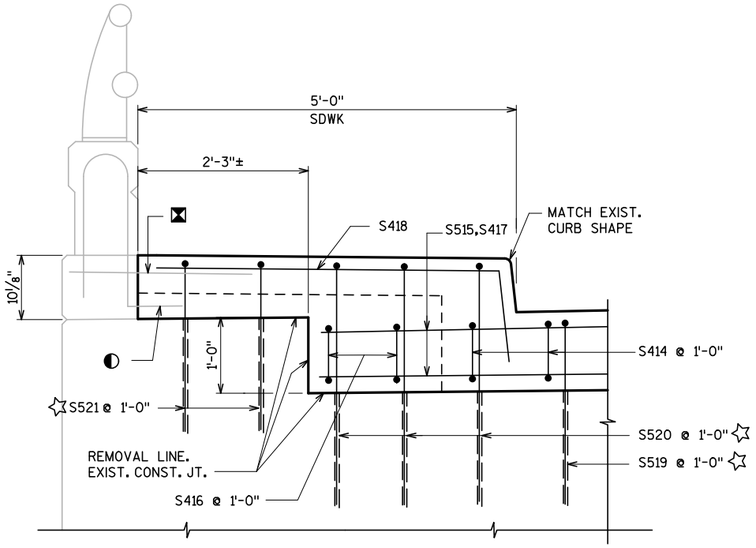

SECTION THRU SIDEWALK JOINT REPAIR

AT ABUTMENT/PAVING BLOCK
EAST ABUTMENT SHOWN, WEST ABUTMENT SIMILAR

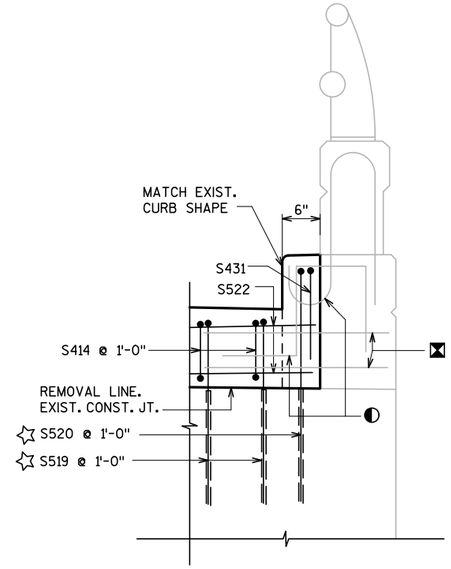

SECTION THRU CURB JOINT REPAIR

AT ABUTMENT/PAVING BLOCK
EAST ABUTMENT SHOWN, WEST ABUTMENT SIMILAR

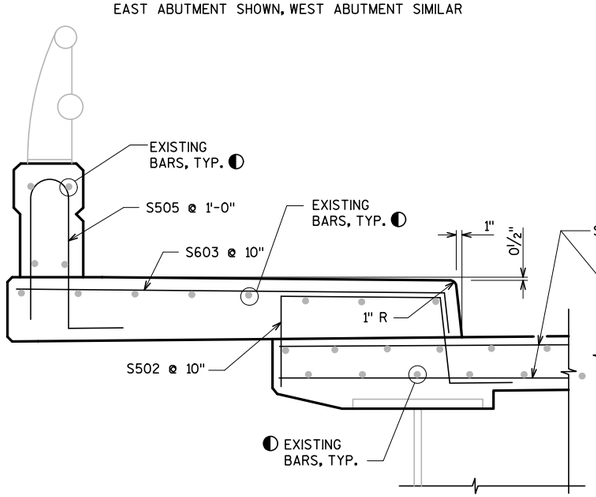

SECTION THRU SIDEWALK

JOINT REPAIR AT SUPERSTRUCTURE

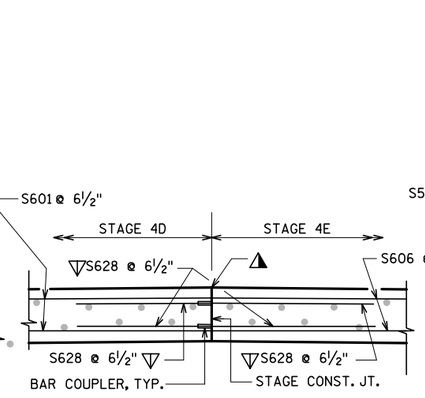

SECTION THRU LONGIT. JOINT

JOINT REPAIR AT SUPERSTRUCTURE

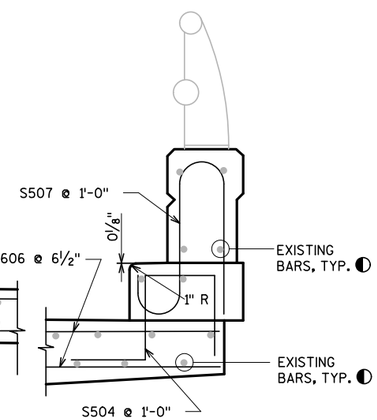

SECTION THRU CURB

JOINT REPAIR AT SUPERSTRUCTURE

BILL OF BARS

BAR MARK	COAT	NO. CONST. STAGE 4D	4E	TOTAL	LENGTH	BENT	BAR SERIES	LOCATION
S601	X	22	-	22	19'-5"	-	-	SLAB TRANSV., TOP & BOTT.
S502	X	8	-	8	4'-10"	X	-	SIDEWALK HORIZ.
S603	X	8	-	8	6'-1"	X	-	SIDEWALK TOP TRANSV.
S504	X	-	8	8	3'-9"	X	-	CURB TRANSV.
S505	X	8	-	8	5'-0"	X	-	PARAPET OVER SIDEWALK
S606	X	-	22	22	18'-2"	-	-	SLAB TRANSV, TOP & BOTT.
S507	X	-	8	8	5'-0"	X	-	PARAPET OVER CURB
S608	X	10	10	20	10'-5"	-	-	DIAPHRAGM BETWN GIRDERS 1&2, 3&4
S609	X	10	-	10	6'-8"	-	-	DIAPHRAGM BETWN GIRDERS 2&3
S410	X	4	4	8	10'-5"	-	-	DIAPHRAGM BETWN GIRDERS 1&2, 3&4
S411	X	4	-	4	6'-8"	-	-	DIAPHRAGM BETWN GIRDERS 2&3
S412	X	46	38	84	4'-4"	X	-	DIAPHRAGM TRANSV.
S413	X	-	4	4	3'-9"	-	-	DIAPHRAGM BETWN GIRDERS 2&3
S414	X	36	36	72	3'-4"	X	-	PAVING BLOCK STIRRUP
S515	X	18	-	18	7'-3"	-	-	PAVING BLOCK LONGIT.
S416	X	4	-	4	4'-6"	X	-	PAVING BLOCK AT SIDEWALK
S417	X	4	-	4	1'-5"	-	-	PAVING BLOCK AT SIDEWALK
S418	X	4	-	4	5'-10"	X	-	PAVING BLOCK AT SIDEWALK
☆ S519	X	34	36	70	3'-0"	X	-	PAVING BLOCK VERT.
☆ S520	X	6	2	8	3'-9"	X	-	PAVING BLOCK VERT.
☆ S521	X	4	-	4	2'-9"	X	-	PAVING BLOCK VERT.
S522	X	-	18	18	6'-6"	-	-	PAVING BLOCK LONGIT.
S623	X	-	10	10	3'-9"	-	-	DIAPHRAGM BETWN GIRDERS 2&3
S424	X	4	-	4	10'-5"	-	-	AT EXP. JT. BETWEEN GIRDERS 1&2
S425	X	4	-	4	6'-8"	-	-	AT EXP. JT. BETWEEN GIRDERS 2&3
S426	X	-	4	4	10'-5"	-	-	AT EXP. JT. BETWEEN GIRDERS 3&4
S427	X	-	4	4	3'-9"	-	-	AT EXP. JT. BETWEEN GIRDERS 2&3
▽ S628	X	32	32	64	3'-2"	-	-	SLAB AND DIAPHR. AT CONST. JT.
▽ S429	X	4	4	8	1'-8"	-	-	DIAPHRAGM AT CONST. JT.
▽ S530	X	3	3	6	2'-8"	-	-	PAVING BLOCK AT CONST. JT.
S431	X	-	2	2	3'-3"	X	-	CURB AT PAVING BLOCK

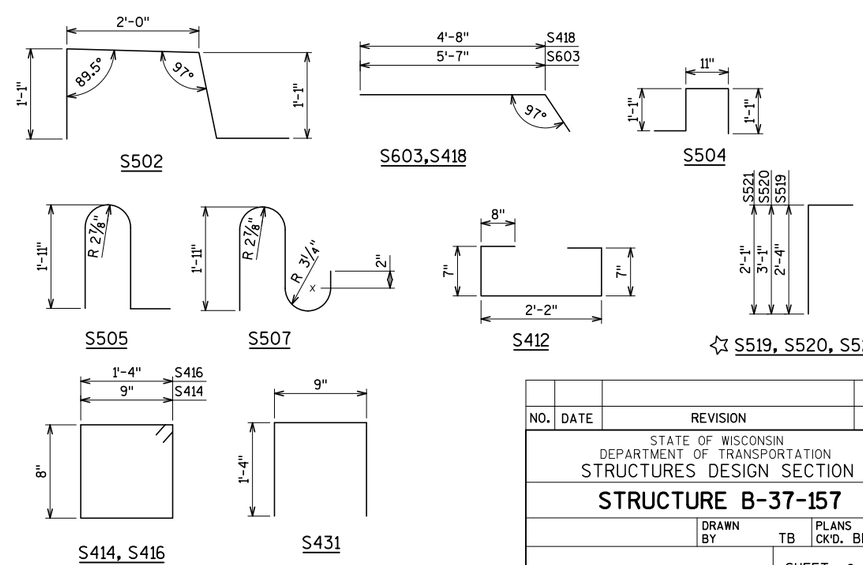

BENDING DIAGRAMS

LEGEND

- ⊠ SALVAGE AND CLEAN EXISTING SIDEWALK REINFORCEMENT AND EXTEND 24 BAR DIAMETERS INTO NEW WORK.
- ◐ SALVAGE AND CLEAN EXISTING REINFORCEMENT AND INCORPORATE FULL LENGTH INTO NEW WORK.
- ☆ CONCRETE MASONRY ANCHOR TYPE L NO. 5 BARS. EMBED A MIN. OF 1'-6" INTO EXISTING CONCRETE. SPACE AT 1'-0". TURN HOOK AS NECESSARY TO FIT.
- ▽ BAR COUPLERS USED. BAR LENGTH COMPUTED TO ℄ OF LONGIT. JOINT AND SHALL BE MODIFIED TO THE BAR COUPLER MANUFACTURER'S RECOMMENDATIONS.
- ◭ LONGITUDINAL CONST. JOINT. SEAL WITH CRACK SEALER PER SECTION 502.3.13 OF STANDARD SPECIFICATIONS. COST INCLUDED IN BID ITEM " CONCRETE MASONRY OVERLAY DECKS".

NO.	DATE	REVISION	BY

STATE OF WISCONSIN
DEPARTMENT OF TRANSPORTATION
STRUCTURES DESIGN SECTION

STRUCTURE B-37-157

DRAWN BY TB | PLANS CK'D. BDT/JRS

JOINT REPAIR 2

SHEET 6 OF 11

8

8

STATE PROJECT NUMBER
1166-07-62

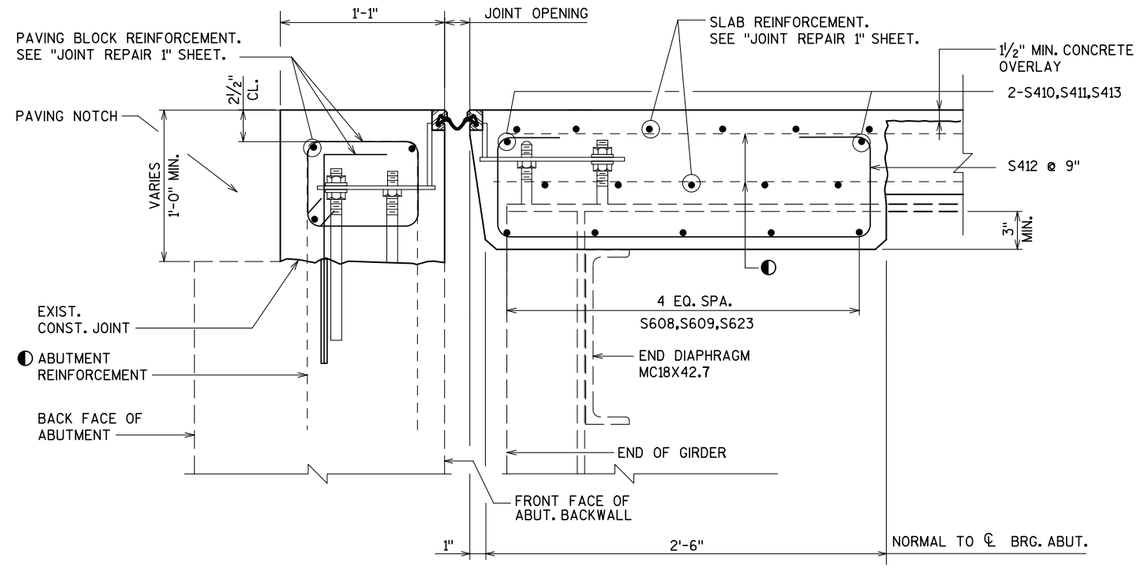

SECTION THRU DIAPHRAGM AT ABUTMENT

NORMAL TO ℄ SUBSTRUCTURE

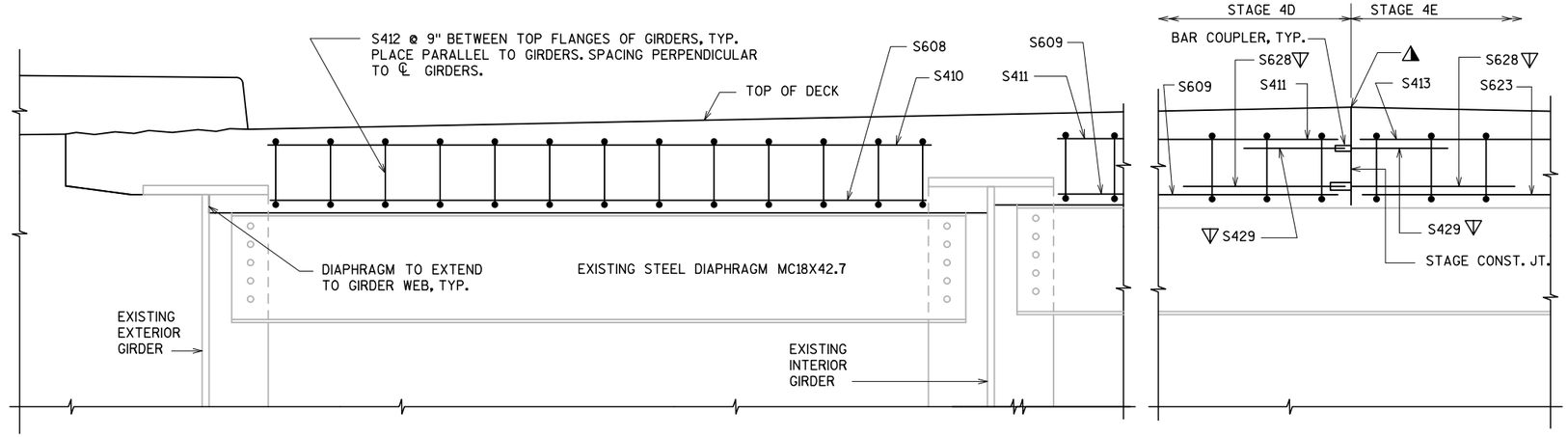

PART TRANSVERSE SECTION AT ABUTMENT DIAPHRAGM

(LOOKING EAST)
(DECK REINFORCEMENT NOT SHOWN FOR CLARITY)

LEGEND

◐ SALVAGE AND CLEAN EXISTING LONGITUDINAL REINFORCEMENT AND INCORPORATE FULL LENGTH INTO NEW WORK.

▽ BAR COUPLERS USED. BAR LENGTH COMPUTED TO ℄ OF LONGIT. JOINT AND SHALL BE MODIFIED TO THE BAR COUPLER MANUFACTURER'S RECOMMENDATIONS.

◭ LONGITUDINAL CONST. JOINT. SEAL WITH CRACK SEALER PER SECTION 502.3.13 OF STANDARD SPECIFICATIONS. SEE DETAIL ON SHEET 3. COST INCLUDED IN BID ITEM " CONCRETE MASONRY OVERLAY DECKS".

NO.	DATE	REVISION	BY

STATE OF WISCONSIN
DEPARTMENT OF TRANSPORTATION
STRUCTURES DESIGN SECTION

STRUCTURE B-37-157

DRAWN BY TB | PLANS CK'D. BDT/JRS

JOINT REPAIR 3

SHEET 7 OF 11

8

8

STATE PROJECT NUMBER
1166-07-62

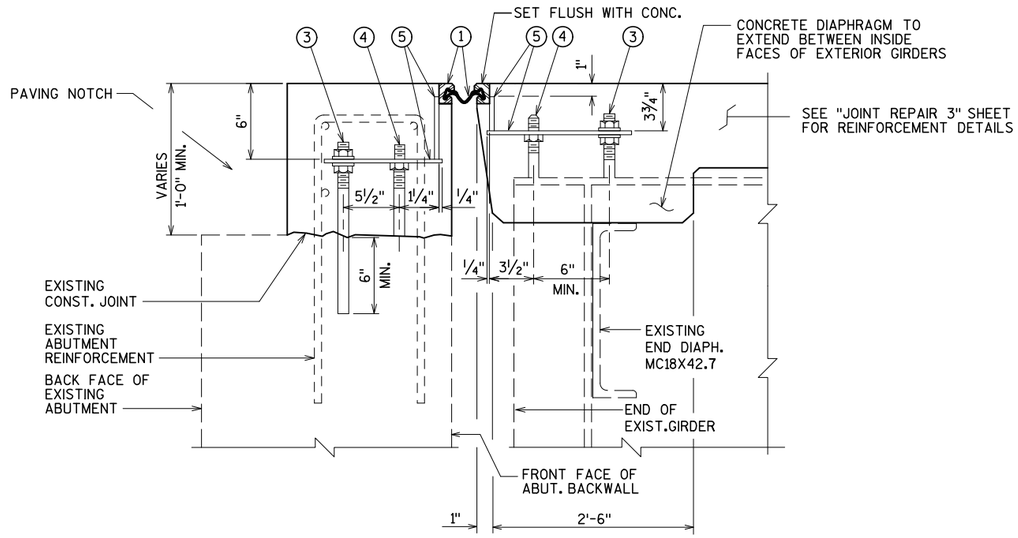

SECTION THRU JOINT AT ABUTMENT

NORMAL TO ℄ SUBSTRUCTURE

LEGEND

1. NEOPRENE STRIP SEAL (4 - INCH) AND STEEL EXTRUSIONS.
2. STUDS ⅝"ϕ X 6⅜" LONG AT 6" ALTERNATE CENTERS. WELD TO EXTRUSIONS AND BEND AS SHOWN AFTER WELDING.

2A. ½" THICK ANCHOR PLATE WITH ⅝"ϕ ROD (OR ALTERNATE STRIP SEAL ANCHOR). WELD ROD TO ANCHOR PLATE, WELD ANCHOR PLATE TO NO. 1 AT 1'-6" CENTERS BETWEEN GIRDERS.

3. ¾" ϕ THREADED ROD WITH 2 NUTS AND PLATE WASHERS. WELD THREADED ROD TO TOP FLANGE OR ATTACH BY BOLTING THRU FLANGE. ON ABUTMENT SIDE GROUT THREADED ROD INTO FIELD DRILLED HOLES IN ABUTMENT BACKWALL AS SHOWN.
4. ¾"ϕ THREADED ROD WITH NUT. TACK WELD NUT TO NO. 5.
5. FABRICATE SUPPORT FROM 3" X ½" BAR AS SHOWN OR EQUIVALENT, ONE PER GIRDER PER SIDE. SHOP OR FIELD WELD TO NO. 1. IF FIELD WELDED, COVER WELDED AREAS WITH EPOXY-COATING MATERIAL. PROVIDE 1½" ϕ HOLE FOR NO. 3 & 1" ϕ HOLE FOR NO. 4.
6. GALVANIZED COVER PLATE ⅜" X 2'-2" X LIMITS SHOWN FOR SOUTH CURB. BEND DOWN FACE OF CURB WITH HOLES FOR NO. 7.
7. ¾"ϕ X 1½" STAINLESS STEEL SOCKET FLAT HEAD SCREWS WITH ANTI-SEIZE LUBRICANT. PLACE IN COUNTERSUNK HOLE. RECESS 1/16" BELOW PLATE SURFACE.
8. ¾"ϕ X 4" GALVANIZED HEX HEAD BOLT. BEND 45°.
9. ¾"ϕ X 2¼" GALVANIZED THREADED COUPLING.
10. 1" X 5" SLOTTED COUNTERSUNK HOLE FOR NO. 7. PLACE SLOT PARALLEL TO DIRECTION OF MOVEMENT.
11. SIDEWALK COVER PLATE ⅜" X 2'-0" X LIMITS SHOWN. BEND DOWN FACE OF SIDEWALK WITH HOLES FOR NO. 7. GALVANIZE PLATE AFTER SLIP-RESISTANT SURFACE IS APPLIED.

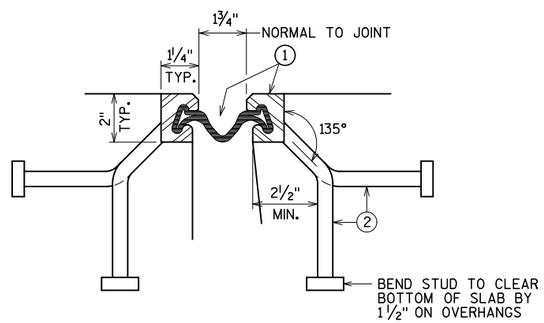

SECTION THRU JOINT

EXTERIOR GIRDER TO EDGE OF DECK AND AT PARAPETS, MEDIANS AND SIDEWALKS

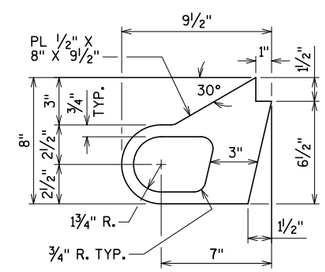

ALTERNATE STRIP SEAL ANCHOR

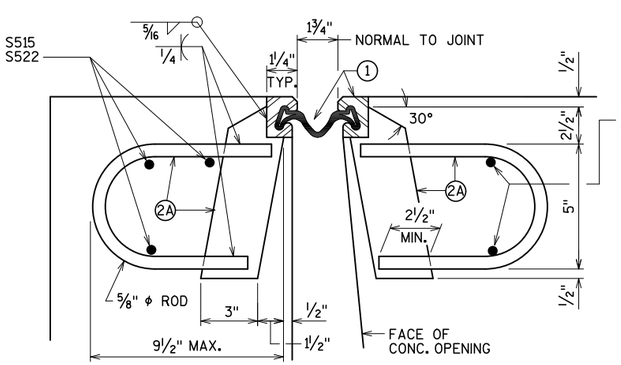

AT PAVING BLOCK AT DECK

SECTION THRU JOINT

ROADWAY TRAFFIC AREA BETWEEN EXTERIOR GIRDERS.

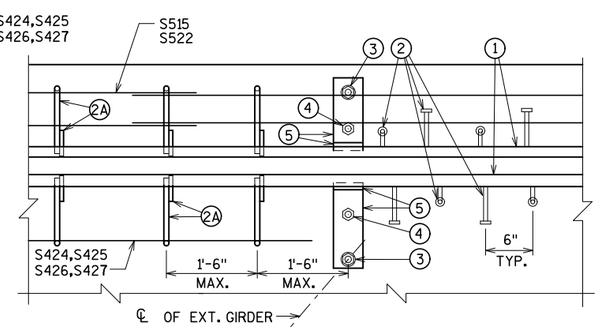

PART PLAN

NOTES

ONE FIELD SPLICE PERMITTED IN STEEL EXTRUSIONS, UNLESS MORE ARE REQUIRED FOR STAGED CONSTRUCTION. HANDLING OR GALVANIZING REQUIREMENTS. IF USED, DETAILS SHALL BE SUBMITTED FOR APPROVAL. NO SPLICING PERMITTED IN NEOPRENE STRIP SEAL.

AFTER FABRICATION, BUT BEFORE SHIPMENT, STRAIGHTEN STEEL EXTRUSIONS SUCH THAT THEY SHALL BE FREE FROM WARP, TWIST AND SWEEP.

FABRICATOR SHALL PROVIDE MEANS OF KEEPING GALVANIZED EXTRUSIONS CLEAN AND SMOOTH DURING SHIPMENT AND PRIOR TO APPLYING LUBRICANT ADHESIVE FOR NEOPRENE GLAND INSTALLATION.

SANDBLAST PLATES, SUPPORTS AND EXTRUSIONS AFTER FABRICATION IN ACCORDANCE WITH SSPC SP. #6 "COMMERCIAL BLAST CLEANING". AFTER BLAST CLEANING, THE PLATES, SUPPORTS AND EXTRUSIONS SHALL BE HOT DIPPED GALVANIZED. SLIP-RESISTANT SURFACE IS APPLIED TO SIDEWALK COVER PLATES BY THE MANUFACTURER AND THEN HOT DIPPED GALVANIZED TO THEIR RECOMMENDATIONS TO MAINTAIN THE INTEGRITY OF THIS SURFACE.

ANCHOR SYSTEM NO. 8 AND NO. 9 SHALL CONFORM TO ASTM A307 AND SHALL BE GALVANIZED IN ACCORDANCE WITH ASTM A153 CLASS C AND D.

STRIP SEAL EXPANSION JOINT ASSEMBLY, INCLUDING ANCHOR STUDS AND HARDWARE WILL BE PAID FOR AT THE LUMP SUM PRICE BID FOR "EXPANSION DEVICE B-37-157".

NO.	DATE	REVISION	BY

STATE OF WISCONSIN
DEPARTMENT OF TRANSPORTATION
STRUCTURES DESIGN SECTION

STRUCTURE B-37-157

DRAWN BY TB | PLANS CK'D. BDT/JRS

EXPANSION DEVICE

SHEET 8 OF 11

8

8

STATE PROJECT NUMBER
1166-07-62

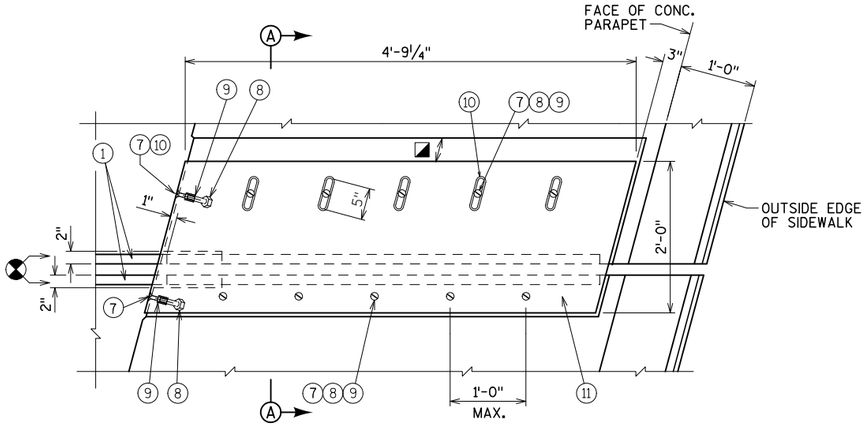

PLAN AT SIDEWALK

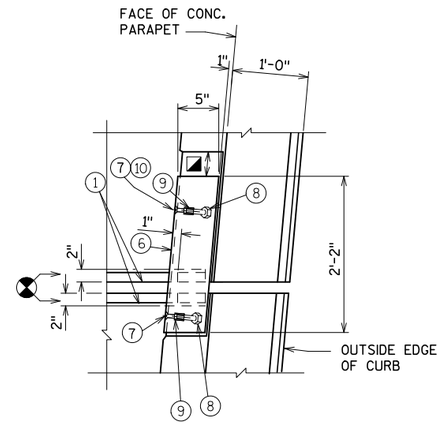

PLAN AT SOUTH CURB

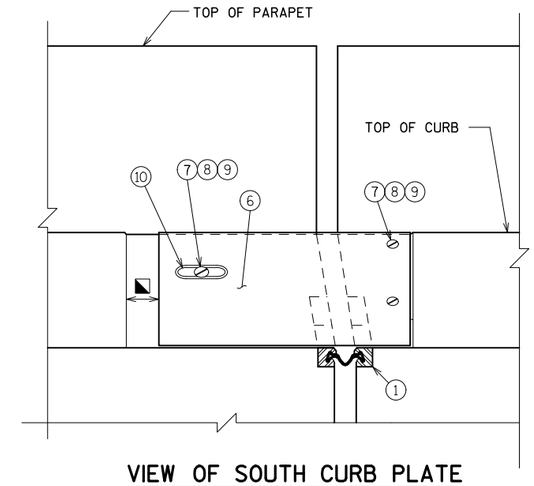

VIEW OF SOUTH CURB PLATE FROM ROADWAY

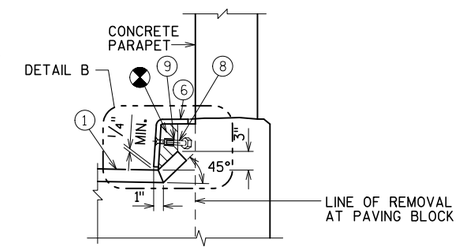

SECTION THRU SOUTH CURB

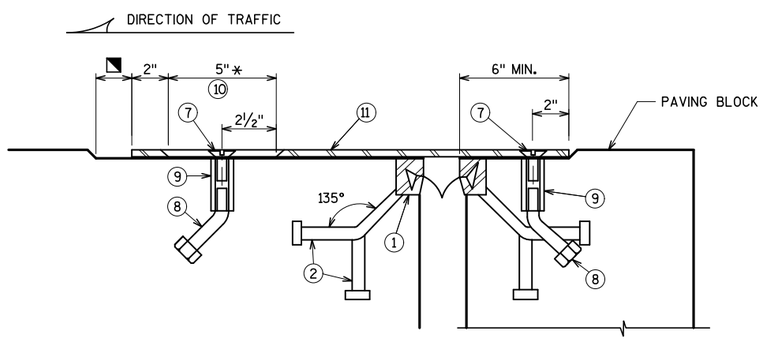

AT EAST ABUTMENT

SIDEWALK SHOWN. SOUTH CURB SIMILAR

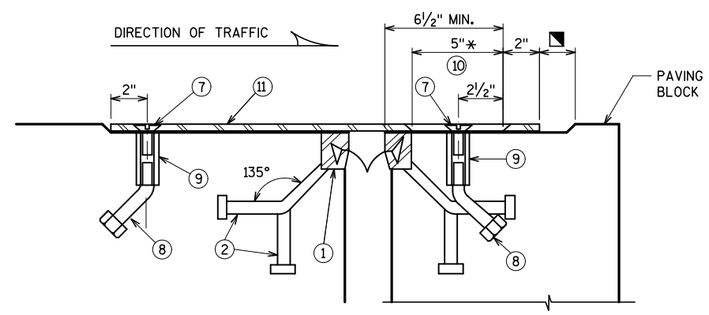

AT WEST ABUTMENT

SIDEWALK SHOWN. SOUTH CURB SIMILAR

SECTION A-A

* DIMENSION ALONG DIRECTION OF MOVEMENT

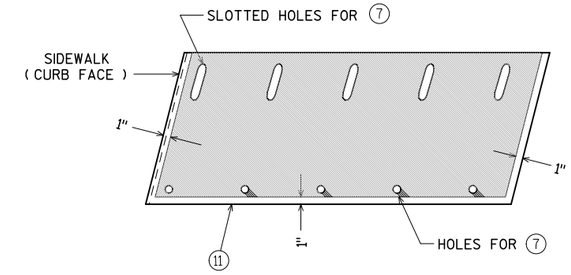

PLAN OF SIDEWALK COVER PLATE WITH SLIP-RESISTANT SURFACE

PLACE SLIP-RESISTANT SURFACE ON TOP WALKING SURFACE IN SHADED AREA ONLY (NOT ON CURB FACE).

APPROVED SLIP-RESISTANT APPLIED SURFACES FOR STEEL PLATES		
PRODUCT	MANUFACTURER	CONTACT AT
SLIPNOT GRADE 2, STEEL	W. S. MOLNAR COMPANY	1-800-SLIPNOT
ALGRIP, STEEL	ROSS TECHNOLOGY CORP.	1-800-345-8170

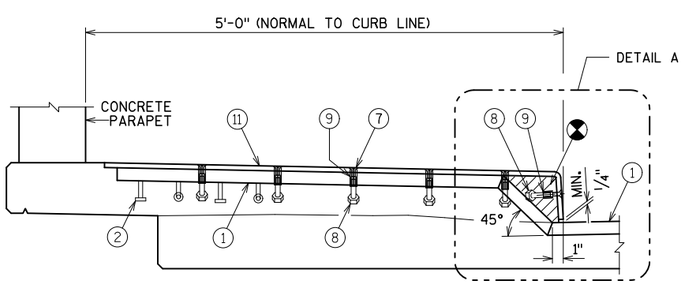

SECTION THRU SIDEWALK

(LOOKING EAST)

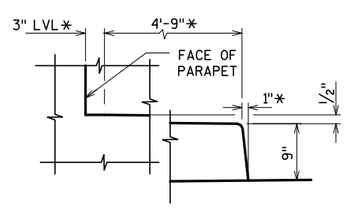

DETAIL A

* DIMENSION NORMAL TO ℞

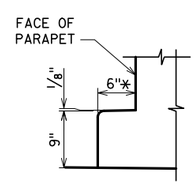

DETAIL B

* DIMENSION NORMAL TO ℞

NOTES

SEE "EXPANSION DEVICE" SHEET FOR KEYED NOTES.

LEGEND

⊗ BLOCK OUT CONCRETE 2" EACH SIDE OF JOINT OPENING.

◪ JOINT OPENING DIMENSION ALONG SKEW PLUS 1/2".

NO.	DATE	REVISION	BY

STATE OF WISCONSIN
DEPARTMENT OF TRANSPORTATION
STRUCTURES DESIGN SECTION

STRUCTURE B-37-157

DRAWN BY TB | PLANS CK'D. BDT/JRS

COVER PLATE DETAILS

SHEET 9 OF 11

209

8

8

STATE PROJECT NUMBER
1166-07-62

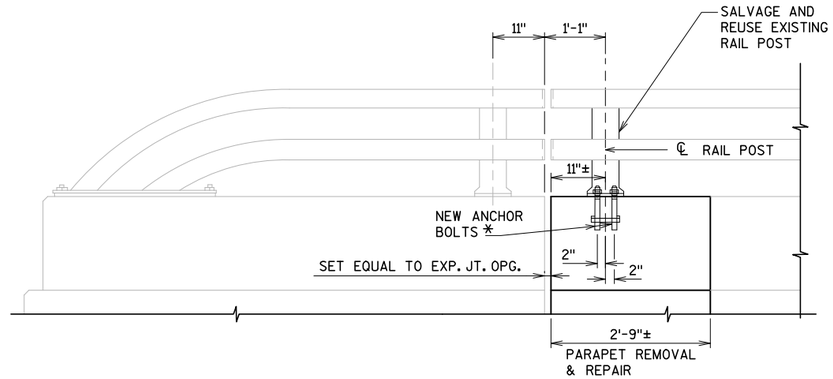

ELEVATION

LOOKING AT FRONT FACE OF PARAPET
AT WINGS 2 AND 4. WINGS 1 AND 3 OPPOSITE.

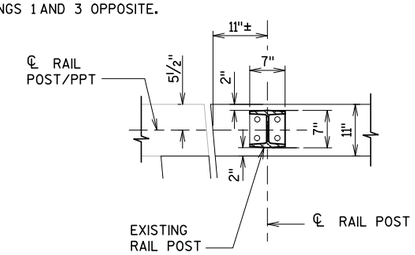

PLAN

* MATCH LOCATION OF EXISTING POST/ANCHOR BOLTS

GENERAL NOTES

THE RESETTING OF THE RAIL POSTS AND THE NEW ANCHOR BOLTS AND SHIMS SHALL BE INCLUDED UNDER THE BID ITEM " REMOVE AND RESET TUBULAR RAILING"

THE SHANK AND ROOT DIAMETER OF THREAD FOR ANCHOR BOLTS SHALL BE A MINIMUM OF 5/8".

ANCHOR BOLTS, NUTS, AND WASHERS SHALL BE STAINLESS STEEL.

SHIMS SHALL CONFORM TO SAME MATERIAL AS POSTS (ALUMINUM)

RAILING POSTS SHALL BE SET NORMAL TO GRADE LINE.

SHIMS SHALL BE USED UNDER POSTS WHERE REQUIRED FOR ALIGNMENT.

FILL ALL EXPOSED OPENINGS BETWEEN SHIMS AND POST ANCHOR BOLT HOLES WITH NON-STAINING GRAY NON-BITUMINOUS JOINT SEALER.

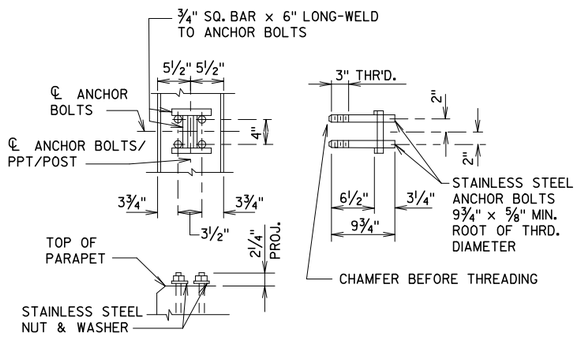

NEW ANCHOR BOLTS AT POSTS

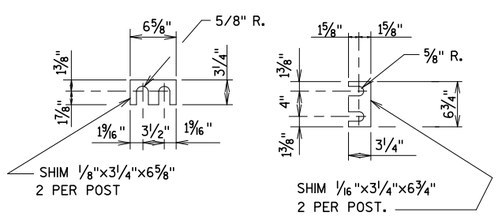

NEW POST SHIM DETAILS

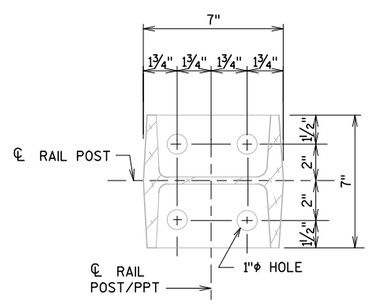

EXISTING ALUMINUM POST BASE

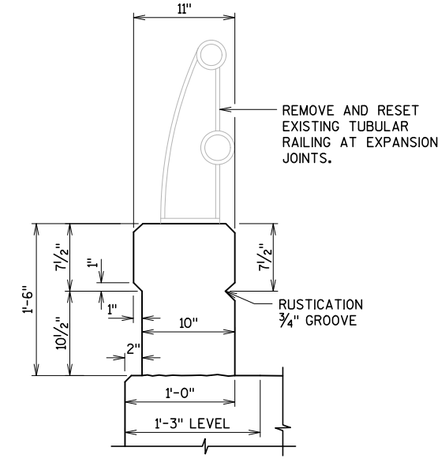

PARAPET DETAIL

MATCH EXISTING.
REINFORCEMENT OMITTED FOR CLARITY.

8

8

NO.	DATE	REVISION	BY

STATE OF WISCONSIN
DEPARTMENT OF TRANSPORTATION
STRUCTURES DESIGN SECTION

STRUCTURE B-37-157

DRAWN BY TB | PLANS CK'D. BDT/JRS

PARAPET AND RAILING DETAILS

SHEET 10 OF 11

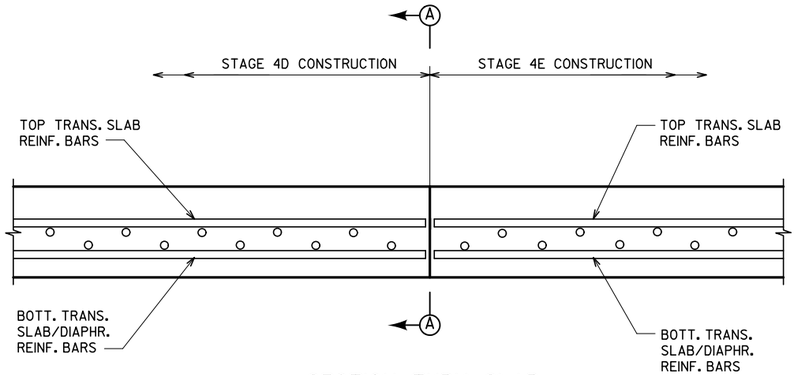

SECTION THRU SLAB

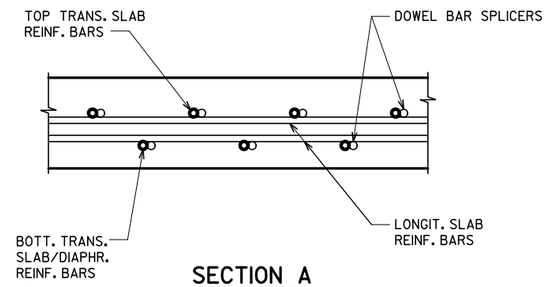

SECTION A

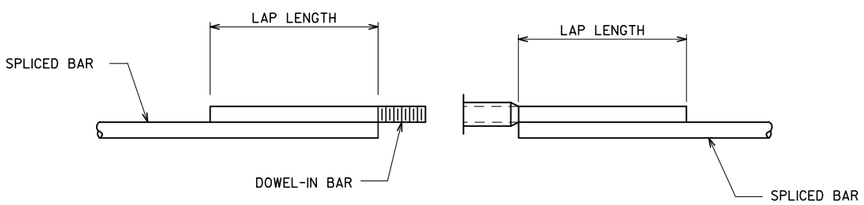

DOWEL BAR SPLICER

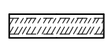

ONE PIECE THREADED SPLICER

SPLICER ALTERNATIVES

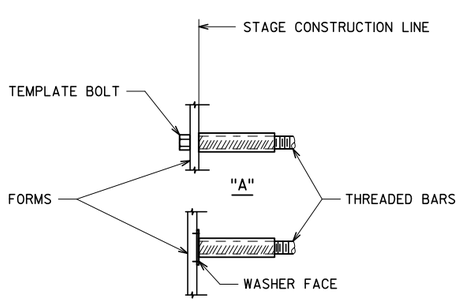

INSTALLATION AND SETTING METHODS

"A" SET SPLICER BY MEANS OF A TEMPLATE BOLT
"B" SET SPLICER BY NAILING TO WOOD FORMS OR CEMENTING TO STEEL FORMS.

NOTES

STEEL SPLICE (COUPLER) ASSEMBLY SHALL BE AN APPROVED TYPE AND SHALL DEVELOP IN TENSION AT LEAST 125% OF THE YIELD STRENGTH OF THE SPLICED REINFORCEMENT BARS.

DOWEL BAR SPLICERS SHALL BE OF MINIMUM 60 ksi YIELD STRENGTH, AND HAVE TENSILE STRENGTH AREA EQUAL OR GREATER THAN THAT OF THE LAPPED REINFORCEMENT BARS.

DOWEL BAR SPLICERS SHALL MEET THE DEFORMATION REQUIREMENTS FOR STANDARD ASTM DEFORMED REINFORCING BARS.

FOR DOWEL BAR SPLICERS, ALL REINFORCEMENT BARS SHALL BE LAPPED AND TIED TO THE SPLICE BARS.

SPLICER (COUPLER) ASSEMBLY IN THE SLAB SHALL BE EPOXY COATED IN ACCORDANCE WITH THE REQUIREMENTS FOR REINFORCEMENT BARS.

OTHER SYSTEMS OF SIMILAR DESIGN MAY BE SUBMITTED TO THE ENGINEER FOR APPROVAL. APPROVAL SHALL BE BASED ON CERTIFIED TEST RESULTS FROM AN APPROVED TESTING LABORATORY THAT THE PROPOSED SPLICER (COUPLER) ASSEMBLY SATISFIES THE FOLLOWING REQUIREMENT:

(1) MINIMUM CAPACITY = 1.25 X fy X AREA OF SPLICED REINFORCEMENT BAR.

WHERE fy = YIELD STRENGTH OF SPLICED REINFORCEMENT BARS

BAR LENGTH COMPUTED TO ℄ LONGIT. JOINT AND SHALL BE MODIFIED IF REQUIRED TO BAR COUPLER MANUFACTURER RECOMMENDATIONS. PAY BASED ON BARS AS DETAILED.

SEE "BILL OF BARS" SHEET FOR LOCATION, STAGING, SIZE, AND QUANTITY OF COUPLERS REQUIRED.

8

8

NO.	DATE	REVISION	BY

STATE OF WISCONSIN
DEPARTMENT OF TRANSPORTATION
STRUCTURES DESIGN SECTION

STRUCTURE B-37-157

DRAWN BY TB | PLANS CK'D. BDT/JRS

BAR COUPLERS

STATE PROJECT NUMBER
1166-07-62

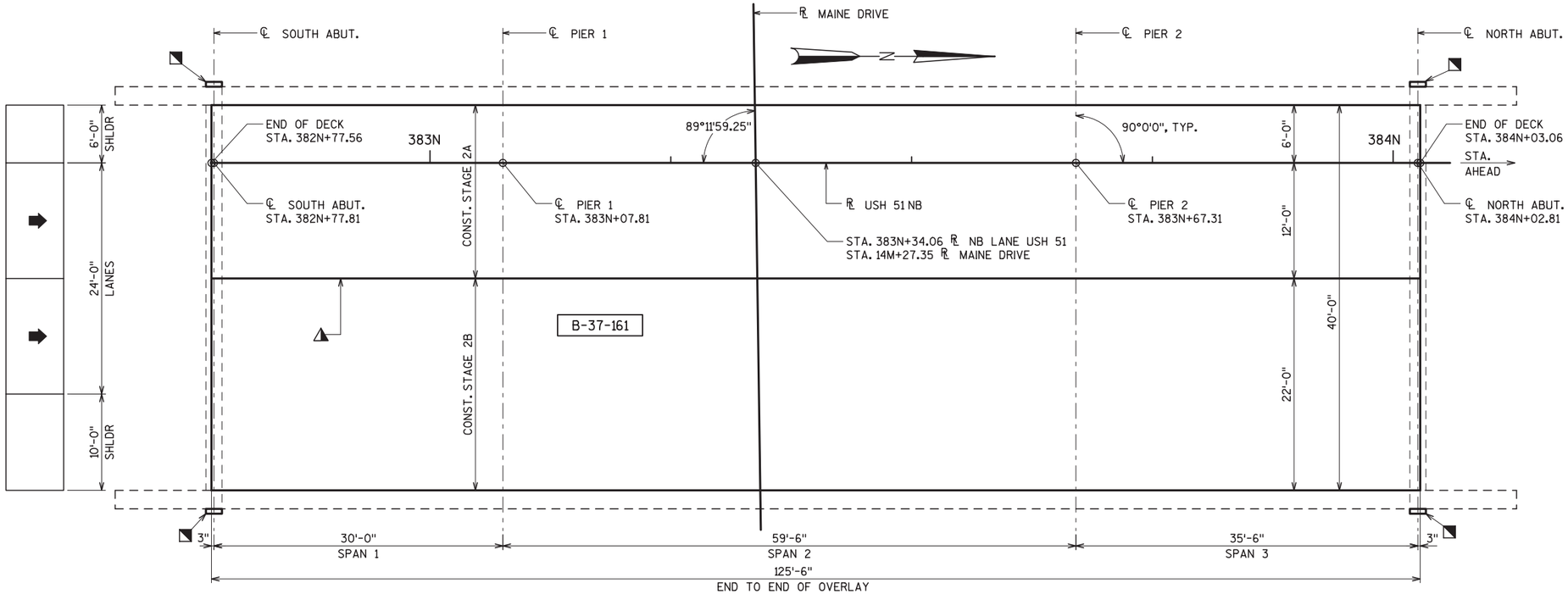

PLAN

(3 SPAN HAUNCHED SLAB BRIDGE)

TOTAL ESTIMATED QUANTITIES

ITEM NUMBER	BID ITEMS	UNIT	TOTAL
502.0100	CONCRETE MASONRY BRIDGES	CY	1
502.3200	PROTECTIVE SURFACE TREATMENT	SY	120
502.5002	MASONRY ANCHORS TYPE L NO. 4 BARS	EACH	36
505.0605	BARS TEEL REINFORCEMENT HS COATED BRIDGES	LB	120
509.0301	PREPARATION DECKS TYPE 1	SY	115
509.0302	PREPARATION DECKS TYPE 2	SY	55
509.1500	CONCRETE SURFACE REPAIR	SF	20
509.2500	CONCRETE MASONRY OVERLAY DECKS	CY	63
509.5100.S	POLYMER OVERLAY	SY	560
509.9005.S	REMOVING CONCRETE MASONRY DECK OVERLAY	SY	560
509.9050.S	CLEANING PARAPETS	LF	290
604.9015.S	RESEAL CRUSHED AGGREGATE SLOPE PAVING	SY	415
SPV.0060.02	ABUTMENT END REPAIR B-37-161	EACH	4

ALL ITEMS ARE CATEGORY 0030

DESIGN DATA

LIVE LOAD

DESIGN LOAD: HS-20
INVENTORY RATING: HS-17
OPERATIONAL RATING: HS-28
WISCONSIN STANDARD PERMIT VEHICLE LOAD (WIS-SPV): 250 KIPS

ULTIMATE DESIGN STRESSES

CONCRETE MASONRY SUPERSTRUCTURE, f'c = 4,000 psi

HIGH STRENGTH BAR STEEL REINFORCEMENT, GRADE 60: fy = 60,000 psi

TRAFFIC DATA

USH 51

A.D.T. = 17,700 (2010)
A.D.T. = 24,800 (2035)
R.D.S. = 70 MPH

LEGEND

◭ - LONGITUDINAL CONST. JOINT. SEAL WITH CRACK SEALER PER SECTION 502.3.13 OF STANDARD SPECIFICATIONS. SEE DETAIL ON SHEET 3. COST INCLUDED IN BID ITEM "CONCRETE MASONRY OVERLAY DECKS".

◐ - ORIGINAL SLAB THICKNESS IS ASSUMED TO BE REDUCED BY 1" DURING PLACEMENT OF THE PREVIOUS CONCRETE OVERLAY

◪ - ABUTMENT END REPAIR, TYP. SEE SHEET 2

GENERAL NOTES

DRAWINGS SHALL NOT BE SCALED.

DIMENSIONS SHOWN ARE BASED ON THE ORIGINAL STRUCTURE PLANS.

PROFILE GRADE LINE SHALL BE BASED ON THE 2% CROSS SLOPE OF EXISTING OVERLAY. THE ORIGINAL DECK HAD A CROSS SLOPE OF 1%. MINIMUM THICKNESS OF OVERLAY ABOVE THE CONCRETE DECK AFTER REMOVING THE EXISTING OVERLAY IS 1½" AT THE FLOWLINE. EXPECTED AVERAGE OVERLAY THICKNESS IS 3½ INCHES. IF EXPECTED OVERLAY THICKNESS IS EXCEEDED BY MORE THAN ½", CONTACT THE STRUCTURES DESIGN SECTION.

TOP OF EXISTING DECK OVERLAY ELEVATIONS SHALL BE DETERMINED FROM A FIELD SURVEY AT LOCATIONS DEEMED NECESSARY FOR ESTABLISHING OVERLAY THICKNESS.

ANY EXCAVATION REQUIRED TO COMPLETE THE OVERLAY IS INCIDENTAL TO THE BID ITEM "CONCRETE MASONRY OVERLAY DECKS".

ALL CONCRETE REMOVAL NOT COVERED WITH A CONCRETE OVERLAY SHALL BE DEIFINED BY A 1-INCH DEEP SAW CUT.

EXISTING CONCRETE OVERLAY SHALL BE COMPLETELY REMOVED FROM THE ENTIRE BRIDGE DECK UNDER THE BID ITEM "REMOVING CONCRETE MASONRY DECK OVERLAY".

BARS STEEL REINFORCEMENT SHALL BE EMBEDDED 2" CLEAR UNLESS OTHERWISE SHOWN OR NOTED.

THE FIRST DIGIT OF A THREE DIGIT BAR MARK AND THE FIRST TWO DIGITS OF A FOUR DIGIT BAR MARK SIGNIFY THE BAR SIZE.

BEVEL EXPOSED EDGES OF CONCRETE ¾" UNLESS OTHERWISE NOTED.

CONCRETE SURFACE REPAIR AND DECK PREPARATION REQ'D IN AREAS DESIGNATED BY THE FIELD ENGINEER. QUANTITIES SHOWN ARE APPROXIMATE.

APPLY PROTECTIVE SURFACE TREATMENT TO TOP AND INSIDE FACES OF EXISTING PARAPETS.

DO NOT EXPOSE MORE THAN 1/3 OF SLAB TOP BAR STEEL OVER THE PIER IF THE BAR ENDS ARE NOT FULLY ANCHORED TO MAINTAIN SPAN CONTINUITY.

SEE SPECIAL PROVISIONS FOR REQUIRED CONCRETE CURE TIME PRIOR TO PLACING POLYMER OVERLAY.

LIST OF DRAWINGS

1. CONCRETE OVERLAY
2. ABUTMENT DETAILS
3. CONSTRUCTION STAGING

8

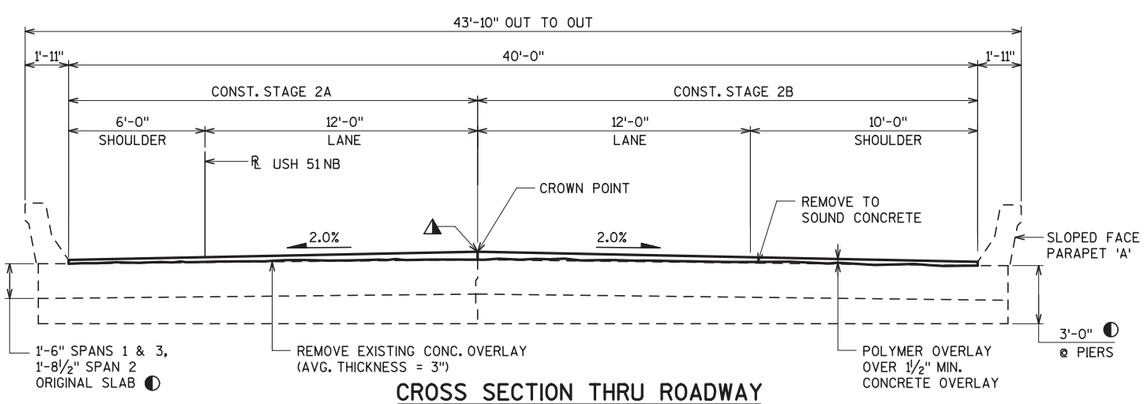

CROSS SECTION THRU ROADWAY

(LOOKING NORTH)

WISCONSIN
THOMAS A. ZALEWSKI
E-26972
MADISON
WI
PROFESSIONAL ENGINEER
3/3/14

WISCONSIN
BABU D. THENGANAKUNNEL
E-35905
MILWAUKEE, WI
PROFESSIONAL ENGINEER
3/3/2014

STRUCTURE DESIGN CONTACTS

BUREAU OF STRUCTURES CONTACT:
WILLIAM DREHER
(608) 266-8489

CONSULTANT CONTACT:
TOM ZALEWSKI
(608) 515-3525

NO.	DATE	REVISION	BY

BLOOM COMPANIES, LLC
Infrastructure Innovation and Ingenuity
10501 W. Research Drive • Milwaukee, WI 53226
Phone: (414) 771-3390 Fax: (414) 771-4490

STATE OF WISCONSIN
DEPARTMENT OF TRANSPORTATION

ACCEPTED William C. Dreher 6/19/14
CHIEF STRUCTURES DESIGN ENGINEER DATE

8

STRUCTURE B-37-161

USH 51 NB OVER MAINE DRIVE

COUNTY	MARATHON	TOWN	MAINE
DESIGN SPEC.	REHABILITATION		N/A
DESIGNED BY BDT	DESIGN CK'D. JRS	DRAWN BY TB	PLANS CK'D. BDT/JRS

CONCRETE OVERLAY

SHEET 1 OF 3
212

STATE PROJECT NUMBER
1166-07-62

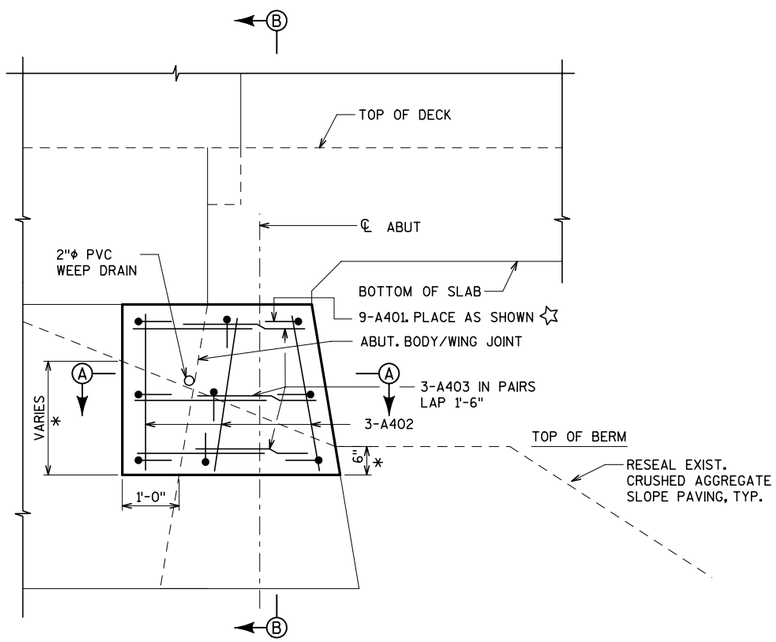

ABUTMENT END ELEVATION

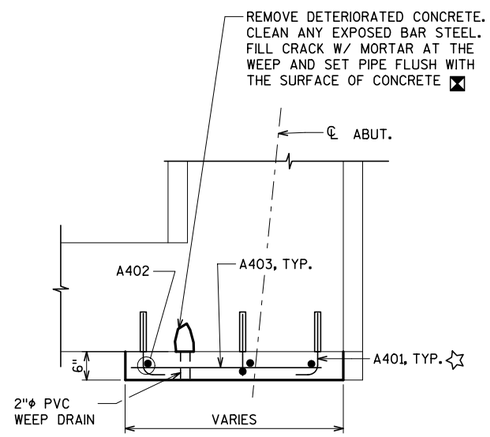

SECTION A-A

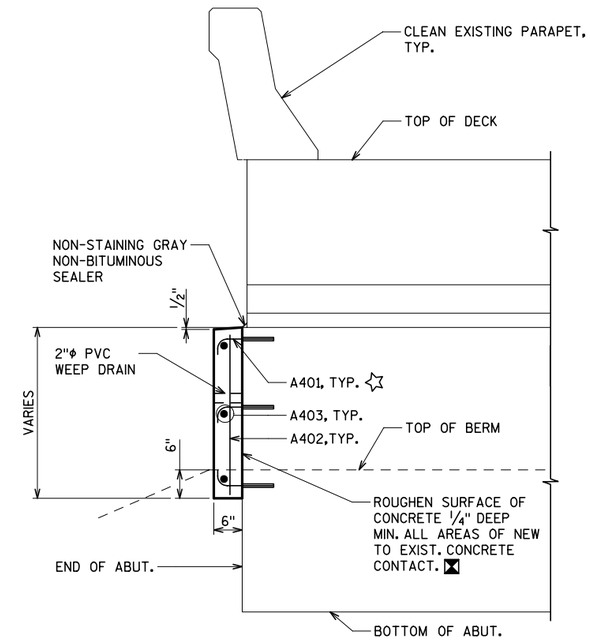

SECTION B-B

ABUTMENT REPAIR DETAILS

* COST OF EXCAVATION AND BACKFILL IS INCLUDED IN THE BID ITEM "ABUTMENT END REPAIR".

LEGEND

☒ COST INCLUDED IN THE BID ITEM "ABUTMENT END REPAIR".

☆ CONCRETE MASONRY ANCHOR, TYPE L, NO. 4 BARS. EMBED 8" IN CONCRETE.

BILL OF BARS

BAR MARK	COAT	NO. REQ'D S. ABUT.	NO. REQ'D N. ABUT.	LENGTH	BENT	BAR SERIES	LOCATION
☆ A401	X	18	18	1'-8"	X	-	ABUT. END REPAIR DOWELS
A402	X	6	6	2'-8"	-	-	ABUT. END REPAIR VERTICAL
A403	X	12	12	3'-0"	-	-	ABUT. END REPAIR HORIZ.

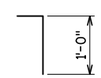

A401 ☆

BENDING DIAGRAM

8

8

NO.	DATE	REVISION	BY

STATE OF WISCONSIN
DEPARTMENT OF TRANSPORTATION
STRUCTURES DESIGN SECTION

STRUCTURE B-37-161

DRAWN BY TB | PLANS CK'D. BDT/JRS

ABUTMENT DETAILS

SHEET 2 OF 3

STATE PROJECT NUMBER
1166-07-62

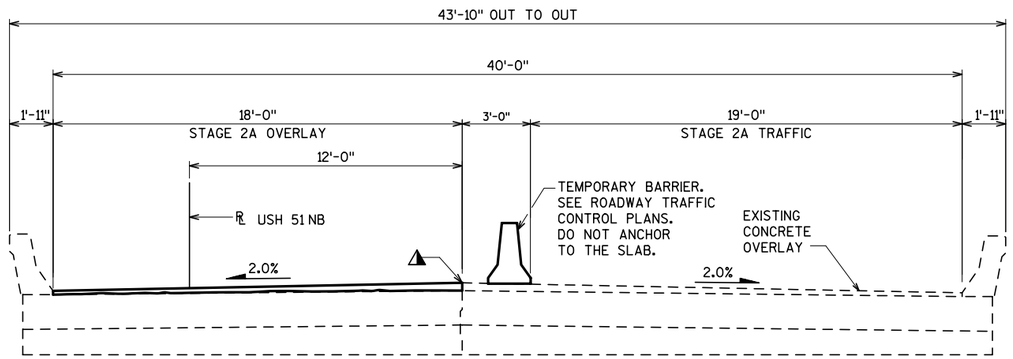

CONSTRUCTION STAGE 2A

(LOOKING NORTH)

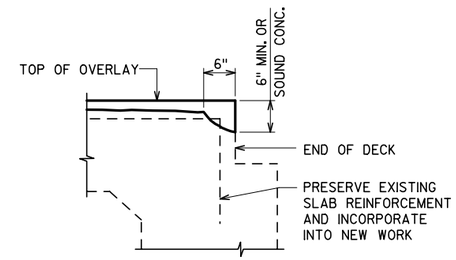

SECTION AT END OF SLAB

CONCRETE OVERLAY

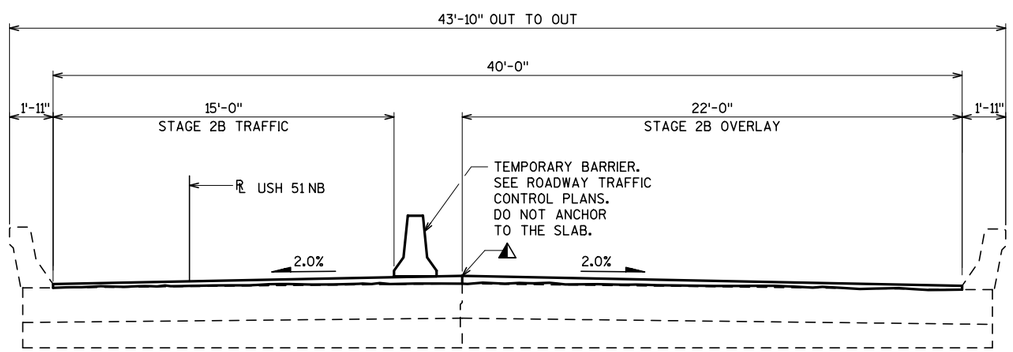

CONSTRUCTION STAGE 2B

(LOOKING NORTH)

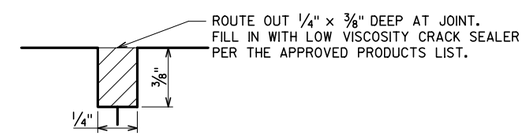

LONGITUDINAL CONSTRUCTION JOINT DETAIL

LEGEND

◭ LONGITUDINAL CONST. JOINT. SEAL WITH CRACK SEALER PER SECTION 502.3.13 OF STANDARD SPECIFICATIONS. SEE DETAIL THIS SHEET. COST INCLUDED IN BID ITEM "CONCRETE MASONRY OVERLAY DECKS".

NO.	DATE	REVISION	BY

STATE OF WISCONSIN
DEPARTMENT OF TRANSPORTATION
STRUCTURES DESIGN SECTION

STRUCTURE B-37-161

DRAWN BY	TB	PLANS CK'D.	BDT/JRS

CONSTRUCTION STAGING

8

8

STATE PROJECT NUMBER
1166-07-62

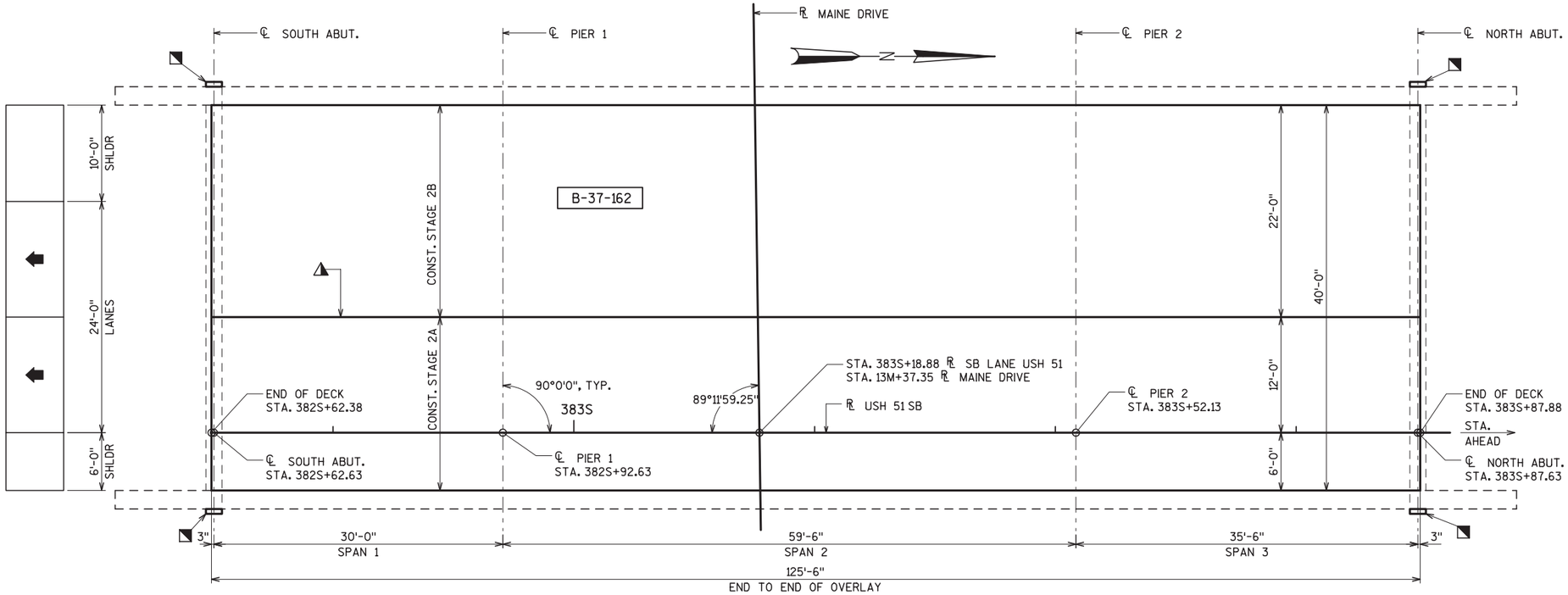

PLAN

(3 SPAN HAUNCHED SLAB BRIDGE)

GENERAL NOTES

DRAWINGS SHALL NOT BE SCALED.

DIMENSIONS SHOWN ARE BASED ON THE ORIGINAL STRUCTURE PLANS.

PROFILE GRADE LINE SHALL BE BASED ON THE 2% CROSS SLOPE OF EXISTING OVERLAY. THE ORIGINAL DECK HAD A CROSS SLOPE OF 1%. MINIMUM THICKNESS OF OVERLAY ABOVE THE CONCRETE DECK AFTER REMOVING THE EXISTING OVERLAY IS 1/2" AT THE FLOWLINE. EXPECTED AVERAGE OVERLAY THICKNESS IS 3 1/2 INCHES. IF EXPECTED OVERLAY THICKNESS IS EXCEEDED BY MORE THAN 1/2", CONTACT THE STRUCTURES DESIGN SECTION.

TOP OF EXISTING DECK OVERLAY ELEVATIONS SHALL BE DETERMINED FROM A FIELD SURVEY AT LOCATIONS DEEMED NECESSARY FOR ESTABLISHING OVERLAY THICKNESS.

ANY EXCAVATION REQUIRED TO COMPLETE THE OVERLAY IS INCIDENTAL TO THE BID ITEM "CONCRETE MASONRY OVERLAY DECKS".

ALL CONCRETE REMOVAL NOT COVERED WITH A CONCRETE OVERLAY SHALL BE DEIFINED BY A 1-INCH DEEP SAW CUT.

EXISTING CONCRETE OVERLAY SHALL BE COMPLETELY REMOVED FROM THE ENTIRE BRIDGE DECK UNDER THE BID ITEM "REMOVING CONCRETE MASONRY DECK OVERLAY".

BARS STEEL REINFORCEMENT SHALL BE EMBEDDED 2" CLEAR UNLESS OTHERWISE SHOWN OR NOTED.

THE FIRST DIGIT OF A THREE DIGIT BAR MARK AND THE FIRST TWO DIGITS OF A FOUR DIGIT BAR MARK SIGNIFY THE BAR SIZE.

BEVEL EXPOSED EDGES OF CONCRETE 3/4" UNLESS OTHERWISE NOTED.

CONCRETE SURFACE REPAIR AND DECK PREPARATION REQ'D IN AREAS DESIGNATED BY THE FIELD ENGINEER. QUNATITIES SHOWN ARE APPROXIMATE.

APPLY PROTECTIVE SURFACE TREATMENT TO TOP OF OVERLAY AND AND TOP AND INSIDE FACES OF EXISTING PARAPETS.

DO NOT EXPOSE MORE THAN 1/3 OF SLAB TOP BAR STEEL OVER THE PIER IF THE BAR ENDS ARE NOT FULLY ANCHORED TO MAINTAIN SPAN CONTINUITY.

TOTAL ESTIMATED QUANTITIES

ITEM NUMBER	BID ITEMS	UNIT	TOTAL
502.0100	CONCRETE MASONRY BRIDGES	CY	1
502.3200	PROTECTIVE SURFACE TREATMENT	SY	680
502.5002	MASONRY ANCHORS TYPE L NO. 4 BARS	EACH	36
505.0605	BAR STEEL REINFORCEMENT HS COATED BRIDGES	LB	120
509.0301	PREPARATION DECKS TYPE 1	SY	115
509.0302	PREPARATION DECKS TYPE 2	SY	55
509.1500	CONCRETE SURFACE REPAIR	SF	20
509.2500	CONCRETE MASONRY OVERLAY DECKS	CY	63
509.9005.S	REMOVING CONCRETE MASONRY DECK OVERLAY	SY	560
509.9050.S	CLEANING PARAPETS	LF	290
604.9015.S	RESEAL CRUSHED AGGREGATE SLOPE PAVING	SY	415
SPV.0060.03	ABUTMENT END REPAIR B-37-162	EACH	4

ALL ITEMS ARE CATEGORY 0040

DESIGN DATA

LIVE LOAD

DESIGN LOAD: HS-20
INVENTORY RATING: HS-17
OPERATIONAL RATING: HS-28
WISCONSIN STANDARD PERMIT VEHICLE LOAD (WIS-SPV): 250 KIPS

ULTIMATE DESIGN STRESSES

CONCRETE MASONRY SUPERSTRUCTURE, f'c = 4,000 psi

HIGH STRENGTH BAR STEEL REINFORCEMENT, GRADE 60: fy = 60,000 psi

TRAFFIC DATA

USH 51

A.D.T. = 17,700 (2010)
A.D.T. = 24,800 (2035)
R.D.S. = 70 MPH

LEGEND

◭ - LONGITUDINAL CONST. JOINT. SEAL WITH CRACK SEALER PER SECTION 502.3.13 OF STANDARD SPECIFICATIONS. SEE DETAIL ON SHEET 3. COST INCLUDED IN BID ITEM "CONCRETE MASONRY OVERLAY DECKS".

◐ - ORIGINAL SLAB THICKNESS IS ASSUMED TO BE REDUCED BY 1" DURING PLACEMENT OF THE PREVIOUS CONCRETE OVERLAY

◪ - ABUTMENT END REPAIR, TYP. SEE SHEET 2

LIST OF DRAWINGS

1. CONCRETE OVERLAY
2. ABUTMENT DETAILS
3. CONSTRUCTION STAGING

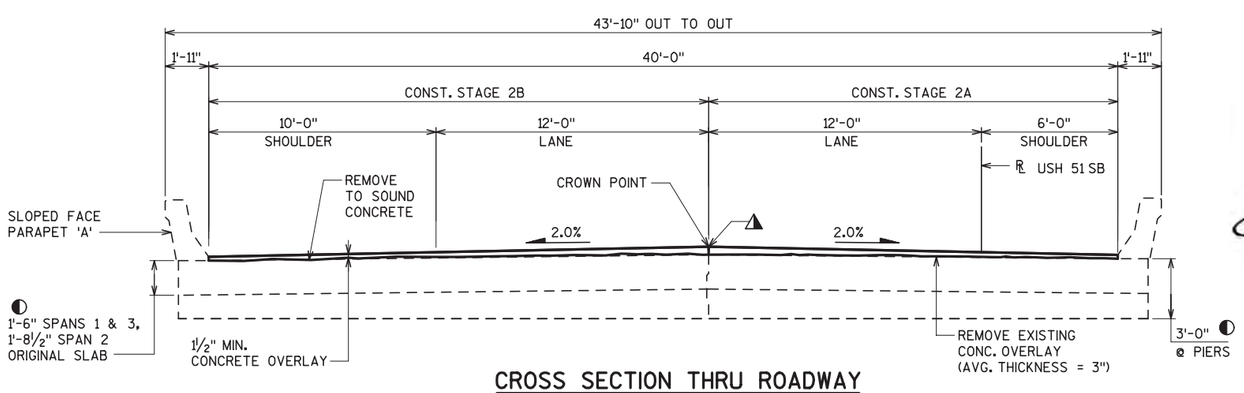

CROSS SECTION THRU ROADWAY

(LOOKING NORTH)

WISCONSIN PROFESSIONAL ENGINEER
THOMAS A. ZALEWSKI
E-26972
MADISON
WI
3/3/14

WISCONSIN PROFESSIONAL ENGINEER
BABU D. THENGANAKUNNEL
E-35905
MILWAUKEE, WI
3/3/2014

STRUCTURE DESIGN CONTACTS

BUREAU OF STRUCTURES CONTACT:
WILLIAM DREHER
(608) 266-8489

CONSULTANT CONTACT:
TOM ZALEWSKI
(608) 515-3525

NO.	DATE	REVISION	BY

BLOOM COMPANIES, LLC
Infrastructure Innovation and Ingenuity
10501 W. Research Drive • Milwaukee, WI 53226
Phone: (414) 771-3390 Fax: (414) 771-4490

STATE OF WISCONSIN
DEPARTMENT OF TRANSPORTATION

ACCEPTED William C. Dreher 6/19/14
CHIEF STRUCTURES DESIGN ENGINEER DATE

STRUCTURE B-37-162

USH 51 SB OVER MAINE DRIVE

COUNTY	MARATHON	TOWN	MAINE
DESIGN SPEC.	REHABILITATION	N/A	

DESIGNED BY	BDT	DESIGN CK'D.	JRS	DRAWN BY	TB	PLANS CK'D.	BDT/JRS

CONCRETE OVERLAY

SHEET 1 OF 3
215

8

8

I.D. 1166-07-32 MARCH 2014

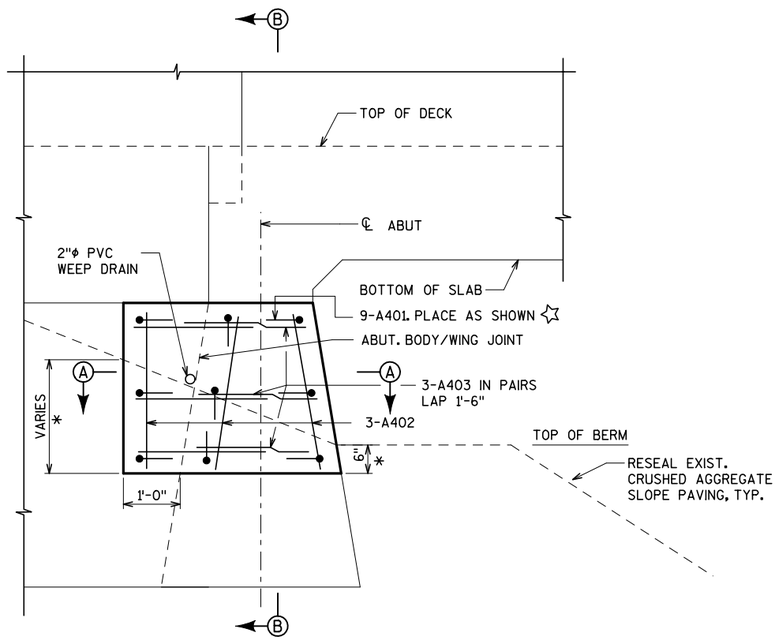

ABUTMENT END ELEVATION

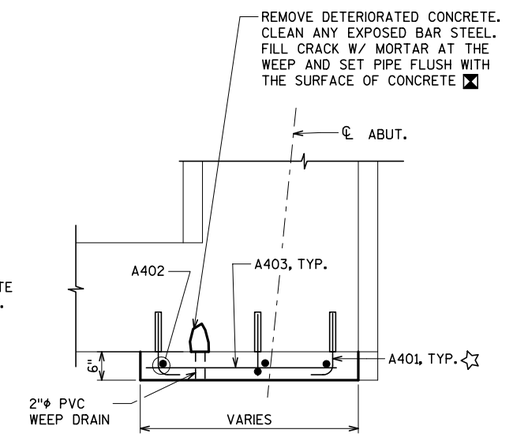

SECTION A-A

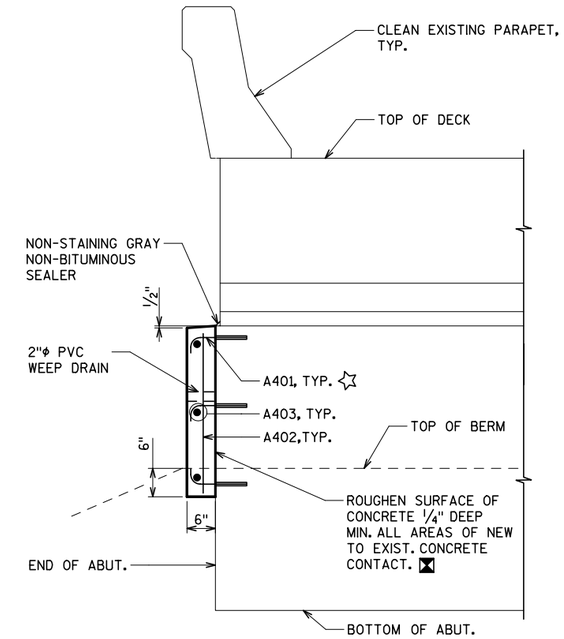

SECTION B-B

ABUTMENT REPAIR DETAILS

* COST OF EXCAVATION AND BACKFILL IS INCLUDED IN THE BID ITEM "ABUTMENT END REPAIR".

LEGEND

☒ COST INCLUDED IN THE BID ITEM "ABUTMENT END REPAIR".

☆ CONCRETE MASONRY ANCHOR, TYPE L, NO. 4 BARS. EMBED 8" IN CONCRETE.

BILL OF BARS

BAR MARK	COAT	NO. REQ'D S. ABUT.	NO. REQ'D N. ABUT.	LENGTH	BENT	BAR SERIES	LOCATION
A401	X	18	18	1'-8"	X	-	ABUT. END REPAIR DOWELS
A402	X	6	6	2'-8"	-	-	ABUT. END REPAIR VERTICAL
A403	X	12	12	3'-0"	-	-	ABUT. END REPAIR HORIZ.

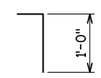

A401

BENDING DIAGRAM

NO.	DATE	REVISION	BY

STATE OF WISCONSIN
DEPARTMENT OF TRANSPORTATION
STRUCTURES DESIGN SECTION

STRUCTURE B-37-162

DRAWN BY TB | PLANS CK'D. BDT/JRS

ABUTMENT DETAILS

SHEET 2 OF 3

8

8

STATE PROJECT NUMBER
1166-07-62

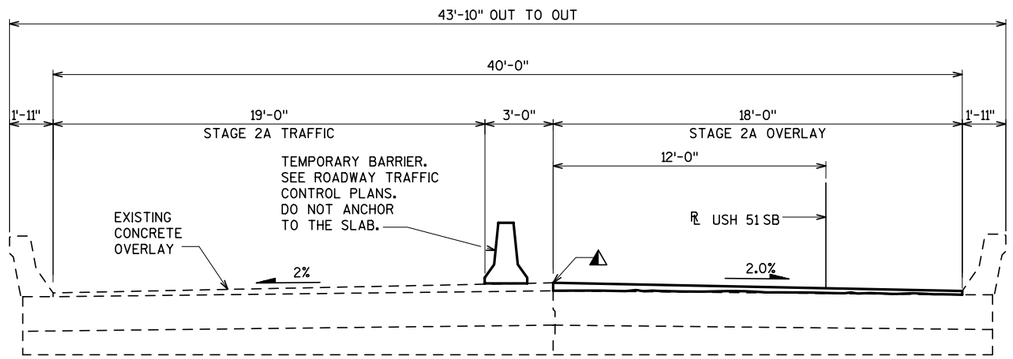

CONSTRUCTION STAGE 2A

(LOOKING NORTH)

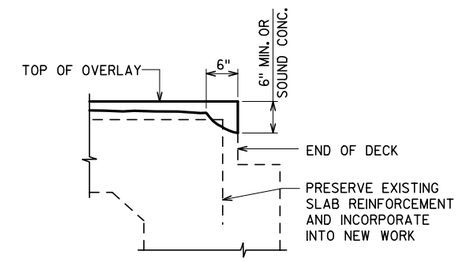

SECTION AT END OF SLAB

CONCRETE OVERLAY

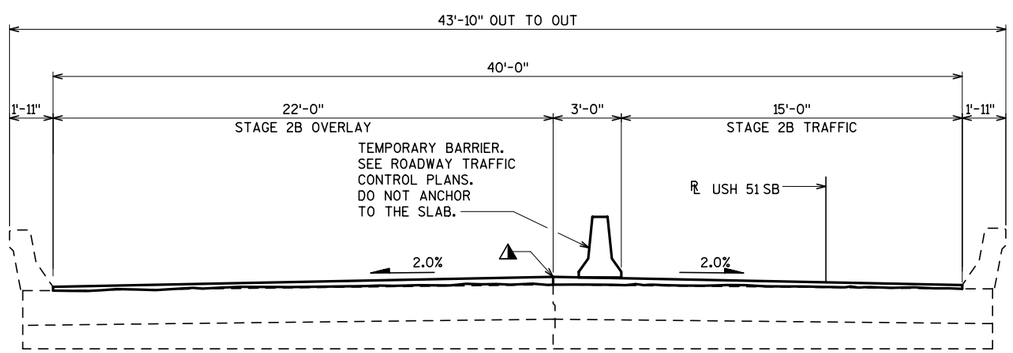

CONSTRUCTION STAGE 2B

(LOOKING NORTH)

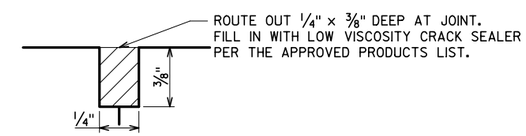

LONGITUDINAL CONSTRUCTION JOINT DETAIL

LEGEND

▲ LONGITUDINAL CONST. JOINT. SEAL WITH CRACK SEALER PER SECTION 502.3.13 OF STANDARD SPECIFICATIONS. SEE DETAIL THIS SHEET. COST INCLUDED IN BID ITEM "CONCRETE MASONRY OVERLAY DECKS".

8

8

NO.	DATE	REVISION	BY

STATE OF WISCONSIN
DEPARTMENT OF TRANSPORTATION
STRUCTURES DESIGN SECTION

STRUCTURE B-37-162

DRAWN BY TB | PLANS CK'D. BDT/JRS

CONSTRUCTION STAGING

SHEET 3 OF 3

STATE PROJECT NUMBER
1166-07-62

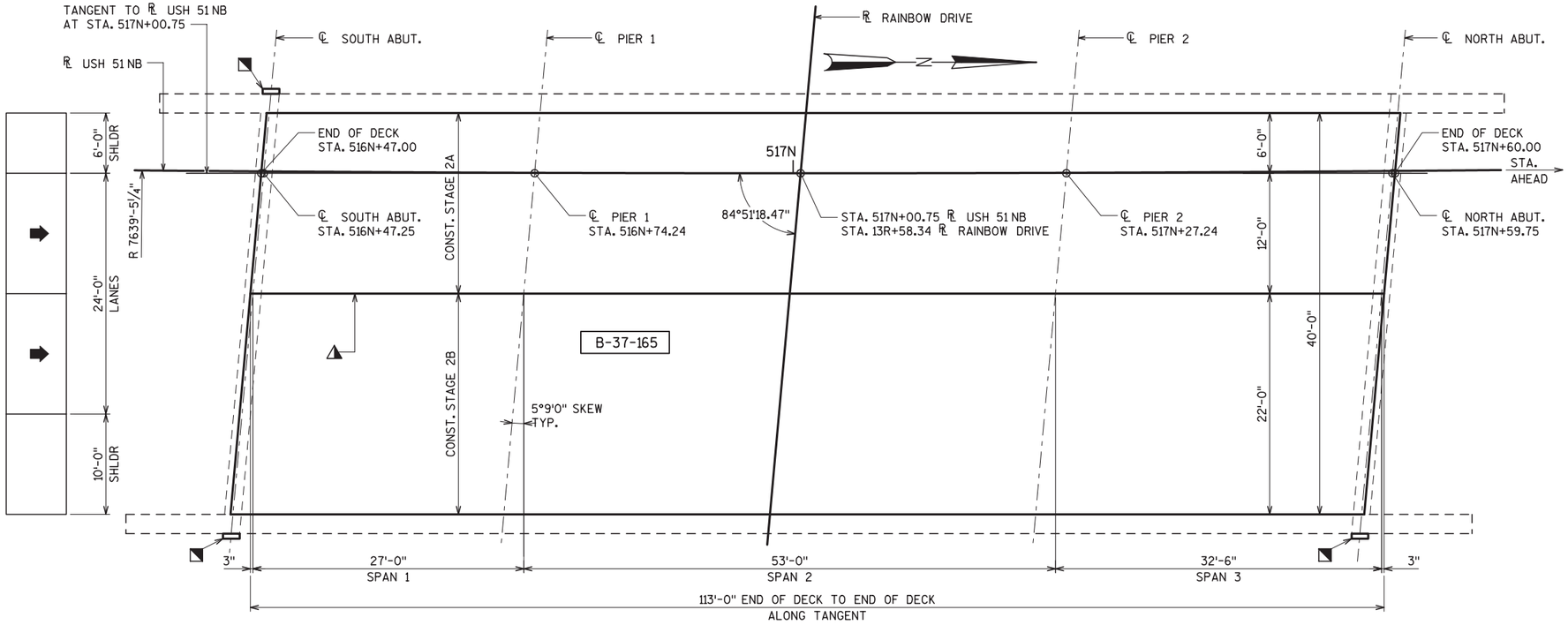

PLAN

(3 SPAN HAUNCHED SLAB BRIDGE)

TOTAL ESTIMATED QUANTITIES

ITEM NUMBER	BID ITEMS	UNIT	TOTAL
502.0100	CONCRETE MASONRY BRIDGES	CY	1
502.3200	PROTECTIVE SURFACE TREATMENT	SY	614
502.5002	MASONRY ANCHORS TYPE L NO. 4 BARS	EACH	27
505.0605	BAR STEEL REINFORCEMENT HS COATED BRIDGES	LB	100
509.0301	PREPARATION DECKS TYPE 1	SY	84
509.0302	PREPARATION DECKS TYPE 2	SY	33
509.1500	CONCRETE SURFACE REPAIR	SF	20
509.2500	CONCRETE MASONRY OVERLAY DECKS	CY	44
509.9005.S	REMOVING CONCRETE MASONRY DECK OVERLAY	SY	502
509.9050.S	CLEANING PARAPETS	LF	270
604.9015.S	RESEAL CRUSHED AGGREGATE SLOPE PAVING	SY	387
SPV.0060.04	ABUTMENT END REPAIR B-37-165	EACH	3

ALL ITEMS ARE CATEGORY 0050

DESIGN DATA

LIVE LOAD

DESIGN LOAD: HS-20
INVENTORY RATING: HS-16
OPERATIONAL RATING: HS-27
WISCONSIN STANDARD PERMIT VEHICLE LOAD (WIS-SPV): 250 KIPS

ULTIMATE DESIGN STRESSES

CONCRETE MASONRY SUPERSTRUCTURE, f'c = 4,000 psi

HIGH STRENGTH BAR STEEL REINFORCEMENT, GRADE 60: fy = 60,000 psi

TRAFFIC DATA

USH 51

A.D.T. = 17,700 (2010)
A.D.T. = 24,800 (2035)
R.D.S. = 70 MPH

LEGEND

◭ - LONGITUDINAL CONST. JOINT. SEAL WITH CRACK SEALER PER SECTION 502.3.13 OF STANDARD SPECIFICATIONS. SEE DETAIL ON SHEET 3. COST INCLUDED IN BID ITEM "CONCRETE MASONRY OVERLAY DECKS".

* - MATCH EXISTING CROSS SLOPE

◐ - ORIGINAL SLAB THICKNESS IS ASSUMED TO BE REDUCED BY 1" DURING PLACEMENT OF THE PREVIOUS CONCRETE OVERLAY

◥ - ABUTMENT END REPAIR, TYP. SEE SHEET 2

GENERAL NOTES

DRAWINGS SHALL NOT BE SCALED.

DIMENSIONS SHOWN ARE BASED ON THE ORIGINAL STRUCTURE PLANS.

PROFILE GRADE LINE SHALL BE DETERMINED BASED ON A MINIMUM OVERLAY THICKNESS OF 1½" PLACED ABOVE THE CONCRETE DECK SURFACE AFTER REMOVING THE EXISTING OVERLAY. EXPECTED AVERAGE OVERLAY THICKNESS IS 2½ INCHES. IF EXPECTED OVERLAY THICKNESS IS EXCEEDED BY MORE THAN ½", CONTACT THE STRUCTURES DESIGN SECTION.

TOP OF EXISTING DECK OVERLAY ELEVATIONS SHALL BE DETERMINED FROM A FIELD SURVEY AT LOCATIONS DEEMED NECESSARY FOR ESTABLISHING OVERLAY THICKNESS.

ANY EXCAVATION REQUIRED TO COMPLETE THE OVERLAY IS INCIDENTAL TO THE BID ITEM "CONCRETE MASONRY OVERLAY DECKS".

ALL CONCRETE REMOVAL NOT COVERED WITH A CONCRETE OVERLAY SHALL BE DEIFINED BY A 1-INCH DEEP SAW CUT.

EXISTING CONCRETE OVERLAY SHALL BE COMPLETELY REMOVED FROM THE ENTIRE BRIDGE DECK UNDER THE BID ITEM "REMOVING CONCRETE MASONRY DECK OVERLAY".

BARS STEEL REINFORCEMENT SHALL BE EMBEDDED 2" CLEAR UNLESS OTHERWISE SHOWN OR NOTED.

THE FIRST DIGIT OF A THREE DIGIT BAR MARK AND THE FIRST TWO DIGITS OF A FOUR DIGIT BAR MARK SIGNIFY THE BAR SIZE.

BEVEL EXPOSED EDGES OF CONCRETE ¾" UNLESS OTHERWISE NOTED.

CONCRETE SURFACE REPAIR AND DECK PREPARATION REQ'D IN AREAS DESIGNATED BY THE FIELD ENGINEER. QUANTITIES SHOWN ARE APPROXIMATE.

APPLY PROTECTIVE SURFACE TREATMENT TO TOP OF OVERLAY AND AND TOP AND INSIDE FACES OF EXISTING PARAPETS.

DO NOT EXPOSE MORE THAN 1/3 OF SLAB TOP BAR STEEL OVER THE PIER IF THE BAR ENDS ARE NOT FULLY ANCHORED TO MAINTAIN SPAN CONTINUITY.

LIST OF DRAWINGS

1. CONCRETE OVERLAY
2. ABUTMENT DETAILS
3. CONSTRUCTION STAGING

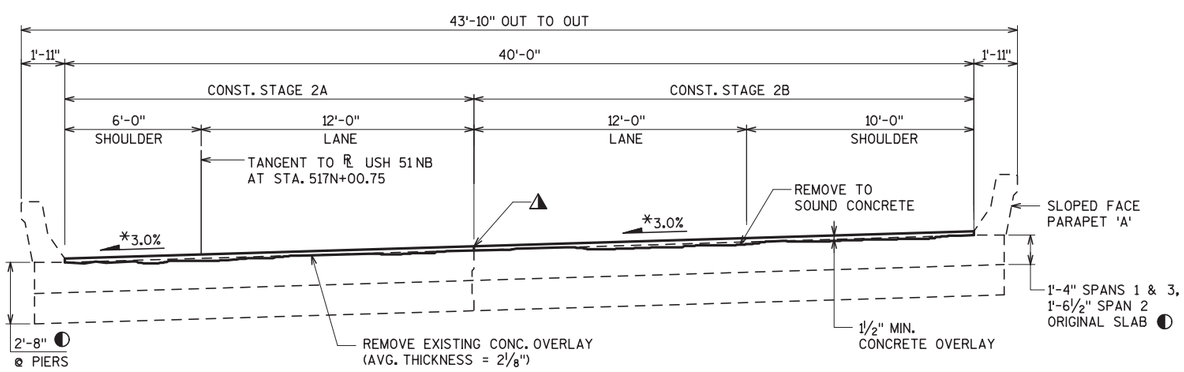

CROSS SECTION THRU ROADWAY

(LOOKING NORTH)

WISCONSIN PROFESSIONAL ENGINEER
THOMAS A. ZALEWSKI
E-26972
MADISON
WI
3/3/14

WISCONSIN PROFESSIONAL ENGINEER
BABU D. THENGANAKUNNEL
E-35905
MILWAUKEE, WI
3/3/2014

STRUCTURE DESIGN CONTACTS

BUREAU OF STRUCTURES CONTACT:
WILLIAM DREHER
(608) 266-8489

CONSULTANT CONTACT:
TOM ZALEWSKI
(608) 515-3525

NO.	DATE	REVISION	BY

BLOOM COMPANIES, LLC
Infrastructure Innovation and Ingenuity
10501 W. Research Drive • Milwaukee, WI 53226
Phone: (414) 771-3390 Fax: (414) 771-4490

STATE OF WISCONSIN
DEPARTMENT OF TRANSPORTATION

ACCEPTED William C. Dreher 6/19/14
CHIEF STRUCTURES DESIGN ENGINEER DATE

STRUCTURE B-37-165

USH 51 NB OVER RAINBOW DRIVE

COUNTY	MARATHON	TOWN	MAINE
DESIGN SPEC.	REHABILITATION	N/A	

DESIGNED BY	BDT	DESIGN CK'D.	JRS	DRAWN BY	TB	PLANS CK'D.	BDT/JRS

CONCRETE OVERLAY

SHEET 1 OF 3
218

8

8

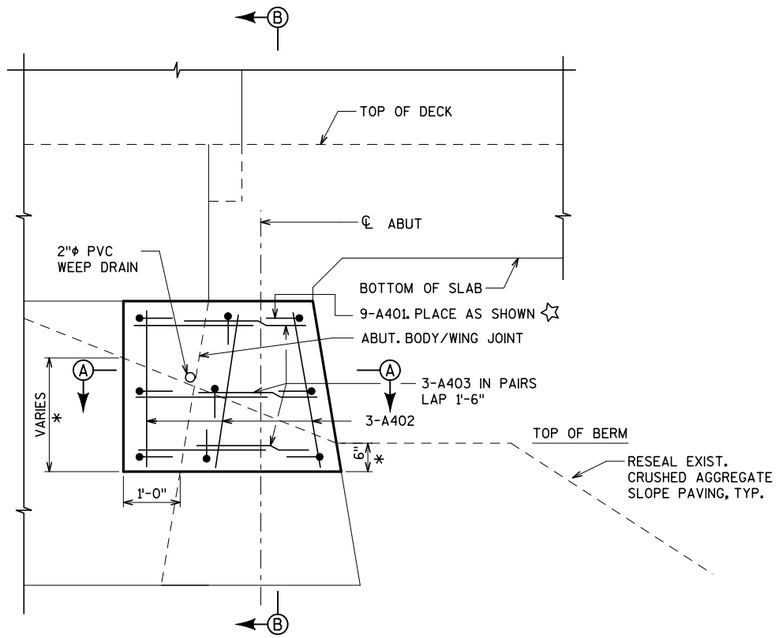

ABUTMENT END ELEVATION

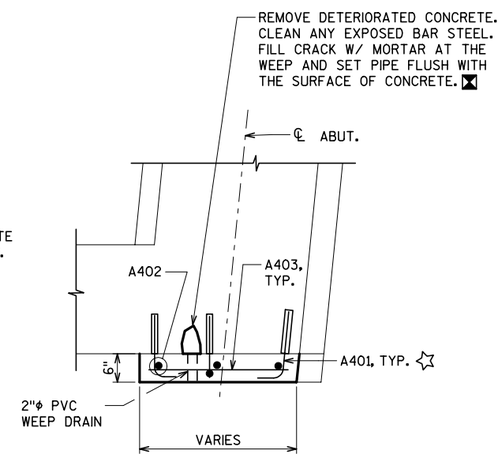

SECTION A-A

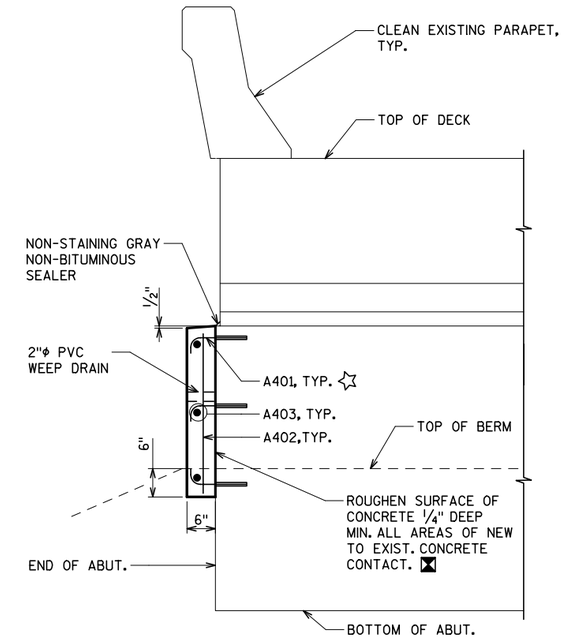

SECTION B-B

ABUTMENT REPAIR DETAILS

* COST OF EXCAVATION AND BACKFILL IS INCLUDED IN THE BID ITEM "ABUTMENT END REPAIR".

LEGEND

☒ COST INCLUDED IN THE BID ITEM "ABUTMENT END REPAIR".

☆ CONCRETE MASONRY ANCHOR, TYPE L, NO. 4 BARS. EMBED 8" IN CONCRETE.

BILL OF BARS

BAR MARK	COAT	NO. REQ'D S. ABUT.	NO. REQ'D N. ABUT.	LENGTH	BENT	BAR SERIES	LOCATION
☆ A401	X	18	9	1'-8"	X	-	ABUT. END REPAIR DOWELS
A402	X	6	3	2'-8"	-	-	ABUT. END REPAIR VERTICAL
A403	X	12	6	3'-0"	-	-	ABUT. END REPAIR HORIZ.

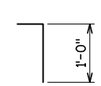

A401 ☆

BENDING DIAGRAM

8

8

NO.	DATE	REVISION	BY

STATE OF WISCONSIN
DEPARTMENT OF TRANSPORTATION
STRUCTURES DESIGN SECTION

STRUCTURE B-37-165

DRAWN BY TB | PLANS CK'D. BDT/JRS

ABUTMENT DETAILS

SHEET 2 OF 3

STATE PROJECT NUMBER
1166-07-62

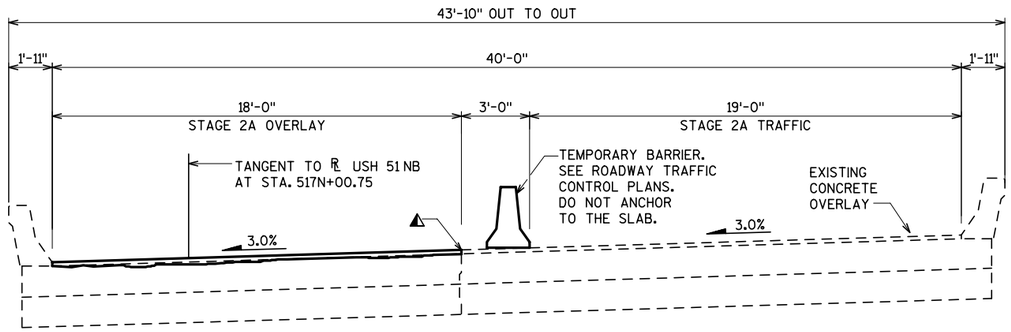

CONSTRUCTION STAGE 2A

(LOOKING NORTH)

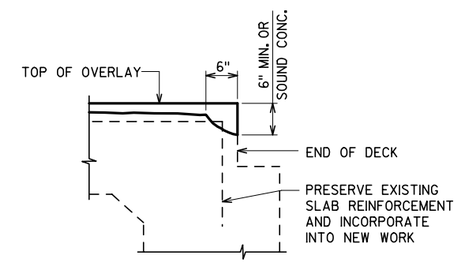

SECTION AT END OF SLAB

CONCRETE OVERLAY

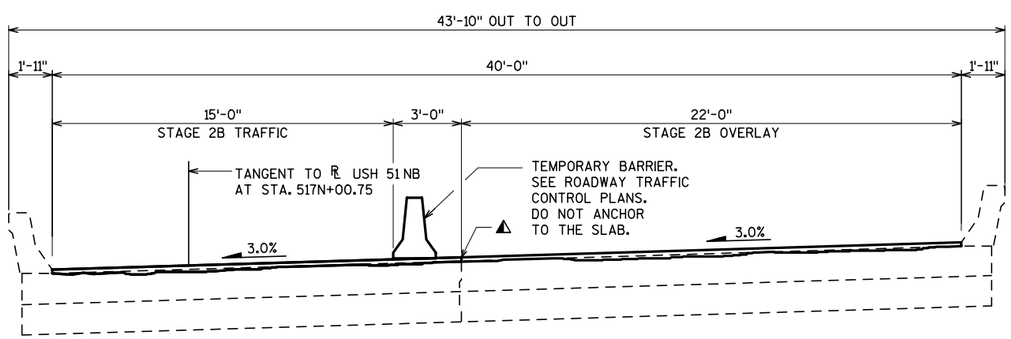

CONSTRUCTION STAGE 2B

(LOOKING NORTH)

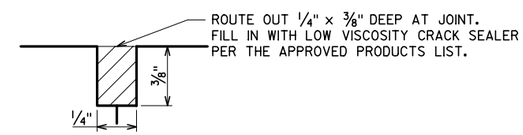

LONGITUDINAL CONSTRUCTION JOINT DETAIL

LEGEND

⚠ LONGITUDINAL CONST. JOINT. SEAL WITH CRACK SEALER PER SECTION 502.3.13 OF STANDARD SPECIFICATIONS. SEE DETAIL THIS SHEET. COST INCLUDED IN BID ITEM "CONCRETE MASONRY OVERLAY DECKS".

NO.	DATE	REVISION	BY

STATE OF WISCONSIN
DEPARTMENT OF TRANSPORTATION
STRUCTURES DESIGN SECTION

STRUCTURE B-37-165

DRAWN BY TB | PLANS CK'D. BDT/JRS

CONSTRUCTION STAGING

SHEET 3 OF 3

8

8

STATE PROJECT NUMBER
1166-07-62

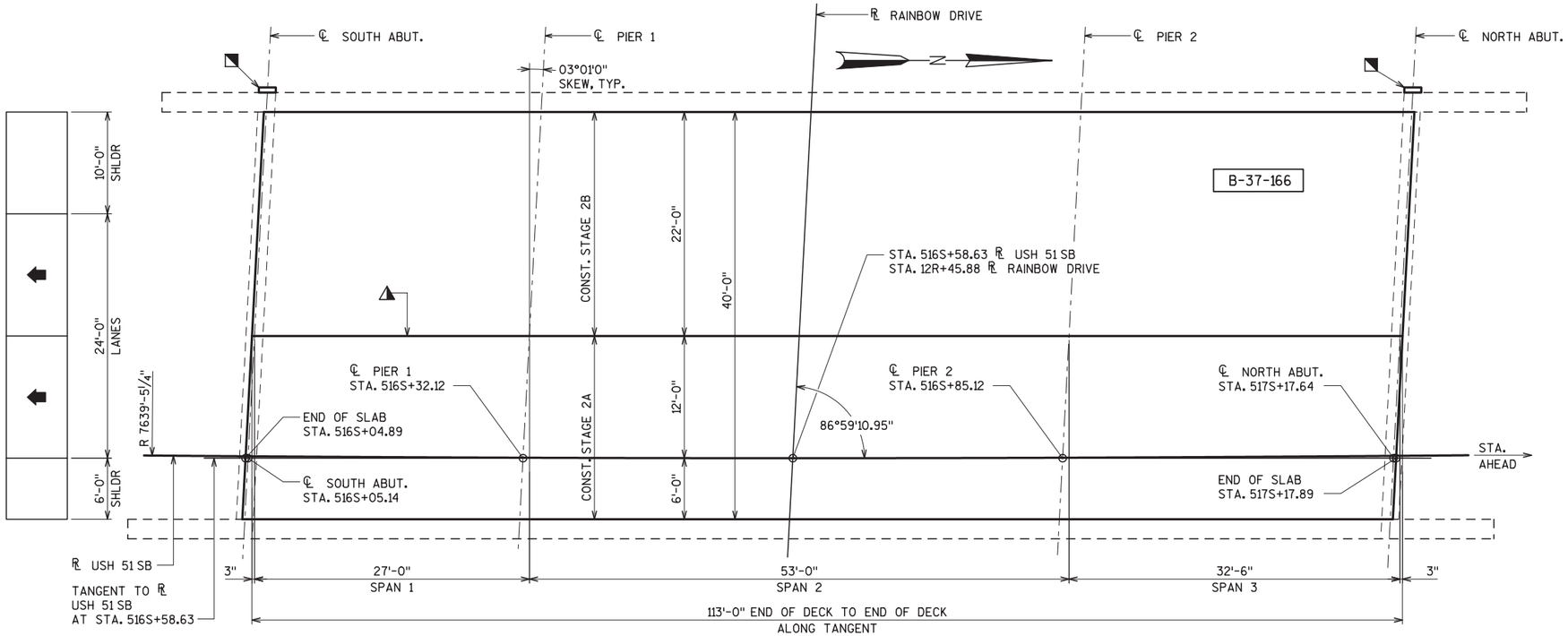

PLAN

(3 SPAN HAUNCHED SLAB BRIDGE)

TOTAL ESTIMATED QUANTITIES

ITEM NUMBER	BID ITEMS	UNIT	TOTAL
502.0100	CONCRETE MASONRY BRIDGES	CY	1
502.3200	PROTECTIVE SURFACE TREATMENT	SY	614
502.5002	MASONRY ANCHORS TYPE L NO. 4 BARS	EACH	18
505.0605	BAR STEEL REINFORCEMENT HS COATED BRIDGES	LB	100
509.0301	PREPARATION DECKS TYPE 1	SY	84
509.0302	PREPARATION DECKS TYPE 2	SY	33
509.1500	CONCRETE SURFACE REPAIR	SF	42
509.2500	CONCRETE MASONRY OVERLAY DECKS	CY	49
509.9005.S	REMOVING CONCRETE MASONRY DECK OVERLAY	SY	502
509.9050.S	CLEANING PARAPETS	LF	270
604.9015.S	RESEAL CRUSHED AGGREGATE SLOPE PAVING	SY	387
SPV.0060.05	ABUTMENT END REPAIR B-37-166	EACH	2

ALL ITEMS ARE CATEGORY 0060

DESIGN DATA

LIVE LOAD

DESIGN LOAD: HS-20
INVENTORY RATING: HS-16
OPERATIONAL RATING: HS-27
WISCONSIN STANDARD PERMIT VEHICLE LOAD (WIS-SPV): 250 KIPS

ULTIMATE DESIGN STRESSES

CONCRETE MASONRY SUPERSTRUCTURE, f'c = 4,000 psi

HIGH STRENGTH BAR STEEL REINFORCEMENT, GRADE 60: fy = 60,000 psi

TRAFFIC DATA

USH 51

A.D.T. = 17,700 (2010)
A.D.T. = 24,800 (2035)
R.D.S. = 70 MPH

LEGEND

◭ - LONGITUDINAL CONST. JOINT. SEAL WITH CRACK SEALER PER SECTION 502.3.13 OF STANDARD SPECIFICATIONS. COST INCLUDED IN BID ITEM "CONCRETE MASONRY OVERLAY DECKS".

* - MATCH EXISTING CROSS SLOPE

◐ - ORIGINAL SLAB THICKNESS IS ASSUMED TO BE REDUCED BY 1" DURING PLACEMENT OF THE PREVIOUS CONCRETE OVERLAY

◪ - ABUTMENT END REPAIR, TYP. SEE SHEET 2

GENERAL NOTES

DRAWINGS SHALL NOT BE SCALED.

DIMENSIONS SHOWN ARE BASED ON THE ORIGINAL STRUCTURE PLANS.

PROFILE GRADE LINE SHALL BE DETERMINED BASED ON A MINIMUM OVERLAY THICKNESS OF 1½" PLACED ABOVE THE CONCRETE DECK SURFACE AFTER REMOVING THE EXISTING OVERLAY. EXPECTED AVERAGE OVERLAY THICKNESS IS 3 INCHES. IF EXPECTED OVERLAY THICKNESS IS EXCEEDED BY MORE THAN ½", CONTACT THE STRUCTURES DESIGN SECTION.

TOP OF EXISTING DECK OVERLAY ELEVATIONS SHALL BE DETERMINED FROM A FIELD SURVEY AT LOCATIONS DEEMED NECESSARY FOR ESTABLISHING OVERLAY THICKNESS.

ANY EXCAVATION REQUIRED TO COMPLETE THE OVERLAY IS INCIDENTAL TO THE BID ITEM "CONCRETE MASONRY OVERLAY DECKS".

ALL CONCRETE REMOVAL NOT COVERED WITH A CONCRETE OVERLAY SHALL BE DEIFINED BY A 1-INCH DEEP SAW CUT.

EXISTING CONCRETE OVERLAY SHALL BE COMPLETELY REMOVED FROM THE ENTIRE BRIDGE DECK UNDER THE BID ITEM "REMOVING CONCRETE MASONRY DECK OVERLAY".

BARS STEEL REINFORCEMENT SHALL BE EMBEDDED 2" CLEAR UNLESS OTHERWISE SHOWN OR NOTED.

THE FIRST DIGIT OF A THREE DIGIT BAR MARK AND THE FIRST TWO DIGITS OF A FOUR DIGIT BAR MARK SIGNIFY THE BAR SIZE.

BEVEL EXPOSED EDGES OF CONCRETE ¾" UNLESS OTHERWISE NOTED.

CONCRETE SURFACE REPAIR AND DECK PREPARATION REQ'D IN AREAS DESIGNATED BY THE FIELD ENGINEER.

APPLY PROTECTIVE SURFACE TREATMENT TO TOP OF OVERLAY AND AND TOP AND INSIDE FACES OF EXISTING PARAPETS.

DO NOT EXPOSE MORE THAN 1/3 OF SLAB TOP BAR STEEL OVER THE PIER IF THE BAR ENDS ARE NOT FULLY ANCHORED TO MAINTAIN SPAN CONTINUITY.

LIST OF DRAWINGS

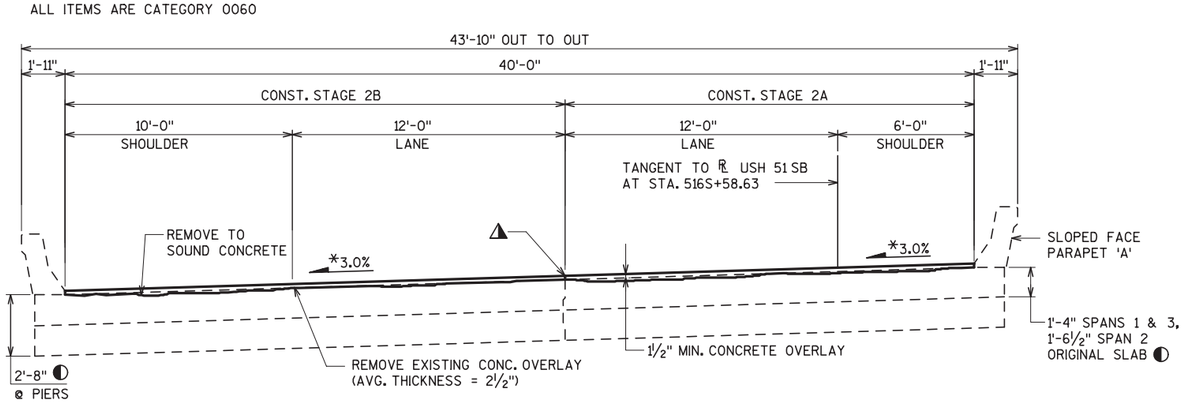

CROSS SECTION THRU ROADWAY

(LOOKING NORTH)

WISCONSIN PROFESSIONAL ENGINEER
THOMAS A. ZALEWSKI
E-26972
MADISON
WI
3/3/14

WISCONSIN PROFESSIONAL ENGINEER
BABU D. THENGANAKUNNEL
E-35905
MILWAUKEE, WI
3/3/2014

STRUCTURE DESIGN CONTACTS

BUREAU OF STRUCTURES CONTACT:
WILLIAM DREHER
(608) 266-8489

CONSULTANT CONTACT:
TOM ZALEWSKI
(608) 515-3525

NO.	DATE	REVISION	BY

BLOOM COMPANIES, LLC
Infrastructure Innovation and Ingenuity
10501 W. Research Drive • Milwaukee, WI 53226
Phone: (414) 771-3390 Fax: (414) 771-4490

STATE OF WISCONSIN
DEPARTMENT OF TRANSPORTATION

ACCEPTED William C. Dreher 6/19/14
CHIEF STRUCTURES DESIGN ENGINEER DATE

STRUCTURE B-37-166

USH 51 SB OVER RAINBOW DRIVE

COUNTY	MARATHON	TOWN	MAINE
DESIGN SPEC.	REHABILITATION	N/A	

DESIGNED BY	BDT	DESIGN CK'D.	JRS	DRAWN BY	TB	PLANS CK'D.	BDT/JRS

CONCRETE OVERLAY

SHEET 1 OF 3
221

8

8

I.D. 1166-07-32 MARCH 2014

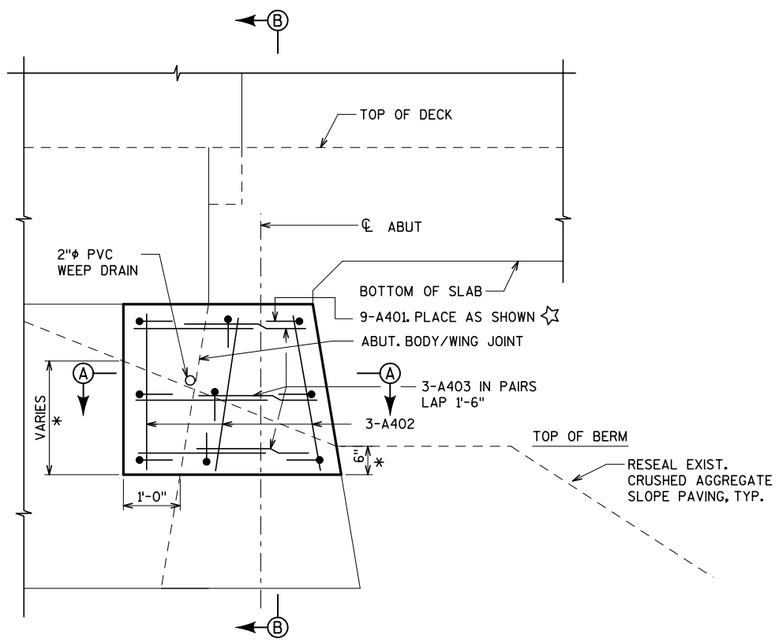

ABUTMENT END ELEVATION

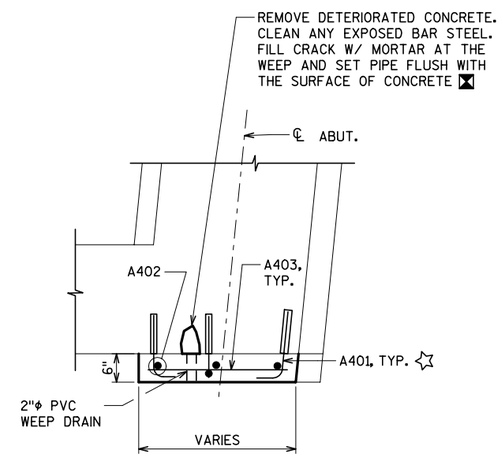

SECTION A-A

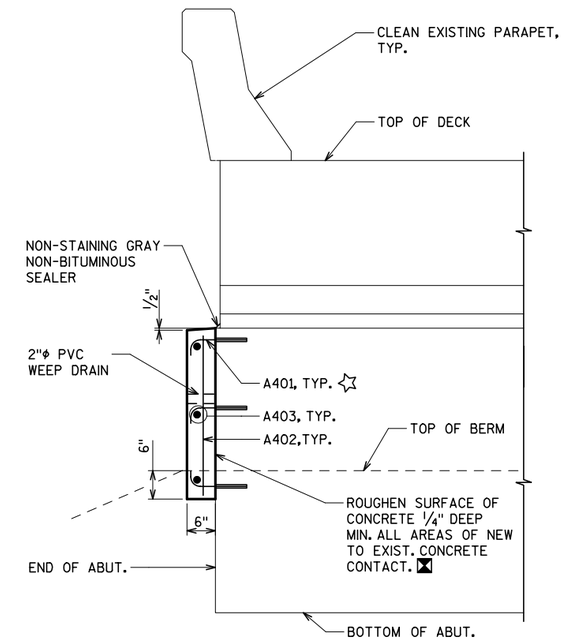

SECTION B-B

ABUTMENT REPAIR DETAILS

* COST OF EXCAVATION AND BACKFILL IS INCLUDED IN THE BID ITEM "ABUTMENT END REPAIR".

LEGEND

☒ COST INCLUDED IN THE BID ITEM "ABUTMENT END REPAIR".

☆ CONCRETE MASONRY ANCHOR, TYPE L, NO. 4 BARS. EMBED 8" IN CONCRETE.

BILL OF BARS

BAR MARK	COAT	NO. REQ'D S. ABUT.	NO. REQ'D N. ABUT.	LENGTH	BENT	BAR SERIES	LOCATION
☆ A401	X	9	9	1'-8"	X	-	ABUT. END REPAIR DOWELS
A402	X	3	3	2'-8"	-	-	ABUT. END REPAIR VERTICAL
A403	X	6	6	3'-0"	-	-	ABUT. END REPAIR HORIZ.

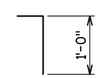

A401 ☆

BENDING DIAGRAM

8

8

NO.	DATE	REVISION	BY

STATE OF WISCONSIN
DEPARTMENT OF TRANSPORTATION
STRUCTURES DESIGN SECTION

STRUCTURE B-37-166

DRAWN BY TB | PLANS CK'D. BDT/JRS

ABUTMENT DETAILS

SHEET 2 OF 3

STATE PROJECT NUMBER
1166-07-62

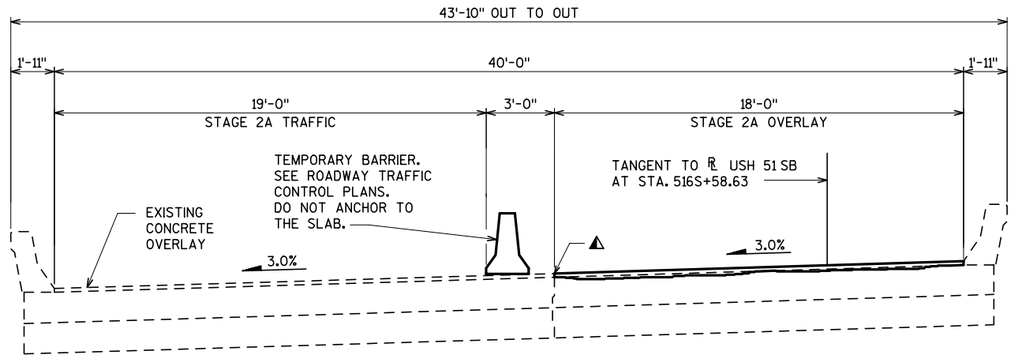

CONSTRUCTION STAGE 2A

(LOOKING NORTH)

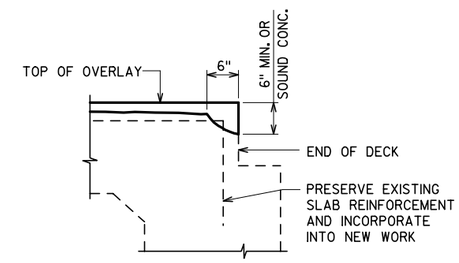

SECTION AT END OF SLAB

CONCRETE OVERLAY

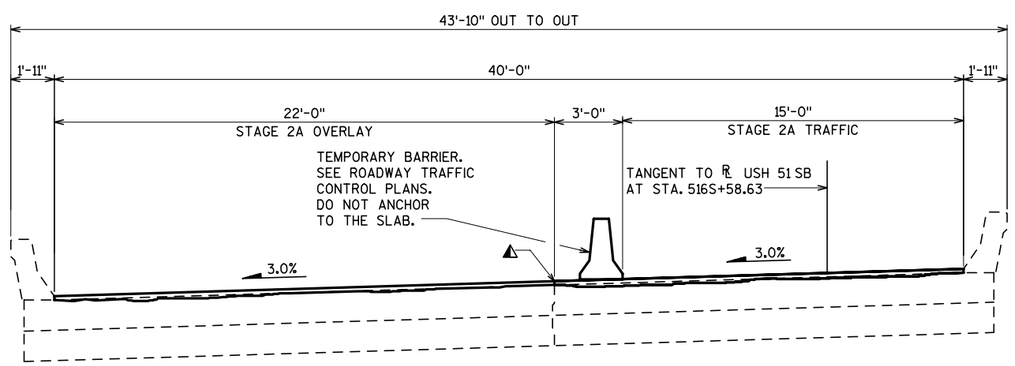

CONSTRUCTION STAGE 2B

(LOOKING NORTH)

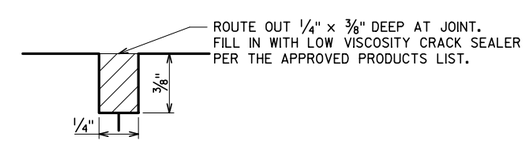

LONGITUDINAL CONSTRUCTION JOINT DETAIL

LEGEND

◭ LONGITUDINAL CONST. JOINT. SEAL WITH CRACK SEALER PER SECTION 502.3.13 OF STANDARD SPECIFICATIONS. SEE DETAIL THIS SHEET. COST INCLUDED IN BID ITEM "CONCRETE MASONRY OVERLAY DECKS".

NO.	DATE	REVISION	BY

STATE OF WISCONSIN
DEPARTMENT OF TRANSPORTATION
STRUCTURES DESIGN SECTION

STRUCTURE B-37-166

DRAWN BY	TB	PLANS CK'D.	BDT/JRS

CONSTRUCTION STAGING

SHEET 3 OF 3

8

8

		FALCON DRIVE							
		AREA (SF)		INCREMENTAL VOLUME (CY)		CUMULATIVE VOLUME (CY) (UNADJUSTED) (ADJUSTED)			MASS ORDINATE
STATION	DISTANCE	CUT	FILL	CUT	FILL	CUT 1.00	FILL 1.00	FILL 1.20	CUT / (FILL)
12+75 BA	0	0	0						
13+00	25	39	2	18	1	18	1	1	17
13+25	25	27	23	13	11	13	11	13	(0)
13+43	18	29	31	10	10	10	10	12	(3)
13+45	2	29	31	3	1	21	2	3	18
13+68	23	32	18	26	21	47	23	28	19
13+71	3	33	17	4	2	50	25	30	20
13+93	22	33	9	27	11	77	36	43	34
13+96	3	32	2	4	1	81	36	43	37
14+00	4	30	2	5	0	85	36	44	42
14+25	25	23	1	25	1	110	38	45	64
14+54	29	44	0	36	1	146	38	46	100
14+71 EA	17	44	0	28	0	173	38	46	127
Bridge Gap									
17+48 BA	0	44	0						
17+65	17	44	0	28	0	28	0	0	28
18+00	0	23	10	0	0	85	36	44	42
18+23	23	27	10	21	9	107	45	54	53
18+27	4	27	10	4	1	111	46	56	55
18+48	21	27	24	21	13	132	60	72	60
18+52	4	27	27	4	4	136	63	76	59
18+73	21	29	53	22	31	157	95	113	44
18+77	4	29	54	4	8	162	103	123	39
19+00	23	30	13	25	29	187	131	157	30
19+25	25	29	0	27	6	214	137	164	50
19+50 EA	25	0	0	13	0	228	137	164	63
TOTALS				**365**	**160**	**228**	**137**	**164**	**63**

9

9

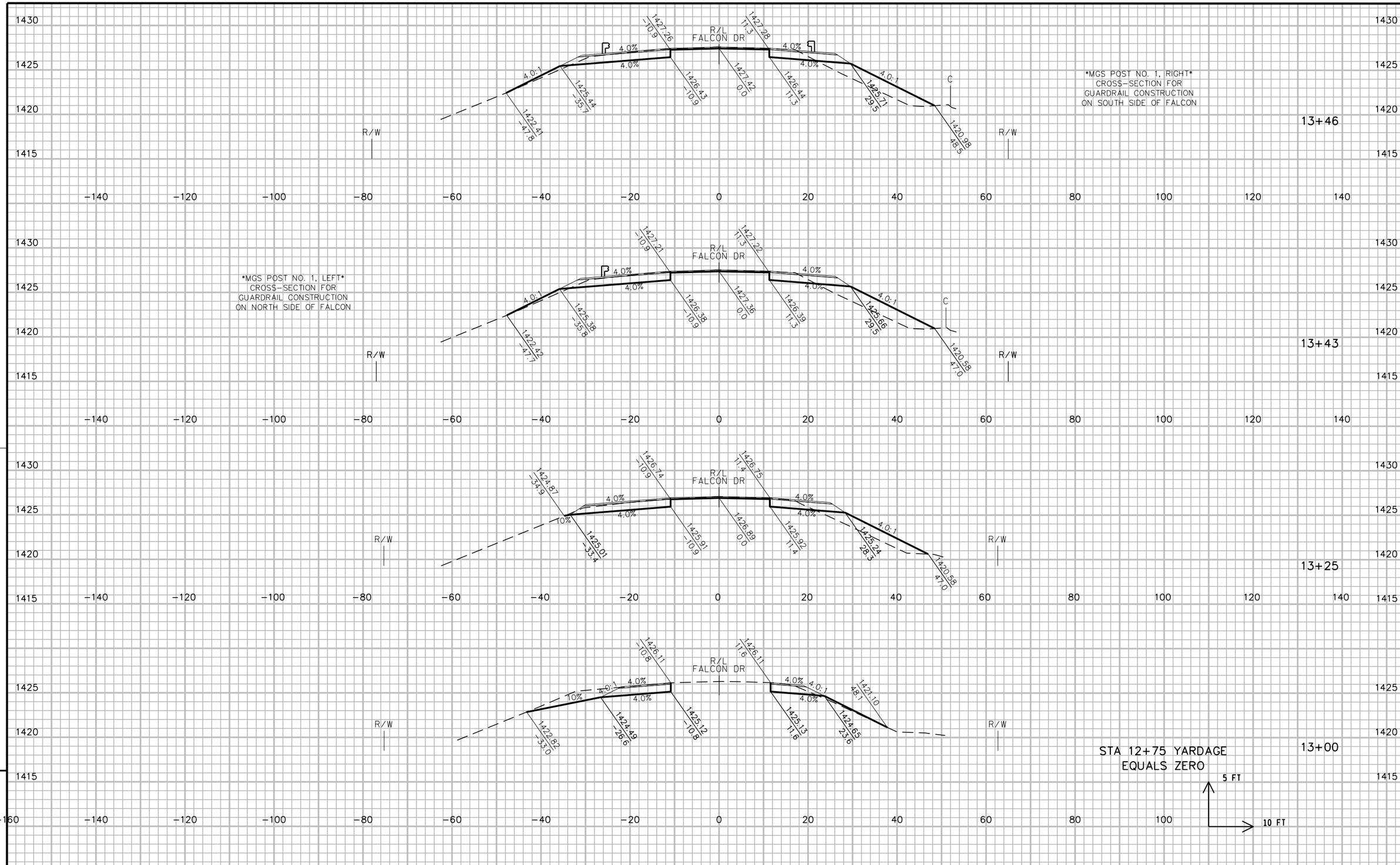

PROJECT NO: 1166-07-62	HWY: USH 51	COUNTY: MARATHON	CROSS SECTIONS: FALCON DRIVE	SHEET 225	E

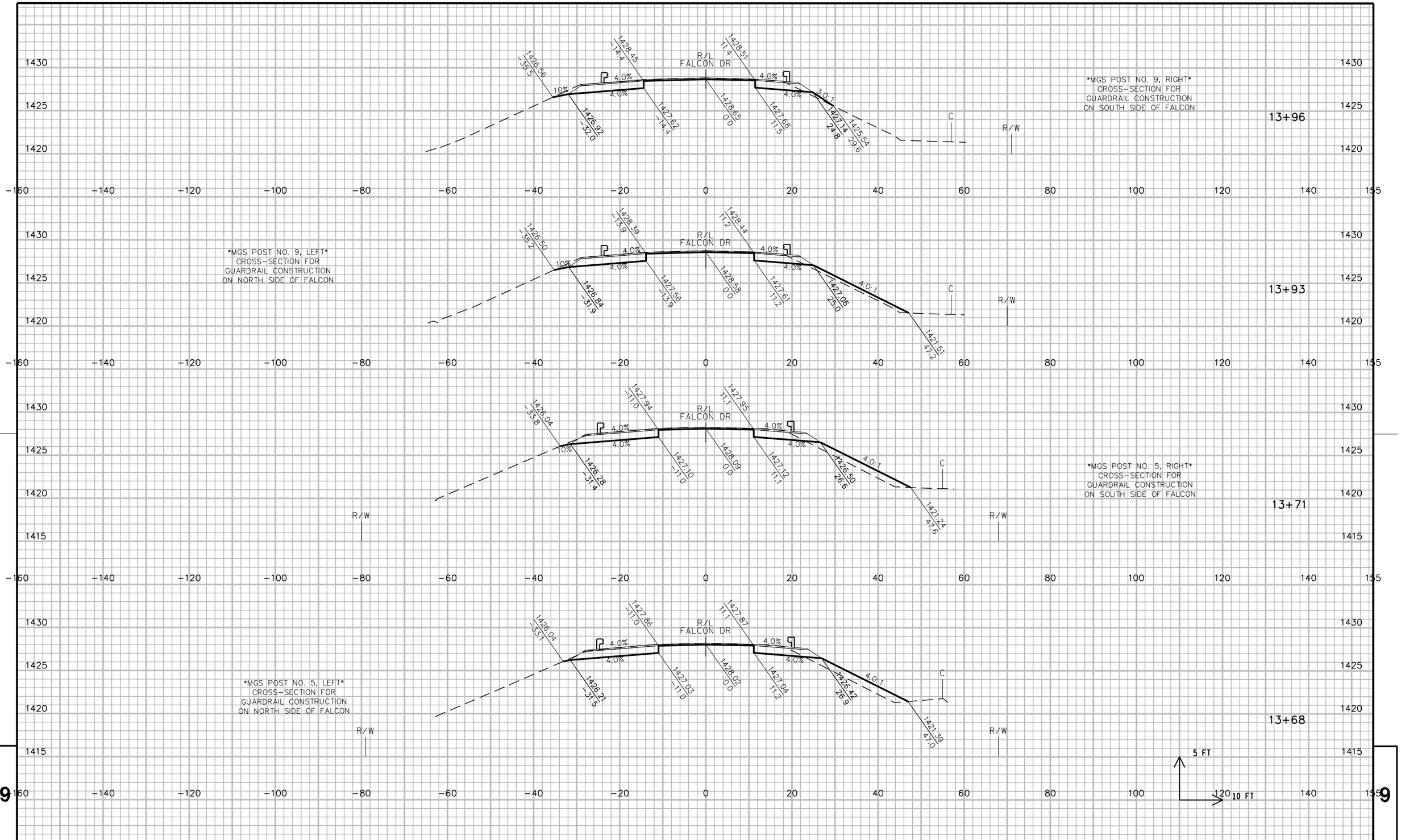

PROJECT NO: 1166-07-62	HWY: USH 51	COUNTY: MARATHON	CROSS SECTIONS: FALCON DRIVE	SHEET 226	E

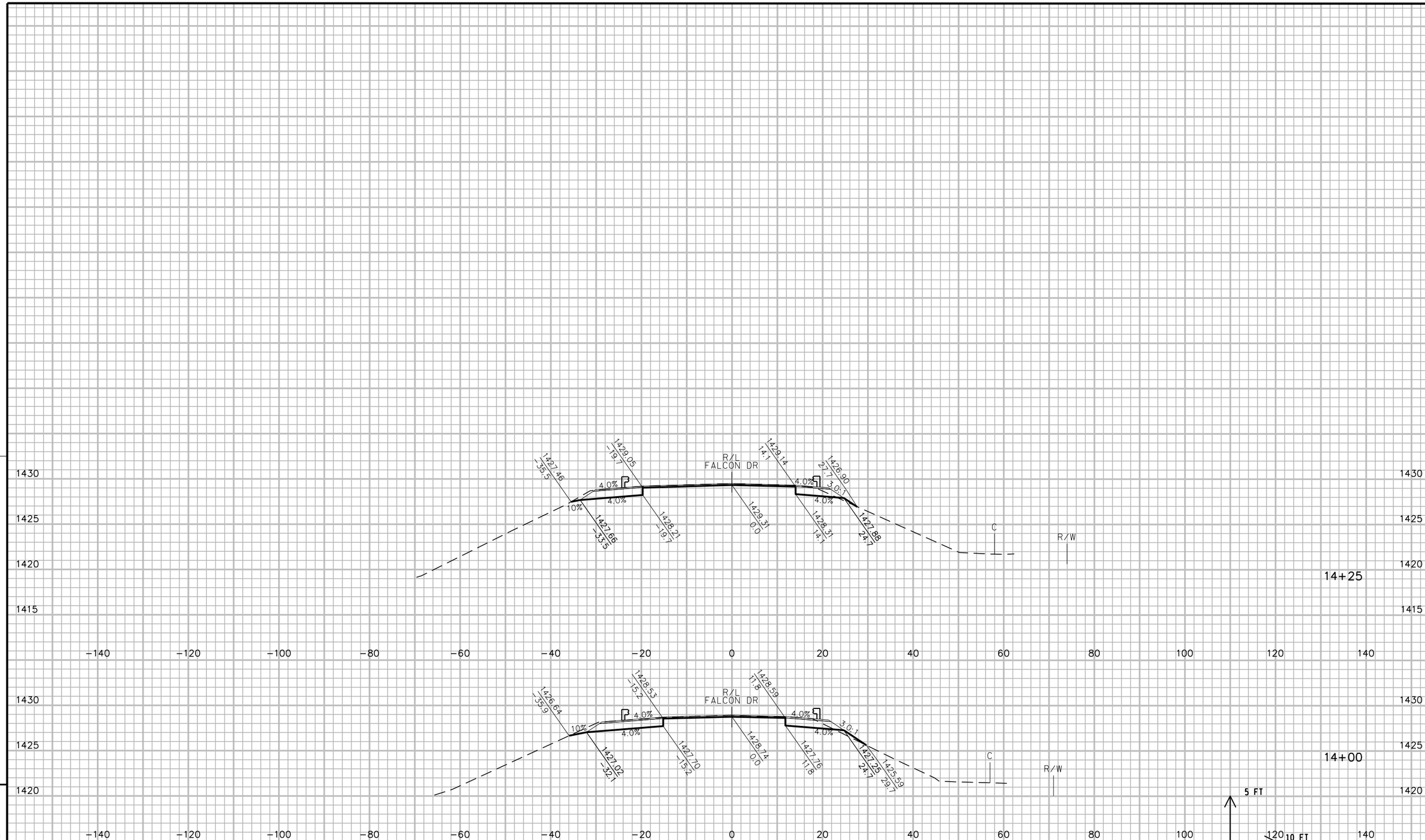

PROJECT NO: 1166-07-62	HWY: USH 51	COUNTY: MARATHON	CROSS SECTIONS: FALCON DRIVE	SHEET 227	E

FILE NAME : F:\BM1-3212 USH 51 Marathon Co Structures\roads\cds\1166-07-32\090201_xs_Falcon_smc.dgn PLOT DATE : 29-JAN-2015 14:03 PLOT BY : scook PLOT NAME : PLOT SCALE : 20:1

WISDOT/CADDS SHEET 21

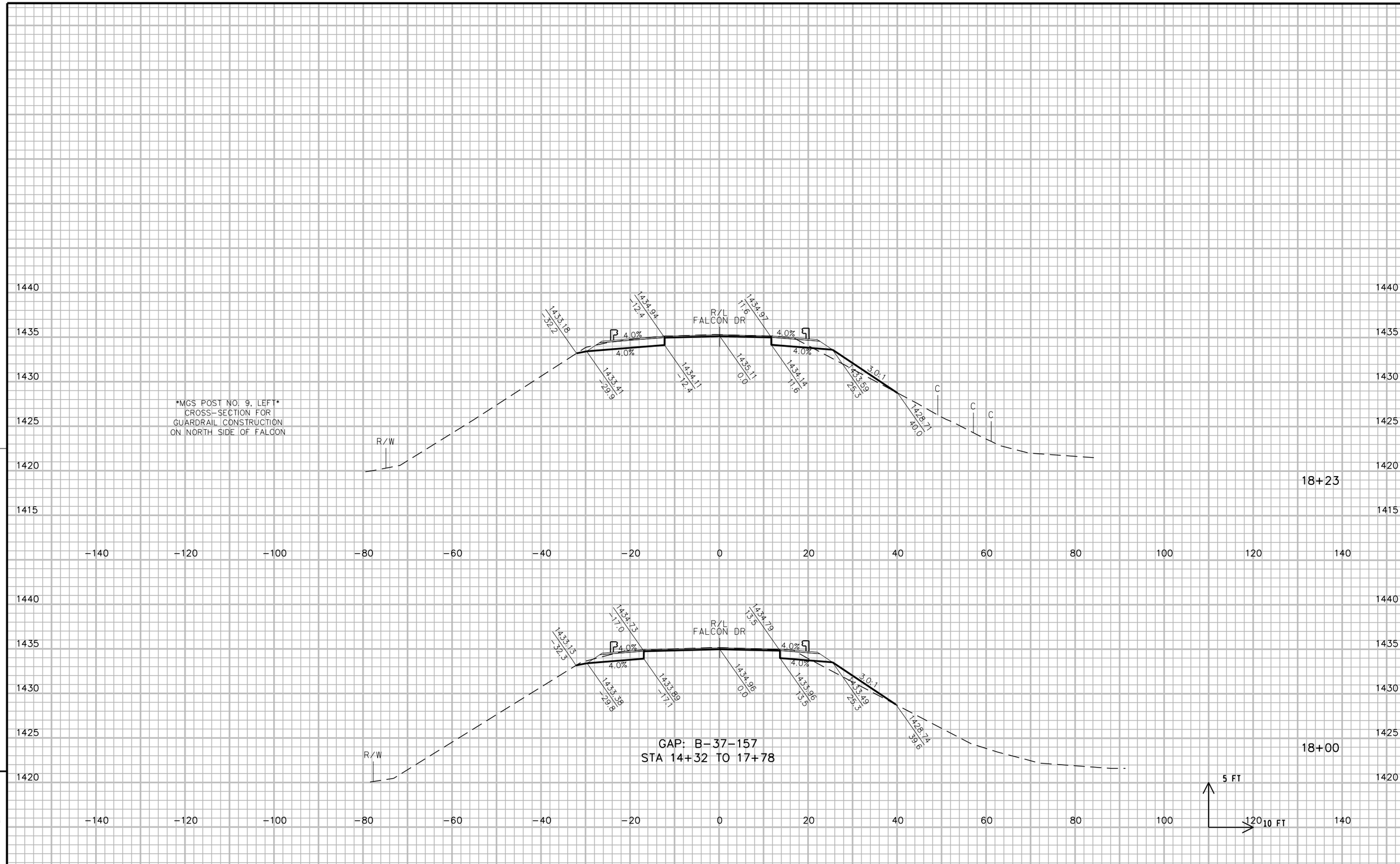

9

9

PROJECT NO: 1166-07-62	HWY: USH 51	COUNTY: MARATHON	CROSS SECTIONS: FALCON DRIVE	SHEET 228	E

FILE NAME : F:\BM1-3212 USH 51 Marathon Co Structures\roads\cds\1166-07-32\090201_xs_Falcon_smc.dgn PLOT DATE : 29-JAN-2015 14:03 PLOT BY : scook PLOT NAME : PLOT SCALE : 20:1

WISDOT/CADDS SHEET 21

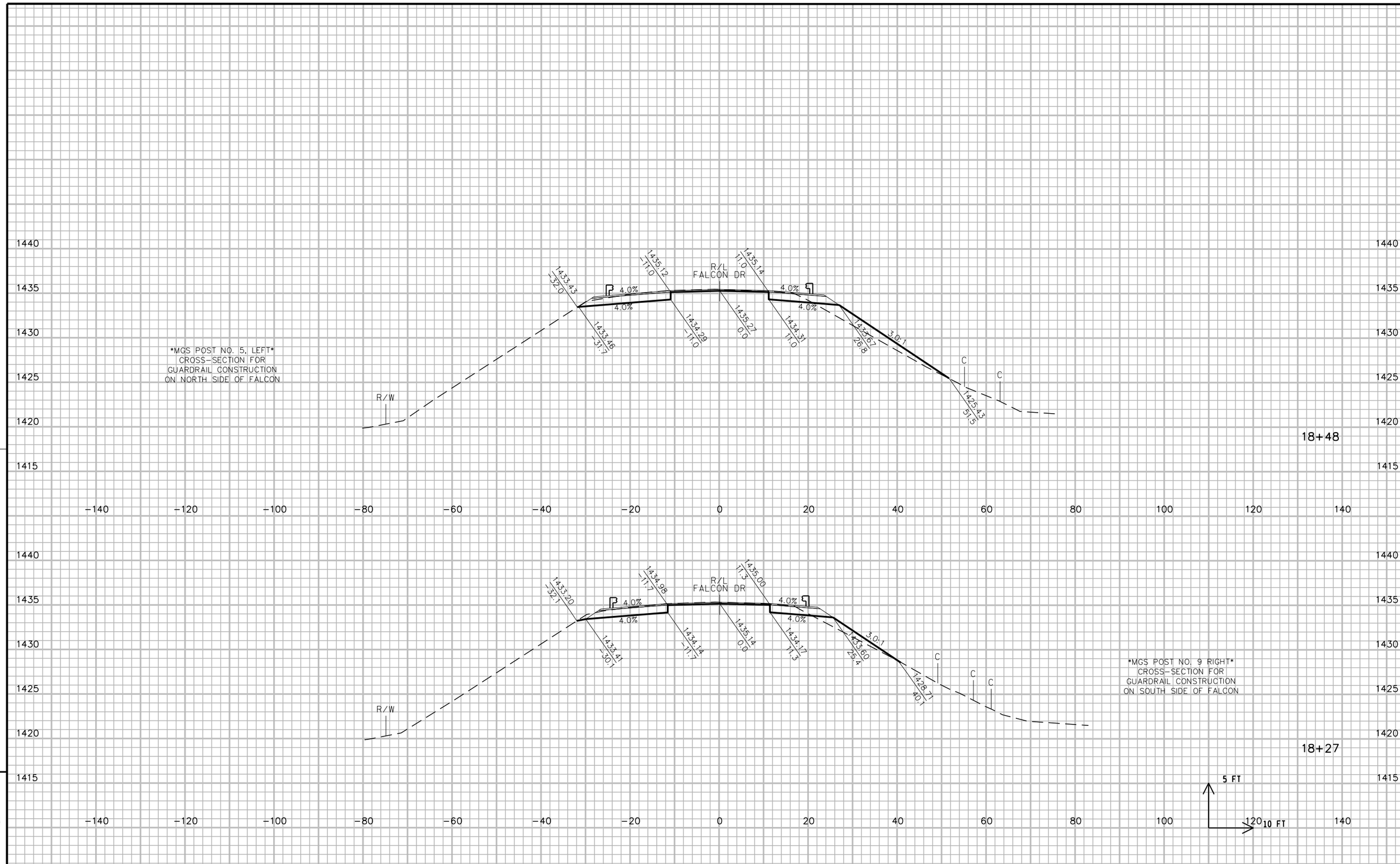

9

PROJECT NO: 1166-07-62	HWY: USH 51	COUNTY: MARATHON	CROSS SECTIONS: FALCON DRIVE	SHEET 229	E

FILE NAME : F:\BM1-3212 USH 51 Marathon Co Structures\roads\cds\1166-07-32\090201_xs_Falcon_smc.dgn PLOT DATE : 29-JAN-2015 14:03 PLOT BY : scook PLOT NAME : PLOT SCALE : 20:1

WISDOT/CADDS SHEET 21

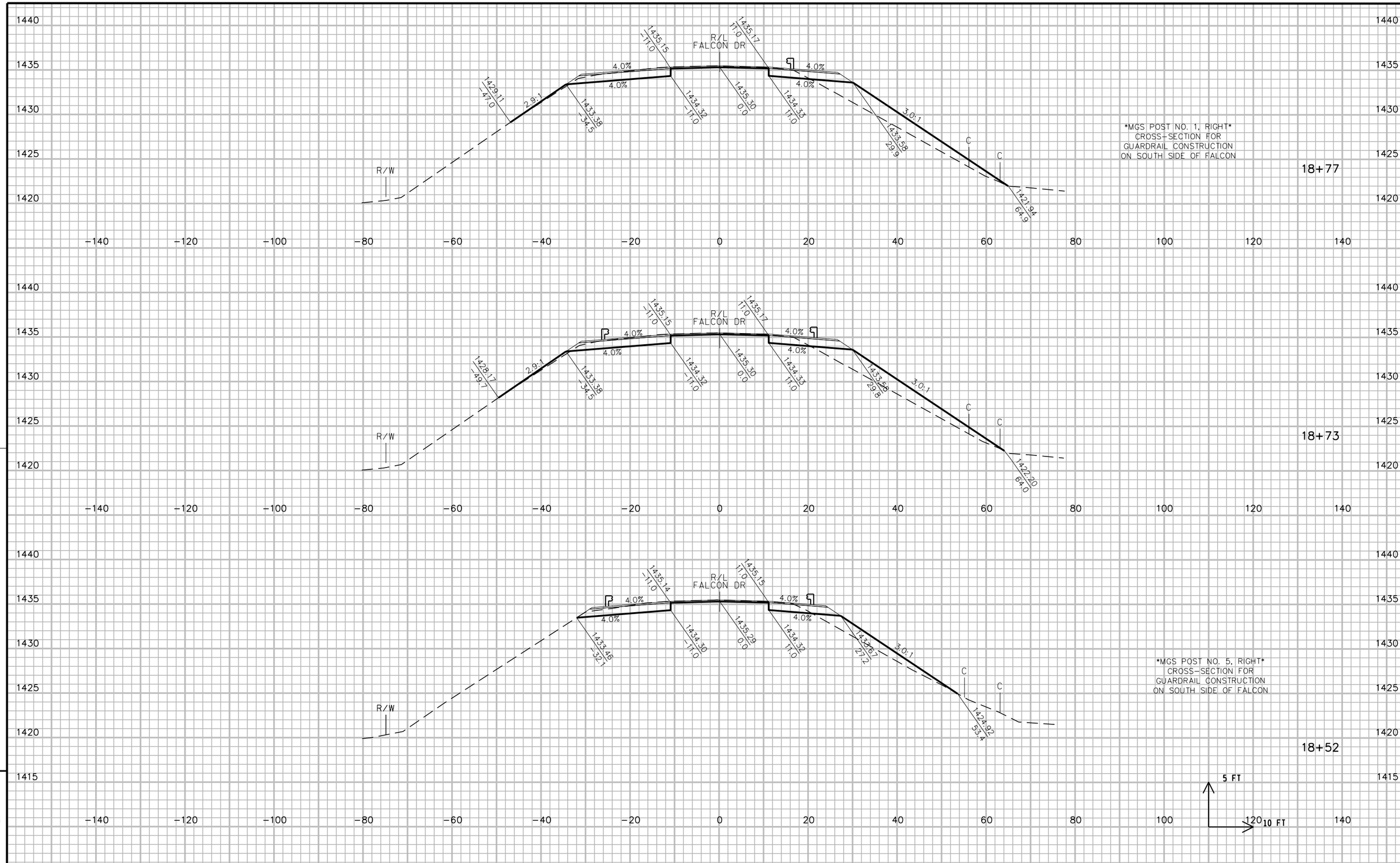

PROJECT NO: 1166-07-62	HWY: USH 51	COUNTY: MARATHON	CROSS SECTIONS: FALCON DRIVE	SHEET 230	E

FILE NAME : F:\BM1-3212 USH 51 Marathon Co Structures\roads\cds\1166-07-32\090201_xs_Falcon_smc.dgn PLOT DATE : 29-JAN-2015 14:03 PLOT BY : scook PLOT NAME : PLOT SCALE : 20:1

WISDOT/CADDS SHEET 21

STA 19+50 YARDAGE
EQUALS ZERO

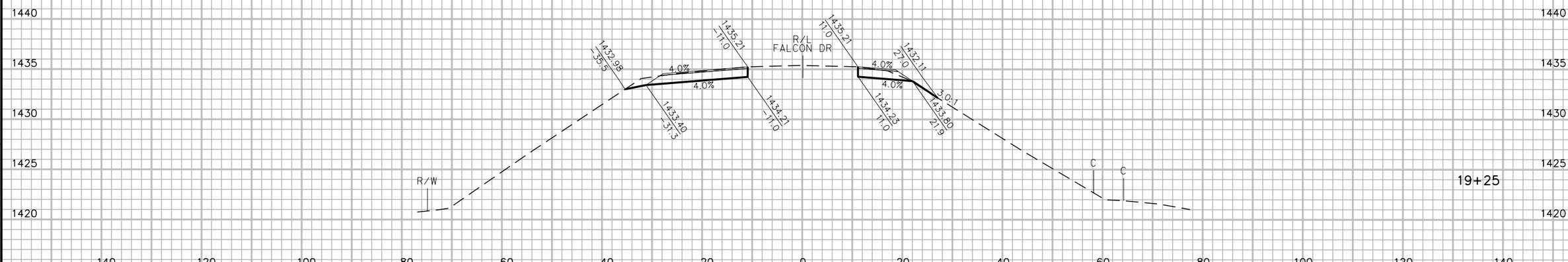

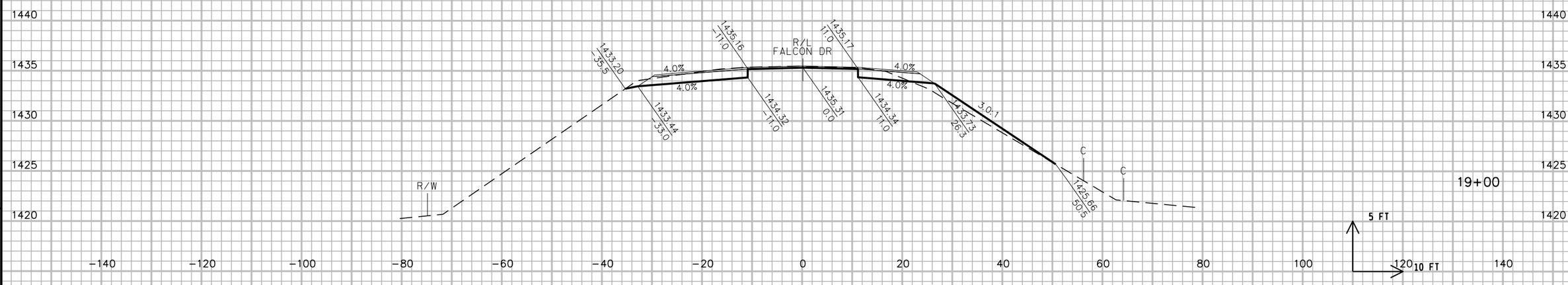

9

9

PROJECT NO: 1166-07-62	HWY: USH 51	COUNTY: MARATHON	CROSS SECTIONS: FALCON DRIVE	SHEET 231	E

FILE NAME : F:\BM1-3212 USH 51 Marathon Co Structures\roads\cds\1166-07-32\090201_xs_Falcon_smc.dgn PLOT DATE : 29-JAN-2015 14:03 PLOT BY : scook PLOT NAME : PLOT SCALE : 20:1

WISDOT/CADDS SHEET 21

Wisconsin Department of Transportation

Dedicated people creating transportation solutions through innovation and exceptional service.

http://www.dot.wisconsin.gov