NCL

MAY 2015

PROJECT ID: 9455-04-70
WITH: N/A

COUNTY: ONEIDA

43

ORDER OF SHEETS

Section No.	1	Title
Section No.	2	Typical Sections and Details
Section No.	3	Estimate of Quantities
Section No.	3	Miscellaneous Quantities
Section No.	4	Right of Way Plat
Section No.	5	Plan and Profile (includes erosion control)
Section No.	6	Standard Detail Drawings
Section No.	7	Sign Plates
~~Section No.~~	~~8~~	~~Structure Plans~~
Section No.	9	Computer Earthwork Data
Section No.	9	Cross Sections

TOTAL SHEETS = 102

STATE OF WISCONSIN
DEPARTMENT OF TRANSPORTATION

PLAN OF PROPOSED IMPROVEMENT

MINOCQUA - WOODRUFF

USH 51 TO STH 47

CTH J

ONEIDA COUNTY

STATE PROJECT	FEDERAL PROJECT	
	PROJECT	CONTRACT
9455-04-70	WISC 2015299	1

STATE PROJECT NUMBER
9455-04-70

PROJECT LOCATION

N

END PROJECT
STA. 143+50
Y = 256,984.17
X = 195,028.65

BEGIN PROJECT
STA. 100+00
Y = 257,005.49
X = 190,678.75

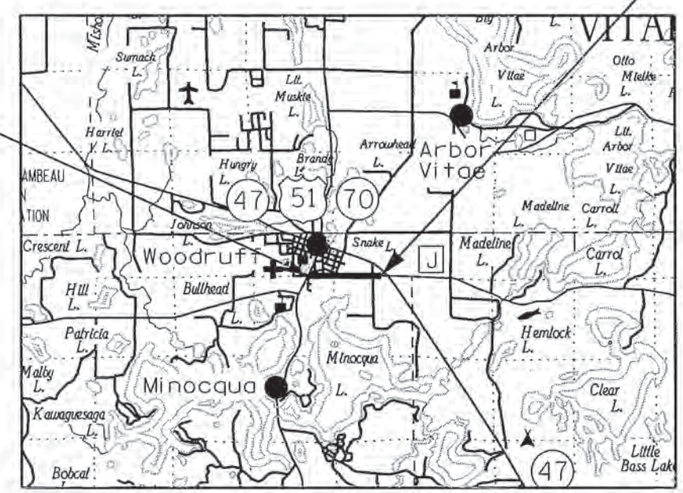

DESIGN DESIGNATION

A.A.D.T. 2015	=	6500
A.A.D.T. 2035	=	7200
D.H.V.	=	374
D.D.	=	61/39
T.	=	5.5%
DESIGN SPEED	=	40 mph
ESALS	=	1,357,800

CONVENTIONAL SYMBOLS

PLAN
- CORPORATE LIMITS
- PROPERTY LINE (PL + 58.1)
- LOT LINE
- LIMITED HIGHWAY EASEMENT
- EXISTING RIGHT OF WAY
- PROPOSED OR NEW R/W LINE
- SLOPE INTERCEPT
- REFERENCE LINE
- EXISTING CULVERT
- PROPOSED CULVERT (Box or Pipe)
- COMBUSTIBLE FLUIDS (CAUTION)
- HIGH VOLTAGE (CAUTION)
- MARSH AREA
- WOODED OR SHRUB AREA

PROFILE
- GRADE LINE
- ORIGINAL GROUND
- MARSH OR ROCK PROFILE (To be noted as such) (ROCK)
- SPECIAL DITCH (LABEL)
- GRADE ELEVATION (95.36)
- CULVERT (Profile View)

UTILITIES
- OVERHEAD UTILITY (OH)
- ELECTRIC (E)
- FIBER OPTIC (FO)
- GAS (G)
- SANITARY SEWER (SAN)
- STORM SEWER (SS)
- TELEPHONE (T)
- WATER (W)
- UTILITY PEDESTAL
- POWER POLE
- TELEPHONE POLE

LAYOUT
SCALE 0 — 1 MI.

TOTAL NET LENGTH OF CENTERLINE = 0.824 MI.

COORDINATES ON THIS PLAN ARE REFERENCED TO THE WISCONSIN COUNTY COORDINATE SYSTEM (WCCS), 'ONEIDA' COUNTY.

ACCEPTED FOR ONEIDA COUNTY

12-30-14 Freeman Butts
DATE HIGHWAY COMMISSIONER

ORIGINAL PLANS PREPARED BY:

MSA PROFESSIONAL SERVICES
TRANSPORTATION - MUNICIPAL DEVELOPMENT - ENVIRONMENTAL
1035 N. Stevens St. Rhinelander, WI 54501
715-362-2344 1-800-244-7654 Fax: 715-362-4118
© MSA PROFESSIONAL SERVICES

WISCONSIN
QUIRIN R. KLINK
E-30535
BARABOO
WI
PROFESSIONAL ENGINEER

12/29/14
Date Signature

STATE OF WISCONSIN
DEPARTMENT OF TRANSPORTATION

PREPARED BY

Surveyor	MSA Professional Services, Inc.
Designer	MSA Professional Services, Inc.
Management Consultant	CEDAR CORP.

APPROVED FOR THE DEPARTMENT
DATE: 1-29-2015 D. M. Wolfe
(Management Consultant Signature)

E

2

STANDARD ABBREVIATIONS

AC	ACRE
AGG	AGGREGATE
<	ANGLE
ASPH	ASPHALTIC
AC	ASPHALT CEMENT
ADT	AVERAGE DAILY TRAFFIC
B & B	BALLED AND BURLAPPED
BM	BENCH MARK
CB	CATCH BASIN
CE	COMMERCIAL ENTRANCE
℄ OR C/L	CENTER LINE
C-C	CENTER TO CENTER
CONC	CONCRETE
CO	COUNTY
CTH	COUNTY TRUNK HIGHWAY
CY	CUBIC YARD
CULV	CULVERT
CP	CULVERT PIPE
CPRC	CULVERT PIPE REINFORCED CONCRETE
C & G	CURB AND GUTTER
D	DEGREE OF CURVE
DHV	DESIGN HOUR VOLUME
DIA OR ϕ	DIAMETER
DIST	DISTRICT
DWY	DRIVEWAY
E	EAST
X	EAST GRID COORDINATE
EB	EASTBOUND
ELEC	ELECTRIC
EL OR ELEV	ELEVATION
EMB	EMBANKMENT
EW	ENDWALL
ESALS	EQUIVALENT SINGLE AXLE LOADS
EXC	EXCAVATION
EBS	EXCAVATION BELOW SUBGRADE
EXIST	EXISTING
EXP	EXPANSION
F-F	FACE TO FACE
FERT	FERTILIZER
FE	FIELD ENTRANCE
F/L	FLOW LINE
FT	FOOT
GN	GRID NORTH
HR	HANDICAP RAMP
HT	HEIGHT
CWT	HUNDREDWEIGHT
HYD	HYDRANT
IN DIA	INCH DIAMETER
INL	INLET
ID	INSIDE DIAMETER
I	INTERSECTION ANGLE
IE	INVERT ELEVATION
IP	IRON PIPE OR PIN
JCT	JUNCTION
L	LENGTH OF CURVE
LF	LINEAR FOOT
LC	LONG CHORD OF CURVE
LCB	LONG CHORD BEARING
LS	LUMP SUM
MH	MANHOLE
N	NORTH
Y	NORTH GRID COORDINATE
OE	OUTLET ELEVATION
OL	OUT LOT
OD	OUTSIDE DIAMETER
OH	OVERHEAD LINES
PAVT	PAVEMENT
PLE	PERMANENT LIMITED EASEMENT
PC	POINT OF CURVATURE
PI	POINT OF INTERSECTION
PT	POINT OF TANGENCY
PCC	PORTLAND CEMENT CONCRETE
LB	POUND
PE	PRIVATE ENTRANCE
R OR RAD	RADIUS
RR	RAILROAD
R	RANGE
℞ OR R/L	REFERENCE LINE
REQD	REQUIRED
RT	RIGHT
R/W	RIGHT-OF-WAY
RD	ROAD
SALV	SALVAGED
SAN	SANITARY SEWER
SECT	SECTION
SHLDR	SHOULDER
SW	SIDEWALK
S	SOUTH
SB	SOUTHBOUND
SPECS	SPECIFICATIONS
SQ	SQUARE
SF OR SQ FT	SQUARE FEET
SY	SQUARE YARD
SSPRC	STORM SEWER PIPE REINFORCED CONCRETE
STD	STANDARD
SDD	STANDARD DETAIL DRAWINGS
STH	STATE TRUNK HIGHWAYS
STA	STATION
SS	STORM SEWER
T	TANGENT
TEL	TELEPHONE
TEMP	TEMPORARY
TLE	TEMPORARY LIMITED EASEMENT
T	TON
TC	TOP OF CURB
TN	TOWN
TRANS	TRANSITION
T	TRUCKS (percent of)
TYP	TYPICAL
UNCL	UNCLASSIFIED
USH	UNITED STATES HIGHWAY
VAR	VARIABLE
VERT	VERTICAL
VC	VERTICAL CURVE
VOL	VOLUME
WM	WATER MAIN
WV	WATER VALVE
W	WEST
WB	WESTBOUND
YD	YARD

UTILITIES

ELECTRIC:
WISCONSIN PUBLIC SERVICE, CORP.
ATTN: ZANE HAGSTROM
2027 NAVAJO ST
RHINELANDER WI 54501
PHONE: 715-369-7117
zrhagstrom@wisconsinpublicservice.com

GAS:
WISCONSIN PUBLIC SERVICE, CORP.
ATTN: EVELYN WEYKER
2027 NAVAJO ST
RHINELANDER WI 54501
PHONE: 715-369-7169
esweyker@wisconsinpublicservice.com

WATER AND SANITARY SEWER:
LAKELAND SANITARY DISTRICT
ATTN: RON GROTH
8180 NORTH MORGAN ROAD
PO BOX 289
MINOCQUA, WI 54548
PHONE: 715-356-4454
sandist@frontier.com

BURIED TELEPHONE:
FRONTIER COMMUNICATIONS
ATTN: WARREN INMAN
525 SUPERIOR ST
ANTIGO, WI 54409
715-847-1504
warren.e.inman@ftr.com

CABLE TV:
CHARTER COMMUNICATIONS
ATTN: MARK OLEJNICZAK
821 LINCOLN STREET
RHINELANDER, WI 54501
PHONE: 715-370-4106
mark.olejniczak@charter.com

DESIGN CONTACT

MSA PROFESSIONAL SERVICES, INC.
ATTN.: CHAD SCHROEDER
1835 N. STEVENS STREET
RHINELANDER, WI 54501-2163
PHONE: 715-362-3244
cschroeder@msa-ps.com

DNR LIAISON

DEPARTMENT OF NATURAL RESOURCES
ATTN.: JON SIMONSEN
107 SUTLIFF AVENUE
RHINELANDER, WI 54501
PHONE: 715-365-8916
Jonathan.Simonsen@wisconsin.gov

BORING LOG

BORING	STATION	LOCATION	THICKNESS ASPHALT/BASE AGG.
1	101+39	6.8' LT	6.5"/0"
2	106+34	8.3' RT	7.0"/0"
3	111+15	7.8' LT	9.0"/0"
4	111+82	32.6' RT	5.0"/25.0"
5	111+94	74.6' RT	3.0"/0"
6	116+14	6.0' LT	7.0"/23.0"
7	121+21	5.3' RT	5.0"/0"
8	125+41	8.5' RT	6.0"/24.0"
9	126+25	5.9' LT	9.0"/21.0"
10	130+50	7.5' RT	8.5"/0"
11	135+43	6.6' LT	10.5"/0"
12	138+88	1.5' RT	9.0"/0"
13	143+45	4.3' LT	9.0"/0"

BORINGS DO NOT REFLECT 2009 1¾-INCH ASPHALTIC OVERLAY

GENERAL NOTES

DISTURBED AREAS WITHIN THE RIGHT-OF-WAY, EXCEPT THE AREAS WITHIN THE FINISHED SHOULDER POINTS SHALL BE FERTILIZED, SEEDED AND MULCHED AS DIRECTED BY THE ENGINEER. OVERSOW PERMANENT SEEDING AREAS WITH TEMPORARY SEED AT 1.5 LBS. PER 1000 SQUARE FEET.

THE LOCATIONS OF EXISTING AND PROPOSED UTILITY INSTALLATIONS AS SHOWN ON THE PLANS ARE APPROXIMATE. THERE MAY BE OTHER UTILITY INSTALLATIONS WITHIN THE AREA THAT ARE NOT SHOWN.

NO TREES OR SHRUBS ARE TO BE REMOVED WITHOUT APPROVAL OF THE ENGINEER, OUTSIDE SHOWN SLOPE INTERCEPTS.

ELEVATIONS SHOWN ON THIS PLAN ARE REFERENCED TO WISDOT PROJECT ID 1174-10-70 CONTROL POINTS, NAVD 88 DATUM.

SILT FENCE TO BE PLACED AS SHOWN ON THE PLAN AND IN PLACE PRIOR TO CONSTRUCTION, AS DIRECTED BY THE ENGINEER.

THE 5.5-INCH HMA PAVEMENT TYPE E-3 SHALL BE PLACED IN TWO LIFTS AS FOLLOWS:
UPPER LIFT = 2.5-INCHES, PG 64-34
LOWER LIFT = 3-INCHES, PG 64-28

TACK COAT APPLICATION RATE FOR THIS PROJECT IS 0.05 GAL/SY.

WHEN THE QUANTITY OF THE ITEM OF BASE LAYER IS MEASURED FOR PAYMENT BY THE TON, THE DEPTH OR THICKNESS OF THE LAYER SHOWN ON THE PLANS IS APPROXIMATE AND THE ACTUAL THICKNESS WILL DEPEND ON THE DISTRIBUTION OF THE MATERIAL AS DIRECTED BY THE ENGINEER.

DIGGERS HOTLINE
Dial 811 or (800) 242-8511
www.DiggersHotline.com

RUNOFF COEFFICIENT TABLE

	HYDROLOGIC SOIL GROUP											
	A			B			C			D		
	SLOPE RANGE (PERCENT)			SLOPE RANGE (PERCENT)			SLOPE RANGE (PERCENT)			SLOPE RANGE (PERCENT)		
LAND USE:	0-2	2-6	6 & OVER	0-2	2-6	6 & OVER	0-2	2-6	6 & OVER	0-2	2-6	6 & OVER
ROW CROPS	.08 .22	.16 .30	.22 .38	.12 .26	.20 .34	.27 .44	.15 .30	.24 .37	.33 .50	.19 .34	.28 .41	.38 .56
MEDIAN STRIP-TURF	.19 .24	.20 .26	.24 .30	.19 .25	.22 .28	.26 .33	.20 .26	.23 .30	.30 .37	.20 .27	.25 .32	.30 .40
SIDE SLOPE-TURF			.25 .32			.27 .34			.28 .36			.30 .38
PAVEMENT:												
ASPHALT	.70 - .95											
CONCRETE	.80 - .95											
BRICK	.70 - .80											
DRIVES, WALKS	.75 - .85											
ROOFS	.75 - .95											
GRAVEL ROADS, SHOULDERS	.40 - .60											

TOTAL PROJECT AREA = 7.1 ACRES
TOTAL AREA EXPECTED TO BE DISTURBED BY CONSTRUCTION ACTIVITIES = 5.0 ACRES

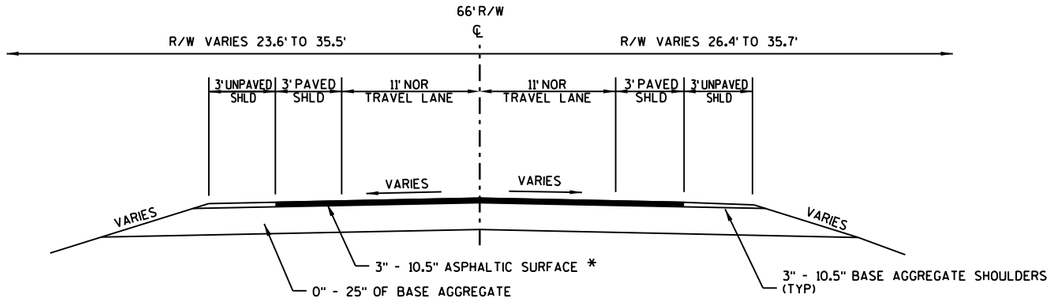

TYPICAL EXISTING SECTION - CTH J

STA 100+00 - STA 143+50

* DOES NOT REFLECT 2009 1 3/4-INCH OVERLAY

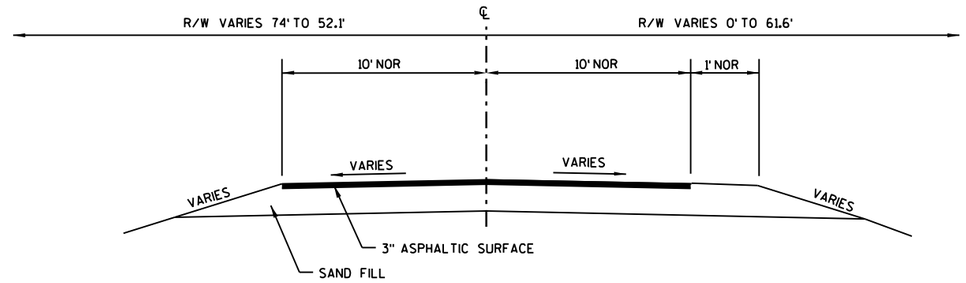

TYPICAL EXISTING SECTION - HANSEN RD

STA 37+61 - STA 39+05

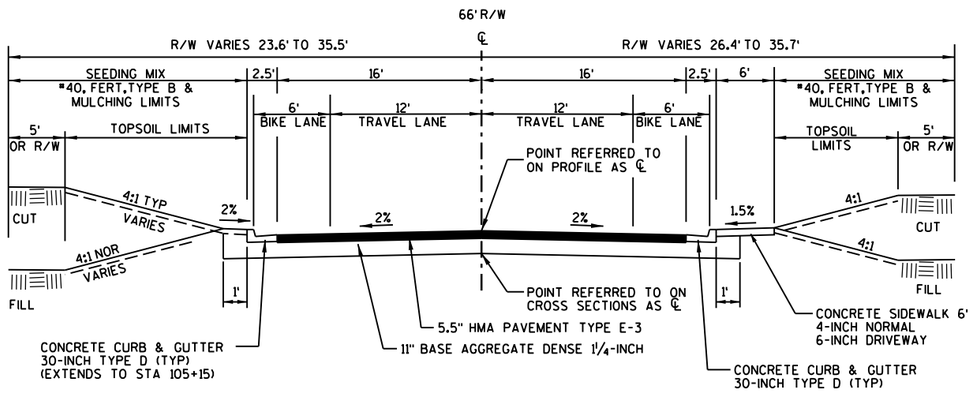

TYPICAL FINISHED SECTION - CTH J RECONSTRUCTION

STA 100+00 - STA 104+80

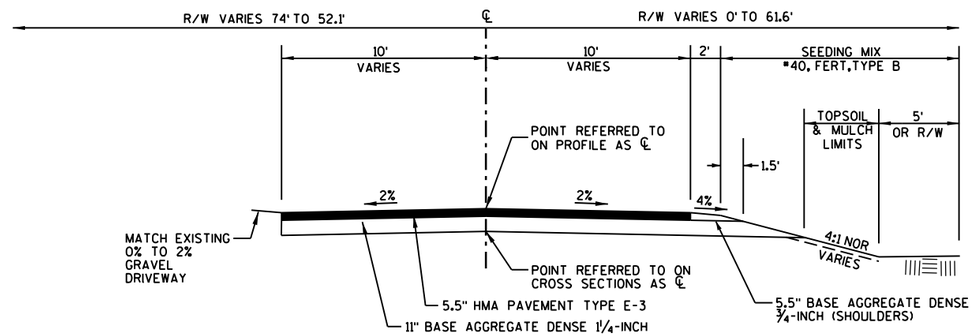

TYPICAL FINISHED SECTION - HANSEN RD

STA 37+61 - STA 39+05

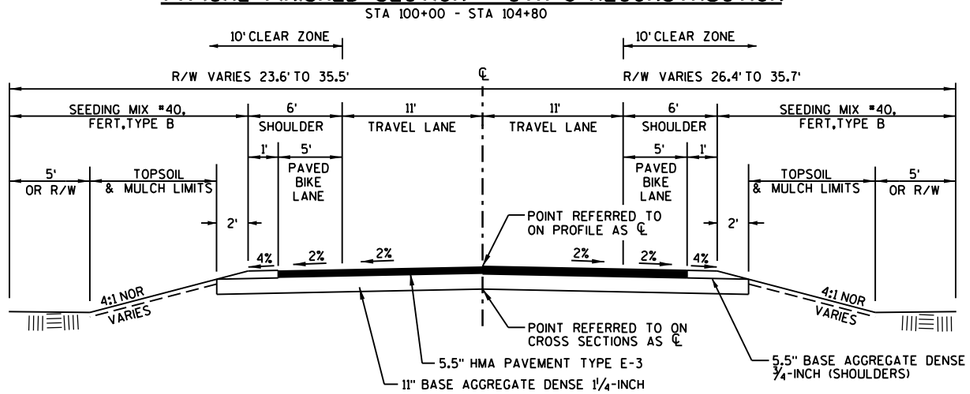

TYPICAL FINISHED SECTION - CTH J RECONDITION

STA 104+80 - STA. 143+50

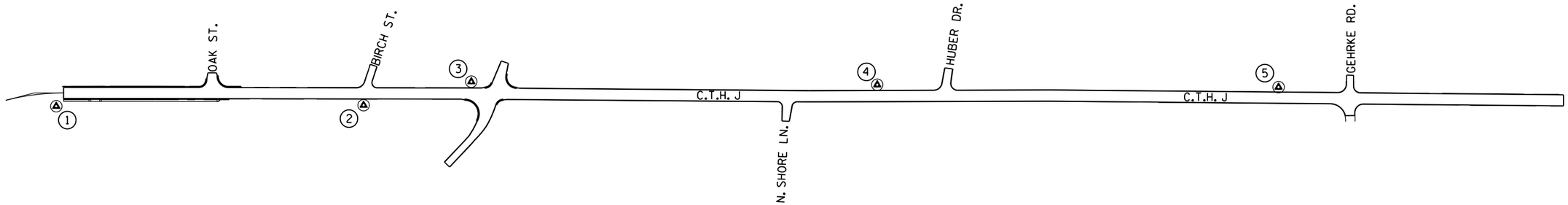

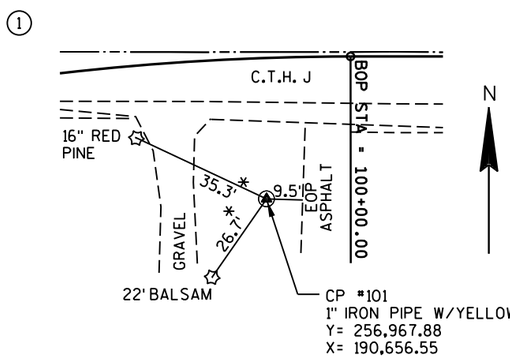

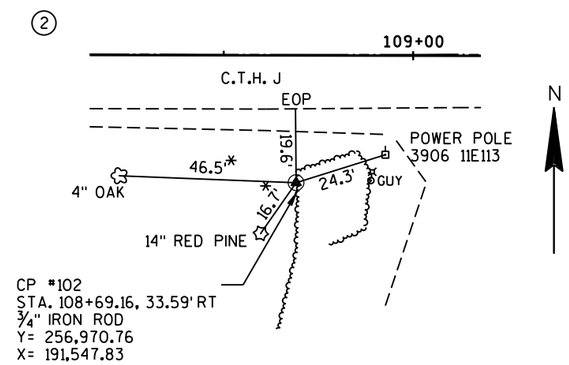

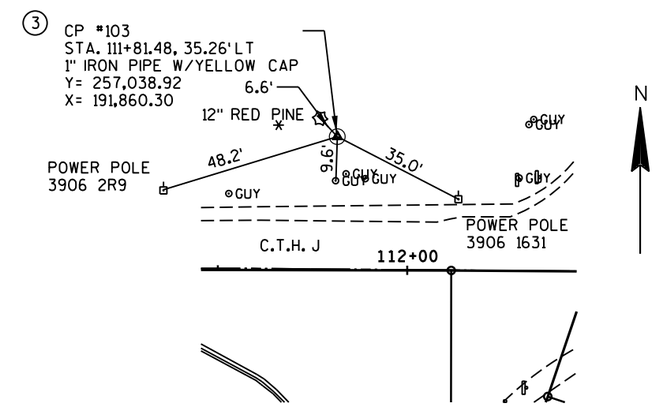

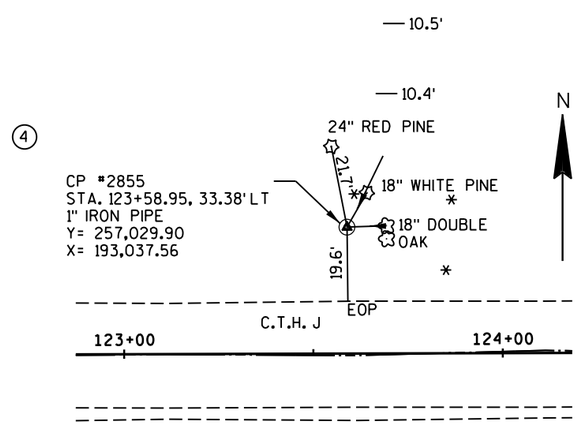

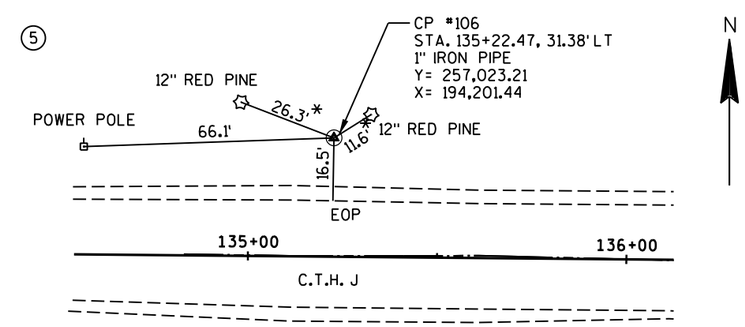

* - DISTANCE IS TO CENTER OF TREE

PROJECT NO: 9455-04-70	HWY: CTH J	COUNTY: ONEIDA	PROJECT TIES	SHEET 4	E

2

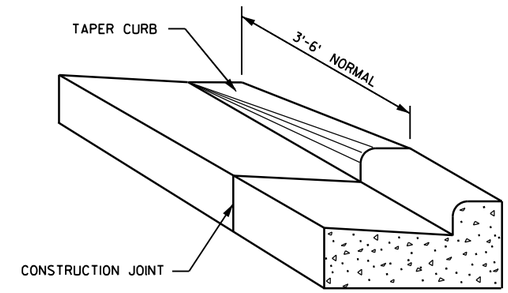

DETAIL OF CURB & GUTTER TERMINI

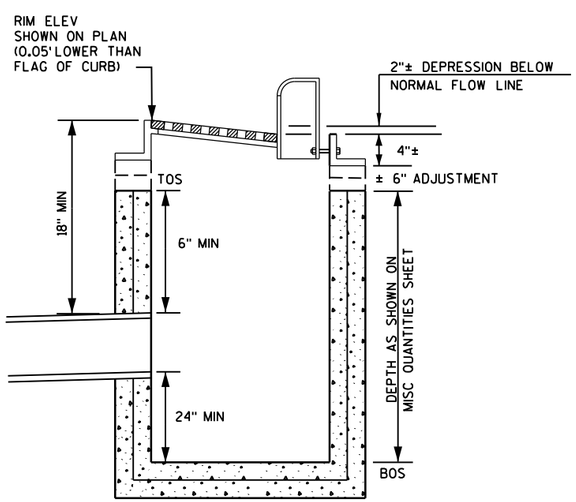

DETAIL FOR COMPUTING CATCH BASIN ELEVATIONS

REQUIREMENTS & SPECIFICATIONS OF INLETS TO FOLLOW
APPLICABLE SDD'S

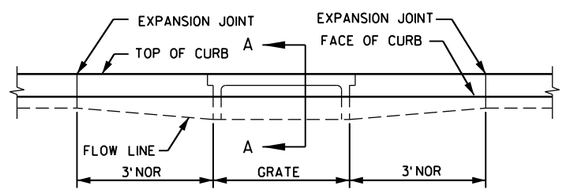

DETAIL - FLOW LINE DEPRESSION AT INLETS
(ELEVATION)

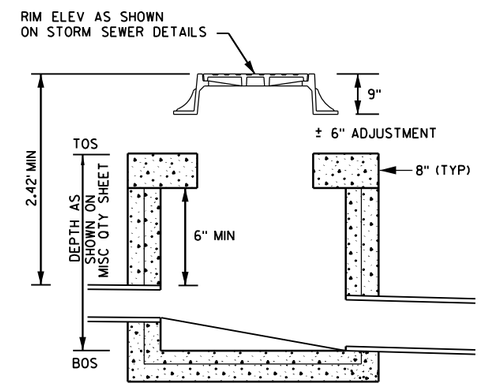

DETAIL FOR COMPUTING MANHOLE ELEVATIONS

PROJECT NO:9455-04-70	HWY:CTH J	COUNTY:ONEIDA	CONSTRUCTION DETAILS	SHEET 5	E

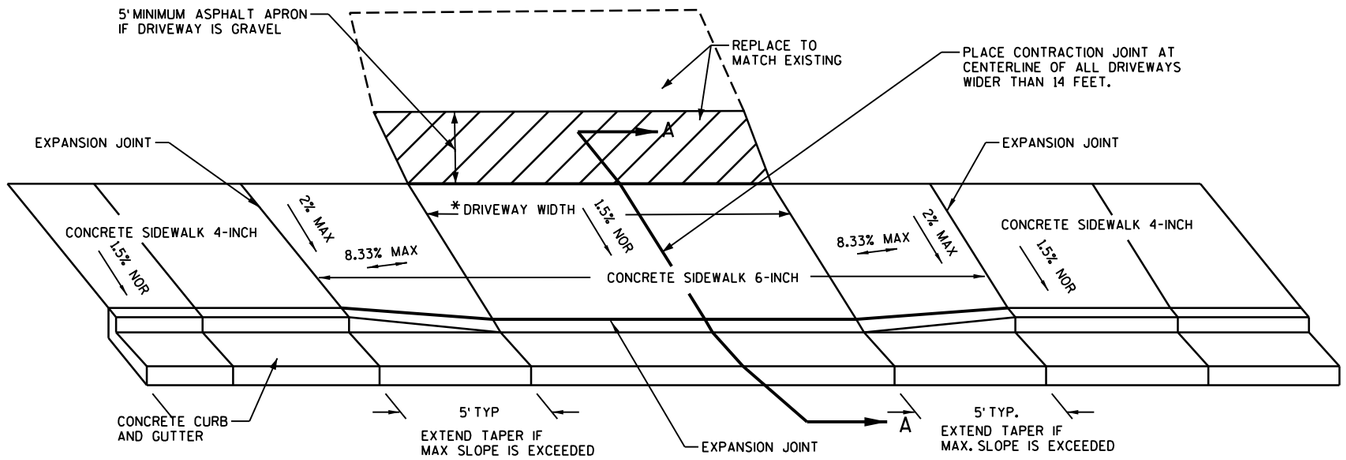

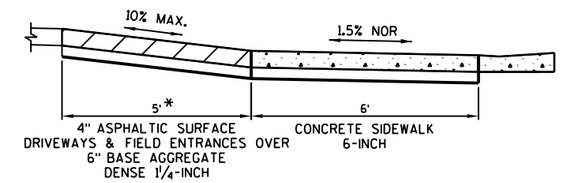

SECTION A-A

* DRIVEWAY WIDTH
COMMERCIAL 35' MAX. 12' MIN
NON-COMMERCIAL 24' MAX. 12' MIN
UNLESS SHOWN OTHERWISE IN PLANS.

URBAN DRIVEWAY DETAIL WITH SIDEWALK

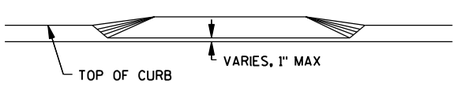

SECTION A-A

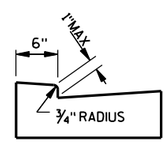

OPTIONAL METHOD FOR CONCRETE GUTTER

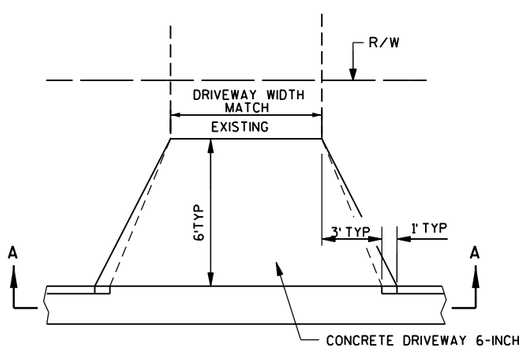

PLAN

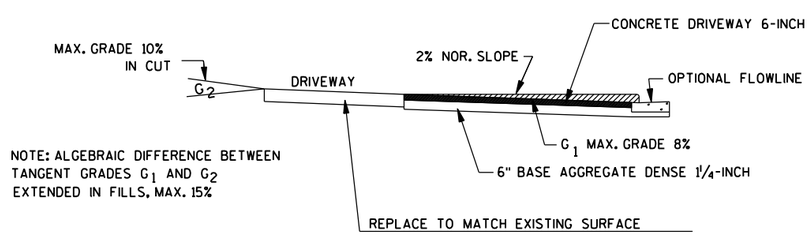

NOTE: ALGEBRAIC DIFFERENCE BETWEEN TANGENT GRADES G_1 AND G_2 EXTENDED IN FILLS, MAX. 15%

GRAVEL: 6" BASE AGGREGATE DENSE 1¼-INCH

ASPHALT: 4" ASPHALTIC SURFACE DRIVEWAYS AND FIELD ENTRANCES OVER 6" BASE AGGREGATE DENSE-1 1/4-INCH

PROFILE

URBAN DRIVEWAY DETAIL WITHOUT SIDEWALK

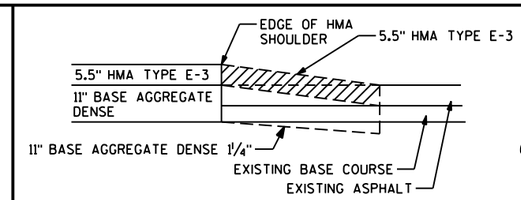

SECTION A-A SIDE ROAD

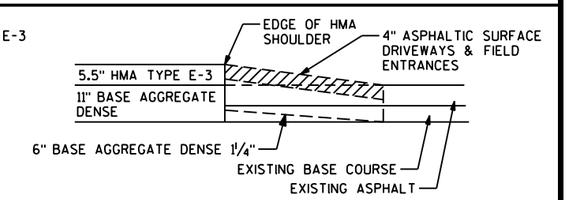

SECTION A-A DRIVEWAY

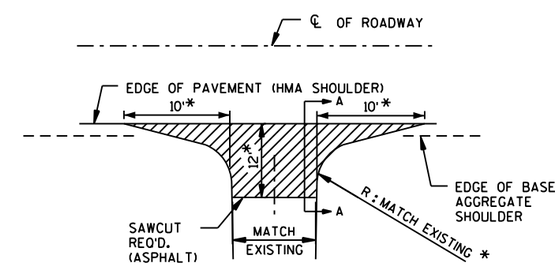

PLAN VIEW

EXTENT OF REMOVAL, PAID AS EXCAVATION COMMON

* -ADJUST AS REQUIRED IN FIELD TO MATCH EXISTING CONDITIONS

RURAL DRIVEWAY & SIDE ROAD MATCH DETAILS

2

BENCHMARKS			
NO.	STA.	DESCRIPTION	ELEV.
1555	104+02.6,92'LT.	NAIL IN E.SIDE RED PINE	1611.17

BM#1555

OVERHEAD ELECTRIC
WISCONSIN PUBLIC SERVICE
BURIED GAS
WISCONSIN PUBLIC SERVICE

OVERHEAD CABLE TV
CHARTER COMMUNICATIONS

(1.1) STA. 100+50.0, 17.5'LT
CATCH BASIN 2X3-FT, H-S REQ'D

(1.0) STA. 100+50.0, 6.0'LT
MANHOLE 4-FT DIA, J REQ'D

(1.2) STA. 100+50.0, 17.5'RT
CATCH BASIN 2X3-FT, H-S REQ'D

STA. 104+14.1, 37.1'LT
CATCH BASIN 2X3-FT,
H-S REQ'D (2.2)

BURIED ELECTRIC
WISCONSIN PUBLIC SERVICE
(2.1) STA. 104+46.2, 47.0'LT
CATCH BASIN 4-FT DIA,
H-S REQ'D

STA. 104+46.2, 8.0'LT
MANHOLE 4-FT DIA, J REQ'D (2.0)

SLOPE INTERCEPT (TYP)

SLOPE INTERCEPT (TYP)

EXISTING R/W
27' VARIES
66' TOTAL
39' VARIES
EXISTING R/W

EXISTING 24" RCPSS
11 LF
23 LF
REMOVE EXISTING MANHOLE*

100+00 101+00 102+00 103+00 104+00 105
394 LF
℄ CTH J
PI STA = 102+66.70
CAUTION
33 LF
39 LF
OAK ST.
STA. 105+00
MATCH LINE

CEMETERY
GRAVEL
TREES
ASPHALT
LAWN
SIGN
CP#101

BEGIN PROJECT
ID #9455-04-70
STA. 100+00

SANITARY SEWER
LAKELAND SANITARY DISTRICT
WATERMAIN
LAKELAND SANITARY DISTRICT

OVERHEAD ELECTRIC
WISCONSIN PUBLIC SERVICE

BURIED TELEPHONE
FRONTIER COMMUNICATIONS

*EXISTING MANHOLE TO BE REMOVED. SALVAGE EXISTING GRATE AND RE-USE AT STRUCTURE 1.0. CONNECT TO EXISTING 24-INCH RCPSS FROM THE WEST.

NOTE: ALL INLETS & CATCH BASINS TO HAVE PROPER INLET PROTECTION INSTALLED AFTER INSTALLATION. SEE MISC. QTY TABLE.

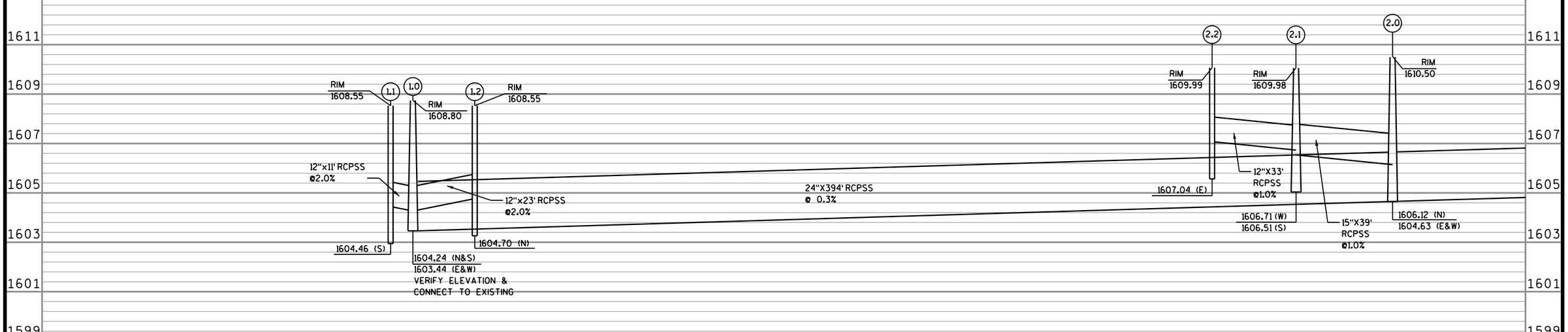

PROJECT NO:9455-04-70	HWY:CTH J	COUNTY:ONEIDA	STORM SEWER	SHEET 7	E

BENCHMARKS			
NO.	STA.	DESCRIPTION	ELEV.
102	108+69.2, 33.6'RT.	3/4-INCH IRON ROD	1611.27

NOTE: ALL INLETS & CATCH BASINS TO HAVE PROPER INLET PROTECTION INSTALLED AFTER INSTALLATION. SEE MISC. QTY TABLE.

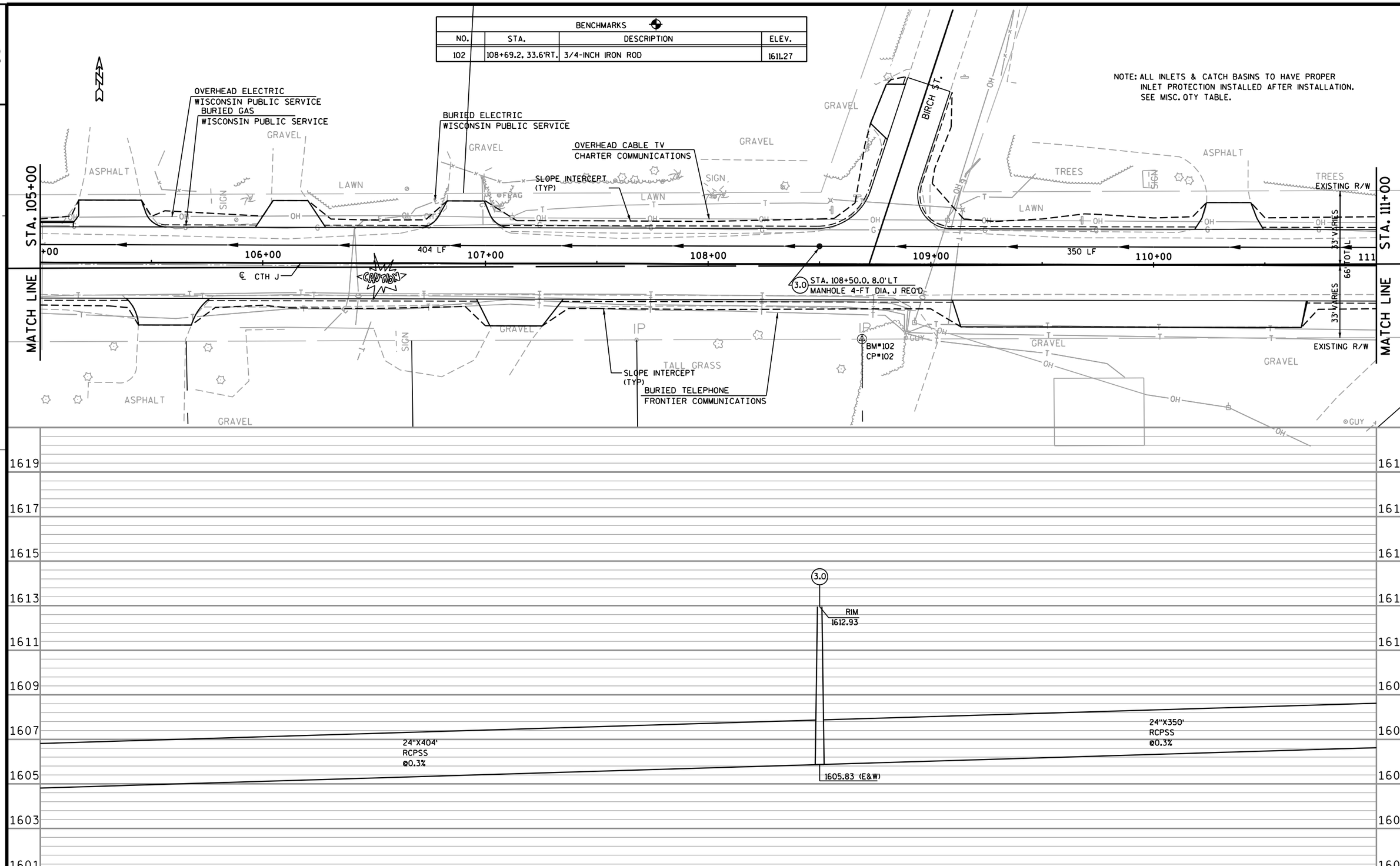

PROJECT NO:9455-04-70	HWY:CTH J	COUNTY:ONEIDA	STORM SEWER	SHEET 8	E

2

BENCHMARKS			
NO.	STA.	DESCRIPTION	ELEV.
103	111+81.5, 35.3'RT.	3/4-INCH IRON ROD	1612.50

NOTE: ALL INLETS & CATCH BASINS TO HAVE PROPER INLET PROTECTION INSTALLED AFTER INSTALLATION. SEE MISC. QTY TABLE.

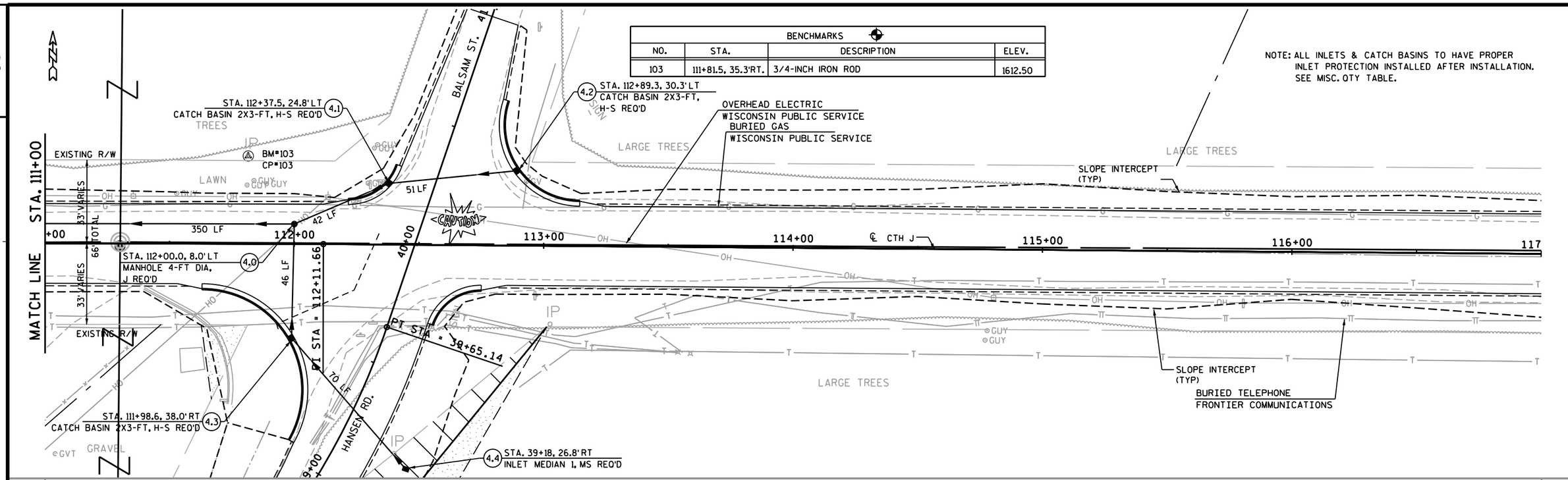

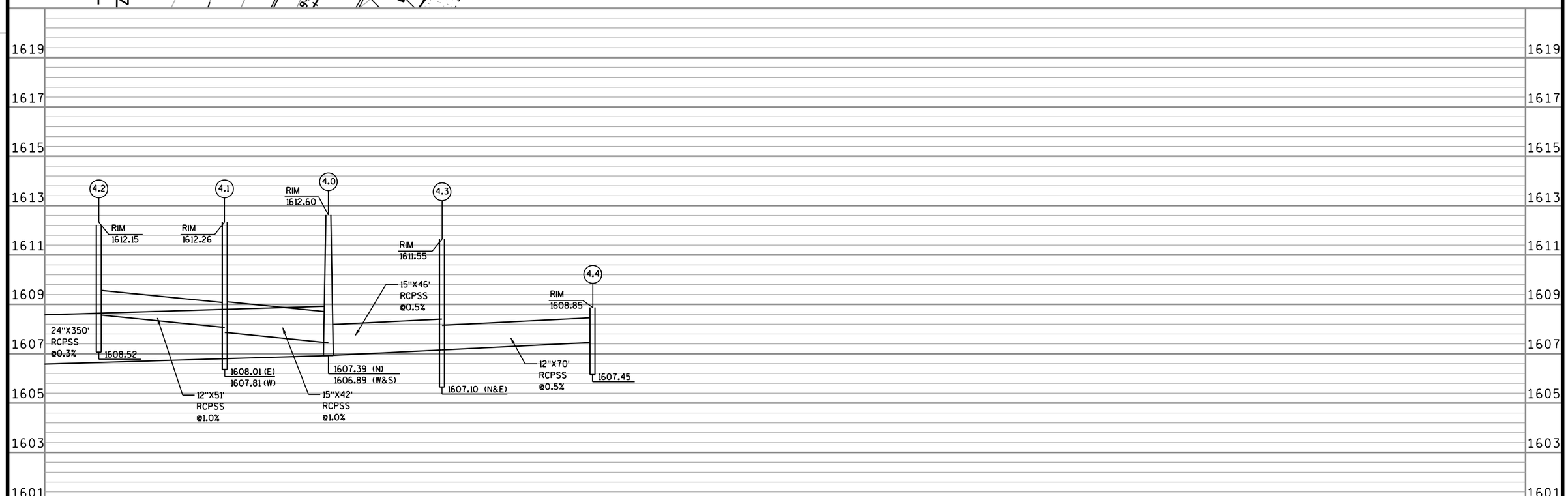

PROJECT NO:9455-04-70	HWY:CTH J	COUNTY:ONEIDA	STORM SEWER	SHEET 9	E

2

PCMS SCHEDULE

PCMS	STAGE	MSG FRAME 1	MSG FRAME 2
A	PRIOR TO CONSTRUCTION	CTH J EB TO CLOSE	MONDAY SEPT 6*
D	PRIOR TO CONSTRUCTION	CTH J WB TO CLOSE	MONDAY SEPT 6*
B/C	DURING CONSTRUCTION	CTH J EAST CLOSED	PAST PACKING PLT RD
E/F	DURING CONSTRUCTION	CTH J CLOSED FROM	USH 51 TO STH 47

* - MODIFY FOR ACTUAL DATE

NOTES:

1. DRAWING IS NOT TO SCALE.
2. WISDOT TRAFFIC ENGINEER CONTACT: CHRIS DROES (715) 365-5749.
3. PCMS (F) IS LOCATED APPROXIMATELY 8 MILES SOUTH OF CTH J/STH 47 INTERSECTION, SOUTH OF LAKE TOMAHAWK.

INTERSECTION DETAILS

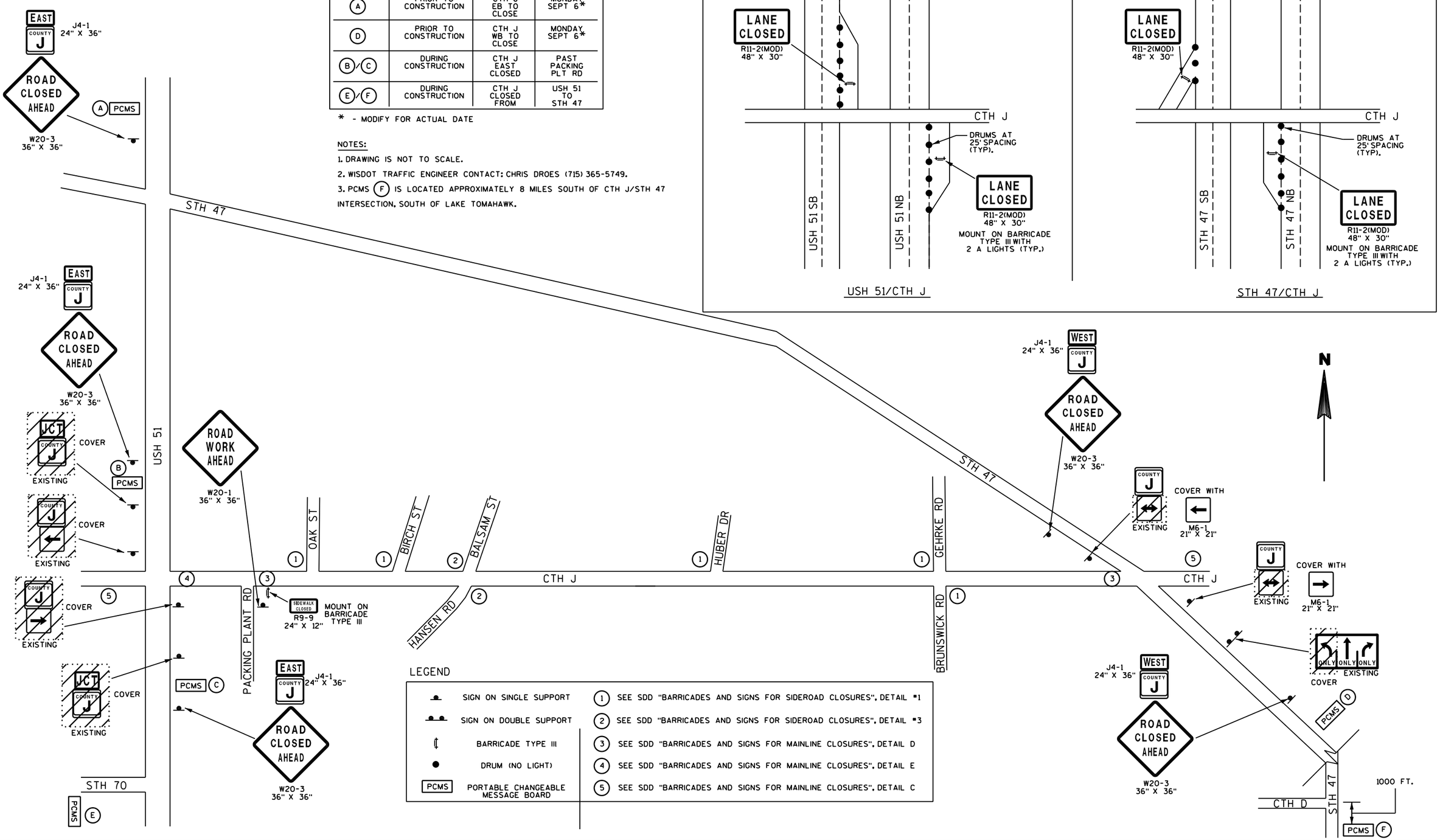

PROJECT NO: 9455-04-70	HWY: CTH J	COUNTY: ONEIDA	TRAFFIC CONTROL	SHEET 10	E

FILE NAME : P:\90s\93\930823\caddWDOT\Plansh ts\930823_TC1.dgn PLOT DATE : 1/28/2015 PLOT BY : pkriesel PLOT NAME : PLOT SCALE : 1:200 WISDOT/CADDS SHEET 41

930823_TC1.dgn 1/28/2015 9:52:17 AM pkriesel

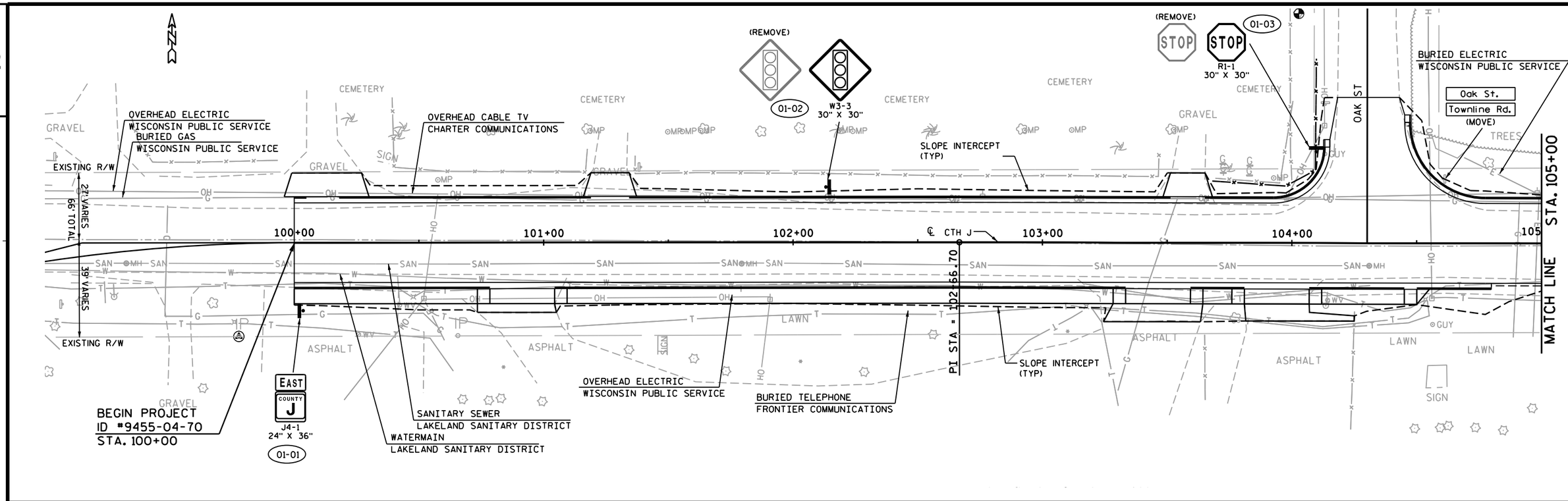

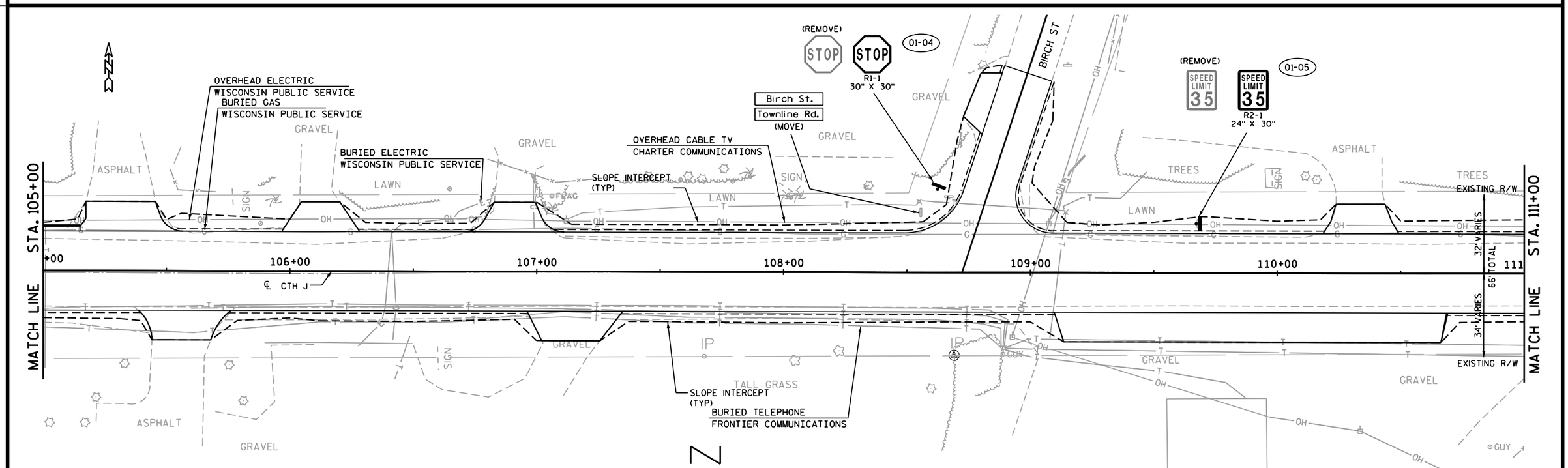

PROJECT NO:9455-04-70	HWY:CTH J	COUNTY:ONEIDA	PERMANENT SIGNING	SHEET 11	E

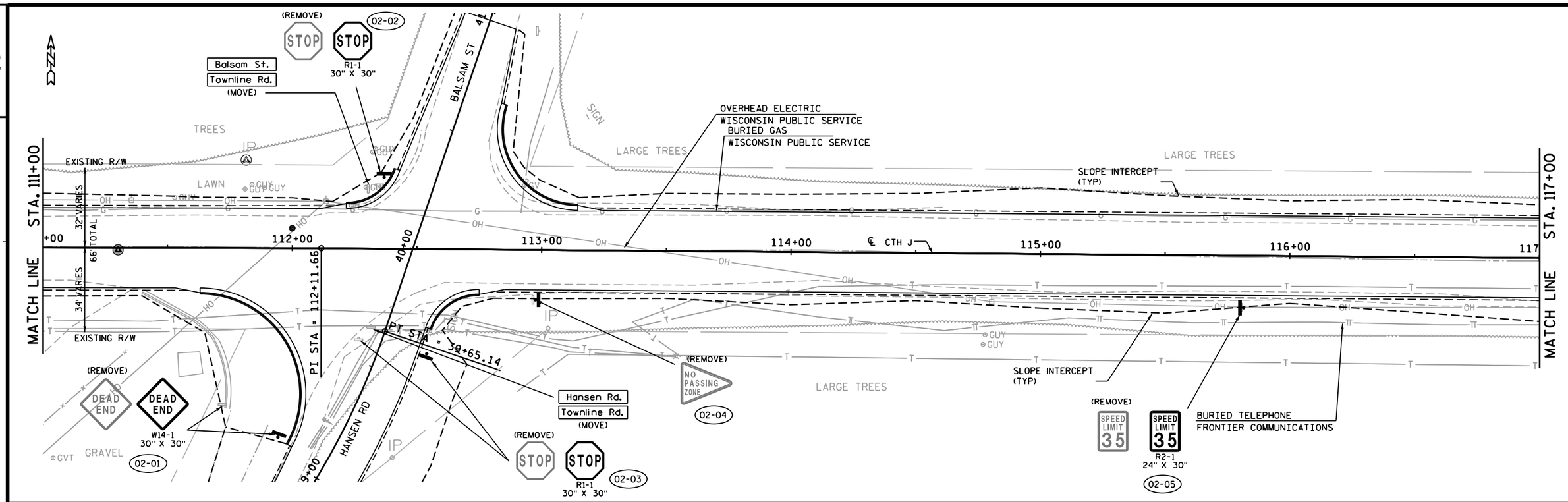

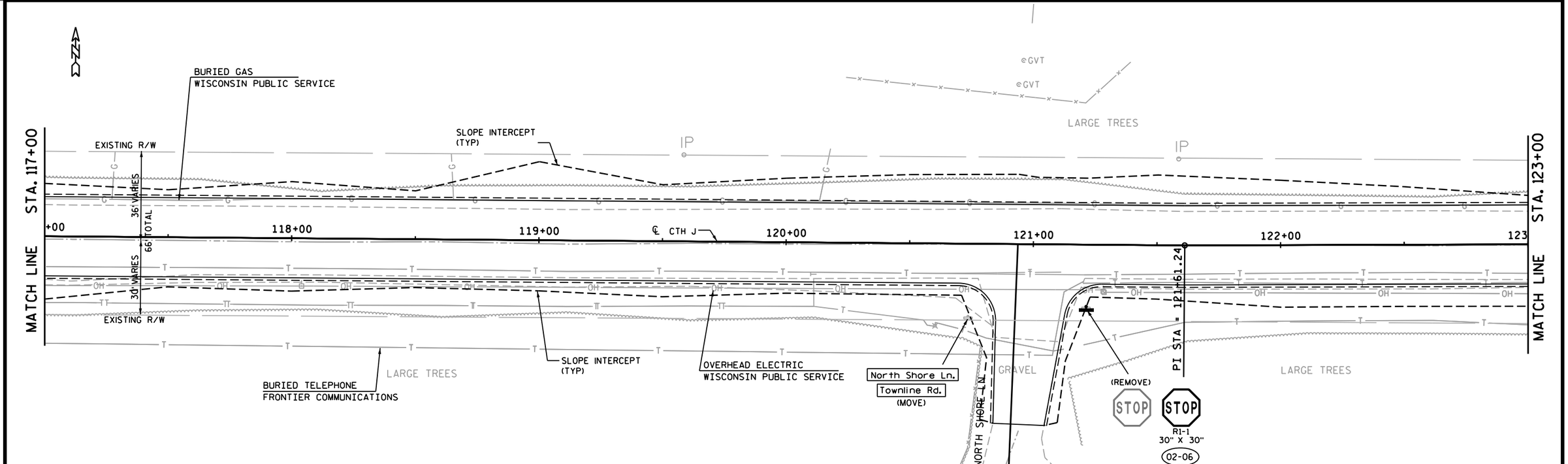

PROJECT NO: 9455-04-70	HWY: CTH J	COUNTY: ONEIDA	PERMANENT SIGNING	SHEET 12	E

FILE NAME : $$....designfile....$$ PLOT DATE : $$...plottingdate...$$ PLOT BY : $$...plotuser...$$ PLOT NAME : PLOT SCALE : $$.....plotscale.....$$ WISDOT/CADDS SHEET 41

plan02.dgn 1/28/2015 9:52:37 AM pkriesel

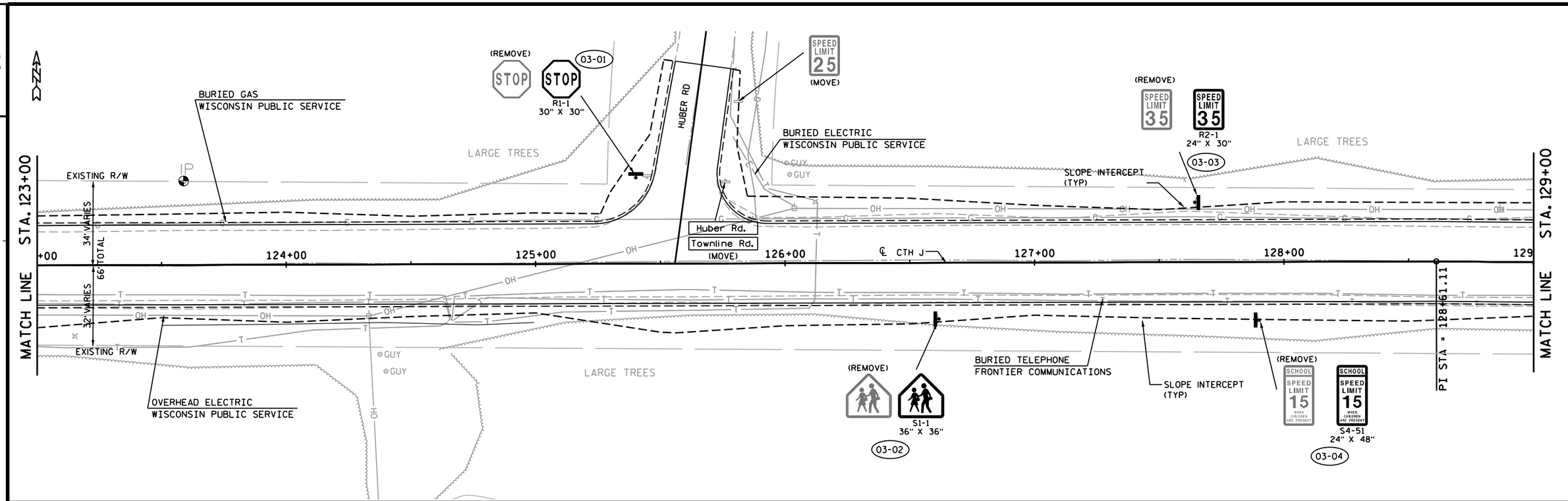

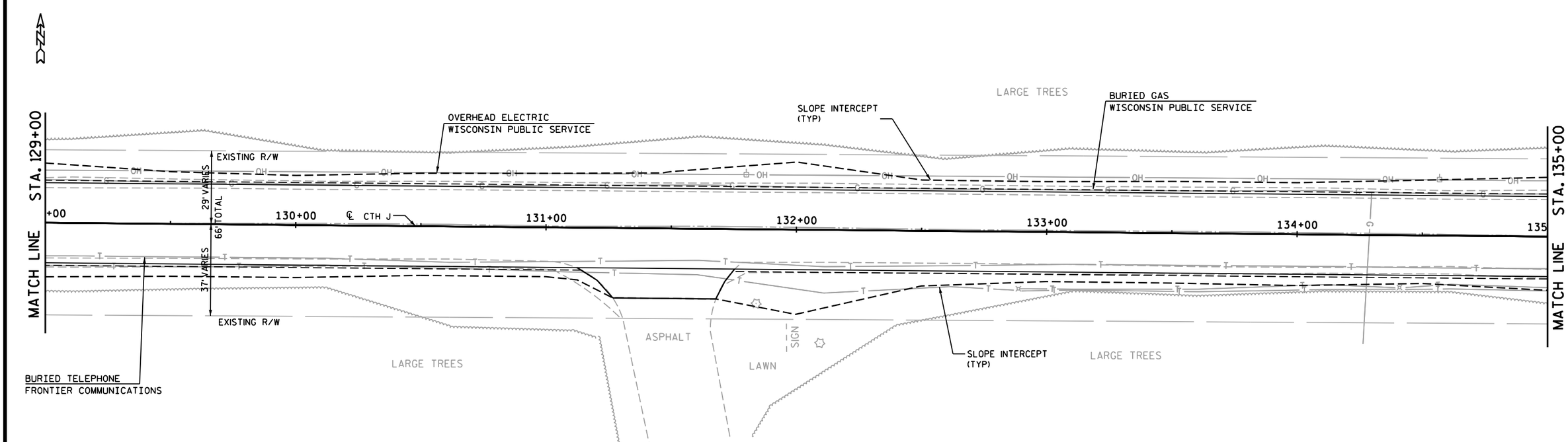

PROJECT NO:9455-04-70	HWY:CTH J	COUNTY:ONEIDA	PERMANENT SIGNING	SHEET 13	E

FILE NAME : $$....designfile....$$ PLOT DATE : $$...plottingdate...$$ PLOT BY : $$...plotuser...$$ PLOT NAME : PLOT SCALE : $$.....plotscale.....$$ WISDOT/CADDS SHEET 41

plan03.dgn 1/28/2015 9:52:41 AM pkriesel

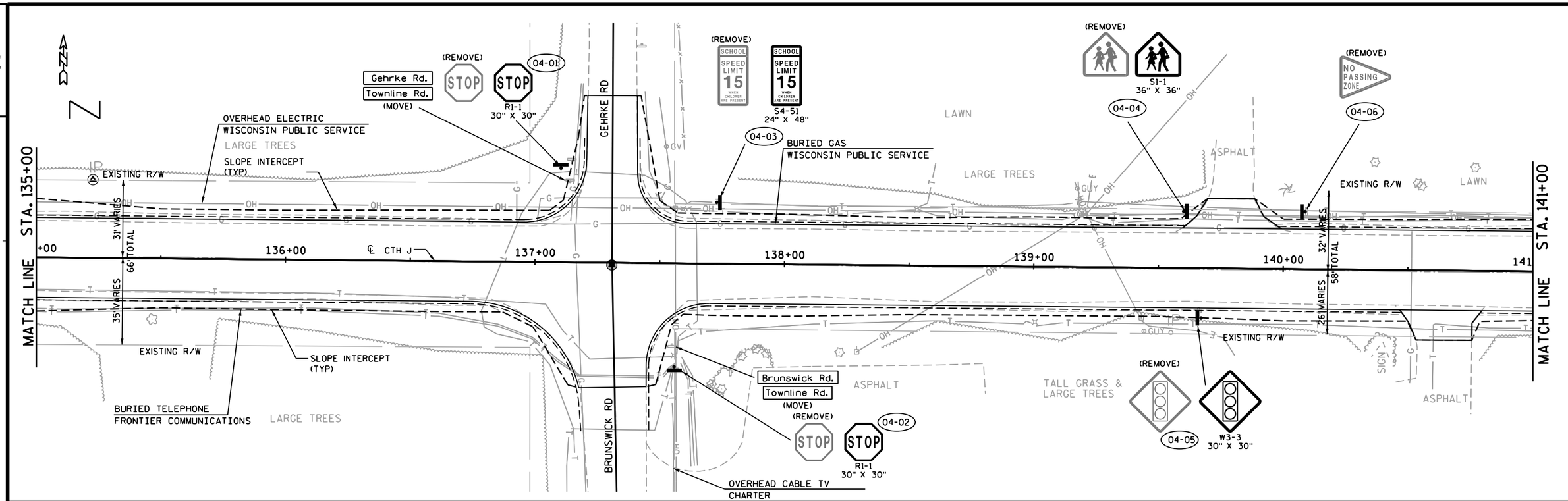

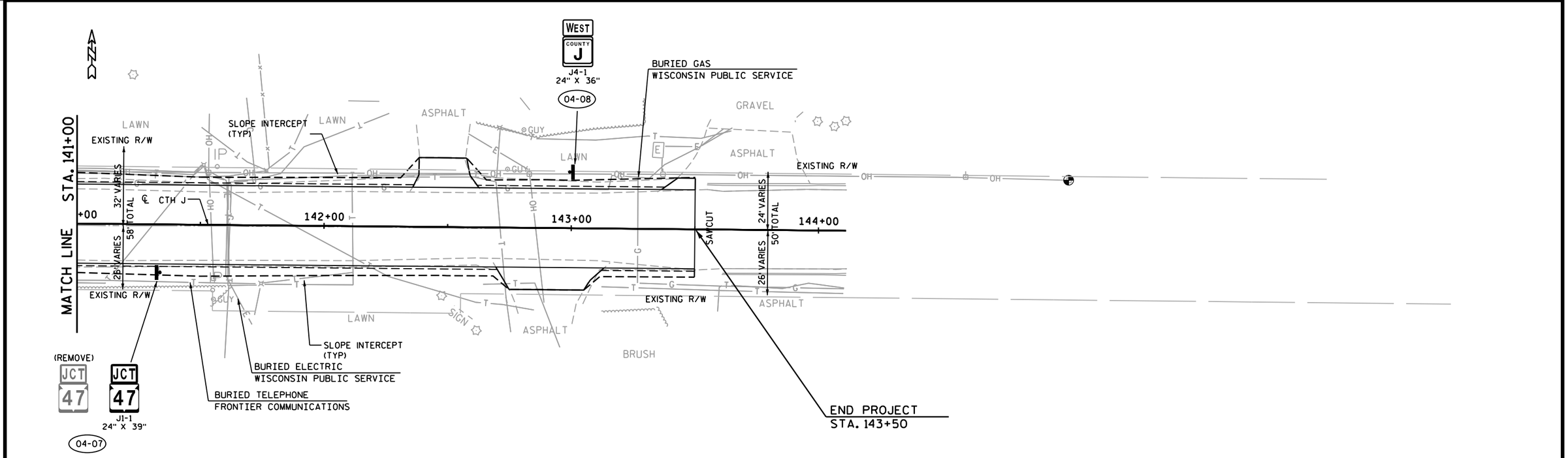

PROJECT NO: 9455-04-70	HWY: CTH J	COUNTY: ONEIDA	PERMANENT SIGNING	SHEET 14	E

FILE NAME : $$....designfile....$$ PLOT DATE : $$...plottingdate...$$ PLOT BY : $$...plotuser...$$ PLOT NAME : PLOT SCALE : $$.....plotscale.....$$ WISDOT/CADDS SHEET 41

plan04.dgn 1/28/2015 9:52:44 AM pkriesel

3

DATE 11MAR15 E S T I M A T E O F Q U A N T I T I E S

LINE NUMBER	ITEM	ITEM DESCRIPTION	UNIT	TOTAL	9455-04-70 QUANTITY
0010	201.0105	Clearing	STA	16.000	16.000
0020	201.0205	Grubbing	STA	16.000	16.000
0030	204.0150	Removing Curb & Gutter	LF	75.000	75.000
0040	204.0210	Removing Manholes	EACH	1.000	1.000
0050	205.0100	Excavation Common	CY	6,990.000	6,990.000
0060	209.0100	Backfill Granular	CY	100.000	100.000
0070	213.0100	Finishing Roadway (project) 01. 9455-04-70	EACH	1.000	1.000
0080	305.0110	Base Aggregate Dense 3/4-Inch	TON	1,370.000	1,370.000
0090	305.0120	Base Aggregate Dense 1 1/4-Inch	TON	15,735.000	15,735.000
0100	416.0160	Concrete Driveway 6-Inch	SY	145.000	145.000
0110	455.0120	Asphaltic Material PG64-28	TON	172.000	172.000
0120	455.0122	Asphaltic Material PG64-34	TON	138.000	138.000
0130	455.0605	Tack Coat	GAL	926.000	926.000
0140	460.1103	HMA Pavement Type E-3	TON	5,560.000	5,560.000
0150	460.2000	Incentive Density HMA Pavement	DOL	3,560.000	3,560.000
0160	460.4000	HMA Cold Weather Paving	TON	5,560.000	5,560.000
0170	465.0120	Asphaltic Surface Driveways and Field Entrances	TON	250.000	250.000
0180	601.0411	Concrete Curb & Gutter 30-Inch Type D	LF	1,205.000	1,205.000
0190	601.0600	Concrete Curb Pedestrian	LF	15.000	15.000
0200	602.0405	Concrete Sidewalk 4-Inch	SF	2,150.000	2,150.000
0210	602.0415	Concrete Sidewalk 6-Inch	SF	570.000	570.000
0220	602.0505	Curb Ramp Detectable Warning Field Yellow	SF	8.000	8.000
0230	608.0312	Storm Sewer Pipe Reinforced Concrete Class III 12-Inch	LF	188.000	188.000
0240	608.0315	Storm Sewer Pipe Reinforced Concrete Class III 15-Inch	LF	127.000	127.000
0250	608.0324	Storm Sewer Pipe Reinforced Concrete Class III 24-Inch	LF	1,148.000	1,148.000
0260	611.0530	Manhole Covers Type J	EACH	3.000	3.000
0270	611.0639	Inlet Covers Type H-S	EACH	7.000	7.000
0280	611.0642	Inlet Covers Type MS	EACH	1.000	1.000
0290	611.1004	Catch Basins 4-FT Diameter	EACH	1.000	1.000
0300	611.1230	Catch Basins 2x3-FT	EACH	6.000	6.000
0310	611.2004	Manholes 4-FT Diameter	EACH	4.000	4.000
0320	611.3901	Inlets Median 1 Grate	EACH	1.000	1.000
0330	611.8110	Adjusting Manhole Covers	EACH	2.000	2.000
0340	611.8120.S	Cover Plates Temporary	EACH	12.000	12.000
0350	611.9705	Salvaged Manhole Covers	EACH	1.000	1.000
0360	616.0700.S	Fence Safety	LF	40.000	40.000
0370	619.1000	Mobilization	EACH	1.000	1.000
0380	624.0100	Water	MGAL	50.000	50.000
0390	625.0100	Topsoil	SY	5,100.000	5,100.000
0400	627.0200	Mulching	SY	2,120.000	2,120.000
0410	628.1504	Silt Fence	LF	200.000	200.000
0420	628.1520	Silt Fence Maintenance	LF	200.000	200.000
0430	628.1905	Mobilizations Erosion Control	EACH	3.000	3.000
0440	628.1910	Mobilizations Emergency Erosion Control	EACH	3.000	3.000
0450	628.2008	Erosion Mat Urban Class I Type B	SY	5,100.000	5,100.000
0460	628.7005	Inlet Protection Type A	EACH	1.000	1.000
0470	628.7015	Inlet Protection Type C	EACH	11.000	11.000
0480	628.7504	Temporary Ditch Checks	LF	24.000	24.000
0490	629.0210	Fertilizer Type B	CWT	7.000	7.000

3

3

DATE 11MAR15 E S T I M A T E O F Q U A N T I T I E S

LINE NUMBER	ITEM	ITEM DESCRIPTION	UNIT	TOTAL	9455-04-70 QUANTITY
0500	630.0120	Seeding Mixture No. 20	LB	55.000	55.000
0510	630.0140	Seeding Mixture No. 40	LB	110.000	110.000
0520	630.0200	Seeding Temporary	LB	110.000	110.000
0530	633.5100	Markers Row	EACH	2.000	2.000
0540	634.0614	Posts Wood 4x6-Inch X 14-FT	EACH	21.000	21.000
0550	637.2210	Signs Type II Reflective H	SF	74.940	74.940
0560	637.2230	Signs Type II Reflective F	SF	48.250	48.250
0570	638.2102	Moving Signs Type II	EACH	17.000	17.000
0580	638.2602	Removing Signs Type II	EACH	11.000	11.000
0590	638.3000	Removing Small Sign Supports	EACH	21.000	21.000
0600	638.4000	Moving Small Sign Supports	EACH	9.000	9.000
0610	642.5001	Field Office Type B	EACH	1.000	1.000
0620	643.0100	Traffic Control (project) 01. 9455-04-70	EACH	1.000	1.000
0630	643.0300	Traffic Control Drums	DAY	3,965.000	3,965.000
0640	643.0420	Traffic Control Barricades Type III	DAY	4,514.000	4,514.000
0650	643.0705	Traffic Control Warning Lights Type A	DAY	6,100.000	6,100.000
0660	643.0900	Traffic Control Signs	DAY	3,355.000	3,355.000
0670	643.0920	Traffic Control Covering Signs Type II	EACH	7.000	7.000
0680	643.1050	Traffic Control Signs PCMS	DAY	387.000	387.000
0690	646.0103	Pavement Marking Paint 4-Inch	LF	17,000.000	17,000.000
0700	647.0203	Pavement Marking Arrows Bike Lane Paint	EACH	19.000	19.000
0710	647.0403	Pavement Marking Words Bike Lane Paint	EACH	38.000	38.000
0720	650.4000	Construction Staking Storm Sewer	EACH	12.000	12.000
0730	650.4500	Construction Staking Subgrade	LF	4,550.000	4,550.000
0740	650.5000	Construction Staking Base	LF	4,550.000	4,550.000
0750	650.5500	Construction Staking Curb Gutter and Curb & Gutter	LF	1,205.000	1,205.000
0760	650.9910	Construction Staking Supplemental Control (project) 01. 9455-04-70	LS	1.000	1.000
0770	650.9920	Construction Staking Slope Stakes	LF	4,550.000	4,550.000
0780	690.0150	Sawing Asphalt	LF	560.000	560.000
0790	690.0250	Sawing Concrete	LF	10.000	10.000
0800	ASP.1T0A	On-the-Job Training Apprentice at $5. 00/HR	HRS	1,200.000	1,200.000
0810	ASP.1T0G	On-the-Job Training Graduate at $5.00/HR	HRS	600.000	600.000
0820	SPV.0060	Special 01. Adjusting Water Valves	EACH	2.000	2.000
0830	SPV.0060	Special 02. Reestablish Survey Monument	EACH	2.000	2.000

3

3

REMOVALS

201.0105 CLEARING
201.0205 GRUBBING

STATION	-	STATION	LOCATION	CLEARING STA	GRUBBING STA
114+00	-	116+00	CTH J	2	2
118+00	-	120+00	CTH J	2	2
121+00	-	124+00	CTH J	3	3
125+00	-	127+00	CTH J	2	2
139+00	-	140+00	CTH J	1	1
37+00	-	40+00	HANSEN ROAD	3	3
UNDISTRIBUTED				3	3
PROJECT TOTALS:				16	16

204.0150 REMOVING CURB AND GUTTER

LOCATION	LF
HANSEN ROAD	65
UNDISTRIBUTED (1)	10
PROJECT TOTAL:	75

(1) - FOR USE IN TYING INTO WEST PROJECT LIMITS

204.0210 REMOVING MANHOLES

STATION	LOCATION	MANHOLES EACH
100+50.0	6.0' LT	1
PROJECT TOTAL:		1

EARTHWORK

205.0100 EXCAVATION COMMON

STATION	-	STATION	LOCATION	EX. COMMON C.Y. (3)	UNEXPANDED FILL C.Y. (1)	EXPANDED FILL C.Y. (1,2)	MASS ORDINATE/ WASTE C.Y. (1,3)
100+00	-	143+50	CTH J	6430	240	311	6119
37+50	-	39+50	HANSEN ROAD	560	0	0	560
PROJECT TOTALS:				6990	240	311	6679

(1) - NOT A BID ITEM - FOR INFORMATIONAL PURPOSES ONLY.
(2) - FILL EXPANSION 30%
(3) - ALL EXISTING ASPHALTIC PAVEMENT IS INCLUDED IN COMMON EXCAVATION TOTALS, SEE EARTHWORK TABLES.

209.0100 BACKFILL GRANULAR

STATION	-	STATION	CY
UNDISTRIBUTED			100
PROJECT TOTALS:			100

USE ONLY AS NEEDED FOR SIDEWALK BASE

AGGREGATES

305.0110 BASE AGGREGATE DENSE 3/4-INCH
305.0120 BASE AGGREGATE DENSE 1 1/4-INCH

STATION	-	STATION	LOCATION	3/4-INCH TON	1 1/4-INCH TON
100+00	-	143+50	CTH J	1180	14360
37+50	-	39+70	HANSEN RD	40	550
DRIVEWAYS & SIDEROADS				50	825
TEMP. ACCESS CONTROL			VARIOUS	100	--
PROJECT TOTALS:				1370	15735

ASPHALTIC ITEMS

455.0120 ASPHALTIC MATERIAL PG64-28
455.0122 ASPHALTIC MATERIAL PG64-34
455.0605 TACK COAT
460.1103 HMA PAVEMENT TYPE E-3
460.4000 HMA COLD WEATHER PAVING
465.0120 ASPHALTIC SURFACE DRIVEWAYS AND FIELD ENTRANCES

STATION	-	STATION	LOCATION	ASPHALTIC MATERIAL PG64-28 TON	ASPHALTIC MATERIAL PG64-34 TON	TACK GAL (1)	HMA TYPE E-3 TON	HMA COLD WEATHER TON	ASPH. SURF. DRIVEWAYS TON
100+00	-	143+50	CTH J	150	120	780	4900	4900	--
37+50	-	39+70	HANSEN ROAD	8	7	40	240	240	--
SIDEROAD INTERSECTIONS			CTH J	14	11	70	420	420	--
DRIVEWAYS				--	--	36	--		250
PROJECT TOTALS:				172	138	926	5560	5560	250

(1) - TACK COAT APPLICATION RATE: 0.05 GAL/SY.

CONCRETE ITEMS

416.0160 CONCRETE DRIVEWAY 6-INCH

STATION	LOCATION	SY
100+12	LT	35
100+90	RT	25
101+27	LT	20
103+45	RT	25
103+58	LT	15
103+94	RT	25
PROJECT TOTAL:		145

601.0411 CONCRETE CURB AND GUTTER 30-INCH TYPE D

STATION	-	STATION	LOCATION	LF
100+00	-	104+14	CTH J LT	435
100+00	-	104+80	CTH J RT	485
104+45	-	105+15	CTH J LT	90
111+63	-	39+06	CTH J/HANSEN RD RT	85
112+22	-	40+28	CTH J/HANSEN RD LT	25
39+72	-	112+72	CTH J/HANSEN RD RT	25
40+67	-	113+14	CTH J/HANSEN RD LT	60
PROJECT TOTAL:				1205

601.0600 CONCRETE CURB PEDESTRIAN
602.0405 CONCRETE SIDEWALK 4-INCH
602.0415 CONCRETE SIDEWALK 6-INCH
602.0505 CURB RAMP DETECTABLE WARNING FIELD YELLOW

STATION	-	STATION	LOCATION	CURB LF	4-INCH SF	6-INCH SF	WARN. FIELD SF
100+00	-	104+80	CTH J RT	15	2150	570	8
PROJECT TOTALS:				15	2150	570	8

STORM SEWER/PIPE

608.0312 STORM SEWER PIPE REINFORCED CONCRETE CLASS III 12-INCH
608.0315 STORM SEWER PIPE REINFORCED CONCRETE CLASS III 15-INCH
608.0324 STORM SEWER PIPE REINFORCED CONCRETE CLASS III 24-INCH

STORM STRUCTURE	-	STORM STRUCTURE	12-INCH LF	15-INCH LF	24-INCH LF
1.0	-	1.1	11	--	--
1.0	-	1.2	23	--	--
2.2	-	2.1	33	--	--
2.1	-	2.0	--	39	--
1.0	-	2.0	--	--	394
2.0	-	3.0	--	--	404
3.0	-	4.0	--	--	350
4.2	-	4.1	51	--	--
4.1	-	4.0	--	42	--
4.4	-	4.3	70	--	--
4.3	-	4.0	--	46	--
PROJECT TOTALS:			188	127	1148

NOTE: ALL ITEMS LISTED ARE CATEGORY 0010 UNLESS OTHERWISE NOTED.

3

STRUCTURES

611.2004 MANHOLES 4-FT DIAMETER
611.1004 CATCH BASINS 4-FT DIAMETER
611.1230 CATCH BASINS 2x3-FT
611.3901 INLETS MEDIAN 1 GRATE
611.0530 MANHOLE COVERS TYPE J
611.0639 INLET COVERS TYPE H-S
611.0642 INLET COVERS TYPE MS
611.9705 SALVAGED MANHOLE COVERS
611.8120.S COVER PLATES TEMPORARY
650.4000 CONSTRUCTION STAKING STORM SEWER

STORM STRUCTURE	STATION	LOCATION	MANHOLE 4-FT EACH	CATCH BASIN 4-FT EACH	CATCH BASIN 2x3-FT EACH	INLETS MEDIAN EACH	MANHOLE COVER TYPE J EACH	INLET COVER TYPE H-S EACH	INLET COVER TYPE MS EACH	SALVAGED COVERS EACH	COVER PLATES TEMPORARY EACH	RIM ELEV	TOS ELEV	BOS ELEV	DEPTH FT (1)	STAKING STORM SEWER EACH	COMMENTS
1.0	100+50.00	6.0' LT	1	--	--	--	--	--	--	1	1	1608.80	1607.55	1604.24	3.31	1	
1.1	100+50.00	17.5' LT	--	--	1	--	--	1	--	--	1	1608.55	1607.55	1602.42	5.13	1	
1.2	100+50.00	17.5' RT	--	--	1	--	--	1	--	--	1	1608.55	1607.55	1602.74	4.81	1	
2.0	104+46.20	8.0' LT	1	--	--	--	1	--	--	--	1	1610.50	1609.25	1606.12	3.13	1	
2.1	104+46.20	47.0' LT	--	1	--	--	--	1	--	--	1	1609.98	1608.98	1604.51	4.47	1	
2.2	104+14.10	37.1' LT	--	--	1	--	--	1	--	--	1	1609.99	1608.99	1605.04	3.95	1	
3.0	108+50.00	8.0' LT	1	--	--	--	1	--	--	--	1	1612.93	1611.68	1605.84	5.84	1	
4.0	112+00.00	8.0' LT	1	--	--	--	1	--	--	--	1	1612.60	1611.35	1606.89	4.46	1	
4.1	112+37.50	24.8' LT	--	--	1	--	--	1	--	--	1	1612.26	1611.26	1605.81	5.45	1	
4.2	112+89.30	30.3' LT	--	--	1	--	--	1	--	--	1	1615.15	1614.15	1606.55	7.60	1	
4.3	111+98.60	38.0' RT	--	--	1	--	--	1	--	--	1	1611.55	1610.55	1605.13	5.42	1	
4.4	39+18.00	26.8' RT HANSEN RD	--	--	--	1	--	--	1	--	1	1608.85	1608.85	1605.48	3.37	1	FLAT GRATE
TOTALS:			4	1	6	1	3	7	1	1	12					12	

(1) - DEPTH IS MEASURED FROM TOP OF STRUCTURE (TOS) TO BOTTOM OF STRUCTURE (BOS)
INLET DEPTHS INCLUDE 2-FOOT SUMP, SEE DETAIL.

611.8110 ADJUSTING MANHOLE COVERS
SPV.0060.01 ADJUSTING WATER VALVES

STATION	LOCATION	MANHOLE EACH	WATER VALVES EACH
100+42	24.5' RT	--	1
101+75	8.0' RT	1	--
104+13	22.5' RT	--	1
104+31	8.5' RT	1	--
PROJECT TOTALS:		2	2

NOTE: CATEGORY 0020 ITEMS

3

FENCING

616.0700.S FENCE SAFETY

STATION	-	STATION	LOCATION	LF
103+68	-	104+07	LT	40
PROJECT TOTALS:				40

628.1504 SILT FENCE
628.1520 SILT FENCE MAINTENANCE

LOCATION	FENCE LF	MAINT. LF
STA 123+50 - STA. 125+00 RT	150	150
UNDISTRIBUTED	50	50
PROJECT TOTALS:	200	200

628.7504 TEMPORARY DITCH CHECKS

LOCATION	LF
HANSEN ROAD UNDISTRIBUTED	24
PROJECT TOTAL:	24

EROSION CONTROL

624.0100 WATER
625.0100 TOPSOIL
627.0200 MULCHING
628.2008 EROSION MAT URBAN CLASS I TYPE B
629.0210 FERTILIZER TYPE B
630.0120 SEEDING MIXTURE NO. 20
630.0140 SEEDING MIXTURE NO. 40
630.0200 SEEDING TEMPORARY

STATION	-	STATION	LOCATION	WATER MGAL (1)	TOPSOIL S.Y.	MULCHING S.Y.	E-MAT S.Y.	FERTILIZER CWT.	SEEDING #20 LB.	SEEDING #40 LB.	SEEDING TEMPORARY LB.
100+00	-	143+50	CTH J LT	--	2400	--	2400	2	--	45	35
100+00	-	143+50	CTH J RT	--	2070	--	2070	1	--	40	30
37+50	-	39+50	HANSEN ROAD RT	--	490	--	490	1	--	10	5
WASTE AREA				--	--	2060	--	2	55	--	30
UNDISTRIBUTED				50	140	60	140	1	--	15	10
PROJECT TOTALS:				50	5100	2120	5100	7	55	110	110

(1) - USE FOR DUST CONTROL AND/OR WATERING SEEDED AREAS.

628.7005 INLET PROTECTION TYPE A
628.7015 INLET PROTECTION TYPE C

STRUCTURE	STATION	LOCATION	TYPE A EACH	TYPE C EACH
1.0	100+50.00	6.0' LT	--	1
1.1	100+50.00	17.5' LT	--	1
1.2	100+50.00	17.5' RT	--	1
2.0	104+46.20	8.0' LT	--	1
2.1	104+46.20	47.0' LT	--	1
2.2	104+14.10	37.1' LT	--	1
3.0	108+50.00	8.0' LT	--	1
4.0	112+00.00	8.0' LT	--	1
4.1	112+37.50	24.8' LT	--	1
4.2	112+89.30	30.3' LT	--	1
4.3	111+98.60	38.0' RT	--	1
4.4	39+18.00	26.8' RT HANSEN RD	1	--
PROJECT TOTALS:			1	11

NOTE: ALL ITEMS LISTED ARE CATEGORY 0010 UNLESS OTHERWISE NOTED.

SIGNING

634.0614 POSTS WOOD 4x6-INCH x 14-FT
637.2210 SIGNS TYPE II REFLECTIVE H
637.2230 SIGNS TYPE II REFLECTIVE F
638.2602 REMOVING SIGNS TYPE II
638.3000 REMOVING SMALL SIGN SUPPORTS

STATION	LOCATION	PLAN SIGN NUMBER	SIGN CODE	SIGN MESSAGE	POSTS 14-FT EACH	WIDTH IN (1)	LENGTH IN (1)	SIGNS H SF	SIGNS F SF	REMOVE SIGNS EACH	REMOVE SUPPORTS EACH
100+00	RT	01-01	J4-1	EAST/CTH J	1	24	36	6.00	--	--	--
102+14	LT	01-02	W3-3	STOPLIGHT AHEAD	1	30	30	--	6.25	1	1
104+13	LT	01-03	R1-1	STOP	1	30	30	5.18	--	1	1
108+65	LT	01-04	R1-1	STOP	1	30	30	5.18	--	1	1
109+69	LT	01-05	R2-1	SPEED LIMIT 35	1	24	30	5.00	--	1	1
111+98	RT	02-01	W14-1	DEAD END	1	30	30	--	6.25	1	1
112+35	LT	02-02	R1-1	STOP	1	30	30	5.18	--	1	1
112+56	RT	02-03	R1-1	STOP	1	30	30	5.18	--	1	1
112+99	RT	02-04	W14-3	NO PASSING ZONE	--	--	--	--	--	1	1
115+80	RT	02-05	R2-1	SPEED LIMIT 35	1	24	30	5.00	--	1	1
121+21	RT	02-06	R1-1	STOP	1	30	30	5.18	--	1	1
125+40	LT	03-01	R1-1	STOP	1	30	30	5.18	--	1	1
126+60	RT	03-02	S1-1	SCHOOL ZONE	1	36	24	--	6.75	1	1
127+66	LT	03-03	R2-1	SPEED LIMIT 35	1	24	30	5.00	--	1	1
127+89	RT	03-04	S4-51	SCHOOL SPEED LIMIT	1	24	48	--	8.00	1	1
137+14	LT	04-01	R1-1	STOP	1	30	30	5.18	--	1	1
137+55	RT	04-02	R1-1	STOP	1	30	30	5.18	--	1	1
137+73	LT	04-03	S4-51	SCHOOL SPEED LIMIT	1	24	48	--	8.00	1	1
139+60	LT	04-04	S1-1	SCHOOL ZONE	1	36	24	--	6.75	1	1
139+65	RT	04-05	W3-3	STOPLIGHT AHEAD	1	30	30	--	6.25	1	1
140+07	RT	04-06	W14-3	NO PASSING ZONE	--	--	--	--	--	1	1
141+32	RT	04-07	J1-1	JCT/STH 47	1	24	39	6.50	--	1	1
143+00	LT	04-08	J4-1	WEST/CTH J	1	24	36	6.00	--	--	--
PROJECT TOTALS:					21			74.94	48.25	11	21

633.5100 MARKERS ROW

POINT (1)	LOCATION	EACH
203	HANSEN ROAD	1
204	HANSEN ROAD	1
PROJECT TOTAL:		2

(1) - SEE RIGHT OF WAY PLAT

638.2102 MOVING SIGNS TYPE II
638.4000 MOVING SMALL SIGN SUPPORTS

STATION	LOCATION	SIGN MESSAGE	SIGNS EACH	SUPPORTS EACH
104+61	LT	OAK ST/TOWNLINE RD	2	1
108+56	LT	BIRCH ST/TOWNLINE RD	2	1
112+30	LT	BALSAM ST/TOWNLINE RD	2	1
112+30	RT	HANSEN RD/TOWNLINE RD	2	1
120+74	RT	N SHORE LN/TOWNLINE RD	2	1
125+76	LT	HUBER DR/TOWNLINE RD	2	1
125+81	LT	SPEED LIMIT 25	1	1
137+14	LT	GEHRKE RD/TOWNLINE RD	2	1
137+56	RT	BRUNSWICK RD/TOWNLINE RD	2	1
PROJECT TOTALS:			17	9

TRAFFIC CONTROL

643.0300 TRAFFIC CONTROL DRUMS
643.0420 TRAFFIC CONTROL BARRICADES TYPE III
643.0705 TRAFFIC CONTROL WARNING LIGHTS TYPE A
643.0900 TRAFFIC CONTROL SIGNS
643.1050 TRAFFIC CONTROL SIGNS PCMS

LOCATION	DURATION DAYS (1)	DRUMS EACH (1)	DRUMS DAYS	BAR. TYPE III EACH (1)	BAR. TYPE III DAYS	LIGHTS TYPE A EACH (1)	LIGHTS TYPE A DAYS	SIGNS EACH (1)	SIGNS DAYS	PCMS EACH (1)	PCMS DAYS
ADVANCED WARNING	7	--	--	--	--	--	--	--	--	3	21
MAINLINE CLOSURE	61	--	--	12	732	16	976	8	488	--	--
SIDEROAD CLOSURES	61	--	--	58	3538	76	4636	28	1708	--	--
USH 51	61	20	1220	2	122	4	244	11	671	2	122
STH 47	61	15	915	2	122	4	244	8	488	2	122
CTH D/STH 70	61	--	--	--	--	--	--	--	--	2	122
UNDISTRIBUTED, LOCAL ACCESS CONTROL	61	30	1830	--	--	--	--	--	--	--	--
PROJECT TOTALS:			3965		4514		6100		3355		387

(1) - NOT A BID ITEM, FOR INFORMATION ONLY.

643.0920 TRAFFIC CONTROL COVERING SIGNS TYPE II

LOCATION	MESSAGE	COVERING EACH	NUMBER OF CYCLES (1)	COMMENTS
USH 51 NB	JCT/CTH J	1	1	
USH 51 NB	CTH J/RT ARROW	1	1	
USH 51 SB	JCT/CTH J	1	1	
USH 51 SB	CTH J/LT ARROW	1	1	
STH 47 NB	LEFT ARROW/STRAIGHT ARROW/RIGHT ARROW	1	1	
STH 47 NB	CTH J/DOUBLE ARROW	1	1	COVER ARROW WITH M6-1
STH 47 SB	CTH J/DOUBLE ARROW	1	1	COVER ARROW WITH M6-1
PROJECT TOTALS:		7		

(1) - NOT A BID ITEM, FOR INFORMATION ONLY.

NOTE: ALL ITEMS LISTED ARE CATEGORY 0010 UNLESS OTHERWISE NOTED.

3

PAVEMENT MARKINGS

646.0103 PAVEMENT MARKING PAINT 4-INCH

STATION	-	STATION	LF	COMMENTS
100+00	-	143+50	8700	DOUBLE YLW CENTERLINE
100+00	-	143+50	8300	WHITE EDGELINES
PROJECT TOTALS:			17000	

647.0203 PAVEMENT MARKING ARROWS BIKE LANE PAINT
647.0403 PAVEMENT MARKING WORDS BIKE LANE PAINT

STATION	LOCATION	ARROWS EACH	WORDS EACH	WORD MESSAGE	
100+25	RT	1	2	BIKE	LANE
103+80	LT	1	2	BIKE	LANE
105+25	RT	1	2	BIKE	LANE
108+25	LT	1	2	BIKE	LANE
110+25	RT	1	2	BIKE	LANE
111+75	LT	1	2	BIKE	LANE
113+00	RT	1	2	BIKE	LANE
115+00	LT	1	2	BIKE	LANE
117+00	RT	1	2	BIKE	LANE
120+00	LT	1	2	BIKE	LANE
121+50	RT	1	2	BIKE	LANE
125+00	LT	1	2	BIKE	LANE
126+50	RT	1	2	BIKE	LANE
131+50	RT	1	2	BIKE	LANE
131+75	LT	1	2	BIKE	LANE
136+75	LT	1	2	BIKE	LANE
137+75	RT	1	2	BIKE	LANE
142+50	RT	1	2	BIKE	LANE
143+00	LT	1	2	BIKE	LANE
PROJECT TOTALS:		19	38		

STATION IS TO FIRST WORD OF SEQUENCE "BIKE".

STAKING

650.4500 CONSTRUCTION STAKING SUBGRADE
650.5000 CONSTRUCTION STAKING BASE
650.9920 CONSTRUCTION STAKING SLOPE STAKES

STATION	-	STATION	LOCATION	SUBGRADE LF	BASE LF	SLOPE STAKES LF
100+00	-	143+50	CTH J	4350	4350	4350
37+50	-	39+50	HANSEN ROAD	200	200	200
PROJECT TOTALS:				4550	4550	4550

650.9910 CONSTRUCTION STAKING SUPPLEMENTAL CONTROL

PROJECT	LS
9455-04-70	1
PROJECT TOTAL:	1

650.5500 CONSTRUCTION STAKING CURB GUTTER AND CURB AND GUTTER

STATION	-	STATION	LOCATION	LF
100+00	-	104+14	CTH J LT	435
100+00	-	104+80	CTH J RT	485
104+45	-	105+15	CTH J LT	90
111+63	-	39+06	CTH J/HANSEN RD RT	85
112+22	-	40+28	CTH J/HANSEN RD LT	25
39+72	-	112+72	CTH J/HANSEN RD RT	25
40+67	-	113+14	CTH J/HANSEN RD LT	60
PROJECT TOTAL:				1205

SPV.0060.02 REESTABLISH SURVEY MONUMENT

POINT (1)	LOCATION	EACH
SW CORNER, SEC 1	CTH J	1
S 1/4 CORNER, SEC 1	CTH J	1
PROJECT TOTAL:		2

(1) - SEE RIGHT OF WAY PLAT

3

SAWING

690.0150 SAWING ASPHALT
690.0250 SAWING CONCRETE

STATION	LOCATION	ASPHALT L.F.	CONCRETE L.F.
100+00	CTH J	28	5
143+50	CTH J	28	5
--	OAK ST	22	--
--	BIRCH ST	22	--
--	BALSAM ST	24	--
--	HUBER DR	24	--
--	BRUNSWICK DR	24	--
--	GEHRKE DR	24	--
	DRIVEWAYS	364	--
PROJECT TOTAL:		560	10

NOTE: ALL ITEMS LISTED ARE CATEGORY 0010 UNLESS OTHERWISE NOTED.

R/W PROJECT NUMBER	SHEET NUMBER	TOTAL SHEETS
9455-04-00		
FEDERAL PROJECT NUMBER	4.01	6

PLAT OF RIGHT-OF-WAY REQUIRED FOR

MINOCOUA - WOODRUFF

USH 51 TO STH 47

CTH J — ONEIDA COUNTY

CONSTRUCTION PROJECT NUMBER 9455-04-70

CONVENTIONAL ABBREVIATIONS

ACCESS POINT/ DRIVEWAY CONNECTION	AP	REFERENCE LINE	R/L
ACCESS RIGHTS	AR	RELEASE OF RIGHTS	ROR
ACRES	AC.	REMAINING	REM.
AND OTHERS	ET.AL.	RIGHT-OF-WAY	R/W
CENTERLINE	C/L	SECTION	SEC.
CERTIFIED SURVEY MAP	CSM	SECTION CORNER	SC
CORNER	COR.	STATION	STA.
DOCUMENT	DOC.	TEMPORARY LIMITED EASEMENT	TLE
EASEMENT	EASE.	VOLUME	V.
HIGHWAY EASEMENT	H.E.		
LAND CONTRACT	LC		
MONUMENT	MON.		
PAGE	P.		
PERMANENT LIMITED EASEMENT	PLE		
PROPERTY LINE	PL		
RECORDED AS	(100')		

CURVE DATA

LONG CHORD	C
LONG CHORD BEARING	CD
RADIUS	R
CENTRAL ANGLE OR DELTA	I
LENGTH OF CURVE	L
TANGENT	T

CONVENTIONAL SYMBOLS

FOUND IRON PIPE/PIN	1" UNLESS NOTED
R/W MONUMENT	•(SET)
R/W STANDARD	▲(SET)
SIGN	SIGN
SECTION CORNER MONUMENT	●
SECTION CORNER SYMBOL	
FEE (HATCH VARIES)	
TEMPORARY LIMITED EASEMENT	
PERMANENT LIMITED EASEMENT	
R/W BOUNDARY POINT	1205
PARCEL NUMBER	10
UTILITY PARCEL NUMBER	92
SIGN NUMBER (OFF PREMISE)	21-1
BUILDING	

PROPOSED R/W LINE	
EXISTING R/W LINE	
PROPERTY LINE	
LOT & TIE LINES	
SLOPE INTERCEPTS	
CORPORATE LIMITS	
NO ACCESS (BY PREVIOUS ACQUISITION/CONTROL)	
NO ACCESS (BY ACQUISTION)	
NO ACCESS (BY STATUTORY AUTHORITY)	
SECTION LINE	
QUARTER LINE	
SIXTEENTH LINE	
EXISTING CENTERLINE	
PROPOSED REFERENCE LINE	
PARALLEL OFFSET	

CONVENTIONAL UTILITY SYMBOLS

WATER	W	
GAS	G	
TELEPHONE	T	
OVERHEAD TRANSMISSION LINES	OH	
ELECTRIC	E	
CABLE TELEVISION	TV	
FIBER OPTIC	FO	
SANITARY SEWER	SAN	
STORM SEWER	SS	
	NON COMPENSABLE	COMPENSABLE
POWER POLE		
TELEPHONE POLE		
TELEPHONE PEDESTAL		
ELECTRIC TOWER		

BEGIN RELOCATION ORDER

STA. 100+00

1,07' NORTH OF AND 1,130.22' WEST OF THE SOUTHWEST CORNER, SECTION 1, T-39-N, R-6-E, TOWN OF WOODRUFF, ONEIDA COUNTY.

END RELOCATION ORDER

STA. 143+50

4.56' SOUTH OF AND 619.01' EAST OF THE SOUTH 1/4 CORNER, SECTION 1, T-39-N, R-6-E, TOWN OF WOODRUFF, ONEIDA COUNTY.

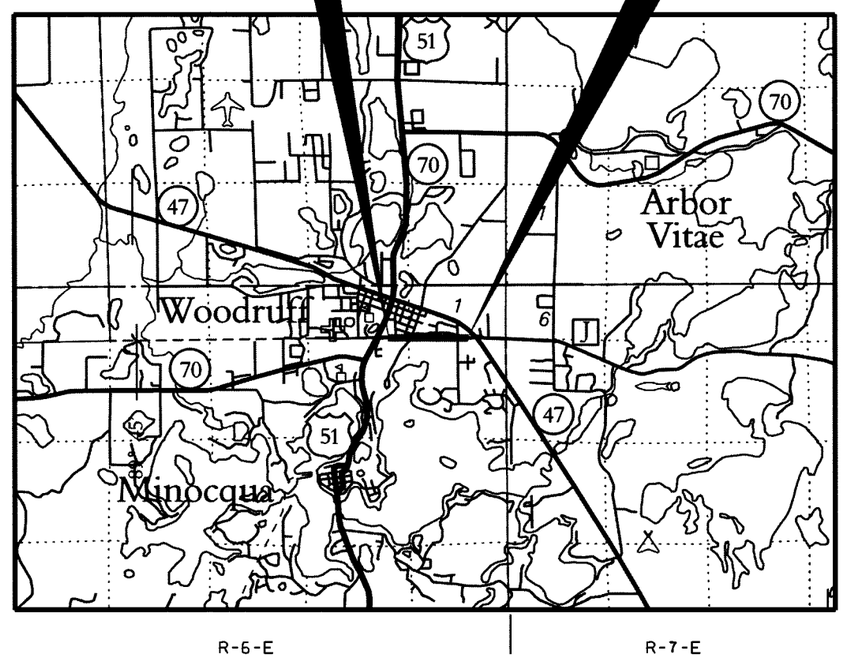

T-40-N

VILAS COUNTY

ONEIDA COUNTY

T-39-N

R-6-E

R-7-E

NOTES:

POSITIONS SHOWN ON THIS PLAT ARE WISCONSIN COUNTY COORDINATES, ONEIDA COUNTY, NAD 83 (1991) IN US SURVEY FEET. VALUES SHOWN ARE GRID COORDINATES, GRID BEARINGS AND GRID DISTANCES. GRID DISTANCES MAY BE USED AS GROUND DISTANCES.

RIGHT-OF-WAY MONUMENTS ARE TYPE 2 MONUMENTS (TYPICALLY 3/4" x 24" REBAR) AND WILL BE PLACED PRIOR TO THE COMPLETION OF THE PROJECT.

RIGHT-OF-WAY BOUNDARIES ARE DEFINED WITH COURSES OF THE PERIMETER OF THE HIGHWAY LANDS REFERENCED TO THE U.S. PUBLIC LAND SURVEY SYSTEM OR OTHER "SURVEYS OF PUBLIC RECORD".

N

LAYOUT

SCALE 0 — 1 MI.

TOTAL NET LENGTH OF CENTERLINE = 0.824 MI.

ORIGINAL PLAT PREPARED BY:

MSA PROFESSIONAL SERVICES

TRANSPORTATION • MUNICIPAL DEVELOPMENT • ENVIRONMENTAL

WISCONSIN JEFFREY L. DEMUTH S-2656 RHINELANDER, WI LAND SURVEYOR

12/04/2014 Date (Registered Land Surveyor)

REVISION DATE 12-04-2014

APPROVED FOR ONEIDA COUNTY

12-4-2014 Date Freeman Bennett (Signature)

E

FILE NAME : P:\90s\93\930823\caddWDOT\Planshts\ROW\RW title sheet.dgn PLOT DATE : 12/4/2014 PLOT BY : bhalley PLOT NAME : PLOT SCALE : 1:10000 WISDOT/CADDS SHEET 50

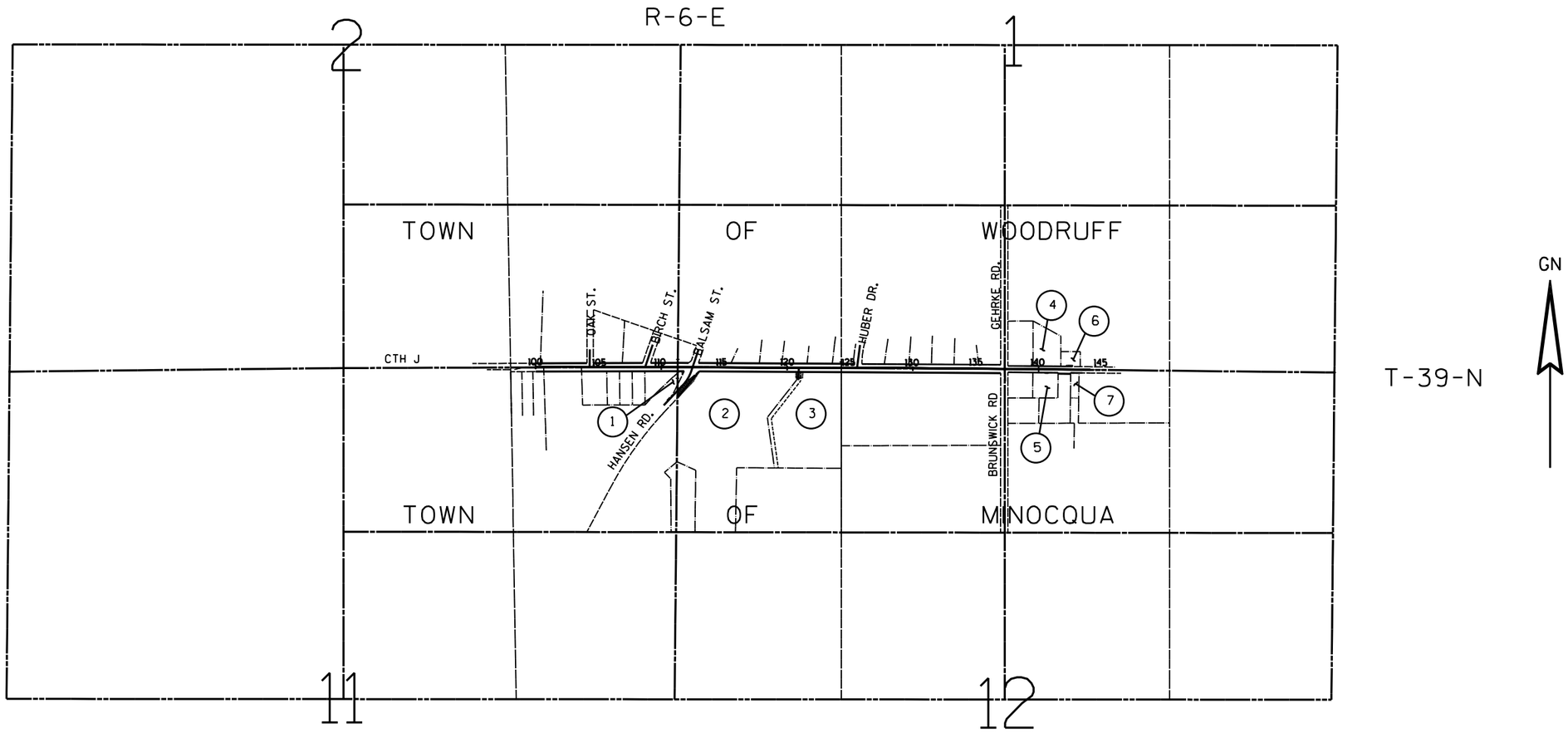

LAYOUT

SCHEDULE OF LANDS & INTERESTS REQUIRED

OWNER'S NAMES ARE SHOWN FOR REFERENCE PURPOSES ONLY AND ARE SUBJECT TO CHANGE PRIOR TO THE TRANSFER OF LAND INTERESTS TO THE COUNTY.

PARCEL NUMBER	SHEET NUMBER	OWNER(S) NAME	INTEREST REQUIRED	FEE NEW (SF)	FEE NEW (Acre)	EXISTING R/W	TOTAL FEE	TLE (SF)	TLE (Acre)
1	4.03	Ritchie-Lakeland Oil Company, Inc.	TLE	0	0.00	0.00	0.00	276	0.01
2	4.04	N & J Investments, LLC	FEE & TLE	5,941	0.14	0.00	0.14	2,393	0.05
3	4.04	Schrom's Excavating, Inc.	TLE	0	0.00	0.00	0.00	2,316	0.05
4	4.06	Edwin F. Wilke	TLE	0	0.00	0.00	0.00	380	0.01
5	4.06	Curtis Investments, LLC	TLE	0	0.00	0.00	0.00	198	0.00
6	4.06	Bill E. Goode Jr., Ferd William Goode & Randy Robert Goode, as Joint Tenants	TLE	0	0.00	0.00	0.00	494	0.01
7	4.06	Ferdinand R. Gehrke	TLE	0	0.00	0.00	0.00	153	0.00
99	4.04	Frontier Communications	Release of Rights						
99	4.06	Frontier Communications	Temp. Construction Easement						

REVISION DATE 12-04-2014 NC	DATE 10-24-2014	NOT TO SCALE	HWY: CTH J	STATE R/W PROJECT NUMBER 9455-04-00	PLAT SHEET 4.02
			COUNTY: ONEIDA	CONSTRUCTION PROJECT NUMBER 9455-04-70	PS&E SHEET E

FILE NAME : P:\90s\93\930823\caddWDOT\Planshts\ROW\Layout.dgn PLOT DATE : 12/4/2014 PLOT BY : bhalley PLOT NAME : PLOT SCALE : 1:1000.09 WISDOT/CADDS SHEET 70

Layout.dgn 12/4/2014 1:55:57 PM bhalley

POINT NUMBER	Y	X	STATION	OFFSET
10	257,005.48	190,678.75	100+00.00	0.00' CL
11	257,004.42	191,808.97	111+30.22	0.64' L
100	257,033.88	190,678.72	100+00.00	28.39' L
101	257,035.16	191,087.73	104+08.92	29.78' L
102	257,035.32	191,137.73	104+58.92	30.05' L
103	257,036.55	191,530.04	108+51.22	32.15' L
104	257,036.74	191,593.09	109+14.28	32.49' L
105	257,037.42	191,809.28	111+30.46	33.64' L
106	257,036.90	191,895.05	112+16.04	33.34' L
200	256,967.88	190,678.77	100+00.00	37.61' R
201	256,971.42	191,808.66	111+29.99	32.36' R
202	256,971.11	191,859.99	111+81.32	32.55' R

NO MONUMENT TO BE SET AT THESE LOCATIONS.

PT - PT	BEARING	DISTANCE
10-100	N 00°02'41" W	28.39'
100-101	N 89°49'14" E	409.01'
101-102	N 89°49'14" E	50.00'
102-103	N 89°49'14" E	392.31'
103-104	N 89°49'14" E	63.06'
104-105	N 89°49'14" E	216.18'
105-106	S 89°39'16" E	85.78'
106-11	S 69°19'40" W	92.01'
10-200	S 00°02'41" E	37.61'
200-201	N 89°49'14" E	1,129.89'
201-202	S 89°39'16" E	51.33'
202-11	N 56°51'48" W	60.93'

NOTE: DUE TO ROUNDING, INVERSING BETWEEN COORDINATES, IN CLOSE PROXIMITY WITH EACH OTHER, MAY NOT REPLICATE THE BEARINGS AND DISTANCES SHOWN ON THIS PLAT.

NOTE:
EXISTING HIGHWAY R/W ESTABLISHED FROM STATE STATUTE 82.31, EXISTING SECTION LINES, IRONS LOCATED IN THE FIELD AND CERTIFIED SURVEY MAPS OF RECORD.

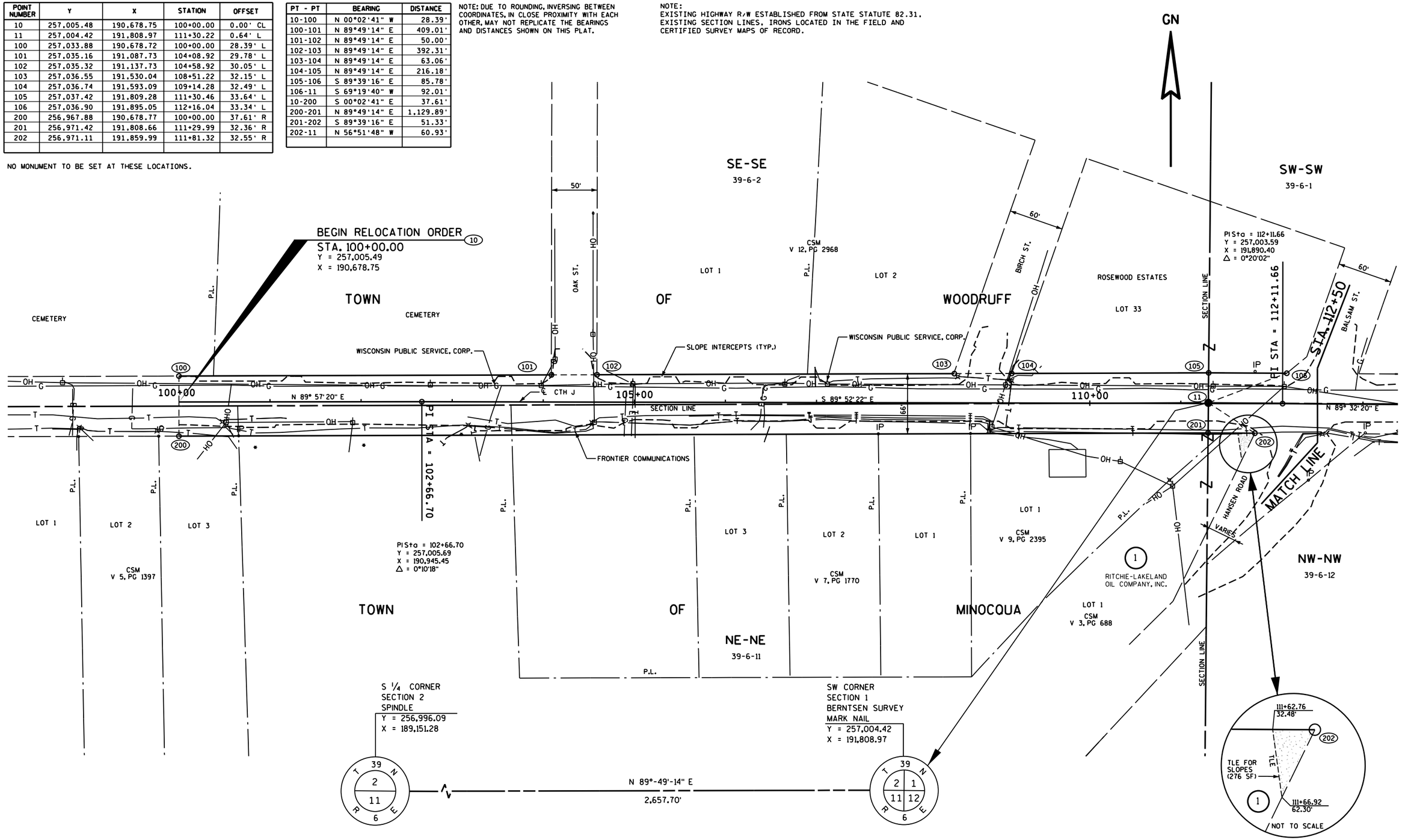

REVISION DATE 12-04-2014	DATE 10-24-2014	SCALE, FEET 0 50 100	HWY: CTH J	STATE R/W PROJECT NUMBER 9455-04-00	PLAT SHEET 4.03
	GRID FACTOR N/A		COUNTY: ONEIDA	CONSTRUCTION PROJECT NUMBER 9455-04-70	PS&E SHEET 23 E

FILE NAME : P:\90s\93\930823\caddWDOT\Planshts\ROW\ROW 01.dgn PLOT DATE : 12/4/2014 PLOT BY : bhalley PLOT NAME : PLOT SCALE : 1:100 WISDOT/CADDS SHEET 75

ROW 01.dgn 12/4/2014 2:36:13 PM bhalley

POINT NUMBER	Y	X	STATION	OFFSET
11	257,004.42	191,808.97	111+30.22	0.64' L
12	256,997.06	193,228.72	125+50.00	0.00' CL
107	257,036.42	191,974.06	112+95.05	33.50' L
108	257,028.99	193,207.40	125+28.78	31.99' L
* 203	256,758.67	191,806.66	111+28.46	245.11' R
* 204	256,970.39	191,980.00	113+01.52	32.48' R
205	256,962.86	193,228.81	125+50.00	34.21' R

* - SET MONUMENT AT THIS LOCATION.

PT - PT	BEARING	DISTANCE
11-107	N 79°01'44" E	168.17'
107-108	S 89°39'16" E	1,233.36'
108-12	S 33°43'45" E	38.39'
11-203	S 00°32'14" W	245.76'
203-204	N 39°18'28" E	273.62'
204-205	S 89°39'16" E	1,248.83'
205-12	N 00°09'48" W	34.21'
107-204	S 05°08'21" E	66.30'

NOTE: DUE TO ROUNDING, INVERSING BETWEEN COORDINATES, IN CLOSE PROXIMITY WITH EACH OTHER, MAY NOT REPLICATE THE BEARINGS AND DISTANCES SHOWN ON THIS PLAT.

NOTE:
EXISTING HIGHWAY R/W ESTABLISHED FROM STATE STATUTE 82.31.
EXISTING SECTION LINES, IRONS LOCATED IN THE FIELD AND CERTIFIED SURVEY MAPS OF RECORD.

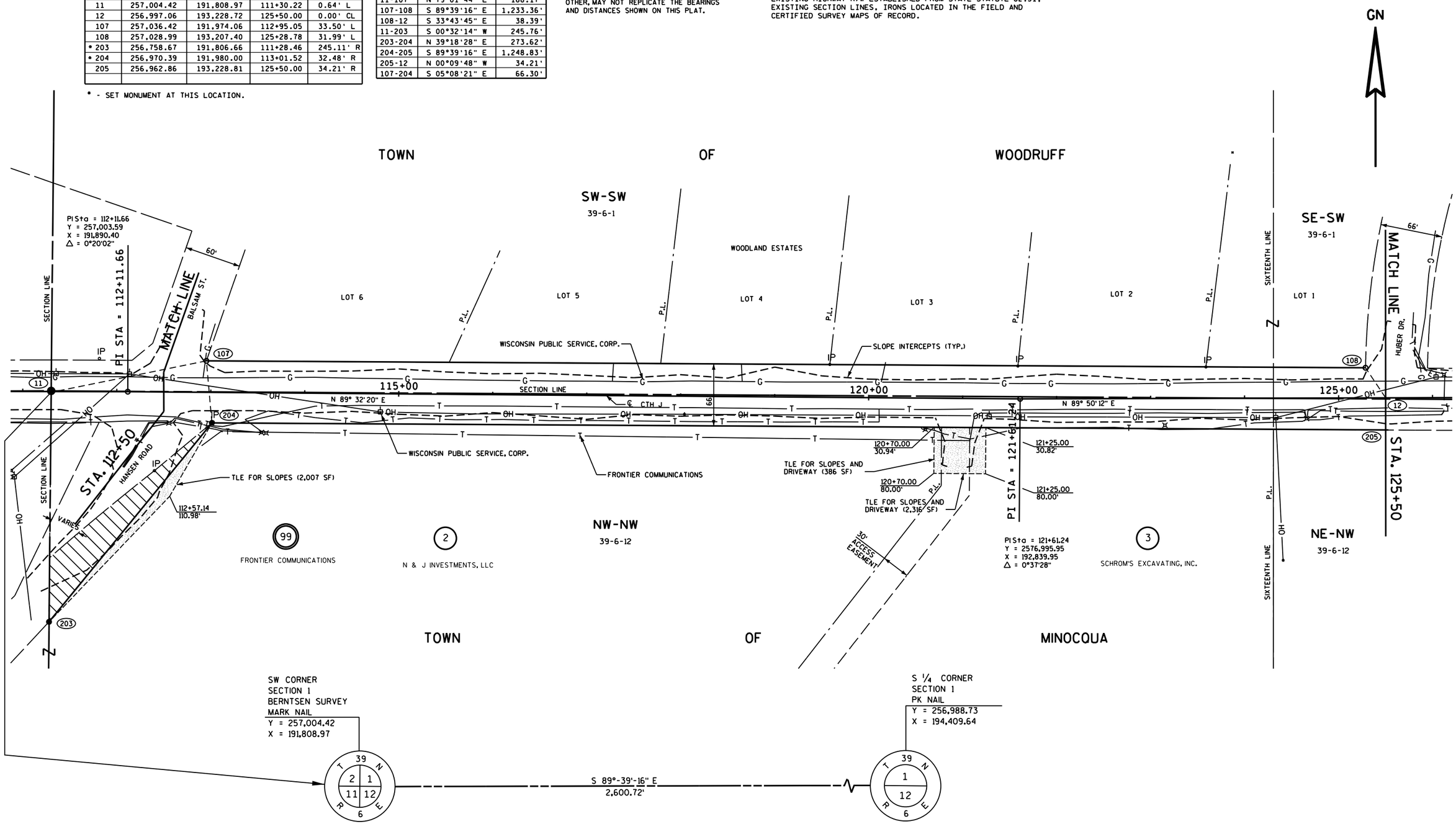

REVISION DATE 12-04-2014	DATE 10-24-2014	SCALE, FEET 0 50 100	HWY: CTH J	STATE R/W PROJECT NUMBER 9455-04-00	PLAT SHEET 4.04	
	GRID FACTOR N/A		COUNTY: ONEIDA	CONSTRUCTION PROJECT NUMBER 9455-04-70	PS&E SHEET	E

FILE NAME : P:\90s\93\930823\caddWDOT\Planshts\ROW\ROW 02.dgn PLOT DATE : 12/4/2014 PLOT BY : bhalley PLOT NAME : PLOT SCALE : 1:100 WISDOT/CADDS SHEET 75

ROW 02.dgn 12/4/2014 2:38:12 PM bhalley

POINT NUMBER	Y	X	STATION	OFFSET
12	256,997.06	193,228.72	125+50.00	0.00' CL
13	256,988.73	194,409.64	137+30.98	1.17' R
109	257,028.59	193,273.39	125+94.77	31.40' L
110	257,021.93	194,376.65	136+97.68	31.73' L
205	256,962.86	193,228.81	125+50.00	34.21' R
206	256,955.93	194,376.64	136+98.28	34.27' R

NO MONUMENT TO BE SET AT THESE LOCATIONS.

PT - PT	BEARING	DISTANCE
12-109	N 54°47'40" E	54.69'
109-110	S 89°39'16" E	1,103.27'
110-13	S 44°49'20" E	46.81'
12-205	S 00°09'48" E	34.21'
205-206	S 89°39'16" E	1,147.85'
206-13	N 45°10'40" E	46.53'

NOTE: DUE TO ROUNDING, INVERSING BETWEEN COORDINATES, IN CLOSE PROXIMITY WITH EACH OTHER, MAY NOT REPLICATE THE BEARINGS AND DISTANCES SHOWN ON THIS PLAT.

NOTE:
EXISTING HIGHWAY R/W ESTABLISHED FROM STATE STATUTE 82.31.
EXISTING SECTION LINES, IRONS LOCATED IN THE FIELD AND CERTIFIED SURVEY MAPS OF RECORD.

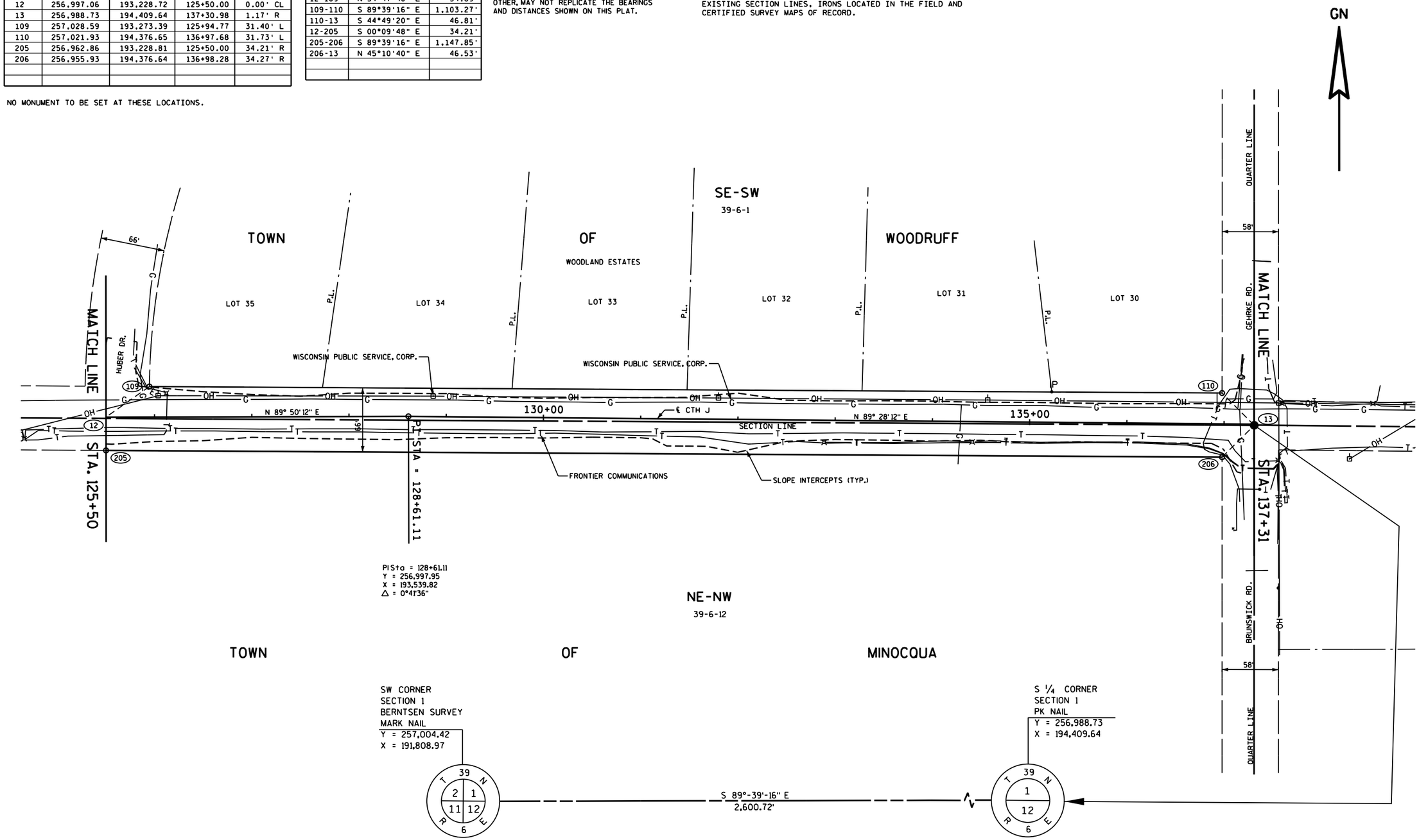

REVISION DATE 12-04-2014	DATE 10-24-2014	SCALE, FEET 0 50 100	HWY: CTH J	STATE R/W PROJECT NUMBER 9455-04-00	PLAT SHEET 4.05
	GRID FACTOR N/A		COUNTY: ONEIDA	CONSTRUCTION PROJECT NUMBER 9455-04-70	PS&E SHEET E

FILE NAME : P:\90s\93\930823\caddWDOT\Planshts\ROW\ROW 03.dgn PLOT DATE : 12/4/2014 PLOT BY : bhalley PLOT NAME : PLOT SCALE : 1:100

WISDOT/CADDS SHEET 75

ROW 03.dgn 12/4/2014 2:16:34 PM bhalley

POINT NUMBER	Y	X	STATION	OFFSET
13	256,988.73	194,409.64	137+30.98	1.17' R
14	256,984.17	195,028.65	143+50.00	0.00' CL
111	257,013.47	194,434.65	137+55.76	23.80' L
112	257,007.15	195,028.86	143+50.00	22.98' L
207	256,963.47	194,434.64	137+56.21	26.20' R
208	256,959.22	194,833.60	141+55.19	26.75' R
209	256,951.23	194,833.50	141+55.17	34.75' R
210	256,950.16	194,933.82	142+55.49	34.89' R
211	256,958.16	194,933.91	142+55.51	26.89' R
212	256,957.15	195,028.40	143+50.00	27.02' R

NO MONUMENT TO BE SET AT THESE LOCATIONS.

PT - PT	BEARING	DISTANCE
13-111	N 45°18'35" E	35.17'
111-112	S 89°23'27" E	594.24'
112-14	S 00°31'48" W	22.98'
13-207	S 44°41'25" E	35.54'
207-208	S 89°23'27" E	398.98'
208-209	S 00°40'27" W	8.00'
209-210	S 89°23'27" E	100.32'
210-211	N 00°40'27" E	8.00'
211-212	S 89°23'27" E	94.49'
212-14	N 00°31'48" E	27.02'

NOTE: DUE TO ROUNDING, INVERSING BETWEEN COORDINATES, IN CLOSE PROXIMITY WITH EACH OTHER, MAY NOT REPLICATE THE BEARINGS AND DISTANCES SHOWN ON THIS PLAT.

NOTE:
EXISTING HIGHWAY R/W ESTABLISHED FROM STATE STATUTE 82.31.
EXISTING SECTION LINES, IRONS LOCATED IN THE FIELD AND CERTIFIED SURVEY MAPS OF RECORD.

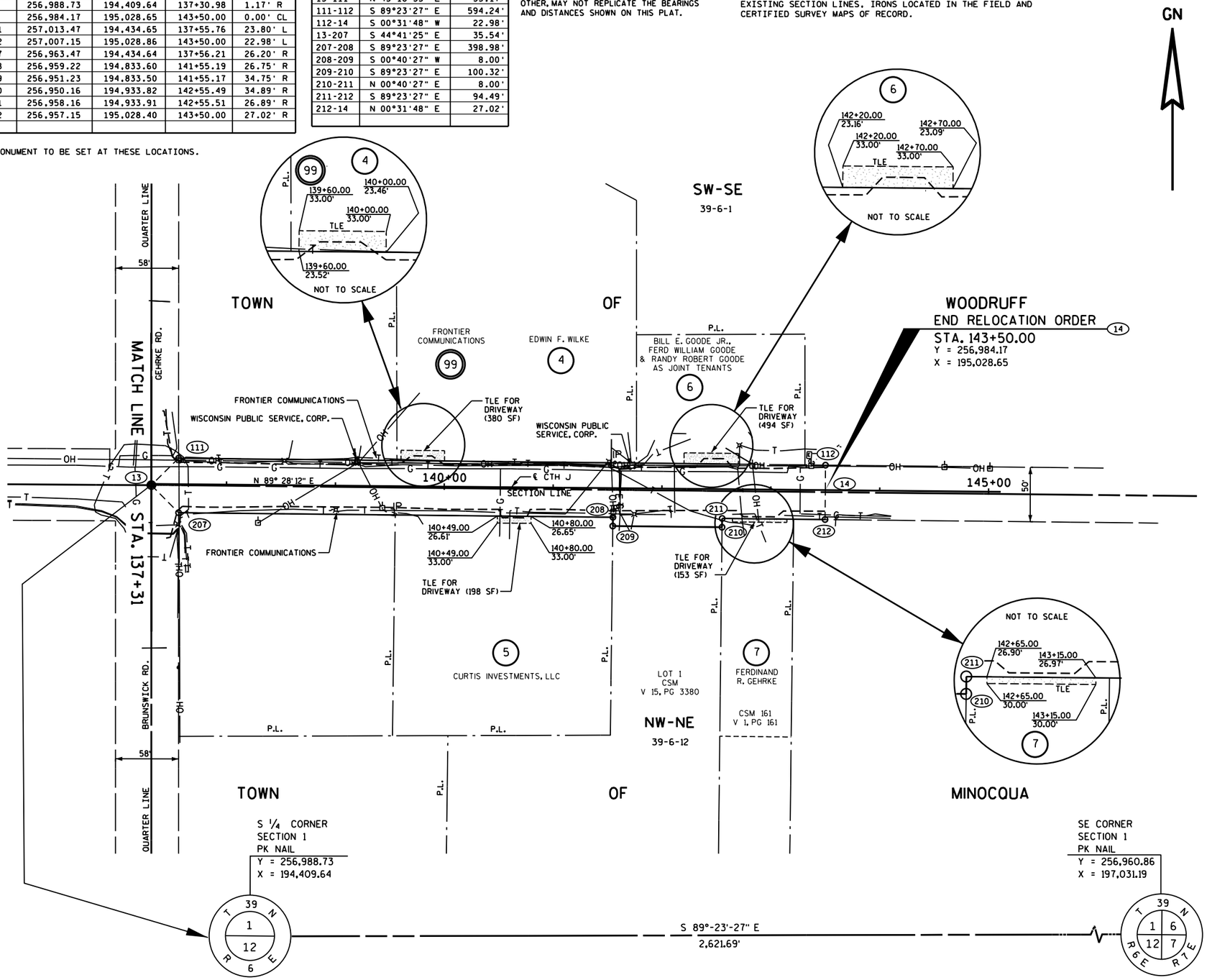

REVISION DATE 12-04-2014	DATE 10-24-2014	SCALE, FEET 0 50 100	HWY: CTH J	STATE R/W PROJECT NUMBER 9455-04-00	PLAT SHEET 4.06
	GRID FACTOR N/A		COUNTY: ONEIDA	CONSTRUCTION PROJECT NUMBER 9455-04-70	PS&E SHEET E

FILE NAME : P:\90s\93\930823\caddWDOT\Planshts\ROW\ROW 04.dgn PLOT DATE : 12/4/2014 PLOT BY : bhalley PLOT NAME : PLOT SCALE : 1:100

WISDOT/CADDS SHEET 75

ROW 04.dgn 12/4/2014 2:45:18 PM bhalley

NOTE: SEE MO TABLES AND STORM SEWER DETAIL SHEETS FOR ADDITIONAL EROSION CONTROL DEVICES NOT SHOWN HERE.

BENCHMARKS			
NO.	STA.	DESCRIPTION	ELEV.
1555	104+02.6,92'LT	NAIL IN E SIDE RED PINE	1611.17

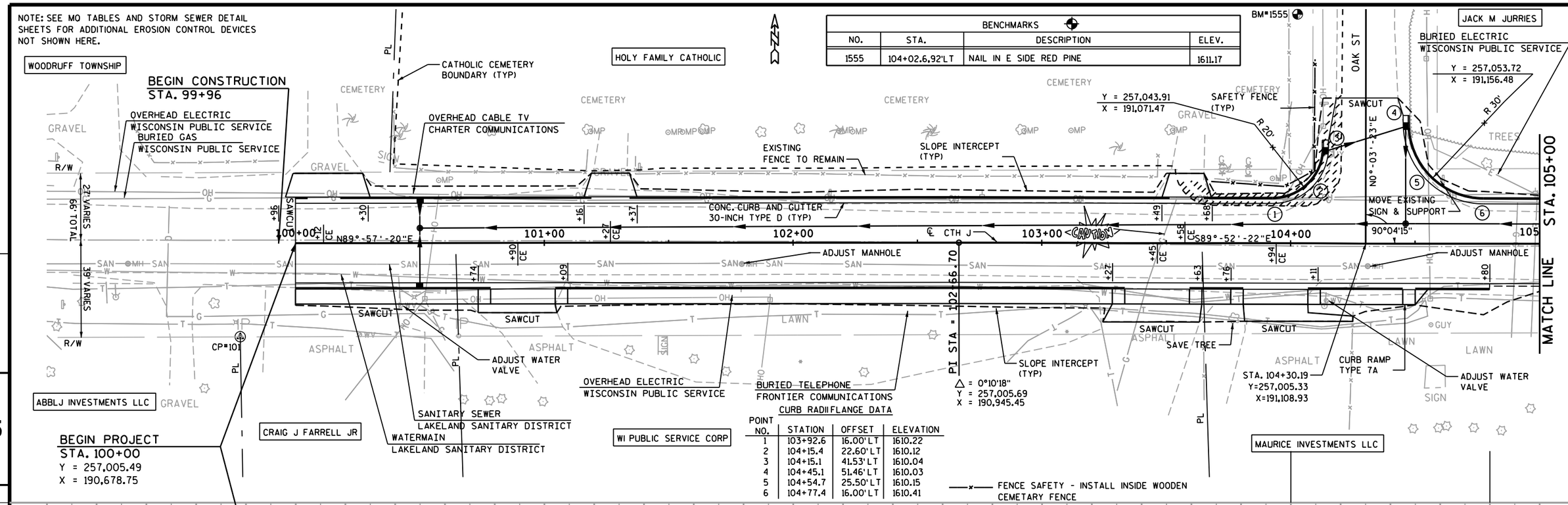

CURB RADII FLANGE DATA

POINT NO.	STATION	OFFSET	ELEVATION
1	103+92.6	16.00'LT	1610.22
2	104+15.4	22.60'LT	1610.12
3	104+15.1	41.53'LT	1610.04
4	104+45.1	51.46'LT	1610.03
5	104+54.7	25.50'LT	1610.15
6	104+77.4	16.00'LT	1610.41

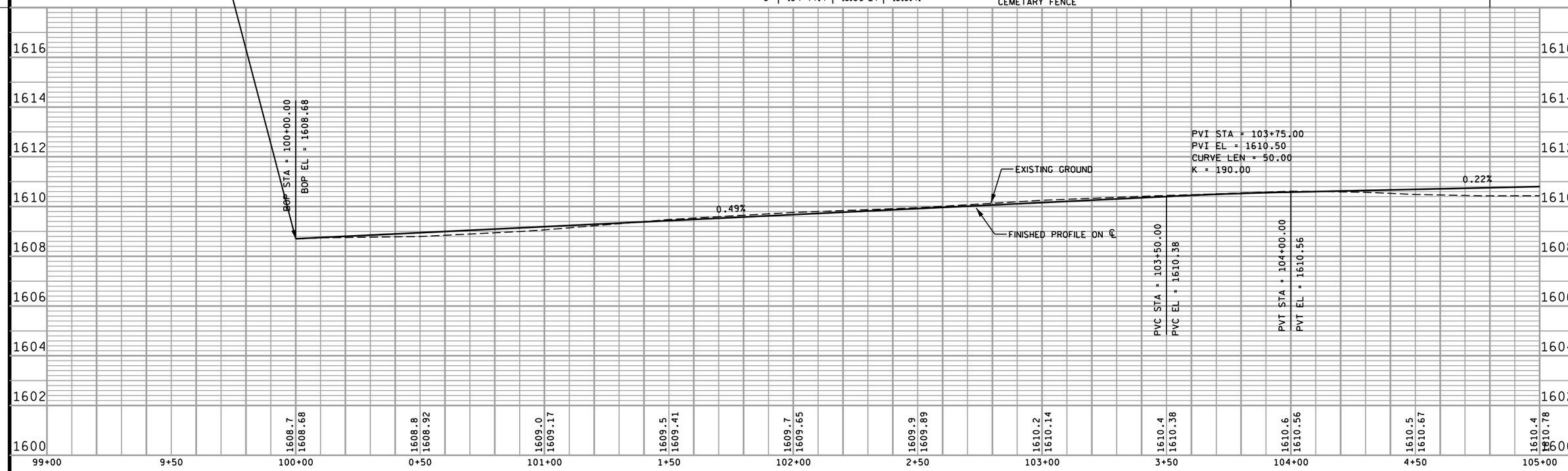

PROJECT NO:9455-04-70	HWY:CTH J	COUNTY:ONEIDA	PLAN AND PROFILE	SHEET 27	E

NOTE: SEE MO TABLES AND STORM SEWER DETAIL SHEETS FOR ADDITIONAL EROSION CONTROL DEVICES NOT SHOWN HERE.

BENCHMARKS			
NO.	STA.	DESCRIPTION	ELEV.
102	108+69.2, 33.6'RT	3/4-INCH IRON ROD	1611.27

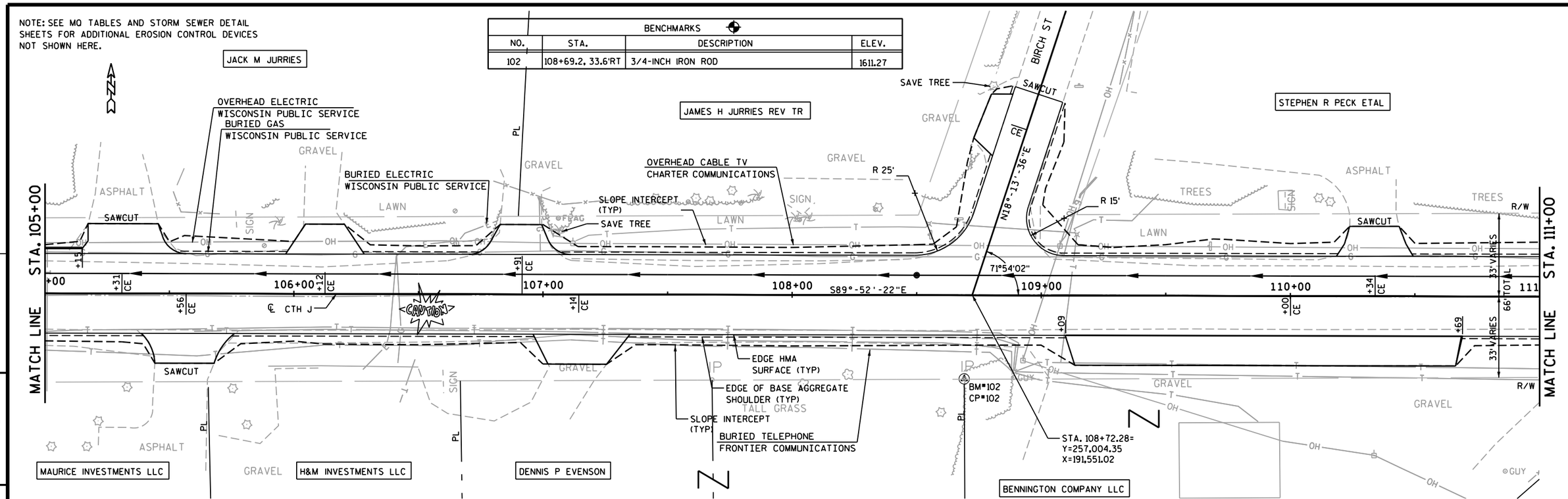

PROJECT NO:9455-04-70	HWY:CTH J	COUNTY:ONEIDA	PLAN AND PROFILE	SHEET 28	E

NOTE: SEE MO TABLES AND STORM SEWER DETAIL SHEETS FOR ADDITIONAL EROSION CONTROL DEVICES NOT SHOWN HERE.

BENCHMARKS			
NO.	STA.	DESCRIPTION	ELEV.
103	111+81.5, 35.3'RT	3/4-INCH IRON ROD	1612.50

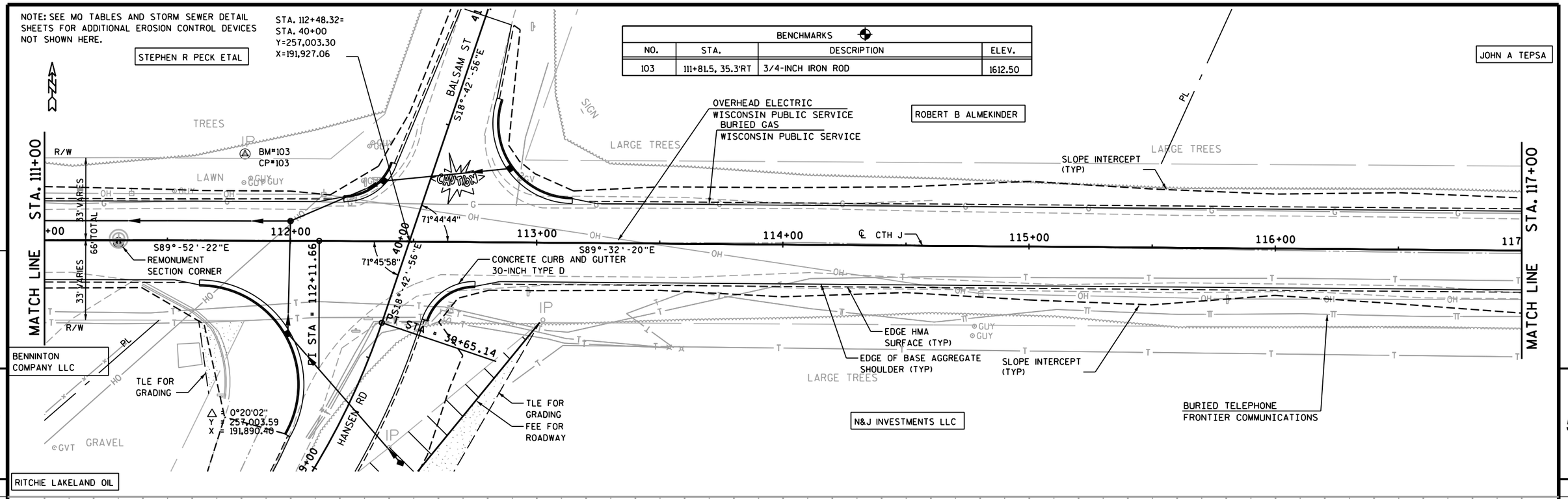

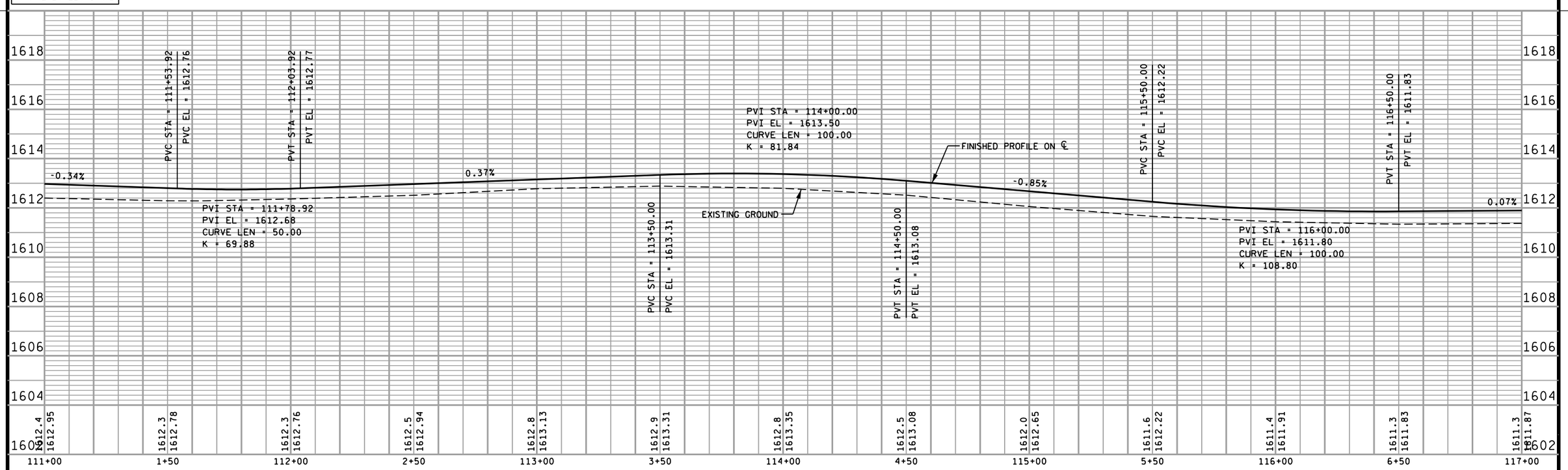

PROJECT NO:9455-04-70	HWY:CTH J	COUNTY:ONEIDA	PLAN AND PROFILE	SHEET 29	E

FILE NAME : $$....designfile....$$ PLOT DATE : $$...plottingdate...$$ PLOT BY : $$...plotuser...$$ PLOT NAME : PLOT SCALE : $$.....plotscale.....$$ WISDOT/CADDS SHEET 40

panp03.dgn 1/28/2015 9:53:28 AM pkriesel

NOTE: SEE MO TABLES AND STORM SEWER DETAIL SHEETS FOR ADDITIONAL EROSION CONTROL DEVICES NOT SHOWN HERE.

BENCHMARKS			
NO.	STA.	DESCRIPTION	ELEV.
2594	119+58.4, 35'LT	1-INCH IRON PIPE	1611.23

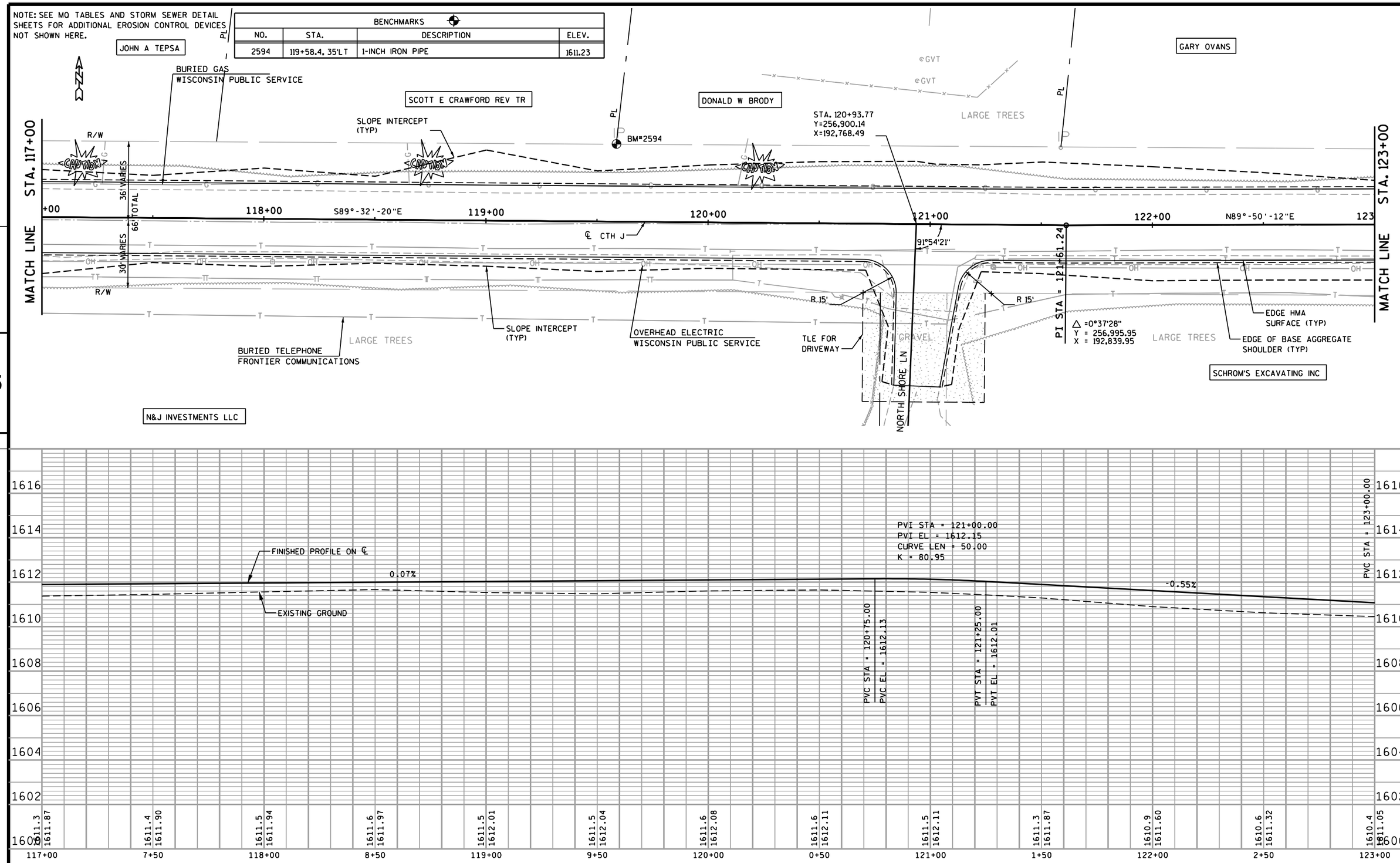

PROJECT NO:9455-04-70	HWY:CTH J	COUNTY:ONEIDA	PLAN AND PROFILE	SHEET 30	E

FILE NAME : $$....designfile....$$ PLOT DATE : $$...plottingdate...$$ PLOT BY : $$...plotuser...$$ PLOT NAME : PLOT SCALE : $$.....plotscale.....$$ WISDOT/CADDS SHEET 40

panp04.dgn 1/28/2015 9:53:33 AM pkriesel

BENCHMARKS			
NO.	STA.	DESCRIPTION	ELEV.
2855	123+59, 33'LT	1-INCH IRON PIPE	1610.33

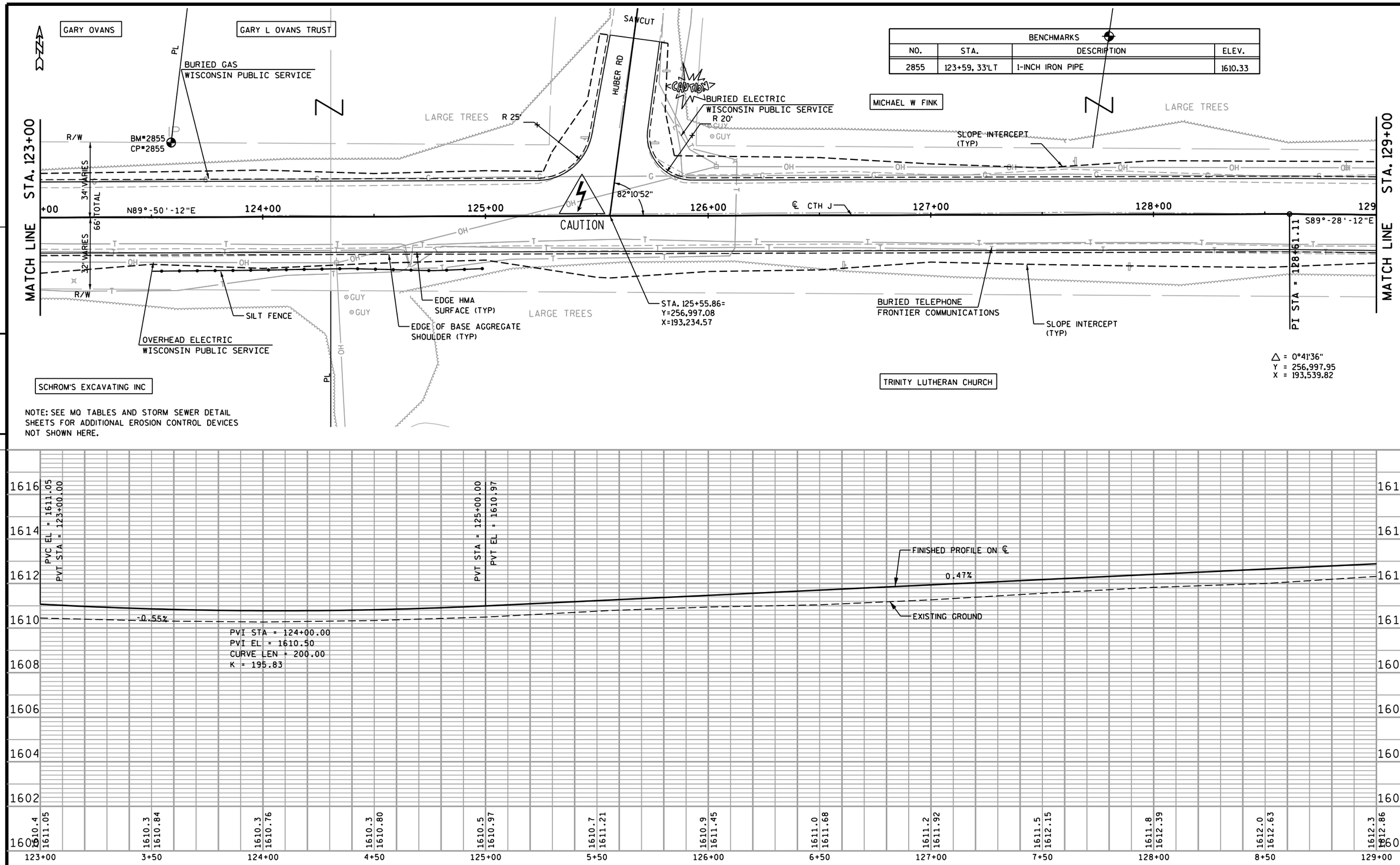

NOTE: SEE MQ TABLES AND STORM SEWER DETAIL SHEETS FOR ADDITIONAL EROSION CONTROL DEVICES NOT SHOWN HERE.

5

5

PROJECT NO:9455-04-70	HWY:CTH J	COUNTY:ONEIDA	PLAN AND PROFILE	SHEET 31	E

BENCHMARKS			
NO.	STA.	DESCRIPTION	ELEV.
150	131+91, 42.5'RT	1.5-INCH IRON PIPE	1612.99

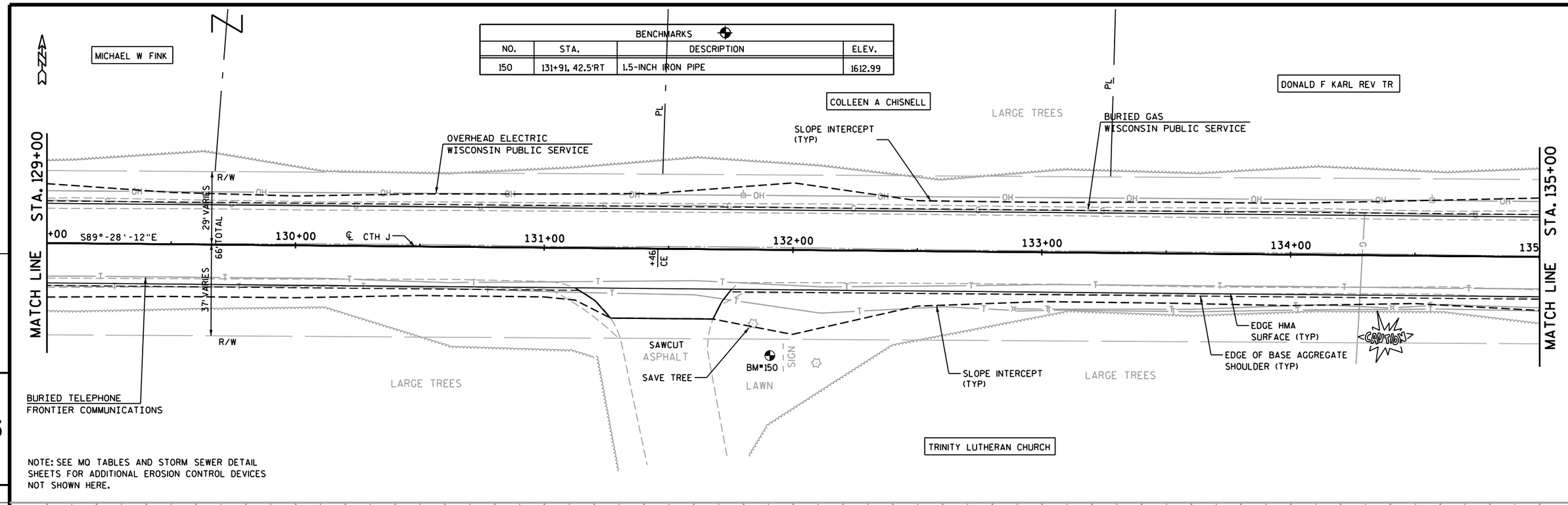

NOTE: SEE MO TABLES AND STORM SEWER DETAIL SHEETS FOR ADDITIONAL EROSION CONTROL DEVICES NOT SHOWN HERE.

5

5

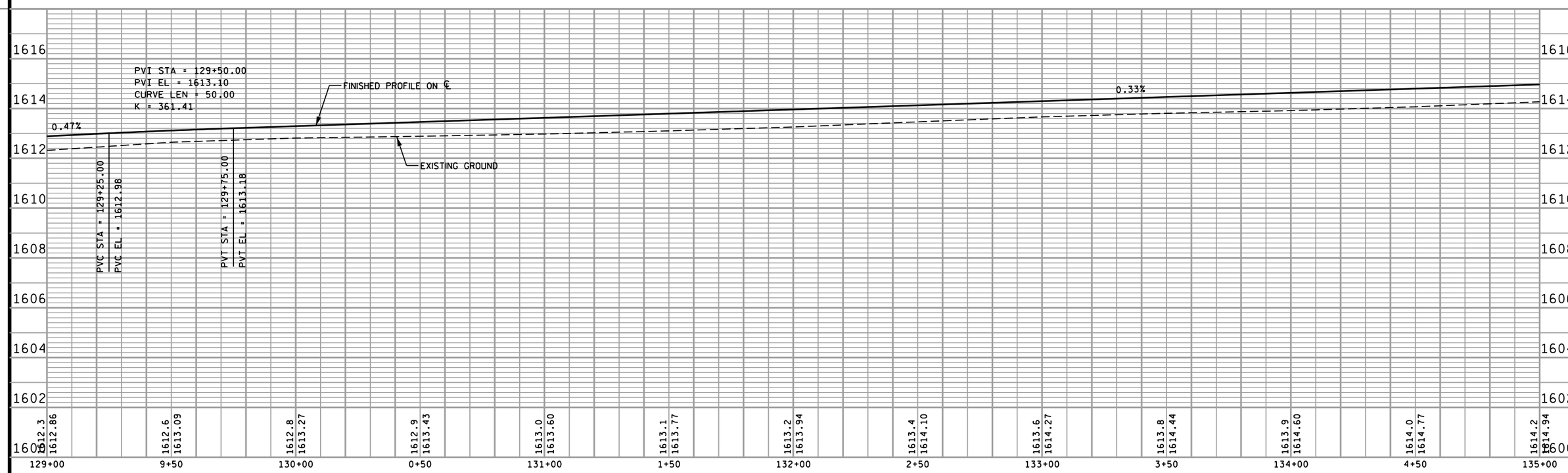

PROJECT NO:9455-04-70	HWY:CTH J	COUNTY:ONEIDA	PLAN AND PROFILE	SHEET 32	E

BENCHMARKS			
NO.	STA.	DESCRIPTION	ELEV.
106	135+22.5, 31.4'LT	1-INCH IRON PIPE	1614.01

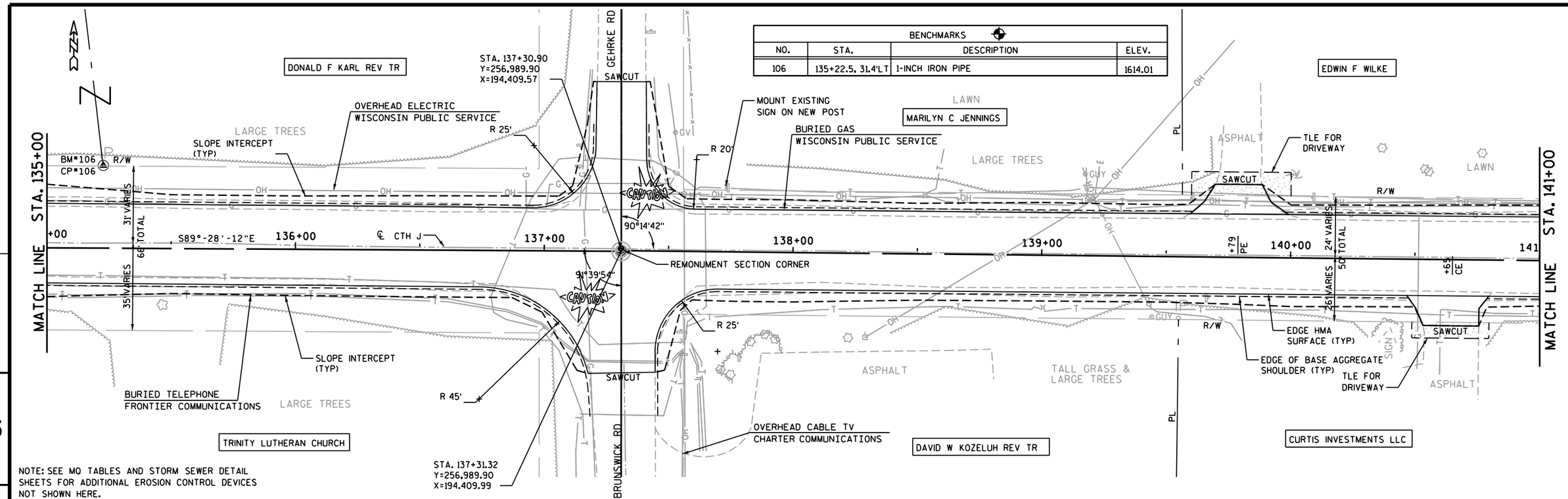

NOTE: SEE MO TABLES AND STORM SEWER DETAIL SHEETS FOR ADDITIONAL EROSION CONTROL DEVICES NOT SHOWN HERE.

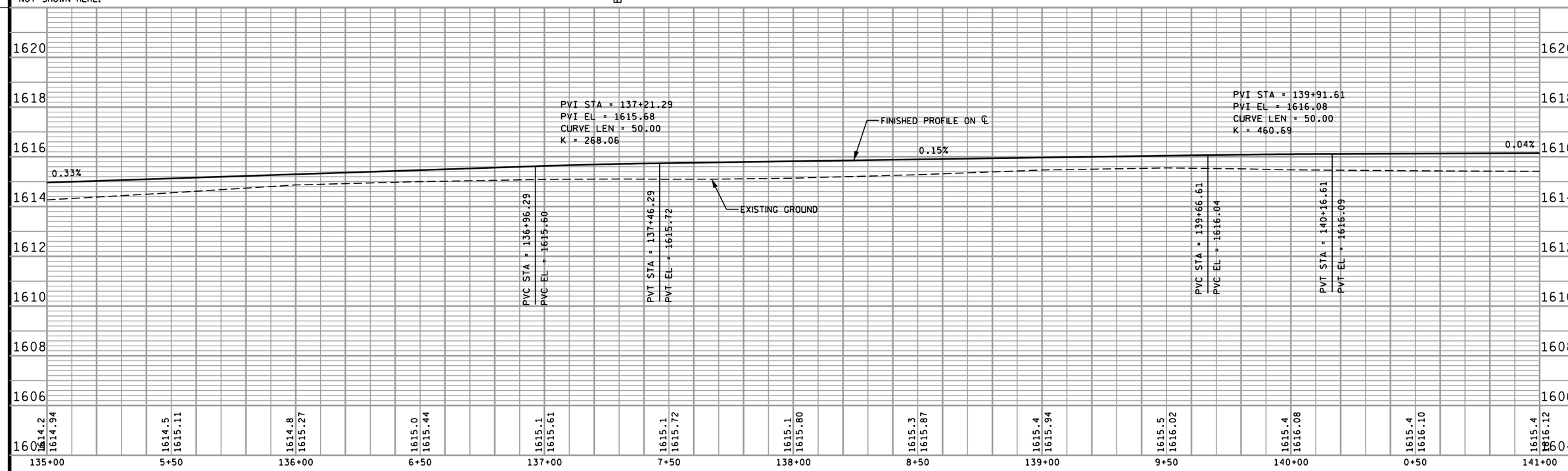

PROJECT NO:9455-04-70	HWY:CTH J	COUNTY:ONEIDA	PLAN AND PROFILE	SHEET 33	E

NOTE: SEE MO TABLES AND STORM SEWER DETAIL SHEETS FOR ADDITIONAL EROSION CONTROL DEVICES NOT SHOWN HERE.

BENCHMARKS			
NO.	STA.	DESCRIPTION	ELEV.
3829	------	NAIL IN POWER POLE	1614.95

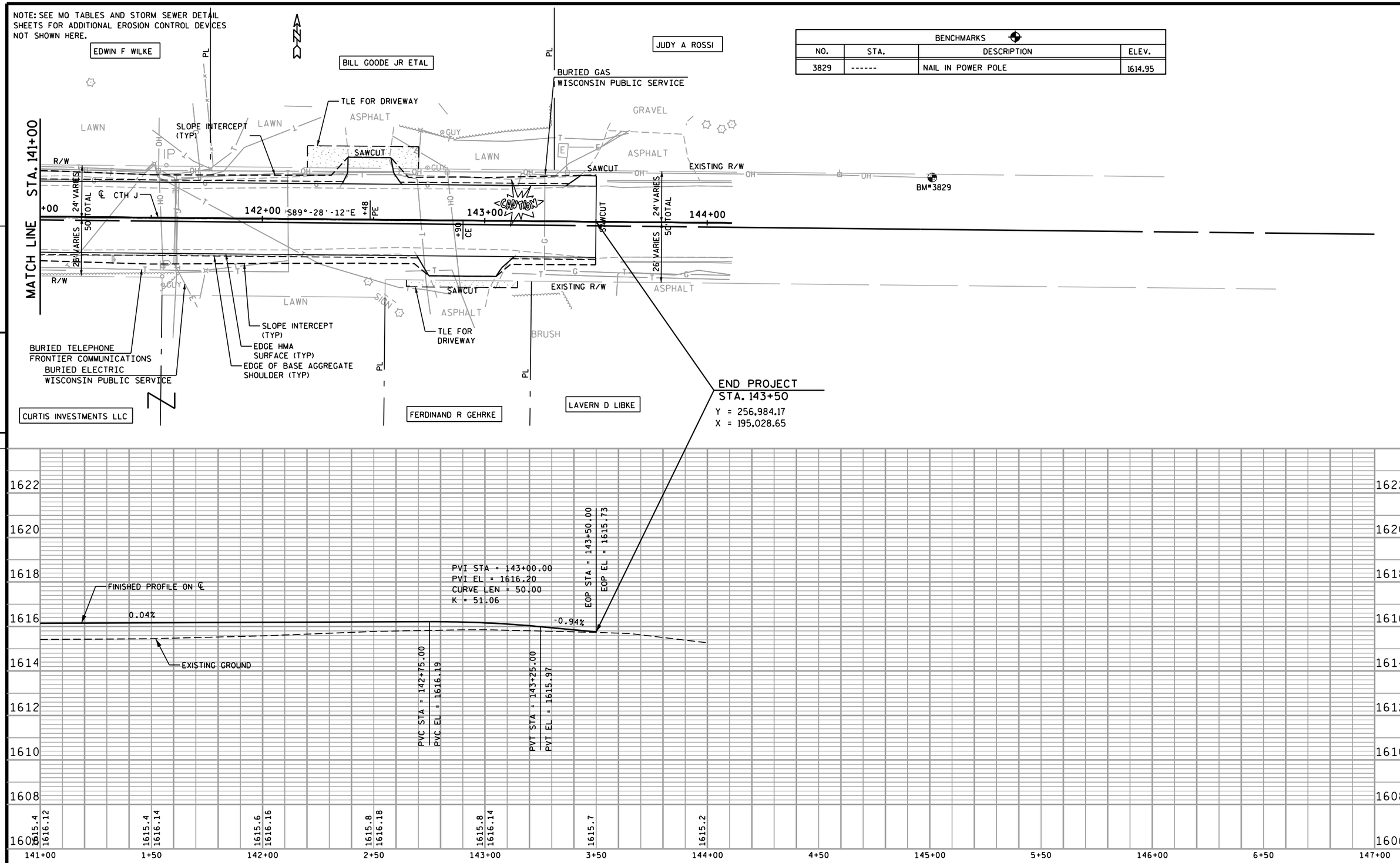

PROJECT NO: 9455-04-70	HWY: CTH J	COUNTY: ONEIDA	PLAN AND PROFILE	SHEET 34	E

FILE NAME : $$....designfile....$$ PLOT DATE : $$...plottingdate...$$ PLOT BY : $$...plotuser...$$ PLOT NAME : PLOT SCALE : $$.....plotscale.....$$ WISDOT/CADDS SHEET 40

panp08.dgn 1/28/2015 9:53:51 AM pkriesel

BENCHMARKS			
NO.	STA.	DESCRIPTION	ELEV.
103	111+81.5, 35.3'RT	3/4-INCH IRON ROD	1612.50

CURB RADII FLANGE DATA

POINT NO.	STATION	OFFSET	ELEVATION
7	39+05.9	15.00' LT	1612.11
8	111+98.6	37.97' RT	1611.60
9	111+63.1	16.00' RT	1612.42
10	112+21.5	16.00' LT	1612.52
11	112+34.7	20.27' LT	1612.40
12	40+28.2	15.00' LT	1612.10
13	40+66.7	15.00' RT	1611.54
14	112+88.0	29.46' LT	1612.20
15	113+14.3	16.00' LT	1612.86
16	112+75.1	16.00' RT	1612.72
17	111+99.9	37.18' RT	1612.40
18	39+71.8	15.00' RT	1612.08

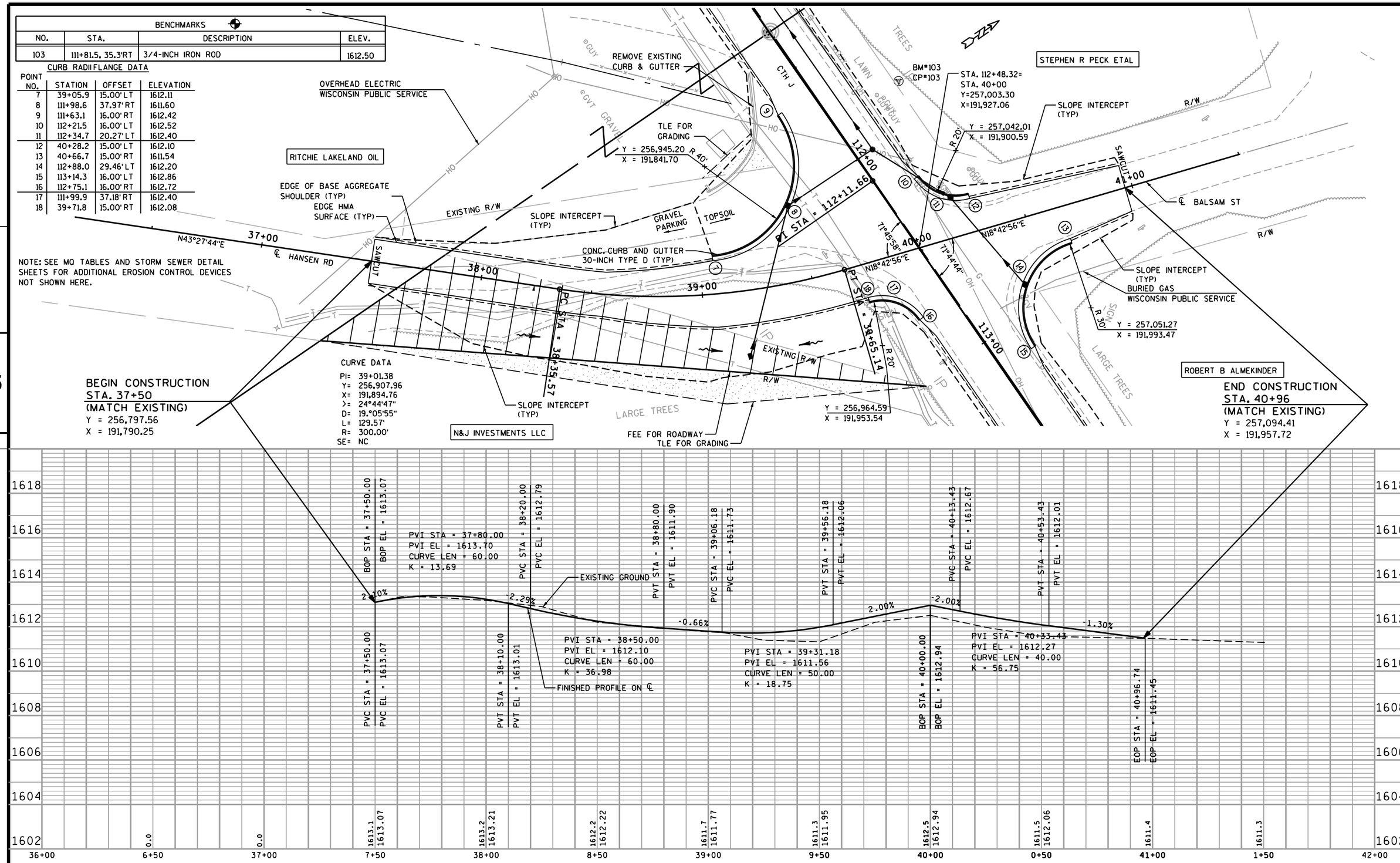

PROJECT NO:9455-04-70	HWY:CTH J	COUNTY:ONEIDA	PLAN AND PROFILE HANSEN RD. & BALSAM ST.	SHEET 35	E

FILE NAME : P:\90s\93\930823\caddWDOT\Planshts\panp09.dgn PLOT DATE : 3/9/2015 PLOT BY : cschroeder PLOT NAME : _____ PLOT SCALE : 1:39.9999 WISDOT/CADDS SHEET 40

panp09.dgn 3/9/2015 1:29:00 PM cschroeder

Standard Detail Drawing List

08A05-19A	INLET COVERS TYPE A, H, A-S, H-S & Z
08A05-19B	INLET COVERS TYPE B, B-A, C, MS, MS-A, & WM
08A05-19D	INLET COVER TYPE BW, MANHOLE COVERS, TYPE K, J, J-S, L & M
08A08-01	CATCH BASINS 3-FT, 4-FT, 5-FT AND 6-FT DIAMETER
08A09-01	CATCH BASINS 2X3-FT AND 2.5X3-FT
08B09-01	MANHOLES 3-FT, 4-FT, 5-FT, 6-FT, 7-FT AND 8-FT DIAMETER
08C08-01	INLETS MEDIAN 1 AND 2 GRATE
08D01-17	CONCRETE CURB, CONCRETE CURB AND GUTTER AND TIES
08D05-15A	CURB RAMPS TYPES 1 AND 1-A
08D05-15B	CURB RAMPS TYPES 2 AND 3
08D05-15C	CURB RAMPS TYPES 4A AND 4A1
08D05-15D	CURB RAMPS TYPE 4B AND 4B1
08D05-15E	CURB RAMPS TYPES 5, 6, 7A, 7B & 8
08E08-03	TYPICAL INSTALLATIONS OF EROSION BALES / TEMPORARY DITCH CHECKS
08E09-06	SILT FENCE
08E10-02	INLET PROTECTION TYPE A, B, C AND D
15A01-11	MARKER POST FOR RIGHT-OF-WAY
15C02-05A	BARRICADES AND SIGNS FOR MAINLINE CLOSURES
15C02-05B	BARRICADES AND SIGNS FOR MAINLINE CLOSURES
15C03-02	BARRICADES AND SIGNS FOR SIDEROAD CLOSURES
15C08-16A	PAVEMENT MARKING (MAINLINE)
15C12-04	TRAFFIC CONTROL FOR LANE CLOSURE (SUITABLE FOR MOVING OPERATIONS)
15C29-03D	URBAN BICYCLE LANE MARKING
15C29-03E	PAVEMENT MARKING FOR BIKE LANES
16A01-06	LANDMARK REFERENCE MONUMENTS AND COVERS

6

6

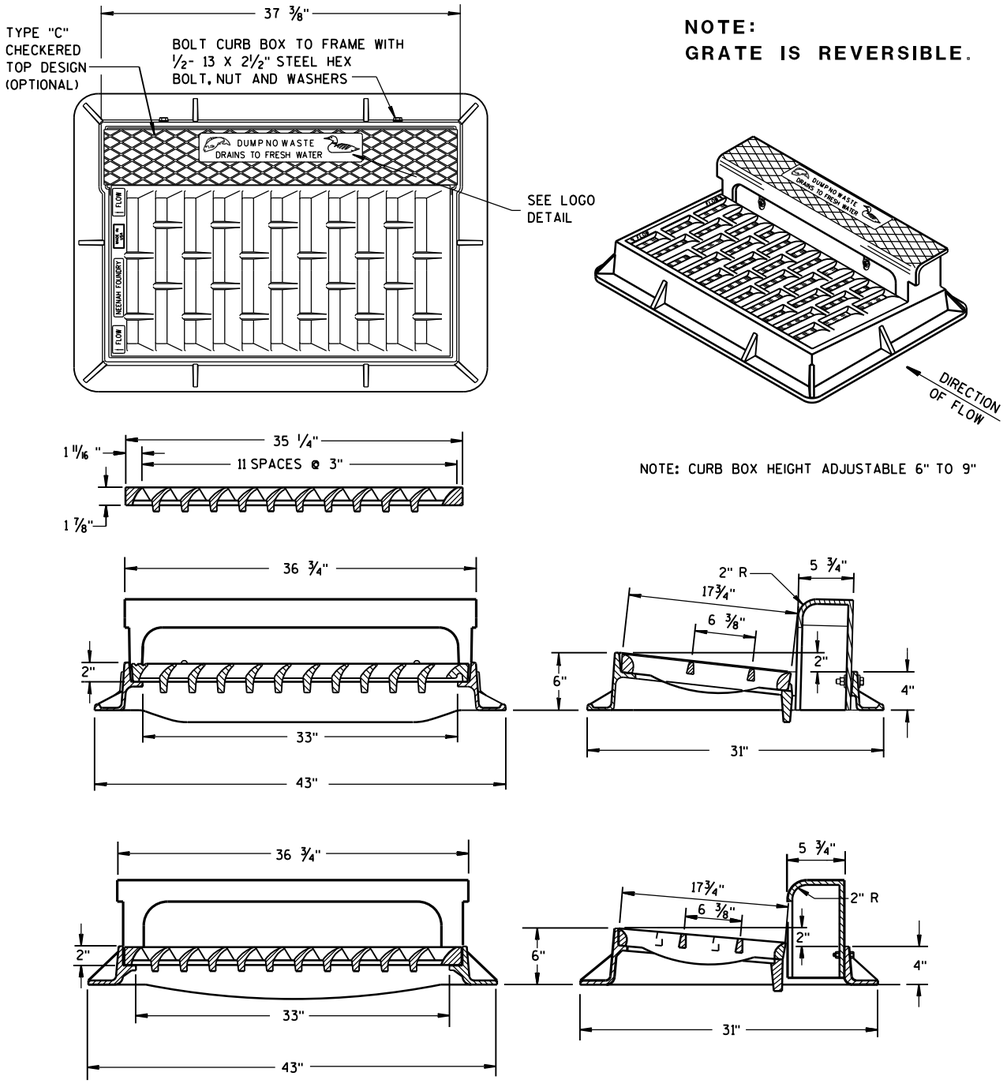

NOTE:
GRATE IS REVERSIBLE.

NOTE: CURB BOX HEIGHT ADJUSTABLE 6" TO 9"

TYPE "H"

NOTE: EITHER CASTING IS ACCEPTABLE

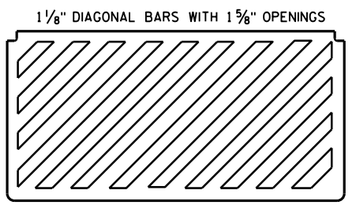

SPECIAL GRATE FOR TYPE "H" COVER

(MEASURES 35 1/4" X 17 3/4" X 2")

(NOTED AS TYPE H-S ON DRAINAGE TABLE)

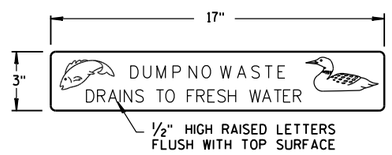

LOGO DETAIL

GENERAL NOTES

DETAILS OF CONSTRUCTION, MATERIALS AND WORKMANSHIP NOT SHOWN ON THIS DRAWING SHALL CONFORM TO THE PERTINENT REQUIREMENTS OF THE STANDARD SPECIFICATIONS AND THE APPLICABLE SPECIAL PROVISIONS.

DETAIL DRAWINGS FOR PROPOSED ALTERNATE DESIGNS FOR CATCH BASIN, MANHOLE AND INLET COVERS SHALL BE SUBMITTED TO THE ENGINEER FOR APPROVAL PROVIDING THAT SUCH ALTERNATE DESIGNS MAKE PROVISION FOR EQUIVALENT CAPACITY AND STRENGTH.

ROUND FRAMES AND COVERS SHALL HAVE CONTINUOUSLY MACHINED BEARING SURFACES TO PREVENT ROCKING AND RATTLING.

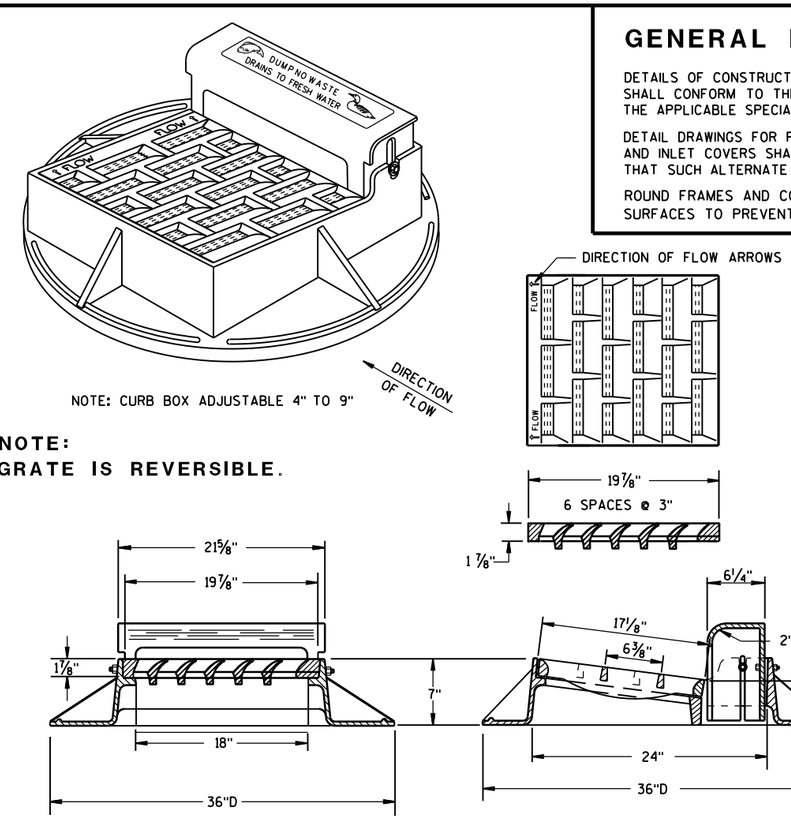

NOTE: CURB BOX ADJUSTABLE 4" TO 9"

NOTE:
GRATE IS REVERSIBLE.

TYPE "A"

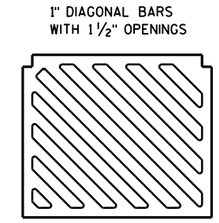

SPECIAL GRATE FOR TYPE "A" COVER

(MEASURES 19 3/4" X 17" X 1 7/8")

(NOTED AS TYPE A-S ON DRAINAGE TABLE)

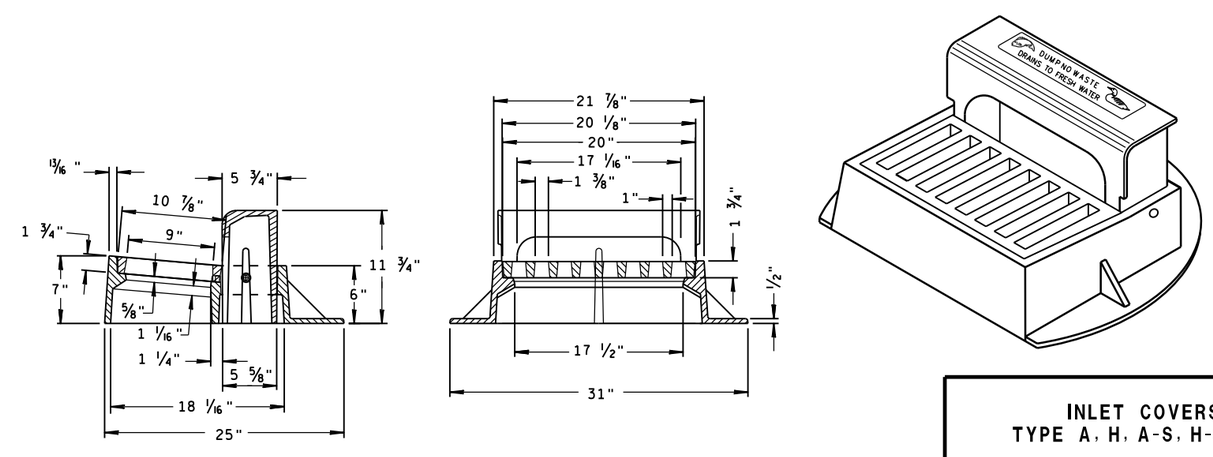

TYPE "Z"

INLET COVERS
TYPE A, H, A-S, H-S & Z

STATE OF WISCONSIN
DEPARTMENT OF TRANSPORTATION

APPROVED
11-27-13 /S/ Jerry H. Zogg
DATE ROADWAY STANDARDS DEVELOPMENT ENGINEER
FHWA

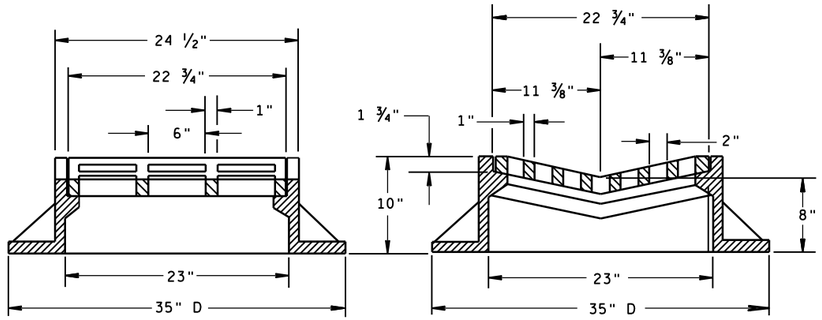

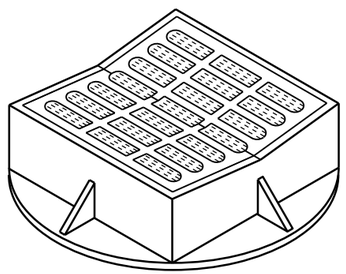

TYPE "B"

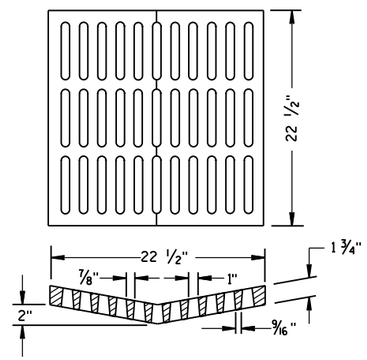

ALTERNATIVE GRATE FOR TYPE "B" COVER

USE WHERE PEDESTRIAN OR BICYCLE TRAFFIC IS POSSIBLE.

NOTED AS TYPE B-A ON THE DRAINAGE TABLE

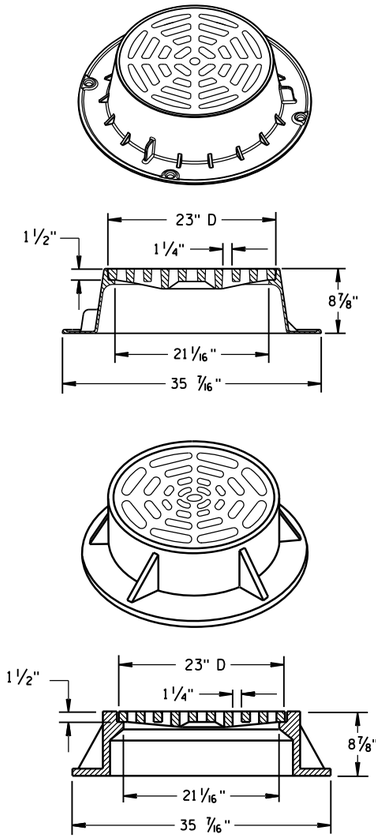

TYPE "C"

NOTE: EITHER CASTING IS ACCEPTABLE

GENERAL NOTES

DETAILS OF CONSTRUCTION, MATERIALS AND WORKMANSHIP NOT SHOWN ON THIS DRAWING SHALL CONFORM TO THE PERTINENT REQUIREMENTS OF THE STANDARD SPECIFICATIONS AND THE APPLICABLE SPECIAL PROVISIONS.

DETAIL DRAWINGS FOR PROPOSED ALTERNATE DESIGNS FOR CATCH BASIN, MANHOLE AND INLET COVERS SHALL BE SUBMITTED TO THE ENGINEER FOR APPROVAL PROVIDING THAT SUCH ALTERNATE DESIGNS MAKE PROVISION FOR EQUIVALENT CAPACITY AND STRENGTH.

ROUND FRAMES AND COVERS SHALL HAVE CONTINUOUSLY MACHINED BEARING SURFACES TO PREVENT ROCKING AND RATTLING.

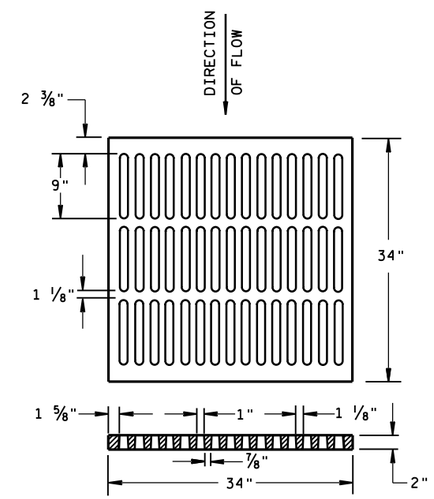

ALTERNATIVE TYPE "MS"

USE WHERE PEDESTRIAN OR BICYCLE TRAFFIC IS PERMITTED

NOTED AS TYPE MS-A ON THE DRAINAGE TABLE

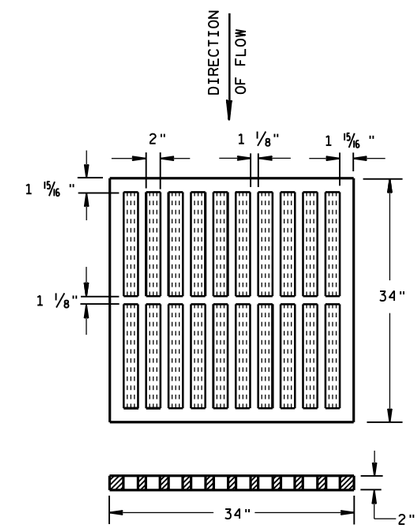

TYPE "MS"

USE ON FREEWAYS AND EXPRESSWAYS

NOTED AS TYPE MS ON DRAINAGE TABLE

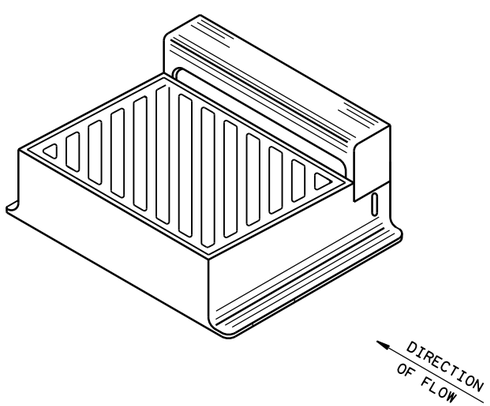

DIAGONAL SLOTS, SHALL BE ORIENTED TO THE DIRECTION OF FLOW AS ILLUSTRATED. GRATES ARE MANUFACTURED TO BE REVERSIBLE.

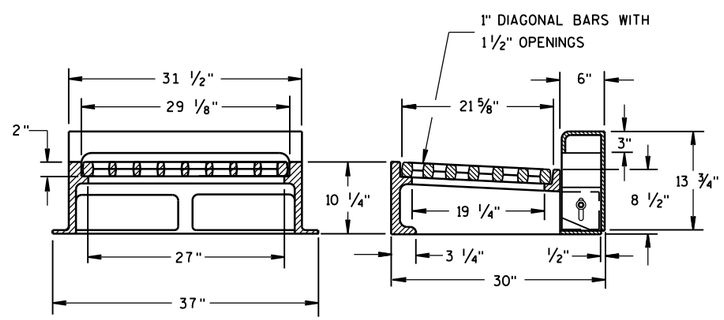

NOTE: CURB BOX HEIGHT ADJUSTABLE 6" TO 9"

TYPE "WM"

6

6

S.D.D. 8 A 5-19b

S.D.D. 8 A 5-19b

INLET COVERS
TYPE B, B-A, C,
MS, MS-A, & WM

STATE OF WISCONSIN
DEPARTMENT OF TRANSPORTATION

APPROVED

11/27/2013 — DATE

/S/ Jerry H. Zogg — ROADWAY STANDARDS DEVELOPMENT ENGINEER

FHWA

GENERAL NOTES

DETAILS OF CONSTRUCTION, MATERIALS AND WORKMANSHIP NOT SHOWN ON THIS DRAWING SHALL CONFORM TO THE PERTINENT REQUIREMENTS OF THE STANDARD SPECIFICATIONS AND THE APPLICABLE SPECIAL PROVISIONS.

DETAIL DRAWINGS FOR PROPOSED ALTERNATE DESIGNS FOR MANHOLE COVERS SHALL BE SUBMITTED TO THE ENGINEER FOR APPROVAL PROVIDING THAT SUCH ALTERNATE DESIGNS MAKE PROVISION FOR EQUIVALENT CAPACITY AND STRENGTH.

ROUND FRAMES AND COVERS SHALL HAVE CONTINUOUSLY MACHINED BEARING SURFACES TO PREVENT ROCKING AND RATTLING.

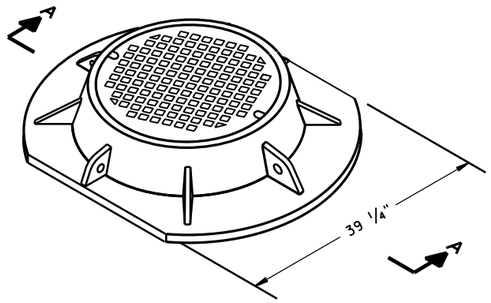

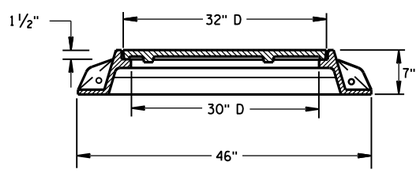

SECTION A-A
TYPE "K"

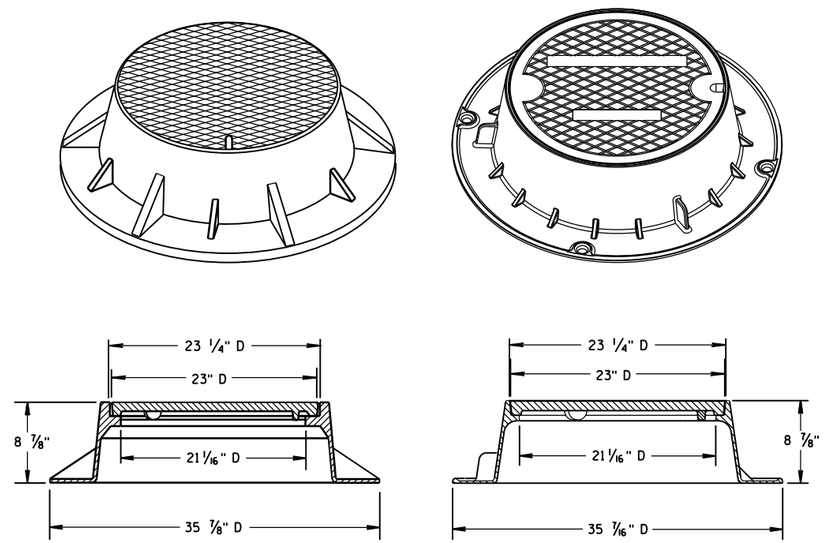

TYPE "J"
NOTE: EITHER CASTING IS ACCEPTABLE

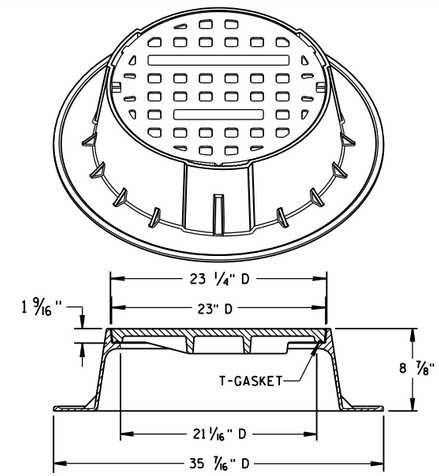

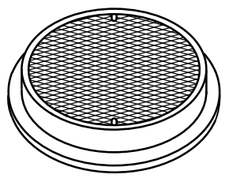

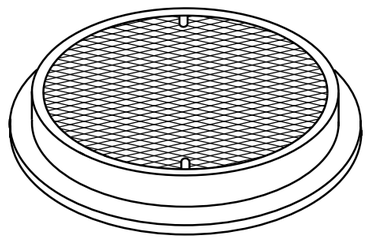

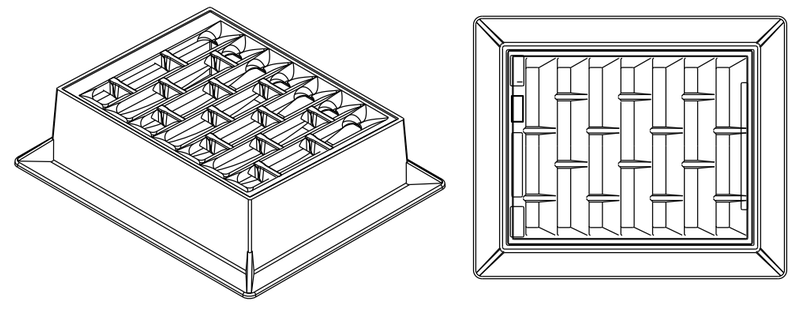

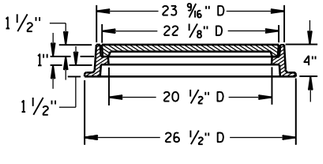

TYPE "L"

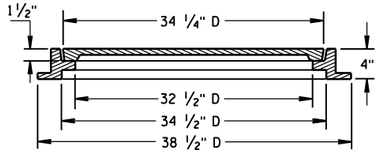

TYPE "M"

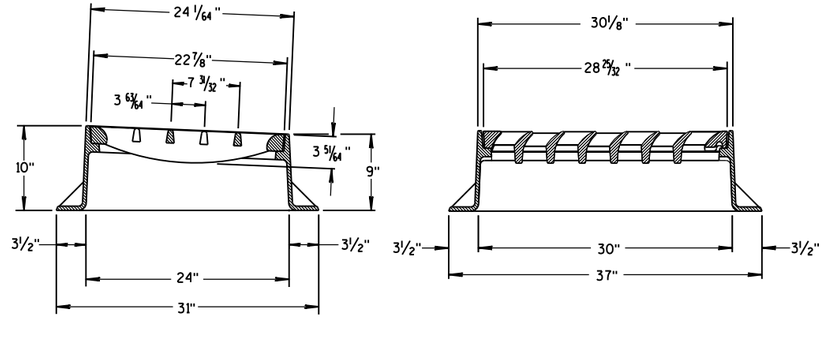

INLET COVER TYPE "BW"

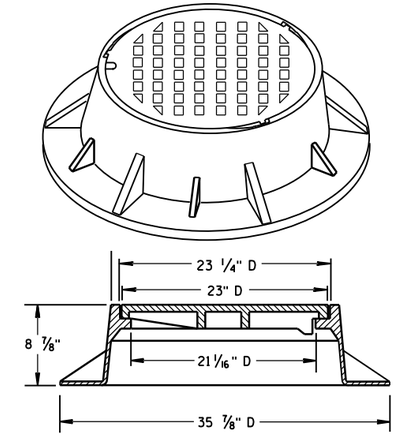

TYPE "J" SPECIAL
TYPE "B" NON-ROCKING SELF-SEAL LID
(NOTED AS TYPE J-S ON THE DRAINAGE TABLE)
NOTE: EITHER CASTING IS ACCEPTABLE

INLET COVER TYPE BW MANHOLE COVERS, TYPE K, J, J-S, L & M	
STATE OF WISCONSIN DEPARTMENT OF TRANSPORTATION	
APPROVED 11/27/2013 DATE FHWA	/S/ Jerry H. Zogg ROADWAY STANDARDS DEVELOPMENT ENGINEER

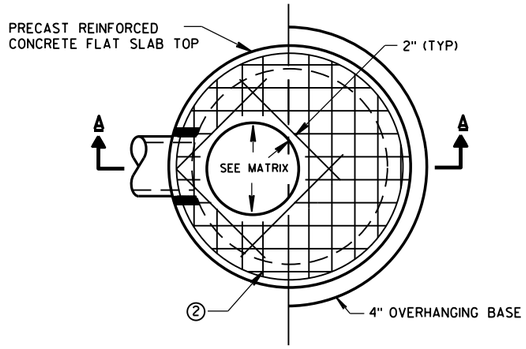

PLAN VIEW CIRCULAR OPENING

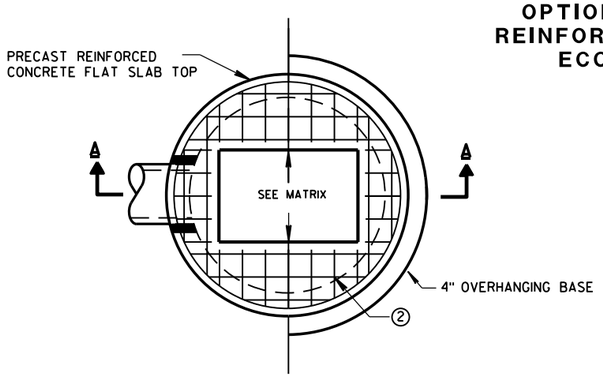

PLAN VIEW RECTANGULAR OPENING

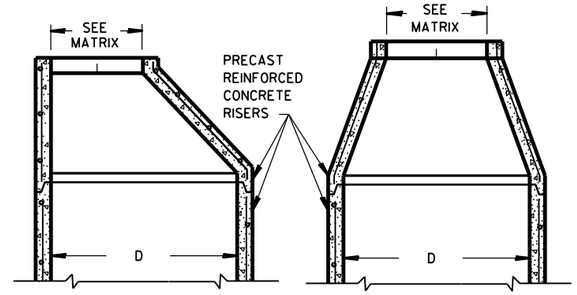

OPTIONAL PRECAST REINFORCED CONCRETE ECCENTRIC TOP

OPTIONAL PRECAST REINFORCED CONCRETE CONCENTRIC TOP

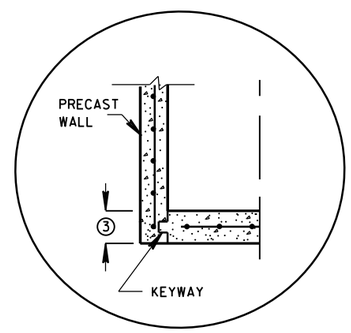

PRECAST REINFORCED CONCRETE WITH INTEGRAL BASE OPTION

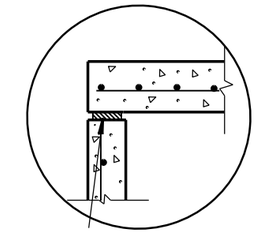

TOP WITH PLAIN END JOINT

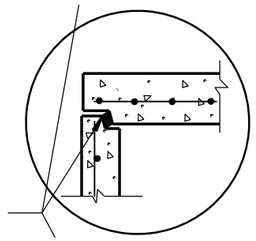

TOP WITH TONGUE AND GROOVE JOINT

JOINTS TO BE SEALED WITH A BUTYL RUBBER SEAL PER SEALANT MANUFACTURERS RECOMMENDATIONS CONFORMING TO ASTM C 990 (TYP)

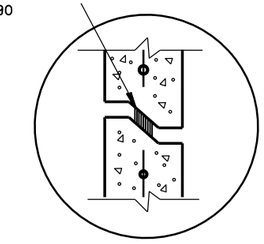

RISER WITH TONGUE AND GROOVE JOINT

DETAIL "B"

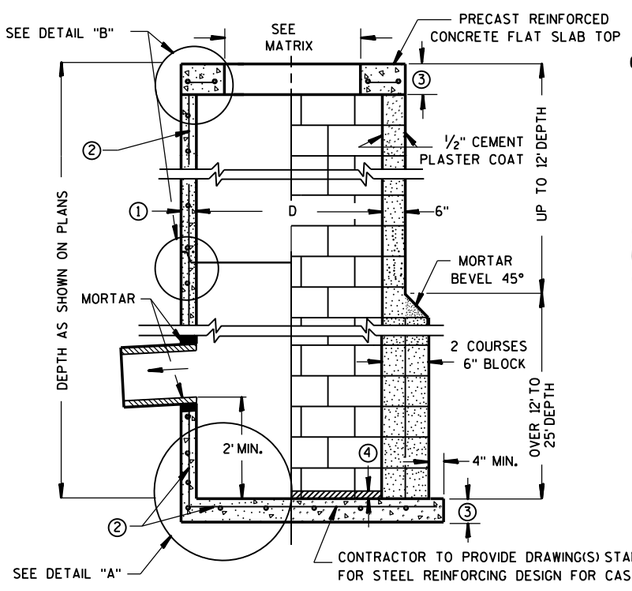

SECTION A-A

PRECAST REINFORCED CONCRETE WITH MONOLITHIC BASE

CONCRETE BLOCK WITH CAST-IN-PLACE OR PRECAST REINFORCED CONCRETE BASE ②

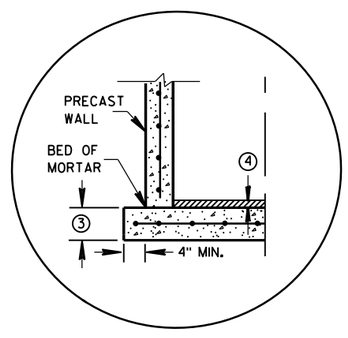

SEPARATE PRECAST REINFORCED CONCRETE BASE OPTION

DETAIL "A"

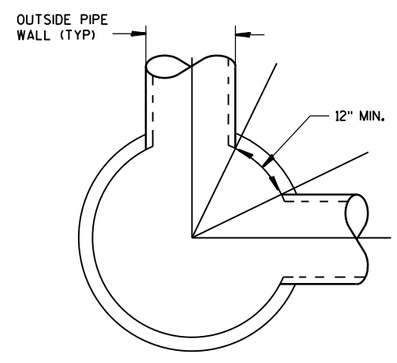

DETAIL "C"

GENERAL NOTES

DETAILS OF CONSTRUCTION, MATERIALS AND WORKMANSHIP NOT SHOWN ON THIS DRAWING SHALL CONFORM TO THE PERTINENT REQUIREMENTS OF THE STANDARD SPECIFICATIONS AND THE APPLICABLE SPECIAL PROVISIONS.

UNLESS OTHERWISE AUTHORIZED IN WRITING BY THE ENGINEER, THE CONTRACTOR SHALL NOT ORDER AND DELIVER PRECAST CATCH BASIN UNITS REQUIRED FOR THE PROJECT UNTIL A LIST OF SIZES IS FURNISHED BY THE ENGINEER.

DETAILED DRAWINGS FOR PROPOSED ALTERNATE DESIGNS FOR UNDERGROUND DRAINAGE STRUCTURES SHALL BE SUBMITTED TO THE ENGINEER FOR APPROVAL PROVIDING THAT SUCH ALTERNATE DESIGNS MAKE PROVISION FOR EQUIVALENT CAPACITY AND STRENGTH.

ALL DRAINAGE STRUCTURES ARE DESIGNATED ON THE PLANS AS "MANHOLES 3X3-L", "CATCH BASINS 4-B", "INLETS 2X3-H", ETC. THE FIRST NUMBERS DESIGNATE THE SIZE OF THE STRUCTURE, AND THE FOLLOWING LETTER DESIGNATES THE TYPE OF COVER TO BE USED TO COMPRISE THE COMPLETE UNIT.

BASES SHALL BE PLACED ON A BED OF MATERIAL AT LEAST 6 INCHES IN DEPTH, WHICH MEETS THE REQUIREMENTS OF GRANULAR BACKFILL. THIS BEDDING SHALL BE COMPACTED AND PROVIDE UNIFORM SUPPORT FOR THE ENTIRE AREA OF THE BASE.

PRECAST REINFORCED CONCRETE CONE TOPS (ECCENTRIC OR CONCENTRIC) OR PRECAST REINFORCED CONCRETE FLAT SLAB TOPS MAY BE USED ON CONCRETE BLOCK STRUCTURES. THE TOPS SHALL BE INSTALLED ON A BED OF MORTAR.

ECCENTRIC CONE TOPS MAY BE USED ON ALL STRUCTURES, AND CONCENTRIC CONE TOPS SHALL BE USED ONLY ON STRUCTURES 5 FEET OR LESS IN DEPTH, UNLESS OTHERWISE DIRECTED BY THE ENGINEER.

STEPS MEETING AASHTO M199 AND THE FOLLOWING REQUIREMENTS SHALL BE INSTALLED IN ALL STRUCTURES OVER 5 FEET IN DEPTH: 16 INCH C-C MAXIMUM SPACING; PROJECT A MINIMUM CLEAR DISTANCE OF 4 INCHES FROM THE WALL AT THE POINT OF EMBEDMENT; MINIMUM LENGTH OF 10 INCHES; MINIMUM WALL EMBEDMENT OF 3 INCHES. FERROUS METAL STEPS NOT PAINTED OR TREATED TO RESIST CORROSION SHALL HAVE A MINIMUM CROSS SECTIONAL DIMENSION OF 1 INCH.

STEPS OF APPROVED POLYPROPYLENE PLASTIC COATED REINFORCEMENT BAR ARE ACCEPTABLE. REINFORCING BAR MUST BE A MINIMUM OF 1/2 INCH AND MEET THE REQUIREMENTS OF ASTM A615.

CERTIFICATION SHALL BE PROVIDED THAT INSTALLED STEPS WHEN TESTED IN ACCORDANCE WITH SECTION 10 OF AASHTO T280 CAN WITHSTAND A VERTICAL LOAD OF 800 LBS. AND A HORIZONTAL LOAD OF 400 LBS.

ALL BAR STEEL REINFORCEMENT SHALL BE EMBEDDED 2 INCHES CLEAR UNLESS OTHERWISE SHOWN OR NOTED.

ALL PRECAST INLET UNITS SHALL CONFORM TO THE PERTINENT REQUIREMENTS OF AASHTO DESIGNATION M199.

PRECAST REINFORCED RISERS SHALL HAVE A TONGUE AND GROOVE JOINT WITH TONGUE UP OR DOWN.

CONCRETE BLOCK WILL NOT BE PERMITED FOR STRUCTURES GREATER THAN 4 FEET IN DIAMETER.

4" OVERHANGING BASES ARE REQUIRED FOR ALL CONCRETE BLOCK INSTALLATIONS. 4" OVERHANG IS REQUIRED WHEN SEPARATE PRECAST BASE IS PROVIDED. OVERHANG IS NOT REQUIRED ON PRECAST STRUCTURES WITH AN INTEGRAL OR MONOLITHIC BASE.

FOR ADDITIONAL CONFIGURATIONS, MAINTAIN A MINIMUM OF 12 INCHES AS MEASURED FROM THE INSIDE OF THE STRUCTURE WALL BETWEEN THE OUTSIDE PIPE WALLS OF ADJACENT PIPES. SEE DETAIL "C".

① MINIMUM WALL THICKNESS SHALL BE 4 INCHES FOR 3-FT, 5 INCHES FOR 4-FT, 6 INCHES FOR 5-FT AND 7 INCHES FOR 6-FT DIAMETER PRECAST CATCH BASINS.

② FOR PRECAST CATCH BASINS PROVIDE REINFORCING STEEL IN ACCORDANCE TO AASHTO M199.

③ PRECAST FLAT SLAB TOPS AND BASES WITH A DIAMETER OF 48" AND LESS SHALL HAVE A MINIMUM THICKNESS OF 6". PRECAST FLAT SLAB TOPS AND BASES WITH A DIAMETER LARGER THAN 48" SHALL HAVE A MINIMUM THICKNESS OF 8".

④ 1" CONCRETE KEY POURED AFTER INSTALLATION. 2' SUMP MEASURED FROM TOP OF KEY.

CATCH BASIN COVER OPENING MATRIX

CATCH BASIN SIZE	INLET COVER TYPE	ALL A'S	ALL B'S	BW	C	F	ALL H'S	S	T	V	WM	Z
	OPENING SIZE (FT)											
3-FT	2X2	X	X					X		X		
	2 DIA.				X							X
4-FT-6-FT	2X2	X	X					X		X		
	2X2.5			X				X	X	X	X	
	2 DIA.				X							X
	2X3						X					
	2.5X3					X						

PIPE MATRIX

CATCH BASIN SIZE	MAXIMUM INSIDE PIPE DIAMETER FOR TWO PIPES	
	180° SEPARATION (IN)	90° SEPARATION (IN)
3-FT	15	12
4-FT	24	18
5-FT	36	24
6-FT	42	30

CATCH BASINS 3-FT, 4-FT, 5-FT AND 6-FT DIAMETER

CATCH BASINS 3-FT, 4-FT, 5-FT AND 6-FT DIAMETER

STATE OF WISCONSIN
DEPARTMENT OF TRANSPORTATION

APPROVED
6/5/2012 — DATE
/S/ Jerry H. Zogg — ROADWAY STANDARDS DEVELOPMENT ENGINEER
FHWA

6

S.D.D. 8 A 8-1

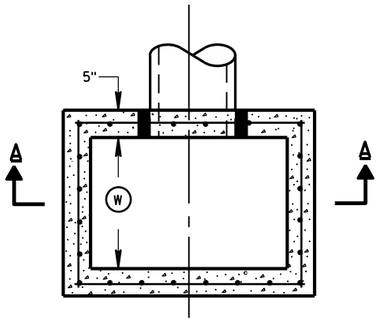

PLAN VIEW

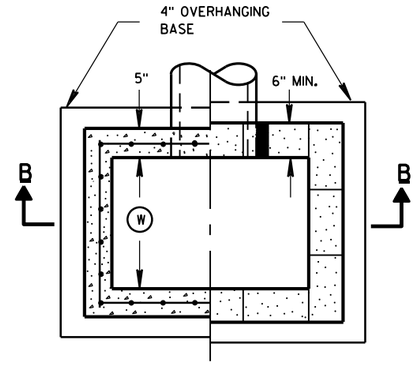

PLAN VIEW

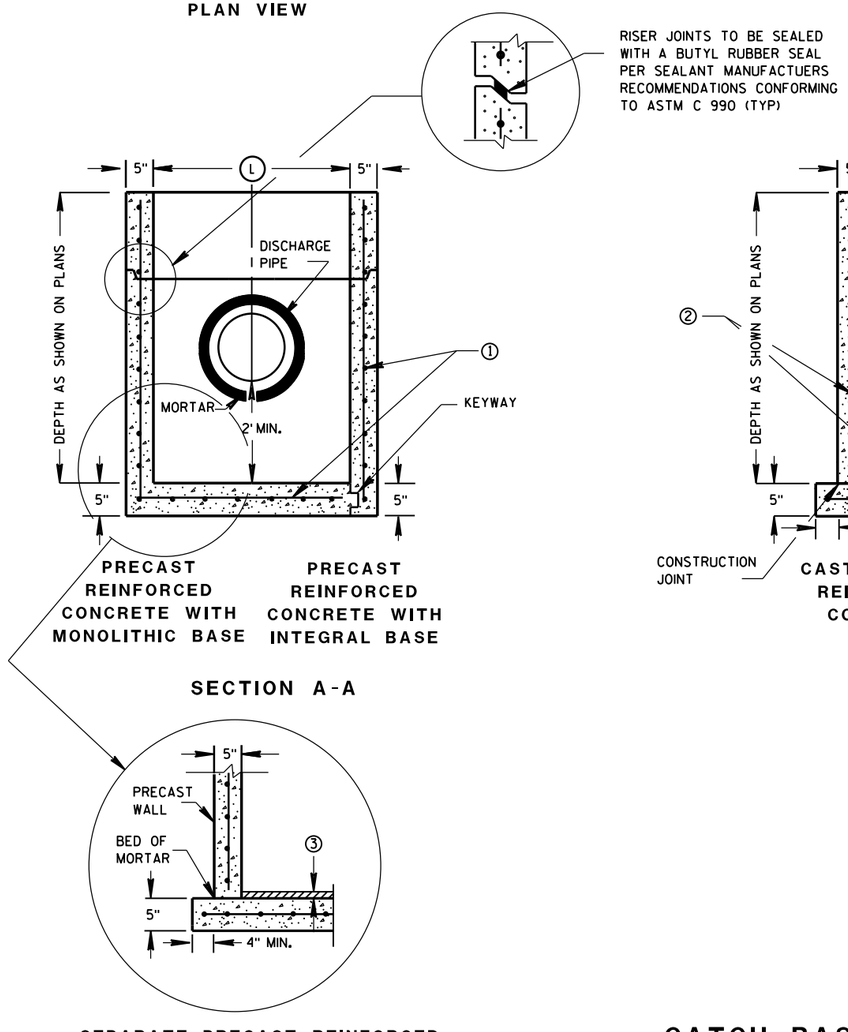

SECTION A-A

SEPARATE PRECAST REINFORCED CONCRETE BASE OPTION

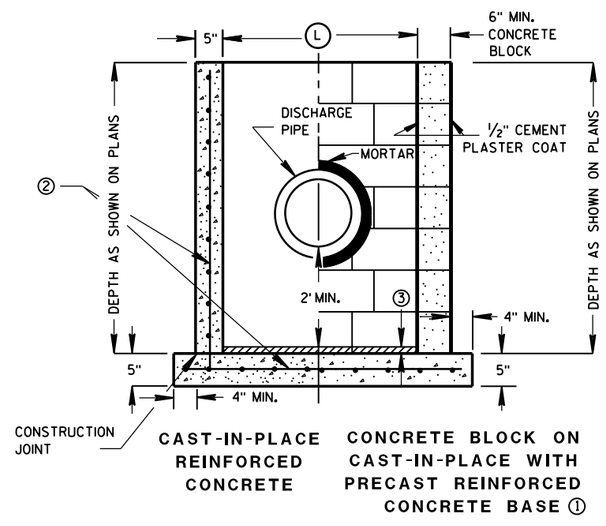

SECTION B-B

GENERAL NOTES

DETAILS OF CONSTRUCTION, MATERIALS AND WORKMANSHIP NOT SHOWN ON THIS DRAWING SHALL CONFORM TO THE PERTINENT REQUIREMENTS OF THE STANDARD SPECIFICATIONS AND THE APPLICABLE SPECIAL PROVISIONS.

UNLESS OTHERWISE AUTHORIZED IN WRITING BY THE ENGINEER, THE CONTRACTOR SHALL NOT ORDER AND DELIVER PRECAST CATCH BASIN UNITS REQUIRED FOR THE PROJECT UNTIL A LIST OF SIZES IS FURNISHED BY THE ENGINEER.

DETAILED DRAWINGS FOR PROPOSED ALTERNATE DESIGNS FOR UNDERGROUND DRAINAGE STRUCTURES SHALL BE SUBMITTED TO THE ENGINEER FOR APPROVAL PROVIDING THAT SUCH ALTERNATE DESIGNS MAKE PROVISION FOR EQUIVALENT CAPACITY AND STRENGTH.

ALL PRECAST CATCH BASIN UNITS SHALL CONFORM TO THE PERTINENT REQUIREMENTS OF ASTM C 913.

ALL DRAINAGE STRUCTURES ARE DESIGNATED ON THE PLANS AS "MANHOLES 3X3-L", "CATCH BASINS 4-B", "INLETS 2X3-H", ETC. THE FIRST NUMBERS DESIGNATES THE SIZE OF THE STRUCTURE, AND THE FOLLOWING LETTER DESIGNATES THE TYPE OF COVER TO BE USED TO COMPRISE THE COMPLETE UNIT.

BASES SHALL BE PLACED ON A BED OF MATERIAL AT LEAST 6 INCHES IN DEPTH, WHICH MEETS THE REQUIREMENTS OF GRANULAR BACKFILL. THIS BEDDING SHALL BE COMPACTED AND PROVIDE UNIFORM SUPPORT FOR THE ENTIRE AREA OF THE BASE.

ALL BAR STEEL REINFORCEMENT SHALL BE EMBEDDED 2 INCHES CLEAR UNLESS OTHERWISE SHOWN OR NOTED.

PRECAST REINFORCED RISERS SHALL HAVE A TONGUE AND GROOVE JOINT WITH TONGUE UP OR DOWN.

4" OVERHANGING BASES ARE REQUIRED FOR CAST-IN-PLACE REINFORCED CONCRETE AND CONCRETE BLOCK INSTALLATIONS.
4" OVERHANG IS REQUIRED WHEN SEPARATE PRECAST BASE IS PROVIDED.
OVERHANG IS NOT REQUIRED ON PRECAST STRUCTURES WITH AN INTEGRAL OR MONOLITHIC BASE.

MAXIMUM INSIDE PIPE DIAMETER DETERMINED BY 3" CLEARANCE ON EACH SIDE OF THE OUTSIDE WALL OF THE PIPE. SEE DETAIL "A". ASSUMES PIPE ENTERS PERPENDICULAR TO THE STRUCTURE.

① FOR PRECAST CATCH BASINS PROVIDE REINFORCING STEEL IN ACCORDANCE TO ASTM C 913.

② CONTRACTOR TO PROVIDE DRAWING(S) STAMPED BY A PROFESSIONAL ENGINEER FOR STEEL REINFORCING DESIGN FOR CAST-IN-PLACE STRUCTURES.

③ 1" CONCRETE KEY POURED AFTER INSTALLATION. 2' SUMP MEASURED FROM TOP OF KEY.

CATCH BASIN COVER MATRIX

CATCH BASIN SIZE		INLET COVER TYPE	F	ALL H'S
	WIDTH (W) (FT)	LENGTH (L) (FT)		
2X3-FT	2	3		X
2.5X3-FT	2.5	3	X	

PIPE MATRIX

CATCH BASIN SIZE	MAXIMUM INSIDE PIPE DIAMETER FOR TWO PIPES	
	WIDTH (IN)	LENGTH (IN)
2X3-FT	12	24
2.5X3-FT	18	24

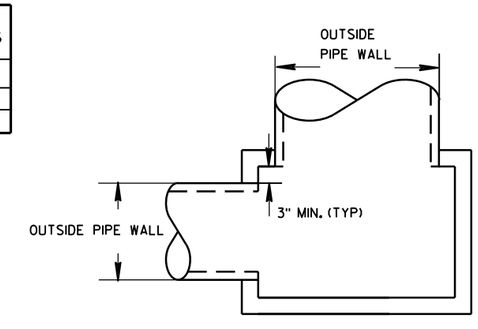

DETAIL "A"

CATCH BASINS 2X3-FT AND 2.5X3-FT

CATCH BASINS 2X3-FT
AND 2.5X3-FT

STATE OF WISCONSIN
DEPARTMENT OF TRANSPORTATION

APPROVED
6/5/2012 — DATE
/S/ Jerry H. Zogg — ROADWAY STANDARDS DEVELOPMENT ENGINEER
FHWA
NT

6

S.D.D. 8 A 9-1

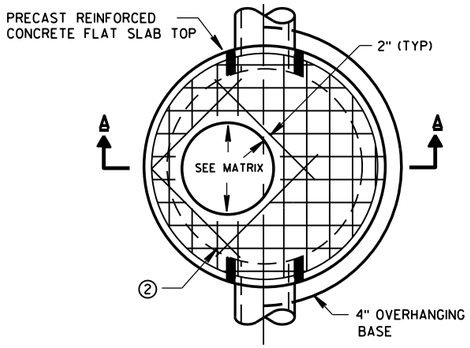

PLAN VIEW CIRCULAR OPENING

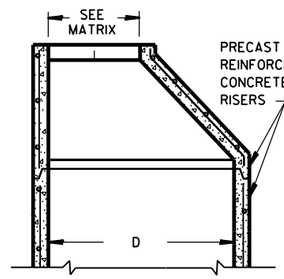

OPTIONAL PRECAST REINFORCED CONCRETE ECCENTRIC TOP

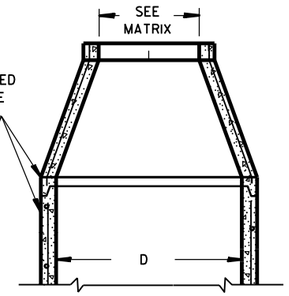

OPTIONAL PRECAST REINFORCED CONCRETE CONCENTRIC TOP

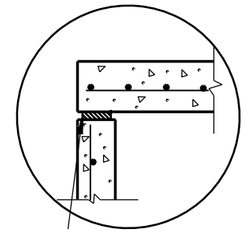

TOP WITH PLAIN END JOINT

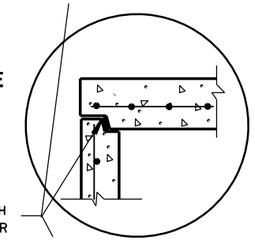

JOINTS TO BE SEALED WITH A BUTYL RUBBER SEAL PER SEALANT MANUFACTURERS RECOMMENDATIONS CONFORMING TO ASTM C990 (TYP)

TOP WITH TONGUE AND GROOVE JOINT

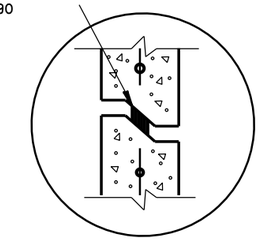

RISER WITH TONGUE AND GROOVE JOINT

DETAIL "B"

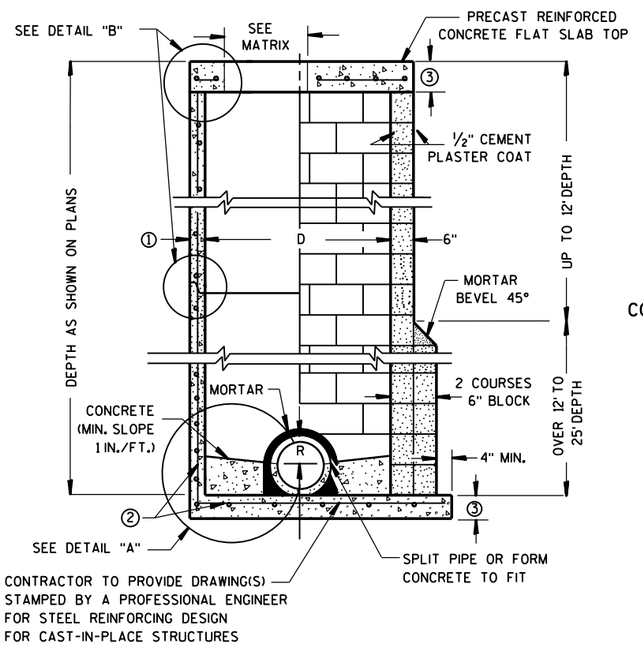

PRECAST REINFORCED CONCRETE WITH MONOLITHIC BASE

CONCRETE BLOCK WITH CAST-IN-PLACE OR PRECAST REINFORCED CONCRETE BASE ②

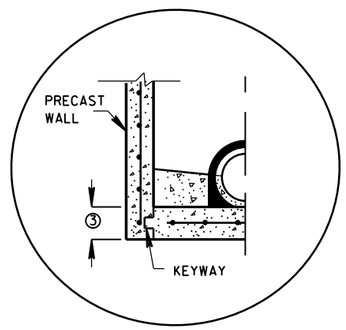

PRECAST REINFORCED CONCRETE WITH INTEGRAL BASE OPTION

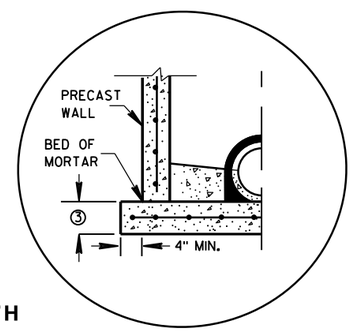

SEPARATE PRECAST REINFORCED CONCRETE BASE OPTION

DETAIL "A"

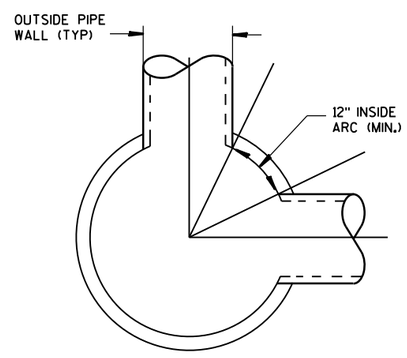

DETAIL "C"

GENERAL NOTES

DETAILS OF CONSTRUCTION, MATERIALS AND WORKMANSHIP NOT SHOWN ON THIS DRAWING SHALL CONFORM TO THE PERTINENT REQUIREMENTS OF THE STANDARD SPECIFICATIONS AND THE APPLICABLE SPECIAL PROVISIONS.

UNLESS OTHERWISE AUTHORIZED IN WRITING BY THE ENGINEER, THE CONTRACTOR SHALL NOT ORDER AND DELIVER PRECAST MANHOLE UNITS REQUIRED FOR THE PROJECT UNTIL A LIST OF SIZES IS FURNISHED BY THE ENGINEER.

DETAILED DRAWINGS FOR PROPOSED ALTERNATE DESIGNS FOR UNDERGROUND DRAINAGE STRUCTURES SHALL BE SUBMITTED TO THE ENGINEER FOR APPROVAL PROVIDING THAT SUCH ALTERNATE DESIGNS MAKE PROVISION FOR EQUIVALENT CAPACITY AND STRENGTH.

ALL DRAINAGE STRUCTURES ARE DESIGNATED ON THE PLANS AS "MANHOLES 3X3-L", "CATCH BASINS 4-B", "INLETS 2X3-H", ETC. THE FIRST NUMBERS DESIGNATE THE SIZE OF THE STRUCTURE, AND THE FOLLOWING LETTER DESIGNATES THE TYPE OF COVER TO BE USED TO COMPRISE THE COMPLETE UNIT.

BASES SHALL BE PLACED ON A BED OF MATERIAL AT LEAST 6 INCHES IN DEPTH, WHICH MEETS THE REQUIREMENTS OF GRANULAR BACKFILL. THIS BEDDING SHALL BE COMPACTED AND PROVIDE UNIFORM SUPPORT FOR THE ENTIRE AREA OF THE BASE.

PRECAST REINFORCED CONE TOPS (ECCENTRIC OR CONCENTRIC) OR PRECAST REINFORCED FLAT SLAB TOPS MAY BE USED ON CONCRETE BLOCK STRUCTURES. THE CONE TOPS SHALL BE INSTALLED ON A BED OF MORTAR.

ECCENTRIC CONE TOPS MAY BE USED ON ALL STRUCTURES, AND CONCENTRIC CONE TOPS SHALL BE USED ONLY ON STRUCTURES 5 FEET OR LESS IN DEPTH, UNLESS OTHERWISE DIRECTED BY THE ENGINEER.

STEPS MEETING AASHTO M199 AND THE FOLLOWING REQUIREMENTS SHALL BE INSTALLED IN ALL STRUCTURES OVER 5 FEET IN DEPTH: 16 INCH C-C MAXIMUM SPACING; PROJECT A MINIMUM CLEAR DISTANCE OF 4 INCHES FROM THE WALL AT THE POINT OF EMBEDMENT; MINIMUM LENGTH OF 10 INCHES; MINIMUM WALL EMBEDMENT OF 3 INCHES. FERROUS METAL STEPS NOT PAINTED OR TREATED TO RESIST CORROSION SHALL HAVE A MINIMUM CROSS SECTIONAL DIMENSION OF 1 INCH.

STEPS OF APPROVED POLYPROPYLENE PLASTIC COATED REINFORCEMENT BAR ARE ACCEPTABLE. REINFORCING BAR MUST BE A MINIMUM OF ½" AND MEET THE REQUIREMENTS OF ASTM A615.

CERTIFICATION SHALL BE PROVIDED THAT INSTALLED STEPS WHEN TESTED IN ACCORDANCE WITH SECTION 10 OF AASHTO T280 CAN WITHSTAND A VERTICAL LOAD OF 800 LBS. AND A HORIZONTAL LOAD OF 400 LBS.

ALL BAR STEEL REINFORCEMENT SHALL BE EMBEDDED 2 INCHES CLEAR UNLESS OTHERWISE SHOWN OR NOTED.

CONCRETE BLOCK WILL NOT BE PERMITED FOR STRUCTURES GREATER THAN 4 FEET IN DIAMETER.

PRECAST REINFORCED RISERS SHALL HAVE A TONGUE AND GROOVE JOINT WITH TONGUE UP OR DOWN.

ALL PRECAST MANHOLE UNITS SHALL CONFORM TO THE PERTINENT REQUIREMENTS OF AASHTO DESIGNATION M 199.

4" OVERHANGING BASES ARE REQUIRED FOR ALL CONCRETE BLOCK INSTALLATIONS. 4" OVERHANG IS REQUIRED WHEN SEPARATE PRECAST BASE IS PROVIDED. OVERHANG IS NOT REQUIRED ON PRECAST STRUCTURES WITH AN INTEGRAL OR MONOLITHIC BASE.

FOR ADDITIONAL CONFIGURATIONS, MAINTAIN A MINIMUM OF 12 INCHES AS MEASURED FROM THE INSIDE OF THE STRUCTURE WALL BETWEEN THE OUTSIDE PIPE WALLS OF ADJACENT PIPES. SEE DETAIL "C".

① MINIMUM WALL THICKNESS SHALL BE 4 INCHES FOR 3-FT, 5 INCHES FOR 4-FT, 6 INCHES FOR 5-FT, 7 INCHES FOR 6-FT, 8 INCHES FOR 7-FT AND 9 INCHES FOR 8-FT DIAMETER PRECAST MANHOLES.

② FOR PRECAST MANHOLES PROVIDE REINFORCING STEEL IN ACCORDANCE TO AASHTO M199.

③ PRECAST FLAT SLAB TOPS AND BASES WITH A DIAMETER OF 48" AND LESS SHALL HAVE A MINIMUM THICKNESS OF 6". PRECAST FLAT SLAB TOPS AND BASES WITH A DIAMETER LARGER THAN 48" SHALL HAVE A MINIMUM THICKNESS OF 8".

MANHOLE COVER OPENING MATRIX

MANHOLE COVER TYPE	C	ALL J'S	K	L	M
OPENING SIZE (FT)					
2 DIA.	X	X		X	
3 DIA.			X		X

PIPE MATRIX

MANHOLE SIZE	MAXIMUM INSIDE PIPE DIAMETER FOR TWO PIPES	
	180° SEPARATION (IN)	90° SEPARATION (IN)
3-FT	15	12
4-FT	24	18
5-FT	36	24
6-FT	42	36
7-FT	48	36
8-FT	60	42

MANHOLES 3-FT, 4-FT, 5-FT, 6-FT, 7-FT AND 8-FT DIAMETER

STATE OF WISCONSIN
DEPARTMENT OF TRANSPORTATION

APPROVED
6/5/2012 — DATE
/S/ Jerry H. Zogg
ROADWAY STANDARDS DEVELOPMENT ENGINEER
FHWA

MANHOLES 3-FT, 4-FT, 5-FT, 6-FT, 7-FT AND 8-FT DIAMETER

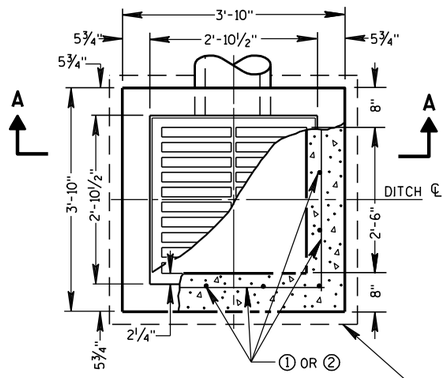

PLAN VIEW

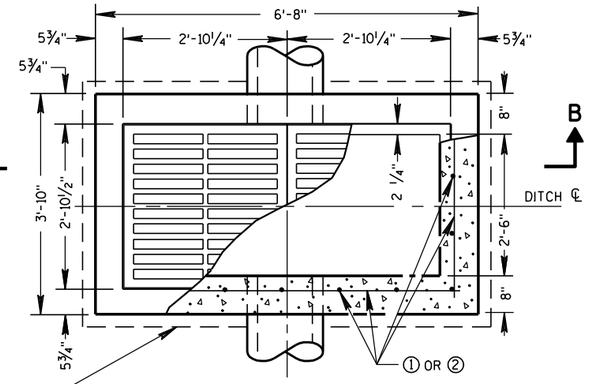

PLAN VIEW

4" OVERHANGING BASE ON REINFORCED CAST-IN-PLACE CONCRETE INLETS

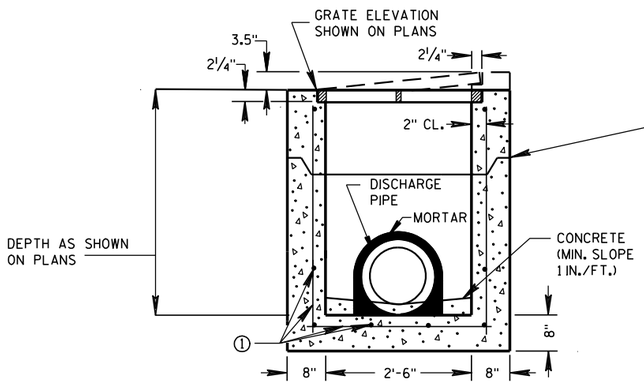

PRECAST REINFORCED CONCRETE SECTION A-A

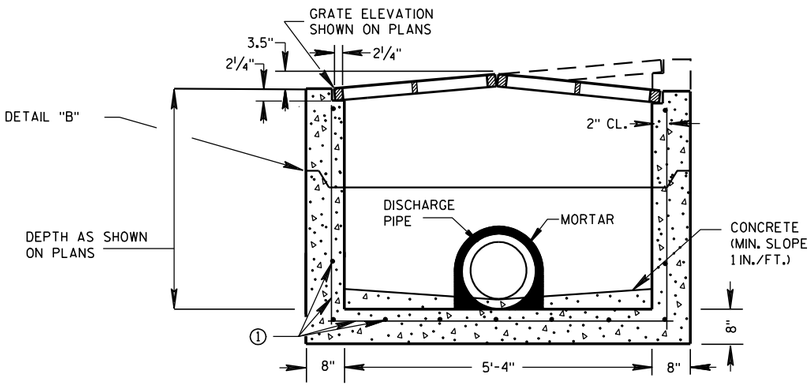

PRECAST REINFORCED CONCRETE SECTION B-B

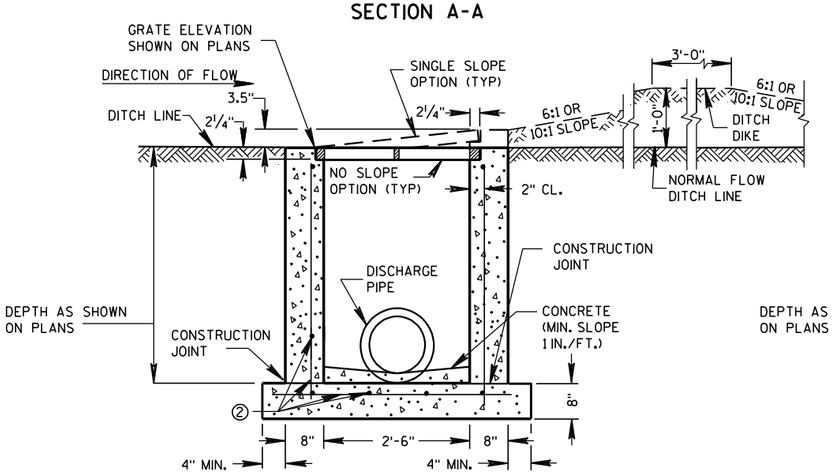

REINFORCED CAST-IN-PLACE CONCRETE SECTION A-A

INLETS MEDIAN 1 GRATE

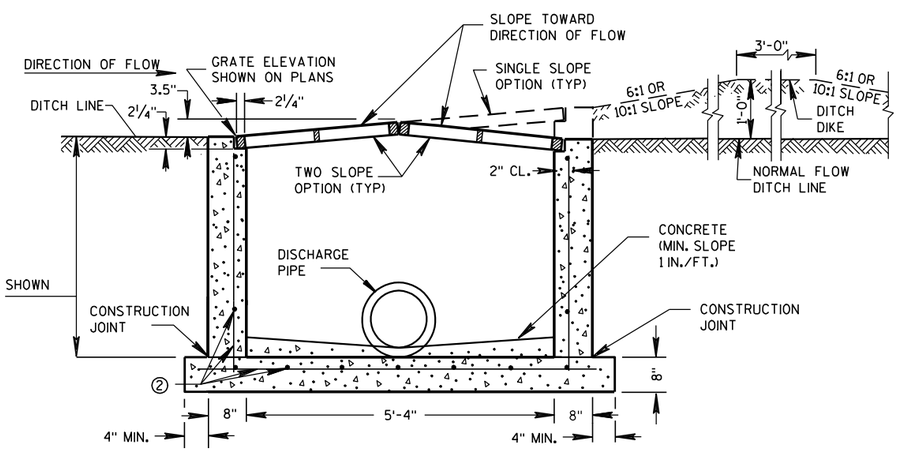

REINFORCED CAST-IN-PLACE CONCRETE SECTION B-B

INLETS MEDIAN 2 GRATE

GENERAL NOTES

DETAILS OF CONSTRUCTION, MATERIALS AND WORKMANSHIP NOT SHOWN ON THIS DRAWING SHALL CONFORM TO THE PERTINENT REQUIREMENTS OF THE STANDARD SPECIFICATIONS AND THE APPLICABLE SPECIAL PROVISIONS.

UNLESS OTHERWISE AUTHORIZED IN WRITING BY THE ENGINEER, THE CONTRACTOR SHALL NOT ORDER AND DELIVER PRECAST INLET UNITS REQUIRED FOR THE PROJECT UNTIL A LIST OF SIZES IS FURNISHED BY THE ENGINEER.

DETAILED DRAWINGS FOR PROPOSED ALTERNATE DESIGNS FOR INLETS WHICH MAY INCLUDE PRECAST REINFORCED CONCRETE INLETS, SHALL BE SUBMITTED TO THE ENGINEER FOR APPROVAL PROVIDING THAT SUCH ALTERNATE DESIGNS MAKE PROVISION FOR EQUIVALENT CAPACITY AND STRENGTH.

ALL MEDIAN INLETS ARE DESIGNATED ON THE PLANS AS "INLETS, 1G-MS", ETC. THE FIRST NUMBER AND LETTER DESIGNATE THE TYPE OF STRUCTURE, AND THE FOLLOWING LETTERS DESIGNATE THE TYPE OF COVER TO BE USED TO COMPRISE THE COMPLETE UNIT.

ALL BAR STEEL REINFORCEMENT SHALL BE EMBEDDED 2 INCHES CLEAR UNLESS OTHERWISE SHOWN OR NOTED.

PRECAST REINFORCED RISERS SHALL HAVE A TONGUE AND GROOVE JOINT WITH TONGUE UP OR DOWN.

ALL PRECAST INLET UNITS SHALL CONFORM TO THE PERTINENT REQUIREMENTS OF ASTM C 913.

MAXIMUM INSIDE PIPE DIAMETER DETERMINED BY 3" CLEARANCE ON EACH SIDE OF THE OUTSIDE WALL OF THE PIPE. SEE DETAIL "A". ASSUMES PIPE ENTERS PERPENDICULAR TO THE STRUCTURE.

① FOR PRECAST INLETS PROVIDE REINFORCING STEEL IN ACCORDANCE TO ASTM C 913.

② CONTRACTOR TO PROVIDE DRAWING(S) STAMPED BY A PROFESSIONAL ENGINEER FOR STEEL REINFORCING DESIGN FOR CAST-IN-PLACE STRUCTURES.

PIPE MATRIX

	MAXIMUM INSIDE PIPE DIAMETER	
INLET SIZE	WIDTH (IN)	LENGTH (IN)
1 GRATE	18	18
2 GRATE	18	42

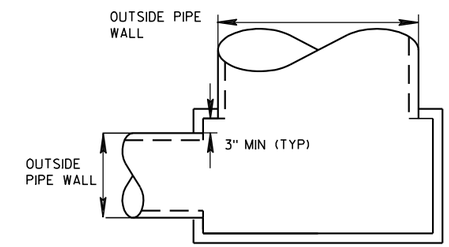

DETAIL "A"

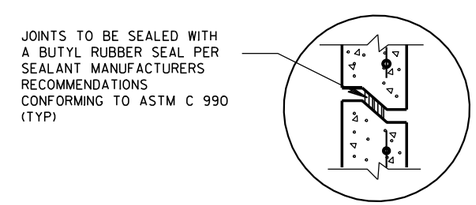

DETAIL "B"

INLETS MEDIAN 1 AND 2 GRATE

STATE OF WISCONSIN
DEPARTMENT OF TRANSPORTATION

APPROVED
6/5/2012 — DATE
/S/ Jerry H. Zogg — ROADWAY STANDARDS DEVELOPMENT ENGINEER
FHWA

6

S.D.D. 8 C 8-1

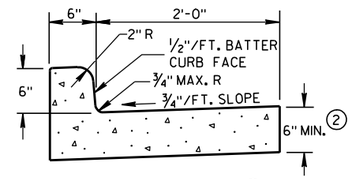

TYPES A & D ①

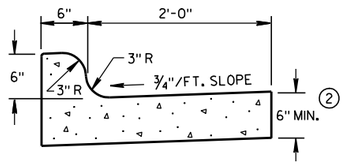

TYPES K & L ①

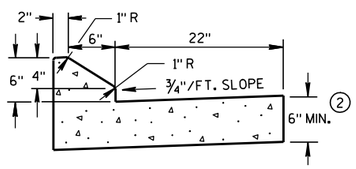

6" SLOPED CURB TYPES G & J ①

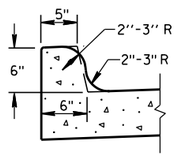

OPTIONAL CURB SHAPE FOR TYPES K & L ①

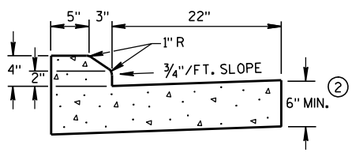

4" SLOPED CURB TYPES G & J ①

CONCRETE CURB & GUTTER 30"

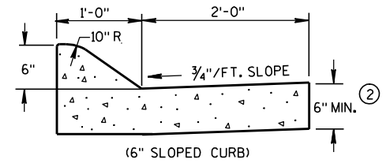

(6" SLOPED CURB)

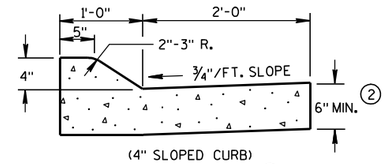

(4" SLOPED CURB)

TYPES A & D ①

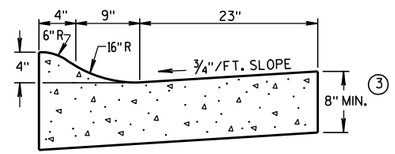

4" SLOPED CURB TYPES R & T ① ④

CONCRETE CURB & GUTTER 36"

GENERAL NOTES

DETAILS OF CONSTRUCTION, MATERIALS AND WORKMANSHIP NOT SHOWN ON THIS DRAWING SHALL CONFORM TO THE PERTINENT REQUIREMENTS OF THE CONTRACT.

PAVEMENT TIES AND TIE BARS SHALL BE EPOXY COATED IN CONFORMANCE WITH SUBSECTION 505.2.6.2 OF THE STANDARD SPECIFICATIONS.

INTEGRAL CURB & GUTTER SHALL CONFORM TO THE DETAILS SHOWN FOR CONCRETE CURB & GUTTER INCLUDING THE TRANSVERSE GUTTER SLOPE. A LONGITUDINAL CONSTRUCTION JOINT IS NOT REQUIRED WITH INTEGRAL CURB AND GUTTER.

WHERE THE TRANSVERSE JOINTS IN THE PAVEMENT ARE REQUIRED TO BE SEALED, THE JOINTS IN THE INTEGRAL CURB AND GUTTER SHALL BE SEALED TO THE FACE OF CURB WITH THE SAME TYPE OF SEALANT. THE COST OF FURNISHING AND INSTALLING THIS SEALANT SHALL BE INCIDENTAL TO THE ITEM CONCRETE CURB AND GUTTER.

UNLESS OTHERWISE SHOWN ON THE TYPICAL CROSS SECTIONS, THE BASE AGGREGATE AND COMMON EXCAVATION LIMITS ARE 2'-0" BEHIND THE BACK OF CURBS.

① TIE BARS ARE REQUIRED FOR CURB AND GUTTER TYPES A, G, K AND R.

② THE BOTTOM OF CURB AND GUTTER MAY BE CONSTRUCTED EITHER LEVEL OR PARALLEL TO THE SLOPE OF THE SUBGRADE OR BASE AGGREGATE PROVIDED A 6" MINIMUM GUTTER THICKNESS IS MAINTAINED.

③ THE BOTTOM OF CURB AND GUTTER MAY BE CONSTRUCTED EITHER LEVEL OR PARALLEL TO THE SLOPE OF THE SUBGRADE OR BASE AGGREGATE PROVIDED A 8" MINIMUM GUTTER THICKNESS IS MAINTAINED.

④ THE FACE OF CURB IS 6" FROM THE BACK OF CURB.

⑤ WHEN REVERSE SLOPE GUTTER IS REQUIRED, THE LOCATION(S) WILL BE SHOWN ELSEWHERE IN THE PLAN.

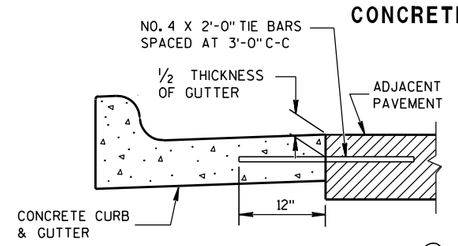

TYPICAL TIE BAR LOCATION ①

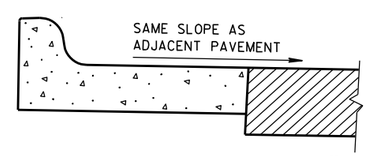

REVERSE SLOPE GUTTER ⑤
(TYPICAL FOR ALL CURB & GUTTER TYPES)

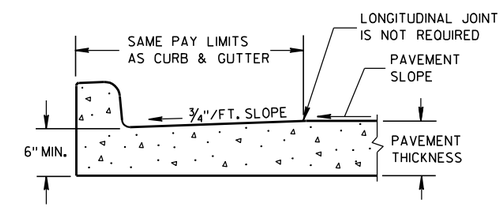

PARTIAL SECTION OF PAVEMENT WITH INTEGRAL CURB & GUTTER

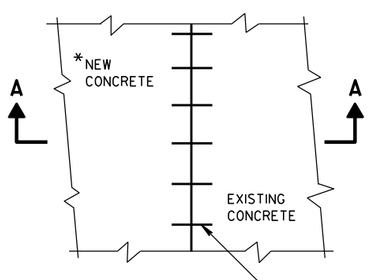

*NEW CURB & GUTTER, SURFACE DRAINS, CONCRETE PAVEMENT OR OTHER NEW CONCRETE.

PLAN VIEW

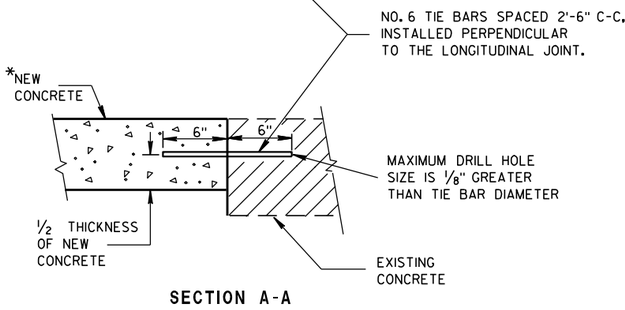

SECTION A-A

TIE BARS DRILLED INTO EXISTING PAVEMENT

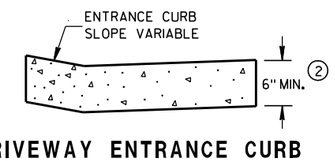

DRIVEWAY ENTRANCE CURB
(WHEN DIRECTED BY THE ENGINEER)

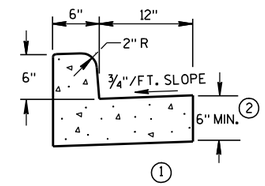

① TYPES A & D

CONCRETE CURB & GUTTER 18"

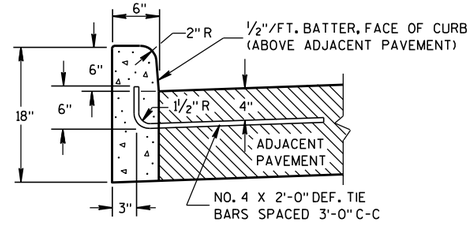

① TYPES A & D

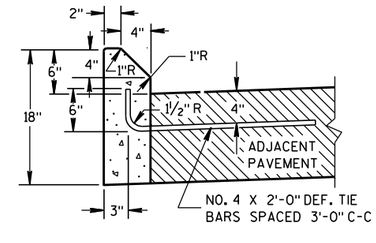

① TYPES G & J

CONCRETE CURB

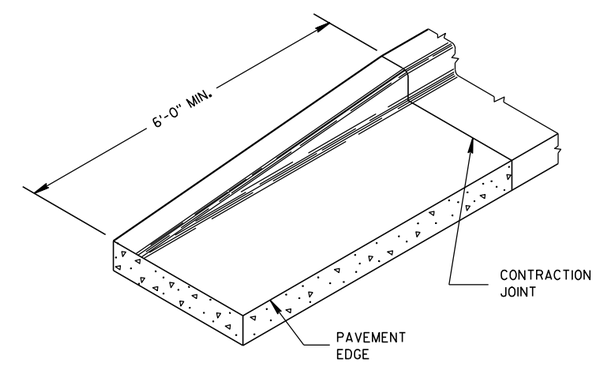

END SECTION CURB & GUTTER

CONCRETE CURB, CONCRETE CURB & GUTTER AND TIES

STATE OF WISCONSIN
DEPARTMENT OF TRANSPORTATION

APPROVED
9/4/08 — DATE
/S/ Jerry H. ---- — ROADWAY STANDARDS ENGINEER
FHWA

6

S.D.D. 8 D 1-17

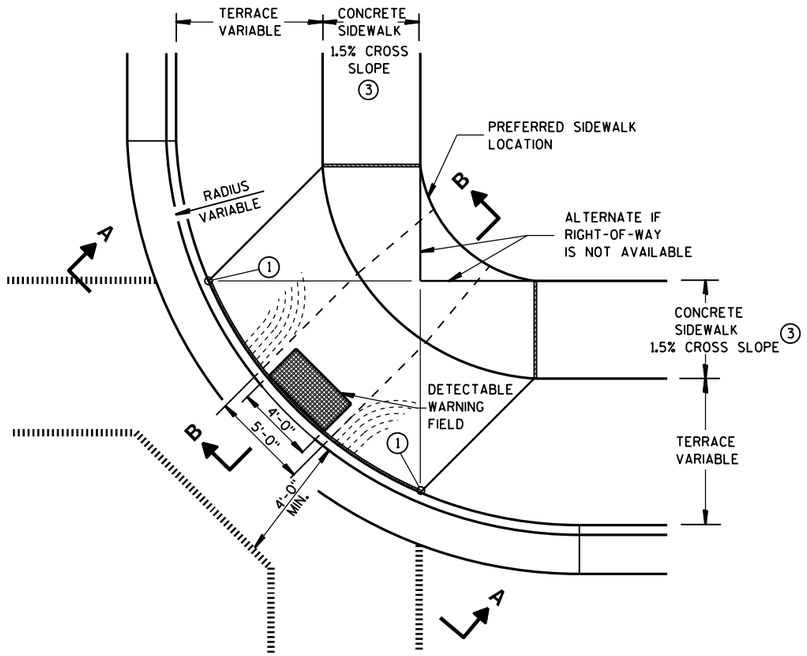

PLAN VIEW

TYPE 1 RAMP

(CENTER OF CORNER RADIUS)

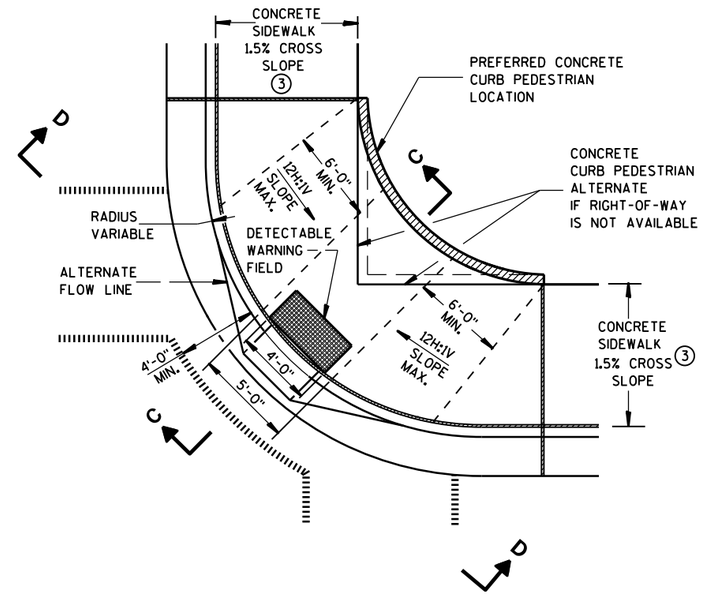

PLAN VIEW

TYPE 1-A RAMP

(NO TERRACE)

GENERAL NOTES

DETAILS OF CONSTRUCTION, MATERIALS AND WORKMANSHIP NOT SHOWN ON THIS DRAWING SHALL CONFORM TO THE PERTINENT REQUIREMENTS OF THE STANDARD SPECIFICATIONS AND THE APPLICABLE SPECIAL PROVISIONS.

RAMPS SHALL BE BUILT AT 12H:1V OR FLATTER. WHEN NECESSARY, THE SIDEWALK ELEVATION MAY BE LOWERED TO MEET THE HIGH POINT ON THE RAMP.

TYPE 1 RAMPS SHALL HAVE A NORMAL SIDEWALK APRON AND CURB ON BOTH SIDES OF RAMP.

DETECTABLE WARNING FIELD SHALL BE MEASURED AND PAID BY THE SQUARE FOOT AS "CURB RAMP DETECTABLE WARNING FIELD". THE CONCRETE PEDESTRIAN CURB, IF NEEDED, SHALL BE MEASURED AND PAID BY THE LINEAL FOOT AS "CONCRETE CURB PEDESTRIAN". CONCRETE SIDEWALK IN THE CURB RAMP AREA SHALL BE MEASURED AND PAID BY THE SQUARE FOOT AS CONCRETE SIDEWALK, INCLUDING THE AREA UNDER THE DETECTABLE WARNING FIELD.

SELECT CURB RAMP DETECTABLE WARNING FIELD MATERIALS AND DEVICES FROM THE DEPARTMENT'S APPROVED MATERIALS LIST. THE COLOR OF THE DETECTABLE WARNING FIELD IS SPECIFIED ELSEWHERE AND IS INCIDENTAL TO THE BID ITEM OF "CURB RAMP DETECTABLE WARNING FIELD".

DETECTABLE WARNING FIELDS THAT ARE INSTALLED AS A GROUP OR SIDE BY SIDE, SHALL BE FROM THE SAME MANUFACTURER.

SURFACE TEXTURE OF THE RAMP SHALL BE OBTAINED BY COARSE BROOMING TRANSVERSE TO THE SLOPE OF THE RAMP.

① THIS POINT IS AN EXTENSION OF OUTSIDE EDGE OF APPROACHING SIDEWALK WHERE IT MEETS THE BACK OF CONCRETE CURB.

② GRADE CHANGE BETWEEN GUTTER FLAG SLOPE AND THE CURB RAMP SLOPE SHALL NOT EXCEED 11%. PROVIDE DRAINAGE AWAY FROM CURB RAMP AT GUTTER FLAG INTERFACE.

③ ±0.5% CONSTRUCTION TOLERANCE IN SIDEWALK CROSS SLOPE. THE SIDEWALK CROSS SLOPE SHALL NOT EXCEED 2% WITHOUT PRIOR APPROVAL FROM THE ENGINEER.

LEGEND

- ½" EXPANSION JOINT-SIDEWALK
- CONTRACTION JOINT FIELD LOCATED
- PAVEMENT MARKING CROSSWALK (WHITE)
- ALTERNATIVE LAYOUT

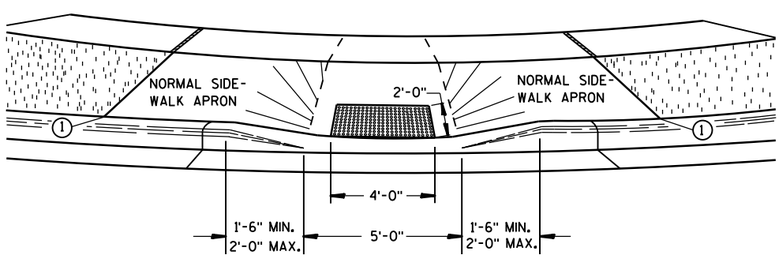

VIEW A-A

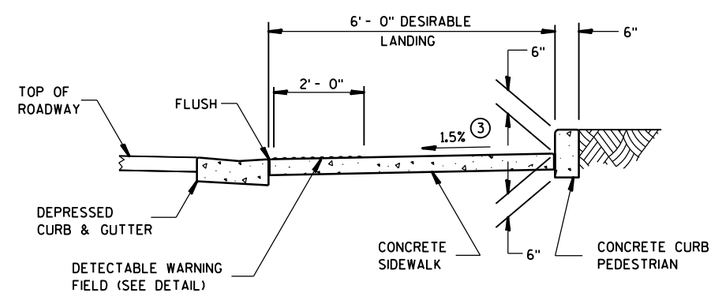

SECTION C-C

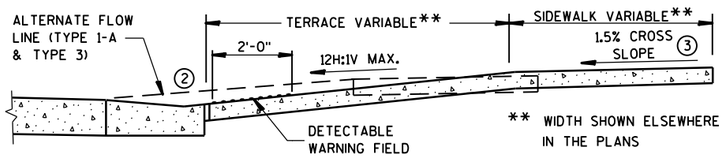

SECTION B-B

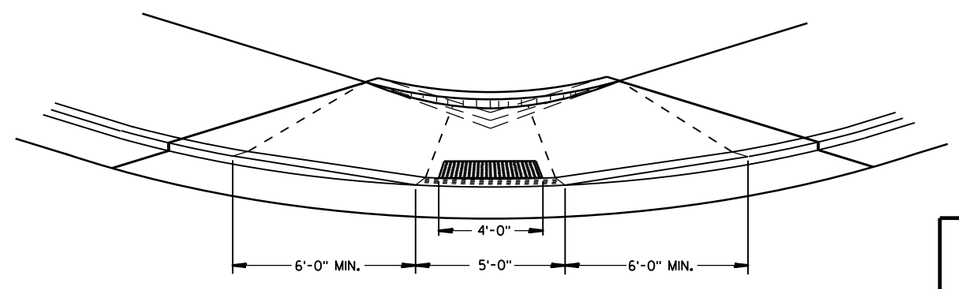

VIEW D-D

CURB RAMPS
TYPES 1 AND 1-A

STATE OF WISCONSIN
DEPARTMENT OF TRANSPORTATION

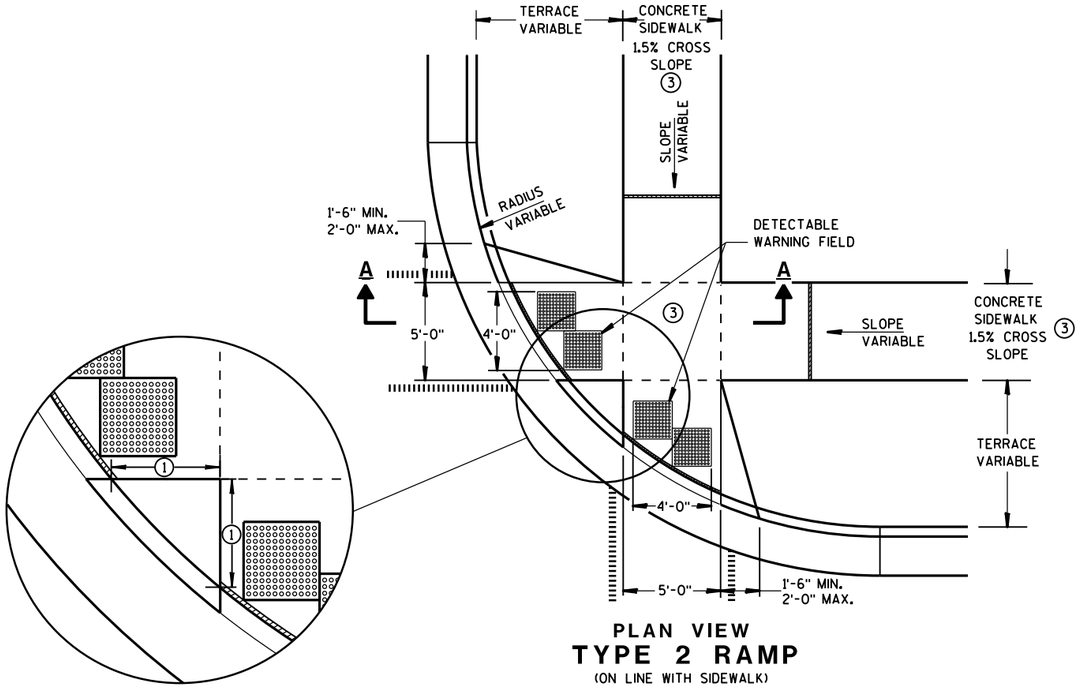

PLAN VIEW
TYPE 2 RAMP
(ON LINE WITH SIDEWALK)

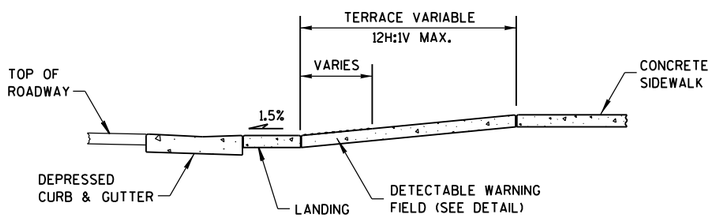

SECTION A-A

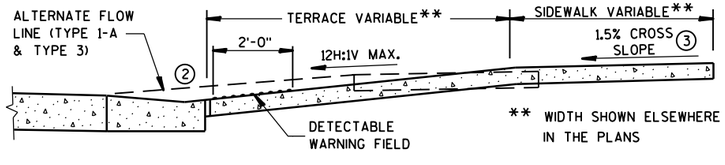

SECTION B-B

GENERAL NOTES

USE THE TYPE 3 RAMP ONLY WHEN A TYPE 1 OR TYPE 2 CANNOT BE ACHIEVED BECAUSE OF FIELD CONDITIONS.

DETECTABLE WARNING FIELDS THAT ARE INSTALLED AS A GROUP OR SIDE BY SIDE, SHALL BE FROM THE SAME MANUFACTURER.

① WHEN THIS DISTANCE IS LESS THAN 6'-0" IT MAY BE DIFFICULT TO ACHIEVE A 12H:1V SLOPE, OR FLATTER, ON THE RAMP. REDUCE CURB HEIGHT IN TRIANGLE AREA TO ACHIEVE 12H:1V SLOPE, OR FLATTER, ON RAMP. 2" MINIMUM CURB HEIGHT.

② GRADE CHANGE BETWEEN GUTTER FLAG SLOPE AND THE CURB RAMP SLOPE SHALL NOT EXCEED 11%. PROVIDE DRAINAGE AWAY FROM CURB RAMP AT GUTTER FLAG INTERFACE.

③ ±0.5% CONSTRUCTION TOLERANCE IN SIDEWALK CROSS SLOPE. THE SIDEWALK CROSS SLOPE SHALL NOT EXCEED 2% WITHOUT PRIOR APPROVAL FROM THE ENGINEER.

LEGEND

- ½" EXPANSION JOINT-SIDEWALK
- CONTRACTION JOINT FIELD LOCATED
- PAVEMENT MARKING CROSSWALK (WHITE)
- ALTERNATIVE LAYOUT

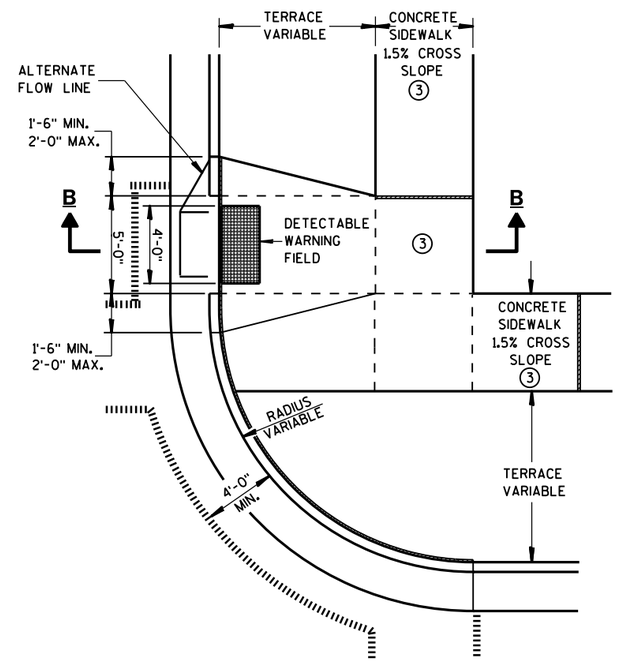

PLAN VIEW
TYPE 3 RAMP
(OUTSIDE OF CROSSWALK AREA)

6

6

CURB RAMPS
TYPES 2 AND 3

STATE OF WISCONSIN
DEPARTMENT OF TRANSPO

S.D.D. 8 D 5-15b

S.D.D. 8 D 5-15b

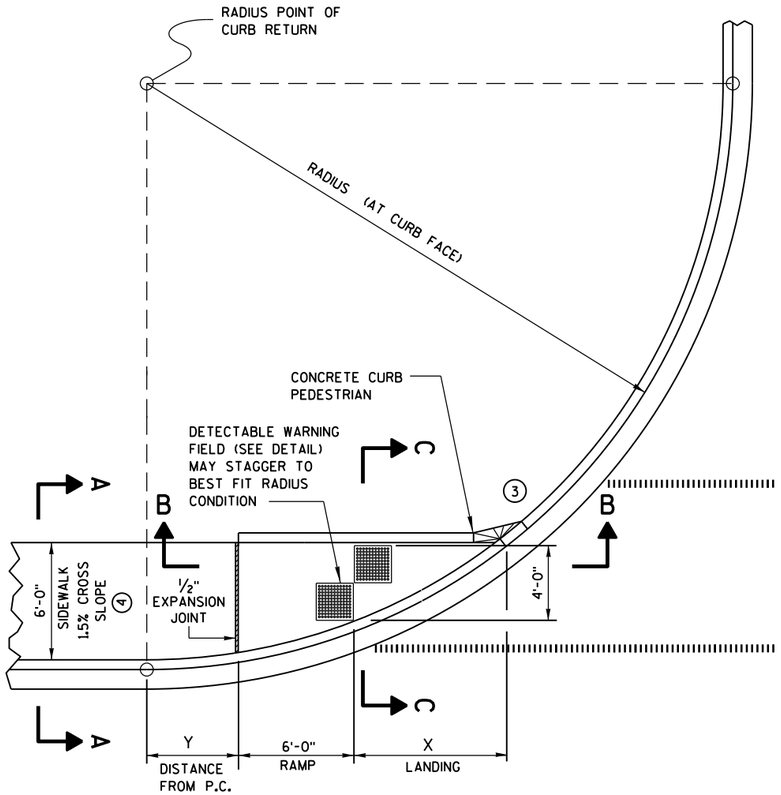

CURB RAMP TYPE 4A
PLAN VIEW

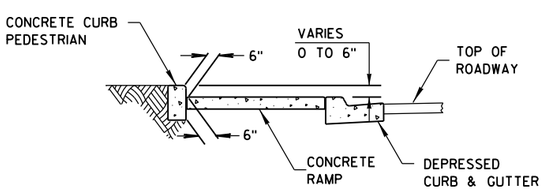

SECTION C-C FOR TYPE 4A

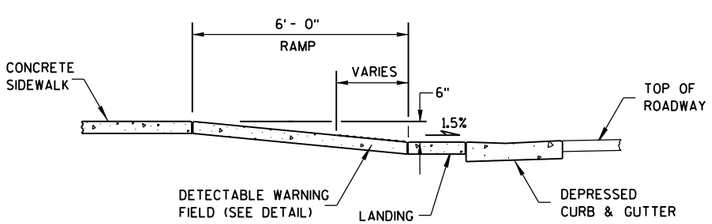

SECTION B-B FOR TYPE 4A

RADIUS (AT CURB FACE)	X	Y
20 FEET	6'-1¾"	2'-7¼"
30 FEET	7'-11¾"	4'-8¼"
40 FEET	9'-5¼"	6'-5"
50 FEET	10'-8¾"	7'-11¼"
60 FEET	11'-10¼"	9'-3½"

INTERMEDIATE RADII CAN BE INTERPOLATED

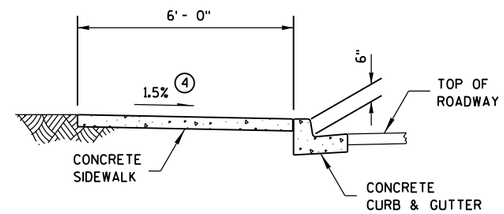

SECTION A-A FOR TYPE 4A

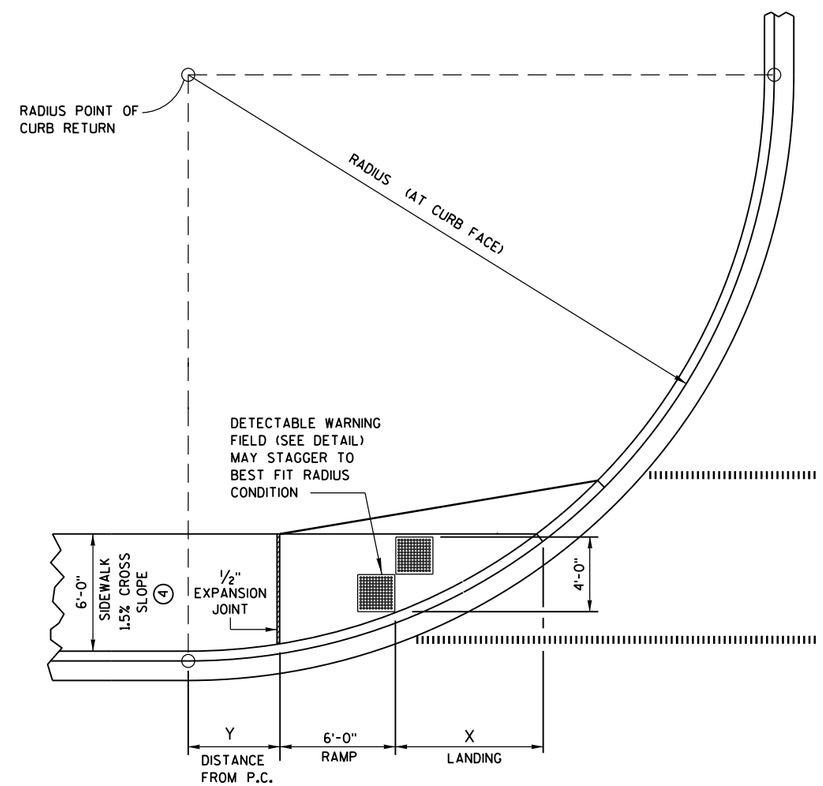

CURB RAMP TYPE 4A1
PLAN VIEW

GENERAL NOTES

AVOID PLACING DRAINAGE STRUCTURES, JUNCTION BOXES OR OTHER OBSTRUCTIONS IN FRONT OF RAMP ACCESS AREAS.

RAMP SLOPES SHALL NOT BE STEEPER THAN 12:1.

DETECTABLE WARNING FIELDS THAT ARE INSTALLED AS A GROUP OR SIDE BY SIDE, SHALL BE FROM THE SAME MANUFACTURER.

(3) INSTALL TRANSITION NOSE. (INCIDENTAL TO OTHER PAY ITEMS.) DO NOT MARK TRANSITION NOSE.

(4) ±0.5% CONSTRUCTION TOLERANCE IN SIDEWALK CROSS SLOPE. THE SIDEWALK CROSS SLOPE SHALL NOT EXCEED 2% WITHOUT PRIOR APPROVAL FROM THE ENGINEER.

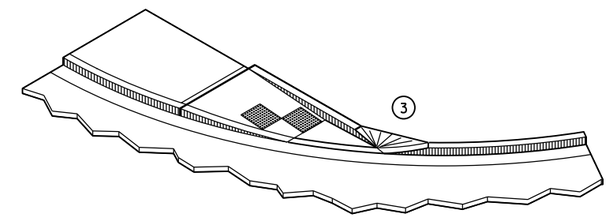

ISOMETRIC VIEW FOR TYPE 4A

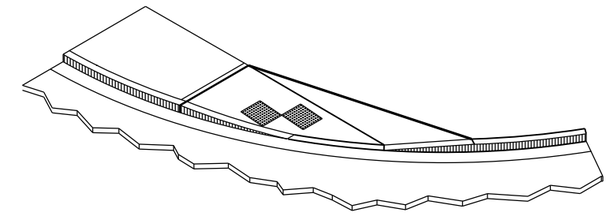

ISOMETRIC VIEW FOR TYPE 4A1

LEGEND

- ½" EXPANSION JOINT-SIDEWALK
- CONTRACTION JOINT FIELD LOCATED
- PAVEMENT MARKING CROSSWALK (WHITE)

CURB RAMPS
TYPES 4A AND 4A1

STATE OF WISCONSIN
DEPARTMENT OF TRANSPOR

6

6

S.D.D. 8 D 5-15c

S.D.D. 8 D 5-15c

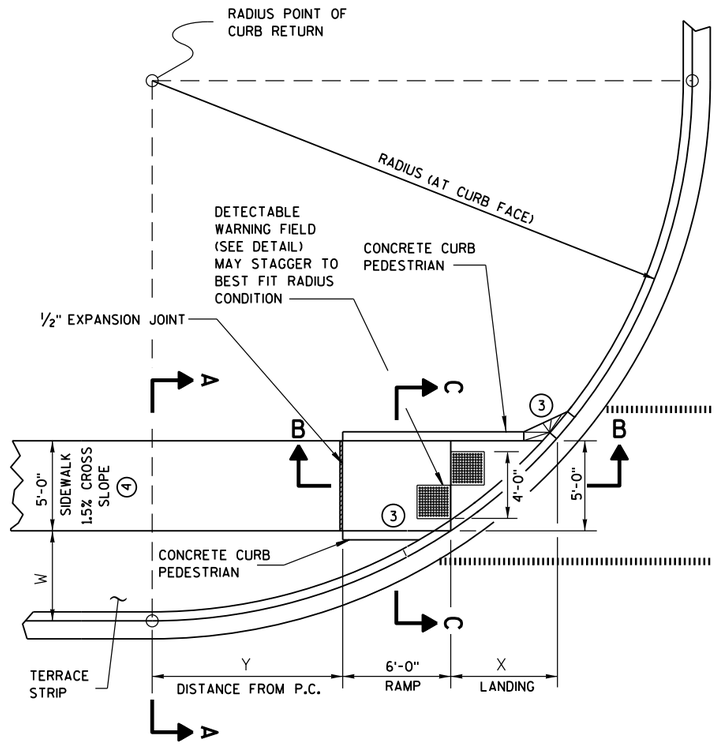

CURB RAMP TYPE 4B
PLAN VIEW

LEGEND

- ½" EXPANSION JOINT-SIDEWALK
- CONTRACTION JOINT FIELD LOCATED
- PAVEMENT MARKING CROSSWALK (WHITE)

RADIUS (AT CURB FACE)	W = 3' - 0"		W = 4' - 0"		W = 5' - 0"		W = 6' - 0"		W = 7' - 0"	
	X	Y	X	Y	X	Y	X	Y	X	Y
20 FEET	5'-5½"	4'-6½"	4'-8½"	6'-0"	4'-1"	7'-2¾"	3'-7"	8'-3½"	3'-1½"	9'-2½"
30 FEET	7'-3¾"	7'-1"	6'-5½"	8'-11½"	5'-9¼"	10'-7"	5'-2½"	12'-0"	4'-8¾"	13'-3¼"
40 FEET	8'-9½"	9'-2½"	7'-10"	11'-5¼"	7'-1"	13'-4½"	6'-5¾"	15'-¾"	5'-11½"	16'-7¼"
50 FEET	10'-¾"	11'-¾"	9'-¼"	13'-7¼"	8'-2½"	15'-9½"	7'-6½"	17'-9"	6'-11¾"	19'-6¼"
60 FEET	11'-2½"	12'-8¾"	10'-¾"	15'-6½"	9'-2¼"	17'-11¾"	8'-5¾"	20'-1¾"	7'-10½"	22'-1½"

INTERMEDIATE RADII CAN BE INTERPOLATED

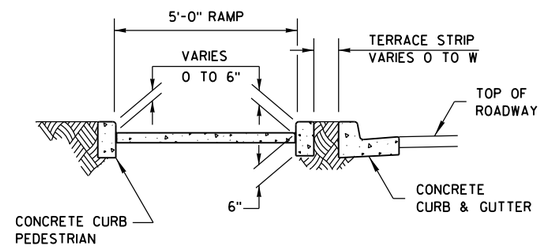

SECTION C-C FOR TYPE 4B

GENERAL NOTES

AVOID PLACING DRAINAGE STRUCTURES, JUNCTION BOXES OR OTHER OBSTRUCTIONS IN FRONT OF RAMP ACCESS AREAS.

RAMP SLOPES SHALL NOT BE STEEPER THAN 12:1.

DETECTABLE WARNING FIELDS THAT ARE INSTALLED AS A GROUP OR SIDE BY SIDE, SHALL BE FROM THE SAME MANUFACTURER.

(3) INSTALL TRANSITION NOSE. (INCIDENTAL TO OTHER PAY ITEMS.) DO NOT MARK TRANSITION NOSE.

(4) ±0.5% CONSTRUCTION TOLERANCE IN SIDEWALK CROSS SLOPE. THE SIDEWALK CROSS SLOPE SHALL NOT EXCEED 2% WITHOUT PRIOR APPROVAL FROM THE ENGINEER.

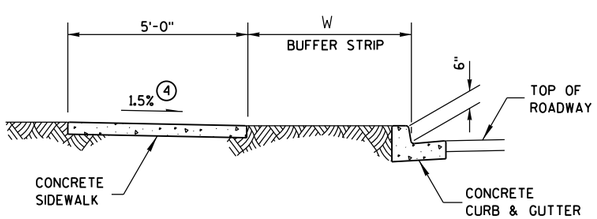

SECTION A-A FOR TYPE 4B

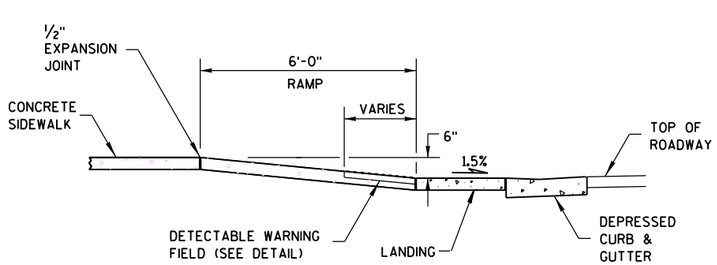

SECTION B-B FOR TYPE 4B

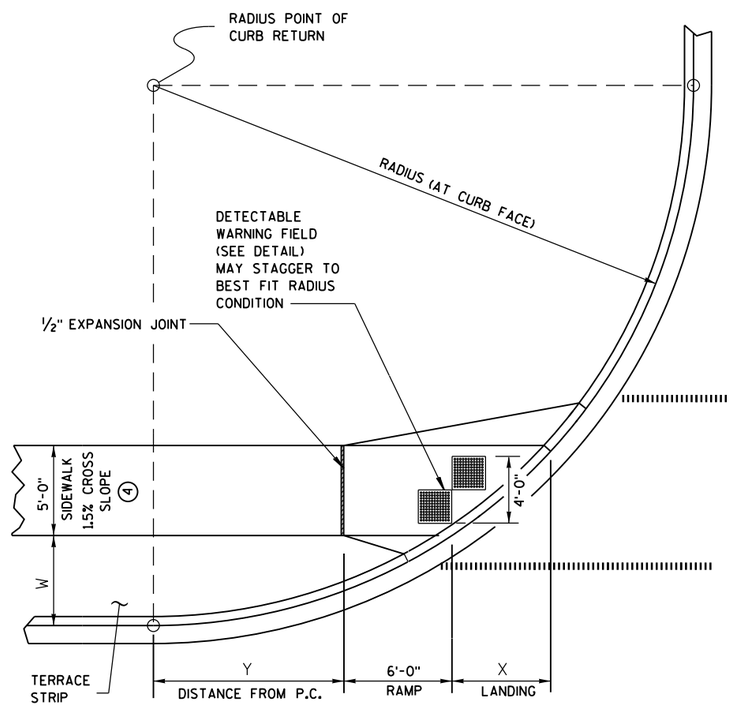

CURB RAMP TYPE 4B1
PLAN VIEW

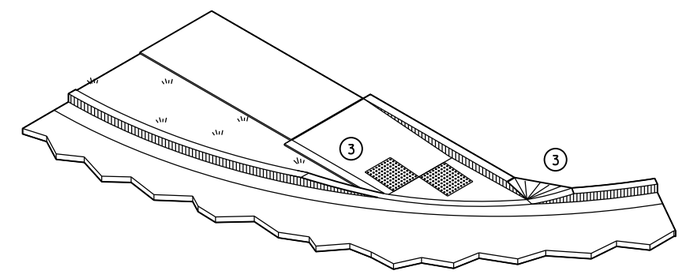

ISOMETRIC VIEW FOR TYPE 4B

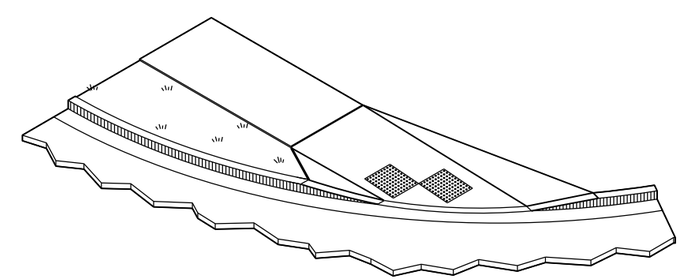

ISOMETRIC VIEW FOR TYPE 4B1

CURB RAMPS
TYPE 4B AND 4B1

STATE OF WISCONSIN
DEPARTMENT OF TRANSPORTATION

6

S.D.D. 8 D 5-15d

6

S.D.D. 8 D 5-15d

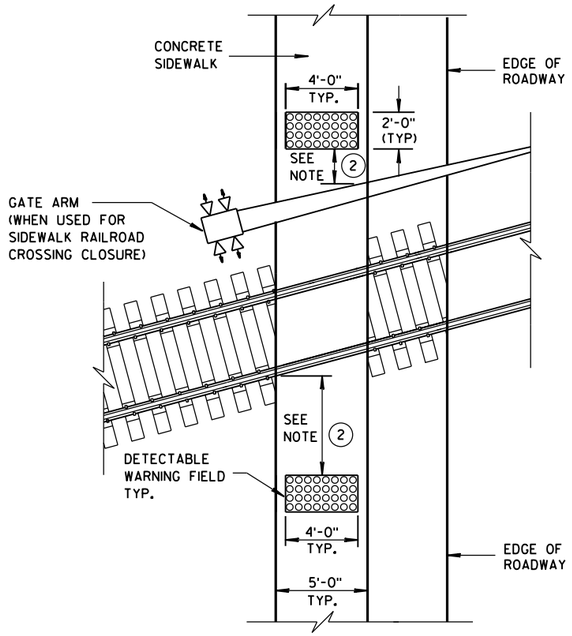

TYPE 8
DETECTABLE WARNINGS AT RAILROAD CROSSING

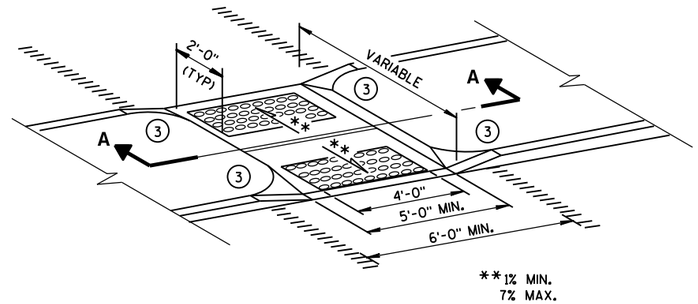

MEDIAN ISLAND
NON-ELEVATED CROSSING
TYPE 5

GENERAL NOTES

SIDEWALK CROSS SLOPE SHALL NOT EXCEED 2%.

DETECTABLE WARNING FIELDS THAT ARE INSTALLED AS A GROUP OR SIDE BY SIDE, SHALL BE FROM THE SAME MANUFACTURER.

1. SLOPE SIDEWALK TOWARD LANDING AS SHOWN WHERE THERE IS NO TERRACE OR WHERE THE TERRACE WIDTH IS LESS THAN 6 FEET WIDE.
2. THE EDGE OF THE DETECTABLE WARNING FIELD NEAREST TO A RAILROAD CROSSING SHALL BE 1.5 FEET ± 0.1' FROM THE FACE OF THE GATE ARM IF THE GATE ARM EXTENDS ACROSS THE SIDEWALK. WHERE THERE IS NO PEDESTRIAN GATE, THE EDGE OF THE DETECTABLE WARNING FIELD NEAREST TO THE RAILROAD CROSSING SHALL BE 15 FEET FROM THE NEAREST RAIL.
3. INSTALL TRANSITION NOSE. (INCIDENTAL TO OTHER PAY ITEMS.) DO NOT MARK TRANSITION NOSE.
4. ±0.5% CONSTRUCTION TOLERANCE IN SIDEWALK CROSS SLOPE. THE SIDEWALK CROSS SLOPE SHALL NOT EXCEED 2% WITHOUT PRIOR APPROVAL FROM THE ENGINEER.

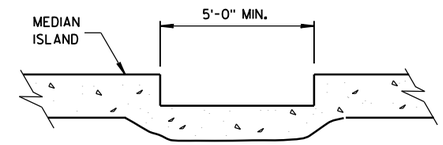

SECTION A-A

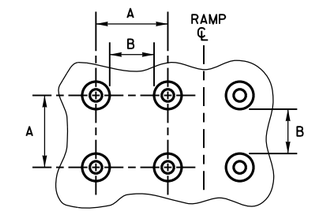

PLAN VIEW

	MIN.	MAX.
A	1.6"	2.4"
B	0.65"	1.5"
C	*	*
D	0.9"	1.4"

* THE C DIMENSION IS 50% TO 65% OF THE D DIMENSION.

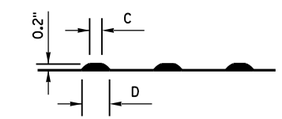

ELEVATION VIEW

TRUNCATED DOMES
DETECTABLE WARNING PATTERN DETAIL

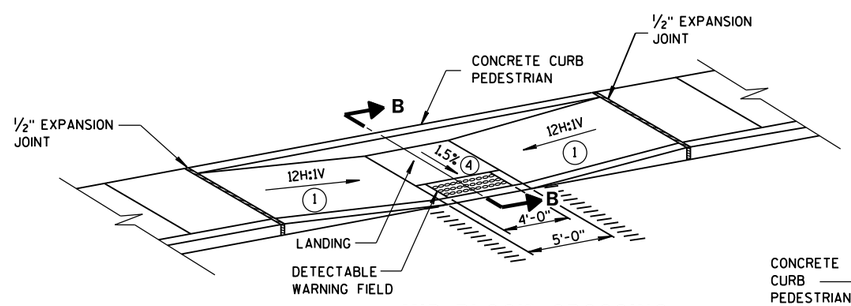

MID-BLOCK CROSSING
TYPE 7A

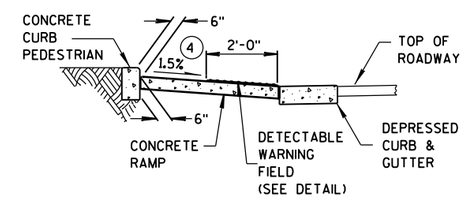

SECTION B-B

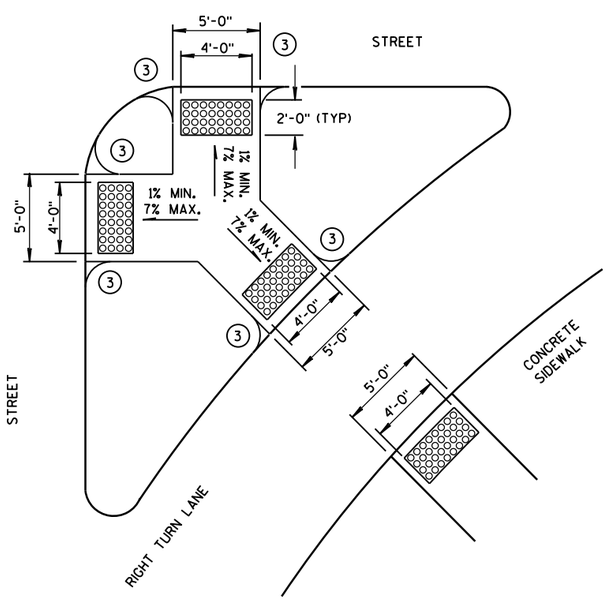

TYPE 6
DETECTABLE WARNING AT ISLANDS

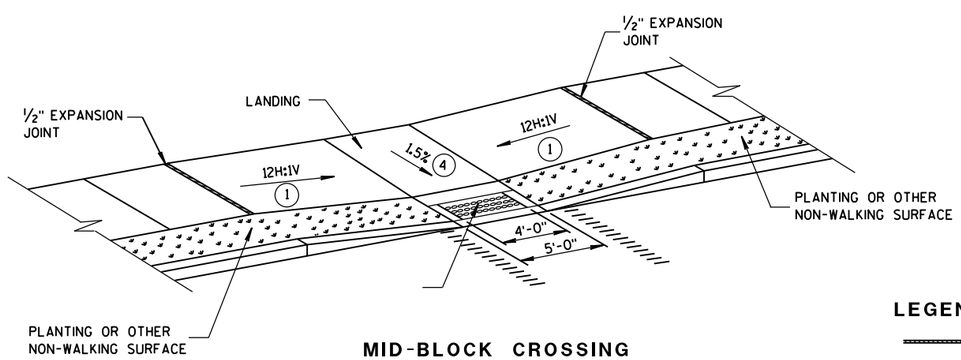

MID-BLOCK CROSSING
TYPE 7B

NOTE: THESE PARALLEL AND PARALLEL/PERPENDICULAR CURB RAMPS MAY BE USED AT INTERSECTIONS AND MID BLOCK LOCATIONS.

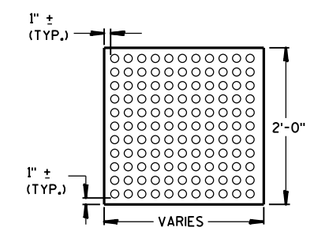

PLAN VIEW
DETECTABLE WARNING FIELD (TYPICAL)

LEGEND

- ½" EXPANSION JOINT-SIDEWALK
- CONTRACTION JOINT FIELD LOCATED
- PAVEMENT MARKING CROSSWALK (WHITE)

CURB RAMPS
TYPES 5, 6, 7A, 7B & 8

STATE OF WISCONSIN
DEPARTMENT OF TRANSPORTATION

APPROVED
2-6-2013 — DATE
/S/ Jerry H. Zogg — ROADWAY STANDARDS DEVELOPMENT ENGINEER
FHWA

6

6

S.D.D. 8 D 5-15e

S.D.D. 8 D 5-15e

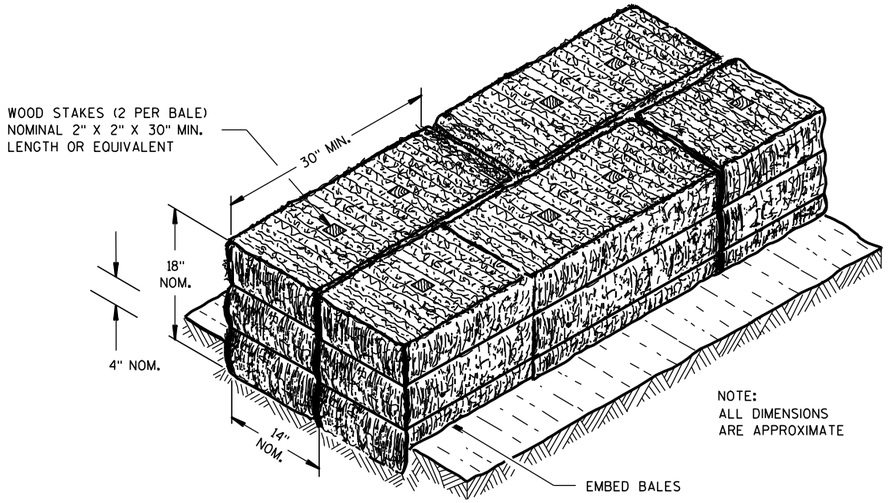

SECTION A-A

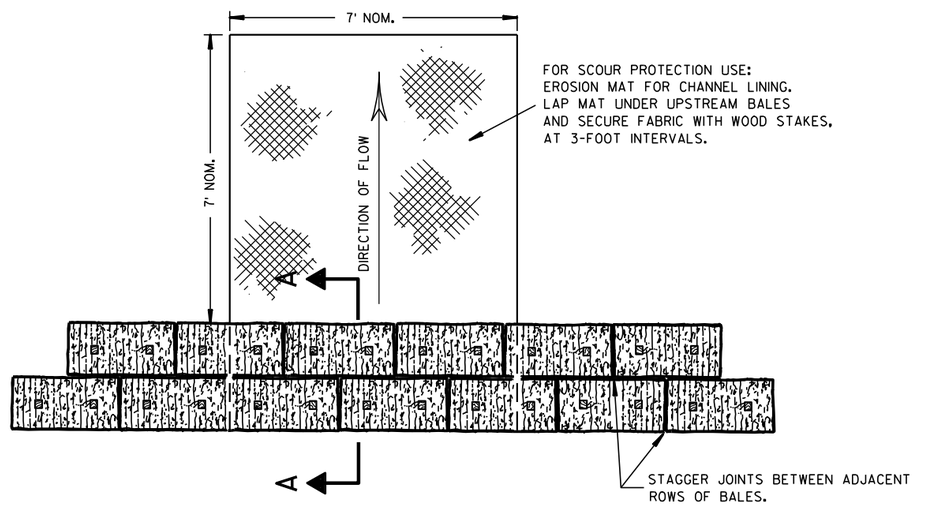

PLAN VIEW

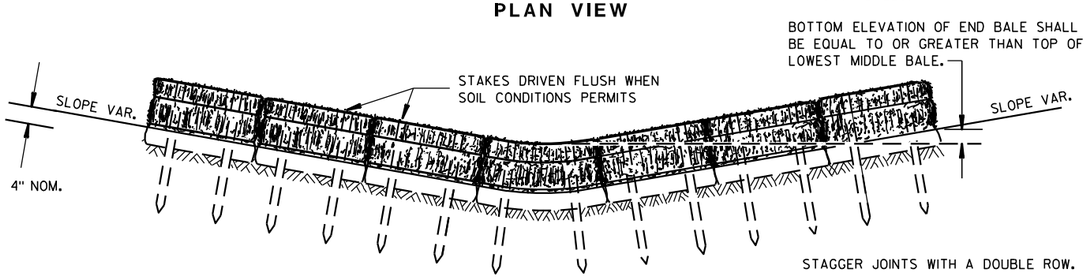

FRONT ELEVATION

TEMPORARY DITCH CHECK USING EROSION BALES ①

GENERAL NOTES

DETAILS OF CONSTRUCTION, MATERIALS AND WORKMANSHIP NOT SHOWN ON THIS DRAWING SHALL CONFORM TO THE PERTINENT REQUIREMENTS OF THE STANDARD SPECIFICATIONS AND THE APPLICABLE SPECIAL PROVISIONS.

① TEMPORARY DITCH CHECKS EITHER EROSION BALES OR MANUFACTURED SHALL BE PAID FOR UNDER THE BID ITEM OF TEMPORARY DITCH CHECK. THE DEPARTMENT WILL NOT PAY FOR TEMPORARY DITCH CHECKS CONSTRUCTED OF A SINGLE ROW OF EROSION BALES.

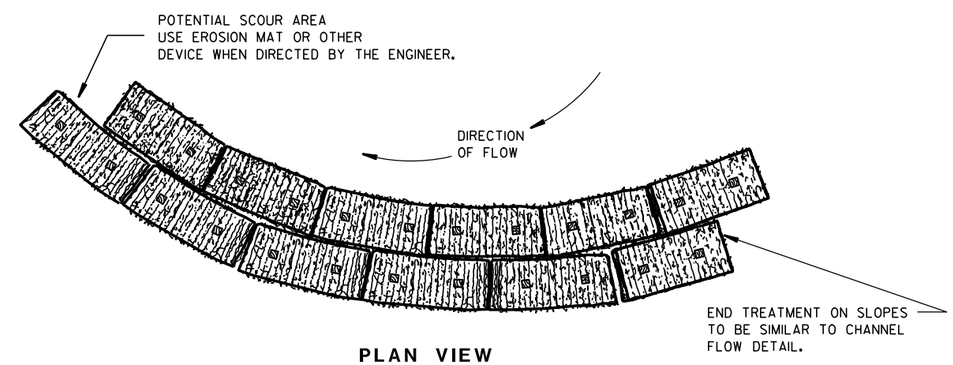

PLAN VIEW

WHEN ALTERING THE DIRECTION OF FLOW

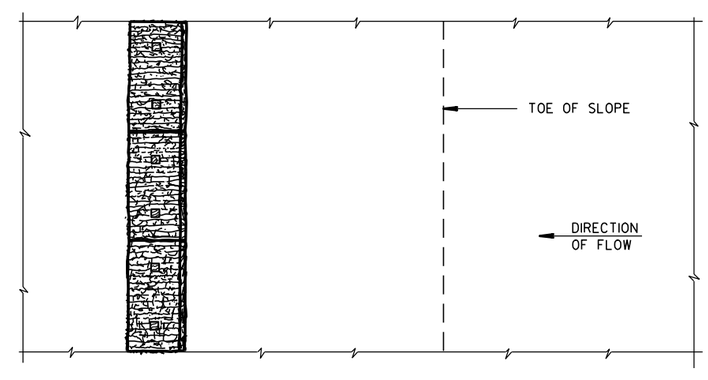

PLAN VIEW

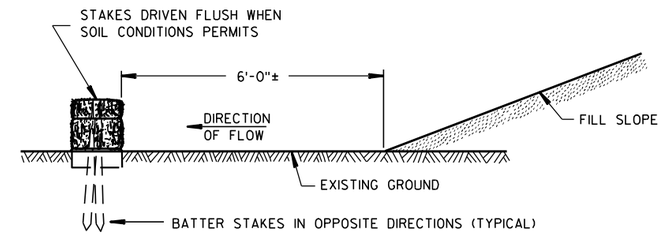

FRONT ELEVATION

WHEN EXISTING GROUND SLOPES AWAY FROM FILL SLOPE

EROSION BALES FOR SHEET FLOW

TYPICAL INSTALLATIONS OF EROSION BALES / TEMPORARY DITCH CHECKS

STATE OF WISCONSIN
DEPARTMENT OF TRANSPORTATION

APPROVED
6/04/02 — DATE
/S/ Beth Cann — CHIEF ROADWAY DEVELOPMENT ENGINEER
FHWA

6

6

S.D.D. 8 E 8-3

S.D.D. 8 E 8-3

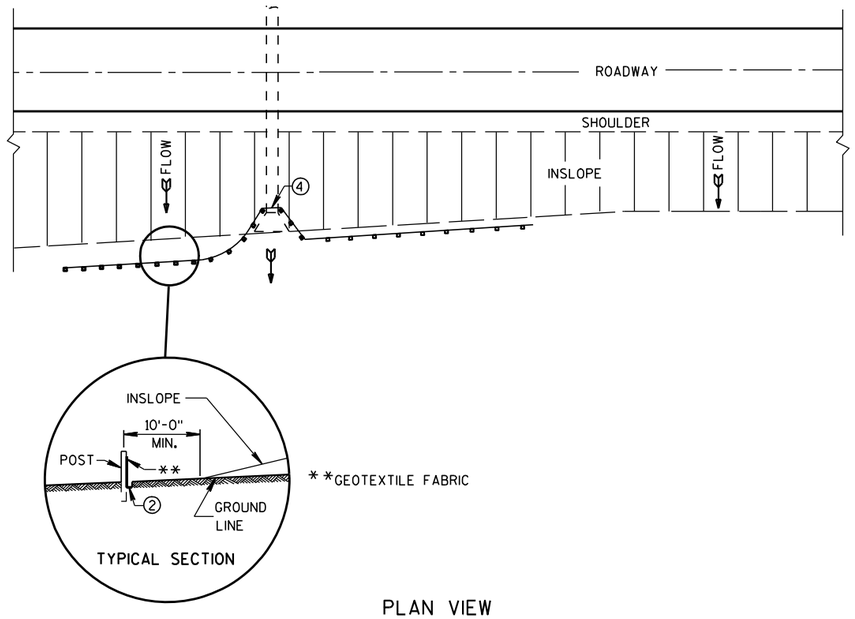

PLAN VIEW

TYPICAL APPLICATION OF SILT FENCE

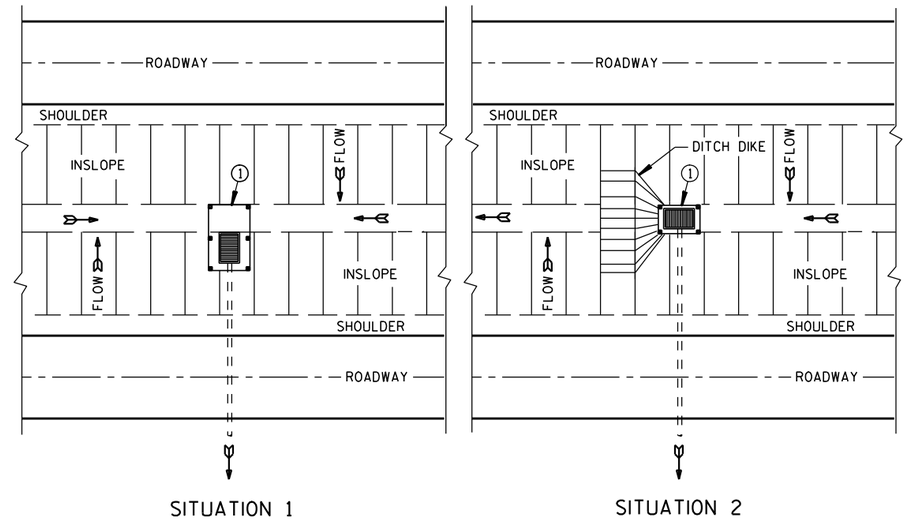

PLAN VIEW

SILT FENCE AT MEDIAN SURFACE DRAINS

GENERAL NOTES

DETAILS OF CONSTRUCTION NOT SHOWN ON THIS DRAWING SHALL CONFORM TO THE PERTINENT REQUIREMENTS OF THE STANDARD SPECIFICATIONS AND APPLICABLE SPECIAL PROVISIONS.

① HORIZONTAL BRACE REQUIRED WITH 2" X 4" WOODEN FRAME OR EQUIVALENT AT TOP OF POSTS.

② FOR MANUAL INSTALLATIONS THE TRENCH SHALL BE A MINIMUM OF 4" WIDE & 6" DEEP TO BURY AND ANCHOR THE GEOTEXTILE FABRIC. FOLD MATERIAL TO FIT TRENCH AND BACKFILL & COMPACT TRENCH WITH EXCAVATED SOIL.

③ WOOD POSTS SHALL BE A MINIMUM SIZE OF 1⅛" X 1⅛" OF OAK OR HICKORY.

④ SILT FENCE TO EXTEND ACROSS THE TOP OF THE PIPE.

⑤ CONSTRUCT SILT FENCE FROM A CONTINUOUS ROLL IF POSSIBLE BY CUTTING LENGTHS TO AVOID JOINTS. IF A JOINT IS NECESSARY USE ONE OF THE FOLLOWING TWO METHODS; A) OVERLAP THE END POSTS AND TWIST, OR ROTATE, AT LEAST 180 DEGREES. B) HOOK THE END OF EACH SILT FENCE LENGTH.

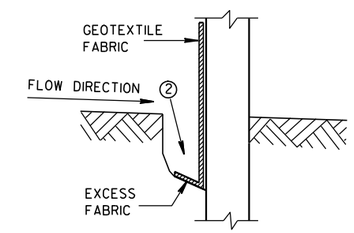

TRENCH DETAIL

NOTE: ADDITIONAL POST DEPTH OR TIE BACKS MAY BE REQUIRED IN UNSTABLE SOILS

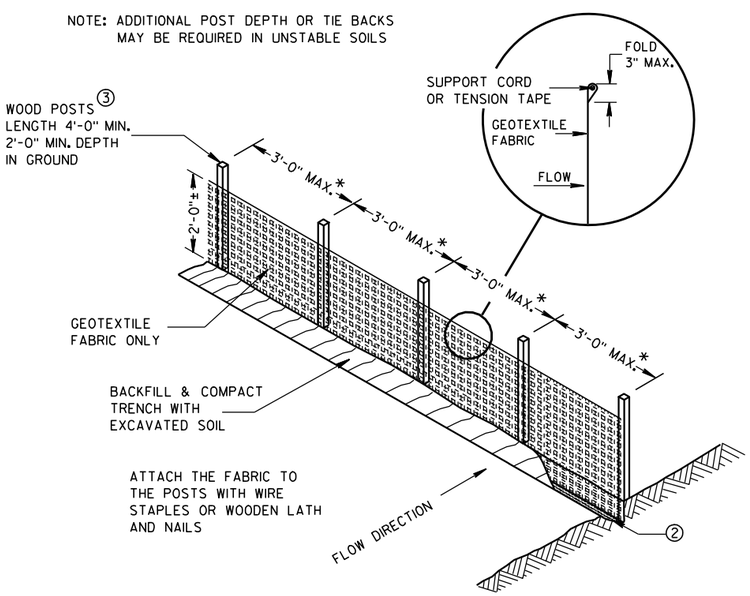

*NOTE: 8'-0" POST SPACING ALLOWED IF A WOVEN GEOTEXTILE FABRIC IS USED.

SILT FENCE

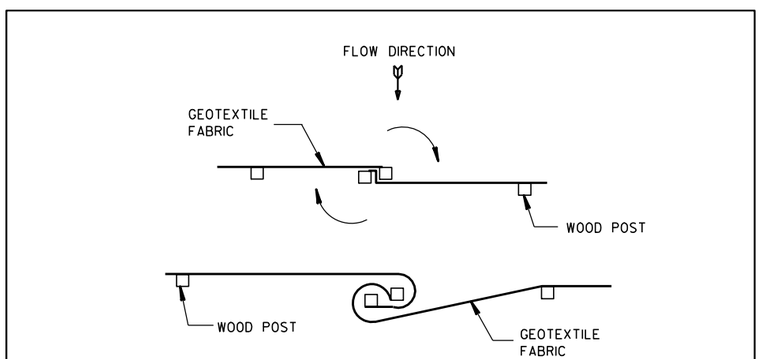

TWIST METHOD

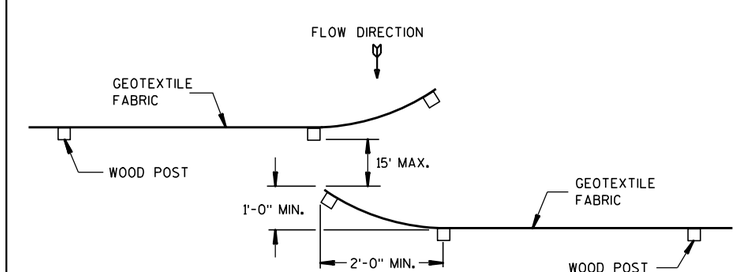

HOOK METHOD

JOINING TWO LENGTHS OF SILT FENCE ⑤

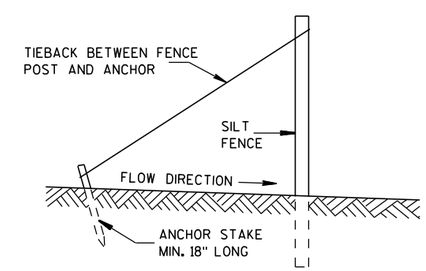

SILT FENCE TIE BACK

(WHEN REQUIRED BY THE ENGINEER)

SILT FENCE
STATE OF WISCONSIN DEPARTMENT OF TRANSPORTATION
APPROVED 4-29-05 /S/ Beth Cann----- DATE CHIEF ROADWAY DEVELOP ENGINEER FHWA

6

6

S.D.D. 8 E 9-6

S.D.D. 8 E 9-6

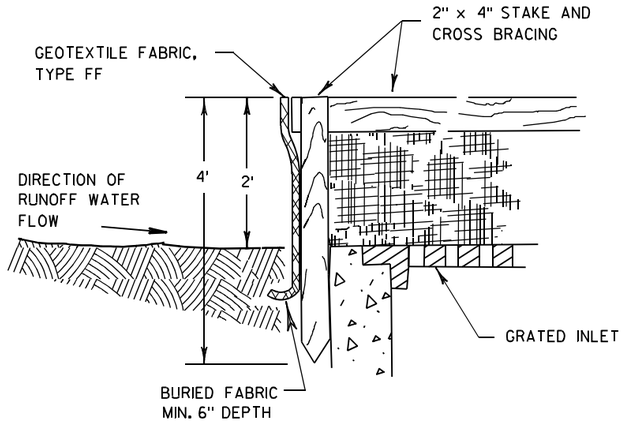

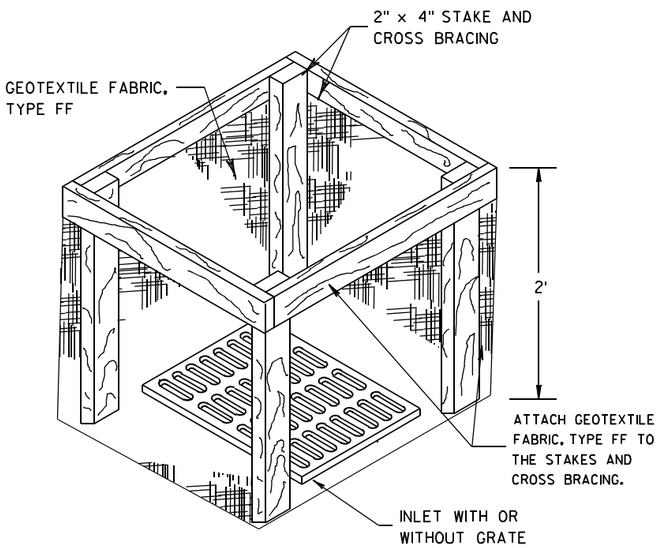

INLET PROTECTION, TYPE A

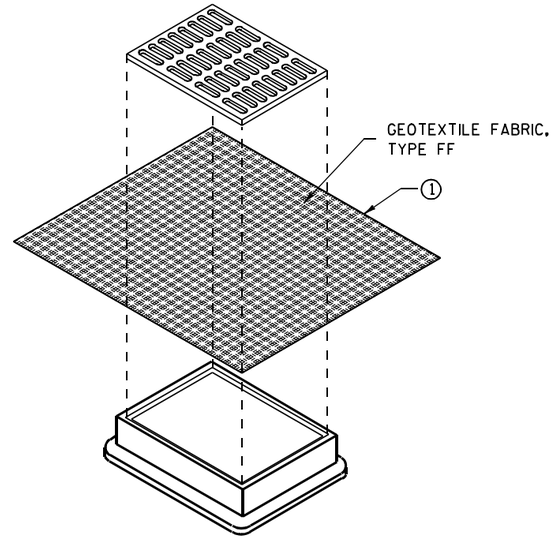

INLET PROTECTION, TYPE B (WITHOUT CURB BOX)

(CAN BE INSTALLED IN ANY INLET WITHOUT A CURB BOX)

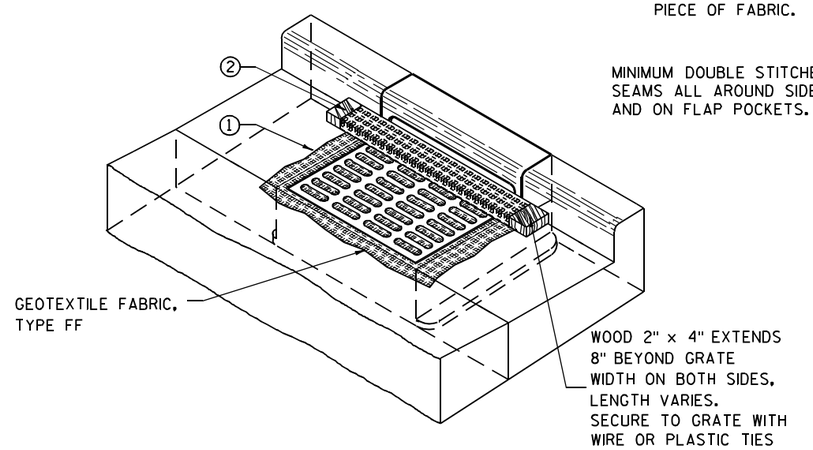

INLET PROTECTION, TYPE C (WITH CURB BOX)

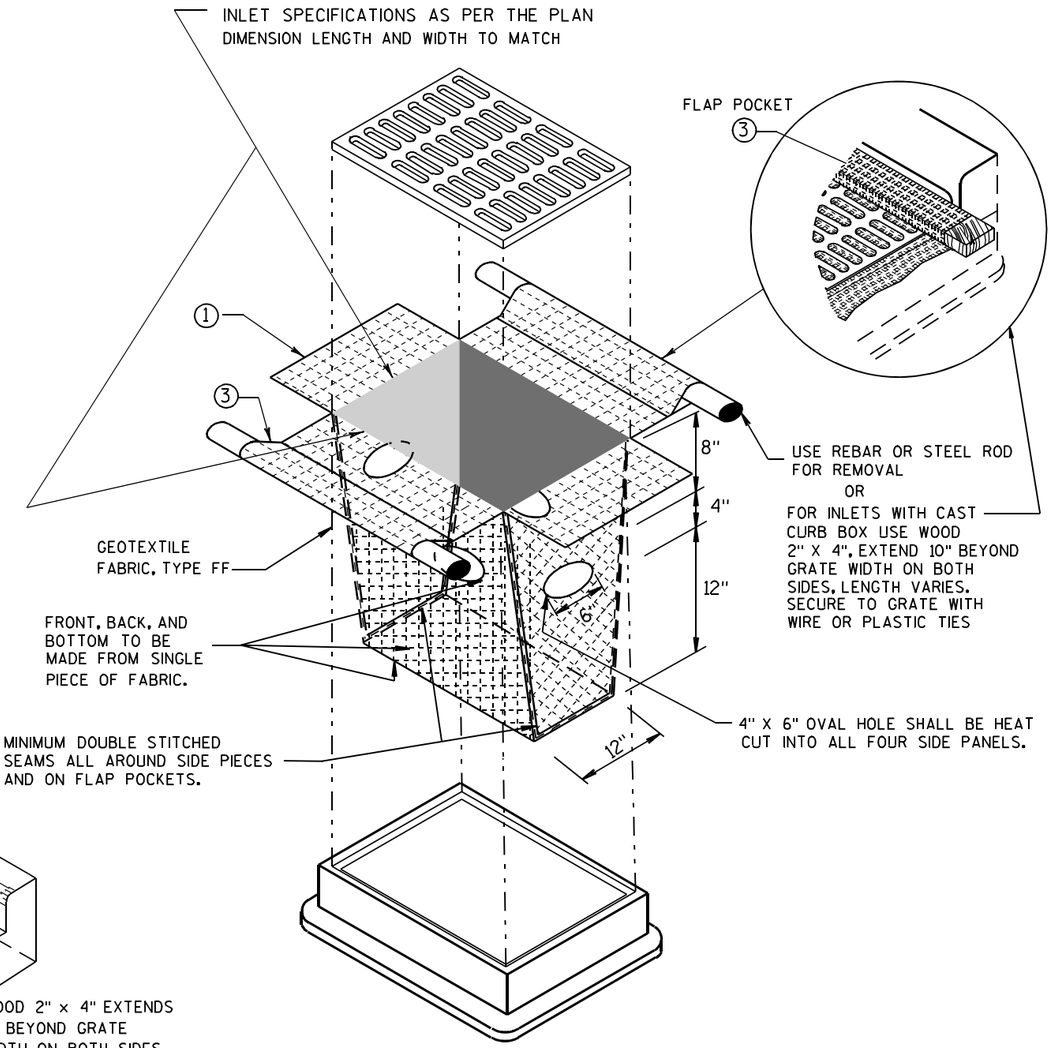

INLET PROTECTION, TYPE D

(CAN BE INSTALLED IN ANY INLET TYPE WITH OR WITHOUT A CURB BOX AS PER NOTE ②)

GENERAL NOTES

INLET PROTECTION DEVICES SHALL BE MAINTAINED OR REPLACED AT THE DIRECTION OF THE ENGINEER.

MANUFACTURED ALTERNATIVES APPROVED AND LISTED ON THE DEPARTMENT'S EROSION CONTROL PRODUCT ACCEPTABILITY LIST MAY BE SUBSTITUTED.

WHEN REMOVING OR MAINTAINING INLET PROTECTION, CARE SHALL BE TAKEN SO THAT THE SEDIMENT TRAPPED ON THE GEOTEXTILE FABRIC DOES NOT FALL INTO THE INLET. ANY MATERIAL FALLING INTO THE INLET SHALL BE REMOVED IMMEDIATELY.

① FINISHED SIZE, INCLUDING FLAP POCKETS WHERE REQUIRED, SHALL EXTEND A MINIMUM OF 10" AROUND THE PERIMETER TO FACILITATE MAINTENANCE OR REMOVAL.

② FOR INLET PROTECTION, TYPE C (WITH CURB BOX), AN ADDITIONAL 18" OF FABRIC IS WRAPPED AROUND THE WOOD AND SECURED WITH STAPLES. THE WOOD SHALL NOT BLOCK THE ENTIRE HEIGHT OF THE CURB BOX OPENING.

③ FLAP POCKETS SHALL BE LARGE ENOUGH TO ACCEPT WOOD 2X4.

INSTALLATION NOTES

TYPE B & C

TRIM EXCESS FABRIC IN THE FLOW LINE TO WITHIN 3" OF THE GRATE.

THE CONTRACTOR SHALL DEMONSTRATE A METHOD OF MAINTENANCE, USING A SEWN FLAP, HAND HOLDS OR OTHER METHOD TO PREVENT ACCUMULATED SEDIMENT FROM ENTERING THE INLET.

TYPE D

DO NOT INSTALL INLET PROTECTION TYPE D IN INLETS SHALLOWER THAN 30", MEASURED FROM THE BOTTOM OF THE INLET TO THE TOP OF THE GRATE.

TRIM EXCESS FABRIC IN THE FLOW LINE TO WITHIN 3" OF THE GRATE.

THE INSTALLED BAG SHALL HAVE A MINIMUM SIDE CLEARANCE, BETWEEN THE INLET WALLS AND THE BAG, MEASURED AT THE BOTTOM OF THE OVERFLOW HOLES, OF 3". WHERE NECESSARY THE CONTRACTOR SHALL CINCH THE BAG, USING PLASTIC ZIP TIES, TO ACHIEVE THE 3" CLEARANCE. THE TIES SHALL BE PLACED AT A MAXIMUM OF 4" FROM THE BOTTOM OF THE BAG.

INLET PROTECTION
TYPE A, B, C, AND D

STATE OF WISCONSIN
DEPARTMENT OF TRANSPORTATION

APPROVED
10/16/02 — DATE
/S/ Beth Cann[illegible] — CHIEF ROADWAY DEVELOPM[illegible] ENGINEER
FHWA

6

S.D.D. 8 E 10-2

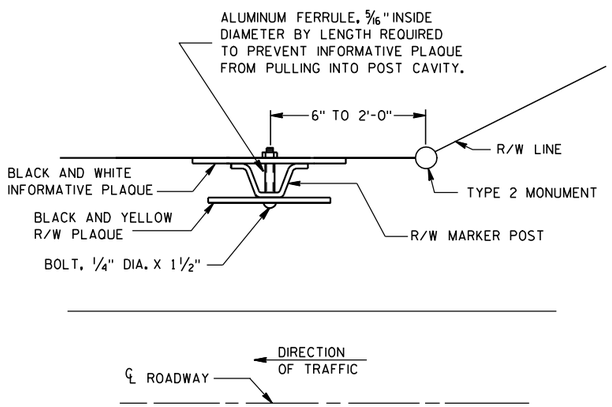

PLAN VIEW

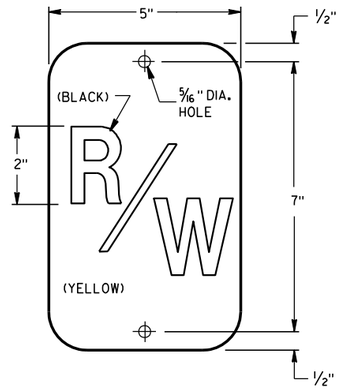

R/W PLAQUE

THE RIGHT-OF-WAY PLAQUE AND INFORMATIVE PLAQUE WILL BE FURNISHED BY THE WISCONSIN DEPARTMENT OF TRANSPORTATION.

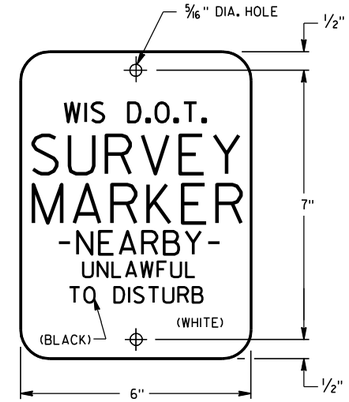

INFORMATIVE PLAQUE

GENERAL NOTES

DETAILS OF CONSTRUCTION NOT SHOWN ON THIS DRAWING SHALL CONFORM TO THE PERTINENT REQUIREMENTS OF THE STANDARD SPECIFICATIONS AND THE APPLICABLE SPECIAL PROVISIONS.

A STEEL MARKER POST FOR RIGHT-OF-WAY SHALL BE PLACED IN THE RIGHT-OF-WAY, WITH THE BACK OF THE POST ON THE LONGER RIGHT-OF-WAY TANGENT, 6 INCHES TO 24 INCHES FROM EACH TYPE 2 MONUMENT TO SERVE AS A GUARD POST, AND AT OTHER LOCATIONS AS SHOWN ON THE PLANS OR AS DIRECTED BY THE ENGINEER.

THE "R/W" PLAQUE SHALL FACE THE ROADWAY AND THE INFORMATIVE PLAQUE SHALL FACE AWAY FROM THE ROADWAY. R/W AND INFORMATIVE PLAQUES WILL BE FURNISHED BY THE DEPARTMENT OF TRANSPORTATION.

STEEL MARKER POSTS SHALL MEET THE MINIMUM MATERIAL REQUIREMENTS FOR STEEL DELINEATOR POSTS; EXCEPT POSTS PAINTED WITH FEDERAL YELLOW ENAMEL NEED NOT BE ZINC COATED.

(1) IN AREAS OF SOLID ROCK, DRILL A BORE HOLE 2" GREATER THAN THE WIDEST DIMENSION OF THE POST CROSS SECTION INTO THE ROCK TO A MINIMUM DEPTH OF 12 INCHES. CUT OR SPLICE THE POST SO THAT A MINIMUM LENGTH OF 3' 10" PROTRUDES ABOVE THE GROUND. BLOW OUT THE BORE HOLE IN THE ROCK USING COMPRESSED AIR.

FILL THE BORE HOLE WITH CEMENT GROUT, OR EQUIVALENT. DEPENDING ON THE STABILITY OF THE ROCK.

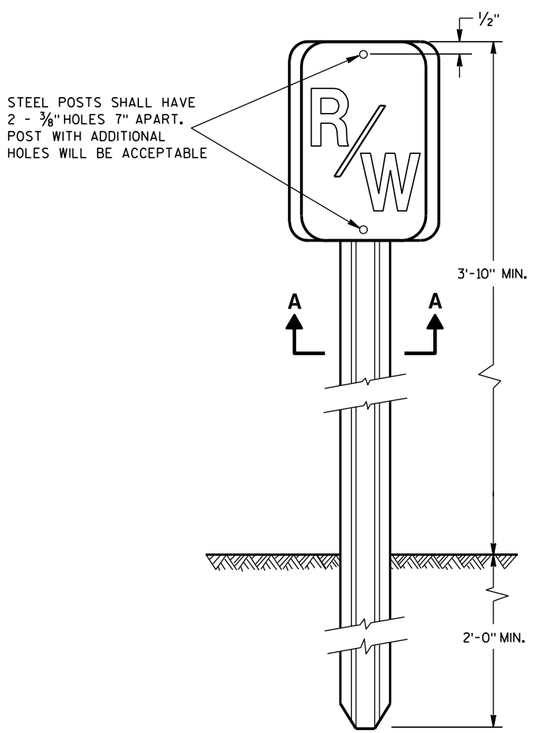

FRONT VIEW
STEEL MARKER POST

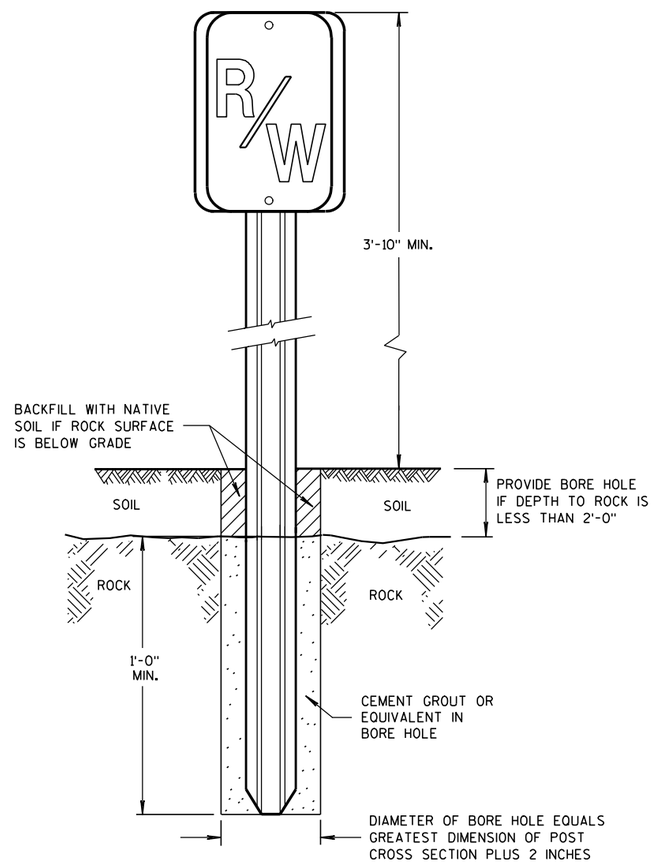

FRONT VIEW
ROCK INSTALLATION (1)

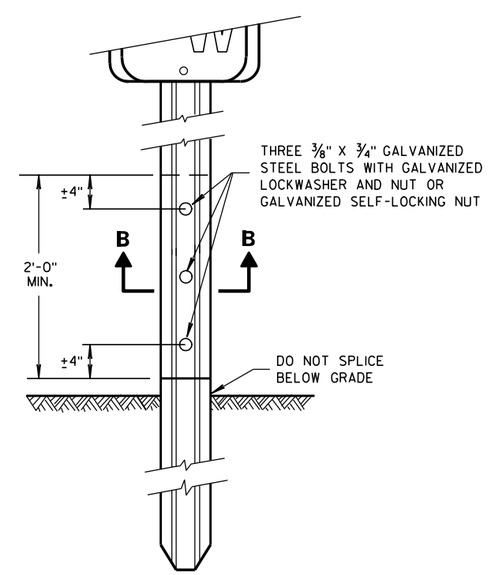

FRONT VIEW
SPLICE DETAIL

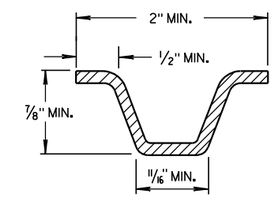

MIN. WEIGHT 1.12 LB./FT.

SECTION A-A

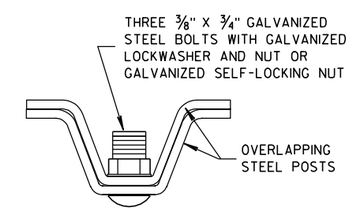

SECTION B-B

MARKER POST FOR RIGHT-OF-WAY

STATE OF WISCONSIN
DEPARTMENT OF TRANSPORTATION

APPROVED
4/27/09 — DATE
/S/ Ray Kumapayi — CHIEF SURVEYING AND MAPPING ENGINEER
FHWA

6

6

S.D.D. 15 A 1-11

S.D.D. 15 A 1-11

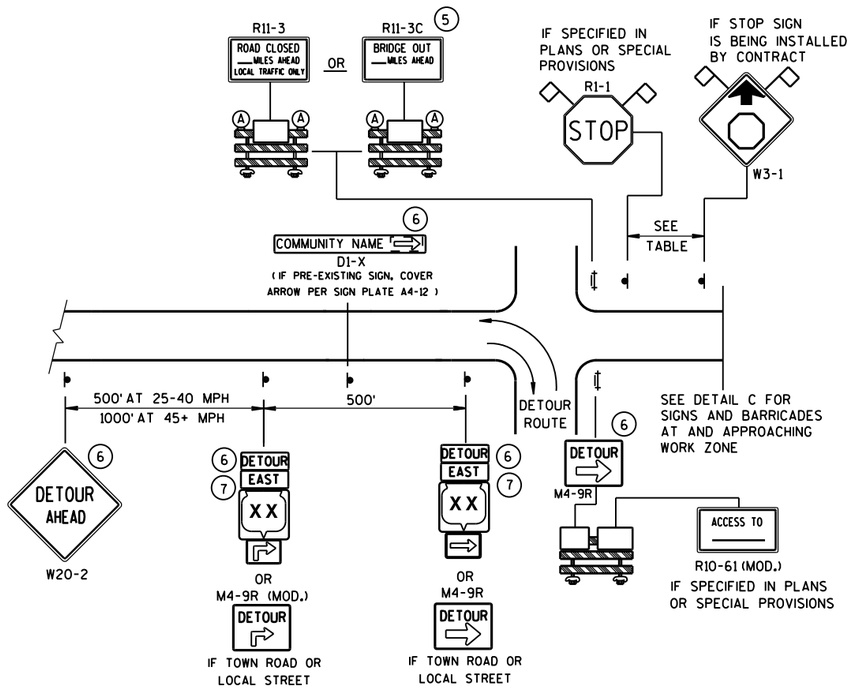

DETAIL A
MAINLINE CLOSURE WITH POSTED DETOUR

WORK ZONE GREATER THAN ½ MILE FROM DETOUR ROUTE (1000 FEET IF URBAN)

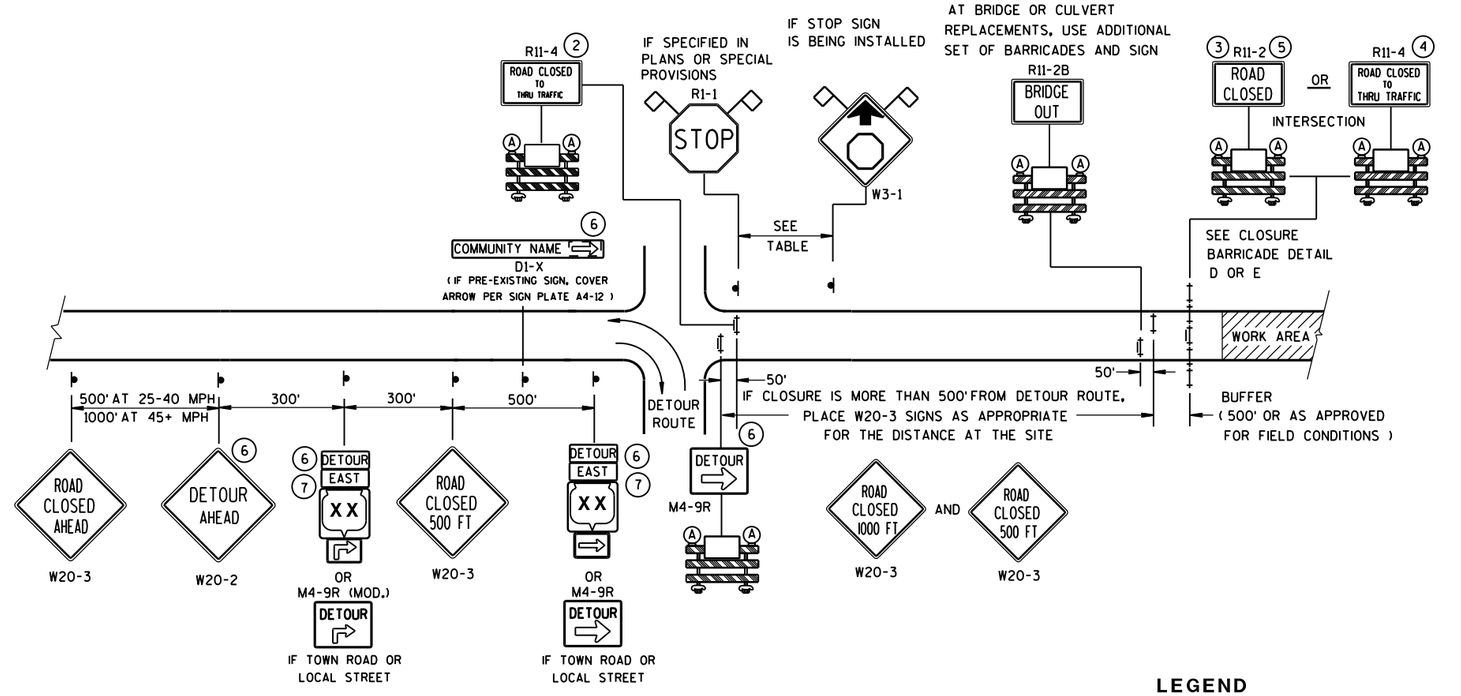

DETAIL B
MAINLINE CLOSURE WITH POSTED DETOUR

WORK ZONE LESS THAN ½ MILE FROM DETOUR ROUTE (1000 FEET IF URBAN)

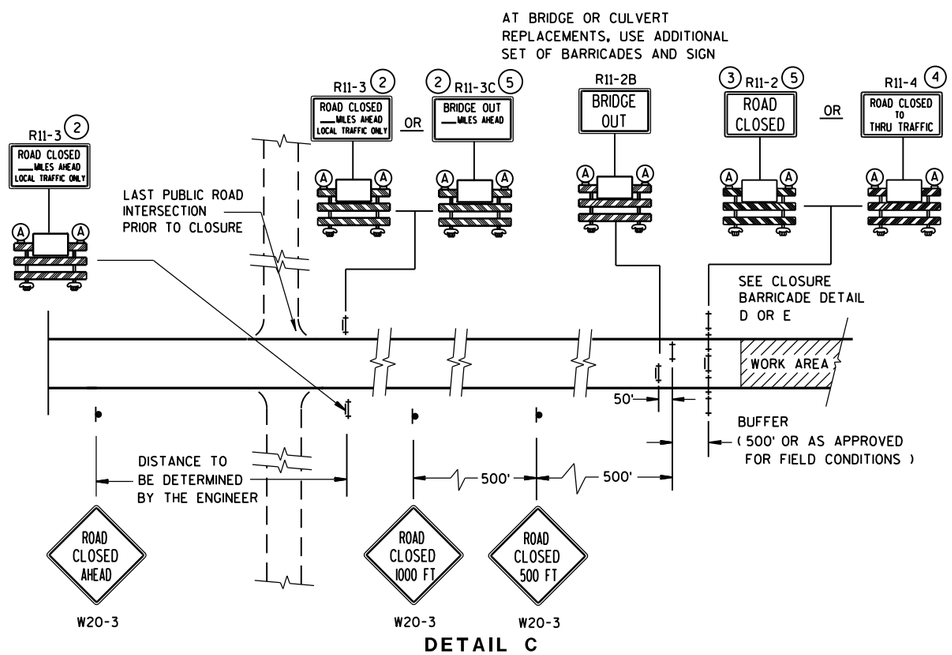

DETAIL C
MAINLINE CLOSURE, NO POSTED DETOUR

SPEED LIMIT (MPH)	"STOP AHEAD" ADVANCE WARNING DISTANCE (FT)
25	200
30	200
35	350
40	350
45	500
50	550
55	750

LEGEND

- SIGN ON PERMANENT SUPPORT
- TYPE III BARRICADE
- TYPE III BARRICADE WITH ATTACHED SIGN
- (A) TYPE "A" WARNING LIGHT (FLASHING)
- WORK AREA
- DETOUR EAST — M4-8 / M3-X
- XX (M1-4) OR COUNTY XX (M1-5A) OR XX (M1-6)
- M05-1 OR M06-1
- FLAGS, 16" X 16" MIN., (ORANGE)

SEE SDD 15C2-SHEET "**b**" FOR GENERAL NOTES AND FOOTNOTES (1) THROUGH (7)

BARRICADES AND SIGNS FOR MAINLINE CLOSURES

STATE OF WISCONSIN
DEPARTMENT OF TRANSPORTATION

8/2013 — DATE
/S/ Travis Feltes — STATE TRAFFIC ENGINEER
FHWA

6

S.D.D. 15 C 2-5a

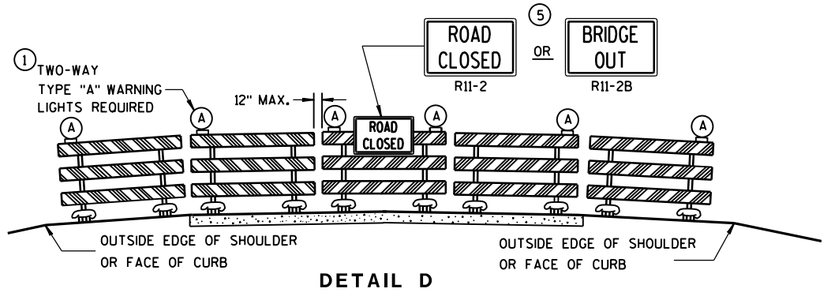

DETAIL D

ROAD CLOSURE BARRICADE DETAIL

APPROACH VIEW

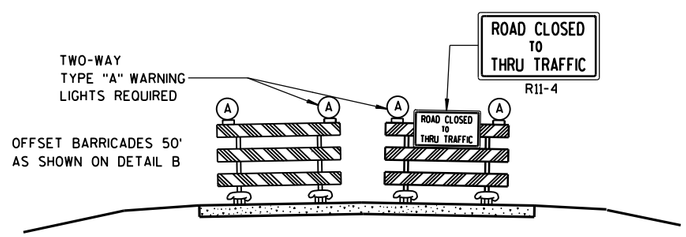

DETAIL E

LANE CLOSURE BARRICADE DETAIL

APPROACH VIEW

SEE SDD 15C2-SHEET "**a**" FOR LEGEND

GENERAL NOTES

THE EXACT NUMBER, LOCATION, AND SPACING OF ALL SIGNS AND BARRICADES SHALL BE ADJUSTED TO FIT FIELD CONDITIONS AS APPROVED BY THE ENGINEER.

ANY SIGNS TEMPORARY OR EXISTING, WHICH CONFLICT WITH TRAFFIC CONTROL "IN USE" SHALL BE REMOVED OR COVERED AS NEEDED AND AS APPROVED BY THE ENGINEER.

THE SPACING BETWEEN TRAFFIC CONTROL SIGNS SHOULD BE ADJUSTED TO NOT CONFLICT WITH AND SHOULD PROVIDE A DESIRABLE MINIMUM OF 200 FEET CLEARANCE TO EXISTING SIGNS THAT WILL REMAIN IN PLACE.

BARRICADES THAT MUST BE MOVED FOR A WORK OPERATION SHALL BE IMMEDIATELY RE-ESTABLISHED UPON COMPLETION OF THE OPERATION OR, FOR CONTINUING OPERATIONS, AT THE END OF EACH WORKING DAY.

SIGNS THAT WILL BE IN PLACE LESS THAN 7 CONTINUOUS DAYS AND NIGHTS MAY BE MOUNTED ON PORTABLE SUPPORTS.

ALL TYPE III BARRICADES SHALL HAVE RAILS REFLECTORIZED ON BOTH FACES. STRIPES SHALL BE PROPERLY SLOPED DOWN TOWARD THE TRAFFIC SIDE OR AS SHOWN IN THE ROAD CLOSURE BARRICADE DETAIL D FOR FULL ROAD CLOSURES.

TYPE "A" LOW-INTENSITY FLASHING WARNING LIGHTS SHALL BE VISIBLE ON BOTH SIDES OF THE BARRICADE.

THE R11-2, R11-3, M4-9, R11-4 AND R10-61 SIGNS PLACED ON BARRICADES SHALL COVER NO MORE THAN THE TOP RAIL. THE SIGNS SHALL NOT COVER ANY PORTION OF THE MIDDLE OR BOTTOM RAILS.

"WO AND "MO" SIGNS ARE THE SAME AS "W" AND "M" SIGNS EXCEPT THE BACKGROUND IS ORANGE.

ALL SIGNS SHALL BE 48" X 48" UNLESS OTHERWISE NOTED BELOW:

- R11-2 SHALL BE 48" X 30".
- R11-3, R11-4 AND R10-61 SHALL BE 60" X 30".
- M4-9 SHALL BE 30" X 24".
- M3-X SHALL BE 24" X 12". (36" X 18" IF NEEDED TO MATCH EXISTING SIGNS.)
- M4-8 SHALL BE 24" X 12". (30" X 15" IF NEEDED TO MATCH EXISTING SIGNS.)
- M1-4, M1-5A, AND M1-6 SHALL BE 24" X 24". (36" X 36" IF NEEDED TO MATCH EXISTING SIGNS.)
- M05-1 AND M06-1 SHALL BE 21" X 21". (30" X 30" IF NEEDED TO MATCH EXISTING SIGNS.)
- D1-X SHALL BE AS SHOWN ON SPECIFIC PROJECT SIGNING DETAIL SHEETS.
- R1-1 SHALL BE 36" X 36".

1. TWO WARNING LIGHTS SHALL BE PROVIDED ON THE CENTER BARRICADE AND A MINIMUM OF ONE WARNING LIGHT SHALL BE PROVIDED ON EACH OF THE OTHER BARRICADES WITHIN THE ROADWAY LIMITS. SPACING OF THE WARNING LIGHTS SHALL BE UNIFORM TO THE EDGE OF ROADWAY AS SHOWN (APPROX. 8-FOOT LIGHT SPACING).
2. THESE SIGNS AND BARRICADES ARE NOT REQUIRED IF ROAD CLOSURE BEGINS AT INTERSECTION.
3. FOR ROAD CLOSURE WITHOUT LOCAL ACCESS TO PROJECT, SEE ROAD CLOSURE BARRICADE DETAIL D.
4. FOR ROAD CLOSURE WITH LOCAL ACCESS TO PROJECT, SEE LANE CLOSURE BARRICADE DETAIL E.
5. FOR BRIDGE OR CULVERT REPLACEMENTS, SUBSTITUTE "BRIDGE OUT" INSTEAD OF "ROAD CLOSED" ON R11-2 AND R11-3 SIGNS.
6. INSTALL DETOUR AND COMMUNITY GUIDE SIGNS AND ARROWS ONLY IF SPECIFIED IN THE CONTRACT. IF THERE ARE EXISTING ROUTE MARKER ASSEMBLIES THAT WILL REMAIN IN PLACE, ADJUST THE LOCATION OF THE DETOUR ROUTE SIGNS TO CORRESPOND WITH THE EXISTING ASSEMBLIES. MODIFY EXISTING SIGNS WHERE POSSIBLE. SEE SPECIFIC PROJECT DETOUR SIGNING DETAIL SHEETS. IF DETOUR SIGNS ARE BEING INSTALLED BY OTHERS, PLACE THE CONTRACTED TRAFFIC CONTROL SIGNS TO ALLOW FOR PLACEMENT OF ALL WARNING, DETOUR AND GUIDE SIGNS AS SHOWN.
7. "EAST" CARDINAL DIRECTION MARKERS AND RIGHT TURN ARROWS ARE SHOWN. USE OTHER CARDINAL DIRECTIONS AND ARROWS AS APPROPRIATE.

BARRICADES AND SIGNS FOR MAINLINE CLOSURES

STATE OF WISCONSIN
DEPARTMENT OF TRANSPORTATION

8/2013 — DATE
/S/ Travis Feltes — STATE TRAFFIC ENGINEER
FHWA

6

S.D.D. 15 C 2-5b

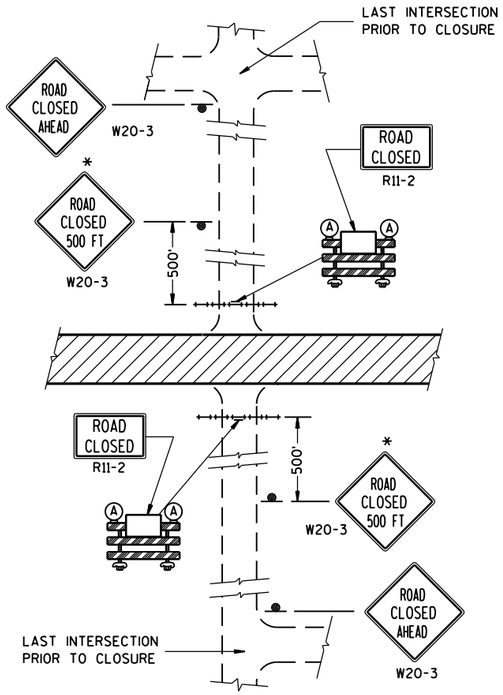

DETAIL 1

(NO ACCESS TO PROJECT)

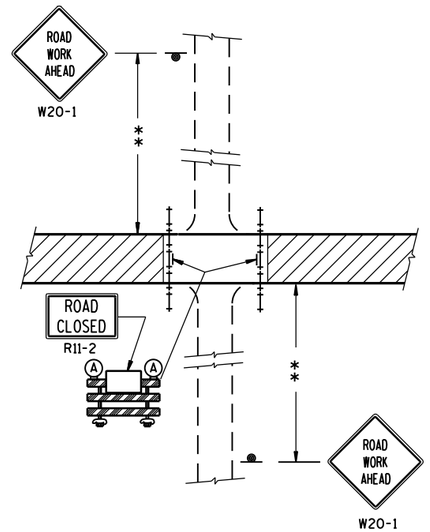

DETAIL 2

(PUBLIC CROSS-TRAFFIC MAINTAINED.
NO ACCESS TO PROJECT).

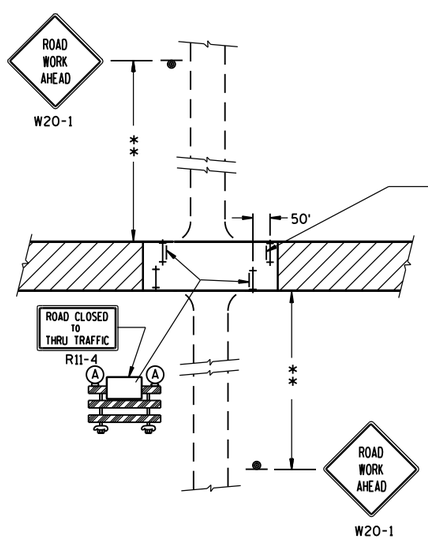

DETAIL 3

(PUBLIC CROSS-TRAFFIC MAINTAINED. CONTRACTOR,
LOCAL BUSINESS AND RESIDENT ACCESS).

FOR BRIDGE OR CULVERT
REPLACEMENT, USE ADDITIONAL
SIGN ON BARRICADE

BRIDGE OUT
XX MILES AHEAD
R11-3C

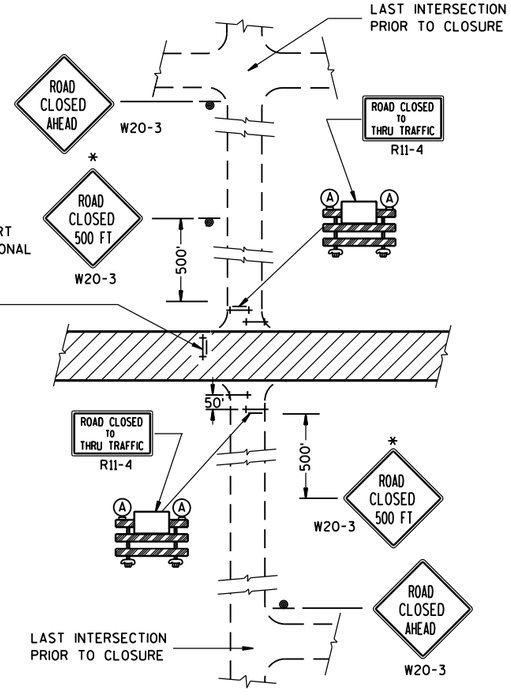

DETAIL 4

(CONTRACTOR, LOCAL BUSINESS AND
RESIDENT ACCESS TO PROJECT)

GENERAL NOTES

THE EXACT NUMBER, LOCATION, AND SPACING OF ALL SIGNS AND BARRICADES SHALL BE ADJUSTED TO FIT FIELD CONDITIONS AS APPROVED BY THE ENGINEER.

ANY SIGNS TEMPORARY OR EXISTING, WHICH CONFLICT WITH TRAFFIC CONTROL "IN USE" SHALL BE REMOVED OR COVERED AS NEEDED AND AS APPROVED BY THE ENGINEER.

THE SPACING BETWEEN TRAFFIC CONTROL SIGNS SHOULD BE ADJUSTED TO NOT CONFLICT WITH AND SHOULD PROVIDE A DESIRABLE MINIMUM OF 200 FEET CLEARANCE TO EXISTING SIGNS THAT WILL REMAIN IN PLACE.

IF A "STOP" SIGN MUST BE REMOVED FOR A WORK OPERATION, A TEMPORARY "STOP" SIGN SHALL BE PLACED PRIOR TO THE SIGN REMOVAL, OR A FLAGGER SHALL BE PROVIDED UNTIL THE SIGN IS RE-ESTABLISHED.

BARRICADES THAT MUST BE MOVED FOR A WORK OPERATION SHALL BE IMMEDIATELY RE-ESTABLISHED UPON COMPLETION OF THE OPERATION OR, FOR CONTINUING OPERATIONS, AT THE END OF EACH WORKING DAY.

SIGNS THAT WILL BE IN PLACE LESS THAN 7 CONTINUOUS DAYS AND NIGHTS MAY BE MOUNTED ON PORTABLE SUPPORTS.

ALL TYPE III BARRICADES SHALL HAVE RAILS REFLECTORIZED ON BOTH FACES. STRIPES SHALL BE PROPERLY SLOPED DOWN TOWARD THE TRAFFIC SIDE OR AS SHOWN IN THE ROAD CLOSURE BARRICADE DETAIL D FOR FULL ROAD CLOSURES.

TYPE "A" LOW-INTENSITY FLASHING WARNING LIGHTS SHALL BE VISIBLE ON BOTH SIDES OF THE BARRICADE.

THE R11-2, R11-3 AND R11-4 SIGNS PLACED ON BARRICADES SHALL COVER NO MORE THAN THE TOP RAIL. THE SIGNS SHALL NOT COVER ANY PORTION OF THE MIDDLE OR BOTTOM RAILS.

ALL SIGNS SHALL BE 48" X 48" UNLESS OTHERWISE NOTED BELOW:
R11-2 SHALL BE 48" X 30".
R11-4 AND R11-3 SHALL BE 60" X 30".

*OMIT THE "ROAD CLOSED 500 FT." SIGN IF THE LAST INTERSECTION IS 500 FT. OR LESS FROM THE WORK ZONE.

**500' MAX. OR AT LAST INTERSECTION WHICHEVER IS CLOSER.

LEGEND

- SIGN ON PERMANENT SUPPORT
- TYPE III BARRICADE
- TYPE III BARRICADE WITH ATTACHED SIGN
- (A) TYPE "A" WARNING LIGHT (FLASHING)
- WORK AREA

BARRICADES AND SIGNS FOR SIDEROAD CLOSURES

STATE OF WISCONSIN
DEPARTMENT OF TRANSPORTATION

APPROVED
8/2013 — DATE
/S/ Travis Feltes — STATE TRAFFIC ENGINEER
FHWA

6

S.D.D. 15 C 3-2

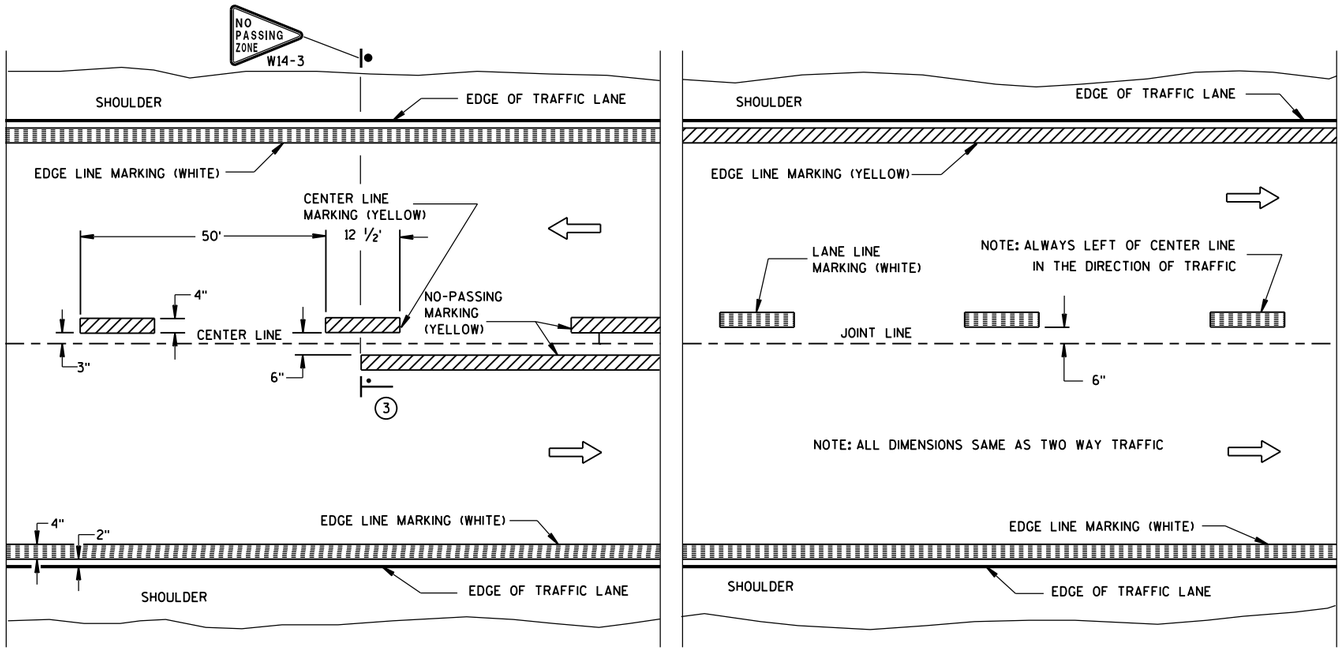

TWO WAY TRAFFIC

ONE WAY TRAFFIC

PERMANENT PAVEMENT MARKING

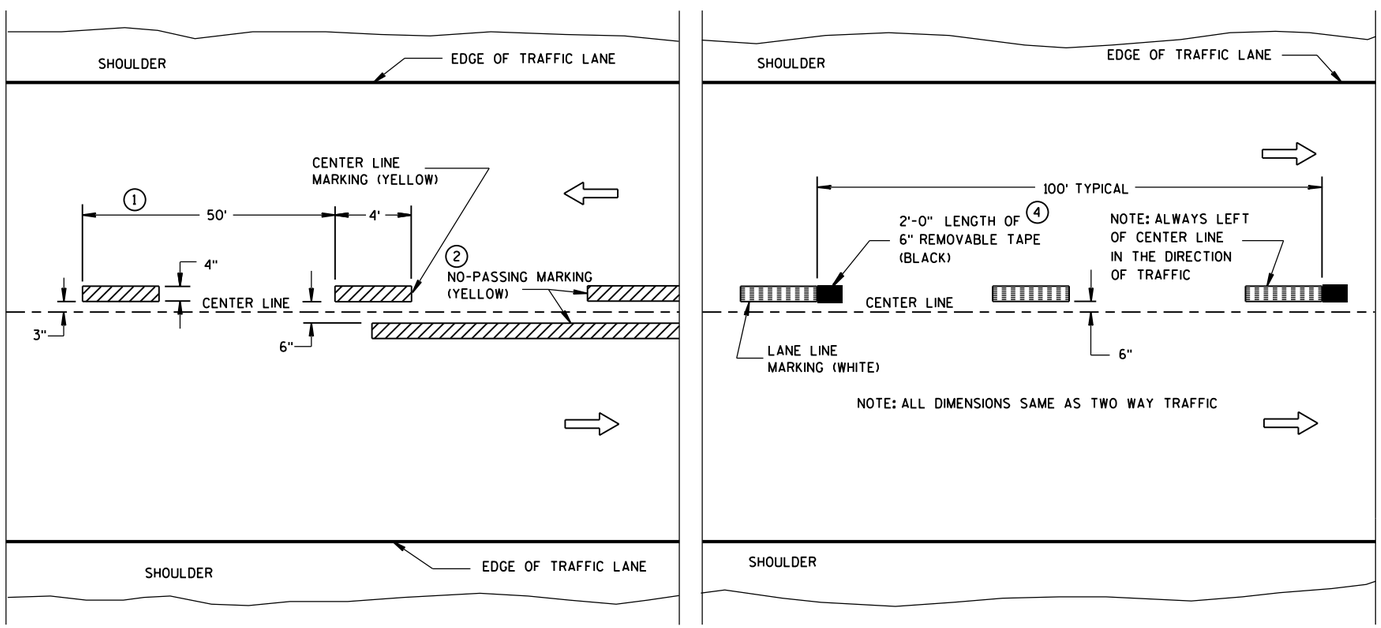

TWO WAY TRAFFIC

ONE WAY TRAFFIC

TEMPORARY (INTERMEDIATE) PAVEMENT MARKING

(SHOWS CYCLE FOR TEMPORARY CENTER LINE OR TEMPORARY LANE LINE MARKING)

GENERAL NOTES

DETAILS OF CONSTRUCTION NOT SHOWN ON THIS DRAWING SHALL CONFORM TO STANDARD SPECIFICATIONS AND SPECIAL PROVISIONS.

1. HALF CYCLE LENGTHS (25'±) WITH 2' MINIMUM STRIPE LENGTHS SHALL BE PROVIDED ON ROADWAYS (INCLUDING TEMPORARY TRAVELED WAYS) WITH REVERSE CURVATURE, CURVATURE OF OVER 5 DEGREES OR WHEN DIRECTED BY THE ENGINEER TO MARK UNUSUAL ALIGNMENT OF THE TRAVELED WAY.
2. NO PASSING ZONE TEMPORARY PAVEMENT MARKING IS REQUIRED TO BE PLACED, WHERE APPROPRIATE, ALONG WITH CENTERLINE TEMPORARY PAVEMENT MARKING WHEN A SAME DAY PERMANENT PAVEMENT MARKING ITEM IS INCLUDED IN THE CONTRACT.
3. NO PASSING ZONE MARKINGS ARE PLACED ACCORDING TO "T" MARKINGS. IF EXISTING NO PASSING ZONE W14-3 SIGNS ARE BEYOND 50 FEET IN EITHER DIRECTION, THE SIGNS SHALL BE MOVED TO THE "T" MARKINGS.
4. CONCRETE ONLY.

NOTE

ARROW SYMBOL (⇨) SHOWS DIRECTION OF TRAVEL

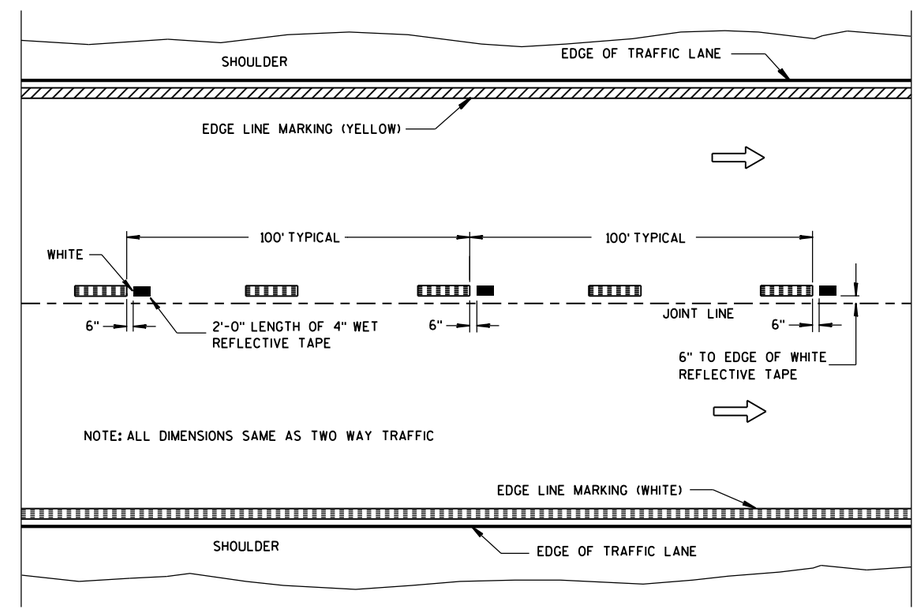

WET REFLECTIVE TAPE SUPPLEMENT TO SPRAYED OR NON WET REFLECTIVE TAPE LANE LINE

LEGEND

"T" MARKING

POST MOUNTED SIGN

PAVEMENT MARKING (MAINLINE)

STATE OF WISCONSIN
DEPARTMENT OF TRANSPORTATION

APPROVED

5-13-2013 — DATE

/S/ Travis Feltes — STATE TRAFFIC E

FHWA

LEGEND

SIGN ON PORTABLE OR PERMANENT SUPPORT

DIRECTION OF TRAFFIC

WORK AREA

FLAGGER, EQUIPPED WITH STOP/SLOW PADDLE FASTENED ON SUPPORT STAFF

SIGN SPACING TABLE

SPEED LIMIT	SIGN SPACING A,B,C
25-35 MPH	200'
35-40 MPH	350'
45-55 MPH	500'

USE OF THE "BE PREPARED TO STOP" SIGN IS OPTIONAL. WHEN USED, THIS SIGN SHALL BE LOCATED BETWEEN THE W20-7a AND W20-4 SIGNS. A 500' TYPICAL SPACING SHALL BE PROVIDED BETWEEN THE SIGNS.

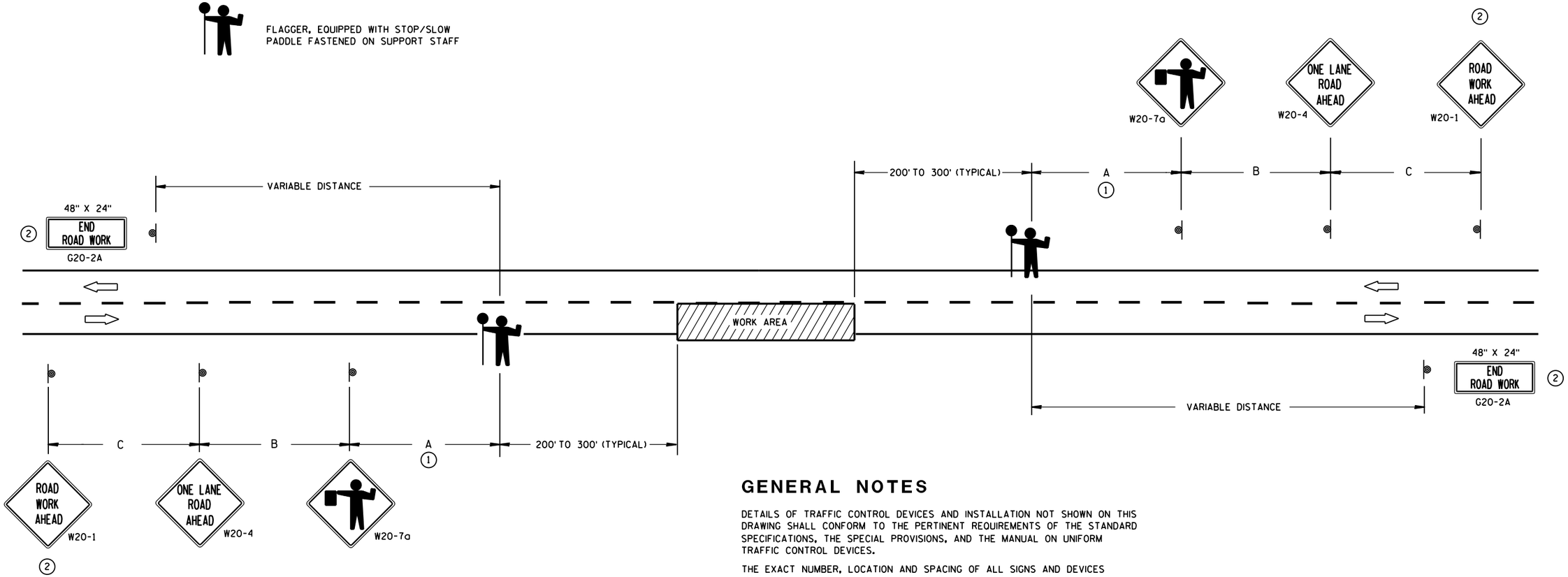

1. FOR A MOVING WORK OPERATION, SIGNING FOR BOTH DIRECTIONS SHALL BE REESTABLISHED (AS SIMULTANEOUSLY AS PRACTICAL) AT APPROXIMATELY 3500 FOOT INTERVALS IN THE MOVING WORK OPERATION OR AS APPROVED BY THE ENGINEER.

2. SIGN NOT REQUIRED IF FLAGGING OPERATION OCCURS WITHIN A SIGNED ROAD WORK ZONE AREA.

GENERAL NOTES

DETAILS OF TRAFFIC CONTROL DEVICES AND INSTALLATION NOT SHOWN ON THIS DRAWING SHALL CONFORM TO THE PERTINENT REQUIREMENTS OF THE STANDARD SPECIFICATIONS, THE SPECIAL PROVISIONS, AND THE MANUAL ON UNIFORM TRAFFIC CONTROL DEVICES.

THE EXACT NUMBER, LOCATION AND SPACING OF ALL SIGNS AND DEVICES (AND THE LOCATION OF ALL FLAGGERS) SHALL BE ADJUSTED TO FIT FIELD CONDITIONS AS APPROVED BY THE ENGINEER.

THE FIRST ADVANCE WARNING SIGN SHOULD TYPICALLY BE LOCATED IN ADVANCE OF THE ANTICIPATED TRAFFIC BACKUP OR QUEUE.

WHEN A SIDE ROAD OR RAMP INTERSECTS THE FACILITY ON WHICH THE WORK IS BEING PERFORMED, ADDITIONAL TRAFFIC CONTROLS SHALL BE PROVIDED AS SPECIFIED IN THE PLANS AND/OR THE SPECIAL PROVISIONS OR AS APPROVED BY THE ENGINEER.

FLAGGERS SHALL BE IN SIGHT OF EACH OTHER OR IN DIRECT COMMUNICATION AT ALL TIMES. THEY SHALL BE EQUIPPED WITH STOP/SLOW PADDLES FASTENED ON SUPPORT STAFFS. WHEN THE FLAGGING OPERATION IS NOT IN EFFECT, COVER OR REMOVE ALL TEMPORARY TRAFFIC CONTROL SIGNS.

ALL SIGNS ARE 48" X 48" UNLESS OTHERWISE NOTED.

TRAFFIC CONTROL FOR LANE CLOSURE (SUITABLE FOR MOVING OPERATIONS)

STATE OF WISCONSIN
DEPARTMENT OF TRANSPORTATION

APPROVED
8/2013 — DATE
/S/ Travis Feltes — STATE TRAFFIC ENGINEER
FHWA

6

S.D.D. 15 C 12-4

GENERAL NOTES

1. DETAILS OF CONSTRUCTION NOT SHOWN ON THIS DRAWING SHALL CONFORM TO STANDARD SPECIFICATIONS AND SPECIAL PROVISIONS.
2. THE SERIES OF PAVEMENT MARKING SYMBOLS SHALL BE REPEATED AFTER INTERSECTIONS AND SPACED A MAXIMUM OF 250'. NO PAVEMENT MARKING WILL TAKE PLACE IN THE CROSSWALK.
3. DOTTED LINES SHOULD BE USED 50' TO 200' IN ADVANCE OF AN INTERSECTION WHERE THERE IS NO RIGHT TURN ONLY LANE AND THERE IS HEAVY RIGHT TURN TRAFFIC OR THERE IS A NEAR-SIDE BUS STOP. AT OTHER INTERSECTIONS WHERE RIGHT TURN TRAFFIC IS LIGHT TO MODERATE, A SOLID LINE CAN BE USED UP TO THE INTERSECTION.
4. 3' LINE, 9' GAP - 4" WIDE, WHITE.

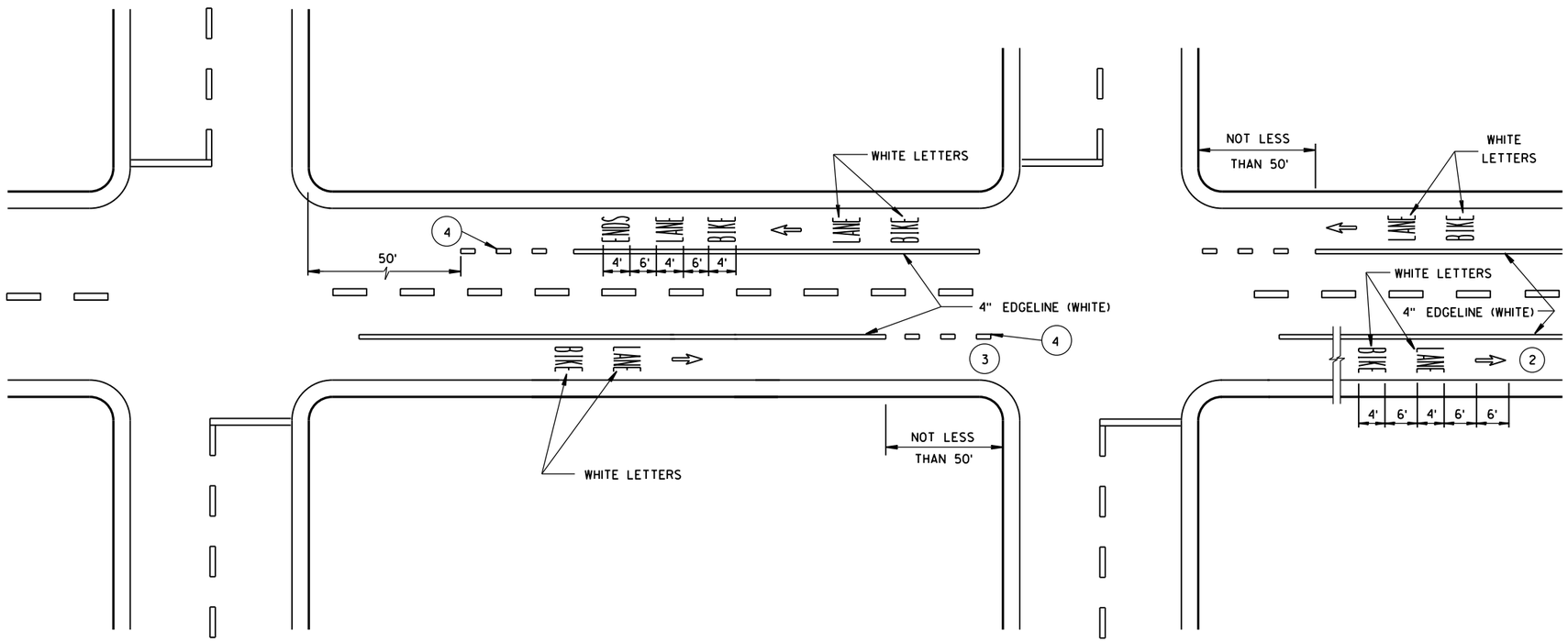

DESIGNATED BICYCLE LANE
NO PARKING

URBAN BICYCLE LANE MARKING
STATE OF WISCONSIN DEPARTMENT OF TRANSPORTATION
APPROVED 4/30/2013 DATE — /S/ Travis Feltes STATE TRAFFIC E
FHWA

6

S.D.D. 15 C 29-3d

GENERAL NOTES

DETAILS OF INSTALLATION, MATERIALS AND WORKMANSHIP NOT SHOWN ON THIS DRAWING SHALL CONFORM TO THE PERTINENT REQUIREMENTS OF THE STANDARD SPECIFICATIONS AND APPLICABLE SPECIAL PROVISIONS.

ALL LETTERS, ARROWS AND SYMBOLS SHALL BE IN CONFORMANCE WITH REQUIREMENTS INCLUDED IN "STANDARD ALPHABETS FOR HIGHWAY SIGNS AND PAVEMENT MARKING" BOOK BY THE FEDERAL HIGHWAY ADMINISTRATION. ALL LETTERS, ARROWS AND SYMBOLS SHALL BE WHITE AND REFLECTORIZED. SMALL DIFFERENCES IN DIMENSIONS WITHIN THE TOLERANCES OF THAT BOOK ARE ACCEPTABLE.

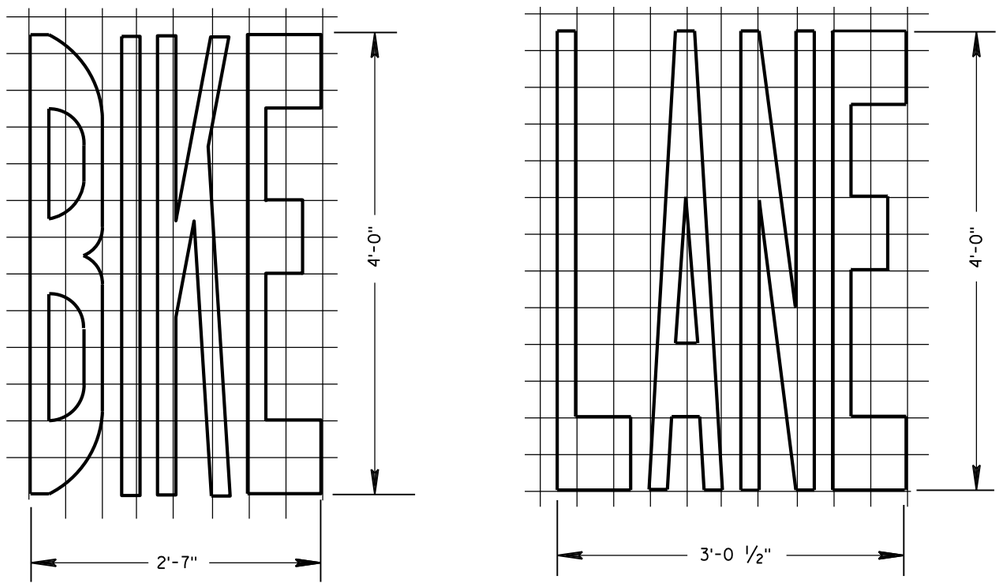

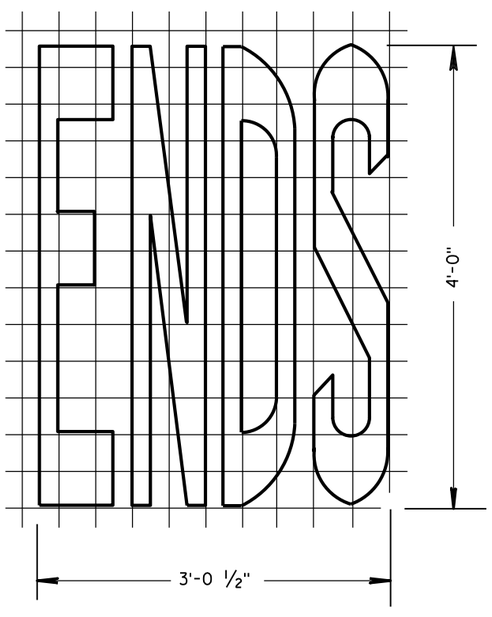

BIKE LANE WORDS

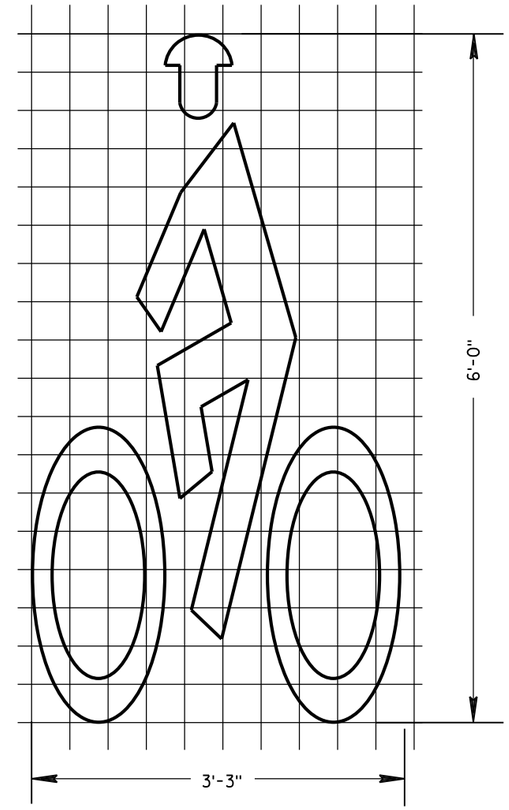

BIKE LANE SYMBOL

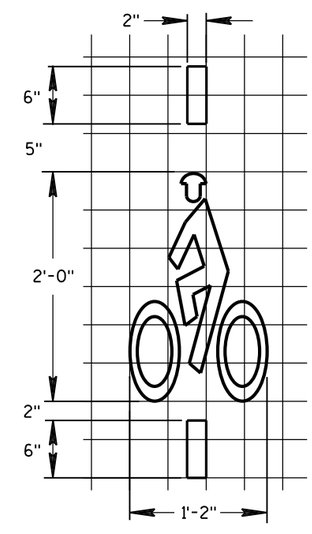

BICYCLE DETECTOR PAVEMENT MARKING

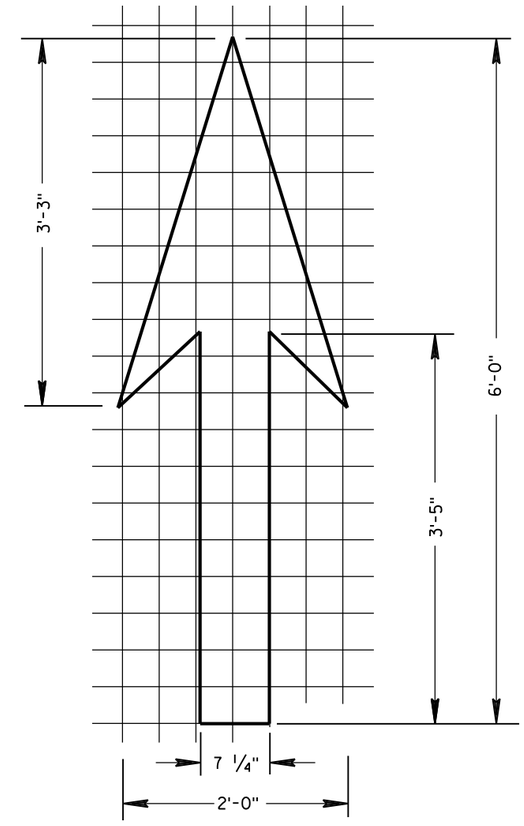

BIKE LANE ARROW

PAVEMENT MARKING FOR BIKE LANES
STATE OF WISCONSIN DEPARTMENT OF TRANSPORTATION
APPROVED 4-30-2013 DATE — /S/ Travis Feltes STATE TRAFFIC EN — FHWA

6

6

S.D.D. 15 C 29-3e

S.D.D. 15 C 29-3e

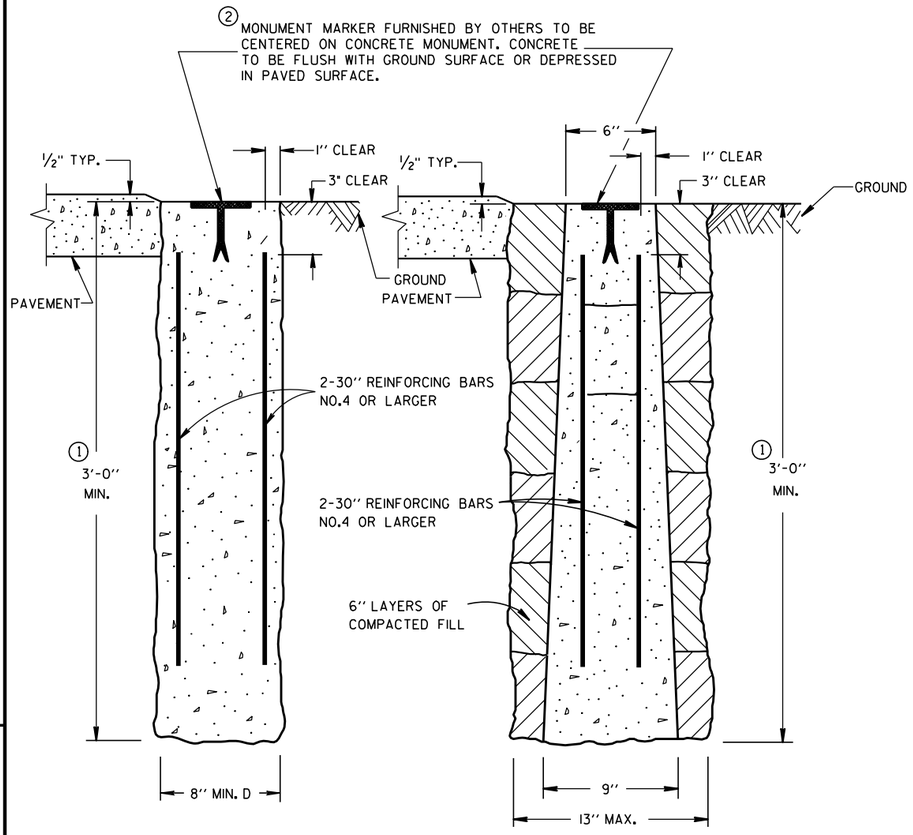

CAST-IN-PLACE PRECAST

CONCRETE MONUMENTS

TYPE A

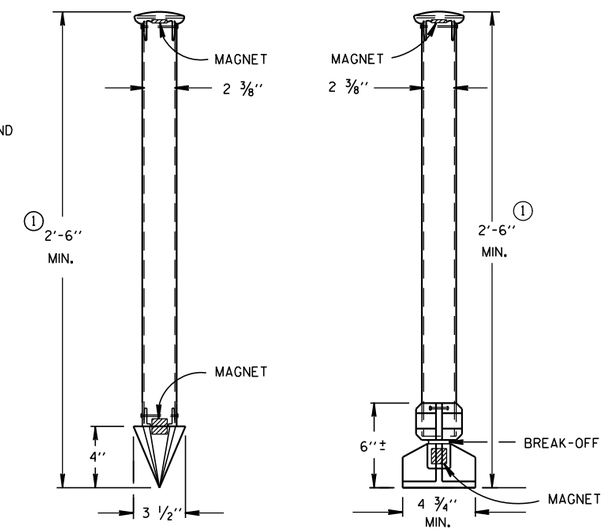

TYPE C TYPE D

DRIVE-IN MONUMENT BREAK-OFF MONUMENT

ALUMINUM MONUMENTS

(INCLUDES MARKER)

GENERAL NOTES

DETAILS OF CONSTRUCTION, MATERIALS AND WORKMANSHIP NOT SHOWN ON THIS DRAWING SHALL CONFORM TO THE PERTINENT REQUIREMENTS OF THE STANDARD SPECIFICATIONS AND THE APPLICABLE SPECIAL PROVISIONS.

DETAILED DRAWINGS OF PROPOSED ALTERNATE DESIGNS FOR METAL MONUMENTS OR MONUMENT COVERS SHALL BE SUBMITTED TO THE ENGINEER FOR APPROVAL.

INSTALLED METAL MONUMENTS MUST BE EASILY DETECTED WITH A DIP NEEDLE. INSERT PERMANENT MAGNETS SHALL BE ATTACHED NEAR THE TOP AND BOTTOM OF THOSE MONUMENTS CONSTRUCTED OF A METAL ALLOY WHICH IS NOT ATTRACTIVE TO A DIP NEEDLE.

THE CAST IRON MONUMENT COVER SHALL BE A "NON-ROCKING" TYPE. ADJUSTMENT OF THE COVER TO GRADE MAY BE ACCOMPLISHED BY THE USE OF MORTAR AND BRICK, OR BY EITHER PRECAST OR CAST-IN-PLACE REINFORCED CONCRETE GRADE RINGS.

MONUMENTS SHALL BE LOCATED AND PLACED AT THE DIRECTION OF THE ENGINEER.

ALUMINUM MONUMENTS AND MONUMENT COVERS SHALL BE MADE FROM AN ALUMINUM AND MAGNESIUM ALLOY AS DETERMINED BY THE MANUFACTURER.

THE MONUMENT COVERS DETAILED ON THIS DRAWING ARE NOT EQUAL ALTERNATES. MONUMENT COVERS SHALL BE CAST IRON UNLESS ALUMINUM IS SPECIFIED ELSEWHERE IN THE CONTRACT.

MONUMENT SHALL BE CAST-IN-PLACE CONCRETE UNLESS PRECAST CONCRETE OR ALUMINUM MONUMENTS ARE SPECIFIED IN THE CONTRACT OR PERMITTED BY THE ENGINEER.

① MINIMUM LENGTH SHALL BE 4'-0" FOR MONUMENTS INSTALLED IN PAVED AREAS.

② AN OFFICIAL COUNTY MONUMENT MARKER SUPPLIED BY A COUNTY MAY BE REQUIRED FOR SOME SECTION CORNERS AND WITNESS MONUMENTS INSTEAD OF THIS WIS DOT MARKER.

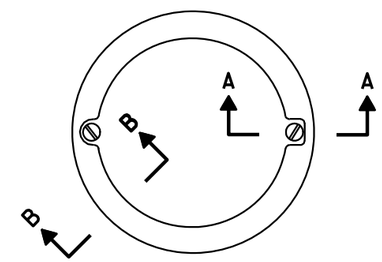

TOP VIEW

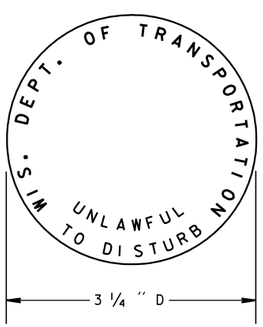

② WIS DOT MONUMENT MARKER LOGO

FOR TYPES "A", "C" & "D"

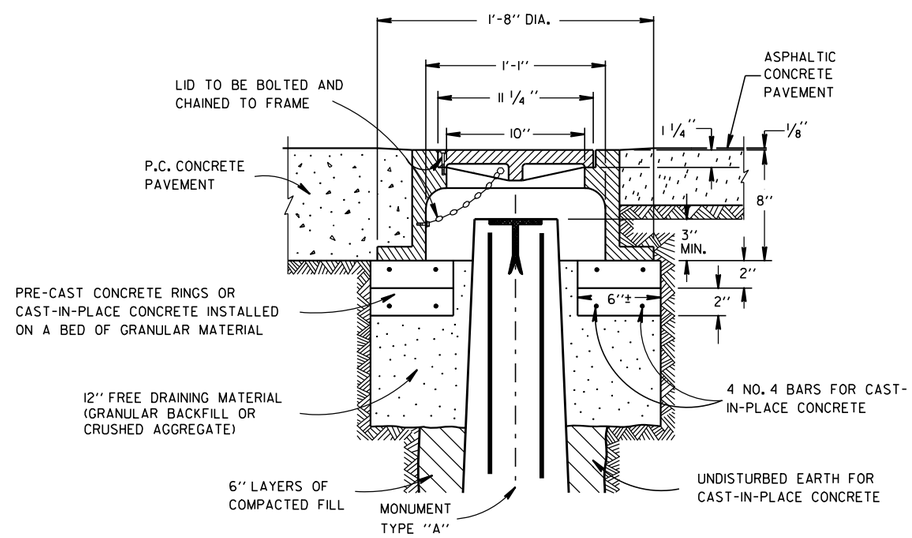

CAST IRON MONUMENT COVER

(APPROXIMATE WEIGHT - 95 LBS.)

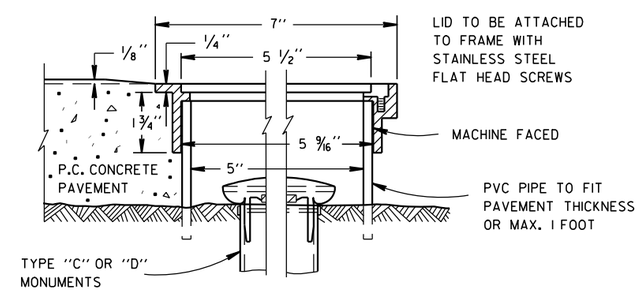

SECTION B-B SECTION A-A

ALUMINUM MONUMENT COVER

(APPROXIMATE WEIGHT 2 LBS)

(FOR CONCRETE PAVEMENT ONLY)

LANDMARK REFERENCE MOUNMENTS AND COVERS

STATE OF WISCONSIN
DEPARTMENT OF TRANSPORTATION

APPROVED

9/22/1999 /S/ Rory L. Rhinesmith

DATE CHIEF ROADWAY DEVELOPMENT ENGINEER

FHWA

TYPICAL ASSEMBLIES

J1-1

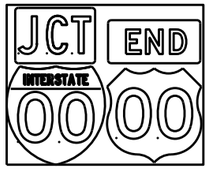

J1-2

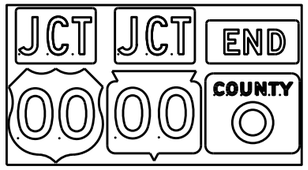

J1-3

J2-1

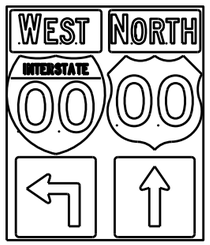

J2-2

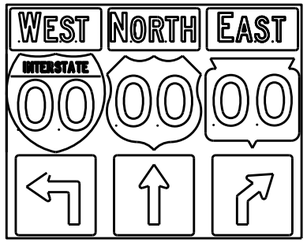

J2-3

JV

(Typical Vertical J-Assembly
See Note 10 and 11)

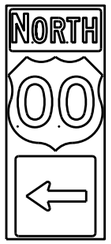

J3-1

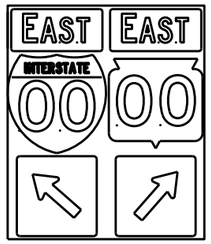

J3-2

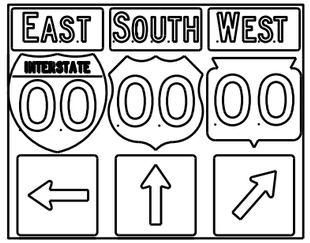

J3-3

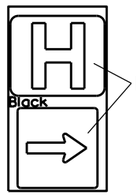

Blue Background

JH-1

J4-1

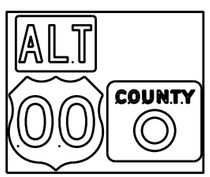

J4-2

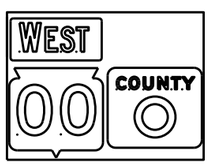

J4-2

J13-1

J12-1

J32-1

J33-1

J23-1

J22-1

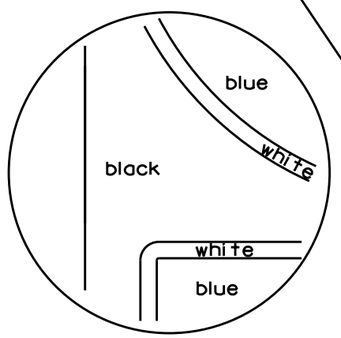

[blue background with interstate]

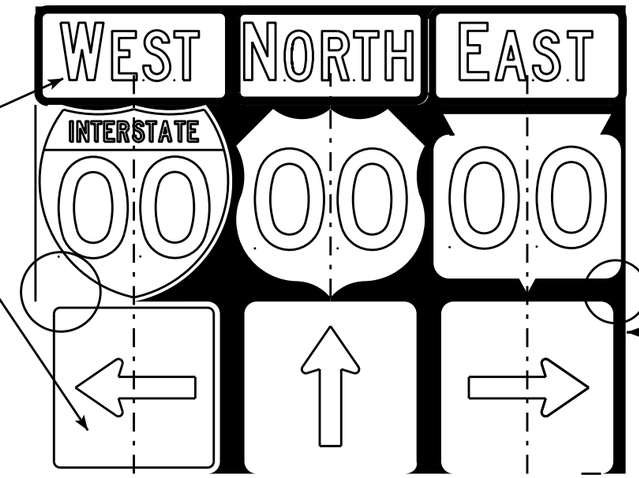

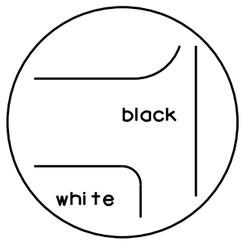

[black background]

NOTES

1. Signs are Type II - Type H Reflective - reference WIS DOT Standard Specification for HIGHWAY and STRUCTURE CONSTRUCTION latest edition.
2. Color:
   Background - Black Non-reflective
   Message - see Note 5
3. Message Series - See Note 5
4. Corners shall be square or rounded if base material is plywood. If base material is metal the corners shall be rounded.
5. The colors and message spacing on each marker shall be according to the applicable route marker panel specifications.
6. Certain marker heads require the component pieces to be the same color. As an example, all the components used with an M1-1 Interstate marker shall be blue.
7. Single panel j-assemblies shall only be used with route marker shields that are same size. If the route marker shields are different size use multiple piece component.
8. Route assemblies that have 24 inch route shields and have dimensions greater than 48 inches (both vertical and horizontal) shall have one horizontal splice between the arrows and route shields. Vertical splices shall not be used on route assemblies with a horizontal dimension of 144 inches or less. The contractor shall not use more than one vertical joint per sign and the joint shall be between route shields.
9. Route assemblies that have 36 inch shields and have dimensions greater than 48 inchs (both vertical and horizontal) shall have two horizontal splices. One horizontal splice shall be between the cardinal direction and route shields and the other horizontal splice shall be between the arrows and route shields. Vertical splices shall not be used on route assemblies with a horizontal dimension of 144 or less. The contractor shall not use more than one vertical joint per sign and the joint shall be between route shields.
10. All Vertical J Assemblies are given a Sign Code of JV
11. For JV Assemblies that have a mixture of Interstate and non Interstate shields, arrows and cardinals shall be white on blue.

ROUTE MARKERS & COMPONENTS IN TYPICAL ASSEMBLIES

WISCONSIN DEPT OF TRANSPORTATION

APPROVED Matthew R Rauch
for State Traffic Engineer

DATE 2/06/14 PLATE A2-1S.8

PROJECT NO: SHEET NO: E

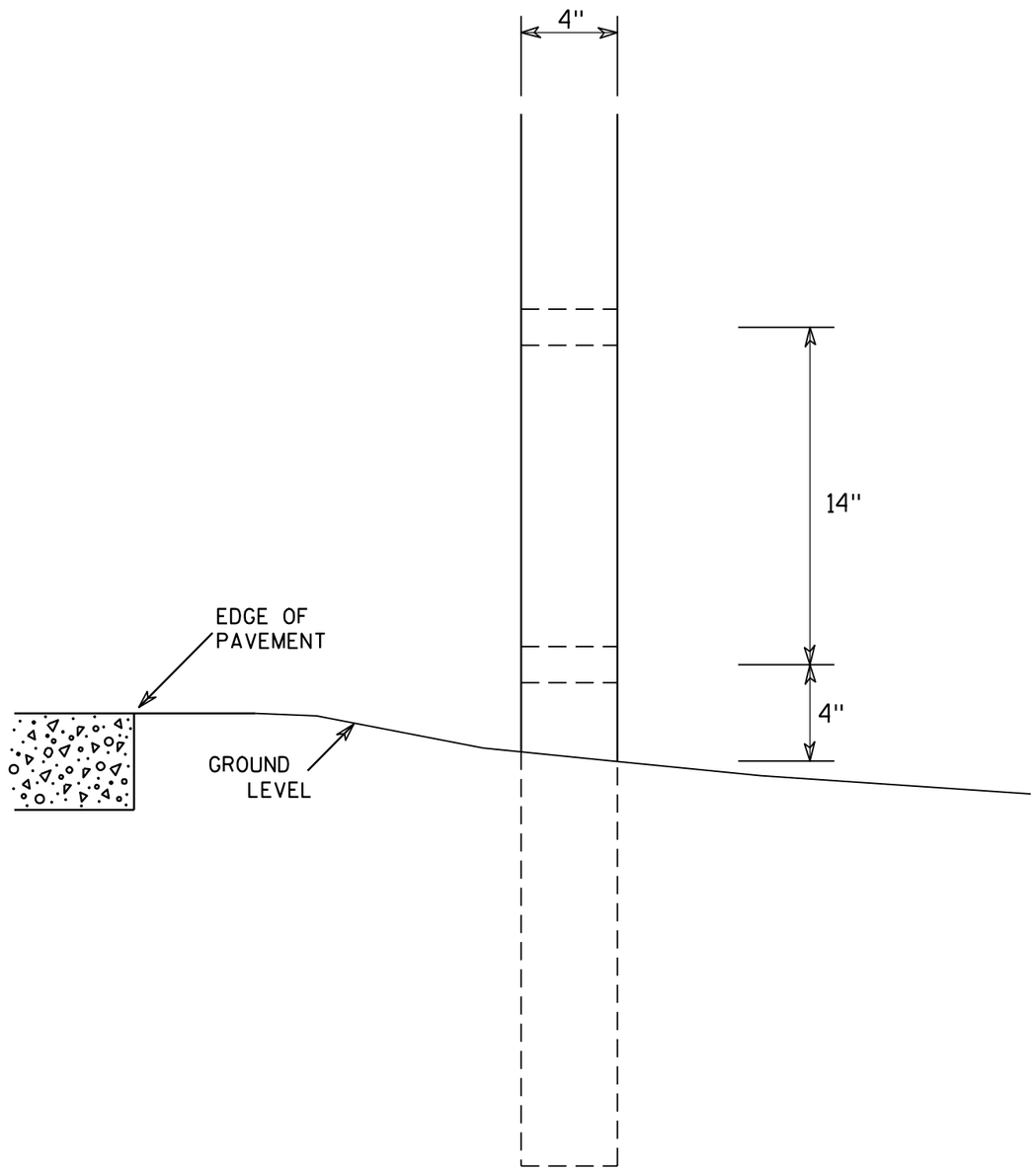

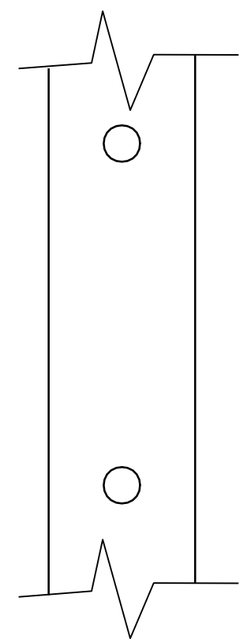

SIDE VIEW

GENERAL NOTES

1. All 4 x 6 Wood Posts shall be modified by having two 1½" diameter holes drilled perpendicular to the roadway centerline.

7

7

4 X 6 WOOD POST MODIFICATIONS

WISCONSIN DEPT OF TRANSPORTATION

APPROVED Chester J Spang for State Traffic Engineer

DATE 3/27/97 PLATE NO. A4-11.2

PROJECT NO:	HWY:	COUNTY:		SHEET NO: 63	E

URBAN AREA

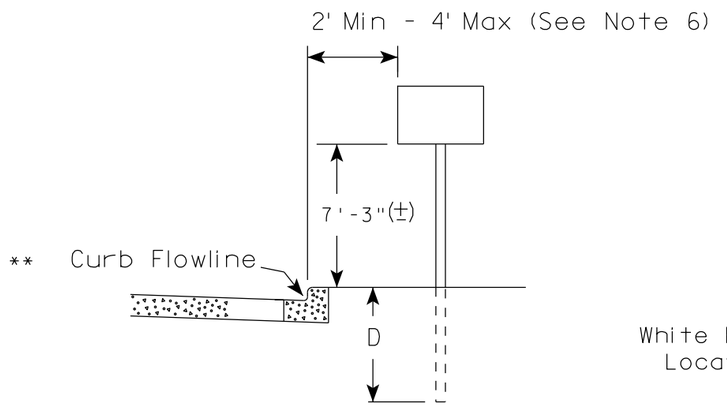

RURAL AREA (See Note 2)

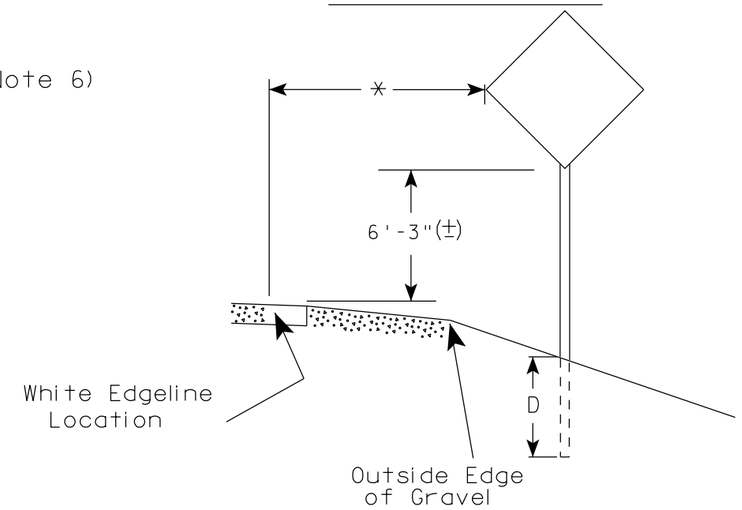

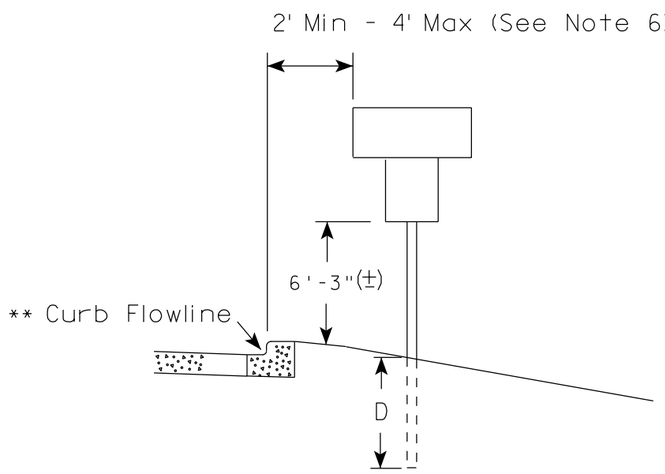

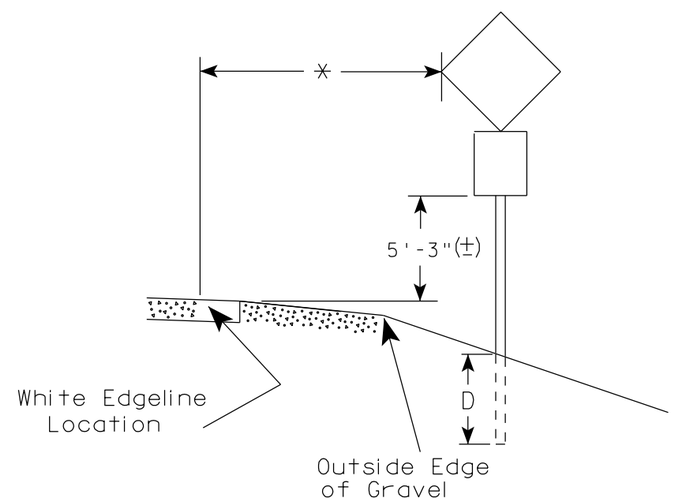

** The existence of curb and gutter does not in itself mandate the vertical clearance illustrated. That height is typically measured where there is sidewalk adjacent to the roadway or parking is permitted. In the absence of sidewalk vertical clearance is measured from the top of the curb. Offset of signs is measured from the flow line.

* 6 feet from edge of a paved shoulder or 12 feet from the edge of pavement (edge line location) or 2 feet from outside edge of gravel, whichever is greater unless directed by project engineer.

GENERAL NOTES

1. Signs wider than 4 feet, 20 sq.ft or larger, shall be mounted on multiple posts. Refer to plate A4-4.
2. If signs are mounted on barrier wall, see A4-10 sign plate.
3. For expressways and freeways, mounting height is 7'- 3" (±) or 6'-3" (±) depending upon existence of a sub-sign.
4. Minimum mounting height for J assemblies (A2-1S) is 7'-3" (±) or 6'-3" (±) per urban or rural detail respectively.
5. Minimum mounting height for signs mounted on traffic signal poles is 5'- 3" (±).
6. Offset distance shall be consistent with existing signs or consistent throughout length of project.
7. The (±) tolerance for mounting height is 3 inches.
8. Folding signs shall be mounted at a height of 5'-3" (±) or as directd by the Engineer.
9. The Double Arrow sign (W12-1) shall be mounted at a height of 2'-3" (±). The Chevron sign (W1-8), Roundabout Chevron panel (R6-4B), Enhanced Reference Markers, Clearance Markers (W5-52), Mile Markers (D10 series), In Road Object Markers (W5-54) & End of Road Markers (W5-56) shall be mounted at a height of 4'-3" (±).

POST EMBEDMENT DEPTH

Area of Sign Installation (Sq. Ft.)	D (Min)
20 or Less	4'
Greater than 20	5'

TYPICAL INSTALLATION OF PERMANENT TYPE II SIGNS ON SINGLE POSTS

WISCONSIN DEPT OF TRANSPORTATION

APPROVED Matthew R Rauch for State Traffic Engineer

DATE 11/12/14 PLATE NO. A4-3.19

PROJECT NO:	HWY:	COUNTY:		SHEET NO:	E

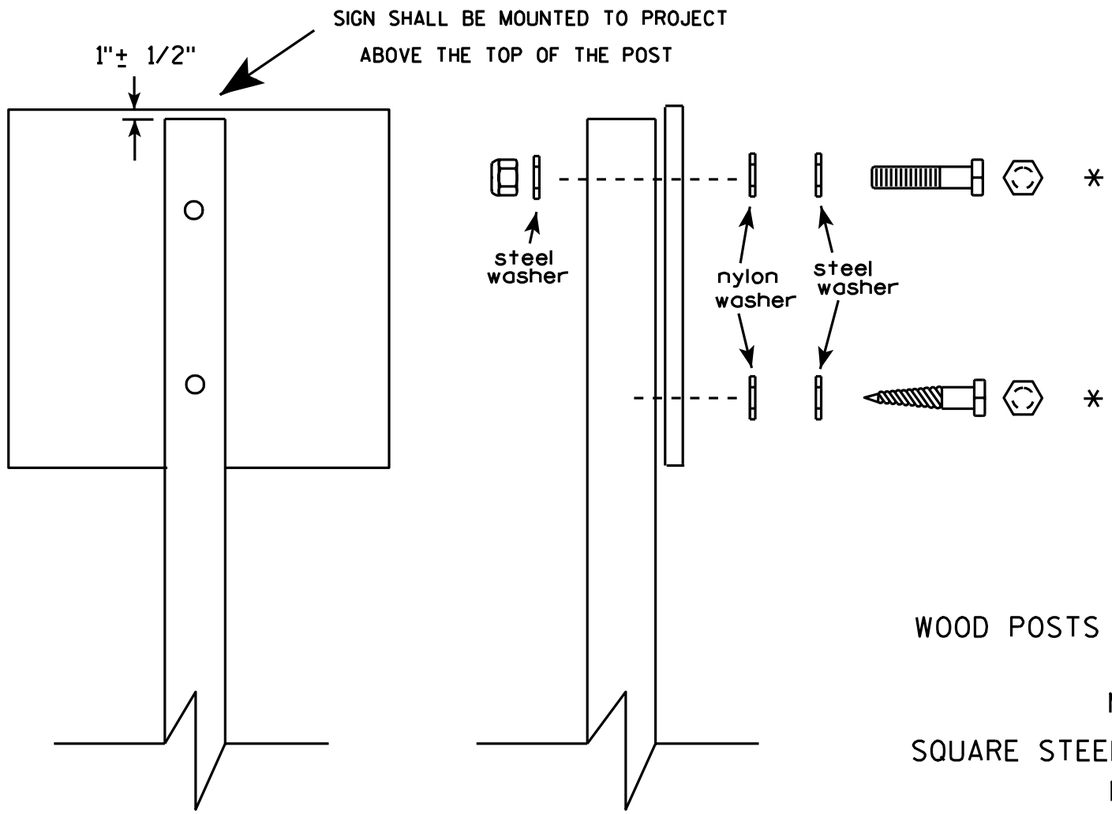

Nuts, bolts and lags used for mounting signs shall have hexagonal heads and shall be either :

a. Hot dip galvanized in accordance with ASTM Designation: A 153, Class D, or SC 3

b. Electro-galvanized in accordance with ASTM Designation : B 633, TYPE III, SC 3.

Threads on bolts and nuts shall be manufactured with sufficient allowance for the cadmium plate or galvanized coating to permit the nuts to run freely on the bolts.

WOOD POSTS (4" x 4" or 4" x 6")

LAG SCREWS - 3/8" X 3"

MACHINE BOLTS - 5/16" X 6-1/2" or 7" Length w/ nuts

SQUARE STEEL POSTS (2" x 2")

MACHINE BOLTS - 3/8" X 3-1/4" Length w/ nuts

RIVETS - 9/32 " (6605-9-6) BULB-TITE, TRI-FOLD, ALUMINUM BODY/MANDREL O.D. FLANGE .720-.765 INCH, GRIP RANGE .042-.375 INCH

WASHERS (ALL POSTS) -

1-1/4" O.D. X 3/8" I.D. X 1/16" STEEL

1-1/4" O.D. X 3/8" I.D. X .080 NYLON for all Type H signs.

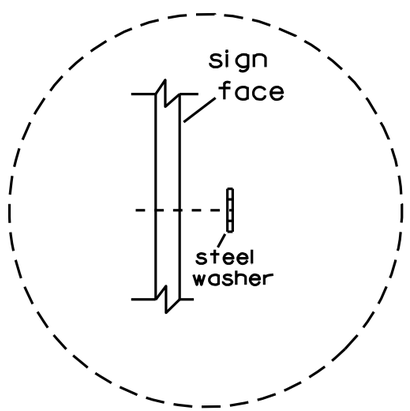

Washer Placement when Sign Has Other Than Type H or Type F Face

* Two different fastening systems are shown for illustration purposes. On any individual sign, either one or the other system shall be used. Actual number of fasteners per sign varies with the sign area, but normally there are two. For a single post installation, all signs greater than 9 sq. ft. require the use of 3 fasteners.

ATTACHMENT OF SIGNS TO POSTS

WISCONSIN DEPT OF TRANSPORTATION

APPROVED Matthew R Rauch
for State Traffic Engineer

DATE 3/23/10 PLATE NO. A4-8.7

PROJECT NO:				SHEET NO: 65	E

TELESCOPIC TUBING ANCHORS
TWO PIECE SYSTEM

2 1/4" SQUARE
12 GAUGE
PERFORATED
GALVANIZED FINISH

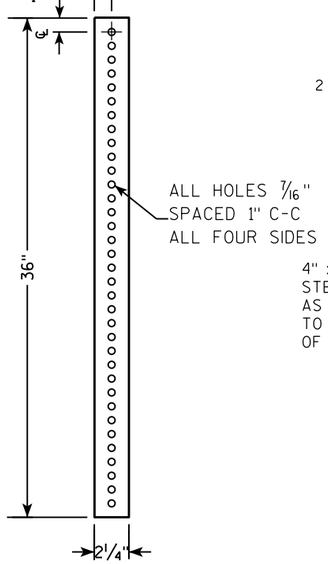

2 1/2" SQUARE
12 GAUGE
OMNI-DIRECTIONAL
PERFORATED
SOIL STABILIZING SLEEVE
GALVANIZED FINISH

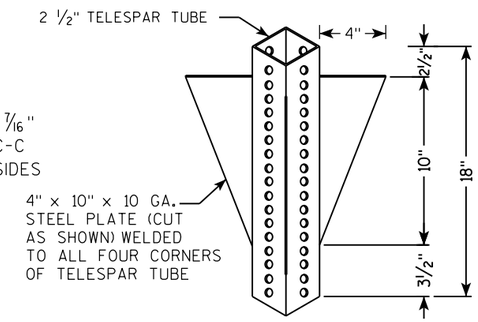

DETAIL OF TUBULAR STEEL SIGN POST
(IN POURED CONCRETE OR ASPHALT)

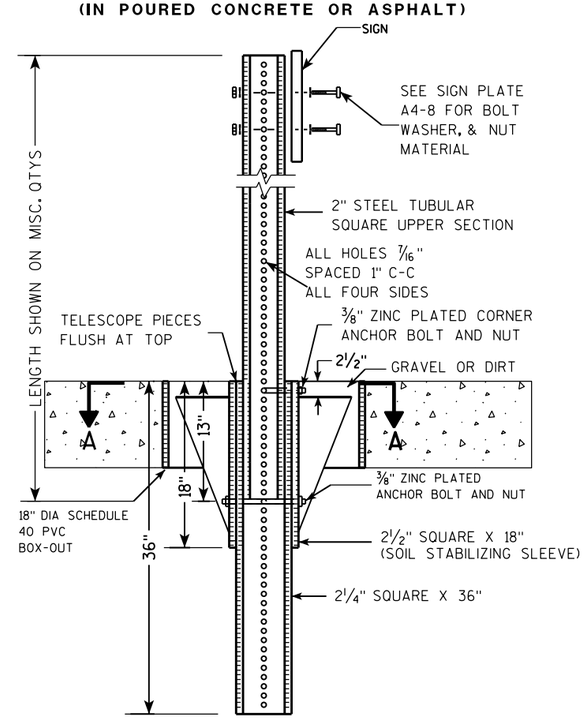

DETAIL OF TUBULAR STEEL SIGN POST
(IN LOCATIONS OTHER THAN POURED CONCRETE OR ASPHALT)

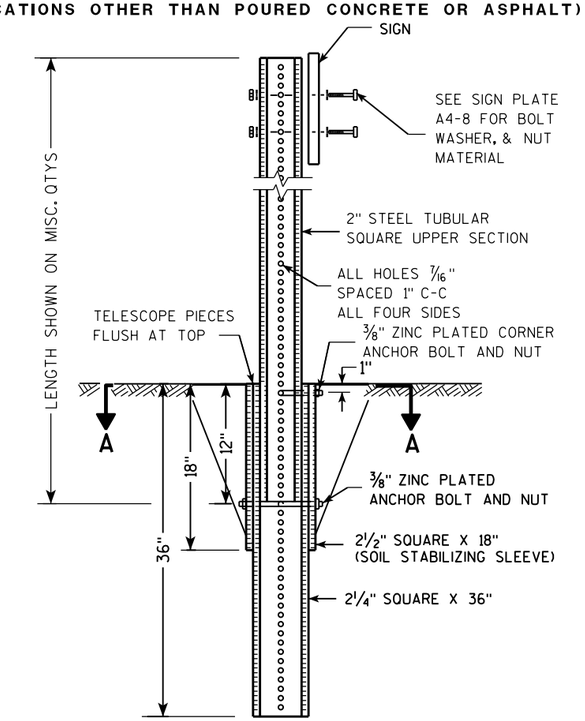

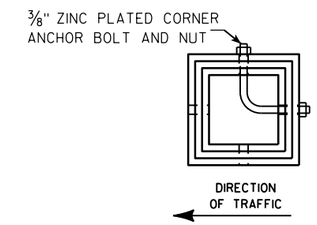

SECTION A-A

Area of Sign Installation (Sq. Ft.)	Number of Required Posts
9 or less	1
Greater than 9 less than or equal to 18	2
Greater than 18 less than or equal to 27	3

Signs wider than 3 feet or larger than 9 sq. ft shall be mounted on multiple posts (see above table).

TUBULAR STEEL
SIGN POST
A4-9

WISCONSIN DEPT OF TRANSPORTATION

APPROVED Matthew R Rauch
for State Traffic Engineer

DATE 2/05/15 PLATE A4-9.9

7 7

PROJECT NO:	HWY:	COUNTY:		SHEET NO:	E

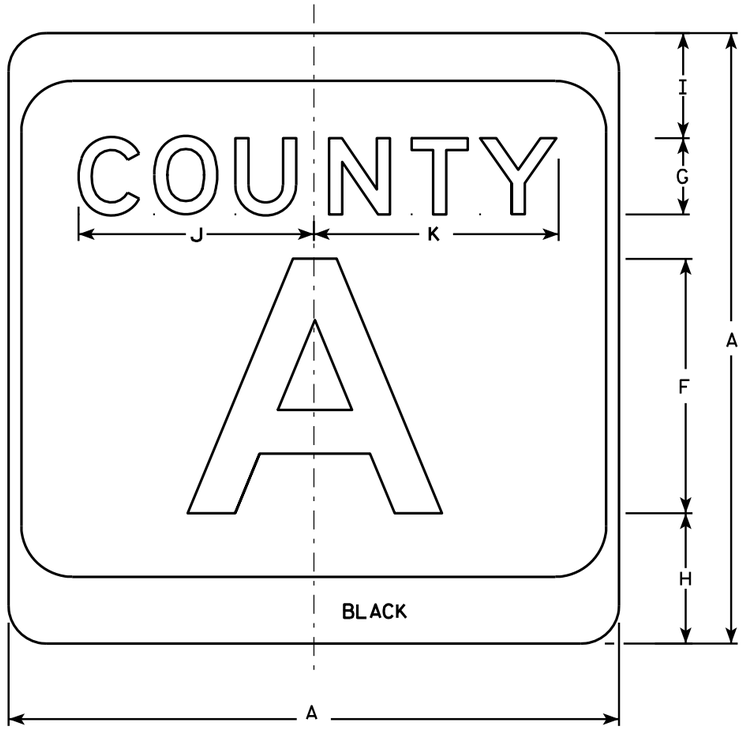

M1-5A

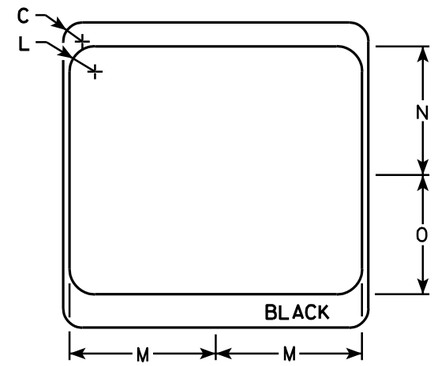

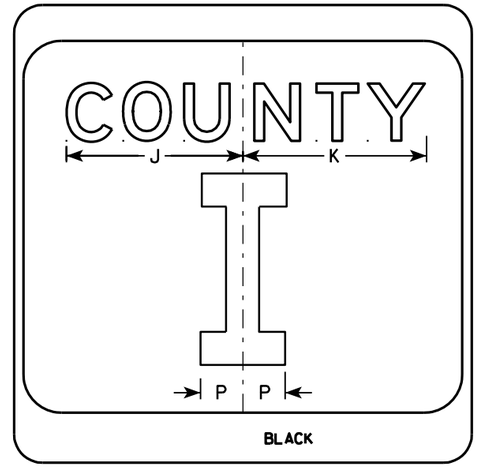

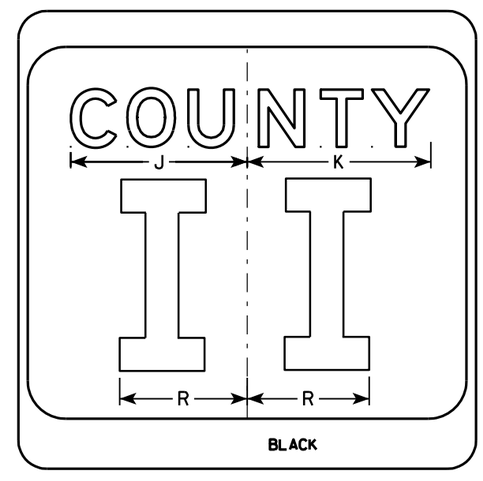

NOTES

1. Sign is Type II - see Note 7 - reference WIS DOT Standard Specification for HIGHWAY and STRUCTURE CONSTRUCTION latest edition.
2. Color:
   Background - White & Black - See Note 7
   Message - Black
3. Message Series - see Note 5
4. Corners may be square or rounded when base material is plywood but borders shall be rounded as shown. When base material is metal, the corners and borders shall be rounded.
5. Message Series E for 1 letter.
   Message Series D for 2 letters unless message is too big then Series C.
   Message Series C for 3 letters unless message is too big then Series B.
6. Substitute appropriate letters & optically center to achieve proper balance.
7. Permanent Signs
   Background - Type H Reflective
   Detour or temporary Signs
   Background - Reflective

SIZE	A	B	C	D	E	F	G	H	I	J	K	L	M	N	O	P	Q	R	S	T	U	V	W	X	Y	Z	Area sq. ft.
1																											
2	24		1 1/2			10	3	5 1/8	4 1/8	9 1/4	9 5/8	2	11 1/2	10 1/8	9 3/8	2 1/4		6 5/8									4.0
3	36		2 1/4			16	4	7 5/8	5 5/8	12 1/4	12 7/8	3	17 1/8	15 1/4	14	3 3/8		10									9.0
4	36		2 1/4			16	4	7 5/8	5 5/8	12 1/4	12 7/8	3	17 1/8	15 1/4	14	3 3/8		10									9.0
5	36		2 1/4			16	4	7 5/8	5 5/8	12 1/4	12 7/8	3	17 1/8	15 1/4	14	3 3/8		10									9.0

CTH MARKER
M1-5A FOR ASSEMBLIES

WISCONSIN DEPT OF TRANSPORTATION

APPROVED Matthew R Rauch
for State Traffic Engineer

DATE 9/27/11 PLATE NO. M1-5A.8

7

7

PROJECT NO: | HWY: | COUNTY: | SHEET NO: 67 | E

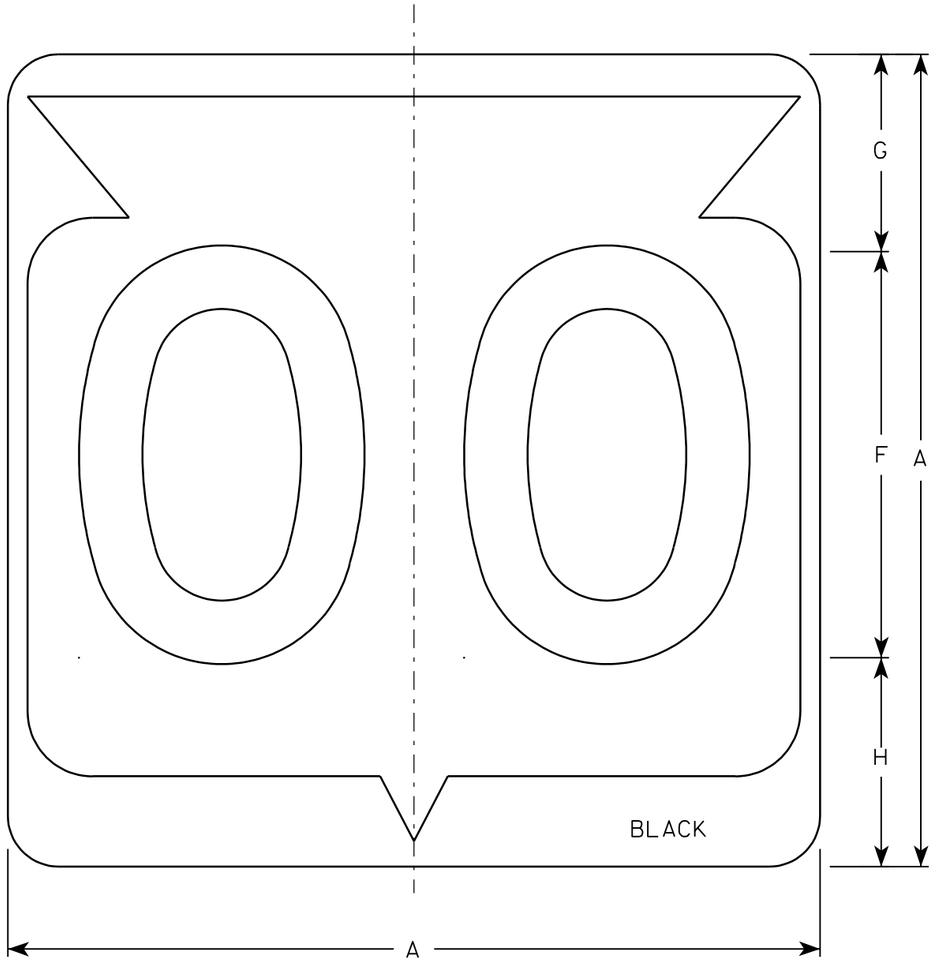

M1-6

NOTES

1. Sign is Type II - See Note 6 - reference WIS DOT Standard Specification for HIGHWAY and STRUCTURE CONSTRUCTION latest edition.
2. Color:
   Background - White & Black - See Note 6
   Message - Black
3. Message Series - See note 5
4. Corners may be square or rounded when base material is plywood but borders shall be rounded as shown. When base material is metal, the corners and borders shall be rounded.
5. Substitute appropriate Series numerals and adjust spacing as per plate A10-1.
6. Permanent Signs
   Background - Type H Reflective
   Detour or temporary Signs
   Background - Reflective

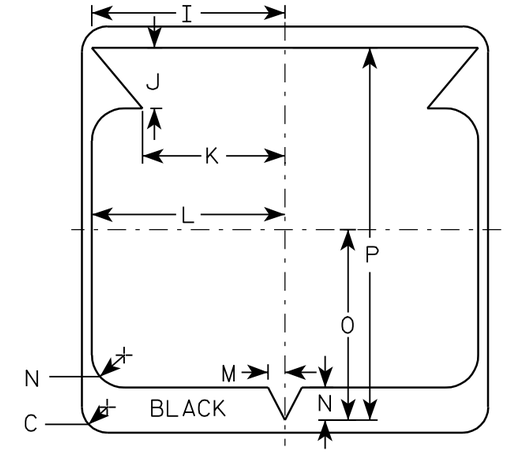

Metric equivalent for this sign is:

SIZE	
1	
2	600 mm X 600 mm
3	900 mm X 900 mm
4	900 mm X 900 mm
5	900 mm X 900 mm

SIZE	A	B	C	D	E	F	G	H	I	J	K	L	M	N	O	P	Q	R	S	T	U	V	W	X	Y	Z	Area sq. ft.	Area m2
1																												
2	24		1 1/2			12	5 1/2	6 1/2	10 1/4	2 1/2	8 7/8	11 1/2	1	1 7/8	11 1/4	21 7/8											4.0	.36
3	36		2 1/4			18	8 3/4	9 1/4	15 3/8	5 3/8	12 5/8	17 1/8	1 1/2	2 7/8	16 7/8	33											9.0	.81
4	36		2 1/4			18	8 3/4	9 1/4	15 3/8	5 3/8	12 5/8	17 1/8	1 1/2	2 7/8	16 7/8	33											9.0	.81
5	36		2 1/4			18	8 3/4	9 1/4	15 3/8	5 3/8	12 5/8	17 1/8	1 1/2	2 7/8	16 7/8	33											9.0	.81

STATE ROUTE MARKER
M1-6 FOR ASSEMBLIES

WISCONSIN DEPT OF TRANSPORTATION

APPROVED Chester J Spang
for State Traffic Engineer

DATE 3/20/02 PLATE NO. M1-6.9

PROJECT NO: | HWY: | COUNTY: | SHEET NO: 68 | E

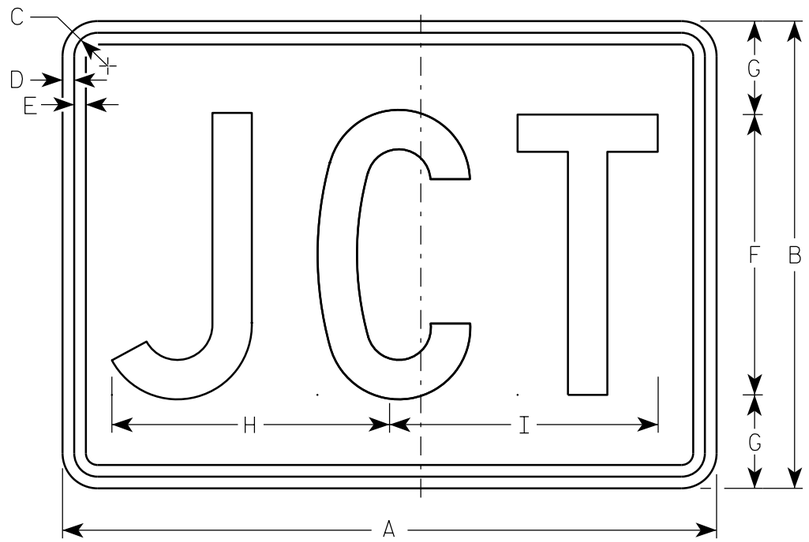

M2-1
MK2-1
MM2-1
MN2-1
MR2-1

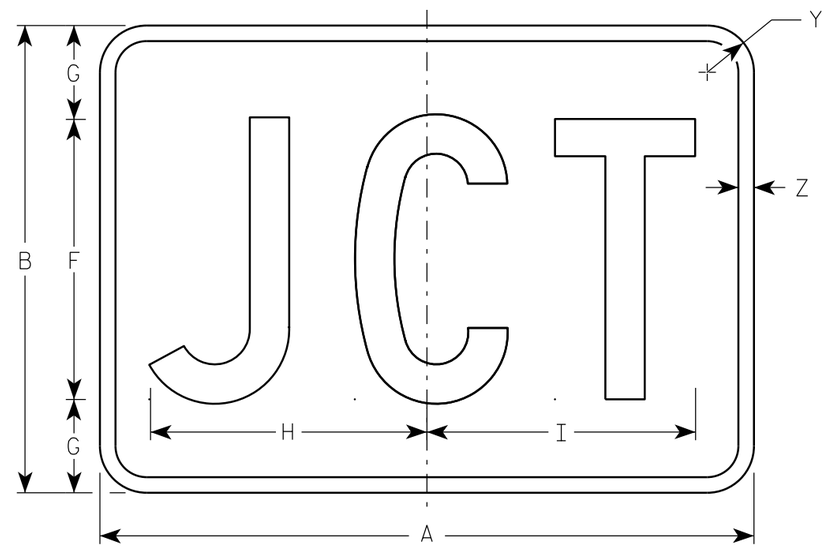

MB2-1

NOTES

1. Sign is Type II - Type H
2. Color:
   Background - See note 5
   Message - See note 5
3. Message Series - C
4. Corners may be square or rounded when base material is plywood but borders shall be rounded as shown. When base material is metal, the corners and borders shall be rounded.
5. M2-1 Background - White
   Message - Black
   MB2-1 Background - Blue
   Message - White
   MK2-1 Background - Green
   Message - White
   MM2-1 Background - White
   Message - Green
   MN2-1 Background - Brown
   Message - White
   MR2-1 Background - Brown
   Message - Yellow

SIZE	A	B	C	D	E	F	G	H	I	J	K	L	M	N	O	P	Q	R	S	T	U	V	W	X	Y	Z	Area sq. ft.
1																											
2	21	15	1 1/8	3/8	3/8	9	3	8 7/8	8 5/8																1 1/2	1/2	2.20
3	30	21	1 1/8	3/8	3/8	13	4	12 7/8	12 3/8																1 1/2	1/2	4.40
4	30	21	1 1/8	3/8	3/8	13	4	12 7/8	12 3/8																1 1/2	1/2	4.40
5	30	21	1 1/8	3/8	3/8	13	4	12 7/8	12 3/8																1 1/2	1/2	4.40

STANDARD SIGN
M2-1

WISCONSIN DEPT OF TRANSPORTATION

APPROVED Matthew R Rauch
For State Traffic Engineer

DATE 6/30/14 PLATE 69 12-1.11

PROJECT NO: | HWY: | COUNTY: | SHEET NO: | E

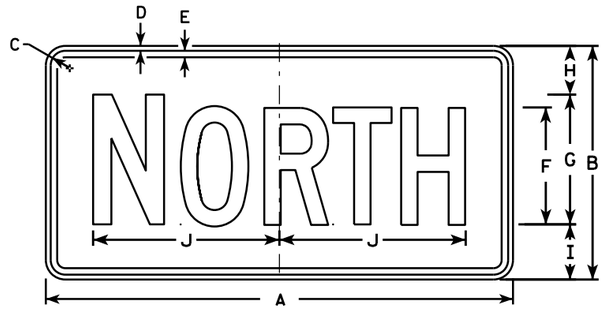

M3-1
MK3-1
MM3-1
MN3-1

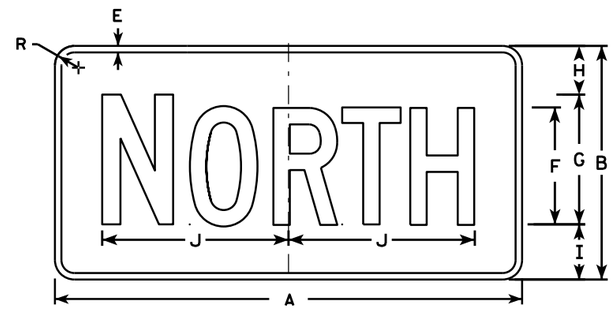

MB3-1

M3-2
MK3-2
MM3-2
MN3-2

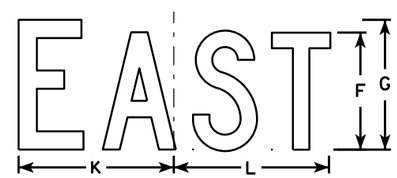

MB3-2

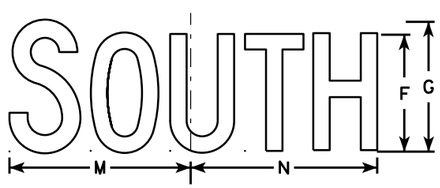

M3-3
MK3-3
MM3-3
MN3-3

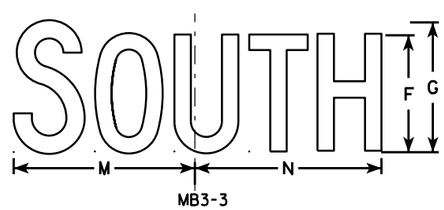

MB3-3

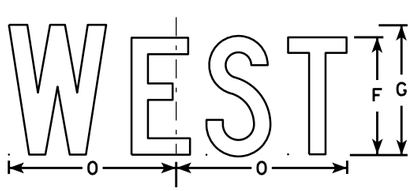

M3-4
MK3-4
MM3-4
MN3-4

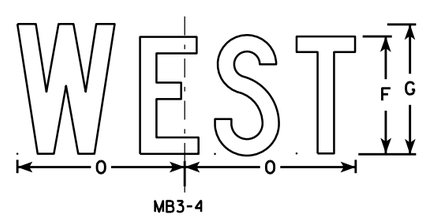

MB3-4

NOTES

1. All Signs Type II - Type H
2. Color:
   Background - See note 5
   Message - See note 5
3. Message Series - C
4. Corners may be square or rounded when base material is plywood but borders shall be rounded as shown. When base material is metal, the corners and borders shall be rounded.
5. M3-1 thru M3-4 Background - White
   Message - Black
   MB3-1 thru MB3-4 Background - Blue
   Message - White
   MK3-1 thru MK3-4 Background - Green
   Message - White
   MM3-1 thru MM3-4 Background - White
   Message - Green
   MN3-1 thru MN3-4 Background - Brown
   Message - White
6. Note the first letter of each direction is larger than the remainder of the message.

SIZE	A	B	C	D	E	F	G	H	I	J	K	L	M	N	O	P	Q	R	S	T	U	V	W	X	Y	Z	Area sq. ft.
1																											
2	24	12	1 1/8	3/8	3/8	6	7	2 1/4	2 3/4	10 1/4	7 7/8	8 3/8	10 1/4	9 3/4	8 3/4			1 1/2									2.00
3	36	18	1 1/8	3/8	1/2	9	10	3 3/4	4 1/4	14 3/8	12	12 1/8	14	14 1/8	13			1 1/2									4.5
4	36	18	1 1/8	3/8	1/2	9	10	3 3/4	4 1/4	14 3/8	12	12 1/8	14	14 1/8	13			1 1/2									4.5
5	36	18	1 1/8	3/8	1/2	9	10	3 3/4	4 1/4	14 3/8	12	12 1/8	14	14 1/8	13			1 1/2									4.5

STANDARD SIGNS
M3-1 thur M3-4
SERIES

WISCONSIN DEPT OF TRANSPORTATION

APPROVED Matthew R Rauch
for State Traffic Engineer

DATE 6/30/14 PLATE NO. M3-1.13

PROJECT NO: | HWY: | COUNTY: | SHEET NO: | E

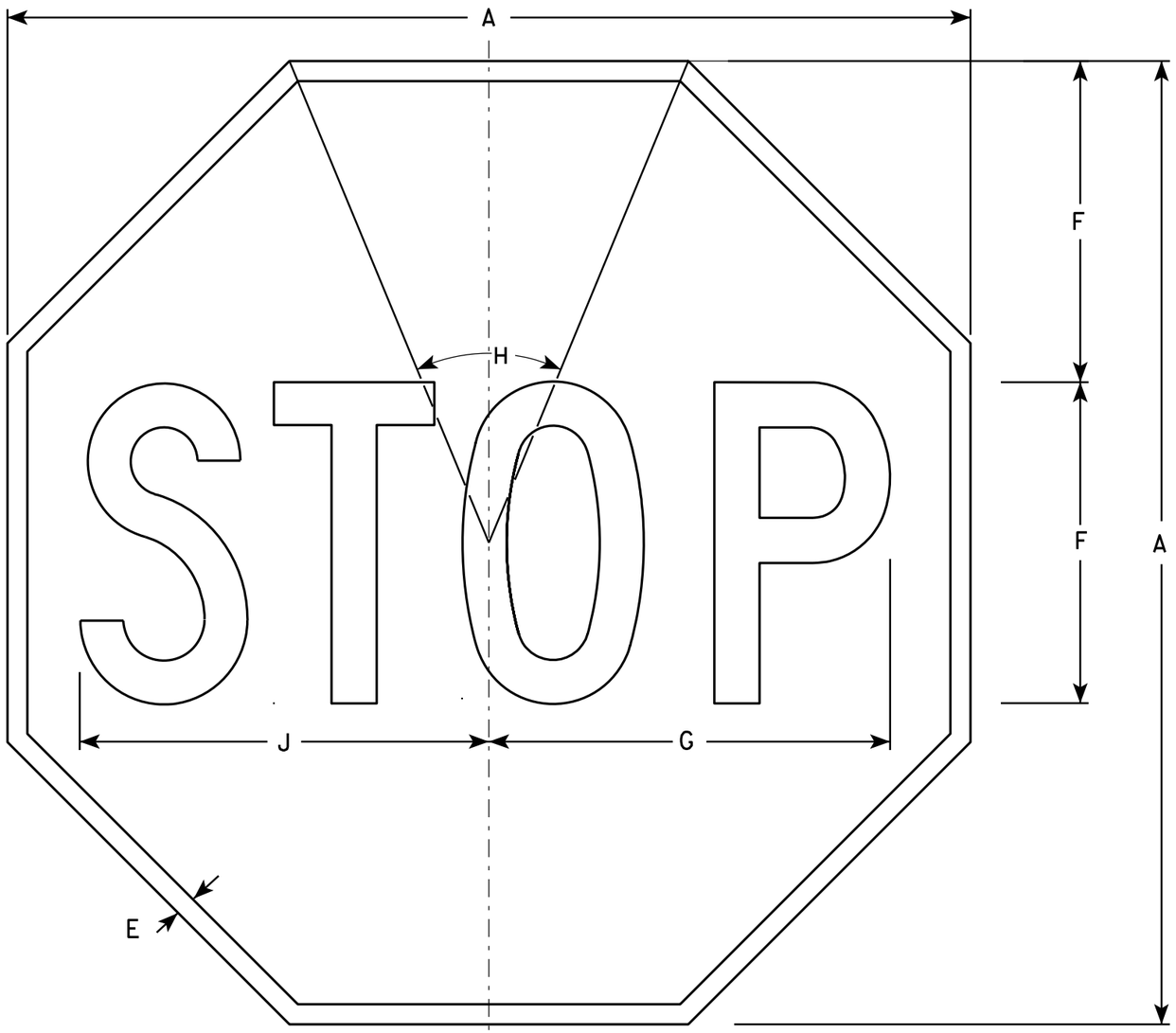

R1-1

NOTES

1. Sign is Type II - Type H Reflective - reference WIS DOT Standard Specification for HIGHWAY and STRUCTURE CONSTRUCTION latest edition.
2. Color:
   Background - Red
   Message - White
3. Message Series - C

SIZE	A	B	C	D	E	F	G	H	I	J	K	L	M	N	O	P	Q	R	S	T	U	V	W	X	Y	Z	Area sq. ft.
1	24				3/8	8	10	45°		10 1/4																	3.31
2S	30				5/8	10	12 1/2	45°		12 3/4																	5.18
2M	36				3/4	12	15	45°		15 3/8																	7.46
3	36				3/4	12	15	45°		15 3/8																	7.46
4	48				1	16	20	45°		20 1/2																	13.25
5	48				1	16	20	45°		20 1/2																	13.25
6	18				3/8	6	7 3/4	45°		7 3/4																	1.86
7	12				1/4	4	5	45°		5 1/8																	0.78

STANDARD SIGN
R1-1

WISCONSIN DEPT OF TRANSPORTATION

APPROVED Matthew R Rauch
for State Traffic Engineer

DATE 12/03/10 PLATE NO. R1-1.12

PROJECT NO: | HWY: | COUNTY: | SHEET NO: 71 | E

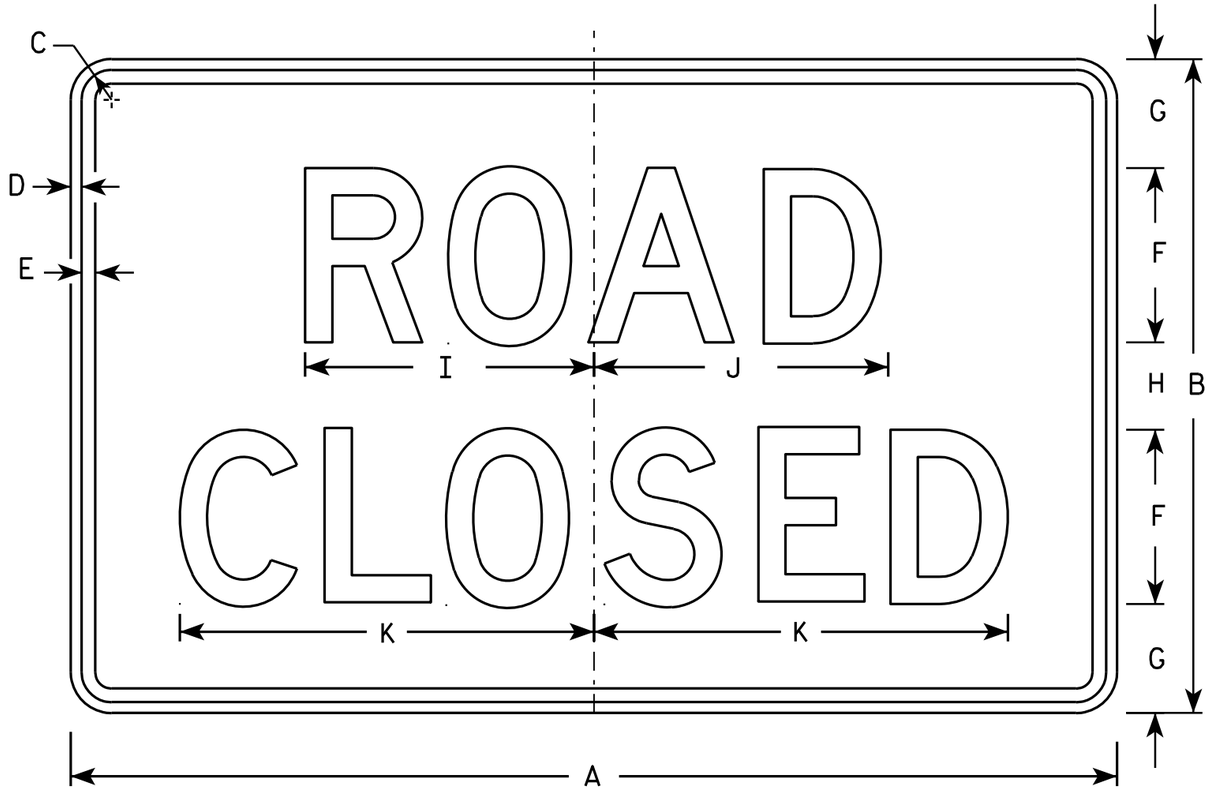

R11-2

NOTES

1. Sign is Type II - Type H Reflective - reference WIS DOT Standard Specification for HIGHWAY and STRUCTURE CONSTRUCTION latest edition.
2. Color:
   Background - White
   Message - Black
3. Message Series - D
4. Corners may be square or rounded when base material is plywood but borders shall be rounded as shown. When base material is metal, the corners and borders shall be rounded.
5. Modify the message as required.

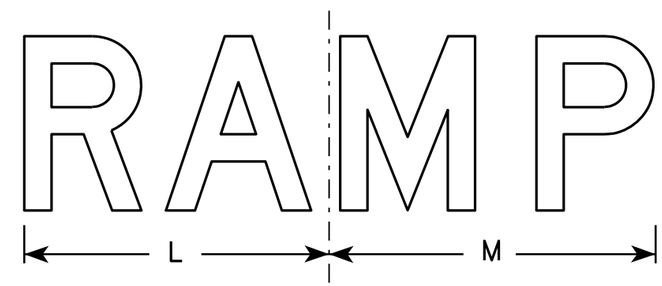

R11-2R

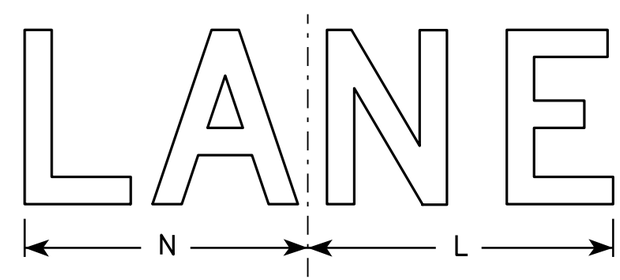

R11-2L

SIZE	A	B	C	D	E	F	G	H	I	J	K	L	M	N	O	P	Q	R	S	T	U	V	W	X	Y	Z	Area sq. ft.
1																											
2S	48	30	1 3/8	1/2	5/8	8	5	4	13 1/4	13 1/2	19	14	15	13													10.0
2M	48	30	1 3/8	1/2	5/8	8	5	4	13 1/4	13 1/2	19	14	15	13													10.0
3	48	30	1 3/8	1/2	5/8	8	5	4	13 1/4	13 1/2	19	14	15	13													10.0
4	48	30	1 3/8	1/2	5/8	8	5	4	13 1/4	13 1/2	19	14	15	13													10.0
5	48	30	1 3/8	1/2	5/8	8	5	4	13 1/4	13 1/2	19	14	15	13													10.0

STANDARD SIGN
R11-2

WISCONSIN DEPT OF TRANSPORTATION

APPROVED Matthew R Rauch
for State Traffic Engineer

DATE 4/1/11 PLATE NO. R11-2.10

PROJECT NO: | HWY: | COUNTY: | SHEET NO: 72 | E

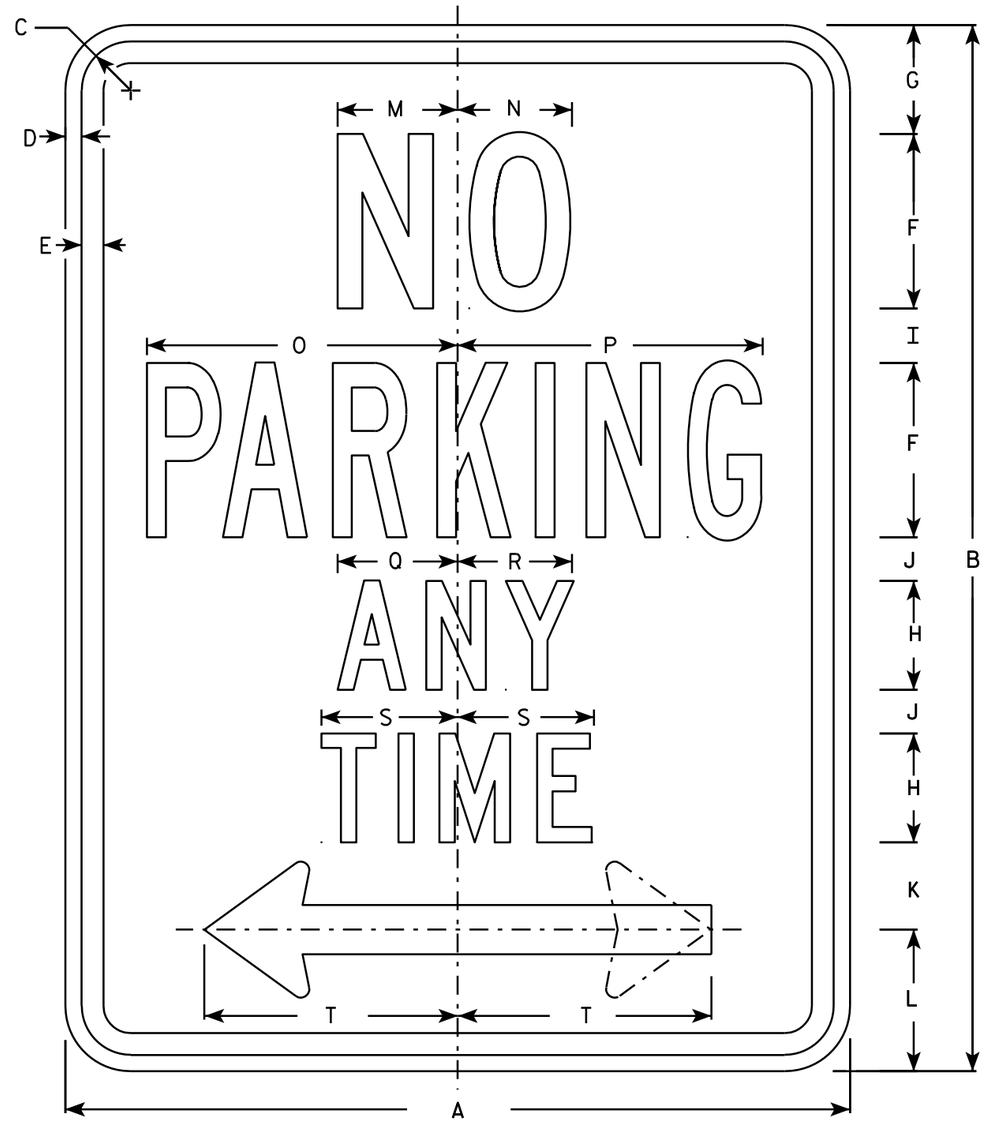

R7-1

NOTES

1. Sign is Type II - Type H Reflective - reference WIS DOT Standard Specification for HIGHWAY and STRUCTURE CONSTRUCTION latest edition.
2. Color:
   Background - White
   Message - Red
3. Message Series - See Note 5
4. Corners may be square or rounded when base material is plywood but borders shall be rounded as shown. When base material is metal, the corners and borders shall be rounded.
5. Lines 1, 3 and 4 are series C, line 2 is series B.
6. R7-1D (double arrow)
   R7-1L (left arrow)
   R7-1R (right arrow)

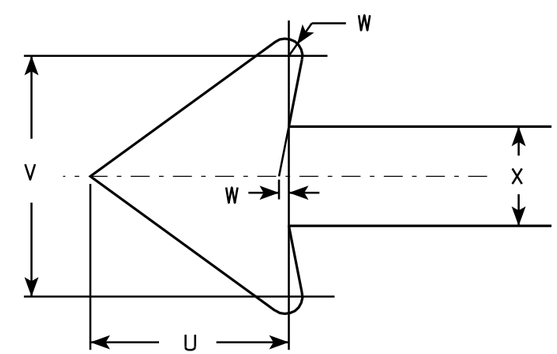

SIZE	A	B	C	D	E	F	G	H	I	J	K	L	M	N	O	P	Q	R	S	T	U	V	W	X	Y	Z	Area sq. ft.
1	12	18	1 1/8	3/8	3/8	3	1 7/8	2	7/8	5/8	1 1/2	2 1/2	2	2	4 7/8	4 7/8	2 1/4	2 1/8	2 1/2	3 7/8	1 1/2	1 3/4	1/8	3/4			1.5
2S	18	24	1 1/8	3/8	1/2	4	2 1/2	2 1/2	1 1/4	1	2	3 1/4	2 3/4	2 5/8	7 1/8	7	2 3/4	2 5/8	3 1/8	5 7/8	2 1/4	2 5/8	1/4	1 1/8			3.0
2M	24	30	1 1/8	3/8	1/2	5	3	3	2	1 1/4	2 1/2	4	3 1/4	3 3/8	9 1/4	9 1/4	3 1/4	3 1/4	3 3/4	7 3/4	3	3 1/2	1/4	1 1/2			5.0
3	24	30	1 1/8	3/8	1/2	5	3	3	2	1 1/4	2 1/2	4	3 1/4	3 3/8	9 1/4	9 1/4	3 1/4	3 1/4	3 3/4	7 3/4	3	3 1/2	1/4	1 1/2			5.0
4																											
5																											

STANDARD SIGN
R7-1

WISCONSIN DEPT OF TRANSPORTATION

APPROVED Matthew R Rauch
for State Traffic Engineer

DATE 3/31/2011 PLATE NO. R7-1.9

PROJECT NO:	HWY:	COUNTY:		SHEET NO: 73	E

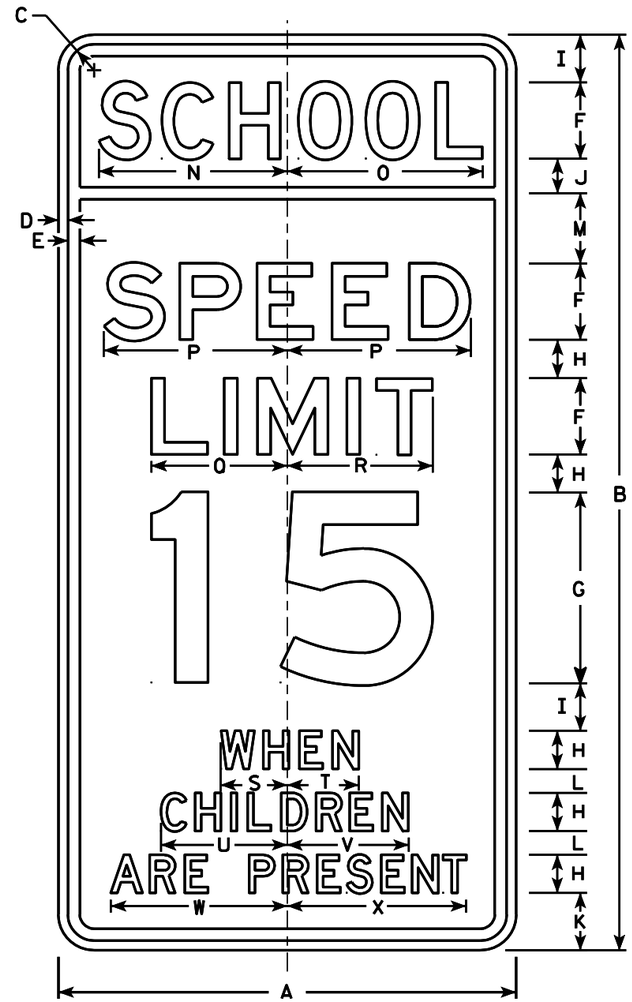

S4-51

NOTES

1. Sign is Type II - reference WIS DOT Standard Specification for HIGHWAY and STRUCTURE CONSTRUCTION latest edition. (See note 5).
2. Color:
   Background - See note 5
   Message - Black
3. Message Series - See note 6
4. Corners may be square or rounded when base material is plywood but borders shall be rounded as shown. When base material is metal, the corners and borders shall be rounded.
5. Top panel (SCHOOL) background - Yellow Green -Type F Reflective. Lower panel background - White -Type H Reflective.
6. From top to bottom:
   Lines 1, 5, 6 & 7 are series D
   Lines 2, 3 & 4 are series E
7. Line 4 substitute appropriate numerals and adjust spacing to achieve proper balance.

Metric equivalent for this sign is:

SIZE	
1	
2	600 mm X 1200 mm
3	900 mm X 1800 mm
4	
5	

SIZE	A	B	C	D	E	F	G	H	I	J	K	L	M	N	O	P	Q	R	S	T	U	V	W	X	Y	Z	Area sq. ft.	Area m2
1																												
2	24	48	1 3/8	1/2	5/8	4	10	2	2 1/2	1 3/4	3	1 1/4	3 3/4	9 7/8	10 1/4	9 5/8	7 1/8	7 5/8	3 1/2	3 3/8	6 5/8	6 3/8	9 1/4	9 3/8			8.00	0.72
3	36	72	2 1/4	3/4	1	6	15	3	3 3/4	2 3/4	4 1/2	1 7/8	5 1/2	15	15 1/4	14 1/2	11 1/4	11 1/2	5 1/2	5 3/4	10	9 3/4	14	14 1/8			18.00	1.62
4																												
5																												

STANDARD SIGN
S4-51

WISCONSIN DEPT OF TRANSPORTATION

APPROVED Matthew R Rauch
for State Traffic Engineer

DATE 4/26/10 PLATE NO. S4-51.9

PROJECT NO: | HWY: | COUNTY: | SHEET NO: 74 | E

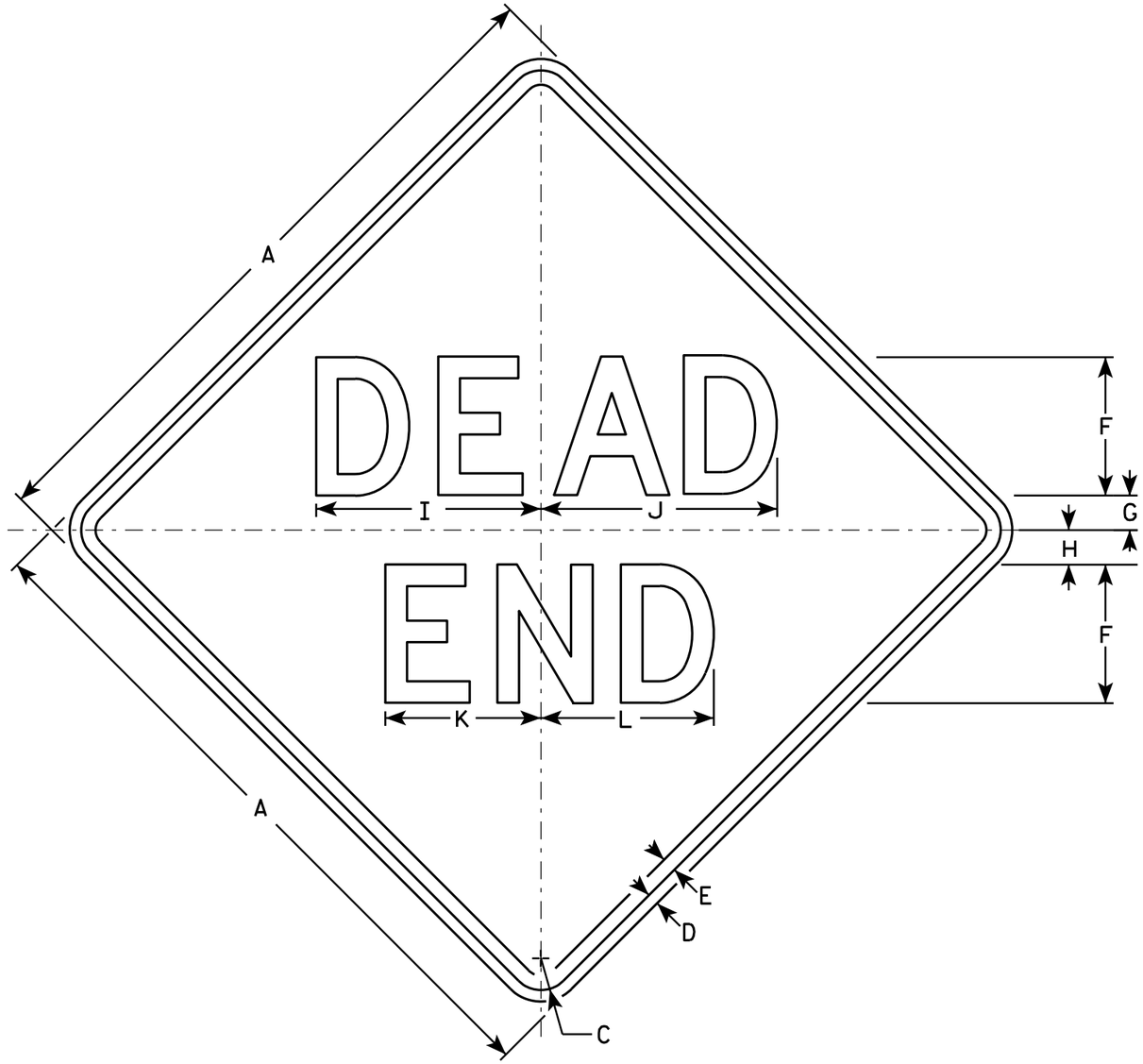

W14-1

NOTES

1. Sign is Type II - Type F Reflective - reference WIS DOT Standard Specification for HIGHWAY and STRUCTURE CONSTRUCTION latest edition.
2. Color:
   Background - Yellow
   Message - Black
3. Message Series - D
4. Corners may be square or rounded when base material is plywood but borders shall be rounded as shown. When base material is metal, the corners and borders shall be rounded.

SIZE	A	B	C	D	E	F	G	H	I	J	K	L	M	N	O	P	Q	R	S	T	U	V	W	X	Y	Z	Area sq. ft.
1	24		1 1/8	3/8	1/2	5	1	2	8 1/4	8 5/8	5 5/8	6 1/4															4.0
2S	30		1 3/8	1/2	5/8	6	1 1/2	2 1/2	9 3/4	10 1/4	6 3/4	7 1/2															6.25
2M	30		1 3/8	1/2	5/8	6	1 1/2	2 1/2	9 3/4	10 1/4	6 3/4	7 1/2															6.25
3	36		1 5/8	5/8	3/4	7	2	3	11 3/8	12	7 7/8	8 3/4															9.0
4																											
5																											

STANDARD SIGN
W14-1

WISCONSIN DEPT OF TRANSPORTATION

APPROVED Matthew R Rauch
for State Traffic Engineer

DATE 3/13/13 PLATE NO. W14-1.7

PROJECT NO: | HWY: | COUNTY: | SHEET NO: 75 | E

NOTES

1. Sign is Type II - Type F Reflective - reference WIS DOT Standard Specification for HIGHWAY and STRUCTURE CONSTRUCTION latest edition.
2. Color:
   Background - Yellow
   Message - Black
3. Message Series - See note 5
4. Corners and borders shall be rounded on all base materials for this sign.
5. Lines 1 and 2 are Series D.
   Line 3 is series C.

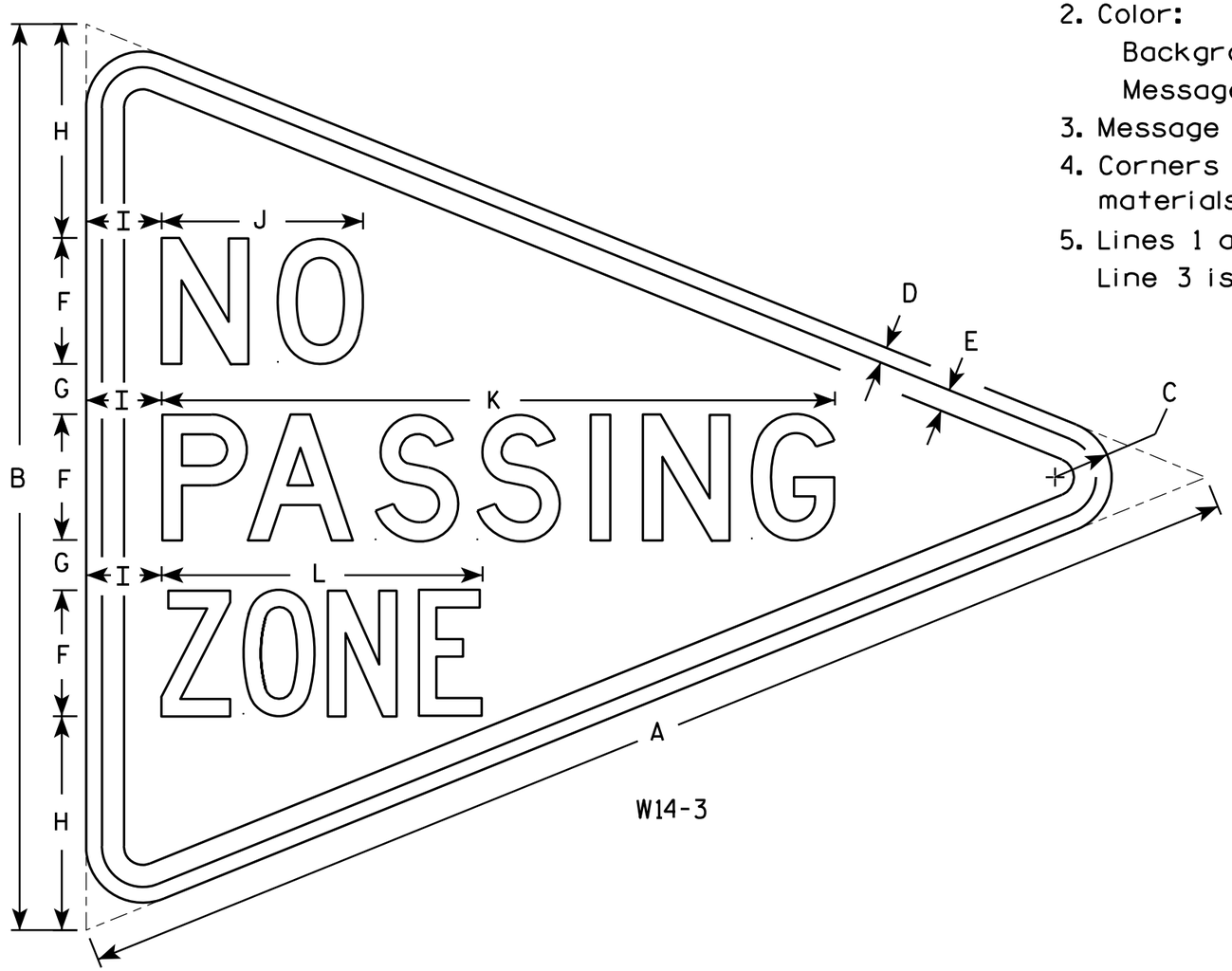

W14-3

SIZE	A	B	C	D	E	F	G	H	I	J	K	L	M	N	O	P	Q	R	S	T	U	V	W	X	Y	Z	Area sq. ft.
1																											
2S	48	36	2 1/4	5/8	7/8	5	2	8 1/2	3	8	26 3/4	12 3/4															6.0
2M	48	36	2 1/4	5/8	7/8	5	2	8 1/2	3	8	26 3/4	12 3/4															6.0
3	64	48	3	3/4	1 1/4	6	3	12	4	10 3/4	33 5/8	16 1/2															10.7
4																											
5																											

STANDARD SIGN
W14-3

WISCONSIN DEPT OF TRANSPORTATION

APPROVED Matthew R Rauch
for State Traffic Engineer
DATE 6/7/10 PLATE NO. W14-3.9

PROJECT NO: | HWY: | COUNTY: | SHEET NO: 76 | E

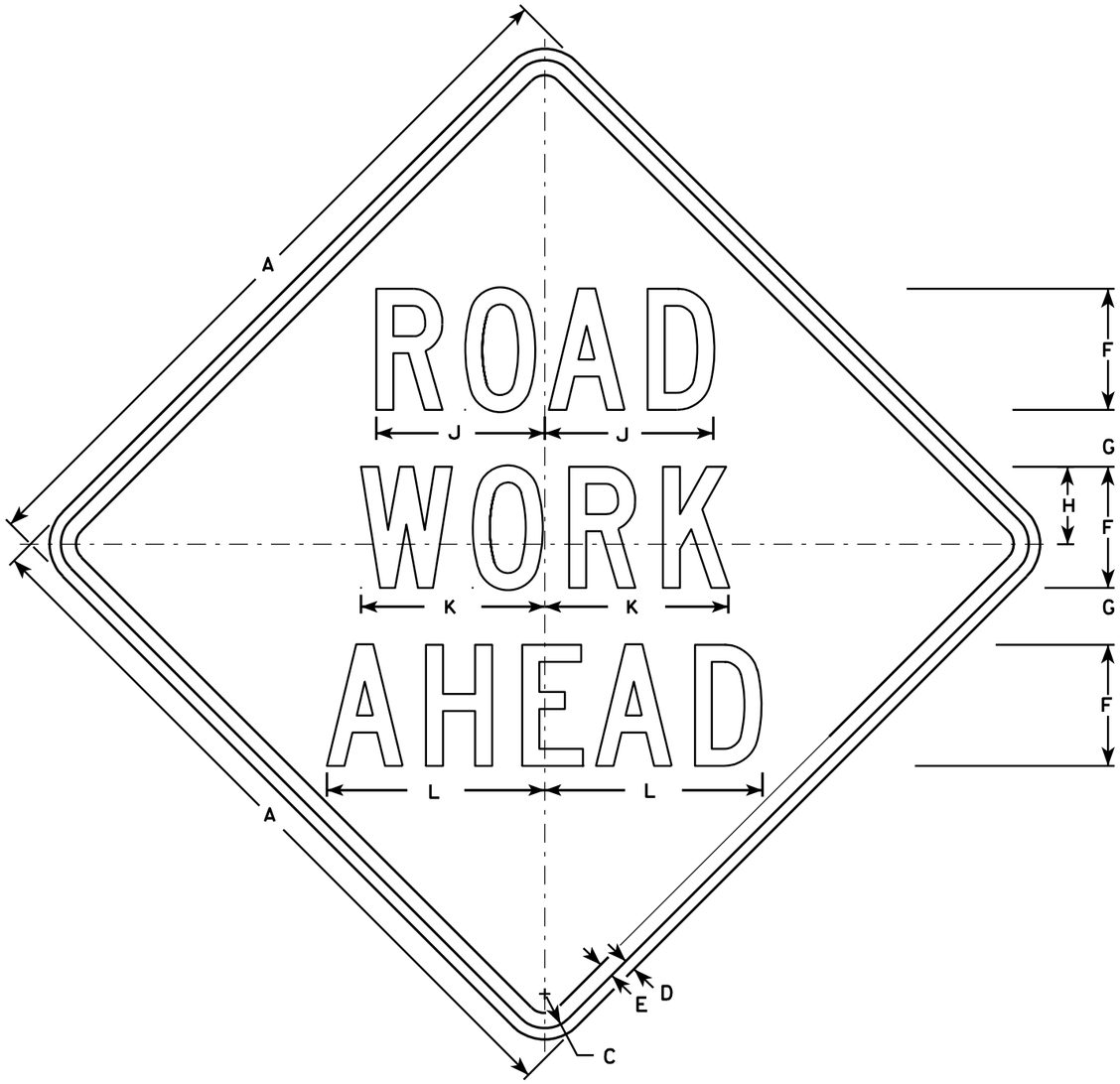

W20-1A

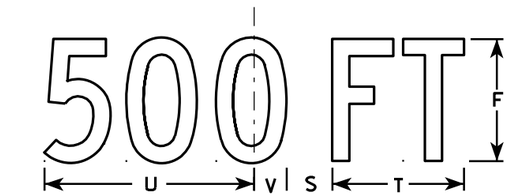

W20-1D

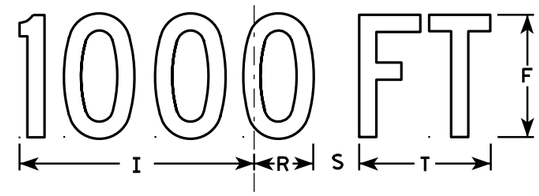

W20-1C

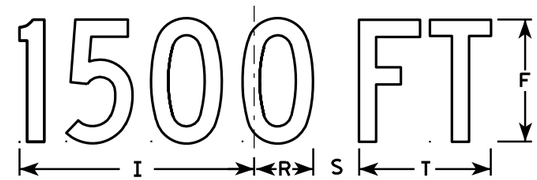

W20-1B

W20-1G

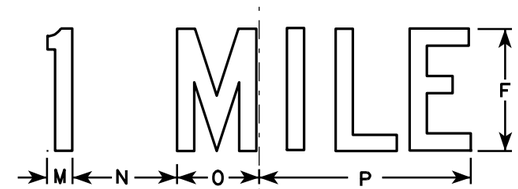

W20-1F

NOTES

1. Sign is Type II - Type F Reflective - reference WIS DOT Standard Specification for HIGHWAY and STRUCTURE CONSTRUCTION latest edition.
2. Color:
   Background - Orange
   Message - Black
3. Message Series - C
4. Corners may be square or rounded when base material is plywood but borders shall be rounded as shown. When base material is metal, the corners and borders shall be rounded.

SIZE	A	B	C	D	E	F	G	H	I	J	K	L	M	N	O	P	Q	R	S	T	U	V	W	X	Y	Z	Area sq. ft.
1	36		1 3/8	1/2	5/8	5	2 5/8	3 1/4	10 1/8	7	7 5/8	8 7/8	1 1/8	4 1/2	3 1/2	9		2 1/2	1 7/8	5 5/8	9	1 3/8	8	1 3/4	10 3/4	6	9.0
2S	48		2 1/4	3/4	1	8	3 3/4	5 1/8	15 3/8	11 1/8	12 1/8	14 3/8	1 5/8	6 7/8	5 3/8	13 7/8		3 7/8	3	8 5/8	13 3/4	2 1/8	11 7/8	2 3/4	16 3/8	9	16.0
2M	48		2 1/4	3/4	1	8	3 3/4	5 1/8	15 3/8	11 1/8	12 1/8	14 3/8	1 5/8	6 7/8	5 3/8	13 7/8		3 7/8	3	8 5/8	13 3/4	2 1/8	11 7/8	2 3/4	16 3/8	9	16.0
3	48		2 1/4	3/4	1	8	3 3/4	5 1/8	15 3/8	11 1/8	12 1/8	14 3/8	1 5/8	6 7/8	5 3/8	13 7/8		3 7/8	3	8 5/8	13 3/4	2 1/8	11 7/8	2 3/4	16 3/8	9	16.0
4	48		2 1/4	3/4	1	8	3 3/4	5 1/8	15 3/8	11 1/8	12 1/8	14 3/8	1 5/8	6 7/8	5 3/8	13 7/8		3 7/8	3	8 5/8	13 3/4	2 1/8	11 7/8	2 3/4	16 3/8	9	16.0
5	48		2 1/4	3/4	1	8	3 3/4	5 1/8	15 3/8	11 1/8	12 1/8	14 3/8	1 5/8	6 7/8	5 3/8	13 7/8		3 7/8	3	8 5/8	13 3/4	2 1/8	11 7/8	2 3/4	16 3/8	9	16.0

STANDARD SIGN
W20-1A, B, C, D, F & G

WISCONSIN DEPT OF TRANSPORTATION

APPROVED Matthew R Rauch
for State Traffic Engineer

DATE 3/18/11 PLATE NO. W20-1.9

PROJECT NO:

SHEET NO: 77 E

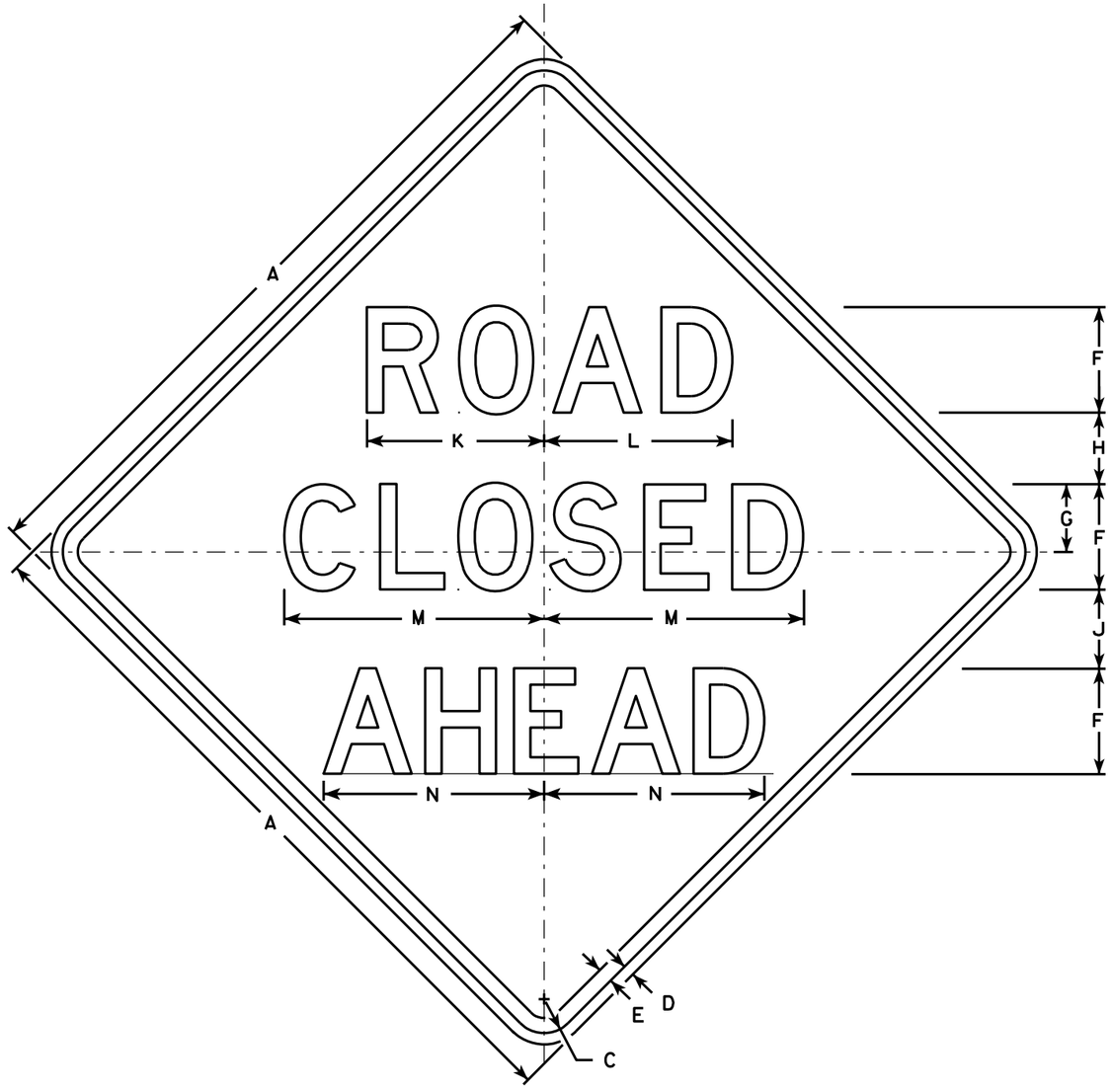

W20-3A

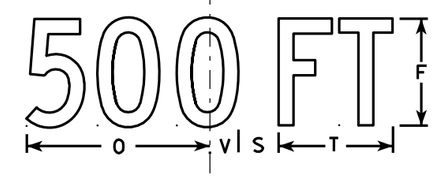

W20-3D

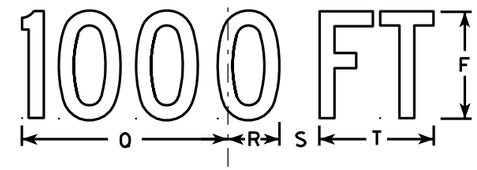

W20-3C

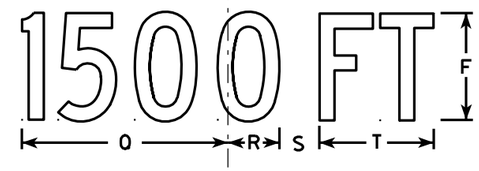

W20-3B

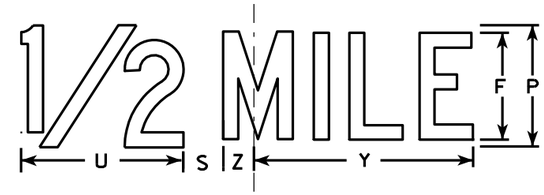

W20-3G

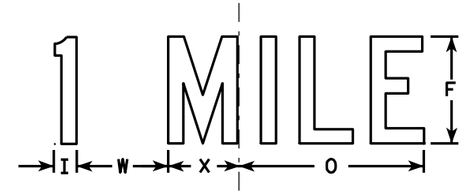

W20-3F

NOTES

1. Sign is Type II - Type F Reflective - reference WIS DOT Standard Specification for HIGHWAY and STRUCTURE CONSTRUCTION latest edition.
2. Color:
   Background - Orange
   Message - Black
3. Message Series - see note 5
4. Corners may be square or rounded when base material is plywood but borders shall be rounded as shown. When base material is metal, the corners and borders shall be rounded.
5. Lines 1 and 2 are Series D.
   Line 3 is Series D for AHEAD and Series C for all other distances.

SIZE	A	B	C	D	E	F	G	H	I	J	K	L	M	N	O	P	Q	R	S	T	U	V	W	X	Y	Z	Area sq. ft.
1	36		1 5/8	5/8	3/4	5	3 3/8	3 1/2	1 1/8	4	8 3/8	8 7/8	12 1/2	11	9	6	10 1/8	2 1/2	1 7/8	5 5/8	8	1 3/8	4 1/2	3 1/2	10 3/4	1 3/4	9.0
2S	48		2 1/4	3/4	1	7	4 1/2	4 3/4	1 1/2	5 1/4	11 3/4	12 1/2	17 1/4	14 5/8	12	8	13 1/2	3 3/8	2 5/8	7 1/2	10 5/8	1 7/8	6	4 5/8	14 3/8	2 3/8	16.0
2M	48		2 1/4	3/4	1	7	4 1/2	4 3/4	1 1/2	5 1/4	11 3/4	12 1/2	17 1/4	14 5/8	12	8	13 1/2	3 3/8	2 5/8	7 1/2	10 5/8	1 7/8	6	4 5/8	14 3/8	2 3/8	16.0
3	48		2 1/4	3/4	1	7	4 1/2	4 3/4	1 1/2	5 1/4	11 3/4	12 1/2	17 1/4	14 5/8	12	8	13 1/2	3 3/8	2 5/8	7 1/2	10 5/8	1 7/8	6	4 5/8	14 3/8	2 3/8	16.0
4	48		2 1/4	3/4	1	7	4 1/2	4 3/4	1 1/2	5 1/4	11 3/4	12 1/2	17 1/4	14 5/8	12	8	13 1/2	3 3/8	2 5/8	7 1/2	10 5/8	1 7/8	6	4 5/8	14 3/8	2 3/8	16.0
5	48		2 1/4	3/4	1	7	4 1/2	4 3/4	1 1/2	5 1/4	11 3/4	12 1/2	17 1/4	14 5/8	12	8	13 1/2	3 3/8	2 5/8	7 1/2	10 5/8	1 7/8	6	4 5/8	14 3/8	2 3/8	16.0

STANDARD SIGN
W20-3A, B, C, D, F & G

WISCONSIN DEPT OF TRANSPORTATION

APPROVED Matthew R Rauch
for State Traffic Engineer
DATE 3/18/11 PLATE NO. W20-3.7

PROJECT NO:	HWY:	COUNTY:		SHEET NO: 78	E

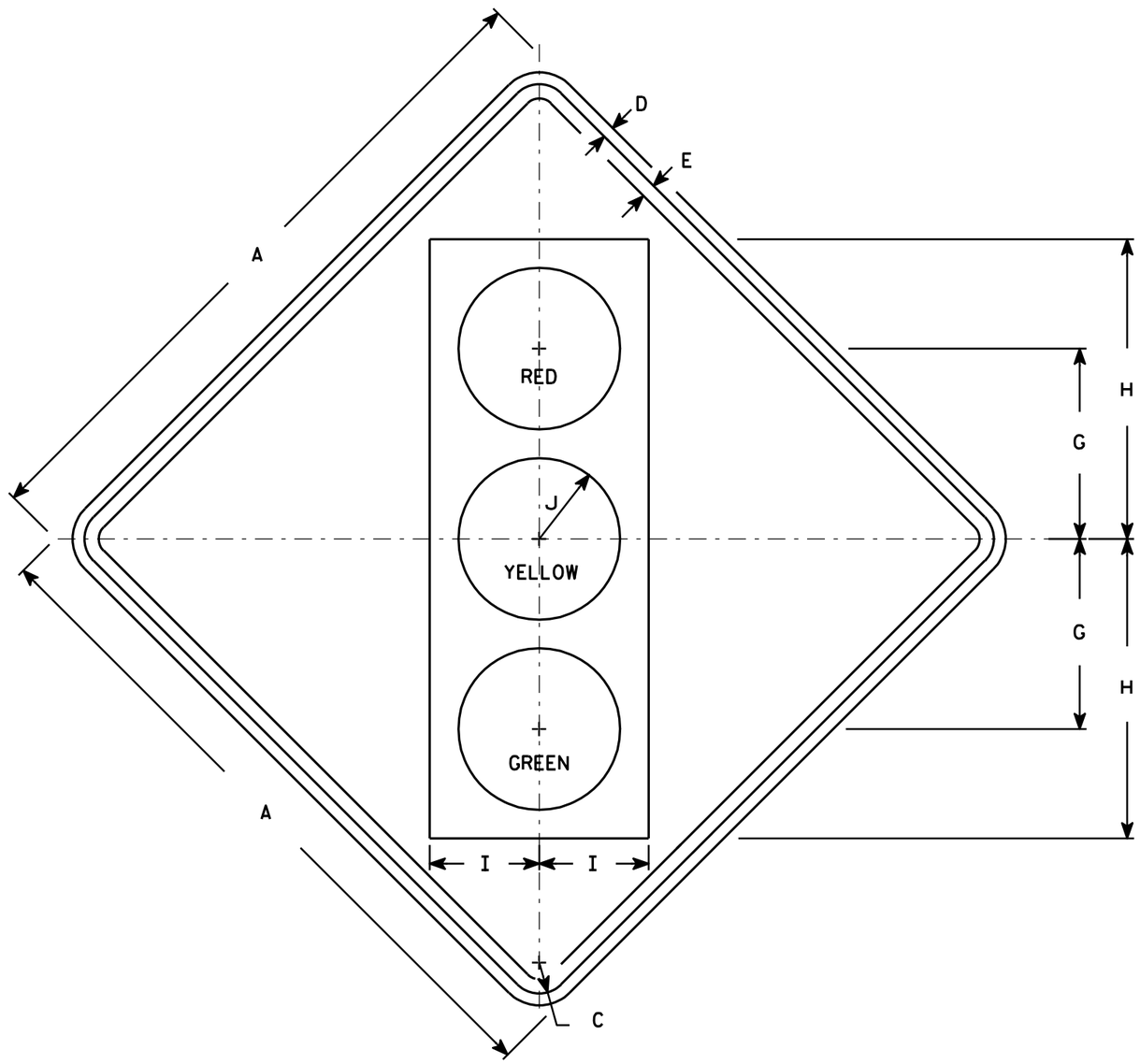

W3-3

NOTES

1. Sign is Type II - Type F Reflective - reference WIS DOT Standard Specification for HIGHWAY and STRUCTURE CONSTRUCTION latest edition.
2. Color:
   Background - Yellow
   Message - See Note 4
3. Corners may be square or rounded when base material is plywood but borders shall be rounded as shown. When base material is metal, the corners and borders shall be rounded.
4. Symbol and border are non-reflective black.
   Top circle - Type H Reflectorized Red
   Center circle - Same as background
   Bottom circle - Type H Reflectorized Green

SIZE	A	B	C	D	E	F	G	H	I	J	K	L	M	N	O	P	Q	R	S	T	U	V	W	X	Y	Z	Area sq. ft.
1	30		1 3/8	1/2	5/8		8 3/4	13 3/4	5	3 3/4																	6.25
2S	36		1 5/8	5/8	3/4		10	15 3/4	5 3/4	4 1/4																	9.0
2M	36		1 5/8	5/8	3/4		10	15 3/4	5 3/4	4 1/4																	9.0
3	36		1 5/8	5/8	3/4		10	15 3/4	5 3/4	4 1/4																	9.0
4	48		2 1/4	3/4	1		12 1/2	20	7 1/2	5																	16.0
5	48		2 1/4	3/4	1		12 1/2	20	7 1/2	5																	16.0

STANDARD SIGN
W3-3

WISCONSIN DEPT OF TRANSPORTATION

APPROVED Matthew R Rauch
for State Traffic Engineer

DATE 6/7/10 PLATE NO. W3-3.11

PROJECT NO: | HWY: | COUNTY: | SHEET NO: 79 | E

CTH J

	AREA (SQUARE FEET)			VOLUME (UNADJUSTED CUBIC YARDS)			MASS ORDINATE (CUBIC YARDS)		
	Cut	Existing Pavement (Unusable)	Fill	Cut	Existing Pavement (Unusable)	Fill	Cut (1.00)	Existing Pavement (1.00)	Fill (1.30)
100+00.00	69	21	0	0	0	0	0	0	0
100+12.00	67	21	0	30	9	0	30	9	0
100+50.00	51	21	1	83	30	1	113	39	1
100+90.00	56	21	1	80	31	2	193	70	4
101+00.00	57	21	1	21	8	0	214	78	5
101+27.00	68	21	0	63	21	1	276	99	5
101+50.00	62	21	1	56	18	0	332	117	6
102+00.00	64	21	0	117	39	1	449	156	6
102+50.00	60	21	1	115	39	1	564	194	7
103+00.00	60	21	0	111	39	1	675	233	8
103+45.00	68	21	0	107	35	0	782	268	9
103+50.00	76	21	0	13	4	0	795	272	9
103+58.00	76	21	0	22	6	0	817	278	9
103+94.00	66	21	0	94	28	0	912	306	9
104+30.00	107	21	1	115	28	1	1027	334	11
104+50.00	52	21	1	59	16	1	1086	350	11
105+00.00	41	21	0	87	39	2	1172	389	14
105+31.00	46	21	0	50	24	0	1222	413	14
105+50.00	44	21	0	31	15	0	1254	428	14
105+56.00	46	21	0	10	5	0	1264	432	14
106+00.00	32	21	0	64	34	0	1327	467	14
106+12.00	34	21	0	15	9	0	1342	476	15
106+50.00	27	21	0	43	30	0	1385	506	15
106+91.00	30	21	0	43	32	0	1428	537	15
107+00.00	36	21	0	11	7	0	1439	544	15
107+14.00	35	21	0	18	11	0	1458	555	15
107+50.00	30	21	0	43	28	0	1501	583	15
108+00.00	27	21	0	53	39	0	1553	622	16
108+72.00	63	21	2	120	56	1	1674	678	17
109+29.00	36	21	0	105	44	0	1779	723	18
109+50.00	41	21	0	30	16	0	1809	739	18
109+69.00	46	21	0	30	15	0	1839	754	18
109+74.00	46	21	0	8	4	0	1848	758	18
110+00.00	45	21	0	44	20	0	1891	778	18
110+34.00	48	21	0	58	26	0	1950	804	18
110+50.00	41	21	0	26	12	0	1976	817	18
111+00.00	34	21	0	70	39	0	2046	856	18
111+50.00	36	21	0	65	39	0	2110	894	18
112+48.00	137	21	0	313	76	0	2424	971	18
112+50.00	35	21	0	6	2	0	2430	972	18
113+50.00	36	21	1	132	78	1	2562	1050	19
114+00.00	32	21	2	63	39	3	2625	1089	23
114+50.00	29	21	2	57	39	4	2681	1128	27
115+00.00	27	21	7	52	39	8	2733	1167	38
115+50.00	28	21	3	51	39	9	2784	1206	50
116+00.00	34	21	1	58	39	3	2842	1244	55
116+50.00	32	21	2	61	39	3	2903	1283	58
117+00.00	35	21	2	62	39	4	2965	1322	63
117+50.00	37	21	0	66	39	2	3031	1361	65
118+00.00	44	21	0	75	39	0	3106	1400	65
118+50.00	42	21	0	80	39	0	3186	1439	65
119+00.00	33	21	10	70	39	9	3255	1478	77
119+50.00	30	21	3	58	39	12	3313	1517	93
120+00.00	34	21	0	59	39	3	3373	1556	96
120+50.00	35	21	0	64	39	1	3436	1594	97
120+94.00	77	21	0	91	34	0	3528	1629	97
121+25.00	32	21	0	63	24	1	3590	1653	98
121+50.00	33	21	1	30	19	0	3620	1672	99
122+00.00	25	21	6	53	39	6	3673	1711	107
122+50.00	26	21	4	47	39	9	3720	1750	119
123+00.00	30	21	4	51	39	7	3771	1789	128
123+50.00	33	21	1	58	39	4	3829	1828	133
124+00.00	32	21	2	60	39	2	3890	1867	136
124+50.00	33	21	0	61	39	2	3951	1906	139
125+00.00	34	21	0	63	39	1	4013	1944	139
125+56.00	81	21	10	119	44	2	4132	1988	142
126+50.00	25	21	8	183	73	18	4316	2061	166
127+00.00	25	21	2	46	39	9	4361	2100	178
127+50.00	28	21	2	49	39	4	4410	2139	183
128+00.00	28	21	3	51	39	4	4461	2178	188
128+50.00	25	21	5	49	39	7	4510	2217	197
129+00.00	28	21	3	49	39	7	4559	2256	206
129+50.00	33	21	1	57	39	4	4616	2294	211
130+00.00	33	21	0	62	39	2	4677	2333	213
130+50.00	32	21	1	60	39	1	4738	2372	215
131+00.00	28	21	1	56	39	1	4793	2411	216
131+46.00	32	21	1	51	36	1	4844	2447	217
131+50.00	32	21	1	5	3	0	4849	2450	218
132+00.00	24	21	31	52	39	30	4901	2489	257
132+50.00	27	21	1	48	39	30	4949	2528	296
133+00.00	30	21	0	53	39	1	5001	2567	298
133+50.00	28	21	0	53	39	1	5055	2606	299
134+00.00	26	21	1	50	39	1	5105	2644	300
134+50.00	30	21	0	52	39	1	5157	2683	301
135+00.00	28	21	1	54	39	1	5211	2722	302
135+50.00	31	21	0	55	39	1	5266	2761	304
136+00.00	36	21	0	62	39	0	5329	2800	304
136+50.00	34	21	0	65	39	0	5394	2839	305
137+31.00	105	21	0	208	63	0	5602	2902	305
138+00.00	25	21	1	166	63	0	5768	2956	306
138+50.00	29	21	0	50	54	0	5818	2994	306
139+00.00	35	21	0	59	39	1	5877	3033	307
139+50.00	34	21	0	64	39	0	5941	3072	307
139+79.00	36	21	0	38	23	0	5978	3095	307
140+00.00	27	21	1	25	16	0	6003	3111	307
140+50.00	25	21	1	49	39	1	6052	3150	308
140+65.00	30	21	0	15	12	0	6067	3162	309
141+00.00	24	21	0	35	27	1	6102	3189	309
141+50.00	24	21	0	44	39	1	6146	3228	310
142+00.00	28	21	0	48	39	1	6194	3267	311
142+48.00	42	21	0	62	37	0	6257	3304	311
142+50.00	42	21	0	3	2	0	6260	3306	311
142+90.00	45	21	0	64	31	0	6324	3337	311
143+00.00	46	21	0	17	8	0	6341	3344	311
143+50.00	49	21	0	88	39	0	6429	3383	311
TOTALS:				6429	3383	240	6429	3383	311

NOTES:
(1) - NO EBS, ROCK, OR MARSH EXCAVATION INCLUDED OR ANTICIPATED
(2) - EXISTING PAVEMENT IS BASED ON AVERAGE THICKNESS OF 9-INCHES OF ASPHALT PER BORING LOG (WITH 2009 OVERLAY).
(3) - FILL EXPANSION IS 30%

9

9

PROJECT NO:CTH J | HWY:CTH J | COUNTY:ONEIDA | EARTHWORK | SHEET 80 | E

HANSEN ROAD

	AREA (SQUARE FEET)			VOLUME (UNADJUSTED CUBIC YARDS)			MASS ORDINATE (CUBIC YARDS)		
	Cut	Existing Pavement (Unusable)	Fill	Cut	Existing Pavement (Unusable)	Fill	Cut (1.00)	Existing Pavement (1.00)	Fill (1.30)
37+50.00	28	7	0	0	0	0	0	0	0
38+00.00	54	7	0	76	13	0	76	13	0
38+50.00	80	7	0	124	13	0	199	26	0
39+00.00	101	7	0	167	13	0	366	39	0
39+50.00	109	7	0	195	13	0	561	52	0
TOTALS:				561	52	0	561	52	0

NOTES:
(1) - NO EBS, ROCK, OR MARSH EXCAVATION INCLUDED OR ANTICIPATED
(2) - EXISTING PAVEMENT IS BASED ON AVERAGE THICKNESS OF 9-INCHES OF ASPHALT PER BORING LOG (WITH 2009 OVERLAY).
(3) - FILL EXPANSION IS 30%

9

9

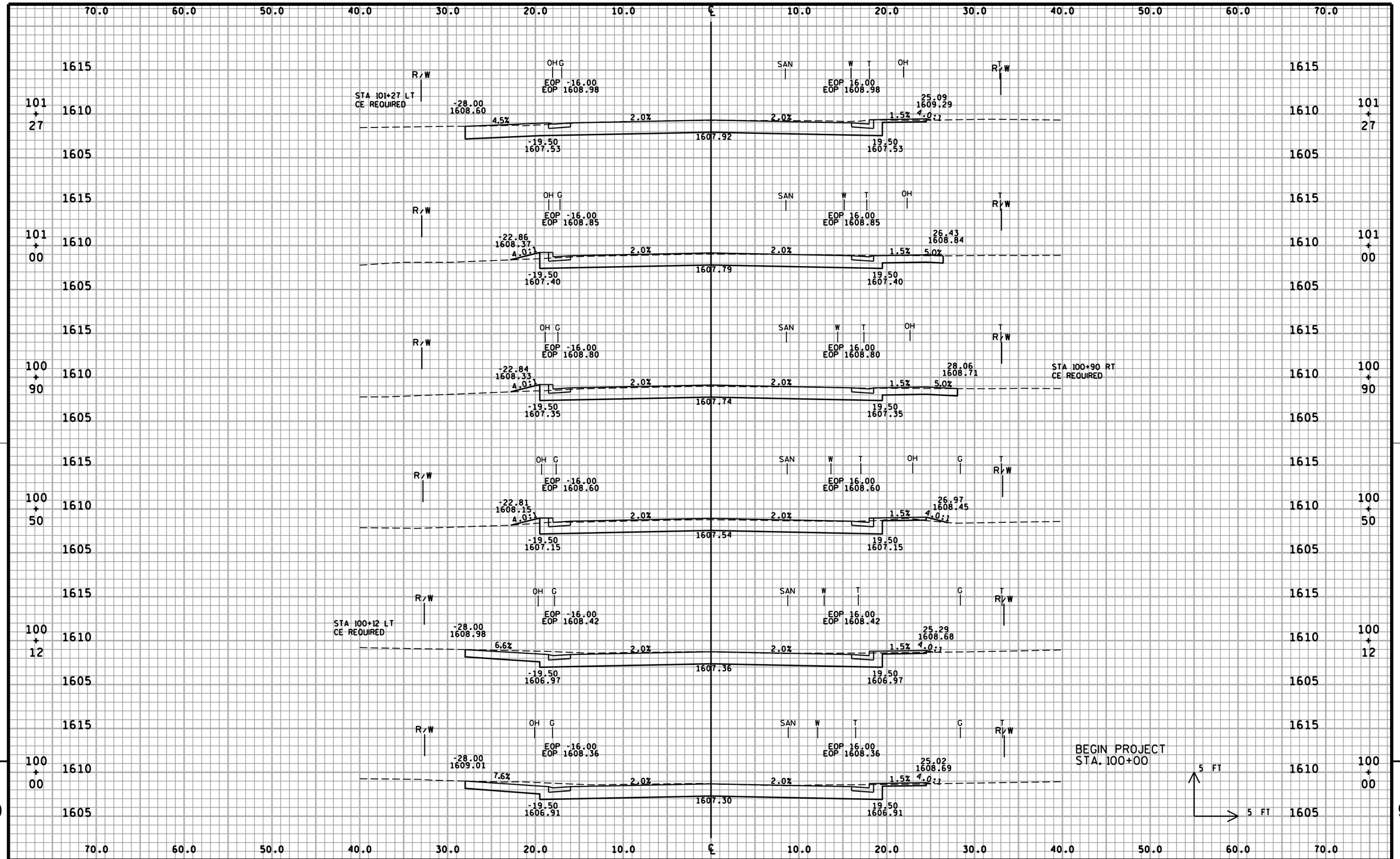

PROJECT NO:9455-04-70	HWY:CTH J	COUNTY:ONEIDA	CROSS SECTIONS:CTH J	SHEET 82	E

FILE NAME : P:\90s\93\930823\caddWDOT\Align\rc001014.dgn PLOT DATE : 1/28/2015 PLOT BY : pkriesel PLOT NAME : PLOT SCALE : 1:1.99999 WISDOT/CADDS SHEET 21

rc001014.dgn 1/28/2015 9:53:57 AM pkriesel

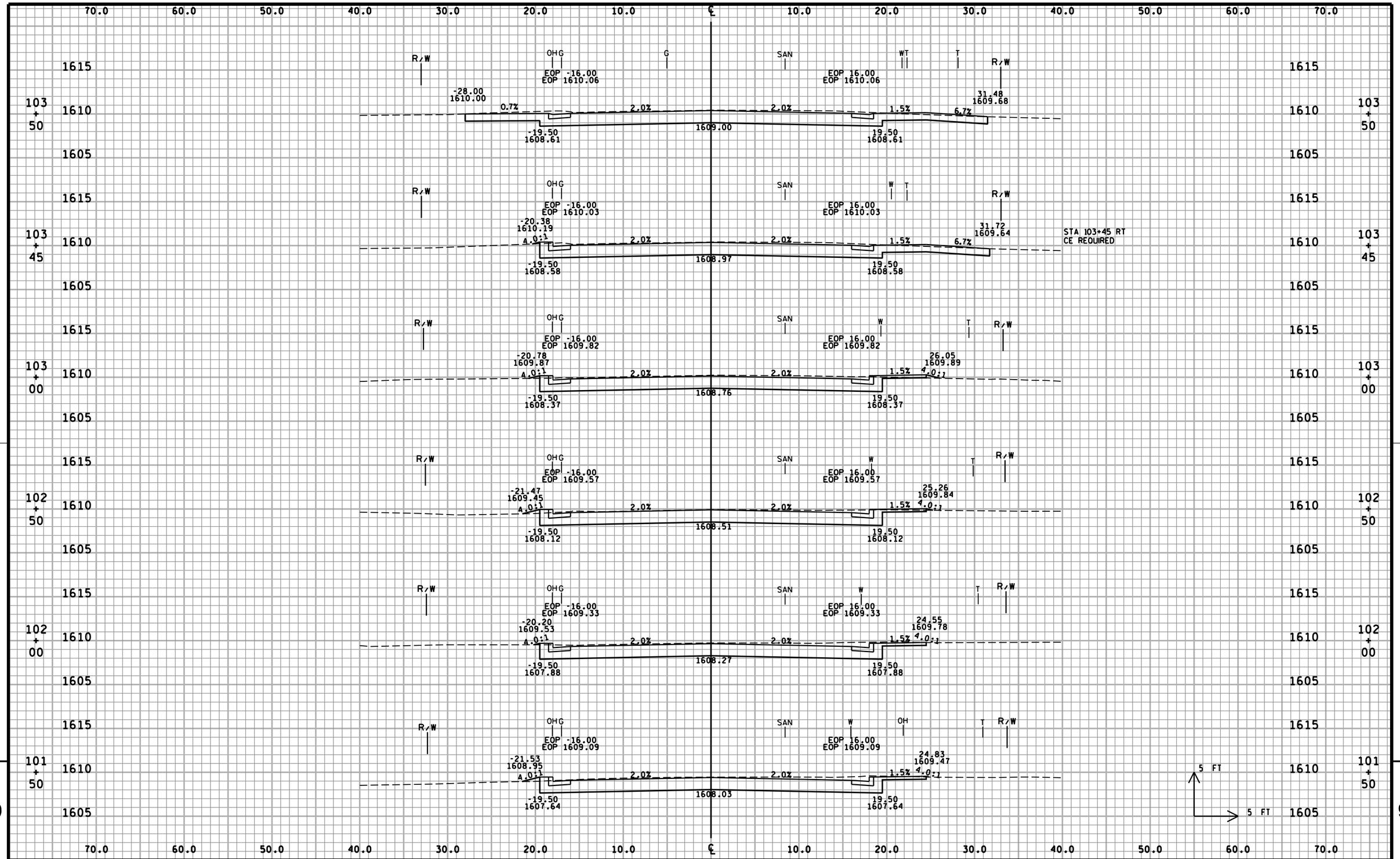

PROJECT NO:9455-04-70	HWY:CTH J	COUNTY:ONEIDA	CROSS SECTIONS:CTH J	SHEET 83	E

FILE NAME : P:\90s\93\930823\caddWDOT\Align\rc002014.dgn PLOT DATE : 1/28/2015 PLOT BY : pkriesel PLOT NAME : PLOT SCALE : 1:1.99999 WISDOT/CADDS SHEET 21

rc002014.dgn 1/28/2015 9:53:58 AM pkriesel

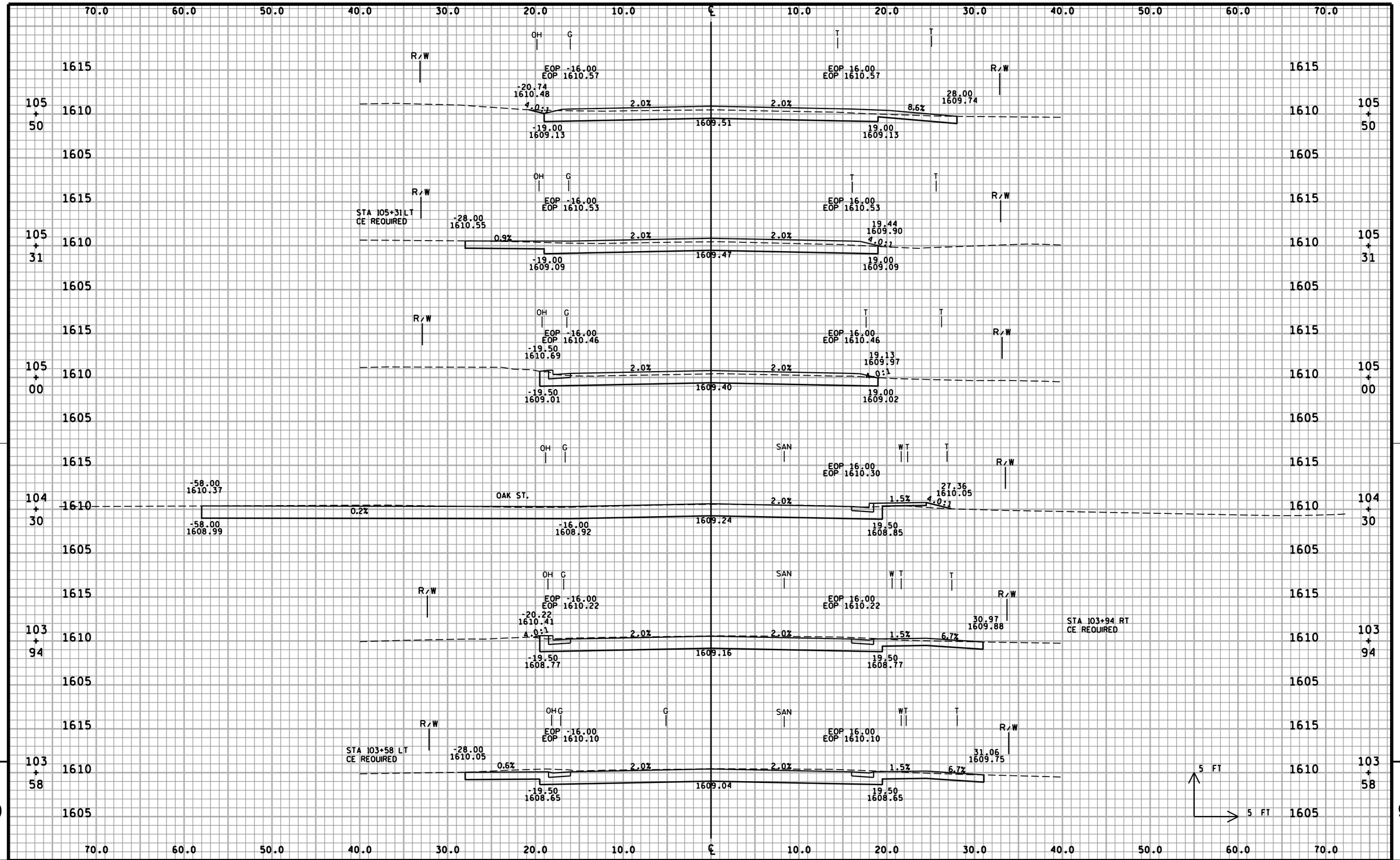

PROJECT NO:9455-04-70	HWY:CTH J	COUNTY:ONEIDA	CROSS SECTIONS:CTH J	SHEET 84	E

FILE NAME : P:\90s\93\930823\caddWDOT\Align\rc003014.dgn PLOT DATE : 1/28/2015 PLOT BY : pkriesel PLOT NAME : PLOT SCALE : 1:1.99999 WISDOT/CADDS SHEET 21

rc003014.dgn 1/28/2015 9:53:59 AM pkriesel

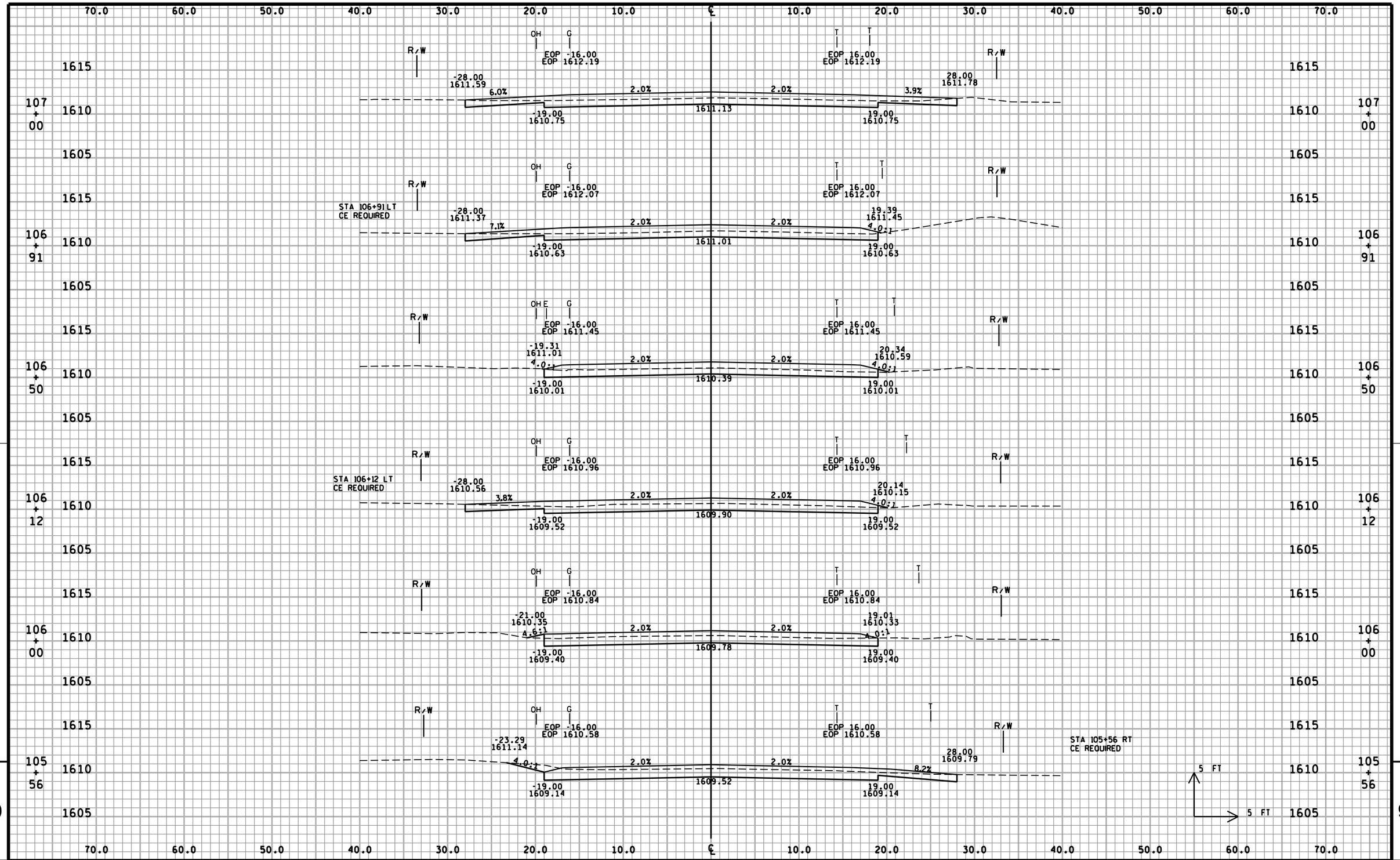

PROJECT NO:9455-04-70	HWY:CTH J	COUNTY:ONEIDA	CROSS SECTIONS:CTH J	SHEET 85	E

FILE NAME : P:\90s\93\930823\caddWDOT\Align\rc004014.dgn PLOT DATE : 1/28/2015 PLOT BY : pkriesel PLOT NAME : PLOT SCALE : 1:1.99999 WISDOT/CADDS SHEET 21

rc004014.dgn 1/28/2015 9:54:00 AM pkriesel

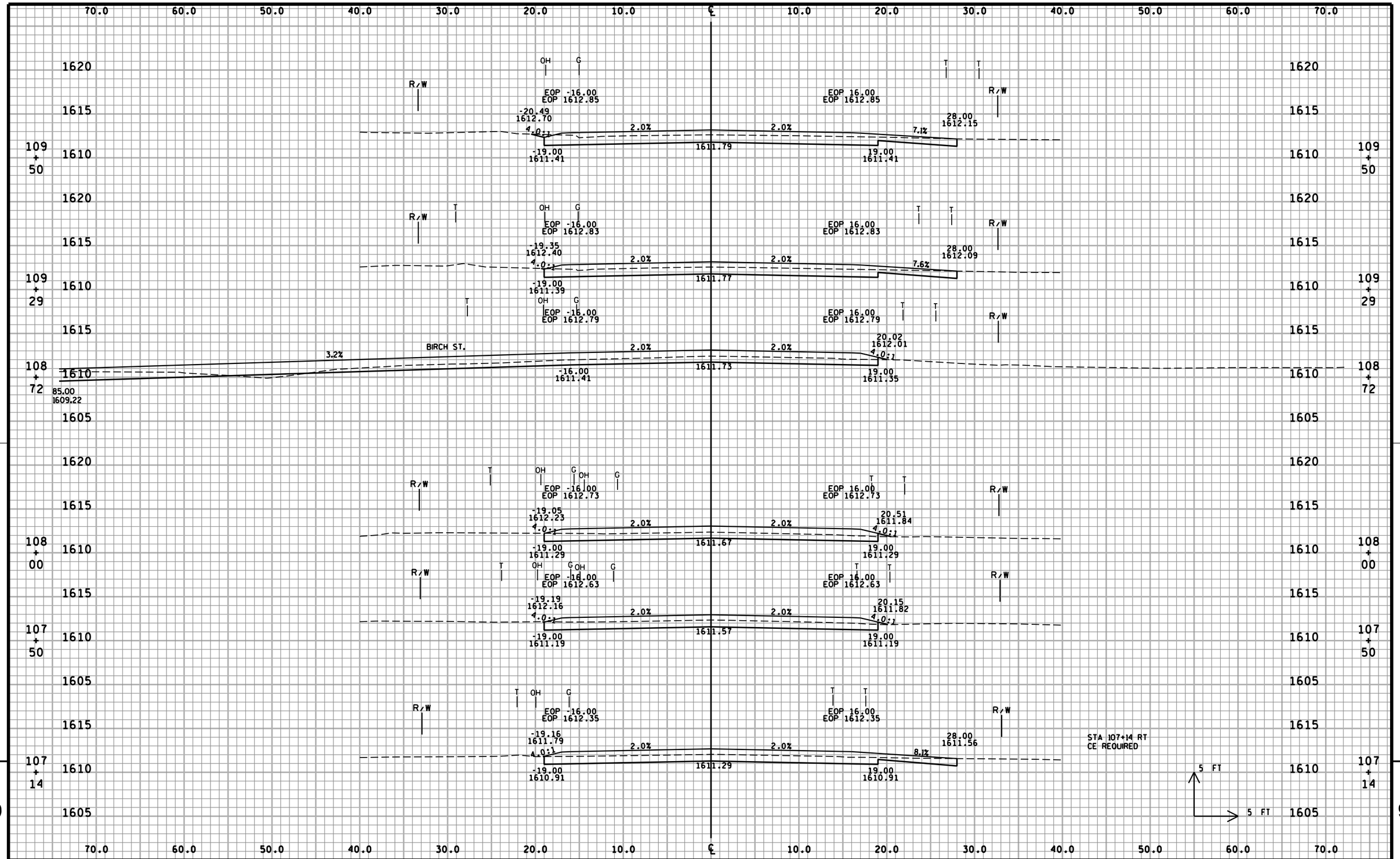

PROJECT NO:9455-04-70	HWY:CTH J	COUNTY:ONEIDA	CROSS SECTIONS:CTH J	SHEET 86	E

FILE NAME : P:\90s\93\930823\caddWDOT\Align\rc005014.dgn PLOT DATE : 1/28/2015 PLOT BY : pkriesel PLOT NAME : PLOT SCALE : 1:1.99999 WISDOT/CADDS SHEET 21

rc005014.dgn 1/28/2015 9:54:01 AM pkriesel

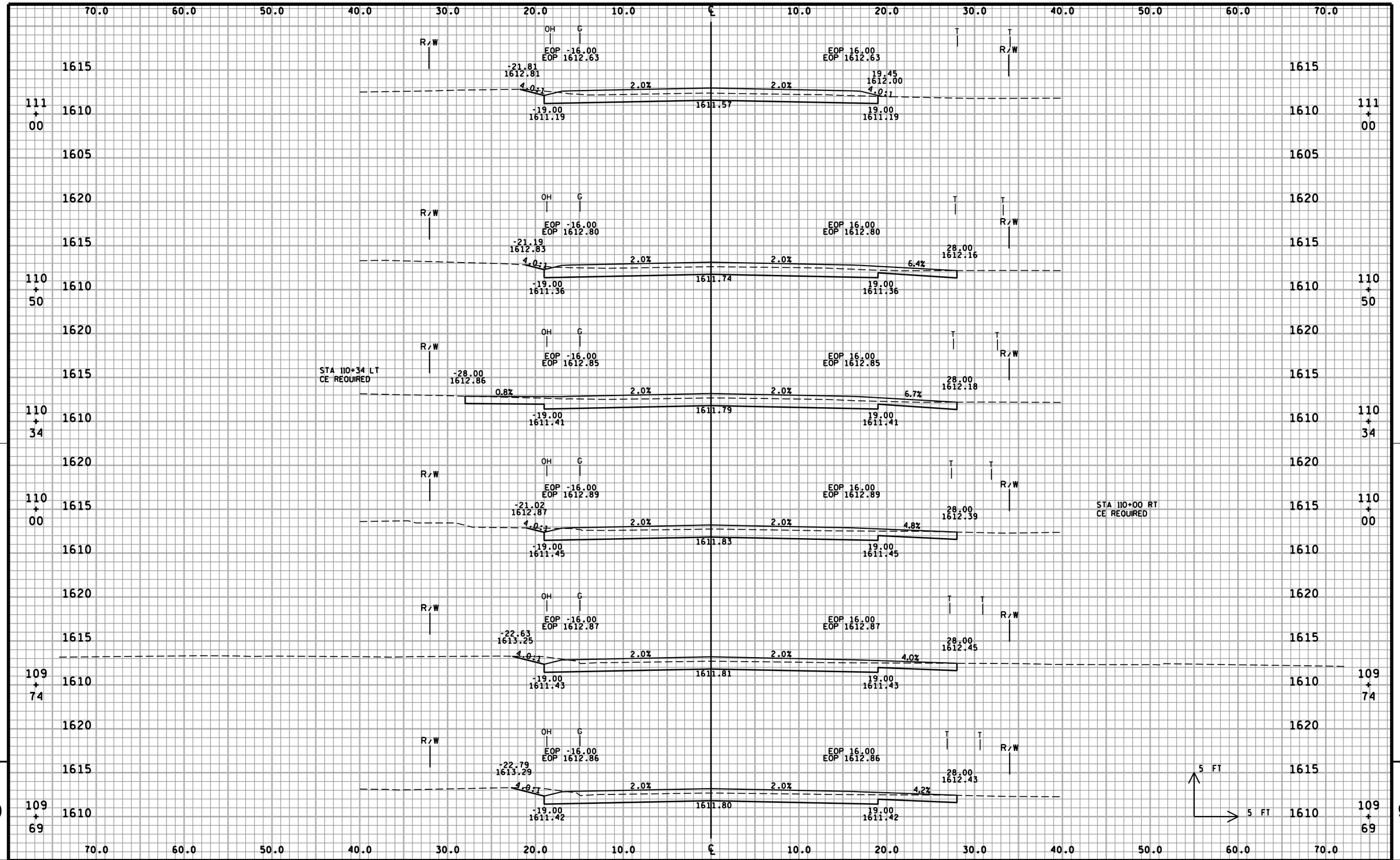

PROJECT NO:9455-04-70	HWY:CTH J	COUNTY:ONEIDA	CROSS SECTIONS:CTH J	SHEET 87	E

FILE NAME : P:\90s\93\930823\caddWDOT\Align\rc006014.dgn PLOT DATE : 1/28/2015 PLOT BY : pkriesel PLOT NAME : PLOT SCALE : 1:1.99999 WISDOT/CADDS SHEET 21

rc006014.dgn 1/28/2015 9:54:02 AM pkriesel

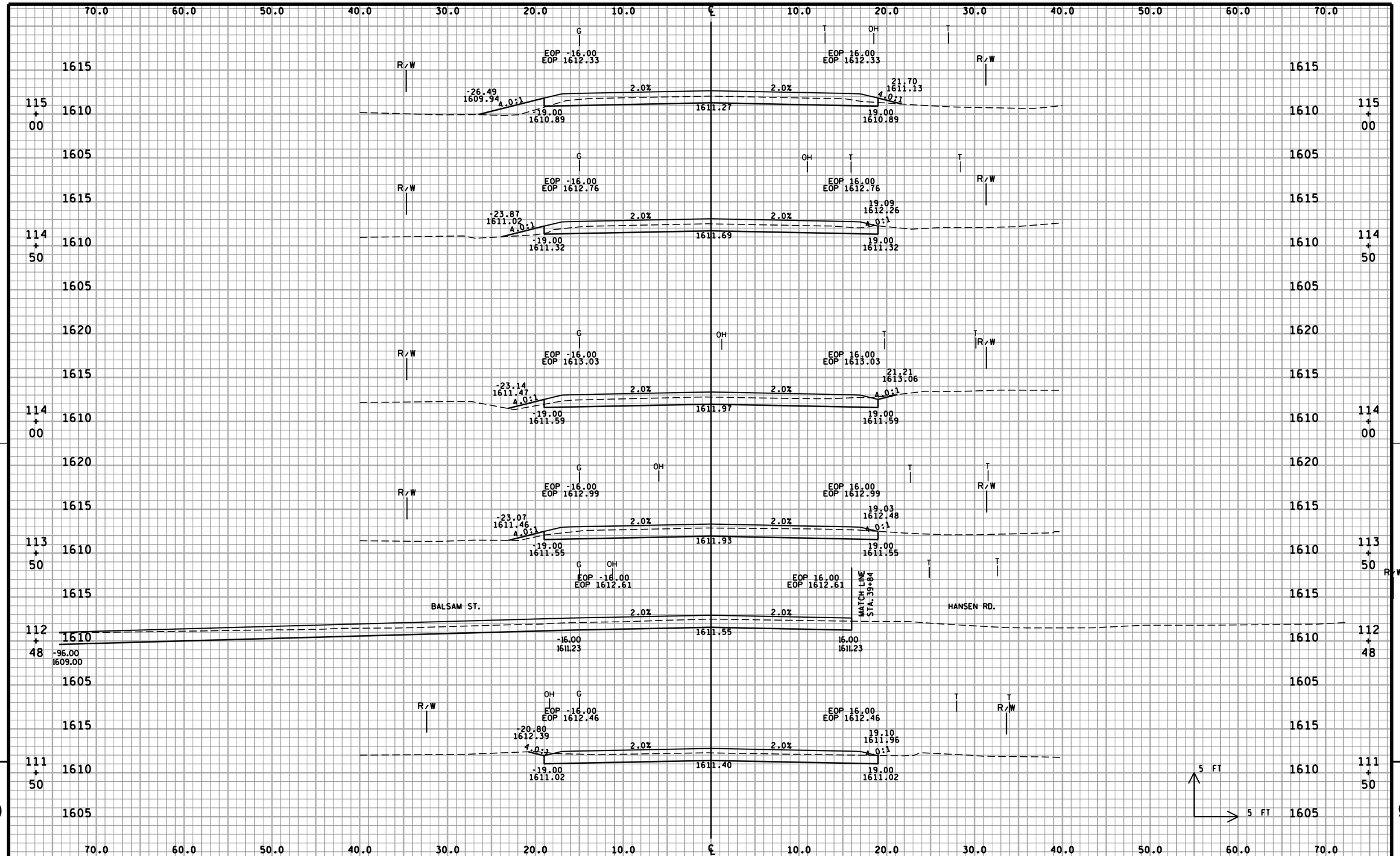

9

PROJECT NO:9455-04-70	HWY:CTH J	COUNTY:ONEIDA	CROSS SECTIONS:CTH J	SHEET 88	E

FILE NAME : P:\90s\93\930823\caddWDOT\Align\rc007014.dgn PLOT DATE : 1/28/2015 PLOT BY : pkriesel PLOT NAME : PLOT SCALE : 1:1.99999 WISDOT/CADDS SHEET 21

rc007014.dgn 1/28/2015 9:54:03 AM pkriesel

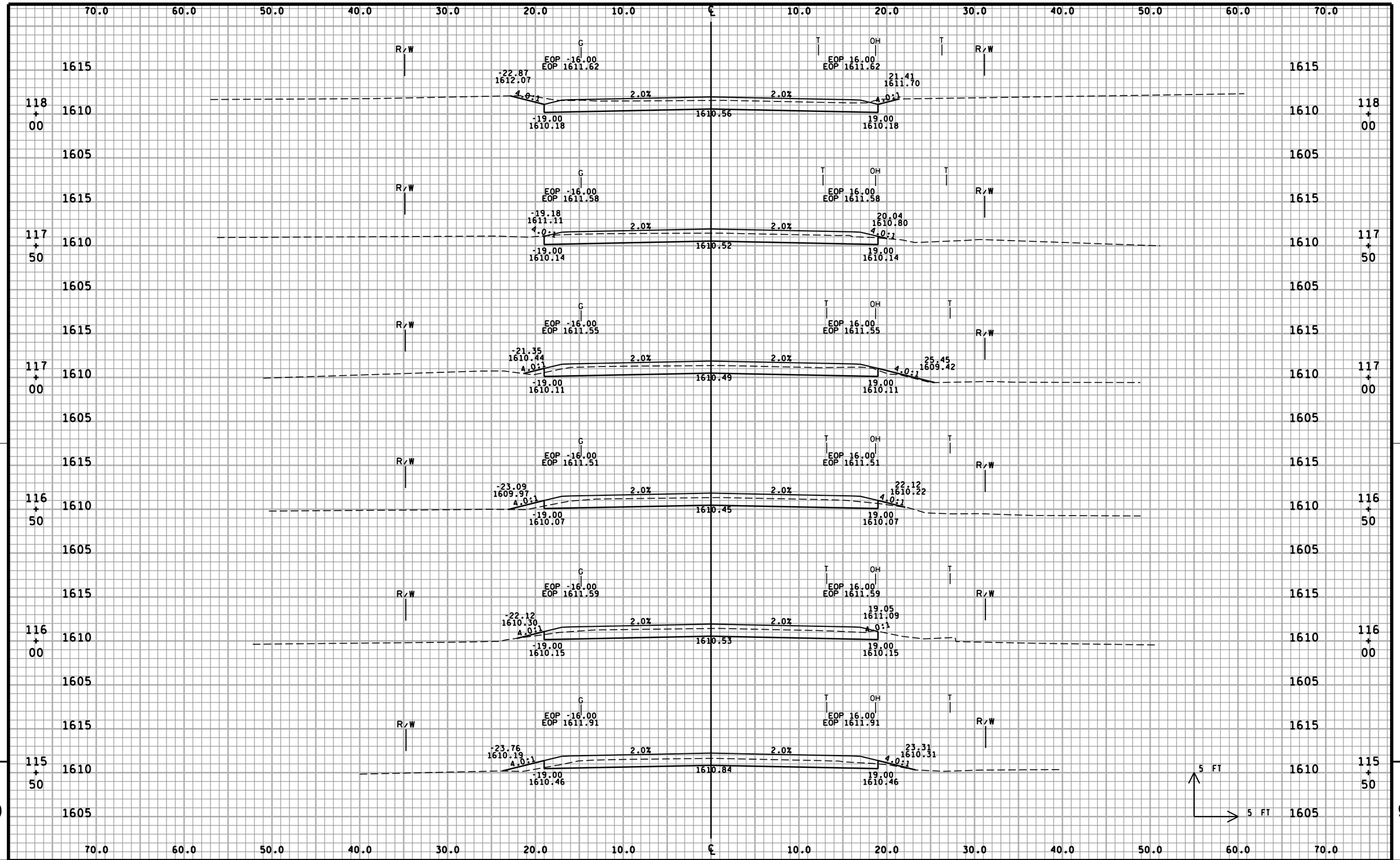

PROJECT NO:9455-04-70	HWY:CTH J	COUNTY:ONEIDA	CROSS SECTIONS:CTH J	SHEET 89	E

FILE NAME : P:\90s\93\930823\caddWDOT\Align\rc008014.dgn PLOT DATE : 1/28/2015 PLOT BY : pkriesel PLOT NAME : PLOT SCALE : 1:1.99999 WISDOT/CADDS SHEET 21

rc008014.dgn 1/28/2015 9:54:03 AM pkriesel

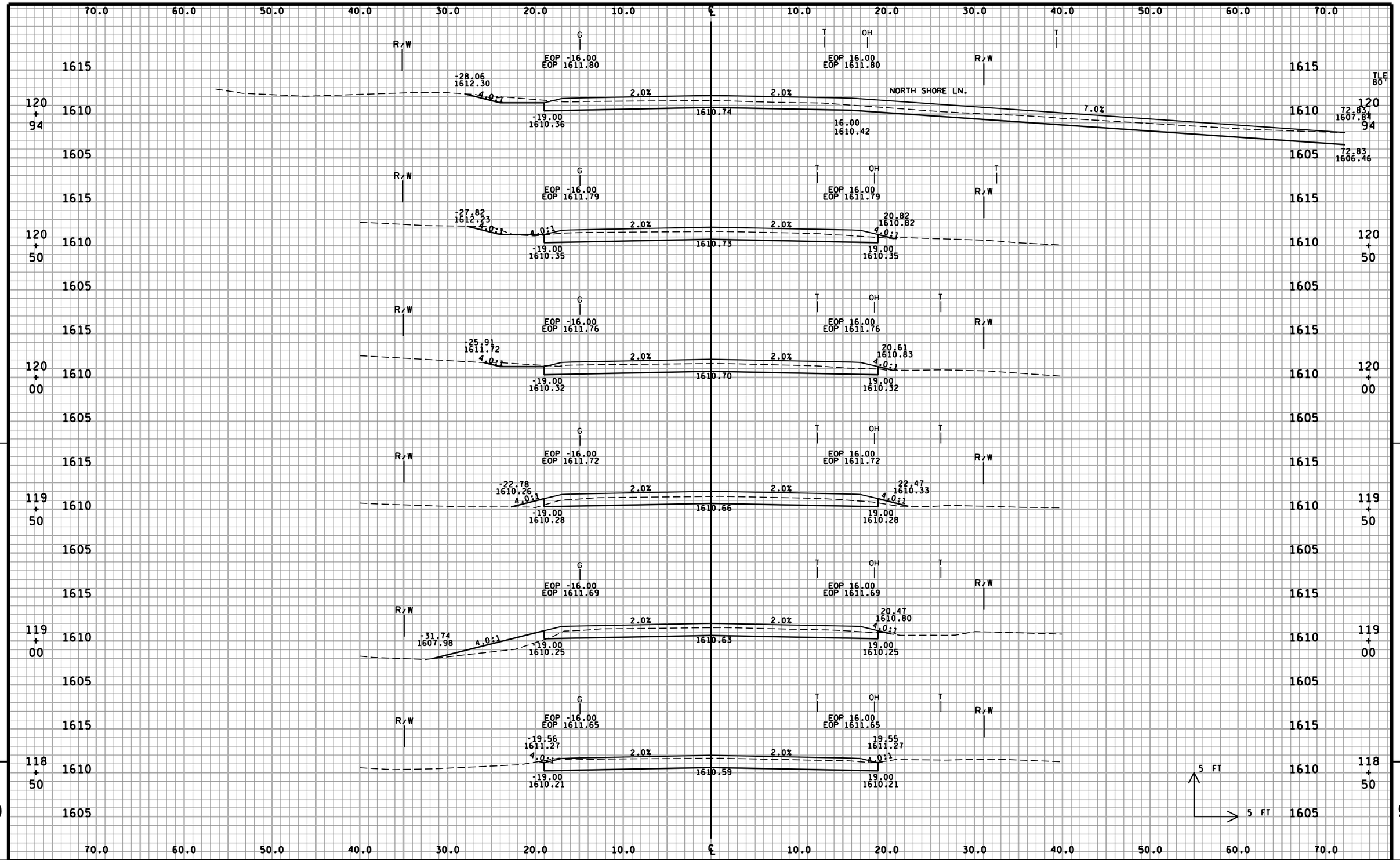

PROJECT NO:9455-04-70	HWY:CTH J	COUNTY:ONEIDA	CROSS SECTIONS:CTH J	SHEET 90	E

FILE NAME : P:\90s\93\930823\caddWDOT\Align\rc009014.dgn PLOT DATE : 1/28/2015 PLOT BY : pkriesel PLOT NAME : PLOT SCALE : 1:1.99999 WISDOT/CADDS SHEET 21

rc009014.dgn 1/28/2015 9:54:04 AM pkriesel

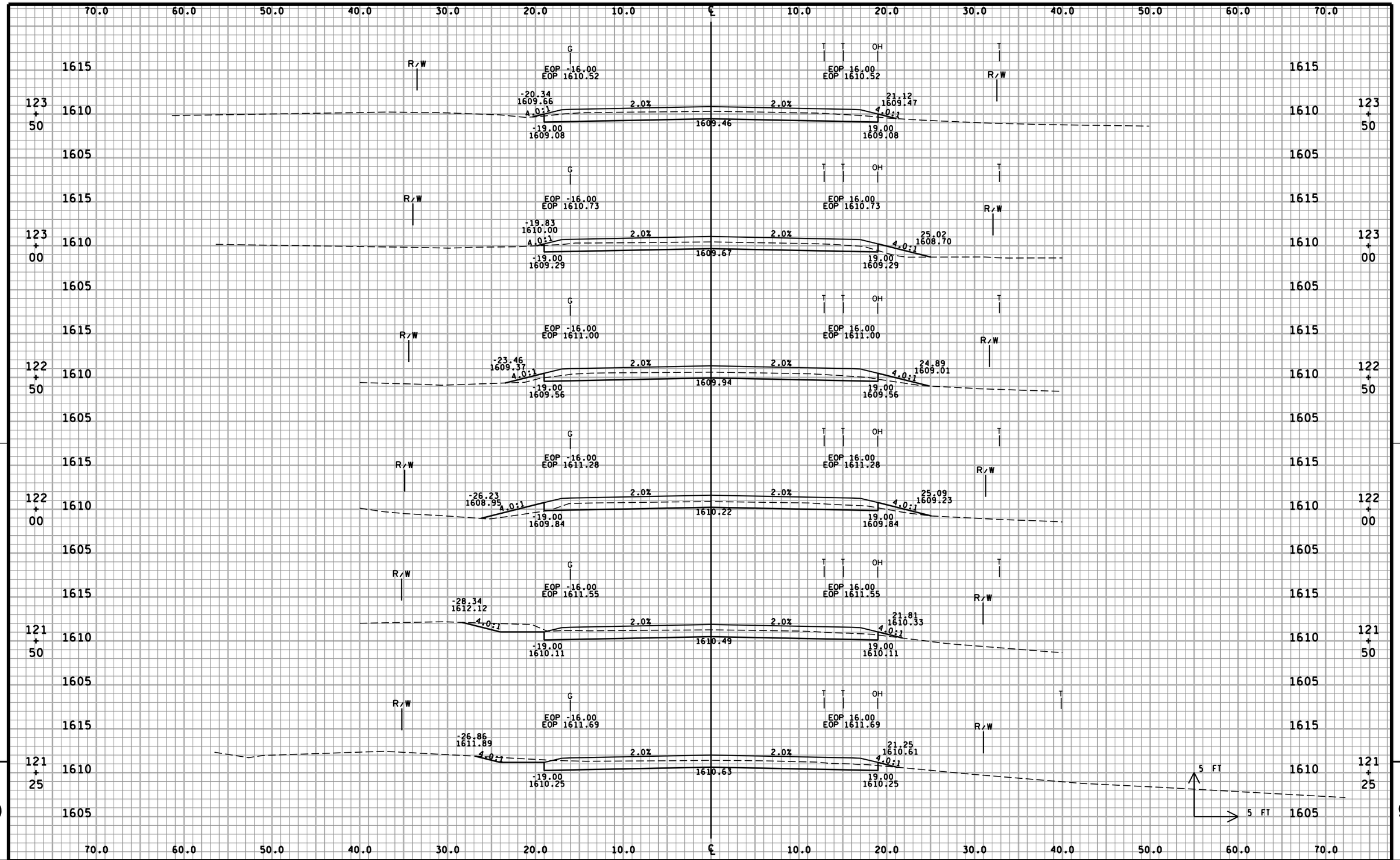

PROJECT NO:9455-04-70	HWY:CTH J	COUNTY:ONEIDA	CROSS SECTIONS:CTH J	SHEET 91	E

FILE NAME : P:\90s\93\930823\caddWDOT\Align\rc010014.dgn PLOT DATE : 1/28/2015 PLOT BY : pkriesel PLOT NAME : PLOT SCALE : 1:1.99999 WISDOT/CADDS SHEET 21

rc010014.dgn 1/28/2015 9:54:05 AM pkriesel

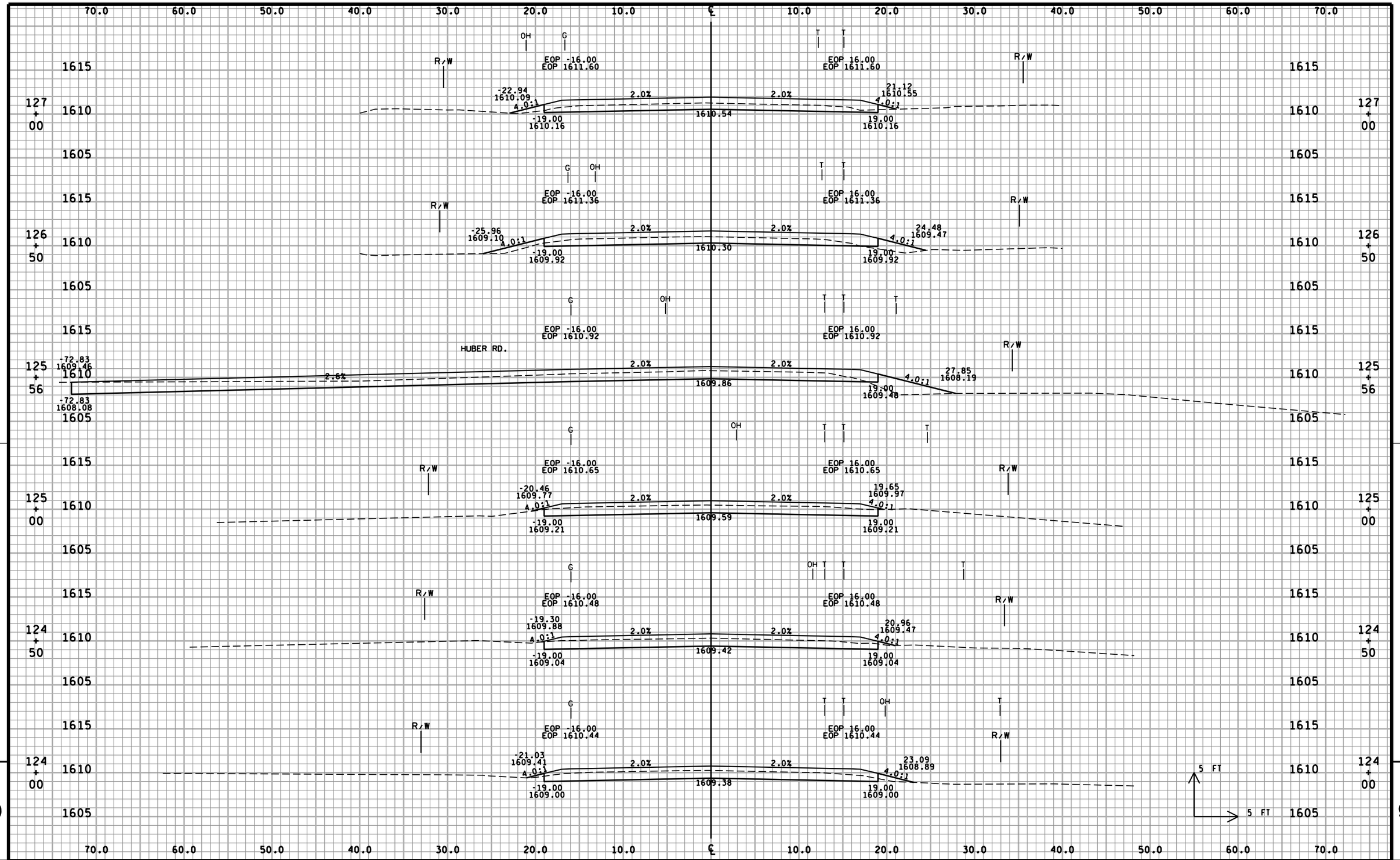

PROJECT NO:9455-04-70	HWY:CTH J	COUNTY:ONEIDA	CROSS SECTIONS:CTH J	SHEET 92	E

FILE NAME : P:\90s\93\930823\caddWDOT\Align\rc011014.dgn PLOT DATE : 1/28/2015 PLOT BY : pkriesel PLOT NAME : PLOT SCALE : 1:1.99999 WISDOT/CADDS SHEET 21

rc011014.dgn 1/28/2015 9:54:06 AM pkriesel

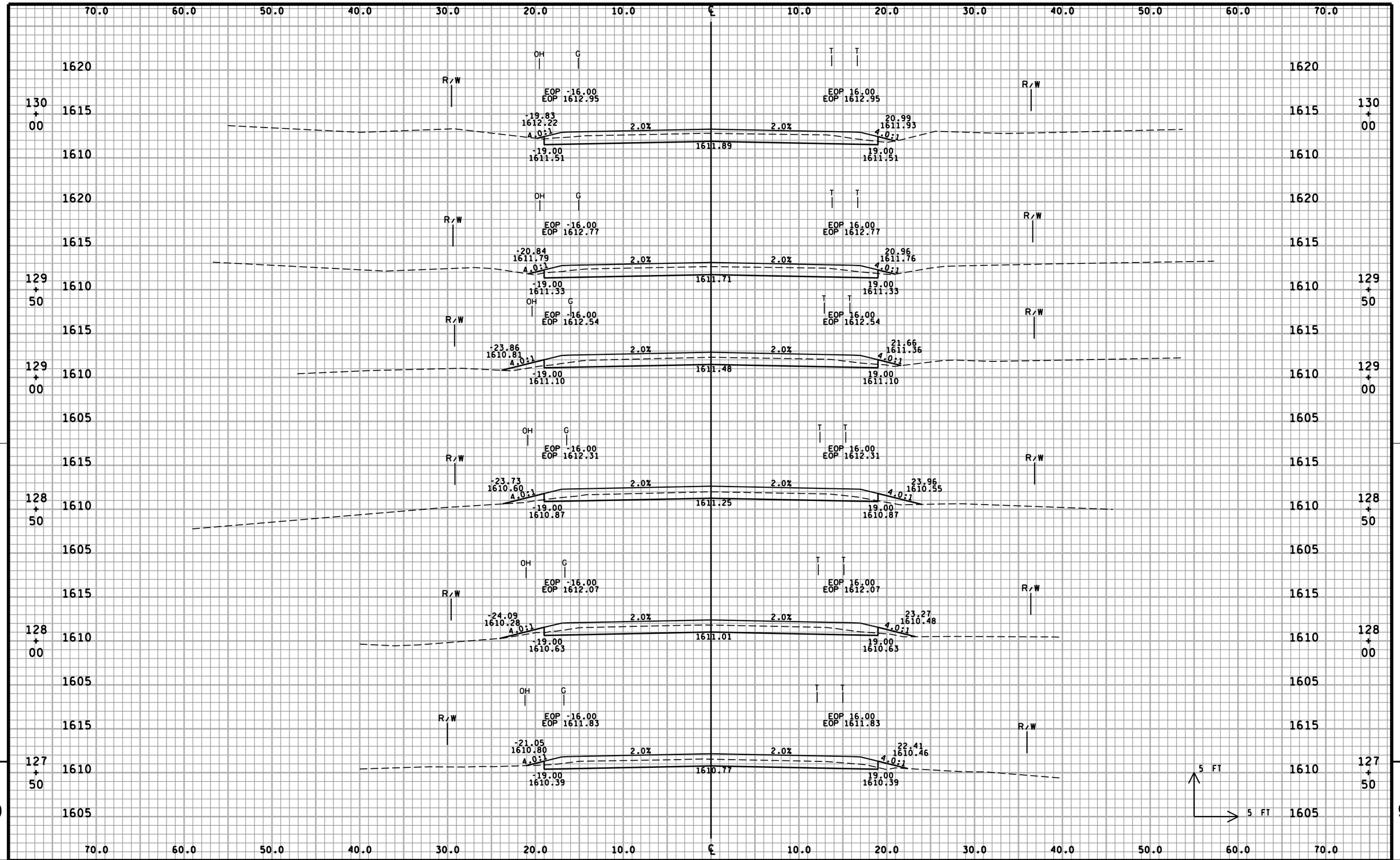

PROJECT NO:9455-04-70	HWY:CTH J	COUNTY:ONEIDA	CROSS SECTIONS:CTH J	SHEET 93	E

FILE NAME : P:\90s\93\930823\caddWDOT\Align\rc012014.dgn PLOT DATE : 1/28/2015 PLOT BY : pkriesel PLOT NAME : PLOT SCALE : 1:1.99999 WISDOT/CADDS SHEET 21

rc012014.dgn 1/28/2015 9:54:07 AM pkriesel

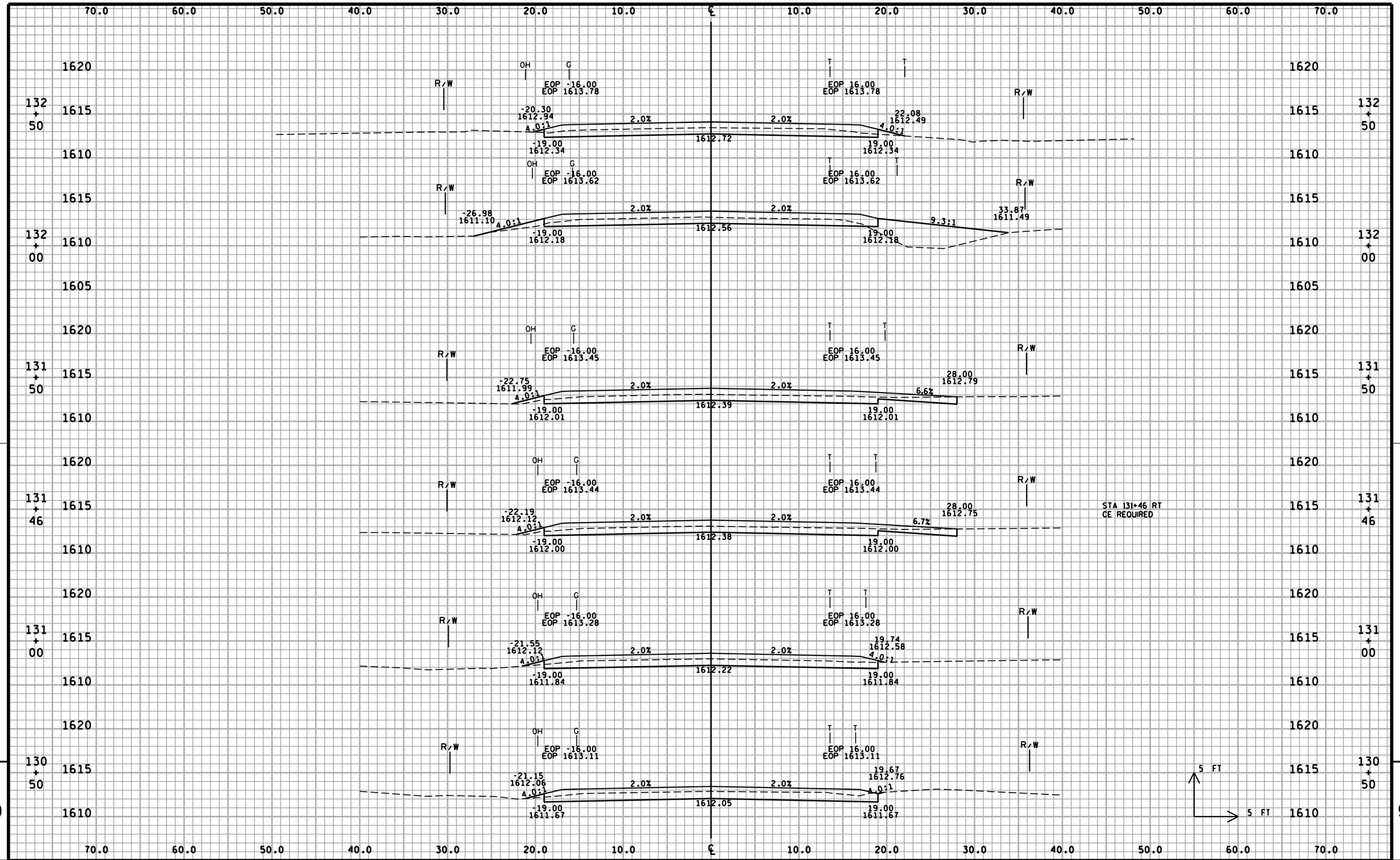

PROJECT NO:9455-04-70	HWY:CTH J	COUNTY:ONEIDA	CROSS SECTIONS:CTH J	SHEET 94	E

FILE NAME : P:\90s\93\930823\caddWDOT\Align\rc013014.dgn PLOT DATE : 1/28/2015 PLOT BY : pkriesel PLOT NAME : PLOT SCALE : 1:1.99999 WISDOT/CADDS SHEET 21

rc013014.dgn 1/28/2015 9:54:08 AM pkriesel

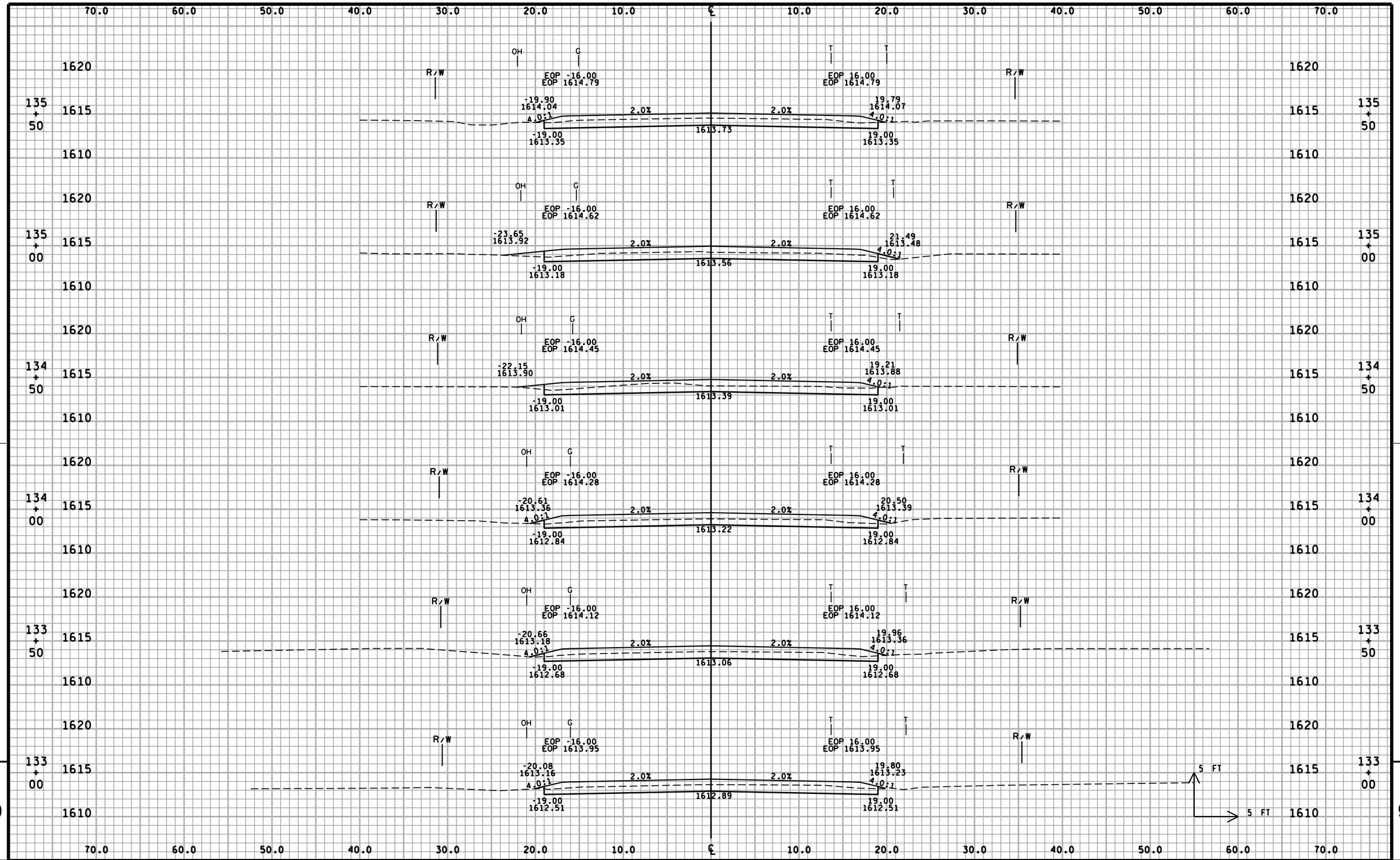

PROJECT NO:9455-04-70	HWY:CTH J	COUNTY:ONEIDA	CROSS SECTIONS:CTH J	SHEET 95	E

FILE NAME : P:\90s\93\930823\caddWDOT\Align\rc014014.dgn PLOT DATE : 1/28/2015 PLOT BY : pkriesel PLOT NAME : PLOT SCALE : 1:1.99999 WISDOT/CADDS SHEET 21

rc014014.dgn 1/28/2015 9:54:09 AM pkriesel

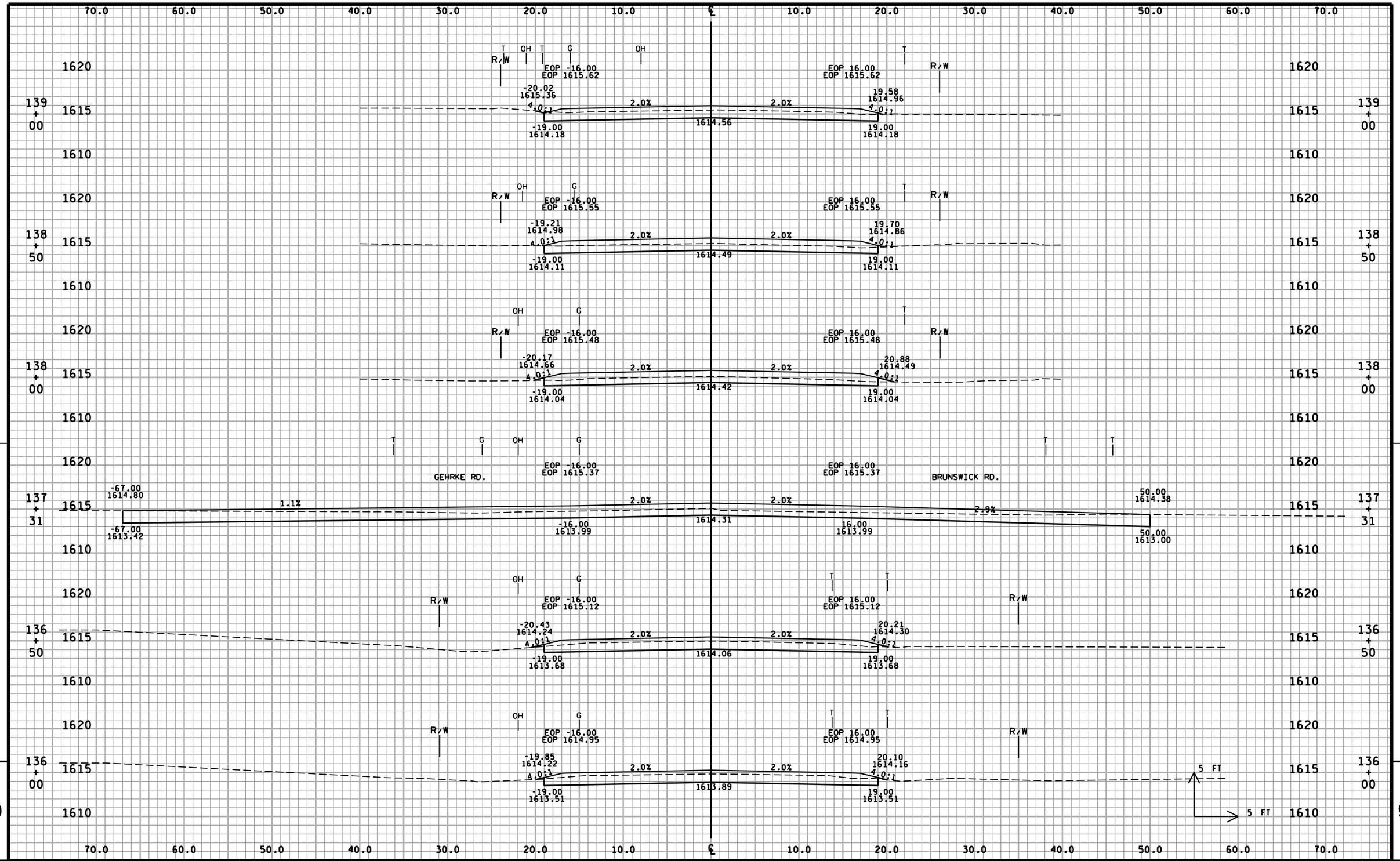

PROJECT NO:9455-04-70	HWY:CTH J	COUNTY:ONEIDA	CROSS SECTIONS:CTH J	SHEET 96	E

FILE NAME : P:\90s\93\930823\caddWDOT\Align\rc015014.dgn PLOT DATE : 1/28/2015 PLOT BY : pkriesel PLOT NAME : PLOT SCALE : 1:1.99999 WISDOT/CADDS SHEET 21

rc015014.dgn 1/28/2015 9:54:09 AM pkriesel

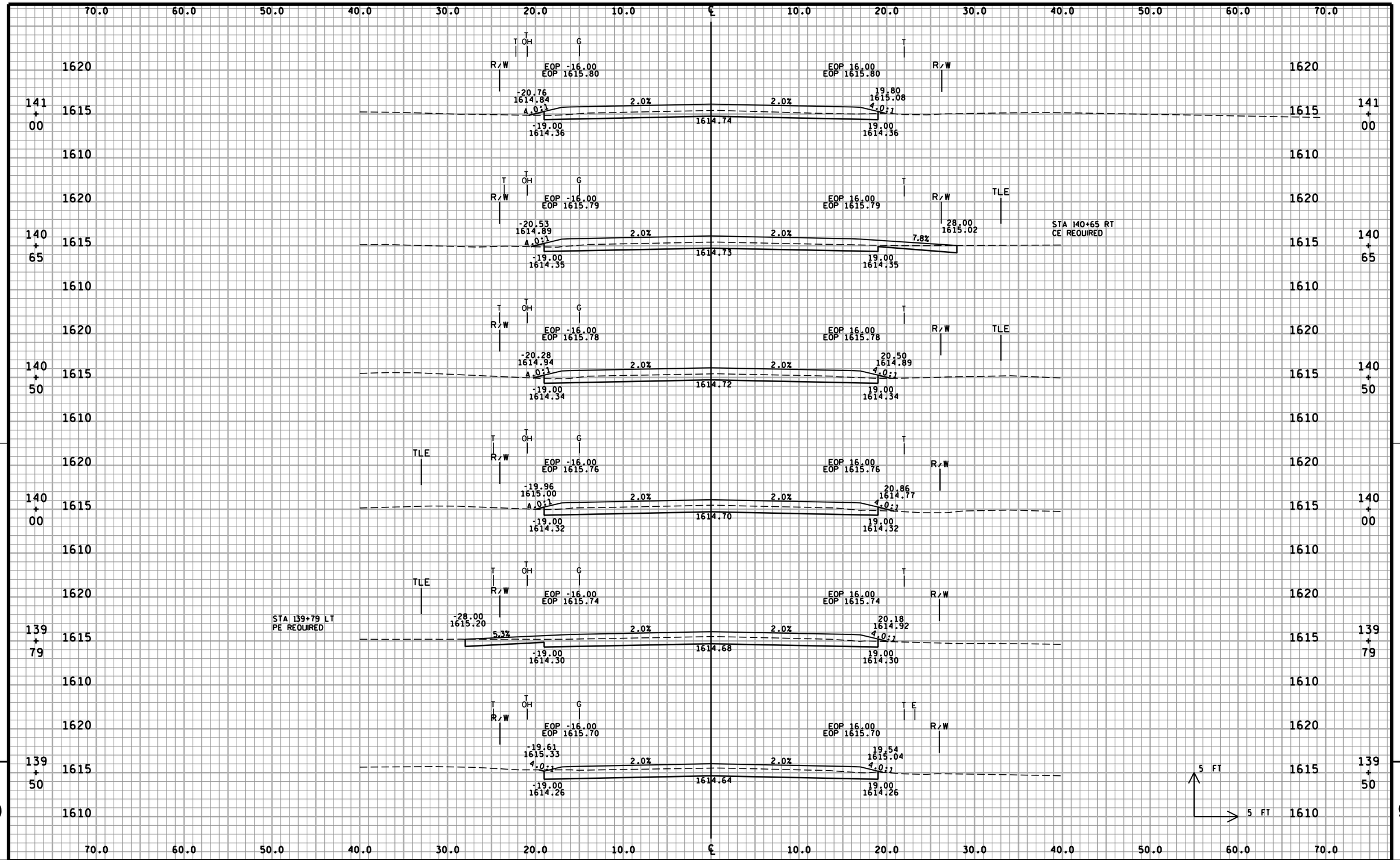

PROJECT NO:9455-04-70	HWY:CTH J	COUNTY:ONEIDA	CROSS SECTIONS:CTH J	SHEET 97	E

FILE NAME : P:\90s\93\930823\caddWDOT\Align\rc016014.dgn PLOT DATE : 1/28/2015 PLOT BY : pkriesel PLOT NAME : PLOT SCALE : 1:1.99999 WISDOT/CADDS SHEET 21

rc016014.dgn 1/28/2015 9:54:11 AM pkriesel

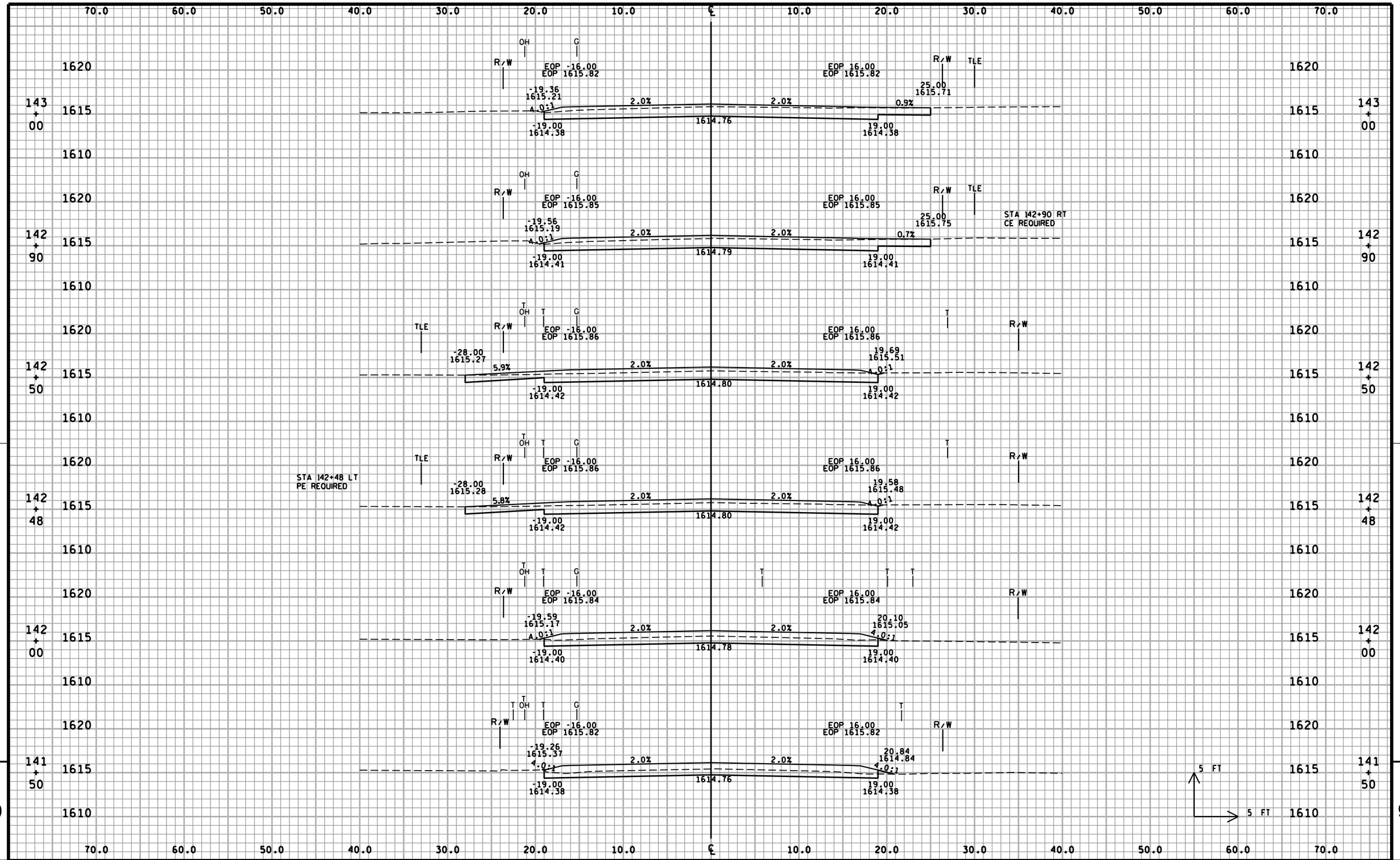

PROJECT NO:9455-04-70	HWY:CTH J	COUNTY:ONEIDA	CROSS SECTIONS:CTH J	SHEET 98	E

FILE NAME : P:\90s\93\930823\caddWDOT\Align\rc017014.dgn PLOT DATE : 1/28/2015 PLOT BY : pkriesel PLOT NAME : PLOT SCALE : 1:1.99999 WISDOT/CADDS SHEET 21

rc017014.dgn 1/28/2015 9:54:11 AM pkriesel

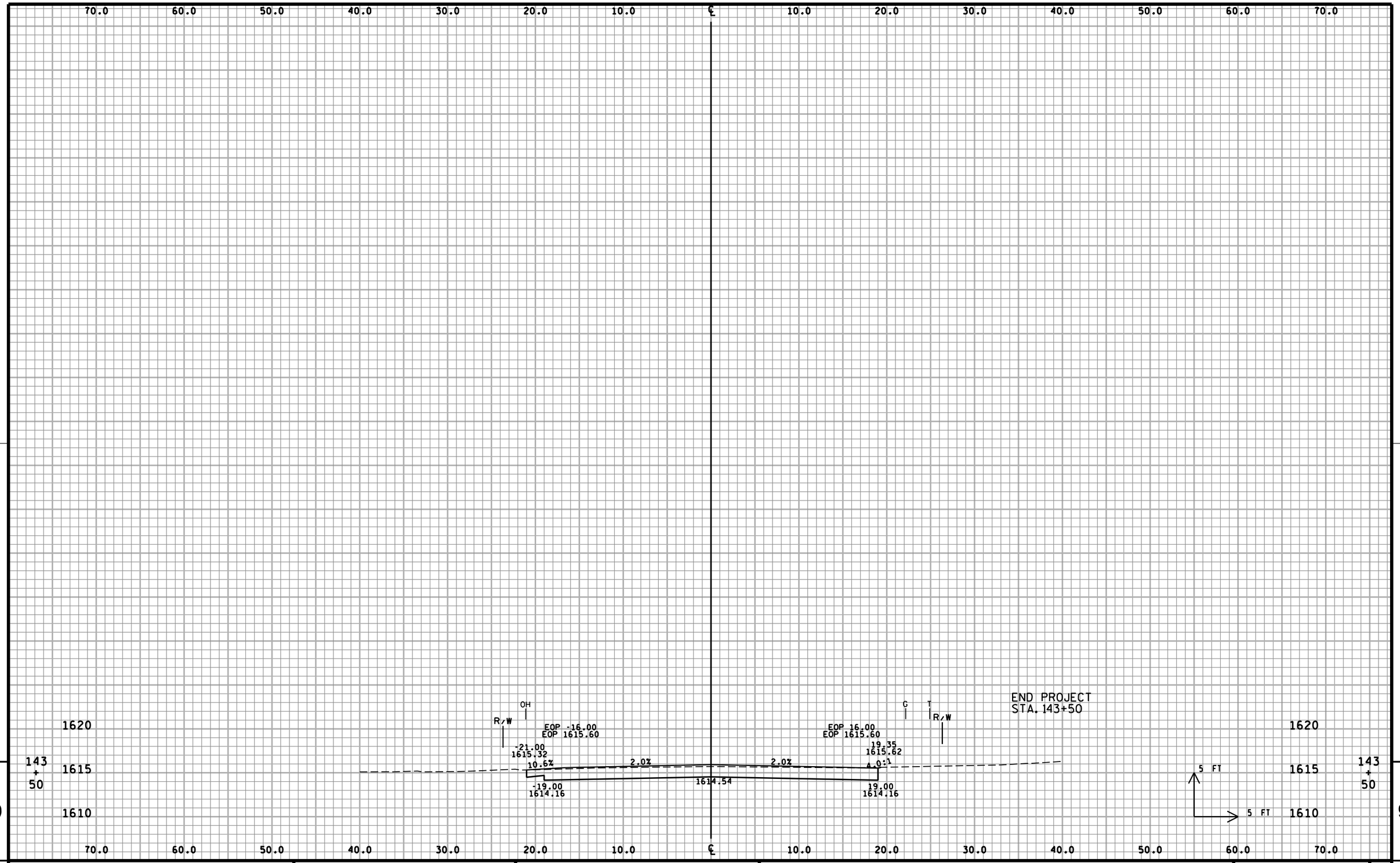

PROJECT NO:9455-04-70	HWY:CTH J	COUNTY:ONEIDA	CROSS SECTIONS:CTH J	SHEET 99	E

FILE NAME : P:\90s\93\930823\caddWDOT\Align\rc018014.dgn PLOT DATE : 1/28/2015 PLOT BY : pkriesel PLOT NAME : PLOT SCALE : 1:1.99999 WISDOT/CADDS SHEET 21

rc018014.dgn 1/28/2015 9:54:12 AM pkriesel

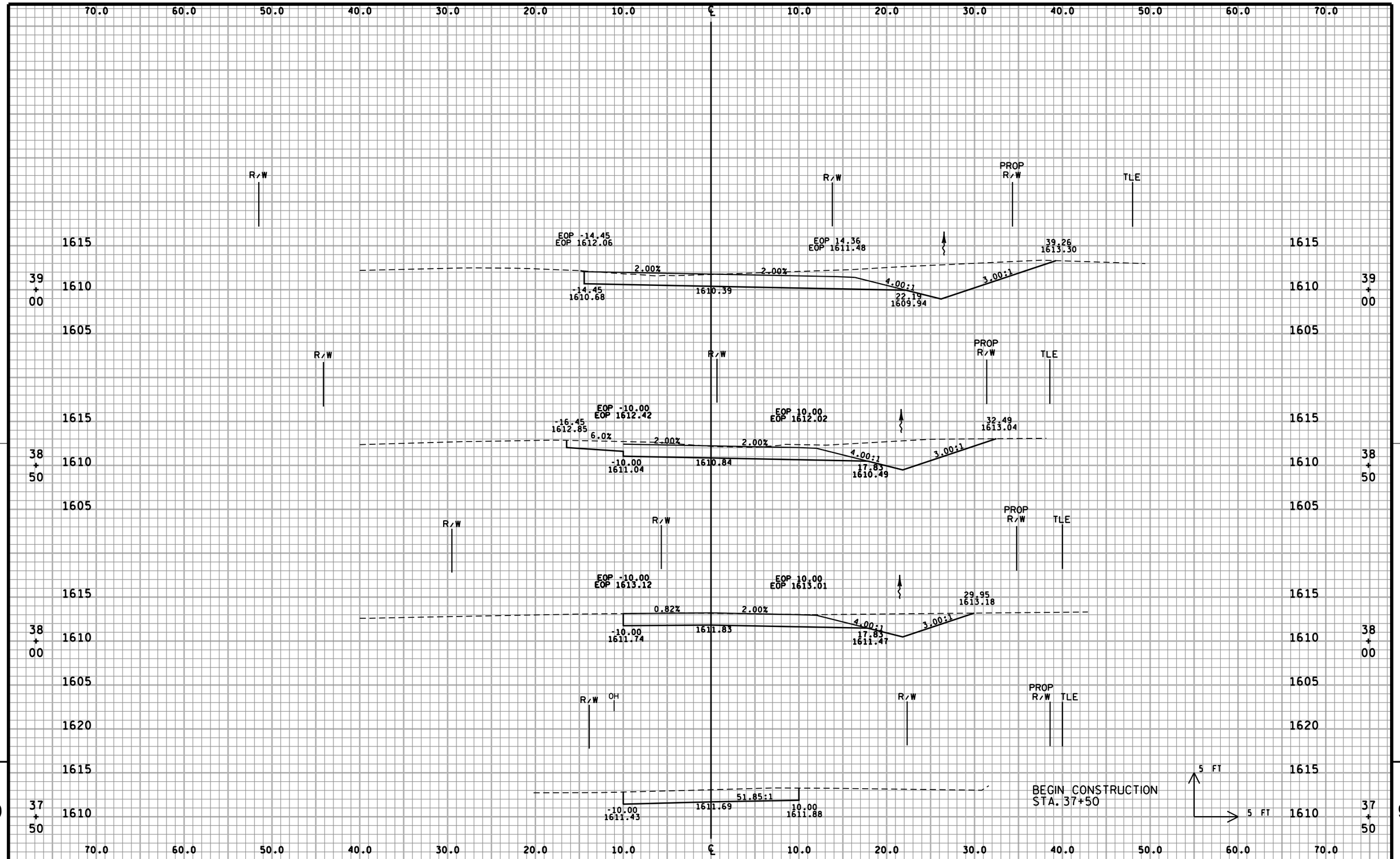

9

PROJECT NO:9455-04-70	HWY:CTH J	COUNTY:ONEIDA	CROSS SECTIONS:HANSEN RD	SHEET 100	E

FILE NAME : P:\90s\93\930823\caddWDOT\Align\rc001004.dgn PLOT DATE : 1/28/2015 PLOT BY : pkriesel PLOT NAME : PLOT SCALE : 1:2

WISDOT/CADDS SHEET 21

rc001004.dgn 1/28/2015 9:54:13 AM pkriesel

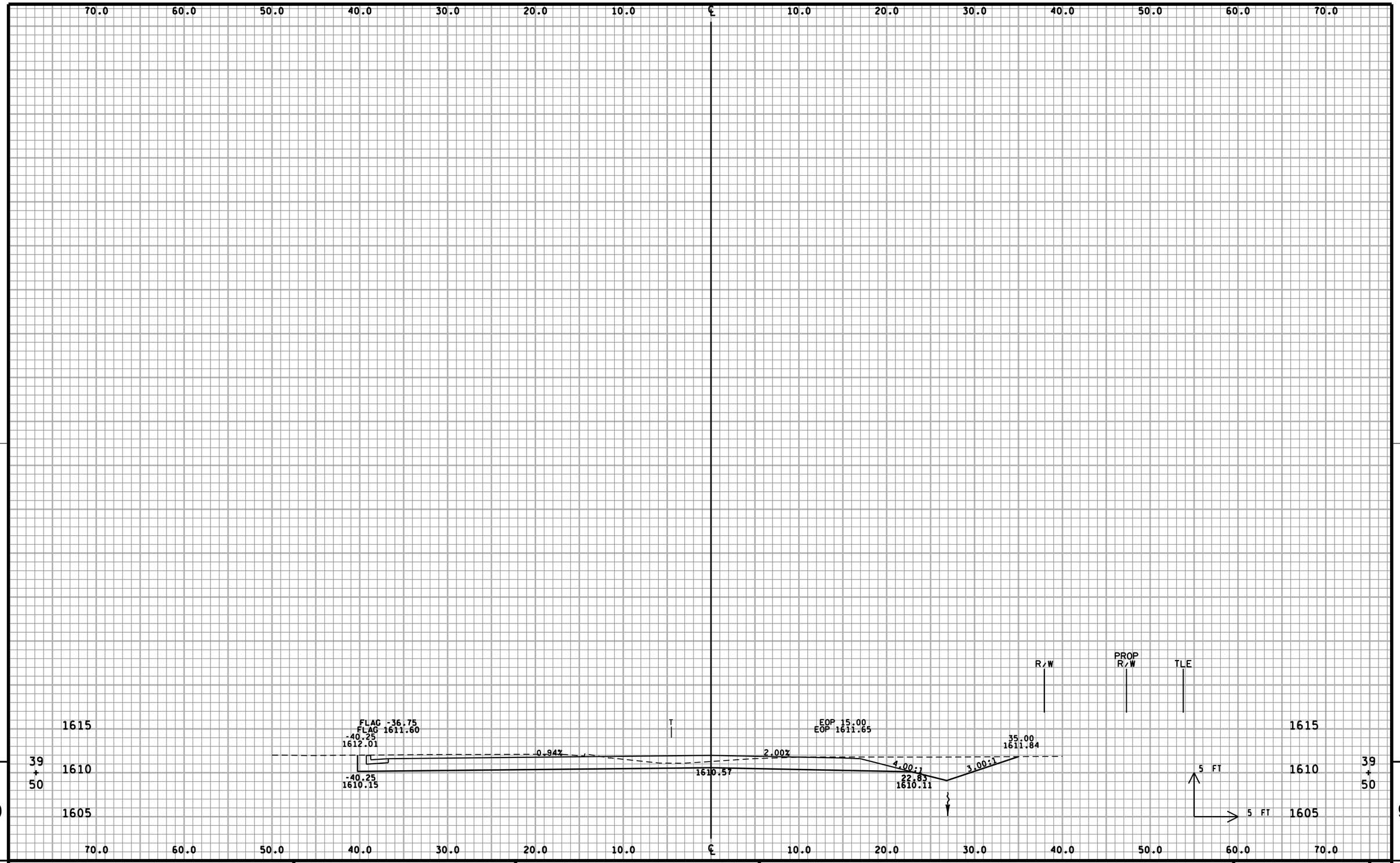

PROJECT NO: 9455-04-70	HWY: CTH J	COUNTY: ONEIDA	CROSS SECTIONS: HANSEN RD	SHEET 101	E

FILE NAME : P:\90s\93\930823\caddWDOT\Align\rc002004.dgn PLOT DATE : 1/28/2015 PLOT BY : pkriesel PLOT NAME : PLOT SCALE : 1:2

WISDOT/CADDS SHEET 21

rc002004.dgn 1/28/2015 9:54:14 AM pkriesel

Wisconsin Department of Transportation

Dedicated people creating transportation solutions through innovation and exceptional service.

http://www.dot.wisconsin.gov