NEL APR 2015

PROJECT ID: 4996-01-54

WITH: _____

COUNTY: SHEBOYGAN

ORDER OF SHEETS

Section No.	1	Title
Section No.	2	Typical Sections and Details
Section No.	3	Estimate of Quantities
Section No.	3	Miscellaneous Quantities
Section No.	4	Right of Way Plat
Section No.	5	Plan and Profile
Section No.	6	Standard Detail Drawings
Section No.	7	Sign Plates
~~Section No.~~	~~8~~	~~Structure Plans~~
Section No.	9	Computer Earthwork Data
Section No.	9	Cross Sections

TOTAL SHEETS = 230

24

N

DESIGN DESIGNATION

A.A.D.T.	------	= NA
A.A.D.T.	------	= NA
D.H.V.	------	= NA
D.D.		= NA
T.	-----	= NA
DESIGN SPEED		= NA
ESALS		= NA

CONVENTIONAL SYMBOLS

PLAN

- CORPORATE LIMITS
- PROPERTY LINE
- LOT LINE
- LIMITED HIGHWAY EASEMENT
- EXISTING RIGHT OF WAY
- PROPOSED OR NEW R/W LINE
- SLOPE INTERCEPT
- REFERENCE LINE
- EXISTING CULVERT
- PROPOSED CULVERT (Box or Pipe)
- COMBUSTIBLE FLUIDS (CAUTION)
- MARSH AREA
- WOODED OR SHRUB AREA

PROFILE

- GRADE LINE
- ORIGINAL GROUND
- MARSH OR ROCK PROFILE (To be noted as such) (ROCK)
- SPECIAL DITCH (LABEL)
- GRADE ELEVATION (95.36)
- CULVERT (Profile View)

UTILITIES

- ELECTRIC (E)
- FIBER OPTIC (FO)
- GAS (G)
- SANITARY SEWER (SAN)
- STORM SEWER (SS)
- TELEPHONE (T)
- WATER (W)
- UTILITY PEDESTAL
- POWER POLE
- TELEPHONE POLE

STATE OF WISCONSIN
DEPARTMENT OF TRANSPORTATION

PLAN OF PROPOSED IMPROVEMENT

CITY OF SHEBOYGAN
SIDEWALK GAP IMPROVEMENTS
NON-HIGHWAY
SHEBOYGAN COUNTY

STATE PROJECT	FEDERAL PROJECT	
	PROJECT	CONTRACT
4996-01-54	WISC 2014305	1

STATE PROJECT NUMBER
4996-01-54

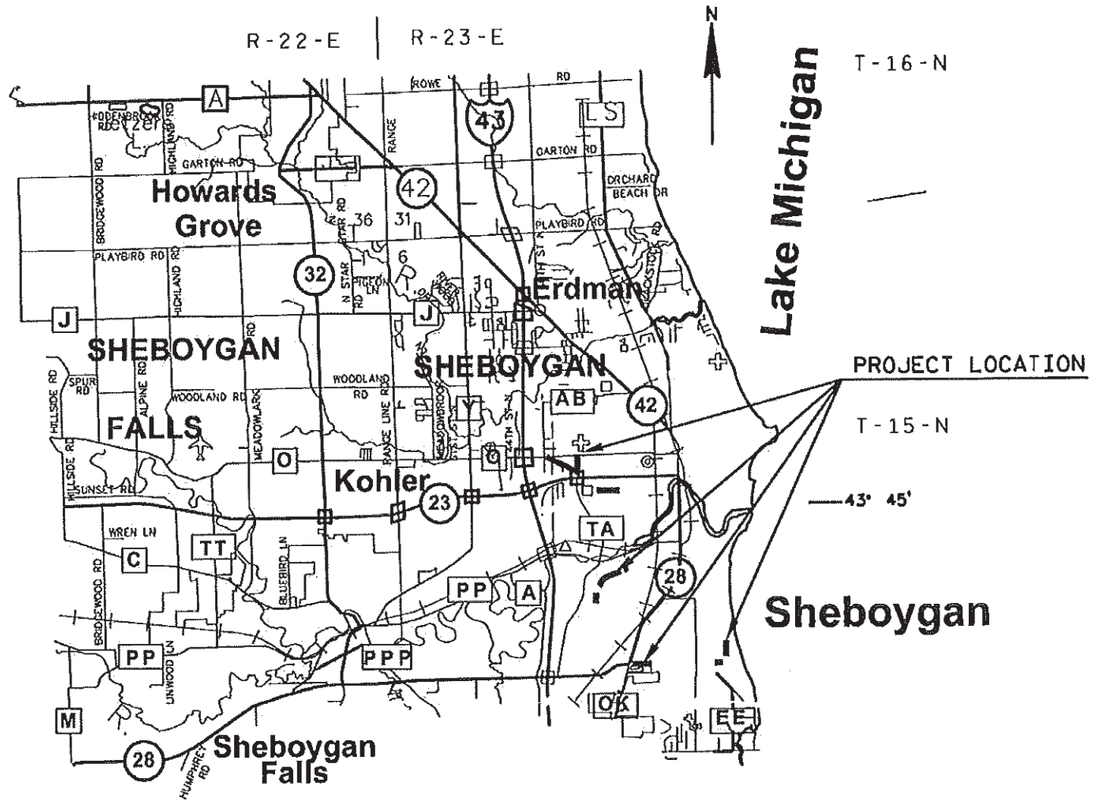

LAYOUT
SCALE 0 1 MI.

TOTAL NET LENGTH OF CENTERLINE = NA

-"COORDINATES ON THIS PLAN ARE REFERENCED TO THE WISCONSIN COUNTY COORDINATE SYSTEM (WCCS), 'COUNTYNAME' COUNTY."

ORIGINAL PLANS PREPARED BY

AECOM

WISCONSIN
JOSEPH C. HOLZWART
E-41064
SHEBOYGAN
WI
PROFESSIONAL ENGINEER

04-03-2014 (Date) Joseph Holzwart (Signature)

APPROVED FOR CITY OF SHEBOYGAN BY:

DATE: 4/03/14 Ryan J. Sayn (City of Sheboygan Signature)

STATE OF WISCONSIN
DEPARTMENT OF TRANSPORTATION

PREPARED BY

Surveyor	AECOM
Designer	AECOM
Management Consultant	SEH
C.O. Examiner	

APPROVED FOR THE DEPARTMENT

DATE: 4/4/2014 (Signature)

E

GENERAL NOTES

THE LOCATIONS OF UTILITY INSTALLATIONS, AS SHOWN ON THE PLAN ARE APPROXIMATE. THERE MAY BE OTHER UTILITY INSTALLATIONS WITHIN THE PROJECT AREA THAT ARE NOT SHOWN. IT IS THE CONTRACTOR'S RESPONSIBILITY TO NOTIFY DIGGERS HOTLINE AND THOSE UTILITIES NOT PART OF DIGGERS HOTLINE.

NO TREES OR SHRUBS ARE TO BE REMOVED UNLESS SUCH TREES OR SHRUBS HAVE FIRST BEEN INDICATED FOR REMOVEAL BY THE ENGINEER.

ALL HOLES OR OPENINGS BELOW SUBGRADE RESULTING FROM THE ABANDONMENT OR REMOVAL OF EXISTING STRUCTURES SHALL BE BACKFILLED WITH GRANULAR BACKFILL. PAYMENT FOR THE GRANULAR BACKFILL SHALL BE INCLUDED IN THE COST FOR REMOVAL OF THE STRUCTURES.

FILL AS SHOWN ON THE PLAN PERTAINS TO EMBANKMENTS CONSTRUCTED FROM COMMON EXCAVATION. THE ALLOWANCE USED FOR EXPANDING THE FILLS TO COMPUTE THE VOLUME OF MATERIAL REQUIRED IS 30 PERCENT. ALL FILL VOLUMES SHOWN ARE ACTUAL IN PLACE VOLUMES (UNEXPANDED).

ALL DISTURBED AREAS NOT OTHERWISE SURFACED SHALL BE TOPSOILED, SEEDED, FERTILIZED AND EROSION MAT.

EXACT LOCATIONS OF DRIVEWAY ENTRANCES ARE TO BE DETERMINED BY THE ENGINEER.

THE EROSION CONTROL ITEMS SHOWN ON THE PLANS ARE AT SUGGESTED LOCATIONS. THE ENGINEER MAY MODIFY LOCATIONS AS NEEDED. ALL EROSION CONTROL MEASURES SHALL BE MAINTAINED UNTIL SUCH TIME AS THE ENGINEER DETERMINES THE MEASURE IS NO LONGER NECESSARY.

ALL DIMENSIONS SHOWN ARE TO FACE OF CURB, UNLESS NOTED OTHERWISE.

TOPSOIL SHALL BE PLACED TO AN APPROXIMATE DEPTH OF 6 INCHES OR AS DETERMINED BY THE ENGINEER.

A VERTICAL SAWCUT SHALL BE MADE THROUGH EXISTING DRIVEWAYS, SIDEWALKS, CURBS AND PAVEMENT AT REMOVAL LIMITS.

EXCAVATION BELOW SUBGRADE (EBS) IS NOT SHOWN ON THE CROSS SECTIONS. IF EBS IS REQUIRED, IT SHALL BE PAID FOR AS 'COMMON EXCAVATION'. LOCATIONS FOR EBS, IF REQUIRED, WILL BE DETERMINED BY THE ENGINEER.

ALL ASPHALTIC SURFACE DRIVEWAYS & FIELD ENTRANCES SHALL CONSIST OF 3" OF ASPHALTIC SURFACE OVER 9" OF BASE AGGREGATE DENSE, 1-¼ INCH.

ALL CONCRETE DRIVEWAYS SHALL CONSIST OF THE SPECIFIED CONCRETE THICKNESS OVER 6" OF BASE AGGREGATE DENSE, 1-¼ INCH.

UTILITY CONTACTS

AMERICAN TRANSMISSION CO LLC
MIKE OLSEN
801 O'KEEFE ROAD
DE PERE, WI 54115
920-338-6582; CELL 920-660-2390

CHARTER COMMUNICATIONS
TOM HARYCKI, PROJECT COORDINATOR
2312 CONTINENTAL DRIVE
WEST BEND, WI 53095
262-306-8756 EXT. 20702

SHEBOYGAN COUNTY SURVEYOR
EDGAR HARVEY
1211 NORTH 23RD STREET
SHEBOYGAN, WI 53081
920-459-3826

WISCONSIN PUBLIC SERVICE
MIKE LOWTHER
933 SOUTH WILDWOOD AVENUE
SHEBOYGAN, WI 53081
920-451-3743

AT & T WISCONSIN
CHARLES BARTELT
70 EAST DIVISION ST.
FOND DU LAC, WI 54935
920-929-1013; FAX 920-929-1064

WISCONSIN POWER AND LIGHT (ALLIANT ENERGY)
JASON HOGAN
4902 N. BILTEMORE LANE SUITE 1000
MADISON, WI 53718-2148
608-458-4871; CELL 608-395-7395

DAVE BIEBEL
CITY OF SHEBOYGAN
2026 NEW JERSEY AVENUE
SHEBOYGAN, WI 53081
920-459-3360; FAX 920-459-3443

RYAN SAZAMA
CITY OF SHEBOYGAN
2026 NEW JERSEY AVENUE
SHEBOYGAN, WI 53081
920-459-3394; FAX 920-459-0227

RICH DALE
SHEBOYGAN WATER UTILITY
72 PARK AVENUE
SHEBOYGAN, WI 53081
920-459-3839; FAX 920-459-4325

JEFFERY G. WISWELL
MCLEOD USA OF WISCONSIN
1858 WRIGHT STREET
MADISON, WI 53704
608-819-5007

BILL BLASHKA
TOWN OF SHEBOYGAN, S.D.*2, AND S.D.*3
1512 NORTH 40TH STREET
SHEBOYGAN, WI 53081

JOHN VENICE
UNION PACIFIC RAILROAD CO.
101 N. WACKER DRIVE, SUITE 1920
CHICAGO, IL 60606
312-777-2043

DNR CONTACT

WISCONSIN DEPARTMENT OF NATURAL RESOURCES
JOANNE KLINE, ENVIRONMENTAL ANALYSIS & LIASON SECTION
SOUTHEAST REGION HEADQUARTERS
2300 N. MARTIN LUTHER KING, JR. DRIVE
MILWAUKEE, WI 53212
414-263-8756; FAX 414-263-8661

RUNOFF COEFFICIENT TABLE

	HYDROLOGIC SOIL GROUP											
	A			B			C			D		
	SLOPE RANGE (PERCENT)			SLOPE RANGE (PERCENT)			SLOPE RANGE (PERCENT)			SLOPE RANGE (PERCENT)		
LAND USE:	0-2	2-6	6 & OVER	0-2	2-6	6 & OVER	0-2	2-6	6 & OVER	0-2	2-6	6 & OVER
ROW CROPS	.08 .22	.16 .30	.22 .38	.12 .26	.20 .34	.27 .44	.15 .30	.24 .37	.33 .50	.19 .34	.28 .41	.38 .56
MEDIAN STRIP-TURF	.19 .24	.20 .26	.24 .30	.19 .25	.22 .28	.26 .33	.20 .26	.23 .30	.30 .37	.20 .27	.25 .32	.30 .40
SIDE SLOPE-TURF			.25 .32			.27 .34			.28 .36			.30 .38
PAVEMENT:												
ASPHALT	.70 - .95											
CONCRETE	.80 - .95											
BRICK	.70 - .80											
DRIVES, WALKS	.75 - .85											
ROOFS	.75 - .95											
GRAVEL ROADS, SHOULDERS	.40 - .60											

TOTAL PROJECT AREA = 6.120 ACRES
TOTAL AREA EXPECTED TO BE DISTURBED BY CONSTRUCTION ACTIVITIES = 5.120 ACRES

DIGGERS HOTLINE
Dial 811 or (800) 242-8511
www.DiggersHotline.com

WIS. STATUTE 182.0175 (1974) REQUIRES MINIMUM OF 3 WORK DAYS NOTICE BEFORE YOU EXCAVATE.

TYPICAL SECTION AND DETAIL SHEET INDEX

GENERAL NOTES
PROJECT OVERVIEW
TYPICAL SECTIONS
CONSTRUCTION DETAILS
TRAFFIC CONTROL
STORM SEWER PROFILE

2

2

LEGEND

PROPOSED SIDEWALK

(1) SIDEWALK SEGMENT NUMBER

N

0' 600' 1200'

APPROX. SCALE

PROJECT NO: 4996-01-54	HWY: SIDEWALK GAP	COUNTY: SHEBOYGAN	PROJECT OVERVIEW NORTH	SHEET 3	E

2

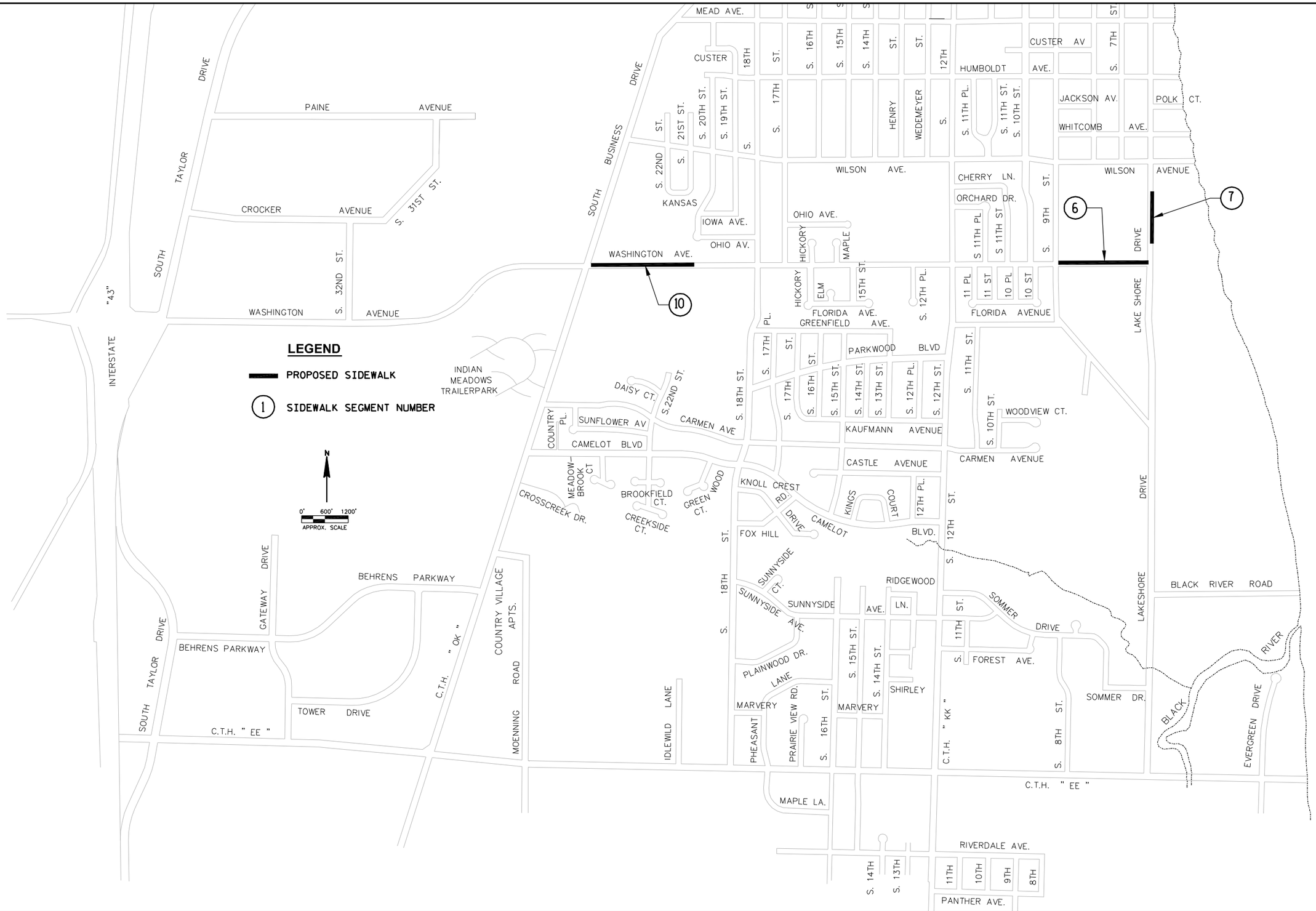

PROJECT NO: 4996-01-54	HWY: SIDEWALK GAP	COUNTY: SHEBOYGAN	PROJECT OVERVIEW SOUTH	SHEET 4	E

FILE NAME : L:\WORK\60158441\000_CADD\CIVIL\SHEETSOTHER\0200202_PO.DWG PLOT DATE : 7/10/2012 3:43 PM PLOT BY : HOLZWART, JOSEPH PLOT NAME : ----------PLOT SCALE : $$.....plotscale.....$$ WISDOT/CADDS SHEET 42

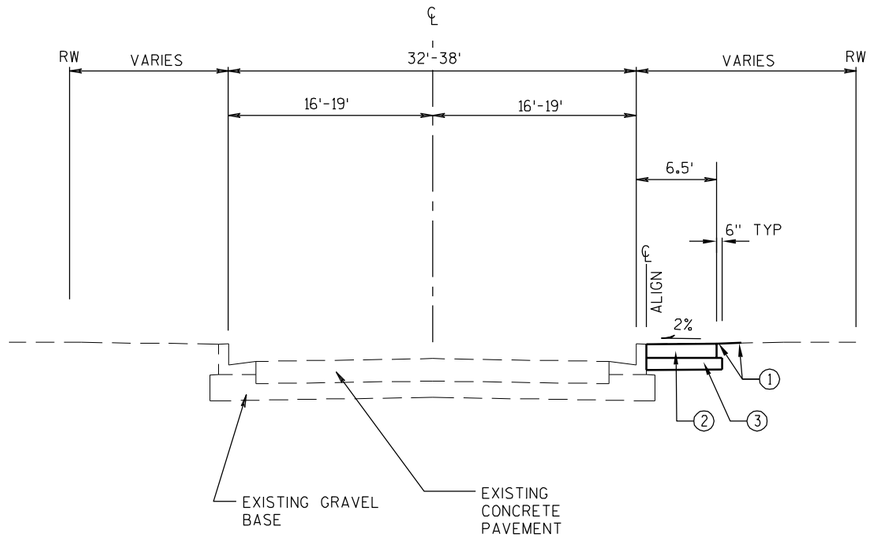

PROPOSED TYPICAL SECTION
SEGMENT 4 - WILGUS AVE.
STA 20+00 - STA 24+85

LEGEND

(1)	TOPSOIL, SEED, FERTILIZE, EROSION MAT
(2)	CONCRETE SIDEWALK 5-INCH
(3)	3" BASE AGGREGATE DENSE, 1-¼ INCH

2

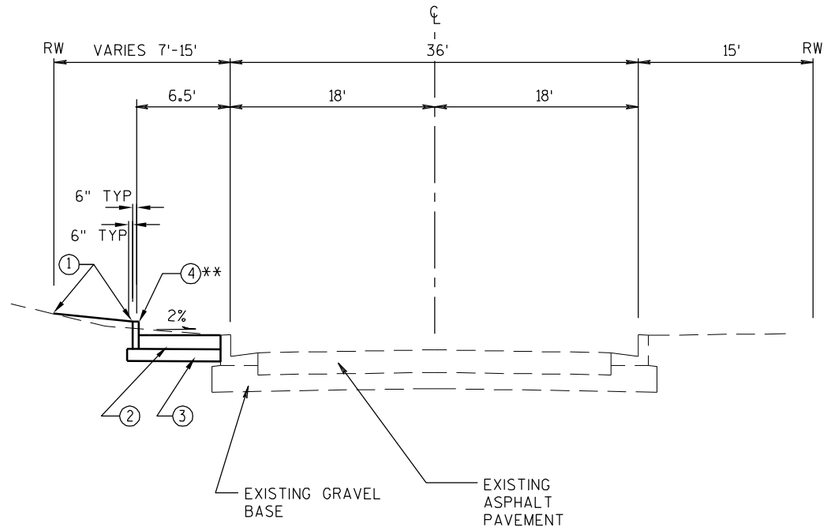

PROPOSED TYPICAL SECTION
SEGMENT 5 - WILGUS AVE.
STA 9+98 - STA 15+40

LEGEND

1. TOPSOIL, SEED, FERTILIZE, EROSION MAT
2. CONCRETE SIDEWALK 5-INCH
3. 3" BASE AGGREGATE DENSE, 1-¼ INCH
4. CONCRETE CURB PEDESTRIAN

** STA 9+98 - 11+80

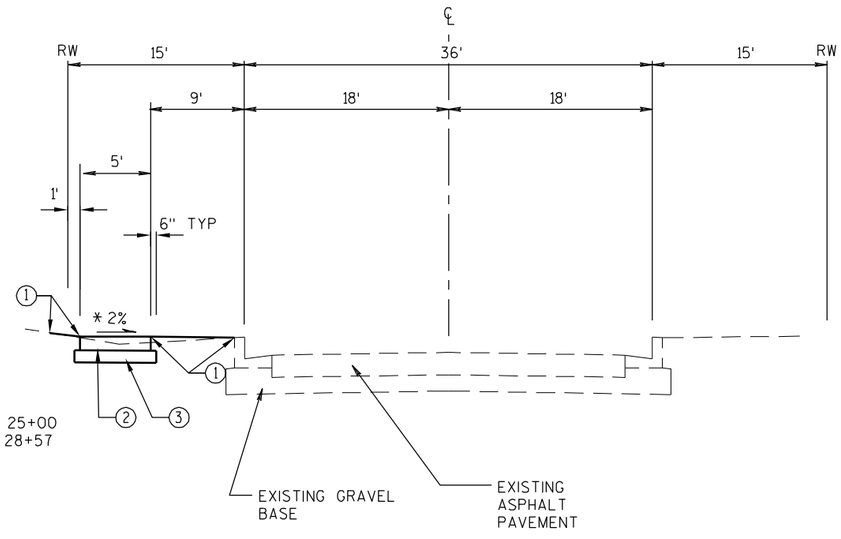

* REVERSE SLOPE STA 24+20 - STA 25+00
STA 28+27 - STA 28+57

PROPOSED TYPICAL SECTION
SEGMENT 5 - WILGUS AVE.
STA 15+40 - STA 36+05

PROJECT NO: 4996-01-54	HWY: SIDEWALK GAP	COUNTY: SHEBOYGAN	TYPICAL SECTIONS	SHEET 6	E

2

* REVERSE SLOPE STA 26+98 - STA 27+48

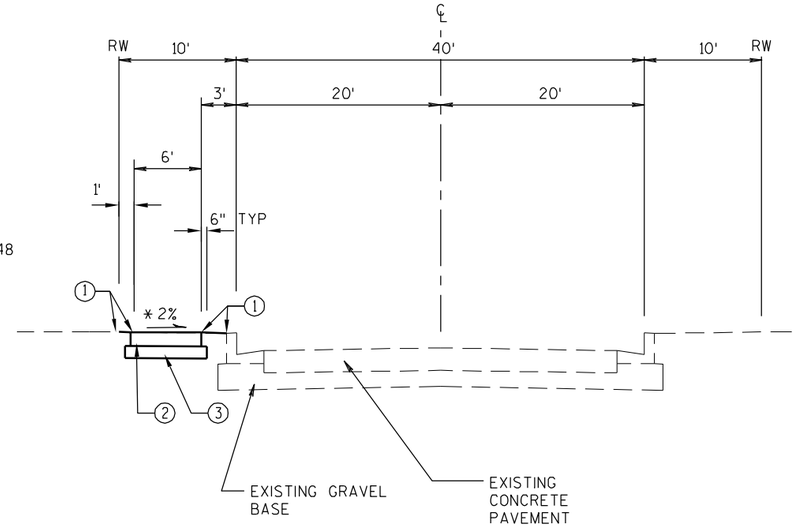

LEGEND

(1)	TOPSOIL, SEED, FERTILIZE, EROSION MAT
(2)	CONCRETE SIDEWALK 5-INCH
(3)	3" BASE AGGREGATE DENSE, 1-¼ INCH

PROPOSED TYPICAL SECTION
SEGMENT 6 - WASHINGTON AVE.
STA 20+22 - STA 31+67

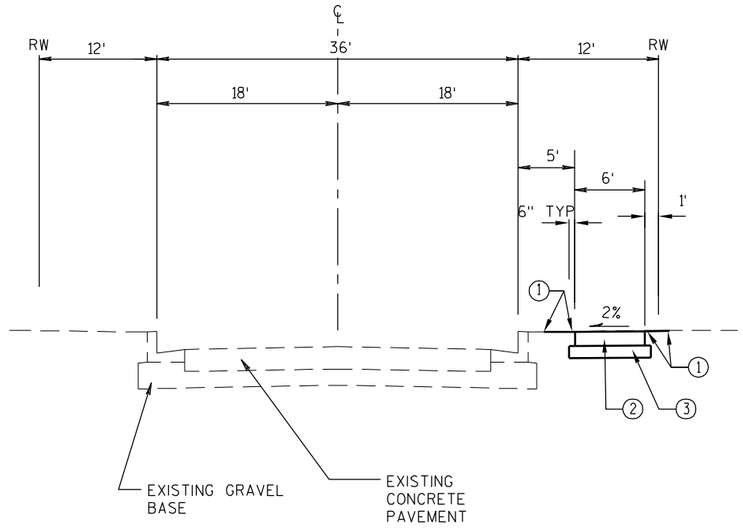

PROPOSED TYPICAL SECTION
SEGMENT 7 - LAKESHORE DR.
STA 10+17 - STA 10+35
STA 11+46 - STA 16+58

PROJECT NO: 4996-01-54	HWY: SIDEWALK GAP	COUNTY: SHEBOYGAN	TYPICAL SECTIONS	SHEET 7	E

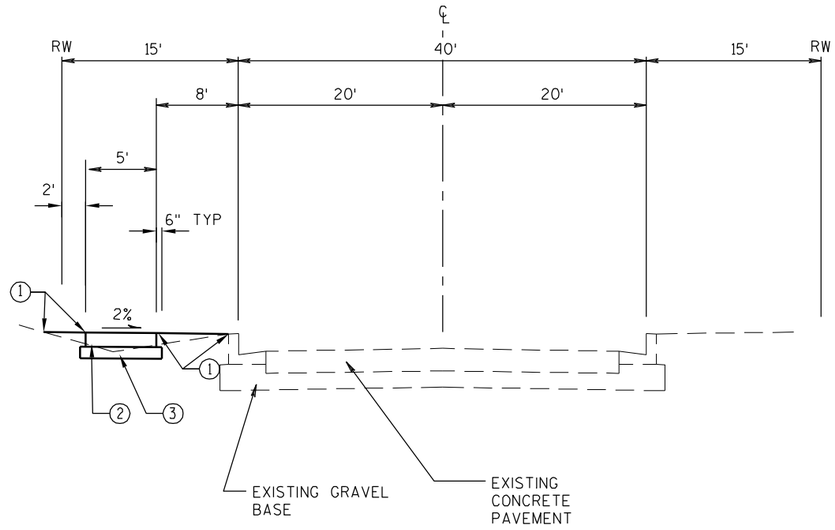

PROPOSED TYPICAL SECTION
SEGMENT 9 - GEORGIA AVE.

STA 10+29 - STA 14+10
STA 16+10 - STA 16+20

LEGEND

1	TOPSOIL, SEED, FERTILIZE, EROSION MAT
2	CONCRETE SIDEWALK 5-INCH
3	3" BASE AGGREGATE DENSE, 1-¼ INCH
4	WALL MODULAR BLOCK GRAVITY LRFD
5	RAILING STEEL PIPE GALVANIZED PEDESTRIAN

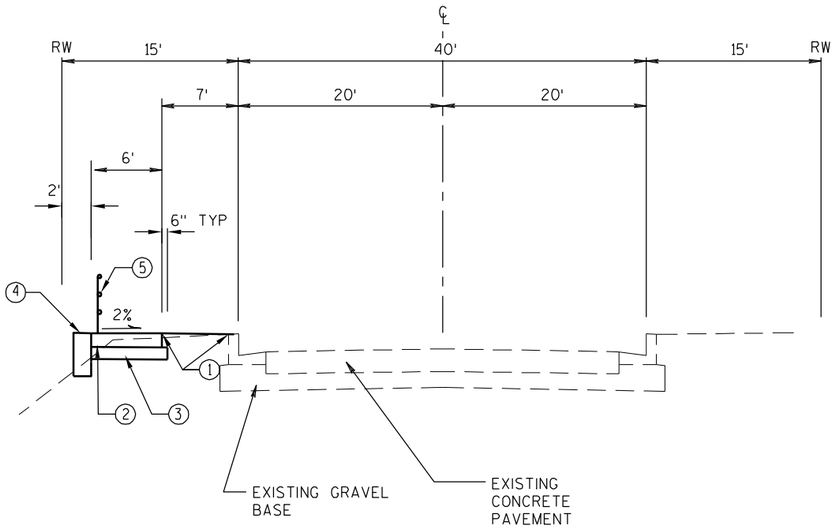

PROPOSED TYPICAL SECTION
SEGMENT 9 - GEORGIA AVE.

STA 14+10 - STA 16+10

LOCATION	OFFSET	A	B
STA 20+70 - STA 24+19	RT	6'	3'
STA 24+19 - STA 24+39	RT	6'-8'	1'-3'
STA 24+39 - STA 28+07	RT	8'	1'

* REVERSE SLOPE STA 26+75 - STA 28+77

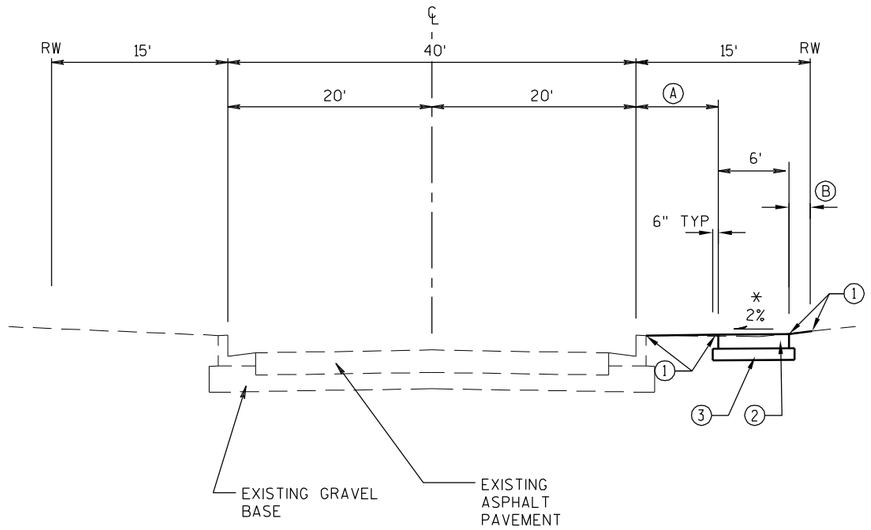

PROPOSED TYPICAL SECTION
SEGMENT 9 - GEORGIA AVE.
STA 20+70 - STA 28+77

LEGEND

1. TOPSOIL, SEED, FERTILIZE, EROSION MAT
2. CONCRETE SIDEWALK 5-INCH
3. 3" BASE AGGREGATE DENSE, 1-¼ INCH

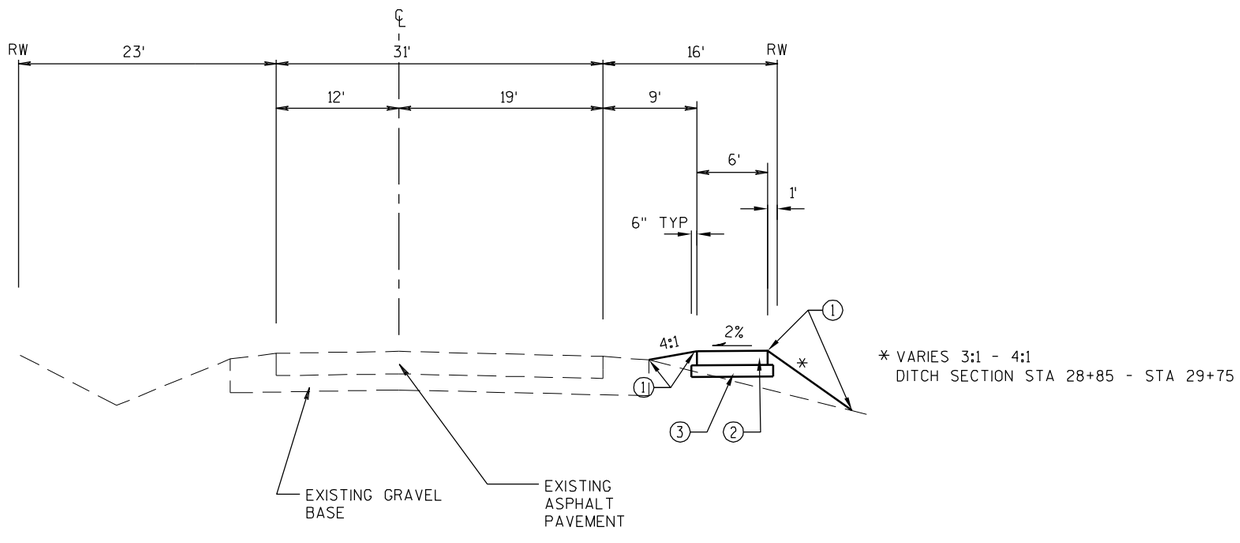

PROPOSED TYPICAL SECTION
SEGMENT 9 - GEORGIA AVE.
STA 28+77 - STA 41+87

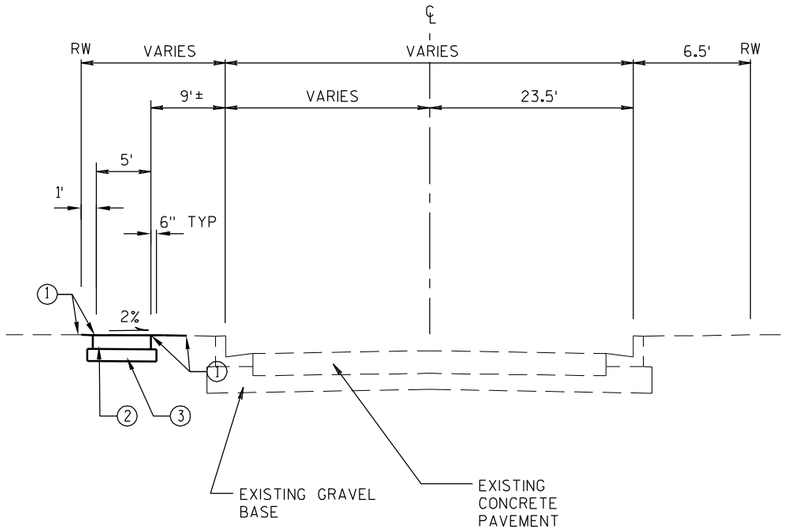

PROPOSED TYPICAL SECTION
SEGMENT 10 - WASHINGTON AVE.

STA 40+80 - STA 43+60

LEGEND

(1)	TOPSOIL, SEED, FERTILIZE, EROSION MAT
(2)	CONCRETE SIDEWALK 5-INCH
(3)	3" BASE AGGREGATE DENSE, 1-¼ INCH

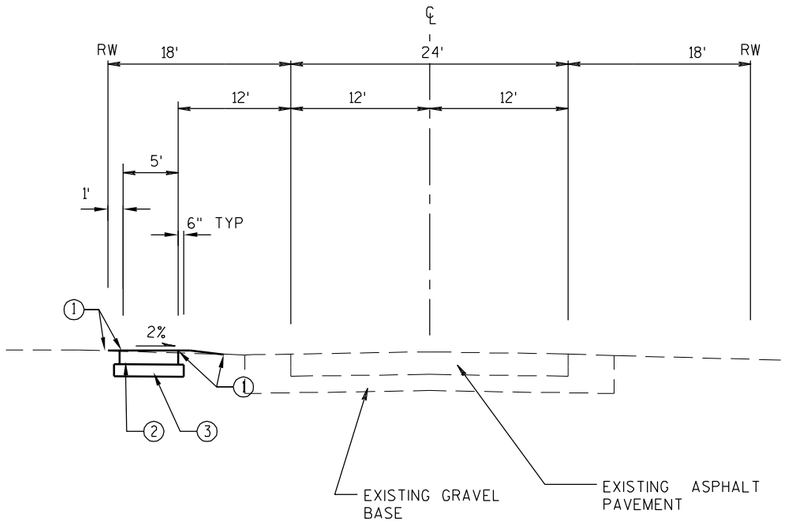

PROPOSED TYPICAL SECTION
SEGMENT 10 - WASHINGTON AVE.

STA 43+60 - STA 47+40
STA 49+25 - STA 52+95

PROJECT NO: 4996-01-54	HWY: SIDEWALK GAP	COUNTY: SHEBOYGAN	TYPICAL SECTIONS	SHEET 10	E

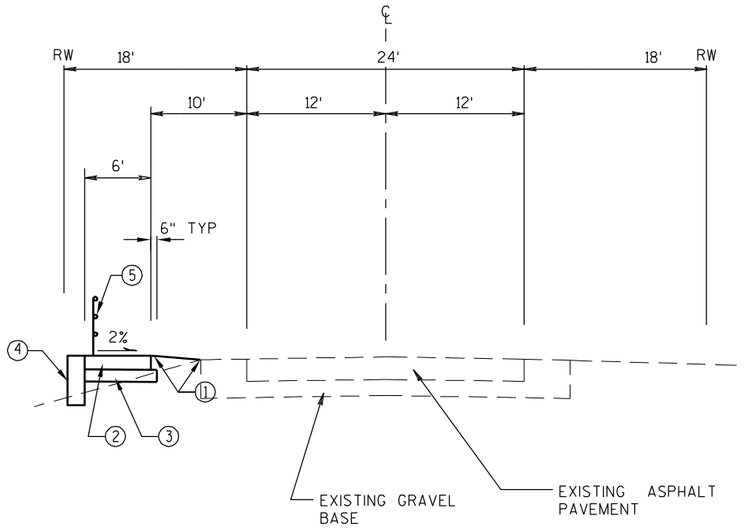

PROPOSED TYPICAL SECTION
SEGMENT 10 - WASHINGTON AVE.

STA 47+40 - STA 49+25

LEGEND

(1)	TOPSOIL, SEED, FERTILIZE, EROSION MAT
(2)	CONCRETE SIDEWALK 5-INCH
(3)	3" BASE AGGREGATE DENSE, 1-¼ INCH
(4)	WALL MODULAR BLOCK GRAVITY LRFD
(5)	RAILING STEEL PIPE GALVANIZED PEDESTRIAN

2

FILE NAME : L:\WORK\60158441\000_CADD\CIVIL\SHEETSOTHER\020309_TS.DWG PLOT DATE : 7/10/2012 3:47 PM PLOT BY : HOLZWART, JOSEPH PLOT NAME : ----------PLOT SCALE : $$.....plotscale.....$$ WISDOT/CADDS SHEET 42

2

* VARIES 13' - 25'
STA 41+00 TO STA 43+30

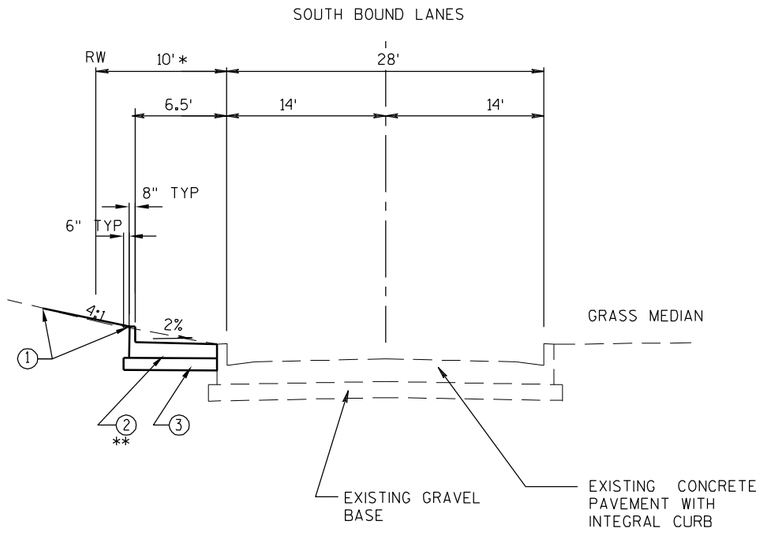

LEGEND

(1)	TOPSOIL, SEED, FERTILIZE, EROSION MAT
(2)	SIDEWALK INTEGRAL PEDESTRIAN CURB (SEE DETAIL)
(3)	3" BASE AGGREGATE DENSE, 1-¼ INCH

** PEDESTRIAN CURB HEIGHT

STA 40+57 TO STA 41+20	6"
STA 41+20 TO STA 41+25	TRANSITION
STA 41+25 TO STA 42+75	12"
STA 42+75 TO STA 42+80	TRANSITION
STA 42+80 TO STA 42+87	6"
STA 43+20 TO STA 43+67	6"
STA 43+95 TO STA 45+68	6"
STA 45+95 TO STA 46+31	6"
STA 46+50 TO STA 46+95	6"
STA 46+95 TO STA 47+00	TRANSITION
STA 47+00 TO STA 48+15	12"
STA 48+15 TO STA 48+20	TRANSITION
STA 48+20 TO STA 48+30	6"
STA 48+50 TO STA 48+80	6"
STA 49+05 TO STA 50+20	6"
STA 50+20 TO STA 50+25	TRANSITION
STA 50+25 TO STA 52+25	12"
STA 52+25 TO STA 52+30	TRANSITION
STA 52+30 TO STA 52+60	6"

PROPOSED TYPICAL SECTION
SEGMENT 15 - TAYLOR DR.
STA 40+45 - STA 52+75

2

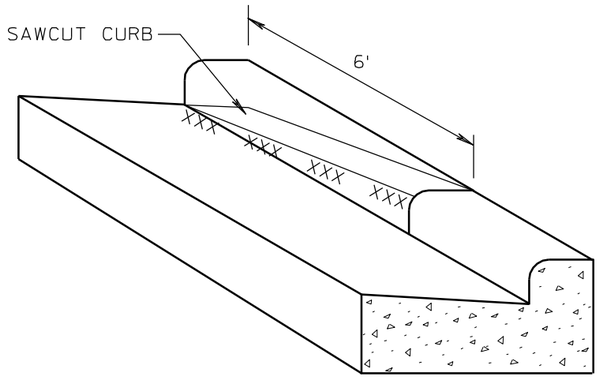

SAWING CURB OPENINGS DETAIL

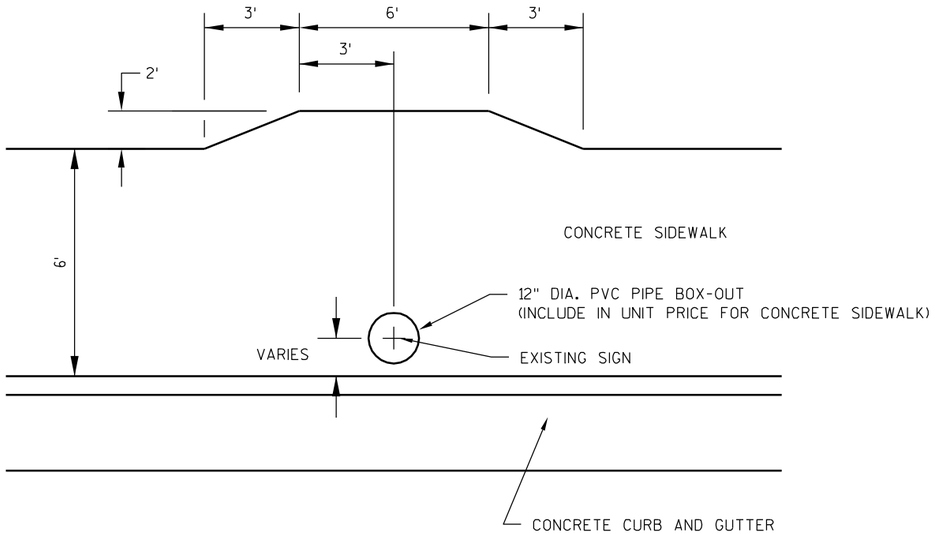

SIDEWALK BUMP-OUT DETAIL

SEGMENT 4: STA 20+95
STA 21+75
STA 23+78

SEGMENT 5: STA 11+50

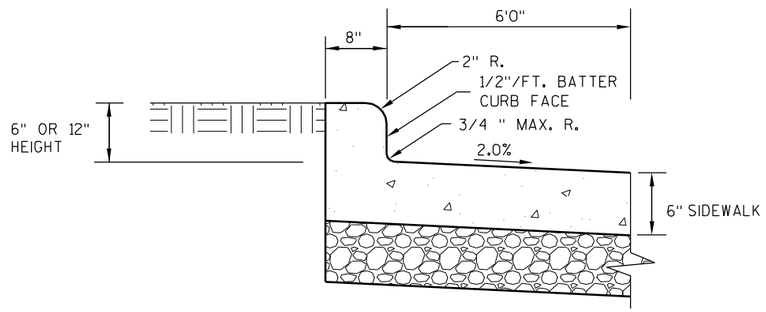

SIDEWALK INTEGRAL PEDESTRIAN CURB

SEGMENT 15

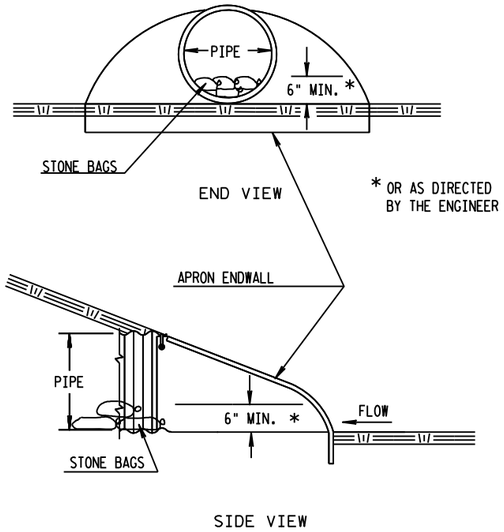

CULVERT PIPE CHECKS

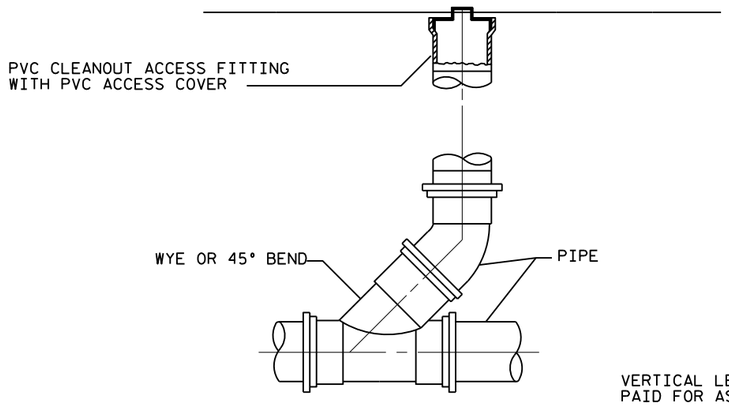

VERTICAL LENGTH OF CLEAN OUT WILL BE MEASURED AND PAID FOR AS STORM SEWER PIPE PVC 4-INCH BID ITEM.

CLEANOUT DETAIL

2

PROJECT NO: 4996-01-54	HWY: SIDEWALK GAP	COUNTY: SHEBOYGAN	CONSTRUCTION DETAILS	SHEET 14	E

SECTION A-A

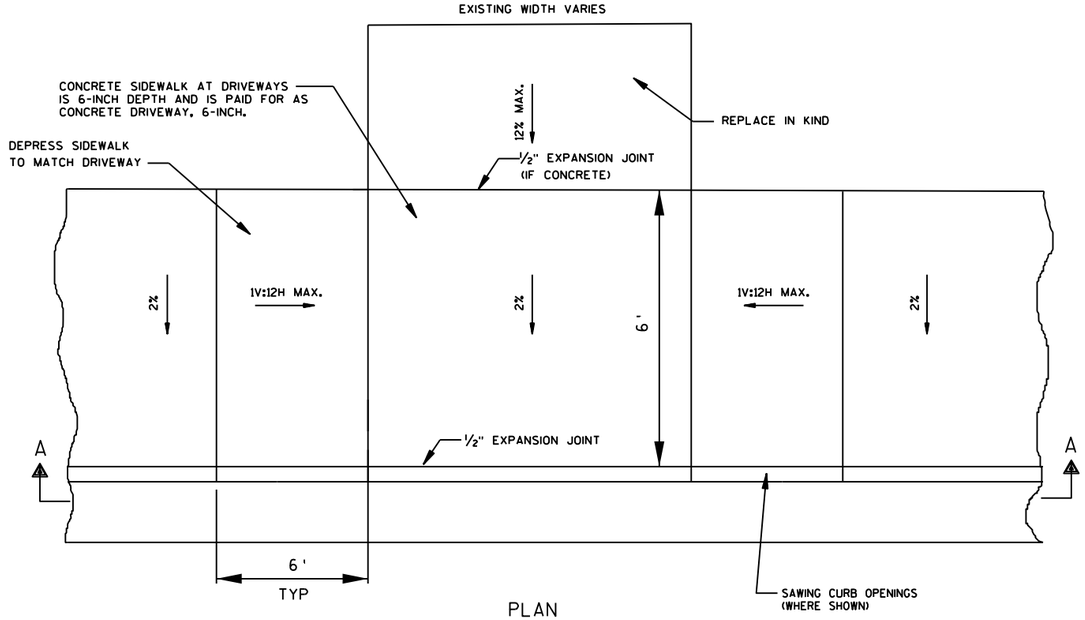

PLAN

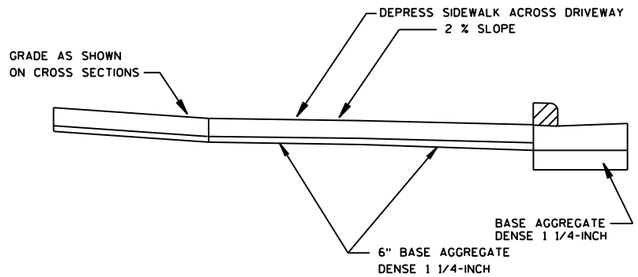

PROFILE

URBAN DRIVEWAY DETAIL

FOR USE IN AREAS WHERE SIDEWALK IS ADJACENT TO BACK OF CURB

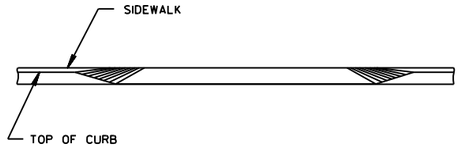

SECTION A-A

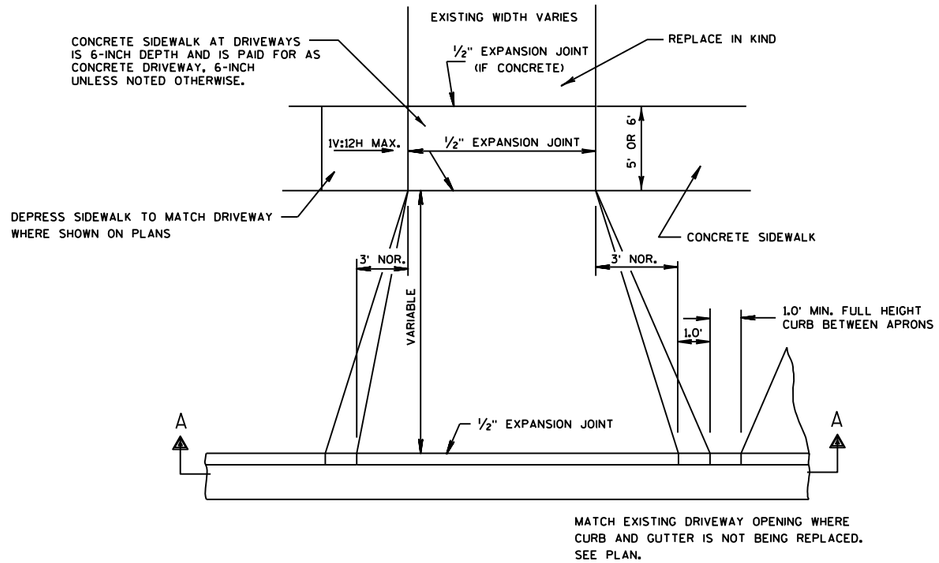

PLAN VIEW

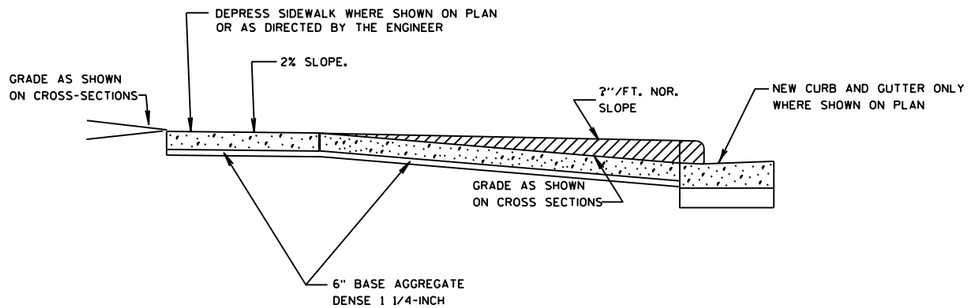

PROFILE VIEW

URBAN DRIVEWAY DETAIL

FOR USE IN AREAS WITH GRASS TERRACE

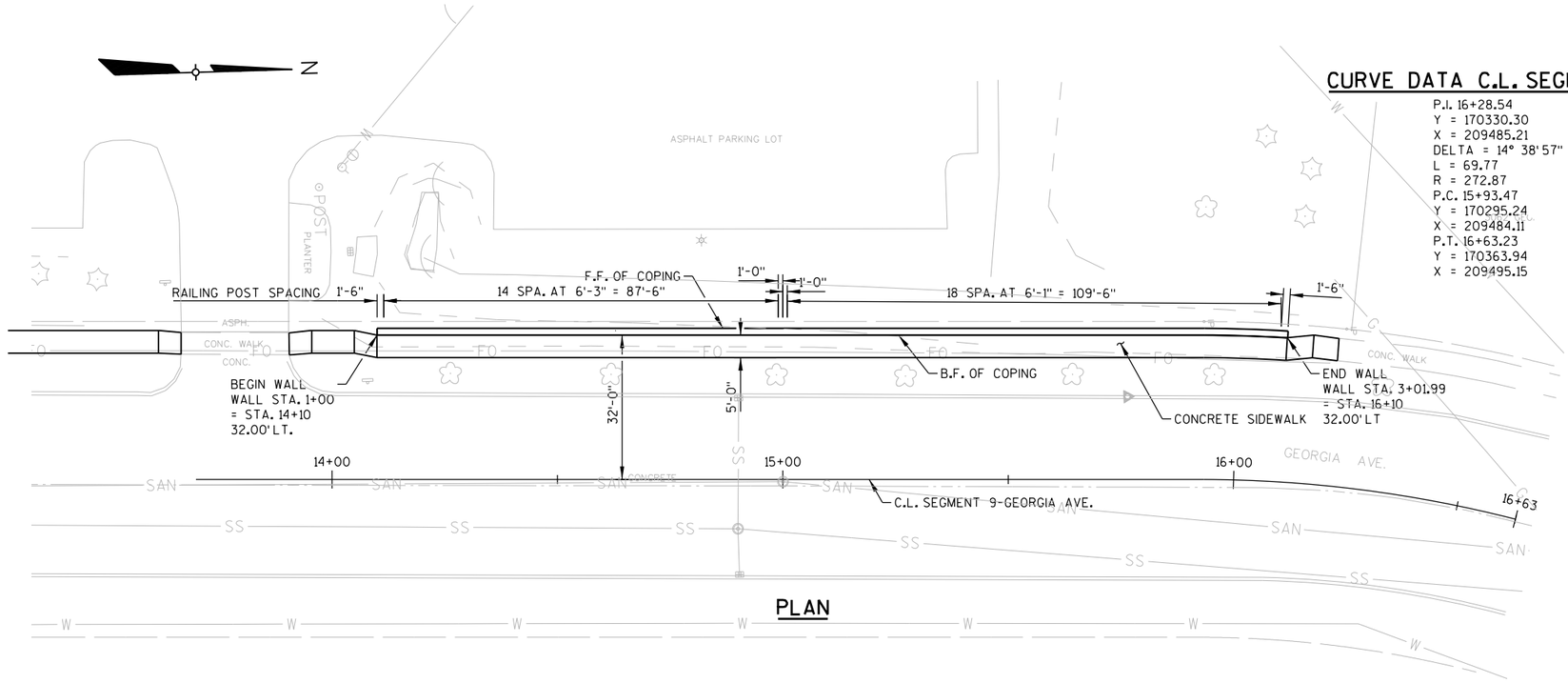

PLAN

CURVE DATA C.L. SEGMENT 9

P.I. 16+28.54
Y = 170330.30
X = 209485.21
DELTA = 14° 38' 57"
L = 69.77
R = 272.87
P.C. 15+93.47
Y = 170295.24
X = 209484.11
P.T. 16+63.23
Y = 170363.94
X = 209495.15

GENERAL NOTES AND DESIGN DATA

THE CONTRACTOR SHALL PROVIDE COMPLETE DESIGN, PLANS, DETAILS, SPECIFICATIONS AND SHOP DRAWINGS FOR THE RETAINING WALLS IN ACCORDANCE WITH THE SPECIAL PROVISIONS. THE RETAINING WALL MANUFACTURER SHALL PROVIDE TECHNICAL ASSISTANCE TO THE CONTRACTOR DURING CONSTRUCTION. THE COST OF FURNISHING THESE ITEMS SHALL BE INCLUDED IN THE BID ITEM "WALL MODULAR BLOCK GRAVITY LRFD".

PLANS, ELEVATIONS AND DETAILS SHOWN ON THESE DRAWINGS ARE INTENDED TO INDICATE WALL LOCATIONS, LENGTHS, HEIGHTS, AND DETAILS COMMON TO THE WALL SYSTEM SELECTED. THE CONTRACTOR SHALL VERIFY THAT THE WALL SYSTEM SELECTED WILL CONFORM TO THE REQUIRED ALIGNMENTS AND DETAILS.

THE MAXIMUM VALUE OF THE ANGLE OF INTERNAL FRICTION OF THE WALL BACKFILL MATERIAL IN THE REINFORCED ZONE SHALL BE ASSUMED TO BE 30° WITHOUT CERTIFIED TESTS.

THE MODULAR BLOCK GRAVITY RETAINING WALL QUANTITIES ARE SHOWN ON THE MISCELLANEOUS QUANTITY SHEETS.

THE RETAINING WALL IS TO BE DESIGNED USING THE ELEVATIONS GIVEN ON THIS SHEET.

DESIGN RETAINING WALL FOR A LIVELOAD SURCHARGE OF 100 PSF, AND ADDITIONAL LIVELOAD APPLIED BY RAILING.

DESIGN WALL FOR A MAXIMUM NOMINAL ALLOWABLE BEARING CAPACITY OF 1,500 PSF.

B.F. = BACK FACE
F.F. = FRONT FACE

DRAWINGS SHALL NOT BE SCALED.

ALL BAR STEEL TO BE EPOXY COATED.

ALLOWABLE WALL SYSTEMS

1. MODULAR BLOCK GRAVITY WALL

TABLE OF ELEVATIONS

MAINLINE STATION	MAINLINE OFFSET	WALL STATION	FINISHED GROUND ELEVATION	TOP OF WALL ELEVATION
14+10.00	32.00 LT.	1+00.00	80.02	81.06
14+35.00	32.00 LT.	1+25.00	80.09	81.63
14+60.00	32.00 LT.	1+50.00	80.67	82.20
14+85.00	32.00 LT.	1+75.00	81.00	82.75
15+00.00	32.00 LT.	1+90.00	81.10	83.09
15+10.00	32.00 LT.	2+00.00	81.23	83.30
15+35.00	32.00 LT.	2+25.00	81.61	83.84
15+60.00	32.00 LT.	2+50.00	82.77	84.38
15+85.00	32.00 LT.	2+75.00	83.40	84.93
16+08.13	32.00 LT.	3+00.00	84.14	85.43
16+10.00	32.00 LT.	3+01.99	84.26	85.43

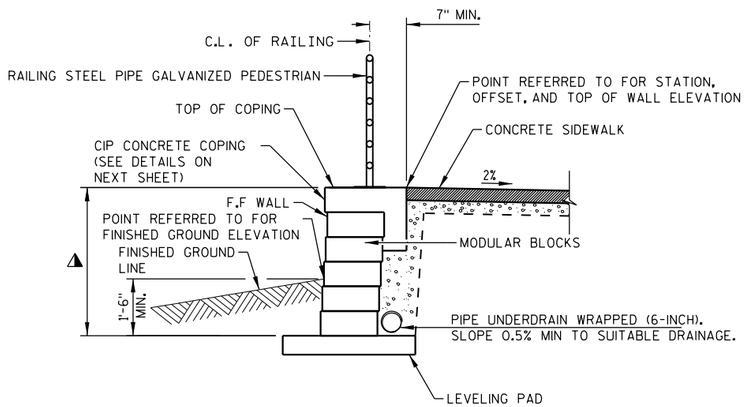

TYPICAL SECTION THRU RETAINING WALL

⚠ PAY LIMITS FOR BID ITEM "WALL MODULAR BLOCK GRAVITY LRFD"

WISCONSIN
MATTHEW S. KRIPPNER
E-42470
VERONA
WI
PROFESSIONAL ENGINEER

4/3/2014

PROJECT NUMBER: 4996-01-54	HWY: SIDEWALK GAP	COUNTY: SHEBOYGAN	CONSTRUCTION DETAILS	SHEET 16	E

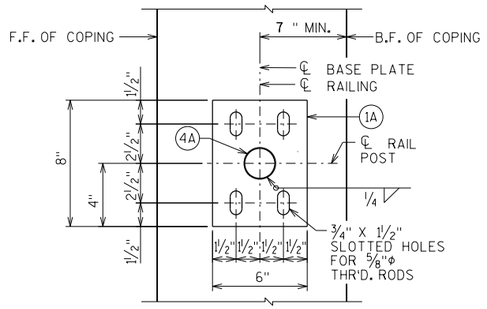

TYPICAL RAIL POST BASE PLATE

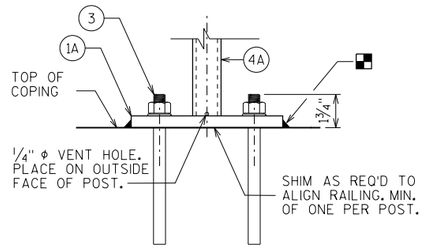

ANCHORAGE FOR RAIL POSTS

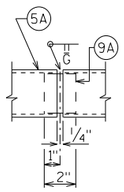

SHOP RAIL SPLICE DETAIL

(LOCATION MUST BE SHOWN ON SHOP DRAWINGS)

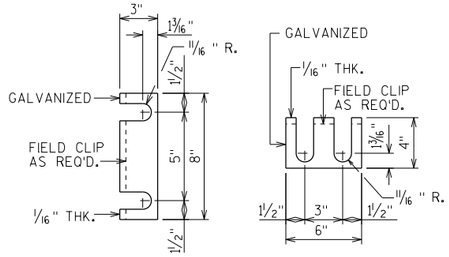

RAIL POST SHIM DETAIL

(2 SETS PER POST)

LEGEND

(1A) PLATE ⅝" X 6" X 8" WITH ¾" X 1½" SLOTTED HOLES.

(3) STAINLESS STEEL CONCRETE MASONRY ANCHORS, TYPE S (EPOXY), ⅝" φ, MINIMUM PULLOUT CAPACITY OF 13 KIPS. EMBED A MIN. OF 7" FOR RAIL POSTS AND 5" FOR RAIL ENDS.)

(4A) 2" φ STANDARD PIPE. PLACE VERTICAL. WELD TO NO. 1A & 5A.

(5A) 2" φ STANDARD PIPE RAILS. WELD TO NO. 4A.

(9A) CIRCULAR SLEEVE FABRICATED FROM 1½" φ STANDARD PIPE.

(10A) CIRCULAR SLEEVE FABRICATED FROM 1½" φ STANDARD PIPE. (1'-4" @ FIELD ERECTION JTS.)

RAILING NOTES

BID ITEM SHALL BE "RAILING STEEL PIPE GALVANIZED PEDESTRIAN", WHICH SHALL INCLUDE ALL STEEL ITEMS SHOWN.

POST BASE PLATES SHALL BE FLAT WITH ALL SURFACES SMOOTH AND FREE FROM WARP AND ALL EDGES SMOOTH, STRAIGHT AND VERTICAL. ALL PLATE CUTS SHALL BE MACHINE OR MACHINE FLAME CUTS.

NO. 1A, 9A AND NO. 10A SHALL CONFORM TO ASTM A709 GRADE 36. STRUCTURAL TUBING SHALL CONFORM TO ASTM A500 GRADE B (NO. 4A AND NO. 5A).

ANCHORAGES SHALL BE ACCURATELY PLACED TO PROVIDE CORRECT ALIGNMENT OF RAILING. SET NORMAL TO GRADE.

CUT BOTTOM OF POST TO MAKE POST VERTICAL IN BOTH TRANSVERSE AND LONGITUDINAL DIRECTION.

■ CAULK AROUND PERIMETER OF BASE PLATES, NO. 1A, AND FILL BOLT SLOT OPENINGS IN BASE PLATES WITH NON-STAINING GRAY NON-BITUMINOUS JOINT SEALER.

ALL JOINTS AND RECESSES IN CONCRETE COPING ARE TO BE VERTICAL.

ALL MATERIAL (EXCEPT NO. 3) SHALL BE GALVANIZED AFTER FABRICATION. PRIOR TO GALVANIZING, THE STEEL RAILING SHALL BE GIVEN A NO. 6 BLAST CLEANING PER SSPC SPECIFICATIONS.

VENT HOLES SHALL BE DRILLED IN POST AND RAIL MEMBERS AS REQUIRED TO FACILITATE GALVANIZING AND DRAINAGE.

RAILING SHALL BE FABRICATED IN LENGTHS THAT INCLUDE 3 OR 4 POSTS.

RAILING SHALL BE FABRICATED TO FOLLOW CURVATURE OF WALL.

STEEL SHIMS SHALL BE PROVIDED & USED UNDER BASE PLATES WHERE REQUIRED FOR ALIGNMENT, AND SHALL BE GALVANIZED.

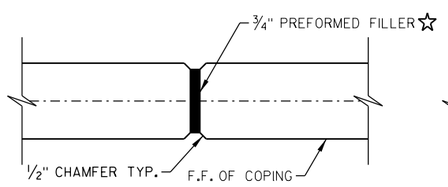

COPING EXPANSION JOINT

DO NOT RUN BAR STEEL THRU JOINTS.
MAX. SPACING OF JOINT = 50'-0".

☆ SEAL ALL EXPOSED HORIZ. & VERT. SURFACES OF FILLER WITH NON-STAINING GRAY NON-BITUMINOUS JOINT SEALER, (1" DEEP AND HOLD ⅛" BELOW SURFACE OF CONCRETE)

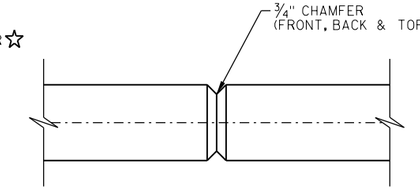

COPING CONTRACTION JOINT

DO NOT RUN BAR STEEL THRU JOINTS.
MAX. SPACING OF JOINT = 12'-0".
PLACE JOINTS VERTICAL.

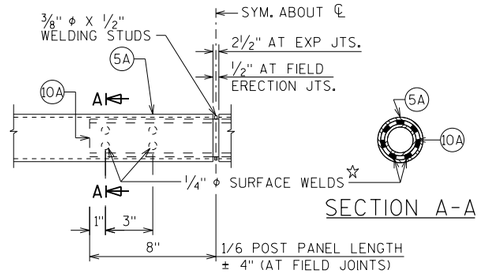

SECTION A-A

FIELD ERECTION JOINT DETAIL

☆ MIN. ⅝" FLAT SURFACE DIA. PUNCHINGS OR STUDS MAY BE USED AS AN ALTERNATE.

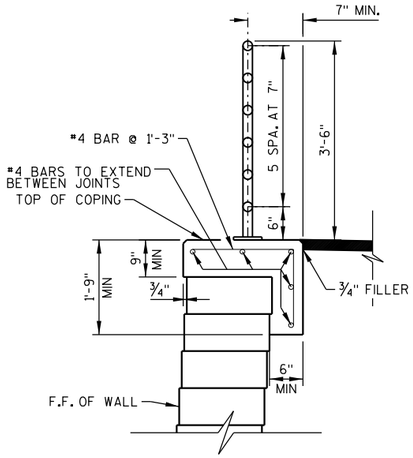

TYPICAL SECTION THRU RETAINING WALL

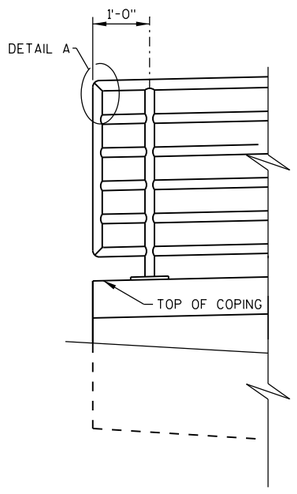

TYPICAL AT ENDS

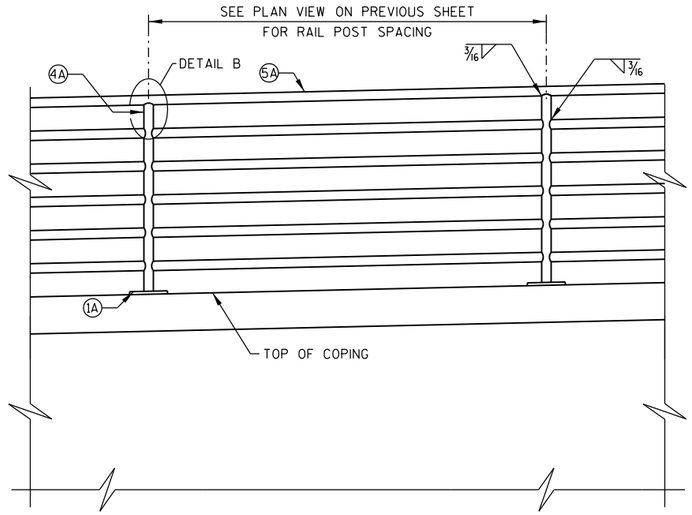

ELEVATION

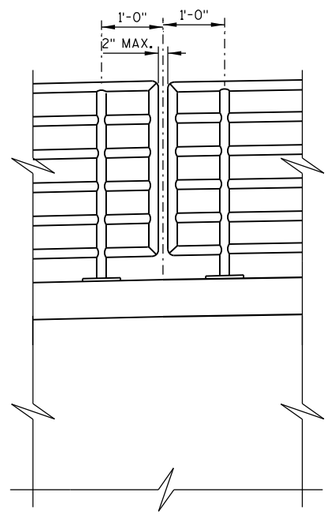

AT WALL STA. 1+90

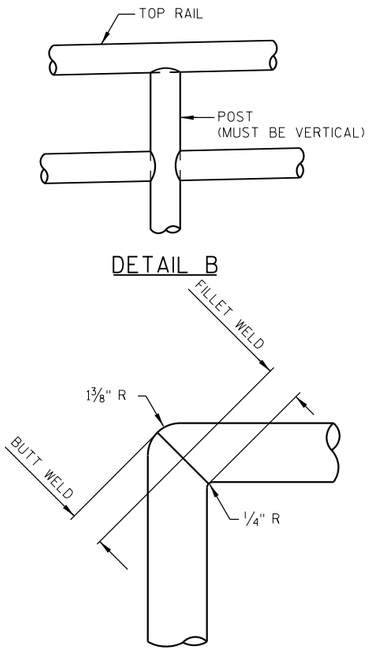

DETAIL B

DETAIL A

PROJECT NUMBER: 4996-01-54	HWY: SIDEWALK GAP	COUNTY: SHEBOYGAN	CONSTRUCTION DETAILS	SHEET 17	E

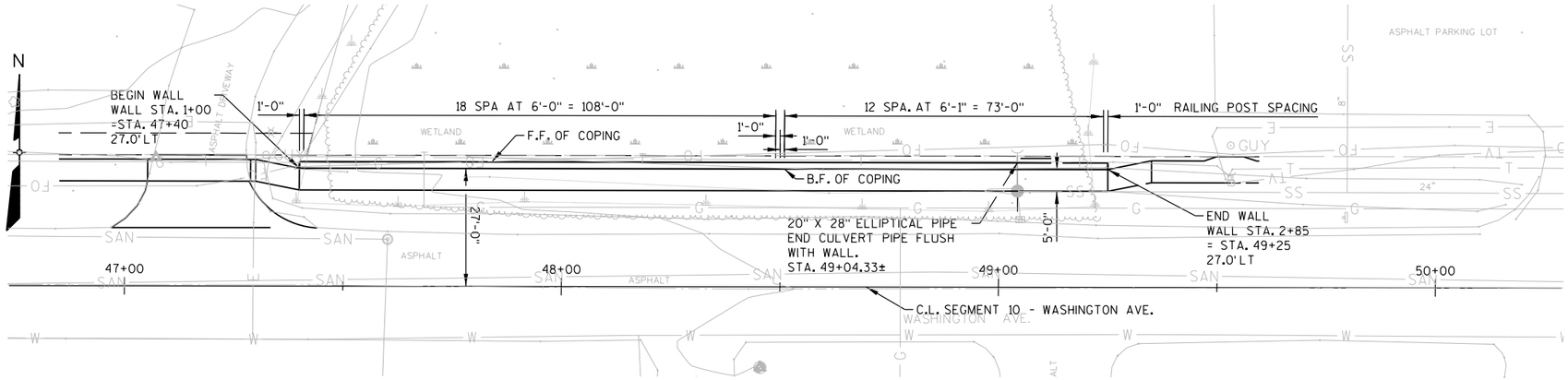

PLAN

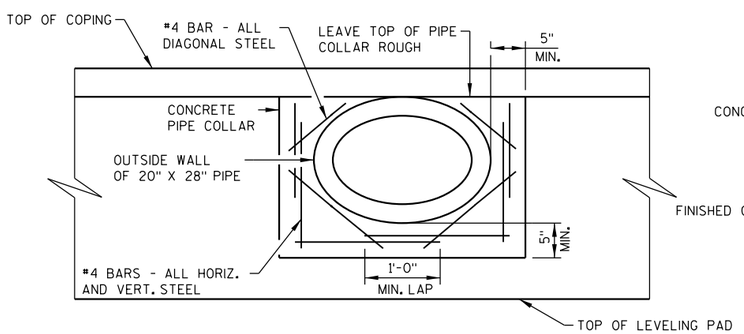

CONCRETE PIPE COLLAR DETAIL

NOTE: BARS ARE IN FRONT AND BACK FACES OF COLLAR

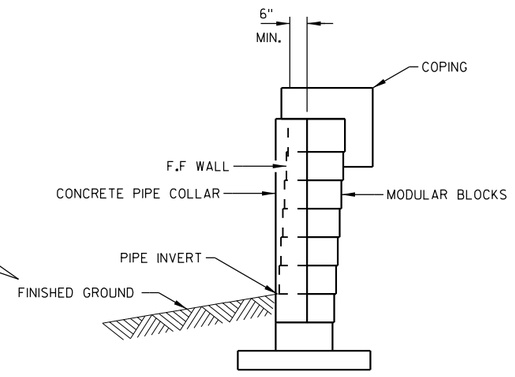

SECTION THRU PIPE COLLAR

AT STA. 49+04.33 +/-

WISCONSIN
MATTHEW S. KRIPPNER
E-42470
VERONA
WI
PROFESSIONAL ENGINEER

4/3/2014

TABLE OF ELEVATIONS

MAINLINE STATION	MAINLINE OFFSET	WALL STATION	FINISHED GROUND ELEVATION	TOP OF WALL ELEVATION
47+40.00	27.00' LT	1+00.00	55.81	57.29
47+65.00	27.00' LT	1+25.00	54.81	56.91
47+90.00	27.00' LT	1+50.00	54.34	56.53
48+15.00	27.00' LT	1+75.00	53.94	56.15
48+40.00	27.00' LT	2+00.00	53.54	55.77
48+50.00	27.00' LT	2+10.00	53.37	55.62
48+65.00	27.00' LT	2+25.00	53.10	55.55
48+90.00	27.00' LT	2+50.00	52.79	55.44
49+15.00	27.00' LT	2+75.00	52.92	55.32
49+25.00	27.00' LT	2+85.00	53.19	55.28

GENERAL NOTES AND DESIGN DATA

THE CONTRACTOR SHALL PROVIDE COMPLETE DESIGN, PLANS, DETAILS, SPECIFICATIONS AND SHOP DRAWINGS FOR THE RETAINING WALLS IN ACCORDANCE WITH THE SPECIAL PROVISIONS. THE RETAINING WALL MANUFACTURER SHALL PROVIDE TECHNICAL ASSISTANCE TO THE CONTRACTOR DURING CONSTRUCTION. THE COST OF FURNISHING THESE ITEMS SHALL BE INCLUDED IN THE BID ITEM "WALL MODULAR BLOCK GRAVITY LRFD".

PLANS, ELEVATIONS AND DETAILS SHOWN ON THESE DRAWINGS ARE INTENDED TO INDICATE WALL LOCATIONS, LENGTHS, HEIGHTS, AND DETAILS COMMON TO THE WALL SYSTEM SELECTED. THE CONTRACTOR SHALL VERIFY THAT THE WALL SYSTEM SELECTED WILL CONFORM TO THE REQUIRED ALIGNMENTS AND DETAILS.

THE RETAINING WALL IS TO BE DESIGNED USING THE ELEVATIONS GIVEN ON THIS SHEET.

THE MAXIMUM VALUE OF THE ANGLE OF INTERNAL FRICTION OF THE WALL BACKFILL MATERIAL IN THE REINFORCED ZONE SHALL BE ASSUMED TO BE 30° WITHOUT CERTIFIED TEST VALUES.

THE MODULAR BLOCK GRAVITY RETAINING WALL QUANTITIES ARE SHOWN ON THE MISCELLANEOUS QUANTITY SHEETS.

ALL CONCRETE AND REINFORCEMENT FOR CONCRETE PIPE COLLAR TO BE INCLUDED IN BID ITEM "WALL MODULAR BLOCK GRAVITY LRFD".

DESIGN RETAINING WALL FOR A LIVELOAD SURCHARGE OF 100 PSF, AND ADDITIONAL LIVELOAD APPLIED BY RAILING.

DESIGN WALL FOR A MAXIMUM NOMINAL ALLOWABLE BEARING CAPACITY OF 1,500 PSF.

B.F. = BACK FACE
F.F. = FRONT FACE

DRAWINGS SHALL NOT BE SCALED.

ALL BAR STEEL IS TO BE EPOXY COATED.

ALLOWABLE WALL SYSTEMS

1. MODULAR BLOCK GRAVITY WALL

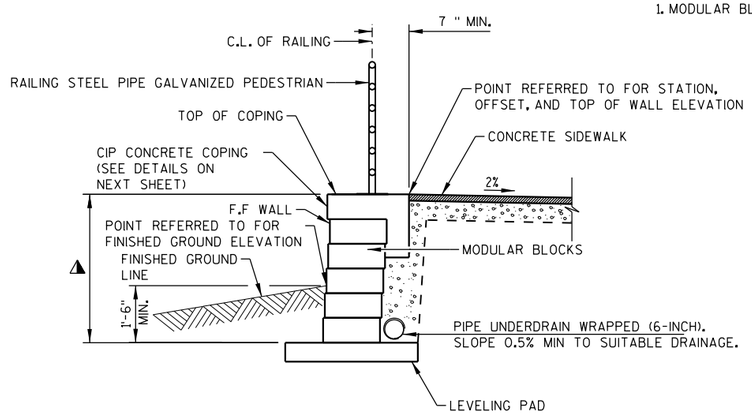

TYPICAL SECTION THRU RETAINING WALL

⚠ PAY LIMITS FOR BID ITEM "WALL MODULAR BLOCK GRAVITY LRFD"

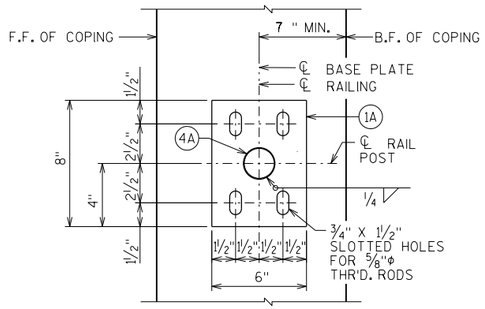

TYPICAL RAIL POST BASE PLATE

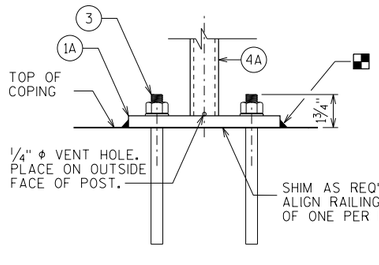

ANCHORAGE FOR RAIL POSTS

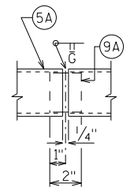

SHOP RAIL SPLICE DETAIL

(LOCATION MUST BE SHOWN ON SHOP DRAWINGS)

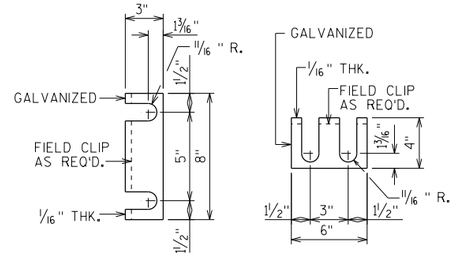

RAIL POST SHIM DETAIL

(2 SETS PER POST)

LEGEND

(1A) PLATE ⅝" X 6" X 8" WITH ¾" X 1½" SLOTTED HOLES.

(3) STAINLESS STEEL CONCRETE MASONRY ANCHORS, TYPE S (EPOXY), ⅝" Φ, MINIMUM PULLOUT CAPACITY OF 13 KIPS. EMBED A MIN. OF 7" FOR RAIL POSTS AND 5" FOR END RAILS.)

(4A) 2" Φ STANDARD PIPE. PLACE VERTICAL. WELD TO NO. 1A & 5A.

(5A) 2" Φ STANDARD PIPE RAILS. WELD TO NO. 4A.

(9A) CIRCULAR SLEEVE FABRICATED FROM 1½" Φ STANDARD PIPE.

(10A) CIRCULAR SLEEVE FABRICATED FROM 1½" Φ STANDARD PIPE. (1'-4" @ FIELD ERECTION JTS.)

RAILING NOTES

BID ITEM SHALL BE "RAILING STEEL PIPE GALVANIZED PEDESTRIAN", WHICH SHALL INCLUDE ALL STEEL ITEMS SHOWN.

POST BASE PLATES SHALL BE FLAT WITH ALL SURFACES SMOOTH AND FREE FROM WARP AND ALL EDGES SMOOTH, STRAIGHT AND VERTICAL. ALL PLATE CUTS SHALL BE MACHINE OR MACHINE FLAME CUTS.

NO. 1A, 9A AND NO. 10A SHALL CONFORM TO ASTM A709 GRADE 36. STRUCTURAL TUBING SHALL CONFORM TO ASTM A500 GRADE B (NO. 4A AND NO. 5A).

ANCHORAGES SHALL BE ACCURATELY PLACED TO PROVIDE CORRECT ALIGNMENT OF RAILING. SET NORMAL TO GRADE.

CUT BOTTOM OF POST TO MAKE POST VERTICAL IN BOTH TRANSVERSE AND LONGITUDINAL DIRECTION.

■ CAULK AROUND PERIMETER OF BASE PLATES, NO. 1A, AND FILL BOLT SLOT OPENINGS IN BASE PLATES WITH NON-STAINING GRAY NON-BITUMINOUS JOINT SEALER.

ALL JOINTS AND RECESSES IN CONCRETE COPING ARE TO BE VERTICAL.

ALL MATERIAL (EXCEPT NO. 3) SHALL BE GALVANIZED AFTER FABRICATION. PRIOR TO GALVANIZING, THE STEEL RAILING SHALL BE GIVEN A NO. 6 BLAST CLEANING PER SSPC SPECIFICATIONS.

VENT HOLES SHALL BE DRILLED IN POST AND RAIL MEMBERS AS REQUIRED TO FACILITATE GALVANIZING AND DRAINAGE.

RAILING SHALL BE FABRICATED IN LENGTHS THAT INCLUDE 3 OR 4 POSTS. RAILING SHALL FOLLOW CURVATURE OF WALL.

STEEL SHIMS SHALL BE PROVIDED & USED UNDER BASE PLATES WHERE REQUIRED FOR ALIGNMENT, AND SHALL BE GALVANIZED.

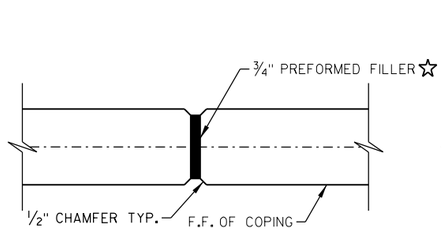

COPING EXPANSION JOINT

DO NOT RUN BAR STEEL THRU JOINTS.
MAX. SPACING OF JOINT = 50'-0".

☆ SEAL ALL EXPOSED HORIZ. & VERT. SURFACES OF FILLER WITH NON-STAINING GRAY NON-BITUMINOUS JOINT SEALER, (1" DEEP AND HOLD ⅛" BELOW SURFACE OF CONCRETE)

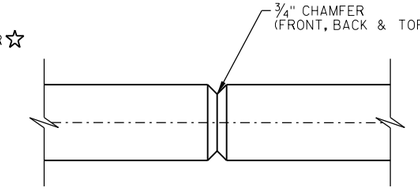

COPING CONTRACTION JOINT

DO NOT RUN BAR STEEL THRU JOINTS.
MAX. SPACING OF JOINT = 12'-0".
PLACE JOINTS VERTICAL.

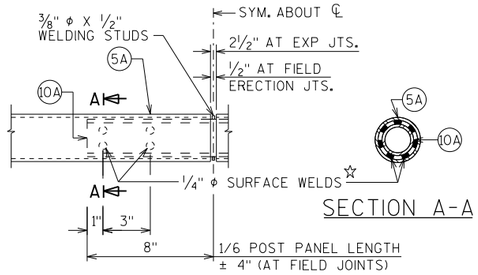

SECTION A-A

FIELD ERECTION JOINT DETAIL

☆ MIN. ⅝" FLAT SURFACE DIA. PUNCHINGS OR STUDS MAY BE USED AS AN ALTERNATE.

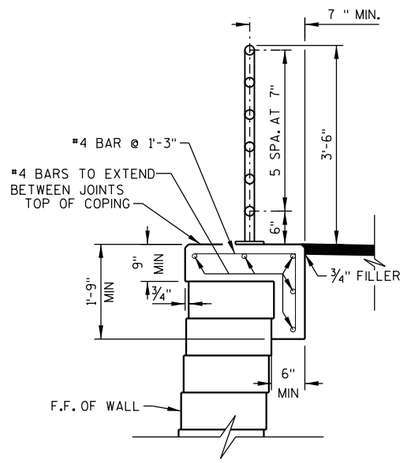

TYPICAL SECTION THRU RETAINING WALL

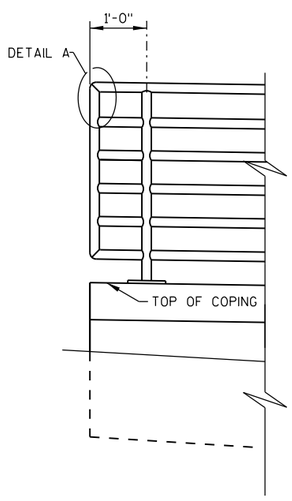

TYPICAL AT ENDS

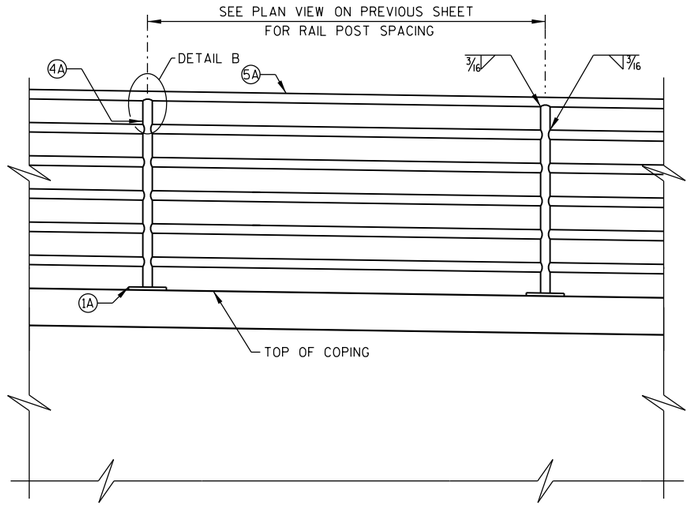

ELEVATION

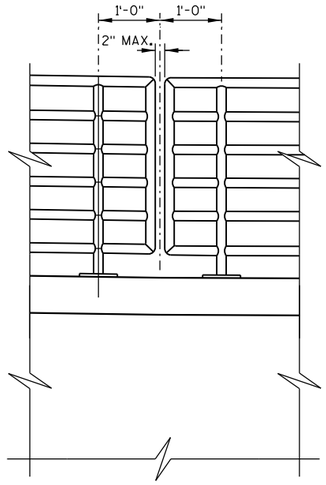

AT WALL STA. 2+10

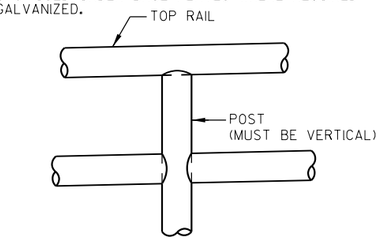

DETAIL B

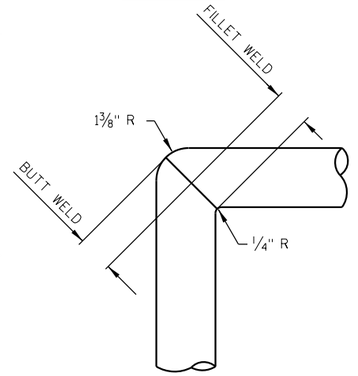

DETAIL A

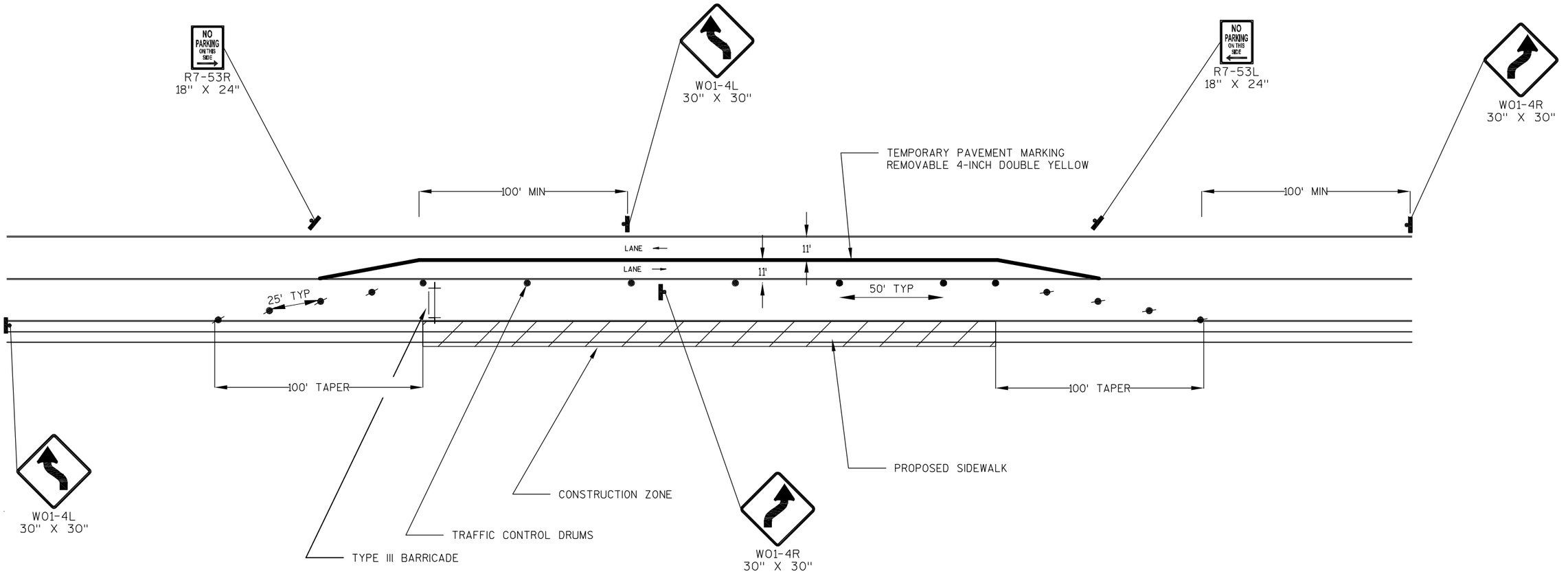

LANE SHIFT ON LOW SPEED 2-WAY STREET

GENERAL NOTES

- ADVANCED WARNING SIGNING SHALL COMPLY WITH S.D.D. TRAFFIC CONTROL, ADVANCED WARNING SIGNS 40 M.P.H. OR LESS. G20-1 SIGN NOT REQUIRED.
- SIDE ROAD ADVANCED WARNING SIGNING SHALL COMPLY WITH S.D.D. BARRICADES AND SIGNS FOR SIDEROAD CLOSURES
- THE FOLLOWING SEGMENTS OF SIDEWALK CONSTRUCTION WILL FOLLOW THIS DETAIL (LANE SHIFT ON LOW SPEED 2-WAY STREET):

  SEGMENT 4
  SEGMENT 5
  SEGMENT 6
  SEGMENT 7
  PORTION OF SEGMENT 9

- DO NO BLOCK DRIVEWAYS THAT ARE TO REMAIN OPEN.

SEGMENT 9 (NORTH): BARRICADES AND SIGNS FOR MAINLINE CLOSURES
- USE DETAILS C AND D

SEGMENT 10: BARRICADES AND SIGNS FOR MAINLINE CLOSURES
- USE DETAILS C AND D
- SEE NEXT SHEET FOR TURN LANE CLOSURES AT SOUTH BUSINESS DR.
- PLACE ADVANCE WARNING SIGNS FOR EACH LEG OF SOUTH BUSINESS DR.

SEGMENT 15: TRAFFIC CONTROL, SINGLE LANE CLOSURE, NON-FREEWAY/EXPRESSWAY

- CLOSE SOUTHBOUND RIGHT TURN LANE TO WILGUS AVE.
- KEEP 2 SOUTHBOUND LANES OPEN ON TAYLOR DR. ADJACENT TO RIGHT TURN LANE TO WILGUS AVE.
- ARROW BOARDS REQUIRED
- BEGIN LANE CLOSURE NORTH OF SUPERIOR AVENUE
- PLACE ADVANCED WARNING SIGNS FOR EACH LEG OF SUPERIOR AVENUE

2

R3-2
24" X 24"

LEGEND

- TRAFFIC CONTROL DRUM
- SIGN ON TEMPORARY SUPPORT

PARKING

PARKING

SOUTH BUSINESS DR.

25' TYP

GENERAL NOTES

- SEE S.D.D. FOR ADVANCED WARNING SIGNS.

WASHINGTON AVE.

WASHINGTON AVE.

R3-1
24" X 24"

70

PROJECT NO: 4996-01-54	HWY: SIDEWALK GAP	COUNTY: SHEBOYGAN	TRAFFIC CONTROL: SEGMENT 10 WASHINGTON AVE.	SHEET 21	E

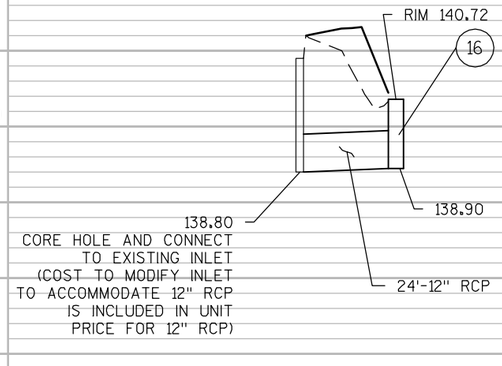

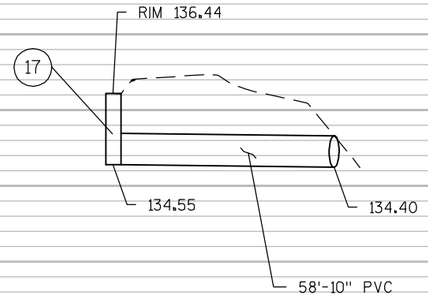

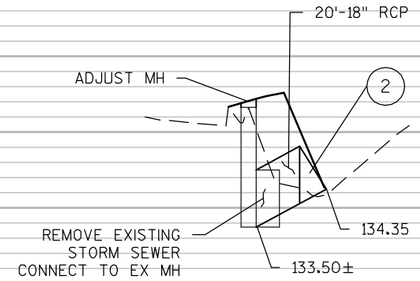

140
138
136
134
132
130
128

PROPOSED GROUND PROFILE ———————

EXISTING GROUND PROFILE — — — — — — — — —

PROJECT NO: 4996-01-54	HWY: SIDEWALK GAP FILLING	COUNTY: SHEBOYGAN	STORM SEWER PROFILE: SEGMENT 5 WILGUS AVE.	SHEET 22	E

38
36
34
32
30
28
26
24
22
20

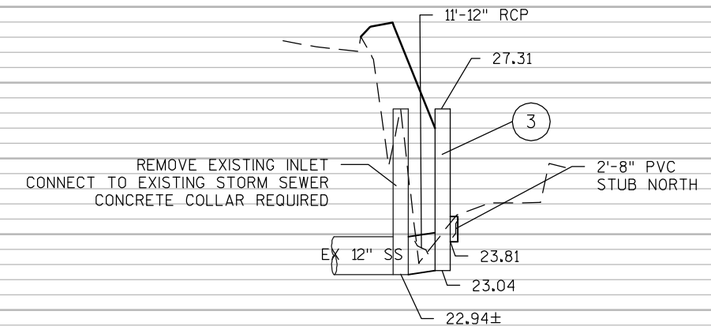

PROPOSED GROUND PROFILE

EXISTING GROUND PROFILE

PROJECT NO: 4996-01-54	HWY: SIDEWALK GAP	COUNTY: SHEBOYGAN	STORM SEWER PROFILE: SEGMENT 6 WASHINGTON AVE.	SHEET 23	E

FILE NAME : L:\WORK\60158441\000_CADD\CIVIL\SEGMENT 6 & 7\022502_SS.DWG PLOT DATE : 7/11/2012 7:16 AM PLOT BY : HOLZWART, JOSEPH PLOT NAME : ---------- PLOT SCALE : *********

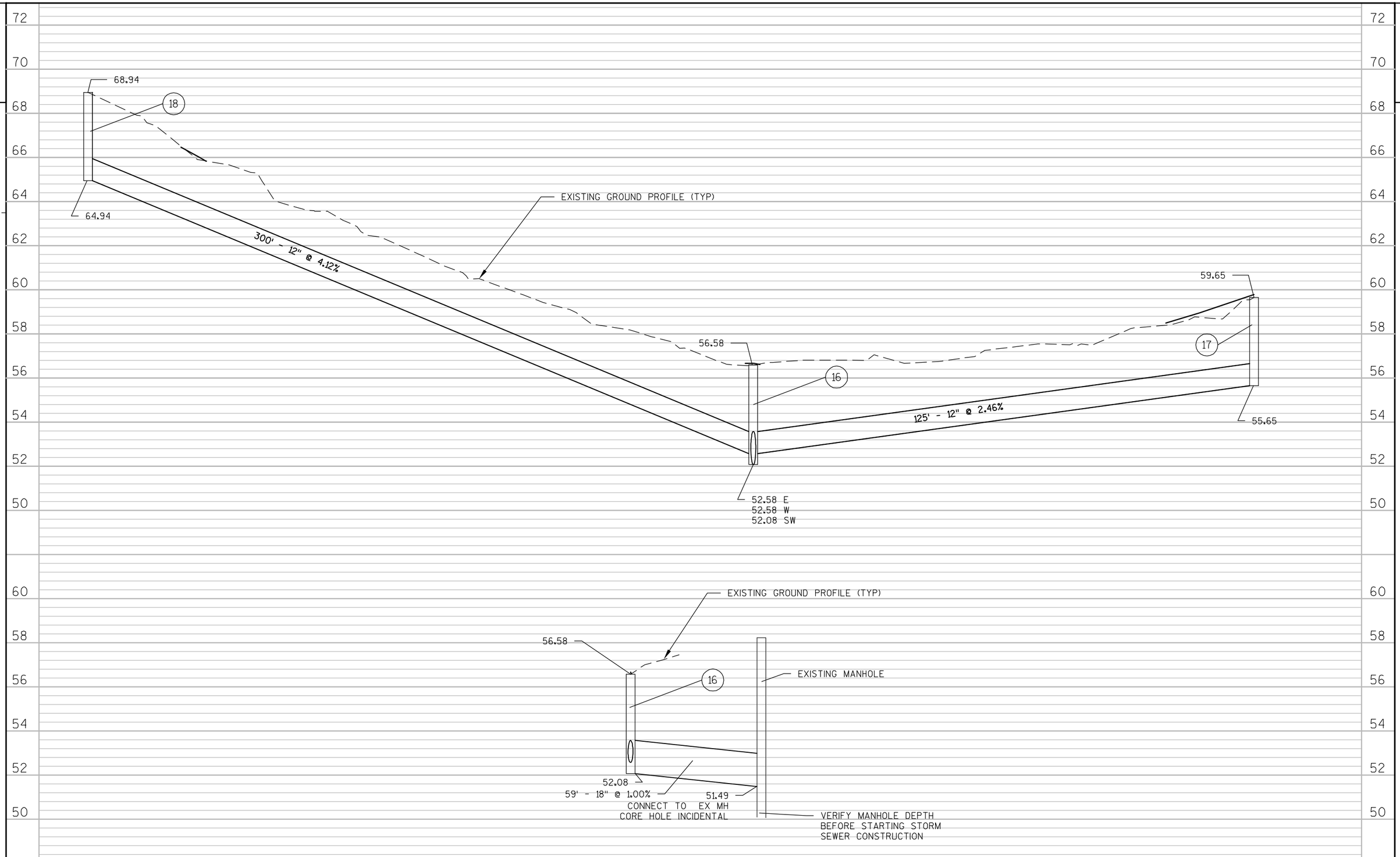

PROJECT NO: 4996-01-54	HWY: SIDEWALK GAP FILLING	COUNTY: SHEBOYGAN	STORM SEWER PROFILE: SEGMENT 9 GEORGIA AVE.	SHEET 24	E

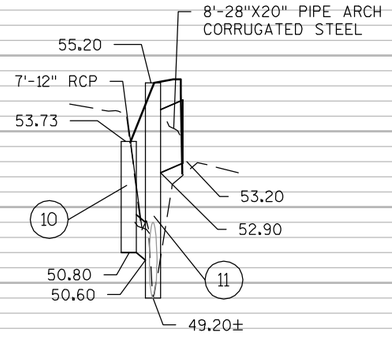

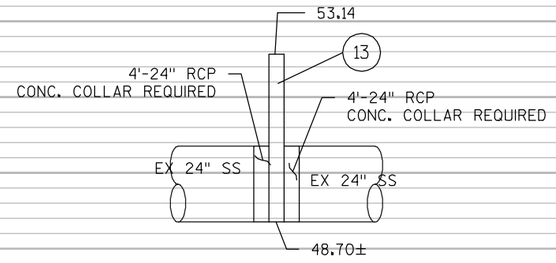

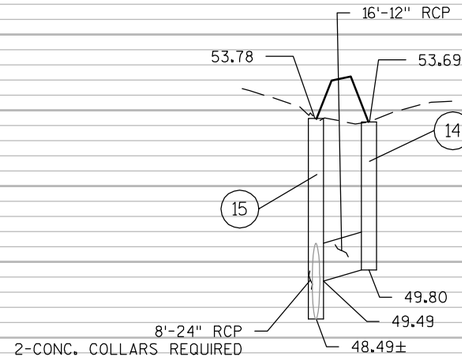

PROPOSED GROUND PROFILE

EXISTING GROUND PROFILE

PROJECT NO: 4996-01-54	HWY: SIDEWALK GAP FILLING	COUNTY: SHEBOYGAN	STORM SEWER PROFILE: SEGMENT 10 WASHINGTON AVE.	SHEET 25	E

DATE 13FEB15 E S T I M A T E O F Q U A N T I T I E S

LINE NUMBER	ITEM	ITEM DESCRIPTION	UNIT	TOTAL	4996-01-54 QUANTITY
0010	201.0105	Clearing	STA	6.000	6.000
0020	201.0120	Clearing	ID	95.000	95.000
0030	201.0205	Grubbing	STA	6.000	6.000
0040	201.0220	Grubbing	ID	95.000	95.000
0050	203.0100	Removing Small Pipe Culverts	EACH	1.000	1.000
0060	204.0100	Removing Pavement	SY	280.000	280.000
0070	204.0150	Removing Curb & Gutter	LF	460.000	460.000
0080	204.0155	Removing Concrete Sidewalk	SY	30.000	30.000
0090	204.0220	Removing Inlets	EACH	2.000	2.000
0100	204.0245	Removing Storm Sewer (size) 01. 18"	LF	10.000	10.000
0110	204.0245	Removing Storm Sewer (size) 02. 24"	LF	8.000	8.000
0120	204.0270	Abandoning Culvert Pipes	EACH	2.000	2.000
0130	205.0100	Excavation Common **P**	CY	1,353.000	1,353.000
0140	208.0100	Borrow **P**	CY	2,881.000	2,881.000
0150	213.0100	Finishing Roadway (project) 01. 4996-01-54	EACH	1.000	1.000
0160	305.0120	Base Aggregate Dense 1 1/4-Inch	TON	2,860.000	2,860.000
0170	416.0160	Concrete Driveway 6-Inch	SY	1,098.000	1,098.000
0180	416.0170	Concrete Driveway 7-Inch	SY	350.000	350.000
0190	416.0610	Drilled Tie Bars	EACH	76.000	76.000
0200	465.0110	Asphaltic Surface Patching	TON	59.000	59.000
0210	465.0120	Asphaltic Surface Driveways and Field Entrances	TON	194.000	194.000
0220	520.0115	Culvert Pipe Class III 15-Inch	LF	92.000	92.000
0230	520.1015	Apron Endwalls for Culvert Pipe 15-Inch	EACH	2.000	2.000
0240	520.8000	Concrete Collars for Pipe	EACH	5.000	5.000
0250	521.0728	Pipe Arch Corrugated Steel 28x20-Inch	LF	9.000	9.000
0260	522.1018	Apron Endwalls for Culvert Pipe Reinforced Concrete 18-Inch	EACH	1.000	1.000
0270	601.0110	Concrete Curb Type D	LF	12.000	12.000
0280	601.0409	Concrete Curb & Gutter 30-Inch Type A	LF	141.000	141.000
0290	601.0411	Concrete Curb & Gutter 30-Inch Type D	LF	276.000	276.000
0300	601.0600	Concrete Curb Pedestrian	LF	192.000	192.000
0310	602.0410	Concrete Sidewalk 5-Inch	SF	41,615.000	41,615.000
0320	602.0515	Curb Ramp Detectable Warning Field Natural Patina	SF	122.000	122.000
0330	608.0312	Storm Sewer Pipe Reinforced Concrete Class III 12-Inch	LF	483.000	483.000
0340	608.0318	Storm Sewer Pipe Reinforced Concrete Class III 18-Inch	LF	79.000	79.000
0350	608.0324	Storm Sewer Pipe Reinforced Concrete Class III 24-Inch	LF	16.000	16.000
0360	611.0420	Reconstructing Manholes	EACH	2.000	2.000
0370	611.0530	Manhole Covers Type J	EACH	1.000	1.000
0380	611.0545	Manhole Covers Type L	EACH	1.000	1.000
0390	611.0609	Inlet Covers Type B-A	EACH	5.000	5.000
0400	611.0645	Inlet Covers Type MS-A	EACH	3.000	3.000
0410	611.2004	Manholes 4-FT Diameter	EACH	8.000	8.000
0420	611.3901	Inlets Median 1 Grate	EACH	3.000	3.000
0430	611.8110	Adjusting Manhole Covers	EACH	5.000	5.000
0440	611.8115	Adjusting Inlet Covers	EACH	2.000	2.000
0450	612.0406	Pipe Underdrain Wrapped 6-Inch	LF	385.000	385.000
0460	619.1000	Mobilization	EACH	1.000	1.000
0470	624.0100	Water	MGAL	26.000	26.000
0480	625.0100	Topsoil **P**	SY	8,373.000	8,373.000

3

DATE 13FEB15 E S T I M A T E O F Q U A N T I T I E S

LINE NUMBER	ITEM	ITEM DESCRIPTION	UNIT	TOTAL	4996-01-54 QUANTITY
0490	628.1504	Silt Fence	LF	235.000	235.000
0500	628.1520	Silt Fence Maintenance	LF	235.000	235.000
0510	628.1905	Mobilizations Erosion Control	EACH	24.000	24.000
0520	628.1910	Mobilizations Emergency Erosion Control	EACH	3.000	3.000
0530	628.2006	Erosion Mat Urban Class I Type A **P**	SY	6,042.000	6,042.000
0540	628.2008	Erosion Mat Urban Class I Type B **P**	SY	2,331.000	2,331.000
0550	628.7005	Inlet Protection Type A	EACH	6.000	6.000
0560	628.7015	Inlet Protection Type C	EACH	23.000	23.000
0570	628.7504	Temporary Ditch Checks	LF	4.000	4.000
0580	628.7555	Culvert Pipe Checks	EACH	13.000	13.000
0590	629.0210	Fertilizer Type B **P**	CWT	8.200	8.200
0600	630.0140	Seeding Mixture No. 40 **P**	LB	150.200	150.200
0610	630.0200	Seeding Temporary **P**	LB	75.100	75.100
0620	638.2102	Moving Signs Type II	EACH	19.000	19.000
0630	638.4000	Moving Small Sign Supports	EACH	18.000	18.000
0640	642.5001	Field Office Type B	EACH	1.000	1.000
0650	643.0100	Traffic Control (project) 01. 4996-01-54	EACH	1.000	1.000
0660	643.0300	Traffic Control Drums	DAY	4,175.000	4,175.000
0670	643.0420	Traffic Control Barricades Type III	DAY	1,120.000	1,120.000
0680	643.0705	Traffic Control Warning Lights Type A	DAY	1,420.000	1,420.000
0690	643.0715	Traffic Control Warning Lights Type C	DAY	1,120.000	1,120.000
0700	643.0800	Traffic Control Arrow Boards	DAY	30.000	30.000
0710	643.0900	Traffic Control Signs	DAY	2,740.000	2,740.000
0720	646.0600	Removing Pavement Markings	LF	20.000	20.000
0730	647.0553	Pavement Marking Stop Line Paint 12-Inch	LF	20.000	20.000
0740	647.0763	Pavement Marking Crosswalk Paint 6-Inch	LF	260.000	260.000
0750	649.0400	Temporary Pavement Marking Removable Tape 4-Inch	LF	7,100.000	7,100.000
0760	650.4000	Construction Staking Storm Sewer	EACH	13.000	13.000
0770	650.5000	Construction Staking Base	LF	8,888.000	8,888.000
0780	650.5500	Construction Staking Curb Gutter and Curb & Gutter	LF	1,575.000	1,575.000
0790	650.6000	Construction Staking Pipe Culverts	EACH	1.000	1.000
0800	650.9910	Construction Staking Supplemental Control (project) 01. 4996-01-54	LS	1.000	1.000
0810	650.9920	Construction Staking Slope Stakes	LF	8,888.000	8,888.000
0820	653.0900	Adjusting Pull Boxes	EACH	4.000	4.000
0830	690.0150	Sawing Asphalt	LF	1,974.000	1,974.000
0840	690.0250	Sawing Concrete	LF	116.000	116.000
0850	ASP.1T0A	On-the-Job Training Apprentice at $5.00/HR	HRS	300.000	300.000
0860	ASP.1T0G	On-the-Job Training Graduate at $5.00/HR	HRS	600.000	600.000
0870	SPV.0060	Special 01. Adjusting Water Valve Boxes	EACH	4.000	4.000
0880	SPV.0060	Special 02. Adjusting Water Curb Stops	EACH	12.000	12.000
0890	SPV.0060	Special 03. Inlet Cover Special	EACH	1.000	1.000
0900	SPV.0060	Special 04. Moving Trees	EACH	5.000	5.000
0910	SPV.0090	Special 01. Sawing Curb Openings	LF	126.000	126.000
0920	SPV.0090	Special 02. Storm Sewer Pipe Pvc 4-Inch	LF	27.000	27.000
0930	SPV.0090	Special 03. Storm Sewer Pipe Pvc 8-Inch	LF	2.000	2.000
0940	SPV.0090	Special 04. Storm Sewer Pipe Pvc 10-Inch	LF	58.000	58.000
0950	SPV.0090	Special 05. Railing Steel Pipe Galvanized Pedestrian	LF	385.000	385.000
0960	SPV.0165	Special 01. Sidewalk Integral Pedestrian Curb	SF	7,190.000	7,190.000

3

DATE 13FEB15 E S T I M A T E O F Q U A N T I T I E S

LINE NUMBER	ITEM	ITEM DESCRIPTION	UNIT	TOTAL	4996-01-54 QUANTITY
0970	SPV.0165	Special 02. Wall Modular Block Gravity Lrfd **P**	SF	863.000	863.000

3

3

CLEARING AND GRUBBING

STATION	-	STATION	LOCATION	CLEARING 201.0105 STA	GRUBBING 201.0205 STA	CLEARING 201.0120 ID	GRUBBING 201.0220 ID
SEGMENT 5 - N. WILGUS AVE., WEST OF TAYLOR AVE.							
29+10			-	---	---	6	6
SEGMENT 5 - TOTAL				**0**	**0**	**6**	**6**
SEGMENT 9 - GEORGIA AVE.							
34+40	-	36+00		2	2	---	---
36+30				---	---	6	6
36+35				---	---	6	6
37+00				---	---	6	6
37+25				---	---	6	6
37+75				---	---	4	4
38+10				---	---	9	9
38+95				---	---	15	15
39+05				---	---	6	6
39+10				---	---	6	6
40+00	-	42+00		2	2	---	---
SEGMENT 9 - TOTAL				**4**	**4**	**64**	**64**
SEGMENT 10 - WASHINGTON AVE., EAST OF S. BUSINESS DR.							
47+45	-	49+25		2	2	---	---
44+90				---	---	10	10
42+20				---	---	15	15
SEGMENT 10 - TOTAL				**2**	**2**	**25**	**25**
TOTAL				**6**	**6**	**95**	**95**

NOTES: TRIM BRANCHES STA 40+00 - 42+00 RT SEGMENT 9 GEORGIA AVE.

REMOVING PAVEMENT

STATION	-	STATION	LOCATION	204.0100 REMOVING PAVEMENT SY
SEGMENT 5 - N. WILGUS AVE., WEST OF TAYLOR AVE.				
12+00			DRIVEWAY	20
SEGMENT 5 - TOTAL				**20**
SEGMENT 6 - WASHINGTON AVE.				
23+75			DRIVEWAY	35
27+20			DRIVEWAY	45
28+25			DRIVEWAY	45
30+60			DRIVEWAY	10
SEGMENT 6 - TOTAL				**135**
SEGMENT 15 - TAYLOR DR.				
43+00			GAS STATION DRIVEWAY	90
43+85			DRIVEWAY	35
SEGMENT 15 - TOTAL				**125**
TOTAL				**280**

REMOVING SMALL PIPE CULVERTS

STATION	LOCATION	203.0100 EACH
SEGMENT 9 - GEORGIA AVE.		
28+50	0' RT - 0' RT	1
SEGMENT 9 - TOTAL		**1**
TOTAL		**1**

ALL ITEMS ON THIS SHEET ARE CATEGORY CODE 0010 UNLESS OTHERWISE NOTED.

3

REMOVING CURB & GUTTER

STATION	-	STATION	LOCATION	204.0150 REMOVE CURB & GUTTER LF
SEGMENT 4 - S. WILGUS AVE.				
24+74			0' LT - 12' LT	10
SEGMENT 4 - TOTAL				**10**
SEGMENT 5 - N. WILGUS AVE., WEST OF TAYLOR AVE.				
12+30	-		DRIVEWAY	6
15+35	-		DRIVEWAY	6
34+90	-		DRIVEWAY	10
35+20	-		DRIVEWAY	10
36+05	-		LT, RAMP	15
SEGMENT 5 - TOTAL				**45**
SEGMENT 6 - WASHINGTON AVE.				
20+25			LT, RAMP	15
31+65			LT, RAMP	15
SEGMENT 6 - TOTAL				**30**
SEGMENT 7 - LAKESHORE DR.				
10+21	-	10+31	RT	10
16+50			RT, RAMP	15
SEGMENT 7 - TOTAL				**25**
SEGMENT 9 - GEORGIA AVE.				
0+00		0+00	RT	---
SEGMENT 9 - TOTAL				**0**
SEGMENT 10 - WASHINGTON AVE., EAST OF S. BUSINESS DR.				
40+75	-		RT, RAMP	15
45+95			DRIVEWAY	15
SEGMENT 10 - TOTAL				**30**

REMOVING CURB & GUTTER

STATION	-	STATION	LOCATION	204.0150 REMOVE CURB & GUTTER LF
SEGMENT 15 - TAYLOR DR.				
42+85			DRIVEWAY	25
43+20			DRIVEWAY	45
43+65			DRIVEWAY	10
43+95			DRIVEWAY	10
45+65			DRIVEWAY	10
45+95			DRIVEWAY	10
46+30			DRIVEWAY	20
46+55			DRIVEWAY	20
46+81	-	46+99	EXISTING CURB OPENING	15
47+88	-	48+05	EXISTING CURB OPENING	15
48+25			DRIVEWAY	10
48+30			DRIVEWAY	30
48+55			DRIVEWAY	40
48+80			DRIVEWAY	20
49+10			DRIVEWAY	20
52+70			LT, RAMP	20
SEGMENT 15 - TOTAL				**320**
TOTAL				**460**

REMOVING CONCRETE SIDEWALK

STATION	-	STATION	LOCATION	204.0155 SY
SEGMENT 4 - S. WILGUS AVE.				
24+75	-	24+80	RT	5
SEGMENT 4 - TOTAL				**5**
SEGMENT 7 - LAKESHORE DR.				
10+17	-	10+35	RT	15
SEGMENT 7 - TOTAL				**15**
SEGMENT 10 - WASHINGTON AVE., EAST OF S. BUSINESS DR.				
40+75			LT, RAMP	10
SEGMENT 10 - TOTAL				**10**
TOTAL				**30**

ALL ITEMS ON THIS SHEET ARE CATEGORY CODE 0010 UNLESS OTHERWISE NOTED.

REMOVING INLETS

STATION	OFFSET	LOCATION	204.0220 REMOVING INLETS EACH
SEGMENT 6 - WASHINGTON AVE.			
25+00	30' RT		1
SEGMENT 6 - TOTAL			**1**
SEGMENT 10 - WASHINGTON AVE., EAST OF S. BUSINESS DR.			
50+60	22' LT		1
SEGMENT 10 - TOTAL			**1**
TOTAL			**2**

ABANDONING CULVERT PIPES

STATION	LOCATION	204.0270 EACH
SEGMENT 5 - N. WILGUS AVE., WEST OF TAYLOR AVE.		
19+20	30' LT	1
20+85	30' LT	1
SEGMENT 5 - TOTAL		**2**
TOTAL		**2**

REMOVING STORM SEWER

STATION	STATION	OFFSET	LOCATION	204.0245 REMOVING STORM SEWER 18" LF	204.0245 REMOVING STORM SEWER 24" LF
SEGMENT 5 - N. WILGUS AVE., WEST OF TAYLOR AVE.					
21+40				10	---
SEGMENT 5 - TOTAL				**10**	**0**
SEGMENT 10 - WASHINGTON AVE., EAST OF S. BUSINESS DR.					
49+04				---	8
SEGMENT 10 - TOTAL				**0**	**8**
TOTAL				**10**	**8**

ALL ITEMS ON THIS SHEET ARE CATEGORY CODE 0010 UNLESS OTHERWISE NOTED.

Division	From/To Station	Location	Excavation Common (1) (item # 205.0100) Cut	EBS Excavation	Salvaged/Unusable Pavement Material (3)	Unexpanded Fill	Expanded Fill (5) Factor 1.30	Mass Ordinate +/- (6)	Waste (7)	Borrow (item #208.0100)	Comment:
1	20+03.95 to 24+74.93	Segment 4 Wilgus Ave.	88	0	23	4	5	60	60	0	Cross Sections Not Included
	9+98.03 to 35+89.58	Segment 5 Wilgus Ave.	355	0	121	342	445	-211	0	211	
	40+75 to 52+60.21	Segment 15 Taylor Drive	460	0	80	2	2	378	378	0	
Division 1 Subtotal			903	0	224	348	452	226	437	211	
2	20+26.47 to 31+62.90	Segment 6 Washington Ave.	131	0	46	125	162	-77	0	77	Cross Sections Not Included
	11+46.54 to 16+52.87	Segment 7 Lakeshore Rd.	18	0	0	57	74	-56	0	56	Cross Sections Not Included
	40+75 to 52+60.21	Segment 10 Washington Ave.	43	0	70	340	443	-469	0	469	
Division 2 Subtotal			193	0	116	522	679	-602	0	602	
3	10+29.04 to 16+20.40	Segment 9 (south) Georgia Ave.	16	0	0	247	321	-305	0	305	
	20+74.58 to 41+83.17	Segment 9 (north) Georgia Ave.	241	0	42	1510	1962	-1763	0	1763	
Division 3 Subtotal			257	0	42	1756	2283	-2068	0	2068	
Grand Total			1353	0	382	2627	3415	-2444	437	2881	
		Total Common Excavation		1353							

1) Excavation Common is the sum of the Cut and EBS Excavation columns. Item number 205.0100
2) Salvaged/Unsuable Pavement Material is included in Cut.
3) Salvaged/Unusable Pavement Material
4) Available Material = Cut - Salvaged/Unusable Pavement Material
5) Expanded Fill. Factor = 1.30 Expanded Fill = Unexpanded Fill * Fill Factor
6) The Mass Ordinate + or - Qty calculated for the Division. Plus quantity indicates an excess of material within the Division. Minus indicates a shortage of material within the Division.
7) Waste material may be used on Georgia Ave. (Segment 9 North) outside 1:1 fill slope to offset quantity of borrow needed.

NOTES:

1. EXCAVATION FOR RETAINING WALLS IS NOT SHOWN ON THE CROSS SECTIONS OR INCLUDED IN THE EARTHWORK SUMMARY. CONTRACTOR SHALL DETERMINE THE VOLUME OF RETAINING WALL EXCAVATION REQUIRED DURING RETAINING WALL DESIGN AND INCLUDE THIS WORK IN THE RETAINING WALL BID ITEM.

2. FILL VOLUMES SHOWN INCLUDE AREAS BEHIND THE RETAINING WALLS. CONTRACTOR SHALL DETERMINE THE VOLUME OF GRANULAR BACKFILL REQUIRED FOR THE RETAINING WALLS AND ADJUST THE EARTHWORK SUMMARY ACCORDINGLY. RETAINING WALL BACKFILL IS INCLUDED IN THE RETAINING WALL BID ITEM.

ALL ITEMS ON THIS SHEET ARE CATEGORY CODE 0010 UNLESS OTHERWISE NOTED.

3

BASE AGGREGATE

STATION	-	STATION	LOCATION	305.0120 1 1/4-INCH TONS
SEGMENT 4 - S. WILGUS AVE.				
20+04	-	20+19	SIDEWALK	10
20+40			DRIVEWAY - RT	20
20+54	-	22+98	SIDEWALK	40
23+15			DRIVEWAY - RT	40
23+28	-	24+40	SIDEWALK	20
24+60			DRIVEWAY - RT	30
24+75	-	24+80	SIDEWALK	10
UNDISTRIBUTED				20
SEGMENT 4 - TOTAL				**190**
SEGMENT 5 - N. WILGUS AVE., WEST OF TAYLOR AVE.				
9+98	-	11+90	SIDEWALK	30
11+90	-	12+29	DRIVEWAY	70
12+29	-	14+64	SIDEWALK	30
14+64	-	15+30	DRIVEWAY	20
15+30	-	15+39	SIDEWALK	10
15+39	-	16+46	SIDEWALK	20
16+46	-	16+75	DRIVEWAY	10
16+75	-	19+08	SIDEWALK	30
19+08	-	19+35	DRIVEWAY	10
19+35	-	20+72	SIDEWALK	20
20+72	-	20+97	DRIVEWAY	20
20+97	-	22+83	SIDEWALK	30
22+83	-	23+19	DRIVEWAY	20
23+19	-	24+29	SIDEWALK	20
24+29	-	24+88	DRIVEWAY	90
24+88	-	26+22	SIDEWALK	20
26+22	-	26+48	DRIVEWAY	30
26+48	-	28+27	SIDEWALK	30
28+27	-	28+57	DRIVEWAY	30
28+57	-	28+85	SIDEWALK	10
30+24	-	31+47	SIDEWALK	20
31+63	-	32+25	SIDEWALK	10
32+53	-	32+85	SIDEWALK	10
32+85	-	33+37	DRIVEWAY	20
33+37	-	34+86	SIDEWALK	20
35+21	-	36+06	SIDEWALK	10
UNDISTRIBUTED				70
SEGMENT 5 - TOTAL				**710**

BASE AGGREGATE

STATION	-	STATION	LOCATION	305.0120 1 1/4-INCH TONS
SEGMENT 6 - WASHINGTON AVE.				
20+22	-	20+59	SIDEWALK	10
20+59	-	21+00	DRIVEWAY	20
21+00	-	23+61	SIDEWALK	40
23+61	-	23+96	DRIVEWAY	20
23+96	-	25+85	SIDEWALK	30
25+85	-	26+25	RAILROAD CROSSING	20
26+25	-	27+48	DRIVEWAY	10
27+48	-	28+17	SIDEWALK	10
28+17	-	28+50	DRIVEWAY	20
28+50	-	29+61	SIDEWALK	20
29+61	-	29+95	DRIVEWAY	20
29+95	-	30+46	SIDEWALK	10
30+46	-	30+80	DRIVEWAY	20
30+80	-	31+67	SIDEWALK	20
UNDISTRIBUTED				30
SEGMENT 6 - TOTAL				**300**
SEGMENT 7 - LAKESHORE DR.				
10+17	-	10+35		10
11+46	-	16+58		70
UNDISTRIBUTED				10
SEGMENT 7 - TOTAL				**90**
SEGMENT 9 - GEORGIA AVE.				
10+25	-	13+67	SIDEWALK	40
13+91	-	14+10	SIDEWALK	10
14+10	-	16+10	SIDEWALK	30
16+10	-	16+20	SIDEWALK	10
20+70	-	23+01	SIDEWALK	40
23+01	-	23+26	DRIVEWAY	20
23+26	-	28+09	SIDEWALK	70
28+09	-	28+78	DRIVEWAY	120
28+78	-	39+59	SIDEWALK	150
40+24	-	41+87	SIDEWALK	30
UNDISTRIBUTED				60
SEGMENT 9 - TOTAL				**580**

BASE AGGREGATE

STATION	-	STATION	LOCATION	305.0120 1 1/4-INCH TONS
SEGMENT 10 - WASHINGTON AVE., EAST OF S. BUSINESS DR.				
40+75	-	41+73	SIDEWALK	20
41+73	-	42+14	DRIVEWAY	30
42+14	-	44+21	SIDEWALK	30
44+21	-	44+72	DRIVEWAY	30
44+72	-	45+43	SIDEWALK	10
45+43	-	45+95	DRIVEWAY	50
45+95	-	46+06	SIDEWALK	10
46+06	-	46+26	DRIVEWAY	20
46+26	-	47+05	SIDEWALK	10
47+05	-	47+29	DRIVEWAY	40
47+29	-	47+40	SIDEWALK	10
47+40	-	49+25	SIDEWALK	30
49+25	-	50+24	SIDEWALK	20
50+24	-	50+45	DRIVEWAY	30
50+45	-	52+95	SIDEWALK	30
UNDISTRIBUTED				40
SEGMENT 10 - TOTAL				**410**
SEGMENT 15 - TAYLOR DR.				
40+45	-	42+76	SIDEWALK	30
42+76	-	43+26	DRIVEWAY	110
43+26	-	43+64	SIDEWALK	10
43+64	-	44+00	DRIVEWAY	30
44+00	-	45+64	SIDEWALK	20
45+64	-	45+98	DRIVEWAY	40
45+98	-	46+24	SIDEWALK	10
46+24	-	46+55	DRIVEWAY	60
46+55	-	48+27	SIDEWALK	30
48+27	-	48+55	DRIVEWAY	90
48+55	-	48+65	SIDEWALK	10
48+65	-	49+21	DRIVEWAY	30
49+21	-	52+75	SIDEWALK	50
UNDISTRIBUTED				60
SEGMENT 15 - TOTAL				**580**
TOTAL				**2,860**

3

ALL ITEMS ON THIS SHEET ARE CATEGORY CODE 0010 UNLESS OTHERWISE NOTED.

CONCRETE DRIVEWAY

STATION	LOCATION	6-INCH 416.0160 SY	7-INCH 416.0170 SY
SEGMENT 4 - S. WILGUS AVE.			
20+40	RT	23	---
23+15	RT	20	---
24+60	RT	22	---
SEGMENT 4 - TOTAL		**65**	**0**
SEGMENT 5 - N. WILGUS AVE., WEST OF TAYLOR AVE.			
12+00	20' LT	24	---
15+00	20' LT	45	---
16+62	20' LT	50	---
19+20	20' LT	45	---
20+85	20' LT	41	---
23+00	20' LT	58	---
28+50	20' LT	47	---
24+50	20' LT	92	---
26+30	20' LT	47	---
33+14	20' LT	79	---
SEGMENT 5 - TOTAL		**528**	**0**
SEGMENT 6 - WASHINGTON AVE.			
20+80	LT	---	40
23+75	LT	---	42
27+20	LT	---	50
28+25	LT	---	51
29+80	LT	---	32
30+60	LT	25	---
SEGMENT 6 - TOTAL		**25**	**215**
SEGMENT 9 - GEORGIA AVE.			
23+10	RT	33	0
28+50	RT	97	---
SEGMENT 9 - TOTAL		**130**	**0**
SEGMENT 10 - WASHINGTON AVE., EAST OF S. BUSINESS DR.			
42+00	35' RT	65	---
44+50	20' RT	35	---
45+75	20' RT	---	135
46+10	20' RT	13	---
47+15	20' RT	17	---
50+35	20' RT	15	---
SEGMENT 10 - TOTAL		**145**	**135**
SEGMENT 15 - TAYLOR DR.			
43+00	LT	83	---
43+85	LT	23	---
45+80	LT	22	---
46+40	LT	20	---
48+40	LT	19	---
48+95	LT	38	---
SEGMENT 15 - TOTAL		**205**	**0**
TOTAL		**1,098**	**350**

DRILLED TIE BARS

STATION	LOCATION	DRILLED TIE BARS 416.0610 EACH
SEGMENT 5 - N. WILGUS AVE., WEST OF TAYLOR AVE.		
36+05	LT, CURB RAMP	10
SEGMENT 5 - TOTAL		**10**
SEGMENT 6 - WASHINGTON AVE.		
20+25	LT, CURB RAMP	8
31+70	LT, CURB RAMP	8
SEGMENT 6 - TOTAL		**16**
SEGMENT 7 - LAKESHORE DR.		
10+21	RT, CURB RAMP	5
16+50	RT, CURB RAMP	8
SEGMENT 7 - TOTAL		**13**
SEGMENT 10 - WASHINGTON AVE., EAST OF S. BUSINESS DR.		
40+75	RT, CURB RAMP	5
SEGMENT 10 - TOTAL		**5**
SEGMENT 15 - TAYLOR DR.		
46+81	46+99 LT	8
47+88	48+05 LT	8
48+25	LT, INLET	6
52+68	LT, CURB RAMP	10
SEGMENT 15 - TOTAL		**32**
TOTAL		**76**

ASPHALT

STATION	-	STATION	LOCATION	465.0110 ASPHALTIC SURFACE PATCHING TONS
SEGMENT 4 - S. WILGUS AVE.				
20+19	-	20+54		1
SEGMENT 4 - TOTAL				**1**
SEGMENT 5 - N. WILGUS AVE., WEST OF TAYLOR AVE.				
12+30				1
15+35				1
36+05			RAMP	1
SEGMENT 5 - TOTAL				**3**
SEGMENT 6 - WASHINGTON AVE.				
25+85	-	26+25		16
SEGMENT 6 - TOTAL				**16**
SEGMENT 9 - GEORGIA AVE.				
31+18	-	34+32		22
34+32	-	36+56		17
SEGMENT 9 - TOTAL				**39**
TOTAL				**59**

ALL ITEMS ON THIS SHEET ARE CATEGORY CODE 0010 UNLESS OTHERWISE NOTED.

3

ASPHALTIC SURFACE DRIVEWAYS AND FIELD ENTRANCES

STATION	LOCATION	465.0120 TON
SEGMENT 4 - S. WILGUS AVE.		
20+40	DRIVEWAY - RT	2
23+15	DRIVEWAY - RT	6
24+60	DRIVEWAY - RT	8
SEGMENT 4 - TOTAL		**16**
SEGMENT 5 - N. WILGUS AVE., WEST OF TAYLOR AVE.		
12+00	DRIVEWAY - LT	19
15+00	DRIVEWAY - LT	3
16+62	DRIVEWAY - LT	1
19+20	DRIVEWAY - LT	1
20+85	DRIVEWAY - LT	5
23+00	DRIVEWAY - LT	2
24+50	DRIVEWAY - LT	5
26+40	DRIVEWAY - LT	1
28+50	DRIVEWAY - LT	3
33+14	DRIVEWAY - LT	3
SEGMENT 5 - TOTAL		**43**
SEGMENT 6 - WASHINGTON AVE.		
30+60	35' LT	8
SEGMENT 6 - TOTAL		**8**
SEGMENT 7 - LAKESHORE DR.		
0+00		---
0+00		---
SEGMENT 7 - TOTAL		**0**
SEGMENT 9 - GEORGIA AVE.		
28+50	0' RT	27
SEGMENT 9 - TOTAL		**27**
SEGMENT 10 - WASHINGTON AVE., EAST OF S. BUSINESS DR.		
44+50	20' LT & 30' LT	14
46+10	20' RT	8
47+15	20' RT	10
50+35	20' RT	4
SEGMENT 10 - TOTAL		**36**
SEGMENT 15 - TAYLOR DR.		
43+00	LT	20
43+85	LT	6
45+80	LT	6
46+40	LT	9
48+40	LT	21
48+95	LT	2
SEGMENT 15 - TOTAL		**64**
TOTAL		**194**

CULVERT PIPES AND ENDWALLS

STATION - STATION	LOCATION	CULVERT PIPES CLASS III 15-INCH 520.0115 LF	APRON ENDWALLS FOR CULVERT PIPE 15-INCH 520.1015 EACH
SEGMENT 9 - GEORGIA AVE.			
28+36	46' RT	92	2
SEGMENT 9 - TOTAL		**92**	**2**
TOTAL		**92**	**2**

MINIMUM WALL THICKNESS FOR STEEL CULVERT PIPE IS 0.064 INCHES

CONCRETE COLLAR

STATION	LOCATION	520.8000 CONCRETE COLLARS FOR PIPE EACH
SEGMENT 6 - WASHINGTON AVE.		
25+00	42' LT	1
SEGMENT 6 - TOTAL		**1**
SEGMENT 10 - WASHINGTON AVE., EAST OF S. BUSINESS DR.		
50+60	21' LT	2
51+00	21' LT	2
SEGMENT 10 - TOTAL		**4**
TOTAL		**5**

ALL ITEMS ON THIS SHEET ARE CATEGORY CODE 0010 UNLESS OTHERWISE NOTED.

CONCRETE CURB & GUTTER

STATION	-	STATION	LOCATION	CONC. CURB TYPE D 601.0110 LF	30-INCH TYPE A 601.0409 LF	30-INCH TYPE D 601.0411 LF	CONCRETE CURB PEDESTRIAN 601.0600 LF
SEGMENT 4 - S. WILGUS AVE.							
20+19	-	20+54		---	---	35	---
24+74			0'RT-12'RT	12	---	---	---
SEGMENT 4 - TOTAL				**12**	**0**	**35**	**0**
SEGMENT 5 - N. WILGUS AVE., WEST OF TAYLOR AVE.							
9+98	-	11+90	RAMP	---	---	---	192
12+30			DW	---	---	6	---
15+35			DW	---	---	6	---
34+90			RAMP, LT	---	---	10	---
35+25			RAMP, LT	---	---	10	---
36+05			RAMP, LT	---	20	---	---
SEGMENT 5 - TOTAL				**0**	**20**	**32**	**192**
SEGMENT 6 - WASHINGTON AVE.							
20+25			LT RAMP	---	15	---	---
31+70			LT RAMP	---	15	---	---
SEGMENT 6 - TOTAL				**0**	**30**	**0**	**0**
SEGMENT 7 - LAKESHORE DR.							
10+21	-	10+31	RT, RAMP	---	10	---	---
16+50			RT, RAMP	---	15	---	---
SEGMENT 7 - TOTAL				**0**	**25**	**0**	**0**
SEGMENT 9 - GEORGIA AVE.							
0+00	-	0+00		---	---	---	---
SEGMENT 9 - TOTAL				**0**	**0**	**0**	**0**
SEGMENT 10 - WASHINGTON AVE., EAST OF S. BUSINESS DR.							
40+75			RT, RAMP	---	10	---	---
SEGMENT 10 - TOTAL				**0**	**10**	**0**	**0**

CONCRETE CURB & GUTTER

STATION	-	STATION	LOCATION	CONC. CURB TYPE D 601.0110 LF	30-INCH TYPE A 601.0409 LF	30-INCH TYPE D 601.0411 LF	CONCRETE CURB PEDESTRIAN 601.0600 LF
SEGMENT 15 - TAYLOR DR.							
42+85			32' LT - 42' LT	---	---	18	---
43+20			25' LT - 57' LT	---	---	34	---
43+65			20' LT - 29' LT	---	---	10	---
43+95			22' LT - 32' LT	---	---	12	---
45+65			21' LT - 30' LT	---	---	10	---
45+95			21' LT - 29' LT	---	---	9	---
46+30			21' LT -38' LT	---	---	18	---
46+55			21' LT -38' LT	---	---	18	---
46+81	-	46+99	LT	---	15	---	---
47+88	-	48+05	LT	---	15	---	---
48+25			LT	---	6	---	---
48+30			21' LT -53' LT	---	---	32	---
48+55			21' LT -61' LT	---	---	40	---
48+80			LT	---	---	4	---
49+10			LT	---	---	4	---
52+68			LT, RAMP	---	20	---	---
SEGMENT 15 - TOTAL				**0**	**56**	**209**	**0**
TOTAL				**12**	**141**	**276**	**192**

ALL ITEMS ON THIS SHEET ARE CATEGORY CODE 0010 UNLESS OTHERWISE NOTED.

CONCRETE SIDEWALK

STATION		STATION	LOCATION	5-INCH 602.0410 SF	SIDEWALK INTEGRAL PEDESTRIAN CURB SPV.0165.01 SF
SEGMENT 4 - S. WILGUS AVE.					
20+04	-	20+19	RT	90	---
20+54	-	22+98	RT	1470	---
23+28	-	24+40	RT	680	---
24+75	-	24+80	RT	30	---
SEGMENT 4 - TOTAL				**2270**	**0**
SEGMENT 5 - N. WILGUS AVE., WEST OF TAYLOR AVE.					
9+98	-	11+90		1160	---
12+29	-	14+64		1410	---
15+30	-	15+39		60	---
15+39	-	16+46		540	---
16+75	-	19+08		1170	---
19+35	-	20+72		690	---
20+97	-	22+83		930	---
23+19	-	24+29		550	---
24+88	-	26+22		670	---
26+48	-	28+27		900	---
28+57	-	29+85		640	---
30+24	-	31+47		620	---
31+63	-	32+25		310	---
32+53	-	32+85		160	---
33+37	-	34+86		750	---
35+21	-	36+06		430	---
SEGMENT 5 - TOTAL				**10990**	**0**
SEGMENT 6 - WASHINGTON AVE.					
20+22	-	20+59	LT	230	---
21+00	-	23+61	LT	1570	---
23+96	-	25+85	LT	1140	---
26+24	-	27+04	LT	480	---
27+48	-	28+17	LT	420	---
28+50	-	29+61	LT	670	---
29+95	-	30+46	LT	310	---
30+80	-	31+67	LT	530	---
SEGMENT 6 - TOTAL				**5350**	**0**
SEGMENT 7 - LAKESHORE DR.					
10+17	-	10+35	RT	110	---
11+46	-	16+58	RT	3080	---
SEGMENT 7 - TOTAL				**3190**	**0**

CONCRETE SIDEWALK

STATION		STATION	LOCATION	5-INCH 602.0410 SF	SIDEWALK INTEGRAL PEDESTRIAN CURB SPV.0165.01 SF
SEGMENT 9 - GEORGIA AVE.					
10+25	-	13+67		1710	---
13+91	-	14+10		100	---
14+10	-	16+10		1000	---
16+10	-	16+20		50	---
20+70	-	23+01		1390	---
23+26	-	28+09		2900	---
28+78	-	39+59		6490	---
40+24	-	41+83		960	---
SEGMENT 9 - TOTAL				**14600**	**0**
SEGMENT 10 - WASHINGTON AVE., EAST OF S. BUSINESS DR.					
40+75	-	41+73	LT	650	---
42+14	-	44+21	LT	1035	---
44+72	-	45+43	LT	355	---
45+95	-	46+06	LT	55	---
46+26	-	47+05	LT	395	---
47+29	-	47+40	LT	55	---
47+40	-	49+25	LT	925	---
49+25	-	50+24	LT	495	---
50+45	-	52+95	LT	1250	---
SEGMENT 10 - TOTAL				**5215**	**0**
SEGMENT 15 - TAYLOR DR.					
40+45	-	42+76	LT	---	1730
43+26	-	43+64	LT	---	260
44+00	-	45+64	LT	---	1080
45+98	-	46+24	LT	---	240
46+55	-	48+26	LT	---	1150
48+55	-	48+65	LT	---	150
49+21	-	52+75	LT	---	2580
SEGMENT 15 - TOTAL				**0**	**7,190**
TOTAL				**41,615**	**7,190**

CURB RAMP DETECTABLE WARNING NATURAL PATINA

STATION	LOCATION	602.0515 SF
SEGMENT 5 - N. WILGUS AVE., WEST OF TAYLOR AVE.		
10+10	LT	10
11+00	LT	10
36+05	LT	8
SEGMENT 5 - TOTAL		**28**
SEGMENT 6 - WASHINGTON AVE.		
21+25	LT	10
31+60	LT	10
SEGMENT 6 - TOTAL		**20**
SEGMENT 7 - LAKESHORE DR.		
10+26	RT	10
16+50	RT	10
SEGMENT 7 - TOTAL		**20**
SEGMENT 9 - GEORGIA AVE.		
10+25		8
20+75		10
39+55		10
40+25		10
SEGMENT 9 - TOTAL		**38**
SEGMENT 10 - WASHINGTON AVE., EAST OF S. BUSINESS DR.		
40+75	LT RAMP	8
SEGMENT 10 - TOTAL		**8**
SEGMENT 15 - TAYLOR DR.		
52+65		8
SEGMENT 15 - TOTAL		**8**
TOTAL		**122**

ALL ITEMS ON THIS SHEET ARE CATEGORY CODE 0010 UNLESS OTHERWISE NOTED.

STORM SEWER PIPE

FROM STRUCTURE NUMBER	TO STRUCTURE NUMBER	INVERT ELEVATION	DISCHARGE ELEVATION	521.0728 PIPE ARCH CORRUGATED STEEL 28X20-INCH LF	608.0312 STORM SEWER PIPE REINFORCED CONCRETE CLASS III 12-INCH LF	608.0318 STORM SEWER PIPE REINFORCED CONCRETE CLASS III 18-INCH LF	608.0324 STORM SEWER PIPE REINFORCED CONCRETE CLASS III 24-INCH LF	522.1018 APRON ENDWALLS FOR CULVERT PIPE REINFORCED CONCRETE 18-INCH EACH	SPV.0090.02 STORM SEWER PIPE PVC 4-INCH LF	SPV.0090.03 STORM SEWER PIPE PVC 8-INCH LF	SPV.0090.04 STORM SEWER PIPE PVC 10-INCH LF	SLOPE PERCENT
SEGMENT 5 - N. WILGUS AVE., WEST OF TAYLOR AVE.												
EX MH	2	133.50	134.35	---	---	20	---	1	---	---	---	4.25%
EX DRAIN	EX INLET	---	---	---	---	---	---	---	27	---	---	---
16	EX INLET	138.90	138.80	---	24	---	---	---	---	---	---	0.42%
17	OUTLET	134.55	134.40	---	---	---	---	---	---	---	58	0.26%
SEGMENT 5 - TOTAL				**0**	**24**	**20**	**0**	**1**	**27**	**0**	**58**	
SEGMENT 6 - WASHINGTON AVE.												
EX 12"SS	3	22.94	23.04	---	11	---	---	---	---	2	---	---
SEGMENT 6 - TOTAL				**0**	**11**	**0**	**0**	**0**	**0**	**2**	**0**	
SEGMENT 9 - GEORGIA AVE.												
18	16	64.94	52.58	---	300	---	---	---	---	---	---	4.12%
17	16	55.65	52.58	---	125	---	---	---	---	---	---	2.46%
16	EX MH	52.08	51.49	---		59	---	---	---	---	---	1.00%
SEGMENT 9 - TOTAL				**0**	**425**	**59**	**0**	**0**	**0**	**0**	**0**	
SEGMENT 10 - WASHINGTON AVE., EAST OF S. BUSINESS DR.												
10	11	50.80	50.60	---	7	---	---	---	---	---	---	2.86%
DAYLIGHT	11	53.20	52.90	9	---	---	---	---	---	---	---	3.33%
	13	---	48.70	---	---	---	8	---	---	---	---	---
14	15	49.80	49.49	---	16	---	8	---	---	---	---	2.21%
SEGMENT 10 - TOTAL				**9**	**23**	**0**	**16**	**0**	**0**	**0**	**0**	
TOTAL				**9**	**483**	**79**	**16**	**1**	**27**	**2**	**58**	

ALL ITEMS ON THIS SHEET ARE CATEGORY CODE 0010 UNLESS OTHERWISE NOTED.

MANHOLES AND MANHOLE COVERS

STRUCTURE NUMBER	STATION	OFFSET	LOCATION	611.2004 MANHOLES 4-FT DIA EACH	611.3901 INLETS MEDIAN 1 GRATE EACH	611.0530 MANHOLE COVER TYPE J EACH	611.0545 MANHOLE COVER TYPE L EACH	SPV.0060.03 INLET COVER SPECIAL EACH	611.0645 INLET COVERS TYPE MS-A EACH	611.0609 INLET COVERS TYPE B-A EACH	RIM OR FLANGE LINE ELEVATION	INVERT ELEVATION	DEPTH	NOTES
SEGMENT 5 - N. WILGUS AVE., WEST OF TAYLOR AVE.														
16	18+82	40.0' LT		---	1	---	---	---	1	---	140.72	138.9	1.82	
17	20+67	37.0' LT		---	1	---	---	---	1	---	136.44	134.55	1.89	
SEGMENT 5 - TOTAL				**0**	**2**	**0**	**0**	**0**	**2**	**0**				
SEGMENT 6 - WASHINGTON AVE.														
3	25+00	42.2'LT		1	---	---	---	1	---	---	27.31	23.04	3.25	
SEGMENT 6 - TOTAL				**1**	**0**	**0**	**0**	**1**	**0**	**0**				
SEGMENT 9 - GEORGIA AVE.														
18	31+25	23.2'RT		1	---	---	---	---	---	1	68.94	64.94	4.00	2'X2' SQUARE OPENING
16	34+25	21.4'RT		1	---	---	---	---	---	1	56.58	52.08	4.50	2'X2' SQUARE OPENING
17	36+50	19.7'RT		1	---	---	---	---	---	1	59.65	55.65	4.00	2'X2' SQUARE OPENING
SEGMENT 9 - TOTAL				**3**	**0**	**0**	**0**	**0**	**0**	**3**				
SEGMENT 10 - WASHINGTON AVE., EAST OF S. BUSINESS DR.														
10	49+05	15.5'LT		1	---	---	---	---	---	1	53.73	50.80	2.93	2'X2' SQUARE OPENING
11	49+04	22.0'LT		1	---	---	1	---	---	---	55.20	49.20	5.67	
13	50+60	20.8'LT		1	---	---	---	---	---	1	53.14	48.70	4.44	2'X2' SQUARE OPENING
14	51+00	36'LT		---	1	---	---	---	1	---	53.69	49.80	3.89	
15	51+00	20.8'LT		1	---	1	---	---	---	---	53.78	48.49	4.21	
SEGMENT 10 - TOTAL				**4**	**1**	**1**	**1**	**0**	**1**	**2**				
TOTAL				**8**	**3**	**1**	**1**	**1**	**3**	**5**				

DEPTH OF FRAME AND RINGS FOR TYPE J COVER IS 1.08'. (INCLUDES 0.33' FOR RINGS)
DEPTH OF FRAME AND RINGS FOR TYPE L COVER IS 0.33'. (INCLUDES 0.0' FOR RINGS)
DEPTH OF FRAME AND RINGS INLET COVER SPECIAL IS 1.02'. (INCLUDES 0.5' FOR RINGS)

ALL ITEMS ON THIS SHEET ARE CATEGORY CODE 0010 UNLESS OTHERWISE NOTED.

ADJUSTING MANHOLES AND INLETS

STATION	OFFSET	LOCATION	CAT. CODE 0020 611.0420 RECONSTRUCTING MANHOLES EACH	611.8110 ADJUSTING MANHOLE COVERS EACH	611.8115 ADJUSTING INLET COVERS EACH	CAT. CODE 0020 SPV.0060.01 ADJUSTING WATER VALVE BOXES EACH	CAT. CODE 0020 SPV.0060.02 ADJUSTING WATER CURB STOPS EACH	653.0900 ADJUSTING PULL BOXES EACH	REMARKS
SEGMENT 4 - S. WILGUS AVE.									
24+25	1' RT		---	---	---	1	---	---	
SEGMENT 4 - TOTAL			**0**	**0**	**0**	**1**	**0**	**0**	
SEGMENT 5 - N. WILGUS AVE., WEST OF TAYLOR AVE.									
10+63	26' LT		---	---	---	---	---	1	
12+33	18' LT		---	---	1	---	---	---	
12+70	22' LT		---	---	---	---	---	1	
15+35	18' LT		---	---	1	---	---	---	
21+38	25' LT		---	1	---	---	---	---	STORM
23+50	25' LT		---	1	---	---	---	---	STORM
24+20	27' LT		---	---	---	1	---	---	
SEGMENT 5 - TOTAL			**0**	**2**	**2**	**1**	**0**	**2**	
SEGMENT 9 - GEORGIA AVE.									
30+07	22' RT		---	---	---	1	---	---	
34+05	40' RT		1	---	---	---	---	---	SAN (CAT0020) - ADD 2.45' BARREL SECTION
36+36	33' RT		---	---	---	---	1	---	
36+45	38' RT		1	---	---	---	---	---	WATER (CAT0020) - REMOVE 12" BARREL, ADD 32" BARREL
37+65	35' RT		---	---	---	---	1	---	
38+43	35' RT		---	---	---	---	1	---	
41+25	40' RT		---	1	---	---	---	---	STORM
SEGMENT 9 - TOTAL			**2**	**1**	**0**	**1**	**3**	**0**	
SEGMENT 10 - WASHINGTON AVE., EAST OF S. BUSINESS DR.									
42+50	40' LT		---	---	---	---	1	---	
42+55	40' LT		---	1	---	---	---	---	
42+65	30' LT		---	1	---	---	---	---	
42+75	35' LT		---	---	---	1	---	---	
51+14	32' LT		---	---	---	---	1	---	
51+55	32' LT		---	---	---	---	1	---	
52+90	20' LT		---	---	---	---	---	1	
SEGMENT 10 - TOTAL			**0**	**2**	**0**	**1**	**3**	**1**	
SEGMENT 15 - TAYLOR DR.									
40+75			---	---	---	---	---	1	
46+20	22' LT		---	---	---	---	1	---	
47+21	23' LT		---	---	---	---	1	---	
48+27	23' LT		---	---	---	---	1	---	
50+07	23' LT		---	---	---	---	1	---	
50+56	23' LT		---	---	---	---	1	---	
51+05	23' LT		---	---	---	---	1	---	
SEGMENT 15 - TOTAL			**0**	**0**	**0**	**0**	**6**	**1**	
TOTAL			**2**	**5**	**2**	**4**	**12**	**4**	

ALL ITEMS ON THIS SHEET ARE CATEGORY CODE 0010 UNLESS OTHERWISE NOTED.

3

WATER

STATION	-	STATION	LOCATION	624.0100 MGAL
SEGMENT 4 - S. WILGUS AVE.				
20+04	-	20+19		0.0
20+40				0.1
20+54	-	22+98		0.5
23+15				0.2
23+28	-	24+40		0.2
24+60				0.1
24+75	-	24+80		0.0
SEGMENT 4 - TOTAL				**1.0**
SEGMENT 5 - N. WILGUS AVE., WEST OF TAYLOR AVE.				
9+98	-	11+90		0.4
11+90	-	12+29		0.1
12+29	-	14+64		0.5
14+64		15+30		0.2
15+30	-	15+39		0.0
15+39	-	16+46		0.2
16+46		16+75		0.1
16+75	-	19+08		0.5
19+08		19+35		0.1
19+35	-	20+72		0.3
20+72		20+97		0.2
20+97	-	22+83		0.4
22+83		23+19		0.2
23+19	-	24+29		0.2
24+29	-	24+88		0.7
24+88	-	26+22		0.3
26+22	-	26+48		0.2
26+48	-	28+27		0.4
28+27	-	28+57		0.2
28+57	-	28+85		0.1
30+24	-	31+47		0.2
31+63	-	32+25		0.1
32+53	-	32+85		0.1
32+85		33+37		0.3
33+37	-	34+86		0.3
35+21	-	36+06		0.2
SEGMENT 5 - TOTAL				**6.0**
SEGMENT 6 - WASHINGTON AVE.				
20+22	-	20+59		0.1
20+59	-	21+00		0.1
21+00	-	23+61		0.6
23+61	-	23+96		0.1
23+96	-	25+85		0.4
25+85	-	26+25		0.1
26+25	-	27+48		0.1
27+48	-	28+17		0.2
28+17	-	28+50		0.1
28+50	-	29+61		0.2
29+61	-	29+95		0.1
29+95	-	30+46		0.1
30+46	-	30+80		0.1
30+80	-	31+67		0.2
SEGMENT 6 - TOTAL				**2.0**

WATER

STATION	-	STATION	LOCATION	624.0100 MGAL
SEGMENT 7 - LAKESHORE DR.				
10+25	-	13+67		0.6
13+91	-	14+10		0.0
14+10	-	16+10		0.4
16+10	-	16+20		0.0
20+70	-	23+01		0.4
23+01	-	23+26		0.1
23+26	-	28+09		0.9
28+09	-	28+78		0.1
28+78	-	39+59		2.0
40+24	-	41+87		0.3
SEGMENT 7 - TOTAL				**5.0**
SEGMENT 9 - GEORGIA AVE.				
10+25	-	13+67		0.6
13+91	-	14+10		0.0
14+10	-	16+10		0.4
16+10	-	16+20		0.0
20+70	-	23+01		0.4
23+01	-	23+26		0.1
23+26	-	28+09		0.9
28+09	-	28+78		0.6
28+78	-	39+59		2.0
40+24	-	41+87		0.3
SEGMENT 9 - TOTAL				**5.0**
SEGMENT 10 - WASHINGTON AVE., EAST OF S. BUSINESS DR.				
40+75	-	41+73		0.2
41+73	-	42+14		0.2
42+14	-	44+21		0.4
44+21	-	44+72		0.2
44+72	-	45+43		0.1
45+43	-	45+95		0.4
45+95	-	46+06		0.0
46+06	-	46+26		0.1
46+26	-	47+05		0.1
47+05	-	47+29		0.2
47+29	-	47+40		0.0
47+40	-	49+25		0.3
49+25	-	50+24		0.2
50+24	-	50+45		0.1
50+45	-	52+95		0.5
SEGMENT 10 - TOTAL				**3.0**

WATER

STATION	-	STATION	LOCATION	624.0100 MGAL
SEGMENT 15 - TAYLOR DR.				
40+45	-	42+76		0.4
42+76	-	43+26		0.6
43+26	-	43+64		0.1
43+64	-	44+00		0.2
44+00	-	45+64		0.3
45+64	-	45+98		0.2
45+98	-	46+24		0.0
46+24	-	46+55		0.3
46+55	-	48+27		0.3
48+27	-	48+55		0.5
48+55	-	48+65		0.0
48+65	-	49+21		0.2
49+21	-	52+75		0.7
SEGMENT 15 - TOTAL				**4.0**
TOTAL				**26.0**

UNDERDRAIN

STATION	-	STATION	LOCATION	PIPE UNDERDRAIN WRAPPED 6- INCH 612.0406 LF
SEGMENT 9 - GEORGIA AVE.				
14+10	-	16+10		200
SEGMENT 9 - TOTAL				**200**
SEGMENT 10 - WASHINGTON AVE., EAST OF S. BUSINESS DR.				
47+40	-	49+25		185
SEGMENT 10 - TOTAL				**185**
TOTAL				**385**

ALL ITEMS ON THIS SHEET ARE CATEGORY CODE 0010 UNLESS OTHERWISE NOTED.

LANDSCAPING

STATION	-	STATION	LOCATION	625.0100 TOPSOIL SY	629.0210 FERTILIZER TYPE B CWT	630.0140 SEEDING MIXTURE NO. 40 LB	630.0200 SEEDING TEMPORARY LB
SEGMENT 4 - S. WILGUS AVE.							
20+04	-	20+27	RT	12	0.1	0.2	0.1
20+48	-	23+00	RT	63	0.1	1.1	0.6
23+24	-	24+40	RT	28	0.1	0.5	0.3
SEGMENT 4 - TOTAL				**103**	**0.3**	**1.9**	**1.0**
SEGMENT 5 - N. WILGUS AVE., WEST OF TAYLOR AVE.							
9+98	-	11+82	LT	13	0.1	0.2	0.1
12+27	-	14+64	LT	30	0.1	0.5	0.3
15+32	-	16+45	LT	108	0.1	1.9	1.0
16+75	-	19+07	LT	327	0.3	5.9	2.9
19+32	-	20+70	LT	370	0.3	6.7	3.3
20+95	-	22+83	LT	486	0.4	8.7	4.4
23+17	-	24+29	LT	180	0.2	3.2	1.6
24+88	-	26+22	LT	198	0.2	3.6	1.8
26+47	-	28+27	LT	243	0.2	4.4	2.2
28+56	-	29+86	LT	166	0.2	3.0	1.5
30+21	-	31+46	LT	135	0.1	2.4	1.2
31+59	-	32+24	LT	62	0.1	1.1	0.6
32+50	-	32+84	LT	25	0.1	0.5	0.2
33+36	-	34+87	LT	163	0.2	2.9	1.5
35+20	-	35+90	LT	69	0.1	1.2	0.6
SEGMENT 5 - TOTAL				**2,575**	**2.7**	**46.4**	**23.2**
SEGMENT 6 - WASHINGTON AVE.							
20+21	-	20+59	LT	12	0.1	0.2	0.1
21+06	-	23+58	LT	120	0.1	2.2	1.1
23+96	-	25+85	LT	148	0.1	2.7	1.3
26+25	-	27+06	LT	34	0.1	0.6	0.3
27+42		28+23	LT	27	0.1	0.5	0.2
28+43		29+61	LT	40	0.1	0.7	0.4
29+83		30+49	LT	19	0.1	0.3	0.2
30+80		31+80	LT	31	0.1	0.6	0.3
SEGMENT 6 - TOTAL				**431**	**0.8**	**7.8**	**3.9**
SEGMENT 7 - LAKESHORE DR.							
11+47	-	16+58	RT	415	0.3	7.0	3.5
SEGMENT 7 - TOTAL				**415**	**0.3**	**7.0**	**3.5**

3

LANDSCAPING

STATION	-	STATION	LOCATION	625.0100 TOPSOIL SY	629.0210 FERTILIZER TYPE B CWT	630.0140 SEEDING MIXTURE NO. 40 LB	630.0200 SEEDING TEMPORARY LB
SEGMENT 9 - GEORGIA AVE.							
10+26	-	13+66	LT	860	0.6	15.5	7.7
13+91	-	16+20	LT	249	0.2	4.5	2.2
20+72	-	23+01	RT	167	0.2	3.0	1.5
23+26	-	28+14	RT	591	0.4	10.6	5.3
28+78	-	39+60	RT	760	0.5	13.7	6.8
40+23	-	41+83	RT	912	0.6	16.4	8.2
SEGMENT 9 - TOTAL				**3,539**	**2.5**	**63.7**	**31.7**
SEGMENT 10 - WASHINGTON AVE., EAST OF S. BUSINESS DR.							
40+77	-	41+23	RT	77	0.1	1.4	0.7
42+14	-	44+21	RT	127	0.1	2.3	1.1
44+60	-	45+47	RT	36	0.1	0.6	0.3
45+93	-	46+07	RT	9	0.1	0.2	0.1
46+25		47+07	RT	25	0.1	0.5	0.2
47+28		50+25	RT	264	0.2	4.8	2.4
50+45	-	52+95	RT	113	0.1	2.0	1.0
SEGMENT 10 - TOTAL				**651**	**0.8**	**11.7**	**5.8**
SEGMENT 15 - TAYLOR DR.							
40+61	-	42+87	LT	143	0.1	2.6	1.3
43+19	-	43+65	LT	17	0.1	0.3	0.2
43+95		45+65	LT	69	0.1	1.2	0.6
45+98		46+28	LT	10	0.1	0.2	0.1
46+54		48+27	LT	149	0.1	2.7	1.3
48+52		48+81	LT	9	0.1	0.2	0.1
49+09	-	52+74	LT	262	0.2	4.7	2.4
SEGMENT 15 - TOTAL				**659**	**0.8**	**11.9**	**6.0**
TOTAL				**8,373**	**8.2**	**150.2**	**75.1**

ALL ITEMS ON THIS SHEET ARE CATEGORY CODE 0010 UNLESS OTHERWISE NOTED.

3

SILT FENCE

STATION	-	STATION	LOCATION	628.1504 SILT FENCE LF	628.1520 SILT FENCE MAINTENANCE LF
SEGMENT 10 - WASHINGTON AVE., EAST OF S. BUSINESS DR.					
47+40	-	49+25	LT	185	185
UNDISTRIBUTED				50	50
SEGMENT 10 - TOTAL				**235**	**235**
TOTAL				**235**	**235**

MOBILIZATIONS EROSION CONTROL

STATION	-	STATION	LOCATION	628.1905 MOBILIZATIONS EROSION CONTROL (EACH)	628.1910 MOBILIZATIONS EMERGENCY EROSION CONTROL (EACH)
SEGMENT 4 - S. WILGUS AVE.					
20+00	-	24+85	RT	3	---
SEGMENT 4 - TOTAL				**3**	**0**
SEGMENT 5 - N. WILGUS AVE., WEST OF TAYLOR AVE.					
9+98	-	36+05	LT	3	---
SEGMENT 5 - TOTAL				**3**	**1**
SEGMENT 6 - WASHINGTON AVE.					
20+22	-	31+67	LT	3	---
SEGMENT 6 - TOTAL				**3**	**0**
SEGMENT 7 - LAKESHORE DR.					
10+17	-	16+58	RT	3	---
SEGMENT 7 - TOTAL				**3**	**0**
SEGMENT 9 - GEORGIA AVE.					
10+00	-	16+20	LT	3	---
20+70	-	41+87	RT	3	---
SEGMENT 9 - TOTAL				**6**	**1**
SEGMENT 10 - WASHINGTON AVE., EAST OF S. BUSINESS DR.					
40+00	-	52+95	LT	3	---
SEGMENT 10 - TOTAL				**3**	**1**
SEGMENT 15 - TAYLOR DR.					
40+00	-	52+90	LT	3	---
SEGMENT 15 - TOTAL				**3**	**0**
TOTAL				**24**	**3**

3

ALL ITEMS ON THIS SHEET ARE CATEGORY CODE 0010 UNLESS OTHERWISE NOTED.

3

EROSION MAT

STATION	-	STATION	LOCATION	628.2006 EROSION MAT URBAN CLASS I, TYPE A SY	628.2008 EROSION MAT URBAN CLASS I, TYPE B SY
SEGMENT 4 - S. WILGUS AVE.					
20+04	-	20+27	RT	12	0
20+48	-	23+00	RT	63	0
23+24	-	24+40	RT	28	0
SEGMENT 4 - TOTAL				**103**	**0**
SEGMENT 5 - N. WILGUS AVE., WEST OF TAYLOR AVE.					
9+98	-	11+82	LT	13	0
12+27	-	14+64	LT	30	0
15+32	-	16+45	LT	108	0
16+75	-	19+07	LT	327	0
19+32	-	20+70	LT	370	0
20+95	-	22+83	LT	486	0
23+17	-	24+29	LT	180	0
24+88	-	26+22	LT	198	0
26+47	-	28+27	LT	243	0
28+56	-	29+86	LT	166	0
30+21	-	31+46	LT	135	0
31+59	-	32+24	LT	62	0
32+50	-	32+84	LT	25	0
33+36	-	34+87	LT	163	0
35+20	-	35+90	LT	69	0
SEGMENT 5 - TOTAL				**2575**	**0**
SEGMENT 6 - WASHINGTON AVE.					
20+21	-	20+59	LT	12	0
21+06	-	23+58	LT	120	0
23+96	-	25+85	LT	148	0
26+25	-	27+06	LT	34	0
27+42	-	28+23	LT	27	0
28+43	-	29+61	LT	40	0
29+83	-	30+49	LT	19	0
30+80	-	31+80	LT	31	0
SEGMENT 6 - TOTAL				**431**	**0**
SEGMENT 7 - LAKESHORE DR.					
11+47	-	16+48	RT	415	0
SEGMENT 7 - TOTAL				**415**	**0**

EROSION MAT

STATION	-	STATION	LOCATION	628.2006 EROSION MAT URBAN CLASS I, TYPE A SY	628.2008 EROSION MAT URBAN CLASS I, TYPE B SY
SEGMENT 9 - GEORGIA AVE.					
10+26	-	13+66	LT	860	0
13+91	-	16+20	LT	249	0
20+72	-	23+01	RT	167	0
23+26	-	28+14	RT	591	0
28+78	-	39+60	RT	0	760
40+23	-	41+83	RT	0	912
SEGMENT 9 - TOTAL				**1,867**	**1,672**
SEGMENT 10 - WASHINGTON AVE., EAST OF S. BUSINESS DR.					
40+77	-	41+23	LT	77	0
42+14	-	44+21	LT	127	0
44+60	-	45+47	LT	36	0
45+93	-	46+07	LT	9	0
46+25		47+07	LT	25	0
47+28		50+25	LT	264	0
50+45	-	52+95	LT	113	0
SEGMENT 10 - TOTAL				**651**	**0**
SEGMENT 15 - TAYLOR DR.					
40+61	-	42+87	LT	0	143
43+19	-	43+65	LT	0	17
43+95		45+65	LT	0	69
45+98		46+28	LT	0	10
46+54		48+27	LT	0	149
48+52		48+81	LT	0	9
49+09	-	52+74	LT	0	262
SEGMENT 15 - TOTAL				**0**	**659**
TOTAL				**6,042**	**2,331**

3

ALL ITEMS ON THIS SHEET ARE CATEGORY CODE 0010 UNLESS OTHERWISE NOTED.

INLET PROTECTION

STATION	OFFSET	LOCATION	TYPE A 628.7005 EACH	TYPE C 628.7015 EACH	TEMPORARY DITCH CHECKS 628.7504 EACH	CULVERT PIPE CHECKS 628.7555 EACH
SEGMENT 4 - S. WILGUS AVE.						
21+32	0'		---	1	---	---
SEGMENT 4 - TOTAL			**0**	**1**	**0**	**0**
SEGMENT 5 - N. WILGUS AVE., WEST OF TAYLOR AVE.						
11+10	18'	LT	---	1	---	---
12+30	18'	LT	---	1	---	---
12+45	18'	LT	---	1	---	---
15+35	18'	LT	---	1	---	---
18+75	18'	LT	---	1	---	---
18+82	40'	LT	---	1	---	---
20+67	37'	LT	---	1	---	---
21+32	45'	LT	---	---	---	3
21+65	18'	LT	---	1	---	---
23+30	18'	LT	---	1	---	---
35+20	18'	LT	---	1	---	---
35+75	18'	LT	---	2	---	---
SEGMENT 5 - TOTAL			**0**	**12**	**0**	**3**
SEGMENT 6 - WASHINGTON AVE.						
24+75	20'	LT	---	1	---	---
31+55	20'	LT	---	1	---	---
31+65	35'	LT	---	1	---	---
SEGMENT 6 - TOTAL			**0**	**3**	**0**	**0**
SEGMENT 7 - LAKESHORE DR.						
10+20	20'	RT	---	1	---	---
SEGMENT 7 - TOTAL			**0**	**1**	**0**	**0**
SEGMENT 9 - GEORGIA AVE.						
10+40	20'	LT	---	1	---	---
12+60	20'	LT	---	1	---	---
14+00	40'	LT	---	---	---	3
14+90	20'	LT	---	1	---	---
20+90	20'	RT	---	1	---	---
25+20	20'	RT	---	1	---	---
27+85	45'	RT	---	---	---	2
30+00	40'	RT	---	---	1	---
31+25	23.2'	RT	1	---	---	---
32+00	65'	RT	---	---	1	---
34+00	50'	RT	---	---	1	---
34+25	21.4'	RT	1	---	---	---
36+50	19.7'	RT	1	---	---	---
38+00	25'	RT	---	---	1	---
SEGMENT 9 - TOTAL			**3**	**5**	**4**	**5**

INLET PROTECTION

STATION	OFFSET	LOCATION	TYPE A 628.7005 EACH	TYPE C 628.7015 EACH	TEMPORARY DITCH CHECKS 628.7504 EACH	CULVERT PIPE CHECKS 628.7555 EACH
SEGMENT 10 - WASHINGTON AVE., EAST OF S. BUSINESS DR.						
49+04	30.7'	LT	---	---	---	5
49+05	15.5'	LT	1	---	---	---
50+60	20.8'	LT	1	---	---	---
51+00	34'	LT	1	---	---	---
SEGMENT 10 - TOTAL			**3**	**0**	**0**	**5**
SEGMENT 15 - TAYLOR DR.						
48+20	14'	LT	---	1	---	---
10+37	0'	LT	---	---	---	---
10+37	0'	LT	---	---	---	---
10+37	0'	LT	---	---	---	---
SEGMENT 15 - TOTAL			**0**	**1**	**0**	**0**
TOTAL			**6**	**23**	**4**	**13**

ALL ITEMS ON THIS SHEET ARE CATEGORY CODE 0010 UNLESS OTHERWISE NOTED.

3

MOVING SIGNS

STATION	SIGN NO.	SIGN CODE	SIGN SIZE IN x IN	638.2102 MOVING SIGNS TYPE II EACH	638.4000 MOVING SMALL SIGN SUPPORTS EACH	SIGN MOUNTED ON SAME POST AS	REMARKS
SEGMENT 5 - N. WILGUS AVE., WEST OF TAYLOR AVE.							
10+69	X	---	---	1	0	LIGHTPOLE	YIELD
11+71	X	---	---	1	1	---	CTH 0 / CTH AB
12+93	X	---	---	1	1	---	ROUNDABOUT AHEAD
14+37	X	---	---	1	1		NO PARKING THIS SIDE
20+65	X	---	---	1	1		ONE WAY
20+95	X	---	---	1	1		ONE WAY
SEGMENT 5 - TOTAL				**6**	**5**		
SEGMENT 6 - WASHINGTON AVE.							
26+45	X	---	---	1	1	---	RAILROAD XING, YIELD
31+25	X	---	---	1	1		SPEED LIMIT
SEGMENT 6 - TOTAL				**2**	**2**		
SEGMENT 7 - LAKESHORE DR.							
13+75	X	---	---	1	1	---	DOG RUN
SEGMENT 7 - TOTAL				**1**	**1**		
SEGMENT 9 - GEORGIA AVE.							
28+85	X	---	---	1	1	---	
38+85	X	---	---	1	1	---	NO PARKING
SEGMENT 9 - TOTAL				**2**	**2**		
SEGMENT 15 - TAYLOR DR.							
40+55	X	---	---	1	1		STOP
41+00	X	---	---	1	1	---	NO PARKING
42+60	X	---	---	1	1	---	NO PARKING
44+00	X	---	---	1	1	---	
44+40	X	---	---	1	1	---	
50+00	X	---	---	1	1	---	
51+25	X	---	---	1	1	---	SP LIMIT 30MPH
52+25	X	---	---	1	1	---	NO PARKING
SEGMENT 15 - TOTAL				**8**	**8**		
TOTAL				**19**	**18**		

PAVEMENT MARKING ITEMS

STATION	-	STATION	LOCATION	646.0600 REMOVE PAVEMENT MARKINGS LF	647.0553 PAVEMENT MARKING STOP LINE PAINT 12-IN LF	647.0763 PAVEMENT MARKING CROSSWALK PAINT 6-IN LF
SEGMENT 15 - TAYLOR DR.						
52+74	-	52+94		20	20	100
52+70			RT	---	---	160
SEGMENT 15 - TOTAL				**20**	**20**	**260**
TOTAL				**20**	**20**	**260**

MOVING TREES

STATION	EXISTING LOCATION	NEW LOCATION	SPV.0060.04 MOVING TREES EACH
SEGMENT 4 - S. WILGUS AVE.			
21+52	5' RT	9' RT	1
21+90	5' RT	9' RT	1
22+50	5' RT	9' RT	1
23+45	5' RT	9' RT	1
23+98	5' RT	9' RT	1
SEGMENT 4 - TOTAL			**5**
TOTAL			**5**

ALL ITEMS ON THIS SHEET ARE CATEGORY CODE 0010 UNLESS OTHERWISE NOTED.

TRAFFIC CONTROL - DRUMS, SIGNS, BARRICADES, & WARNING LIGHTS

STATION	-	STATION	DAYS IN SERVICE	643.0300 TRAFFIC CONTROL DRUMS No.	DAYS	643.0420 TRAFFIC CONTROL BARRICADES TYPE III No.	DAYS	643.0705 TRAFFIC CONTROL WARNING LIGHTS TYPE A No.	DAYS	643.0715 TRAFFIC CONTROL WARNING LIGHTS TYPE C No.	DAYS	643.0800 TRAFFIC CONTROL ARROW BOARDS No.	DAYS	643.0900 TRAFFIC CONTROL SIGNS No.	DAYS
SEGMENT 4 - S. WILGUS AVE.															
20+04	-	24+80	10	15	150	1	10	0	0	8	80	0	0	14	140
SEGMENT 4 - TOTAL				15	150	1	10	0	0	8	80	0	0	14	140
SEGMENT 5 - N. WILGUS AVE., WEST OF TAYLOR AVE.															
10+00	-	36+00	30	60	1,800	1	30	0	0	8	240	0	0	20	600
SEGMENT 5 - TOTAL				60	1,800	1	30	0	0	8	240	0	0	20	600
SEGMENT 6 - WASHINGTON AVE.															
20+20	-	31+80	15	30	450	1	15	0	0	8	120	0	0	18	270
SEGMENT 6 - TOTAL				30	450	1	15	0	0	8	120	0	0	18	270
SEGMENT 7 - LAKESHORE DR.															
10+00		16+60	10	25	250	1	10	0	0	8	80	0	0	14	140
SEGMENT 7 - TOTAL				25	250	1	10	0	0	8	80	0	0	14	140
SEGMENT 9 - GEORGIA AVE.															
10+00	-	16+50	15	15	225	1	15	0	0	8	120	0	0	14	210
20+50	-	42+00	45	0	0	14	630	20	900	0	0	----	----	14	630
SEGMENT 9 - TOTAL				15	225	15	645	20	900	8	120	0	0	28	840
SEGMENT 10 - WASHINGTON AVE., EAST OF S. BUSINESS DR.															
40+00	-	53+00	20	35	700	19	380	26	520	0	0	0	0	18	360
SEGMENT 10 - TOTAL				35	700	19	380	26	520	0	0	0	0	18	360
SEGMENT 15 - TAYLOR DR.															
40+00	-	53+00	30	20	600	1	30	0	0	16	480	1	30	13	390
SEGMENT 15 - TOTAL				20	600	1	30	0	0	16	480	1	30	13	390
TOTAL				200	4175	39	1120	46	1420	56	1120	1	30	125	2740

ALL ITEMS ON THIS SHEET ARE CATEGORY CODE 0010 UNLESS OTHERWISE NOTED.

TEMPORARY PAVEMENT MARKING ITEMS

STATION	-	STATION	LOCATION	649.0400 TEMPORARY PAVEMENT MARKING REMOVABLE TAPE 4-INCH LF
SEGMENT 4 - S. WILGUS AVE.				
20+04	-	24+80		500
SEGMENT 4 - TOTAL				**500**
SEGMENT 5 - N. WILGUS AVE., WEST OF TAYLOR AVE.				
10+00	-	36+00		2600
SEGMENT 5 - TOTAL				**2600**
SEGMENT 6 - WASHINGTON AVE.				
20+20	-	31+80		1300
SEGMENT 6 - TOTAL				**1,300**
SEGMENT 7 - LAKESHORE DR.				
10+00	-	16+60		700
SEGMENT 7 - TOTAL				**700**
SEGMENT 9 - GEORGIA AVE.				
10+00	-	16+50		700
20+50	-	42+00		---
SEGMENT 9 - TOTAL				**700**
SEGMENT 15 - TAYLOR DR.				
40+00	-	53+00		1300
SEGMENT 15 - TOTAL				**1,300**
TOTAL				**7,100**

RAILING PIPE

STATION	-	STATION	LOCATION	RAILING STEEL PIPE GALVANIZED PEDESTRIAN SPV.0090.05 LF
SEGMENT 9 - GEORGIA AVE.				
14+10		16+10	LT	200
SEGMENT 9 - TOTAL				**200**
SEGMENT 10 - WASHINGTON AVE., EAST OF S. BUSINESS DR.				
47+40		49+25	LT	185
SEGMENT 10 - TOTAL				**185**
TOTAL				**385**

RETAINING WALL

STATION	-	STATION	LOCATION	WALL MODULAR BLOCK GRAVITY LRFD SPV.0165.02 SF
SEGMENT 9 - GEORGIA AVE.				
14+10	-	16+10		400
SEGMENT 9 - TOTAL				**400**
SEGMENT 10 - WASHINGTON AVE., EAST OF S. BUSINESS DR.				
47+40	-	49+25		463
SEGMENT 10 - TOTAL				**463**
TOTAL				**863**

ALL ITEMS ON THIS SHEET ARE CATEGORY CODE 0010 UNLESS OTHERWISE NOTED.

CONSTRUCTION STAKING

STATION	-	STATION	LOCATION	650.4000 STORM SEWER EACH	650.5000 BASE LF	650.5500 CONCRETE CURB & GUTTER LF	650.6000 PIPE CULVERTS LF	650.9910 SUPPLEMENTAL CONTROL LS	650.9920 SLOPE STAKES LF
SEGMENT 4 - S. WILGUS AVE.									
20+04	-	20+19	RT	---	15	---	---	---	15
20+19	-	20+54	RT	---	---	35	---	---	---
20+54	-	22+98	RT	---	244	---	---	---	244
23+28	-	24+40	RT	---	112	---	---	---	112
24+75	-	24+80	RT	---	5	12	---	---	5
SEGMENT 4 - TOTAL				**0**	**376**	**47**	**0**	**---**	**376**
SEGMENT 5 - N. WILGUS AVE., WEST OF TAYLOR AVE.									
9+98	-	11+90	LT	---	192	192	---	---	192
12+29	-	15+30	LT	---	301	6	---	---	301
15+30	-	15+39	LT	---	9	6	---	---	9
15+39	-	16+75	LT	---	136	---	---	---	136
16+75	-	19+35	LT	1	260	---	---	---	260
19+35	-	20+97	LT	1	162	---	---	---	162
20+97	-	23+19	LT	1	222	---	---	---	222
23+19	-	24+29	LT	---	110	---	---	---	110
24+88	-	26+22	LT	---	134	---	---	---	134
26+48	-	28+27	LT	---	179	---	---	---	179
28+57	-	29+85	LT	---	128	---	---	---	128
30+24	-	31+47	LT	---	123	---	---	---	123
31+63	-	32+25	LT	---	62	---	---	---	62
32+53	-	33+37	LT	---	84	---	---	---	84
33+37	-	34+86	LT	---	149	10	---	---	149
35+21	-	36+06	LT	---	85	10	---	---	85
SEGMENT 5 - TOTAL				**3**	**2336**	**224**	**0**	**---**	**2336**
SEGMENT 6 - WASHINGTON AVE.									
20+22	-	20+59	LT	---	37	10	---	---	37
21+00	-	23+61	LT	---	261	---	---	---	261
23+96	-	25+85	LT	1	189	---	---	---	189
26+24	-	27+04	LT	---	80	---	---	---	80
27+48	-	28+17	LT	---	69	---	---	---	69
28+50	-	29+61	LT	---	111	---	---	---	111
29+95	-	30+46	LT	---	51	---	---	---	51
30+80	-	31+67	LT	---	87	15	---	---	87
SEGMENT 6 - TOTAL				**1**	**885**	**25**	**0**	**---**	**885**
SEGMENT 7 - LAKESHORE DR.									
10+17	-	10+35	RT	---	18	---	---	---	18
11+46	-	16+58	RT	---	512	---	---	---	512
SEGMENT 7 - TOTAL				**0**	**530**	**0**	**0**	**---**	**530**

ALL ITEMS ON THIS SHEET ARE CATEGORY CODE 0010 UNLESS OTHERWISE NOTED.

CONSTRUCTION STAKING

STATION	-	STATION	LOCATION	650.4000 STORM SEWER EACH	650.5000 BASE LF	650.5500 CONCRETE CURB & GUTTER LF	650.6000 PIPE CULVERTS LF	650.9910 SUPPLEMENTAL CONTROL LS	650.9920 SLOPE STAKES LF
SEGMENT 9 - GEORGIA AVE.									
10+25	-	13+67	LT	---	342	---	----	----	342
13+91	-	14+10	LT	---	19	---	---	---	19
14+10	-	16+10	LT	---	200	---	---	---	200
16+10	-	16+20	LT	---	10	---	---	---	10
20+70	-	23+01	RT	---	231	---	---	---	231
23+26	-	28+09	RT	---	483	---	1	---	483
28+78	-	39+59	RT	3	1081	---	---	---	1081
40+24	-	41+83	RT	---	159	---	----	----	159
SEGMENT 9 - TOTAL				**3**	**2,525**	**0**	**1**	**---**	**2,525**
SEGMENT 10 - WASHINGTON AVE., EAST OF S. BUSINESS DR.									
40+75	-	41+73	LT	---	98	10	----	----	98
42+14	-	44+21	LT	---	207	---	---	---	207
44+72	-	45+43	LT	---	71	---	---	---	71
45+95	-	46+06	LT	---	11	---	---	---	11
46+26	-	47+05	LT	---	79	---	---	---	79
47+29	-	47+40	LT	---	11	---	---	---	11
47+40	-	49+25	LT	3	185	---	---	---	185
49+25	-	50+24	LT	---	99	---	---	----	99
50+45	-	52+95	LT	3	250	---	----	----	250
SEGMENT 10 - TOTAL				**6**	**1,011**	**10**	**0**	**---**	**1,011**
SEGMENT 15 - TAYLOR DR.									
40+45	-	42+76	LT	---	231	---	----	----	231
43+26	-	43+64	LT	---	38	---	---	---	38
44+00	-	45+64	LT	---	164	---	---	---	164
45+98	-	46+24	LT	---	26	---	---	---	26
46+55	-	48+26	LT	---	171	---	---	---	171
48+55	-	48+65	LT	---	10	---	---	---	10
49+21	-	52+75	LT	---	354	---	---	---	354
40+45	-	42+76	LT		231	1269	---	---	231
SEGMENT 15 - TOTAL				**0**	**1,225**	**1,269**	**0**	**---**	**1,225**
TOTAL				**13**	**8,888**	**1,575**	**1**	**1**	**8,888**

ALL ITEMS ON THIS SHEET ARE CATEGORY CODE 0010 UNLESS OTHERWISE NOTED.

SAWING PAVEMENT

STATION	-	STATION	LOCATION	690.0150 SAWING ASPHALT LF	690.0250 SAWING CONCRETE LF	SPV.0090.01 SAWING CURB OPENINGS LF
SEGMENT 4 - S. WILGUS AVE.						
20+19	-	20+54	CUL-DE-SAC	35	---	---
20+25	-	20+50	DRIVEWAY	25	---	---
23+00	-	23+22	DRIVEWAY	22	---	12
24+38	-	24+73	DRIVEWAY	35	---	6
SEGMENT 4 - TOTAL				**117**	**0**	**18**
SEGMENT 5 - N. WILGUS AVE., WEST OF TAYLOR AVE.						
10+10			RAMP	---	---	12
11+00			RAMP	---	---	12
11+80	-	12+40	DRIVEWAY	60	---	6
14+60				---	---	6
14+65	-	15+32	DRIVEWAY	70	---	---
16+45	-	16+75	DRIVEWAY	30	---	---
19+08	-	19+32	DRIVEWAY	25	---	---
20+72	-	20+94	DRIVEWAY	25	---	---
22+82	-	23+17	DRIVEWAY	35	---	---
24+20	-	25+10	DRIVEWAY	90	---	---
26+20	-	26+50	DRIVEWAY	30	---	---
28+25	-	28+55	DRIVEWAY	30	---	---
32+82	-	33+37	DRIVEWAY	55	---	---
34+90	-		RAMP	---	5	---
35+20	-		RAMP	---	5	---
SEGMENT 5 - TOTAL				**450**	**10**	**36**
SEGMENT 6 - WASHINGTON AVE.						
21+25			LT RAMP	---	5	---
23+65	-	23+89	30' LT	---	24	---
25+85	-	26+25	20' LT	---	---	12
28+17	-	28+32	32' LT	15	---	---
30+50	-	30+85	40' LT-31' LT	40	---	---
31+70			LT RAMP	---	5	---
SEGMENT 6 - TOTAL				**55**	**34**	**12**
SEGMENT 7 - LAKESHORE DR.						
10+26			RT, RAMP	---	17	---
16+50			RT, RAMP	---	5	---
SEGMENT 7 - TOTAL				**0**	**22**	**0**
SEGMENT 9 - GEORGIA AVE.						
23+05	-	23+20	35' RT	15	---	---
28+00		28+70	40' RT	85	---	---
28+05		28+70	20' RT	75	---	---
31+18		36+56	VARIES	538	---	---
41+50	-	41+65	20' RT	15	---	---
SEGMENT 9 - TOTAL				**728**	**0**	**0**

SAWING PAVEMENT

STATION	-	STATION	LOCATION	690.0150 SAWING ASPHALT LF	690.0250 SAWING CONCRETE LF	SPV.0090.01 SAWING CURB OPENINGS LF
SEGMENT 10 - WASHINGTON AVE., EAST OF S. BUSINESS DR.						
40+75	-	40+80	70' LT	---	5	---
40+75				---	5	---
44+20	-	44+80	18' LT	60	---	---
44+20	-	44+65	32' LT	45	---	---
45+25	-	46+30	12' LT	105	---	---
45+45	-	45+95	32' LT	50	---	---
46+05	-	46+25	30' LT	20	---	---
46+07	-	46+26	34.5' LT	19	---	---
47+00	-	47+35	14' LT	35	---	---
47+05	-	47+25	30' LT	20	---	---
50+25	-	50+50	20' LT	25	---	---
50+25	-	50+50	32' LT	25	---	---
SEGMENT 10 - TOTAL				**404**	**10**	**0**
SEGMENT 15 - TAYLOR DR.						
43+00			DRIVEWAY	70	---	12
43+85			DRIVEWAY	30	---	12
45+80			DRIVEWAY	30	---	6
46+40			DRIVEWY- LT	30	---	6
46+55			DRIVEWY- LT	---	---	6
46+81	-	46+99	LT	---	20	---
47+88	-	48+05	LT	---	20	---
48+40			DRIVEWY- LT	30	---	6
48+90			DRIVEWY- LT	30	---	12
SEGMENT 15 - TOTAL				**220**	**40**	**60**
TOTAL				**1,974**	**116**	**126**

ALL ITEMS ON THIS SHEET ARE CATEGORY CODE 0010 UNLESS OTHERWISE NOTED.

R/W PROJECT NUMBER	SHEET NUMBER	TOTAL SHEETS
4996-01-54		
FEDERAL PROJECT NUMBER SIDEWALK GAP IMPROVEMENTS	4.01	24

PLAT OF RIGHT-OF-WAY REQUIRED FOR

CITY OF SHEBOYGAN

SIDEWALK GAP IMPROVEMENTS

SIDEWALK GAP IMPROVEMENTS SHEBOYGAN COUNTY

CONSTRUCTION PROJECT NUMBER
4996-01-54

CONVENTIONAL ABBREVIATIONS

ACCESS POINT/ DRIVEWAY CONNECTION	AP	REFERENCE LINE	R/L
ACCESS RIGHTS	AR	RELEASE OF RIGHTS	ROR
ACRES	AC.	REMAINING	REM.
AND OTHERS	ET.AL.	RIGHT-OF-WAY	R/W
CENTERLINE	C/L	SECTION	SEC.
CERTIFIED SURVEY MAP	CSM	STATION	STA.
CORNER	COR.	TEMPORARY LIMITED EASEMENT	TLE
DOCUMENT	DOC.	VOLUME	V.
EASEMENT	EASE.		
HIGHWAY EASEMENT	H.E.		
LAND CONTRACT	LC		
MONUMENT	MON.		
PAGE	P.		
PERMANENT LIMITED EASEMENT	PLE		
PROPERTY LINE	PL		
RECORDED AS	(100')		

CURVE DATA

LONG CHORD	LCH
LONG CHORD BEARING	LCB
RADIUS	R
DEGREE OF CURVE	D
CENTRAL ANGLE OR DELTA	DELTA
LENGTH OF CURVE	L
TANGENT	TAN

CONVENTIONAL SYMBOLS

IRON PIPE/PIN SET OR ACCEPTED	●
SIGN	ISIGN
SECTION CORNER MONUMENT	⊕
SECTION CORNER SYMBOL	SECTION CORNER
TIE POINT	DB 501
TEMPORARY LIMITED EASEMENT POINT	TLE 215
PERMANENT LIMITED EASEMENT POINT	PLE 182
PARCEL NUMBER	(5)
UTILITY PARCEL NUMBER	(92)
SIGN NUMBER (OFF PREMISE)	21-1
BUILDING	
PROPOSED R/W LINE	
EXISTING H.E. LINE	
PROPERTY LINE	
LOT & TIE LINES	
SLOPE INTERCEPTS	
CORPORATE LIMITS	
NO ACCESS (BY PREVIOUS ACQUISITION/CONTROL)	
NO ACCESS (BY ACQUISITION)	
NO ACCESS (BY STATUTORY AUTHORITY)	
SECTION LINE	
QUARTER LINE	
SIXTEENTH LINE	
EXISTING CENTERLINE	
PROPOSED REFERENCE LINE	
PARALLEL OFFSET	
ADJOINING LANDS WITH SAME OWNER	

CONVENTIONAL UTILITY SYMBOLS

WATER	W
GAS	G
TELEPHONE	T
OVERHEAD TRANSMISSION LINES ELECTRIC	OH
CABLE TELEVISION	E
FIBER OPTIC	TV
SANITARY SEWER	FO
STORM SEWER	SAN
EXISTING MANHOLE	SS
EXISTING INLET	

	NON COMPENSABLE	COMPENSABLE
POWER POLE		
TELEPHONE POLE		
TELEPHONE PEDESTAL		
ELECTRIC TOWER		

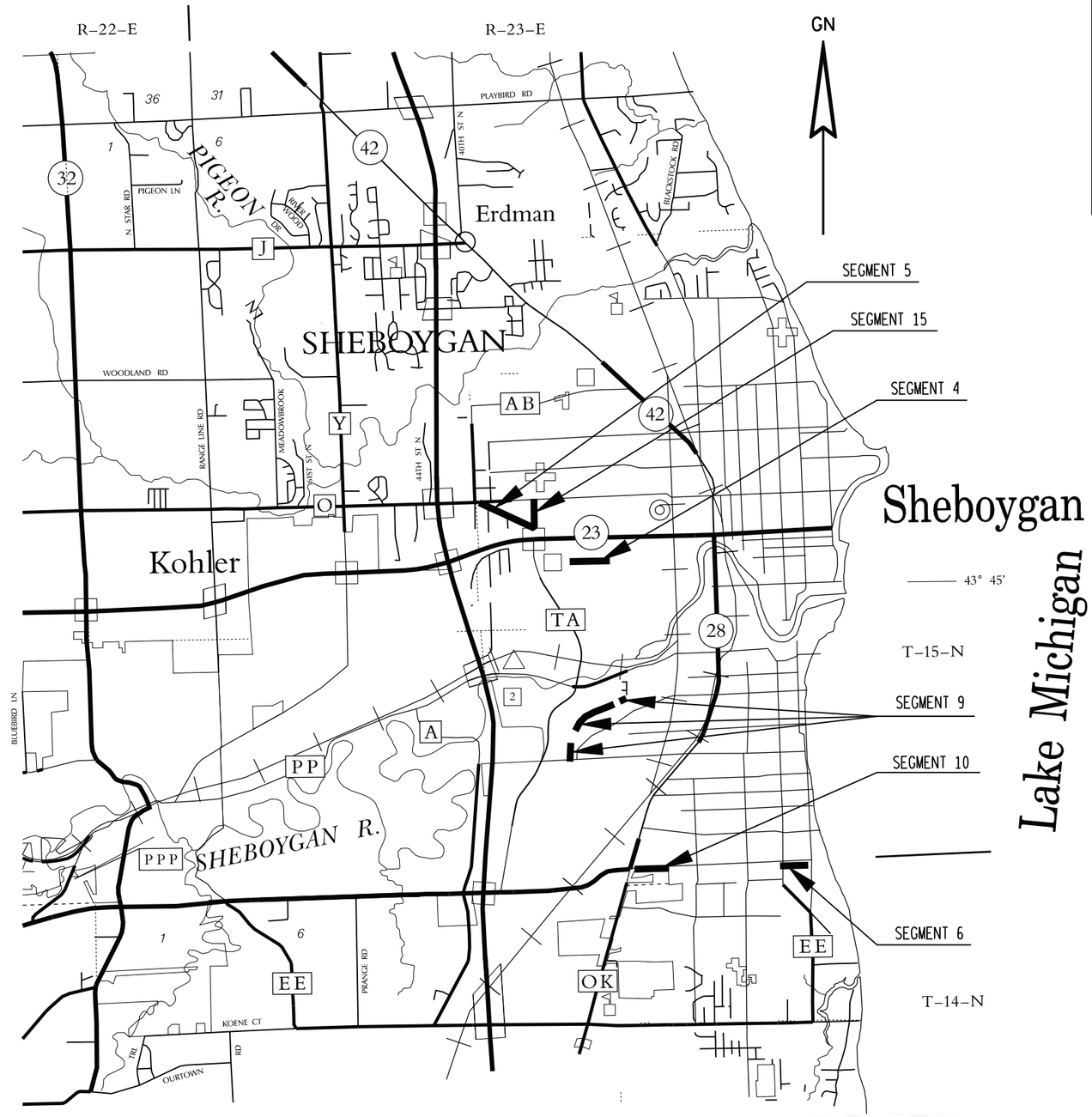

LAYOUT
SCALE 0 .5 MI.

TOTAL NET LENGTH OF CENTERLINE = N/A MI.

NOTES

COORDINATES AND BEARINGS ON THIS PLAT ARE ORIENTED TO THE WISCONSIN COUNTY COORDINATE SYSTEM, SHEBOYGAN COUNTY ZONE, NAD 83 (97) ADJUSTMENT. THE COORDINATES SHOWN ARE GRID COORDINATES AND ARE TO BE USED AS GROUND VALUES ON THIS PLAT.

RIGHT-OF-WAY BOUNDARIES ARE DEFINED WITH COURSES OF THE PERIMETER OF THE HIGHWAY LANDS REFERENCED TO THE U.S. PUBLIC LAND SURVEY SYSTEM OR OTHER SURVEYS OF PUBLIC RECORD.

FOR CURRENT ACCESS / DRIVEWAY INFORMATION, CONTACT THE WISCONSIN DEPT. OF TRANSPORTATION REGIONAL OFFICE IN GREEN BAY.

WISCONSIN
KENNETH R. WOLF
S-1421
SHEBOYGAN, WISCONSIN
LAND SURVEYOR
Kenneth R. Wolf
6/11/2012

REVISION DATE
FEBRUARY 3, 2014

CITY OF SHEBOYGAN

APPROVED FOR CITY OF SHEBOYGAN

DATE: _____ _____ (Signature)

_____ TITLE

STATE OF WISCONSIN
DEPARTMENT OF TRANSPORTATION

APPROVED FOR THE DEPARTMENT

DATE: _____ _____ (Signature)

FILE NAME: L:\work\60158441\000_CADD\SURVEY\RW PLAT\040101_rp REV 1.dgn
BATCH PRINT SHEET 1 OF 1
PRINTER DRIVER: L:\library\TPN_CADstds\Workspace-Clients\WisDOT\Microstation\Resources\MS_Printing\Printer_Drivers\ET_PDF_11 x 17.plt
PEN TABLE: L:\work\60158441\000_CADD\SURVEY\RW PLAT\ms_printing\pen_tables\et_wisdot.tbl
PLOT DATE: 2/3/2014
PLOT TIME: 1:54:57 PM
PLOT SCALE: 1:100
WISDOT/CADDS SHEET 50
A-80901

T 15 N

TOWN OF SHEBOYGAN

CITY OF SHEBOYGAN

TOWN OF SHEBOYGAN

TOWN OF SHEBOYGAN

GN

N. 38TH STREET

SEGMENT 5

SUPERIOR AVENUE

N. 36TH STREET

WILGUS AVENUE

CITY OF SHEBOYGAN

CITY OF SHEBOYGAN

SUPERIOR AVENUE

TAYLOR DRIVE

R 23 E

CITY OF SHEBOYGAN

21

16

R 23 E

SEGMENT 15

SEGMENT 4

WILGUS AVENUE

KOHLER MEMORIAL DRIVE - STH 23

WILGUS AVENUE

CITY OF SHEBOYGAN

T 15 N

REVISION DATE FEBRUARY 3, 2013 N.C.	DATE MAY, 2012	NOT TO SCALE	HWY: SIDEWALK GAP	STATE R/W PROJECT NUMBER 4996-01-54	PLAT SHEET 4.02	
			COUNTY: SHEBOYGAN	CONSTRUCTION PROJECT NUMBER 4996-01-54	PS&E SHEET 53	E

FILE NAME: L:\work\60158441\000_CADD\SURVEY\RW PLAT\040102_rp REV 1.dgn
BATCH PRINT SHEET 1 OF 1

PRINTER DRIVER: L:\library\TPN_CADstds\Workspace-Clients\WisDOT\Microstation\Resources\MS_Printing\Printer_Drivers\ET_PDF_11 x 17.plt
PEN TABLE: L:\work\60158441\000_CADD\SURVEY\RW PLAT\ms_printing\pen_tables\et_wisdot.tbl

PLOT DATE: 2/3/2014
PLOT TIME: 6:13:15 PM

PLOT SCALE: 1:600

WISDOT/CADDS SHEET 70

4

4

CITY OF SHEBOYGAN

CITY OF SHEBOYGAN

34

35

R 23 E

FEBRUARY 3, 2014 N.C.

GN

SOUTH BUSINESS DRIVE

P.I.

P.I.

23

24

P.I.

25

P.I.

27

P.I.

P.I.

P.I.

WASHINGTON AVENUE

SEGMENT 10

CITY OF SHEBOYGAN

SOUTH 9TH STREET

LAKESHORE DRIVE

13

14

P.I.

P.I.

15

WASHINGTON AVENUE

SEGMENT 6

T 15 N

T 14 N

REVISION DATE FEBRUARY 3, 2014 N.C.	DATE MAY, 2012	NOT TO SCALE	HWY: SIDEWALK GAP	STATE R/W PROJECT NUMBER 4996-01-54	PLAT SHEET 4.03	
			COUNTY: SHEBOYGAN	CONSTRUCTION PROJECT NUMBER 4996-01-54	PS&E SHEET 54	E

FILE NAME: L:\work\60158441\000_CADD\SURVEY\RW PLAT\040103_rp REV 1.dgn
BATCH PRINT SHEET 1 OF 1
PRINTER DRIVER: L:\library\TPN_CADstds\Workspace-Clients\WisDOT\Microstation\Resources\MS_Printing\Printer_Drivers\ET_PDF_11 x 17.plt
PEN TABLE: L:\work\60158441\000_CADD\SURVEY\RW PLAT\ms_printing\pen_tables\et_wisdot.tbl
PLOT DATE: 2/3/2014
PLOT TIME: 6:11:16 PM
PLOT SCALE: 1:600
WISDOT/CADDS SHEET 70

T 15 N

CITY OF SHEBOYGAN

GN

R 23 E

33

28

17

P.I.

P.I.

SEGMENT 9

GEORGIA AVENUE

UNION AVENUE

HILTOP DRIVE

ASHBY COURT

GEORGIA AVENUE

18

P.I.

P.I.

P.I.

19

GEORGIA AVENUE

P.I.

20

BLACK WALNUT TRAIL

P.I.

22

CITY OF SHEBOYGAN

4

4

REVISION DATE	DATE		HWY: SIDEWALK GAP	STATE R/W PROJECT NUMBER 4996-01-54	PLAT SHEET 4.04	
FEBRUARY 3, 2014 N.C.	MAY, 2012	NOT TO SCALE	COUNTY: SHEBOYGAN	CONSTRUCTION PROJECT NUMBER 4996-01-54	PS&E SHEET 55	E

FILE NAME: L:\work\60158441\000_CADD\SURVEY\RW PLAT\040104_rp REV 1.dgn
BATCH PRINT SHEET 1 OF 1

PRINTER DRIVER: L:\library\TPN_CADstds\Workspace-Clients\WisDOT\Microstation\Resources\MS_Printing\Printer_Drivers\ET_PDF_11 x 17.plt
PEN TABLE: L:\work\60158441\000_CADD\SURVEY\RW PLAT\ms_printing\pen_tables\et_wisdot.tbl

PLOT DATE: 2/3/2014
PLOT TIME: 6:12:16 PM

PLOT SCALE: 1:600

SCHEDULE OF LANDS AND INTERESTS REQUIRED

PARCEL NUMBER	OWNER (S)	INTEREST REQUIRED	P.L.E. SQ. FT. REQ'D.	T.L.E. SQ. FT. REQ'D.
1	LUTHERAN CHURCH OF OUR REDEEMER	T.L.E.	—	519

OWNERS' NAMES ARE SHOWN FOR REFERENCE PURPOSES ONLY AND ARE SUBJECT TO CHANGE PRIOR TO THE TRANSFER OF LAND INTERESTS TO THE DEPARTMENT.

T.L.E. 1 CURVE TABLE

FROM - TO	RADIUS	DELTA	LENGTH	CHORD	CHORD BEARING
TLE 100 - TLE 101	1399.42'	1°25'09"	34.66'	34.66'	N79° 44' 44"E
TLE 101 - TLE 104	1399.42'	4°20'29"	106.03'	106.01'	N82° 37' 32"E
TLE 104 - TLE 105	1399.42'	1°44'32"	42.55'	42.55'	N85° 40' 02"E

T.L.E. 1 STATION, OFFSET AND COORDINATE TABLE

POINT	STATION	OFFSET	Y	X
DB 108	20+50.54	789.19 R	177636.861	209685.540
TLE 100	22+94.82	12.69 R	178463.305	209676.359
TLE 101	23+29.76	11.32 R	178469.475	209710.466
TLE 102	23+30.00	16.99 R	178463.881	209711.422
TLE 103	22+95.00	18.46 R	178457.629	209677.404
TLE 104	24+36.03	9.30 R	178483.082	209815.597
TLE 105	24+78.99	9.40 R	178486.296	209858.024
TLE 106	24+79.05	16.73 R	178478.985	209858.497
TLE 107	24+35.99	16.74 R	178475.673	209816.292

T.L.E. COURSE TABLE

FROM - TO	BEARING	DISTANCE
TLE 100 - TLE 101	CURVE	
TLE 101 - TLE 102	S09°41'57"E	5.68'
TLE 102 - TLE 103	S79°35'13"W	34.59'
TLE 103 - TLE 100	N10°25'46"W	5.77'
TLE 101 - TLE 104	CURVE	
TLE 104 - TLE 105	CURVE	
TLE 105 - TLE 106	S03°42'01" E	7.33'
TLE 106 - TLE 107	S85°30'42" W	42.33'
TLE 107 - TLE 104	N05°21'35" W	7.44'

GN

CITY

S.T.H. 23

R/L CURVE 1 DATA
P.I. = 22+68.40
Y 178474.343
X 209647.775
Δ. = 7° 13' 34"
D. = 4° 05' 33"
T. = 88.40'
L. = 176.57'
R. = 1400.00'
P.T. = 23+56.57

R/L CURVE 2 DATA
P.I. = 24+60.28
Y 178494.971
X 209838.776
Δ. = 3° 42' 03"
D. = 5° 43' 46"
T. = 32.31'
L. = 64.59'
R. = 1000.00'
P.T. = 24+92.56

BEGIN SEGMENT 4
STA. 20+00
Y=178414.66
X=209417.10

BP: 20+00.00
PC: 20+80.57
PT: 20+67.59
PCC: 20+61.38
PC: 21+80.00
178453.870
209561.777
PT: 21+28.39
178441.918
209511.570
PT: 23+56.57
178483.835
209735.665
PC: 24+27.97
178491.502
209806.656
PT: 24+92.56
178496.360
209871.053
EP: 25+13.23
178497.248
209891.695

CURVE 1
CURVE 2
SEGMENT 4 ALIGNMENT
SLOPE INTERCEPT LINE
WILGUS AVENUE
ASPHALT
CONC. WALK
STEPS
N76°36'35"E
N83°50'09"E
N87°32'12"E
20+00
21+00
22+00
23+00
24+00
25+00
25+13
TLE 100
TLE 101
TLE 102
TLE 103
TLE 104
TLE 105
TLE 106
TLE 107
T.L.E. FOR GRADING
201 SQ. FT.
T.L.E. FOR GRADING
318 SQ. FT.
1
3007 WILGUS AVE.
LUTHERAN CHURCH
OF OUR REDEEMER
59281215100
OF
SW-NE
SEC. 21
SHEBOYGAN COUNTY
POST
P.L.
1/4 LINE
451.99'
N89°21'49"E 2648.58'
N00°38'11"W 826.50'
CTR 2158
1" IRON PIPE
Y=177631.840
X=209233.573
DB 108
QTR 69
CUT "X" IN CONC.
Y=177661.259
X=211881.988
THE RIGHT-OF-WAY LINE OF WILGUS AVE. IS BASED ON WIS. D.O.T. PROJECT I.D. T017-3 (24).
SHEBOYGAN

END SEGMENT 4
STA. 25+13.23
Y=178497.25
X=209891.70

SEGMENT 4

REVISION DATE FEBRUARY 3, 2014 N.C.	DATE MAY, 2012	SCALE 0' 10' 20' 40'	HWY: SIDEWALK GAP	STATE R/W PROJECT NUMBER 4996-01-54	PLAT SHEET 4.05
			COUNTY: SHEBOYGAN	CONSTRUCTION PROJECT NUMBER 4996-01-54	PS&E SHEET 56 E

FILE NAME : L:\WORK\60158441\000_CADD\SURVEY\RW PLAT\040105_RP REV 1.DWG PLOT DATE : 2/3/2014 5:15 PM PLOT BY : LAHAYE, CHRIS PLOT NAME : 040105_RP REV 1.DWGPLOT SCALE : ********* WISDOT/CADDS SHEET 70

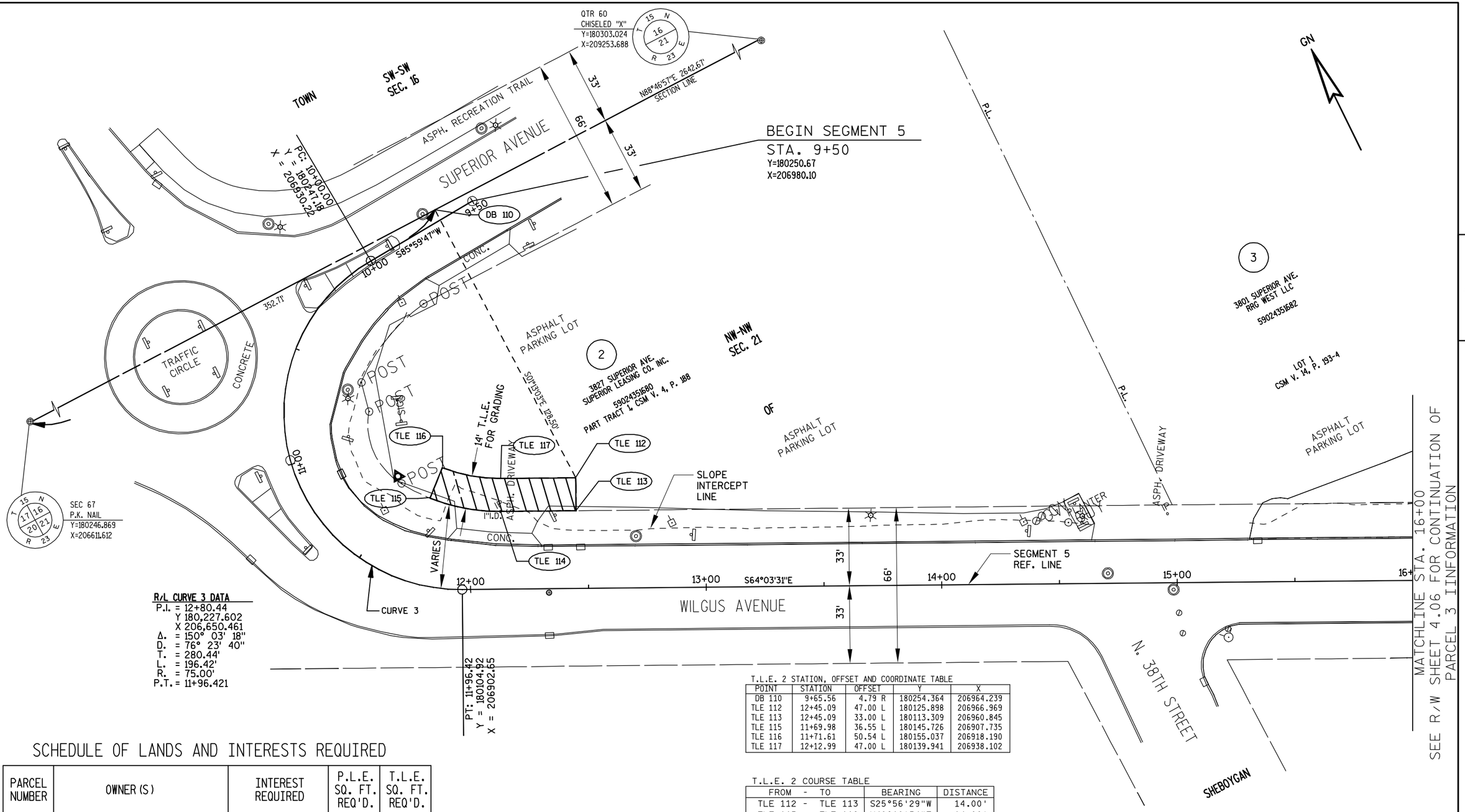

4

4

R/L CURVE 3 DATA
P.I. = 12+80.44
Y 180,227.602
X 206,650.461
Δ. = 150° 03' 18"
D. = 76° 23' 40"
T. = 280.44'
L. = 196.42'
R. = 75.00'
P.T. = 11+96.421

T.L.E. 2 STATION, OFFSET AND COORDINATE TABLE

POINT	STATION	OFFSET	Y	X
DB 110	9+65.56	4.79 R	180254.364	206964.239
TLE 112	12+45.09	47.00 L	180125.898	206966.969
TLE 113	12+45.09	33.00 L	180113.309	206960.845
TLE 115	11+69.98	36.55 L	180145.726	206907.735
TLE 116	11+71.61	50.54 L	180155.037	206918.190
TLE 117	12+12.99	47.00 L	180139.941	206938.102

T.L.E. 2 COURSE TABLE

FROM - TO	BEARING	DISTANCE
TLE 112 - TLE 113	S25°56'29"W	14.00'
TLE 115 - TLE 116	N48°18'54"E	14.00'
TLE 117 - TLE 112	S64°03'31"E	32.10'

T.L.E. 2 CURVE TABLE

FROM - TO	RADIUS	DELTA	LENGTH	CHORD	CHORD BEARING
TLE 116 - TLE 117	64.00'	20°30'53"	25.15'	24.99'	S52° 50' 00"E

THE RIGHT-OF-WAY LINE OF SUPERIOR AVE. AND WILGUS AVE. IS BASED ON TOWN ROAD RECORDS AND WIS.D.O.T. PROJECT I.D. 4996-01-11.

SCHEDULE OF LANDS AND INTERESTS REQUIRED

PARCEL NUMBER	OWNER (S)	INTEREST REQUIRED	P.L.E. SQ. FT. REQ'D.	T.L.E. SQ. FT. REQ'D.
1	SUPERIOR LEASING CO. INC.	T.L.E.	———	840

OWNERS' NAMES ARE SHOWN FOR REFERENCE PURPOSES ONLY AND ARE SUBJECT TO CHANGE PRIOR TO THE TRANSFER OF LAND INTERESTS TO THE DEPARTMENT.

SEGMENT 5 WILGUS AVE.

REVISION DATE FEBRUARY 3, 2014 N.C.	DATE MAY, 2012	SCALE 0' 10' 20' 40'	HWY: SIDEWALK GAP	STATE R/W PROJECT NUMBER 4996-01-54	PLAT SHEET 4.06
			COUNTY: SHEBOYGAN	CONSTRUCTION PROJECT NUMBER 4996-01-54	PS&E SHEET 57 E

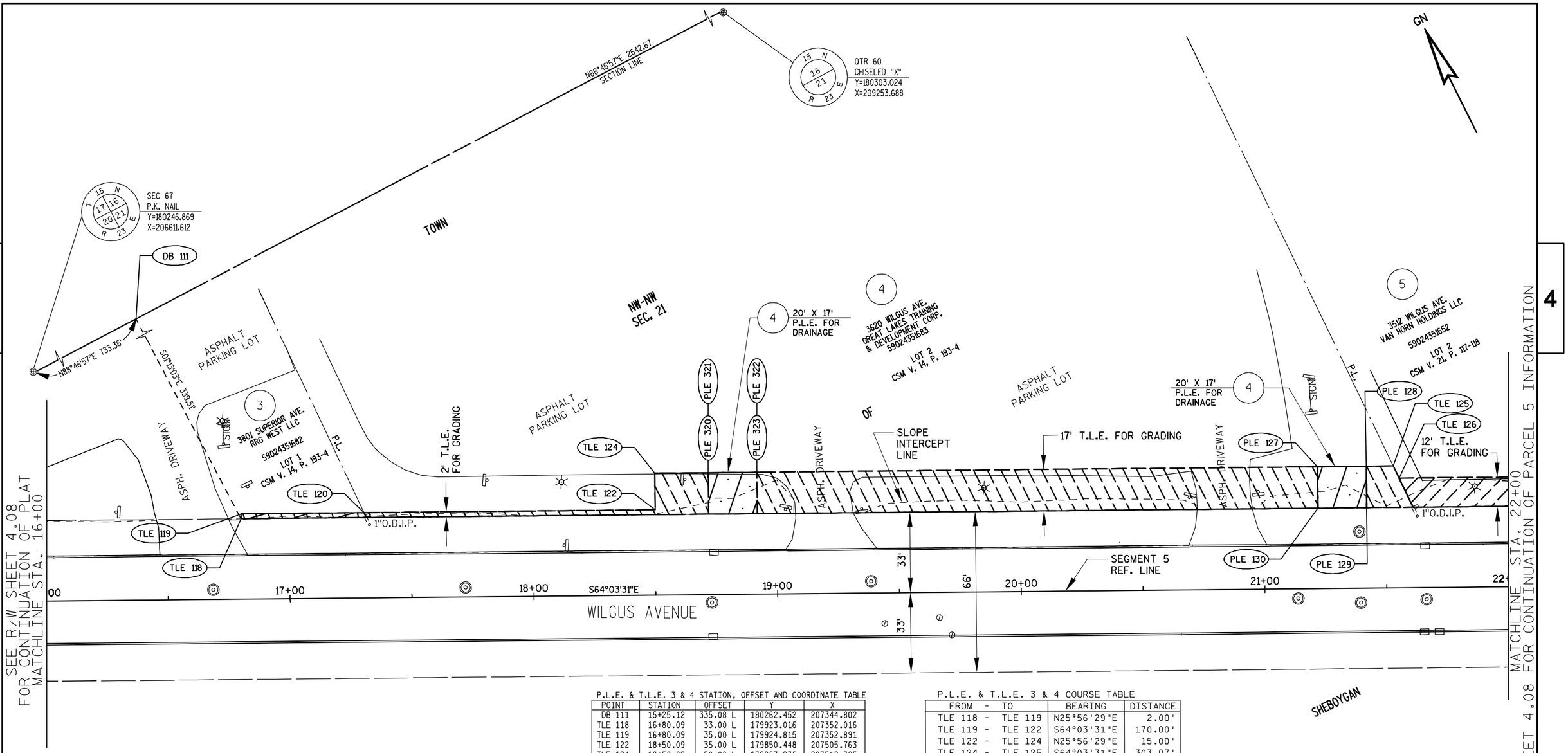

SCHEDULE OF LANDS AND INTERESTS REQUIRED

PARCEL NUMBER	OWNER (S)	INTEREST REQUIRED	P.L.E. SQ. FT. REQ'D.	T.L.E. SQ. FT. REQ'D.
3	RRG WEST LLC	T.L.E.	———	102
4	GREAT LAKES TRAINING & DEVELOPMENT CORP.	P.L.E. & T.L.E.	680	4,778

OWNERS' NAMES ARE SHOWN FOR REFERENCE PURPOSES ONLY AND ARE SUBJECT TO CHANGE PRIOR TO THE TRANSFER OF LAND INTERESTS TO THE DEPARTMENT.

P.L.E. & T.L.E. 3 & 4 STATION, OFFSET AND COORDINATE TABLE

POINT	STATION	OFFSET	Y	X
DB 111	15+25.12	335.08 L	180262.452	207344.802
TLE 118	16+80.09	33.00 L	179923.016	207352.016
TLE 119	16+80.09	35.00 L	179924.815	207352.891
TLE 122	18+50.09	35.00 L	179850.448	207505.763
TLE 124	18+50.09	50.00 L	179863.936	207512.325
TLE 125	21+53.16	50.00 L	179731.359	207784.856
TLE 126	21+55.51	45.00 L	179725.836	207784.779
PLE 127	21+22.07	50.00 L	179744.960	207756.897
PLE 128	21+42.07	50.00 L	179736.211	207774.882
PLE 129	21+42.07	33.00 L	179720.924	207767.445
PLE 130	21+22.07	33.00 L	179729.673	207749.460
PLE 320	18+72.00	33.00 L	179839.065	207524.590
PLE 321	18+72.00	50.00 L	179854.352	207532.027
PLE 322	18+92.00	50.00 L	179845.603	207550.012
PLE 323	18+92.00	33.00 L	179830.316	207542.575

P.L.E. & T.L.E. 3 & 4 COURSE TABLE

FROM - TO	BEARING	DISTANCE
TLE 118 - TLE 119	N25°56'29"E	2.00'
TLE 119 - TLE 122	S64°03'31"E	170.00'
TLE 122 - TLE 124	N25°56'29"E	15.00'
TLE 124 - TLE 125	S64°03'31"E	303.07'
TLE 125 - TLE 126	S00°47'44"W	5.52'
TLE 126 - TLE 178	S64°03'31"E	233.12'
TLE 124 - PLE 127	S64°03'31"E	271.98'
PLE 127 - PLE 128	S64°03'31"E	20.00'
PLE 128 - PLE 129	S25°56'29"W	17.00'
PLE 129 - PLE 130	N64°03'31"W	20.00'
PLE 130 - PLE 127	N25°56'29"E	17.00'

THE RIGHT-OF-WAY LINE OF WILGUS AVE. IS BASED ON TOWN ROAD RECORDS AND WIS.D.O.T. PROJECT I.D. 4996-01-11.

SEGMENT 5 WILGUS AVE.

REVISION DATE	DATE	SCALE	HWY	STATE R/W PROJECT NUMBER	PLAT SHEET
FEBRUARY 3, 2014	MAY, 2012	0' 10' 20' 40'	SIDEWALK GAP	4996-01-54	4.07
			COUNTY: SHEBOYGAN	CONSTRUCTION PROJECT NUMBER 4996-01-54	PS&E SHEET 58 E

SEE R/W SHEET 4.07 FOR CONTINUATION OF PARCEL 5 INFORMATION
MATCHLINE STA. 22+00

MATCHLINE STA. 28+00
SEE R/W SHEET 4.09 FOR CONTINUATION OF PARCEL 7 INFORMATION

4

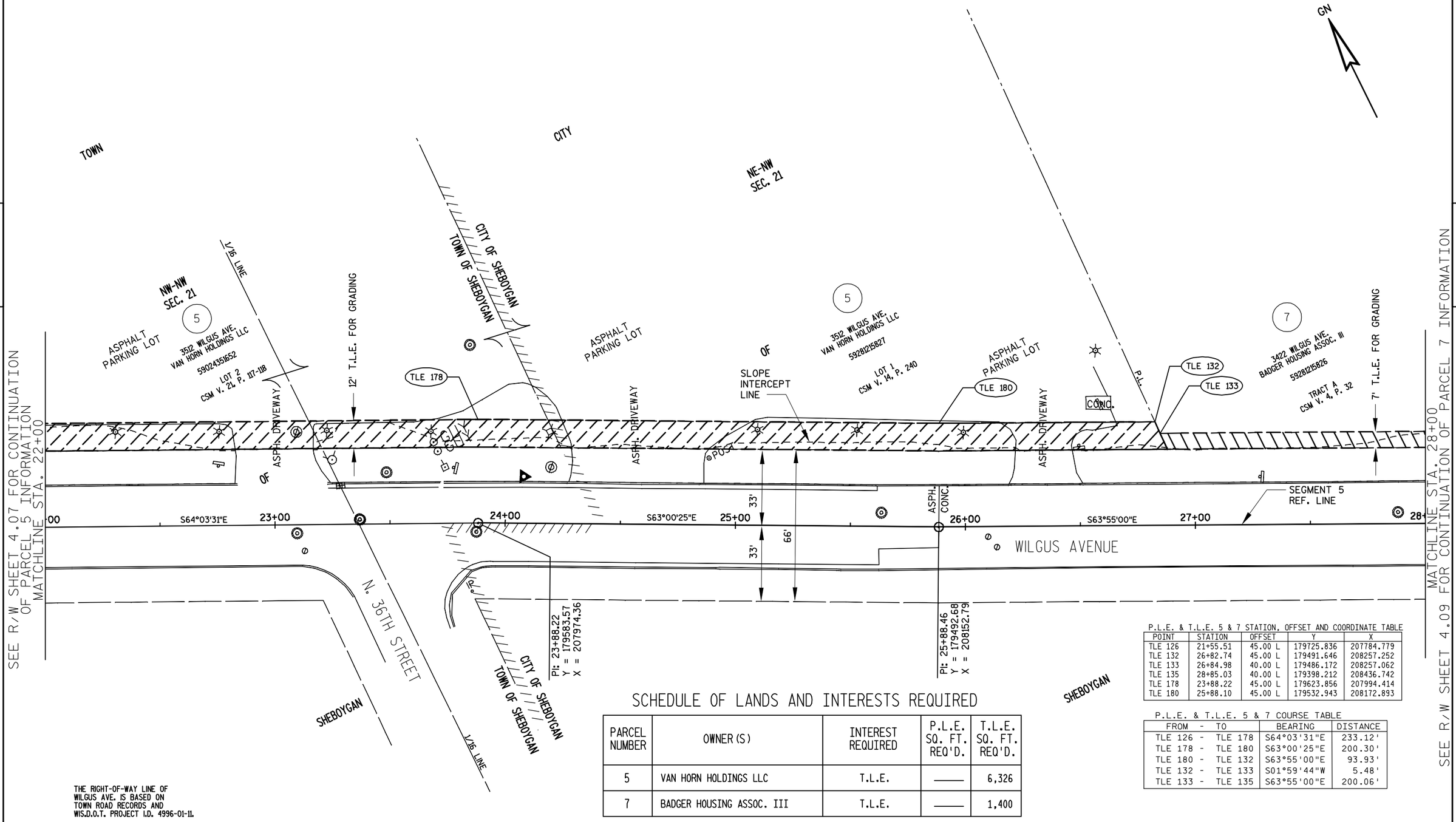

THE RIGHT-OF-WAY LINE OF WILGUS AVE. IS BASED ON TOWN ROAD RECORDS AND WIS.D.O.T. PROJECT I.D. 4996-01-11.

SCHEDULE OF LANDS AND INTERESTS REQUIRED

PARCEL NUMBER	OWNER (S)	INTEREST REQUIRED	P.L.E. SQ. FT. REQ'D.	T.L.E. SQ. FT. REQ'D.
5	VAN HORN HOLDINGS LLC	T.L.E.	———	6,326
7	BADGER HOUSING ASSOC. III	T.L.E.	———	1,400

OWNERS' NAMES ARE SHOWN FOR REFERENCE PURPOSES ONLY AND ARE SUBJECT TO CHANGE PRIOR TO THE TRANSFER OF LAND INTERESTS TO THE DEPARTMENT.

P.L.E. & T.L.E. 5 & 7 STATION, OFFSET AND COORDINATE TABLE

POINT	STATION	OFFSET	Y	X
TLE 126	21+55.51	45.00 L	179725.836	207784.779
TLE 132	26+82.74	45.00 L	179491.646	208257.252
TLE 133	26+84.98	40.00 L	179486.172	208257.062
TLE 135	28+85.03	40.00 L	179398.212	208436.742
TLE 178	23+88.22	45.00 L	179623.856	207994.414
TLE 180	25+88.10	45.00 L	179532.943	208172.893

P.L.E. & T.L.E. 5 & 7 COURSE TABLE

FROM - TO	BEARING	DISTANCE
TLE 126 - TLE 178	S64°03'31"E	233.12'
TLE 178 - TLE 180	S63°00'25"E	200.30'
TLE 180 - TLE 132	S63°55'00"E	93.93'
TLE 132 - TLE 133	S01°59'44"W	5.48'
TLE 133 - TLE 135	S63°55'00"E	200.06'

SEGMENT 5 WILGUS AVE.

REVISION DATE	DATE	SCALE	HWY:	STATE R/W PROJECT NUMBER	PLAT SHEET	
FEBRUARY 3, 2014 N.C.	MAY, 2012	0' 10' 20' 40'	SIDEWALK GAP	4996-01-54	4.08	
			COUNTY: SHEBOYGAN	CONSTRUCTION PROJECT NUMBER 4996-01-54	PS&E SHEET 59	E

T.L.E. 8 & 9 STATION, OFFSET AND COORDINATE TABLE

POINT	STATION	OFFSET	Y	X
TLE 133	26+84.98	40.00 L	179486.172	208257.062
TLE 135	28+85.03	40.00 L	179398.212	208436.742
TLE 136	28+85.93	38.00 L	179396.022	208436.666
TLE 138	31+36.76	38.00 L	179285.735	208661.955
TLE 139	31+38.19	35.00 L	179282.412	208661.921
TLE 141	32+77.37	35.00 L	179221.221	208786.919
TLE 142	32+76.89	36.00 L	179222.328	208786.931
TLE 144	34+75.59	36.00 L	179134.963	208965.396

T.L.E. 8 & 9 COURSE TABLE

FROM - TO	BEARING	DISTANCE
TLE 133 - TLE 135	S63°55'00"E	200.06'
TLE 135 - TLE 136	S01°59'44"W	2.19'
TLE 136 - TLE 138	S63°55'00"E	250.84'
TLE 138 - TLE 139	S00°35'08"W	3.32'
TLE 139 - TLE 141	S63°55'00"E	139.17'
TLE 141 - TLE 142	N00°35'04"E	1.10'
TLE 142 - TLE 144	S63°55'00"E	198.70'

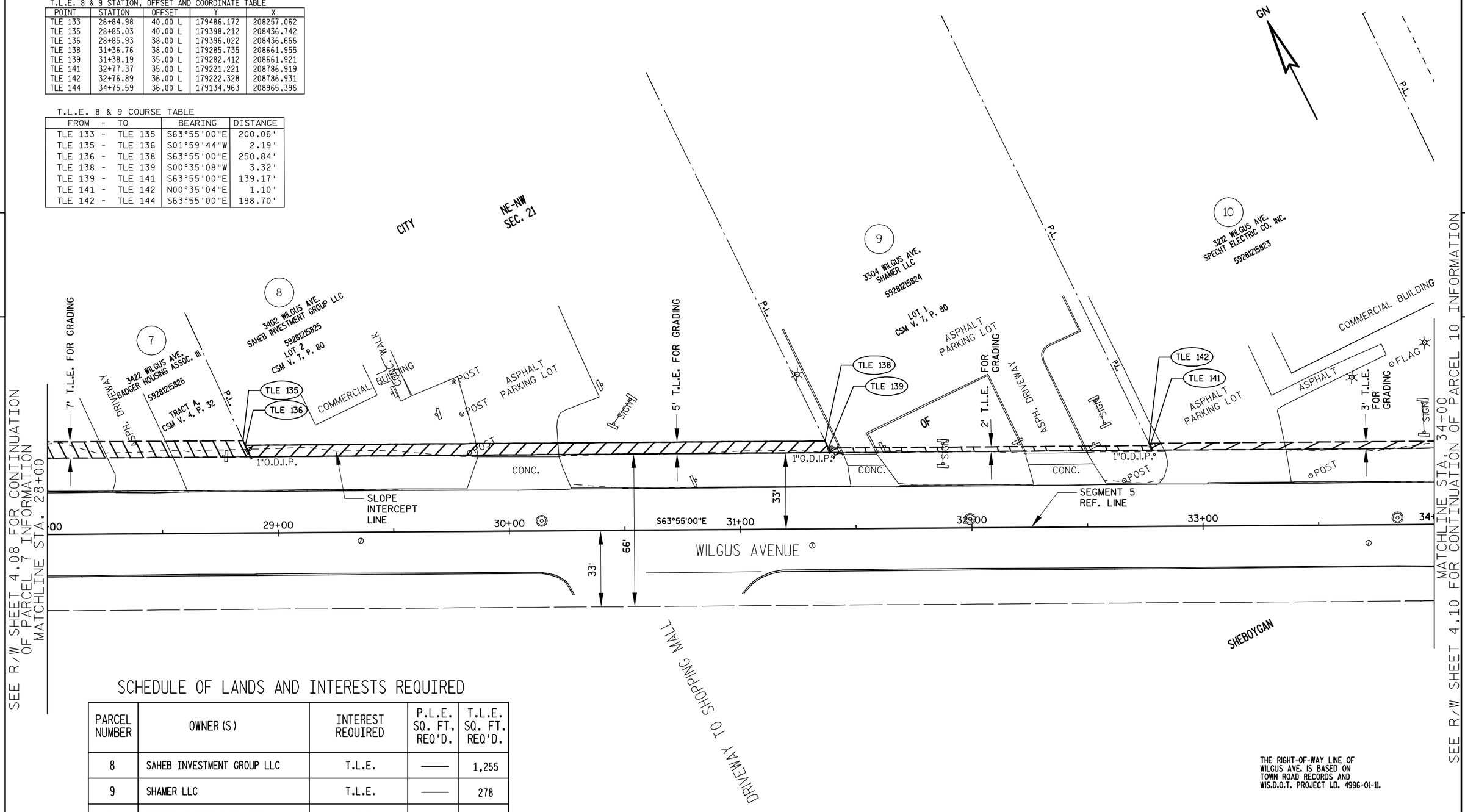

SCHEDULE OF LANDS AND INTERESTS REQUIRED

PARCEL NUMBER	OWNER (S)	INTEREST REQUIRED	P.L.E. SQ. FT. REQ'D.	T.L.E. SQ. FT. REQ'D.
8	SAHEB INVESTMENT GROUP LLC	T.L.E.	——	1,255
9	SHAMER LLC	T.L.E.	——	278
10	SPECHT ELECTRIC CO. INC.	T.L.E.	——	596

OWNERS' NAMES ARE SHOWN FOR REFERENCE PURPOSES ONLY AND ARE SUBJECT TO CHANGE PRIOR TO THE TRANSFER OF LAND INTERESTS TO THE DEPARTMENT.

THE RIGHT-OF-WAY LINE OF WILGUS AVE. IS BASED ON TOWN ROAD RECORDS AND WIS.D.O.T. PROJECT I.D. 4996-01-11.

SEGMENT 5 WILGUS AVE.

REVISION DATE	DATE	SCALE	HWY	STATE R/W PROJECT NUMBER	PLAT SHEET	
FEBRUARY 3, 2014	MAY, 2012	0' 10' 20' 40'	SIDEWALK GAP	4996-01-54	4.09	
			COUNTY: SHEBOYGAN	CONSTRUCTION PROJECT NUMBER 4996-01-54	PS&E SHEET 60	E

SCHEDULE OF LANDS AND INTERESTS REQUIRED

PARCEL NUMBER	OWNER (S)	INTEREST REQUIRED	P.L.E. SQ. FT. REQ'D.	T.L.E. SQ. FT. REQ'D.
12	OSO TAYLOR LLC.	T.L.E.	———	1,374

OWNERS' NAMES ARE SHOWN FOR REFERENCE PURPOSES ONLY AND ARE SUBJECT TO CHANGE PRIOR TO THE TRANSFER OF LAND INTERESTS TO THE DEPARTMENT.

SEE R/W SHEET 4.22 FOR CONTINUATION OF PARCEL 12 INFORMATION

SEE R/W SHEET 4.09 FOR CONTINUATION OF PARCEL 11 INFORMATION MATCHLINE STA. 34+00

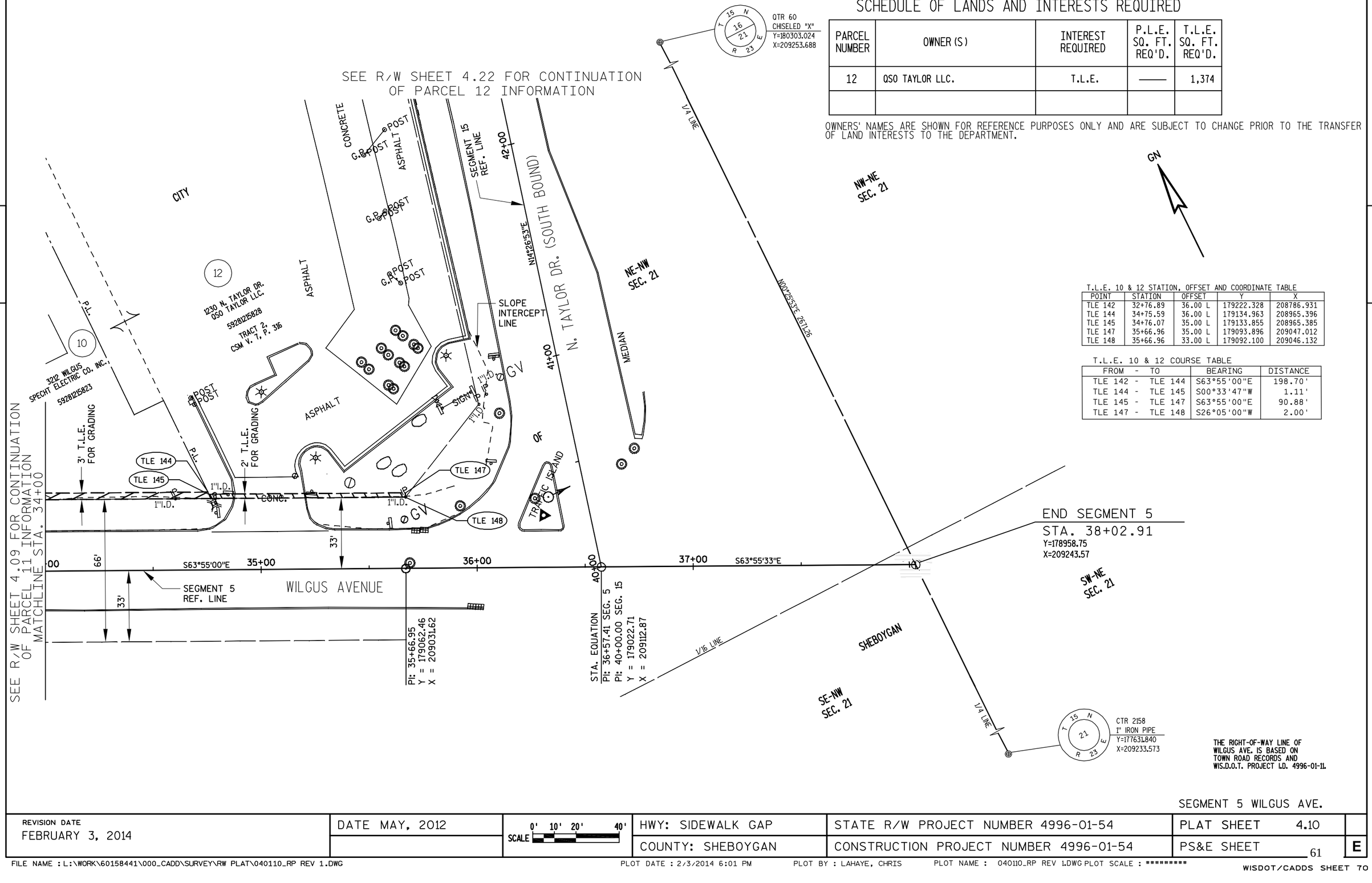

T.L.E. 10 & 12 STATION, OFFSET AND COORDINATE TABLE

POINT	STATION	OFFSET	Y	X
TLE 142	32+76.89	36.00 L	179222.328	208786.931
TLE 144	34+75.59	36.00 L	179134.963	208965.396
TLE 145	34+76.07	35.00 L	179133.855	208965.385
TLE 147	35+66.96	35.00 L	179093.896	209047.012
TLE 148	35+66.96	33.00 L	179092.100	209046.132

T.L.E. 10 & 12 COURSE TABLE

FROM - TO	BEARING	DISTANCE
TLE 142 - TLE 144	S63°55'00"E	198.70'
TLE 144 - TLE 145	S00°33'47"W	1.11'
TLE 145 - TLE 147	S63°55'00"E	90.88'
TLE 147 - TLE 148	S26°05'00"W	2.00'

THE RIGHT-OF-WAY LINE OF WILGUS AVE. IS BASED ON TOWN ROAD RECORDS AND WIS.D.O.T. PROJECT I.D. 4996-01-11.

SEGMENT 5 WILGUS AVE.

REVISION DATE	DATE MAY, 2012	SCALE 0' 10' 20' 40'	HWY: SIDEWALK GAP	STATE R/W PROJECT NUMBER 4996-01-54	PLAT SHEET 4.10	
FEBRUARY 3, 2014			COUNTY: SHEBOYGAN	CONSTRUCTION PROJECT NUMBER 4996-01-54	PS&E SHEET 61	E

SCHEDULE OF LANDS AND INTERESTS REQUIRED

PARCEL NUMBER	OWNER (S)	INTEREST REQUIRED	P.L.E. SQ. FT. REQ'D.	T.L.E. SQ. FT. REQ'D.
13	MMW PROPERTIES LLC	T.L.E.	901	1,780
14	WISCONSIN POWER & LIGHT CO.	T.L.E.	———	881

OWNERS' NAMES ARE SHOWN FOR REFERENCE PURPOSES ONLY AND ARE SUBJECT TO CHANGE PRIOR TO THE TRANSFER OF LAND INTERESTS TO THE DEPARTMENT.

P.L.E. & T.L.E. 13 & 14 STATION, OFFSET AND COORDINATE TABLE

POINT	STATION	OFFSET	Y	X
DB 200	20+34.01	641.74 R	164449.865	218456.610
TLE 201	20+30.10	30.00 L	165121.612	218454.128
TLE 202	20+30.10	34.00 L	165125.612	218454.137
TLE 203	24+75.00	34.00 L	165124.669	218899.031
PLE 204	24+75.00	50.00 L	165140.669	218899.065
PLE 205	25+20.13	50.00 L	165140.574	218944.194
TLE 206	25+20.07	38.00 L	165128.575	218944.107
TLE 207	26+30.24	38.00 L	165128.340	219054.277
PLE 325	25+20.03	30.00 L	165120.574	218944.048
PLE 326	24+75.00	30.00 L	165120.669	218899.023

P.L.E. & T.L.E. 13 & 14 COURSE TABLE

FROM - TO	BEARING	DISTANCE
TLE 201 - TLE 202	N00°07'17"E	4.00'
TLE 202 - TLE 203	S89°52'43"E	444.90'
TLE 203 - PLE 204	N00°07'17"E	16.00'
PLE 204 - PLE 205	S89°52'43"E	45.13'
PLE 205 - TLE 206	S00°25'05"W	12.00'
TLE 206 - TLE 207	S89°52'43"E	110.17'
PLE 326 - PLE 204	N00°07'17"E	20.00'
PLE 204 - PLE 205	S89°52'43"E	45.13'
PLE 205 - PLE 325	S00°25'05"W	12.00'
PLE 203 - PLE 326	S00°07'17"W	4.00'

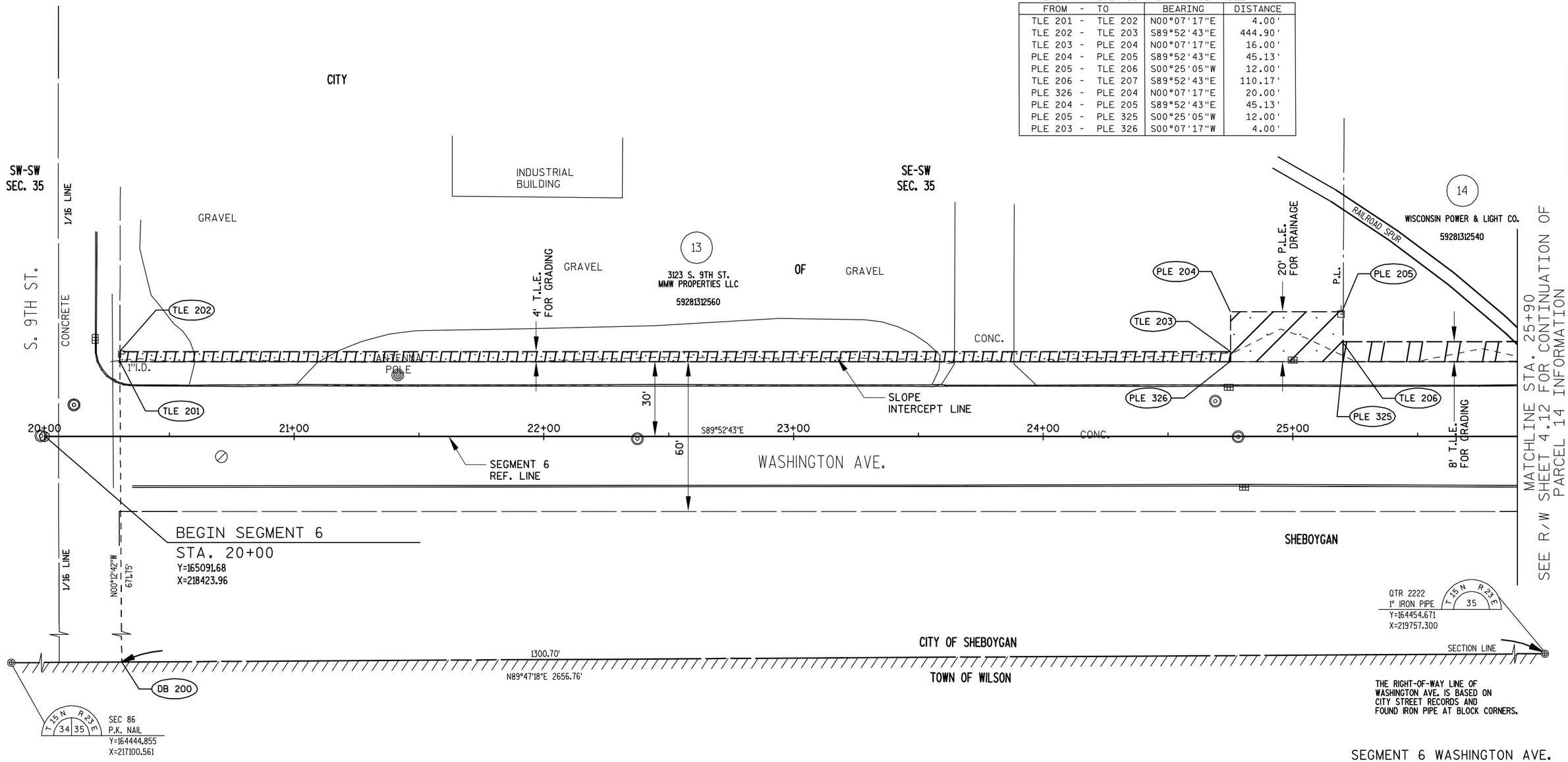

SEGMENT 6 WASHINGTON AVE.

REVISION DATE	DATE	SCALE	HWY	STATE R/W PROJECT NUMBER	PLAT SHEET	
FEBRUARY 3, 2014 N.C.	MAY, 2012	0' 10' 20' 40'	SIDEWALK GAP	4996-01-54	4.11	
			COUNTY: SHEBOYGAN	CONSTRUCTION PROJECT NUMBER 4996-01-54	PS&E SHEET 62	E

SCHEDULE OF LANDS AND INTERESTS REQUIRED

PARCEL NUMBER	OWNER (S)	INTEREST REQUIRED	P.L.E. SQ. FT. REQ'D.	T.L.E. SQ. FT. REQ'D.
15	WATRY INDUSTRIES, INC.	T.L.E.	———	1,340

OWNERS' NAMES ARE SHOWN FOR REFERENCE PURPOSES ONLY AND ARE SUBJECT TO CHANGE PRIOR TO THE TRANSFER OF LAND INTERESTS TO THE DEPARTMENT.

T.L.E. 14 & 15 STATION, OFFSET AND COORDINATE TABLE

POINT	STATION	OFFSET	Y	X
DB 221	30+88.87	635.61 R	164453.763	219511.481
DB 222	28+53.88	636.97 R	164452.895	219276.486
TLE 206	25+20.07	38.00 L	165128.575	218944.107
TLE 207	26+30.24	38.00 L	165128.340	219054.277
TLE 208	26+30.21	32.00 L	165122.340	219054.233
TLE 209	27+00.00	32.00 L	165122.193	219124.027
TLE 210	27+00.00	38.00 L	165128.193	219124.039
TLE 211	27+45.00	38.00 L	165128.097	219169.039
TLE 212	27+45.00	30.00 L	165120.097	219169.022
TLE 213	28+20.00	30.00 L	165119.938	219244.022
TLE 214	28+20.00	42.00 L	165131.938	219244.048
TLE 215	28+50.00	42.00 L	165131.875	219274.048
TLE 216	28+50.00	30.00 L	165119.875	219274.022
TLE 217	30+45.00	30.00 L	165119.461	219469.022
TLE 218	30+45.00	42.00 L	165131.461	219469.047
TLE 219	30+85.00	42.00 L	165131.377	219509.047
TLE 220	30+85.00	30.00 L	165119.377	219509.022

T.L.E. 14 & 15 COURSE TABLE

FROM - TO	BEARING	DISTANCE
TLE 206 - TLE 207	S89°52'43"E	110.17'
TLE 207 - TLE 208	S00°25'05"W	6.00'
TLE 208 - TLE 209	S89°52'43"E	69.79'
TLE 209 - TLE 210	N00°07'17"E	6.00'
TLE 210 - TLE 211	S89°52'43"E	45.00'
TLE 211 - TLE 212	S00°07'17"W	8.00'
TLE 212 - TLE 213	S89°52'43"E	75.00'
TLE 213 - TLE 214	N00°07'17"E	12.00'
TLE 214 - TLE 215	S89°52'43"E	30.00'
TLE 215 - TLE 216	S00°07'17"W	12.00'
TLE 216 - TLE 217	S89°52'43"E	195.00'
TLE 217 - TLE 218	N00°07'17"E	12.00'
TLE 218 - TLE 219	S89°52'43"E	40.00'
TLE 219 - TLE 220	S00°07'17"W	12.00'

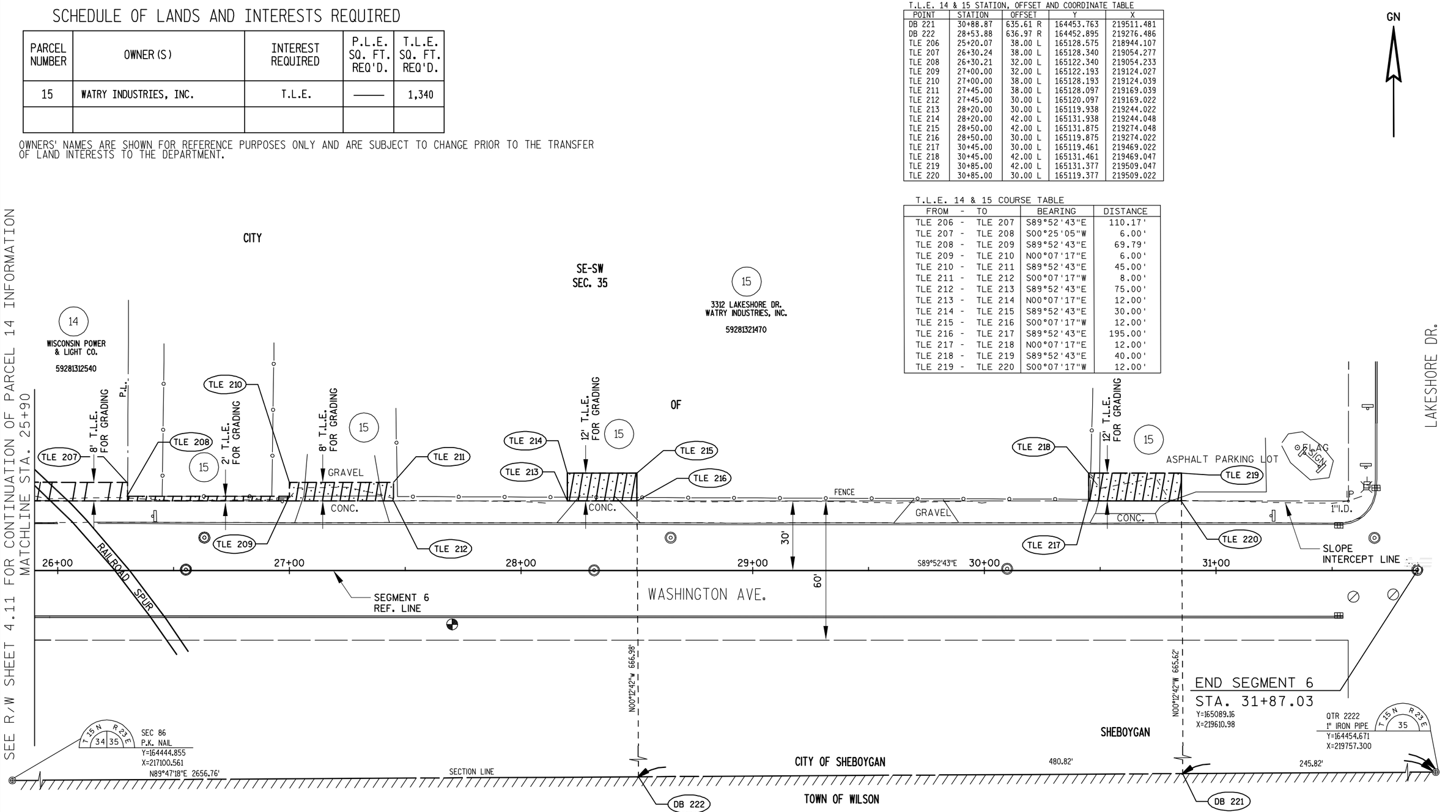

THE RIGHT-OF-WAY LINE OF WASHINGTON AVE. IS BASED ON CITY STREET RECORDS AND FOUND IRON PIPE AT BLOCK CORNERS.

SEGMENT 6 WASHINGTON AVENUE

REVISION DATE	DATE	SCALE	HWY:	STATE R/W PROJECT NUMBER	PLAT SHEET	
FEBRUARY 3, 2014 N.C.	MAY, 2012	0' 10' 20' 40'	SIDEWALK GAP	4996-01-54	4.12	
			COUNTY: SHEBOYGAN	CONSTRUCTION PROJECT NUMBER 4996-01-54	PS&E SHEET 63	E

FILE NAME : L:\WORK\60158441\000_CADD\SURVEY\RW PLAT\040112_RP REV 1.DWG PLOT DATE : 2/3/2014 5:04 PM PLOT BY : LAHAYE, CHRIS PLOT NAME : 040112_RP REV 1.DWG PLOT SCALE : ********

WISDOT/CADDS SHEET 70

SCHEDULE OF LANDS AND INTERESTS REQUIRED

PARCEL NUMBER	OWNER(S)	INTEREST REQUIRED	P.L.E. SQ. FT. REQ'D.	T.L.E. SQ. FT. REQ'D.
17	INREIT BL SHEBOYGAN LLC	T.L.E.	———	7,890

OWNERS' NAMES ARE SHOWN FOR REFERENCE PURPOSES ONLY AND ARE SUBJECT TO CHANGE PRIOR TO THE TRANSFER OF LAND INTERESTS TO THE DEPARTMENT.

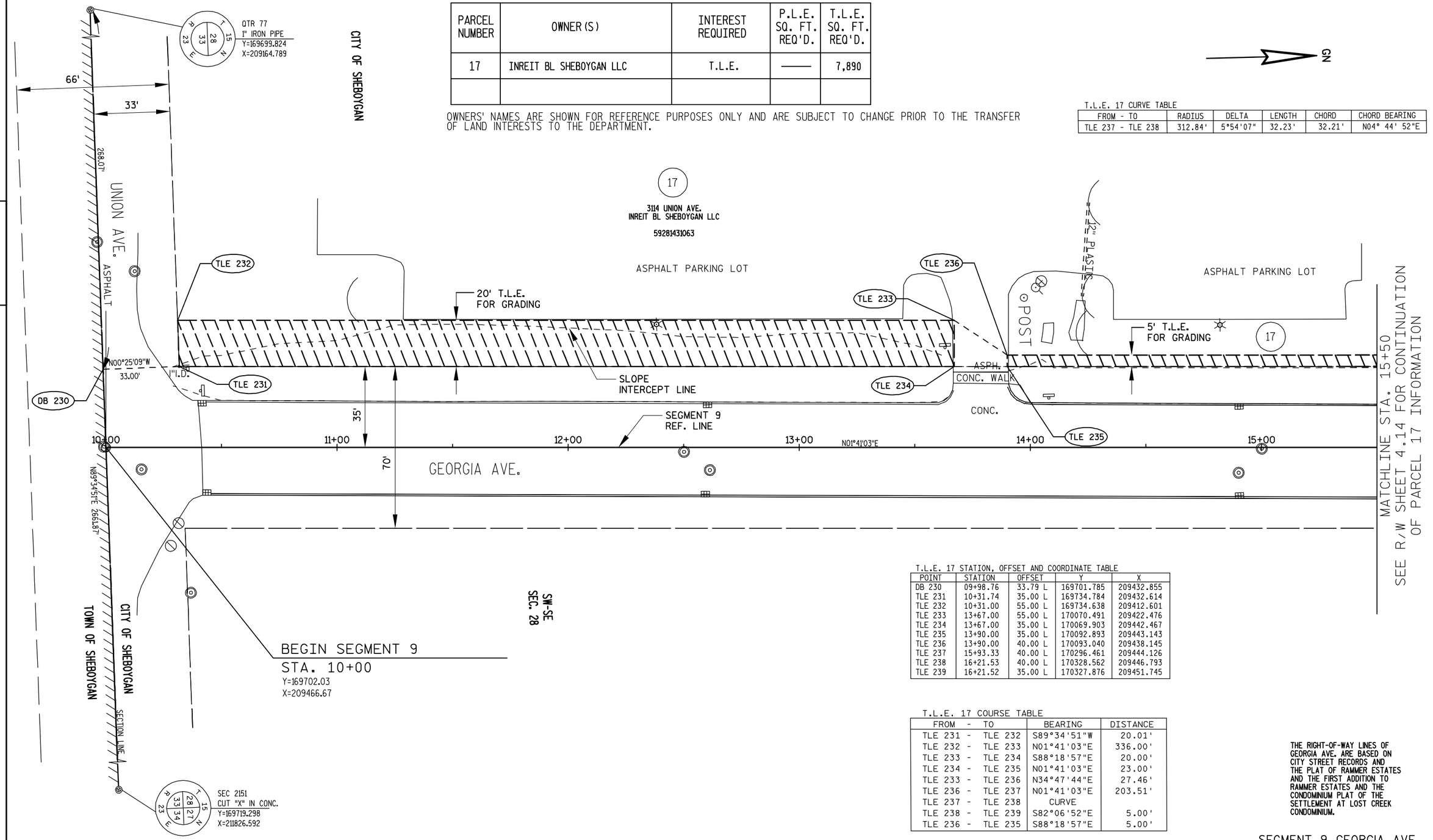

T.L.E. 17 CURVE TABLE

FROM - TO	RADIUS	DELTA	LENGTH	CHORD	CHORD BEARING
TLE 237 - TLE 238	312.84'	5°54'07"	32.23'	32.21'	N04° 44' 52"E

T.L.E. 17 STATION, OFFSET AND COORDINATE TABLE

POINT	STATION	OFFSET	Y	X
DB 230	09+98.76	33.79 L	169701.785	209432.855
TLE 231	10+31.74	35.00 L	169734.784	209432.614
TLE 232	10+31.00	55.00 L	169734.638	209412.601
TLE 233	13+67.00	55.00 L	170070.491	209422.476
TLE 234	13+67.00	35.00 L	170069.903	209442.467
TLE 235	13+90.00	35.00 L	170092.893	209443.143
TLE 236	13+90.00	40.00 L	170093.040	209438.145
TLE 237	15+93.33	40.00 L	170296.461	209444.126
TLE 238	16+21.53	40.00 L	170328.562	209446.793
TLE 239	16+21.52	35.00 L	170327.876	209451.745

T.L.E. 17 COURSE TABLE

FROM - TO	BEARING	DISTANCE
TLE 231 - TLE 232	S89°34'51"W	20.01'
TLE 232 - TLE 233	N01°41'03"E	336.00'
TLE 233 - TLE 234	S88°18'57"E	20.00'
TLE 234 - TLE 235	N01°41'03"E	23.00'
TLE 233 - TLE 236	N34°47'44"E	27.46'
TLE 236 - TLE 237	N01°41'03"E	203.51'
TLE 237 - TLE 238	CURVE	
TLE 238 - TLE 239	S82°06'52"E	5.00'
TLE 236 - TLE 235	S88°18'57"E	5.00'

THE RIGHT-OF-WAY LINES OF GEORGIA AVE. ARE BASED ON CITY STREET RECORDS AND THE PLAT OF RAMMER ESTATES AND THE FIRST ADDITION TO RAMMER ESTATES AND THE CONDOMINIUM PLAT OF THE SETTLEMENT AT LOST CREEK CONDOMINIUM.

SEGMENT 9 GEORGIA AVE.

REVISION DATE FEBRUARY 3, 2014 N.C.	DATE MAY, 2012	SCALE 0' 10' 20' 40'	HWY: SIDEWALK GAP	STATE R/W PROJECT NUMBER 4996-01-54	PLAT SHEET 4.13
			COUNTY: SHEBOYGAN	CONSTRUCTION PROJECT NUMBER 4996-01-54	PS&E SHEET 64 E

4

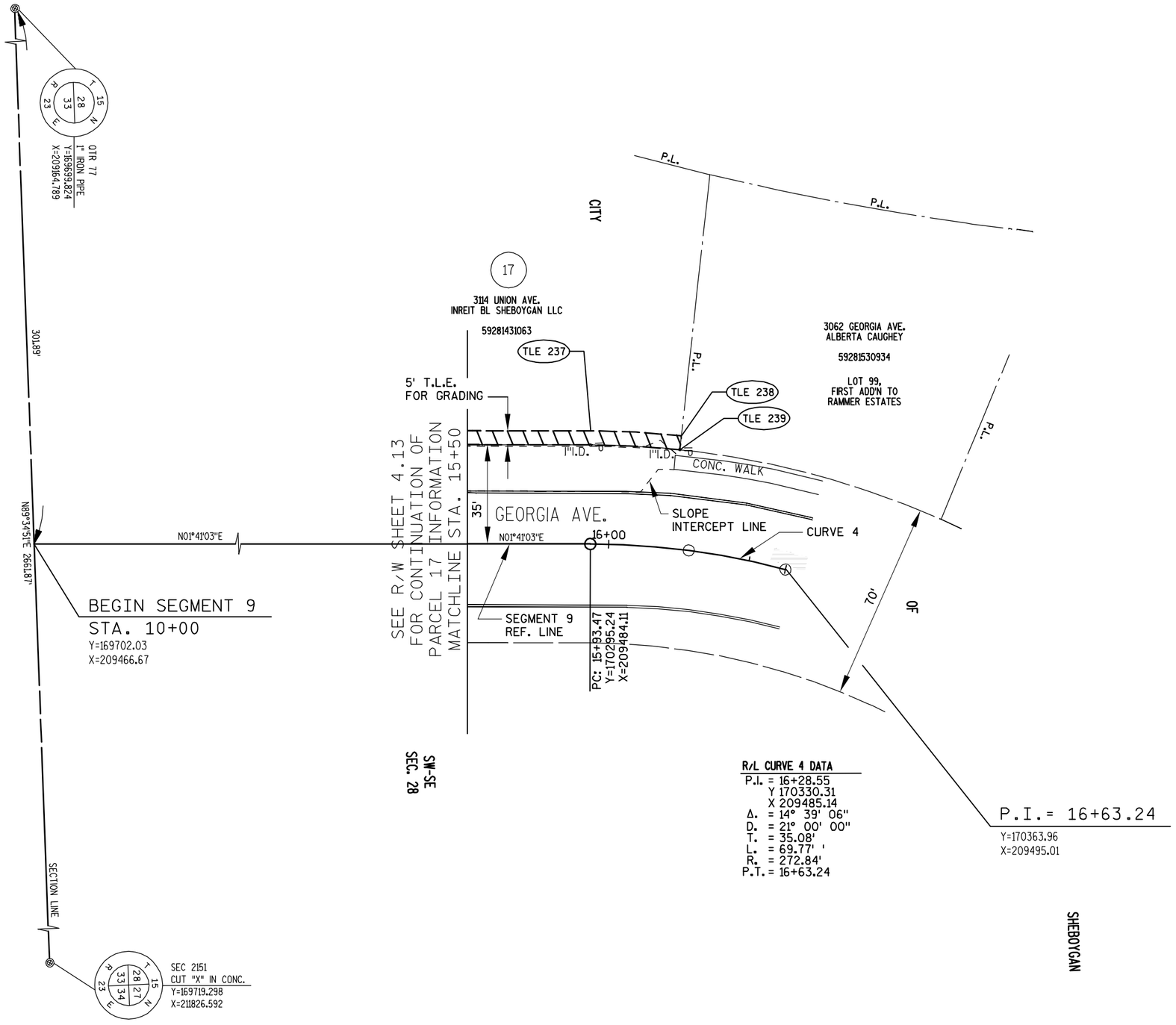

SEGMENT 9 GEORGIA AVE.

REVISION DATE FEBRUARY 3, 2014 N.C.	DATE MAY, 2012	SCALE 0' 10' 20' 40'	HWY: SIDEWALK GAP	STATE R/W PROJECT NUMBER 4996-01-54	PLAT SHEET 4.14	
			COUNTY: SHEBOYGAN	CONSTRUCTION PROJECT NUMBER 4996-01-54	PS&E SHEET 65	E

SCHEDULE OF LANDS AND INTERESTS REQUIRED

PARCEL NUMBER	OWNER (S)	INTEREST REQUIRED	P.L.E. SQ. FT. REQ'D.	T.L.E. SQ. FT. REQ'D.
18	BOARD OF WATER COMMISSIONERS	T.L.E.	———	250

OWNERS' NAMES ARE SHOWN FOR REFERENCE PURPOSES ONLY AND ARE SUBJECT TO CHANGE PRIOR TO THE TRANSFER OF LAND INTERESTS TO THE DEPARTMENT.

T.L.E. 18 & 19 STATION, OFFSET AND COORDINATE TABLE

POINT	STATION	OFFSET	Y	X
DB 241	NA	NA	169706.481	210074.682
TLE 242	21+63.26	33.00 R	170877.912	210066.112
TLE 243	21+63.17	34.00 R	170877.099	210066.702
TLE 244	24+17.63	33.00 R	171031.375	210263.750
TLE 245	24+17.65	34.00 R	171030.565	210264.338
TLE 246	24+17.68	35.00 R	171029.756	210264.926
TLE 247	24+17.82	40.00 R	171025.708	210267.864
TLE 248	26+74.89	40.00 R	171155.188	210484.127

T.L.E. 18 & 19 COURSE TABLE

FROM - TO	BEARING	DISTANCE
TLE 242 - TLE 243	S35°59'29"E	1.00'
TLE 243 - TLE 245	CURVE	
TLE 244 - TLE 245	S35°58'18"E	1.00'
TLE 245 - TLE 246	S35°58'18"E	1.00'
TLE 246 - TLE 247	S35°58'18"E	5.00'
TLE 247 - TLE 248	CURVE	

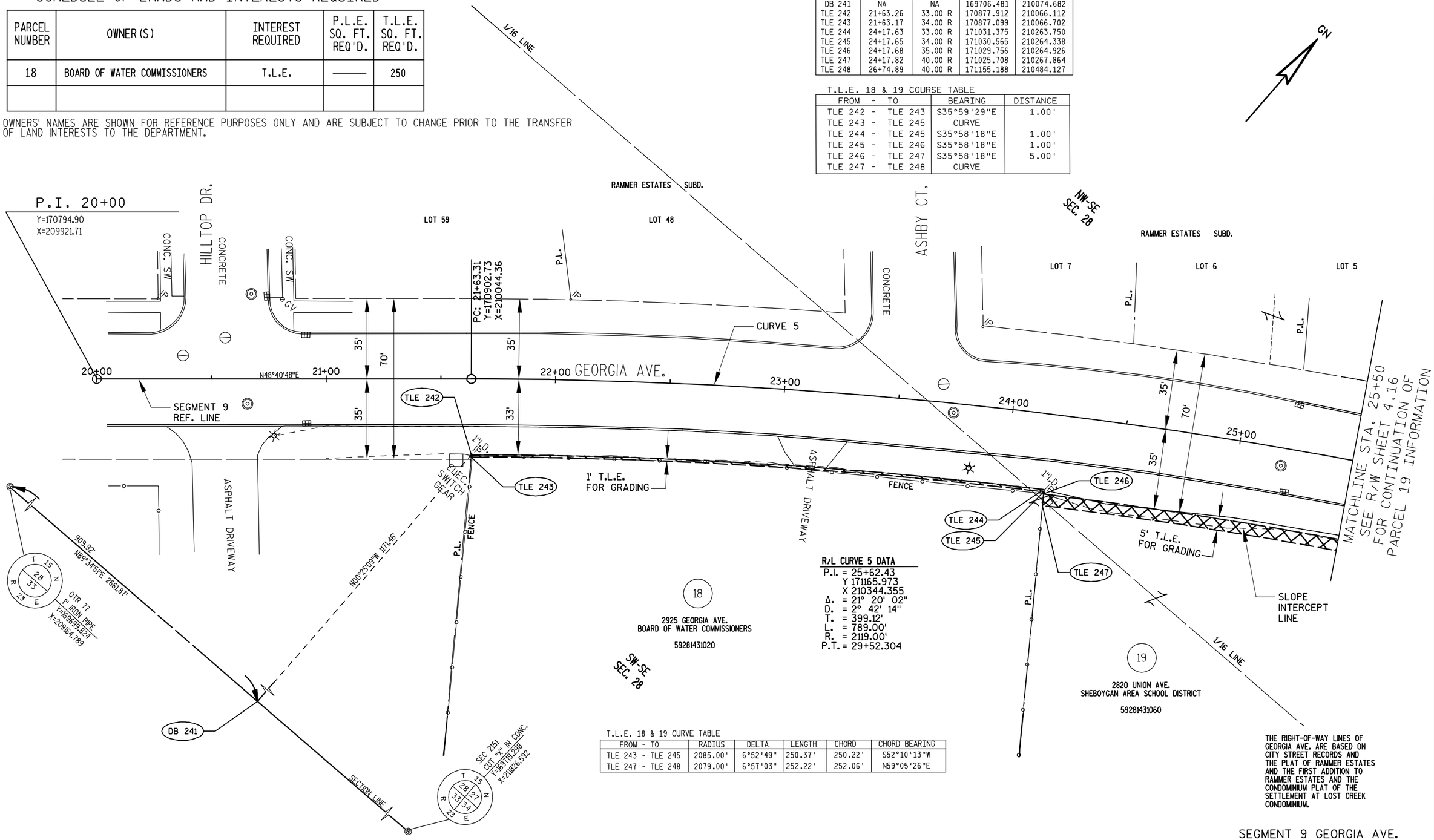

R/L CURVE 5 DATA
P.I. = 25+62.43
Y 171165.973
X 210344.355
Δ. = 21° 20' 02"
D. = 2° 42' 14"
T. = 399.12'
L. = 789.00'
R. = 2119.00'
P.T. = 29+52.304

18
2925 GEORGIA AVE.
BOARD OF WATER COMMISSIONERS
59281431020

19
2820 UNION AVE.
SHEBOYGAN AREA SCHOOL DISTRICT
59281431060

SW-SE SEC. 28

T.L.E. 18 & 19 CURVE TABLE

FROM - TO	RADIUS	DELTA	LENGTH	CHORD	CHORD BEARING
TLE 243 - TLE 245	2085.00'	6°52'49"	250.37'	250.22'	S52°10'13"W
TLE 247 - TLE 248	2079.00'	6°57'03"	252.22'	252.06'	N59°05'26"E

THE RIGHT-OF-WAY LINES OF GEORGIA AVE. ARE BASED ON CITY STREET RECORDS AND THE PLAT OF RAMMER ESTATES AND THE FIRST ADDITION TO RAMMER ESTATES AND THE CONDOMINIUM PLAT OF THE SETTLEMENT AT LOST CREEK CONDOMINIUM.

SEGMENT 9 GEORGIA AVE.

REVISION DATE	DATE MAY, 2012	SCALE 0' 10' 20' 40'	HWY: SIDEWALK GAP	STATE R/W PROJECT NUMBER 4996-01-54	PLAT SHEET 4.15	
FEBRUARY 3, 2014 N.C.			COUNTY: SHEBOYGAN	CONSTRUCTION PROJECT NUMBER 4996-01-54	PS&E SHEET 66	E

T.L.E. 19 STATION, OFFSET AND COORDINATE TABLE

POINT	STATION	OFFSET	Y	X
DB 320	38+40.68	525.42 R	171240.235	211826.404
TLE 248	26+74.89	40.00 R	171155.188	210484.127
TLE 249	26+74.89	52.00 R	171144.536	210489.653
TLE 250	29+49.77	52.00 R	171252.312	210734.965
TLE 251	29+49.76	64.99 R	171240.101	210739.407
TLE 252	29+51.78	65.00 R	171240.764	210741.242
TLE 253	32+49.31	65.00 R	171338.939	211021.357

T.L.E. 19 CURVE TABLE

FROM - TO	RADIUS	DELTA	LENGTH	CHORD	CHORD BEARING
TLE 249 - TLE 250	2067.00'	7°25'57"	268.13'	267.94'	N66°16'55"E
TLE 251 - TLE 252	2054.00'	0°04'10"	1.95'	1.95'	N70°08'26"E

T.L.E. 19 COURSE TABLE

FROM - TO	BEARING	DISTANCE
TLE 248 - TLE 249	S27°25'12"E	12.00'
TLE 249 - TLE 250	CURVE	
TLE 250 - TLE 251	S19°59'15"E	13.00'
TLE 251 - TLE 252	CURVE	
TLE 252 - TLE 253	N70°41'07"E	296.82'

SCHEDULE OF LANDS AND INTERESTS REQUIRED

PARCEL NUMBER	OWNER (S)	INTEREST REQUIRED	P.L.E. SQ. FT. REQ'D.	T.L.E. SQ. FT. REQ'D.
19	SHEBOYGAN AREA SCHOOL DISTRICT	T.L.E.	———	19,446

OWNERS' NAMES ARE SHOWN FOR REFERENCE PURPOSES ONLY AND ARE SUBJECT TO CHANGE PRIOR TO THE TRANSFER OF LAND INTERESTS TO THE DEPARTMENT.

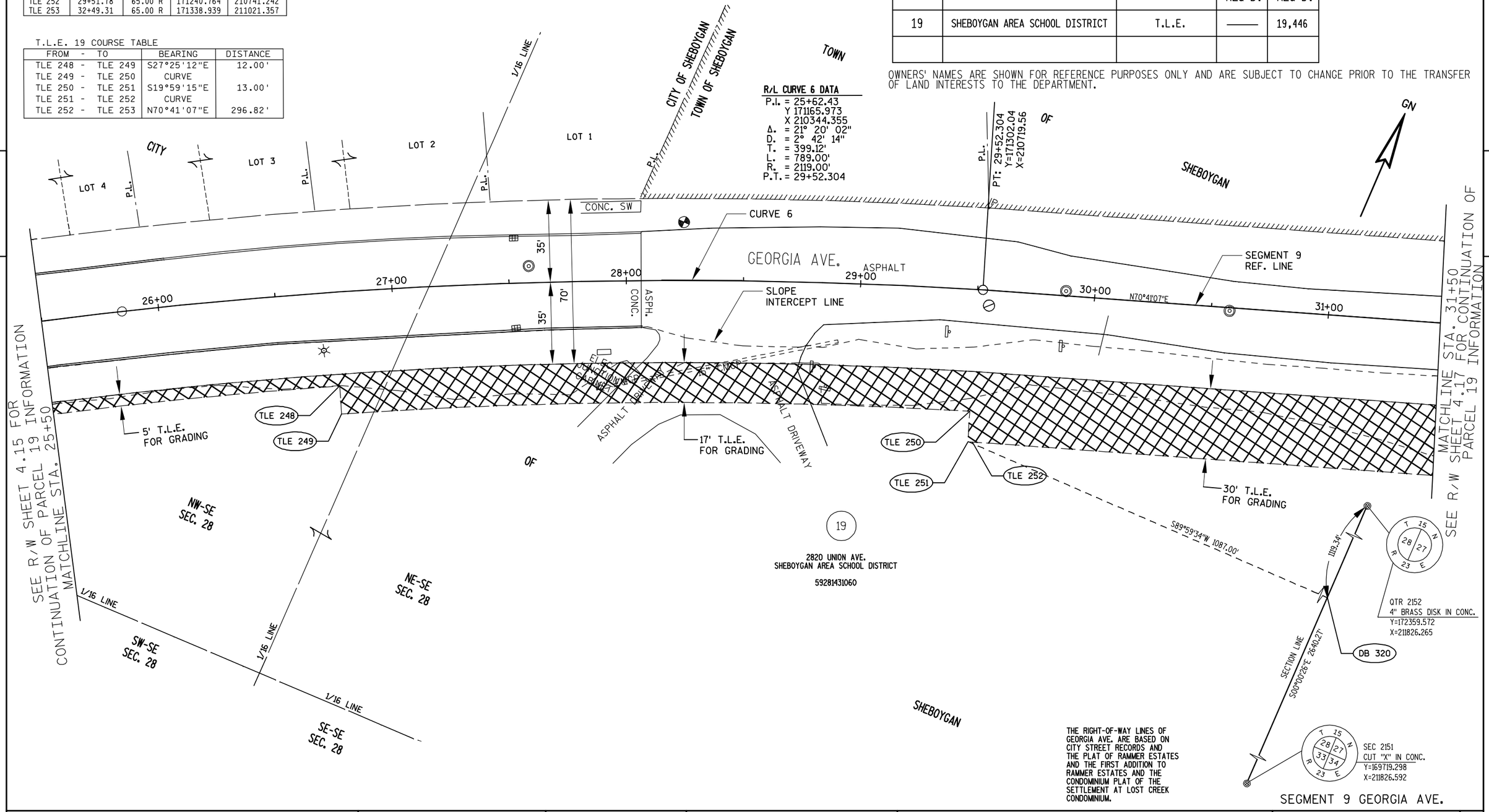

REVISION DATE FEBRUARY 3, 2014 N.C.	DATE MAY, 2012	SCALE 0' 10' 20' 40'	HWY: SIDEWALK GAP	STATE R/W PROJECT NUMBER 4996-01-54	PLAT SHEET 4.16
			COUNTY: SHEBOYGAN	CONSTRUCTION PROJECT NUMBER 4996-01-54	PS&E SHEET 67 E

FILE NAME : L:\WORK\60158441\000_CADD\SURVEY\RW PLAT\040116_RP REV 1.DWG PLOT DATE : 2/3/2014 4:59 PM PLOT BY : LAHAYE, CHRIS PLOT NAME : 040116_RP REV 1.DWG PLOT SCALE : ********* WISDOT/CADDS SHEET 70

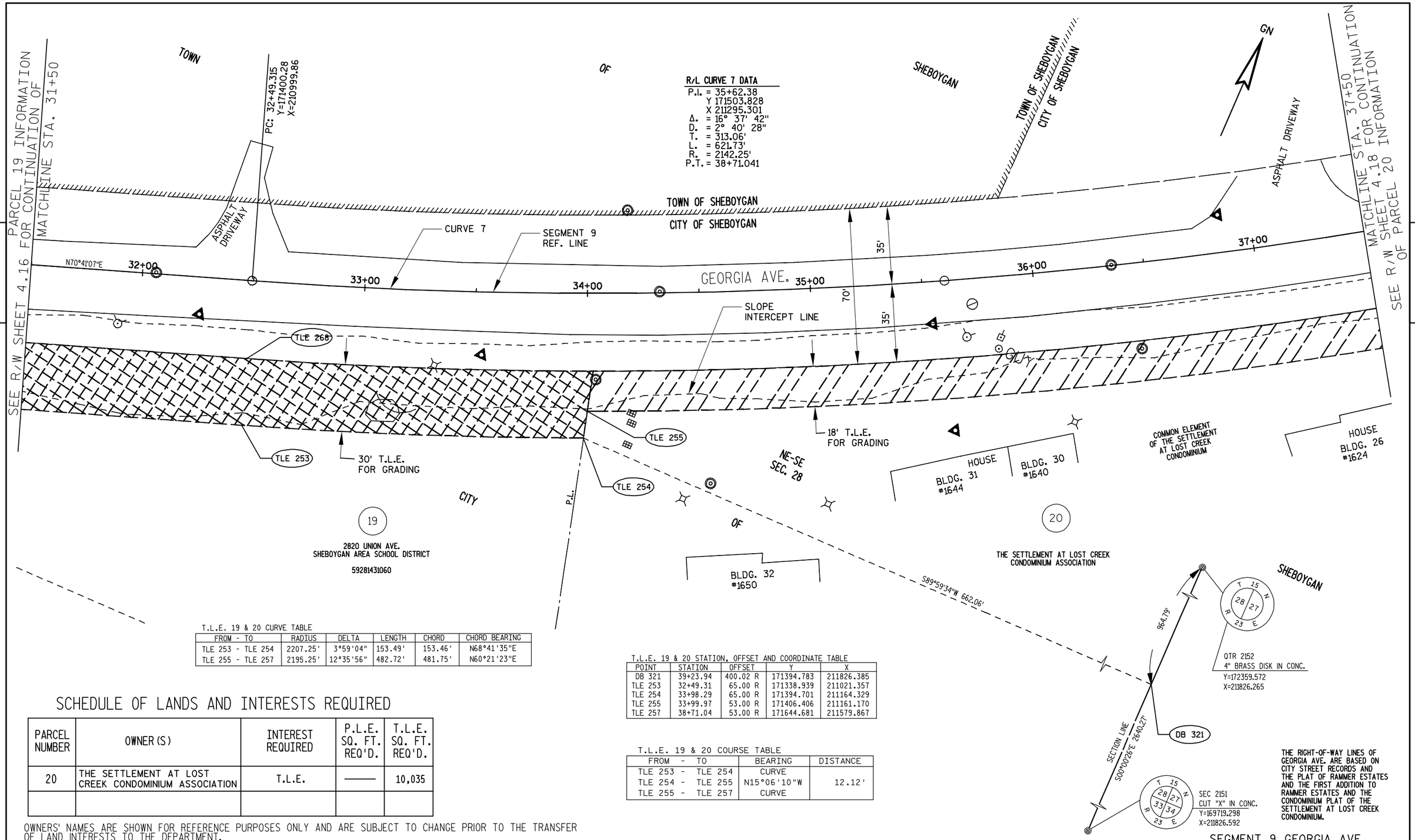

T.L.E. 19 & 20 CURVE TABLE

FROM - TO	RADIUS	DELTA	LENGTH	CHORD	CHORD BEARING
TLE 253 - TLE 254	2207.25'	3°59'04"	153.49'	153.46'	N68°41'35"E
TLE 255 - TLE 257	2195.25'	12°35'56"	482.72'	481.75'	N60°21'23"E

T.L.E. 19 & 20 STATION, OFFSET AND COORDINATE TABLE

POINT	STATION	OFFSET	Y	X
DB 321	39+23.94	400.02 R	171394.783	211826.385
TLE 253	32+49.31	65.00 R	171338.939	211021.357
TLE 254	33+98.29	65.00 R	171394.701	211164.329
TLE 255	33+99.97	53.00 R	171406.406	211161.170
TLE 257	38+71.04	53.00 R	171644.681	211579.867

T.L.E. 19 & 20 COURSE TABLE

FROM - TO	BEARING	DISTANCE
TLE 253 - TLE 254	CURVE	
TLE 254 - TLE 255	N15°06'10"W	12.12'
TLE 255 - TLE 257	CURVE	

SCHEDULE OF LANDS AND INTERESTS REQUIRED

PARCEL NUMBER	OWNER(S)	INTEREST REQUIRED	P.L.E. SQ. FT. REQ'D.	T.L.E. SQ. FT. REQ'D.
20	THE SETTLEMENT AT LOST CREEK CONDOMINIUM ASSOCIATION	T.L.E.	———	10,035

OWNERS' NAMES ARE SHOWN FOR REFERENCE PURPOSES ONLY AND ARE SUBJECT TO CHANGE PRIOR TO THE TRANSFER OF LAND INTERESTS TO THE DEPARTMENT.

REVISION DATE FEBRUARY 3, 2014 N.C.	DATE MAY, 2012	SCALE 0' 10' 20' 40'	HWY: SIDEWALK GAP	STATE R/W PROJECT NUMBER 4996-01-54	PLAT SHEET 4.17
			COUNTY: SHEBOYGAN	CONSTRUCTION PROJECT NUMBER 4996-01-54	PS&E SHEET 68 E

FILE NAME : L:\WORK\60158441\000_CADD\SURVEY\RW PLAT\040117_RP REV 1.DWG PLOT DATE : 2/3/2014 4:57 PM PLOT BY : LAHAYE, CHRIS PLOT NAME : 040117_RP REV 1.DWG PLOT SCALE : *********

4

SEE R/W SHEET 4.17 FOR CONTINUATION OF PARCEL 20 INFORMATION
MATCHLINE STA. 37+50

T.L.E. 22 CURVE TABLE

FROM - TO	RADIUS	DELTA	LENGTH	CHORD	CHORD BEARING
TLE 262 - TLE 263	2433.00'	3°06'06"	131.71'	131.69'	N55°36'40"E

R/L CURVE 7 DATA
P.I. = 35+62.38
Y 171503.828
X 211295.301
Δ. = 16° 37' 42"
D. = 2° 40' 28"
T. = 313.06'
L. = 621.73'
R. = 2142.25'
P.T. = 38+71.041

R/L CURVE 8 DATA
P.I. = 41+22.20
Y 171835.017
X 211752.098
Δ. = 3° 47' 51"
D. = 2° 18' 37"
T. = 82.21'
L. = 164.37'
R. = 2480.00'
P.T. = 42+04.36

CITY

PT: 38+71.04
Y=171687.59
X=211548.76

PC: 40+39.99
Y=171786.76
X=211685.54

P.L.

CURVE 7

CURVE 8

SEGMENT 9
REF. LINE

ASPHALT DRIVEWAY

ASPHALT DRIVEWAY

35'

70'

35'

38+00

39+00

40+00

41+00

42+00

N54°03'25"E

GEORGIA AVE.

TLE 259

TLE 258

TLE 257

TLE 266

TLE 265

TLE 264

TLE 262

TLE 261

TLE 263

DB 269

SLOPE
INTERCEPT LINE

ASPHALT 85'

1"I.D.I.P.

2"I.D.I.P.

12' T.L.E.
FOR GRADING

18' T.L.E.
FOR GRADING

CONCRETE

CONCRETE

BLDG. 25
#1602

HOUSE
BLDG. 1
#1531

HOUSE

VARIES

S89°59'34"W 4.42'

COMMON ELEMENT OF THE
SETTLEMENT AT LOST CREEK
CONDOMINIUM

COMMON ELEMENT OF THE
SETTLEMENT AT LOST CREEK
CONDOMINIUM

20

THE SETTLEMENT AT LOST CREEK
CONDOMINIUM ASSOCIATION

22

THE SETTLEMENT AT LOST CREEK
CONDOMINIUM ASSOCIATION

NE-SE
SEC. 28

BLACK WALNUT TRAIL

P.L.

S00°00'26"W SUBD. LINE

S00°00'26"E 2640.27

SECTION LINE

2609 GEORGIA AVE.
LOT 2 BLOCK 8
MADISON HEIGHTS
SUBD. NO. 3

NW-SW
SEC. 27

SHEBOYGAN

SECTION LINE

536.40'

TOWN OF SHEBOYGAN
CITY OF SHEBOYGAN

END SEGMENT 9
STA. 42+04.73
Y=171878.76
X=211821.71

QTR 2152
4" BRASS DISK IN CONC.
Y=172359.572
X=211826.265

T 15 N
R 23 E
28 27

SEC 2151
CUT "X" IN CONC.
Y=169719.298
X=211826.592

T 15 N
R 23 E
28 27 33 34

GN

T.L.E. 20 & 22 STATION, OFFSET AND COORDINATE TABLE

POINT	STATION	OFFSET	Y	X
DB 269	41+78.17	49.39 R	171823.173	211826.331
TLE 257	38+71.04	53.00 R	171644.681	211579.867
TLE 258	39+49.07	53.00 R	171690.484	211643.042
TLE 259	39+49.10	35.00 R	171705.076	211632.502
TLE 261	40+29.20	47.00 R	171742.376	211704.392
TLE 262	40+40.13	47.00 R	171748.791	211713.240
TLE 263	41+74.39	47.00 R	171823.172	211821.916
TLE 264	41+82.24	35.00 R	171837.441	211821.918
TLE 266	40+34.16	35.00 R	171755.002	211701.363

T.L.E. 20 & 22 COURSE TABLE

FROM - TO	BEARING	DISTANCE
TLE 257 - TLE 258	N54°03'25"E	78.03'
TLE 258 - TLE 259	N35°50'34"W	18.00'
TLE 266 - TLE 261	S13°29'08"E	12.99'
TLE 261 - TLE 262	N54°03'25"E	10.93'
TLE 262 - TLE 263	CURVE	
TLE 263 - TLE 264	N00°00'26"E	14.27'

SCHEDULE OF LANDS AND INTERESTS REQUIRED

PARCEL NUMBER	OWNER(S)	INTEREST REQUIRED	P.L.E. SQ. FT. REQ'D.	T.L.E. SQ. FT. REQ'D.
22	THE SETTLEMENT AT LOST CREEK CONDOMINIUM ASSOC.	T.L.E.	———	1,732

OWNERS' NAMES ARE SHOWN FOR REFERENCE PURPOSES ONLY AND ARE SUBJECT TO CHANGE PRIOR TO THE TRANSFER OF LAND INTERESTS TO THE DEPARTMENT.

THE RIGHT-OF-WAY LINES OF GEORGIA AVE. ARE BASED ON CITY STREET RECORDS AND THE PLAT OF RAMMER ESTATES AND THE FIRST ADDITION TO RAMMER ESTATES AND THE CONDOMINIUM PLAT OF THE SETTLEMENT AT LOST CREEK CONDOMINIUM.

SEGMENT 9 GEORGIA AVE.

REVISION DATE	DATE	SCALE	HWY	STATE R/W PROJECT NUMBER	PLAT SHEET	
FEBRUARY 3, 2014 N.C.	MAY, 2012	0' 10' 20' 40'	SIDEWALK GAP	4996-01-54	4.18	
			COUNTY: SHEBOYGAN	CONSTRUCTION PROJECT NUMBER 4996-01-54	PS&E SHEET 69	E

SCHEDULE OF LANDS AND INTERESTS REQUIRED

PARCEL NUMBER	OWNER (S)	INTEREST REQUIRED	P.L.E. SQ. FT. REQ'D.	T.L.E. SQ. FT. REQ'D.
23	BANK MUTUAL	T.L.E.	——	537

OWNERS' NAMES ARE SHOWN FOR REFERENCE PURPOSES ONLY AND ARE SUBJECT TO CHANGE PRIOR TO THE TRANSFER OF LAND INTERESTS TO THE DEPARTMENT.

T.L.E. 23 STATION, OFFSET AND COORDINATE TABLE

POINT	STATION	OFFSET	Y	X
DB 300	44+05.56	666.05 R	164436.014	212788.612
TLE 301	45+43.05	32.00 L	165133.806	212927.430
TLE 302	45+43.05	35.00 L	165136.806	212927.435
TLE 303	44+01.48	32.00 L	165134.074	212785.860
TLE 304	44+01.48	30.00 L	165132.074	212785.856
TLE 306	45+94.61	35.00 L	165136.708	212978.987

T.L.E. 23 COURSE TABLE

FROM - TO	BEARING	DISTANCE
TLE 304 - TLE 303	N00°06'30"E	2.00'
TLE 303 - TLE 301	S89°53'30"E	141.57'
TLE 301 - TLE 302	N00°06'30"E	3.00'
TLE 302 - TLE 306	S89°53'30"E	51.55'

GN

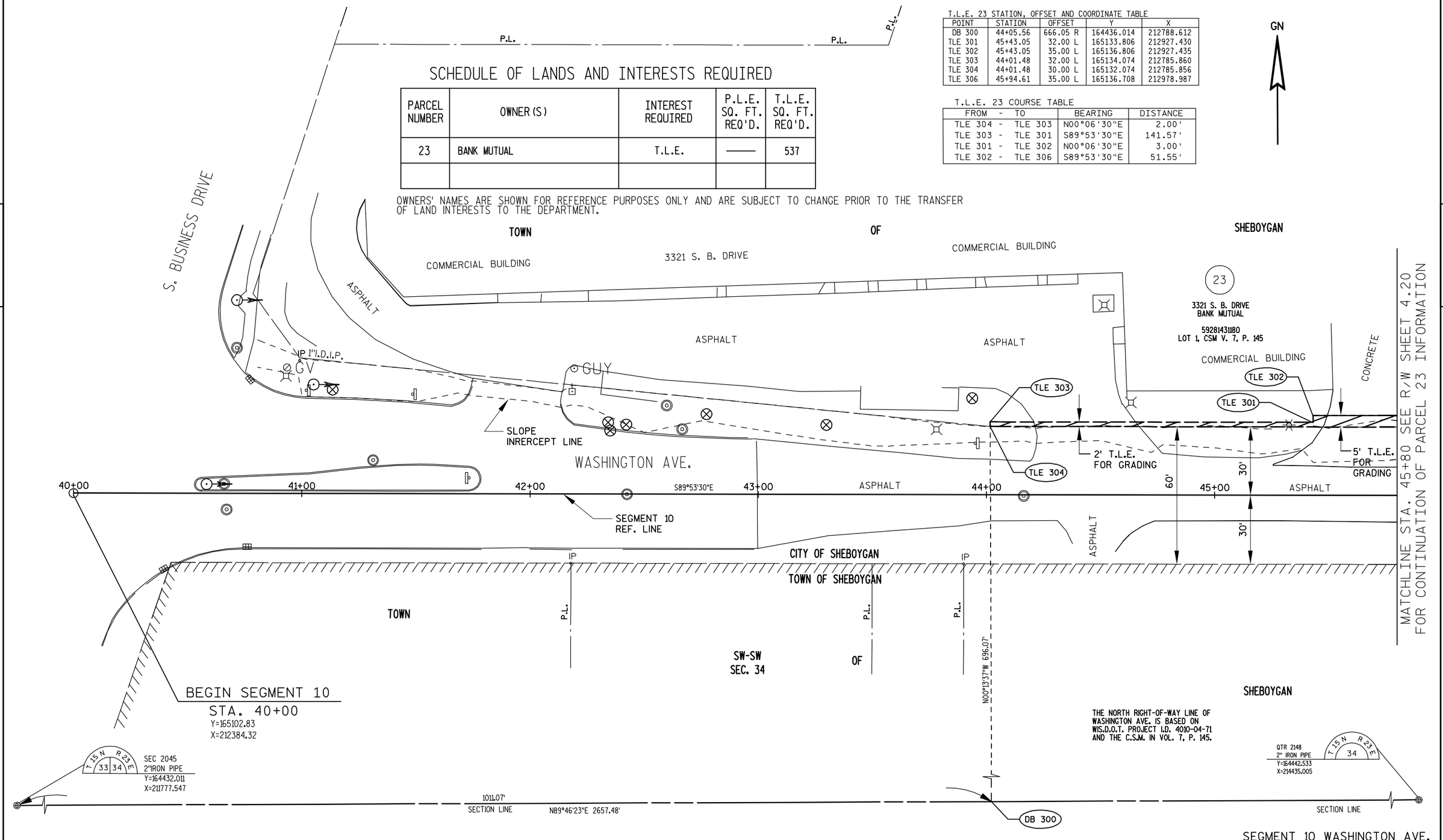

SEGMENT 10 WASHINGTON AVE.

REVISION DATE	DATE	SCALE	HWY	STATE R/W PROJECT NUMBER	PLAT SHEET	
FEBRUARY 3, 2014	MAY, 2012	0' 10' 20' 40'	SIDEWALK GAP	4996-01-54	4.19	
			COUNTY: SHEBOYGAN	CONSTRUCTION PROJECT NUMBER 4996-01-54	PS&E SHEET 70	E

FILE NAME : L:\WORK\60158441\000_CADD\SURVEY\RW PLAT\040119_RP REV 1.DWG PLOT DATE : 2/3/2014 6:00 PM PLOT BY : LAHAYE, CHRIS PLOT NAME : 040119_RP REV 1.DWG PLOT SCALE : -----

WISDOT/CADDS SHEET 70

SCHEDULE OF LANDS AND INTERESTS REQUIRED

PARCEL NUMBER	OWNER (S)	INTEREST REQUIRED	P.L.E. SQ. FT. REQ'D.	T.L.E. SQ. FT. REQ'D.
24	KOREY FAY	T.L.E.	———	447
25	MIDWEST COMMUNICATIONS, INC.	P.L.E._&_T.L.E.	350	3,851

OWNERS' NAMES ARE SHOWN FOR REFERENCE PURPOSES ONLY AND ARE SUBJECT TO CHANGE PRIOR TO THE TRANSFER OF LAND INTERESTS TO THE DEPARTMENT.

T.L.E.& P.L.E. 24,25 & 27 STATION, OFFSET AND COORDINATE TABLE

POINT	STATION	OFFSET	Y	X
DB 322	47+47.11	664.06 R	164437.367	213130.170
TLE 306	45+94.61	35.00 L	165136.708	212978.987
TLE 307	47+43.03	33.00 L	165134.427	213127.410
TLE 308	47+44.96	40.00 L	165141.424	213129.349
PLE 310	48+96.82	30.00 L	165131.136	213281.188
PLE 311	48+96.82	40.00 L	165141.136	213281.207
PLE 312	49+11.82	40.00 L	165141.108	213296.207
PLE 313	49+11.82	30.00 L	165131.108	213296.188
TLE 314	51+63.72	40.00 L	165140.631	213548.109
TLE 315	51+63.65	32.00 L	165132.631	213548.028
TLE 317	52+96.20	32.00 L	165132.381	213680.569
PLE 324	50+90.00	30.00 L	165130.771	213474.369
PLE 325	50+90.00	40.00 L	165140.771	213474.388
PLE 326	51+10.00	40.00 L	165140.733	213494.388
PLE 324	51+10.00	30.00 L	165130.733	213494.369

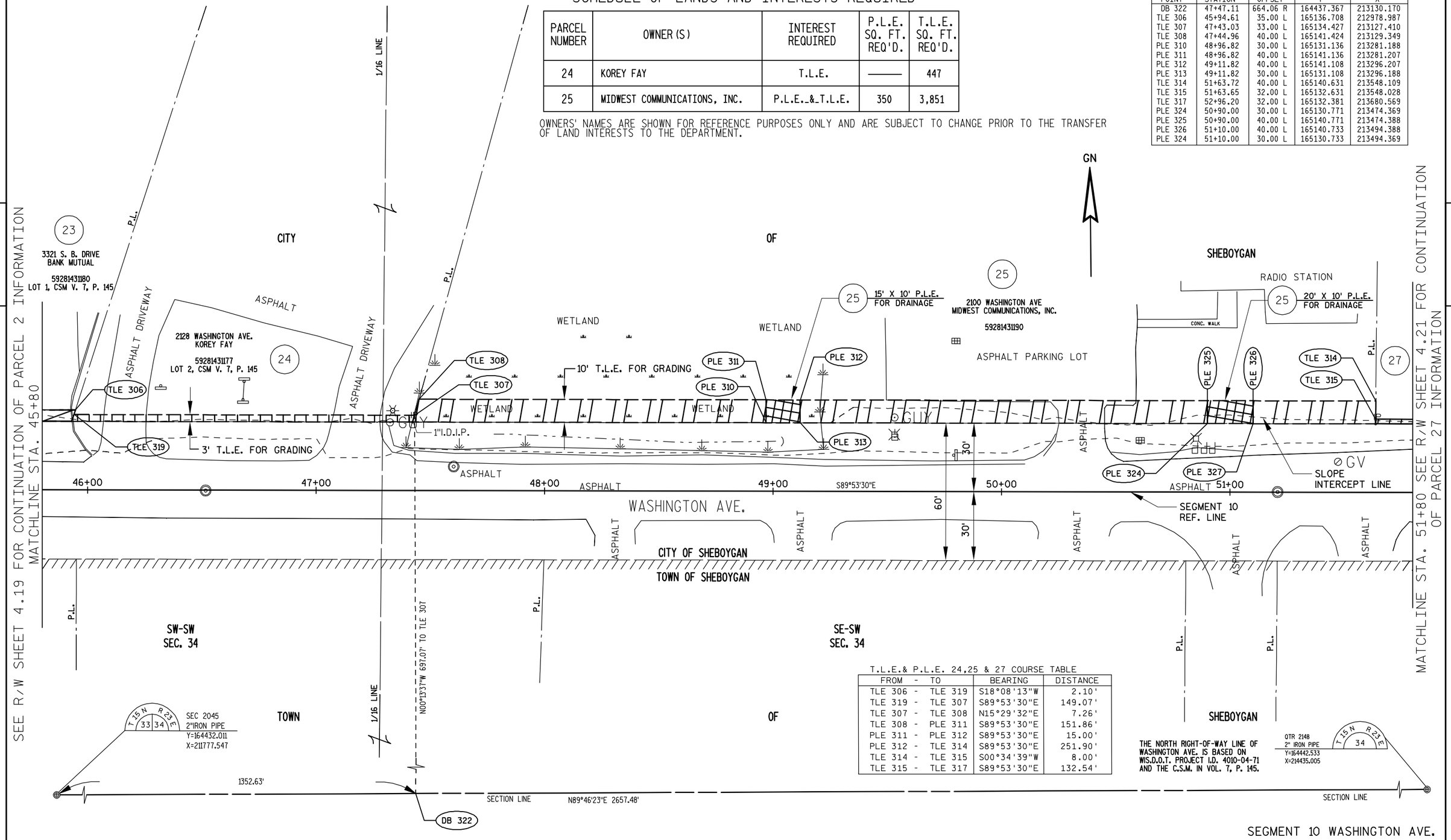

T.L.E.& P.L.E. 24,25 & 27 COURSE TABLE

FROM - TO	BEARING	DISTANCE
TLE 306 - TLE 319	S18°08'13"W	2.10'
TLE 319 - TLE 307	S89°53'30"E	149.07'
TLE 307 - TLE 308	N15°29'32"E	7.26'
TLE 308 - PLE 311	S89°53'30"E	151.86'
PLE 311 - PLE 312	S89°53'30"E	15.00'
PLE 312 - TLE 314	S89°53'30"E	251.90'
TLE 314 - TLE 315	S00°34'39"W	8.00'
TLE 315 - TLE 317	S89°53'30"E	132.54'

SEE R/W SHEET 4.19 FOR CONTINUATION OF PARCEL 2 INFORMATION MATCHLINE STA. 45+80

SEE R/W SHEET 4.21 FOR CONTINUATION OF PARCEL 27 INFORMATION MATCHLINE STA. 51+80

SEGMENT 10 WASHINGTON AVE.

REVISION DATE FEBRUARY 3, 2014	DATE MAY, 2012	SCALE 0' 10' 20' 40'	HWY: SIDEWALK GAP	STATE R/W PROJECT NUMBER 4996-01-54	PLAT SHEET 4.20
			COUNTY: SHEBOYGAN	CONSTRUCTION PROJECT NUMBER 4996-01-54	PS&E SHEET 71 E

SCHEDULE OF LANDS AND INTERESTS REQUIRED

PARCEL NUMBER	OWNER(S)	INTEREST REQUIRED	P.L.E. SQ. FT. REQ'D.	T.L.E. SQ. FT. REQ'D.
27	CASPER REAL ESTATE LLC	T.L.E.	———	265

OWNERS' NAMES ARE SHOWN FOR REFERENCE PURPOSES ONLY AND ARE SUBJECT TO CHANGE PRIOR TO THE TRANSFER OF LAND INTERESTS TO THE DEPARTMENT.

T.L.E. 27 STATION, OFFSET AND COORDINATE TABLE

POINT	STATION	OFFSET	Y	X
DB 323	53+00.22	660.82 R	164439.557	213683.280
TLE 317	52+96.20	32.00 L	165132.381	213680.569
TLE 318	52+96.17	30.00 L	165130.381	213680.545

T.L.E. 27 COURSE TABLE

FROM - TO	BEARING	DISTANCE
TLE 315 - TLE 317	S89°53'30"E	132.54'
TLE 317 - TLE 318	S00°42'48"W	2.00'

GN

4

4

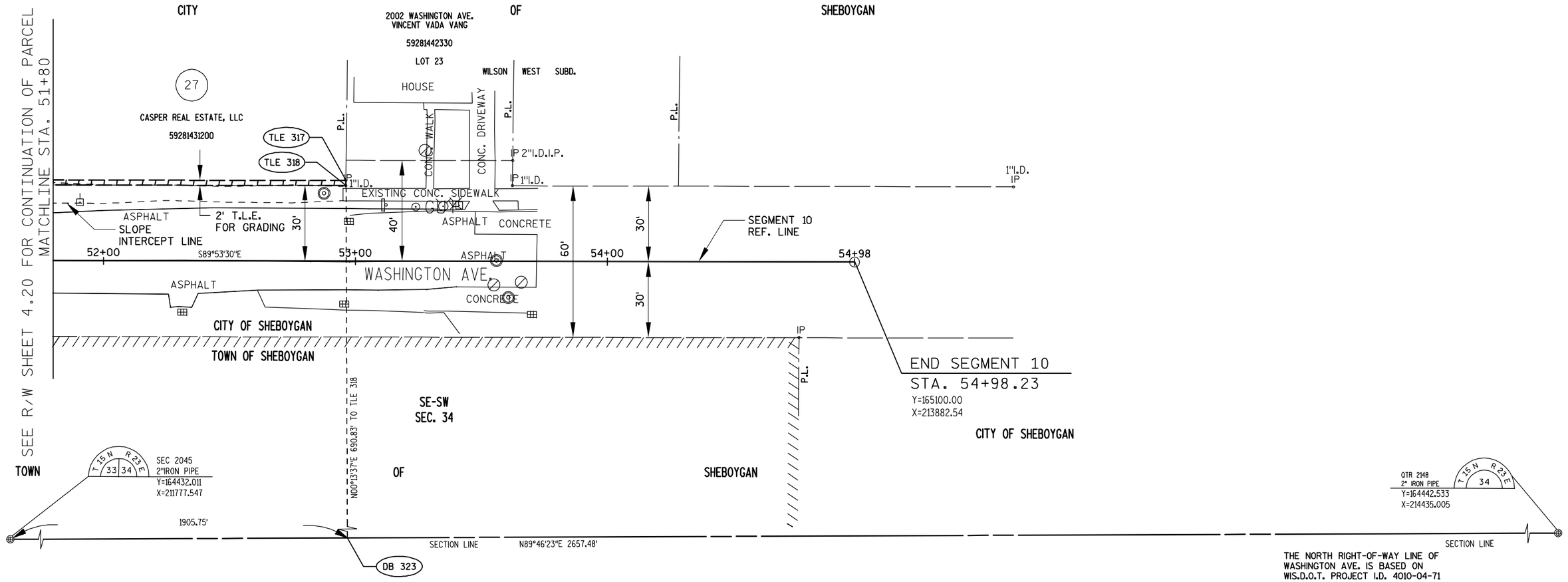

SEGMENT 10 WASHINGTON AVE.

REVISION DATE	DATE	SCALE	HWY	STATE R/W PROJECT NUMBER	PLAT SHEET	
FEBRUARY 3, 2014	MAY, 2012	0' 10' 20' 40'	SIDEWALK GAP	4996-01-54	4.21	
			COUNTY: SHEBOYGAN	CONSTRUCTION PROJECT NUMBER 4996-01-54	PS&E SHEET 72	E

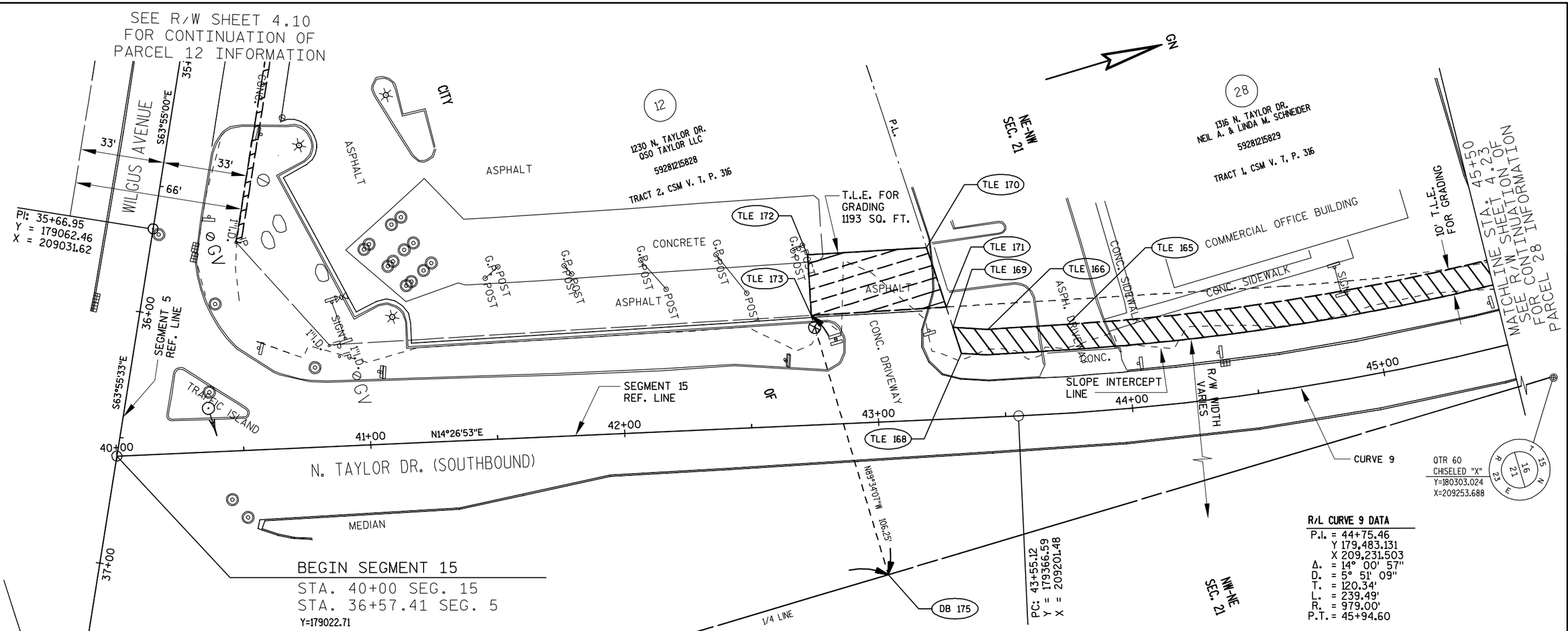

T.L.E. 12 & 28 STATION, OFFSET AND COORDINATE TABLE

POINT	STATION	OFFSET	Y	X
DB 175	43+01.14	60.02 R	179299.342	209246.130
TLE 162	45+98.50	34.00 L	179607.620	209198.441
TLE 165	43+76.88	34.86 L	179395.673	209172.727
TLE 166	43+44.53	34.52 L	179364.951	209165.406
TLE 168	43+33.79	25.56 L	179352.313	209171.403
TLE 169	43+30.87	35.91 L	179352.067	209160.654
TLE 170	43+21.90	67.69 L	179351.310	209127.643
TLE 171	43+28.59	43.96 L	179351.875	209152.288
TLE 172	42+75.00	66.90 L	179305.701	209116.706
TLE 173	42+75.40	43.07 L	179300.143	209139.883

SCHEDULE OF LANDS AND INTERESTS REQUIRED

PARCEL NUMBER	OWNER (S)	INTEREST REQUIRED	P.L.E. SQ. FT. REQ'D.	T.L.E. SQ. FT. REQ'D.
28	NEIL A. & LINDA M. SCHNEIDER	T.L.E.	———	2,833

OWNERS' NAMES ARE SHOWN FOR REFERENCE PURPOSES ONLY AND ARE SUBJECT TO CHANGE PRIOR TO THE TRANSFER OF LAND INTERESTS TO THE DEPARTMENT.

T.L.E. 28 CURVE TABLE

FROM - TO	RADIUS	DELTA	LENGTH	CHORD	CHORD BEARING
TLE 165 - TLE 162	945.00'	12°58'20"	213.96'	213.50'	N06° 55' 03"E

THE RIGHT-OF-WAY LINE OF N. TAYLOR DR. IS BASED ON CITY STREET RECORDS AND THE C.S.M. IN VOLUME 7 OF CSM'S, PAGE 316.

T.L.E. 12 & 28 COURSE TABLE

FROM - TO	BEARING	DISTANCE
TLE 173 - TLE 172	N76°30'53"W	23.83'
TLE 172 - TLE 170	N13°29'07"E	46.90'
TLE 170 - TLE 171	N88°41'12"E	24.65'
TLE 171 - TLE 169	N88°41'12"E	8.37'
TLE 169 - TLE 168	N88°41'12"E	10.75'
TLE 169 - TLE 166	N20°14'46"E	13.73'
TLE 166 - TLE 165	N13°24'13"E	31.58'
TLE 165 - TLE 162	CURVE	

SEGMENT 15 TAYLOR DR.

REVISION DATE FEBRUARY 3, 2014	DATE MAY, 2012	SCALE 0' 10' 20' 40'	HWY: SIDEWALK GAP	STATE R/W PROJECT NUMBER 4996-01-54	PLAT SHEET 4.22
			COUNTY: SHEBOYGAN	CONSTRUCTION PROJECT NUMBER 4996-01-54	PS&E SHEET 73 E

SCHEDULE OF LANDS AND INTERESTS REQUIRED

PARCEL NUMBER	OWNER(S)	INTEREST REQUIRED	P.L.E. SQ. FT. REQ'D.	T.L.E. SQ. FT. REQ'D.
29	1338 NORTH TAYLOR DRIVE LLC	T.L.E.	—	4,640

OWNERS' NAMES ARE SHOWN FOR REFERENCE PURPOSES ONLY AND ARE SUBJECT TO CHANGE PRIOR TO THE TRANSFER OF LAND INTERESTS TO THE DEPARTMENT.

T.L.E. 28 CURVE TABLE

FROM - TO	RADIUS	DELTA	LENGTH	CHORD	CHORD BEARING
TLE 165 - TLE 162	945.00'	12°58'20"	213.96'	213.50'	N06°55'03"E

T.L.E. 29 STATION, OFFSET AND COORDINATE TABLE

POINT	STATION	OFFSET	Y	X
DB 324	48+62.32	16.01 R	179871.058	209250.435
TLE 152	52+32.51	35.00 L	180241.623	209202.224
TLE 154	48+62.32	35.00 L	179871.442	209199.432
TLE 155	48+61.42	64.00 L	179870.763	209170.426
TLE 156	48+20.00	64.00 L	179829.344	209170.113
TLE 157	48+20.00	39.00 L	179829.155	209195.112
TLE 159	46+22.56	39.00 L	179631.717	209193.623
TLE 161	46+22.68	34.00 L	179631.799	209198.624
TLE 162	45+98.50	34.00 L	179607.620	209198.442

T.L.E. 29 COURSE TABLE

FROM - TO	BEARING	DISTANCE
TLE 162 - TLE 161	N00°25'54"E	24.18'
TLE 161 - TLE 159	S89°03'24"W	5.00'
TLE 159 - TLE 157	N00°25'56"E	197.44'
TLE 157 - TLE 156	N89°34'04"W	25.00'
TLE 156 - TLE 155	N00°25'56"E	41.42'
TLE 155 - TLE 154	N88°39'32"E	29.01'
TLE 154 - TLE 152	N00°25'56"E	370.19'
QTR 60 - DB 342	S00°25'53"W	431.98'
DB 342 - TLE 154	N89°34'07"W	51.00'

GN

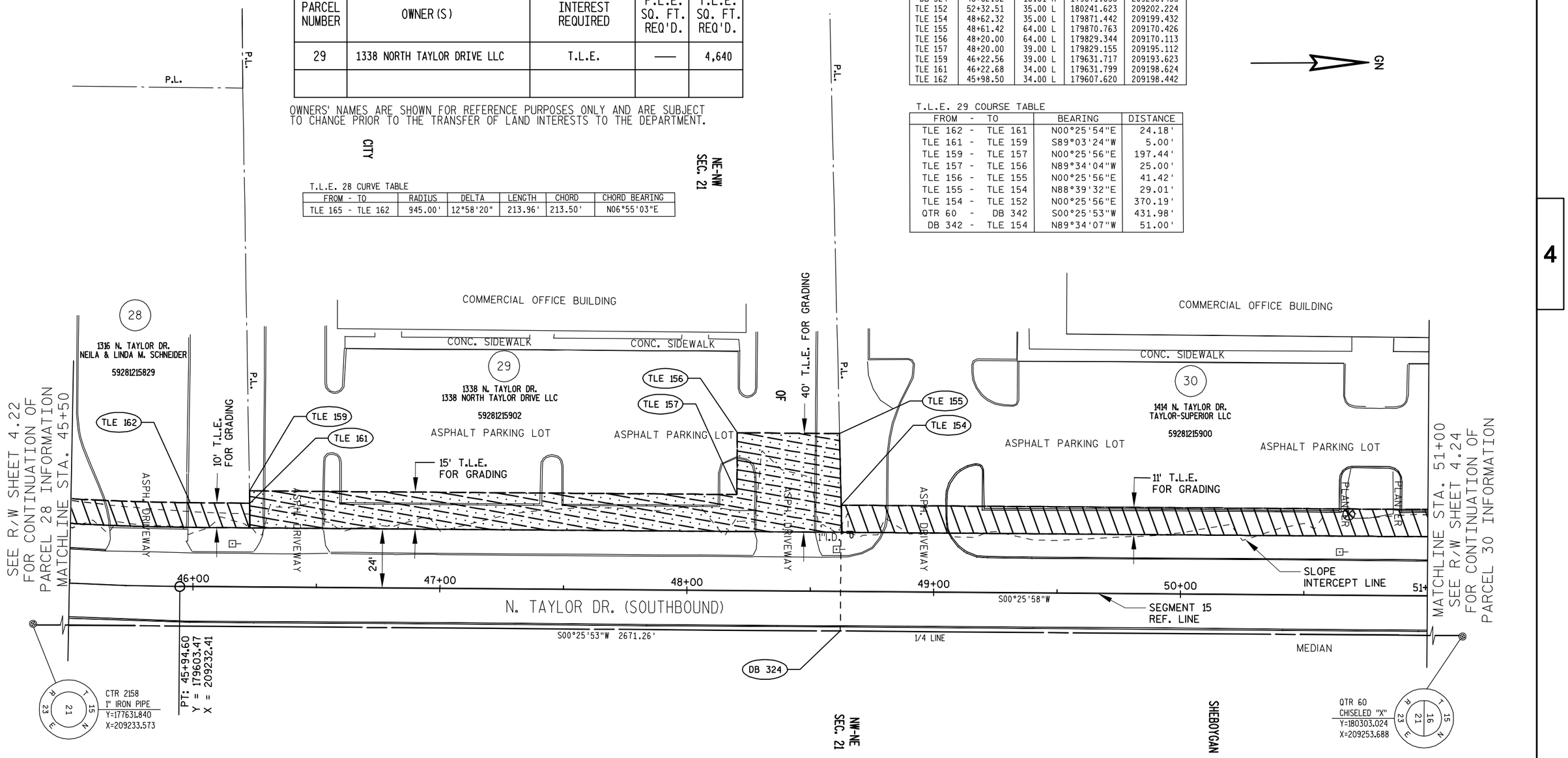

THE RIGHT-OF-WAY LINE OF N. TAYLOR DR. IS BASED ON CITY STREET RECORDS AND THE C.S.M. IN VOLUME 7 OF CSM'S, PAGE 316.

SEGMENT 15 TAYLOR DR.

REVISION DATE	DATE	SCALE	HWY	STATE R/W PROJECT NUMBER	PLAT SHEET	
FEBRUARY 3, 2014	MAY, 2012	0' 10' 20' 40'	SIDEWALK GAP	4996-01-54	4.23	
			COUNTY: SHEBOYGAN	CONSTRUCTION PROJECT NUMBER 4996-01-54	PS&E SHEET 74	E

FILE NAME : L:\WORK\60158441\000_CADD\SURVEY\RW PLAT\040123_RP REV 1.DWG PLOT DATE : 2/3/2014 5:43 PM PLOT BY : LAHAYE, CHRIS PLOT NAME : 040123_RP REV 1.DWGPLOT SCALE : ********

WISDOT/CADDS SHEET 70

SCHEDULE OF LANDS AND INTERESTS REQUIRED

PARCEL NUMBER	OWNER (S)	INTEREST REQUIRED	P.L.E. SQ. FT. REQ'D.	T.L.E. SQ. FT. REQ'D.
30	TAYLOR-SUPERIOR LLC	T.L.E.	——	4,101

OWNERS' NAMES ARE SHOWN FOR REFERENCE PURPOSES ONLY AND ARE SUBJECT TO CHANGE PRIOR TO THE TRANSFER OF LAND INTERESTS TO THE DEPARTMENT.

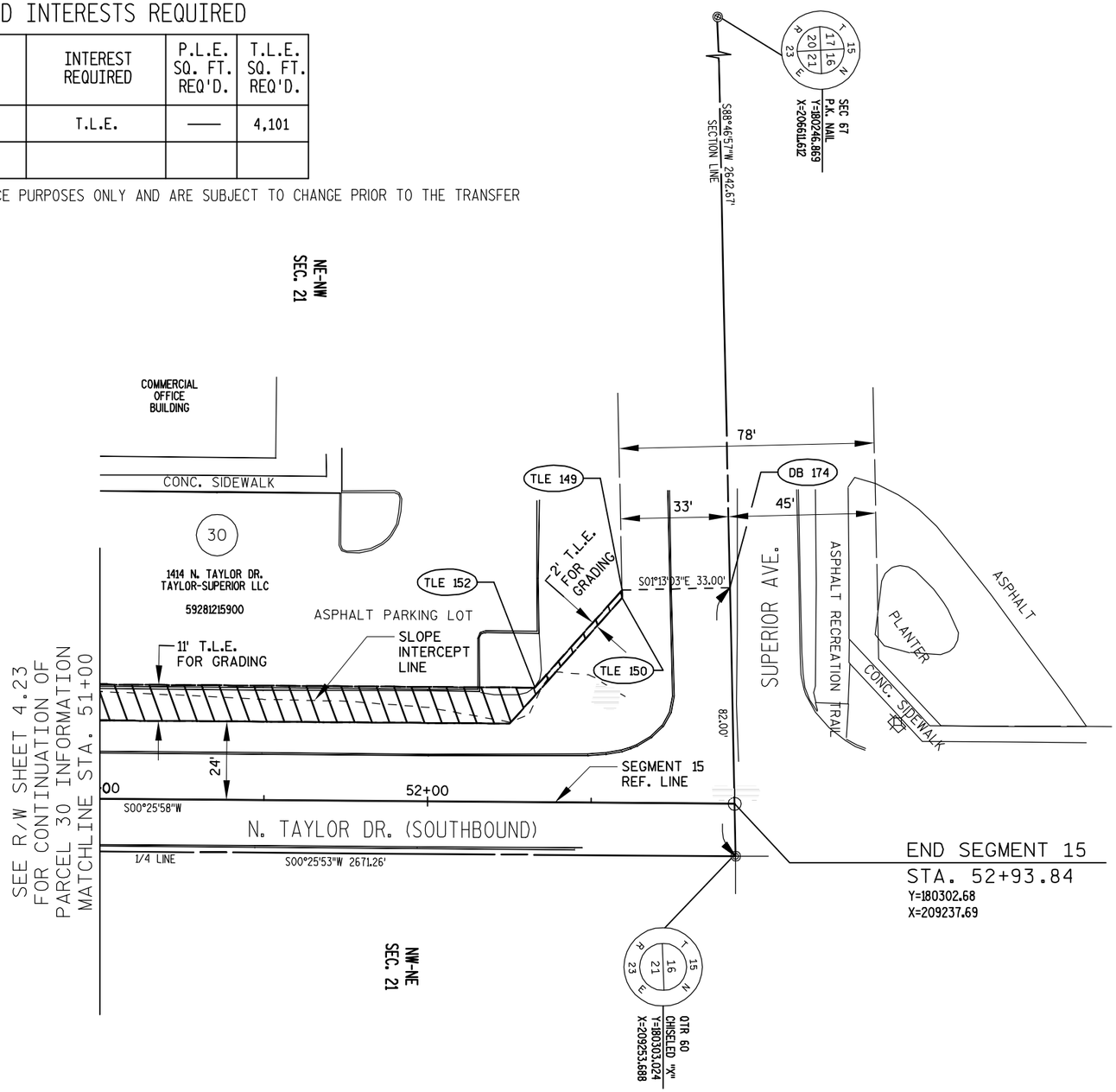

T.L.E. 30 STATION, OFFSET AND COORDINATE TABLE

POINT	STATION	OFFSET	Y	X
DB 174	52+91.94	65.97 L	180301.282	209171.702
TLE 149	52+58.95	65.02 L	180268.289	209172.403
TLE 152	52+32.51	35.00 L	180241.623	209202.224
TLE 154	48+62.32	35.00 L	179871.442	209199.432

T.L.E. 30 COURSE TABLE

FROM - TO	BEARING	DISTANCE
TLE 154 - TLE 152	N00°25'56"E	370.19'
TLE 152 - TLE 149	N48°11'49"W	40.00'

THE RIGHT-OF-WAY LINE OF N. TAYLOR DR. IS BASED ON CITY STREET RECORDS AND THE C.S.M. IN VOLUME 7 OF CSM'S, PAGE 316. THE RIGHT-OF-WAY LINE OF SUPERIOR AVE. IS BASED ON TOWN ROAD RECORDS AND WIS.D.O.T. PROJECT I.D. 4996-01-11.

SEGMENT 15 TAYLOR DR.

REVISION DATE	DATE	SCALE	HWY	STATE R/W PROJECT NUMBER	PLAT SHEET	
FEBRUARY 3, 2014 N.C.	MAY, 2012	0' 10' 20' 40'	SIDEWALK GAP	4996-01-54	4.24	
			COUNTY: SHEBOYGAN	CONSTRUCTION PROJECT NUMBER 4996-01-54	PS&E SHEET 75	E

RADIUS INFORMATION

NO.	STATION	OFFSET	Y COORDINATE	X COORDINATE	RADIUS
A	20+74.97	28.78'LT	178,421.18	209,446.99	30.61'

DIMENSION SHOWN IS TO BACK OF CURB

BENCH MARKS

NO.	STATION	DESCRIPTION	ELEV.
19	21+45	CHISELED "X" N. CURB OF WILGUS	124.35
X	X+XX	XXX	XX.XX
X	X+XX	XXX	XX.XX
X	X+XX	XXX	XX.XX

N

SCALE, FEET 0 20 40

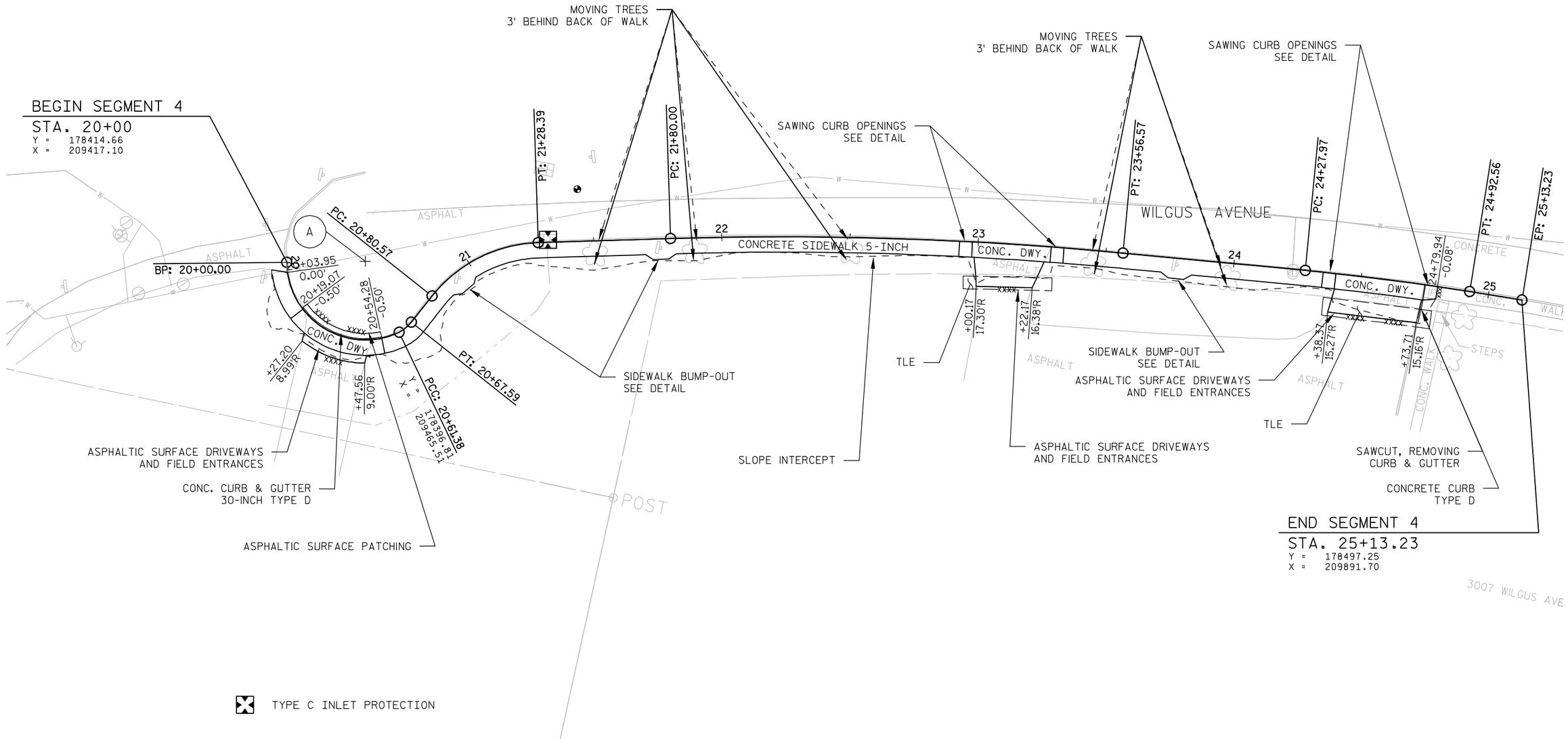

PROJECT NO: 4996-01-54	HWY: SIDEWALK GAP	COUNTY: SHEBOYGAN	SEGMENT 4 WILGUS AVE.	SHEET 76	E

BENCH MARKS

NO.	STATION	DESCRIPTION	ELEV.
17	11+37	P.K. NL 3' N R/W, N. SIDE WILGUS	137.29

N

SCALE, FEET 0 20 40

BEGIN SEGMENT 5
STA. 9+50

X Y = BP: 9+50.00
180250.67
206980.10

X Y = PC: 10+00.00
180247.18
206930.22

SUPERIOR AVENUE

SAWING CURB OPENINGS
SEE DETAIL

ADJUSTING PULL BOX

MOVING SIGNS TYPE II

PLACE CONCRETE AROUND PORTION
OF POLE. USE FELT AS BARRIER

+97.03
26.01'L

TYPE 7A RAMP

MOVING SIGNS
TYPE II

CONCRETE CURB PEDESTRIAN (STA 9+98 - STA 11+90)

PI X,Y = 206650.46, 180227.60
PI STATION = 12+80.44
DELTA = 150°03'18"
LENGTH = 196.42
RADIUS = 75.00

+76.60
38.64'L

+90.49
46.34'L

+32.86
44.16'L

TLE

+39.45
34.95'L

REMOVING CURB & GUTTER,
ADJUSTING INLET COVER

CONCRETE CURB & GUTTER
30-INCH TYPE D, ASPHALTIC
SURFACE PATCHING

SAWING CURB OPENINGS
SEE DETAIL

CONC. DWY

SAWING CURB OPENINGS
SEE DETAIL

MOVING SIGNS TYPE II

CONCRETE SIDEWALK 5-INCH

CONC. DWY

MOVING SIGNS TYPE II

+37.96
24.40'L

+55.63
32.00'L

MATCHLINE STA. 16+00

ASPHALTIC SURFACE DRIVEWAYS
AND FIELD ENTRANCES

3827 SUPERIOR AVE

3801 SUPERIOR AVE

WILGUS AVENUE

38TH STREET N.

PT: 11+96.42
Y = 180104.92
X = 206902.65

TYPE 7A RAMP

SIDEWALK BUMP-OUT
SEE DETAIL

MOVING SIGNS TYPE II

ASPHALTIC SURFACE DRIVEWAYS
AND FIELD ENTRANCES

ADJUSTING PULL BOX

STORM SEWER PIPE PVC 4-INCH WITH CLEANOUT
(COST TO CONNECT 4" PVC TO
INLET IS INCLUDED IN BID ITEM PRICE)

SAWING CURB OPENINGS
SEE DETAIL

CONCRETE CURB & GUTTER
30-INCH TYPE D, ASPHALTIC
SURFACE PATCHING

REMOVING CURB & GUTTER,
ADJUSTING INLET COVER

TYPE C INLET PROTECTION

PROJECT NO: 4996-01-54	HWY: SIDEWALK GAP	COUNTY: SHEBOYGAN	SEGMENT 5 WILGUS AVE.	SHEET 77	E

FILE NAME : L:\WORK\60158441\000_CADD\CIVIL\SEGMENT 5 & 15\050203_PN.DWG PLOT DATE : 4/11/2014 7:31 AM PLOT BY : HOLZWART, JOSEPH PLOT NAME : ---------- PLOT SCALE : ********

WISDOT/CADDS SHEET 44

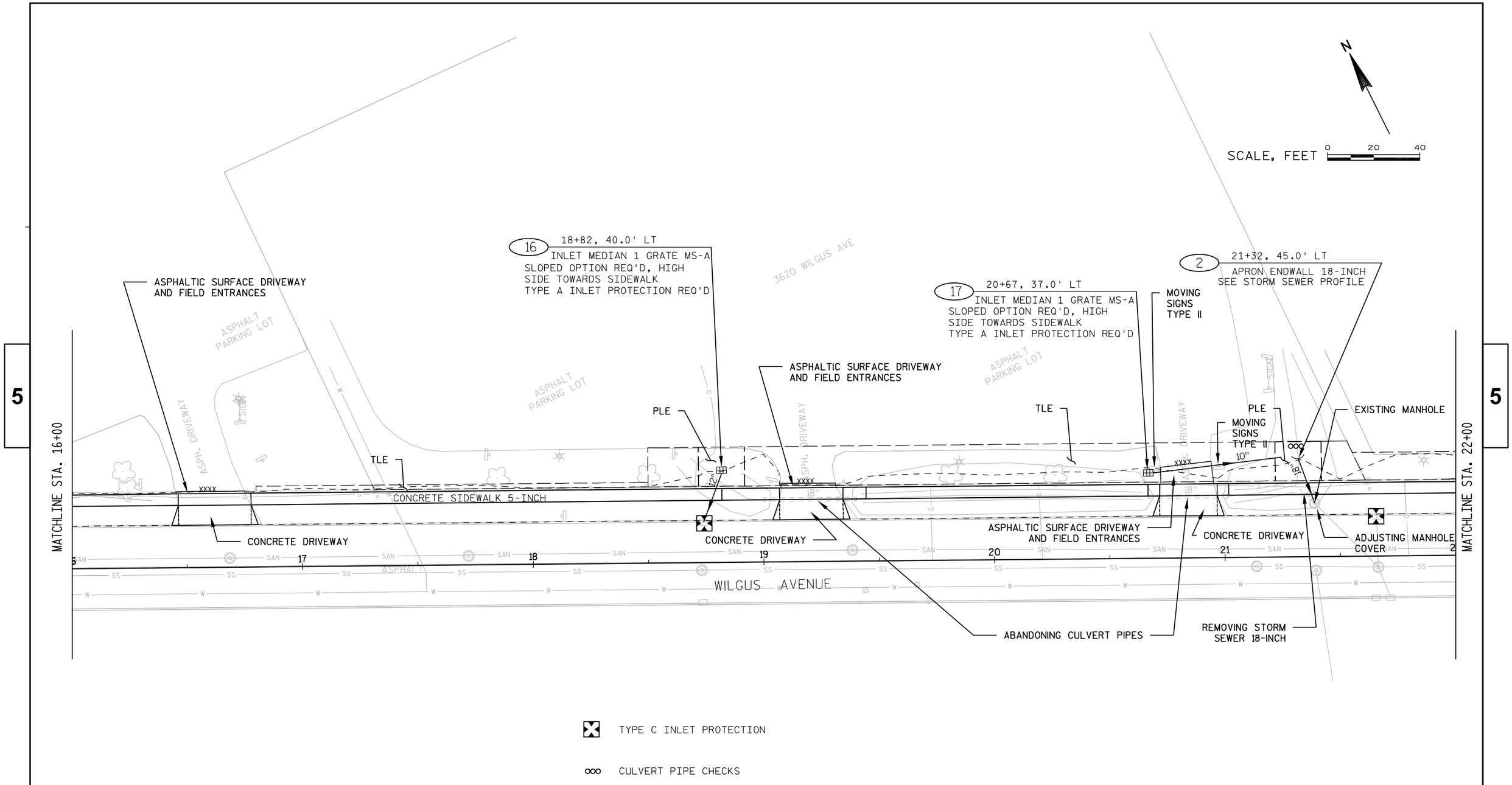

PROJECT NO: 4996-01-54	HWY: SIDEWALK GAP	COUNTY: SHEBOYGAN	SEGMENT 5 WILGUS AVE.	SHEET 78	E

FILE NAME : L:\WORK\60158441\000_CADD\CIVIL\SEGMENT 5 & 15\050204_PN.DWG PLOT DATE : 2/26/2014 1:07 PM PLOT BY : HOLZWART, JOSEPH PLOT NAME : PLOT SCALE : *********

WISDOT/CADDS SHEET 44

BENCH MARKS

NO.	STATION	DESCRIPTION	ELEV.
15	24+08	3/8" REBAR 75' E OF 36TH	137.04

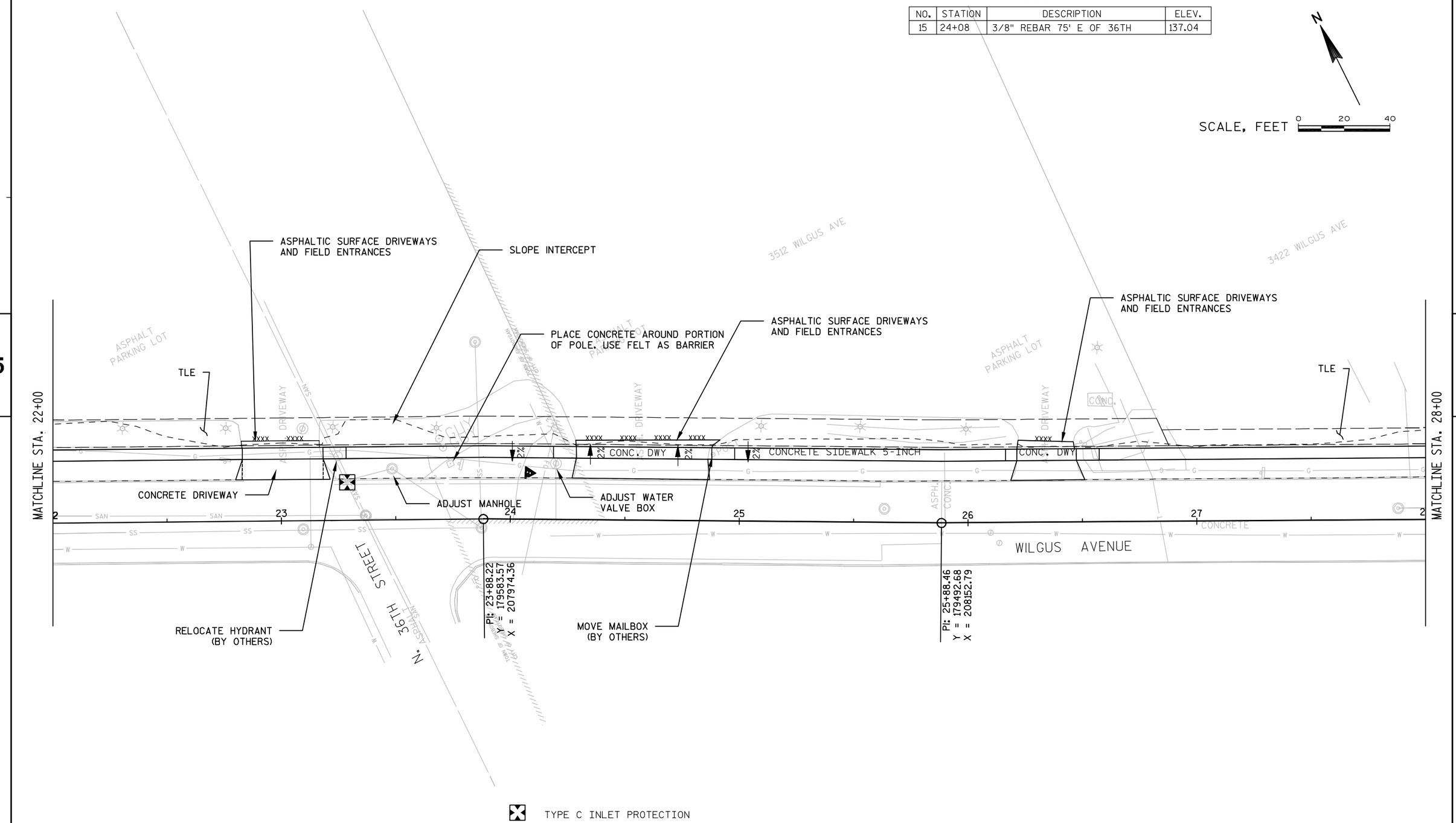

PROJECT NO: 4996-01-54	HWY: SIDEWALK GAP	COUNTY: SHEBOYGAN	SEGMENT 5 WILGUS AVE.	SHEET 79	E

FILE NAME : L:\WORK\60158441\000_CADD\CIVIL\SEGMENT 5 & 15\050205_PN.DWG PLOT DATE : 2/26/2014 1:12 PM PLOT BY : HOLZWART, JOSEPH PLOT NAME : PLOT SCALE : *********

WISDOT/CADDS SHEET 44

SCALE, FEET 0 20 40

ASPHALTIC SURFACE DRIVEWAYS AND FIELD ENTRANCES

CLEARING AND GRUBBING

ASPHALTIC SURFACE DRIVEWAYS AND FIELD ENTRANCES

3402 WILGUS AVE

3304 WILGUS AVE

3212 WILGUS AVE

COMMERCIAL BUILDING

ASPHALT PARKING LOT

TLE

MATCH EXISTING

SAWCUT CURB

CONCRETE SIDEWALK 5-INCH

CONC. DWY

CONCRETE DRIVEWAY

MATCHLINE STA. 28+00

MATCHLINE STA. 34+00

WILGUS AVENUE

DRIVEWAY TO SHOPPING MALL

REMOVE PORTION OF PLANTER THAT ENCROACHES

MATCH EXISTING

PROJECT NO: 4996-01-54	HWY: SIDEWALK GAP	COUNTY: SHEBOYGAN	SEGMENT 5 WILGUS AVE.	SHEET 80	E

FILE NAME : L:\WORK\60158441\000_CADD\CIVIL\SEGMENT 5 & 15\050206_PN.DWG PLOT DATE : 2/26/2014 1:15 PM PLOT BY : HOLZWART, JOSEPH PLOT NAME : ---------- PLOT SCALE : ********

WISDOT/CADDS SHEET 44

BENCH MARKS

NO.	STATION	DESCRIPTION	ELEV.
13	36+31	MAG. NAIL IN TRAFFIC ISLAND	124.20

N

SCALE, FEET 0 20 40

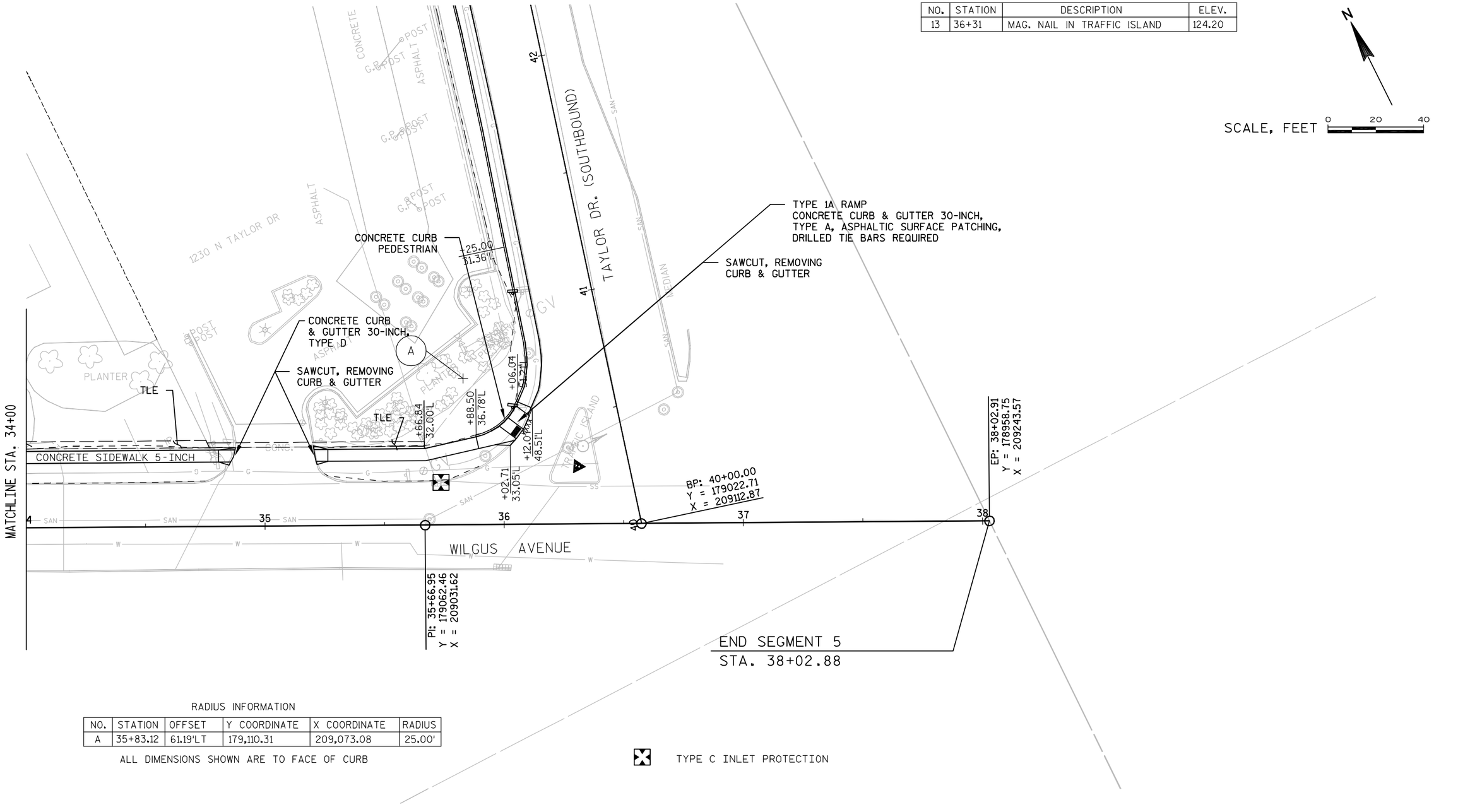

RADIUS INFORMATION

NO.	STATION	OFFSET	Y COORDINATE	X COORDINATE	RADIUS
A	35+83.12	61.19'LT	179,110.31	209,073.08	25.00'

ALL DIMENSIONS SHOWN ARE TO FACE OF CURB

TYPE C INLET PROTECTION

PROJECT NO: 4996-01-54	HWY: SIDEWALK GAP	COUNTY: SHEBOYGAN	SEGMENT 5 WILGUS AVE.	SHEET 81	E

FILE NAME : L:\WORK\60158441\000_CADD\CIVIL\SEGMENT 5 & 15\050207_PN.DWG PLOT DATE : 2/26/2014 1:17 PM PLOT BY : HOLZWART, JOSEPH PLOT NAME : _____ PLOT SCALE : *********

WISDOT/CADDS SHEET 44

BENCH MARKS

NO.	STATION	DESCRIPTION	ELEV.
54	24+00	CUT "X" 24' E OF DWY	29.72

N

SCALE, FEET 0 20 40

3 25+00, 42.2' LT
MANHOLES 4-FT DIA. SP.
(FLAT TOP SLAB)
(NEENAH R-4345)
SEE STORM SEWER PROFILE

3123 S. 9TH ST.
INDUSTRIAL BUILDING

MMW PROPERTIES, LLC

GRAVEL

WIS. POWER &

SLOPE INTERCEPT

TLE

PLE

TLE

S. 9TH ST.

CONCRETE

+32.47 31.71 | +50.00 31.66 | +52.96 31.60 | +58.96 30.00'L 31.40 | +00.36 30.00'L 31.12 | +6.36 31.42 | +50.00 31.26 | +0.00 31.08 | +50.00 30.92 | +0.00 30.69 | +50.00 30.20 | +54.79 30.13 | +60.79 29.00'L 29.83 | +64.44 32.00'L | +88.27 32.00'L | +96.37 29.00'L 29.65 | +2.37 29.95 | +50.00 29.73 | +00.00 29.59 | +50.00 29.27 | +84.60 28.85

CONC. DRWY. 7-INCH

ANTENNA POLE

CONCRETE SIDEWALK 5-INCH

CONC. DRWY. 7-INCH

CONC.

XXXX

12"

TYPE 2 RAMP

20 21 22 23 24 25

SAWCUT, REMOVING CURB & GUTTER

CONCRETE CURB & GUTTER 30-INCH TYPE A, DRILLED TIE BARS REQUIRED

WASHINGTON AVE.

REMOVE INLET

EXISTING 12" SS

MATCHLINE STA. 25+90

BEGIN SEGMENT 6
STA. 20+00

BP: 20+00.00
Y = 165091.68
X = 218423.96

SAWING CURB OPENINGS SEE DETAIL

TYPE C INLET PROTECTION

PROJECT NO: 4996-01-54	HWY: SIDEWALK GAP	COUNTY: SHEBOYGAN	SEGMENT 6 WASHINGTON AVE.	SHEET 82	E

N

SCALE, FEET 0 20 40

8" ASPHALTIC SURFACE PATCHING
ROLL 2"X2" FLANGEWAYS

FILL WITH GRAVEL
GRADE TO MATCH

FILL WITH GRAVEL
GRADE TO MATCH

ASPHALTIC SURFACE DRIVEWAYS
AND FIELD ENTRANCES

MATCHLINE STA. 10+90

SAWCUT, REMOVING
CURB & GUTTER

CONCRETE CURB
& GUTTER 30-INCH TYPE A,
DRILLED TIE BARS REQ'D

LIGHT CO.

WATRY INDUSTRIES, INC.
3312 LAKESHORE DR

TLE

TLE

TLE

+24.73 28.71
+50.00 28.48
+97.55 29.00'L 28.15
+03.55 29.00'L 27.71
+06.22 32.08'L
+39.76 32.20'L
+41.73 29.00'L 27.40
+47.73 29.00'L 27.69
+50.00 27.70
+82.53 27.84
+00.00 27.72
+10.61 27.65
+16.61 27.35
+25.60 40.01'L
+50.38 27.24
+40.22 40.04'L
+56.38 27.54
+0.00 27.05
+50.00 26.70
+60.87 29.01'L 26.56
+94.81 29.00'L 26.55
+0.00 26.72
+40.38 26.62
+46.38 26.22
+50.00 26.18
+49.72 39.99'L
+73.96 25.94
+79.96 26.24
+0.00 26.20
+73.96 40.04'L
+84.31 31.46'L
+50.90 25.92
+56.90 25.67

2%

GRAVEL

CONC.

CONCRETE SIDEWALK 5-INCH

ASPHALT PARKING LOT

SAWING CURB
OPENINGS
SEE DETAIL

CONCRETE DRIVEWAY 7-INCH

CONCRETE DRIVEWAY 7-INCH

CONCRETE DRIVEWAY

TLE

MOVING SIGNS
TYPE II

MOVING SIGNS
TYPE II

TYPE 2 RAMP

MATCHLINE STA. 25+90

26 27 28 29 30 31 10

RAILROAD SPUR

WASHINGTON AVE.

EP: 31+87.03
Y = 165089.16
X = 219610.98

TYPE C INLET PROTECTION

END SEGMENT 6
STA. 31+87.03

5

5

PROJECT NO: 4996-01-54	HWY: SIDEWALK GAP	COUNTY: SHEBOYGAN	SEGMENT 6 WASHINGTON AVENUE	SHEET 83	E

BENCH MARKS

NO.	STATION	DESCRIPTION	ELEV.
55	10+21	3/8" REBAR 2' E OF CURB	25.93

N

SCALE, FEET 0 20 40

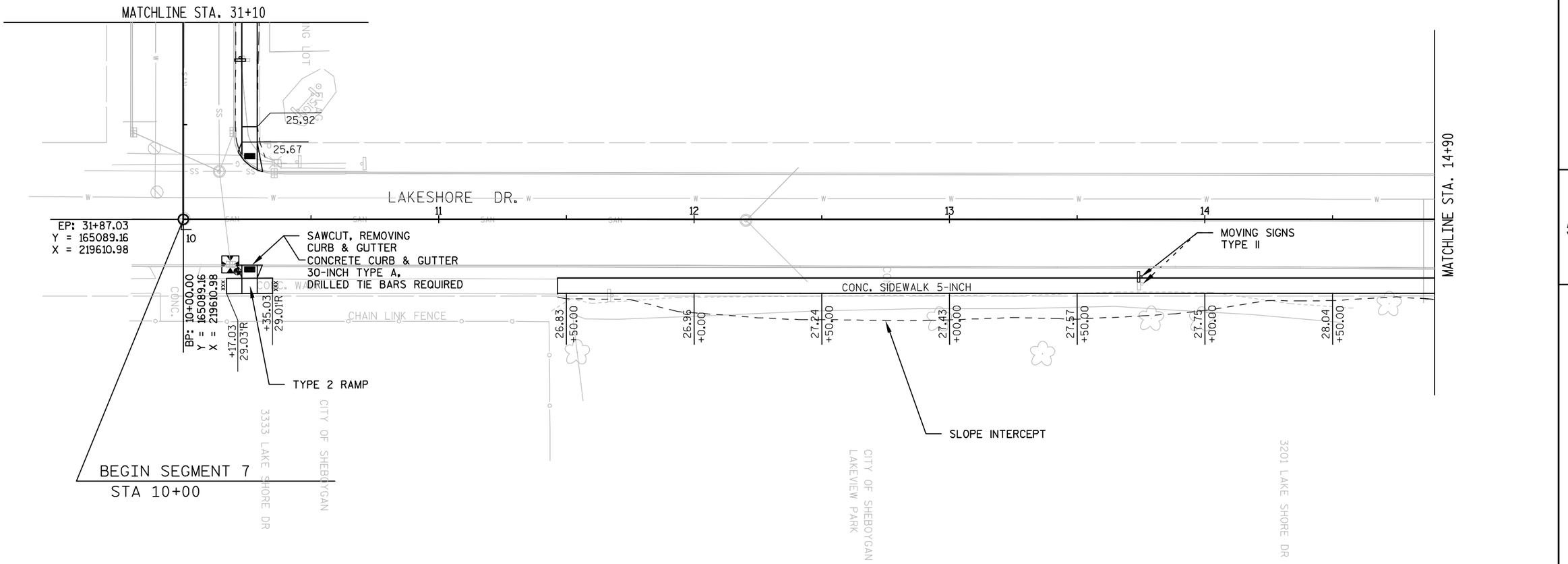

TYPE C INLET PROTECTION

PROJECT NO: 4996-01-54	HWY: SIDEWALK GAP	COUNTY: SHEBOYGAN	SEGMENT 7 LAKESHORE DRIVE	SHEET 84	E

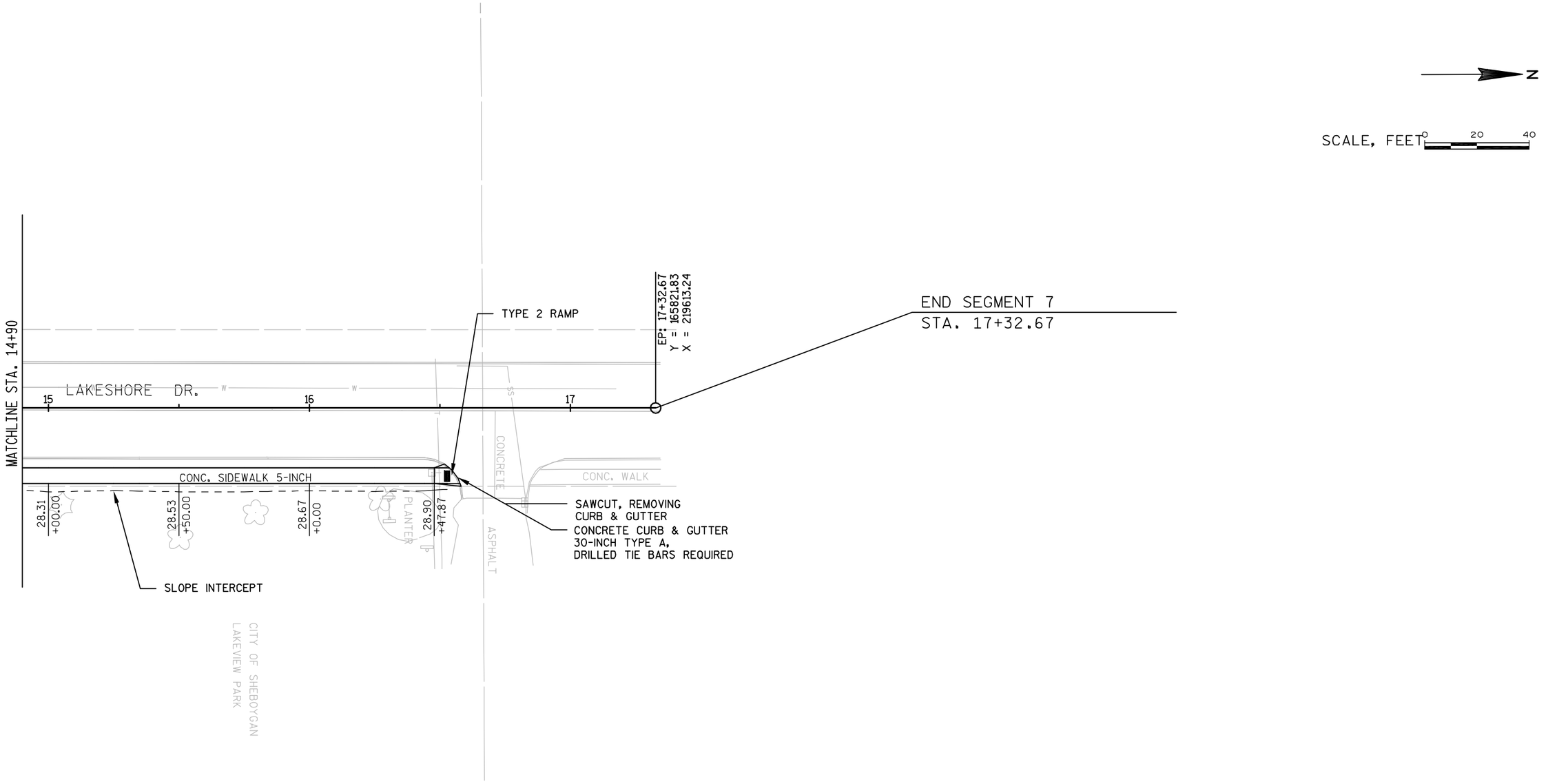

5

PROJECT NO: 4996-01-54	HWY: SIDEWALK GAP	COUNTY: SHEBOYGAN	SEGMENT 7 LAKESHORE DRIVE	SHEET 85	E

FILE NAME : L:\WORK\60158441\000_CADD\CIVIL\SEGMENT 6 & 7\050211_PN.DWG PLOT DATE : 2/12/2014 7:13 AM PLOT BY : HOLZWART, JOSEPH PLOT NAME : ---------- PLOT SCALE : *********
WISDOT/CADDS SHEET 44

BENCH MARKS

NO.	STATION	DESCRIPTION	ELEV.
21	10+48	CHISELED "X" W. CURB	73.59

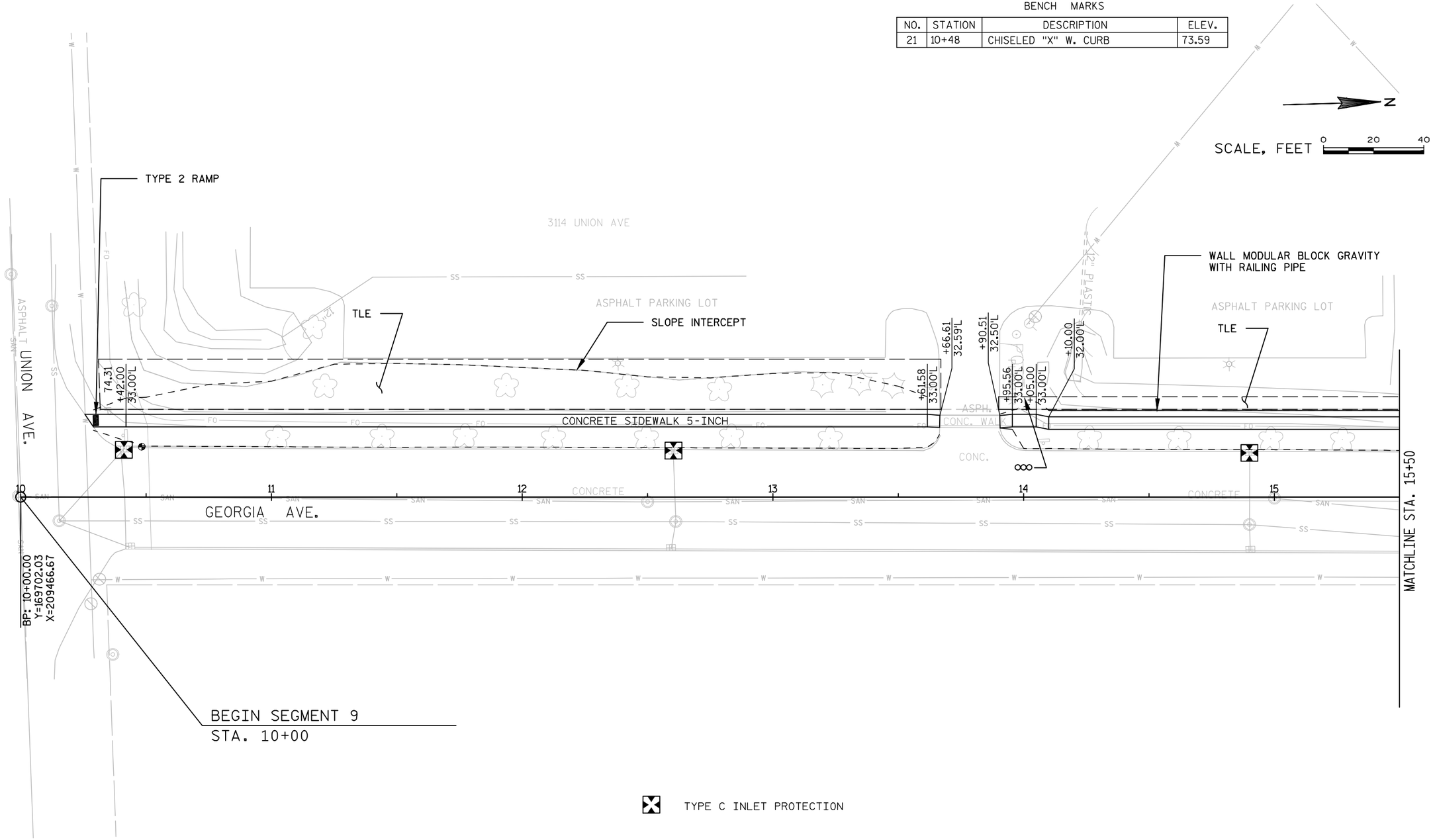

PROJECT NO: 4996-01-54	HWY: SIDEWALK GAP	COUNTY: SHEBOYGAN	SEGMENT 9 GEORGIA AVE.	SHEET 86	E

FILE NAME : L:\WORK\60158441\000_CADD\CIVIL\SEGMENT 9\050224_PN.DWG PLOT DATE : 7/13/2012 10:19 AM PLOT BY : HOLZWART, JOSEPH PLOT NAME : _____ PLOT SCALE : *********

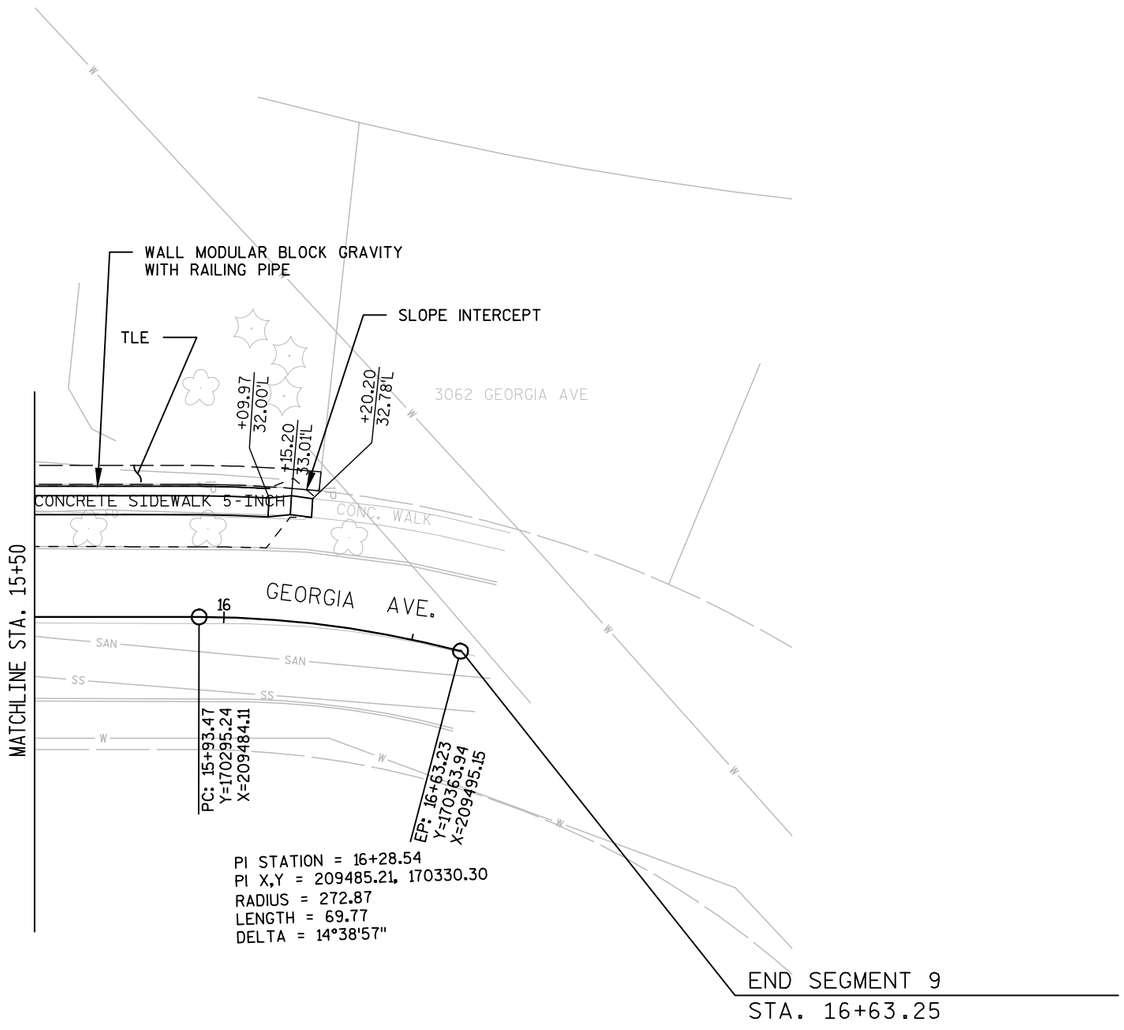

PROJECT NO: 4996-01-54	HWY: SIDEWALK GAP	COUNTY: SHEBOYGAN	SEGMENT 9 GEORGIA AVE.	SHEET 87	E

BENCH MARKS

NO.	STATION	DESCRIPTION	ELEV.
23	21+65	CHISELED "X", 110' N. OF HILLTOP	100.69

N

SCALE, FEET 0 20 40

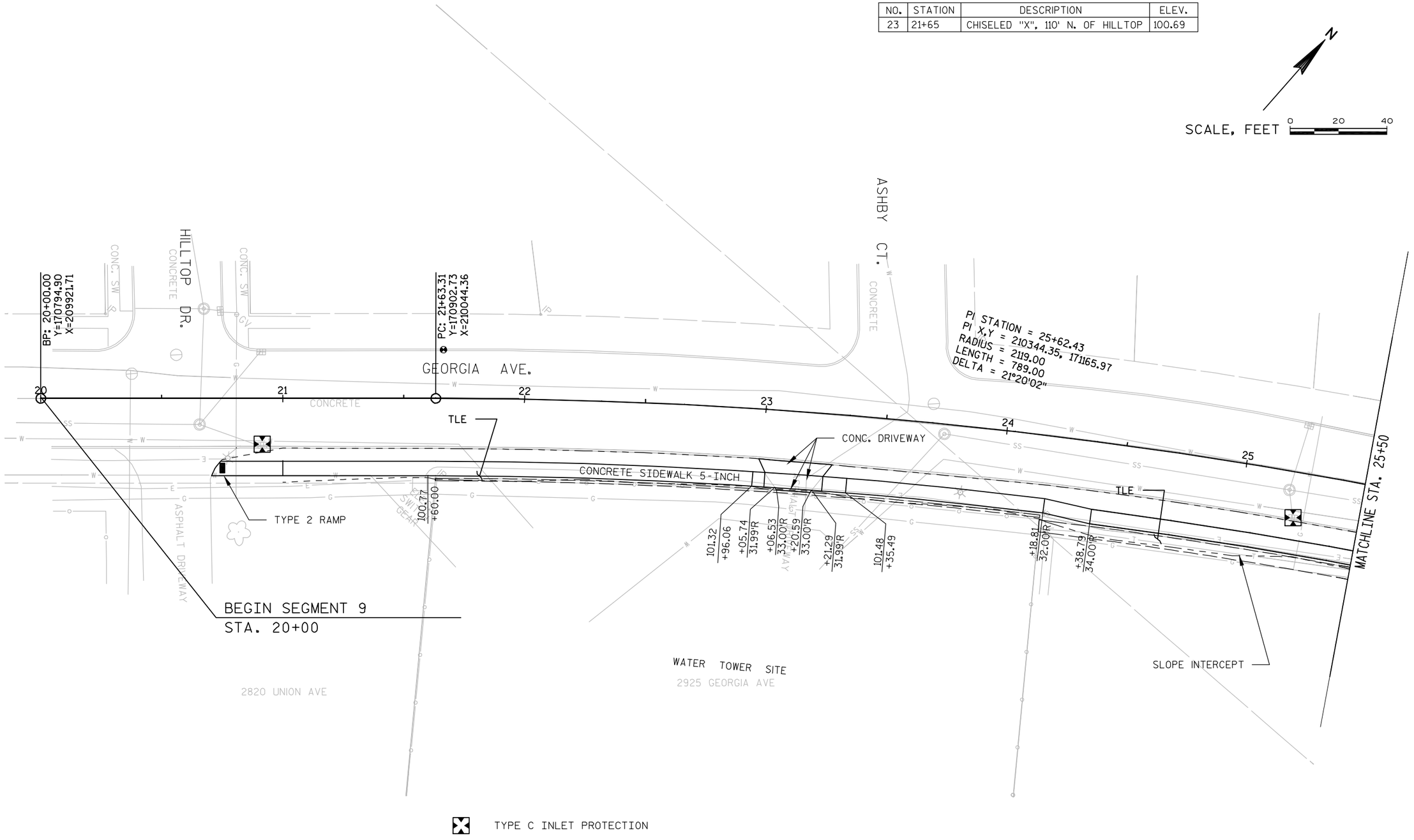

TYPE C INLET PROTECTION

PROJECT NO: 4996-01-54	HWY: SIDEWALK GAP	COUNTY: SHEBOYGAN	SEGMENT 9 GEORGIA AVE.	SHEET 88	E

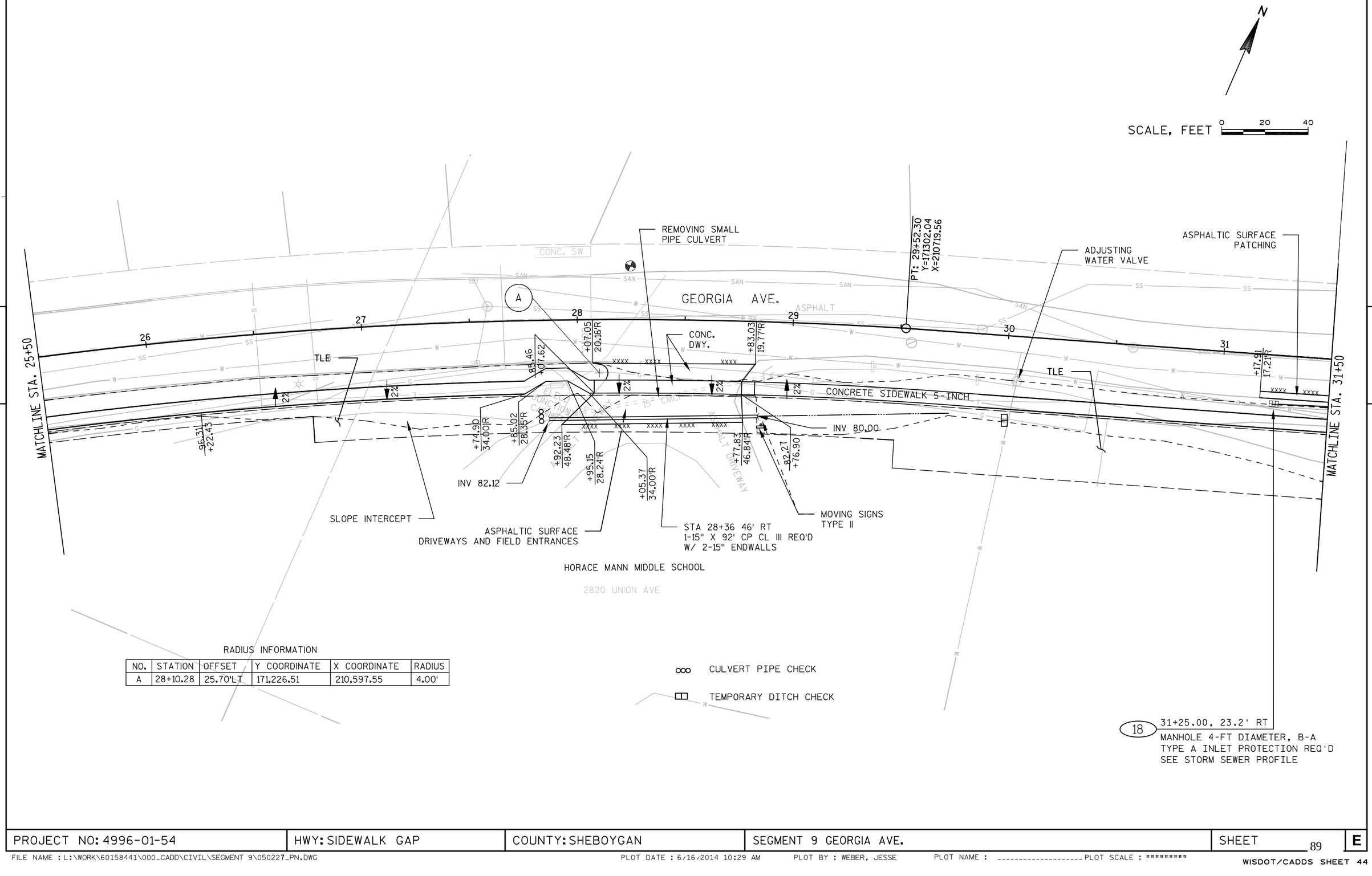

RADIUS INFORMATION

NO.	STATION	OFFSET	Y COORDINATE	X COORDINATE	RADIUS
A	28+10.28	25.70'LT	171,226.51	210,597.55	4.00'

5

5

PROJECT NO: 4996-01-54	HWY: SIDEWALK GAP	COUNTY: SHEBOYGAN	SEGMENT 9 GEORGIA AVE.	SHEET 89	E

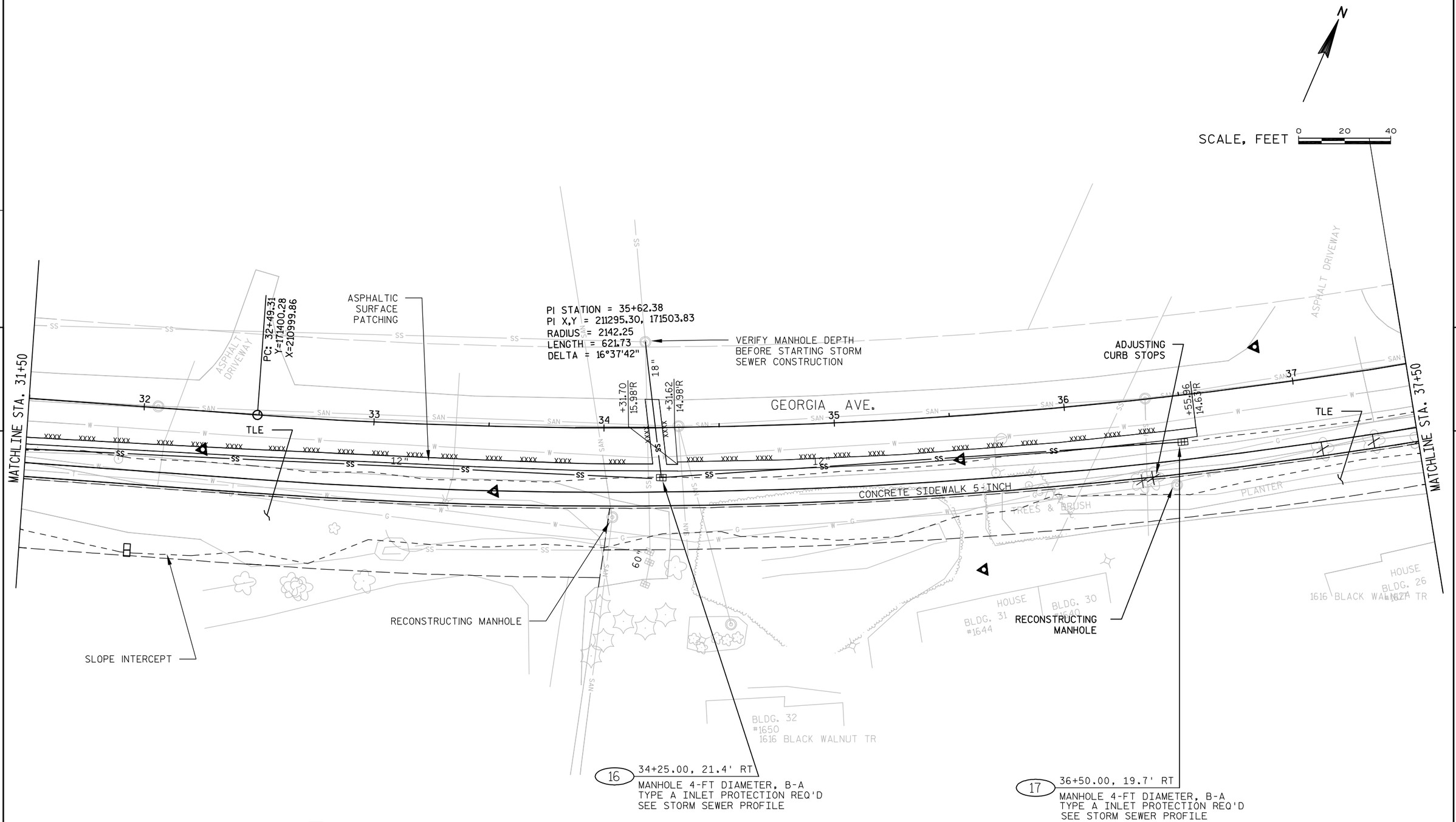

5

PROJECT NO: 4996-01-54	HWY: SIDEWALK GAP	COUNTY: SHEBOYGAN	SEGMENT 9 GEORGIA AVE.	SHEET 90	E

BENCH MARKS

NO.	STATION	DESCRIPTION	ELEV.
27	40+45	P.K. NAIL, 2' NW OF EDGE PAVE	71.19

N

SCALE, FEET 0 20 40

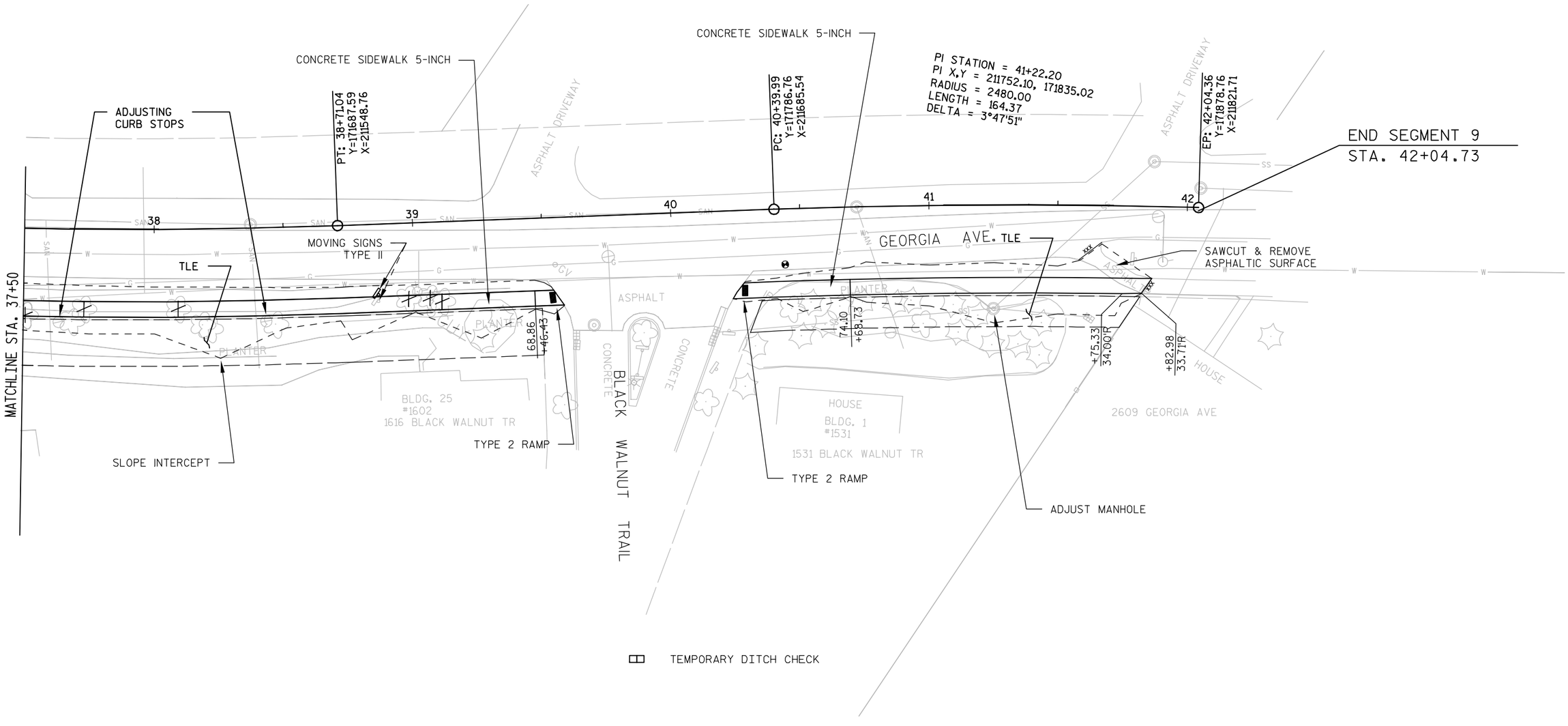

PROJECT NO: 4996-01-54	HWY: SIDEWALK GAP	COUNTY: SHEBOYGAN	SEGMENT 9 GEORGIA AVE.	SHEET 91	E

FILE NAME : L:\WORK\60158441\000_CADD\CIVIL\SEGMENT 9\050229_PN.DWG PLOT DATE : 2/10/2014 1:08 PM PLOT BY : HOLZWART, JOSEPH PLOT NAME : ---------- PLOT SCALE : ********* WISDOT/CADDS SHEET 44

BENCH MARKS

NO.	STATION	DESCRIPTION	ELEV.
38	42+20	3/8" REBAR, 4' N OF CURB	68.53

N

SCALE, FEET 0 20 40

BP: 40+00.00
Y=165102.83
X=212384.32

S. BUSINESS DRIVE

TYPE 1 RAMP

+79.15 -70.15'L
+87.24 -59.53'L
+98.90 -57.25'L
66.65

CONCRETE DRIVEWAY

+74.78 -49.97'L
+14.34 -45.65'L

ADJUSTING CURB STOP
ADJUSTING MANHOLE COVER
SLOPE INTERCEPT

PLACE CONCRETE AROUND PORTION OF POLE. USE FELT AS BARRIER

CONC. SIDEWALK 5-INCH

+56.91 -29.00'L
+01.48 -29.00'L
+20.90 -31.00'L
+21.48 -29.00'L

ASPHALTIC SURFACE DRIVEWAYS AND FILED ENRTRANCES

TLE

+66.09 -31.00'L
+72.25 -29.00'L
+20.00 -29.00'L
+43.05 -29.00'L
+48.84 -33.79'L

CONCRETE DRIVEWAY 7-INCH

CONC. SIDEWALK 5-INCH

MATCHLINE STA. 45+80

COMMERCIAL BUILDING
3321 S. B. DRIVE
WASHINGTON AVE.
CONC. MEDIAN
ASPHALT
CONCRETE

40 41 42 43 44 45

SAWCUT, REMOVING CURB & GUTTER

CONCRETE CURB & GUTTER 30-INCH TYPE A, DRILLED TIE BARS REQUIRED

ADJUSTING MANHOLE COVER

ADJUSTING WATER VALVE

CONCRETE DRIVEWAY

+20.35 -16.39'L
+76.99 -16.49'L
+25.60 -13.14'L

BEGIN SEGMENT 10
STA. 40+00

PROJECT NO: 4996-01-54	HWY: SIDEWALK GAP	COUNTY: SHEBOYGAN	SEGMENT 10 WASHINGTON AVE.	SHEET 92	E

FILE NAME : L:\WORK\60158441\000_CADD\CIVIL\SEGMENT 10\050215_PN.DWG PLOT DATE : 2/12/2014 7:15 AM PLOT BY : HOLZWART, JOSEPH PLOT NAME : ---------- PLOT SCALE : ********

WISDOT/CADDS SHEET 44

GENERAL NOTES

RADIO TRANSMITTER GROUNDING CABLES PRESENT NEAR RADIO STATION PROPERTY. SEE SPECIAL PROVISIONS.

BENCH MARKS

NO.	STATION	DESCRIPTION	ELEV.
39	48+45	3/8" REBAR, 6' S OF EDGE PAVE	55.04

N

SCALE, FEET 0 20 40

MATCHLINE STA. 45+80

MATCHLINE STA. 51+80

REMOVING CURB & GUTTER

ASPHALTIC SURFACE DRIVEWAYS AND FIELD ENTRANCES

TLE

WALL MODULAR BLOCK GRAVITY LRFD WITH RAILING STEEL PIPE GALVANIZED PEDESTRIAN (SEE DETAIL)

49+04.32, 29.8' LT
PIPE DAYLIGHT
CULVERT PIPE CHECK
SEE STORM SEWER PROFILE

11 49+04.33, 22.0' LT
MANHOLES 4-FT DIA. L
SEE STORM SEWER PROFILE

14 51+00.00, 36.0' LT
INLET MEDIAN 1 GRATE MS
TYPE A INLET
PROTECTION REQ'D
SEE STORM SEWER PROFILE

ADJUSTING CURB STOPS

SLOPE INTERCEPT

PLE

WETLAND

2128 WASHINGTON AVE

2100 WASHINGTON AVE

RADIO STATION

ASPHALT PARKING LOT

CONC. SIDEWALK 5-INCH

CONC. DRIVEWAY

ASPHALT

WASHINGTON AVE.

10 49+05.00, 15.5' LT
MANHOLE 4-FT DIAMETER, B-A
TYPE A INLET
PROTECTION REQ'D
SEE STORM SEWER PROFILE

PLACE CONCRETE AROUND PORTION OF POLE. USE FELT AS BARRIER

REMOVE INLET

13 50+60.00, 20.8' LT
MANHOLE 4-FT DIAMETER, B-A
TYPE A INLET
PROTECTION REQ'D
SEE STORM SEWER PROFILE

15 51+00.00, 20.8' LT
MANHOLES 4-FT DIA. J
SEE STORM SEWER PROFILE

SILT FENCE

PROJECT NO: 4996-01-54	HWY: SIDEWALK GAP	COUNTY: SHEBOYGAN	SEGMENT 10 WASHINGTON AVE.	SHEET 93	E

N

SCALE, FEET 0 20 40

5

5

MATCHLINE STA. 51+80

SLOPE INTERCEPT

TLE

+95.11
29.00L

CONC. SIDEWALK 5-INCH

MATCH EXISTING

HOUSE

CONC. WALK

CONC. DRIVEWAY

EXISTING 6" CONC. SIDEWALK

ASPHALT

CONCRETE

52

53

54

WASHINGTON AVE.

EP: 54+98.23
Y=165100.00
X=213882.54

END SEGMENT 10
STA. 54+98.23

PROJECT NO: 4996-01-54	HWY: SIDEWALK GAP	COUNTY: SHEBOYGAN	SEGMENT 10 WASHINGTON AVE.	SHEET 94	E

BENCH MARKS

NO.	STATION	DESCRIPTION	ELEV.
13	40+29	MAG. NAIL IN TRAFFIC ISLAND	124.20

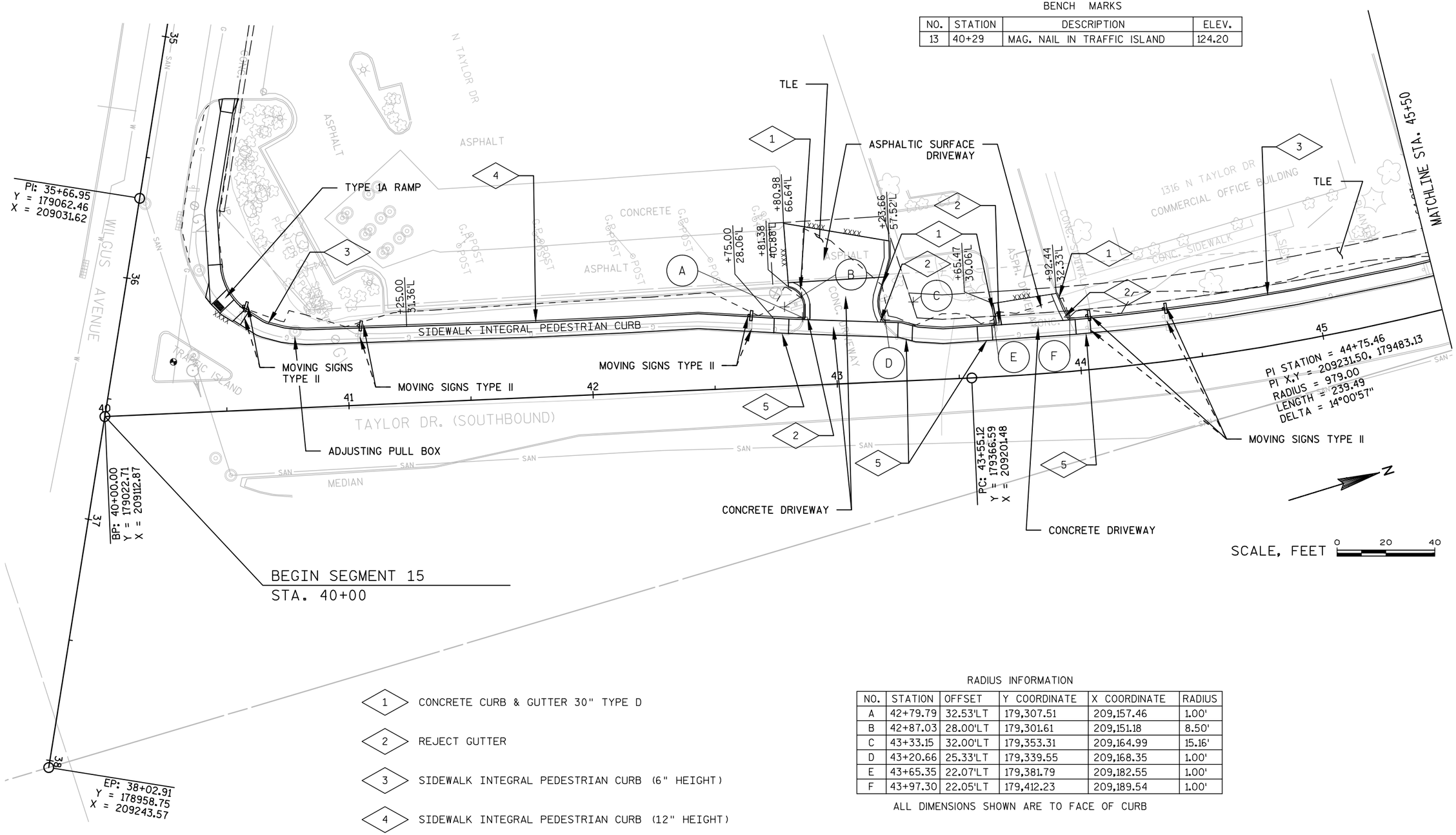

1 CONCRETE CURB & GUTTER 30" TYPE D

2 REJECT GUTTER

3 SIDEWALK INTEGRAL PEDESTRIAN CURB (6" HEIGHT)

4 SIDEWALK INTEGRAL PEDESTRIAN CURB (12" HEIGHT)

5 SAWING CURB OPENINGS, SEE DETAIL

RADIUS INFORMATION

NO.	STATION	OFFSET	Y COORDINATE	X COORDINATE	RADIUS
A	42+79.79	32.53'LT	179,307.51	209,157.46	1.00'
B	42+87.03	28.00'LT	179,301.61	209,151.18	8.50'
C	43+33.15	32.00'LT	179,353.31	209,164.99	15.16'
D	43+20.66	25.33'LT	179,339.55	209,168.35	1.00'
E	43+65.35	22.07'LT	179,381.79	209,182.55	1.00'
F	43+97.30	22.05'LT	179,412.23	209,189.54	1.00'

ALL DIMENSIONS SHOWN ARE TO FACE OF CURB

PROJECT NO: 4996-01-54	HWY: SIDEWALK GAP	COUNTY: SHEBOYGAN	SEGMENT 15 TAYLOR DR.	SHEET 95	E

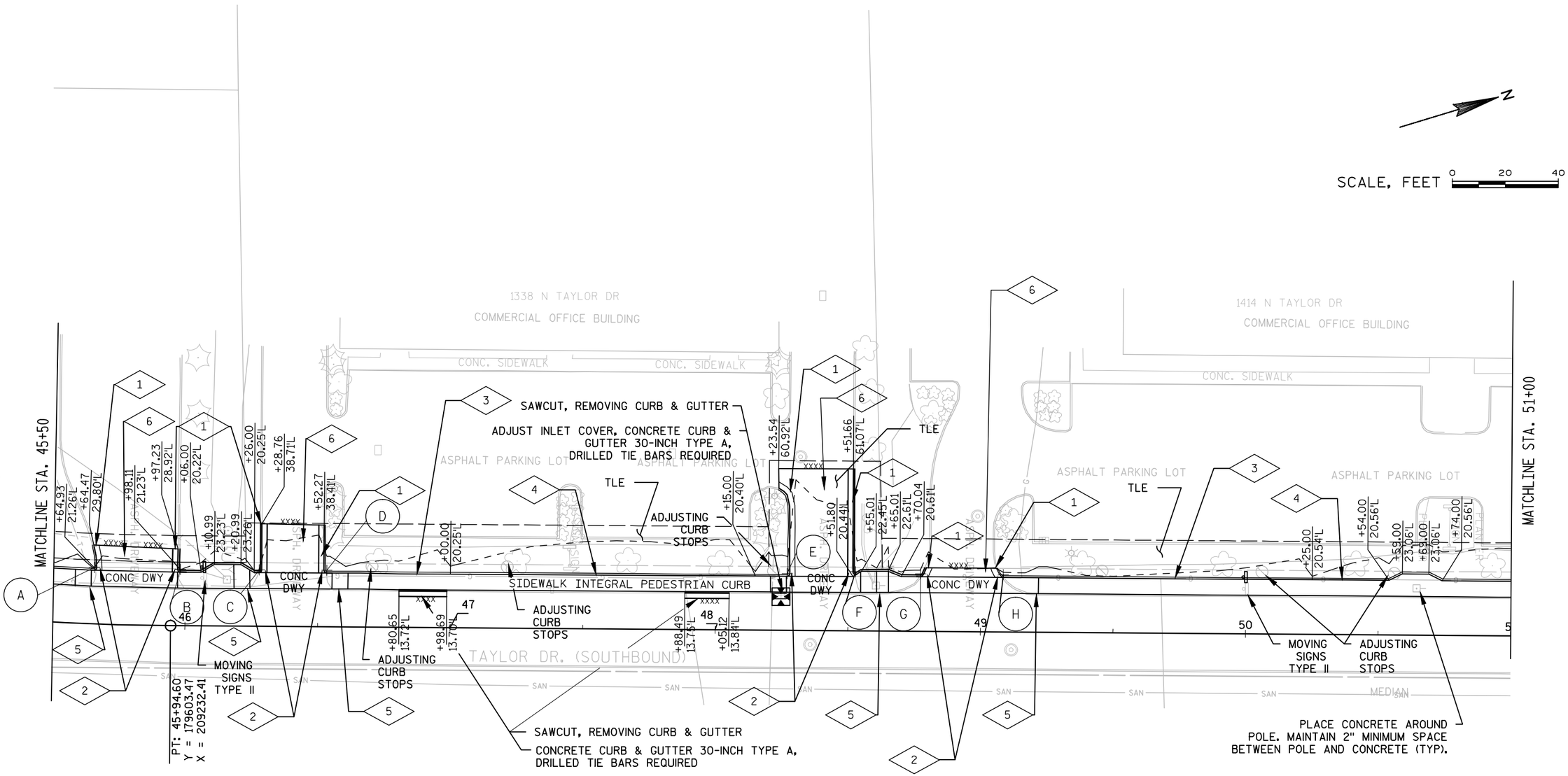

TYPE C INLET PROTECTION

1 CONCRETE CURB & GUTTER 30" TYPE D

2 REJECT GUTTER

3 SIDEWALK INTEGRAL PEDESTRIAN CURB (6" HEIGHT)

4 SIDEWALK INTEGRAL PEDESTRIAN CURB (12" HEIGHT)

5 SAWING CURB OPENINGS, SEE DETAIL

6 ASPHALTIC SURFACE DRIVEWAY

RADIUS INFORMATION

NO.	STATION	OFFSET	Y COORDINATE	X COORDINATE	RADIUS
A	45+64.93	21.26'LT	179,574.61	209,210.50	1.00'
B	45+98.11	21.23'LT	179,607.14	209,211.21	1.00'
C	46+27.80	21.26'LT	179,636.83	209,211.40	1.00'
D	46+53.30	21.31'LT	179,662.33	209,211.54	1.00'
E	48+26.97	21.35'LT	179,835.99	209,212.81	1.00'
F	48+52.79	22.24'LT	179,861.82	209,212.12	1.00'
G	48+77.18	21.60'LT	179,886.20	209,212.94	1.00'
H	49+08.51	21.57'LT	179,917.53	209,213.21	1.00'

ALL DIMENSIONS SHOWN ARE TO FACE OF CURB

PROJECT NO: 4996-01-54	HWY: SIDEWALK GAP	COUNTY: SHEBOYGAN	SEGMENT 15 TAYLOR DR.	SHEET 96	E

BENCH MARKS

NO.	STATION	DESCRIPTION	ELEV.
10	52+34	CUT "X" IN MEDIAN	100.76

N

SCALE, FEET 0 20 40

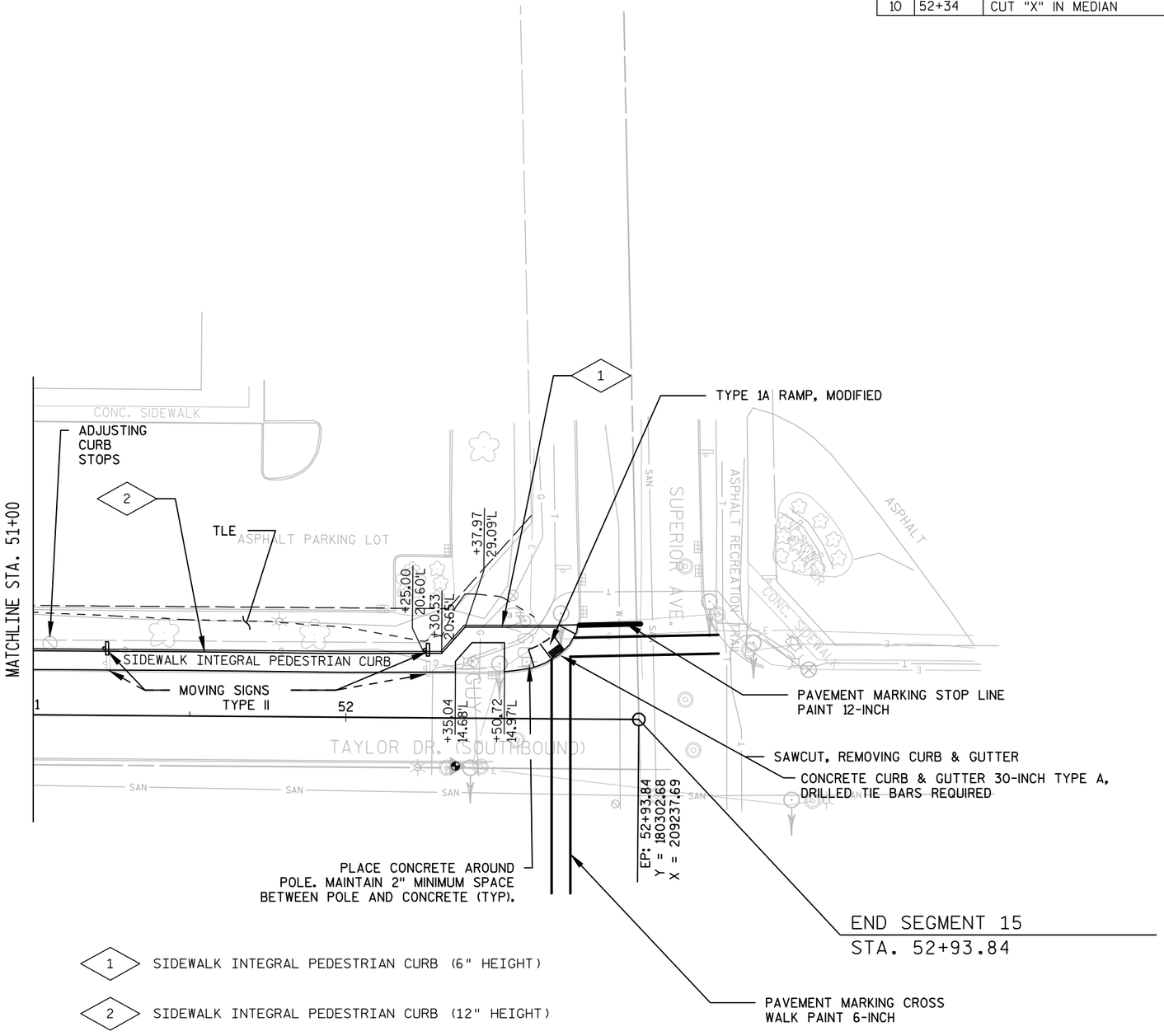

PROJECT NO: 4996-01-54	HWY: SIDEWALK GAP	COUNTY: SHEBOYGAN	SEGMENT 15 TAYLOR DR.	SHEET 97	E

FILE NAME : L:\WORK\60158441\000_CADD\CIVIL\SEGMENT 5 & 15\050232_PN.DWG PLOT DATE : 2/27/2014 10:53 AM PLOT BY : HOLZWART, JOSEPH PLOT NAME : ---------- PLOT SCALE : ********

WISDOT/CADDS SHEET 44

Standard Detail Drawing List

08A05-19B	INLET COVERS TYPE B, B-A, C, MS, MS-A, & WM
08A05-19D	INLET COVER TYPE BW, MANHOLE COVERS, TYPE K, J, J-S, L & M
08B09-01	MANHOLES 3-FT, 4-FT, 5-FT, 6-FT, 7-FT AND 8-FT DIAMETER
08C08-01	INLETS MEDIAN 1 AND 2 GRATE
08D01-17	CONCRETE CURB, CONCRETE CURB AND GUTTER AND TIES
08D05-15A	CURB RAMPS TYPES 1 AND 1-A
08D05-15B	CURB RAMPS TYPES 2 AND 3
08D05-15C	CURB RAMPS TYPES 4A AND 4A1
08D05-15D	CURB RAMPS TYPE 4B AND 4B1
08D05-15E	CURB RAMPS TYPES 5, 6, 7A, 7B & 8
08E08-03	TYPICAL INSTALLATIONS OF EROSION BALES / TEMPORARY DITCH CHECKS
08E09-06	SILT FENCE
08E10-02	INLET PROTECTION TYPE A, B, C AND D
08F01-11	APRON ENDWALLS FOR CULVERT PIPE
08F04-07	JOINT TIES FOR CONCRETE PIPE AND CONCRETE COLLAR DETAIL
13B01-10	PAVEMENT DETAILS FOR RAILROAD APPROACH
13C18-02C	CONCRETE PAVEMENT JOINT TIES
15C02-05A	BARRICADES AND SIGNS FOR MAINLINE CLOSURES
15C02-05B	BARRICADES AND SIGNS FOR MAINLINE CLOSURES
15C03-02	BARRICADES AND SIGNS FOR SIDEROAD CLOSURES
15C05-02	TRAFFIC CONTROL, ADVANCE WARNING SIGNS 40 M.P.H. OR LESS
15C33-01	STOP LINE AND CROSSWALK PAVEMENT MARKING
15D20-02	TRAFFIC CONTROL, SINGLE LANE CLOSURE, NON-FREEWAY/EXPRESSWAY
15D30-01	TRAFFIC CONTROL, SIDEWALK CLOSURE

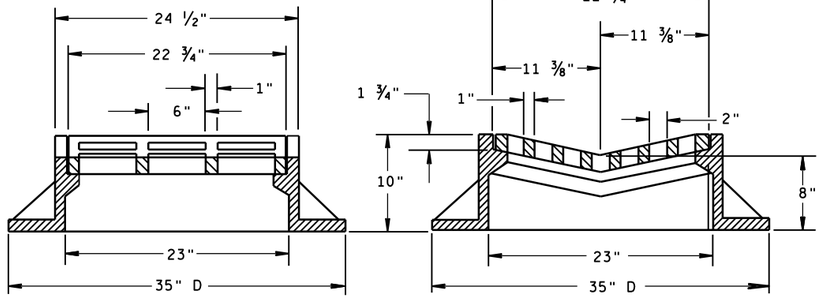

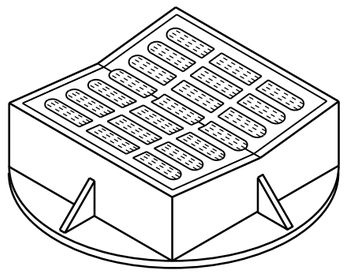

TYPE "B"

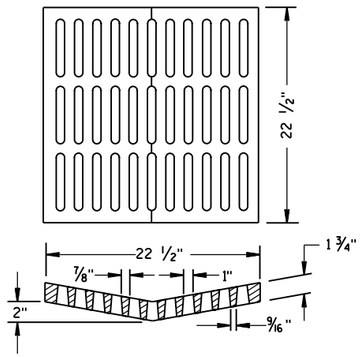

ALTERNATIVE GRATE FOR TYPE "B" COVER

USE WHERE PEDESTRIAN OR BICYCLE TRAFFIC IS POSSIBLE.
NOTED AS TYPE B-A ON THE DRAINAGE TABLE

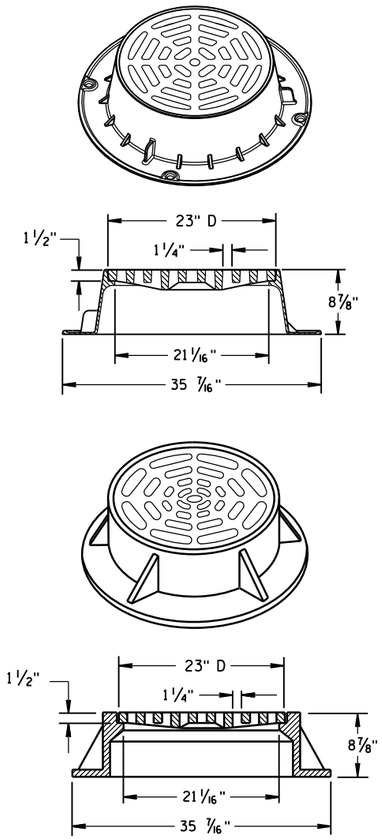

TYPE "C"

NOTE: EITHER CASTING IS ACCEPTABLE

GENERAL NOTES

DETAILS OF CONSTRUCTION, MATERIALS AND WORKMANSHIP NOT SHOWN ON THIS DRAWING SHALL CONFORM TO THE PERTINENT REQUIREMENTS OF THE STANDARD SPECIFICATIONS AND THE APPLICABLE SPECIAL PROVISIONS.

DETAIL DRAWINGS FOR PROPOSED ALTERNATE DESIGNS FOR CATCH BASIN, MANHOLE AND INLET COVERS SHALL BE SUBMITTED TO THE ENGINEER FOR APPROVAL PROVIDING THAT SUCH ALTERNATE DESIGNS MAKE PROVISION FOR EQUIVALENT CAPACITY AND STRENGTH.

ROUND FRAMES AND COVERS SHALL HAVE CONTINUOUSLY MACHINED BEARING SURFACES TO PREVENT ROCKING AND RATTLING.

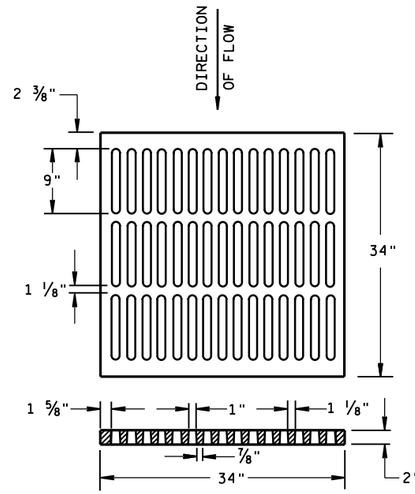

ALTERNATIVE TYPE "MS"

USE WHERE PEDESTRIAN OR BICYCLE TRAFFIC IS PERMITTED
NOTED AS TYPE MS-A ON THE DRAINAGE TABLE

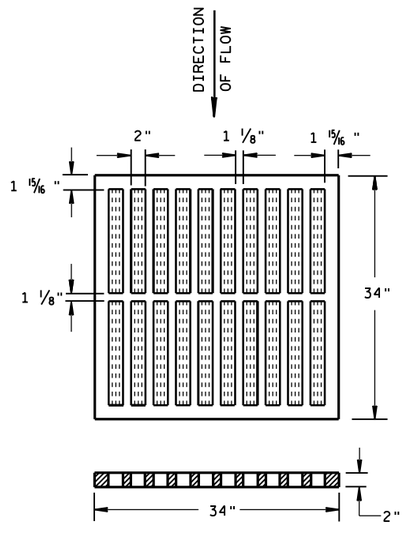

TYPE "MS"

USE ON FREEWAYS AND EXPRESSWAYS
NOTED AS TYPE MS ON DRAINAGE TABLE

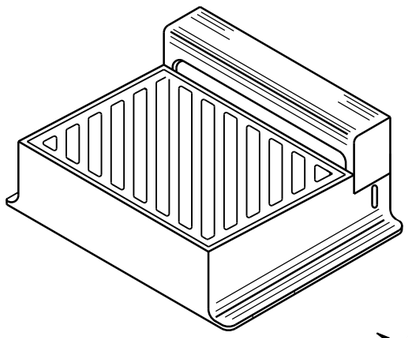

DIAGONAL SLOTS, SHALL BE ORIENTED TO THE DIRECTION OF FLOW AS ILLUSTRATED. GRATES ARE MANUFACTURED TO BE REVERSIBLE.

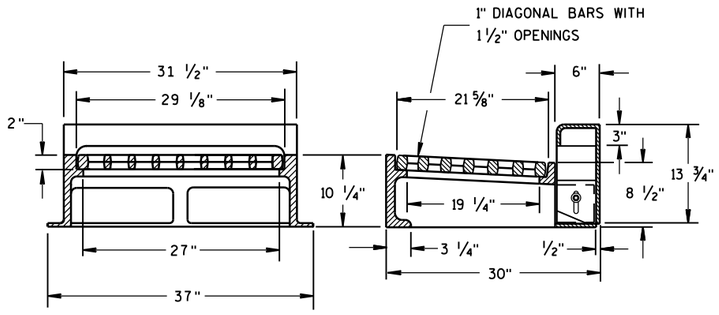

NOTE: CURB BOX HEIGHT ADJUSTABLE 6" TO 9"

TYPE "WM"

INLET COVERS
TYPE B, B-A, C, MS, MS-A, & WM

STATE OF WISCONSIN
DEPARTMENT OF TRANSPORTATION

APPROVED
11/27/2013 — DATE
/S/ Jerry H. Zogg — ROADWAY STANDARDS ENGINEER
FHWA

6

S.D.D. 8 A 5-19b

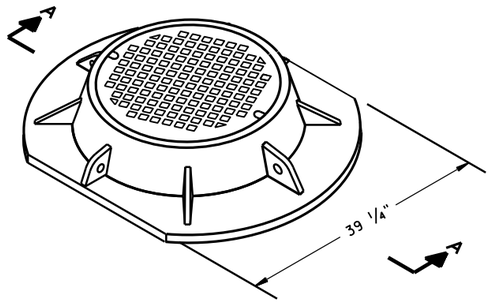

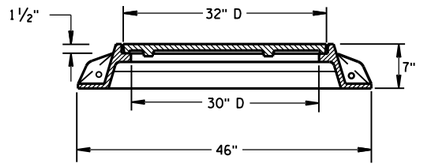

SECTION A-A
TYPE "K"

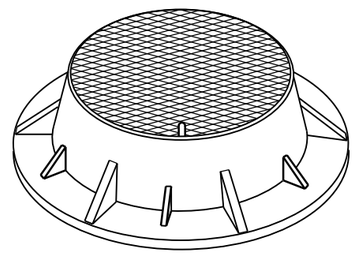

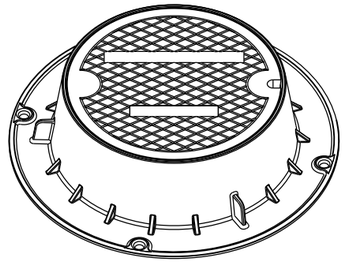

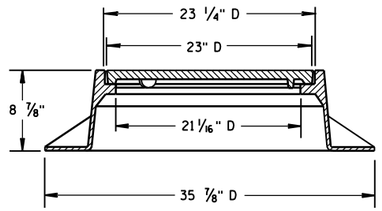

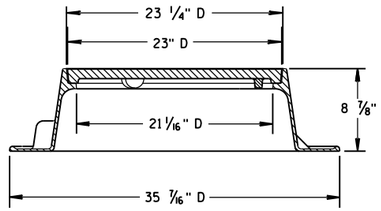

TYPE "J"
NOTE: EITHER CASTING IS ACCEPTABLE

GENERAL NOTES

DETAILS OF CONSTRUCTION, MATERIALS AND WORKMANSHIP NOT SHOWN ON THIS DRAWING SHALL CONFORM TO THE PERTINENT REQUIREMENTS OF THE STANDARD SPECIFICATIONS AND THE APPLICABLE SPECIAL PROVISIONS.

DETAIL DRAWINGS FOR PROPOSED ALTERNATE DESIGNS FOR MANHOLE COVERS SHALL BE SUBMITTED TO THE ENGINEER FOR APPROVAL PROVIDING THAT SUCH ALTERNATE DESIGNS MAKE PROVISION FOR EQUIVALENT CAPACITY AND STRENGTH.

ROUND FRAMES AND COVERS SHALL HAVE CONTINUOUSLY MACHINED BEARING SURFACES TO PREVENT ROCKING AND RATTLING.

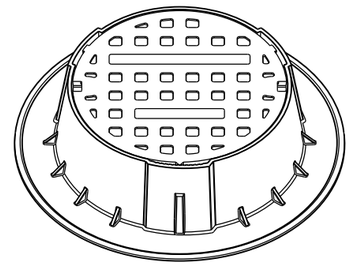

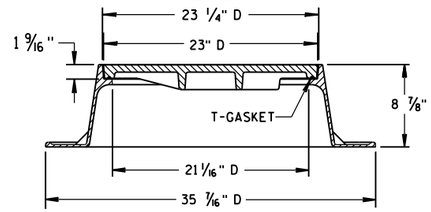

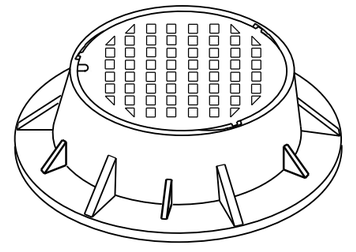

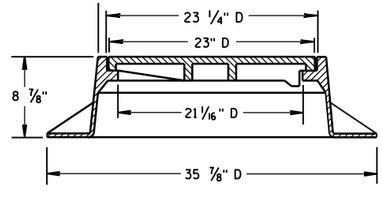

TYPE "J" SPECIAL
TYPE "B" NON-ROCKING SELF-SEAL LID
(NOTED AS TYPE J-S ON THE DRAINAGE TABLE)
NOTE: EITHER CASTING IS ACCEPTABLE

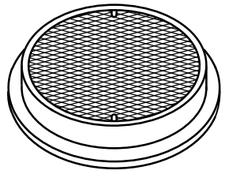

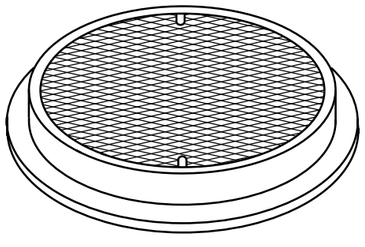

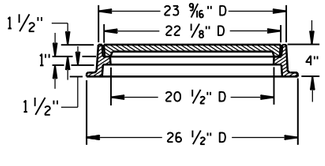

TYPE "L"

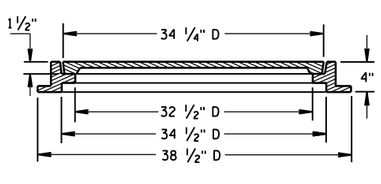

TYPE "M"

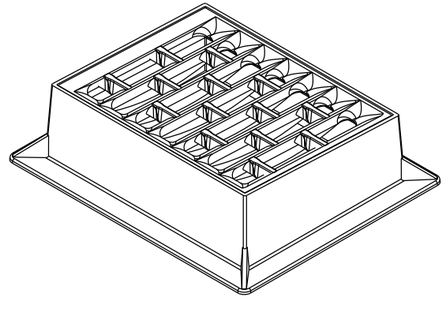

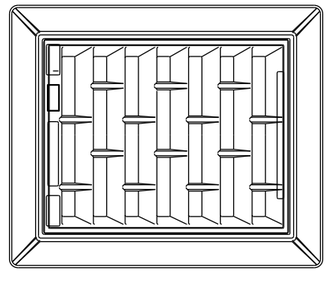

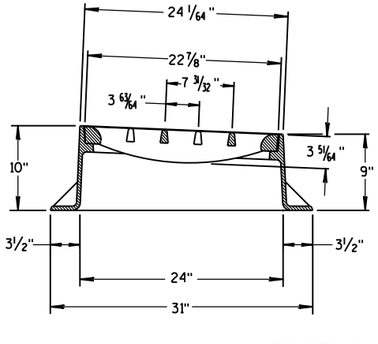

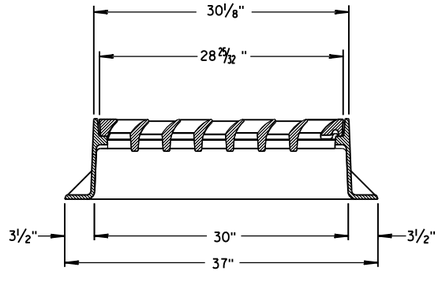

INLET COVER TYPE "BW"

INLET COVER TYPE BW
MANHOLE COVERS, TYPE K, J, J-S, L & M

STATE OF WISCONSIN
DEPARTMENT OF TRANSPORTATION

APPROVED
11/27/2013
DATE
/S/ Jerry H. Zogg
ROADWAY STANDARDS DEVELOPMENT ENGINEER
FHWA

6

S.D.D. 8 A 5-19d

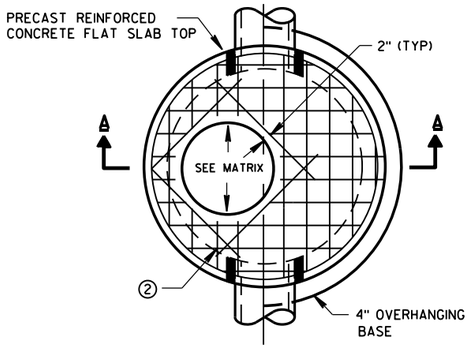

PLAN VIEW CIRCULAR OPENING

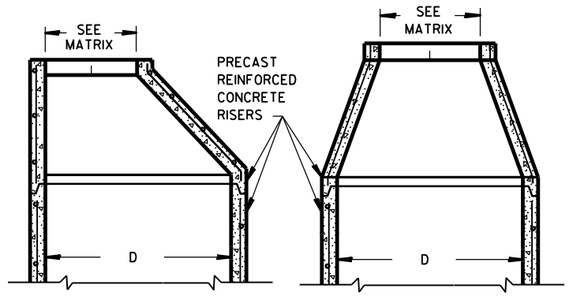

OPTIONAL PRECAST REINFORCED CONCRETE ECCENTRIC TOP

OPTIONAL PRECAST REINFORCED CONCRETE CONCENTRIC TOP

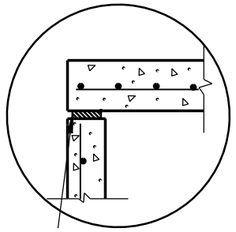

TOP WITH PLAIN END JOINT

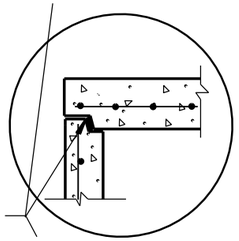

JOINTS TO BE SEALED WITH A BUTYL RUBBER SEAL PER SEALANT MANUFACTURERS RECOMMENDATIONS CONFORMING TO ASTM C990 (TYP)

TOP WITH TONGUE AND GROOVE JOINT

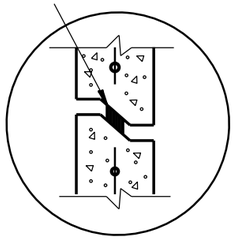

RISER WITH TONGUE AND GROOVE JOINT

DETAIL "B"

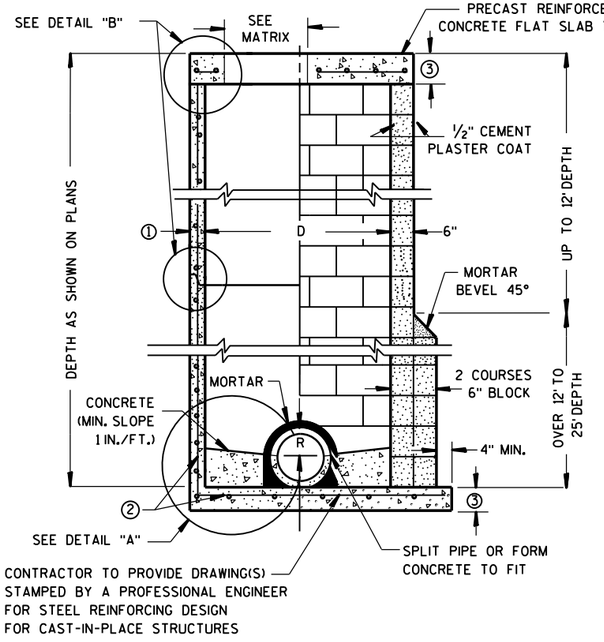

PRECAST REINFORCED CONCRETE WITH MONOLITHIC BASE

CONCRETE BLOCK WITH CAST-IN-PLACE OR PRECAST REINFORCED CONCRETE BASE ②

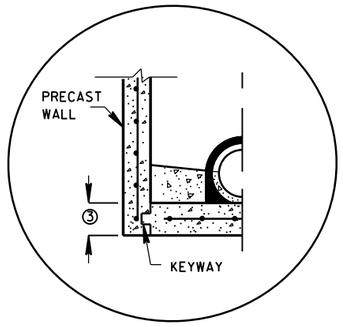

PRECAST REINFORCED CONCRETE WITH INTEGRAL BASE OPTION

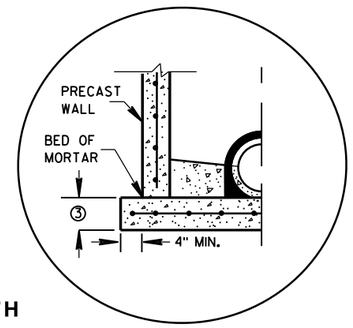

SEPARATE PRECAST REINFORCED CONCRETE BASE OPTION

DETAIL "A"

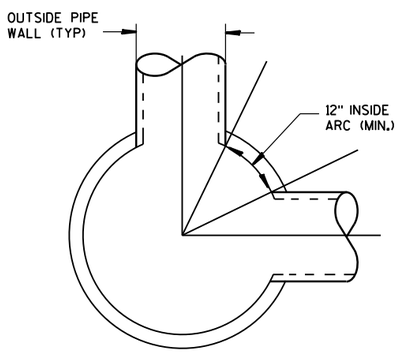

DETAIL "C"

GENERAL NOTES

DETAILS OF CONSTRUCTION, MATERIALS AND WORKMANSHIP NOT SHOWN ON THIS DRAWING SHALL CONFORM TO THE PERTINENT REQUIREMENTS OF THE STANDARD SPECIFICATIONS AND THE APPLICABLE SPECIAL PROVISIONS.

UNLESS OTHERWISE AUTHORIZED IN WRITING BY THE ENGINEER, THE CONTRACTOR SHALL NOT ORDER AND DELIVER PRECAST MANHOLE UNITS REQUIRED FOR THE PROJECT UNTIL A LIST OF SIZES IS FURNISHED BY THE ENGINEER.

DETAILED DRAWINGS FOR PROPOSED ALTERNATE DESIGNS FOR UNDERGROUND DRAINAGE STRUCTURES SHALL BE SUBMITTED TO THE ENGINEER FOR APPROVAL PROVIDING THAT SUCH ALTERNATE DESIGNS MAKE PROVISION FOR EQUIVALENT CAPACITY AND STRENGTH.

ALL DRAINAGE STRUCTURES ARE DESIGNATED ON THE PLANS AS "MANHOLES 3X3-L", "CATCH BASINS 4-B", "INLETS 2X3-H", ETC. THE FIRST NUMBERS DESIGNATE THE SIZE OF THE STRUCTURE, AND THE FOLLOWING LETTER DESIGNATES THE TYPE OF COVER TO BE USED TO COMPRISE THE COMPLETE UNIT.

BASES SHALL BE PLACED ON A BED OF MATERIAL AT LEAST 6 INCHES IN DEPTH, WHICH MEETS THE REQUIREMENTS OF GRANULAR BACKFILL. THIS BEDDING SHALL BE COMPACTED AND PROVIDE UNIFORM SUPPORT FOR THE ENTIRE AREA OF THE BASE.

PRECAST REINFORCED CONE TOPS (ECCENTRIC OR CONCENTRIC) OR PRECAST REINFORCED FLAT SLAB TOPS MAY BE USED ON CONCRETE BLOCK STRUCTURES. THE CONE TOPS SHALL BE INSTALLED ON A BED OF MORTAR.

ECCENTRIC CONE TOPS MAY BE USED ON ALL STRUCTURES, AND CONCENTRIC CONE TOPS SHALL BE USED ONLY ON STRUCTURES 5 FEET OR LESS IN DEPTH, UNLESS OTHERWISE DIRECTED BY THE ENGINEER.

STEPS MEETING AASHTO M199 AND THE FOLLOWING REQUIREMENTS SHALL BE INSTALLED IN ALL STRUCTURES OVER 5 FEET IN DEPTH: 16 INCH C-C MAXIMUM SPACING; PROJECT A MINIMUM CLEAR DISTANCE OF 4 INCHES FROM THE WALL AT THE POINT OF EMBEDMENT; MINIMUM LENGTH OF 10 INCHES; MINIMUM WALL EMBEDMENT OF 3 INCHES. FERROUS METAL STEPS NOT PAINTED OR TREATED TO RESIST CORROSION SHALL HAVE A MINIMUM CROSS SECTIONAL DIMENSION OF 1 INCH.

STEPS OF APPROVED POLYPROPYLENE PLASTIC COATED REINFORCEMENT BAR ARE ACCEPTABLE. REINFORCING BAR MUST BE A MINIMUM OF ½" AND MEET THE REQUIREMENTS OF ASTM A615.

CERTIFICATION SHALL BE PROVIDED THAT INSTALLED STEPS WHEN TESTED IN ACCORDANCE WITH SECTION 10 OF AASHTO T280 CAN WITHSTAND A VERTICAL LOAD OF 800 LBS. AND A HORIZONTAL LOAD OF 400 LBS.

ALL BAR STEEL REINFORCEMENT SHALL BE EMBEDDED 2 INCHES CLEAR UNLESS OTHERWISE SHOWN OR NOTED.

CONCRETE BLOCK WILL NOT BE PERMITED FOR STRUCTURES GREATER THAN 4 FEET IN DIAMETER.

PRECAST REINFORCED RISERS SHALL HAVE A TONGUE AND GROOVE JOINT WITH TONGUE UP OR DOWN.

ALL PRECAST MANHOLE UNITS SHALL CONFORM TO THE PERTINENT REQUIREMENTS OF AASHTO DESIGNATION M 199.

4" OVERHANGING BASES ARE REQUIRED FOR ALL CONCRETE BLOCK INSTALLATIONS. 4" OVERHANG IS REQUIRED WHEN SEPARATE PRECAST BASE IS PROVIDED. OVERHANG IS NOT REQUIRED ON PRECAST STRUCTURES WITH AN INTEGRAL OR MONOLITHIC BASE.

FOR ADDITIONAL CONFIGURATIONS, MAINTAIN A MINIMUM OF 12 INCHES AS MEASURED FROM THE INSIDE OF THE STRUCTURE WALL BETWEEN THE OUTSIDE PIPE WALLS OF ADJACENT PIPES. SEE DETAIL "C".

① MINIMUM WALL THICKNESS SHALL BE 4 INCHES FOR 3-FT, 5 INCHES FOR 4-FT, 6 INCHES FOR 5-FT, 7 INCHES FOR 6-FT, 8 INCHES FOR 7-FT AND 9 INCHES FOR 8-FT DIAMETER PRECAST MANHOLES.

② FOR PRECAST MANHOLES PROVIDE REINFORCING STEEL IN ACCORDANCE TO AASHTO M199.

③ PRECAST FLAT SLAB TOPS AND BASES WITH A DIAMETER OF 48" AND LESS SHALL HAVE A MINIMUM THICKNESS OF 6". PRECAST FLAT SLAB TOPS AND BASES WITH A DIAMETER LARGER THAN 48" SHALL HAVE A MINIMUM THICKNESS OF 8".

MANHOLE COVER OPENING MATRIX

MANHOLE COVER TYPE	C	ALL J'S	K	L	M
OPENING SIZE (FT)					
2 DIA.	X	X		X	
3 DIA.			X		X

PIPE MATRIX

MANHOLE SIZE	MAXIMUM INSIDE PIPE DIAMETER FOR TWO PIPES	
	180° SEPARATION (IN)	90° SEPARATION (IN)
3-FT	15	12
4-FT	24	18
5-FT	36	24
6-FT	42	36
7-FT	48	36
8-FT	60	42

MANHOLES 3-FT, 4-FT, 5-FT, 6-FT, 7-FT AND 8-FT DIAMETER

STATE OF WISCONSIN
DEPARTMENT OF TRANSPORTATION

APPROVED
6/5/2012 — DATE
/S/ Jerry H. Zogg — ROADWAY STANDARDS DEVELOPMENT ENGINEER
FHWA

MANHOLES 3-FT, 4-FT, 5-FT, 6-FT, 7-FT AND 8-FT DIAMETER

6

S.D.D. 8 B 9-1

6

S.D.D. 8 B 9-1

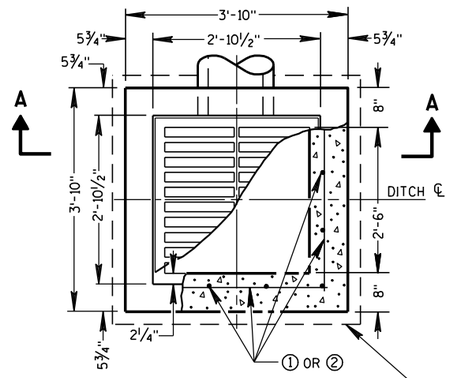

PLAN VIEW

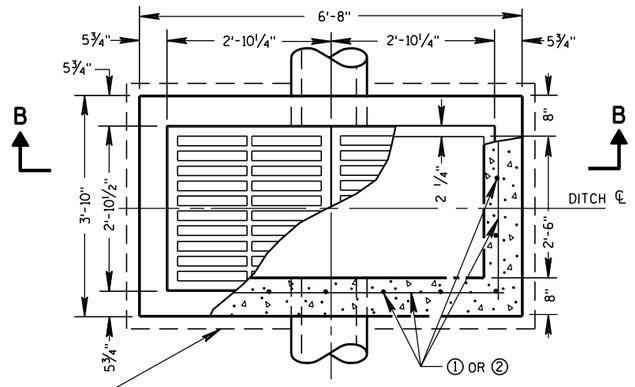

PLAN VIEW

4" OVERHANGING BASE ON REINFORCED CAST-IN-PLACE CONCRETE INLETS

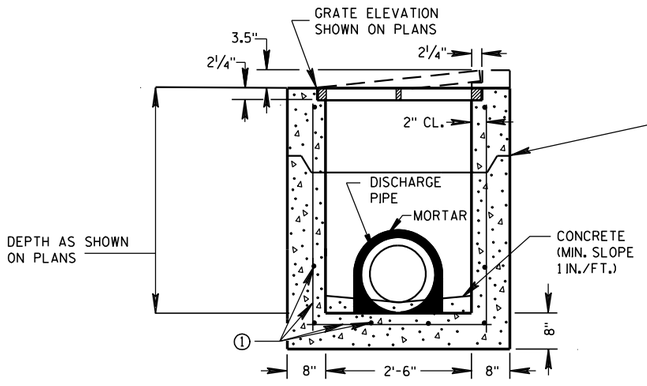

PRECAST REINFORCED CONCRETE SECTION A-A

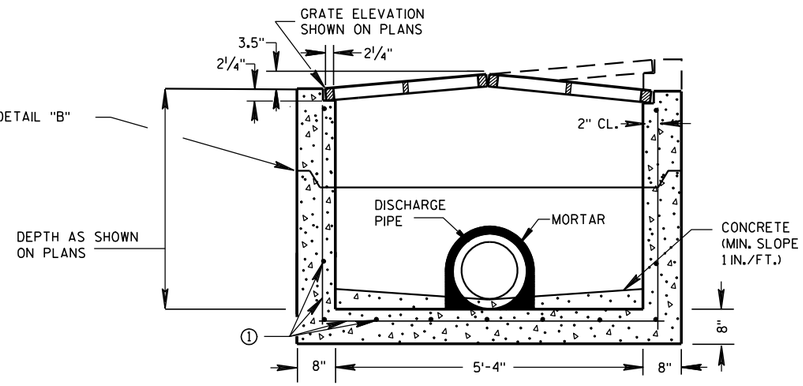

PRECAST REINFORCED CONCRETE SECTION B-B

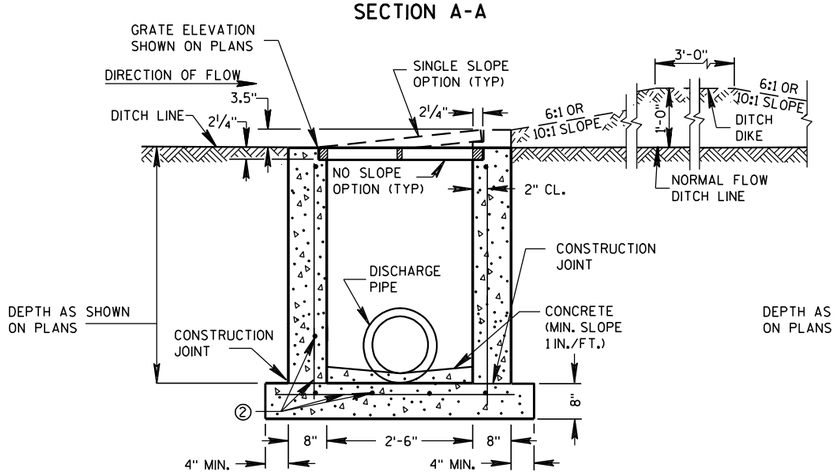

REINFORCED CAST-IN-PLACE CONCRETE SECTION A-A

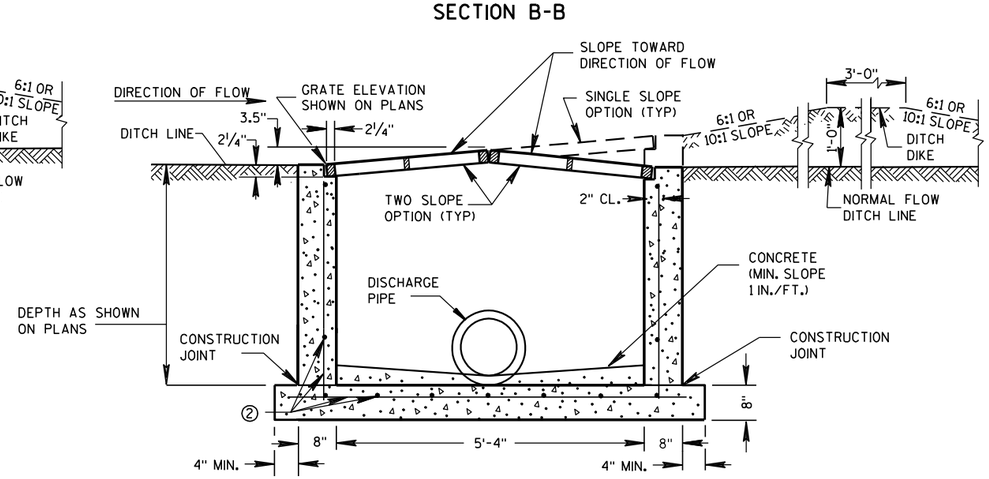

REINFORCED CAST-IN-PLACE CONCRETE SECTION B-B

GENERAL NOTES

DETAILS OF CONSTRUCTION, MATERIALS AND WORKMANSHIP NOT SHOWN ON THIS DRAWING SHALL CONFORM TO THE PERTINENT REQUIREMENTS OF THE STANDARD SPECIFICATIONS AND THE APPLICABLE SPECIAL PROVISIONS.

UNLESS OTHERWISE AUTHORIZED IN WRITING BY THE ENGINEER, THE CONTRACTOR SHALL NOT ORDER AND DELIVER PRECAST INLET UNITS REQUIRED FOR THE PROJECT UNTIL A LIST OF SIZES IS FURNISHED BY THE ENGINEER.

DETAILED DRAWINGS FOR PROPOSED ALTERNATE DESIGNS FOR INLETS WHICH MAY INCLUDE PRECAST REINFORCED CONCRETE INLETS, SHALL BE SUBMITTED TO THE ENGINEER FOR APPROVAL PROVIDING THAT SUCH ALTERNATE DESIGNS MAKE PROVISION FOR EQUIVALENT CAPACITY AND STRENGTH.

ALL MEDIAN INLETS ARE DESIGNATED ON THE PLANS AS "INLETS, 1G-MS", ETC. THE FIRST NUMBER AND LETTER DESIGNATE THE TYPE OF STRUCTURE, AND THE FOLLOWING LETTERS DESIGNATE THE TYPE OF COVER TO BE USED TO COMPRISE THE COMPLETE UNIT.

ALL BAR STEEL REINFORCEMENT SHALL BE EMBEDDED 2 INCHES CLEAR UNLESS OTHERWISE SHOWN OR NOTED.

PRECAST REINFORCED RISERS SHALL HAVE A TONGUE AND GROOVE JOINT WITH TONGUE UP OR DOWN.

ALL PRECAST INLET UNITS SHALL CONFORM TO THE PERTINENT REQUIREMENTS OF ASTM C 913.

MAXIMUM INSIDE PIPE DIAMETER DETERMINED BY 3" CLEARANCE ON EACH SIDE OF THE OUTSIDE WALL OF THE PIPE. SEE DETAIL "A". ASSUMES PIPE ENTERS PERPENDICULAR TO THE STRUCTURE.

① FOR PRECAST INLETS PROVIDE REINFORCING STEEL IN ACCORDANCE TO ASTM C 913.

② CONTRACTOR TO PROVIDE DRAWING(S) STAMPED BY A PROFESSIONAL ENGINEER FOR STEEL REINFORCING DESIGN FOR CAST-IN-PLACE STRUCTURES.

PIPE MATRIX

	MAXIMUM INSIDE PIPE DIAMETER	
INLET SIZE	WIDTH (IN)	LENGTH (IN)
1 GRATE	18	18
2 GRATE	18	42

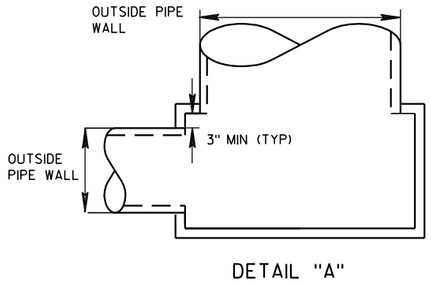

DETAIL "A"

JOINTS TO BE SEALED WITH A BUTYL RUBBER SEAL PER SEALANT MANUFACTURERS RECOMMENDATIONS CONFORMING TO ASTM C 990 (TYP)

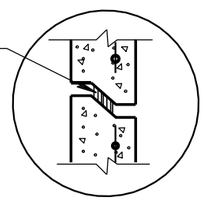

DETAIL "B"

INLETS MEDIAN 1 GRATE

INLETS MEDIAN 2 GRATE

INLETS MEDIAN 1 AND 2 GRATE

STATE OF WISCONSIN
DEPARTMENT OF TRANSPORTATION

APPROVED
6/5/2012 — DATE
/S/ Jerry H. Zogg — ROADWAY STANDARDS DEVELOPMENT ENGINEER
FHWA

6
S.D.D. 8 C 8-1

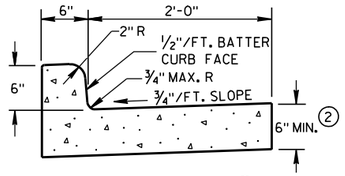

TYPES A & D (1)

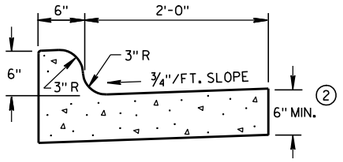

TYPES K & L (1)

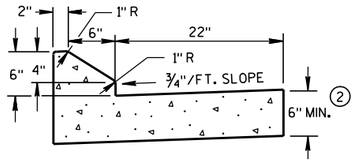

6" SLOPED CURB TYPES G & J (1)

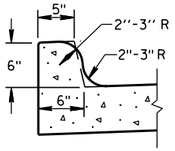

OPTIONAL CURB SHAPE FOR TYPES K & L (1)

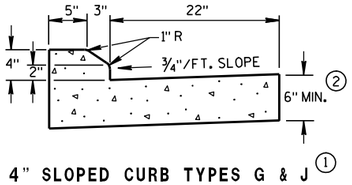

4" SLOPED CURB TYPES G & J (1)

CONCRETE CURB & GUTTER 30"

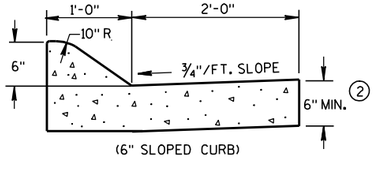

(6" SLOPED CURB)

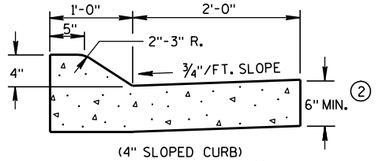

(4" SLOPED CURB)

TYPES A & D (1)

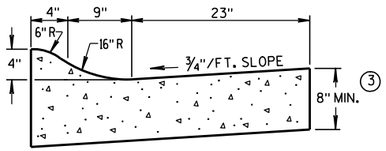

4" SLOPED CURB TYPES R & T (1) (4)

CONCRETE CURB & GUTTER 36"

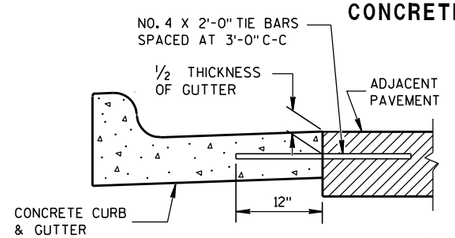

TYPICAL TIE BAR LOCATION (1)

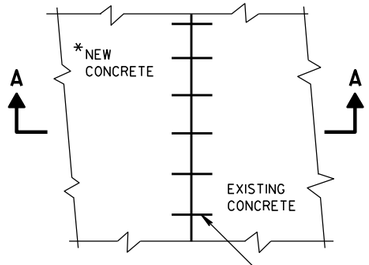

*NEW CURB & GUTTER, SURFACE DRAINS, CONCRETE PAVEMENT OR OTHER NEW CONCRETE.

PLAN VIEW

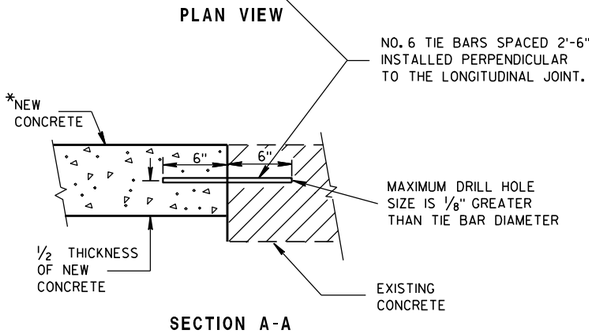

SECTION A-A

TIE BARS DRILLED INTO EXISTING PAVEMENT

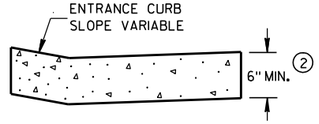

DRIVEWAY ENTRANCE CURB

(WHEN DIRECTED BY THE ENGINEER)

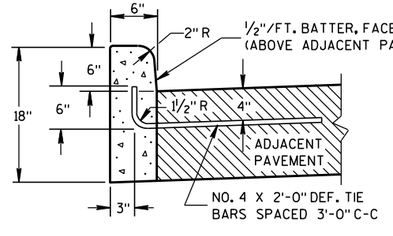

(1)

TYPES A & D

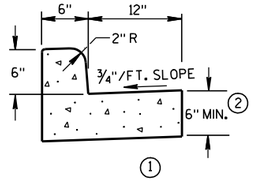

(1)

TYPES A & D

CONCRETE CURB & GUTTER 18"

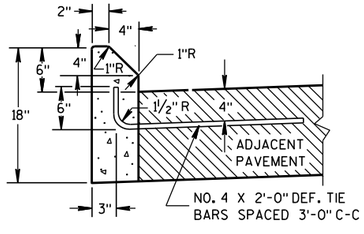

(1)

TYPES G & J

CONCRETE CURB

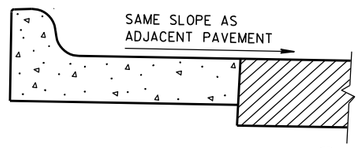

(5)

REVERSE SLOPE GUTTER

(TYPICAL FOR ALL CURB & GUTTER TYPES)

GENERAL NOTES

DETAILS OF CONSTRUCTION, MATERIALS AND WORKMANSHIP NOT SHOWN ON THIS DRAWING SHALL CONFORM TO THE PERTINENT REQUIREMENTS OF THE CONTRACT.

PAVEMENT TIES AND TIE BARS SHALL BE EPOXY COATED IN CONFORMANCE WITH SUBSECTION 505.2.6.2 OF THE STANDARD SPECIFICATIONS.

INTEGRAL CURB & GUTTER SHALL CONFORM TO THE DETAILS SHOWN FOR CONCRETE CURB & GUTTER INCLUDING THE TRANSVERSE GUTTER SLOPE. A LONGITUDINAL CONSTRUCTION JOINT IS NOT REQUIRED WITH INTEGRAL CURB AND GUTTER.

WHERE THE TRANSVERSE JOINTS IN THE PAVEMENT ARE REQUIRED TO BE SEALED, THE JOINTS IN THE INTEGRAL CURB AND GUTTER SHALL BE SEALED TO THE FACE OF CURB WITH THE SAME TYPE OF SEALANT. THE COST OF FURNISHING AND INSTALLING THIS SEALANT SHALL BE INCIDENTAL TO THE ITEM CONCRETE CURB AND GUTTER.

UNLESS OTHERWISE SHOWN ON THE TYPICAL CROSS SECTIONS, THE BASE AGGREGATE AND COMMON EXCAVATION LIMITS ARE 2'-0" BEHIND THE BACK OF CURBS.

(1) TIE BARS ARE REQUIRED FOR CURB AND GUTTER TYPES A, G, K AND R.

(2) THE BOTTOM OF CURB AND GUTTER MAY BE CONSTRUCTED EITHER LEVEL OR PARALLEL TO THE SLOPE OF THE SUBGRADE OR BASE AGGREGATE PROVIDED A 6" MINIMUM GUTTER THICKNESS IS MAINTAINED.

(3) THE BOTTOM OF CURB AND GUTTER MAY BE CONSTRUCTED EITHER LEVEL OR PARALLEL TO THE SLOPE OF THE SUBGRADE OR BASE AGGREGATE PROVIDED A 8" MINIMUM GUTTER THICKNESS IS MAINTAINED.

(4) THE FACE OF CURB IS 6" FROM THE BACK OF CURB.

(5) WHEN REVERSE SLOPE GUTTER IS REQUIRED, THE LOCATION(S) WILL BE SHOWN ELSEWHERE IN THE PLAN.

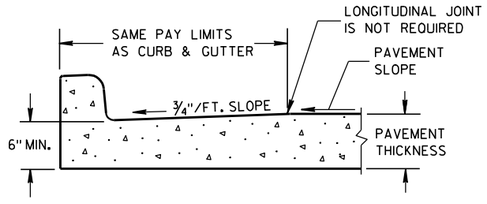

PARTIAL SECTION OF PAVEMENT WITH INTEGRAL CURB & GUTTER

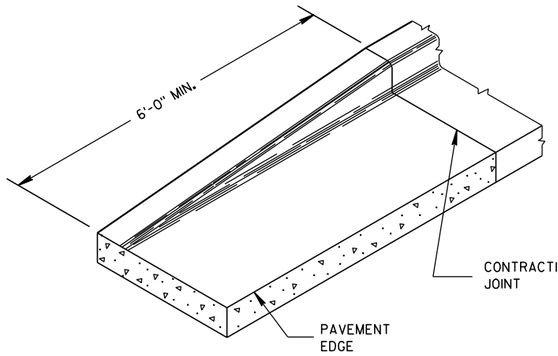

END SECTION CURB & GUTTER

CONCRETE CURB, CONCRETE CURB & GUTTER AND TIES

STATE OF WISCONSIN
DEPARTMENT OF TRANSPORTATION

APPROVED
9/4/08 DATE
/S/ Jerry H. [illegible]
ROADWAY STANDARDS ENGINEER

FHWA

ENT

6

S.D.D. 8 D 1-17

6

S.D.D. 8 D 1-17

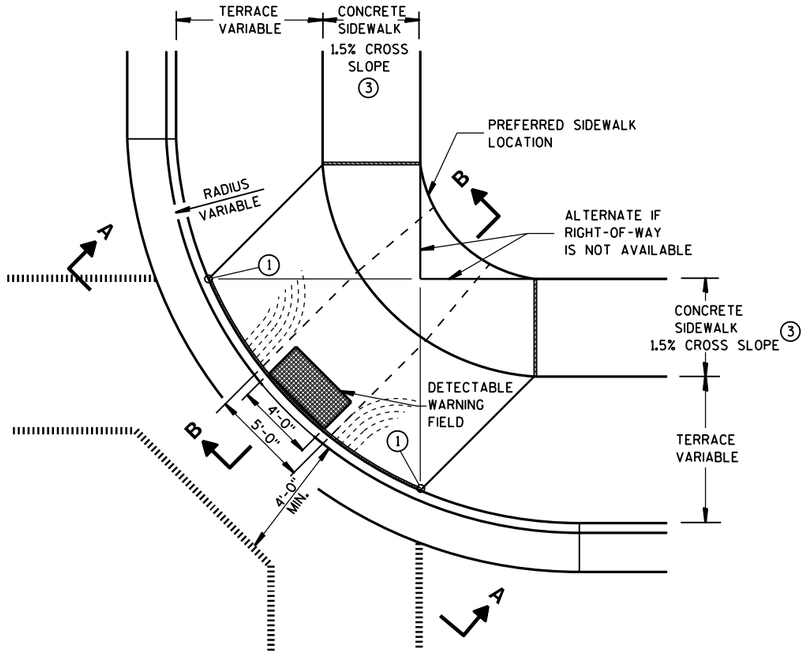

PLAN VIEW

TYPE 1 RAMP

(CENTER OF CORNER RADIUS)

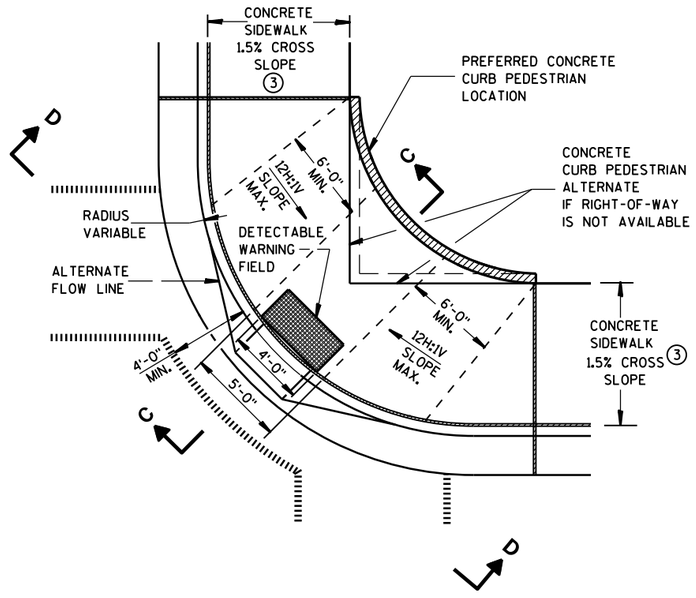

PLAN VIEW

TYPE 1-A RAMP

(NO TERRACE)

GENERAL NOTES

DETAILS OF CONSTRUCTION, MATERIALS AND WORKMANSHIP NOT SHOWN ON THIS DRAWING SHALL CONFORM TO THE PERTINENT REQUIREMENTS OF THE STANDARD SPECIFICATIONS AND THE APPLICABLE SPECIAL PROVISIONS.

RAMPS SHALL BE BUILT AT 12H:1V OR FLATTER. WHEN NECESSARY, THE SIDEWALK ELEVATION MAY BE LOWERED TO MEET THE HIGH POINT ON THE RAMP.

TYPE 1 RAMPS SHALL HAVE A NORMAL SIDEWALK APRON AND CURB ON BOTH SIDES OF RAMP.

DETECTABLE WARNING FIELD SHALL BE MEASURED AND PAID BY THE SQUARE FOOT AS "CURB RAMP DETECTABLE WARNING FIELD". THE CONCRETE PEDESTRIAN CURB, IF NEEDED, SHALL BE MEASURED AND PAID BY THE LINEAL FOOT AS "CONCRETE CURB PEDESTRIAN". CONCRETE SIDEWALK IN THE CURB RAMP AREA SHALL BE MEASURED AND PAID BY THE SQUARE FOOT AS CONCRETE SIDEWALK, INCLUDING THE AREA UNDER THE DETECTABLE WARNING FIELD.

SELECT CURB RAMP DETECTABLE WARNING FIELD MATERIALS AND DEVICES FROM THE DEPARTMENT'S APPROVED MATERIALS LIST. THE COLOR OF THE DETECTABLE WARNING FIELD IS SPECIFIED ELSEWHERE AND IS INCIDENTAL TO THE BID ITEM OF "CURB RAMP DETECTABLE WARNING FIELD".

DETECTABLE WARNING FIELDS THAT ARE INSTALLED AS A GROUP OR SIDE BY SIDE, SHALL BE FROM THE SAME MANUFACTURER.

SURFACE TEXTURE OF THE RAMP SHALL BE OBTAINED BY COARSE BROOMING TRANSVERSE TO THE SLOPE OF THE RAMP.

① THIS POINT IS AN EXTENSION OF OUTSIDE EDGE OF APPROACHING SIDEWALK WHERE IT MEETS THE BACK OF CONCRETE CURB.

② GRADE CHANGE BETWEEN GUTTER FLAG SLOPE AND THE CURB RAMP SLOPE SHALL NOT EXCEED 11%. PROVIDE DRAINAGE AWAY FROM CURB RAMP AT GUTTER FLAG INTERFACE.

③ ±0.5% CONSTRUCTION TOLERANCE IN SIDEWALK CROSS SLOPE. THE SIDEWALK CROSS SLOPE SHALL NOT EXCEED 2% WITHOUT PRIOR APPROVAL FROM THE ENGINEER.

LEGEND

- ½" EXPANSION JOINT-SIDEWALK
- CONTRACTION JOINT FIELD LOCATED
- PAVEMENT MARKING CROSSWALK (WHITE)
- ALTERNATIVE LAYOUT

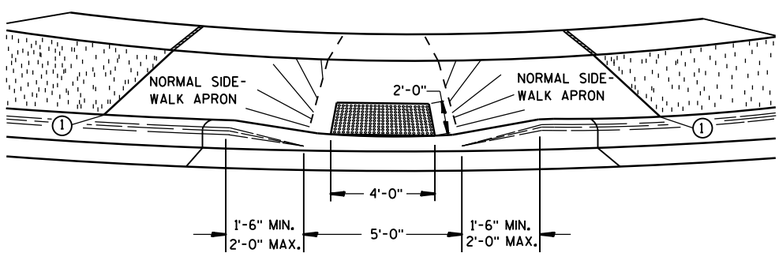

VIEW A-A

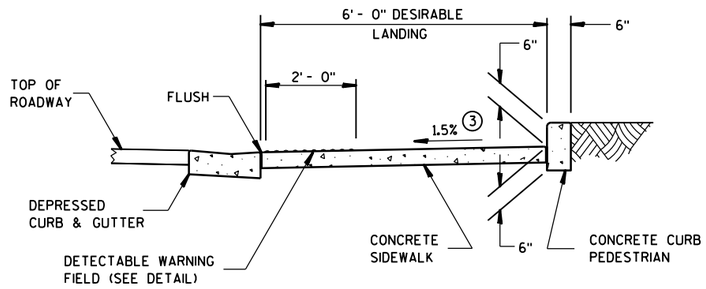

SECTION C-C

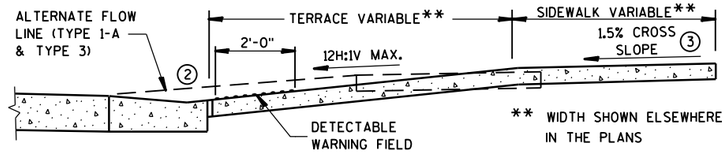

SECTION B-B

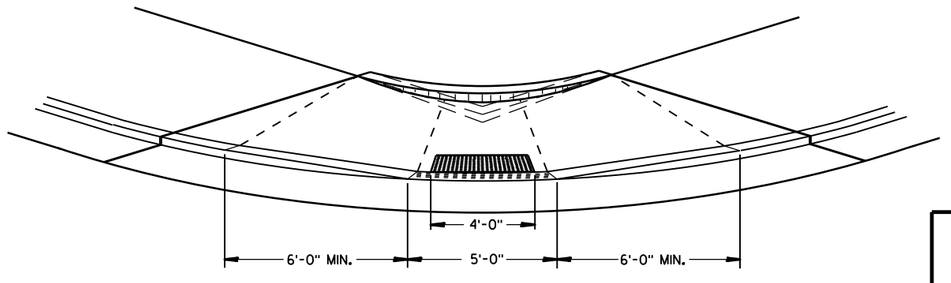

VIEW D-D

CURB RAMPS TYPES 1 AND 1-A

STATE OF WISCONSIN
DEPARTMENT OF TRANSPOR

6

S.D.D. 8 D 5-15a

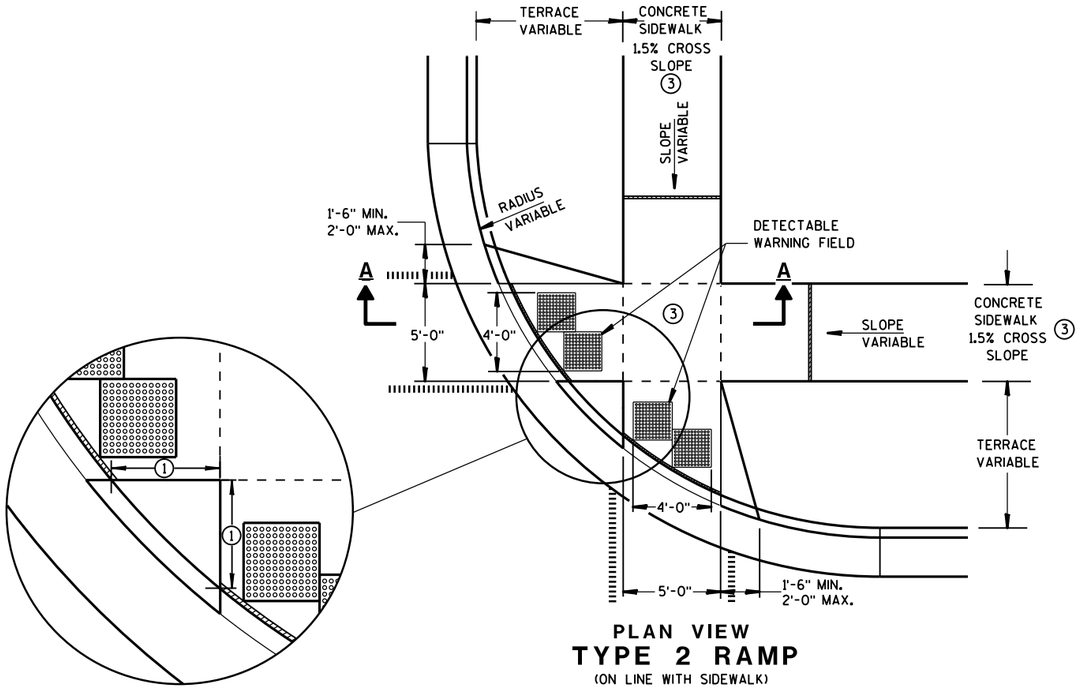

PLAN VIEW

TYPE 2 RAMP

(ON LINE WITH SIDEWALK)

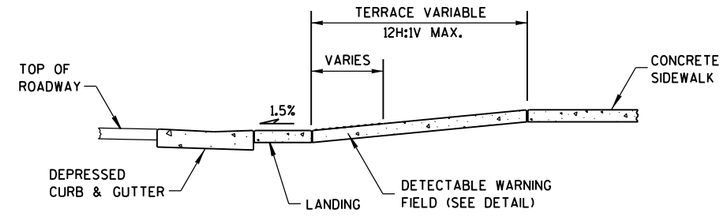

SECTION A-A

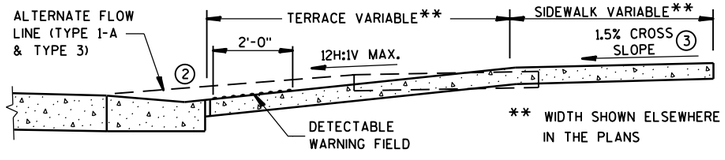

SECTION B-B

GENERAL NOTES

USE THE TYPE 3 RAMP ONLY WHEN A TYPE 1 OR TYPE 2 CANNOT BE ACHIEVED BECAUSE OF FIELD CONDITIONS.

DETECTABLE WARNING FIELDS THAT ARE INSTALLED AS A GROUP OR SIDE BY SIDE, SHALL BE FROM THE SAME MANUFACTURER.

① WHEN THIS DISTANCE IS LESS THAN 6'-0" IT MAY BE DIFFICULT TO ACHIEVE A 12H:1V SLOPE, OR FLATTER, ON THE RAMP. REDUCE CURB HEIGHT IN TRIANGLE AREA TO ACHIEVE 12H:1V SLOPE, OR FLATTER, ON RAMP. 2" MINIMUM CURB HEIGHT.

② GRADE CHANGE BETWEEN GUTTER FLAG SLOPE AND THE CURB RAMP SLOPE SHALL NOT EXCEED 11%. PROVIDE DRAINAGE AWAY FROM CURB RAMP AT GUTTER FLAG INTERFACE.

③ ±0.5% CONSTRUCTION TOLERANCE IN SIDEWALK CROSS SLOPE. THE SIDEWALK CROSS SLOPE SHALL NOT EXCEED 2% WITHOUT PRIOR APPROVAL FROM THE ENGINEER.

LEGEND

- ½" EXPANSION JOINT-SIDEWALK
- CONTRACTION JOINT FIELD LOCATED
- PAVEMENT MARKING CROSSWALK (WHITE)
- ALTERNATIVE LAYOUT

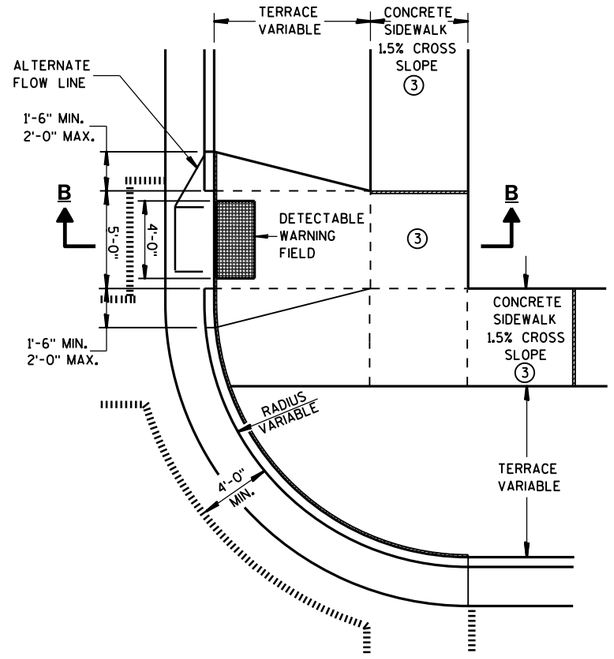

PLAN VIEW

TYPE 3 RAMP

(OUTSIDE OF CROSSWALK AREA)

CURB RAMPS TYPES 2 AND 3

STATE OF WISCONSIN
DEPARTMENT OF TRANSPOR

6

S.D.D. 8 D 5-15b

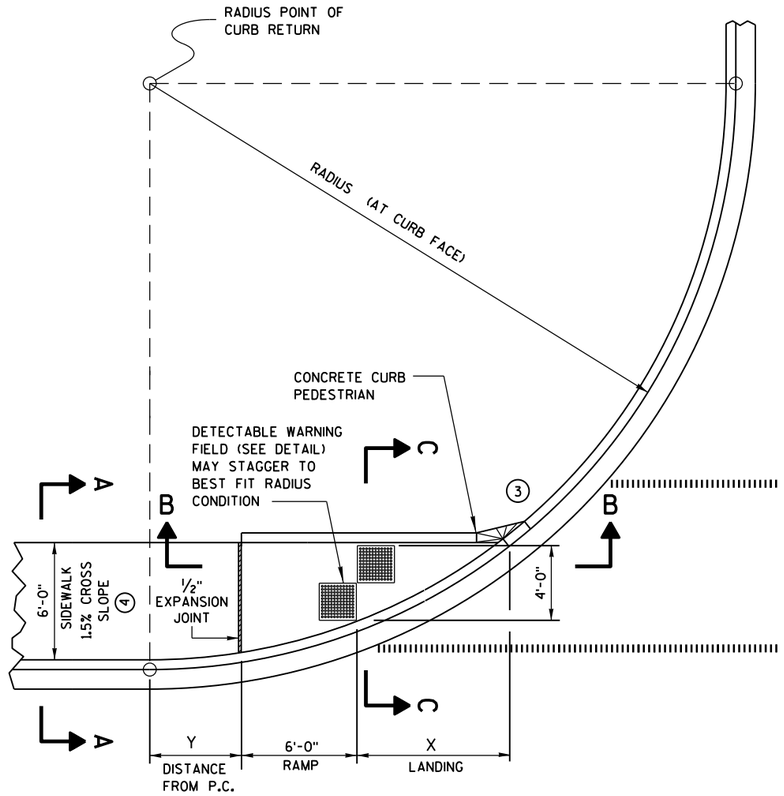

CURB RAMP TYPE 4A
PLAN VIEW

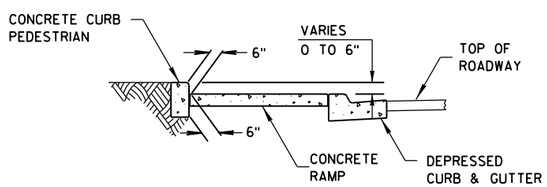

SECTION C-C FOR TYPE 4A

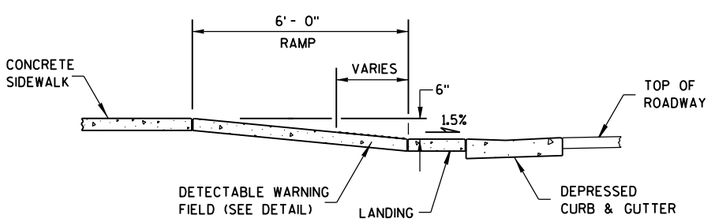

SECTION B-B FOR TYPE 4A

RADIUS (AT CURB FACE)	X	Y
20 FEET	6'-1¾"	2'-7¼"
30 FEET	7'-11¾"	4'-8¼"
40 FEET	9'-5¼"	6'-5"
50 FEET	10'-8¾"	7'-11¼"
60 FEET	11'-10¼"	9'-3½"

INTERMEDIATE RADII CAN BE INTERPOLATED

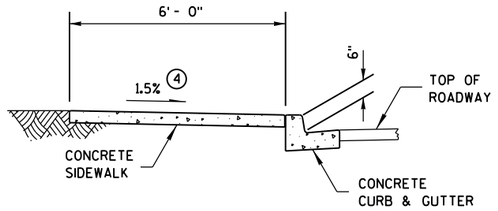

SECTION A-A FOR TYPE 4A

GENERAL NOTES

AVOID PLACING DRAINAGE STRUCTURES, JUNCTION BOXES OR OTHER OBSTRUCTIONS IN FRONT OF RAMP ACCESS AREAS.

RAMP SLOPES SHALL NOT BE STEEPER THAN 12:1.

DETECTABLE WARNING FIELDS THAT ARE INSTALLED AS A GROUP OR SIDE BY SIDE, SHALL BE FROM THE SAME MANUFACTURER.

(3) INSTALL TRANSITION NOSE. (INCIDENTAL TO OTHER PAY ITEMS.) DO NOT MARK TRANSITION NOSE.

(4) ±0.5% CONSTRUCTION TOLERANCE IN SIDEWALK CROSS SLOPE. THE SIDEWALK CROSS SLOPE SHALL NOT EXCEED 2% WITHOUT PRIOR APPROVAL FROM THE ENGINEER.

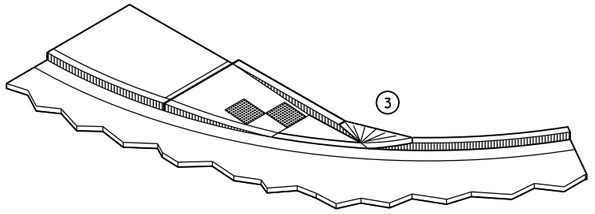

ISOMETRIC VIEW FOR TYPE 4A

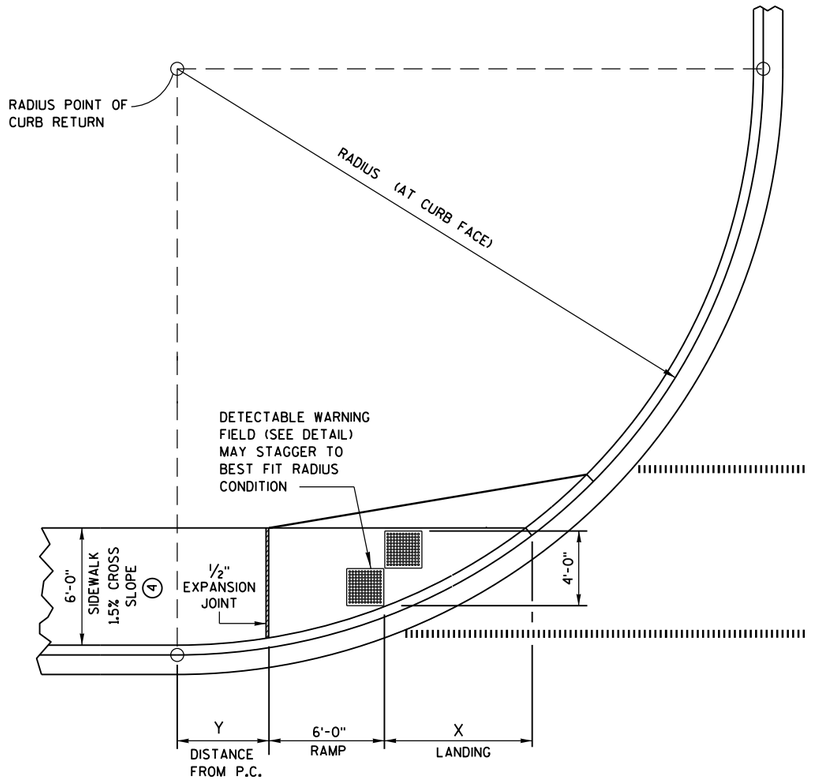

CURB RAMP TYPE 4A1
PLAN VIEW

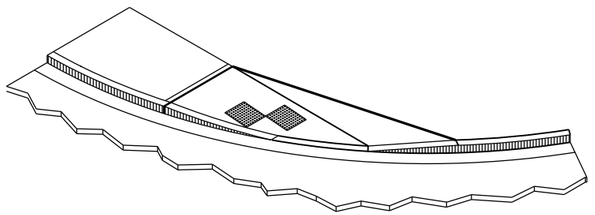

ISOMETRIC VIEW FOR TYPE 4A1

LEGEND

- ½" EXPANSION JOINT-SIDEWALK
- CONTRACTION JOINT FIELD LOCATED
- PAVEMENT MARKING CROSSWALK (WHITE)

CURB RAMPS TYPES 4A AND 4A1

STATE OF WISCONSIN
DEPARTMENT OF TRANSPOR

6

S.D.D. 8 D 5-15c

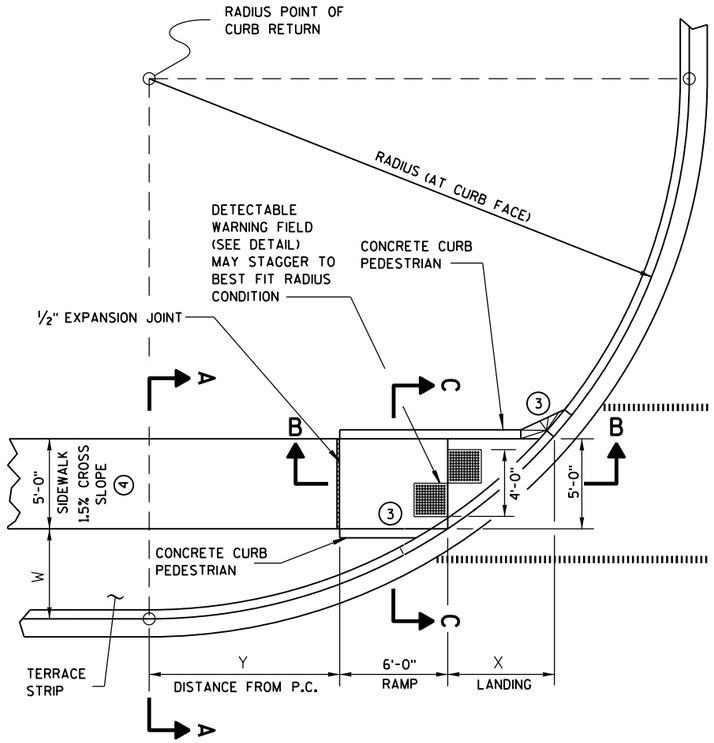

CURB RAMP TYPE 4B
PLAN VIEW

LEGEND

½" EXPANSION JOINT-SIDEWALK

CONTRACTION JOINT FIELD LOCATED

PAVEMENT MARKING CROSSWALK (WHITE)

RADIUS (AT CURB FACE)	W = 3'-0"		W = 4'-0"		W = 5'-0"		W = 6'-0"		W = 7'-0"	
	X	Y	X	Y	X	Y	X	Y	X	Y
20 FEET	5'-5½"	4'-6½"	4'-8½"	6'-0"	4'-1"	7'-2¾"	3'-7"	8'-3½"	3'-1½"	9'-2½"
30 FEET	7'-3¾"	7'-1"	6'-5½"	8'-11½"	5'-9¼"	10'-7"	5'-2½"	12'-0"	4'-8¾"	13'-3¼"
40 FEET	8'-9½"	9'-2½"	7'-10"	11'-5¼"	7'-1"	13'-4½"	6'-5¾"	15'-¾"	5'-11½"	16'-7¼"
50 FEET	10'-¾"	11'-¾"	9'-¼"	13'-7¼"	8'-2½"	15'-9½"	7'-6½"	17'-9"	6'-11¾"	19'-6¼"
60 FEET	11'-2½"	12'-8¾"	10'-¾"	15'-6½"	9'-2¼"	17'-11¾"	8'-5¾"	20'-1¾"	7'-10½"	22'-1½"

INTERMEDIATE RADII CAN BE INTERPOLATED

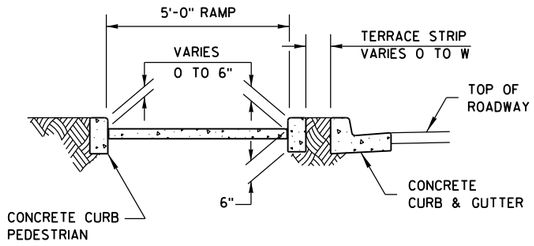

SECTION C-C FOR TYPE 4B

GENERAL NOTES

AVOID PLACING DRAINAGE STRUCTURES, JUNCTION BOXES OR OTHER OBSTRUCTIONS IN FRONT OF RAMP ACCESS AREAS.

RAMP SLOPES SHALL NOT BE STEEPER THAN 12:1.

DETECTABLE WARNING FIELDS THAT ARE INSTALLED AS A GROUP OR SIDE BY SIDE, SHALL BE FROM THE SAME MANUFACTURER.

(3) INSTALL TRANSITION NOSE. (INCIDENTAL TO OTHER PAY ITEMS.) DO NOT MARK TRANSITION NOSE.

(4) ±0.5% CONSTRUCTION TOLERANCE IN SIDEWALK CROSS SLOPE. THE SIDEWALK CROSS SLOPE SHALL NOT EXCEED 2% WITHOUT PRIOR APPROVAL FROM THE ENGINEER.

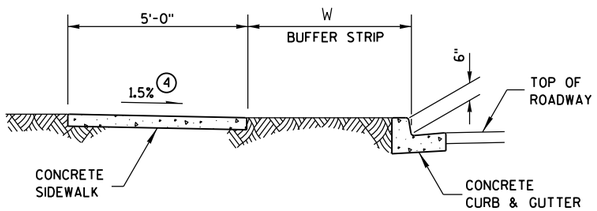

SECTION A-A FOR TYPE 4B

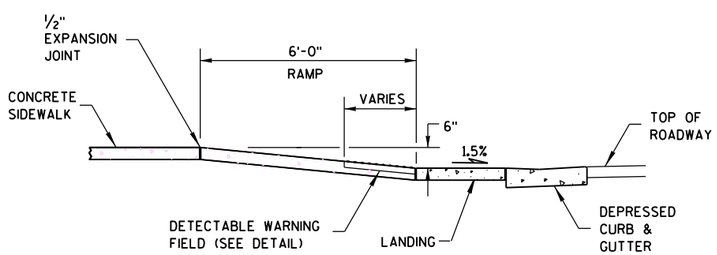

SECTION B-B FOR TYPE 4B

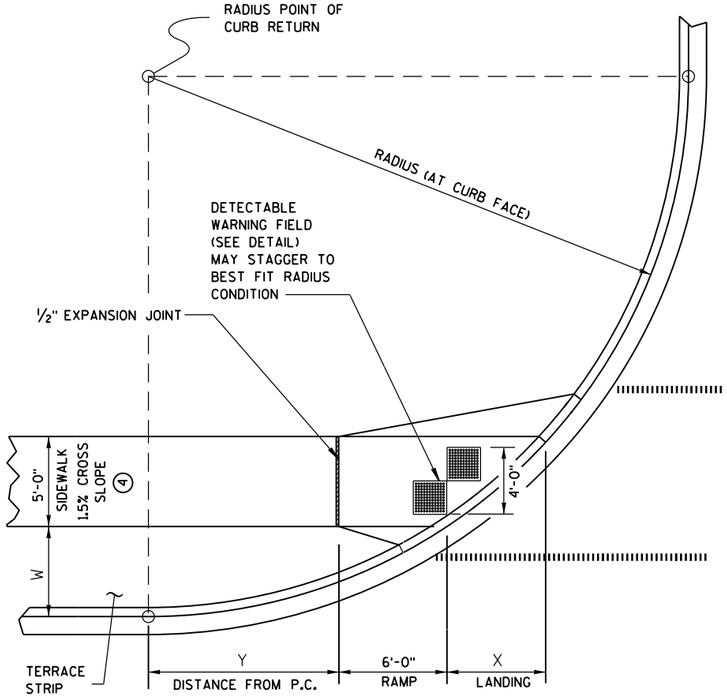

CURB RAMP TYPE 4B1
PLAN VIEW

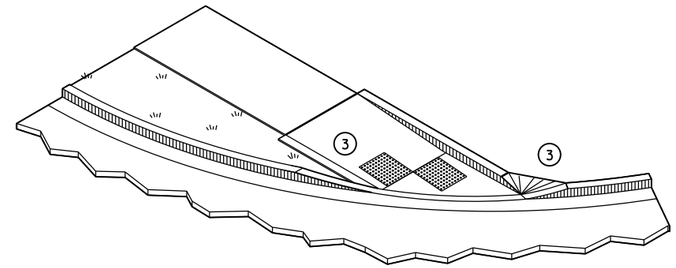

ISOMETRIC VIEW FOR TYPE 4B

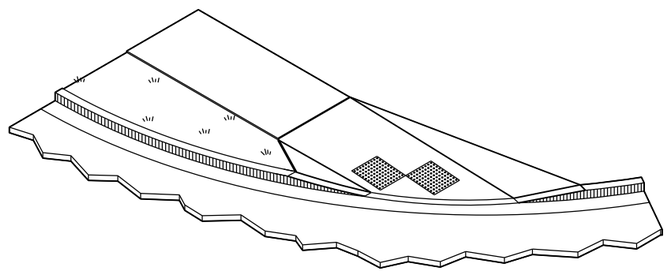

ISOMETRIC VIEW FOR TYPE 4B1

CURB RAMPS TYPE 4B AND 4B1

STATE OF WISCONSIN
DEPARTMENT OF TRANSPOR

6

S.D.D. 8 D 5-15d

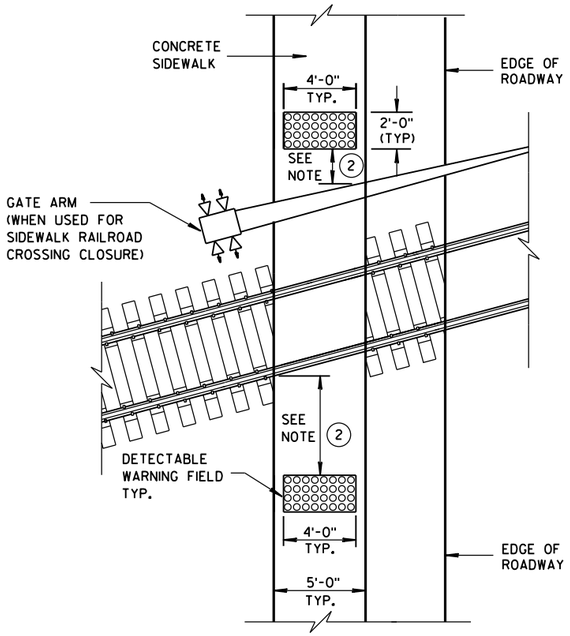

TYPE 8
DETECTABLE WARNINGS AT RAILROAD CROSSING

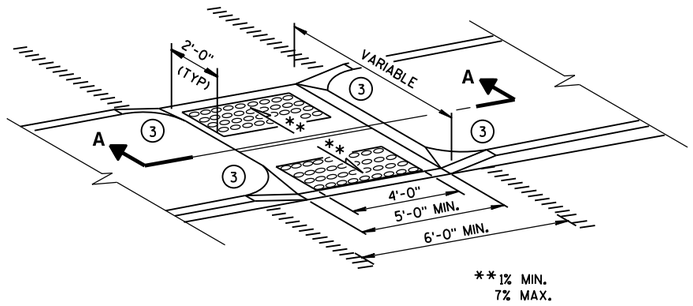

MEDIAN ISLAND
NON-ELEVATED CROSSING
TYPE 5

GENERAL NOTES

SIDEWALK CROSS SLOPE SHALL NOT EXCEED 2%.

DETECTABLE WARNING FIELDS THAT ARE INSTALLED AS A GROUP OR SIDE BY SIDE, SHALL BE FROM THE SAME MANUFACTURER.

(1) SLOPE SIDEWALK TOWARD LANDING AS SHOWN WHERE THERE IS NO TERRACE OR WHERE THE TERRACE WIDTH IS LESS THAN 6 FEET WIDE.

(2) THE EDGE OF THE DETECTABLE WARNING FIELD NEAREST TO A RAILROAD CROSSING SHALL BE 1.5 FEET ± 0.1' FROM THE FACE OF THE GATE ARM IF THE GATE ARM EXTENDS ACROSS THE SIDEWALK. WHERE THERE IS NO PEDESTRIAN GATE, THE EDGE OF THE DETECTABLE WARNING FIELD NEAREST TO THE RAILROAD CROSSING SHALL BE 15 FEET FROM THE NEAREST RAIL.

(3) INSTALL TRANSITION NOSE. (INCIDENTAL TO OTHER PAY ITEMS.) DO NOT MARK TRANSITION NOSE.

(4) ±0.5% CONSTRUCTION TOLERANCE IN SIDEWALK CROSS SLOPE. THE SIDEWALK CROSS SLOPE SHALL NOT EXCEED 2% WITHOUT PRIOR APPROVAL FROM THE ENGINEER.

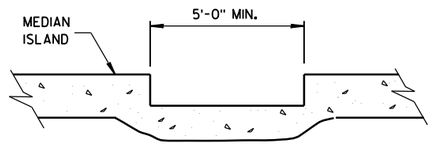

SECTION A-A

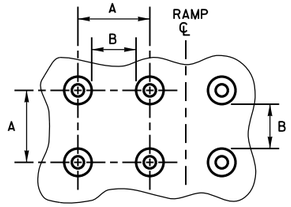

PLAN VIEW

	MIN.	MAX.
A	1.6"	2.4"
B	0.65"	1.5"
C	*	*
D	0.9"	1.4"

* THE C DIMENSION IS 50% TO 65% OF THE D DIMENSION.

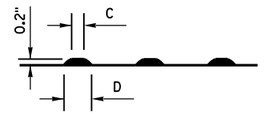

ELEVATION VIEW

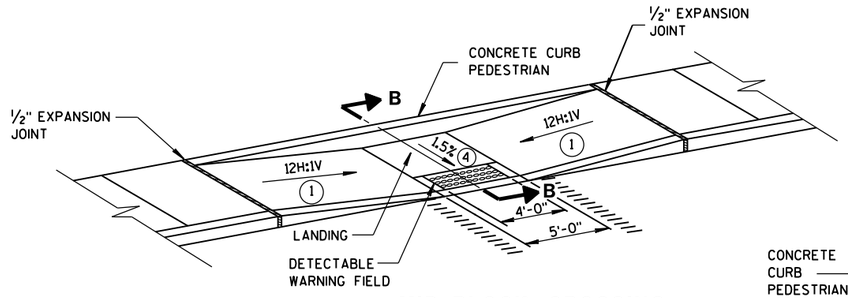

MID-BLOCK CROSSING
TYPE 7A

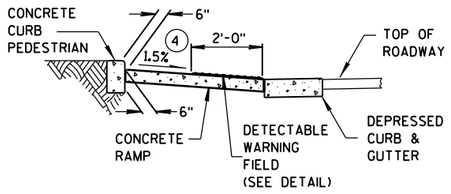

SECTION B-B

TRUNCATED DOMES
DETECTABLE WARNING PATTERN DETAIL

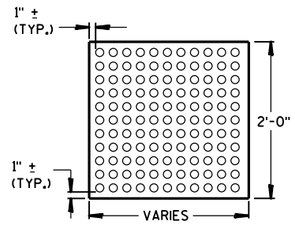

PLAN VIEW

DETECTABLE WARNING FIELD (TYPICAL)

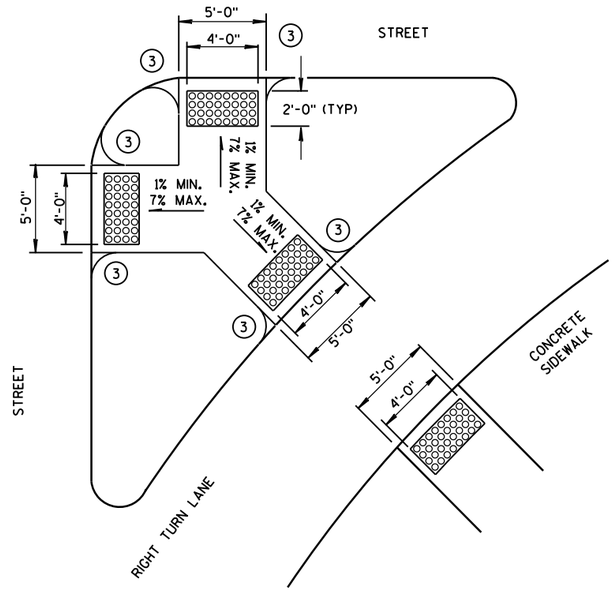

TYPE 6
DETECTABLE WARNING AT ISLANDS

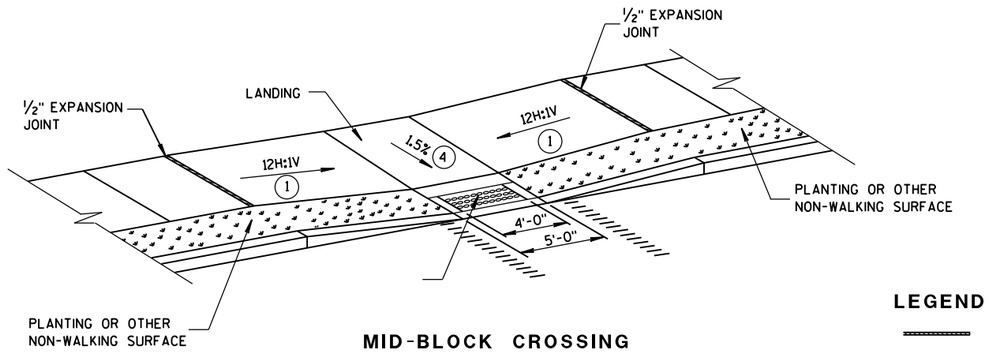

MID-BLOCK CROSSING
TYPE 7B

NOTE: THESE PARALLEL AND PARALLEL/PERPENDICULAR CURB RAMPS MAY BE USED AT INTERSECTIONS AND MID BLOCK LOCATIONS.

LEGEND

- ½" EXPANSION JOINT-SIDEWALK
- CONTRACTION JOINT FIELD LOCATED
- PAVEMENT MARKING CROSSWALK (WHITE)

CURB RAMPS
TYPES 5, 6, 7A, 7B & 8

STATE OF WISCONSIN
DEPARTMENT OF TRANSPORTATION

APPROVED
2-6-2013 DATE
/S/ Jerry H. Zogg
ROADWAY STANDARDS DEVELOPMENT ENGINEER
FHWA

6

S.D.D. 8 D 5-15e

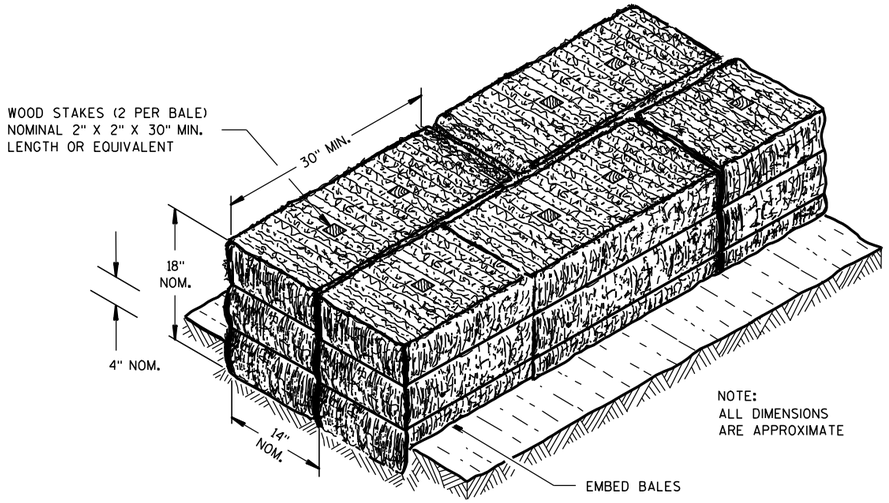

SECTION A-A

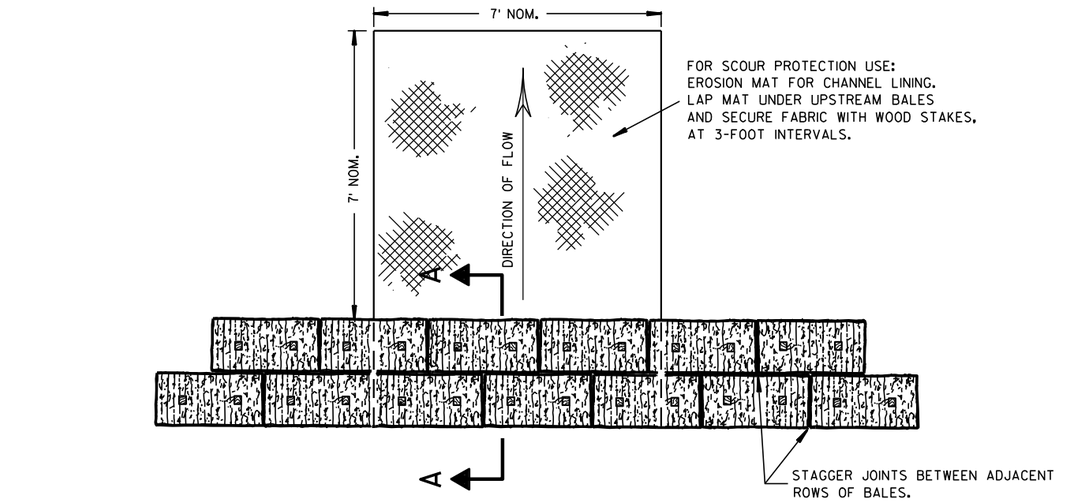

PLAN VIEW

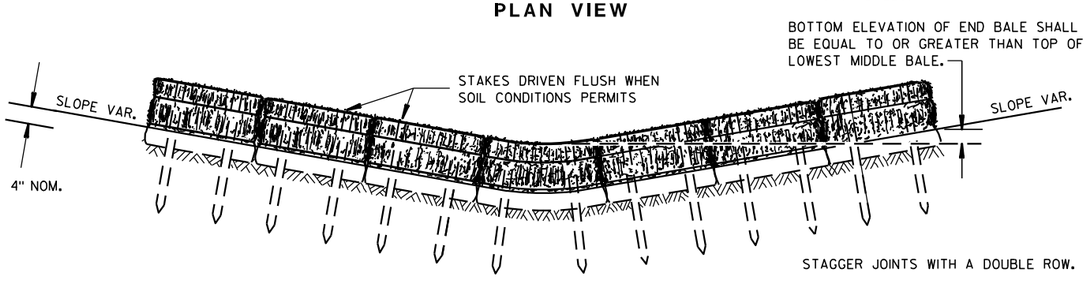

FRONT ELEVATION

TEMPORARY DITCH CHECK USING EROSION BALES ①

GENERAL NOTES

DETAILS OF CONSTRUCTION, MATERIALS AND WORKMANSHIP NOT SHOWN ON THIS DRAWING SHALL CONFORM TO THE PERTINENT REQUIREMENTS OF THE STANDARD SPECIFICATIONS AND THE APPLICABLE SPECIAL PROVISIONS.

① TEMPORARY DITCH CHECKS EITHER EROSION BALES OR MANUFACTURED SHALL BE PAID FOR UNDER THE BID ITEM OF TEMPORARY DITCH CHECK. THE DEPARTMENT WILL NOT PAY FOR TEMPORARY DITCH CHECKS CONSTRUCTED OF A SINGLE ROW OF EROSION BALES.

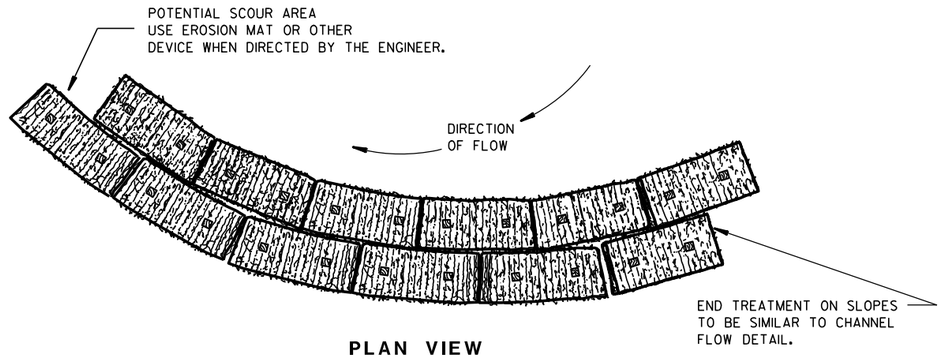

PLAN VIEW

WHEN ALTERING THE DIRECTION OF FLOW

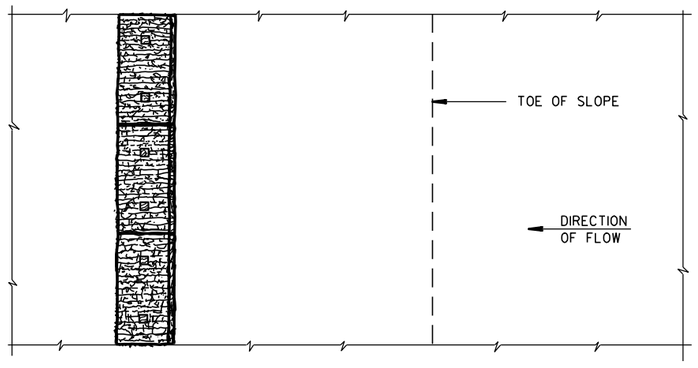

PLAN VIEW

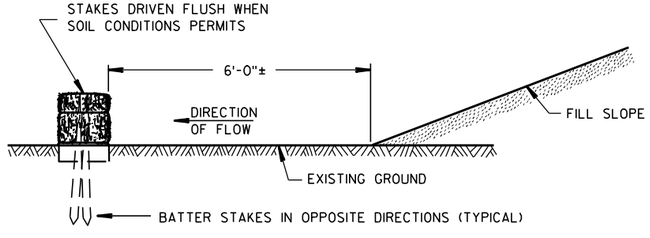

FRONT ELEVATION

WHEN EXISTING GROUND SLOPES AWAY FROM FILL SLOPE

EROSION BALES FOR SHEET FLOW

TYPICAL INSTALLATIONS OF EROSION BALES / TEMPORARY DITCH CHECKS

STATE OF WISCONSIN
DEPARTMENT OF TRANSPORTATION

APPROVED
6/04/02 DATE
/S/ Beth Cannestra
CHIEF ROADWAY DEVELOPMENT ENGINEER
FHWA

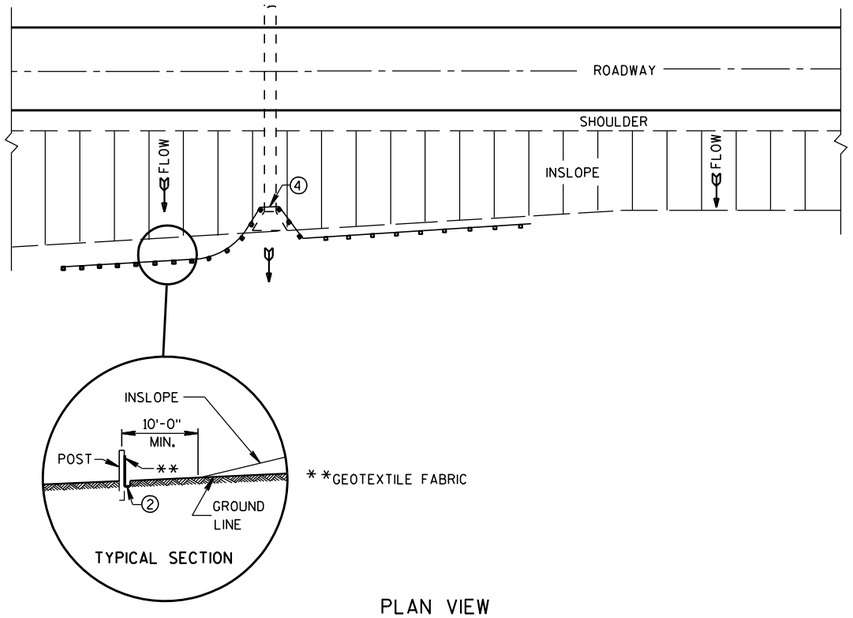

PLAN VIEW

TYPICAL APPLICATION OF SILT FENCE

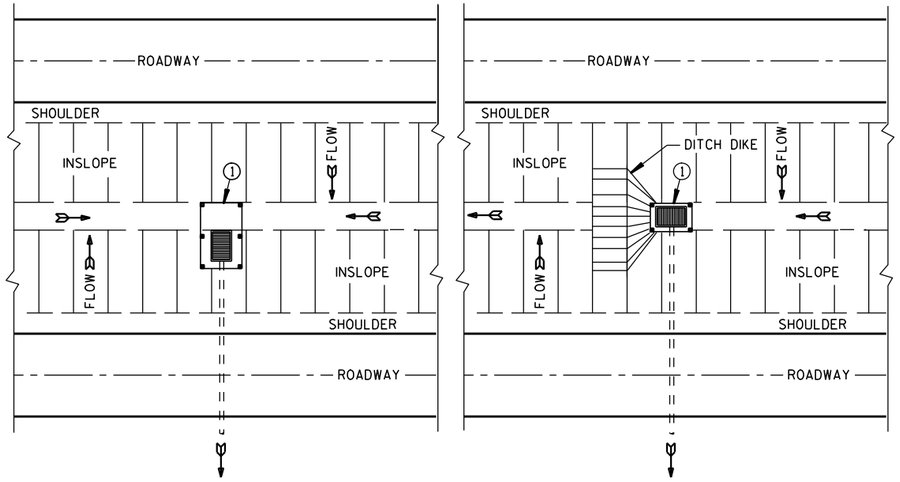

PLAN VIEW

SILT FENCE AT MEDIAN SURFACE DRAINS

GENERAL NOTES

DETAILS OF CONSTRUCTION NOT SHOWN ON THIS DRAWING SHALL CONFORM TO THE PERTINENT REQUIREMENTS OF THE STANDARD SPECIFICATIONS AND APPLICABLE SPECIAL PROVISIONS.

① HORIZONTAL BRACE REQUIRED WITH 2" X 4" WOODEN FRAME OR EQUIVALENT AT TOP OF POSTS.

② FOR MANUAL INSTALLATIONS THE TRENCH SHALL BE A MINIMUM OF 4" WIDE & 6" DEEP TO BURY AND ANCHOR THE GEOTEXTILE FABRIC. FOLD MATERIAL TO FIT TRENCH AND BACKFILL & COMPACT TRENCH WITH EXCAVATED SOIL.

③ WOOD POSTS SHALL BE A MINIMUM SIZE OF 1⅛" X 1⅛" OF OAK OR HICKORY.

④ SILT FENCE TO EXTEND ACROSS THE TOP OF THE PIPE.

⑤ CONSTRUCT SILT FENCE FROM A CONTINUOUS ROLL IF POSSIBLE BY CUTTING LENGTHS TO AVOID JOINTS. IF A JOINT IS NECESSARY USE ONE OF THE FOLLOWING TWO METHODS; A) OVERLAP THE END POSTS AND TWIST, OR ROTATE, AT LEAST 180 DEGREES, B) HOOK THE END OF EACH SILT FENCE LENGTH.

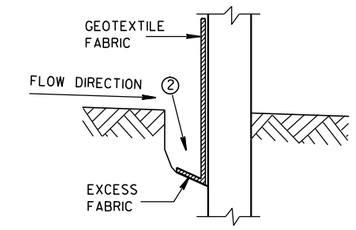

TRENCH DETAIL

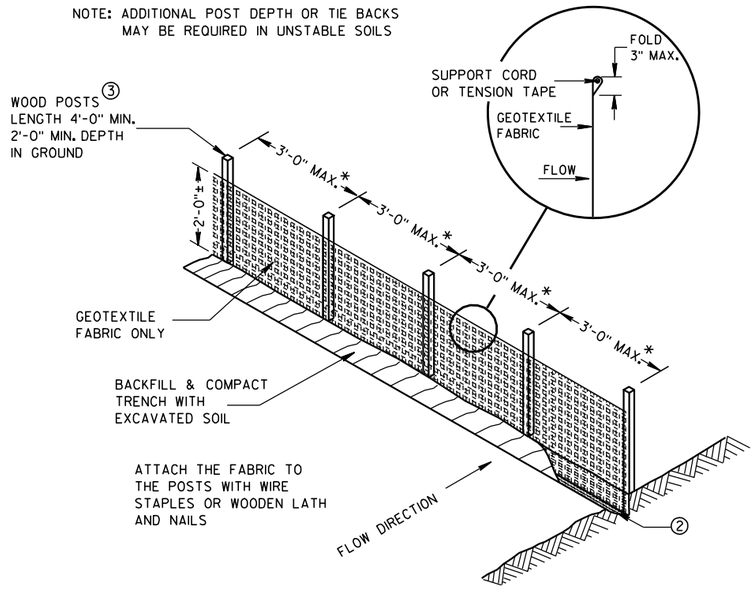

SILT FENCE

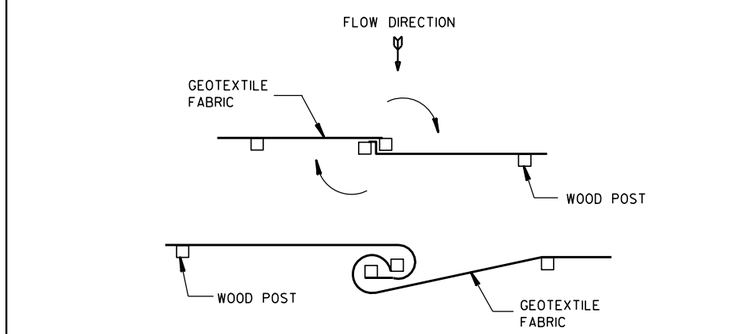

TWIST METHOD

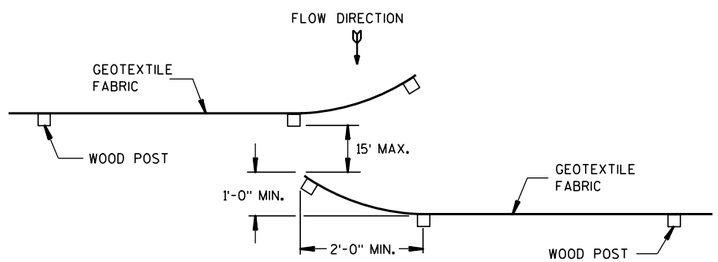

HOOK METHOD

JOINING TWO LENGTHS OF SILT FENCE ⑤

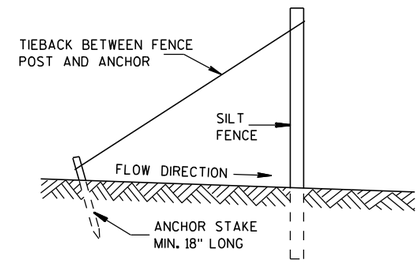

SILT FENCE TIE BACK

(WHEN REQUIRED BY THE ENGINEER)

SILT FENCE

STATE OF WISCONSIN
DEPARTMENT OF TRANSPORTATION

APPROVED
4-29-05 DATE
/S/ Beth Cannestra
CHIEF ROADWAY DEVELOPMENT ENGINEER
FHWA

6

S.D.D. 8 E 9-6

6

S.D.D. 8 E 9-6

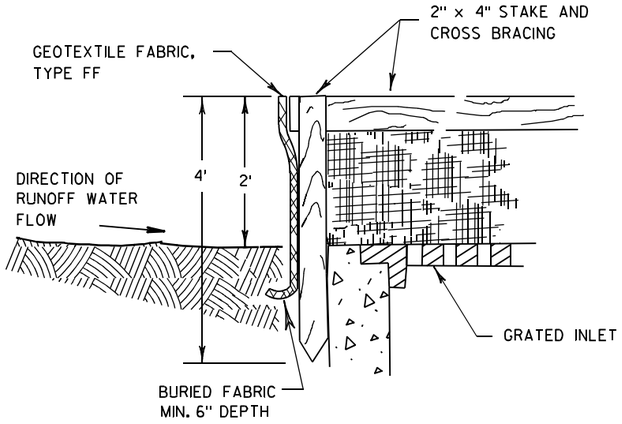

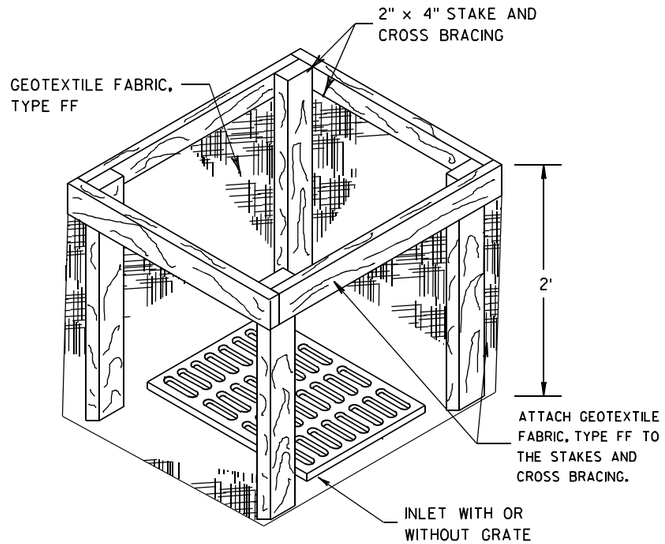

INLET PROTECTION, TYPE A

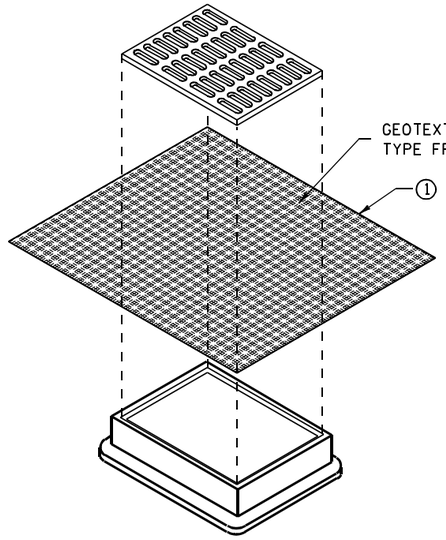

INLET PROTECTION, TYPE B
(WITHOUT CURB BOX)

(CAN BE INSTALLED IN ANY INLET WITHOUT A CURB BOX)

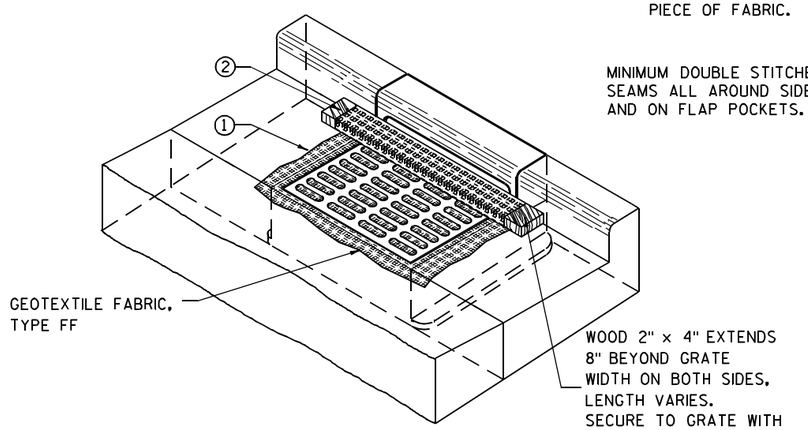

INLET PROTECTION, TYPE C (WITH CURB BOX)

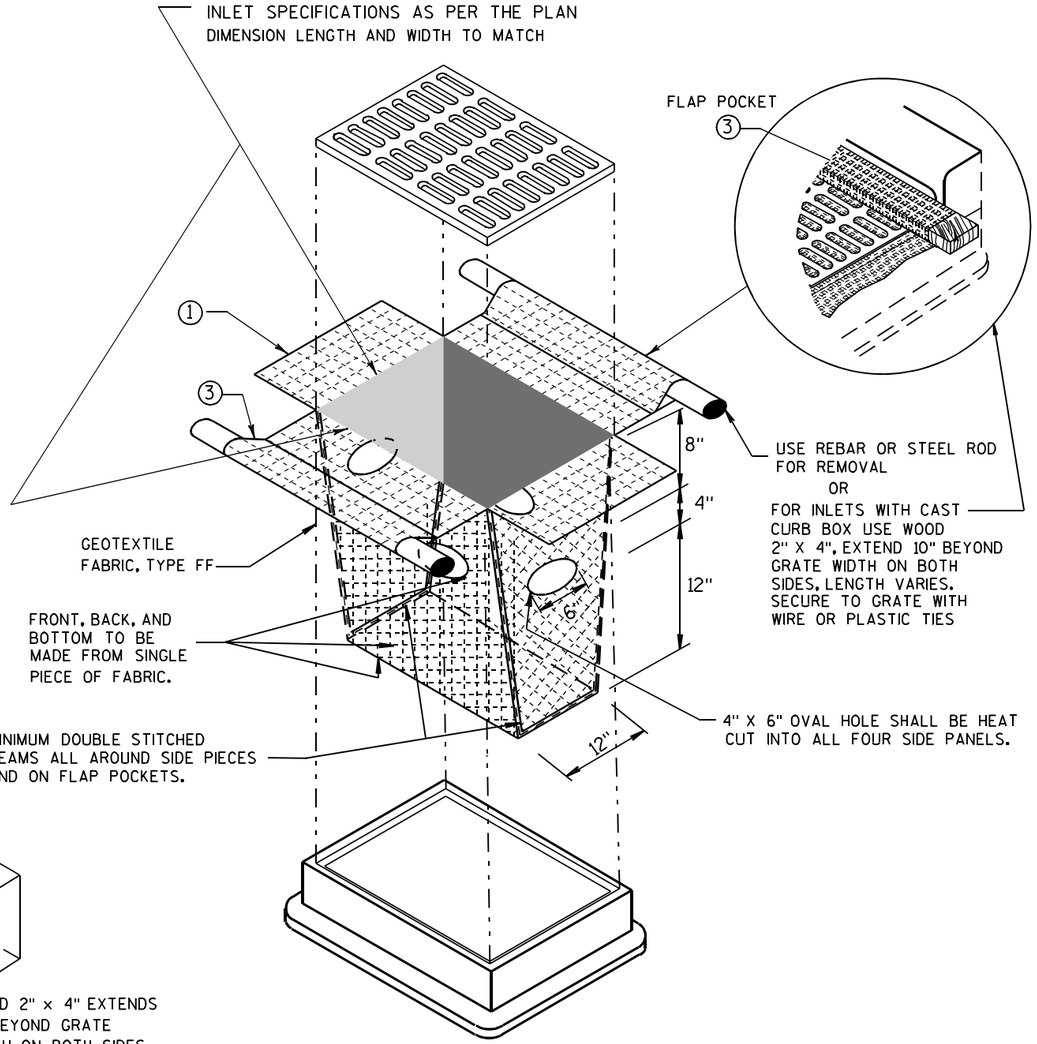

INLET PROTECTION, TYPE D

(CAN BE INSTALLED IN ANY INLET TYPE WITH
OR WITHOUT A CURB BOX AS PER NOTE ②)

GENERAL NOTES

INLET PROTECTION DEVICES SHALL BE MAINTAINED OR REPLACED AT THE DIRECTION OF THE ENGINEER.

MANUFACTURED ALTERNATIVES APPROVED AND LISTED ON THE DEPARTMENT'S EROSION CONTROL PRODUCT ACCEPTABILITY LIST MAY BE SUBSTITUTED.

WHEN REMOVING OR MAINTAINING INLET PROTECTION, CARE SHALL BE TAKEN SO THAT THE SEDIMENT TRAPPED ON THE GEOTEXTILE FABRIC DOES NOT FALL INTO THE INLET. ANY MATERIAL FALLING INTO THE INLET SHALL BE REMOVED IMMEDIATELY.

① FINISHED SIZE, INCLUDING FLAP POCKETS WHERE REQUIRED, SHALL EXTEND A MINIMUM OF 10" AROUND THE PERIMETER TO FACILITATE MAINTENANCE OR REMOVAL.

② FOR INLET PROTECTION, TYPE C (WITH CURB BOX), AN ADDITIONAL 18" OF FABRIC IS WRAPPED AROUND THE WOOD AND SECURED WITH STAPLES. THE WOOD SHALL NOT BLOCK THE ENTIRE HEIGHT OF THE CURB BOX OPENING.

③ FLAP POCKETS SHALL BE LARGE ENOUGH TO ACCEPT WOOD 2X4.

INSTALLATION NOTES

TYPE B & C

TRIM EXCESS FABRIC IN THE FLOW LINE TO WITHIN 3" OF THE GRATE.

THE CONTRACTOR SHALL DEMONSTRATE A METHOD OF MAINTENANCE, USING A SEWN FLAP, HAND HOLDS OR OTHER METHOD TO PREVENT ACCUMULATED SEDIMENT FROM ENTERING THE INLET.

TYPE D

DO NOT INSTALL INLET PROTECTION TYPE D IN INLETS SHALLOWER THAN 30", MEASURED FROM THE BOTTOM OF THE INLET TO THE TOP OF THE GRATE.

TRIM EXCESS FABRIC IN THE FLOW LINE TO WITHIN 3" OF THE GRATE.

THE INSTALLED BAG SHALL HAVE A MINIMUM SIDE CLEARANCE, BETWEEN THE INLET WALLS AND THE BAG, MEASURED AT THE BOTTOM OF THE OVERFLOW HOLES, OF 3". WHERE NECESSARY THE CONTRACTOR SHALL CINCH THE BAG, USING PLASTIC ZIP TIES, TO ACHIEVE THE 3" CLEARANCE. THE TIES SHALL BE PLACED AT A MAXIMUM OF 4" FROM THE BOTTOM OF THE BAG.

INLET PROTECTION
TYPE A, B, C, AND D

STATE OF WISCONSIN
DEPARTMENT OF TRANSPORTATION

APPROVED

10/16/02
DATE

/S/ Beth Cannestra
CHIEF ROADWAY DEVELOPMENT ENGINEER

FHWA

6

S.D.D. 8 E 10-2

METAL APRON ENDWALLS

PIPE DIA. (IN.)	MIN. THICK. (Inches) STEEL	MIN. THICK. (Inches) ALUM.	DIMENSIONS (Inches) A (±1")	B (MAX.)	H (±1")	L (±1 1/2")	L1 ①	L2 ①	W (±2")	APPROX. SLOPE	BODY
12	.064	.060	6	6	6	21	12	17 1/2	24	2 1/2 to 1	1 Pc.
15	.064	.060	7	8	6	26	14	21 3/4	30	2 1/2 to 1	1 Pc.
18	.064	.060	8	10	6	31	15	28 1/4	36	2 1/2 to 1	1 Pc.
21	.064	.060	9	12	6	36	18	29 5/8	42	2 1/2 to 1	1 Pc.
24	.064	.075	10	13	6	41	18	37 1/4	48	2 1/2 to 1	1 Pc.
30	.079	.075	12	16	8	51	18	52 1/4	60	2 1/2 to 1	1 Pc.
36	.079	.105	14	19	9	60	24	59 3/4	72	2 1/2 to 1	2 Pc.
42	.109	.105	16	22	11	69	24	75 5/8	84	2 1/2 to 1	2 Pc.
48	.109	.105	18	27	12	78	24	81	90	2 1/4 to 1	3 Pc.
54	.109	.105	18	30	12	84	30	85 1/2	102	2 1/4 to 1	3 Pc.
60	.109×	.105×	18	33	12	87	—	—	114	2 to 1	3 Pc.
66	.109×	.105×	18	36	12	87	—	—	120	2 to 1	3 Pc.
72	.109×	.105×	18	39	12	87	—	—	126	2 to 1	3 Pc.
78	.109×	.105×	18	42	12	87	—	—	132	1 1/2 to 1	3 Pc.
84	.109×	.105×	18	45	12	87	—	—	138	1 1/2 to 1	3 Pc.
90	.109×	.105×	18	37	12	87	—	—	144	1 1/2 to 1	3 Pc.
96	.109×	.105×	18	35	12	87	—	—	150	1 1/2 to 1	3 Pc.

× EXCEPT CENTER PANEL SEE GENERAL NOTES

REINFORCED CONCRETE APRON ENDWALLS

PIPE DIA. (IN.)	DIMENSIONS (Inches) T	A	B	C	D	E	G	APPROX. SLOPE
12	2	4	24	48 7/8	72 1/8	24	2	3 to 1
15	2 1/4	6	27	46	73	30	2 1/4	3 to 1
18	2 1/2	9	27	46	73	36	2 1/2	3 to 1
21	2 3/4	9	36	37 1/2	73 1/2	42	2 3/4	3 to 1
24	3	9 1/2	43 1/2	30	73 1/2	48	3	3 to 1
27	3 1/4	10 1/2	49 1/2	24	73 1/2	54	3 1/4	3 to 1
30	3 1/2	12	54	19 3/4	73 1/2	60	3 1/2	3 to 1
36	4	15	63	34 3/4	97 3/4	72	4	3 to 1
42	4 1/2	21	63	35	98	78	4 1/2	3 to 1
48	5	24	72	26	98	84	5	3 to 1
54	5 1/2	27	65	* 33 1/4 - ** 35	* 98 1/4 - ** 100	90	5 1/2	2 2/5 to 1
60	6	* 30 - ** 35	60	39	99	96	5	2 to 1
66	6 1/2	* 24 - ** 30	* 72 - ** 78	* 21 - ** 27	99	102	5 1/2	2 to 1
72	7	* 24 - ** 36	78	21	99	108	6	2 to 1
78	7 1/2	* 24 - ** 36	78	21	99	114	6 1/2	2 to 1
84	8	36	90 1/2	21	111 1/2	120	6 1/2	1 1/2 to 1
90	8 1/2	41	87 1/2	24	111 1/2	132	6 1/2	1 1/2 to 1

*MINIMUM
**MAXIMUM

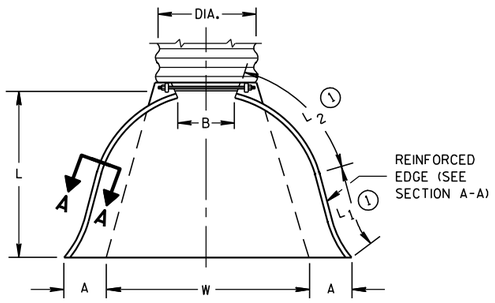

PLAN VIEW

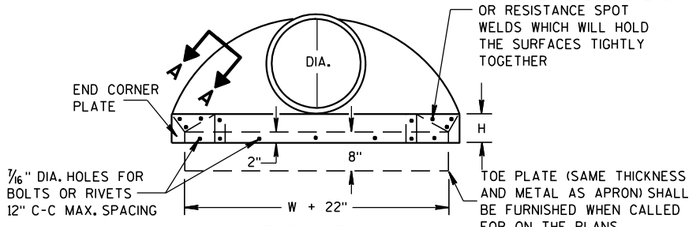

END VIEW

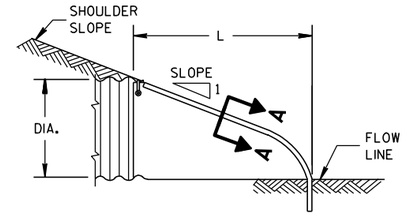

SIDE ELEVATION

METAL ENDWALLS

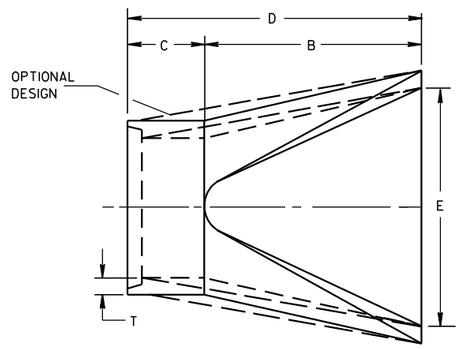

PLAN

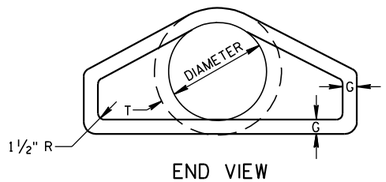

END VIEW

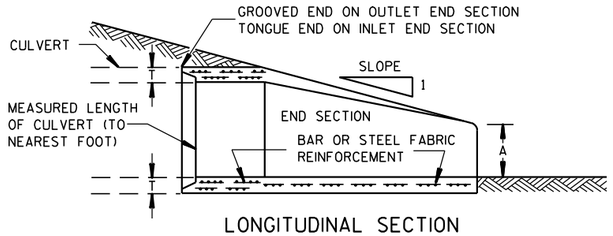

LONGITUDINAL SECTION

CONCRETE ENDWALLS

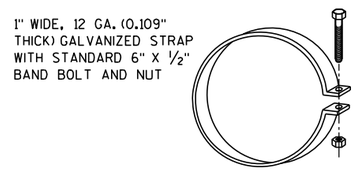

ALTERNATE FOR TYPE 1 CONNECTION

END SECTION CONNECTOR STRAP

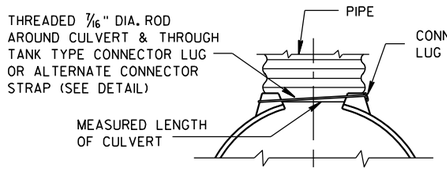

TYPE 1
FOR 12" THRU 24" CORR. PIPE

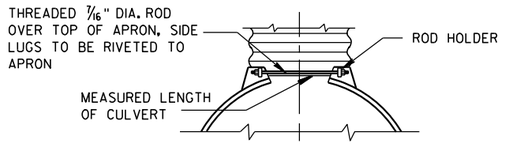

TYPE 2
FOR 30" THRU 96" CORR. PIPE

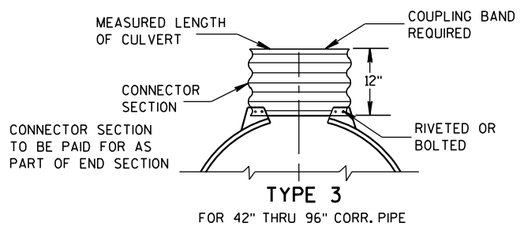

TYPE 3
FOR 42" THRU 96" CORR. PIPE

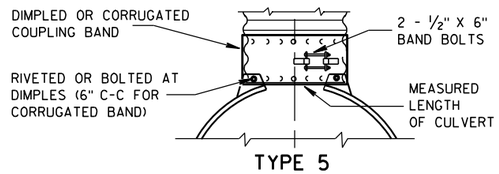

TYPE 5
ALTERNATE FOR:
ALL SIZES CORRUGATED CIRCULAR PIPE

NOTE: DIMPLED BAND FITS OVER OUTSIDE OF ENDWALL. AND CORRUGATED BAND FITS INSIDE ENDWALL. DIMPLED BAND MAY BE USED WITH HELICALLY CORRUGATED PIPE.

FOR CIRCUMFERENTIALLY CORRUGATED PIPE USE ENDWALL CONNECTION DETAILS 1, 2, 3 OR 5 AS APPLICABLE.

FOR HELICALLY CORRUGATED PIPE USE ENDWALL CONNECTION DETAILS 1, 2 OR 5.

FOR HELICALLY CORRUGATED PIPES WITH TWO CIRCUMFERENTIAL CORRUGATIONS AT EACH END USE ENDWALL CONNECTION DETAILS 1, 2 OR 3.

CONNECTION DETAILS

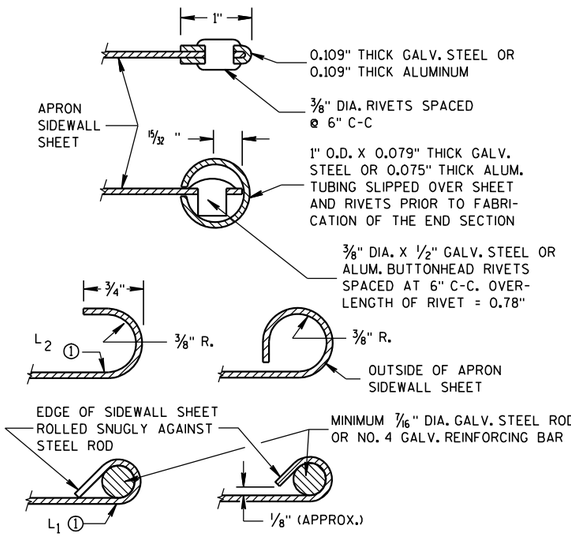

SECTION A-A

GENERAL NOTES

DETAILS OF CONSTRUCTION, MATERIALS AND WORKMANSHIP NOT SHOWN ON THIS DRAWING SHALL CONFORM TO THE PERTINENT REQUIREMENTS OF THE STANDARD SPECIFICATIONS AND THE APPLICABLE SPECIAL PROVISIONS.

CONCRETE CULVERT ENDWALLS MAY NOT BE USED WITH GALVANIZED STEEL OR ALUMINUM CULVERT PIPE OR VISE VERSA. GALVANIZED STEEL OR ALUMINUM ENDWALLS SHALL NORMALLY BE INSTALLED ON CULVERT PIPE OF THE SAME METAL.

ALL THREE PIECE STEEL APRON ENDWALLS FOR 60" DIAMETER PIPE AND LARGER SHALL HAVE 0.109" SIDES AND 0.138" CENTER PANELS. ALL THREE PIECE ALUMINUM APRON ENDWALLS FOR 60" DIAMETER PIPE AND LARGER SHALL HAVE 0.105" SIDES AND 0.134" CENTER PANELS. THE WIDTH OF CENTER PANELS SHALL BE GREATER THAN 20 PERCENT OF THE PIPE PERIMETER.

LAP SEAMS SHALL BE TIGHTLY JOINED BY GALVANIZED RIVETS OR BOLTS FOR STEEL UNITS AND ALUMINUM RIVETS AND BOLTS FOR ALUMINUM UNITS. FOR THE 60" THROUGH 96" DIAMETER APRON ENDWALL SIZES, THE REINFORCED EDGES AND CENTER PANEL SEAMS SHALL BE FURTHER REINFORCED WITH GALVANIZED STEEL OR ALUMINUM STIFFENER ANGLES. THE ANGLES SHALL BE ATTACHED BY GALVANIZED NUTS AND BOLTS FOR STEEL UNITS AND ALUMINUM NUTS AND BOLTS FOR ALUMINUM UNITS.

WHERE TWO OR MORE PIPES WITH APRON ENDWALLS ARE LAID ADJACENT TO EACH OTHER, THEY SHALL BE SEPARATED BY A DISTANCE SUFFICIENT TO PROVIDE A MINIMUM CLEARANCE OF 6 INCHES BETWEEN APRON ENDWALLS.

① FOR PIPE SIZES UP TO 60" DIAMETER, A 180° ROLLED EDGE MAY BE USED INSTEAD OF STEEL ROD REINFORCEMENT. SEE SECTION A-A.

APRON ENDWALLS FOR CULVERT PIPE

STATE OF WISCONSIN
DEPARTMENT OF TRANSPORTATION

APPROVED
11/30/94 DATE
/S/ Rory L. Rhinesmith
CHIEF ROADWAY DEVELOPMENT ENGINEER
FHWA

6

S.D.D. 8 F 1-11

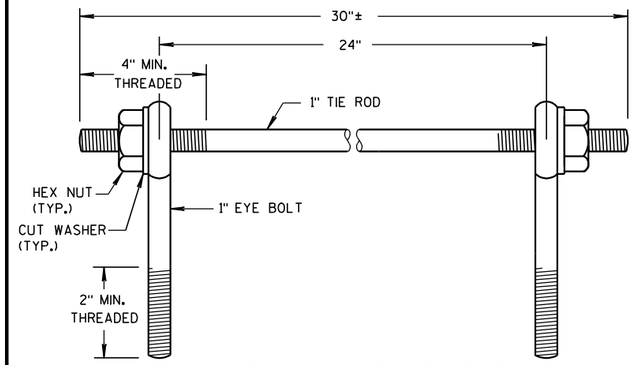

EYE BOLTS AND TIE ROD

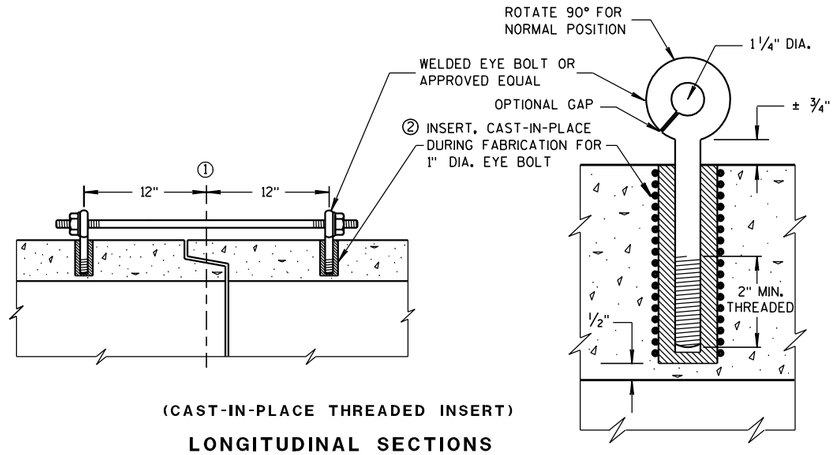

(CAST-IN-PLACE THREADED INSERT)

LONGITUDINAL SECTIONS

EYE BOLT AND TIE ROD ASSEMBLY (ALTERNATE NO. 1)

GENERAL NOTES

DETAILS OF CONSTRUCTION, MATERIALS, AND WORKMANSHIP NOT SHOWN ON THIS DRAWING SHALL CONFORM TO THE PERTINENT REQUIREMENTS OF THE STANDARD SPECIFICATIONS AND APPLICABLE SPECIAL PROVISIONS.

CONCRETE CULVERT AND STORM SEWER PIPE SHALL BE TIED TOGETHER IN THE MANNER ILLUSTRATED BY THIS DETAIL AT LOCATIONS DESIGNATED IN THE STANDARD SPECIFICATIONS AND THE PLAN. THE CONTRACTOR MAY USE EITHER ALTERNATE 1, 2 OR 3 FOR DRAINAGE STRUCTURES. ONLY ALTERNATE 1 AND 3 MAY BE USED FOR CATTLE PASSES, UNLESS OTHERWISE STATED IN THE CONTRACT. THE MATERIALS, FABRICATION AND WORK NECESSARY TO TIE THE PIPE BY THIS DETAIL WILL BE CONSIDERED INCIDENTAL TO THE PIPE AND APRON ENDWALLS IF REQUIRED.

DETAILED DRAWINGS FOR PROPOSED ALTERNATE DESIGNS FOR JOINT TIES SHALL BE SUBMITTED TO THE ENGINEER FOR APPROVAL.

JOINT TIES TO BE HOT-DIP GALVANIZED PER ASTM A 153.

① ℄ OF TONGUE AND GROOVE OR BELL AND SPIGOT JOINTS.

② THE INSIDE OF THE THREADED INSERTS SHALL BE CLEAN TO ALLOW THE INSERTION OF THREADED EYE BOLTS.

③ HOLES SHALL BE CAST-IN-PLACE OR DRILLED 12 INCHES FROM ℄ OF TONGUE AND GROOVE.

④ BOLT PROJECTION INSIDE OF PIPE SHALL NOT EXCEED 2 INCHES.

⑤ OPENING TO BE ROD DIAMETER PLUS 1 INCH.

⑥ LENGTH ADEQUATE TO EXTEND TO WITHIN 1/2 INCH OF THE INNER SURFACE OF THE PIPE.

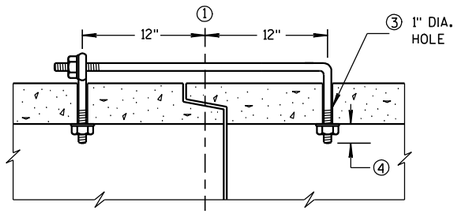

(TONGUE & GROOVE PIPE)

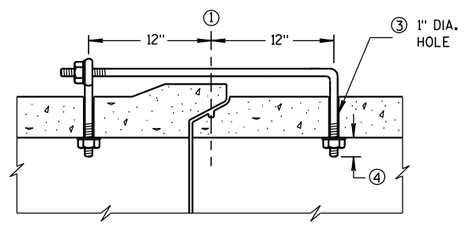

(MODIFIED BELL PIPE)

LONGITUDINAL SECTION

EYE BOLT DIMENSION TABLE

PIPE SIZE	L = LENGTH	
	TONGUE & GROOVE PIPE	MODIFIED BELL PIPE
18" TO 24"	4 1/2"	6 1/4"
30"	5"	7"
36"	5 1/2"	7"
42"	6"	
48"	6 1/2"	
60"	7 1/2"	
66"	8"	

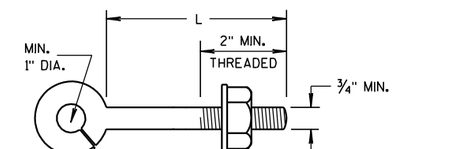

NOTE:

EYE BOLT

NOTE: TWO EYE BOLTS MAY BE USED WITH A 30" LONG THREADED ROD IN LIEU OF THE 90° BENT TIE ROD.

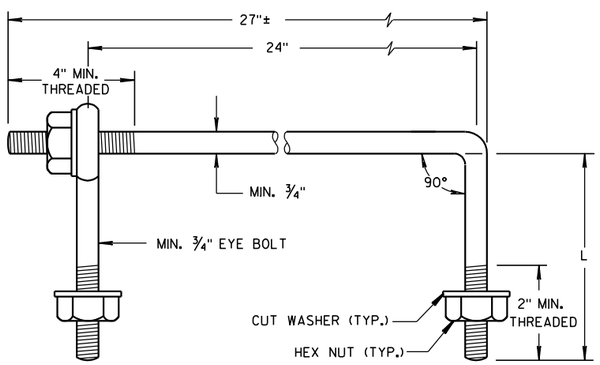

EYE BOLT AND TIE ROD

(JOINT TIES FOR 18" TO 66" DIA. CONCRETE PIPE)

EYE BOLT AND TIE ROD ASSEMBLY (ALTERNATE NO. 2)

ADJUSTABLE TIE ROD TABLE

PIPE DIAMETER	TIE ROD DIAMETER	D	L_1	N
12-60	5/8	5/8	5	1/2
66-84	3/4	3/4	5	1/2
90-108	1	1	7	1 1/16

DIMENSIONS SHOWN ARE IN INCHES

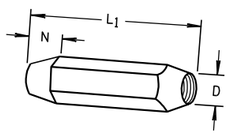

TAPERED

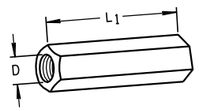

PLAIN

RIGHT AND LEFT THREADS

SLEEVE NUTS

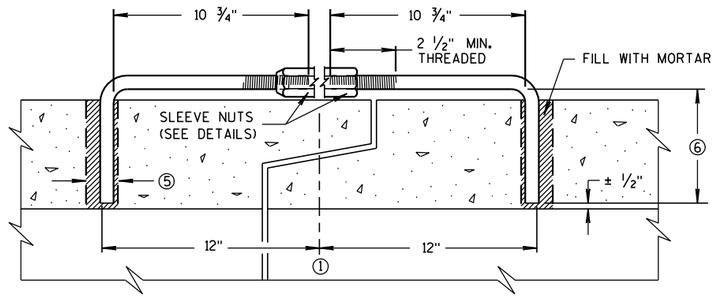

LONGITUDINAL SECTION

(JOINT TIES FOR 12" TO 108" DIA. CONCRETE PIPE)

ADJUSTABLE TIE ROD (ALTERNATE NO. 3)

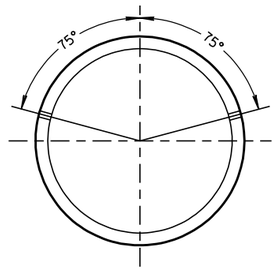

PLACEMENT OF (2) CAST-IN-PLACE INSERTS OR HOLES DURING FABRICATION FOR PIPE SECTIONS REQUIRING TIE RODS

TRANSVERSE SECTION

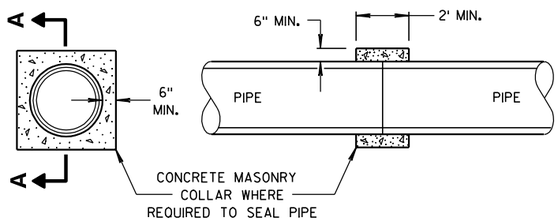

SECTION A-A

CONCRETE COLLAR DETAIL

JOINT TIES FOR CONCRETE PIPE AND CONCRETE COLLAR DETAIL

STATE OF WISCONSIN
DEPARTMENT OF TRANSPORTATION

APPROVED
6/5/2012 — DATE
/S/ Jerry H. Zogg — ROADWAY STANDARDS ENGINEER
FHWA

6

S.D.D. 8 F 4-7

6

S.D.D. 8 F 4-7

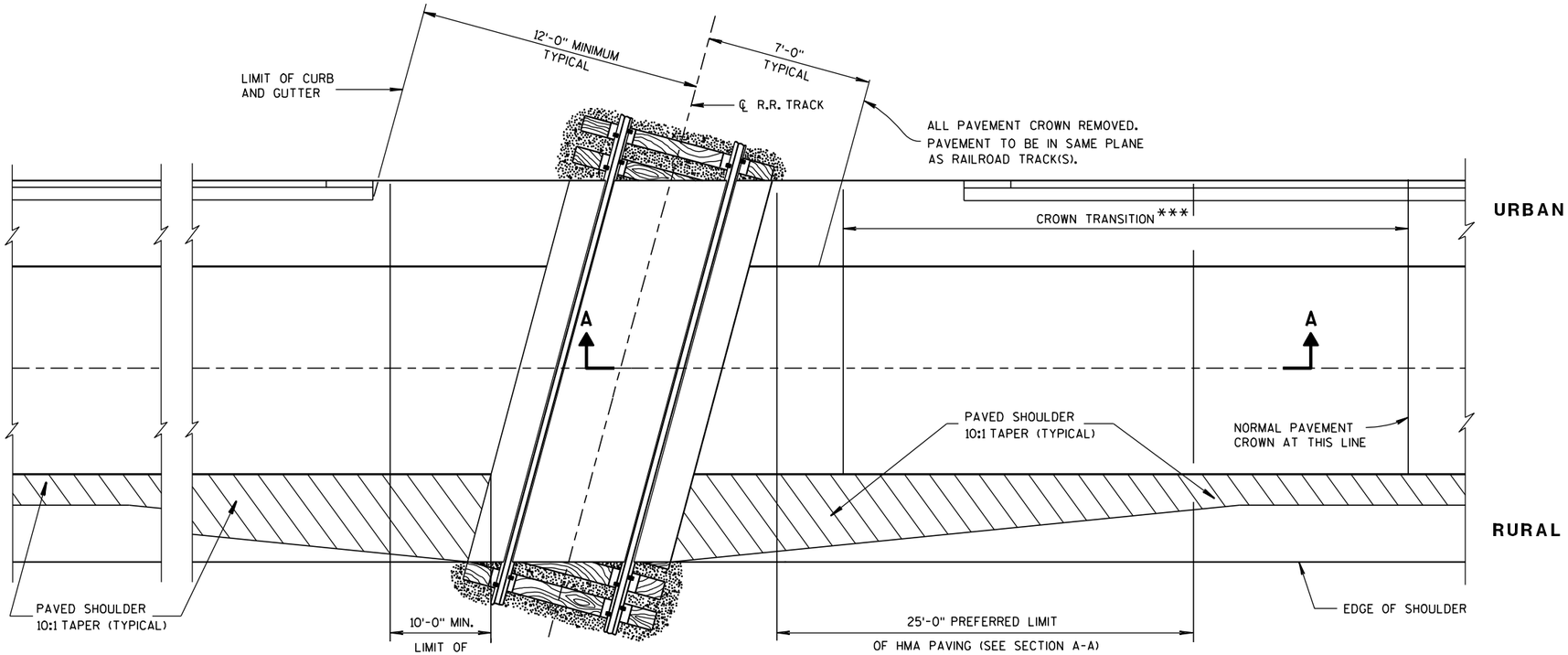

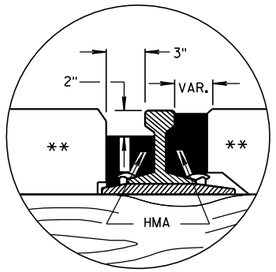

DETAIL B

HMA FLANGEWAY AND FIELD FILLERS

GENERAL NOTES

DETAILS OF CONSTRUCTION, MATERIALS AND WORKMANSHIP NOT SHOWN ON THIS DRAWING SHALL CONFORM TO THE PERTINENT REQUIREMENTS OF THE STANDARD SPECIFICATIONS AND THE APPLICABLE SPECIAL PROVISIONS.

TIMBER, CONCRETE OR RUBBER CROSSING SURFACE MATERIAL, RAILS, TIES, BALLAST, GEOTEXTILE FABRIC AND CROSSING DRAINAGE SYSTEM BY OTHERS UNLESS OTHERWISE PROVIDED.

HMA PAVEMENT APPROACHES AND HMA PAVEMET CROSSING SURFACES TO BE PLACED BY CONTRACTOR UNLESS OTHERWISE PROVIDED.

HMA FLANGEWAY AND FIELD FILLERS TO BE PLACED AND THOROUGHLY HAND COMPACTED BY THE CONTRACTOR WHEN NOT PROVIDED BY OTHERS. SEE DETAIL B. HMA FILLERS NOT REQUIRED WHEN RUBBER FILLERS ARE PROVIDED.

HMA PAVEMENT SHALL BE ROLLED PARALLEL TO THE TRACK.

** CROSSING SURFACE MAY BE TIMBER, RUBBER, CONCRETE, HMA PAVEMENT OR A COMBINATION OF SUCH MATERIALS.

*** CROWN TRANSITION LENGTH SHOWN ELSEWHERE IN THE PLAN.

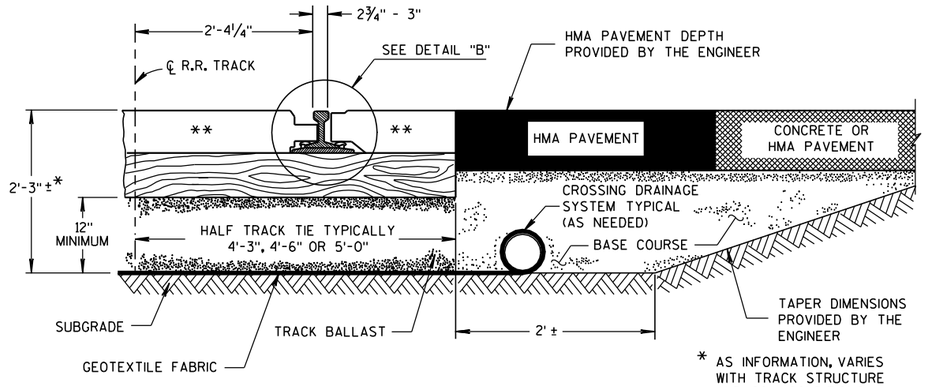

TYPICAL HALF SECTION

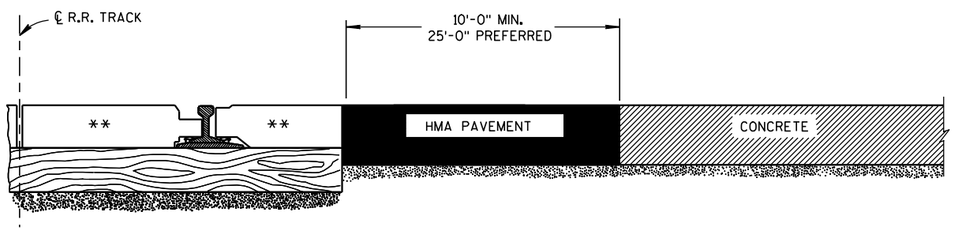

SECTION A-A

CONCRETE PAVEMENT APPROACH

SECTION A-A

HMA PAVEMENT APPROACH

EXAMPLES OF PAVEMENT APPROACHES

PAVEMENT DETAILS FOR RAILROAD APPROACH

STATE OF WISCONSIN
DEPARTMENT OF TRANSPORTATION

APPROVED
8-28-09 DATE
/S/ Ronald E. Adams
CHIEF, RAILROADS & HAI CTION
FHWA

6

S.D.D. 13 B 1-10
S.D.D. 13 B 1-10

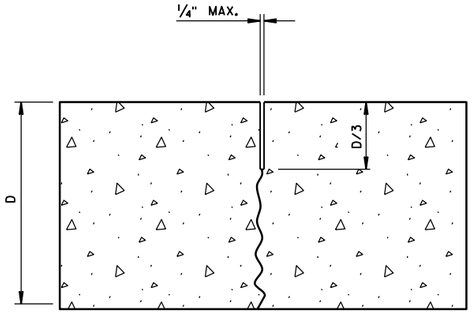

UNDOWELED-TRANSVERSE

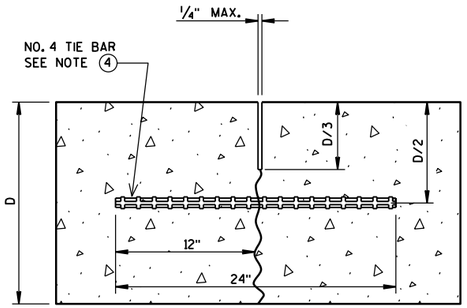

TIED LONGITUDINAL

GENERAL NOTES

1. USE DOWELED EXPANSION JOINTS ON SIDE ROADS AT INTERSECTIONS (TO ISOLATE THE SIDE ROAD FROM THE THROUGH STREET) IF THE SIDE ROAD IS CONCRETE PAVEMENT AND GREATER THAN 300 FEET IN LENGTH.
2. SPACE CONTRACTION JOINTS IN ACCORDANCE WITH 13C4, 13C11 OR 13C13.
3. LOCATE CONSTRUCTION JOINTS A MINIMUM OF 6 FEET FROM THE NEAREST CONTRACTION JOINT AND ALIGN PARALLEL TO CONTRACTION JOINTS.
4. SPACE TIE BARS AT LONGITUDINAL CONSTRUCTION OR CONTRACTION JOINTS IN ACCORDANCE WITH SDD 13C1.
5. CONSTRUCTION JOINTS CAN BE FORMED OR SAWED.
6. IF JOINT IS FORMED, PROVIDE A 1/4-INCH RADIUS.

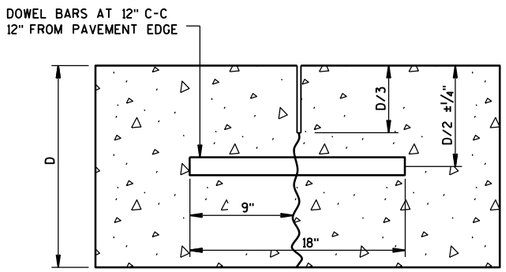

DOWELED-TRANSVERSE

CONTRACTION JOINTS

SEE NOTE (2)

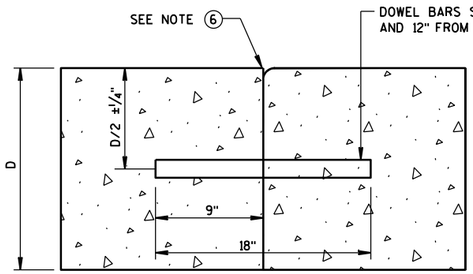

DOWELED TRANSVERSE

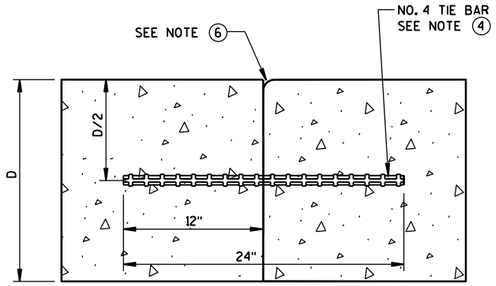

TIED LONGITUDINAL

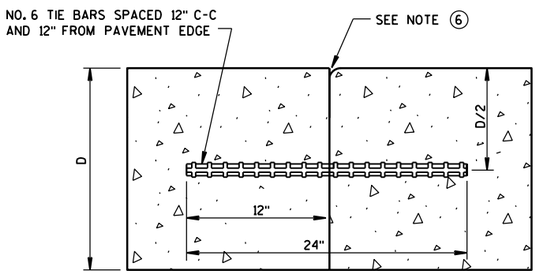

TIED TRANSVERSE

(FOR USE ON NON-DOWELED PAVEMENTS ONLY)

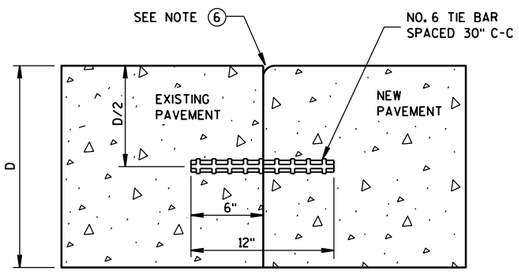

TIED LONGITUDINAL TO EXISTING

CONSTRUCTION JOINTS

SEE NOTE (5)

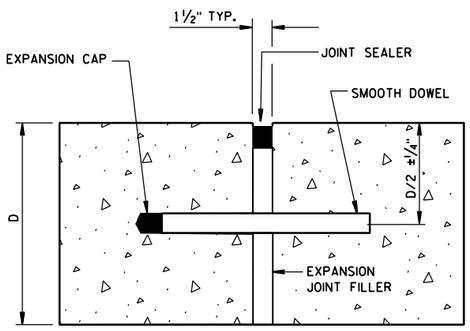

DOWELED-TRANSVERSE

SEE NOTE (1)

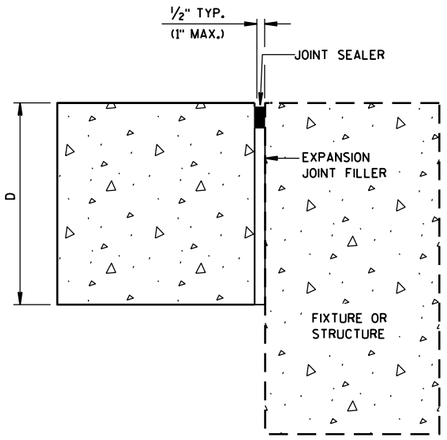

UNTIED-LONGITUDINAL

EXPANSION JOINTS

CONCRETE PAVEMENT
JOINT TYPES

STATE OF WISCONSIN
DEPARTMENT OF TRANSPOI

6

S.D.D. 13 C 18-2c

6

S.D.D. 13 C 18-2c

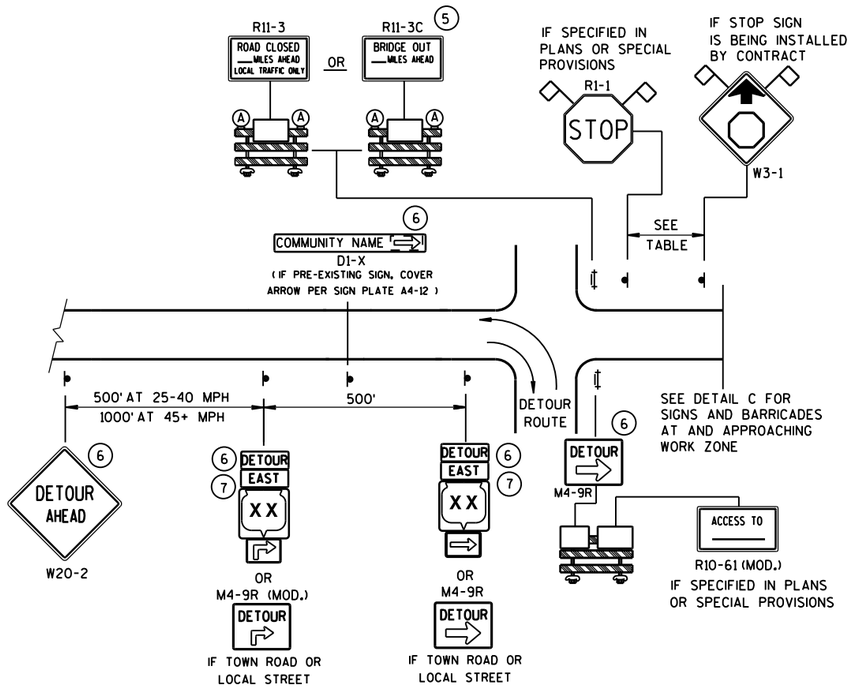

DETAIL A
MAINLINE CLOSURE WITH POSTED DETOUR

WORK ZONE GREATER THAN ½ MILE FROM DETOUR ROUTE (1000 FEET IF URBAN)

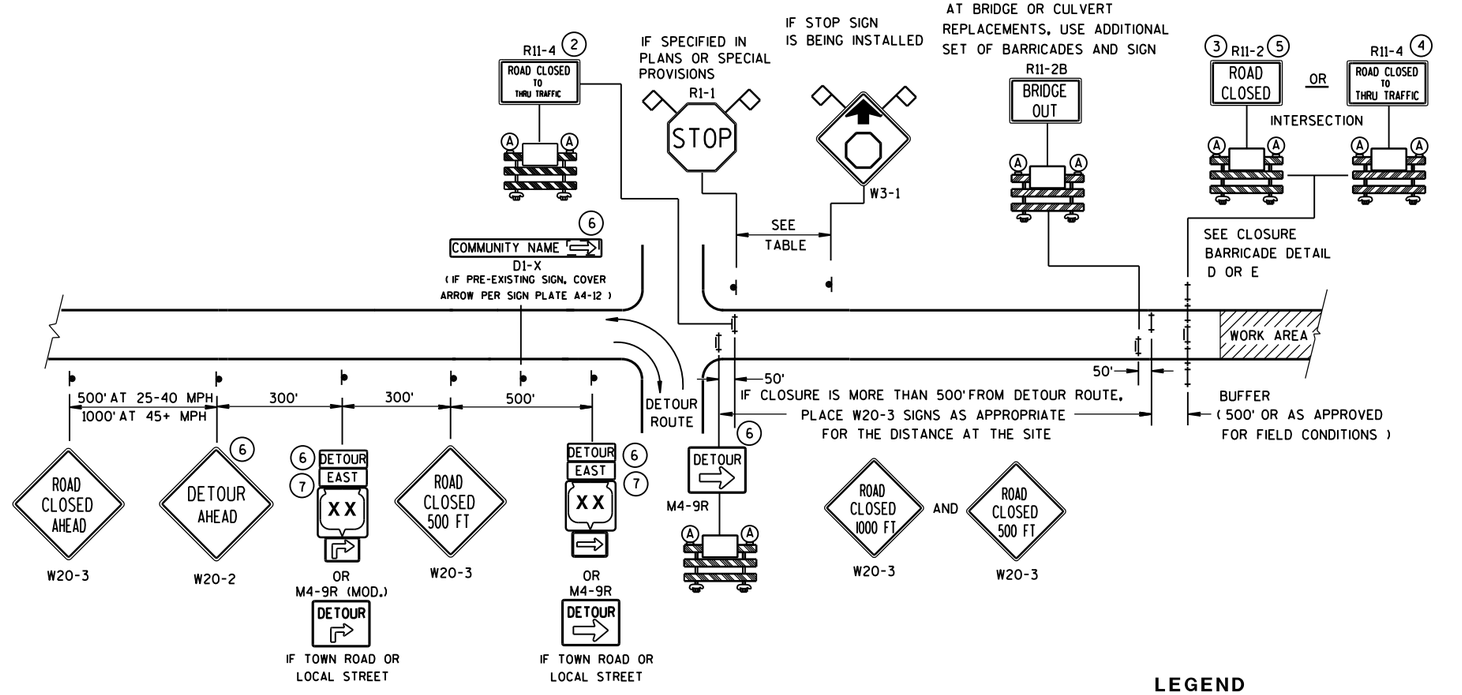

DETAIL B
MAINLINE CLOSURE WITH POSTED DETOUR

WORK ZONE LESS THAN ½ MILE FROM DETOUR ROUTE (1000 FEET IF URBAN)

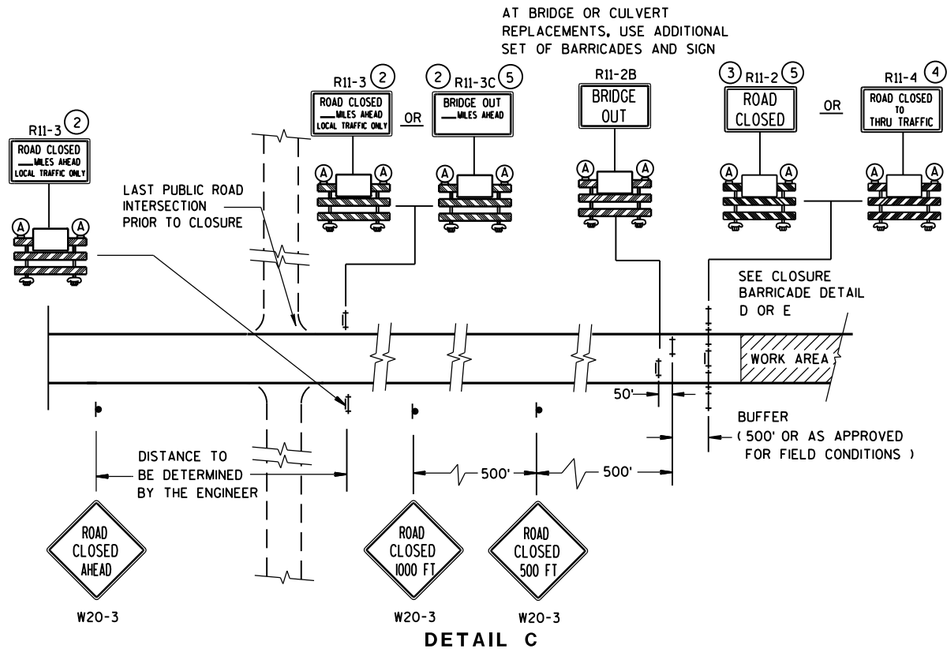

DETAIL C
MAINLINE CLOSURE, NO POSTED DETOUR

SPEED LIMIT (MPH)	"STOP AHEAD" ADVANCE WARNING DISTANCE (FT)
25	200
30	200
35	350
40	350
45	500
50	550
55	750

SEE SDD 15C2-SHEET "**b**" FOR GENERAL NOTES AND FOOTNOTES (1) THROUGH (7)

LEGEND

- SIGN ON PERMANENT SUPPORT
- TYPE III BARRICADE
- TYPE III BARRICADE WITH ATTACHED SIGN
- (A) TYPE "A" WARNING LIGHT (FLASHING)
- WORK AREA
- DETOUR / EAST — M4-8 / M3-X
- XX — M1-4; COUNTY XX — M1-5A; XX — M1-6
- M05-1 OR M06-1
- FLAGS, 16" X 16" MIN., (ORANGE)

BARRICADES AND SIGNS FOR MAINLINE CLOSURES

STATE OF WISCONSIN
DEPARTMENT OF TRANSPORTATION

8/2013 DATE

/S/ Travis Feltes
STATE TRAFFIC ENGINEER

FHWA

6

S.D.D. 15 C 2-5a

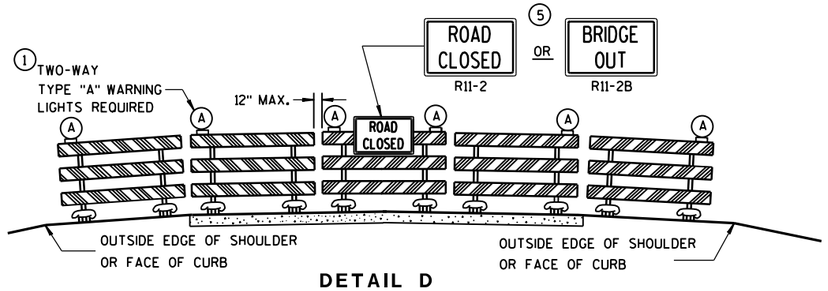

DETAIL D

ROAD CLOSURE BARRICADE DETAIL

APPROACH VIEW

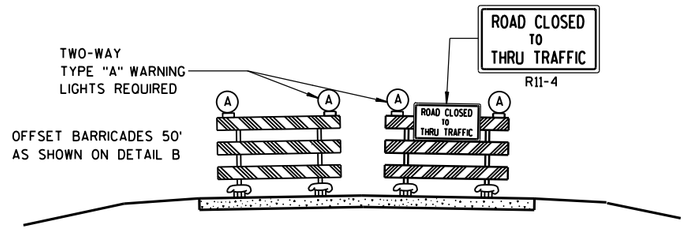

DETAIL E

LANE CLOSURE BARRICADE DETAIL

APPROACH VIEW

SEE SDD 15C2-SHEET "**a**" FOR LEGEND

GENERAL NOTES

THE EXACT NUMBER, LOCATION, AND SPACING OF ALL SIGNS AND BARRICADES SHALL BE ADJUSTED TO FIT FIELD CONDITIONS AS APPROVED BY THE ENGINEER.

ANY SIGNS TEMPORARY OR EXISTING, WHICH CONFLICT WITH TRAFFIC CONTROL "IN USE" SHALL BE REMOVED OR COVERED AS NEEDED AND AS APPROVED BY THE ENGINEER.

THE SPACING BETWEEN TRAFFIC CONTROL SIGNS SHOULD BE ADJUSTED TO NOT CONFLICT WITH AND SHOULD PROVIDE A DESIRABLE MINIMUM OF 200 FEET CLEARANCE TO EXISTING SIGNS THAT WILL REMAIN IN PLACE.

BARRICADES THAT MUST BE MOVED FOR A WORK OPERATION SHALL BE IMMEDIATELY RE-ESTABLISHED UPON COMPLETION OF THE OPERATION OR, FOR CONTINUING OPERATIONS, AT THE END OF EACH WORKING DAY.

SIGNS THAT WILL BE IN PLACE LESS THAN 7 CONTINUOUS DAYS AND NIGHTS MAY BE MOUNTED ON PORTABLE SUPPORTS.

ALL TYPE III BARRICADES SHALL HAVE RAILS REFLECTORIZED ON BOTH FACES. STRIPES SHALL BE PROPERLY SLOPED DOWN TOWARD THE TRAFFIC SIDE OR AS SHOWN IN THE ROAD CLOSURE BARRICADE DETAIL D FOR FULL ROAD CLOSURES.

TYPE "A" LOW-INTENSITY FLASHING WARNING LIGHTS SHALL BE VISIBLE ON BOTH SIDES OF THE BARRICADE.

THE R11-2, R11-3, M4-9, R11-4 AND R10-61 SIGNS PLACED ON BARRICADES SHALL COVER NO MORE THAN THE TOP RAIL. THE SIGNS SHALL NOT COVER ANY PORTION OF THE MIDDLE OR BOTTOM RAILS.

"WO AND "MO" SIGNS ARE THE SAME AS "W" AND "M" SIGNS EXCEPT THE BACKGROUND IS ORANGE.

ALL SIGNS SHALL BE 48" X 48" UNLESS OTHERWISE NOTED BELOW:
- R11-2 SHALL BE 48" X 30".
- R11-3, R11-4 AND R10-61 SHALL BE 60" X 30".
- M4-9 SHALL BE 30" X 24".
- M3-X SHALL BE 24" X 12". (36" X 18" IF NEEDED TO MATCH EXISTING SIGNS.)
- M4-8 SHALL BE 24" X 12". (30" X 15" IF NEEDED TO MATCH EXISTING SIGNS.)
- M1-4, M1-5A, AND M1-6 SHALL BE 24" X 24". (36" X 36" IF NEEDED TO MATCH EXISTING SIGNS.)
- M05-1 AND M06-1 SHALL BE 21" X 21". (30" X 30" IF NEEDED TO MATCH EXISTING SIGNS.)
- D1-X SHALL BE AS SHOWN ON SPECIFIC PROJECT SIGNING DETAIL SHEETS.
- R1-1 SHALL BE 36" X 36".

(1) TWO WARNING LIGHTS SHALL BE PROVIDED ON THE CENTER BARRICADE AND A MINIMUM OF ONE WARNING LIGHT SHALL BE PROVIDED ON EACH OF THE OTHER BARRICADES WITHIN THE ROADWAY LIMITS. SPACING OF THE WARNING LIGHTS SHALL BE UNIFORM TO THE EDGE OF ROADWAY AS SHOWN (APPROX. 8-FOOT LIGHT SPACING).

(2) THESE SIGNS AND BARRICADES ARE NOT REQUIRED IF ROAD CLOSURE BEGINS AT INTERSECTION.

(3) FOR ROAD CLOSURE WITHOUT LOCAL ACCESS TO PROJECT, SEE ROAD CLOSURE BARRICADE DETAIL D.

(4) FOR ROAD CLOSURE WITH LOCAL ACCESS TO PROJECT, SEE LANE CLOSURE BARRICADE DETAIL E.

(5) FOR BRIDGE OR CULVERT REPLACEMENTS, SUBSTITUTE "BRIDGE OUT" INSTEAD OF "ROAD CLOSED" ON R11-2 AND R11-3 SIGNS.

(6) INSTALL DETOUR AND COMMUNITY GUIDE SIGNS AND ARROWS ONLY IF SPECIFIED IN THE CONTRACT. IF THERE ARE EXISTING ROUTE MARKER ASSEMBLIES THAT WILL REMAIN IN PLACE, ADJUST THE LOCATION OF THE DETOUR ROUTE SIGNS TO CORRESPOND WITH THE EXISTING ASSEMBLIES. MODIFY EXISTING SIGNS WHERE POSSIBLE. SEE SPECIFIC PROJECT DETOUR SIGNING DETAIL SHEETS. IF DETOUR SIGNS ARE BEING INSTALLED BY OTHERS, PLACE THE CONTRACTED TRAFFIC CONTROL SIGNS TO ALLOW FOR PLACEMENT OF ALL WARNING, DETOUR AND GUIDE SIGNS AS SHOWN.

(7) "EAST" CARDINAL DIRECTION MARKERS AND RIGHT TURN ARROWS ARE SHOWN. USE OTHER CARDINAL DIRECTIONS AND ARROWS AS APPROPRIATE.

BARRICADES AND SIGNS FOR MAINLINE CLOSURES

STATE OF WISCONSIN
DEPARTMENT OF TRANSPORTATION

8/2013 — DATE

/S/ Travis Feltes — STATE TRAFFIC ENGINEER

FHWA

6

S.D.D. 15 C 2-5b

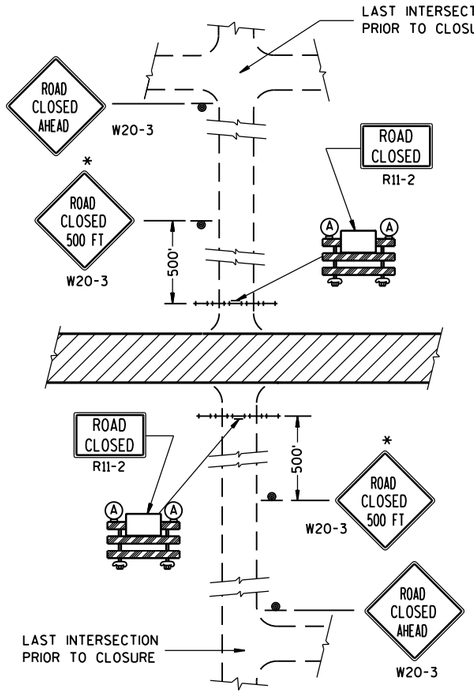

DETAIL 1

(NO ACCESS TO PROJECT)

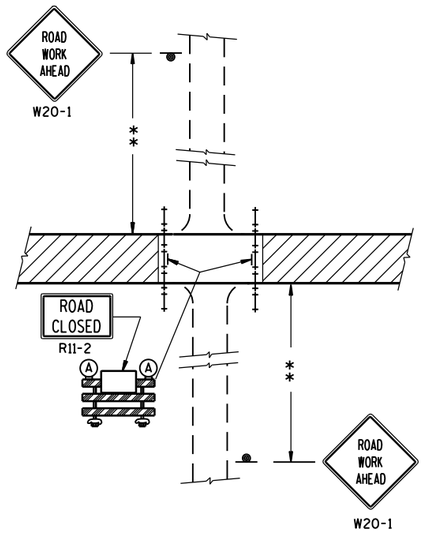

DETAIL 2

(PUBLIC CROSS-TRAFFIC MAINTAINED. NO ACCESS TO PROJECT).

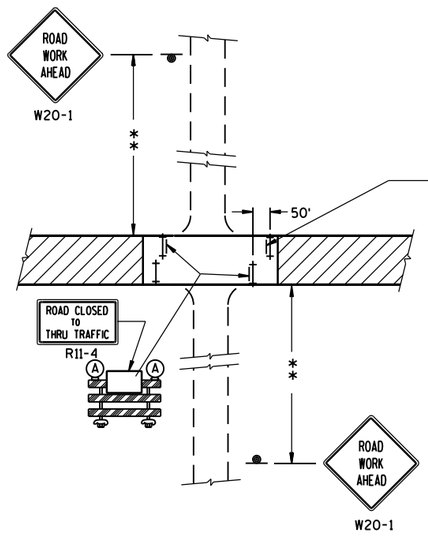

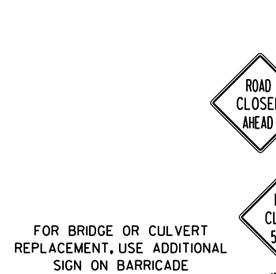

DETAIL 3

(PUBLIC CROSS-TRAFFIC MAINTAINED. CONTRACTOR, LOCAL BUSINESS AND RESIDENT ACCESS).

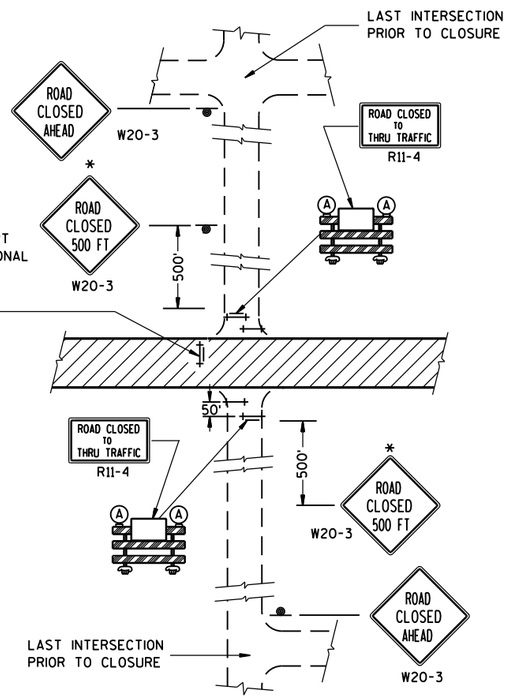

DETAIL 4

(CONTRACTOR, LOCAL BUSINESS AND RESIDENT ACCESS TO PROJECT)

GENERAL NOTES

THE EXACT NUMBER, LOCATION, AND SPACING OF ALL SIGNS AND BARRICADES SHALL BE ADJUSTED TO FIT FIELD CONDITIONS AS APPROVED BY THE ENGINEER.

ANY SIGNS TEMPORARY OR EXISTING, WHICH CONFLICT WITH TRAFFIC CONTROL "IN USE" SHALL BE REMOVED OR COVERED AS NEEDED AND AS APPROVED BY THE ENGINEER.

THE SPACING BETWEEN TRAFFIC CONTROL SIGNS SHOULD BE ADJUSTED TO NOT CONFLICT WITH AND SHOULD PROVIDE A DESIRABLE MINIMUM OF 200 FEET CLEARANCE TO EXISTING SIGNS THAT WILL REMAIN IN PLACE.

IF A "STOP" SIGN MUST BE REMOVED FOR A WORK OPERATION, A TEMPORARY "STOP" SIGN SHALL BE PLACED PRIOR TO THE SIGN REMOVAL, OR A FLAGGER SHALL BE PROVIDED UNTIL THE SIGN IS RE-ESTABLISHED.

BARRICADES THAT MUST BE MOVED FOR A WORK OPERATION SHALL BE IMMEDIATELY RE-ESTABLISHED UPON COMPLETION OF THE OPERATION OR, FOR CONTINUING OPERATIONS, AT THE END OF EACH WORKING DAY.

SIGNS THAT WILL BE IN PLACE LESS THAN 7 CONTINUOUS DAYS AND NIGHTS MAY BE MOUNTED ON PORTABLE SUPPORTS.

ALL TYPE III BARRICADES SHALL HAVE RAILS REFLECTORIZED ON BOTH FACES. STRIPES SHALL BE PROPERLY SLOPED DOWN TOWARD THE TRAFFIC SIDE OR AS SHOWN IN THE ROAD CLOSURE BARRICADE DETAIL D FOR FULL ROAD CLOSURES.

TYPE "A" LOW-INTENSITY FLASHING WARNING LIGHTS SHALL BE VISIBLE ON BOTH SIDES OF THE BARRICADE.

THE R11-2, R11-3 AND R11-4 SIGNS PLACED ON BARRICADES SHALL COVER NO MORE THAN THE TOP RAIL. THE SIGNS SHALL NOT COVER ANY PORTION OF THE MIDDLE OR BOTTOM RAILS.

ALL SIGNS SHALL BE 48" X 48" UNLESS OTHERWISE NOTED BELOW:
R11-2 SHALL BE 48" X 30".
R11-4 AND R11-3 SHALL BE 60" X 30".

*OMIT THE "ROAD CLOSED 500 FT." SIGN IF THE LAST INTERSECTION IS 500 FT. OR LESS FROM THE WORK ZONE.

**500' MAX. OR AT LAST INTERSECTION WHICHEVER IS CLOSER.

LEGEND

- SIGN ON PERMANENT SUPPORT
- TYPE III BARRICADE
- TYPE III BARRICADE WITH ATTACHED SIGN
- (A) TYPE "A" WARNING LIGHT (FLASHING)
- WORK AREA

BARRICADES AND SIGNS FOR SIDEROAD CLOSURES

STATE OF WISCONSIN
DEPARTMENT OF TRANSPORTATION

APPROVED
8/2013 — DATE
/S/ Travis Feltes — STATE TRAFFIC ENGINEER
FHWA

6

S.D.D. 15 C 3-2

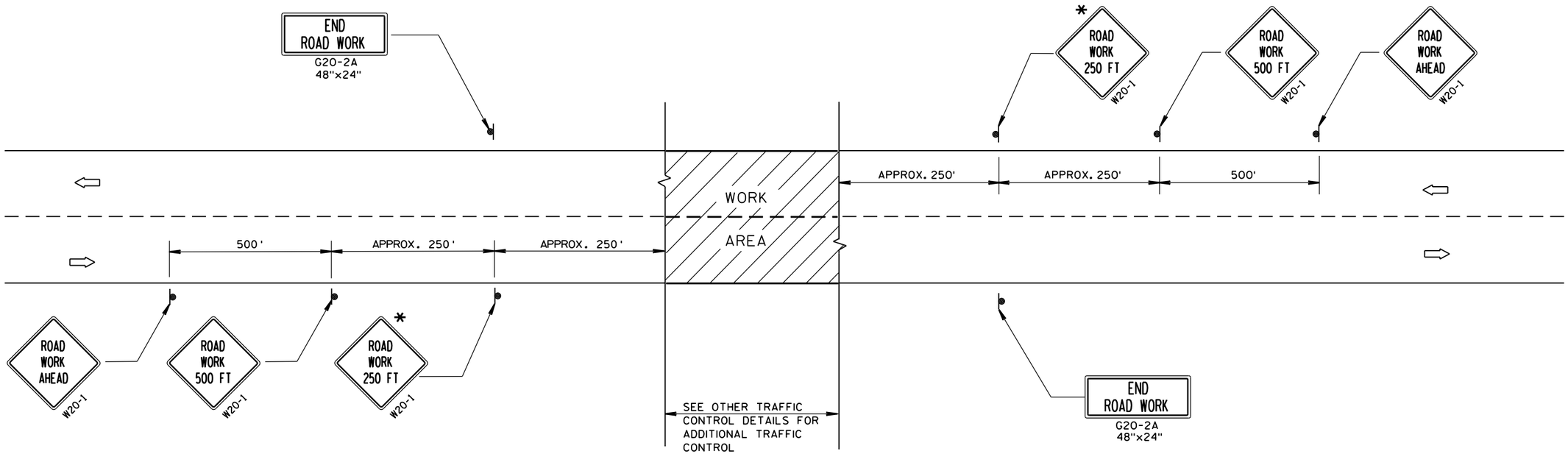

TYPICAL SIDEROAD APPROACH WARNING SIGN DETAIL

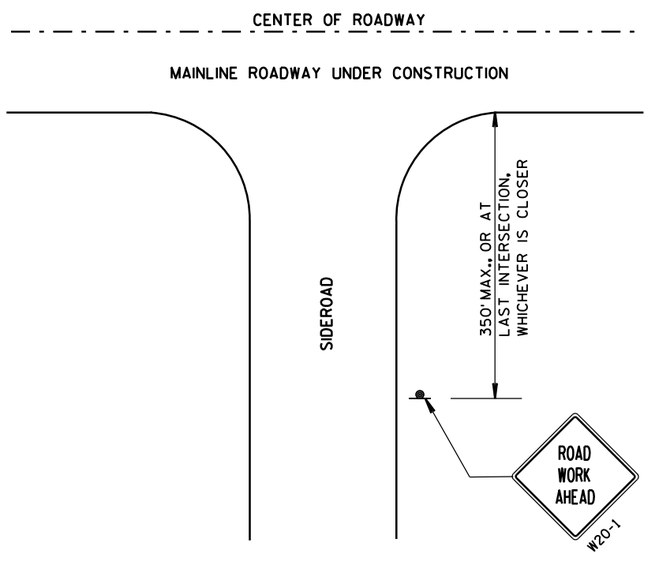

GENERAL NOTES

THE EXACT NUMBER, LOCATION, AND SPACING OF ALL SIGNS AND DEVICES SHALL BE ADJUSTED TO FIT FIELD CONDITIONS.

THE SPACING BETWEEN TRAFFIC CONTROL SIGNS SHOULD BE ADJUSTED TO NOT CONFLICT WITH AND SHOULD PROVIDE A DESIRABLE MINIMUM OF 200 FEET CLEARANCE TO EXISTING SIGNS THAT WILL REMAIN IN PLACE.

ALL SIGNS ARE 48"x48" UNLESS OTHERWISE NOTED. IF NECESSARY DUE TO SPACE CONSTRAINTS, 36"x36" SIGNS MAY BE USED INSTEAD OF 48"x48" SIGNS.

SIGNS THAT WILL BE IN PLACE LESS THAN 7 CONTINUOUS DAYS AND NIGHTS MAY BE MOUNTED ON PORTABLE SUPPORTS.

IF A "STOP" SIGN MUST BE REMOVED FOR A WORK OPERATION, A TEMPORARY "STOP" SIGN SHALL BE PLACED PRIOR TO THE SIGN REMOVAL, OR A FLAGGER SHALL BE PROVIDED UNTIL THE SIGN IS RE-ESTABLISHED.

* THE THIRD W20-1 SIGN IS REQUIRED ONLY IF THERE IS AN INTERSECTION BETWEEN THE "ROAD WORK 500 FT" SIGN AND THE WORK ZONE. ADJUST THE PLACEMENT OF THIS SIGN BASED ON INTERSECTION LOCATION AND OTHER FIELD CONDITIONS.

LEGEND

- SIGN ON PERMANENT SUPPORT
- DIRECTION OF TRAFFIC
- WORK AREA

TRAFFIC CONTROL, ADVANCE WARNING SIGNS 40 M.P.H. OR LESS TWO-WAY UNDIVIDED ROAD OPEN TO TRAFFIC

STATE OF WISCONSIN
DEPARTMENT OF TRANSPORTATION

APPROVED

8/2013 — DATE

/S/ Travis Feltes — STATE TRAFFIC ENGINEER

FHWA

SIGN

6

S.D.D. 15 C 5-2

6

S.D.D. 15 C 5-2

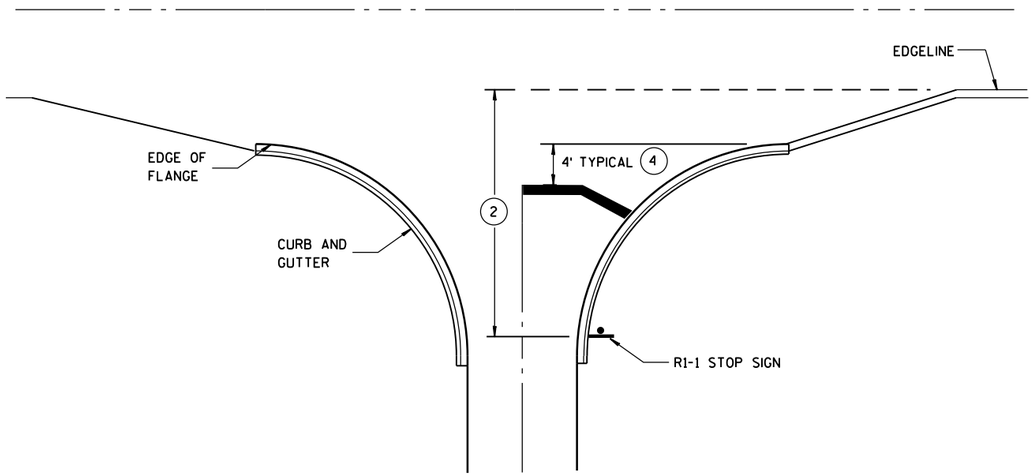

TYPICAL STOP LINE PAVEMENT MARKING WITH CURB AND GUTTER

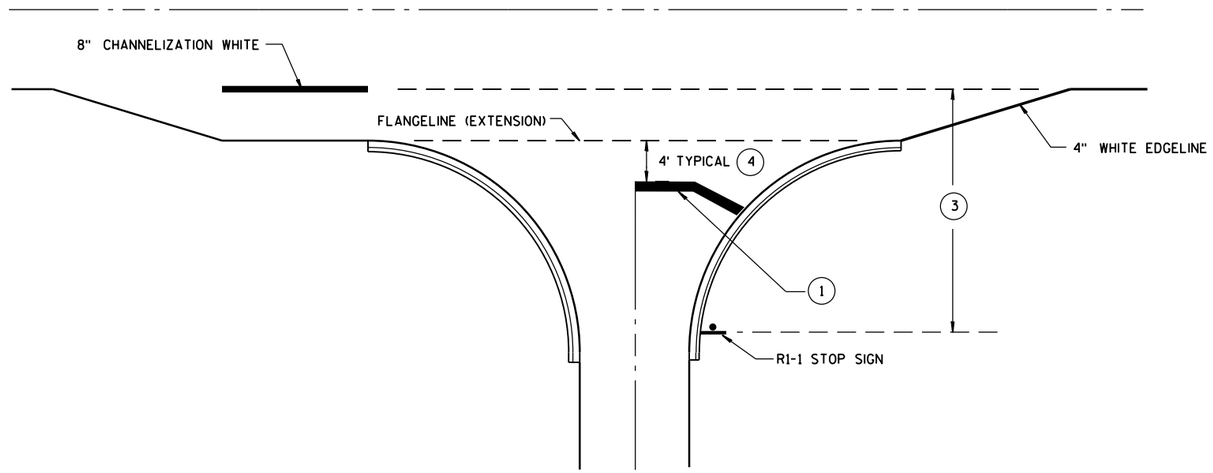

TYPICAL STOP LINE PAVEMENT MARKING FOR SIDEROADS WITH RIGHT TURN LANE

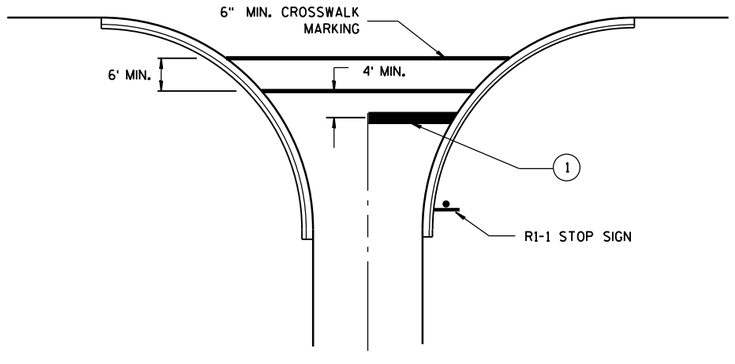

TYPICAL STOP LINE PAVEMENT MARKING FOR SIDEROADS WITH CROSSWALK MARKING

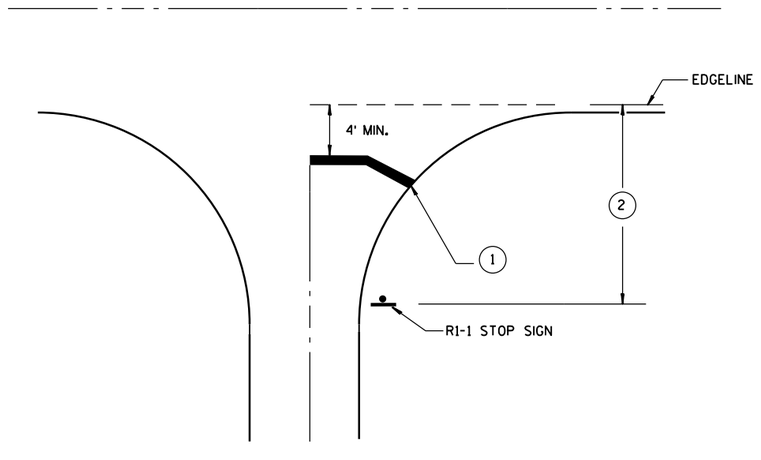

TYPICAL STOP LINE PAVEMENT MARKING WITHOUT CURB AND GUTTER

GENERAL NOTES

1. 18-INCH STOP LINES MAY BE DELETED OR ADDED BY THE PROJECT ENGINEER BASED ON VISIBILITY AND SIGHT LINES.
2. IF STOP SIGN IS LESS THAN OR EQUAL TO 40 FEET FROM THE EDGELINE THAN NO STOP LINE IS REQUIRED.
3. IF STOP SIGN IS LESS THAN OR EQUAL TO 30 FEET FROM THE FLANGELINE EXTENSION THAN NO STOP LINE IS REQUIRED.
4. MOVE CLOSER TO EDGE OF TRAVEL LANE AS NEEDED FOR VISIBILITY AND SIGHT LINES.

STOP LINE AND CROSSWALK PAVEMENT MARKING

STATE OF WISCONSIN
DEPARTMENT OF TRANSPORTATION

APPROVED

4/30/2013
DATE

/S/ Travis Feltes
STATE TRAFFIC E

FHWA

6

S.D.D. 15 C 33-1

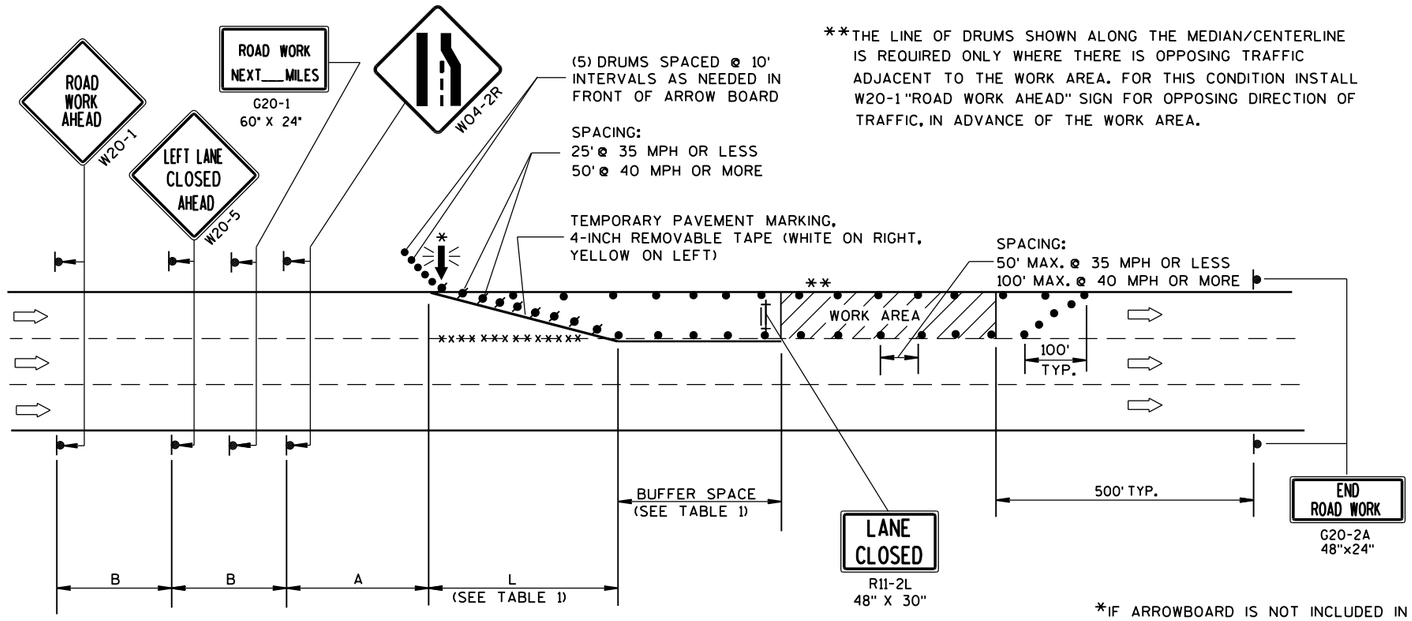

**THE LINE OF DRUMS SHOWN ALONG THE MEDIAN/CENTERLINE IS REQUIRED ONLY WHERE THERE IS OPPOSING TRAFFIC ADJACENT TO THE WORK AREA. FOR THIS CONDITION INSTALL W20-1 "ROAD WORK AHEAD" SIGN FOR OPPOSING DIRECTION OF TRAFFIC, IN ADVANCE OF THE WORK AREA.

B=400' AT 25-30 MPH
700' AT 35-40 MPH
1000' AT 45-55 MPH

A=200' AT 25-30 MPH
350' AT 35-40 MPH
500' AT 45-55 MPH

(PLACE BARRICADE AND SIGN APPROX. EVERY 1000' ACROSS THE CLOSED LANE)

*IF ARROWBOARD IS NOT INCLUDED IN MISCELLANEOUS QUANTITIES, SUBSTITUTE A TYPE III BARRICADE WITH W01-6 SIGN IN THE LANE CLOSURE TAPER.

W01-6
48"x24"

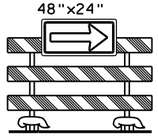

TABLE 1
TAPER AND BUFFER SPACE FOR 12' LANE WIDTH

S	L	BUFFER SPACE
25	125'	55'
30	180'	85'
35	245'	120'
40	320'	170'
45	540'	220'
50	600'	280'
55	660'	335'

FOR LANE WIDTH OTHER THAN 12':

L = WS AT 45 MPH OR GREATER

$L = \frac{WS^2}{60}$ AT 40 MPH OR LESS

L = TAPER LENGTH IN FEET

S = NON-CONSTRUCTION SPEED LIMIT (MPH)

W = WIDTH OF LANE CLOSURE

LEGEND

- TYPE III BARRICADE WITH ATTACHED SIGN
- SIGN ON PERMANENT SUPPORT
- TRAFFIC CONTROL DRUM WITH TYPE "C" STEADY BURN LIGHT
- TRAFFIC CONTROL DRUM
- FLASHING ARROW BOARD
- DIRECTION OF TRAFFIC
- REMOVING PAVEMENT MARKING (SEE GENERAL NOTES)
- WORK AREA

GENERAL NOTES

THIS LANE CLOSURE DETAIL IS TYPICAL FOR CLOSING THE LEFT LANE. FOR A RIGHT LANE CLOSURE, REVERSE THE TRAFFIC CONTROL.

THIS DETAIL MAY BE USED FOR ROADWAYS WITH EITHER TWO OR THREE LANES IN EACH DIRECTION.

THE EXACT NUMBER, LOCATION, AND SPACING OF ALL SIGNS AND DEVICES SHALL BE ADJUSTED TO FIT FIELD CONDITIONS AS APPROVED BY THE ENGINEER.

THE SPACING BETWEEN TRAFFIC CONTROL SIGNS SHOULD BE ADJUSTED TO NOT CONFLICT WITH AND SHOULD PROVIDE A DESIRABLE MINIMUM OF 200 FEET CLEARANCE TO EXISTING SIGNS THAT WILL REMAIN IN PLACE.

ALL SIGNS ARE 48"x48" UNLESS OTHERWISE NOTED. IF NECESSARY DUE TO SPACE CONSTRAINTS IN URBAN AREAS, 36" X 36" SIGNS MAY BE USED IF APPROVED BY DISTRICT TRAFFIC UNIT.

"WO" SIGNS ARE THE SAME AS "W" SIGNS EXCEPT THE BACKGROUND IS ORANGE.

SIGNS THAT WILL BE IN PLACE LESS THAN 7 CONTINUOUS DAYS AND NIGHTS, OR THAT WILL BE PLACED IN A CLOSED LANE, MAY BE MOUNTED ON PORTABLE SUPPORTS.

ANY SIGNS TEMPORARY OR EXISTING, WHICH CONFLICT WITH TRAFFIC CONTROL "IN USE" SHALL BE REMOVED OR COVERED AS NEEDED AND AS APPROVED BY THE ENGINEER.

REMOVE PAVEMENT MARKINGS AND PLACE TEMPORARY PAVEMENT MARKING, REMOVABLE TAPE IF LANE CLOSURE IS TO BE IN PLACE FOR 4 OR MORE CONTINUOUS DAYS AND NIGHTS.

ON UNDIVIDED ROADWAYS, OMIT THE SIGNS SHOWN ON LEFT SIDE OF ROAD.

W20-1, G20-1 AND G20-2A SIGNS ARE NOT REQUIRED IF THE LANE CLOSURE IS WITHIN A LARGER WORK ZONE WHERE THESE SIGNS ARE ALREADY PRESENT.

OMIT G20-1 SIGNS IF LENGTH OF WORK AREA IS 2 MILES OR LESS.

CONSIDER GEOMETRICS WHEN LOCATING SIGNS AND ARROWBOARDS SO THE APPROACHING DRIVER HAS A CLEAR VIEW OF THE ARROWBOARDS AND LANE CLOSURE DRUMS.

PLACE THE ARROWBOARD AS CLOSE AS POSSIBLE TO THE BEGINNING OF THE LANE CLOSURE TAPER, PREFERABLY ON THE SHOULDER OR TERRACE.

CHANNELIZING DEVICES PLACED ADJACENT TO WORK AREA SHALL BE PULLED BACK FROM THE TRAVEL LANE WHEN WORK IS NOT IN PROGRESS.

BARRICADES IN A CLOSED LANE THAT MUST BE MOVED FOR A WORK OPERATION SHALL BE IMMEDIATELY RE-ESTABLISHED UPON COMPLETION OF THE OPERATION OR, FOR CONTINUING OPERATIONS, AT THE END OF EACH WORKING DAY.

WARNING LIGHTS ARE NOT REQUIRED IF THE LANE CLOSURE IS A DAYTIME ONLY OPERATION.

TRAFFIC CONTROL, SINGLE LANE CLOSURE, NON-FREEWAY/EXPRESSWAY

STATE OF WISCONSIN
DEPARTMENT OF TRANSPORTATION

APPROVED
8/2013 — DATE
/S/ Travis Feltes — STATE TRAFFIC ENGINEER
FHWA

6

S.D.D. 15 D 20-2

6

S.D.D. 15 D 20-2

WARNING OF LOCALIZED SIDEWALK WORK AREAS

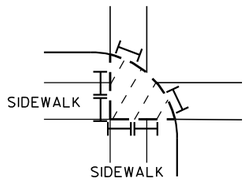

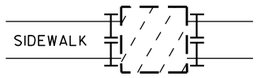

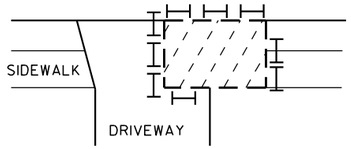

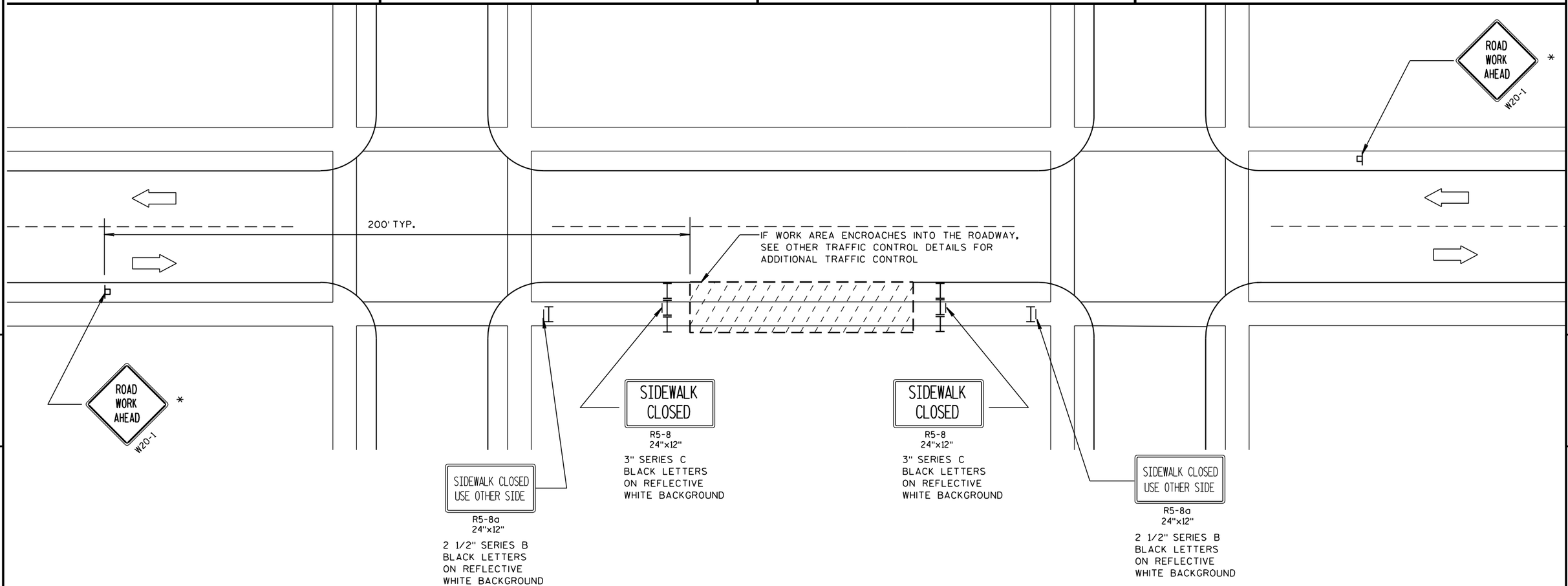

LEGEND

- POST MOUNTED SIGN
- TYPE II BARRICADE WITH/WITHOUT SIGN (ALL WITH ONE WARNING LIGHT, TYPE A, LOW-INTENSITY FLASHING)
- WORK AREA
- DIRECTION OF TRAFFIC FLOW

GENERAL NOTES :

ALL SIGNS ARE 48"x48" UNLESS OTHERWISE NOTED. IF NECESSARY DUE TO SPACE CONSTRAINTS, 36"x36" SIGNS MAY BE USED INSTEAD OF 48"x48" SIGNS, IF APPROVED BY DISTRICT TRAFFIC UNIT.

THE EXACT LOCATION AND PLACEMENT OF ALL SIGNS AND DEVICES SHALL BE ADJUSTED TO FIT FIELD CONDITIONS.

"WO" SIGNS ARE THE SAME AS "W" SIGNS EXCEPT THE BACKGROUND IS ORANGE.

* "ROAD WORK AHEAD" SIGNS ARE NOT REQUIRED IF THE SIDEWALK CLOSURE OCCURS WITHIN A LARGER WORK ZONE WHERE ADVANCE WARNING SIGNS ARE ALREADY PRESENT, OR IF THE WORK AREA AND EQUIPMENT ARE MORE THAN 2 FEET BEHIND THE CURB.

WARNING SIGNS THAT WILL BE IN PLACE LESS THAN 7 CONTINUOUS DAYS AND NIGHTS MAY BE MOUNTED ON PORTABLE SUPPORTS.

TRAFFIC CONTROL, SIDEWALK CLOSURE

TRAFFIC CONTROL, SIDEWALK CLOSURE

STATE OF WISCONSIN
DEPARTMENT OF TRANSPORTATION

APPROVED
5/23/2000 DATE
/S/ Chester J. [illegible]
CHIEF SIGNS AND MARK[illegible] ENGINEER
FHWA

6

S.D.D. 15 D 30-1

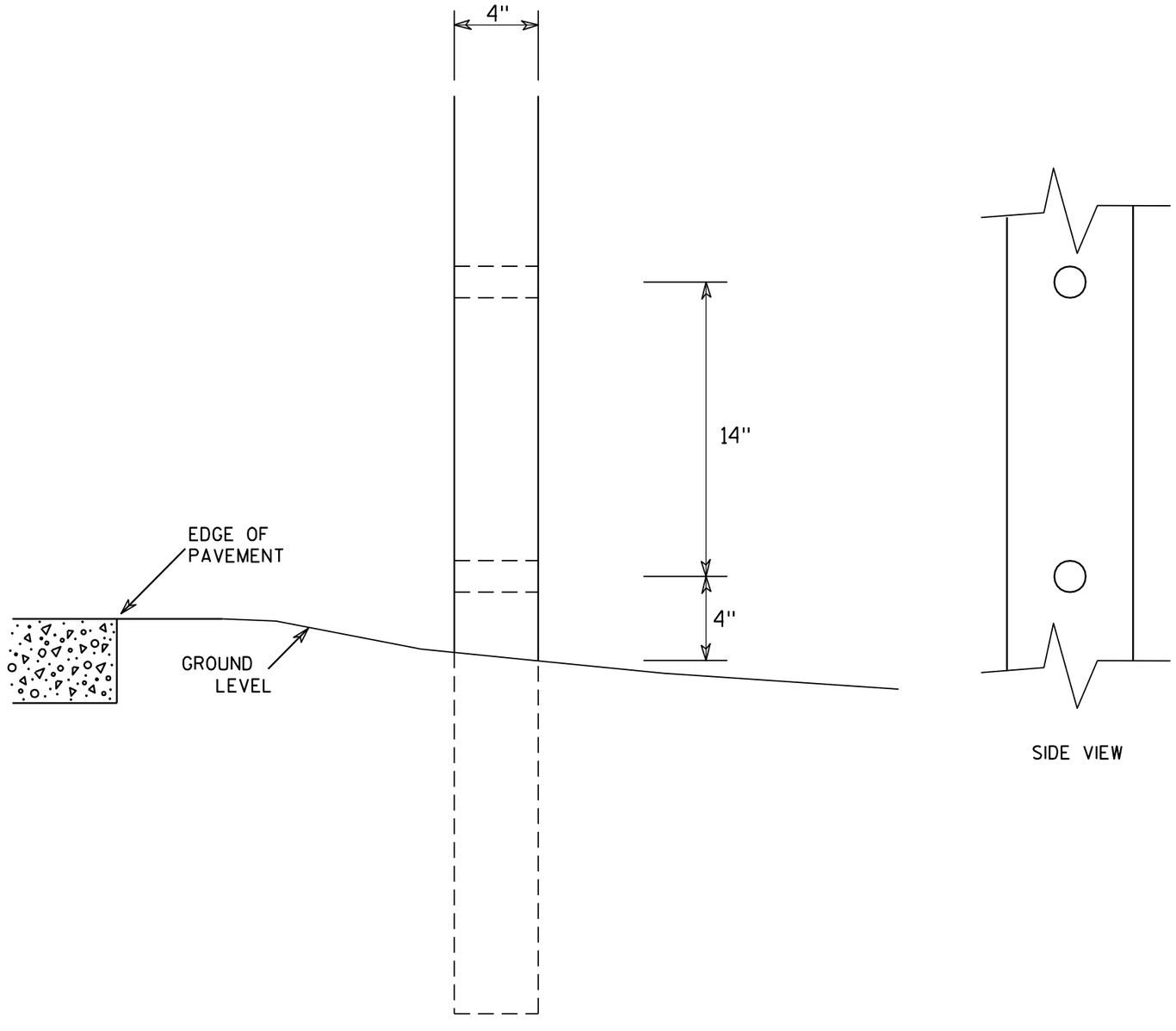

SIDE VIEW

GENERAL NOTES

1. All 4 x 6 Wood Posts shall be modified by having two 1½" diameter holes drilled perpendicular to the roadway centerline.

7

7

4 X 6 WOOD POST MODIFICATIONS

WISCONSIN DEPT OF TRANSPORTATION

APPROVED Chester J Spang for State Traffic Engineer

DATE 3/27/97 PLATE NO. A4-11.2

PROJECT NO:	HWY:	COUNTY:		SHEET NO: 123	E

URBAN AREA

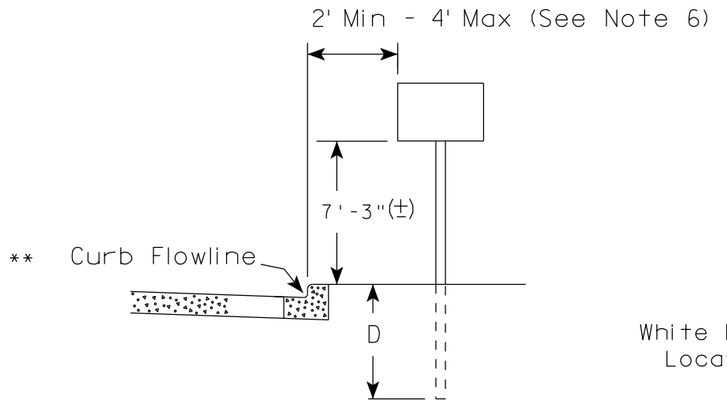

RURAL AREA (See Note 2)

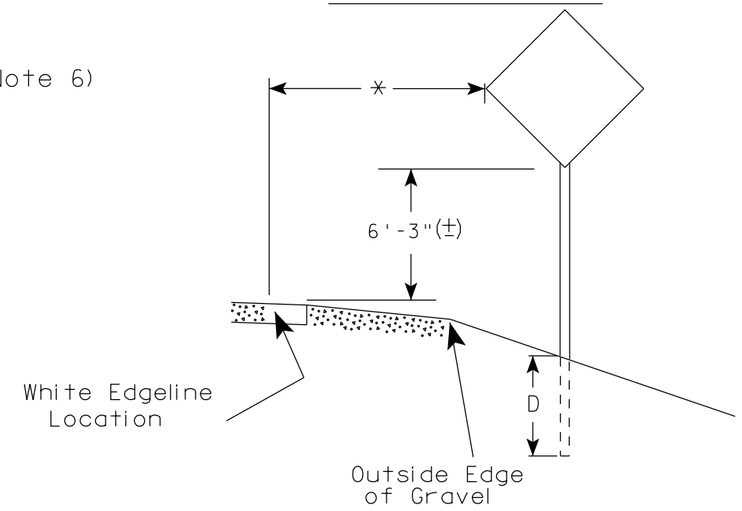

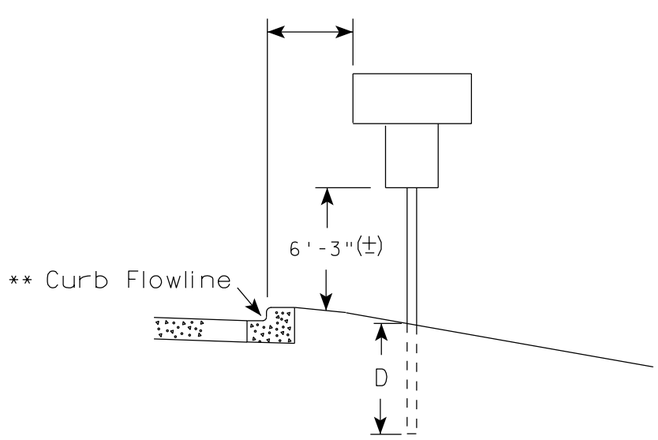

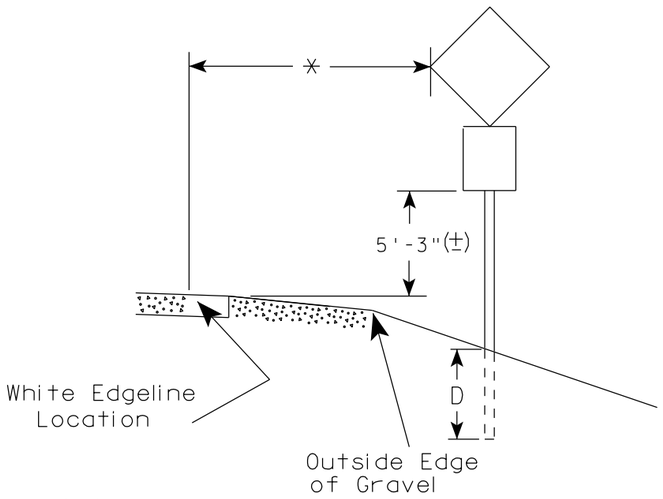

GENERAL NOTES

1. Signs wider than 4 feet, 20 sq.ft or larger, shall be mounted on multiple posts. Refer to plate A4-4.
2. If signs are mounted on barrier wall, see A4-10 sign plate.
3. For expressways and freeways, mounting height is 7'- 3" (±) or 6'-3" (±) depending upon existence of a sub-sign.
4. Minimum mounting height for J assemblies (A2-1S) is 7'-3" (±) or 6'-3" (±) per urban or rural detail respectively.
5. Minimum mounting height for signs mounted on traffic signal poles is 5'- 3" (±).
6. Offset distance shall be consistent with existing signs or consistent throughout length of project.
7. The (±) tolerance for mounting height is 3 inches.
8. Folding signs shall be mounted at a height of 5'-3" (±) or as directd by the Engineer.
9. The Double Arrow sign (W12-1) shall be mounted at a height of 2'-3" (±). The Chevron sign (W1-8), Roundabout Chevron panel (R6-4B), Enhanced Reference Markers, Clearance Markers (W5-52), Mile Markers (D10 series), In Road Object Markers (W5-54) & End of Road Markers (W5-56) shall be mounted at a height of 4'-3" (±).

POST EMBEDMENT DEPTH

Area of Sign Installation (Sq.Ft.)	D (Min)
20 or Less	4'
Greater than 20	5'

** The existence of curb and gutter does not in itself mandate the vertical clearance illustrated. That height is typically measured where there is sidewalk adjacent to the roadway or parking is permitted. In the absence of sidewalk vertical clearance is measured from the top of the curb. Offset of signs is measured from the flow line.

* 6 feet from edge of a paved shoulder or 12 feet from the edge of pavement (edge line location) or 2 feet from outside edge of gravel, whichever is greater unless directed by project engineer.

TYPICAL INSTALLATION OF PERMANENT TYPE II SIGNS ON SINGLE POSTS

WISCONSIN DEPT OF TRANSPORTATION

APPROVED Matthew R Rauch
for State Traffic Engineer

DATE 11/12/14 PLATE NO. A4-3.19

PROJECT NO:	HWY:	COUNTY:		SHEET NO:	E

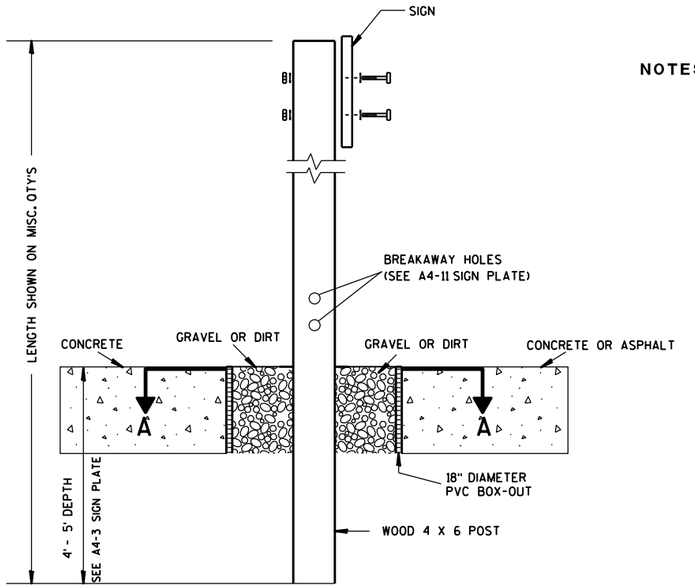

ELEVATION VIEW

DETAIL OF WOOD 4 X 6 SIGN POST IN BOX-OUT

NOTES:
1. ALL MATERIAL TO BE APPROVED BY ENGINEER PRIOR TO INSTALLATION
2. SEE SIGN PLATE A4-8 FOR SIGN HARDWARE REQUIREMENTS
3. 18 INCH X 18 INCH SQUARE BOX-OUTS MAY BE USED FOR INSTALLATIONS IN EXISTING CONCRETE OR ASPHALT LOCATIONS.

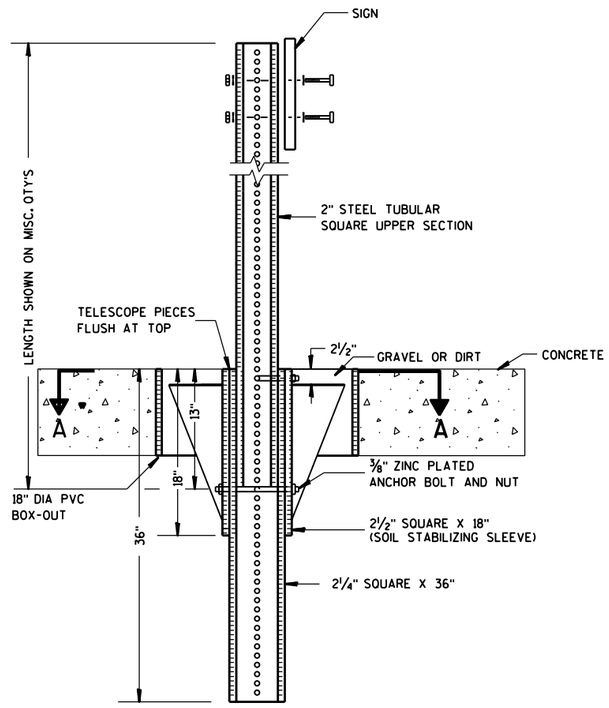

ELEVATION VIEW

DETAIL OF STEEL 2 X 2 SIGN POST IN BOX-OUT

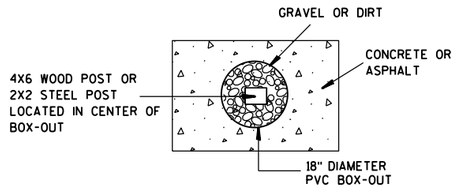

PLAN VIEW

FOR NEW CONCRETE/ASPHALT INSTALLATIONS

SIGN POST BOX-OUTS A4-3B

WISCONSIN DEPT OF TRANSPORTATION

APPROVED Matthew R Rauch
for State Traffic Engineer

DATE 1/27/14 PLATE NO. A4-3B.1

PROJECT NO:	HWY:	COUNTY:		SHEET NO:	E

FILE NAME : C:\CAEFiles\Projects\tr_stdplate\A43B.DGN PLOT DATE : 27-JAN-2014 09:48 PLOT BY : mscsja PLOT NAME : PLOT SCALE : 13.659812:1.000000 WISDOT/CADDS SHEET 42

URBAN AREA

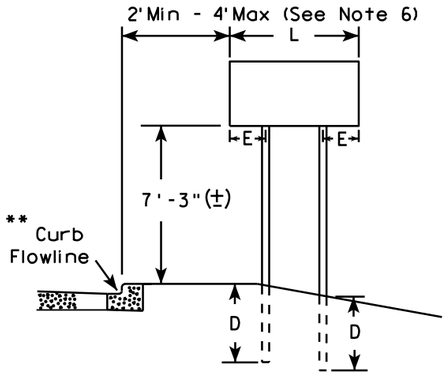

RURAL AREA (See Note 3)

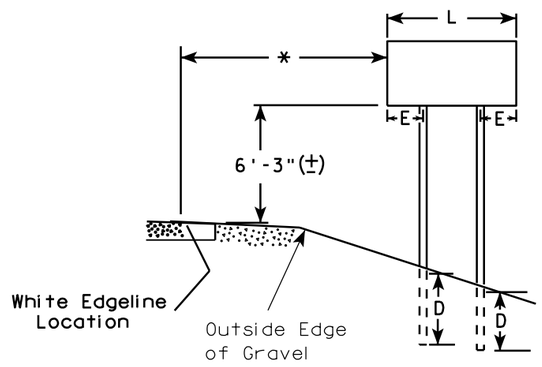

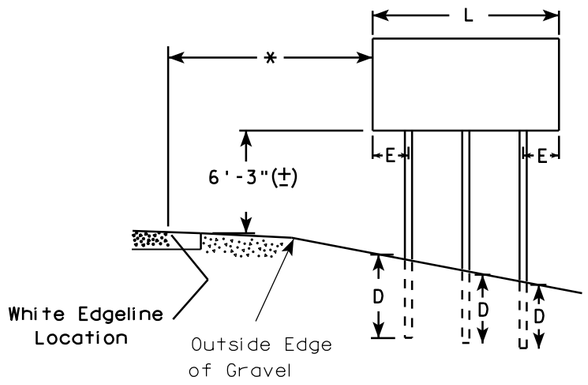

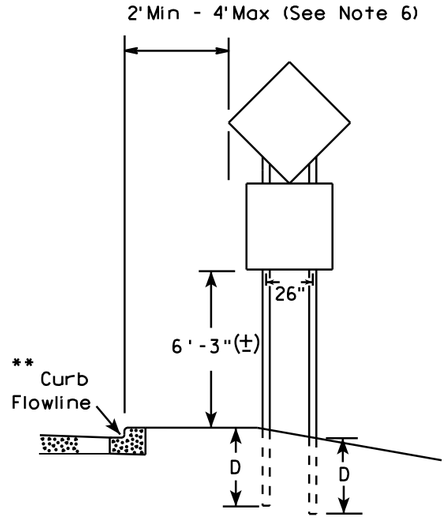

48" DIAMOND WARNING SIGN

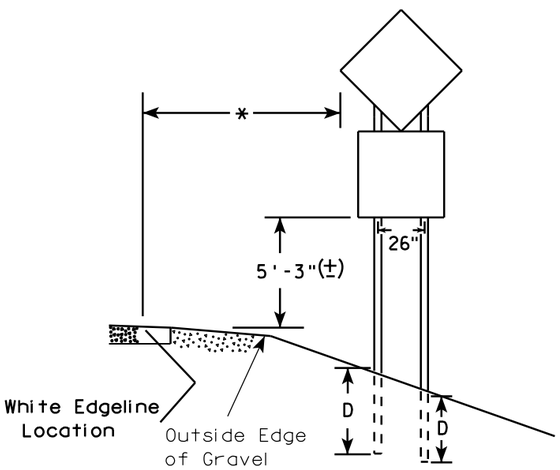

48" DIAMOND WARNING SIGN

GENERAL NOTES

1. For 3 or 4 post installations, individual post spacing shall be greater than 3'-6".
2. See tables below for required number of posts.
3. For expressways and freeways, mounting height is 7'-3" (±) or 6'-3" (±) depending upon existence of sub-sign.
4. The (±) tolerance for mounting height is 3 inches.
5. Minimum mounting height for J assemblies (A2-1S) is 7'-3" (±) or 6'-3" (±) per urban or rural detail respectively.
6. Offset distance shall be consistent with existing signs or consistent throughout length of project.
7. Folding signs shall be mounted at a height of 5'-3" (±) or as directed by the engineer.
8. The Double Arrow sign (W12-1) shall be mounted at a height of 2'-3" (±). The Chevron sign (W1-8), Roundabout Chevron panel (R6-4B), Clearance Markers (W5-52), Mile Markers (D10 series), In Road Object Markers (W5-54) & End of Road Markers (W5-56) shall be mounted at a height of 4"-3" (±).

* 6 feet from edge of a paved shoulder or 12 feet from the edge of pavement (edge line location) or 2 feet from outside edge of gravel, whichever is greater unless directed by project engineer.

** The existence of curb and gutter does not in itself mandate the vertical clearance illustrated. That height is typically measured where there is sidewalk adjacent to the roadway or parking is permitted. In the absence of sidewalk vertical clearance is measured from the top of the curb. Offset of signs is measured from the flow line.

*** See A4-3 sign plate for signs 4' or less in width or less than 20 S.F. in area.

SIGN SHAPE OTHER THAN DIAMOND (TWO POSTS REQUIRED)	
L	E
Greater than 48" Less than 60"	12"
60" to 120"	L/5

***

SIGN SHAPE OTHER THAN DIAMOND (THREE POSTS REQUIRED)	
L	E
Greater than 120" less than 168"	12"

SIGN SHAPE OTHER THAN DIAMOND (FOUR POSTS REQUIRED)	
L	E
168" and greater	12"

POST EMBEDMENT DEPTH

Area of Sign Installation (Sq. Ft.)	D (Min)
20 or Less	4'
Greater than 20	5'

TYPICAL INSTALLATION OF TYPE II SIGNS ON MULTIPLE POSTS

WISCONSIN DEPT OF TRANSPORTATION

APPROVED Matthew R Rauch
for State Traffic Engineer

DATE 11/12/14 PLATE NO. A4-4 126 13

PROJECT NO:	HWY:	COUNTY:		SHEET NO:	E

FILE NAME : C:\CAEFiles\Projects\tr_stdplate\A44.DGN PLOT DATE : 12-NOV-2014 14:01 PLOT BY : mscsja PLOT NAME : PLOT SCALE : 107.021305:1.000000

WISDOT/CADDS SHEET 42

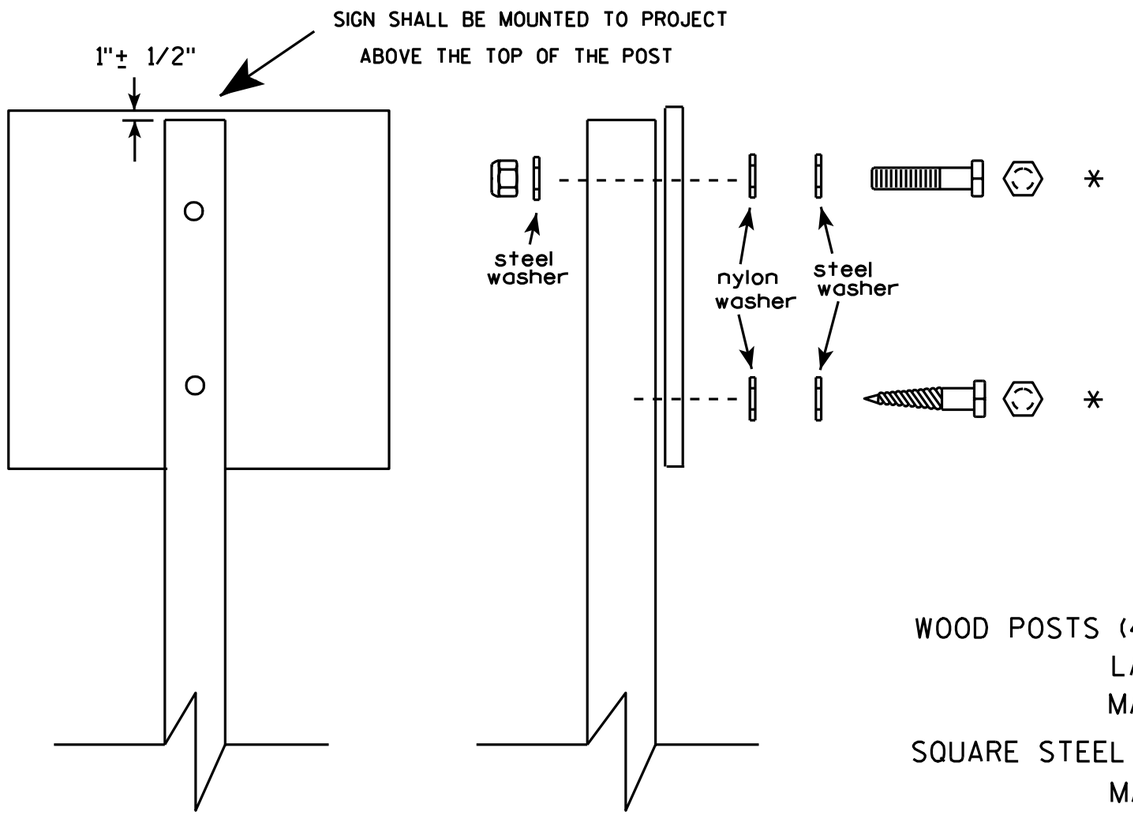

Nuts, bolts and lags used for mounting signs shall have hexagonal heads and shall be either :

a. Hot dip galvanized in accordance with ASTM Designation: A 153, Class D, or SC 3

b. Electro-galvanized in accordance with ASTM Designation : B 633, TYPE III, SC 3.

Threads on bolts and nuts shall be manufactured with sufficient allowance for the cadmium plate or galvanized coating to permit the nuts to run freely on the bolts.

WOOD POSTS (4" x 4" or 4" x 6")
LAG SCREWS - 3/8" X 3"
MACHINE BOLTS - 5/16" X 6-1/2" or 7" Length w/ nuts

SQUARE STEEL POSTS (2" x 2")
MACHINE BOLTS - 3/8" X 3-1/4" Length w/ nuts
RIVETS - 9/32 " (6605-9-6) BULB-TITE, TRI-FOLD, ALUMINUM BODY/MANDREL
O.D. FLANGE .720-.765 INCH, GRIP RANGE .042-.375 INCH

WASHERS (ALL POSTS) -
1-1/4" O.D. X 3/8" I.D. X 1/16" STEEL
1-1/4" O.D. X 3/8" I.D. X .080 NYLON for all Type H signs.

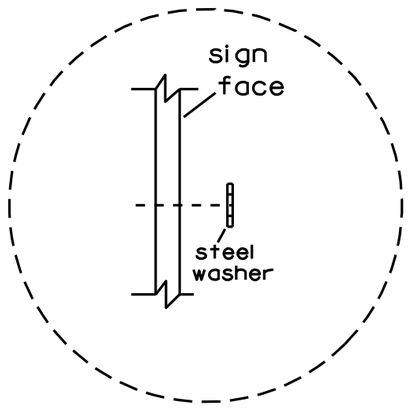

Washer Placement when Sign Has Other Than Type H or Type F Face

* Two different fastening systems are shown for illustration purposes. On any individual sign, either one or the other system shall be used. Actual number of fasteners per sign varies with the sign area, but normally there are two. For a single post installation, all signs greater than 9 sq. ft. require the use of 3 fasteners.

ATTACHMENT OF SIGNS TO POSTS

WISCONSIN DEPT OF TRANSPORTATION

APPROVED Matthew R Rauch
for State Traffic Engineer

DATE 3/23/10 PLATE NO. A4-8.7

7

7

PROJECT NO:

SHEET NO: 127 E

TELESCOPIC TUBING ANCHORS
TWO PIECE SYSTEM

2 1/4 " SQUARE
12 GAUGE
PERFORATED
GALVANIZED FINISH

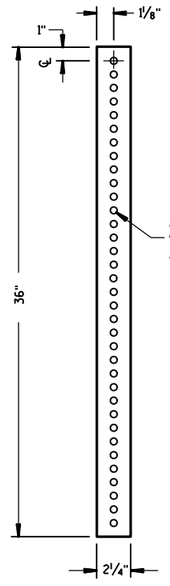

2 1/2 " SQUARE
12 GAUGE
OMNI-DIRECTIONAL
PERFORATED
SOIL STABILIZING SLEEVE
GALVANIZED FINISH

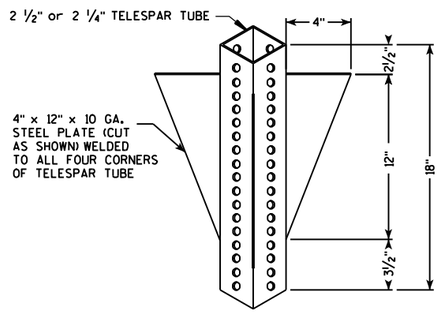

DETAIL OF TUBULAR STEEL SIGN POST
(IN POURED CONCRETE OR ASPHALT)

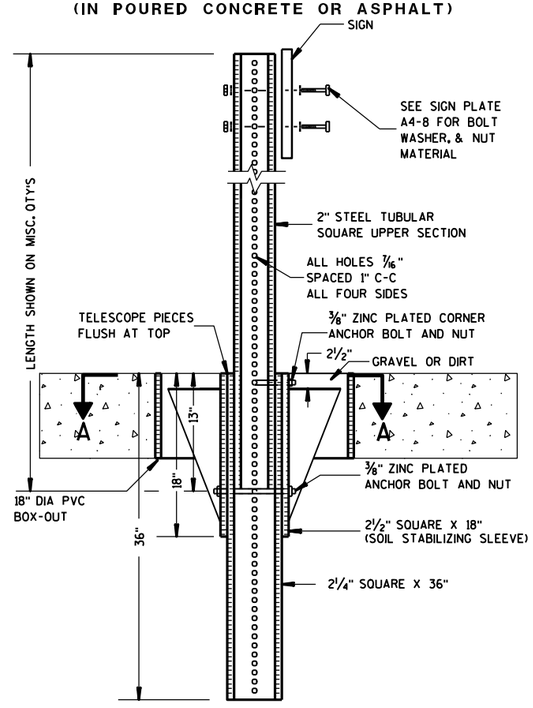

DETAIL OF TUBULAR STEEL SIGN POST
(IN LOCATIONS OTHER THAN POURED CONCRETE OR ASHALT)

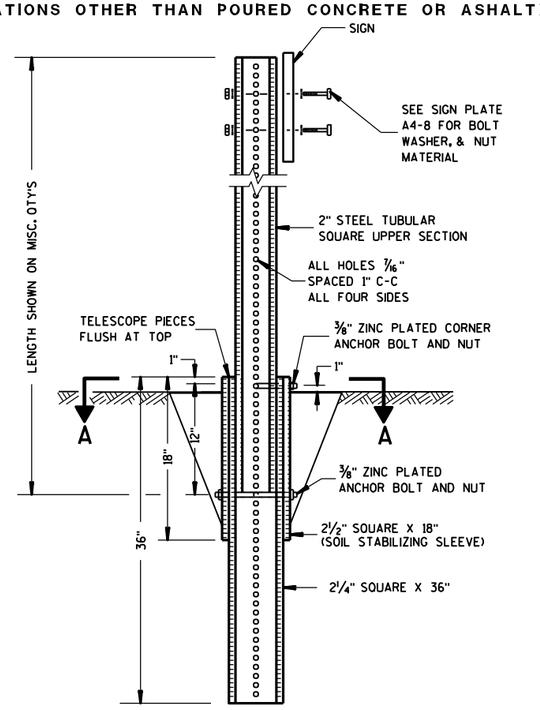

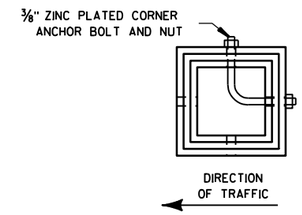

SECTION A-A

Area of Sign Installation (Sq. Ft.)	Number of Required Posts
9 or less	1
Greater than 9 less than or equal to 18	2
Greater than 18 less than or equal to 27	3

Signs wider than 3 feet or larger than 9 sq. ft shall be mounted on multiple posts (see above table).

TUBULAR STEEL
SIGN POST
A4-9

WISCONSIN DEPT OF TRANSPORTATION

APPROVED Matthew R Rauch
for State Traffic Engineer
DATE 5/30/12 PLATE NO. A4-9.7

PROJECT NO:	HWY:	COUNTY:		SHEET NO: 128	E

FILE NAME : C:\CAEFiles\Projects\tr_stdplate\A49.DGN PLOT DATE : 30-MAY-2012 14:04 PLOT BY : mscj9h PLOT NAME : PLOT SCALE : 13.933009:1.000000

WISDOT/CADDS SHEET 42

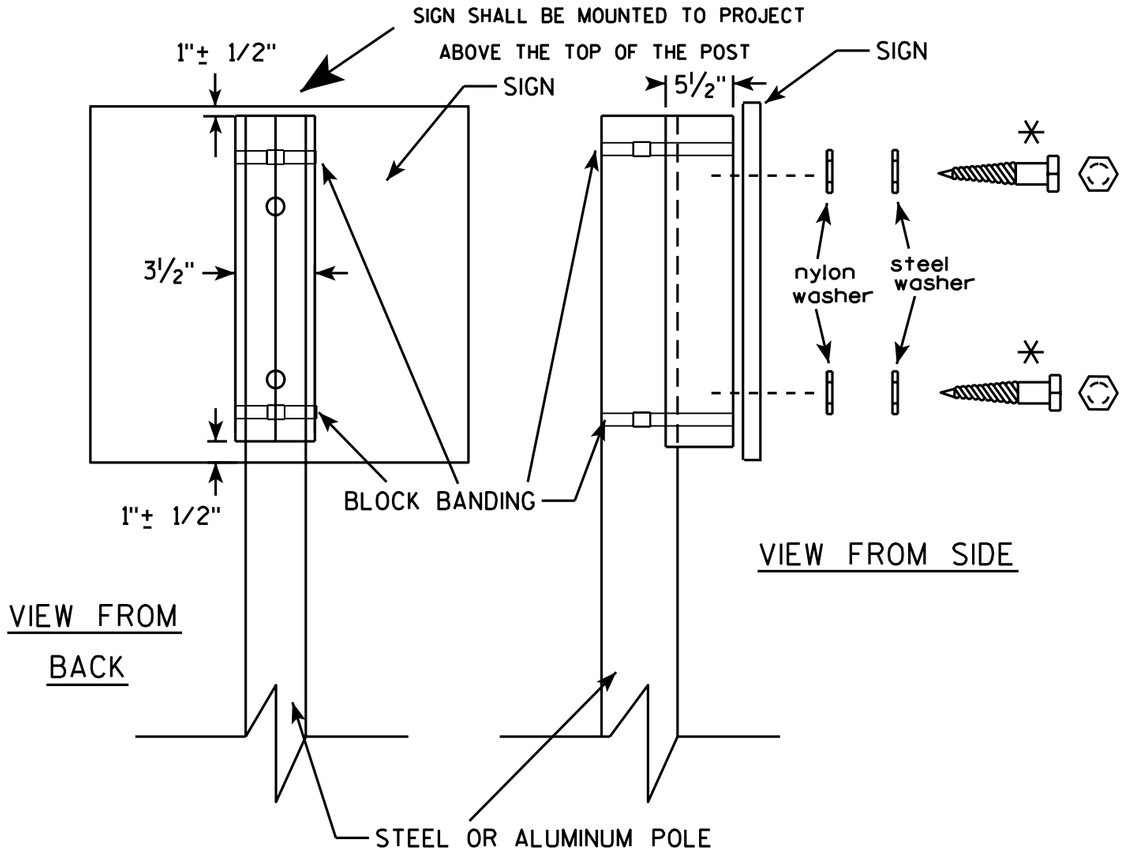

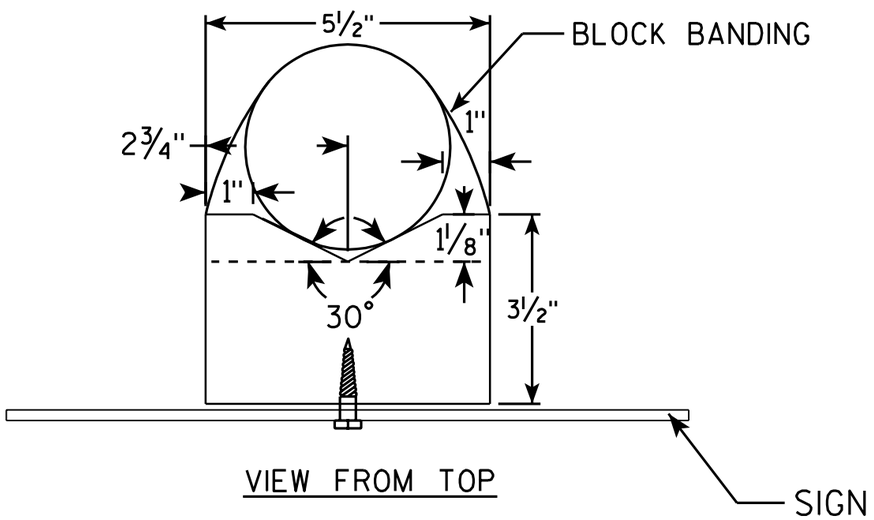

GENERAL NOTES

1. WOOD 4"X6" POST MATERIAL SHALL CONFORM TO 507.2.2 OF THE WisDOT STANDARD SPECIFICATIONS
2. BLOCK BANDING AND CLIPS SHALL BE STAINLESS STEEL, ¾" WIDTH AND 0.025" THICKNESS
3. SIGNS 3' OR GREATER IN HEIGHT SHALL UTILIZE 3 BLOCK BANDS. SIGNS UNDER 3' IN HEIGHT SHALL UTILIZE 2 BLOCK BANDS
4. ACTUAL NUMBER OF FASTENERS PER SIGN VARIES WITH THE SIGN AREA, BUT NORNALLY THERE ARE TWO. FOR SIGNS GREATER THAN 9 S.F. 3 FASTENERS SHALL BE USED.
5. ALL SIGN MOUNTING BOLTS AND WASHERS SHALL BE EITHER:
   a. Hot dip or mechanically galvanized in accordance with ASTM Designation: A 153, Class D, or
   b. Cadmium plated in accordance with ASTM Designation : B 766 TYPE 3, Class 12, or
   c. Electro-galvanized in accordance with ASTM Designation : B 633, TYPE III, SC 3.
6. ALL BOLTS SHALL HAVE HEXAGONAL HEADS.
7. STEEL WASHERS SHALL BE 1¼" O.D. X ⅜" I.D. X 1/16"
8. NYLON WASHERS SHALL BE 1¼" O.D. X ⅜" I.D. X .080 FOR TYPE H OR TYPE F FACE SIGN

✳ LAG BOLTS SHALL BE ⅜" X 2½"

BLOCK BANDING DETAIL (V-BLOCK OPTION)

WISCONSIN DEPT OF TRANSPORTATION

APPROVED Matthew R Rauch
for State Traffic Engineer

DATE 7/12/07 PLATE NO. A5-10.1

PROJECT NO:

SHEET NO: 129 E

FILE NAME : C:\Users\Projects\tr_stdplate\A510.dgn PLOT DATE : 06-AUG-2007 13:37 PLOT BY : ditjph

WISDOT/CADDS SHEET 42

BANDING

SINGLE SIGN

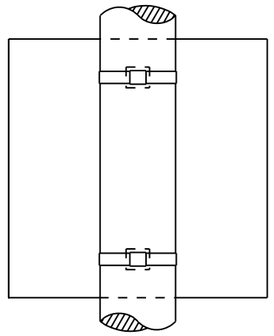

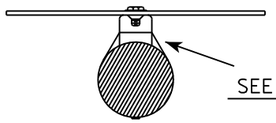

"J" ASSEMBLY

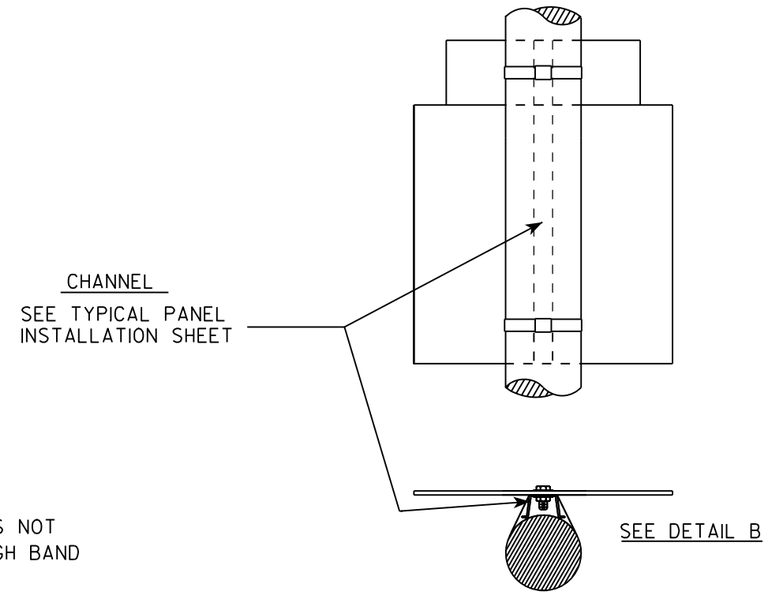

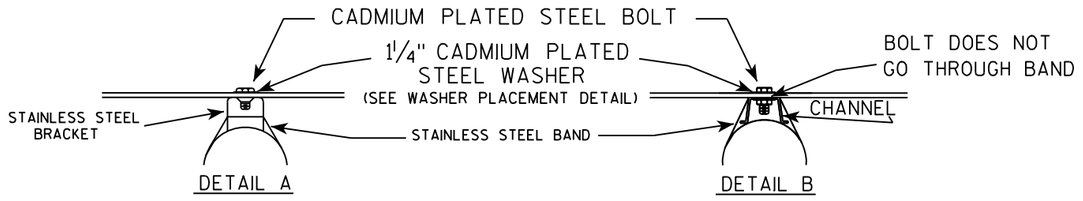

WASHER PLACEMENT

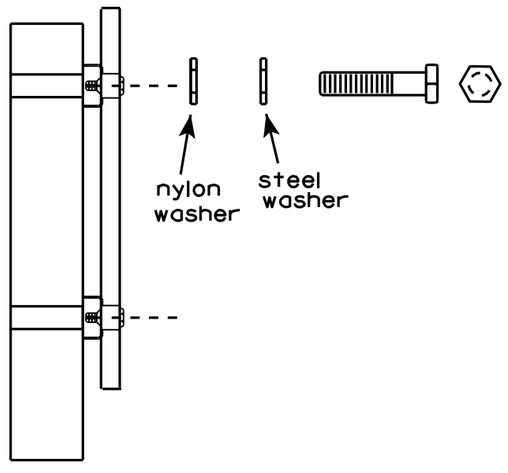

WASHERS (ALL POSTS) -
1-1/4" O.D. X 3/8" I.D. X 1/16" STEEL
1-1/4" O.D. X 3/8" I.D. X .080 NYLON
FOR ALL TYPE H SIGNS

GENERAL NOTES

1. Any sign over 3 feet in width shall use the V-Block banding method. See A5-10 standard plate.
2. Signs 3 feet or greater in height shall have three bracket bands installed. Signs less than 3 feet in height shall have two bracket bands installed.
3. Banding and assembly bracket shall be stainless steel. All bands shall be ¾" in width and 0.025" thickness.

STANDARD SIGN
SIGN BANDING DETAILS

WISCONSIN DEPT OF TRANSPORTATION

APPROVED Matthew R Rauch
for State Traffic Engineer

DATE 8/16/13 PLATE NO. A5-9.3

PROJECT NO:	HWY:	COUNTY:		SHEET NO: 130	E

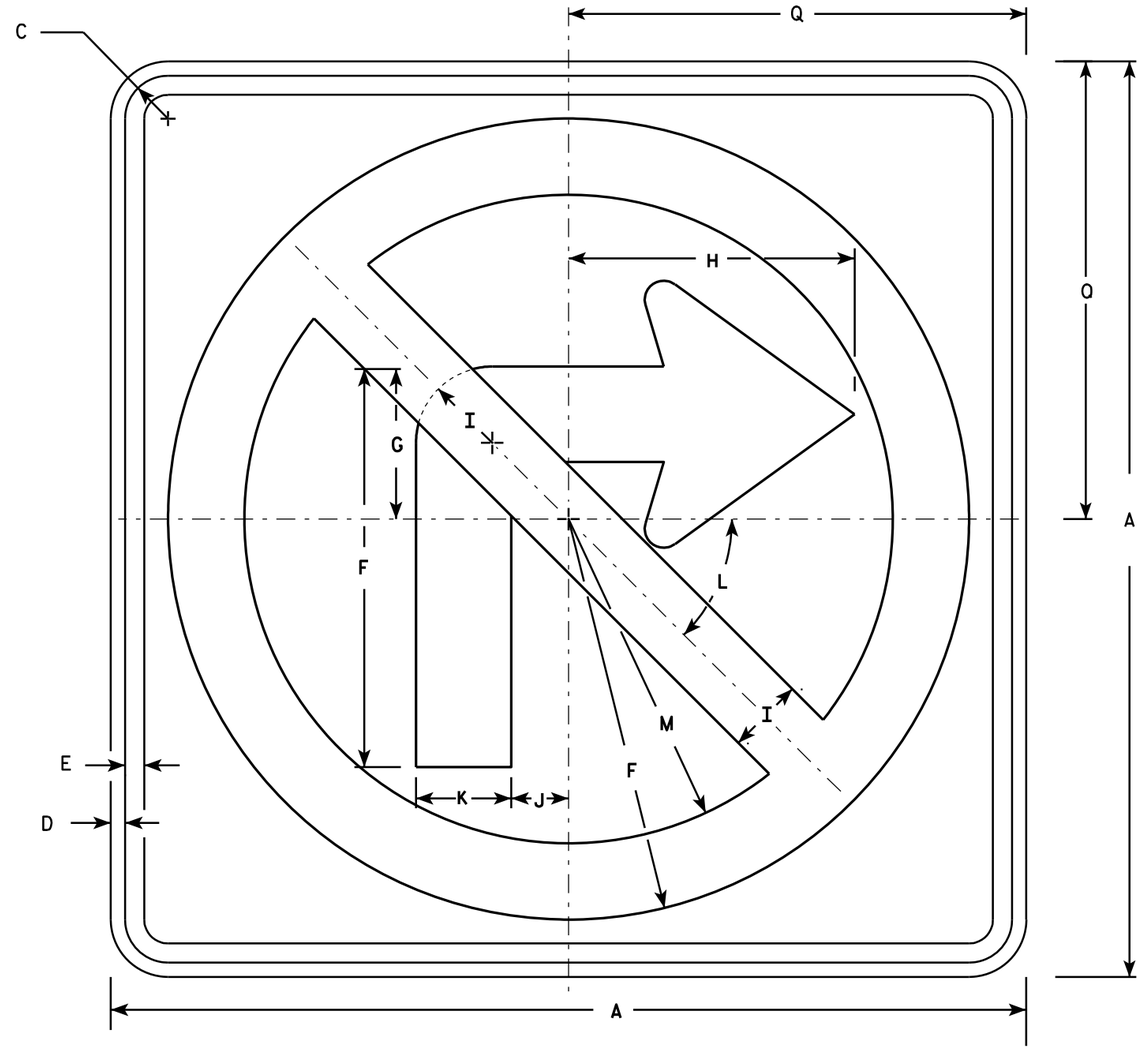

R3-1

NOTES

1. Sign is Type II - Type H Reflective - reference WIS DOT Standard Specification for HIGHWAY and STRUCTURE CONSTRUCTION latest edition.
2. Color:
   Background - White
   Message - See note 4
3. Corners may be square or rounded when base material is plywood but borders shall be rounded as shown. When base material is metal, the corners and borders shall be rounded.
4. Border & Arrow are non reflective black, the circle with diagonal bar is reflective red.

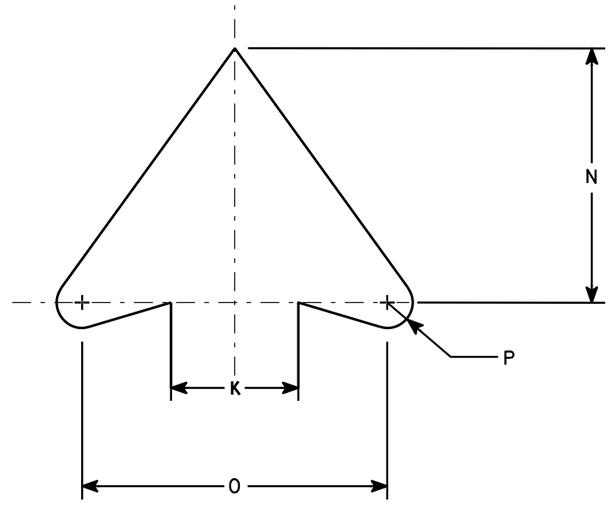

ARROW DETAIL

SIZE	A	B	C	D	E	F	G	H	I	J	K	L	M	N	O	P	Q	R	S	T	U	V	W	X	Y	Z	Area sq. ft.
1	24		1 1/8	3/8	1/2	10 1/2	4	7 1/2	2	1 1/2	2 1/2	45	8 1/2	5	6	1/2	12										4.0
2S	24		1 1/8	3/8	1/2	10 1/2	4	7 1/2	2	1 1/2	2 1/2	45°	8 1/2	5	6	1/2	12										4.0
2M	36		1 5/8	5/8	3/4	15 3/4	6	11 1/4	3	2 1/4	3 3/4	45	12 3/4	7 1/2	9	3/4	18										9.0
3	36		1 5/8	5/8	3/4	15 3/4	6	11 1/4	3	2 1/4	3 3/4	45	12 3/4	7 1/2	9	3/4	18										9.0
4	36		1 5/8	5/8	3/4	15 3/4	6	11 1/4	3	2 1/4	3 3/4	45°	12 3/4	7 1/2	9	3/4	18										9.0
5	48		2 1/4	3/4	1	21	8	15	4	3	5	45°	17	10	12	1	24										16.0

STANDARD SIGN
R3-1

WISCONSIN DEPT OF TRANSPORTATION

APPROVED Matthew R Rauch
for State Traffic Engineer

DATE 12/08/10 PLATE NO. R3-1.5

PROJECT NO:	HWY:	COUNTY:		SHEET NO: 131	E

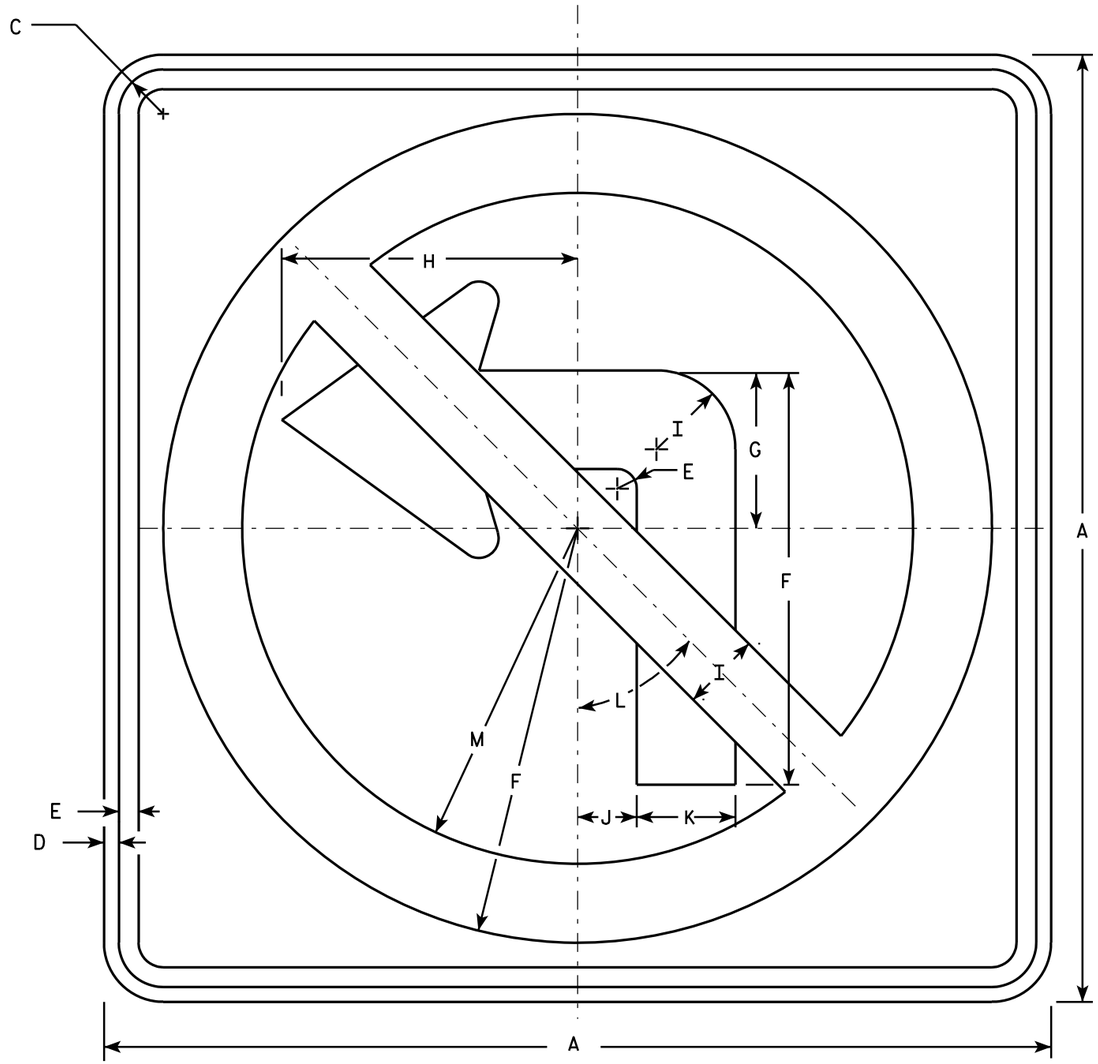

R3-2

NOTES

1. Sign is Type II - Type H Reflective - reference WIS DOT Standard Specification for HIGHWAY and STRUCTURE CONSTRUCTION latest edition.
2. Color:
   Background - White
   Message - See note 4
3. Corners may be square or rounded when base material is plywood but borders shall be rounded as shown. When base material is metal, the corners and borders shall be rounded.
4. Border & Arrow are non reflective black, the circle with diagonal bar is reflective red.

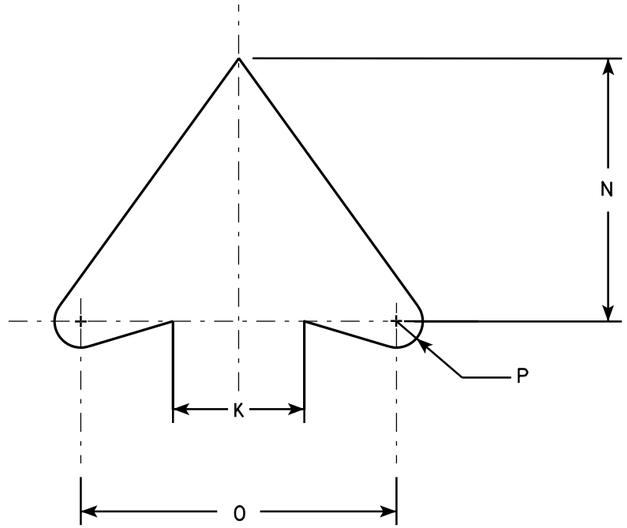

ARROW DETAIL

SIZE	A	B	C	D	E	F	G	H	I	J	K	L	M	N	O	P	Q	R	S	T	U	V	W	X	Y	Z	Area sq. ft.
1	24		1 1/8	3/8	1/2	10 1/2	4	7 1/2	2	1 1/2	2 1/2	45°	8 1/2	5	6	1/2											4.0
2S	24		1 1/8	3/8	1/2	10 1/2	4	7 1/2	2	1 1/2	2 1/2	45°	8 1/2	5	6	1/2											4.0
2M	36		1 5/8	5/8	3/4	15 3/4	6	11 1/4	3	2 1/4	3 3/4	45°	12 3/4	7 1/2	9	3/4											9.0
3	36		1 5/8	5/8	3/4	15 3/4	6	11 1/4	3	2 1/4	3 3/4	45°	12 3/4	7 1/2	9	3/4											9.0
4	36		1 5/8	5/8	3/4	15 3/4	6	11 1/4	3	2 1/4	3 3/4	45°	12 3/4	7 1/2	9	3/4											9.0
5	48		2 1/4	3/4	1	21	8	15	4	3	5	45°	17	10	12	1											16.0

STANDARD SIGN
R3-2

WISCONSIN DEPT OF TRANSPORTATION

APPROVED Matthew R Rauch
for State Traffic Engineer

DATE 12/08/10 PLATE NO. R3-2.10

PROJECT NO: | HWY: | COUNTY: | SHEET NO: 132 | E

R7-53

NOTES

1. Sign is Type II - Type H Reflective - reference WIS DOT Standard Specification for HIGHWAY and STRUCTURE CONSTRUCTION latest edition.
2. Color:
   Background - White
   Message - Red
3. Message Series - See Note 5
4. Corners may be square or rounded when base material is plywood but borders shall be rounded as shown. When base material is metal, the corners and borders shall be rounded.
5. Lines 1, 3 and 4 are series C, line 2 is series B.
6. R7-53D (double arrow)
   R7-53L (left arrow)
   R7-53R (right arrow)

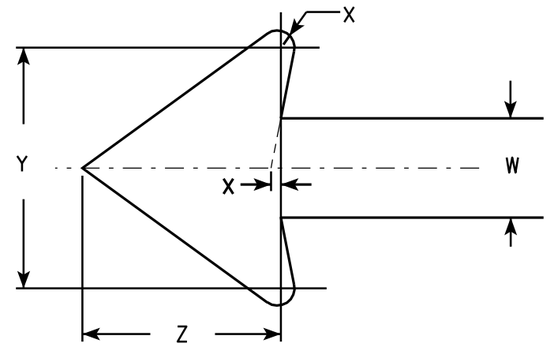

ARROW DETAIL

SIZE	A	B	C	D	E	F	G	H	I	J	K	L	M	N	O	P	Q	R	S	T	U	V	W	X	Y	Z	Area sq. ft.
1	12	18	1 1/8	3/8	3/8	3	1 7/8	2	7/8	5/8	1 1/2	2 1/2	2	2	4 7/8	4 7/8	2 5/8	1 3/4	1/4	4 1/2	2 3/8	3 7/8	3/4	1/8	1 3/4	1 1/2	1.5
2S	18	24	1 1/8	3/8	1/2	4	2 1/2	2 1/2	1 1/4	1	2	3 1/4	2 3/4	2 5/8	7 1/8	7	3 3/8	1 1/2	5/8	5 3/8	3	5 7/8	1 1/8	1/4	2 5/8	2 1/4	3.0
2M	24	30	1 1/8	3/8	1/2	5	3	3	2	1 1/4	2 1/2	4	3 1/4	3 3/8	9 1/4	9 1/4	4	2	5/8	6 5/8	3 5/8	7 3/4	1 1/2	1/4	3 1/2	3	5.0
3	24	30	1 1/8	3/8	1/2	5	3	3	2	1 1/4	2 1/2	4	3 1/4	3 3/8	9 1/4	9 1/4	4	2	5/8	6 5/8	3 5/8	7 3/4	1 1/2	1/4	3 1/2	3	5.0
4																											
5																											

STANDARD SIGN
R7-53

WISCONSIN DEPT OF TRANSPORTATION

APPROVED Matthew R Rauch
for State Traffic Engineer

DATE 3/31/2011 PLATE NO. R7-53.6

PROJECT NO:	HWY:	COUNTY:		SHEET NO: 133	E

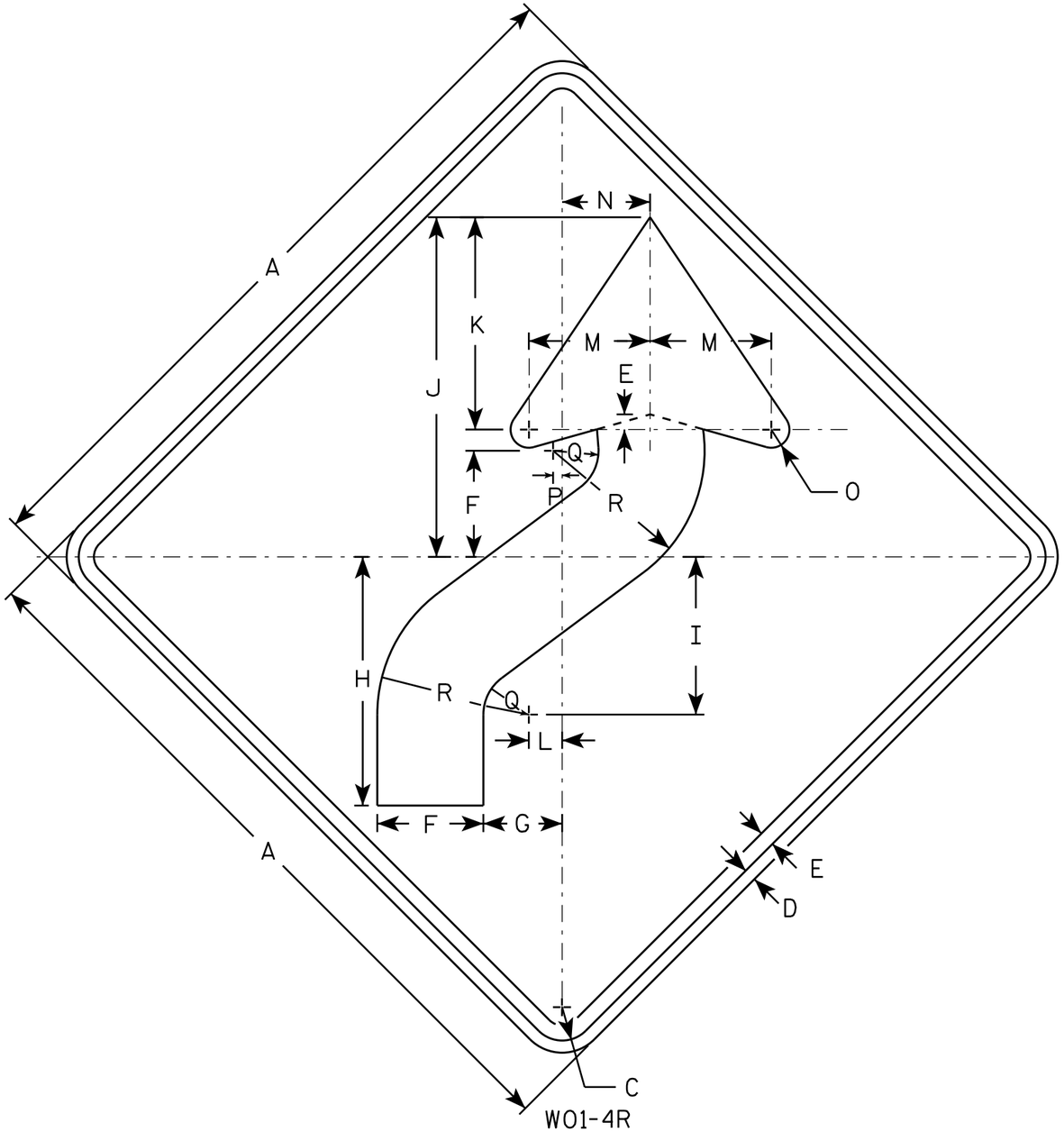

W01-4R

NOTES

1. Sign is Type II - Type F Reflective - reference WIS DOT Standard Specification for HIGHWAY and STRUCTURE CONSTRUCTION latest edition.
2. Color:
   Background - Orange
   Message - Black
3. Corners may be square or rounded when base material is plywood but borders shall be rounded as shown. When base material is metal, the corners and borders shall be rounded.
4. W01-4L is the same as W01-4R except the arrow is reversed along the vertical centerline.

SIZE	A	B	C	D	E	F	G	H	I	J	K	L	M	N	O	P	Q	R	S	T	U	V	W	X	Y	Z	Area sq. ft.
1	36		1 5/8	5/8	3/4	5 1/4	4	12 3/8	7 7/8	16 7/8	10 1/2	1 5/8	6	4 1/2	1	1/2	2 1/4	7 1/2									9.0
2S	48		2 1/4	3/4	1	7	5 1/4	16 1/2	10 1/2	22 1/2	14	2 1/4	8	6	1 1/4	5/8	3	10									16.0
2M	48		2 1/4	3/4	1	7	5 1/4	16 1/2	10 1/2	22 1/2	14	2 1/4	8	6	1 1/4	5/8	3	10									16.0
3	48		2 1/4	3/4	1	7	5 1/4	16 1/2	10 1/2	22 1/2	14	2 1/4	8	6	1 1/4	5/8	3	10									16.0
4	48		2 1/4	3/4	1	7	5 1/4	16 1/2	10 1/2	22 1/2	14	2 1/4	8	6	1 1/4	5/8	3	10									16.0
5	48		2 1/4	3/4	1	7	5 1/4	16 1/2	10 1/2	22 1/2	14	2 1/4	8	6	1 1/4	5/8	3	10									16.0

STANDARD SIGN
W01-4

WISCONSIN DEPT OF TRANSPORTATION

APPROVED Matthew R Rauch
for State Traffic Engineer

DATE 11/18/13 PLATE NO W01-4.1

PROJECT NO:	HWY:	COUNTY:		SHEET NO:	E

FILE NAME : C:\CAEfiles\Projects\tr_stdplate\W014.DGN PLOT DATE : 28-FEB-2014 11:35 PLOT BY : mscj9h PLOT NAME : PLOT SCALE : 6.755110:1.000000
WISDOT/CADDS SHEET 42

SEGMENT 4

STATION	END AREA (S.F.)			UNADJUSTED VOLUME INCREMENTAL (C.Y.)			UNADJUSTED VOLUME CUMULATIVE (C.Y.)			SHRINKAGE/SWELL FACTORS			ADJUSTED VOLUME CUMULATIVE (C.Y.)			MASS HAUL (C.Y.)
	COMMON EXC.	ROCK EXC.	FILL	COMMON EXC.	ROCK EXC.	FILL	COMMON EXC.	ROCK EXC.	FILL	COMMON	ROCK	FILL	COMMON EXC.	ROCK EXC.	FILL	
20+03.95	4.64	0.0	0	0	0	0	0	0	0	1.00	1.11	1.30	0	0	0	0
20+19.07	1.42	0.0	2.74	2	0	1	2	0	1	1.00	1.11	1.30	2	0	1	1
20+50.00	4.18	0.0	0	3	0	2	5	0	2	1.00	1.11	1.30	5	0	3	2
20+54.28	3.8	0.0	0.02	1	0	0	6	0	2	1.00	1.11	1.30	6	0	3	2
21+00.00	3.48	0.0	0.1	6	0	0	12	0	2	1.00	1.11	1.30	12	0	3	9
21+50.00	3.53	0.0	0.68	6	0	1	18	0	3	1.00	1.11	1.30	18	0	4	14
22+00.00	5.12	0.0	0	8	0	1	26	0	4	1.00	1.11	1.30	26	0	5	21
22+50.00	5.43	0.0	0	10	0	0	36	0	4	1.00	1.11	1.30	36	0	5	31
23+00.00	6.22	0.0	0.04	11	0	0	47	0	4	1.00	1.11	1.30	47	0	5	42
23+28.52	7.12	0.0	0	7	0	0	54	0	4	1.00	1.11	1.30	54	0	5	49
23+50.00	4.79	0.0	0	5	0	0	59	0	4	1.00	1.11	1.30	59	0	5	54
24+00.00	5.8	0.0	0	10	0	0	68	0	4	1.00	1.11	1.30	68	0	5	63
24+39.94	5.77	0.0	0	9	0	0	77	0	4	1.00	1.11	1.30	77	0	5	72
24+50.00	6.08	0.0	0	2	0	0	79	0	4	1.00	1.11	1.30	79	0	5	74
24+74.93	12.47	0.0	0	9	0	0	88	0	4	1.00	1.11	1.30	88	0	5	83
		Column totals		**88**		**4**										

SEGMENT 5

STATION	END AREA (S.F.)			UNADJUSTED VOLUME INCREMENTAL (C.Y.)			UNADJUSTED VOLUME CUMULATIVE (C.Y.)			SHRINKAGE/SWELL FACTORS			ADJUSTED VOLUME CUMULATIVE (C.Y.)			MASS HAUL (C.Y.)
	COMMON EXC.	ROCK EXC.	FILL	COMMON EXC.	ROCK EXC.	FILL	COMMON EXC.	ROCK EXC	FILL	COMMON	ROCK	FILL	COMMON EXC.	ROCK EXC.	FILL	
9+98.03	6.03	0.0	0	0	0	0	0	0	0	1.00	1.11	1.30	0	0	0	0
10+00.00	6.47	0.0	0	0	0	0	0	0	0	1.00	1.11	1.30	0	0	0	0
10+50.00	4.6	0.0	0	10	0	0	11	0	0	1.00	1.11	1.30	11	0	0	11
11+00.00	6.4	0.0	0	10	0	0	21	0	0	1.00	1.11	1.30	21	0	0	21
11+50.00	7.79	0.0	0	13	0	0	34	0	0	1.00	1.11	1.30	34	0	0	34
11+90.28	15.32	0.0	0	17	0	0	51	0	0	1.00	1.11	1.30	51	0	0	51
12+00.00	9.71	0.0	0	5	0	0	56	0	0	1.00	1.11	1.30	56	0	0	56
12+10.00	8.57	0.0	0	3	0	0	59	0	0	1.00	1.11	1.30	59	0	0	59
12+28.72	7.34	0.0	0	6	0	0	65	0	0	1.00	1.11	1.30	65	0	0	65
12+34.72	5.79	0.0	0	1	0	0	66	0	0	1.00	1.11	1.30	66	0	0	66
12+50.00	4.39	0.0	0	3	0	0	69	0	0	1.00	1.11	1.30	69	0	0	69
13+00.00	2.25	0.0	0.06	6	0	0	75	0	0	1.00	1.11	1.30	75	0	0	75
13+50.00	3.81	0.0	0	6	0	0	81	0	0	1.00	1.11	1.30	81	0	0	81
14+00.00	3.4	0.0	0.06	7	0	0	87	0	0	1.00	1.11	1.30	87	0	0	87
14+50.00	4.05	0.0	0.17	7	0	0	94	0	0	1.00	1.11	1.30	94	0	0	94
14+63.68	3.74	0.0	0	2	0	0	96	0	0	1.00	1.11	1.30	96	0	1	96
15+30.80	3.25	0.0	0	9	0	0	105	0	0	1.00	1.11	1.30	105	0	1	104
15+38.61	4.65	0.0	0	1	0	0	106	0	0	1.00	1.11	1.30	106	0	1	106
15+56.59	4.23	0.0	0.26	3	0	0	109	0	1	1.00	1.11	1.30	109	0	1	108
16+00.00	6.74	0.0	0	9	0	0	118	0	1	1.00	1.11	1.30	118	0	1	117
16+46.32	3.82	0.0	0	9	0	0	127	0	1	1.00	1.11	1.30	127	0	1	126
16+77.87	3.81	0.0	0.26	4	0	0	131	0	1	1.00	1.11	1.30	131	0	1	130
17+00.00	10.15	0.0	0	6	0	0	137	0	1	1.00	1.11	1.30	137	0	1	136
17+50.00	9.52	0.0	0	18	0	0	155	0	1	1.00	1.11	1.30	155	0	1	154
18+00.00	9.93	0.0	0	18	0	0	173	0	1	1.00	1.11	1.30	173	0	1	172
18+50.00	2.4	0.0	0.95	11	0	1	185	0	2	1.00	1.11	1.30	185	0	2	182
18+81.98	0	0.0	25.14	1	0	15	186	0	17	1.00	1.11	1.30	186	0	22	164
19+00.00	0.06	0.0	14.53	0	0	13	186	0	31	1.00	1.11	1.30	186	0	40	147
19+06.98	3.74	0.0	0.32	0	0	2	187	0	32	1.00	1.11	1.30	187	0	42	145
19+34.49	3.6	0.0	1.35	4	0	1	190	0	33	1.00	1.11	1.30	190	0	43	147
19+34.54	3.6	0.0	1.36	0	0	0	190	0	33	1.00	1.11	1.30	190	0	43	147
19+44.54	0	0.0	34.19	1	0	7	191	0	40	1.00	1.11	1.30	191	0	52	139
19+50.00	0	0.0	34.92	0	0	7	191	0	47	1.00	1.11	1.30	191	0	61	130
20+00.00	0	0.0	35.8	0	0	65	191	0	112	1.00	1.11	1.30	191	0	146	45
20+50.00	0	0.0	35.46	0	0	66	191	0	178	1.00	1.11	1.30	191	0	232	-41
20+66.78	0	0.0	26.92	0	0	19	191	0	198	1.00	1.11	1.30	191	0	257	-66
20+71.78	0	0.0	5.81	0	0	3	191	0	201	1.00	1.11	1.30	191	0	261	-70
20+96.73	1.78	0.0	1.31	1	0	3	192	0	204	1.00	1.11	1.30	192	0	265	-73
21+01.73	0	0.0	19.72	0	0	2	192	0	206	1.00	1.11	1.30	192	0	268	-76
21+33.36	0	0.0	36.45	0	0	33	192	0	239	1.00	1.11	1.30	192	0	311	-118
21+50.00	1	0.0	3.45	0	0	12	192	0	251	1.00	1.11	1.30	192	0	327	-134
22+00.00	2.42	0.0	2.74	3	0	6	196	0	257	1.00	1.11	1.30	196	0	334	-138
22+50.00	3.35	0.0	0.71	5	0	3	201	0	260	1.00	1.11	1.30	201	0	338	-137
22+83.07	4.53	0.0	0	5	0	0	206	0	261	1.00	1.11	1.30	206	0	339	-133
23+18.44	3.66	0.0	0.77	5	0	1	211	0	261	1.00	1.11	1.30	211	0	339	-128
23+28.41	1.54	0.0	3.55	1	0	1	212	0	262	1.00	1.11	1.30	212	0	340	-128
23+50.00	1.32	0.0	5.24	1	0	4	213	0	265	1.00	1.11	1.30	213	0	345	-132

SEGMENT 5

STATION	END AREA (S.F.)			UNADJUSTED VOLUME INCREMENTAL (C.Y.)			UNADJUSTED VOLUME CUMULATIVE (C.Y.)			SHRINKAGE/SWELL FACTORS			ADJUSTED VOLUME CUMULATIVE (C.Y.)			MASS HAUL (C.Y.)
	COMMON EXC.	ROCK EXC.	FILL	COMMON EXC.	ROCK EXC.	FILL	COMMON EXC.	ROCK EXC	FILL	COMMON	ROCK	FILL	COMMON EXC.	ROCK EXC.	FILL	
24+00.00	0	0.0	7.99	1	0	12	214	0	278	1.00	1.11	1.30	214	0	361	-146
24+24.03	1.02	0.0	3.38	0	0	5	215	0	283	1.00	1.11	1.30	215	0	367	-153
24+29.03	5.58	0.0	0.03	1	0	0	216	0	283	1.00	1.11	1.30	216	0	368	-152
24+50.00	4.5	0.0	0.13	4	0	0	219	0	283	1.00	1.11	1.30	219	0	368	-149
24+88.28	6.31	0.0	0	8	0	0	227	0	283	1.00	1.11	1.30	227	0	368	-141
24+93.28	2.17	0.0	0.78	1	0	0	228	0	283	1.00	1.11	1.30	228	0	368	-140
25+00.00	0.44	0.0	3.22	0	0	0	228	0	284	1.00	1.11	1.30	228	0	369	-141
25+50.00	0	0.0	5.44	0	0	8	229	0	292	1.00	1.11	1.30	229	0	379	-151
26+00.00	1.25	0.0	2.86	1	0	8	230	0	299	1.00	1.11	1.30	230	0	389	-159
26+16.59	1.95	0.0	2.11	1	0	2	231	0	301	1.00	1.11	1.30	231	0	391	-160
26+21.59	4.57	0.0	0.2	1	0	0	231	0	301	1.00	1.11	1.30	231	0	392	-160
26+35.00	6.45	0.0	0	3	0	0	234	0	301	1.00	1.11	1.30	234	0	392	-157
26+47.51	5.26	0.0	0.01	3	0	0	237	0	301	1.00	1.11	1.30	237	0	392	-155
26+52.51	5.9	0.0	0	1	0	0	238	0	301	1.00	1.11	1.30	238	0	392	-154
26+57.51	7.47	0.0	0.03	1	0	0	239	0	301	1.00	1.11	1.30	239	0	392	-153
27+00.00	4.66	0.0	0	10	0	0	249	0	301	1.00	1.11	1.30	249	0	392	-143
27+50.00	2.87	0.0	0.8	7	0	1	256	0	302	1.00	1.11	1.30	256	0	393	-137
28+00.00	0	0.0	9.08	3	0	9	258	0	311	1.00	1.11	1.30	258	0	404	-146
28+21.53	2.42	0.0	0.61	1	0	4	259	0	315	1.00	1.11	1.30	259	0	410	-150
28+26.53	4.49	0.0	0.28	1	0	0	260	0	315	1.00	1.11	1.30	260	0	410	-150
28+40.00	3.69	0.0	0.56	2	0	0	262	0	315	1.00	1.11	1.30	262	0	410	-148
28+50.00	4.03	0.0	0.16	1	0	0	263	0	315	1.00	1.11	1.30	263	0	410	-147
28+57.15	4.4	0.0	0.17	1	0	0	264	0	315	1.00	1.11	1.30	264	0	410	-146
28+62.15	1.29	0.0	2.22	1	0	0	265	0	316	1.00	1.11	1.30	265	0	410	-145
29+00.00	0.36	0.0	3.66	1	0	4	266	0	320	1.00	1.11	1.30	266	0	416	-150
29+50.00	0.22	0.0	3.32	1	0	6	267	0	326	1.00	1.11	1.30	267	0	424	-157
29+79.69	3.1	0.0	0.59	2	0	2	269	0	328	1.00	1.11	1.30	269	0	427	-158
29+84.69	3.63	0.0	0	1	0	0	269	0	328	1.00	1.11	1.30	269	0	427	-158
30+23.40	4.09	0.0	0.43	6	0	0	275	0	329	1.00	1.11	1.30	275	0	427	-153
30+50.00	2.72	0.0	0.75	3	0	1	278	0	329	1.00	1.11	1.30	278	0	428	-150
31+00.00	1.5	0.0	1.68	4	0	2	282	0	332	1.00	1.11	1.30	282	0	431	-149
31+46.58	4.52	0.0	0.04	5	0	1	287	0	333	1.00	1.11	1.30	287	0	433	-146
31+62.90	5.31	0.0	0.31	3	0	0	290	0	333	1.00	1.11	1.30	290	0	433	-143
32+00.00	6.91	0.0	0	8	0	0	298	0	333	1.00	1.11	1.30	298	0	433	-135
32+24.69	4.48	0.0	0	5	0	0	304	0	333	1.00	1.11	1.30	304	0	433	-130
32+52.98	4.01	0.0	0.38	4	0	0	308	0	334	1.00	1.11	1.30	308	0	434	-126
32+84.95	3.62	0.0	0.38	5	0	0	313	0	334	1.00	1.11	1.30	313	0	434	-122
33+37.07	4.11	0.0	0.04	7	0	0	320	0	334	1.00	1.11	1.30	320	0	435	-115
33+42.07	2.44	0.0	1.88	1	0	0	321	0	335	1.00	1.11	1.30	321	0	435	-114
33+50.00	3.08	0.0	1.04	1	0	0	322	0	335	1.00	1.11	1.30	322	0	436	-114
34+00.00	2.64	0.0	1.44	5	0	2	327	0	337	1.00	1.11	1.30	327	0	439	-112
34+50.00	1.57	0.0	1.32	4	0	3	331	0	340	1.00	1.11	1.30	331	0	442	-111
34+85.76	5.29	0.0	0.39	5	0	1	335	0	341	1.00	1.11	1.30	335	0	443	-108
35+21.47	5.84	0.0	0.43	7	0	1	343	0	342	1.00	1.11	1.30	343	0	444	-101
35+26.49	5.59	0.0	0.33	1	0	0	344	0	342	1.00	1.11	1.30	344	0	444	-100
35+50.00	6.46	0.0	0	5	0	0	349	0	342	1.00	1.11	1.30	349	0	444	-95
35+67.09	3.71	0.0	0.1	3	0	0	352	0	342	1.00	1.11	1.30	352	0	444	-92
35+89.58	2.68	0.0	1.21	3	0	1	355	0	342	1.00	1.11	1.30	355	0	445	-90
			Column totals	**355**		**342**										

SEGMENT 15

STATION	END AREA (S.F.)			UNADJUSTED VOLUME INCREMENTAL (C.Y.)			UNADJUSTED VOLUME CUMULATIVE (C.Y.)			SHRINKAGE/SWELL FACTORS			ADJUSTED VOLUME CUMULATIVE (C.Y.)			MASS HAUL (C.Y.)
	COMMON EXC.	ROCK EXC.	FILL	COMMON EXC.	ROCK EXC.	FILL	COMMON EXC.	ROCK EXC.	FILL	COMMON	ROCK	FILL	COMMON EXC.	ROCK EXC.	FILL	
40+75.00	6	0	0	0	0	0	0	0	0	1.00	1.11	1.30	0	0	0	0
41+00.00	6	0	0	6	0	0	6	0	0	1.00	1.11	1.30	6	0	0	6
41+20.00	10	0	0	6	0	0	12	0	0	1.00	1.11	1.30	12	0	0	12
41+25.00	9	0	0	2	0	0	14	0	0	1.00	1.11	1.30	14	0	0	14
41+50.00	9	0	0	9	0	0	22	0	0	1.00	1.11	1.30	22	0	0	22
42+00.00	9	0	0	17	0	0	39	0	0	1.00	1.11	1.30	39	0	0	39
42+50.00	10	0	0	17	0	0	56	0	0	1.00	1.11	1.30	56	0	0	56
42+68.98	9	0	0	6	0	0	63	0	0	1.00	1.11	1.30	63	0	0	62
42+75.00	11	0	0	2	0	0	65	0	0	1.00	1.11	1.30	65	0	0	64
42+80.98	17	0	0	3	0	0	68	0	0	1.00	1.11	1.30	68	0	0	67
42+86.95	14	0	0	3	0	0	71	0	0	1.00	1.11	1.30	71	0	0	71
43+00.00	21	0	0	8	0	0	80	0	0	1.00	1.11	1.30	80	0	0	79
43+25.50	10	0	0	15	0	0	95	0	0	1.00	1.11	1.30	95	0	0	94
43+32.90	7	0	0	2	0	0	97	0	0	1.00	1.11	1.30	97	0	0	96
43+50.00	5	0	1	4	0	0	101	0	0	1.00	1.11	1.30	101	0	1	100
43+65.00	9	0	0	4	0	0	105	0	1	1.00	1.11	1.30	105	0	1	104
43+75.00	7	0	0	3	0	0	107	0	1	1.00	1.11	1.30	107	0	1	107
43+97.29	7	0	0	6	0	0	113	0	1	1.00	1.11	1.30	113	0	1	112
44+00.00	7	0	0	1	0	0	114	0	1	1.00	1.11	1.30	114	0	1	113
44+50.00	9	0	0	15	0	0	129	0	1	1.00	1.11	1.30	129	0	1	128
45+00.00	10	0	0	18	0	0	146	0	1	1.00	1.11	1.30	146	0	1	145
45+50.00	6	0	0	15	0	0	161	0	1	1.00	1.11	1.30	161	0	1	160
45+58.32	6	0	1	2	0	0	163	0	1	1.00	1.11	1.30	163	0	1	161
45+64.95	8	0	0	2	0	0	164	0	1	1.00	1.11	1.30	164	0	1	163
45+75.00	7	0	0	3	0	0	167	0	1	1.00	1.11	1.30	167	0	1	166
45+98.10	8	0	0	6	0	0	173	0	1	1.00	1.11	1.30	173	0	1	172
46+00.00	9	0	0	1	0	0	174	0	1	1.00	1.11	1.30	174	0	1	173
46+24.39	9	0	0	8	0	0	182	0	1	1.00	1.11	1.30	182	0	1	181
46+27.80	7	0	0	1	0	0	183	0	1	1.00	1.11	1.30	183	0	1	182
46+38.00	10	0	0	3	0	0	186	0	1	1.00	1.11	1.30	186	0	1	185
46+50.00	9	0	1	4	0	0	191	0	1	1.00	1.11	1.30	191	0	2	189
46+53.31	10	0	0	1	0	0	192	0	1	1.00	1.11	1.30	192	0	2	190
46+95.00	11	0	0	16	0	0	208	0	1	1.00	1.11	1.30	208	0	2	206
47+00.00	10	0	0	2	0	0	209	0	1	1.00	1.11	1.30	209	0	2	208
47+50.00	13	0	0	21	0	0	231	0	1	1.00	1.11	1.30	231	0	2	229
48+00.00	12	0	0	23	0	0	254	0	1	1.00	1.11	1.30	254	0	2	252
48+15.00	9	0	0	6	0	0	259	0	1	1.00	1.11	1.30	259	0	2	258
48+20.00	8	0	0	2	0	0	261	0	1	1.00	1.11	1.30	261	0	2	259
48+26.95	11	0	0	2	0	0	263	0	1	1.00	1.11	1.30	263	0	2	262
48+38.00	20	0	0	6	0	0	270	0	1	1.00	1.11	1.30	270	0	2	268
48+49.80	9	0	0	6	0	0	276	0	1	1.00	1.11	1.30	276	0	2	274
48+53.32	11	0	0	1	0	0	277	0	1	1.00	1.11	1.30	277	0	2	276
48+55.01	13	0	0	1	0	0	278	0	1	1.00	1.11	1.30	278	0	2	276
48+60.75	8	0	0	2	0	0	281	0	1	1.00	1.11	1.30	281	0	2	279
48+65.01	8	0	1	1	0	0	282	0	1	1.00	1.11	1.30	282	0	2	280

SEGMENT 15

STATION	END AREA (S.F.)			UNADJUSTED VOLUME INCREMENTAL (C.Y.)			UNADJUSTED VOLUME CUMULATIVE (C.Y.)			SHRINKAGE/SWELL FACTORS			ADJUSTED VOLUME CUMULATIVE (C.Y.)			MASS HAUL (C.Y.)
	COMMON EXC.	ROCK EXC.	FILL	COMMON EXC.	ROCK EXC.	FILL	COMMON EXC.	ROCK EXC.	FILL	COMMON	ROCK	FILL	COMMON EXC.	ROCK EXC.	FILL	
48+77.18	8	0	0	4	0	0	285	0	2	1.00	1.11	1.30	285	0	2	283
48+90.00	6	0	0	3	0	0	288	0	2	1.00	1.11	1.30	288	0	2	286
49+00.00	6	0	0	2	0	0	291	0	2	1.00	1.11	1.30	291	0	2	289
49+08.50	7	0	0	2	0	0	293	0	2	1.00	1.11	1.30	293	0	2	291
49+25.00	6	0	0	4	0	0	297	0	2	1.00	1.11	1.30	297	0	2	295
49+50.00	7	0	0	6	0	0	303	0	2	1.00	1.11	1.30	303	0	2	301
50+00.00	8	0	0	14	0	0	317	0	2	1.00	1.11	1.30	317	0	2	315
50+20.00	10	0	0	7	0	0	324	0	2	1.00	1.11	1.30	324	0	2	322
50+25.00	9	0	0	2	0	0	326	0	2	1.00	1.11	1.30	326	0	2	324
50+50.00	11	0	0	9	0	0	335	0	2	1.00	1.11	1.30	335	0	2	333
51+00.00	17	0	0	27	0	0	362	0	2	1.00	1.11	1.30	362	0	2	360
51+50.00	13	0	0	28	0	0	390	0	2	1.00	1.11	1.30	390	0	2	387
52+00.00	13	0	0	24	0	0	413	0	2	1.00	1.11	1.30	413	0	2	411
52+25.00	11	0	0	11	0	0	424	0	2	1.00	1.11	1.30	424	0	2	422
52+30.00	9	0	0	2	0	0	426	0	2	1.00	1.11	1.30	426	0	2	424
52+35.01	26	0	0	3	0	0	429	0	2	1.00	1.11	1.30	429	0	2	427
52+40.24	42	0	0	7	0	0	436	0	2	1.00	1.11	1.30	436	0	2	434
52+50.64	35	0	0	15	0	0	451	0	2	1.00	1.11	1.30	451	0	2	449
52+60.21	18	0	0	9	0	0	460	0	2	1.00	1.11	1.30	460	0	2	458
		Column totals		**460**		**2**										

SEGMENT 6

STATION	END AREA (S.F.)			UNADJUSTED VOLUME INCREMENTAL (C.Y.)			UNADJUSTED VOLUME CUMULATIVE (C.Y.)			SHRINKAGE/SWELL FACTORS			ADJUSTED VOLUME CUMULATIVE (C.Y.)			MASS HAUL (C.Y.)
	COMMON EXC.	ROCK EXC.	FILL	COMMON EXC.	ROCK EXC.	FILL	COMMON EXC.	ROCK EXC.	FILL	COMMON	ROCK	FILL	COMMON EXC.	ROCK EXC.	FILL	
20+26.47	0	0.0	0	0	0	0	0	0	0	1.00	1.11	1.30	0	0	0	0
20+50.00	3.51	0.0	0.14	2	0	0	2	0	0	1.00	1.11	1.30	2	0	0	1
21+00.00	4.71	0.0	0.16	8	0	0	9	0	0	1.00	1.11	1.30	9	0	0	9
21+50.00	2.87	0.0	0.22	7	0	0	16	0	1	1.00	1.11	1.30	16	0	1	15
22+00.00	2.59	0.0	0.29	5	0	0	21	0	1	1.00	1.11	1.30	21	0	2	20
22+50.00	1.47	0.0	0.76	4	0	1	25	0	2	1.00	1.11	1.30	25	0	3	22
23+00.00	1.55	0.0	0.71	3	0	1	28	0	3	1.00	1.11	1.30	28	0	5	23
23+50.00	2.12	0.0	0.45	3	0	1	31	0	5	1.00	1.11	1.30	31	0	6	25
24+00.00	2.97	0.0	0.23	5	0	1	36	0	5	1.00	1.11	1.30	36	0	7	29
24+50.00	1.19	0.0	0.97	4	0	1	40	0	6	1.00	1.11	1.30	40	0	8	32
25+00.00	0.02	0.0	60.18	1	0	57	41	0	63	1.00	1.11	1.30	41	0	82	-41
25+50.00	2.89	0.0	0.22	3	0	56	44	0	119	1.00	1.11	1.30	44	0	155	-111
26+00.00	0.75	0.0	1.71	3	0	2	47	0	121	1.00	1.11	1.30	47	0	157	-110
26+50.00	3.5	0.0	0.5	4	0	2	51	0	123	1.00	1.11	1.30	51	0	159	-109
27+00.00	3.27	0.0	0.3	6	0	1	57	0	123	1.00	1.11	1.30	57	0	160	-103
27+50.00	0.12	0.0	0	3	0	0	60	0	124	1.00	1.11	1.30	60	0	161	-101
28+00.00	3.45	0.0	0.15	3	0	0	64	0	124	1.00	1.11	1.30	64	0	161	-97
28+50.00	7.14	0.0	0	10	0	0	73	0	124	1.00	1.11	1.30	73	0	161	-88
29+00.00	3.34	0.0	0.2	10	0	0	83	0	124	1.00	1.11	1.30	83	0	161	-78
29+50.00	4.25	0.0	0.03	7	0	0	90	0	124	1.00	1.11	1.30	90	0	162	-72
30+00.00	4.14	0.0	0.03	8	0	0	98	0	124	1.00	1.11	1.30	98	0	162	-64
30+50.00	6.35	0.0	0.1	10	0	0	108	0	125	1.00	1.11	1.30	108	0	162	-54
30+73.96	7.78	0.0	0	6	0	0	114	0	125	1.00	1.11	1.30	114	0	162	-48
31+00.00	4.79	0.0	0.03	6	0	0	120	0	125	1.00	1.11	1.30	120	0	162	-42
31+50.00	4.80	0.0	0.04	9	0	0	129	0	125	1.00	1.11	1.30	129	0	162	-33
31+62.90	6.50	0.0	0	3	0	0	131	0	125	1.00	1.11	1.30	131	0	162	-31
			Column totals	**131**		**125**										

SEGMENT 7

STATION	END AREA (S.F.)			UNADJUSTED VOLUME INCREMENTAL (C.Y.)			UNADJUSTED VOLUME CUMULATIVE (C.Y.)			SHRINKAGE/SWELL FACTORS			ADJUSTED VOLUME CUMULATIVE (C.Y.)			MASS HAUL (C.Y.)
	COMMON EXC.	ROCK EXC.	FILL	COMMON EXC.	ROCK EXC.	FILL	COMMON EXC.	ROCK EXC.	FILL	COMMON	ROCK	FILL	COMMON EXC.	ROCK EXC.	FILL	
11+46.54	1.83	0.0	0.82	0	0	0	0	0	0	1.00	1.11	1.30	0	0	0	0
11+50.00	1.3	0.0	0.9	0	0	0	0	0	0	1.00	1.11	1.30	0	0	0	0
12+00.00	0.88	0.0	2.03	2	0	3	2	0	3	1.00	1.11	1.30	2	0	4	-1
12+50.00	1.57	0.0	5.49	2	0	7	4	0	10	1.00	1.11	1.30	4	0	13	-8
13+00.00	0.46	0.0	7.85	2	0	12	6	0	22	1.00	1.11	1.30	6	0	29	-22
13+50.00	0.5	0.0	7.28	1	0	14	7	0	36	1.00	1.11	1.30	7	0	47	-40
14+00.00	1.71	0.0	2.26	2	0	9	9	0	45	1.00	1.11	1.30	9	0	58	-49
14+50.00	1	0.0	1.16	3	0	3	12	0	48	1.00	1.11	1.30	12	0	63	-51
15+00.00	0.69	0.0	1.41	2	0	2	13	0	51	1.00	1.11	1.30	13	0	66	-52
15+50.00	0.71	0.0	1.35	1	0	3	15	0	53	1.00	1.11	1.30	15	0	69	-54
16+00.00	0.86	0.0	1.11	1	0	2	16	0	55	1.00	1.11	1.30	16	0	72	-56
16+50.00	1.36	0.0	0.64	2	0	2	18	0	57	1.00	1.11	1.30	18	0	74	-56
16+52.87	1.5	0.0	0.34	0	0	0	18	0	57	1.00	1.11	1.30	18	0	74	-56
			Column totals	18		57										

SEGMENT 9 (SOUTH)

STATION	END AREA (S.F.)			UNADJUSTED VOLUME INCREMENTAL (C.Y.)			UNADJUSTED VOLUME CUMULATIVE (C.Y.)			SHRINKAGE/SWELL FACTORS			ADJUSTED VOLUME CUMULATIVE (C.Y.)			MASS HAUL (C.Y.)
	COMMON EXC.	ROCK EXC.	FILL	COMMON EXC.	ROCK EXC.	FILL	COMMON EXC.	ROCK EXC.	FILL	COMMON	ROCK	FILL	COMMON EXC.	ROCK EXC.	FILL	
10+29.04	3.2	0.0	0.1	0	0	0	0	0	0	1.00	1.11	1.30	0	0	0	0
10+42.00	0.0	0.0	7.1	1	0	2	1	0	2	1.00	1.11	1.30	1	0	2	-1
10+50.00	0.0	0.0	9.8	0	0	3	1	0	4	1.00	1.11	1.30	1	0	5	-5
11+00.00	0.0	0.0	17.2	0	0	25	1	0	29	1.00	1.11	1.30	1	0	38	-37
11+50.00	0.0	0.0	24.6	0	0	39	1	0	68	1.00	1.11	1.30	1	0	88	-87
12+00.00	0.0	0.0	24.4	0	0	45	1	0	113	1.00	1.11	1.30	1	0	147	-146
12+50.00	0.0	0.0	13.9	0	0	35	1	0	149	1.00	1.11	1.30	1	0	193	-192
13+00.00	0.0	0.0	17.6	0	0	29	1	0	178	1.00	1.11	1.30	1	0	231	-230
13+50.00	0.0	0.0	9.0	0	0	25	1	0	202	1.00	1.11	1.30	1	0	263	-262
13+66.57	5.5	0.0	0.7	2	0	3	2	0	205	1.00	1.11	1.30	2	0	267	-264
13+90.59	7.3	0.0	0.4	6	0	0	8	0	206	1.00	1.11	1.30	8	0	267	-259
14+00.00	1.3	0.0	2.5	1	0	1	10	0	206	1.00	1.11	1.30	10	0	268	-258
14+10.00	1.3	0.0	2.9	0	0	1	10	0	207	1.00	1.11	1.30	10	0	269	-259
14+50.00	1.0	0.0	3.7	2	0	5	12	0	212	1.00	1.11	1.30	12	0	276	-264
15+00.00	0.0	0.0	7.2	1	0	10	13	0	222	1.00	1.11	1.30	13	0	289	-276
15+50.00	0.6	0.0	6.2	1	0	12	13	0	235	1.00	1.11	1.30	13	0	305	-292
15+93.44	0.7	0.0	5.0	1	0	9	14	0	244	1.00	1.11	1.30	14	0	317	-302
16+00.00	0.8	0.0	4.8	0	0	1	15	0	245	1.00	1.11	1.30	15	0	318	-304
16+10.00	1.1	0.0	3.1	0	0	1	15	0	246	1.00	1.11	1.30	15	0	320	-305
16+20.40	3.9	0.0	0.0	1	0	1	16	0	247	1.00	1.11	1.30	16	0	321	-305
			Column totals	16		247										

SEGMENT 9 (NORTH)

STATION	END AREA (S.F.)			UNADJUSTED VOLUME INCREMENTAL (C.Y.)			UNADJUSTED VOLUME CUMULATIVE (C.Y.)			SHRINKAGE/SWELL FACTORS			ADJUSTED VOLUME CUMULATIVE (C.Y.)			MASS HAUL (C.Y.)
	COMMON EXC.	ROCK EXC.	FILL	COMMON EXC.	ROCK EXC.	FILL	COMMON EXC.	ROCK EXC.	FILL	COMMON	ROCK	FILL	COMMON EXC.	ROCK EXC.	FILL	
20+74.58	0.0	0.0	0.0	0	0	0	0	0	0	1.00	1.11	1.30	0	0	0	0
21+00.00	1.1	0.0	1.3	1	0	1	1	0	1	1.00	1.11	1.30	1	0	1	0
21+50.00	3.5	0.0	0.4	4	0	2	5	0	2	1.00	1.11	1.30	5	0	3	2
21+60.00	4.8	0.0	0.1	2	0	0	6	0	2	1.00	1.11	1.30	6	0	3	3
22+00.00	5.4	0.0	0.4	7	0	0	14	0	3	1.00	1.11	1.30	14	0	3	10
22+50.00	4.5	0.0	0.4	9	0	1	23	0	3	1.00	1.11	1.30	23	0	4	18
23+00.00	4.7	0.0	0.2	8	0	1	31	0	4	1.00	1.11	1.30	31	0	5	26
23+50.00	1.1	0.0	1.1	5	0	1	37	0	5	1.00	1.11	1.30	37	0	7	30
23+58.00	0.7	0.0	1.3	0	0	0	37	0	6	1.00	1.11	1.30	37	0	7	30
24+00.00	5.3	0.0	0.3	5	0	1	42	0	7	1.00	1.11	1.30	42	0	9	33
24+18.78	8.1	0.0	0.0	5	0	0	46	0	7	1.00	1.11	1.30	46	0	9	37
24+38.77	12.9	0.0	0.0	8	0	0	54	0	7	1.00	1.11	1.30	54	0	9	45
24+50.00	14.0	0.0	0.0	6	0	0	60	0	7	1.00	1.11	1.30	60	0	9	51
25+00.00	14.1	0.0	0.0	26	0	0	86	0	7	1.00	1.11	1.30	86	0	9	77
25+50.00	5.9	0.0	0.3	19	0	0	104	0	7	1.00	1.11	1.30	104	0	9	95
26+00.00	6.5	0.0	0.0	12	0	0	116	0	7	1.00	1.11	1.30	116	0	10	106
26+50.00	2.7	0.0	1.6	9	0	1	124	0	9	1.00	1.11	1.30	124	0	12	113
26+75.00	1.3	0.0	2.1	2	0	2	126	0	11	1.00	1.11	1.30	126	0	14	112
27+00.00	2.3	0.0	4.4	2	0	3	128	0	14	1.00	1.11	1.30	128	0	18	110
27+50.00	0.7	0.0	12.2	3	0	15	130	0	29	1.00	1.11	1.30	130	0	38	93
28+00.00	6.7	0.0	0.2	7	0	11	137	0	40	1.00	1.11	1.30	137	0	52	85
28+07.71	6.2	0.0	1.2	2	0	0	139	0	41	1.00	1.11	1.30	139	0	53	86
28+50.00	5.3	0.0	0.0	9	0	1	148	0	41	1.00	1.11	1.30	148	0	54	94
28+76.95	5.3	0.0	0.0	5	0	0	153	0	41	1.00	1.11	1.30	153	0	54	100
28+85.00	20.6	0.0	0.0	4	0	0	157	0	41	1.00	1.11	1.30	157	0	54	103
29+00.00	18.4	0.0	1.4	11	0	0	168	0	42	1.00	1.11	1.30	168	0	54	114
29+50.00	8.8	0.0	1.5	25	0	3	193	0	44	1.00	1.11	1.30	193	0	58	135
29+75.00	0.0	0.0	16.0	4	0	8	197	0	53	1.00	1.11	1.30	197	0	68	129
30+00.00	0.0	0.0	21.2	0	0	17	197	0	70	1.00	1.11	1.30	197	0	91	107
30+50.00	0.0	0.0	22.5	0	0	40	197	0	110	1.00	1.11	1.30	197	0	143	54
31+00.00	0.0	0.0	44.5	0	0	62	197	0	172	1.00	1.11	1.30	197	0	224	-27
31+50.00	0.0	0.0	69.9	0	0	106	197	0	278	1.00	1.11	1.30	197	0	362	-164
32+00.00	0.0	0.0	100.0	0	0	157	197	0	436	1.00	1.11	1.30	197	0	566	-369
32+50.00	0.0	0.0	70.2	0	0	158	197	0	593	1.00	1.11	1.30	197	0	771	-574
33+00.00	0.0	0.0	76.8	0	0	136	197	0	729	1.00	1.11	1.30	197	0	948	-751
33+50.00	0.0	0.0	53.8	0	0	121	197	0	850	1.00	1.11	1.30	197	0	1105	-908
34+00.00	0.0	0.0	49.3	0	0	95	197	0	946	1.00	1.11	1.30	197	0	1229	-1032
34+50.00	0.0	0.0	30.4	0	0	74	197	0	1019	1.00	1.11	1.30	197	0	1325	-1128
35+00.00	0.0	0.0	41.4	0	0	66	197	0	1086	1.00	1.11	1.30	197	0	1412	-1214
35+50.00	0.0	0.0	33.6	0	0	69	197	0	1155	1.00	1.11	1.30	197	0	1502	-1304
35+94.00	0.0	0.0	32.8	0	0	54	197	0	1209	1.00	1.11	1.30	197	0	1572	-1375
36+00.00	0.0	0.0	32.7	0	0	7	197	0	1217	1.00	1.11	1.30	197	0	1582	-1384
36+50.00	0.0	0.0	42.6	0	0	70	197	0	1286	1.00	1.11	1.30	197	0	1672	-1475
37+00.00	0.0	0.0	28.0	0	0	65	197	0	1352	1.00	1.11	1.30	197	0	1757	-1560
37+50.00	0.0	0.0	23.0	0	0	47	197	0	1399	1.00	1.11	1.30	197	0	1819	-1621
38+00.00	0.0	0.0	21.3	0	0	41	197	0	1440	1.00	1.11	1.30	197	0	1872	-1674
38+50.00	0.0	0.0	14.9	0	0	33	197	0	1473	1.00	1.11	1.30	197	0	1915	-1718
39+00.00	1.7	0.0	2.5	2	0	16	199	0	1489	1.00	1.11	1.30	199	0	1936	-1737
39+46.46	3.9	0.0	1.0	5	0	3	204	0	1492	1.00	1.11	1.30	204	0	1940	-1736
39+50.00	5.4	0.0	0.2	1	0	0	204	0	1492	1.00	1.11	1.30	204	0	1940	-1736
39+53.73	6.8	0.0	0.0	1	0	0	205	0	1492	1.00	1.11	1.30	205	0	1940	-1735
40+27.87	5.4	0.0	0.0	17	0	0	222	0	1492	1.00	1.11	1.30	222	0	1940	-1718
40+50.00	7.7	0.0	0.8	5	0	0	227	0	1493	1.00	1.11	1.30	227	0	1940	-1713
40+69.20	1.0	0.0	7.1	3	0	3	231	0	1495	1.00	1.11	1.30	231	0	1944	-1714
41+00.00	4.3	0.0	3.6	3	0	6	233	0	1502	1.00	1.11	1.30	233	0	1952	-1719
41+50.00	1.0	0.0	2.7	5	0	6	238	0	1507	1.00	1.11	1.30	238	0	1960	-1721
41+72.61	2.2	0.0	1.5	1	0	2	240	0	1509	1.00	1.11	1.30	240	0	1962	-1722
41+83.17	4.3	0.0	0.1	1	0	0	241	0	1510	1.00	1.11	1.30	241	0	1962	-1721
			Column totals	**241**		**1510**										

SEGMENT 10

STATION	END AREA (S.F.)			UNADJUSTED VOLUME INCREMENTAL (C.Y.)			UNADJUSTED VOLUME CUMULATIVE (C.Y.)			SHRINKAGE/SWELL FACTORS			ADJUSTED VOLUME CUMULATIVE (C.Y.)			MASS HAUL (C.Y.)
	COMMON EXC.	ROCK EXC.	FILL	COMMON EXC.	ROCK EXC.	FILL	COMMON EXC.	ROCK EXC.	FILL	COMMON	ROCK	FILL	COMMON EXC.	ROCK EXC.	FILL	
40+80.52	2.6	0.0	0.5	0	0	0	0	0	0	1.00	1.11	1.30	0	0	0	0
41+00.00	0.9	0.0	0.7	1	0	0	1	0	0	1.00	1.11	1.30	1	0	1	1
41+01.74	1.0	0.0	0.7	0	0	0	1	0	0	1.00	1.11	1.30	1	0	1	1
41+50.00	2.8	0.0	0.3	3	0	1	5	0	1	1.00	1.11	1.30	5	0	2	3
41+73.10	2.5	0.0	0.0	2	0	0	7	0	1	1.00	1.11	1.30	7	0	2	5
42+00.00	1.7	0.0	0.0	2	0	0	9	0	1	1.00	1.11	1.30	9	0	2	7
42+13.42	2.2	0.0	0.1	1	0	0	10	0	2	1.00	1.11	1.30	10	0	2	8
42+50.00	0.2	0.0	1.7	2	0	1	12	0	3	1.00	1.11	1.30	12	0	4	8
43+00.00	0.0	0.0	1.2	0	0	3	12	0	5	1.00	1.11	1.30	12	0	7	5
43+50.00	0.0	0.0	3.9	0	0	5	12	0	10	1.00	1.11	1.30	12	0	13	-1
44+00.00	1.2	0.0	0.1	1	0	4	13	0	14	1.00	1.11	1.30	13	0	18	-5
44+01.49	1.1	0.0	0.2	0	0	0	13	0	14	1.00	1.11	1.30	13	0	18	-5
44+16.49	1.5	0.0	0.1	1	0	0	14	0	14	1.00	1.11	1.30	14	0	18	-5
44+21.49	1.9	0.0	0.1	0	0	0	14	0	14	1.00	1.11	1.30	14	0	18	-4
44+50.00	2.3	0.0	0.0	2	0	0	16	0	14	1.00	1.11	1.30	16	0	18	-2
44+72.25	0.9	0.0	1.1	1	0	0	18	0	15	1.00	1.11	1.30	18	0	19	-1
45+00.00	1.5	0.0	0.9	1	0	1	19	0	16	1.00	1.11	1.30	19	0	20	-1
45+20.00	0.5	0.0	2.6	1	0	1	20	0	17	1.00	1.11	1.30	20	0	22	-2
45+43.05	1.0	0.0	2.2	1	0	2	20	0	19	1.00	1.11	1.30	20	0	25	-4
45+50.00	0.8	0.0	2.1	0	0	1	20	0	19	1.00	1.11	1.30	20	0	25	-5
45+75.00	2.3	0.0	1.0	1	0	1	22	0	21	1.00	1.11	1.30	22	0	27	-5
46+00.00	2.6	0.0	0.3	2	0	1	24	0	21	1.00	1.11	1.30	24	0	28	-4
46+15.00	0.3	0.0	2.8	1	0	1	25	0	22	1.00	1.11	1.30	25	0	29	-4
46+25.55	1.7	0.0	0.3	0	0	1	25	0	23	1.00	1.11	1.30	25	0	30	-4
46+30.55	1.9	0.0	0.2	0	0	0	26	0	23	1.00	1.11	1.30	26	0	30	-4
46+50.00	2.5	0.0	0.1	2	0	0	27	0	23	1.00	1.11	1.30	27	0	30	-3
47+00.00	1.8	0.0	0.2	4	0	0	31	0	23	1.00	1.11	1.30	31	0	30	1
47+05.28	1.0	0.0	2.6	0	0	0	31	0	24	1.00	1.11	1.30	31	0	31	1
47+15.00	1.4	0.0	1.8	0	0	1	32	0	24	1.00	1.11	1.30	32	0	32	0
47+28.80	0.0	0.0	5.4	0	0	2	32	0	26	1.00	1.11	1.30	32	0	34	-2
47+40.00	0.0	0.0	15.1	0	0	4	32	0	30	1.00	1.11	1.30	32	0	40	-7
47+50.00	0.0	0.0	16.5	0	0	6	32	0	36	1.00	1.11	1.30	32	0	47	-15
48+00.00	0.0	0.0	25.1	0	0	39	32	0	75	1.00	1.11	1.30	32	0	97	-65
48+50.00	0.0	0.0	29.2	0	0	50	32	0	125	1.00	1.11	1.30	32	0	163	-130
49+00.00	0.0	0.0	54.5	0	0	77	32	0	203	1.00	1.11	1.30	32	0	263	-231
49+25.00	0.0	0.0	29.7	0	0	39	32	0	241	1.00	1.11	1.30	32	0	314	-282
49+35.00	0.0	0.0	25.2	0	0	10	32	0	252	1.00	1.11	1.30	32	0	327	-295
49+50.00	0.0	0.0	27.6	0	0	15	32	0	266	1.00	1.11	1.30	32	0	346	-314
50+00.00	0.0	0.0	17.4	0	0	42	32	0	308	1.00	1.11	1.30	32	0	400	-368
50+03.78	0.0	0.0	14.5	0	0	2	32	0	310	1.00	1.11	1.30	32	0	403	-371
50+23.78	0.8	0.0	0.9	0	0	6	33	0	316	1.00	1.11	1.30	33	0	411	-378
50+35.00	1.3	0.0	0.2	0	0	0	33	0	316	1.00	1.11	1.30	33	0	411	-378
50+45.29	2.7	0.0	0.0	1	0	0	34	0	316	1.00	1.11	1.30	34	0	411	-377
50+50.00	2.4	0.0	0.0	0	0	0	34	0	316	1.00	1.11	1.30	34	0	411	-377
50+60.00	1.0	0.0	2.4	1	0	0	35	0	317	1.00	1.11	1.30	35	0	412	-377
50+65.29	1.0	0.0	2.1	0	0	0	35	0	317	1.00	1.11	1.30	35	0	412	-377
50+85.29	0.0	0.0	10.2	0	0	5	35	0	322	1.00	1.11	1.30	35	0	418	-383
51+00.00	0.0	0.0	8.6	0	0	5	35	0	327	1.00	1.11	1.30	35	0	425	-389
51+50.00	0.0	0.0	2.9	0	0	11	35	0	337	1.00	1.11	1.30	35	0	439	-403
52+00.00	1.1	0.0	0.3	1	0	3	36	0	340	1.00	1.11	1.30	36	0	442	-406
52+30.00	2.9	0.0	0.0	2	0	0	39	0	340	1.00	1.11	1.30	39	0	442	-404
52+50.00	1.8	0.0	0.1	2	0	0	40	0	340	1.00	1.11	1.30	40	0	443	-402
52+95.12	1.9	0.0	0.0	3	0	0	43	0	340	1.00	1.11	1.30	43	0	443	-399
			Column totals	**43**		**340**										

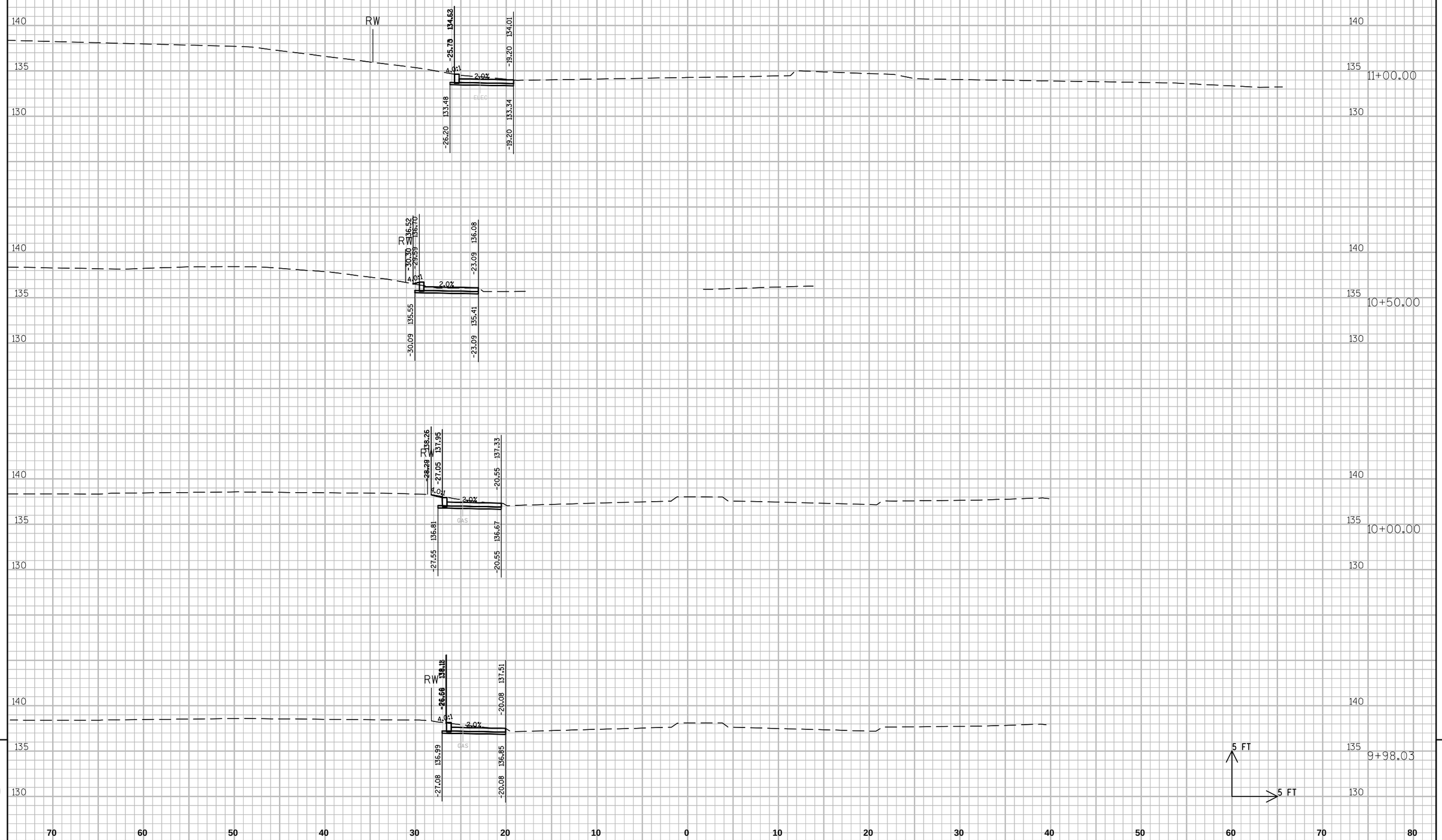

9

9

PROJECT NO: 4996-01-54	HWY: SIDEWALK GAP	COUNTY: SHEBOYGAN	CROSS SECTIONS: SEGMENT 5 WILGUS AVE.	SHEET 144	E

FILE NAME : L:\WORK\60158441\000_CADD\CIVIL\SEGMENT 5 & 15\SEG 5 XS BASE.DWG PLOT DATE : 2/26/2014 3:40 PM PLOT BY : HOLZWART, JOSEPH PLOT NAME : ----------

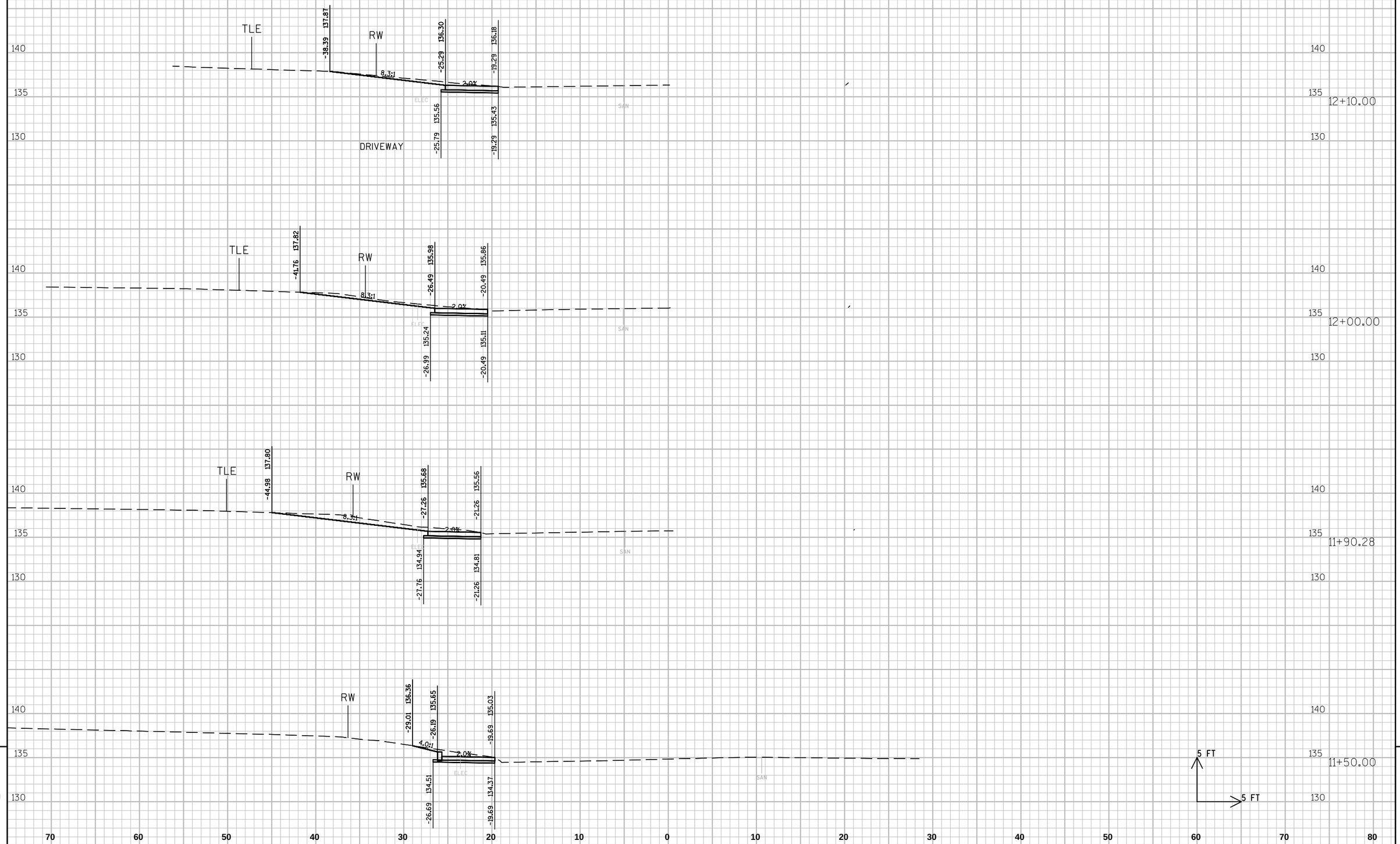

9

9

PROJECT NO: 4996-01-54	HWY: SIDEWALK GAP	COUNTY: SHEBOYGAN	CROSS SECTIONS: SEGMENT 5 WILGUS AVE.	SHEET 145	E

FILE NAME : L:\WORK\60158441\000_CADD\CIVIL\SEGMENT 5 & 15\SEG 5 XS BASE.DWG PLOT DATE : 2/26/2014 3:40 PM PLOT BY : HOLZWART, JOSEPH PLOT NAME : ----------

WISDOT/CADDS SHEET 21

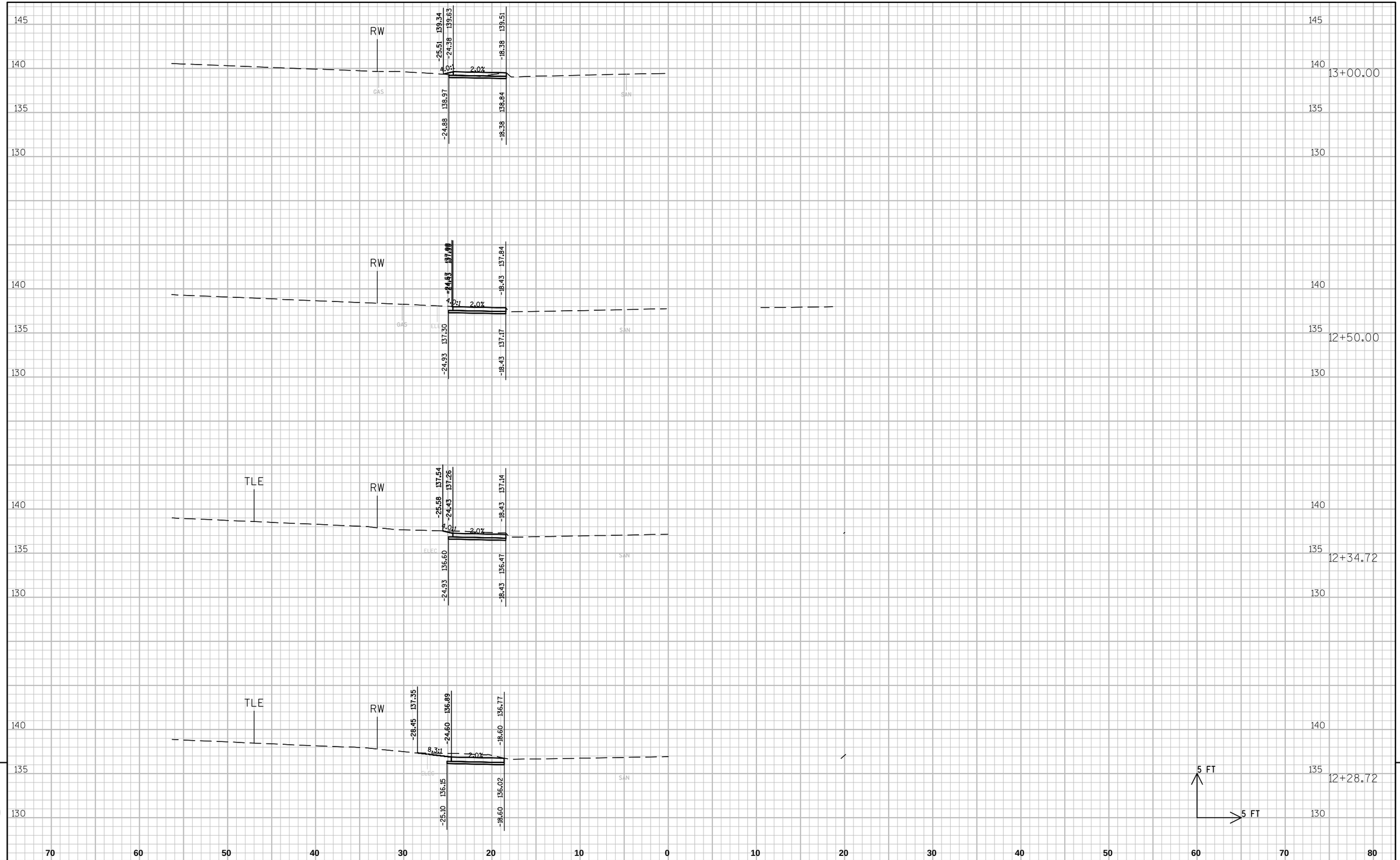

9

9

PROJECT NO: 4996-01-54	HWY: SIDEWALK GAP	COUNTY: SHEBOYGAN	CROSS SECTIONS: SEGMENT 5 WILGUS AVE.	SHEET 146	E

FILE NAME : L:\WORK\60158441\000_CADD\CIVIL\SEGMENT 5 & 15\SEG 5 XS BASE.DWG PLOT DATE : 2/26/2014 3:40 PM PLOT BY : HOLZWART, JOSEPH PLOT NAME : ----------

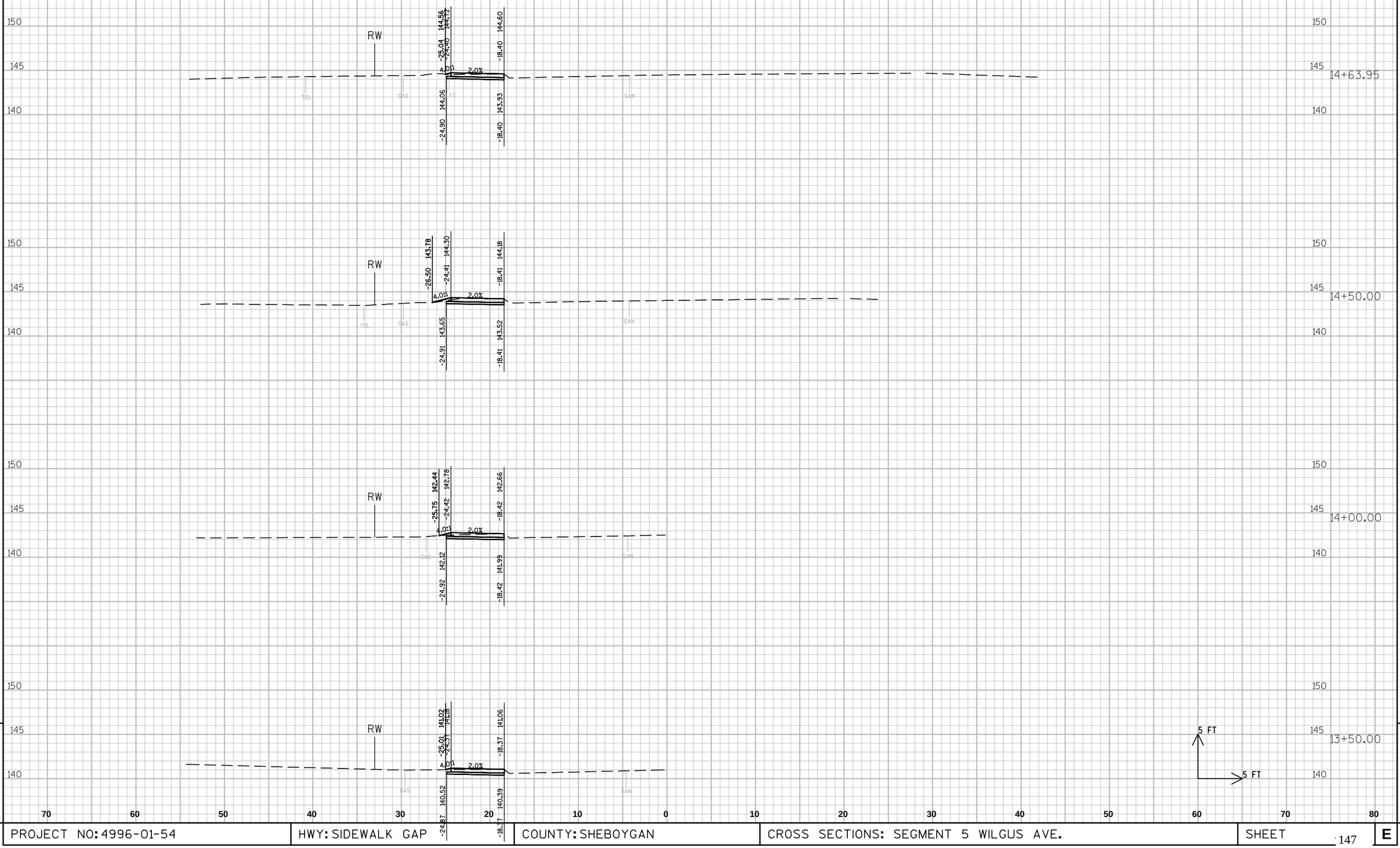

9

9

PROJECT NO: 4996-01-54	HWY: SIDEWALK GAP	COUNTY: SHEBOYGAN	CROSS SECTIONS: SEGMENT 5 WILGUS AVE.	SHEET 147	E

FILE NAME : L:\WORK\60158441\000_CADD\CIVIL\SEGMENT 5 & 15\SEG 5 XS BASE.DWG PLOT DATE : 2/26/2014 3:40 PM PLOT BY : HOLZWART, JOSEPH PLOT NAME : ----------

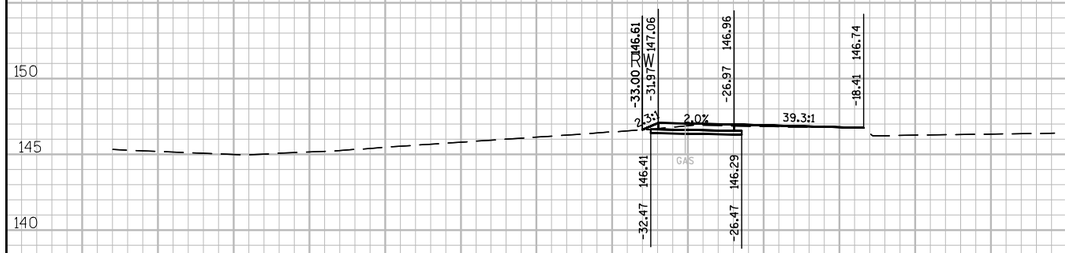

15+56.59

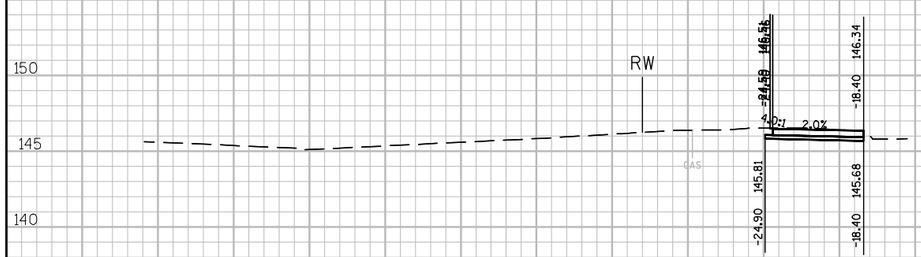

15+38.61

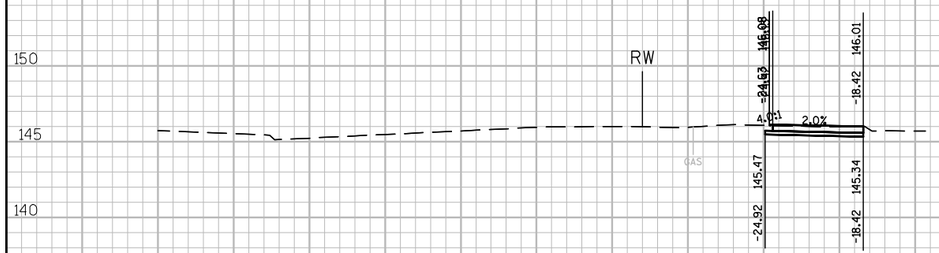

15+30.80

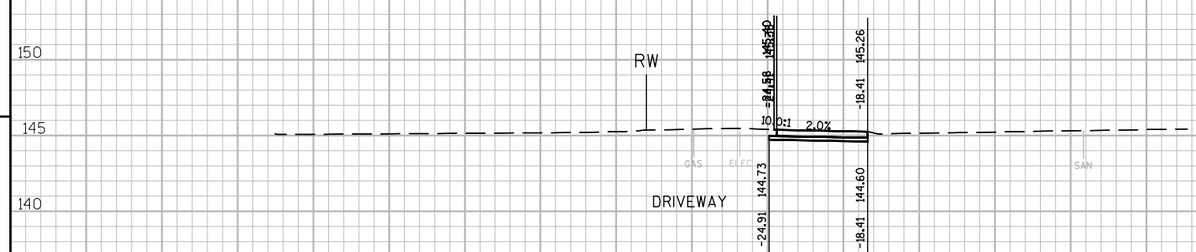

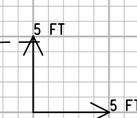

15+00.00

70 60 50 40 30 20 10 0 10 20 30 40 50 60 70 80

9

9

PROJECT NO: 4996-01-54	HWY: SIDEWALK GAP	COUNTY: SHEBOYGAN	CROSS SECTIONS: SEGMENT 5 WILGUS AVE.	SHEET 148	E

FILE NAME : L:\WORK\60158441\000_CADD\CIVIL\SEGMENT 5 & 15\SEG 5 XS BASE.DWG PLOT DATE : 2/26/2014 3:40 PM PLOT BY : HOLZWART, JOSEPH PLOT NAME : ----------

WISDOT/CADDS SHEET 21

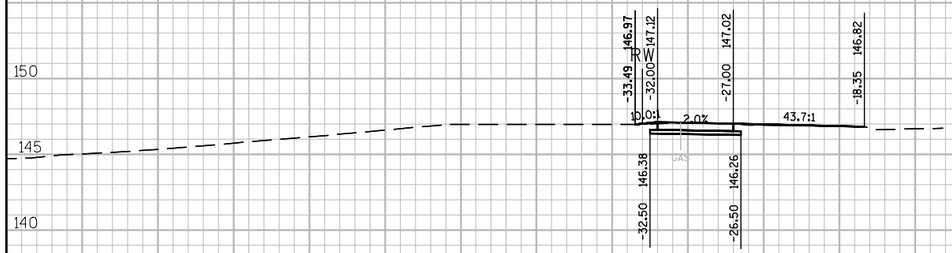

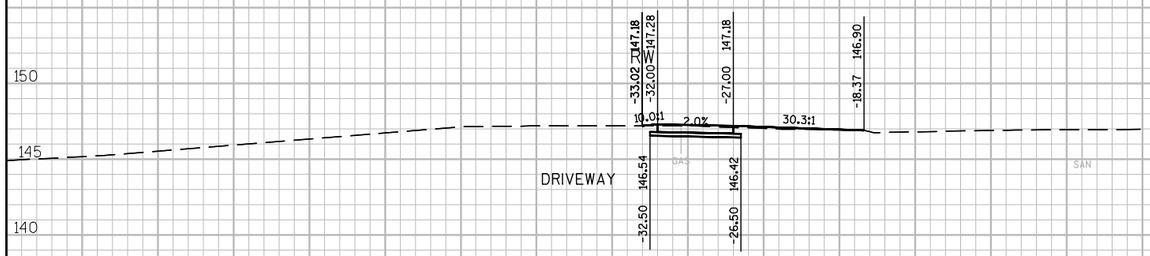

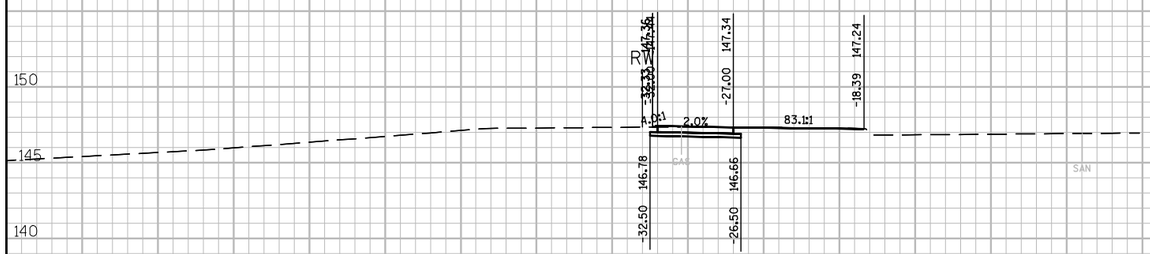

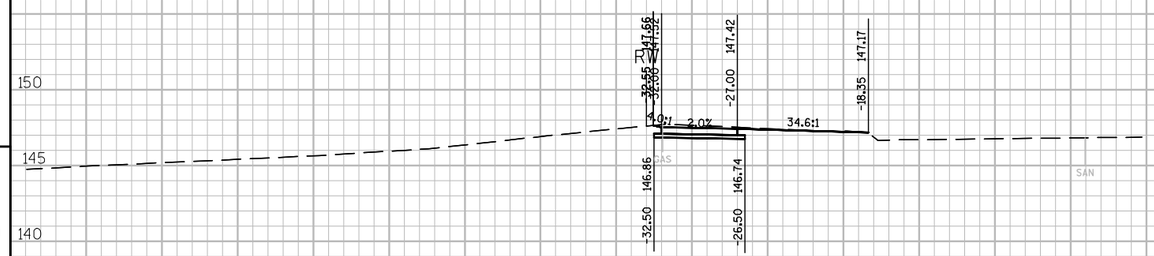

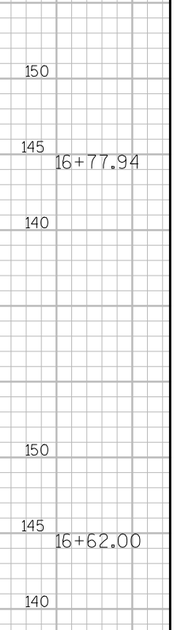

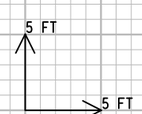

9

9

PROJECT NO: 4996-01-54	HWY: SIDEWALK GAP	COUNTY: SHEBOYGAN	CROSS SECTIONS: SEGMENT 5 WILGUS AVE.	SHEET 149	E

FILE NAME : L:\WORK\60158441\000_CADD\CIVIL\SEGMENT 5 & 15\SEG 5 XS BASE.DWG PLOT DATE : 2/26/2014 3:41 PM PLOT BY : HOLZWART, JOSEPH PLOT NAME : ----------

WISDOT/CADDS SHEET 21

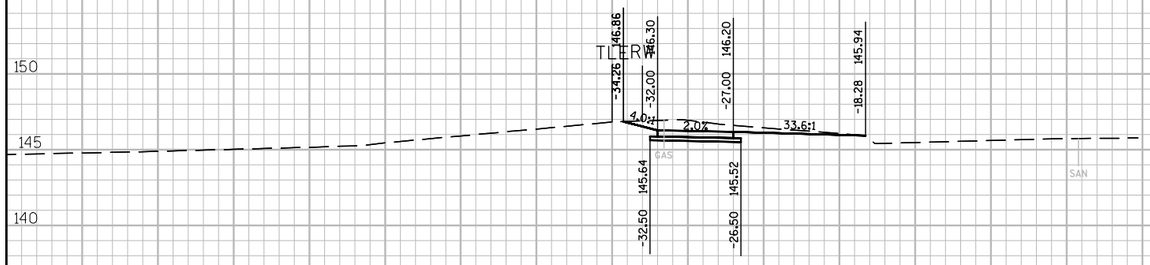

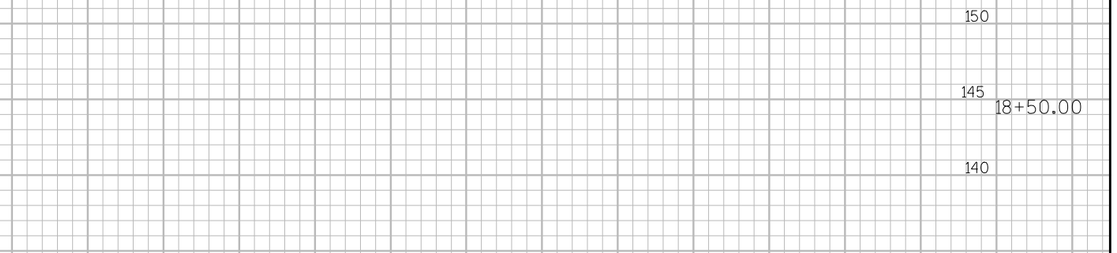

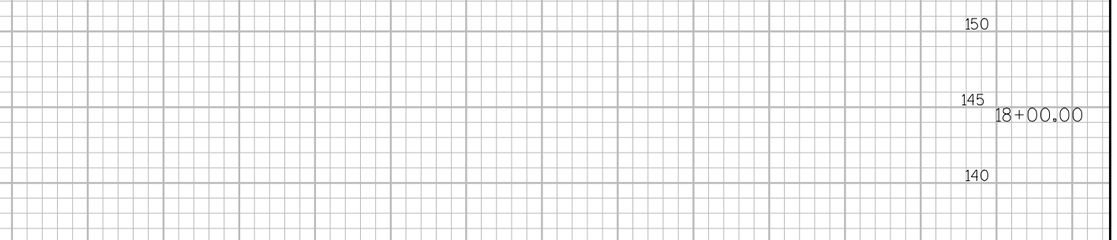

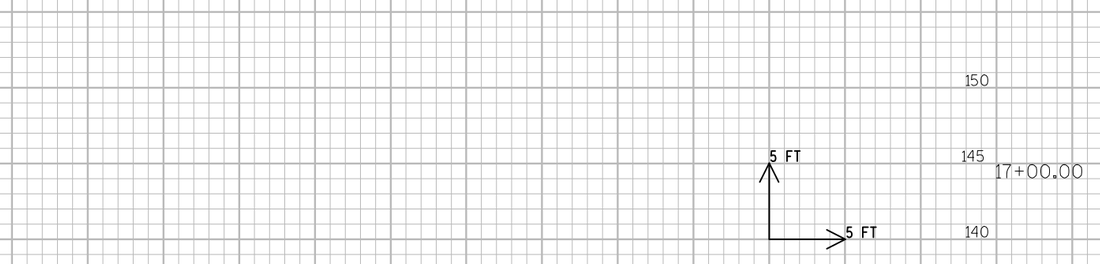

70 60 50 40 30 20 10 0 10 20 30 40 50 60 70 80

9 9

PROJECT NO: 4996-01-54	HWY: SIDEWALK GAP	COUNTY: SHEBOYGAN	CROSS SECTIONS: SEGMENT 5 WILGUS AVE.	SHEET 150	E

FILE NAME : L:\WORK\60158441\000_CADD\CIVIL\SEGMENT 5 & 15\SEG 5 XS BASE.DWG PLOT DATE : 2/26/2014 3:41 PM PLOT BY : HOLZWART, JOSEPH PLOT NAME : ----------

WISDOT/CADDS SHEET 21

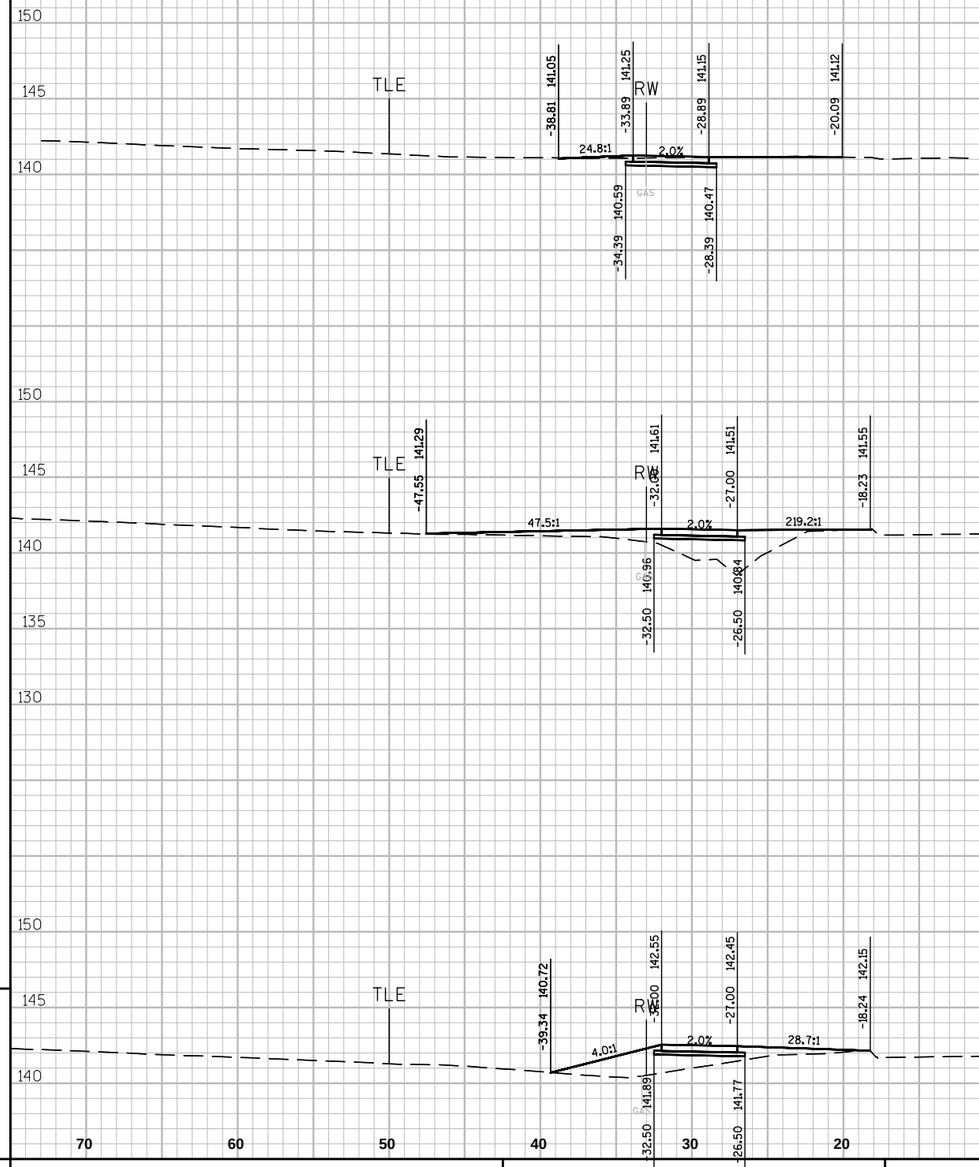

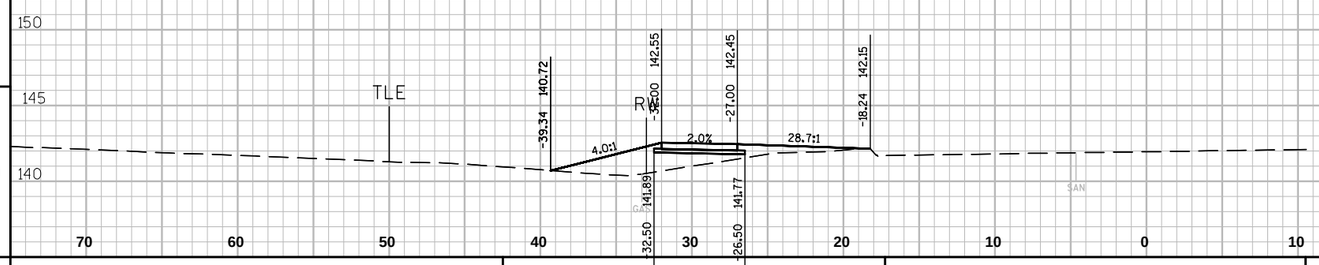

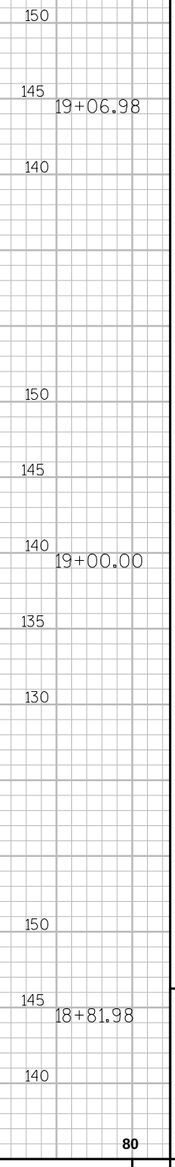

9

9

PROJECT NO: 4996-01-54	HWY: SIDEWALK GAP	COUNTY: SHEBOYGAN	CROSS SECTIONS: SEGMENT 5 WILGUS AVE.	SHEET 151	E

FILE NAME : L:\WORK\60158441\000_CADD\CIVIL\SEGMENT 5 & 15\SEG 5 XS BASE.DWG PLOT DATE : 2/26/2014 3:41 PM PLOT BY : HOLZWART, JOSEPH PLOT NAME : ----------

WISDOT/CADDS SHEET 21

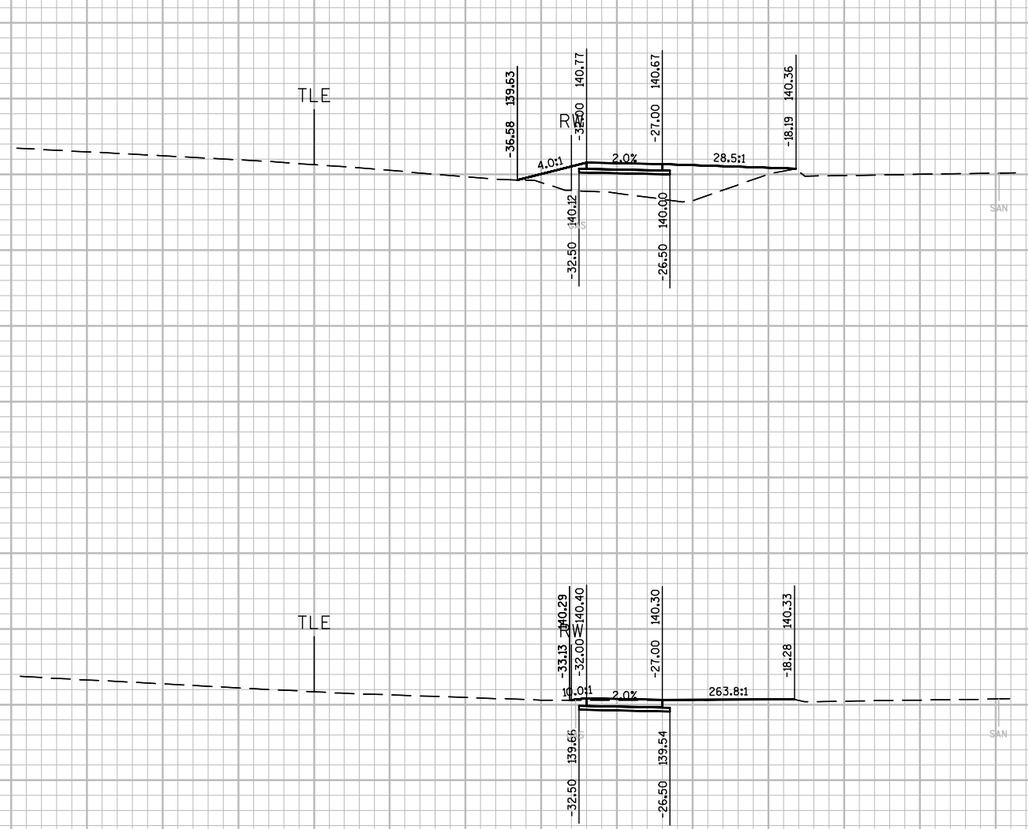

19+44.54

19+34.57

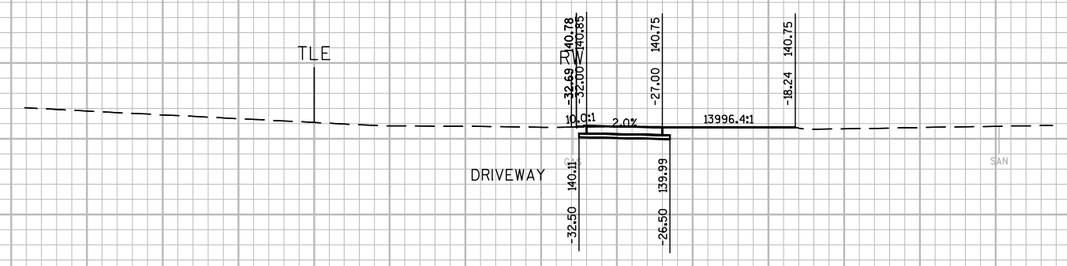

19+20.00

5 FT
5 FT

9

9

PROJECT NO: 4996-01-54	HWY: SIDEWALK GAP	COUNTY: SHEBOYGAN	CROSS SECTIONS: SEGMENT 5 WILGUS AVE.	SHEET 152	E

FILE NAME : L:\WORK\60158441\000_CADD\CIVIL\SEGMENT 5 & 15\SEG 5 XS BASE.DWG PLOT DATE : 2/26/2014 3:41 PM PLOT BY : HOLZWART, JOSEPH PLOT NAME : ----------

WISDOT/CADDS SHEET 21

9

9

PROJECT NO: 4996-01-54	HWY: SIDEWALK GAP	COUNTY: SHEBOYGAN	CROSS SECTIONS: SEGMENT 5 WILGUS AVE.	SHEET 153	E

FILE NAME : L:\WORK\60158441\000_CADD\CIVIL\SEGMENT 5 & 15\SEG 5 XS BASE.DWG PLOT DATE : 2/26/2014 3:41 PM PLOT BY : HOLZWART, JOSEPH PLOT NAME : ----------

WISDOT/CADDS SHEET 21

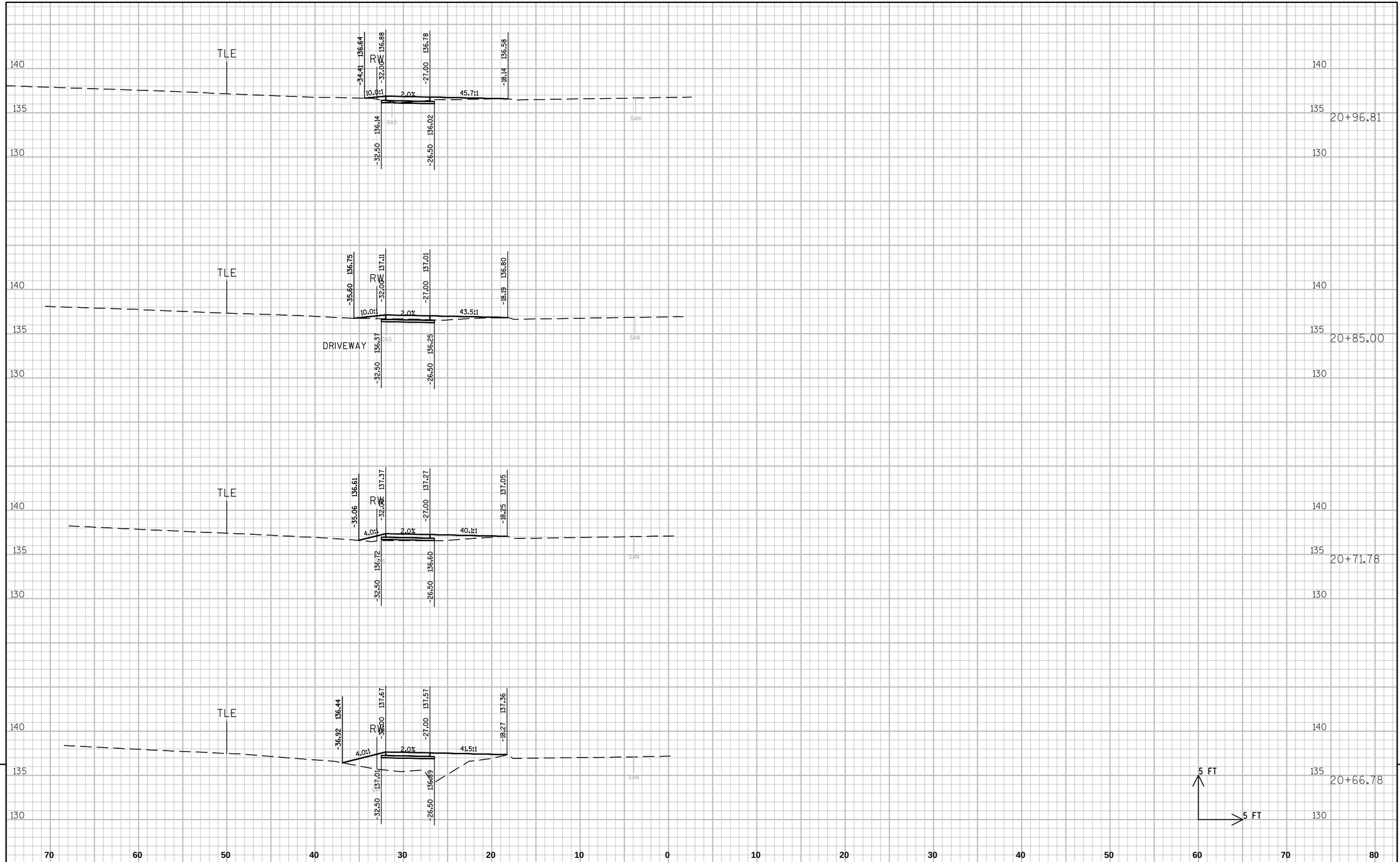

9

9

PROJECT NO: 4996-01-54	HWY: SIDEWALK GAP	COUNTY: SHEBOYGAN	CROSS SECTIONS: SEGMENT 5 WILGUS AVE.	SHEET 154	E

FILE NAME : L:\WORK\60158441\000_CADD\CIVIL\SEGMENT 5 & 15\SEG 5 XS BASE.DWG PLOT DATE : 2/26/2014 3:41 PM PLOT BY : HOLZWART, JOSEPH PLOT NAME : ----------

WISDOT/CADDS SHEET 21

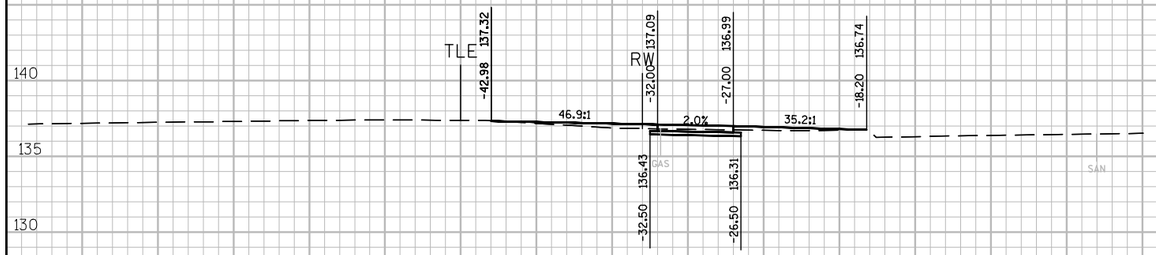

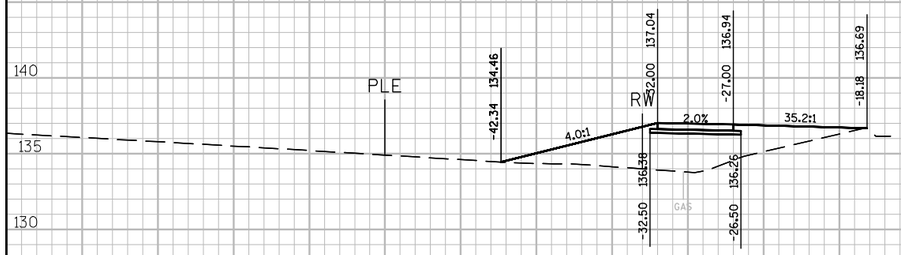

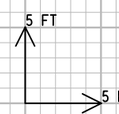

9

9

PROJECT NO: 4996-01-54	HWY: SIDEWALK GAP	COUNTY: SHEBOYGAN	CROSS SECTIONS: SEGMENT 5 WILGUS AVE.	SHEET 155	E

FILE NAME : L:\WORK\60158441\000_CADD\CIVIL\SEGMENT 5 & 15\SEG 5 XS BASE.DWG PLOT DATE : 2/26/2014 3:41 PM PLOT BY : HOLZWART, JOSEPH PLOT NAME : ----------

WISDOT/CADDS SHEET 21

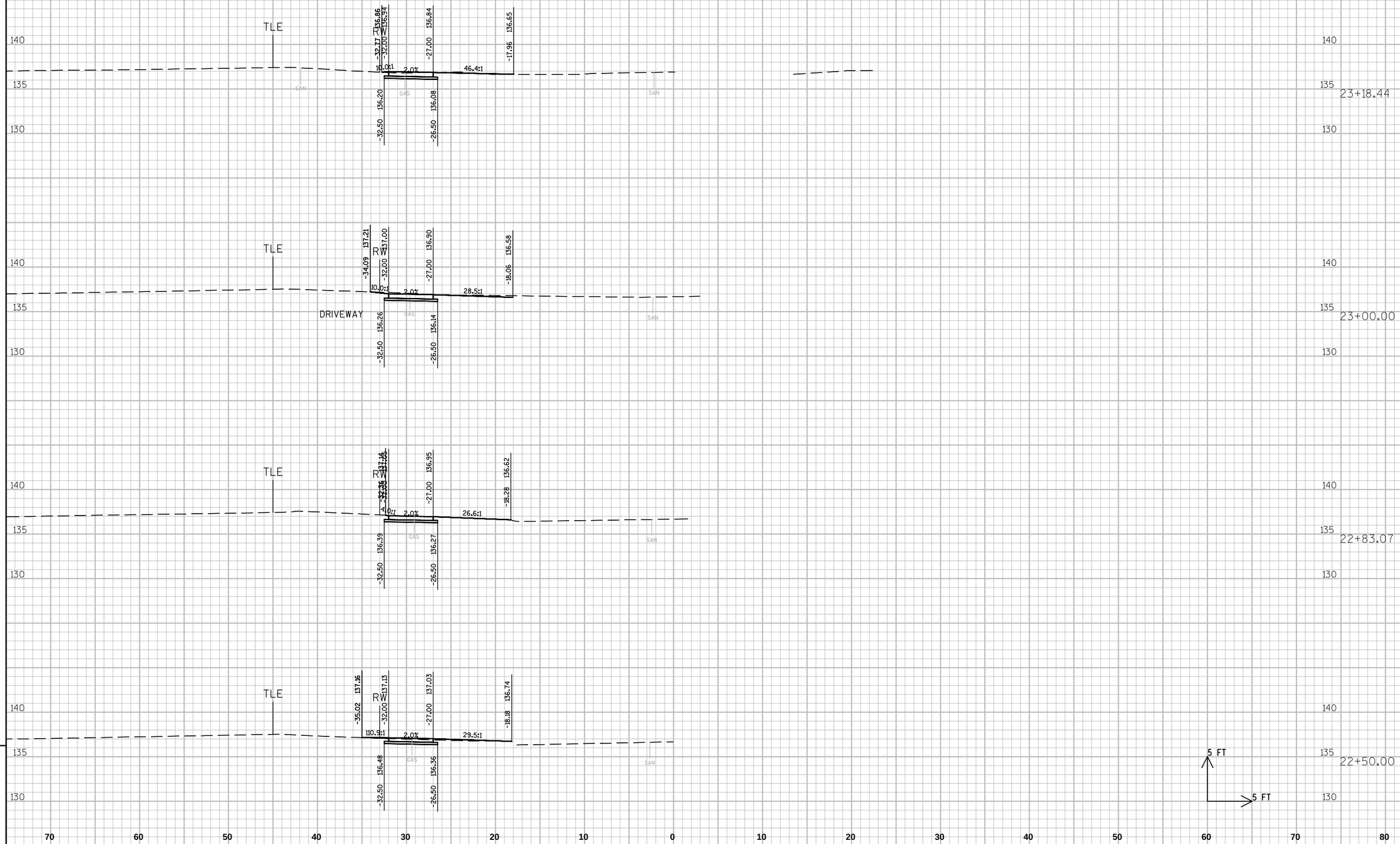

9

PROJECT NO: 4996-01-54	HWY: SIDEWALK GAP	COUNTY: SHEBOYGAN	CROSS SECTIONS: SEGMENT 5 WILGUS AVE.	SHEET 156	E

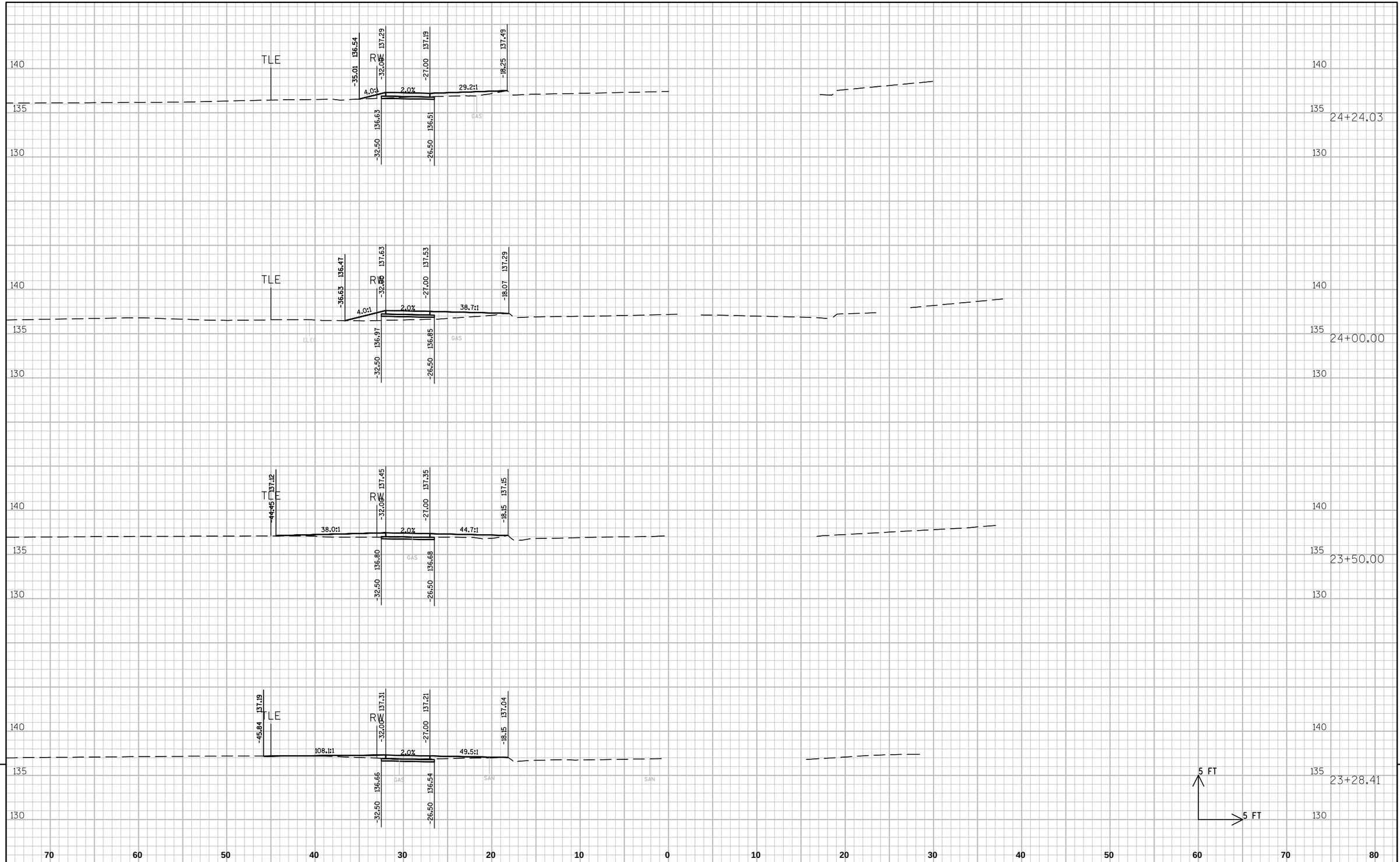

9

9

PROJECT NO: 4996-01-54	HWY: SIDEWALK GAP	COUNTY: SHEBOYGAN	CROSS SECTIONS: SEGMENT 5 WILGUS AVE.	SHEET 157	E

FILE NAME : L:\WORK\60158441\000_CADD\CIVIL\SEGMENT 5 & 15\SEG 5 XS BASE.DWG PLOT DATE : 2/26/2014 3:41 PM PLOT BY : HOLZWART, JOSEPH PLOT NAME : ----------

WISDOT/CADDS SHEET 21

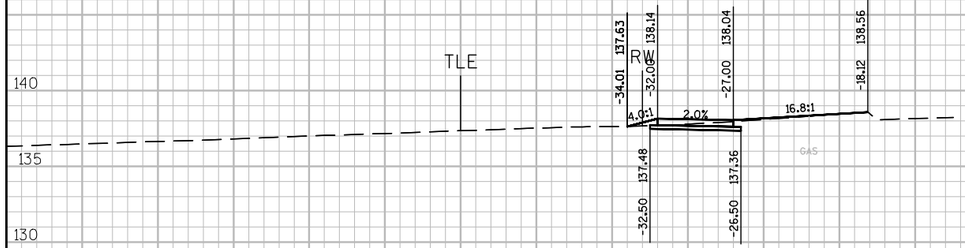

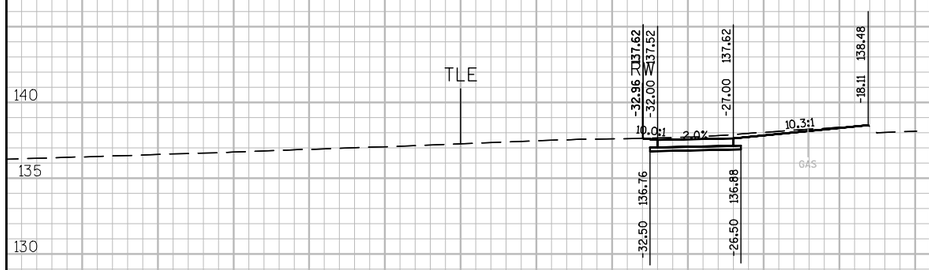

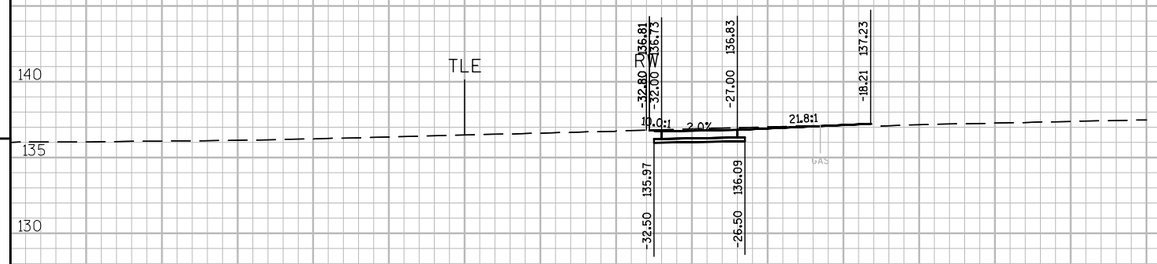

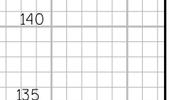

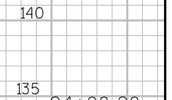

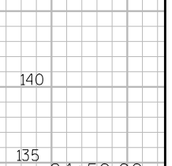

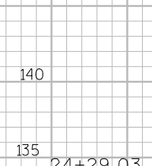

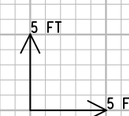

70 60 50 40 30 20 10 0 10 20 30 40 50 60 70 80

9 9

PROJECT NO: 4996-01-54	HWY: SIDEWALK GAP	COUNTY: SHEBOYGAN	CROSS SECTIONS: SEGMENT 5 WILGUS AVE.	SHEET 158	E

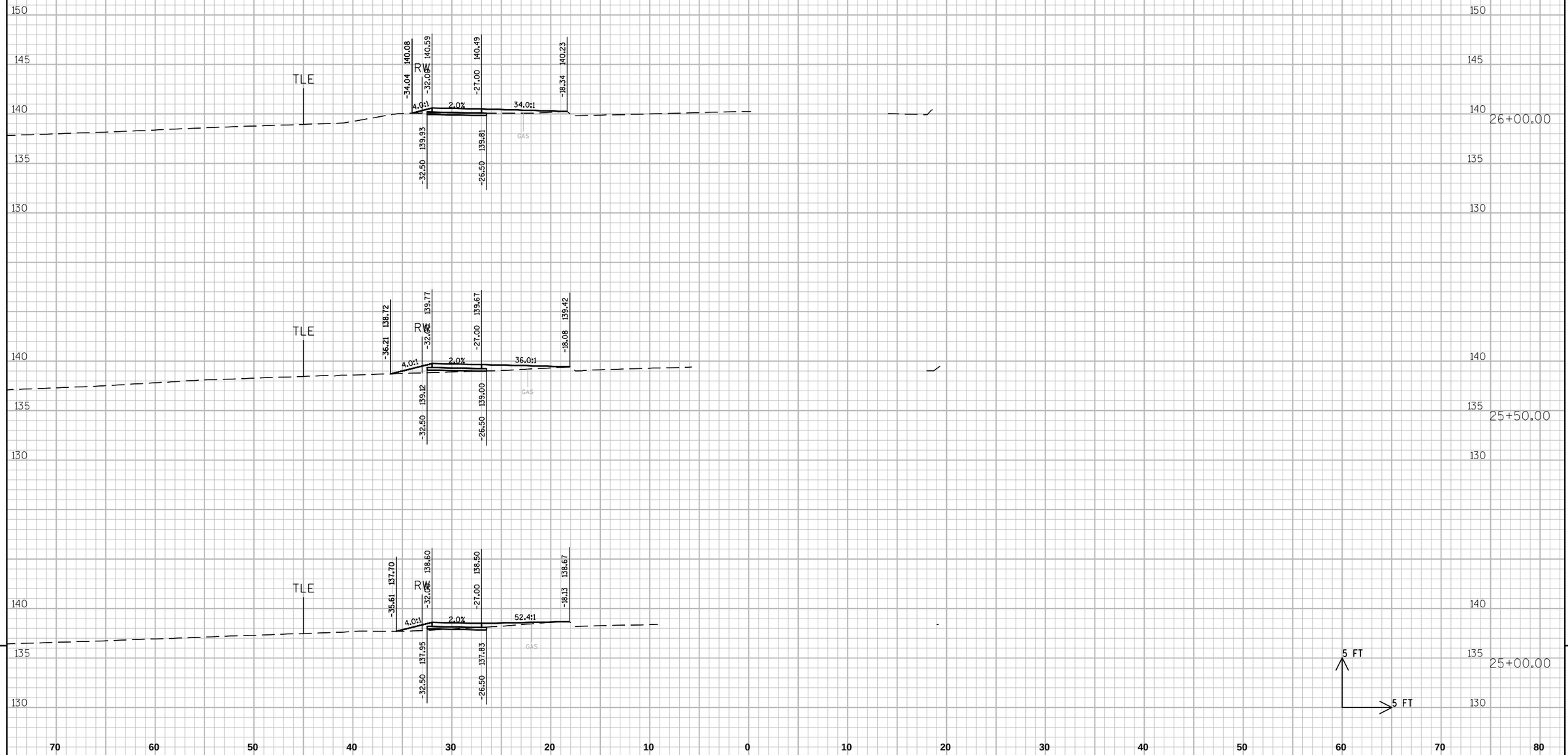

PROJECT NO: 4996-01-54	HWY: SIDEWALK GAP	COUNTY: SHEBOYGAN	CROSS SECTIONS: SEGMENT 5 WILGUS AVE.	SHEET 159 E

FILE NAME : L:\WORK\60158441\000_CADD\CIVIL\SEGMENT 5 & 15\SEG 5 XS BASE.DWG PLOT DATE : 2/26/2014 3:42 PM PLOT BY : HOLZWART, JOSEPH PLOT NAME : ----------

WISDOT/CADDS SHEET 21

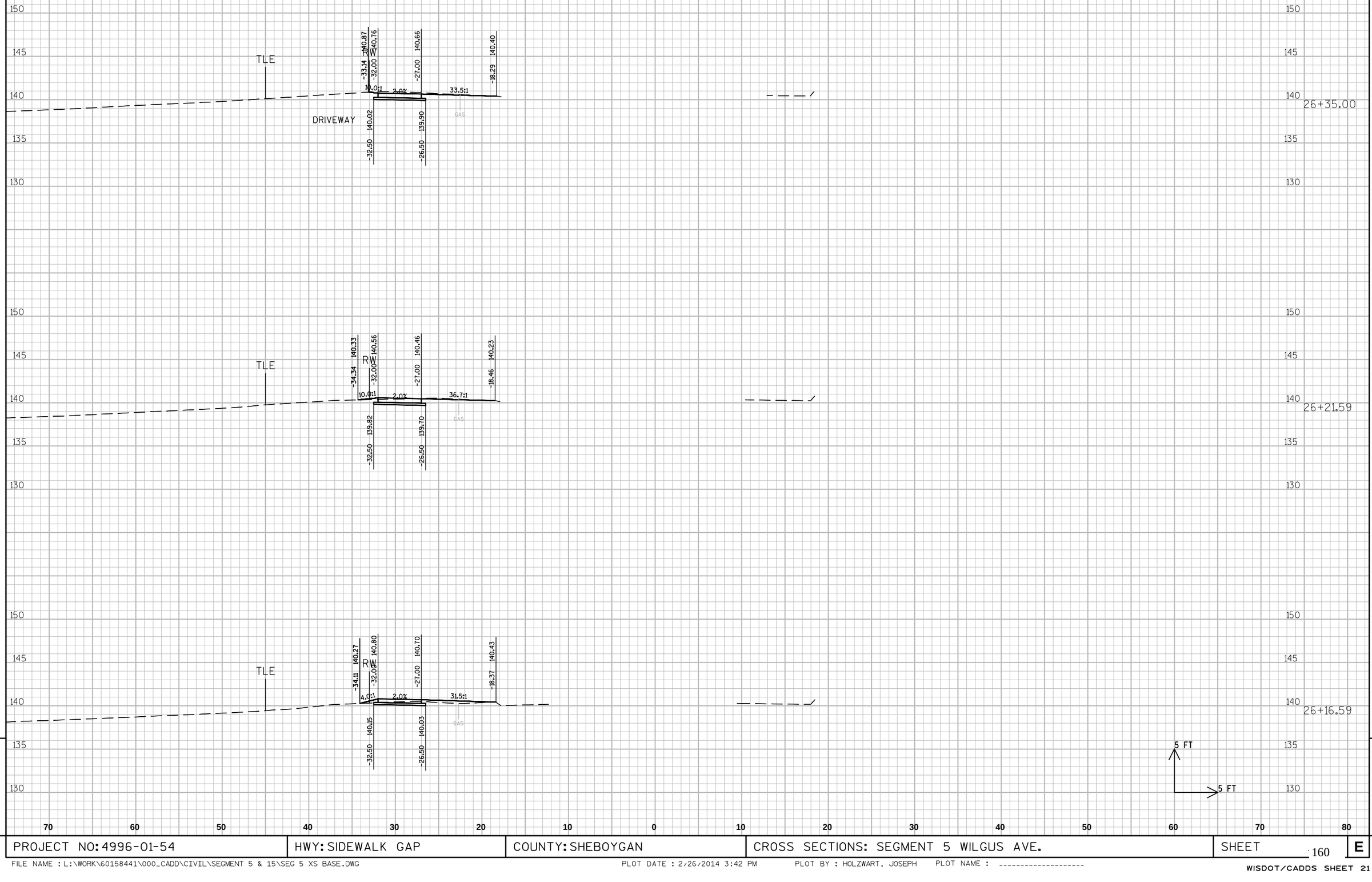

9

9

PROJECT NO: 4996-01-54	HWY: SIDEWALK GAP	COUNTY: SHEBOYGAN	CROSS SECTIONS: SEGMENT 5 WILGUS AVE.	SHEET 160	E

FILE NAME : L:\WORK\60158441\000_CADD\CIVIL\SEGMENT 5 & 15\SEG 5 XS BASE.DWG PLOT DATE : 2/26/2014 3:42 PM PLOT BY : HOLZWART, JOSEPH PLOT NAME : ----------

WISDOT/CADDS SHEET 21

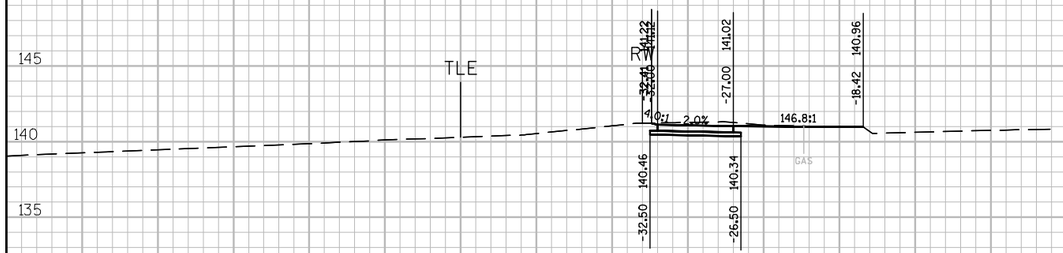

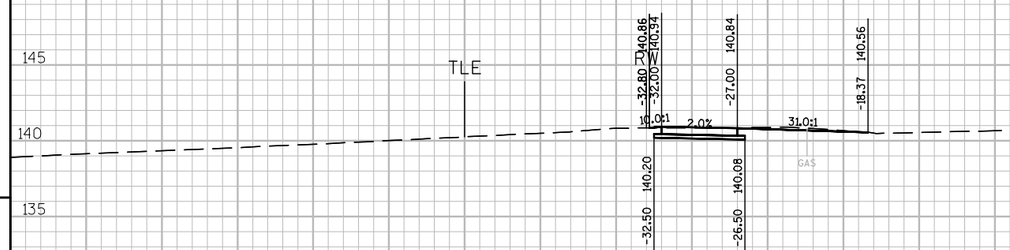

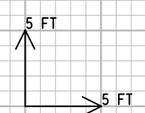

26+57.51

26+52.51

26+47.51

9

9

PROJECT NO: 4996-01-54	HWY: SIDEWALK GAP	COUNTY: SHEBOYGAN	CROSS SECTIONS: SEGMENT 5 WILGUS AVE.	SHEET 161	E

28+00.00

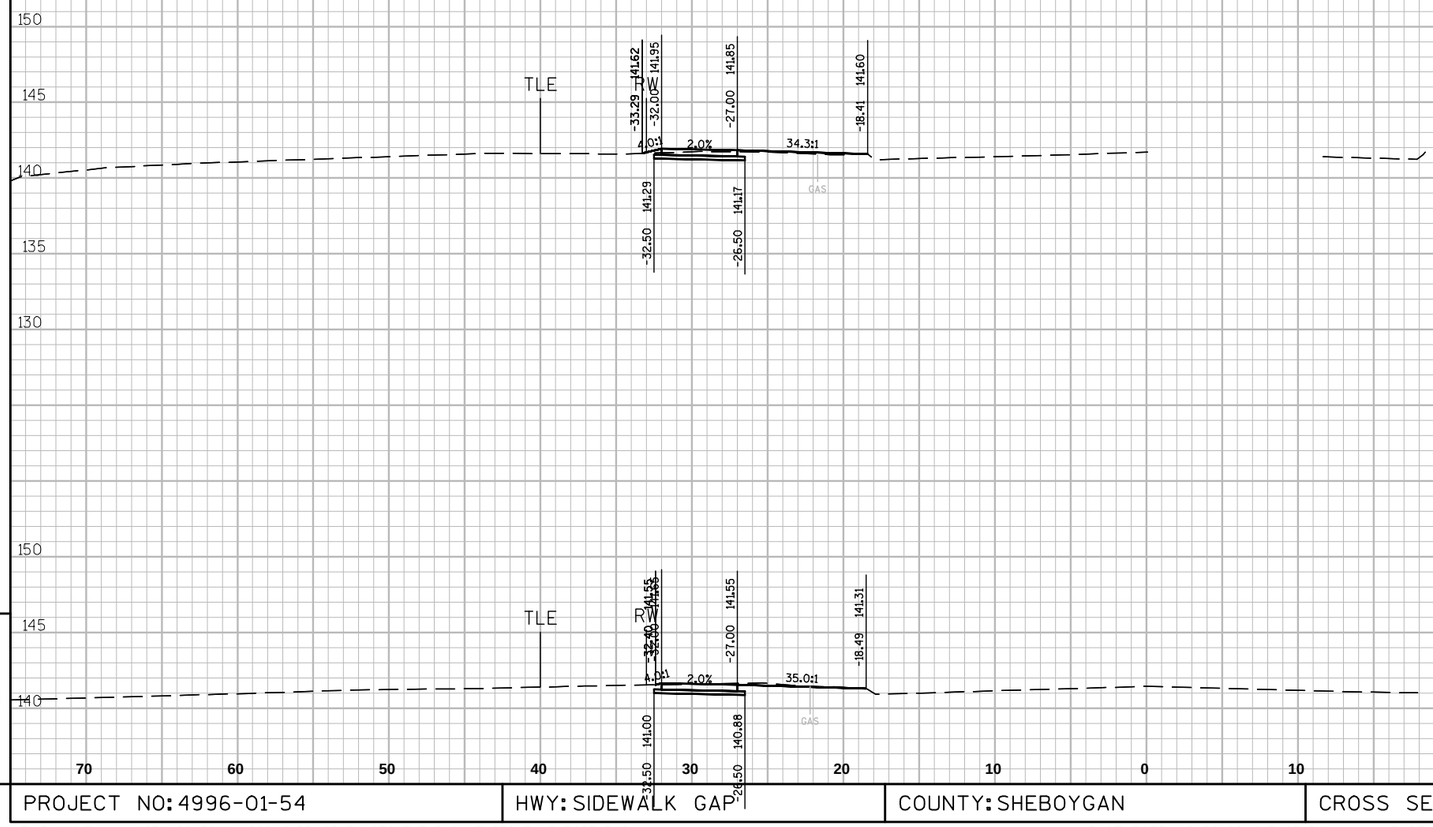

27+50.00

27+00.00

5 FT

5 FT

9

9

70 60 50 40 30 20 10 0 10 20 30 40 50 60 70 80

PROJECT NO: 4996-01-54	HWY: SIDEWALK GAP	COUNTY: SHEBOYGAN	CROSS SECTIONS: SEGMENT 5 WILGUS AVE.	SHEET 162	E

FILE NAME : L:\WORK\60158441\000_CADD\CIVIL\SEGMENT 5 & 15\SEG 5 XS BASE.DWG PLOT DATE : 2/26/2014 3:42 PM PLOT BY : HOLZWART, JOSEPH PLOT NAME : ----------

WISDOT/CADDS SHEET 21

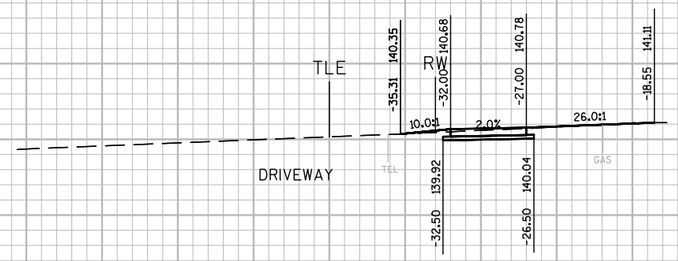

28+40.00

28+26.53

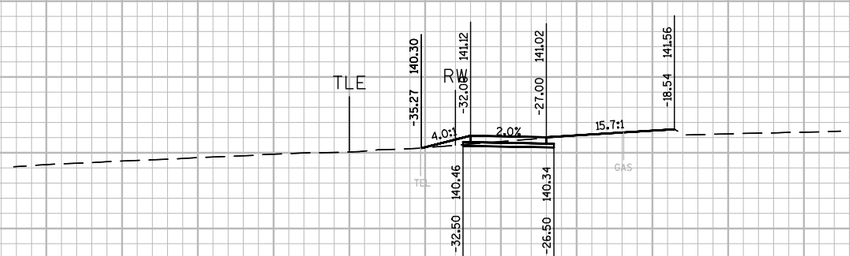

28+21.53

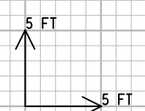

9

9

PROJECT NO: 4996-01-54	HWY: SIDEWALK GAP	COUNTY: SHEBOYGAN	CROSS SECTIONS: SEGMENT 5 WILGUS AVE.	SHEET 163	E

FILE NAME : L:\WORK\60158441\000_CADD\CIVIL\SEGMENT 5 & 15\SEG 5 XS BASE.DWG PLOT DATE : 2/26/2014 3:42 PM PLOT BY : HOLZWART, JOSEPH PLOT NAME : ----------

WISDOT/CADDS SHEET 21

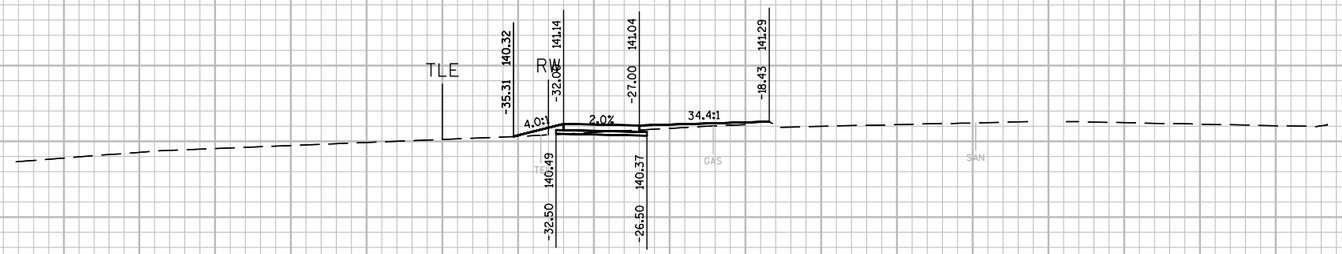

28+62.15

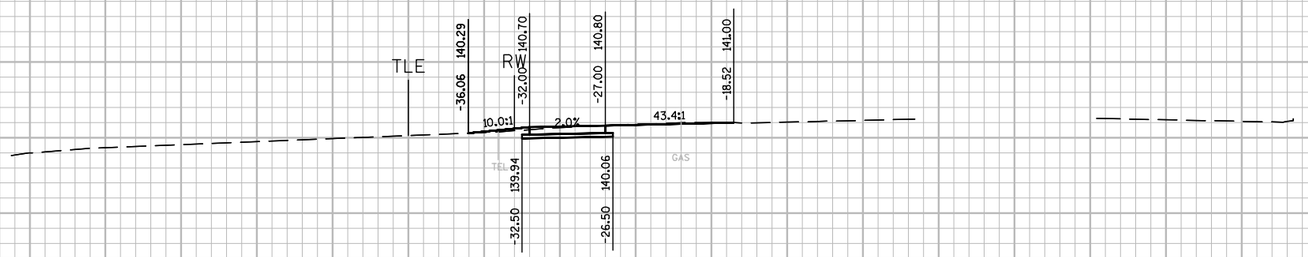

28+57.15

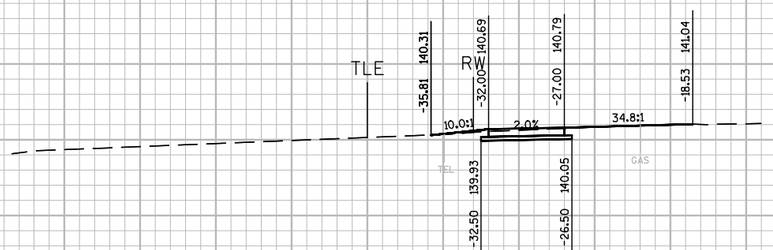

28+50.00

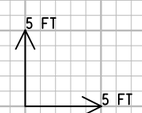

9

9

70 60 50 40 30 20 10 0 10 20 30 40 50 60 70 80

PROJECT NO: 4996-01-54	HWY: SIDEWALK GAP	COUNTY: SHEBOYGAN	CROSS SECTIONS: SEGMENT 5 WILGUS AVE.	SHEET 164	E

FILE NAME : L:\WORK\60158441\000_CADD\CIVIL\SEGMENT 5 & 15\SEG 5 XS BASE.DWG PLOT DATE : 2/26/2014 3:42 PM PLOT BY : HOLZWART, JOSEPH PLOT NAME : ----------

WISDOT/CADDS SHEET 21

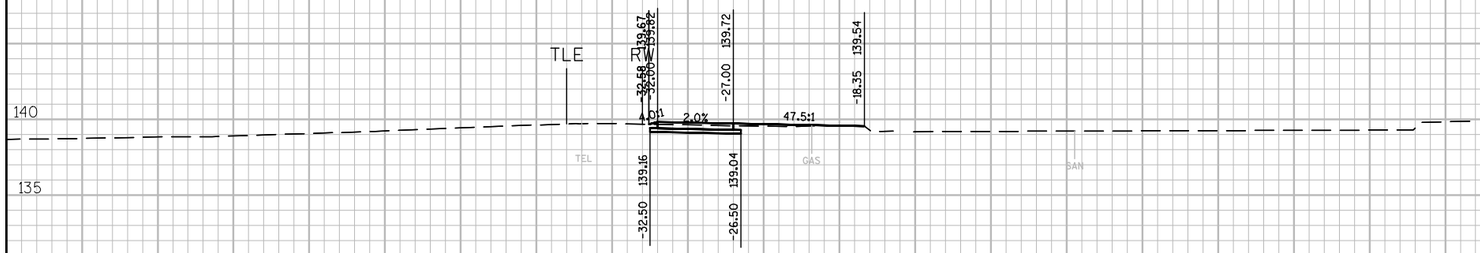

29+79.69

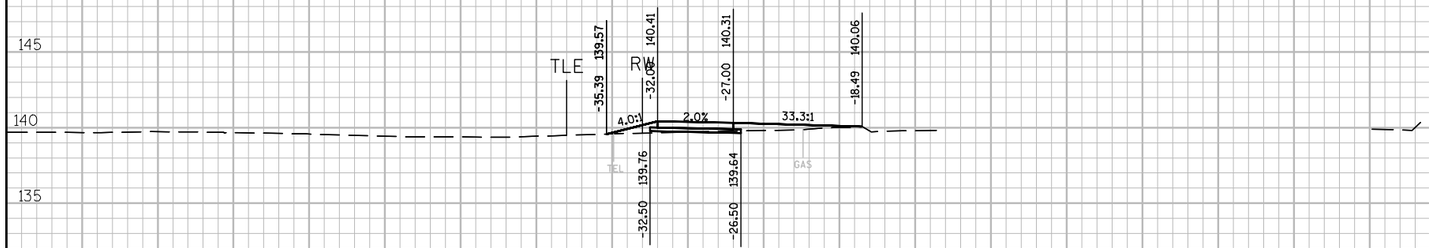

29+50.00

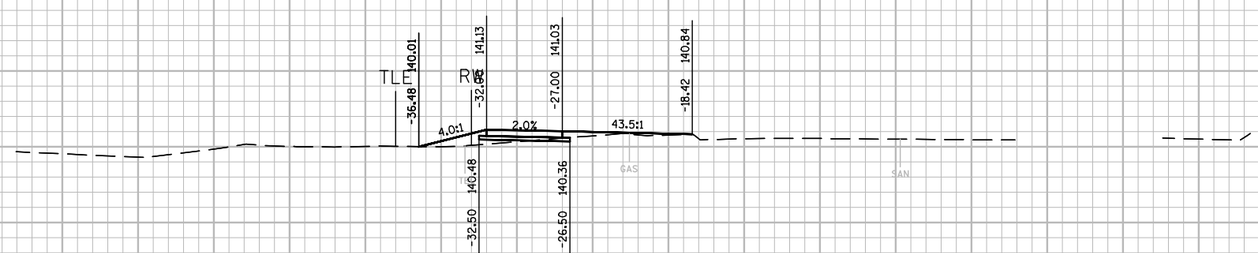

29+00.00

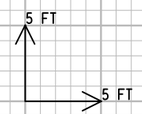

70 60 50 40 30 20 10 0 10 20 30 40 50 60 70 80

9 9

PROJECT NO: 4996-01-54	HWY: SIDEWALK GAP	COUNTY: SHEBOYGAN	CROSS SECTIONS: SEGMENT 5 WILGUS AVE.	SHEET 165	E

FILE NAME : L:\WORK\60158441\000_CADD\CIVIL\SEGMENT 5 & 15\SEG 5 XS BASE.DWG PLOT DATE : 2/26/2014 3:42 PM PLOT BY : HOLZWART, JOSEPH PLOT NAME : ----------

WISDOT/CADDS SHEET 21

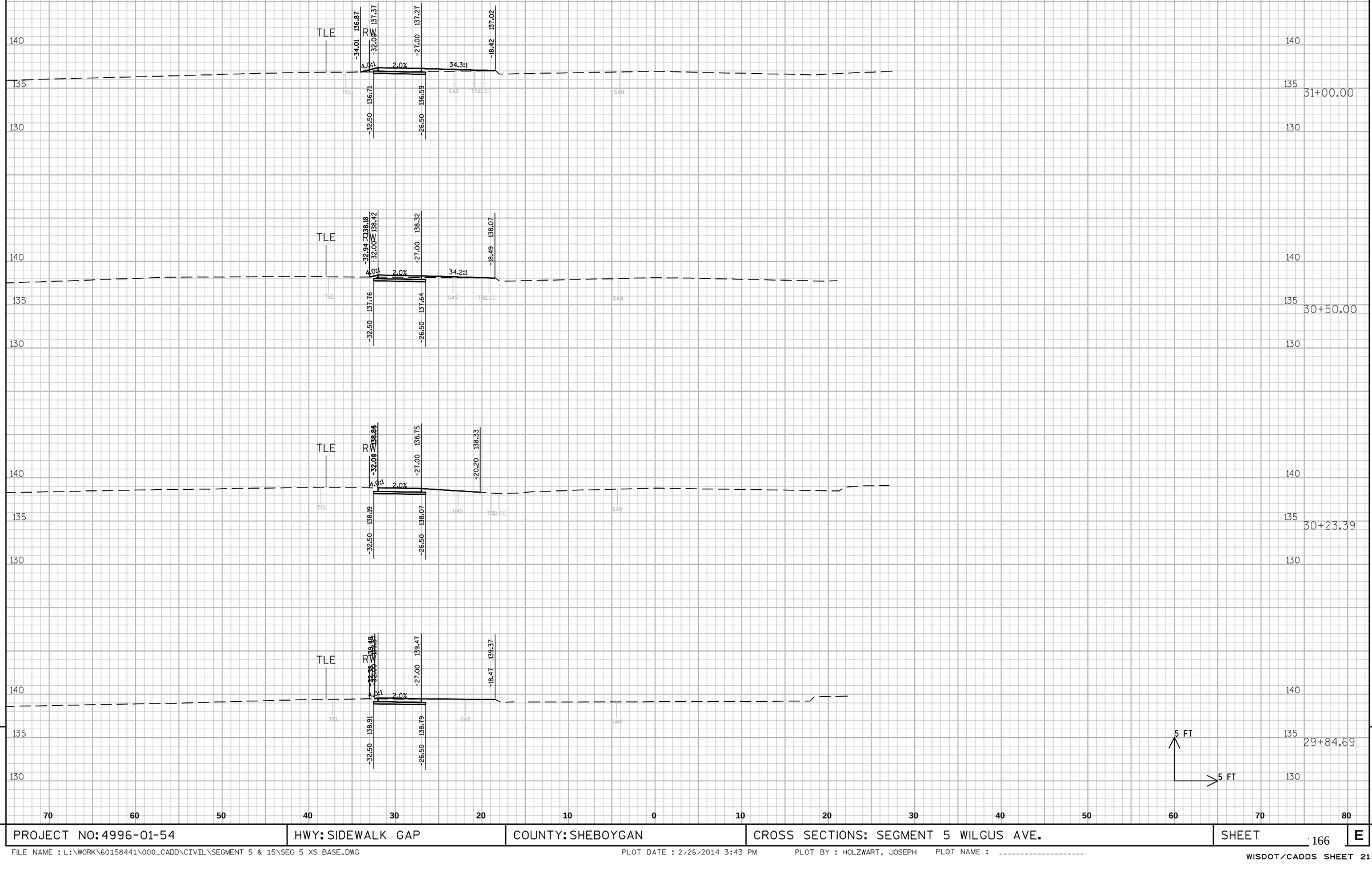

9

9

PROJECT NO: 4996-01-54	HWY: SIDEWALK GAP	COUNTY: SHEBOYGAN	CROSS SECTIONS: SEGMENT 5 WILGUS AVE.	SHEET 166	E

FILE NAME : L:\WORK\60158441\000_CADD\CIVIL\SEGMENT 5 & 15\SEG 5 XS BASE.DWG PLOT DATE : 2/26/2014 3:43 PM PLOT BY : HOLZWART, JOSEPH PLOT NAME : ----------

WISDOT/CADDS SHEET 21

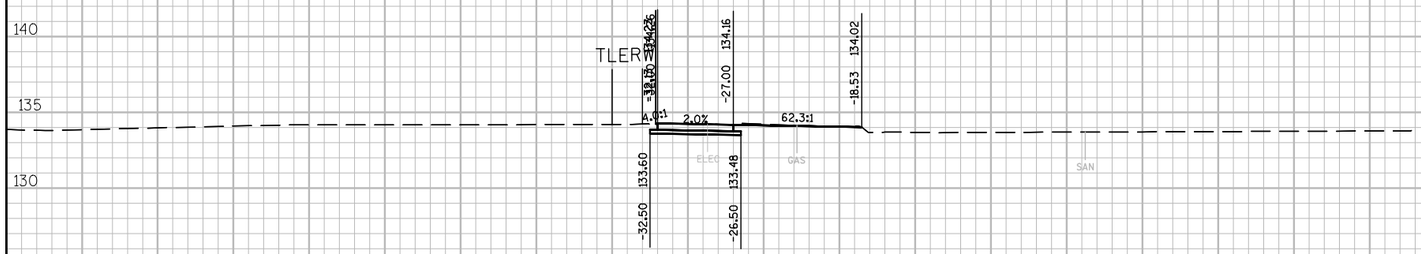

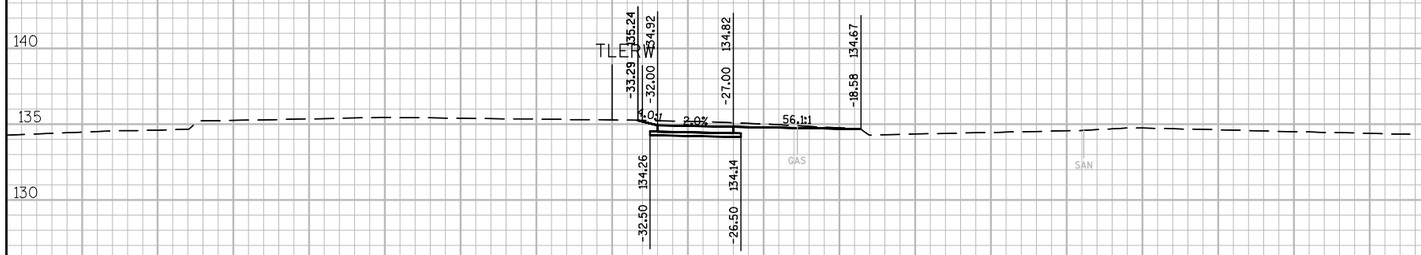

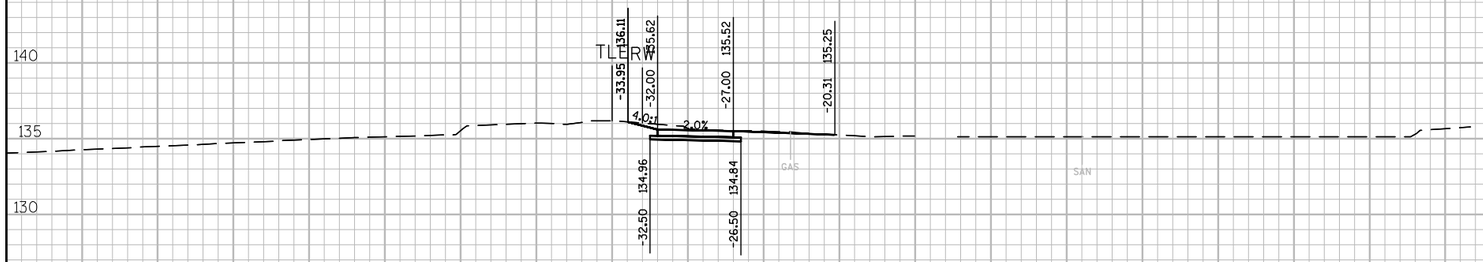

9

9

PROJECT NO: 4996-01-54	HWY: SIDEWALK GAP	COUNTY: SHEBOYGAN	CROSS SECTIONS: SEGMENT 5 WILGUS AVE.	SHEET 167	E

FILE NAME : L:\WORK\60158441\000_CADD\CIVIL\SEGMENT 5 & 15\SEG 5 XS BASE.DWG PLOT DATE : 2/26/2014 3:43 PM PLOT BY : HOLZWART, JOSEPH PLOT NAME : ----------

WISDOT/CADDS SHEET 21

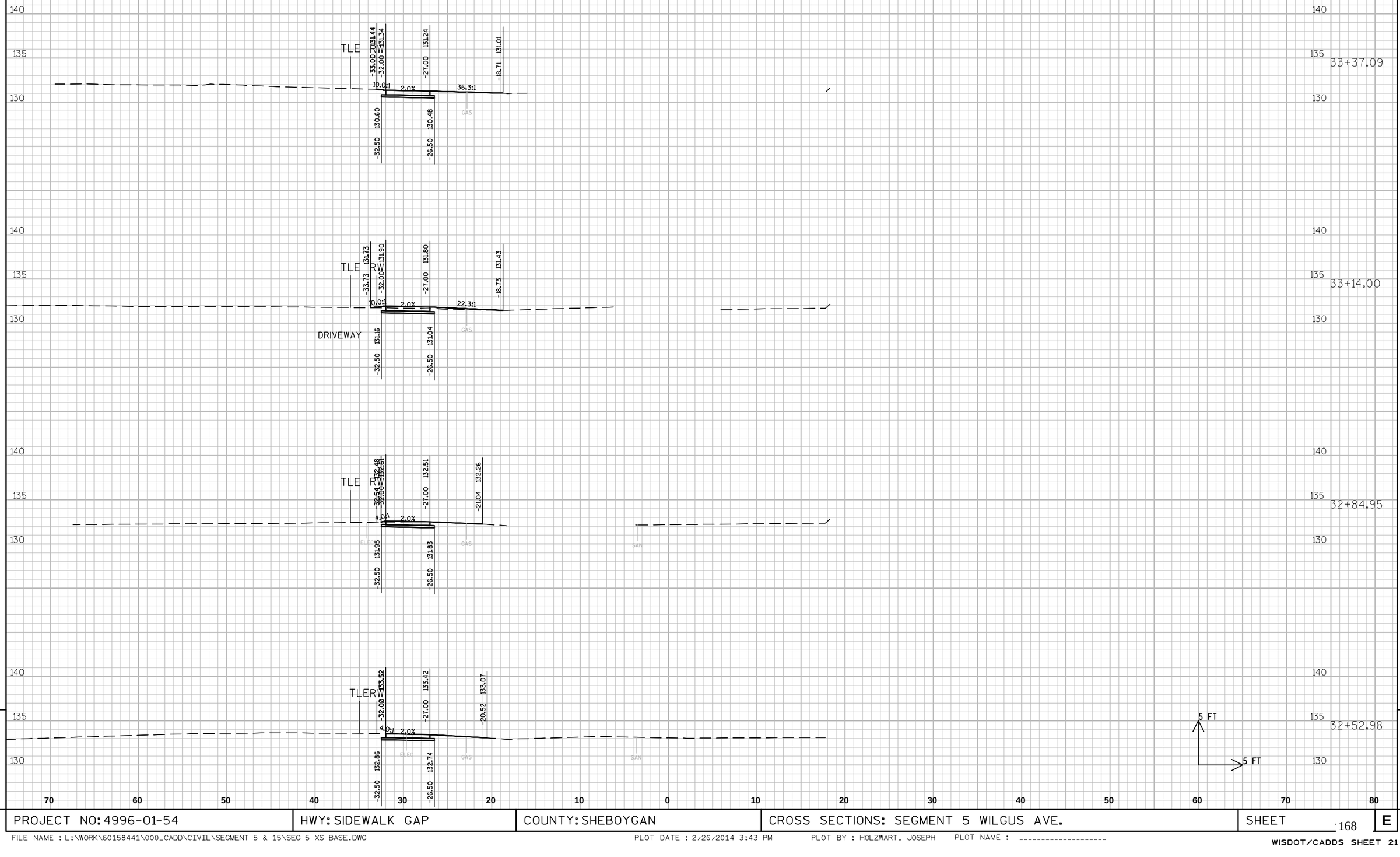

PROJECT NO: 4996-01-54	HWY: SIDEWALK GAP	COUNTY: SHEBOYGAN	CROSS SECTIONS: SEGMENT 5 WILGUS AVE.	SHEET 168	E

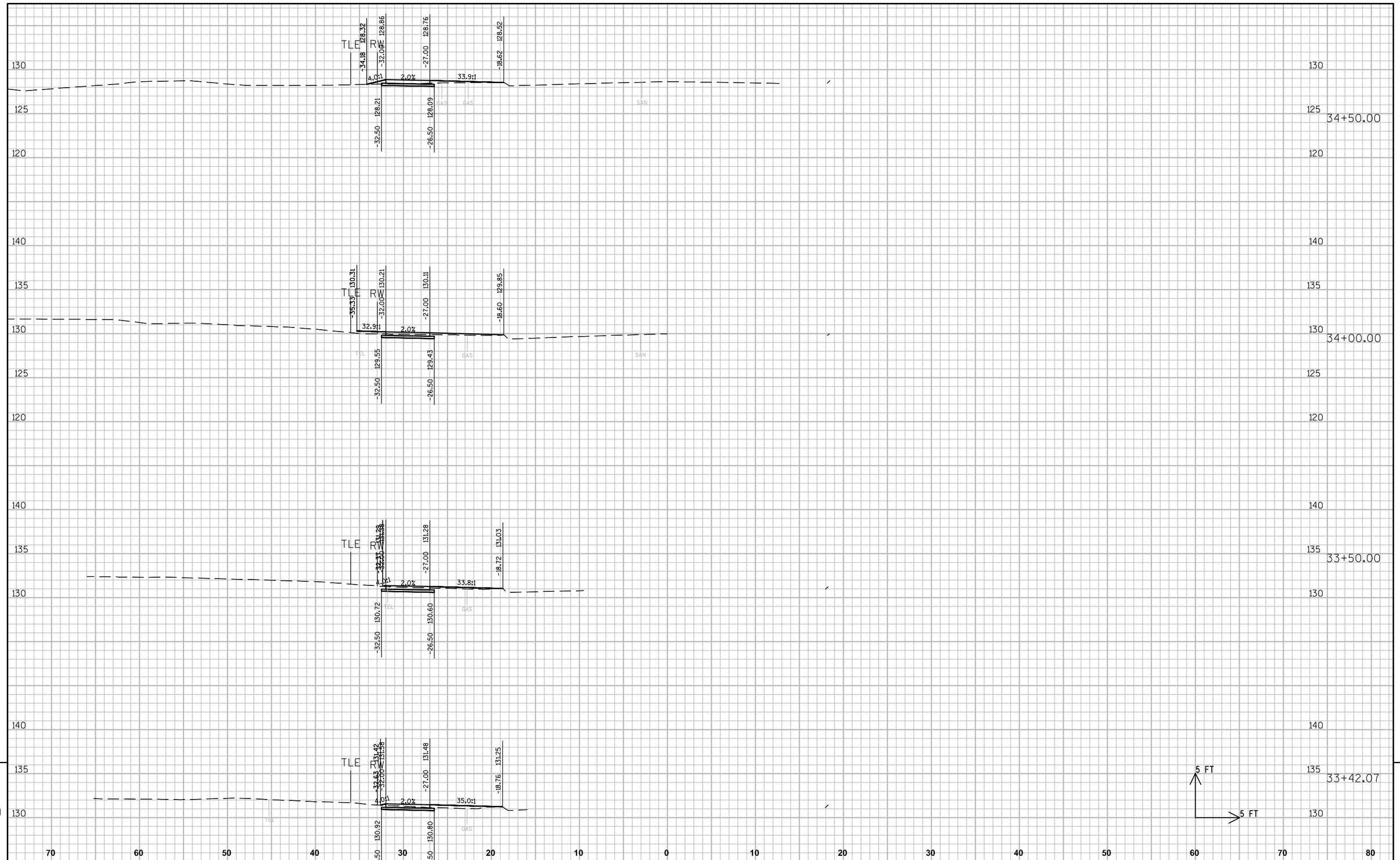

PROJECT NO: 4996-01-54	HWY: SIDEWALK GAP	COUNTY: SHEBOYGAN	CROSS SECTIONS: SEGMENT 5 WILGUS AVE.	SHEET 169	E

FILE NAME : L:\WORK\60158441\000_CADD\CIVIL\SEGMENT 5 & 15\SEG 5 XS BASE.DWG PLOT DATE : 2/26/2014 3:48 PM PLOT BY : HOLZWART, JOSEPH PLOT NAME : ----------

WISDOT/CADDS SHEET 21

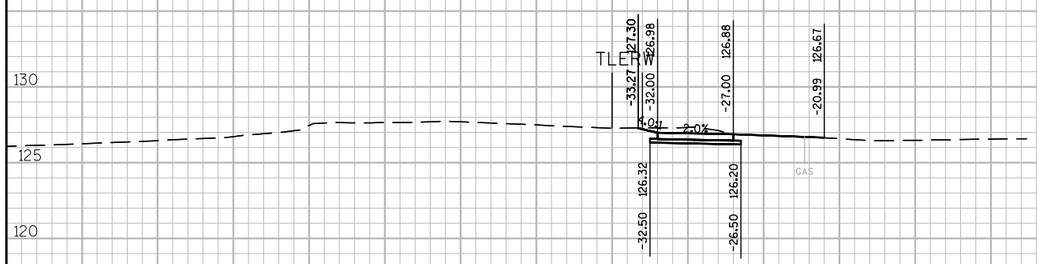

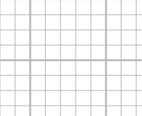

35+50.00

35+26.49

35+21.47

34+85.76

70 60 50 40 30 20 10 0 10 20 30 40 50 60 70 80

9

9

PROJECT NO: 4996-01-54	HWY: SIDEWALK GAP	COUNTY: SHEBOYGAN	CROSS SECTIONS: SEGMENT 5 WILGUS AVE.	SHEET 170	E

FILE NAME : L:\WORK\60158441\000_CADD\CIVIL\SEGMENT 5 & 15\SEG 5 XS BASE.DWG PLOT DATE : 2/26/2014 3:43 PM PLOT BY : HOLZWART, JOSEPH PLOT NAME : ----------

WISDOT/CADDS SHEET 21

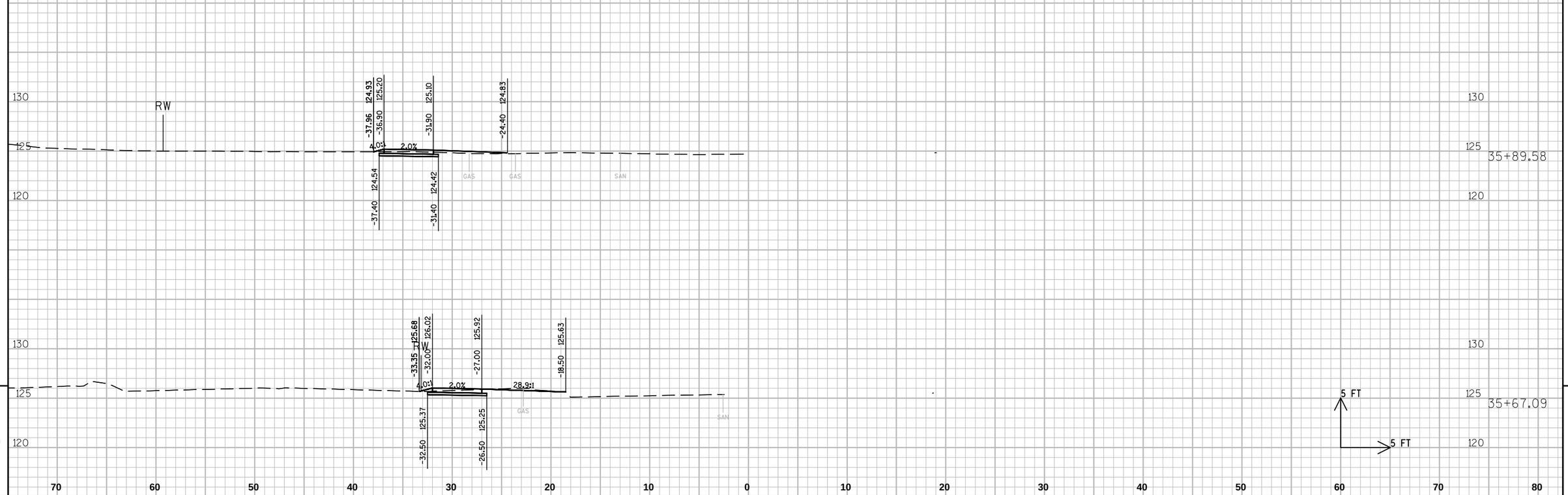

9

9

PROJECT NO: 4996-01-54	HWY: SIDEWALK GAP	COUNTY: SHEBOYGAN	CROSS SECTIONS: SEGMENT 5 WILGUS AVE.	SHEET 171	E

FILE NAME : L:\WORK\60158441\000_CADD\CIVIL\SEGMENT 5 & 15\SEG 5 XS BASE.DWG PLOT DATE : 2/26/2014 3:43 PM PLOT BY : HOLZWART, JOSEPH PLOT NAME : ----------

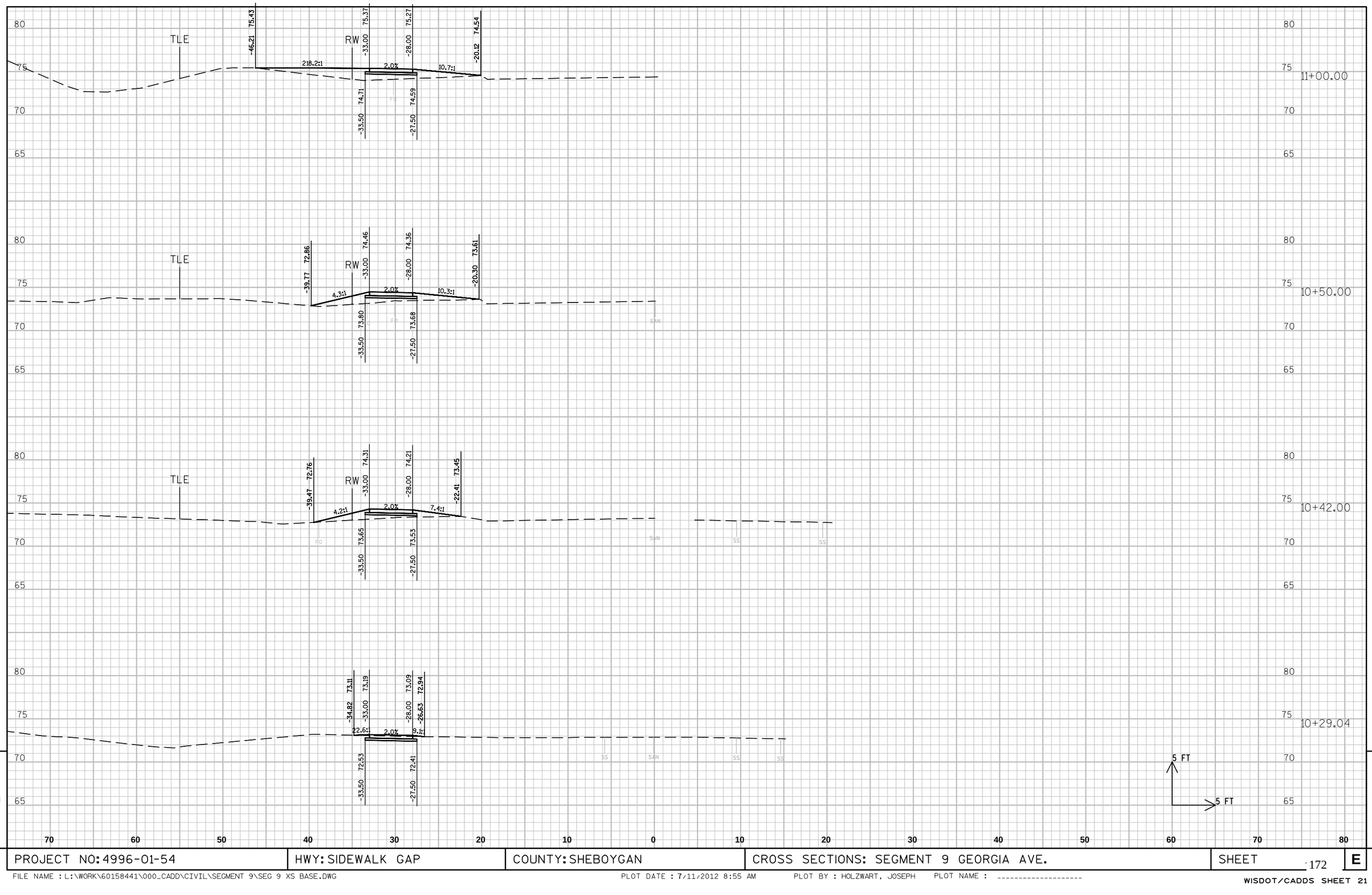

9

9

PROJECT NO: 4996-01-54	HWY: SIDEWALK GAP	COUNTY: SHEBOYGAN	CROSS SECTIONS: SEGMENT 9 GEORGIA AVE.	SHEET 172	E

FILE NAME : L:\WORK\60158441\000_CADD\CIVIL\SEGMENT 9\SEG 9 XS BASE.DWG PLOT DATE : 7/11/2012 8:55 AM PLOT BY : HOLZWART, JOSEPH PLOT NAME : ----------

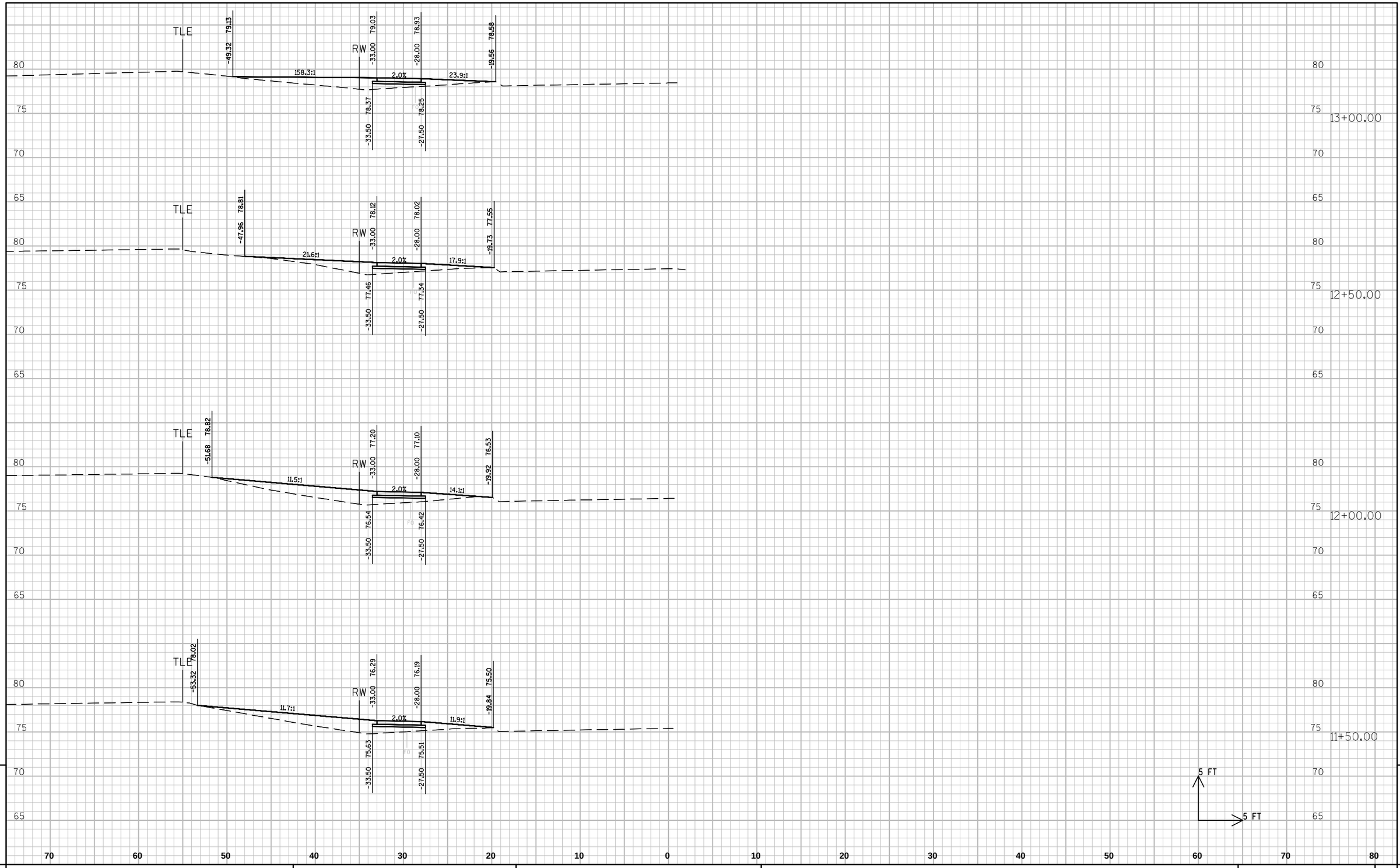

9

PROJECT NO: 4996-01-54	HWY: SIDEWALK GAP	COUNTY: SHEBOYGAN	CROSS SECTIONS: SEGMENT 9 GEORGIA AVE.	SHEET 173	E

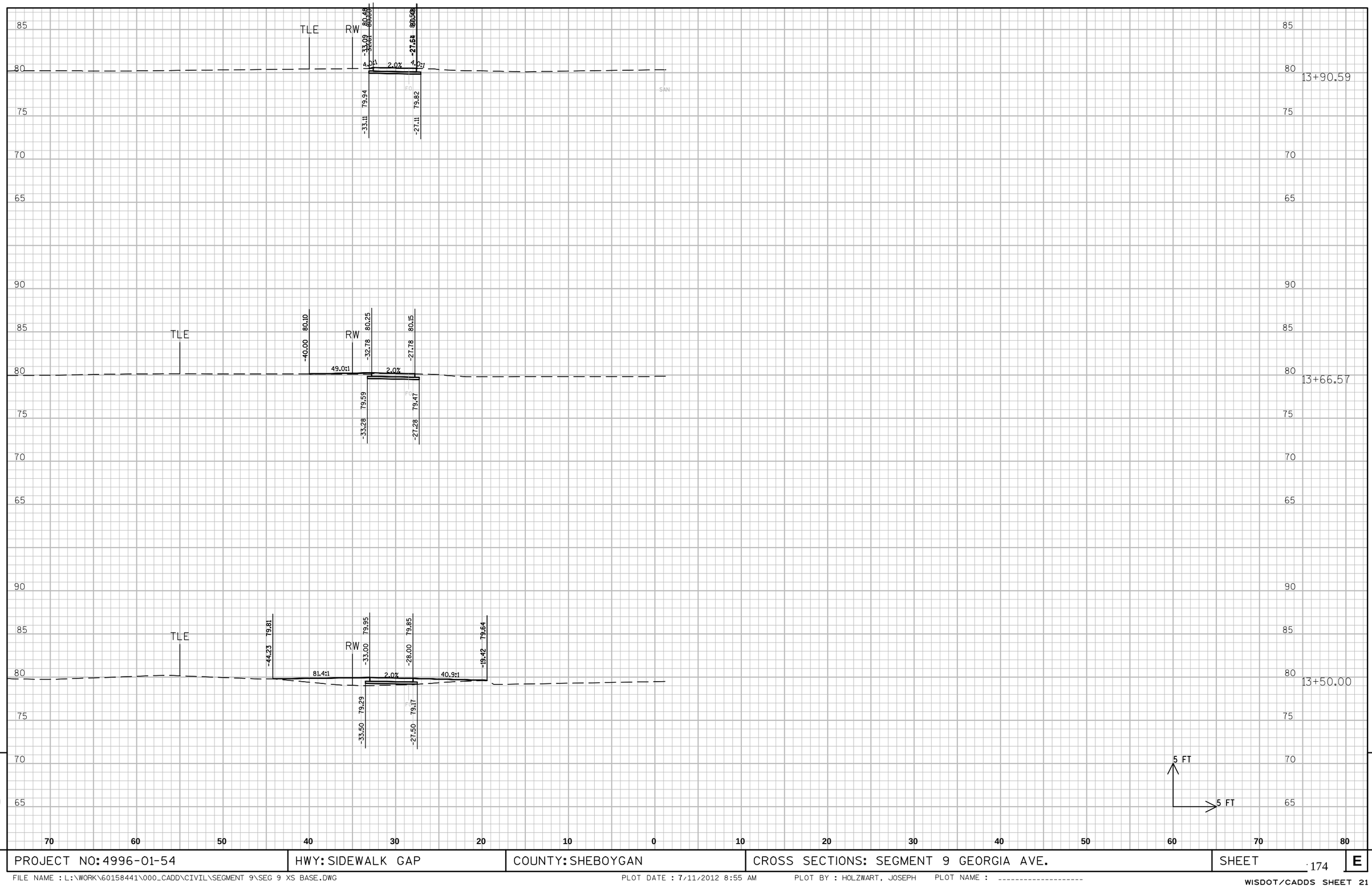

PROJECT NO: 4996-01-54	HWY: SIDEWALK GAP	COUNTY: SHEBOYGAN	CROSS SECTIONS: SEGMENT 9 GEORGIA AVE.	SHEET 174	E

FILE NAME : L:\WORK\60158441\000_CADD\CIVIL\SEGMENT 9\SEG 9 XS BASE.DWG PLOT DATE : 7/11/2012 8:55 AM PLOT BY : HOLZWART, JOSEPH PLOT NAME : ----------

WISDOT/CADDS SHEET 21

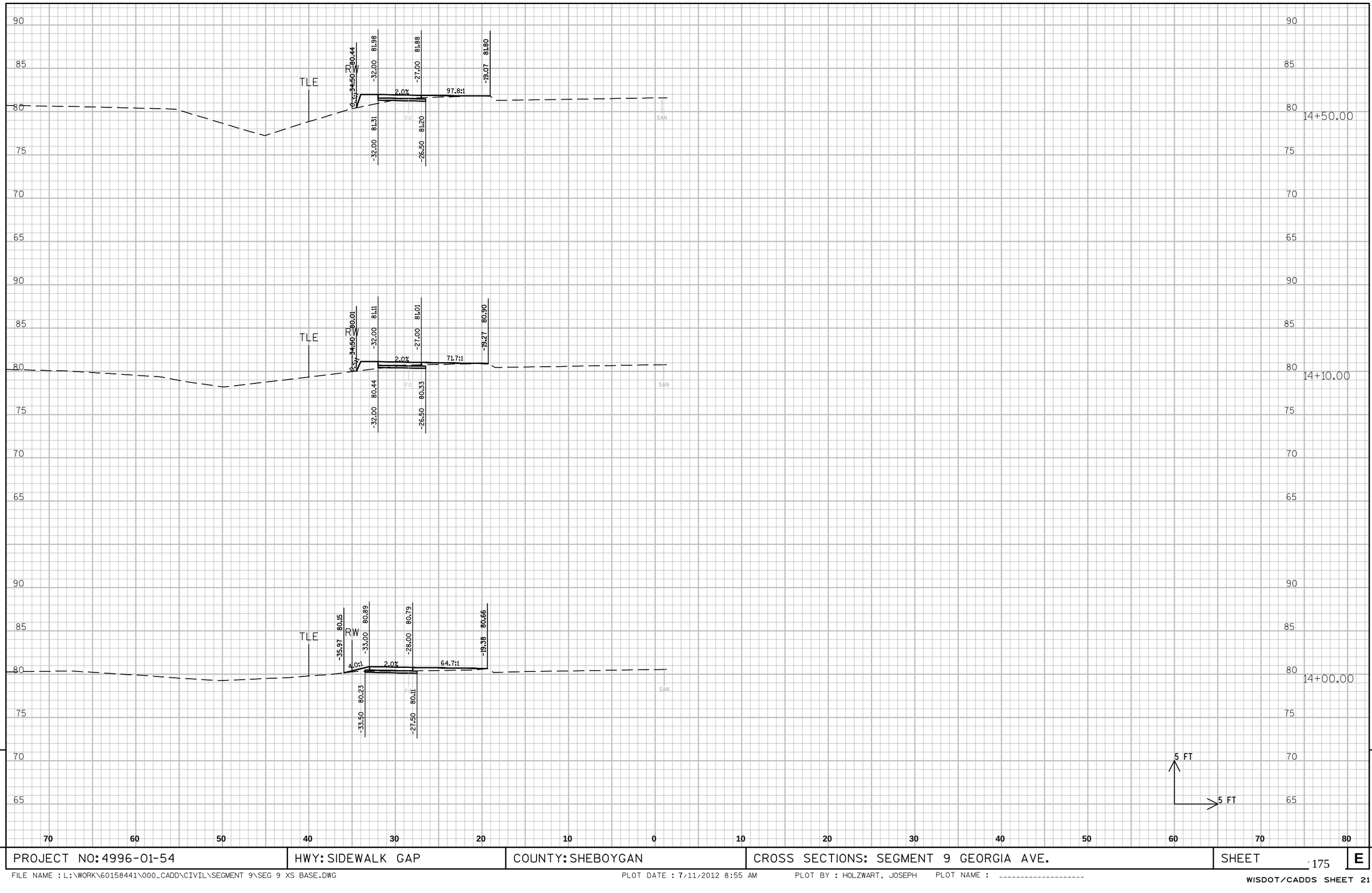

PROJECT NO: 4996-01-54	HWY: SIDEWALK GAP	COUNTY: SHEBOYGAN	CROSS SECTIONS: SEGMENT 9 GEORGIA AVE.	SHEET 175 E

FILE NAME : L:\WORK\60158441\000_CADD\CIVIL\SEGMENT 9\SEG 9 XS BASE.DWG PLOT DATE : 7/11/2012 8:55 AM PLOT BY : HOLZWART, JOSEPH PLOT NAME : ----------

WISDOT/CADDS SHEET 21

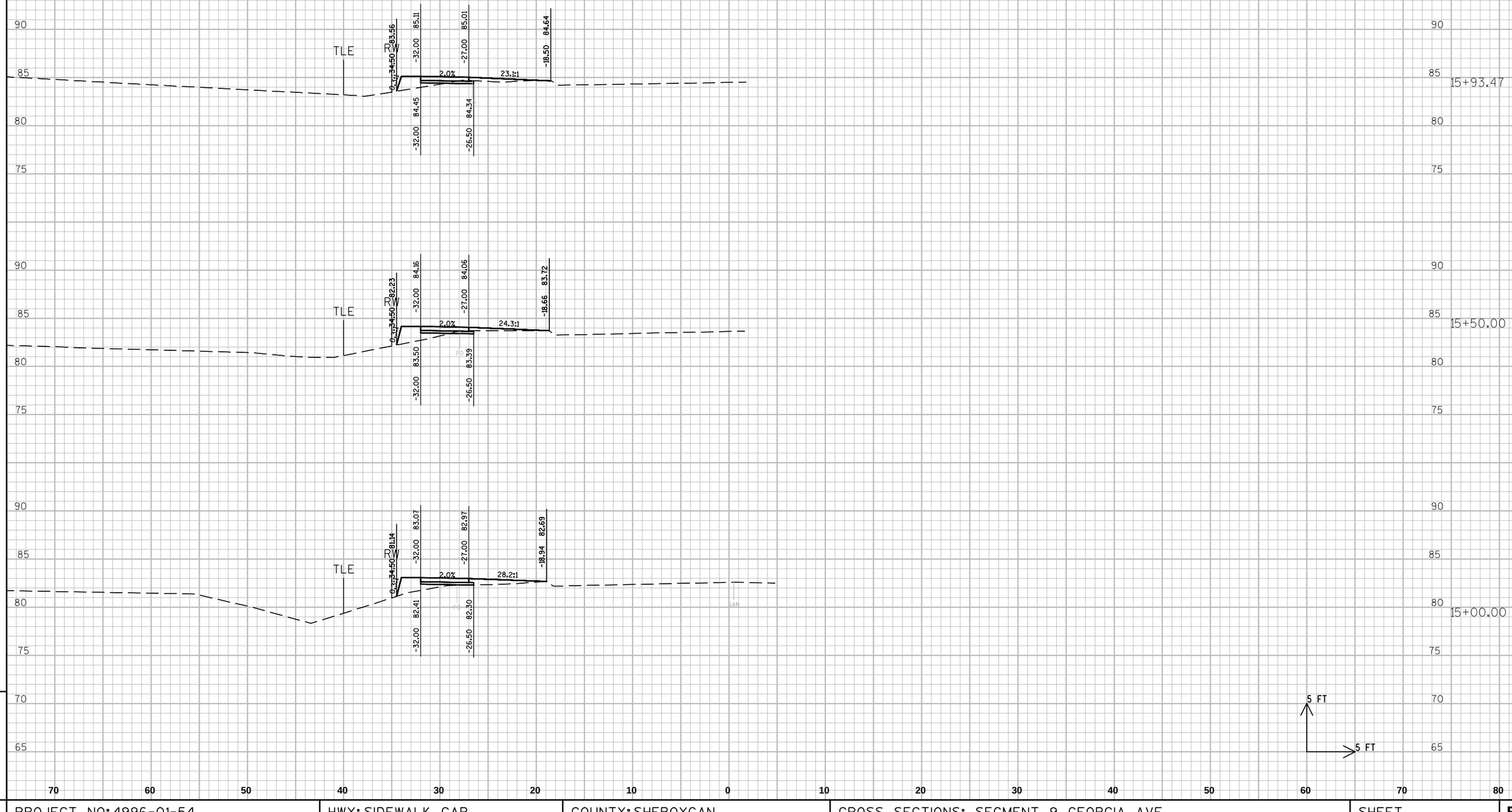

PROJECT NO: 4996-01-54	HWY: SIDEWALK GAP	COUNTY: SHEBOYGAN	CROSS SECTIONS: SEGMENT 9 GEORGIA AVE.	SHEET 176	E

FILE NAME : L:\WORK\60158441\000_CADD\CIVIL\SEGMENT 9\SEG 9 XS BASE.DWG PLOT DATE : 7/11/2012 8:55 AM PLOT BY : HOLZWART, JOSEPH PLOT NAME : ----------

WISDOT/CADDS SHEET 21

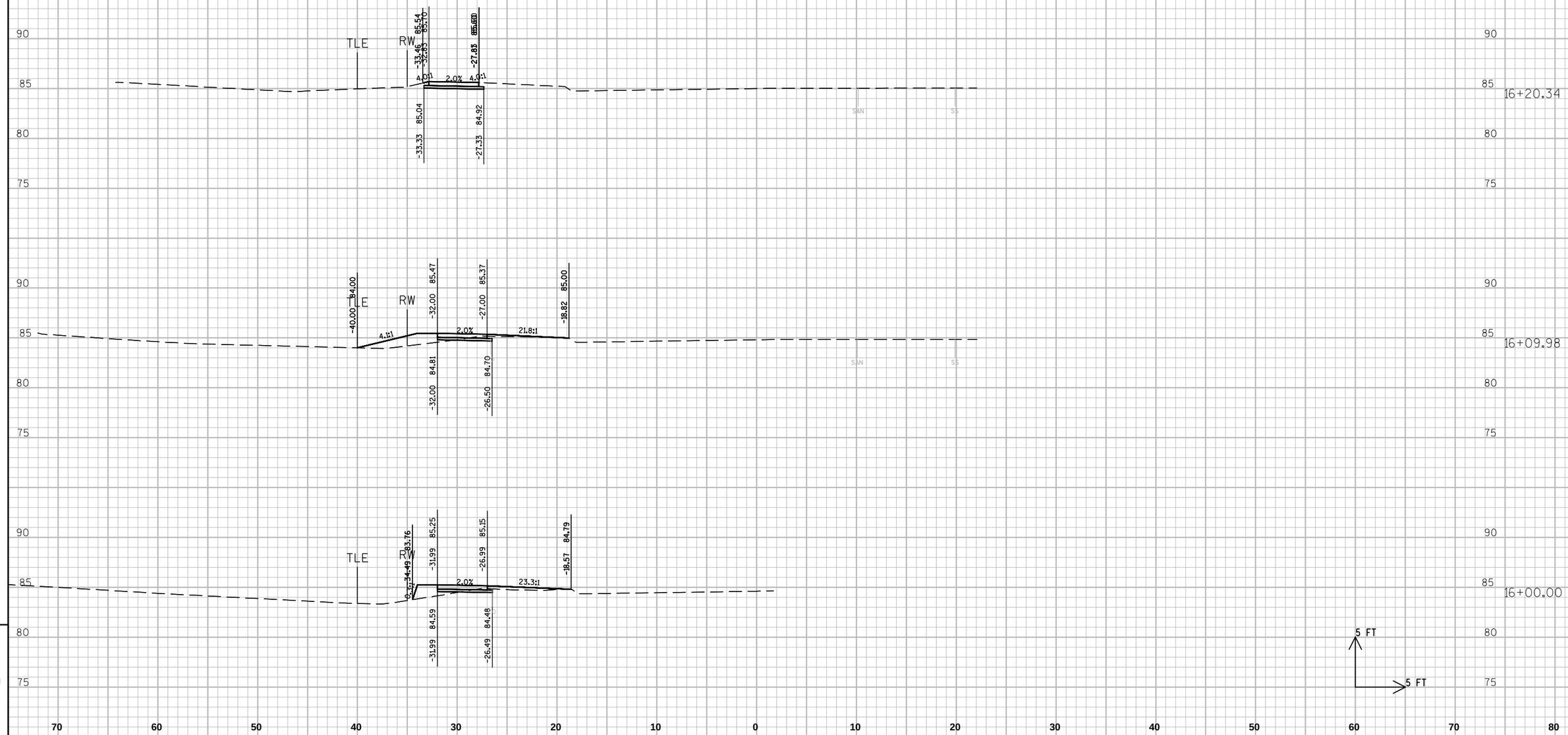

9

PROJECT NO: 4996-01-54	HWY: SIDEWALK GAP	COUNTY: SHEBOYGAN	CROSS SECTIONS: SEGMENT 9 GEORGIA AVE.	SHEET 177 E

9

FILE NAME : L:\WORK\60158441\000_CADD\CIVIL\SEGMENT 9\SEG 9 XS BASE.DWG PLOT DATE : 7/11/2012 8:55 AM PLOT BY : HOLZWART, JOSEPH PLOT NAME : ----------

WISDOT/CADDS SHEET 21

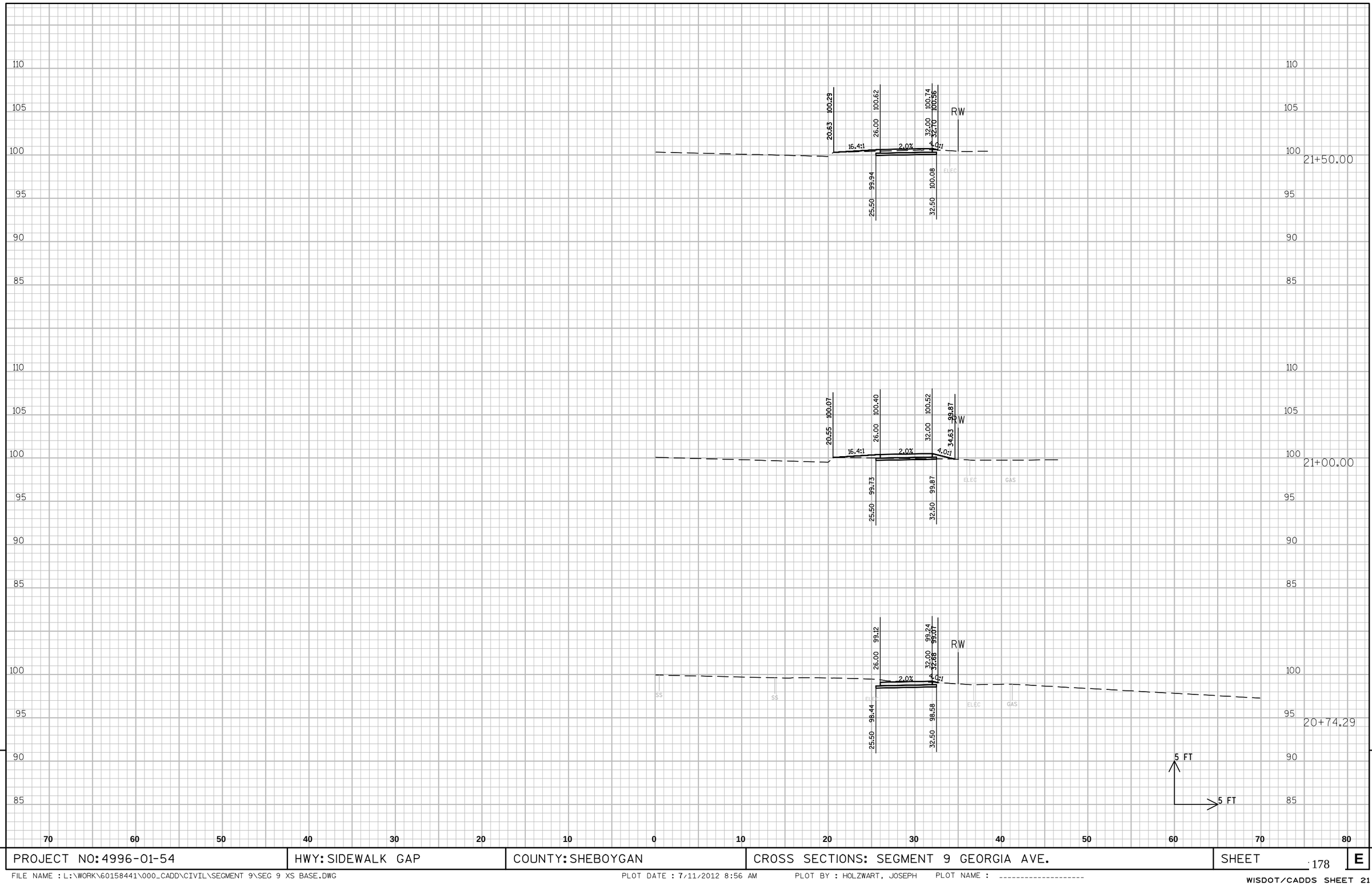

9

9

PROJECT NO: 4996-01-54	HWY: SIDEWALK GAP	COUNTY: SHEBOYGAN	CROSS SECTIONS: SEGMENT 9 GEORGIA AVE.	SHEET 178	E

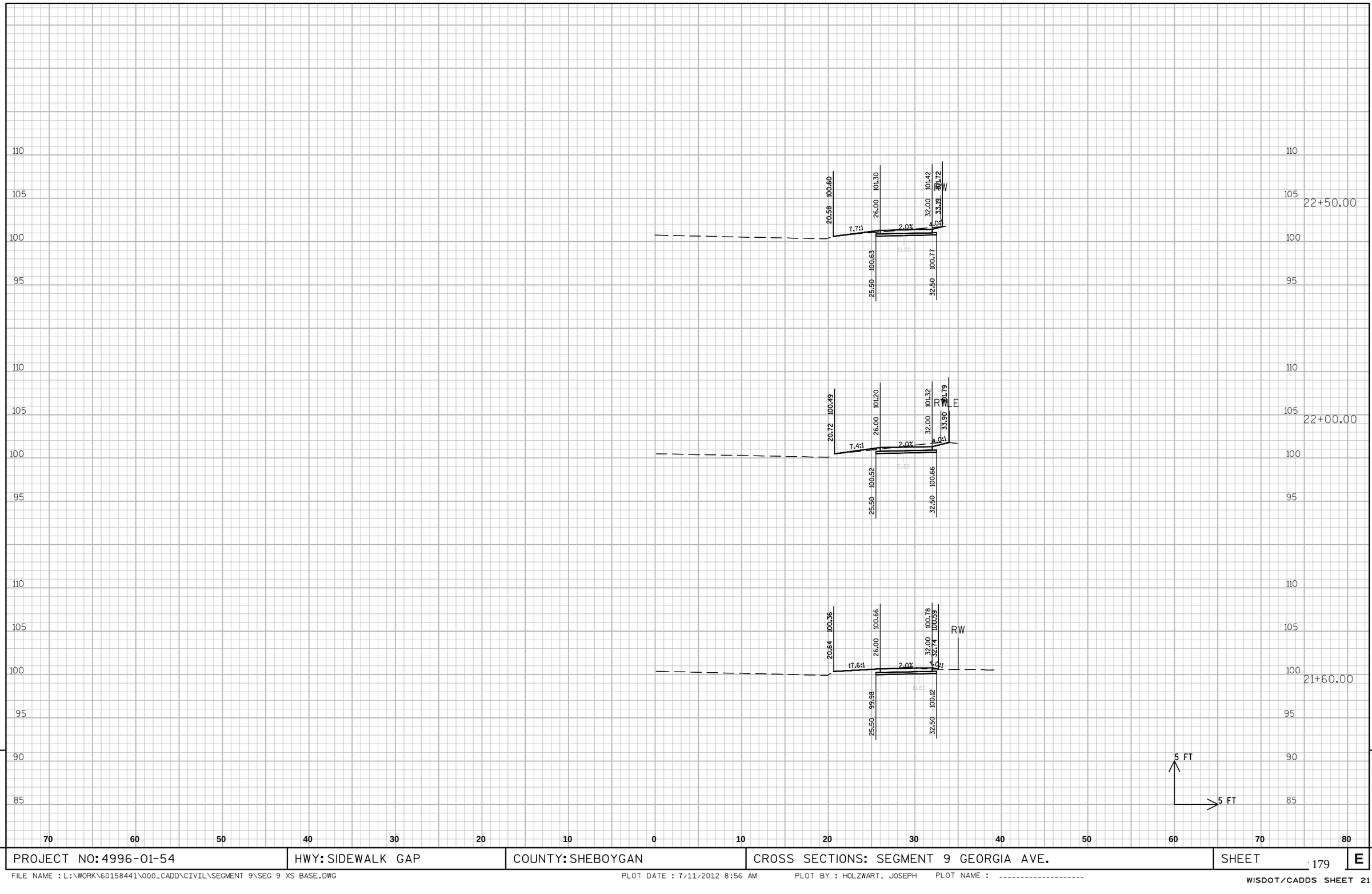

PROJECT NO: 4996-01-54	HWY: SIDEWALK GAP	COUNTY: SHEBOYGAN	CROSS SECTIONS: SEGMENT 9 GEORGIA AVE.	SHEET 179	E

FILE NAME : L:\WORK\60158441\000_CADD\CIVIL\SEGMENT 9\SEG 9 XS BASE.DWG PLOT DATE : 7/11/2012 8:56 AM PLOT BY : HOLZWART, JOSEPH PLOT NAME : ----------

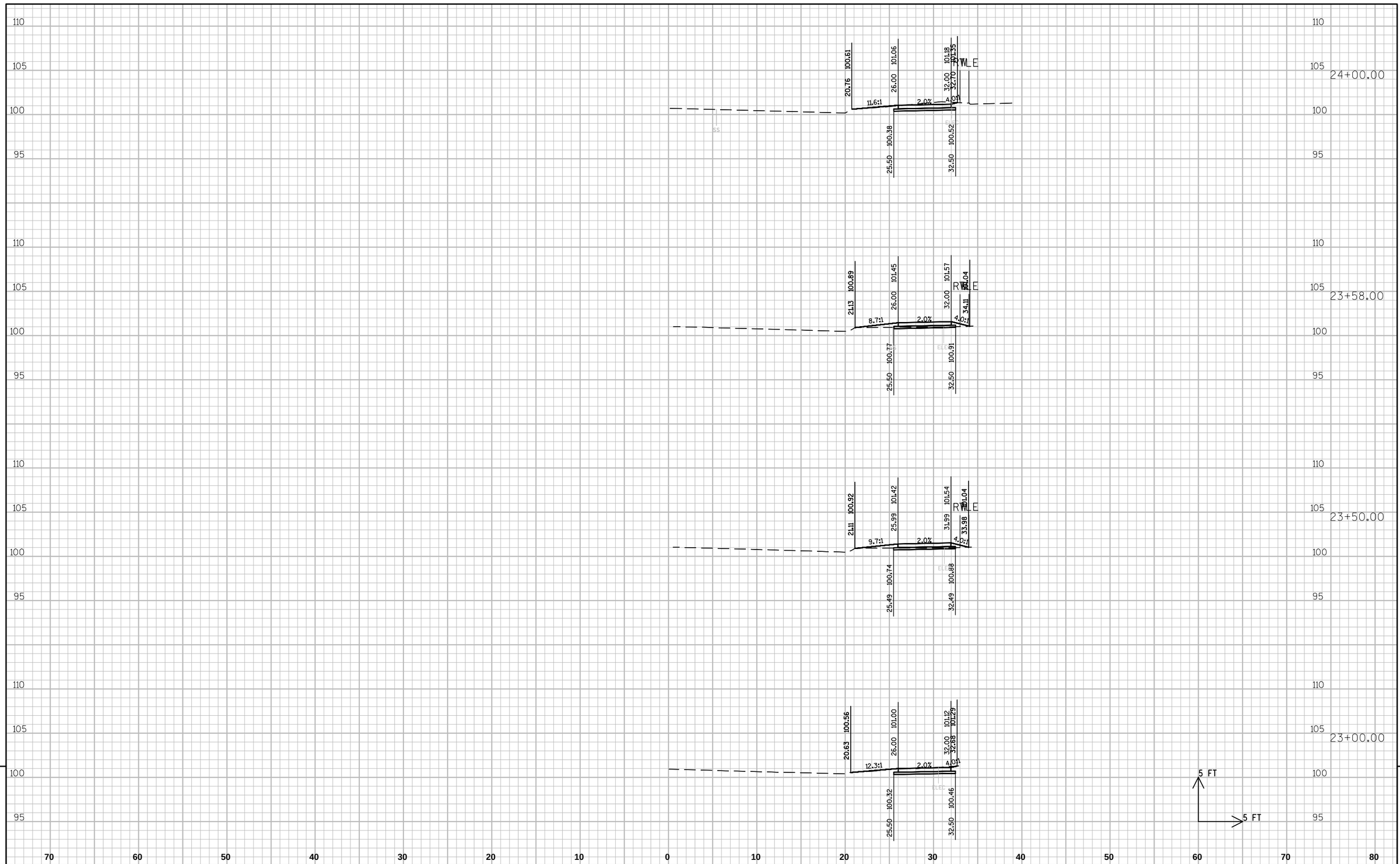

PROJECT NO: 4996-01-54	HWY: SIDEWALK GAP	COUNTY: SHEBOYGAN	CROSS SECTIONS: SEGMENT 9 GEORGIA AVE.	SHEET 180	E

FILE NAME : L:\WORK\60158441\000_CADD\CIVIL\SEGMENT 9\SEG 9 XS BASE.DWG PLOT DATE : 7/11/2012 8:56 AM PLOT BY : HOLZWART, JOSEPH PLOT NAME : ----------

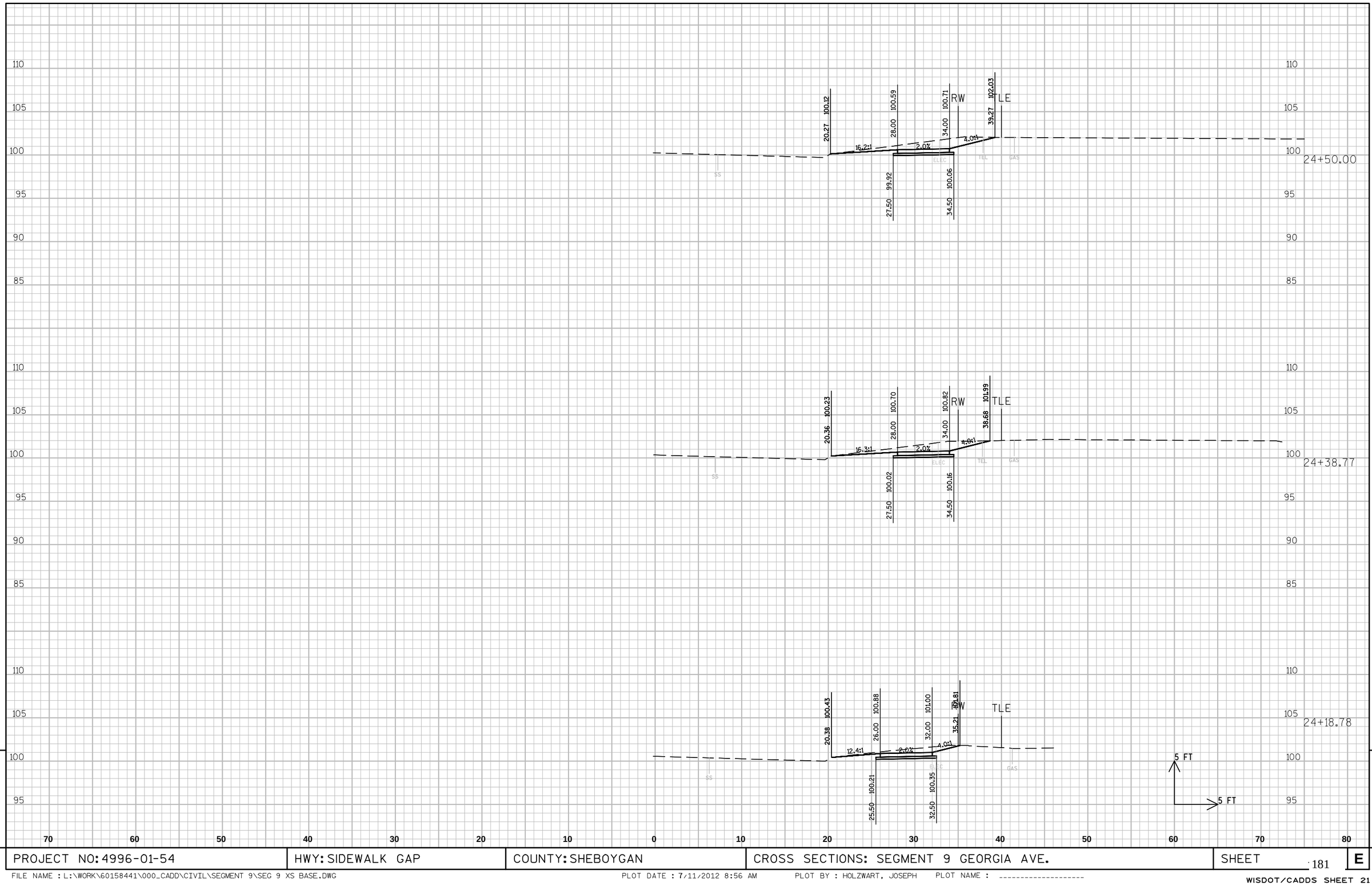

9

9

PROJECT NO: 4996-01-54	HWY: SIDEWALK GAP	COUNTY: SHEBOYGAN	CROSS SECTIONS: SEGMENT 9 GEORGIA AVE.	SHEET 181	E

FILE NAME : L:\WORK\60158441\000_CADD\CIVIL\SEGMENT 9\SEG 9 XS BASE.DWG PLOT DATE : 7/11/2012 8:56 AM PLOT BY : HOLZWART, JOSEPH PLOT NAME : ----------

WISDOT/CADDS SHEET 21

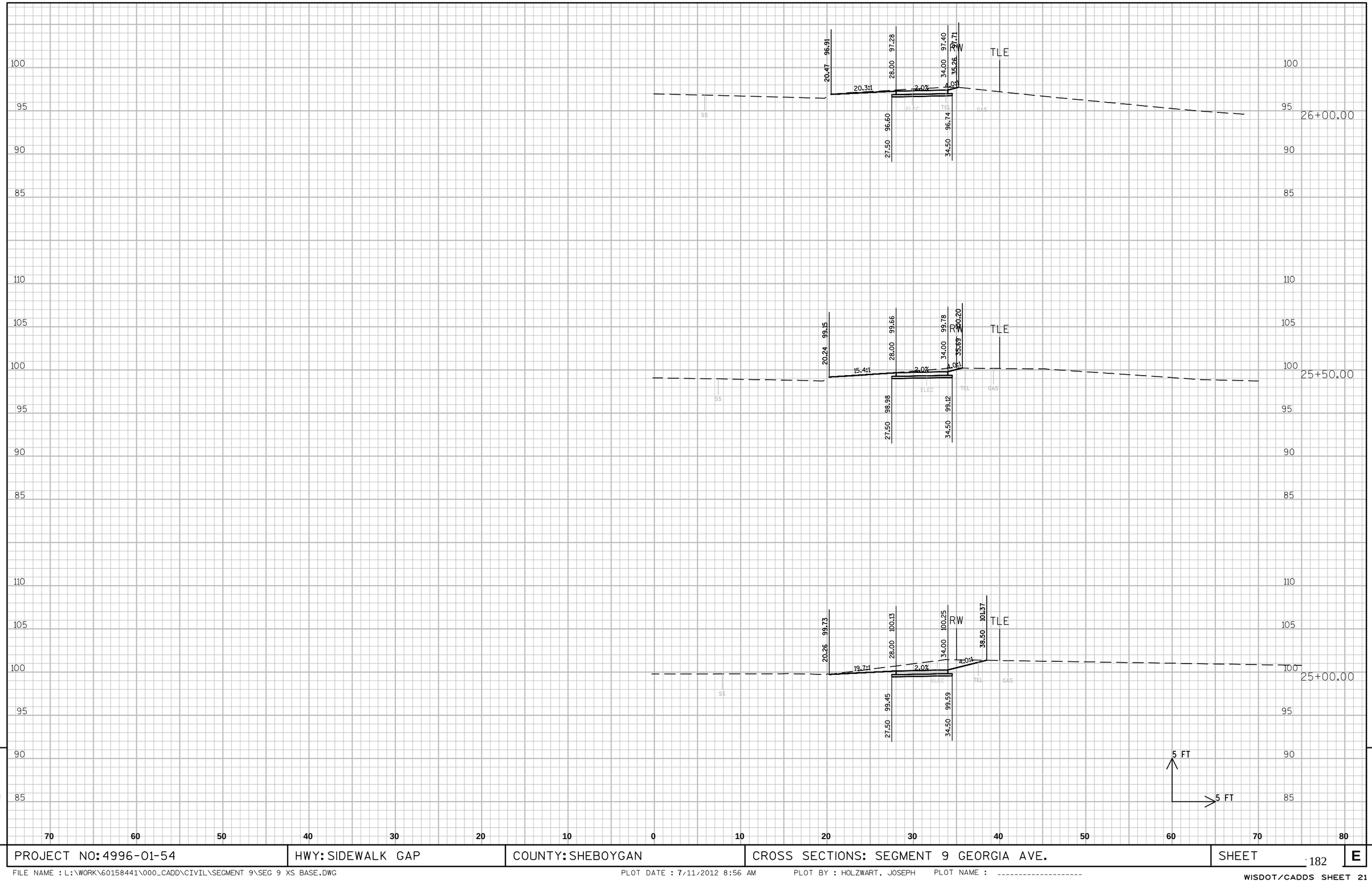

9

9

PROJECT NO: 4996-01-54	HWY: SIDEWALK GAP	COUNTY: SHEBOYGAN	CROSS SECTIONS: SEGMENT 9 GEORGIA AVE.	SHEET 182	E

FILE NAME : L:\WORK\60158441\000_CADD\CIVIL\SEGMENT 9\SEG 9 XS BASE.DWG PLOT DATE : 7/11/2012 8:56 AM PLOT BY : HOLZWART, JOSEPH PLOT NAME : ----------

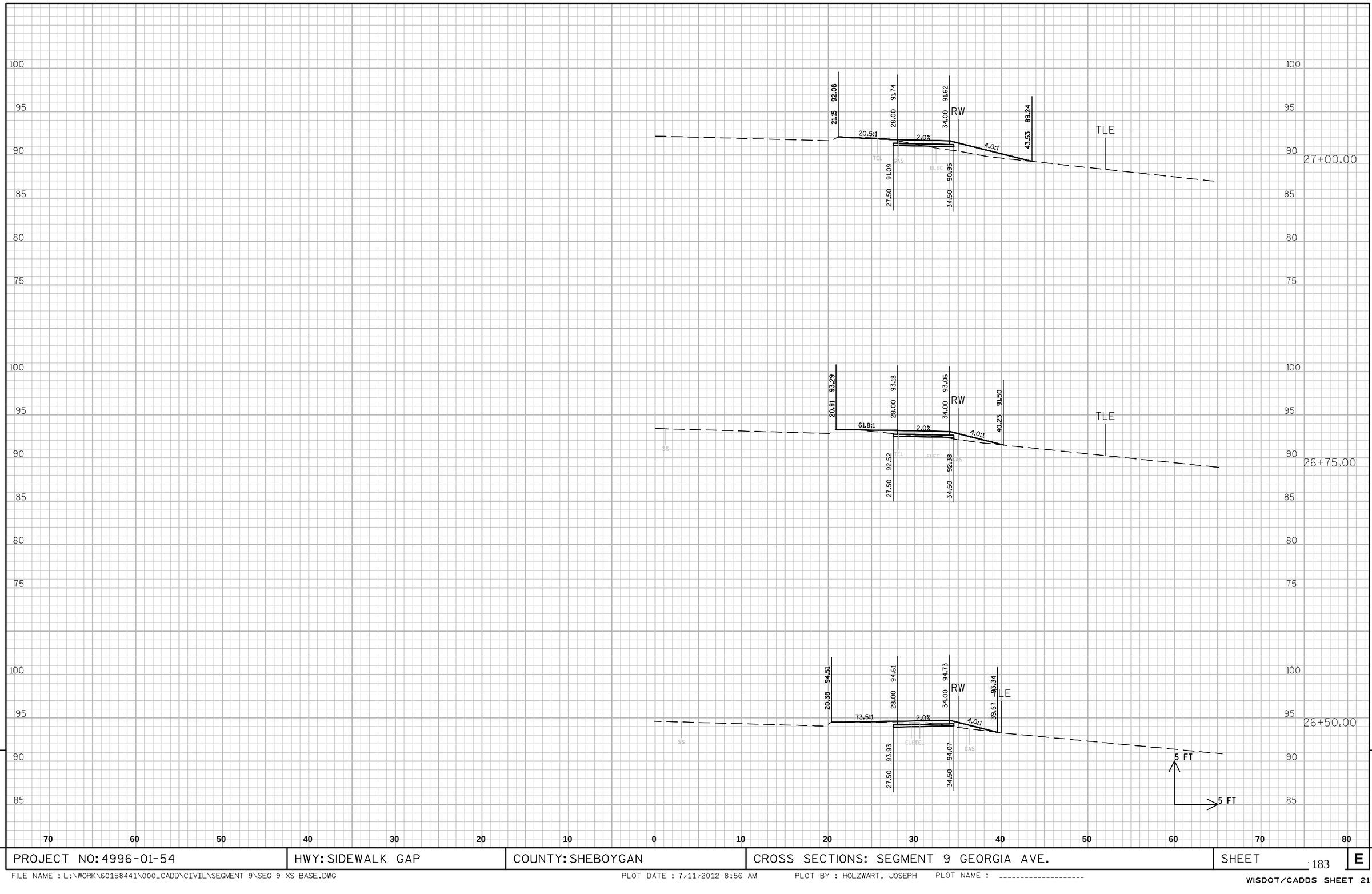

PROJECT NO: 4996-01-54	HWY: SIDEWALK GAP	COUNTY: SHEBOYGAN	CROSS SECTIONS: SEGMENT 9 GEORGIA AVE.	SHEET 183 E

FILE NAME : L:\WORK\60158441\000_CADD\CIVIL\SEGMENT 9\SEG 9 XS BASE.DWG PLOT DATE : 7/11/2012 8:56 AM PLOT BY : HOLZWART, JOSEPH PLOT NAME : ----------

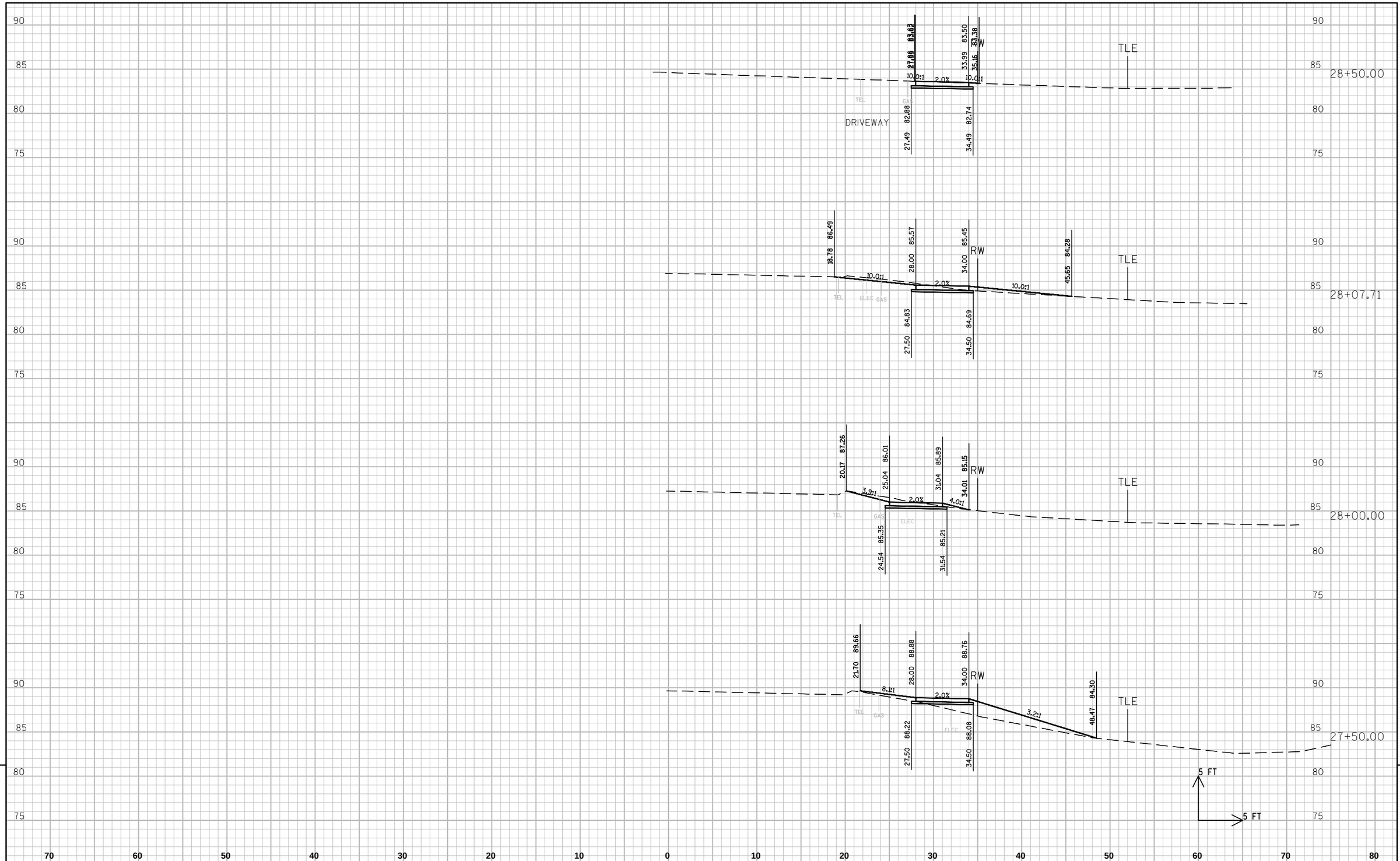

9

PROJECT NO: 4996-01-54	HWY: SIDEWALK GAP	COUNTY: SHEBOYGAN	CROSS SECTIONS: SEGMENT 9 GEORGIA AVE.	SHEET 184	E

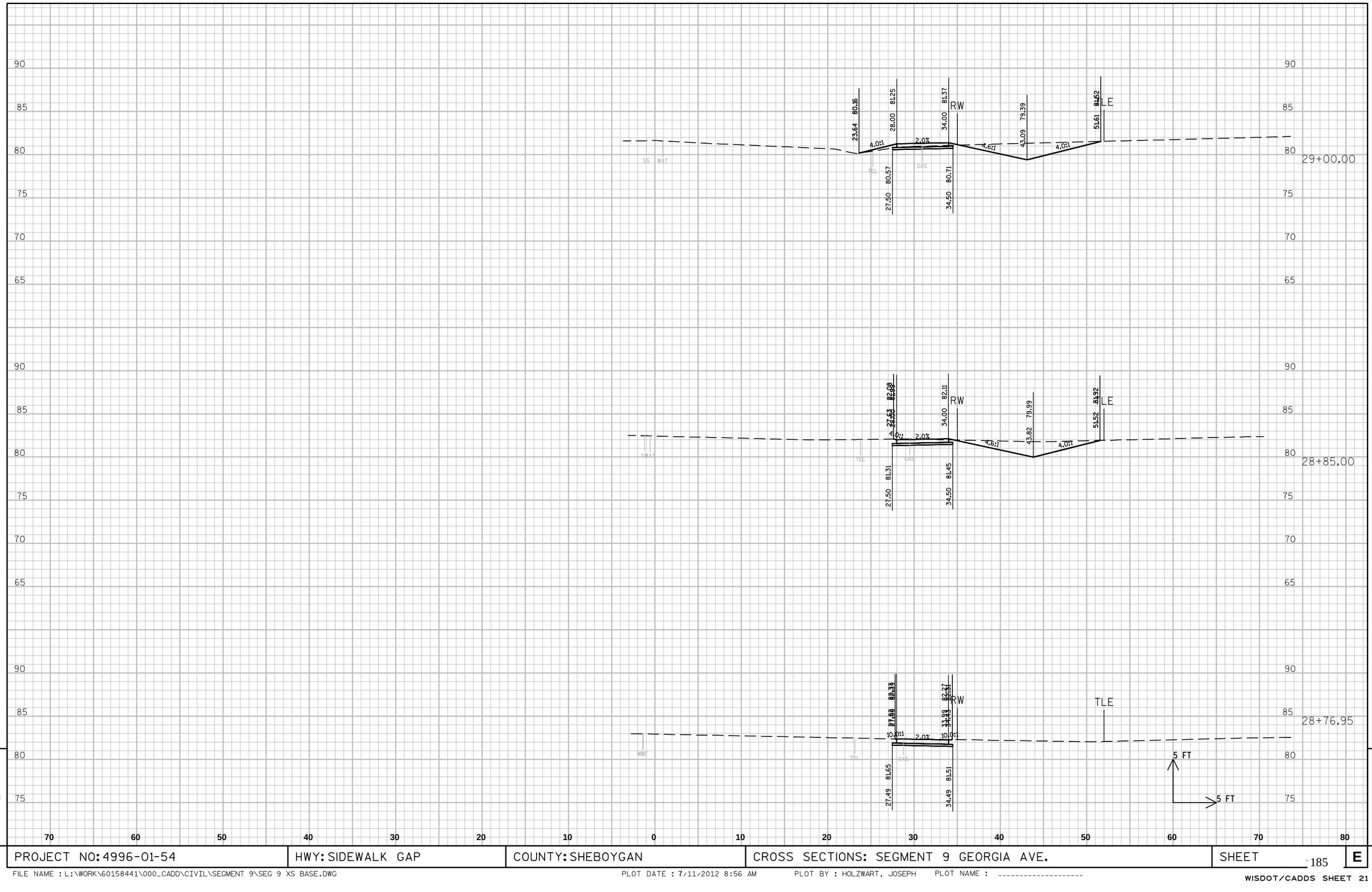

PROJECT NO: 4996-01-54	HWY: SIDEWALK GAP	COUNTY: SHEBOYGAN	CROSS SECTIONS: SEGMENT 9 GEORGIA AVE.	SHEET 185 E

FILE NAME : L:\WORK\60158441\000_CADD\CIVIL\SEGMENT 9\SEG 9 XS BASE.DWG PLOT DATE : 7/11/2012 8:56 AM PLOT BY : HOLZWART, JOSEPH PLOT NAME : ----------

WISDOT/CADDS SHEET 21

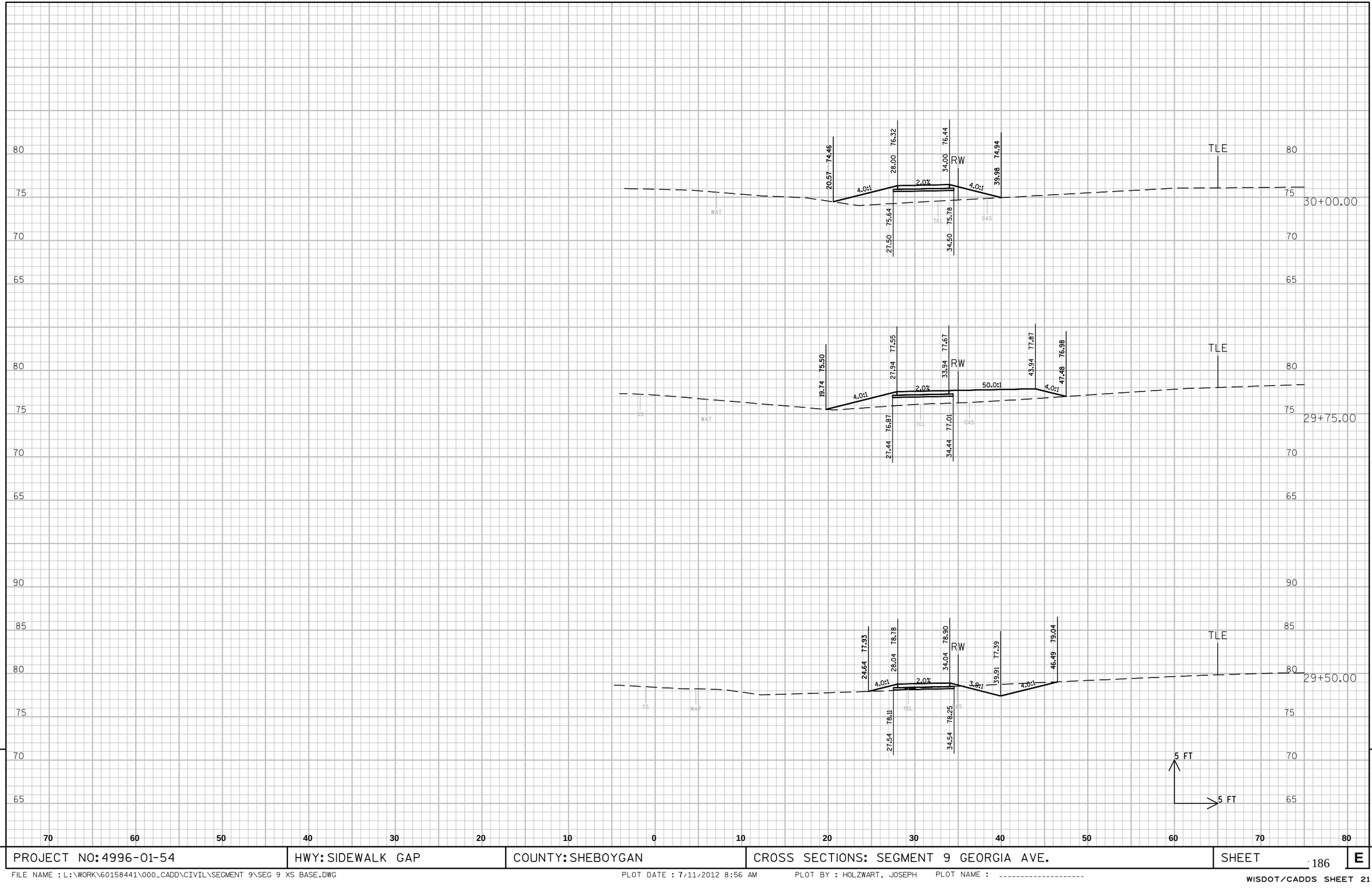

9

9

PROJECT NO: 4996-01-54	HWY: SIDEWALK GAP	COUNTY: SHEBOYGAN	CROSS SECTIONS: SEGMENT 9 GEORGIA AVE.	SHEET 186	E

FILE NAME : L:\WORK\60158441\000_CADD\CIVIL\SEGMENT 9\SEG 9 XS BASE.DWG PLOT DATE : 7/11/2012 8:56 AM PLOT BY : HOLZWART, JOSEPH PLOT NAME : ----------

WISDOT/CADDS SHEET 21

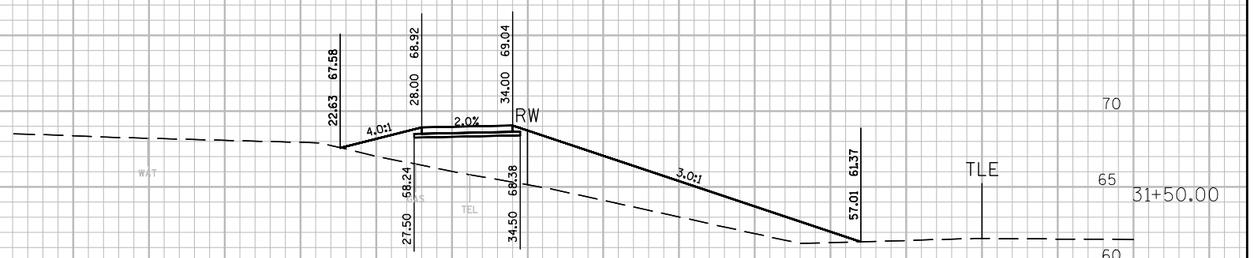

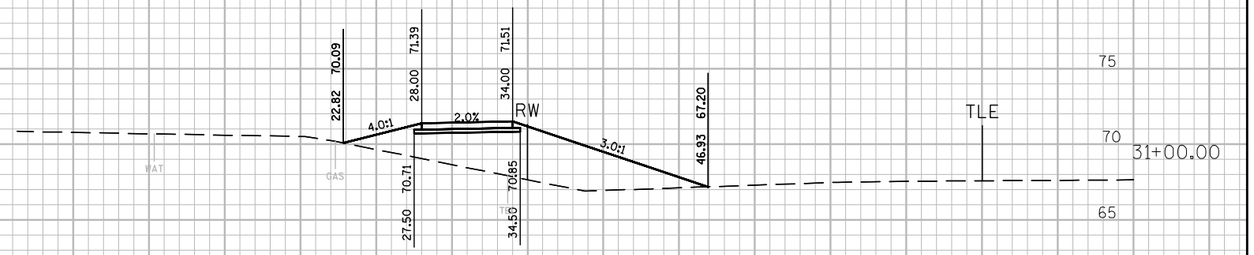

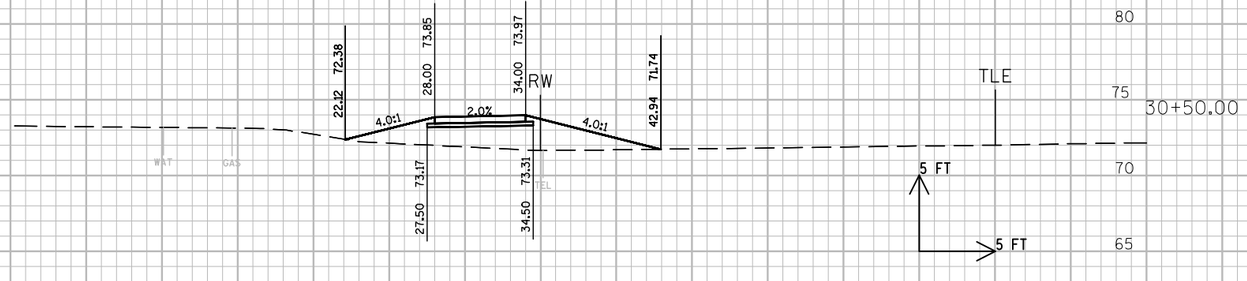

9

9

PROJECT NO: 4996-01-54	HWY: SIDEWALK GAP	COUNTY: SHEBOYGAN	CROSS SECTIONS: SEGMENT 9 GEORGIA AVE.	SHEET	E

FILE NAME : L:\WORK\60158441\000_CADD\CIVIL\SEGMENT 9\SEG 9 XS BASE.DWG PLOT DATE : 7/11/2012 8:57 AM PLOT BY : HOLZWART, JOSEPH PLOT NAME : ----------

WISDOT/CADDS SHEET 21

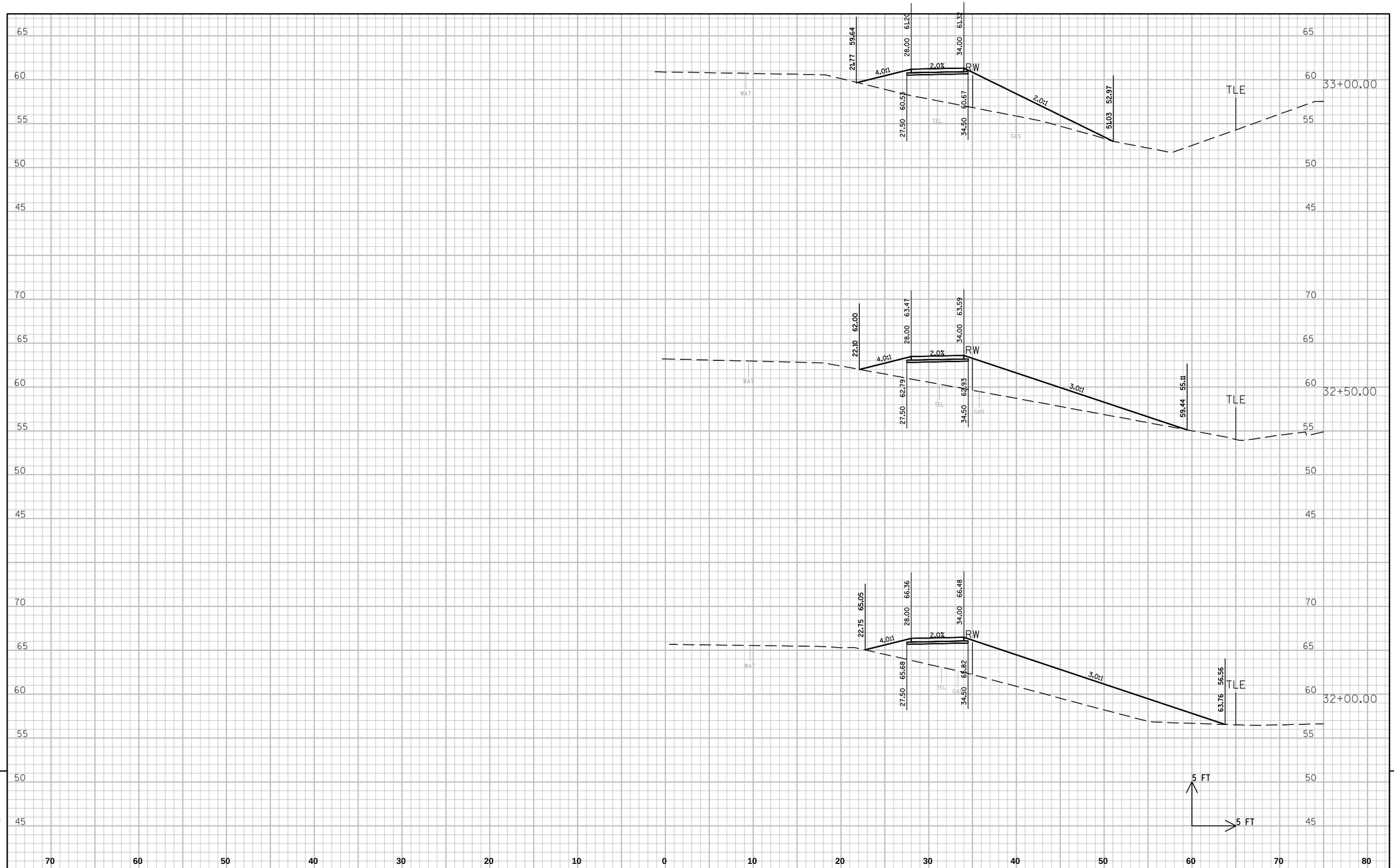

PROJECT NO: 4996-01-54	HWY: SIDEWALK GAP	COUNTY: SHEBOYGAN	CROSS SECTIONS: SEGMENT 9 GEORGIA AVE.	SHEET 188	E

FILE NAME : L:\WORK\60158441\000_CADD\CIVIL\SEGMENT 9\SEG 9 XS BASE.DWG PLOT DATE : 7/11/2012 8:57 AM PLOT BY : HOLZWART, JOSEPH PLOT NAME : ----------

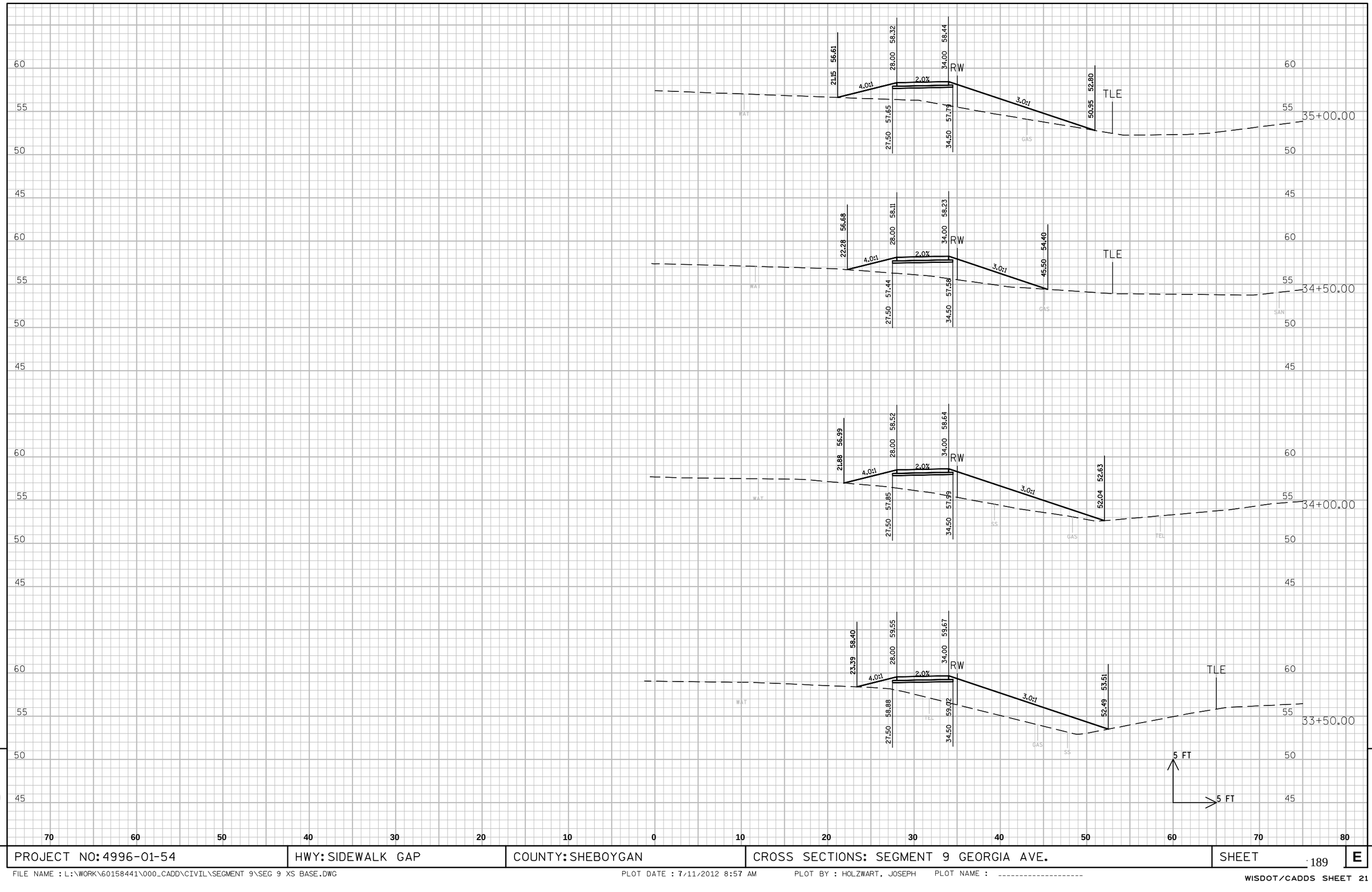

9

PROJECT NO: 4996-01-54	HWY: SIDEWALK GAP	COUNTY: SHEBOYGAN	CROSS SECTIONS: SEGMENT 9 GEORGIA AVE.	SHEET	E

FILE NAME : L:\WORK\60158441\000_CADD\CIVIL\SEGMENT 9\SEG 9 XS BASE.DWG PLOT DATE : 7/11/2012 8:57 AM PLOT BY : HOLZWART, JOSEPH PLOT NAME : ----------

WISDOT/CADDS SHEET 21

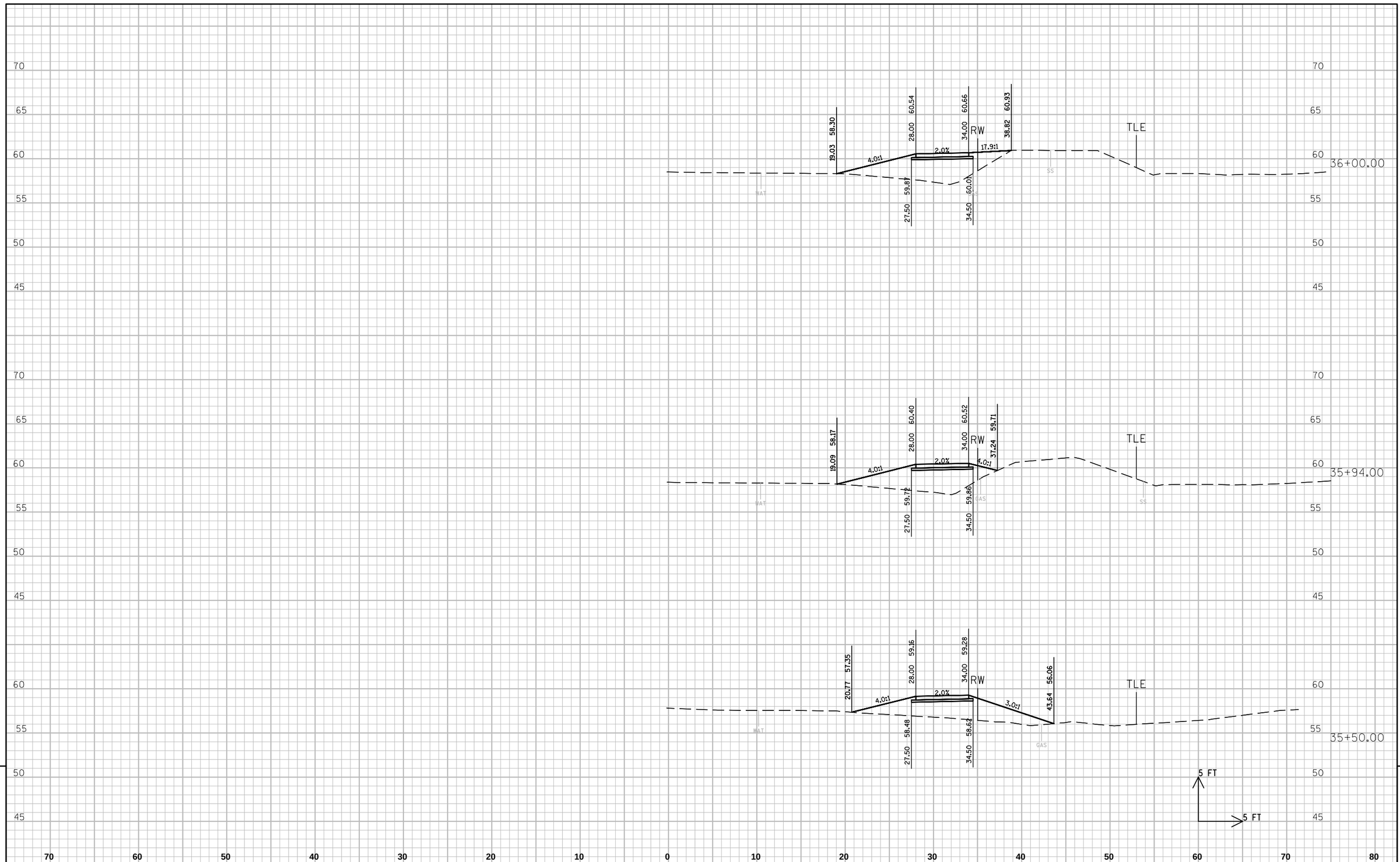

PROJECT NO: 4996-01-54	HWY: SIDEWALK GAP	COUNTY: SHEBOYGAN	CROSS SECTIONS: SEGMENT 9 GEORGIA AVE.	SHEET 190	E

FILE NAME : L:\WORK\60158441\000_CADD\CIVIL\SEGMENT 9\SEG 9 XS BASE.DWG PLOT DATE : 7/11/2012 8:57 AM PLOT BY : HOLZWART, JOSEPH PLOT NAME : ----------

WISDOT/CADDS SHEET 21

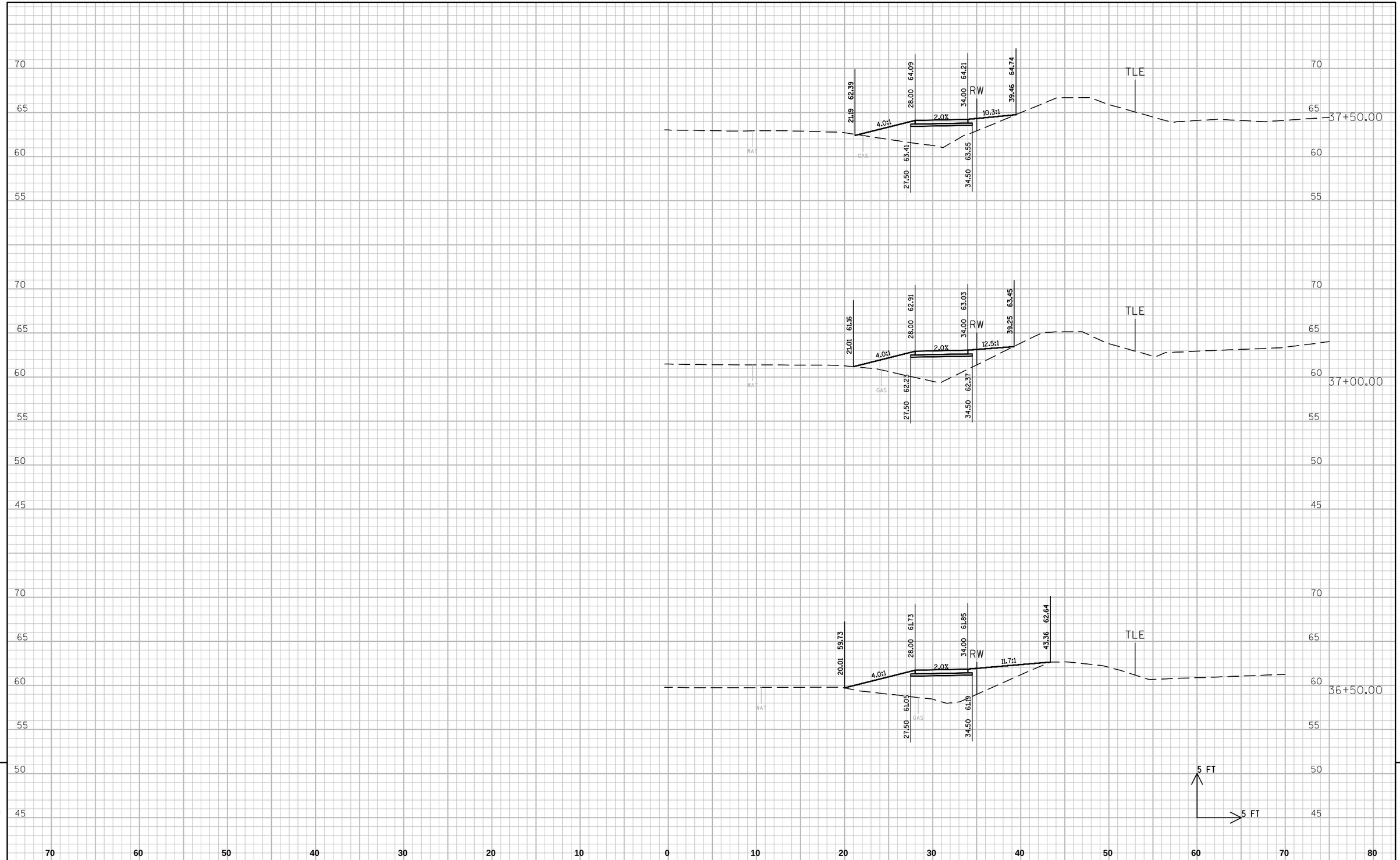

PROJECT NO: 4996-01-54	HWY: SIDEWALK GAP	COUNTY: SHEBOYGAN	CROSS SECTIONS: SEGMENT 9 GEORGIA AVE.	SHEET 191 E

FILE NAME : L:\WORK\60158441\000_CADD\CIVIL\SEGMENT 9\SEG 9 XS BASE.DWG PLOT DATE : 7/11/2012 8:57 AM PLOT BY : HOLZWART, JOSEPH PLOT NAME : ----------

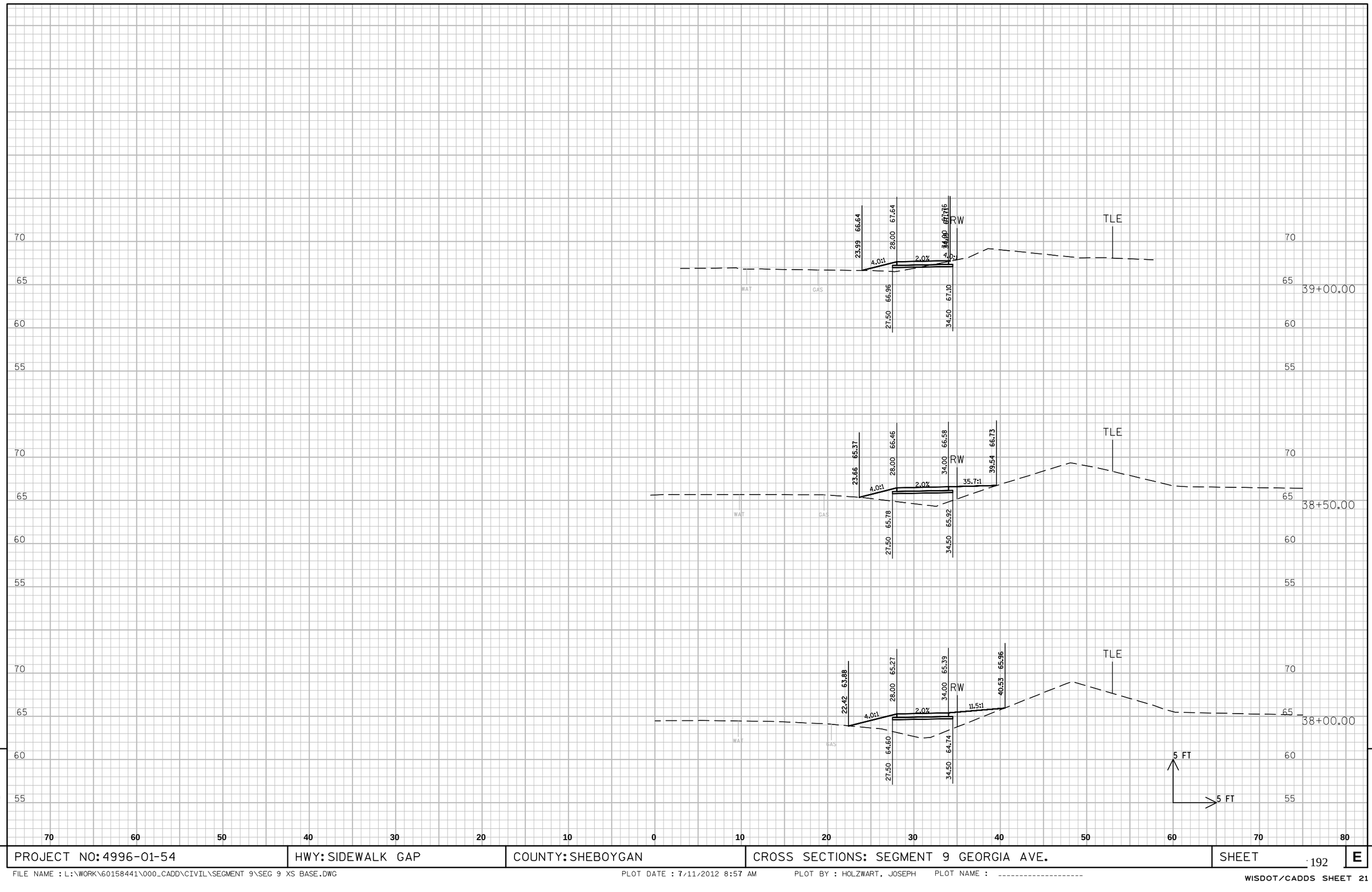

PROJECT NO: 4996-01-54	HWY: SIDEWALK GAP	COUNTY: SHEBOYGAN	CROSS SECTIONS: SEGMENT 9 GEORGIA AVE.	SHEET	E

FILE NAME : L:\WORK\60158441\000_CADD\CIVIL\SEGMENT 9\SEG 9 XS BASE.DWG PLOT DATE : 7/11/2012 8:57 AM PLOT BY : HOLZWART, JOSEPH PLOT NAME : ----------

WISDOT/CADDS SHEET 21

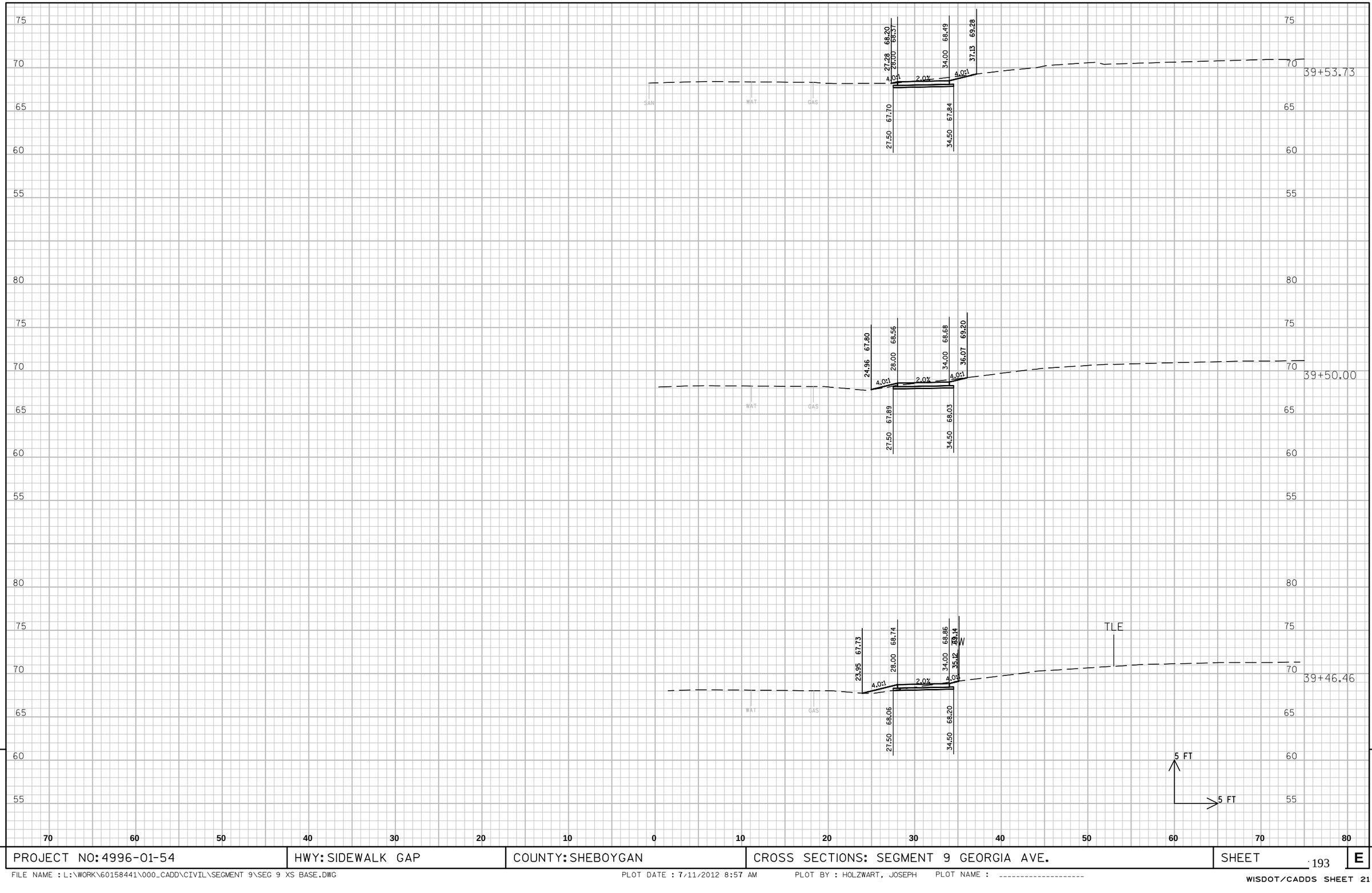

PROJECT NO: 4996-01-54	HWY: SIDEWALK GAP	COUNTY: SHEBOYGAN	CROSS SECTIONS: SEGMENT 9 GEORGIA AVE.	SHEET 193 E

FILE NAME : L:\WORK\60158441\000_CADD\CIVIL\SEGMENT 9\SEG 9 XS BASE.DWG PLOT DATE : 7/11/2012 8:57 AM PLOT BY : HOLZWART, JOSEPH PLOT NAME : ----------

WISDOT/CADDS SHEET 21

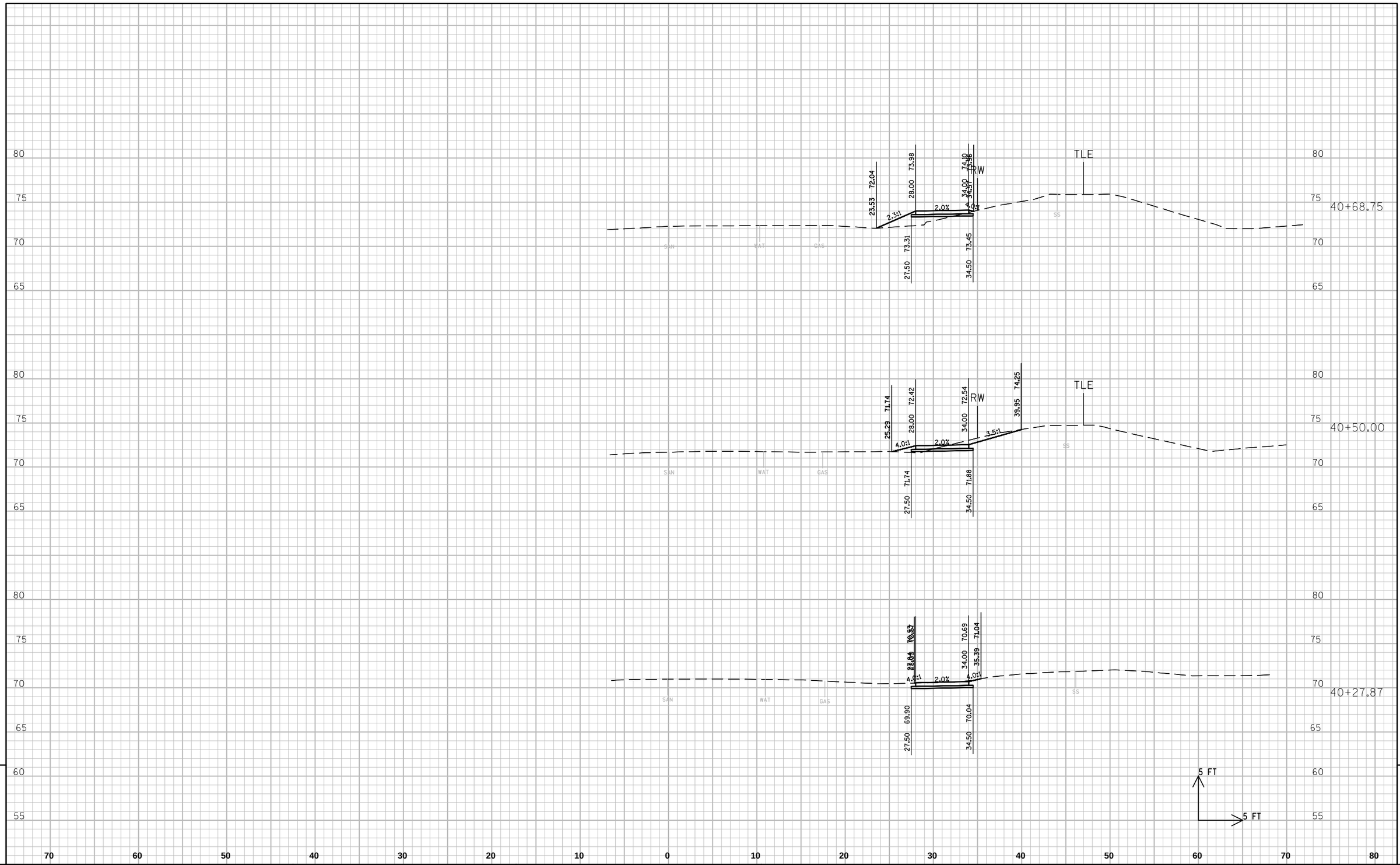

9	PROJECT NO: 4996-01-54	HWY: SIDEWALK GAP	COUNTY: SHEBOYGAN	CROSS SECTIONS: SEGMENT 9 GEORGIA AVE.	SHEET 194 E

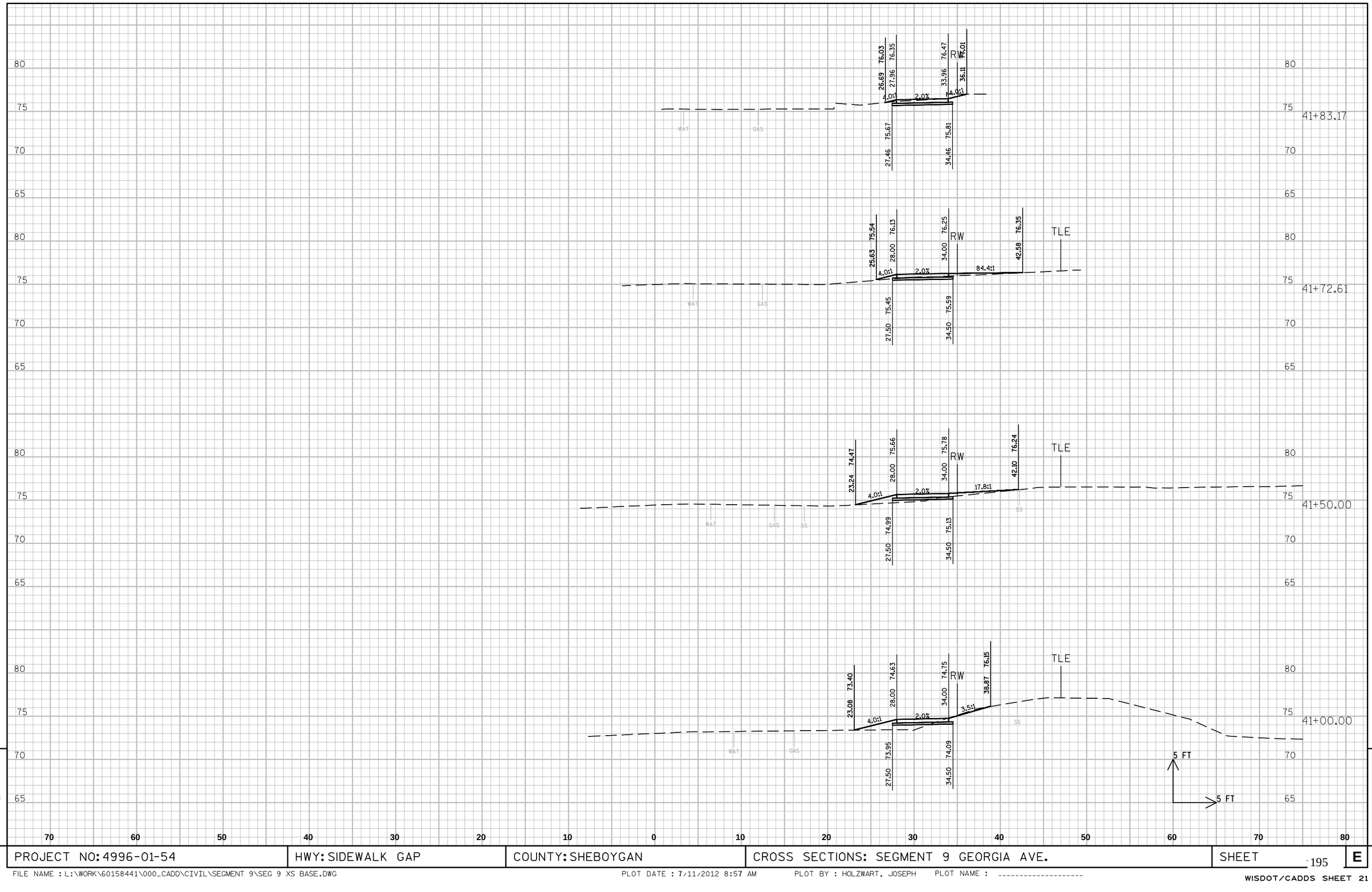

9

9

PROJECT NO: 4996-01-54	HWY: SIDEWALK GAP	COUNTY: SHEBOYGAN	CROSS SECTIONS: SEGMENT 9 GEORGIA AVE.	SHEET 195	E

FILE NAME : L:\WORK\60158441\000_CADD\CIVIL\SEGMENT 9\SEG 9 XS BASE.DWG PLOT DATE : 7/11/2012 8:57 AM PLOT BY : HOLZWART, JOSEPH PLOT NAME : ----------

WISDOT/CADDS SHEET 21

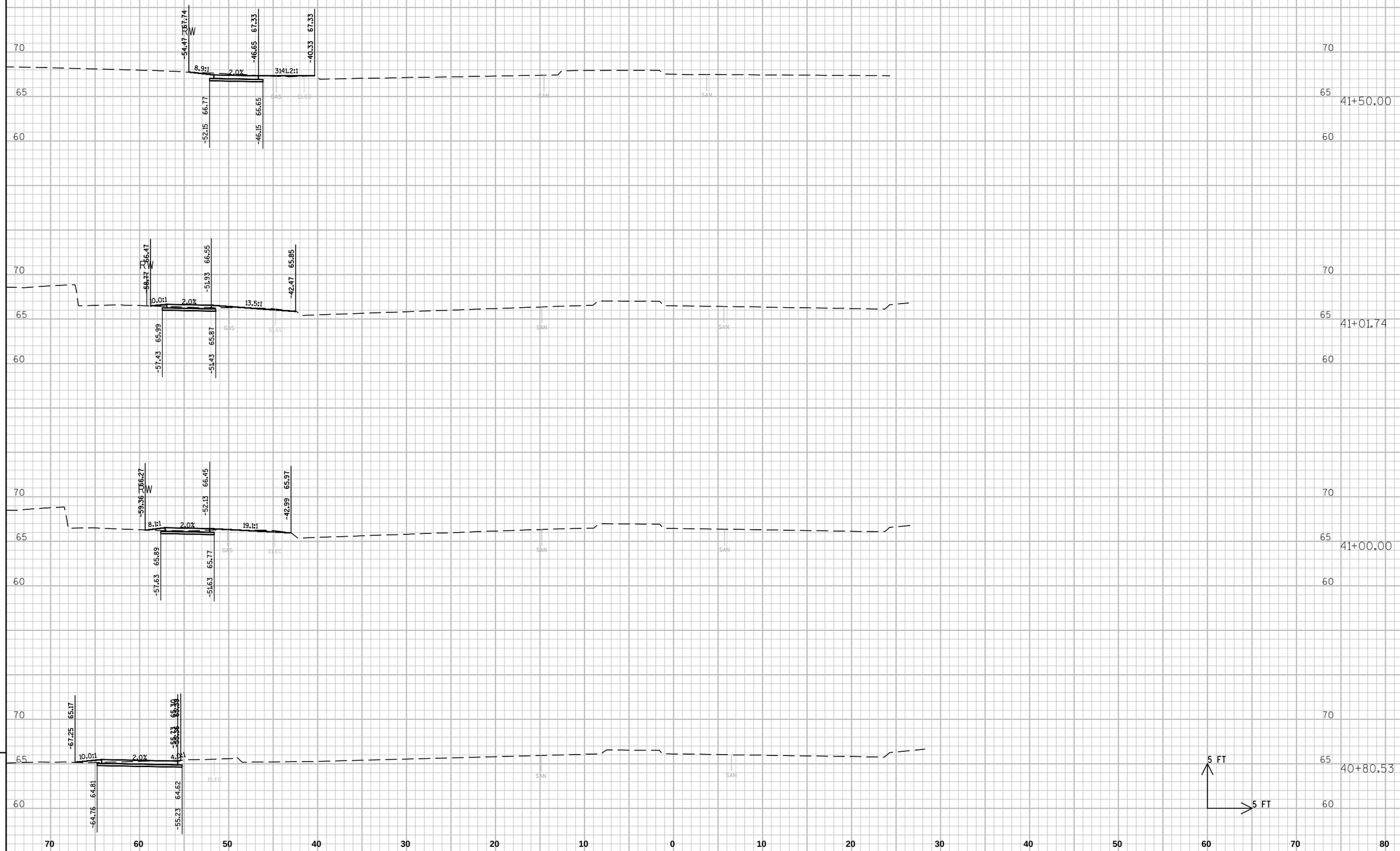

9

PROJECT NO: 4996-01-54	HWY: SIDEWALK GAP	COUNTY: SHEBOYGAN	CROSS SECTIONS: SEGMENT 10 WASHINGTON AVE.	SHEET 196	E

9

FILE NAME : L:\WORK\60158441\000_CADD\CIVIL\SEGMENT 10\SEG 10 XS BASE.DWG PLOT DATE : 7/11/2012 9:28 AM PLOT BY : HOLZWART, JOSEPH PLOT NAME : ----------

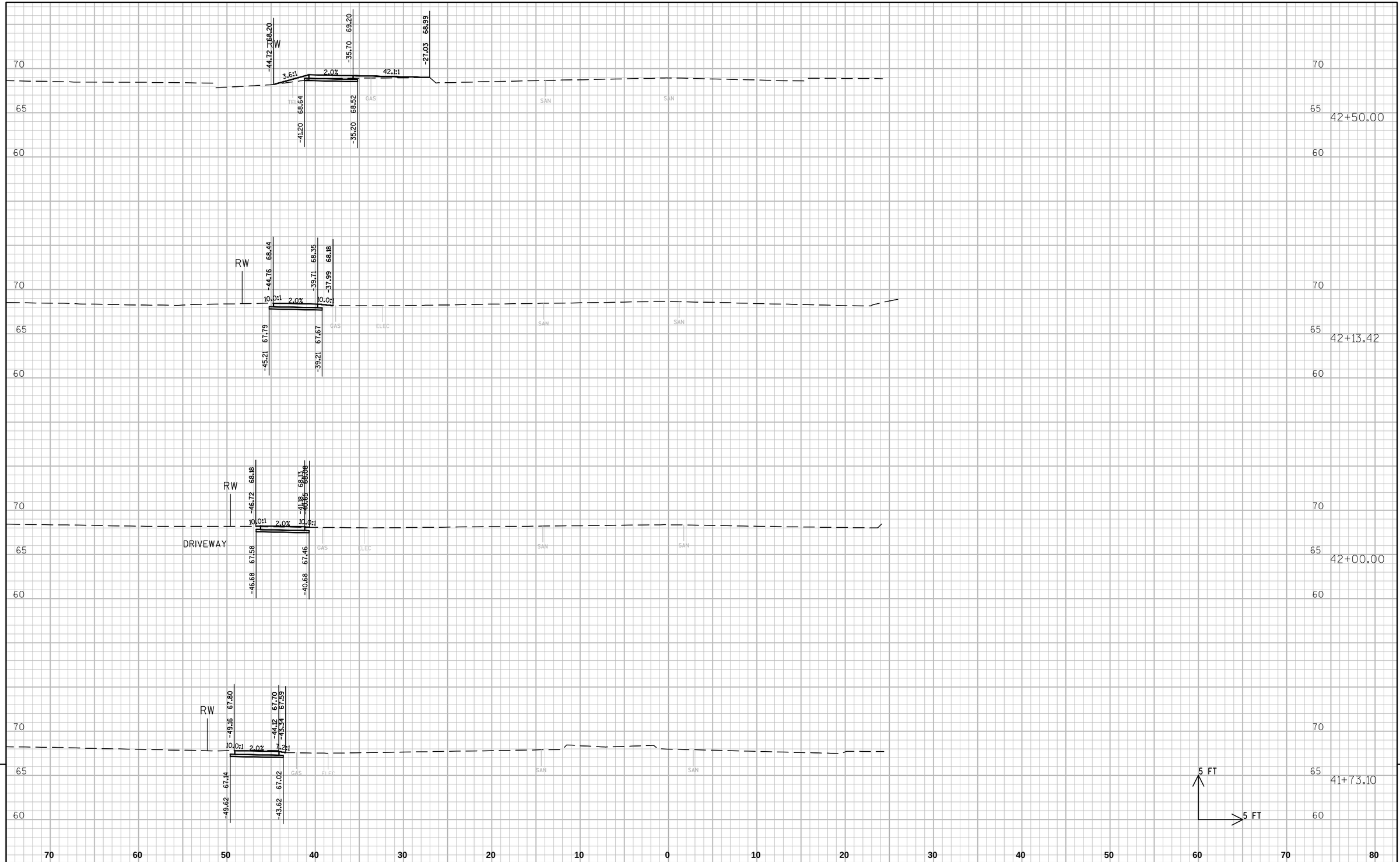

9

9

PROJECT NO: 4996-01-54	HWY: SIDEWALK GAP	COUNTY: SHEBOYGAN	CROSS SECTIONS: SEGMENT 10 WASHINGTON AVE.	SHEET 197	E

FILE NAME : L:\WORK\60158441\000_CADD\CIVIL\SEGMENT 10\SEG 10 XS BASE.DWG PLOT DATE : 7/11/2012 9:28 AM PLOT BY : HOLZWART, JOSEPH PLOT NAME : ----------

WISDOT/CADDS SHEET 21

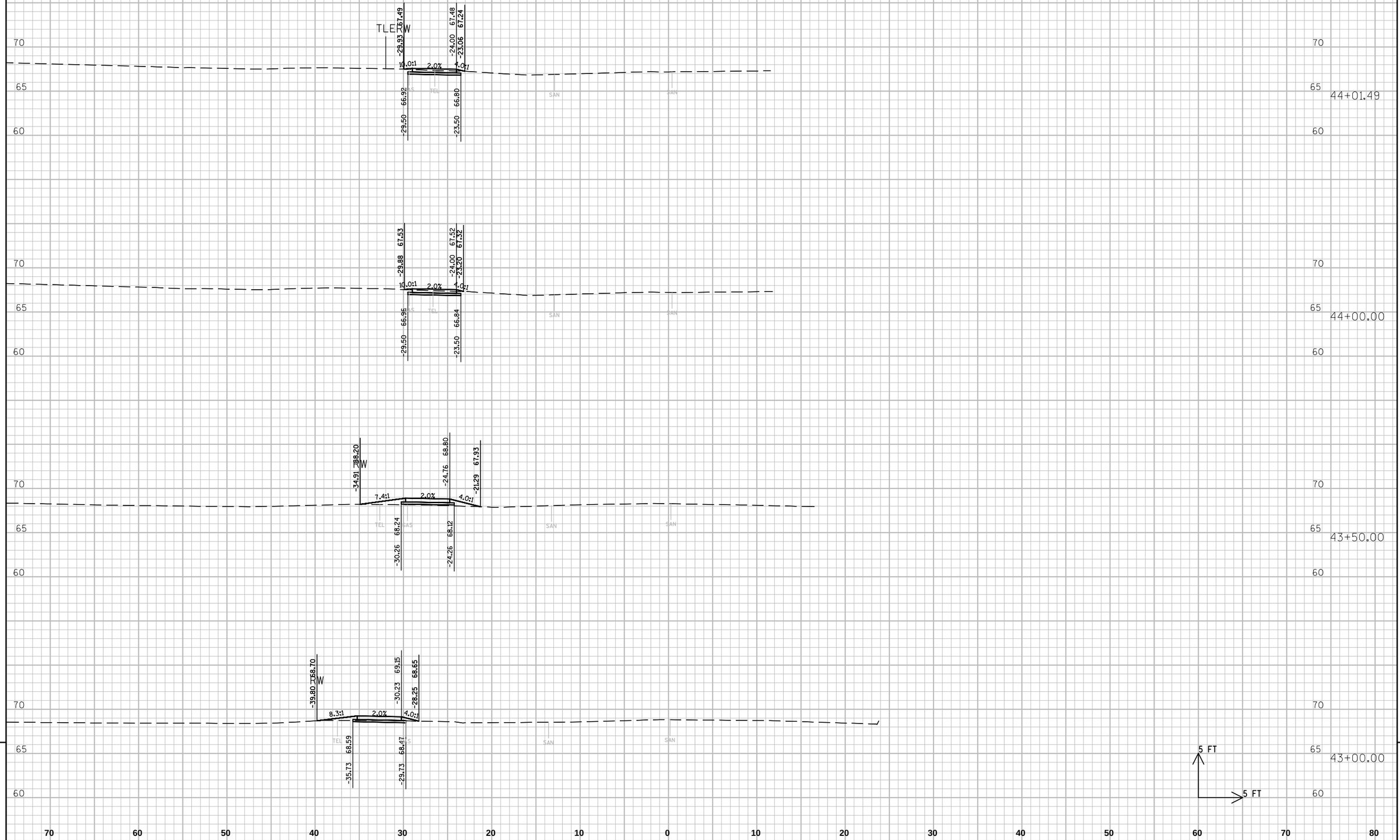

PROJECT NO: 4996-01-54	HWY: SIDEWALK GAP	COUNTY: SHEBOYGAN	CROSS SECTIONS: SEGMENT 10 WASHINGTON AVE.	SHEET 198	E

FILE NAME : L:\WORK\60158441\000_CADD\CIVIL\SEGMENT 10\SEG 10 XS BASE.DWG PLOT DATE : 7/11/2012 9:28 AM PLOT BY : HOLZWART, JOSEPH PLOT NAME : ----------

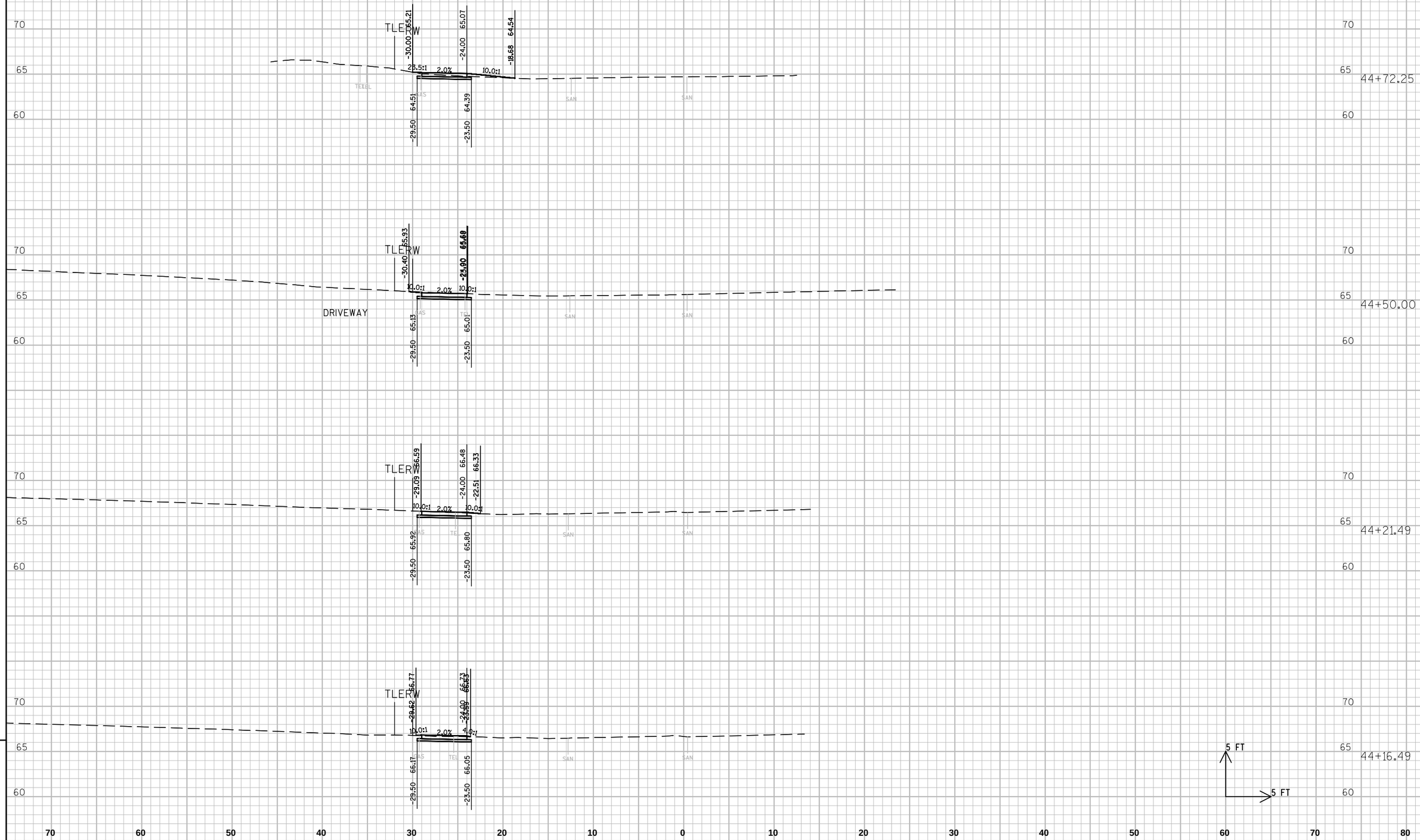

PROJECT NO: 4996-01-54	HWY: SIDEWALK GAP	COUNTY: SHEBOYGAN	CROSS SECTIONS: SEGMENT 10 WASHINGTON AVE.	SHEET 199	E

FILE NAME : L:\WORK\60158441\000_CADD\CIVIL\SEGMENT 10\SEG 10 XS BASE.DWG PLOT DATE : 7/11/2012 9:28 AM PLOT BY : HOLZWART, JOSEPH PLOT NAME : ----------

WISDOT/CADDS SHEET 21

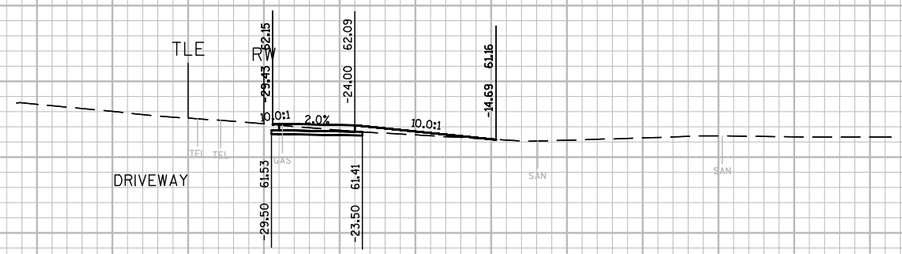

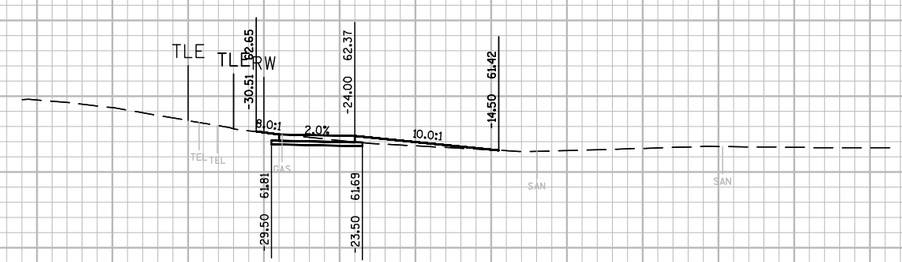

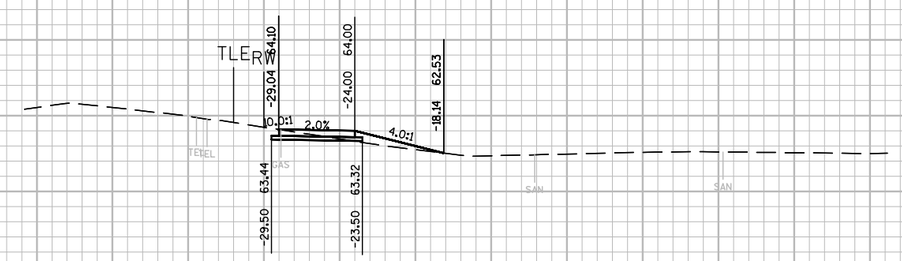

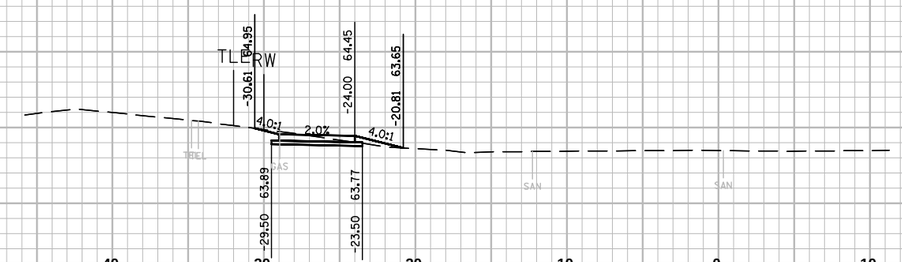

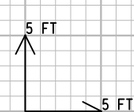

70 65 60 45+50.00

70 65 60 45+43.05

70 65 60 45+20.00

70 65 60 45+00.00

70 60 50 40 30 20 10 0 10 20 30 40 50 60 70 80

9

9

PROJECT NO: 4996-01-54	HWY: SIDEWALK GAP	COUNTY: SHEBOYGAN	CROSS SECTIONS: SEGMENT 10 WASHINGTON AVE.	SHEET 200	E

FILE NAME : L:\WORK\60158441\000_CADD\CIVIL\SEGMENT 10\SEG 10 XS BASE.DWG PLOT DATE : 7/11/2012 9:28 AM PLOT BY : HOLZWART, JOSEPH PLOT NAME : ----------

WISDOT/CADDS SHEET 21

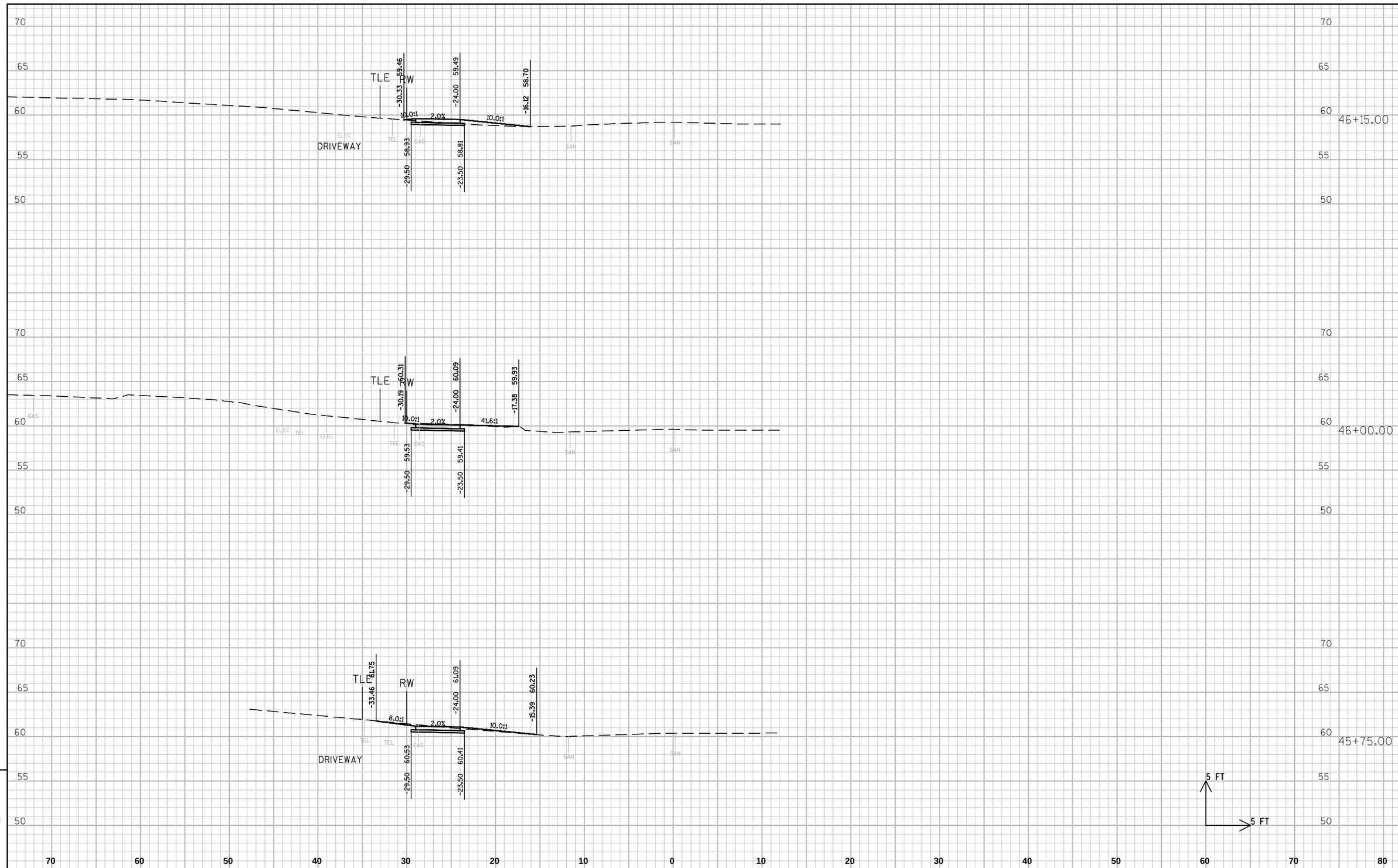

PROJECT NO: 4996-01-54	HWY: SIDEWALK GAP	COUNTY: SHEBOYGAN	CROSS SECTIONS: SEGMENT 10 WASHINGTON AVE.	SHEET 201 E

FILE NAME : L:\WORK\60158441\000_CADD\CIVIL\SEGMENT 10\SEG 10 XS BASE.DWG PLOT DATE : 7/11/2012 9:28 AM PLOT BY : HOLZWART, JOSEPH PLOT NAME : ----------

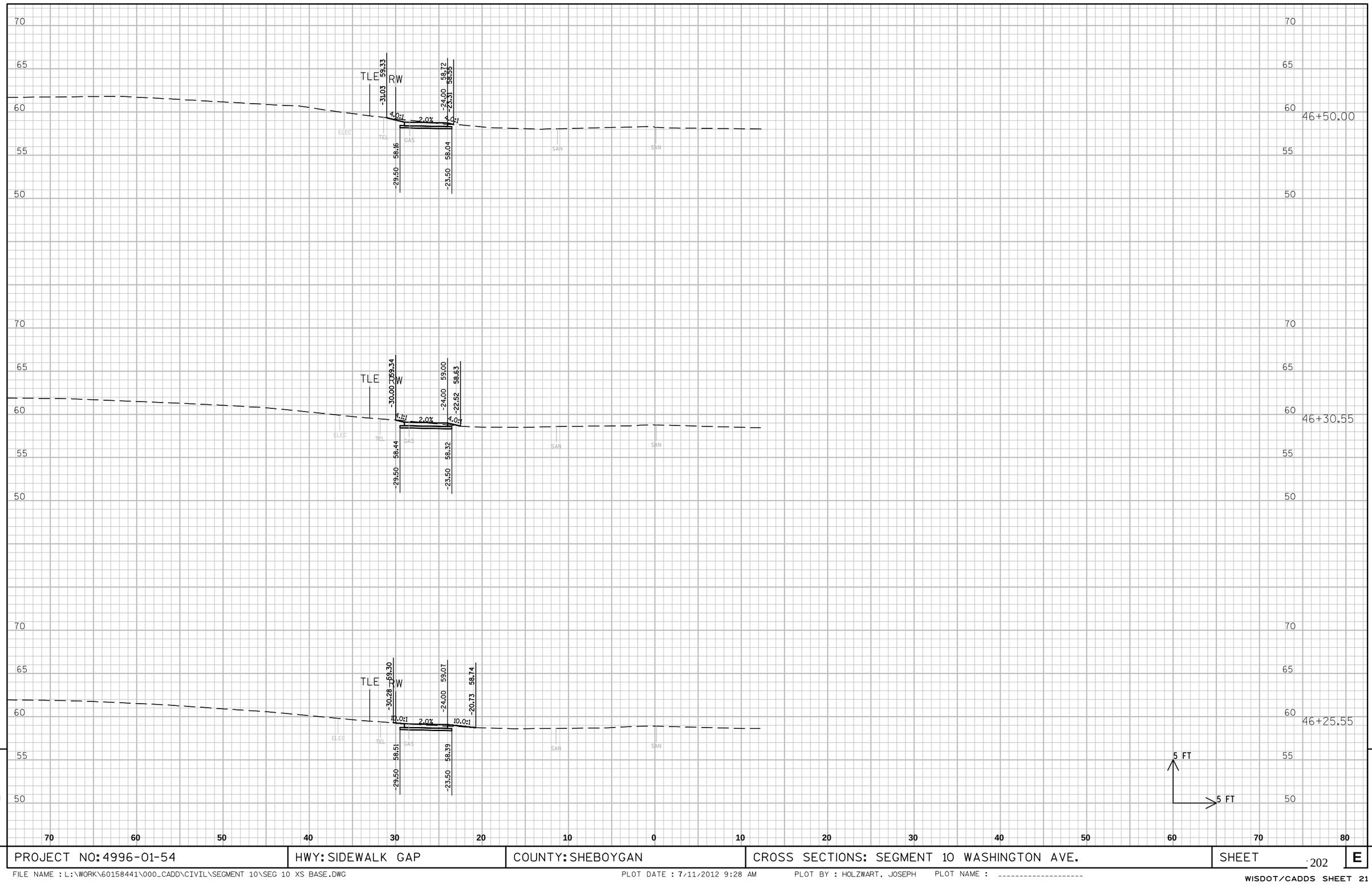

9

9

PROJECT NO: 4996-01-54	HWY: SIDEWALK GAP	COUNTY: SHEBOYGAN	CROSS SECTIONS: SEGMENT 10 WASHINGTON AVE.	SHEET 202	E

FILE NAME : L:\WORK\60158441\000_CADD\CIVIL\SEGMENT 10\SEG 10 XS BASE.DWG PLOT DATE : 7/11/2012 9:28 AM PLOT BY : HOLZWART, JOSEPH PLOT NAME : ----------

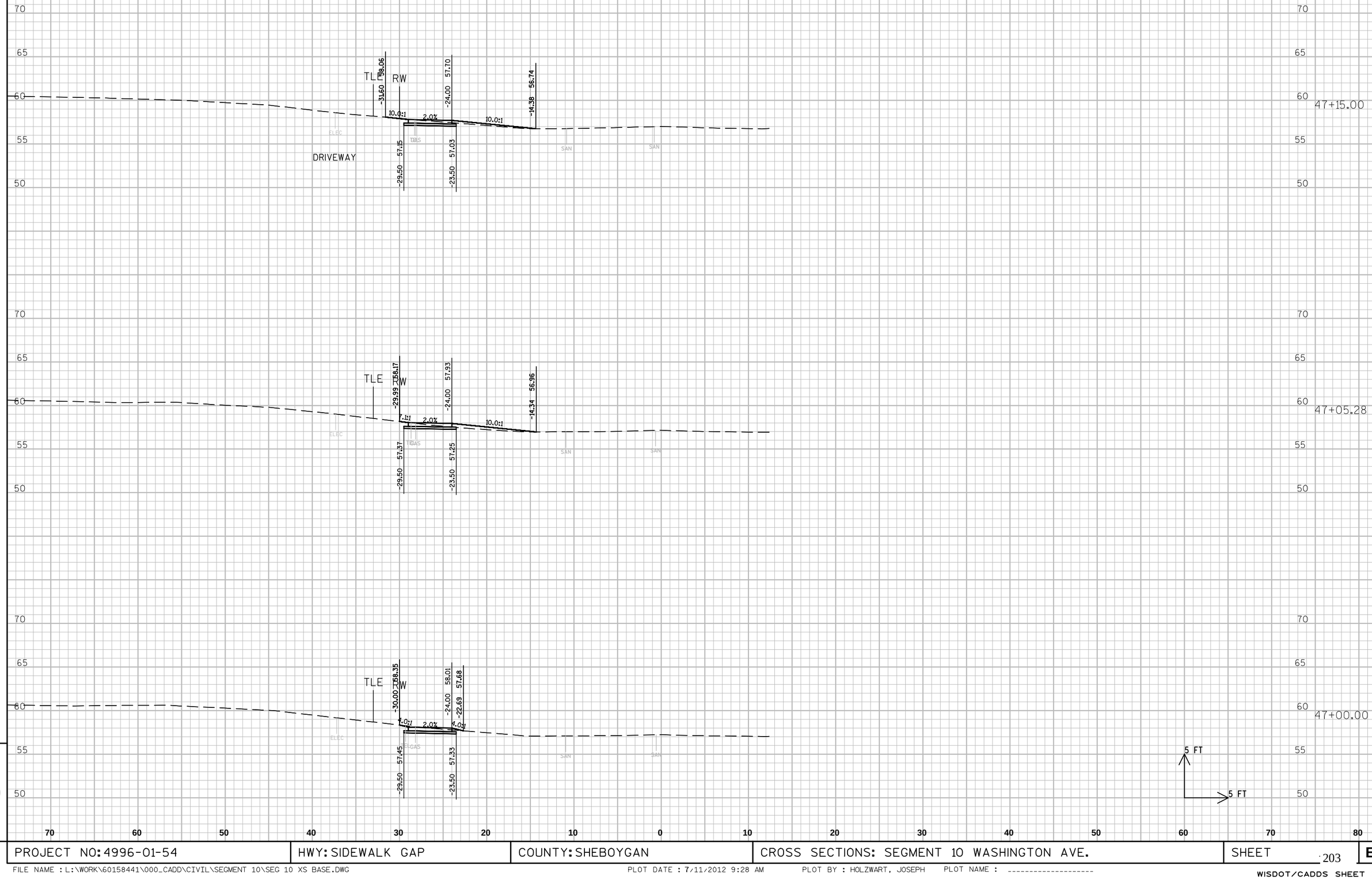

9

9

PROJECT NO: 4996-01-54	HWY: SIDEWALK GAP	COUNTY: SHEBOYGAN	CROSS SECTIONS: SEGMENT 10 WASHINGTON AVE.	SHEET 203	E

FILE NAME : L:\WORK\60158441\000_CADD\CIVIL\SEGMENT 10\SEG 10 XS BASE.DWG PLOT DATE : 7/11/2012 9:28 AM PLOT BY : HOLZWART, JOSEPH PLOT NAME : ----------

WISDOT/CADDS SHEET 21

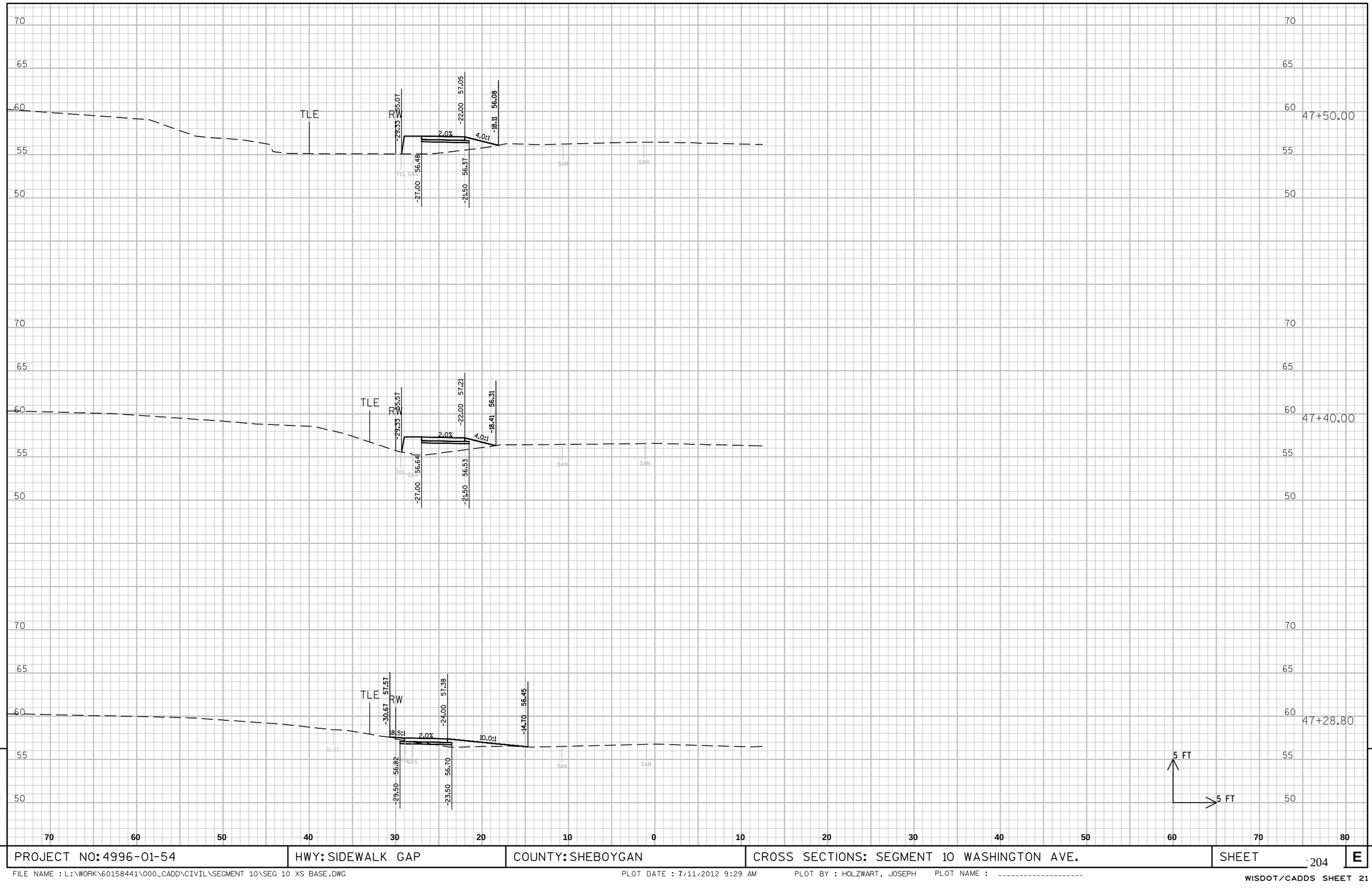

PROJECT NO: 4996-01-54	HWY: SIDEWALK GAP	COUNTY: SHEBOYGAN	CROSS SECTIONS: SEGMENT 10 WASHINGTON AVE.	SHEET 204 E

FILE NAME : L:\WORK\60158441\000_CADD\CIVIL\SEGMENT 10\SEG 10 XS BASE.DWG PLOT DATE : 7/11/2012 9:29 AM PLOT BY : HOLZWART, JOSEPH PLOT NAME : ----------

WISDOT/CADDS SHEET 21

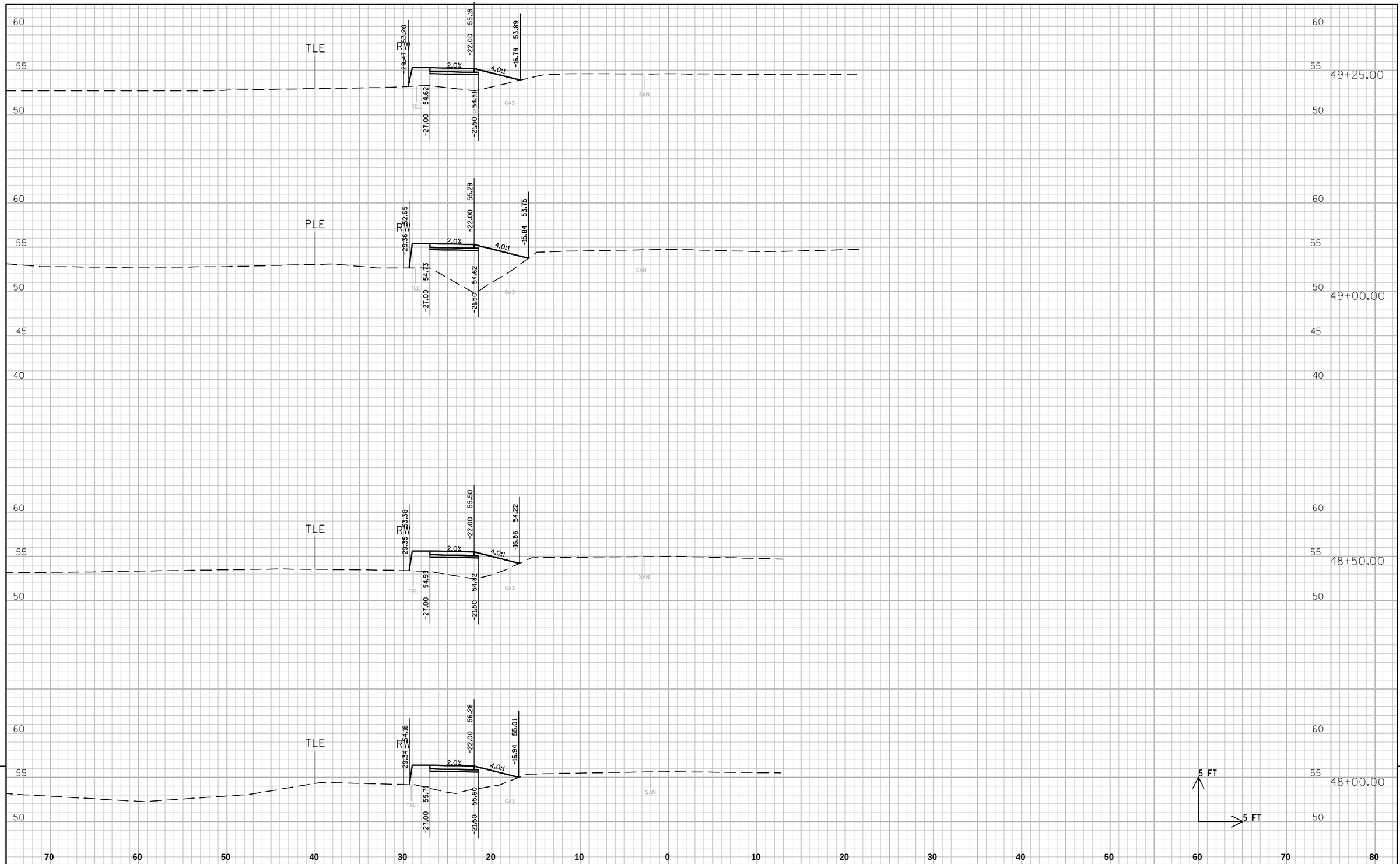

9

PROJECT NO: 4996-01-54	HWY: SIDEWALK GAP	COUNTY: SHEBOYGAN	CROSS SECTIONS: SEGMENT 10 WASHINGTON AVE.	SHEET 205	E

9

FILE NAME : L:\WORK\60158441\000_CADD\CIVIL\SEGMENT 10\SEG 10 XS BASE.DWG PLOT DATE : 7/11/2012 9:29 AM PLOT BY : HOLZWART, JOSEPH PLOT NAME : ----------

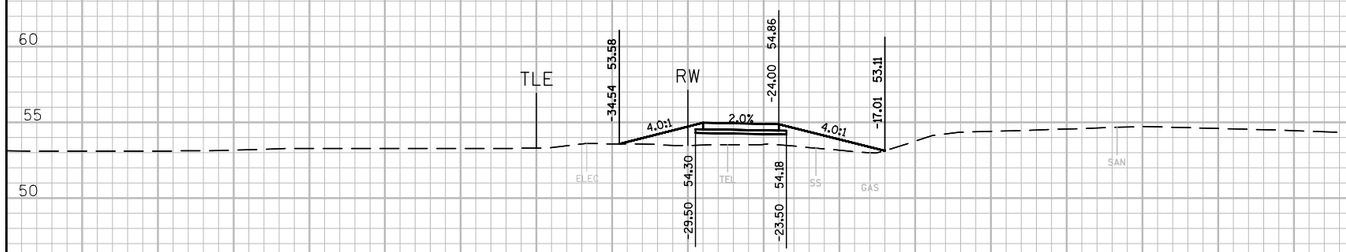

50+03.78

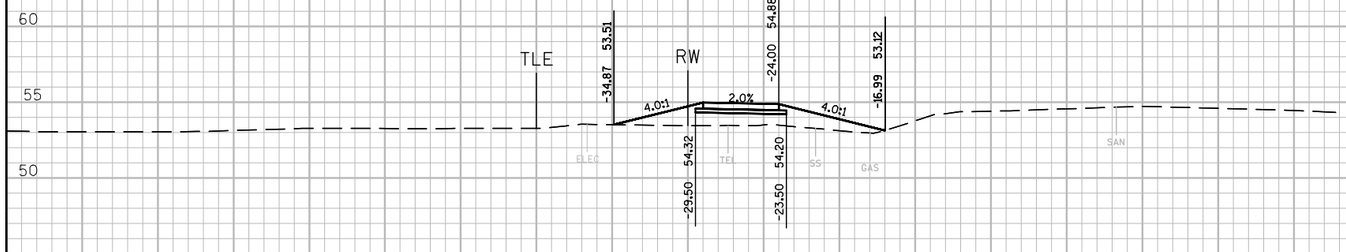

50+00.00

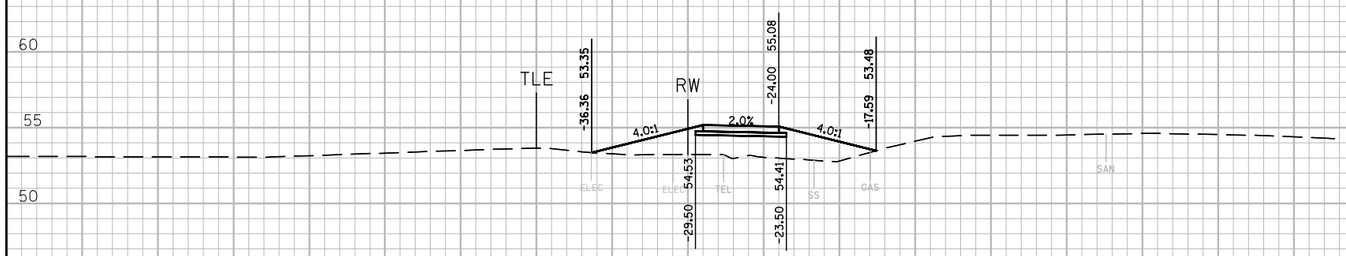

49+50.00

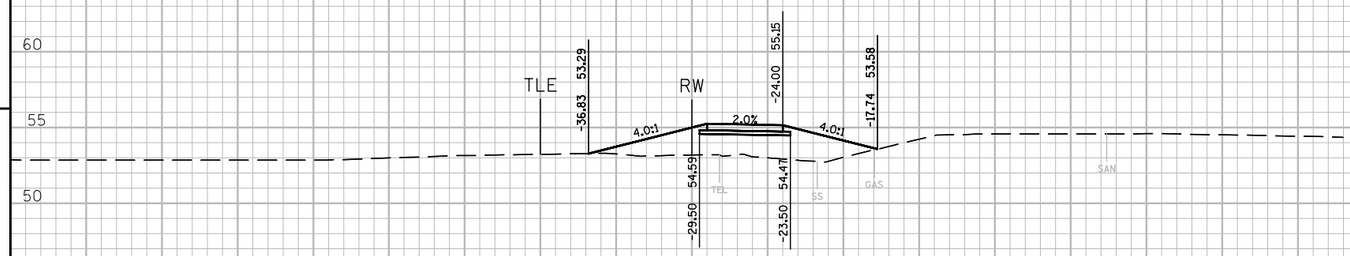

49+35.00

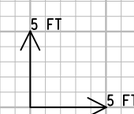

70 60 50 40 30 20 10 0 10 20 30 40 50 60 70 80

9

9

PROJECT NO: 4996-01-54	HWY: SIDEWALK GAP	COUNTY: SHEBOYGAN	CROSS SECTIONS: SEGMENT 10 WASHINGTON AVE.	SHEET 206	E

FILE NAME : L:\WORK\60158441\000_CADD\CIVIL\SEGMENT 10\SEG 10 XS BASE.DWG PLOT DATE : 7/11/2012 9:29 AM PLOT BY : HOLZWART, JOSEPH PLOT NAME : ----------

WISDOT/CADDS SHEET 21

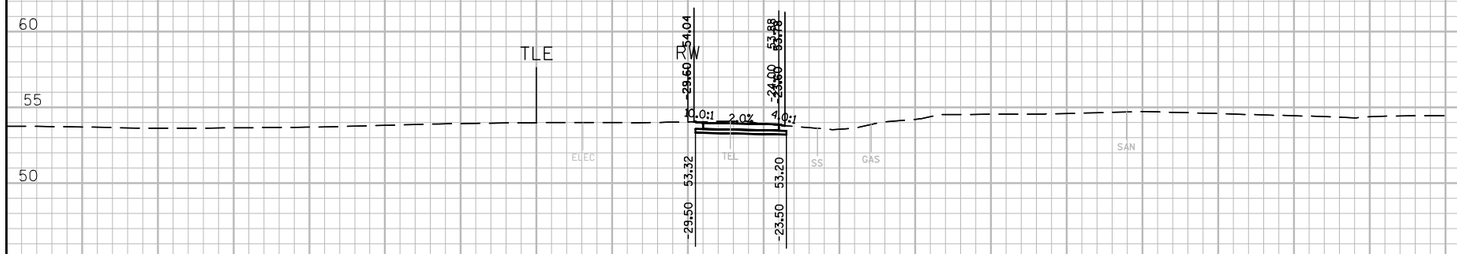

50+50.29

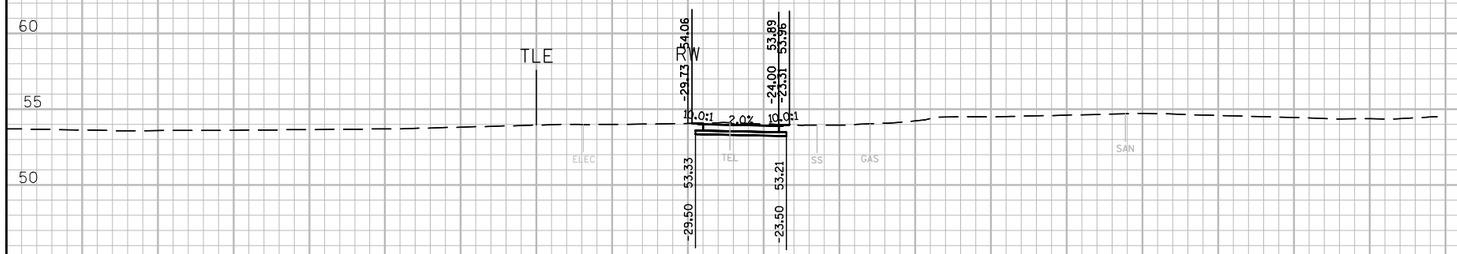

50+45.29

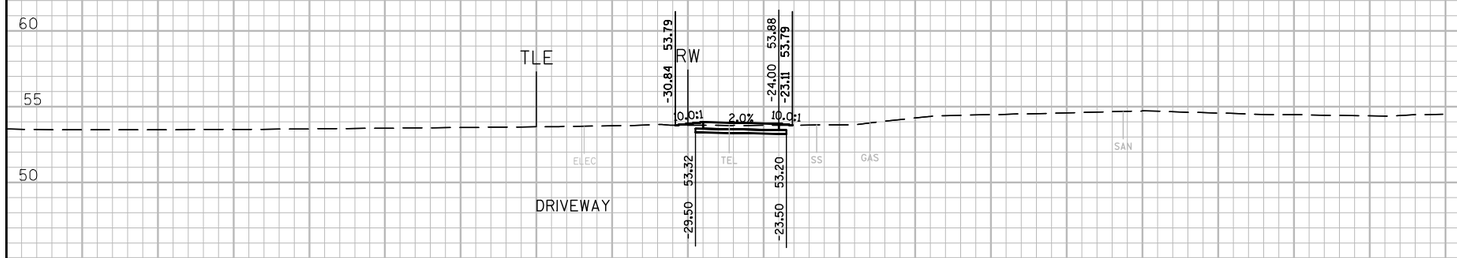

50+35.00

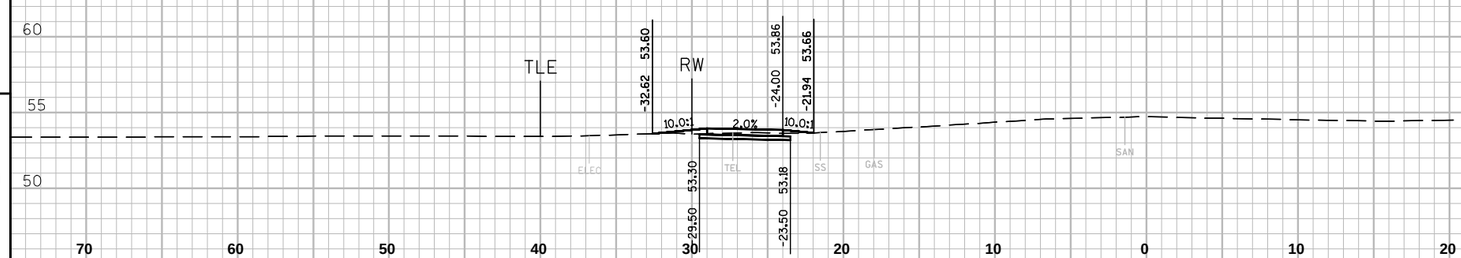

50+23.78

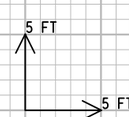

9

9

PROJECT NO: 4996-01-54	HWY: SIDEWALK GAP	COUNTY: SHEBOYGAN	CROSS SECTIONS: SEGMENT 10 WASHINGTON AVE.	SHEET 207	E

FILE NAME : L:\WORK\60158441\000_CADD\CIVIL\SEGMENT 10\SEG 10 XS BASE.DWG PLOT DATE : 7/11/2012 9:29 AM PLOT BY : HOLZWART, JOSEPH PLOT NAME : ----------

WISDOT/CADDS SHEET 21

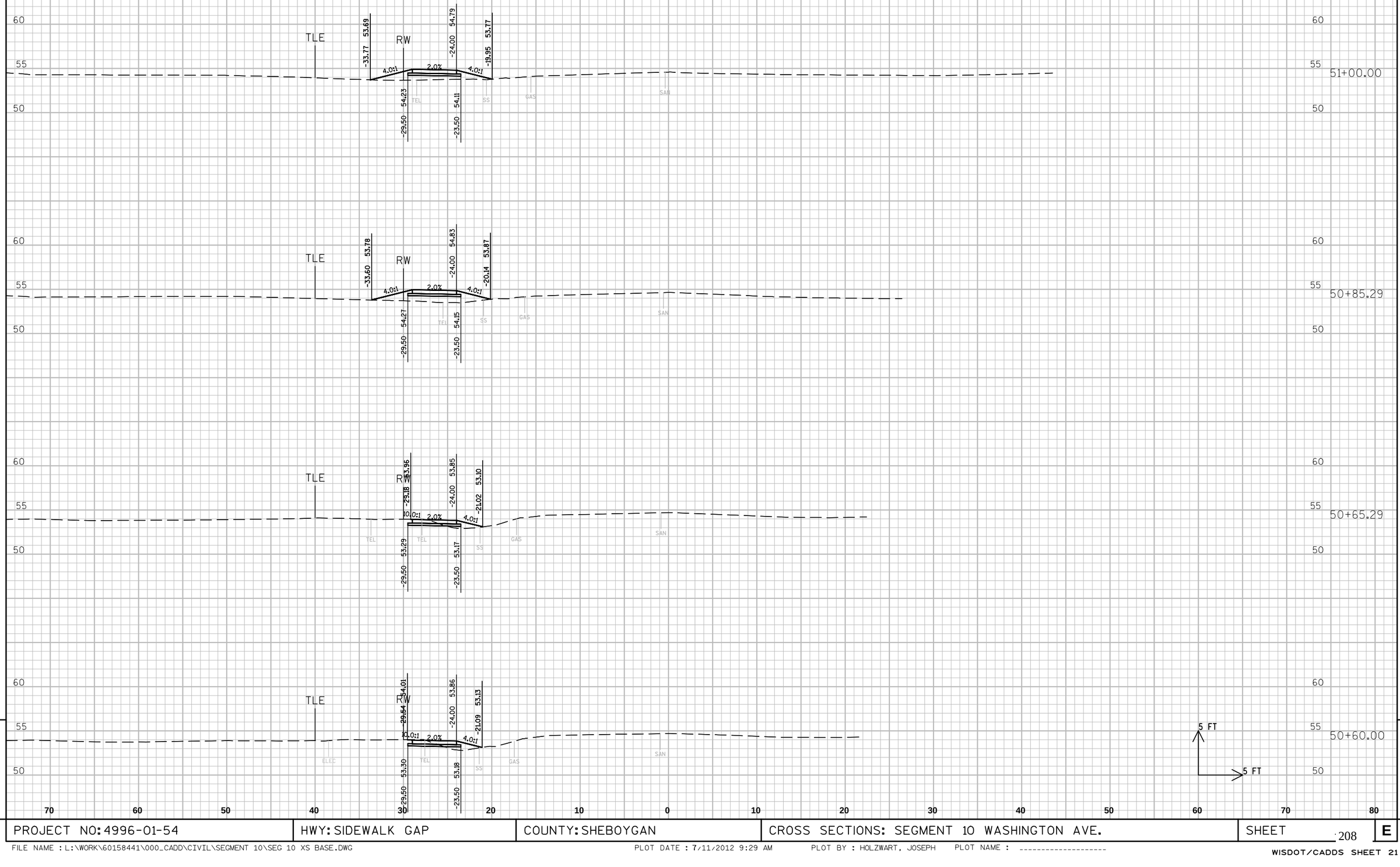

PROJECT NO: 4996-01-54	HWY: SIDEWALK GAP	COUNTY: SHEBOYGAN	CROSS SECTIONS: SEGMENT 10 WASHINGTON AVE.	SHEET 208	E

FILE NAME : L:\WORK\60158441\000_CADD\CIVIL\SEGMENT 10\SEG 10 XS BASE.DWG PLOT DATE : 7/11/2012 9:29 AM PLOT BY : HOLZWART, JOSEPH PLOT NAME : ----------

WISDOT/CADDS SHEET 21

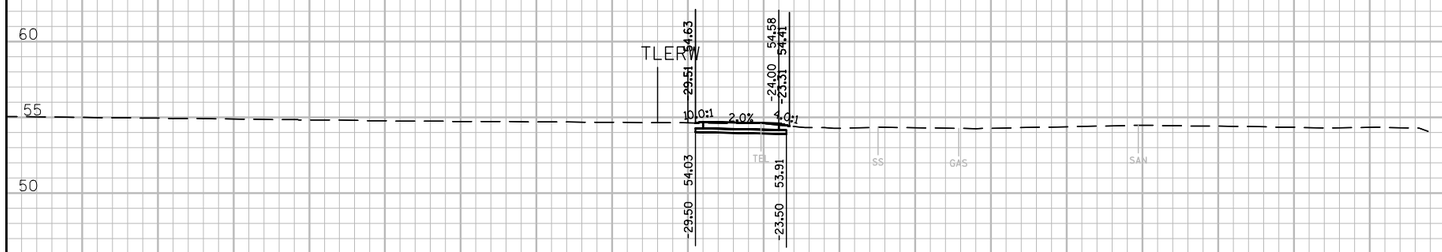

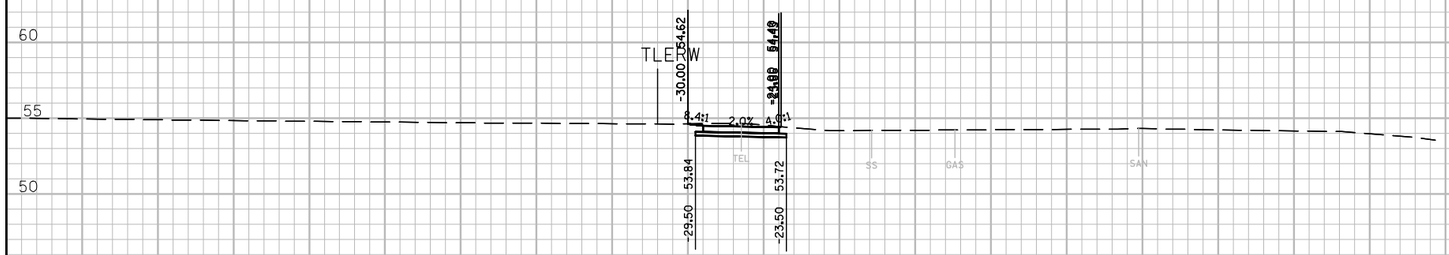

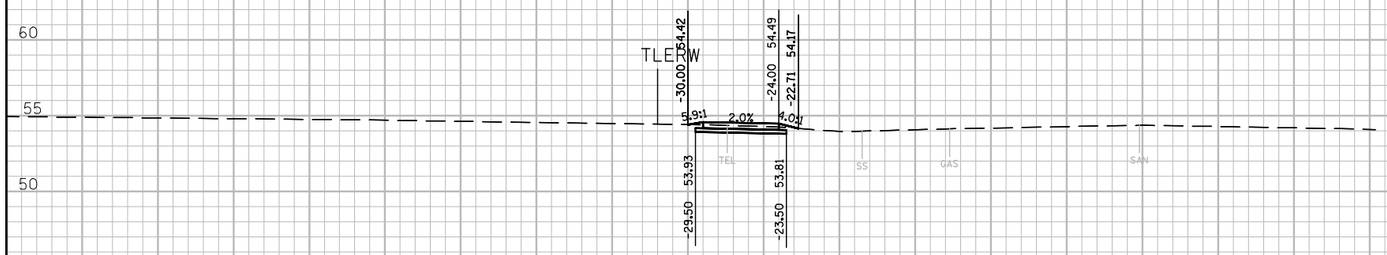

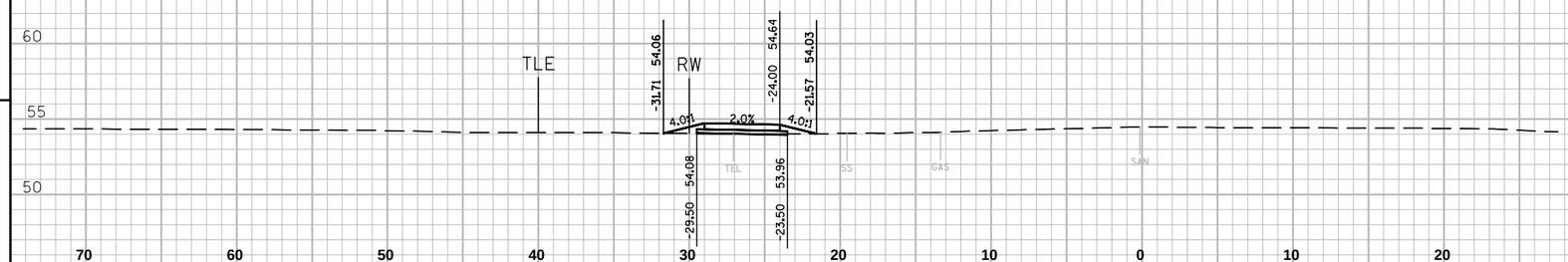

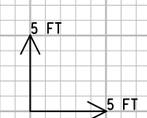

9

9

PROJECT NO: 4996-01-54	HWY: SIDEWALK GAP	COUNTY: SHEBOYGAN	CROSS SECTIONS: SEGMENT 10 WASHINGTON AVE.	SHEET 209	E

FILE NAME : L:\WORK\60158441\000_CADD\CIVIL\SEGMENT 10\SEG 10 XS BASE.DWG PLOT DATE : 7/11/2012 9:29 AM PLOT BY : HOLZWART, JOSEPH PLOT NAME : ----------

WISDOT/CADDS SHEET 21

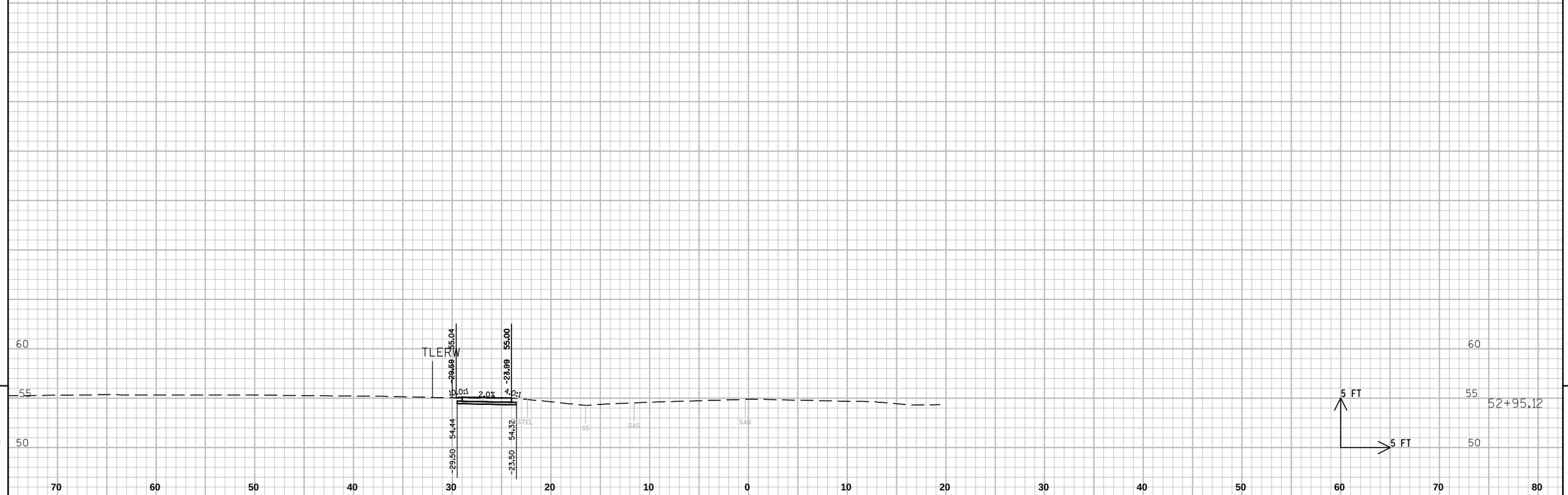

9	PROJECT NO: 4996-01-54	HWY: SIDEWALK GAP	COUNTY: SHEBOYGAN	CROSS SECTIONS: SEGMENT 10 WASHINGTON AVE.	SHEET 210 E

FILE NAME : L:\WORK\60158441\000_CADD\CIVIL\SEGMENT 10\SEG 10 XS BASE.DWG PLOT DATE : 7/11/2012 9:29 AM PLOT BY : HOLZWART, JOSEPH PLOT NAME : ----------

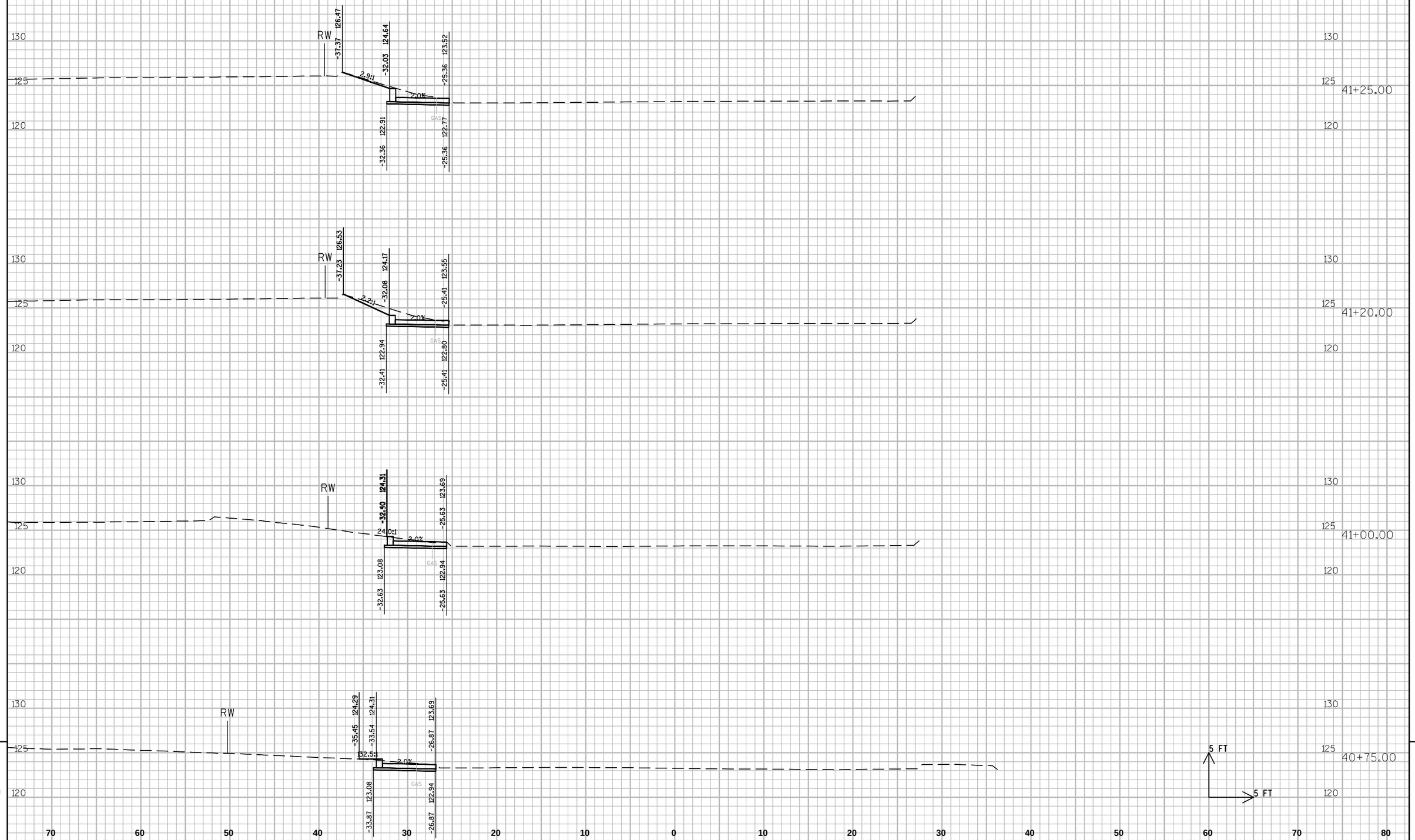

9

9

PROJECT NO: 4996-01-54	HWY: SIDEWALK GAP	COUNTY: SHEBOYGAN	CROSS SECTIONS: SEGMENT 15 TAYLOR DR.	SHEET 211	E

FILE NAME : L:\WORK\60158441\000_CADD\CIVIL\SEGMENT 5 & 15\SEG 15 XS BASE.DWG PLOT DATE : 7/11/2012 9:17 AM PLOT BY : HOLZWART, JOSEPH PLOT NAME : ----------

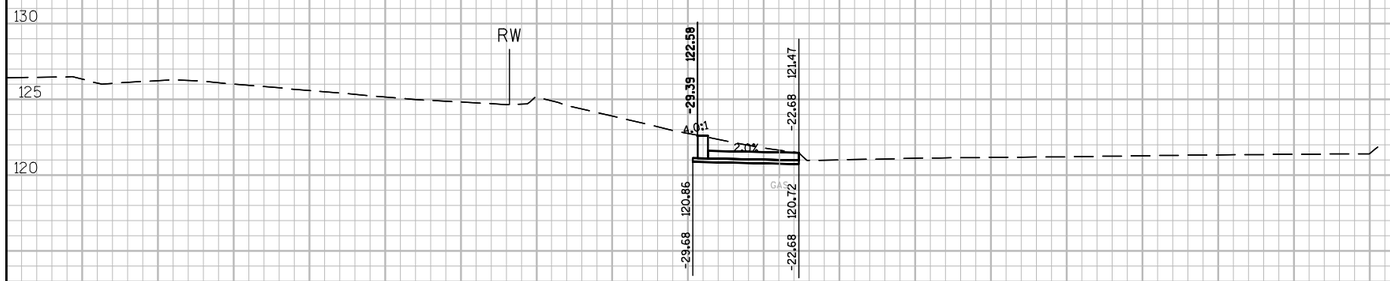

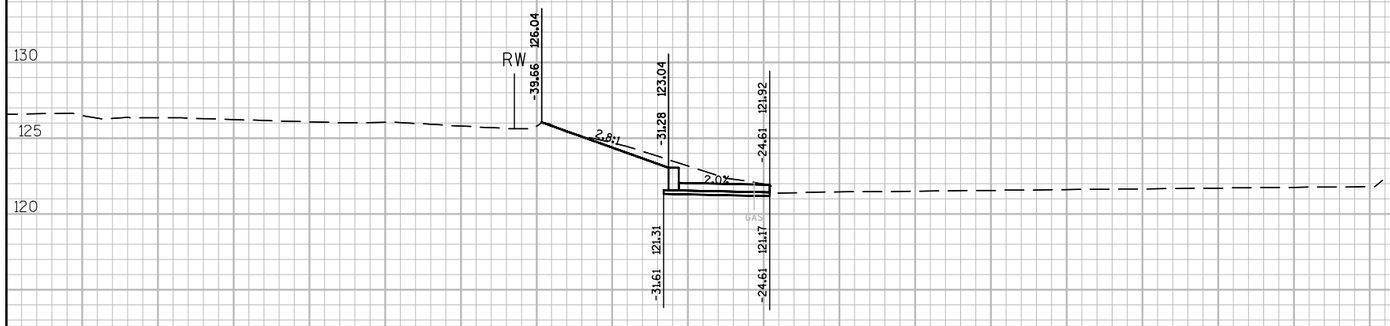

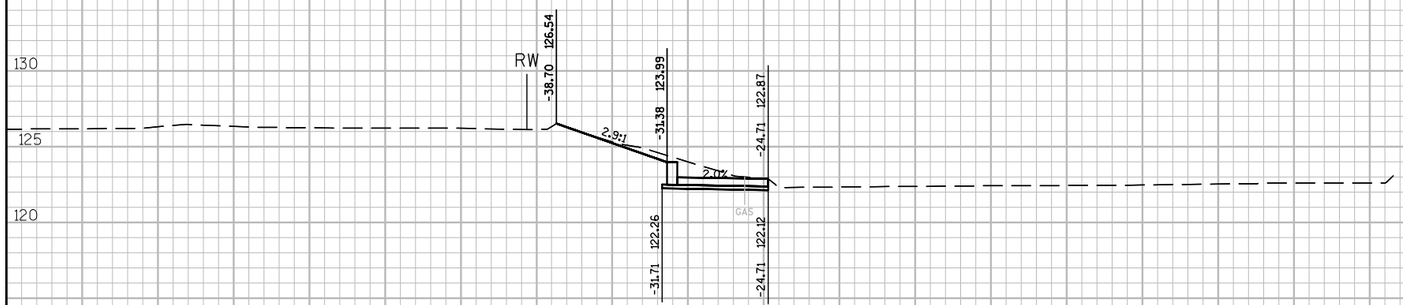

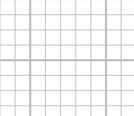

42+68.98

42+50.00

42+00.00

41+50.00

9

9

PROJECT NO: 4996-01-54	HWY: SIDEWALK GAP	COUNTY: SHEBOYGAN	CROSS SECTIONS: SEGMENT 15 TAYLOR DR.	SHEET 212	E

FILE NAME : L:\WORK\60158441\000_CADD\CIVIL\SEGMENT 5 & 15\SEG 15 XS BASE.DWG PLOT DATE : 7/11/2012 9:17 AM PLOT BY : HOLZWART, JOSEPH PLOT NAME : ----------

WISDOT/CADDS SHEET 21

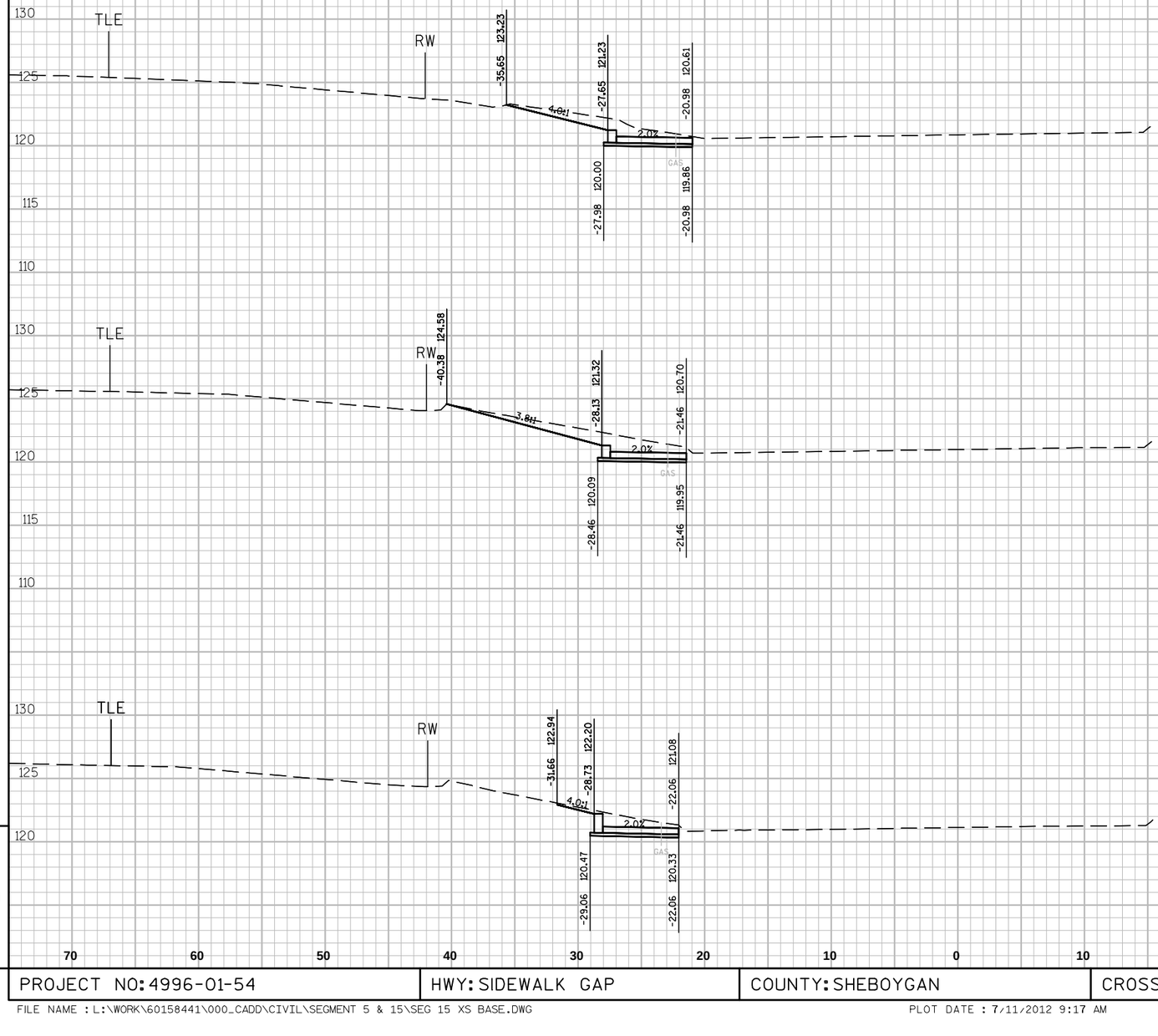

9

9

PROJECT NO: 4996-01-54	HWY: SIDEWALK GAP	COUNTY: SHEBOYGAN	CROSS SECTIONS: SEGMENT 15 TAYLOR DR.	SHEET 213	E

FILE NAME : L:\WORK\60158441\000_CADD\CIVIL\SEGMENT 5 & 15\SEG 15 XS BASE.DWG PLOT DATE : 7/11/2012 9:17 AM PLOT BY : HOLZWART, JOSEPH PLOT NAME : ----------

WISDOT/CADDS SHEET 21

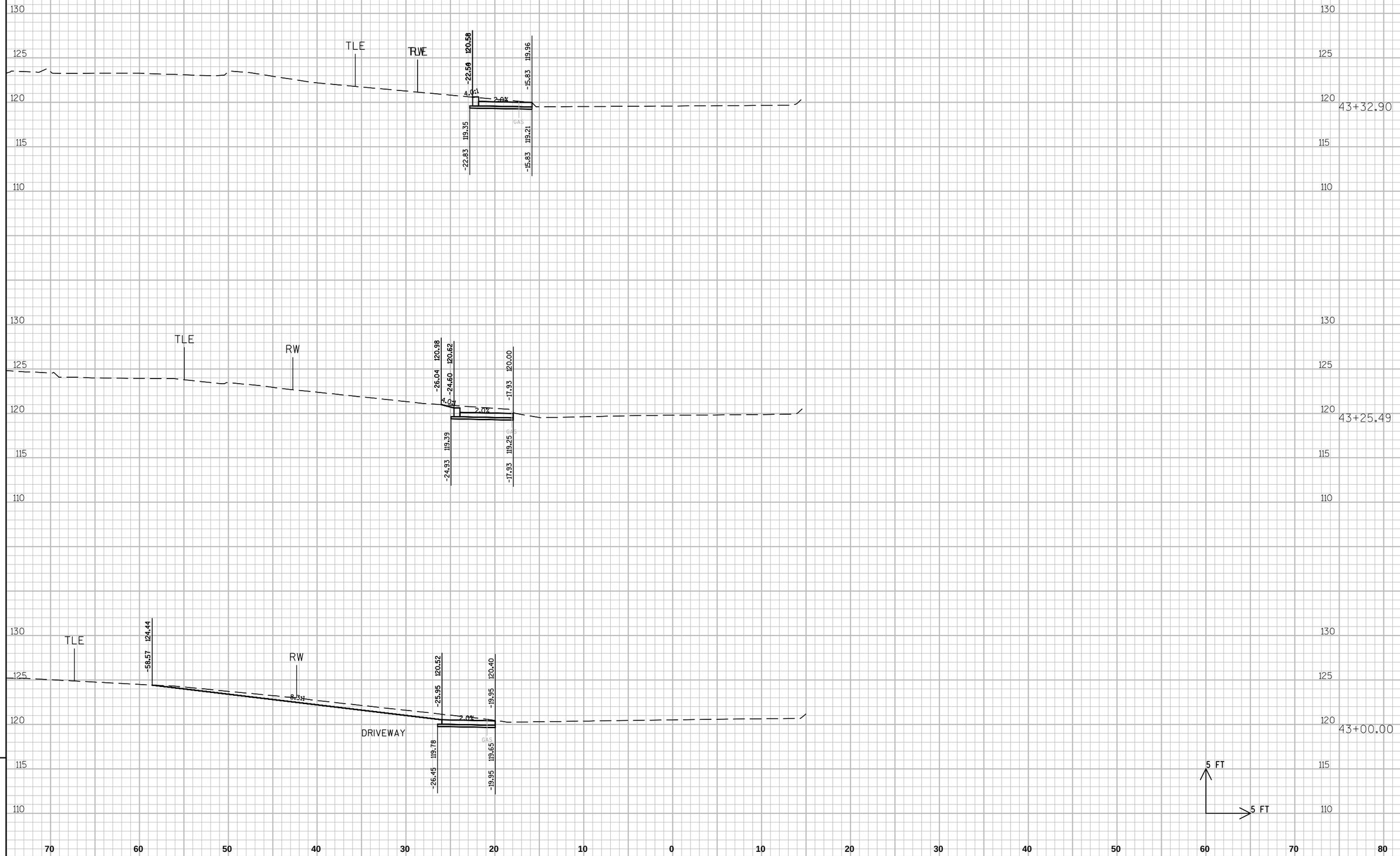

PROJECT NO: 4996-01-54	HWY: SIDEWALK GAP	COUNTY: SHEBOYGAN	CROSS SECTIONS: SEGMENT 15 TAYLOR DR.	SHEET 214 E

FILE NAME : L:\WORK\60158441\000_CADD\CIVIL\SEGMENT 5 & 15\SEG 15 XS BASE.DWG PLOT DATE : 7/11/2012 9:17 AM PLOT BY : HOLZWART, JOSEPH PLOT NAME : ----------

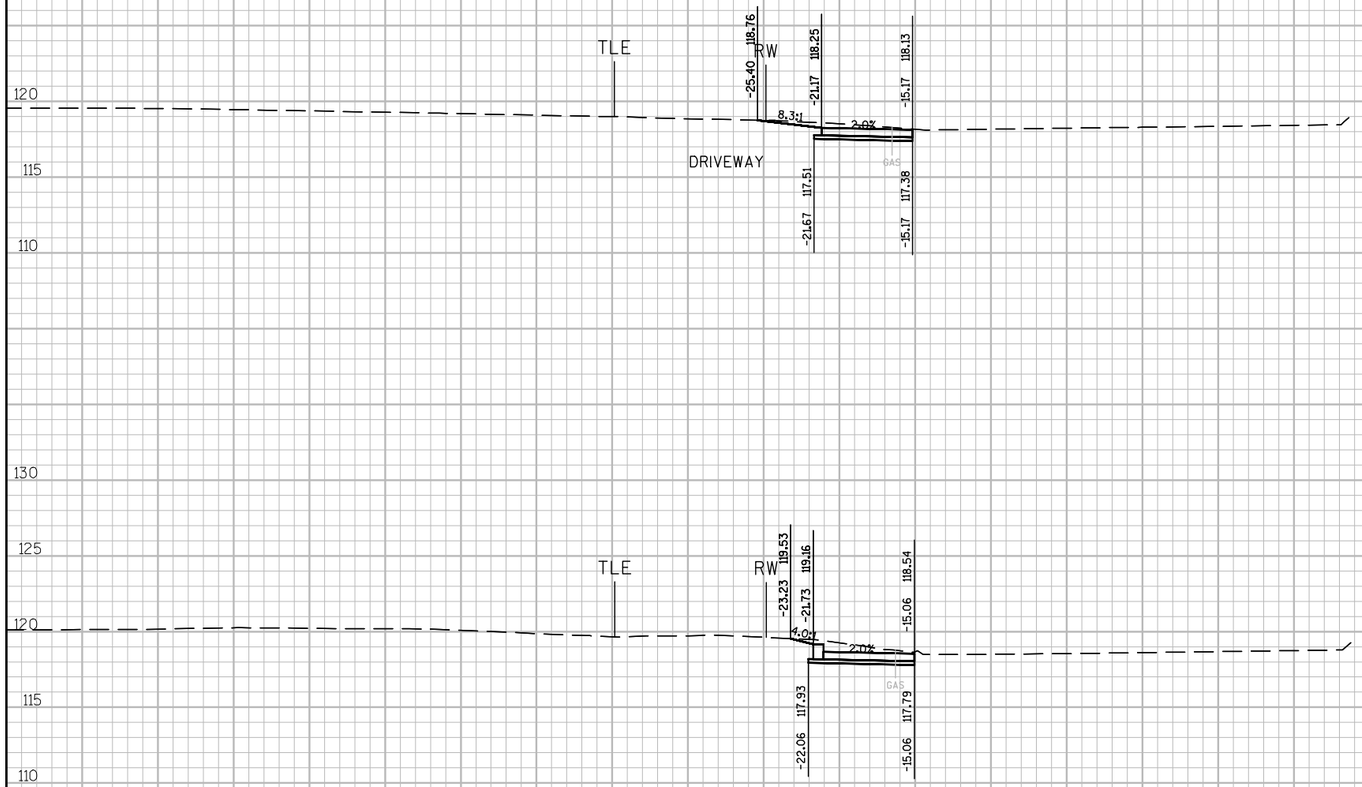

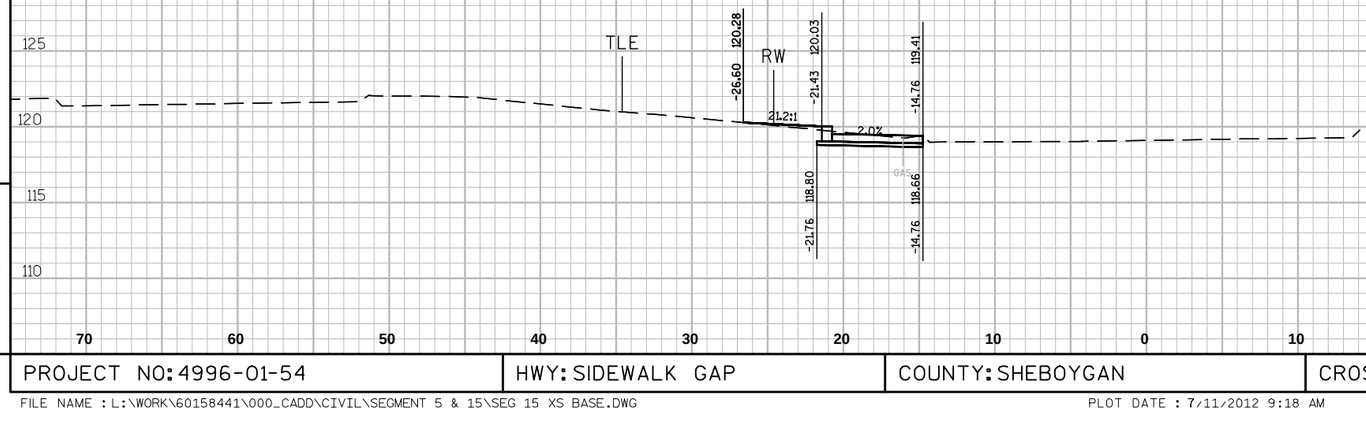

9

9

PROJECT NO: 4996-01-54	HWY: SIDEWALK GAP	COUNTY: SHEBOYGAN	CROSS SECTIONS: SEGMENT 15 TAYLOR DR.	SHEET 215	E

FILE NAME : L:\WORK\60158441\000_CADD\CIVIL\SEGMENT 5 & 15\SEG 15 XS BASE.DWG PLOT DATE : 7/11/2012 9:18 AM PLOT BY : HOLZWART, JOSEPH PLOT NAME : ----------

WISDOT/CADDS SHEET 21

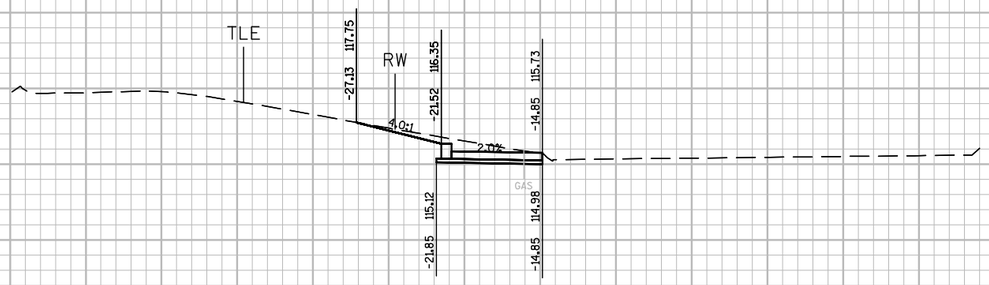

44+50.00

44+00.00

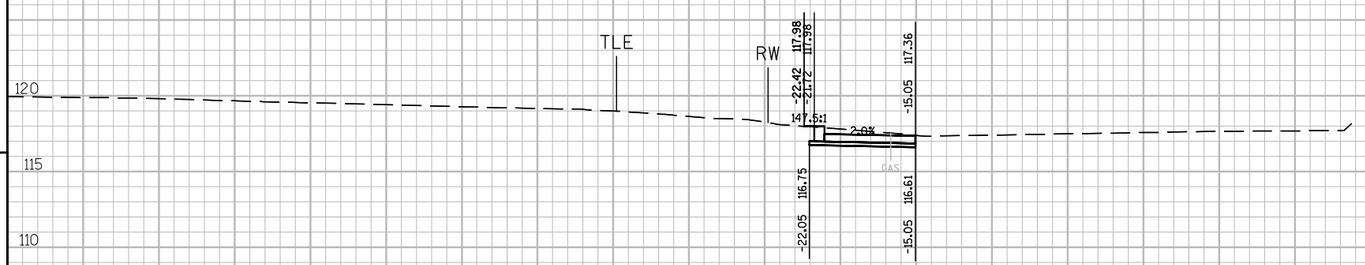

43+97.29

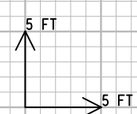

70 60 50 40 30 20 10 0 10 20 30 40 50 60 70 80

9 9

PROJECT NO: 4996-01-54	HWY: SIDEWALK GAP	COUNTY: SHEBOYGAN	CROSS SECTIONS: SEGMENT 15 TAYLOR DR.	SHEET 216	E

FILE NAME : L:\WORK\60158441\000_CADD\CIVIL\SEGMENT 5 & 15\SEG 15 XS BASE.DWG PLOT DATE : 7/11/2012 9:18 AM PLOT BY : HOLZWART, JOSEPH PLOT NAME : ----------

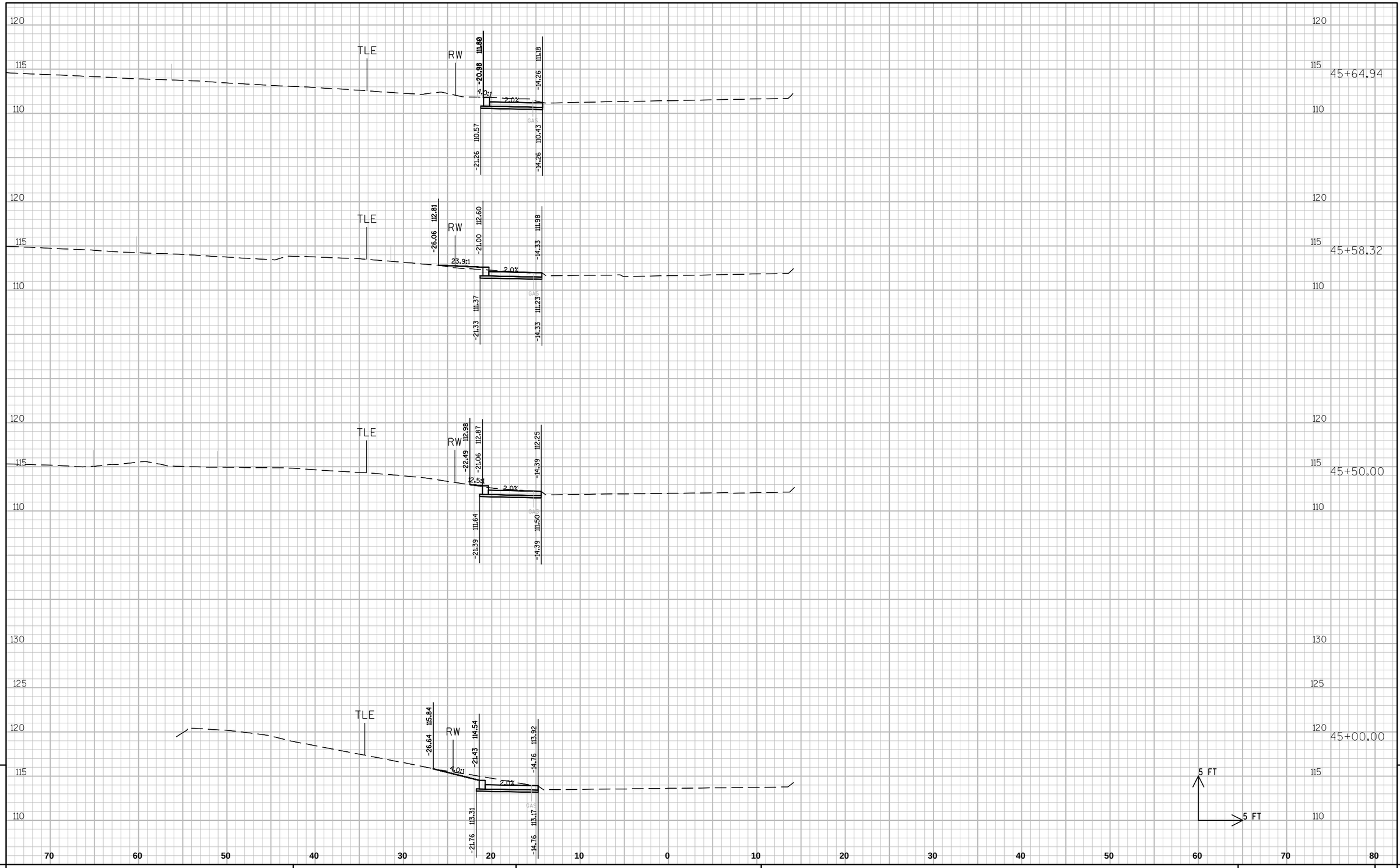

9

9

PROJECT NO: 4996-01-54	HWY: SIDEWALK GAP	COUNTY: SHEBOYGAN	CROSS SECTIONS: SEGMENT 15 TAYLOR DR.	SHEET 217	E

FILE NAME : L:\WORK\60158441\000_CADD\CIVIL\SEGMENT 5 & 15\SEG 15 XS BASE.DWG PLOT DATE : 7/11/2012 9:18 AM PLOT BY : HOLZWART, JOSEPH PLOT NAME : ----------

WISDOT/CADDS SHEET 21

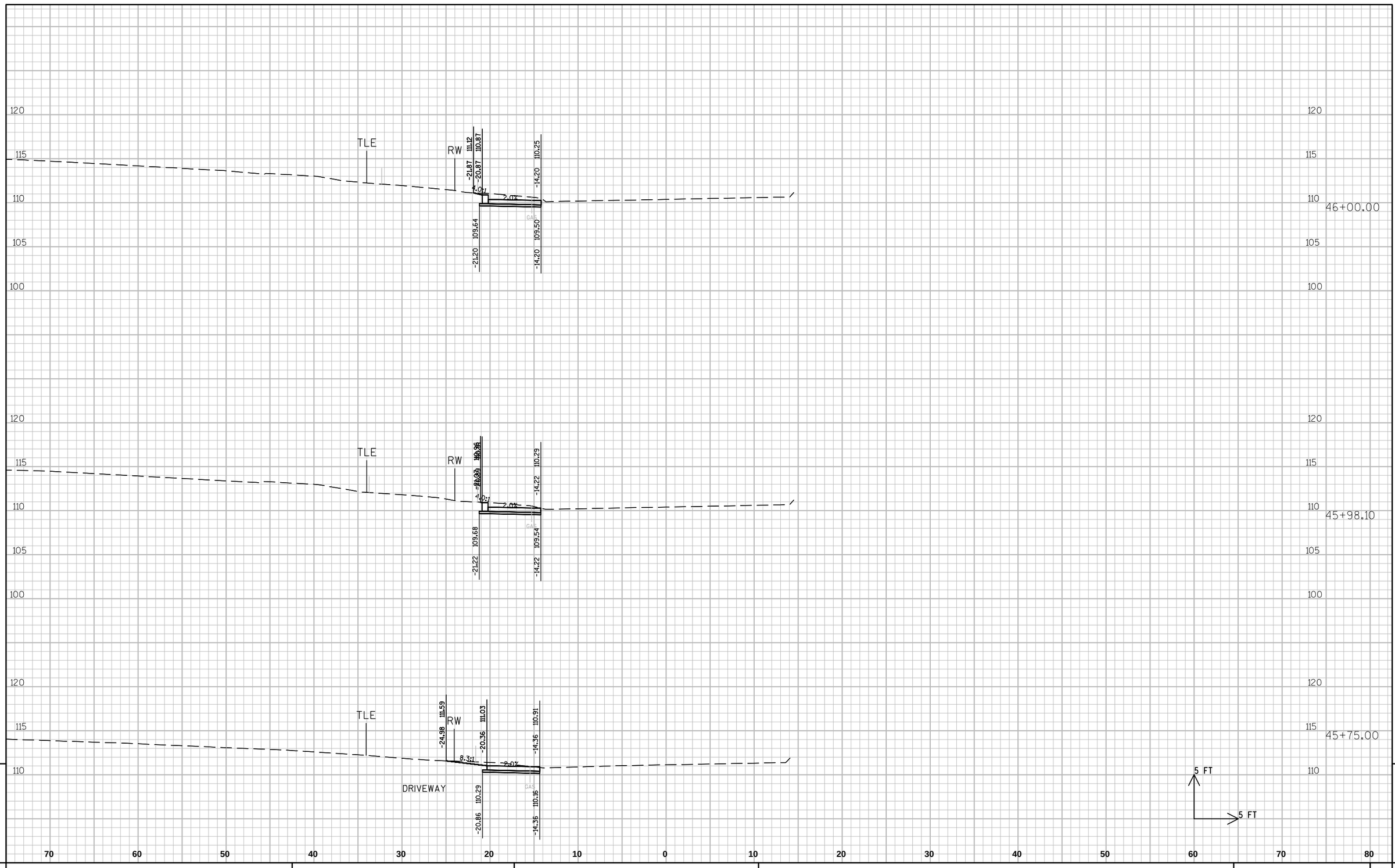

PROJECT NO: 4996-01-54	HWY: SIDEWALK GAP	COUNTY: SHEBOYGAN	CROSS SECTIONS: SEGMENT 15 TAYLOR DR.	SHEET 218	E

FILE NAME : L:\WORK\60158441\000_CADD\CIVIL\SEGMENT 5 & 15\SEG 15 XS BASE.DWG PLOT DATE : 7/11/2012 9:18 AM PLOT BY : HOLZWART, JOSEPH PLOT NAME : ----------

WISDOT/CADDS SHEET 21

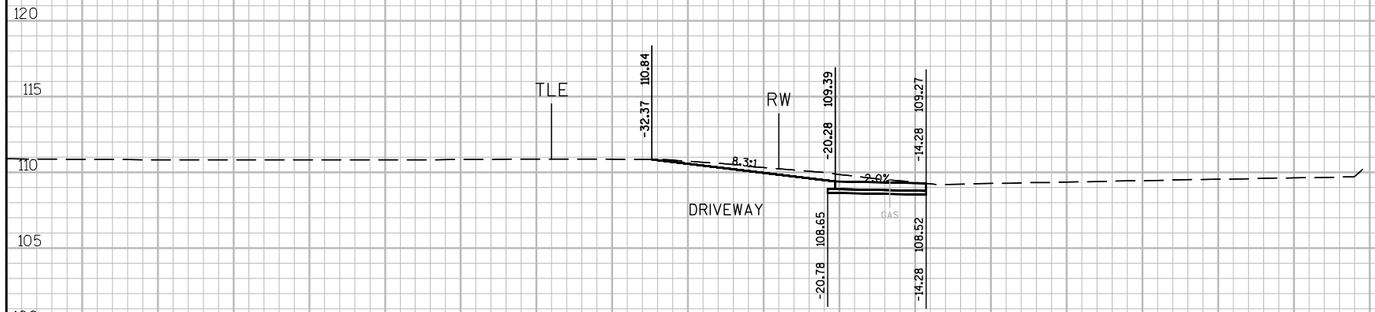

46+38.00

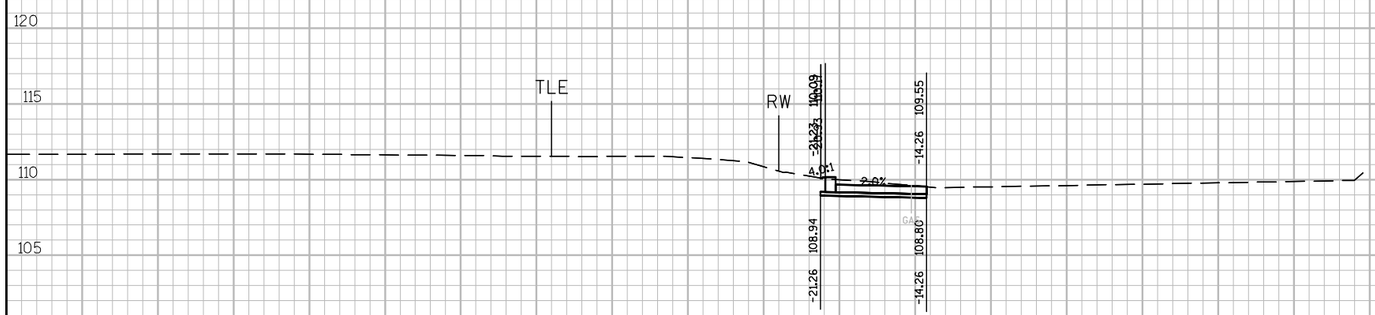

46+27.80

46+24.39

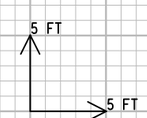

70 60 50 40 30 20 10 0 10 20 30 40 50 60 70 80

9 9

PROJECT NO: 4996-01-54	HWY: SIDEWALK GAP	COUNTY: SHEBOYGAN	CROSS SECTIONS: SEGMENT 15 TAYLOR DR.	SHEET 219	E

FILE NAME : L:\WORK\60158441\000_CADD\CIVIL\SEGMENT 5 & 15\SEG 15 XS BASE.DWG PLOT DATE : 7/11/2012 9:18 AM PLOT BY : HOLZWART, JOSEPH PLOT NAME : ----------

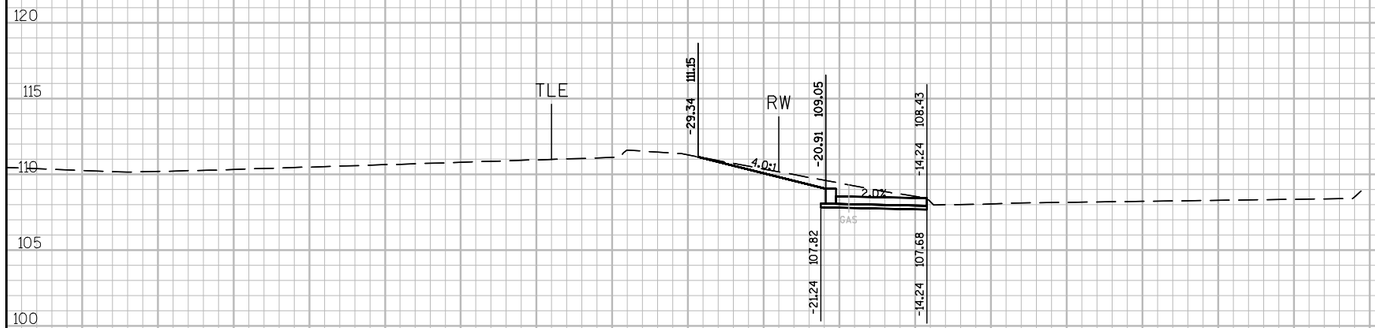

46+95.00

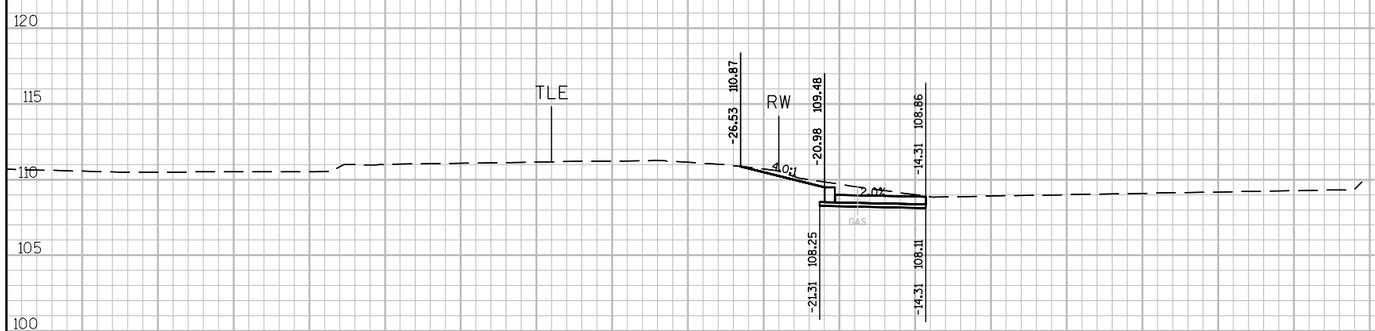

46+53.31

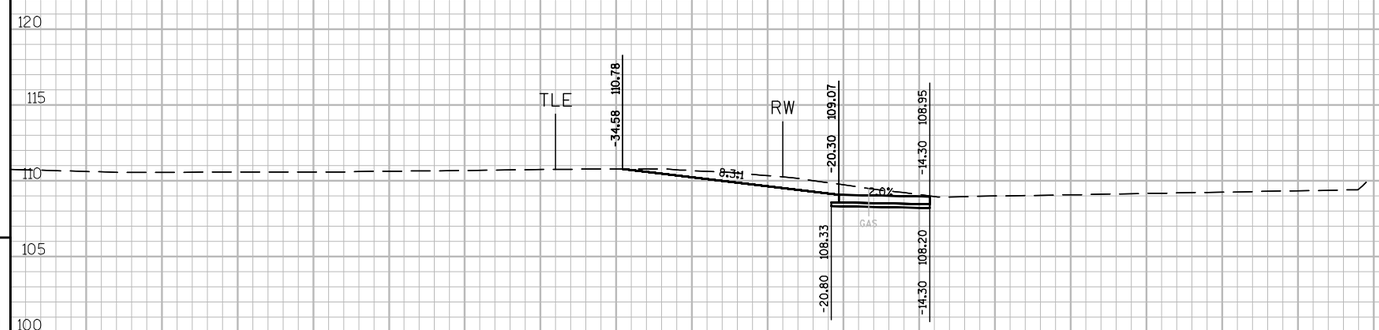

46+50.00

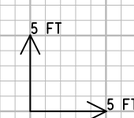

70 60 50 40 30 20 10 0 10 20 30 40 50 60 70 80

9 9

PROJECT NO: 4996-01-54	HWY: SIDEWALK GAP	COUNTY: SHEBOYGAN	CROSS SECTIONS: SEGMENT 15 TAYLOR DR.	SHEET 220	E

FILE NAME : L:\WORK\60158441\000_CADD\CIVIL\SEGMENT 5 & 15\SEG 15 XS BASE.DWG PLOT DATE : 7/11/2012 9:18 AM PLOT BY : HOLZWART, JOSEPH PLOT NAME : ----------

WISDOT/CADDS SHEET 21

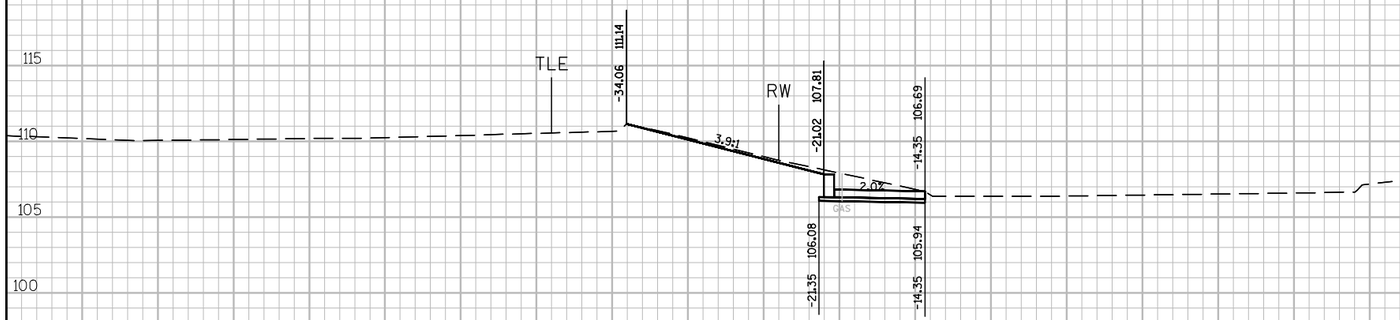

48+00.00

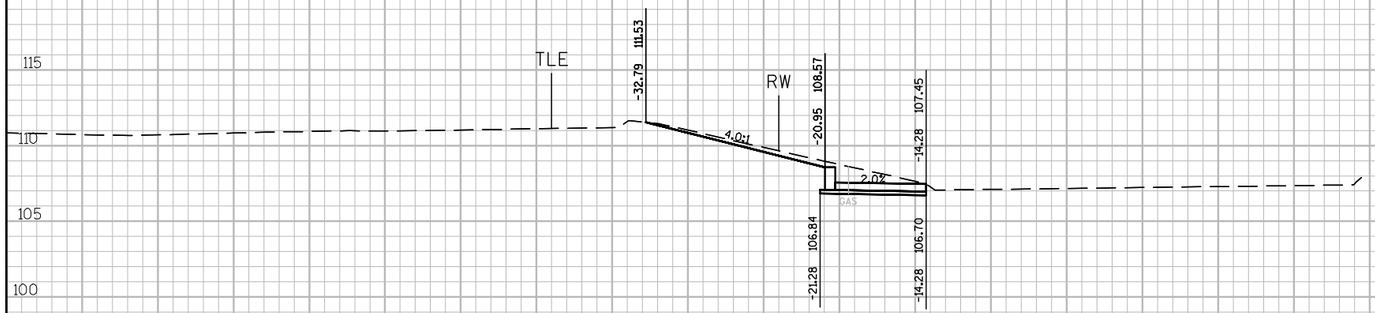

47+50.00

47+00.00

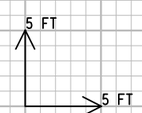

9

9

PROJECT NO: 4996-01-54	HWY: SIDEWALK GAP	COUNTY: SHEBOYGAN	CROSS SECTIONS: SEGMENT 15 TAYLOR DR.	SHEET 221	E

FILE NAME : L:\WORK\60158441\000_CADD\CIVIL\SEGMENT 5 & 15\SEG 15 XS BASE.DWG PLOT DATE : 7/11/2012 9:18 AM PLOT BY : HOLZWART, JOSEPH PLOT NAME : ----------

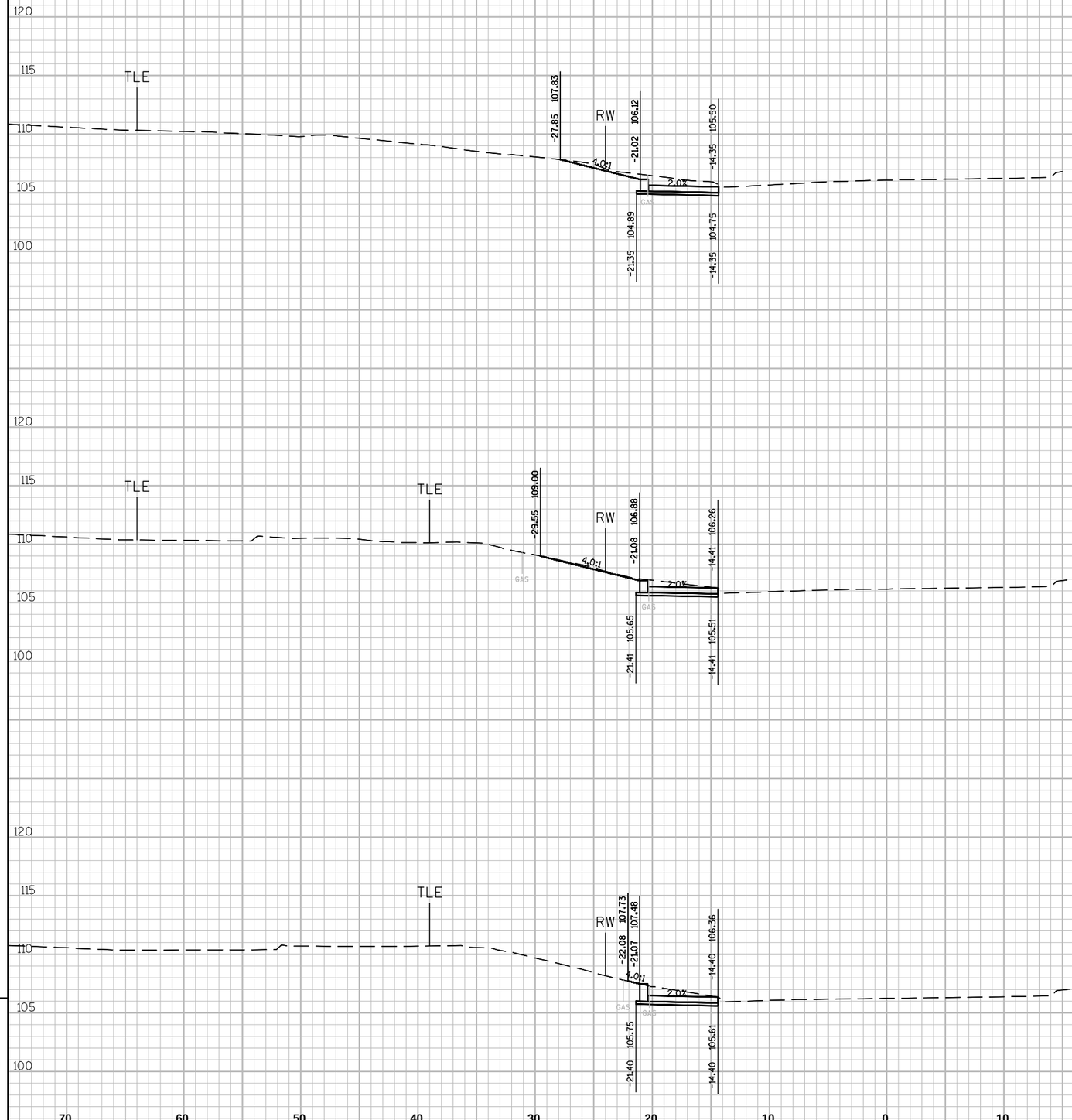

9

9

PROJECT NO: 4996-01-54	HWY: SIDEWALK GAP	COUNTY: SHEBOYGAN	CROSS SECTIONS: SEGMENT 15 TAYLOR DR.	SHEET 222	E

FILE NAME : L:\WORK\60158441\000_CADD\CIVIL\SEGMENT 5 & 15\SEG 15 XS BASE.DWG PLOT DATE : 7/11/2012 9:18 AM PLOT BY : HOLZWART, JOSEPH PLOT NAME : ----------

WISDOT/CADDS SHEET 21

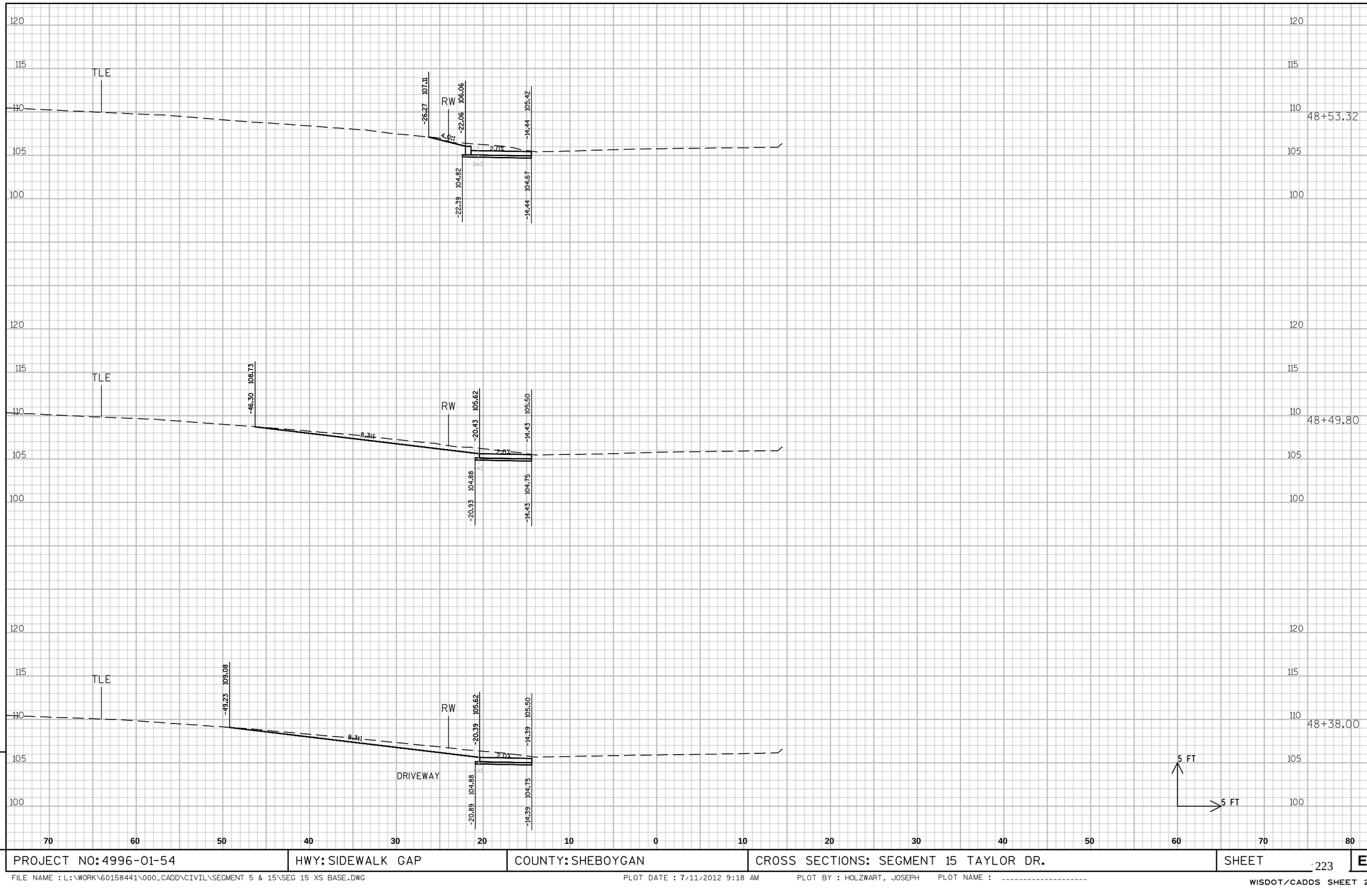

9

9

PROJECT NO: 4996-01-54	HWY: SIDEWALK GAP	COUNTY: SHEBOYGAN	CROSS SECTIONS: SEGMENT 15 TAYLOR DR.	SHEET 223	E

FILE NAME : L:\WORK\60158441\000_CADD\CIVIL\SEGMENT 5 & 15\SEG 15 XS BASE.DWG PLOT DATE : 7/11/2012 9:18 AM PLOT BY : HOLZWART, JOSEPH PLOT NAME : ----------

WISDOT/CADDS SHEET 21

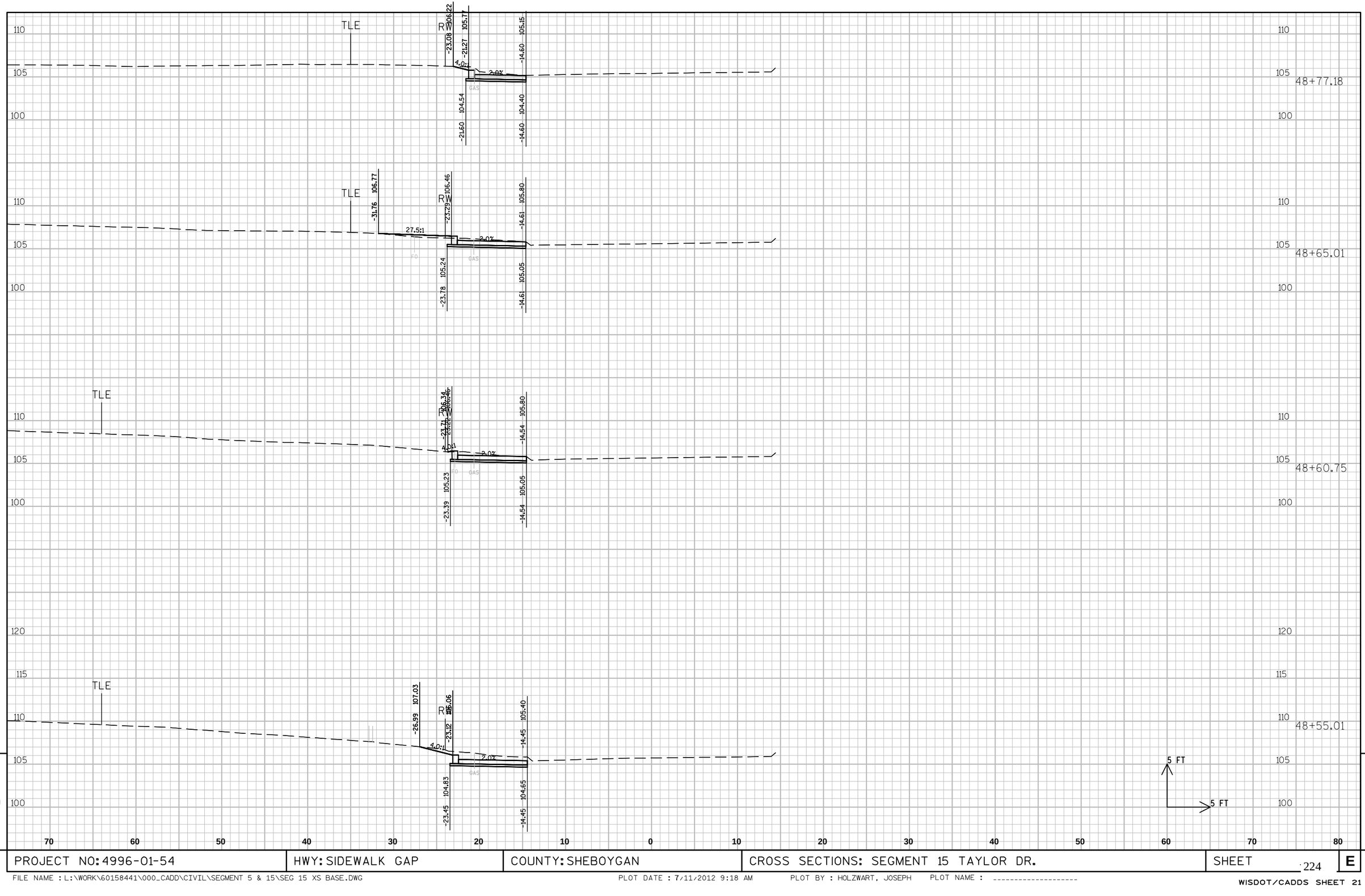

PROJECT NO: 4996-01-54	HWY: SIDEWALK GAP	COUNTY: SHEBOYGAN	CROSS SECTIONS: SEGMENT 15 TAYLOR DR.	SHEET 224	E

FILE NAME : L:\WORK\60158441\000_CADD\CIVIL\SEGMENT 5 & 15\SEG 15 XS BASE.DWG PLOT DATE : 7/11/2012 9:18 AM PLOT BY : HOLZWART, JOSEPH PLOT NAME : ----------

WISDOT/CADDS SHEET 21

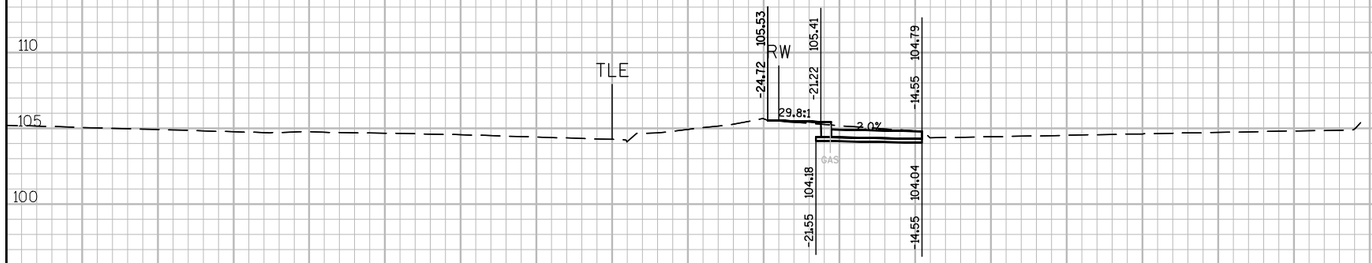

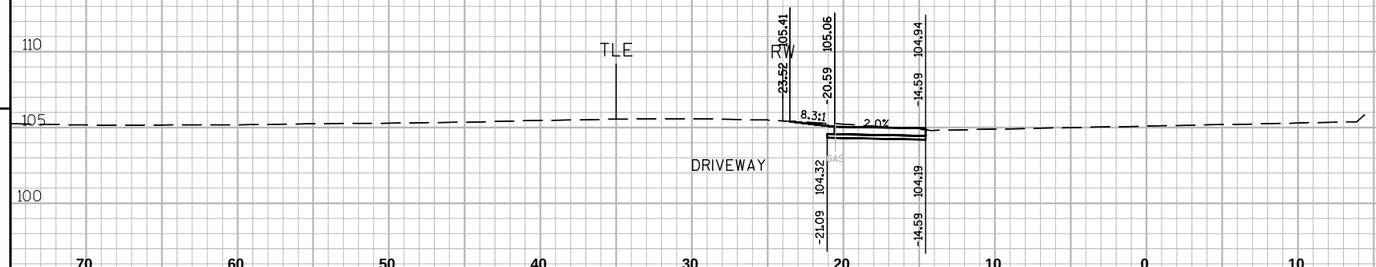

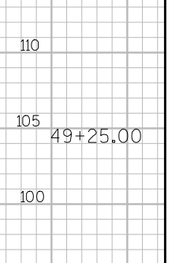

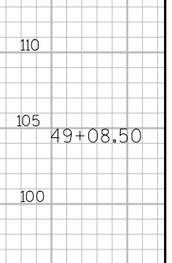

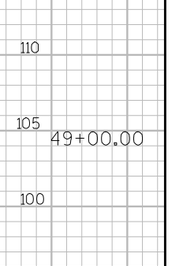

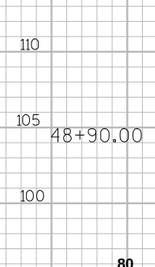

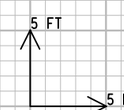

70 60 50 40 30 20 10 0 10 20 30 40 50 60 70 80

9 9

PROJECT NO: 4996-01-54	HWY: SIDEWALK GAP	COUNTY: SHEBOYGAN	CROSS SECTIONS: SEGMENT 15 TAYLOR DR.	SHEET 225	E

FILE NAME : L:\WORK\60158441\000_CADD\CIVIL\SEGMENT 5 & 15\SEG 15 XS BASE.DWG PLOT DATE : 7/11/2012 9:18 AM PLOT BY : HOLZWART, JOSEPH PLOT NAME : ----------

WISDOT/CADDS SHEET 21

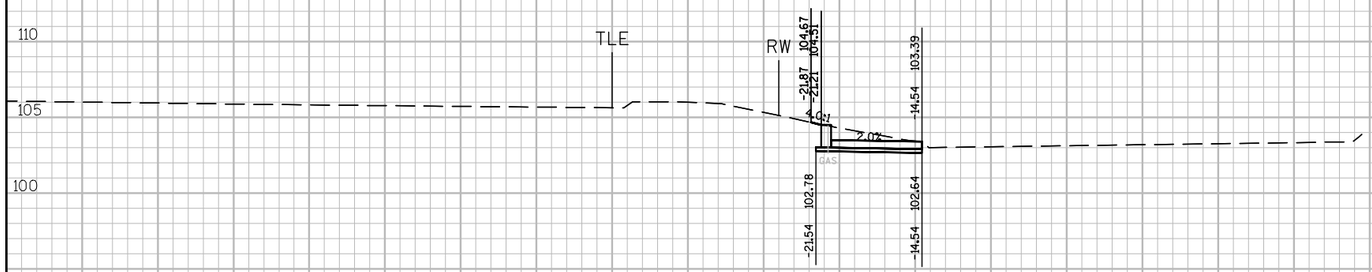

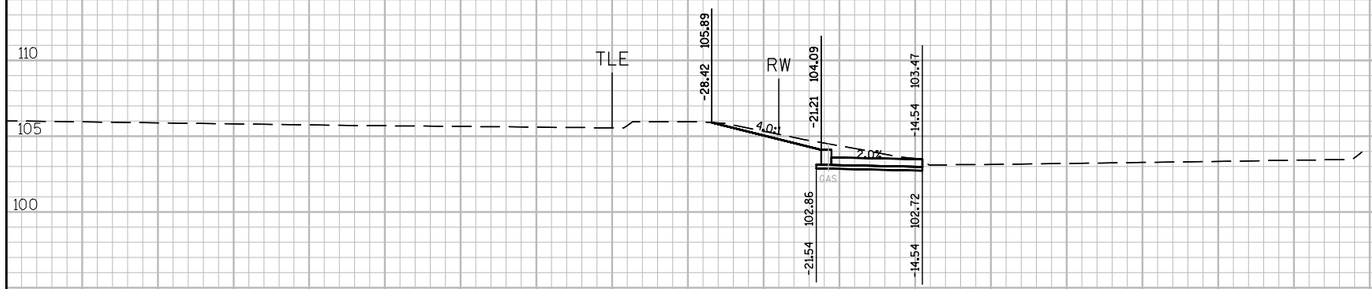

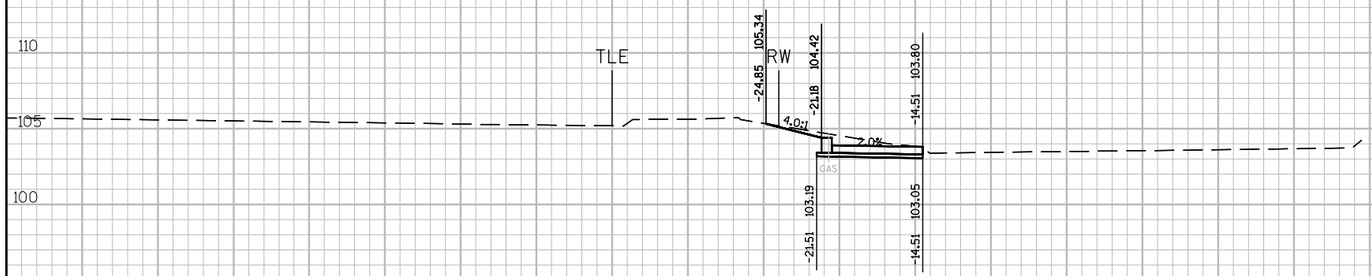

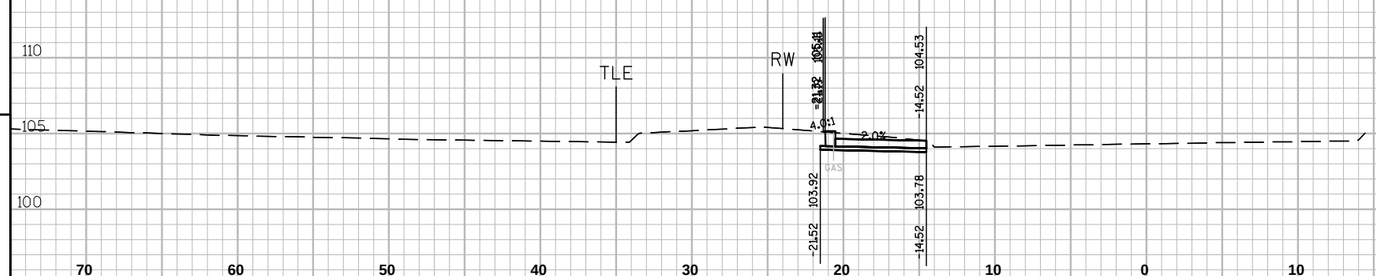

9

9

PROJECT NO: 4996-01-54	HWY: SIDEWALK GAP	COUNTY: SHEBOYGAN	CROSS SECTIONS: SEGMENT 15 TAYLOR DR.	SHEET 226	E

FILE NAME : L:\WORK\60158441\000_CADD\CIVIL\SEGMENT 5 & 15\SEG 15 XS BASE.DWG PLOT DATE : 7/11/2012 9:19 AM PLOT BY : HOLZWART, JOSEPH PLOT NAME : ----------

WISDOT/CADDS SHEET 21

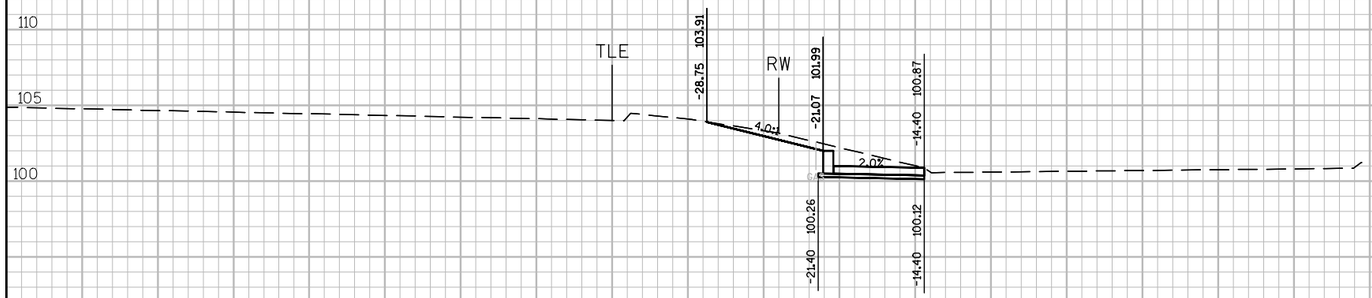

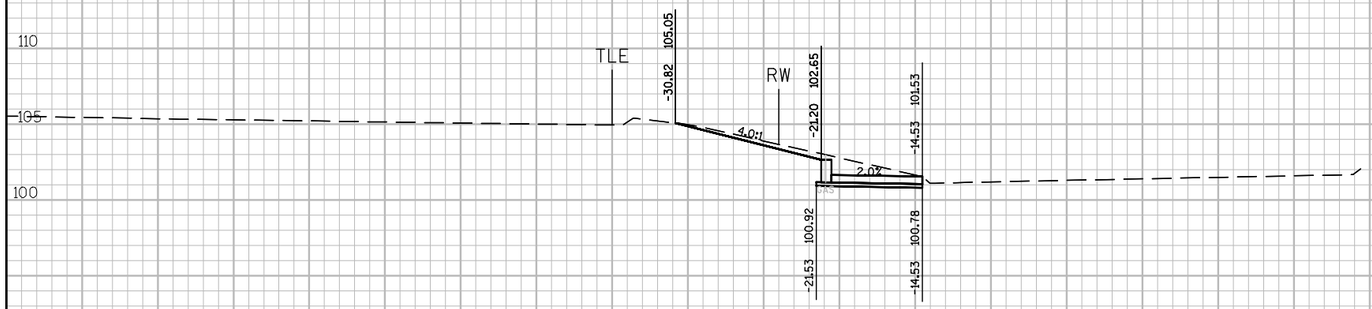

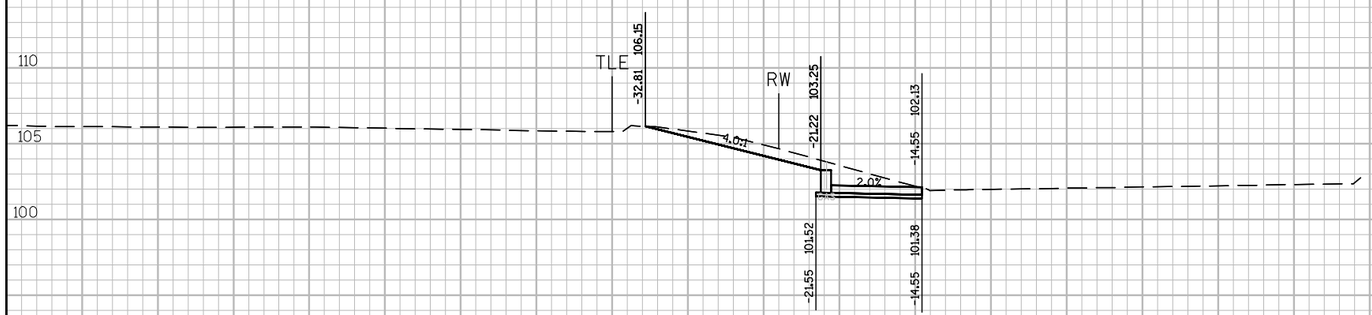

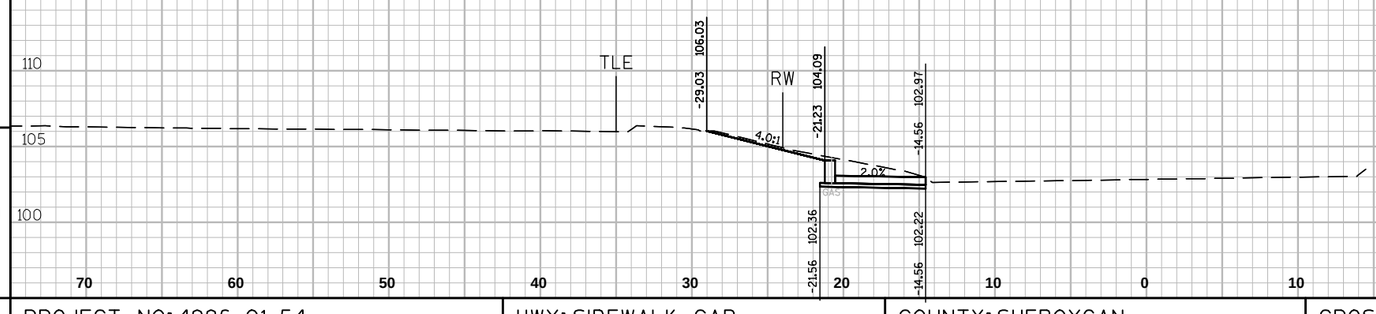

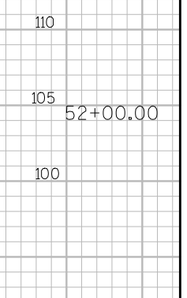

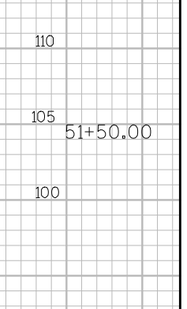

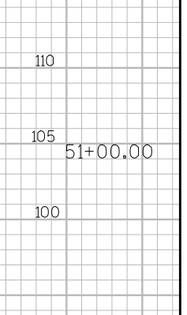

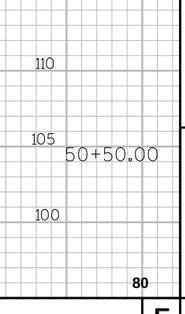

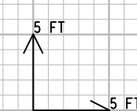

70 60 50 40 30 20 10 0 10 20 30 40 50 60 70 80

9 9

PROJECT NO: 4996-01-54	HWY: SIDEWALK GAP	COUNTY: SHEBOYGAN	CROSS SECTIONS: SEGMENT 15 TAYLOR DR.	SHEET 227	E

FILE NAME : L:\WORK\60158441\000_CADD\CIVIL\SEGMENT 5 & 15\SEG 15 XS BASE.DWG PLOT DATE : 7/11/2012 9:19 AM PLOT BY : HOLZWART, JOSEPH PLOT NAME : ----------

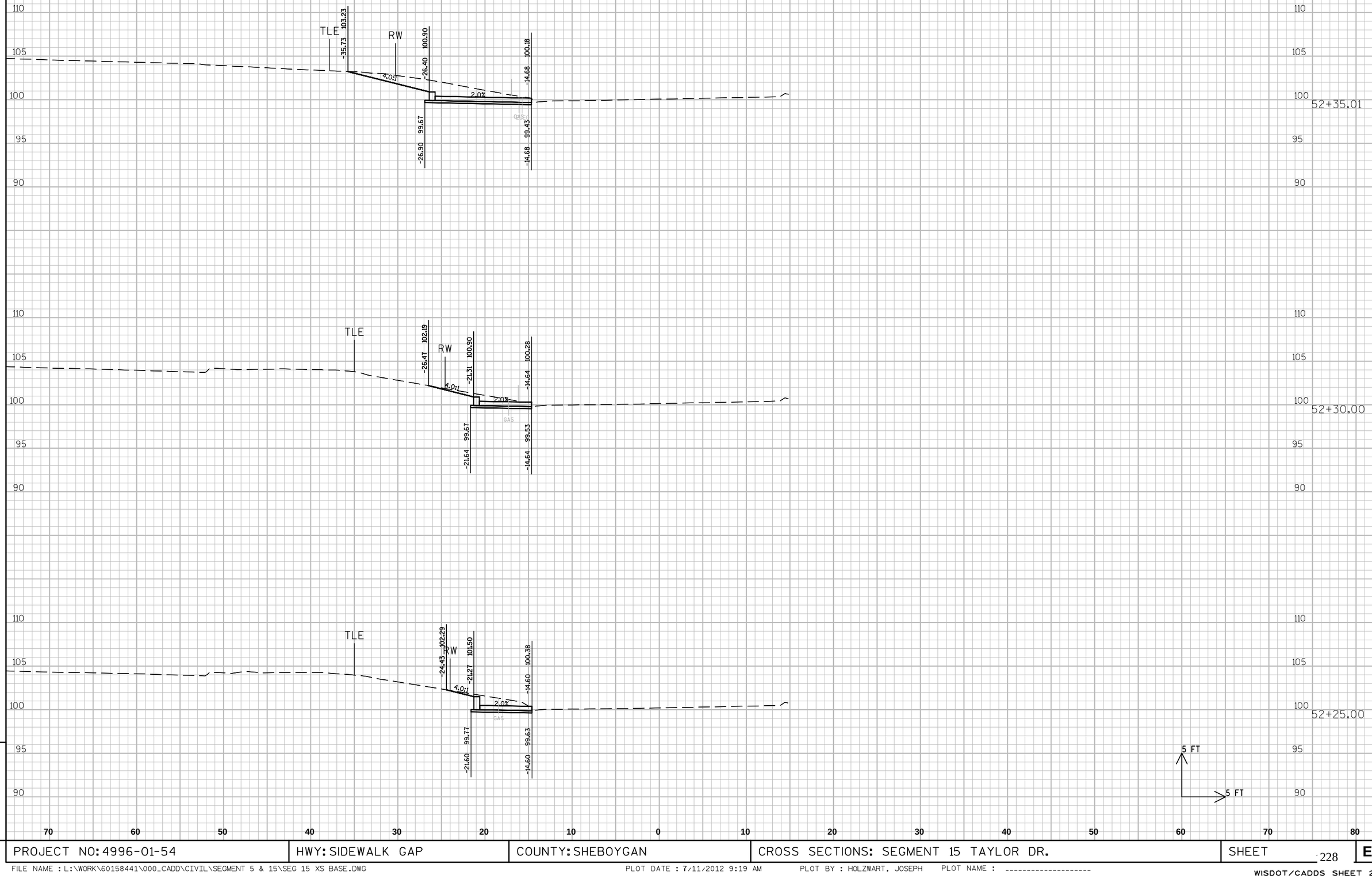

9

9

PROJECT NO: 4996-01-54	HWY: SIDEWALK GAP	COUNTY: SHEBOYGAN	CROSS SECTIONS: SEGMENT 15 TAYLOR DR.	SHEET 228	E

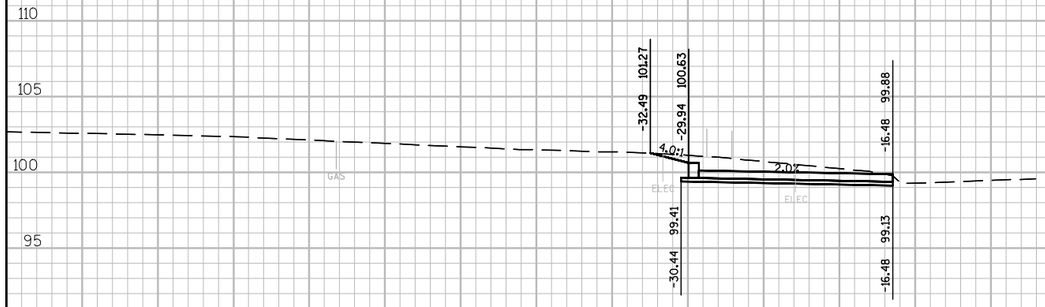

52+60.21

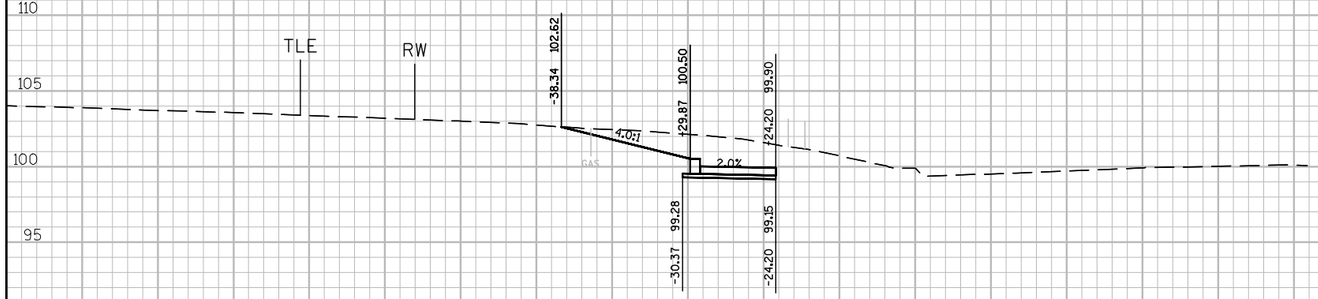

52+50.64

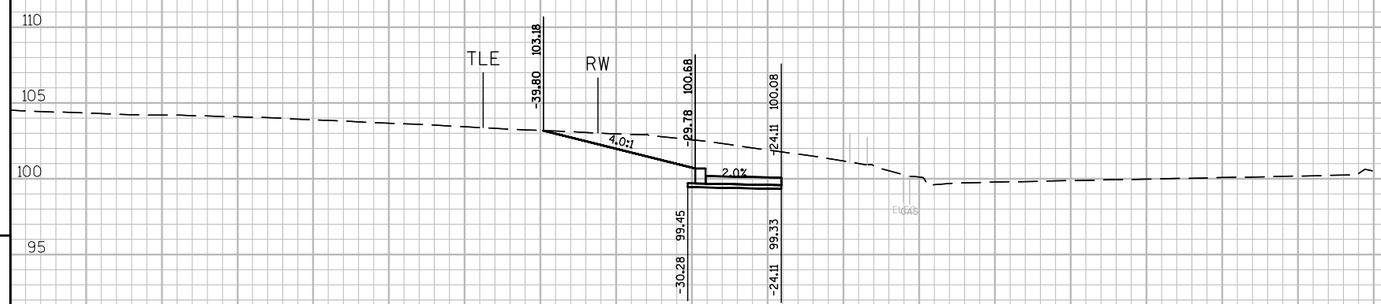

52+40.24

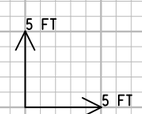

9 9

PROJECT NO: 4996-01-54	HWY: SIDEWALK GAP	COUNTY: SHEBOYGAN	CROSS SECTIONS: SEGMENT 15 TAYLOR DR.	SHEET 229	E

FILE NAME : L:\WORK\60158441\000_CADD\CIVIL\SEGMENT 5 & 15\SEG 15 XS BASE.DWG PLOT DATE : 7/11/2012 9:19 AM PLOT BY : HOLZWART, JOSEPH PLOT NAME : ----------

WISDOT/CADDS SHEET 21

Wisconsin Department of Transportation

Dedicated people creating transportation solutions
through innovation and exceptional service.

http://www.dot.wisconsin.gov