SWL

APRIL 2015

PROJECT ID: 5989-05-71,72

COUNTY: ROCK

ORDER OF SHEETS

Section No.	1	Title
Section No.	2	Typical Sections and Details (Incl. Erosion Control Plans)
Section No.	3	Estimate of Quantities
Section No.	3	Miscellaneous Quantities
Section No.	4	Right of Way Plat
Section No.	5	Plan and Profile
Section No.	6	Standard Detail Drawings
Section No.	7	Sign Plates
Section No.	8	Structure Plans
~~Section No.~~	~~9~~	~~Computer Earthwork Data~~
Section No.	9	Cross Sections

TOTAL SHEETS = 230

STATE OF WISCONSIN
DEPARTMENT OF TRANSPORTATION

PLAN OF PROPOSED IMPROVEMENT

INMAN PARKWAY EXTENSION, CITY OF BELOIT

(PRAIRIE AVENUE - SHOPIERE ROAD)

CTH BT

ROCK COUNTY

STATE PROJECT NUMBER	STATE PROJECT NUMBER
5989-05-71	5989-05-72

STATE PROJECT	FEDERAL PROJECT	
	PROJECT	CONTRACT
5989-05-71		
5989-05-72	WISC 2015180	1

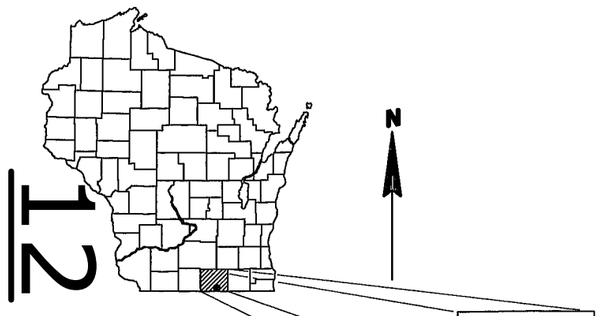

DESIGN DESIGNATION

A.A.D.T. (2015)	=	2,200
A.A.D.T. (2035)	=	6,000
D.H.V. (2035) (k100)	=	382
D.D.	=	59/41
T.	=	9.0%
DESIGN SPEED	=	50 MPH
ESALS	=	1,540,000

BEGIN PROJECT 5989-05-72
STA 16+88.60'BT'
X = 496,476.596
Y = 222,147.303

END PROJECT 5989-05-72
BEGIN PROJECT 5989-05-71
STA 70+14.55'BT'
X = 501,802.512
Y = 222,128.184

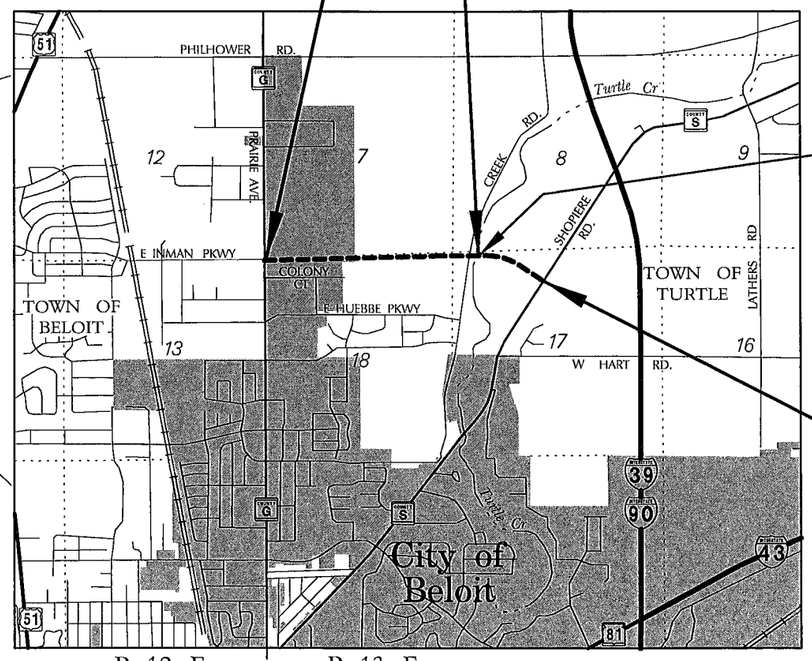

STRUCTURE B-53-0292

END PROJECT 5989-05-71
STA 89+91.83'BT'
X = 503,653.908
Y = 221,620.439

LAYOUT
SCALE 0 0.5 1 MILE

TOTAL NET LENGTH OF CENTERLINE = 1.383 MI.

COORDINATES ON THIS PLAN ARE REFERENCED TO THE WISCONSIN COUNTY COORDINATE SYSTEM (WCCS), ROCK COUNTY, HORIZONTAL DATUM NAD 83(2007)

CONVENTIONAL SYMBOLS

PLAN
- CORPORATE LIMITS
- PROPERTY LINE (PL + 58.1)
- LOT LINE
- LIMITED HIGHWAY EASEMENT
- EXISTING RIGHT OF WAY
- PROPOSED OR NEW R/W LINE
- SLOPE INTERCEPT
- REFERENCE LINE
- EXISTING CULVERT
- PROPOSED CULVERT (Box or Pipe)
- COMBUSTIBLE FLUIDS (CAUTION)
- MARSH AREA
- WOODED OR SHRUB AREA

PROFILE
- GRADE LINE
- ORIGINAL GROUND
- MARSH OR ROCK PROFILE (To be noted as such) (ROCK)
- SPECIAL DITCH (LABEL)
- GRADE ELEVATION (95.36)
- CULVERT (Profile View)

UTILITIES
- HIGH VOLTAGE (CAUTION)
- ELECTRIC (E)
- FIBER OPTIC (FO)
- GAS (G)
- SANITARY SEWER (SAN)
- STORM SEWER (SS)
- TELEPHONE (T)
- WATER (W)
- UTILITY PEDESTAL
- POWER POLE
- TELEPHONE POLE

ORIGINAL PLANS PREPARED BY:
AYRES ASSOCIATES

WISCONSIN JOHN A. BANECK E-37477 MADISON WI PROFESSIONAL ENGINEER
10/10/14

WISCONSIN SARA A. ARNOLD 39050 FRANKLIN WI PROFESSIONAL ENGINEER
10/10/14

ACCEPTED FOR
County of ROCK
10-13-14 (Date)
Director of Public Works

STATE OF WISCONSIN
DEPARTMENT OF TRANSPORTATION

PREPARED BY
Surveyor: AYRES ASSOCIATES
Designer: AYRES ASSOCIATES
Management Consultant: KJOHNSON ENGINEERS

APPROVED FOR THE DEPARTMENT
DATE: 10/30/14
(Management Consultant Signature)

E

FILE NAME : N:\450351\DGN\Plan Sheets\5989-05-71_010101_ti.dgn | PLOT DATE : 10/10/2014 | PLOT BY : dm253 | PLOT NAME : | PLOT SCALE : 1:200

WISDOT/CADDS SHEET 15

GENERAL NOTES

THE LOCATIONS OF EXISTING UTILITY INSTALLATIONS AS SHOWN ON THE PLANS ARE APPROXIMATE. THEY ARE BASED UPON SURVEY AS STAKED IN THE FIELD BY THE RESPECTIVE UTILITIES, AND ARE SUPPLEMENTED WITH UTILITY MAPS. THERE MAY BE OTHER UTILITY INSTALLATIONS WITHIN THE PROJECT AREA THAT ARE NOT SHOWN.

COORDINATES AND BEARINGS ON THIS PLAN ARE REFERENCED TO THE WISCONSIN COUNTY COORDINATE SYSTEM (WCCS), ROCK COUNTY, NAD83/2007 ADJUSTMENT. THE COORDINATES SHOWN ARE GRID COORDINATES AND ARE USED AS GRID OR GROUND VALUES.

PLAN ELEVATIONS ARE REFERENCED TO NGVD88.

NO TREES OR SHRUBS ARE TO BE REMOVED WITHOUT THE APPROVAL OF THE ENGINEER.

CONTRACTOR SHALL VERIFY ALL UTILITY DEPTHS AT ALL PROPOSED CONNECTION POINTS TO EXISTING SYSTEMS.

DISTURBED AREAS WITHIN THE RIGHT-OF-WAY AND WASTE AREAS, EXCEPT THE AREAS WITHIN THE FINISHED SHOULDER POINTS, SHALL BE FERTILIZED, SEEDED, MULCHED, OR TEMPORARY SEEDED AS SHOWN IN THE PLANS AND AS DIRECTED BY THE ENGINEER.

CONTRACTOR SHOULD NOT OPERATE BEYOND SLOPE INTERCEPTS AS SHOWN IN THE PLANS WHEN ADJACENT TO WETLANDS OR ENVIRONMENTALLY SENSITIVE AREAS.

THE QUANTITY OF THE ITEMS FOR EROSION PROTECTION INCLUDE AN UNDISTRIBUTED AMOUNT FOR CONTROL OF SEDIMENT AND SHALL BE REMOVED AS AREAS ARE STABILIZED OR AT THE DIRECTION OF THE ENGINEER. THE DISTRIBUTION AND LOCATION OF THESE MATERIALS ARE TO BE DETERMINED BY THE ENGINEER.

AFTER PLACING CURB & GUTTER, ANY EXCESS CONCRETE PROTRUDING BEYOND THE BACK OF CURB LINE SHALL BE REMOVED BY THE CONTRACTOR BEFORE BACKFILLING.

PAVING OPERATIONS SHALL BE CONSISTENT WITH THE PLAN TYPICAL SECTIONS AND CONSTRUCTED TO PREVENT LONGITUDINAL JOINTS FROM BEING LOCATED WITHIN A DRIVING OR TURNING LANE.

HMA PAVEMENT WEIGHT CALCULATIONS ARE BASED ON 112 LBS/SY-IN. ASPHALTIC MATERIAL IS ESTIMATED AT 5.5% OF HMA PAVEMENT QUANTITY.

HMA PAVEMENT LAYERS AND ASPHALTIC MATERIAL:
4.75" HMA PAVEMENT TYPE E-3
2.5" LOWER LAYER
- 19.0mm NOMINAL SIZE AGGREGATE, ASPHALTIC MATERIAL PG 58-28
2.25" UPPER LAYER
- 12.5mm NOMINAL SIZE AGGREGATE, ASPHALTIC MATERIAL PG 58-28

EXCAVATION BELOW SUBGRADE (EBS) IS ANTICIPATED FOR THIS PROJECT. BACKFILL EBS AREAS WITH SELECT CRUSHED MATERIAL WITH GEOGRID REINFORCEMENT. MORE INFORMATION ABOUT THE ESTIMATED EBS AND BACKFILL MATERIALS IS PROVIDED IN THE EARTHWORK SUMMARY TABLE AND MISCELLANEOUS QUANTITY TABLES.

DIGGERS HOTLINE
Dial 811 or (800) 242-8511
www.DiggersHotline.com

ABBREVIATIONS

A.D.T.	AVERAGE DAILY TRAFFIC
ATMS	ARTERIAL TRAFFIC MANAGEMENT SYSTEM
BM	BENCHMARK
BOC	BACK OF CURB
BTWN	BETWEEN
C&G	CURB AND GUTTER
C.E.	COMMERCIAL ENTRANCE
CONST.	CONSTRUCTION
CP	CONTROL POINT
CTR.	CENTER
D.D.	DIRECTIONAL DISTIBUTION
D.H.V.	DESIGN HOURLY VOLUME
DMS	DYNAMIC MESSAGE SIGN
EB	EASTBOUND
EXIST	EXISTING
GALV.	GALVANIZE
HMA	HOT MIX ASPHALT
H.S.	HIGH STRENGTH
ITS	INTELLIGENT TRAFFIC SYSTEM
MAX	MAXIMUM
MIN	MINIMUM
NB	NORTHBOUND
NOR	NORMAL
PC	POINT OF CURVATURE
PCC	POINT OF COMMON CURVATURE
PGL	PROFILE GRADE LINE
PI	POINT OF INTERSECTION
PRC	POINT OF REVERSE CURVATURE
PT	POINT OF TANGENCY
PVT	PAVEMENT
R/L	REFERENCE LINE
R/W	RIGHT-OF-WAY
REQ'D	REQUIRED
SB	SOUTHBOUND
SYM	SYMMETRICAL
T.	PERCENT TRUCKS
TCC	TRAFFIC CONDITION CAMERA
TYP.	TYPICAL
VAR.	VARIABLE
WB	WESTBOUND
Wt.	WEIGHT
X-WALK	CROSS WALK

ORDER OF SECTION 2 SHEETS

GENERAL NOTES & CONTACTS
TYPICAL SECTIONS
CONSTRUCTION DETAILS
INTERSECTION DETAILS
PLAN DETAILS
EROSION CONTROL
STORM SEWER
PERMANENT SIGNING & PAVEMENT MARKING
TRAFFIC CONTROL AND CONSTRUCTION STAGING
ALIGNMENT DIAGRAM

UTILITY CONTACTS

** - INDICATES CONTACT IS NOT A MEMBER OF DIGGERS HOTLINE

ALLIANT ENERGY - ELECTRIC & GAS

(WISCONSIN POWER & LIGHT COMPANY)
JASON HOGAN
4902 N. BILTMORE LANE
P.O. BOX 77007
MADISON, WI 53707
JASONHOGAN@ALLIANTENERGY.COM

AMERICAN TRANSMISSION COMPANY

MIKE OLSEN
801 O'KEEFE ROAD, PO BOX 6113
DE PERE, WI 54115
(920) 338-6582
MOLSEN@ATCLLC.COM

AT&T WISCONSIN - COMMUNICATION

CAROL ANASON
316 W. WASHINGTON AVENUE
MADISON, WI 53703
(608) 252-2385
CA2624@ATT.COM

CHARTER - COMMUNICATION

TOM PHILLIPS
1348 PLAINFIELD AVENUE
JANESVILLE, WI 53545
(608) 373-7537
THOMAS.PHILLIPS@CHARTERCOM.COM

CITY OF BELOIT

MIKE FLESCH, P.E.
2400 SPRING COURT
BELOIT, WI 53511
(608) 364-6690
FLESCHM@BELOITWI.GOV

OTHER CONTACTS

ROCK COUNTY DIRECTOR OF PUBLIC WORKS

BENJAMIN COOPMAN, P.E.
3715 NEWVILLE ROAD
JANESVILLE, WI 53545
(608) 757-5450
COOPMAN@CO.ROCK.WI.US

PROJECT DESIGNER - AYRES ASSOCIATES

JOHN BANECK, P.E.
5201 E. TERRACE AVE, SUITE 200
MADISON, WI 53718
(608) 443-1284
BANECKJ@AYRESASSOCIATES.COM

WDNR LIASON

LAURA BUB
3911 FISH HATCHERY ROAD
MADISON, WI 53711
(608) 275-3485
LAURA.BUB@WISCONSIN.GOV

ROCK COUNTY SURVEYOR

JASON HOULE
ROCK COUNTY COURTHOUSE
1ST FLOOR COURTHOUSE EAST
51 SOUTH MAIN STREET
JANESVILLE, WI 53545
(608) 757-5658
HOULE@CO.ROCK.WI.US

2

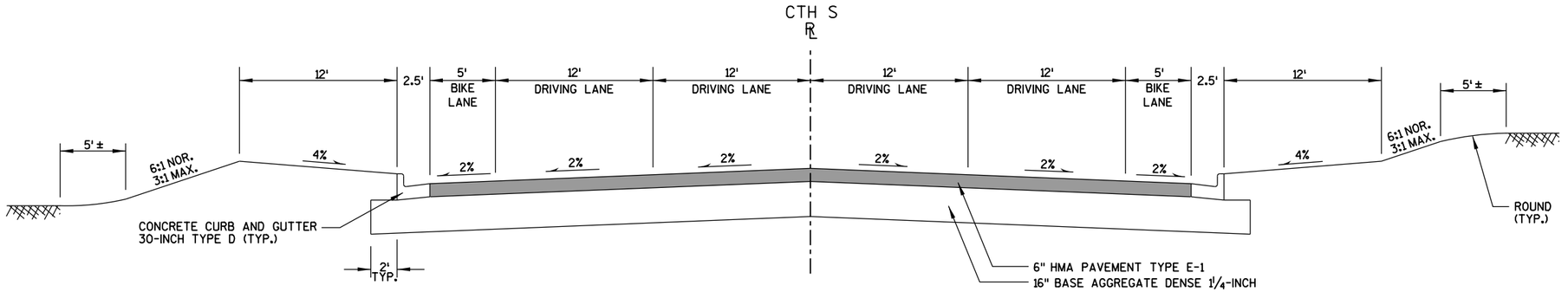

TYPICAL EXISTING SECTION - CTH S

SOUTH OF STA 125+00'S'±

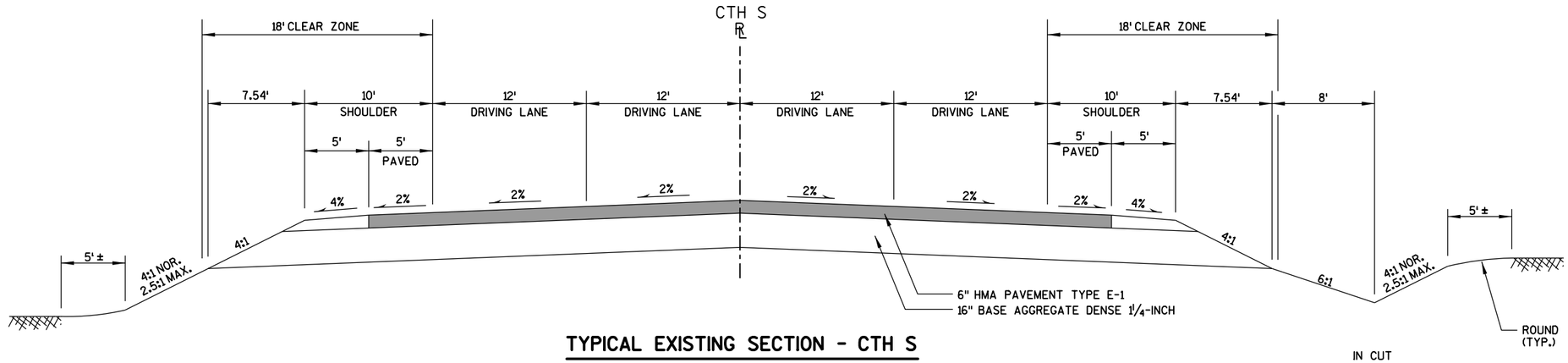

TYPICAL EXISTING SECTION - CTH S

STA 125+00'S'± - 128+20'S'±
STA 128+20'S'± - 131+25'S'±, RT

IN CUT

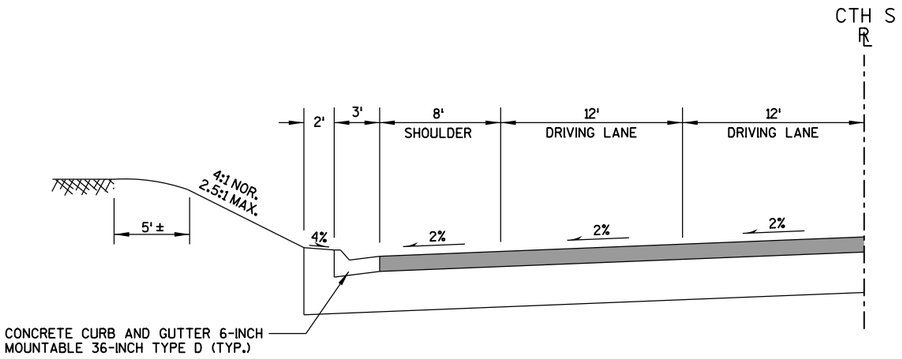

TYPICAL EXISTING HALF SECTION - CTH S

STA 128+20'S'± - 131+25'S'±, LT

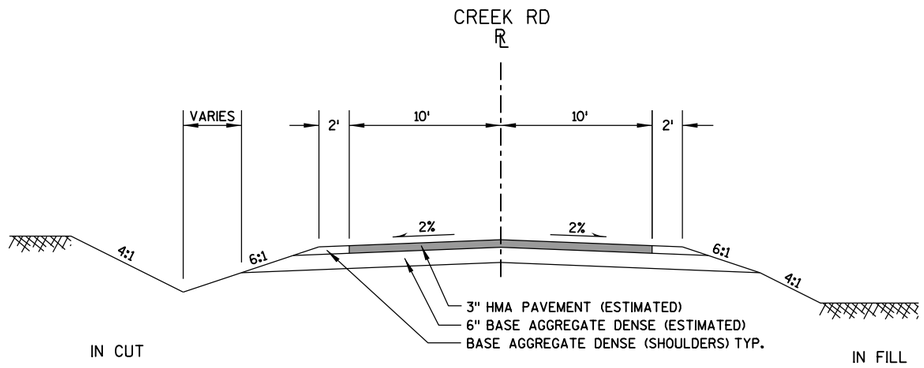

IN CUT

IN FILL

TYPICAL EXISTING SECTION - CREEK ROAD

PROJECT NO: 5989-05-71,72	HWY: CTH BT	COUNTY: ROCK	TYPICAL SECTIONS	SHEET 3	E

FILE NAME : N:\450351\DGN\Plan Sheets\5989-05-71_020301_ts.dgn PLOT BY : dm253 PLOT DATE : 1/27/2015 PLOT SCALE : 1:200

WISDOT/CADDS SHEET 42

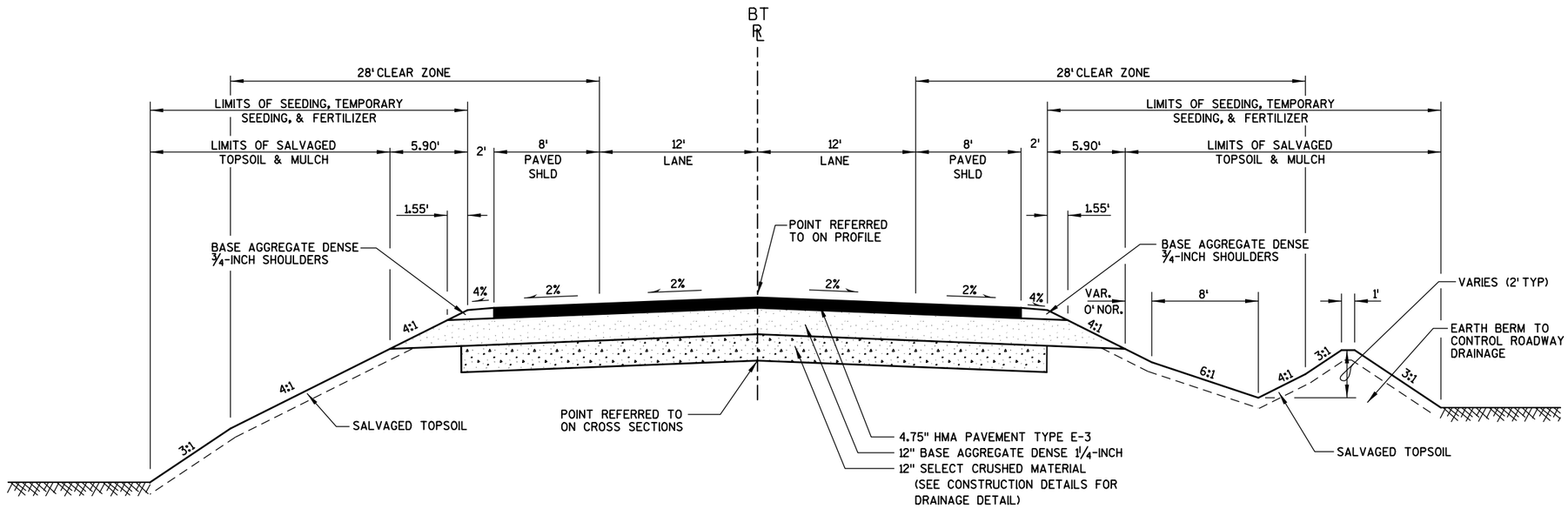

TYPICAL FINISHED SECTION - CTH BT

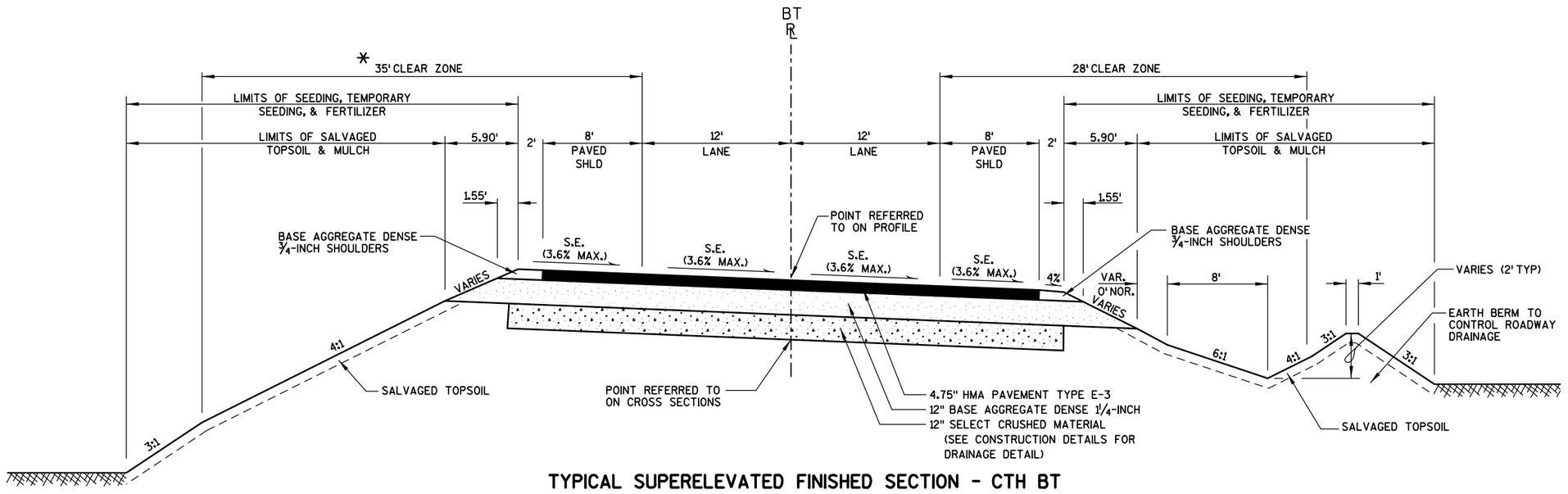

TYPICAL SUPERELEVATED FINISHED SECTION - CTH BT

* CLEAR ZONE ON OUTSIDE OF CURVE IS 1.25 x NORMAL CLEAR ZONE

PROJECT NO: 5989-05-71,72	HWY: CTH BT	COUNTY: ROCK	TYPICAL SECTIONS	SHEET 4	E

	HYDROLOGIC SOIL GROUP											
	A			B			C			D		
	SLOPE RANGE (PERCENT)			SLOPE RANGE (PERCENT)			SLOPE RANGE (PERCENT)			SLOPE RANGE (PERCENT)		
LAND USE:	0-2	2-6	6 & OVER	0-2	2-6	6 & OVER	0-2	2-6	6 & OVER	0-2	2-6	6 & OVER
ROW CROPS	.08 .22	.16 .30	.22 .38	.12 .26	.20 .34	.27 .44	.15 .30	.24 .37	.33 .50	.19 .34	.28 .41	.38 .56
MEDIAN STRIP-TURF	.19 .24	.20 .26	.24 .30	.19 .25	.22 .28	.26 .33	.20 .26	.23 .30	.30 .37	.20 .27	.25 .32	.30 .40
SIDE SLOPE-TURF			.25 .32			.27 .34			.28 .36			.30 .38
PAVEMENT:												
ASPHALT	.70 - .95											
CONCRETE	.80 - .95											
BRICK	.70 - .80											
DRIVES, WALKS	.75 - .85											
ROOFS	.75 - .95											
GRAVEL ROADS, SHOULDERS	.40 - .60											

TOTAL PROJECT AREA = 26.49 ACRES
TOTAL AREA EXPECTED TO BE DISTURBED BY CONSTRUCTION ACTIVITIES = 21.25 ACRES

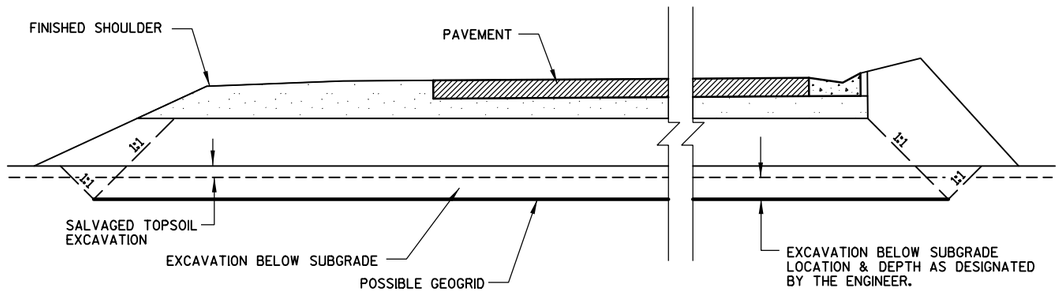

NOTE:
EXACT LOCATIONS AND EXTENT OF EXCAVATION BELOW SUBGRADE (E.B.S.) SHALL BE DETERMINED BY THE ENGINEER IN THE FIELD. AREA TO BE BACKFILLED MUST BE SELECT CRUSHED MATERIAL, OR A COMBINATION OF SELECT CRUSHED MATERIAL WITH A GEOGRID LAYER, SUBJECT TO THE APPROVAL OF THE ENGINEER IN THE FIELD.

DETAIL FOR EXCAVATION BELOW SUBGRADE

(CROSS SECTION SHOWING UNDERCUT)

2

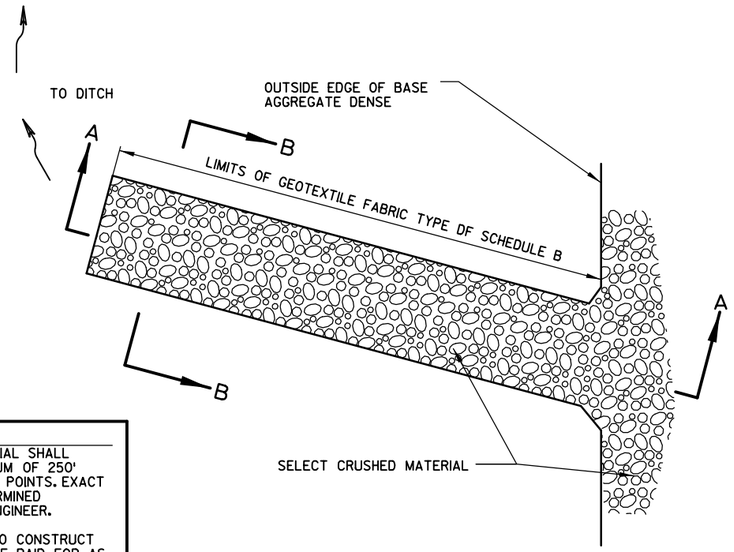

NOTES:
SELECT CRUSHED MATERIAL SHALL BE DRAINED AT A MINIMUM OF 250' INTERVALS AND AT LOW POINTS. EXACT LOCATIONS TO BE DETERMINED IN THE FIELD BY THE ENGINEER.

EXCAVATION REQUIRED TO CONSTRUCT FRENCH DRAINS SHALL BE PAID FOR AS "EXCAVATION COMMON".

PLAN VIEW

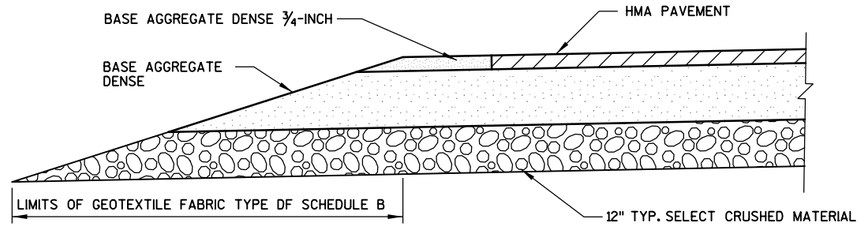

SECTION A - A

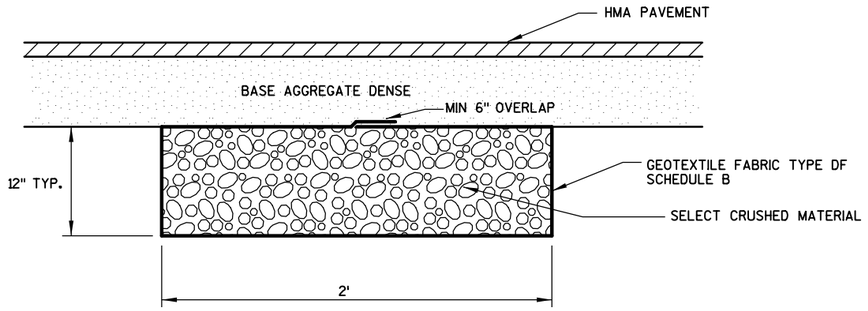

SECTION B - B

DETAIL FOR DRAINAGE OF SELECT CRUSHED MATERIAL IN DITCH SECTIONS

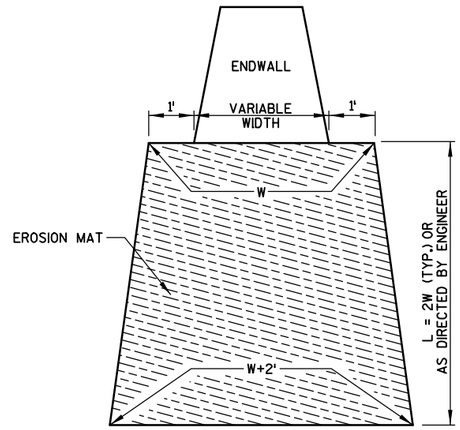

EROSION MAT OR SOD TREATMENT AT CULVERTS

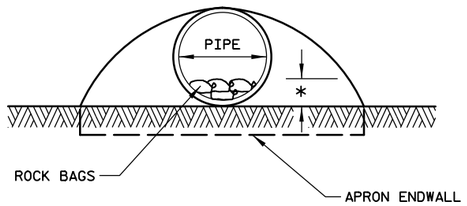

END VIEW

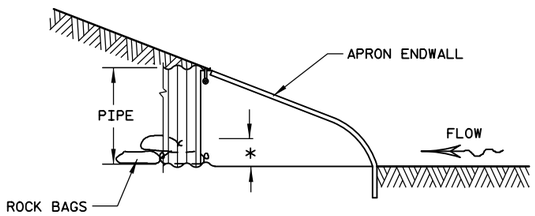

SIDE VIEW

CULVERT PIPE CHECK

* PLACE AT 1/3 PIPE DIAMETER, 6" MINIMUM, OR AS DIRECTED BY THE ENGINEER

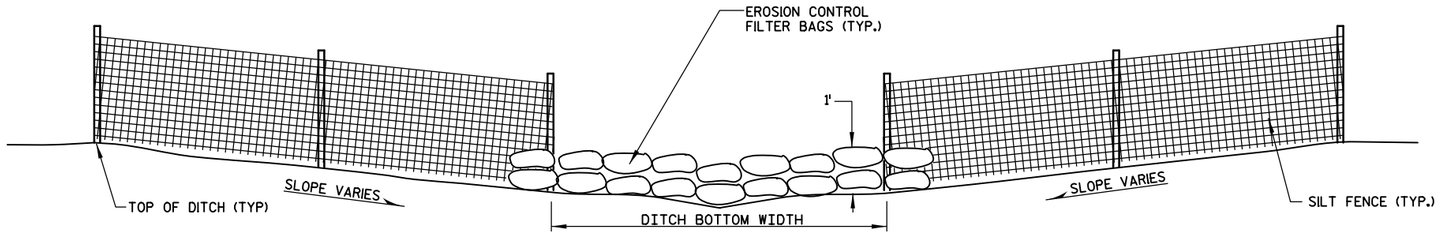

PROFILE

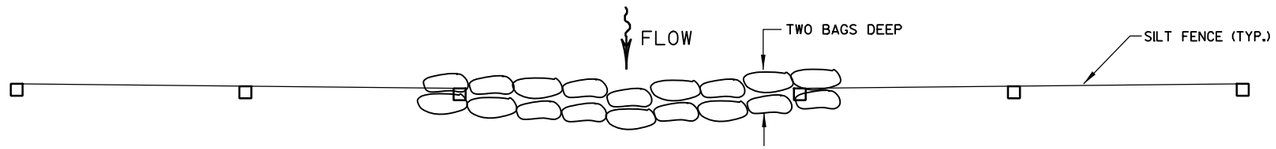

PLAN

EROSION CONTROL FILTER BAGS DETAIL

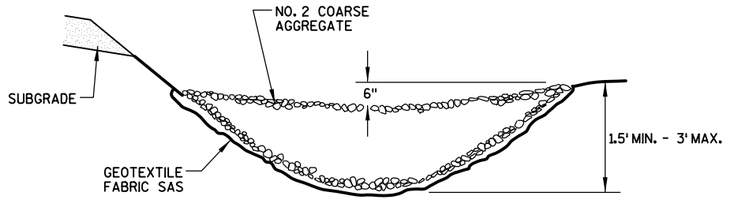

CROSS SECTIONAL VIEW

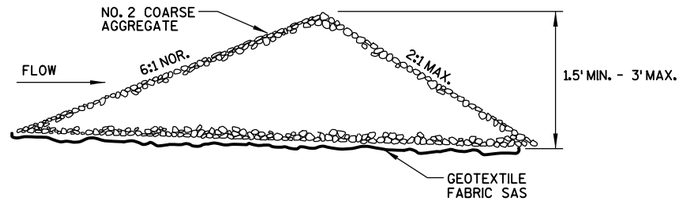

SIDE VIEW (SINGLE)

DETAIL FOR STONE OR ROCK DITCH CHECK

PROJECT NO:5989-05-71,72	HWY:CTH BT	COUNTY:ROCK	CONSTRUCTION DETAILS	SHEET 6	E

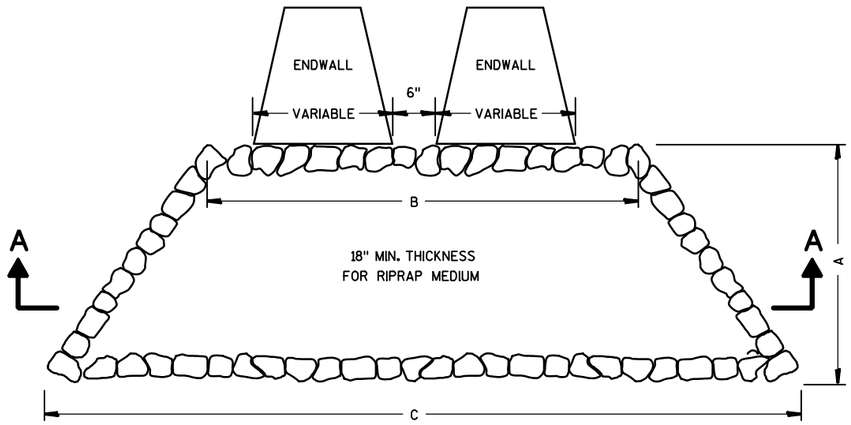

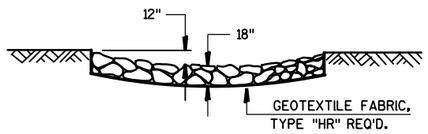

SECTION A-A

RIPRAP MEDIUM TREATMENT AT CULVERTS

STATION	A	B	C
22+50	9'	8'	8'
36+50	7'	12.5'	14.5'
75+50	17'	20.3'	25.5'
86+00*	9'	6'	11'
87+00	19'	20.3'	27.5'
128+00**	35	35	46

* SINGLE APRON ENDWALL

** IRREGULAR SHAPE, SEE EROSION CONTROL PLAN

NOTE: RIPRAP MEDIUM DIMENSIONS SHALL BE ADJUSTED AS TO MAINTAIN 2-FT LATERAL CLEARANCE BETWEEN RIGHT OF WAY AND EDGE OF RIPRAP.

2

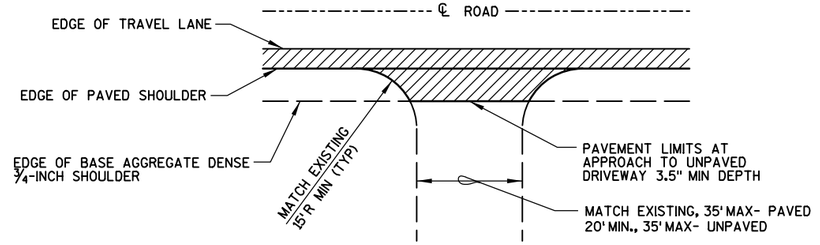

PLAN VIEW - SHOULDERS

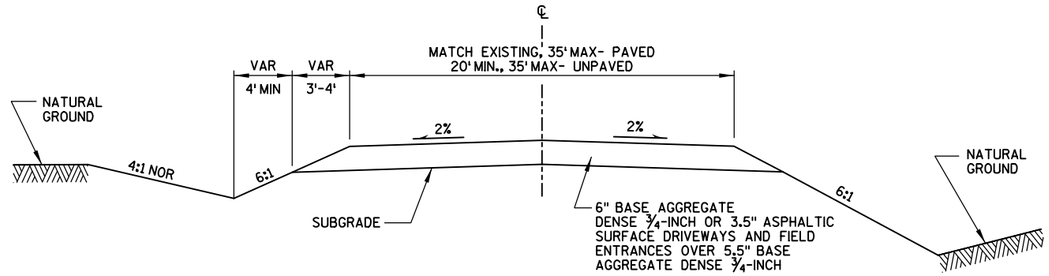

IN CUT

CROSS SECTION VIEW

IN FILL

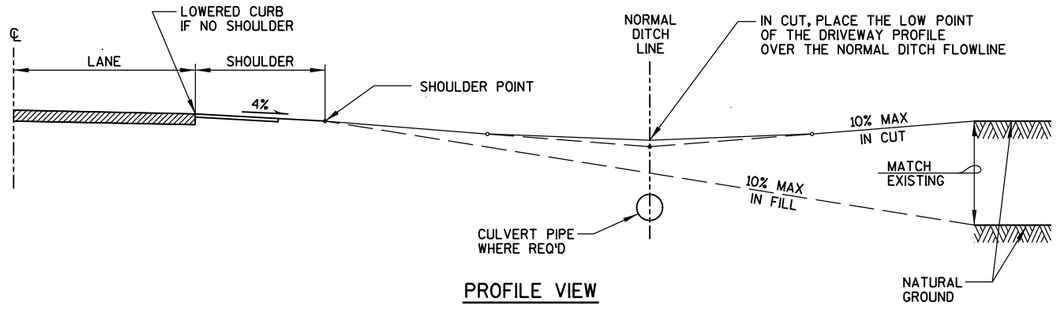

PROFILE VIEW

DETAILS FOR ENTRANCES

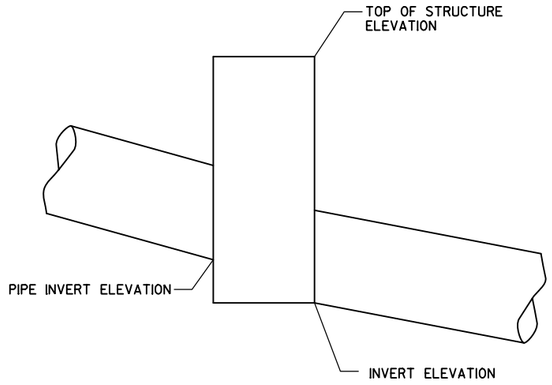

STORM SEWER STRUCTURE NOTATION

NOTES:

TO OBTAIN RIM ELEVATION ON MANHOLE COVER, OR FLAG LINE ELEVATION AT INLET, USING TOP OF STRUCTURE ELEVATION ADD HEIGHT OF 3-2" ADJUSTING RINGS AND CASTING HEIGHT:

(TYPE J MANHOLE COVER = 9")
(TYPE HM INLET COVER = 6")

FOR MS COVERS, THE TOP OF STRUCTURE WILL BE FLUSH WITH THE TOP OF GRATE. NO ADJUSTING RINGS ARE NEEDED.

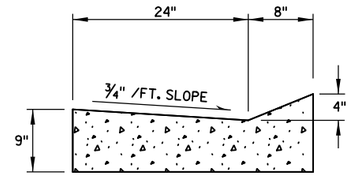

CONCRETE CURB AND GUTTER 4-INCH SLOPED 32-INCH TYPE D SPECIAL

FOR USE UNDER THRIE BEAM STRUCTURE APPROACH AT BRIDGES.

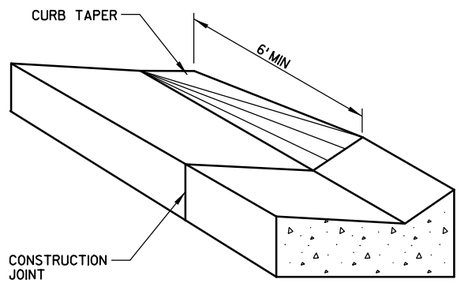

DETAIL OF CURB & GUTTER TERMINI

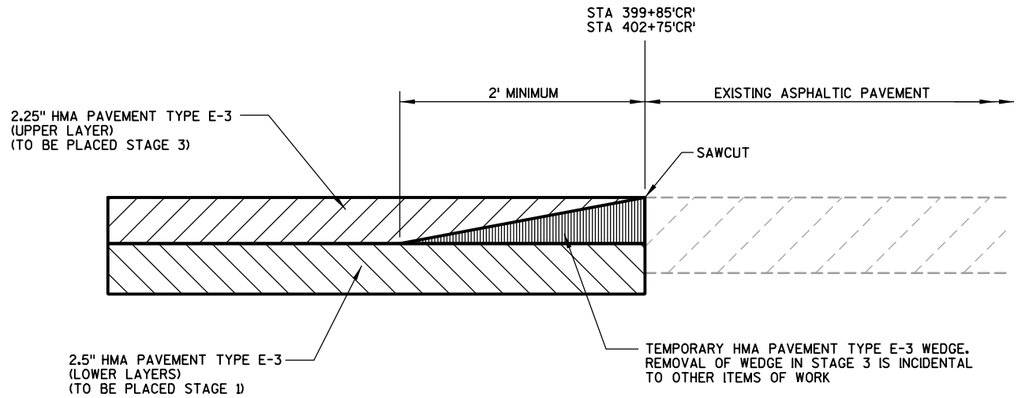

DETAIL FOR TEMPORARY BUTT JOINT

STA 399+85'CR'
STA 402+75'CR'

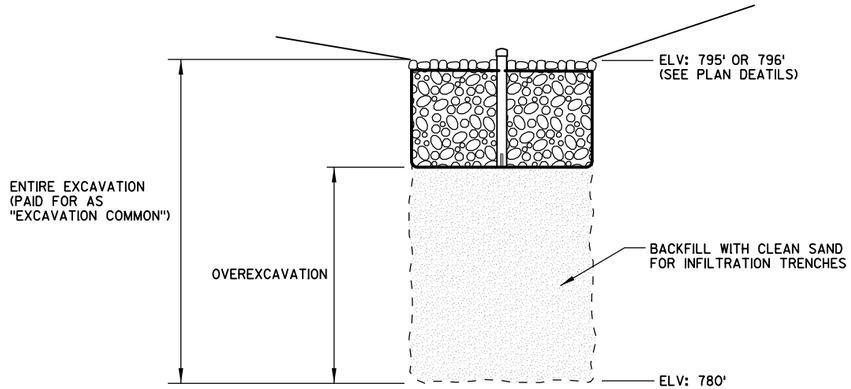

OVEREXCAVATION

TRENCH AT STA 57+00'BT', LT
TRENCH AT STA 57+50'BT', RT
TRENCH AT STA 58+75'BT', LT
TRENCH AT STA 59+00'BT', RT

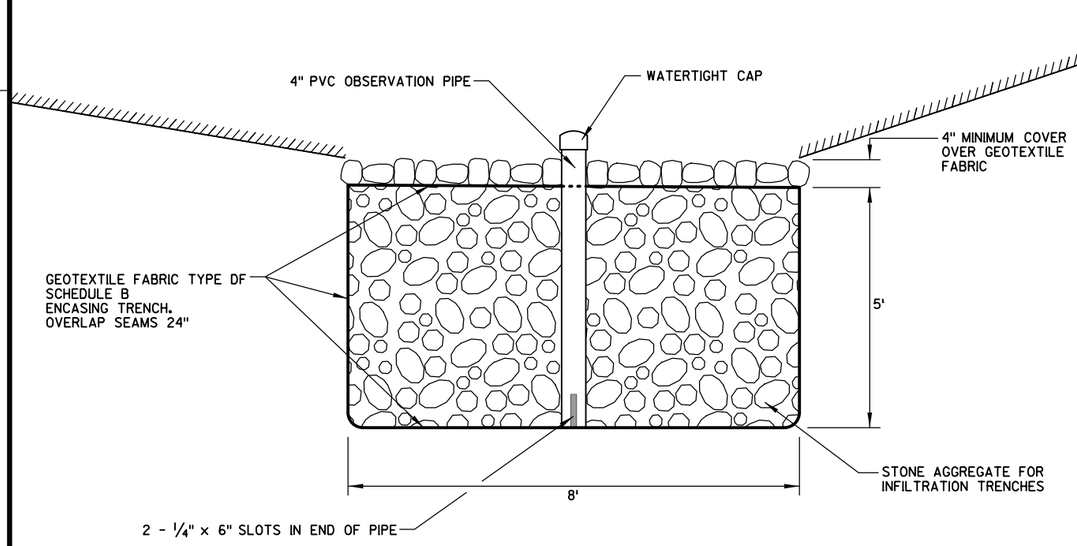

TYPICAL

INFILTRATION TRENCH SECTION

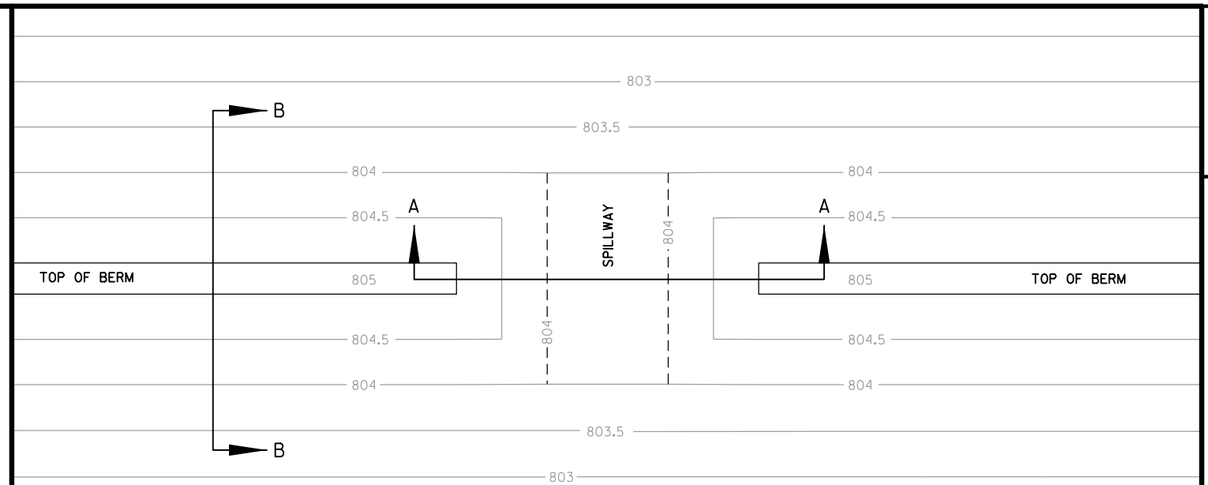

PLAN VIEW EXAMPLE

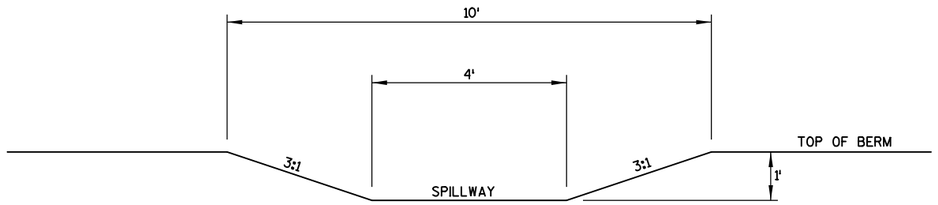

TYPICAL SPILLWAY SECTION
A-A

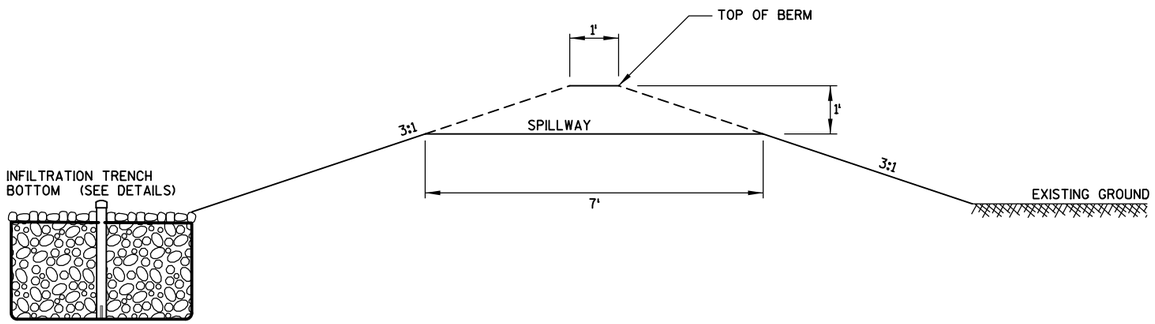

TYPICAL SPILLWAY PROFILE
B-B

INFILTRATION TRENCH SPILLWAY DETAIL

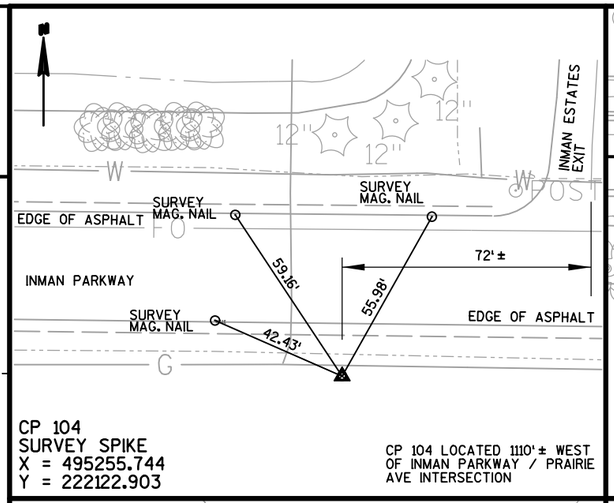

CP 104
SURVEY SPIKE
X = 495255.744
Y = 222122.903

CP 104 LOCATED 1110'± WEST OF INMAN PARKWAY / PRAIRIE AVE INTERSECTION

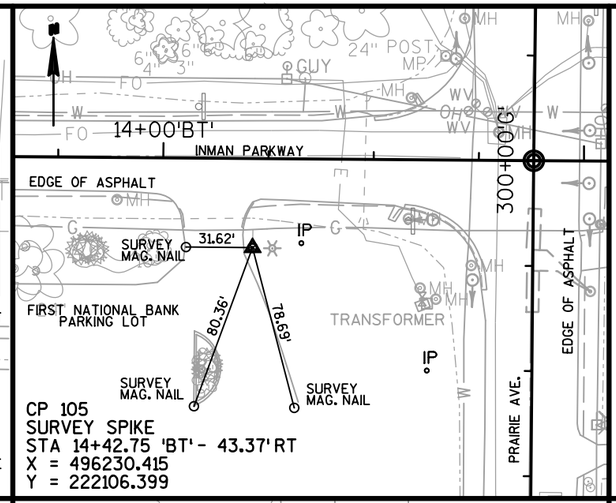

CP 105
SURVEY SPIKE
STA 14+42.75 'BT' - 43.37' RT
X = 496230.415
Y = 222106.399

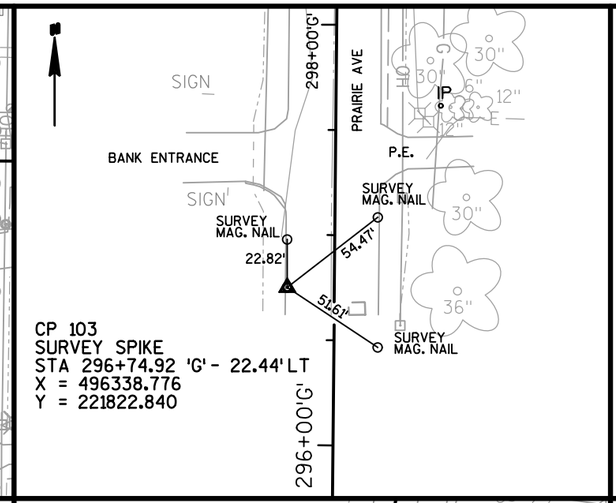

CP 103
SURVEY SPIKE
STA 296+74.92 'G' - 22.44' LT
X = 496338.776
Y = 221822.840

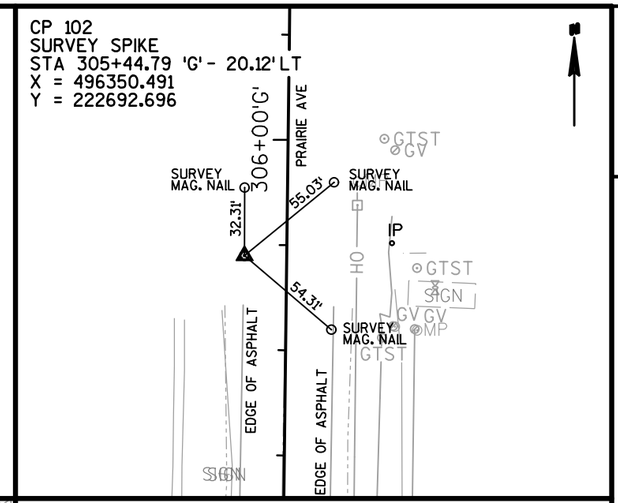

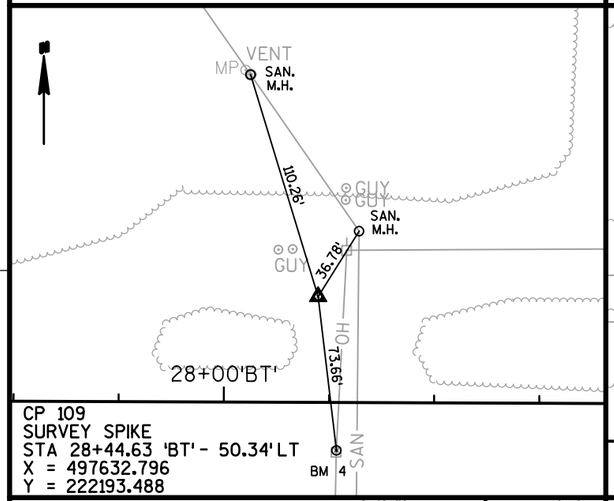

CP 109
SURVEY SPIKE
STA 28+44.63 'BT' - 50.34' LT
X = 497632.796
Y = 222193.488

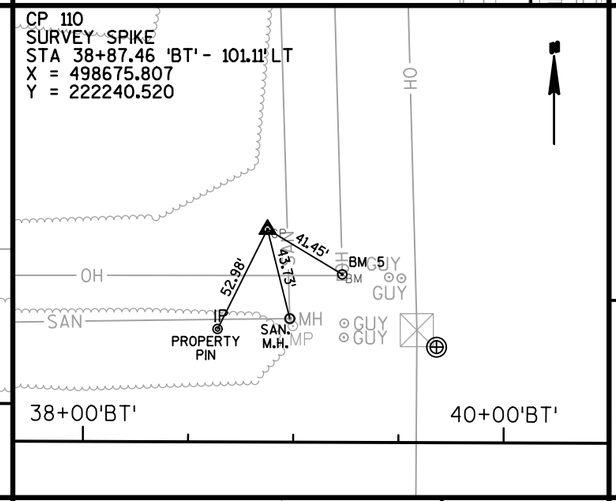

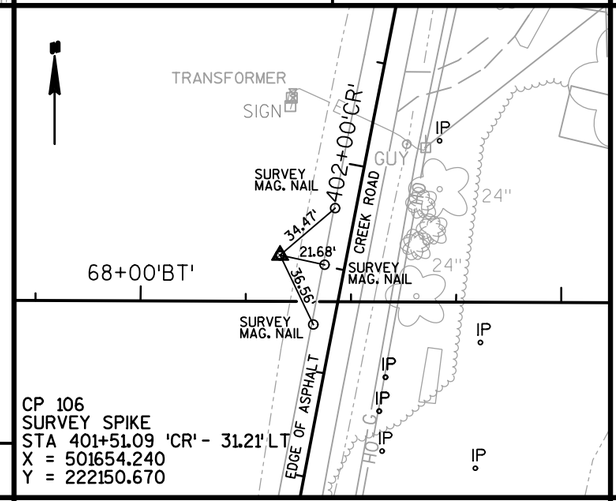

CP 106
SURVEY SPIKE
STA 401+51.09 'CR' - 31.21' LT
X = 501654.240
Y = 222150.670

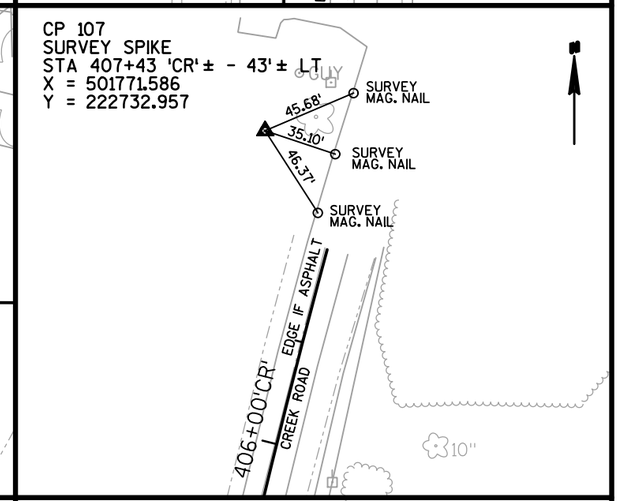

CP 107
SURVEY SPIKE
STA 407+43 'CR'± - 43'± LT
X = 501771.586
Y = 222732.957

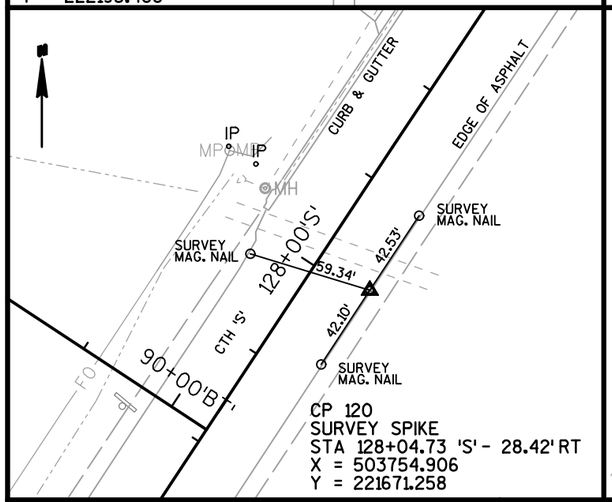

CP 120
SURVEY SPIKE
STA 128+04.73 'S' - 28.42' RT
X = 503754.906
Y = 221671.258

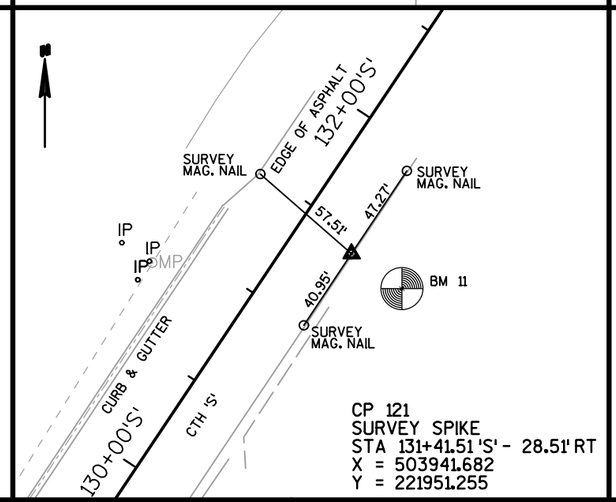

CP 121
SURVEY SPIKE
STA 131+41.51 'S' - 28.51' RT
X = 503941.682
Y = 221951.255

2

N

PRAIRIE AVE (CTH G)

PROJECT ID
5966-10-70
(WORK COMPLETED
BY OTHERS)

PROJECT ID
5989-05-72

16+88.60'BT'

ASPHALTIC FLUME

MATCH PAVING GRADES
COMPLETED UNDER
PROJECT 5966-10-70

BASE AGGREGATE
DENSE 3/4-INCH

262.5' TAPER

BASE AGGREGATE
DENSE 3/4-INCH

BASE AGGREGATE
DENSE 3/4-INCH

3'

+53

3'

2'

+15

16+00'BT'

17+00'BT'

18+00'BT'

19+00'BT'

20+00'BT'

21+00'BT'

22+00'BT'

INMAN PARKWAY (CTH BT)

INMAN PARKWAY (CTH BT)

2%

41'

20'

20'

20'

+09

2'

2'

SAWCUT AS NEEDED TO CREATE A
SQUARE JOINT IN PAVEMENT PREVIOUSLY
PLACED UNDER PROJECT 5966-10-70

4.75"
HMA PAVEMENT
TYPE E-3

BASE AGGREGATE
DENSE 3/4-INCH

ASPHALTIC FLUME

POST

SEPV

SEPC

OH

PRAIRIE AVE (CTH G)

PROJECT NO: 5989-05-71,72	HWY: CTH BT	COUNTY: ROCK	INTERSECTION DETAILS	SHEET	E

FILE NAME : N:\450351\DGN\Plan Sheets\5989-05-71_021100_id.dgn PLOT BY : dm253 PLOT DATE : 1/27/2015 PLOT SCALE : 1:40

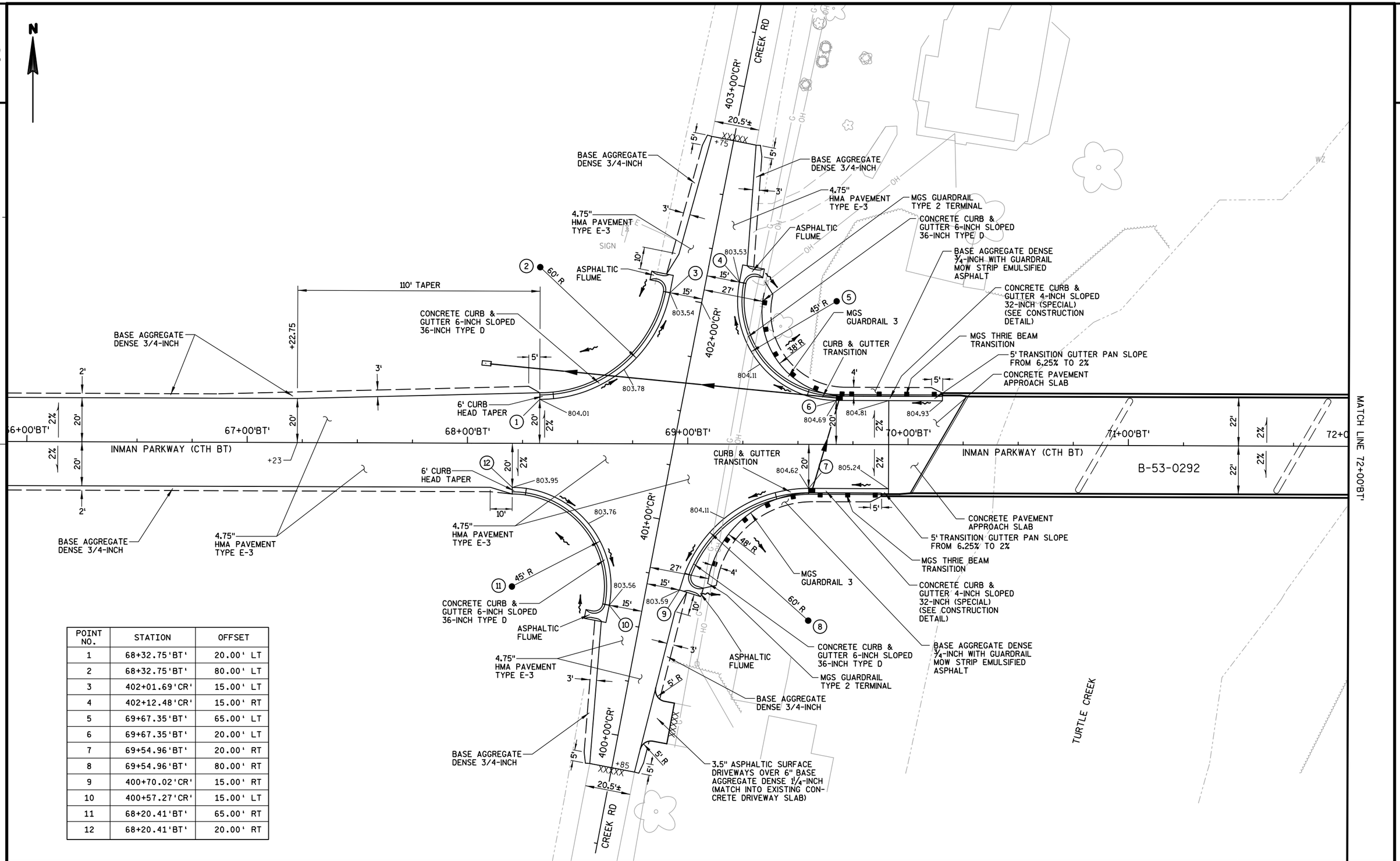

POINT NO.	STATION	OFFSET
1	68+32.75'BT'	20.00' LT
2	68+32.75'BT'	80.00' LT
3	402+01.69'CR'	15.00' LT
4	402+12.48'CR'	15.00' RT
5	69+67.35'BT'	65.00' LT
6	69+67.35'BT'	20.00' LT
7	69+54.96'BT'	20.00' RT
8	69+54.96'BT'	80.00' RT
9	400+70.02'CR'	15.00' RT
10	400+57.27'CR'	15.00' LT
11	68+20.41'BT'	65.00' RT
12	68+20.41'BT'	20.00' RT

PROJECT NO: 5989-05-71,72	HWY: CTH BT	COUNTY: ROCK	INTERSECTION DETAILS	SHEET 12	E

2

2

N

TURTLE CREEK

MATCH LINE 72+00'BT'

CONCRETE PAVEMENT APPROACH SLAB

BASE AGGREGATE DENSE 3/4-INCH WITH GUARDRAIL
MOW STRIP EMULSIFIED ASPHALT BEHIND GUARDRAIL

MGS THRIE BEAM TRANSITION

MGS GUARDRAIL 3

MGS EAT

120' PAVEMENT EDGE TAPER

4.75" HMA PAVEMENT TYPE E-3

BASE AGGREGATE DENSE 3/4-INCH

5'

4'

2'

60:1

2%

22'

20'

3.6%

0'BT'

73+00'BT'

74+00'BT'

75+00'BT'

76+00'BT'

77+00'BT'

78+00'BT'

INMAN PARKWAY (CTH BT)

+81

+21

+01

+41

B-53-0292

PROJECT NO: 5989-05-71,72	HWY: CTH BT	COUNTY: ROCK	INTERSECTION DETAILS	SHEET 13	E

FILE NAME : N:\450351\DGN\Plan Sheets\5989-05-71_021102_id.dgn PLOT BY : dm253 PLOT DATE : 1/27/2015 PLOT SCALE : 1:40

WISDOT/CADDS SHEET 42

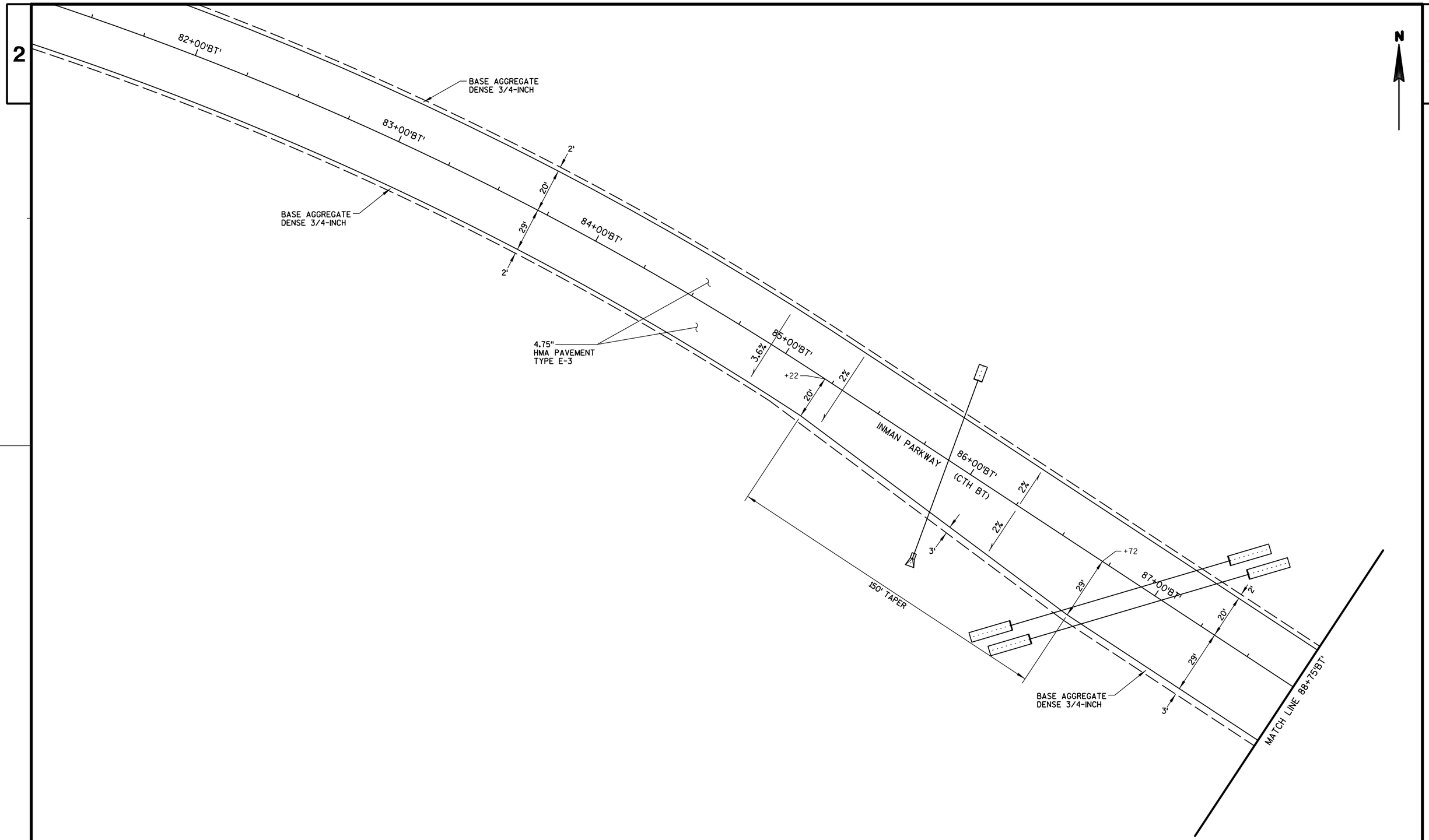

2

PROJECT NO: 5989-05-71,72	HWY: CTH BT	COUNTY: ROCK	INTERSECTION DETAILS	SHEET	E

FILE NAME : N:\450351\DGN\Plan Sheets\5989-05-71_021103_id.dgn PLOT BY : dm253 PLOT DATE : 1/27/2015 PLOT SCALE : 1:40

POINT NO.	STATION	OFFSET
1	124+90.00'S'	29.16' LT
2	125+29.22'S'	29.17' LT
3	126+33.53'S'	41.34' LT
4	89+28.82'BT'	79.00' RT
5	89+28.82'BT'	29.00' RT
6	89+18.85'BT'	20.00' LT
7	89+18.85'BT'	80.00' LT
8	127+82.05'S'	41.18' LT
9	129+02.66'S'	31.96' LT
10	129+05.00'S'	31.96' LT
11	125+53.46'S'	28.00' LT

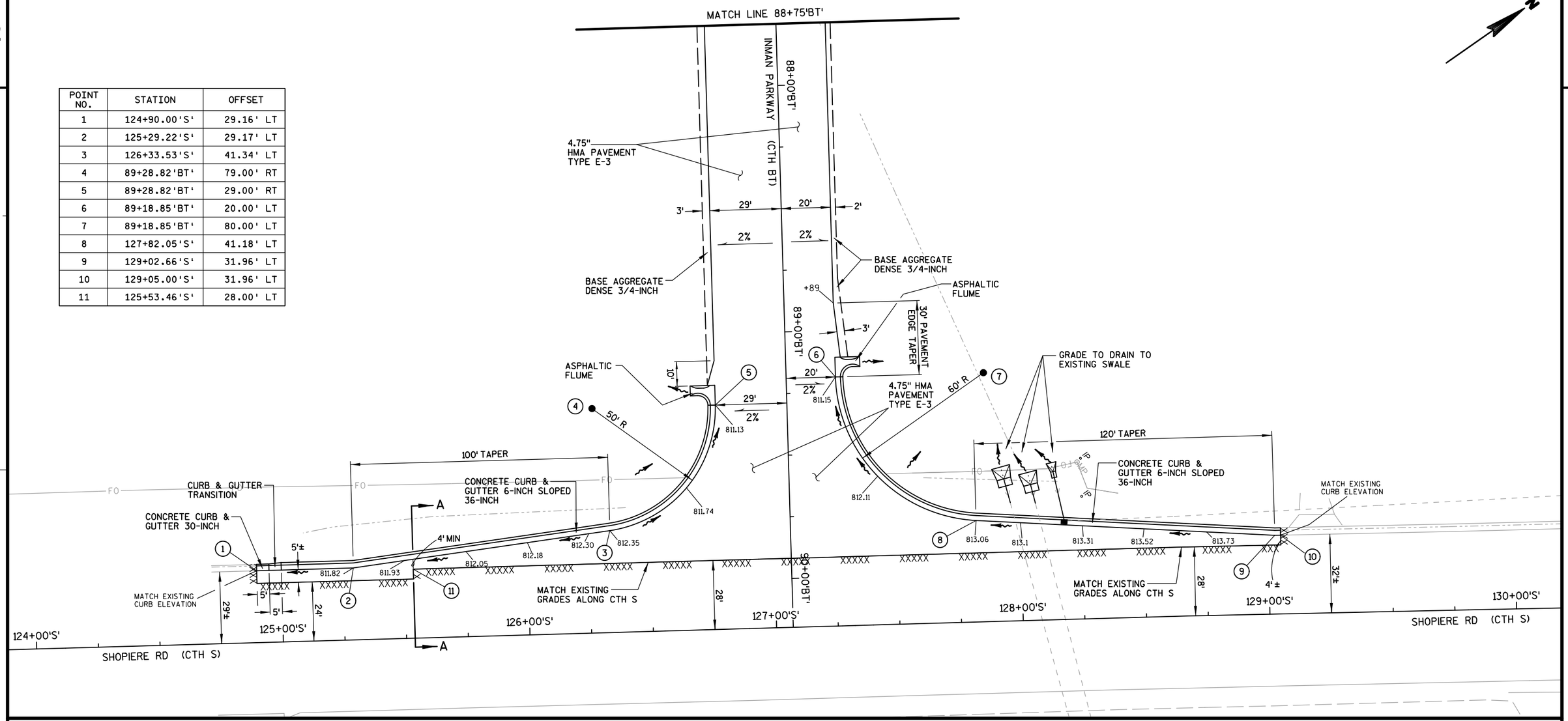

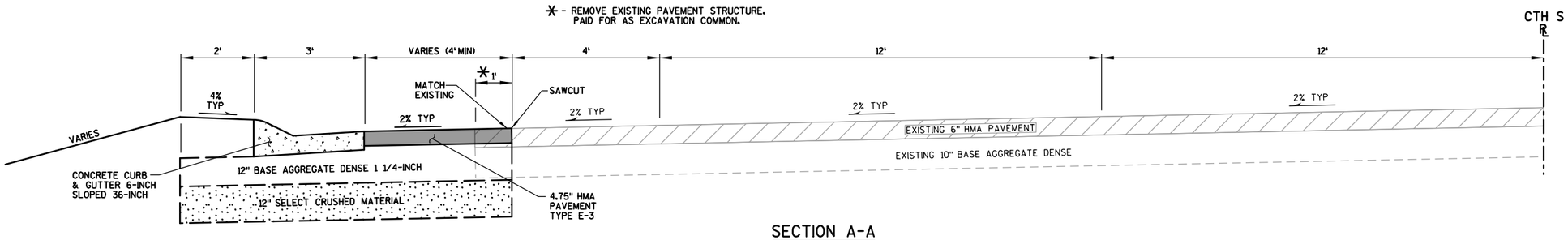

SECTION A-A

PROJECT NO: 5989-05-71,72	HWY: CTH BT	COUNTY: ROCK	INTERSECTION DETAILS	SHEET	E

FILE NAME : N:\450351\DGN\Plan Sheets\5989-05-71_021104_id.dgn PLOT BY : dm253 PLOT DATE : 1/27/2015 PLOT SCALE : 1:40

POINT NUMBER	X	Y
B1	496430.595	222278.275
B2	496421.829	222267.235
B3	496430.734	222269.164
B4	496430.411	222230.351
B5	496435.281	222226.484
B6	496435.281	222231.484
B7	496468.135	222226.484
B8	496498.958	222238.595
B9	496633.274	222238.595
B10	496659.704	222230.528
B11	496861.765	222206.764

POINT NUMBER	X	Y
B12	496865.060	222207.501
B13	496865.060	222258.171
B14	496857.060	222266.171
B15	496857.060	222258.171
B16	496601.186	222266.521
B17	496580.086	222277.788
B18	496515.108	222214.705
B19	496515.108	222206.705
B20	496615.108	222206.705
B21	496615.108	222214.705

POINT NUMBER	X	Y
B22	496565.108	222210.705
B23	496588.763	222104.204
B24	496537.865	222108.066
B25	496537.865	222100.066
B26	496637.865	222100.066
B27	496637.865	222108.066
B28	496436.812	222087.870
B29	496432.458	222083.886
B30	496436.458	222083.886
B31	496432.458	222054.099
B32	496436.515	222050.100

POINT NUMBER	X	Y
B33	496436.458	222054.099
B34	496881.407	222056.343
B35	496885.348	222060.185
B36	496881.351	222060.342
B37	496886.421	222087.487
B38	496882.378	222091.644
B39	496882.424	222087.644
B40	496659.901	222089.091
B41	496641.598	222078.996
B42	496536.691	222078.996

PRAIRIE AVE (CTH G)

INMAN PARKWAY (CTH BT)

SLOPE INTERCEPTS

PROPOSED R/W

DRY DETENTION AREA
BOTTOM EL. 801.00

TOP OF BERM
EL. 805.00

4'x7' SPILLWAY
EL. 804.00

TOP OF BERM
EL. 805.00

GRADE AROUND EXISTING ALLIANT ENERGY ELECTRIC POLE TO REMAIN (APPROX. STA 18+71, 66' LT)

EXISTING R/W

OBSERVATION PIPE

100' x 8' INFILTRATION TRENCH
EL. 801.37

100' x 8' INFILTRATION TRENCH
EL. 801.81

PROPOSED STORM SEWER SYSTEM BY OTHERS

PROPOSED STORM SEWER SYSTEM

TOP OF BERM
EL. 805.00

4'x7' SPILLWAY
EL. 804.00

TOP OF BERM
EL. 805.00

DRY DETENTION AREA
BOTTOM EL. 801.50

PROPOSED R/W

SLOPE INTERCEPTS

MATCH LINE 21+50'BT'

PROJECT NO: 5989-05-71, 72	HWY: CTH BT	COUNTY: ROCK	PLAN DETAILS - DRAINAGE BASINS AND INFILTRATION TRENCHES	SHEET	E

FILE NAME : N:\450351\DGN\Plan Sheets\5989-05-71_021201_pd.dgn PLOT BY : dm253 PLOT DATE : 1/27/2015 PLOT SCALE : 1:40

WISDOT/CADDS SHEET 42

POINT NUMBER	X	Y
B43	497068.880	222205.151
B44	497068.896	222197.139
B45	497168.902	222197.116
B46	497168.896	222205.139
B47	497118.896	222201.139
B48	497115.630	222088.782
B49	497065.630	222092.782
B50	497065.630	222084.782
B51	497165.630	222084.782
B52	497165.630	222092.782

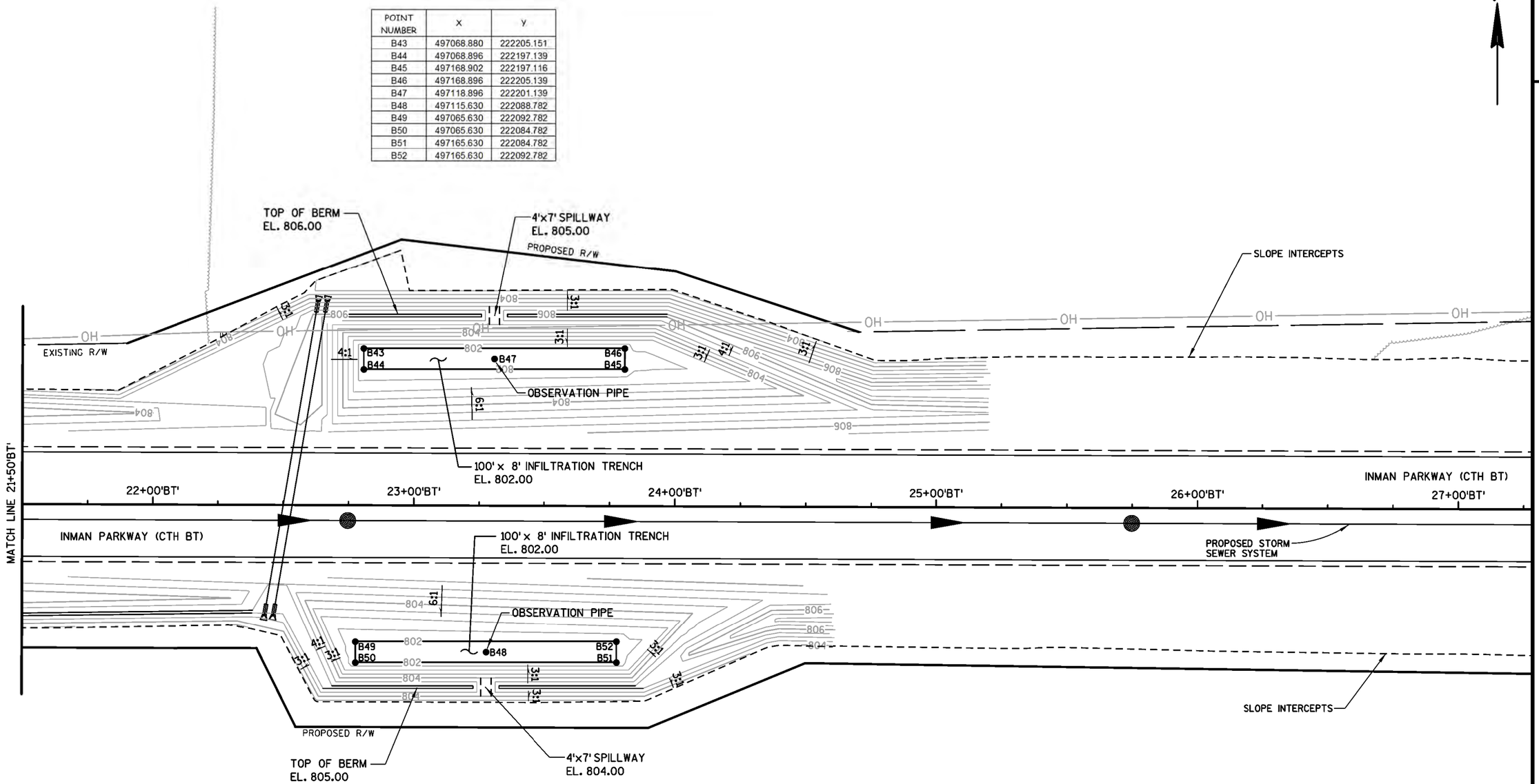

PROJECT NO: 5989-05-71, 72	HWY: CTH BT	COUNTY: ROCK	PLAN DETAILS - DRAINAGE BASINS AND INFILTRATION TRENCHES	SHEET	E

FILE NAME : N:\450351\DGN\Plan Sheets\5989-05-71_021202_pd.dgn PLOT BY : dm253 PLOT DATE : 1/27/2015 PLOT SCALE : 1:40

WISDOT/CADDS SHEET 42

POINT NUMBER	X	Y
B53	498307.709	222201.147
B54	498307.701	222193.135
B55	498407.713	222192.759
B56	498407.730	222200.776
B57	498357.667	222196.975
B58	498354.019	222077.885
B59	498304.033	222082.065
B60	498304.005	222074.065
B61	498404.004	222073.706
B62	498404.023	222081.742

POINT NUMBER	X	Y
B63	498477.770	222080.836
B64	498477.709	222072.841
B65	498577.741	222072.477
B66	498577.770	222080.477
B67	498527.853	222076.659
B68	498591.991	222189.089
B69	498542.045	222193.277
B70	498542.014	222185.265
B71	498642.002	222184.871
B72	498642.041	222192.918

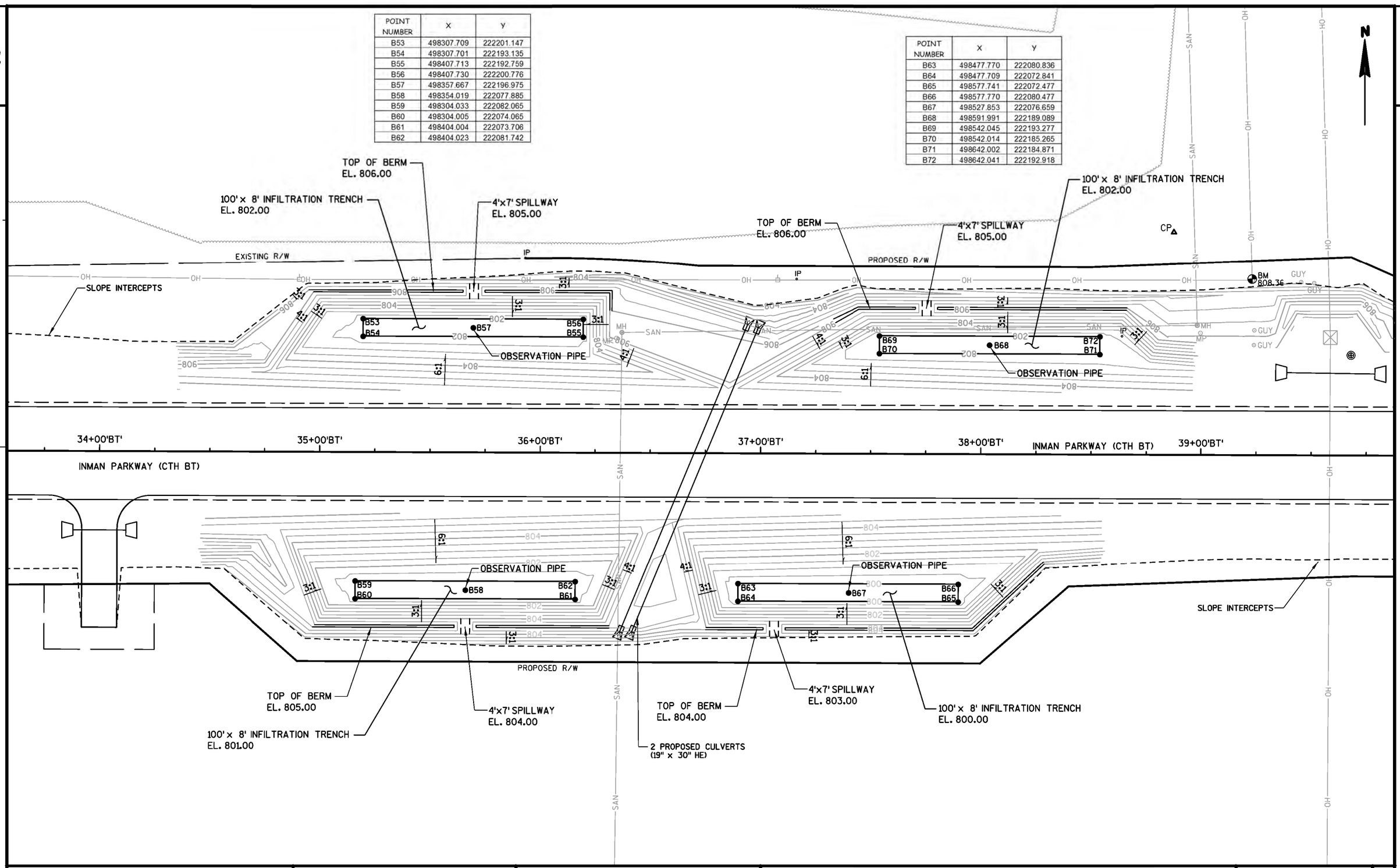

PROJECT NO: 5989-05-71, 72	HWY: CTH BT	COUNTY: ROCK	PLAN DETAILS - DRAINAGE BASINS AND INFILTRATION TRENCHES	SHEET	E

FILE NAME : N:\450351\DGN\Plan Sheets\5989-05-71_021203_pd.dgn PLOT BY : dm253 PLOT DATE : 1/27/2015 PLOT SCALE : 1:40

WISDOT/CADDS SHEET 42

POINT NUMBER	X	Y
B73	500449.191	222193.706
B74	500449.181	222185.650
B75	500549.310	222185.261
B76	500549.210	222193.335
B77	500498.999	222189.499
B78	500530.880	222083.600
B79	500480.926	222087.782
B80	500480.880	222079.770
B81	500580.919	222079.411
B82	500580.995	222087.468

POINT NUMBER	X	Y
B83	500649.440	222085.834
B84	500649.375	222077.793
B85	500749.397	222077.446
B86	500749.426	222085.446
B87	500699.604	222081.633
B88	500675.649	222182.054
B89	500625.663	222186.234
B90	500625.635	222178.234
B91	500725.634	222177.875
B92	500725.663	222185.875

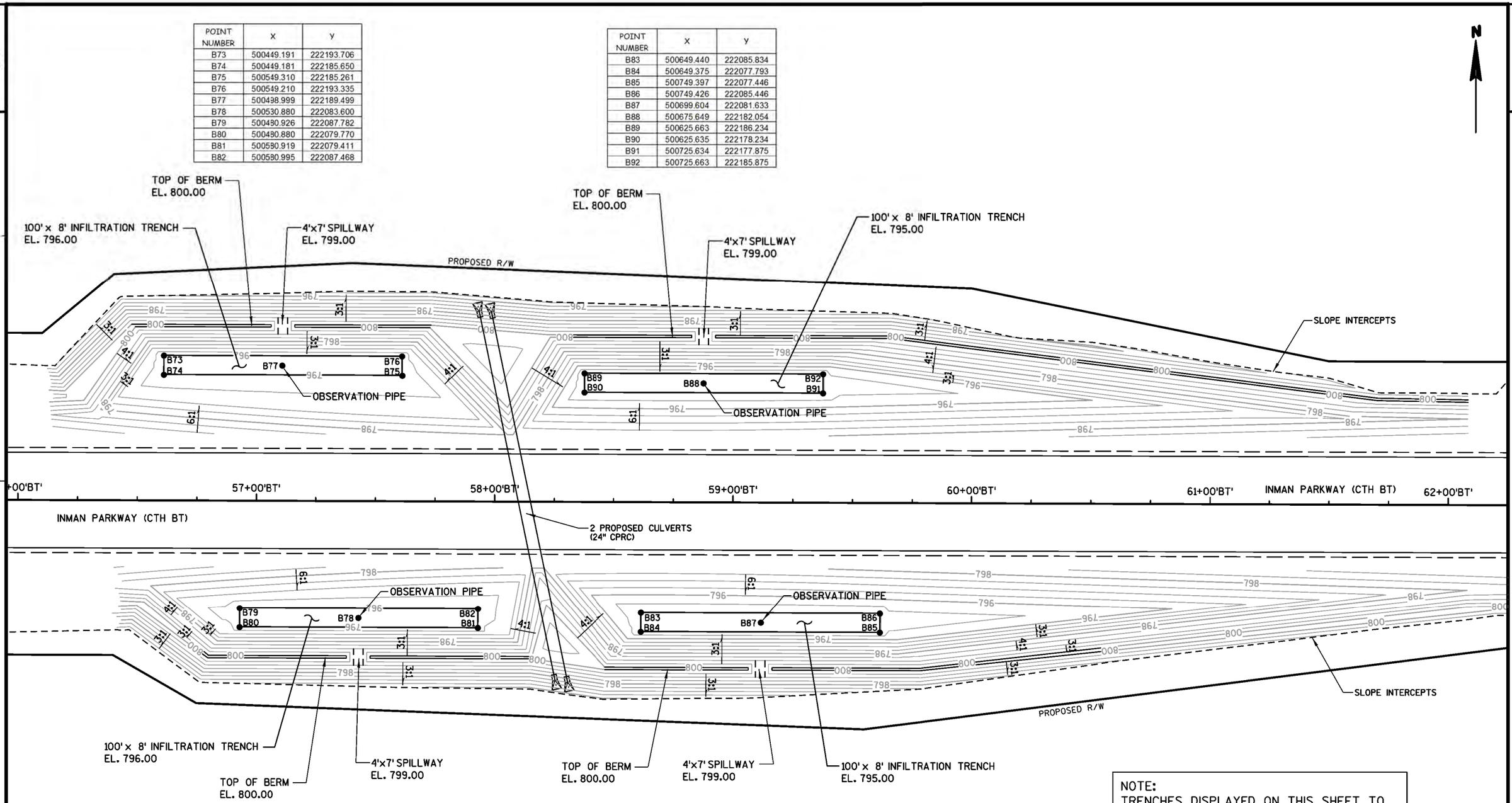

NOTE:
TRENCHES DISPLAYED ON THIS SHEET TO BE OVEREXCAVATED TO ELEVATION 780.00. BACKFILL OVEREXCAVATION TO 5' BELOW TRENCH ELEVATION WITH CLEAN SAND. (SEE DETAILS)

PROJECT NO: 5989-05-71, 72	HWY: CTH BT	COUNTY: ROCK	PLAN DETAILS - DRAINAGE BASINS AND INFILTRATION TRENCHES	SHEET	E

FILE NAME : N:\450351\DGN\Plan Sheets\5989-05-71_021204_pd.dgn PLOT BY : dm253 PLOT DATE : 1/27/2015 PLOT SCALE : 1:40

POINT NUMBER	X	Y
B93	502728.283	222166.496
B94	502726.539	222158.688
B95	502824.135	222136.892
B96	502825.879	222144.700
B97	502776.209	222151.694
B98	502724.735	222034.285
B99	502676.809	222049.086
B100	502675.065	222041.279
B101	502772.661	222019.483
B102	502774.405	222027.290

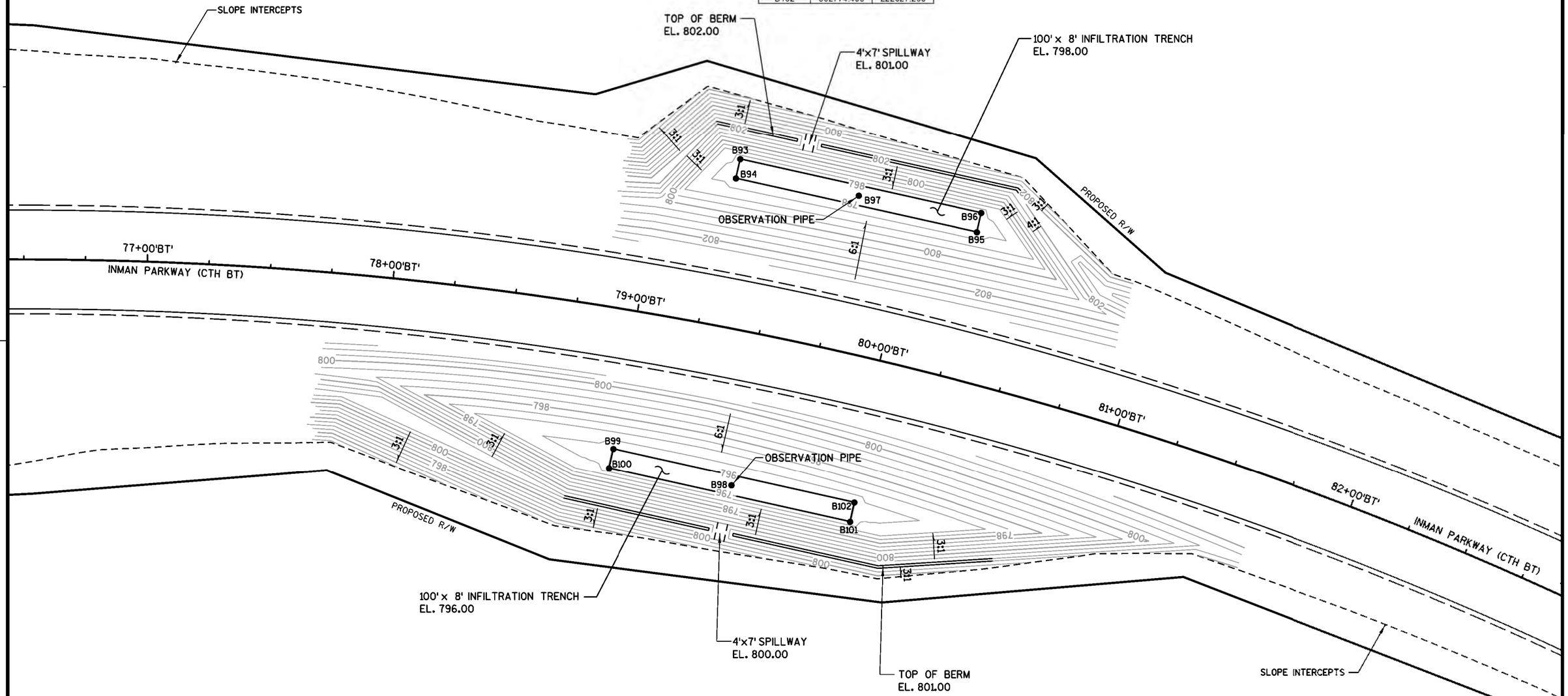

PROJECT NO: 5989-05-71, 72	HWY: CTH BT	COUNTY: ROCK	PLAN DETAILS - DRAINAGE BASINS AND INFILTRATION TRENCHES	SHEET	E

FILE NAME : N:\450351\DGN\Plan Sheets\5989-05-71_021205_pd.dgn PLOT BY : dm253 PLOT DATE : 1/27/2015 PLOT SCALE : 1:40

WISDOT/CADDS SHEET 42

2

2

N

PRAIRIE AVE (CTH G)

304+00'G'

302+00'G'

300+00'G'

298+00'G'

296+00'G'

PROPOSED ROW

DRAINAGE BASIN

INFILTRATION TRENCH

SOD LAWN

FILTER BAGS

RIPRAP MEDIUM

HIGH POINT OF DITCH

EXISTING ROW

16+00'BT'

18+00'BT'

20+00'BT'

22+00'BT'

24+00'BT'

26+00'BT'

28+00'BT'

30+00'BT'

PROPOSED STORM SEWER

INMAN PKWY (CTH BT)

100' TYP.

30"

30"

36"

VENT MP MH

GUY

OH

SAN

SS

NOTES

* EROSION CONTROL DEVICES TO BE INSTALLED WITHIN EXISTING OR PROPOSED RIGHT-OF-WAY BOUNDARIES.
* DO NOT PLACE TEMPORARY SEEDING WITHIN LIMITS OF INFILTRATION TRENCHES.
* SEEDING SHALL BE SEEDING MIXTURE NO. 40 IN ALL AREAS UNLESS NOTED OTHERWISE.
* NO MULCH REQUIRED IN AREAS WITH EROSION MAT.

LEGEND

- FLOW DIRECTION
- SLOPE INTERCEPTS
- DITCH LINE
- SILT FENCE
- TURBIDITY BARRIER
- RIRRAP HEAVY BOUNDARY
- TEMPORARY DITCH CHECK
- CULVERT PIPE CHECK
- STONE OR ROCK DITCH CHECKS (INCLUDES GEOTEXTILE FABRIC)
- INLET PROTECTION TYPE C
- EROSION MAT URBAN CLASS I TYPE B
- EROSION MAT CLASS I TYPE B

PROJECT NO: 5989-05-71, 72	HWY: CTH BT	COUNTY: ROCK	EROSION CONTROL	SHEET 21	E

2

2

N

SOD EROSION CONTROL

INFILTRATION TRENCH

INFILTRATION TRENCH

INMAN PKWY
(CTH BT)

32+00'BT'

34+00'BT'

36+00'BT'

38+00'BT'

40+00'BT'

42+00'BT'

44+00'BT'

INMAN PKWY
(CTH BT)

46+0

INFILTRATION TRENCH

INFILTRATION TRENCH

100' TYP.

SOD EROSION CONTROL

RIPRAP MEDIUM

FILTER BAGS

OH

HO

SAN

MH

LEGEND

- FLOW DIRECTION
- SLOPE INTERCEPTS
- DITCH LINE
- SILT FENCE
- TURBIDITY BARRIER
- RIRRAP HEAVY BOUNDARY
- TEMPORARY DITCH CHECK
- CULVERT PIPE CHECK
- STONE OR ROCK DITCH CHECKS (INCLUDES GEOTEXTILE FABRIC)
- INLET PROTECTION TYPE C
- EROSION MAT URBAN CLASS I TYPE B
- EROSION MAT CLASS I TYPE B

NOTES

* EROSION CONTROL DEVICES TO BE INSTALLED WITHIN EXISTING OR PROPOSED RIGHT-OF-WAY BOUNDARIES.
* DO NOT PLACE TEMPORARY SEEDING WITHIN LIMITS OF INFILTRATION TRENCHES.
* SEEDING SHALL BE SEEDING MIXTURE NO. 40 IN ALL AREAS UNLESS NOTED OTHERWISE.
* NO MULCH REQUIRED IN AREAS WITH EROSION MAT.

PROJECT NO: 5989-05-71, 72	HWY: CTH BT	COUNTY: ROCK	EROSION CONTROL	SHEET 22	E

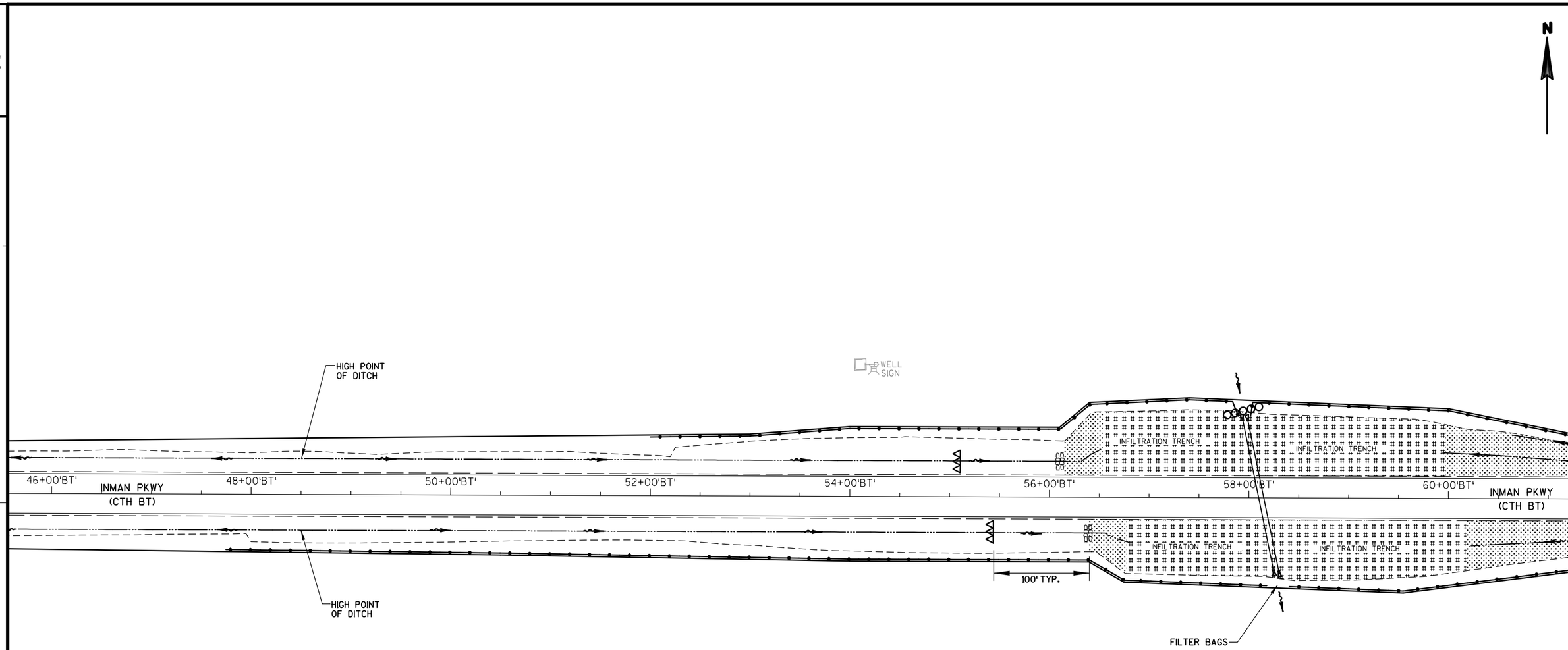

LEGEND

- FLOW DIRECTION
- SLOPE INTERCEPTS
- DITCH LINE
- SILT FENCE
- TURBIDITY BARRIER
- RIRRAP HEAVY BOUNDARY
- TEMPORARY DITCH CHECK
- CULVERT PIPE CHECK
- STONE OR ROCK DITCH CHECKS (INCLUDES GEOTEXTILE FABRIC)
- INLET PROTECTION TYPE C
- EROSION MAT URBAN CLASS I TYPE B
- EROSION MAT CLASS I TYPE B

NOTES

* EROSION CONTROL DEVICES TO BE INSTALLED WITHIN EXISTING OR PROPOSED RIGHT-OF-WAY BOUNDARIES.
* DO NOT PLACE TEMPORARY SEEDING WITHIN LIMITS OF INFILTRATION TRENCHES.
* SEEDING SHALL BE SEEDING MIXTURE NO. 40 IN ALL AREAS UNLESS NOTED OTHERWISE.
* NO MULCH REQUIRED IN AREAS WITH EROSION MAT.

PROJECT NO:5989-05-71, 72	HWY:CTH BT	COUNTY:ROCK	EROSION CONTROL	SHEET 23	E

2

2

N

406+00'CR'

404+00'CR'

402+00'CR'

400+00'CR'

S CREEK RD

S CREEK RD

TURTLE CREEK

RIPARIAN FORESTED WETLANDS

SOD LAWN

SOD EROSION CONTROL

SOD LAWN

SOD LAWN

SOD LAWN

RIFFLE HABITAT AREA
COORDINATE WITH WISCONSIN DNR PRIOR TO CONSTRUCTION.

TRANSFORMER

SIGN

POST

INMAN PKWY
(CTH BT)

62+00'BT'

64+00'BT'

66+00'BT'

68+00'BT'

70+00'BT'

72+00'BT'

74+00'BT'

76+00'BT'

INMAN PKWY
(CTH BT)

100' TYP.

RIPRAP MEDIUM

FILTER BAGS

SEE DETAIL FOR SEEDING NEAR TURTLE CREEK

COARSE WOODY DEBRIS/HABITAT AREA
CONSISTING OF A LARGE TREE IN CREEK
APPROXIMATELY 50-FT IN LENGTH.

LEGEND

- FLOW DIRECTION
- SLOPE INTERCEPTS
- DITCH LINE
- SILT FENCE
- TURBIDITY BARRIER
- RIRRAP HEAVY BOUNDARY
- TEMPORARY DITCH CHECK
- CULVERT PIPE CHECK
- STONE OR ROCK DITCH CHECKS (INCLUDES GEOTEXTILE FABRIC)
- INLET PROTECTION TYPE C
- EROSION MAT URBAN CLASS I TYPE B
- EROSION MAT CLASS I TYPE B

NOTES

* EROSION CONTROL DEVICES TO BE INSTALLED WITHIN EXISTING OR PROPOSED RIGHT-OF-WAY BOUNDARIES.
* DO NOT PLACE TEMPORARY SEEDING WITHIN LIMITS OF INFILTRATION TRENCHES.
* SEEDING SHALL BE SEEDING MIXTURE NO. 40 IN ALL AREAS UNLESS NOTED OTHERWISE.
* NO MULCH REQUIRED IN AREAS WITH EROSION MAT.

PROJECT NO: 5989-05-71, 72	HWY: CTH BT	COUNTY: ROCK	EROSION CONTROL	SHEET 24	E

FILE NAME : N:\450351\DGN\Plan Sheets\5989-05-71_022004_ec.dgn PLOT BY : dm253 PLOT DATE : 2/3/2015 PLOT SCALE : 1:100

WISDOT/CADDS SHEET 42

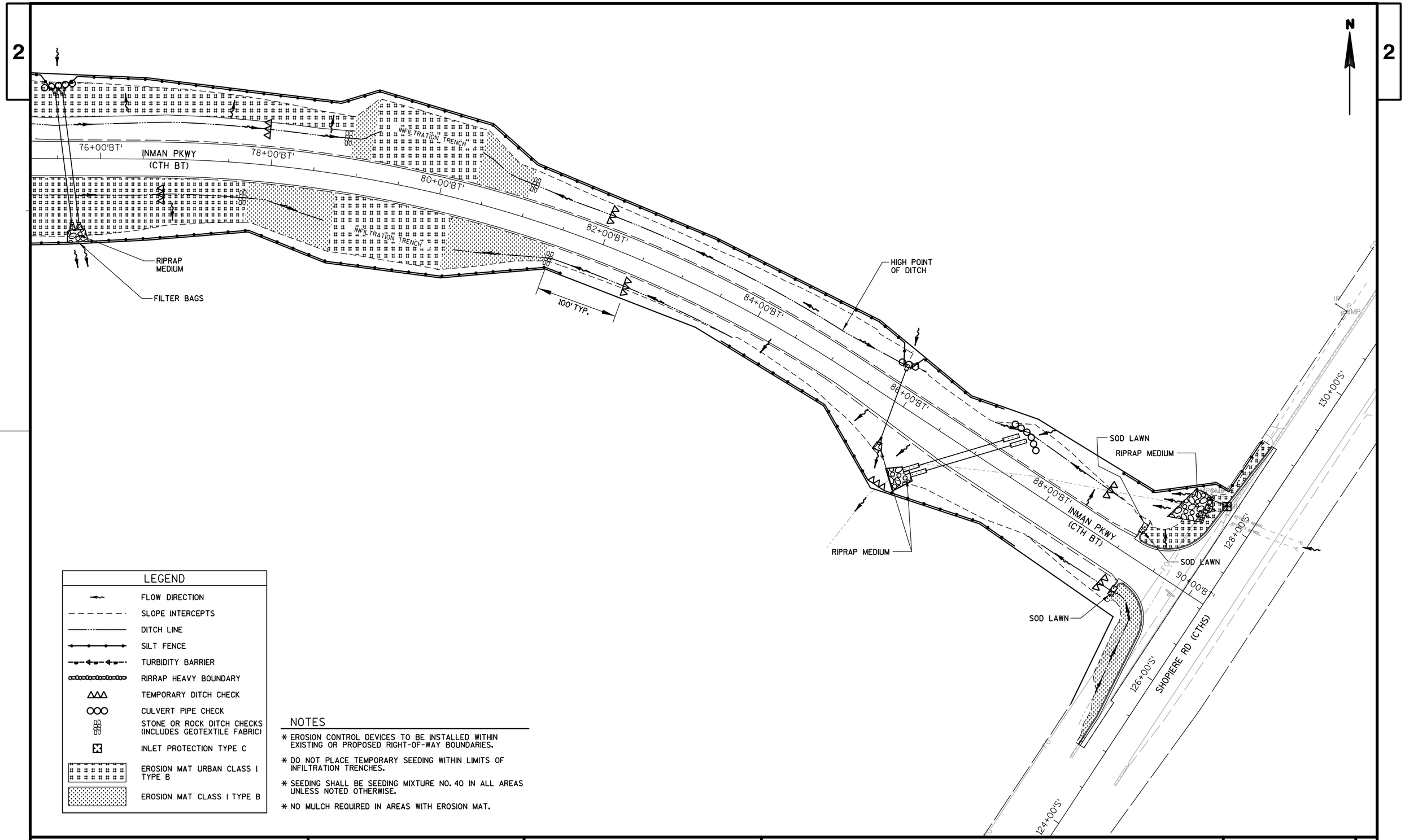

LEGEND

- FLOW DIRECTION
- SLOPE INTERCEPTS
- DITCH LINE
- SILT FENCE
- TURBIDITY BARRIER
- RIRRAP HEAVY BOUNDARY
- TEMPORARY DITCH CHECK
- CULVERT PIPE CHECK
- STONE OR ROCK DITCH CHECKS (INCLUDES GEOTEXTILE FABRIC)
- INLET PROTECTION TYPE C
- EROSION MAT URBAN CLASS I TYPE B
- EROSION MAT CLASS I TYPE B

NOTES

* EROSION CONTROL DEVICES TO BE INSTALLED WITHIN EXISTING OR PROPOSED RIGHT-OF-WAY BOUNDARIES.
* DO NOT PLACE TEMPORARY SEEDING WITHIN LIMITS OF INFILTRATION TRENCHES.
* SEEDING SHALL BE SEEDING MIXTURE NO. 40 IN ALL AREAS UNLESS NOTED OTHERWISE.
* NO MULCH REQUIRED IN AREAS WITH EROSION MAT.

PROJECT NO: 5989-05-71, 72	HWY: CTH BT	COUNTY: ROCK	EROSION CONTROL	SHEET 25	E

2

N

S CREEK RD

403+00'CR'

402+00'CR'

401+00'CR'

400+00'CR'

TURTLE CREEK

INMAN PKWY
(CTH BT)

69+00'BT'

70+00'BT'

71+00'BT'

72+00'BT'

73+00'BT'

74+00'BT'

SEEDING #40

SOD LAWN

SOD EROSION CONTROL

USE SEEDING #75
NEAR TURTLE CREEK
(NO SEEDING TEMPORARY)

RIPRAP HEAVY BOUNDARY
(SEE STRUCTURE PLAN)

RIFFLE HABITAT AREA
COORDINATE WITH WISCONSIN
DNR PRIOR TO CONSTRUCTION.

TRANSFORMER

SIGN

COARSE WOODY DEBRIS/HABITAT AREA
CONSISTING OF A LARGE TREE IN CREEK
APPROXIMATELY 50-FT IN LENGTH.

PROJECT NO: 5989-05-71, 72	HWY: CTH BT	COUNTY: ROCK	EROSION CONTROL - #75 SEEDING AT TURTLE CREEK	SHEET	E

FILE NAME : N:\450351\DGN\Plan Sheets\5989-05-71_022006_ec.dgn PLOT BY : dm253 PLOT DATE : 2/3/2015 PLOT SCALE : 1:40

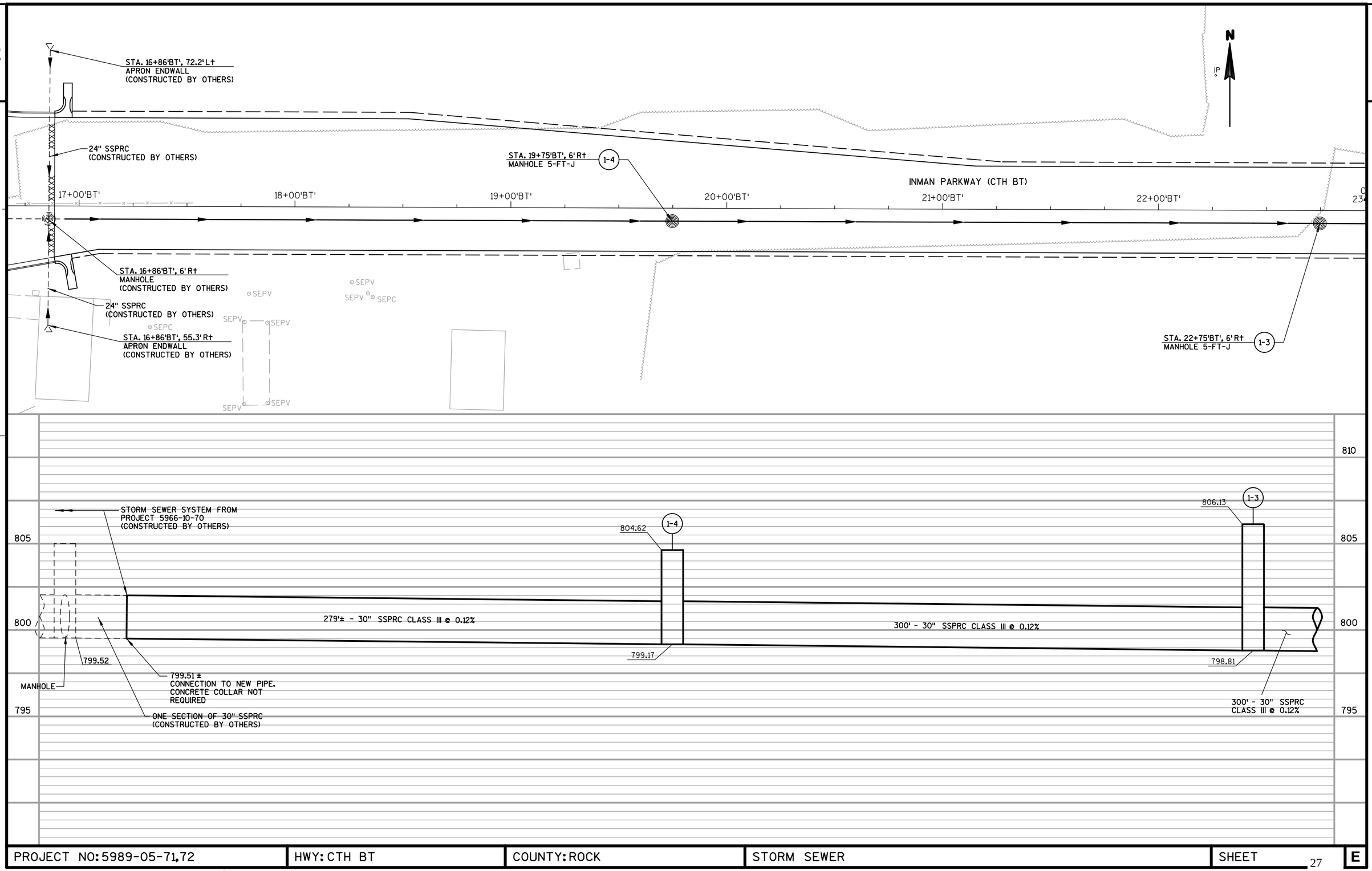

PROJECT NO: 5989-05-71,72	HWY: CTH BT	COUNTY: ROCK	STORM SEWER	SHEET 27	E

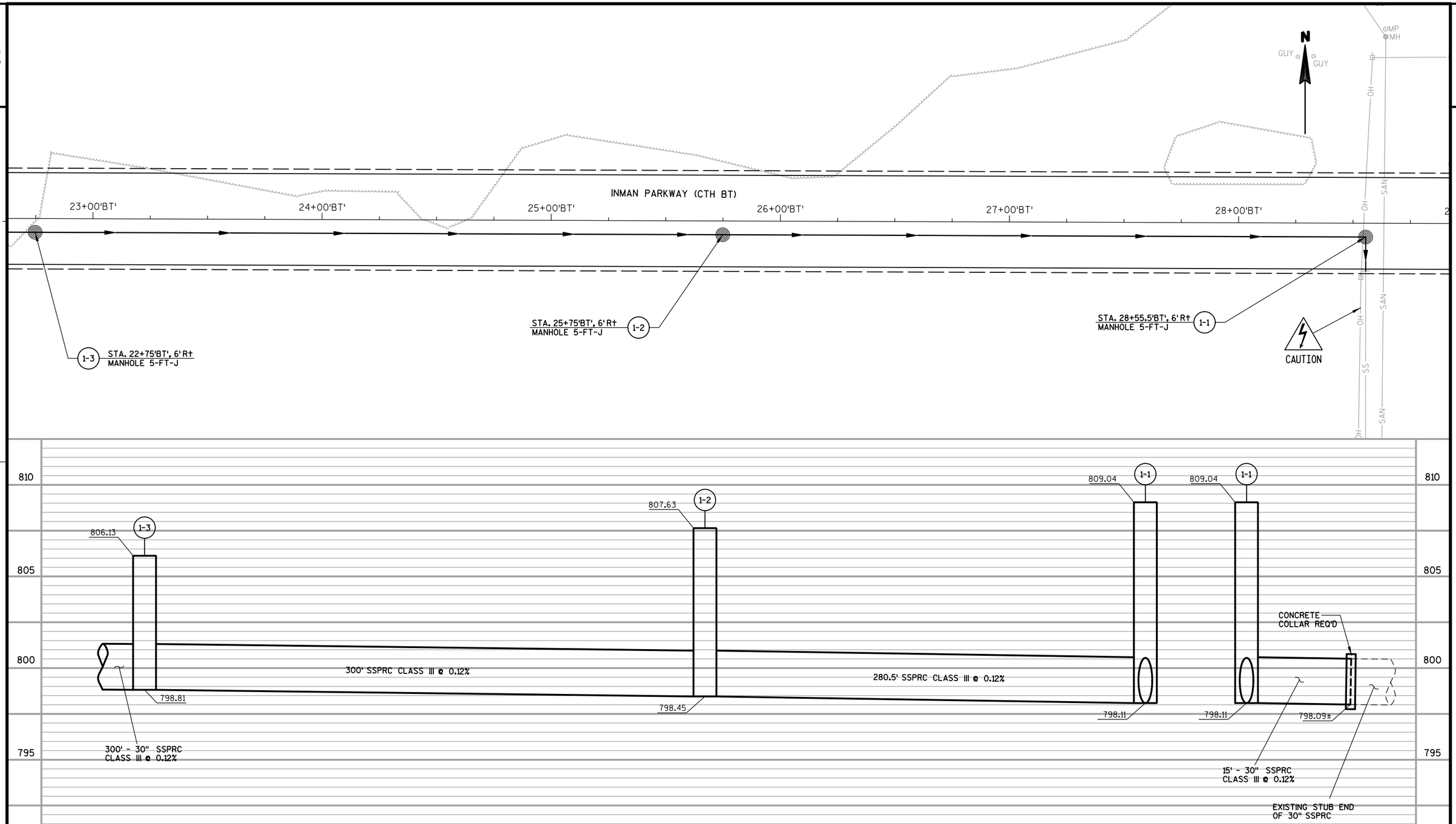

PROJECT NO: 5989-05-71,72	HWY: CTH BT	COUNTY: ROCK	STORM SEWER	SHEET 28	E

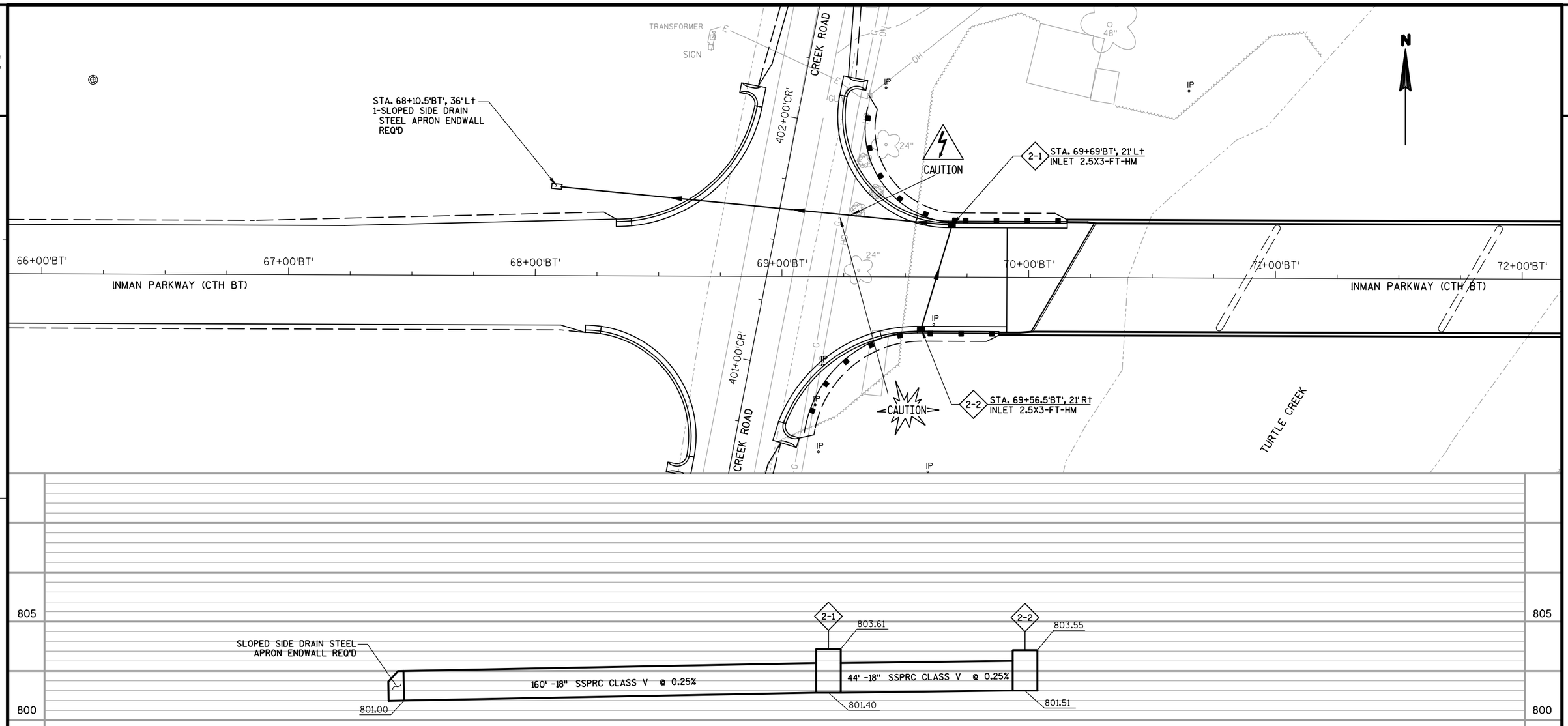

PROJECT NO: 5989-05-71,72	HWY: CTH BT	COUNTY: ROCK	STORM SEWER	SHEET 29	E

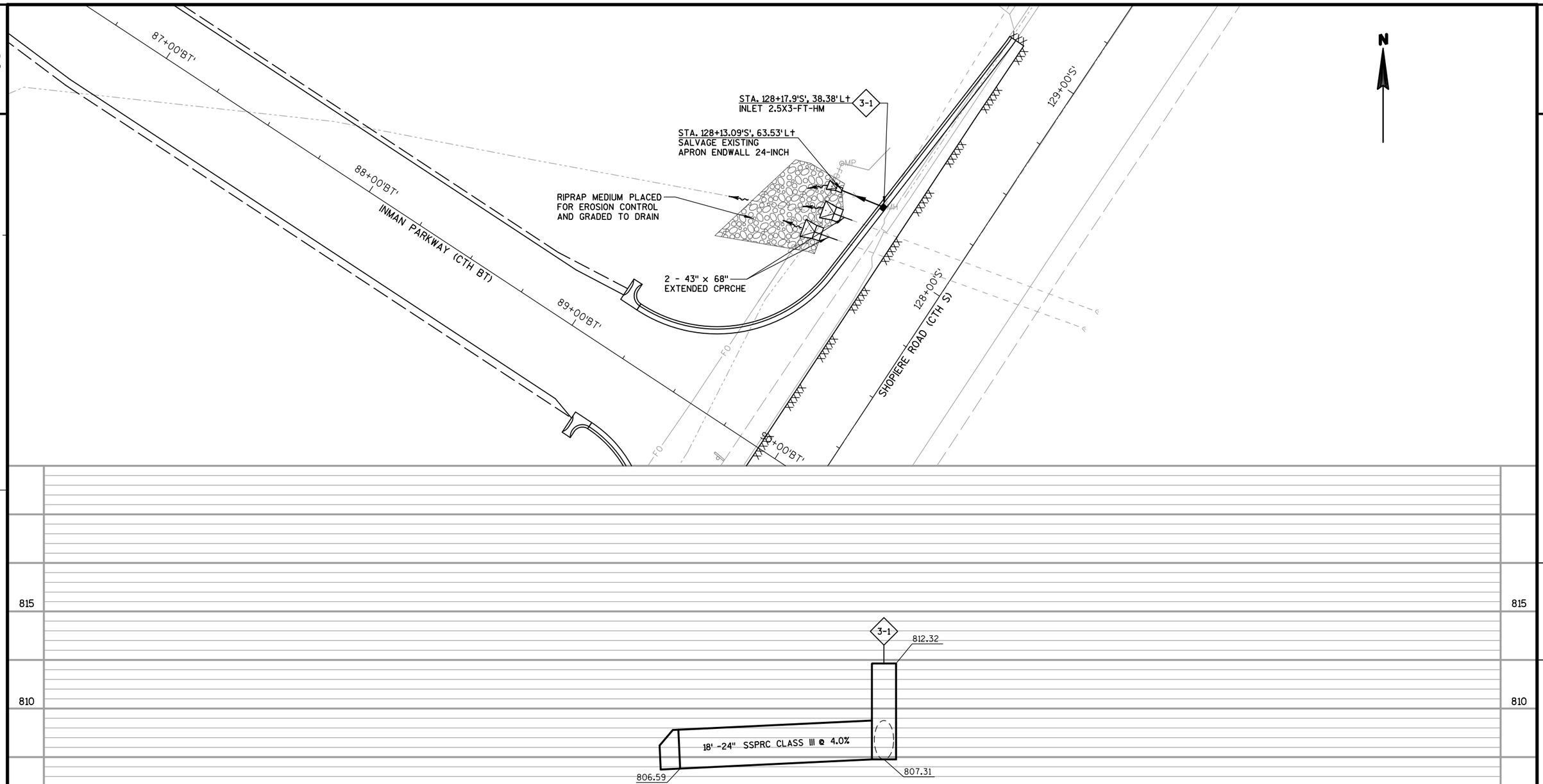

2

PROJECT NO: 5989-05-71, 72	HWY: CTH BT	COUNTY: ROCK	STORM SEWER	SHEET 30	E

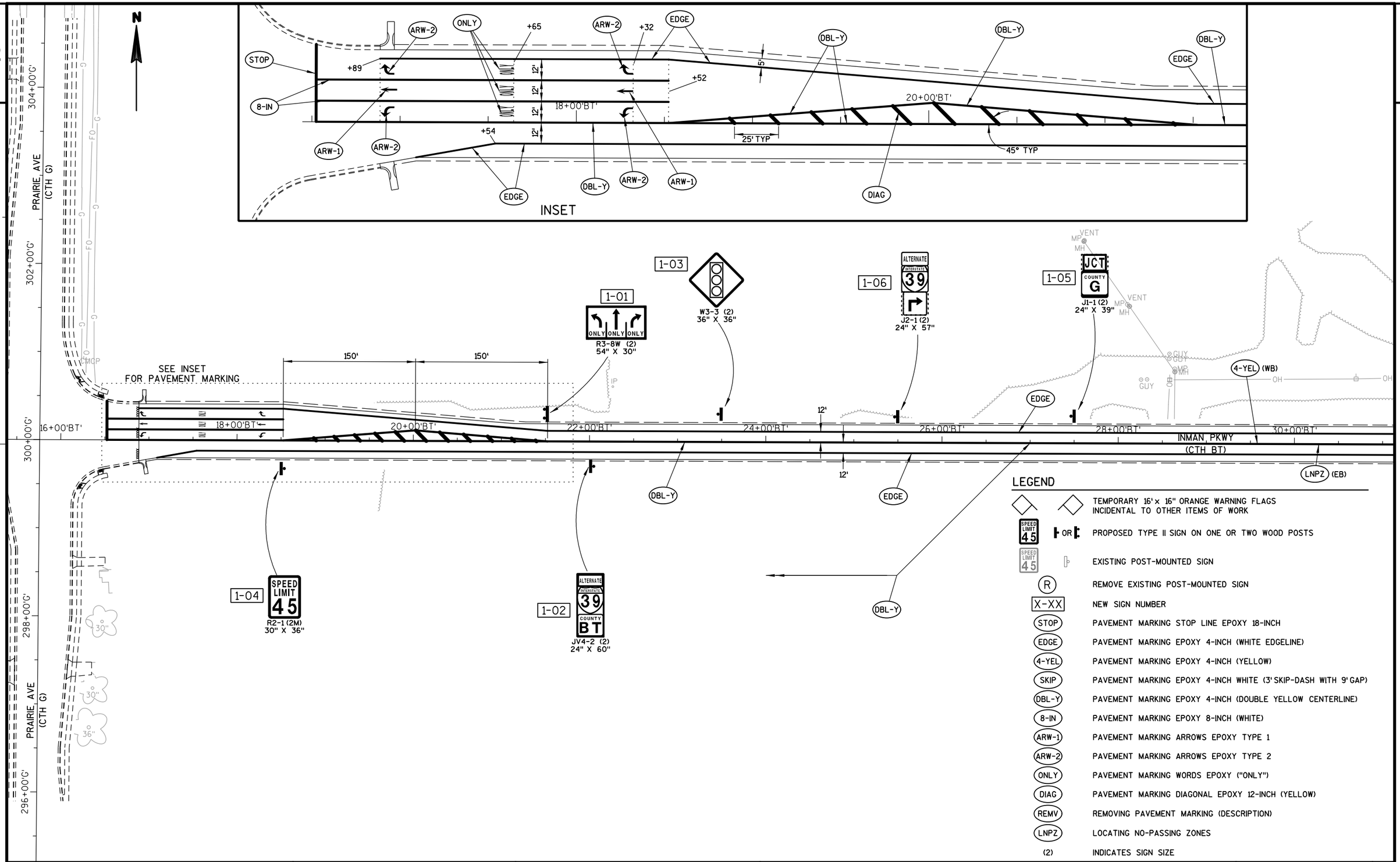

LEGEND

◇ ◇	TEMPORARY 16"x 16" ORANGE WARNING FLAGS INCIDENTAL TO OTHER ITEMS OF WORK
SPEED LIMIT 45 OR	PROPOSED TYPE II SIGN ON ONE OR TWO WOOD POSTS
SPEED LIMIT 45	EXISTING POST-MOUNTED SIGN
R	REMOVE EXISTING POST-MOUNTED SIGN
X-XX	NEW SIGN NUMBER
STOP	PAVEMENT MARKING STOP LINE EPOXY 18-INCH
EDGE	PAVEMENT MARKING EPOXY 4-INCH (WHITE EDGELINE)
4-YEL	PAVEMENT MARKING EPOXY 4-INCH (YELLOW)
SKIP	PAVEMENT MARKING EPOXY 4-INCH WHITE (3' SKIP-DASH WITH 9' GAP)
DBL-Y	PAVEMENT MARKING EPOXY 4-INCH (DOUBLE YELLOW CENTERLINE)
8-IN	PAVEMENT MARKING EPOXY 8-INCH (WHITE)
ARW-1	PAVEMENT MARKING ARROWS EPOXY TYPE 1
ARW-2	PAVEMENT MARKING ARROWS EPOXY TYPE 2
ONLY	PAVEMENT MARKING WORDS EPOXY ("ONLY")
DIAG	PAVEMENT MARKING DIAGONAL EPOXY 12-INCH (YELLOW)
REMV	REMOVING PAVEMENT MARKING (DESCRIPTION)
LNPZ	LOCATING NO-PASSING ZONES
(2)	INDICATES SIGN SIZE

PROJECT NO: 5989-05-71,72	HWY: CTH BT	COUNTY: ROCK	PERMANENT SIGNING AND PAVEMENT MARKING	SHEET 31	E

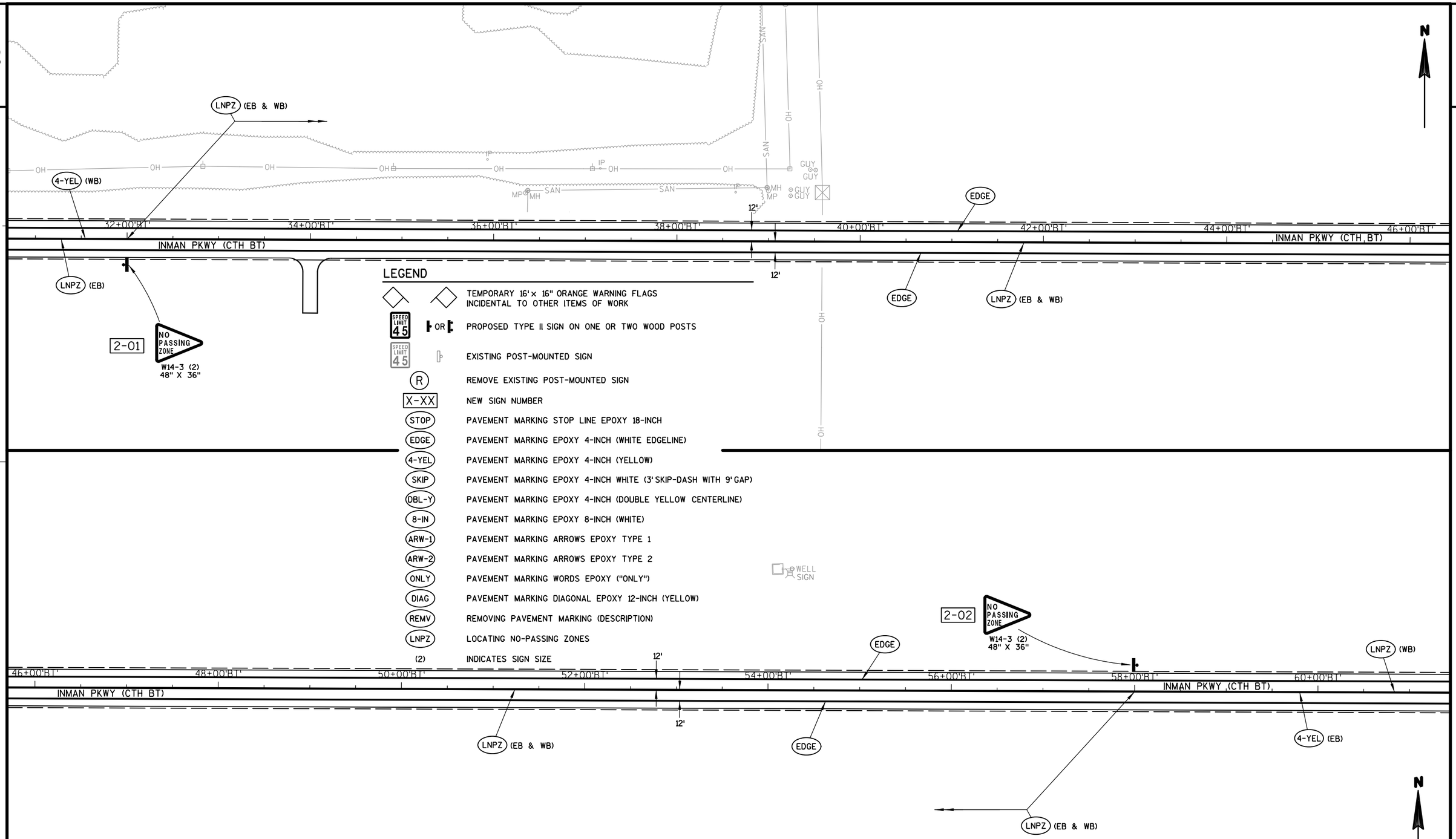

PROJECT NO: 5989-05-71,72	HWY: CTH BT	COUNTY: ROCK	PERMANENT SIGNING AND PAVEMENT MARKING	SHEET	E

LEGEND

- TEMPORARY 16" x 16" ORANGE WARNING FLAGS INCIDENTAL TO OTHER ITEMS OF WORK
- PROPOSED TYPE II SIGN ON ONE OR TWO WOOD POSTS
- EXISTING POST-MOUNTED SIGN
- (R) REMOVE EXISTING POST-MOUNTED SIGN
- X-XX NEW SIGN NUMBER
- STOP PAVEMENT MARKING STOP LINE EPOXY 18-INCH
- EDGE PAVEMENT MARKING EPOXY 4-INCH (WHITE EDGELINE)
- 4-YEL PAVEMENT MARKING EPOXY 4-INCH (YELLOW)
- SKIP PAVEMENT MARKING EPOXY 4-INCH WHITE (3' SKIP-DASH WITH 9' GAP)
- DBL-Y PAVEMENT MARKING EPOXY 4-INCH (DOUBLE YELLOW CENTERLINE)
- 8-IN PAVEMENT MARKING EPOXY 8-INCH (WHITE)
- ARW-1 PAVEMENT MARKING ARROWS EPOXY TYPE 1
- ARW-2 PAVEMENT MARKING ARROWS EPOXY TYPE 2
- ONLY PAVEMENT MARKING WORDS EPOXY ("ONLY")
- DIAG PAVEMENT MARKING DIAGONAL EPOXY 12-INCH (YELLOW)
- REMV REMOVING PAVEMENT MARKING (DESCRIPTION)
- LNPZ LOCATING NO-PASSING ZONES
- (2) INDICATES SIGN SIZE

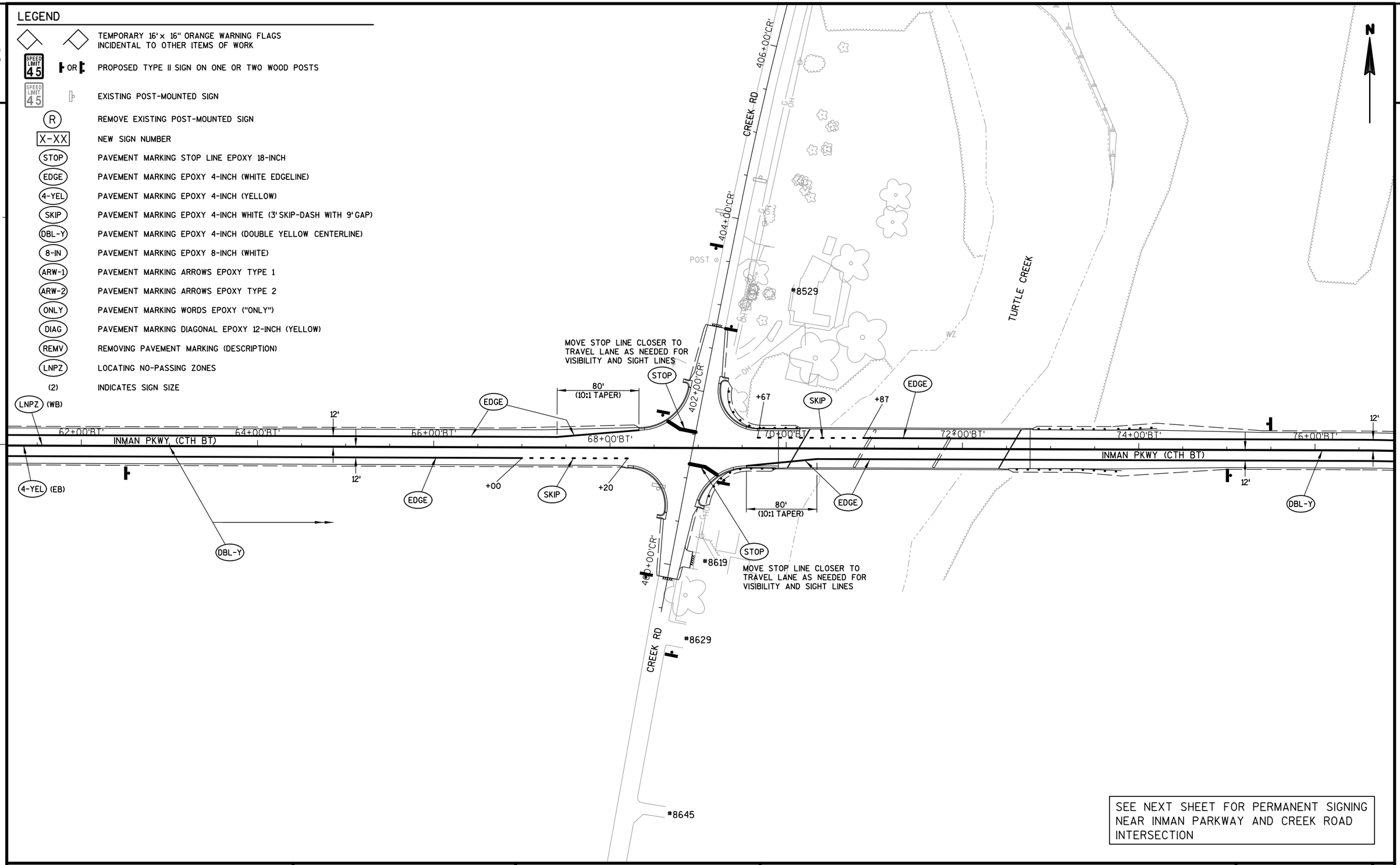

SEE NEXT SHEET FOR PERMANENT SIGNING NEAR INMAN PARKWAY AND CREEK ROAD INTERSECTION

PROJECT NO: 5989-05-71, 72	HWY: CTH BT	COUNTY: ROCK	PERMANENT SIGNING AND PAVEMENT MARKING	SHEET	E

FILE NAME : N:\450351\DGN\Plan Sheets\5989-05-71_023203_ps.dgn PLOT BY : dm253 PLOT DATE : 1/28/2015 PLOT SCALE : 1:100

LEGEND

- TEMPORARY 16'× 16" ORANGE WARNING FLAGS INCIDENTAL TO OTHER ITEMS OF WORK
- PROPOSED TYPE II SIGN ON ONE OR TWO WOOD POSTS
- EXISTING POST-MOUNTED SIGN
- (R) REMOVE EXISTING POST-MOUNTED SIGN
- [X-XX] NEW SIGN NUMBER
- (STOP) PAVEMENT MARKING STOP LINE EPOXY 18-INCH
- (EDGE) PAVEMENT MARKING EPOXY 4-INCH (WHITE EDGELINE)
- (4-YEL) PAVEMENT MARKING EPOXY 4-INCH (YELLOW)
- (SKIP) PAVEMENT MARKING EPOXY 4-INCH WHITE (3' SKIP-DASH WITH 9' GAP)
- (DBL-Y) PAVEMENT MARKING EPOXY 4-INCH (DOUBLE YELLOW CENTERLINE)
- (8-IN) PAVEMENT MARKING EPOXY 8-INCH (WHITE)
- (ARW-1) PAVEMENT MARKING ARROWS EPOXY TYPE 1
- (ARW-2) PAVEMENT MARKING ARROWS EPOXY TYPE 2
- (ONLY) PAVEMENT MARKING WORDS EPOXY ("ONLY")
- (DIAG) PAVEMENT MARKING DIAGONAL EPOXY 12-INCH (YELLOW)
- (REMV) REMOVING PAVEMENT MARKING (DESCRIPTION)
- (LNPZ) LOCATING NO-PASSING ZONES
- (2) INDICATES SIGN SIZE

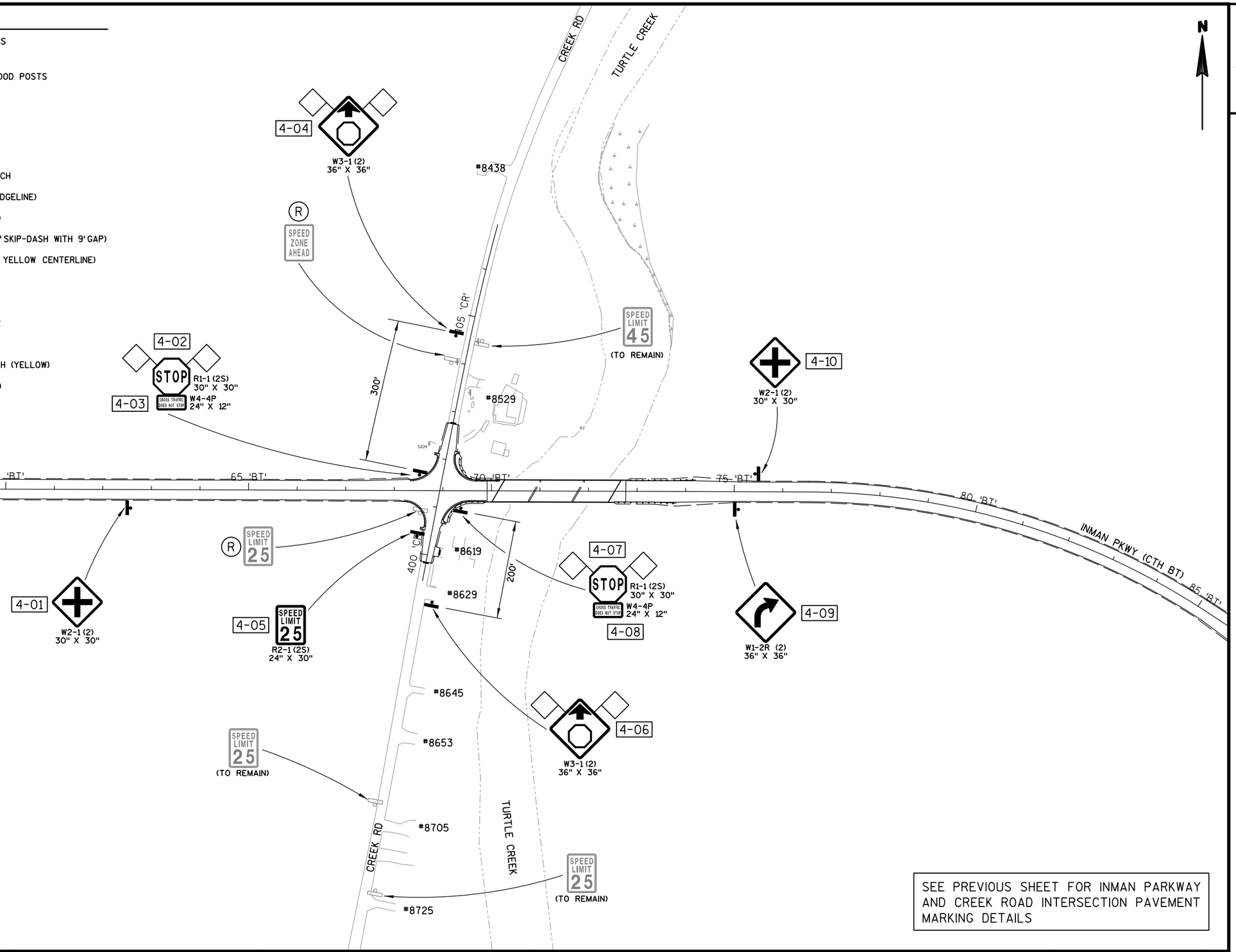

SEE PREVIOUS SHEET FOR INMAN PARKWAY AND CREEK ROAD INTERSECTION PAVEMENT MARKING DETAILS

PROJECT NO: 5989-05-71, 72	HWY: CTH BT	COUNTY: ROCK	PERMANENT SIGNING AND PAVEMENT MARKING	SHEET 34	E

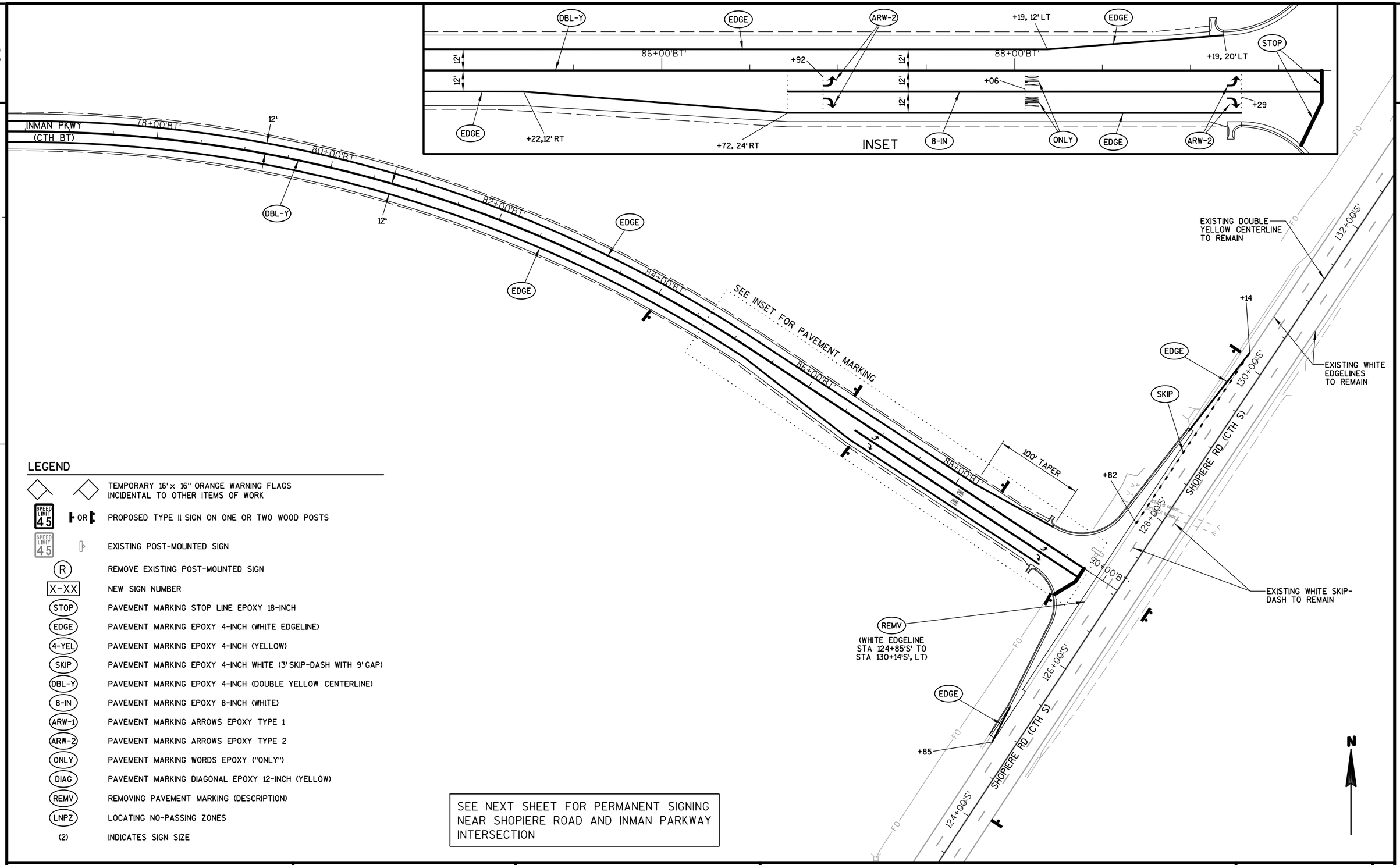

LEGEND

◇ ◇	TEMPORARY 16' x 16" ORANGE WARNING FLAGS INCIDENTAL TO OTHER ITEMS OF WORK
SPEED LIMIT 45 OR	PROPOSED TYPE II SIGN ON ONE OR TWO WOOD POSTS
SPEED LIMIT 45	EXISTING POST-MOUNTED SIGN
(R)	REMOVE EXISTING POST-MOUNTED SIGN
X-XX	NEW SIGN NUMBER
STOP	PAVEMENT MARKING STOP LINE EPOXY 18-INCH
EDGE	PAVEMENT MARKING EPOXY 4-INCH (WHITE EDGELINE)
4-YEL	PAVEMENT MARKING EPOXY 4-INCH (YELLOW)
SKIP	PAVEMENT MARKING EPOXY 4-INCH WHITE (3' SKIP-DASH WITH 9' GAP)
DBL-Y	PAVEMENT MARKING EPOXY 4-INCH (DOUBLE YELLOW CENTERLINE)
8-IN	PAVEMENT MARKING EPOXY 8-INCH (WHITE)
ARW-1	PAVEMENT MARKING ARROWS EPOXY TYPE 1
ARW-2	PAVEMENT MARKING ARROWS EPOXY TYPE 2
ONLY	PAVEMENT MARKING WORDS EPOXY ("ONLY")
DIAG	PAVEMENT MARKING DIAGONAL EPOXY 12-INCH (YELLOW)
REMV	REMOVING PAVEMENT MARKING (DESCRIPTION)
LNPZ	LOCATING NO-PASSING ZONES
(2)	INDICATES SIGN SIZE

SEE NEXT SHEET FOR PERMANENT SIGNING NEAR SHOPIERE ROAD AND INMAN PARKWAY INTERSECTION

PROJECT NO: 5989-05-71,72	HWY: CTH BT	COUNTY: ROCK	PERMANENT SIGNING AND PAVEMENT MARKING	SHEET 35	E

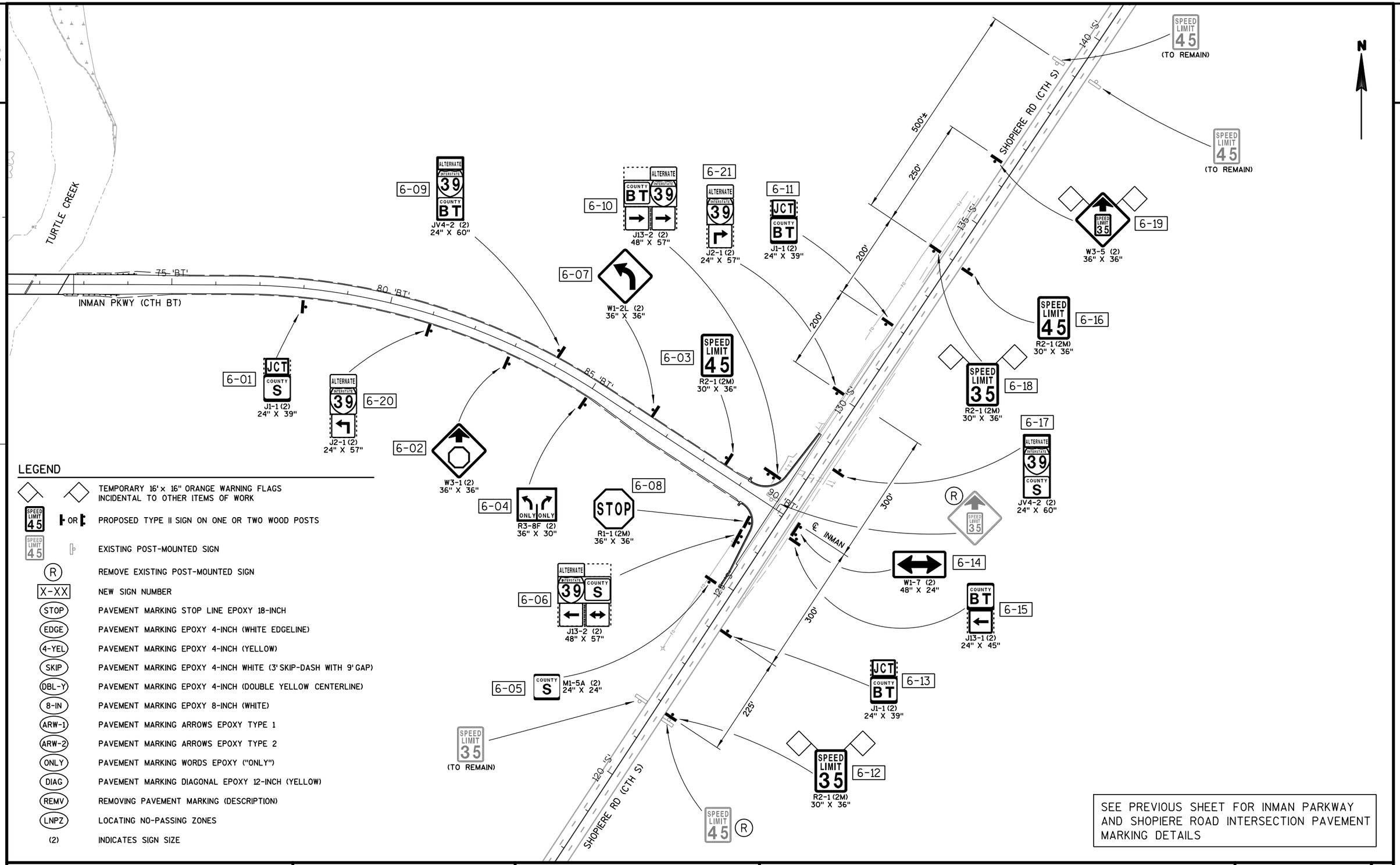

LEGEND

◇ ◇	TEMPORARY 16" x 16" ORANGE WARNING FLAGS INCIDENTAL TO OTHER ITEMS OF WORK
SPEED LIMIT 45 ⊢ OR ⊢	PROPOSED TYPE II SIGN ON ONE OR TWO WOOD POSTS
SPEED LIMIT 45 ⊢	EXISTING POST-MOUNTED SIGN
(R)	REMOVE EXISTING POST-MOUNTED SIGN
X-XX	NEW SIGN NUMBER
STOP	PAVEMENT MARKING STOP LINE EPOXY 18-INCH
EDGE	PAVEMENT MARKING EPOXY 4-INCH (WHITE EDGELINE)
4-YEL	PAVEMENT MARKING EPOXY 4-INCH (YELLOW)
SKIP	PAVEMENT MARKING EPOXY 4-INCH WHITE (3'SKIP-DASH WITH 9'GAP)
DBL-Y	PAVEMENT MARKING EPOXY 4-INCH (DOUBLE YELLOW CENTERLINE)
8-IN	PAVEMENT MARKING EPOXY 8-INCH (WHITE)
ARW-1	PAVEMENT MARKING ARROWS EPOXY TYPE 1
ARW-2	PAVEMENT MARKING ARROWS EPOXY TYPE 2
ONLY	PAVEMENT MARKING WORDS EPOXY ("ONLY")
DIAG	PAVEMENT MARKING DIAGONAL EPOXY 12-INCH (YELLOW)
REMV	REMOVING PAVEMENT MARKING (DESCRIPTION)
LNPZ	LOCATING NO-PASSING ZONES
(2)	INDICATES SIGN SIZE

SEE PREVIOUS SHEET FOR INMAN PARKWAY AND SHOPIERE ROAD INTERSECTION PAVEMENT MARKING DETAILS

PROJECT NO: 5989-05-71,72	HWY: CTH BT	COUNTY: ROCK	PERMANENT SIGNING AND PAVEMENT MARKING	SHEET	E

FILE NAME : N:\450351\DGN\Plan Sheets\5989-05-71_023206_ps.dgn PLOT BY : dm253 PLOT DATE : 1/28/2015 PLOT SCALE : 1:200

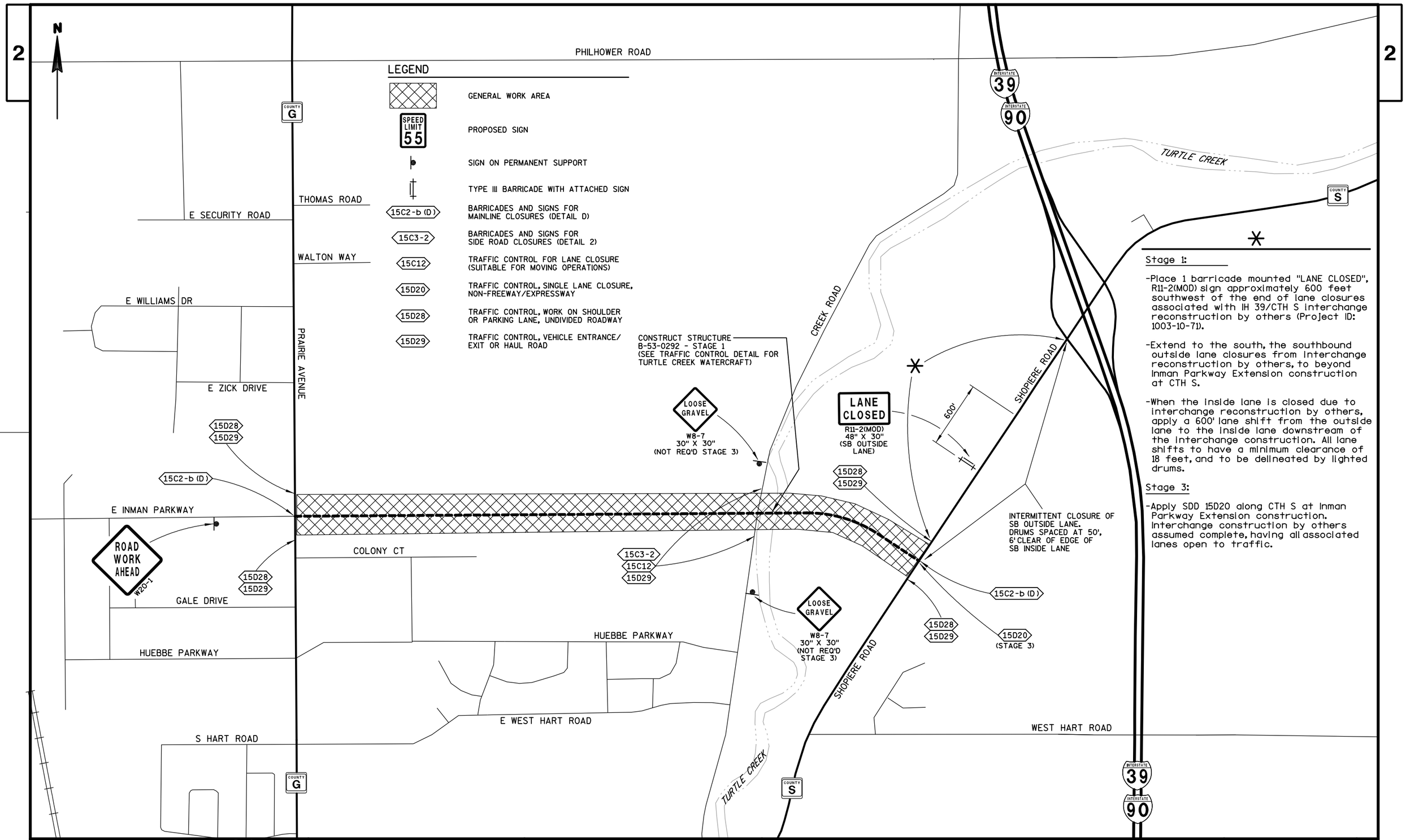

PROJECT NO: 5989-05-71, 72	HWY: CTH BT	COUNTY: ROCK	TRAFFIC CONTROL - STAGES 1 AND 3 OVERVIEW	SHEET	E

FILE NAME : N:\450351\DGN\Plan Sheets\5989-05-71_025020_TC_OV.dgn PLOT BY : dm253 PLOT DATE : 1/28/2015 PLOT SCALE : 1:200

WISDOT/CADDS SHEET 42

N

2

2

PHILHOWER ROAD

LEGEND

15C2-b (D) — BARRICADES AND SIGNS FOR MAINLINE CLOSURES (DETAIL D)

15C3-2 — BARRICADES AND SIGNS FOR SIDE ROAD CLOSURES (DETAIL 2)

COUNTY G

THOMAS ROAD

E SECURITY ROAD

WALTON WAY

E WILLIAMS DR

PRAIRIE AVENUE

E ZICK DRIVE

15C2-b (D)

E INMAN PARKWAY

COLONY CT

15C3-2

GALE DRIVE

HUEBBE PARKWAY

HUEBBE PARKWAY

E WEST HART ROAD

S HART ROAD

COUNTY G

INTERSTATE 39

INTERSTATE 90

TURTLE CREEK

COUNTY S

CREEK ROAD

SHOPIERE ROAD

SHOPIERE ROAD

WEST HART ROAD

TURTLE CREEK

COUNTY S

INTERSTATE 39

INTERSTATE 90

15C2-b (D)

PROJECT NO: 5989-05-71, 72	HWY: CTH BT	COUNTY: ROCK	TRAFFIC CONTROL - STAGE 2 OVERVIEW	SHEET E

FILE NAME : N:\450351\DGN\Plan Sheets\5989-05-71_025021_TC_OV.dgn PLOT BY : dm253 PLOT DATE : 1/28/2015 PLOT SCALE : 1:200

WISDOT/CADDS SHEET 42

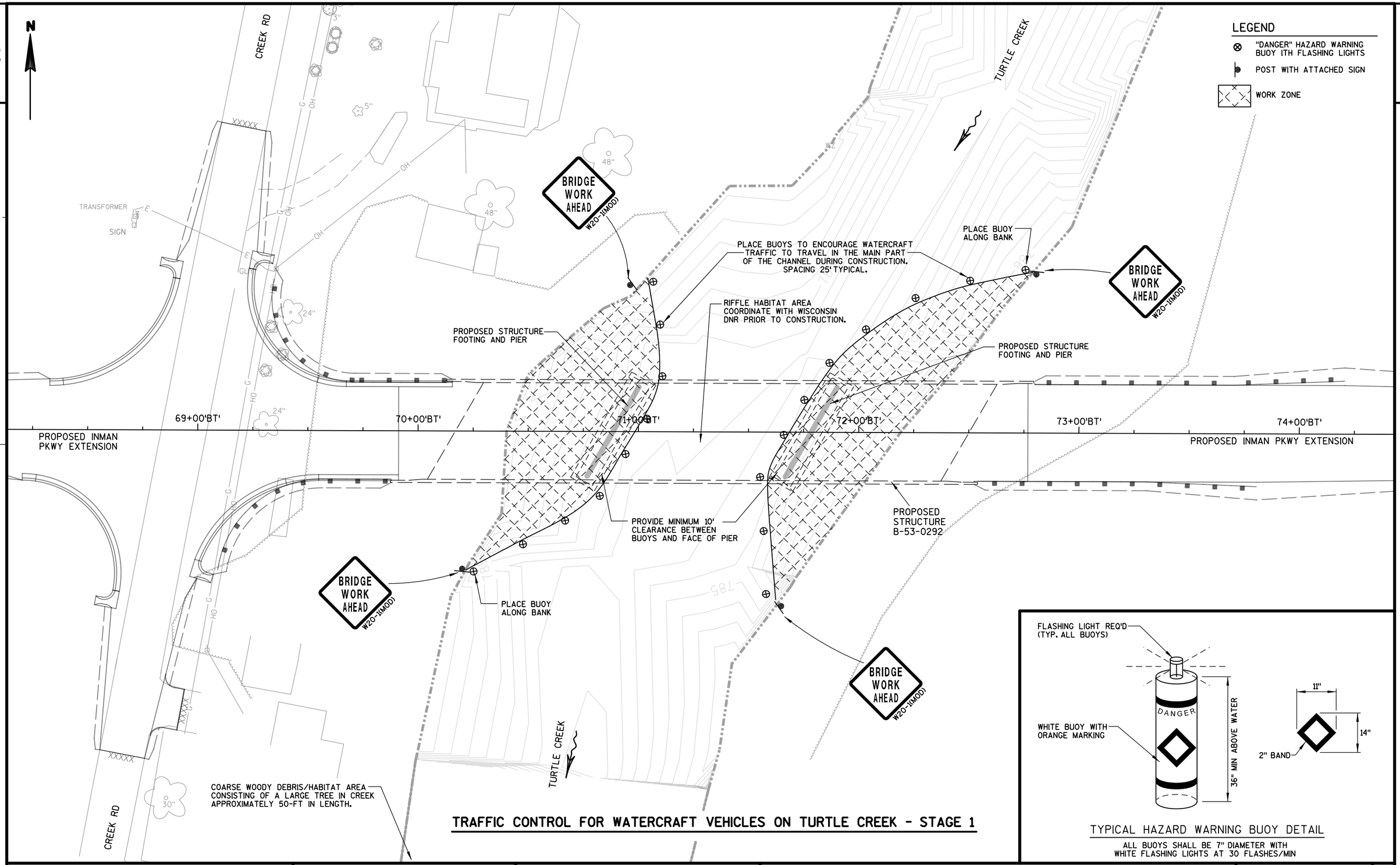

TRAFFIC CONTROL FOR WATERCRAFT VEHICLES ON TURTLE CREEK - STAGE 1

TYPICAL HAZARD WARNING BUOY DETAIL

ALL BUOYS SHALL BE 7" DIAMETER WITH WHITE FLASHING LIGHTS AT 30 FLASHES/MIN

PROJECT NO: 5989-05-71,72	HWY: CTH BT	COUNTY: ROCK	TRAFFIC CONTROL DETAILS	SHEET 39	E

2

PRAIRIE AVE (CTH G)

PI = 15+76.10 'BT'
Y = 222147.707
X = 496364.101
Delta = 00°14'53" LT
BK = S 89°32'47" E
AH = S 89°47'40" E

INMAN PKWY

S 89°32'47" E

15 'BT'

20 'BT'

25 'BT'

S 89°47'40" E

30 'BT'

35 'BT'

INMAN PKWY (CTH BT)

MATCH LINE 36+00 'BT'

2

MATCH LINE 36+00 'BT'

40 'BT'

45 'BT'

S 89°47'40" E

50 'BT'

55 'BT'

60 'BT'

65

INMAN PKWY (CTH BT)

INMAN PKWY (CTH BT)

MATCH LINE 65+00 'BT'

PROJECT NO: 5989-05-71, 72	HWY: CTH BT	COUNTY: ROCK	ALIGNMENT DIAGRAM	SHEET 40	E

FILE NAME : N:\450351\DGN\Plan Sheets\5989-05-71_027201_ad.dgn

PLOT BY : dm253 PLOT DATE : 1/28/2015 PLOT SCALE : 1:200

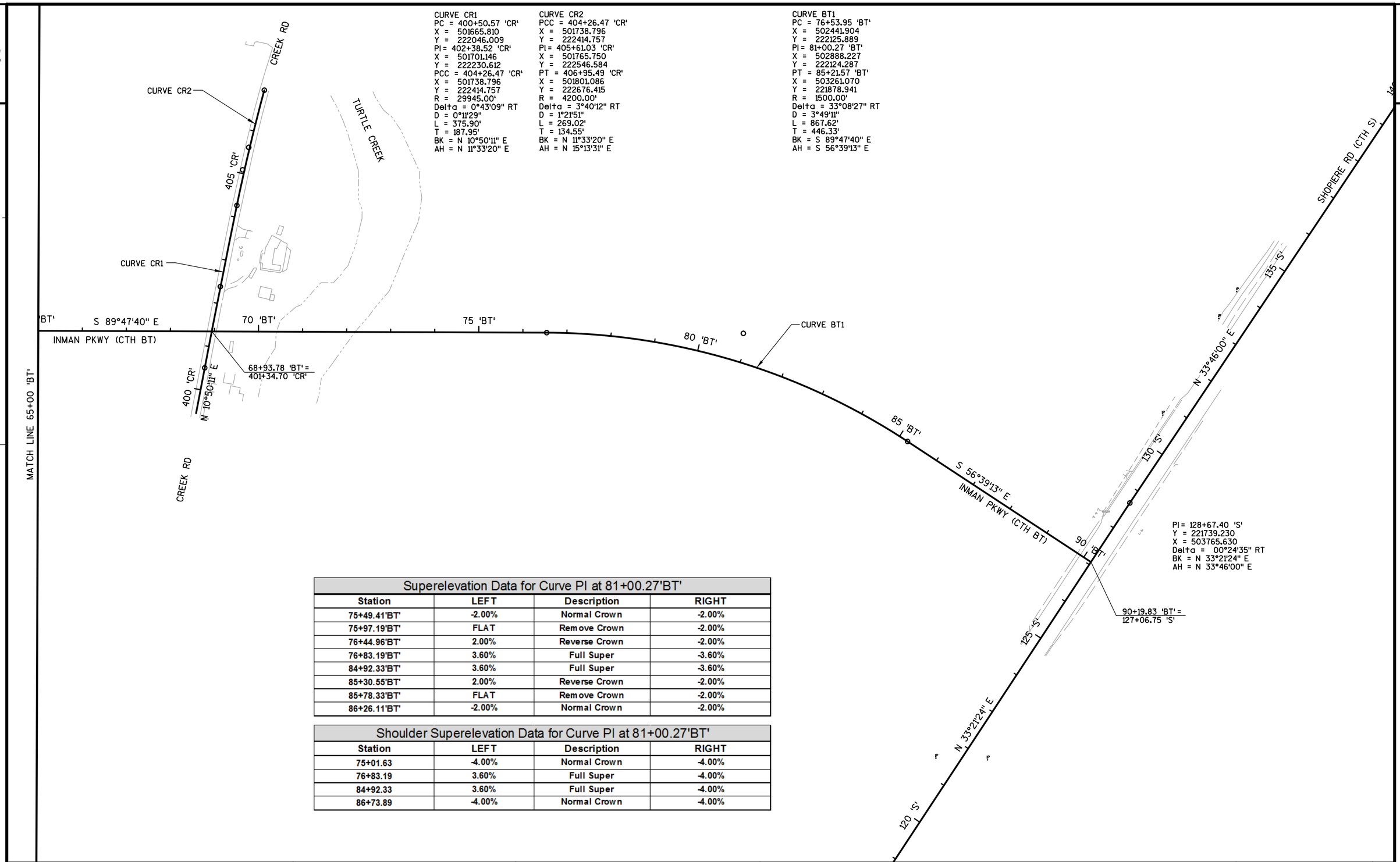

Superelevation Data for Curve PI at 81+00.27'BT'			
Station	**LEFT**	**Description**	**RIGHT**
75+49.41'BT'	-2.00%	Normal Crown	-2.00%
75+97.19'BT'	FLAT	Remove Crown	-2.00%
76+44.96'BT'	2.00%	Reverse Crown	-2.00%
76+83.19'BT'	3.60%	Full Super	-3.60%
84+92.33'BT'	3.60%	Full Super	-3.60%
85+30.55'BT'	2.00%	Reverse Crown	-2.00%
85+78.33'BT'	FLAT	Remove Crown	-2.00%
86+26.11'BT'	-2.00%	Normal Crown	-2.00%

Shoulder Superelevation Data for Curve PI at 81+00.27'BT'			
Station	**LEFT**	**Description**	**RIGHT**
75+01.63	-4.00%	Normal Crown	-4.00%
76+83.19	3.60%	Full Super	-4.00%
84+92.33	3.60%	Full Super	-4.00%
86+73.89	-4.00%	Normal Crown	-4.00%

PROJECT NO: 5989-05-71, 72	HWY: CTH BT	COUNTY: ROCK	ALIGNMENT DIAGRAM	SHEET 41	E

DATE 19FEB15 — E S T I M A T E O F Q U A N T I T I E S

LINE NUMBER	ITEM	ITEM DESCRIPTION	UNIT	TOTAL	5989-05-71 QUANTITY	5989-05-72 QUANTITY
0010	201.0105	Clearing	STA	27.000	1.000	26.000
0020	201.0120	Clearing	ID	68.000		68.000
0030	201.0205	Grubbing	STA	27.000	1.000	26.000
0040	201.0220	Grubbing	ID	68.000		68.000
0050	204.0150	Removing Curb & Gutter	LF	106.000	106.000	
0060	204.0170	Removing Fence	LF	75.000		75.000
0070	204.0210	Removing Manholes	EACH	1.000	1.000	
0080	204.0245	Removing Storm Sewer (size) 01. 24-Inch	LF	12.000	12.000	
0090	205.0100	Excavation Common	CY	26,795.000	5,076.000	21,719.000
0100	206.1000	Excavation for Structures Bridges (structure) 01. B-53-0292	LS	1.000	1.000	
0110	206.5000	Cofferdams (structure) 01. B-53-0292	LS	1.000	1.000	
0120	208.1100	Select Borrow	CY	54,453.000	44,809.000	9,644.000
0130	210.0100	Backfill Structure	CY	360.000	360.000	
0140	213.0100	Finishing Roadway (project) 01. 5989-05-71	EACH	1.000	1.000	
0150	213.0100	Finishing Roadway (project) 02. 5989-05-72	EACH	1.000		1.000
0160	305.0110	Base Aggregate Dense 3/4-Inch	TON	1,370.000	345.000	1,025.000
0170	305.0120	Base Aggregate Dense 1 1/4-Inch	TON	31,920.000	8,250.000	23,670.000
0180	312.0110	Select Crushed Material	TON	42,825.000	13,360.000	29,465.000
0190	415.0410	Concrete Pavement Approach Slab	SY	219.000	112.000	107.000
0200	440.4410.S	Incentive IRI Ride	DOL	5,534.000	1,720.000	3,814.000
0210	455.0105	Asphaltic Material PG58-28	TON	495.000	125.000	370.000
0220	455.0605	Tack Coat	GAL	4,760.000	1,210.000	3,550.000
0230	460.1103	HMA Pavement Type E-3	TON	9,040.000	2,300.000	6,740.000
0240	460.2000	Incentive Density HMA Pavement	DOL	5,783.000	1,472.000	4,311.000
0250	465.0120	Asphaltic Surface Driveways and Field Entrances	TON	5.000		5.000
0260	465.0315	Asphaltic Flumes	SY	54.000	12.000	42.000
0270	502.0100	Concrete Masonry Bridges	CY	954.000	954.000	
0280	502.1100	Concrete Masonry Seal	CY	332.000	332.000	
0290	502.3200	Protective Surface Treatment	SY	1,400.000	1,400.000	
0300	503.0137	Prestressed Girder Type I 36W-Inch	LF	1,419.000	1,419.000	
0310	505.0405	Bar Steel Reinforcement HS Bridges	LB	67,800.000	67,800.000	
0320	505.0605	Bar Steel Reinforcement HS Coated Bridges	LB	107,580.000	107,580.000	
0330	506.2605	Bearing Pads Elastomeric Non-Laminated	EACH	36.000	36.000	
0340	506.4000	Steel Diaphragms (structure) 01. B-53-0292	EACH	20.000	20.000	
0350	516.0500	Rubberized Membrane Waterproofing	SY	24.000	24.000	
0360	520.0118	Culvert Pipe Class III 18-Inch	LF	64.000		64.000
0370	520.7000	Cleaning Culvert Pipes	EACH	2.000	2.000	
0380	520.8000	Concrete Collars for Pipe	EACH	1.000		1.000
0390	521.0448	Apron Endwalls for Culvert Pipe Sloped Cross Drains Steel 48-Inch 6 to 1	EACH	4.000	4.000	
0400	521.1518	Apron Endwalls for Culvert Pipe Sloped Side Drains Steel 18-Inch 6 to 1	EACH	5.000		5.000
0410	522.0148	Culvert Pipe Reinforced Concrete Class III 48-Inch	LF	308.000	308.000	
0420	522.0324	Culvert Pipe Reinforced Concrete Class IV 24-Inch	LF	84.000	84.000	
0430	522.0348	Culvert Pipe Reinforced Concrete Class IV 48-Inch	LF	204.000	204.000	
0440	522.0515	Culvert Pipe Reinforced Concrete Class V 15-Inch	LF	228.000		228.000

3

DATE 19FEB15 E S T I M A T E O F Q U A N T I T I E S

LINE NUMBER	ITEM	ITEM DESCRIPTION	UNIT	TOTAL	5989-05-71 QUANTITY	5989-05-72 QUANTITY
0450	522.0524	Culvert Pipe Reinforced Concrete Class V 24-Inch	LF	308.000		308.000
0460	522.1015	Apron Endwalls for Culvert Pipe Reinforced Concrete 15-Inch	EACH	4.000		4.000
0470	522.1024	Apron Endwalls for Culvert Pipe Reinforced Concrete 24-Inch	EACH	3.000	1.000	2.000
0480	522.1048	Apron Endwalls for Culvert Pipe Reinforced Concrete 48-Inch	EACH	4.000	4.000	
0490	523.0143	Culvert Pipe Reinforced Concrete Horizontal Elliptical Class HE-III 43x68-Inch	LF	14.000	14.000	
0500	523.0419	Culvert Pipe Reinforced Concrete Horizontal Elliptical Class HE-IV 19x30-Inch	LF	292.000		292.000
0510	523.0519	Apron Endwalls for Culvert Pipe Reinforced Concrete Horizontal Elliptical 19x30-Inch	EACH	4.000		4.000
0520	524.0624	Apron Endwalls for Culvert Pipe Salvaged 24-Inch	EACH	1.000	1.000	
0530	550.0500	Pile Points	EACH	104.000	104.000	
0540	550.1100	Piling Steel HP 10-Inch X 42 Lb	LF	7,760.000	7,760.000	
0550	601.0557	Concrete Curb & Gutter 6-Inch Sloped 36-Inch Type D	LF	700.000	425.000	275.000
0560	606.0200	Riprap Medium	CY	120.000	110.000	10.000
0570	606.0300	Riprap Heavy	CY	620.000	620.000	
0580	608.0324	Storm Sewer Pipe Reinforced Concrete Class III 24-Inch	LF	18.000	18.000	
0590	608.0330	Storm Sewer Pipe Reinforced Concrete Class III 30-Inch	LF	1,190.000		1,190.000
0600	608.0518	Storm Sewer Pipe Reinforced Concrete Class V 18-Inch	LF	204.000	204.000	
0610	611.0530	Manhole Covers Type J	EACH	4.000		4.000
0620	611.0627	Inlet Covers Type HM	EACH	3.000	1.000	2.000
0630	611.2005	Manholes 5-FT Diameter	EACH	4.000		4.000
0640	611.3253	Inlets 2.5x3-FT	EACH	3.000	1.000	2.000
0650	612.0406	Pipe Underdrain Wrapped 6-Inch	LF	230.000	230.000	
0660	614.0150	Anchor Assemblies for Steel Plate Beam Guard	EACH	4.000	4.000	
0670	614.0397	Guardrail Mow Strip Emulsified Asphalt	SY	293.000	142.000	151.000
0680	614.2300	MGS Guardrail 3	LF	225.000	87.500	137.500
0690	614.2500	MGS Thrie Beam Transition	LF	150.000	75.000	75.000
0700	614.2610	MGS Guardrail Terminal EAT	EACH	2.000	2.000	
0710	614.2620	MGS Guardrail Terminal Type 2	EACH	2.000		2.000
0720	616.0700.S	Fence Safety	LF	275.000		275.000
0730	618.0100	Maintenance And Repair of Haul Roads (project) 01. 5989-05-71	EACH	1.000	1.000	
0740	618.0100	Maintenance And Repair of Haul Roads (project) 02. 5989-05-72	EACH	1.000		1.000
0750	619.1000	Mobilization	EACH	1.000	0.500	0.500
0760	621.0100	Landmark Reference Monuments	EACH	4.000		4.000
0770	623.0200	Dust Control Surface Treatment	SY	35,600.000	8,600.000	27,000.000
0780	625.0500	Salvaged Topsoil	SY	64,780.000	16,500.000	48,280.000
0790	627.0200	Mulching	SY	37,840.000	12,950.000	24,890.000
0800	628.1504	Silt Fence	LF	12,630.000	3,515.000	9,115.000
0810	628.1520	Silt Fence Maintenance	LF	12,630.000	3,515.000	9,115.000
0820	628.1905	Mobilizations Erosion Control	EACH	8.000	3.000	5.000

3

DATE 19FEB15 E S T I M A T E O F Q U A N T I T I E S

LINE NUMBER	ITEM	ITEM DESCRIPTION	UNIT	TOTAL	5989-05-71 QUANTITY	5989-05-72 QUANTITY
0830	628.1910	Mobilizations Emergency Erosion Control	EACH	6.000	2.000	4.000
0840	628.2004	Erosion Mat Class I Type B	SY	6,950.000	2,430.000	4,520.000
0850	628.2008	Erosion Mat Urban Class I Type B	SY	29,190.000	7,500.000	21,690.000
0860	628.6005	Turbidity Barriers	SY	400.000	400.000	
0870	628.7015	Inlet Protection Type C	EACH	5.000	2.000	3.000
0880	628.7504	Temporary Ditch Checks	LF	221.000	101.000	120.000
0890	628.7555	Culvert Pipe Checks	EACH	15.000	6.000	9.000
0900	628.7560.S	Stone or Rock Ditch Checks	CY	102.000	22.000	80.000
0910	629.0205	Fertilizer Type A	CWT	54.000	11.000	43.000
0920	630.0140	Seeding Mixture No. 40	LB	1,334.000	330.000	1,004.000
0930	630.0175	Seeding Mixture No. 75	LB	18.000	5.000	13.000
0940	630.0200	Seeding Temporary	LB	913.000	330.000	583.000
0950	631.0300	Sod Water	MGAL	8.000	2.000	6.000
0960	631.1000	Sod Lawn	SY	44.000	11.000	33.000
0970	631.1100	Sod Erosion Control	SY	228.000	190.000	38.000
0980	633.5200	Markers Culvert End	EACH	31.000	13.000	18.000
0990	634.0614	Posts Wood 4x6-Inch X 14-FT	EACH	8.000	4.000	4.000
1000	634.0616	Posts Wood 4x6-Inch X 16-FT	EACH	16.000	10.000	6.000
1010	634.0618	Posts Wood 4x6-Inch X 18-FT	EACH	17.000	12.000	5.000
1020	637.2210	Signs Type II Reflective H	SF	217.070	152.960	64.110
1030	637.2230	Signs Type II Reflective F	SF	95.500	50.250	45.250
1040	638.2602	Removing Signs Type II	EACH	4.000	2.000	2.000
1050	638.3000	Removing Small Sign Supports	EACH	4.000	2.000	2.000
1060	642.5401	Field Office Type D	EACH	1.000		1.000
1070	643.0100	Traffic Control (project) 01. 5989-05-71	EACH	1.000	1.000	
1080	643.0100	Traffic Control (project) 02. 5989-05-72	EACH	1.000		1.000
1090	643.0300	Traffic Control Drums	DAY	13,500.000	7,400.000	6,100.000
1100	643.0410	Traffic Control Barricades Type II	DAY	300.000	100.000	200.000
1110	643.0420	Traffic Control Barricades Type III	DAY	11,300.000	3,000.000	8,300.000
1120	643.0705	Traffic Control Warning Lights Type A	DAY	13,600.000	3,600.000	10,000.000
1130	643.0715	Traffic Control Warning Lights Type C	DAY	350.000	350.000	
1140	643.0800	Traffic Control Arrow Boards	DAY	10.000	10.000	
1150	643.0900	Traffic Control Signs	DAY	10,300.000	2,800.000	7,500.000
1160	645.0112	Geotextile Fabric Type DF Schedule B	SY	6,460.000	980.000	5,480.000
1170	645.0120	Geotextile Fabric Type HR	SY	1,375.000	1,340.000	35.000
1180	645.0140	Geotextile Fabric Type SAS	SY	850.000	200.000	650.000
1190	646.0106	Pavement Marking Epoxy 4-Inch	LF	24,149.000	7,824.000	16,325.000
1200	646.0126	Pavement Marking Epoxy 8-Inch	LF	705.000	305.000	400.000
1210	646.0600	Removing Pavement Markings	LF	430.000	430.000	
1220	647.0156	Pavement Marking Arrows Epoxy Type 1	EACH	2.000		2.000
1230	647.0166	Pavement Marking Arrows Epoxy Type 2	EACH	8.000	4.000	4.000
1240	647.0356	Pavement Marking Words Epoxy	EACH	5.000	2.000	3.000
1250	647.0566	Pavement Marking Stop Line Epoxy 18-Inch	LF	157.000	45.000	112.000
1260	647.0726	Pavement Marking Diagonal Epoxy 12-Inch	LF	100.000		100.000
1270	648.0100	Locating No-Passing Zones	MI	0.670		0.670
1280	650.4000	Construction Staking Storm Sewer	EACH	7.000	1.000	6.000
1290	650.4500	Construction Staking Subgrade	LF	7,353.000	1,738.000	5,615.000
1300	650.5000	Construction Staking Base	LF	7,353.000	1,738.000	5,615.000
1310	650.5500	Construction Staking Curb Gutter and Curb & Gutter	LF	809.000	425.000	384.000
1320	650.6000	Construction Staking Pipe Culverts	EACH	16.000	8.000	8.000
1330	650.6500	Construction Staking Structure Layout (structure) 01. B-53-0292	LS	1.000	1.000	

DATE 19FEB15 E S T I M A T E O F Q U A N T I T I E S

LINE NUMBER	ITEM	ITEM DESCRIPTION	UNIT	TOTAL	5989-05-71 QUANTITY	5989-05-72 QUANTITY
1340	650.9910	Construction Staking Supplemental Control (project) 01. 5989-05-71	LS	1.000	1.000	
1350	650.9910	Construction Staking Supplemental Control (project) 02. 5989-05-72	LS	1.000		1.000
1360	650.9920	Construction Staking Slope Stakes	LF	7,353.000	1,738.000	5,615.000
1370	690.0150	Sawing Asphalt	LF	562.000	435.000	127.000
1380	690.0250	Sawing Concrete	LF	5.000	5.000	
1390	715.0502	Incentive Strength Concrete Structures	DOL	7,356.000	7,356.000	
1400	999.1000.S	Seismograph	LS	1.000	1.000	
1410	999.1500.S	Crack and Damage Survey	LS	1.000	1.000	
1420	ASP.1T0A	On-the-Job Training Apprentice at $5.00/HR	HRS	800.000		800.000
1430	ASP.1T0G	On-the-Job Training Graduate at $5.00/HR	HRS	666.000		666.000
1440	SPV.0035	Special 01. Clean Sand For Infiltration Trenches	CY	1,980.000		1,980.000
1450	SPV.0035	Special 02. Stone Aggregate For Infiltration Trenches	CY	2,310.000	330.000	1,980.000
1460	SPV.0060	Special 01. Grading And Shaping For Infiltration Trenches	EACH	14.000	2.000	12.000
1470	SPV.0060	Special 02. Erosion Control Filter Bags	EACH	120.000	33.000	87.000
1480	SPV.0060	Special 03. Observation Pipe With Cap For Infiltration Trenches	EACH	14.000	2.000	12.000
1490	SPV.0060	Special 04. Apron Endwalls For Culvert Pipe Salvaged 43x68-Inch	EACH	2.000	2.000	
1500	SPV.0060	Special 05. Apron Endwalls For Culvert Pipe Sloped Cross Drains Steel 24-Inch 6:1	EACH	1.000	1.000	
1510	SPV.0090	Special 01. Concrete Curb And Gutter 4-Inch Sloped 32-Inch Type D Special	LF	109.000		109.000
1520	SPV.0105	Special 01. Traffic Control For Watercraft On Turtle Creek	LS	1.000	1.000	
1530	SPV.0180	Special 01. Geogrid Reinforcement	SY	14,830.000	5,640.000	9,190.000
1540	SPV.0195	Special 01. Select Crushed Material For Travel Corridor	TON	100.000	100.000	

3

5989-05-71 EARTHWORK SUMMARY

Division	From/To Station	Location	Excavation Common (1) (item # 205.0100)		Salvaged/Un-usable Pavement Material (4)	Available Material (5)	Reduced EBS in Fill (9)	Expanded EBS Backfill (11)	Unexpanded Fill	Expanded Fill (13)	Mass Ordinate +/- (14)	Waste	Select Borrow	Comment:
			Cut (2)	EBS Excavation (3)			Factor 0.80	Factor 1.30		Factor 1.25			(item #208.1100)	
Mainline	67+22.75 to 89+91	Mainline	1461	2054	0	1461	1643	2671	39694	47252	-44894			
Mainline EBS	72+50 to 78+50	Undistributed		311			249	404						
Excavation for 2 Infiltration Basins		Project Wide	296			296								
Excavation for Ditch Checks		Project Wide	600			600								
Excavation for French Drains		Project Wide	12											
CTH S Total	124+90-129+05	CTH S	341	0	21	320	0	0	187	234	86			
			2710	**2365**	**21**	**2678**	**1892**	**3075**	**39881**	**47486**	**-44809**			
Project 5889-05-71 Totals			**Total Exc. Common**	**5076**									**44809**	

5989-05-72 EARTHWORK SUMMARY

Division	From/To Station	Location	Excavation Common (1) (item # 205.0100)		Salvaged/Un-usable Pavement Material (4)	Available Material (5)	Reduced EBS in Fill (9)	Expanded EBS Backfill (11)	Unexpanded Fill	Expanded Fill (13)	Mass Ordinate +/- (14)	Waste	Select Borrow	Comment:
			Cut (2)	EBS Excavation (3)			Factor 0.80	Factor 1.30		Factor 1.25			(item #208.1100)	
Mainline	16+25 to 67+22.75	Mainline	12431	2933	0	12431	2347	3813	24719	27276	-10024			
Mainline EBS	47+50 to 60+50	Undistributed		689	0		551	896						
Excavation for 12 Infiltration Basins		Project Wide	3022		0	3022								
Excavation for ditch checks		Project Wide	1800		0	1800								
Excavation for French Drains		Project Wide	33											
Creek Rd Total	399+85 to 402+75	Creek Road	811	0	54	757	0	0	302	378	380			
			18097	**3622**	**54**	**18010**	**2898**	**4709**	**25021**	**27654**	**-9644**			
Project 5889-05-72 Totals			**Total Exc. Common**	**21719**									**9644**	

1) Excavation Common is the sum of the Cut and EBS Excavation columns. Item number 205.0100
2) Salvaged/Unsuable Pavement Material is included in Cut.
3) EBS Excavation to be backfilled with Select Crushed Material in conjunction with geogrid reinforcement.
4) Salvaged/Unusable Pavement Material is excluded from Available Material
5) Available Material = Cut - Salvaged/Unusuable Pavement Material
9) Reduced EBS in Fill: Excavated EBS material is usuable in Fills outside the 1:1 slope. EBS in Fill Reduction factor = 0.8
11) Expanded EBS Backfill: C.Y. Quantity used to compute Select Crushed Material, item 312.0110, used for backfill in conjunction with geogrid reinforcement. EBS Backfill Factor = 1.3.
13) Expanded Fill = (Unexpanded Fill - Reduced EBS in Fill) * Fill Factor. Expanded Fill Factor = 1.25
14) The Mass Ordinate = Available Material - Expanded Fill

CONTRACT EARTHWORK SUMMARY

Total Excavation Common (C.Y.) =	26795
Total Select Borrow (C.Y.) =	54453

ALL QUANTITIES CATEGORY 0010 UNLESS OTHERWISE NOTED

3

CLEARING & GRUBBING

LOCATION	201.0105 CLEARING STA	201.0120 CLEARING ID	201.0205 GRUBBING STA	201.0220 GRUBBING ID
5989-05-71				
72+00'BT' TO 73+00'BT', LT & RT	1	--	1	--
5989-05-71 TOTALS	1	0	1	0
5989-05-72				
16+88.60'BT' TO 19+75'BT', LT & RT	3	--	3	--
19+75'BT' TO 39+75'BT', LT	20	--	20	--
69+31'BT', LT	--	25	--	25
69+42'BT', LT	--	25	--	25
69+50'BT' TO 70+50'BT', LT & RT	1	--	1	--
400+45'CR', RT	--	12	--	12
400+40'CR' TO 400+90'CR', RT	0.5	--	0.5	--
401+50'CR' TO 402+00"CR', RT	0.5	--	0.5	--
UNDISTRIBUTED	1	6	1	6
5989-05-72 TOTALS	26	68	26	68
CONTRACT TOTALS	27	68	27	68

REMOVALS

LOCATION	204.0150 REMOVING CURB & GUTTER LF	204.0170 REMOVING FENCE LF	204.0210 REMOVING MANHOLES EACH	204.0245 REMOVING STORM SEWER 24-INCH LF
5989-05-71				
124+90 - 125+01 'S'	11	--	--	--
128+10 - 129+05 'S'	95	--	--	--
128+18 'S', 40' LT	--	--	1	12
5989-05-71 TOTALS	106	0	1	12
5989-05-72				
30+00'BT' TO 30+75'BT', LT	--	75	--	--
5989-05-72 TOTALS	0	75	0	0
CONTRACT TOTALS	106	75	1	12

AGGREGATE ITEMS

LOCATION	305.0110 BASE AGGREGATE DENSE 3/4-INCH TON	305.0120 BASE AGGREGATE DENSE 1 1/4-INCH TON	312.0110 SELECT CRUSHED MATERIAL TON	645.0112* GEOTEXTILE FABRIC TYPE DF SCHEDULE B SY	SPV.0180.01 GEOGRID REINFORCEMENT SY
5989-05-71					
72+53.71'BT' TO 89+92'BT'	--	7500	6290	--	--
72+54'BT' TO 73+32'BT', RT (4' SHLDR)	10	--	--	--	--
72+79'BT' TO 73+70'BT', LT (4' SHLDR)	10	--	--	--	--
73+32'BT' TO 75+02'BT', RT (EAT GRADING)	30	--	--	--	--
73+70'BT' TO 75+40'BT', LT (EAT GRADING)	30	--	--	--	--
75+02'BT' TO 85+21'BT', RT (2' SHLDR)	80	--	--	--	--
75+40'BT' TO 88+89'BT', LT (2' SHLDR)	110	--	--	--	--
85+21'BT' TO 89+21'BT', RT (3' SHLDR)	40	--	--	--	--
88+89'BT' TO 89+11'BT', LT (3' SHLDR)	2	--	--	--	--
FRENCH DRAINS	--	--	20	110	--
EXPANDED EBS BACKFILL (SEE EARTHWORK TABLE)	--	--	5850	--	5130
UNDISTRIBUTED	33	750	1200	10	510
5989-05-71 TOTALS	345	8250	13360	120	5640
5989-05-72					
16+88.60'BT' TO 67+22.75'BT'	--	19700	16100	--	--
16+88.60'BT' TO 21+45'BT', LT (3' SHLDR)	50	--	--	--	--
16+88.60'BT' TO 67+22.75'BT', RT (2' SHLDR)	400	--	--	--	--
21+45'BT' TO 67+22.75, LT (2' SHLDR)	350	--	--	--	--
34+00'BT', RT (FIELD ENTRANCE)	40	--	--	--	--
67+22.75'BT' TO 70+13'BT' (CREEK RD INTERSECTION)	--	2000	1650	--	--
67+22.75'BT' TO 68+33'BT', LT (3' SHLDR)	10	--	--	--	--
67+22.75'BT' TO 68+20'BT', RT (2' SHLDR)	10	--	--	--	--
CREEK RD (3' SHLDR)	25	--	--	--	--
FRENCH DRAINS	--	--	65	320	--
EXPANDED EBS BACKFILL (SEE EARTHWORK TABLE)	--	--	8950	--	8350
GUARDRAIL MOW STRIP AREAS	55	--	--	--	--
UNDISTRIBUTED	85	1970	2700	30	840
5989-05-72 TOTALS	1025	23670	29465	350	9190
CONTRACT TOTALS	1370	31920	42825	470	14830

* ADDITIONAL QUANTITIES SHOWN ELSEWHERE

ALL QUANTITIES CATEGORY 0010 UNLESS OTHERWISE NOTED

3

3

FINISHING ROADWAY

LOCATION	213.0100.01 FINISHING ROADWAY (5984-05-71) EACH	213.0100.02 FINISHING ROADWAY (5989-05-72) EACH
5989-05-71	1	--
5989-05-72	--	1
CONTRACT TOTALS	1	1

CONCRETE ITEMS

STATION	TO STATION	ROADWAY	LOCATION	415.0410 CONCRETE PAVEMENT APPROACH SLAB SY	601.0557 CONCRETE CURB & GUTTER 6-INCH SLOPED 36-INCH TYPE D LF	SPV.0090.01 CONCRETE CURB & GUTTER 4-INCH SLOPED 32-INCH TYPE D SPECIAL LF	COMMENTS
				5989-05-71			
72+54	72+76	CTH BT	LT&RT	112	--	--	
89+19	129+05	CTH BT & CTH S	LT	--	210	--	
89+29	124+90	CTH BT & CTH S	RT	--	215	--	
5989-05-71 TOTALS				112	425	0	
				5989-05-72			
68+20	400+57	CTH BT & CREEK RD.	RT	--	76	--	
68+33	402+02	CTH BT & CREEK RD.	LT	--	80	--	
400+67	69+40	CREEK RD & CTH BT	RT	--	56	--	
402+12	69+54	CREEK RD & CTH BT	RT	--	63	--	
69+40	69+91	CTH BT	RT	--	--	48	INCLUDES TRANSITION
69+54	70+13	CTH BT	LT	--	--	61	INCLUDES TRANSITION
69+81	70+26	CTH BT	LT&RT	107	--	--	
5989-05-72 TOTALS				107	275	109	
CONTRACT TOTALS				219	700	109	

ASPHALT ITEMS

STATION	TO STATION	ROADWAY(S)	LOCATION	440.4410.S PAYMENT FOR INCENTIVE IRI RIDE DOL	455.0105 ASPHALTIC MATERIAL PG 58-28 TON	455.0605 TACK COAT GAL	460.1103 HMA PAVEMENT TYPE E-3 TON	460.2000 INCENTIVE DENSITY HMA PAVEMENT DOL	465.0120 ASPHALTIC SURFACE DRIVEWAYS AND FIELD ENTRANCES TON	465.0315 ASPHALTIC FLUMES SY	COMMENTS
							5989-05-71				
72+77	89+91	CTH BT	RT & LT	1720	126	1210	2299	1472	--	--	
89+15		CTH BT	LT	--	--	--	--	--	--	6	
89+25		CTH BT	RT	--	--	--	--	--	--	6	
5989-05-71 TOTALS				1720	125	1210	2300	1472	0	12	
							5989-05-72				
16+88.60	67+22.75	CTH BT	RT & LT	3814	338	3230	6138	3928	--	--	
16+90		CTH BT	RT	--	--	--	--	--	--	9	
16+90		CTH BT	LT	--	--	--	--	--	--	9	
67+22.75	69+91	CTH BT & CREEK RD	RT & LT	--	33	315	598	383	--	--	INCLUDES CREEK RD INTERSECTION
400+10		CREEK RD	RT	--	--	--	--	--	5	--	PRIVATE DRIVEWAY
400+51		CREEK RD	LT	--	--	--	--	--	--	6	
400+70		CREEK RD	RT	--	--	--	--	--	--	6	
402+07		CREEK RD	LT	--	--	--	--	--	--	6	
402+18		CREEK RD	RT	--	--	--	--	--	--	6	
5989-05-72 TOTALS				3814	370	3550	6740	4311	5	42	
CONTRACT TOTALS				5534	495	4760	9040	5783	5	54	

ALL QUANTITIES CATEGORY 0010 UNLESS OTHERWISE NOTED

3

APRON ENDWALLS, MARKERS, & STAKING

	521.0448	521.1518	522.1015	522.1024	522.1048	523.0519	524.0624	633.5200	650.4000	650.6000	SPV.0060.04	SPV.0060.05	
	APRON ENDWALLS FOR CULVERT PIPE SLOPED		APRON ENDWALLS FOR CULVERT PIPE REINFORCED CONCRETE			APRON ENDWALLS FOR CULVERT PIPE REINFORCED CONCRETE HORIZONTAL ELLIPTICAL		MARKERS	CONSTRUCTION STAKING		APRON ENDWALLS FOR CULVERT PIPE SALVAGED	APRON ENDWALLS FOR CULVERT PIPE SLOPED CROSS DRAINS STEEL	JOINT TIES CONCRETE PIPES
	CROSS DRAINS STEEL 48-INCH 6 TO 1	SIDE DRAINS STEEL 18-INCH 6 TO 1	15-INCH	24-INCH	48-INCH	19X30-INCH	SALVAGED 24-INCH	CULVERT END	STORM SEWER	PIPE CULVERTS	43X68-INCH	24-INCH 6:1	(NON BID ITEM)
LOCATION	EACH	EACH	EACH	EACH	EACH	EACH	EACH	EACH	EACH	EACH	EACH	EACH	EACH
5989-05-71													
75+57'BT'	--	--	--	--	2	--	--	2	--	1	--	--	12
75+65'BT'	--	--	--	--	2	--	--	2	--	1	--	--	12
85+88'BT'	--	--	--	1	--	--	--	2	--	1	--	1	12
86+94'BT'	2	--	--	--	--	--	--	2	--	1	--	--	12
87+02'BT'	2	--	--	--	--	--	--	2	--	1	--	--	12
127+96'S'	--	--	--	--	--	--	--	1	--	1	1	--	4
128+06'S'	--	--	--	--	--	--	--	1	--	1	1	--	4
128+16'S'	--	--	--	--	--	--	1	1	1	1	--	--	4
5989-05-71 TOTALS	4	0	0	1	4	0	1	13	1	8	2	1	
5989-05-72													
19+75'BT'	--	--	--	--	--	--	--	--	1	--	--	--	--
22+50'BT'	--	--	2	--	--	--	--	2	--	1	--	--	12
22+54'BT'	--	--	2	--	--	--	--	2	--	1	--	--	12
22+75'BT'	--	--	--	--	--	--	--	--	1	--	--	--	--
25+75'BT'	--	--	--	--	--	--	--	--	1	--	--	--	--
28+56'BT	--	--	--	--	--	--	--	--	1	--	--	--	--
33+88'BT' - 34+12'BT', RT	--	2	--	--	--	--	--	2	--	1	--	--	--
36+70'BT'	--	--	--	--	--	2	--	2	--	1	--	--	12
36+76'BT'	--	--	--	--	--	2	--	2	--	1	--	--	12
39+39'BT' - 39+79'BT', LT	--	2	--	--	--	--	--	2	--	1	--	--	--
58+11'BT'	--	--	--	1	--	--	--	2	--	1	--	--	12
58+16'BT'	--	--	--	1	--	--	--	2	--	1	--	--	12
69+56 'BT'	--	--	--	--	--	--	--	--	1	--	--	--	--
69+69'BT', 21' LT	--	--	--	--	--	--	--	1	1	--	--	--	--
68+10'BT'	--	1	--	--	--	--	--	1	1	--	--	--	--
5989-05-72 TOTALS	0	5	4	2	0	4	0	18	6	8	0	0	
CONTRACT TOTALS	4	5	4	3	4	4	1	31	7	16	2	1	

ALL QUANTITIES CATEGORY 0010 UNLESS OTHERWISE NOTED

CULVERT PIPES

LOCATION	520.0118 CULVERT PIPE CLASS III 18-INCH LF	520.7000 CLEANING CULVERT PIPES EACH	522.0148 CULVERT PIPE REINFORCED CONCRETE CLASS III 48-INCH LF	522.0324 CULVERT PIPE REINFORCED CONCRETE CLASS IV 24-INCH LF	522.0348 CULVERT PIPE REINFORCED CONCRETE CLASS IV 48-INCH LF	522.0515 CULVERT PIPE REINFORCED CONCRETE CLASS V 15-INCH LF	522.0524 CULVERT PIPE REINFORCED CONCRETE CLASS V 24-INCH LF	523.0143 CULVERT PIPE REINFORCED CONCRETE HORIZONTAL ELLIPTICAL CLASS HE-III 43X68-INCH LF	523.0419 CULVERT PIPE REINFORCED CONCRETE HORIZONTAL ELLIPTICAL CLASS HE-IV 19X30-INCH LF	(NON BID ITEM) MINIMUM THICKNESS STEEL INCH	(NON BID ITEM) MINIMUM THICKNESS ALUM. INCH
5989-05-71											
75+57'BT'	--	--	154	--	--	--	--	--	--	--	--
75+65'BT'	--	--	154	--	--	--	--	--	--	--	--
85+88'BT'	--	--	--	84	--	--	--	--	--	--	--
86+94'BT'	--	--	--	--	102	--	--	--	--	--	--
87+02'BT'	--	--	--	--	102	--	--	--	--	--	--
127+96'S'	--	1	--	--	--	--	--	8	--	--	--
128+06'S'	--	1	--	--	--	--	--	6	--	--	--
128+16'S'	--	--	--	--	--	--	--	--	--	--	--
5989-05-71 TOTALS	0	2	308	84	204	0	0	14	0		
5989-05-72											
22+50'BT'	--	--	--	--	--	114	--	--	--	--	--
22+54'BT'	--	--	--	--	--	114	--	--	--	--	--
33+88'BT' - 34+12'BT', RT	24	--	--	--	--	--	--	--	--	0.064	0.060
36+70'BT'	--	--	--	--	--	--	--	--	146	--	--
36+76'BT'	--	--	--	--	--	--	--	--	146	--	--
39+39'BT' - 39+79'BT', LT	40	-	--	--	--	--	--	--	--	0.064	0.060
58+11'BT'	--	--	--	--	--	--	154	--	--	--	--
58+16'BT'	--	--	--	--	--	--	154	--	--	--	--
5989-05-72 TOTALS	64	0	0	0	0	228	308	0	292		
CONTRACT TOTALS	64	2	308	84	204	228	308	14	292		

STORM SEWER PIPES

FROM STR	TO STR	INLET ELEVATION	DISCHARGE ELEVATION	SLOPE	608.0324 STORM SEWER PIPE REINFORCED CONCRETE CLASS III 24-INCH LF	608.0330 STORM SEWER PIPE REINFORCED CONCRETE CLASS III 30-INCH LF	608.0518 STORM SEWER PIPE REINFORCED CONCRETE CLASS V 18-INCH LF
5989-05-71							
2-2	2-1	801.51	801.40	0.25%	--	--	44
2-1	OUTFALL	801.40	801.00	0.25%	--	--	160
3-1	OUTFALL	807.31	806.59	4.00%	18	--	--
5989-05-71 TOTALS					18	0	204
5989-05-72							
STUB	1-4	799.51+/-	799.17	0.12%	--	279	--
1-4	1-3	799.17	798.81	0.12%	--	300	--
1-3	1-2	798.81	798.45	0.12%	--	300	--
1-2	1-1	798.45	798.11	0.12%	--	281	--
1-1	STUB	798.11	798.09+/-	0.12%	--	30	--
5989-05-72 TOTALS					0	1190	
CONTRACT TOTALS					18	1190	204

ALL QUANTITIES CATEGORY 0010 UNLESS OTHERWISE NOTED

STORM SEWER STRUCTRES

STRUCTURE NUMBER	LOCATION	520.8000 CONCRETE COLLARS FOR PIPE EACH	611.0530 MANHOLE COVERS TYPE J EACH	611.0627 INLET COVERS TYPE HM EACH	611.2005 MANHOLES 5-FT DIA EACH	611.3253 INLETS 2.5x3-FT EACH	RIM OR FLANGE ELEV.	STRUCTURE DEPTH FT
				5989-05-71				
3-1		--	--	1	--	1	812.32	5.01
5989-05-71 TOTALS		0	0	1	0	1		
				5989-05-72				
1-4	19+75'BT', 6' RT	--	1	--	1	--	804.62	5.45
1-3	22+75'BT', 6' RT	--	1	--	1	--	806.13	7.32
1-2	25+75'BT', 6' RT	--	1	--	1	--	807.63	9.18
1-1	28+55.5'BT', 6' RT	--	1	--	1	--	809.04	10.93
	28+56'BT', RT	1	--	--	--	--	--	--
2-2	69+56.5'BT', 21' RT	--	--	1	--	1	803.55	2.04
2-1	69+69'BT', 21' LT	--	--	1	--	1	803.61	2.21
5989-05-72 TOTALS		1	4	2	4	2		
CONTRACT TOTALS		1	4	3	4	3		

GUARDRAIL MOW STRIP

LOCATION	614.0397 GUARDRAIL MOW STRIP EMULSIFIED ASPHALT SY
5989-05-71	
72+52 - 73+80 'BT' RT	69
72+80 - 74+22 'BT' LT	73
5989-05-71 TOTAL	142
5989-05-72	
69+26 - 70+16 'BT' LT	83
68+98 - 69+88 'BT' RT	68
5989-05-71 TOTAL	151
CONTRACT TOTAL	293

RIPRAP & GEOTEXTILE FABRIC

LOCATION	606.0200 RIPRAP MEDIUM CY	645.0120 GEOTEXTILE FABRIC TYPE HR SY
5989-05-71		
75+75'BT', RT	18	48
86+01'BT', RT	4	15
86+39'BT', RT	30	77
128+00'S', LT	58	141
5989-05-71 TOTALS	110	280
5989-05-72		
22+65'BT', LT	4	14
36+36'BT', RT	6	19
5989-05-71 TOTALS	10	35
CONTRACT TOTALS	120	315

GUARDRAIL ITEMS

STATION	TO STATION	ROADWAY	LOCATION	614.2300 MGS GUARDRAIL 3 LF	614.2500 MGS GUARDRAIL THRIE BEAM TRANSITION LF	614.2610 MGS GUARDRAIL TERMINAL EAT EACH	614.2620 MGS GUARDRAIL TERMINAL TYPE 2 EACH
				5989-05-71			
72+54	72+92	CTH B	RT	--	37.5	--	--
72+79	73+17	CTH B	LT	--	37.5	--	--
72+92	73+29	CTH B	RT	37.5	--	--	--
73+17	73+67	CTH B	LT	50	--	--	--
73+29	73+82	CTH B	RT	--	--	1	--
73+67	74+20	CTH B	LT	--	--	1	--
5989-05-71 TOTALS				87.5	75	2	0
				5989-05-72			
400+78		CREEK RD	RT	--	--	--	1
402+06		CREEK RD	RT	--	--	--	1
400+78	69+50	CREEK RD TO CTH BT	RT	62.5	--	--	--
402+06	69+76	CREEK RD TO CTH BT	RT	75	--	--	--
69+50	69+87.5	CTH B	RT	--	37.5	--	--
69+76	70+13	CTH B	LT	--	37.5	--	--
5989-05-72 TOTALS				137.5	75	0	2
CONTRACT TOTALS				225	150	2	2

ALL QUANTITIES CATEGORY 0010 UNLESS OTHERWISE NOTED

3

FENCE SAFETY

LOCATION	616.0700.S FENCE SAFETY LF
5989-05-72	
400+70'CR', RT	100
402+20'CR', RT	175
5989-05-72 TOTAL	275
CONTRACT TOTAL	275

MAINTENANCE & REPAIR OF HAUL ROADS

LOCATION	618.0100.01 (5989-05-71) EACH	618.0100.02 (5989-05-72) EACH
5989-05-71	1	--
5989-05-72	--	1
CONTRACT TOTALS	1	1

MOBILIZATION

PROJECT	619.1000 EACH
5989-05-71	0.5
5989-05-72	0.5
CONTRACT TOTAL	1

LANDMARK REFERENCE MONUMENTS

LOCATION	621.0100 *** WITNESS MONUMENT EACH	COMMENT
5989-05-72		
39+68'BT', 45.40' LT	4	S1/4 SEC. 7, T1N,R13E
5989-05-72 TOTAL	4	
CONTRACT TOTAL	4	

*** TYPE A CAST IN PLACE CONCRETE LANDMARK REFERENCE MONUMENTS ARE TO BE USED.
CORNER MONUMENT TO BE SET BY ROCK COUNTY SURVEYOR

DUST CONTROL SURFACE TREATMENT

LOCATION	623.0200 SY
5989-05-71	
72+60 - 89+92	8600
5989-05-71 TOTAL	8600
5989-05-72	
16+75 - 70+15	27000
5989-05-72 TOTAL	27000
CONTRACT TOTAL	35600

EROSION CONTROL MOBILIZATIONS

PROJECT	628.1905 MOBILIZATIONS EROSION CONTROL EACH	628.1910 MOBILIZATIONS EMERGENCY EROSION CONTROL EACH
5989-05-71	3	2
5989-05-72	5	4
CONTRACT TOTALS	8	6

ALL QUANTITIES CATEGORY 0010 UNLESS OTHERWISE NOTED

EROSION CONTROL

LOCATION	625.0500 SALVAGED TOPSOIL SY	627.0200 MULCHING SY	628.1504 SILT FENCE LF	628.1520 SILT FENCE MAINTENANCE LF	628.2004 EROSION MAT CLASS I TYPE B SY	628.2008 EROSION MAT URBAN CLASS I TYPE B SY	628.6005 TURBIDITY BARRIERS SY	628.7015 INLET PROTECTION TYPE C EACH	628.7504 TEMPORARY DITCH CHECKS LF	628.7555 CULVERT PIPE CHECKS EACH	628.7560.S STONE OR ROCK DITCH CHECKS CY	629.0205 FERTILIZER TYPE A CWT	630.0140 SEEDING MIXTURE NO. 40 LB	630.0175 SEEDING MIXTURE NO. 75 LB	630.0200 SEEDING TEMPORARY LB	631.1100 SOD EROSION CONTROL SY	645.0140 GEOTEXTILE FABRIC TYPE SAS SY	SPV.0060.02 EROSION CONTROL FILTER BAGS EACH
5989-05-71																		
72+25'BT' TO 77+75'BT', RT	3300	3300	--	--	--	2100	--	--	--	--	--	2	65	1	85	--	--	--
72+50'BT' TO 78+90'BT', LT	3900	3900	--	--	--	2450	--	--	--	--	--	3	70	3	90	--	--	--
77+75'BT' TO 81+40'BT, RT	1950	--	--	--	1250	960	--	--	--	--	--	1	40	--	--	--	--	--
78+90'BT' TO 81+00'BT', LT	1300	--	--	--	520	910	--	--	--	--	--	1	25	--	--	--	--	--
81+00'BT' TO 90+00'BT', LT	2700	2700	--	--	--	400	--	--	--	--	--	2	60	--	75	--	--	--
81+40'BT' TO 90+00'BT', RT	1850	1850	--	--	440	--	--	--	--	--	--	1	40	--	50	--	--	--
69+45'BT' TO 71+00'BT', LT	--	--	165	165	--	--	--	--	--	--	--	--	--	--	--	--	--	--
72+00'BT' TO 81+65'BT', RT	--	--	955	955	--	--	--	--	--	--	--	--	--	--	--	--	--	--
73+00'BT' TO 87+00'BT', LT	--	--	1460	1460	--	--	--	--	--	--	--	--	--	--	--	--	--	--
83+75'BT' TO 88+00'BT', RT	--	--	410	410	--	--	--	--	--	--	--	--	--	--	--	--	--	--
88+55'BT' TO 89+70'BT, LT	--	--	205	205	--	--	--	--	--	--	--	--	--	--	--	--	--	--
70+50'BT', RT & LT	--	--	--	--	--	--	140	--	--	--	--	--	--	--	--	--	--	--
72+13'BT', RT & LT	--	--	--	--	--	--	220	--	--	--	--	--	--	--	--	--	--	--
75+47'BT', LT	--	--	--	--	--	--	--	--	--	1	--	--	--	--	--	--	--	--
75+55'BT', LT	--	--	--	--	--	--	--	--	--	1	--	--	--	--	--	--	--	--
75+75'BT', RT	--	--	--	--	--	--	--	--	--	--	--	--	--	--	--	--	--	30
76+75'BT', RT	--	--	--	--	--	--	--	--	10	--	--	--	--	--	--	--	--	--
77+70'BT', RT	--	--	--	--	--	--	--	--	--	--	5	--	--	--	--	--	45	--
77+90'BT', LT	--	--	--	--	--	--	--	--	10	--	--	--	--	--	--	--	--	--
78+85'BT', LT	--	--	--	--	--	--	--	--	--	--	5	--	--	--	--	--	45	--
81+00'BT', LT	--	--	--	--	--	--	--	--	--	--	5	--	--	--	--	--	45	--
81+40'BT', RT	--	--	--	--	--	--	--	--	--	--	5	--	--	--	--	--	45	--
82+00'BT', LT	--	--	--	--	--	--	--	--	10	--	--	--	--	--	--	--	--	--
82+40'BT', RT	--	--	--	--	--	--	--	--	10	--	--	--	--	--	--	--	--	--
85+80'BT', LT	--	--	--	--	--	--	--	--	--	1	--	--	--	--	--	--	--	--
86+00'BT', RT	--	--	--	--	--	--	--	--	--	--	--	--	--	--	--	10	--	--
86+15'BT', RT	--	--	--	--	--	--	--	--	28	--	--	--	--	--	--	--	--	--
86+50'BT', RT	--	--	--	--	--	--	--	--	--	--	--	--	--	--	--	75	--	--
87+20'BT', LT	--	--	--	--	--	--	--	--	--	1	--	--	--	--	--	--	--	--
87+30'BT, LT	--	--	--	--	--	--	--	--	--	1	--	--	--	--	--	--	--	--
88+50'BT, LT	--	--	--	--	--	--	--	--	14	--	--	--	--	--	--	--	--	--
89+00'BT', RT	--	--	--	--	--	--	--	--	10	--	--	--	--	--	--	--	--	--
128+00'S', LT	--	--	--	--	--	--	--	--	--	--	--	--	--	--	--	75	--	--
128+10'S', LT	--	--	--	--	--	--	--	--	--	--	--	--	--	--	--	10	--	--
128+18'S', LT	--	--	--	--	--	--	--	1	--	--	--	--	--	--	--	--	--	--
UNDISTRIBUTED	1500	1200	320	320	220	680	40	1	9	1	2	1	30	1	30	20	20	3
5989-05-71 TOTALS	16500	12950	3515	3515	2430	7500	400	2	101	6	22	11	330	5	330	190	200	33

(CONTINUED ON NEXT PAGE)

ALL QUANTITIES CATEGORY 0010 UNLESS OTHERWISE NOTED

EROSION CONTROL

(CONTINUED FROM PREVIOUS PAGE)

LOCATION	625.0500 SALVAGED TOPSOIL SY	627.0200 MULCHING SY	628.1504 SILT FENCE LF	628.1520 SILT FENCE MAINTENANCE LF	628.2004 EROSION MAT CLASS I TYPE B SY	628.2008 EROSION MAT URBAN CLASS I TYPE B SY	628.6005 TURBIDITY BARRIERS SY	628.7015 INLET PROTECTION TYPE C EACH	628.7504 TEMPORARY DITCH CHECKS LF	628.7555 CULVERT PIPE CHECKS EACH	628.7560.S STONE OR ROCK DITCH CHECKS CY	629.0205 FERTILIZER TYPE A CWT	630.0140 SEEDING MIXTURE NO. 40 LB	630.0175 SEEDING MIXTURE NO. 75 LB	630.0200 SEEDING TEMPORARY LB	631.1100 SOD EROSION CONTROL SY	645.0140 GEOTEXTILE FABRIC TYPE SAS SY	SPV.0060.02 EROSION CONTROL FILTER BAGS EACH
								5989-05-72										
16+00'BT' TO 24+50'BT', RT	5100	810	--	--	280	4250	--	--	--	--	--	4	100	--	--	--	--	--
16+00'BT' TO 25+00'BT', LT	6200	1050	--	--	520	4850	--	--	--	--	--	4	120	--	--	--	--	--
24+50'BT' TO 34+50'BT', RT	3150	3150	--	--	--	--	--	--	--	--	--	2	65	--	80	--	--	--
25+00'BT' TO 34+50'BT', LT	3100	3100	--	--	--	--	--	--	--	--	--	2	65	--	85	--	--	--
34+50'BT' TO 38+50'BT', RT	2200	--	--	--	460	2000	--	--	--	--	--	2	45	--	--	--	--	--
34+50'BT' TO 39+00'BT', LT	2200	--	--	--	400	2100	--	--	--	--	--	2	45	--	--	--	--	--
38+50'BT' TO 56+40'BT', RT	3950	3950	--	--	--	--	--	--	--	--	--	3	95	--	105	--	--	--
39+00'BT' TO 56+15'BT', LT	4450	4450	--	--	--	--	--	--	--	--	--	4	100	--	120	--	--	--
56+15'BT' TO 62+00'BT', LT	2950	--	--	--	1100	2250	--	--	--	--	--	2	60	--	--	--	--	--
56+40'BT' TO 62+00'BT', RT	2700	--	--	--	1000	2050	--	--	--	--	--	2	55	--	--	--	--	--
62+00'BT' TO 67+22.75'BT', RT	1300	1300	--	--	--	--	--	--	--	--	--	1	30	--	35	--	--	--
62+00'BT' TO 67+22.75'BT', LT	1400	1400	--	--	--	--	--	--	--	--	--	1	30	--	40	--	--	--
20+90'BT' TO 35+00'BT', LT	--	--	1410	1410	--	--	--	--	--	--	--	--	--	--	--	--	--	--
43+00'BT' TO 44+50'BT', LT	--	--	150	150	--	--	--	--	--	--	--	--	--	--	--	--	--	--
21+07'BT' TO 44+75'BT', RT	--	--	2450	2450	--	--	--	--	--	--	--	--	--	--	--	--	--	--
47+75'BT' TO 65+75'BT', RT	--	--	1790	1790	--	--	--	--	--	--	--	--	--	--	--	--	--	--
52+00'BT' TO 67+22.75'BT', LT	--	--	1540	1540	--	--	--	--	--	--	--	--	--	--	--	--	--	--
18+50'BT', LT	--	--	--	--	--	--	--	--	--	--	5	--	--	--	--	--	45	--
18+60'BT', RT	--	--	--	--	--	--	--	--	--	--	5	--	--	--	--	--	45	--
19+45'BT', LT	--	--	--	--	--	--	--	--	10	--	--	--	--	--	--	--	--	--
19+55'BT', RT	--	--	--	--	--	--	--	--	10	--	--	--	--	--	--	--	--	--
22+65'BT', LT	--	--	--	--	--	--	--	--	--	--	--	--	--	--	--	--	--	24
22+50'BT', RT	--	--	--	--	--	--	--	--	--	1	--	--	--	--	--	--	--	--
24+50'BT', RT	--	--	--	--	--	--	--	--	--	--	5	--	--	--	--	--	45	--
25+00'BT', LT	--	--	--	--	--	--	--	--	--	--	5	--	--	--	--	--	45	--
25+50'BT', RT	--	--	--	--	--	--	--	--	10	--	--	--	--	--	--	--	--	--
26+00'BT', LT	--	--	--	--	--	--	--	--	10	--	--	--	--	--	--	--	--	--
33+50'BT', LT	--	--	--	--	--	--	--	--	10	--	--	--	--	--	--	--	--	--
33+80'BT' RT	--	--	--	--	--	--	--	--	--	1	--	--	--	--	--	--	--	--
34+25'BT', RT	--	--	--	--	--	--	--	--	--	--	--	--	--	--	--	10	--	--
34+50'BT', RT	--	--	--	--	--	--	--	--	--	--	5	--	--	--	--	--	45	--
34+50'BT', LT	--	--	--	--	--	--	--	--	--	--	5	--	--	--	--	--	45	--
36+35'BT', RT	--	--	--	--	--	--	--	--	--	--	--	--	--	--	--	--	--	24
36+94'BT', LT	--	--	--	--	--	--	--	--	--	1	--	--	--	--	--	--	--	--
36+99'BT', LT	--	--	--	--	--	--	--	--	--	1	--	--	--	--	--	--	--	--
38+55'BT', RT	--	--	--	--	--	--	--	--	--	--	5	--	--	--	--	--	45	--
39+00'BT', LT	--	--	--	--	--	--	--	--	--	--	5	--	--	--	--	--	45	--
39+25'BT', LT	--	--	--	--	--	--	--	--	--	--	--	--	--	--	--	10	--	--
39+50'BT', RT	--	--	--	--	--	--	--	--	10	--	--	--	--	--	--	--	--	--
39+84'BT', LT	--	--	--	--	--	--	--	--	--	1	--	--	--	--	--	--	--	--
55+15'BT', LT	--	--	--	--	--	--	--	--	10	--	--	--	--	--	--	--	--	--
55+40'BT', RT	--	--	--	--	--	--	--	--	10	--	--	--	--	--	--	--	--	--
56+15'BT', LT	--	--	--	--	--	--	--	--	--	--	5	--	--	--	--	--	45	--
56+35'BT', RT	--	--	--	--	--	--	--	--	--	--	5	--	--	--	--	--	45	--
57+93'BT', LT	--	--	--	--	--	--	--	--	--	1	--	--	--	--	--	--	--	--

CONTINUED ON NEXT PAGE

ALL QUANTITIES CATEGORY 0010 UNLESS OTHERWISE NOTED

3

EROSION CONTROL

(CONTINUED FROM PREVIOUS PAGE)

LOCATION	625.0500 SALVAGED TOPSOIL SY	627.0200 MULCHING SY	628.1504 SILT FENCE LF	628.1520 SILT FENCE MAINTENANCE LF	628.2004 EROSION MAT CLASS I TYPE B SY	628.2008 EROSION MAT URBAN CLASS I TYPE B SY	628.6005 TURBIDITY BARRIERS SY	628.7015 INLET PROTECTION TYPE C EACH	628.7504 TEMPORARY DITCH CHECKS LF	628.7555 CULVERT PIPE CHECKS EACH	628.7560.S STONE OR ROCK DITCH CHECKS CY	629.0205 FERTILIZER TYPE A CWT	630.0140 SEEDING MIXTURE NO. 40 LB	630.0175 SEEDING MIXTURE NO. 75 LB	630.0200 SEEDING TEMPORARY LB	631.1100 SOD EROSION CONTROL SY	645.0140 GEOTEXTILE FABRIC TYPE SAS SY	SPV.0060.02 EROSION CONTROL FILTER BAGS EACH
5989-05-72																		
57+98'BT', LT	--	--	--	--	--	--	--	--	--	1	--	--	--	--	--	--	--	--
58+30'BT', RT	--	--	--	--	--	--	--	--	--	--	--	--	--	--	--	--	--	24
62+10'BT', LT	--	--	--	--	--	--	--	--	--	--	5	--	--	--	--	--	45	--
62+25'BT', RT	--	--	--	--	--	--	--	--	--	--	5	--	--	--	--	--	45	--
63+05'BT', LT	--	--	--	--	--	--	--	--	10	--	--	--	--	--	--	--	--	--
63+25'BT', RT	--	--	--	--	--	--	--	--	10	--	--	--	--	--	--	--	--	--
67+90'BT', LT	--	--	--	--	--	--	--	--	--	--	--	--	--	--	--	8	--	--
69+56'BT', RT	--	--	--	--	--	--	--	1	--	--	--	--	--	--	--	--	--	--
69+69'BT', LT	--	--	--	--	--	--	--	1	--	--	--	--	--	--	--	--	--	--
67+22.75'BT' TO 68+75'BT', RT	310	310	--	--	--	--	--	--	--	--	--	1	8	--	8	--	--	--
67+22.75'BT' TO 69+00'BT', LT	420	420	--	--	--	--	--	--	--	--	--	1	10	--	10	--	--	--
67+22.75'BT' TO 68+50'BT', LT	--	--	125	125	--	--	--	--	--	--	--	--	--	--	--	--	--	--
69+00'BT' TO 70+30'BT', RT	--	--	130	130	--	--	--	--	--	--	--	--	--	--	--	--	--	--
68+75'BT' TO 70+10'BT, RT	370	370	--	--	--	270	--	--	--	--	--	1	3	1	--	--	--	--
69+25'BT' TO 70+25'BT', LT	430	430	--	--	--	300	--	--	--	--	--	1	3	2	--	--	--	--
UNDISTRIBUTED	8050	4150	1520	1520	760	3620	0	1	20	2	20	10	170	10	100	10	110	15
5989-05-72 TOTALS	48280	24890	9115	9115	4520	21690	0	3	120	9	80	43	1004	13	583	38	650	87
CONTRACT TOTALS	64780	37840	12630	12630	6950	29190	400	5	221	15	102	54	1334	18	913	228	850	120

SOD

LOCATION	631.0300 SOD WATER MGAL	631.1000 SOD LAWN SY
5989-05-71		
89+15, LT	1	5.5
89+25, RT	1	5.5
5989-05-71 TOTAL	2	11
5989-05-72		
16+90, LT	1	5.5
16+90, RT	1	5.5
400+51, LT	1	5.5
400+70, RT	1	5.5
402+07, LT	1	5.5
402+18, RT	1	5.5
5989-05-72 TOTAL	6	33
CONTRACT TOTALS	8	44

ALL QUANTITIES CATEGORY 0010 UNLESS OTHERWISE NOTED

PERMANENT SIGNING

SIGN NUMBER	LOCATION	SIGN CODE	W x H	634.0614 POSTS WOOD 4X6-INCH 14-FT EACH	634.0616 POSTS WOOD 4X6-INCH 16-FT EACH	634.0618 POSTS WOOD 4X6-INCH 18-FT EACH	637.2210 SIGNS TYPE II REFLECTIVE H SF	637.2230 SIGNS TYPE II REFLECTIVE F SF	REMARKS
			5989-05-71						
4-09	75+00'BT', RT	W1-2R	36"x36"	--	--	1	--	9.00	
4-10	75+50'BT', LT	W2-1	30"x30"	--	1	--	--	6.25	
6-01	78+00'BT', RT	J1-1	24"x39"	--	1	--	6.50	--	
6-02	83+00'BT', RT	W3-1	36"x36"	--	--	1	--	9.00	
6-03	88+50'BT', LT	R2-1	30"x36"	--	1	--	7.50	--	
6-04	85+00'BT', RT	R3-8F	36"x30"	1	--	--	7.50	--	
6-05	125+00'S', LT	M1-5A	24"x24"	1	--	--	4.00	--	
6-06	89+60'BT', RT	J13-2	48"x57"	--	--	2	19.00	--	
6-07	86+50'BT', LT	W1-2L	36"x36"	--	--	1	--	9.00	
6-08	89+60'BT', RT	R1-1	36"x36"	--	1	--	7.46	--	
6-09	84+00'BT', LT	JV4-2	24"x60"	--	--	1	10.00	--	
6-10	127+70'S', LT	J13-2	48"x57"	--	--	2	19.00	--	
6-11	132+00'S', LT	J1-1	24"x39"	--	1	--	6.50	--	
6-12	121+85'S', RT	R2-1	30"x36"	--	1	--	7.50	--	TEMPORARY SIGN FLAGS REQUIRED
6-13	124+10'S', RT	J1-1	24"x39"	--	1	--	6.50	--	
6-14	127+00'S', RT	W1-7	48"x24"	2	--	--	--	8.00	
6-15	126+70'S', RT	J13-1	24"x45"	--	1	--	7.50	--	
6-16	134+00'S', RT	R2-1	30"x36"	--	1	--	7.50	--	
6-17	128+50'S', RT	JV4-2	24"x60"	--	--	1	10.00	--	
6-18	134+00'S', LT	R2-1	30"x36"	--	1	--	7.50	--	TEMPORARY SIGN FLAGS REQUIRED
6-19	136+50'S', LT	W3-5	36"x36"	--	--	1	--	9.00	TEMPORARY SIGN FLAGS REQUIRED
6-20	81+00'BT', RT	J2-1	24"x57"	--	--	1	9.50	--	
6-21	130+10'S', LT	J2-1	24"x57"	--	--	1	9.50	--	
5989-05-71 TOTALS				4	10	12	152.96	50.25	
			5989-05-72						
1-01	21+50'BT', LT	R3-8W	54"x30"	--	2	--	11.25	--	
1-02	22+00'BT', RT	JV4-2	24"x60"	--	--	1	10.00	--	
1-03	23+50'BT', LT	W3-3	36"x36"	--	--	1	--	9.00	
1-04	18+50'BT', RT	R2-1	30"x36"	--	1	--	7.50	--	
1-05	27+50'BT' LT	J1-1	24"x39"	--	1	--	6.50	--	
1-06	25+50'BT' LT	J2-1	24"x57"	--	--	1	9.50	--	
2-01	32+00'BT', RT	W14-3	48"x36"	1	--	--	--	6.00	
2-02	58+00'BT', LT	W14-3	48"x36"	1	--	--	--	6.00	
4-01	62+50'BT', RT	W2-1	30"x30"	--	1	--	--	6.25	
4-02	401+65'CR', LT	R1-1	30"x30"	1	--	--	5.18	--	TEMPORARY SIGN FLAGS REQUIRED
4-03	401+65'CR', LT	W4-4P	24"x12"	--	--	--	2.00	--	
4-04	404+60'CR', LT	W3-1	36"x36"	--	--	1	--	9.00	TEMPORARY SIGN FLAGS REQUIRED
4-05	400+55'CR', LT	R2-1	24"x30"	--	1	--	5.00	--	TEMPORARY SIGN FLAGS REQUIRED
4-06	200' UP STATION FROM SIGN #4-07, RT	W3-1	36"x36"	--	--	1	--	9.00	TEMPORARY SIGN FLAGS REQUIRED
4-07	401+00'CR', RT	R1-1	30"x30"	1	--	--	5.18	--	TEMPORARY SIGN FLAGS REQUIRED
4-08	401+00'CR', RT	W4-4P	24"x12"	--	--	--	2.00	--	
5989-05-72 TOTALS				4	6	5	64.11	45.25	
CONTRACT TOTALS				8	16	17	217.07	95.50	

ALL QUANTITIES CATEGORY 0010 UNLESS OTHERWISE NOTED

3

SIGN REMOVALS

LOCATION	SIGN CODE	638.2602 REMOVING SIGNS TYPE II EACH	638.3000 REMOVING SMALL SIGN SUPPORTS EACH	COMMENTS
		5989-05-71		
121+70'S', RT	R2-1	1	1	"45 MPH"
127+15'S', LT	W3-5	1	1	"35 MPH - AHEAD"
5989-05-71 TOTALS		2	2	
		5989-05-72		
401+00'CR', LT	R2-1	1	1	"25 MPH"
404+00'CR', LT	N/A	1	1	"SPEED ZONE AHEAD"
5989-05-72 TOTALS		2	2	
CONTRACT TOTALS		4	4	

FIELD OFFICE

LOCATION	642.5401.01 TYPE D EACH
5989-05-72	1
CONTRACT TOTAL	1

TRAFFIC CONTROL

LOCATION	643.0100.01 (5989-05-71) EACH	643.0100.02 (5989-05-72) EACH
5989-05-71	1	--
5989-05-72	--	1
CONTRACT TOTALS	1	1

TRAFFIC CONTROL ITEMS

STAGE	LOCATION	SERVICE PERIOD DAYS	643.0300 TRAFFIC CONTROL DRUMS NO. IN SERVICE EACH	643.0300 TRAFFIC CONTROL DRUMS PAY QUANTITY DAY	643.0410 TRAFFIC CONTROL BARRICADES TYPE II NO. IN SERVICE EACH	643.0410 TRAFFIC CONTROL BARRICADES TYPE II PAY QUANTITY DAY	643.0420 TRAFFIC CONTROL BARRICADES TYPE III NO. IN SERVICE EACH	643.0420 TRAFFIC CONTROL BARRICADES TYPE III PAY QUANTITY DAY	643.0705 TRAFFIC CONTROL WARNING LIGHTS TYPE A NO. IN SERVICE EACH	643.0705 TRAFFIC CONTROL WARNING LIGHTS TYPE A PAY QUANTITY DAY	643.0715 TRAFFIC CONTROL WARNING LIGHTS TYPE C NO. IN SERVICE EACH	643.0715 TRAFFIC CONTROL WARNING LIGHTS TYPE C PAY QUANTITY DAY	643.0800 TRAFFIC CONTROL ARROW BOARDS NO. IN SERVICE EACH	643.0800 TRAFFIC CONTROL ARROW BOARDS PAY QUANTITY DAY	643.0900 TRAFFIC CONTROL SIGNS NO. IN SERVICE EACH	643.0900 TRAFFIC CONTROL SIGNS PAY QUANTITY DAY
							5989-05-71									
1	CTH S	178	30	5340	--	--	10	1780	12	2136	--	--	--	--	12	2136
1	CTH S SB OUTSIDE LANE CLOSURE	5	150	750	--	--	8	40	16	80	40	200	1	5	8	40
2	CTH S	160	--	--	--	--	5	800	6	960	--	--	--	--	1	160
3	CTH S	27	15	405	--	--	5	135	6	162	--	--	--	--	6	162
3	CTH S SB OUTSIDE LANE CLOSURE	5	75	375	--	--	4	20	8	40	20	100	1	5	4	20
UNDISTRIBUTED		--	--	530	--	100	--	225	--	222	--	50	--	--	--	282
5989-05-71 TOTALS				7400		100		3000		3600		350		10		2800
							5989-05-72									
1	CREEK RD	178	--	--	--	--	20	3560	24	4272	--	--	--	--	20	3560
1	CTH G/INMAN PKWY	178	30	5340	--	--	10	1780	12	2136	--	--	--	--	14	2492
2	CREEK RD	160	--	--	--	--	10	1600	12	1920	--	--	--	--	4	640
2	CTH G/INMAN PKWY	160	--	--	--	--	5	800	6	960	--	--	--	--	1	160
3	CREEK RD	27	--	--	--	--	10	270	12	324	--	--	--	--	8	216
3	CTH G/INMAN PKWY	27	15	405	--	--	5	135	6	162	--	--	--	--	7	189
UNDISTRIBUTED				355	--	200	--	155	--	226	--	--	--	--	--	243
5989-05-72 TOTALS				6100		200		8300		10000		0		0		7500
CONTRACT TOTALS				13500		300		11300		13600		350		10		10300

ALL QUANTITIES CATEGORY 0010 UNLESS OTHERWISE NOTED

3

SAWING PAVEMENTS

LOCATION	690.0150 SAWING ASPHALT LF	690.0250 SAWING CONCRETE LF
5989-05-71		
124+90'S' TO 129+05'S'	435	5
5989-05-71 TOTALS	435	5
5989-05-72		
16+88'BT'	65	--
399+85'CR'	21	--
402+75'CR'	21	--
400+00'CR' TO 400+20'CR'	20	--
5989-05-72 TOTALS	127	0
CONTRACT TOTALS	562	5

INFILTRATION TRENCH ITEMS

LOCATION	645.0112* GEOTEXTILE FABRIC TYPE DF SCHEDULE B SY	SPV.0035.01 CLEAN SAND FOR INFILTRATION TRENCHES CY	SPV.0035.02 STONE AGGREGATE FOR INFILTRATION TRENCHES CY	SPV.0060.01 GRADING AND SHAPING FOR INFILTRATION TRENCHES EACH	SPV.0060.03 OBSERVATION PIPE WITH CAP FOR INFILTRATION TRENCHES EACH
5989-05-71					
79+50'BT', RT	390	--	150	1	1
79+75'BT', LT	390	--	150	1	1
UNDISTRIBUTED	80	--	30	--	--
5989-05-71 TOTALS	860	0	330	2	2
5989-05-72					
17+75'BT', LT	390	--	150	1	1
18+00'BT', RT	390	--	150	1	1
23+25'BT', LT	390	--	150	1	1
23+25'BT', RT	390	--	150	1	1
35+75'BT', LT	390	--	150	1	1
35+75'BT', RT	390	--	150	1	1
37+50'BT', RT	390	--	150	1	1
38+00'BT', LT	390	--	150	1	1
57+00'BT', LT	390	450	150	1	1
57+50'BT', RT	390	450	150	1	1
58+75'BT', LT	390	450	150	1	1
59+00'BT', RT	390	450	150	1	1
UNDISTRIBUTED	450	180	180	--	--
5989-05-72 TOTALS	5130	1980	1980	12	12
CONTRACT TOTALS	5990	1980	2310	14	14

* ADDITIONAL QUANTITIES SHOWN ELSEWHERE

CONSTRUCTION STAKING ITEMS

LOCATION	650.4500 CONSTRUCTION STAKING SUBGRADE LF	650.5000 CONSTRUCTION STAKING BASE LF	650.5500 CONSTRUCTION STAKING CURB GUTTER AND CURB & GUTTER LF	650.9910.01 CONSTRUCTION STAKING SUPPLEMENTAL CONTROL 5989-05-71 LS	650.9910.02 CONSTRUCTION STAKING SUPPLEMENTAL CONTROL 5989-05-72 LS	650.9920 CONSTRUCTION STAKING SLOPE STAKES LF
5989-05-71						
67+22.75'BT' TO 89+95.83'BT'	1738	1738	--	1	--	1738
SHOPIERE ROAD INTERSECTION	--	--	425	--	--	--
5989-05-71 TOTALS	1738	1738	425	1	0	1738
5989-05-72						
16+88.60'BT' TO 67+22.75'BT'	5325	5325	--	--	1	5325
CREEK ROAD INTERSECTION	290	290	384	--	--	290
5989-05-72 TOTALS	5615	5615	384	0	1	5615
CONTRACT TOTALS	7353	7353	809	1	1	7353

TRAFFIC CONTROL FOR WATERCRAFT ON TURTLE CREEK

LOCATION	SPV.0105.01 EACH	BUOYS ** EACH	W20-1 (MOD)** SIGNS EACH
5989-05-71	1	19	4
CONTRACT TOTAL	1		

** INFORMATION FOR BIDDING PURPOSES ONLY

ALL QUANTITIES CATEGORY 0010 UNLESS OTHERWISE NOTED

3

PAVEMENT MARKING

LOCATION	DESCRIPTION	646.0106 PAVEMENT MARKING EPOXY 4-INCH WHITE LF	646.0106 PAVEMENT MARKING EPOXY 4-INCH YELLOW LF	646.0126 PAVEMENT MARKING EPOXY 8-INCH WHITE LF	646.0600 REMOVING PAVEMENT MARKINGS LF	647.0156 PAVEMENT MARKING ARROWS EPOXY TYPE 1 EACH	647.0166 PAVEMENT MARKING ARROWS EPOXY TYPE 2 EACH	647.0356 PAVEMENT MARKING WORDS EPOXY EACH	647.0566 PAVEMENT MARKING STOP LINE EPOXY 18-INCH LF	647.0726 PAVEMENT MARKING DIAGONAL EPOXY 12-INCH LF	648.0100 LOCATING NO-PASSING ZONES MI
5989-05-71											
70+15'BT' TO 89+75'BT'	DOUBLE YELLOW CENTERLINE	--	3900	--	--	--	--	--	--	--	--
70+15'BT' TO 89+29'BT', RT	WHITE EDGELINE	1850	--	--	--	--	--	--	--	--	--
69+67'BT' TO 70+87'BT', LT	3' DASH - 9' SKIP	30	--	--	--	--	--	--	--	--	--
70+87'BT' TO 89+19'BT', RT	WHITE EDGELINE	1830	--	--	--	--	--	--	--	--	--
86+72'BT' TO 89+75'BT', RT	TURN-LANE CHANNELIZING (1)	--	--	305	--	--	--	--	--	--	--
86+92'BT', RT	TURN LANE DESIGNATORS	--	--	--	--	--	2	--	--	--	--
88+06'BT', RT	ONLYS	--	--	--	--	--	--	2	--	--	--
89+29'BT', RT	TURN LANE DESIGNATORS	--	--	--	--	--	2	--	--	--	--
89+75'BT', RT	STOP LINE	--	--	--	--	--	--	--	45	--	--
124+85'S' TO 125+31'S', LT	WHITE EDGELINE	46	--	--	--	--	--	--	--	--	--
127+82'S' TO 130+14'S', LT	3' DASH - 9' SKIP	58	--	--	--	--	--	--	--	--	--
129+03'S' TO 130+14'S', LT	WHITE EDGELINE	110	--	--	--	--	--	--	--	--	--
124+85'S' TO 130+14'S', LT	WHITE EDGELINE	--	--	--	430	--	--	--	--	--	--
5989-05-71 TOTALS		7824		305	430	0	4	2	45	0	0
5989-05-72											
16+52'BT', LT	STOP LINE	--	--	--	--	--	--	--	44	--	--
16+52'BT' TO 27+00'BT'	DOUBLE YELLOW CENTERLINE	--	2100	--	--	--	--	--	--	--	--
16+52'BT' TO 18+52'BT' LT	TURN-LANE CHANNELIZNG (2)	--	--	400	--	--	--	--	--	--	--
16+89'BT' TO 67+22.75'BT', LT	WHITE EDGELINE	5030	--	--	--	--	--	--	--	--	--
16+89'BT, LT	TURN LANE DESIGNATORS	--	--	--	--	1	2	--	--	--	--
17+09'BT' TO 67+00'BT', RT	WHITE EDGELINE	4990	--	--	--	--	--	--	--	--	--
17+65'BT', LT	ONLYS	--	--	--	--	--	--	3	--	--	--
18+32'BT', LT	TURN LANE DESIGNATORS	--	--	--	--	1	2	--	--	--	--
18+52'BT' TO 21+52'BT', LT	MEDIAN GORE	--	600	--	--	--	--	--	--	100	--
27+00'BT' TO 32+00'BT'	PASSING/NO-PASSING ZONE	--	625	--	--	--	--	--	--	--	0.09
32+00'BT' TO 58+00'BT'	PASSING ZONE	--	650	--	--	--	--	--	--	--	0.49
58+00'BT' TO 63+00'BT'	PASSING/NO-PASSING ZONE	--	625	--	--	--	--	--	--	--	0.09
63+00'BT' TO 70+15'BT'	DOUBLE YELLOW CENTERLINE	--	1445	--	--	--	--	--	--	--	--
67+00'BT' TO 67+22.75'BT', RT	3' DASH - 9' SKIP	6	--	--	--	--	--	--	--	--	--
67+22.75'BT' TO 68+32.75'BT', LT	WHITE EDGELINE	110	--	--	--	--	--	--	--	--	--
67+22.75'BT' TO 68+20'BT', RT	3' DASH - 9' SKIP	24	--	--	--	--	--	--	--	--	--
69+55'BT' TO 70+15'BT', RT	WHITE EDGELINE	120	--	--	--	--	--	--	--	--	--
401+16'CR'	STOP LINE	--	--	--	--	--	--	--	34	--	--
401+53'CR'	STOP LINE	--	--	--	--	--	--	--	34	--	--
5989-05-72 TOTALS		16325		400	0	2	4	3	112	100	0.67
CONTRACT TOTALS		24149		705	430	2	8	5	157	100	0.67

ALL QUANTITIES CATEGORY 0010 UNLESS OTHERWISE NOTED

CONVENTIONAL ABBREVIATIONS

ACCESS POINT/ DRIVEWAY CONNECTION	AP	RECORDED AS	(100')
ACCESS RIGHTS	AR	REFERENCE LINE	R/L
ACRES	AC.	RELEASE OF RIGHTS	ROR
AND OTHERS	ET.AL.	REMAINING	REM.
CENTERLINE	C/L	RIGHT-OF-WAY	R/W
CERTIFIED SURVEY MAP	CSM	SECTION	SEC.
CORNER	COR.	STATION	STA.
DOCUMENT	DOC.	TEMPORARY LIMITED EASEMENT	TLE
EASEMENT	EASE.	VOLUME	V.
HIGHWAY EASEMENT	H.E.		
LAND CONTRACT	LC		
MONUMENT	MON.		
PAGE	P.		
PERMANENT LIMITED EASEMENT	PLE		
PRIVATE DRIVE	P.D.		
PROPERTY LINE	PL		

CURVE DATA

LONG CHORD	LCH
LONG CHORD BEARING	LCB
RADIUS	R
DEGREE OF CURVE	D
CENTRAL ANGLE OR DELTA	Δ
LENGTH OF CURVE	L
TANGENT	T

CONVENTIONAL UTILITY SYMBOLS

WATER	—W—	
GAS	—G—	
TELEPHONE	—T—	
OVERHEAD TRANSMISSION LINES	—OH—	
ELECTRIC	—E—	
CABLE TELEVISION	—TV—	
FIBER OPTIC	—FO—	
SANITARY SEWER	—SAN—	
STORM SEWER	—SS—	
	NON COMPENSABLE	COMPENSABLE
POWER POLE		
TELEPHONE POLE		
TELEPHONE PEDESTAL		
ELECTRIC TOWER	⊠	

CONVENTIONAL SYMBOLS

SECTION LINE
QUARTER LINE
SIXTEENTH LINE
NEW REFERENCE LINE
NEW R/W LINE
EXISTING R/W LINE
PROPERTY LINE
LOT, TIE AND OTHER MINOR LINES
CORPORATE LIMITS
FEE ACQUISITION AREA (HATCHING VARIES BY OWNER)
TEMPORARY LIMITED EASEMENT AREA
EASEMENT (HIGHWAY, PERMANENT LIMITED OR RESTRICTED DEVELOPMENT) AREAS
BUILDING

SECTION CORNER
NOTATION FOR COMBUSTABLE FLUIDS
NOTATION FOR HIGH VOLTAGE TRANSMISSION LINES
OFF-PREMISE SIGN

R/W MONUMENT ○ ● (SET)
NON-MONUMENTED R/W POINT ○
IRON PIPE / PIN ○ I.P. / TYPE
VALVE (GAS, WATER, ETC.) ⊘ (TYPE)
SIGN

ELECTRIC POLE
TELEPHONE POLE
PEDESTAL (LABEL TYPE - (COMMUNICATIONS, ELECTRIC)

COMPENSABLE | NON-COMPENSABLE

NO ACCESS (BY PARCEL ACQUISITION)
NO ACCESS (BY STATUTORY AUTHORITY)
ACCESS RESTRICTED (BY PREVIOUS PROJECT/CONTROL)

BRIDGE

PARCEL NUMBER (6)
UTILITY PARCEL NUMBER (83)

NOTES:

POSITIONS SHOWN ON THIS PLAT ARE WISCONSIN COUNTY COORDINATES, ROCK COUNTY, NAD83 (2007) ADJUSTMENT IN U.S. SURVEY FEET. VALUES SHOWN ARE GRID COORDINATES, GRID BEARINGS AND GRID DISTANCES. GRID DISTANCES MAY BE USED AS AND GROUND DISTANCES.

ALL NEW RIGHT-OF-WAY MONUMENTS WILL BE TYPE 2 (TYPICALLY ¾" X 24" IRON REBARS), UNLESS OTHERWISE NOTED, AND WILL BE PLACED PRIOR TO THE COMPLETION OF THE PROJECT BY OTHERS.

RIGHT-OF-WAY BOUNDARIES ARE DEFINED WITH COURSES OF THE PERIMETER OF THE HIGHWAY LANDS REFERENCED TO THE U.S. PUBLIC LAND SURVEY SYSTEM OR OTHER "SURVEYS OF PUBLIC RECORD".

PROPERTY LINES SHOWN ON THIS PLAT ARE DRAWN FROM DATA DERIVED FROM MAPS AND DOCUMENTS OF PUBLIC RECORD AND/OR EXISTING OCCUPATIONAL LINES. THIS PLAT MAY NOT BE A TRUE REPRESENTATION OF EXISTING PROPERTY LINES, EXCLUDING RIGHT-OF-WAY LINES, AND SHOULD NOT BE USED AS A SUBSTITUTE FOR AN ACCURATE FIELD SURVEY.

EXISTING HIGHWAY RIGHT-OF-WAY SHOWN HEREIN IS BASED ON THE POINTS OF REFERENCE AS SPECIFIED ON EACH PLAT DETAIL SHEET.

DIMENSIONING FOR THE NEW RIGHT-OF-WAY IS MEASURED ALONG AND PERPENDICULAR TO NEW REFERENCE LINES.

A **TEMPORARY LIMITED EASEMENT** (TLE) IS A RIGHT FOR CONSTRUCTION PURPOSES, AS DEFINED HEREIN, INCLUDING THE RIGHT TO OPERATE NECESSARY EQUIPMENT THEREON AND THE RIGHT OF INGRESS AND EGRESS, AS LONG AS REQUIRED FOR SUCH PUBLIC PURPOSE, INCLUDING THE RIGHT TO PRESERVE, PROTECT, REMOVE, OR PLANT THEREON ANY VEGETATION THAT THE HIGHWAY AUTHORITIES MAY DEEM NECESSARY OR DESIRABLE. ALL TLES EXPIRE AT THE COMPLETION OF THE CONSTRUCTION PROJECT FOR WHICH THIS INSTRUMENT IS GIVEN.

T-1-N

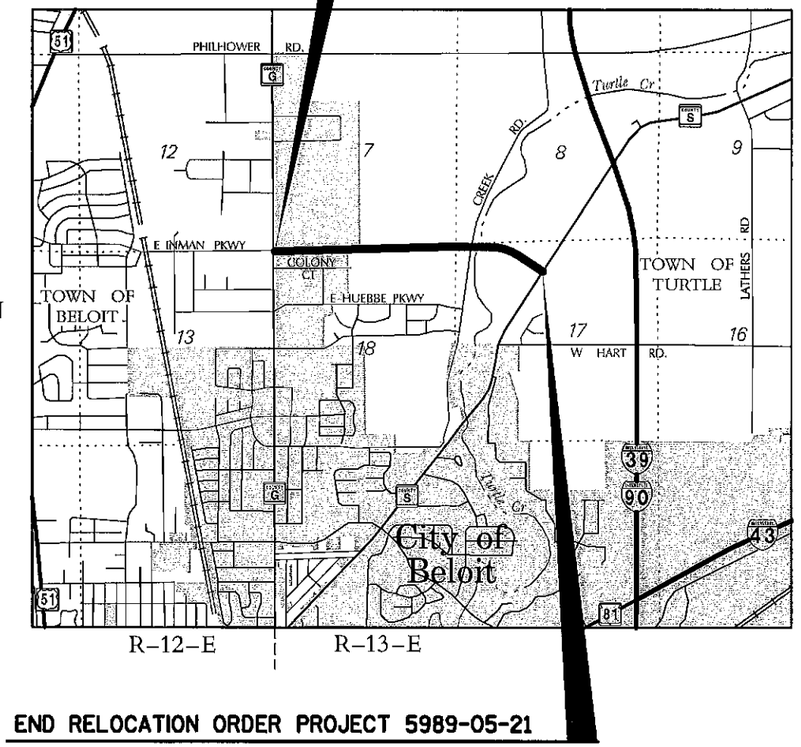

BEGIN RELOCATION ORDER PROJECT 5989-05-21

STA. 15+76.10 'BT'

LOCATED 0.00' N. OF AND 0.00' E. OF OF THE NORTHWEST CORNER OF SEC. 18, T-1-N, R-13-E

END RELOCATION ORDER PROJECT 5989-05-21

STA. 90+19.83 'BT'

LOCATED 570.99' S. OF AND 386.03' W. OF THE NORTH ¼ COR. OF SEC. 17, T-1-N., R-13-E.

LAYOUT
SCALE 0 ½ MI.

TOTAL NET LENGTH OF CENTERLINE = 1.410 MI.

R/W PROJECT NUMBER	SHEET NUMBER	TOTAL SHEETS
5989-05-21	4.01	6
FEDERAL PROJECT NUMBER		

PLAT OF RIGHT-OF-WAY REQUIRED FOR
INMAN PARKWAY EXTENSION, CITY OF BELOIT
(PRAIRIE AVENUE TO SHOPIERE ROAD)

CTH BT — ROCK COUNTY

CONSTRUCTION PROJECT NUMBER
5989-05-71/72

ACCEPTED FOR ROCK COUNTY

1-20-15 Benjamin A. Coffman
(Date) (Signature & Title of Official)

ORIGINAL PLAT PREPARED BY

AYRES ASSOCIATES

WISCONSIN TODD G. MROCHEK S-2260 WESTON WI LAND SURVEYOR

THIS SURVEY IS PREPARED AT THE REQUEST OF THE DEPARTMENT, THE FIELD SURVEY WAS PERFORMED IN MAY 2011. THIS SURVEY IS CORRECT TO THE BEST OF MY KNOWLEDGE AND BELIEF.

(SIGNATURE) Todd G. Mrochek
DATE: 1/03/2014
(PRINTED NAME) TODD G. MROCHEK
(REGISTRATION NUMBER) S-2260

REVISION DATE
7/03/2014 N.C.
12/23/2014 N.C.
01/15/2015 N.C.

E

SCHEDULE OF LANDS & INTERESTS REQUIRED

OWNER'S NAMES ARE SHOWN FOR REFERENCE PURPOSES ONLY AND ARE SUBJECT TO CHANGE PRIOR TO THE TRANSFER OF LAND INTERESTS TO THE COUNTY.

AREAS SHOWN IN THE TOTAL ACRES COLUMN MAY BE APPROXIMATE AND ARE DERIVED FROM TAX ROLLS OR OTHER AVAILABLE SOURCES AND MAY NOT INCLUDE LANDS OF THE OWNER WHICH ARE NOT CONTIGUOUS TO THE AREA TO BE ACQUIRED

PARCEL NUMBER	SHEET NUMBER	OWNER (S)	INTEREST REQUIRED	TOTAL ACRES OR S.F.	R/W ACRES OR S.F. REQUIRED NEW	EXISTING	TOTAL	TOTAL ACRES OR S.F. REMAINING	TLE ACRES OR S.F.	PLE ACRES OR S.F.
1	4.04	RELIABLE PROPERTIES, LLC	FEE	1.35	1.27	0.08	1.35	0.00	----	----
101	4.04	RELIABLE PROPERTIES, LLC	FEE, TLE & ACCESS RIGHTS	8.10	1.50	---	1.50	6.60	0.08	----
2	4.04	PRAIRIE AVENUE LLC	FEE, TLE & ACCESS RIGHTS	6.89	0.91	---	0.91	5.98	0.07	----
3	4.04	BRP US INC.	FEE & ACCESS RIGHTS	81.58	0.30	---	0.30	81.28	----	----
4	4.04-4.06	TWIN CITY FARMS PARTNERSHIP	FEE & PLE	299.86	9.54	0.17	9.71	290.15	----	0.19
5	4.04	CITY OF BELOIT	FEE	---	---	4.24	4.24	---	----	----
6	4.06	EDWIN H. KJORNES	FEE & TLE	245,678 S.F.	144 S.F.	3,427 S.F.	3,571 S.F.	242,107 S.F.	443 S.F.	----
7	4.06	GARY W. & MICHELLE J. HAHN TRUSTEES OF THE HAHN FAMILY REVOCABLE TRUST	FEE	93.17	6.73	---	6.73	86.44	----	----
8	4.06	DAN L. TRUMBO	FEE	0.70	0.40	---	0.40	0.30	----	----
9	4.04	MAURICE H. SCHUSTER ESTATE	FEE	2.06	27 S.F.	---	27 S.F.	2.06	----	----
81	4.04	WISCONSIN POWER & LIGHT COMPANY	RELEASE OF RIGHTS	----	----	----	----	----	----	----
82	4.04	AMERICAN TRANSMISSION COMPANY LLC	RELEASE OF RIGHTS	----	----	----	----	----	----	----
83	4.04	AT&T WISCONSIN	RELEASE OF RIGHTS	----	----	----	----	----	----	----
84	4.04	CITY OF BELOIT	RELEASE OF RIGHTS	----	----	----	----	----	----	----

4

4

REVISION DATE 7/03/2014
12/23/2014
01/16/2015

DATE 2-10-2014

SCALE, FEET
0 N/A

HWY: CTH BT

COUNTY: ROCK

STATE R/W PROJECT NUMBER 5989-05-21

CONSTRUCTION PROJECT NUMBER 5989-05-71/72

PLAT SHEET 4.02

PS&E SHEET

E

FILE NAME : N:\450351\DGN\Plan Sheets\5989-05-21_040102_rs.dgn PLOT DATE : 1/16/2015 PLOT BY : kk226 PLOT NAME : PLOT SCALE : 1:200

WISDOT/CADDS SHEET 60

TOWN OF BELOIT

CITY OF BELOIT

TOWN OF TURTLE

12

8

18

13

17

TOWN OF BELOIT
CITY OF BELOIT

CITY OF BELOIT
TOWN OF TURTLE

N

4

4

COUNTY G

COUNTY BT

COUNTY S

S. FLACK ROAD

PRAIRIE AVENUE

'G' LINE

305+00'G'

20+00'BT'

INMAN PARKWAY (CTH BT)

'CR' LINE

405+00'CR'

CREEK ROAD

STRUCTURE B-53-0292

80+00'BT'

150+00'S'

SHOPIERE ROAD

TURTLE CREEK

110+00'S'

T - 1 - N

BEGIN RELOCATION ORDER
STA. 15+76.10 'BT'

END RELOCATION ORDER
STA. 90+19.83 'BT'

1 2 3 4 5 6 7 8 9 101

TOWN OF BELOIT

CITY OF BELOIT

TOWN OF TURTLE

R - 12 - E

R - 13 - E

REVISION DATE 7/03/2014 12/23/2014 01/16/2015 N.C.	DATE 2-10-2014	NOT TO SCALE	HWY: CTH BT	STATE R/W PROJECT NUMBER 5989-05-21	PLAT SHEET 4.03
			COUNTY: ROCK	CONSTRUCTION PROJECT NUMBER 5989-05-71/72	PS&E SHEET E

FILE NAME : N:\450351\DGN\Plan Sheets\5989-05-21_040103_r1.dgn PLOT DATE : 1/16/2015 PLOT BY : kk226 PLOT NAME : PLOT SCALE : 1:800

WISDOT/CADDS SHEET 70

RAILROAD SPIKE
Y=224788.775
X=496395.660

P.I.= 300+00.00 'G'
Y= 222147.707
X= 496364.101
Δ= 00°10'32"RT

P.I.= 15+76.10 'BT'
Y= 222147.707
X= 496364.101
Δ= 00°14'53"LT.

TLE COURSE TABLE

COURSE	BEARING	DISTANCE
103-T501	N 89°07'06" E	25.01'
T501-T502	S 00°30'33" W	39.82'
T502-T503	N 89°29'27" W	10.00'
T503-T504	S 00°30'33" W	89.68'
T504-T505	S 89°07'06" W	15.00'
T505-103	N 00°30'33" E	129.26'
110-T601	N 00°41'05" E	406.44'
T601-T602	N 89°08'30" E	5.00'
T602-T603	S 00°41'05" W	66.58'
T603-T604	S 89°18'55" E	15.00'
T604-T605	S 00°41'05" W	60.00'
T605-T606	N 89°18'55" W	15.00'
T606-T607	S 00°41'05" W	279.95'
T607-110	N 89°56'20" W	5.00'
129-T610	S 89°41'05" W	25.00'
T610-T611	S 00°12'20" W	29.77'
T611-T612	N 89°47'40" W	50.00'
T612-T613	N 00°12'20" E	29.32'
T613-T610	N 89°41'05" E	50.00'

R/W COURSE TABLE

COURSE	BEARING	DISTANCE
108-109	N 00°41'05" E	145.00'
109-110	S 89°18'55" E	50.00'
110-111	S 89°56'20" E	167.69'
111-112	S 62°19'12" E	28.18'
112-113	N 88°32'22" E	275.12'
113-114	S 00°12'20" W	80.14'
114-115	N 89°07'06" E	95.02'
115-116	N 69°11'24" E	112.48'
116-117	S 83°16'28" E	105.68'
117-118	S 71°35'15" E	73.69'
118-119	N 89°07'06" E	1123.14'
120-121	S 89°47'40" E	178.25'
121-122	N 87°46'40" E	118.03'
122-123	S 00°06'50" W	44.60'
123-124	S 00°00'09" E	55.40'
124-125	S 00°00'09" E	55.00'
125-126	S 87°58'30" W	128.46'
126-127	S 49°01'11" W	53.15'
127-128	N 89°47'40" W	310.00'
128-129	N 48°36'30" W	53.15'
129-130	S 89°41'05" W	550.02'
130-131	N 89°09'28" W	450.03'
131-132	S 67°35'09" W	65.00'
132-133	N 89°47'40" W	135.00'
133-134	N 26°21'34" W	33.54'
134-135	N 89°47'40" W	130.34'
135-102	S 00°30'33" W	44.86'
102-103	S 89°07'06" W	483.99'
103-138	S 89°07'06" W	50.01'
138-108	N 00°30'33" E	110.00'
129-151	N 00°12'20" E	60.00'
151-152	N 00°12'20" E	35.57'
152-153	N 00°12'20" E	50.01'
153-119	N 89°07'06" E	142.97'

NOTES: EXISTING HIGHWAY R/W FOR CTH G ESTABLISHED FROM
C.S.M. - V. 5 / PGS. 240-243 / DOC. 842807
C.S.M. - V. 10 / PGS. 538-539 / DOC. 951239
C.S.M. - V. 28 / PGS. 106-107 / DOC. 1693994
C.S.M. - V. 6 / PGS. 271-272 / DOC. 865227
C.S.M. - V. 3 / PGS. 22-23 / DOC. 793800
AND SECTION LINE.

EXISTING HIGHWAY R/W FOR CTH BT ESTABLISHED FROM
C.S.M. - V. 5 / PGS. 240-243 / DOC. 842807
C.S.M. - V. 10 / PGS. 538-539 / DOC. 951239

ACCESS NOTE:
NO ACCESS RIGHTS SHALL ACCRUE TO CTH BT

CAST IRON MONUMENT
Y=227454.912
X=498766.629

TOWN OF BELOIT
TOWN OF TURTLE
CITY OF BELOIT
TOWN OF TURTLE
SE-SE
SW-SE
NE-NE
NW-NW
NE-SW
SE-SW

S 00°41'05" W 2641.26' MON. TO MON.
S 00°06'50" W 5225.80' MON. TO R/W
S 00°06'50" W 5270.40' MON. TO MON.
N 00°30'33" E 2644.32' MON. TO MON.
N 00°30'33" E 2534.32' ALONG SEC. LINE
N 00°00'09" W 5216.30' MON. TO R/W
N 00°00'09" W 5316.70' MON. TO MON.

LOT 1 C.S.M. V. 28 / PGS. 106-107 / DOC. 1693994
LOT 1 C.S.M. V. 6 / PGS. 271-272 / DOC. 865227
LOT 1 C.S.M. V. 3 / PGS. 22-23 / DOC. 793800
LOT 1 C.S.M. V. 10 / PGS. 538-539 / DOC. 951239
LOT 2 C.S.M. V. 5 / PGS. 240-243 / DOC. 842807
LOT 2 C.S.M. V. 10 / PGS. 538-539 / DOC. 951239
LOT 3 C.S.M. V. 10 / PGS. 538-539 / DOC. 951239
LOT 1 C.S.M. V. 5 / PGS. 240-243 / DOC. 842807

1" I.P. IN MONUMENT BOX
Y=222147.707
X=496364.101

2¾" I.P.
2" I.P.
1" I.P.
Y=222184.521
X=498756.144

MONUMENT BOX
Y=219503.496
X=496340.602

¾" BAR
Y=216867.817
X=498756.369

1 TLE GRADING 0.05 AC.
2 TLE GRADING & DRIVEWAY 0.07 AC.
3 BRP US INC.
4 TWIN CITY FARMS PARTNERSHIP
5 CITY OF BELOIT
81 WISCONSIN POWER & LIGHT COMPANY EASEMENT, 20'x15' DOC. 1874141
81 PRAIRIE AVENUE LLC LOT 2 C.S.M. V. 5 / PGS. 240-243 / DOC. 842807
81 WISCONSIN POWER & LIGHT COMPANY EASEMENT, 15' C.S.M. V. 5 / PGS. 240-243 / DOC. 842807
81 WISCONSIN POWER & LIGHT COMPANY EASEMENT, 20' V. 10 / PGS. 296-297 / DOC.633636a
81 WISCONSIN POWER & LIGHT COMPANY EASEMENT, 10' CARD 636 / IMAGES 956-957 / DOC. 1201753 UTILITY EASEMENT, 10' C.S.M. V. 10 / PGS. 538-539 / DOC. 951239
81 WISCONSIN POWER & LIGHT COMPANY EASEMENT, 10' CARD 636 / IMAGES 958-959 / DOC. 1201754 UTILITY EASEMENT, 10' C.S.M. - V. 10 / PGS. 538-539 / DOC. 951239
81 WISCONSIN POWER & LIGHT COMPANY EASEMENT, 20' CARD 640 / IMAGES 876-877 / DOC. 1203448
81 WISCONSIN POWER & LIGHT COMPANY EASEMENT, 10' CARD 640 / IMAGES 876-877 / DOC. 1203448
81 WISCONSIN POWER & LIGHT COMPANY EASEMENT, 26'x26' CARD 640 / IMAGES 876-877 / DOC. 1203448
82 ATC TRANSMISSION LINE EASEMENT V. 22, P. 98, DOC. 342312a
82 ATC TRANSMISSION LINE EASEMENT V. 261, P. 516, DOC. 344032 V. 22, P. 101, DOC. 342315a V. 22, P. 32, DOC. 341541a
83 AT&T WISCONSIN
84 CITY OF BELOIT SANITARY SEWER EASEMENT, 20' V. 614 / P. 167
84 CITY OF BELOIT SANITARY SEWER
101 RELIABLE PROPERTIES, LLC
101 TLE DRIVEWAY 0.03 AC.
CITY OF BELOIT SAN. SEWER EASEMENT, 30' V. 448 / PGS. 246-247

BEGIN RELOCATION ORDER
STA. 15+76.10 'BT'
Y=222,147.707
X=496,364.101

P.I. 15+76.10BT'= P.I. 300+00'G'

CTH BT
CTH G
PRAIRIE AVENUE
COLONY CT.
ENLARGEMENT
SLOPE INTERCEPTS
1 P.D. 50.00' STA. 34+00'BT'
0.5'+/- FROM SEC. LINE
ATC TRANSMISSION TOWER
MATCH LINE NORTH-SOUTH QUARTER LINE STA 39+68.16 'BT'

15 'BT' 20 'BT' 25 'BT' 30 'BT' 35 'BT' 40 'BT'

534.00' S 89°07'06" W 483.99' S 89°47'40" E

R/W MONUMENT POINT NUMBER AND COORDINATE TABLE

POINT	Y	X	POINT	Y	X
101	222,155.924	496,898.038	122	222,229.120	498,756.233
102	222,045.929	496,897.060	123	222,184.521	498,756.144
103	222,038.481	496,413.132	124	222,139.120	498,756.146
108	222,147.707	496,364.101	125	222,084.120	498,756.148
109	222,292.697	496,365.834	126	222,079.580	498,627.767
110	222,292.099	496,415.830	127	222,044.724	498,587.641
111	222,291.920	496,583.516	128	222,045.837	498,277.643
112	222,278.831	496,608.469	129	222,080.981	498,237.769
113	222,285.843	496,883.496	130	222,077.955	497,687.755
114	222,205.702	496,883.208	131	222,084.570	497,237.776
115	222,207.164	496,978.214	132	222,059.786	497,177.686
116	222,247.126	497,083.358	133	222,060.270	497,042.687
117	222,234.749	497,188.315	134	222,090.324	497,027.795
118	222,211.474	497,258.232	135	222,090.792	496,897.459
119	222,228.757	498,381.241	138	222,037.712	496,363.123
120	222,225.184	498,460.035			
121	222,224.544	498,638.287			

Station & Offset Table

Point No.	Station	Offset	Point No.	Station	Offset	Point No.	Station	Offset
101	21+10.01'BT'	10.13'	121	38+50.00'BT'	85.00'	T500	298+91.21'G'	50.00'
102	21+09.43'BT'	99.86'	122	39+67.93'BT'	90.00'	T501	298+91.82'G'	75.00'
103	298+91.21'G'	50.00'	123	39+68.00'BT'	45.40'	T502	298+52.00'G'	75.00'
108	300+00.00'G'	0.00'	124	39+68.16'BT'	0.00'	T503	298+52.00'G'	65.00'
108	15+76.10'BT'	0.00'	125	39+68.36'BT'	55.00'	T504	297+62.32'G'	65.00'
109	301+45.00'G'	0.00'	126	38+40.00'BT'	60.00'	T505	297+61.96'G'	50.00'
110	16+27.31'BT'	144.58'	127	38+00.00'BT'	95.00'	T600	301+45.00'G'	50.00'
110	301+45.00'G'	50.00'	128	34+90.00'BT'	95.00'	T601	305+51.44'G'	50.00'
111	17+95.00'BT'	145.00'	129	34+50.00'BT'	60.00'	T602	305+51.58'G'	55.00'
112	18+20.00'BT'	132.00'	130	29+00.00'BT'	65.00'	T603	304+85.00'G'	55.00'
113	20+95.00'BT'	140.00'	131	24+50.00'BT'	60.00'	T604	304+85.00'G'	70.00'
114	20+95.00'BT'	59.86'	132	23+90.00'BT'	85.00'	T605	304+25.00'G'	70.00'
115	21+90.00'BT'	61.66'	133	22+55.00'BT'	85.00'	T606	304+25.00'G'	55.00'
116	22+95.00'BT'	102.00'	134	22+40.00'BT'	55.00'	T607	301+45.05'G'	55.00'
117	24+00.00'BT'	90.00'	135	21+09.66'BT'	55.00'	T610	34+25.00'BT'	60.23'
118	24+70.00'BT'	66.98'	138	298+90.00'G'	0.00'	T611	34+25.00'BT'	90.00'
119	35+92.94'BT'	88.29'				T612	33+75.00'BT'	90.00'
120	36+71.75'BT'	85.00'				T613	33+75.00'BT'	60.68'

REVISION DATE 7/03/2014 12/23/2014 01/16/2015 N.C.	DATE 2-10-2014	SCALE, FEET 0 100 200	HWY: CTH BT	STATE R/W PROJECT NUMBER 5989-05-21	PLAT SHEET 4.04
	GRID FACTOR N/A		COUNTY: ROCK	CONSTRUCTION PROJECT NUMBER 5989-05-71/72	PS&E SHEET 63 E

FILE NAME : N:\450351\DGN\Plan Sheets\5989-05-21_040104_rp.dgn PLOT DATE : 1/16/2015 PLOT BY : kk226 PLOT NAME : PLOT SCALE : 1:200

WISDOT/CADDS SHEET 75

CAST IRON MONUMENT
Y=227454.912
X=498766.629

ALUMINUM MONUMENT
Y=224871.476
X=501411.917

TOWN OF TURTLE

ACCESS NOTES:
ACCESS CONTROL BETWEEN STA.39+68.16'BT' AND STA. 66+20.76'BT' SHALL RESERVE AND ALLOW FOR TWO FUTURE ACCESS POINTS FOR ANY FUTURE EXTENSIONS OF CLAREMONT DRIVE AND SOUTH HAZELWOOD DRIVE FROM THE SOUTH. THE ALLOWABLE ACCESS POINTS SHALL BE ON BOTH THE NORTH AND SOUTH SIDE OF CTH BT AND MUST LINE UP IF SAID ROADS ARE EXTENDED TO THE NORTH OF CTH BT. THE ALLOWABLE ACCESS POINTS ARE ONLY ALLOWED FOR MUNICIPAL STREET EXTENSIONS AND FOR NO OTHER USES, SUCH AS DRIVEWAYS OR PROPERTY ACCESS.

NO ACCESS RIGHTS SHALL ACCRUE TO CTH BT

SE-SW

SW-SE

SE-SE

SW-SW

CITY OF BELOIT

TOWN OF TURTLE

S 00°06'50" W
5270.40' MON. TO MON.

S 00°06'50" W
5225.80' MON. TO R/W

S 00°04'04" W
2663.15' MON. TO MON.

4 TWIN CITY FARMS PARTNERSHIP

EXISTING 100-YEAR FLOOD EL. 797.66

4 PLE TO INCREASE BACKWATER NORTH OF CTH BT, INCREASING THE 100-YEAR FLOOD ELEVATION FROM 797.66 TO 797.77 (0.02 ACRES)

2" I.P.
Y=222184.521
X=498756.144

¾" IRON BAR
Y=222208.323
X=501408.764

S 89°29'09" W
2652.73' MON. TO MON.

S 89°29'09" W
530.84' TO R/W

SEE ACCESS NOTE

P.I.

WELL

TRANSFORMER

S 00°01'53" W
18.72' TO R/W

91.50'

61.47'

SLOPE INTERCEPTS

40 'BT' 45 'BT' 50 'BT' S 89°47'40" E 55 'BT' 60 'BT' 65 'BT'

CTH BT

SLOPE INTERCEPTS

4 PLE TO INCREASE BACKWATER SOUTH OF CTH BT, INCREASING THE 100-YEAR FLOOD ELEVATION FROM 797.66 TO 797.84 (0.17 ACRES)

EXISTING 100-YEAR FLOOD EL. 797.66

SEE ACCESS NOTE

N 00°00'09" W
5316.70' MON. TO MON.

N 00°00'09" W
5216.30' MON. TO R/W

MATCH LINE NORTH-SOUTH QUARTER LINE
STA 39+68.16 'BT'

MATCH LINE SECTION LINE
STA 66+20.76 'BT'

N 00°01'53" E
2527.49' MON. TO R/W

N 00°01'53" E
2656.21' MON. TO MON.

NW-NE

NE-NW

NW-NW

NE-NE

TOWN

TURTLE

4 TWIN CITY FARMS PARTNERSHIP

R/W COURSE TABLE

COURSE	BEARING	DISTANCE
122-200	S 66°08'19" E	62.31'
200-201	S 89°07'13" E	425.03'
201-202	S 80°47'54" E	50.62'
202-203	N 89°29'09" E	550.04'
203-204	N 89°29'09" E	250.02'
204-205	N 85°42'31" E	100.31'
205-206	S 89°47'40" E	210.00'
206-207	N 50°24'00" E	39.05'
207-208	N 87°20'36" E	100.12'
208-209	S 87°35'30" E	260.19'
209-210	S 78°29'04" E	152.97'
210-211	S 89°47'40" E	470.57'
211-212	S 00°01'53" W	60.00'
212-213	S 00°01'53" W	50.00'
213-214	S 83°08'01" W	121.84'
214-215	N 88°45'10" W	275.05'
215-216	S 82°49'11" W	272.26'
216-217	N 87°44'56" W	280.18'
217-218	N 60°02'58" W	40.31'
218-219	N 89°47'40" W	240.00'
219-220	N 88°58'33" W	350.04'
220-221	N 89°16'24" W	550.02'
221-125	N 89°47'40" W	531.64'
125-124	N 00°00'09" W	55.00'
124-123	N 00°00'09" W	45.40'
123-122	N 00°06'50" E	44.60'

Station & Offset Table

Point Number	Station	Offset
122	39+67.93'BT'	90.00'
123	39+68.00'BT'	45.40'
124	39+68.16'BT'	0.00'
125	39+68.36'BT'	55.00'
200	40+25.00'BT'	65.00'
201	44+50.00'BT'	60.00'
202	45+00.00'BT'	52.08'
203	50+50.00'BT'	58.99'
204	53+00.00'BT'	62.13'
205	54+00.00'BT'	70.00'
206	56+10.00'BT'	70.00'
207	56+40.00'BT'	95.00'
208	57+40.00'BT'	100.00'
209	60+00.00'BT'	90.00'
210	61+50.00'BT'	60.00'
211	66+20.57'BT'	60.00'
212	66+20.76'BT'	0.00'
213	66+20.91'BT'	50.00'
214	65+00.00'BT'	65.00'
215	62+25.00'BT'	60.00'
216	59+55.00'BT'	95.00'
217	56+75.00'BT'	85.00'
218	56+40.00'BT'	65.00'
219	54+00.00'BT'	65.00'
220	50+50.00'BT'	60.00'
221	45+00.00'BT'	55.00'

R/W MONUMENT POINT NUMBER AND COORDINATE TABLE

POINT	Y	X
122	222,229.120	498,756.233
123	222,184.521	498,756.144
124	222,139.120	498,756.146
125	222,084.120	498,756.148
200	222,203.916	498,813.214
201	222,197.390	499,238.194
202	222,189.295	499,288.165
203	222,194.230	499,838.186
204	222,196.474	500,088.196
205	222,203.980	500,188.223
206	222,203.226	500,398.222
207	222,228.118	500,428.312
208	222,232.759	500,528.329
209	222,221.826	500,788.291
210	222,191.287	500,938.183
211	222,189.598	501,408.754
212	222,129.598	501,408.721
213	222,079.598	501,408.694
214	222,065.032	501,287.732
215	222,071.019	501,012.752
216	222,036.988	500,742.628
217	222,047.993	500,462.665
218	222,068.119	500,427.737
219	222,068.980	500,187.739
220	222,075.237	499,837.759
221	222,082.211	499,287.781

¾" BAR
Y=216867.817
X=498756.369

BRASS DISK IN CONC.
Y=219552.111
X=501407.310

REVISION DATE 7/03/2014 12/23/2014 N.C. 01/16/2015 N.C.	DATE 2-10-2014	SCALE, FEET 0 100 200	HWY: CTH BT	STATE R/W PROJECT NUMBER 5989-05-21	PLAT SHEET 4.05
	GRID FACTOR N/A		COUNTY: ROCK	CONSTRUCTION PROJECT NUMBER 5989-05-71/72	PS&E SHEET E

FILE NAME : N:\450351\DGN\Plan Sheets\5989-05-21_040105_rp.dgn PLOT DATE : 1/16/2015 PLOT BY : kk226 PLOT NAME : PLOT SCALE : 1:200

NOTE: EXISTING HIGHWAY R/W FOR CTH S ESTABLISHED FROM PREVIOUS PROJECT 5989-02-85 & C.S.M. - V. 10 / PGS. 151-152 / DOC. 933786

EXISTING HIGHWAY R/W FOR CREEK ROAD ESTABLISHED FROM GORNET'S SUBDIVISION & CLOVERDALE SUBDIVISION.

ALUMINUM MONUMENT
Y=224871.476
X=501411.917

S 00°04'04" W
2663.15' MON. TO MON.

TOWN OF TURTLE

P.I.= 405+61.03'CR'
Y= 222546.584
X= 501765.750
Δ= 03°40'12"RT.
D.= 01°21'51"
T.= 134.55'
L.= 269.02'
R.= 4200.00'
BK = N 10°50'11" E
AH = N 11°33'20" E

P.I.= 402+38.52'CR'
Y= 222230.612
X= 501701.146
Δ= 00°43'09"RT.
D.= 00°11'29"
T.= 187.95'
L.= 375.90'
R.= 29945.00'
BK = N 11°33'20" E
AH = N 15°13'31" E

CAST IRON MONUMENT
Y=227497.282
X=504084.819

N 00°13'53" E
5321.29' MON. TO MON.

N 33°46'00" E

135'S

BRASS DISK IN CONC.
Y=222176.039
X=504063.326

¾" RE-BAR

CREEK ROAD

APPROXIMATE MEANDER LINE

E. CLOVERDALE DR.

P.L.

N 15°13'31" E

PT406+95.49'CR'

PI405+61.03'CR'

WISCONSIN POWER & LIGHT COMPANY

TWIN CITY FARMS PARTNERSHIP

CLOVERDALE
V. 22 / PG. 1 / DOC. 663522
LOT 2

¾" IRON BAR
Y=222208.323
X=501408.764

EDWIN H. KJORNES

405'CR'

BLOCK FIVE
LOT 1

PCC404+26.47'CR'

STA. 68+93.78'BT'=
STA. 401+34.70'CR'

PI402+38.52'CR'

110'

TRANSFORMER

S 00°01'53" W
18.72'

65 'BT'

CTH BT

S 89°47'40" E

70 'BT'

75 'BT'

S 00°12'20" W
95.00' TO R

S 00°12'20" W
95.00' TO R/W

80 'BT'

85 'BT'

90 'BT'

SLOPE INTERCEPTS

GARY W. & MICHELLE J. HAHN
TRUSTEES OF THE HAHN FAMILY REVOCABLE TRUST

SW-SW

403'CR'

402'CR'

TLE GRADING
443 S.F.

S 89°18'12" E
2654.76' MON. TO MON.

0.5' FROM SHED TO R/W SECTION LINE

R/W LINE

APPROX. 5.5'+/- GAP BETWEEN P.L. / SEC. LINE & PROPOSED R/W LINE

ENLARGEMENT

N 89°18'12" W
1299.09' TO R/W

PI81+00.27 'BT'

51.64

87.34'

SE-SW

¾" RE-BAR

¾" RE-BAR

CTH S

SHOPIERE ROAD

TERRY L & DONNA V DOBRATZ
LOT 1
C.S.M.
V. 10 / PGS. 151-152 / DOC. 933786

¾" RE BAR

¾" RE BAR

¾" RE BAR

PI128+67.40'S'

130'S

¾" RE BARS

CTH BT

S 56°39'13" E

PT85+21.57 'BT'

STA. 90+19.83 'BT'=
STA. 127+06.75 'S'

END RELOCATION ORDER
STA. 90+19.83 'BT'
Y=221,605.047
X=503,677.298

P.I.= 128+67.40'S'
Y= 221739.230
X= 503765.630
Δ= 00°24'35"RT.

ACCESS NOTE:
NO ACCESS RIGHTS SHALL ACCRUE TO CTH BT

N 00°11'55" E
5306.29' MON. TO MON.

CONCRETE MONUMENT
Y=216869.783
X=504044.938

N 33°21'24" E

120'S

1¼" I.P.

AT&T WISCONSIN

NE-NW

P.L.

¾" RE-BAR

¾" RE-BAR

P.I.= 81+00.27 'BT'
Y= 222124.287
X= 502888.227
Δ= 33°08'27"RT.
D.= 03°49'11"
T.= 446.33'
L.= 867.62'
R.= 1500.00'

PC76+53.95 'BT'

GARY W. & MICHELLE J. HAHN
TRUSTEES OF THE HAHN FAMILY REVOCABLE TRUST

7

GARY W. & MICHELLE J. HAHN
TRUSTEES OF THE HAHN FAMILY REVOCABLE TRUST

7

STRUCTURE B-53-0292

PC400+50.57'CR'

LOT 12
1½" I.P.

LOT 11

LOT 10

LOT 9

LOT 8

48'

66'

1" I.P.

1" I.P.

1" I.P.

N 10°50'11" E

CREEK ROAD

GORNET'S SUBDIVISION
V. 160 / PG. 22 / DOC. 551057

TURTLE

APPROXIMATE MEANDER LINE

MATCH LINE SECTION LINE
STA 66+20.76 'BT'

N 00°01'53" E
2527.49' MON. TO R/W

TWIN CITY FARMS PARTNERSHIP

N 00°01'53" E
2656.21' MON. TO MON.

BRASS DISK IN CONC.
Y=219552.111
X=501407.310

R/W COURSE TABLE

COURSE	BEARING	DISTANCE	COURSE	BEARING	DISTANCE
211-300	S 89°47'40" E	229.43'	324-325	N 56°38'36" W	65.16'
300-301	N 37°27'30" E	20.92'	325-326	N 25°52'56" E	112.70'
301-302	N 14°46'58" E	113.41'	326-327	N 55°08'46" W	190.07'
302-303	S 77°39'38" E	37.99'	327-328	N 71°43'19" W	134.63'
303-304	S 77°39'38" E	35.01'	328-329	N 29°43'27" W	110.40'
304-305	S 12°20'22" W	80.76'	329-330	N 58°29'40" W	175.78'
305-306	S 41°03'21" E	29.42'	330-331	N 68°49'40" W	188.76'
306-307	S 89°47'40" E	135.00'	331-332	S 85°10'28" W	122.70'
307-308	N 88°34'55" E	125.05'	332-333	N 82°36'47" W	135.65'
308-309	N 74°14'26" E	78.01'	333-334	N 68°09'22" W	97.09'
309-310	N 84°29'42" E	100.50'	334-335	S 85°24'54" W	119.61'
310-311	S 87°32'21" E	254.14'	335-336	S 87°09'33" W	94.08'
311-312	S 83°00'11" E	229.02'	336-337	S 88°59'12" W	235.05'
312-313	N 73°17'36" E	47.28'	337-338	N 86°17'08" W	335.63'
313-314	S 73°24'32" E	138.98'	338-339	N 79°32'15" W	76.11'
314-315	S 48°30'44" E	69.95'	339-340	S 10°27'45" W	93.72'
315-316	S 67°22'24" E	223.82'	340-341	N 79°32'15" W	34.77'
316-317	S 63°15'04" E	215.58'	341-342	N 79°32'15" W	31.23'
317-318	S 50°28'09" E	139.24'	342-343	N 10°27'45" E	25.20'
318-319	S 70°41'23" E	82.46'	343-344	N 05°07'44" W	67.63'
319-320	N 58°26'36" E	160.08'	344-345	N 73°32'11" W	32.99'
320-321	N 82°19'37" E	72.70'	345-213	N 89°47'40" W	179.09'
321-322	S 59°14'38" E	15.47'	213-212	N 00°01'53" E	50.00'
322-323	S 56°38'36" E	49.55'	212-211	N 00°01'53" E	60.00'
323-324	S 33°21'24" W	310.16'			

TLE COURSE TABLE

COURSE	BEARING	DISTANCE
304-T700	S 12°20'22" W	35.80'
T700-T701	S 78°43'29" E	8.64'
T701-T702	S 11°13'30" W	52.30'
T702-305	N 41°03'21" W	12.03'
305-T700	N 12°20'22" E	44.96'

Station & Offset Table

Point Number	Station	Offset	Point Number	Station	Offset
211	66+20.57'BT'	60.00'	325	125+25.00'S'	65.16'
212	66+20.76'BT'	0.00'	326	89+40.00'BT'	70.00'
213	66+20.91'BT'	50.00'	327	87+50.00'BT'	65.00'
300	68+50.00'BT'	60.00'	328	86+20.00'BT'	100.00'
301	402+04.06'CR'	45.00'	329	85+21.57'BT'	50.00'
302	403+17.10'CR'	37.99'	330	83+40.00'BT'	45.00'
303	403+16.44'CR'	0.00'	331	81+45.00'BT'	50.00'
304	403+15.83'CR'	35.00'	332	80+25.00'BT'	95.00'
305	402+35.00'CR'	33.49'	333	78+80.00'BT'	105.00'
306	69+65.00'BT'	70.00'	334	77+80.00'BT'	80.00'
307	71+00.00'BT'	70.00'	335	76+53.95'BT'	95.00'
308	72+25.00'BT'	73.54'	336	75+60.00'BT'	100.00'
309	73+00.00'BT'	95.00'	337	73+25.00'BT'	105.00'
310	74+00.00'BT'	105.00'	338	69+90.00'BT'	84.46'
311	76+53.95'BT'	95.00'	339	400+68.97'CR'	34.15'
312	78+70.00'BT'	84.32'	340	399+75.23'CR'	34.77'
313	79+10.00'BT'	105.00'	341	399+75.00'CR'	0.00'
314	80+40.00'BT'	95.00'	342	399+74.80'CR'	31.23'
315	81+00.00'BT'	65.00'	343	400+00.00'CR'	31.39'
316	83+15.00'BT'	60.00'	344	400+65.00'CR'	50.00'
317	85+21.57'BT'	70.00'	345	68+00.00'BT'	50.00'
318	86+60.00'BT'	55.00'			
319	87+40.00'BT'	75.00'	T700	402+80.00'CR'	34.36'
320	89+00.00'BT'	80.00'	T701	402+80.00'CR'	43.00'
321	128+34.46'S'	65.00'	T702	402+27.62'CR'	43.00'
322	128+35.16'S'	49.55'	T703	402+35.00'CR'	33.49'
323	128+35.16'S'	0.00'	T700	402+80.00'CR'	34.36'
324	125+25.00'S'	0.00'			

R/W MONUMENT POINT NUMBER AND COORDINATE TABLE

POINT	Y	X	POINT	Y	X
211	222,189.598	501,408.754	322	221,739.545	503,706.516
212	222,129.598	501,408.721	323	221,712.300	503,747.902
213	222,079.598	501,408.694	324	221,453.236	503,577.361
300	222,188.774	501,638.178	325	221,489.063	503,522.937
301	222,205.378	501,650.900	326	221,590.455	503,572.131
302	222,315.034	501,679.837	327	221,699.075	503,416.161
303	222,306.915	501,716.953	328	221,741.298	503,288.325
304	222,299.434	501,751.150	329	221,837.173	503,233.585
305	222,220.544	501,733.893	330	221,929.035	503,083.714
306	222,198.362	501,753.213	331	221,997.209	502,907.697
307	222,197.877	501,888.213	332	221,986.887	502,785.427
308	222,200.972	502,013.224	333	222,004.327	502,650.904
309	222,222.159	502,088.301	334	222,040.450	502,560.788
310	222,231.800	502,188.336	335	222,030.889	502,441.563
311	222,220.888	502,442.245	336	222,026.227	502,347.599
312	222,192.990	502,669.557	337	222,022.070	502,112.583
313	222,206.582	502,714.844	338	222,043.814	501,777.659
314	222,166.897	502,848.041	339	222,057.636	501,702.813
315	222,120.556	502,900.442	340	221,965.473	501,685.794
316	222,034.446	503,107.037	341	221,971.786	501,651.602
317	221,937.417	503,299.549	342	221,977.458	501,620.891
318	221,848.791	503,406.943	343	222,002.243	501,625.468
319	221,821.522	503,484.766	344	222,069.605	501,619.422
320	221,737.747	503,621.172	345	222,078.955	501,587.784
321	221,747.454	503,693.224			

REVISION DATE 7/03/2014 12/23/2014 N.C. 01/16/2015 N.C.	DATE 2-10-2014	SCALE, FEET 0 100 200	HWY: CTH BT	STATE R/W PROJECT NUMBER 5989-05-21	PLAT SHEET 4.06
	GRID FACTOR N/A		COUNTY: ROCK	CONSTRUCTION PROJECT NUMBER 5989-05-71/72	PS&E SHEET 65 E

FILE NAME : N:\450351\DGN\Plan Sheets\5989-05-21_040106_rp.dgn PLOT DATE : 1/16/2015 PLOT BY : kk226 PLOT NAME : PLOT SCALE : 1:200

WISDOT/CADDS SHEET 75

INMAN PRAIRIE, LLC

INMAN PRAIRIE, LLC

TRANSFORMER

PAETEC

CITY OF BELOIT

BM 2

EXISTING R/W

INMAN PARKWAY

ALLIANT ENERGY

CHARTER

FIRST NATIONAL BANK & TRUST

AT&T WISCONSIN

APPROXIMATE LOCATION OF ABANDONED GAS REGULATOR VAULT (EXACT LOCATION UNKNOWN)

PROPOSED STORM SEWER MANHOLE BY OTHERS

CITY OF BELOIT (SIGNALS AND LIGHTING)

AT&T WISCONSIN

PROPOSED TLE

AT&T WISCONSIN

BM 3

ALLIANT ENERGY

PRAIRIE AVE (CTH G)

PRAIRIE AVENUE LLC

CAUTION

ALLIANT ENERGY

SLOPE INTERCEPTS

PROPOSED R/W

ALLIANT ENERGY

ALLIANT ENERGY & WIND STREAM (OVERHEAD)

DRAINAGE BASIN

PROPOSED STORM SEWER MANHOLE

INFILTRATION TRENCH

EXISTING R/W

INMAN PKWY (CTH BT)

MATCH LINE STA. 20+50

SEPTIC SYSTEM REMOVED BY OTHERS

BUILDINGS REMOVED BY OTHERS

EXSITING WELL CAPPED BY OTHERS

RELIABLE PROPERTIES, LLC

PROPOSED TLE

BENCH MARKS

NO.	STATION	DESCRIPTION	OFFSET	ELEV.
2	9+11'BT'	E. NUT OF HYDRANT, CHISELED W/ X IN NUT	38'LT	805.57
3	302+13'G'	R.R. SPIKE SET IN E. FACE OF POWER POLE	33'RT	805.60

PROJECT 5966-10-70
(WORK COMPLETED BY OTHERS)

PROJECT 5989-05-72

11+70.00 Elev 805.35
PVC 12+00.00 Elev 805.36
PVI 12+25.00 Elev 805.36
PVT 12+50.00 Elev 805.23
PVC 13+12.50 Elev 804.92
LO 13+43.26 Elev 804.84
PVT 13+87.50 Elev 805.00
PVC 15+00.00 Elev 805.82
PVI 15+75.00 Elev 806.36
PVT 16+50.00 Elev 805.84
PVC 17+00.00 Elev 805.50
LO 17+86.76 Elev 805.20
PVT 18+50.00 Elev 805.36
PVI 13+50.00 Elev 804.73
PVI 17+75.00 Elev 804.98

K = 61
L = 75.00'
K = 98
L = 50.00'
K = 106
L = 150.00'
K = 126
L = 150.00'

G = 0.01%
G = -0.50%
G = 0.72%
G = -0.69%
G = 0.50%

HI 12+00.89 Elev 805.36
HI 15+76.87 Elev 806.10

BEGIN PROJECT 5989-05-72
STA 16+88.60'BT'
Y = 222,147.303
X = 496,476.596

6+00	6+50	7+00	7+50	8+00	8+50	9+00	9+50	10+00	10+50	11+00	11+50	12+00	12+50	13+00	13+50	14+00	14+50	15+00	15+50	16+00	16+50	17+00	17+50	18+00	18+50	19+00	19+50	20+00	20+50	21+00
								805.68	805.57	805.46	805.42	805.36	805.30	805.28	805.24	805.12	804.77	804.70	805.08	804.91	802.01	802.07	802.44	802.81	803.26	803.50	804.31	804.54	804.84	804.79
												805.36	805.23	804.98	804.85	805.09	805.45	805.82	806.06	806.07	805.84	805.50	805.25	805.21	805.36	805.61	805.86	806.11	806.36	806.61

830	820	810	800	790	780	770	760

PROJECT NO: 5989-05-71,72	HWY: CTH BT	COUNTY: ROCK	PLAN & PROFILE	SHEET	E

FILE NAME : N:\450351\DGN\Plan Sheets\5989-05-71_050101_pp.dgn

PLOT BY : dm253 PLOT DATE : 1/28/2015 PLOT SCALE : 1:100

WISDOT/CADDS SHEET 40

BENCH MARKS

NO.	STATION	DESCRIPTION	OFFSET	ELEV.
4	28+54'BT	R.R. SPIKE IN NORTH FACE OF POWER POLE	23'RT	806.20

PRAIRIE AVENUE LLC

BRP US INC

RELIABLE PROPERTIES, LLC

RELIABLE PROPERTIES, LLC

PROPOSED STORM SEWER MANHOLE

PROPOSED R/W

INFILTRATION TRENCH

EXISTING R/W

MATCH LINE STA. 20+50

22+00'BT'

24+00'BT'

26+00'BT'

28+00'BT'

30+00'BT'

32+00'BT'

34+00'BT'

MATCH LINE STA. 34+50

INMAN PARKWAY (CTH BT)

SLOPE INTERCEPTS

PROPOSED STORM SEWER

BM 4

CONNECT PROPOSED STORM SEWER TO EXISTING STUB (CONCRETE COLLAR REQ'D)

CITY OF BELOIT

ALLIANT ENERGY

ALLIANT ENERGY (TO BE RETIRED)

REMOVE FENCE

CAUTION

N

STA. 34+00'BT'
CONSTRUCT F.E. RT.
1-18" CP CL. III REQ'D.
2-SLOPED SIDE DRAIN STEEL
APRON ENDWALLS REQ'D

STA. 22+52'BT'
2-15" CPRC CL. V REQ'D.
4-APRON ENDWALLS REQ'D
SKEWED 9°31' LHF

PVC 28+75.00
Elev 810.51

PVI 29+50.00
Elev 810.88

PVT 30+25.00
Elev 810.51

HI 29+50.20
Elev 810.70

K = 150
L = 150.00'

G = 0.50%

G = -0.50%

| | | | |

CITY OF BELOIT

MAURICE H. SCHUSTER ESTATE

BRP US INC

TWIN CITY FARMS PARTNERSHIP

CAUTION

ALLIANT ENERGY

SANITARY MANHOLE CASTINGS ADJUSTED BY OTHERS

ALLIANT ENERGY (TO BE RETIRED)

BM 5

ATC TOWER

STA. 39+50'BT' LT
1-18" CP CL III REQ'D.
2-SLOPED SIDE DRAIN STEEL
APRON ENDWALLS REQ'D

EXISTING R/W

PROPOSED R/W

INFILTRATION TRENCH

INFILTRATION TRENCH

INFILTRATION TRENCH

INFILTRATION TRENCH

MATCH LINE STA. 34+50

MATCH LINE STA. 48+50

36+00'BT' 38+00'BT' 40+00'BT' 42+00'BT' 44+00'BT' 46+00'BT' 48+00'BT'

INMAN PARKWAY (CTH BT)

INMAN PARKWAY (CTH BT)

PROPOSED R/W

SLOPE INTERCEPTS

ATC

CAUTION

RELIABLE PROPERTIES, LLC

TWIN CITY FARMS PARTNERSHIP

N

BENCH MARKS

NO.	STATION	DESCRIPTION	OFFSET	ELEV.
5	39+23'BT'	R.R. SPIKE ON N. SIDE OF POWER POLE	80'LT	808.36

5

5

K = 150
L = 150.00'

PVC 38+90.00
Elev 806.19

LO 39+64.86
Elev 806.00

PVT 40+40.00
Elev 806.19

PVI 39+65.00
Elev 805.81

G = -0.50%

G = 0.50%

0.57% LT

0.50% RT

SPECIAL DITCH LT

SPECIAL DITCH RT

PVC 47+75.00
Elev 809.87

PVI 48+50.00
Elev 810.25

HI 48+50.11
Elev 810.06

K = 150
L = 150.00'

STA. 36+73'BT'
2-19" X 30" CPRCHE CL. HE-IV REQ'D.
4-APRON ENDWALLS REQ'D
SKEWED 22°23'LHF

830 820 810 800 790 780 770 760

804.63 808.64 | 804.20 808.39 | 804.12 808.14 | 803.66 807.89 | 803.21 807.64 | 803.09 807.39 | 803.13 807.14 | 803.33 806.89 | 803.66 806.64 | 803.84 806.39 | 804.11 806.14 | 804.52 806.01 | 804.84 806.04 | 805.06 806.24 | 805.13 806.49 | 805.38 806.74 | 805.64 806.99 | 805.93 807.24 | 806.04 807.49 | 806.26 807.74 | 806.28 807.99 | 806.77 808.24 | 806.97 808.50 | 807.15 808.75 | 807.39 809.00 | 807.62 809.25 | 807.66 809.50 | 807.78 809.75 | 807.89 809.98 | 807.84 810.06 | 807.71 809.98

34+00 34+50 35+00 35+50 36+00 36+50 37+00 37+50 38+00 38+50 39+00 39+50 40+00 40+50 41+00 41+50 42+00 42+50 43+00 43+50 44+00 44+50 45+00 45+50 46+00 46+50 47+00 47+50 48+00 48+50 49+00

PROJECT NO: 5989-05-71,72	HWY: CTH BT	COUNTY: ROCK	PLAN & PROFILE	SHEET 68	E

FILE NAME : N:\450351\DGN\Plan Sheets\5989-05-71_050103_pp.dgn PLOT BY : dm253 PLOT DATE : 1/28/2015 PLOT SCALE : 1:100

WISDOT/CADDS SHEET 40

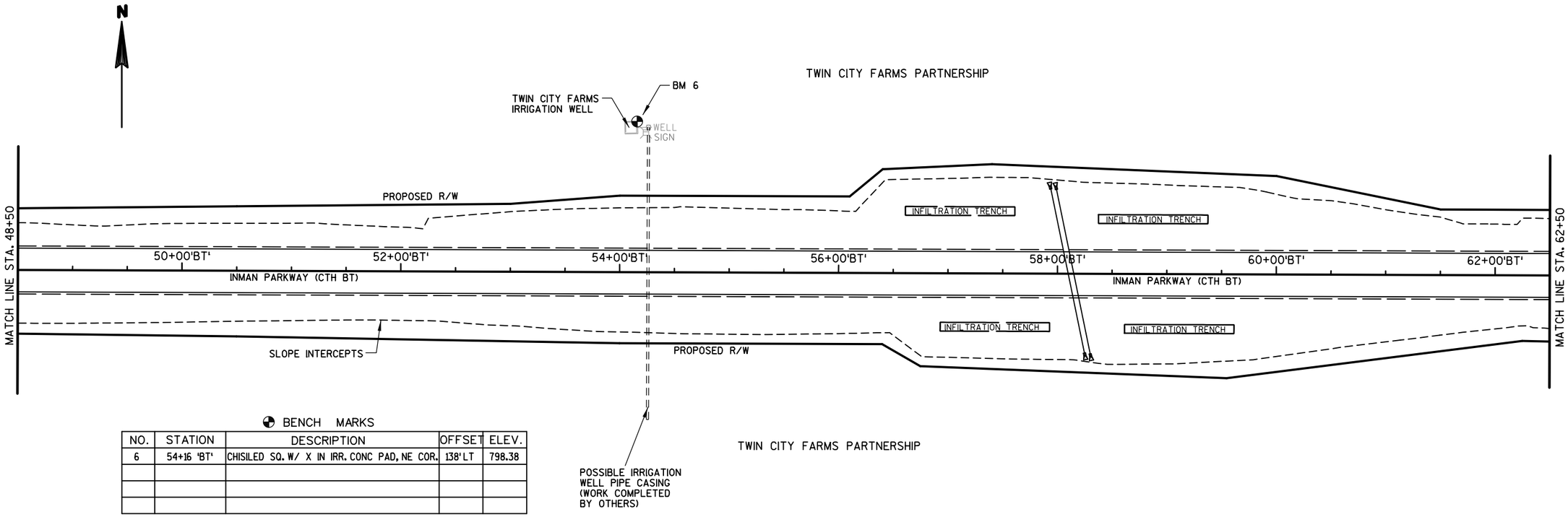

BENCH MARKS

NO.	STATION	DESCRIPTION	OFFSET	ELEV.
6	54+16 'BT'	CHISILED SQ. W/ X IN IRR. CONC PAD, NE COR.	138' LT	798.38

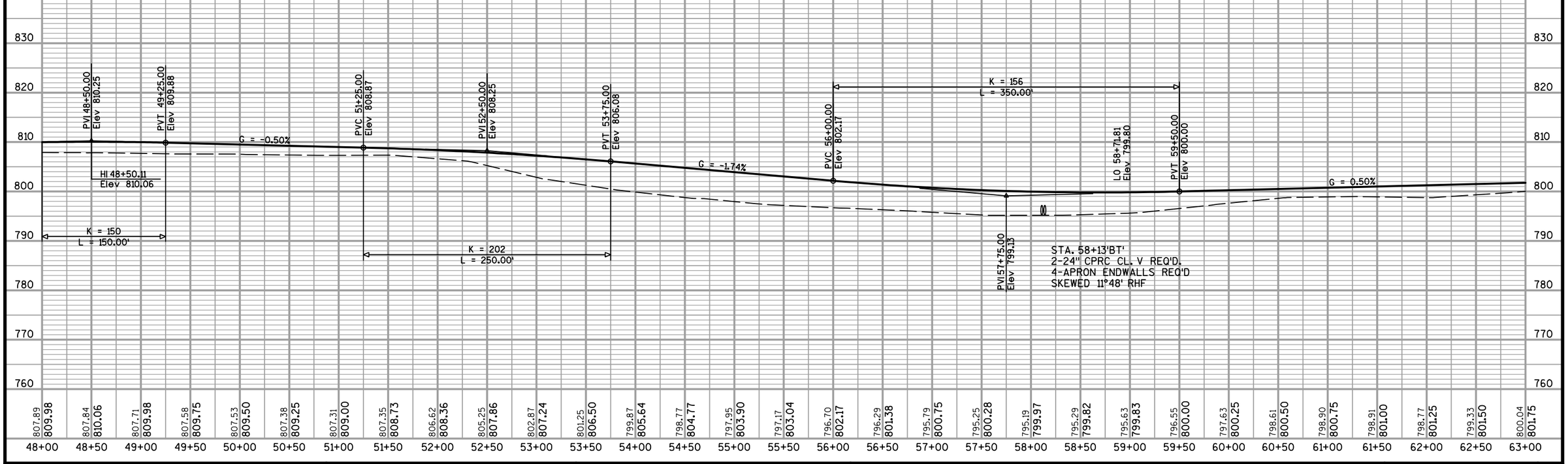

PROJECT NO: 5989-05-71,72	HWY: CTH BT	COUNTY: ROCK	PLAN & PROFILE	SHEET 69	E

N

TWIN CITY FARMS PARTNERSHIP

= REMOVE TREE

CAUTION

AT&T WISCONSIN, CHARTER, & ALLIANT ENERGY ON ALLIANT ENERGY POLES (EXISTING LINE REPLACED WITH A NEW LINE)

DEDICATED R/W

PROPOSED STORM SEWER

TRANSFORMER

SIGN

POST

404+00'CR'

402+00'CR'

400+00'CR'

68+93.78'BT'= 401+34.70'CR'

BM 7

EDWIN H. KJORNES

REMOVE EXISTING DRIVEWAY

SAFETY FENCE REQ'D

BM 9

TURTLE CREEK

BM 10

GARY W. & MICHELLE J. HAHN
TRUSTEES OF THE HAHN FAMILY REVOCABLE TRUST

RIFFLE HABITAT AREA
COORDINATE WITH WISCONSIN
DNR PRIOR TO CONSTRUCTION.

PROPOSED R/W

MATCH LINE STA. 62+50

64+00'BT' 66+00'BT' 68+00'BT' 70+00'BT' 72+00'BT' 74+00'BT' 76+00'BT'

INMAN PKWY (CTH BT)

S89°47'40"E

MATCH LINE STA. 76+50

PROPOSED R/W

SLOPE INTERCEPTS

PROPOSED INLETS

SAFETY FENCE REQ'D

PROPOSED BRIDGE B-53-0292
(ENTIRELY WITHIN PROJECT
5989-05-71 LIMITS)

ALLIANT ENERGY
(EXISTING LINE REPLACED
WITH A NEW LINE)

CAUTION

DAN L. TRUMBO

COARSE WOODY DEBRIS/HABITAT AREA
CONSISTING OF A LARGE TREE IN CREEK
APPROXIMATELY 50-FT IN LENGTH.

EXISTING R/W

CREEK RD

EXISTING R/W

TWIN CITY FARMS PARTNERSHIP

BENCH MARKS

NO.	STATION	DESCRIPTION	OFFSET	ELEV.
7	404+00 'CR'	R.R. SPIKE IN W. FACE OF POWER POLE	30' RT	804.28
9	70+66 'BT'	R.R. SPIKE IN S. FACE OF 24" DIA. STUMP	66' LT	790.18
10	76+26 'BT'	R.R. SPIKE, E. FACE OF 15" DI. BOXELDER TREE	211' LT	794.19	

END PROJECT 5989-05-72
BEGIN PROJECT 5989-05-71
STA 70+14.55'BT'
X = 501,802.512
Y = 222,128.184

STA 70+16'BT'- 72+52'BT
STRUCTURE B-53-0292 REQUIRED
THREE SPAN 36W" PRESTRESSED CONCRETE GIRDERS
SKEW 30° LHF

HIGH WATER EL. 798.9
100

WATER EL. 786.2
(04-07-11)

STREAM BED
EL. 784.4

G = 0.50%

PVC 73+00.00
Elev 806.75

PVI 74+00.00
Elev 807.25

PVT 75+00.00
Elev 806.41

HI 73+74.36
Elev 806.94

G = -0.84%

0.49%

0.85%

SPECIAL DITCH RT

SPECIAL DITCH LT

K = 149
L = 200.00'

STA. 75+61'BT'
2-48" CPRC CL. III REQ'D.
4-APRON ENDWALLS REQ'D
SKEWED 7°25' RHF

| | | |

GARY W. & MICHELLE J. HAHN
TRUSTEES OF THE HAHN FAMILY REVOCABLE TRUST

TERRY L. &
DONNA V. DOBRATZ

SLOPE INTERCEPTS

BM* 10

INFILTRATION TRENCH

INFILTRATION TRENCH

PROPOSED R/W

PROPOSED R/W

INMAN PKWY (CTH BT)

INMAN PKWY (CTH BT)

78+00'BT'

80+00'BT'

82+00'BT'

84+00'BT'

86+00'BT'

88+00'BT'

90+00'BT'

90+19.83'BT' =
127+06.75'ST'

MATCH LINE STA. 76+50

REMOVE
CURB & GUTTER

REMOVE MANHOLE
REMOVE STORM SEWER 24"

PROPOSED STORM SEWER

CLEAN 2 EXISTING CULVERT PIPES
EXTEND 2 EXISTING 43" x 68" CPRCHE CL. HE-III
SALVAGE 2-APRON ENDWALLS 43" x 68"
SKEWED 12°53' RHF, AND
SKEWED 13°40' RHF

EXISTING R/W

EXISTING R/W

130+00'S'

128+00'S'

126+00'S'

REMOVE SIGN

AT&T WISCONSIN

REMOVE
CURB & GUTTER

SHOPIERE RD (CTH S)

ALLIANT ENERGY
(OVERHEAD ELECTRIC
ON EAST SIDE OF CTH S)

GARY W. & MICHELLE J. HAHN
TRUSTEES OF THE HAHN FAMILY REVOCABLE TRUST

BENCH MARKS

NO.	STATION	DESCRIPTION	OFFSET	ELEV.
10	76+26 'BT'	R.R. SPIKE E. FACE 15" DIA. BOXELDER TREE	211' LT	794.19

5

5

840

840

830

830

820

820

810

810

800

800

790

790

780

780

770

770

K = 148
L = 250.00'

PVC 77+96.87
Elev 803.90

LO 79+22.00
Elev 803.37

PVT 80+46.87
Elev 803.90

PVI 79+21.87
Elev 802.84

G = -0.84%

0.49%

SPECIAL DITCH LT

2.20%

1.09%

G = 0.84%

SPECIAL DITCH LT

STA. 85+88'BT'
1-24" CPRC CL. IV REQ'D.
1-SLOPED CROSS DRAIN STEEL
APRON ENDWALL REQ'D, LT
1-APRON ENDWALL REQ'D, RT
SKEWED 13°08' RHF

2.45%

3.91%

1.47%

SPECIAL DITCH LT

K = 104
L = 120.00'

PVC 88+40.00
Elev 810.58

PVI 89+00.00
Elev 811.09

PVT 89+60.00
Elev 812.29

G = 2.00%

89+91.83
Elev 812.92

STA. 86+98'BT'
2-48" CPRC CL. IV REQ'D.
4-SLOPED CROSS DRAIN STEEL
APRON ENDWALLS REQ'D
SKEWED 40°10' LHF

END PROJECT 5989-05-71
STA 89+91.83
Y = 221,620.439
X = 503,653.907

| | | | |

TWIN CITY FARMS PARTNERSHIP

TWIN CITY FARMS PARTNERSHIP

PROPOSED R/W

INMAN PKWY (CTH BT)

DEDICATED R/W

68+93.18'BT' = 401+34.70'CR'

68+00'BT'

PROPOSED STORM SEWER

TRANSFORMER

SIGN

CAUTION

ALLIANT ENERGY (EXISTING LINE REPLACED WITH A NEW LINE)

E. CLOVERDALE DRIVE

= REMOVE TREE

EXISTING R/W

400+00'CR'

402+00'CR'

404+00'CR'

406+00'CR'

CREEK RD

CREEK RD

EXISTING R/W

BM 7

AT&T WISCONSIN, CHARTER, & ALLIANT ENERGY ON ALLIANT ENERGY POLES (EXISTING LINE REPLACED WITH A NEW LINE)

DAN L. TRUMBO

COARSE WOODY DEBRIS/HABITAT AREA CONSISTING OF A LARGE TREE IN CREEK APPROXIMATELY 50-FT IN LENGTH.

SAFETY FENCE REQ'D

PROPOSED INLETS

70+100'BT'

REMOVE EXISTING DRIVEWAY

CAUTION

SAFETY FENCE REQ'D

COARSE WOODY DEBRIS/HABITAT AREA CONSISTING OF A LARGE TREE IN CREEK APPROXIMATELY 50-FT IN LENGTH.

PROPOSED R/W

TURTLE CREEK

EDWIN H. KJORNES

BM 9

BM 8

RIFFLE HABITAT AREA COORDINATE WITH WISCONSIN DNR PRIOR TO CONSTRUCTION.

PROPOSED BRIDGE B-53-0292 (ENTIRELY WITHIN PROJECT 5989-05-71 LIMITS)

RIPARIAN FORESTED WETLAND

TURTLE CREEK

BENCH MARKS

NO.	STATION	DESCRIPTION	OFFSET	ELEV.
7	404+00 'CR'	R.R. SPIKE IN W. FACE OF POWER POLE	30' RT	804.28
8	404+62 'CR'	R.R. SPIKE S. FACE OF 30" DIA. COTTONWOOD	171' RT	793.46
9	70+66 'BT'	R.R. SPIKE S. FACE OF 24" DIA. STUMP	66' LT	790.18

K = 17
L = 28.00'

K = 28
L = 68.00'

399+85.00 Elev 803.61

PVC 400+86.00 Elev 803.96

PVT 401+14.00 Elev 804.29

PVI 401+34.70 Elev 804.72

PVC 401+56.00 Elev 804.32

PVI 401+90.00 Elev 803.69

PVT 402+24.00 Elev 803.86

402+75.00 Elev 804.13

G = 0.35%

G = 2.05%

G = -1.87%

G = 0.52%

PVI 401+00.00 Elev 804.01

LO 402+09.17 Elev 803.83

840 830 820 810 800 790 780 770

803.50 | 803.61 803.66 | 803.76 803.83 | 803.81 804.07 | 803.78 804.43 | 803.84 803.84 | 804.02 804.00 | 804.19 | 804.29 | 804.36 | 804.37 | 804.35 | 804.37 | 804.45 | 804.50

394+50 395+00 395+50 396+00 396+50 397+00 397+50 398+00 398+50 399+00 399+50 400+00 400+50 401+00 401+50 402+00 402+50 403+00 403+50 404+00 404+50 405+00 405+50 406+00 406+50 407+00 407+50 408+00 408+50 409+00 409+50

PROJECT NO: 5989-05-71,72	HWY: CTH BT	COUNTY: ROCK	PLAN & PROFILE - CREEK ROAD	SHEET 72	E

FILE NAME : N:\450351\DGN\Plan Sheets\5989-05-71_050107_pp.dgn

PLOT BY : dm253 PLOT DATE : 1/28/2015 PLOT SCALE : 1:100

WISDOT/CADDS SHEET 40

BENCH MARKS

NO.	STATION	DESCRIPTION	OFFSET	ELEV.
11	131+41'S'	R.R. SPIKE IN W. FACE OF POWER POLE	58'RT	817.90

PROPOSED CULVERTS
(2 - 48" CPRC)

TERRY L &
DONNA V DOBRATZ

GARY W. & MICHELLE J. HAHN
TRUSTEES OF THE HAHN FAMILY REVOCABLE TRUST

GARY W. & MICHELLE J. HAHN
TRUSTEES OF THE HAHN FAMILY REVOCABLE TRUST

PROPOSED R/W

INMAN PKWY (CTH BT)

88+00'BT'

PROPOSED R/W

CLEAN 2 EXISTING CULVERT PIPES
EXTEND 2 EXISTING 43" x 68" CPRCHE CL. HE-III
SALVAGE 2-APRON ENDWALLS 43" x 68"
SKEWED 12°53' RHF AND
SKEWED 13°40' RHF

REMOVE SIGN

PROPOSED STORM SEWER

REMOVE MANHOLE
REMOVE STORM SEWER 24"

REMOVE
CURB & GUTTER

MATCH EXISTING
CURB & GUTTER

AT&T WISCONSIN

REMOVE
CURB & GUTTER

MATCH EXISTING
CURB & GUTTER

EXISTING R/W

FO

FO

FO

FO

EXISTING R/W

90+00'BT'

120+00'S'

SHOPIERE RD (CTH S)

122+00'S'

124+00'S'

126+00'S'

128+00'S'

130+00'S'

132+00'S'

SHOPIERE RD (CTH S)

134+00'S'

90+19.83'BT'=
127+06.75'S'

BM 11

EXISTING R/W

EXISTING R/W

MATCH EXISTING
PAVEMENT ELEVATION

2 EXISTING 43" x 68" CPRCHE

ALLIANT ENERGY
(OVERHEAD ELECTRIC ON EAST
SIDE OF CTH S NOT SHOWN)

5

5

840
830
820
810
800
790
780
770

811.73 812.03 812.38 812.73 813.06 813.36 813.64 813.95 814.28 814.65 814.95 815.29 815.70 816.19 816.07

119+50 120+00 120+50 121+00 121+50 122+00 122+50 123+00 123+50 124+00 124+50 125+00 125+50 126+00 126+50 127+00 127+50 128+00 128+50 129+00 129+50 130+00 130+50 131+00 131+50 132+00 132+50 133+00 133+50 134+00 134+50

PROJECT NO: 5989-05-71,72	HWY: CTH BT	COUNTY: ROCK	PLAN & PROFILE - SHOPIERE ROAD	SHEET 73	E

FILE NAME : N:\450351\DGN\Plan Sheets\5989-05-71_050108_pp.dgn

PLOT BY : dm253 PLOT DATE : 1/28/2015 PLOT SCALE : 1:100

WISDOT/CADDS SHEET 40

Standard Detail Drawing List

08A05-19C	INLET COVERS TYPE F, HM, HM-S, S, T, V, HM-GJ, & HM-GJ-S
08A05-19D	INLET COVER TYPE BW, MANHOLE COVERS, TYPE K, J, J-S, L & M
08B09-01	MANHOLES 3-FT, 4-FT, 5-FT, 6-FT, 7-FT AND 8-FT DIAMETER
08C07-01	INLETS 2X2-FT, 2X2.5-FT, 2X3-FT AND 2.5X3-FT
08D01-17	CONCRETE CURB, CONCRETE CURB AND GUTTER AND TIES
08D04-05	CONCRETE SURFACE DRAINS & ASPHALTIC FLUMES
08E08-03	TYPICAL INSTALLATIONS OF EROSION BALES / TEMPORARY DITCH CHECKS
08E09-06	SILT FENCE
08E10-02	INLET PROTECTION TYPE A, B, C AND D
08E11-02	TURBIDITY BARRIER
08F01-11	APRON ENDWALLS FOR CULVERT PIPE
08F02-01	APRON ENDWALLS FOR PIPE ARCH AND ELLIPTICAL PIPE
08F04-07	JOINT TIES FOR CONCRETE PIPE AND CONCRETE COLLAR DETAIL
08F07-05	STEEL APRON ENDWALLS FOR CULVERT PIPE AND PIPE ARCH SLOPED SIDE FRAINS
08F08-02	STEEL APRON ENDWALLS FOR CULVERT PIPE AND PIPE ARCH SLOPED CROSS DRAINS
09A01-13A	AT-GRADE SIDE ROAD INTERSECTION, TYPES "B1", "B2", "C" AND D AND TEE INTERSECTION BYPASS LANE
13B02-07A	CONCRETE BRIDGE APPROACH
14B28-03	GUARDRAIL MOW STRIP
14B42-03A	MIDWEST GUARDRAIL SYSTEM (MGS) GUARDRAIL
14B42-03B	MIDWEST GUARDRAIL SYSTEM (MGS) GUARDRAIL
14B42-03C	MIDWEST GUARDRAIL SYSTEM (MGS) GUARDRAIL
14B44-02A	MIDWEST GUARDRAIL SYSTEM ENERGY ABSORBING TERMINAL (MGS)
14B44-02B	MIDWEST GUARDRAIL SYSTEM ENERGY ABSORBING TERMINAL (MGS)
14B44-02C	MIDWEST GUARDRAIL SYSTEM ENERGY ABSORBING TERMINAL (MGS)
14B45-03A	MIDWEST GUARDRAIL SYSTEM THRIE BEAM TRANSITION (MGS)
14B45-03B	MIDWEST GUARDRAIL SYSTEM THRIE BEAM TRANSITION (MGS)
14B45-03C	MIDWEST GUARDRAIL SYSTEM THRIE BEAM TRANSITION (MGS)
14B45-03D	MIDWEST GUARDRAIL SYSTEM THRIE BEAM TRANSITION (MGS)
14B45-03E	MIDWEST GUARDRAIL SYSTEM THRIE BEAM TRANSITION (MGS)
14B45-03F	MIDWEST GUARDRAIL SYSTEM THRIE BEAM TRANSITION (MGS)
14B45-03G	MIDWEST GUARDRAIL SYSTEM THRIE BEAM TRANSITION (MGS)
14B45-03H	MIDWEST GUARDRAIL SYSTEM THRIE BEAM TRANSITION (MGS)
14B45-03I	MIDWEST GUARDRAIL SYSTEM THRIE BEAM TRANSITION (MGS)
14B45-03J	MIDWEST GUARDRAIL SYSTEM THRIE BEAM TRANSITION (MGS)
14B47-02A	MIDWEST GUARDRAIL SYSTEM (MGS) TYPE 2 TERMINAL
14B47-02B	MIDWEST GUARDRAIL SYSTEM (MGS) TYPE 2 TERMINAL
14B47-02C	MIDWEST GUARDRAIL SYSTEM (MGS) TYPE 2 TERMINAL
15A03-02A	FLEXIBLE MARKER POST FOR CULVERT END
15A03-02B	FLEXIBLE MARKER POST FOR CULVERT END
15C02-05A	BARRICADES AND SIGNS FOR MAINLINE CLOSURES
15C02-05B	BARRICADES AND SIGNS FOR MAINLINE CLOSURES
15C03-02	BARRICADES AND SIGNS FOR SIDEROAD CLOSURES
15C07-12B	PAVEMENT MARKING WORDS
15C07-12C	PAVEMENT MARKING ARROWS
15C08-16A	PAVEMENT MARKING (MAINLINE)
15C08-16B	PAVEMENT MARKING (INTERSECTIONS)
15C08-16E	PAVEMENT MARKING (LEFT TURN LANE)
15C12-04	TRAFFIC CONTROL FOR LANE CLOSURE (SUITABLE FOR MOVING OPERATIONS)
15C18-03	MEDIAN ISLAND MARKING
15C19-02A	MOVING PAVEMENT MARKING OPERATION TWO-LANE TWO-WAY ROADWAY
15C19-02B	MOVING PAVEMENT MARKING OPERATION MULTI-LANE UNDIVIDED ROADWAY
15C33-01	STOP LINE AND CROSSWALK PAVEMENT MARKING
15D20-02	TRAFFIC CONTROL, SINGLE LANE CLOSURE, NON-FREEWAY/EXPRESSWAY
15D28-02	TRAFFIC CONTROL, WORK ON SHOULDER OR PARKING LANE, UNDIVIDED ROADWAY
15D29-03	TRAFFIC CONTROL, VEHICLE ENTRANCE/EXIT OR HAUL ROAD
16A01-06	LANDMARK REFERENCE MONUMENTS AND COVERS

6

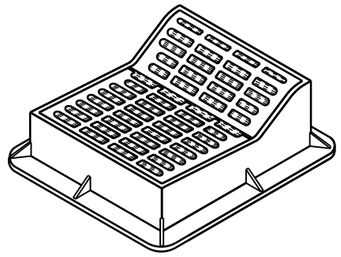

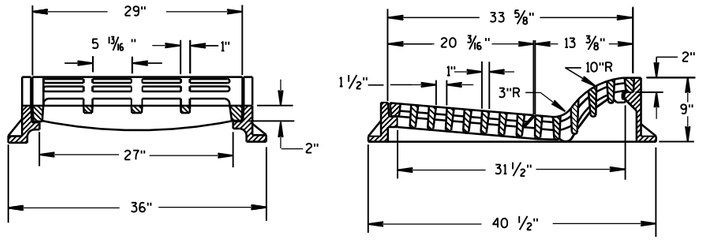

TYPE "F"

USE WITH TYPES A & D CONCRETE CURB & GUTTER, 36 INCH.

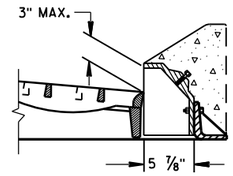

ALTERNATIVE CURB BOX FOR TYPE "HM" COVER

USE WITH TYPES G & J CONCRETE CURB & GUTTER, 30 INCH
NOTED AS TYPE HM-GJ ON DRAINAGE TABLE

NOTE:
SPECIAL GRATE FOR THE
TYPE "H" COVER MAY ALSO BE
USED FOR THE TYPE "HM-GJ" COVER
NOTED AS TYPE HM-GJ-S ON DRAINAGE TABLE

GENERAL NOTES

DETAILS OF CONSTRUCTION, MATERIALS AND WORKMANSHIP NOT SHOWN ON THIS DRAWING SHALL CONFORM TO THE PERTINENT REQUIREMENTS OF THE STANDARD SPECIFICATIONS AND THE APPLICABLE SPECIAL PROVISIONS.

DETAIL DRAWINGS FOR PROPOSED ALTERNATE DESIGNS FOR INLET COVERS SHALL BE SUBMITTED TO THE ENGINEER FOR APPROVAL PROVIDING THAT SUCH ALTERNATE DESIGNS MAKE PROVISION FOR EQUIVALENT CAPACITY AND STRENGTH.

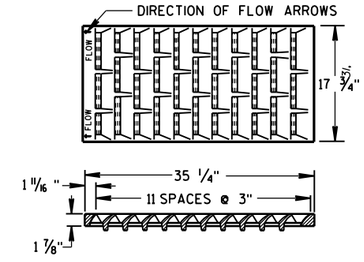

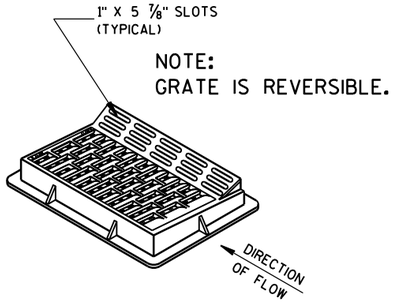

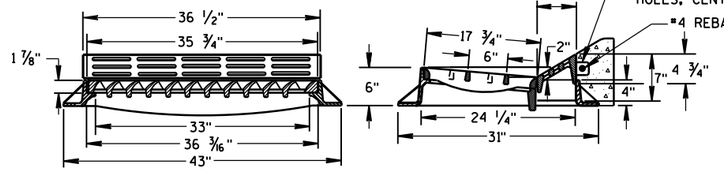

TYPE "HM"

USE WITH TYPES A & D CONCRETE CURB & GUTTER, 36 INCH.

NOTE:
SPECIAL GRATE FOR THE
TYPE "H" COVER MAY ALSO BE
USED FOR THE TYPE "HM" COVER
NOTED AS TYPE HM-S ON DRAINAGE TABLE

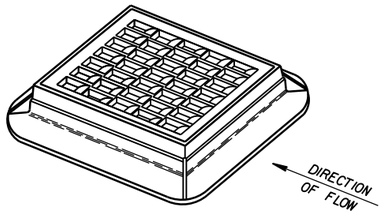

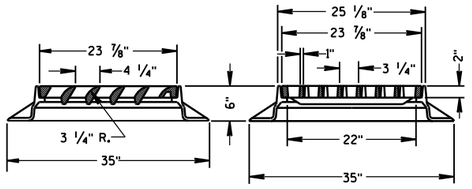

TYPE "S"

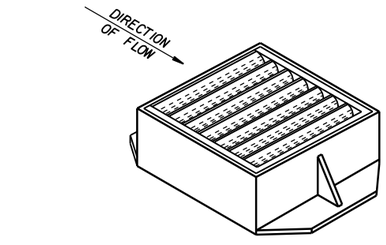

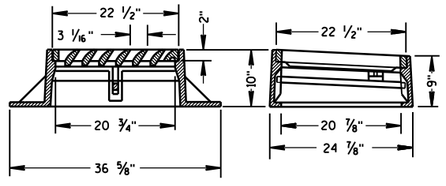

TYPE "V"

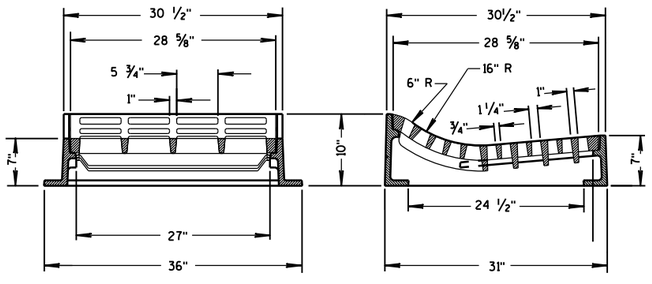

TYPE "T"

USE WITH TYPES R & T CONCRETE CURB & GUTTER, 36 INCH.

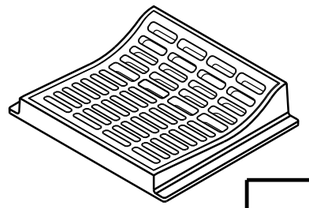

INLET COVERS
TYPE F, HM, HM-S, S, T, V, HM-GJ, & HM-GJ-S

STATE OF WISCONSIN
DEPARTMENT OF TRANSPORTATION

APPROVED
11/27/2013
DATE

/S/ Jerry H. Zogg
ROADWAY STANDARDS ENGINEER

FHWA

6
S.D.D. 8 A 5-19c

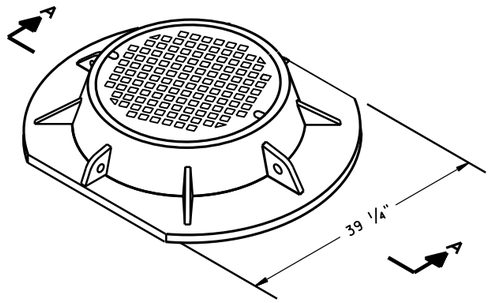

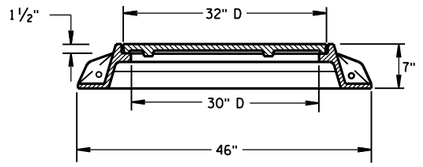

SECTION A-A
TYPE "K"

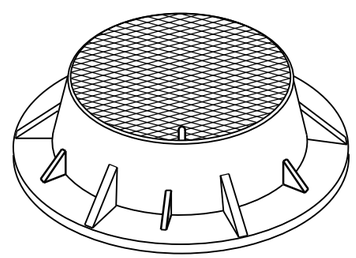

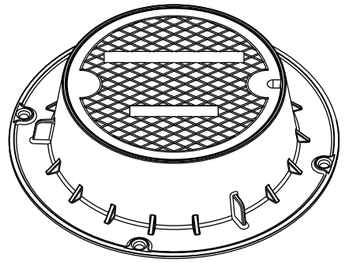

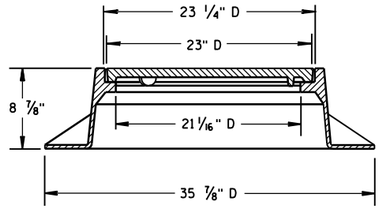

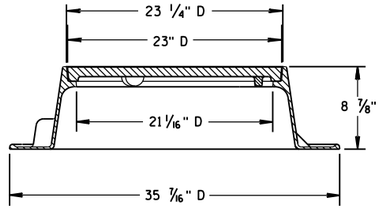

TYPE "J"
NOTE: EITHER CASTING IS ACCEPTABLE

GENERAL NOTES

DETAILS OF CONSTRUCTION, MATERIALS AND WORKMANSHIP NOT SHOWN ON THIS DRAWING SHALL CONFORM TO THE PERTINENT REQUIREMENTS OF THE STANDARD SPECIFICATIONS AND THE APPLICABLE SPECIAL PROVISIONS.

DETAIL DRAWINGS FOR PROPOSED ALTERNATE DESIGNS FOR MANHOLE COVERS SHALL BE SUBMITTED TO THE ENGINEER FOR APPROVAL PROVIDING THAT SUCH ALTERNATE DESIGNS MAKE PROVISION FOR EQUIVALENT CAPACITY AND STRENGTH.

ROUND FRAMES AND COVERS SHALL HAVE CONTINUOUSLY MACHINED BEARING SURFACES TO PREVENT ROCKING AND RATTLING.

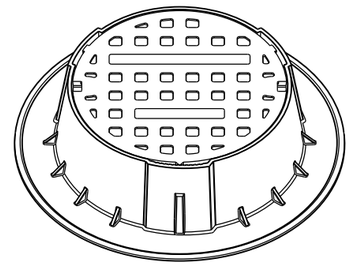

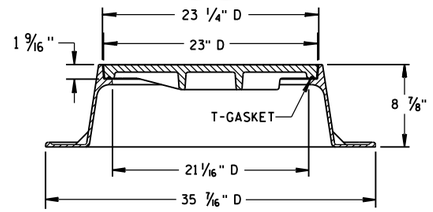

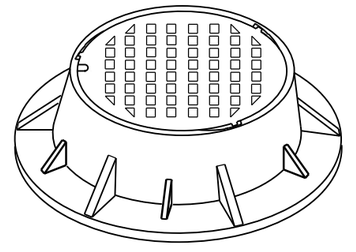

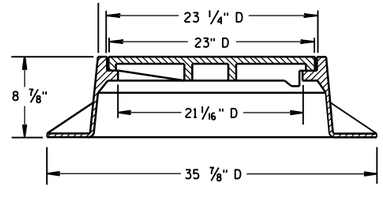

TYPE "J" SPECIAL
TYPE "B" NON-ROCKING SELF-SEAL LID
(NOTED AS TYPE J-S ON THE DRAINAGE TABLE)
NOTE: EITHER CASTING IS ACCEPTABLE

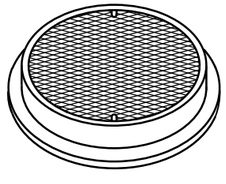

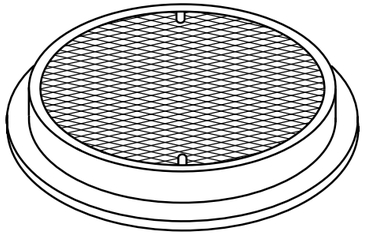

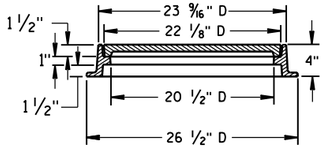

TYPE "L"

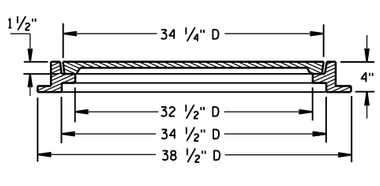

TYPE "M"

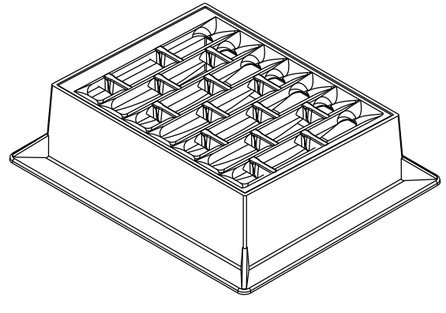

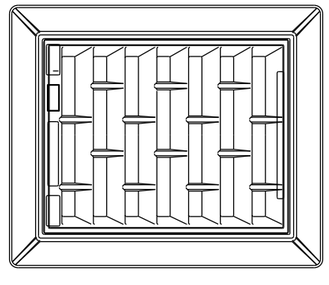

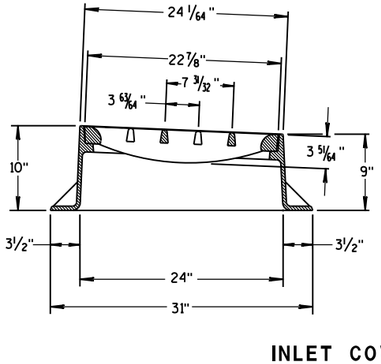

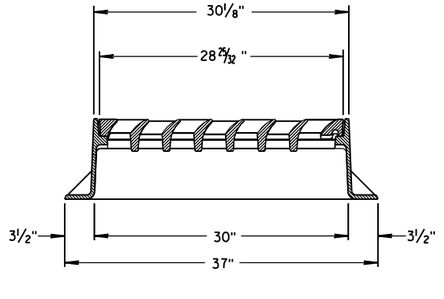

INLET COVER TYPE "BW"

INLET COVER TYPE BW
MANHOLE COVERS, TYPE K, J, J-S, L & M

STATE OF WISCONSIN
DEPARTMENT OF TRANSPORTATION

APPROVED
11/27/2013
DATE
/S/ Jerry H. Zogg
ROADWAY STANDARDS DEVELOPMENT ENGINEER
FHWA

6

S.D.D. 8 A 5-19d

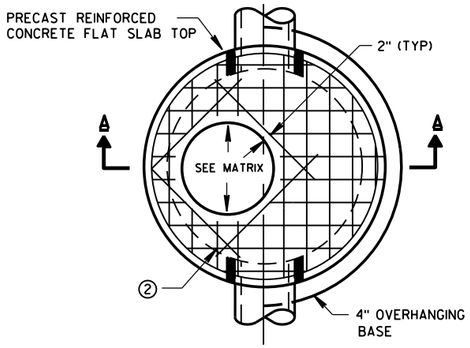

PLAN VIEW CIRCULAR OPENING

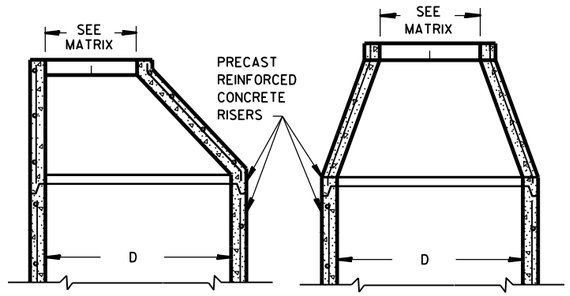

OPTIONAL PRECAST REINFORCED CONCRETE ECCENTRIC TOP

OPTIONAL PRECAST REINFORCED CONCRETE CONCENTRIC TOP

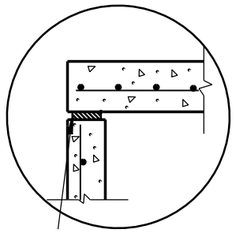

TOP WITH PLAIN END JOINT

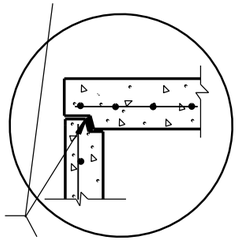

JOINTS TO BE SEALED WITH A BUTYL RUBBER SEAL PER SEALANT MANUFACTURERS RECOMMENDATIONS CONFORMING TO ASTM C990 (TYP)

TOP WITH TONGUE AND GROOVE JOINT

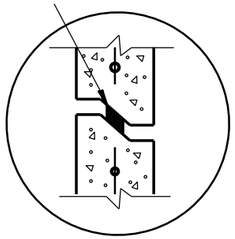

RISER WITH TONGUE AND GROOVE JOINT

DETAIL "B"

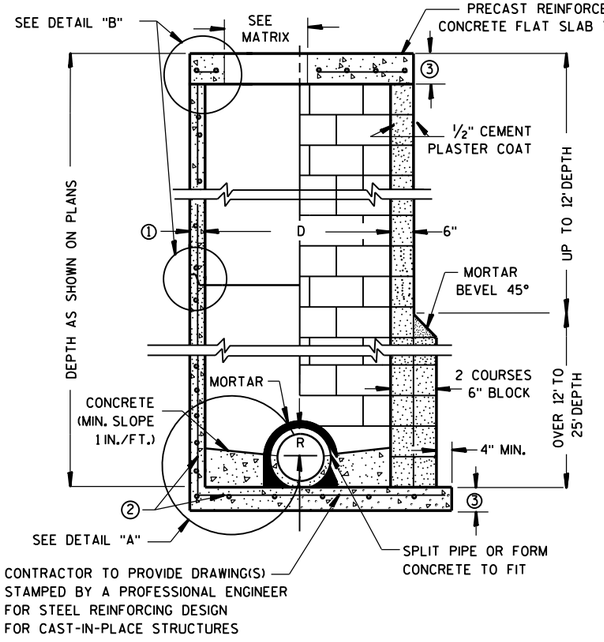

PRECAST REINFORCED CONCRETE WITH MONOLITHIC BASE

CONCRETE BLOCK WITH CAST-IN-PLACE OR PRECAST REINFORCED CONCRETE BASE ②

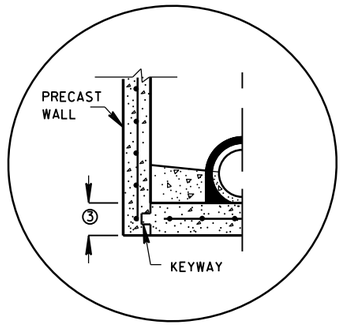

PRECAST REINFORCED CONCRETE WITH INTEGRAL BASE OPTION

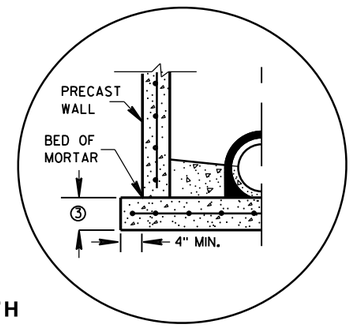

SEPARATE PRECAST REINFORCED CONCRETE BASE OPTION

DETAIL "A"

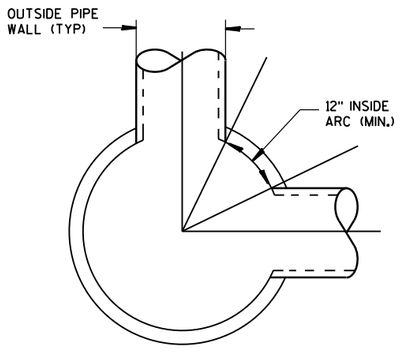

DETAIL "C"

GENERAL NOTES

DETAILS OF CONSTRUCTION, MATERIALS AND WORKMANSHIP NOT SHOWN ON THIS DRAWING SHALL CONFORM TO THE PERTINENT REQUIREMENTS OF THE STANDARD SPECIFICATIONS AND THE APPLICABLE SPECIAL PROVISIONS.

UNLESS OTHERWISE AUTHORIZED IN WRITING BY THE ENGINEER, THE CONTRACTOR SHALL NOT ORDER AND DELIVER PRECAST MANHOLE UNITS REQUIRED FOR THE PROJECT UNTIL A LIST OF SIZES IS FURNISHED BY THE ENGINEER.

DETAILED DRAWINGS FOR PROPOSED ALTERNATE DESIGNS FOR UNDERGROUND DRAINAGE STRUCTURES SHALL BE SUBMITTED TO THE ENGINEER FOR APPROVAL PROVIDING THAT SUCH ALTERNATE DESIGNS MAKE PROVISION FOR EQUIVALENT CAPACITY AND STRENGTH.

ALL DRAINAGE STRUCTURES ARE DESIGNATED ON THE PLANS AS "MANHOLES 3X3-L", "CATCH BASINS 4-B", "INLETS 2X3-H", ETC. THE FIRST NUMBERS DESIGNATE THE SIZE OF THE STRUCTURE, AND THE FOLLOWING LETTER DESIGNATES THE TYPE OF COVER TO BE USED TO COMPRISE THE COMPLETE UNIT.

BASES SHALL BE PLACED ON A BED OF MATERIAL AT LEAST 6 INCHES IN DEPTH, WHICH MEETS THE REQUIREMENTS OF GRANULAR BACKFILL. THIS BEDDING SHALL BE COMPACTED AND PROVIDE UNIFORM SUPPORT FOR THE ENTIRE AREA OF THE BASE.

PRECAST REINFORCED CONE TOPS (ECCENTRIC OR CONCENTRIC) OR PRECAST REINFORCED FLAT SLAB TOPS MAY BE USED ON CONCRETE BLOCK STRUCTURES. THE CONE TOPS SHALL BE INSTALLED ON A BED OF MORTAR.

ECCENTRIC CONE TOPS MAY BE USED ON ALL STRUCTURES, AND CONCENTRIC CONE TOPS SHALL BE USED ONLY ON STRUCTURES 5 FEET OR LESS IN DEPTH, UNLESS OTHERWISE DIRECTED BY THE ENGINEER.

STEPS MEETING AASHTO M199 AND THE FOLLOWING REQUIREMENTS SHALL BE INSTALLED IN ALL STRUCTURES OVER 5 FEET IN DEPTH: 16 INCH C-C MAXIMUM SPACING; PROJECT A MINIMUM CLEAR DISTANCE OF 4 INCHES FROM THE WALL AT THE POINT OF EMBEDMENT; MINIMUM LENGTH OF 10 INCHES; MINIMUM WALL EMBEDMENT OF 3 INCHES. FERROUS METAL STEPS NOT PAINTED OR TREATED TO RESIST CORROSION SHALL HAVE A MINIMUM CROSS SECTIONAL DIMENSION OF 1 INCH.

STEPS OF APPROVED POLYPROPYLENE PLASTIC COATED REINFORCEMENT BAR ARE ACCEPTABLE. REINFORCING BAR MUST BE A MINIMUM OF ½" AND MEET THE REQUIREMENTS OF ASTM A615.

CERTIFICATION SHALL BE PROVIDED THAT INSTALLED STEPS WHEN TESTED IN ACCORDANCE WITH SECTION 10 OF AASHTO T280 CAN WITHSTAND A VERTICAL LOAD OF 800 LBS. AND A HORIZONTAL LOAD OF 400 LBS.

ALL BAR STEEL REINFORCEMENT SHALL BE EMBEDDED 2 INCHES CLEAR UNLESS OTHERWISE SHOWN OR NOTED.

CONCRETE BLOCK WILL NOT BE PERMITED FOR STRUCTURES GREATER THAN 4 FEET IN DIAMETER.

PRECAST REINFORCED RISERS SHALL HAVE A TONGUE AND GROOVE JOINT WITH TONGUE UP OR DOWN.

ALL PRECAST MANHOLE UNITS SHALL CONFORM TO THE PERTINENT REQUIREMENTS OF AASHTO DESIGNATION M 199.

4" OVERHANGING BASES ARE REQUIRED FOR ALL CONCRETE BLOCK INSTALLATIONS. 4" OVERHANG IS REQUIRED WHEN SEPARATE PRECAST BASE IS PROVIDED. OVERHANG IS NOT REQUIRED ON PRECAST STRUCTURES WITH AN INTEGRAL OR MONOLITHIC BASE.

FOR ADDITIONAL CONFIGURATIONS, MAINTAIN A MINIMUM OF 12 INCHES AS MEASURED FROM THE INSIDE OF THE STRUCTURE WALL BETWEEN THE OUTSIDE PIPE WALLS OF ADJACENT PIPES. SEE DETAIL "C".

① MINIMUM WALL THICKNESS SHALL BE 4 INCHES FOR 3-FT, 5 INCHES FOR 4-FT, 6 INCHES FOR 5-FT, 7 INCHES FOR 6-FT, 8 INCHES FOR 7-FT AND 9 INCHES FOR 8-FT DIAMETER PRECAST MANHOLES.

② FOR PRECAST MANHOLES PROVIDE REINFORCING STEEL IN ACCORDANCE TO AASHTO M199.

③ PRECAST FLAT SLAB TOPS AND BASES WITH A DIAMETER OF 48" AND LESS SHALL HAVE A MINIMUM THICKNESS OF 6". PRECAST FLAT SLAB TOPS AND BASES WITH A DIAMETER LARGER THAN 48" SHALL HAVE A MINIMUM THICKNESS OF 8".

MANHOLE COVER OPENING MATRIX

MANHOLE COVER TYPE	C	ALL J'S	K	L	M
OPENING SIZE (FT)					
2 DIA.	X	X		X	
3 DIA.			X		X

PIPE MATRIX

MANHOLE SIZE	MAXIMUM INSIDE PIPE DIAMETER FOR TWO PIPES	
	180° SEPARATION (IN)	90° SEPARATION (IN)
3-FT	15	12
4-FT	24	18
5-FT	36	24
6-FT	42	36
7-FT	48	36
8-FT	60	42

MANHOLES 3-FT, 4-FT, 5-FT, 6-FT, 7-FT AND 8-FT DIAMETER

STATE OF WISCONSIN
DEPARTMENT OF TRANSPORTATION

APPROVED
6/5/2012
DATE
/S/ Jerry H. Zogg
ROADWAY STANDARDS DEVELOPMENT ENGINEER
FHWA

6
S.D.D. 8 B 9-1

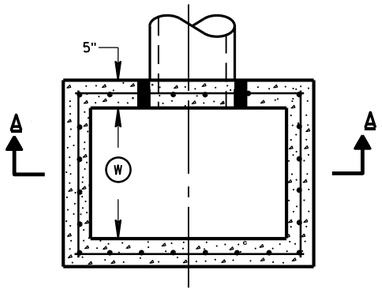

PLAN VIEW

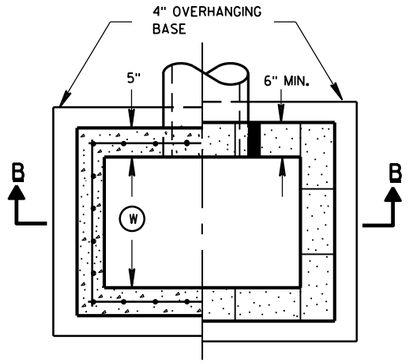

PLAN VIEW

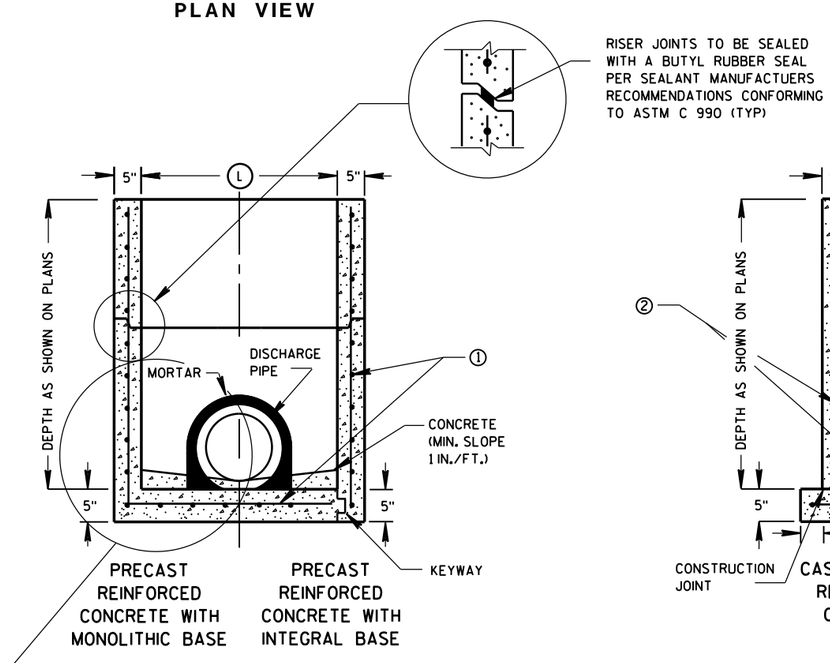

SECTION A-A

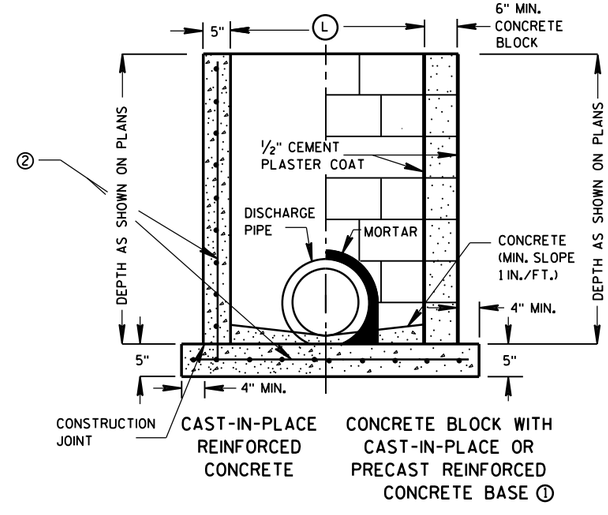

SECTION B-B

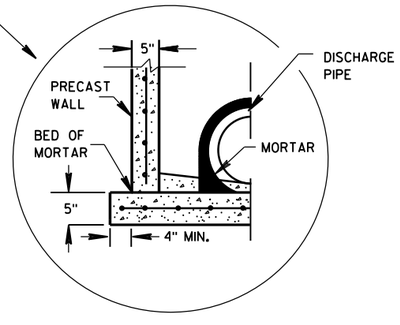

SEPARATE PRECAST REINFORCED CONCRETE BASE OPTION

GENERAL NOTES

DETAILS OF CONSTRUCTION, MATERIALS AND WORKMANSHIP NOT SHOWN ON THIS DRAWING SHALL CONFORM TO THE PERTINENT REQUIREMENTS OF THE STANDARD SPECIFICATIONS AND THE APPLICABLE SPECIAL PROVISIONS.

UNLESS OTHERWISE AUTHORIZED IN WRITING BY THE ENGINEER, THE CONTRACTOR SHALL NOT ORDER AND DELIVER PRECAST INLET UNITS REQUIRED FOR THE PROJECT UNTIL A LIST OF SIZES IS FURNISHED BY THE ENGINEER.

DETAILED DRAWINGS FOR PROPOSED ALTERNATE DESIGNS FOR UNDERGROUND DRAINAGE STRUCTURES SHALL BE SUBMITTED TO THE ENGINEER FOR APPROVAL PROVIDING THAT SUCH ALTERNATE DESIGNS MAKE PROVISION FOR EQUIVALENT CAPACITY AND STRENGTH.

ALL PRECAST INLET UNITS SHALL CONFORM TO THE PERTINENT REQUIREMENTS OF ASTM C 913.

ALL DRAINAGE STRUCTURES ARE DESIGNATED ON THE PLANS AS "MANHOLES 3X3-L", "CATCH BASINS 4-B", "INLETS 2X3-H", ETC. THE FIRST NUMBERS DESIGNATES THE SIZE OF THE STRUCTURE, AND THE FOLLOWING LETTER DESIGNATES THE TYPE OF COVER TO BE USED TO COMPRISE THE COMPLETE UNIT.

BASES SHALL BE PLACED ON A BED OF MATERIAL AT LEAST 6 INCHES IN DEPTH, WHICH MEETS THE REQUIREMENTS OF GRANULAR BACKFILL. THIS BEDDING SHALL BE COMPACTED AND PROVIDE UNIFORM SUPPORT FOR THE ENTIRE AREA OF THE BASE.

ALL BAR STEEL REINFORCEMENT SHALL BE EMBEDDED 2 INCHES CLEAR UNLESS OTHERWISE SHOWN OR NOTED.

PRECAST REINFORCED RISERS SHALL HAVE A TONGUE AND GROOVE JOINT WITH TONGUE UP OR DOWN.

4" OVERHANGING BASES ARE REQUIRED FOR CAST-IN-PLACE REINFORCED CONCRETE AND CONCRETE BLOCK INSTALLATIONS.
4" OVERHANG IS REQUIRED WHEN SEPARATE PRECAST BASE IS PROVIDED.
OVERHANG IS NOT REQUIRED ON PRECAST STRUCTURES WITH AN INTEGRAL OR MONOLITHIC BASE.

MAXIMUM INSIDE PIPE DIAMETER DETERMINED BY 3 INCH CLEARANCE ON EACH SIDE OF THE OUTSIDE WALL OF THE PIPE. SEE DETAIL "A". ASSUMES PIPE ENTERS PERPENDICULAR TO THE STRUCTURE.

① FOR PRECAST INLETS PROVIDE REINFORCING STEEL IN ACCORDANCE TO ASTM C 913.

② CONTRACTOR TO PROVIDE DRAWING(S) STAMPED BY A PROFESSIONAL ENGINEER FOR STEEL REINFORCING DESIGN FOR CAST-IN-PLACE STRUCTURES.

INLET COVER MATRIX

INLET SIZE		INLET COVER TYPE	ALL A'S	ALL B'S	BW	F	ALL H'S	S	T	V	WM
	WIDTH (W) (FT)	LENGTH (L) (FT)									
2X2-FT	2	2	X	X				X		X	
2X2.5-FT	2	2.5			X			X	X	X	X
2X3-FT	2	3					X				
2.5X3-FT	2.5	3				X					

PIPE MATRIX

INLET SIZE	MAXIMUM INSIDE PIPE DIAMETER	
	WIDTH (IN)	LENGTH (IN)
2X2-FT	12	12
2X2.5-FT	12	18
2X3-FT	12	24
2.5X3-FT	18	24

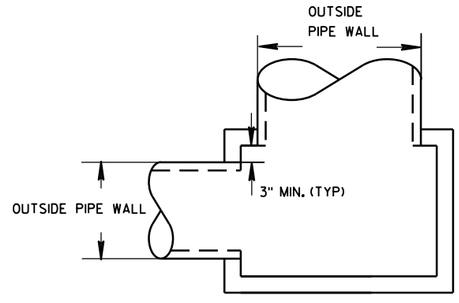

DETAIL "A"

INLETS 2X2-FT, 2X2.5-FT, 2X3-FT AND 2.5X3-FT

STATE OF WISCONSIN
DEPARTMENT OF TRANSPORTATION

APPROVED
6/5/2012
DATE
FHWA

/S/ Jerry H. Zogg
ROADWAY STANDARDS DE
ENGINEER

6
S.D.D. 8 C 7-1

INLETS 2X2-FT, 2X2.5-FT, 2X3-FT AND 2.5X3-FT

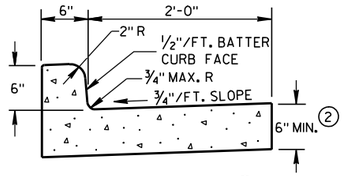

TYPES A & D (1)

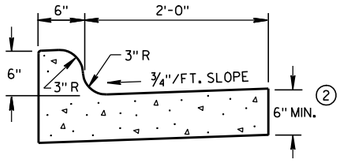

TYPES K & L (1)

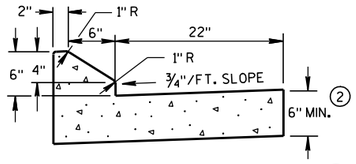

6" SLOPED CURB TYPES G & J (1)

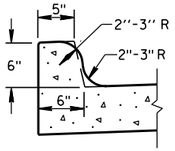

OPTIONAL CURB SHAPE FOR TYPES K & L (1)

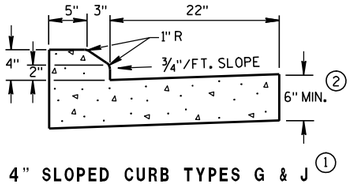

4" SLOPED CURB TYPES G & J (1)

CONCRETE CURB & GUTTER 30"

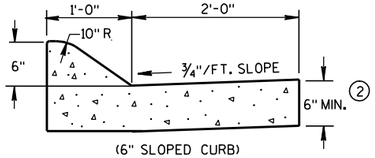

(6" SLOPED CURB)

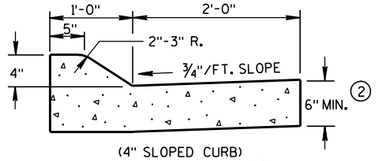

(4" SLOPED CURB)

TYPES A & D (1)

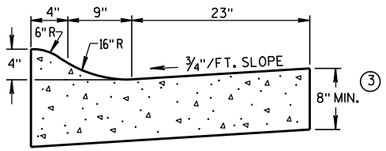

4" SLOPED CURB TYPES R & T (1) (4)

CONCRETE CURB & GUTTER 36"

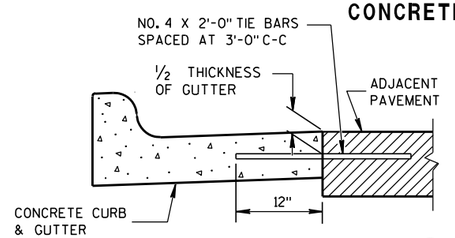

TYPICAL TIE BAR LOCATION (1)

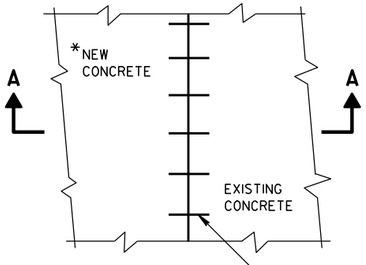

*NEW CURB & GUTTER, SURFACE DRAINS, CONCRETE PAVEMENT OR OTHER NEW CONCRETE.

PLAN VIEW

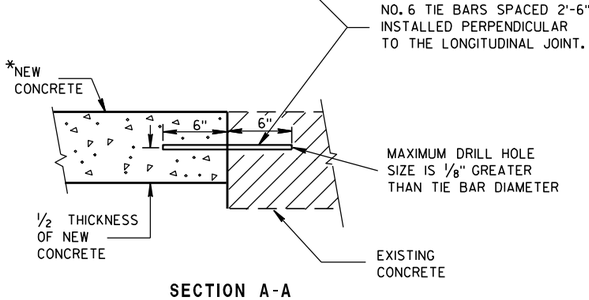

SECTION A-A

TIE BARS DRILLED INTO EXISTING PAVEMENT

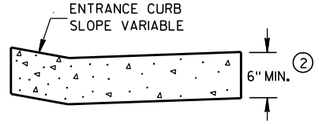

DRIVEWAY ENTRANCE CURB

(WHEN DIRECTED BY THE ENGINEER)

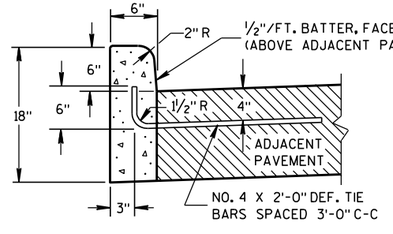

(1)

TYPES A & D

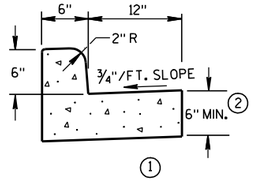

(1)

TYPES A & D

CONCRETE CURB & GUTTER 18"

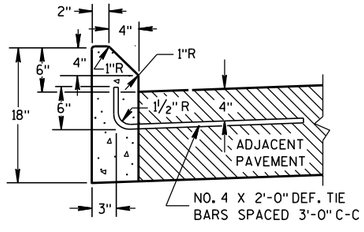

(1)

TYPES G & J

CONCRETE CURB

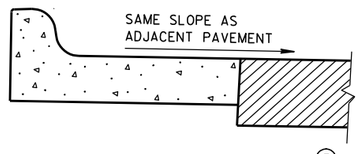

(5)

REVERSE SLOPE GUTTER

(TYPICAL FOR ALL CURB & GUTTER TYPES)

GENERAL NOTES

DETAILS OF CONSTRUCTION, MATERIALS AND WORKMANSHIP NOT SHOWN ON THIS DRAWING SHALL CONFORM TO THE PERTINENT REQUIREMENTS OF THE CONTRACT.

PAVEMENT TIES AND TIE BARS SHALL BE EPOXY COATED IN CONFORMANCE WITH SUBSECTION 505.2.6.2 OF THE STANDARD SPECIFICATIONS.

INTEGRAL CURB & GUTTER SHALL CONFORM TO THE DETAILS SHOWN FOR CONCRETE CURB & GUTTER INCLUDING THE TRANSVERSE GUTTER SLOPE. A LONGITUDINAL CONSTRUCTION JOINT IS NOT REQUIRED WITH INTEGRAL CURB AND GUTTER.

WHERE THE TRANSVERSE JOINTS IN THE PAVEMENT ARE REQUIRED TO BE SEALED, THE JOINTS IN THE INTEGRAL CURB AND GUTTER SHALL BE SEALED TO THE FACE OF CURB WITH THE SAME TYPE OF SEALANT. THE COST OF FURNISHING AND INSTALLING THIS SEALANT SHALL BE INCIDENTAL TO THE ITEM CONCRETE CURB AND GUTTER.

UNLESS OTHERWISE SHOWN ON THE TYPICAL CROSS SECTIONS, THE BASE AGGREGATE AND COMMON EXCAVATION LIMITS ARE 2'-0" BEHIND THE BACK OF CURBS.

(1) TIE BARS ARE REQUIRED FOR CURB AND GUTTER TYPES A, G, K AND R.

(2) THE BOTTOM OF CURB AND GUTTER MAY BE CONSTRUCTED EITHER LEVEL OR PARALLEL TO THE SLOPE OF THE SUBGRADE OR BASE AGGREGATE PROVIDED A 6" MINIMUM GUTTER THICKNESS IS MAINTAINED.

(3) THE BOTTOM OF CURB AND GUTTER MAY BE CONSTRUCTED EITHER LEVEL OR PARALLEL TO THE SLOPE OF THE SUBGRADE OR BASE AGGREGATE PROVIDED A 8" MINIMUM GUTTER THICKNESS IS MAINTAINED.

(4) THE FACE OF CURB IS 6" FROM THE BACK OF CURB.

(5) WHEN REVERSE SLOPE GUTTER IS REQUIRED, THE LOCATION(S) WILL BE SHOWN ELSEWHERE IN THE PLAN.

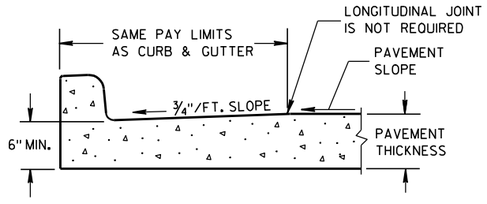

PARTIAL SECTION OF PAVEMENT WITH INTEGRAL CURB & GUTTER

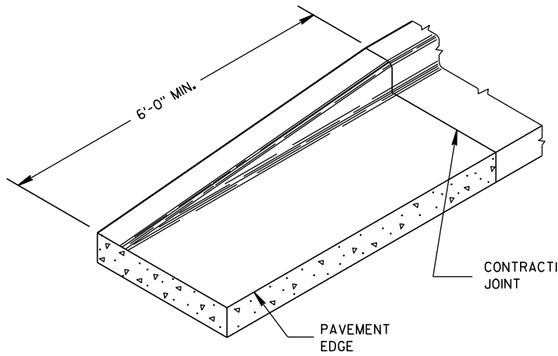

END SECTION CURB & GUTTER

CONCRETE CURB, CONCRETE CURB & GUTTER AND TIES

STATE OF WISCONSIN
DEPARTMENT OF TRANSPORTATION

APPROVED
9/4/08 DATE
/S/ Jerry H. [illegible]
ROADWAY STANDARDS ENGINEER
FHWA

6

S.D.D. 8 D 1-17

ASPHALTIC FLUME

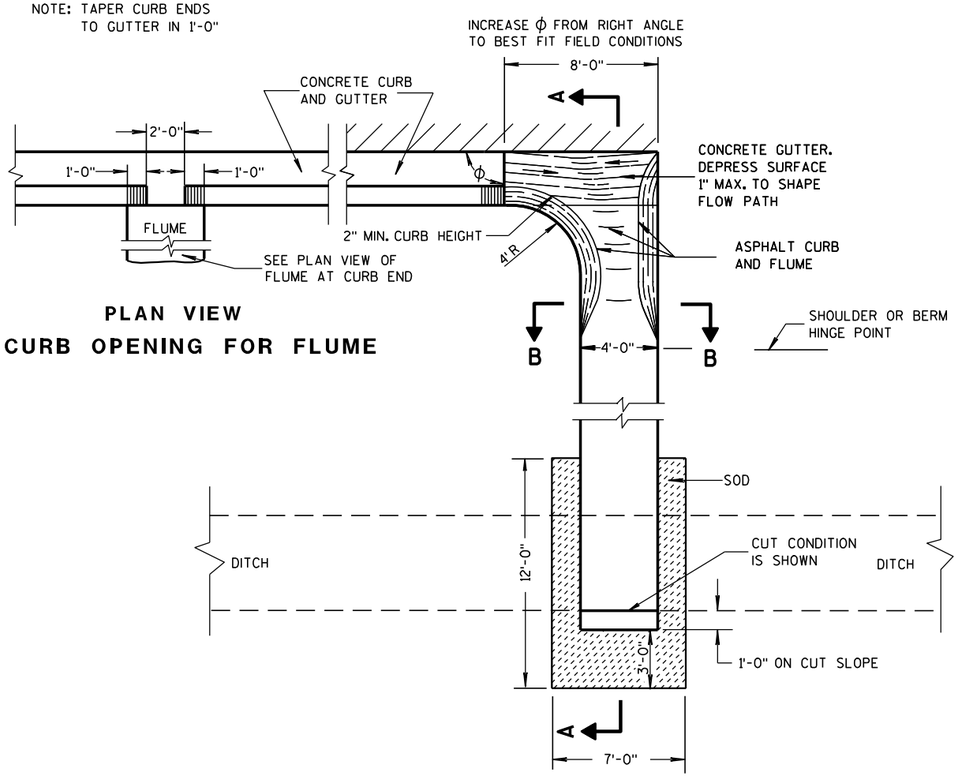

PLAN VIEW
CURB OPENING FOR FLUME

PLAN VIEW
FLUME AT CURB END

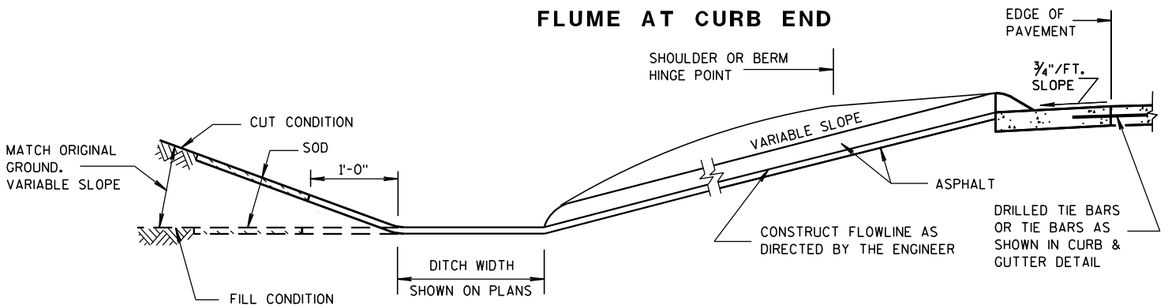

SECTION A-A

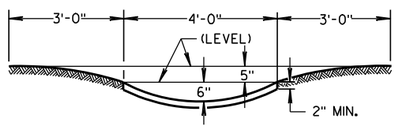

SECTION B-B

GENERAL NOTES

DETAILS OF CONSTRUCTION, MATERIALS AND WORKMANSHIP NOT SHOWN ON THIS DRAWING SHALL CONFORM TO PERTINENT REQUIREMENTS OF THE STANDARD SPECIFICATIONS AND APPLICABLE SPECIAL PROVISIONS.

WELDED STEEL WIRE FABRIC SHALL BE IN ACCORDANCE WITH AASHTO SPECIFICATION M55.

① JOINTS SHALL BE $\frac{1}{8}$ TO $\frac{1}{4}$ INCH WIDE BY $1\frac{1}{2}$ INCHES DEEP AND SPACED AT UNIFORM INTERVALS OF APPROXIMATELY 4 FEET.

② GEOTEXTILE FABRIC TYPE "R" SHALL UNDERLAY THE FULL LENGTH AND WIDTH OF THE CONCRETE SURFACE DRAIN AND RIPRAP.

③ CONCRETE SURFACE DRAIN WITHOUT CURB AND GUTTER MAY BE USED ON BACKSLOPES WHEN SPECIFIED

③ CONCRETE SURFACE DRAIN

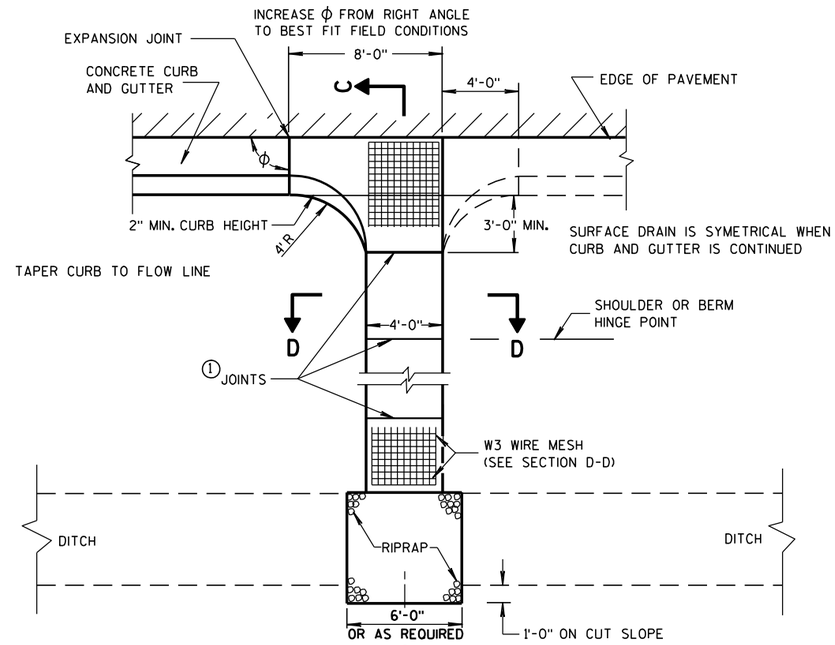

PLAN VIEW

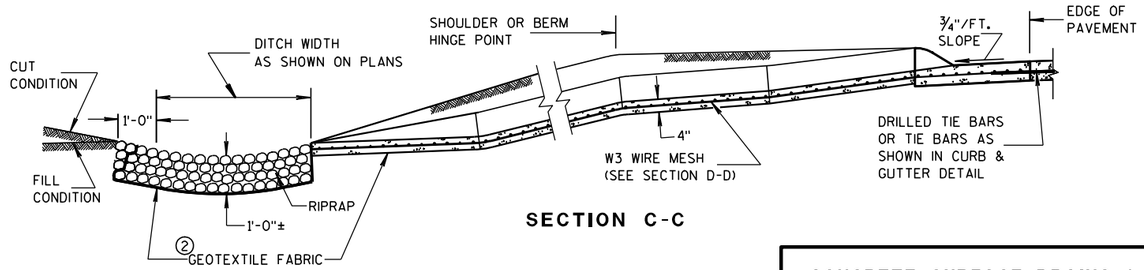

SECTION C-C

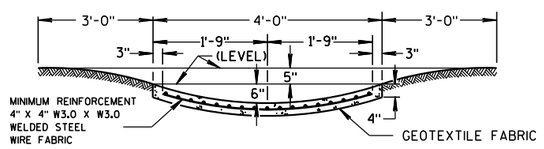

SECTION D-D

CONCRETE SURFACE DRAINS & ASPHALTIC FLUMES

STATE OF WISCONSIN
DEPARTMENT OF TRANSPORTATION

APPROVED
9-4-08 DATE
/S/ Jerry H. Zogg
ROADWAY STANDARDS ENGINEER
MENT

FHWA

6
S.D.D. 8 D 4-5

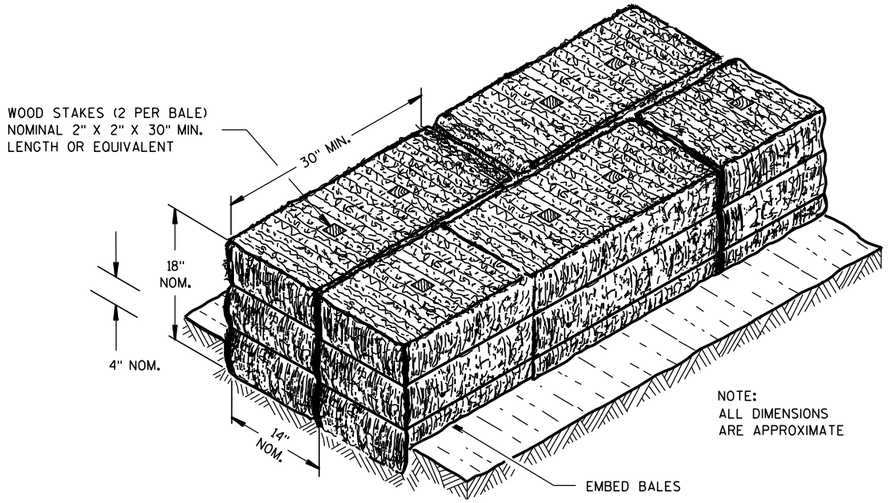

SECTION A-A

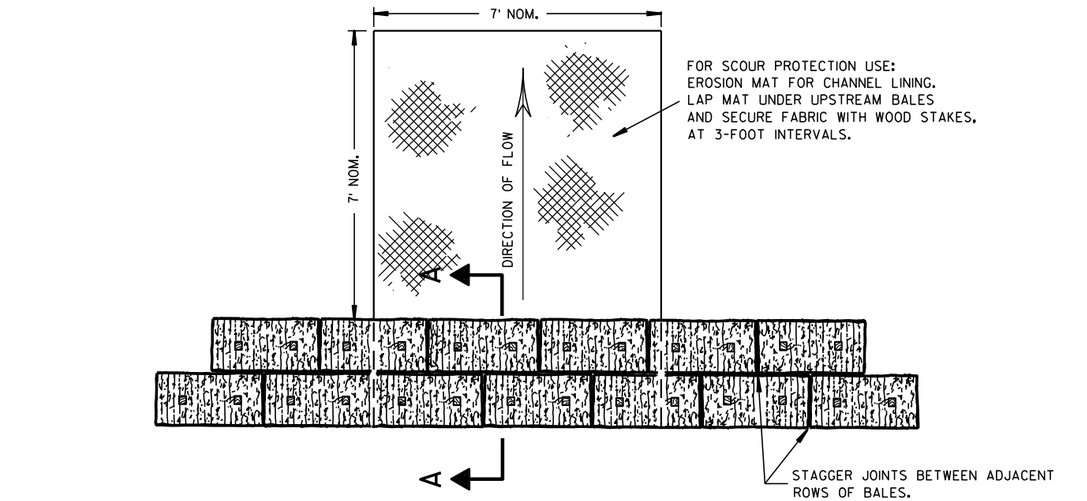

PLAN VIEW

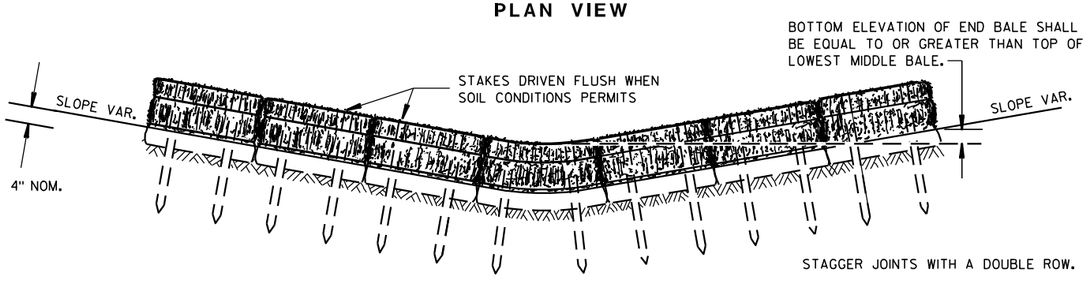

FRONT ELEVATION

TEMPORARY DITCH CHECK USING EROSION BALES (1)

GENERAL NOTES

DETAILS OF CONSTRUCTION, MATERIALS AND WORKMANSHIP NOT SHOWN ON THIS DRAWING SHALL CONFORM TO THE PERTINENT REQUIREMENTS OF THE STANDARD SPECIFICATIONS AND THE APPLICABLE SPECIAL PROVISIONS.

(1) TEMPORARY DITCH CHECKS EITHER EROSION BALES OR MANUFACTURED SHALL BE PAID FOR UNDER THE BID ITEM OF TEMPORARY DITCH CHECK. THE DEPARTMENT WILL NOT PAY FOR TEMPORARY DITCH CHECKS CONSTRUCTED OF A SINGLE ROW OF EROSION BALES.

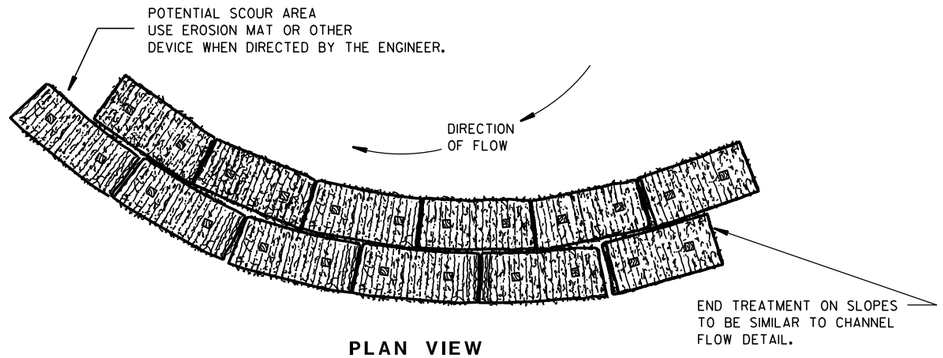

PLAN VIEW

WHEN ALTERING THE DIRECTION OF FLOW

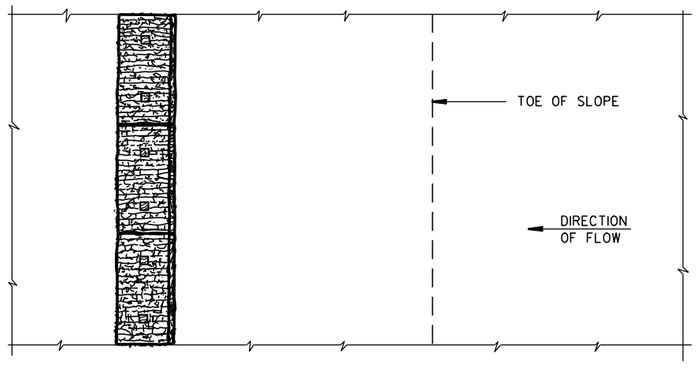

PLAN VIEW

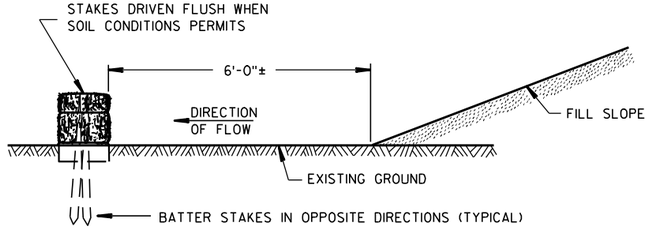

FRONT ELEVATION

WHEN EXISTING GROUND SLOPES AWAY FROM FILL SLOPE

EROSION BALES FOR SHEET FLOW

TYPICAL INSTALLATIONS OF EROSION BALES / TEMPORARY DITCH CHECKS

STATE OF WISCONSIN
DEPARTMENT OF TRANSPORTATION

APPROVED

6/04/02 — DATE

/S/ Beth Cannestra — CHIEF ROADWAY DEVELOPMENT ENGINEER

FHWA

6

S.D.D. 8 E 8-3

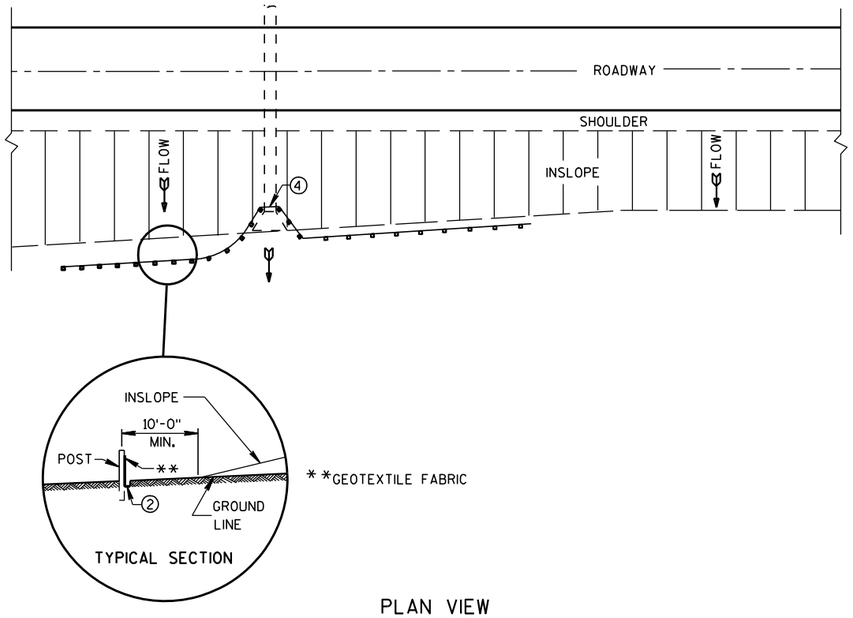

PLAN VIEW

TYPICAL APPLICATION OF SILT FENCE

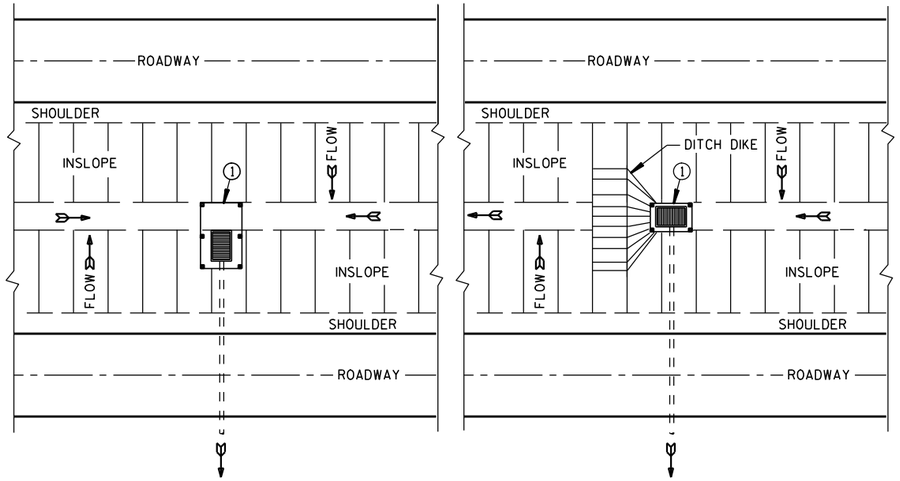

PLAN VIEW

SILT FENCE AT MEDIAN SURFACE DRAINS

GENERAL NOTES

DETAILS OF CONSTRUCTION NOT SHOWN ON THIS DRAWING SHALL CONFORM TO THE PERTINENT REQUIREMENTS OF THE STANDARD SPECIFICATIONS AND APPLICABLE SPECIAL PROVISIONS.

① HORIZONTAL BRACE REQUIRED WITH 2" X 4" WOODEN FRAME OR EQUIVALENT AT TOP OF POSTS.

② FOR MANUAL INSTALLATIONS THE TRENCH SHALL BE A MINIMUM OF 4" WIDE & 6" DEEP TO BURY AND ANCHOR THE GEOTEXTILE FABRIC. FOLD MATERIAL TO FIT TRENCH AND BACKFILL & COMPACT TRENCH WITH EXCAVATED SOIL.

③ WOOD POSTS SHALL BE A MINIMUM SIZE OF 1⅛" X 1⅛" OF OAK OR HICKORY.

④ SILT FENCE TO EXTEND ACROSS THE TOP OF THE PIPE.

⑤ CONSTRUCT SILT FENCE FROM A CONTINUOUS ROLL IF POSSIBLE BY CUTTING LENGTHS TO AVOID JOINTS. IF A JOINT IS NECESSARY USE ONE OF THE FOLLOWING TWO METHODS; A) OVERLAP THE END POSTS AND TWIST, OR ROTATE, AT LEAST 180 DEGREES, B) HOOK THE END OF EACH SILT FENCE LENGTH.

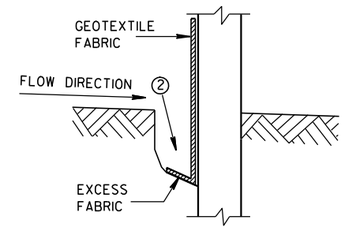

TRENCH DETAIL

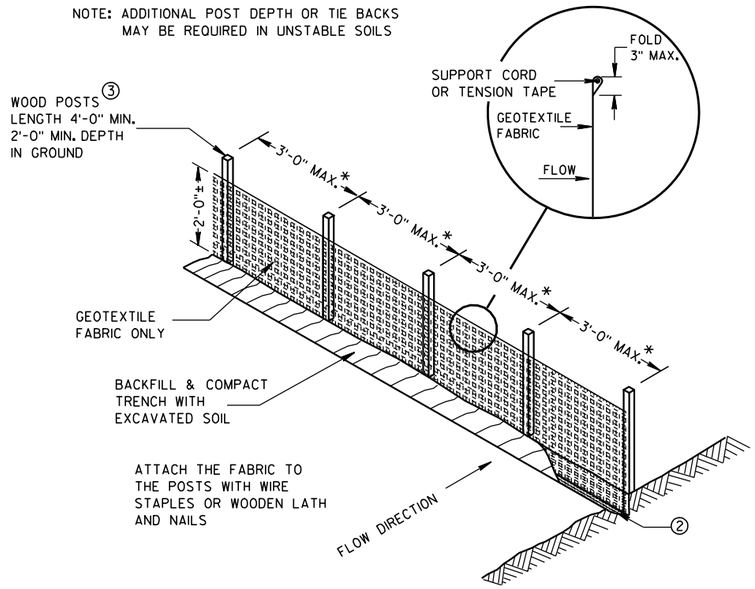

SILT FENCE

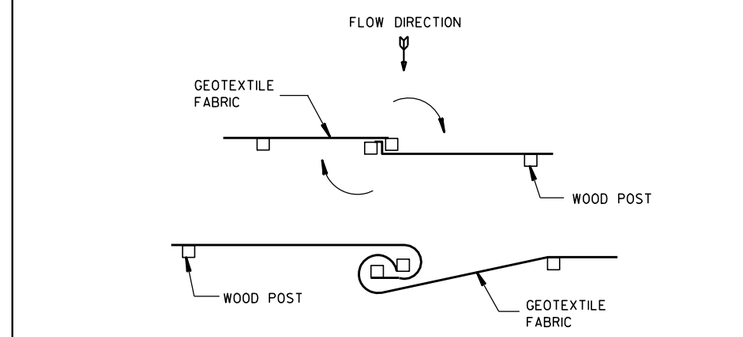

TWIST METHOD

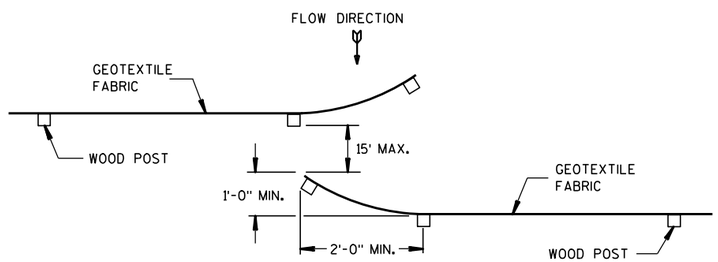

HOOK METHOD

JOINING TWO LENGTHS OF SILT FENCE ⑤

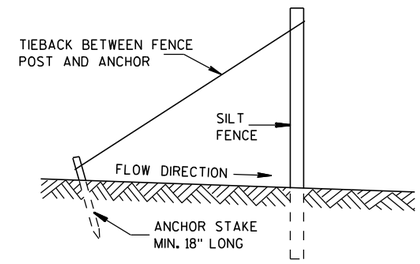

SILT FENCE TIE BACK

(WHEN REQUIRED BY THE ENGINEER)

SILT FENCE

STATE OF WISCONSIN
DEPARTMENT OF TRANSPORTATION

APPROVED
4-29-05 DATE
/S/ Beth Cannestra
CHIEF ROADWAY DEVELOPMENT ENGINEER
FHWA

6

S.D.D. 8 E 9-6

6

S.D.D. 8 E 9-6

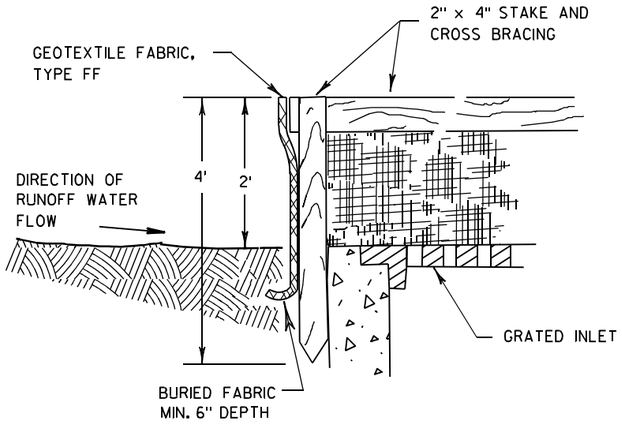

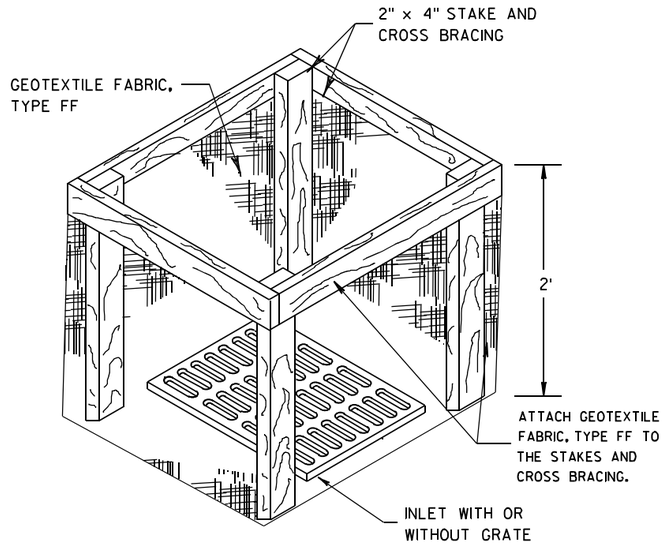

INLET PROTECTION, TYPE A

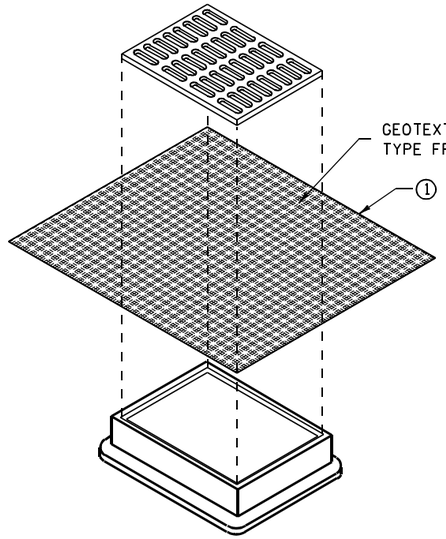

INLET PROTECTION, TYPE B
(WITHOUT CURB BOX)

(CAN BE INSTALLED IN ANY INLET WITHOUT A CURB BOX)

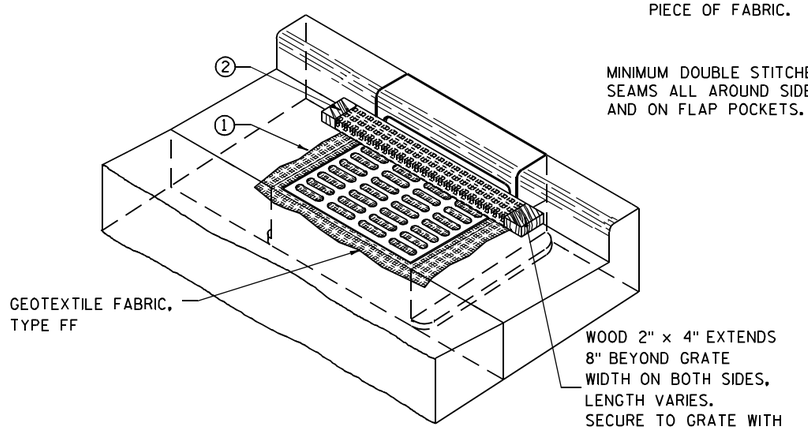

INLET PROTECTION, TYPE C (WITH CURB BOX)

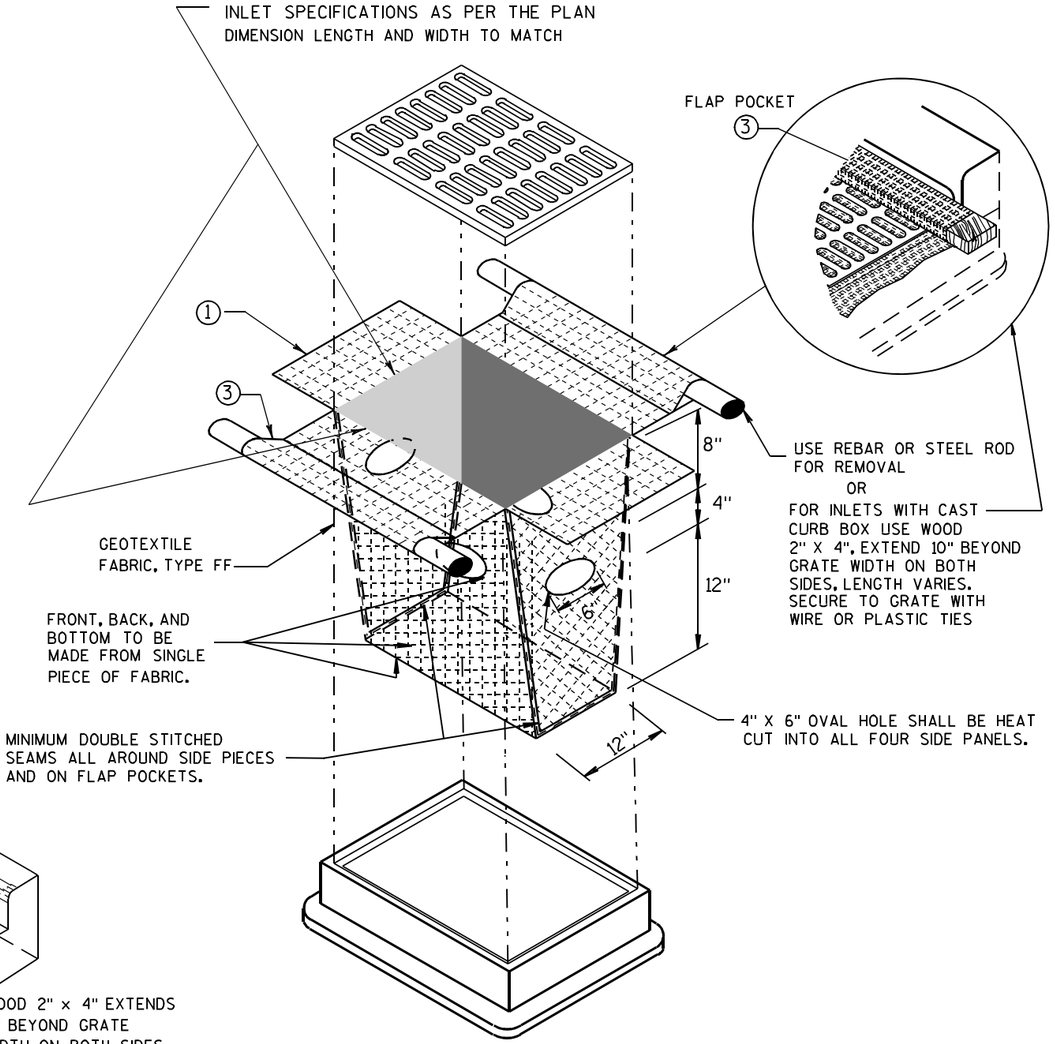

INLET PROTECTION, TYPE D

(CAN BE INSTALLED IN ANY INLET TYPE WITH
OR WITHOUT A CURB BOX AS PER NOTE ②)

GENERAL NOTES

INLET PROTECTION DEVICES SHALL BE MAINTAINED OR REPLACED AT THE DIRECTION OF THE ENGINEER.

MANUFACTURED ALTERNATIVES APPROVED AND LISTED ON THE DEPARTMENT'S EROSION CONTROL PRODUCT ACCEPTABILITY LIST MAY BE SUBSTITUTED.

WHEN REMOVING OR MAINTAINING INLET PROTECTION, CARE SHALL BE TAKEN SO THAT THE SEDIMENT TRAPPED ON THE GEOTEXTILE FABRIC DOES NOT FALL INTO THE INLET. ANY MATERIAL FALLING INTO THE INLET SHALL BE REMOVED IMMEDIATELY.

① FINISHED SIZE, INCLUDING FLAP POCKETS WHERE REQUIRED, SHALL EXTEND A MINIMUM OF 10" AROUND THE PERIMETER TO FACILITATE MAINTENANCE OR REMOVAL.

② FOR INLET PROTECTION, TYPE C (WITH CURB BOX), AN ADDITIONAL 18" OF FABRIC IS WRAPPED AROUND THE WOOD AND SECURED WITH STAPLES. THE WOOD SHALL NOT BLOCK THE ENTIRE HEIGHT OF THE CURB BOX OPENING.

③ FLAP POCKETS SHALL BE LARGE ENOUGH TO ACCEPT WOOD 2X4.

INSTALLATION NOTES

TYPE B & C

TRIM EXCESS FABRIC IN THE FLOW LINE TO WITHIN 3" OF THE GRATE.

THE CONTRACTOR SHALL DEMONSTRATE A METHOD OF MAINTENANCE, USING A SEWN FLAP, HAND HOLDS OR OTHER METHOD TO PREVENT ACCUMULATED SEDIMENT FROM ENTERING THE INLET.

TYPE D

DO NOT INSTALL INLET PROTECTION TYPE D IN INLETS SHALLOWER THAN 30", MEASURED FROM THE BOTTOM OF THE INLET TO THE TOP OF THE GRATE.

TRIM EXCESS FABRIC IN THE FLOW LINE TO WITHIN 3" OF THE GRATE.

THE INSTALLED BAG SHALL HAVE A MINIMUM SIDE CLEARANCE, BETWEEN THE INLET WALLS AND THE BAG, MEASURED AT THE BOTTOM OF THE OVERFLOW HOLES, OF 3". WHERE NECESSARY THE CONTRACTOR SHALL CINCH THE BAG, USING PLASTIC ZIP TIES, TO ACHIEVE THE 3" CLEARANCE. THE TIES SHALL BE PLACED AT A MAXIMUM OF 4" FROM THE BOTTOM OF THE BAG.

INLET PROTECTION
TYPE A, B, C, AND D

STATE OF WISCONSIN
DEPARTMENT OF TRANSPORTATION

APPROVED
10/16/02
DATE
/S/ Beth Cannestra
CHIEF ROADWAY DEVELOPMENT ENGINEER
FHWA

6
S.D.D. 8 E 10-2

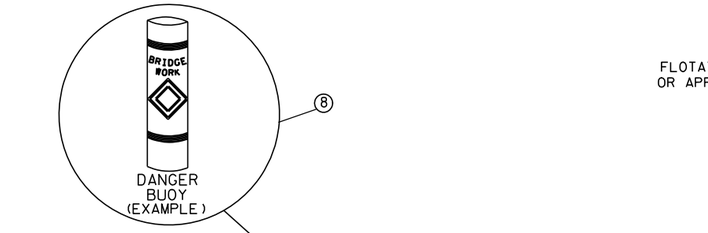

SECTION B-B

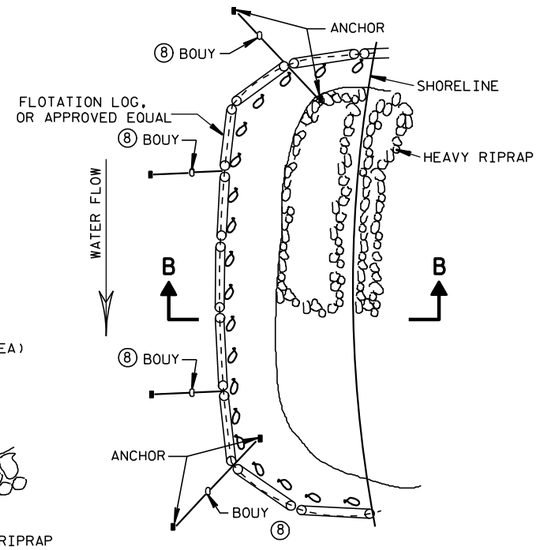

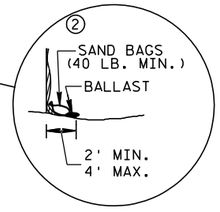

TURBIDITY BARRIER FLOAT ALTERNATIVE
CAUTION - SEE NOTE 6

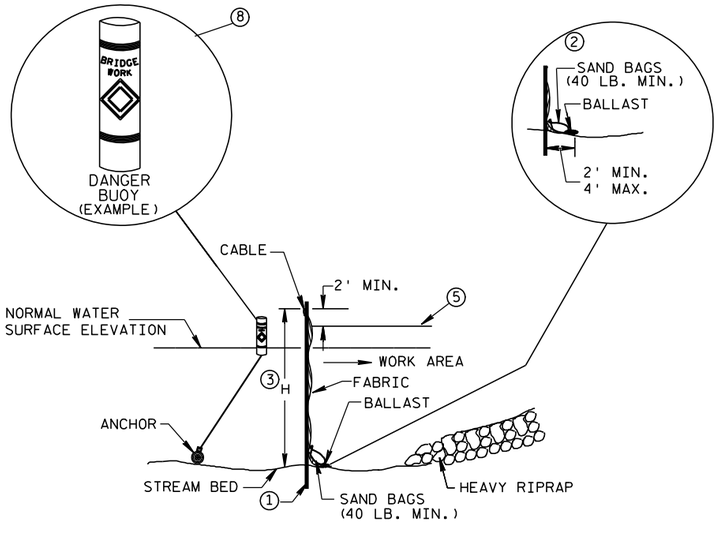

SECTION A-A

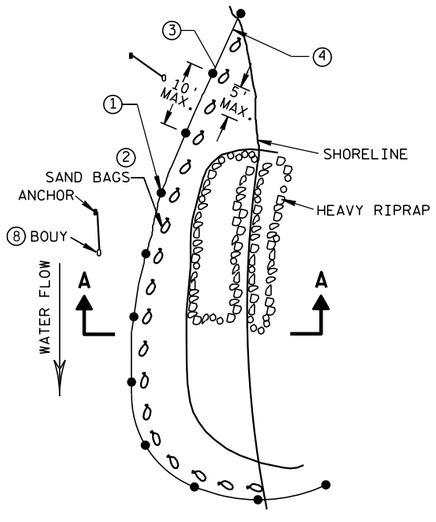

PLAN VIEW

TURBIDITY BARRIER STANDARD POST INSTALLATION

TURBIDITY BARRIER PLACEMENT DETAILS

GENERAL NOTES

DETAILS OF CONSTRUCTION, MATERIALS AND WORKMANSHIP NOT SHOWN ON THIS DRAWING SHALL CONFORM TO THE PERTINENT REQUIREMENTS OF THE STANDARD SPECIFICATIONS AND THE APPLICABLE SPECIAL PROVISIONS.

TURBIDITY BARRIER MAY BE REMOVED AT THE ENGINEERS DISCRETION, WHEN PERMANENT EROSION CONTROL MEASURES HAVE BEEN ESTABLISHED.

① DRIVEN STEEL POSTS, PIPES, OR CHANNELS. LENGTH SHALL BE SUFFICIENT TO SECURELY SUPPORT BARRIER AT HIGH WATER ELEVATIONS.

② SANDBAGS TO BE USED AS ADDITIONAL BALLAST WHEN ORDERED BY THE ENGINEER TO MEET ADVERSE FIELD CONDITIONS. SPACE AS APPROPRIATE FOR SITE CONDITIONS.

③ WHEN BARRIER HEIGHT, H, EXCEEDS 8 FT., POST SPACING MAY NEED TO BE DECREASED.

④ IN WATERWAYS SUBJECT TO FLUCTUATING WATER ELEVATIONS, PROVISIONS SHOULD BE MADE TO ALLOW THE WATER TO EQUALIZE ON EACH SIDE OF THE BARRIER. THIS MAY BE ACCOMPLISHED BY LEAVING A PORTION OF THE BARRIER OPEN ON THE UPSTREAM END.

⑤ ESTIMATED HIGH WATER ELEVATION DURING CONSTRUCTION PERIOD. MIMIMUM BARRIER HEIGHT SHALL BE 2'GREATER THAN EITHER THE O2 ELEVATION OR THE ESTIMATED HIGH WATER ELEVATION DURING CONSTRUCTION, WICHEVER IS GREATER.

⑥ FLOAT ALTERNATIVE WILL ONLY BE ALLOWED WITH WRITTEN APPROVAL OF THE ENGINEER, AND IS MEANT FOR LOCATIONS WHERE BED ROCK PREVENTS THE INSTALLATION OF POSTS.

⑦ ALLOW SUFFICIENT SLACK VERTICALLY AND HORIZONTALLY SO THAT SEDIMENT BUILD UP WILL NOT SEPARATE OR LOWER THE TURBIDITY BARRIER.

⑧ USE AS DIRECTED BY COAST GUARD OR DNR PERMIT WHEN WORKING IN NAVIGABLE WATERWAYS.

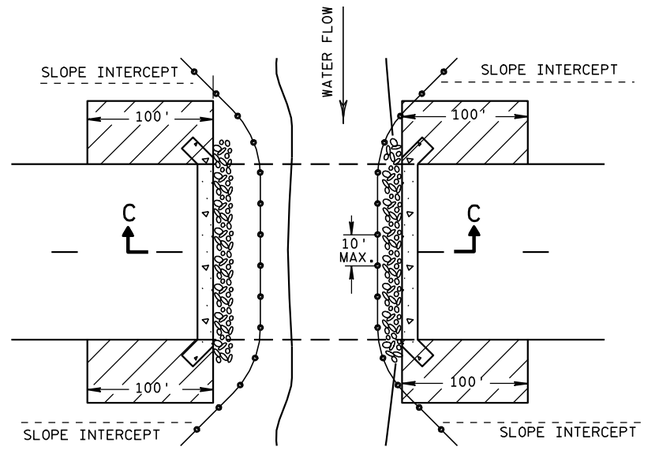

PLAN VIEW

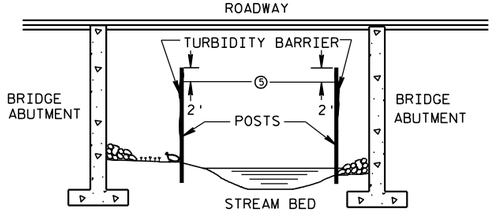

SECTION C-C

TURBIDITY BARRIER DETAIL SHOWING TYPICAL PLACEMENT AT STRUCTURES

TURBIDITY BARRIER

STATE OF WISCONSIN
DEPARTMENT OF TRANSPORTATION

APPROVED
6/04/02 DATE
/S/ Beth Cannestra
CHIEF ROADWAY DEVELOPMENT ENGINEER
FHWA

6

S.D.D. 8 E 11-2

6

S.D.D. 8 E 11-2

METAL APRON ENDWALLS

PIPE DIA. (IN.)	MIN. THICK. (Inches) STEEL	MIN. THICK. (Inches) ALUM.	DIMENSIONS (Inches) A (±1")	B (MAX.)	H (±1")	L (±1 1/2")	L1 ①	L2 ①	W (±2")	APPROX. SLOPE	BODY
12	.064	.060	6	6	6	21	12	17 1/2	24	2 1/2 to 1	1 Pc.
15	.064	.060	7	8	6	26	14	21 3/4	30	2 1/2 to 1	1 Pc.
18	.064	.060	8	10	6	31	15	28 1/4	36	2 1/2 to 1	1 Pc.
21	.064	.060	9	12	6	36	18	29 5/8	42	2 1/2 to 1	1 Pc.
24	.064	.075	10	13	6	41	18	37 1/4	48	2 1/2 to 1	1 Pc.
30	.079	.075	12	16	8	51	18	52 1/4	60	2 1/2 to 1	1 Pc.
36	.079	.105	14	19	9	60	24	59 3/4	72	2 1/2 to 1	2 Pc.
42	.109	.105	16	22	11	69	24	75 5/8	84	2 1/2 to 1	2 Pc.
48	.109	.105	18	27	12	78	24	81	90	2 1/4 to 1	3 Pc.
54	.109	.105	18	30	12	84	30	85 1/2	102	2 1/4 to 1	3 Pc.
60	.109×	.105×	18	33	12	87	—	—	114	2 to 1	3 Pc.
66	.109×	.105×	18	36	12	87	—	—	120	2 to 1	3 Pc.
72	.109×	.105×	18	39	12	87	—	—	126	2 to 1	3 Pc.
78	.109×	.105×	18	42	12	87	—	—	132	1 1/2 to 1	3 Pc.
84	.109×	.105×	18	45	12	87	—	—	138	1 1/2 to 1	3 Pc.
90	.109×	.105×	18	37	12	87	—	—	144	1 1/2 to 1	3 Pc.
96	.109×	.105×	18	35	12	87	—	—	150	1 1/2 to 1	3 Pc.

× EXCEPT CENTER PANEL SEE GENERAL NOTES

REINFORCED CONCRETE APRON ENDWALLS

PIPE DIA. (IN.)	DIMENSIONS (Inches) T	A	B	C	D	E	G	APPROX. SLOPE
12	2	4	24	48 7/8	72 1/8	24	2	3 to 1
15	2 1/4	6	27	46	73	30	2 1/4	3 to 1
18	2 1/2	9	27	46	73	36	2 1/2	3 to 1
21	2 3/4	9	36	37 1/2	73 1/2	42	2 3/4	3 to 1
24	3	9 1/2	43 1/2	30	73 1/2	48	3	3 to 1
27	3 1/4	10 1/2	49 1/2	24	73 1/2	54	3 1/4	3 to 1
30	3 1/2	12	54	19 3/4	73 1/2	60	3 1/2	3 to 1
36	4	15	63	34 3/4	97 3/4	72	4	3 to 1
42	4 1/2	21	63	35	98	78	4 1/2	3 to 1
48	5	24	72	26	98	84	5	3 to 1
54	5 1/2	27	65	* 33 1/4 - ** 35	* 98 1/4 - ** 100	90	5 1/2	2 2/5 to 1
60	6	* 30 - ** 35	60	39	99	96	5	2 to 1
66	6 1/2	* 24 - ** 30	* 72 - ** 78	* 21 - ** 27	99	102	5 1/2	2 to 1
72	7	* 24 - ** 36	78	21	99	108	6	2 to 1
78	7 1/2	* 24 - ** 36	78	21	99	114	6 1/2	2 to 1
84	8	36	90 1/2	21	111 1/2	120	6 1/2	1 1/2 to 1
90	8 1/2	41	87 1/2	24	111 1/2	132	6 1/2	1 1/2 to 1

*MINIMUM
**MAXIMUM

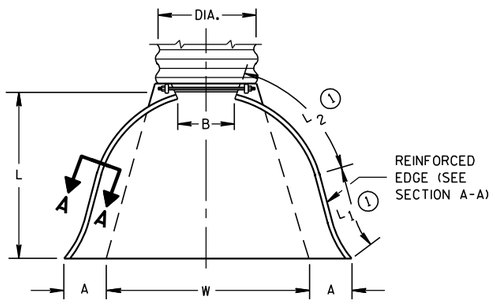

PLAN VIEW

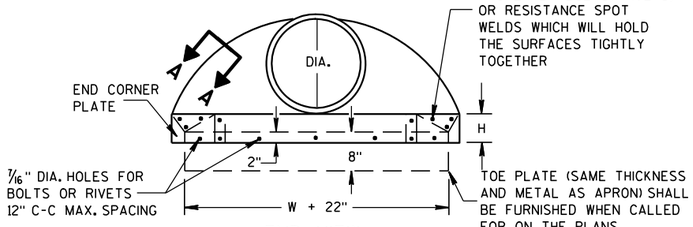

END VIEW

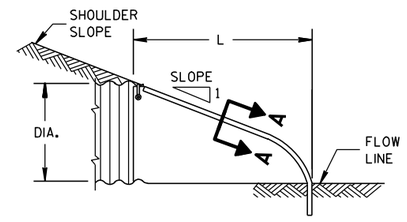

SIDE ELEVATION

METAL ENDWALLS

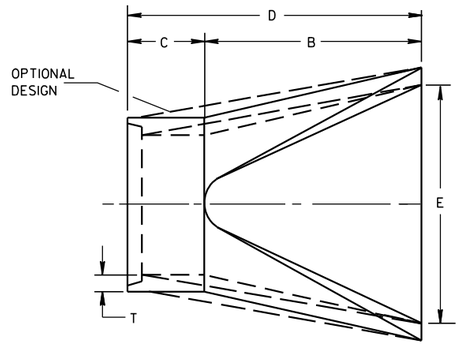

PLAN

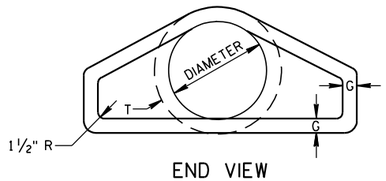

END VIEW

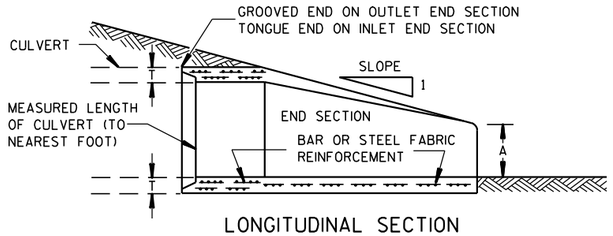

LONGITUDINAL SECTION

CONCRETE ENDWALLS

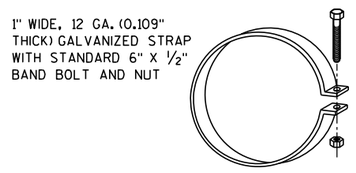

ALTERNATE FOR TYPE 1 CONNECTION

END SECTION CONNECTOR STRAP

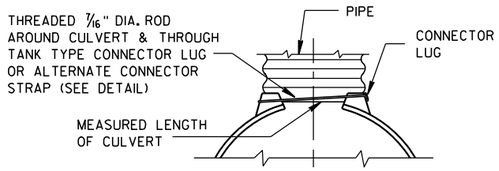

TYPE 1
FOR 12" THRU 24" CORR. PIPE

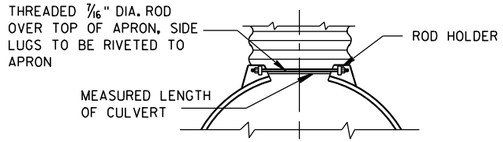

TYPE 2
FOR 30" THRU 96" CORR. PIPE

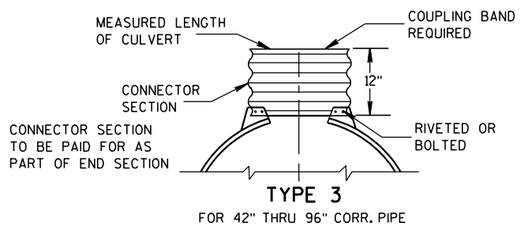

TYPE 3
FOR 42" THRU 96" CORR. PIPE

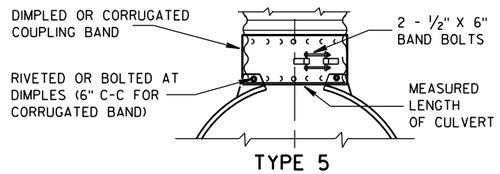

TYPE 5
ALTERNATE FOR:
ALL SIZES CORRUGATED CIRCULAR PIPE

NOTE: DIMPLED BAND FITS OVER OUTSIDE OF ENDWALL. AND CORRUGATED BAND FITS INSIDE ENDWALL. DIMPLED BAND MAY BE USED WITH HELICALLY CORRUGATED PIPE.

FOR CIRCUMFERENTIALLY CORRUGATED PIPE USE ENDWALL CONNECTION DETAILS 1, 2, 3 OR 5 AS APPLICABLE.

FOR HELICALLY CORRUGATED PIPE USE ENDWALL CONNECTION DETAILS 1, 2 OR 5.

FOR HELICALLY CORRUGATED PIPES WITH TWO CIRCUMFERENTIAL CORRUGATIONS AT EACH END USE ENDWALL CONNECTION DETAILS 1, 2 OR 3.

CONNECTION DETAILS

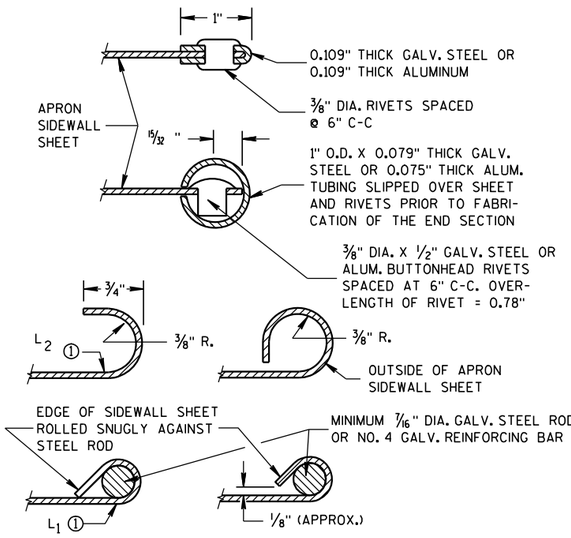

SECTION A-A

GENERAL NOTES

DETAILS OF CONSTRUCTION, MATERIALS AND WORKMANSHIP NOT SHOWN ON THIS DRAWING SHALL CONFORM TO THE PERTINENT REQUIREMENTS OF THE STANDARD SPECIFICATIONS AND THE APPLICABLE SPECIAL PROVISIONS.

CONCRETE CULVERT ENDWALLS MAY NOT BE USED WITH GALVANIZED STEEL OR ALUMINUM CULVERT PIPE OR VISE VERSA. GALVANIZED STEEL OR ALUMINUM ENDWALLS SHALL NORMALLY BE INSTALLED ON CULVERT PIPE OF THE SAME METAL.

ALL THREE PIECE STEEL APRON ENDWALLS FOR 60" DIAMETER PIPE AND LARGER SHALL HAVE 0.109" SIDES AND 0.138" CENTER PANELS. ALL THREE PIECE ALUMINUM APRON ENDWALLS FOR 60" DIAMETER PIPE AND LARGER SHALL HAVE 0.105" SIDES AND 0.134" CENTER PANELS. THE WIDTH OF CENTER PANELS SHALL BE GREATER THAN 20 PERCENT OF THE PIPE PERIMETER.

LAP SEAMS SHALL BE TIGHTLY JOINED BY GALVANIZED RIVETS OR BOLTS FOR STEEL UNITS AND ALUMINUM RIVETS AND BOLTS FOR ALUMINUM UNITS. FOR THE 60" THROUGH 96" DIAMETER APRON ENDWALL SIZES, THE REINFORCED EDGES AND CENTER PANEL SEAMS SHALL BE FURTHER REINFORCED WITH GALVANIZED STEEL OR ALUMINUM STIFFENER ANGLES. THE ANGLES SHALL BE ATTACHED BY GALVANIZED NUTS AND BOLTS FOR STEEL UNITS AND ALUMINUM NUTS AND BOLTS FOR ALUMINUM UNITS.

WHERE TWO OR MORE PIPES WITH APRON ENDWALLS ARE LAID ADJACENT TO EACH OTHER, THEY SHALL BE SEPARATED BY A DISTANCE SUFFICIENT TO PROVIDE A MINIMUM CLEARANCE OF 6 INCHES BETWEEN APRON ENDWALLS.

① FOR PIPE SIZES UP TO 60" DIAMETER, A 180° ROLLED EDGE MAY BE USED INSTEAD OF STEEL ROD REINFORCEMENT. SEE SECTION A-A.

APRON ENDWALLS FOR CULVERT PIPE

STATE OF WISCONSIN
DEPARTMENT OF TRANSPORTATION

APPROVED
11/30/94 DATE
/S/ Rory L. Rhinesmith
CHIEF ROADWAY DEVELOP 85 NEER
FHWA

6
S.D.D. 8 F 1-11

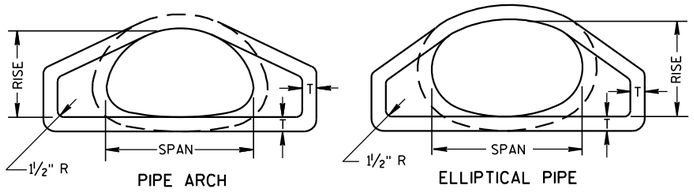

END VIEW

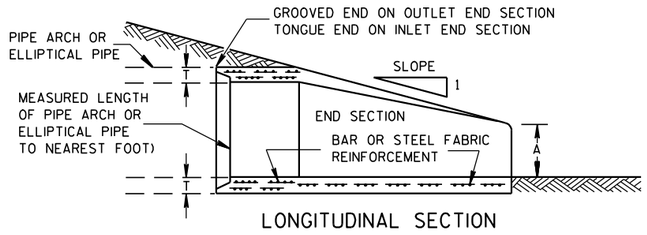

LONGITUDINAL SECTION

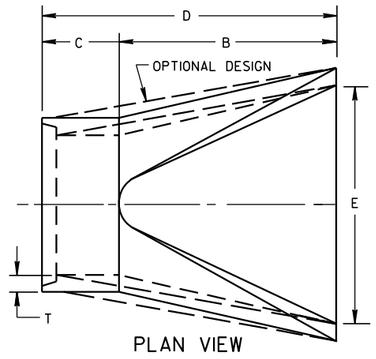

PLAN VIEW

CONCRETE ENDWALLS

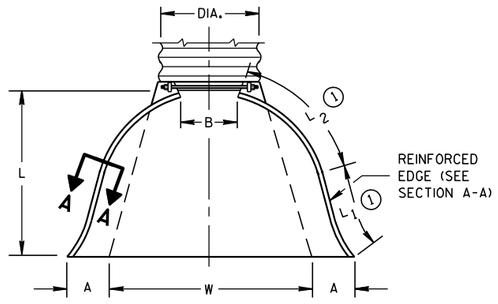

PLAN VIEW

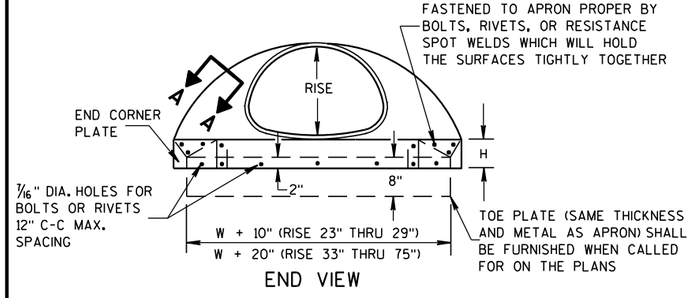

END VIEW

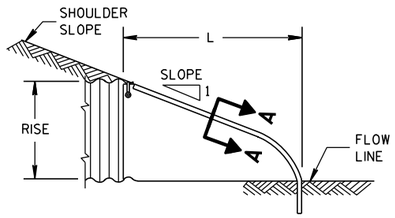

SIDE ELEVATION

METAL ENDWALLS

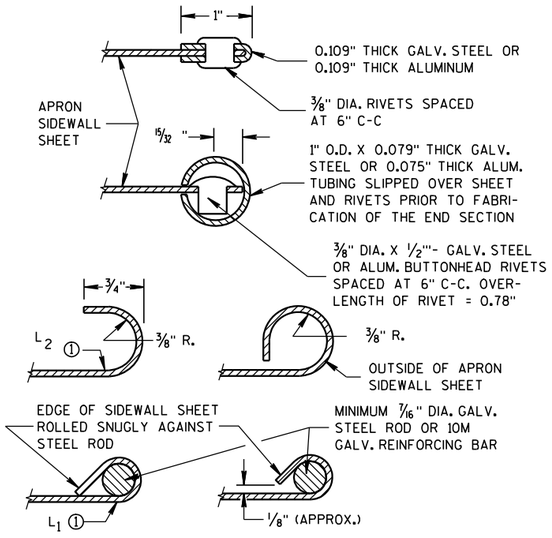

SECTION A-A

2- 2/3" X 1/2" CORRUGATIONS

EQUIV. DIA. (Inches)	(Inches) SPAN	(Inches) RISE	MIN. THICK. (Inches) STEEL	MIN. THICK. (Inches) ALUM.	DIMENSIONS (Inches) A (±1")	B (MAX.)	H (±1")	L (±1 1/2")	L1 ①	L2 ①	W (±2")	APPROX. SLOPE	BODY
15	17	13	.064	.060	7	9	6	19	14	16	30	2½ to 1	1 Pc.
18	21	15	.064	.060	7	10	6	23	14	19⅜	36	2½ to 1	1 Pc.
21	24	18	.064	.060	8	12	6	28	18	21¾	42	2½ to 1	1 Pc.
24	28	20	.064	.060	9	14	6	32	18	27½	48	2½ to 1	1 Pc.
30	35	24	.079	.075	10	16	6	39	18	37⅝	60	2½ to 1	1 Pc.
36	42	29	.079	.075	12	18	8	46	24	45⅜	75	2½ to 1	1 Pc.
42	49	33	.109	.105	13	21	9	53	24	54¾	85	2½ to 1	2 Pc.
48	57	38	.109	.105	18	26	12	63	24	68	90	2½ to 1	3 Pc.
54	64	43	.109	.105	18	30	12	70	24	72¾	102	2¼ to 1	3 Pc.
60	71	47	.109*	.105*	18	33	12	77	30	82¼	114	2¼ to 1	3 Pc.
66	77	52	.109*	.105*	18	36	12	77	—	—	126	2 to 1	3 Pc.
72	83	57	.109*	.105*	18	39	12	77	—	—	138	2 to 1	3 Pc.

3" X 1" CORRUGATIONS

EQUIV. DIA. (Inches)	(Inches) SPAN	(Inches) RISE	MIN. THICK. (Inches) STEEL	MIN. THICK. (Inches) ALUM.	DIMENSIONS (Inches) A (±1")	B (MAX.)	H (±1")	L (±1 1/2")	L1 ①	L2 ①	W (±2")	APPROX. SLOPE	BODY
48	53	41	.109	.105	18	26	12	63	24	72¾	90	2½ to 1	2 Pc.
54	60	46	.109	.105	18	30	12	70	30	82¼	102	2 to 1	2 Pc.
60	66	51	.109*	.105*	18	33	12	77	—	—	114	1½ to 1	3 Pc.
66	73	55	.109*	.105*	18	36	12	77	—	—	126	1½ to 1	3 Pc.
72	81	59	.109*	.105*	18	39	12	77	—	—	138	2 to 1	3 Pc.
78	87	63	.109*	.105*	22	38	12	77	—	—	148	1½ to 1	3 Pc.
84	95	67	.109*	.105*	22	34	12	77	—	—	162	1½ to 1	3 Pc.
90	103	71	.109*	.105*	22	38	12	77	—	—	174	1½ to 1	3 Pc.
96	112	75	.109*	.105*	24	40	12	77	—	—	174	1½ to 1	3 Pc.

NOTE: ALL SPLICES TO BE LAP RIVETED OR BOLTED.

* EXCEPT CENTER PANEL SEE GENERAL NOTES

REINFORCED CONCRETE PIPE ARCH

EQUIV. DIA. (Inches)	DIMENSIONS (Inches) ** SPAN	** RISE	T	A	B	C	D	E	APPROX. SLOPE
24	29	18	3	8½	39	33	72	48	3 to 1
30	36	22	3½	9½	50	46	96	60	3 to 1
36	44	27	4	11⅛	60	36	96	72	3 to 1
42	51	31	4½	15 13/16	60	36	96	78	3 to 1
48	58	36	5	21	60	36	96	84	3 to 1
54	65	40	5½	25½	60	36	96	90	3 to 1
60	73	45	6	31	60	36	96	96	3 to 1
72	88	54	7	31	60	39	99	120	2 to 1
84	102	62	8	28½	83	19	102	144	2 to 1

REINFORCED CONCRETE ELLIPTICAL PIPE

EQUIV. DIA. (Inches)	DIMENSIONS (Inches) ** SPAN	** RISE	T	A	B	C	D	E	APPROX. SLOPE
24	30	19	3¼	8½	39	33	72	48	3 to 1
30	38	24	3¾	9½	54	18	72	60	3 to 1
36	45	29	4½	11⅛	60	24	84	72	2½ to 1
42	53	34	5	15¾	60	36	96	78	2½ to 1
48	60	38	5½	21	60	36	96	84	2½ to 1
54	68	43	6	25½	60	36	96	90	2½ to 1
60	76	48	6½	30	60	36	96	96	2½ to 1

**NOMINAL SIZE

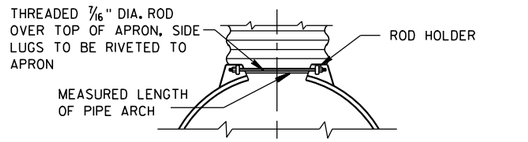

TYPE 2

FOR 17" X 13" THRU 112" X 75" PIPE ARCH

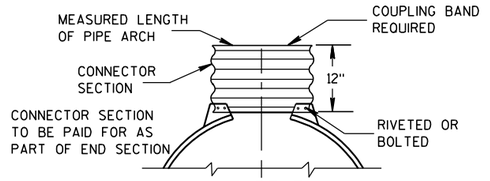

TYPE 3

FOR 64" X 43" THRU 112" X 75" PIPE ARCH

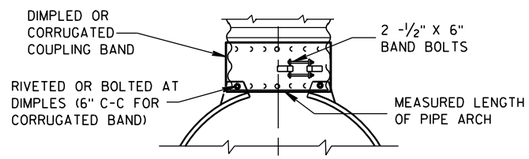

TYPE 5

ALTERNATE FOR:

ALL SIZES CORRUGATED PIPE ARCHES

NOTE: DIMPLED BAND FITS OVER OUTSIDE OF ENDWALL, AND CORRUGATED BAND FITS INSIDE ENDWALL.

CONNECTION DETAILS

GENERAL NOTES

DETAILS OF CONSTRUCTION, MATERIALS AND WORKMANSHIP NOT SHOWN ON THIS DRAWING SHALL CONFORM TO THE PERTINENT REQUIREMENTS OF THE STANDARD SPECIFICATIONS AND THE APPLICABLE SPECIAL PROVISIONS.

CONCRETE APRON ENDWALLS MAY NOT BE USED WITH GALVANIZED STEEL OR ALUMINUM CULVERT PIPE OR VISE VERSA. GALVANIZED STEEL OR ALUMINUM APRON ENDWALLS SHALL NORMALLY BE INSTALLED ON CULVERT PIPE OF THE SAME METAL.

ALL THREE PIECE STEEL APRON ENDWALLS FOR 66" X 51" PIPE ARCH AND LARGER SHALL HAVE 0.109" SIDES AND 0.138" CENTER PANELS. ALL THREE PIECE ALUMINUM APRON ENDWALLS FOR 66" X 51" PIPE ARCH AND LARGER SHALL HAVE 0.105" SIDES AND 0.134" CENTER PANELS. THE WIDTH OF CENTER PANELS SHALL BE GREATER THAN 20 PERCENT OF THE PIPE ARCH PERIMETER.

LAP SEAMS SHALL BE TIGHTLY JOINED BY GALVANIZED RIVETS OR BOLTS FOR STEEL UNITS AND ALUMINUM RIVETS AND BOLTS FOR ALUMINUM UNITS. FOR THE 77" X 52" THROUGH 112" X 75" APRON ENDWALL SIZES, THE REINFORCED EDGES AND CENTER PANEL SEAMS SHALL BE FURTHER REINFORCED WITH GALVANIZED STEEL OR ALUMINUM STIFFENER ANGLES. THE ANGLES SHALL BE ATTACHED BY GALVANIZED NUTS AND BOLTS FOR STEEL UNITS AND ALUMINUM NUTS AND BOLTS FOR ALUMINUM UNITS.

WHERE TWO OR MORE PIPES WITH APRON ENDWALLS ARE LAID ADJACENT TO EACH OTHER, THEY SHALL BE SEPARATED BY A DISTANCE SUFFICIENT TO PROVIDE A MINIMUM CLEARANCE OF 6 INCHES BETWEEN APRON ENDWALLS.

① FOR PIPE ARCH SIZES UP TO 73" X 55" A 180° ROLLED EDGE MAY BE USED INSTEAD OF STEEL ROD REINFORCEMENT. SEE SECTION A-A.

APRON ENDWALLS FOR PIPE ARCH AND ELLIPTICAL PIPE

STATE OF WISCONSIN
DEPARTMENT OF TRANSPORTATION

APPROVED

11/30/94 — DATE

/S/ Rory L. Rhinesmith — CHIEF ROADWAY DEVELOPMENT ENGINEER

FHWA

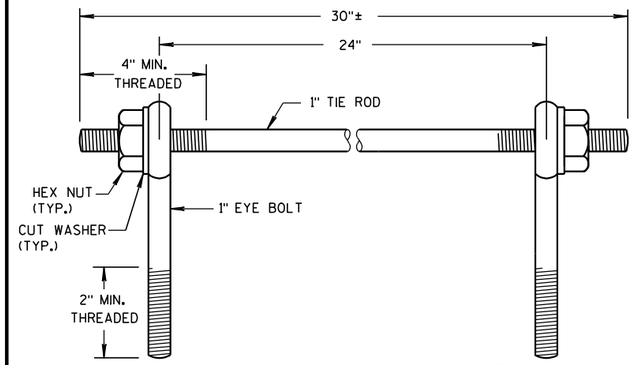

EYE BOLTS AND TIE ROD

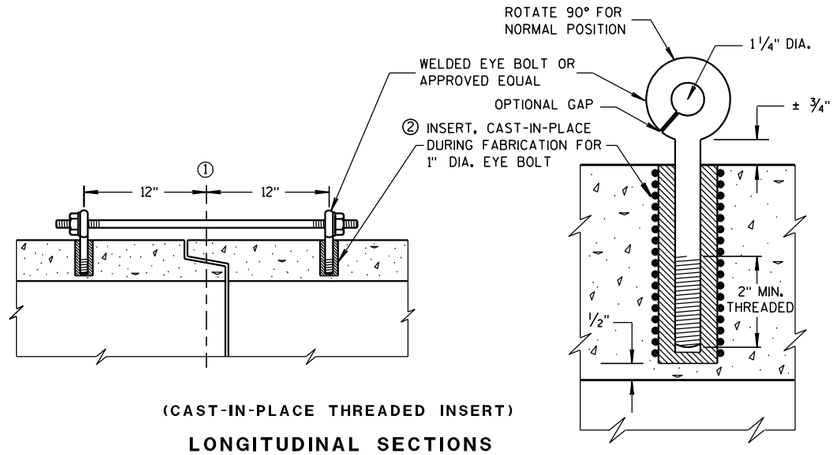

(CAST-IN-PLACE THREADED INSERT)

LONGITUDINAL SECTIONS

EYE BOLT AND TIE ROD ASSEMBLY (ALTERNATE NO. 1)

GENERAL NOTES

DETAILS OF CONSTRUCTION, MATERIALS, AND WORKMANSHIP NOT SHOWN ON THIS DRAWING SHALL CONFORM TO THE PERTINENT REQUIREMENTS OF THE STANDARD SPECIFICATIONS AND APPLICABLE SPECIAL PROVISIONS.

CONCRETE CULVERT AND STORM SEWER PIPE SHALL BE TIED TOGETHER IN THE MANNER ILLUSTRATED BY THIS DETAIL AT LOCATIONS DESIGNATED IN THE STANDARD SPECIFICATIONS AND THE PLAN. THE CONTRACTOR MAY USE EITHER ALTERNATE 1, 2 OR 3 FOR DRAINAGE STRUCTURES. ONLY ALTERNATE 1 AND 3 MAY BE USED FOR CATTLE PASSES, UNLESS OTHERWISE STATED IN THE CONTRACT. THE MATERIALS, FABRICATION AND WORK NECESSARY TO TIE THE PIPE BY THIS DETAIL WILL BE CONSIDERED INCIDENTAL TO THE PIPE AND APRON ENDWALLS IF REQUIRED.

DETAILED DRAWINGS FOR PROPOSED ALTERNATE DESIGNS FOR JOINT TIES SHALL BE SUBMITTED TO THE ENGINEER FOR APPROVAL.

JOINT TIES TO BE HOT-DIP GALVANIZED PER ASTM A 153.

① ℄ OF TONGUE AND GROOVE OR BELL AND SPIGOT JOINTS.

② THE INSIDE OF THE THREADED INSERTS SHALL BE CLEAN TO ALLOW THE INSERTION OF THREADED EYE BOLTS.

③ HOLES SHALL BE CAST-IN-PLACE OR DRILLED 12 INCHES FROM ℄ OF TONGUE AND GROOVE.

④ BOLT PROJECTION INSIDE OF PIPE SHALL NOT EXCEED 2 INCHES.

⑤ OPENING TO BE ROD DIAMETER PLUS 1 INCH.

⑥ LENGTH ADEQUATE TO EXTEND TO WITHIN 1/2 INCH OF THE INNER SURFACE OF THE PIPE.

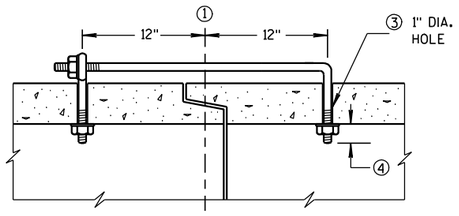

(TONGUE & GROOVE PIPE)

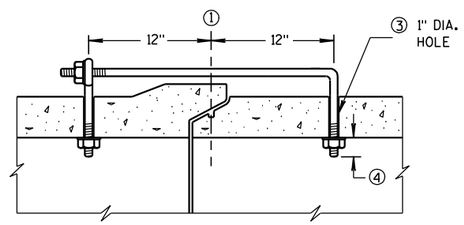

(MODIFIED BELL PIPE)

LONGITUDINAL SECTION

EYE BOLT DIMENSION TABLE

PIPE SIZE	L = LENGTH	
	TONGUE & GROOVE PIPE	MODIFIED BELL PIPE
18" TO 24"	4 1/2"	6 1/4"
30"	5"	7"
36"	5 1/2"	7"
42"	6"	
48"	6 1/2"	
60"	7 1/2"	
66"	8"	

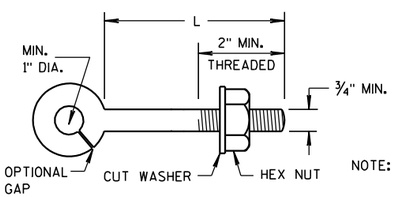

NOTE:

EYE BOLT

NOTE: TWO EYE BOLTS MAY BE USED WITH A 30" LONG THREADED ROD IN LIEU OF THE 90° BENT TIE ROD.

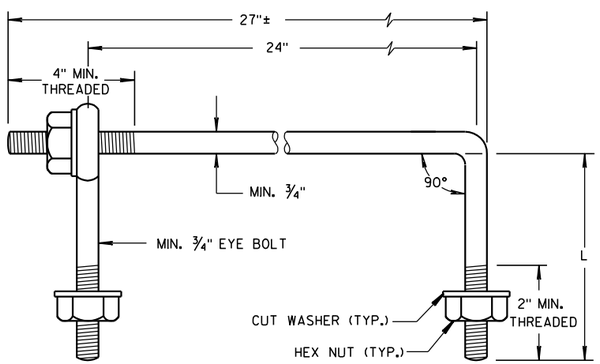

EYE BOLT AND TIE ROD

(JOINT TIES FOR 18" TO 66" DIA. CONCRETE PIPE)

EYE BOLT AND TIE ROD ASSEMBLY (ALTERNATE NO. 2)

ADJUSTABLE TIE ROD TABLE

PIPE DIAMETER	TIE ROD DIAMETER	D	L_1	N
12-60	5/8	5/8	5	1/2
66-84	3/4	3/4	5	1/2
90-108	1	1	7	1 1/16

DIMENSIONS SHOWN ARE IN INCHES

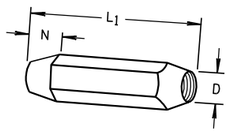

TAPERED

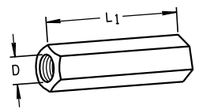

PLAIN

RIGHT AND LEFT THREADS

SLEEVE NUTS

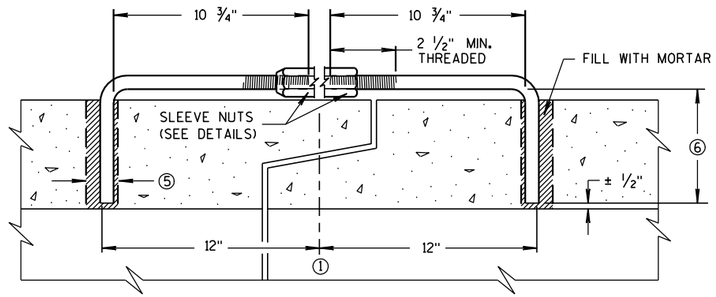

LONGITUDINAL SECTION

(JOINT TIES FOR 12" TO 108" DIA. CONCRETE PIPE)

ADJUSTABLE TIE ROD (ALTERNATE NO. 3)

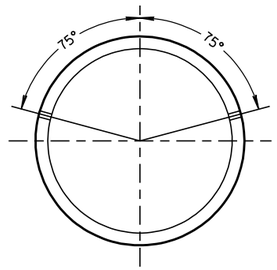

PLACEMENT OF (2) CAST-IN-PLACE INSERTS OR HOLES DURING FABRICATION FOR PIPE SECTIONS REQUIRING TIE RODS

TRANSVERSE SECTION

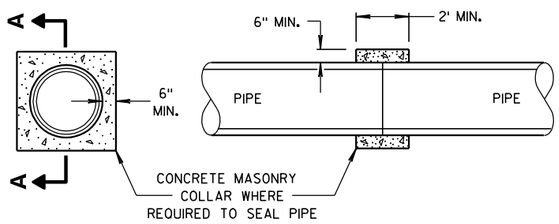

SECTION A-A

CONCRETE COLLAR DETAIL

JOINT TIES FOR CONCRETE PIPE AND CONCRETE COLLAR DETAIL

STATE OF WISCONSIN
DEPARTMENT OF TRANSPORTATION

APPROVED
6/5/2012 — DATE
/S/ Jerry H. Zogg — ROADWAY STANDARDS ENGINEER
87 — 'MENT
FHWA

6

S.D.D. 8 F 4-7

6

S.D.D. 8 F 4-7

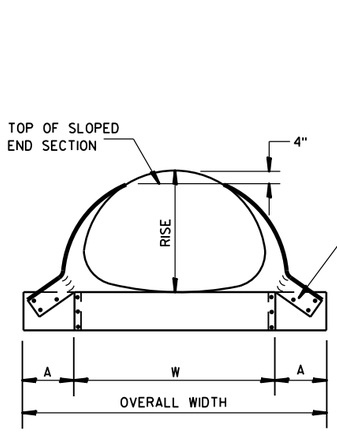

FRONT VIEW

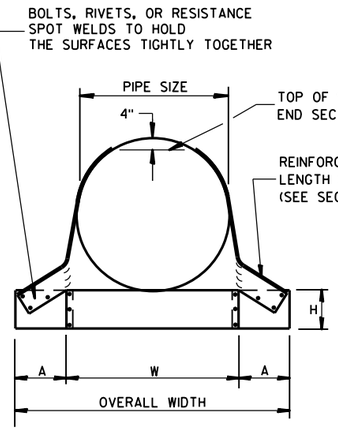

FRONT VIEW

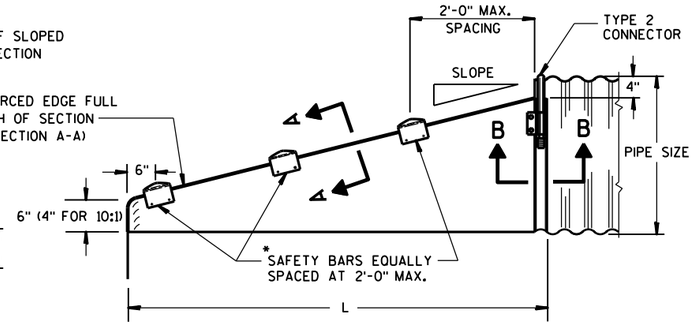

SIDE VIEW

GENERAL NOTES

DETAILS OF CONSTRUCTION, MATERIALS AND WORKMANSHIP NOT SHOWN ON THIS DRAWING SHALL CONFORM TO THE PERTINENT REQUIREMENTS OF THE STANDARD SPECIFICATIONS AND THE APPLICABLE SPECIAL PROVISIONS.

SLOPED END SECTIONS SHALL CONFORM TO THE REQUIREMENTS OF THE STANDARD SPECIFICATIONS, SECTION 521 FOR STEEL APRON ENDWALLS.

SAFETY BARS SHALL BE FABRICATED FROM GALVANIZED STEEL PIPE MEETING THE REQUIREMENTS OF ASTM A-53, GRADE B, SCHEDULE 40 OR APPROVED EQUAL.

STEEL APRON ENDWALLS FOR CULVERT PIPE
SLOPED SIDE DRAINS

PIPE DIA. (IN.)	MIN. THICK. (Inches)	DIMENSIONS (Inches)				L DIMENSIONS					
		A	H	W	OVERALL WIDTH	SLOPE	LENGTH INCHES	SLOPE	LENGTH INCHES	SLOPE	LENGTH INCHES
15	.064	8	6	21	37	4:1	20	6:1	30	10:1	70
18	.064	8	6	24	40	4:1	32	6:1	48	10:1	100
21	.064	8	6	27	43	4:1	44	6:1	66	10:1	130
24	.064	8	6	30	46	4:1	56	6:1	84	10:1	160
30	.109	12	9	36	60	4:1	80	6:1	120	10:1	220
36	.109	12	9	42	66	4:1	104	6:1	156	10:1	280
42	.109	16	12	48	80	4:1	128	6:1	192	——	——
48	.109	16	12	54	86	4:1	152	6:1	228	——	——
54	.109	16	12	60	92	4:1	176	6:1	264	——	——
60	.109	16	12	66	98	4:1	200	6:1	300	——	——

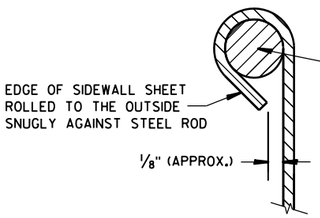

SECTION A-A

*NOTE:
THREE SAFETY BARS ARE SHOWN. ACTUAL NUMBER OF BARS REQUIRED AT A 2'-0" C-C MAX. SPACING WILL VARY DEPENDING ON THE LENGTH OF THE END SECTION.

3" GALVANIZED PIPE. FLATTEN ENDS, THEN BEND OUTSIDE 4" TO MATCH END SECTION SIDES.

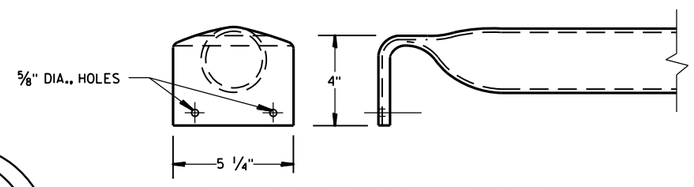

DETAIL OF SAFETY BAR

STEEL APRON ENDWALLS FOR PIPE ARCH
SLOPED SIDE DRAINS

EQUIV. DIA. (Inches)	(Inches) SPAN	(Inches) RISE	MIN. THICK. (Inches) ①	DIMENSIONS (Inches) A	H	W	OVERALL WIDTH	L DIMENSIONS SLOPE	LENGTH INCHES	SLOPE	LENGTH INCHES	SLOPE	LENGTH INCHES
15	17	13	.064 *	7	6	30	44	4:1	19	6:1	30	10:1 ②	70
18	21	15	.064 *	8	6	27	43	4:1	20	6:1	30	10:1	70
21	24	18	.064 *	8	6	30	46	4:1	32	6:1	48	10:1	100
24	28	20	.064 *	8	6	34	50	4:1	40	6:1	60	10:1	120
30	35	24	.079 *	12	9	41	65	4:1	56	6:1	84	10:1	160
36	42	29	.109 *	12	9	48	72	4:1	76	6:1	114	10:1	210
42	49	33	.109	16	12	55	87	4:1	92	6:1	138	——	——
48	57	38	.109	16	12	63	95	4:1	112	6:1	168	——	——
54	64	43	.109	16	12	70	102	4:1	132	6:1	198	——	——

① * MINIMUM THICKNESS OF ALL 10:1 SLOPED SIDE DRAINS IS 0.109".
② ACTUAL SLOPE GREATER THAN 10:1.

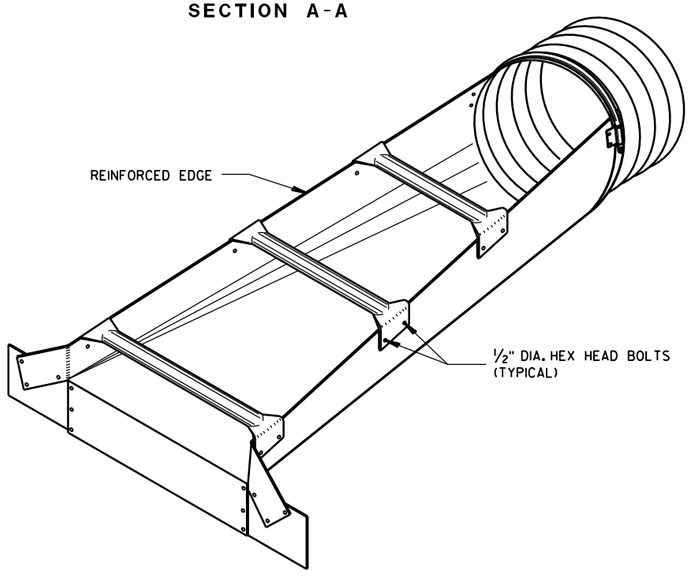

ISOMETRIC VIEW

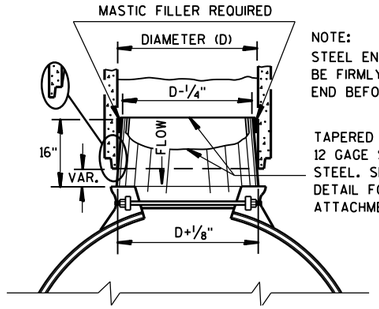

STEEL ADAPTER SLEEVE FOR CONCRETE PIPE

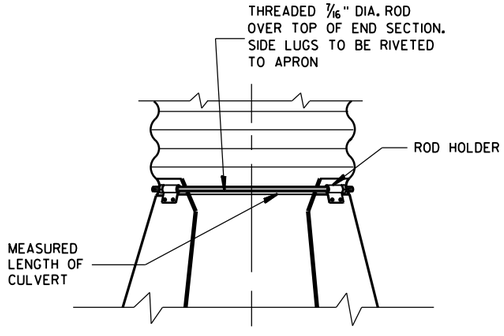

TYPE 2
CONNECTION DETAIL

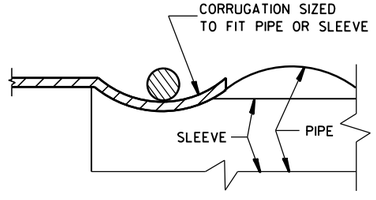

SECTION B-B

STEEL APRON ENDWALLS FOR CULVERT PIPE AND PIPE ARCH SLOPED SIDE DRAINS

STATE OF WISCONSIN
DEPARTMENT OF TRANSPORTATION

APPROVED
9/14/2012 — DATE
/S/ Jerry H. Zoda — ROADWAY STANDARDS DEVELOPMENT ENGINEER
FHWA

6

S.D.D. 8 F 7-5

6

S.D.D. 8 F 7-5

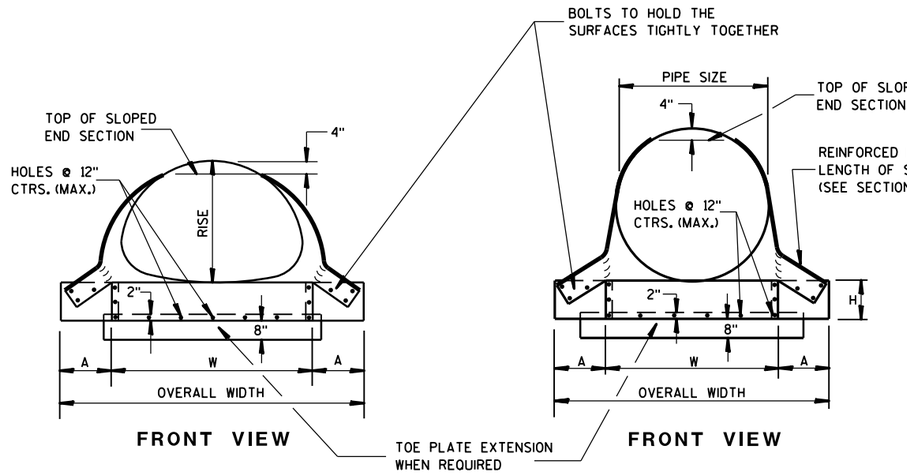

FRONT VIEW

FRONT VIEW

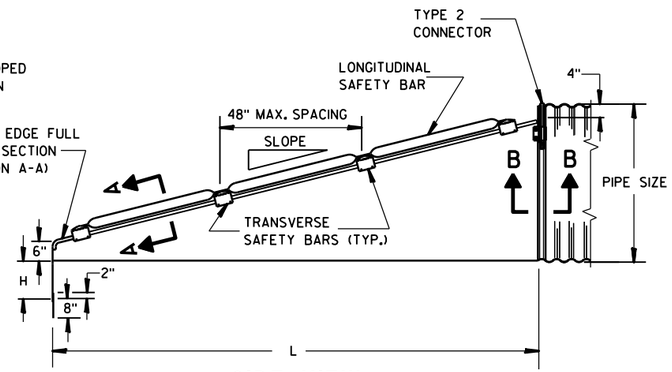

SIDE VIEW
(48" SIZE ILLUSTRATED)

GENERAL NOTES

DETAILS OF CONSTRUCTION, MATERIALS AND WORKMANSHIP NOT SHOWN ON THIS DRAWING SHALL CONFORM TO THE PERTINENT REQUIREMENTS OF THE STANDARD SPECIFICATIONS AND APPLICABLE SPECIAL PROVISIONS.

SAFETY GRATES SHALL BE FABRICATED FROM 3-INCH DIAMETER GALVANIZED PIPE MEETING THE REQUIREMENTS OF ASTM A-53, GRADE B, SCHEDULE 40 OR APPROVED EQUAL. THE LONGITUDINAL BAR SHALL BE WELDED TO THE TRANSVERSE BARS WHERE THE BARS CROSS. THE NUMBER OF TRANSVERSE BARS REQUIRED WILL VARY DEPENDING ON THE LENGTH OF THE END SECTION.

SLOPED STEEL ENDWALLS LOCATED AT THE ENDS OF CONCRETE CULVERT PIPE SHALL BE FURNISHED WITH STEEL ADAPTER SLEEVES.

STEEL APRON ENDWALLS FOR CULVERT PIPE CROSS DRAINS

PIPE DIA. (IN.)	MIN. THICK.		DIMENSIONS (Inches)				L DIMENSIONS			
	IN.	GAGE	A	H	W	OVERALL WIDTH	SLOPE	LENGTH INCHES	SLOPE	LENGTH INCHES
36	.109	12	12	9	42	66	4:1	104	6:1	156
42	.109	12	16	12	48	80	4:1	128	6:1	192
48	.109	12	16	12	54	86	4:1	152	6:1	228
54	.109	12	16	12	60	92	4:1	176	6:1	264
60	.109	12	16	12	66	98	4:1	200	6:1	300

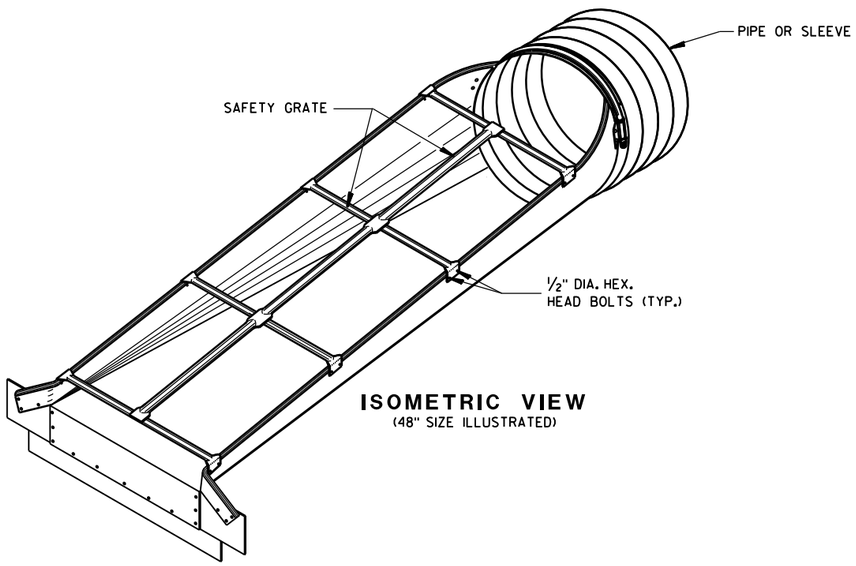

ISOMETRIC VIEW
(48" SIZE ILLUSTRATED)

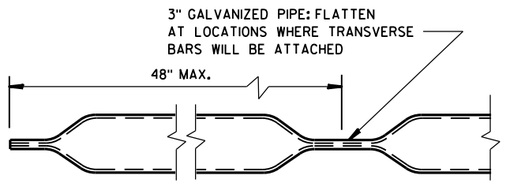

LONGITUDINAL SAFETY BAR

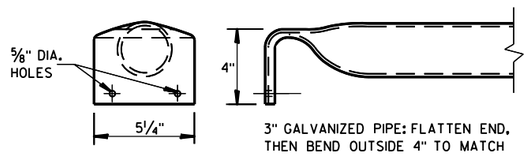

TRANSVERSE SAFETY BAR

STEEL APRON ENDWALLS FOR PIPE ARCH SLOPED CROSS DRAINS

EQUIV. DIA. (IN.)	INCHES		MIN. THICK.		DIMENSIONS (Inches)				L DIMENSIONS			
	SPAN	RISE	IN.	GAGE	A	H	W	OVERALL WIDTH	SLOPE	LENGTH INCHES	SLOPE	LENGTH INCHES
30	35	24	.079	14	12	9	41	65	4:1	56	6:1	84
36	42	29	.109	12	12	9	48	72	4:1	76	6:1	114
42	49	33	.109	12	16	12	55	87	4:1	92	6:1	138
48	57	38	.109	12	16	12	63	95	4:1	112	6:1	168
54	64	43	.109	12	16	12	70	102	4:1	132	6:1	198
60	71	47	.109	12	16	12	77	109	4:1	148	6:1	222

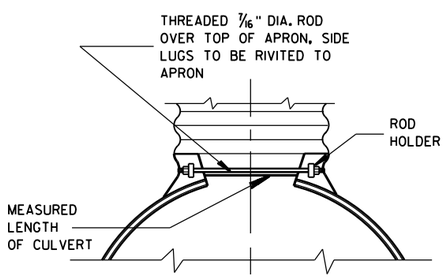

TYPE 2 CONNECTOR DETAIL

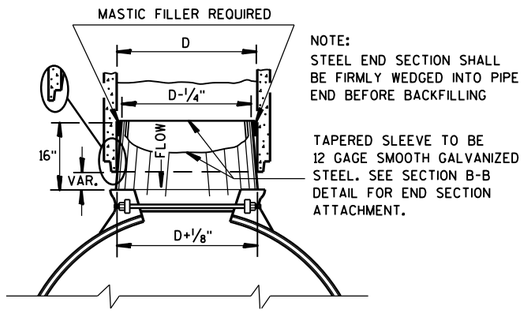

STEEL ADAPTER SLEEVE FOR CONCRETE PIPE

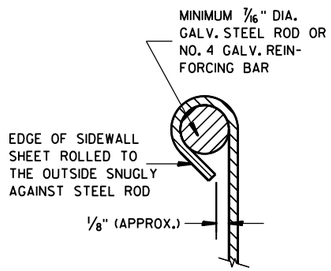

SECTION A-A

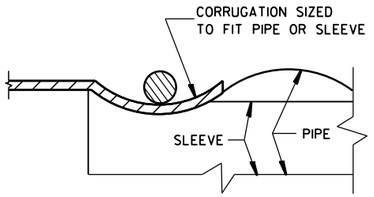

SECTION B-B

STEEL APRON ENDWALLS FOR CULVERT PIPE AND PIPE ARCH SLOPED CROSS DRAINS

STATE OF WISCONSIN
DEPARTMENT OF TRANSPORTATION

APPROVED
6/5/2012 — DATE
/S/ Jerry H. Zogg — ROADWAY STANDARDS ENGINEER
FHWA

6

S.D.D. 8 F 8-2

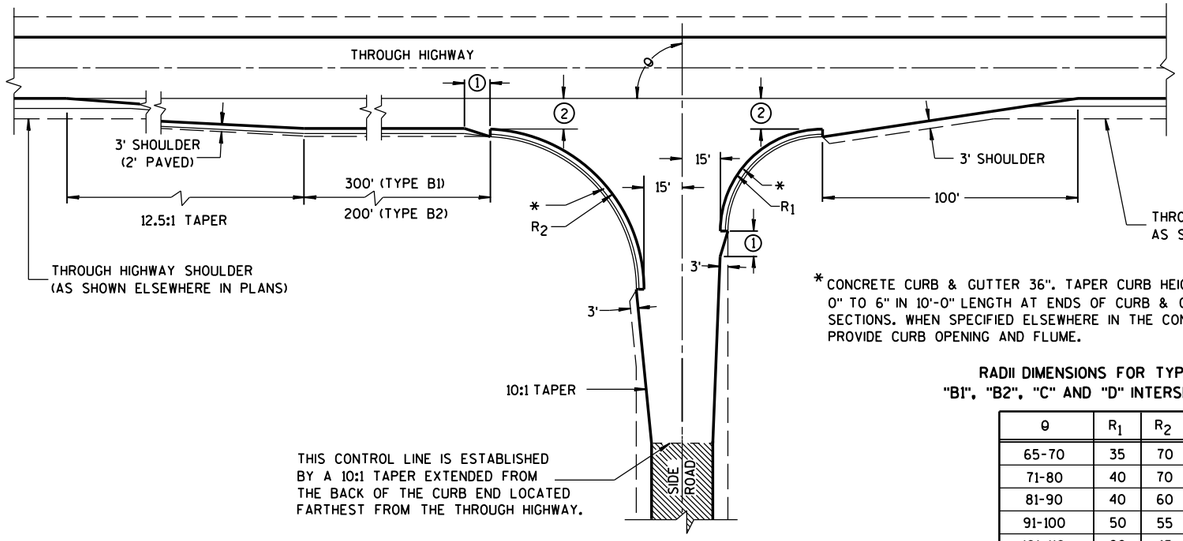

TYPE "B1" AND "B2"

*CONCRETE CURB & GUTTER 36". TAPER CURB HEIGHT 0" TO 6" IN 10'-0" LENGTH AT ENDS OF CURB & GUTTER SECTIONS. WHEN SPECIFIED ELSEWHERE IN THE CONTRACT, PROVIDE CURB OPENING AND FLUME.

RADII DIMENSIONS FOR TYPES "B1", "B2", "C" AND "D" INTERSECTIONS

θ	R_1	R_2
65-70	35	70
71-80	40	70
81-90	40	60
91-100	50	55
101-110	60	45

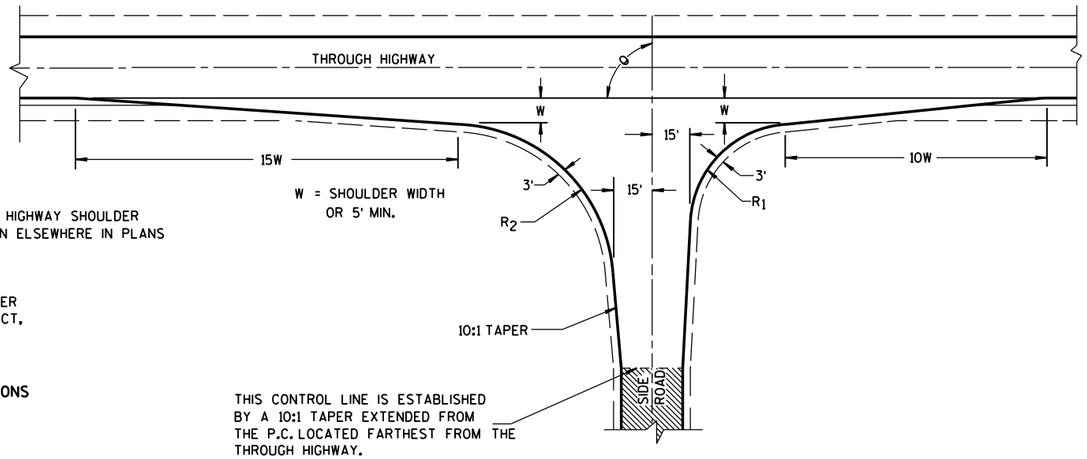

TYPE "C"

GENERAL NOTES

DESIGNS MAY BE USED INTERCHANGEABLY IN COMBINATION OR SEPARATELY FOR ANY ONE COMPLETE INTERSECTION DEPENDING UPON INTERSECTION ANGLE AND SURFACING OF EACH APPROACH ROADWAY.

SIDE ROAD SURFACING NOTE

WHEN THE SIDE ROAD IS NOT PRESENTLY PAVED, PAVEMENT SHALL BE PLACED TO THE LIMITS SHOWN UNLESS OTHERWISE PROVIDED IN THE CONTRACT. WHERE THE CONSTRUCTION LIMITS ARE BEYOND THE PAVING LIMITS, CRUSHED AGGREGATE SURFACING SHALL BE PLACED BETWEEN THE PAVING LIMITS AND CONSTRUCTION LIMITS.

WHEN THE SIDE ROAD IS PRESENTLY PAVED, NEW PAVEMENT SHALL BE PLACED TO THE LIMITS OF DESIGN AS SHOWN AND BEYOND, IF NECESSARY, TO MEET EXISTING PAVEMENT.

WHEN THE SIDE ROAD IS THE CONSTRUCTION PROJECT, THE INTERSECTION SURFACING SHALL BE THE SAME AS FOR THE PROJECT.

EXISTING PAVED SURFACE

BYPASS LANE

(1) 10-FT TYPICAL.

(2) 12-FT** PLUS ADDITIONAL WIDTH FOR BIKE LANE IF SHOWN ELSEWHERE IN THE PLAN.

**10-FT MAY BE USED ON TYPE B2 ON RESURFACING PROJECTS IF SPECIFIED IN THE CONTRACT.

(3) BYPASS LANE PAVED SURFACE WIDTH OUTSIDE OF TRAVEL LANE
-ASPHALT = 12-FT PLUS PAVED SHOULDER WIDTH.
-PC CPNCRETE = 13-FT PLUS PAVED SHOULDER WIDTH.

(4) BYPASS LANE PAVED SHOULDER WIDTH = THE GREATER OF 1-FT OR THE PAVED SHOULDER WIDTH OF THE THROUGH HIGHWAY.

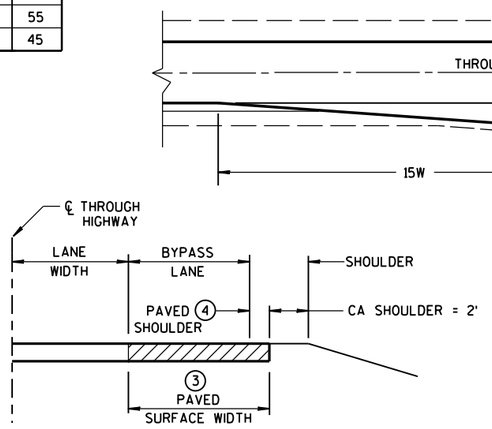

SECTION A-A
(SHOWING BYPASS LANE AND SHOULDER)

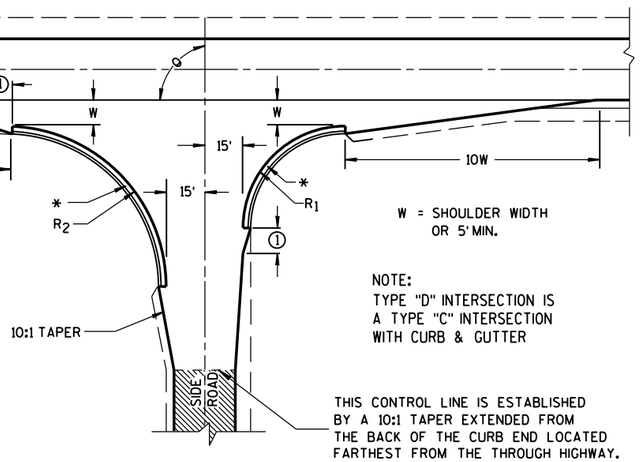

TYPE "D"

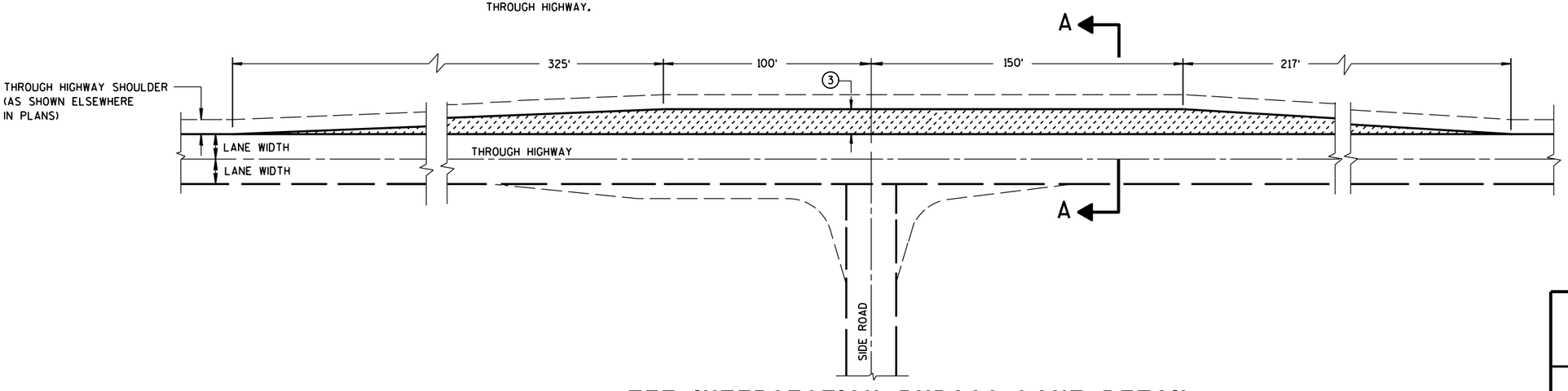

TEE INTERSECTION BYPASS LANE DETAIL

AT-GRADE SIDE ROAD INTERSECTION, TYPES "B1", "B2", "C" AND "D" AND TEE INTERSECTION BYPASS LANE

STATE OF WISCONSIN
DEPARTMENT OF TRANSPO

6

S.D.D. 9 A 1-13a

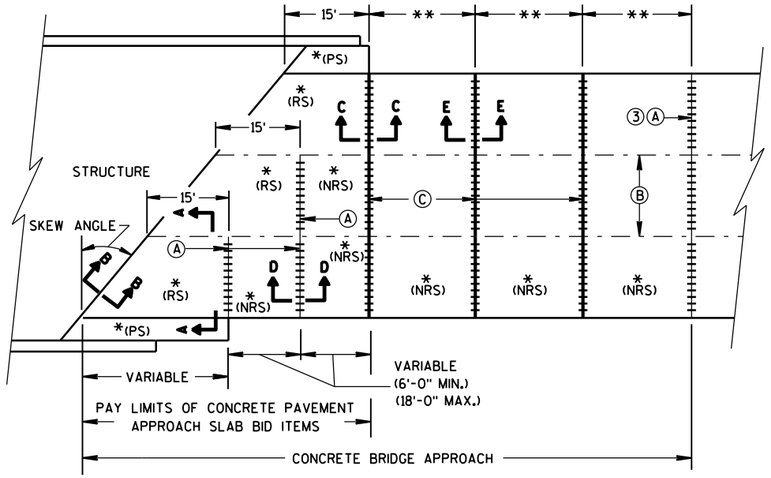

SKEWED APPROACH
(PAVEMENT MORE THAN 2 LANES)

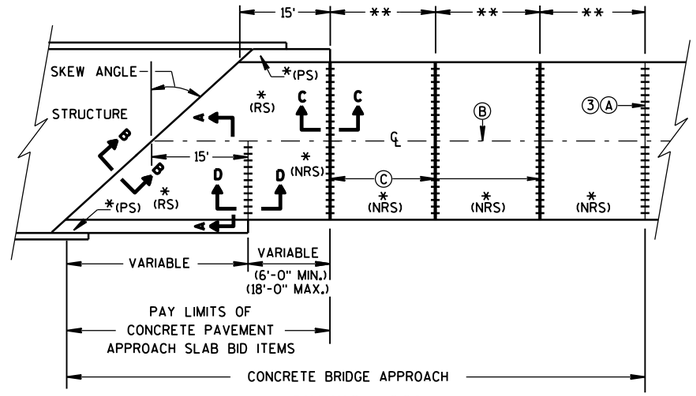

SKEWS >30°
(PAVEMENT WIDTH ≤30')

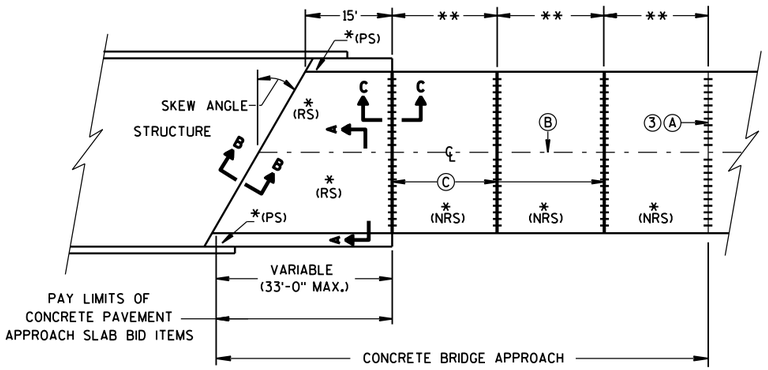

SKEWS ≤30°
(PAVEMENT WIDTH ≤30')

APPROACH SLAB AND ADJACENT PAVEMENT

*(RS) = REINFORCED CONCRETE SLAB
*(PS) = PAVED CONCRETE SHOULDER: CONCRETE PAVEMENT, OR CONCRETE SURFACE DRAIN (SEE DETAILS ELSEWHERE IN THE PLAN)
*(NRS) = NON-REINFORCED CONCRETE SLAB

**STANDARD TRANSVERSE JOINT SPACING (SEE SDD 13C4, SDD 13C11, & SDD 13C13)
***STANDARD DOWEL BAR DIAMETER (SEE SDD 13C11, & SDD 13C13)

(A) STANDARD CONTRACTION JOINT NORMAL TO ℄ OR ℄
(B) STANDARD LONGITUDINAL JOINT AND TIE BARS.
(C) 1½" EXPANSION JOINT WITH DOWEL BARS NORMAL TO ℄ OR ℄

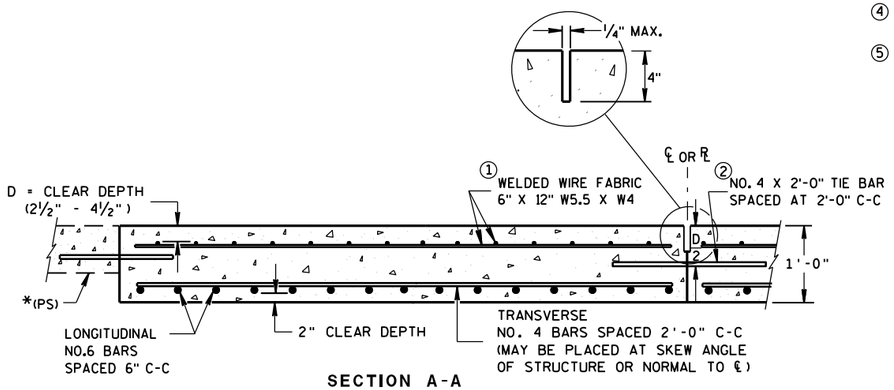

SECTION A-A
REINFORCEMENT POSITIONING DETAIL

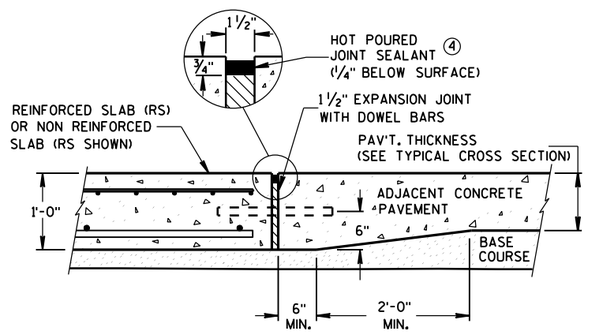

SECTION C-C
TRANSITION DETAIL
APPROACH SLAB TO ADJACENT PAVEMENT

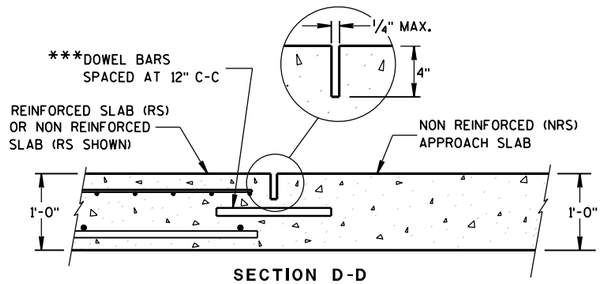

SECTION D-D
CONTRACTION JOINT

GENERAL NOTES

THE CONTRACTOR MAY SPLICE NO. 6 BARS IN THE APPROACH SLAB FOR SKEWED STRUCTURES ONLY. STAGGER SPLICES WITH A MAXIMUM OF ONE SPLICE PER BAR. THE LENGTH OF LAP IS 20 INCHES.

TACK WELD DOWEL BARS TO THE BASKETS ON ALTERNATE ENDS.

1. THE CONTRACTOR MAY USE NO. 4 BARS SPACED AT 2'-0" C-C IN BOTH THE LONGITUDINAL AND TRANSVERSE DIRECTIONS FOR TOP REINFORCEMENT AS AN ALTERNATIVE TO THE WELDED WIRE FABRIC.
2. THE CONTRACTOR MAY OMIT TIE BARS BETWEEN REINFORCED SLABS WHERE SLAB REINFORCEMENT BARS EXTEND ACROSS THE CENTERLINE OR REFERENCE LINE.
3. DO NOT DOWEL A CONTRACTION JOINT THAT ABUTS AN HMA PAVEMENT.
4. USE A JOINT SEALANT MEETING THE REQUIREMENTS OF ASTM D6690.
5. PLACE EXPANSION CAP ON THE END OF THE DOWEL THAT IS NOT TACK WELDED TO THE BASKET. DO NOT FORCE DOWEL BAR PAST THE DOWEL STOP.

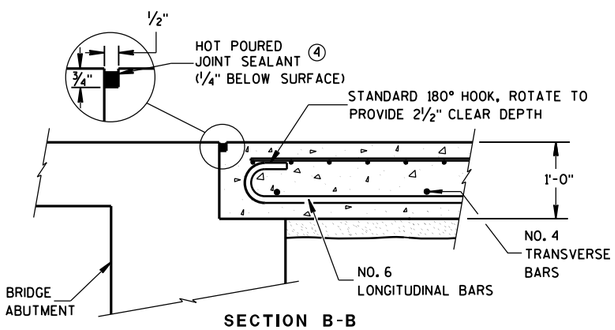

SECTION B-B
BEND DETAIL
BOTTOM REINFORCEMENT

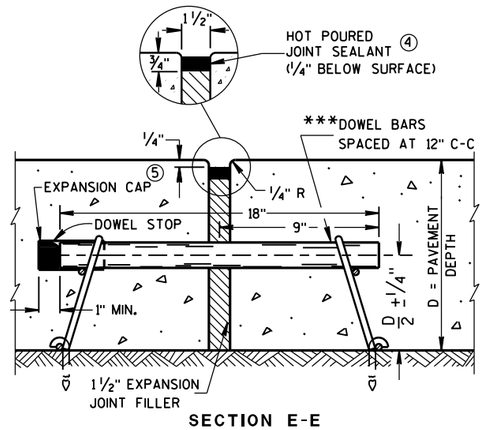

SECTION E-E
EXPANSION JOINT

CONCRETE BRIDGE APPROACH

STATE OF WISCONSIN
DEPARTMENT OF TRANSPORTATION

APPROVED
June, 2014 — DATE
/S/ Deb Bischoff — PAVEMENT POLICY & DE
EER
FHWA

6
S.D.D. 13 B 2-7a

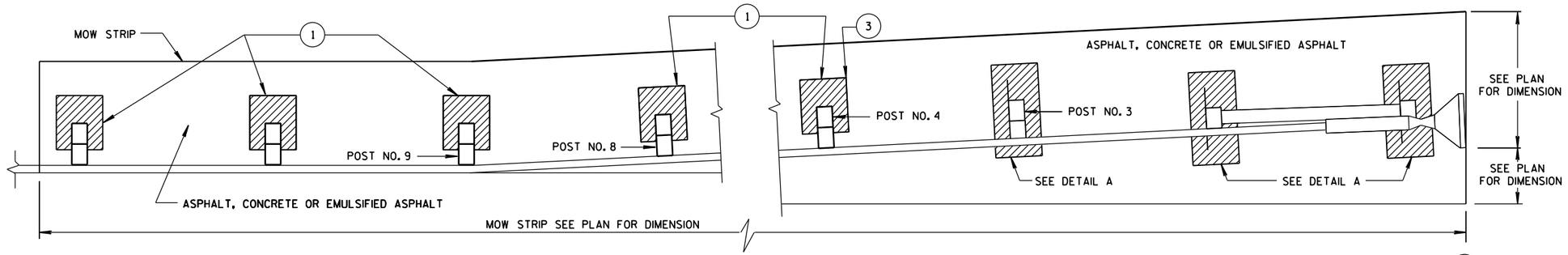

PLAN VIEW

MOW STRIP LAYOUT FOR ENERGY ABORBING TERMINAL

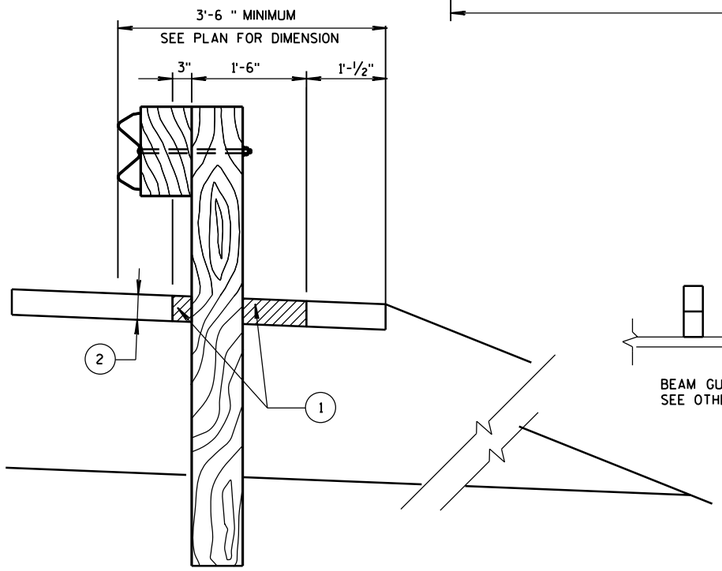

SECTION A-A

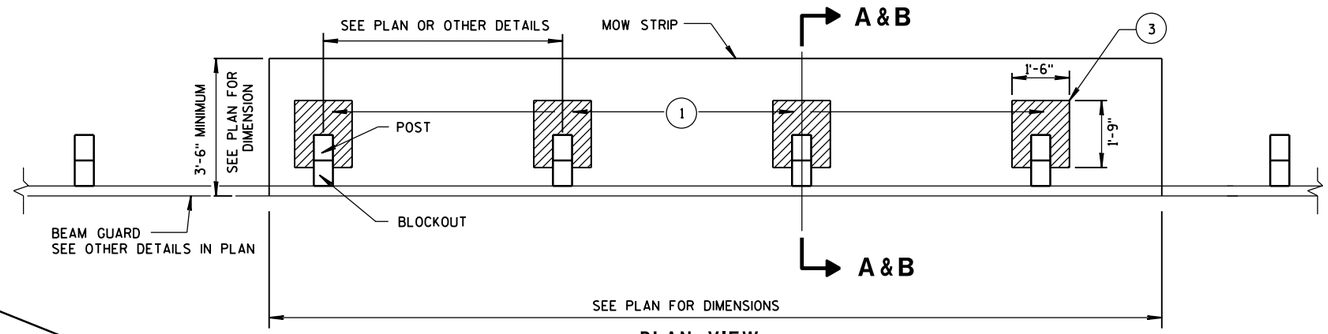

PLAN VIEW

MOW STRIP FOR TYPICAL BLOCKOUT LAYOUT

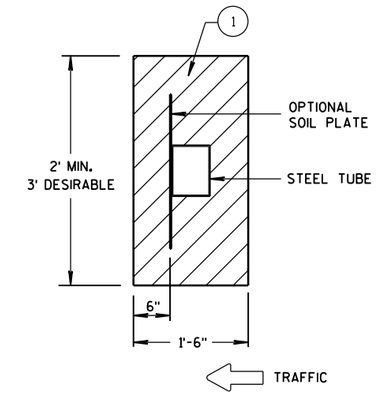

DETAIL A

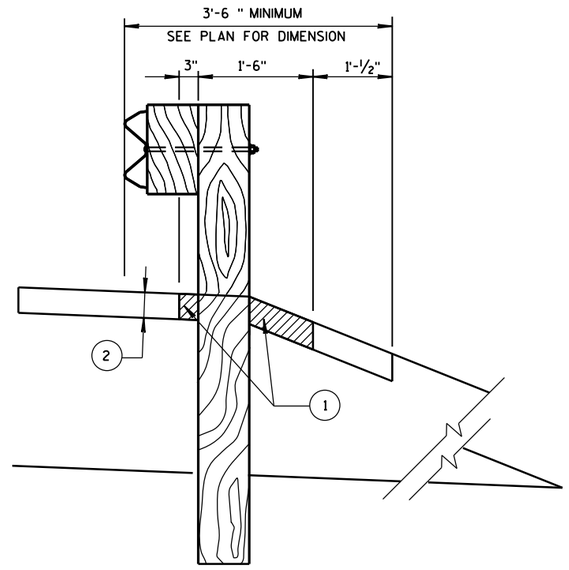

SECTION B-B

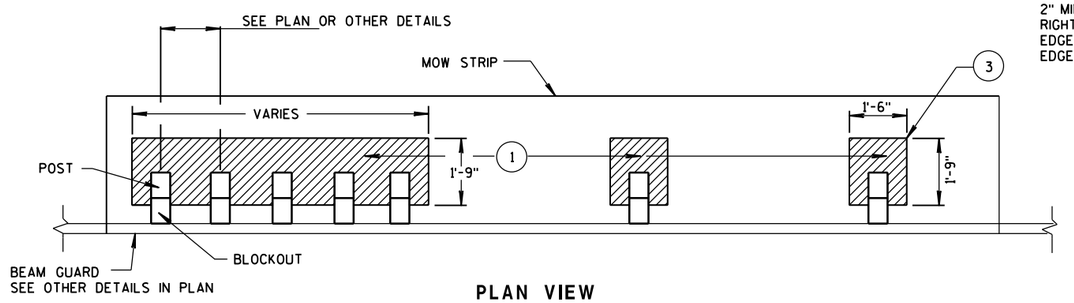

PLAN VIEW

MOW STRIP FOR TIGHT SPACING LAYOUT

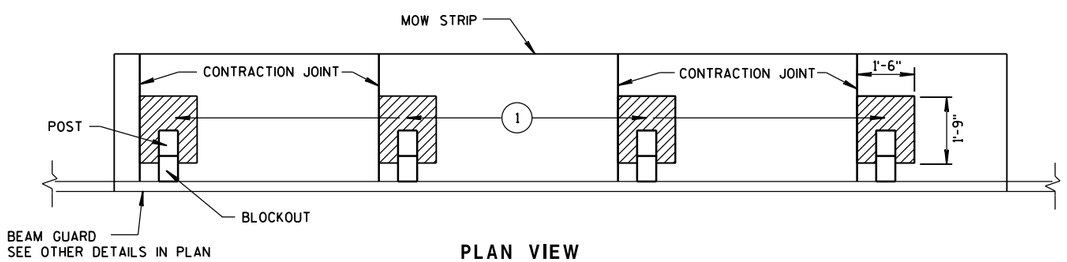

PLAN VIEW

JOINT PLACEMENT FOR CONCRETE MOW STRIP

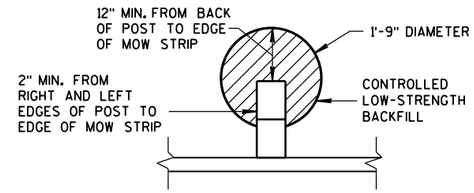

ALTERNATIVE HMA
MOW STRIP DESIGN

(1) CONTROLLED LOW-STRENGTH BACKFILL OR EMULSIFIED ASPHALT.

(2) DEPTH OF MOW STRIP:
ASPHALT - 4"
CONCRETE - 4"
EMULSIFIED ASPHALT - 1" OR LESS

(3) FOR EMULSIFIED ASPHALT MOW STRIP LEAVE OUTS NOT REQUIRED. (TYPICAL FOR ALL POSTS.)

GUARDRAIL MOW STRIP

STATE OF WISCONSIN
DEPARTMENT OF TRANSPORTATION

APPROVED
June 2014
DATE
/S/ Jerry H. Zogg
ROADWAY STANDARDS ENGINEER
92
NT
FHWA

6

S.D.D. 14 B 28-3

6

S.D.D. 14 B 28-3

GENERAL NOTES

1. WOOD OR STEEL POSTS (w6X9 OR w6X8.5) MAY BE USED. DO NOT INTERMIX WOOD AND STEEL POSTS. INSTALL STEEL POSTS WITH HOLES ON APPROACHING TRAFFIC SIDE.

2. USE WOOD OR APPROVED PLASTIC BLOCKOUTS. WOOD BLOCKOUTS MAY BE CONSTRUCTED OUT OF TWO OR MORE WOOD BLOCKOUTS. SEE ALTERNATE WOOD BLOCKOUT DETAIL. DIMENSIONS OF APPROVED PLASTIC BLOCKOUTS MAY VARY.

3. IF ROCK IS ENCOUNTERED DURING EXCAVATION, PROVIDE A HOLE 12 INCHES IN DIAMETER EXTENDING 20 INCHES DEEP INTO THE ROCK. PLACE APPROXIMATELY 2½ INCHES OF GRANULAR MATERIAL IN THE BOTTOM OF THE HOLE. CUT THE POSTS THE TO LENGTH AMD INSTALL. BACKFILL WITH EXCAVATED MATERIAL AND COMPACT. BACKFILL IS TO BE FREE OF LARGE ROCKS.

4. WHEN THE DISTANCE FROM BACK OF POST TO SHOULDER HINGE POINT IS LESS THAN 2 FEET INSTALL LONGER POST AT HALF POST SPACING (K).

5. FOR NEW MGS INSTALLATION TOP OF W-BEAM RAIL TOLERANCE IS ± 1". FOR EXISTING MGS INSTALLATION TOP OF W-BEAM IS BETWEEN 27¾" TO 32".

6. WHEN USING STEEL POST AND WOOD BLOCKOUTS INSTALL FOUR 16D GALVANIZED NAILS. INSTALL NAILS AT THE BACK CORNERS OF THE BLOCK AND BEND THE NAILS OVER THE FLANGE OF THE STEEL POST.

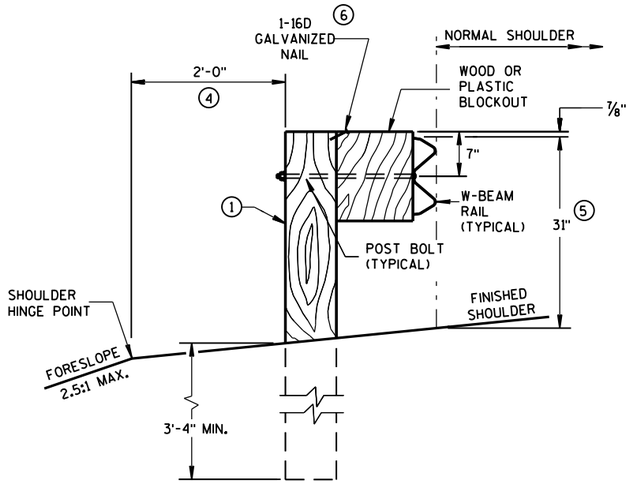

END VIEW

LOCATED ALONG A ROADWAY SHOULDER
STANDARD INSTALLATION

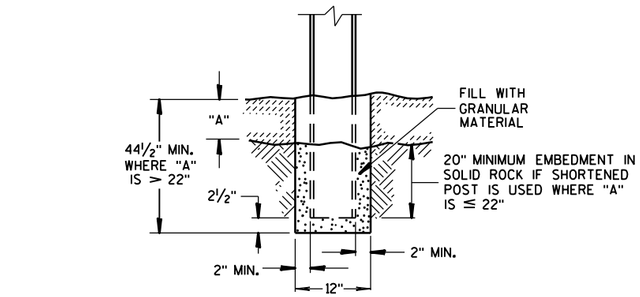

END VIEW

SETTING STEEL OR WOOD POST IN ROCK ③

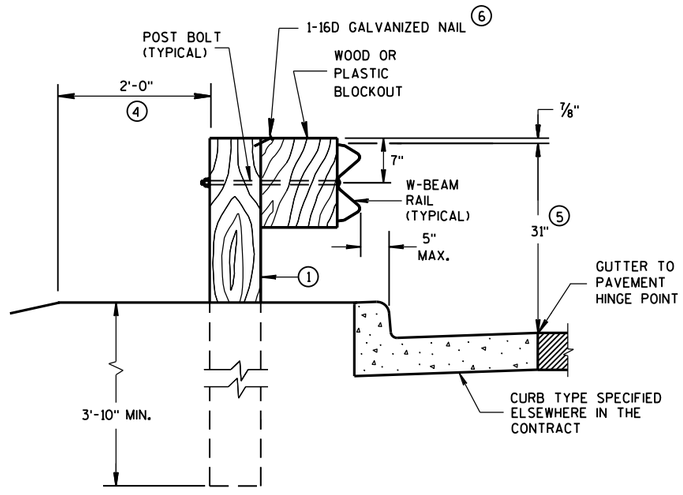

END VIEW

LOCATED ALONG A CURBED ROADWAY

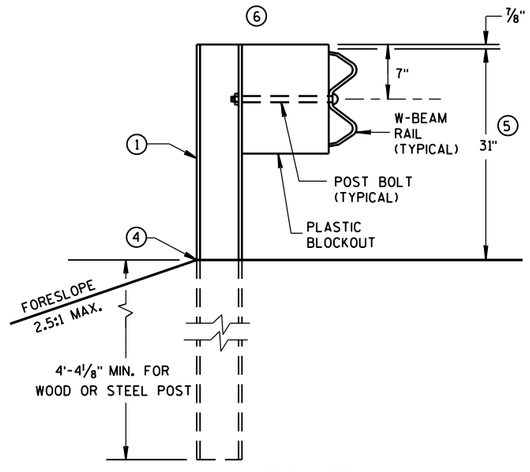

END VIEW

MGS LONGER POST AT HALFPOST SPACING W BEAM (K)

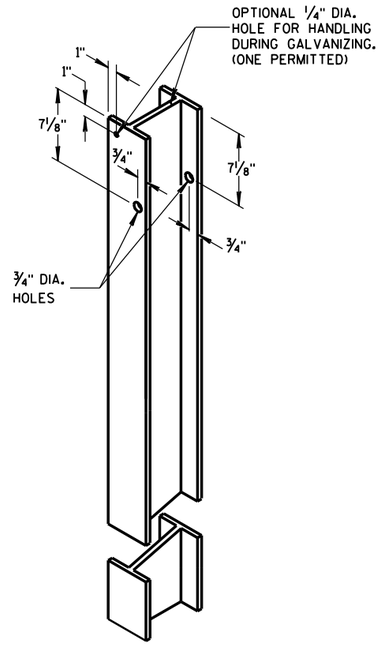

STEEL POST &
HOLE PUNCHING DETAIL
(w6X9) ①

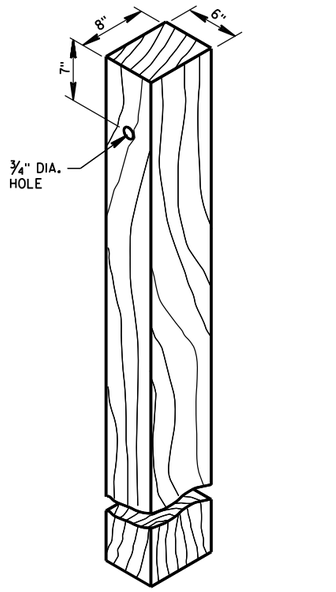

WOOD POST
(6" X 8") NOMINAL ①

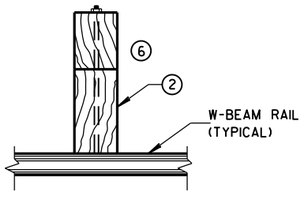

PLAN VIEW
WOOD POST,
BLOCKOUT & BEAM

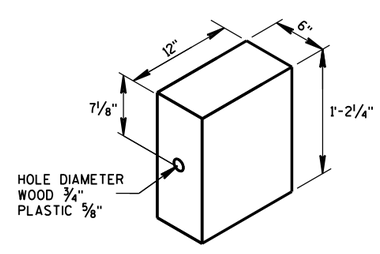

WOOD OR
PLASTIC BLOCKOUT ②

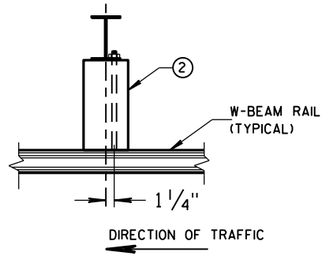

PLAN VIEW
STEEL POST,
PLASTIC BLOCKOUT & BEAM

MIDWEST GUARDRAIL SYSTEM
(MGS) GUARDRAIL

STATE OF WISCONSIN
DEPARTMENT OF TRANSPOR

6
S.D.D. 14 B 42-3a

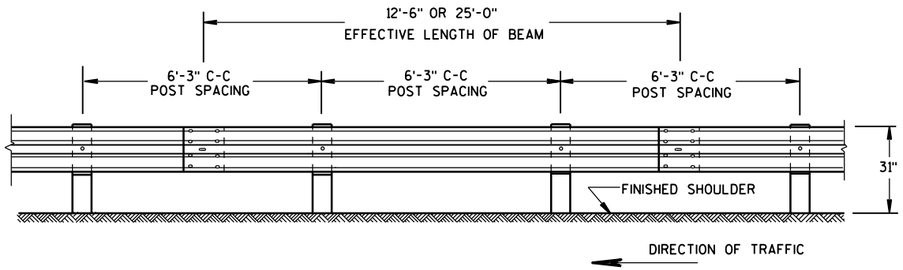

FRONT VIEW

POST SPACING STANDARD INSTALLATION

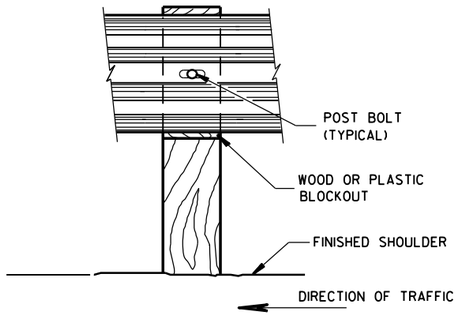

FRONT VIEW AT WOOD POST

GENERAL NOTES

(7) PROVIDE SILVER REFLECTIVE SHEETING ON ALL REFLECTORS EXCEPT THOSE LOCATED ALONG THE LEFT EDGE OF ONE-WAY ROADWAYS, WHICH SHALL BE PROVIDED WITH YELLOW REFLECTIVE SHEETING. SHEETING IS TYPE H. SEE STANDARD SPECIFICATION 637.

(8) DO NOT INSTALL REFLECTORS ON THE FIRST 50 FEET OF THE APPROACH END OF THE ENERGY ABSORBING TERMINAL. RAIL SPLICE LOCATIONS ARE THE ONLY ACCEPTABLE LOCATIONS FOR REFLECTORS.

(9) REVERSE EVERY OTHER REFLECTOR FOR 2-WAY VISIBILITY. THE CONTRACTOR MAY FURNISH TWO-SIDED REFLECTORS IN LIEU OF ONE-SIDED REFLECTORS.

(10) PROVIDE AN ANGLE OF BEND OF 90° ± 1° FOR TWO-SIDED REFLECTORS.

(11) 25 FEET OF HALF POST SPACING IS REQUIRED ON APPROACH AND DEPARTURE ENDS OF QUARTER POST SPACING.

POST BOLTS ARE A 5/8" DIAMETER ASTM A307 GUARDRAIL BOLT. A POST BOLT REQUIRES 5/8" DIAMETER A563A DOUBLE RECESSED (DR) HEAVY HEX NUT AND 5/8" DIAMETER F844 FLAT WASHER. POST BOLTS MAY BE LONGER IF MULTIPLE BLOCKOUTS ARE BEING USED.

GUARD RAIL SPLICE BOLTS ARE A 5/8" DIAMETER ASTM A307 GUARDRAIL HEAD BOLT. A GUARDRAIL SPLICE BOLT REQUIRES 5/8" DIAMETER A563A DOUBLE RECESSED (DR) HEAVY HEX NUT.

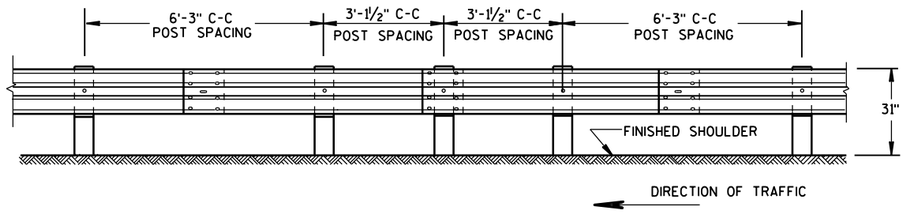

FRONT VIEW

HALF POST SPACING (HS) AND HALF POST SPACING WITH LONGER POSTS (K)

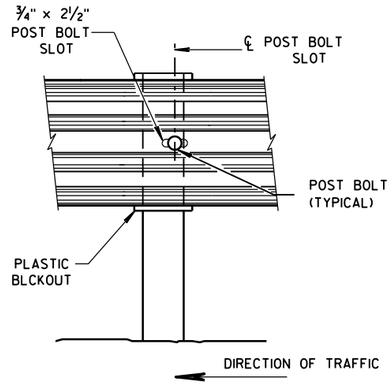

FRONT VIEW AT STEEL POST

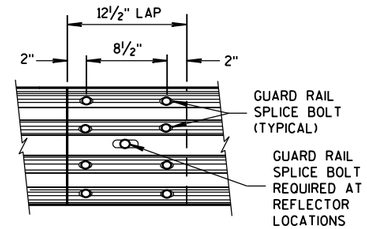

FRONT VIEW
MID-SPAN BEAM SPLICE

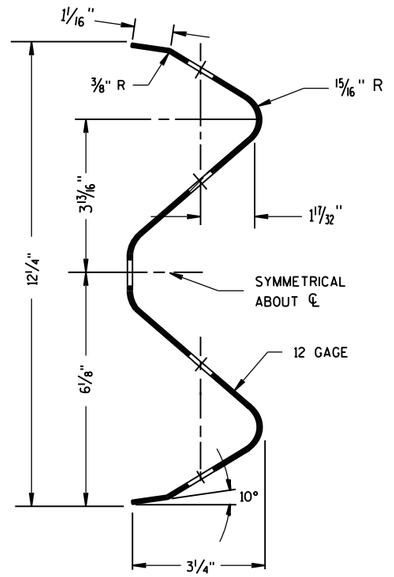

SECTION THRU W-BEAM RAIL

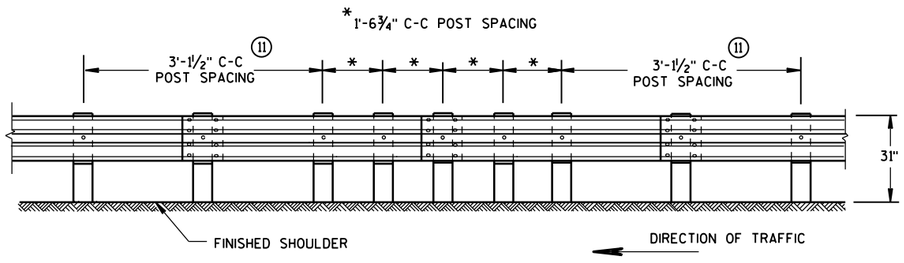

FRONT VIEW

QUARTER POST SPACING (QS)

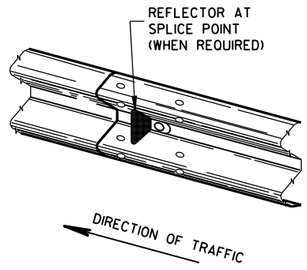

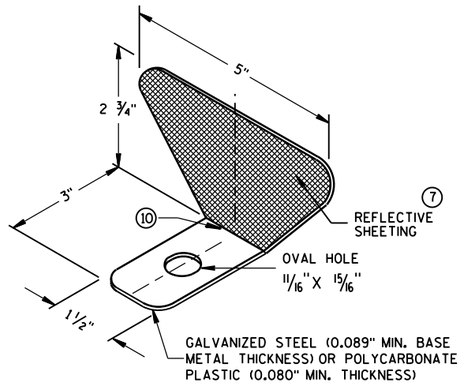

ONE SIDED REFLECTOR DETAIL AND TYPICAL INSTALLATION (7)

REFLECTOR SPACING (8)

	BEAM GUARD LENGTH	REFLECTOR SPACING	NO. SURFACES REFLECTORIZED	MIN. NO. REFLECTORS
ONE WAY TRAFFIC	< 200'	50' C-C	1	3
	> 200'	100' C-C	1	
TWO WAY TRAFFIC	< 200'	25' C-C	1 (9)	6
	> 200'	50' C-C	1	
TWO WAY TRAFFIC	< 200'	50' C-C	2	3
	> 200'	100' C-C	2 (10)	

MIDWEST GUARDRAIL SYSTEM
(MGS) GUARDRAIL

STATE OF WISCONSIN
DEPARTMENT OF TRANSPO

6

S.D.D. 14 B 42-3b

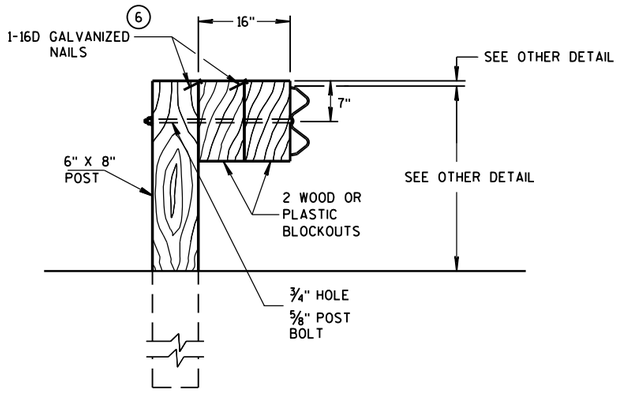

DETAIL FOR 16" BLOCKOUT DEPTH

IT IS ACCEPTABLE TO USE BLOCKOUTS UP TO 16" DEEP TO INCREASE THE POST OFFSET TO AVOID UNDERGROUND OBSTACLES. THERE IS NO LIMIT TO THE NUMBER OF POSTS THAT CAN HAVE ADDITIONAL BLOCKOUTS UP TO 16" DEEP.

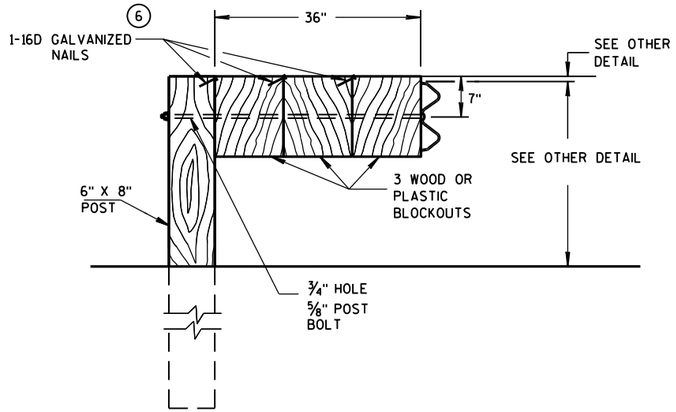

DETAIL FOR 36" BLOCKOUT DEPTH

NOTES: UNDER SPECIAL CIRCUMSTANCES, SUCH AS AVOIDING OBSTACLES THAT ARE NOT RELOCATED, IT IS ACCEPTABLE TO INSTALL ADDITIONAL BLOCKOUTS TO OBTAIN UP TO 36" DEPTH FOR ONE OR TWO POSTS IN A SECTION OF GUARDRAIL.

DO NOT USE 16" OR 36" BLOCKOUTS IF IT CAUSES THE POST TO BE DRIVEN BEYOND SHOULDER HINGE POINT OR CAUSES A FIXED OBJECT TO BE WITHIN THE DEFLECTION DISTANCE OF THE BARRIER.

NOTE: 1. ALL FILLETS SHALL HAVE A MINIMUM RADIUS OF 1/16".
2. IF THE BOLT EXTENDS MORE THAN 1/4" FROM THE NUT THE BOLT SHOULD BE TRIMMED BACK.

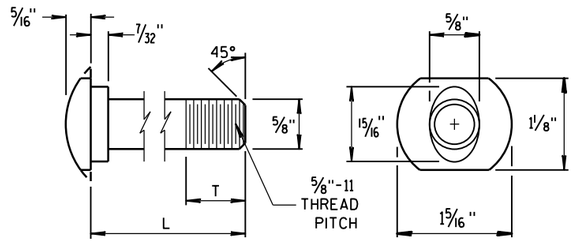

POST BOLT TABLE

L	T (MIN.)
1¼"	1⅛"
2"	1¾"
10"	4"
14"	4 1/16"
18"	4"
21"	4 1/16"
25"	4"

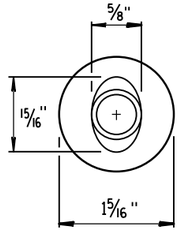

ALTERNATE BOLT HEAD

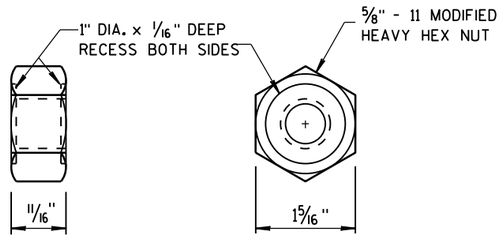

POST BOLT AND RECESS NUT

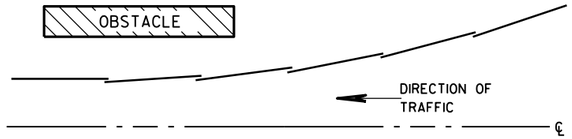

PLAN VIEW

BEAM LAPPING DETAIL

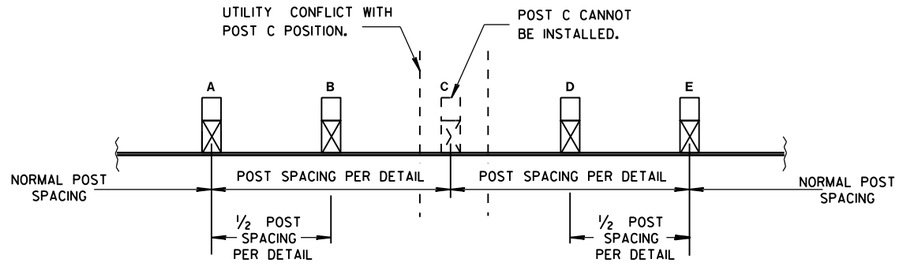

POST DRIVING FOR CONTINUOUS UNDERGROUND OBSTRUCTION

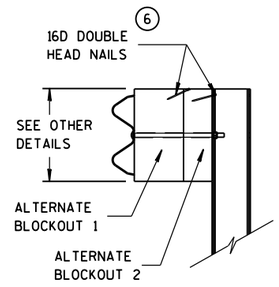

SIDE VIEW

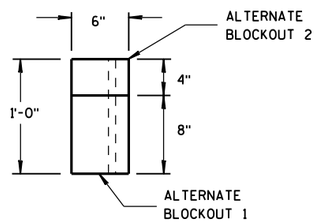

TOP VIEW

ALTERNATE WOOD BLOCKOUT DETAIL

MIDWEST GUARDRAIL SYSTEM (MGS) GUARDRAIL

STATE OF WISCONSIN
DEPARTMENT OF TRANSPORTATION

APPROVED
June 2014 — DATE
/S/ Jerry H. Zogg — ROADWAY STANDARDS ENGINEER
FHWA

6
S.D.D. 14 B 42-3c

GENERAL NOTES

(A) THE SLOPE IN THE AREA BOUNDED BY THE GRADELINE, THE HINGE POINT LINE (HPL), AND THE CLEAR ZONE LIMITS (CZL) SHALL BE 4:1 OR FLATTER.

(B) AFTER FINAL ASSEMBLY, RECHECK CABLE TO BE SURE IT IS TAUT AND HAS NOT RELAXED.

(C) DIFFERENT MANUFACTURES REQUIRE DIFFERENT PERFORATED W-BEAM RAIL END PANELS. SEE MANUFACTURES INFORMATION.

(D) THE TOP OF THE STEEL TUBE ON POST 1 AND POST 2 SHALL NOT BE MORE THAN 3" ABOVE THE FINISH GROUND ELEVATION.

(F) ATTACH ALUMINUM SHEET TO E.A.T. HEAD USING 4 STAINLESS STEEL SELF-TAPPING SCREWS. ONE SCREW PER CORNER.

(G) ½" DIAMETER X 3" LONG LAG BOLT AND WASHER.

(H) HARDWARE VARIES BETWEEN DIFFERENT MANUFACTURES. SEE MANUFACTURE'S DRAWING FOR INFORMATION.

(I) DIMENSIONS MAY VARY. SEE MANUFACTURE'S INFORMATION.

SEE SDD 14B42 FOR MORE INFORMATION.

* DO NOT ATTACH BLOCKOUTS TO POSTS 1 AND 2.

DO NOT INSTALL REFLECTORS ON THE FIRST 50 FEET OF THE APPROACH END OF THE ENERGY ABSORBING TERMINAL.

W-BEAM RAIL SPLICES ARE LOCATED AT POST NUMBER 3, AND BETWEEN POST 5 AND 6, BETWEEN POSTS 7 AND 8, AND MIDDLE OF THE SPAN AFTER POST 9.

THE CENTER OF THE UPPER 3½" DIAMETER HOLE ON POST NUMBER 3 THROUGH POST 9 IS TO BE FLUSH WITH THE GROUND LINE UP TO A MAXIMUM OF 2" ABOVE GROUND LINE.

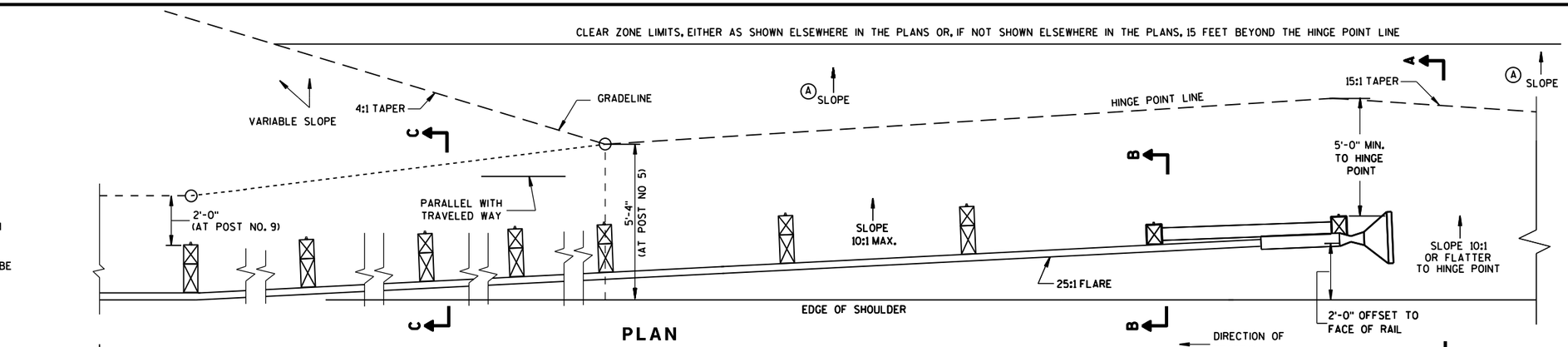

ELEVATION

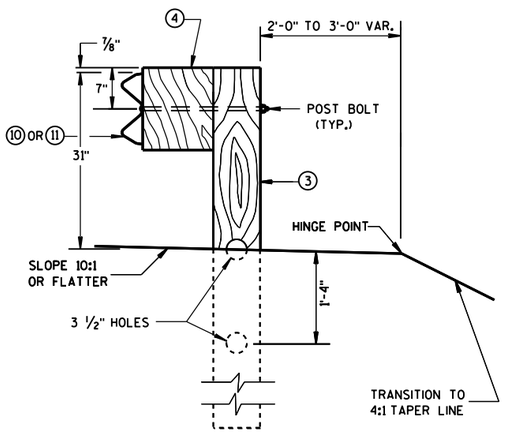

SECTION C-C
TYPICAL AT POST NOS. 3-9

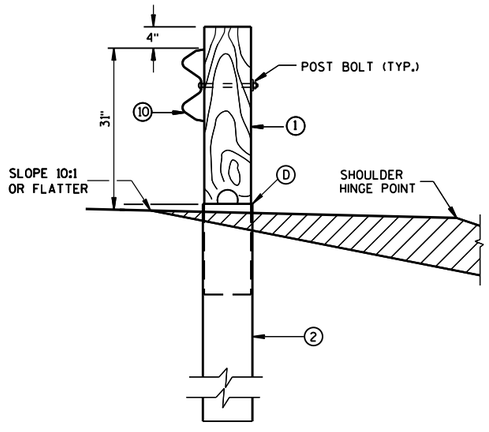

SECTION B-B
TYPICAL AT POST NO. 2*

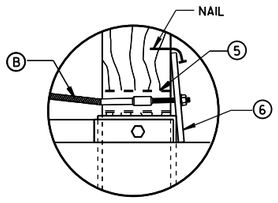

DETAIL "A"

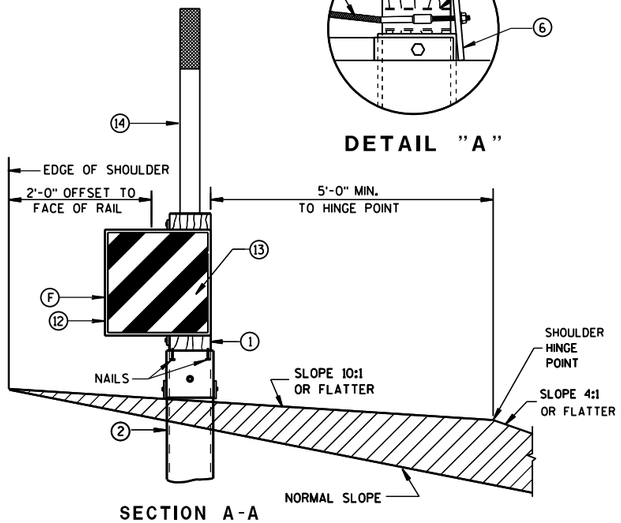

SECTION A-A
TYPICAL AT POST NO. 1*

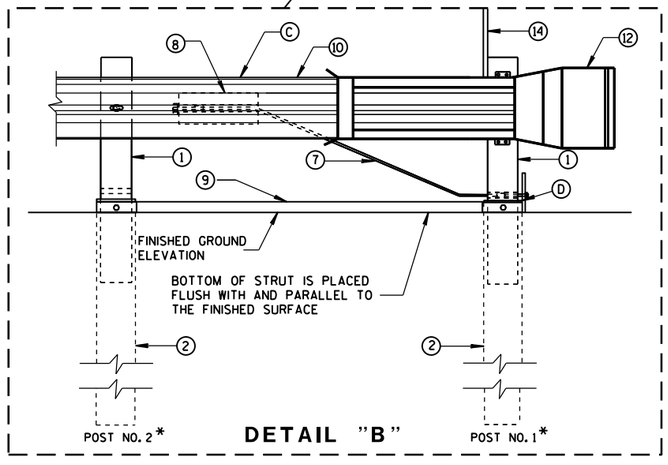

DETAIL "B"

MIDWEST GUARDRAIL SYSTEM
ENERGY ABSORBING TERMINAL (MGS)

STATE OF WISCONSIN
DEPARTMENT OF TRANSPO

S.D.D. 14 B 44-2a

6

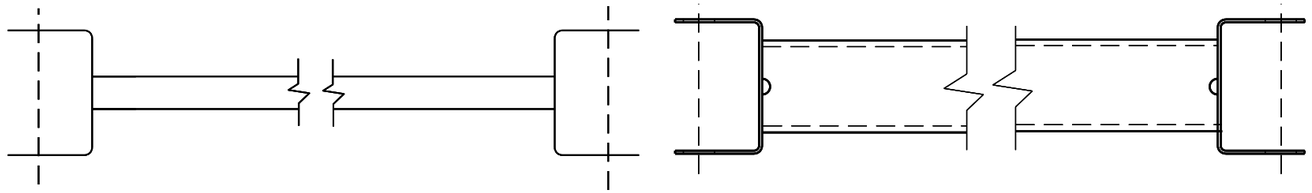

GENERIC GROUND STRUT (9) (H)

BILL OF MATERIALS

PART NO.	DESCRIPTION MATERIALS PROVIDED BY MGS EAT MANUFACTURER. SEE MANUFACTURER'S DETAILS FOR MORE INFORMATION.
(1)	WOOD BREAKAWAY POST
(2)	6" X 8" X 0.188", 6'-0" LONG FOUNDATION TUBE AT POSTS 1 AND 2
(3)	WOOD CRT
(4)	WOOD BLOCKOUT
(5)	PIPE SLEEVE
(6)	BEARING PLATE
(7)	BCT CABLE ASSEMBLY
(8)	ANCHOR CABLE BOX
(9)	GROUND STRUT
(10)	PERFORATED W-BEAM RAIL END PANEL, 12'-6" LONG.
(11)	STANDARD W-BEAM RAIL. MULTIPLE SECTIONS REQUIRED. SECTIONS VARY IN LENGTH.
(12)	END SECTION EAT
(13)	0.040" ALUMINUM SHEET WITH REFLECTIVE SHEETING TYPE F PER SECTION 637 OF THE STANDARD SPECIFICATIONS
(14)	EAT MARKER POST - YELLOW (SEE APPROVED PRODUCTS LIST)

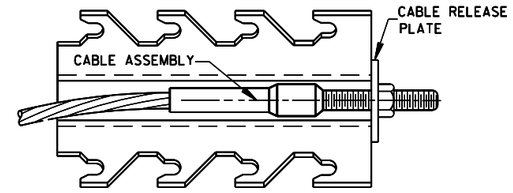

FRONT VIEW

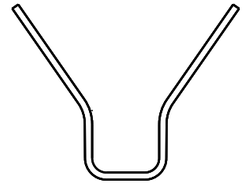

SECTION B-B

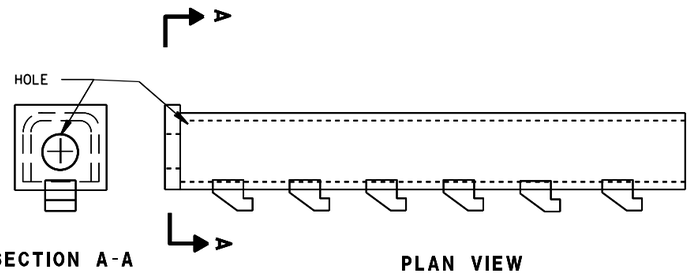

SECTION A-A

PLAN VIEW

GENERIC ANCHOR CABLE BOX (8) (H)

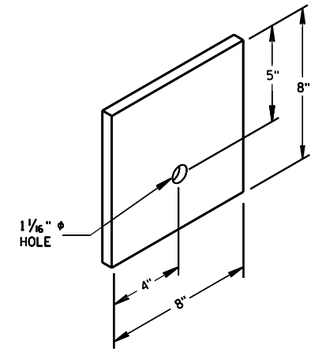

BEARING PLATE (6)

MIDWEST GUARDRAIL SYSTEM
ENERGY ABSORBING TERMINAL
(MGS)

STATE OF WISCONSIN
DEPARTMENT OF TRANSPOR

6

S.D.D. 14 B 44-2b

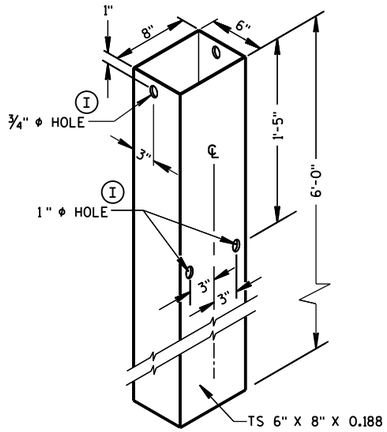

FOUNDATION TUBE (2)

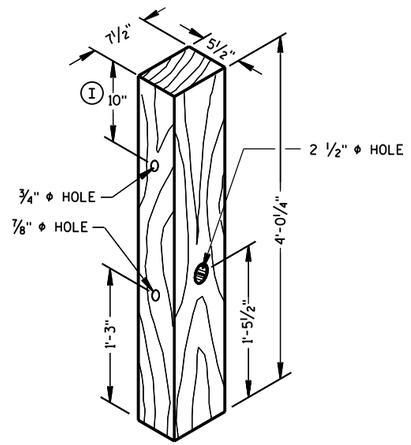

POSTS NUMBER 1 AND 2

WOOD BREAKAWAY POST (1)

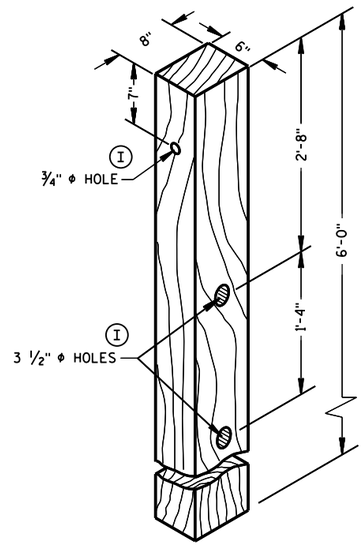

POSTS NUMBER 3-9

WOOD CRT POST (3)

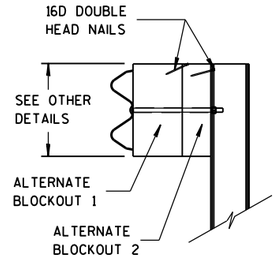

SIDE VIEW

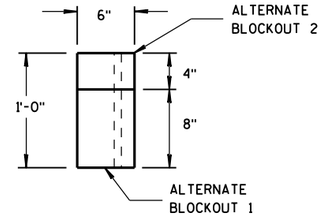

TOP VIEW

ALTERNATE WOOD BLOCKOUT DETAIL

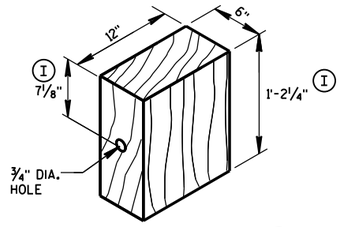

WOOD BLOCKOUT (4)

REQ'D. AT ALL POSTS EXCEPT POST NO'S 1 & 2

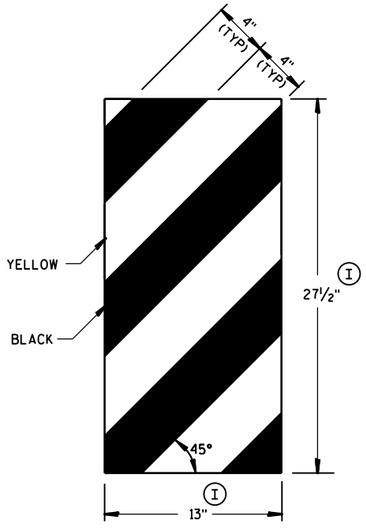

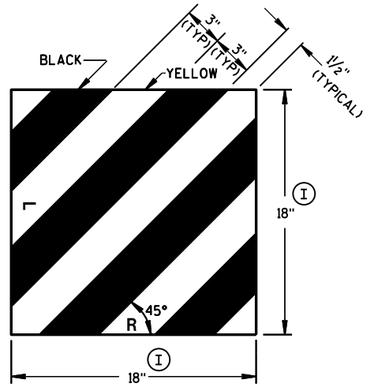

GENERIC REFLECTIVE SHEETING (13) (H)

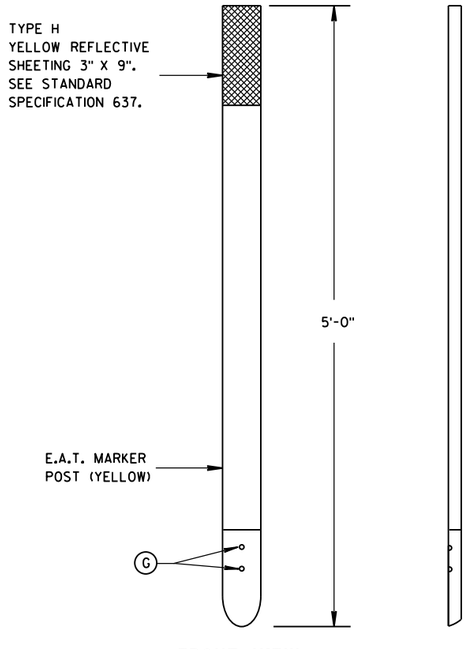

FRONT VIEW

SIDE VIEW

E.A.T. MARKER POST (14)

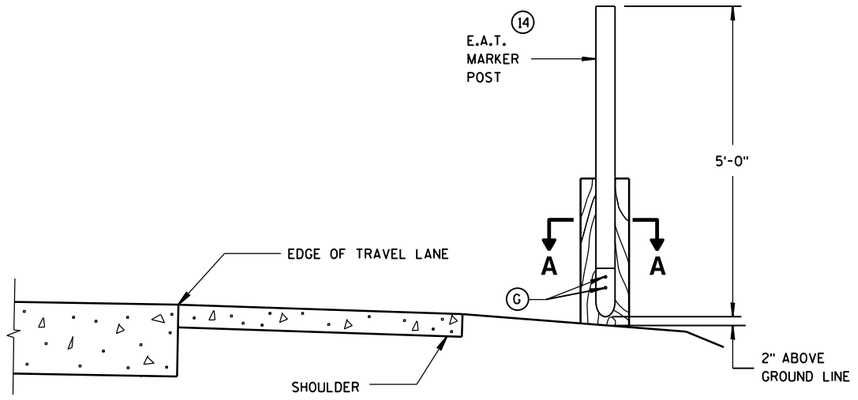

TYPICAL INSTALLATION OF E.A.T. MARKER POST BACKSIDE OF POST NO. 1

(E.A.T. AND RAIL REMOVED FOR CLARITY)

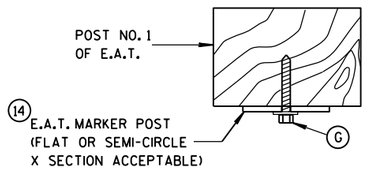

SECTION A-A

MIDWEST GUARDRAIL SYSTEM ENERGY ABSORBING TERMINAL (MGS)

STATE OF WISCONSIN
DEPARTMENT OF TRANSPORTATION

APPROVED
June 2014 — DATE
/S/ Jerry H. Zogg — ROADWAY STANDARDS ENGINEER
FHWA

6

S.D.D. 14 B 44-2c

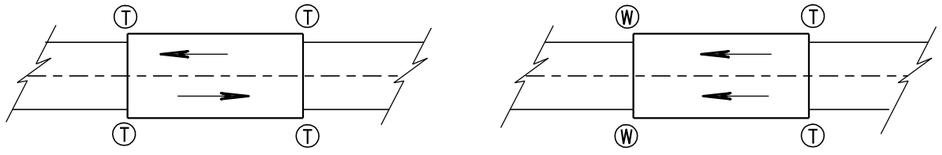

TWO WAY TRAFFIC

ONE WAY TRAFFIC

Ⓣ THRIE BEAM CONNECTION

Ⓦ W-BEAM CONNECTION WHEN REQUIRED

TYPICAL LOCATIONS OF THRIE BEAM AND W-BEAM CONNECTIONS TO BRIDGE

GENERAL NOTES

BOLT THE THRIE BEAM TO ALL POSTS AND BLOCKOUTS. DRILL OR PUNCH BOLT HOLES IN THE BEAM IF THE POST SPACING IS LESS THAN 6'-3.

IF ROCK IS ENCOUNTERED, REMOVE ROCK TO FULL DEPTH OF POST PLUS 2½", AND 12" DIAMETER AROUND POST. SEE 14B42 FOR MORE DETAILS.

TRANSITION USES STEEL POSTS ONLY.

SEE STANDARD DETAIL DRAWING 14 B 42 FOR MORE INFORMATION.

Ⓐ BRIDGE RAILING TYPE "W" DOES NOT REQUIRE A TERMINAL CONNECTOR.

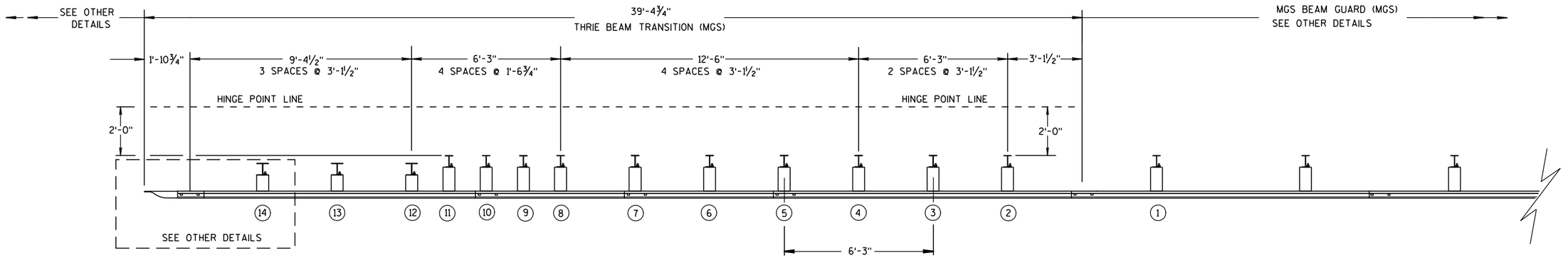

PLAN VIEW

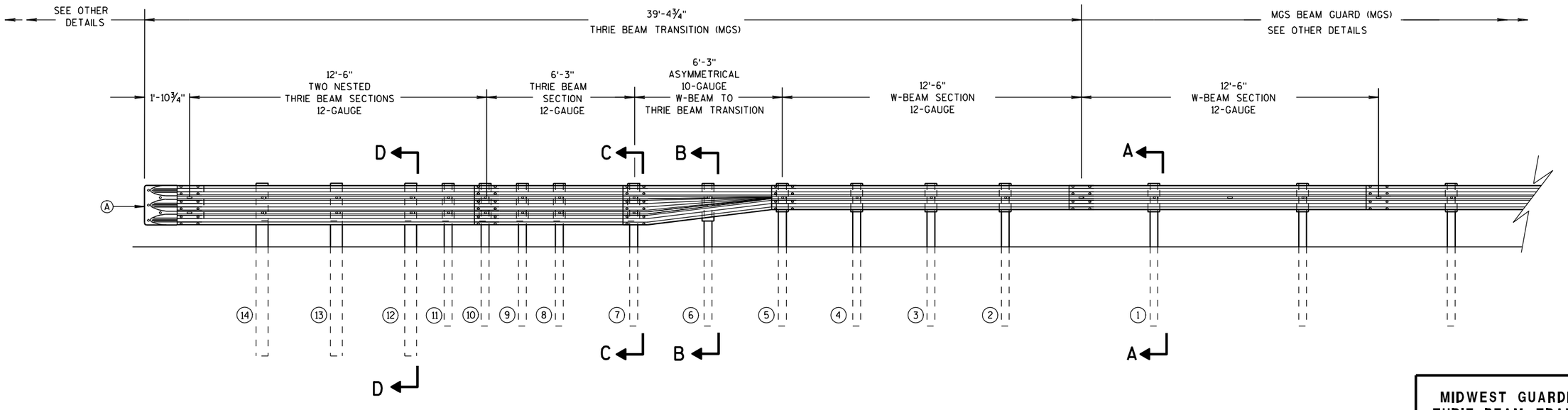

ELEVATION VIEW

MIDWEST GUARDRAIL SYSTEM THRIE BEAM TRANSITION

MIDWEST GUARDRAIL SYSTEM
THRIE BEAM TRANSITION (MGS)

STATE OF WISCONSIN
DEPARTMENT OF TRANSPO.....T

6

S.D.D. 14 B 45-3a

6

S.D.D. 14 B 45-3a

GENERAL NOTES

(B) TOLERANCE FOR TOP OF W-BEAM RAIL IS ± 1".

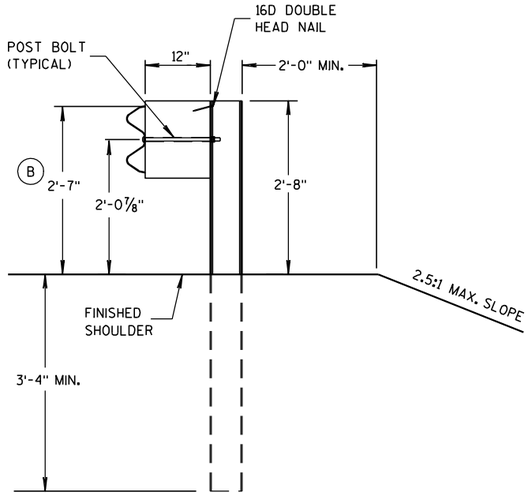

SECTION A-A

POSTS 1-5

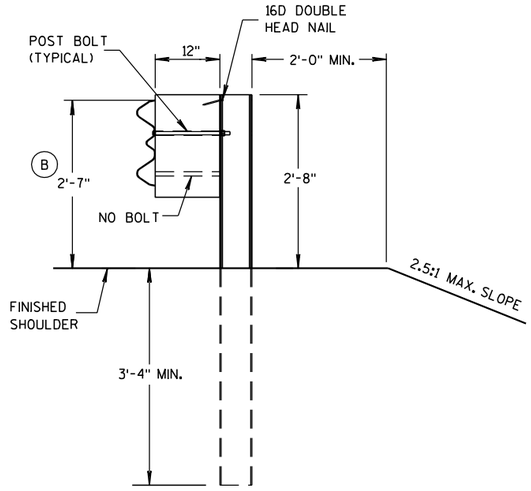

SECTION B-B

POST 6

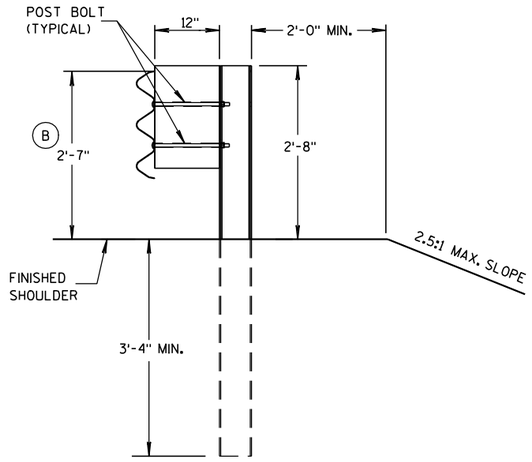

SECTION C-C

POSTS 7-11

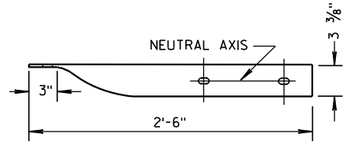

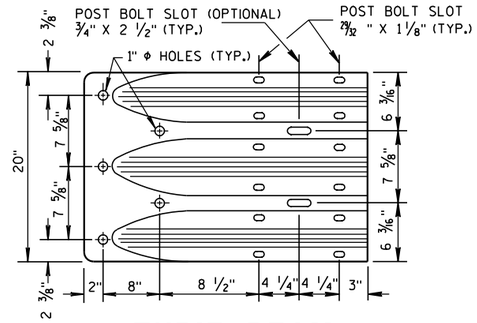

THRIE BEAM TERMINAL CONNECTOR

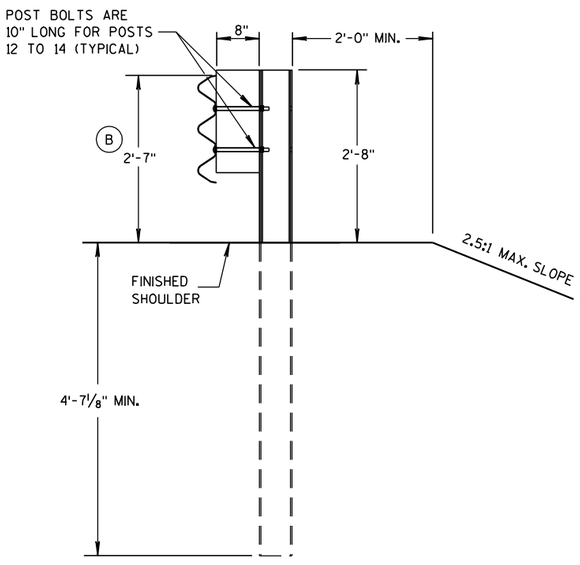

SECTION D-D

POSTS 12-14

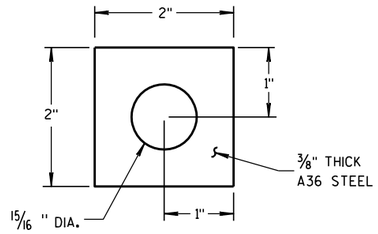

PLATE WASHER DETAIL

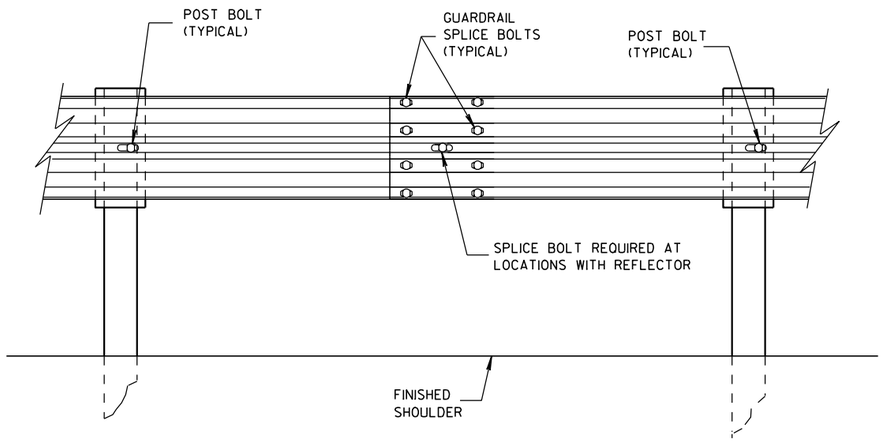

SPLICE DETAIL

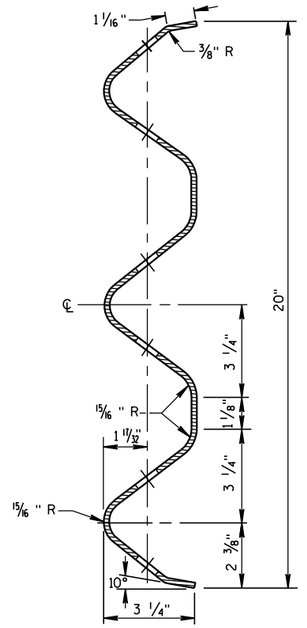

SECTION THRU THRIE BEAM RAIL ELEMENT

MIDWEST GUARDRAIL SYSTEM
THRIE BEAM TRANSITION (MGS)

STATE OF WISCONSIN
DEPARTMENT OF TRANSPORTATION

6

S.D.D. 14 B 45-3b

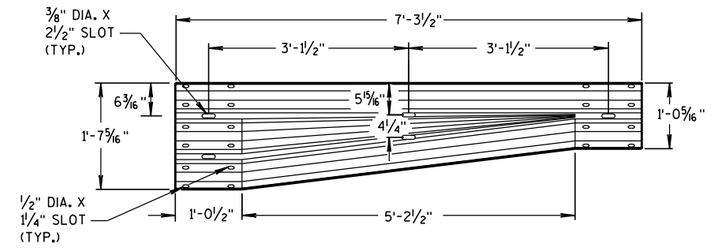

W-BEAM TO THRIE BEAM TRANSITION SECTION

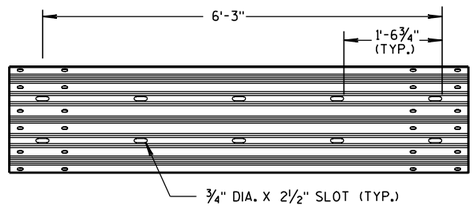

6'-3" THRIE BEAM SECTION

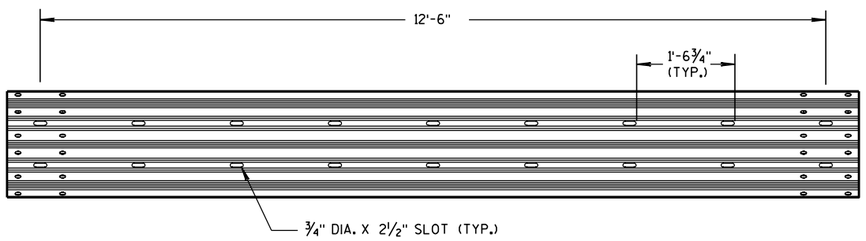

12'-6" THRIE BEAM SECTION

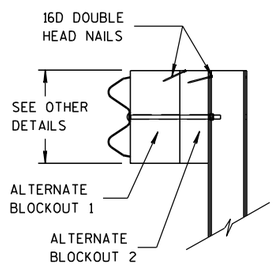

SIDE VIEW

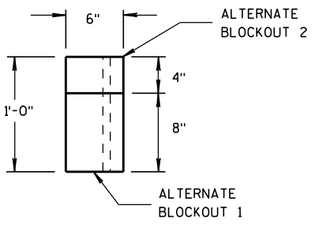

TOP VIEW

ALTERNATE WOOD BLOCKOUT DETAIL

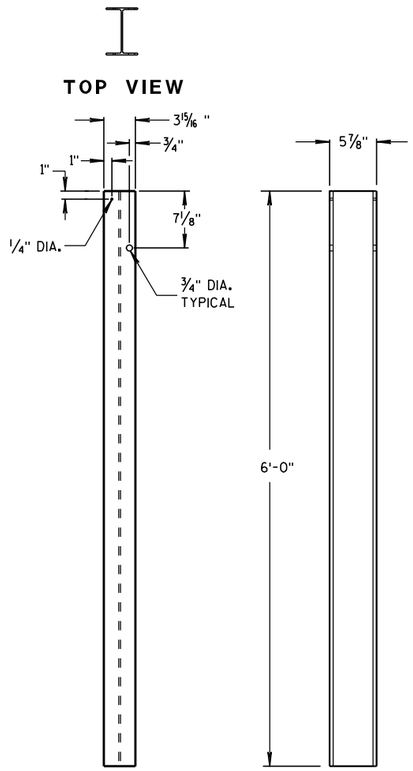

STEEL POSTS 1-5

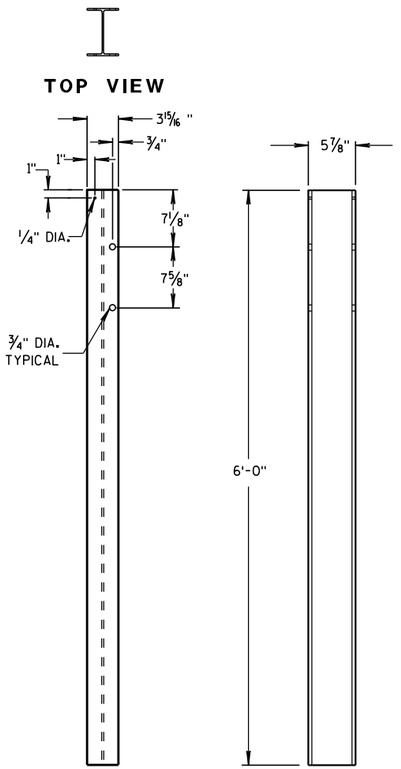

STEEL POSTS 6-11

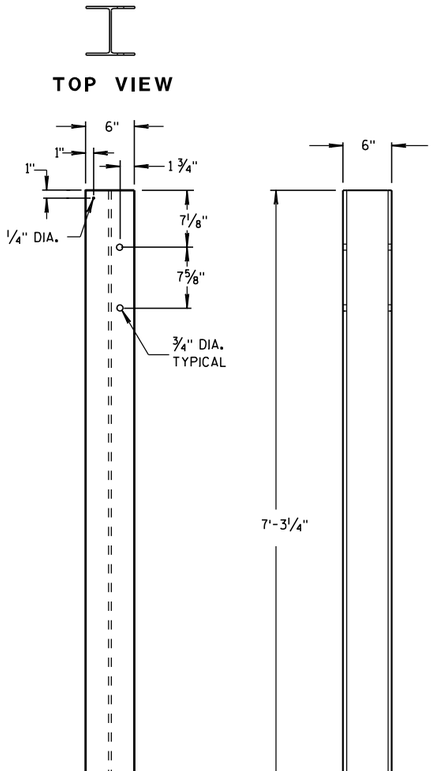

STEEL POSTS 12-14

(1) WOOD BLOCKS MAY BE CONSTRUCTED OUT OF 2 WOOD BLOCKS. SEE ALTERNATE WOOD BLOCK DETAIL.

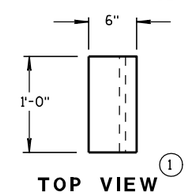

TOP VIEW (1)

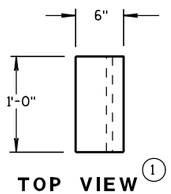

TOP VIEW (1)

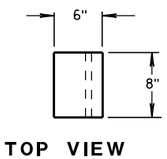

TOP VIEW

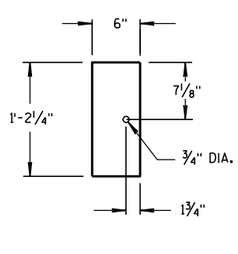

FRONT VIEW

BLOCKOUT POSTS 1-5

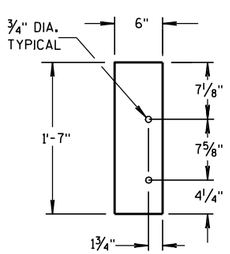

FRONT VIEW

BLOCKOUT POSTS 6-11

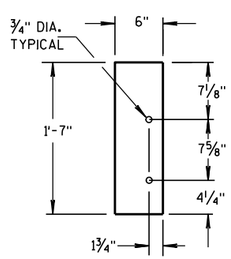

FRONT VIEW

BLOCKOUT POSTS 12-14

STEEL POST SIZES

POST NUMBER	SECTION TYPE	LENGTH
1	W6x9	72"
2	W6x9	72"
3	W6x9	72"
4	W6x9	72"
5	W6x9	72"
6	W6x9	72"
7	W6x9	72"
8	W6x9	72"
9	W6x9	72"
10	W6x9	72"
11	W6x9	72"
12	W6x15	87 1/8"
13	W6x15	87 1/8"
14	W6x15	87 1/8"

MIDWEST GUARDRAIL SYSTEM
THRIE BEAM TRANSITION (MGS)

STATE OF WISCONSIN
DEPARTMENT OF TRANSPORTATION

6
S.D.D. 14 B 45-3c

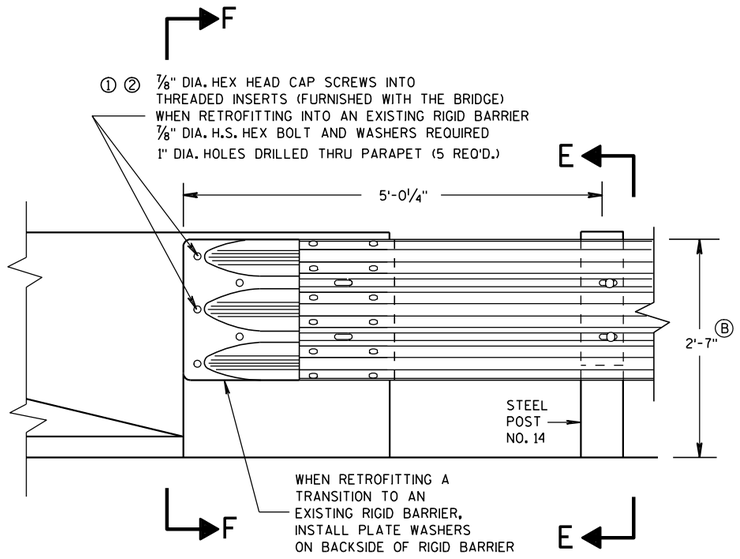

FRONT VIEW

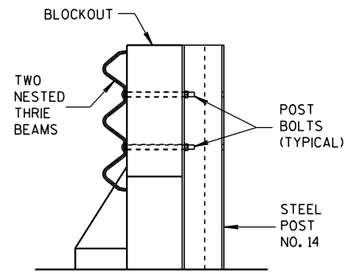

SECTION E-E

GENERAL NOTES

THESE ARE TYPICAL CONNECTION DETAILS. ADJUST THE POSTION OF CONNECTIONS TO EXISTING BRIDGES TO FIT THE ACTUAL BRIDGE AND SITE DIMENSIONS.

① DRILLING BOLT HOLES THROUGH THE PARAPET, BOLTS, NUTS, WASHERS AND REPAIRING DAMAGED CONCRETE ARE INCIDENTAL TO THE CONTRACT.

② BOLTS MAY BE A325 BOLTS OR A449 BOLTS. BOLT LENGTH AND THREADING LENGTH ARE TO ALLOW FOR A TIGHT CONNECTION BETWEEN RIGID BARRIER AND THRIE BEAM CONNECTION PLATE. CONTRACTOR IS TO FIELD VERIFY BOLT LENGTH AND THREAD LENGTH. ONE ROUND WASHER REQUIRED BETWEEN BOLT HEAD AND THRIE BEAM CONNECTOR PLATE. BOLTS THAT EXTEND THROUGH THE PARAPET AND OUT THE BACK FACE REQUIRE A HARDENED ROUND STEEL WASHER THAT IS 2" O.D. X 5/8" THICK AND ONE PLATE WASHER. REPAIR ANY DAMAGED CONCRETE FROM BOLT INSTALLATION.

③ THE RECESS FOR A W-BEAM CONNECTION, WHICH EXISTS ON SOME PARAPETS OF THIS TYPE, SHALL BE FILLED WITH A TREATED TIMBER BLOCKOUT. BLOCKOUT SIZE IS 1'-6" X 2'-0" X 3 1/2".

Ⓑ TOLERANCE FOR TOP OF BEAM IS ± 1".

THRIE BEAM CONNECTION TO BRIDGE PARAPET WITH SQUARE ENDS

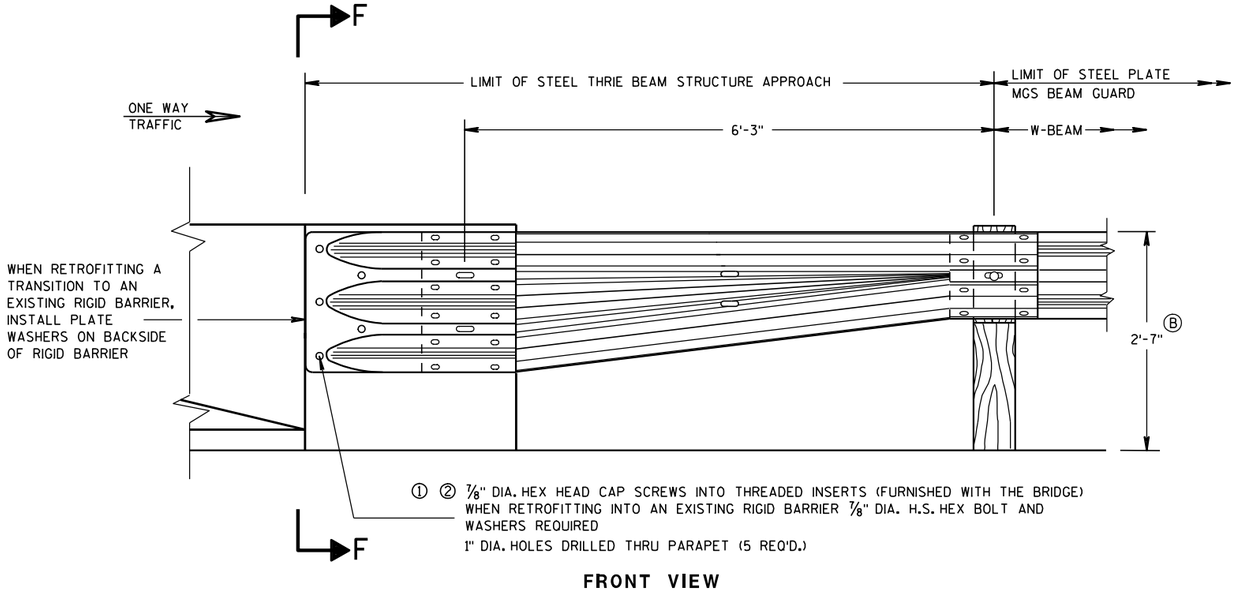

FRONT VIEW

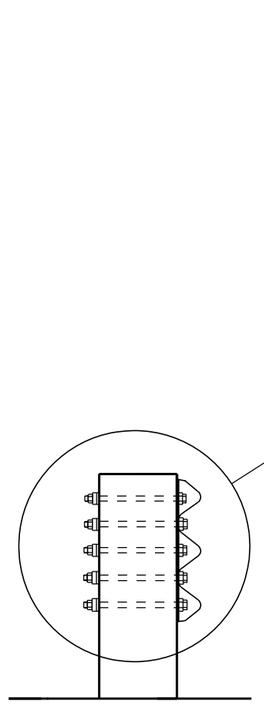

SECTION F-F

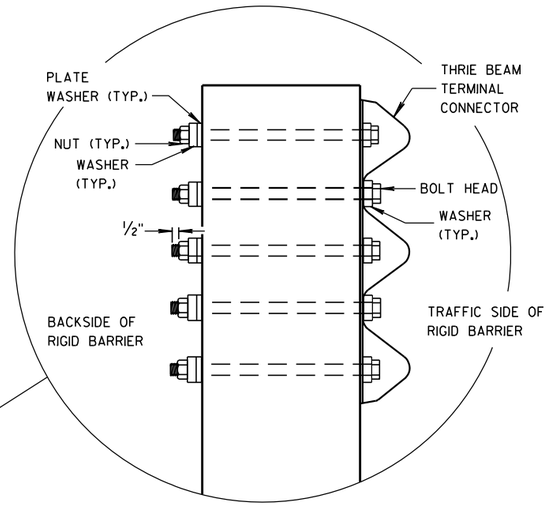

W BEAM TRANSITION AND CONNECTION TO BRIDGE PARAPETS WITH SQUARE ENDS

(USE ONLY ON THE TRAFFIC EXIT END OF ONE WAY BRIDGES)

MIDWEST GUARDRAIL SYSTEM
THRIE BEAM TRANSITION (MGS)

STATE OF WISCONSIN
DEPARTMENT OF TRANSPORTATION

APPROVED

8/31/2012
DATE

/S/ Jerry H. [illegible]
ROADWAY STANDARDS [illegible]
ENGINEER

FHWA

6
S.D.D. 14 B 45-3d

GENERAL NOTES

THESE ARE TYPICAL CONNECTION DETAILS. ADJUST THE POSTION OF CONNECTIONS TO EXISTING BRIDGES TO FIT THE ACTUAL BRIDGE AND SITE DIMENSIONS.

① DRILLING BOLT HOLES THROUGH THE PARAPET, BOLTS, NUTS, WASHERS AND REPAIRING DAMAGED CONCRETE ARE INCIDENTAL TO THE CONTRACT.

② BOLTS MAY BE A325 BOLTS OR A449 BOLTS. BOLT LENGTH AND THREADING LENGTH ARE TO ALLOW FOR A TIGHT CONNECTION BETWEEN RIGID BARRIER AND THRIE BEAM CONNECTION PLATE. CONTRACTOR IS TO FIELD VERIFY BOLT LENGTH AND THREAD LENGTH. ONE ROUND WASHER REQUIRED BETWEEN BOLT HEAD AND THRIE BEAM CONNECTOR PLATE. BOLTS THAT EXTEND THROUGH THE PARAPET AND OUT THE BACK FACE REQUIRE A HARDENED ROUND STEEL WASHER THAT IS 2" O.D. X 5/8" THICK AND ONE PLATE WASHER. REPAIR ANY DAMAGED CONCRETE FROM BOLT INSTALLATION.

③ THE RECESS FOR A W-BEAM CONNECTION, WHICH EXISTS ON SOME PARAPETS OF THIS TYPE, SHALL BE FILLED WITH A TREATED TIMBER BLOCKOUT. BLOCKOUT SIZE IS 1'-6" X 2'-0" X 3 1/2". BLOCK IS INCIDENTAL TO THE CONTRACT.

④ BOLT, NUT AND WASHERS NOT REQUIRED FOR THIS LOCATION WHEN RETROFITTING AN EXISTING PAPAPET AND THE HOLE IS EITHER ABOVE PARAPET OR WITHIN 4 INCHES OF THE EDGE OF PARAPET.

Ⓑ TOLERANCE FOR TOP OF BEAM IS ± 1".

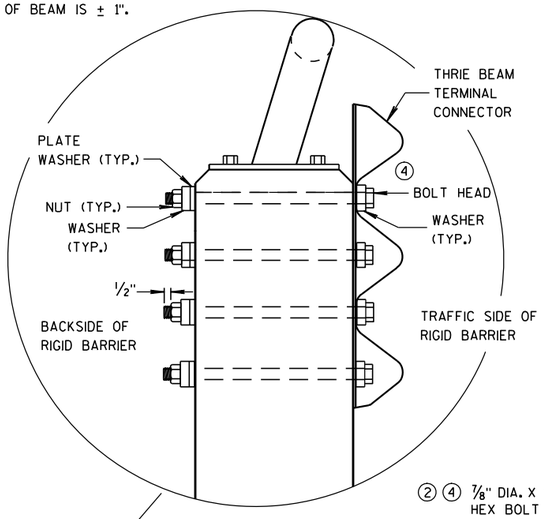

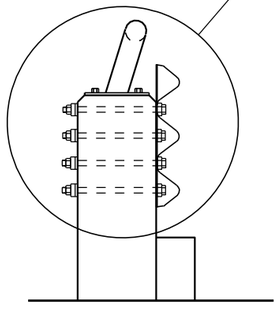

SECTION G-G

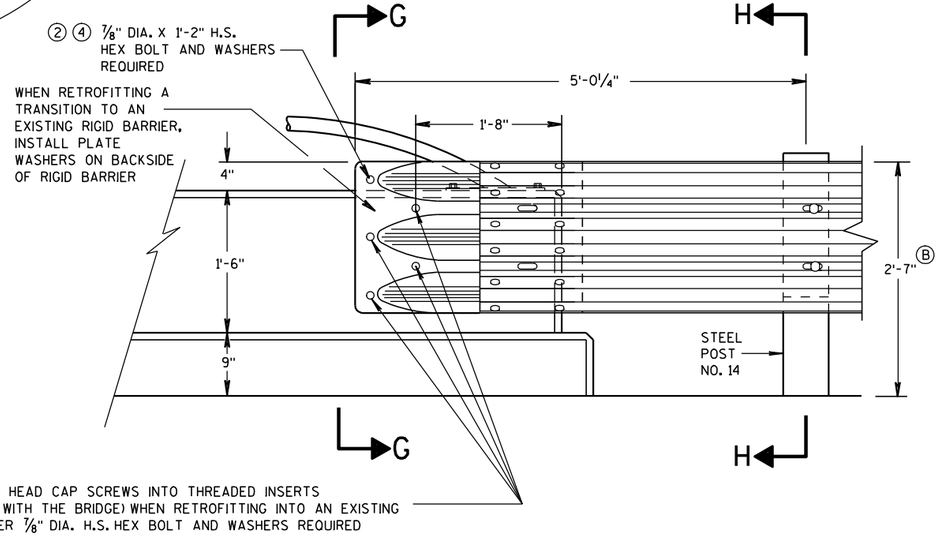

FRONT VIEW

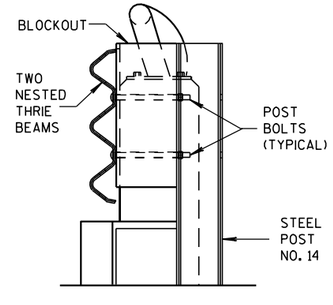

SECTION H-H

THRIE BEAM CONNECTION TO VERTICAL FACED PARAPETS

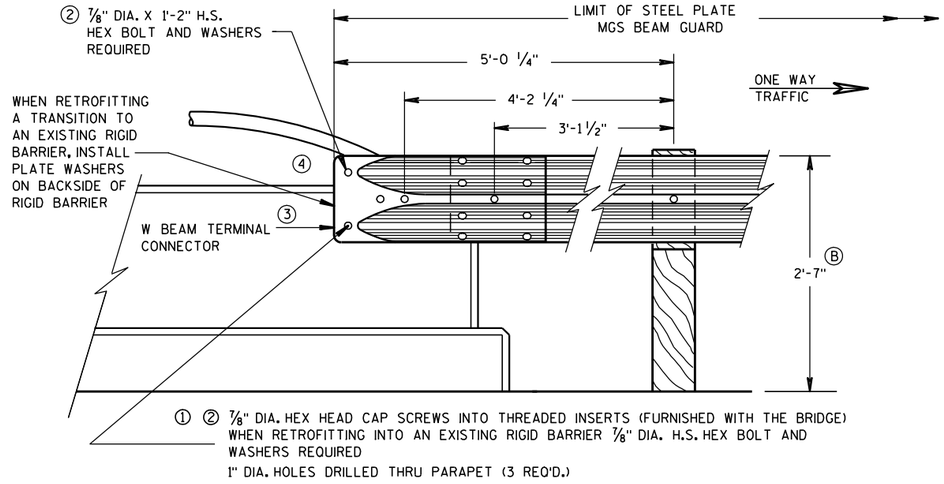

FRONT VIEW

W BEAM CONNECTION TO VERTICAL FACE PARAPET
(USE ONLY ON THE TRAFFIC EXIT END OF ONE WAY BRIDGES)

MIDWEST GUARDRAIL SYSTEM
THRIE BEAM TRANSITION (MGS)

STATE OF WISCONSIN
DEPARTMENT OF TRANSPORTATION

APPROVED

8-31-2012
DATE

/S/ Jerry H. Zogg
ROADWAY STANDARDS DEVELOPMENT ENGINEER

FHWA

6

S.D.D. 14 B 45-3e

6

S.D.D. 14 B 45-3e

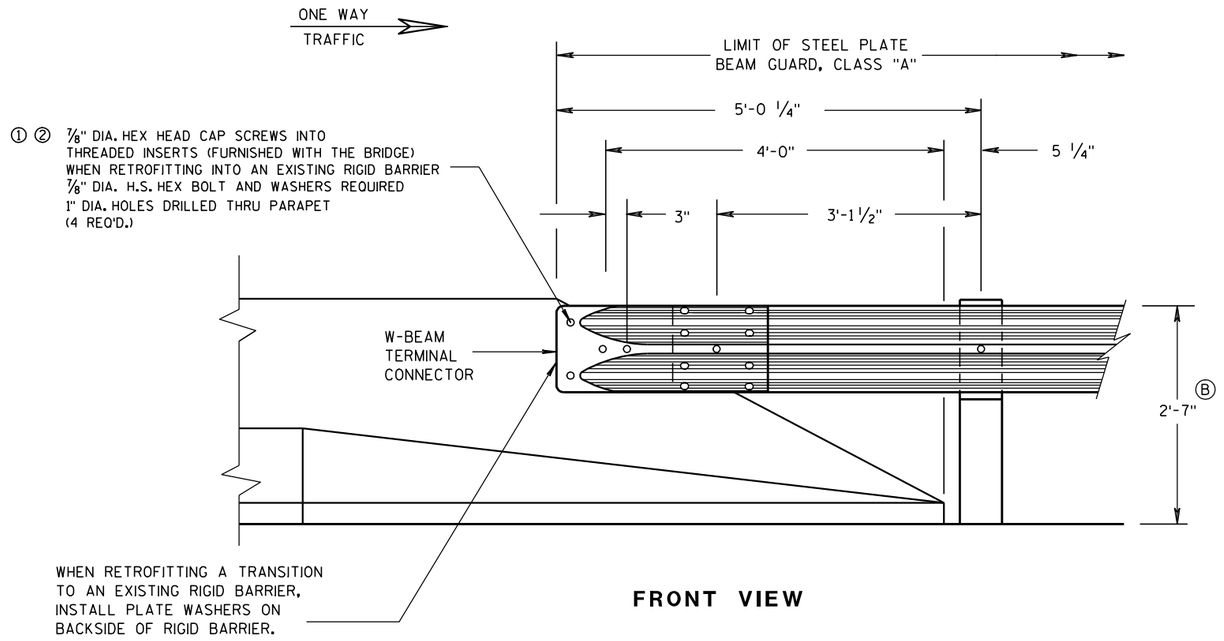

FRONT VIEW

W BEAM CONNECTION TO PARAPETS WITH SLOPED ENDS

(USE ONLY AT TRAFFIC EXIT END OF ONE WAY BRIDGE)

GENERAL NOTES

① DRILLING BOLT HOLES THROUGH THE PARAPET, BOLTS, NUTS, WASHERS AND REPAIRING DAMAGED CONCRETE ARE INCIDENTAL TO THE CONTRACT.

② BOLTS MAY BE A325 BOLTS OR A449 BOLTS. BOLT LENGTH AND THREADING LENGTH ARE TO ALLOW FOR A TIGHT CONNECTION BETWEEN RIGID BARRIER AND THRIE BEAM CONNECTION PLATE. CONTRACTOR IS TO FIELD VERIFY BOLT LENGTH AND THREAD LENGTH. ONE ROUND WASHER REQUIRED BETWEEN BOLT HEAD AND THRIE BEAM CONNECTOR PLATE. BOLTS THAT EXTEND THROUGH THE PARAPET AND OUT THE BACK FACE REQUIRE A HARDENED ROUND STEEL WASHER THAT IS 2" O.D. X 5/8" THICK AND ONE PLATE WASHER. REPAIR ANY DAMAGED CONCRETE FROM BOLT INSTALLATION.

Ⓑ TOLERANCE FOR TOP OF BEAM IS ± 1".

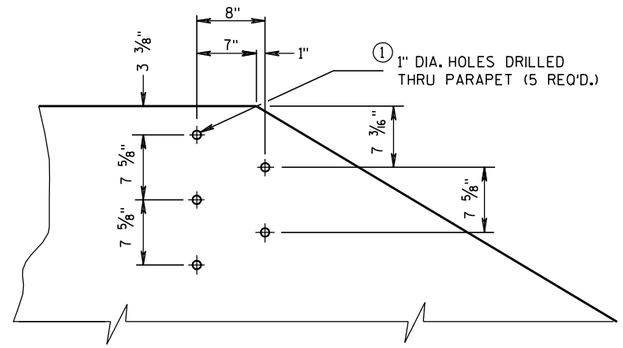

DRILL HOLE LOCATION AND PATTERN FOR THRIE BEAM CONNECTION

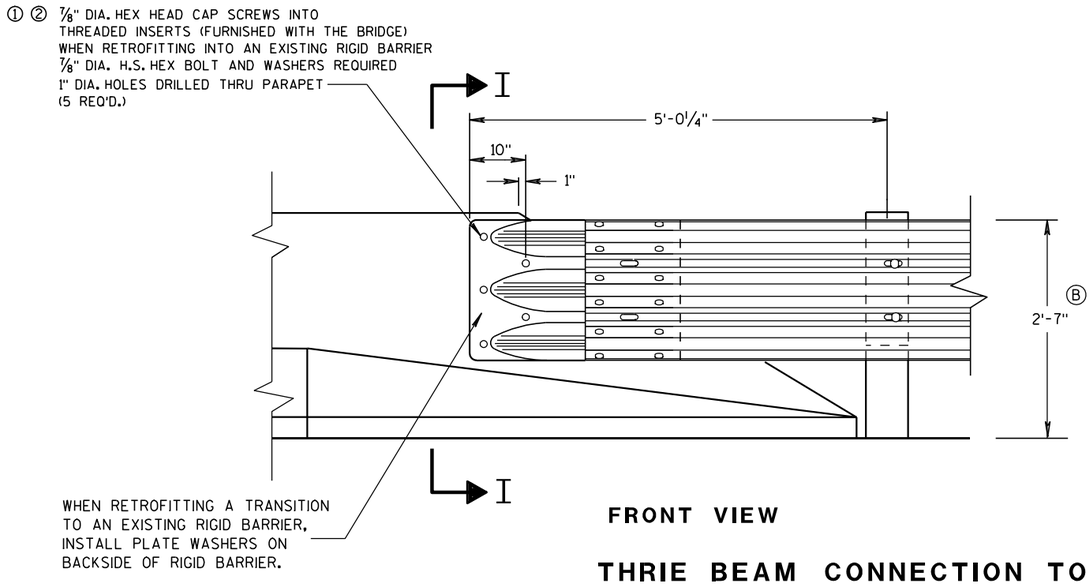

FRONT VIEW

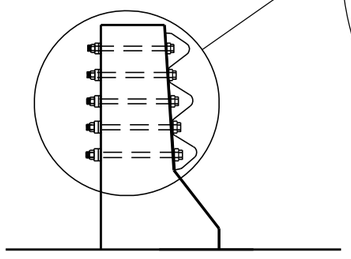

SECTION I-I

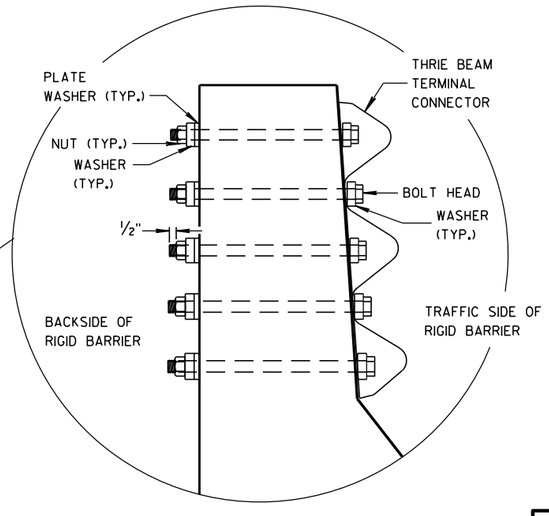

THRIE BEAM CONNECTION TO BRIDGE PARAPETS WITH SLOPED ENDS

MIDWEST GUARDRAIL SYSTEM
THRIE BEAM TRANSITION (MGS)

STATE OF WISCONSIN
DEPARTMENT OF TRANSPORTATION

APPROVED

8/31/2012 — DATE

/S/ Jerry H. Zogg — ROADWAY STANDARDS ENGINEER

104

ENT

FHWA

6

S.D.D. 14 B 45-3f

6

S.D.D. 14 B 45-3f

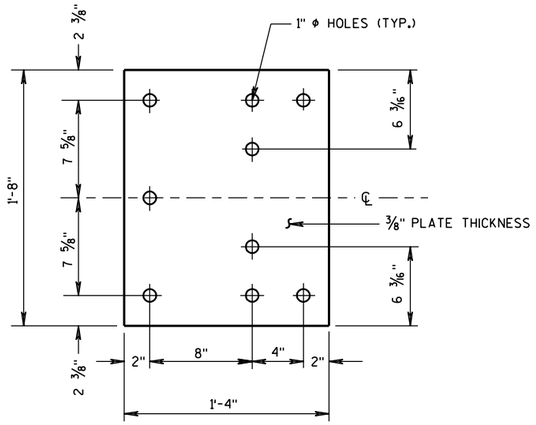

BACK-UP PLATE DETAIL

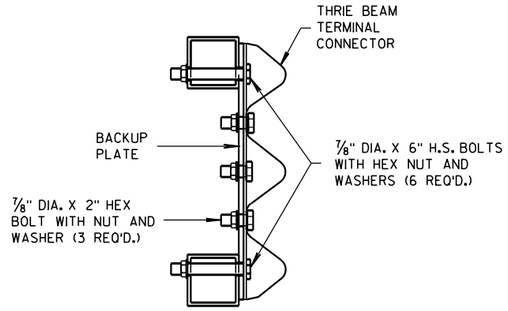

SECTION J-J

GENERAL NOTES

(1) DRILLING HOLES THROUGH THE PAPRPET, BOLTS, NUTS, WASHERS AND REPAIRING DAMAGED CONCRETE ARE INCIDENTAL TO THE CONTRACT.

(B) TOLERANCE FOR TOP OF BEAM IS ± 1".

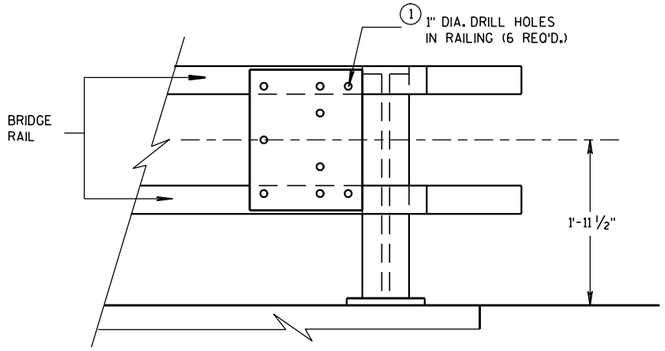

BACK-UP PLATE MOUNTING ONTO BRIDGE RAILING

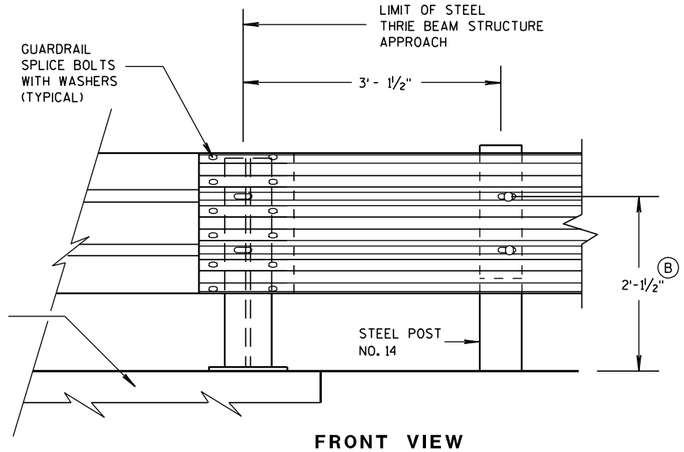

FRONT VIEW

THRIE BEAM CONNECTION TO STEEL RAILING TYPE "W"

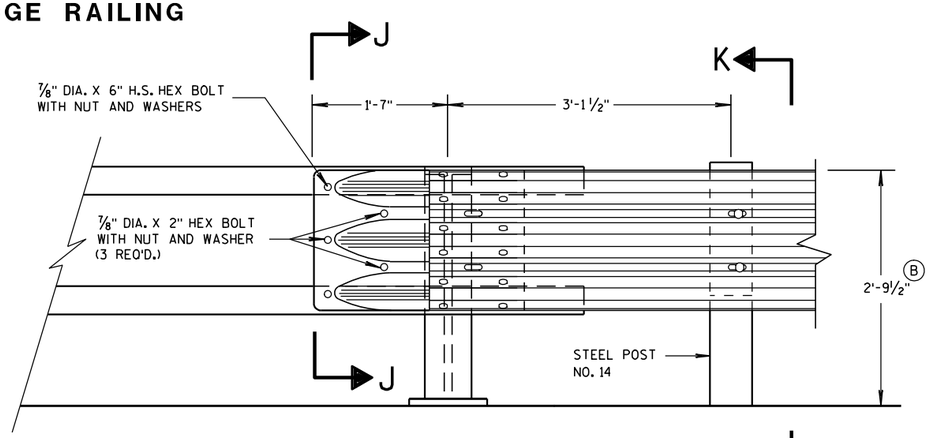

FRONT VIEW

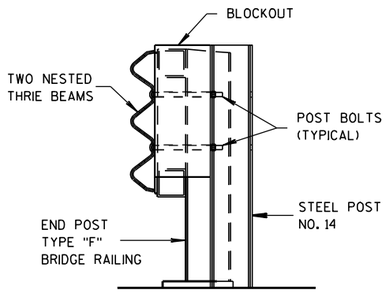

SECTION K-K

THRIE BEAM CONNECTION TO TUBULAR RAILING TYPE "F"

MIDWEST GUARDRAIL SYSTEM THRIE BEAM TRANSITION (MGS)	
STATE OF WISCONSIN DEPARTMENT OF TRANSPORTATION	
APPROVED 8/31/2012 DATE FHWA	/S/ Jerry H. Zogg ROADWAY STANDARDS DEVELOPMENT ENGINEER

6
S.D.D. 14 B 45-3g

GENERAL NOTES

(B) TOLERANCE FOR TOP OF W-BEAM RAIL IS ± 1".

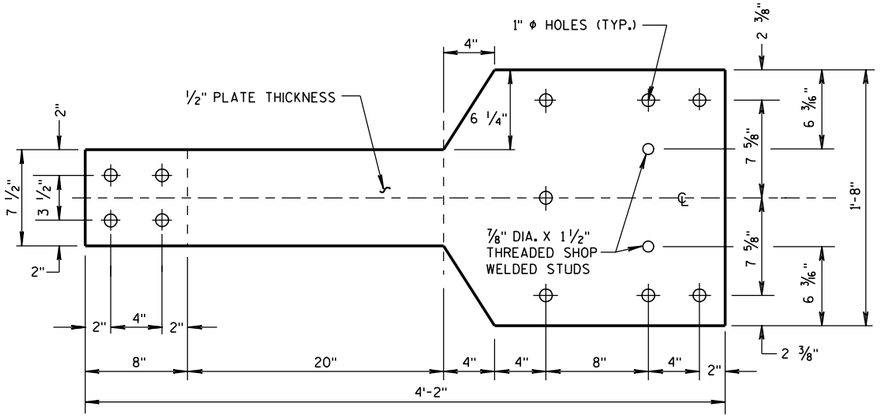

FRONT VIEW

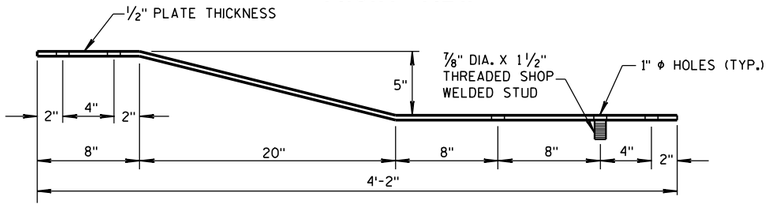

PLAN VIEW

BACK-UP PLATE DETAIL, TYPE "M"

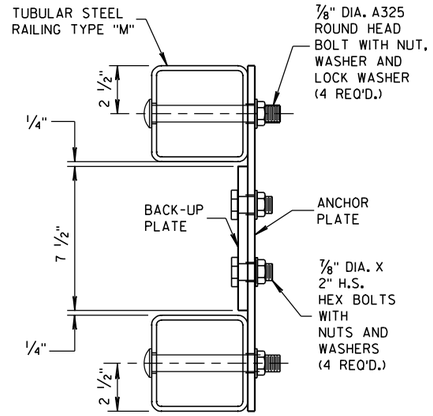

SECTION L-L

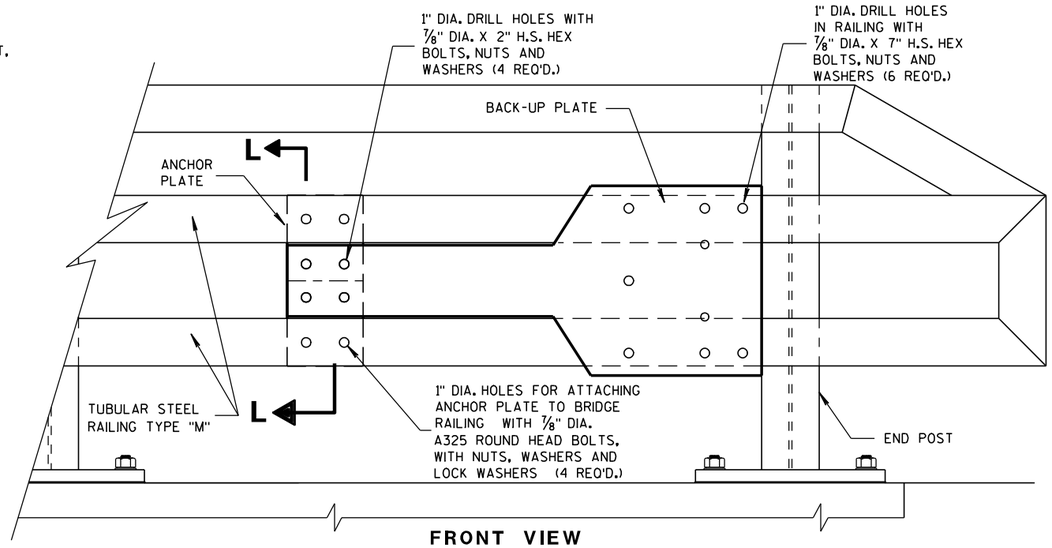

FRONT VIEW

ANCHOR AND BACK-UP PLATE MOUNTING TO BRIDGE RAILING, TYPE "M"

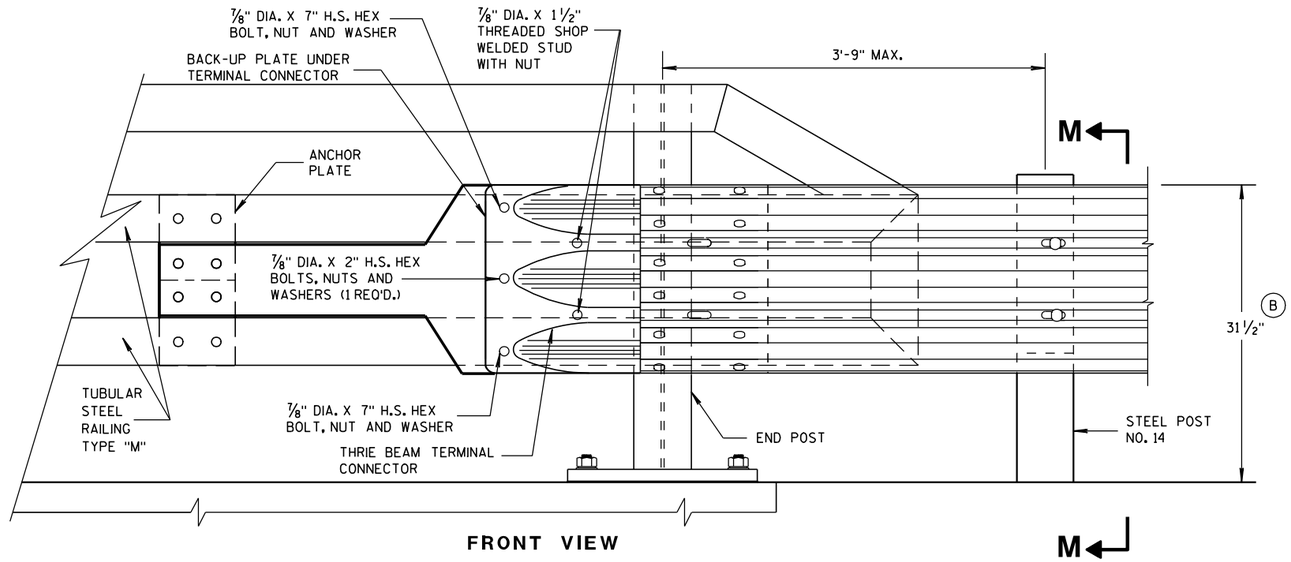

FRONT VIEW

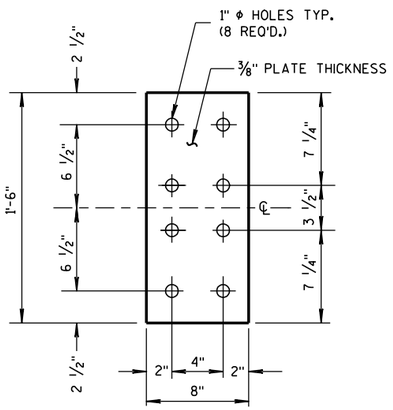

FRONT VIEW

ANCHOR PLATE DETAIL, TYPE "M"

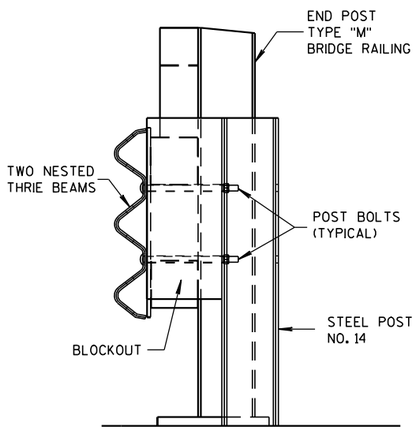

SECTION M-M

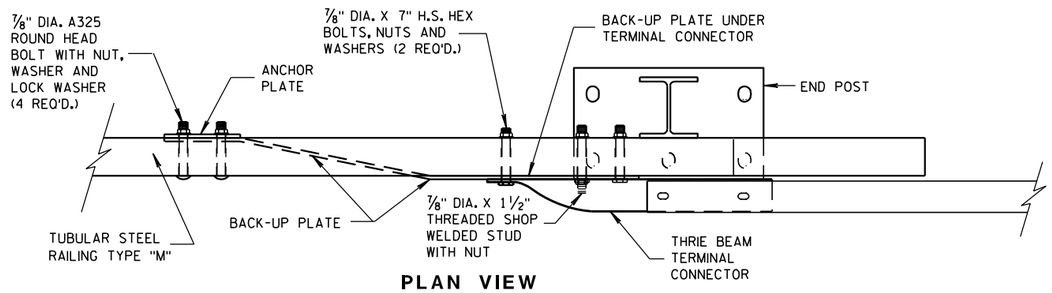

PLAN VIEW

THRIE BEAM CONNECTION TO TUBULAR RAILING, TYPE "M"

MIDWEST GUARDRAIL SYSTEM
THRIE BEAM TRANSITION (MGS)

STATE OF WISCONSIN
DEPARTMENT OF TRANSPORTATION

APPROVED
8-31-2012 DATE
/S/ Jerry H. [illegible]
ROADWAY STANDARDS ENGINEER

FHWA

6

S.D. 14 B 45-3h

6

S.D. 14 B 45-3h

GENERAL NOTES

COVER PLATE PANELS ARE 3/16" THICK.

ALL STIFFENERS ARE 1/4" THICK.

CONNECTOR PLATE SHALL BE FABRICATED FROM ASTM GRADE A36 STEEL AND GALVANIZED.

FOR GALVANIZED REQUIREMENTS, SEE SECTION 614 OF THE STANDARD SPECIFICATIONS.

ALL HOLE DIAMETERS SHALL BE 1".

FOR OPPOSITE SIDE INSTALLATION MIRROR DRAWINGS.

(1) STIFFENERS LOCATED AT THE OUTSIDE EDGES OF THE COVER PLATES SHALL BE WELDED AS FOLLOWS:
SINGLE BEVEL GROOVE WELD ON EXTERNAL SIDES AND 3/16" FILLET WELD BY 1" LONG SPACED AT 2" ON INTERNAL SIDES.

(2) STIFFENERS LOCATED ON THE INSIDE OF THE COVER PLATE SHALL BE WELDED AS FOLLOWS:
3/16" FILLET WELD BY 1" LONG SPACED AT 2".

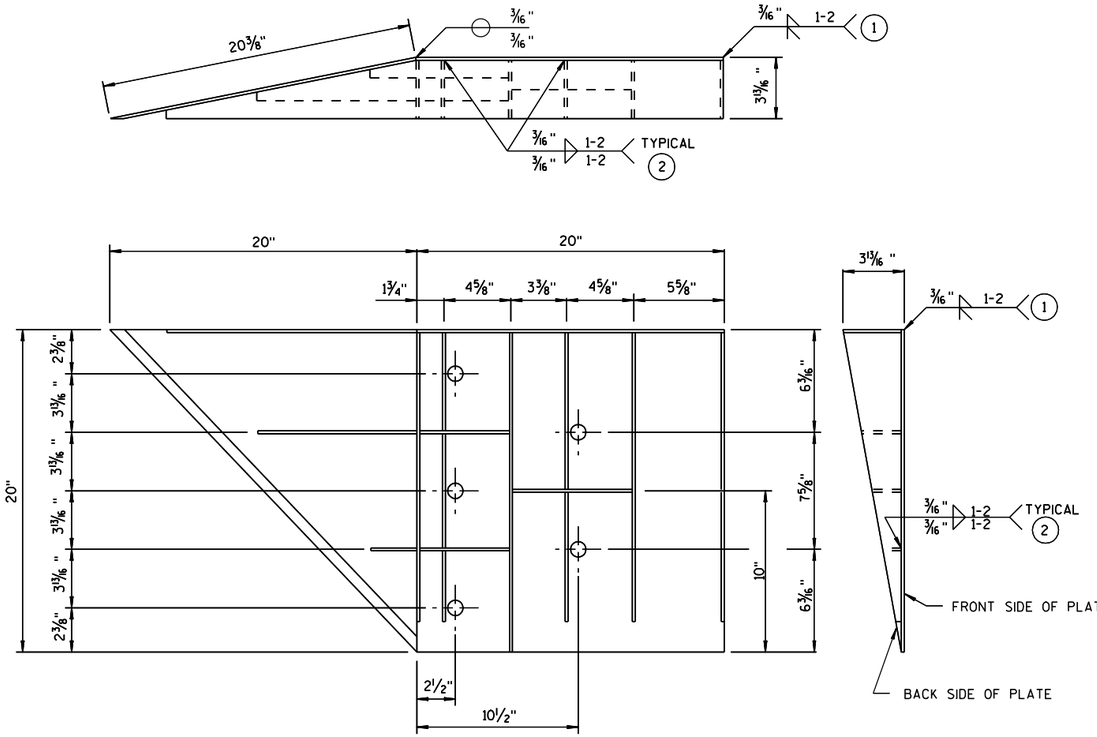

WELDING INSTRUCTION

(VIEWED FROM BACK SIDE OF PLATE)

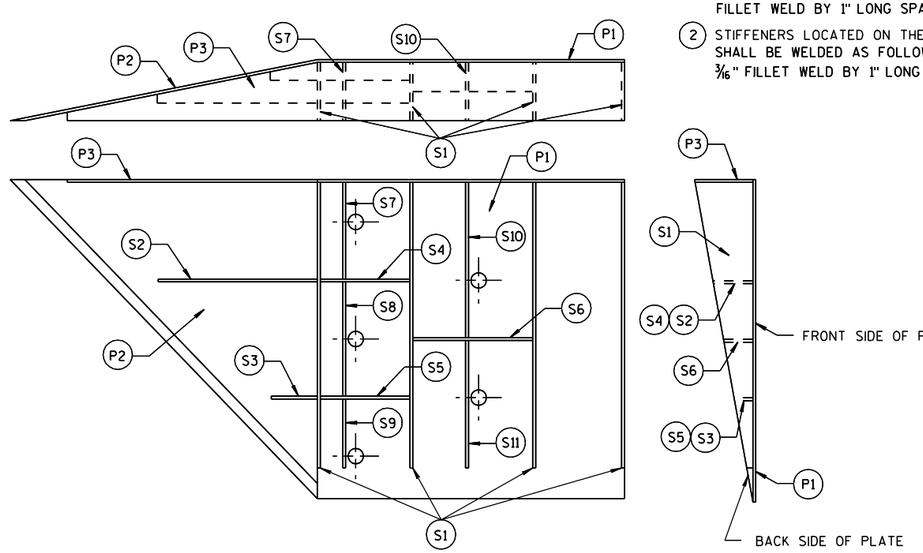

PLATE AND STIFFENER IDENTIFICATION

(VIEWED FROM BACK SIDE OF PLATE)

CONNECTOR PLATE DIMENSION (PER ASSEMBLY)

PLATE	QUANTITY	SHAPE	SIZE (A x B x C x D)	THICKNESS
P1	1		20" x 20"	3/16"
P2	1		20" x 20" x 28 9/16"	3/16"
P3	1		39" x 3 5/8" x 20" x 19 5/16"	3/16"
S1	4		18 7/16" x 3 5/8" x 18 3/4"	1/4"
S2	1		10 1/4" x 2 7/16" x 10 3/8" x 1/2"	1/4"
S3	1		3" x 1 1/16" x 3 1/8" x 1/2"	1/4"
S4	1		6 1/8" x 2 7/16"	1/4"
S5	1		6 1/8" x 1 1/16"	1/4"
S6	1		7 3/4" x 1 3/4"	1/4"
S7	1		2 9/16" x 6" x 3 5/8" x 5 7/8"	1/4"
S8	1		1 5/32" x 7 1/2" x 2 1/2" x 7 3/8"	1/4"
S9	1		6 1/16" x 6 3/16" x 1 3/32"	1/4"
S10	1		1 7/8" x 9 7/8" x 3 5/8" x 9 11/16"	1/4"
S11	1		8 1/2" x 8 3/4" x 1 13/16"	1/4"

SINGLE SLOPE CONNECTION PLATE

MIDWEST GUARDRAIL SYSTEM
THRIE BEAM TRANSITION (MGS)

STATE OF WISCONSIN
DEPARTMENT OF TRANSPORTATION

APPROVED
8/31/2012 DATE
/S/ Jerry H ---- ROADWAY STANDARDS ENGINEER
FHWA

6
S.D.D. 14 B 45-3i

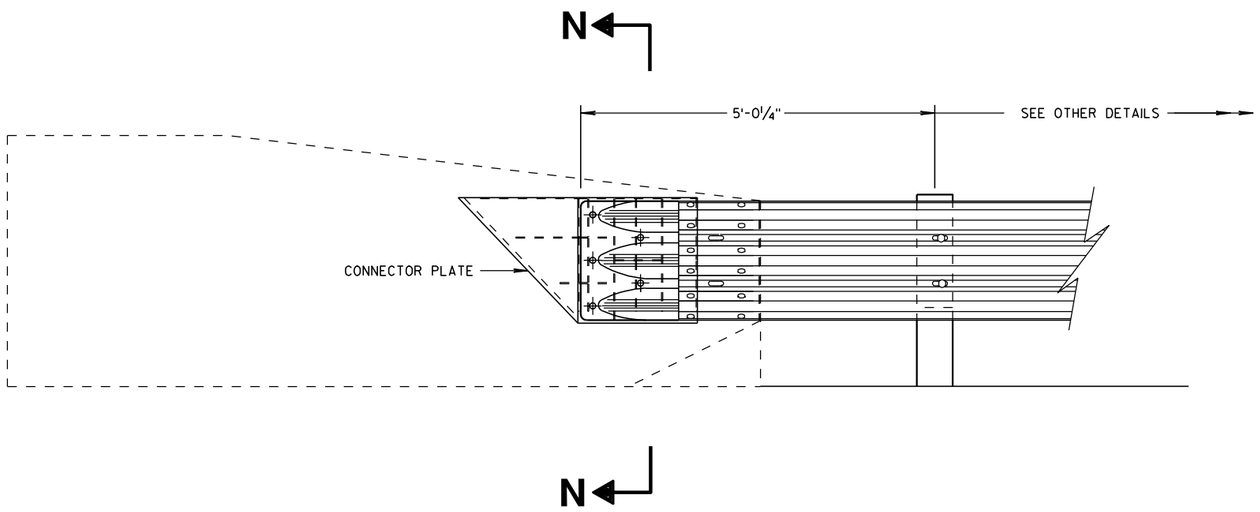

THRIE BEAM CONNECTION TO SINGLE SLOPE BARRIER

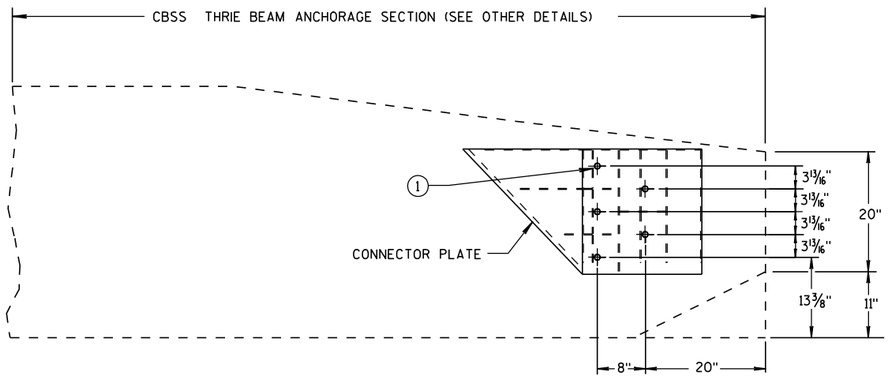

SINGLE SLOPE CONNECTION PLATE PLACEMENT

GENERAL NOTES

CONNECTOR PLATE, DRILLING BOLT HOLES THROUGH THE PARAPET, BOLTS, NUTS, WASHERS AND REPAIRING DAMAGED CONCRETE ARE INCIDENTAL TO THE CONTRACT.

(1) BOLTS MAY BE A325 BOLTS OR A449 BOLTS. BOLT LENGTH AND THREADING LENGTH ARE TO ALLOW FOR A TIGHT CONNECTION BETWEEN RIGID BARRIER AND THRIE BEAM CONNECTION PLATE. CONTRACTOR IS TO FIELD VERIFY BOLT LENGTH AND THREAD LENGTH. ONE ROUND WASHER REQUIRED BETWEEN BOLT HEAD AND THRIE BEAM CONNECTOR PLATE. BOLTS THAT EXTEND THROUGH THE PARAPET AND OUT THE BACK FACE REQUIRE A HARDENED ROUND STEEL WASHER THAT IS 2" O.D. X ⅝" THICK AND ONE PLATE WASHER. REPAIR ANY DAMAGED CONCRETE FROM BOLT INSTALLATION.

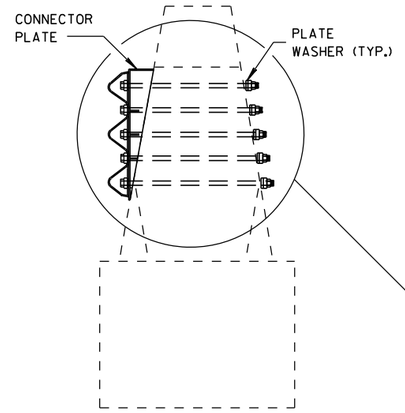

SECTION N-N

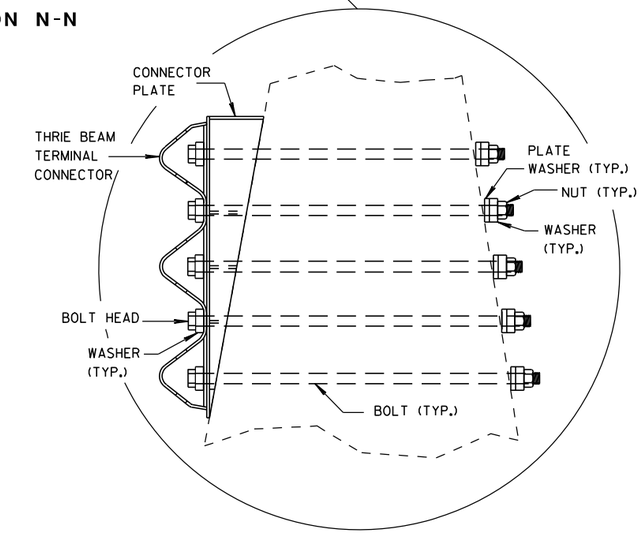

MIDWEST GUARDRAIL SYSTEM
THRIE BEAM TRANSITION (MGS)

STATE OF WISCONSIN
DEPARTMENT OF TRANSPORTATION

APPROVED
8/31/2012 — DATE
/S/ Jerry H. [illegible] — ROADWAY STANDARDS ENGINEER
FHWA

6

S.D.D. 14 B 45-3j

6

S.D.D. 14 B 45-3j

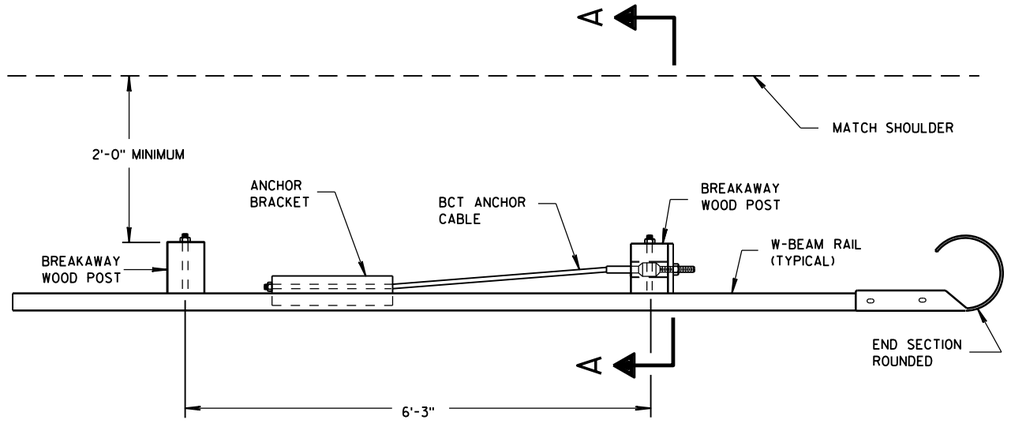

PLAN VIEW

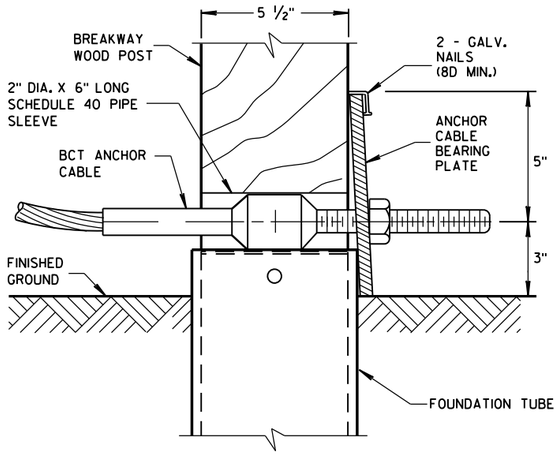

DETAIL A

POST NO. 1
GROUNG STRUT NOT SHOWN FOR CLARITY.

GENERAL NOTES

SEE SDD 14 B 42 FOR MORE INFORMATION.

END SECTION BOLTS AND NUTS HAVE THE SAME MATERIAL REQUIREMENTS AS SPLICE BOLTS.

FOUNDATION TUBE BOLTS ARE ⅞" DIAMETER ASTM A307 HEX HEAD BOLT. FOUNDATION TUBE BOLTS REQUIRE ASTM A563 A NUT AND TWO ASTM F844 ⅞" DIAMETER FLAT WASHERS. INSTALL ONE WASHER UNDER BOLT HEAD AND ONE WASHER UNDER NUT.

ANCHOR BRACKET AND GROUND STRUT BOLTS ARE A ⅝" DIAMETER ASTM A307 HEX HEAD BOLT. ANCHOR BRACKET BOLTS REQUIRE ASTM A563 A NUT AND TWO ASTM F844 ⅝" DIAMETER FLAT WASHERS. INSTALL ONE WASHER UNDER BOLT HEAD AND ONE WASHER UNDER NUT.

W-BEAM END SECTION ROUNDED HAS THE SAME MATERIAL PROPERTIES AS STANDARD STEEL RAIL.

(A) TOP OF FOUNDATION TUBE SHALL BE NO MORE THAN 3" ABOVE FINISHED GROUND.

(B) FOR NEW CONSTRUCTION TOP OF RAIL IS 31" ± 1".
FOR EXISTING INSTALLATIONS TOP OF RAIL IS BETWEEN 27¾" TO 32" ± 1".

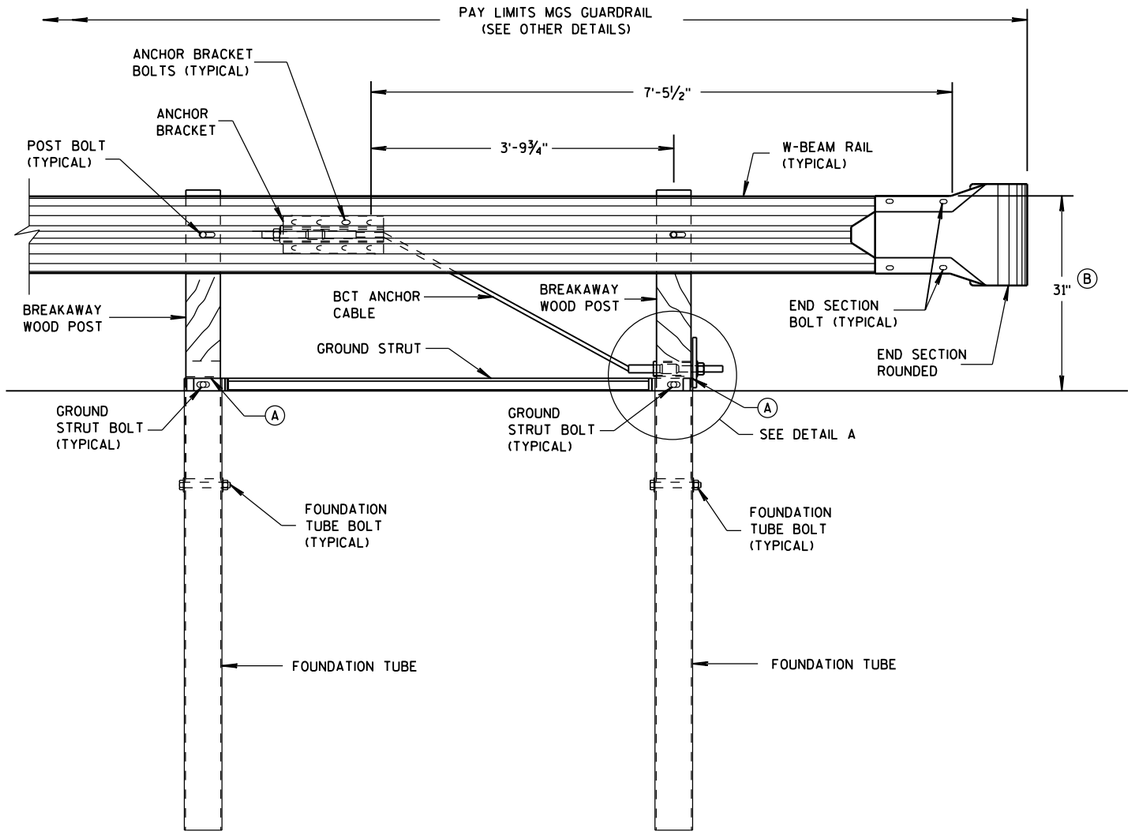

FRONT VIEW

END RAIL DETAIL

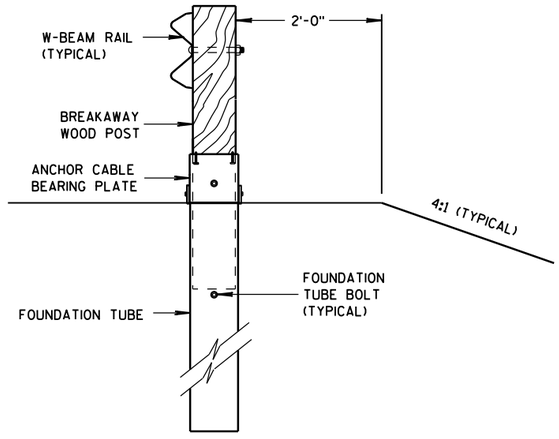

SECTION A-A

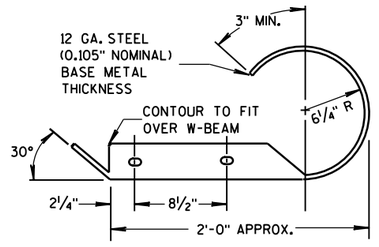

PLAN VIEW

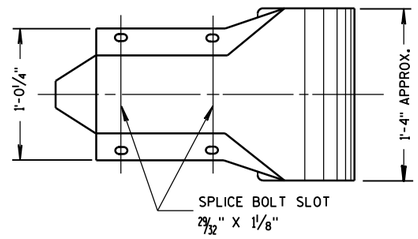

FRONT VIEW

W BEAM END SECTION ROUNDED

MIDWEST GUARDRAIL SYSTEM (MGS) TYPE 2 TERMINAL

STATE OF WISCONSIN
DEPARTMENT OF TRANSPO

6
S.D.D. 14 B 47-2a

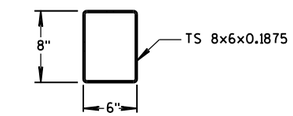

PLAN VIEW

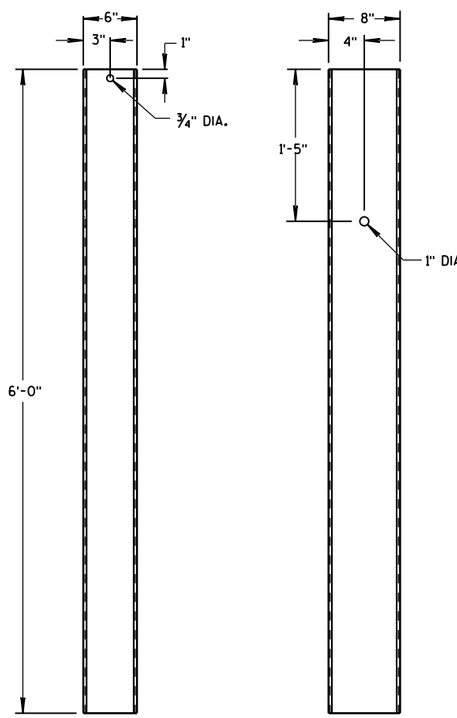

FRONT VIEW SIDE VIEW

FOUNDATION TUBE

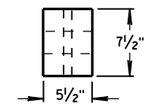

PLAN VIEW

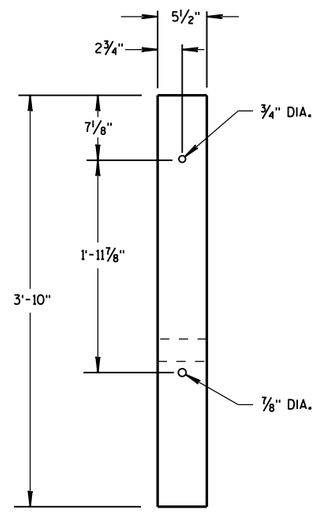

FRONT VIEW

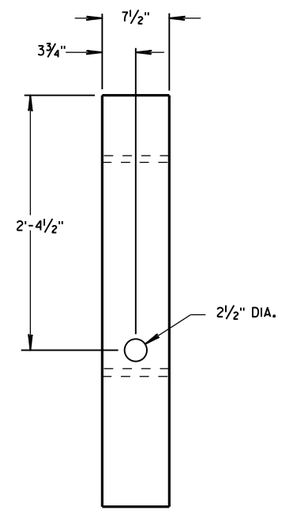

SIDE VIEW

BREAKAWAY WOOD POST

GENERAL NOTES

BCT ANCHOR CABLE IS A ¾" DIAMETER 6X19 IWRC IPS GALVANIZED WIRE ROPE. THE SWAGED FITTINGS AND STUD ARE REQUIRED. END FITTING SHALL BE MACHINED FROM HOT-ROLLED CARBON STEEL CONFORMING TO ASTM A576 GRADE 1035 AND GALVANIZED ACCORDING TO ASTM A123. TREADED STUD SHALL CONFORM TO ASTM A325 OR SAE GRADE 5. MINIMUM BREAKING STRENGTH OF WIRE ROPE IS 43,000 LB. WIRE ROPE IS TO BE TAUT.

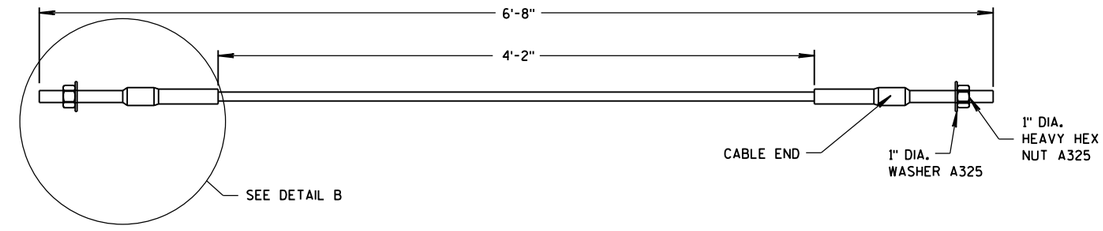

BCT ANCHOR CABLE

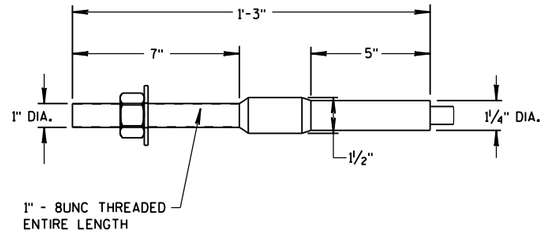

DETAIL B

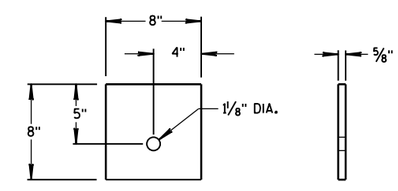

SIDE VIEW FRONT VIEW

ANCHOR CABLE
BEARING PLATE

MIDWEST GUARDRAIL
SYSTEM (MGS) TYPE 2 TERMINAL

STATE OF WISCONSIN
DEPARTMENT OF TRANSPO

6

S.D.D. 14 B 47-2b

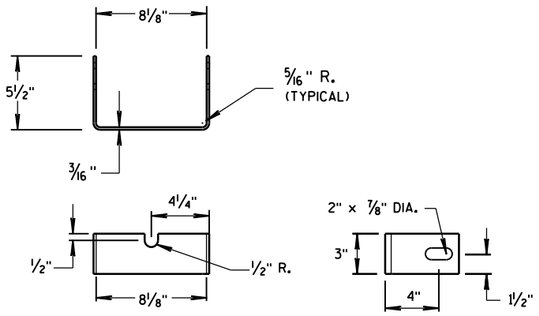

YOKE DETAIL

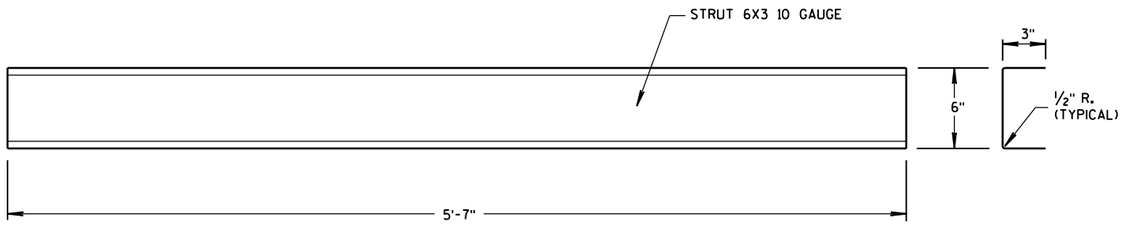

STRUT DETAIL

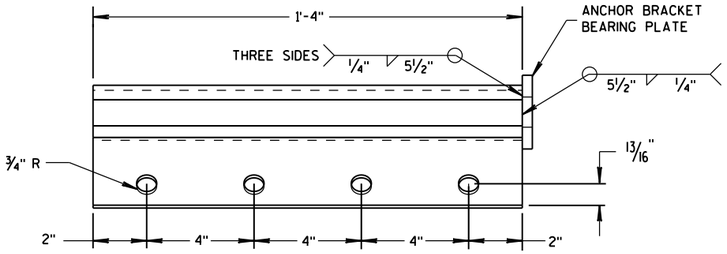

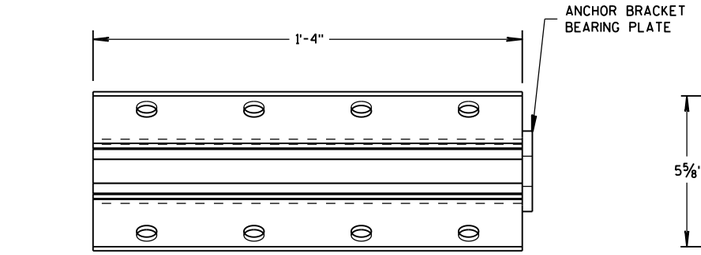

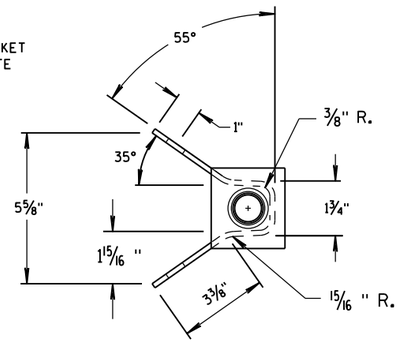

ANCHOR BRACKET

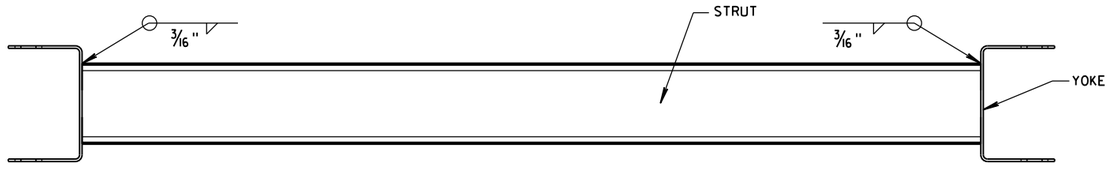

PLAN VIEW

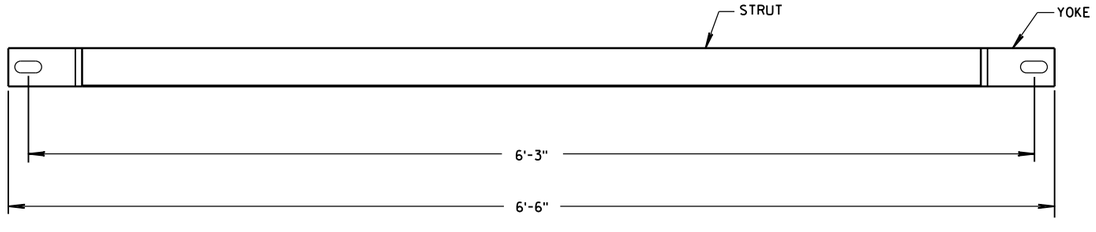

FRONT VIEW

GROUND STRUT DETAIL

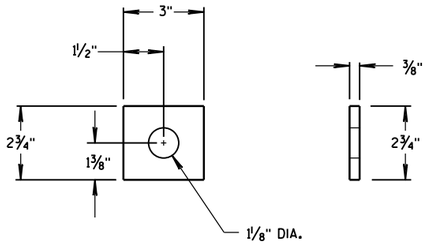

ANCHOR BRACKET BEARING PLATE

MIDWEST GUARDRAIL
SYSTEM (MGS) TYPE 2 TERMINAL

STATE OF WISCONSIN
DEPARTMENT OF TRANSPORTATION

APPROVED
June 2014
DATE

/S/ Jerry H. Zogg
ROADWAY STANDARDS ENGINEER

FHWA

6

S.D.D. 14 B 47-2c

6

S.D.D. 14 B 47-2c

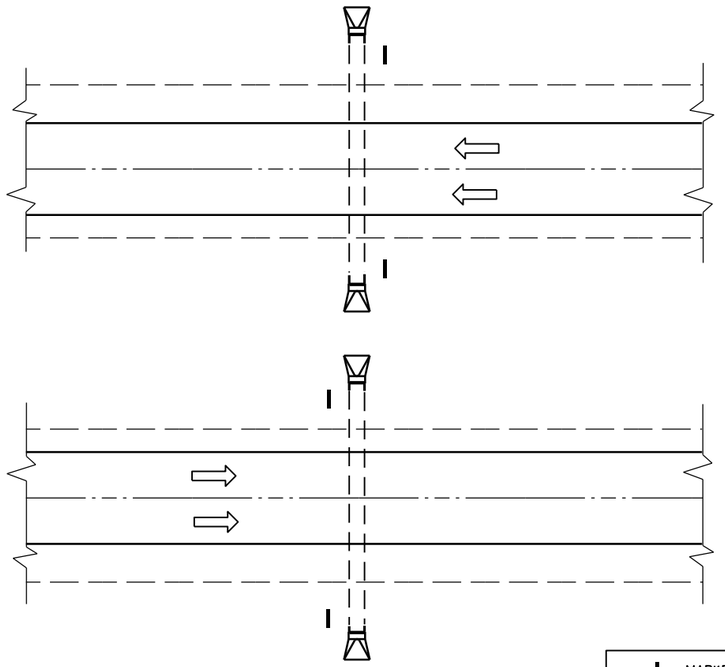

PLAN VIEW

DIVIDED HIGHWAY

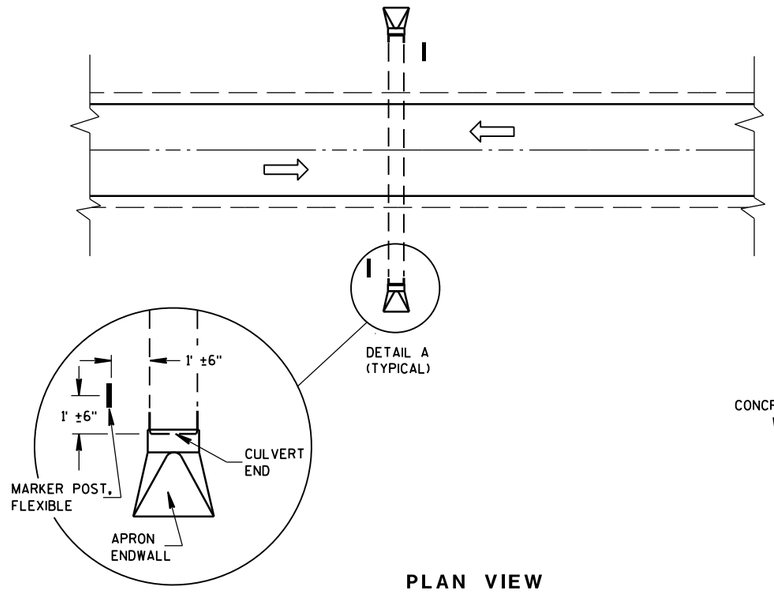

DETAIL A
(TYPICAL)

PLAN VIEW

UNDIVIDED HIGHWAY

MARKER POST, FLEXIBLE

DIRECTION OF TRAFFIC FLOW

GENERAL NOTES

DETAILS OF CONSTRUCTION, MATERIALS AND WORKMANSHIP NOT SHOWN ON THIS DRAWING SHALL CONFORM TO THE PERTINENT REQUIREMENTS OF THE STANDARD SPECIFICATIONS AND THE APPLICABLE SPECIAL PROVISIONS.

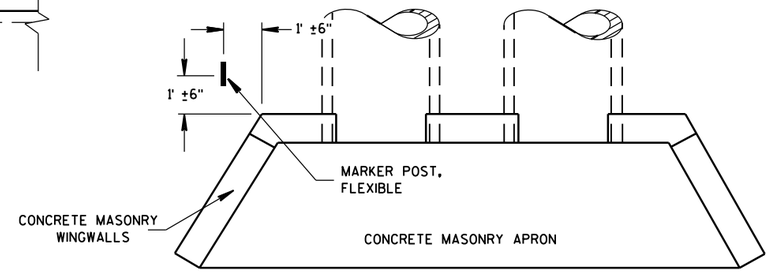

PLAN VIEW

CONCRETE MASONRY ENDWALLS FOR CULVERT PIPE AND PIPE ARCH

FLEXIBLE MARKER POST LOCATION

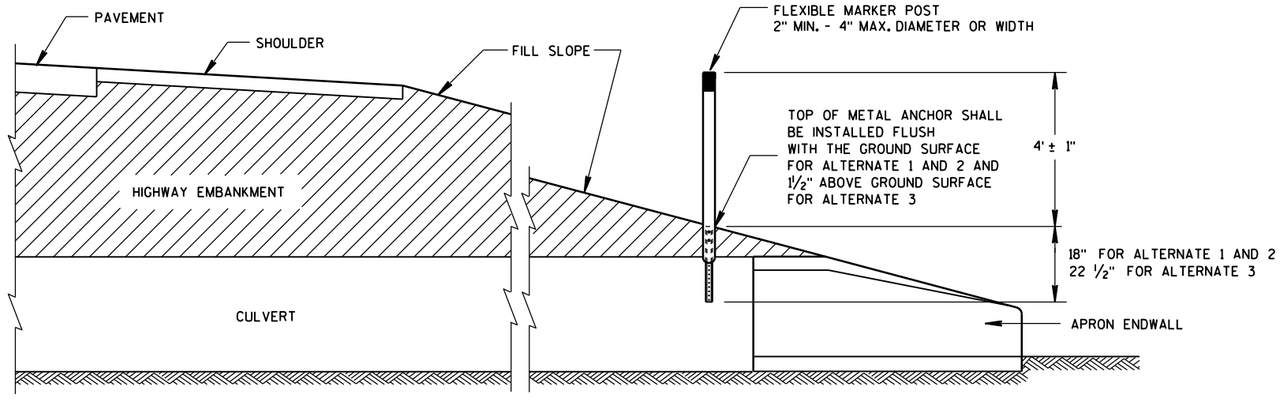

CROSS SECTION

FLEXIBLE MARKER POST

FLEXIBLE MARKER POST FOR CULVERT END

STATE OF WISCONSIN
DEPARTMENT OF TRANSPOI

6

S.D.D. 15 A 3-2a

6

S.D.D. 15 A 3-2a

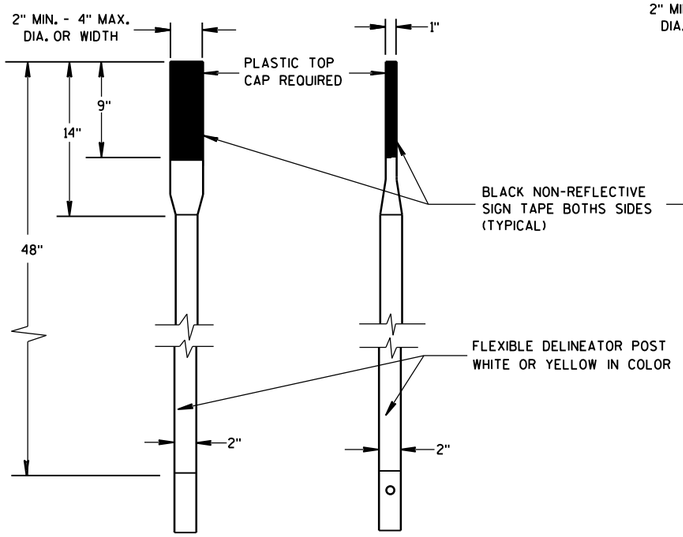

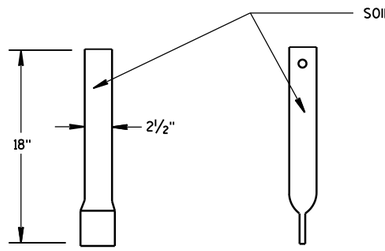

FRONT VIEW SIDE VIEW

ALTERNATE 1

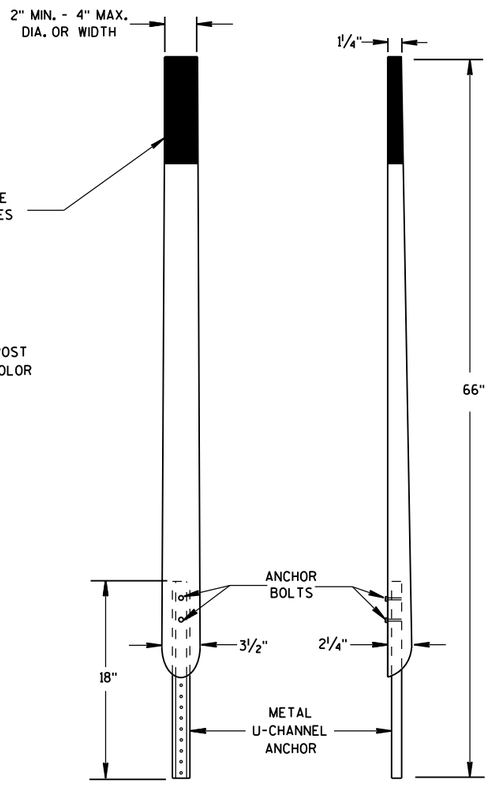

FRONT VIEW SIDE VIEW

ALTERNATE 2

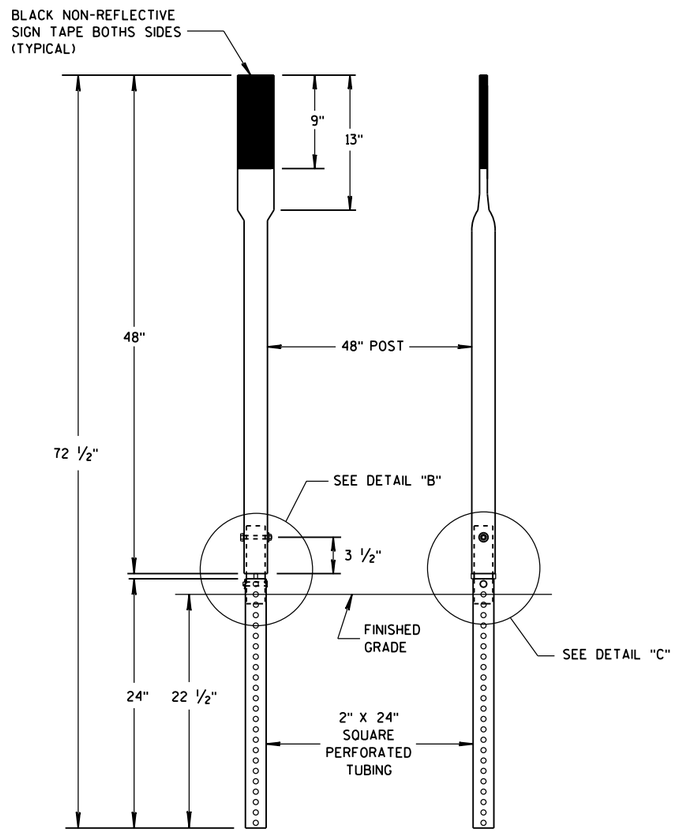

FRONT VIEW SIDE VIEW

ALTERNATE 3

FLEXIBLE MARKER POSTS

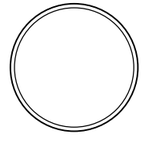

SECTION A-A

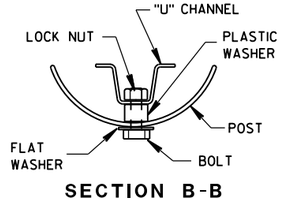

SECTION B-B

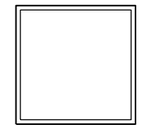

SECTION C-C

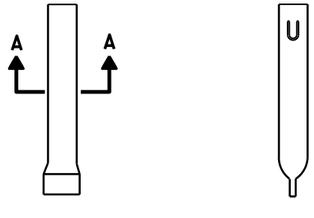

FRONT VIEW SIDE VIEW

ALTERNATE 1

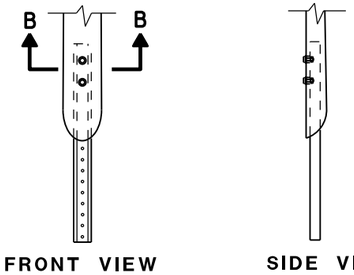

FRONT VIEW SIDE VIEW

ALTERNATE 2

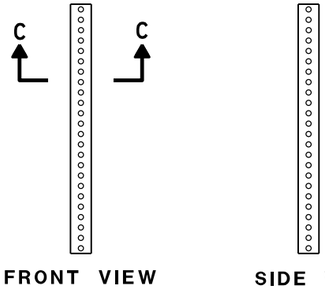

FRONT VIEW SIDE VIEW

ALTERNATE 3

FLEXIBLE MARKER POST ANCHORS

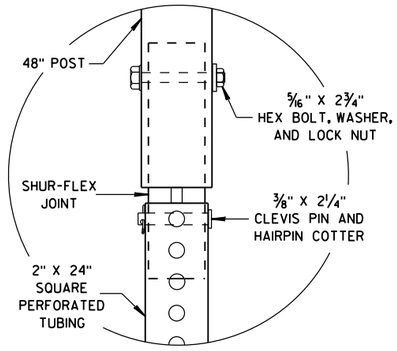

DETAIL B

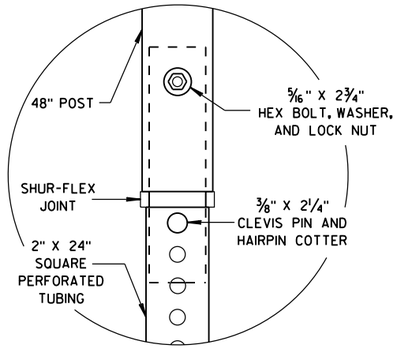

DETAIL C

FLEXIBLE MARKER POST
FOR CULVERT END

STATE OF WISCONSIN
DEPARTMENT OF TRANSPORTATION

APPROVED
10/1/2012
DATE
/S/ Travis Feltes
STATE TRAFFIC ENGINEER
FHWA

6

S.D.D. 15 A 3-2b

6

S.D.D. 15 A 3-2b

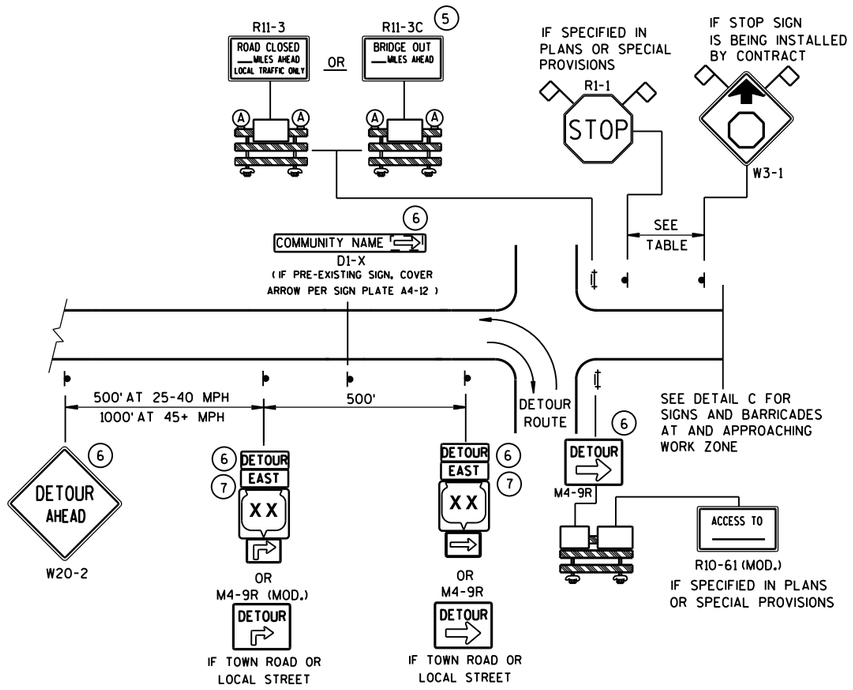

DETAIL A
MAINLINE CLOSURE WITH POSTED DETOUR

WORK ZONE GREATER THAN ½ MILE FROM DETOUR ROUTE (1000 FEET IF URBAN)

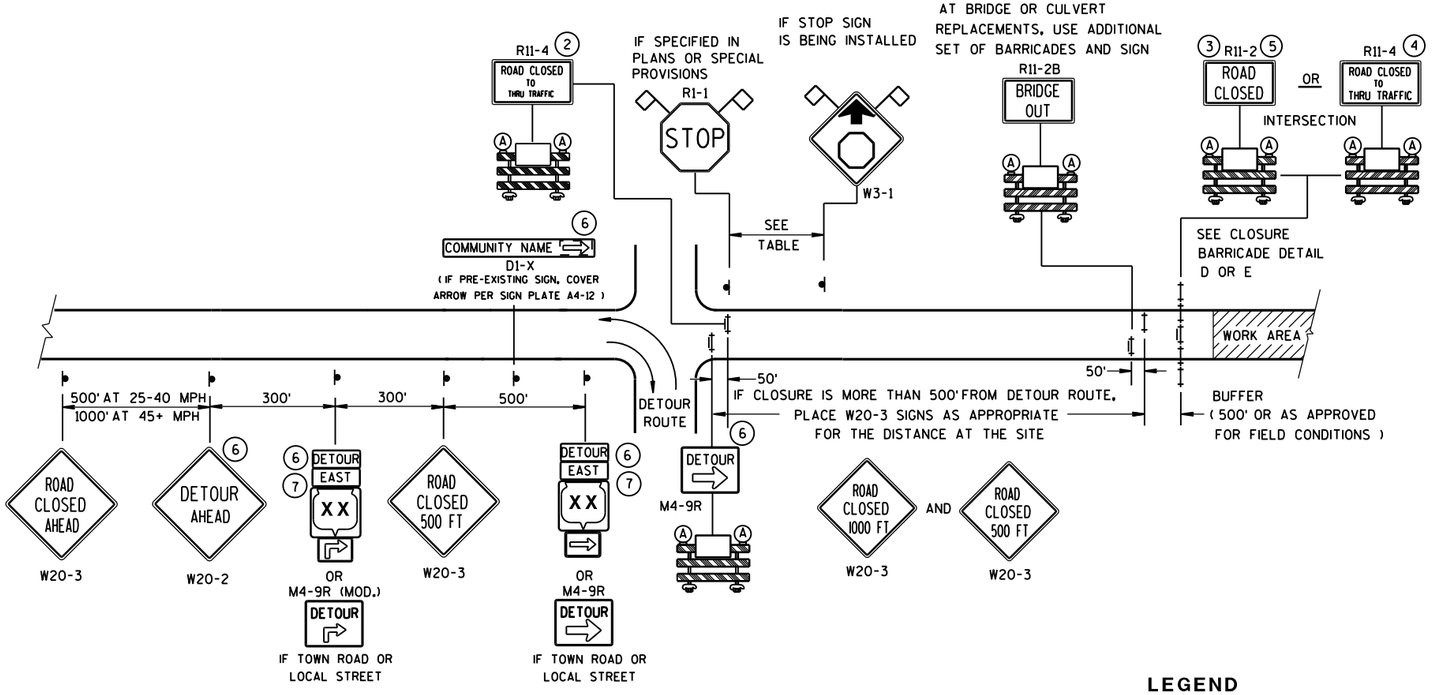

DETAIL B
MAINLINE CLOSURE WITH POSTED DETOUR

WORK ZONE LESS THAN ½ MILE FROM DETOUR ROUTE (1000 FEET IF URBAN)

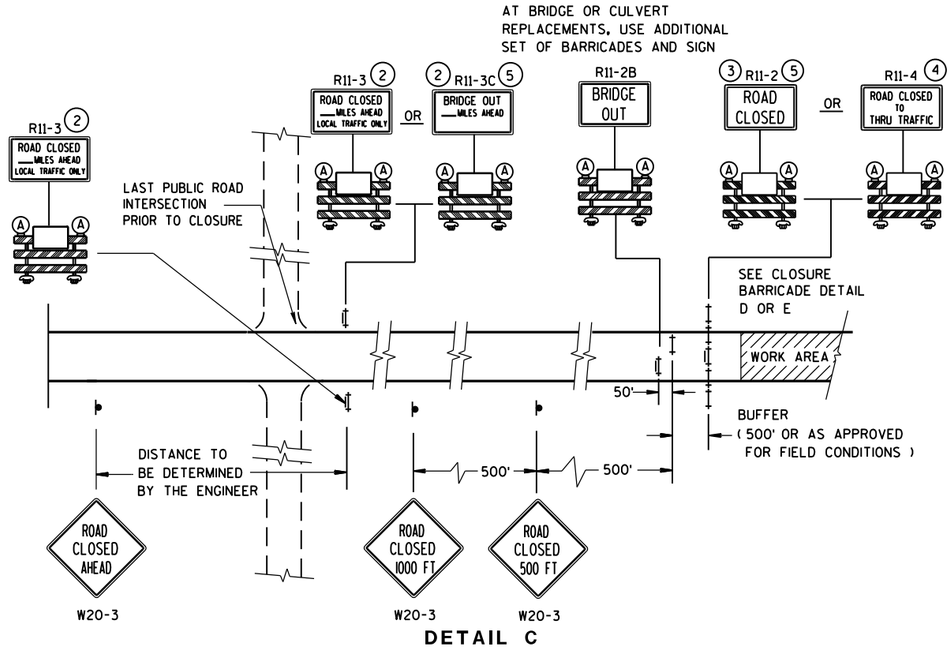

DETAIL C
MAINLINE CLOSURE, NO POSTED DETOUR

SPEED LIMIT (MPH)	"STOP AHEAD" ADVANCE WARNING DISTANCE (FT)
25	200
30	200
35	350
40	350
45	500
50	550
55	750

SEE SDD 15C2-SHEET "**b**"
FOR GENERAL NOTES
AND FOOTNOTES ① THROUGH ⑦

LEGEND

- SIGN ON PERMANENT SUPPORT
- TYPE III BARRICADE
- TYPE III BARRICADE WITH ATTACHED SIGN
- (A) TYPE "A" WARNING LIGHT (FLASHING)
- WORK AREA
- DETOUR / EAST — M4-8 / M3-X
- XX — M1-4; COUNTY XX — M1-5A; XX — M1-6
- M05-1 OR M06-1
- FLAGS, 16" X 16" MIN., (ORANGE)

BARRICADES AND SIGNS FOR MAINLINE CLOSURES

STATE OF WISCONSIN
DEPARTMENT OF TRANSPORTATION

8/2013 DATE — /S/ Travis Feltes STATE TRAFFIC ENGINEER — DESIGN

FHWA

6

S.D.D. 15 C 2-5a

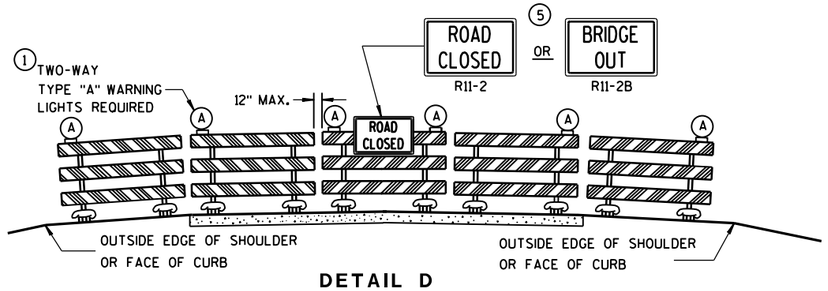

DETAIL D

ROAD CLOSURE BARRICADE DETAIL

APPROACH VIEW

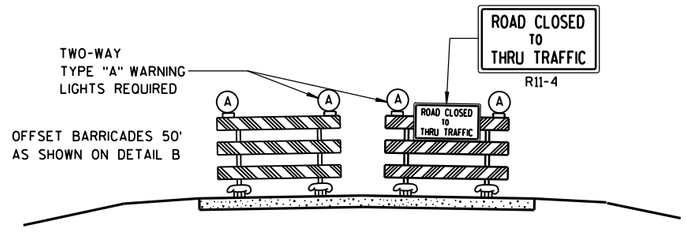

DETAIL E

LANE CLOSURE BARRICADE DETAIL

APPROACH VIEW

SEE SDD 15C2-SHEET "**a**" FOR LEGEND

GENERAL NOTES

THE EXACT NUMBER, LOCATION, AND SPACING OF ALL SIGNS AND BARRICADES SHALL BE ADJUSTED TO FIT FIELD CONDITIONS AS APPROVED BY THE ENGINEER.

ANY SIGNS TEMPORARY OR EXISTING, WHICH CONFLICT WITH TRAFFIC CONTROL "IN USE" SHALL BE REMOVED OR COVERED AS NEEDED AND AS APPROVED BY THE ENGINEER.

THE SPACING BETWEEN TRAFFIC CONTROL SIGNS SHOULD BE ADJUSTED TO NOT CONFLICT WITH AND SHOULD PROVIDE A DESIRABLE MINIMUM OF 200 FEET CLEARANCE TO EXISTING SIGNS THAT WILL REMAIN IN PLACE.

BARRICADES THAT MUST BE MOVED FOR A WORK OPERATION SHALL BE IMMEDIATELY RE-ESTABLISHED UPON COMPLETION OF THE OPERATION OR, FOR CONTINUING OPERATIONS, AT THE END OF EACH WORKING DAY.

SIGNS THAT WILL BE IN PLACE LESS THAN 7 CONTINUOUS DAYS AND NIGHTS MAY BE MOUNTED ON PORTABLE SUPPORTS.

ALL TYPE III BARRICADES SHALL HAVE RAILS REFLECTORIZED ON BOTH FACES. STRIPES SHALL BE PROPERLY SLOPED DOWN TOWARD THE TRAFFIC SIDE OR AS SHOWN IN THE ROAD CLOSURE BARRICADE DETAIL D FOR FULL ROAD CLOSURES.

TYPE "A" LOW-INTENSITY FLASHING WARNING LIGHTS SHALL BE VISIBLE ON BOTH SIDES OF THE BARRICADE.

THE R11-2, R11-3, M4-9, R11-4 AND R10-61 SIGNS PLACED ON BARRICADES SHALL COVER NO MORE THAN THE TOP RAIL. THE SIGNS SHALL NOT COVER ANY PORTION OF THE MIDDLE OR BOTTOM RAILS.

"WO AND "MO" SIGNS ARE THE SAME AS "W" AND "M" SIGNS EXCEPT THE BACKGROUND IS ORANGE.

ALL SIGNS SHALL BE 48" X 48" UNLESS OTHERWISE NOTED BELOW:
- R11-2 SHALL BE 48" X 30".
- R11-3, R11-4 AND R10-61 SHALL BE 60" X 30".
- M4-9 SHALL BE 30" X 24".
- M3-X SHALL BE 24" X 12". (36" X 18" IF NEEDED TO MATCH EXISTING SIGNS.)
- M4-8 SHALL BE 24" X 12". (30" X 15" IF NEEDED TO MATCH EXISTING SIGNS.)
- M1-4, M1-5A, AND M1-6 SHALL BE 24" X 24". (36" X 36" IF NEEDED TO MATCH EXISTING SIGNS.)
- M05-1 AND M06-1 SHALL BE 21" X 21". (30" X 30" IF NEEDED TO MATCH EXISTING SIGNS.)
- D1-X SHALL BE AS SHOWN ON SPECIFIC PROJECT SIGNING DETAIL SHEETS.
- R1-1 SHALL BE 36" X 36".

(1) TWO WARNING LIGHTS SHALL BE PROVIDED ON THE CENTER BARRICADE AND A MINIMUM OF ONE WARNING LIGHT SHALL BE PROVIDED ON EACH OF THE OTHER BARRICADES WITHIN THE ROADWAY LIMITS. SPACING OF THE WARNING LIGHTS SHALL BE UNIFORM TO THE EDGE OF ROADWAY AS SHOWN (APPROX. 8-FOOT LIGHT SPACING).

(2) THESE SIGNS AND BARRICADES ARE NOT REQUIRED IF ROAD CLOSURE BEGINS AT INTERSECTION.

(3) FOR ROAD CLOSURE WITHOUT LOCAL ACCESS TO PROJECT, SEE ROAD CLOSURE BARRICADE DETAIL D.

(4) FOR ROAD CLOSURE WITH LOCAL ACCESS TO PROJECT, SEE LANE CLOSURE BARRICADE DETAIL E.

(5) FOR BRIDGE OR CULVERT REPLACEMENTS, SUBSTITUTE "BRIDGE OUT" INSTEAD OF "ROAD CLOSED" ON R11-2 AND R11-3 SIGNS.

(6) INSTALL DETOUR AND COMMUNITY GUIDE SIGNS AND ARROWS ONLY IF SPECIFIED IN THE CONTRACT. IF THERE ARE EXISTING ROUTE MARKER ASSEMBLIES THAT WILL REMAIN IN PLACE, ADJUST THE LOCATION OF THE DETOUR ROUTE SIGNS TO CORRESPOND WITH THE EXISTING ASSEMBLIES. MODIFY EXISTING SIGNS WHERE POSSIBLE. SEE SPECIFIC PROJECT DETOUR SIGNING DETAIL SHEETS. IF DETOUR SIGNS ARE BEING INSTALLED BY OTHERS, PLACE THE CONTRACTED TRAFFIC CONTROL SIGNS TO ALLOW FOR PLACEMENT OF ALL WARNING, DETOUR AND GUIDE SIGNS AS SHOWN.

(7) "EAST" CARDINAL DIRECTION MARKERS AND RIGHT TURN ARROWS ARE SHOWN. USE OTHER CARDINAL DIRECTIONS AND ARROWS AS APPROPRIATE.

BARRICADES AND SIGNS FOR MAINLINE CLOSURES

STATE OF WISCONSIN
DEPARTMENT OF TRANSPORTATION

8/2013 — DATE
/S/ Travis Feltes — STATE TRAFFIC ENGINEER
FHWA

6

S.D.D. 15 C 2-5b

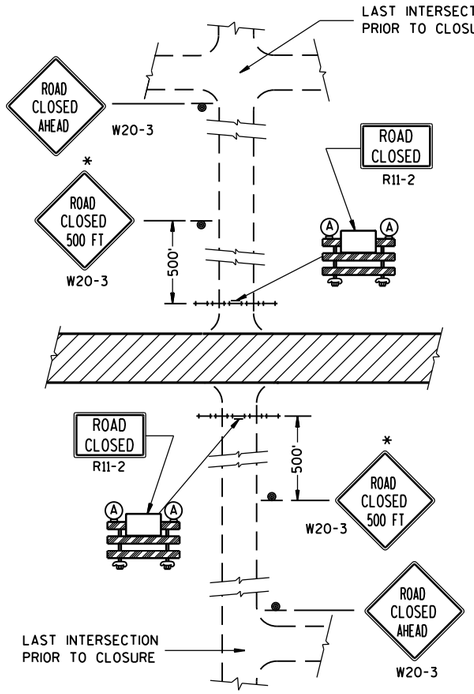

DETAIL 1

(NO ACCESS TO PROJECT)

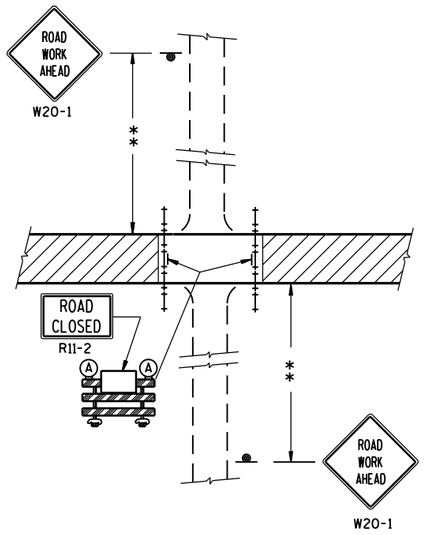

DETAIL 2

(PUBLIC CROSS-TRAFFIC MAINTAINED. NO ACCESS TO PROJECT).

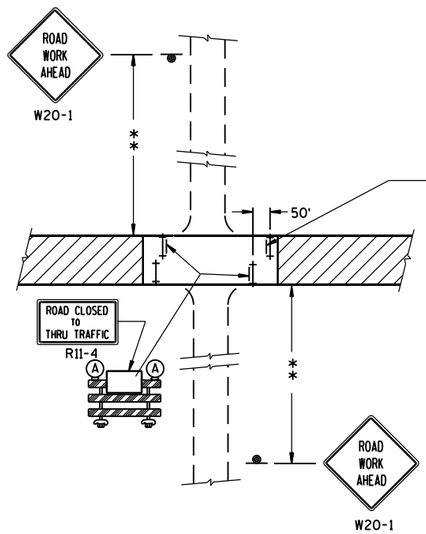

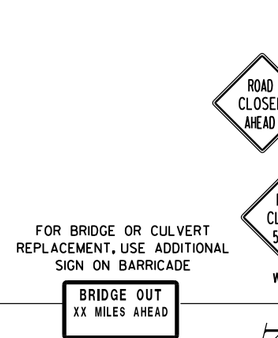

DETAIL 3

(PUBLIC CROSS-TRAFFIC MAINTAINED. CONTRACTOR, LOCAL BUSINESS AND RESIDENT ACCESS).

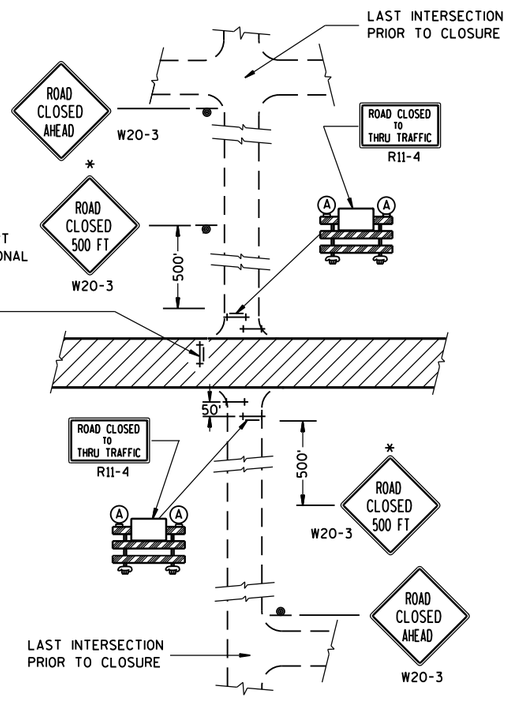

DETAIL 4

(CONTRACTOR, LOCAL BUSINESS AND RESIDENT ACCESS TO PROJECT)

GENERAL NOTES

THE EXACT NUMBER, LOCATION, AND SPACING OF ALL SIGNS AND BARRICADES SHALL BE ADJUSTED TO FIT FIELD CONDITIONS AS APPROVED BY THE ENGINEER.

ANY SIGNS TEMPORARY OR EXISTING, WHICH CONFLICT WITH TRAFFIC CONTROL "IN USE" SHALL BE REMOVED OR COVERED AS NEEDED AND AS APPROVED BY THE ENGINEER.

THE SPACING BETWEEN TRAFFIC CONTROL SIGNS SHOULD BE ADJUSTED TO NOT CONFLICT WITH AND SHOULD PROVIDE A DESIRABLE MINIMUM OF 200 FEET CLEARANCE TO EXISTING SIGNS THAT WILL REMAIN IN PLACE.

IF A "STOP" SIGN MUST BE REMOVED FOR A WORK OPERATION, A TEMPORARY "STOP" SIGN SHALL BE PLACED PRIOR TO THE SIGN REMOVAL, OR A FLAGGER SHALL BE PROVIDED UNTIL THE SIGN IS RE-ESTABLISHED.

BARRICADES THAT MUST BE MOVED FOR A WORK OPERATION SHALL BE IMMEDIATELY RE-ESTABLISHED UPON COMPLETION OF THE OPERATION OR, FOR CONTINUING OPERATIONS, AT THE END OF EACH WORKING DAY.

SIGNS THAT WILL BE IN PLACE LESS THAN 7 CONTINUOUS DAYS AND NIGHTS MAY BE MOUNTED ON PORTABLE SUPPORTS.

ALL TYPE III BARRICADES SHALL HAVE RAILS REFLECTORIZED ON BOTH FACES. STRIPES SHALL BE PROPERLY SLOPED DOWN TOWARD THE TRAFFIC SIDE OR AS SHOWN IN THE ROAD CLOSURE BARRICADE DETAIL D FOR FULL ROAD CLOSURES.

TYPE "A" LOW-INTENSITY FLASHING WARNING LIGHTS SHALL BE VISIBLE ON BOTH SIDES OF THE BARRICADE.

THE R11-2, R11-3 AND R11-4 SIGNS PLACED ON BARRICADES SHALL COVER NO MORE THAN THE TOP RAIL. THE SIGNS SHALL NOT COVER ANY PORTION OF THE MIDDLE OR BOTTOM RAILS.

ALL SIGNS SHALL BE 48" X 48" UNLESS OTHERWISE NOTED BELOW:
R11-2 SHALL BE 48" X 30".
R11-4 AND R11-3 SHALL BE 60" X 30".

*OMIT THE "ROAD CLOSED 500 FT." SIGN IF THE LAST INTERSECTION IS 500 FT. OR LESS FROM THE WORK ZONE.

**500' MAX. OR AT LAST INTERSECTION WHICHEVER IS CLOSER.

LEGEND

- SIGN ON PERMANENT SUPPORT
- TYPE III BARRICADE
- TYPE III BARRICADE WITH ATTACHED SIGN
- (A) TYPE "A" WARNING LIGHT (FLASHING)
- WORK AREA

BARRICADES AND SIGNS FOR SIDEROAD CLOSURES

STATE OF WISCONSIN
DEPARTMENT OF TRANSPORTATION

APPROVED
8/2013 — DATE
/S/ Travis Feltes — STATE TRAFFIC ENGINEER
FHWA

6

S.D.D. 15 C 3-2

6

S.D.D. 15 C 3-2

GENERAL NOTES

DETAILS OF INSTALLATION, MATERIALS AND WORKMANSHIP NOT SHOWN ON THIS DRAWING SHALL CONFORM TO THE PERTINENT REQUIREMENTS OF THE STANDARD SPECIFICATIONS AND APPLICABLE SPECIAL PROVISIONS.

ALL LETTERS, ARROWS AND SYMBOLS SHALL BE IN CONFORMANCE WITH REQUIREMENTS INCLUDED IN "STANDARD ALPHABETS FOR HIGHWAY SIGNS AND PAVEMENT MARKING" BOOK BY THE FEDERAL HIGHWAY ADMINISTRATION. ALL LETTERS, ARROWS AND SYMBOLS SHALL BE WHITE AND REFLECTORIZED. SMALL DIFFERENCES IN DIMENSIONS WITHIN THE TOLERANCES OF THAT BOOK ARE ACCEPTABLE.

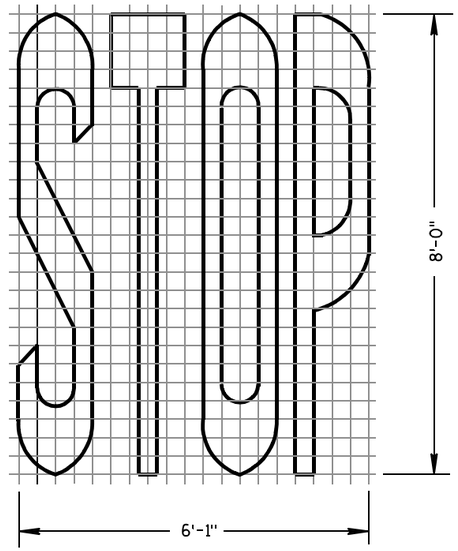

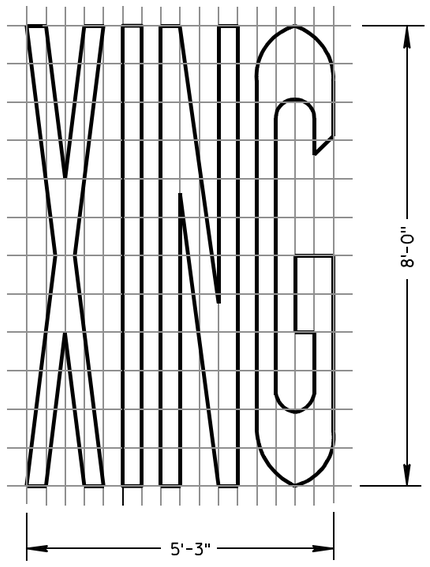

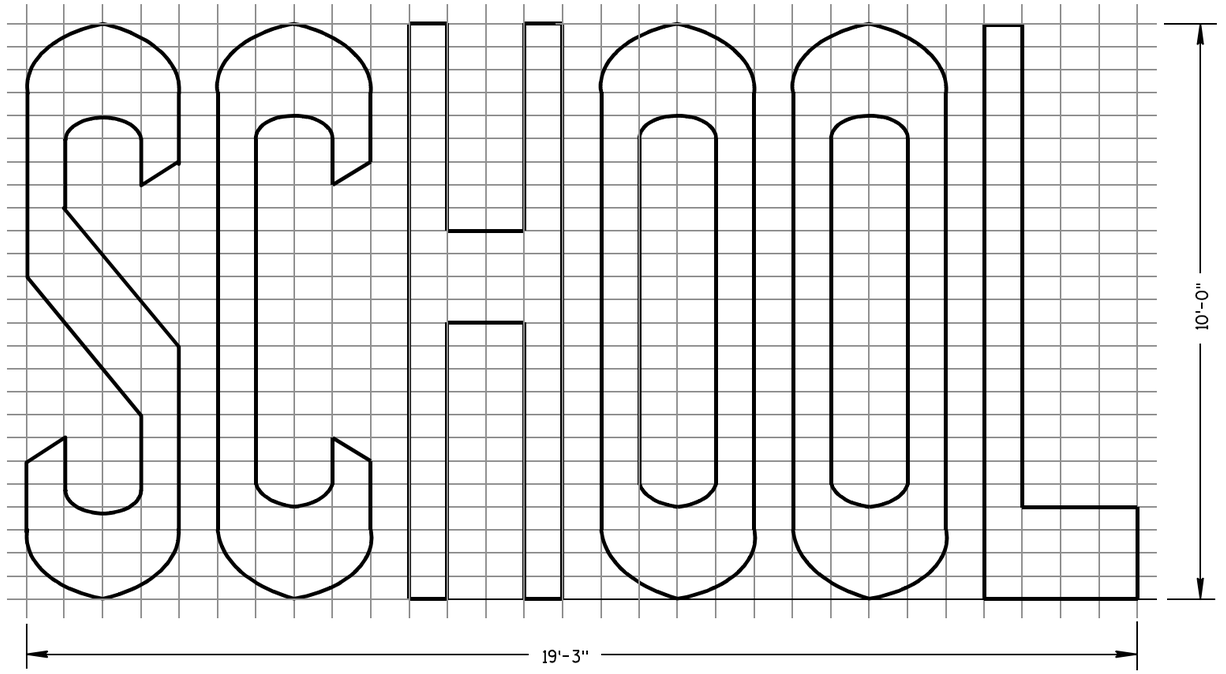

TWO-LANE

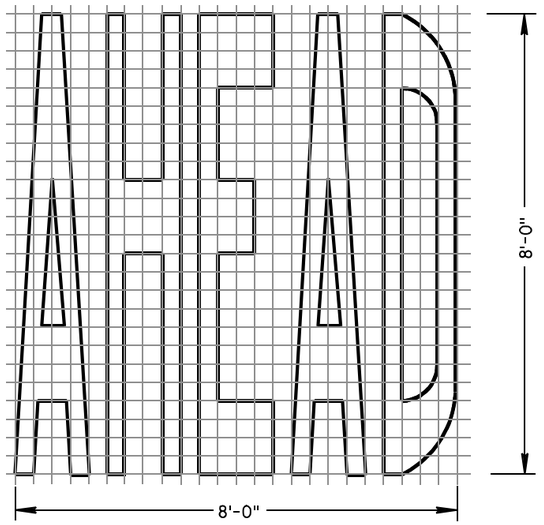

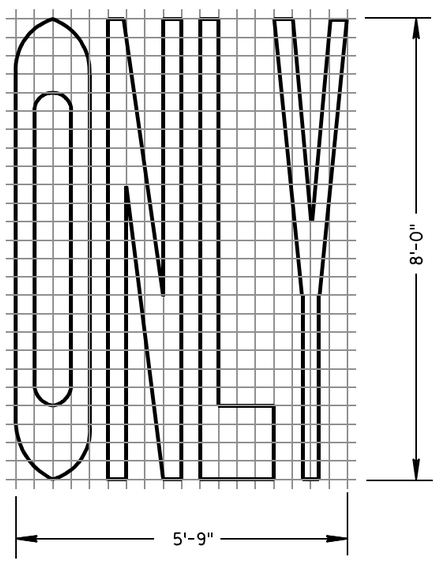

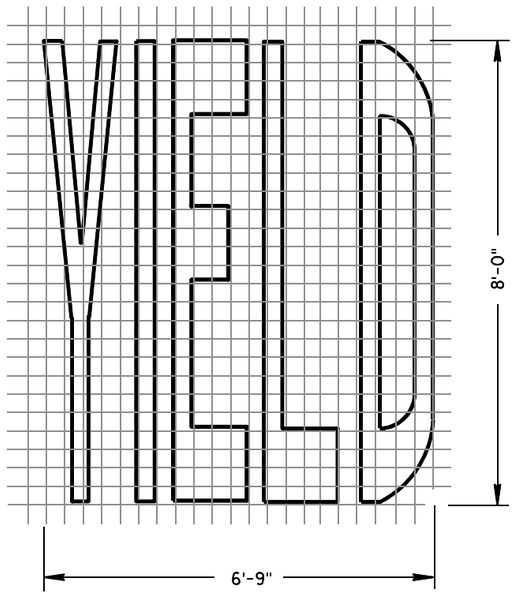

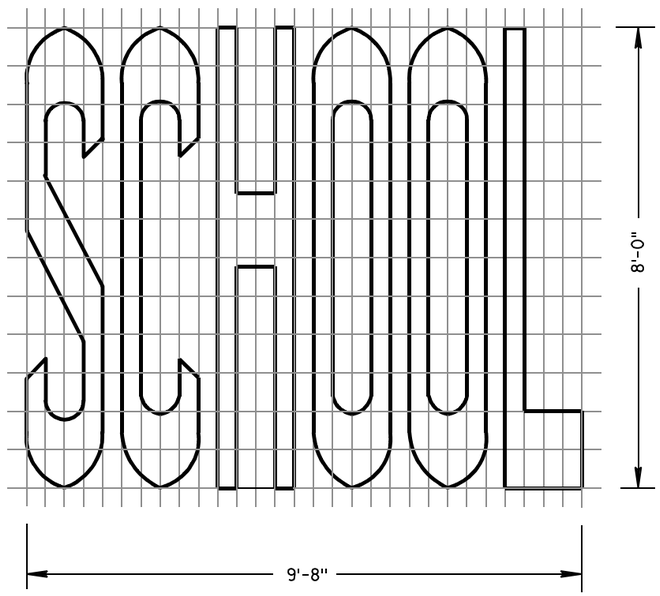

SINGLE-LANE

PAVEMENT MARKING WORDS

STATE OF WISCONSIN
DEPARTMENT OF TRANSPORTATION

APPROVED

7-1-11 DATE — /S/ Thomas N. Nothohm STATE TRAFFIC ENGINEER — IGN

FHWA

6

S.D.D. 15 C 7-12b

6

S.D.D. 15 C 7-12b

GENERAL NOTES

DETAILS OF INSTALLATION, MATERIALS AND WORKMANSHIP NOT SHOWN ON THIS DRAWING SHALL CONFORM TO THE PERTINENT REQUIREMENTS OF THE STANDARD SPECIFICATIONS AND APPLICABLE SPECIAL PROVISIONS.

ALL LETTERS, ARROWS AND SYMBOLS SHALL BE IN CONFORMANCE WITH REQUIREMENTS INCLUDED IN "STANDARD ALPHABETS FOR HIGHWAY SIGNS AND PAVEMENT MARKING" BOOK BY THE FEDERAL HIGHWAY ADMINISTRATION. ALL LETTERS, ARROWS AND SYMBOLS SHALL BE WHITE AND REFLECTORIZED. SMALL DIFFERENCES IN DIMENSIONS WITHIN THE TOLERANCES OF THAT BOOK ARE ACCEPTABLE.

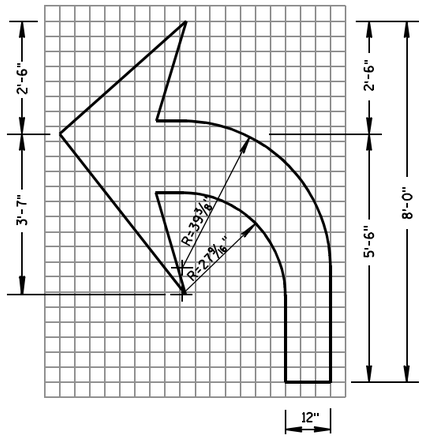

TYPE 2

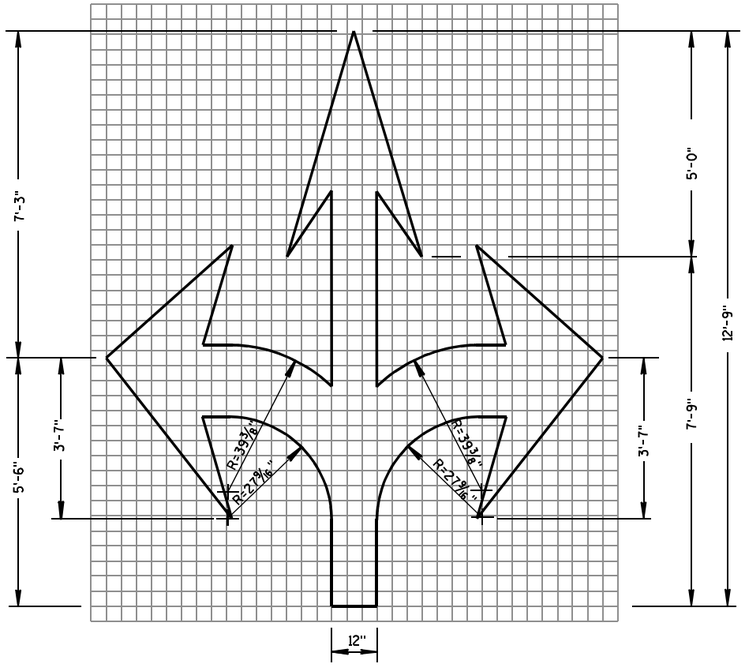

TYPE 6

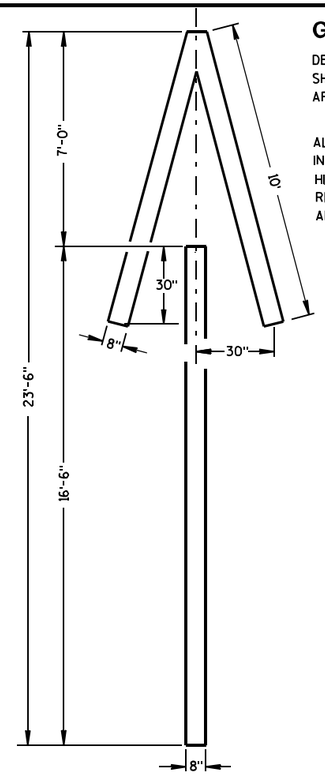

TYPE 4

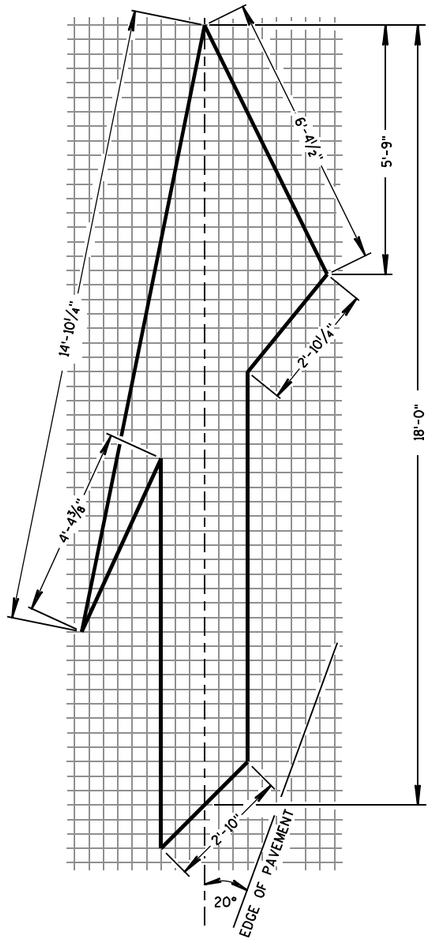

TYPE 5 LANE DROP ARROW

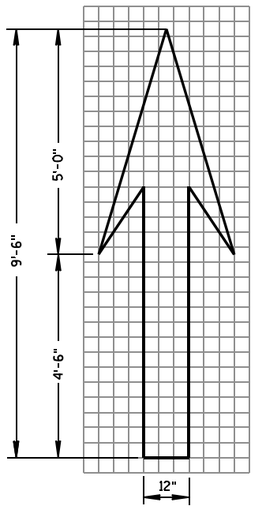

TYPE 1

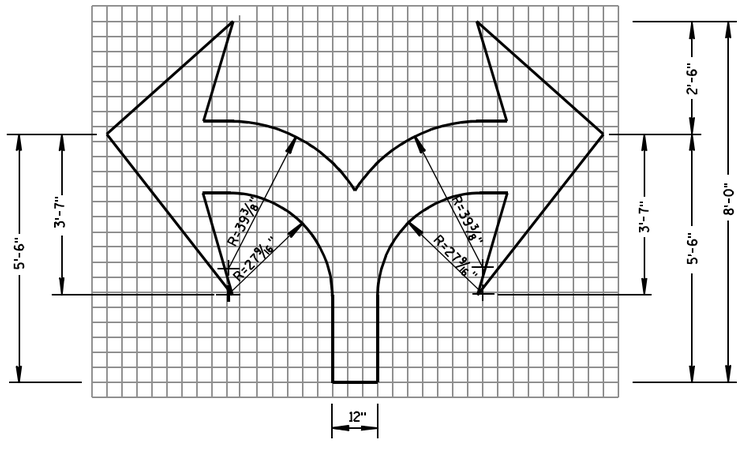

TYPE 7

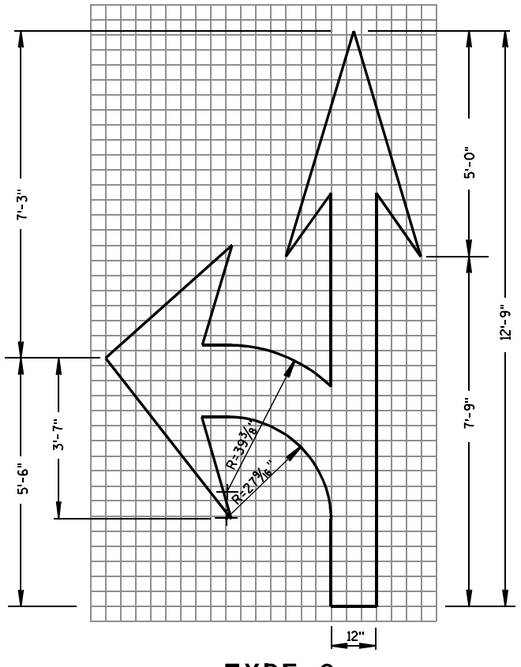

TYPE 3

PAVEMENT MARKING ARROWS

STATE OF WISCONSIN
DEPARTMENT OF TRANSPORTATION

APPROVED

7/1/11 — DATE

/S/ Thomas N. Nothdurft — STATE TRAFFIC ENGINEER

FHWA

6

S.D.D. 15 C 7-12c

6

S.D.D. 15 C 7-12c

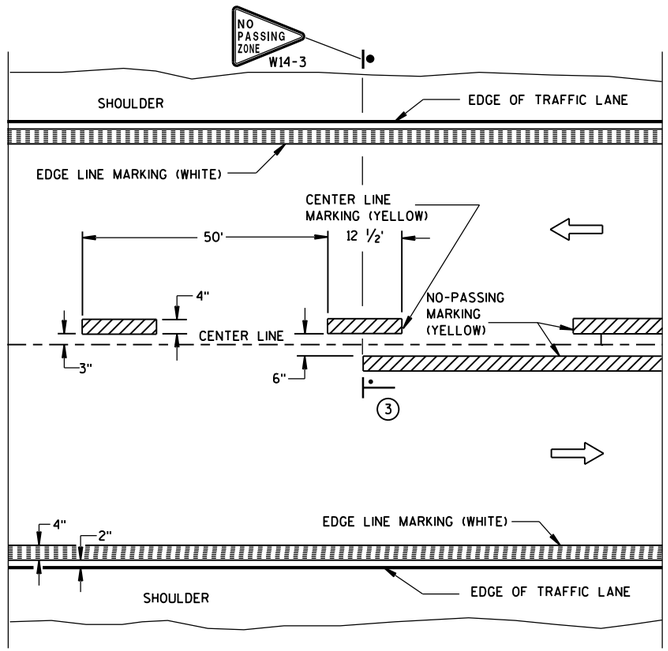

TWO WAY TRAFFIC

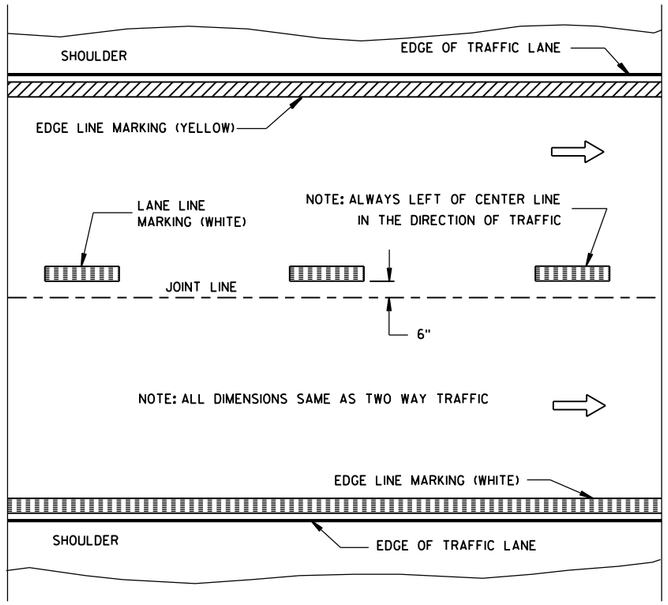

ONE WAY TRAFFIC

PERMANENT PAVEMENT MARKING

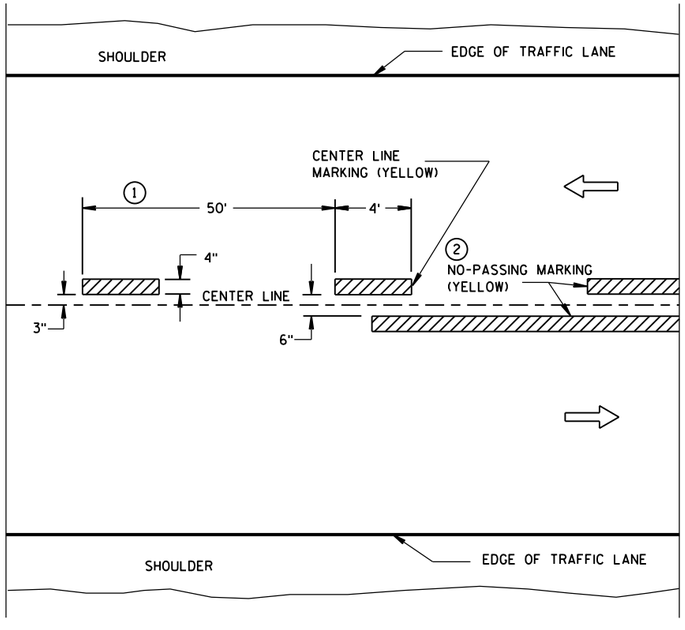

TWO WAY TRAFFIC

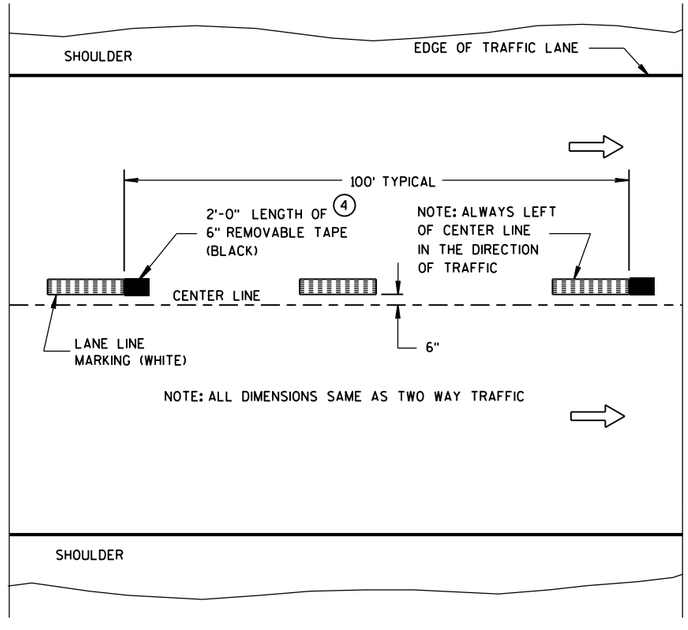

ONE WAY TRAFFIC

TEMPORARY (INTERMEDIATE) PAVEMENT MARKING

(SHOWS CYCLE FOR TEMPORARY CENTER LINE OR TEMPORARY LANE LINE MARKING)

GENERAL NOTES

DETAILS OF CONSTRUCTION NOT SHOWN ON THIS DRAWING SHALL CONFORM TO STANDARD SPECIFICATIONS AND SPECIAL PROVISIONS.

1. HALF CYCLE LENGTHS (25'±) WITH 2' MINIMUM STRIPE LENGTHS SHALL BE PROVIDED ON ROADWAYS (INCLUDING TEMPORARY TRAVELED WAYS) WITH REVERSE CURVATURE, CURVATURE OF OVER 5 DEGREES OR WHEN DIRECTED BY THE ENGINEER TO MARK UNUSUAL ALIGNMENT OF THE TRAVELED WAY.
2. NO PASSING ZONE TEMPORARY PAVEMENT MARKING IS REQUIRED TO BE PLACED, WHERE APPROPRIATE, ALONG WITH CENTERLINE TEMPORARY PAVEMENT MARKING WHEN A SAME DAY PERMANENT PAVEMENT MARKING ITEM IS INCLUDED IN THE CONTRACT.
3. NO PASSING ZONE MARKINGS ARE PLACED ACCORDING TO "T" MARKINGS. IF EXISTING NO PASSING ZONE W14-3 SIGNS ARE BEYOND 50 FEET IN EITHER DIRECTION, THE SIGNS SHALL BE MOVED TO THE "T" MARKINGS.
4. CONCRETE ONLY.

NOTE

ARROW SYMBOL (⇨) SHOWS DIRECTION OF TRAVEL

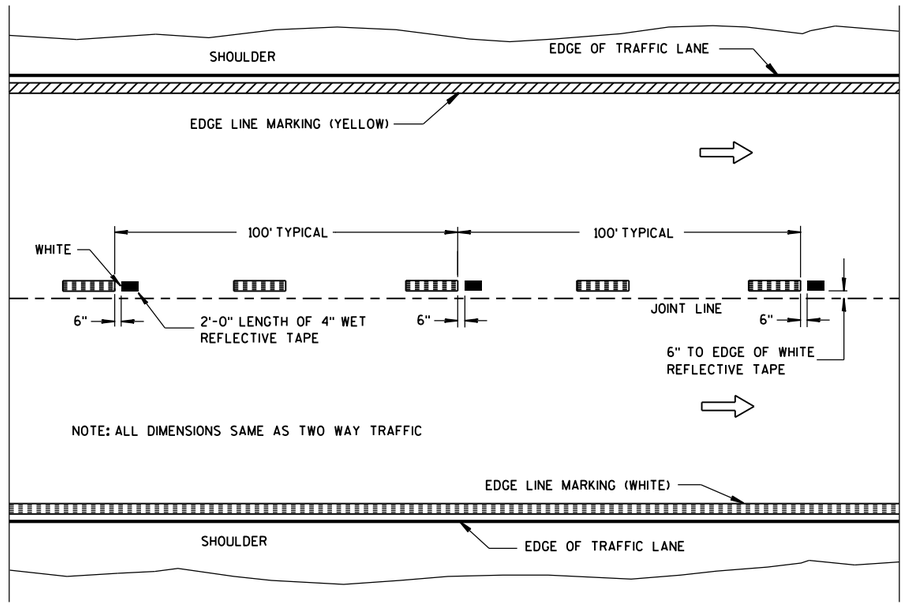

WET REFLECTIVE TAPE SUPPLEMENT TO
SPRAYED OR NON WET REFLECTIVE TAPE LANE LINE

LEGEND

"T" MARKING

POST MOUNTED SIGN

PAVEMENT MARKING (MAINLINE)

STATE OF WISCONSIN
DEPARTMENT OF TRANSPORTATION

APPROVED

5-13-2013 DATE

/S/ Travis Feltes STATE TRAFFIC E

FHWA

6

S.D.D. 15 C 8-16a

6

S.D.D. 15 C 8-16a

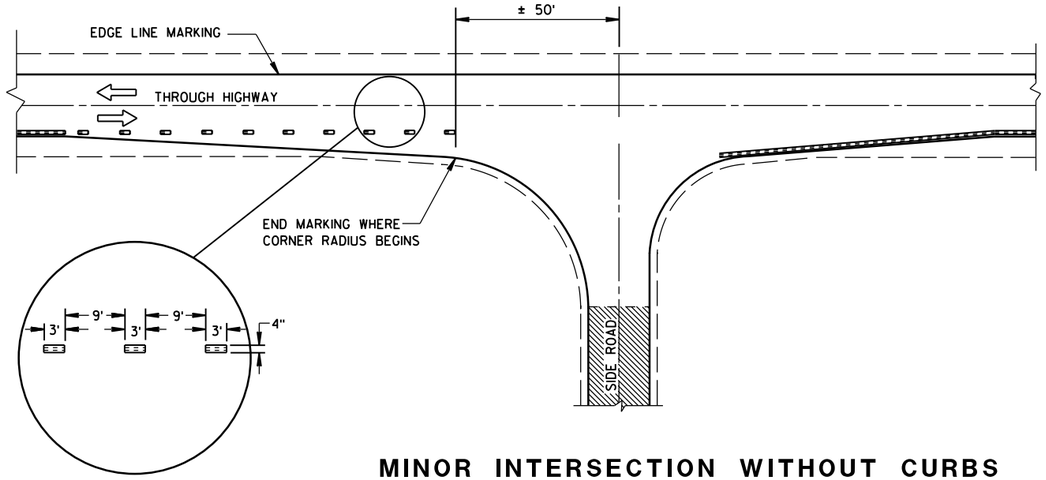

MINOR INTERSECTION WITHOUT CURBS

GENERAL NOTES

EDGE LINES SHALL BE OMITTED THROUGH INTERSECTIONS. EDGE LINES SHALL BE CONTINUED THROUGH DRIVEWAYS.

(1) WHEN DISTANCE "A" IS LESS THAN 250 FEET, OMIT LANE LINE.

(2) WHEN DISTANCE "B" IS LESS THAN 100 FEET, OMIT CHANNELIZING LANE LINE.

(3) ALTERNATIVE MARKING SHALL BE PROVIDED WHEN SPECIFIED IN THE CONTRACT. TYPICAL SITUATIONS WHERE THIS MARKING MAY BE REQUIRED ARE WHERE THE INTERSECTION IS ON A SHARP HORIZONTAL CURVE OR CREST VERTICAL CURVE IN AN UNLIGHTED AREA SUCH THAT THE EDGE LINE MAY BE MISLEADING TO THE MOTORIST OR DISAPPEAR FROM SIGHT.

(4) THE EDGE LINE IN THE TAPER AREAS OF THE BYPASS LANE AND THE BYPASS LANE SHALL BE LOCATED 1-FOOT FROM EDGE OF PAVEMENT TO THE OUTSIDE EDGE OF EDGE LINE.

(5) BARRIER LINE ENDS AT SIDE ROAD PAVEMENT/SURFACE EDGE EXTENSION.

(6) BARRIER LINE STARTS 500 FEET PRIOR TO THE BYPASS TAPER.

(7) IF THE DISTANCE BETWEEN 2 SUCCESSIVE NO-PASSING ZONES IS LESS THAN THE MINIMUM DISTANCE BETWEEN ZONES, CONNECT THE 2 ZONES.

(8) 3' LINE 9' GAP, EXCEPT RETRACE THE EXISTING LINE - GAP PATTERN WHERE EXISTING MARKINGS ARE IN PLACE.

ARROW SYMBOL (⇨) SHOWS DIRECTION OF TRAVEL

(7)

POSTED SPEED (MPH)	MINIMUM DISTANCE BETWEEN ZONES (FEET)
25 - 30	528
35 - 40	528
45 - 50	686
55	792

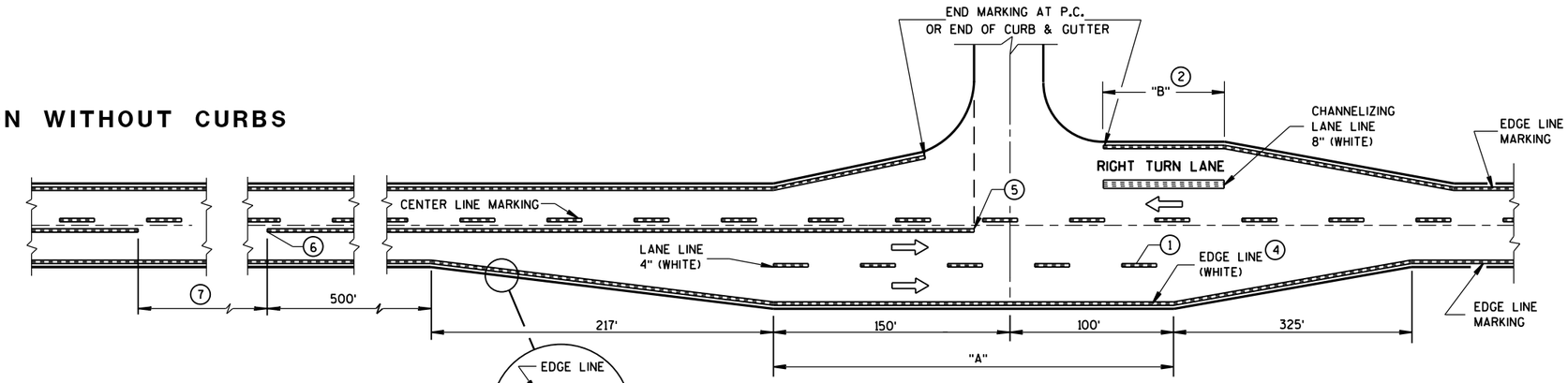

MAJOR INTERSECTIONS

(INTERSECTION WITH FULL RIGHT TURN LANE OR BYPASS LANES)

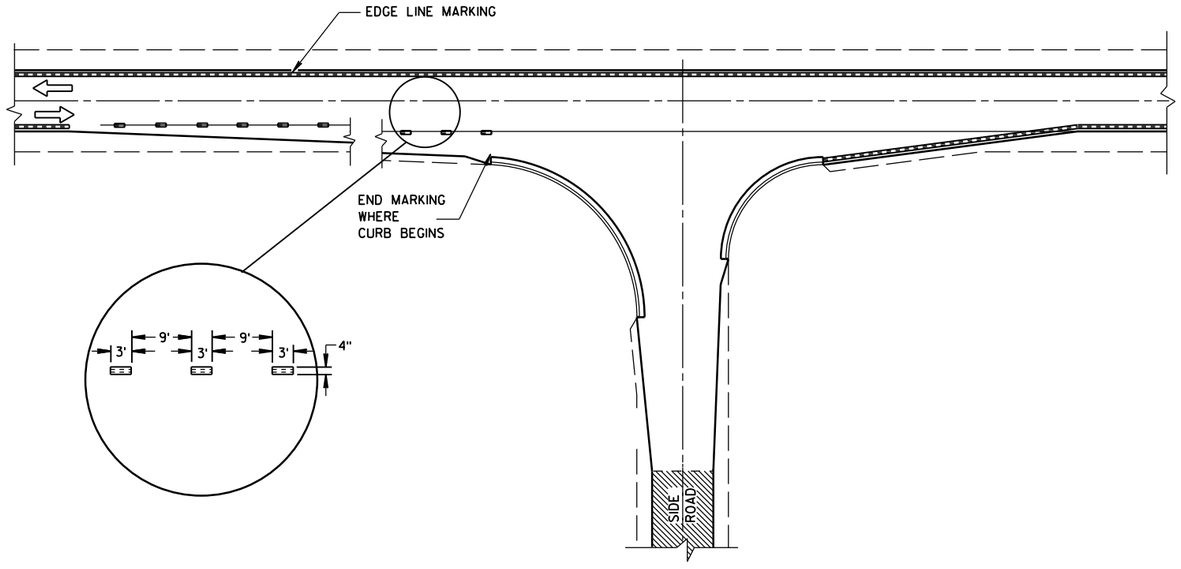

MINOR INTERSECTION WITH CURBS

(TYPICAL MARKING)

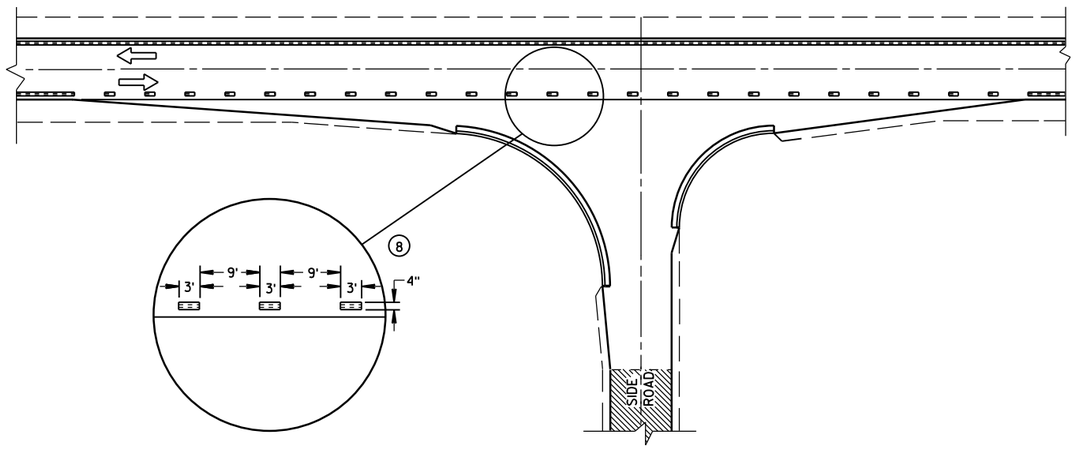

MINOR INTERSECTION WITH CURBS

(3) (FOR SPECIAL CONDITIONS AS SPECIFIED)

PAVEMENT MARKING
(INTERSECTIONS)

STATE OF WISCONSIN
DEPARTMENT OF TRANSPOR

6

S.D.D. 15 C 8-16b

6

S.D.D. 15 C 8-16b

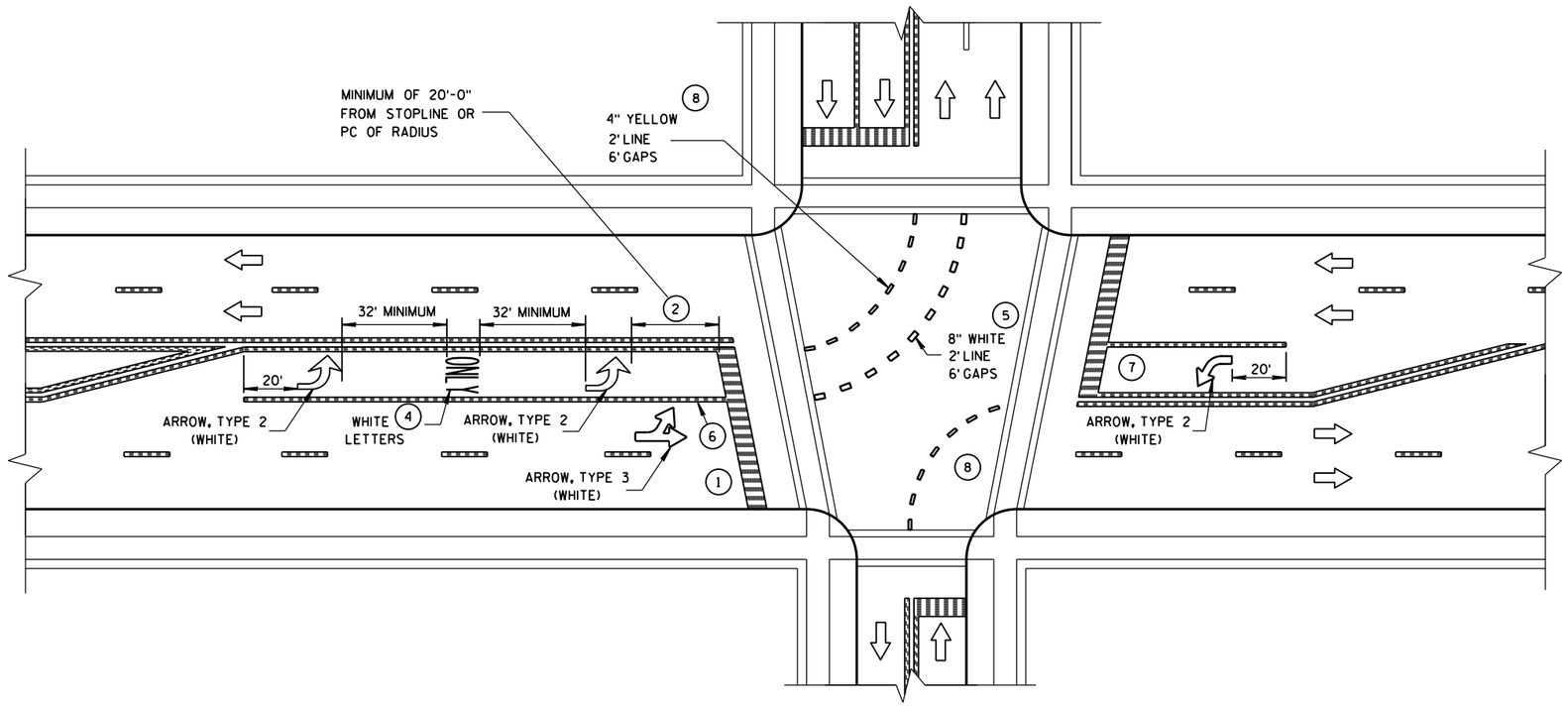

GENERAL NOTES

1. STOP BAR IS REQUIRED ONLY WHEN SPECIFIED IN THE CONTRACT.
2. DISTANCE MAY BE ADJUSTED TO ACCOMODATE SHORT LEFT TURN LANES. AS APPROVED BY THE ENGINEER.
3. A SET OF ARROWS IS REQUIRED EVERY 400 FEET OR NEAR INTERSECTIONS OR DRIVEWAYS WITH TURNING TRAFFIC.
4. ADD EXTRA SETS OF ONE ARROW AND ONE ONLY PER 160 FEET OR WHEN ON A CURVE.
5. 8" WHITE WITH 2' LINE 6' GAPS FOR DUAL TURN LANE.
6. 8" WHITE
7. ADD SECOND ARROW WHEN TURN BAY IS GREATER THAN OR EQUAL TO 108 FEET.
8. REQUIRED ONLY WHEN SPECIFIED IN THE CONTRACT.

NOTE:
ARROW SYMBOL (⇨)
SHOWS DIRECTION OF TRAVEL

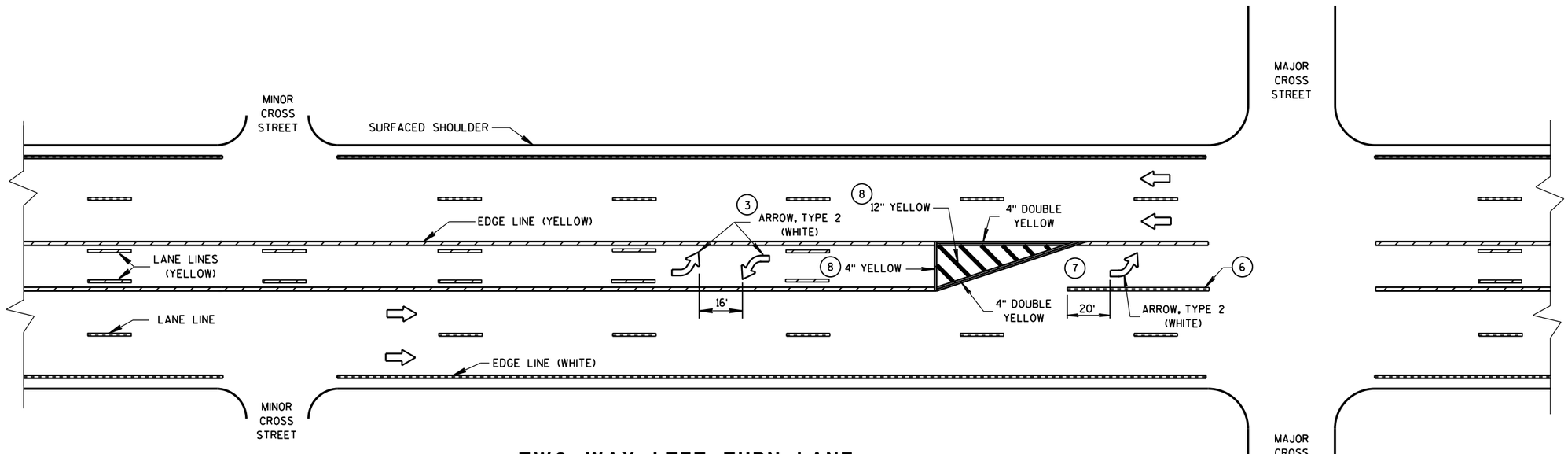

TWO WAY LEFT TURN LANE

PAVEMENT MARKING (LEFT TURN LANE)

STATE OF WISCONSIN
DEPARTMENT OF TRANSPORTATION

6

S.D.D. 15 C 8-16e

LEGEND

SIGN ON PORTABLE OR PERMANENT SUPPORT

DIRECTION OF TRAFFIC

WORK AREA

FLAGGER, EQUIPPED WITH STOP/SLOW PADDLE FASTENED ON SUPPORT STAFF

SIGN SPACING TABLE

SPEED LIMIT	SIGN SPACING A,B,C
25-35 MPH	200'
35-40 MPH	350'
45-55 MPH	500'

W3-4

USE OF THE "BE PREPARED TO STOP" SIGN IS OPTIONAL. WHEN USED, THIS SIGN SHALL BE LOCATED BETWEEN THE W20-7a AND W20-4 SIGNS. A 500' TYPICAL SPACING SHALL BE PROVIDED BETWEEN THE SIGNS.

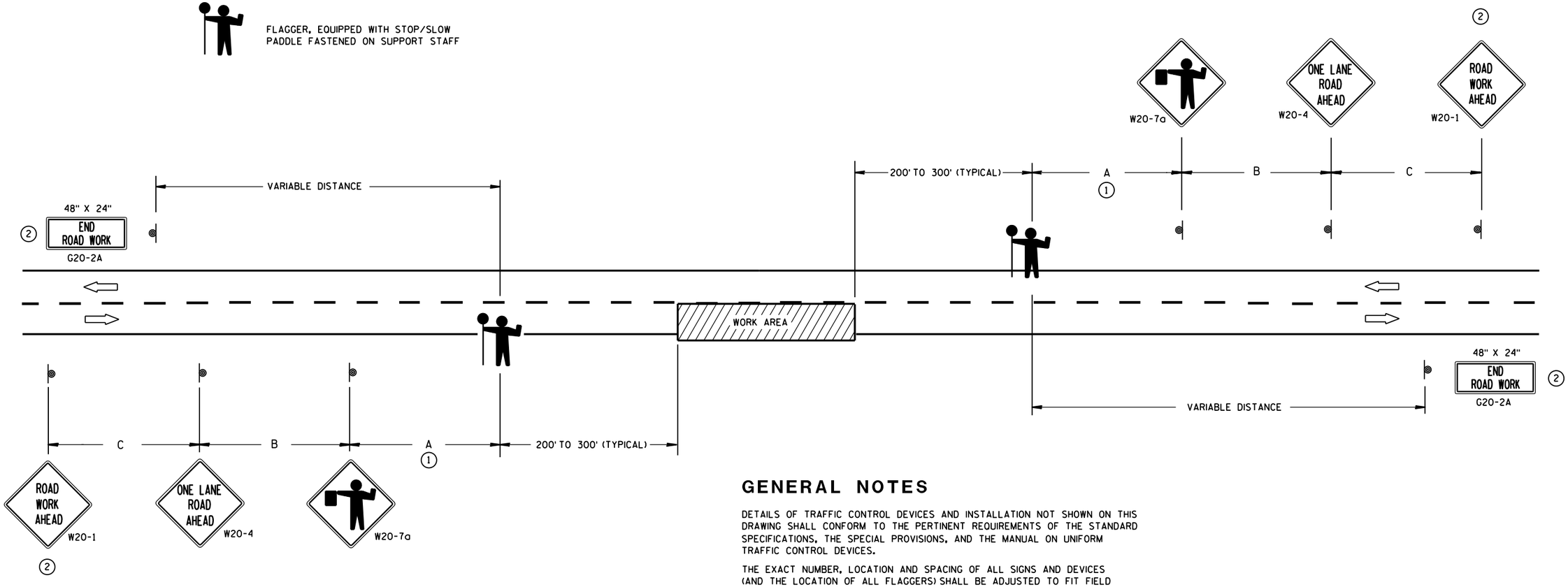

(1) FOR A MOVING WORK OPERATION,
SIGNING FOR BOTH DIRECTIONS SHALL BE REESTABLISHED (AS SIMULTANEOUSLY AS PRACTICAL) AT APPROXIMATELY 3500 FOOT INTERVALS IN THE MOVING WORK OPERATION OR AS APPROVED BY THE ENGINEER.

(2) SIGN NOT REQUIRED IF FLAGGING OPERATION OCCURS WITHIN A SIGNED ROAD WORK ZONE AREA.

GENERAL NOTES

DETAILS OF TRAFFIC CONTROL DEVICES AND INSTALLATION NOT SHOWN ON THIS DRAWING SHALL CONFORM TO THE PERTINENT REQUIREMENTS OF THE STANDARD SPECIFICATIONS, THE SPECIAL PROVISIONS, AND THE MANUAL ON UNIFORM TRAFFIC CONTROL DEVICES.

THE EXACT NUMBER, LOCATION AND SPACING OF ALL SIGNS AND DEVICES (AND THE LOCATION OF ALL FLAGGERS) SHALL BE ADJUSTED TO FIT FIELD CONDITIONS AS APPROVED BY THE ENGINEER.

THE FIRST ADVANCE WARNING SIGN SHOULD TYPICALLY BE LOCATED IN ADVANCE OF THE ANTICIPATED TRAFFIC BACKUP OR QUEUE.

WHEN A SIDE ROAD OR RAMP INTERSECTS THE FACILITY ON WHICH THE WORK IS BEING PERFORMED, ADDITIONAL TRAFFIC CONTROLS SHALL BE PROVIDED AS SPECIFIED IN THE PLANS AND/OR THE SPECIAL PROVISIONS OR AS APPROVED BY THE ENGINEER.

FLAGGERS SHALL BE IN SIGHT OF EACH OTHER OR IN DIRECT COMMUNICATION AT ALL TIMES. THEY SHALL BE EQUIPPED WITH STOP/SLOW PADDLES FASTENED ON SUPPORT STAFFS. WHEN THE FLAGGING OPERATION IS NOT IN EFFECT, COVER OR REMOVE ALL TEMPORARY TRAFFIC CONTROL SIGNS.

ALL SIGNS ARE 48" X 48" UNLESS OTHERWISE NOTED.

TRAFFIC CONTROL FOR LANE CLOSURE (SUITABLE FOR MOVING OPERATIONS)

STATE OF WISCONSIN
DEPARTMENT OF TRANSPORTATION

APPROVED
8/2013 — DATE
/S/ Travis Feltes — STATE TRAFFIC ENGINEER
FHWA

6

S.D.D. 15 C 12-4

6

S.D.D. 15 C 12-4

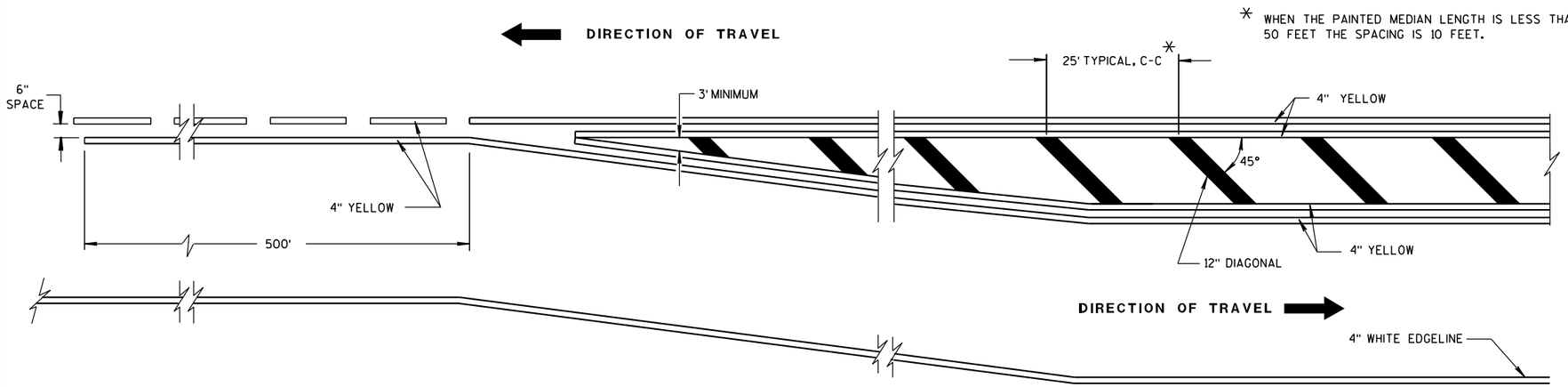

MEDIAN ISLAND DETAIL

GENERAL NOTE

DIAGONALS ARE OPTIONAL WHEN PAINTED ISLAND IS LESS THAN 6 FEET AT WIDEST POINT.

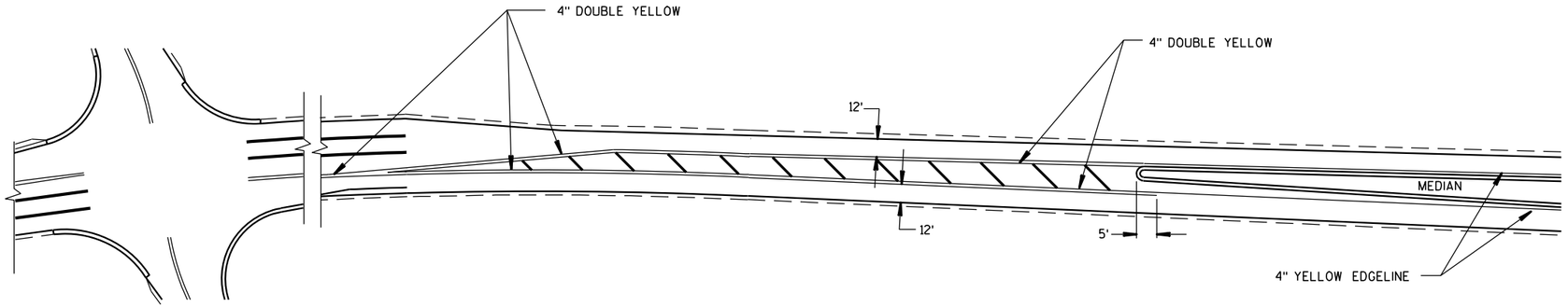

APPROACH MARKINGS FOR OTHER MEDIAN TYPES

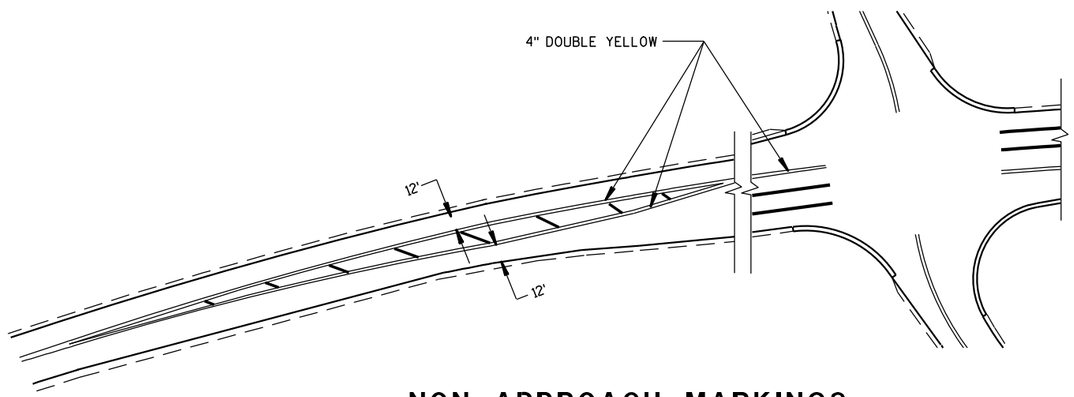

NON APPROACH MARKINGS

6

6

S.D.D. 15 C 18-3

S.D.D. 15 C 18-3

MEDIAN ISLAND MARKING

STATE OF WISCONSIN
DEPARTMENT OF TRANSPORTATION

APPROVED

2-5-09 DATE

/S/ Thomas N. Nothohm
STATE TRAFFIC ENGINEER

123 IGN

FHWA

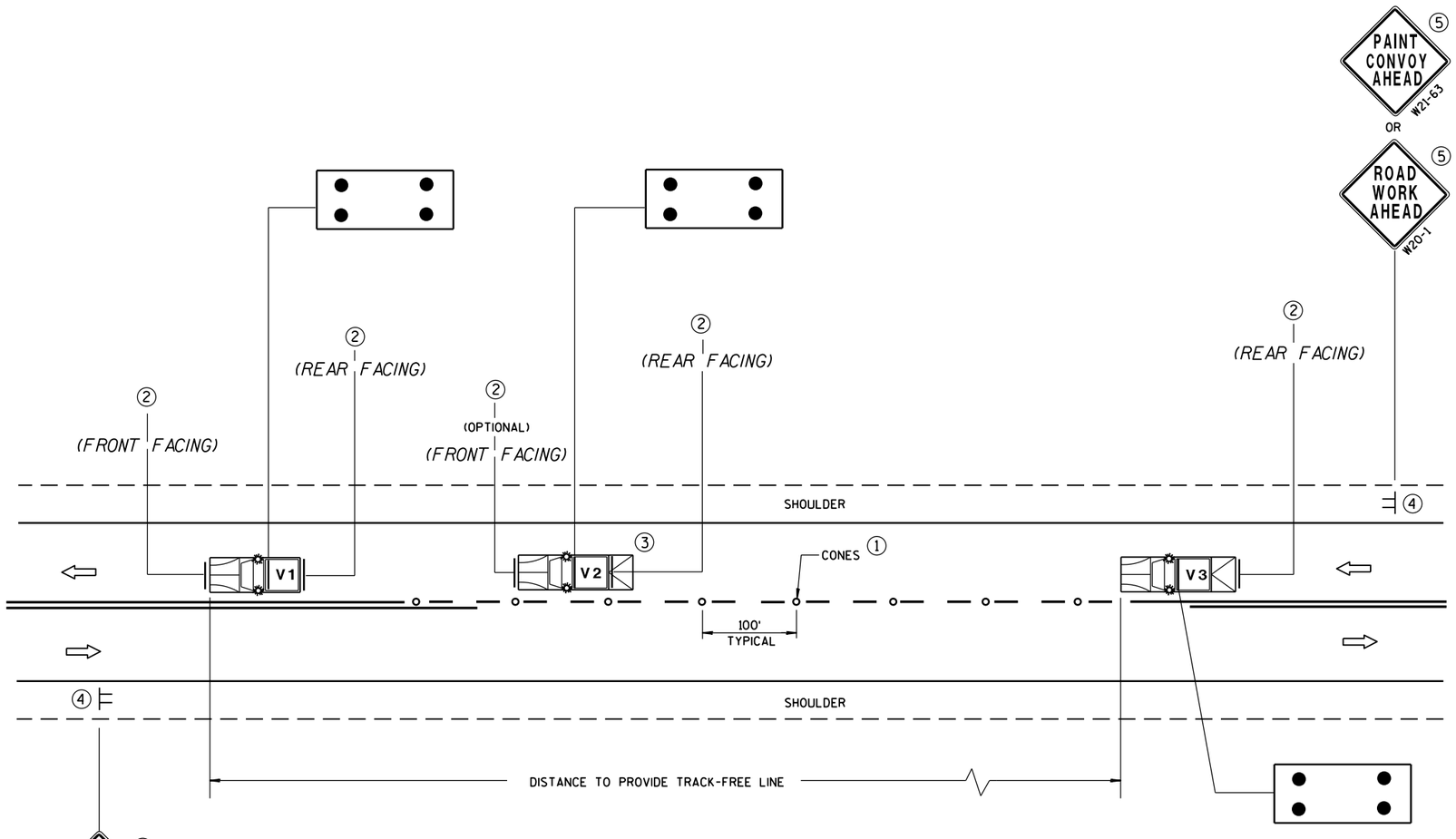

GENERAL NOTES

ALL VEHICLES SHALL BE EQUIPPED WITH TWO 360 DEGREE HIGH INTENSITY YELLOW FLASHING LIGHTS OR STROBE LIGHTS AND OPERATED WITH HEADLIGHTS TURNED ON.

VEHICLES SHALL BE EQUIPPED WITH REAR FACING TYPE B OR C FLASHING ARROW PANEL OPERATING IN CAUTION MODE. SIGNS PLACED ON VEHICLES MUST NOT OBSCURE THE ARROW PANEL.

ALL SIGNS ARE 48" X 48" UNLESS OTHERWISE SPECIFIED.

IF SPEED LIMIT IS 40 MPH OR LESS STATIONARY SIGNS MAY BE OMITTED IF CONES ARE USED.

ALTERNATE SIGN MESSAGES, SUCH AS "PAINT CREW AHEAD" OR "ROAD PAINTING AHEAD" MAY BE USED.

DISTANCE BETWEEN VEHICLES MAY VARY ACCORDING TO TERRAIN, SIGHT DISTANCE, PAINT DRYING TIME, AND OTHER FACTORS. WHENEVER ADEQUATE STOPPING SIGHT DISTANCE EXISTS TO THE REAR, SHADOW VEHICLES SHOULD MAINTAIN THE MINIMUM DISTANCE FROM THE WORK VEHICLE AND PROCEED AT THE SAME SPEED AS THE WORK VEHICLE. SHADOW VEHICLES SHOULD SLOW DOWN IN ADVANCE OF VERTICAL OR HORIZONTAL CURVES THAT RESTRICT SIGHT DISTANCE.

THE WORK AND SHADOW VEHICLES SHOULD PULL OVER PERIODICALLY TO ALLOW TRAFFIC TO PASS.

THIS DRAWING SHALL BE USED FOR CENTERLINE OR EDGELINE MARKING.

WHEN NO WORK ACTIVITY IS TAKING PLACE, REMOVE OR TURN THE STATIONARY WARNING SIGNS AWAY FROM TRAFFIC.

(1) CONES MAY BE OMITTED ON PAINTED LINE IF APPROVED BY THE ENGINEER. CONSIDER PAVEMENT MARKING DRY OR CURE TIMES AND TRAFFIC VOLUME.

(2) USE STANDARD SIGN W21-64 WITH APPROPRIATE ARROW.

WET PAINT W21-64 OR WET PAINT W21-64

(3) OPTIONAL TRUCK-MOUNTED ATTENUATOR.

(4) SIGNS SHALL BE REPEATED APPROXIMATELY EVERY THREE MILES.

(5) IF CONSTRUCTION WORK ZONE SIGNS ARE IN PLACE, W20-1 OR W21-63 ARE NOT REQUIRED.

LEGEND

- **V1** LEAD VEHICLE
- **V2** SHADOW VEHICLE
- **V3** TRAIL VEHICLE WITH TMA
- **TMA** TRUCK-MOUNTED ATTENUATOR
- SIGN ON TEMPORARY SUPPORT
- DIRECTION OF TRAFFIC
- CONES
- FLASHING ARROW PANEL (CAUTION)

MOVING PAVEMENT MARKING OPERATIONS
TWO-LANE TWO-WAY ROADWAY

MOVING PAVEMENT MARKING OPERATION TWO-LANE TWO-WAY ROADWAY	
STATE OF WISCONSIN DEPARTMENT OF TRANSPORTATION	
APPROVED 5/3/2013 DATE	/S/ Travis Feltes STATE TRAFFIC E
FHWA	

6

S.D.D. 15 C 19-2a

6

S.D.D. 15 C 19-2a

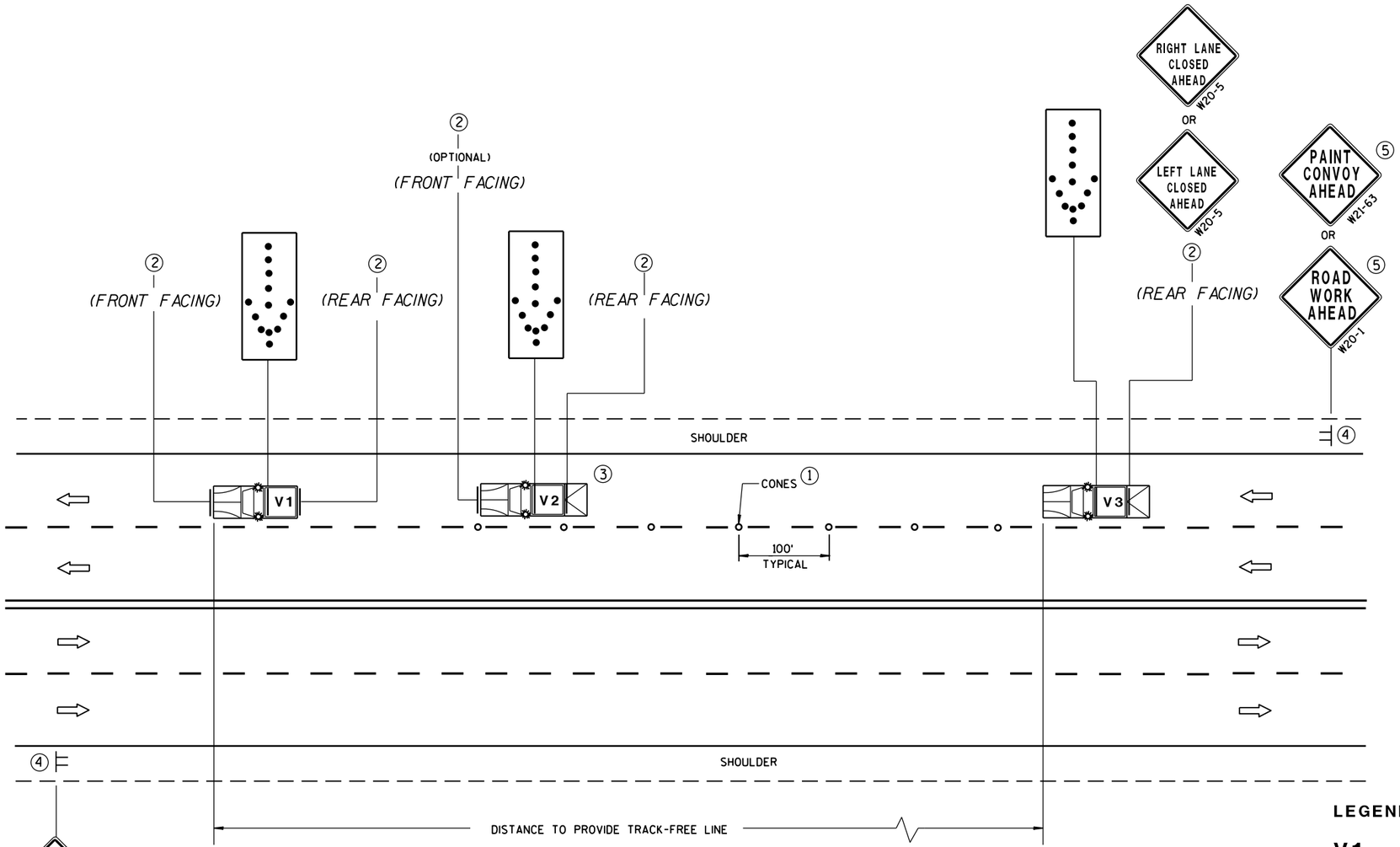

PAINT CONVOY AHEAD W21-63
OR
ROAD WORK AHEAD W20-1

MOVING PAVEMENT MARKING OPERATIONS
MULTI-LANE UNDIVIDED ROADWAY

GENERAL NOTES

ALL VEHICLES SHALL BE EQUIPPED WITH TWO 360 DEGREE HIGH INTENSITY YELLOW FLASHING LIGHTS OR STROBE LIGHTS AND OPERATED WITH HEADLIGHTS TURNED ON.

ALL VEHICLES SHALL BE EQUIPPED WITH REAR FACING TYPE B OR C FLASHING ARROW PANEL. SIGNS PLACED ON VEHICLES MUST NOT OBSCURE THE ARROW PANEL.

ALL SIGNS ARE 48" X 48" UNLESS OTHERWISE SPECIFIED.

IF SPEED LIMIT IS 40 MPH OR LESS STATIONARY SIGNS MAY BE OMITTED IF CONES ARE USED.

ALTERNATE SIGN MESSAGES, SUCH AS "PAINT CREW AHEAD" OR "ROAD PAINTING AHEAD" MAY BE USED.

DISTANCE BETWEEN VEHICLES MAY VARY ACCORDING TO TERRAIN, SIGHT DISTANCE, PAINT DRYING TIME, AND OTHER FACTORS. WHENEVER ADEQUATE STOPPING SIGHT DISTANCE EXISTS TO THE REAR, SHADOW VEHICLES SHOULD MAINTAIN THE MINIMUM DISTANCE FROM THE WORK VEHICLE AND PROCEED AT THE SAME SPEED AS THE WORK VEHICLE. SHADOW VEHICLES SHOULD SLOW DOWN IN ADVANCE OF VERTICAL OR HORIZONTAL CURVES THAT RESTRICT SIGHT DISTANCE.

WHEN WORK ACTIVITY BLOCKS THE LEFT LANE, REVERSE TRAFFIC CONTROL.

WHEN A RAMP INTERSECTS THE FACILITY ON WHICH THE WORK IS BEING PERFORMED, PROVIDE ADDITIONAL TRAFFIC CONTROLS AS SPECIFIED IN THE CONTRACT OR AS APPROVED BY THE ENGINEER.

USE AN ATTENUATOR ON THE REARMOST VEHICLE THAT BLOCKS ALL OR PART OF THE TRAFFIC LANE.

FOR EDGELINE MARKING OR IF CONES ARE NOT USED, POSITION THE REARMOST SHADOW VEHICLE ON THE SHOULDER AS SHOWN IN THE MUTCD IF THE SHOULDER HAS ADEQUATE WIDTH.

WHEN NO WORK ACTIVITY IS TAKING PLACE, REMOVE OR TURN THE STATIONARY WARNING SIGNS AWAY FROM TRAFFIC.

THIS DRAWING SHALL BE USED FOR CENTERLINE OR EDGELINE OR LANELINE MARKING FOR MULTILANE UNDIVIDED ROADWAYS.

(1) CONES MAY BE OMITTED ON PAINTED LINE IF APPROVED BY THE ENGINEER. CONSIDER PAVEMENT MARKING DRY OR CURE TIMES AND TRAFFIC VOLUME.

(2) USE STANDARD SIGN W21-64 WITH APPROPRIATE ARROW.

WET PAINT W21-64 OR WET PAINT W21-64

(3) OPTIONAL TRUCK-MOUNTED ATTENUATOR.

(4) SIGNS SHALL BE REPEATED APPROXIMATELY EVERY THREE MILES.

(5) IF CONSTRUCTION WORK ZONE SIGNS ARE IN PLACE, W20-1 OR W21-63 ARE NOT REQUIRED.

LEGEND

V1	LEAD VEHICLE
V2	SHADOW VEHICLE
V3	TRAIL VEHICLE WITH TMA
TMA	TRUCK-MOUNTED ATTENUATOR
	SIGN ON TEMPORARY SUPPORT
	DIRECTION OF TRAFFIC
	CONES
	FLASHING ARROW PANEL (MERGE)

MOVING PAVEMENT MARKING OPERATION
MULTI-LANE UNDIVIDED ROADWAY

STATE OF WISCONSIN
DEPARTMENT OF TRANSPORTATION

APPROVED
5/3/2013 DATE
/S/ Travis Feltes STATE TRAFFIC EN
FHWA

6

S.D.D. 15 C 19-2b

6

S.D.D. 15 C 19-2b

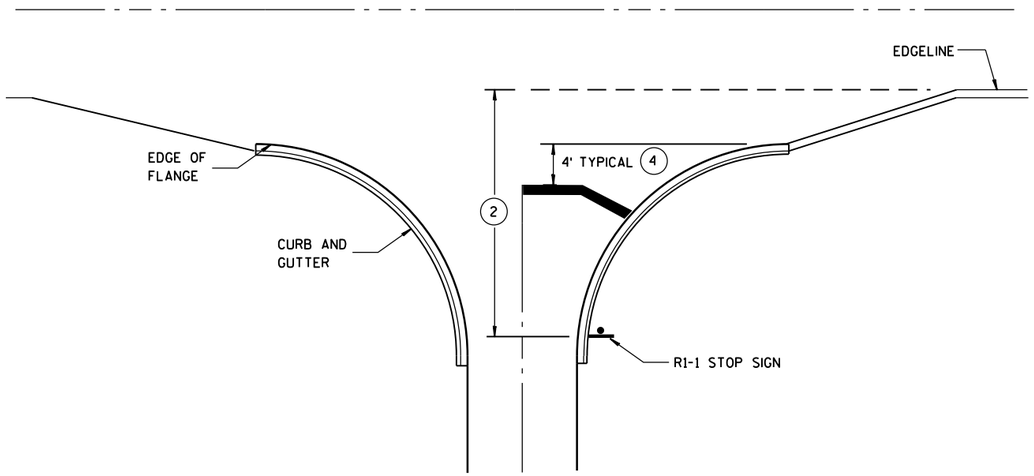

TYPICAL STOP LINE PAVEMENT MARKING WITH CURB AND GUTTER

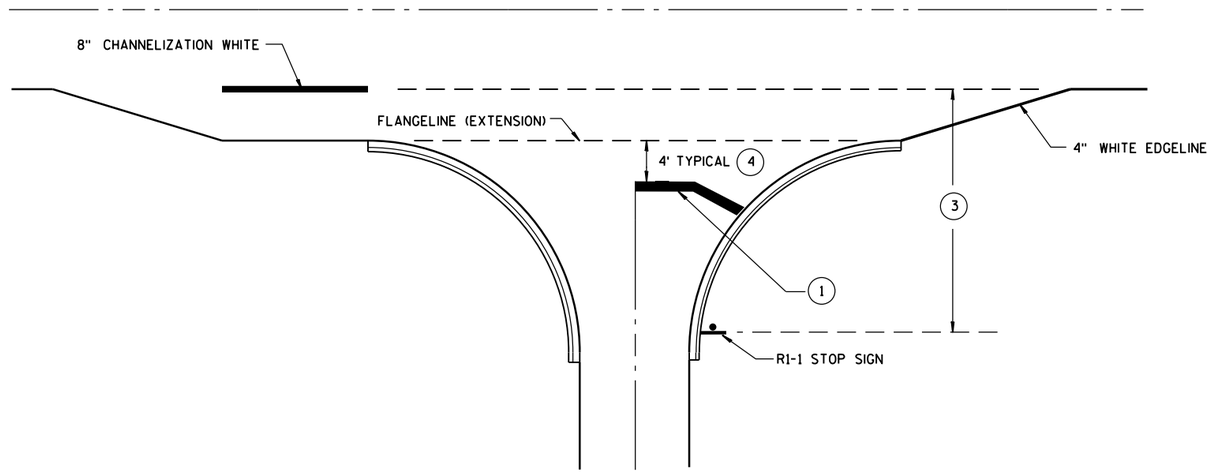

TYPICAL STOP LINE PAVEMENT MARKING FOR SIDEROADS WITH RIGHT TURN LANE

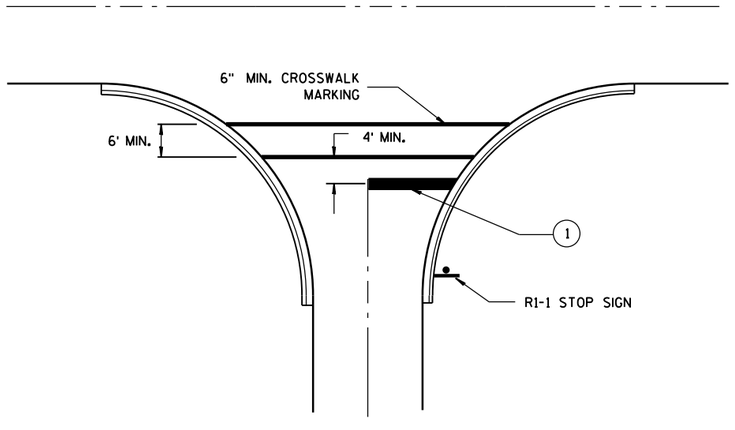

TYPICAL STOP LINE PAVEMENT MARKING FOR SIDEROADS WITH CROSSWALK MARKING

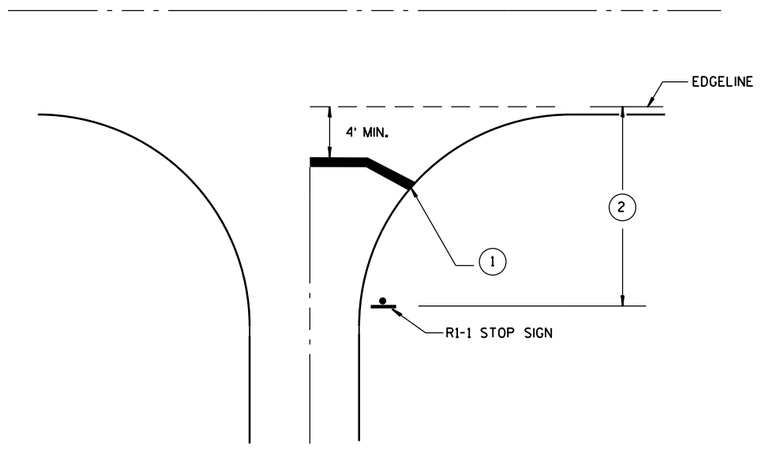

TYPICAL STOP LINE PAVEMENT MARKING WITHOUT CURB AND GUTTER

GENERAL NOTES

1. 18-INCH STOP LINES MAY BE DELETED OR ADDED BY THE PROJECT ENGINEER BASED ON VISIBILITY AND SIGHT LINES.
2. IF STOP SIGN IS LESS THAN OR EQUAL TO 40 FEET FROM THE EDGELINE THAN NO STOP LINE IS REQUIRED.
3. IF STOP SIGN IS LESS THAN OR EQUAL TO 30 FEET FROM THE FLANGELINE EXTENSION THAN NO STOP LINE IS REQUIRED.
4. MOVE CLOSER TO EDGE OF TRAVEL LANE AS NEEDED FOR VISIBILITY AND SIGHT LINES.

STOP LINE AND CROSSWALK PAVEMENT MARKING

STATE OF WISCONSIN
DEPARTMENT OF TRANSPORTATION

APPROVED

4/30/2013
DATE

/S/ Travis Feltes
STATE TRAFFIC E

FHWA

6

S.D.D. 15 C 33-1

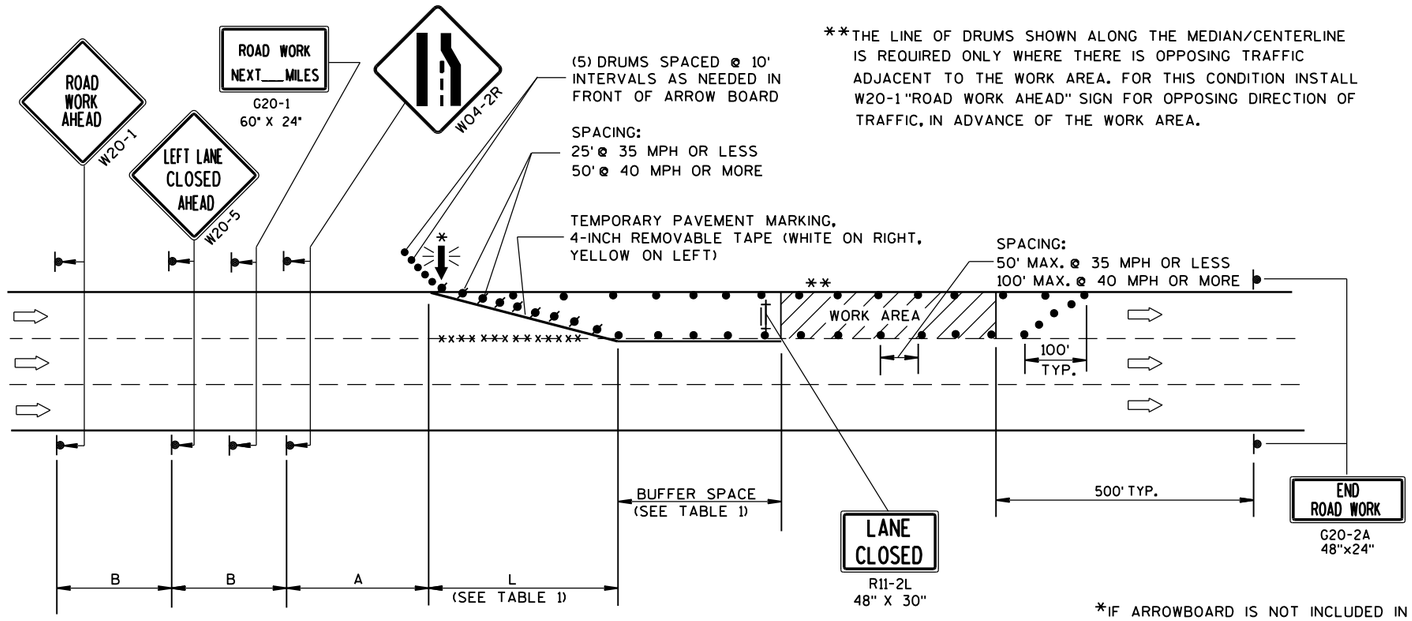

**THE LINE OF DRUMS SHOWN ALONG THE MEDIAN/CENTERLINE IS REQUIRED ONLY WHERE THERE IS OPPOSING TRAFFIC ADJACENT TO THE WORK AREA. FOR THIS CONDITION INSTALL W20-1 "ROAD WORK AHEAD" SIGN FOR OPPOSING DIRECTION OF TRAFFIC, IN ADVANCE OF THE WORK AREA.

B=400' AT 25-30 MPH
700' AT 35-40 MPH
1000' AT 45-55 MPH

A=200' AT 25-30 MPH
350' AT 35-40 MPH
500' AT 45-55 MPH

(PLACE BARRICADE AND SIGN APPROX. EVERY 1000' ACROSS THE CLOSED LANE)

*IF ARROWBOARD IS NOT INCLUDED IN MISCELLANEOUS QUANTITIES, SUBSTITUTE A TYPE III BARRICADE WITH W01-6 SIGN IN THE LANE CLOSURE TAPER.

W01-6
48"x24"

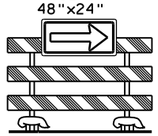

TABLE 1
TAPER AND BUFFER SPACE
FOR 12' LANE WIDTH

S	L	BUFFER SPACE
25	125'	55'
30	180'	85'
35	245'	120'
40	320'	170'
45	540'	220'
50	600'	280'
55	660'	335'

FOR LANE WIDTH OTHER THAN 12':

L = WS AT 45 MPH OR GREATER

$L = \frac{WS^2}{60}$ AT 40 MPH OR LESS

L = TAPER LENGTH IN FEET

S = NON-CONSTRUCTION SPEED LIMIT (MPH)

W = WIDTH OF LANE CLOSURE

LEGEND

- TYPE III BARRICADE WITH ATTACHED SIGN
- SIGN ON PERMANENT SUPPORT
- TRAFFIC CONTROL DRUM WITH TYPE "C" STEADY BURN LIGHT
- TRAFFIC CONTROL DRUM
- FLASHING ARROW BOARD
- DIRECTION OF TRAFFIC
- REMOVING PAVEMENT MARKING (SEE GENERAL NOTES)
- WORK AREA

GENERAL NOTES

THIS LANE CLOSURE DETAIL IS TYPICAL FOR CLOSING THE LEFT LANE. FOR A RIGHT LANE CLOSURE, REVERSE THE TRAFFIC CONTROL.

THIS DETAIL MAY BE USED FOR ROADWAYS WITH EITHER TWO OR THREE LANES IN EACH DIRECTION.

THE EXACT NUMBER, LOCATION, AND SPACING OF ALL SIGNS AND DEVICES SHALL BE ADJUSTED TO FIT FIELD CONDITIONS AS APPROVED BY THE ENGINEER.

THE SPACING BETWEEN TRAFFIC CONTROL SIGNS SHOULD BE ADJUSTED TO NOT CONFLICT WITH AND SHOULD PROVIDE A DESIRABLE MINIMUM OF 200 FEET CLEARANCE TO EXISTING SIGNS THAT WILL REMAIN IN PLACE.

ALL SIGNS ARE 48"x48" UNLESS OTHERWISE NOTED. IF NECESSARY DUE TO SPACE CONSTRAINTS IN URBAN AREAS, 36" X 36" SIGNS MAY BE USED IF APPROVED BY DISTRICT TRAFFIC UNIT.

"WO" SIGNS ARE THE SAME AS "W" SIGNS EXCEPT THE BACKGROUND IS ORANGE.

SIGNS THAT WILL BE IN PLACE LESS THAN 7 CONTINUOUS DAYS AND NIGHTS, OR THAT WILL BE PLACED IN A CLOSED LANE, MAY BE MOUNTED ON PORTABLE SUPPORTS.

ANY SIGNS TEMPORARY OR EXISTING, WHICH CONFLICT WITH TRAFFIC CONTROL "IN USE" SHALL BE REMOVED OR COVERED AS NEEDED AND AS APPROVED BY THE ENGINEER.

REMOVE PAVEMENT MARKINGS AND PLACE TEMPORARY PAVEMENT MARKING, REMOVABLE TAPE IF LANE CLOSURE IS TO BE IN PLACE FOR 4 OR MORE CONTINUOUS DAYS AND NIGHTS.

ON UNDIVIDED ROADWAYS, OMIT THE SIGNS SHOWN ON LEFT SIDE OF ROAD.

W20-1, G20-1 AND G20-2A SIGNS ARE NOT REQUIRED IF THE LANE CLOSURE IS WITHIN A LARGER WORK ZONE WHERE THESE SIGNS ARE ALREADY PRESENT.

OMIT G20-1 SIGNS IF LENGTH OF WORK AREA IS 2 MILES OR LESS.

CONSIDER GEOMETRICS WHEN LOCATING SIGNS AND ARROWBOARDS SO THE APPROACHING DRIVER HAS A CLEAR VIEW OF THE ARROWBOARDS AND LANE CLOSURE DRUMS.

PLACE THE ARROWBOARD AS CLOSE AS POSSIBLE TO THE BEGINNING OF THE LANE CLOSURE TAPER, PREFERABLY ON THE SHOULDER OR TERRACE.

CHANNELIZING DEVICES PLACED ADJACENT TO WORK AREA SHALL BE PULLED BACK FROM THE TRAVEL LANE WHEN WORK IS NOT IN PROGRESS.

BARRICADES IN A CLOSED LANE THAT MUST BE MOVED FOR A WORK OPERATION SHALL BE IMMEDIATELY RE-ESTABLISHED UPON COMPLETION OF THE OPERATION OR, FOR CONTINUING OPERATIONS, AT THE END OF EACH WORKING DAY.

WARNING LIGHTS ARE NOT REQUIRED IF THE LANE CLOSURE IS A DAYTIME ONLY OPERATION.

TRAFFIC CONTROL, SINGLE LANE CLOSURE, NON-FREEWAY/EXPRESSWAY

STATE OF WISCONSIN
DEPARTMENT OF TRANSPORTATION

APPROVED
8/2013 — DATE
/S/ Travis Feltes — STATE TRAFFIC ENGINEER
FHWA

6

S.D.D. 15 D 20-2

6

S.D.D. 15 D 20-2

GENERAL NOTES

THE EXACT NUMBER, LOCATION AND SPACING OF ALL SIGNS AND DEVICES SHALL BE ADJUSTED TO FIT FIELD CONDITIONS AS APPROVED BY THE ENGINEER.

ALL SIGNS ARE 48" X 48" UNLESS OTHERWISE NOTED. IF NECESSARY DUE TO SPACE CONSTRAINTS IN URBAN AREAS, 36" X 36" SIGNS MAY BE USED IF APPROVED BY DISTRICT TRAFFIC UNIT.

"WO" SIGNS ARE THE SAME AS "W" SIGNS EXCEPT THE BACKGROUND IS ORANGE.

SIGNS THAT WILL BE IN PLACE LESS THAN 7 CONTINUOUS DAYS AND NIGHTS MAY BE MOUNTED ON PORTABLE SUPPORTS.

ANY SIGNS TEMPORARY OR EXISTING, WHICH CONFLICT WITH TRAFFIC CONTROL "IN USE" SHALL BE REMOVED OR COVERED AS NEEDED AND AS APPROVED BY THE ENGINEER.

W20-1 AND G20-2A SIGNS ARE NOT REQUIRED IF THE WORK AREA IS WITHIN A LARGER WORK ZONE WHERE THESE SIGNS ARE ALREADY PRESENT. G20-2A SIGNS MAY ALSO BE OMITTED IF DURATION OF WORK IS LESS THAN 7 CONTINUOUS DAYS AND NIGHTS.

CHANNELIZING DEVICES PLACED ADJACENT TO THE WORK AREA SHALL BE PULLED BACK FROM THE TRAVEL LANE WHEN WORK IS NOT IN PROGRESS.

TABLE A

S \ W	SHOULDER TAPER LENGTH (FEET) 4	6	8	10	BUFFER SPACE (FEET)
30	20	30	40	50	85
35	30	45	55	70	120
40	40	55	75	90	170
45	60	90	120	150	220
50	70	100	135	170	280
55	75	110	150	185	335

W = SHOULDER WIDTH (FEET)
S = NON-CONSTRUCTION SPEED LIMIT (MPH)

SHOULDER TAPER LENGTH
= WS AT 45 MPH OR GREATER

$= \frac{WS^2}{60}$ AT 40 MPH OR LESS

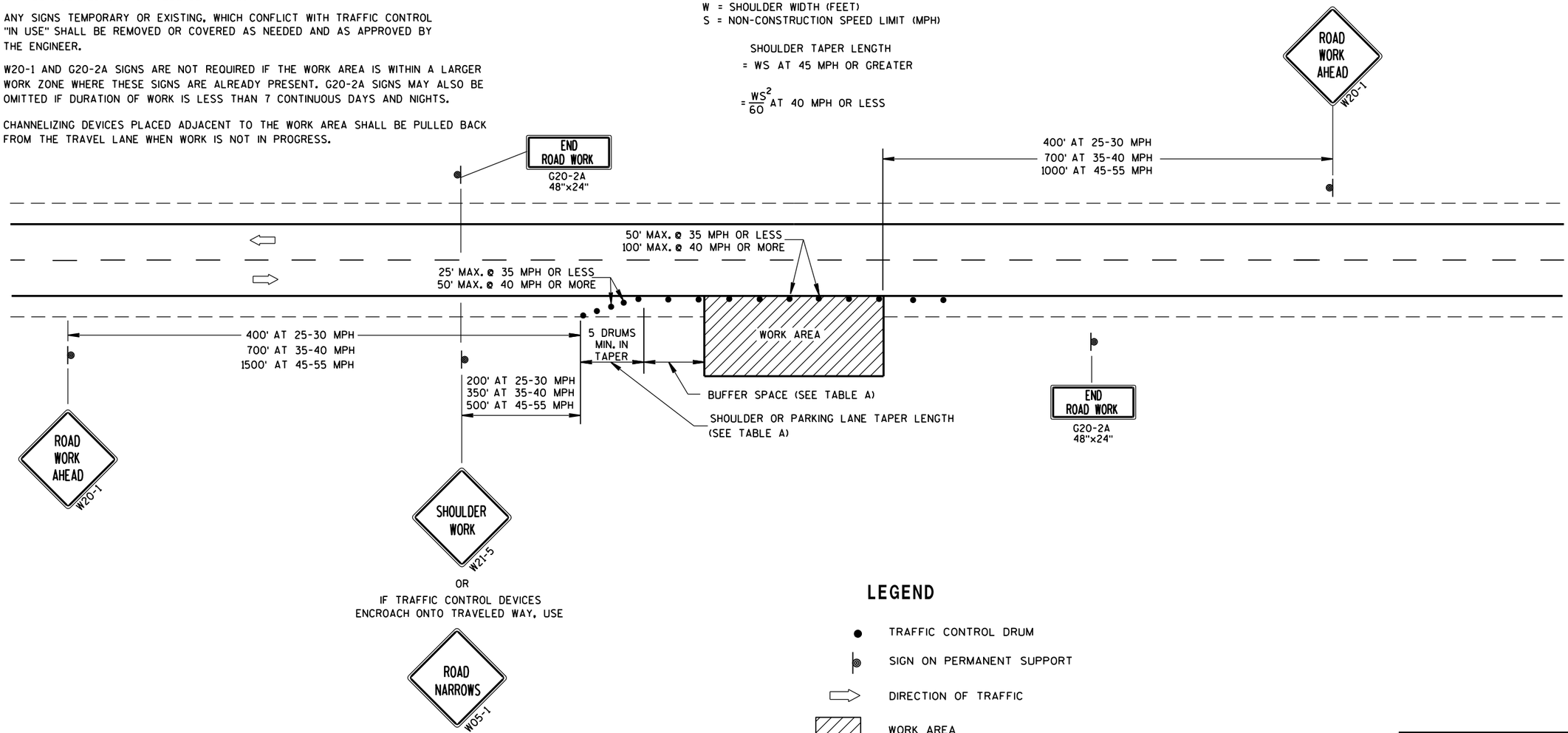

LEGEND

- TRAFFIC CONTROL DRUM
- SIGN ON PERMANENT SUPPORT
- DIRECTION OF TRAFFIC
- WORK AREA

TRAFFIC CONTROL, WORK ON SHOULDER OR PARKING LANE, UNDIVIDED ROADWAY

STATE OF WISCONSIN
DEPARTMENT OF TRANSPORTATION

APPROVED

8/2013 DATE

/S/ Travis Feltes
STATE TRAFFIC ENGINEER

FHWA

6

S.D.D. 15 D 28-2

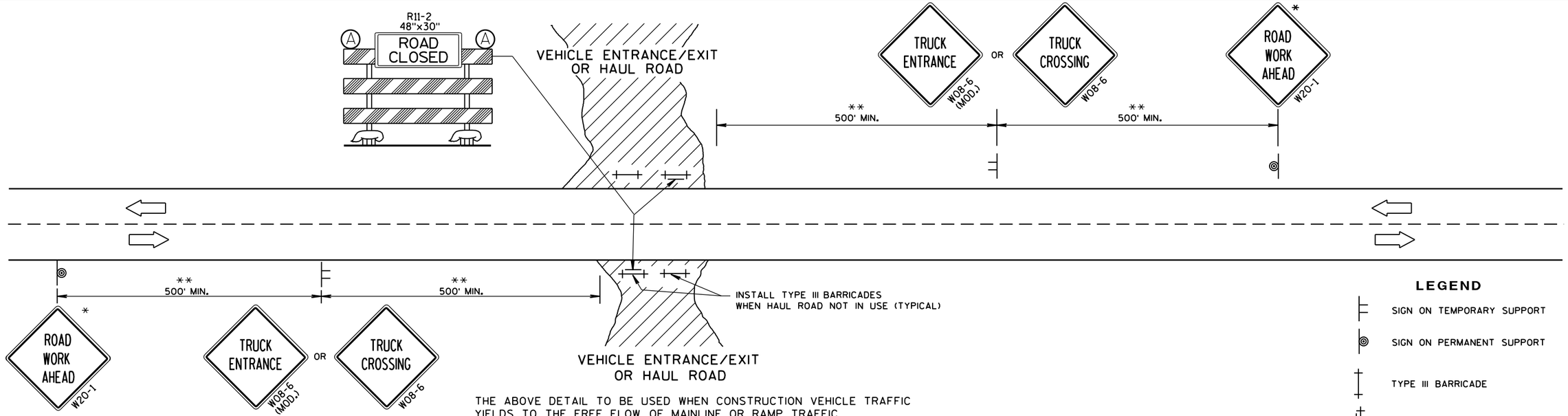

THE ABOVE DETAIL TO BE USED WHEN CONSTRUCTION VEHICLE TRAFFIC YIELDS TO THE FREE FLOW OF MAINLINE OR RAMP TRAFFIC

LEGEND

- SIGN ON TEMPORARY SUPPORT
- SIGN ON PERMANENT SUPPORT
- TYPE III BARRICADE
- TYPE III BARRICADE WITH ATTACHED SIGN
- FLAGGER, EQUIPPED WITH STOP/SLOW PADDLE FASTENED ON SUPPORT STAFF
- TYPE "A" WARNING LIGHT (FLASHING)
- DIRECTION OF TRAFFIC

GENERAL NOTES

THE EXACT NUMBER, LOCATION, AND SPACING OF ALL SIGNS, DEVICES AND FLAGGERS SHALL BE ADJUSTED TO FIT FIELD CONDITIONS AS APPROVED BY THE ENGINEER.

WHEN ACTIVITY REFLECTED BY THE SIGN IS NOT CURRENTLY TAKING PLACE, THE HIGHWAY SHALL BE RESTORED TO NORMAL CONDITION AND THE SIGNS SHALL BE REMOVED, COVERED OR TURNED AWAY FROM TRAFFIC.

WHEN A SIDE ROAD OR RAMP INTERSECTS WITHIN THE ADVANCE SIGNING AREA, ADDITIONAL TRAFFIC CONTROLS SHALL BE PROVIDED AS SPECIFIED IN THE PLANS AND/OR THE SPECIAL PROVISIONS OR AS APPROVED BY THE ENGINEER.

* THESE SIGNS ARE TO BE USED ONLY WHEN VEHICLE ENTRANCE/EXIT CONDITIONS ARE SEPARATED BY MORE THAN 2 MILES FROM PREVIOUS WORK AREA OR SIGNING OR AS DIRECTED BY THE ENGINEER.

** 500 FEET SHOWN IS FOR ROADWAYS WITH A NON-CONSTRUCTION REGULATORY SPEED LIMIT OF 45 MPH OR MORE. FOR 35-40 MPH, USE 350 FEET. FOR 25-30 MPH, USE 200 FEET. USE 1000 FEET/1500 FEET FOR EXPRESSWAY/FREEWAY.

ALL SIGNS ARE 48"x48" UNLESS OTHERWISE NOTED.

"WO" IS THE SAME AS "W" EXCEPT THE BACKGROUND IS ORANGE.

PLACE SIGNS ON BOTH SIDES IF USED ON DIVIDED HIGHWAY.

THE FIRST ADVANCE WARNING SIGN AND THE W20-7b SIGN SHOULD TYPICALLY BE LOCATED IN ADVANCE OF THE ANTICIPATED TRAFFIC BACKUP OR QUEUE.

FLAGGERS SHALL BE IN SIGHT OF EACH OTHER OR IN DIRECT COMMUNICATION AT ALL TIMES. THEY SHALL BE EQUIPPED WITH STOP/SLOW PADDLES FASTENED ON SUPPORT STAFFS.

WARNING SIGNS THAT WILL BE IN PLACE LESS THAN 7 CONTINUOUS DAYS AND NIGHTS MAY BE MOUNTED ON PORTABLE SUPPORTS.

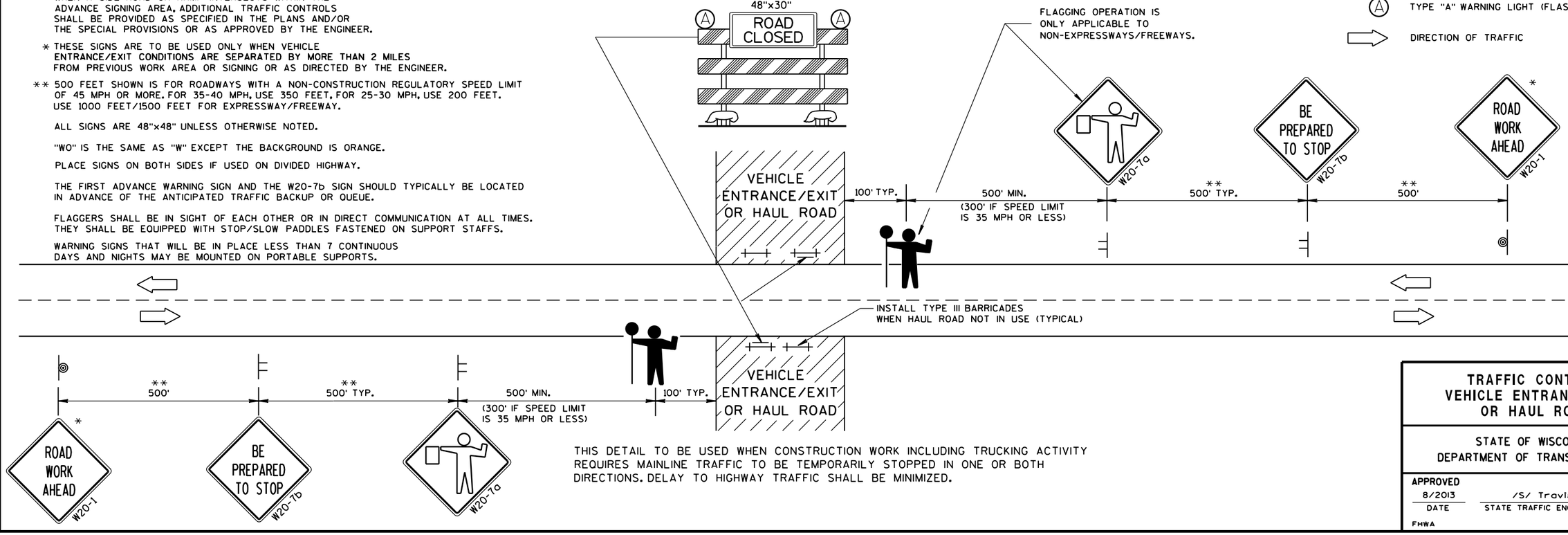

THIS DETAIL TO BE USED WHEN CONSTRUCTION WORK INCLUDING TRUCKING ACTIVITY REQUIRES MAINLINE TRAFFIC TO BE TEMPORARILY STOPPED IN ONE OR BOTH DIRECTIONS. DELAY TO HIGHWAY TRAFFIC SHALL BE MINIMIZED.

TRAFFIC CONTROL, VEHICLE ENTRANCE/EXIT OR HAUL ROAD

STATE OF WISCONSIN
DEPARTMENT OF TRANSPORTATION

APPROVED
8/2013 — DATE
/S/ Travis Feltes — STATE TRAFFIC ENGINEER
FHWA

6

S.D.D. 15 D 29-3

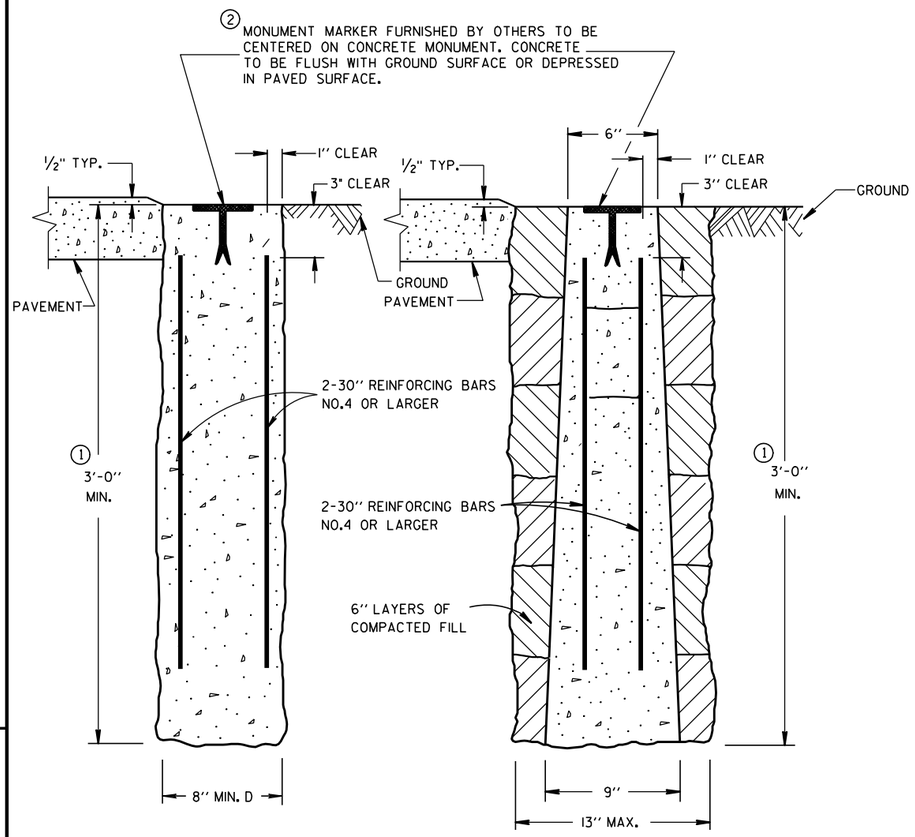

CAST-IN-PLACE PRECAST

CONCRETE MONUMENTS

TYPE A

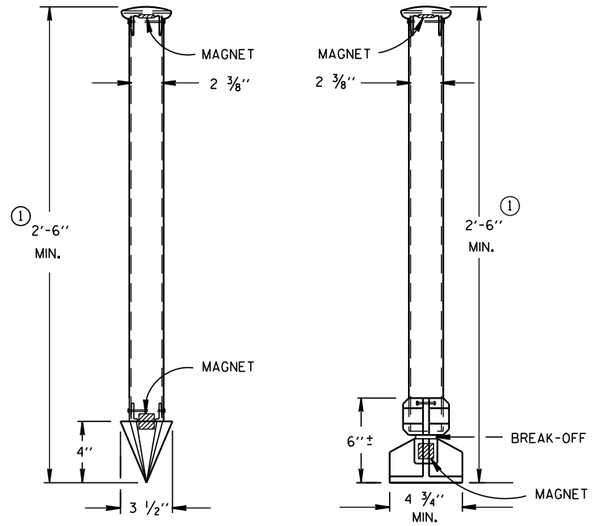

TYPE C DRIVE-IN MONUMENT

TYPE D BREAK-OFF MONUMENT

ALUMINUM MONUMENTS

(INCLUDES MARKER)

GENERAL NOTES

DETAILS OF CONSTRUCTION, MATERIALS AND WORKMANSHIP NOT SHOWN ON THIS DRAWING SHALL CONFORM TO THE PERTINENT REQUIREMENTS OF THE STANDARD SPECIFICATIONS AND THE APPLICABLE SPECIAL PROVISIONS.

DETAILED DRAWINGS OF PROPOSED ALTERNATE DESIGNS FOR METAL MONUMENTS OR MONUMENT COVERS SHALL BE SUBMITTED TO THE ENGINEER FOR APPROVAL.

INSTALLED METAL MONUMENTS MUST BE EASILY DETECTED WITH A DIP NEEDLE. INSERT PERMANENT MAGNETS SHALL BE ATTACHED NEAR THE TOP AND BOTTOM OF THOSE MONUMENTS CONSTRUCTED OF A METAL ALLOY WHICH IS NOT ATTRACTIVE TO A DIP NEEDLE.

THE CAST IRON MONUMENT COVER SHALL BE A "NON-ROCKING" TYPE. ADJUSTMENT OF THE COVER TO GRADE MAY BE ACCOMPLISHED BY THE USE OF MORTAR AND BRICK, OR BY EITHER PRECAST OR CAST-IN-PLACE REINFORCED CONCRETE GRADE RINGS.

MONUMENTS SHALL BE LOCATED AND PLACED AT THE DIRECTION OF THE ENGINEER.

ALUMINUM MONUMENTS AND MONUMENT COVERS SHALL BE MADE FROM AN ALUMINUM AND MAGNESIUM ALLOY AS DETERMINED BY THE MANUFACTURER.

THE MONUMENT COVERS DETAILED ON THIS DRAWING ARE NOT EQUAL ALTERNATES. MONUMENT COVERS SHALL BE CAST IRON UNLESS ALUMINUM IS SPECIFIED ELSEWHERE IN THE CONTRACT.

MONUMENT SHALL BE CAST-IN-PLACE CONCRETE UNLESS PRECAST CONCRETE OR ALUMINUM MONUMENTS ARE SPECIFIED IN THE CONTRACT OR PERMITTED BY THE ENGINEER.

① MINIMUM LENGTH SHALL BE 4'-0" FOR MONUMENTS INSTALLED IN PAVED AREAS.

② AN OFFICIAL COUNTY MONUMENT MARKER SUPPLIED BY A COUNTY MAY BE REQUIRED FOR SOME SECTION CORNERS AND WITNESS MONUMENTS INSTEAD OF THIS WIS DOT MARKER.

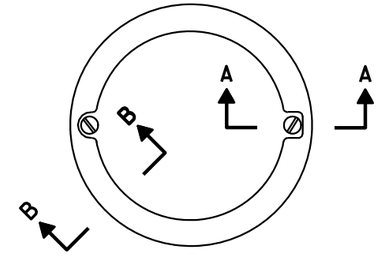

TOP VIEW

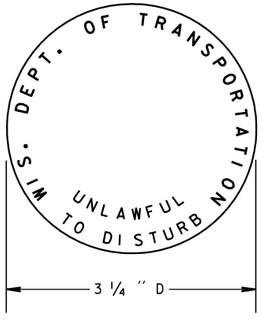

② WIS DOT MONUMENT MARKER LOGO FOR TYPES "A", "C" & "D"

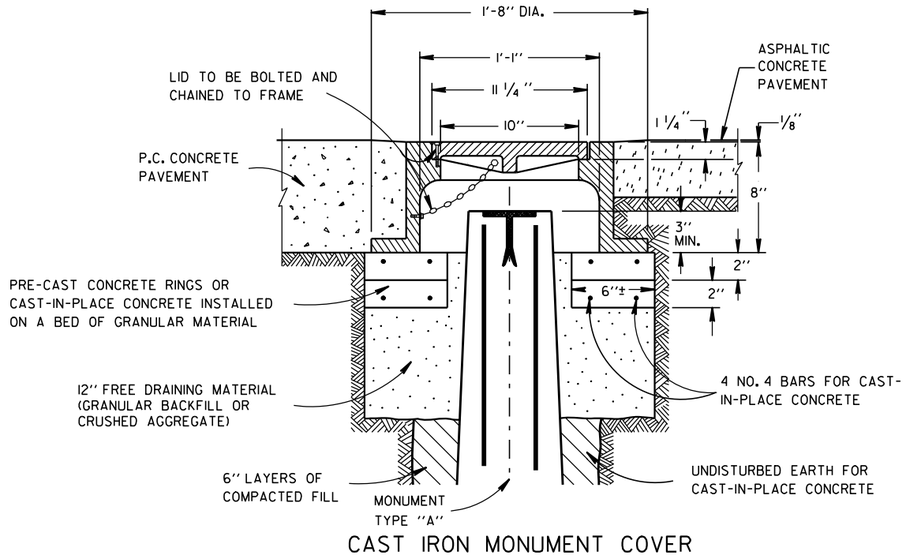

CAST IRON MONUMENT COVER

(APPROXIMATE WEIGHT - 95 LBS.)

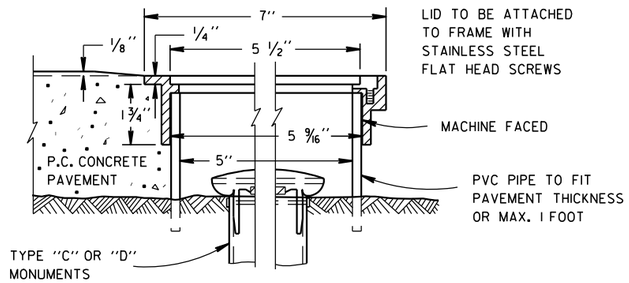

SECTION B-B SECTION A-A

ALUMINUM MONUMENT COVER

(APPROXIMATE WEIGHT 2 LBS)

(FOR CONCRETE PAVEMENT ONLY)

LANDMARK REFERENCE MOUNMENTS AND COVERS

STATE OF WISCONSIN
DEPARTMENT OF TRANSPORTATION

APPROVED

9/22/1999 DATE

/S/ Rory L. Rhinesmith
CHIEF ROADWAY DEVELOPMENT ENGINEER

FHWA

6

S.D.D. 16 A 1-6

6

S.D.D. 16 A 1-6

TYPICAL ASSEMBLIES

J1-1

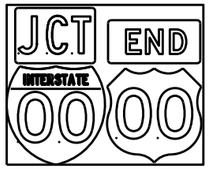

J1-2

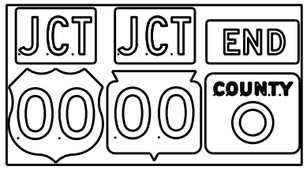

J1-3

J2-1

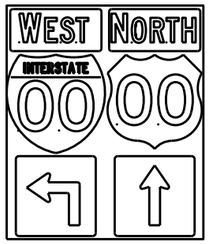

J2-2

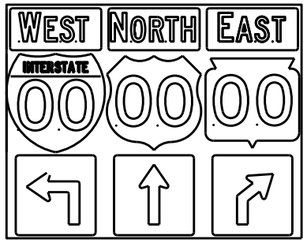

J2-3

JV

(Typical Vertical J-Assembly
See Note 10 and 11)

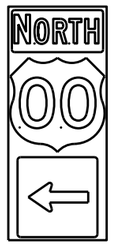

J3-1

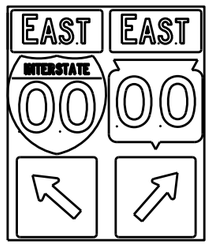

J3-2

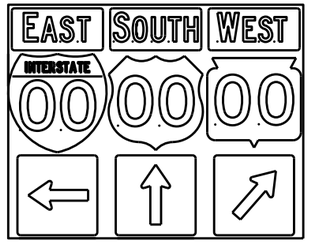

J3-3

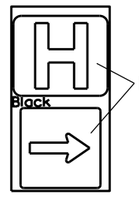

JH-1

J4-1

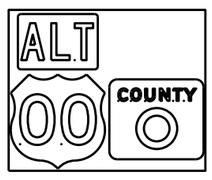

J4-2

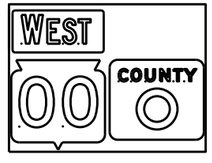

J4-2

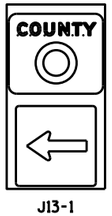

J13-1

J12-1

J32-1

J33-1

J23-1

J22-1

[blue background with interstate]

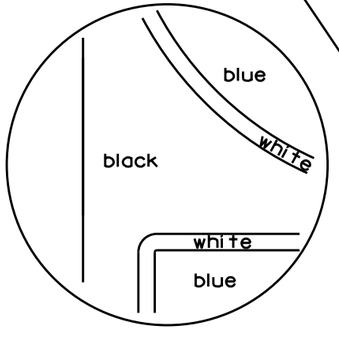

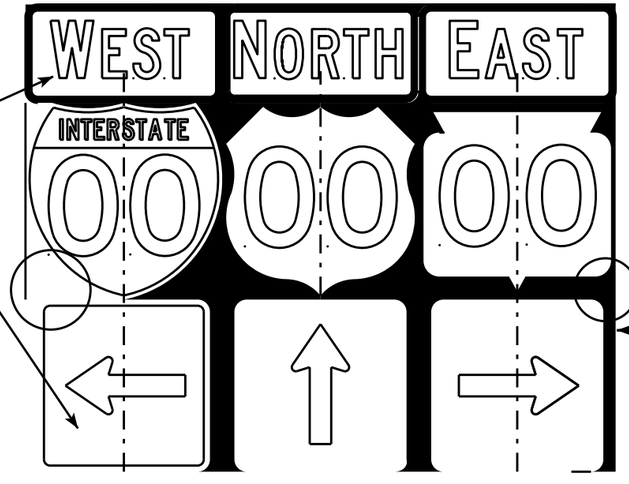

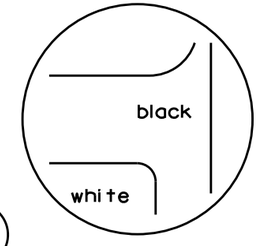

[black background]

NOTES

1. Signs are Type II - Type H Reflective - reference WIS DOT Standard Specification for HIGHWAY and STRUCTURE CONSTRUCTION latest edition.
2. Color:
   Background - Black Non-reflective
   Message - see Note 5
3. Message Series - See Note 5
4. Corners shall be square or rounded if base material is plywood. If base material is metal the corners shall be rounded.
5. The colors and message spacing on each marker shall be according to the applicable route marker panel specifications.
6. Certain marker heads require the component pieces to be the same color. As an example, all the components used with an M1-1 Interstate marker shall be blue.
7. Single panel j-assemblies shall only be used with route marker shields that are same size. If the route marker shields are different size use multiple piece component.
8. Route assemblies that have 24 inch route shields and have dimensions greater than 48 inches (both vertical and horizontal) shall have one horizontal splice between the arrows and route shields. Vertical splices shall not be used on route assemblies with a horizontal dimension of 144 inches or less. The contractor shall not use more than one vertical joint per sign and the joint shall be between route shields.
9. Route assemblies that have 36 inch shields and have dimensions greater than 48 inchs (both vertical and horizontal) shall have two horizontal splices. One horizontal splice shall be between the cardinal direction and route shields and the other horizontal splice shall be between the arrows and route shields. Vertical splices shall not be used on route assemblies with a horizontal dimension of 144 or less. The contractor shall not use more than one vertical joint per sign and the joint shall be between route shields.
10. All Vertical J Assemblies are given a Sign Code of JV
11. For JV Assemblies that have a mixture of Interstate and non Interstate shields, arrows and cardinals shall be white on blue.

ROUTE MARKERS & COMPONENTS
IN TYPICAL ASSEMBLIES

WISCONSIN DEPT OF TRANSPORTATION

APPROVED Matthew R Rauch
for State Traffic Engineer

DATE 2/06/14 PL... A2-1S.8

PROJECT NO: SHEET NO: E

FILE NAME : C:\CAEFiles\Projects\tr_stdplate\A21S.DGN PLOT DATE : 06-FEB-2014 14:10 PLOT BY : mscsja PLOT NAME :
WISDOT/CADDS SHEET 42

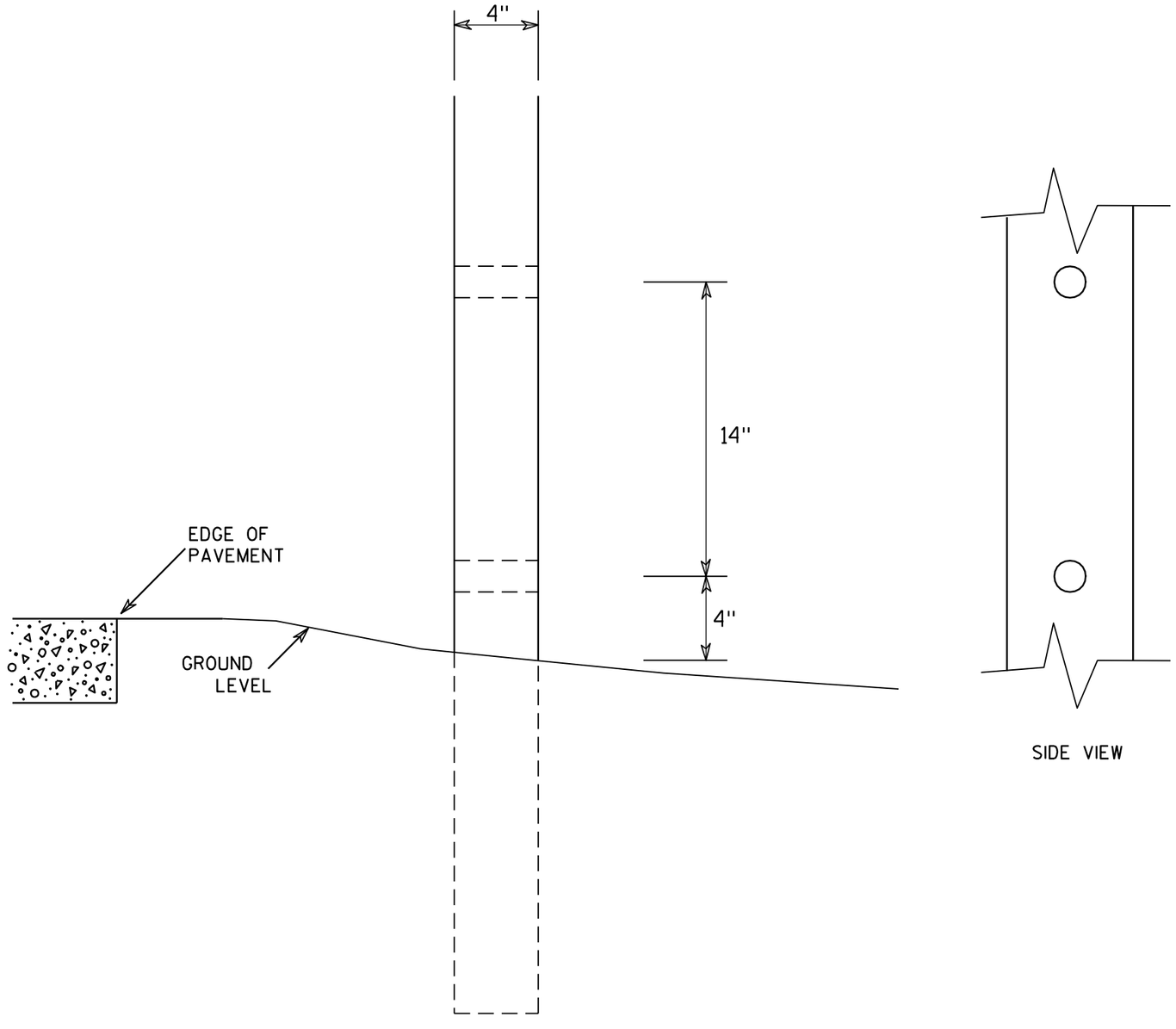

SIDE VIEW

GENERAL NOTES

1. All 4 x 6 Wood Posts shall be modified by having two 1½" diameter holes drilled perpendicular to the roadway centerline.

7

7

4 X 6 WOOD POST MODIFICATIONS

WISCONSIN DEPT OF TRANSPORTATION

APPROVED Chester J Spang for State Traffic Engineer

DATE 3/27/97 PLATE NO. A4-11.2

PROJECT NO:	HWY:	COUNTY:		SHEET NO: 132	E

URBAN AREA

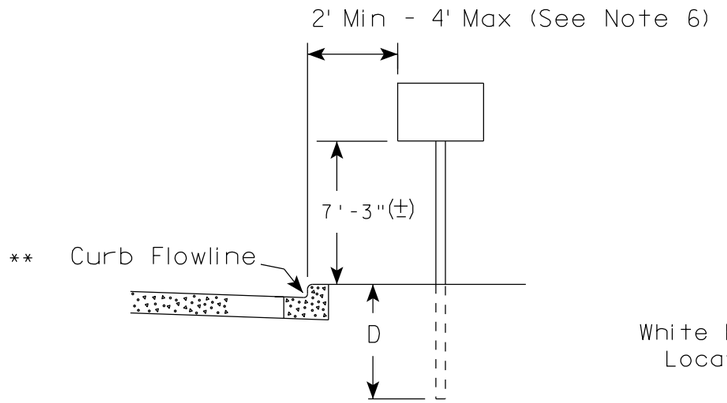

RURAL AREA (See Note 2)

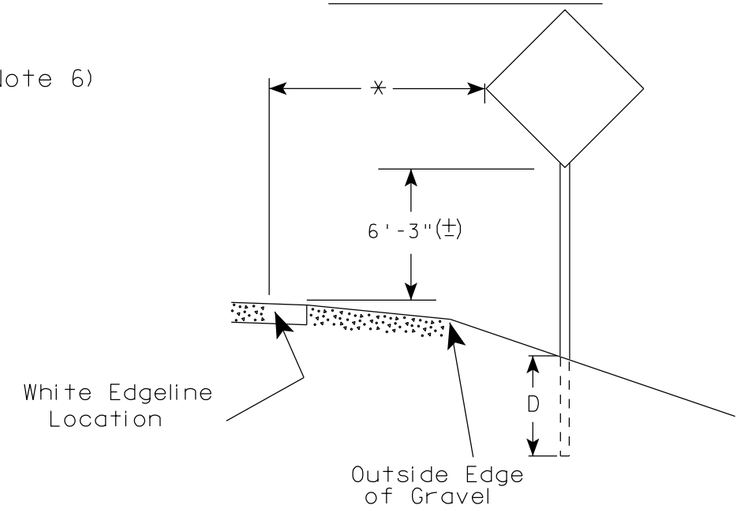

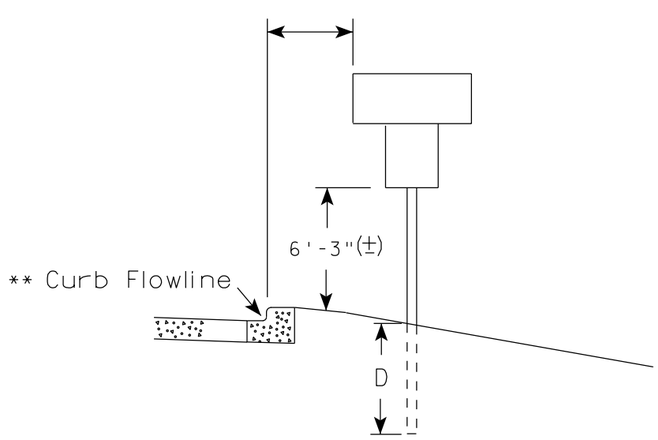

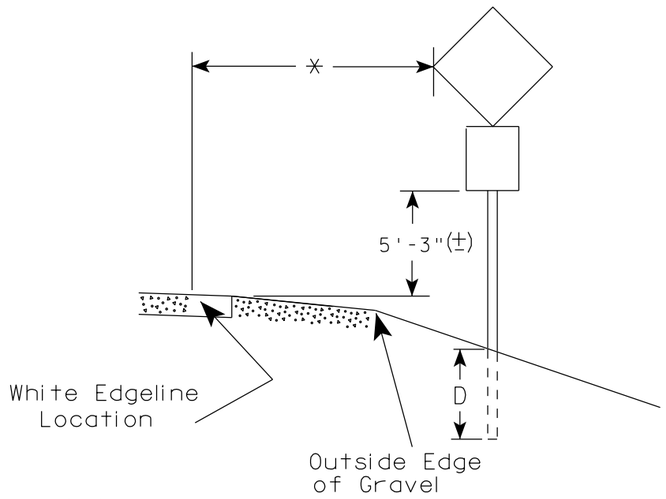

** The existence of curb and gutter does not in itself mandate the vertical clearance illustrated. That height is typically measured where there is sidewalk adjacent to the roadway or parking is permitted. In the absence of sidewalk vertical clearance is measured from the top of the curb. Offset of signs is measured from the flow line.

* 6 feet from edge of a paved shoulder or 12 feet from the edge of pavement (edge line location) or 2 feet from outside edge of gravel, whichever is greater unless directed by project engineer.

GENERAL NOTES

1. Signs wider than 4 feet, 20 sq.ft or larger, shall be mounted on multiple posts. Refer to plate A4-4.
2. If signs are mounted on barrier wall, see A4-10 sign plate.
3. For expressways and freeways, mounting height is 7'- 3" (±) or 6'-3" (±) depending upon existence of a sub-sign.
4. Minimum mounting height for J assemblies (A4-5) is 7'-3" (±) or 6'-3" (±) per urban or rural detail respectively.
5. Minimum mounting height for signs mounted on traffic signal poles is 5'- 3" (±).
6. Offset distance shall be consistent with existing signs or consistent throughout length of project.
7. The (±) tolerance for mounting height is 3 inches.
8. Folding stop signs (R1-1F) shall be mounted at a height of 5'-3" (±) or as directed by the Engineer.
9. The Double Arrow sign (W12-1) shall be mounted at a height of 2'-3" (±). The Chevron sign (W1-8), Roundabout Chevron panel (R6-4B), Enhanced Reference Markers, Clearance Markers (W5-52), Mile Markers (D10 series) & End of Rod Markers (W5-56 & W5-56A) shall be mounted at a height of 4'-3" (+).

POST EMBEDMENT DEPTH

Area of Sign Installation (Sq. Ft.)	D (Min)
20 or Less	4'
Greater than 20	5'

TYPICAL INSTALLATION OF PERMANENT TYPE II SIGNS ON SINGLE POSTS

WISCONSIN DEPT OF TRANSPORTATION

APPROVED Matthew R Rauch
for State Traffic Engineer

DATE 9/30/13 PLATE NO. A4-3.18

PROJECT NO:	HWY:	COUNTY:		SHEET NO:	E

FILE NAME : C:\CAEfiles\Projects\tr_stdplate\A43.DGN PLOT DATE : 30-SEP-2013 13:25 PLOT BY : mscj9h PLOT NAME : PLOT SCALE : 99.237937:1.000000 WISDOT/CADDS SHEET 42

URBAN AREA

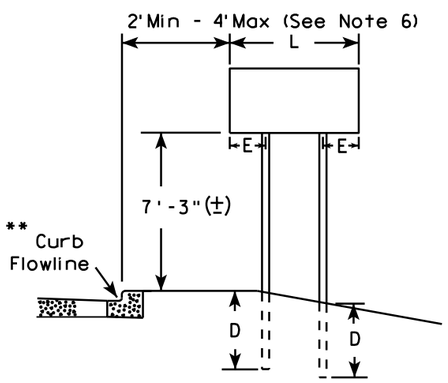

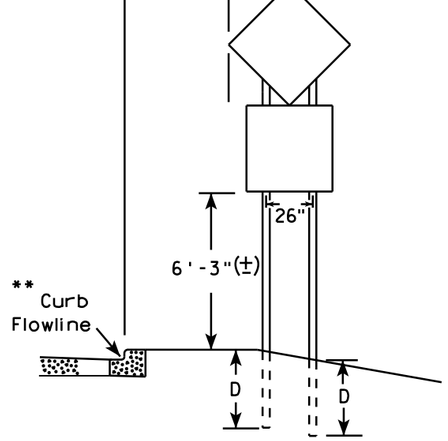

48" DIAMOND WARNING SIGN

RURAL AREA (See Note 3)

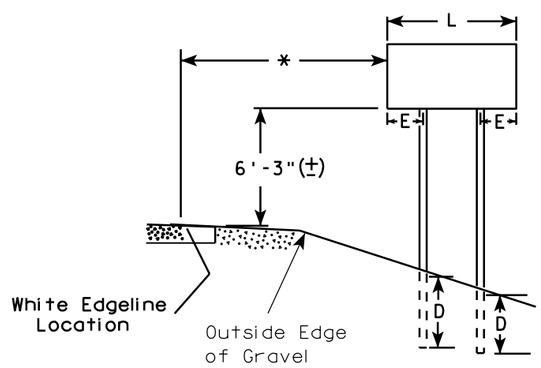

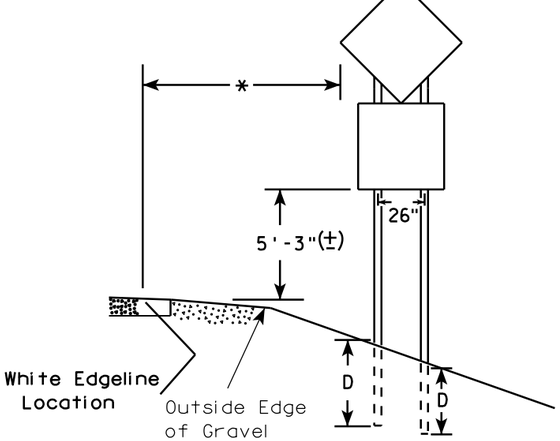

48" DIAMOND WARNING SIGN

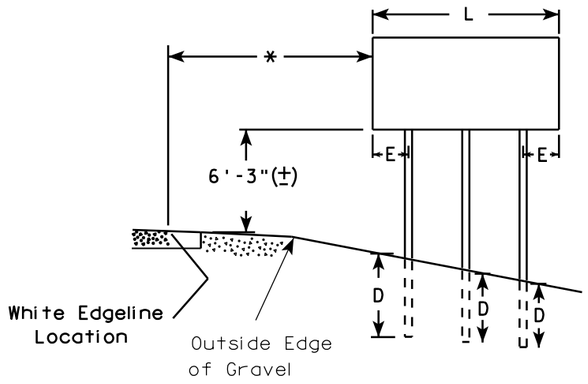

GENERAL NOTES

1. For 3 or 4 post installations, individual post spacing shall be greater than 3'-6".
2. See tables below for required number of posts.
3. For expressways and freeways, mounting height is 7'-3" (±) or 6'-3" (±) depending upon existence of sub-sign.
4. The (±) tolerance for mounting height is 3 inches.
5. Minimum mounting height for J assemblies (A4-5) is 7'-3" (±) or 6'-3" (±) per urban or rural detail respectively.
6. Offset distance shall be consistent with existing signs or consistent throughout length of project.
7. Folding stop signs (R1-1F) shall be mounted at a height of 5'-3" (±) or as directed by the engineer.
8. The Double Arrow sign (W12-1) shall be mounted at a height of 2'-3" (±). The Chevron sign (W1-8), Roundabout Chevron panel (R6-4B), Clearance Markers (W5-52), Mile Markers (D10 series) & End of Road Markers (W5-56 & W5-56A) shall be mounted at a height of 4"-3" (±).

* 6 feet from edge of a paved shoulder or 12 feet from the edge of pavement (edge line location) or 2 feet from outside edge of gravel, whichever is greater unless directed by project engineer.

** The existence of curb and gutter does not in itself mandate the vertical clearance illustrated. That height is typically measured where there is sidewalk adjacent to the roadway or parking is permitted. In the absence of sidewalk vertical clearance is measured from the top of the curb. Offset of signs is measured from the flow line.

*** See A4-3 sign plate for signs 4' or less in width or less than 20 S.F. in area.

SIGN SHAPE OTHER THAN DIAMOND (TWO POSTS REQUIRED)	
L	E
Greater than 48" Less than 60"	12"
60" to 120"	L/5

***

SIGN SHAPE OTHER THAN DIAMOND (THREE POSTS REQUIRED)	
L	E
Greater than 120" less than 168"	12"

SIGN SHAPE OTHER THAN DIAMOND (FOUR POSTS REQUIRED)	
L	E
168" and greater	12"

POST EMBEDMENT DEPTH

Area of Sign Installation (Sq. Ft.)	D (Min)
20 or Less	4'
Greater than 20	5'

TYPICAL INSTALLATION OF TYPE II SIGNS ON MULTIPLE POSTS

WISCONSIN DEPT OF TRANSPORTATION

APPROVED Matthew R Rauch
for State Traffic Engineer

DATE 4/29/14 PLATE NO. A4-4 13

PROJECT NO:	HWY:	COUNTY:		SHEET NO:	E

FILE NAME : C:\CAEFiles\Projects\tr_stdplate\A44.DGN PLOT DATE : 30-APR-2014 13:10 PLOT BY : mscsja PLOT NAME : PLOT SCALE : 107.021305:1.000000 WISDOT/CADDS SHEET 42

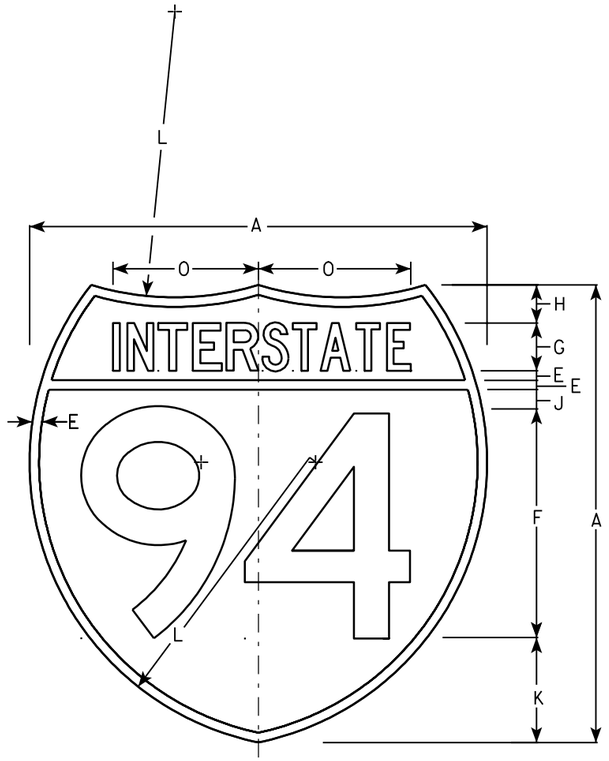

M1-1

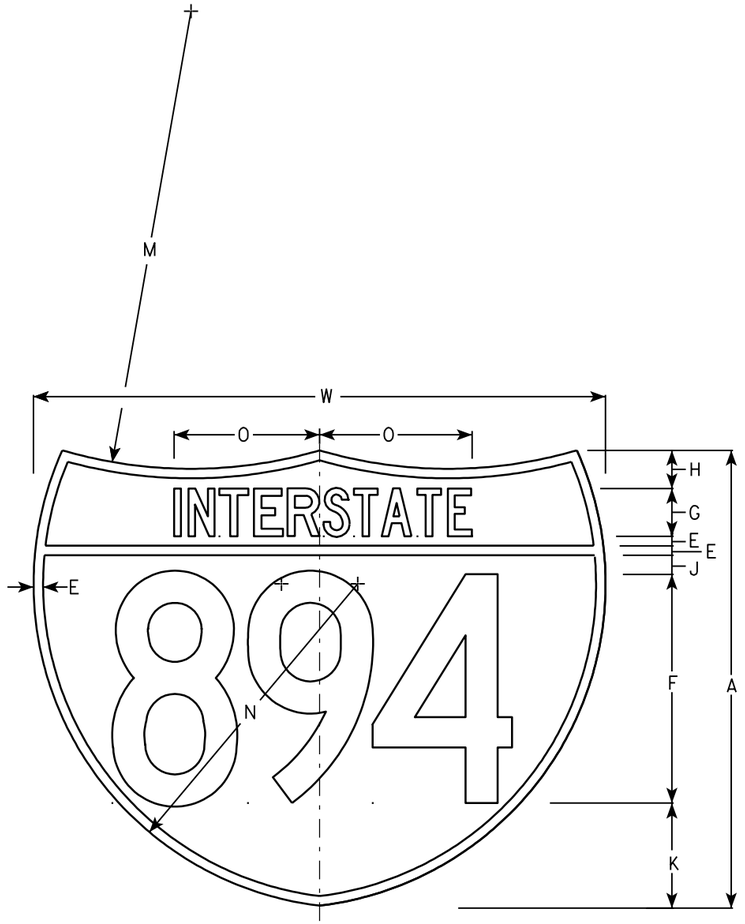

M1-1A

NOTES

1. Sign is Type II - See Note 6 - reference WIS DOT Standard Specification for HIGHWAY and STRUCTURE CONSTRUCTION latest edition.
2. Color:
   Background - Top Red - Bottom Blue (See Note 6)
   Message - White - See Note 6
3. Message Series - See note 5
4. Substitute appropriate numerals & ajust spacing as per plate A10-1.
5. M1-1 - Numerals - D
   Interstate - C
   M1-1A - All copy - C
6. Permanent Signs
   Message - Type H Reflective
   Detour or other temporary signs
   Background - Reflective
   Message - Reflective

Metric equivalent for these signs are:

SIZE	M1-1	SIZE	M1-1A
1			
2	600 mm X 600 mm	2	600 mm X 750 mm
3	900 mm X 900 mm	3	900 mm X 1125 mm
4	900 mm X 900 mm	4	900 mm X 1125 mm
5	900 mm X 900 mm	5	900 mm X 1125 mm

SIZE	A	B	C	D	E	F	G	H	I	J	K	L	M	N	O	P	Q	R	S	T	U	V	W	X	Y	M1-1 Area sq. ft.	M1-1A Area sq. ft.	M1-1 Area m2	M1-1A Area m2
1																													
2	24				1/2	12	2 1/2	2		1	5 1/2	15	24	17	7 7/8								30			3.13	3.91	.36	.46
3	36				3/4	18	3 3/4	3		1 1/2	8 1/4	22 1/2	36	25 1/2	11 3/4								45			7.03	8.79	.81	1.05
4	36				3/4	18	3 3/4	3		1 1/2	8 1/4	22 1/2	36	25 1/2	11 3/4								45			7.03	8.79	.81	1.05
5	36				3/4	18	3 3/4	3		1 1/2	8 1/4	22 1/2	36	25 1/2	11 3/4								45			7.03	8.79	.81	1.05

INTERSTATE ROUTE MARKER
M1-1 FOR ASSEMBLIES

WISCONSIN DEPT OF TRANSPORTATION

APPROVED Matthew R Rauch
for State Traffic Engineer

DATE 08/23/05 PLATE NO. M1-1.8

PROJECT NO:	HWY:	COUNTY:		SHEET NO: 135	E

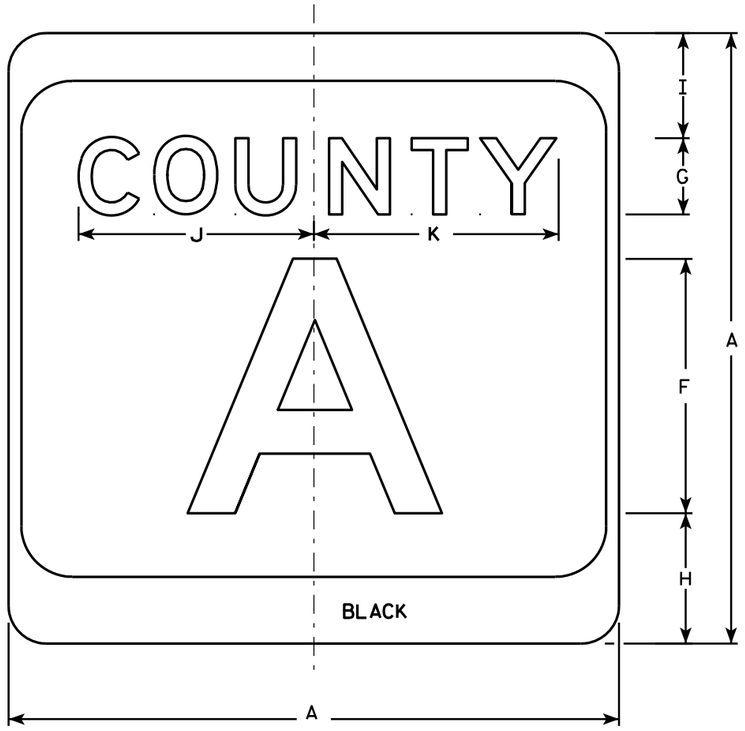

M1-5A

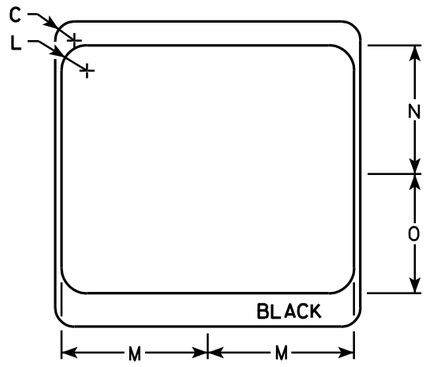

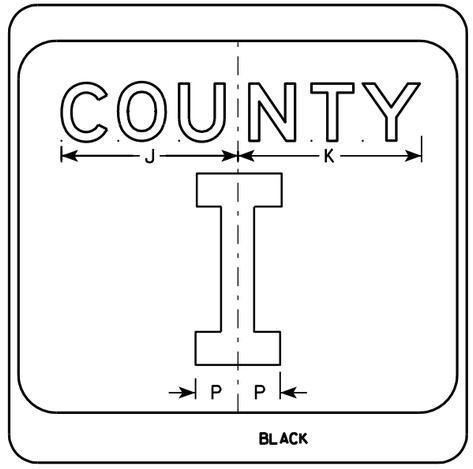

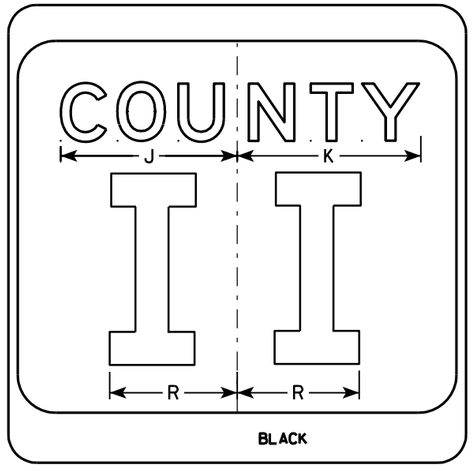

NOTES

1. Sign is Type II - see Note 7 - reference WIS DOT Standard Specification for HIGHWAY and STRUCTURE CONSTRUCTION latest edition.
2. Color:
   Background - White & Black - See Note 7
   Message - Black
3. Message Series - see Note 5
4. Corners may be square or rounded when base material is plywood but borders shall be rounded as shown. When base material is metal, the corners and borders shall be rounded.
5. Message Series E for 1 letter.
   Message Series D for 2 letters unless message is too big then Series C.
   Message Series C for 3 letters unless message is too big then Series B.
6. Substitute appropriate letters & optically center to achieve proper balance.
7. Permanent Signs
   Background - Type H Reflective
   Detour or temporary Signs
   Background - Reflective

SIZE	A	B	C	D	E	F	G	H	I	J	K	L	M	N	O	P	Q	R	S	T	U	V	W	X	Y	Z	Area sq. ft.
1																											
2	24		1 1/2			10	3	5 1/8	4 1/8	9 1/4	9 5/8	2	11 1/2	10 1/8	9 3/8	2 1/4		6 5/8									4.0
3	36		2 1/4			16	4	7 5/8	5 5/8	12 1/4	12 7/8	3	17 1/8	15 1/4	14	3 3/8		10									9.0
4	36		2 1/4			16	4	7 5/8	5 5/8	12 1/4	12 7/8	3	17 1/8	15 1/4	14	3 3/8		10									9.0
5	36		2 1/4			16	4	7 5/8	5 5/8	12 1/4	12 7/8	3	17 1/8	15 1/4	14	3 3/8		10									9.0

CTH MARKER
M1-5A FOR ASSEMBLIES

WISCONSIN DEPT OF TRANSPORTATION

APPROVED Matthew R Rauch
for State Traffic Engineer

DATE 9/27/11 PLATE NO. M1-5A.8

PROJECT NO: | HWY: | COUNTY: | SHEET NO: 136 | E

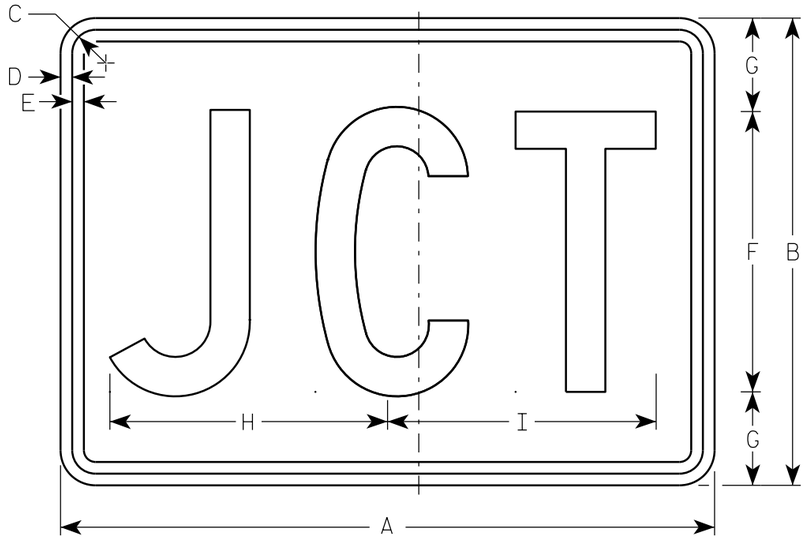

M2-1
MK2-1
MM2-1
MN2-1
MR2-1

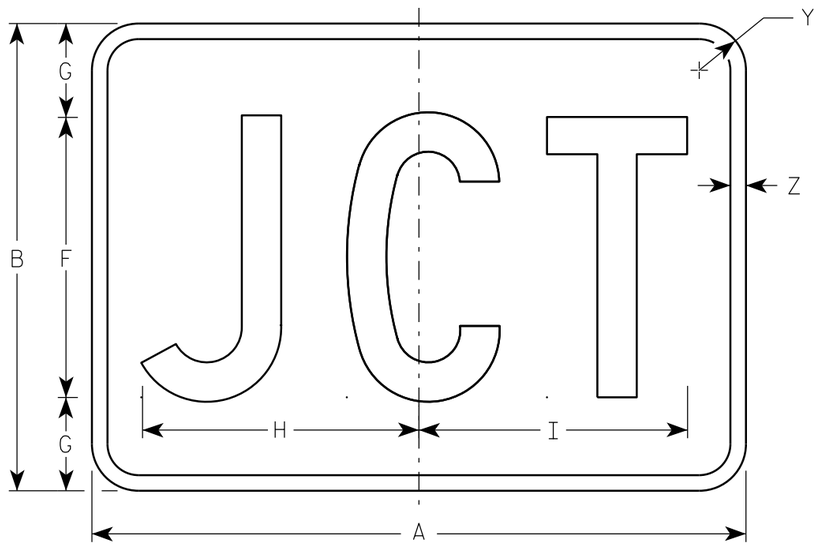

MB2-1

NOTES

1. Sign is Type II - Type H
2. Color:
   Background - See note 5
   Message - See note 5
3. Message Series - C
4. Corners may be square or rounded when base material is plywood but borders shall be rounded as shown. When base material is metal, the corners and borders shall be rounded.
5. M2-1 Background - White
   Message - Black
   MB2-1 Background - Blue
   Message - White
   MK2-1 Background - Green
   Message - White
   MM2-1 Background - White
   Message - Green
   MN2-1 Background - Brown
   Message - White
   MR2-1 Background - Brown
   Message - Yellow

SIZE	A	B	C	D	E	F	G	H	I	J	K	L	M	N	O	P	Q	R	S	T	U	V	W	X	Y	Z	Area sq. ft.
1																											
2	21	15	1 1/8	3/8	3/8	9	3	8 7/8	8 5/8																1 1/2	1/2	2.20
3	30	21	1 1/8	3/8	3/8	13	4	12 7/8	12 3/8																1 1/2	1/2	4.40
4	30	21	1 1/8	3/8	3/8	13	4	12 7/8	12 3/8																1 1/2	1/2	4.40
5	30	21	1 1/8	3/8	3/8	13	4	12 7/8	12 3/8																1 1/2	1/2	4.40

STANDARD SIGN
M2-1

WISCONSIN DEPT OF TRANSPORTATION

APPROVED Matthew R Rauch
For State Traffic Engineer

DATE 6/30/14 PLATE 137 12-1.11

PROJECT NO: | HWY: | COUNTY: | | SHEET NO: E

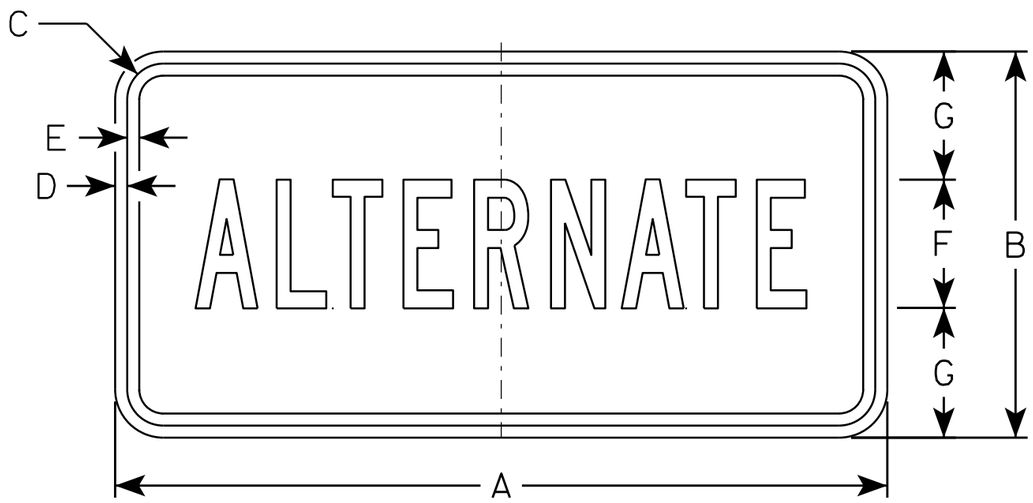

M4-1
M04-1

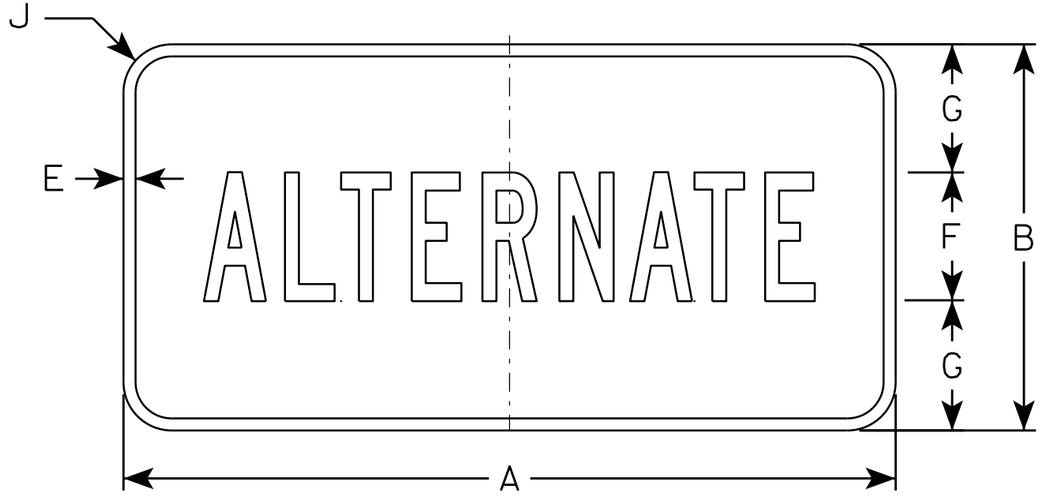

MB4-1

NOTES

1. Sign is Type II - Type H except as Shown
2. Color:
   Background - See Note 5
   Message - See note 5
3. Message Series - B
4. Corners may be square or rounded when base material is plywood but borders shall be rounded as shown. When base material is metal, the corners and borders shall be rounded.
5. M4-1 Background - White
   Message - Black

   MB4-1 Background - Blue
   Message - White

   M04-1 Background - Orange - Type F
   Message - Black

SIZE	A	B	C	D	E	F	G	H	I	J	K	L	M	N	O	P	Q	R	S	T	U	V	W	X	Y	Z	Area sq. ft.
1																											
2	24	12	1 1/8	3/8	3/8	4	4	9 3/4	9 1/2	1 1/2																	2.00
3	36	18	1 1/8	3/8	1/2	7	5 1/2	16 3/8	16 1/2	1 1/2																	4.5
4	36	18	1 1/8	3/8	1/2	7	5 1/2	16 3/8	16 1/2	1 1/2																	4.5
5	36	18	1 1/8	3/8	1/2	7	5 1/2	16 3/8	16 1/2	1 1/2																	4.5

STANDARD SIGN
M4-1

WISCONSIN DEPT OF TRANSPORTATION

APPROVED Matthew R Rauch
for State Traffic Engineer

DATE 6/30/14 PLATE 14-1.8

PROJECT NO:	HWY:	COUNTY:		SHEET NO:	E

FILE NAME : C:\CAEFiles\Projects\tr_stdplate\M41.DGN PLOT DATE : 30-JUN-2014 15:38 PLOT BY : mscsja PLOT NAME : PLOT SCALE : 4.708937:1.000000
WISDOT/CADDS SHEET 42

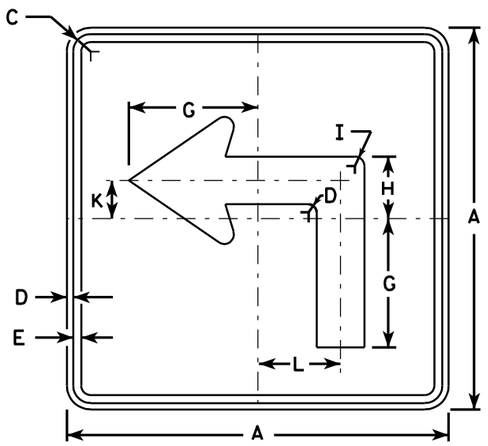

M5-1L
MK5-1L
MM5-1L
MO5-1L
MP5-1L
MR5-1L

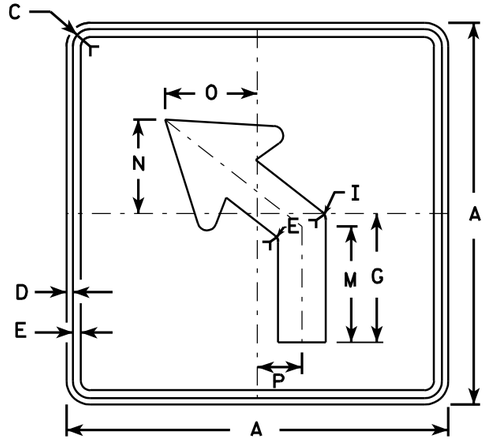

M5-2L
MK5-2L
MM5-2L
MO5-2L
MP5-2L
MR5-2L

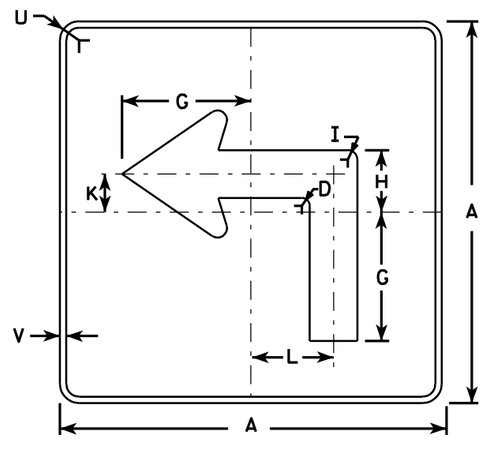

MB5-1L
MG5-1L
MN5-1L

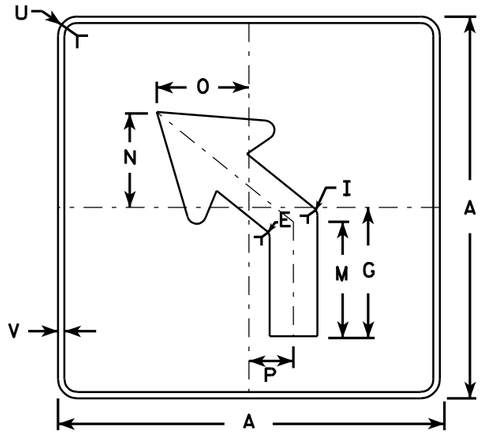

MB5-2L
MG5-2L
MN5-2L

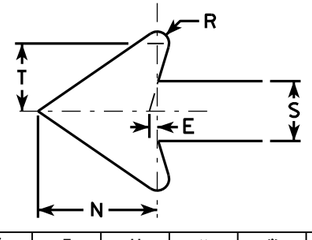

NOTES

1. Signs are Type II - See Note 4 - reference WIS DOT Standard Specification for HIGHWAY and STRUCTURE CONSTRUCTION latest edition.
2. Color:
   Background - See note 4
   Message - See note 4
3. Corners may be square or rounded when base material is plywood but borders shall be rounded as shown. When base material is metal, the corners and borders shall be rounded.
4. M5-1 and M5-2 Background - White - Type H Reflective
   Message - Black
   MB5-1 and MB5-2 Background - Blue
   Message - White - Type H Reflective
   MG5-1 and MG5-2 Background - Green
   Message - White - Type H Reflective
   MK5-1 and MK5-2 Background - Green
   Message - White Type H Reflective
   MM5-1 and MM5-2 Background - White - Type H Reflective
   Message - Green
   MN5-1 and MN5-2 Background - Brown
   Message - White - Type H Reflective
   MO5-1 and MO5-2 Background - Orange - Type F Reflective
   Message - Black
   MP5-1 and MP5-2 Background - White - Type H Reflective
   Message - Blue
   MR5-1 and MR5-2 Background - Brown
   Message - Yellow - Type H Reflective
5. M5-1R same as M5-1L except arrow points right.
6. M5-2R same as M5-2L except arrow tilts right.

SIZE	A	B	C	D	E	F	G	H	I	J	K	L	M	N	O	P	Q	R	S	T	U	V	W	X	Y	Z	Area sq. ft.
1																											
2	21		1 1/8	3/8	3/8		7	3 3/8	5/8		2 1/8	4 1/2	6 3/8	5 1/4	5	2 1/2		1/2	2 5/8	3	1 1/2	1/2					3.06
3	30		1 3/8	1/2	5/8		10 1/8	4 1/8	7/8		3	6 1/2	9 1/8	7 1/2	7 1/4	3 1/2		3/4	3 3/4	4 1/4	1 7/8	1/2					6.25
4	30		1 3/8	1/2	5/8		10 1/8	4 1/8	7/8		3	6 1/2	9 1/8	7 1/2	7 1/4	3 1/2		3/4	3 3/4	4 1/4	1 7/8	1/2					6.25
5	30		1 3/8	1/2	5/8		10 1/8	4 1/8	7/8		3	6 1/2	9 1/8	7 1/2	7 1/4	3 1/2		3/4	3 3/4	4 1/4	1 7/8	1/2					6.25

STANDARD SIGN
M5-1 & M5-2

WISCONSIN DEPT OF TRANSPORTATION

APPROVED Matthew R Rauch
for State Traffic Engineer

DATE 7/29/13 PLATE NO. M5-1.12

PROJECT NO:	HWY:	COUNTY:		SHEET NO: 139	E

7

FILE NAME : C:\CAEFiles\Projects\tr_stdplate\M51.DGN PLOT DATE : 29-JUL-2013 13:34 PLOT BY : mscj9h PLOT NAME : PLOT SCALE : 11.908552:1.000000

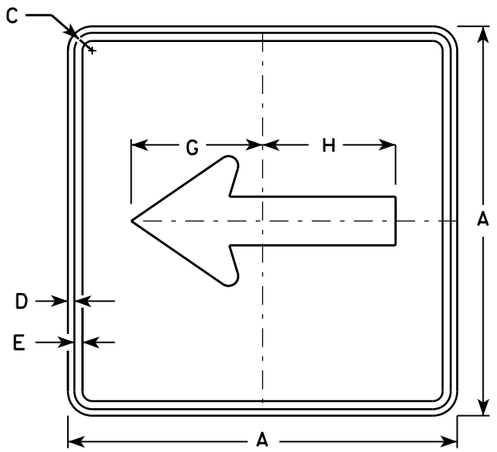

M6-1
MK6-1
MM6-1
MN6-1
MO6-1
MP6-1
MR6-1

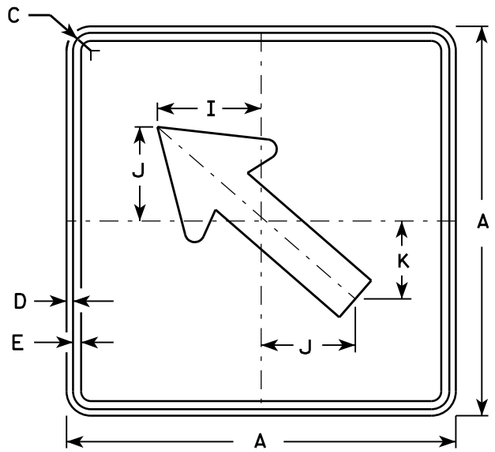

M6-2
MK6-2
MM6-2
MN6-2
MO6-2
MP6-2
MR6-2

NOTES

1. Signs are Type II - Type H except as Shown
2. Color:
   Background - See note 4
   Message - See note 4
3. Corners may be square or rounded when base material is plywood but borders shall be rounded as shown. When base material is metal, the corners and borders shall be rounded.
4. M6-1 and M6-2 Background - White
   Message - Black
   MB6-1 and MB6-2 Background - Blue
   Message - White
   MG6-1 and MG6-2 Background - Green
   Message - White
   MK6-1 and MK6-2 Background - Green
   Message - White
   MM6-1 and MM6-2 Background - White
   Message - Green
   MN6-1 and MN6-2 Background - Brown
   Message - White
   MO6-1 and MO6-2 Background - Orange - Type F Reflective
   Message - Black
   MP6-1 and MP6-2 Background - White
   Message - Blue
   MR6-1 and MR6-2 Background - Brown
   Message - Yellow

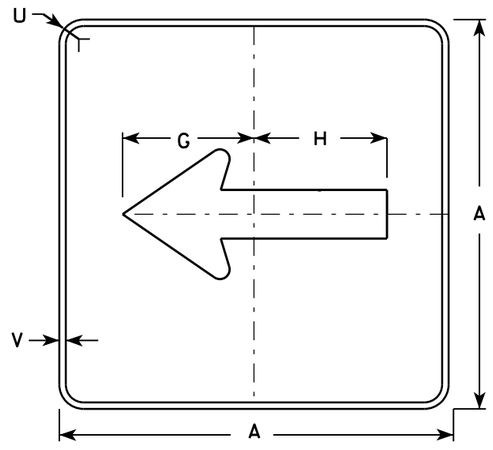

MB6-1

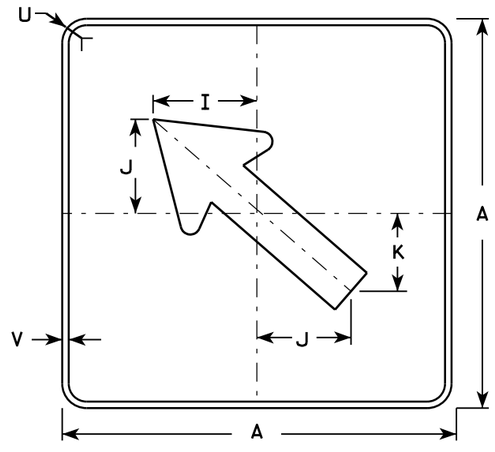

MB6-2

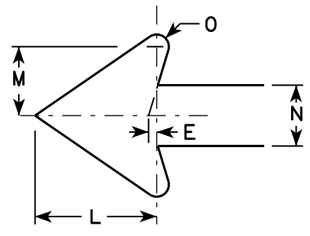

SIZE	A	B	C	D	E	F	G	H	I	J	K	L	M	N	O	P	Q	R	S	T	U	V	W	X	Y	Z	Area sq. ft.
1																											
2	21		1 1/8	3/8	3/8		7 1/2	7 1/8	5 5/8	5	4 1/4	5 1/4	3	2 5/8	1/2						1 1/2	1/2						3.06
3	30		1 3/8	1/2	5/8		10 3/4	10 1/4	8	7 1/4	6	7 1/2	4 1/4	3 3/4	3/4						1 7/8	1/2						6.25
4	30		1 3/8	1/2	5/8		10 3/4	10 1/4	8	7 1/4	6	7 1/2	4 1/4	3 3/4	3/4						1 7/8	1/2						6.25
5	30		1 3/8	1/2	5/8		10 3/4	10 1/4	8	7 1/4	6	7 1/2	4 1/4	3 3/4	3/4						1 7/8	1/2						6.25

STANDARD SIGN M6-1 & M6-2 SERIES

WISCONSIN DEPT OF TRANSPORTATION

APPROVED Matthew R Rauch
for State Traffic Engineer

DATE 7/03/14 PLATE 140 M6-1.14

PROJECT NO: | HWY: | COUNTY: | SHEET NO: E

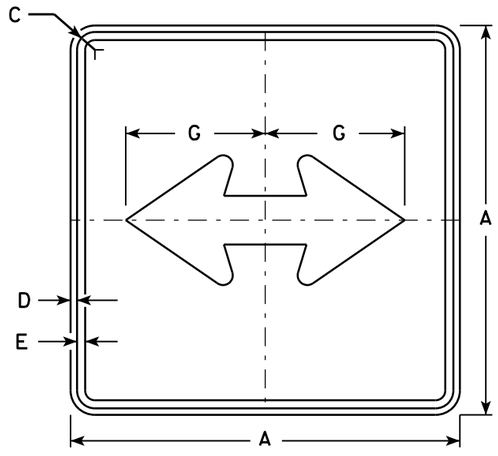

M6-4
MK6-4
MM6-4
MN6-4
MO6-4
MP6-4
MR6-4

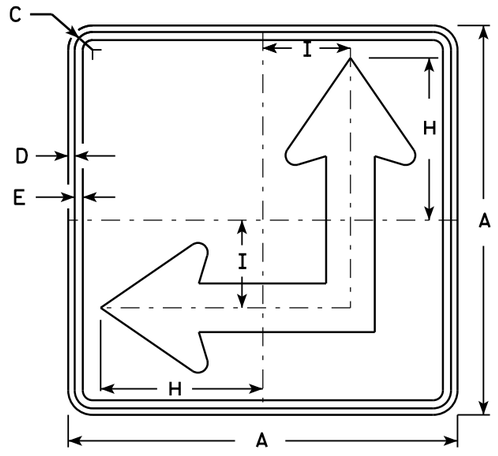

M6-6
MK6-6
MM6-6
MN6-6
MO6-6
MP6-6
MR6-6

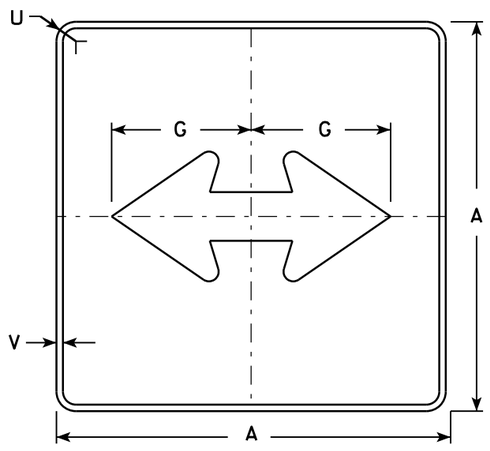

MB6-4

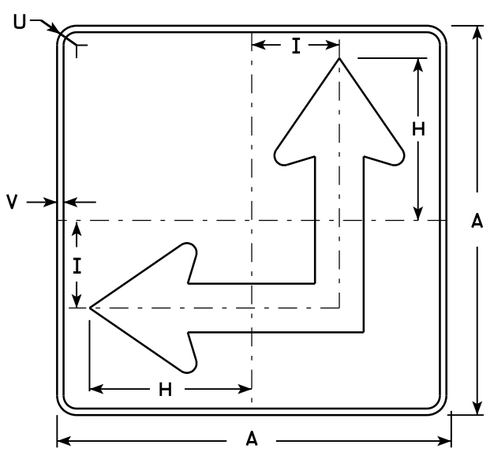

MB6-6

NOTES

1. Signs are Type II - Type H except as Shown
2. Color:
   Background - See Note 4
   Message - See Note 4
3. Corners may be square or rounded when base material is plywood but borders shall be rounded as shown. When base material is metal, the corners and borders shall be rounded.
4. M6-4 and M6-6 Background - White
   Message - Black
   MB6-4 and MB6-6 Background - Blue
   Message - White
   MK6-4 and MK6-6 Background - Green
   Message - White
   MM6-4 and MM6-6 Background - White
   Message - Green
   MN6-4 and MN6-6 Background - Brown
   Message - White
   MO6-4 and MO6-6 Background - Orange - Type F Reflective
   Message - Black
   MP6-4 and MP6-6 Background - White
   Message - Blue
   MR6-4 and MR6-6 Background - Brown
   Message - Yellow
5. M6-6R same as M6-6L except arrow points ahead and right.

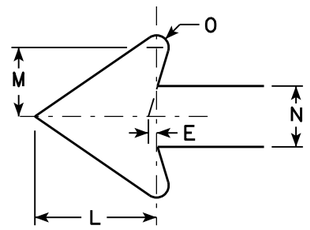

SIZE	A	B	C	D	E	F	G	H	I	J	K	L	M	N	O	P	Q	R	S	T	U	V	W	X	Y	Z	Area sq. ft.
1																											
2	21		1 1/8	3/8	3/8		7 1/2	8 3/4	4 1/4			5 1/4	3	2 5/8	1/2						1 1/2	1/2					3.06
3	30		1 3/8	1/2	5/8		10 3/4	12 1/2	6 3/4			7 1/2	4 1/4	3 3/4	3/4						1 7/8	1/2					6.25
4	30		1 3/8	1/2	5/8		10 3/4	12 1/2	6 3/4			7 1/2	4 1/4	3 3/4	3/4						1 7/8	1/2					6.25
5	30		1 3/8	1/2	5/8		10 3/4	12 1/2	6 3/4			7 1/2	4 1/4	3 3/4	3/4						1 7/8	1/2					6.25

STANDARD SIGN M6-4 & M6-6 SERIES

WISCONSIN DEPT OF TRANSPORTATION

APPROVED Matthew R Rauch for State Traffic Engineer

DATE 7/03/14 PLATE M6-4.9

PROJECT NO: | HWY: | COUNTY: | SHEET NO: E

FILE NAME : C:\CAEFiles\Projects\tr_stdplate\M64.DGN PLOT DATE : 03-JUL-2014 14:56 PLOT BY : mscsja PLOT NAME : PLOT SCALE : 11.675051:1.000000

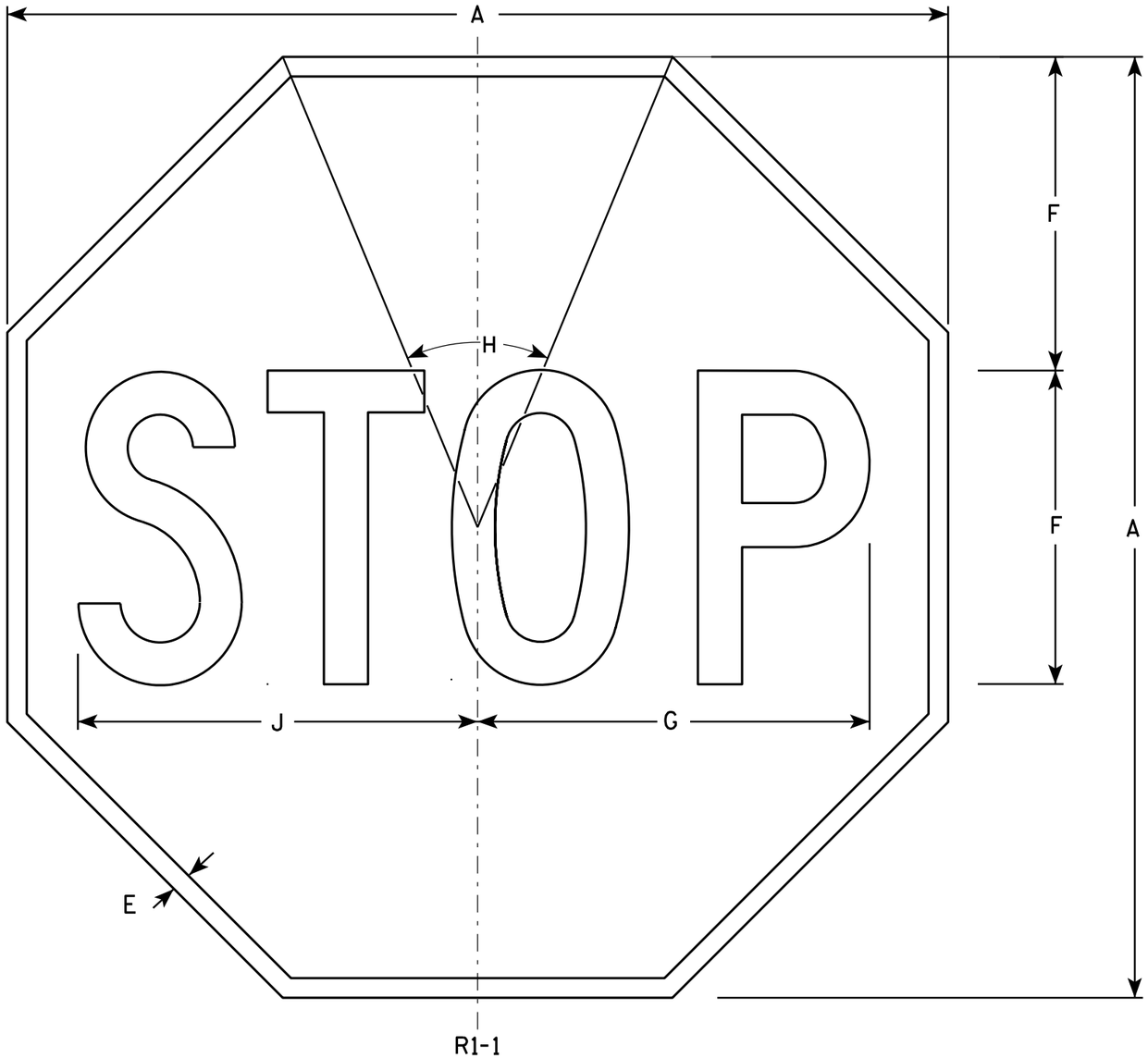

NOTES

1. Sign is Type II - Type H Reflective - reference WIS DOT Standard Specification for HIGHWAY and STRUCTURE CONSTRUCTION latest edition.
2. Color:
   Background - Red
   Message - White
3. Message Series - C

SIZE	A	B	C	D	E	F	G	H	I	J	K	L	M	N	O	P	Q	R	S	T	U	V	W	X	Y	Z	Area sq. ft.
1	24				3/8	8	10	45°		10 1/4																	3.31
2S	30				5/8	10	12 1/2	45°		12 3/4																	5.18
2M	36				3/4	12	15	45°		15 3/8																	7.46
3	36				3/4	12	15	45°		15 3/8																	7.46
4	48				1	16	20	45°		20 1/2																	13.25
5	48				1	16	20	45°		20 1/2																	13.25
6	18				3/8	6	7 3/4	45°		7 3/4																	1.86
7	12				1/4	4	5	45°		5 1/8																	0.78

STANDARD SIGN
R1-1

WISCONSIN DEPT OF TRANSPORTATION

APPROVED Matthew R Rauch
for State Traffic Engineer

DATE 12/03/10 PLATE NO. R1-1.12

PROJECT NO:	HWY:	COUNTY:		SHEET NO: 142	E

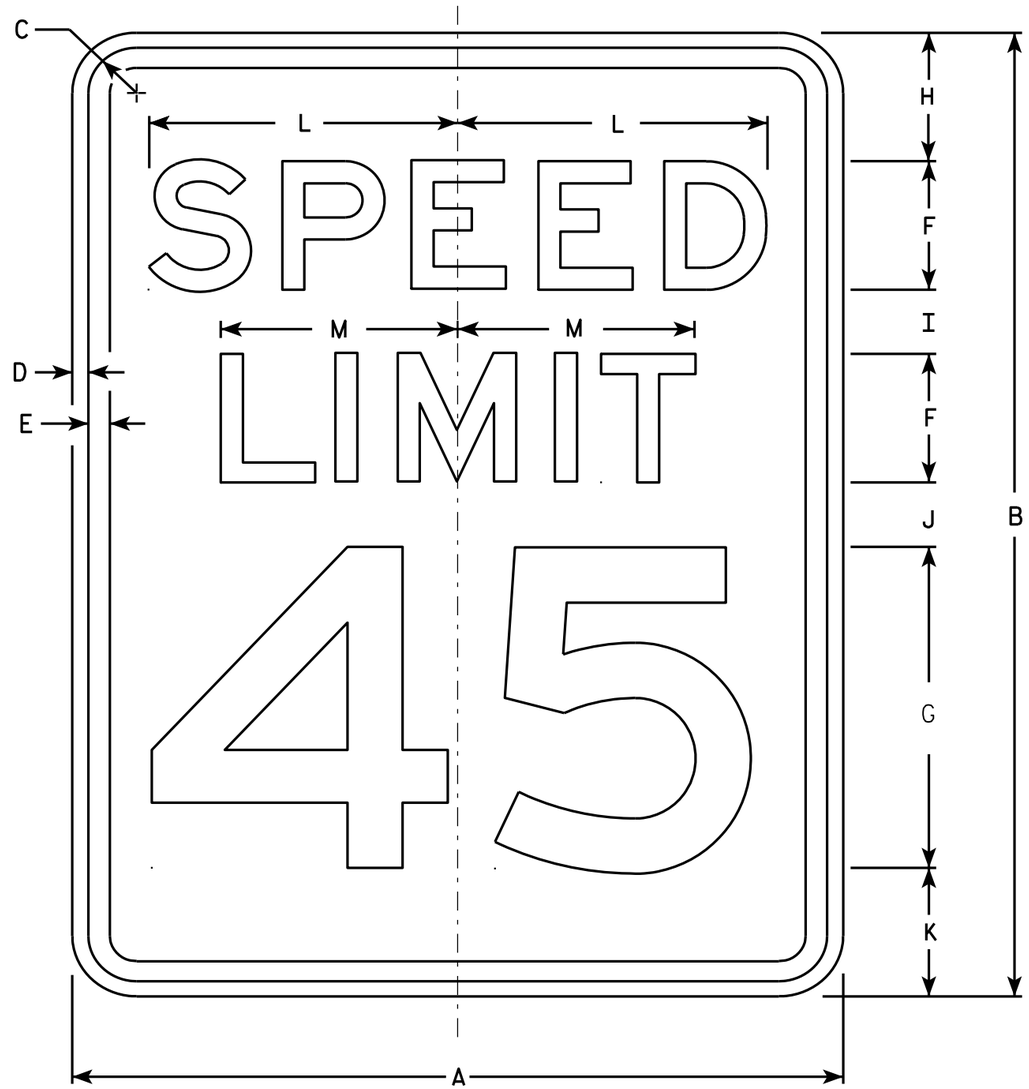

R2-1

NOTES

1. Sign is Type II - Type H Reflective - reference WIS DOT Standard Specification for HIGHWAY and STRUCTURE CONSTRUCTION latest edition.
2. Color:
   Background - White
   Message - Black
3. Message Series - E
4. Corners may be square or rounded when base material is plywood but borders shall be rounded as shown. When base material is metal, the corners and borders shall be rounded.
5. Substitute appropriate numerals and optically adjust spacing to achieve proper balance.

SIZE	A	B	C	D	E	F	G	H	I	J	K	L	M	N	O	P	Q	R	S	T	U	V	W	X	Y	Z	Area sq. ft.
1	18	24	1 1/8	3/8	1/2	3	8	3	2	2	3	7 1/4	5 1/2														3.0
2S	24	30	1 1/8	3/8	1/2	4	10	3	2 1/4	3 3/8	3 3/8	9 5/8	7 3/8														5.0
2M	30	36	1 3/8	1/2	5/8	5	12	5	2 1/2	2 1/2	4	12	9 1/4														7.5
3	36	48	1 3/8	1/2	5/8	6	14	6	5	5	6	14 3/8	11														12.0
4	36	48	1 3/8	1/2	5/8	6	14	6	5	5	6	14 3/8	11														12.0
5	48	60	2 1/4	3/4	1	8	20	6	4 1/2	6 3/4	6 3/4	19 1/4	14 5/8														20.0

STANDARD SIGN
R2-1

WISCONSIN DEPT OF TRANSPORTATION

APPROVED Matthew R Rauch
for State Traffic Engineer

DATE 5/26/10 PLATE NO. R2-1.13

PROJECT NO: | HWY: | COUNTY: | SHEET NO: 143 | E

FILE NAME : C:\Users\PROJECTS\tr_stdplate\R21.DGN PLOT DATE : 28-MAY-2010 08:32 PLOT BY : ditjph PLOT NAME : PLOT SCALE : 4.717577:1.000000
WISDOT/CADDS SHEET 42

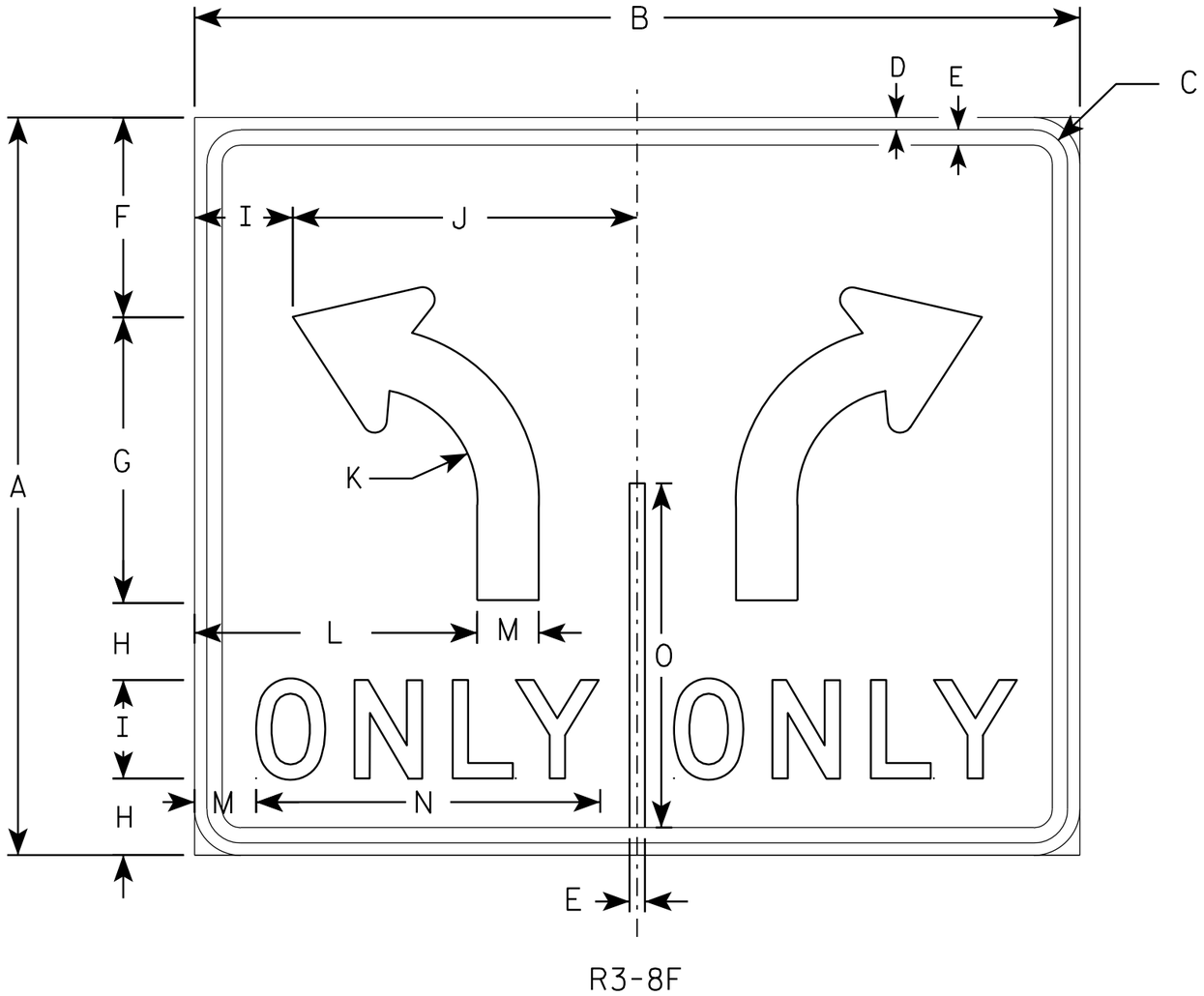

R3-8F

NOTES

1. Sign is Type II - Type H Reflective - reference WIS DOT Standard Specification for HIGHWAY and STRUCTURE CONSTRUCTION latest edition.
2. Color:
   Background - WHITE
   Message - BLACK
3. Message Series - D
4. Corners may be square or rounded when base material is plywood but borders shall be rounded as shown. When base material is metal, the corners and borders shall be rounded.

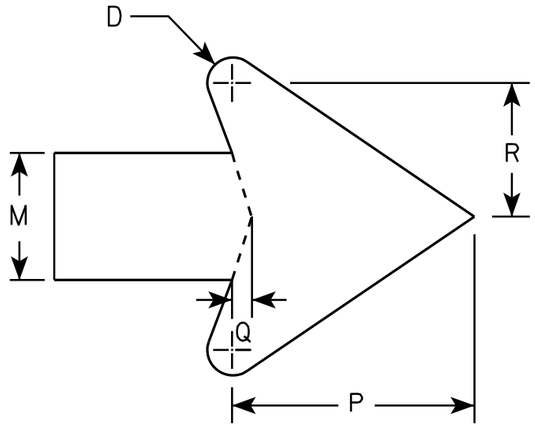

ARROW DETAIL

SIZE	A	B	C	D	E	F	G	H	I	J	K	L	M	N	O	P	Q	R	S	T	U	V	W	X	Y	Z	Area sq. ft.
1																											
2S	30	36	1 3/8	1/2	5/8	8 1/8	11 5/8	3 1/8	4	14	4 1/2	11 1/2	2 1/2	14	14	4 3/4	3/8	2 5/8									7.5
2M	30	36	1 3/8	1/2	5/8	8 1/8	11 5/8	3 1/8	4	14	4 1/2	11 1/2	2 1/2	14	14	4 3/4	3/8	2 5/8									7.5
3																											
4	48	54	2 1/4	3/4	1	13 1/4	18 1/2	5 1/8	6	21	7 1/4	17 1/4	3 3/4	20 5/8	22 3/8	7 1/8	5/8	4									18.0
5	48	54	2 1/4	3/4	1	13 1/4	18 1/2	5 1/8	6	21	7 1/4	17 1/4	3 3/4	20 5/8	22 3/8	7 1/8	5/8	4									18.0

STANDARD SIGN
R3-8F

WISCONSIN DEPT OF TRANSPORTATION

APPROVED Matthew R Rauch
for State Traffic Engineer

DATE 3/18/2011 PLATE NO. R3-8F.2

PROJECT NO: | HWY: | COUNTY: | SHEET NO: 144 | E

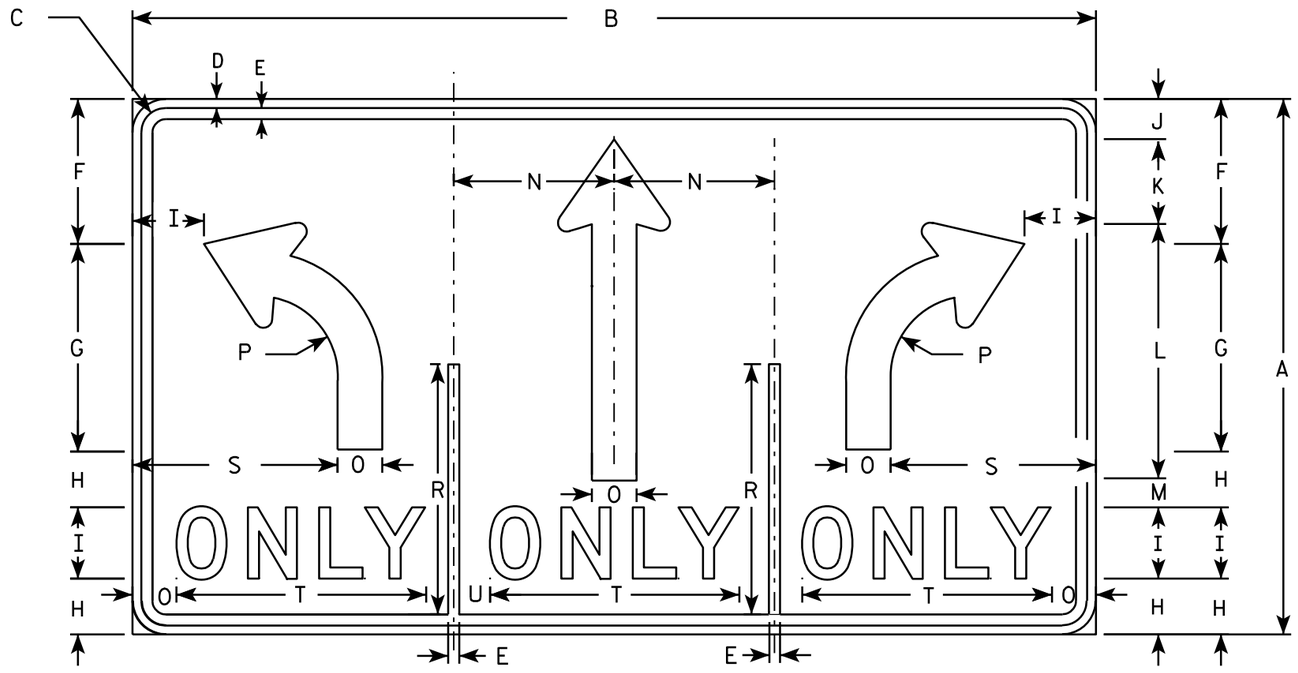

R3-8W

NOTES

1. Sign is Type II - Type H Reflective - reference WIS DOT Standard Specification for HIGHWAY and STRUCTURE CONSTRUCTION latest edition.
2. Color:
   Background - WHITE
   Message - BLACK
3. Message Series - D
4. Corners may be square or rounded when base material is plywood but borders shall be rounded as shown. When base material is metal, the corners and borders shall be rounded.

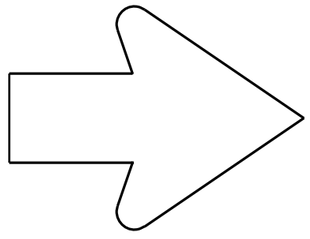

SEE R3-8 FOR ARROW DETAIL

SIZE	A	B	C	D	E	F	G	H	I	J	K	L	M	N	O	P	O	R	S	T	U	V	W	X	Y	Z	Area sq. ft.
1																											
2S	30	54	1 3/8	1/2	5/8	8 1/8	11 5/8	3 1/8	4	2 1/4	4 3/4	14 1/4	1 5/8	9	2 1/2	4 1/2		14	11 1/2	14	2						11.25
2M	30	54	1 3/8	1/2	5/8	8 1/8	11 5/8	3 1/8	4	2 1/4	4 3/4	14 1/4	1 5/8	9	2 1/2	4 1/2		14	11 1/2	14	2						11.25
3																											
4	48	84	2 1/4	3/4	1	13	18 1/2	5 1/4	6	3 3/4	7	29 1/8	2 3/8	14	3 3/4	7 1/4		22 3/8	17 1/4	20 1/2	3 1/4						28.0
5	48	84	2 1/4	3/4	1	13	18 1/2	5 1/4	6	3 3/4	7	29 1/8	2 7/8	14	3 3/4	7 1/4		22 3/8	17 1/4	20 1/2	3 1/4						28.0

STANDARD SIGN
R3-8W

WISCONSIN DEPT OF TRANSPORTATION

APPROVED Matthew R Rauch for State Traffic Engineer

DATE 3/24/2011 PLATE NO. R3-8W.4

PROJECT NO:

SHEET NO: 145 E

NOTES

1. Sign is Type II - Type F Reflective - reference WIS DOT Standard Specification for HIGHWAY and STRUCTURE CONSTRUCTION latest edition.
2. Color:
   Background - Yellow
   Message - Black
3. Message Series - See note 5
4. Corners and borders shall be rounded on all base materials for this sign.
5. Lines 1 and 2 are Series D.
   Line 3 is series C.

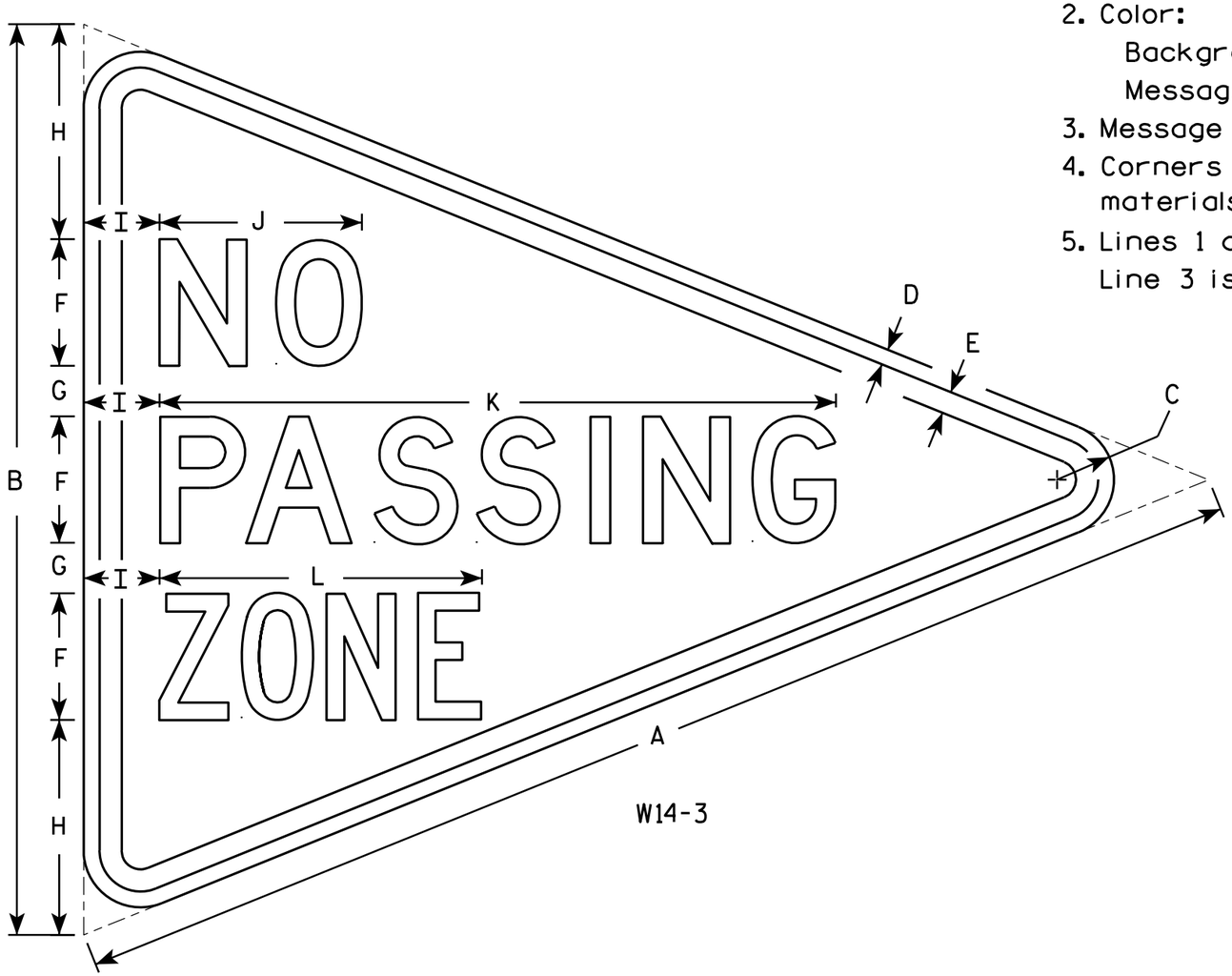

W14-3

SIZE	A	B	C	D	E	F	G	H	I	J	K	L	M	N	O	P	O	R	S	T	U	V	W	X	Y	Z	Area sq. ft.
1																											
2S	48	36	2 1/4	5/8	7/8	5	2	8 1/2	3	8	26 3/4	12 3/4															6.0
2M	48	36	2 1/4	5/8	7/8	5	2	8 1/2	3	8	26 3/4	12 3/4															6.0
3	64	48	3	3/4	1 1/4	6	3	12	4	10 3/4	33 5/8	16 1/2															10.7
4																											
5																											

STANDARD SIGN
W14-3

WISCONSIN DEPT OF TRANSPORTATION

APPROVED Matthew R Rauch
for State Traffic Engineer

DATE 6/7/10 PLATE NO. W14-3.9

PROJECT NO:	HWY:	COUNTY:		SHEET NO: 146	E

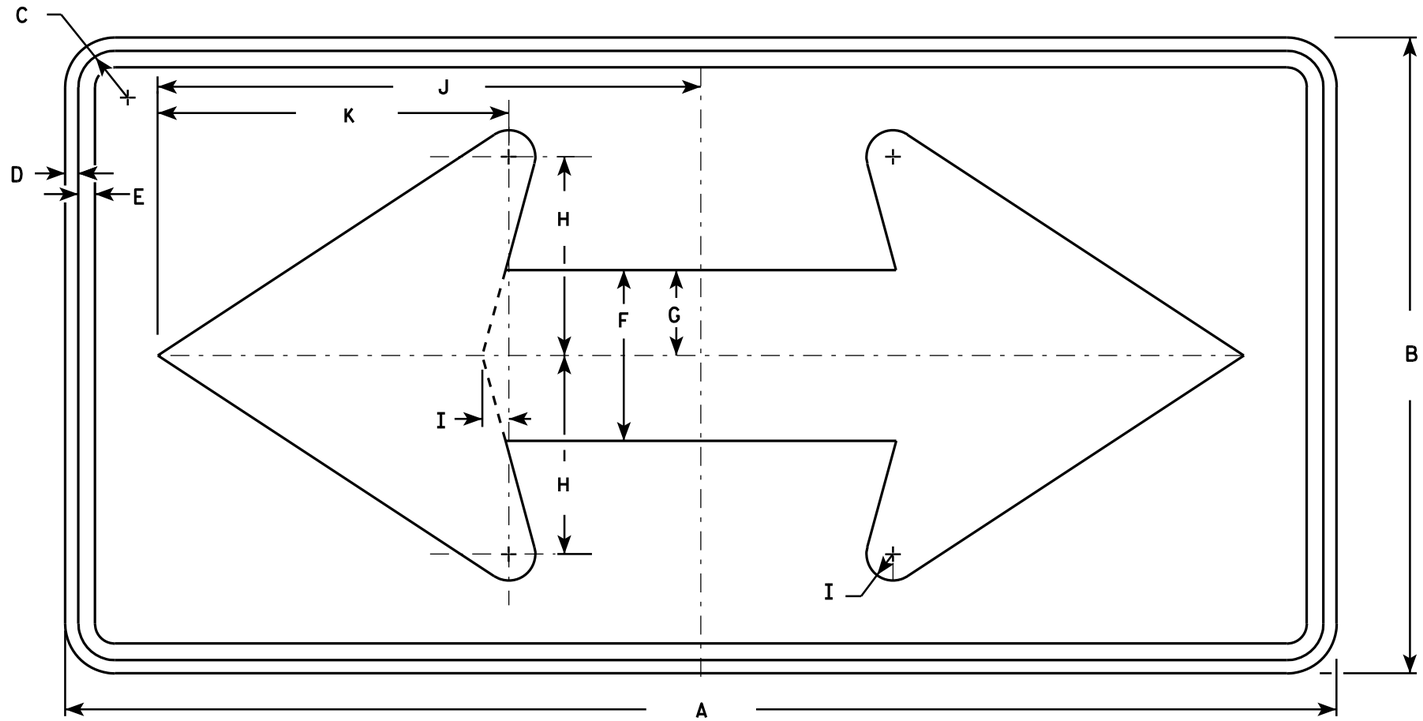

W1-7

NOTES

1. Sign is Type II - Type F Reflective - reference WIS DOT Standard Specification for HIGHWAY and STRUCTURE CONSTRUCTION latest edition.
2. Color:
   Background - Yellow
   Message - Black
3. Corners may be square or rounded when base material is plywood but borders shall be rounded as shown. When base material is metal, the corners and borders shall be rounded.

SIZE	A	B	C	D	E	F	G	H	I	J	K	L	M	N	O	P	Q	R	S	T	U	V	W	X	Y	Z	Area sq. ft.
1	36	18	1 1/8	3/8	1/2	5	2 1/2	5 3/4	3/4	15 5/8	10 1/8																4.5
2S	48	24	1 3/8	1/2	5/8	6 1/2	3 1/4	7 1/2	1	20 1/2	13 1/4																8.0
2M	48	24	1 3/8	1/2	5/8	6 1/2	3 1/4	7 1/2	1	20 1/2	13 1/4																8.0
3	60	30	1 3/8	1/2	5/8	8	4	9 1/4	1 1/4	25 3/8	16 1/4																12.5
4	60	30	1 3/8	1/2	5/8	8	4	9 1/4	1 1/4	25 3/8	16 1/4																12.5
5	96	48	2 1/4	3/4	1	13	6 1/2	15	2	41	26 1/2																32.0

STANDARD SIGN
W1-7

WISCONSIN DEPT OF TRANSPORTATION

APPROVED Matthew R Rauch
for State Traffic Engineer

DATE 6/7/10 PLATE NO. W1-7.7

PROJECT NO: | HWY: | COUNTY: | SHEET NO: 147 | E

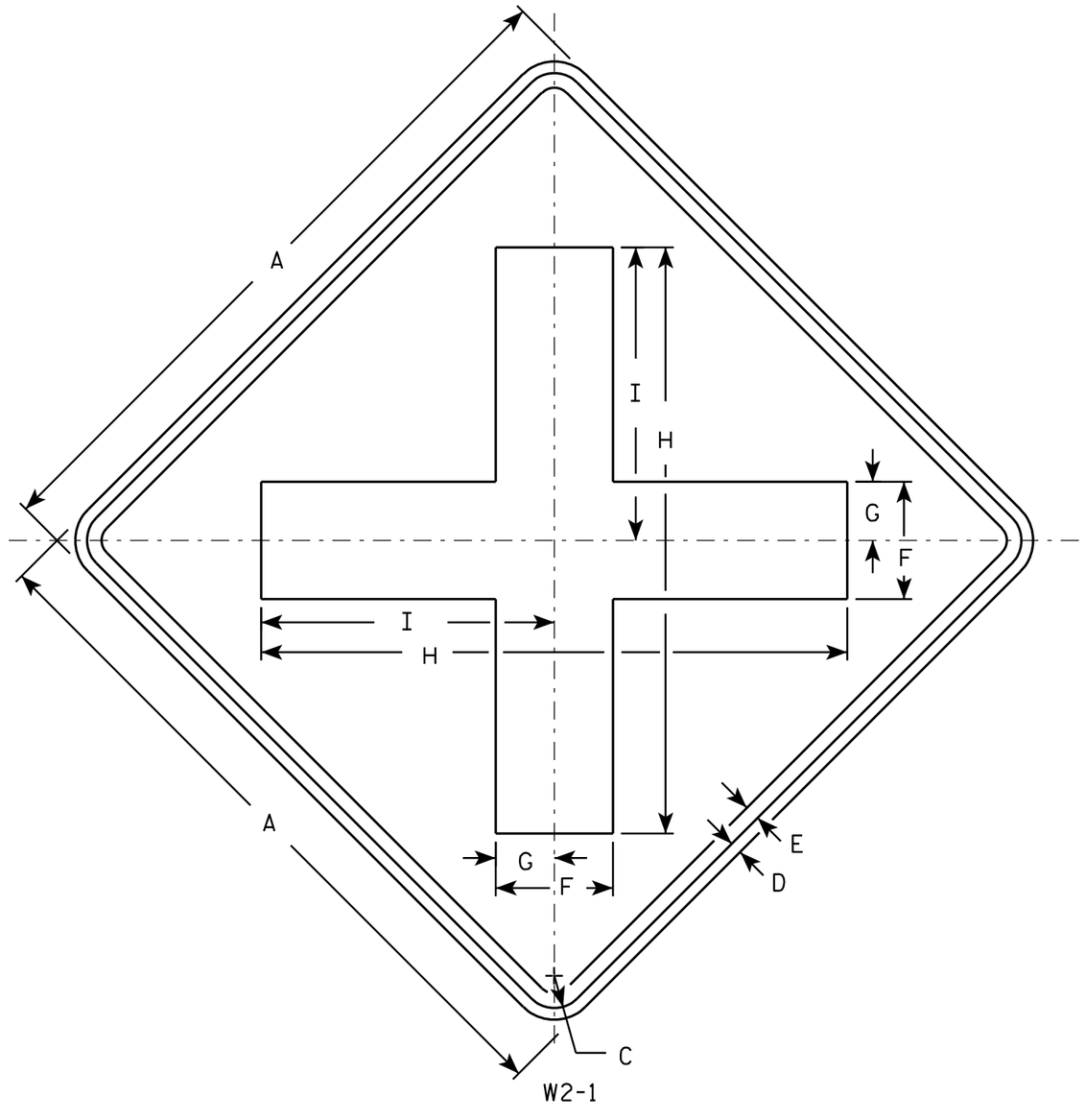

NOTES

1. Sign is Type II - Type F Reflective - reference WIS DOT Standard Specification for HIGHWAY and STRUCTURE CONSTRUCTION latest edition.
2. Color:
   Background - Yellow
   Message - Black
3. Corners may be square or rounded when base material is plywood but borders shall be rounded as shown. When base material is metal, the corners and borders shall be rounded.

SIZE	A	B	C	D	E	F	G	H	I	J	K	L	M	N	O	P	Q	R	S	T	U	V	W	X	Y	Z	Area sq. ft.
1	24		1 1/8	3/8	1/2	4	2	20	10																		4.0
2S	30		1 3/8	1/2	5/8	5	2 1/2	25	12 1/2																		6.25
2M	30		1 3/8	1/2	5/8	5	2 1/2	25	12 1/2																		6.25
3	36		1 5/8	5/8	3/4	6	3	30	15																		9.0
4	48		2 1/4	3/4	1	8	4	40	20																		16.0
5																											

STANDARD SIGN
W2-1

WISCONSIN DEPT OF TRANSPORTATION

APPROVED Matthew R Rauch
for State Traffic Engineer

DATE 5/29/12 PLATE NO. W2-1.9

PROJECT NO:	HWY:	COUNTY:		SHEET NO: 148	E

FILE NAME : C:\CAEFiles\Projects\tr_stdplate\W21.DGN PLOT DATE : 29-MAY-2012 10:10 PLOT BY : mscsja PLOT NAME : PLOT SCALE : 6.202372:1.000000
WISDOT/CADDS SHEET 42

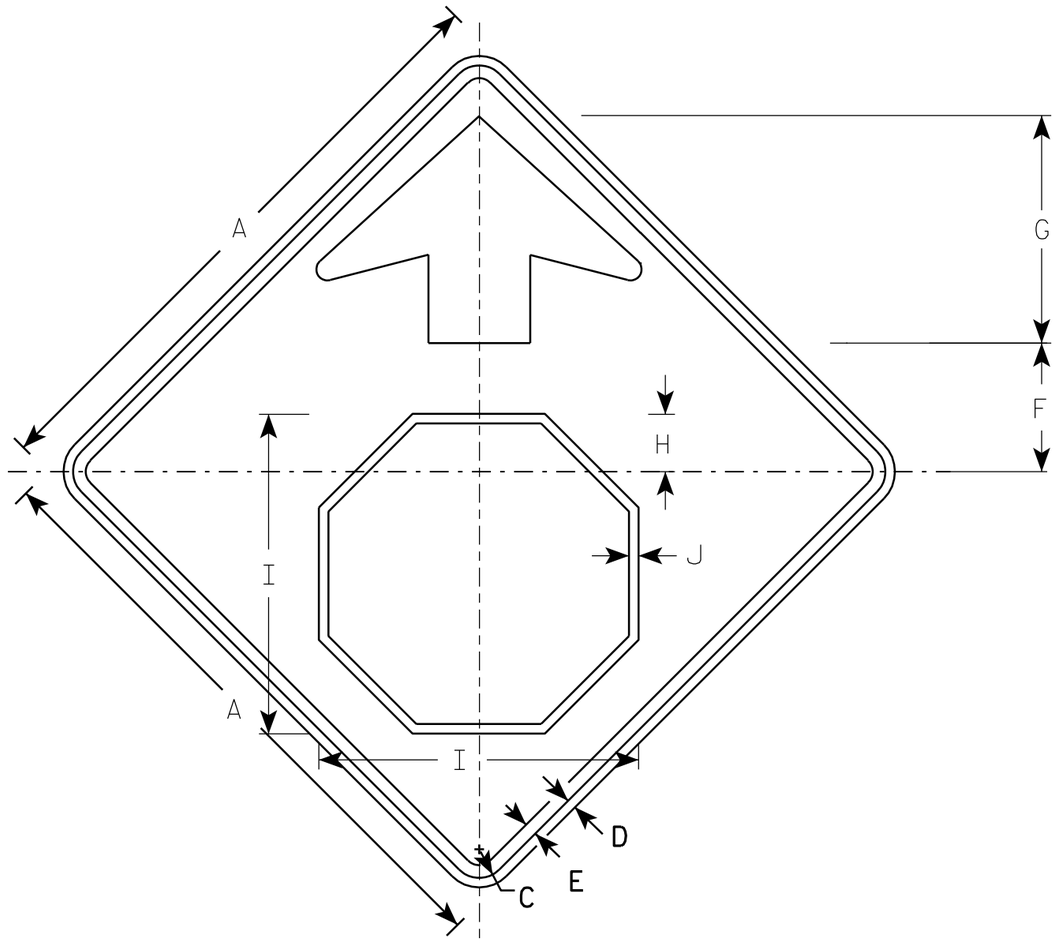

W3-1

NOTES

1. All Signs Type II - Type F Reflective - reference WIS DOT Standard Specification for HIGHWAY and STRUCTURE CONSTRUCTION latest edition.
2. Color:
   Background - YELLOW
   Arrow & Border - BLACK
   Stop Symbol - WHITE BORDER ON RED BACKGROUND

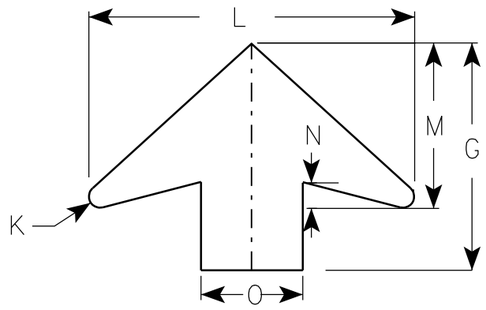

ARROW DETAIL

SIZE	A	B	C	D	E	F	G	H	I	J	K	L	M	N	O	P	Q	R	S	T	U	V	W	X	Y	Z	Area sq. ft.
1	30		1 3/8	1/2	5/8	6 1/4	11 1/4	2 7/8	15 3/4	1/2	1/2	16	8	1 1/4	5												6.25
2S	36		1 5/8	5/8	3/4	7 1/2	13 1/2	3 1/2	19	5/8	5/8	19 1/4	9 3/4	1 5/8	6												9.0
2M	36		1 5/8	5/8	3/4	7 1/2	13 1/2	3 1/2	19	5/8	5/8	19 1/4	9 3/4	1 5/8	6												9.0
3	36		1 5/8	5/8	3/4	7 1/2	13 1/2	3 1/2	19	5/8	5/8	19 1/4	9 3/4	1 5/8	6												9.0
4	48		2 1/4	3/4	1	10	17 7/8	4 1/2	25 1/8	3/4	7/8	25 5/8	13	2	8												16.0
5	48		2 1/4	3/4	1	10	17 7/8	4 1/2	25 1/8	3/4	7/8	25 5/8	13	2	8												16.0

STANDARD SIGN
W3-1

WISCONSIN DEPT OF TRANSPORTATION

APPROVED Matthew R Rauch
for State Traffic Engineer

DATE 6/7/10 PLATE NO. W3-1.12

PROJECT NO:

SHEET NO: 149 E

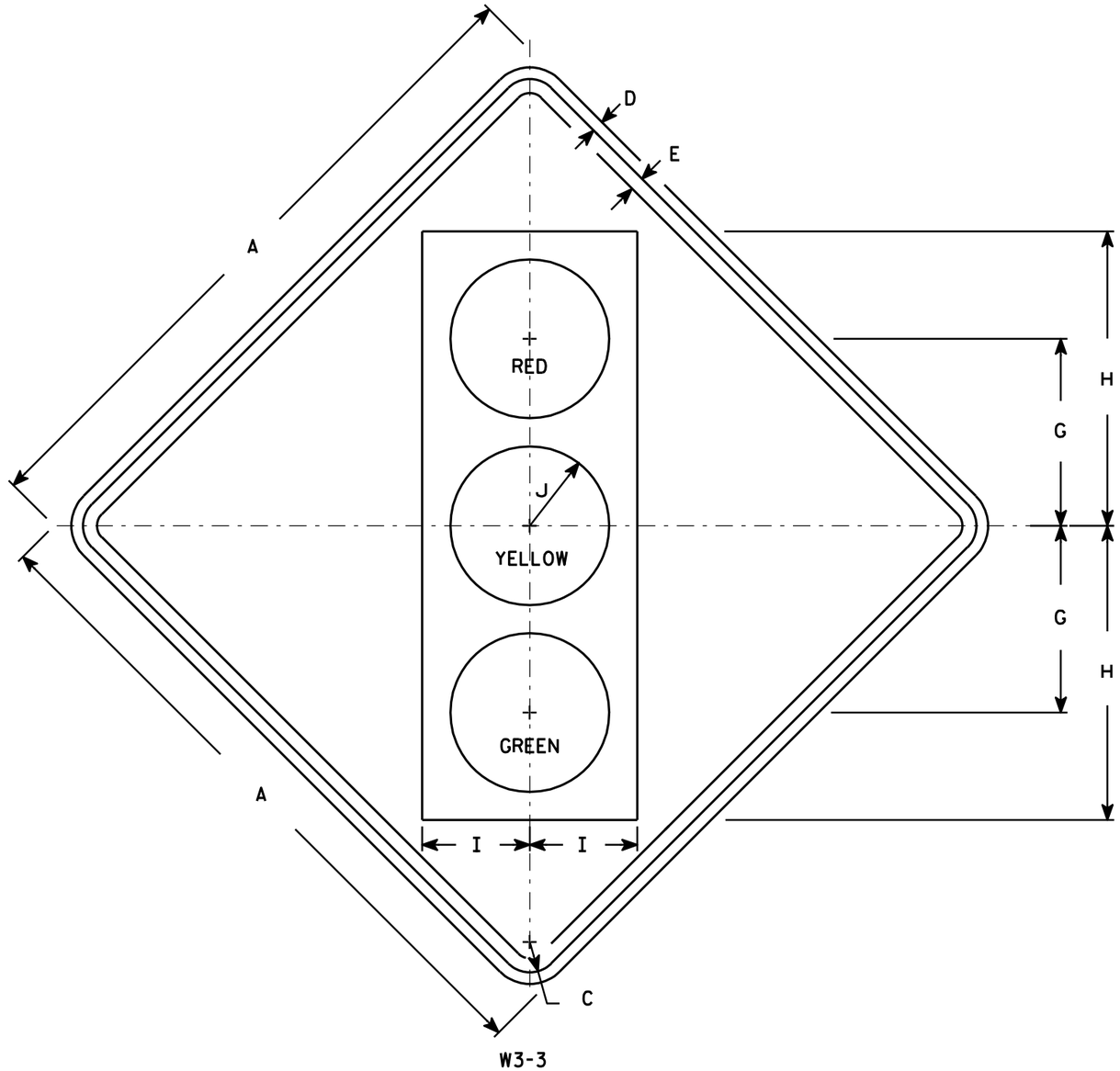

NOTES

1. Sign is Type II - Type F Reflective - reference WIS DOT Standard Specification for HIGHWAY and STRUCTURE CONSTRUCTION latest edition.
2. Color:
   Background - Yellow
   Message - See Note 4
3. Corners may be square or rounded when base material is plywood but borders shall be rounded as shown. When base material is metal, the corners and borders shall be rounded.
4. Symbol and border are non-reflective black.
   Top circle - Type H Reflectorized Red
   Center circle - Same as background
   Bottom circle - Type H Reflectorized Green

SIZE	A	B	C	D	E	F	G	H	I	J	K	L	M	N	O	P	Q	R	S	T	U	V	W	X	Y	Z	Area sq. ft.
1	30		1 3/8	1/2	5/8		8 3/4	13 3/4	5	3 3/4																	6.25
2S	36		1 5/8	5/8	3/4		10	15 3/4	5 3/4	4 1/4																	9.0
2M	36		1 5/8	5/8	3/4		10	15 3/4	5 3/4	4 1/4																	9.0
3	36		1 5/8	5/8	3/4		10	15 3/4	5 3/4	4 1/4																	9.0
4	48		2 1/4	3/4	1		12 1/2	20	7 1/2	5																	16.0
5	48		2 1/4	3/4	1		12 1/2	20	7 1/2	5																	16.0

STANDARD SIGN
W3-3

WISCONSIN DEPT OF TRANSPORTATION

APPROVED Matthew R Rauch
for State Traffic Engineer

DATE 6/7/10 PLATE NO. W3-3.11

PROJECT NO: | HWY: | COUNTY: | SHEET NO: 150 | E

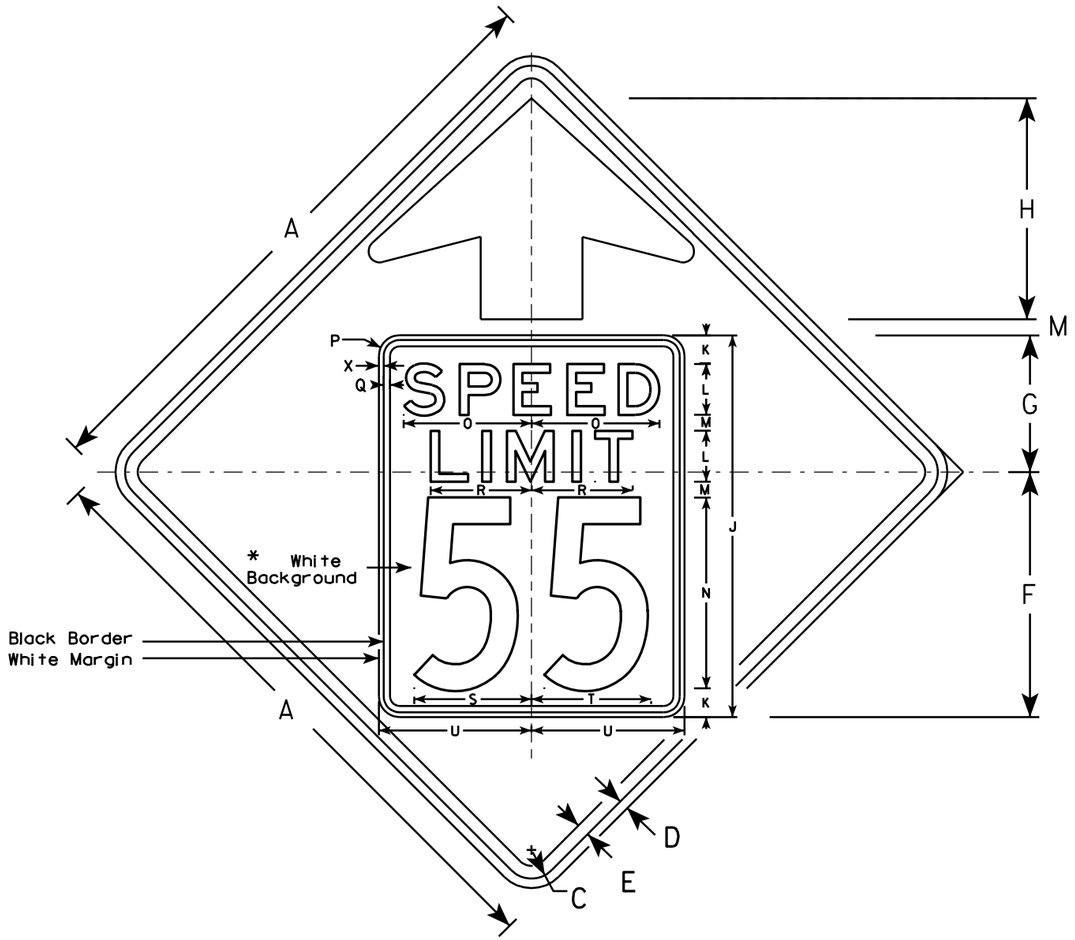

W3-5

NOTES

1. Sign is Type II - Type F Reflective - reference WIS DOT Standard Specification for HIGHWAY and STRUCTURE CONSTRUCTION latest edition.
2. Color: *
   Background - YELLOW*
   Message - BLACK
3. Message Series - C for numbers Series E for wording
4. Substitute appropriate numerals and optically adjust spacing to achieve proper balance

*Speed Limit Sign shall have a White Background

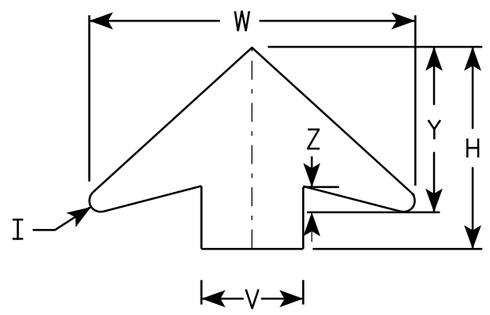

ARROW DETAIL

SIZE	A	B	C	D	E	F	G	H	I	J	K	L	M	N	O	P	Q	R	S	T	U	V	W	X	Y	Z	Area sq. ft.
1																											
2S	36		1 5/8	5/8	3/4	14 1/2	9 1/2	11 1/2	5/8	24	2	3	1	12	7 1/8	1 1/2	3/8	5 3/4	7 1/4	7 1/8	9	6	19 1/4	3/8	9 3/4	1 5/8	9.0
2M	36		1 5/8	5/8	3/4	14 1/2	9 1/2	11 1/2	5/8	24	2	3	1	12	7 1/8	1 1/2	3/8	5 3/4	7 1/4	7 1/8	9	6	19 1/4	3/8	9 3/4	1 5/8	9.0
3	36		1 5/8	5/8	3/4	14 1/2	9 1/2	11 1/2	5/8	24	2	3	1	12	7 1/8	1 1/2	3/8	5 3/4	7 1/4	7 1/8	9	6	19 1/4	3/8	9 3/4	1 5/8	9.0
4	48		2 1/4	3/4	1	19 1/4	10 3/4	17 3/8	7/8	30	2 1/4	4	1 1/4	15	10	1 5/8	1/2	8	9 1/4	9 3/8	12	8	25 5/8	3/8	13	2	16.0
5	48		2 1/4	3/4	1	19 1/4	10 3/4	17 3/8	7/8	30	2 1/4	4	1 1/4	15	10	1 5/8	1/2	8	9 1/4	9 3/8	12	8	25 5/8	3/8	13	2	16.0

STANDARD SIGN
W3-5

WISCONSIN DEPT OF TRANSPORTATION

APPROVED Matthew R Rauch
for State Traffic Engineer

DATE 5/29/12 PLATE NO. W3-5.5

PROJECT NO:

SHEET NO: 151 E

STATE PROJECT NUMBER

5989-05-71

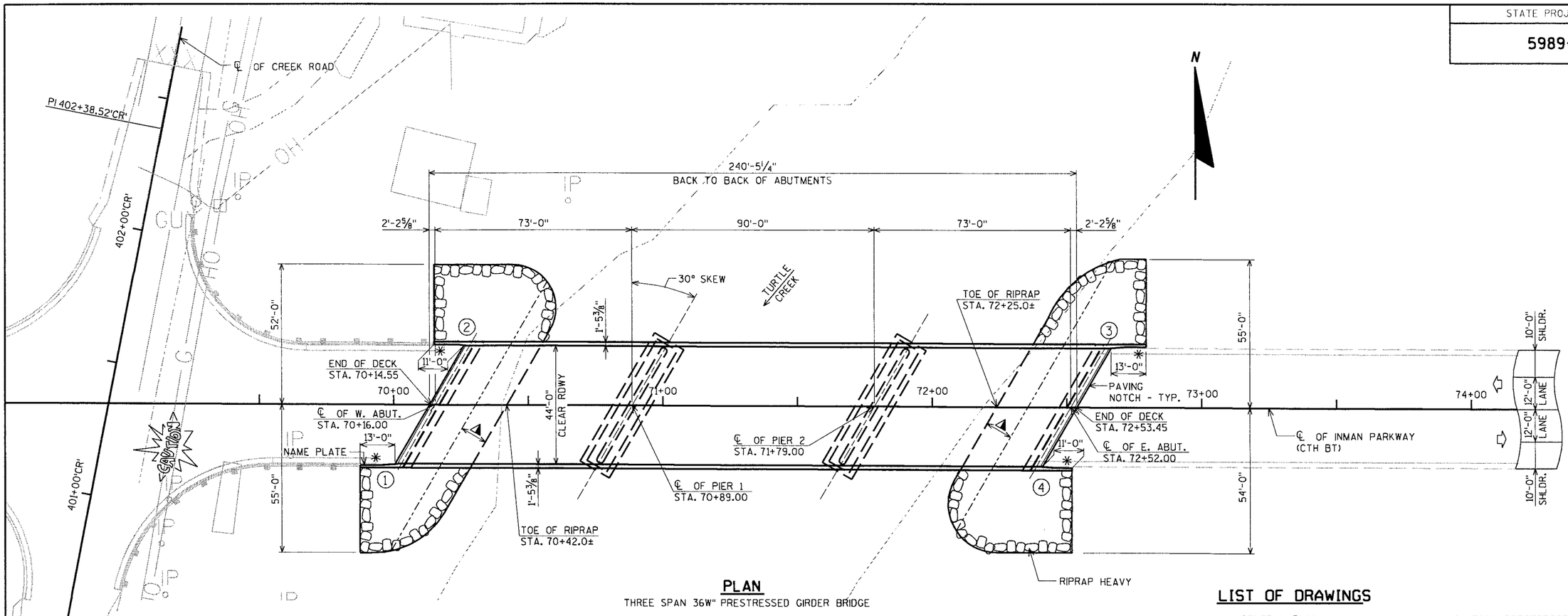

PLAN

THREE SPAN 36W" PRESTRESSED GIRDER BRIDGE

✳ANCHOR ASSEMBLY FOR THRIE BEAM TYPE GUARDRAIL.

◯ DENOTES WING NUMBER.

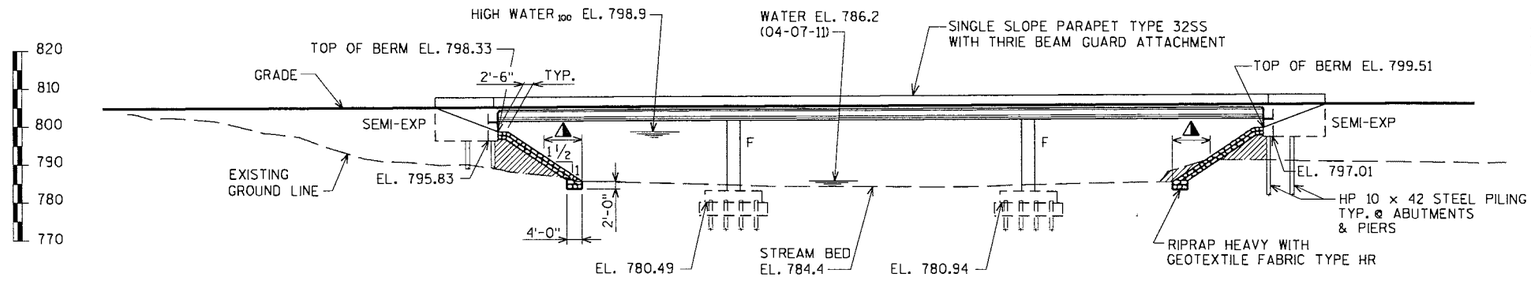

ELEVATION

(NORMAL TO ℄ TURTLE OF CREEK)

COST OF EXCAVATION AND FILL IN THE HATCHED AREAS SHALL BE INCLUDED IN THE CONTRACT LUMP SUM PRICE FOR "EXCAVATION FOR STRUCTURES BRIDGES B-53-292."

10'-0" SELECT CRUSHED MATERIAL FOR TRAVEL CORRIDOR TO BE USED TO FILL VOIDS OF RIPRAP HEAVY.

LIST OF DRAWINGS

1. GENERAL PLAN
2. TYPICAL SECTION AND NOTES
3. SUBSURFACE EXPLORATION
4. WEST ABUTMENT
5. WEST ABUTMENT DETAILS
6. EAST ABUTMENT
7. EAST ABUTMENT DETAILS
8. PIER 1
9. PIER 1 PLAN
10. PIER 1 DETAILS & BILL OF BARS
11. PIER 2
12. PIER 2 PLAN
13. PIER 2 DETAILS & BILL OF BARS
14. 36W" PRESTRESSED GIRDER DETAILS
15. 36W" PRESTRESSED GIRDER DETAILS
16. STEEL INTER. DIAPHRAGM DETAILS
17. TOP DECK ELEVATIONS
18. SUPERSTRUCTURE
19. SUPERSTRUCTURE PLAN
20. SUPERSTRUCTURE DETAILS
21. SINGLE SLOPE PARAPET 32SS

DATE:
DATE:
DATE:

CHECKED BY:
BACK CHECKED BY:
CORRECTED BY:

8

WISCONSIN
DANIEL N. SYDOW
E-38363
WI
PROFESSIONAL ENGINEER
11/18/2014

NO.	DATE	REVISION	BY

ORIGINAL PLANS PREPARED BY
AYRES ASSOCIATES
3433 Oakwood Hills Parkway
Eau Claire, WI 54701
www.AyresAssociates.com

STATE OF WISCONSIN
DEPARTMENT OF TRANSPORTATION

ACCEPTED William C. Dreher KAR 11/28/14
CHIEF STRUCTURES DESIGN ENGINEER — DATE

STRUCTURE B-53-292

INMAN PARKWAY (CTH BT) OVER TURTLE CREEK

COUNTY	TOWN ~~/CITY/VILLAGE~~
ROCK	TURTLE

DESIGN SPEC.
AASHTO LRFD BRIDGE DESIGN SPECIFICATIONS

DESIGNED BY	DESIGN CK'D.	DRAWN BY	PLANS CK'D.
CJM	JCK	CLS	DNS

GENERAL PLAN

SHEET 1 OF 21
152

BRIDGE OFFICE CONTACT:
WILLIAM DREHER
(608)-266-8489

CONSULTANT CONTACT:
DAN SYDOW
(715)-834-3161

8

I.D.

DATE:

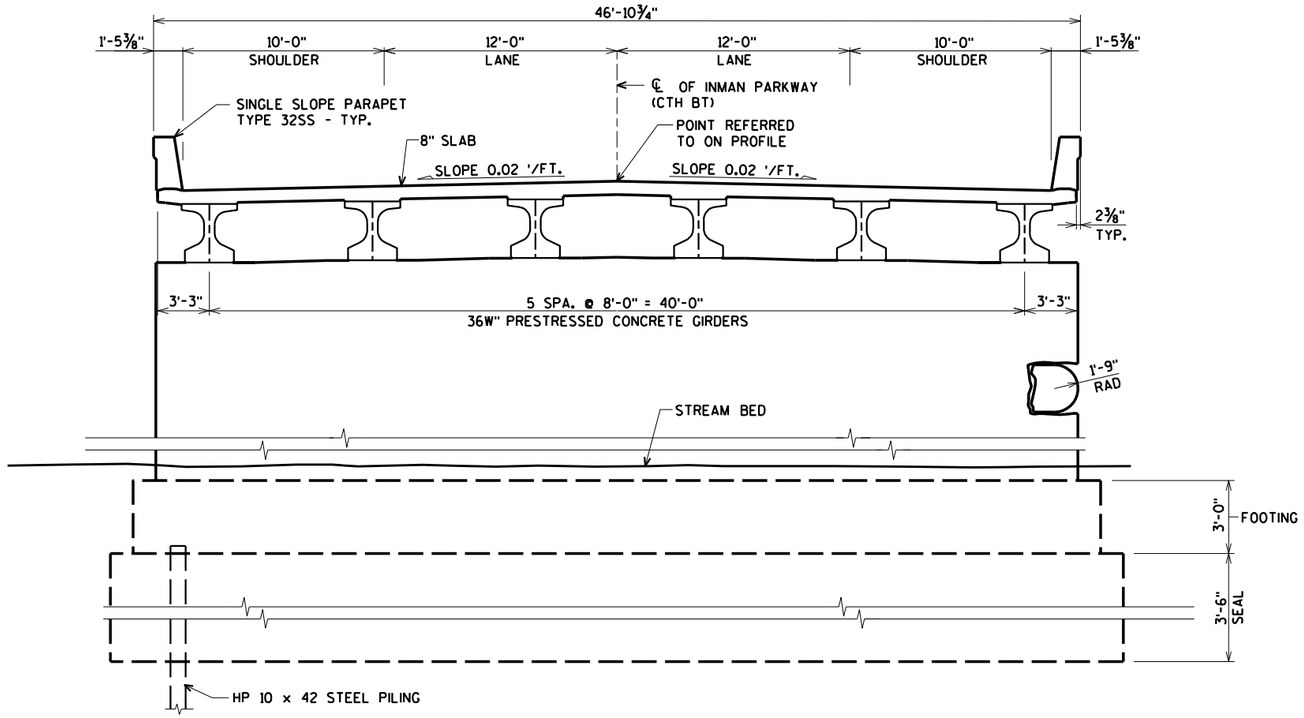

TYPICAL SECTION THRU BRIDGE

GENERAL NOTES

DRAWINGS SHALL NOT BE SCALED.

BAR STEEL REINFORCEMENT SHALL BE EMBEDDED 2" CLEAR UNLESS SHOWN OR NOTED OTHERWISE.

THE FIRST DIGIT OF A THREE DIGIT BAR NO. AND THE FIRST TWO DIGITS OF A FOUR DIGIT BAR NO. SIGNIFIES THE BAR SIZE.

JOINT FILLER SHALL CONFORM TO THE REQUIREMENTS OF A.A.S.H.T.O. DESIGNATION M 153, TYPE I, II OR III OR A.A.S.H.T.O. DESIGNATION M 213.

THE SLOPE OF THE FILL IN FRONT OF THE ABUTMENTS SHALL BE COVERED WITH RIPRAP HEAVY AND GEOTEXTILE FABRIC TYPE HR TO THE EXTENT SHOWN ON THE GENERAL PLAN SHEET AND IN THE ABUTMENT DETAILS.

PROTECTIVE SURFACE TREATMENT IS TO BE APPLIED AS SHOWN IN DETAIL ON THIS SHEET.

ELASTOMERIC BEARING PADS NEED NOT BE INDIVIDUALLY MOLDED PROVIDED THE CUT EDGES ARE SMOOTH AND TRUE.

THE EXISTING GROUND LINE SHALL BE THE UPPER LIMIT FOR EXCAVATION FOR STRUCTURES.

AT BACKFACE OF ABUTMENTS ALL EXCAVATED VOLUME NOT OCCUPIED BY THE NEW STRUCTURE SHALL BE BACKFILLED WITH BACKFILL STRUCTURE.

THE HAUNCH CONCRETE QUANTITY IS BASED ON THE AVERAGE HAUNCH DEPTH SHOWN ON SHEET 17, WHICH IS THE MAXIMUM HAUNCH QUANTITY FOR WHICH THE CONTRACTOR WILL BE PAID.

TOTAL ESTIMATED QUANTITIES

BID ITEM NUMBER	BID ITEM	UNIT	W. ABUT.	E. ABUT.	PIER 1	PIER 2	SUPER.	TOTAL
206.1000	EXCAVATION FOR STRUCTURES BRIDGES B-53-292	LS	----	----	----	----	----	1
206.5000	COFFERDAMS B-53-292	LS	----	----	----	----	----	1
210.0100	BACKFILL STRUCTURE	CY	180	180	----	----	----	360
502.0100	CONCRETE MASONRY BRIDGES	CY	48	48	211	211	436	954
502.1100	CONCRETE MASONRY SEAL	CY	----	----	166	166	----	332
502.3200	PROTECTIVE SURFACE TREATMENT	SY	----	----	----	----	1,400	1,400
503.0137	PRESTRESSED GIRDER TYPE I 36W-INCH	LF	----	----	----	----	1,419	1,419
505.0405	BAR STEEL REINFORCEMENT HS BRIDGES	LB	3,230	3,230	30,670	30,670	----	67,800
505.0605	BAR STEEL REINFORCEMENT HS COATED BRIDGES	LB	1,990	1,960	40	40	103,550	107,580
506.2605	BEARING PADS ELASTOMERIC NON-LAMINATED	EACH	6	6	12	12	----	36
506.4000	STEEL DIAPHRAGMS B-53-292	EACH	----	----	----	----	20	20
516.0500	RUBBERIZED MEMBRANE WATERPROOFING	SY	12	12	----	----	----	24
550.0500	PILE POINTS	EACH	12	12	40	40	----	104
550.1100	PILING STEEL HP 10-INCH x 42 LB	LF	1,080	1,080	2,800	2,800	----	7,760
606.0300	RIPRAP HEAVY	CY	310	310	----	----	----	620
612.0406	PIPE UNDERDRAIN WRAPPED 6-INCH	LF	115	115	----	----	----	230
614.0150	ANCHOR ASSEMBLIES FOR STEEL PLATE BEAM GUARD	EACH	2	2	----	----	----	4
645.0120	GEOTEXTILE FABRIC TYPE HR	SY	530	530	----	----	----	1,060
SPV.0195	SELECT CRUSHED MATERIAL FOR TRAVEL CORRIDOR	TON	50	50	----	----	----	100
999.1000.S	SEISMOGRAPH	LS	----	----	----	----	----	1
999.1500.S	CRACK AND DAMAGE SURVEY	LS	----	----	----	----	----	1
	NON-BID ITEMS							
	FILLER	SIZE	----	----	----	----	----	½" & ¾"

DESIGN DATA

LIVE LOAD:

DESIGN LOADING: HL-93
INVENTORY RATING FACTOR: 1.14
OPERATING RATING FACTOR: 1.53
WISCONSIN STANDARD PERMIT VEHICLE (WIS-SPV) = 250 KIPS

STRUCTURE IS DESIGNED FOR A FUTURE WEARING SURFACE OF 20 #/S.F.

ULTIMATE DESIGN STRESSES:

CONCRETE MASONRY { SUPERSTRUCTURE f'c = 4,000 p.s.i.; ALL OTHER f'c = 3,500 p.s.i.
HIGH STRENGTH BAR STEEL REINFORCEMENT (GRADE 60) f'y = 60,000 p.s.i.
36W" PRESTRESSED GIRDER
CONCRETE MASONRY f'c = 8,000 p.s.i.
STRANDS - 0.6" DIA. WITH ULTIMATE TENSILE STRENGTH OF Fu = 270,000 p.s.i.

HYDRAULIC DATA:

100 YEAR FLOOD

DRAINAGE AREA = 226 sq. mi.
WATERWAY AREA = 2,120 sq. ft.
V = 6.5 f.p.s.
Q_{100} = 13,769 c.f.s.
HIGH $WATER_{100}$ EL. 798.9 — REGULATORY HIGH $WATER_{100}$ EL. 799.6
HIGH $WATER_{2}$ EL. 790.2 — REGULATORY Q_{100} = 15,400 c.f.s.
RDWY. OVERFLOW = N/A
SCOUR CRITICAL CODE = 5
DATUM = NGVD88 (2007)

FOUNDATION DATA:

ABUTMENTS TO BE SUPPORTED ON HP 10 x 42 STEEL PILING (WITH PILE POINTS) DRIVEN TO A REQUIRED DRIVING RESISTANCE OF 180 TONS ‡ PER PILE AS DETERMINED BY THE MODIFIED GATES DYNAMIC FORMULA. ESTIMATED LENGTH 90'-0".

PIERS TO BE SUPPORTED ON HP 10 x 42 STEEL PILING (WITH PILE POINTS) DRIVEN TO A REQUIRED DRIVING RESISTANCE OF 180 TONS ‡ PER PILE AS DETERMINED BY THE MODIFIED GATES DYNAMIC FORMULA. ESTIMATED LENGTH 70'-0".

‡ THE FACTORED AXIAL RESISTANCE OF PILES IN COMPRESSION USED FOR DESIGN IS THE REQUIRED DRIVING RESISTANCE MULTIPLIED BY A RESISTANCE FACTOR OF 0.5 USING MODIFIED GATES TO DETERMINE DRIVEN PILE CAPACITY.

TRAFFIC DATA:

A.D.T. = 2,200 (2015)
A.D.T. = 6,000 (2035)
R.D.S. = 50 M.P.H.

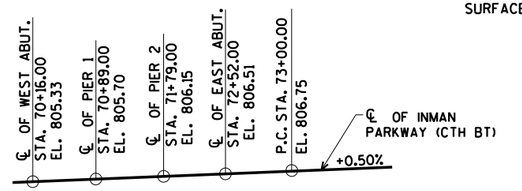

PROFILE GRADE LINE
INMAN PARKWAY (CTH BT)

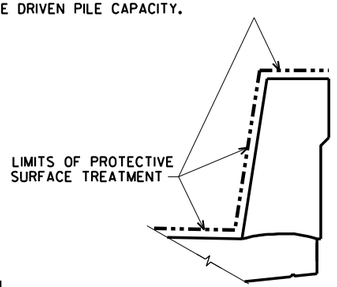

PROTECTIVE SURFACE TREATMENT DETAIL

BENCH MARK:
R.R. SPK W FACE OF PP, 65' N-NW OF NW COR OF HOUSE
STA. 404+00.13 'CR', 30' RT
EL. 804.28

NO.	DATE	REVISION	BY

STATE OF WISCONSIN
DEPARTMENT OF TRANSPORTATION

STRUCTURE B-53-292

DRAWN BY CLS | PLANS CK'D. DRJ

TYPICAL SECTION AND NOTES

SHEET 2 OF 21
153

ORIGINAL PLANS PREPARED BY
AYRES ASSOCIATES
3433 Oakwood Hills Parkway
Eau Claire, WI 54701
www.AyresAssociates.com

8

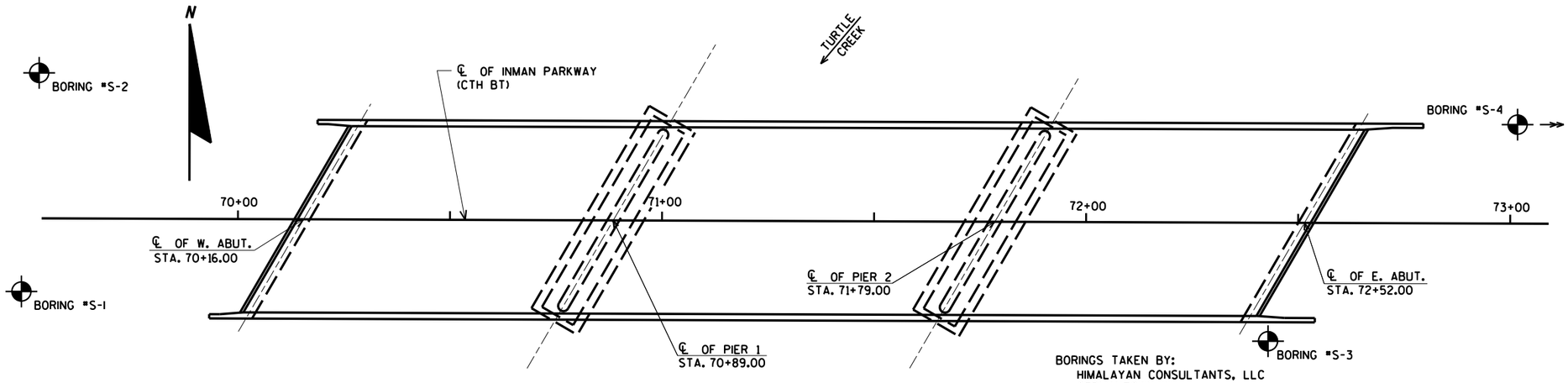

BORINGS TAKEN BY:
HIMALAYAN CONSULTANTS, LLC
GERMANTOWN, WI
SEPTEMBER 18-20, 24-25, 2013

GEOTECHNICAL REPORT BY:
HIMALAYAN CONSULTANTS, LLC
GERMANTOWN, WI
NOVEMBER 21, 2013

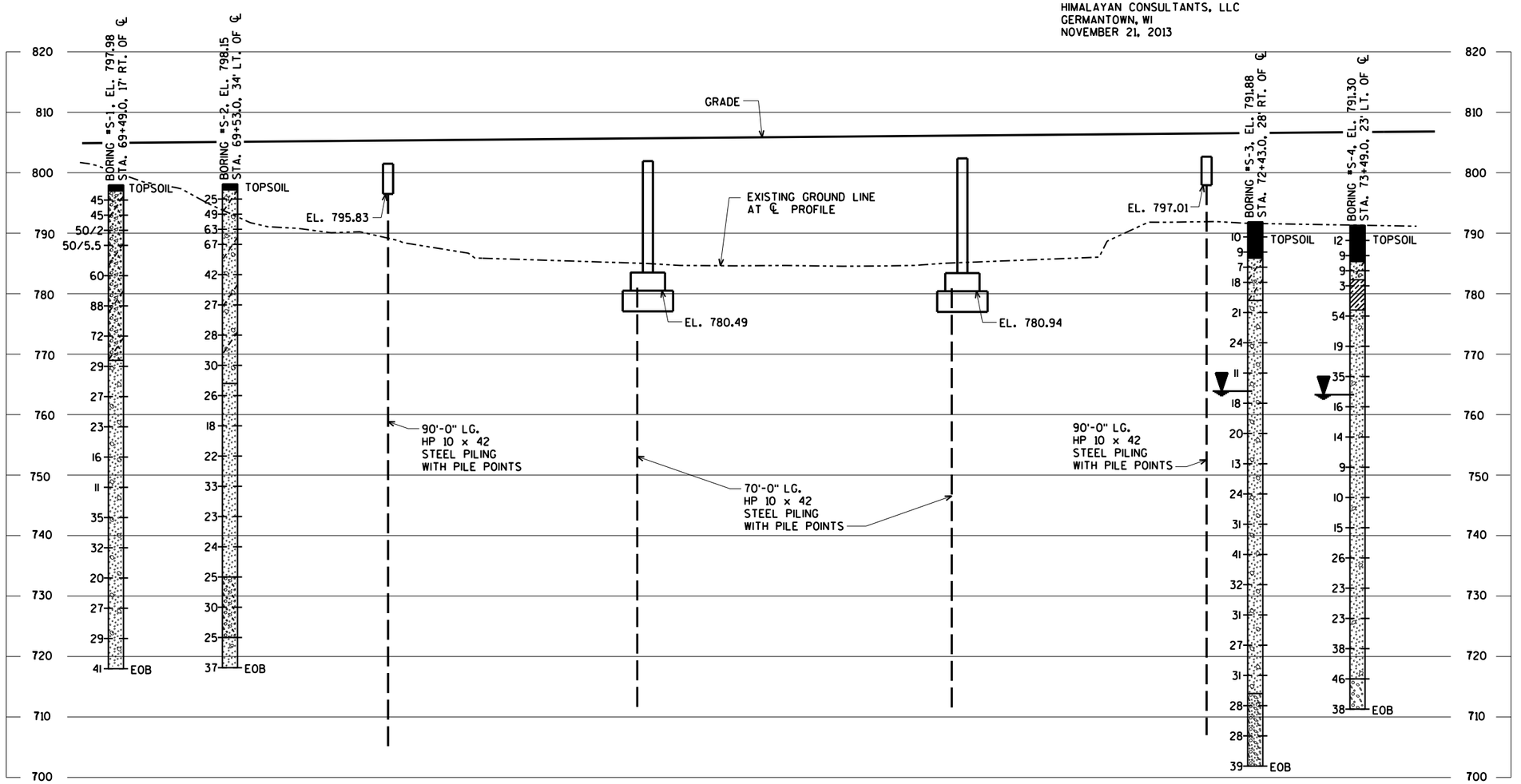

STATE PROJECT NUMBER

5989-05-71

ABBREVIATIONS

F — FINE M — MEDIUM C — COARSE
WS — WEATHERED SO — SOUND

MATERIAL SYMBOLS

TOPSOIL, SILT, SANDSTONE
SAND, PEAT, LIMESTONE
GRAVEL, CLAY, IGNEOUS ROCK

LEGEND OF PROBING

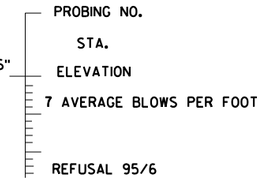

LEGEND OF BORING

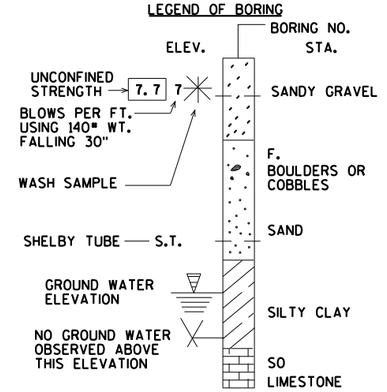

UNLESS OTHERWISE SPECIFIED, THE BLOWS PER FOOT AT THE LOCATIONS INDICATED ARE BASED ON DRIVING A 2" O.D. X 1.4" I.D. SPLIT SPOON SAMPLER WITH A 140# HAMMER HAVING A FREE FALL OF 30". THE BLOW COUNT IS TAKEN IN UNDISTURBED SOIL IMMEDIATELY BELOW A CASED OR OPEN HOLE ELIMINATING SIDE FRICTION ON THE DRIVE PIPE.

SUBSURFACE EXPLORATION FOR FOUNDATION DESIGN AND BIDDERS INFORMATION

TO OBTAIN RELATIVE DATA CONCERNING THE CHARACTER OF MATERIAL IN AND UPON WHICH THE FOUNDATION MIGHT BE BUILT, BORINGS AND/OR SOUNDINGS WERE MADE AT POINTS APPROXIMATELY AS INDICATED ON THIS DRAWING. THE DATA PRESENTED HEREIN REPRESENTS THE FINDINGS OF THE SUBSURFACE EXPLORATIONS MADE. HOWEVER, BECAUSE THE DEPTHS INVESTIGATED ARE LIMITED AND THE AREA OF THE BORINGS AND/OR SOUNDINGS IS VERY SMALL IN RELATION TO THE ENTIRE AREA, THE WISCONSIN DEPARTMENT OF TRANSPORTATION DOES NOT WARRANT CONDITIONS BELOW THE DEPTHS INVESTIGATED OR THAT THE CLASSIFICATION OF MATERIAL ENCOUNTERED IN THESE INVESTIGATIONS IS NECESSARILY TYPICAL OF THE ENTIRE SITE.

NO.	DATE	REVISION	BY

STATE OF WISCONSIN
DEPARTMENT OF TRANSPORTATION

STRUCTURE B-53-292

DRAWN BY CLS | PLANS CK'D. DRJ

SUBSURFACE EXPLORATION

SHEET 3 OF 21
154

8

8

NOTE: SEAL ALL EXPOSED HORIZONTAL AND VERTICAL SURFACES OF ½" FILLER WITH NON-STAINING GRAY NON-BITUMINOUS JOINT SEALER. (1" DEEP AND HOLD ⅛" BELOW SURFACE OF CONCRETE.) EXTEND SEALER 3" BELOW GUTTER LINE AT INSIDE FACE.

STATE PROJECT NUMBER

5989-05-71

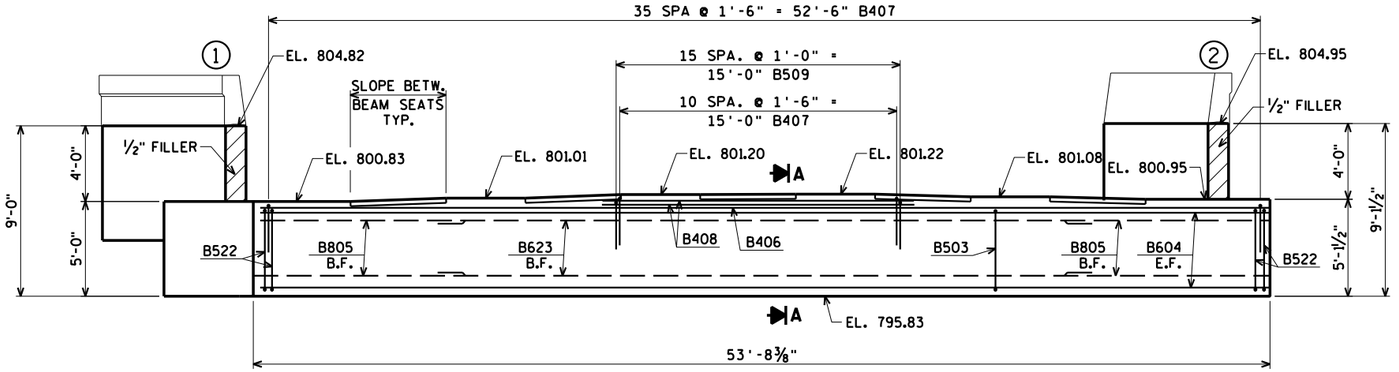

ELEVATION
(LOOKING WEST)

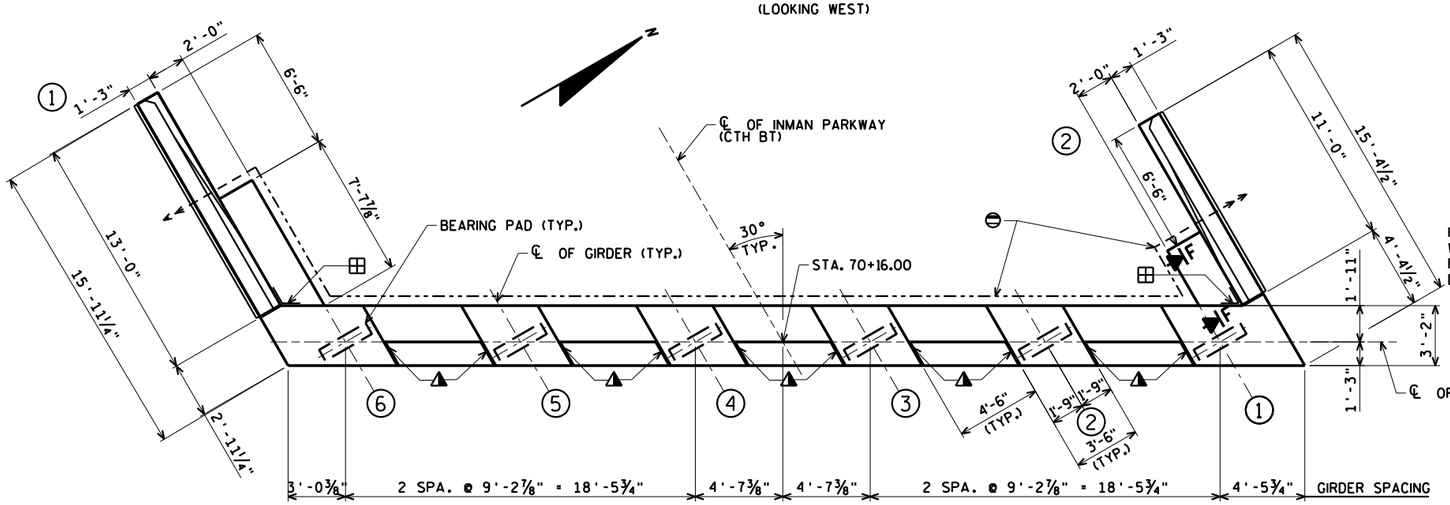

PLAN

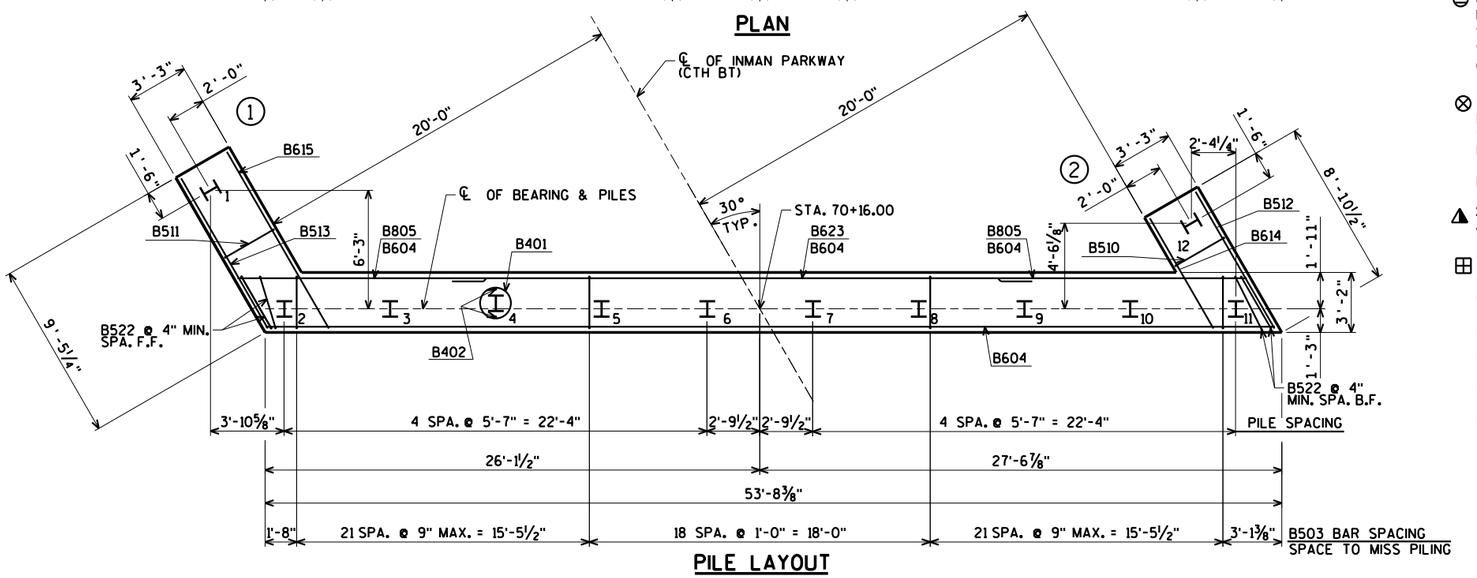

PILE LAYOUT

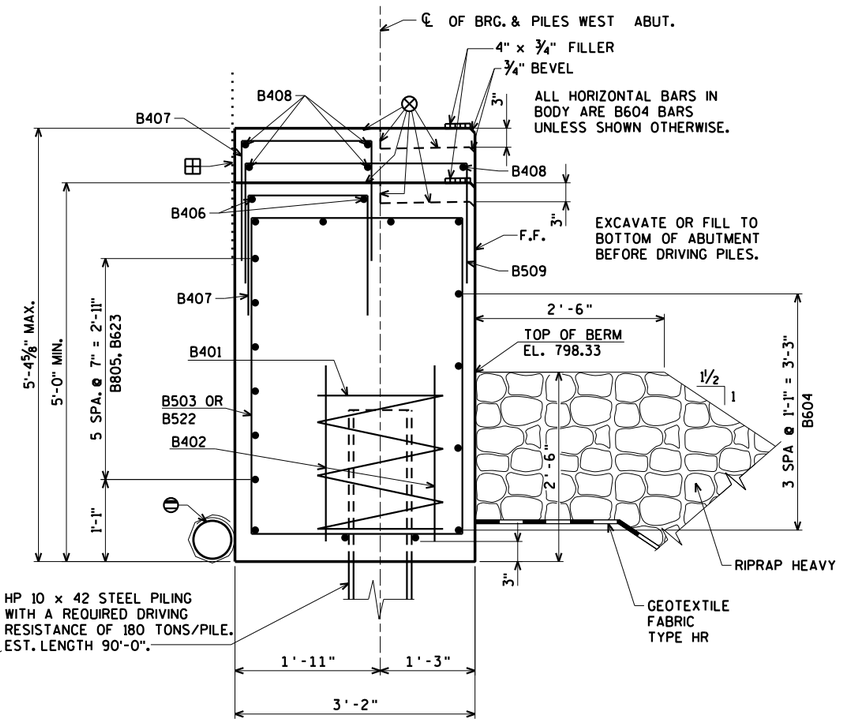

SECTION A-A

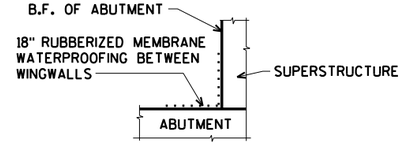

SECTION F

⊖ PIPE UNDERDRAIN WRAPPED 6-INCH. SLOPE 0.5% MIN. TO SUITABLE DRAINAGE. ATTACH RODENT SHIELD AT ENDS OF PIPE UNDERDRAIN. RODENT SHIELD TO BE INCLUDED IN BID PRICE. SEE DETAIL ON SHEET 5.

⊗ STEEL TROWEL TOP SURFACE OF ABUTMENT. PLACE MULTIPLE LAYERS OF POLYETHYLENE SHEETS OVER ENTIRE ABUTMENT TOP BEFORE PLACING BEARING PADS AND SUPERSTRUCTURE. TOTAL THICKNESS OF SHEETS SHALL BE AT LEAST 0.03".

▲ ¾" CORK FILLER ON VERTICAL BEAM SEAT FACES THAT RUN PARALLEL WITH GIRDER.

⊞ 18" RUBBERIZED MEMBRANE WATERPROOFING SEAL ALL HORIZONTAL AND VERTICAL JOINTS ON BACK FACE OF ABUTMENT.

FOR PILE SPLICE DETAIL SEE SHEET 9.

F.F. DENOTES FRONT FACE

B.F. DENOTES BACK FACE

E.F. DENOTES EACH FACE

NO.	DATE	REVISION	BY

STATE OF WISCONSIN
DEPARTMENT OF TRANSPORTATION

STRUCTURE B-53-292

DRAWN BY AAM | PLANS CK'D. DRJ

WEST ABUTMENT

SHEET 4 OF 21
155

ORIGINAL PLANS PREPARED BY
AYRES ASSOCIATES
3433 Oakwood Hills Parkway
Eau Claire, WI 54701
www.AyresAssociates.com

8/27/2014

STATE PROJECT NUMBER

5989-05-71

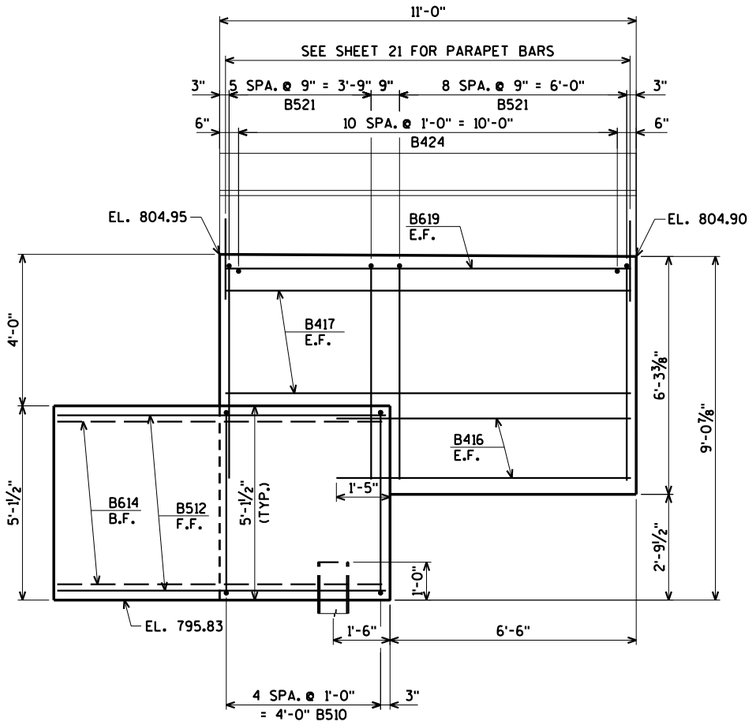

ELEVATION - WING 2

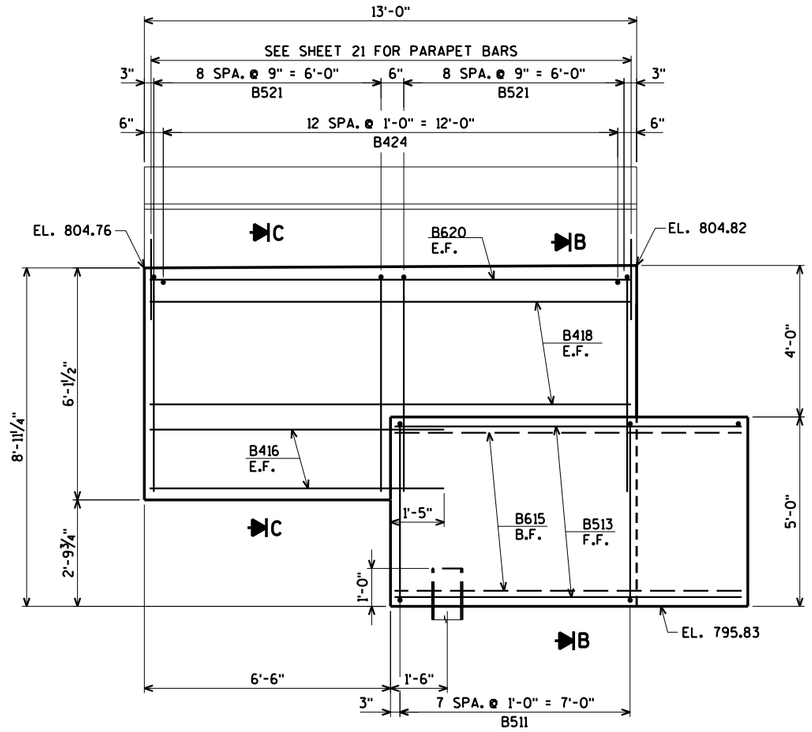

ELEVATION - WING 1

BILL OF BARS

BAR. NO.	COATED BAR	NO. REQ'D.	LENGTH	BENT BAR	BUNDLED BAR SERIES	1,990# COATED 3,230# UNCOATED LOCATION
B401		10	28-0	X		BODY @ PILES
B402		20	2-3			BODY @ PILES
B503		61	14-9	X		BODY VERT.
B604		11	53-4			BODY HORIZ.
B805		12	13-0			BODY HORIZ. @ WINGS
B406		2	53-4			BODY HORIZ.
B407		47	4-9	X		BODY VERT.
B408		5	16-6			BODY HORIZ.
B509		16	5-11	X		BODY VERT.
B510	X	5	15-5	X		WING 2 VERT.
B511	X	8	15-3	X		WING 1 VERT.
B512	X	5	8-4			WING 2 HORIZ. F.F.
B513	X	5	9-2			WING 1 HORIZ. F.F.
B614	X	10	6-8			WING 2 HORIZ. B.F.
B615	X	10	9-8			WING 1 HORIZ. B.F.
B416	X	16	7-9			WING 1 & 2 HORIZ. E.F.
B417	X	8	10-8			WING 2 HORIZ. E.F.
B418	X	8	12-8			WING 1 HORIZ. E.F.
B619	X	2	10-8			WING 2 HORIZ. TOP
B620	X	2	12-8			WING 1 HORIZ. TOP
B521	X	33	12-2	X		WING 1 & 2 VERT.
B522		4	15-5	X		BODY VERT. AT ENDS
B623		6	37-6			BODY HORIZ. B.F.
B424	X	24	2-0			WING DOWELS

BENDING DIMENSIONS ARE OUT TO OUT OF BARS.

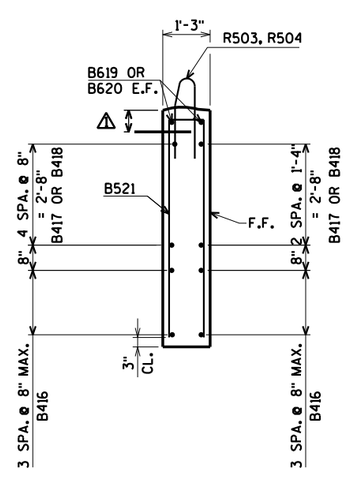

SECTION B AT WING 1
WING 2 SIMILAR

SECTION C AT WING 1
WING 2 SIMILAR

- △ 3" MIN. TO 6" MAX. SEE CONCRETE SURFACE DRAIN S.D.D.
- ◔ ¾" V-GROOVE ON FRONT FACE OF WINGWALL
- ● OPT. KEYED CONST. JOINT - FORMED BY A BEVELED 2" x 6".
- ⊞ 18" RUBBERIZED MEMBRANE WATERPROOFING SEAL ALL HORIZONTAL AND VERTICAL JOINTS ON BACKFACE OF ABUTMENT.

F.F. DENOTES FRONT FACE

B.F. DENOTES BACK FACE

E.F. DENOTES EACH FACE

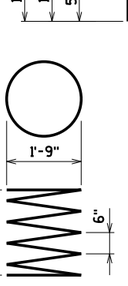

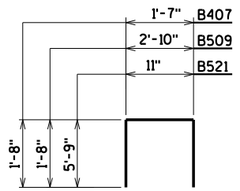

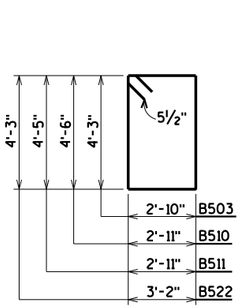

NO.	DATE	REVISION	BY

STATE OF WISCONSIN
DEPARTMENT OF TRANSPORTATION

STRUCTURE B-53-292

DRAWN BY AAM | PLANS CK'D. DRJ

WEST ABUTMENT DETAILS

SHEET 5 OF 21
156

ORIGINAL PLANS PREPARED BY
AYRES ASSOCIATES
3433 Oakwood Hills Parkway
Eau Claire, WI 54701
www.AyresAssociates.com

8

8

8/27/2014

NOTE: SEAL ALL EXPOSED HORIZONTAL AND VERTICAL SURFACES OF ½" FILLER WITH NON-STAINING GRAY NON-BITUMINOUS JOINT SEALER. (1" DEEP AND HOLD ⅛" BELOW SURFACE OF CONCRETE.) EXTEND SEALER 3" BELOW GUTTER LINE AT INSIDE FACE.

STATE PROJECT NUMBER

5989-05-71

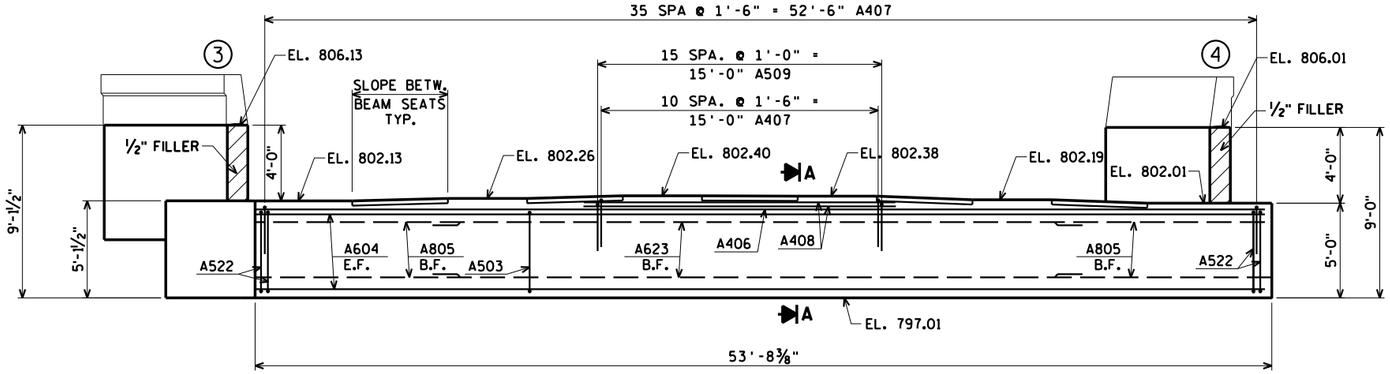

ELEVATION
(LOOKING EAST)

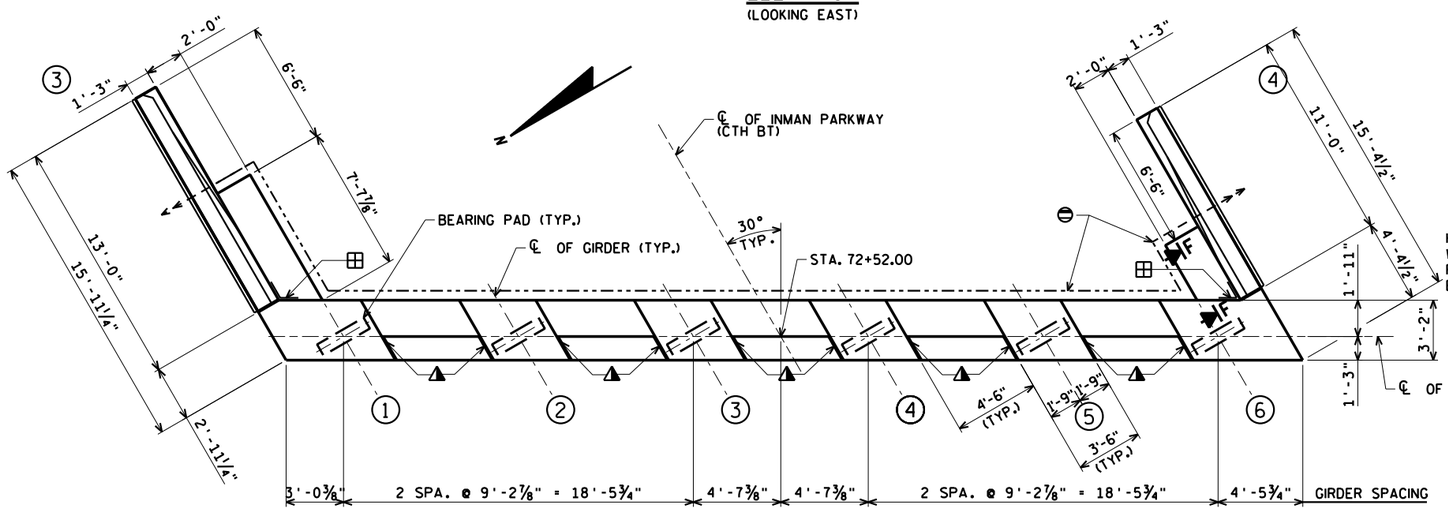

PLAN

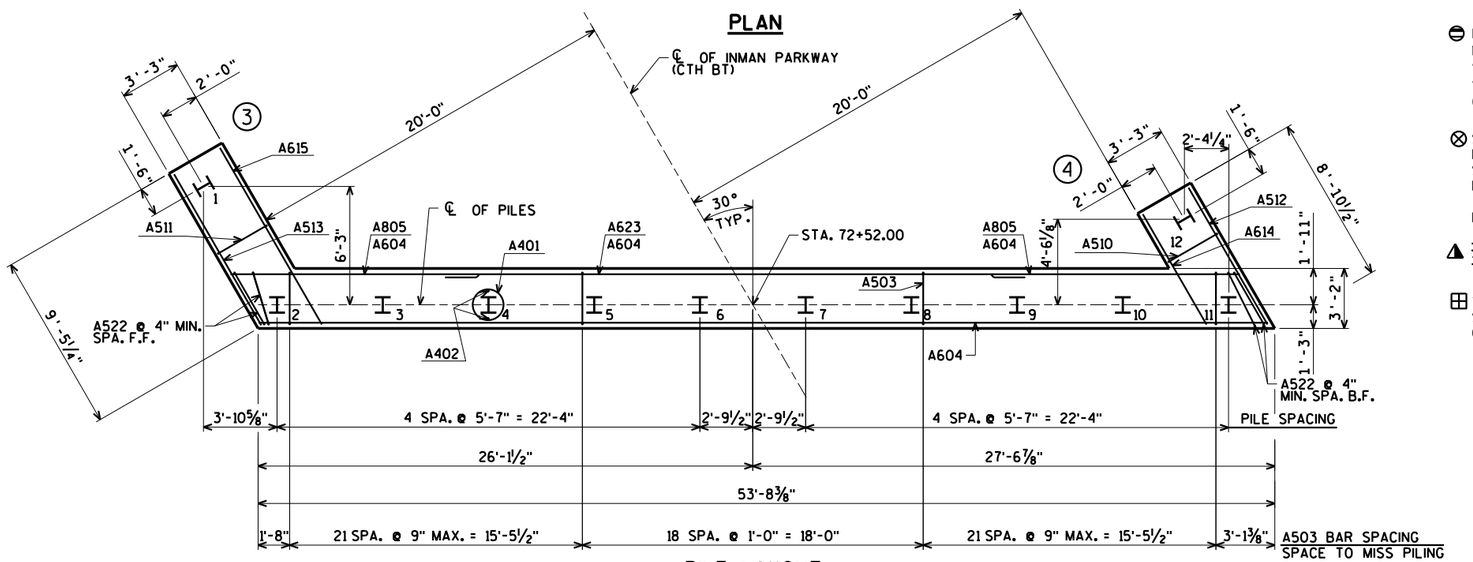

PILE LAYOUT

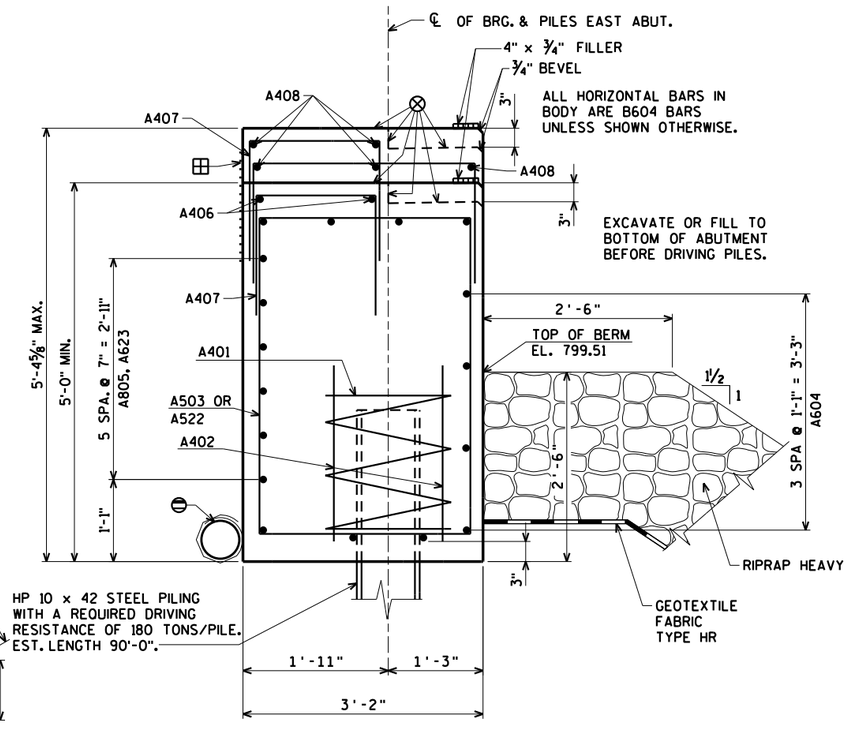

SECTION A-A

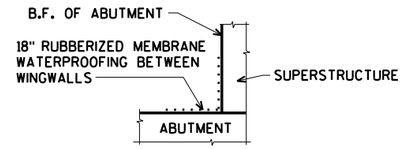

SECTION F

⊖ PIPE UNDERDRAIN WRAPPED 6-INCH. SLOPE 0.5% MIN. TO SUITABLE DRAINAGE. ATTACH RODENT SHIELD AT ENDS OF PIPE UNDERDRAIN. RODENT SHIELD TO BE INCLUDED IN BID PRICE. SEE DETAIL ON SHEET 7.

⊗ STEEL TROWEL TOP SURFACE OF ABUTMENT. PLACE MULTIPLE LAYERS OF POLYETHYLENE SHEETS OVER ENTIRE ABUTMENT TOP BEFORE PLACING BEARING PADS AND SUPERSTRUCTURE. TOTAL THICKNESS OF SHEETS SHALL BE AT LEAST 0.03".

▲ ¾" CORK FILLER ON VERTICAL BEAM SEAT FACES THAT RUN PARALLEL WITH GIRDER.

⊞ 18" RUBBERIZED MEMBRANE WATERPROOFING SEAL ALL HORIZONTAL AND VERTICAL JOINTS ON BACK FACE OF ABUTMENT.

FOR PILE SPLICE DETAIL SEE SHEET 9.

F.F. DENOTES FRONT FACE

B.F. DENOTES BACK FACE

E.F. DENOTES EACH FACE

NO.	DATE	REVISION	BY

STATE OF WISCONSIN
DEPARTMENT OF TRANSPORTATION

STRUCTURE B-53-292

DRAWN BY AAM | PLANS CK'D. DRJ

EAST ABUTMENT

SHEET 6 OF 21
157

ORIGINAL PLANS PREPARED BY
AYRES ASSOCIATES
3433 Oakwood Hills Parkway
Eau Claire, WI 54701
www.AyresAssociates.com

8

8

8/27/2014

STATE PROJECT NUMBER

5989-05-71

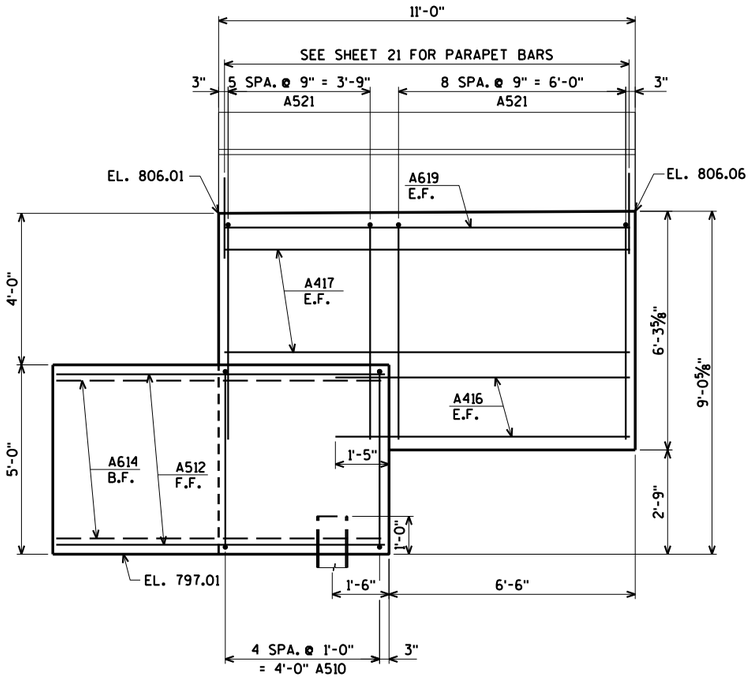

ELEVATION - WING 4

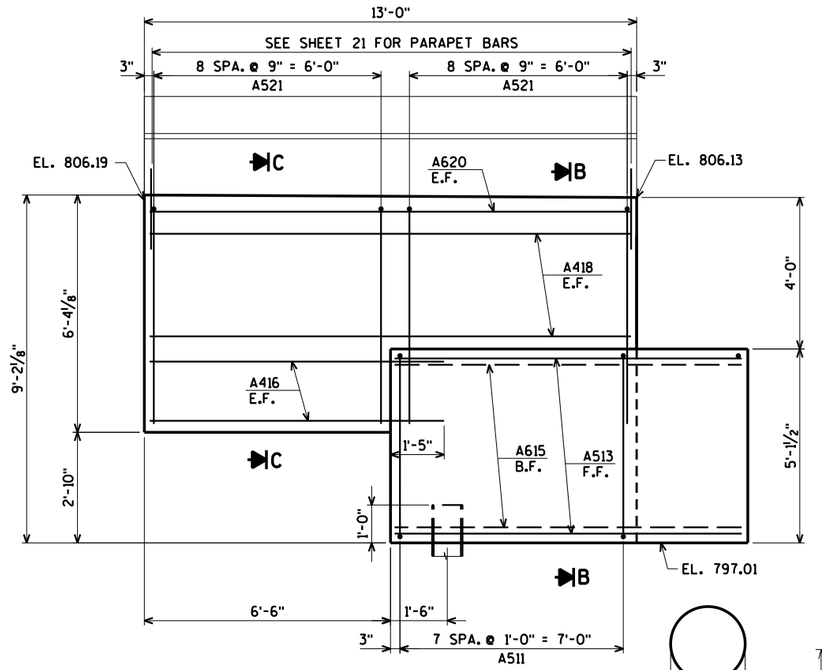

ELEVATION - WING 3

BILL OF BARS

BAR. NO.	COATED BAR	NO. REQ'D.	LENGTH	BENT BAR	BUNDLED BAR SERIES	1,960# COATED 3,230# UNCOATED LOCATION
A401		10	28-0	X		BODY @ PILES
A402		20	2-3			BODY @ PILES
A503		61	14-9	X		BODY VERT.
A604		11	53-4			BODY HORIZ.
A805		12	13-0			BODY HORIZ. @ WINGS
A406		2	53-4			BODY HORIZ.
A407		47	4-9	X		BODY VERT.
A408		5	16-6			BODY HORIZ.
A509		16	5-11	X		BODY VERT.
A510	X	5	15-3	X		WING 4 VERT.
A511	X	8	15-5	X		WING 3 VERT.
A512	X	5	8-4			WING 4 HORIZ. F.F.
A513	X	5	9-2			WING 3 HORIZ. F.F.
A614	X	10	6-8			WING 4 HORIZ. B.F.
A615	X	10	9-8			WING 3 HORIZ. B.F.
A416	X	16	7-9			WING 3 & 4 HORIZ. E.F.
A417	X	8	10-8			WING 4 HORIZ. E.F.
A418	X	8	12-8			WING 3 HORIZ. E.F.
A619	X	2	10-8			WING 4 HORIZ. TOP
A620	X	2	12-8			WING 3 HORIZ. TOP
A521	X	33	12-4	X		WING 3 & 4 VERT.
A522		4	15-5	X		BODY VERT. AT ENDS
A623		6	37-6			BODY HORIZ. B.F.

BENDING DIMENSIONS ARE OUT TO OUT OF BARS.

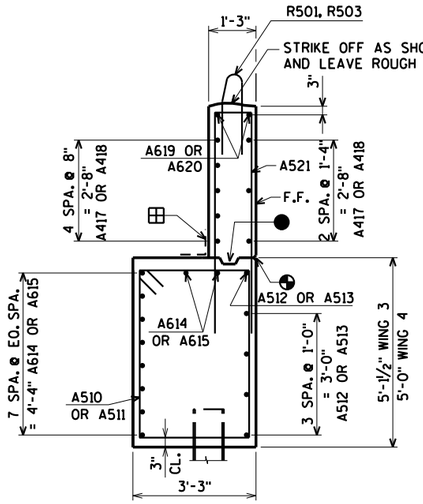

SECTION B AT WING 3
WING 4 SIMILAR

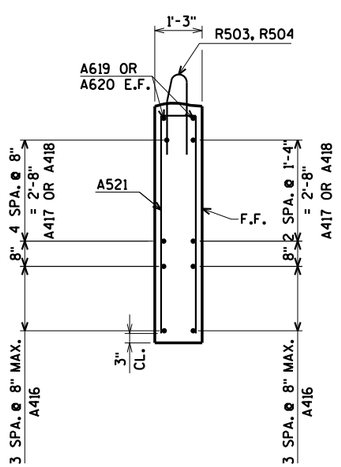

SECTION C AT WING 3
WING 4 SIMILAR

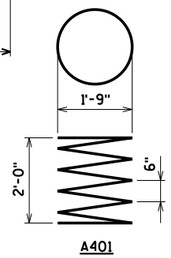

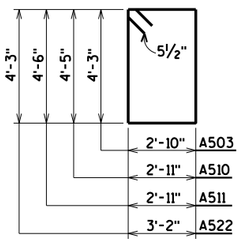

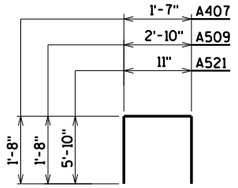

⊕ ¾" V-GROOVE ON FRONT FACE OF WINGWALL

F.F. DENOTES FRONT FACE

B.F. DENOTES BACK FACE

E.F. DENOTES EACH FACE

⊞ 18" RUBBERIZED MEMBRANE WATERPROOFING SEAL ALL HORIZONTAL AND VERTICAL JOINTS ON BACKFACE OF ABUTMENT.

● OPT. KEYED CONST. JOINT - FORMED BY A BEVELED 2" x 6".

NO.	DATE	REVISION	BY

STATE OF WISCONSIN
DEPARTMENT OF TRANSPORTATION

STRUCTURE B-53-292

DRAWN BY AAM | PLANS CK'D. DRJ

EAST ABUTMENT DETAILS

SHEET 7 OF 21
158

ORIGINAL PLANS PREPARED BY
AYRES ASSOCIATES
3433 Oakwood Hills Parkway
Eau Claire, WI 54701
www.AyresAssociates.com

8/27/2014

8

8

STATE PROJECT NUMBER

5989-05-71

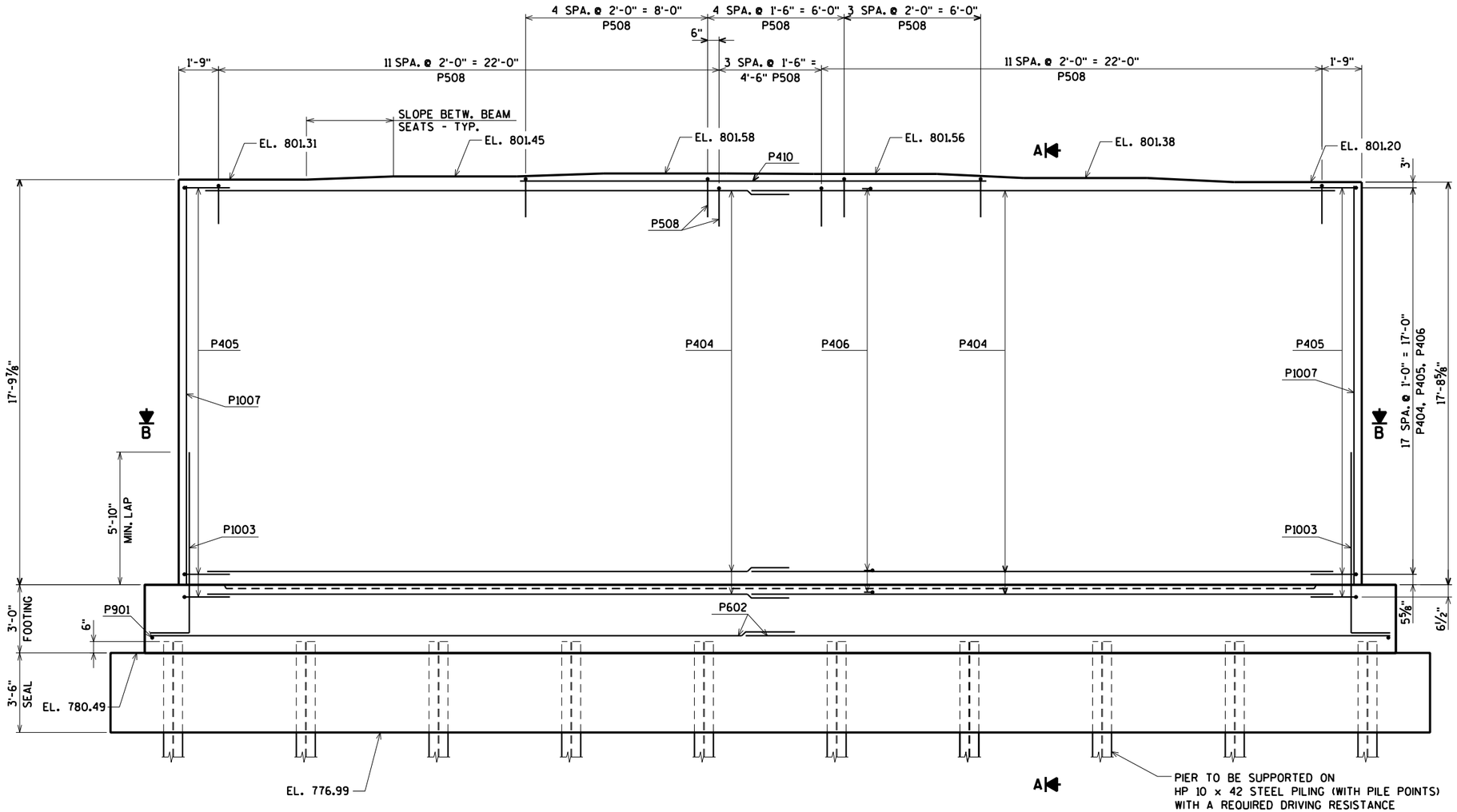

ELEVATION
(LOOKING EAST)

P509 BARS MAY BE PLACED AFTER PIER IS POURED BUT BEFORE CONC. HAS SET. EMBED BARS 1'-0".

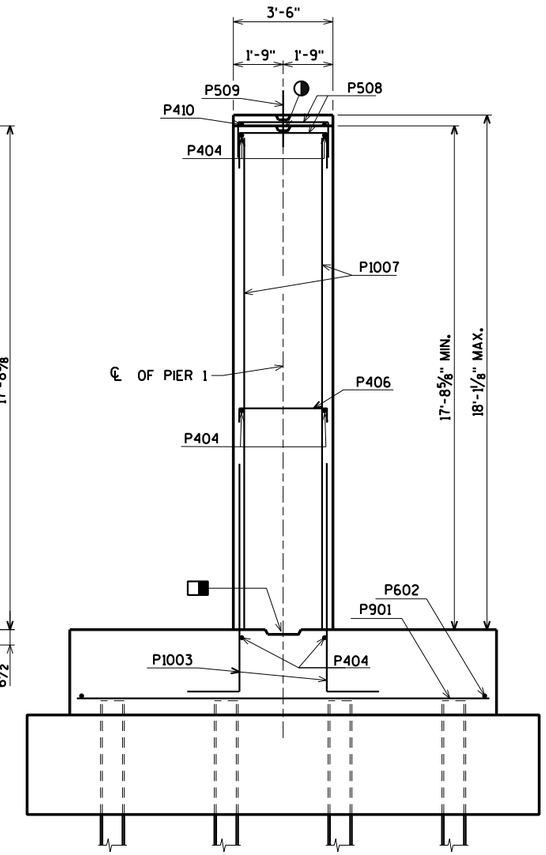

SECTION A

FOR SECTION "B" SEE SHEET 10

◑ KEYED CONST. JOINT - BEVELED 2" x 6".

FOR PILE SPLICE DETAIL SEE SHEET 9.

◨ KEYED CONST. JOINT - BEVELED 4" x 1'-3" x 48'-0".

NO.	DATE	REVISION	BY

STATE OF WISCONSIN
DEPARTMENT OF TRANSPORTATION

STRUCTURE B-53-292

DRAWN BY AAM | PLANS CK'D. DRJ

PIER 1

SHEET 8 OF 21
159

ORIGINAL PLANS PREPARED BY
AYRES ASSOCIATES
3433 Oakwood Hills Parkway
Eau Claire, WI 54701
www.AyresAssociates.com

8/27/2014

STATE PROJECT NUMBER

5989-05-71

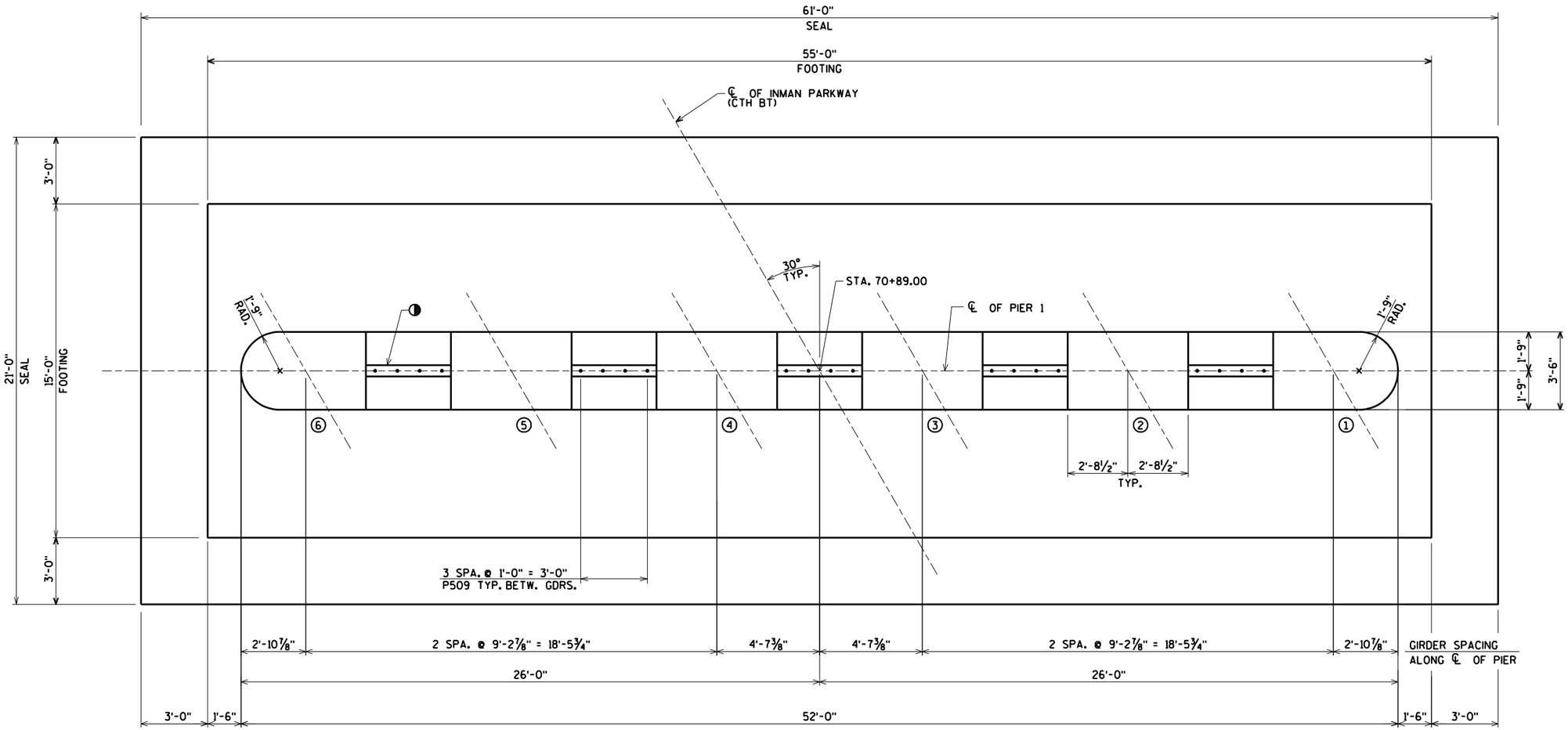

PLAN

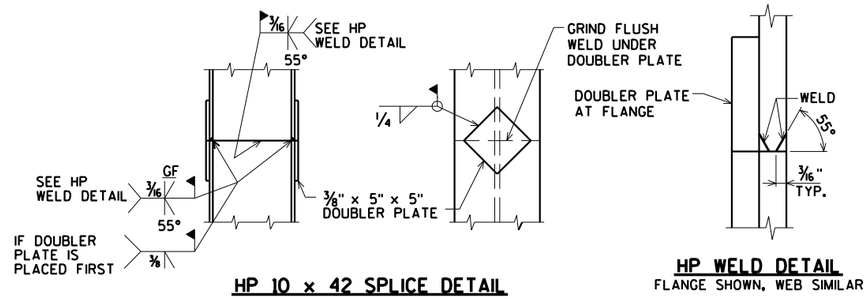

HP 10 x 42 SPLICE DETAIL

HP WELD DETAIL
FLANGE SHOWN, WEB SIMILAR

◑ KEYED CONST. JOINT - FORMED
BEVELED 2" x 6".

NO.	DATE	REVISION	BY

STATE OF WISCONSIN
DEPARTMENT OF TRANSPORTATION

STRUCTURE B-53-292

DRAWN BY AAM | PLANS CK'D. DRJ

PIER 1 PLAN

SHEET 9 OF 21
160

ORIGINAL PLANS PREPARED BY
AYRES ASSOCIATES
3433 Oakwood Hills Parkway
Eau Claire, WI 54701
www.AyresAssociates.com

11/18/2014

STATE PROJECT NUMBER

5989-05-71

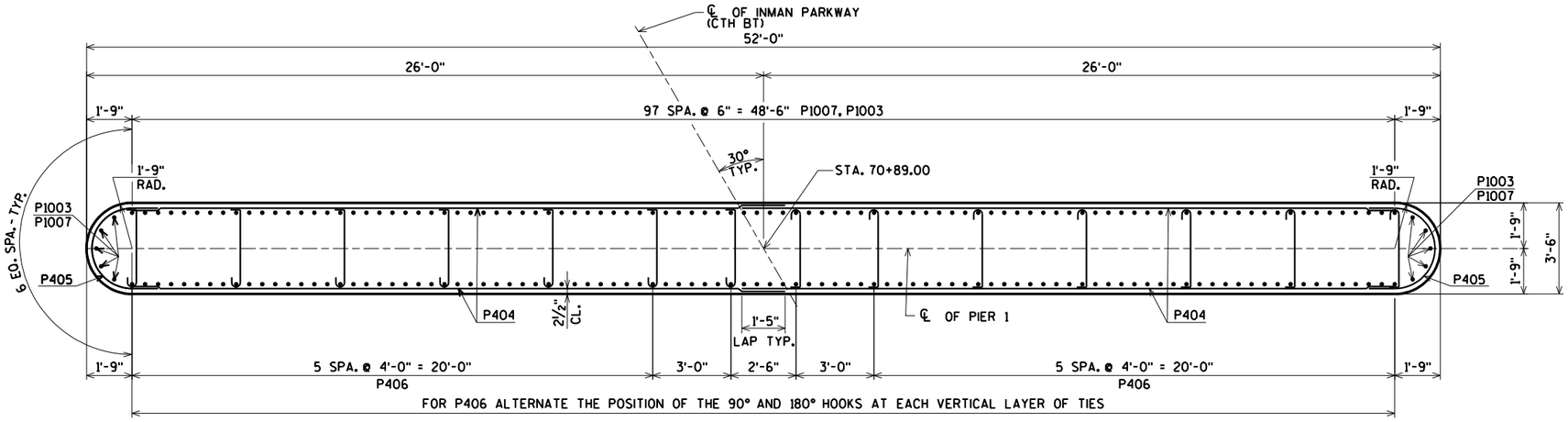

BILL OF BARS

BAR. NO.	COATED BAR	NO. REQ'D.	LENGTH	BENT BAR	BUNDLED BAR	SERIES	30,670# UNCOATED 40# COATED — LOCATION
P901		55	14-6				FOOTING
P602		30	28-5				FOOTING
P1003		206	9-10	X			FOOTING DOWELS
P404		76	25-1				FOOTING & COLUMN HORIZ.
P405		38	7-8	X			FOOTING & COLUMN HORIZ.
P406		266	3-11	X			FOOTING & COLUMN TIES
P1007		206	17-6				COLUMN VERT.
P508		38	6-4	X			COLUMN TOP
P509	X	20	2-0				COLUMN DOWELS
P410		2	20-6				COLUMN HORIZ.

BENDING DIMENSIONS ARE OUT TO OUT OF BARS.

SECTION B

FOR LOCATION OF SECTION "B" SEE SHEET 8

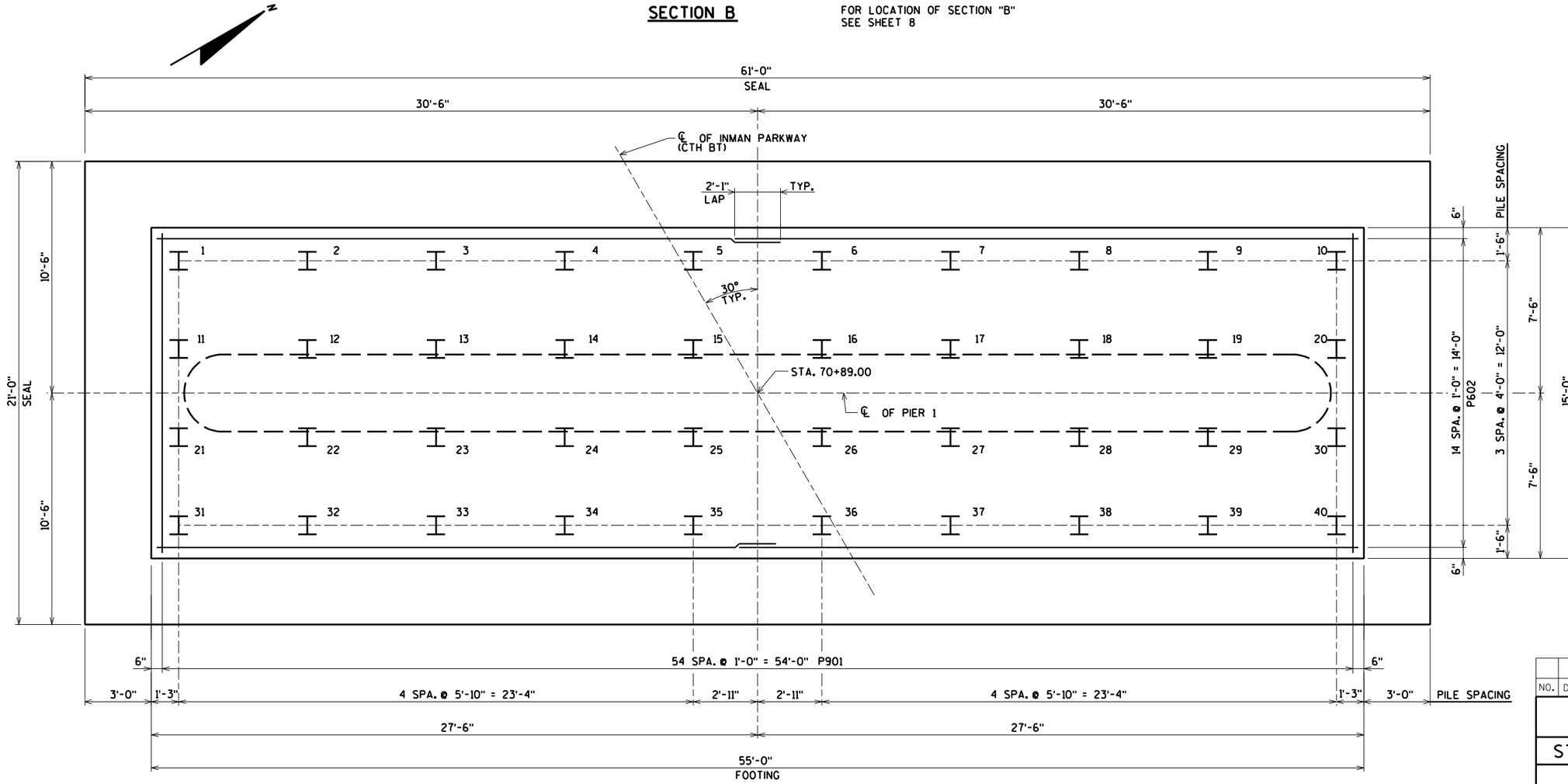

PILE LAYOUT

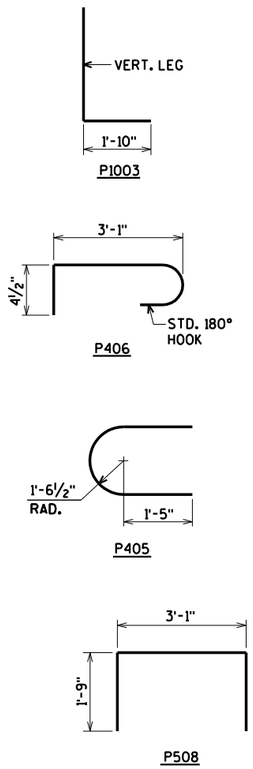

NO.	DATE	REVISION	BY

STATE OF WISCONSIN
DEPARTMENT OF TRANSPORTATION

STRUCTURE B-53-292

DRAWN BY AAM | PLANS CK'D. DRJ

PIER 1 DETAILS & BILL OF BARS

SHEET 10 OF 21
161

ORIGINAL PLANS PREPARED BY
AYRES ASSOCIATES
3433 Oakwood Hills Parkway
Eau Claire, WI 54701
www.AyresAssociates.com

11/18/2014

8

8

STATE PROJECT NUMBER

5989-05-71

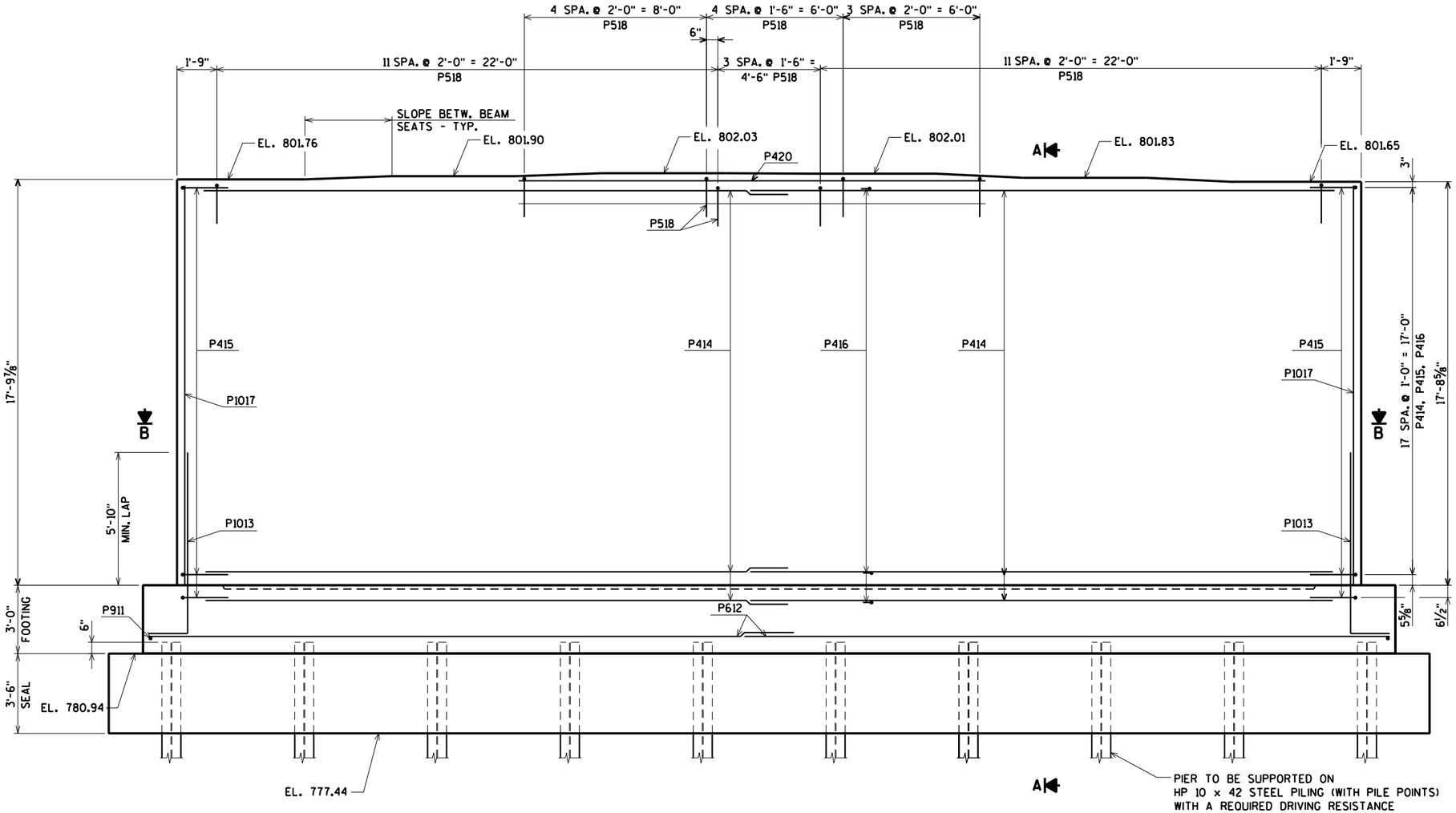

ELEVATION
(LOOKING EAST)

P519 BARS MAY BE PLACED AFTER PIER IS POURED BUT BEFORE CONC. HAS SET. EMBED BARS 1'-0".

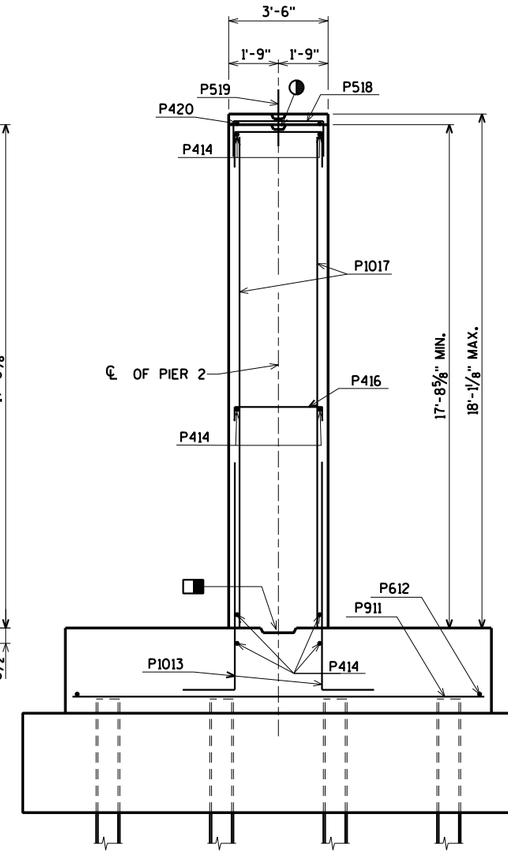

SECTION A

FOR SECTION "B" SEE SHEET 13

◑ KEYED CONST. JOINT - BEVELED 2" x 6".

FOR PILE SPLICE DETAIL SEE SHEET 9.

◨ KEYED CONST. JOINT - BEVELED 4" x 1'-3" x 48'-0".

NO.	DATE	REVISION	BY

STATE OF WISCONSIN
DEPARTMENT OF TRANSPORTATION

STRUCTURE B-53-292

DRAWN BY AAM | PLANS CK'D. DRJ

PIER 2

SHEET 11 OF 21
162

ORIGINAL PLANS PREPARED BY
AYRES ASSOCIATES
3433 Oakwood Hills Parkway
Eau Claire, WI 54701
www.AyresAssociates.com

8/27/2014

STATE PROJECT NUMBER
5989-05-71

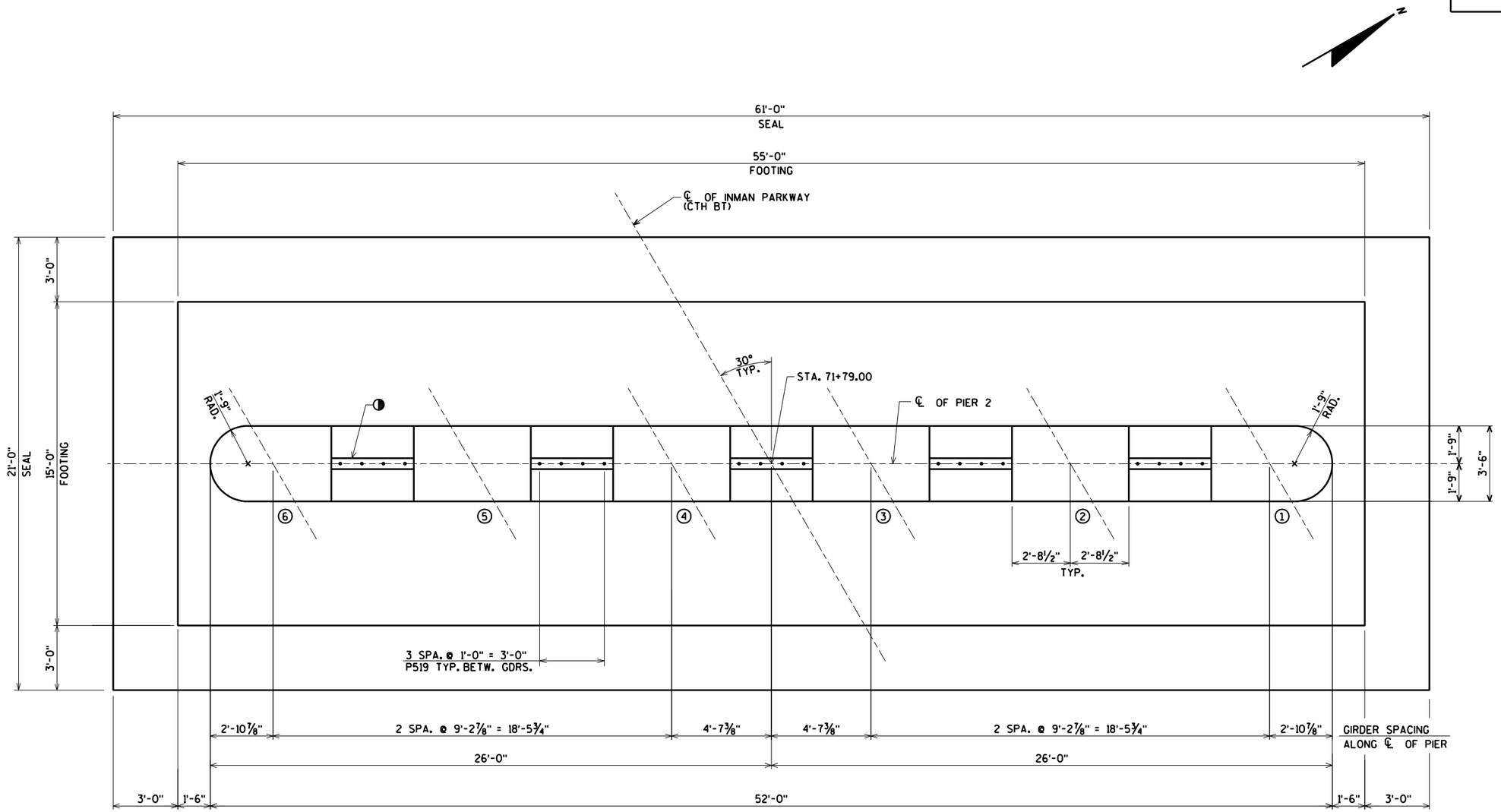

PLAN

◑ KEYED CONST. JOINT - BEVELED 2" x 6".

8

8

NO.	DATE	REVISION	BY

STATE OF WISCONSIN
DEPARTMENT OF TRANSPORTATION

STRUCTURE B-53-292

DRAWN BY AAM | PLANS CK'D. DRJ

PIER 2 PLAN

SHEET 12 OF 21
163

ORIGINAL PLANS PREPARED BY
AYRES ASSOCIATES
3433 Oakwood Hills Parkway
Eau Claire, WI 54701
www.AyresAssociates.com

11/18/2014

STATE PROJECT NUMBER

5989-05-71

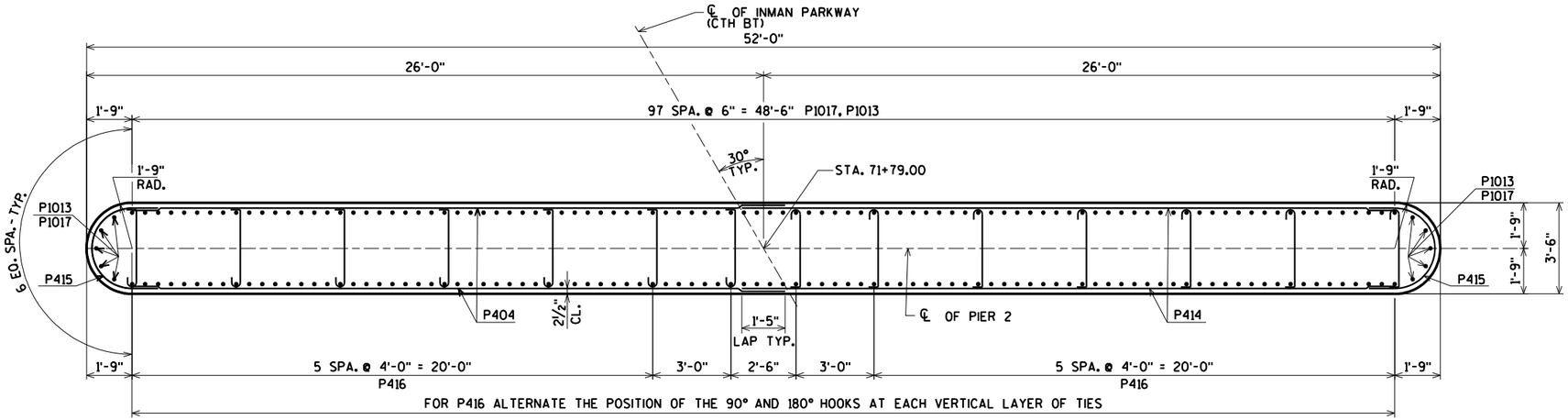

BILL OF BARS

BAR. NO.	COATED BAR	NO. REQ'D.	LENGTH	BENT BAR	BUNDLED	BAR SERIES	30.670# UNCOATED 40# COATED — LOCATION
P911		55	14-6				FOOTING
P612		30	28-5				FOOTING
P1013		206	9-10	X			FOOTING DOWELS
P414		76	25-1				FOOTING & COLUMN HORIZ.
P415		38	7-8	X			FOOTING & COLUMN HORIZ.
P416		266	3-11	X			FOOTING & COLUMN TIES
P1017		206	17-6				COLUMN VERT.
P518		38	6-4	X			COLUMN TOP
P519	X	20	2-0				COLUMN DOWELS
P420		2	20-6				COLUMN HORIZ.

BENDING DIMENSIONS ARE OUT TO OUT OF BARS.

SECTION B

FOR LOCATION OF SECTION "B" SEE SHEET 11

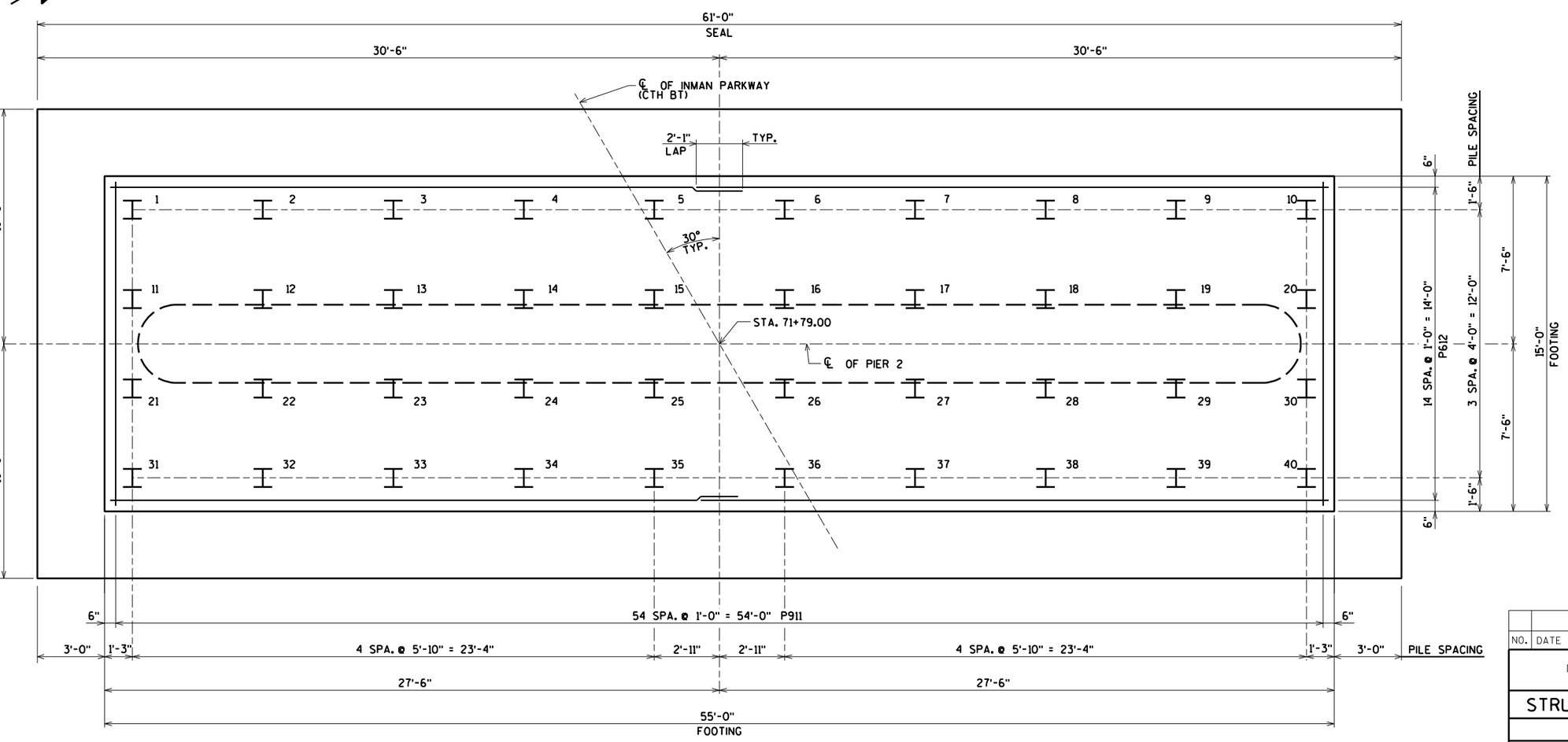

PILE LAYOUT

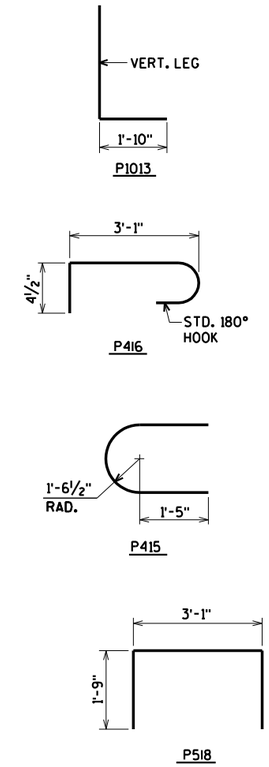

NO.	DATE	REVISION	BY

STATE OF WISCONSIN
DEPARTMENT OF TRANSPORTATION

STRUCTURE B-53-292

DRAWN BY AAM | PLANS CK'D. DRJ

PIER 2 DETAILS & BILL OF BARS

SHEET 13 OF 21
164

ORIGINAL PLANS PREPARED BY
AYRES ASSOCIATES
3433 Oakwood Hills Parkway
Eau Claire, WI 54701
www.AyresAssociates.com

11/18/2014

8

8

STATE PROJECT NUMBER

5989-05-71

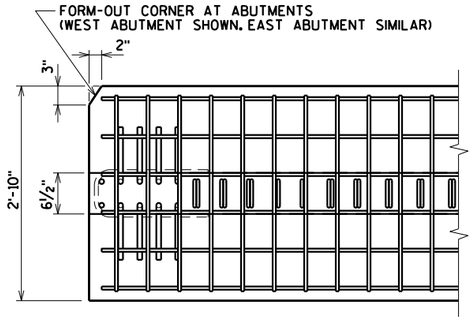

TOP FLANGE

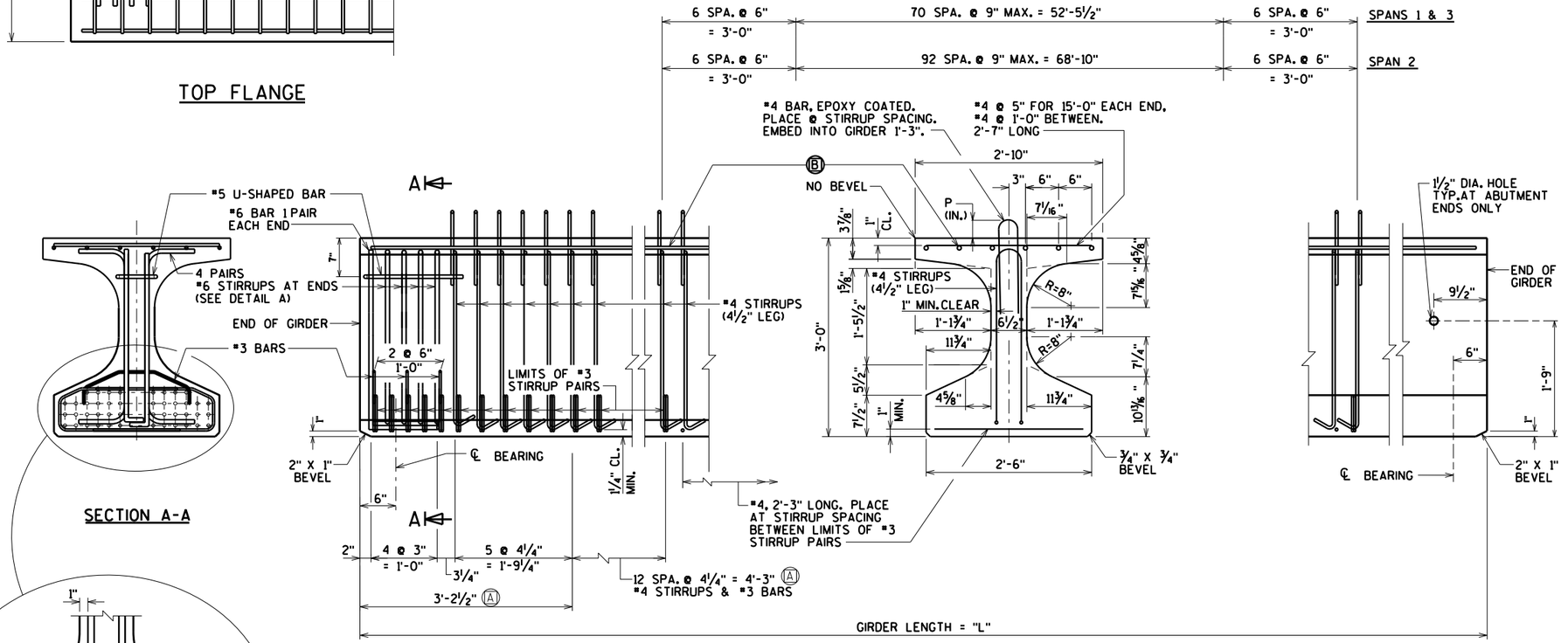

SECTION A-A

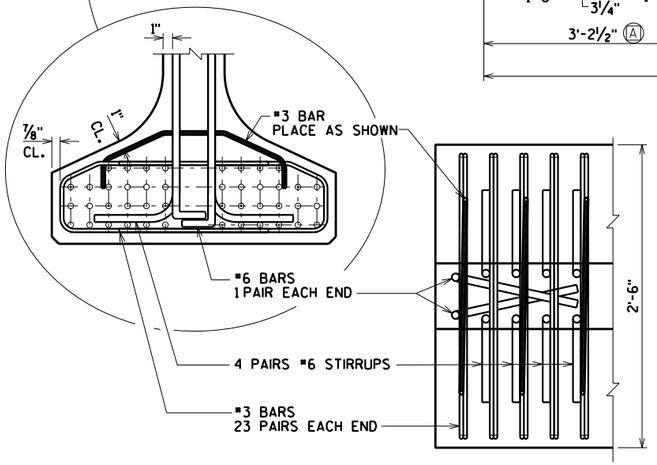

BOTTOM FLANGE
DETAIL A

GIRDER NOTES

TOP OF GIRDER TO BE ROUGH FLOATED AND BROOMED TRANSVERSELY FOR BONDING TO THE SLAB, EXCEPT THE OUTSIDE 8" OF GIRDER, WHICH SHALL RECEIVE A SMOOTH FINISH. AN APPROVED CONCRETE SEALER SHALL BE APPLIED TO ALL SMOOTH SURFACES INCLUDING THE OUTSIDE 8" OF THE TOP FLANGE.

DO NOT APPLY CONCRETE SEALER TO SURFACES RECEIVING APPLICATION OF CONCRETE STAINING.

THE GIRDERS SHALL BE PROVIDED WITH A SUITABLE LIFTING DEVICE FOR HANDLING AND ERECTING THE GIRDERS.

STRANDS SHALL BE FLUSH WITH THE END OF GIRDER. FOR GIRDER ENDS EMBEDDED COMPLETELY IN CONCRETE, ENDS OF STRANDS SHALL BE COATED WITH NON-BITUMINOUS JOINT SEALER. FOR GIRDER ENDS THAT ARE FINALLY EXPOSED, COAT THE GIRDER ENDS, EXPOSED STRAND ENDS AND ALL NON-BONDING SURFACES WITHIN 2 FEET OF THE GIRDER ENDS WITH A NON-PIGMENTED EPOXY CONFORMING TO AASHTO M-235 TYPE III, CLASS B OR C. THE EPOXY SHALL BE APPLIED AT LEAST 3 DAYS AFTER MOIST CURING HAS CEASED AND PRIOR TO APPLICATION OF THE SEALER.

ALL GIRDERS SHALL BE CAST FULL LENGTH AS SHOWN.

SPACING SHOWN FOR #4 STIRRUPS IS FOR GRADE 60 REINFORCEMENT.

AN ALTERNATE EQUIVALENT OF WELDED WIRE FABRIC (WWF) ASTM A497 MAY BE SUBSTITUTED FOR THE STIRRUP REINFORCEMENT SHOWN, UPON APPROVAL OF THE STRUCTURES DEVELOPMENT CHIEF, (608)266-5161.

PRESTRESSING STRANDS SHALL BE 0.6" DIA.-7 WIRE LOW-RELAXATION STRANDS WITH AN ULTIMATE STRENGTH OF 270,000 psi.

FOR DIAPHRAGM INSERT & CONNECTION DETAILS SEE "STEEL INTER. DIAPHRAGM DETAILS" SHEET.

SIDE VIEW & TYP. SECTION IN SPAN

Ⓐ DETAIL TYP. AT EACH END

Ⓑ 6 #4 BARS, FULL LENGTH, MIN. LAP = 1'-11"

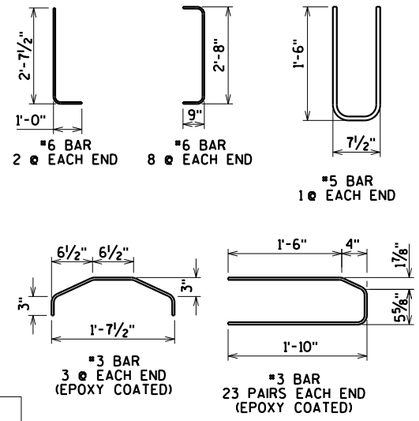

* MINIMUM CYLINDER STRENGTH OF CONCRETE @ TIME OF TRANSFER OF PRESTRESS FORCE.

GIRDER DATA

SPAN	GIRDER	GIRDER LENGTH "L"	DEAD LOAD DEFL. (IN.) 1/10	2/10	3/10	4/10	5/10	6/10	7/10	8/10	9/10	CONC. STRGTH. f'c (p.s.i.)	"P" IST 1/3 OF GIRDER	"P" MID 1/3 OF GIRDER	"P" END 1/3 OF GIRDER	DIA. OF STRAND (IN.)	DRAPED PATTERN TOTAL NO. OF STRANDS	f'ci (P.S.I.) *	(IN.) "A"	"B" MIN.	"B" MAX.	"C"	UNDRAPED PATTERN TOTAL NO. OF STRANDS	f'ci (P.S.I.) *
1	ALL	73'-4½"	0.3	0.5	0.7	0.8	0.9	0.8	0.7	0.5	0.3	8,000	8"	7"	8"	0.6	20	6,400	32	11	14	4	-----	---
2	ALL	89'-9"	0.6	1.1	1.6	1.9	2.0	1.9	1.6	1.1	0.3	8,000	8"	7"	8"	0.6	28	6,400	32	11	14	4	-----	---
3	ALL	73'-4½"	0.3	0.5	0.7	0.8	0.9	0.8	0.7	0.5	0.3	8,000	8"	7"	8"	0.6	20	6,400	32	11	14	4	-----	---

NO.	DATE	REVISION	BY

STATE OF WISCONSIN
DEPARTMENT OF TRANSPORTATION

STRUCTURE B-53-292

DRAWN BY AAM | PLANS CK'D. DRJ

36W" PRESTRESSED GIRDER DETAILS

SHEET 14 OF 21
165

ORIGINAL PLANS PREPARED BY
AYRES ASSOCIATES
3433 Oakwood Hills Parkway
Eau Claire, WI 54701
www.AyresAssociates.com

FILE=

STATE PROJECT NUMBER

5989-05-71

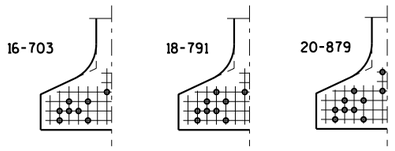

STANDARD ARRANGEMENTS TO RAISE CENTER OF GRAVITY TO AVOID DRAPING OF STRANDS

0.6"Φ STRANDS

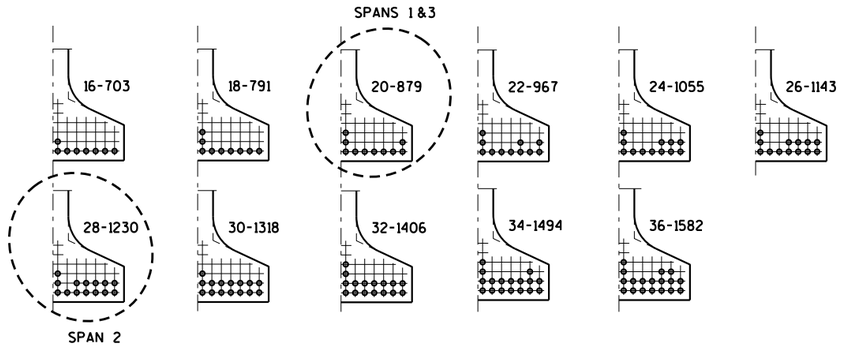

ARRANGEMENT AT ℄ SPAN - FOR GIRDERS WITH DRAPED STRANDS

0.6"Φ STRANDS

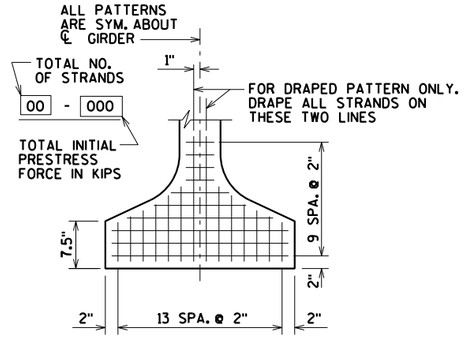

STRAND PATTERN

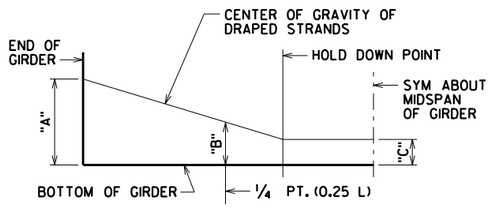

DRAPED STRAND PROFILE

THE THEORETICAL INITIAL CAMBER VALUE AT THE TIME OF STRAND RELEASE AT MIDSPAN

SPAN	CAMBER (IN.)
1	2.0
2	3.9
3	2.0

THESE VALUES ARE NOT TO BE USED IN DETERMINING 'T'. USE ACTUAL GIRDER SHOTS. THESE VALUES ARE FOR INFORMATIONAL PURPOSES ONLY.

8

8

NO.	DATE	REVISION	BY

STATE OF WISCONSIN
DEPARTMENT OF TRANSPORTATION

STRUCTURE B-53-292

DRAWN BY AAM | PLANS CK'D. DRJ

36W" PRESTRESSED GIRDER DETAILS

SHEET 15 OF 21

166

ORIGINAL PLANS PREPARED BY
AYRES ASSOCIATES
3433 Oakwood Hills Parkway
Eau Claire, WI 54701
www.AyresAssociates.com

STATE PROJECT NUMBER

5989-05-71

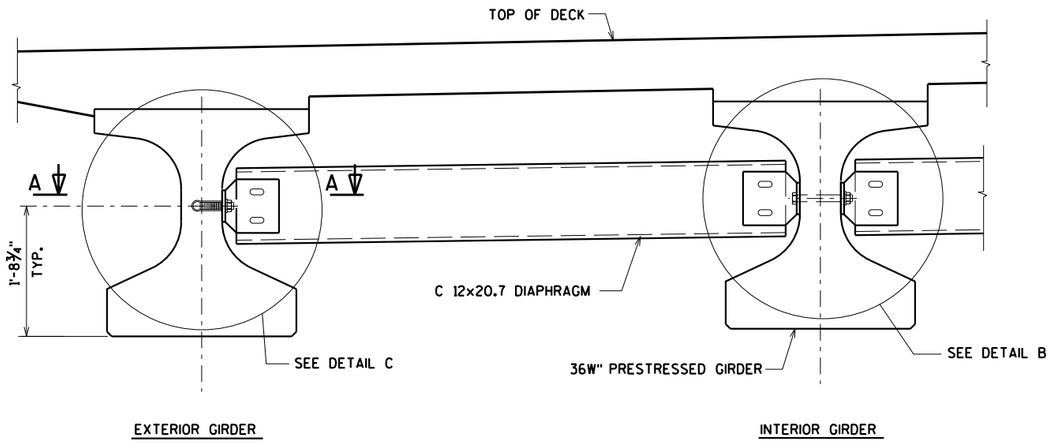

PART TRANSVERSE SECTION AT DIAPHRAGM

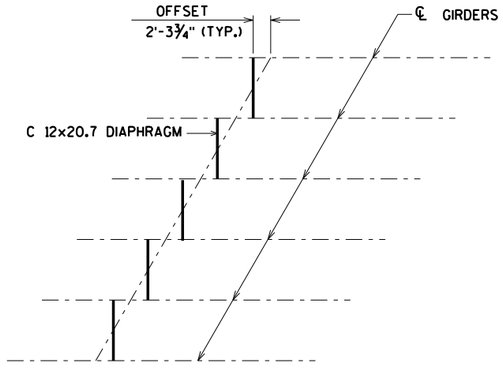

PLAN FOR SKEW ANGLES > 10°

NOTES

ALL DIAPHRAGM MATERIAL NOT EMBEDDED IN THE CONCRETE GIRDER SHALL BE PAID FOR AT THE UNIT PRICE BID FOR "STEEL DIAPHRAGM B-53-292", EACH.

EACH DIAPHRAGM BETWEEN GIRDERS SHALL CONSTITUTE ONE UNIT.

ALL DIAPHRAGM STRUCTURAL STEEL SHALL BE ASTM A709 GRADE 36. ALL BOLTS, NUTS AND WASHERS SHALL BE ASTM A325 TYPE 1.

ALL DIAPHRAGM STRUCTURAL STEEL SHOWN SHALL BE HOT-DIPPED GALVANIZED. ALL BOLTS, NUTS AND WASHERS SHALL BE HOT-DIPPED GALVANIZED IN ACCORDANCE WITH ASTM A153 CLASS C. GALVANIZED NUTS SHALL BE TAPPED OVERSIZE IN ACCORDANCE WITH THE REQUIREMENTS OF ASTM A563 AND SHALL MEET THE REQUIREMENTS OF SUPPLEMENTARY REQUIREMENT S1 OF ASTM A563, LUBRICANT AND TEST FOR COATED NUTS.

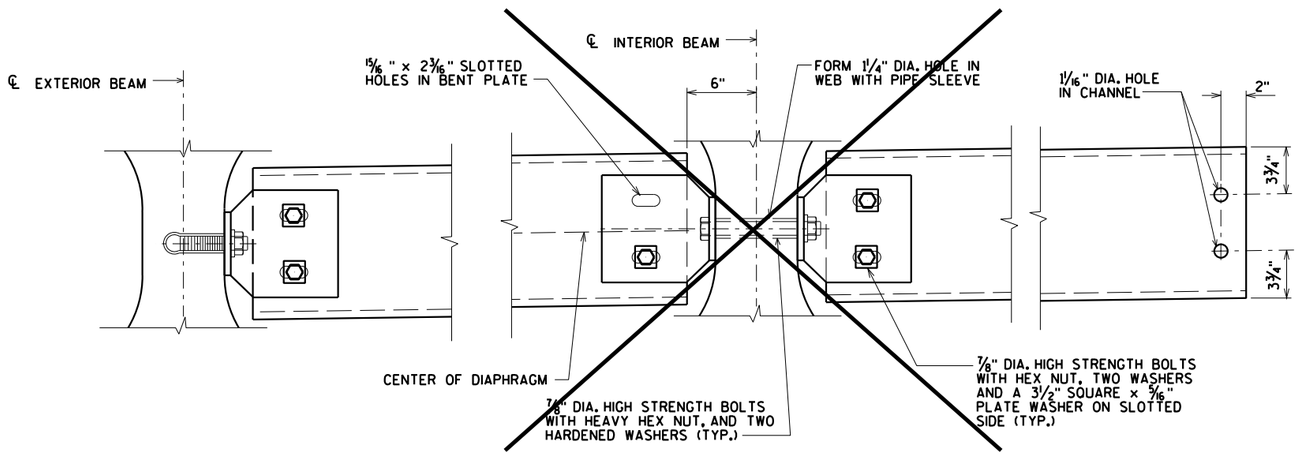

DETAIL C

DETAIL B

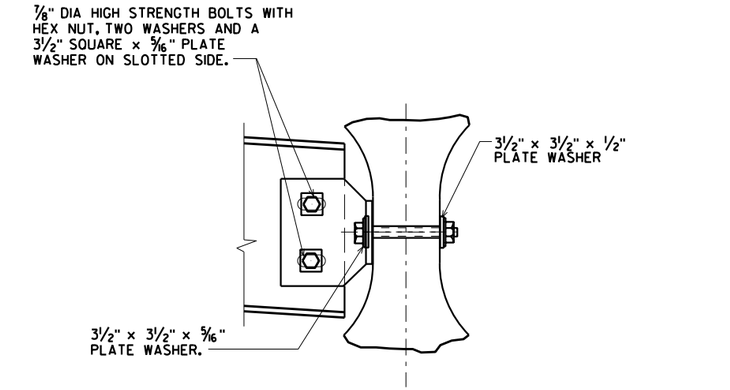

SECTION AT INTERIOR GIRDERS THRU DIAPHRAGM FOR SKEW ANGLES > 10°

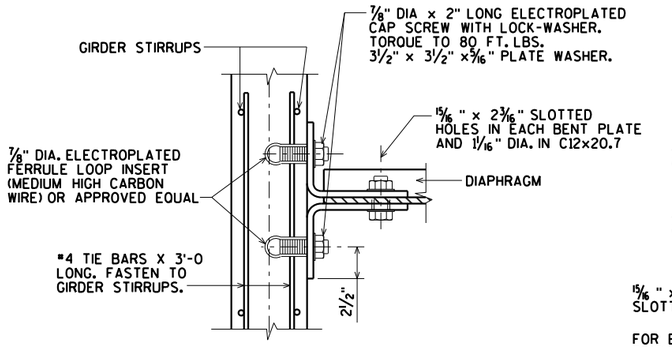

SECTION A-A

(FOR EXTERIOR ATTACHMENT)

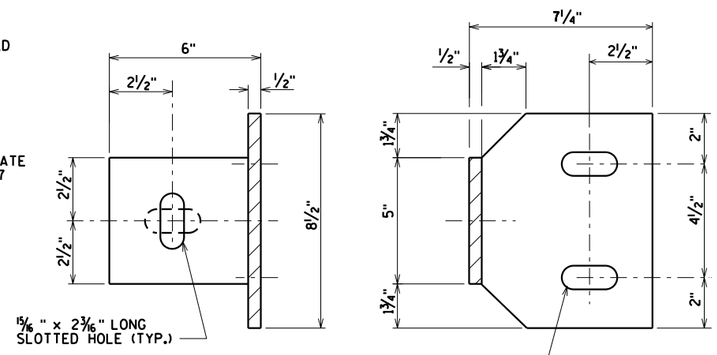

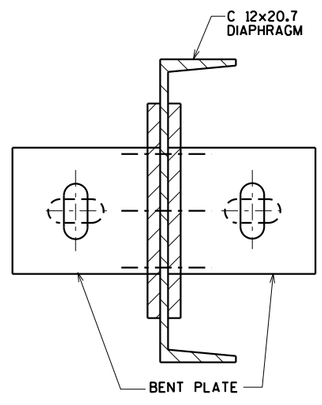

ATTACHMENT TO CHANNEL

NO.	DATE	REVISION	BY

STATE OF WISCONSIN
DEPARTMENT OF TRANSPORTATION

STRUCTURE B-53-292

DRAWN BY AAM | PLANS CK'D. DRJ

STEEL INTER. DIAPHRAGM DETAILS

SHEET 16 OF 21

167

ORIGINAL PLANS PREPARED BY
AYRES ASSOCIATES
3433 Oakwood Hills Parkway
Eau Claire, WI 54701
www.AyresAssociates.com

8

8

STATE PROJECT NUMBER

5989-05-71

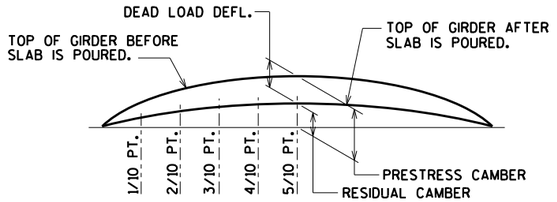

DEAD LOAD DEFLECTION DIAGRAM

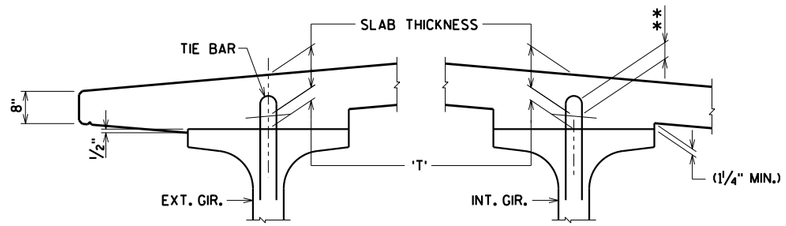

SLAB HAUNCH DETAIL

IF 1¼" MINIMUM HAUNCH HEIGHT AT EDGE OF GIRDER CANNOT BE MAINTAINED, THE GRADE LINE MAY BE REVISED BY THE ENGINEER AT THE OPTION OF THE CONTRACTOR. THE PLAN SLAB THICKNESS SHALL BE HELD. NOTIFY THE STRUCTURES SECTION IF THE GRADE LINE IS RAISED FROM THE PLAN PROFILE BY MORE THAN ½" OR.

** IF 3" MINIMUM DECK EMBEDMENT OF TIE BAR CANNOT BE OBTAINED.

TO DETERMINE 'T', ELEV. OF TOP OF GIR'S. AT ℄ OF SUBSTRUCTURE UNITS & AT 1/10 POINTS OF EACH SPAN SHALL BE TAKEN. THEN FOLLOW THIS PROCESS:

TOP OF DECK ELEV. AT FINAL GRADE
\- TOP OF GIRDER ELEVATION
\+ DEAD LOAD DEFLECTION
\- SLAB THICKNESS
= HAUNCH HEIGHT 'T'

NOTE: AN AVERAGE HAUNCH ('T') OF 3¼" WAS USED IN THE QUANTITY "CONCRETE MASONRY BRIDGES".

TOP OF DECK ELEVATIONS

		SPAN 1										SPAN 2									
	℄ W. Abut.	0.1 PT	0.2 PT	0.3 PT	0.4 PT	0.5 PT	0.6 PT	0.7 PT	0.8 PT	0.9 PT	℄ PIER 1	0.1 PT	0.2 PT	0.3 PT	0.4 PT	0.5 PT	0.6 PT	0.7 PT	0.8 PT	0.9 PT	℄ PIER 2
Edge of Deck	804.96	804.99	805.03	805.07	805.10	805.14	805.18	805.21	805.25	805.29	805.32	805.37	805.41	805.46	805.50	805.55	805.59	805.64	805.68	805.73	805.77
Girder 1	804.99	805.02	805.06	805.10	805.13	805.17	805.21	805.24	805.28	805.32	805.35	805.40	805.44	805.49	805.53	805.58	805.62	805.67	805.71	805.76	805.80
Girder 2	805.12	805.16	805.20	805.23	805.27	805.31	805.34	805.38	805.42	805.45	805.49	805.53	805.58	805.62	805.67	805.71	805.76	805.80	805.85	805.89	805.94
Girder 3	805.26	805.30	805.33	805.37	805.41	805.44	805.48	805.52	805.55	805.59	805.63	805.67	805.72	805.76	805.81	805.85	805.90	805.94	805.99	806.03	806.08
℄ Inman Parkway	805.33	805.37	805.40	805.44	805.48	805.51	805.55	805.59	805.62	805.66	805.70	805.74	805.79	805.83	805.88	805.92	805.97	806.01	806.06	806.10	806.15
Girder 4	805.24	805.27	805.31	805.35	805.38	805.42	805.46	805.49	805.53	805.57	805.60	805.65	805.69	805.74	805.78	805.83	805.87	805.92	805.96	806.01	806.05
Girder 5	805.06	805.09	805.13	805.16	805.20	805.24	805.27	805.31	805.35	805.38	805.42	805.47	805.51	805.56	805.60	805.65	805.69	805.74	805.78	805.83	805.87
Girder 6	804.87	804.91	804.95	804.98	805.02	805.05	805.09	805.13	805.16	805.20	805.24	805.28	805.33	805.37	805.42	805.46	805.51	805.55	805.60	805.64	805.69
Edge of Deck	804.82	804.86	804.90	804.93	804.97	805.01	805.04	805.08	805.11	805.15	805.19	805.23	805.28	805.32	805.37	805.41	805.46	805.50	805.55	805.59	805.64

		SPAN 3									
	℄ PIER 2	0.1 PT	0.2 PT	0.3 PT	0.4 PT	0.5 PT	0.6 PT	0.7 PT	0.8 PT	0.9 PT	℄ E. Abut.
Edge of Deck	805.77	805.81	805.85	805.88	805.92	805.95	805.99	806.03	806.06	806.10	806.14
Girder 1	805.80	805.84	805.88	805.91	805.95	805.99	806.02	806.06	806.09	806.13	806.17
Girder 2	805.94	805.98	806.01	806.05	806.09	806.12	806.16	806.20	806.23	806.27	806.30
Girder 3	806.08	806.11	806.15	806.19	806.22	806.26	806.30	806.33	806.37	806.41	806.44
℄ Inman Parkway	806.15	806.18	806.22	806.25	806.29	806.33	806.36	806.40	806.44	806.47	806.51
Girder 4	806.05	806.09	806.13	806.16	806.20	806.24	806.27	806.31	806.35	806.38	806.42
Girder 5	805.87	805.91	805.94	805.98	806.02	806.05	806.09	806.13	806.16	806.20	806.24
Girder 6	805.69	805.72	805.76	805.80	805.83	805.87	805.91	805.94	805.98	806.02	806.05
Edge of Deck	805.64	805.67	805.71	805.75	805.78	805.82	805.86	805.89	805.93	805.97	806.00

8

8

NO.	DATE	REVISION	BY

STATE OF WISCONSIN
DEPARTMENT OF TRANSPORTATION

STRUCTURE B-53-292

DRAWN BY AAM | PLANS CK'D. DRJ

TOP OF DECK ELEVATIONS

SHEET 17 OF 21
168

ORIGINAL PLANS PREPARED BY
AYRES ASSOCIATES
3433 Oakwood Hills Parkway
Eau Claire, WI 54701
www.AyresAssociates.com

STATE PROJECT NUMBER

5989-05-71

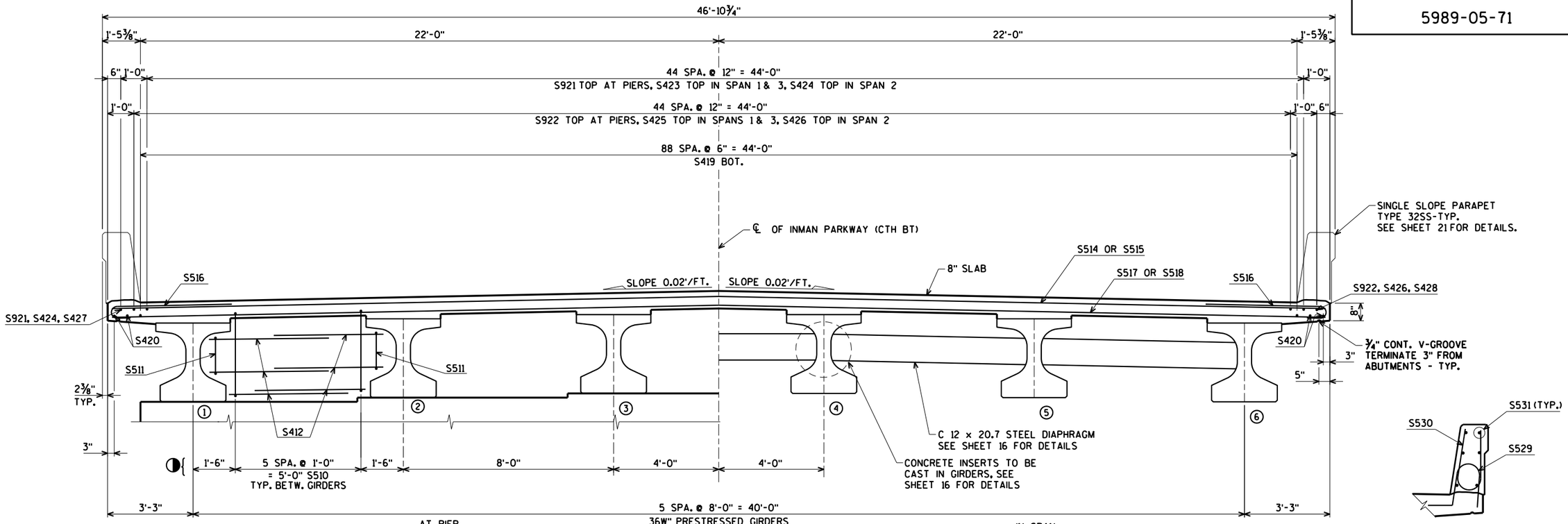

TYPICAL CROSS SECTION THRU DECK

SECTION THRU PARAPET ON BRIDGE

(SLAB REINFORCING OMITTED FOR CLARITY)

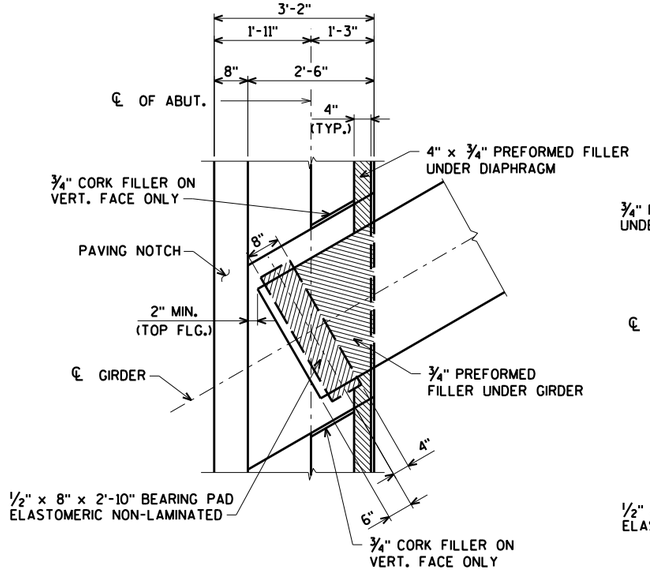

AT ABUTMENTS

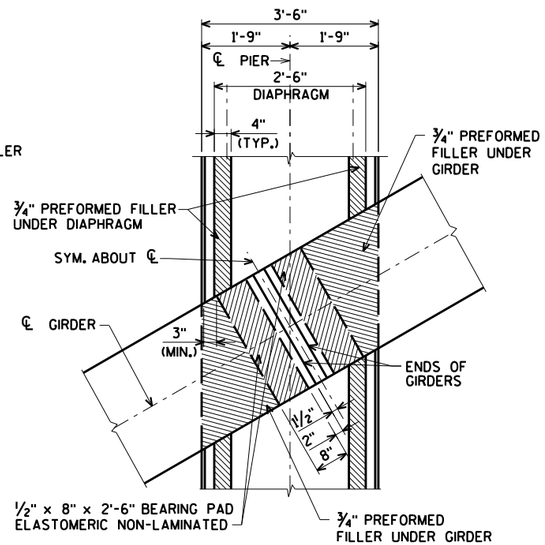

AT PIERS

BEARING PAD DETAIL

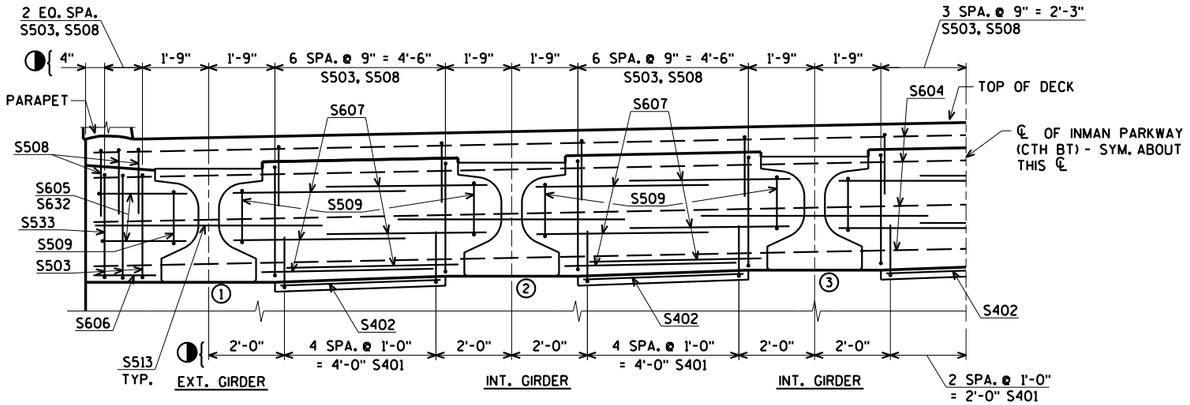

TYPICAL DIAPHRAGM DETAIL AT ABUTMENTS

◑ DIMENSION IS TAKEN NORMAL TO ℄ OF GIRDERS

NO.	DATE	REVISION	BY

STATE OF WISCONSIN
DEPARTMENT OF TRANSPORTATION

STRUCTURE B-53-292

DRAWN BY AAM | PLANS CK'D. DRJ

SUPERSTRUCTURE

SHEET 18 OF 21
169

ORIGINAL PLANS PREPARED BY
AYRES ASSOCIATES
3433 Oakwood Hills Parkway
Eau Claire, WI 54701
www.AyresAssociates.com

8

8

STATE PROJECT NUMBER

5989-05-71

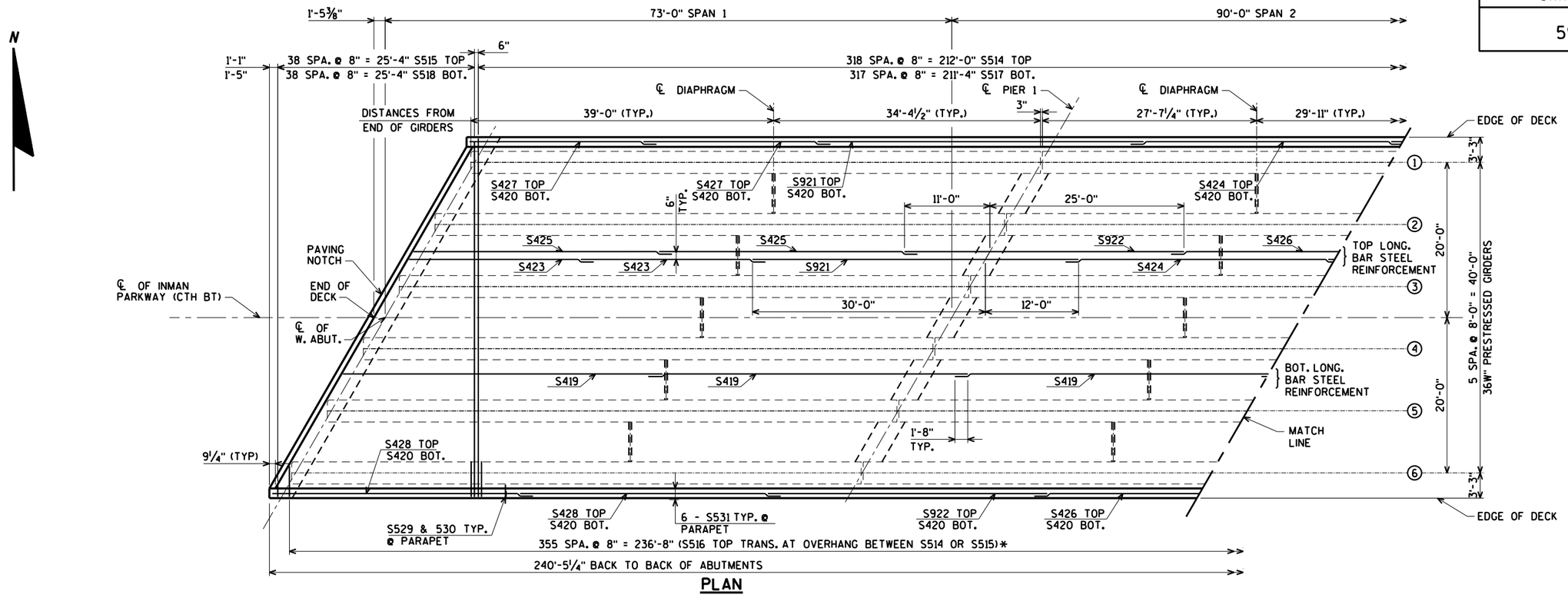

PLAN

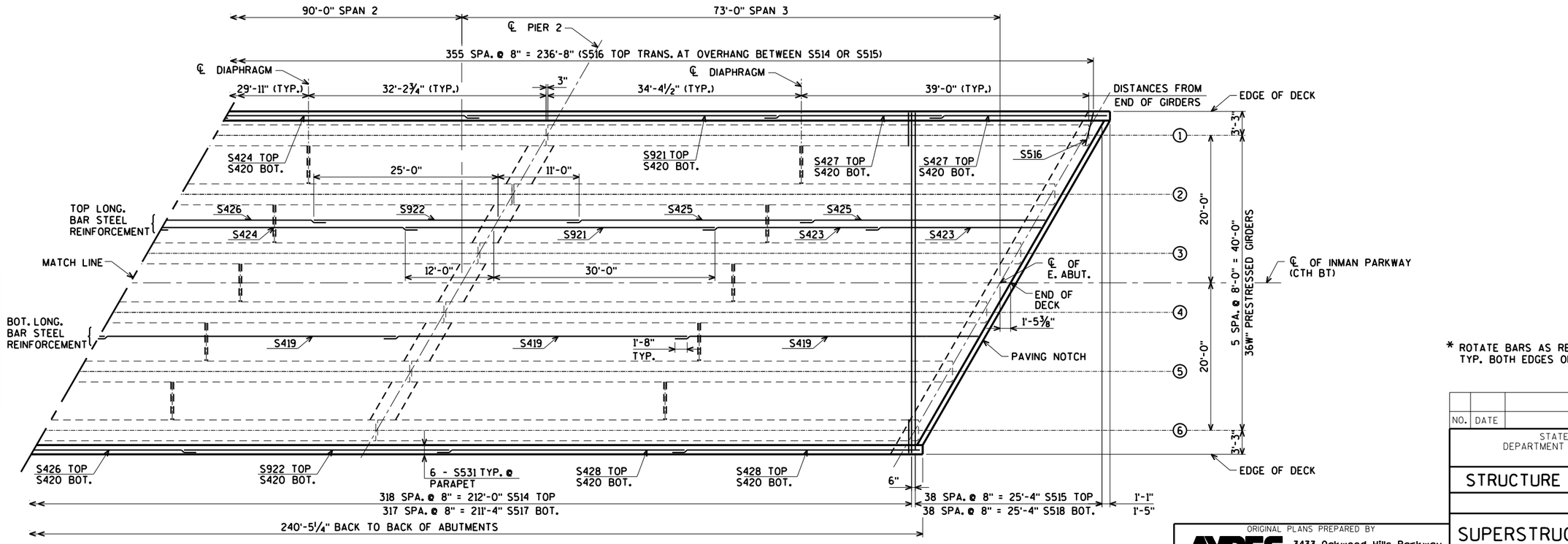

PLAN

* ROTATE BARS AS REO'D NEAR ABUTMENTS. TYP. BOTH EDGES OF DECK.

NO.	DATE	REVISION	BY

STATE OF WISCONSIN
DEPARTMENT OF TRANSPORTATION

STRUCTURE B-53-292

DRAWN BY AAM | PLANS CK'D. DRJ

SUPERSTRUCTURE PLAN

SHEET 19 OF 21
170

ORIGINAL PLANS PREPARED BY
AYRES ASSOCIATES
3433 Oakwood Hills Parkway
Eau Claire, WI 54701
www.AyresAssociates.com

8

8

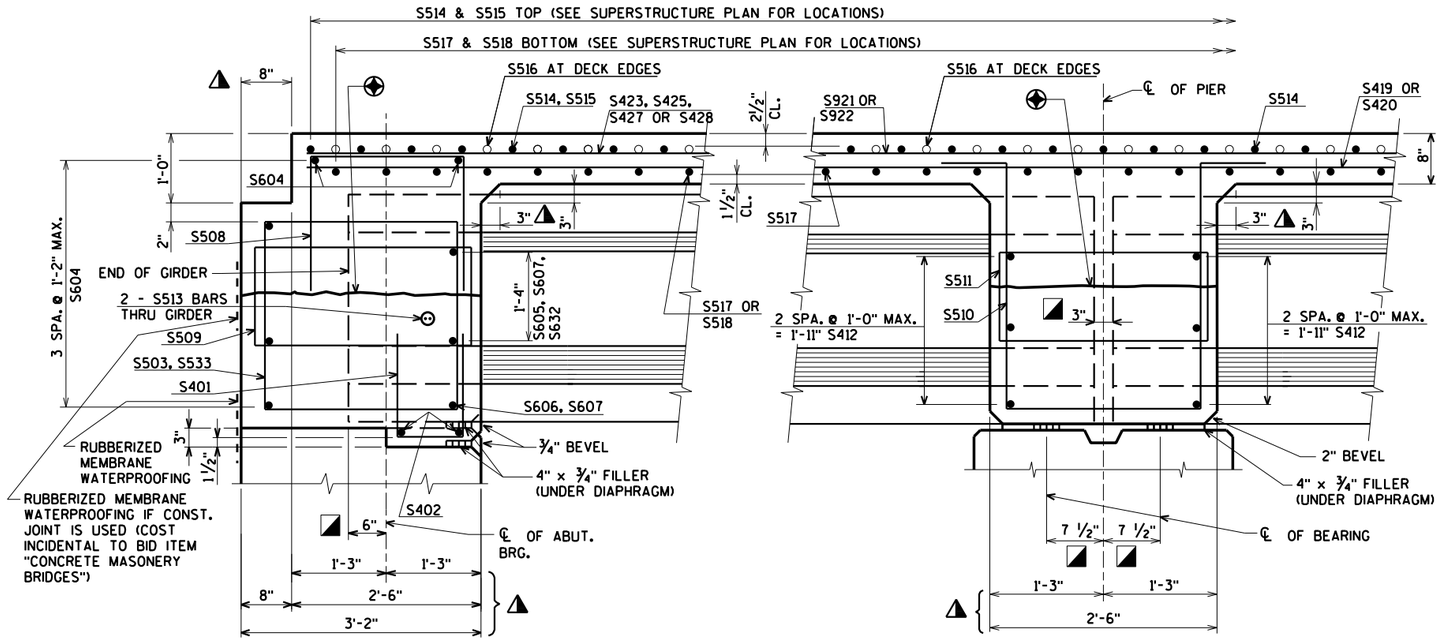

PART LONGITUDINAL SECTION

BILL OF BARS

	BAR NO.	COATED BAR	NO. REQ'D.	LENGTH	BENT BAR	BUNDLED BAR SERIES	103,550# COATED LOCATION
	S401	X	50	3-4	X		DIAPH. @ ABUT. VERT. @ NOTCH
	S402	X	20	4-2			DIAPH. @ ABUT. HORIZ. @ NOTCH
	S503	X	78	12-0	X		DIAPH. @ ABUT. VERT.
	S604	X	10	53-3			DIAPH. @ ABUT. HORIZ.
	S605	X	4	7-4	X		DIAPH. @ ABUT. HORIZ. WINGS 1 & 3
	S606	X	4	1-11			DIAPH. @ ABUT. HORIZ.
	S607	X	60	5-2			DIAPH. @ ABUT. HORIZ.
	S508	X	82	6-3	X		DIAPH. @ ABUT. VERT.
	S509	X	24	10-0	X		DIAPH. @ ABUT. VERT.
	S510	X	60	10-4	X		DIAPH. @ PIER VERT.
	S511	X	20	8-6	X		DIAPH. @ PIER VERT.
	S412	X	120	4-10			DIAPH. @ PIER HORIZ.
*	S513	X	24	6-0			DIAPH. @ ABUT. HORIZ. THRU GDR.
	S514	X	319	46-2			SLAB TRANS. TOP
	S515	X	78	23-5		Ⓧ	SLAB TRANS. TOP
	S516	X	712	5-2	X		SLAB TRANS. TOP AT OVERHANG
	S517	X	318	46-2			SLAB TRANS. BOT.
	S518	X	78	24-0		Ⓧ	SLAB TRANS. BOT.
	S419	X	534	41-2			SLAB LONG. BOT.
	S420	X	24	41-5			SLAB LONG. BOT. BELOW PARAPET
	S921	X	92	42-0			SLAB LONG. TOP @ PIERS
	S922	X	92	36-0			SLAB LONG. TOP @ PIERS
	S423	X	180	23-10			SLAB LONG. TOP SPANS 1 & 3
	S424	X	92	35-9			SLAB LONG. TOP SPAN 2
	S425	X	180	33-4			SLAB LONG. TOP SPANS 1 & 3
	S426	X	46	43-4			SLAB LONG. TOP SPAN 2
	S427	X	4	24-1			SLAB LONG. TOP AT OVERHANG
	S428	X	4	33-7			SLAB LONG. TOP AT OVERHANG
	S529	X	718	4-5	X		PARAPET VERTICAL ON BRIDGE
	S530	X	722	5-0	X		PARAPET VERTICAL ON BRIDGE
	S531	X	60	49-6			PARAPET HORIZ. ON BRIDGE
	S632	X	4	7-11	X		DIAPH. @ ABUT. HORIZ. WINGS 2 & 4
	S533	X	2	10-8	X		DIAPH. @ ABUT. VERT. WINGS 1 & 3
	S534	X	4	5-10	X		PARAPET VERTICAL AT ENDS OF DECK

BENDING DIMENSIONS ARE OUT TO OUT OF BARS.

Ⓧ LENGTH SHOWN FOR BAR IS AN AVERAGE LENGTH AND SHOULD ONLY BE USED FOR BAR WEIGHT CALCULATIONS. SEE BAR SERIES TABLE FOR ACTUAL LENGTHS.

* FIELD BEND BARS ALONG SKEW.

BARS SERIES TABLE

BAR NO.	NO. REQ'D	LENGTH
S515	2 SERIES OF 39	1'-6" TO 45'-4"
S518	2 SERIES OF 39	2'-1" TO 45'-11"

BUNDLE AND TAG EACH SERIES SEPARTELY.

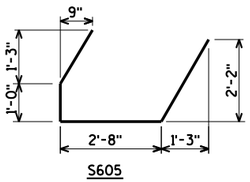

S605

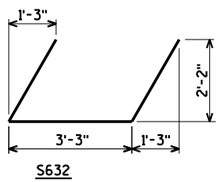

S632

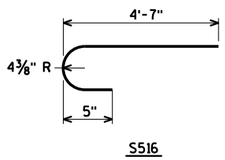

S516

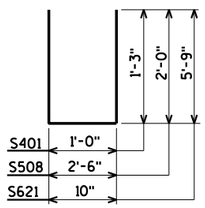

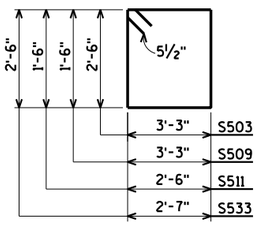

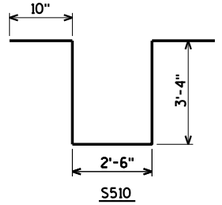

S510

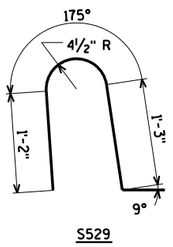

S529

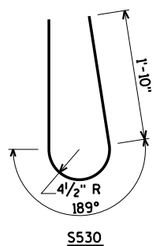

S530

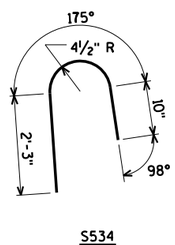

S534

- ◈ OPTIONAL CONSTRUCTION JOINT 1'-2" BELOW TOP OF GIRDER. IF USED, DECK POUR MUST BE WITHIN 2 WEEKS FROM THE TIME OF THE DIAPHRAGM POUR.
- ◪ DIMENSION IS TAKEN PARALLEL TO GIRDER.
- ⚠ DIMENSION IS TAKEN NORMAL TO ℄ OF SUBSTRUCTURE UNITS.

NO.	DATE	REVISION	BY

STATE OF WISCONSIN
DEPARTMENT OF TRANSPORTATION

STRUCTURE B-53-292

DRAWN BY AAM | PLANS CK'D. DRJ

SUPERSTRUCTURE DETAILS

SHEET 20 OF 21
171

ORIGINAL PLANS PREPARED BY
AYRES ASSOCIATES
3433 Oakwood Hills Parkway
Eau Claire, WI 54701
www.AyresAssociates.com

8

8

STATE PROJECT NUMBER

5989-05-71

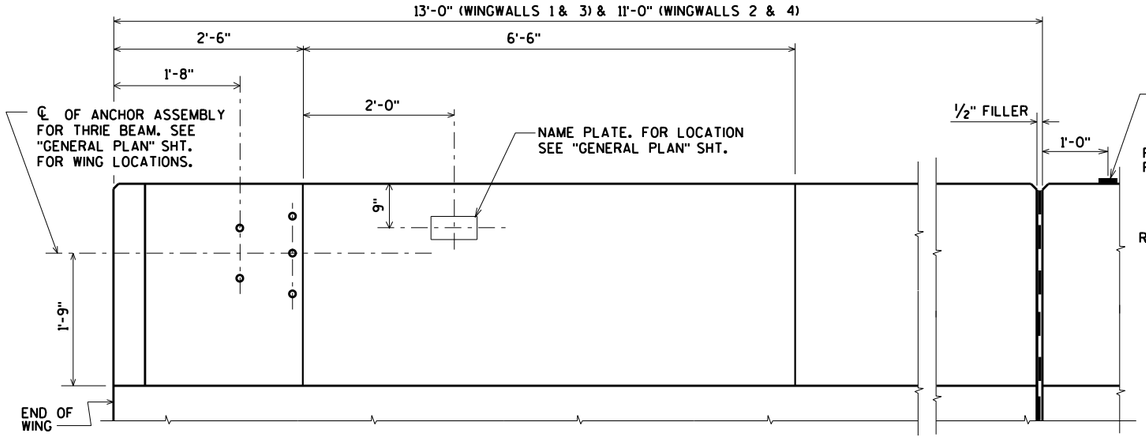

INSIDE ELEVATION

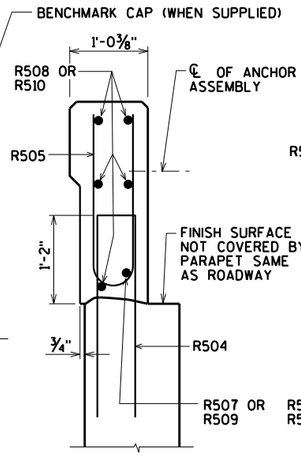

SECTION A

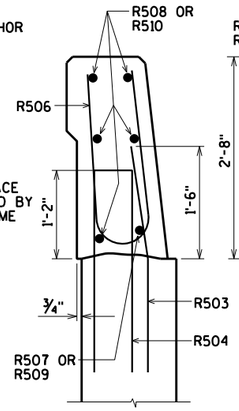

SECTION B

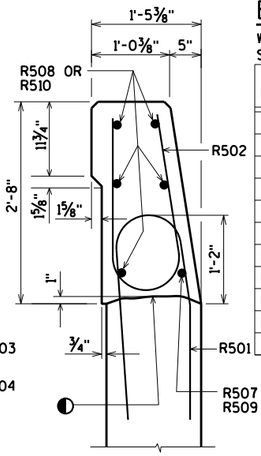

SECTION C

BILL OF BARS

WEIGHTS INCLUDED IN ABUTMENT WEIGHTS SHOWN ON SHEETS 5 & 7.

BAR MARK	COAT	WEST ABUT.	EAST ABUT.	LENGTH	BENT	BAR SERIES	LOCATION
R501	X	11	11	5-10	X		PARAPET VERT.
R502	X	11	11	5-0	X		PARAPET VERT.
R503	X	24	24	3-0	X		PARAPET VERT.
R504	X	34	34	5-7	X		PARAPET VERT.
R505	X	22	22	4-9	X		PARAPET VERT.
R506	X	12	12	4-10	X		PARAPET VERT.
R507	X	1	1	12-7	X		PARAPET HORIZ.
R508	X	5	5	12-7			PARAPET HORIZ.
R509	X	1	1	10-7	X		PARAPET HORIZ.
R510	X	5	5	10-7			PARAPET HORIZ.

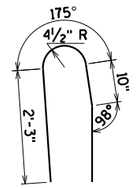

R501

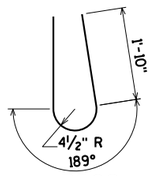

R502

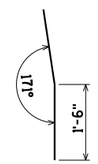

R503

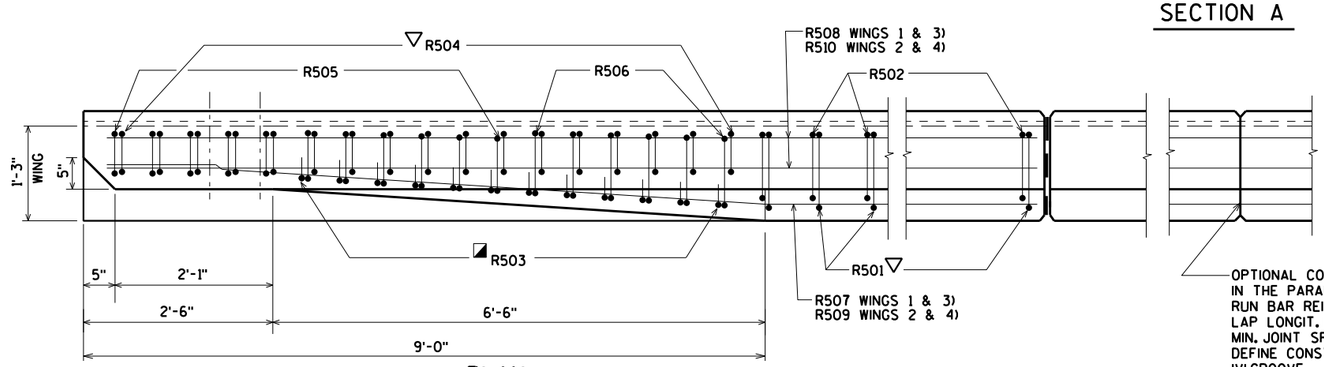

PLAN

OPTIONAL CONSTRUCTION JOINTS IN THE PARAPETS MAY BE USED. RUN BAR REINF. THRU THE JOINT. LAP LONGIT. BARS A MIN. OF 1'-9". MIN. JOINT SPACING OF 80'-0". DEFINE CONST. JOINT WITH A ¾" - 'V' GROOVE.

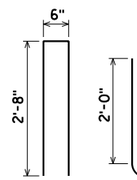

R504 R505

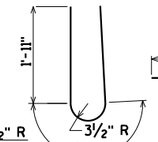

R506

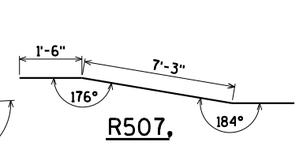

R507, R509

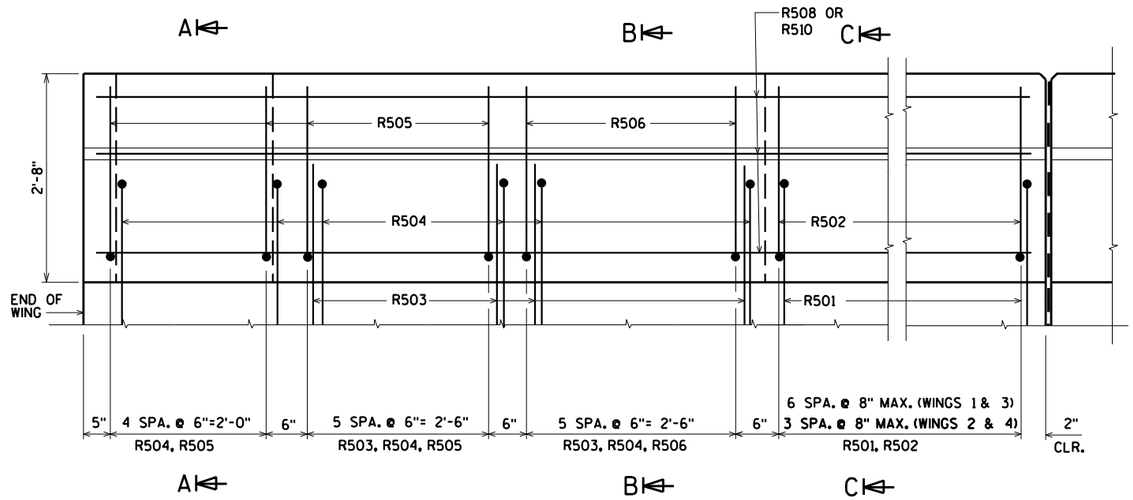

OUTSIDE ELEVATION

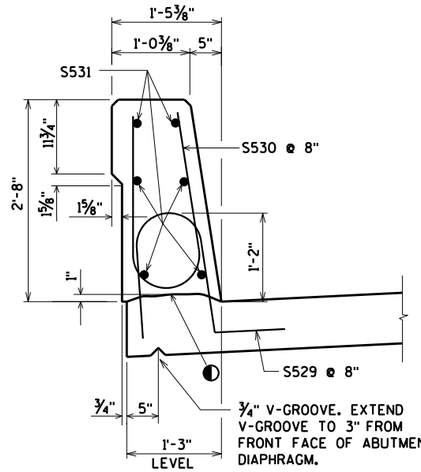

SECTION THRU PARAPET ON BRIDGE

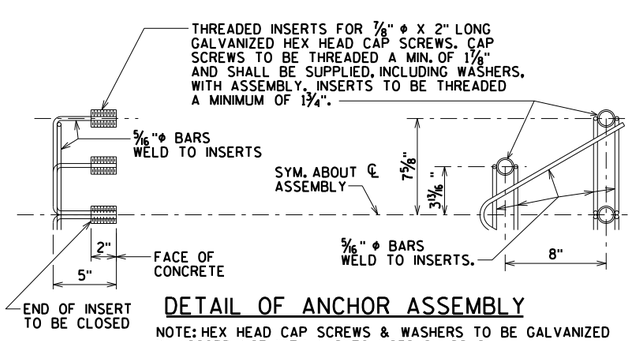

DETAIL OF ANCHOR ASSEMBLY

NOTE: HEX HEAD CAP SCREWS & WASHERS TO BE GALVANIZED IN ACCORDANCE WITH AASHTO M232 CLASS C.

ASSEMBLY SHALL BE BID ITEM "ANCHOR ASSEMBLIES FOR STEEL PLATE BEAM GUARD", EACH.

◐ CONST. JOINT - STRIKE OFF AS SHOWN.

◪ R503 BARS MAY BE PLACED AFTER CONCRETE IS POURED BUT BEFORE INITIAL SET HAS TAKEN PLACE. USE CARE TO PLACE R503 BARS CORRECTLY ALONG TRANSITION OF PARAPET.

▽ R501 AND R504 BARS TO BE TIED TO WING STEEL BEFORE WING IS POURED.

NO.	DATE	REVISION	BY

STATE OF WISCONSIN
DEPARTMENT OF TRANSPORTATION

STRUCTURE B-53-292

DRAWN BY AAM | PLANS CK'D. DRJ

SINGLE SLOPE PARAPET 32SS

SHEET 21 OF 21
172

ORIGINAL PLANS PREPARED BY
AYRES ASSOCIATES
3433 Oakwood Hills Parkway
Eau Claire, WI 54701
www.AyresAssociates.com

32SSWIN
1-14

8

8

5989-05-71 Mainline Earthwork Summary

STATION	Distance	Area (SF)				Incremental Vol (CY) (Unadjusted)				Cumulative Vol (CY)					
		Cut	Salvaged/Unusable Pavement Material	Fill	EBS	Cut	Salvaged/Unusable Pavement Material	Fill	EBS	Cut	Salvaged or Unusable Pavement Material	Expanded Fill	Expanded EBS Backfill	Reduced EBS In Fill	Mass Ordinate
										1.00		1.25	1.30	0.80	
						Note 1	Note 2	Note 3		Note 1	Note 2		Note 5	Note 7	Note 8
70+50.00	45	0	0	0	0	0	0	0	0	0	0	0	0	0	0
71+00.00	50	0	0	0	0	0	0	0	0	0	0	0	0	0	0
71+50.00	50	0	0	0	0	0	0	0	0	0	0	0	0	0	0
72+00.00	50	0	0	0	0	0	0	0	0	0	0	0	0	0	0
72+50.00	50	0	0	0	85	0	0	0	79	0	0	-79	103	63	79
72+64.00	14	0	0	0	85	0	0	0	44	0	0	-123	160	99	123
72+65.00	1	0	0	1830	85	0	0	34	3	0	0	-84	164	101	84
73+00.00	35	0	0	1830	85	0	0	2372	111	0	0	2770	308	190	-2770
73+50.00	50	0	0	1857	85	0	0	3414	158	0	0	6879	514	316	-6879
74+00.00	50	0	0	1731	85	0	0	3322	158	0	0	10874	719	442	-10874
74+50.00	50	0	0	1706	85	0	0	3182	158	0	0	14693	924	569	-14693
75+00.00	50	0	0	1802	85	0	0	3248	158	0	0	18596	1130	695	-18596
75+50.00	50	0	0	1853	85	0	0	3385	158	0	0	22668	1335	822	-22668
76+00.00	50	0	0	1713	85	0	0	3302	158	0	0	26638	1541	948	-26638
76+50.00	50	0	0	1402	85	0	0	2884	158	0	0	30085	1746	1075	-30085
77+00.00	50	0	0	1164	85	0	0	2376	158	0	0	32896	1952	1201	-32896
77+50.00	50	0	0	978	85	0	0	1983	158	0	0	35217	2157	1327	-35217
78+00.00	50	0	0	803	85	0	0	1649	158	0	0	37120	2362	1454	-37120
78+50.00	50	0	0	597	85	0	0	1296	158	0	0	38582	2568	1580	-38582
79+00.00	50	36	0	440	0	33	0	960	79	33	0	39702	2671	1643	-39669
79+50.00	50	72	0	258	0	100	0	646	0	133	0	40509	2671	1643	-40376
80+00.00	50	126	0	145	0	184	0	373	0	318	0	40976	2671	1643	-40658
80+50.00	50	84	0	77	0	195	0	206	0	513	0	41233	2671	1643	-40720
81+00.00	50	48	0	39	0	122	0	107	0	635	0	41367	2671	1643	-40732
81+50.00	50	52	0	21	0	92	0	55	0	727	0	41436	2671	1643	-40709
82+00.00	50	54	0	7	0	98	0	26	0	825	0	41468	2671	1643	-40643
82+50.00	50	54	0	5	0	100	0	11	0	925	0	41482	2671	1643	-40557
83+00.00	50	38	0	8	0	85	0	12	0	1010	0	41497	2671	1643	-40487
83+50.00	50	5	0	22	0	40	0	27	0	1049	0	41530	2671	1643	-40481
84+00.00	50	0	0	69	0	4	0	84	0	1054	0	41636	2671	1643	-40582
84+50.00	50	0	0	136	0	0	0	190	0	1054	0	41874	2671	1643	-40820
85+00.00	50	0	0	213	0	0	0	324	0	1054	0	42278	2671	1643	-41224
85+50.00	50	0	0	268	0	0	0	446	0	1054	0	42836	2671	1643	-41782
86+00.00	50	0	0	306	0	0	0	532	0	1054	0	43500	2671	1643	-42446
86+50.00	50	0	0	370	0	0	0	626	0	1054	0	44282	2671	1643	-43228
87+00.00	50	0	0	345	0	0	0	662	0	1054	0	45109	2671	1643	-44055
87+50.00	50	29	0	310	0	27	0	606	0	1082	0	45867	2671	1643	-44785
88+00.00	50	12	0	220	0	38	0	491	0	1120	0	46480	2671	1643	-45360
88+50.00	50	14	0	99	0	24	0	296	0	1144	0	46850	2671	1643	-45706
89+00.00	50	44	0	66	0	54	0	153	0	1197	0	47042	2671	1643	-45844
89+50.00	50	91	0	145	0	125	0	196	0	1323	0	47287	2671	1643	-45964
89+91.00	41	91	0	145	0	139	0	221	0	1461	0	47563	2671	1643	-46102
				Column totals		1461	0	39694	2054						

Notes:

1 - Cut	Cut includes Salvaged/Unusable Pavement material
2 - Salvaged/Unusable Pavement Material	This does not show up in cross sections
5 - Expanded EBS	Will be backfilled with Select Crushed Material in conjunction with geogrid reinforcement
7 - Reduced EBS in Fill	Reduced EBS Excavation that can be used as Fill
8 - Mass Ordinate	Mass Ordinate = (Cumulative Cut - Cumulative Salvaged or Unusable Pavement Material) - Cumulative Expanded Fill

5989-05-71 CTH S Earthwork Summary

STATION	Distance	Area (SF) Cut	Area (SF) Salvaged/Unusable Pavement Material	Area (SF) Fill	Area (SF) EBS	Incremental Vol (CY) (Unadjusted) Cut Note 1	Incremental Vol (CY) (Unadjusted) Salvaged/Unusable Pavement Material Note 2	Incremental Vol (CY) (Unadjusted) Fill Note 3	Incremental Vol (CY) (Unadjusted) EBS	Cumulative Vol (CY) Cut 1.00 Note 1	Cumulative Vol (CY) Salvaged or Unusable Pavement Material Note 2	Cumulative Vol (CY) Expanded Fill 1.25	Cumulative Vol (CY) Expanded EBS Backfill 1.30 Note 5	Cumulative Vol (CY) Reduced EBS In Fill 0.80 Note 7	Mass Ordinate Note 8
124+90.00		25	3	0	0	0	0	0	0	0	0	0	0	0	0
125+00.00	10	25	3	0	0	9	1	0	0	9	1	0	0	0	8
125+25.00	25	24	3	2	0	23	2	1	0	32	3	1	0	0	28
125+50.00	25	29	1	8	0	24	2	4	0	57	5	7	0	0	45
125+75.00	25	31	1	14	0	27	1	10	0	84	6	20	0	0	59
126+00.00	25	44	1	17	0	35	1	15	0	119	6	38	0	0	75
126+25.00	25	51	1	18	0	44	0	16	0	163	7	58	0	0	98
126+50.00	25	60	1	10	0	52	0	13	0	214	7	74	0	0	133
126+51.00	1	0	1	0	0	1	0	0	0	216	7	74	0	0	134
127+74.00	123	0	1	0	0	0	2	0	0	216	10	74	0	0	132
127+75.00	1	28	1	71	0	1	0	1	0	216	10	76	0	0	131
128+00.00	25	30	3	82	0	27	1	71	0	243	11	164	0	0	68
128+25.00	25	31	3	17	0	29	2	46	0	272	13	221	0	0	38
128+50.00	25	32	3	1	0	29	2	9	0	301	16	232	0	0	54
128+75.00	25	27	3	1	0	27	2	1	0	328	18	233	0	0	77
129+00.00	25	0	3	0	0	13	2	1	0	341	20	234	0	0	86
129+05.00	5	0	3	0	0	0	0	0	0	341	21	234	0	0	86
					Column totals	341	21	187	0						

Notes:

1 - Cut	Cut includes Salvaged/Unusable Pavement material
2 - Salvaged/Unusable Pavement Material	This does not show up in cross sections
5 - Expanded EBS	Will be backfilled with Select Crushed Material in conjunction with geogrid reinforcement
7 - Reduced EBS in Fill	Reduced EBS Excavation that can be used as Fill
8 - Mass Ordinate	Mass Ordinate = (Cumulative Cut - Cumulative Salvaged or Unusable Pavement Material) - Cumulative Expanded Fill

5989-05-72 Mainline Earthwork Summary

STATION	Distance	Area (SF)				Incremental Vol (CY) (Unadjusted)				Cumulative Vol (CY)					
		Cut	Salvaged/Unusable Pavement Material	Fill	EBS	Cut	Salvaged/Unusable Pavement Material	Fill	EBS	Cut	Salvaged or Unusable Pavement Material	Expanded Fill	Expanded EBS Backfill	Reduced EBS In Fill	Mass Ordinate
										1.00		1.25	1.30	0.80	
						Note 1	Note 2			Note 1	Note 2		Note 5	Note 7	Note 8
16+25.00		0	0	28	0	0	0	0	0	0	0	0	0	0	0
16+50.00	25	129	0	15	0	60	0	20	0	60	0	25	0	0	35
17+00.00	50	117	0	148	0	228	0	151	0	288	0	213	0	0	75
17+50.00	50	142	0	75	0	240	0	207	0	528	0	472	0	0	56
18+00.00	50	174	0	38	0	293	0	105	0	821	0	603	0	0	217
18+50.00	50	205	0	38	0	351	0	71	0	1172	0	692	0	0	480
19+00.00	50	234	0	25	0	407	0	59	0	1579	0	765	0	0	813
19+50.00	50	276	0	20	0	472	0	42	0	2051	0	818	0	0	1233
20+00.00	50	328	0	11	0	559	0	29	0	2610	0	853	0	0	1757
20+50.00	50	353	0	12	0	631	0	21	0	3241	0	880	0	0	2361
21+00.00	50	88	0	13	0	408	0	23	0	3649	0	909	0	0	2740
21+50.00	50	11	0	23	0	92	0	33	0	3741	0	950	0	0	2790
22+00.00	50	0	0	62	0	10	0	78	0	3751	0	1048	0	0	2704
22+50.00	50	0	0	246	0	0	0	285	0	3751	0	1404	0	0	2347
23+00.00	50	43	0	147	0	40	0	364	0	3791	0	1858	0	0	1933
23+50.00	50	39	0	156	0	77	0	281	0	3868	0	2209	0	0	1659
24+00.00	50	6	0	196	0	42	0	326	0	3910	0	2617	0	0	1293
24+50.00	50	0	0	222	0	6	0	387	0	3915	0	3101	0	0	815
25+00.00	50	0	0	240	0	0	0	428	0	3915	0	3635	0	0	280
25+50.00	50	0	0	253	0	0	0	456	0	3915	0	4205	0	0	-290
26+00.00	50	0	0	260	0	0	0	475	0	3915	0	4799	0	0	-883
26+50.00	50	0	0	269	0	0	0	490	0	3915	0	5411	0	0	-1496
27+00.00	50	0	0	282	0	0	0	510	0	3915	0	6049	0	0	-2133
27+50.00	50	0	0	270	0	0	0	511	0	3915	0	6687	0	0	-2772
28+00.00	50	0	0	305	0	0	0	532	0	3915	0	7353	0	0	-3437
28+50.00	50	0	0	344	0	0	0	601	0	3915	0	8104	0	0	-4188
29+00.00	50	0	0	388	0	0	0	678	0	3915	0	8951	0	0	-5036
29+50.00	50	0	0	378	0	0	0	709	0	3915	0	9838	0	0	-5922
30+00.00	50	0	0	338	0	0	0	663	0	3915	0	10667	0	0	-6751
30+50.00	50	0	0	269	0	0	0	562	0	3915	0	11370	0	0	-7454
31+00.00	50	0	0	227	0	0	0	459	0	3915	0	11944	0	0	-8028
31+50.00	50	0	0	213	0	0	0	407	0	3915	0	12453	0	0	-8537
32+00.00	50	0	0	225	0	0	0	405	0	3915	0	12959	0	0	-9044
32+50.00	50	0	0	201	0	0	0	395	0	3915	0	13452	0	0	-9537
33+00.00	50	0	0	180	0	0	0	353	0	3915	0	13893	0	0	-9978
33+50.00	50	0	0	166	0	0	0	320	0	3915	0	14293	0	0	-10377
34+00.00	50	2	0	167	0	2	0	309	0	3917	0	14678	0	0	-10762
34+50.00	50	0	0	154	0	2	0	297	0	3918	0	15050	0	0	-11132
35+00.00	50	67	0	130	0	62	0	263	0	3981	0	15378	0	0	-11397
35+50.00	50	91	0	149	0	146	0	259	0	4127	0	15701	0	0	-11574
36+00.00	50	71	0	174	0	149	0	299	0	4277	0	16076	0	0	-11799
36+50.00	50	1	0	298	0	67	0	437	0	4343	0	16622	0	0	-12278
37+00.00	50	65	0	162	0	62	0	426	0	4405	0	17154	0	0	-12749
37+50.00	50	97	0	94	0	150	0	237	0	4556	0	17450	0	0	-12894
38+00.00	50	111	0	44	0	193	0	128	0	4749	0	17609	0	0	-12861
38+50.00	50	76	0	16	0	173	0	55	0	4922	0	17678	0	0	-12756
39+00.00	50	77	0	11	0	142	0	25	0	5063	0	17709	0	0	-12646
39+50.00	50	106	0	8	0	170	0	18	0	5233	0	17732	0	0	-12498
40+00.00	50	126	0	7	0	215	0	14	0	5448	0	17749	0	0	-12301
40+50.00	50	116	0	5	0	224	0	11	0	5672	0	17762	0	0	-12091
41+00.00	50	99	0	6	0	199	0	10	0	5871	0	17775	0	0	-11904
41+50.00	50	109	0	4	0	193	0	10	0	6064	0	17787	0	0	-11724
42+00.00	50	100	0	5	0	194	0	8	0	6257	0	17798	0	0	-11541
42+50.00	50	100	0	4	0	186	0	8	0	6443	0	17808	0	0	-11365
43+00.00	50	90	0	6	0	177	0	9	0	6620	0	17820	0	0	-11200
43+50.00	50	86	0	7	0	163	0	11	0	6783	0	17834	0	0	-11051
44+00.00	50	73	0	7	0	148	0	12	0	6931	0	17850	0	0	-10919
44+50.00	50	87	0	5	0	149	0	11	0	7079	0	17864	0	0	-10784

Continued on next sheet

Notes:

1 - Cut	Cut includes Salvaged/Unusable Pavement material
2 - Salvaged/Unusable Pavement Material	This does not show up in cross sections
5 - Expanded EBS	Will be backfilled with Select Crushed Material in conjunction with geogrid reinforcement
7 - Reduced EBS in Fill	Reduced EBS Excavation that can be used as Fill
8 - Mass Ordinate	Mass Ordinate = (Cumulative Cut - Cumulative Salvaged or Unusable Pavement Material) - Cumulative Expanded Fill

Continued from previous sheet

5989-05-72 Mainline Earthwork Summary

STATION	Distance	Area (SF)				Incremental Vol (CY) (Unadjusted)				Cumulative Vol (CY)					
		Cut	Salvaged/Unusable Pavement Material	Fill	EBS	Cut	Salvaged/Unusable Pavement Material	Fill	EBS	Cut 1.00	Salvaged or Unusable Pavement Material	Expanded Fill 1.25	Expanded EBS Backfill 1.30	Reduced EBS In Fill 0.80	Mass Ordinate
						Note 1	Note 2			Note 1	Note 2		Note 5	Note 7	Note 8
45+00.00	50	85	0	0	0	159	0	5	0	7238	0	17870	0	0	-10631
45+50.00	50	73	0	0	0	146	0	0	0	7385	0	17870	0	0	-10485
46+00.00	50	71	0	0	0	134	0	0	0	7518	0	17870	0	0	-10351
46+50.00	50	75	0	0	0	135	0	0	0	7653	0	17870	0	0	-10216
47+00.00	50	60	0	1	0	124	0	1	0	7778	0	17871	0	0	-10093
47+50.00	50	47	0	1	59	98	0	2	54	7876	0	17819	71	44	-9943
48+00.00	50	39	0	8	59	79	0	9	109	7955	0	17721	212	130	-9766
48+50.00	50	32	0	16	59	66	0	22	109	8021	0	17640	353	217	-9619
49+00.00	50	27	0	15	59	54	0	28	109	8075	0	17567	494	304	-9491
49+50.00	50	31	0	12	59	53	0	25	109	8128	0	17489	636	391	-9361
50+00.00	50	47	0	8	59	72	0	18	109	8200	0	17403	777	478	-9203
50+50.00	50	57	0	4	59	97	0	10	109	8297	0	17307	918	565	-9010
51+00.00	50	72	0	1	59	120	0	5	109	8417	0	17205	1059	652	-8787
51+50.00	50	86	0	0	59	147	0	2	109	8564	0	17098	1201	739	-8534
52+00.00	50	57	0	1	59	133	0	2	109	8697	0	16991	1342	826	-8295
52+50.00	50	8	0	38	59	60	0	36	109	8757	0	16928	1483	913	-8171
53+00.00	50	0	0	180	59	8	0	202	109	8764	0	17071	1624	999	-8307
53+50.00	50	0	0	282	59	0	0	428	109	8764	0	17498	1765	1086	-8734
54+00.00	50	0	0	340	59	0	0	576	109	8764	0	18110	1907	1173	-9345
54+50.00	50	0	0	365	59	0	0	654	109	8764	0	18818	2048	1260	-10054
55+00.00	50	0	0	367	59	0	0	678	109	8764	0	19557	2189	1347	-10793
55+50.00	50	0	0	356	59	0	0	669	109	8764	0	20284	2330	1434	-11520
56+00.00	50	0	0	315	59	0	0	621	109	8764	0	20952	2471	1521	-12188
56+50.00	50	0	0	307	59	0	0	576	109	8764	0	21563	2613	1608	-12799
57+00.00	50	2	0	296	59	2	0	559	109	8766	0	22153	2754	1695	-13387
57+50.00	50	0	0	333	59	2	0	583	109	8767	0	22773	2895	1782	-14005
58+00.00	50	0	0	450	59	0	0	725	109	8767	0	23571	3036	1869	-14803
58+50.00	50	5	0	285	59	4	0	680	109	8772	0	24312	3178	1955	-15540
59+00.00	50	22	0	221	59	25	0	468	109	8797	0	24789	3319	2042	-15992
59+50.00	50	45	0	140	59	62	0	335	109	8859	0	25099	3460	2129	-16240
60+00.00	50	59	0	60	59	96	0	185	109	8955	0	25222	3601	2216	-16267
60+50.00	50	110	0	20	59	156	0	74	109	9111	0	25205	3742	2303	-16094
61+00.00	50	90	0	14	0	184	0	32	54	9296	0	25191	3813	2347	-15895
61+50.00	50	51	0	11	0	130	0	23	0	9426	0	25220	3813	2347	-15794
62+00.00	50	17	0	16	0	63	0	25	0	9489	0	25251	3813	2347	-15762
62+50.00	50	37	0	18	0	51	0	32	0	9540	0	25290	3813	2347	-15751
63+00.00	50	80	0	9	0	109	0	25	0	9648	0	25322	3813	2347	-15674
63+50.00	50	128	0	10	0	192	0	18	0	9841	0	25345	3813	2347	-15504
64+00.00	50	189	0	9	0	293	0	18	0	10134	0	25367	3813	2347	-15233
64+50.00	50	228	0	8	0	386	0	16	0	10521	0	25387	3813	2347	-14867
65+00.00	50	209	0	9	0	404	0	16	0	10925	0	25407	3813	2347	-14482
65+50.00	50	148	0	10	0	330	0	18	0	11255	0	25430	3813	2347	-14174
66+00.00	50	79	0	8	0	210	0	17	0	11465	0	25451	3813	2347	-13986
66+50.00	50	19	0	16	0	91	0	23	0	11556	0	25479	3813	2347	-13923
67+00.00	50	18	0	11	0	35	0	25	0	11591	0	25511	3813	2347	-13920
67+22.75	23	33	0	6	0	22	0	7	0	11612	0	25520	3813	2347	-13907
67+50.00	27	33	0	6	0	34	0	6	0	11646	0	25528	3813	2347	-13881
68+00.00	50	80	0	1	0	105	0	6	0	11752	0	25536	3813	2347	-13784
68+50.00	50	220	0	3	0	278	0	4	0	12030	0	25540	3813	2347	-13510
69+00.00	50	139	0	34	0	332	0	35	0	12362	0	25584	3813	2347	-13222
69+50.00	50	0	0	453	0	128	0	451	0	12490	0	26148	3813	2347	-13658
70+00.00	50	0	0	965	0	0	0	1313	0	12490	0	27789	3813	2347	-15299
70+04.00	4	0	0	965	0	0	0	143	0	12490	0	27968	3813	2347	-15477
70+05.00	1	0	0	0	0	0	0	18	0	12490	0	27990	3813	2347	-15500
					Column totals	12431	0	24719	2933						

Notes:

1 - Cut	Cut includes Salvaged/Unusable Pavement material
2 - Salvaged/Unusable Pavement Material	This does not show up in cross sections
5 - Expanded EBS	Will be backfilled with Select Crushed Material in conjunction with geogrid reinforcement
7 - Reduced EBS in Fill	Reduced EBS Excavation that can be used as Fill
8 - Mass Ordinate	Mass Ordinate = (Cumulative Cut - Cumulative Salvaged or Unusable Pavement Material) - Cumulative Expanded Fill

5989-05-72 Creek Road Earthwork Summary

STATION	Distance	Area (SF) Cut	Area (SF) Salvaged/Unusable Pavement Material	Area (SF) Fill	Area (SF) EBS	Incremental Vol (CY) (Unadjusted) Cut Note 1	Incremental Vol (CY) (Unadjusted) Salvaged/Unusable Pavement Material Note 2	Incremental Vol (CY) (Unadjusted) Fill	Incremental Vol (CY) (Unadjusted) EBS	Cumulative Vol (CY) Cut 1.00 Note 1	Cumulative Vol (CY) Salvaged or Unusable Pavement Material Note 2	Cumulative Vol (CY) Expanded Fill 1.25	Cumulative Vol (CY) Expanded EBS Backfill 1.30 Note 5	Cumulative Vol (CY) Reduced EBS In Fill 0.80 Note 7	Mass Ordinate Note 8
399+84.00		0	0	0	0	0	0	0	0	0	0	0	0	0	0
399+85.00	1	49	5	0	0	1	0	0	0	1	0	0	0	0	1
400+00.00	15	0	5	0	0	14	3	0	0	15	3	0	0	0	12
400+25.00	25	77	5	0	0	36	5	0	0	50	8	0	0	0	43
400+50.00	25	99	5	0	0	81	5	0	0	131	12	0	0	0	119
400+75.00	25	108	5	44	0	96	5	21	0	227	17	26	0	0	185
401+00.00	25	128	5	74	0	109	5	55	0	337	21	94	0	0	221
401+14.00	14	128	5	74	0	66	3	38	0	403	24	142	0	0	237
401+15.00	1	0	5	0	0	2	0	1	0	405	24	144	0	0	238
401+55.00	40	0	5	0	0	0	7	0	0	405	32	144	0	0	230
401+56.00	1	109	5	122	0	2	0	2	0	407	32	146	0	0	229
401+75.00	19	109	5	122	0	77	4	86	0	484	35	253	0	0	195
402+00.00	25	93	5	47	0	93	5	78	0	577	40	351	0	0	187
402+25.00	25	95	5	0	0	87	5	22	0	664	45	378	0	0	242
402+50.00	25	86	5	0	0	83	5	0	0	748	49	378	0	0	321
402+75.00	25	50	5	0	0	63	5	0	0	810	54	378	0	0	379
402+76.00	1	0	0	0	0	1	0	0	0	811	54	378	0	0	380
					Column totals	811	54	302	0						

Notes:

1 - Cut	Cut includes Salvaged/Unusable Pavement material
2 - Salvaged/Unusable Pavement Material	This does not show up in cross sections
5 - Expanded EBS	Will be backfilled with Select Crushed Material in conjunction with geogrid reinforcement
7 - Reduced EBS in Fill	Reduced EBS Excavation that can be used as Fill
8 - Mass Ordinate	Mass Ordinate = (Cumulative Cut - Cumulative Salvaged or Unusable Pavement Material) - Cumulative Expanded Fill

STA. 17+00 'BT' TO 18+50 'BT'

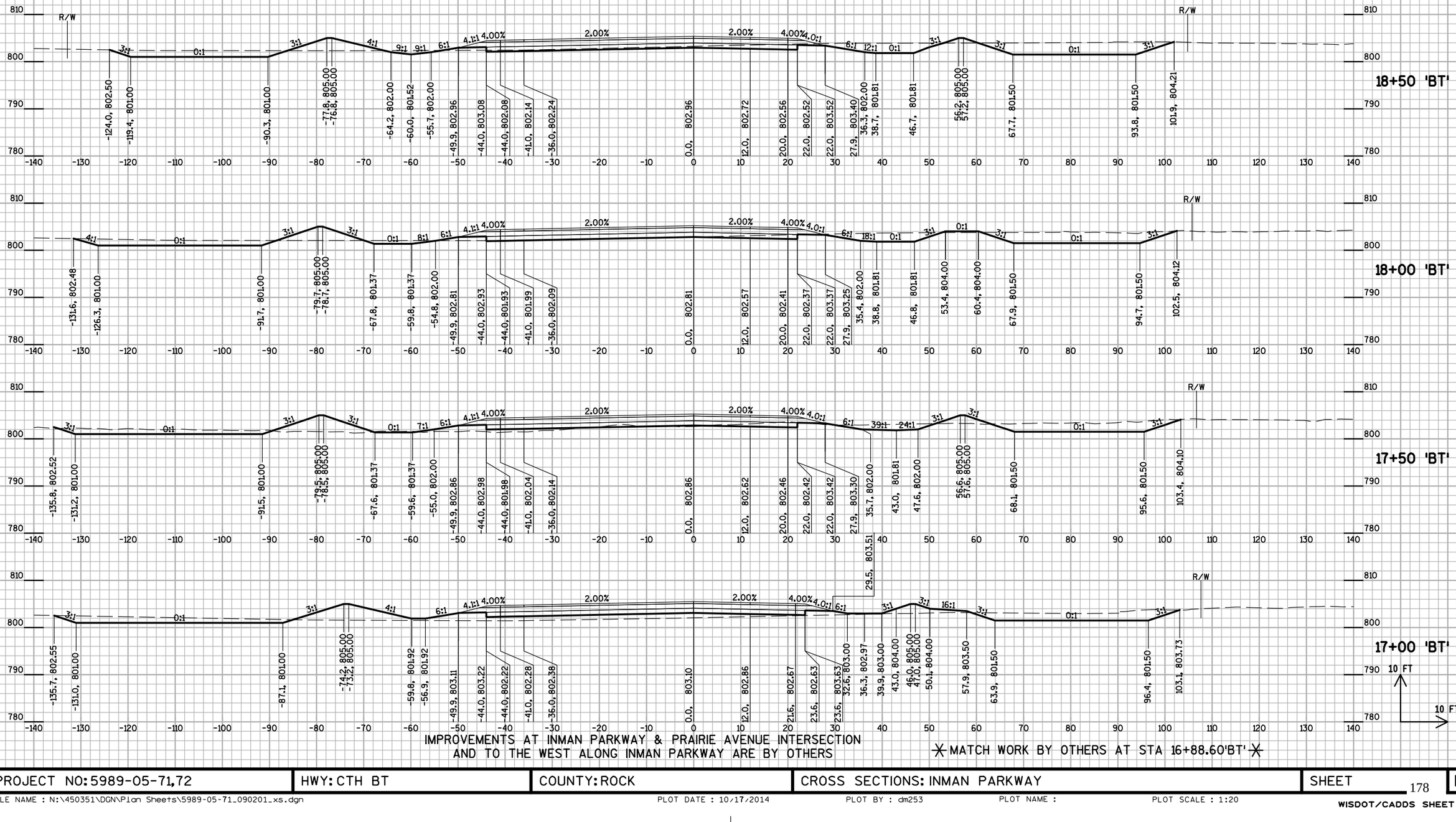

IMPROVEMENTS AT INMAN PARKWAY & PRAIRIE AVENUE INTERSECTION AND TO THE WEST ALONG INMAN PARKWAY ARE BY OTHERS

MATCH WORK BY OTHERS AT STA 16+88.60'BT'

PROJECT NO: 5989-05-71,72	HWY: CTH BT	COUNTY: ROCK	CROSS SECTIONS: INMAN PARKWAY	SHEET E

FILE NAME : N:\450351\DGN\Plan Sheets\5989-05-71_090201_xs.dgn PLOT DATE : 10/17/2014 PLOT BY : dm253 PLOT NAME : PLOT SCALE : 1:20

WISDOT/CADDS SHEET 21

STA. 19+00 'BT' TO 20+50 'BT'

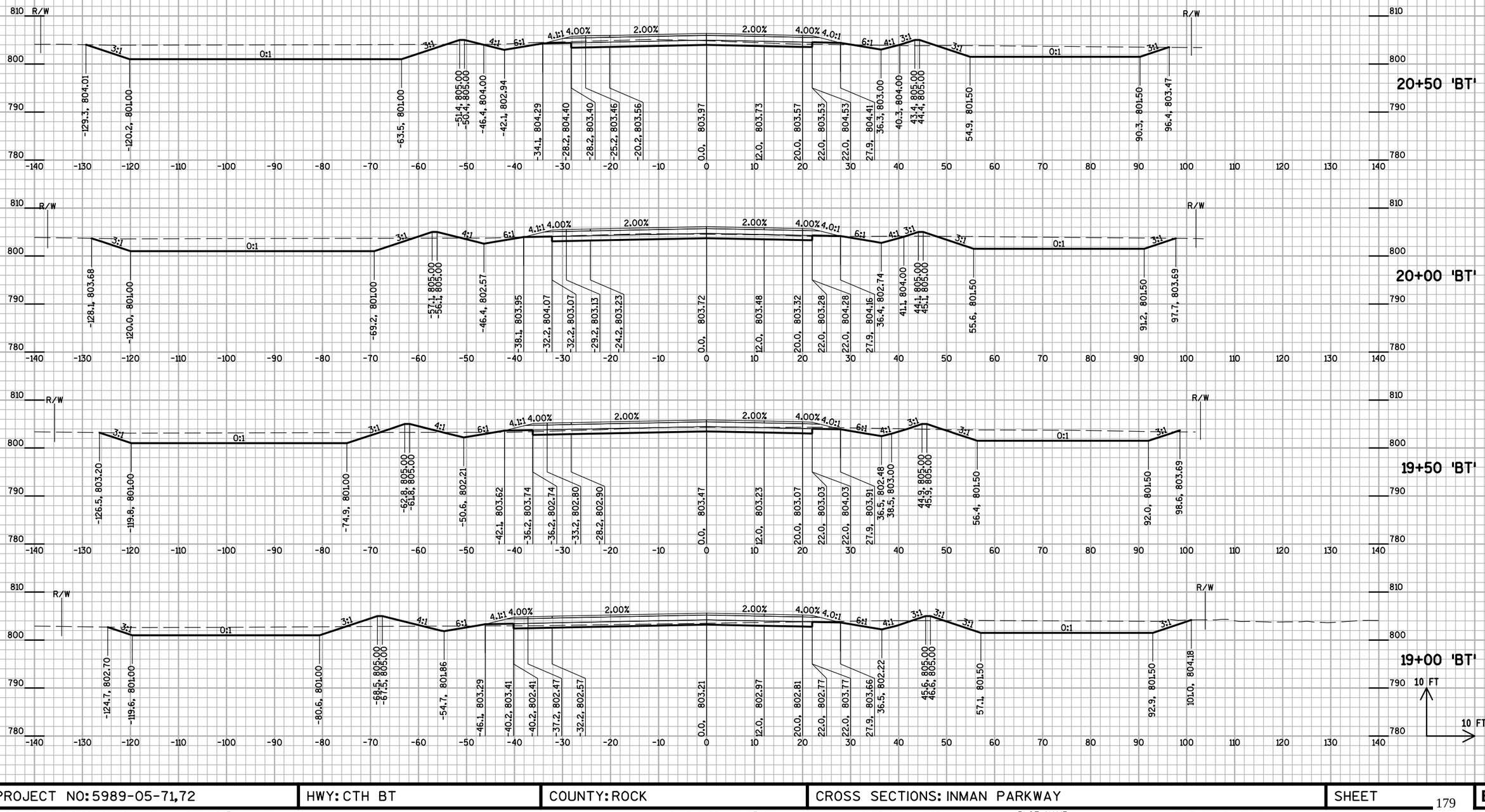

9

9

PROJECT NO: 5989-05-71,72	HWY: CTH BT	COUNTY: ROCK	CROSS SECTIONS: INMAN PARKWAY	SHEET	E

FILE NAME : N:\450351\DGN\Plan Sheets\5989-05-71_090201_xs.dgn | PLOT DATE : 10/17/2014 | PLOT BY : dm253 | PLOT NAME : | PLOT SCALE : 1:20

WISDOT/CADDS SHEET 21

STA. 21+00 'BT' TO 22+50 'BT'

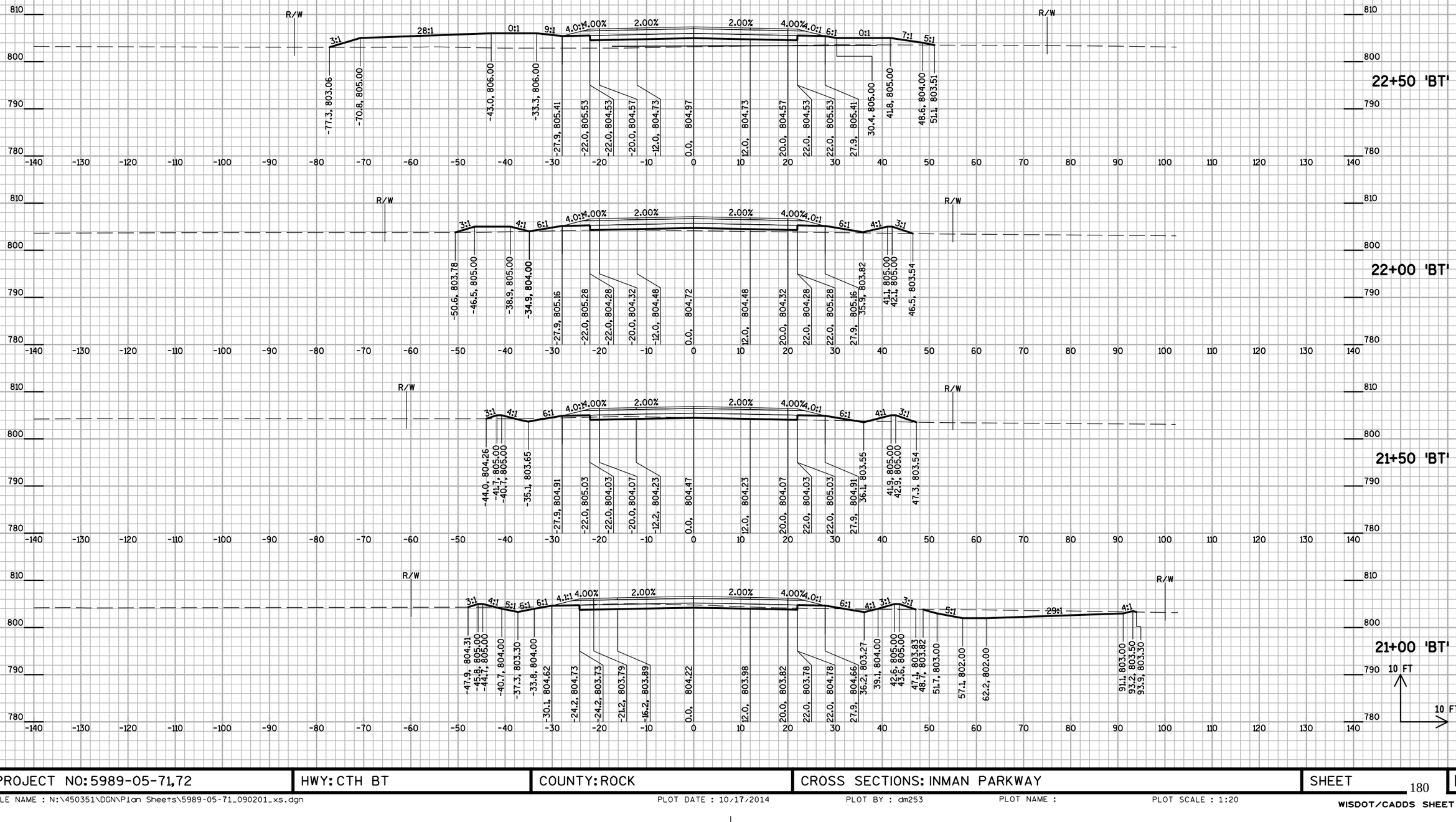

PROJECT NO: 5989-05-71,72	HWY: CTH BT	COUNTY: ROCK	CROSS SECTIONS: INMAN PARKWAY	SHEET	E

FILE NAME : N:\450351\DGN\Plan Sheets\5989-05-71_090201_xs.dgn | PLOT DATE : 10/17/2014 | PLOT BY : dm253 | PLOT NAME : | PLOT SCALE : 1:20

WISDOT/CADDS SHEET 21

STA. 22+50 'BT' TO 23+50 'BT'

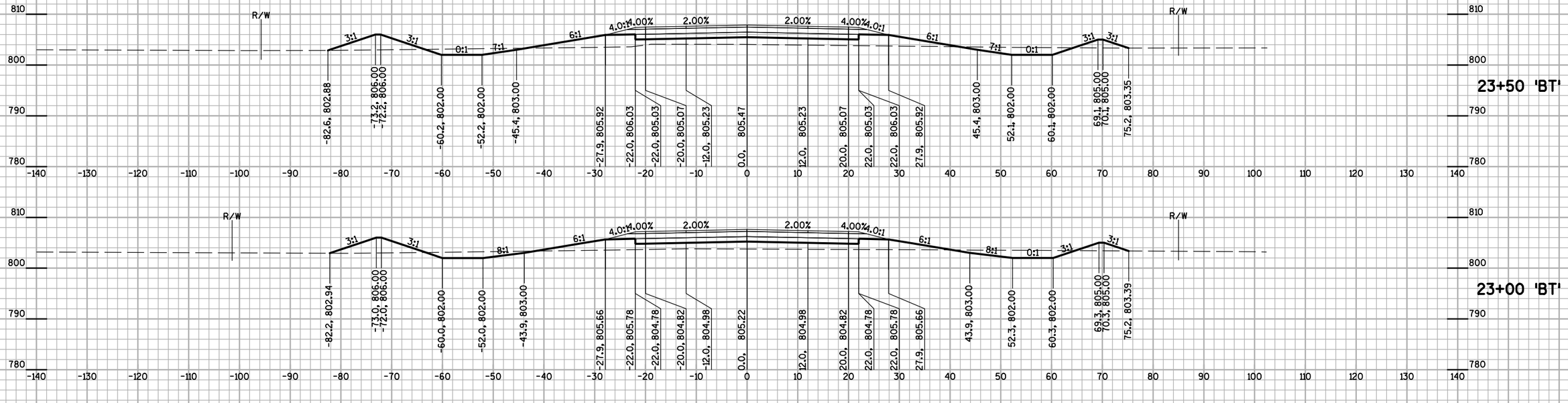

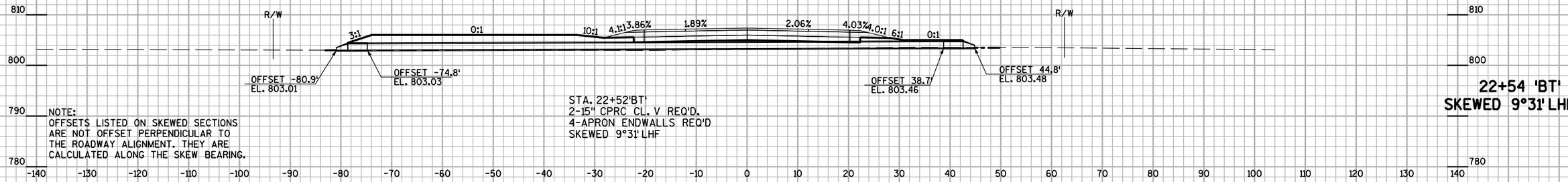

NOTE:
OFFSETS LISTED ON SKEWED SECTIONS ARE NOT OFFSET PERPENDICULAR TO THE ROADWAY ALIGNMENT. THEY ARE CALCULATED ALONG THE SKEW BEARING.

STA. 22+52'BT'
2-15" CPRC CL. V REQ'D.
4-APRON ENDWALLS REQ'D
SKEWED 9°31' LHF

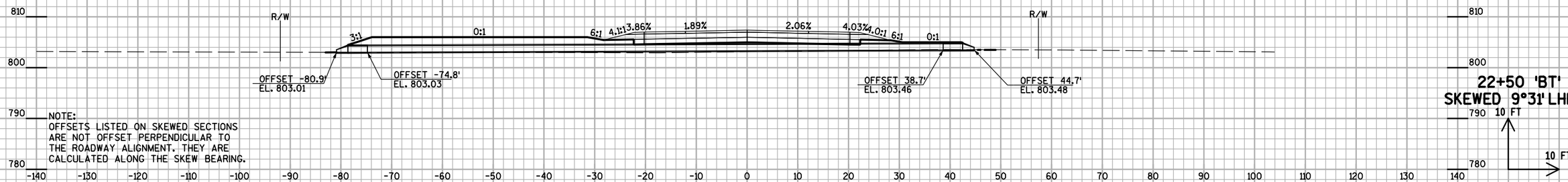

NOTE:
OFFSETS LISTED ON SKEWED SECTIONS ARE NOT OFFSET PERPENDICULAR TO THE ROADWAY ALIGNMENT. THEY ARE CALCULATED ALONG THE SKEW BEARING.

PROJECT NO: 5989-05-71,72	HWY: CTH BT	COUNTY: ROCK	CROSS SECTIONS: INMAN PARKWAY	SHEET	E

FILE NAME : N:\450351\DGN\Plan Sheets\5989-05-71_090201_xs.dgn | PLOT DATE : 10/17/2014 | PLOT BY : dm253 | PLOT NAME : | PLOT SCALE : 1:20

WISDOT/CADDS SHEET 21

STA. 24+00 'BT' TO 25+50 'BT'

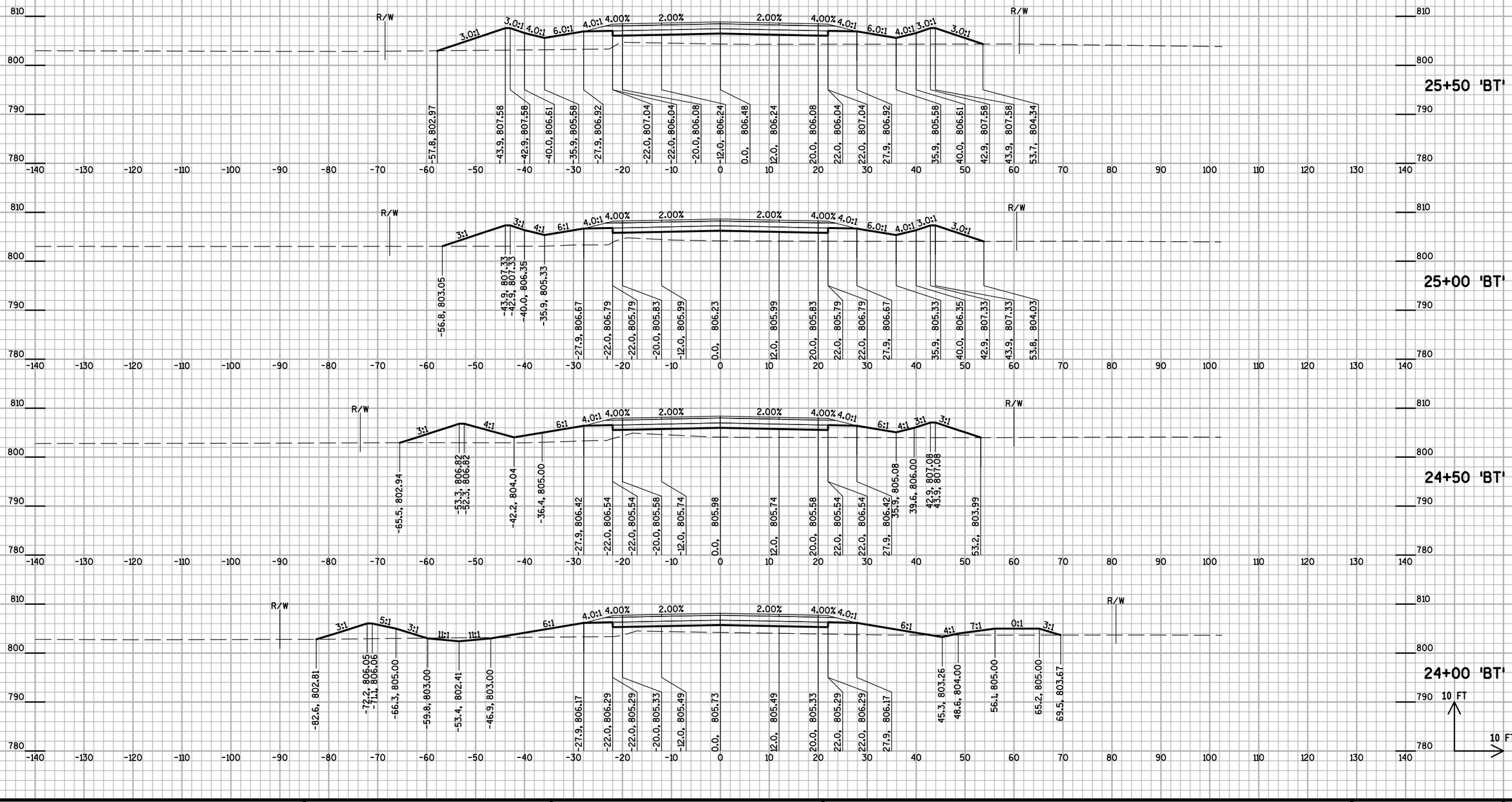

9

PROJECT NO: 5989-05-71,72	HWY: CTH BT	COUNTY: ROCK	CROSS SECTIONS: INMAN PARKWAY	SHEET	E

FILE NAME : N:\450351\DGN\Plan Sheets\5989-05-71_090201_xs.dgn | PLOT DATE : 10/17/2014 | PLOT BY : dm253 | PLOT NAME : | PLOT SCALE : 1:20

WISDOT/CADDS SHEET 21

STA. 26+00 'BT' TO 27+50 'BT'

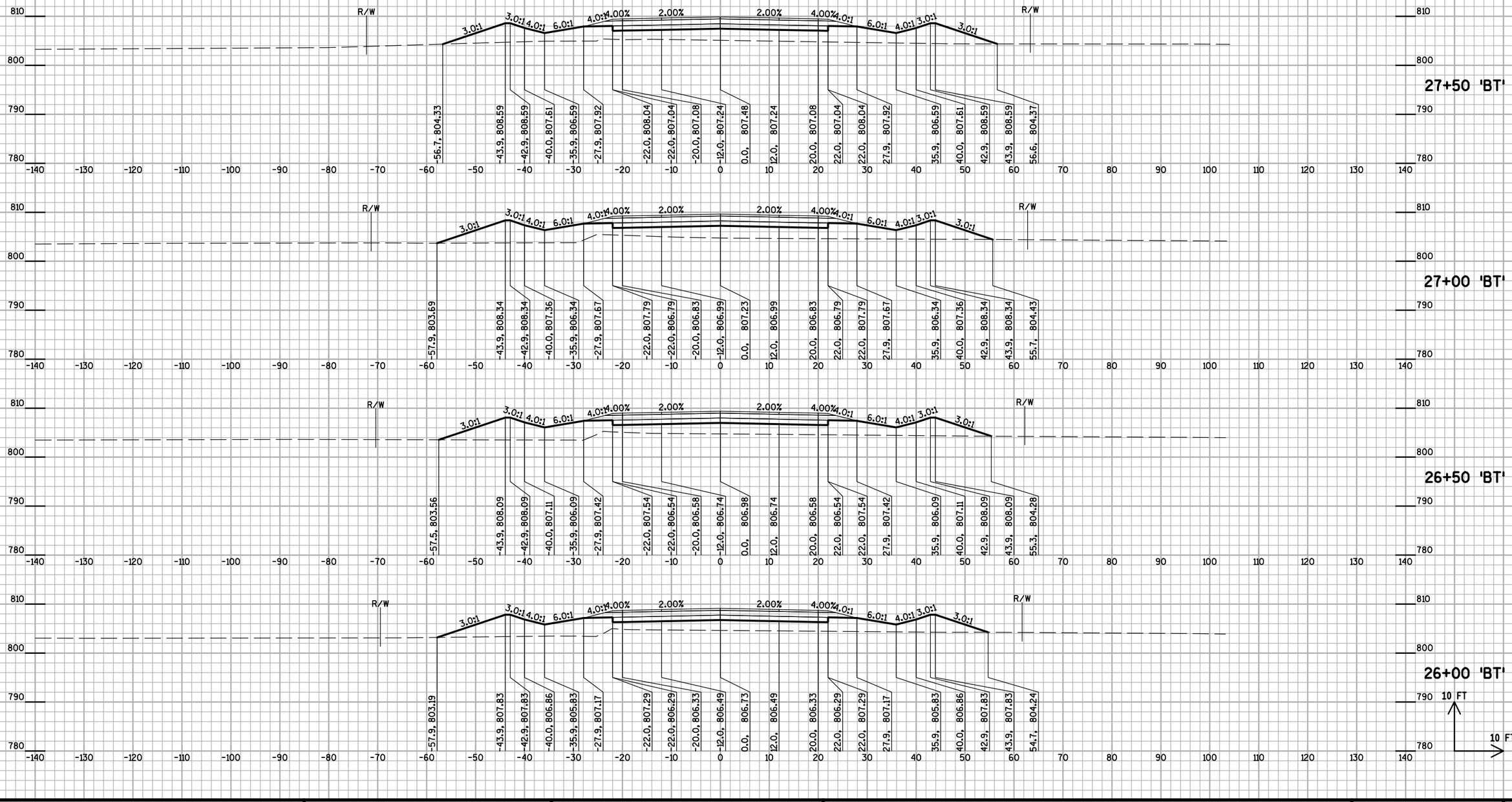

9

9

PROJECT NO: 5989-05-71,72	HWY: CTH BT	COUNTY: ROCK	CROSS SECTIONS: INMAN PARKWAY	SHEET	E

FILE NAME : N:\450351\DGN\Plan Sheets\5989-05-71_090201_xs.dgn PLOT DATE : 10/17/2014 PLOT BY : dm253 PLOT NAME : PLOT SCALE : 1:20

WISDOT/CADDS SHEET 21

STA. 28+00 'BT' TO 29+00 'BT'

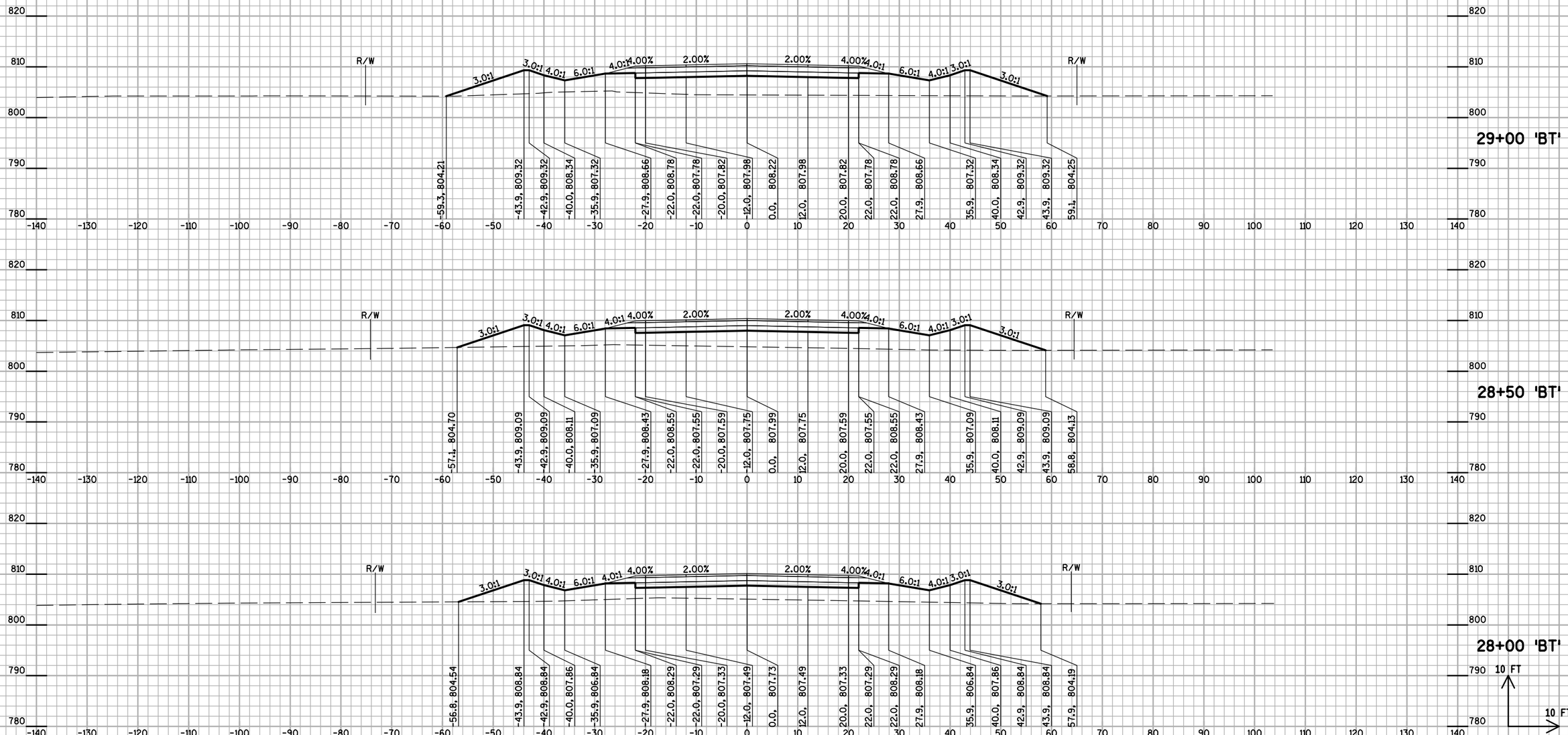

9

9

PROJECT NO: 5989-05-71,72	HWY: CTH BT	COUNTY: ROCK	CROSS SECTIONS: INMAN PARKWAY	SHEET	E

FILE NAME : N:\450351\DGN\Plan Sheets\5989-05-71_090201_xs.dgn PLOT DATE : 10/17/2014 PLOT BY : dm253 PLOT NAME : PLOT SCALE : 1:20

WISDOT/CADDS SHEET 21

STA. 29+50 'BT' TO 30+50 'BT'

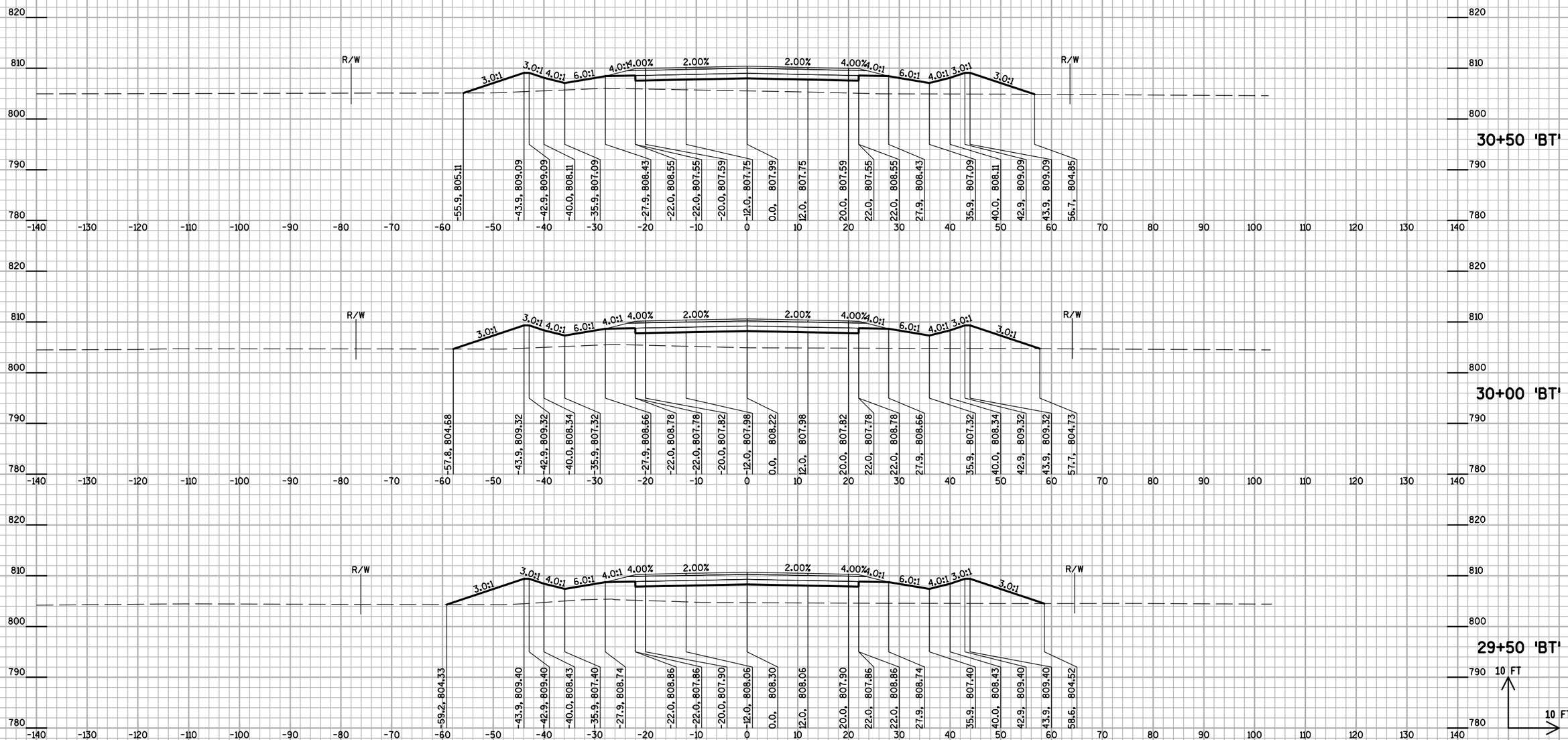

9

9

PROJECT NO: 5989-05-71,72	HWY: CTH BT	COUNTY: ROCK	CROSS SECTIONS: INMAN PARKWAY	SHEET	E

FILE NAME : N:\450351\DGN\Plan Sheets\5989-05-71_090201_xs.dgn PLOT DATE : 10/17/2014 PLOT BY : dm253 PLOT NAME : PLOT SCALE : 1:20

WISDOT/CADDS SHEET 21

STA. 31+00 'BT' TO 32+50 'BT'

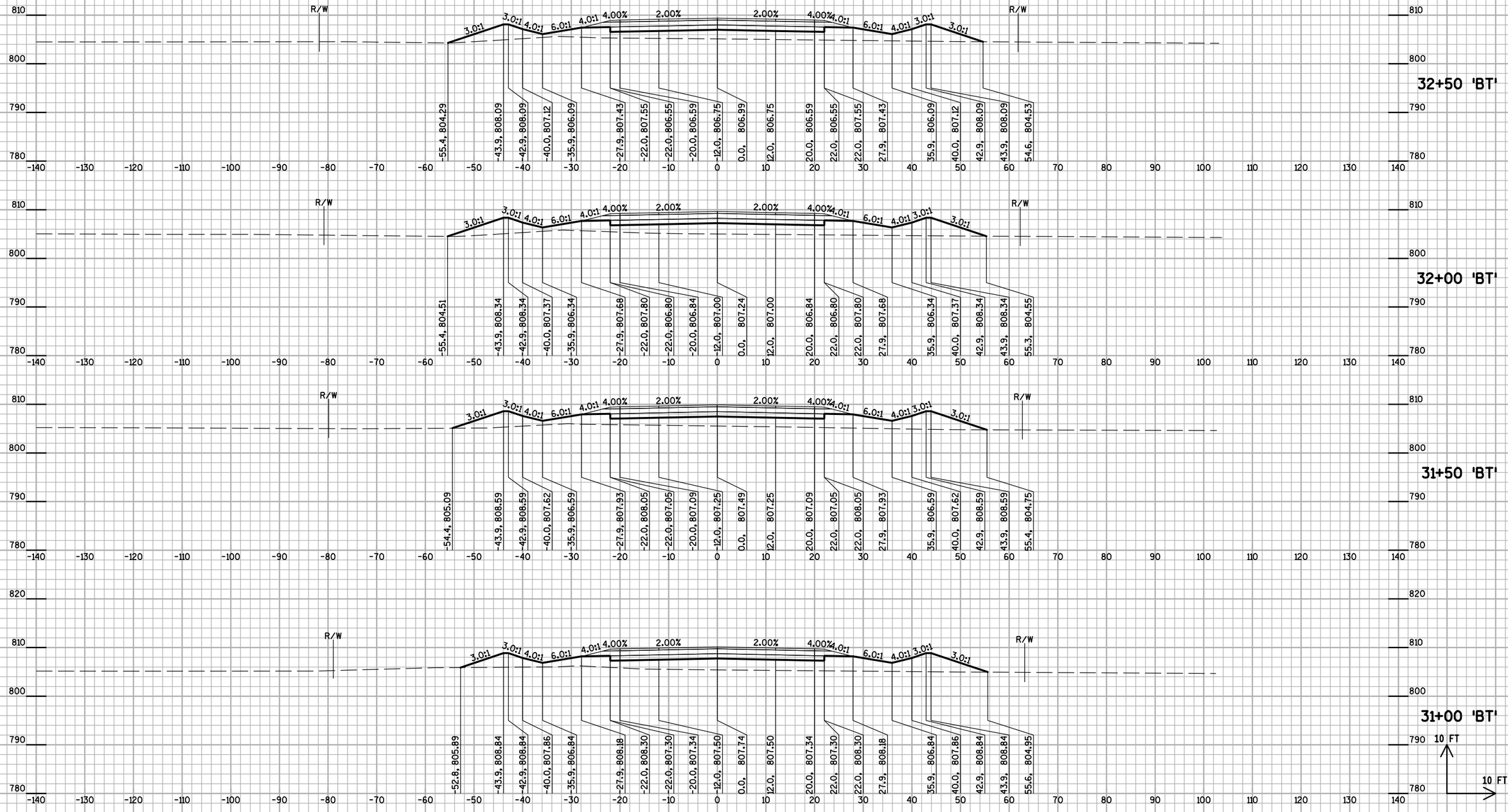

9

9

PROJECT NO: 5989-05-71,72	HWY: CTH BT	COUNTY: ROCK	CROSS SECTIONS: INMAN PARKWAY	SHEET	E

FILE NAME : N:\450351\DGN\Plan Sheets\5989-05-71_090201_xs.dgn PLOT DATE : 10/17/2014 PLOT BY : dm253 PLOT NAME : PLOT SCALE : 1:20

WISDOT/CADDS SHEET 21

STA. 33+00 'BT' TO 34+50 'BT'

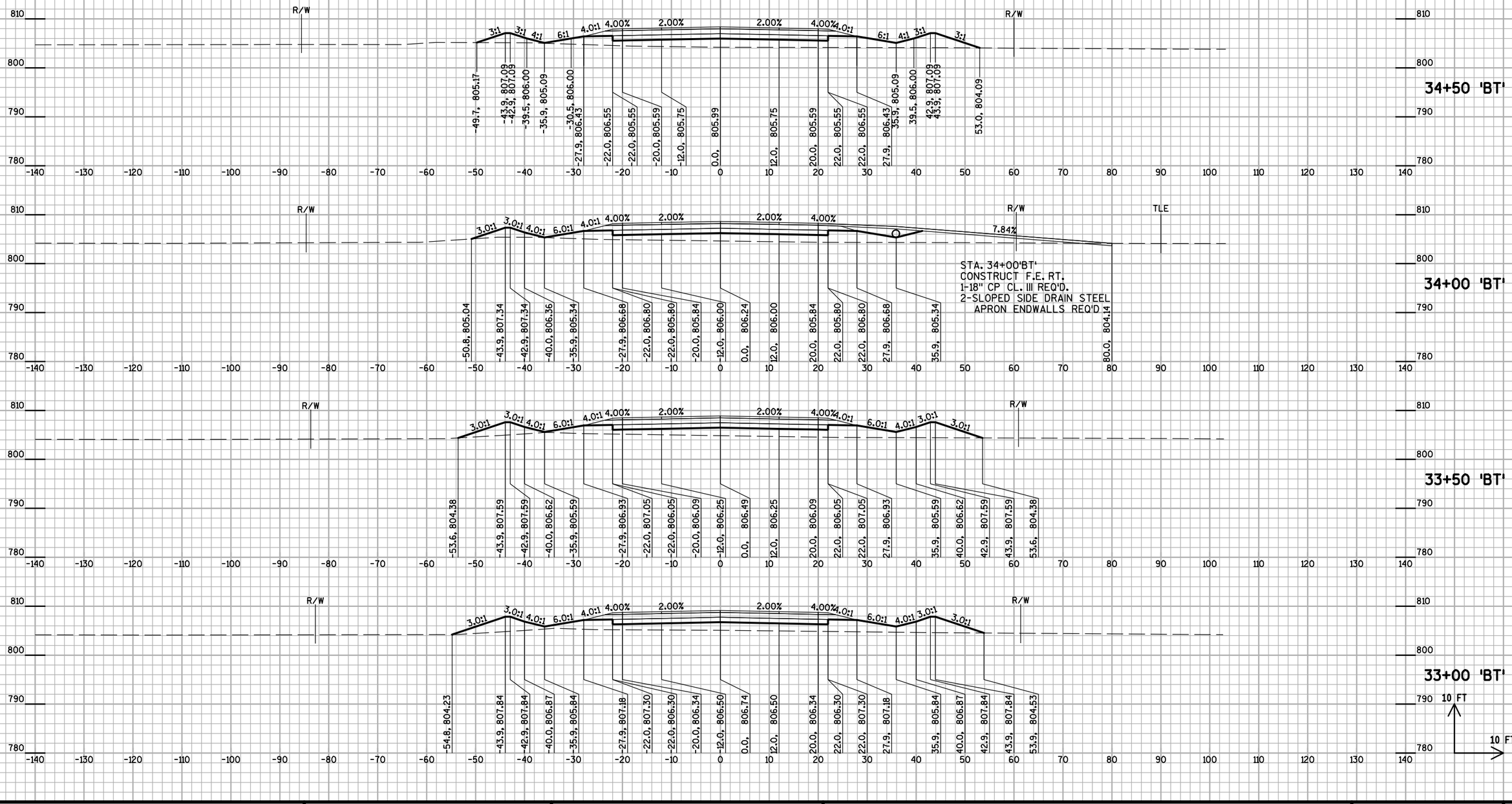

9

9

PROJECT NO: 5989-05-71,72	HWY: CTH BT	COUNTY: ROCK	CROSS SECTIONS: INMAN PARKWAY	SHEET	E

FILE NAME : N:\450351\DGN\Plan Sheets\5989-05-71_090201_xs.dgn | PLOT DATE : 10/17/2014 | PLOT BY : dm253 | PLOT NAME : | PLOT SCALE : 1:20

WISDOT/CADDS SHEET 21

STA. 35+00 'BT' TO 36+50 'BT'

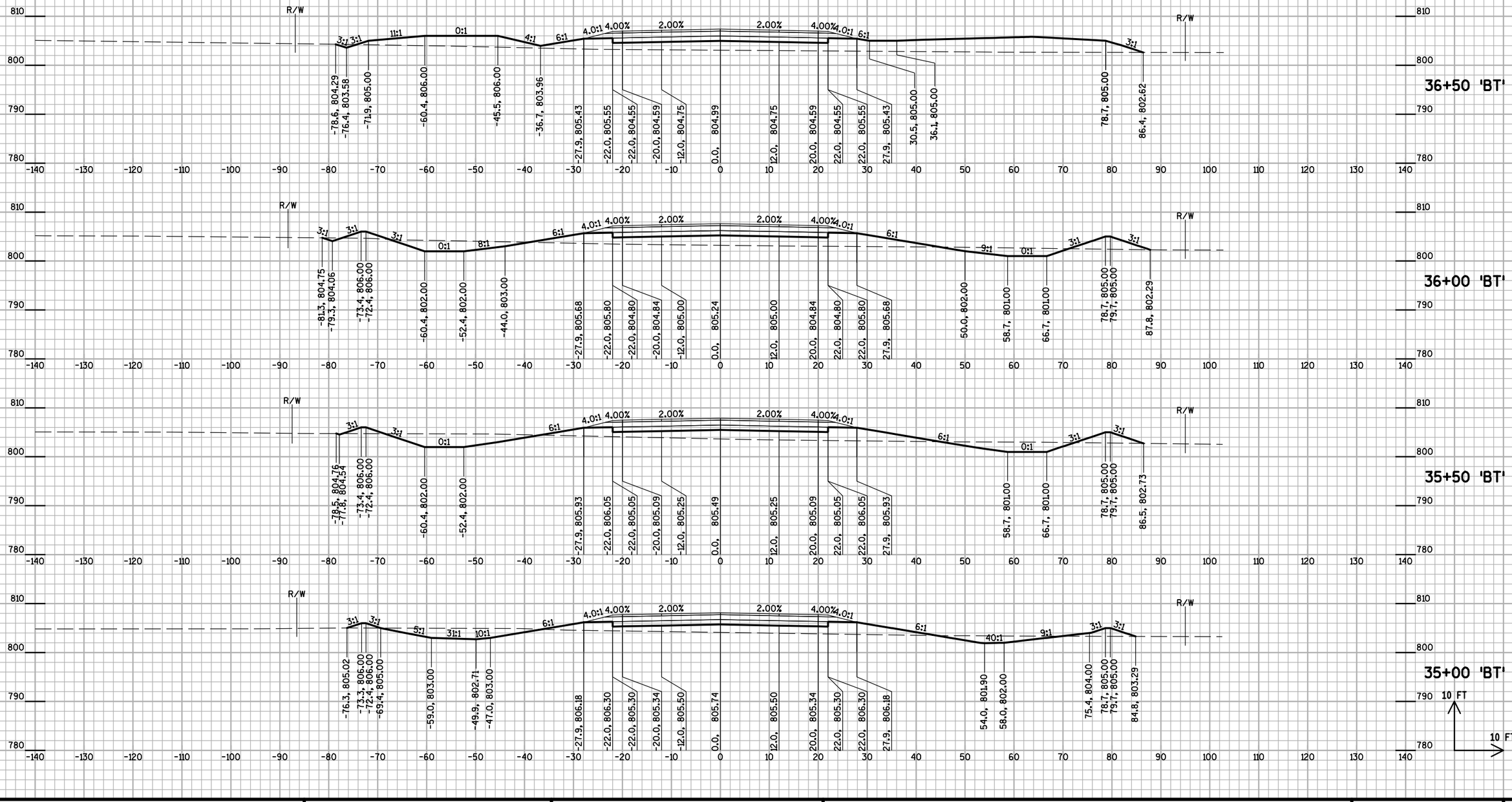

PROJECT NO: 5989-05-71,72	HWY: CTH BT	COUNTY: ROCK	CROSS SECTIONS: INMAN PARKWAY	SHEET	E

FILE NAME : N:\450351\DGN\Plan Sheets\5989-05-71_090201_xs.dgn | PLOT DATE : 10/17/2014 | PLOT BY : dm253 | PLOT NAME : | PLOT SCALE : 1:20

WISDOT/CADDS SHEET 21

STA. 36+70 'BT' TO 37+50 'BT'

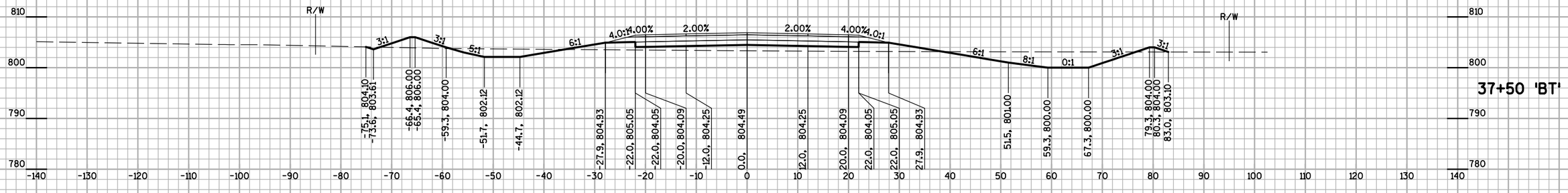

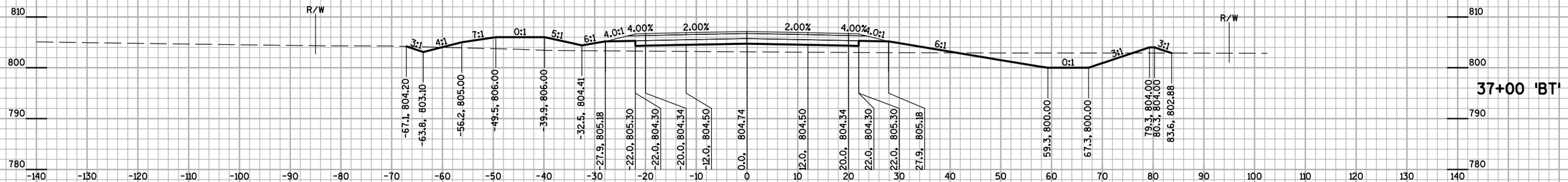

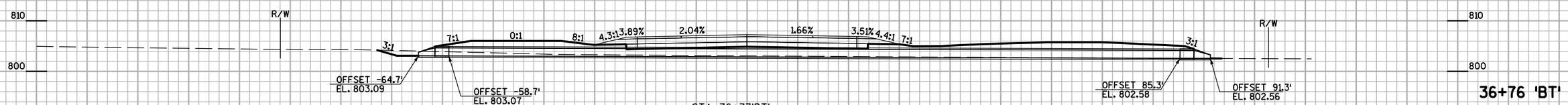

NOTE:
OFFSETS LISTED ON SKEWED SECTIONS ARE NOT OFFSET PERPENDICULAR TO THE ROADWAY ALIGNMENT. THEY ARE CALCULATED ALONG THE SKEW BEARING.

STA. 36+73'BT'
2-19" X 30" CPRCHE CL.HE-IV REQ'D.
4-APRON ENDWALLS REQ'D
SKEWED 22°23' LHF

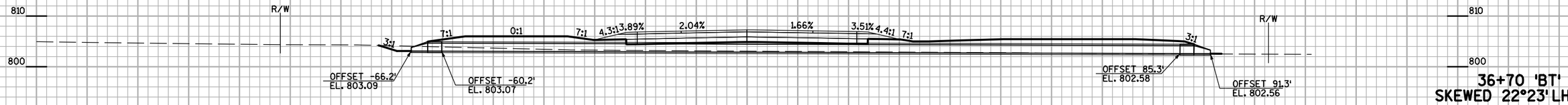

NOTE:
OFFSETS LISTED ON SKEWED SECTIONS ARE NOT OFFSET PERPENDICULAR TO THE ROADWAY ALIGNMENT. THEY ARE CALCULATED ALONG THE SKEW BEARING.

10 FT
10 FT

9

9

PROJECT NO: 5989-05-71,72	HWY: CTH BT	COUNTY: ROCK	CROSS SECTIONS: INMAN PARKWAY	SHEET E

FILE NAME : N:\450351\DGN\Plan Sheets\5989-05-71_090201_xs.dgn | PLOT DATE : 10/17/2014 | PLOT BY : dm253 | PLOT NAME : | PLOT SCALE : 1:20

WISDOT/CADDS SHEET 21

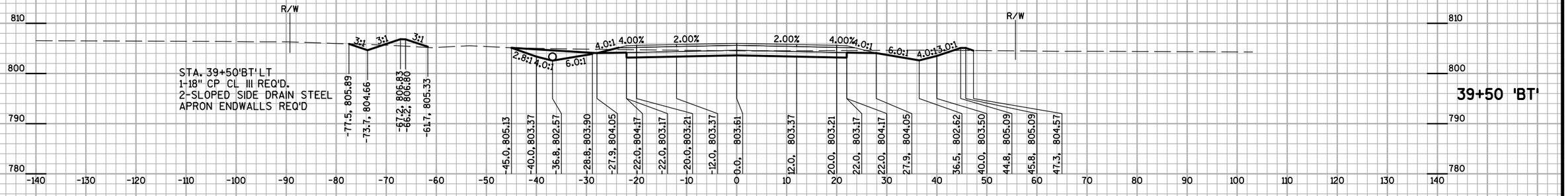

9

9

PROJECT NO: 5989-05-71,72	HWY: CTH BT	COUNTY: ROCK	CROSS SECTIONS: INMAN PARKWAY	SHEET	E

FILE NAME : N:\450351\DGN\Plan Sheets\5989-05-71_090201_xs.dgn | PLOT DATE : 10/17/2014 | PLOT BY : dm253 | PLOT NAME : | PLOT SCALE : 1:20

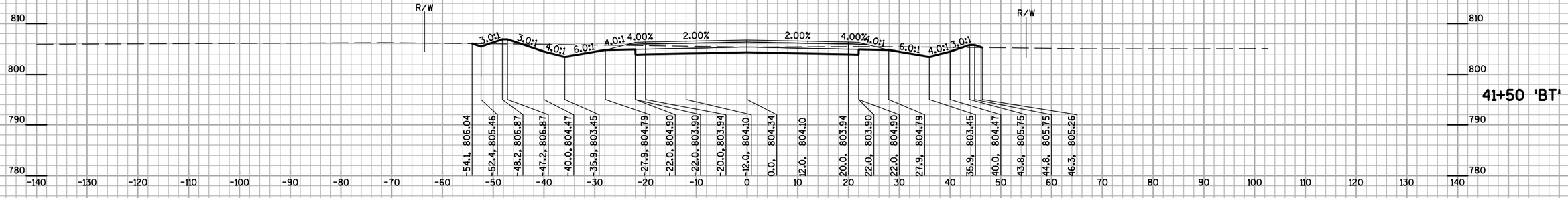

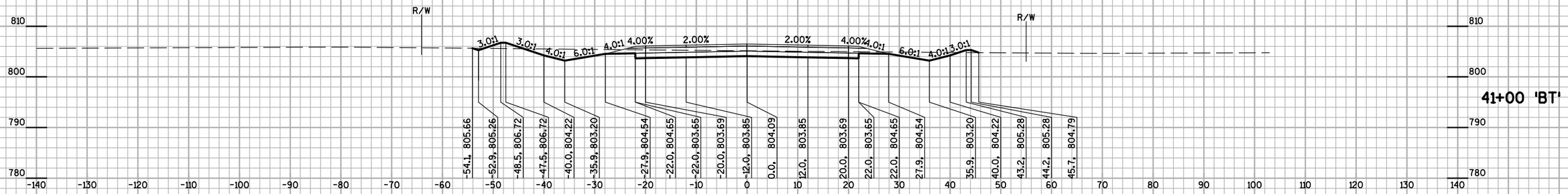

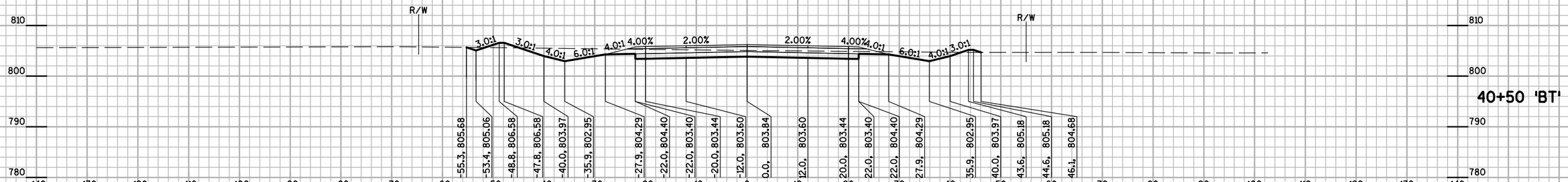

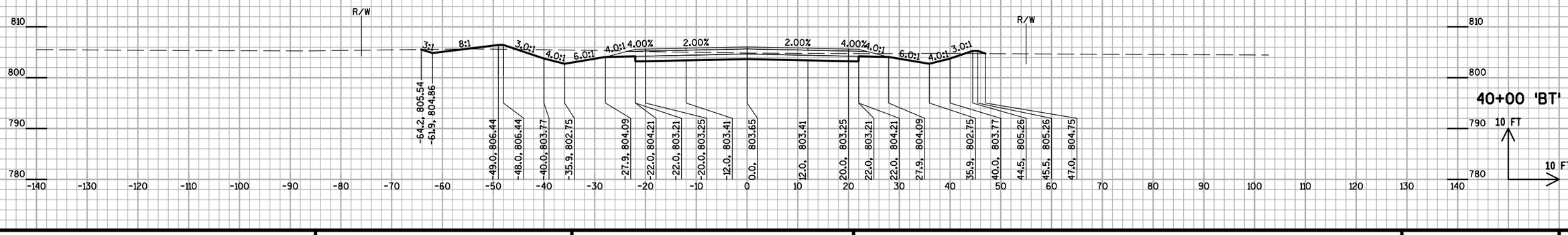

9

PROJECT NO: 5989-05-71,72	HWY: CTH BT	COUNTY: ROCK	CROSS SECTIONS: INMAN PARKWAY	SHEET	E

FILE NAME : N:\450351\DGN\Plan Sheets\5989-05-71_090201_xs.dgn | PLOT DATE : 10/17/2014 | PLOT BY : dm253 | PLOT NAME : | PLOT SCALE : 1:20

WISDOT/CADDS SHEET 21

9

STA. 42+00 'BT' TO 43+50 'BT'

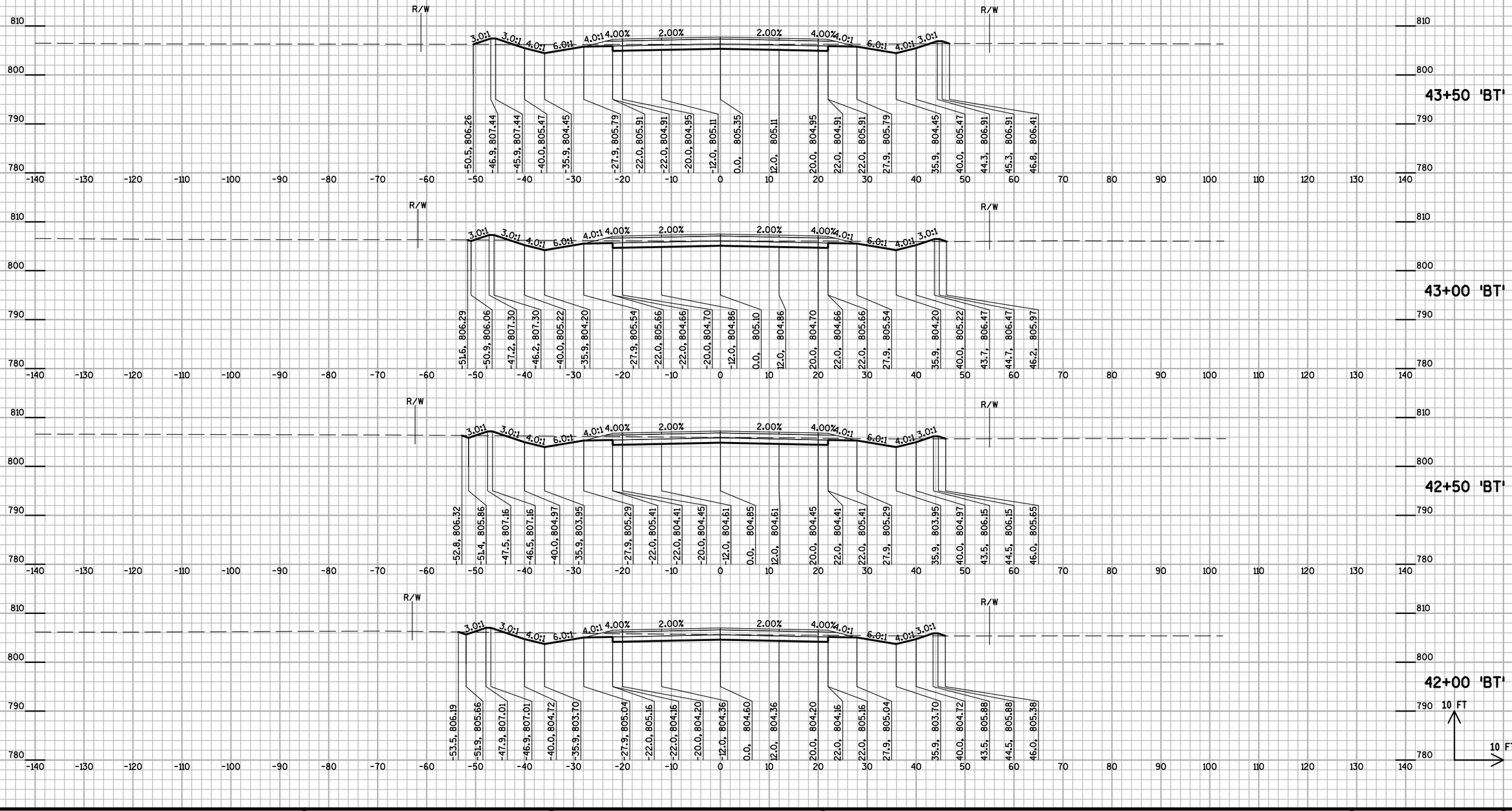

9

9

PROJECT NO: 5989-05-71,72	HWY: CTH BT	COUNTY: ROCK	CROSS SECTIONS: INMAN PARKWAY	SHEET	E

FILE NAME : N:\450351\DGN\Plan Sheets\5989-05-71_090201_xs.dgn PLOT DATE : 10/17/2014 PLOT BY : dm253 PLOT NAME : PLOT SCALE : 1:20

WISDOT/CADDS SHEET 21

STA. 44+00 'BT' TO 46+00 'BT'

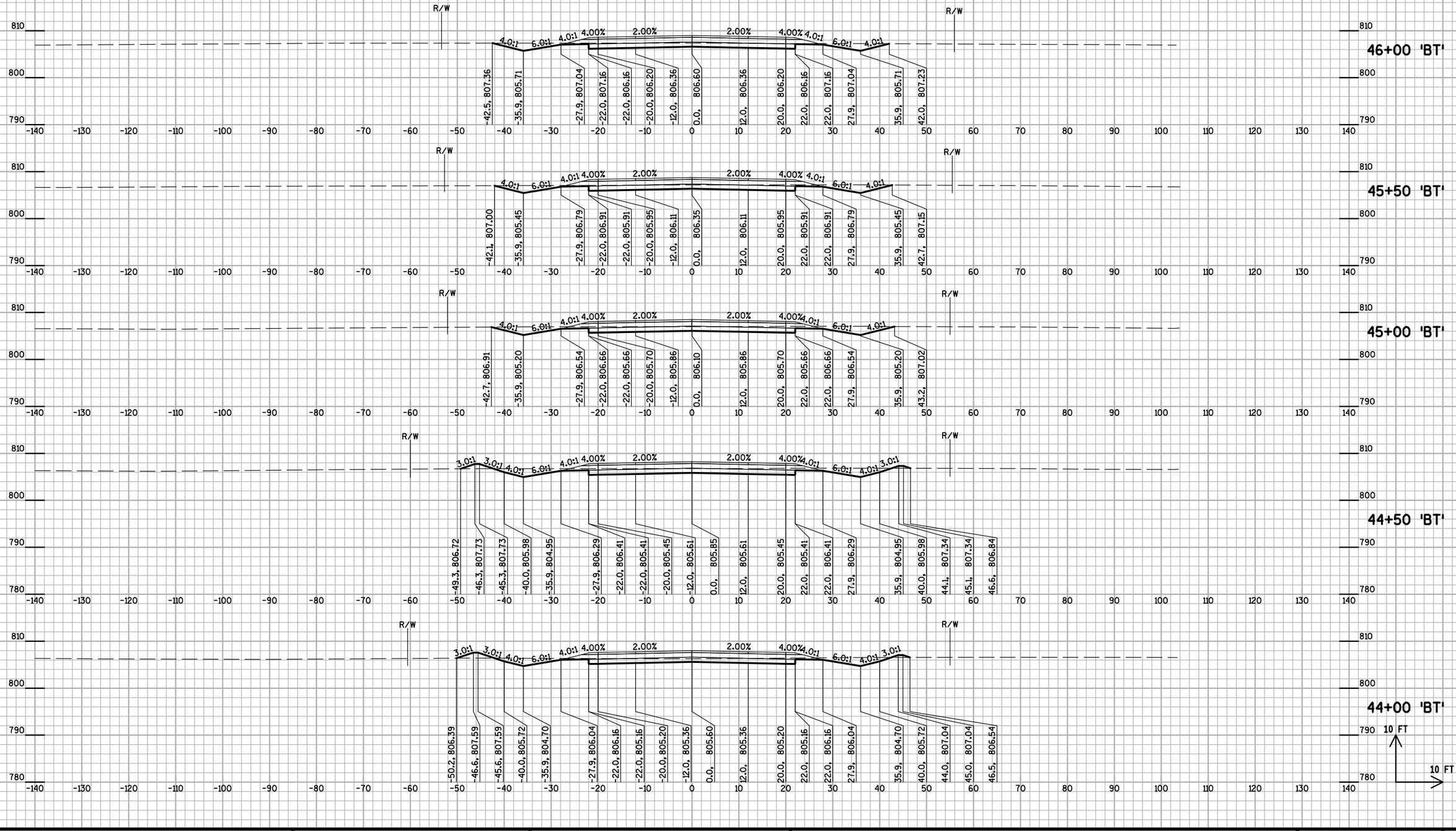

9

9

PROJECT NO: 5989-05-71,72	HWY: CTH BT	COUNTY: ROCK	CROSS SECTIONS: INMAN PARKWAY	SHEET	E

FILE NAME : N:\450351\DGN\Plan Sheets\5989-05-71_090201_xs.dgn | PLOT DATE : 10/17/2014 | PLOT BY : dm253 | PLOT NAME : | PLOT SCALE : 1:20

WISDOT/CADDS SHEET 21

STA. 46+50 'BT' TO 49+00 'BT'

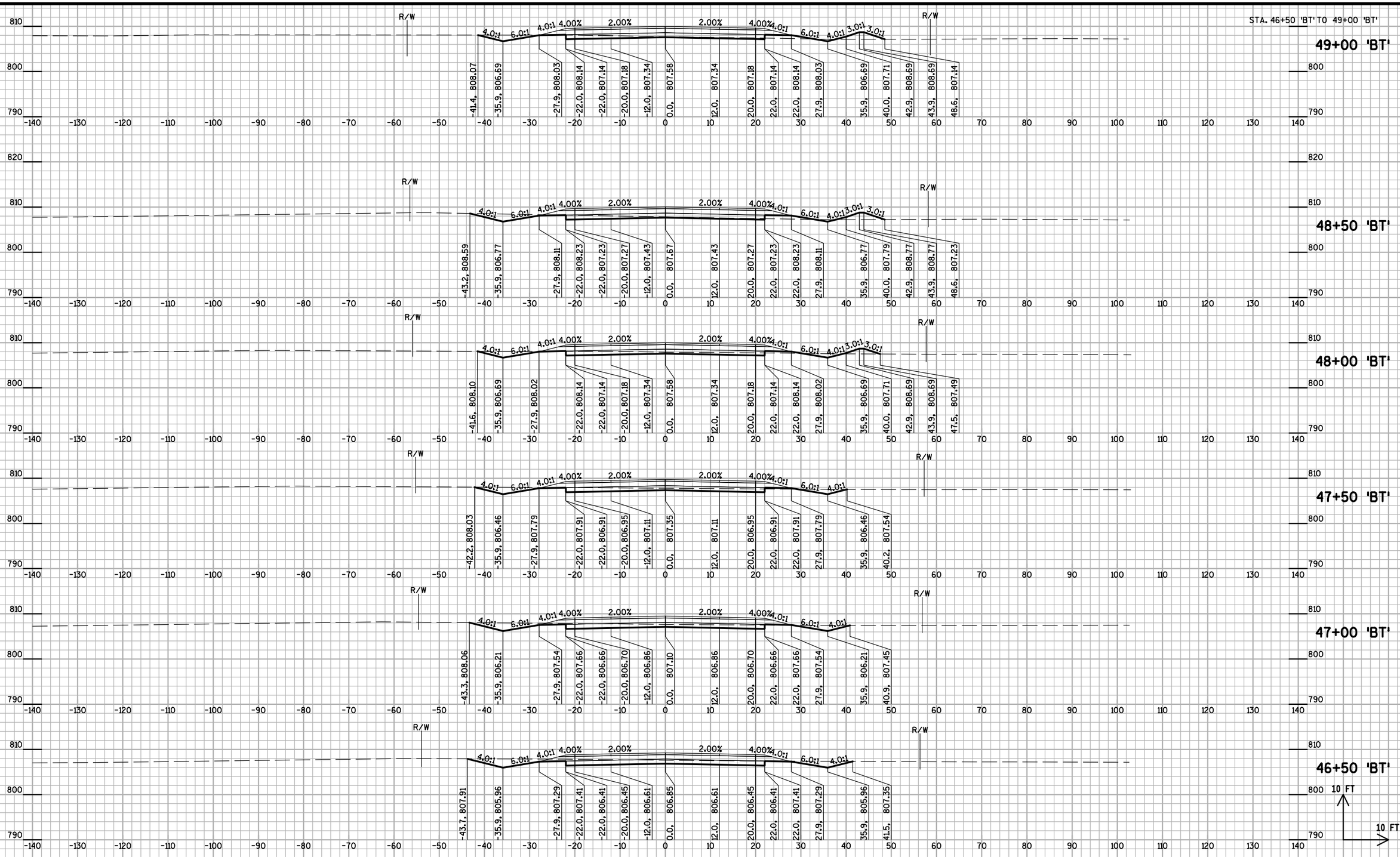

9

9

PROJECT NO: 5989-05-71,72	HWY: CTH BT	COUNTY: ROCK	CROSS SECTIONS: INMAN PARKWAY	SHEET	E

FILE NAME : N:\450351\DGN\Plan Sheets\5989-05-71_090201_xs.dgn PLOT DATE : 10/17/2014 PLOT BY : dm253 PLOT NAME : PLOT SCALE : 1:20

WISDOT/CADDS SHEET 21

STA. 49+50 'BT' TO 51+50 'BT'

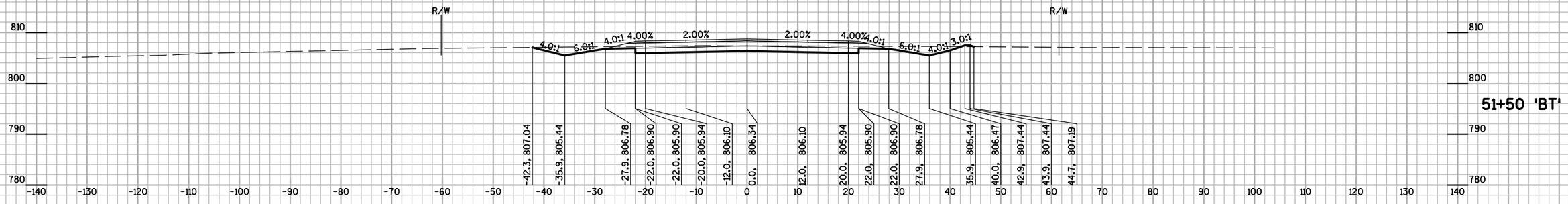

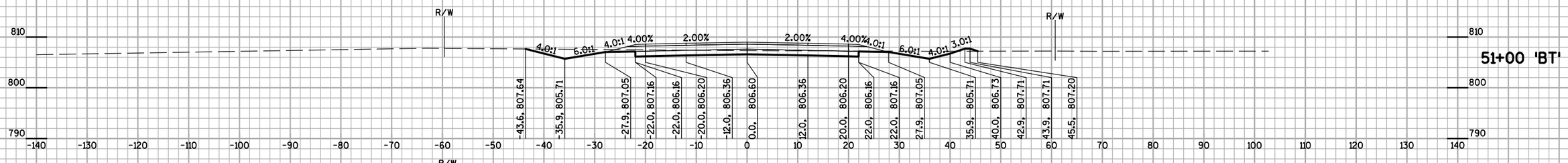

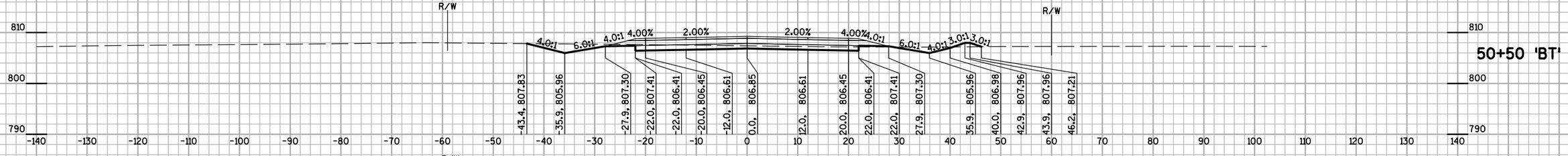

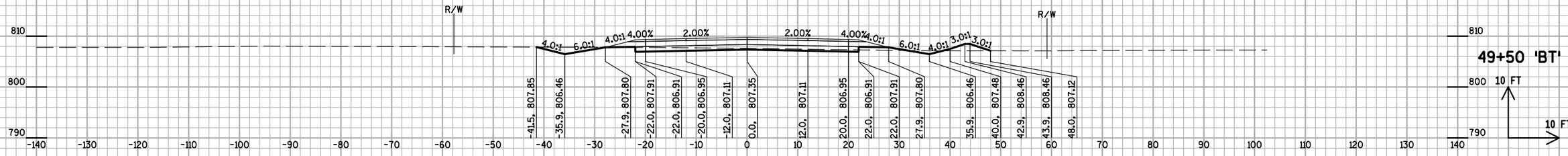

9

9

PROJECT NO: 5989-05-71,72	HWY: CTH BT	COUNTY: ROCK	CROSS SECTIONS: INMAN PARKWAY	SHEET	E

FILE NAME : N:\450351\DGN\Plan Sheets\5989-05-71_090201_xs.dgn PLOT DATE : 10/17/2014 PLOT BY : dm253 PLOT NAME : PLOT SCALE : 1:20

WISDOT/CADDS SHEET 21

STA. 52+00 'BT' TO 53+50 'BT'

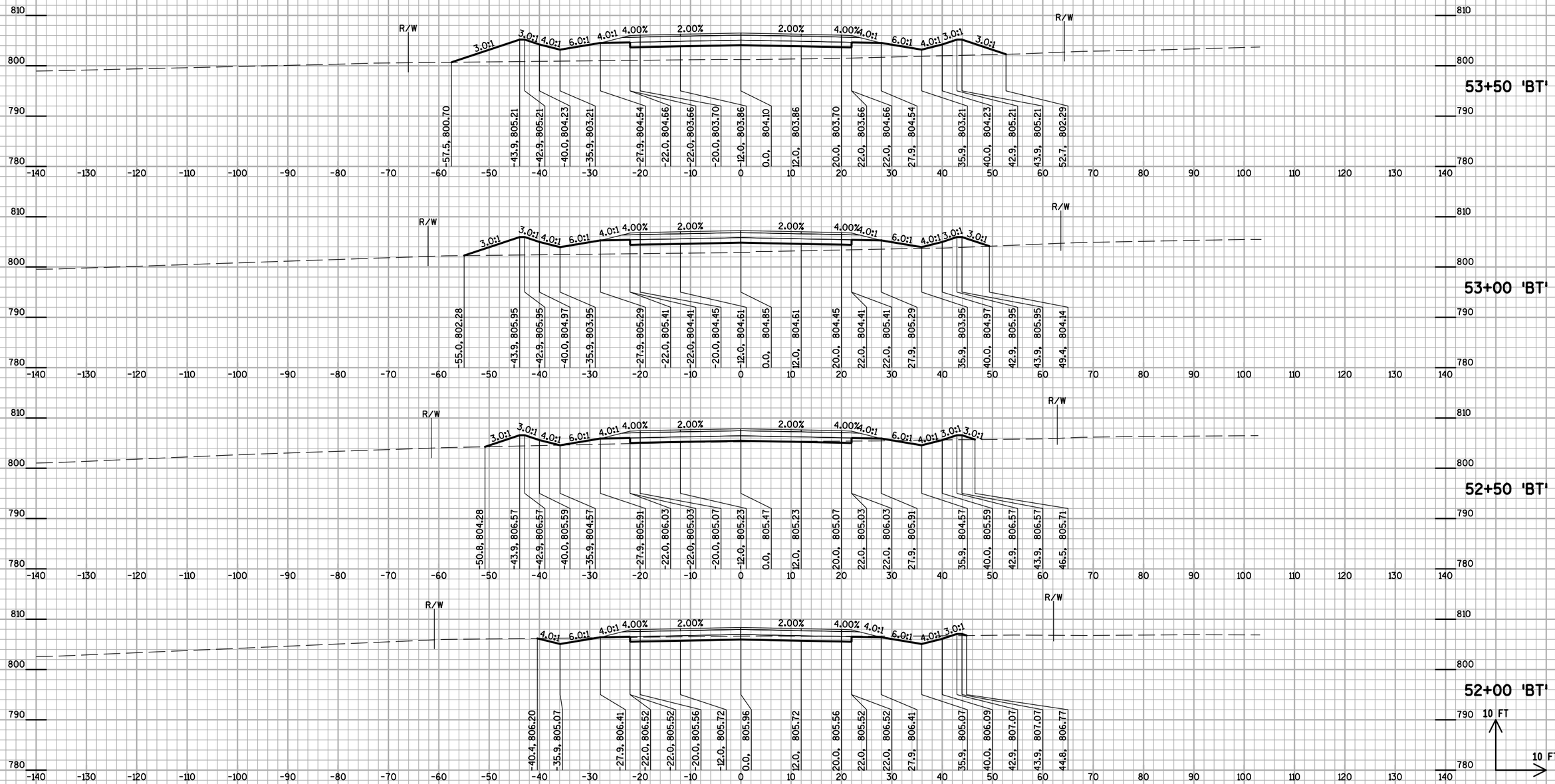

9

PROJECT NO: 5989-05-71,72	HWY: CTH BT	COUNTY: ROCK	CROSS SECTIONS: INMAN PARKWAY	SHEET	E

FILE NAME : N:\450351\DGN\Plan Sheets\5989-05-71_090201_xs.dgn | PLOT DATE : 10/17/2014 | PLOT BY : dm253 | PLOT NAME : | PLOT SCALE : 1:20

WISDOT/CADDS SHEET 21

STA. 54+00 'BT' TO 55+50 'BT'

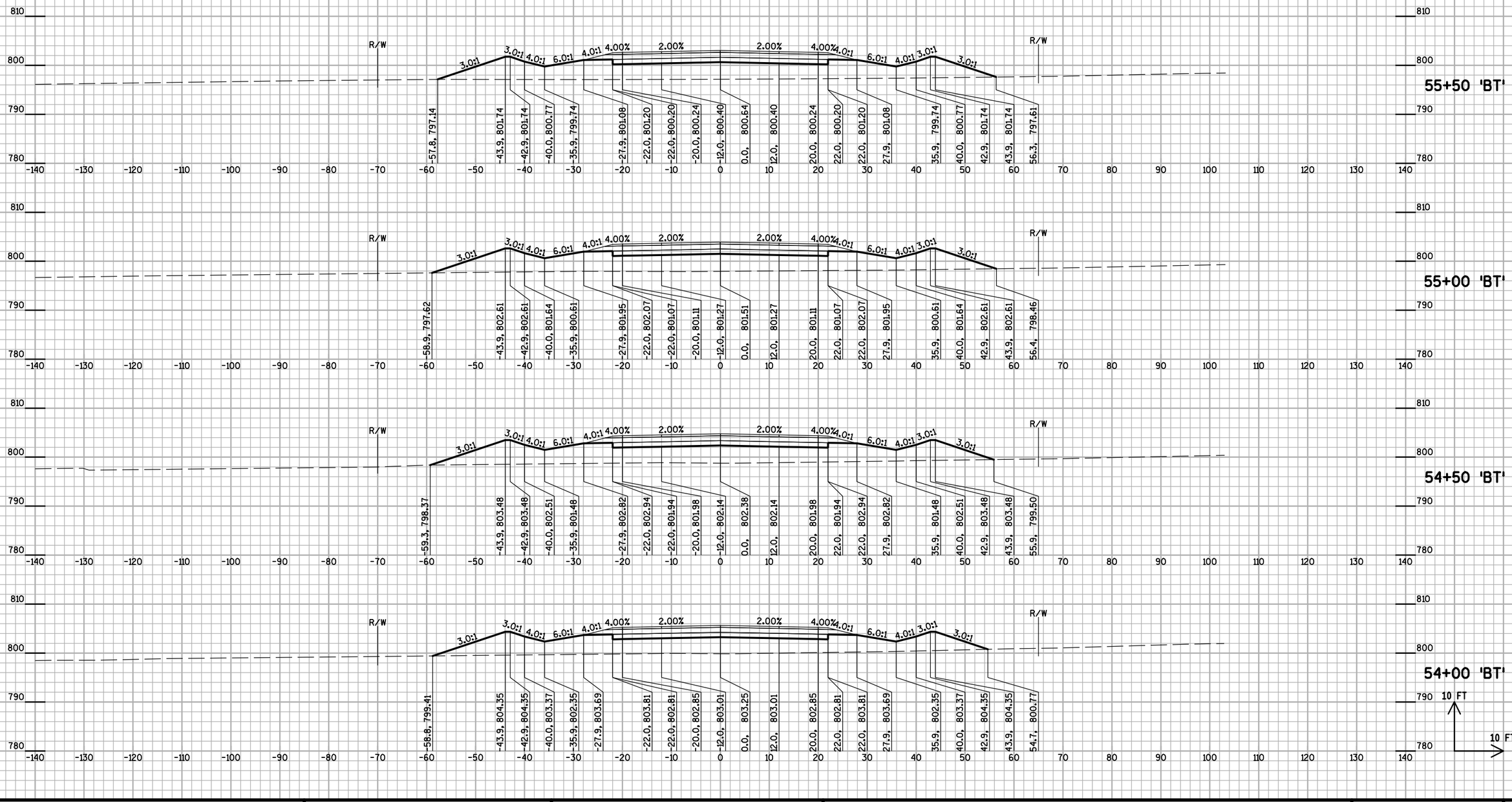

9

PROJECT NO: 5989-05-71,72	HWY: CTH BT	COUNTY: ROCK	CROSS SECTIONS: INMAN PARKWAY	SHEET	E

FILE NAME : N:\450351\DGN\Plan Sheets\5989-05-71_090201_xs.dgn PLOT DATE : 10/17/2014 PLOT BY : dm253 PLOT NAME : PLOT SCALE : 1:20

WISDOT/CADDS SHEET 21

STA. 56+00 'BT' TO 57+50 'BT'

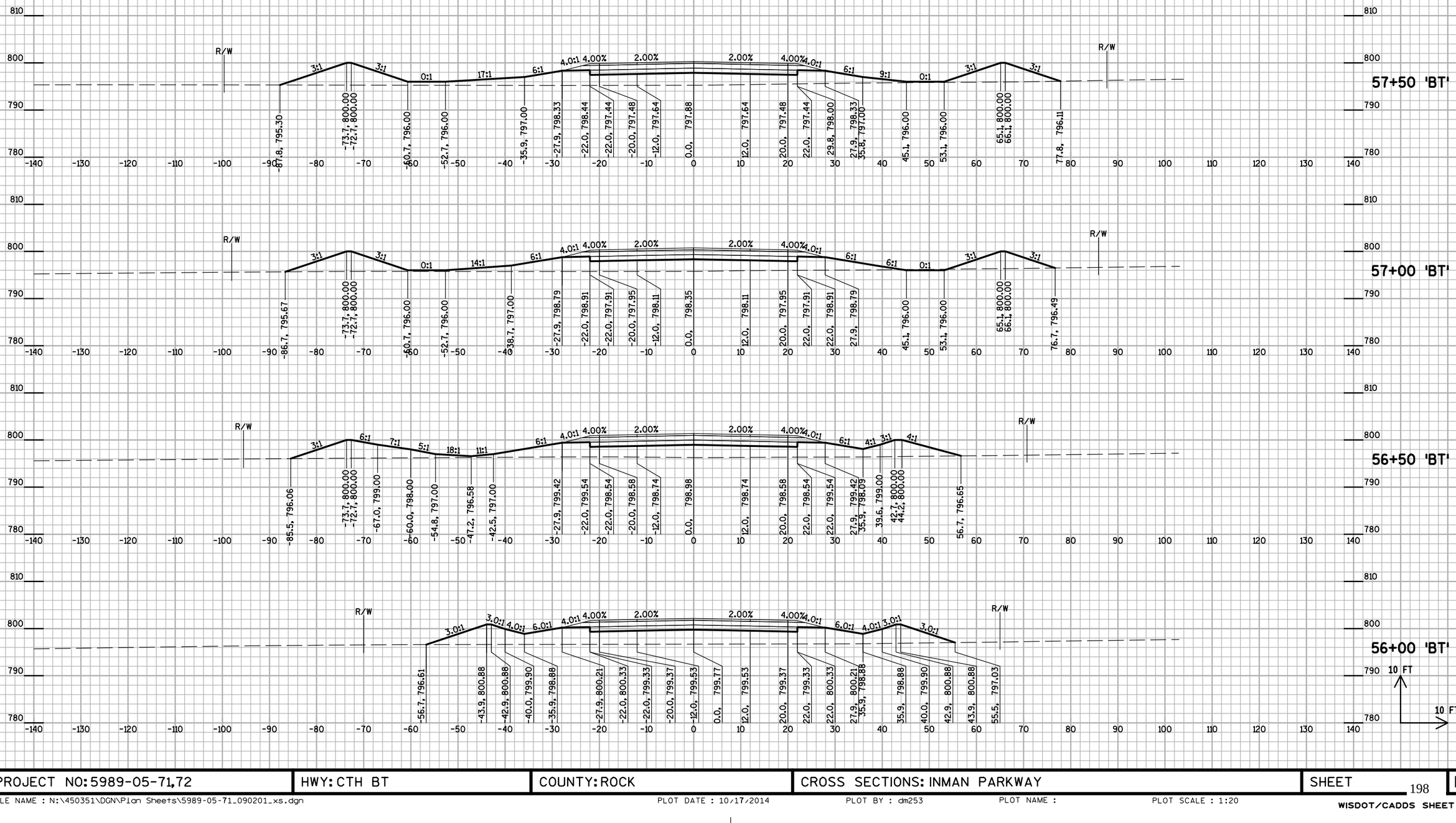

9

PROJECT NO: 5989-05-71,72	HWY: CTH BT	COUNTY: ROCK	CROSS SECTIONS: INMAN PARKWAY	SHEET	E

FILE NAME : N:\450351\DGN\Plan Sheets\5989-05-71_090201_xs.dgn | PLOT DATE : 10/17/2014 | PLOT BY : dm253 | PLOT NAME : | PLOT SCALE : 1:20

WISDOT/CADDS SHEET 21

STA. 58+00 'BT' TO 58+50 'BT'

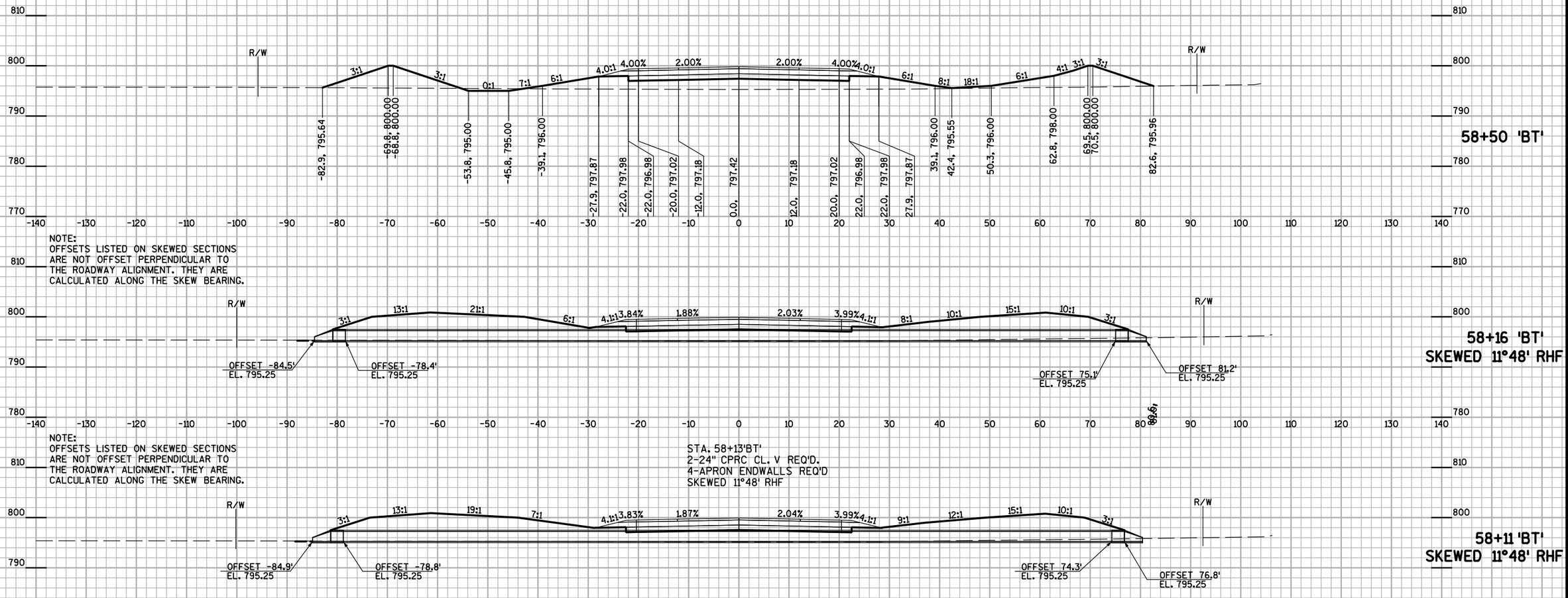

PROJECT NO: 5989-05-71,72	HWY: CTH BT	COUNTY: ROCK	CROSS SECTIONS: INMAN PARKWAY	SHEET	E

FILE NAME : N:\450351\DGN\Plan Sheets\5989-05-71_090201_xs.dgn | PLOT DATE : 10/17/2014 | PLOT BY : dm253 | PLOT NAME : | PLOT SCALE : 1:20

STA. 59+00 'BT' TO 60+50 'BT'

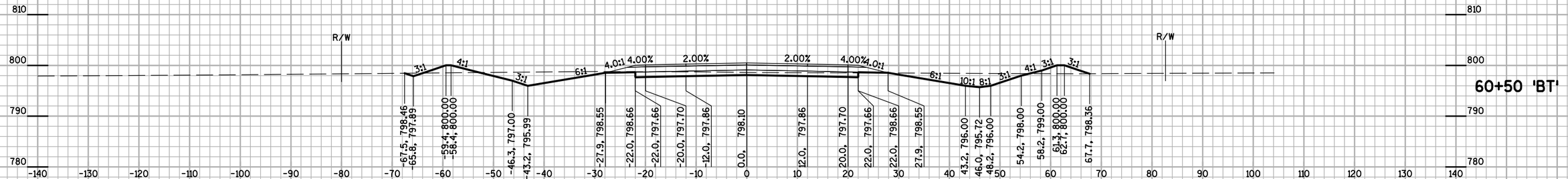

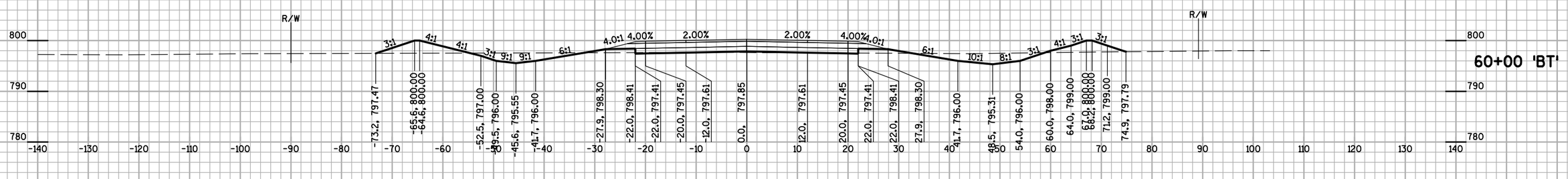

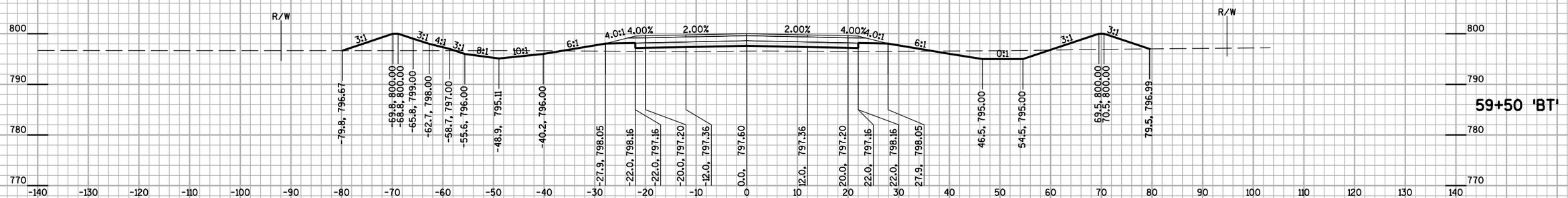

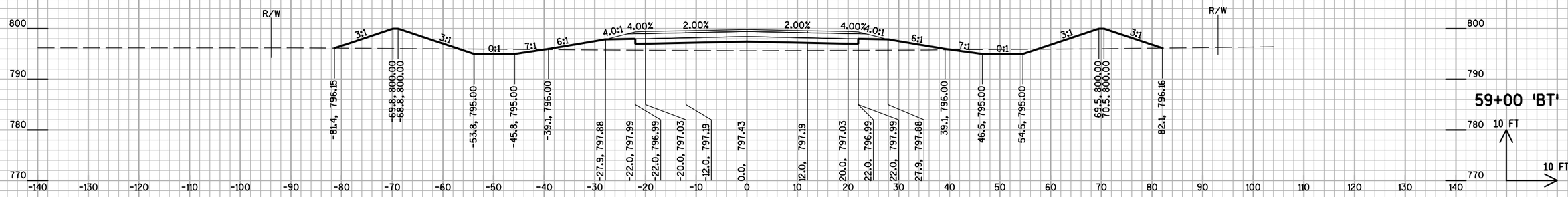

9

9

PROJECT NO: 5989-05-71,72	HWY: CTH BT	COUNTY: ROCK	CROSS SECTIONS: INMAN PARKWAY	SHEET 200	E

FILE NAME : N:\450351\DGN\Plan Sheets\5989-05-71_090201_xs.dgn PLOT DATE : 10/17/2014 PLOT BY : dm253 PLOT NAME : PLOT SCALE : 1:20

WISDOT/CADDS SHEET 21

STA. 61+00 'BT' TO 62+50 'BT'

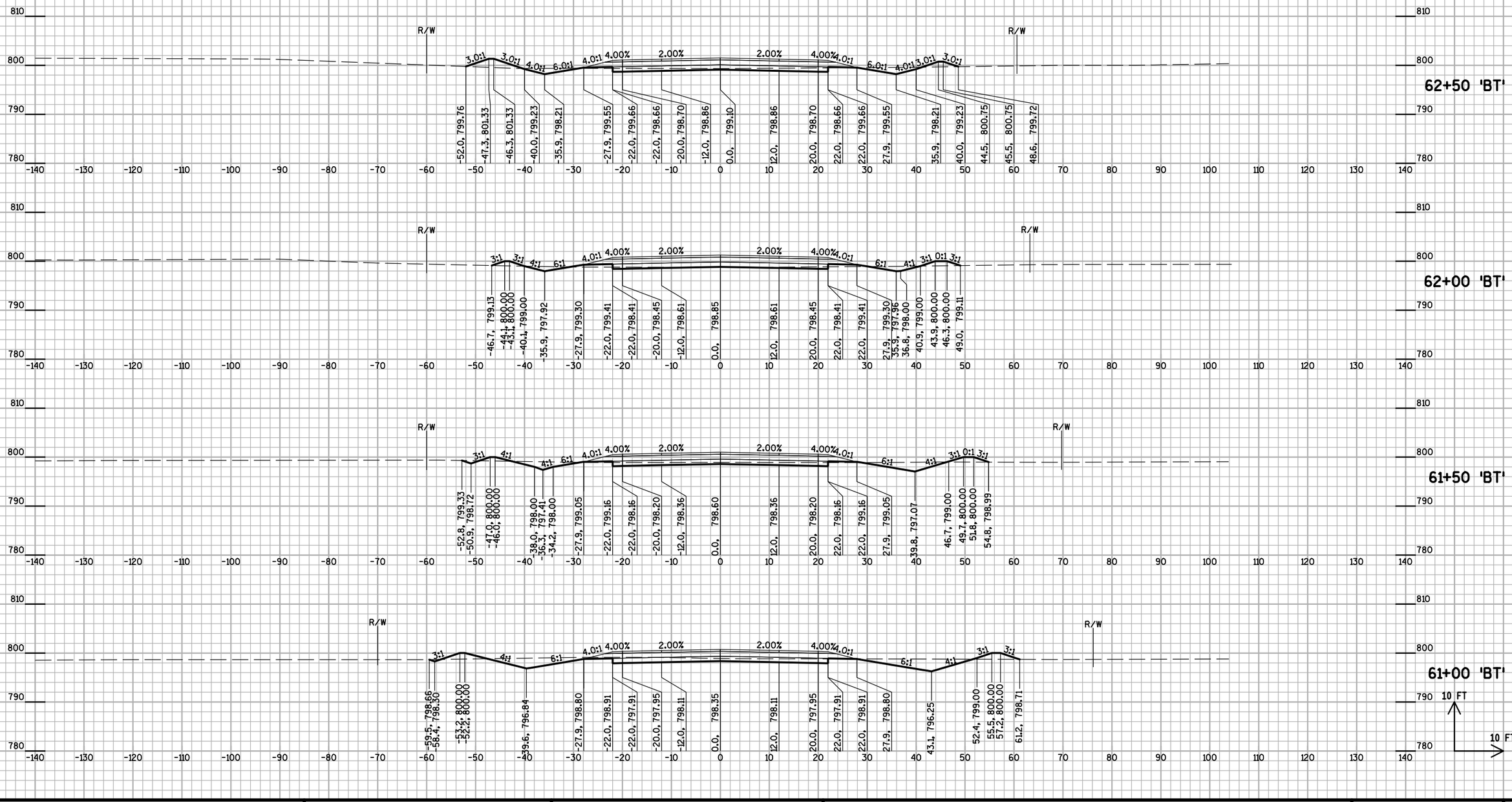

9

PROJECT NO: 5989-05-71,72	HWY: CTH BT	COUNTY: ROCK	CROSS SECTIONS: INMAN PARKWAY	SHEET 201	E

FILE NAME : N:\450351\DGN\Plan Sheets\5989-05-71_090201_xs.dgn | PLOT DATE : 10/17/2014 | PLOT BY : dm253 | PLOT NAME : | PLOT SCALE : 1:20

WISDOT/CADDS SHEET 21

9

STA. 63+00 'BT' TO 64+50 'BT'

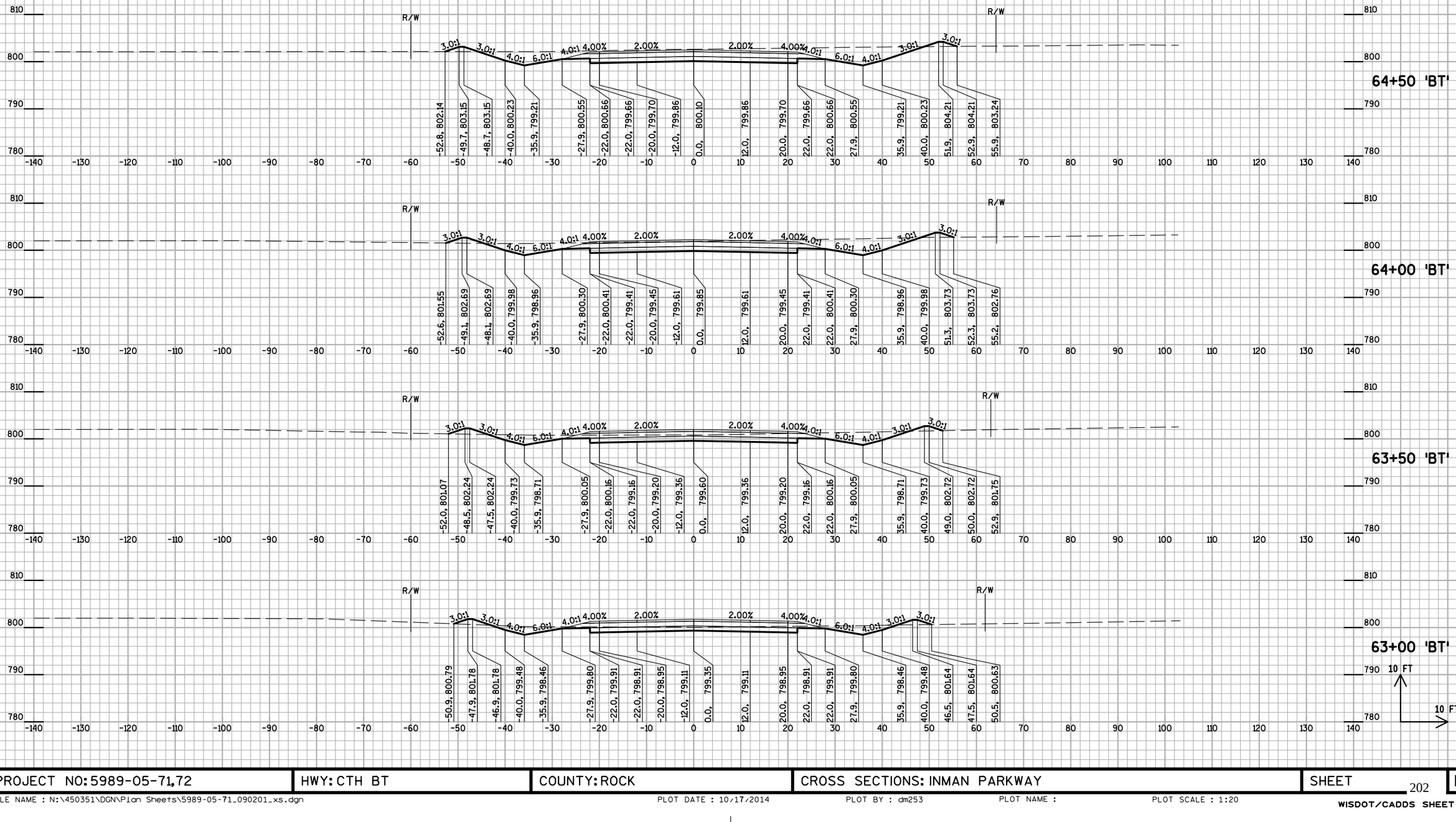

9

9

PROJECT NO: 5989-05-71,72	HWY: CTH BT	COUNTY: ROCK	CROSS SECTIONS: INMAN PARKWAY	SHEET	E

FILE NAME : N:\450351\DGN\Plan Sheets\5989-05-71_090201_xs.dgn PLOT DATE : 10/17/2014 PLOT BY : dm253 PLOT NAME : PLOT SCALE : 1:20

WISDOT/CADDS SHEET 21

STA. 65+00 'BT' TO 66+50 'BT'

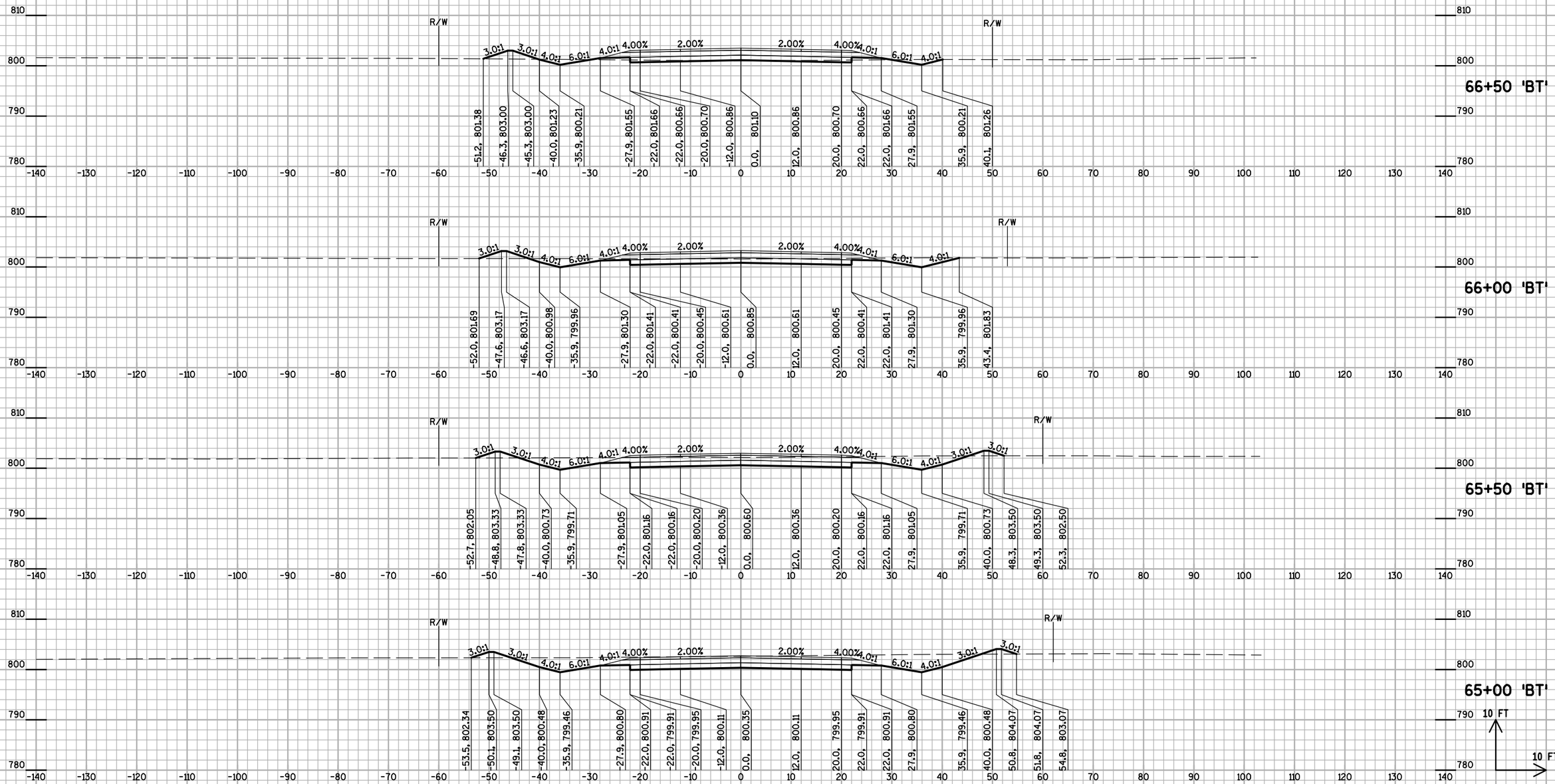

9

9

PROJECT NO: 5989-05-71,72	HWY: CTH BT	COUNTY: ROCK	CROSS SECTIONS: INMAN PARKWAY	SHEET	E

FILE NAME : N:\450351\DGN\Plan Sheets\5989-05-71_090201_xs.dgn | PLOT DATE : 10/17/2014 | PLOT BY : dm253 | PLOT NAME : | PLOT SCALE : 1:20

WISDOT/CADDS SHEET 21

STA. 67+00 'BT' TO 68+50 'BT'

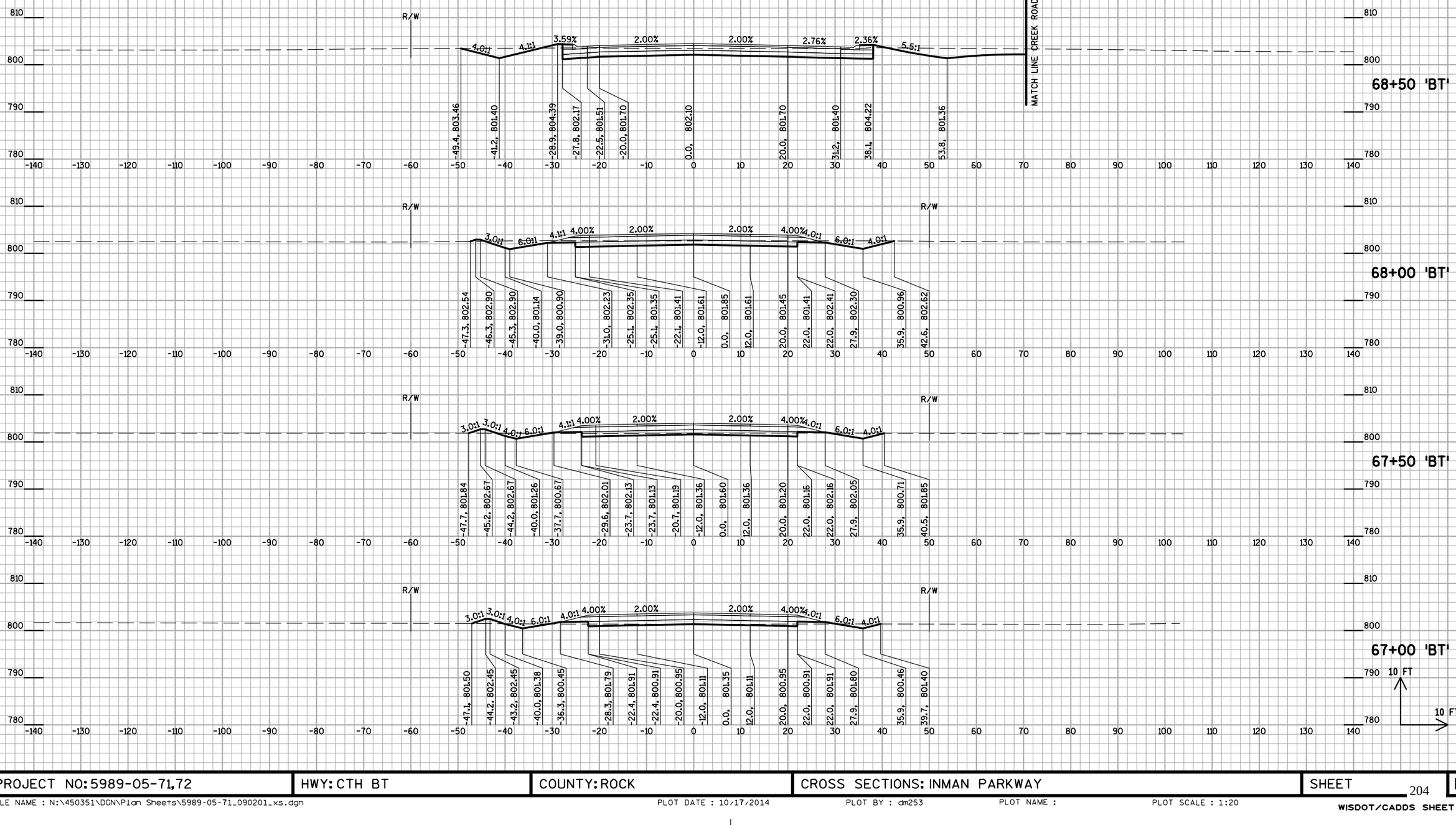

9

9

PROJECT NO: 5989-05-71,72	HWY: CTH BT	COUNTY: ROCK	CROSS SECTIONS: INMAN PARKWAY	SHEET 204	E

FILE NAME : N:\450351\DGN\Plan Sheets\5989-05-71_090201_xs.dgn | PLOT DATE : 10/17/2014 | PLOT BY : dm253 | PLOT NAME : | PLOT SCALE : 1:20

WISDOT/CADDS SHEET 21

STA. 69+00 'BT' to 70+50 'BT'

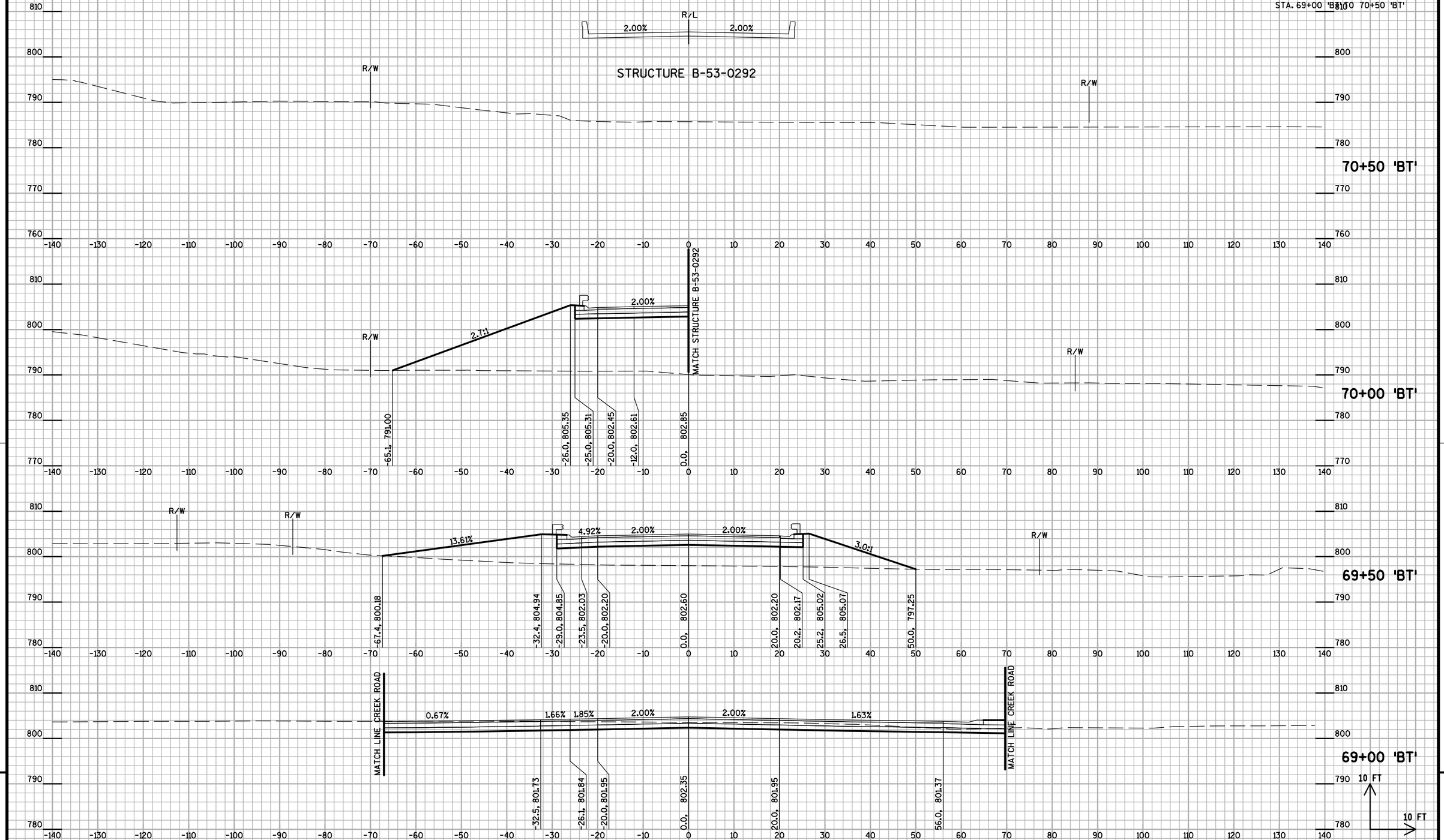

PROJECT NO: 5989-05-71,72	HWY: CTH BT	COUNTY: ROCK	CROSS SECTIONS: INMAN PARKWAY	SHEET	E

FILE NAME : N:\450351\DGN\Plan Sheets\5989-05-71_090201_xs.dgn | PLOT DATE : 10/17/2014 | PLOT BY : dm253 | PLOT NAME : | PLOT SCALE : 1:20

WISDOT/CADDS SHEET 21

STA. 71+00 'BT' TO 72+00 'BT'

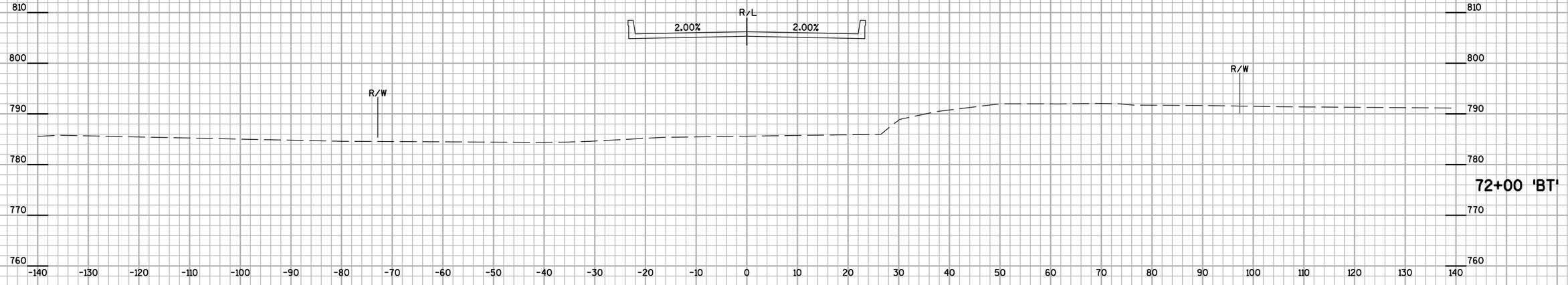

STRUCTURE B-53-0292

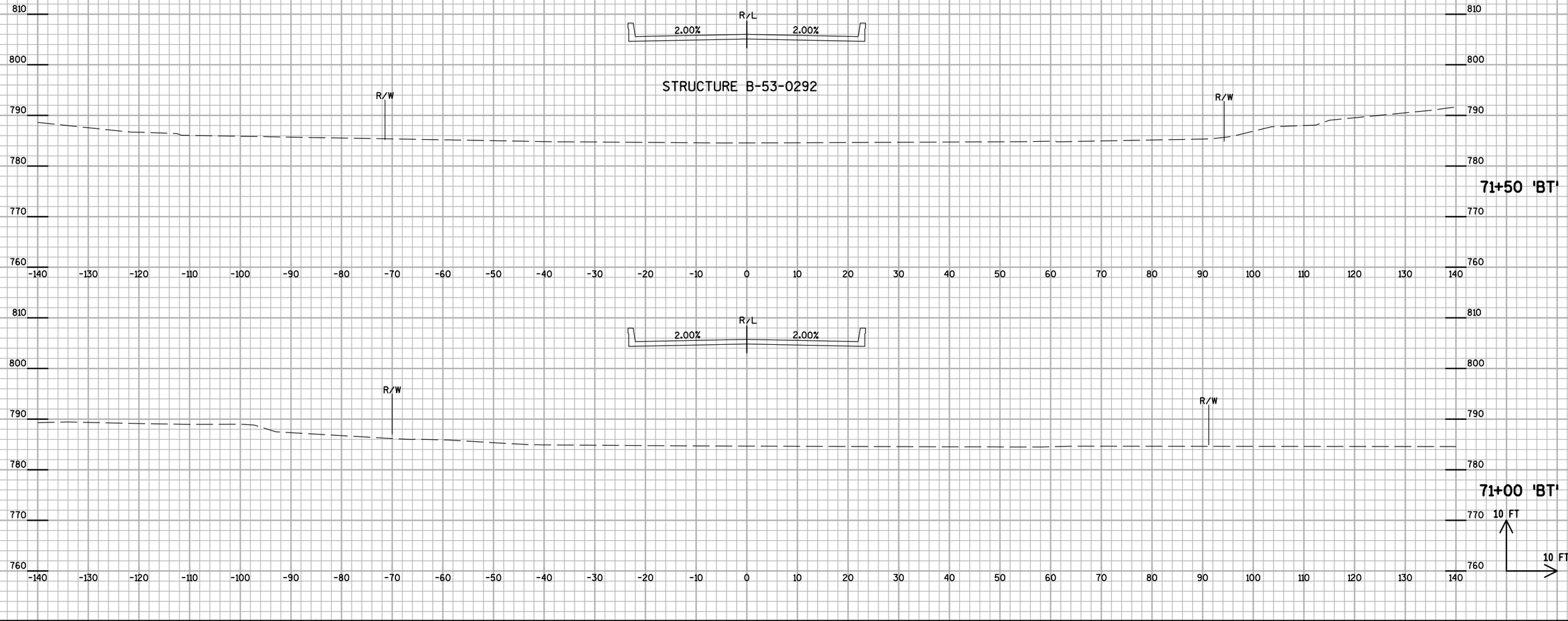

9

9

PROJECT NO: 5989-05-71,72	HWY: CTH BT	COUNTY: ROCK	CROSS SECTIONS: INMAN PARKWAY	SHEET	E

FILE NAME : N:\450351\DGN\Plan Sheets\5989-05-71_090201_xs.dgn PLOT DATE : 10/17/2014 PLOT BY : dm253 PLOT NAME : PLOT SCALE : 1:20

WISDOT/CADDS SHEET 21

STA. 72+50 'BT' TO 73+32 'BT'

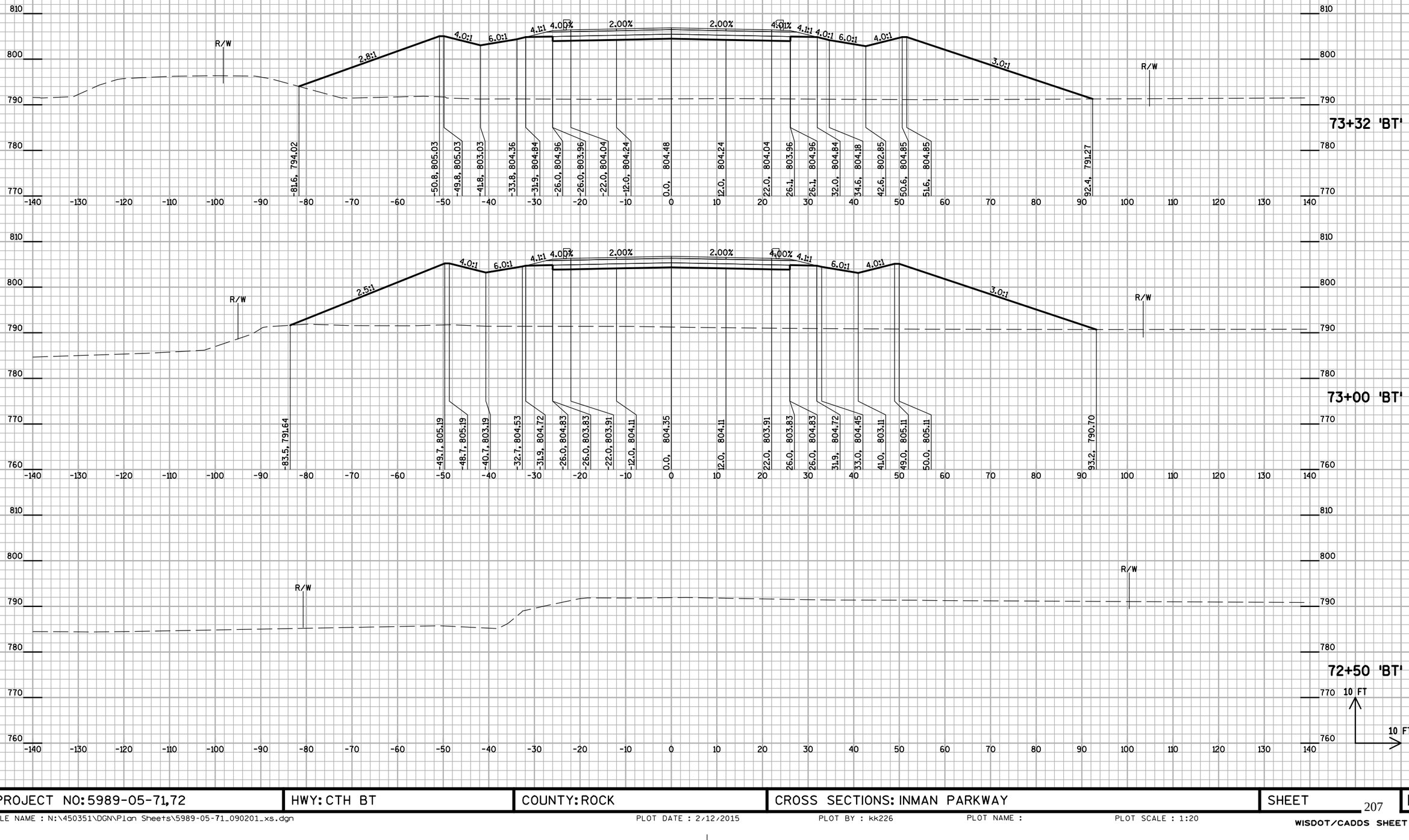

9

9

PROJECT NO: 5989-05-71,72	HWY: CTH BT	COUNTY: ROCK	CROSS SECTIONS: INMAN PARKWAY	SHEET	E

FILE NAME : N:\450351\DGN\Plan Sheets\5989-05-71_090201_xs.dgn PLOT DATE : 2/12/2015 PLOT BY : kk226 PLOT NAME : PLOT SCALE : 1:20

WISDOT/CADDS SHEET 21

STA. 73+50 'BT' TO 73+70 'BT'

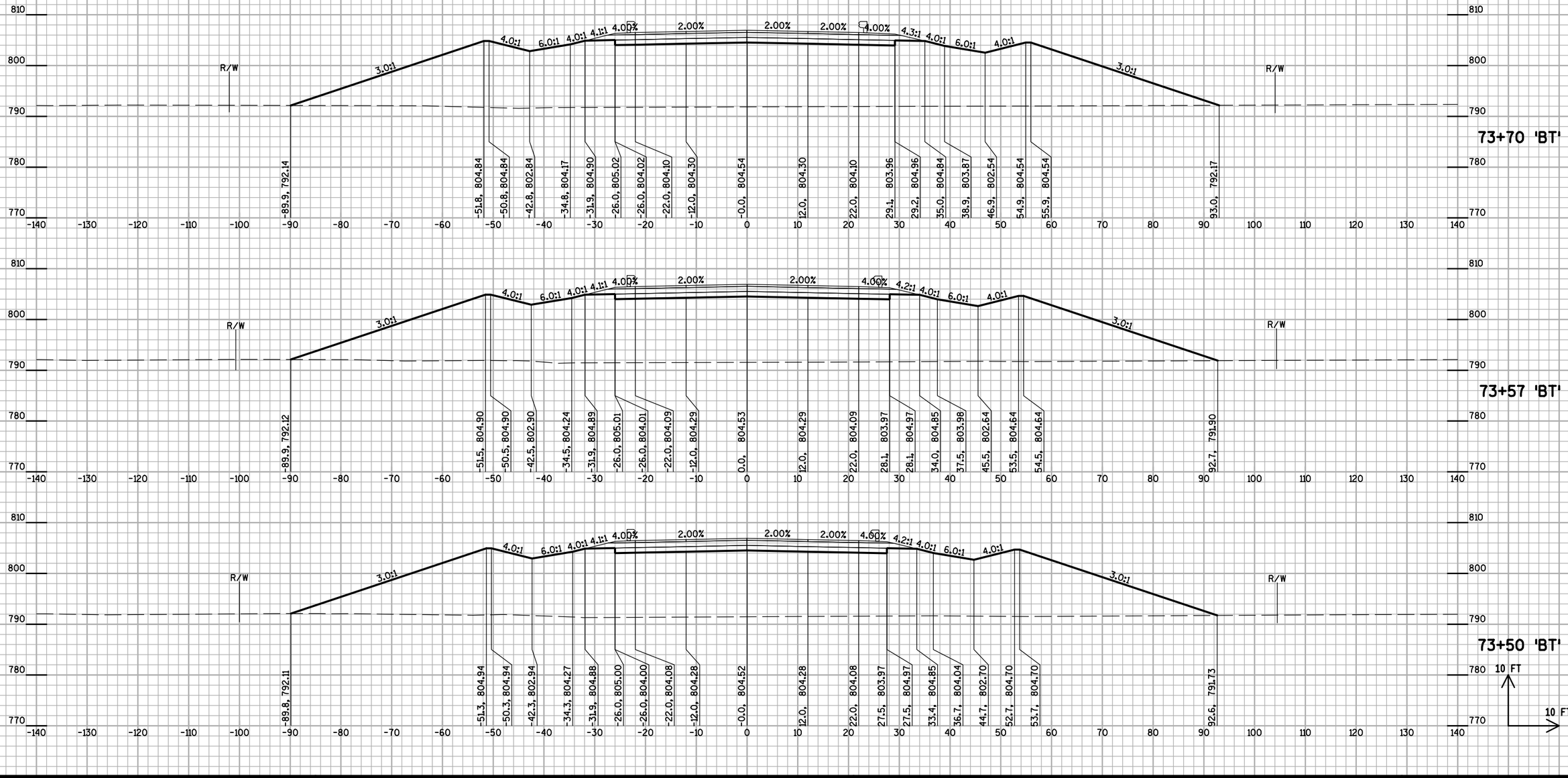

9

9

PROJECT NO: 5989-05-71,72	HWY: CTH BT	COUNTY: ROCK	CROSS SECTIONS: INMAN PARKWAY	SHEET	E

FILE NAME : N:\450351\DGN\Plan Sheets\5989-05-71_090201_xs.dgn PLOT DATE : 2/12/2015 PLOT BY : kk226 PLOT NAME : PLOT SCALE : 1:20

WISDOT/CADDS SHEET 21

STA. 73+82 'BT' TO 74+00 'BT'

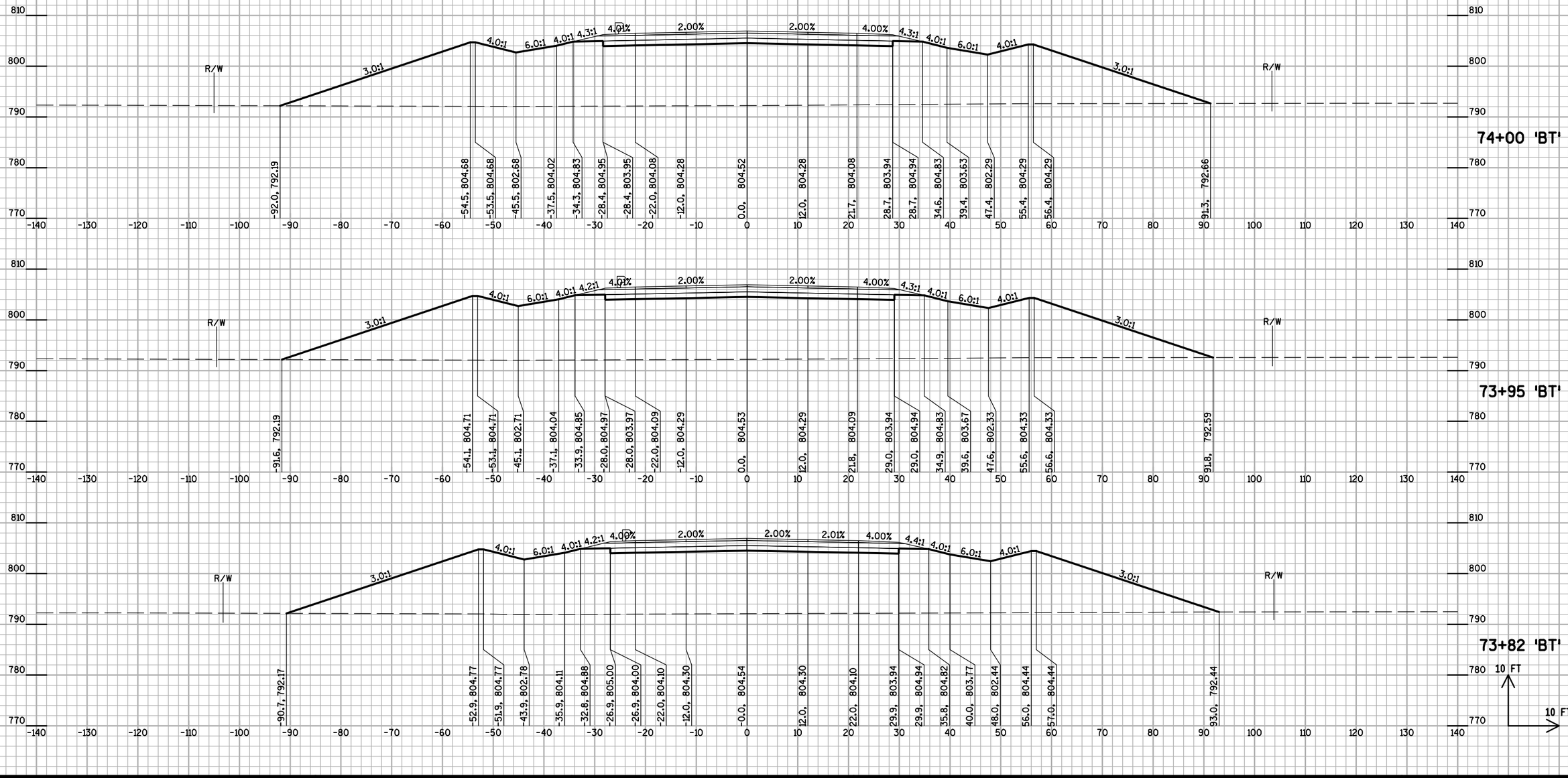

9

PROJECT NO: 5989-05-71,72	HWY: CTH BT	COUNTY: ROCK	CROSS SECTIONS: INMAN PARKWAY	SHEET	E

FILE NAME : N:\450351\DGN\Plan Sheets\5989-05-71_090201_xs.dgn PLOT DATE : 2/12/2015 PLOT BY : kk226 PLOT NAME : PLOT SCALE : 1:20

WISDOT/CADDS SHEET 21

STA. 74+20 'BT' TO 75+00 'BT'

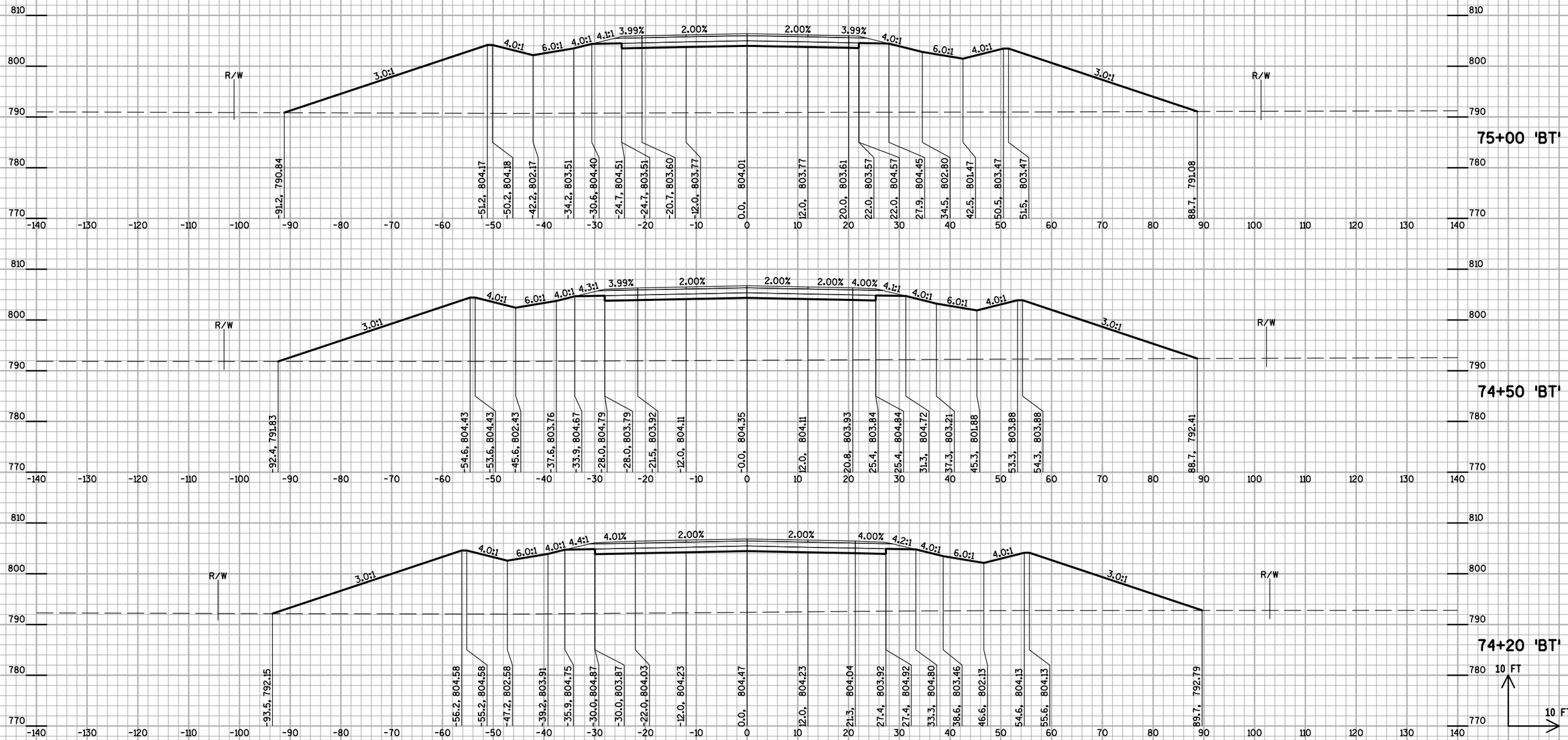

PROJECT NO: 5989-05-71,72	HWY: CTH BT	COUNTY: ROCK	CROSS SECTIONS: INMAN PARKWAY	SHEET	E

FILE NAME : N:\450351\DGN\Plan Sheets\5989-05-71_090201_xs.dgn | PLOT DATE : 2/12/2015 | PLOT BY : kk226 | PLOT NAME : | PLOT SCALE : 1:20

WISDOT/CADDS SHEET 21

STA. 75+50 'BT' TO 75+65 'BT'

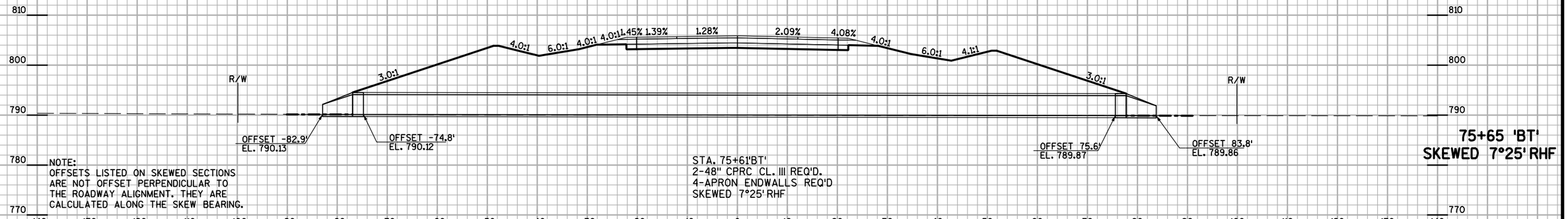

NOTE:
OFFSETS LISTED ON SKEWED SECTIONS ARE NOT OFFSET PERPENDICULAR TO THE ROADWAY ALIGNMENT. THEY ARE CALCULATED ALONG THE SKEW BEARING.

STA. 75+61'BT'
2-48" CPRC CL. III REQ'D.
4-APRON ENDWALLS REQ'D
SKEWED 7°25' RHF

75+65 'BT'
SKEWED 7°25' RHF

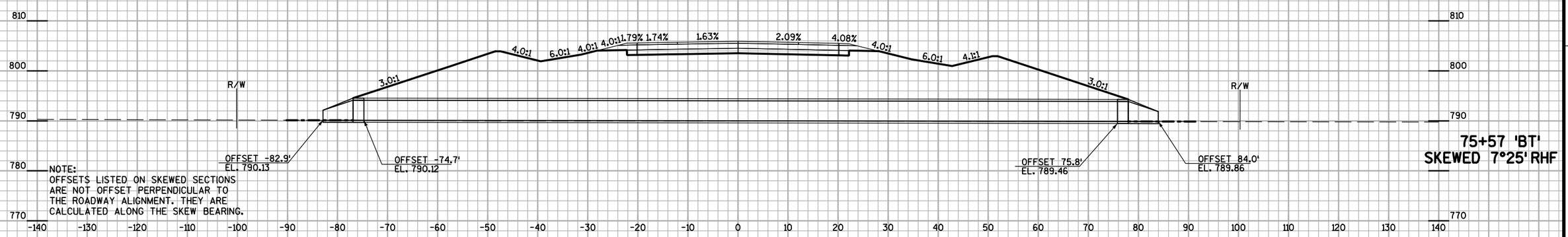

NOTE:
OFFSETS LISTED ON SKEWED SECTIONS ARE NOT OFFSET PERPENDICULAR TO THE ROADWAY ALIGNMENT. THEY ARE CALCULATED ALONG THE SKEW BEARING.

75+57 'BT'
SKEWED 7°25' RHF

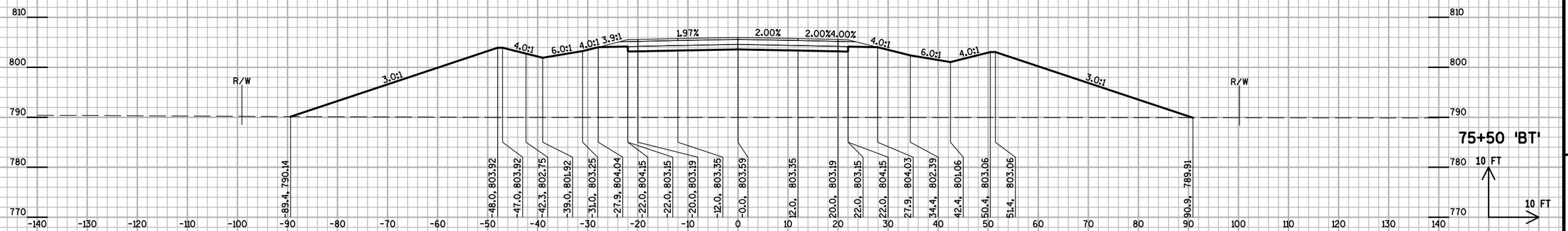

75+50 'BT'

10 FT
10 FT

9

9

PROJECT NO: 5989-05-71,72	HWY: CTH BT	COUNTY: ROCK	CROSS SECTIONS: INMAN PARKWAY	SHEET	E

FILE NAME : N:\450351\DGN\Plan Sheets\5989-05-71_090201_xs.dgn PLOT DATE : 2/12/2015 PLOT BY : kk226 PLOT NAME : PLOT SCALE : 1:20

WISDOT/CADDS SHEET 21

STA. 76+00 'BT' TO 77+00 'BT'

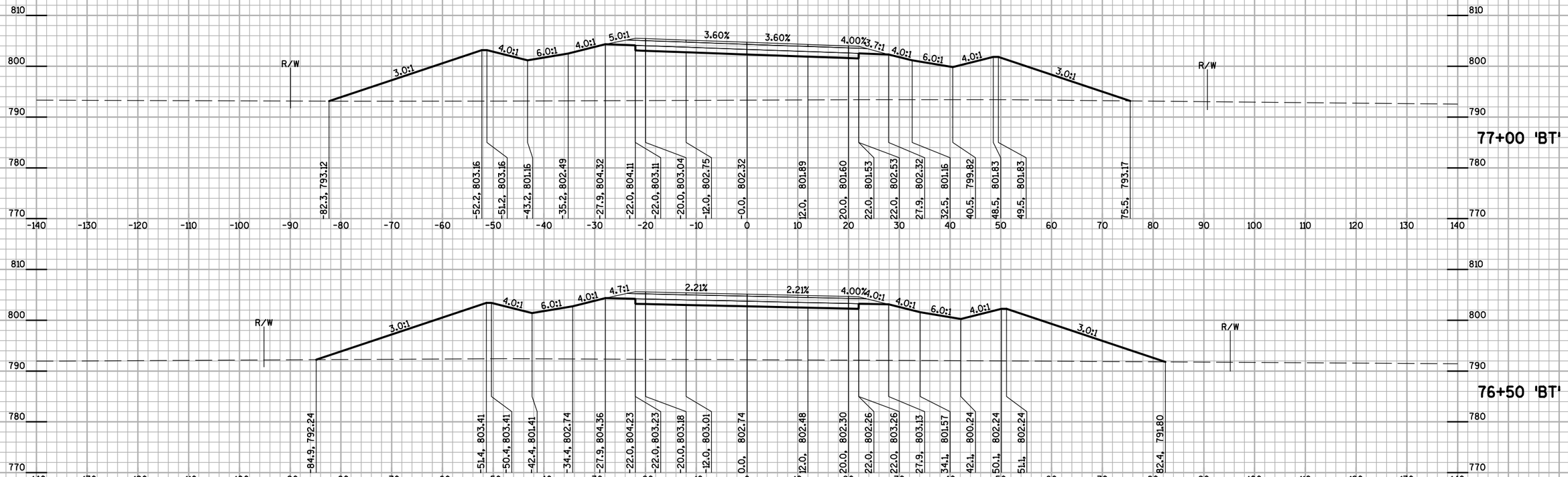

PROJECT NO: 5989-05-71,72	HWY: CTH BT	COUNTY: ROCK	CROSS SECTIONS: INMAN PARKWAY	SHEET	E

FILE NAME : N:\450351\DGN\Plan Sheets\5989-05-71_090201_xs.dgn PLOT DATE : 2/12/2015 PLOT BY : kk226 PLOT NAME : PLOT SCALE : 1:20

WISDOT/CADDS SHEET 21

STA. 77+50 'BT' TO 79+00 'BT'

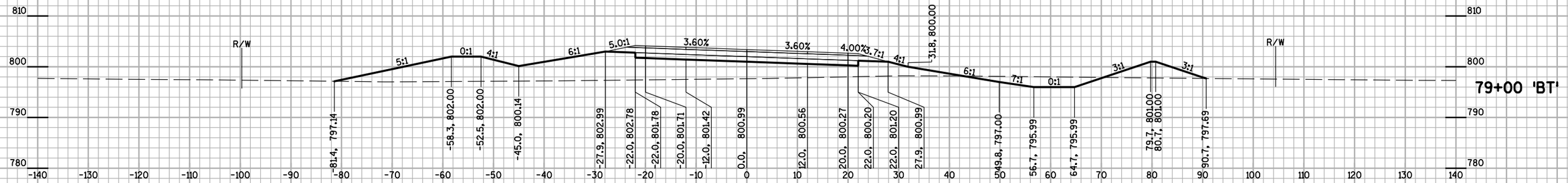

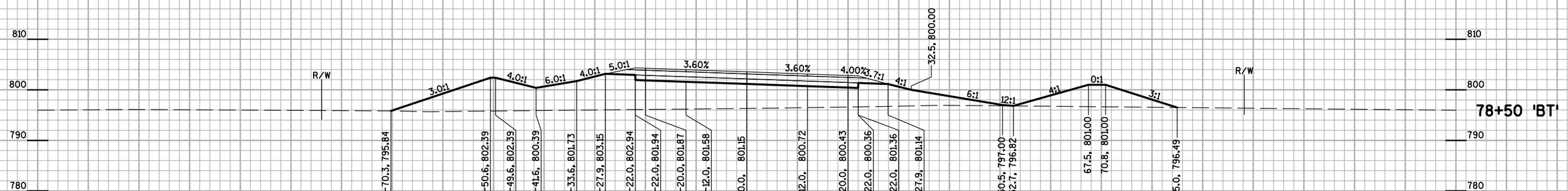

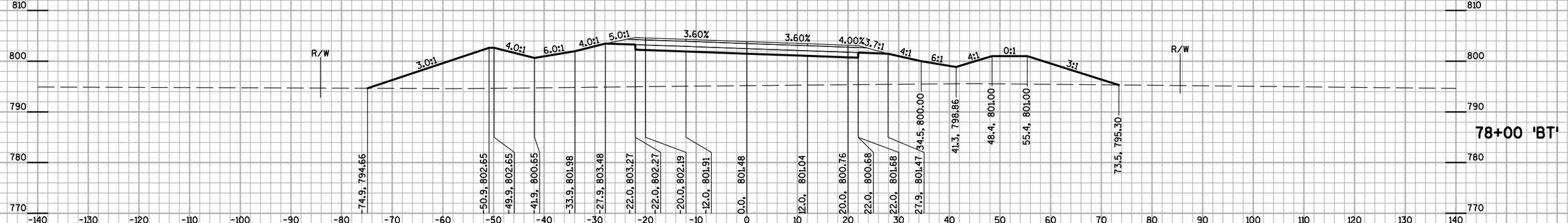

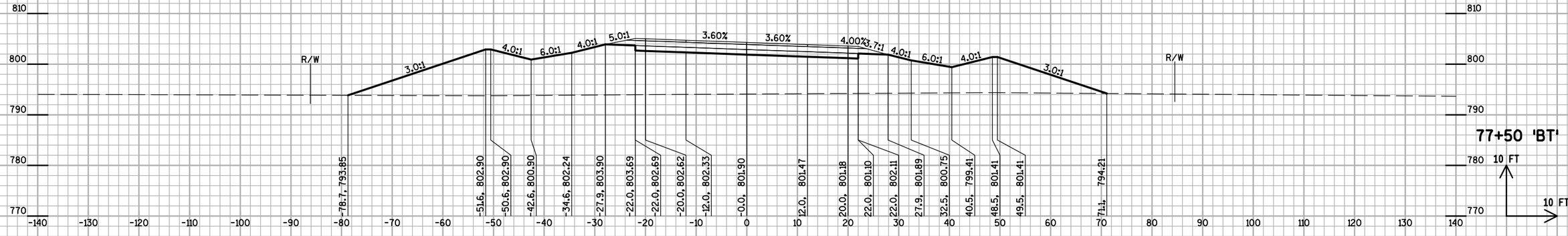

9

PROJECT NO: 5989-05-71,72	HWY: CTH BT	COUNTY: ROCK	CROSS SECTIONS: INMAN PARKWAY	SHEET	E

FILE NAME : N:\450351\DGN\Plan Sheets\5989-05-71_090201_xs.dgn PLOT DATE : 2/12/2015 PLOT BY : kk226 PLOT NAME : PLOT SCALE : 1:20

WISDOT/CADDS SHEET 21

STA. 79+50 'BT' TO 81+00 'BT'

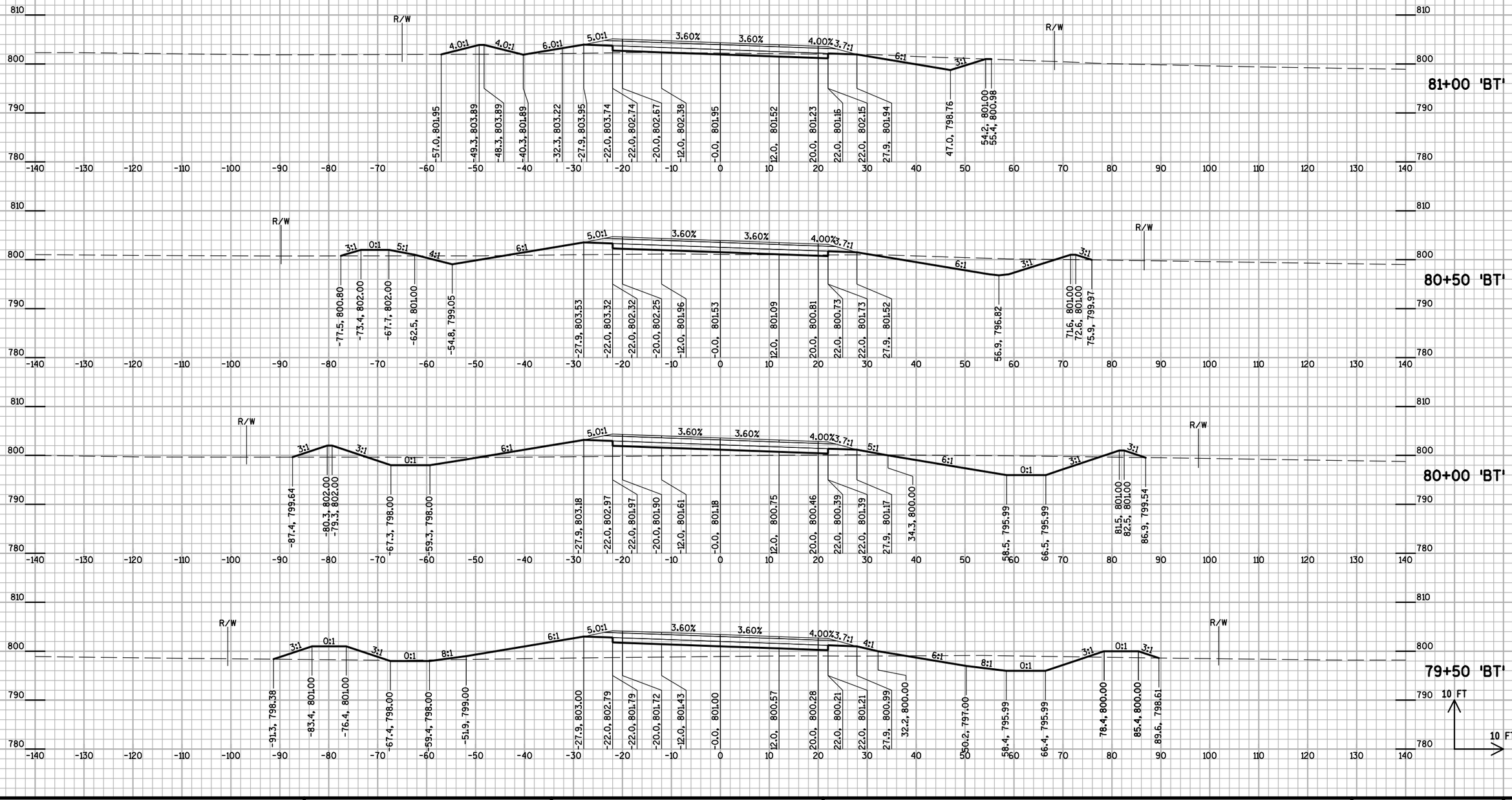

PROJECT NO: 5989-05-71,72	HWY: CTH BT	COUNTY: ROCK	CROSS SECTIONS: INMAN PARKWAY	SHEET E

FILE NAME : N:\450351\DGN\Plan Sheets\5989-05-71_090201_xs.dgn | PLOT DATE : 2/12/2015 | PLOT BY : kk226 | PLOT NAME : | PLOT SCALE : 1:20

WISDOT/CADDS SHEET 21

STA. 81+50 'BT' TO 83+00 'BT'

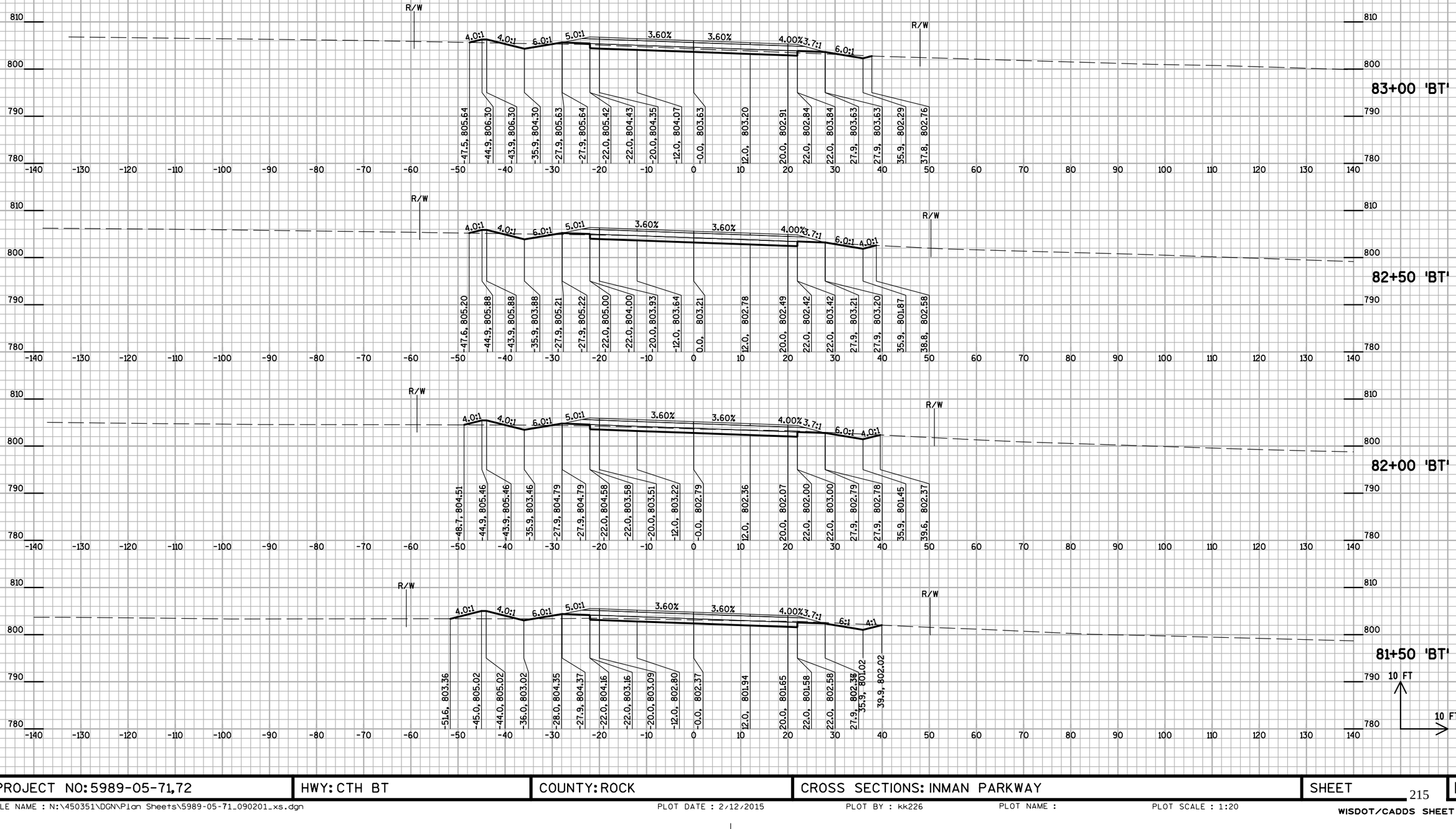

9

PROJECT NO: 5989-05-71,72	HWY: CTH BT	COUNTY: ROCK	CROSS SECTIONS: INMAN PARKWAY	SHEET	E

FILE NAME : N:\450351\DGN\Plan Sheets\5989-05-71_090201_xs.dgn | PLOT DATE : 2/12/2015 | PLOT BY : kk226 | PLOT NAME : | PLOT SCALE : 1:20

WISDOT/CADDS SHEET 21

STA. 83+50 'BT' TO 85+00 'BT'

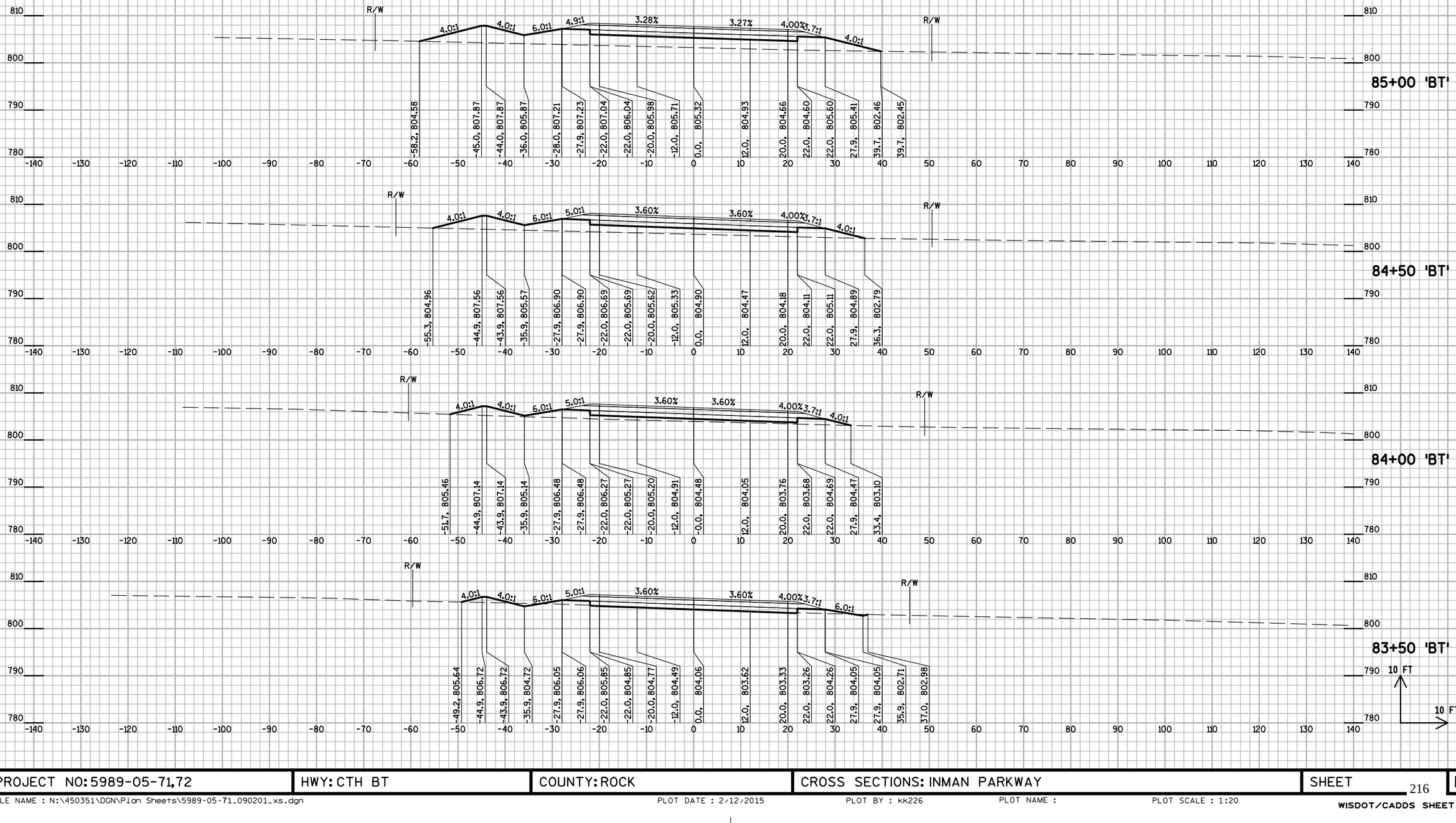

9

9

PROJECT NO: 5989-05-71,72	HWY: CTH BT	COUNTY: ROCK	CROSS SECTIONS: INMAN PARKWAY	SHEET	E

FILE NAME : N:\450351\DGN\Plan Sheets\5989-05-71_090201_xs.dgn PLOT DATE : 2/12/2015 PLOT BY : kk226 PLOT NAME : PLOT SCALE : 1:20

WISDOT/CADDS SHEET 21

STA. 85+50 'BT' TO 86+50 'BT'

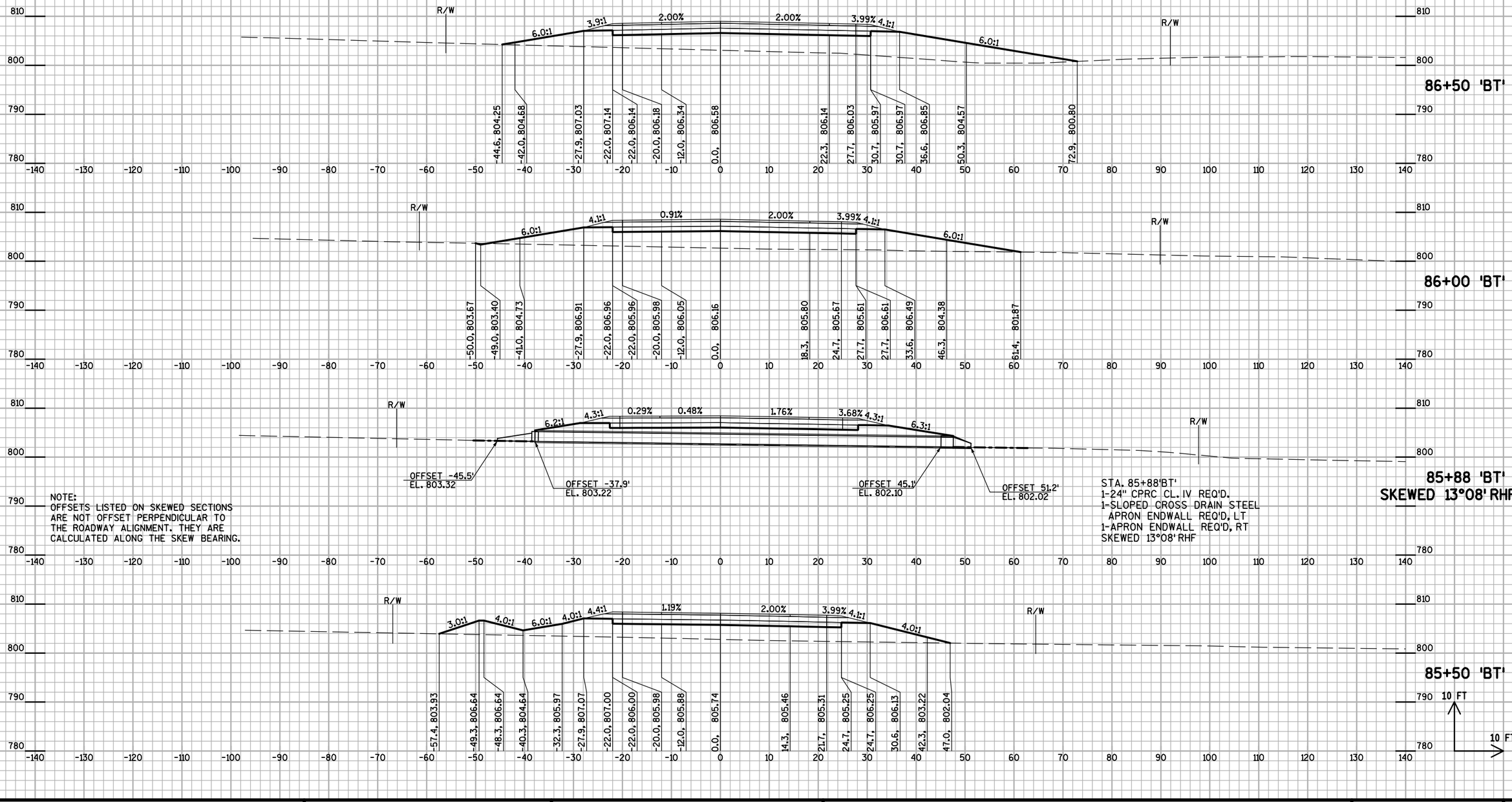

NOTE:
OFFSETS LISTED ON SKEWED SECTIONS ARE NOT OFFSET PERPENDICULAR TO THE ROADWAY ALIGNMENT. THEY ARE CALCULATED ALONG THE SKEW BEARING.

STA. 85+88'BT'
1-24" CPRC CL. IV REQ'D.
1-SLOPED CROSS DRAIN STEEL APRON ENDWALL REQ'D, LT
1-APRON ENDWALL REQ'D, RT
SKEWED 13°08' RHF

9

PROJECT NO: 5989-05-71,72	HWY: CTH BT	COUNTY: ROCK	CROSS SECTIONS: INMAN PARKWAY	SHEET 217	E

STA. 86+94 'BT' TO 87+50 'BT'

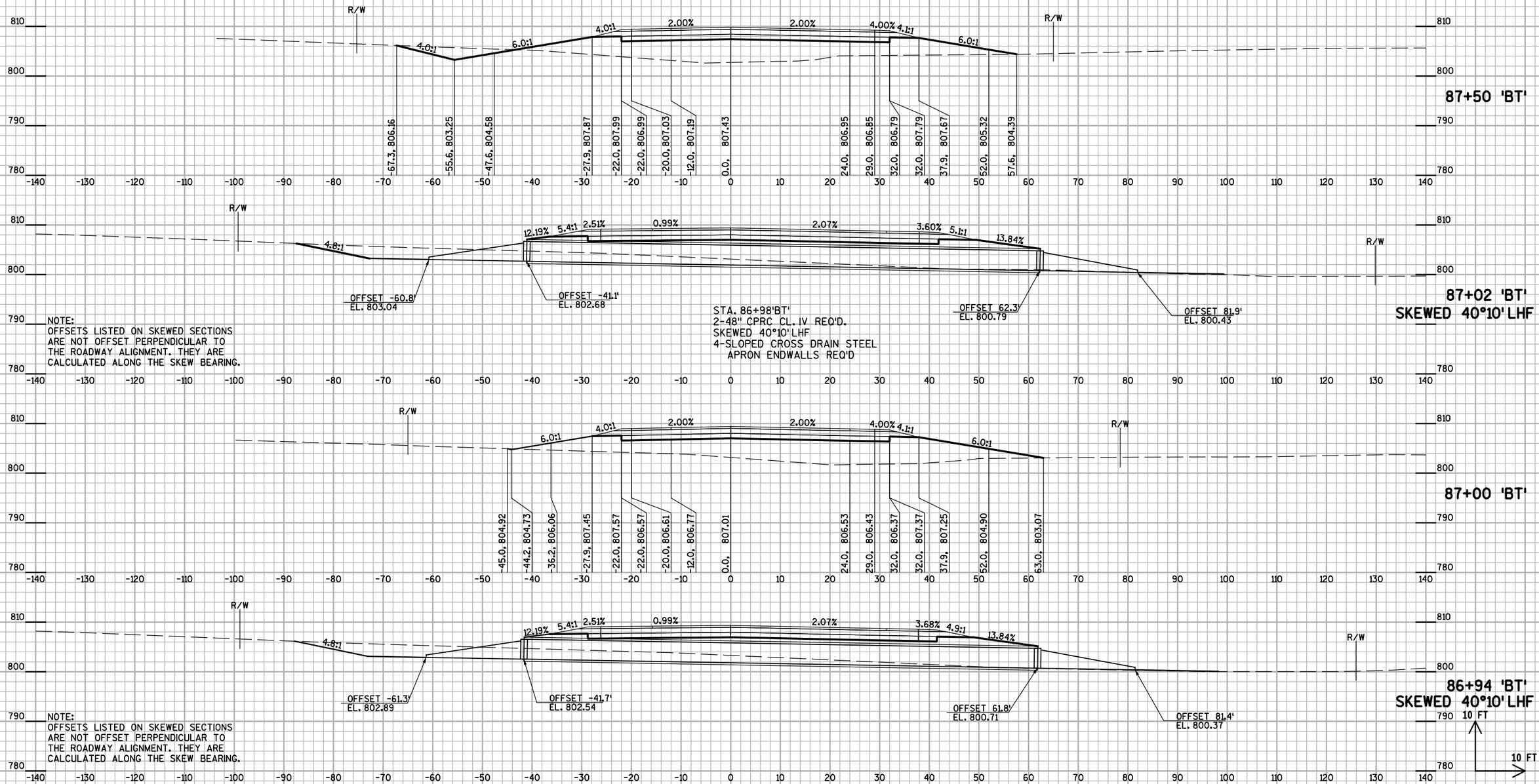

9

9

PROJECT NO: 5989-05-71,72	HWY: CTH BT	COUNTY: ROCK	CROSS SECTIONS: INMAN PARKWAY	SHEET	E

FILE NAME : N:\450351\DGN\Plan Sheets\5989-05-71_090201_xs.dgn PLOT DATE : 2/12/2015 PLOT BY : kk226 PLOT NAME : PLOT SCALE : 1:20

WISDOT/CADDS SHEET 21

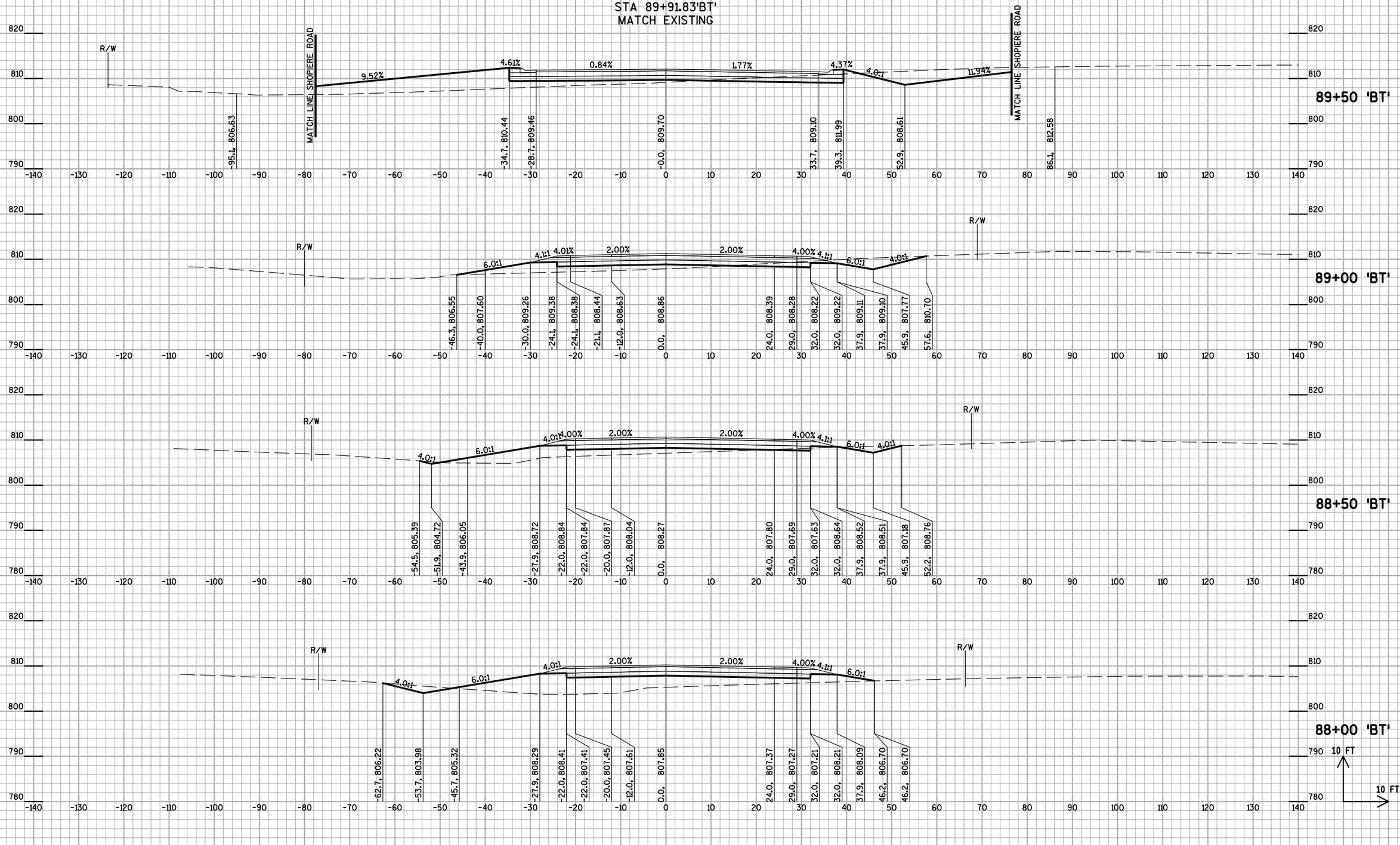

PROJECT NO: 5989-05-71,72	HWY: CTH BT	COUNTY: ROCK	CROSS SECTIONS: INMAN PARKWAY	SHEET 219	E

STA. 399+75 'CR' TO 400+25 'CR'

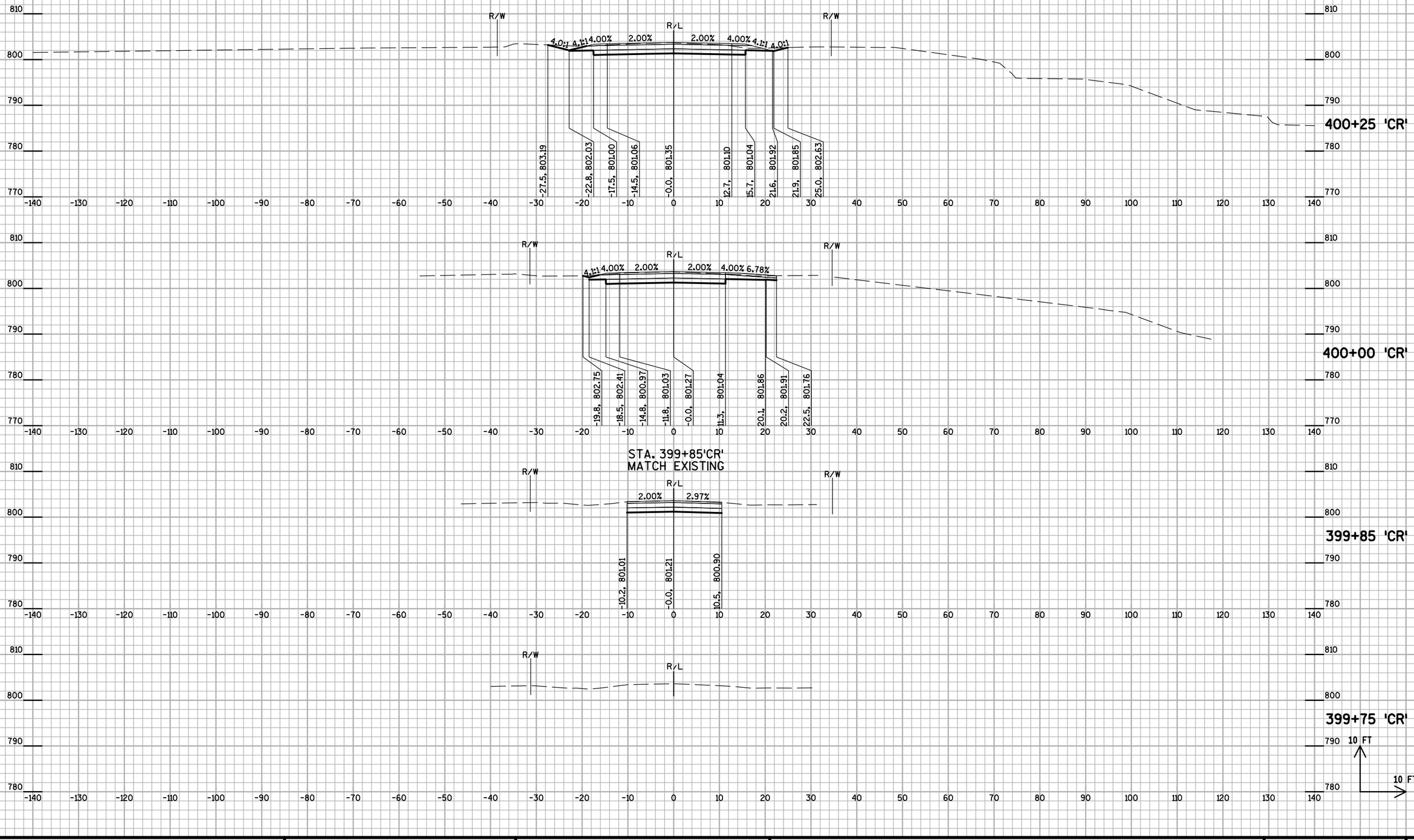

9

9

PROJECT NO: 5989-05-71,72	HWY: CTH BT	COUNTY: ROCK	CROSS SECTIONS: CREEK ROAD	SHEET 220	E

STA. 400+50 'CR' TO 401+00 'CR'

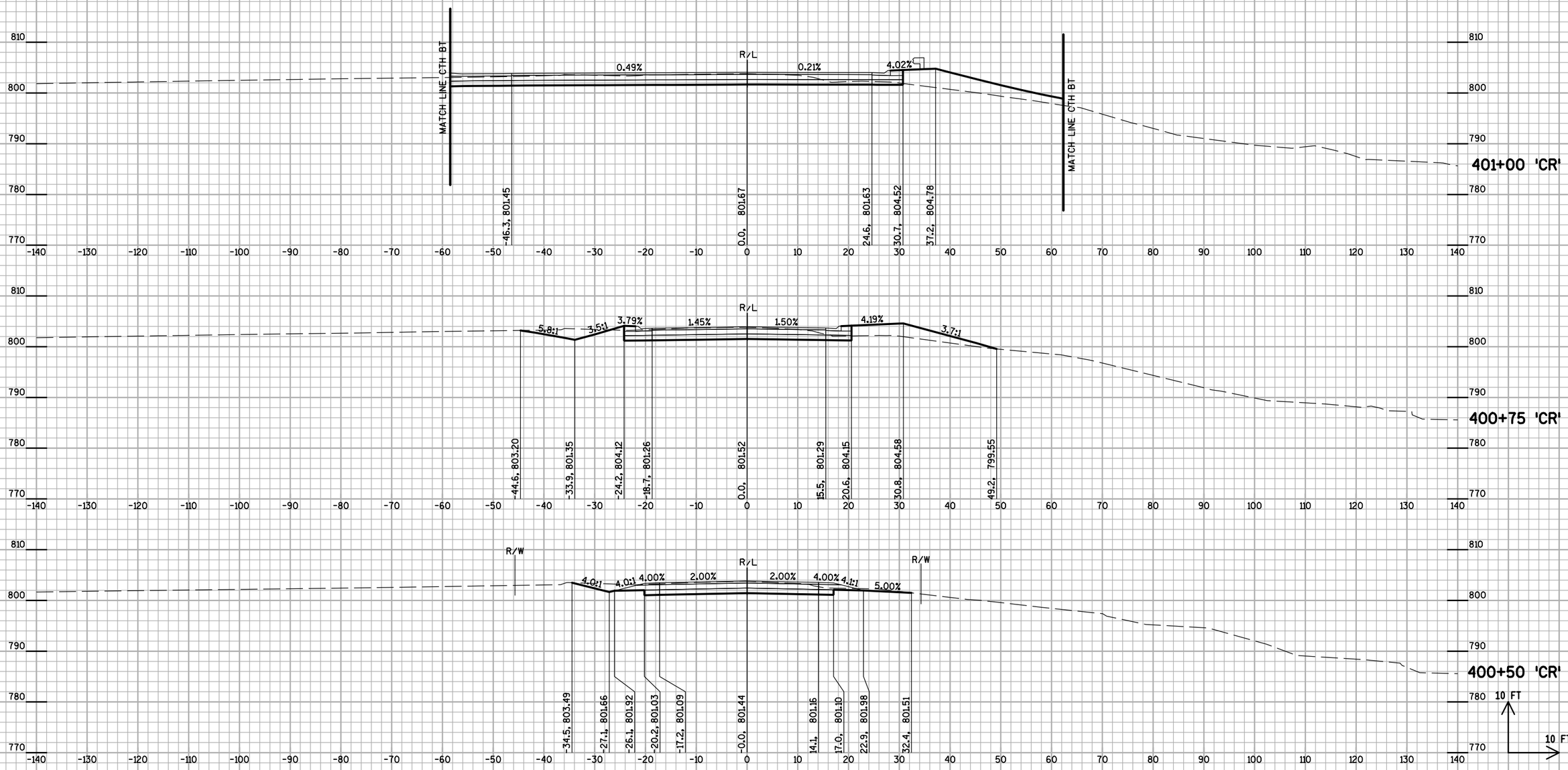

PROJECT NO: 5989-05-71,72	HWY: CTH BT	COUNTY: ROCK	CROSS SECTIONS: CREEK ROAD	SHEET	E

FILE NAME : N:\450351\DGN\Plan Sheets\5989-05-71_090202_xs.dgn PLOT DATE : 10/17/2014 PLOT BY : dm253 PLOT NAME : PLOT SCALE : 1:20

WISDOT/CADDS SHEET 21

STA. 401+75 'CR' TO 402+25 'CR'

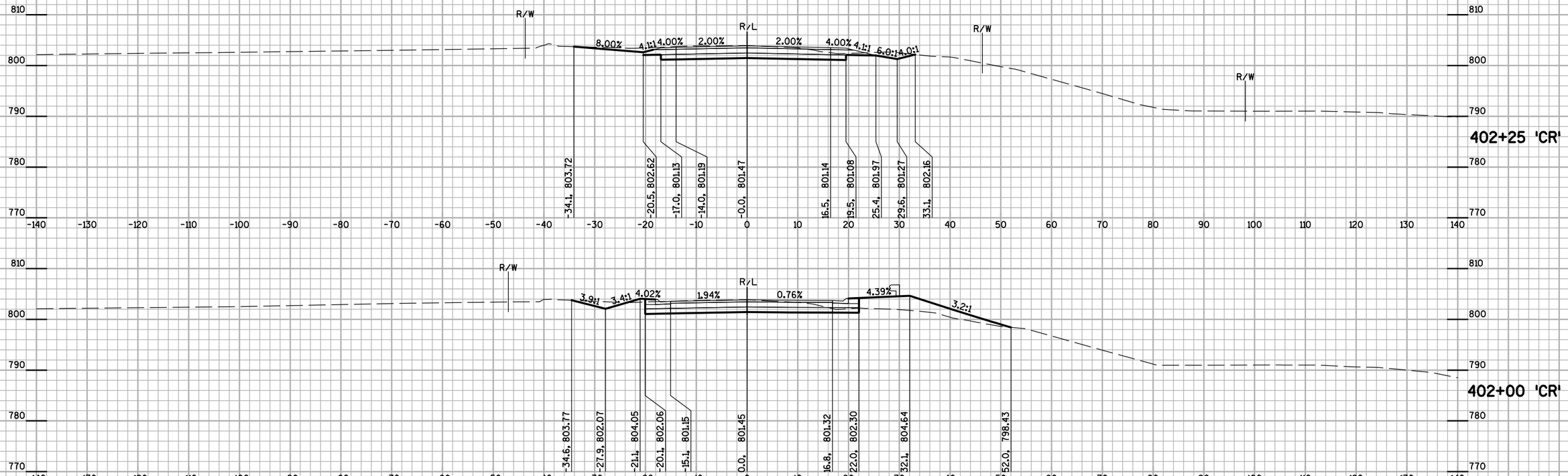

PROJECT NO: 5989-05-71,72	HWY: CTH BT	COUNTY: ROCK	CROSS SECTIONS: CREEK ROAD	SHEET	E

FILE NAME : N:\450351\DGN\Plan Sheets\5989-05-71_090202_xs.dgn PLOT DATE : 10/17/2014 PLOT BY : dm253 PLOT NAME : PLOT SCALE : 1:20

WISDOT/CADDS SHEET 21

STA. 402+50 'CR' TO 403+00 'CR'

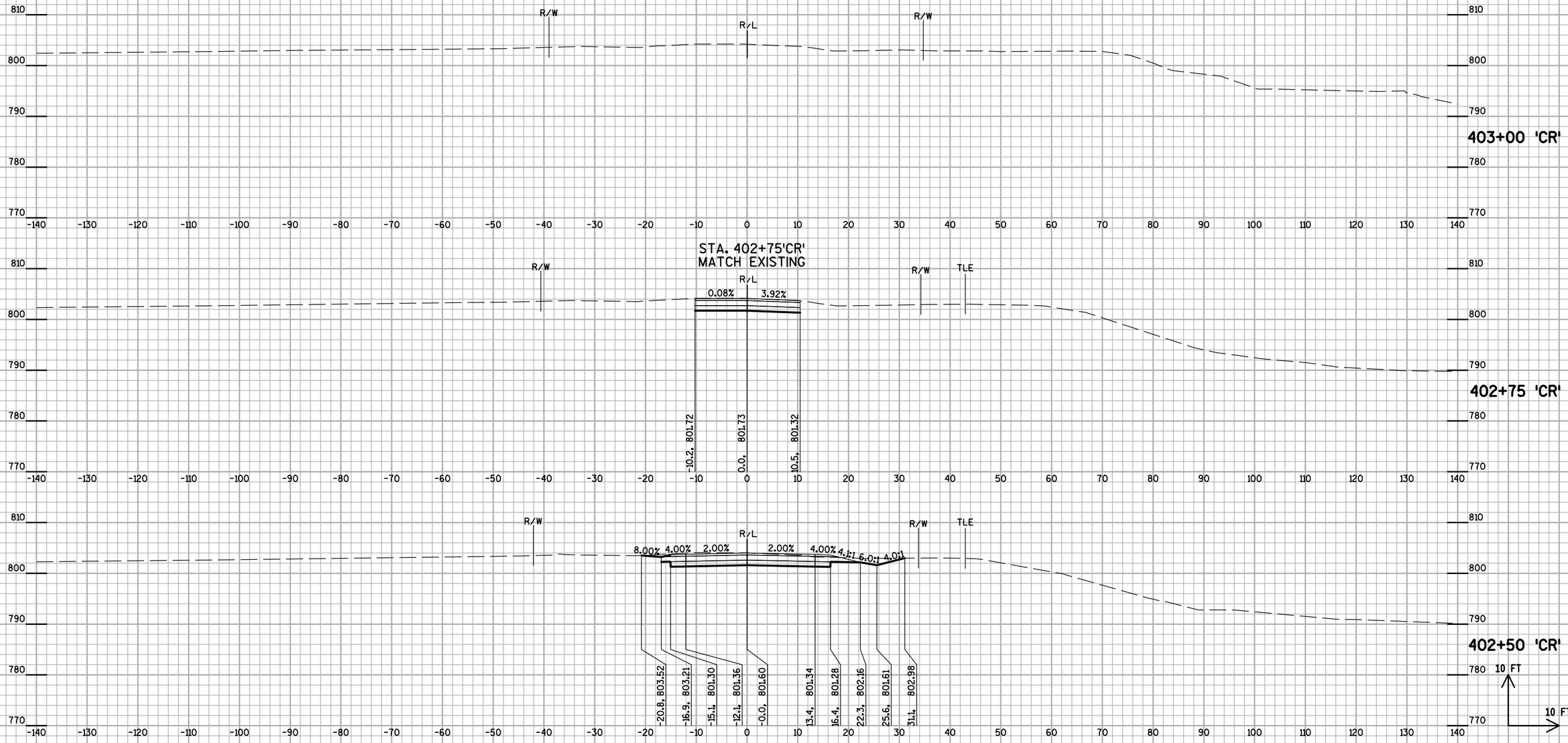

9

PROJECT NO: 5989-05-71,72	HWY: CTH BT	COUNTY: ROCK	CROSS SECTIONS: CREEK ROAD	SHEET	E

FILE NAME : N:\450351\DGN\Plan Sheets\5989-05-71_090202_xs.dgn PLOT DATE : 10/17/2014 PLOT BY : dm253 PLOT NAME : PLOT SCALE : 1:20

WISDOT/CADDS SHEET 21

STA. 124+75 'S' TO 125+50 'S'

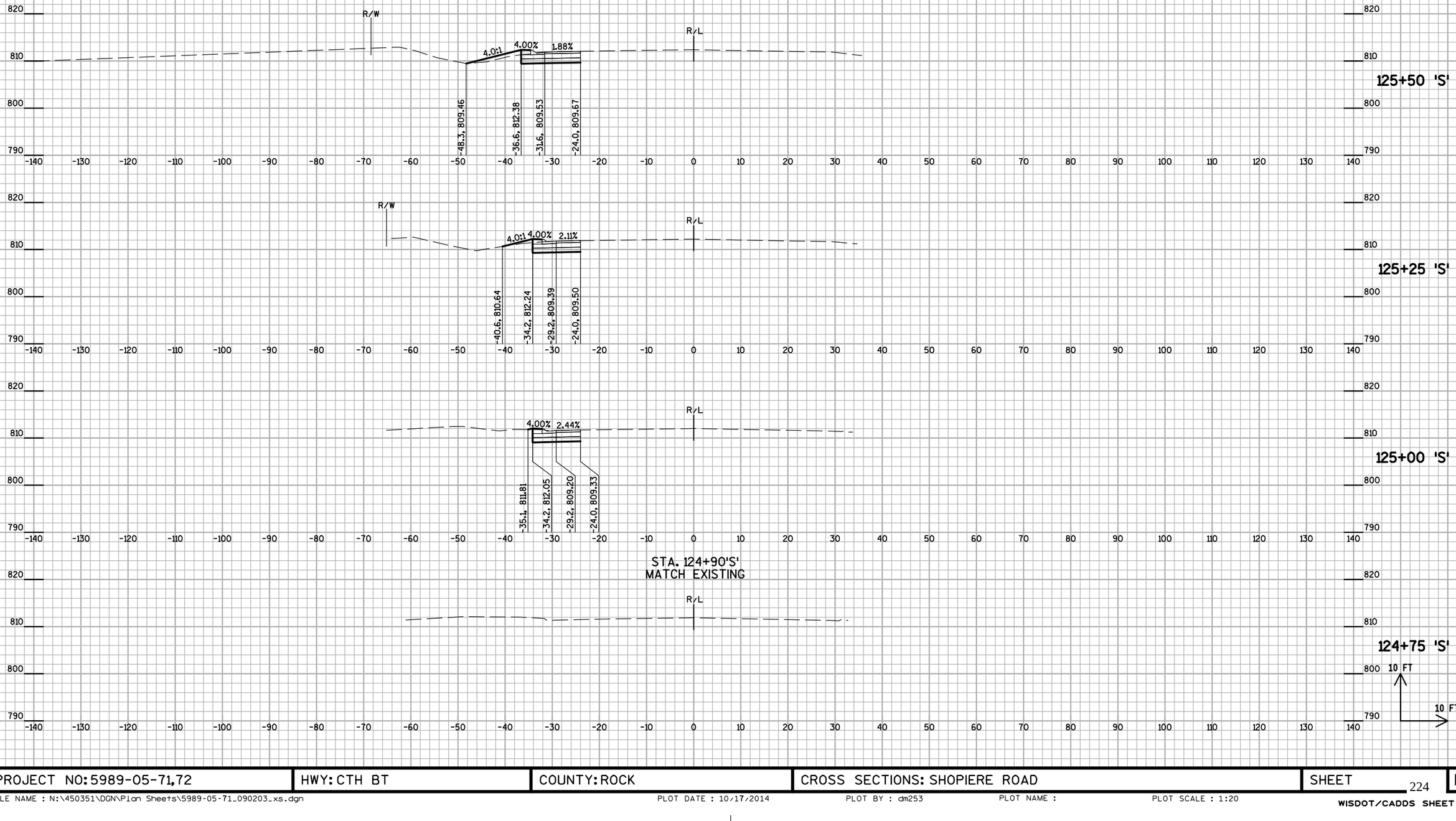

9

9

PROJECT NO: 5989-05-71,72	HWY: CTH BT	COUNTY: ROCK	CROSS SECTIONS: SHOPIERE ROAD	SHEET 224	E

FILE NAME : N:\450351\DGN\Plan Sheets\5989-05-71_090203_xs.dgn PLOT DATE : 10/17/2014 PLOT BY : dm253 PLOT NAME : PLOT SCALE : 1:20

WISDOT/CADDS SHEET 21

STA. 125+75 'S' TO 126+50 'S'

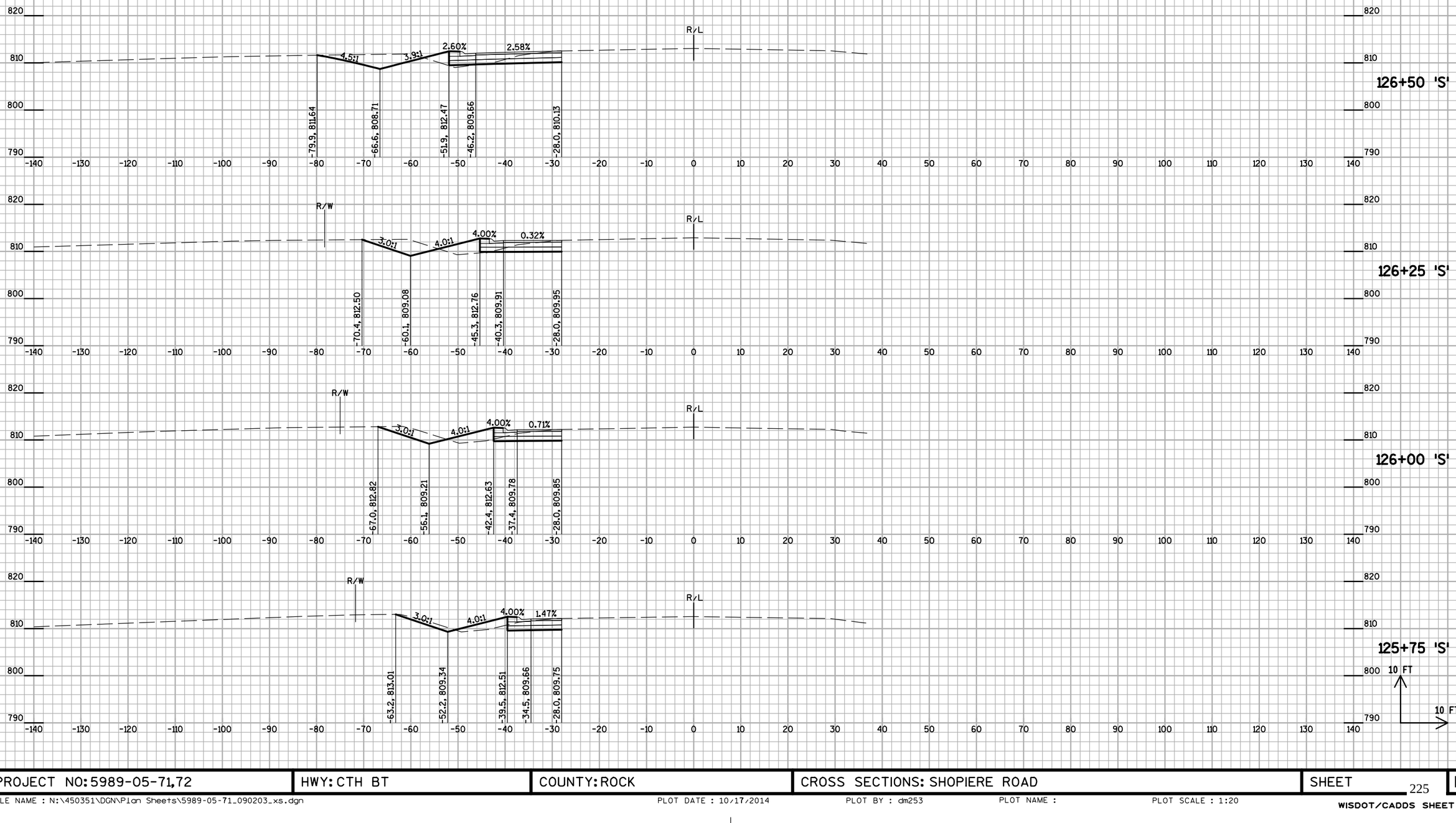

9

9

PROJECT NO: 5989-05-71,72	HWY: CTH BT	COUNTY: ROCK	CROSS SECTIONS: SHOPIERE ROAD	SHEET 225	E

FILE NAME : N:\450351\DGN\Plan Sheets\5989-05-71_090203_xs.dgn PLOT DATE : 10/17/2014 PLOT BY : dm253 PLOT NAME : PLOT SCALE : 1:20

WISDOT/CADDS SHEET 21

STA. 127+07 'S' TO 128+00 'S'

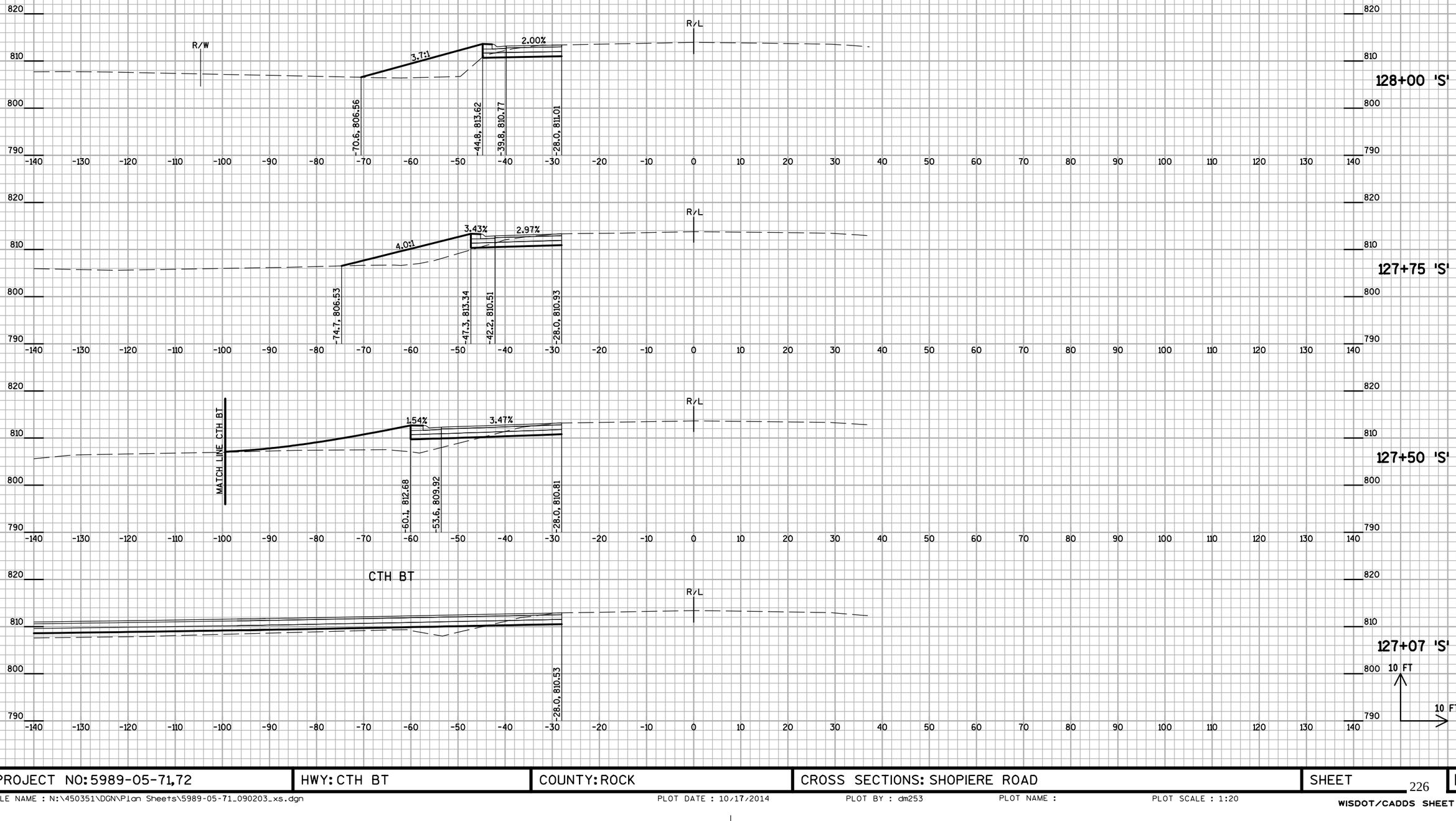

PROJECT NO: 5989-05-71,72	HWY: CTH BT	COUNTY: ROCK	CROSS SECTIONS: SHOPIERE ROAD	SHEET	E

FILE NAME : N:\450351\DGN\Plan Sheets\5989-05-71_090203_xs.dgn PLOT DATE : 10/17/2014 PLOT BY : dm253 PLOT NAME : PLOT SCALE : 1:20

WISDOT/CADDS SHEET 21

SEE STORM SEWER PLAN

DITCH TO DRAIN

NOTE:
OFFSETS LISTED ON SKEWED SECTIONS ARE NOT OFFSET PERPENDICULAR TO THE ROADWAY ALIGNMENT. THEY ARE CALCULATED ALONG THE SKEW BEARING.

OFFSET -64.8'
EL. 806.35

OFFSET -40.6'
EL. 807.31

128+26 'S'
SKEWED 11°25' RHF

R/W

R/L

3.0:1

4.00%

2.00%

-52.9, 810.38

-42.8, 813.76

-37.8, 810.91

-28.0, 811.11

DITCH TO DRAIN

128+25 'S'

EXISTING 43"x68" CPRCHE

OFFSET -61.7'
EL. 806.46

OFFSET -48.6'
EL. 806.56

OFFSET 54.9'
EL. 807.37

NOTE:
OFFSETS LISTED ON SKEWED SECTIONS ARE NOT OFFSET PERPENDICULAR TO THE ROADWAY ALIGNMENT. THEY ARE CALCULATED ALONG THE SKEW BEARING.

128+17 'S'
SKEWED 12°53' RHF

CLEAN 2 EXISTING CULVERT PIPES
EXTEND 2 EXISTING 43" x 68" CPRCHE CL. HE-III
SALVAGE 2-APRON ENDWALLS 43" x 68"
SKEWED 12°53' RHF AND
SKEWED 13°40' RHF

DITCH TO DRAIN

EXISTING 43"x68" CPRCHE

OFFSET -64.7'
EL. 806.13

OFFSET -49.3'
EL. 806.30

OFFSET 54.2'
EL. 807.44

NOTE:
OFFSETS LISTED ON SKEWED SECTIONS ARE NOT OFFSET PERPENDICULAR TO THE ROADWAY ALIGNMENT. THEY ARE CALCULATED ALONG THE SKEW BEARING.

128+08 'S'
SKEWED 13°40' RHF

10 FT

10 FT

9

9

PROJECT NO: 5989-05-71,72	HWY: CTH BT	COUNTY: ROCK	CROSS SECTIONS: SHOPIERE ROAD	SHEET 227	E

STA. 128+50 'S' TO 129+25 'S'

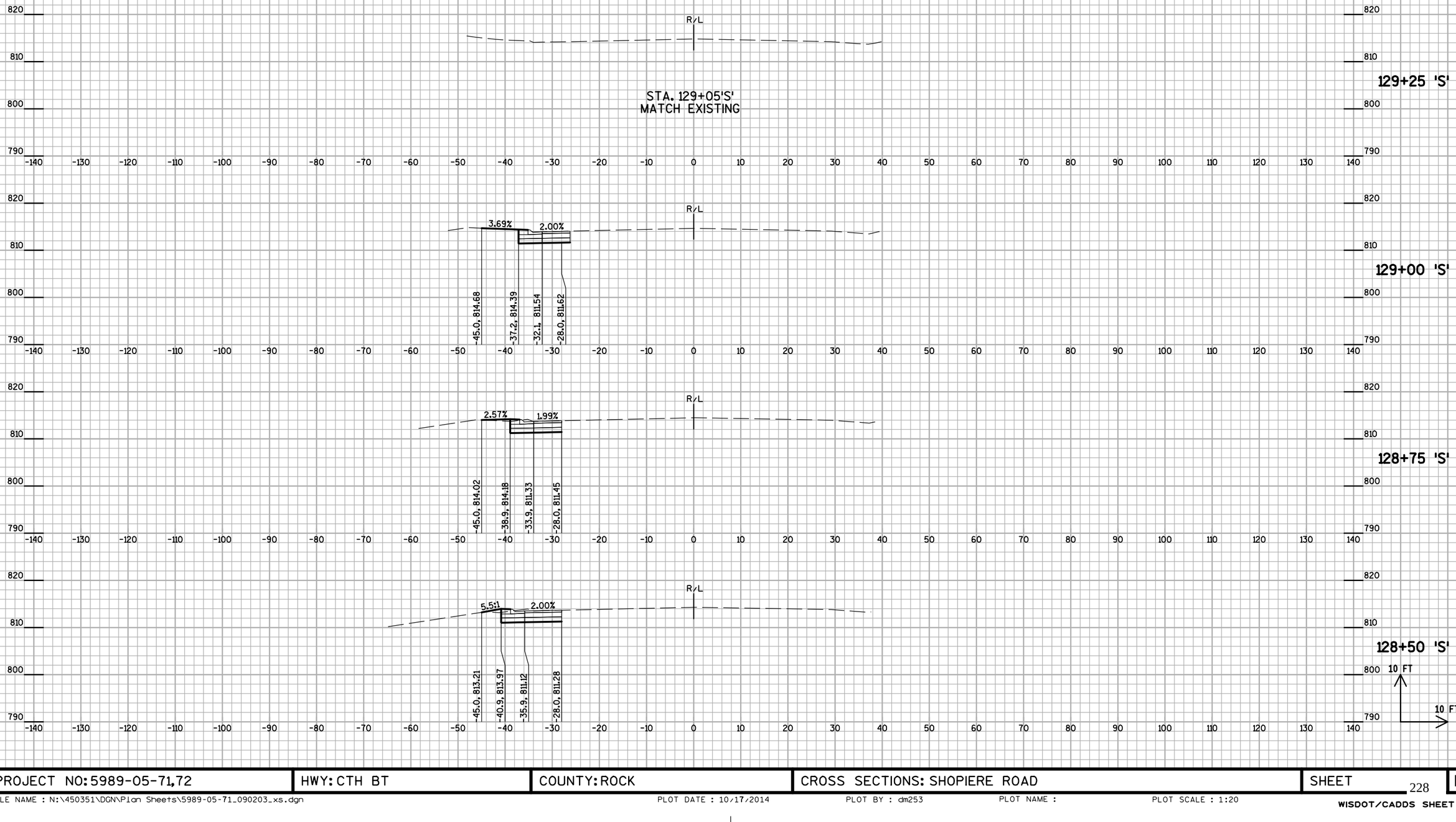

9

9

PROJECT NO: 5989-05-71,72	HWY: CTH BT	COUNTY: ROCK	CROSS SECTIONS: SHOPIERE ROAD	SHEET 228	E

FILE NAME : N:\450351\DGN\Plan Sheets\5989-05-71_090203_xs.dgn | PLOT DATE : 10/17/2014 | PLOT BY : dm253 | PLOT NAME : | PLOT SCALE : 1:20

WISDOT/CADDS SHEET 21

Notes

Wisconsin Department of Transportation

Dedicated people creating transportation solutions
through innovation and exceptional service.

http://www.dot.wisconsin.gov