MAD | FEB 2015

PROJECT ID: 1204-06-75
WITH: N/A

COUNTY: DANE

ORDER OF SHEETS

Section No.	1	Title
Section No.	2	Typical Sections and Details (includes erosion control plans)
Section No.	3	Estimate of Quantities
Section No.	3	Miscellaneous Quantities
Section No.	4	Right of Way Plat
Section No.	5	Plan and Profile
Section No.	6	Standard Detail Drawings
Section No.	7	Sign Plates
~~Section No.~~	~~8~~	~~Structure Plans~~
Section No.	9	Computer Earthwork Data
Section No.	9	Cross Sections

TOTAL SHEETS = 168

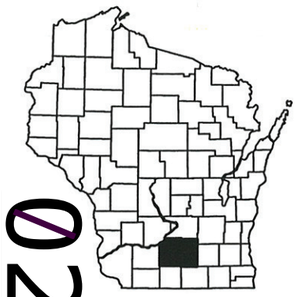

02

N

DESIGN DESIGNATION

A.A.D.T. (2013)	=	300
A.A.D.T. (2033)	=	400
D.H.V.	=	70
D.D.	=	60/40
T.	=	4.0
DESIGN SPEED	=	50 MPH
ESALS	=	51,100

CONVENTIONAL SYMBOLS

PLAN

- CORPORATE LIMITS
- PROPERTY LINE
- LOT LINE
- LIMITED HIGHWAY EASEMENT
- EXISTING RIGHT OF WAY
- PROPOSED OR NEW R/W LINE
- SLOPE INTERCEPT
- REFERENCE LINE
- EXISTING CULVERT
- PROPOSED CULVERT (Box or Pipe)
- COMBUSTIBLE FLUIDS (CAUTION)
- MARSH AREA
- WOODED OR SHRUB AREA

PROFILE

- GRADE LINE
- ORIGINAL GROUND
- MARSH OR ROCK PROFILE (To be noted as such) (ROCK)
- SPECIAL DITCH (LABEL)
- GRADE ELEVATION (95.36)
- CULVERT (Profile View)

UTILITIES

- ELECTRIC (E)
- FIBER OPTIC (FO)
- GAS (G)
- SANITARY SEWER (SAN)
- STORM SEWER (SS)
- TELEPHONE (T)
- WATER (W)
- UTILITY PEDESTAL
- POWER POLE
- TELEPHONE POLE

STATE OF WISCONSIN
DEPARTMENT OF TRANSPORTATION

PLAN OF PROPOSED IMPROVEMENT

BARNEVELD - MOUNT HOREB

CTH E INTERSECTION

USH 18

DANE COUNTY

STATE PROJECT	FEDERAL PROJECT	
	PROJECT	CONTRACT
1204-06-75	WISC 2015081	1

STATE PROJECT NUMBER
1204-06-75

R-6-E

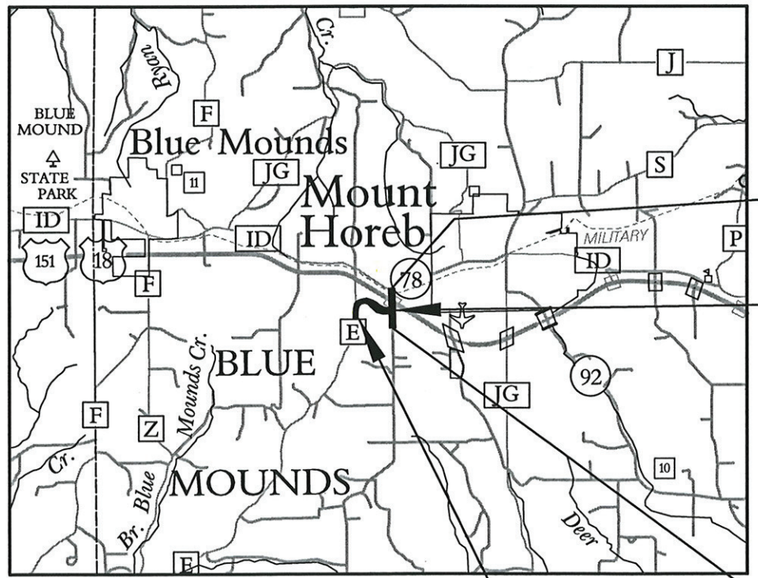

R-6-E

END CONSTRUCTION
STA. 33+50.00ST

END PROJECT
STA. 50+96.40

BEGIN CONSTRUCTION
STA. 16+77.00ST

BEGIN PROJECT
STA. 6+95.00
Y = 455,961.860
X = 717,947.528

LAYOUT
SCALE 0 1 MI.

TOTAL NET LENGTH OF CENTERLINE = 0.834 MI.

Coordinates on this plan are referenced to the Wisconsin County Coordinate System (WCCS), Dane County.

ORIGINAL PLANS PREPARED BY

STRAND ASSOCIATES®
910 WEST WINGRA DRIVE
MADISON, WISCONSIN 53715
(608) 251-4843

WISCONSIN
NED R. GRADY
E-38610
MADISON
WI
PROFESSIONAL ENGINEER
2/13/13

STATE OF WISCONSIN
DEPARTMENT OF TRANSPORTATION

PREPARED BY

Surveyor	WISCONSIN DOT
Designer	STRAND ASSOCIATES
Project Manager	KRIS SOMMERS, P.E.
Regional Examiner	
Regional Supervisor	CHRISTOPHER HODGES, P.E.
C.O. Examiner	

APPROVED FOR THE DEPARTMENT
DATE: 2/13/13 Christopher A. Hodges (Signature)

E

2

GENERAL NOTES

MISCELLANEOUS

ELEVATIONS SHOWN ON THE PLAN ARE REFERENCED TO THE NORTH AMERICAN VERTICAL DATUM OF 1988 (NAVD 88).

BEARINGS ON THIS PLAN ARE SHOWN TO THE NEAREST SECOND.

DETAILS OF CONSTRUCTION NOT SHOWN SHALL BE IN ACCORDANCE WITH THE PERTINENT REQUIREMENTS OF THE STANDARD SPECIFICATIONS.

THE LOCATIONS OF EXISTING AND PROPOSED UTILITY INSTALLATIONS AS SHOWN ON THE PLANS ARE APPROXIMATE. THERE MAY BE OTHER UTILITY INSTALLATIONS WITHIN THE PROJECT THAT ARE NOT SHOWN. THE CONTRACTOR SHALL NOTIFY DIGGERS HOTLINE AND AFFECTED UTLITIES PRIOR TO THE START OF WORK, ANY MUNICIPAL UTILITY WHICH IS NOT A MEMBER OF THE DIGGERS HOTLINE MUST BE CONTACTED SEPARATELY.

RADIUS DIMENSIONS ON CURB AND GUTTER ARE TO THE FLANGE OF CURB AND GUTTER UNLESS NOTED OTHERWISE.

ALL SIGN LOCATIONS SHALL BE REVIEWED BY THE ENGINEER PRIOR TO INSTALLATION.

REMOVING ASPHALTIC SURFACE SHALL BE PAID AS ITEMIZED IN THE MISCELLANEOUS QUANTITIES. ALL OTHER ASPHALT REMOVAL WITHIN EXCAVATION LIMITS WILL BE CONSIDERED INCIDENTAL TO EXCAVATION COMMON.

CROSS SECTIONS INCLUDE THE THICKNESS OF SALVAGED TOPSOIL WHERE REQUIRED.

SEE SUBSURFACE EXPLORATION REPORTS FOR SOIL BORING INFORMATION. REPORTS ARE AVAILABLE FROM THE WISDOT SW REGION PROJECTS SECTION, KRIS SOMMERS, PROJECT MANAGER, PHONE (608) 785-9048.

WHEN THE QUANTITY OF ITEMS OF BASE OR SURFACE COURSE IS MEASURED FOR PAYMENT BY THE TON, THE THICKNESS OF THE COURSE SHOW ON THE PLANS IS APPROXIMATE, AND THE ACTUAL THICKNESS WILL DEPEND ON THE DISTRIBUTION OF THE MATERIAL AS DIRECTED BY THE ENGINEER.

THE EXACT LOCATION OF PRIVATE ENTRANCES AND DRIVEWAYS IS TO BE DETERMINED IN THE FIELD BY THE ENGINEER.

STATIONING, DISTANCES AND OFFSETS FOR PROPOSED SIGNS SHOWN ON THE PLANS ARE APPROXIMATE AND THE LOCATIONS OF SIGNS ARE TO BE COORDINATED IN THE FIELD WITH THE ENGINEER.

RESTORATION OF EXPOSED SLOPES AND DITCHES SHALL TAKE PLACE IMMEDIATELY AFTER FINISHED GRADING IS COMPLETE.

REMOVALS

NO TREES OR SHRUBS ARE TO BE REMOVED UNLESS INDICATED FOR REMOVAL BY THE ENGINEER.

MISCELLANEOUS REMOVAL ITEMS REQUIRING RESTORATION OF CONCRETE OR ASPHALTIC CONCRETE DRIVEWAYS, SIDEWALKS OR SIDE STREETS SHALL BE REMOVED TO AN EXISTING JOINT OR SAWED AS DETERMINED BY THE ENGINEER.

GRADING/EROSION CONTROL

SALVAGED TOPSOIL, SEEDING, MULCHING, AND FERTILIZER HAVE BEEN COMPUTED BY A DIRECT MEASUREMENT ON THE CROSS SECTIONS PLUS FIVE (5) FEET BEYOND THE SLOPE INTERCEPT.

FILL AS SHOWN ON THE PLANS PERTAINS TO EMBANKMENT CONSTRUCED FROM BORROW. THE FACTOR USED FOR EXPANDING THE FILLS TO COMPUTE THE VOLUME OF MATERIAL REQUIRED IS 1.25. ACTUAL EXPANSION FACTOR MAY VARY.

EXCAVATION BELOW SUBGRADE (EBS) IS NOT USED TO BALANCE YARDAGE, BUT IS MEASURED BY THE ENGINEER.

EXCAVATION BELOW SUBGRADE (EBS) IS ESTIMATED AND MAY VARY AS DIRECTED BY THE ENGINEER.

THE EROSION CONTROL ITEMS SHOWN ON THE PLANS ARE AT SUGGESTED LOCATIONS. THE ENGINEER SHALL DETERMINE THE EXACT LOCATION. ALL TEMPORARY EROSION CONTROL MEASURES SHALL BE MAINTAINED UNTIL SUCH TIME AS THE ENGINEER DETERMINES THE MEASUSRE IS NO LONGER NECESSARY.

EROSION CONTROL DEVICES SHALL BE PLACED IN SEQUENCE WITH CONSTRUCTION OPERATIONS OR AS DETERMINED BY THE ENGINEER.

STORM DRAINAGE

CROSS DRAIN PIPE ELEVATIONS AS SHOWN ON THE CROSS SECTIONS MAY BE ADJUSTED BY THE ENGINEER TO FIT EXISTING FIELD CONDITIONS.

EXISTING PIPE CULVERT SIZES SHOWN ARE APPROXIMATE. BASE THE BID ON THE ACTUAL FIELD CONDITIONS.

PAVING

A SAWED JOINT WILL BE REQUIRED WHERE NEW PAVEMENT IS TO MEET AN EXISTING PAVED SURFACE.

4-INCH HMA PAVEMENT SHALL BE CONSTRUCTED WITH A 2-INCH UPPER LAYER AND 2-INCH LOWER LAYER. USE ASPHALTIC MATERIAL PG 58-28 FOR BOTH LAYERS. BOTH LAYERS SHALL USE 12.5mm NOMINAL AGGREGATE SIZE.

HMA PAVEMENT WEIGHT CALCULATIONS ARE BASED ON 112 LBS/SY-IN.

HMA PAVEMENT

	PAVEMENT THICKNESS	TYPE OF ASPHALT	NO. OF LAYERS	12.5 MM LOWER LAYER THICKNESS	12.5 MM UPPER LAYER THICKNESS
CTH E	4	E-1	2	2.0	2.0
STH 78 SHOULDER	3.5	E-1	1	---	3.5

UTILITY/MUNICIPALITY	CONTACT/ADDRESS	UTILITY TYPE
MOUNT HOREB TELEPHONE CO	KEVIN MAYNE 200 E MAIN ST PO BOX 65 MOUNT HOREB, WI 53572 608-437-6770 (OFFICE) 608-516-6801 (MOBILE)	COMMUNICATION
ALLIANT ENERGY CORPORATION	JASON HOGAN 4902 NORTH BILTMORE LANE PO BOX 77007 MADISON, WI 53718-2148 608-458-4871 (OFFICE) 608-395-7395 (MOBILE) jasonhogan@alliantenergy.com	ELECTRIC
MOUNT HOREB UTILITIES	DAVE HERPEL 301 BLUE MOUNDS STREET MOUNT HOREB, WI 53572 608-437-3300 (OFFICE) 608-576-9220 (MOBILE)	ELECTRIC

DIGGERS HOTLINE

Dial 811 or (800) 242-8511

www.DiggersHotline.com

ABBREVIATIONS

ABUT.	ABUTMENT
A.D.T	AVERAGE DAILY TRAFFIC
AEWCP	APRON ENDWALL CULVERT PIPE
AEWCPRCHE	APRON ENDWALL CULVERT PIPE REINFORCED CONCRETE HORIZONTAL ELLIPTICAL
B.F.	BACK FACE
B.F.S.	BEGIN FULL SUPERELEVATION
B.M.	BENCH MARK
CP	CULVERT PIPE
CPRC	CULVERT PIPE REINFORCED CONCRETE
CPRCHE	CULVERT PIPE REINFORCED CONCRETE HORIZONTAL ELLIPTICAL
CTR.	CENTER
C.L.	CENTERLINE
D.	LANE DISTRIBUTION
D.H.V.	DESIGN HOURLY VOLUME
DIA.	DIAMETER
DIM.	DIMENSION
E.F.S.	END FULL SUPERELEVATION
EL. OR ELEV.	ELEVATION
ESALS	EQUIVALENT SINGLE AXLE LOADS
EXC.	EXCAVATION
F.E.	FIELD ENTRANCE
F.F.	FRONT FACE
LT.	LEFT
MAX.	MAXIMUM
MIN.	MINIMUM
NORM.	NORMAL
O.H.	OVERHEAD POWER LINE
P.E.	PRIVATE ENTRANCE
P.O.L.	POINT ON LINE
REQ'D.	REQUIRED
RDWY.	ROADWAY
R.H.F.	RIGHT HAND FORWARD
RO	RUNOFF
RT.	RIGHT
S.E.	SUPERELEVATON
SPA.	SPACE
STA.	STATION
SYM.	SYMMETRICAL
T.	PERCENT OF TRUCKS
TYP.	TYPICAL
V.	DESIGN SPEED
VPD	VEHICLES PER DAY
VPH	VEHICLES PER HOUR

DNR LIASON

ERIC HEGGELUND
3911 FISH HATCHERY ROAD
FITCHBURG, WI 53711
PH: (608) 275-3301

DESIGN CONSULTANT

NED GRADY
STRAND ASSOCIATES
910 W. WINGRA DRIVE
MADISON, WI 53715
PH: (608) 251-4843

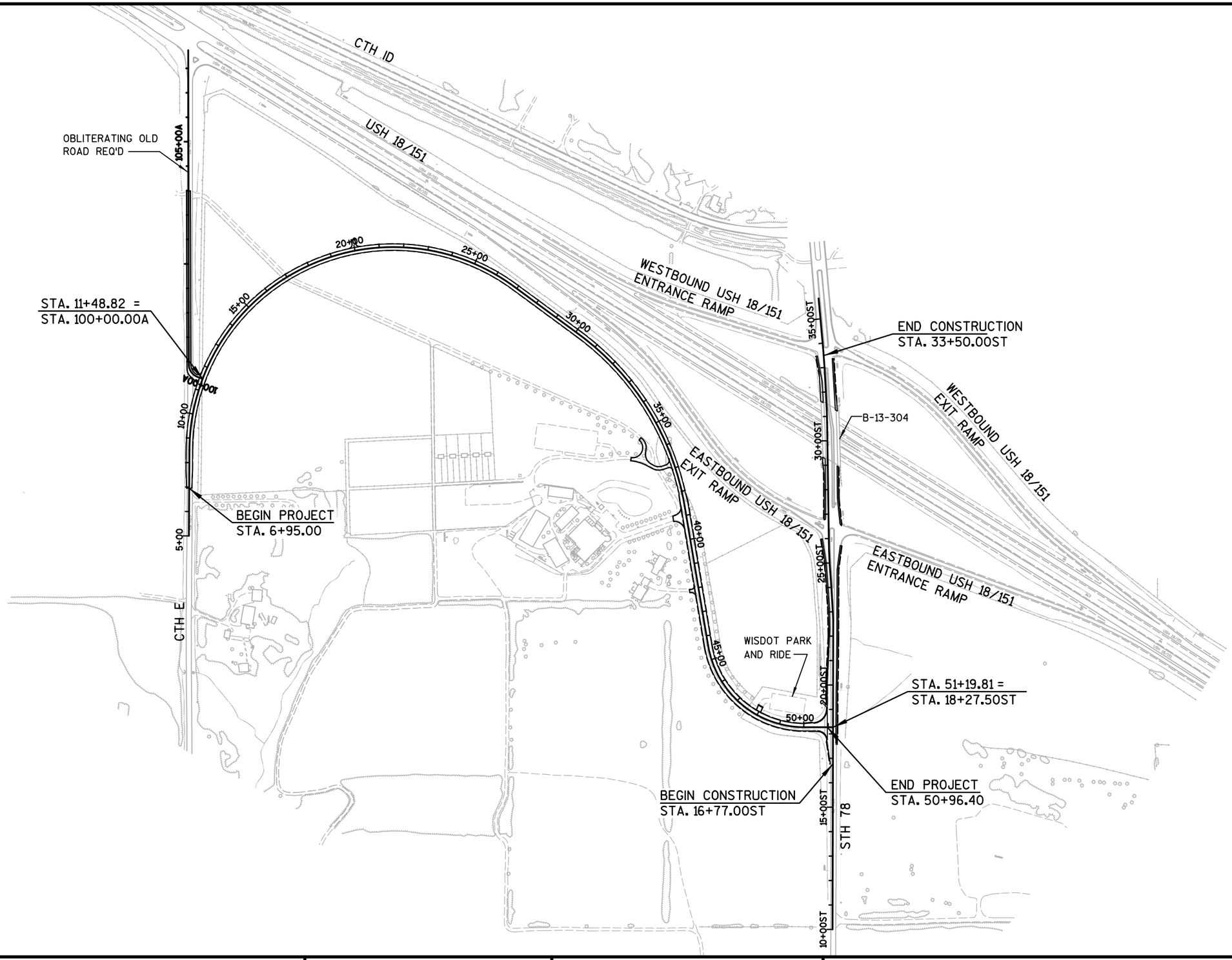

PROJECT NO: 1204-06-75	HWY: USH 18/CTH E	COUNTY: DANE	PROJECT OVERVIEW	SHEET 3	E

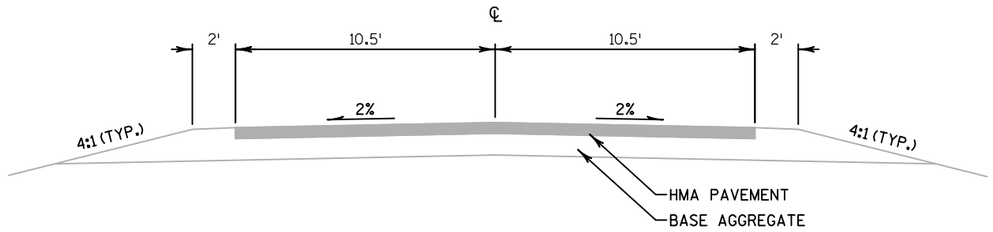

EXISTING TYPICAL SECTION - CTH E

① PAVED WIDTH
STA. 6+95.00 TO STA. 7+07.93 VARIES 10.5' TO 11.1'

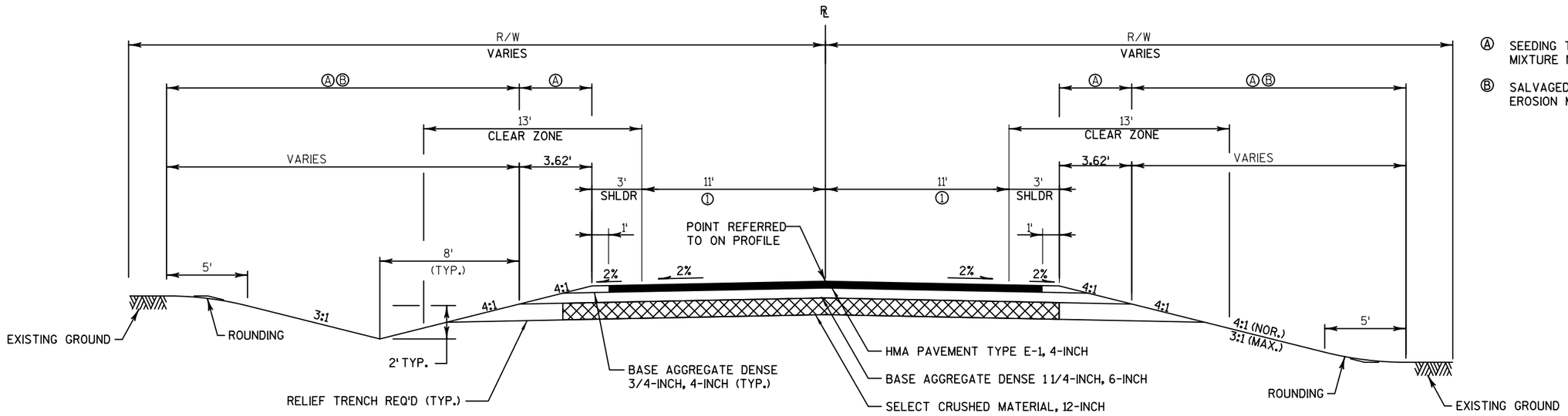

Ⓐ SEEDING TEMPORARY, SEEDING MIXTURE NO. 20, FERTILIZER TYPE B

Ⓑ SALVAGED TOPSOIL AND EROSION MAT CLASS I TYPE A

TYPICAL FINISHED SECTION - CTH E NORMAL CROWN

STA. 6+95.0 TO STA. 7+07.9
STA. 28+32.4 TO STA. 28+76.8

PROJECT NO: 1204-06-75	HWY: USH 18/CTH E	COUNTY: DANE	TYPICAL SECTION - CTH E	SHEET 4	E

① PAVED WIDTH
STA. 7+07.9 TO STA. 7+70.0 VARIES 11.1' TO 14'

Ⓐ SEEDING TEMPORARY, SEEDING MIXTURE NO. 20, FERTILIZER TYPE B

Ⓑ SALVAGED TOPSOIL AND EROSION MAT CLASS I TYPE A

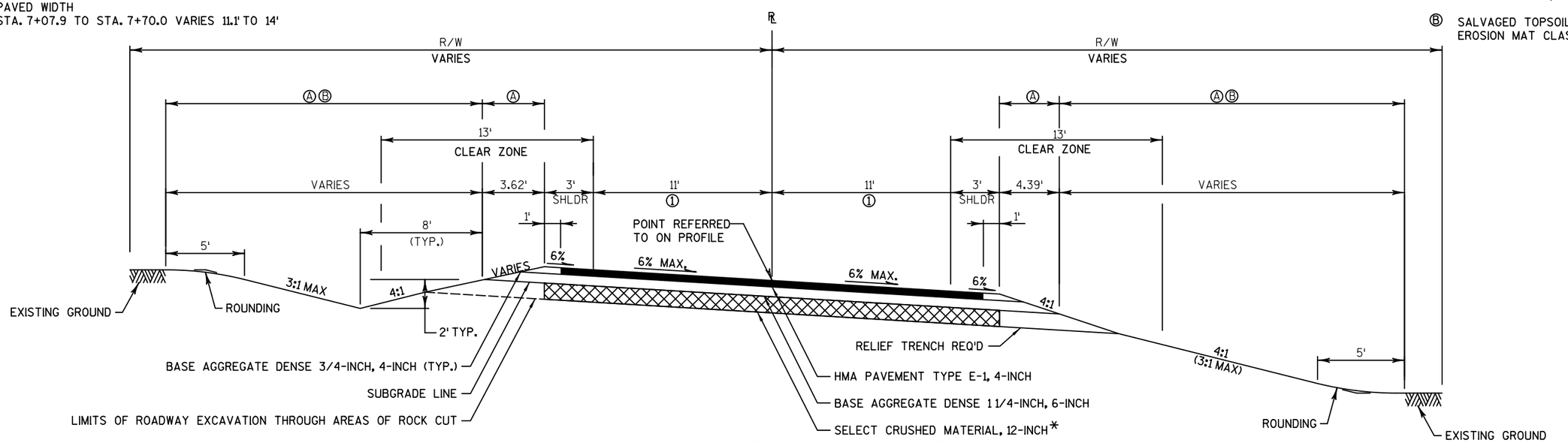

TYPICAL FINISHED SECTION - CTH E (SUPERELEVATION)

STA. 7+07.9 TO STA. 28+32.4
STA. 28+76.8 TO STA. 38+00.0*

*IN THE AREAS OF EXCAVATION ROCK, REMOVE THE ROCK TO A DEPTH OF APPROXIMATELY ONE FOOT BELOW THE EARTH SUBGRADE LINE BETWEEN THE LIMITS OF THE SHOULDER SLOPE. IN THE AREA OF ROCK EXCAVATION, REPLACE THE 12-INCHES OF SELECT CRUSHED MATERIAL WITH 12-INCHES OF BASE AGGREGATE DENSE 1¼-INCH. A RELIEF TRENCH IS NOT REQUIRED THROUGH THIS AREA.

Ⓐ SEEDING TEMPORARY, SEEDING MIXTURE NO. 20, FERTILIZER TYPE B

Ⓑ SALVAGED TOPSOIL AND EROSION MAT CLASS I TYPE A

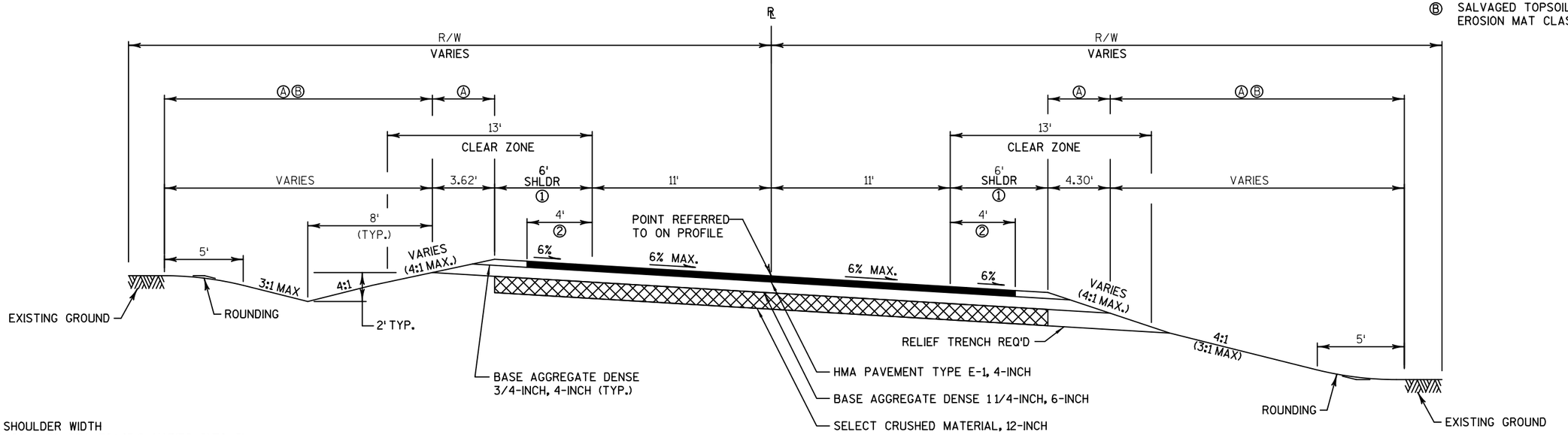

① TOTAL SHOULDER WIDTH
STA. 38+00.0 TO STA. 38+45.0 VARIES 2' TO 6'

② PAVED SHOULDER WIDTH
STA. 38+00.0 TO STA. 38+45.0 VARIES 2' TO 4'

TYPICAL FINISHED SECTION - CTH E (SUPERELEVATION)

STA. 38+00.0 TO STA. 40+01.8

PROJECT NO: 1204-06-75	HWY: USH 18/CTH E	COUNTY: DANE	TYPICAL SECTION - CTH E	SHEET 5	E

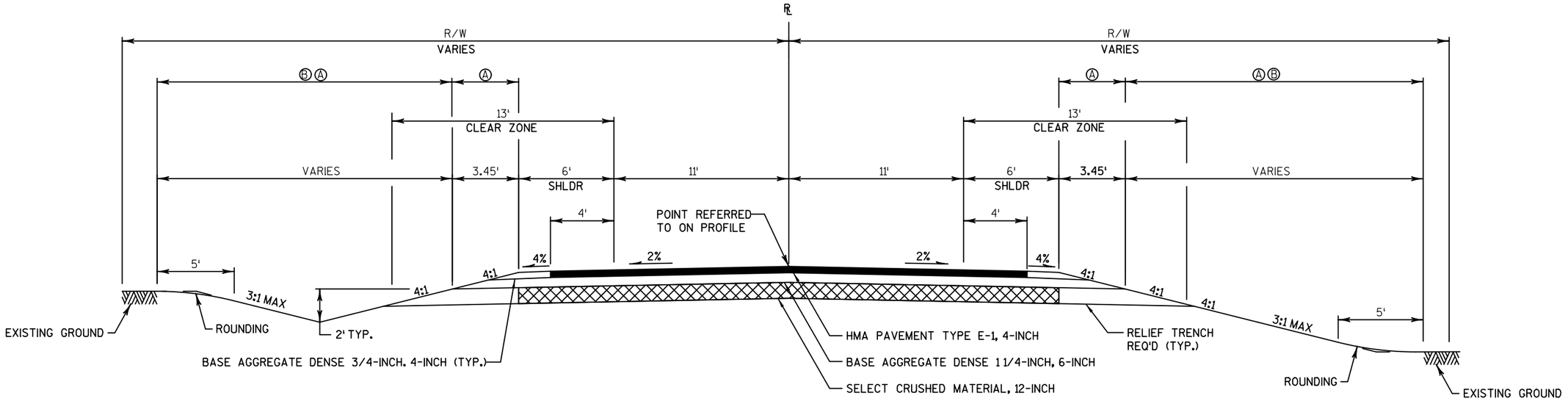

TYPICAL FINISHED SECTION - CTH E NORMAL CROWN

STA. 40+01.8 TO STA. 42+97.0

Ⓐ SEEDING TEMPORARY, SEEDING MIXTURE NO. 20, FERTILIZER TYPE B

Ⓑ SALVAGED TOPSOIL AND EROSION MAT CLASS I TYPE A

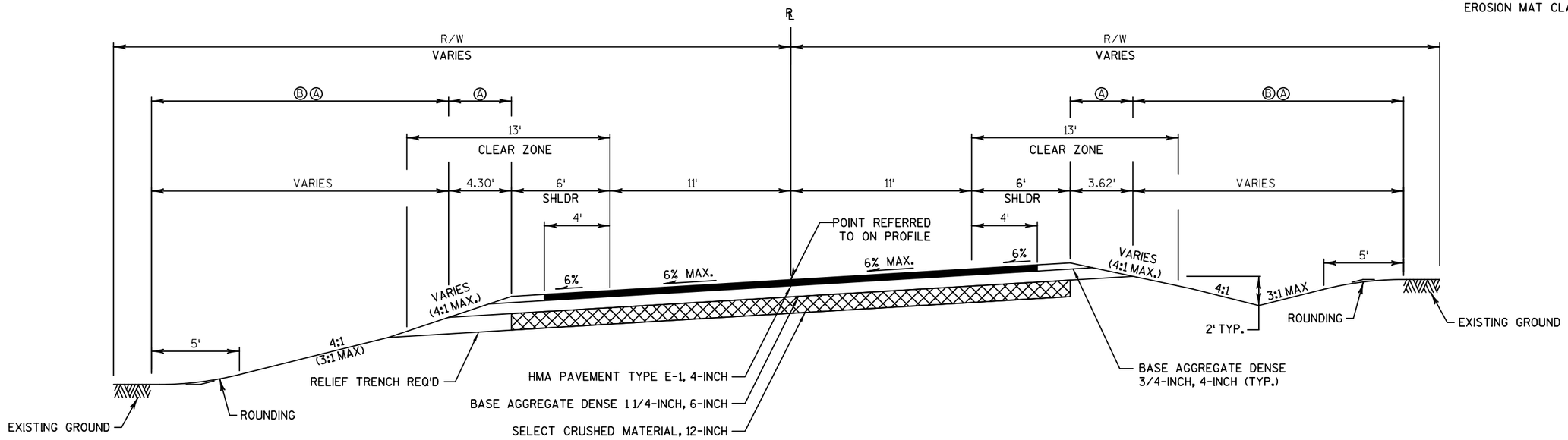

TYPICAL FINISHED SECTION - CTH E (SUPERELEVATION)

STA. 42+97.0 TO STA. 50+96.4

PROJECT NO: 1204-06-75	HWY: USH 18/CTH E	COUNTY: DANE	TYPICAL SECTION - CTH E	SHEET 6	E

2

P.I. = 100+59.95A
Y = 456,431.14
X = 717,946.77
DELTA = 68° 14' 56" (RT)
D = 108° 06' 19"
T = 35.92'
L = 63.13'
R = 53.00'
P.C. = 100+24.03A
P.T. = 100+87.16A

BENCH MARKS

NO.	STATION	DESCRIPTION	ELEV.
350	11+49	"X" EAST END ELLIPTICAL CMCP UNDER CTH E	1200.22
		1000± SOUTH OF USH 18 & 151	

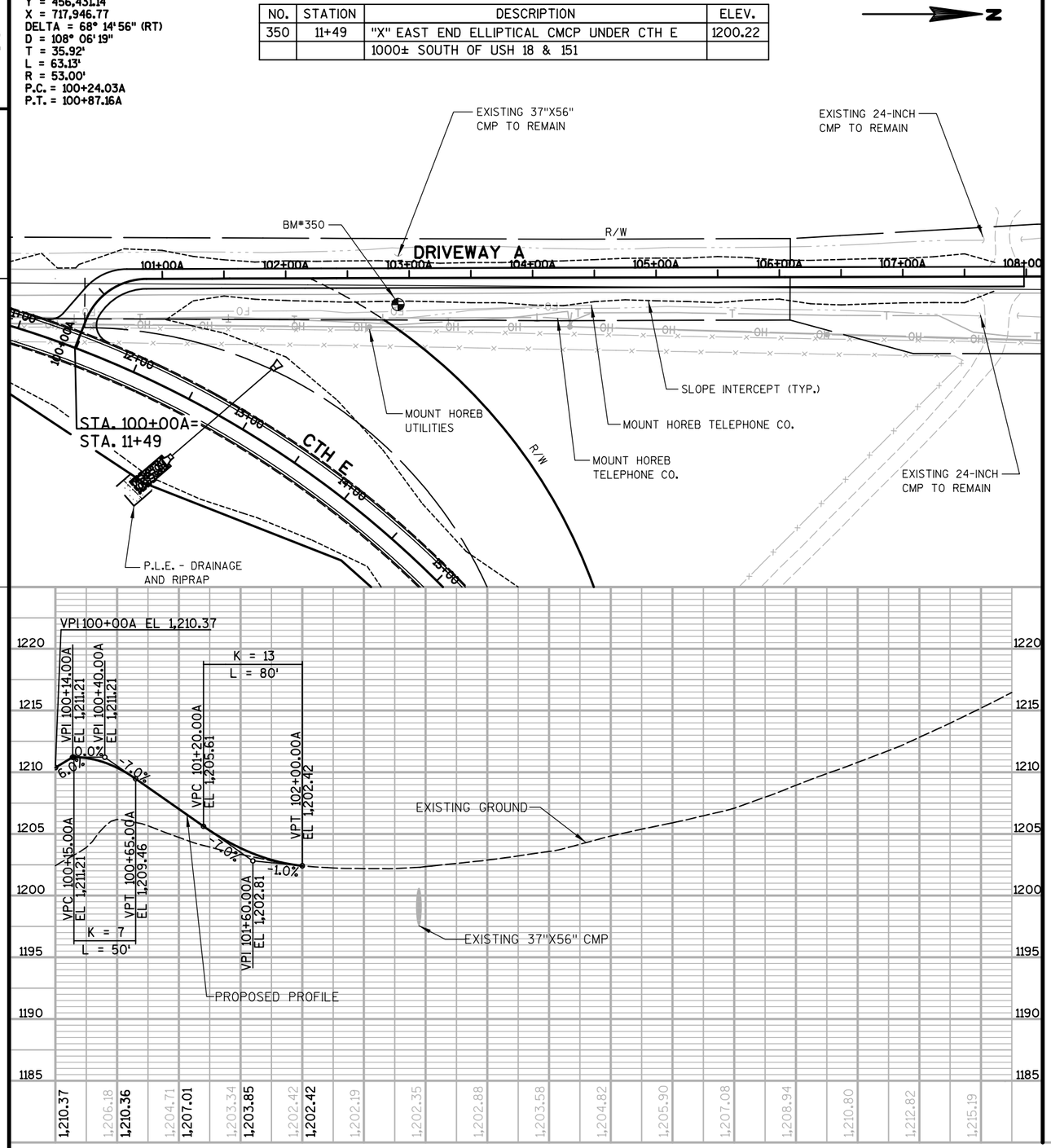

N

POINT	STATION	OFFSET	RADIUS
1	100+12.9A	-32.4	---
2	100+22.9A	-19	---
3	---	---	15
4	100+43.4A	-14.5	---
5	100+73.7A	-10	---
6	---	---	45

POINT	STATION	OFFSET	RADIUS
7	100+14.0A	23.2	---
8	100+32.9A	8	---
9	---	---	15
10	100+87.2A	8	---
11	---	---	45
12	100+87.2A	8	---

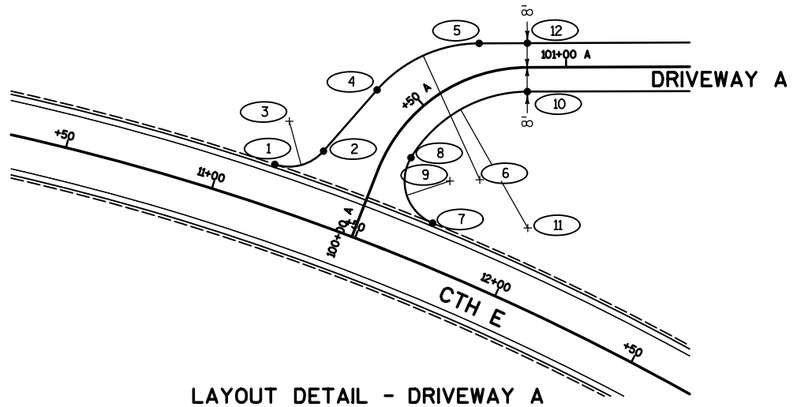

LAYOUT DETAIL - DRIVEWAY A

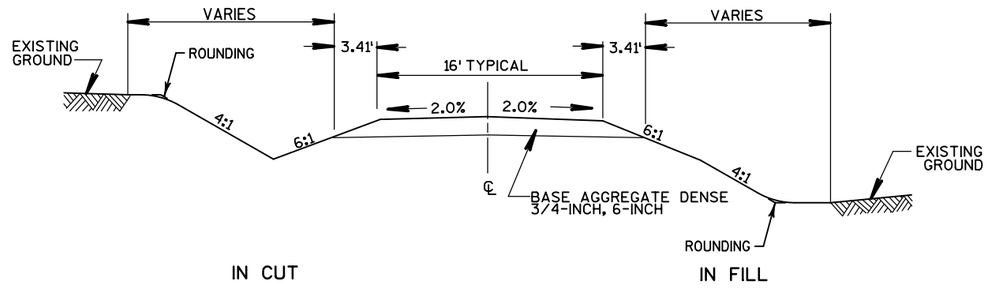

TYPICAL CROSS SECTION FOR FIELD ENTRANCE

STA. 100+14A TO STA. 102+00A

PROJECT NO: 1204-06-05	HWY: USH 18/CTH E	COUNTY: DANE	CONSTRUCTION DETAIL - DRIVEWAY A	SHEET 7	E

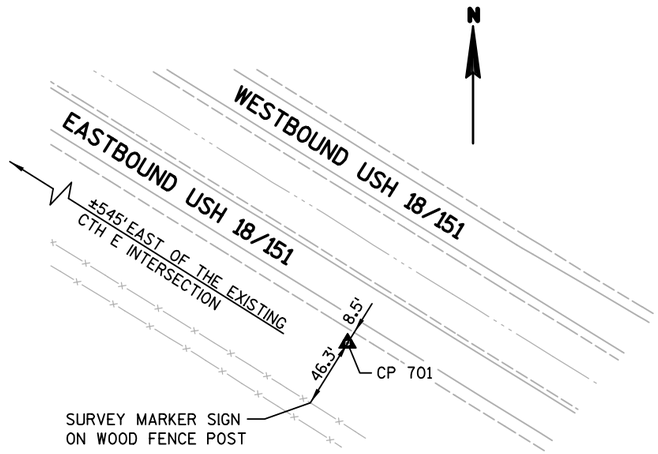

CP 701
Y = 457,423.870
X = 718,445.056

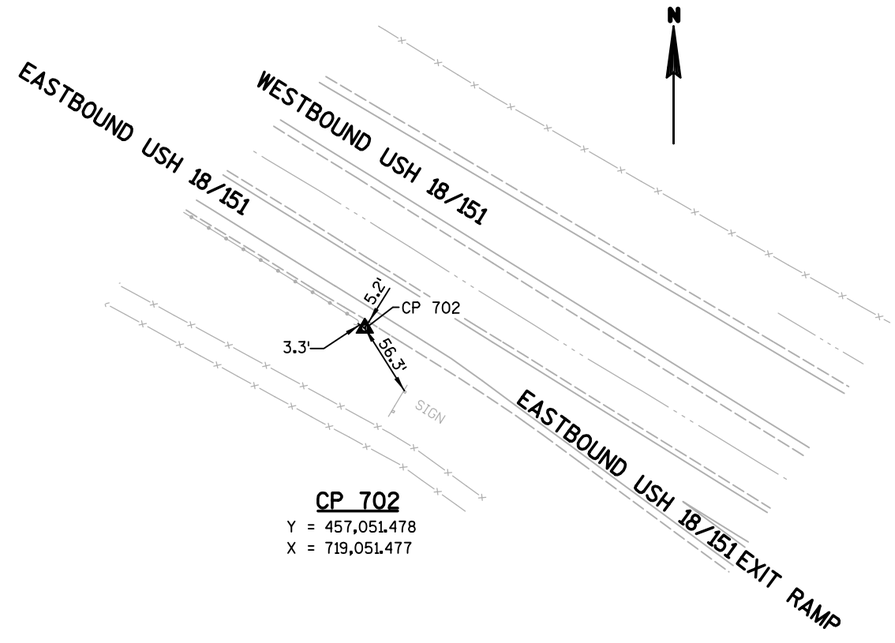

CP 702
Y = 457,051.478
X = 719,051.477

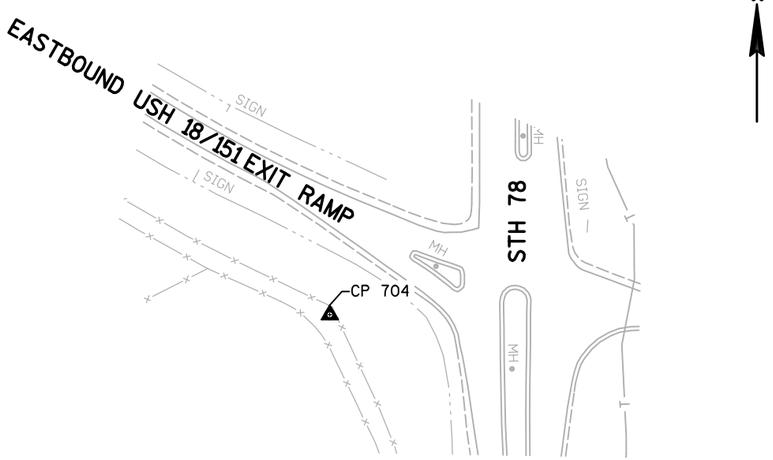

CP 704
Y = 455,776.612
X = 720,452.142

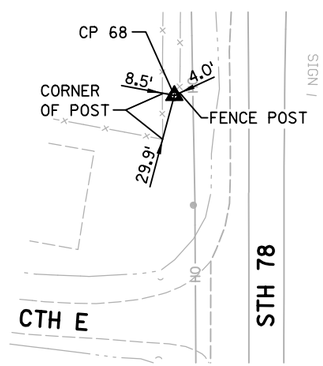

CP 68
Y = 455,132.860
X = 720,521.556

PROJECT NO: 1204-06-75	HWY: CTH E	COUNTY: DANE	CONSTRUCTION DETAILS	SHEET 8	E

2

RUNOFF COEFFICIENT TABLE

	HYDROLOGIC SOIL GROUP											
	A			B			C			D		
	SLOPE RANGE (PERCENT)			SLOPE RANGE (PERCENT)			SLOPE RANGE (PERCENT)			SLOPE RANGE (PERCENT)		
LAND USE:	0-2	2-6	6 & OVER	0-2	2-6	6 & OVER	0-2	2-6	6 & OVER	0-2	2-6	6 & OVER
ROW CROPS	.08 .22	.16 .30	.22 .38	.12 .26	.20 .34	.27 .44	.15 .30	.24 .37	.33 .50	.19 .34	.28 .41	.38 .56
MEDIAN STRIP-TURF	.19 .24	.20 .26	.24 .30	.19 .25	.22 .28	.26 .33	.20 .26	.23 .30	.30 .37	.20 .27	.25 .32	.30 .40
SIDE SLOPE-TURF			.25 .32			.27 .34			.28 .36			.30 .38
PAVEMENT:												
ASPHALT	.70 - .95											
CONCRETE	.80 - .95											
BRICK	.70 - .80											
DRIVES, WALKS	.75 - .85											
ROOFS	.75 - .95											
GRAVEL ROADS, SHOULDERS	.40 - .60											

TOTAL PROJECT AREA = 10.86 ACRES
TOTAL AREA EXPECTED TO BE DISTURBED BY CONSTRUCTION ACTIVITIES= 10.09 ACRES

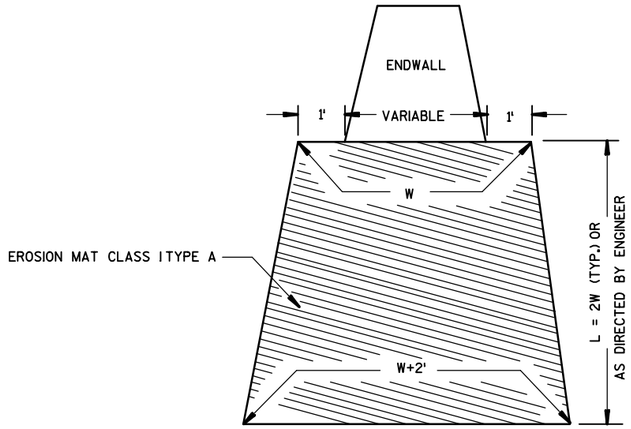

EROSION MAT TREATMENT AT CULVERTS

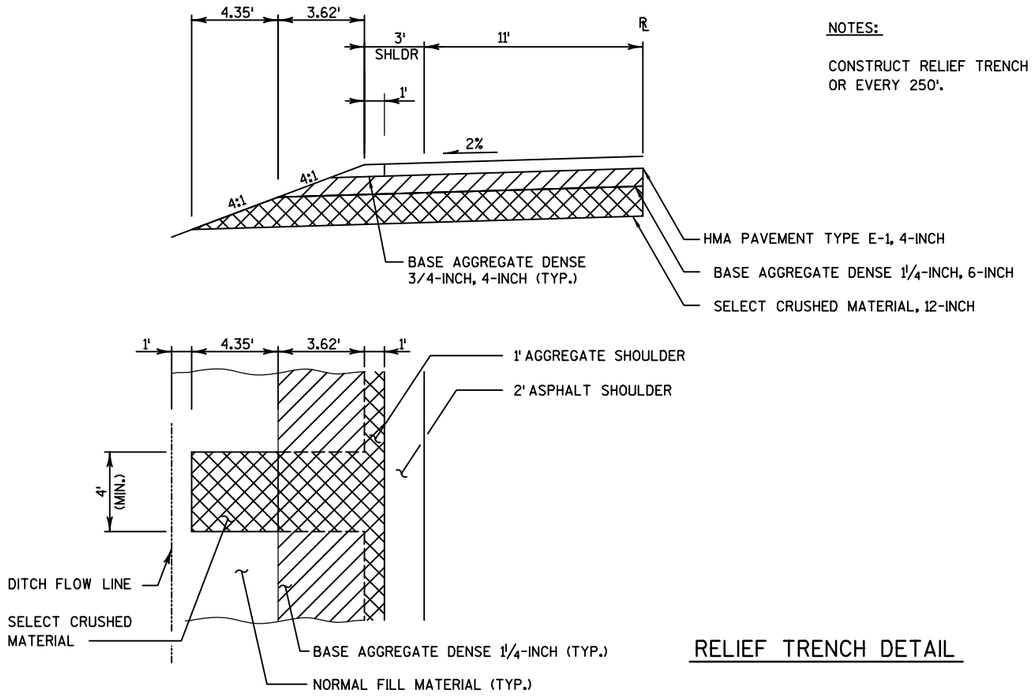

NOTES:

CONSTRUCT RELIEF TRENCH AT SAG POINTS OR EVERY 250'.

RELIEF TRENCH DETAIL

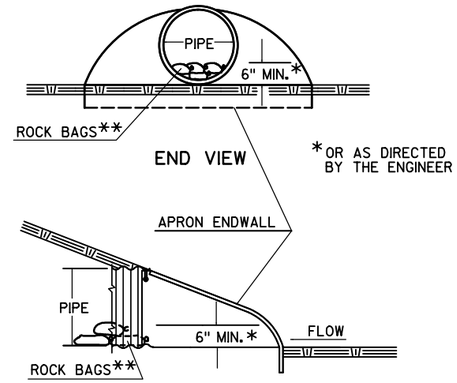

** CULVERT PIPE CHECKS WILL BE MEASURED AS EACH INDIVIDUAL ROCK BAG.

CULVERT PIPE CHECKS

PROJECT NO: 1204-06-75	HWY: CTH E	COUNTY: DANE	CONSTRUCTION DETAILS	SHEET 9	E

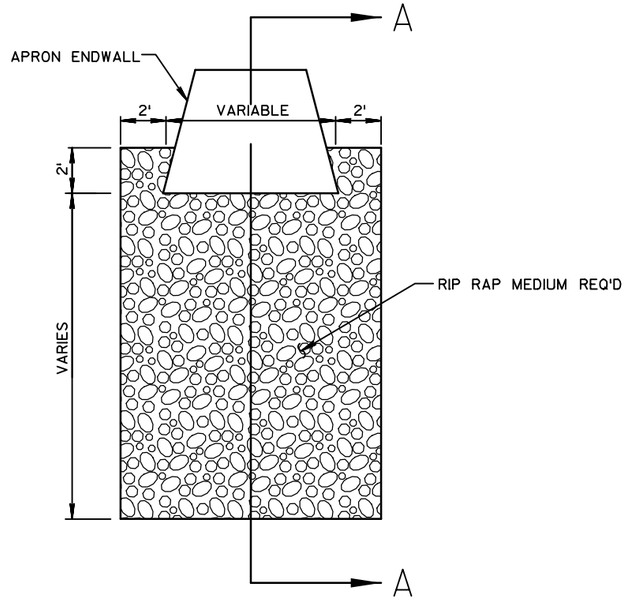

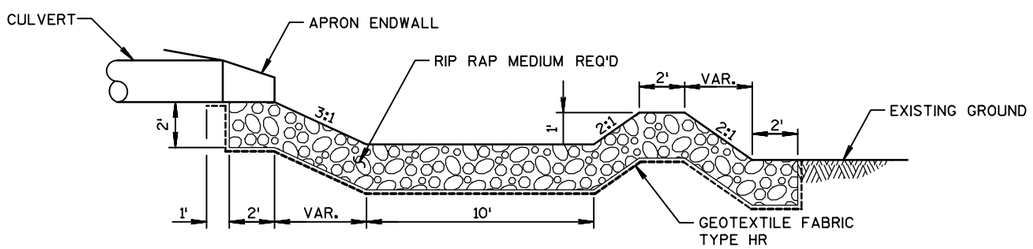

SECTION A-A

LEVEL SPREADER DETAIL

STA. 12+50 RT
STA. 21+50 RT
STA. 28+50 RT

* THICKNESS OF ASPHALTIC SURFACE AND BASE AGGREGATE TO MATCH EXISTING PAVEMENT STRUCTURE OR AS DIRECTED BY THE ENGINEER.

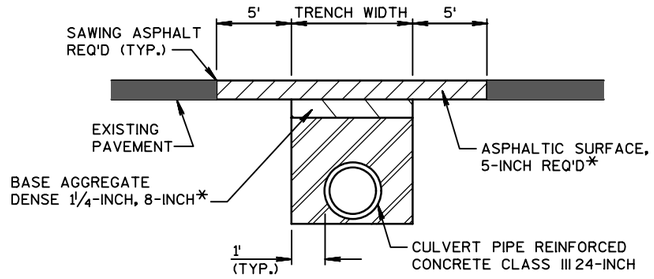

DETAIL FOR CULVERT PIPE INSTALLATION

STA. 18+06ST

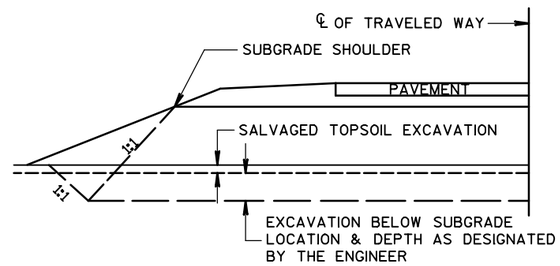

DETAIL FOR EXCAVATION BELOW SUBGRADE

STA. 10+00 TO STA. 15+00
STA. 20+00 TO STA. 23+50
STA. 27+50 TO STA. 30+50

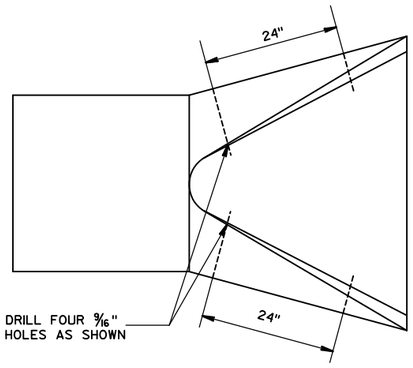

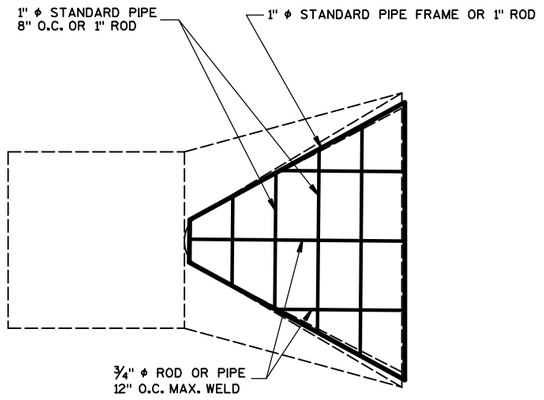

AT EACH PIPE

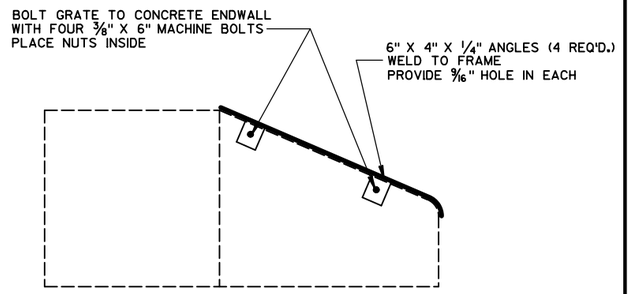

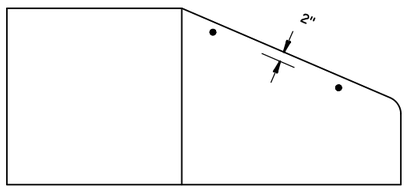

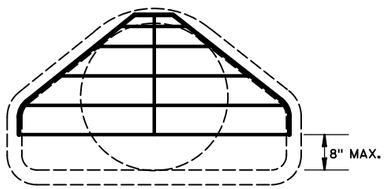

PIPE GRATE DETAIL

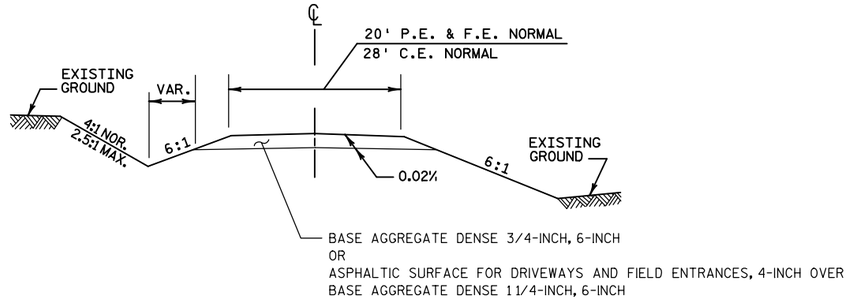

TYPICAL CROSS SECTION

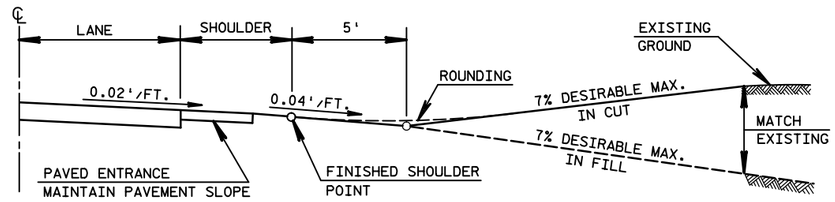

PROFILE VIEW

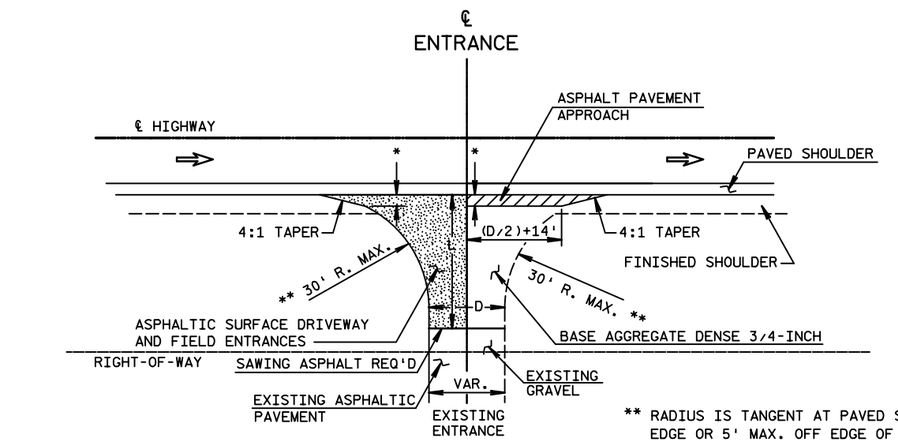

L=VARIABLE, EXACT LENGTH TO BE DETERMINED IN THE FIELD BY THE ENGINEER. BLEND BACK ON THE ENTRANCE FAR ENOUGH TO GET A SMOOTH PROFILE.

D=DRIVEWAY WIDTH
D=20'TYP.(PE's & FE's) (16'MIN.-24'MAX.)
D=28'TYP.(CE's & FARM ENT.) (24'MIN.-35'MAX.)

** RADIUS IS TANGENT AT PAVED SHOULDER EDGE OR 5' MAX. OFF EDGE OF MAIN LINE PAVEMENT WHICH EVER IS LESS.

* 3' MAX. OR TO FINISHED SHOULDER WHICH EVER IS LESS.

PLAN VIEW

RURAL DRIVEWAY INTERSECTION DETAIL (PE's, FE's & CE'S)

LEFT LANE RATE (%)	STATION	RIGHT LANE RATE (%)
-2.0	06+95.0	-2.0
-2.0	07+07.9	-2.0
2.0	08+03.9	-2.0
6.0	09+00.0	-6.0
6.0	26+40.4	-6.0
2.0	27+36.4	-2.0
-2.0	28+32.4	-2.0
-2.0	28+76.8	-2.0
-2.0	29+72.8	2.0
-5.7	30+61.8	-5.7
-5.7	38+16.2	5.7
-2.0	39+05.8	2.0
-2.0	40+01.8	-2.0
-2.0	42+97.0	-2.0
2.0	43+93.0	-2.0
6.0	44+90.0	-6.0

CTH E SUPERELEVATION TRANSITION LOCATIONS

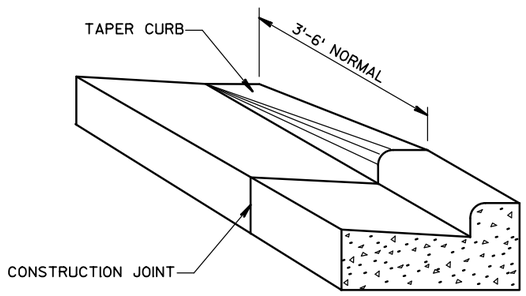

DETAIL OF CURB & GUTTER TERMINI

POINT	STATION	OFFSET
1	49+95.7	-17.0
2	50+05.3	-15.0
3	50+32.0	-20.7
4	50+46.7	15.0
5	50+42.0	-18.7
6	50+56.7	18.0
7	50+56.7	55.0
8	50+36.0	-75.6
9	17+66.3ST	-27.6
10	17+76.3ST	-26.1
11	19+02.6ST	-27.2
12	19+18.5ST	-26.8
13	19+28.5ST	-29.9

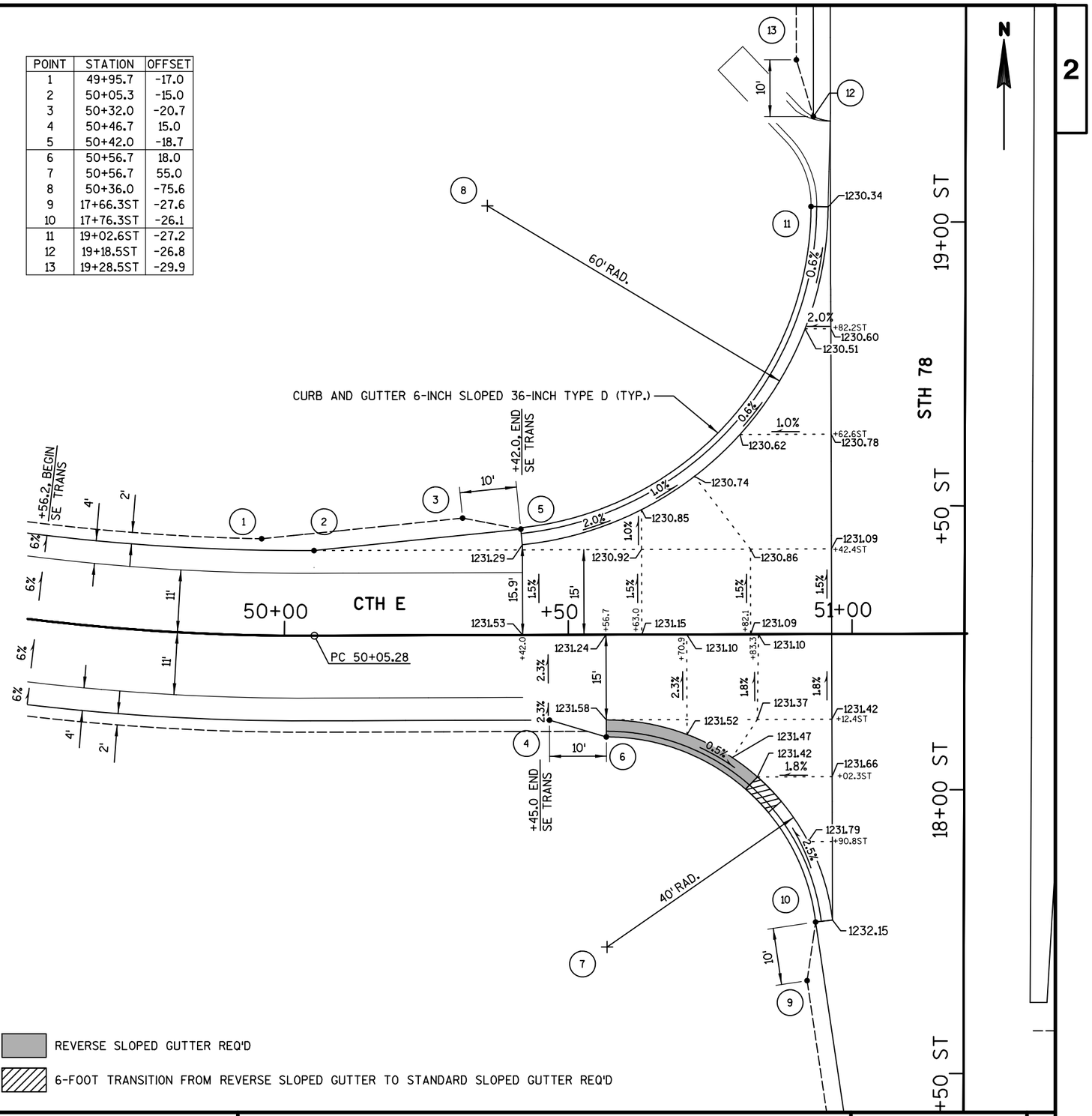

PROJECT NO: 1204-06-75	HWY: USH 18/CTH E	COUNTY: DANE	CONSTRUCTION DETAILS	SHEET 12	E

C LINE

P.I. 10+00.00 C	P.I. = 10+32.99 C	P.I. 10+99.02 C
Y = 456,162.95	Y = 456,141.48	Y = 456,072.99
X = 719,791.60	X = 719,816.65	X = 719,794.39
	DELTA = 67° 24' 33" (RT)	
	D = 150° 46' 42"	
	T = 25.35'	
	L = 44.71'	
	R = 38.00'	
	P.C. = 10+07.64 C	
	P.T. = 10+52.35 C	

B LINE

P.I. 10+00.00 B	P.I. = 10+33.73 B	P.I. = 11+19.31 B	P.I. 11+86.47 B
Y = 456,081.09	Y = 456,077.97	Y = 456,038.43	Y = 456,061.35
X = 719,755.13	X = 719,788.71	X = 719,865.46	X = 719,931.22
	DELTA = 21° 04' 16" (RT)	DELTA = 47° 01' 40" (LT)	
	D = 31° 35' 27"	D = 114° 35' 30"	
	T = 33.73'	T = 21.76'	
	L = 66.70'	L = 41.04'	
	R = 181.37'	R = 50.00'	
	P.C. = 10+00.00 B	P.C. = 10+97.56 B	
	P.T. = 10+66.70 B	P.T. = 11+38.60 B	

SEE CONSTRUCTION DETAILS - DRIVEWAY B AND DRIVEWAY C PROFILES FOR VERTICAL PROFILE INFORMATION.

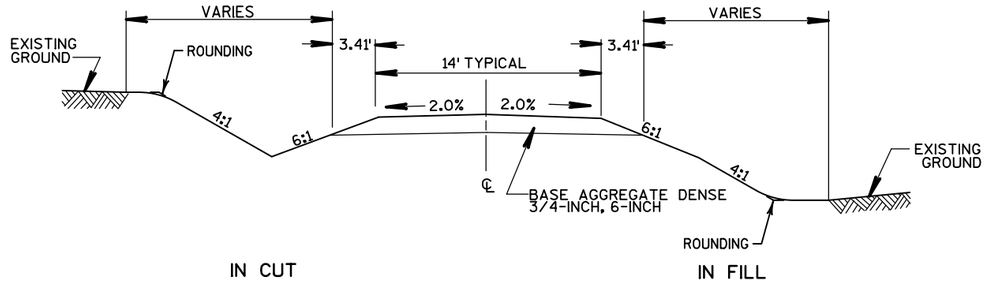

TYPICAL CROSS SECTION FOR FIELD ENTRANCE

DRIVEWAY B
DRIVEWAY C

POINT	STATION	OFFSET
1	10+02.4 B	-46.1
2	10+85.0 B	-52.0
3	11+52.3 B	-27.0
4	11+57.1 B	22.0
5	10+07.6 C	7.0

TLE - DRIVEWAY
10+00 C
PC
PI
PT
+50 C
DRIVEWAY C
40' RAD.
45' RAD.
20' RAD.
15' RAD.
7'
7'
7'
7'
10+00 B
PC
PI
DRIVEWAY B
+50 B
PT
11+00 B
PC
PT
PI
+50 B
STA. 10+40.17 B =
STA. 10+99.02 C
STA. 11+86.47 B =
STA. 36+83.80
CTH E
37+00
EXISTING R/W (TYP.)
PROPOSED R/W
TLE - DRIVEWAY
N

PROJECT NO: 1204-06-75	HWY: USH 18/CTH E	COUNTY: DANE	CONSTRUCTION DETAILS - DRIVEWAY B AND DRIVEWAY C	SHEET	E

FILE NAME : S:\MAD\1000--1099\1089\665\Micros\PLAN\021002d_cd.dgn PLOT DATE : 3/14/2013 PLOT BY : _username_ PLOT NAME : PLOT SCALE : $$.....plotscale.....$$ WISDOT/CADDS SHEET 42

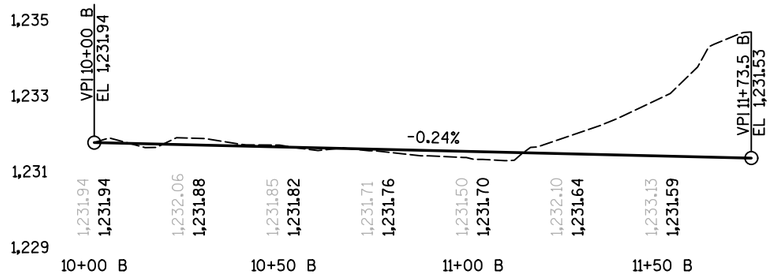

DRIVEWAY B PROFILE INFORMATION

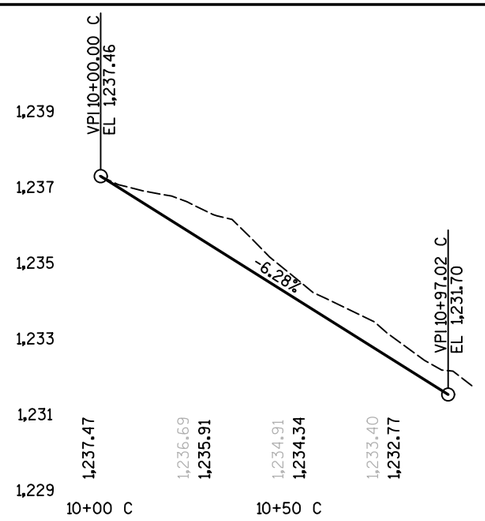

DRIVEWAY C PROFILE INFORMATION

PROJECT NO: 1204-06-75	HWY: USH 18/CTH E	COUNTY: DANE	CONSTRUCTION DETAILS - DRIVEWAY B AND DRIVEWAY C PROFILES	SHEET 14	E

2

N

NORTH ROAD

CTH ID

BIKE PATH

SEPTIC

SIGN

OH

SEE SDD "INLETS MEDIAN 1 AND 2 GRATE" FOR BERM DETAIL ON THE DOWNSTREAM END OF THE EXISTING INLET

REMOVE EXISTING MEDIAN PAVEMENT AND GRADE THE MEDIAN DITCH TO DRAIN

REMOVING PAVEMENT MARKINGS REQ'D (TYP.)

DIRECTION OF SURFACE WATER (TYP.)

INLET PROTECTION TYPE A REQ'D

WESTBOUND USH 18/151

EASTBOUND USH 18/151

SAWING ASPHALT REQ'D (TYP.)

REMOVING CURB AND GUTTER REQ'D

REMOVING CURB REQ'D

FENCE WOVEN WIRE 4-FOOT REQ'D

LIMITS OF REMOVING FENCE

EXISTING CTH E

102+00A

111+00A

110+00A

*OBLITERATING ROAD REQ'D STA. 102+00A TO 113+50A

A

B

XXXXX

WESTBOUND USH 18/151 INSIDE EDGE OF PAVEMENT

6' SHLDR

4' PAVED

2'

VARIES

SALVAGED TOPSOIL, TEMPORARY SEEDING, SEED MIXTURE NO. 20, FERTILIZER TYPE B, AND EROSION MAT URBAN CLASS I TYPE A REQ'D

10:1

EASTBOUND USH 18/151 INSIDE EDGE OF PAVEMENT

EXISTING ASPHALT SHOULDER (TYP.)

EXISTING CONCRETE PAVEMENT (TYP.)

SECTION A-A

*OBLITERATION OF EXISTING CTH E CONSISTS OF REMOVING THE EXISTING ASPHALT PAVEMENT AND BASE AGGREGATE. AFTER COMPLETING ROUGH GRADING, PLACE SALVAGED TOPSOIL, SMOOTH, FERTILIZE, AND SEED THE ENTIRE AREA OF THE OBLITERATED OLD ROAD.

WESTBOUND USH 18/151 INSIDE EDGE OF PAVEMENT

EXISTING CONCRETE PAVEMENT

6' SHOULDER

4' PAVED

2'

EXISTING ASPHALT SHOULDER

VAR.

SHAPING SHOULDERS REQ'D

SHOULDER SUBGRADE POINT

SAWING ASPHALT REQ'D

BASE AGGREGATE DENSE 3/4-INCH, 4-INCH REQ'D

SECTION B-B

PROJECT NO: 1204-06-75	HWY: USH 18/CTH E	COUNTY: DANE	CONSTRUCTION DETAILS - USH 18/151/CTH E INTERSECTION REMOVAL	SHEET 15	E

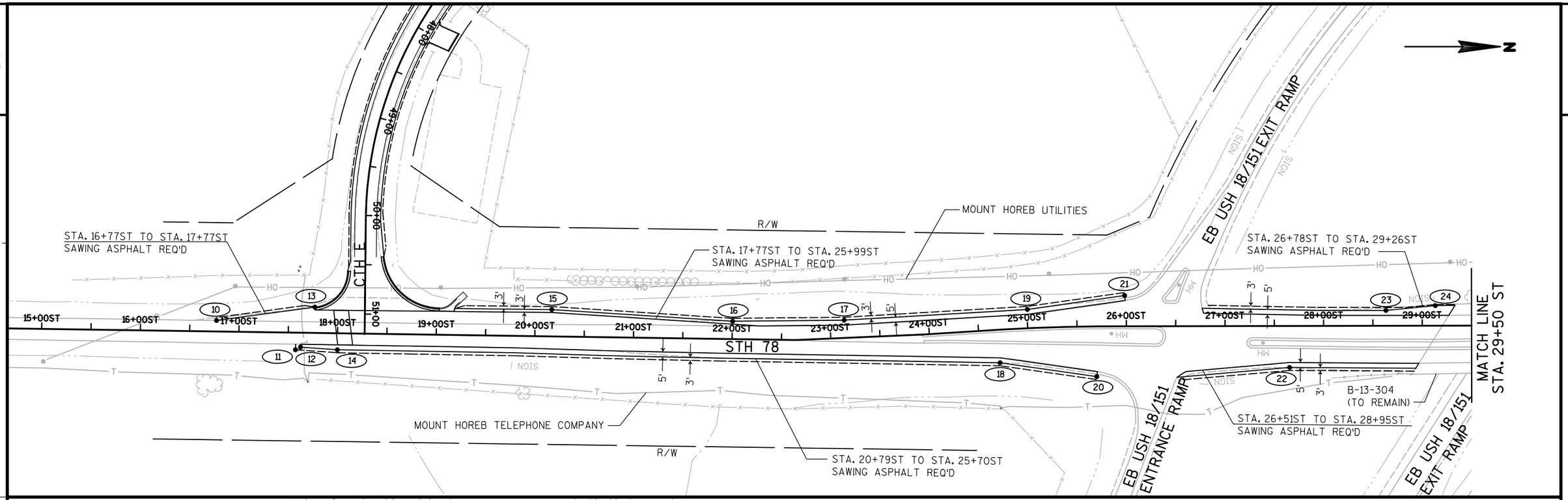

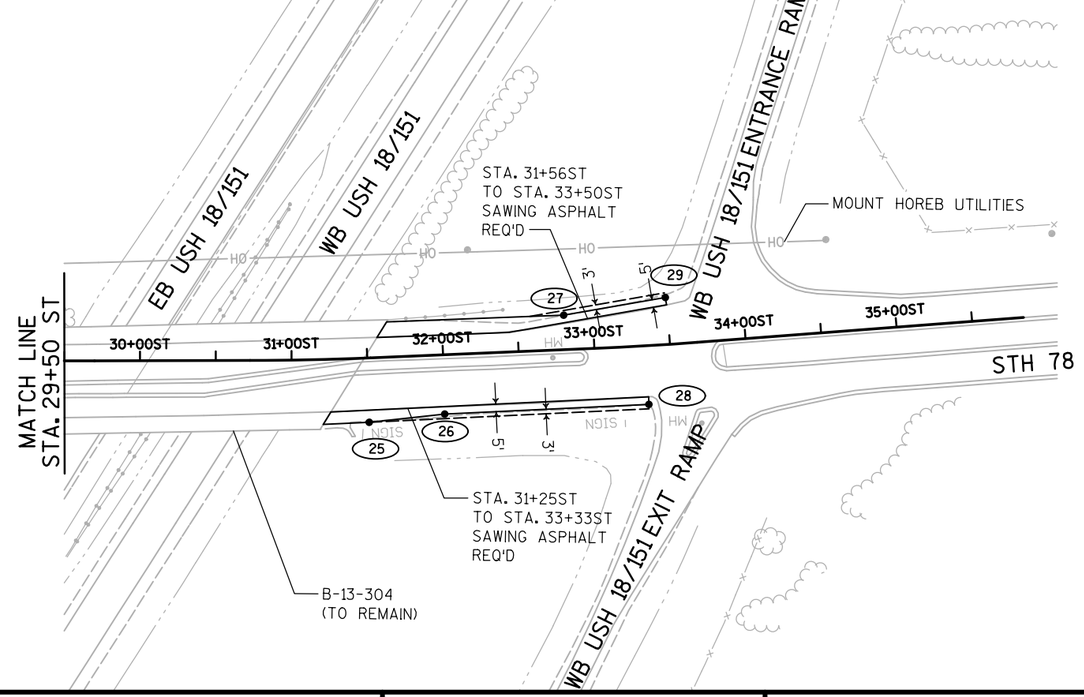

Ⓐ SEEDING TEMPORARY, SEEDING MIXTURE NO. 20, FERTILIZER TYPE B

Ⓑ SALVAGED TOPSOIL AND EROSION MAT CLASS I TYPE A

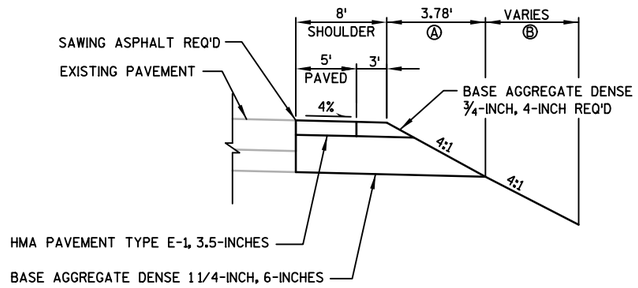

TYPICAL SECTION - STH 78 SHOULDER

POINT	STATION	OFFSET
10	16+77ST	-11.1
11	17+58ST	17.4
12	17+63ST	14.7
13	17+77ST	-26.1
14	18+00ST	16.8
15	20+16ST	-27.2
16	22+00ST	-18.1
17	23+14ST	-18.0
18	24+70ST	33.5
19	25+00ST	-19.1
20	25+70ST	50.9
21	25+98ST	-31.2
22	27+65ST	42.1
23	28+63ST	-15.6
24	29+13ST	-20.4
25	31+50ST	42.5
26	32+00ST	39.2
27	32+81ST	-22.8
28	33+34ST	38.7
29	33+49ST	-31.1

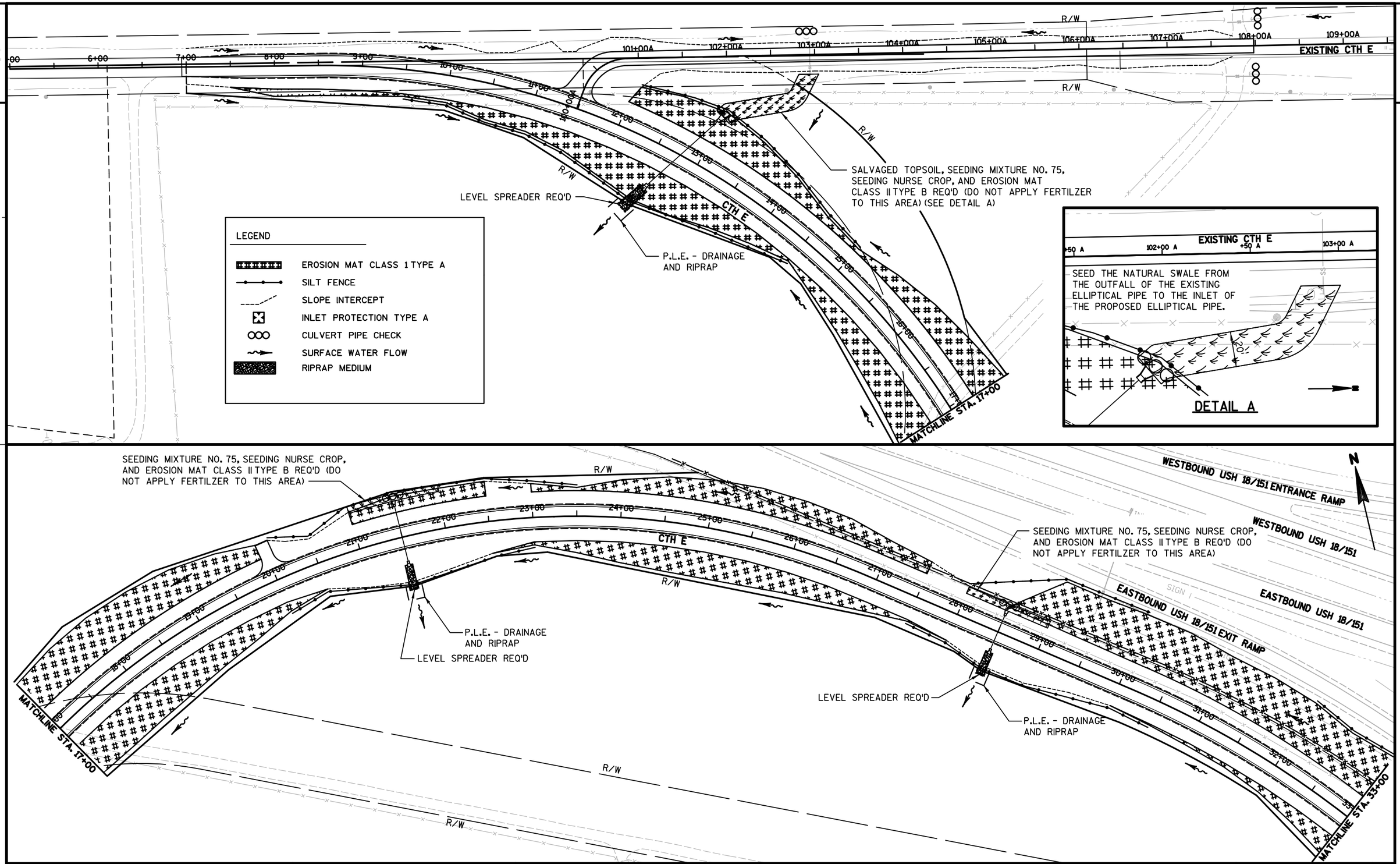

PROJECT NO:1204-06-75	HWY:USH 18/CTH E	COUNTY:DANE	EROSION CONTROL	SHEET 17	E

FILE NAME : S:\MAD\1000--1099\1089\665\Micros\PLAN\022001_ec.dgn PLOT DATE : 1/31/2013 PLOT BY : _username_ PLOT NAME : PLOT SCALE : $$.....plotscale.....$$ WISDOT/CADDS SHEET 42

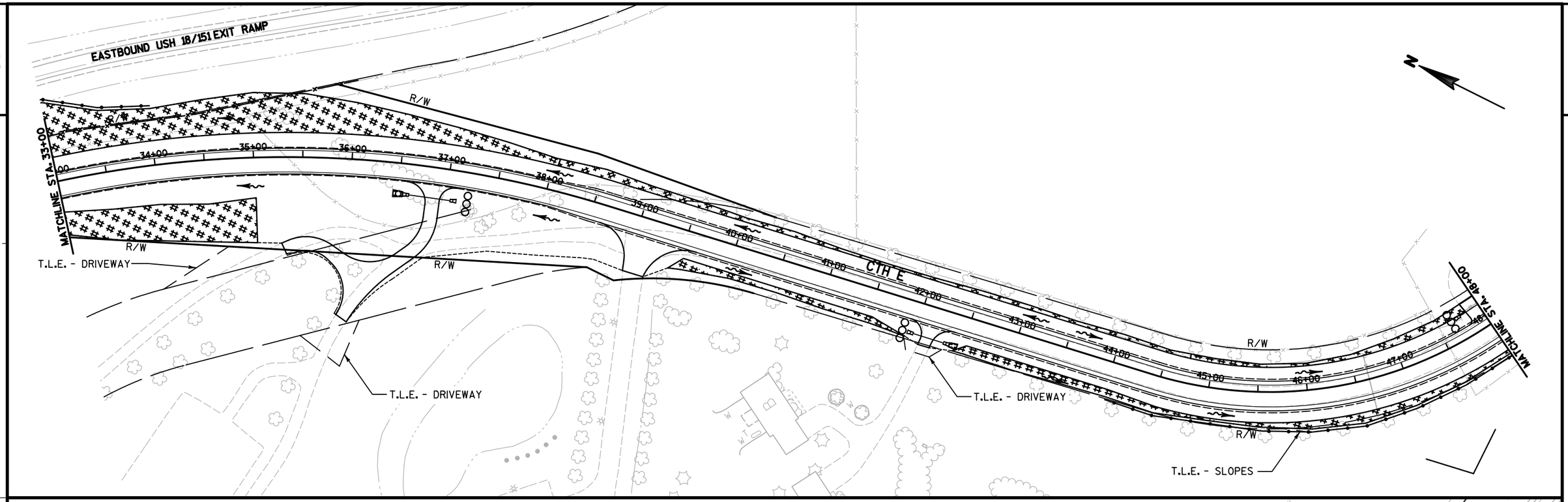

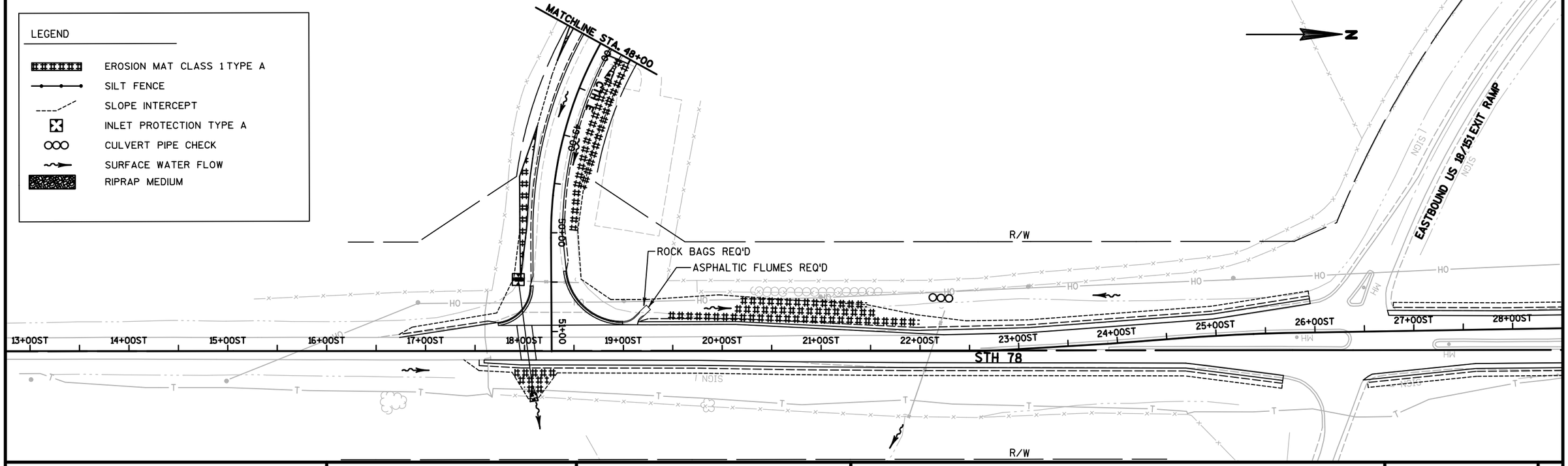

PROJECT NO: 1204-06-75	HWY: USH 18/CTH E	COUNTY: DANE	EROSION CONTROL	SHEET	E

FILE NAME : S:\MAD\1000--1099\1089\665\Micros\PLAN\022002_ec.dgn PLOT DATE : 3/15/2013 PLOT BY : _username_ PLOT NAME : PLOT SCALE : $$.....plotscale.....$$

2

PERMANENT SIGNING LEGEND

- SIGN SUPPORTS
- (X-XX) PROPOSED SIGN NUMBER
- (XE-XX) EXISTING SIGN NUMBER
- (X) SIGN SIZE
- REMOVE SIGN
- SIGN FLAGS PERMANENT TYPE II

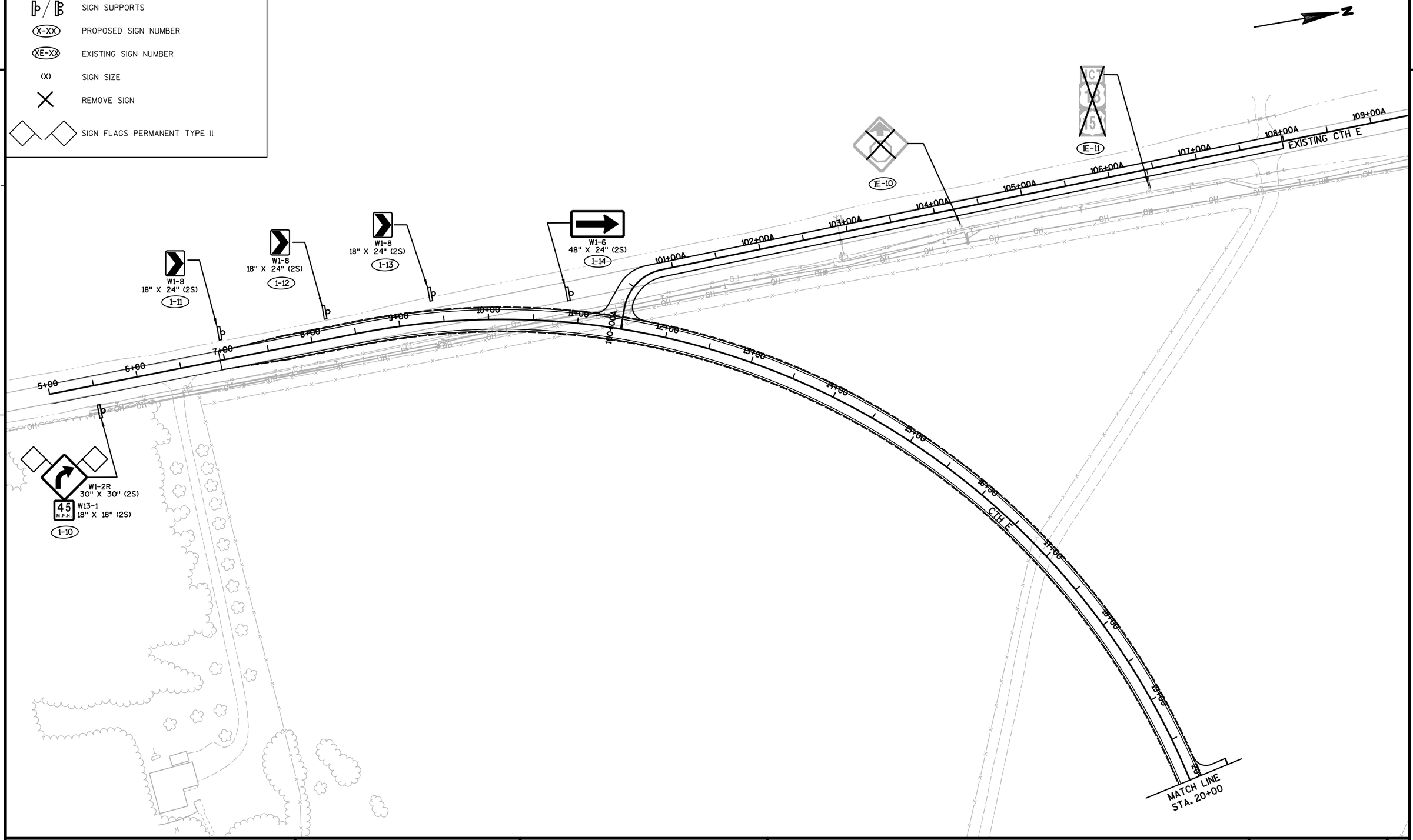

PROJECT NO: 1204-06-75	HWY: USH 18/CTH E	COUNTY: DANE	PERMANENT SIGNING	SHEET	E

FILE NAME : S:\MAD\1000--1099\1089\665\Micros\PLAN\023201_ps.dgn PLOT DATE : 1/31/2013 PLOT BY : _username_ PLOT NAME : PLOT SCALE : $$.....plotscale.....$$ WISDOT/CADDS SHEET 42

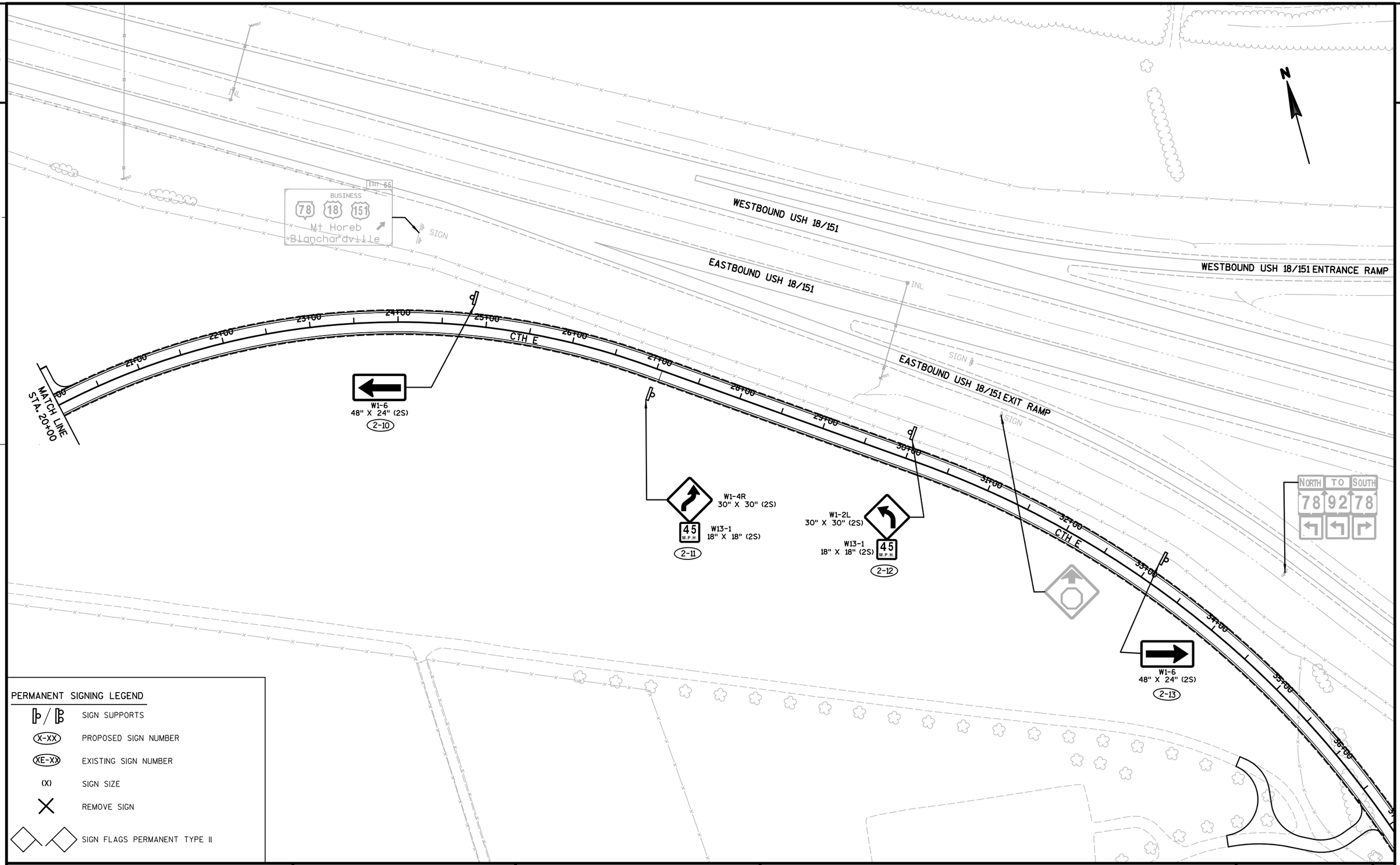

PROJECT NO:1204-06-75	HWY:USH 18/CTH E	COUNTY:DANE	PERMANENT SIGNING	SHEET 20	E

FILE NAME : S:\MAD\1000--1099\1089\665\Micros\PLAN\023202_ps.dgn PLOT DATE : 1/31/2013 PLOT BY : _username_ PLOT NAME : PLOT SCALE : $$.....plotscale.....$$ WISDOT/CADDS SHEET 42

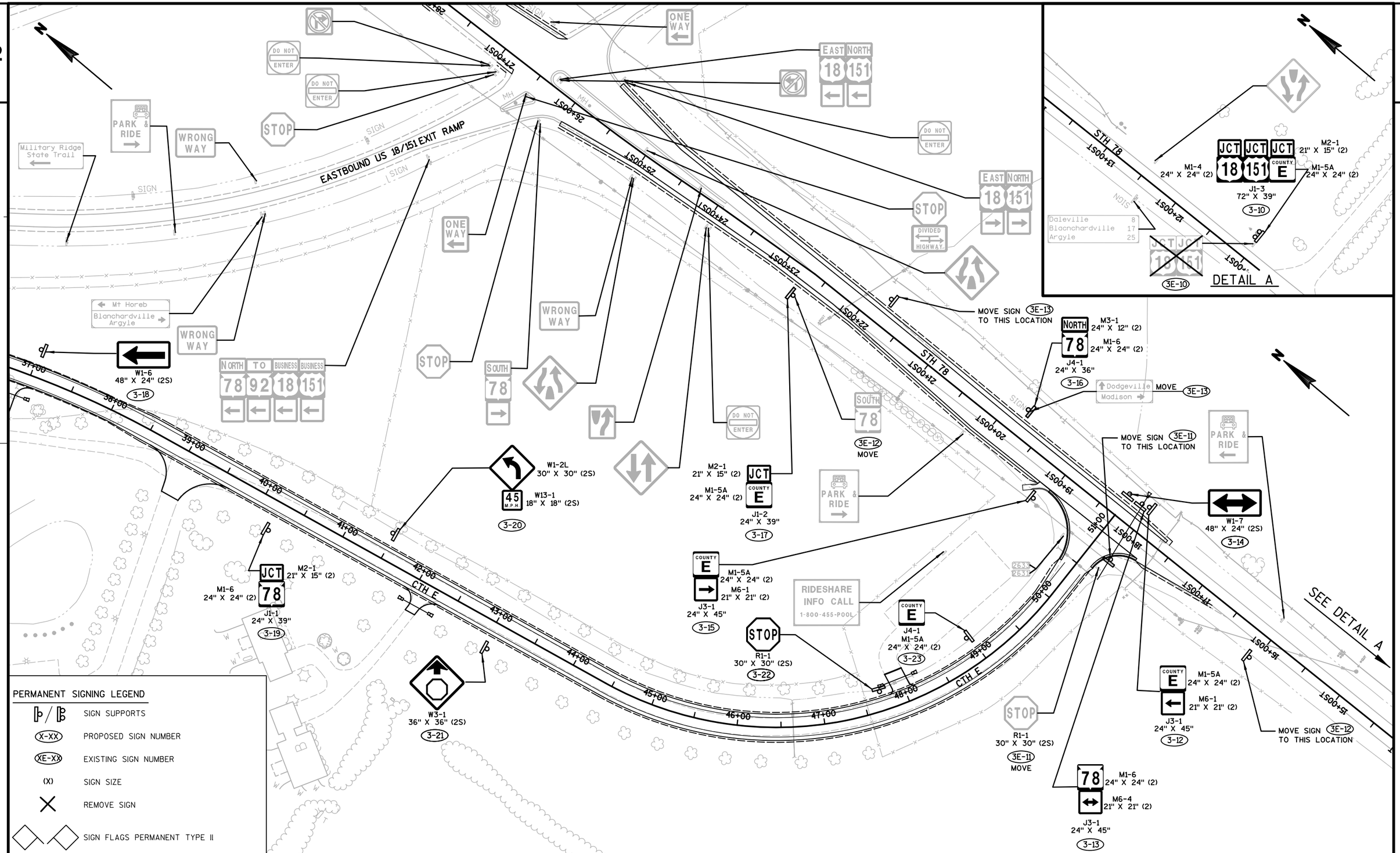

PROJECT NO: 1204-06-75	HWY: USH 18/CTH E	COUNTY: DANE	PERMANENT SIGNING	SHEET E

FILE NAME : S:\MAD\1000--1099\1089\665\Micros\PLAN\023203_ps.dgn PLOT DATE : 7/25/2014 PLOT BY : _username_ PLOT NAME : PLOT SCALE : $$.....plotscale.....$$ WISDOT/CADDS SHEET 42

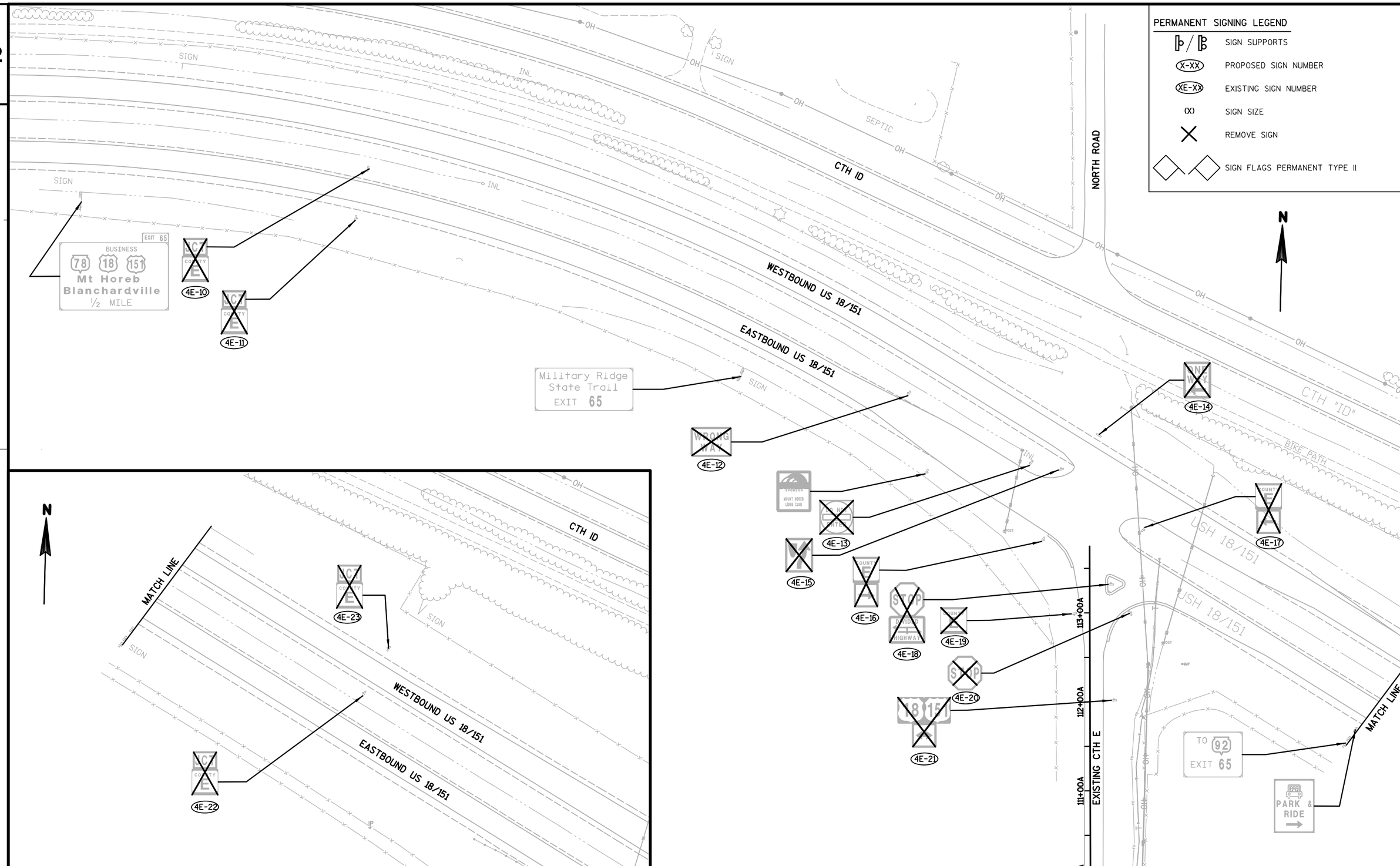

PROJECT NO:1204-06-75	HWY:USH 18/CTH E	COUNTY:DANE	PERMANENT SIGNING	SHEET 22	E

FILE NAME : S:\MAD\1000--1099\1089\665\Micros\PLAN\023204_ps.dgn PLOT DATE : 1/31/2013 PLOT BY : _username_ PLOT NAME : PLOT SCALE : $$.....plotscale.....$$ WISDOT/CADDS SHEET 42

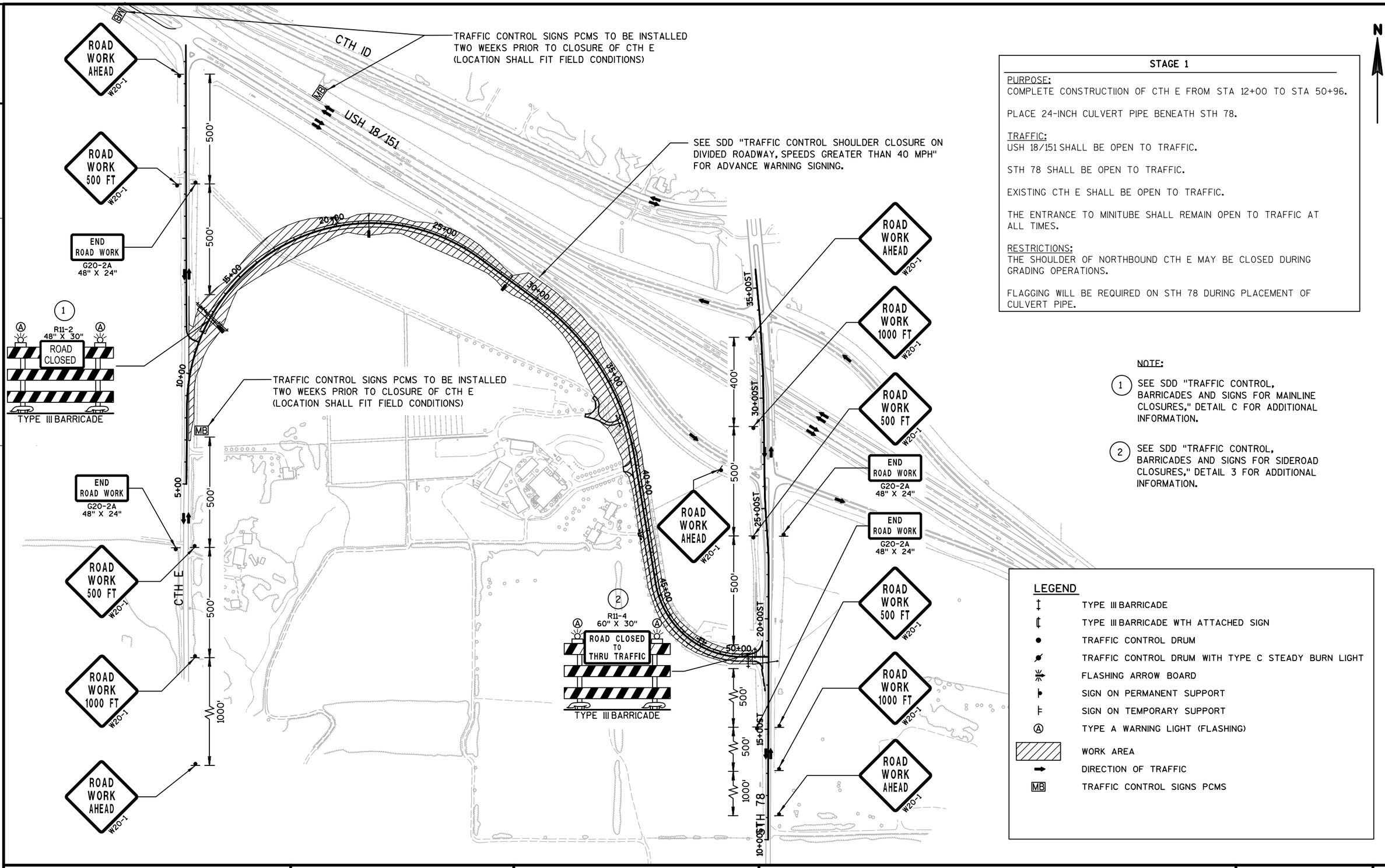

STAGE 1

PURPOSE:
COMPLETE CONSTRUCTIION OF CTH E FROM STA 12+00 TO STA 50+96.

PLACE 24-INCH CULVERT PIPE BENEATH STH 78.

TRAFFIC:
USH 18/151 SHALL BE OPEN TO TRAFFIC.

STH 78 SHALL BE OPEN TO TRAFFIC.

EXISTING CTH E SHALL BE OPEN TO TRAFFIC.

THE ENTRANCE TO MINITUBE SHALL REMAIN OPEN TO TRAFFIC AT ALL TIMES.

RESTRICTIONS:
THE SHOULDER OF NORTHBOUND CTH E MAY BE CLOSED DURING GRADING OPERATIONS.

FLAGGING WILL BE REQUIRED ON STH 78 DURING PLACEMENT OF CULVERT PIPE.

NOTE:

1. SEE SDD "TRAFFIC CONTROL, BARRICADES AND SIGNS FOR MAINLINE CLOSURES," DETAIL C FOR ADDITIONAL INFORMATION.
2. SEE SDD "TRAFFIC CONTROL, BARRICADES AND SIGNS FOR SIDEROAD CLOSURES," DETAIL 3 FOR ADDITIONAL INFORMATION.

LEGEND

- TYPE III BARRICADE
- TYPE III BARRICADE WTH ATTACHED SIGN
- TRAFFIC CONTROL DRUM
- TRAFFIC CONTROL DRUM WITH TYPE C STEADY BURN LIGHT
- FLASHING ARROW BOARD
- SIGN ON PERMANENT SUPPORT
- SIGN ON TEMPORARY SUPPORT
- (A) TYPE A WARNING LIGHT (FLASHING)
- WORK AREA
- DIRECTION OF TRAFFIC
- MB TRAFFIC CONTROL SIGNS PCMS

PROJECT NO: 1204-06-75	HWY: USH 18/CTH E	COUNTY: DANE	CONSTRUCTION STAGING, STAGE 1	SHEET 23	E

SEE CONSTRUCTION STAGING, STAGE 2 DETAIL A FOR TRAFFIC CONTROL REQUIRED DURING CLOSURE AND REMOVAL OF THE EXISTING INTERSECTION.

STAGE 2

PURPOSE:
COMPLETE CONSTRUCTION OF CTH E FROM STA. 6+95 TO STA. 12+00, OBLITERATE OLD CTH E, AND REMOVE RIGHT TURN LANE ALONG EASTBOUND USH 18/151.

TRAFFIC:
USH 18/151 SHALL BE OPEN TO THROUGH TRAFFIC.

STH 78 SHALL BE OPEN TO TRAFFIC.

EXISTING CTH E SHALL BE CLOSED TO TRAFFIC.

THE ENTRANCE TO MINITUBE SHALL BE OPEN TO TRAFFIC.

RESTRICTIONS:
CTH E WILL BE CLOSED. THROUGH TRAFFIC WILL BE DETOURED.

TRAFFIC CONTROL SHALL INCLUDE SHOULDER CLOSURES ALONG EASTBOUND AND WESTBOUND USH 18/151 DURING REMOVAL OF THE EXISTING CTH E INTERSECTION.

N

CTH ID

USH 18/151

M1-5A 24" X 24" COUNTY E

DETOUR AHEAD W20-2

500'

500'

OBLITERATING OLD ROAD REQUIRED

20+00

25+00

15+00

30+00

35+00

10+00

WORK AREA

1 R11-2 48" X 30" ROAD CLOSED

TYPE III BARRICADE

1 R11-2 48" X 30" ROAD CLOSED

TYPE III BARRICADE

END ROAD WORK G20-2A 48" X 24"

5+00

500'

500'

ROAD CLOSED 500 FT W20-3

ROAD CLOSED 1000 FT W20-3

CTH E

SEE SDD "DETOUR SIGNING FOR MAINLINE CLOSURES" FOR ADDITIONAL INFORMATION.

2 R11-4 60" X 30" ROAD CLOSED TO THRU TRAFFIC

TYPE III BARRICADE

40+00

45+00

50+00

35+00ST

30+00ST

25+00ST

20+00ST

15+00ST

400'

500'

500'

500'

500'

1000'

STH 78

ROAD WORK AHEAD W20-1

ROAD WORK 1000 FT W20-1

ROAD WORK 500 FT W20-1

END ROAD WORK G20-2A 48" X 24"

END ROAD WORK G20-2A 48" X 24"

ROAD WORK 500 FT W20-1

ROAD WORK 1000 FT W20-1

ROAD WORK AHEAD W20-1

NOTE:

1. SEE SDD "TRAFFIC CONTROL, BARRICADES AND SIGNS FOR MAINLINE CLOSURES," DETAIL C FOR ADDITIONAL INFORMATION.

2. SEE SDD "TRAFFIC CONTROL, BARRICADES AND SIGNS FOR SIDEROAD CLOSURES," DETAIL 3 FOR ADDITIONAL INFORMATION.

LEGEND

- TYPE III BARRICADE
- TYPE III BARRICADE WTH ATTACHED SIGN
- TRAFFIC CONTROL DRUM
- TRAFFIC CONTROL DRUM WITH TYPE C STEADY BURN LIGHT
- FLASHING ARROW BOARD
- SIGN ON PERMANENT SUPPORT
- SIGN ON TEMPORARY SUPPORT
- (A) TYPE A WARNING LIGHT (FLASHING)
- WORK AREA
- DIRECTION OF TRAFFIC
- MB TRAFFIC CONTROL SIGNS PCMS

PROJECT NO: 1204-06-75	HWY: USH 18/CTH E	COUNTY: DANE	CONSTRUCTION STAGING, STAGE 2	SHEET E

FILE NAME : S:\MAD\1000--1099\1089\665\Micros\PLAN\026002_s2.dgn PLOT DATE : 1/31/2013 PLOT BY : _username_ PLOT NAME : PLOT SCALE : $$.....plotscale.....$$ WISDOT/CADDS SHEET 42

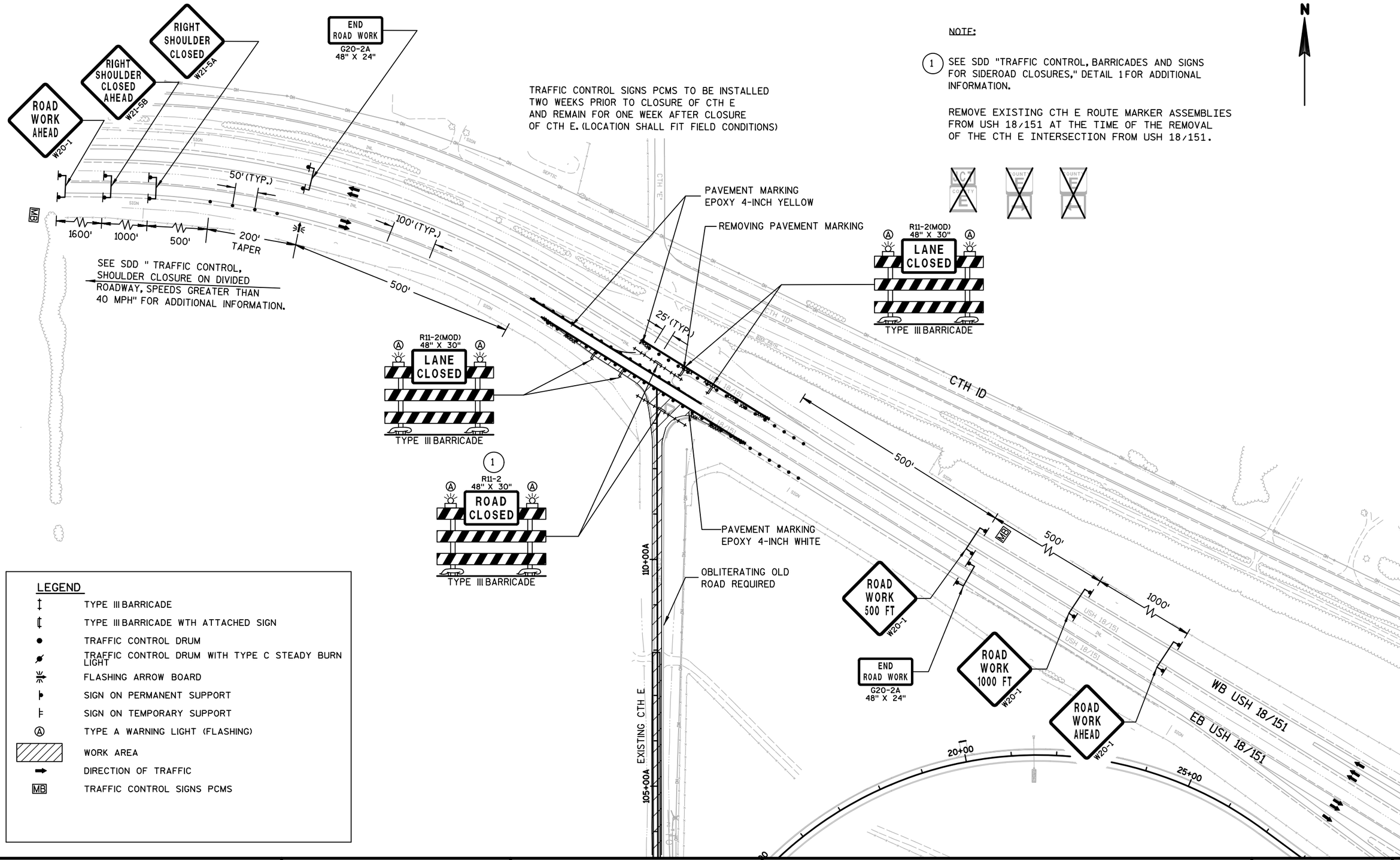

PROJECT NO:1204-06-75	HWY:USH 18/CTH E	COUNTY:DANE	CONSTRUCTION STAGING, STAGE 2, DETAIL A	SHEET 25	E

FILE NAME : S:\MAD\1000--1099\1089\665\Micros\PLAN\026002a_s2.dgn PLOT DATE : 1/31/2013 PLOT BY : _username_ PLOT NAME : PLOT SCALE : $$.....plotscale.....$$ WISDOT/CADDS SHEET 42

2

STAGE 3

PURPOSE:
REMOVE THE LEFT TURN LANE AND MEDIAN CROSSING FROM WESTBOUND USH 18/151.

CONSTRUCT THE NEW SHOULDER ALONG STH 78.

TRAFFIC:
USH 18/151 SHALL BE OPEN TO TRAFFIC

STH 78 SHALL BE OPEN TO TRAFFIC.

CTH E SHALL BE OPEN TO TRAFFIC.

RESTRICTIONS:
THE INSIDE LANE OF WESTBOUND USH 18/151 SHALL BE CLOSED TO TRAFFIC DURING NON-PEAK HOURS.

FLAGGING AND SHOULDER CLOSURES WILL BE REQUIRED ON STH 78.

LEGEND

- TYPE III BARRICADE
- TYPE III BARRICADE WTH ATTACHED SIGN
- TRAFFIC CONTROL DRUM
- TRAFFIC CONTROL DRUM WITH TYPE C STEADY BURN LIGHT
- FLASHING ARROW BOARD
- SIGN ON PERMANENT SUPPORT
- SIGN ON TEMPORARY SUPPORT
- TYPE A WARNING LIGHT (FLASHING)
- WORK AREA
- DIRECTION OF TRAFFIC
- MB TRAFFIC CONTROL SIGNS PCMS

ROAD WORK AHEAD W20-1
ROAD WORK 1000 FT W20-1
ROAD WORK 500 FT W20-1
END ROAD WORK G20-2A 48" X 24"

SEE CONSTRUCTION STAGING, STAGE 3 LANE CLOSURE DETAIL FOR TRAFFIC CONTROL REQUIRED DURING REMOVAL OF LEFT TURN LANE ALONG WESTBOUND USH 18/151 AND SHAPING OF THE MEDIAN.

TRAFFIC CONTROL SIGNS PCMS TO BE INSTALLED TWO WEEKS PRIOR TO BEGINNING WORK ON USH 18/151 (LOCATION SHALL FIT FIELD CONDITIONS)

SEE SDD "TRAFFIC CONTROL, LANE CLOSURE, SPEED REDUCTION" FOR ADDITIONAL INFORMATION.

TRAFFIC CONTROL SIGNS PCMS TO BE INSTALLED TWO WEEKS PRIOR TO BEGINNING WORK ON STH 78 (LOCATION SHALL FIT FIELD CONDITIONS)

CTH ID

WB USH 18/151
EB USH 18/151

CTH E

STH 78

WORK AREA

STA. 16+80ST TO STA. 22+18ST, LT
REMOVING PAVEMENT MARKINGS REQ'D
(SOUTHBOUND STH 78 EDGELINE)

SEE SDD "TRAFFIC CONTROL FOR LANE CLOSURE (SUITABLE FOR MOVING OPERATIONS) FOR ADVANCED WARNING ON STH 78 SHOULDER WORK.

TRAFFIC CONTROL SIGNS PCMS TO BE INSTALLED TWO WEEKS PRIOR TO BEGINNING WORK ON STH 78 (LOCATION SHALL FIT FIELD CONDITIONS)

N

PROJECT NO: 1204-06-75	HWY: USH 18/CTH E	COUNTY: DANE	CONSTRUCTION STAGING, STAGE 3	SHEET 26	E

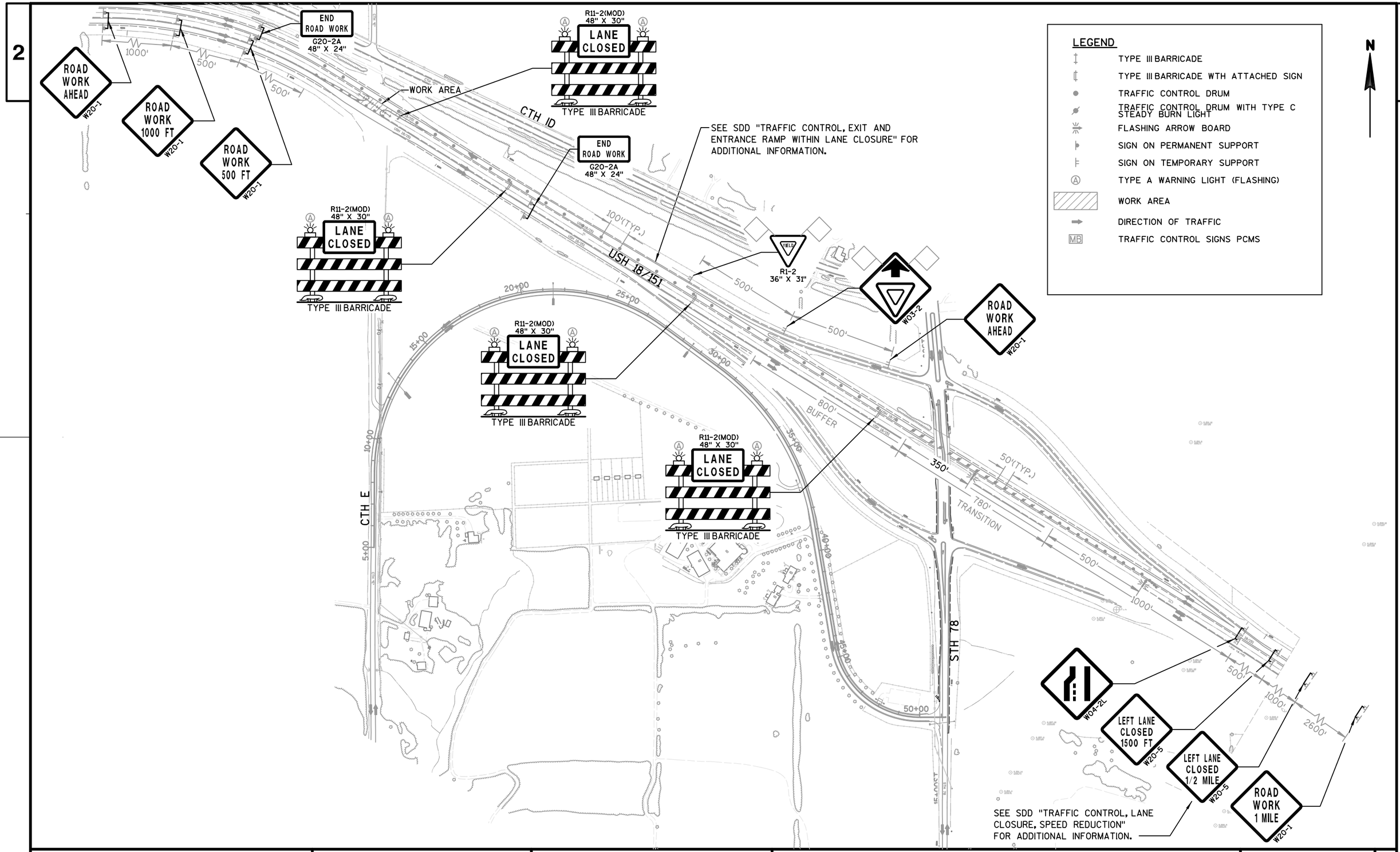

2

PROJECT NO: 1204-06-75	HWY: USH 18/CTH E	COUNTY: DANE	CONSTRUCTION STAGING, STAGE 3, LANE CLOSURE DETAIL	SHEET 27	E

GENERAL NOTES

THE EXACT LOCATION AND SPACING OF ALL SIGNS AND DEVICES SHALL BE ADJUSTED TO FIT FIELD CONDITIONS AS APPROVED BY THE ENGINEER.

"WO" SIGNS ARE THE SAME AS "W" SIGNS EXCEPT THE BACKGROUND IS ORANGE.

"MO" SIGNS ARE THE SAME AS "M" SIGNS EXCEPT THE BACKGROUND IS ORANGE.

ALL "WO" AND "W" SIGNS SHALL BE 48"X48" UNLESS OTHERWISE NOTED.

IMMEDIATELY RE-ESTABLISH "STOP" SIGNS THAT ARE REMOVED FOR A CONSTRUCTION OPERATION.

SEE S.D.D. "DETOUR MAINLINE CLOSURES" AND "BARRICADES AND SIGNS FOR MAINLINE CLOSURES," FOR ADDITIONAL INFORMATION.

LEGEND

DETOUR ROUTE

BARRICADES TYPE III WITH ATTACHED SIGN TYPE 2 (TWO WARNING LIGHTS TYPE A REQ'D.)

BARRICADES TYPE III WITHOUT SIGN (ONE WARNING LIGHT TYPE A REQ'D.)

WOOD POST WITH ATTACHED SIGN

78 EXISTING SIGN

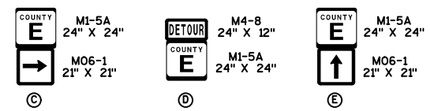

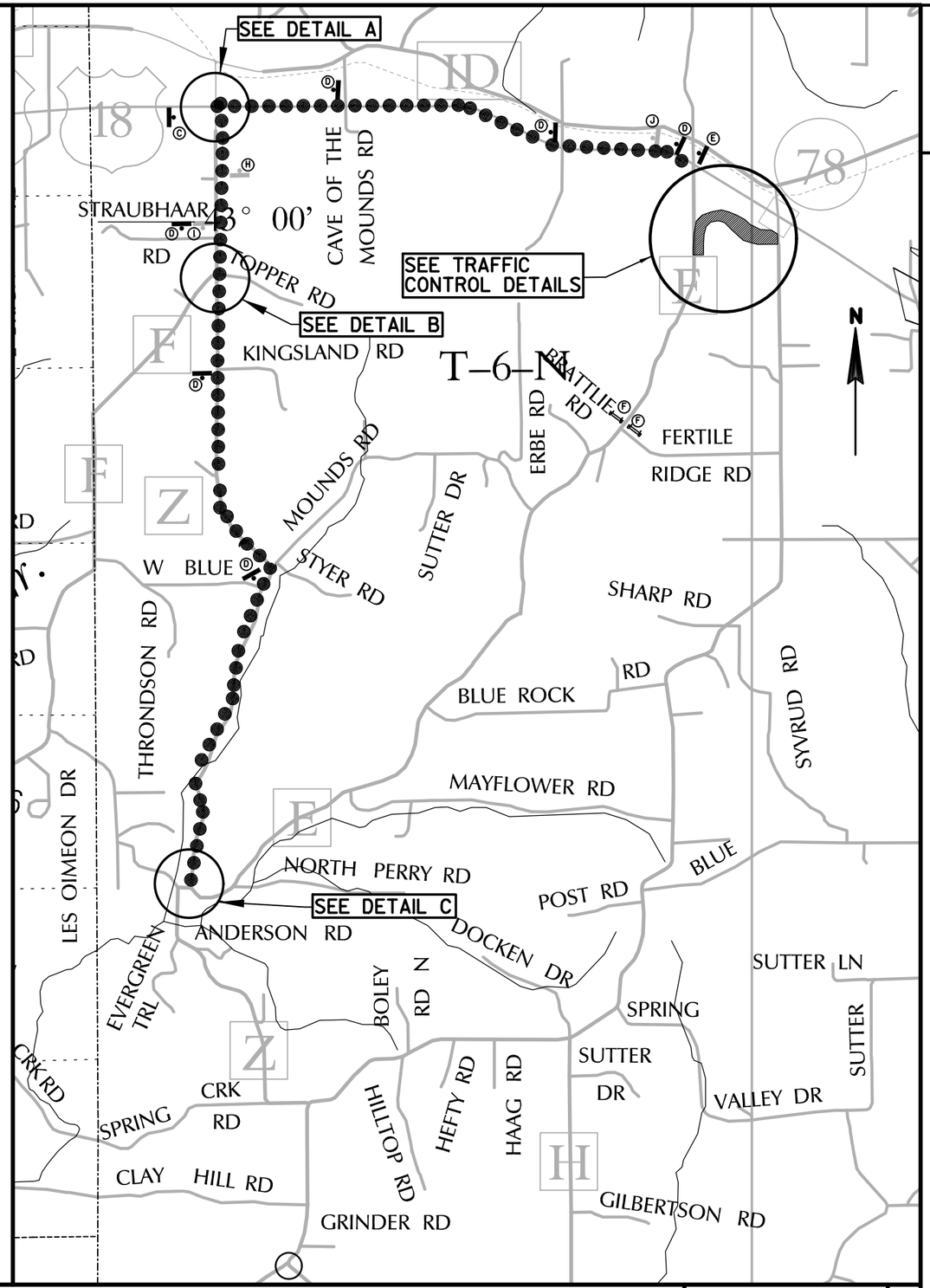

2

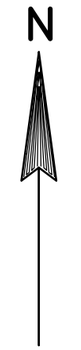

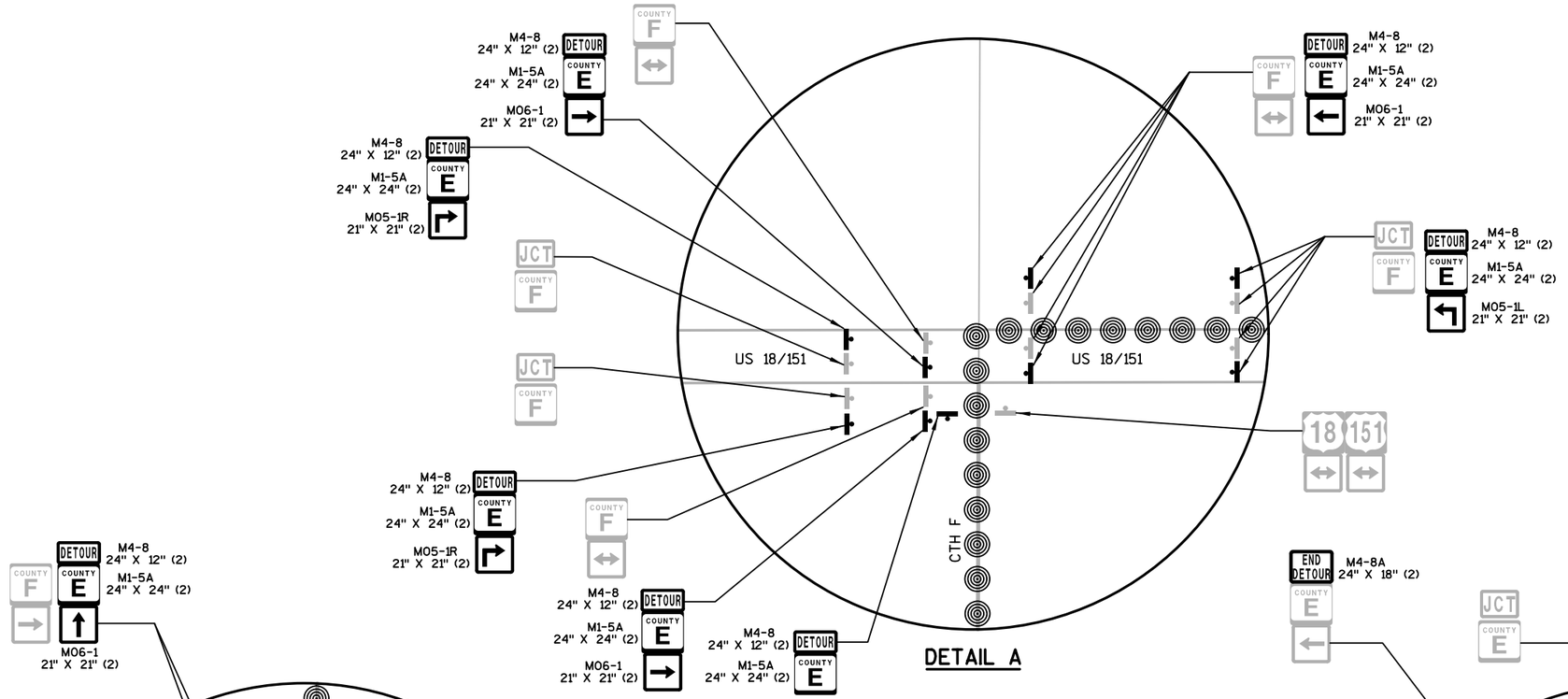

DETAIL A

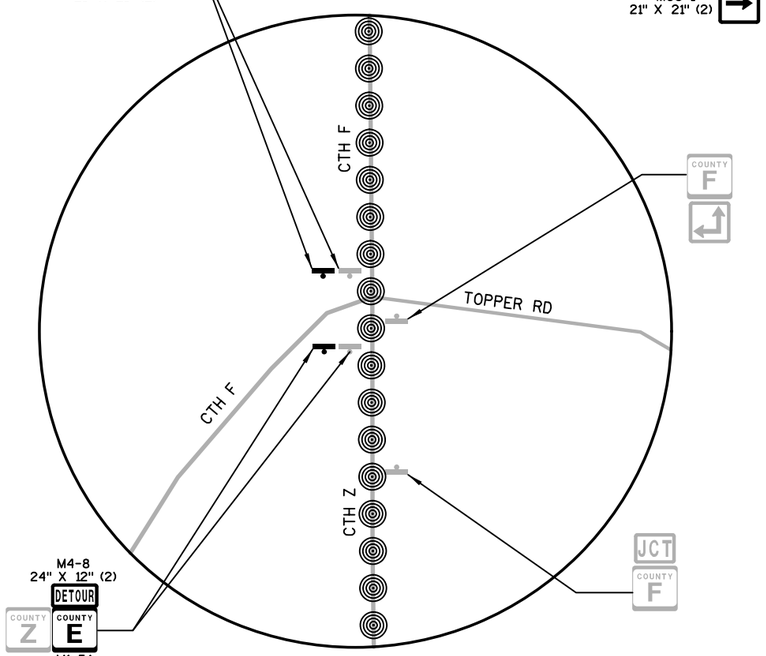

DETAIL B

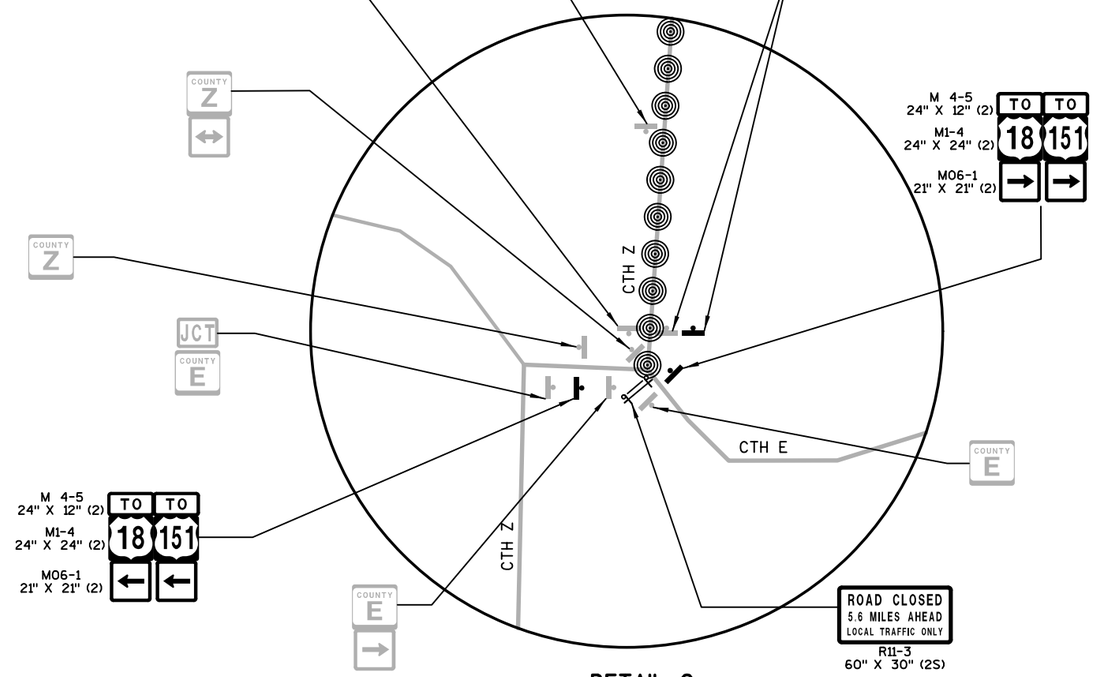

DETAIL C

PROJECT NO:1204-06-75	HWY: USH 18/CTH E	COUNTY: DANE	DETOUR ROUTE	SHEET	E

FILE NAME : S:\MAD\1000--1099\1089\665\Micros\PLAN\027002_dt.dgn PLOT DATE : 1/31/2013 PLOT BY : _username_ PLOT NAME : PLOT SCALE : $$.....plotscale.....$$ WISDOT/CADDS SHEET 42

DATE 12DEC14 E S T I M A T E O F Q U A N T I T I E S

LINE NUMBER	ITEM	ITEM DESCRIPTION	UNIT	TOTAL	1204-06-75 QUANTITY
0010	201.0105	CLEARING	STA	5.000	5.000
0020	201.0205	GRUBBING	STA	5.000	5.000
0030	203.0100	REMOVING SMALL PIPE CULVERTS	EACH	3.000	3.000
0040	204.0130	REMOVING CURB	LF	73.000	73.000
0050	204.0150	REMOVING CURB & GUTTER	LF	146.000	146.000
0060	204.0170	REMOVING FENCE	LF	1,830.000	1,830.000
0070	205.0100	EXCAVATION COMMON	CY	43,069.000	43,069.000
0080	205.0200	EXCAVATION ROCK	CY	4,133.000	4,133.000
0090	213.0100	FINISHING ROADWAY (PROJECT) 001. 1204-06-75	EACH	1.000	1.000
0100	214.0100	OBLITERATING OLD ROAD	STA	11.500	11.500
0110	305.0110	BASE AGGREGATE DENSE 3/4-INCH	TON	1,581.000	1,581.000
0120	305.0120	BASE AGGREGATE DENSE 1 1/4-INCH	TON	7,695.000	7,695.000
0130	305.0500	SHAPING SHOULDERS	STA	4.500	4.500
0140	312.0110	SELECT CRUSHED MATERIAL	TON	9,342.000	9,342.000
0150	455.0105	ASPHALTIC MATERIAL PG58-28	TON	181.800	181.800
0160	455.0605	TACK COAT	GAL	357.000	357.000
0170	460.1101	HMA PAVEMENT TYPE E-1	TON	3,303.000	3,303.000
0180	460.2000	INCENTIVE DENSITY HMA PAVEMENT	DOL	1,920.000	1,920.000
0190	465.0105	ASPHALTIC SURFACE	TON	16.000	16.000
0200	465.0120	ASPHALTIC SURFACE DRIVEWAYS AND FIELD ENTRANCES	TON	56.000	56.000
0210	465.0315	ASPHALTIC FLUMES	SY	20.000	20.000
0220	520.0112	CULVERT PIPE CLASS III 12-INCH	LF	32.000	32.000
0230	520.0115	CULVERT PIPE CLASS III 15-INCH	LF	42.000	42.000
0240	520.0130	CULVERT PIPE CLASS III 30-INCH	LF	42.000	42.000
0250	520.0136	CULVERT PIPE CLASS III 36-INCH	LF	64.000	64.000
0260	520.1012	APRON ENDWALLS FOR CULVERT PIPE 12-INCH	EACH	2.000	2.000
0270	520.1015	APRON ENDWALLS FOR CULVERT PIPE 15-INCH	EACH	2.000	2.000
0280	520.1030	APRON ENDWALLS FOR CULVERT PIPE 30-INCH	EACH	2.000	2.000
0290	520.1036	APRON ENDWALLS FOR CULVERT PIPE 36-INCH	EACH	2.000	2.000
0300	522.0124	CULVERT PIPE REINFORCED CONCRETE CLASS III 24-INCH	LF	110.000	110.000
0310	522.1024	APRON ENDWALLS FOR CULVERT PIPE REINFORCED CONCRETE 24-INCH	EACH	1.000	1.000
0320	523.0119	CULVERT PIPE REINFORCED CONCRETE HORIZONTAL ELLIPTICAL CLASS HE-III 19X30-INCH	LF	36.000	36.000
0330	523.0138	CULVERT PIPE REINFORCED CONCRETE HORIZONTAL ELLIPTICAL CLASS HE-III 38X60-INCH	LF	108.000	108.000
0340	523.0519	APRON ENDWALLS FOR CULVERT PIPE REINFORCED CONCRETE HORIZONTAL ELLIPTICAL 19X30-INCH	EACH	2.000	2.000
0350	523.0538	APRON ENDWALLS FOR CULVERT PIPE REINFORCED CONCRETE HORIZONTAL ELLIPTICAL 38X60-INCH	EACH	2.000	2.000
0360	601.0557	CONCRETE CURB AND GUTTER 6-INCH SLOPED 36-INCH TYPE D	LF	146.000	146.000
0370	606.0200	RIPRAP MEDIUM	CY	90.000	90.000
0380	611.0642	INLET COVERS TYPE MS	EACH	2.000	2.000
0390	611.3902	INLETS MEDIAN 2 GRATE	EACH	1.000	1.000
0400	611.9800.S	PIPE GRATES	EACH	4.000	4.000
0410	616.0100	FENCE WOVEN WIRE (HEIGHT) 001. 4-FOOT	LF	1,690.000	1,690.000
0420	618.0100	MAINTENANCE AND REPAIR OF HAUL ROADS (PROJECT) 001. 1204-06-75	EACH	1.000	1.000

3

DATE 12DEC14 E S T I M A T E O F Q U A N T I T I E S

LINE 1204-06-75

NUMBER	ITEM	ITEM DESCRIPTION	UNIT	TOTAL	QUANTITY
0430	619.1000	MOBILIZATION	EACH	1.000	1.000
0440	624.0100	WATER	MGAL	1,217.800	1,217.800
0450	625.0500	SALVAGED TOPSOIL	SY	42,000.000	42,000.000
0460	628.1504	SILT FENCE	LF	3,295.000	3,295.000
0470	628.1520	SILT FENCE MAINTENANCE	LF	6,590.000	6,590.000
0480	628.1905	MOBILIZATIONS EROSION CONTROL	EACH	4.000	4.000
0490	628.1910	MOBILIZATIONS EMERGENCY EROSION CONTROL	EACH	4.000	4.000
0500	628.2006	EROSION MAT URBAN CLASS I TYPE A	SY	27,688.000	27,688.000
0510	628.2023	EROSION MAT CLASS II TYPE B	SY	565.000	565.000
0520	628.7005	INLET PROTECTION TYPE A	EACH	2.000	2.000
0530	628.7555	CULVERT PIPE CHECKS	EACH	66.000	66.000
0540	629.0210	FERTILIZER TYPE B	CWT	35.000	35.000
0550	630.0120	SEEDING MIXTURE NO. 20	LB	1,585.000	1,585.000
0560	630.0175	SEEDING MIXTURE NO. 75	LB	5.000	5.000
0570	630.0200	SEEDING TEMPORARY	LB	1,585.000	1,585.000
0580	630.0400	SEEDING NURSE CROP	LB	8.000	8.000
0590	633.5200	MARKERS CULVERT END	EACH	9.000	9.000
0600	634.0612	POSTS WOOD 4X6-INCH X 12-FT	EACH	3.000	3.000
0610	634.0614	POSTS WOOD 4X6-INCH X 14-FT	EACH	8.000	8.000
0620	634.0616	POSTS WOOD 4X6-INCH X 16-FT	EACH	8.000	8.000
0630	634.0618	POSTS WOOD 4X6-INCH X 18-FT	EACH	4.000	4.000
0640	637.0620	SIGN FLAGS PERMANENT TYPE II	EACH	1.000	1.000
0650	637.2210	SIGNS TYPE II REFLECTIVE H	SF	77.500	77.500
0660	637.2230	SIGNS TYPE II REFLECTIVE F	SF	92.000	92.000
0670	638.2102	MOVING SIGNS TYPE II	EACH	2.000	2.000
0680	638.2602	REMOVING SIGNS TYPE II	EACH	20.000	20.000
0690	638.3000	REMOVING SMALL SIGN SUPPORTS	EACH	17.000	17.000
0700	638.4000	MOVING SMALL SIGN SUPPORTS	EACH	2.000	2.000
0710	642.5001	FIELD OFFICE TYPE B	EACH	1.000	1.000
0720	643.0100	TRAFFIC CONTROL (PROJECT) 001. 1204-06-75	EACH	1.000	1.000
0730	643.0300	TRAFFIC CONTROL DRUMS	DAY	2,748.000	2,748.000
0740	643.0420	TRAFFIC CONTROL BARRICADES TYPE III	DAY	882.000	882.000
0750	643.0705	TRAFFIC CONTROL WARNING LIGHTS TYPE A	DAY	638.000	638.000
0760	643.0715	TRAFFIC CONTROL WARNING LIGHTS TYPE C	DAY	80.000	80.000
0770	643.0800	TRAFFIC CONTROL ARROW BOARDS	DAY	35.000	35.000
0780	643.0900	TRAFFIC CONTROL SIGNS	DAY	2,768.000	2,768.000
0790	643.1050	TRAFFIC CONTROL SIGNS PCMS	DAY	140.000	140.000
0800	643.2000	TRAFFIC CONTROL DETOUR (PROJECT) 001. 1204-06-75	EACH	1.000	1.000
0810	643.3000	TRAFFIC CONTROL DETOUR SIGNS	DAY	840.000	840.000
0820	645.0120	GEOTEXTILE FABRIC TYPE HR	SY	195.000	195.000
0830	646.0106	PAVEMENT MARKING EPOXY 4-INCH	LF	19,442.000	19,442.000
0840	646.0600	REMOVING PAVEMENT MARKINGS	LF	1,730.000	1,730.000
0850	647.0566	PAVEMENT MARKING STOP LINE EPOXY 18-INCH	LF	21.000	21.000
0860	650.4000	CONSTRUCTION STAKING STORM SEWER	EACH	1.000	1.000
0870	650.4500	CONSTRUCTION STAKING SUBGRADE	LF	4,587.000	4,587.000
0880	650.5000	CONSTRUCTION STAKING BASE	LF	6,982.000	6,982.000
0890	650.5500	CONSTRUCTION STAKING CURB GUTTER AND CURB & GUTTER	LF	146.000	146.000
0900	650.6000	CONSTRUCTION STAKING PIPE CULVERTS	EACH	7.000	7.000
0910	650.9910	CONSTRUCTION STAKING SUPPLEMENTAL CONTROL (PROJECT) 001. 1204-06-75	LS	1.000	1.000
0920	650.9920	CONSTRUCTION STAKING SLOPE STAKES	LF	6,982.000	6,982.000

3

DATE 12DEC14 E S T I M A T E O F Q U A N T I T I E S

LINE NUMBER	ITEM	ITEM DESCRIPTION	UNIT	TOTAL	1204-06-75 QUANTITY
0930	690.0150	SAWING ASPHALT	LF	3,607.000	3,607.000
0940	ASP.1T0A	ON-THE-JOB TRAINING APPRENTICE AT $5.00/HR	HRS	175.000	175.000
0950	ASP.1T0G	ON-THE-JOB TRAINING GRADUATE AT $5.00/HR	HRS	200.000	200.000
0960	SPV.0060	SPECIAL 001. UTILITY LINE OPENING	EACH	1.000	1.000

DIVISION	CATEGORY	ROAD	STATION - STATION	LOCATION	(1) 205.0100 EXCAVATION COMMON CY	(2) SALVAGED/ UNUSABLE MATERIAL CY	(3) AVAILABLE MATERIAL CY	(4) EBS EXCAVATION CY	(5) 205.0100 TOTAL EXCAVATION COMMON CY	205.0200 EXCAVATION ROCK CY	(6) EXPANDED EXCAVATION ROCK FACTOR 1.1 CY	(7) EBS EXCAVATION REDUCED FACTOR 0.8 CY	FILL CY	(8) EXPANDED FILL FACTOR 1.25 CY	(9) MASS ORDINATE+ CY	WASTE CY	(10) 624.0100 WATER MGAL*
	0010																
1		CTH E	6+95.0 - 50+96.4	LT/RT	40,061	332	39,729	356	40,417	4,133	4,546	285	16,627	14,745	24,984	24,984	110.3
		STH 78	16+77.0ST - 25+98.0ST	LT/RT	455	68	387	19	474	0	0	15	35	25	362	362	1.0
			26+51.0ST - 29+27.0 ST	LT/RT	86	20	66	3	89	0	0	2	0	-3	69	69	0.2
			31+25.0ST - 33+49.0 ST	LT/RT	91	16	75	4	95	0	0	3	4	1	74	74	0.2
		A	110+14A - 102+00A	LT/RT	19	0	19	0	19	0	0	0	1,000	1,250	-1,231	0	2.5
		EXISTING CTH E	102+00A - 113+50A	LT/RT	975	336	639	0	975	0	0	0	0	0	0	0	2.0
		UNDISTRIBUTED (CTH E)			0	0	0	1,000	1,000	0	0	0	0	0	0	0	0
		PAY QUANTITY							43,069	4,133							116.2

1) EXCAVATION COMMON INCLUDES EXCAVATION FOR PAVEMENT STRUCTURE INCLUDING HMA PAVEMENT, BASE AGGREGATE, AND SELECT CRUSHED MATERIAL.
2) UNUSABLE PAVEMENT MATERIAL IS INCLUDED IN EXCAVATION COMMON.
3) AVAILABLE MATERIAL = EXCAVATION COMMON - UNUSABLE MATERIAL.
4) EBS EXCAVATION TO BE BACKFILLED WITH SELECT CRUSHED MATERIAL.
5) TOTAL EXCAVATION COMMON = EXCAVATION COMMON + EBS EXCAVATION
6) EXPANDED EXCAVATION ROCK FACTOR = 1.1
7) REDUCED EBS FILL - EXCAVATED EBS MATERIAL IS USABLE IN FILLS OUTSIDE THE 1:1 SLOPE; EBS IN FILL REDUCTION FACTOR = 0.8
8) EXPANDED FILL = (UNEXPANDED FILL -EXPANDED EXCAVATIO ROCK, EBS EXCAVATION REDUCED)*FILL FACTOR; EXPANDED FILL FACTOR = 1.25
9) THE MASS ORDINATE (+) OR (-) QUANTITY CALCULATED FOR THE DIVISION. A (+) QUANTITIY INDICATES AN EXCESS OF MATERIAL WITHING THE DIVISION.
A (-) QUANTITY INDICATES A SHORTAGE OF MATERIAL WITHIN THE DIVISION.
10) FOR DUST CONTROL ONLY

* ADDITIONAL QUANTITIES LISTED ELSEWHERE.

CLEARING AND GRUBBING

CATEGORY	ROAD	STATION - STATION	LOCATION	201.0105 CLEARING STA	201.0205 GRUBBING STA
0010	CTH E	35+00 - 40+00	LT/RT	5	5

REMOVING CURB AND GUTTER SUMMARY

CATEGORY	ROAD	LOCATION	204.0130 CURB LF	204.0150 CURB & GUTTER LF	REMARKS
0010					
	USH 18/151	CTH E INTERSECTION	73	---	SEE CONSTRUCTION DETAILS FOR REMOVAL LOCATION
		CTH E INTERSECTION	---	47	SEE CONSTRUCTION DETAILS FOR REMOVAL LOCATION
		CTH E INTERSECTION	---	99	SEE CONSTRUCTION DETAILS FOR REMOVAL LOCATION
		TOTAL	73	146	

REMOVING SMALL PIPE CULVERTS

CATEGORY	ROAD	STAGE	STATION	LOCATION	203.0100 EACH	REMARKS
0010						
	CTH E	1	46+64	LT/RT	1	18" X 60' CMP
			48+00	LT	1	15" X 21" X 35' CMP
			50+50	LT/RT	1	15" X 52' CMP
			TOTAL		3	

REMOVING FENCE

CATEGORY	ROAD	STATION	LOCATION	204.0170 LF	REMARKS
0010					
	CTH E	24+50 - 36+00	LT	1,200	
	USH 18/151	WEST OF CTH E INTERSECTION		470	SEE CONSTRUCTION DETAILS FOR REMOVAL LOCATION
		EAST OF CTH E INTERSECTION		160	SEE CONSTRUCTION DETAILS FOR REMOVAL LOCATION
		TOTAL		1,830	

OBLITERATING OLD ROAD

CATEGORY	ROAD	STATION - STATION	214.0100 STA	REMARKS
0010	CTH E	102+00A - 113+50A	11.5	EXISTING CTH E

FINISHING ROADWAY

CATEGORY	PROJECT I.D.	213.0100 EACH
0010	1204-06-75	1

AGGREGATE SUMMARY

CATEGORY	ROAD	STATION - STATION	LOCATION	305.0110 BASE AGGREGATE DENSE 3/4-INCH TON	305.0120 BASE AGGREGATE DENSE 1 1/4-INCH TON*	312.0110 SELECT CRUSHED MATERIAL TON*	624.0100 WATER MGAL*
0010							
	CTH E	6+95.0 - 50+96.4	LT/RT	240	6,800	7,500	29.1
		20+00	LT	21	---	---	---
		35+90	RT	165	---	---	---
		UNDISTRIBUTED FOR EBS	LT/RT	---	---	1,800	3.6
	STH 78	16+77.0ST - 17+77.0ST	LT	10	15	---	0.1
		17+58.0ST - 25+70.0ST	RT	85	240	---	0.7
		19+05.0ST - 25+98.0ST	LT	75	230	---	0.6
		26+51.0ST - 28+93.0ST	RT	25	80	---	0.2
		26+83.0ST - 29+33.0ST	LT	15	60	---	0.2
		31+20.0ST - 33+49.0ST	RT	25	65	---	0.2
		32+58.0ST - 33+48.0ST	LT	10	20	---	0.1
	DRIVEWAY A	100+14A - 118+00A	LT/RT	740	---	---	1.5
	DRIVEWAY B	35+90.0	RT	170	---	---	0.3
			TOTAL	1,581	7,510	9,300	36.6

*ADDITIONAL QUANTITIES LISTED ELSEWHERE.

RELIEF TRENCH SUMMARY

CATEGORY	ROAD	STATION	LOCATION	312.0110 SELECT CRUSHED MATERIAL TON*
0010				
	CTH E	8+30	RT	2
		10+80	RT	2
		13+31	RT	2
		15+80	RT	2
		18+30	RT	2
		20+80	RT	2
		23+30	RT	2
		25+80	RT	2
		28+30	LT & RT	4
		30+80	RT	2
		33+30	RT	2
		35+80	RT	2
		38+30	RT	2
		40+80	LT & RT	4
		43+30	LT & RT	4
		45+80	LT	2
		48+30	LT	2
		50+00	LT	2
			TOTAL	42

*ADDITIONAL QUANTITIES LISTED ELSEWHERE.

SHAPING SHOULDERS

CATEGORY	ROAD	STATION - STATION	LOCATION	305.0500 STA
0010				
	USH 18/151	WB USH 18/151	LT MED SHLDR	2.0
		EB USH 18/151	RT MED SHLDR	2.5
		TOTAL		4.5

ASPHALTIC SURFACE

CATEGORY	ROAD	STATION - STATION	LOCATION	465.0105 TON	305.0120 BASE AGGREGATE DENSE 1 1/4-INCH TON*
0010					
	STH 78	18+06ST	LT/RT	16	40

*ADDITIONAL QUANTITIES LISTED ELSEWHERE.

ASPHALTIC SURFACE DRIVEWAYS AND FIELD ENTRANCES

CATEGORY	ROAD	STATION - STATION	LOCATION	465.0120 TON	305.0120 BASE AGGREGATE DENSE 1 1/4-INCH TON*
0010					
	CTH E	39+00	RT	36	85
		42+00	RT	9	30
		48+00	LT	11	30
		TOTAL		56	145

*ADDITIONAL QUANTITIES LISTED ELSEWHERE.

TACK COAT

CATEGORY	ROAD	STATION - STATION	LOCATION	455.0605 GAL
0010				
	CTH E	6+95 - 50+96	RT	350
		39+00	RT	4
		42+00	RT	1
		48+00	LT	1
	STH 78	18+06ST	LT/RT	1
		TOTAL		357

HMA PAVEMENT TYPE E-1

CATEGORY	ROAD	STATION - STATION	LOCATION	460.1101 TON
0010				
	CTH E	6+95 - 50+96	LT/RT	3,000
	STH 78	19+78ST - 25+99ST	LT	70
		17+83ST - 25+70ST	RT	100
		26+78ST - 29+27ST	LT	37
		26+51ST - 28+96ST	RT	30
		31+18ST - 33+34ST	RT	30
		31+57ST - 33+50ST	LT	36
		TOTALS		3,303

ASPHALTIC MATERIAL PG58-28

CATEGORY	ROAD	STATION - STATION	LOCATION	455.0105 TON
0010				
	CTH E	6+95 - 50+96	LT/RT	165.0
	STH 78	19+78ST - 25+99ST	LT	3.9
		17+83ST - 25+70ST	RT	5.5
		26+78ST - 29+27ST	LT	2.0
		26+51ST - 28+96ST	RT	1.7
		31+18ST - 33+34ST	RT	1.7
		31+57ST - 33+50ST	LT	2.0
		TOTAL		181.8

ASPHALTIC FLUMES

CATEGORY	ROAD	STATION - STATION	LOCATION	465.0315 SY
0010				
	STH 78	19+11ST	LT	20

CULVERT PIPE CLASS III SUMMARY

CATEGORY	ROAD	INLET END STATION	INLET END OFFSET		INLET END ELEV	DISCHARGE END STATION	DISCHARGE END OFFSET		DISCHARGE END ELEV	SLOPE	520.0112 12-INCH LF	520.0115 15-INCH LF	520.0130 30-INCH LF	520.0136 36-INCH LF	650.6000 CONSTRUCTION STAKING, PIPE CULVERTS EACH*	THICKNESS STEEL	THICKNESS ALUMINIM
0010																	
	CTH E	21+50.0	36.0	LT	1209.92	21+50.0	28.0	RT	1209.60	0.5%	---	---	---	64	1	0.079	0.105
		28+50.0	20.0	LT	1221.59	28+50.0	21.0	RT	1221.37	0.5%	---	---	42	---	1	0.079	0.075
		37+02.0	27.4	RT	1228.19	36+58.9	27.3	RT	1227.97	0.5%	---	42	---	---	1	0.064	0.060
		41+95.0	28.8	RT	1236.30	42+26.8	28.8	RT	1236.73	-1.3%	32	---	---	---	1	0.064	0.060
										TOTALS	32	42	42	64	4		

NOTES

1) STATION OFFSETS SHOWN ARE TO THE END OF THE PIPE (NOT THE APRON END OF ENDWALLS).

*ADDITIONAL QUANTITIES LISTED ELSEWHERE

CULVERT PIPE REINFORCED CONCRETE CLASS III

CATEGORY	ROAD	INLET END STATION	INLET END OFFSET		INLET END ELEV	DISCHARGE END STATION	DISCHARGE END OFFSET		DISCHARGE END ELEV	SLOPE	522.0124 24-INCH EACH	650.6000 CONSTRUCTION STAKING, PIPE CULVERTS EACH*
0010												
	STH 78	17+97.1ST	69.6	LT	1226.20	18+11.3ST	38.5	RT	1225.65	0.5%	110	1

NOTES

1) STATION OFFSETS SHOWN ARE TO THE END OF THE PIPE (NOT THE APRON END OF ENDWALLS).

*ADDITIONAL QUANTITIES LISTED ELSEWHERE

CULVERT PIPE REINFORCED CONCRETE HORIZONTAL ELLIPTICAL CLASS HE-III SUMMARY

CATEGORY	ROAD	INLET END STATION	INLET END OFFSET		INLET END ELEV	DISCHARGE END STATION	DISCHARGE END OFFSET		DISCHARGE END ELEV	SLOPE	523.0119 19X30-INCH LF	523.0138 38X60-INCH LF	650.6000 CONSTRUCTION STAKING, PIPE CULVERTS EACH*
0010													
	CTH E	12+95.6	54.0	LT	1193.88	12+59.8	46.9	RT	1193.54	0.3%	---	108	1
		47+77.7	28.0	LT	1231.57	48+15.2	28.0	LT	1231.15	1.2%	36	---	1
										TOTALS	36	108	2

NOTES

1) STATION OFFSETS SHOWN ARE TO THE END OF THE PIPE (NOT THE APRON END OF ENDWALLS).

*ADDITIONAL QUANTITIES LISTED ELSEWHERE

APRON ENDWALL FOR CULVERT PIPE SUMMARY

CATEGORY	ROAD	STATION	LOCATION	520.1012 12-INCH EACH	520.1015 15-INCH EACH	520.1030 30-INCH EACH	520.1036 36-INCH EACH	522.1024 REINFORCED CONCRETE 24-INCH EACH	523.0519 REINFORCED CONCRETE HE 19X30-INCH EACH	523.0538 REINFORCED CONCRETE HE 38X60-INCH EACH
0010	CTH E	12+78	LT/RT	---	---	---	---	---	---	2
		21+50	LT/RT	---	---	---	2	---	---	
		28+50	LT/RT	---	---	2	---	---	---	---
		36+84	RT	---	2	---	---	---	---	---
		42+15	RT	2	---	---	---	---	---	---
		48+00	LT	---	---	---	---	---	2	---
	STH 78	18+06ST	RT	---	---	---	---	1	---	---
			TOTALS	2	2	2	2	1	2	2

INLETS SUMMARY

CATEGORY	ROAD	STATION	OFFSET	611.3902 MEDIAN 2 GRATE EACH	611.0642 COVER TYPE MS EACH	650.4000 CONSTRUCTION STAKING, STORM SEWER SYSTEM EACH	REMARKS
0010	STH 78	18+06ST	30' RT	1	2	1	NO SLOPE ON INLET COVER

3

CONCRETE CURB & GUTTER 6-INCH SLOPED 36-INCH TYPE D

CATEGORY	ROAD	STATION - STATION	LOCATION	601.0557 LF	650.5500 CONSTRUCTION STAKING, CURB, CURB AND GUTTER LF
0010					
	CTH E	50+42 - 50+96	LT	88	88
		50+57 - 50+96	RT	58	58
		TOTAL		146	146

PIPE GRATES

CATEGORY	ROAD	STATION	LOCATION	611.9800.S EACH	REMARKS
0010					
	CTH E	12+78	LT/RT	2	36"
		21+50	LT/RT	2	38"X60"
			TOTAL	4	

FENCE WOVEN WIRE 4-FOOT

CATEGORY	ROAD	STATION - STATION	LOCATION	616.0100.01 LF
0010				
	CTH E	24+50 - 36+00	LT	1,205
	USH 18/151	EB USH 18/151	RT OUTSIDE SHLDR	485
			TOTAL	1,690

MOBILIZATION

CATEGORY	PROJECT I.D.	619.1000 EACH
0010	1204-06-75	1

MAINTENANCE AND REPAIR OF HAUL ROADS

CATEGORY	PROJECT I.D.	618.0100 EACH
0010	1204-06-75	1

FINISHING ITEMS

CATEGORY	STATION - STATION	625.0500 SALVAGED TOPSOIL SY	629.0210 FERTILIZER TYPE B CWT	630.0120 SEEDING MIXTURE NO. 20 LB	630.0175 SEEDING MIXTURE NO. 75 LB	630.0200 SEEDING TEMPORARY LB	630.0400 SEEDING NURSE CROP LB	624.0100 WATER MGAL *
0010	6+95 - 50+95	32,500	23	995	5	995	8	830
	16+77ST - 33+49ST	2,300	2	85	0	85	0	70
	100+14A - 102+00A	900	1	25	0	25	0	20
	102+00A - 113+61A	5,200	3	140	0	140	0	120
	USH 18/151 MEDIAN	1,100	1	30	0	30	0	25
	UNDISTRIBUTED	0	5	310	0	310	0	
	TOTALS	42,000	35	1,585	5	1,585	8	1,065

* ADDITIONAL QUANTITIES LISTED ELSEWHERE.

SILT FENCE

CATEGORY	STATION - STATION	LOCATION	628.1504 SILT FENCE LF	628.1520 SILT FENCE MAINTENANCE LF
0010	9+50 - 14+51	RT	480	960
	12+06 - 15+00	LT	320	640
	20+00 - 23+00	RT	290	580
	20+08 - 23+50	LT	370	740
	27+50 - 30+50	RT	305	610
	27+99 - 30+00	LT	215	430
	32+00 - 34+00	LT	220	440
	44+00 - 48+00	RT	435	870
	UNDISTRIBUTED	LT & RT	660	1,320
		TOTALS	3,295	6,590

MOBILIZATIONS EROSION CONTROL

CATEGORY	628.1905 EACH
0010	4

MOBILIZATIONS EMERGENCY EROSION CONTROL

CATEGORY	628.1910 EACH
0010	4

EROSION MAT SUMMARY

CATEGORY	ROAD	STATION - STATION	LOCATION	628.2006 URBAN CLASS I TYPE A SY	628.2023 CLASS II TYPE B SY
0010					
	CTH E	7+50 - 20+50	RT	3,100	---
		12+00 - 19+93	LT	2,800	---
		12+88 - 13+57	LT	---	270
		21+00 - 22+50	LT	300	---
		21+00 - 22+00	LT	---	95
		22+50 - 28+00	RT	1,000	---
		23+00 - 27+50	LT	1,050	---
		28+00 - 29+00	LT	---	90
		28+50 - 38+02	LT	4,550	---
		30+00 - 35+00	RT	1,000	---
		36+42 - 36+52	RT	7	---
		38+02 - 44+73	LT	360	---
		39+50 - 41+88	RT	180	---
		42+33 - 42+41	RT	5	---
		42+50 - 48+37	RT	470	---
		44+73 - 47+85	LT	180	---
		48+07 - 50+00	LT	260	---
		48+22 - 48+31	LT	6	---
		49+00 - 50+50	RT	100	---
	STH 78	18+12 - 18+13	53.4' RT	20	---
		19+50 - 22+50	LT	500	
	EXISTING CTH E	102+00A - 113+61A	LT/RT	5,200	---
	USH 18/15	MEDIAN	LT/RT	1,100	---
		UNDISTRIBUTED		5,500	110
			TOTALS	27,688	565

INLET PROTECTION TYPE A

CATEGORY	ROAD	STATION	LOCATION	628.7005 EACH
0010				
	CTH E	50+50	RT	1
	USH 18/151		MEDIAN CROSSOVER	1
			TOTAL	2

CULVERT PIPE CHECKS

CATEGORY	ROAD	STATION	LOCATION	628.7555 EACH
0010				
	EXISTING CTH E	102+91A	LT	10
		107+96A	LT	3
		107+93A	RT	3
	CTH E	12+78	LT	10
		21+50	LT	7
		28+50	LT	5
		37+08	RT	2
		41+89	RT	1
		47+71	LT	2
	STH 78	22+25ST	LT	3
		UNDISTRIBUTED		20
			TOTAL	66

MARKERS CULVERT END

CATEGORY	ROAD	STATION	LOCATION	633.5200 EACH
0010				
	CTH E	12+44	55' RT	1
		12+98	62' LT	1
		21+50	34' RT	1
		21+50	42' LT	1
		28+50	27' RT	1
		28+50	26' LT	1
		47+71	28' LT	1
		48+22	28' LT	1
	STH 78	18+12ST	45' RT	1
			TOTAL	9

PERMANENT SIGNING SUMMARY

CATEGORY	SIGN NO.	STATION	LOCATION	SIGN CODE	SIGN MESSAGE	SIGN SIZE (W X H) IN X IN	637.2210 SIGNS TYPE II REFLECTIVE H SF	637.2230 SIGNS TYPE II REFLECTIVE F SF	634.0612 POSTS WOOD 4X6-INCH 12-FOOT EACH	634.0614 POSTS WOOD 4X6-INCH 14-FOOT EACH	634.0616 POSTS WOOD 4X6-INCH 16-FOOT EACH	634.0618 POSTS WOOD 4X6-INCH 18-FOOT EACH	637.0620 SIGN FLAGS PERMANENT TYPE II EACH	638.2102 MOVING SIGNS EACH	638.4000 MOVING SMALL SIGN SUPPORTS EACH	REMARKS
0010																
CTH E																
	1-10	5+55	RT	W1-2R	RIGHT CURVE	30 X 30	---	6.25	---	---	1	---	1	---	---	
		---	---	W13-1	ADVISORY SPEED	18 X 18	---	2.25	---	---	---	---	---	---	---	
	1-11	7+03	LT	w1-8	CHEVRON	18 X 24	---	3.00	1	---	---	---	---	---	---	
	1-12	8+24	LT	w1-8	CHEVRON	18 X 24	---	3.00	1	---	---	---	---	---	---	
	1-13	9+41	LT	w1-8	CHEVRON	18 X 24	---	3.00	1	---	---	---	---	---	---	
	1-14	10+90	LT	W1-6	SINGLE NIGHT ARROW	48 X 24	---	8.00	---	1	---	---	---	---	---	
	2-10	24+81	LT	W1-6	SINGLE NIGHT ARROW	48 X 24	---	8.00	---	1	---	---	---	---	---	
	2-11	27+06	RT	W1-4R	RIGHT REVERSE CURVE	30 X 30	---	6.25	---	---	---	1	---	---	---	
		---	---	W13-1	ADVISORY SPEED	18 X 18	---	2.25	---	---	---	---	---	---	---	
	2-12	29+95	LT	W1-2L	LEFT CURVE	30 X 30	---	6.25	---	---	---	1	---	---	---	
		---	---	W13-1	ADVISORY SPEED	18 X 18	---	2.25	---	---	---	---	---	---	---	
	2-13	33+12	LT	W1-6	SINGLE NIGHT ARROW	48 X 24	---	8.00	---	1	---	---	---	---	---	
	3-18	37+01	LT	W1-6	SINGLE NIGHT ARROW	48 X 24	---	8.00	---	1	---	---	---	---	---	
	3-19	40+22	RT	J1-1	JUNCTION ASSEMBLY	24 X 39	6.50	---	---	---	1	---	---	---	---	M2-1, M1-6
	3-20	41+48	LT	W1-2L	LEFT CURVE	30 X 30	---	6.25	---	---	---	1	---	---	---	
		---	---	W13-1	ADVISORY SPEED	18 X 18	---	2.25	---	---	---	---	---	---	---	
	3-21	43+05	RT	W3-1	STOP AHEAD	36 X 36	---	9.00	---	---	---	1	---	---	---	
	3-22	47+71	LT	R1-1	STOP SIGN	30 X 30	6.25	---	---	---	1	---	---	---	---	
	3-23	48+95	LT	J4-1	REASSURANCE ASSEMBLY	24 X 24	4.00	---	---	1	---	---	---	---	---	M1-5A
	3E-11	50+61	RT	R1-1	STOP SIGN	30 X 30	6.25	---	---	---	---	---	---	1	1	
STH 78																
	3-10	11+05	RT	J1-3	JUNCTION ASSEMBLY	72 X 39	19.50	---	---	---	2	---	---	---	---	M2-1(3), M1-5A, M1-4(2)
	3-12	18+02	RT	J3-1		24 X 45	7.50	---	---	---	1	---	---	---	---	M1-5A, M6-1
	3-13	18+11	RT	J3-1		24 X 45	7.50	---	---	---	1	---	---	---	---	M1-6, M6-4
	3-14	18+29	RT	W1-7	DOUBLE NIGHT ARROW	48 X 24	---	8.00	---	1	---	---	---	---	---	
	3-15	19+12	LT	J3-1		24 X 45	7.50	---	---	---	1	---	---	---	---	M1-5A, M6-1
	3-16	19+79	RT	J4-1		24 X 36	6.00	---	---	1	---	---	---	---	---	M3-1, M1-6
	3-17	22+71	LT	J1-2	JUNCTION ASSEMBLY	48 X 39	6.50	---	---	1	---	---	---	---	---	M2-1, M1-5A
	3E-13	19+76	RT		DESTINATION				---	---	---	---	---	1	1	
						TOTALS	77.50	92.00	3	8	8	4	1	2	2	

REMOVING SIGNS SUMMARY

CATEGORY	ROAD	STATION	LOCATION	SIGN NO.	SIGN MESSAGE	638.2602 TYPE II EACH	638.3000 SMALL SIGN SUPPORTS EACH
0010							
	EXISTING CTH E	104+27A	RT	1E-10	STOP AHEAD	1	1
		106+43A	RT	1E-11	JUNCTION ASSEMBLY	3	1
	STH 78	11+02	RT	3E-10	JUNCTION ASSEMBLY	1	1
	USH 18/151	---	---	4E-10	JUNCTION ASSEMBLY	1	1
		---	---	4E-11	JUNCTION ASSEMBLY	1	1
		---	---	4E-12	WRONG WAY	1	1
		---	---	4E-13	DO NOT ENTER	1	1
		---	---	4E-14	ONE WAY	1	1
		---	---	4E-15	KEEP RIGHT	1	1
		---	---	4E-16	ROUTE TURN ASSEMBLY	1	1
		---	---	4E-17	ROUTE TURN ASSEMBLY	1	1
		---	---	4E-18	STOP SIGN ASSEMBLY	2	1
		---	---	4E-19	REASSURANCE ASSEMBLY	1	1
		---	---	4E-20	STOP SIGN	1	1
		---	---	4E-21	ROUTE TURN ASSEMBLY	1	1
		---	---	4E-22	JUNCTION ASSEMBLY	1	1
		---	---	4E-23	JUNCTION ASSEMBLY	1	1
					TOTALS	20	17

3

FIELD OFFICE TYPE B

CATEGORY	PROJECT I.D.	642.5001 EACH
0010	1204-06-75	1

TRAFFIC CONTROL

CATEGORY	PROJECT I.D.	643.0100 EACH
0010	1204-06-75	1

TRAFFIC CONTROL DETOUR

CATEGORY	PROJECT I.D.	643.2000 EACH
0010	1204-06-75	1

TRAFFIC CONTROL DETOUR SIGNS

CATEGORY	DURATION	SIGNS	643.3000 DAYS
0010	14	60	840

TRAFFIC CONTROL SUMMARY

CATEGORY	STAGE	DURATION DAYS	LOCATION	643.0300 DRUMS EACH	643.0300 DRUMS DAYS	643.0420 BARRICADES, TYPE III EACH	643.0420 BARRICADES, TYPE III DAYS	643.0705 WARNING LIGHTS TYPE A EACH	643.0705 WARNING LIGHTS TYPE A DAYS	643.0715 WARNING LIGHTS TYPE C EACH	643.0715 WARNING LIGHTS TYPE C DAYS	643.0800 ARROW BOARDS EACH	643.0800 ARROW BOARDS DAYS	643.0900 SIGNS EACH	643.0900 SIGNS DAYS	643.1050 SIGNS PCMS EACH	643.1050 SIGNS PCMS DAY
0010	1	49	ADVANCE WARNING - CTH E	0	0	0	0	0	0	0	0	0	0	7	343	0	0
			ADVANCE WARNING - STH 78	0	0	0	0	0	0	0	0	0	0	8	392	0	0
			CTH E	0	0	6	294	4	196	0	0	0	0	2	98	1	14
			USH 18/151	0	0	0	0	0	0	0	0	0	0	0	0	2	28
			TOTALS (STAGE 1)		0		294		196		0		0		833		42
	2	14	ADVANCE WARNING - CTH E	0	0	0	0	0	0	0	0	0	0	3	42	0	0
			ADVANCE WARNING - STH 78	0	0	0	0	0	0	0	0	0	0	9	126	0	0
			ADVANCE WARNING - USH 18/151	0	0	0	0	0	0	0	0	0	0	6	84	0	0
			CTH E	0	0	8	112	6	84	0	0	0	0	3	42	0	0
			USH 18/151 & CTH E - INTERSECTION CLOSURE	61	854	14	196	12	168	0	0	0	0	12	168	0	0
		5	USH 18/151 - RIGHT TURN LANE REMOVAL	0	0	0	0	0	0	0	0	1	5	16	80	2	42
			TOTALS (STAGE 2)		854		308		252		0		5		542		42
	3	19	ADVANCE WARNING - CTH E	0	0	0	0	0	0	0	0	0	0	4	76	0	0
			ADVANCE WARNING - STH 78	0	0	0	0	0	0	0	0	0	0	11	209	2	28
			ADVANCE WARNING - USH 18/151	36	684	0	0	0	0	0	0	0	0	16	304	2	28
			STH 78	0	0	0	0	0	0	0	0	0	0	6	114	0	0
		10	USH 18/151 - LANE CLOSURE	71	710	10	100	6	60	6	60	2	20	14	140	0	0
			TOTALS (STAGE 3)		1394		100		60		60		20		843		56
			UNDISTRIBUTED		500		180		130		20		10		550		0
			TOTALS		2748		882		638		80		35		2768		140

RIPRAP SUMMARY

CATEGORY	ROAD	STATION	LOCATION	606.0200 RIPRAP MEDIUM CY	645.0120 GEOTEXTILE FABRIC TYPE HR SY
0010					
	CTH E	12+50	RT	27	60
		21+50	RT	17	45
		28+50	RT	16	40
		UNDISTRIBUTED		30	50
			TOTAL	90	195

PAVEMENT MARKING SUMMARY

CATEGORY	ROAD	FROM STATION	TO STATION	LOCATION	646.0106 EPOXY 4-INCH (WHITE) LF	646.0106 EPOXY 4-INCH (YELLOW) LF	647.0566 STOP LINE EPOXY 18-INCH (WHITE) LF
0010							
	CTH E						
		6+95	50+42	LT	4,347	---	---
		6+95	50+78	LT/RT	---	8,796	---
		6+95	50+56	RT	4,361	---	---
		50+75	50+78	RT	---	---	21
	STH 78						
		19+03	22+27	LT	82	---	---
		16+80	17+76	LT	96	---	---
	USH 18/151						
		EB USH 18/151		RT OUTSIDE SHLDR	585	---	---
		EB USH 18/151		RT MEDIAN SHLDR	---	435	---
		WB USH 18/151		LT MEDIAN SHLDR	---	740	---
					9,471	9,971	
				TOTALS	19,442		21

3

REMOVING PAVEMENT MARKINGS

CATEGORY	ROAD	FROM STATION	TO STATION	LOCATION	646.0600 LF
0010					
	STH 78				
		16+80.02	22+18.36	LT	540
	USH 18/151				
		EB USH 18/151		RT OUTSIDE SHLDR	195
		EB USH 18/151		RT OUTSIDE SHLDR	105
		WB USH 18/151		LT MEDIAN SHLDR	81
		EB USH 18/151		RT MEDIAN SHLDR	79
		WB USH 18/151		LT MEDIAN SHLDR	605
		EB USH 18/151		RT OUTSIDE SHLDR	125
				TOTAL	1,730

CONSTRUCTION STAKING SUMMARY

CATEGORY	ROAD	STATION-STATION	LOCATION	650.4500 SUBGRADE LF	650.5000 BASE LF	650.9920 SLOPE STAKES LF
0010						
	CTH E	6+95 - 50+96	LT/RT	4,401	4,401	4,401
	STH 78	17+83ST - 25+70ST	RT	---	810	810
		19+78ST - 25+99S	LT	---	680	680
		26+51ST - 28+96S	RT	---	245	245
		26+78ST - 29+27S	LT	---	260	260
		31+18ST - 33+34ST	RT	---	215	215
		31+57ST - 33+50S	LT	---	185	185
	DRIVEWAY A	100+14A - 102+00A	LT/RT	186	186	186
			TOTALS	4,587	6,982	6,982

CONSTRUCTION STAKING SUPPLEMENTAL CONTROL

CATEGORY	PROJECT I.D.	650.9910 LS
0010	1204-06-75	1

SAWING ASPHALT

CATEGORY	ROAD	STATION - STATION	LOCATION	690.0150 LF
0010				
	CTH E	6+95	LT/RT	21
		39+05	RT	22
		42+08	RT	12
		47+95	LT	20
	STH 78	16+77ST -17+77ST	LT	100
		17+77ST - 25+99ST	LT	822
		17+99ST	LT/RT	47
		18+14ST	LT/RT	58
		20+79ST - 25+70ST	RT	500
		26+51ST - 28+96ST	RT	260
		26+78ST - 29+26ST	LT	270
		31+25ST - 33+33ST	RT	225
		31+56ST - 33+50ST	LT	200
	USH 18/151	EB USH 18/151	RT OUTSIDE SHLDR	340
		EB USH 18/151	RT MEDIAN SHLDR	390
		WB USH 18/151	LT MEDIAN SHLDR	320
			TOTAL	3,607

UTILITY LINE OPENING

CATEGORY	ROAD	STATION LOCATION		SPV.0060.01 EACH
0010				
	STH 78	18+11ST	RT	1

CONVENTIONAL ABBREVIATIONS

ACCESS POINT	AP	POINT OF CURVATURE	PC
ACCESS RIGHTS	AR	POINT OF INTERSECTION	PI
ACRES	AC.	POINT OF REVERSE CURVATURE	PRC
AGRICULTURAL	AG	PRIVATE DRIVEWAY	P.D.
AHEAD	AH	POINT ON TANGENT	POT
ALUMINUM	ALUM.	PROPERTY LINE	P.L.
AND OTHERS	ET.AL.	RECORDED AS	(100')
BACK	BK	REFERENCE LINE	R/L
BLOCK	BLK	REMAINING	REM.
CENTERLINE	C/L	RIGHT	RT.
CERTIFIED SURVEY MAP	C.S.M.	RIGHT OF WAY	R/W
CONCRETE	CONC.	SECTION	SEC.
CORNER	COR.	SEPTIC VENT	SEPV.
COUNTY	CO.	SQUARE FEET	S.F.
COUNTY TRUNK HIGHWAY	CTH	STATE TRUNK HIGHWAY	STH
DISTANCE	DIST.	STATION	STA.
DOCUMENT NUMBER	DOC.	SUBDIVISION	SUBD
EASEMENT	EASE	TANGENT	TAN.
EXISTING	EX.	TELEPHONE PEDESTAL	T.P.
GAS VALVE	G.V.	TEMPORARY LIMITED EASEMENT	T.L.E.
GRID NORTH	GN	TRANSPORTATION PROJECT PLAT	TPP
HIGHWAY EASEMENT	H.E.	UNITED STATES HIGHWAY	USH
IDENTIFICATION	ID.	VOLUME	V.
LAND CONTRACT	LC	WITH	W/
LEFT	LT.		
MONUMENT	MON.		
NATIONAL GEODETIC SURVEY	NGS		
NOT APPLICABLE	N.A.		
NUMBER	NO.		
OUTLOT	O.L.		
PAGE	P.		
PART OF	PT.		
PERMANENT LIMITED EASEMENT	P.L.E.		
POINT OF BEGINNING	P.O.B.		
POINT OF COMPOUND CURVE	PCC		

CURVE DATA

LONG CHORD	L.C.
LONG CHORD BEARING	L.C.B.
RADIUS	R.
DEGREE OF CURVE	D.
CENTRAL ANGLE OR DELTA	Δ.
LENGTH OF CURVE	L.
TANGENT	T.
DIRECTION AHEAD	DA.
DIRECTION BACK	DB.

CONVENTIONAL UTILITY SYMBOLS

	NON COMPENSABLE	COMPENSABLE
WATER	—W—	
GAS	—G—	
TELEPHONE	—T—	
OVERHEAD TRANSMISSION LINES	—OH—	
ELECTRIC	—E—	
CABLE TELEVISION	—TV—	
FIBER OPTIC	—FO—	
SANITARY SEWER	—SAN—	
STORM SEWER	—SS—	
POWER POLE		
TELEPHONE POLE		
TELEPHONE PEDESTAL		
ELECTRIC TOWER	⊠	

CONVENTIONAL SYMBOLS

FOUND IRON PIPE/PIN (3/4" REBAR UNLESS NOTED)	PROPOSED R/W LINE
	EXISTING H.E. LINE
R/W MONUMENT ○ ●(SET)	PROPERTY LINE
R/W STANDARD △ ▲(SET)	LOT & TIE LINES
SIGN |SIGN	SLOPE INTERCEPTS
SECTION CORNER MONUMENT ●	CORPORATE LIMITS
SECTION CORNER SYMBOL (SEE DETAIL)	ACCESS RESTRICTED (BY PREVIOUS PROJECT/CONTROL OR ACQUISITION)
FEE (HATCH VARIES)	ACCESS RESTRICTED (BY ACQUISITION)
TEMPORARY LIMITED EASEMENT	NO ACCESS (BY STATUTORY AUTHORITY)
PERMANENT LIMITED EASEMENT	SECTION LINE
R/W BOUNDARY POINT 8730	QUARTER LINE
BUILDING	SIXTEENTH LINE
PARCEL NUMBER (102)	EXISTING CENTERLINE
UTILITY PARCEL NUMBER (92)	PROPOSED REFERENCE LINE
SIGN NUMBER (OFF PREMISE) (21-1)	PARALLEL OFFSET

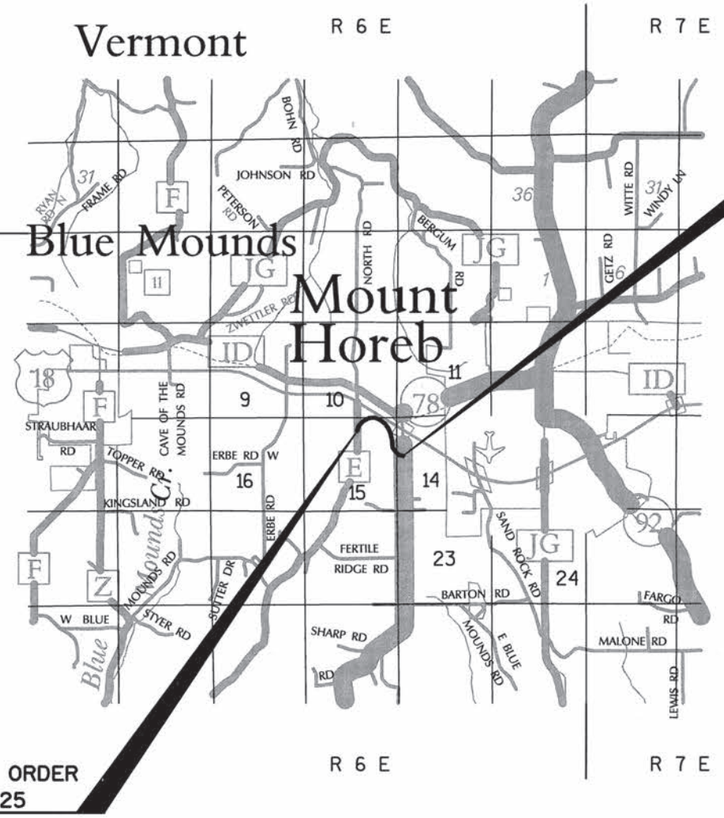

END RELOCATION ORDER
PROJECT 1204-06-25
STA. 50+05.28
1830.84 FEET SOUTH OF AND 116.63 FEET WEST OF THE NE CORNER OF SEC. 15, T.6 N., R.6 E.

BEGIN RELOCATION ORDER
PROJECT 1204-06-25
STA. 5+00
1036.53 FEET SOUTH OF AND 1.12 FEET WEST OF THE N 1/4 CORNER OF SEC. 15, T.6 N., R.6 E.

LAYOUT
SCALE 0 1 MI.

TOTAL NET LENGTH OF CENTERLINE = 0.853 MI.

R/W PROJECT NUMBER	SHEET NUMBER	TOTAL SHEETS
1204-06-25	4.01	4
FEDERAL PROJECT NUMBER		

PLAT OF RIGHT-OF-WAY REQUIRED FOR
BARNEVELD-MOUNT HOREB
CTH E INTERSECTION
USH 18/151 DANE COUNTY

CONSTRUCTION PROJECT NUMBER
1204-06-75

NOTES

DISTANCES SHOWN FROM BUILDINGS TO RIGHT OF WAY LINES ARE APPROXIMATE.

COORDINATES AND BEARINGS SHOWN ON THIS PLAT ARE REFERENCED TO THE WISCONSIN COUNTY COORDINATE SYSTEM, DANE COUNTY ZONE, NAD83/1997 ADJUSTMENT. THE COORDINATES SHOWN ARE GRID COORDINATES AND ARE TO BE USED AS GRID OR GROUND VALUES ON THIS PLAT.

ALL RIGHT-OF-WAY LINES DEPICTED IN NON ACQUISITION AREAS ARE INTENDED TO RE-ESTABLISH EXISTING RIGHT-OF-WAY LINES AS DETERMINED FROM PREVIOUS PROJECTS, OTHER RECORDED DOCUMENTS, OR FROM CENTERLINE OF EXISTING PAVEMENTS.

ALL NEW RIGHT-OF-WAY MONUMENTS WILL BE TYPE 2 (TYPICALLY ¾" X 24" IRON REBARS), UNLESS OTHERWISE NOTED, AND WILL BE PLACED PRIOR TO COMPLETION OF THE PROJECT.

RIGHT-OF-WAY BOUNDARIES ARE DEFINED WITH COURSES OF THE PERIMETER OF THE HIGHWAY LANDS REFERENCED TO THE U.S. PUBLIC LAND SURVEY SYSTEM OR OTHER "SURVEYS OF PUBLIC RECORD".

DIMENSIONING FOR THE NEW R/W IS MEASURED ALONG AND PERPENDICULAR TO THE NEW REFERENCE LINE.

PROPERTY LINES SHOWN ON THIS PLAT ARE DRAWN FROM DATA DERIVED FROM MAPS AND DOCUMENTS OF PUBLIC RECORD AND/OR EXISTING OCCUPATIONAL LINES. THIS PLAT MAY NOT BE A TRUE REPRESENTATION OF EXISTING PROPERTY LINES, EXCLUDING RIGHT-OF WAY LINES, AND SHOULD NOT BE USED AS A SUBSTITUTE FOR AN ACCURATE LAND SURVEY.

FOR THE LATEST ACCESS/DRIVEWAY INFORMATION, CONTACT THE PLANNING UNIT OF THE WISCONSIN DEPARTMENT OF TRANSPORTATION OFFICE IN MADISON.

A TEMPORARY LIMITED EASEMENT (T.L.E.) IS A RIGHT FOR CONSTRUCTION PURPOSES, AS DEFINED HEREIN, INCLUDING THE RIGHT TO OPERATE NECESSARY EQUIPMENT THEREON, THE RIGHT OF INGRESS AND EGRESS, AS LONG AS REQUIRED FOR SUCH PUBLIC PURPOSE, INCLUDING THE RIGHT TO PRESERVE, PROTECT, REMOVE, OR PLANT THEREON ANY VEGETATION THAT THE HIGHWAY AUTHORITIES MAY DEEM DESIRABLE. ALL (T.L.E.'S) ON THIS PLAT EXPIRE AT THE COMPLETION OF THE CONSTRUCTION PROJECT FOR WHICH THIS INSTRUMENT IS GIVEN.

A PERMANENT LIMITED EASEMENT (P.L.E.) IS A RIGHT FOR CONSTRUCTION AND MAINTENANCE PURPOSES, AS DEFINED HEREIN, INCLUDING THE RIGHT TO OPERATE NECESSARY EQUIPMENT THEREON AND THE RIGHT OF INGRESS AND EGRESS, AS LONG AS REQUIRED FOR SUCH PUBLIC PURPOSE, INCLUDING THE RIGHT TO PRESERVE, PROTECT, REMOVE OR PLANT THEREON ANY VEGETATION THAT THE HIGHWAY AUTHORITIES MAY DEEM DESIRABLE, BUT WITHOUT PREJUDICE TO THE OWNER'S RIGHT TO MAKE OR CONSTRUCT IMPROVEMENTS ON SAID LANDS OR TO FLATTEN THE SLOPES, PROVIDING SAID ACTIVITIES WILL NOT IMPAIR OR OTHERWISE ADVERSELY AFFECT THE HIGHWAY FACILITIES.

EXISTING ACCESS CONTROL ALONG U.S.H. 18/151 ESTABLISHED FROM PREVIOUS PROJECT 1204-3-21.

EXISTING ACCESS CONTROL ALONG STH 78 ESTABLISHED FROM PREVIOUS PROJECT 1204-3-21 AND PER REFERENCE TO WISDOT PLAT OF SURVEY BY BRUCE BOWDEN IN 2004.

CTH E IS NOT LISTED AS AN ACCESS-CONTROLLED HIGHWAY IN CHAPTER 78 OF THE DANE COUNTY CODE OF ORDINANCES.

EXISTING RIGHT OF WAY ON CTH E ESTABLISHED FROM REFERENCE TO DANE COUNTYC.S.M. NO. 4444 AND WISDOT R/W PROJECT ID 1204-3-21.
EXISTING RIGHT OF WAY ON USH 18/151 ESTABLISHED FROM REFERNCE TO WISDOT R/W PROJECT ID 1204-3-21.
EXISTING R/W ON STH 78 ESTABLISHED FROM REFERENCE TO WISDOT R/W PROJECT 1204-3-21 AND WISDOT PLAT OF SURVEY BY BRUCE BOWDEN IN 2004.

ORIGINAL PLAT PREPARED BY

WISCONSIN
TERRANCE L. GENSKE
S-1443
WAUNAKEE
WI
LAND SURVEYOR
10/16/2012

(Signature) (Date) 10/16/2012

STRAND ASSOCIATES®
910 WEST WINGRA DRIVE
MADISON, WISCONSIN 53715
(608) 251-4843

REVISION DATE
6/18/2012 N.C
10/16/2012 N.C.

STATE OF WISCONSIN
DEPARTMENT OF TRANSPORTATION

APPROVED FOR THE DEPARTMENT

DATE:_____ _____ (Signature)

E

FILE NAME : S:\MAD\1000--1099\1089\665\Micros\PLAN\RW Plat\040101_rw.dgn PLOT DATE : 10/16/2012 PLOT BY : _username_ PLOT NAME : PLOT SCALE : $$.....plotscale.....$$ WISDOT/CADDS SHEET 50

SCHEDULE OF LANDS & INTERESTS REQUIRED

OWNER'S NAMES ARE SHOWN FOR REFERENCE PURPOSED ONLY AND ARE SUBJECT TO CHANGE PRIOR TO THE TRANSFER OF LAND INTERESTS TO THE DEPARTMENT.

SCHEDULE OF LANDS & INTERESTS REQUIRED

PARCEL NUMBER	SHEET NUMBER	OWNER(S)	INTEREST REQUIRED	R/W ACRES OR S.F. REQUIRED NEW	EXISTING	TOTAL	T.L.E. ACRES OR S.F.	P.L.E. ACRES OR S.F.
1	4.3	HLS, LCC	FEE, PLE, TLE	6.583	0.341	6.924	0.093	0.022

4

4

UTILITY SCHEDULE & INTERESTS REQUIRED

UTILITY NUMBER	SHEET NUMBER	UTILITY OWNER(S)	INTEREST REQUIRED
81	4.3	MOUNT HOREB ELECTRIC UTILITY	RELEASE OF RIGHTS
82	4.3	MOUNT HOREB TELEPHONE COMPANY	RELEASE OF RIGHTS

REVISION DATE 6/18/2012 N.C	DATE 3/27/2012	SCALE, FEET 0 N/A	HWY: USH 18/151	STATE R/W PROJECT NUMBER 1204-06-25	PLAT SHEET 4.02	
			COUNTY: DANE	CONSTRUCTION PROJECT NUMBER 1204-06-75	PS&E SHEET PR[illegible]	E

FILE NAME : S:\MAD\1000--1099\1089\665\Micros\PLAN\RW Plat\040102_rw.dgn PLOT DATE : 11/26/2012 PLOT BY : _username_ PLOT NAME : PLOT SCALE : $$.....plotscale.....$$ WISDOT/CADDS SHEET 60

TO BE CLOSED

PI 24+91.18

SE-SW SEC 10

0.52 AC. REMAINS

FOUND RAILROAD SPIKE
Y=456,803.395
X=717,947.438
3028

SW-SE SEC 10

9.3 AC. +/- REMAIN

PREVIOUS PROJECT 1204-3-21 REFERENCE LINE

SHIRLEY THOMPSON

S 89° 45' 41" W, 2636.68'

EXISTING ACCESS CONTROL ALONG U.S.H. 18/151 ESTABLISHED FROM PREVIOUS PROJECT 1204-3-21.
EXISTING ACCESS CONTROL ALONG STH 78 ESTABLISHED FROM PREVIOUS PROJECT 1204-3-21 AND REFERENCE TO WISDOT PLAT OF SURVEY BY BRUCE BOWDEN IN 2004.
CTH E IS NOT AN ACCESS CONTROLLED HIGHWAY - NOT FOUND IN THE LIST OF HIGHWAYS IN CHAPTER 79 - DANE COUNTY CODE OF ORDINANCES.

USH 18/151

SE-SE SEC 10

LOT2 CSM8792 V. 48 P. 300 DOC. NO. 2922656

FOUND 1" IRON PIPE
Y=456,814.376
X=720,584.098
2000

HLS, LLC LAND

N 89° 45' 41" E, 1279.45'

105+00A

149-150
L.C. = 215.11'
L.C.B. = N 47° 49' 28" E
L. = 217.31'
R. = 440.00'

150-108
L.C. = 115.38'
L.C.B. = N 69° 30' 26" E
L. = 115.71'
R. = 440.00'

105-106
L.C. = 96.28'
L.C.B. = N 50° 33' 35" E
L. = 96.57'
R. = 360.00'

148-149
L.C. = 68.00'
L.C.B. = N 29° 14' 37" E
L. = 68.06'
R. = 440.00'

POT 100+62.41 A

PT 100+94.71 A

PI 100+62.41 A

PC 100+19.78 A

NE-NW SEC 15

100+00

10+00

PC 8+51.93

BEGIN RELOCATION ORDER
STA 5+00
X= 717946.319
Y= 455766.864

N 0° 21' 19" E

N 89° 47' 22" W, 33.00'

CTH E

65'

5+00

LOT 2 CSM 4444 VOL. 19 P. 130

LOT 1 CSM 4444 VOL. 19 P. 130

33'

3025
FOUND RAILROAD SPIKE AT THE 40-CORNER (SW CORNER, NW-NE) AS SHOWN ON CSM 4444, VOL. 19 OR C.S.M.S P. 130.

FEE POINT, STATION & OFFSET TABLE								
100	7+00.00	29.80'	123	35+59.88	95.01'	141	11+00.00	50.00'
101	6+99.92	3.19'	124	33+00.00	58.00'	142	10+00.00	40.00'
102	12+36.44	102.26'	125	32+00.00	40.00'	143	44+44.79	42.72'
103	12+50.00	71.86'	126	30+16.10	40.00'	144	49+48.16	38.34'
104	13+25.00	75.00'	127	28+50.00	48.00'	3004	49+42.77	41.82'
105	14+00.00	54.42'	128	28+13.00	40.00'	3014	34+43.69	48.20'
106	14+90.00	38.49'	129	27+15.00	40.00'	3015	33+17.99	46.85'
107	15+85.00	57.98'	130	23+15.00	40.00'	3016	30+36.65	37.24'
108	16+30.00	71.48'	131	22+55.00	40.00'	5009	44+44.86	37.29'
109	17+75.00	84.00'	132	21+50.00	57.00'	181	47+09.33	42.29'
110	18+85.00	75.00'	133	20+50.00	40.00'			
111	21+50.00	53.00'	134	19+00.00	65.00'			
112	22+50.00	50.00'	135	18+49.53	71.96'			
113	24+78.95	60.00'	136	17+22.71	76.92'			
117	35+80.00	75.35'	137	15+50.00	55.00'			
118	38+40.00	48.00'	138	14+78.77	40.00'			
119	40+30.65	39.07'	139	14+30.00	40.00'			
122	38+61.89	65.54'	140	12+50.00	77.00'			

NOTE: THE MONUMENT MARKING THE SOUTH¼CORNER OF SECTION 15 AND SOME TIES WERE ACCIDENTALLY GRADED OUT ACCORDING TO THE ADJACENT OWNER. THE DANE COUNTY SURVEYOR WAS NOTIFIED.

ROAD NAME	BASIS OF EXISTING R/W	WIDTH	YEAR
CTH E	DANE COUNTY C.S.M. NO. 4444	66'	1984
U.S.H. 18/151	RIGHT OF WAY PROJECT ID 1204-3-21 DODGEVILLE - MT. HOREB ROAD	AS SHOWN	1978
STH 78	WISDOT PLAT OF SURVEY BY BRUCE BOWDEN	220'	2004

NOTE: ALL I.P.'S SHOWN ON THIS PLAT ARE FOUND ¾" REBAR UNLESS OTHERWISE NOTED.

COORDINATES AND BEARINGS SHOWN ON THIS PLAT ARE REFERENCED TO THE WISCONSIN COUNTY COORDINATE SYSTEM, DANE COUNTY ZONE, NAD83/1997 ADJUSTMENT. THE COORDINATES SHOWN ARE GRID COORDINATES AND ARE TO BE USED AS GRID OR GROUND VALUES ON THIS PLAT.

EXISTING ACCESS CONTROL ALONG U.S.H. 18/151 ESTABLISHED FROM PREVIOUS PROJECT 1204-3-21.

EXISTING ACCESS CONTROL ALONG STH 78 ESTABLISHED FROM PREVIOUS PROJECT 1204-3-21 AND PER REFERENCE TO WISDOT PLAT OF SURVEY BY BRUCE BOWDEN IN 2004.

FOR THE LATEST ACCESS/DRIVEWAY INFORMATION CONTACT THE PLANNING UNIT OF THE WISCONSIN DEPARTMENT OF TRANSPORTATION OFFICE IN MADISON.

SW-NE SEC 15

NW-NE SEC 15

TOWN OF BLUE MOUNDS

(82) MOUNT HOREB TELEPHONE COMPANY
RELEASE OF RIGHTS - PEDESTAL AND BURIED CABLE
PARCEL 1
EASEMENT DOC. NO.S 1855134 AND 1749594
(BLANKET EASEMENTS IN SW-SE 10, NW-NE 15, SE-NE 15 AND E1/2 NE-NE 15)

(81) MOUNT HOREB ELECTRIC UTILITY
RELEASE OF RIGHTS - POWER POLES

P.I. STA. = 24+91.18
Y = 457,758.005
X = 717,958.664
Δ = 126° 00' 48" (RT)
D = 6° 51' 42"
T = 1639.25'
L = 1836.45'
R = 835.00'
P.C. STA. = 8+51.93
P.T. STA. = 26+88.38
D.B. = S 0° 21' 19" W
D.A. = S 53° 37' 53" E

P.I. STA. = 34+61.50
Y = 456,327.531
X = 719,901.146
Δ = 44° 05' 13" (RT)
D = 5° 12' 31"
T = 445.40'
L = 846.41'
R = 1,100.00'
P.C. STA. = 30+16.10
P.T. STA. = 38+62.51

P.I. STA. = 47+81.68
Y = 454,981.852
X = 720,127.414
Δ = 80° 44' 20" (LT)
D = 14° 19' 26"
T = 340.06'
L = 563.66'
R = 400.00'
P.C. STA. = 44+41.62
P.T. STA. = 50+05.28

P.I. STA. = 100+62.41 A
Y = 456,443.019
X = 717,948.721
Δ = 68° 14' 56" (RT)
D = 91° 04' 56"
T = 42.63'
L = 74.93'
R = 62.905'
P.C. STA. = 100+19.78 A
P.T. STA. = 100+94.71 A

SE-NE SEC 15

MATCH LINE 44+45

SEE DETAIL 6 SHEET 4.04

SLOPE INTERCEPT (TYP.)

WISDOT LANDS

PARCEL 1

143-181
L.C. = 232.15' (232.12')
L.C.B. = S 28°50'46" E (S 28°51'00" E)
L. = 236.37' (236.34')
R. = 360.00' (360.00')

181-3004
L.C. = 206.16'
L.C.B. = S 64° 17' 41" E
L. = 209.09'
R. = 360.00'

POT 51+20.28

PI 47+81.68

144-T238
L.C. = 267.59'
L.C.B. = N 64° 04' 20" W
L. = 271.89'
R. = 440.00'

144-5009
L.C. = 515.61 (515.47')
L.C.B. = N 45° 54' 25" W (N 45° 53' 55" W)
L. = 550.89' (550.72')
R. = 440.00' (440.00')

PT 50+05.28

END RELOCATION ORDER
STA 50+05.28
X= 720,467.469
Y= 454,983.535

HLS, LLC

D.B. = N 9°32'41" W

SE-NE SEC 15

PARCEL 1 OF BOWDEN PLAT OF SURVEY

WISDOT LANDS PER DOC. NO. 4043320

PC 44+41.62

MATCH LINE 44+45

NOT FOUND
COMPUTED FROM TIES
Y=454,161.993
X=720,580.708

REVISION DATE	DATE 3/27/2012	SCALE, FEET 0 100 200	HWY: USH 18/151	STATE R/W PROJECT NUMBER 1204-06-25	PLAT SHEET 4.03	
6/18/2012 10/16/2012	GRID FACTOR N.A.		COUNTY: DANE	CONSTRUCTION PROJECT NUMBER 1204-06-75	PS&E SHEET PRT 00	E

FILE NAME : S:\MAD\1000--1099\1089\665\Micros\PLAN\RW Plat\040103_rw.dgn PLOT DATE : 11/26/2012 PLOT BY : _username_ PLOT NAME : PLOT SCALE : $$.....plotscale.....$$ WISDOT/CADDS SHEET 75

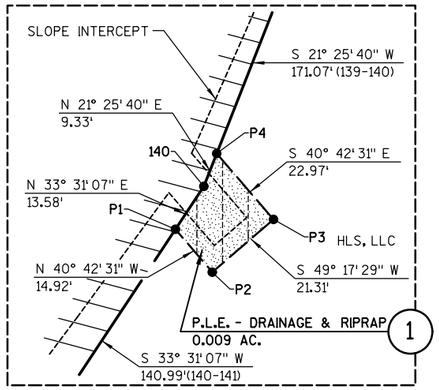

DETAIL 1 - NOT TO SCALE

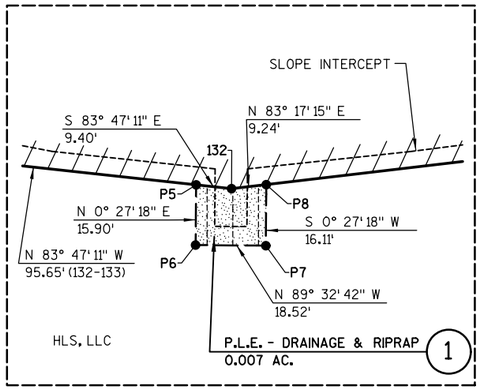

DETAIL 2 - NOT TO SCALE

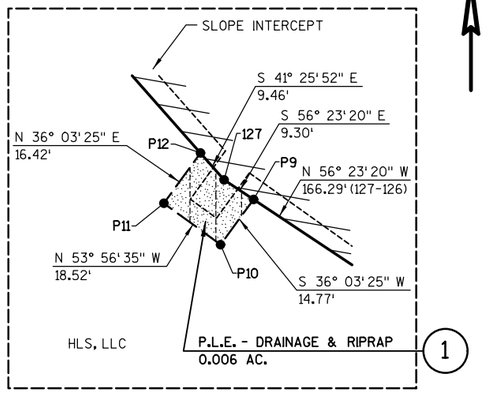

DETAIL 3 - NOT TO SCALE

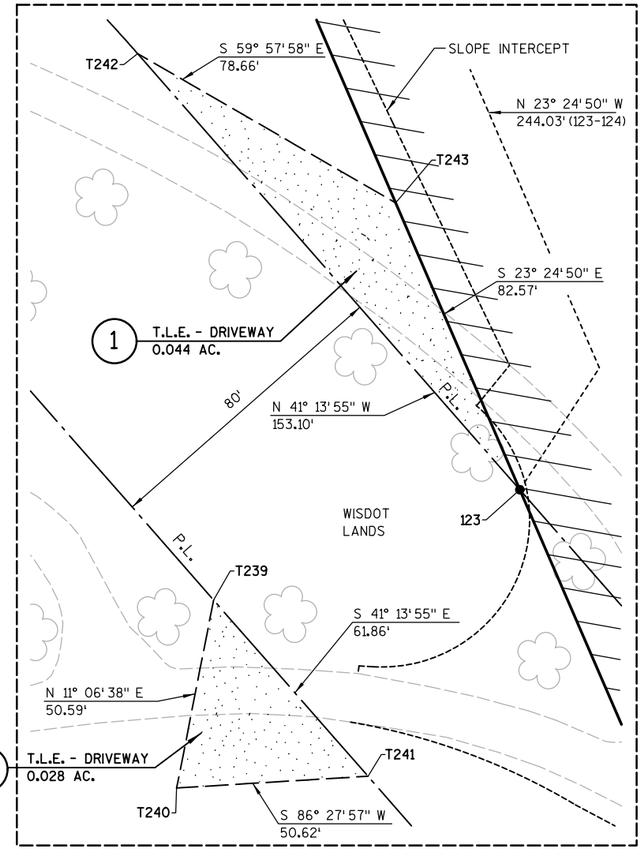

DETAIL 4 - NOT TO SCALE

DETAIL 5 - NOT TO SCALE

DETAIL 6 - NOT TO SCALE

FEE MONUMENT POINT AND COORDINATE TABLE					
POINT	Y	X	POINT	Y	X
100	455966.675	717977.363	133	456901.925	718680.597
101	455966.797	717944.363	134	456847.043	718549.012
102	456535.319	717946.453	135	456825.052	718507.652
108	456844.587	718247.404	136	456770.827	718405.667
109	456937.440	718376.218	137	456695.582	718264.149
110	456975.277	718490.855	138	456659.515	718205.545
111	457001.566	718774.585	139	456624.850	718174.667
112	456993.287	718880.408	140	456465.608	718112.171
113	456943.455	719118.722	141	456348.060	718034.312
114	456809.047	719304.657	142	456258.698	718001.836
117	456188.820	719961.791	143	455321.496	720113.626
118	455919.379	720018.205	144	454948.759	720405.169
119	455728.964	720041.415	148	456600.436	717946.692
122	455877.999	719910.277	149	456659.767	717979.910
123	456135.513	719798.766	150	456804.194	718139.328
124	456359.445	719701.797	162	456805.576	718471.021
125	456442.939	719652.051	181	455118.153	720225.627
126	456559.434	719518.783	3004	455028.731	720411.387
127	456651.485	719380.293	3014	456303.433	719870.699
128	456679.867	719355.243	3015	456411.730	719796.678
129	456737.979	719276.332	3016	456608.873	719581.572
130	456894.665	718931.740	5009	455307.531	720034.854
131	456903.293	718875.282	5012	455715.030	719962.638
132	456891.572	718775.687	5013	455847.770	719910.469

PLE MONUMENT POINT AND COORDINATE TABLE		
POINT	Y	X
P1	456454.289	718104.674
P2	456442.982	718114.402
P3	456456.883	718130.559
P4	456474.293	718115.579
P5	456892.589	718766.340
P6	456876.693	718766.214
P7	456876.546	718784.734
P8	456892.651	718784.861
P9	456646.338	719388.036
P10	456634.395	719379.341
P11	456645.296	719364.368
P12	456658.574	719374.036

TLE POINT AND COORDINATE TABLE		
POINT	Y	X
T230	455558.785	719990.327
T231	455552.117	719980.826
T232	455527.463	719984.971
T233	455519.397	719997.308
T234	455173.834	720081.681
T235	455147.262	720090.755
T236	455101.116	720121.590
T238	455065.758	720164.516
T239	456106.408	719717.899
T240	456056.764	719708.150
T241	456059.884	719758.673
T242	456250.653	719697.855
T243	456211.281	719765.956

R/W OF INTENT POINT AND COORDINATE TABLE		
POINT	Y	X
103	456535.197	717979.453
104	456606.781	718018.708
105	456660.736	718082.251
106	456721.903	718156.610
107	456804.521	718217.753

PLE POINT STATION & OFFSET TABLE		
P1	12+35.15	75.50
P2	12+28.72	89.24
P3	12+50.92	97.34
P4	12+60.20	75.93
P5	21+39.99	55.83
P6	21+39.47	71.72
P7	21+59.74	72.06
P8	21+59.84	55.96
P9	28+59.29	47.55
P10	28+59.37	62.33
P11	28+40.85	62.43
P12	28+40.76	46.00

TLE POINT STATION & OFFSET TABLE		
T230	41+90.00	39.52
T231	41+95.00	50.00
T232	42+20.00	50.00
T233	42+30.00	39.17
T234	45+75.00	37.36
T235	46+00.00	43.00
T236	46+50.00	45.00
T238	47+00.00	37.68
T239	35+50.00	180.52
T240	36+00.00	210.00
T241	36+20.00	162.18
T242	33+92.99	125.83
T243	34+70.00	88.91

COORDINATES AND BEARINGS SHOWN ON THIS PLAT ARE REFERENCED TO THE WISCONSIN COUNTY COORDINATE SYSTEM, DANE COUNTY ZONE, NAD83/1997 ADJUSTMENT. THE COORDINATES SHOWN ARE GRID COORDINATES AND ARE TO BE USED AS GRID OR GROUND VALUES ON THIS PLAT.

EXISTING ACCESS CONTROL ALONG U.S.H. 18/151 ESTABLISHED FROM PREVIOUS PROJECT 1204-3-21.

EXISTING ACCESS CONTROL ALONG STH 78 ESTABLISHED FROM PREVIOUS PROJECT 1204-3-21 AND PER REFERENCE TO WISDOT PLAT OF SURVEY BY BRUCE BOWDEN IN 2004.

FOR THE LATEST ACCESS/DRIVEWAY INFORMATION CONTACT THE PLANNING UNIT OF THE WISCONSIN DEPARTMENT OF TRANSPORTATION OFFICE IN MADISON.

REVISION DATE
6/18/2012 N.C
10/16/2012 N.C.

DATE 3/27/2012

GRID FACTOR N.A.

SCALE, FEET
0 N/A

HWY: USH 18/151

COUNTY: DANE

STATE R/W PROJECT NUMBER 1204-06-25

CONSTRUCTION PROJECT NUMBER 1204-06-75

PLAT SHEET 4.04

PS&E SHEET PR[illegible]

E

FILE NAME : S:\MAD\1000--1099\1089\665\Micros\PLAN\RW Plat\040104_rw.dgn PLOT DATE : 11/26/2012 PLOT BY : _username_ PLOT NAME : PLOT SCALE : $$.....plotscale.....$$ WISDOT/CADDS SHEET 75

CTH E

P.I. = 5+00.00
Y = 455,766.86
X = 717,946.32

P.I. = 24+91.18
Y = 457,758.01
X = 717,958.66
DELTA = 126° 00' 48" (RT)
D = 6° 51' 42"
T = 1,639.25'
L = 1,836.45'
R = 835.00'
P.C. = 8+51.93
P.T. = 26+88.38
S.E. = 6.0%
R.O. = 144'
S.E. TRANS = 192'

SEE "CONSTRUCTION DETAIL - DRIVEWAY A" FOR BENCHMARK INFORMATION.

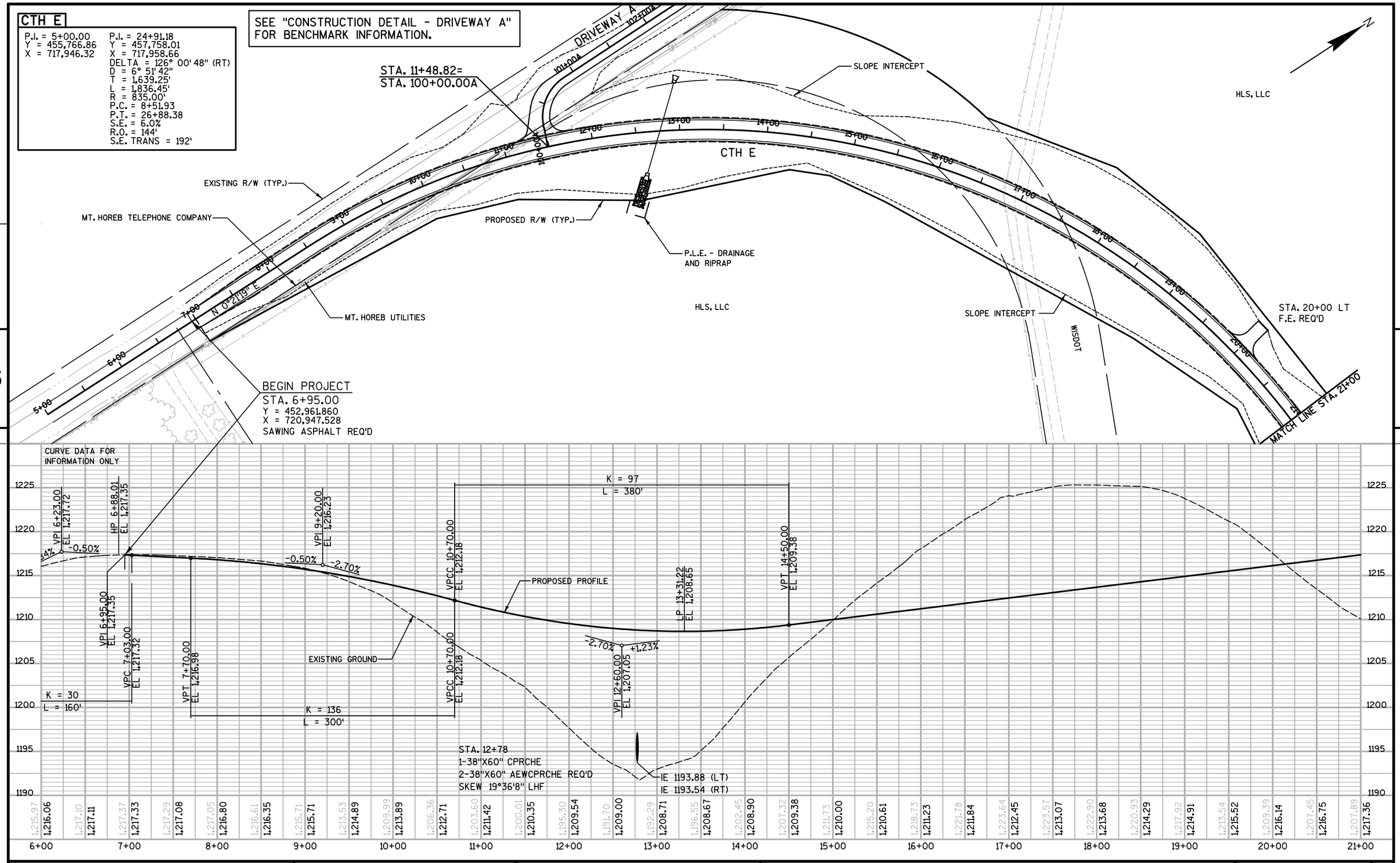

PROJECT NO: 1204-06-75	HWY: USH 18/CTH E	COUNTY: DANE	PLAN & PROFILE - CTH E	SHEET 44	E

FILE NAME : S:\MAD\1000--1099\1089\665\Micros\PLAN\050101_pp.dgn PLOT DATE : 3/15/2013 PLOT BY : _username_ PLOT NAME : PLOT SCALE : $$.....plotscale.....$$

STA. 24+50 TO STA. 36+00 LT
REMOVING FENCE REQ'D

STA. 24+50 TO STA. 36+00 LT
FENCE WOVEN WIRE 4-FT REQ'D

USH 18/151 EXIT RAMP

N

HLS, LLC

SLOPE INTERCEPT

CTH E

S 53°37'53" E

SLOPE INTERCEPT

PROPOSED R/W (TYP.)

MATCH LINE STA. 21+00

P.L.E. - DRAINAGE AND RIPRAP

HLS, LLC

P.L.E. - DRAINAGE AND RIPRAP

TLE-DRIVEWAY

EXISTING R/W (TYP.)

WISDOT

HLS, LLC

MATCH LINE STA. 36+00

TLE-DRIVEWAY

CTH E
P.I. = 34+61.50
Y = 456,327.53
X = 719,901.15
DELTA = 44° 05' 13" (RT)
D = 5° 12' 31"
T = 445.40'
L = 846.41'
R = 1,100.00'
P.C. = 30+16.10
P.T. = 38+62.51
S.E. = 5.7%
R.O. = 137'
S.E. TRANS = 185'

VPI 30+60.00
EL 1229.15

+1.23%

+0.50%

PROPOSED PROFILE

APPROXIMATE ROCK PROFILE

STA. 21+50
1-36" CP CL III
2-36" AEWCP REQ'D

EXISTING GROUND

IE 1209.92 (LT)
IE 1209.60 (RT)

IE 1221.59 (LT)
IE 1221.37 (RT)

VPT 29+85.00
EL 1228.23

VPC 31+35.00
EL 1229.52

K = 206
L = 150'

STA. 28+50
1-30" CP CL III
2-30" AEWCP REQ'D

1240 1235 1230 1225 1220 1215 1210 1205

21+00	22+00	23+00	24+00	25+00	26+00	27+00	28+00	29+00	30+00	31+00	32+00	33+00	34+00	35+00	36+00
1207.89	1211.18	1215.49	1219.69	1223.58	1226.43	1227.75	1227.84	1226.82	1225.49	1224.11	1221.52	1219.57	1218.52	1219.69	1221.83	1222.95	1225.62	1227.11	1229.43	1232.31	1235.49	1238.23	1240.37	1240.98	1239.83	1237.94	1236.17	1235.00	1233.20
1217.36	1217.98	1218.59	1219.21	1219.82	1220.43	1221.05	1221.66	1222.27	1222.89	1223.50	1224.12	1224.73	1225.34	1225.96	1226.57	1227.19	1227.80	1228.41	1228.92	1229.32	1229.60	1229.85	1230.10	1230.35	1230.60	1230.85	1231.10	1231.35	1231.60	1231.85

PROJECT NO: 1204-06-75	HWY: USH 18/CTH E	COUNTY: DANE	PLAN & PROFILE - CTH E	SHEET 45 E

FILE NAME : S:\MAD\1000--1099\1089\665\Micros\PLAN\050102_pp.dgn PLOT DATE : 3/14/2013 PLOT BY : _username_ PLOT NAME : PLOT SCALE : $$.....plotscale.....$$

WISDOT/CADDS SHEET 40

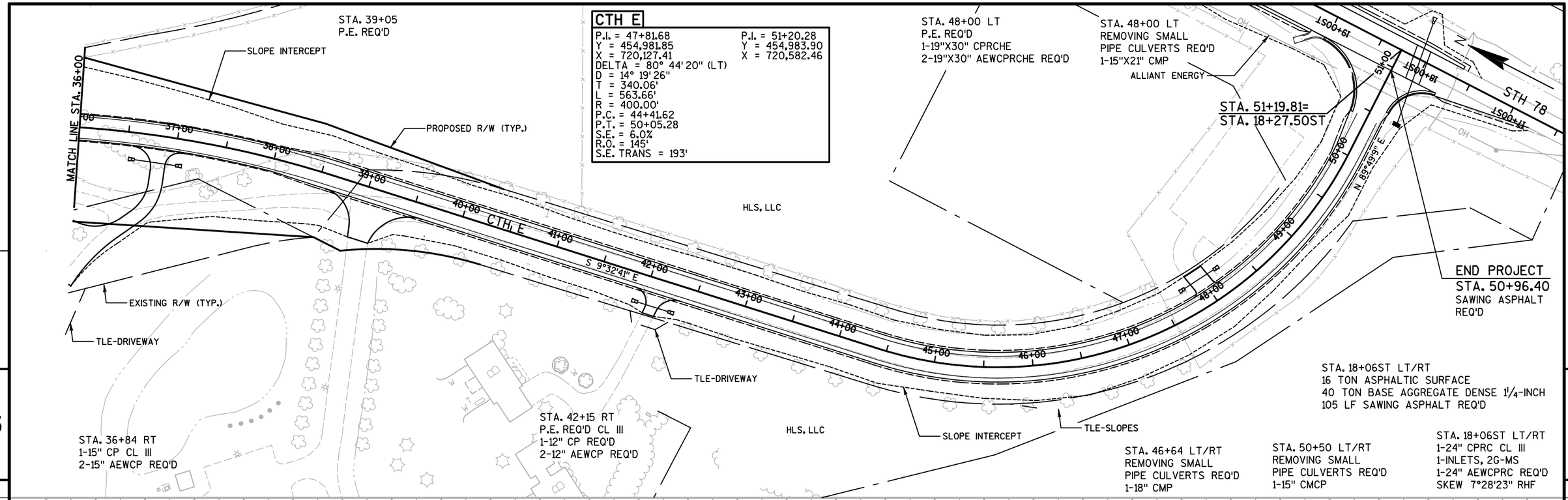

STATION	OFFSET		INLET TYPE & COVER	RIM/ GRATE ELEV.	T.O.S. ELEV.	DEPTH (FT)	DISCHARGE PIPE SIZE (IN)	DISCHARGE PIPE INLET ELEV.	DISCHARGE PIPE DISCHARGE ELEV.	DISCHARGE PIPE LENGTH (FT)	DISCHARGE PIPE SLOPE (%)	REMARKS
17+97ST	69.6	LT	2G-MS	1229.50	1229.50	3.3	24	1226.20	1225.65	110'	0.50%	24-INCH APRON ENDWALL REQ'D

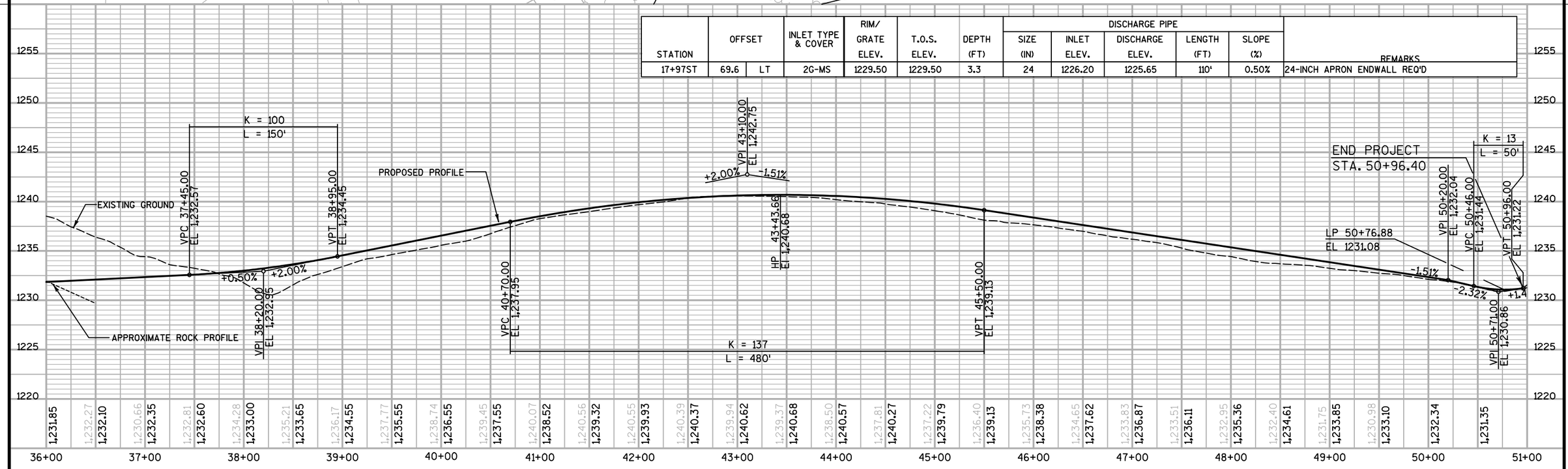

PROJECT NO: 1204-06-75	HWY: USH 18/CTH E	COUNTY: DANE	PLAN & PROFILE - CTH E	SHEET 46 E

Standard Detail Drawing List

08A05-19B	INLET COVERS TYPE B, B-A, C, MS, MS-A, & WM
08C08-01	INLETS MEDIAN 1 AND 2 GRATE
08D01-17	CONCRETE CURB, CONCRETE CURB AND GUTTER AND TIES
08D04-05	CONCRETE SURFACE DRAINS & ASPHALTIC FLUMES
08E09-06	SILT FENCE
08E10-02	INLET PROTECTION TYPE A, B, C AND D
08F01-11	APRON ENDWALLS FOR CULVERT PIPE
08F02-01	APRON ENDWALLS FOR PIPE ARCH AND ELLIPTICAL PIPE
08F04-07	JOINT TIES FOR CONCRETE PIPE AND CONCRETE COLLAR DETAIL
09A01-13A	AT-GRADE SIDE ROAD INTERSECTION, TYPES "B1", "B2", "C" AND D AND TEE INTERSECTION BYPASS LANE
15A03-02A	FLEXIBLE MARKER POST FOR CULVERT END
15A03-02B	FLEXIBLE MARKER POST FOR CULVERT END
15B01-08A	FENCE WOVEN WIRE
15B01-08B	FENCE WOVEN WIRE
15C02-05A	BARRICADES AND SIGNS FOR MAINLINE CLOSURES
15C02-05B	BARRICADES AND SIGNS FOR MAINLINE CLOSURES
15C02-05C	DETOUR SIGNING FOR MAINLINE CLOSURES
15C03-02	BARRICADES AND SIGNS FOR SIDEROAD CLOSURES
15C04-02	TRAFFIC CONTROL, ADVANCE WARNING SIGNS 45 M.P.H. OR GREATER TWO-WAY UNDIVIDED ROAD OPEN TO TRAFFIC
15C08-16A	PAVEMENT MARKING (MAINLINE)
15C08-16B	PAVEMENT MARKING (INTERSECTIONS)
15C12-04	TRAFFIC CONTROL FOR LANE CLOSURE (SUITABLE FOR MOVING OPERATIONS)
15C33-01	STOP LINE AND CROSSWALK PAVEMENT MARKING
15D12-04	TRAFFIC CONTROL, LANE CLOSURE, SPEED REDUCTION
15D15-01	TRAFFIC CONTROL, EXIT AND ENTRANCE RAMP WITHIN LANE CLOSURE
15D27-02	TRAFFIC CONTROL, SHOULDER CLOSURE ON DIVIDED ROADWAY, SPEEDS GREATER THAN 40 MPH

6

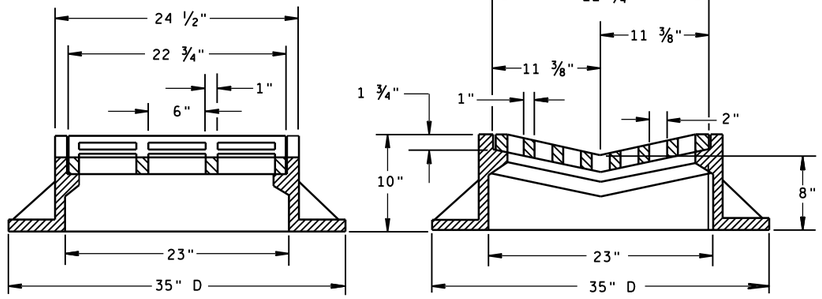

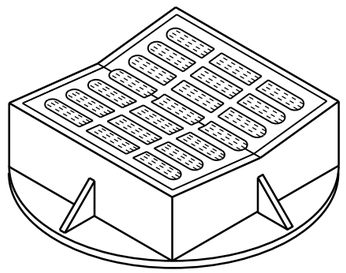

TYPE "B"

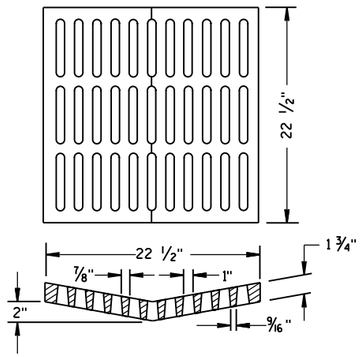

ALTERNATIVE GRATE FOR TYPE "B" COVER

USE WHERE PEDESTRIAN OR BICYCLE TRAFFIC IS POSSIBLE.
NOTED AS TYPE B-A ON THE DRAINAGE TABLE

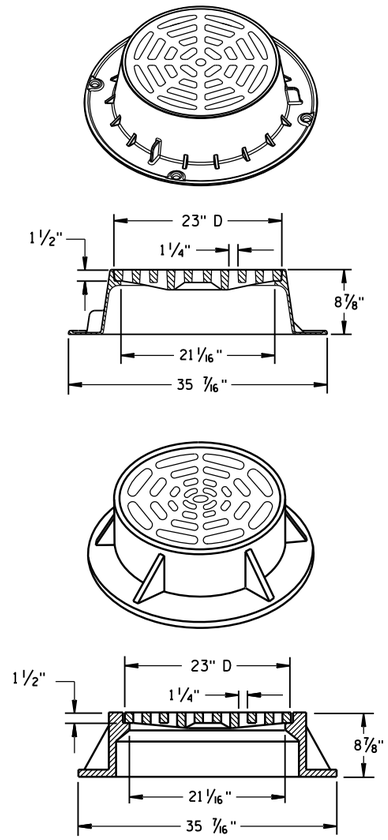

TYPE "C"

NOTE: EITHER CASTING IS ACCEPTABLE

GENERAL NOTES

DETAILS OF CONSTRUCTION, MATERIALS AND WORKMANSHIP NOT SHOWN ON THIS DRAWING SHALL CONFORM TO THE PERTINENT REQUIREMENTS OF THE STANDARD SPECIFICATIONS AND THE APPLICABLE SPECIAL PROVISIONS.

DETAIL DRAWINGS FOR PROPOSED ALTERNATE DESIGNS FOR CATCH BASIN, MANHOLE AND INLET COVERS SHALL BE SUBMITTED TO THE ENGINEER FOR APPROVAL PROVIDING THAT SUCH ALTERNATE DESIGNS MAKE PROVISION FOR EQUIVALENT CAPACITY AND STRENGTH.

ROUND FRAMES AND COVERS SHALL HAVE CONTINUOUSLY MACHINED BEARING SURFACES TO PREVENT ROCKING AND RATTLING.

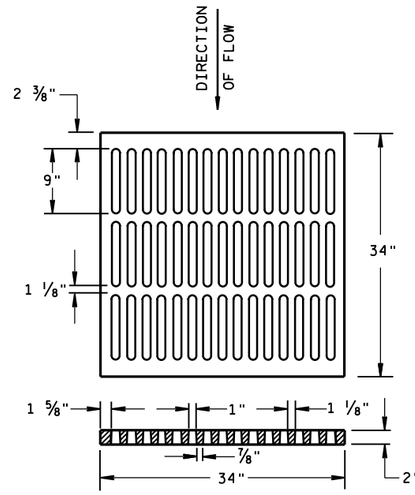

ALTERNATIVE TYPE "MS"

USE WHERE PEDESTRIAN OR BICYCLE TRAFFIC IS PERMITTED
NOTED AS TYPE MS-A ON THE DRAINAGE TABLE

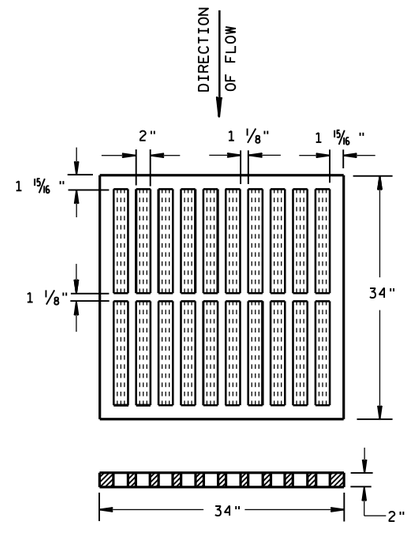

TYPE "MS"

USE ON FREEWAYS AND EXPRESSWAYS
NOTED AS TYPE MS ON DRAINAGE TABLE

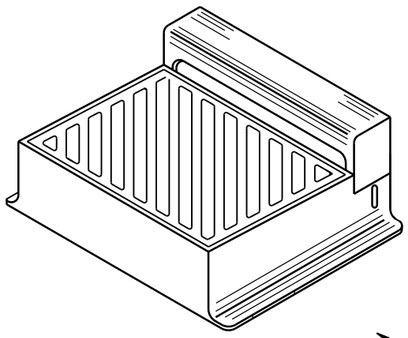

DIAGONAL SLOTS, SHALL BE ORIENTED TO THE DIRECTION OF FLOW AS ILLUSTRATED. GRATES ARE MANUFACTURED TO BE REVERSIBLE.

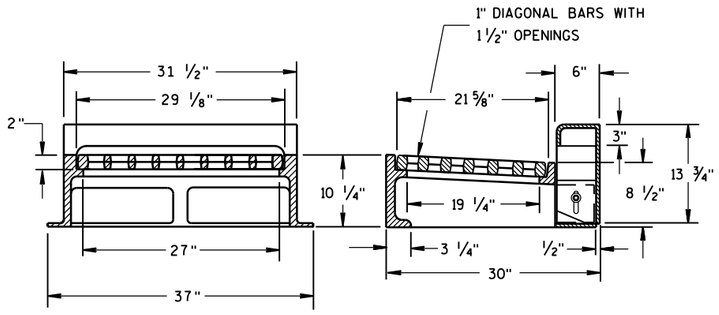

NOTE: CURB BOX HEIGHT ADJUSTABLE 6" TO 9"

TYPE "WM"

INLET COVERS
TYPE B, B-A, C,
MS, MS-A, & WM

STATE OF WISCONSIN
DEPARTMENT OF TRANSPORTATION

APPROVED
11/27/2013 — DATE
/S/ Jerry H. Zogg — ROADWAY STANDARDS ENGINEER
FHWA

6

S.D.D. 8 A 5-19b

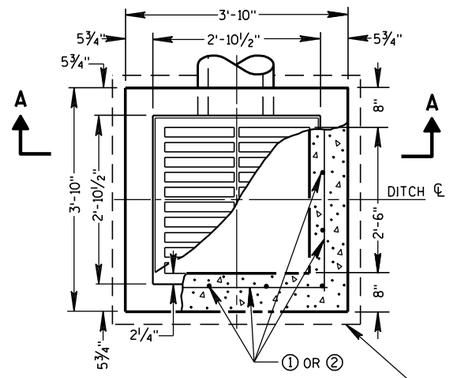

PLAN VIEW

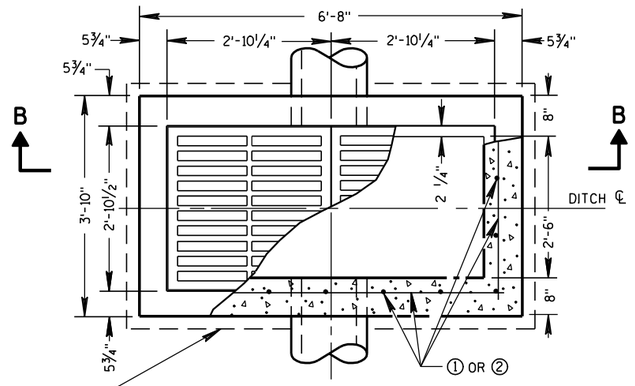

PLAN VIEW

4" OVERHANGING BASE ON REINFORCED CAST-IN-PLACE CONCRETE INLETS

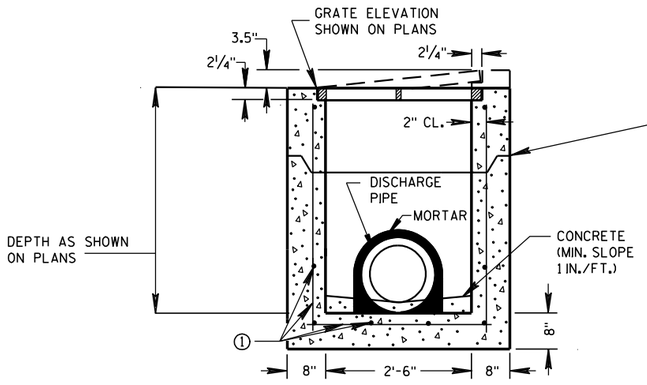

PRECAST REINFORCED CONCRETE SECTION A-A

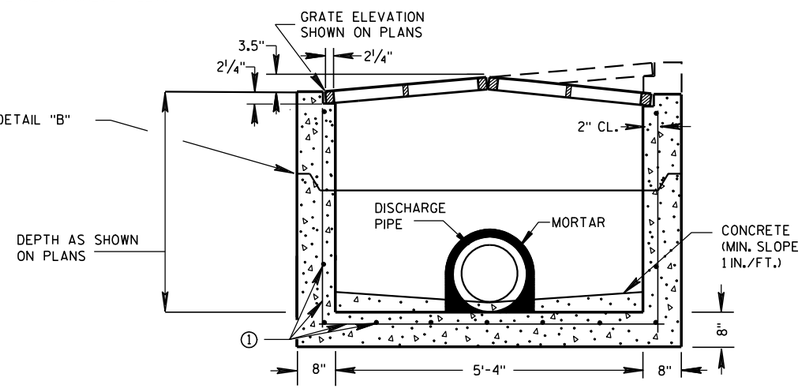

PRECAST REINFORCED CONCRETE SECTION B-B

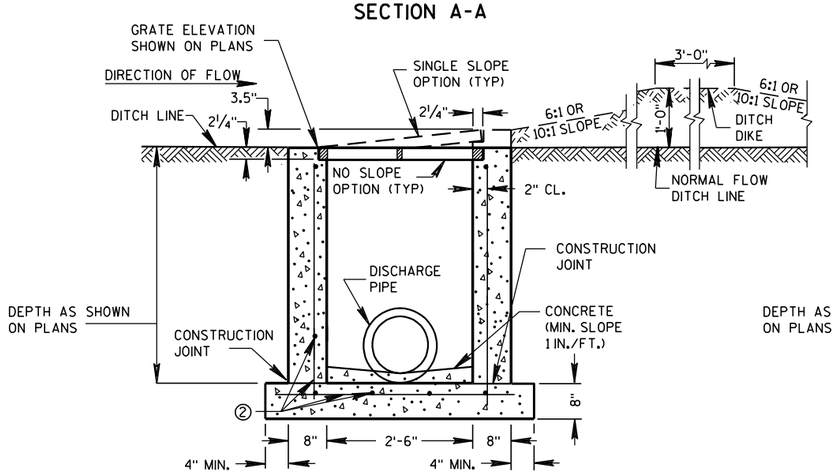

REINFORCED CAST-IN-PLACE CONCRETE SECTION A-A

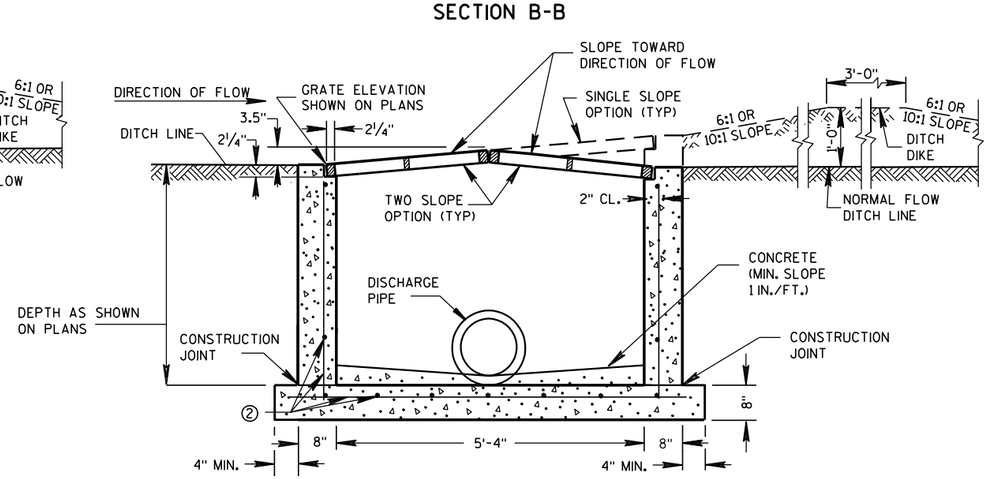

REINFORCED CAST-IN-PLACE CONCRETE SECTION B-B

INLETS MEDIAN 1 GRATE

INLETS MEDIAN 2 GRATE

GENERAL NOTES

DETAILS OF CONSTRUCTION, MATERIALS AND WORKMANSHIP NOT SHOWN ON THIS DRAWING SHALL CONFORM TO THE PERTINENT REQUIREMENTS OF THE STANDARD SPECIFICATIONS AND THE APPLICABLE SPECIAL PROVISIONS.

UNLESS OTHERWISE AUTHORIZED IN WRITING BY THE ENGINEER, THE CONTRACTOR SHALL NOT ORDER AND DELIVER PRECAST INLET UNITS REQUIRED FOR THE PROJECT UNTIL A LIST OF SIZES IS FURNISHED BY THE ENGINEER.

DETAILED DRAWINGS FOR PROPOSED ALTERNATE DESIGNS FOR INLETS WHICH MAY INCLUDE PRECAST REINFORCED CONCRETE INLETS, SHALL BE SUBMITTED TO THE ENGINEER FOR APPROVAL PROVIDING THAT SUCH ALTERNATE DESIGNS MAKE PROVISION FOR EQUIVALENT CAPACITY AND STRENGTH.

ALL MEDIAN INLETS ARE DESIGNATED ON THE PLANS AS "INLETS, 1G-MS", ETC. THE FIRST NUMBER AND LETTER DESIGNATE THE TYPE OF STRUCTURE, AND THE FOLLOWING LETTERS DESIGNATE THE TYPE OF COVER TO BE USED TO COMPRISE THE COMPLETE UNIT.

ALL BAR STEEL REINFORCEMENT SHALL BE EMBEDDED 2 INCHES CLEAR UNLESS OTHERWISE SHOWN OR NOTED.

PRECAST REINFORCED RISERS SHALL HAVE A TONGUE AND GROOVE JOINT WITH TONGUE UP OR DOWN.

ALL PRECAST INLET UNITS SHALL CONFORM TO THE PERTINENT REQUIREMENTS OF ASTM C 913.

MAXIMUM INSIDE PIPE DIAMETER DETERMINED BY 3" CLEARANCE ON EACH SIDE OF THE OUTSIDE WALL OF THE PIPE. SEE DETAIL "A". ASSUMES PIPE ENTERS PERPENDICULAR TO THE STRUCTURE.

① FOR PRECAST INLETS PROVIDE REINFORCING STEEL IN ACCORDANCE TO ASTM C 913.

② CONTRACTOR TO PROVIDE DRAWING(S) STAMPED BY A PROFESSIONAL ENGINEER FOR STEEL REINFORCING DESIGN FOR CAST-IN-PLACE STRUCTURES.

PIPE MATRIX

	MAXIMUM INSIDE PIPE DIAMETER	
INLET SIZE	WIDTH (IN)	LENGTH (IN)
1 GRATE	18	18
2 GRATE	18	42

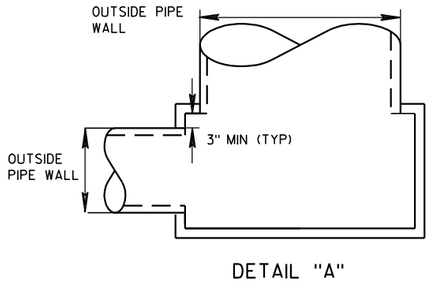

DETAIL "A"

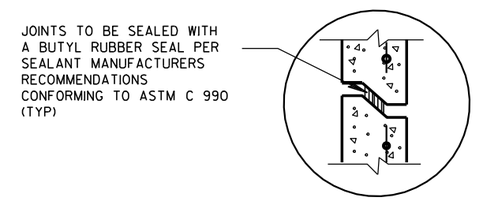

DETAIL "B"

INLETS MEDIAN 1 AND 2 GRATE

STATE OF WISCONSIN
DEPARTMENT OF TRANSPORTATION

APPROVED

6/5/2012 — DATE

/S/ Jerry H. Zogg — ROADWAY STANDARDS DEVELOPMENT ENGINEER

FHWA

6

S.D.D. 8 C 8-1

6

S.D.D. 8 C 8-1

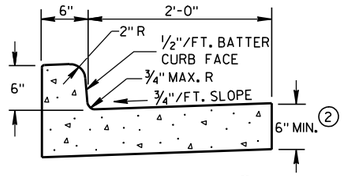

TYPES A & D (1)

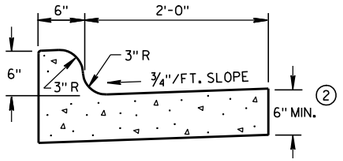

TYPES K & L (1)

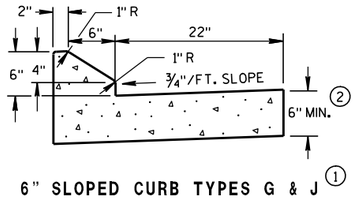

6" SLOPED CURB TYPES G & J (1)

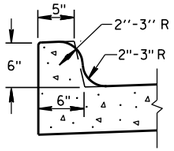

OPTIONAL CURB SHAPE FOR TYPES K & L (1)

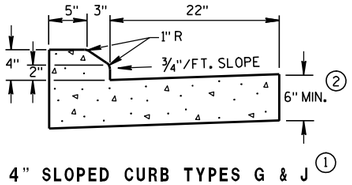

4" SLOPED CURB TYPES G & J (1)

CONCRETE CURB & GUTTER 30"

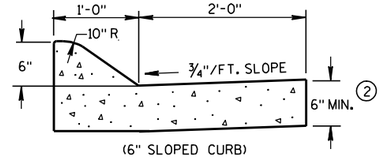

(6" SLOPED CURB)

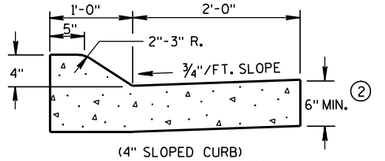

(4" SLOPED CURB)

TYPES A & D (1)

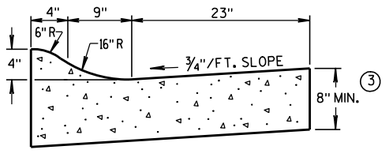

4" SLOPED CURB TYPES R & T (1) (4)

CONCRETE CURB & GUTTER 36"

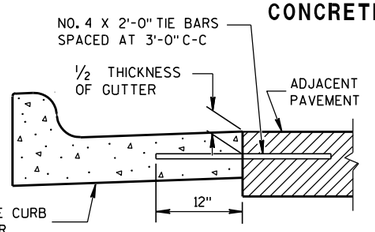

TYPICAL TIE BAR LOCATION (1)

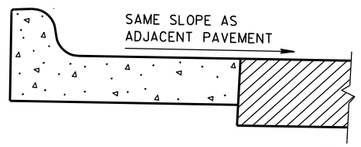

REVERSE SLOPE GUTTER (5)
(TYPICAL FOR ALL CURB & GUTTER TYPES)

GENERAL NOTES

DETAILS OF CONSTRUCTION, MATERIALS AND WORKMANSHIP NOT SHOWN ON THIS DRAWING SHALL CONFORM TO THE PERTINENT REQUIREMENTS OF THE CONTRACT.

PAVEMENT TIES AND TIE BARS SHALL BE EPOXY COATED IN CONFORMANCE WITH SUBSECTION 505.2.6.2 OF THE STANDARD SPECIFICATIONS.

INTEGRAL CURB & GUTTER SHALL CONFORM TO THE DETAILS SHOWN FOR CONCRETE CURB & GUTTER INCLUDING THE TRANSVERSE GUTTER SLOPE. A LONGITUDINAL CONSTRUCTION JOINT IS NOT REQUIRED WITH INTEGRAL CURB AND GUTTER.

WHERE THE TRANSVERSE JOINTS IN THE PAVEMENT ARE REQUIRED TO BE SEALED, THE JOINTS IN THE INTEGRAL CURB AND GUTTER SHALL BE SEALED TO THE FACE OF CURB WITH THE SAME TYPE OF SEALANT. THE COST OF FURNISHING AND INSTALLING THIS SEALANT SHALL BE INCIDENTAL TO THE ITEM CONCRETE CURB AND GUTTER.

UNLESS OTHERWISE SHOWN ON THE TYPICAL CROSS SECTIONS, THE BASE AGGREGATE AND COMMON EXCAVATION LIMITS ARE 2'-0" BEHIND THE BACK OF CURBS.

(1) TIE BARS ARE REQUIRED FOR CURB AND GUTTER TYPES A, G, K AND R.

(2) THE BOTTOM OF CURB AND GUTTER MAY BE CONSTRUCTED EITHER LEVEL OR PARALLEL TO THE SLOPE OF THE SUBGRADE OR BASE AGGREGATE PROVIDED A 6" MINIMUM GUTTER THICKNESS IS MAINTAINED.

(3) THE BOTTOM OF CURB AND GUTTER MAY BE CONSTRUCTED EITHER LEVEL OR PARALLEL TO THE SLOPE OF THE SUBGRADE OR BASE AGGREGATE PROVIDED A 8" MINIMUM GUTTER THICKNESS IS MAINTAINED.

(4) THE FACE OF CURB IS 6" FROM THE BACK OF CURB.

(5) WHEN REVERSE SLOPE GUTTER IS REQUIRED, THE LOCATION(S) WILL BE SHOWN ELSEWHERE IN THE PLAN.

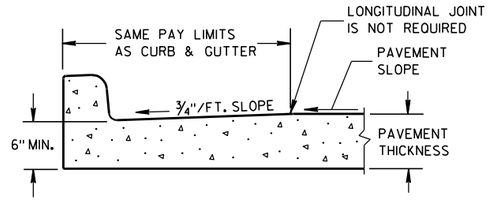

PARTIAL SECTION OF PAVEMENT WITH INTEGRAL CURB & GUTTER

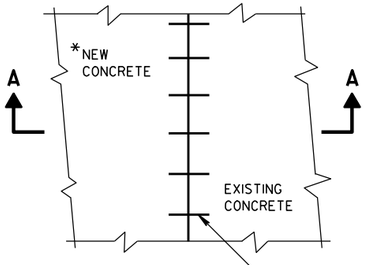

PLAN VIEW

*NEW CURB & GUTTER, SURFACE DRAINS, CONCRETE PAVEMENT OR OTHER NEW CONCRETE.

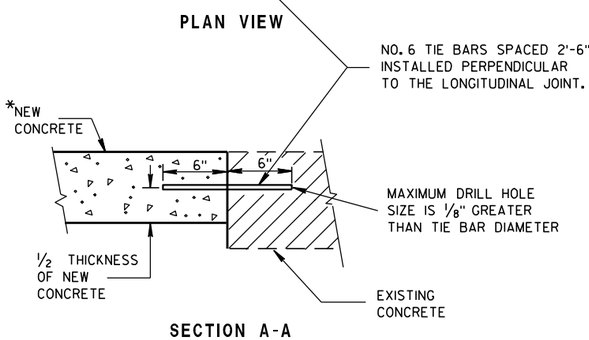

SECTION A-A

TIE BARS DRILLED INTO EXISTING PAVEMENT

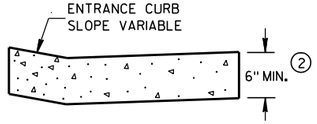

DRIVEWAY ENTRANCE CURB
(WHEN DIRECTED BY THE ENGINEER)

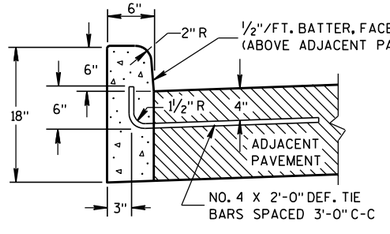

(1) TYPES A & D

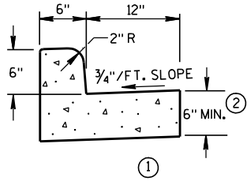

(1) TYPES A & D

CONCRETE CURB & GUTTER 18"

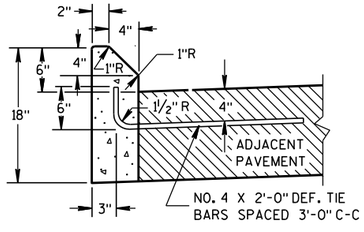

(1) TYPES G & J

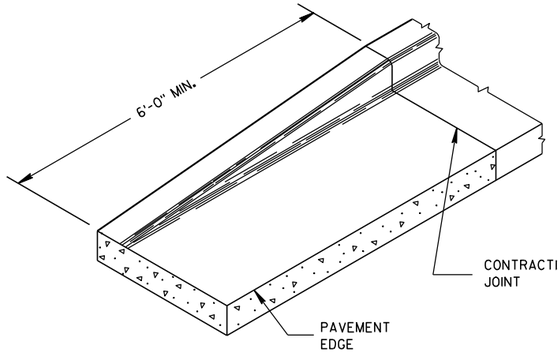

END SECTION CURB & GUTTER

CONCRETE CURB

CONCRETE CURB, CONCRETE CURB & GUTTER AND TIES	
STATE OF WISCONSIN DEPARTMENT OF TRANSPORTATION	
APPROVED	
9/4/08 DATE	/S/ Jerry H. [illegible] ROADWAY STANDARDS ENGINEER
FHWA	

6

S.D.D. 8 D 1-17

6

S.D.D. 8 D 1-17

ASPHALTIC FLUME

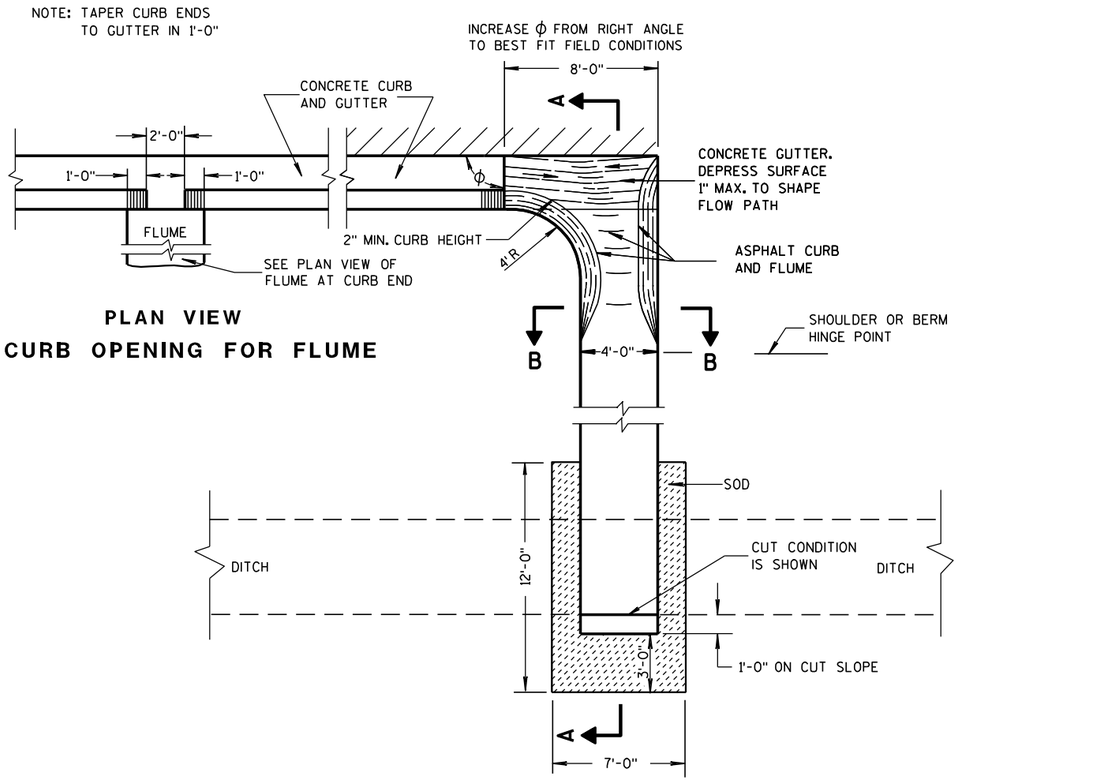

PLAN VIEW
CURB OPENING FOR FLUME

PLAN VIEW
FLUME AT CURB END

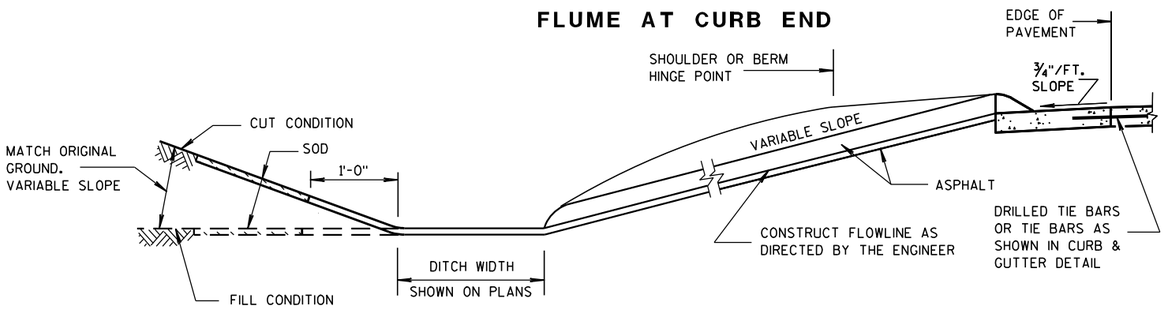

SECTION A-A

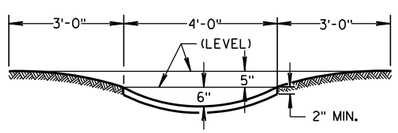

SECTION B-B

GENERAL NOTES

DETAILS OF CONSTRUCTION, MATERIALS AND WORKMANSHIP NOT SHOWN ON THIS DRAWING SHALL CONFORM TO PERTINENT REQUIREMENTS OF THE STANDARD SPECIFICATIONS AND APPLICABLE SPECIAL PROVISIONS.

WELDED STEEL WIRE FABRIC SHALL BE IN ACCORDANCE WITH AASHTO SPECIFICATION M55.

① JOINTS SHALL BE $\frac{1}{8}$ TO $\frac{1}{4}$ INCH WIDE BY $1\frac{1}{2}$ INCHES DEEP AND SPACED AT UNIFORM INTERVALS OF APPROXIMATELY 4 FEET.

② GEOTEXTILE FABRIC TYPE "R" SHALL UNDERLAY THE FULL LENGTH AND WIDTH OF THE CONCRETE SURFACE DRAIN AND RIPRAP.

③ CONCRETE SURFACE DRAIN WITHOUT CURB AND GUTTER MAY BE USED ON BACKSLOPES WHEN SPECIFIED

③ CONCRETE SURFACE DRAIN

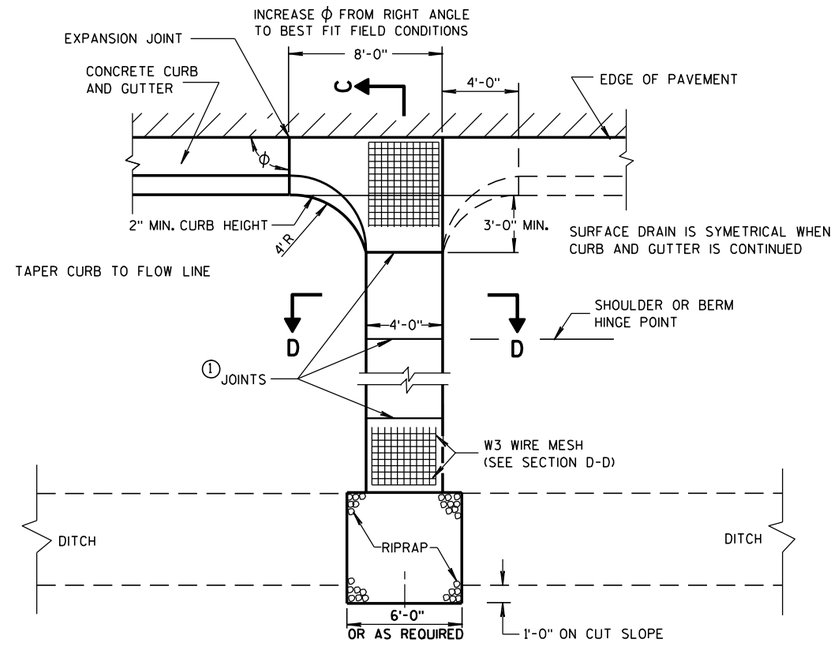

PLAN VIEW

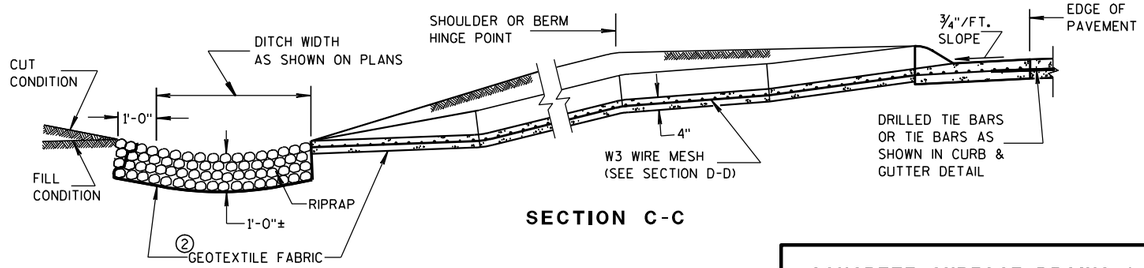

SECTION C-C

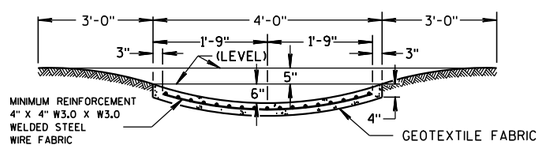

SECTION D-D

CONCRETE SURFACE DRAINS & ASPHALTIC FLUMES

STATE OF WISCONSIN
DEPARTMENT OF TRANSPORTATION

APPROVED
9-4-08 DATE
/S/ Jerry H. Zogg
ROADWAY STANDARDS ENGINEER
MENT
FHWA

6

S.D.D. 8 D 4-5

6

S.D.D. 8 D 4-5

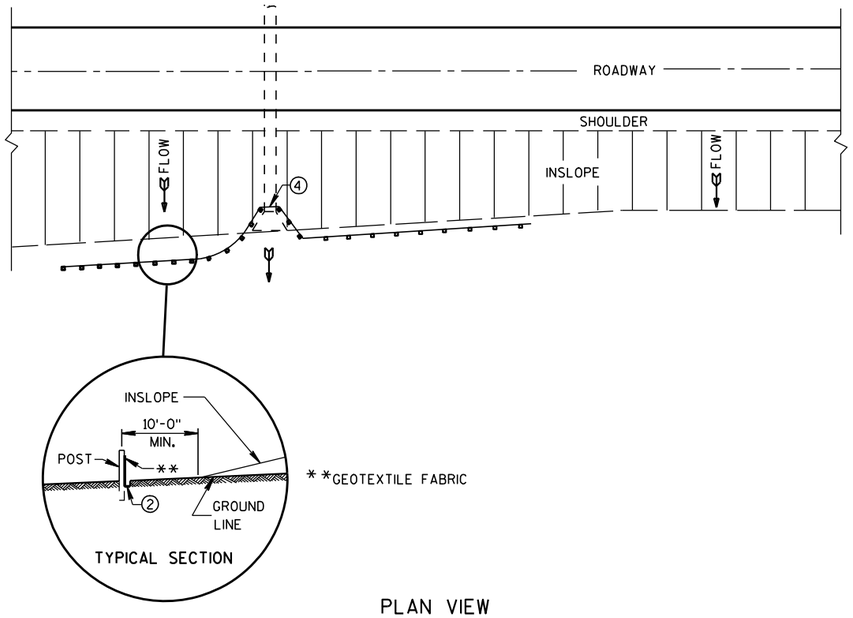

PLAN VIEW

TYPICAL APPLICATION OF SILT FENCE

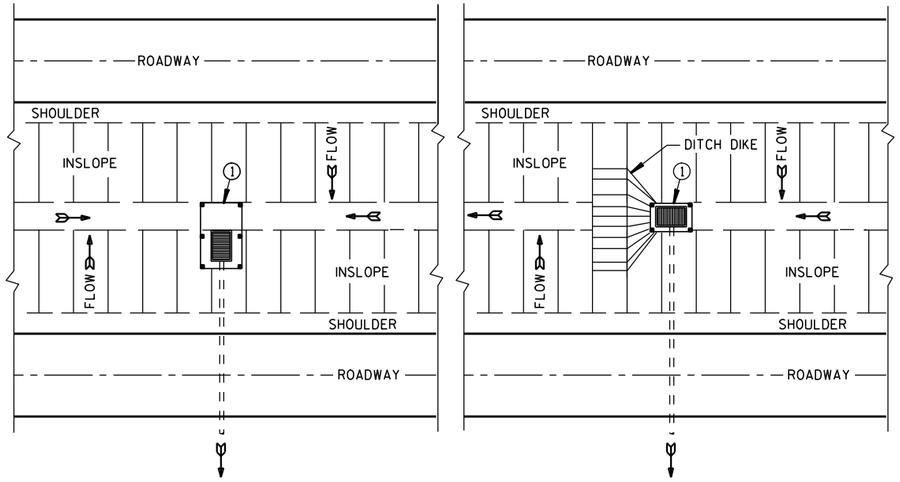

PLAN VIEW

SILT FENCE AT MEDIAN SURFACE DRAINS

GENERAL NOTES

DETAILS OF CONSTRUCTION NOT SHOWN ON THIS DRAWING SHALL CONFORM TO THE PERTINENT REQUIREMENTS OF THE STANDARD SPECIFICATIONS AND APPLICABLE SPECIAL PROVISIONS.

① HORIZONTAL BRACE REQUIRED WITH 2" X 4" WOODEN FRAME OR EQUIVALENT AT TOP OF POSTS.

② FOR MANUAL INSTALLATIONS THE TRENCH SHALL BE A MINIMUM OF 4" WIDE & 6" DEEP TO BURY AND ANCHOR THE GEOTEXTILE FABRIC. FOLD MATERIAL TO FIT TRENCH AND BACKFILL & COMPACT TRENCH WITH EXCAVATED SOIL.

③ WOOD POSTS SHALL BE A MINIMUM SIZE OF 1⅛" X 1⅛" OF OAK OR HICKORY.

④ SILT FENCE TO EXTEND ACROSS THE TOP OF THE PIPE.

⑤ CONSTRUCT SILT FENCE FROM A CONTINUOUS ROLL IF POSSIBLE BY CUTTING LENGTHS TO AVOID JOINTS. IF A JOINT IS NECESSARY USE ONE OF THE FOLLOWING TWO METHODS; A) OVERLAP THE END POSTS AND TWIST, OR ROTATE, AT LEAST 180 DEGREES, B) HOOK THE END OF EACH SILT FENCE LENGTH.

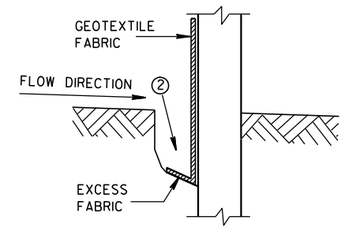

TRENCH DETAIL

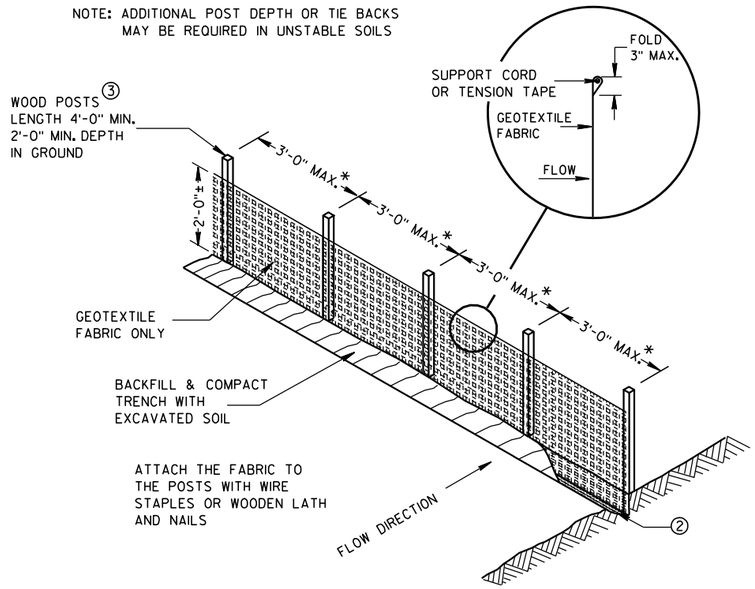

SILT FENCE

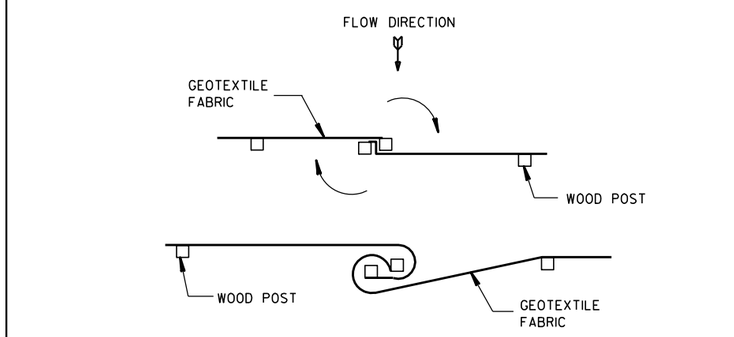

TWIST METHOD

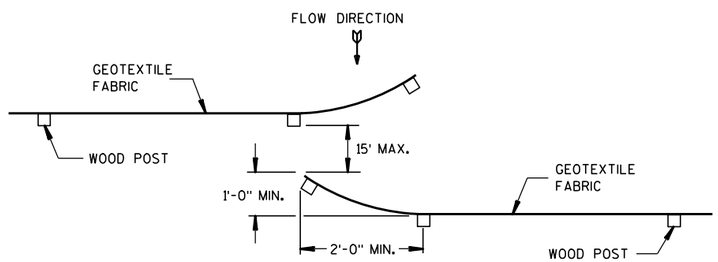

HOOK METHOD

JOINING TWO LENGTHS OF SILT FENCE ⑤

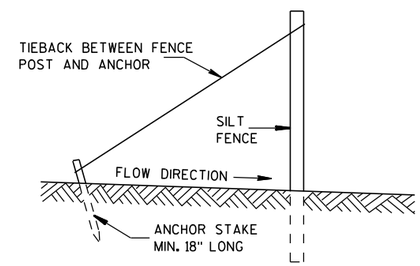

SILT FENCE TIE BACK

(WHEN REQUIRED BY THE ENGINEER)

SILT FENCE	
STATE OF WISCONSIN DEPARTMENT OF TRANSPORTATION	
APPROVED	
4-29-05 DATE	/S/ Beth Cannestra CHIEF ROADWAY DEVELOPMENT ENGINEER
FHWA	

6

S.D.D. 8 E 9-6

6

S.D.D. 8 E 9-6

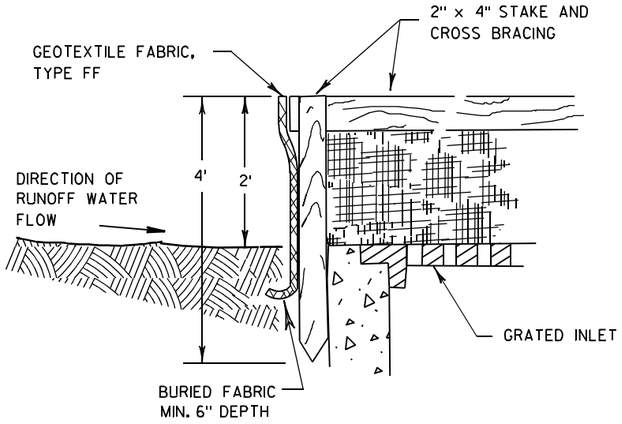

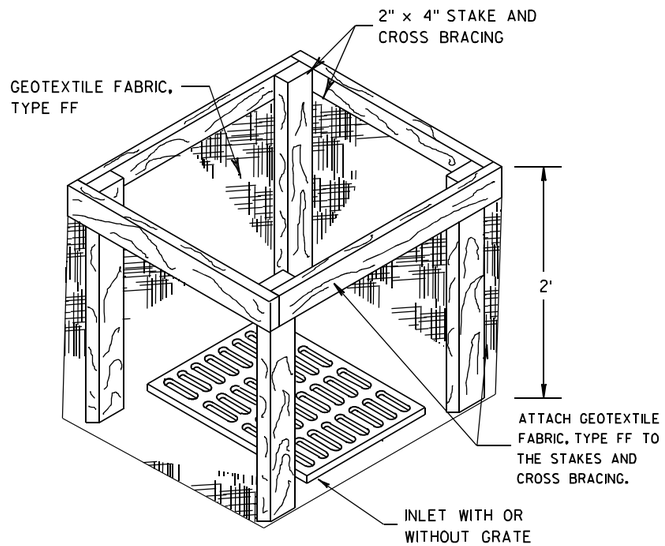

INLET PROTECTION, TYPE A

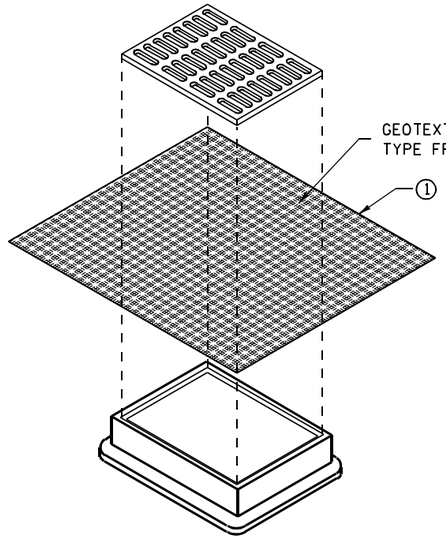

INLET PROTECTION, TYPE B
(WITHOUT CURB BOX)

(CAN BE INSTALLED IN ANY INLET WITHOUT A CURB BOX)

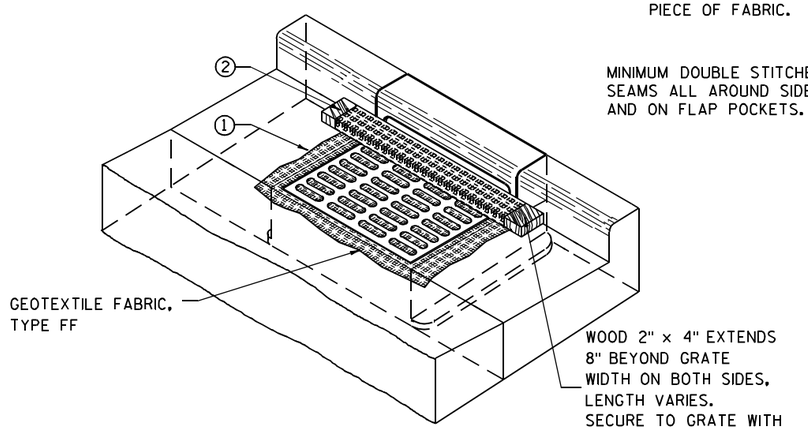

INLET PROTECTION, TYPE C (WITH CURB BOX)

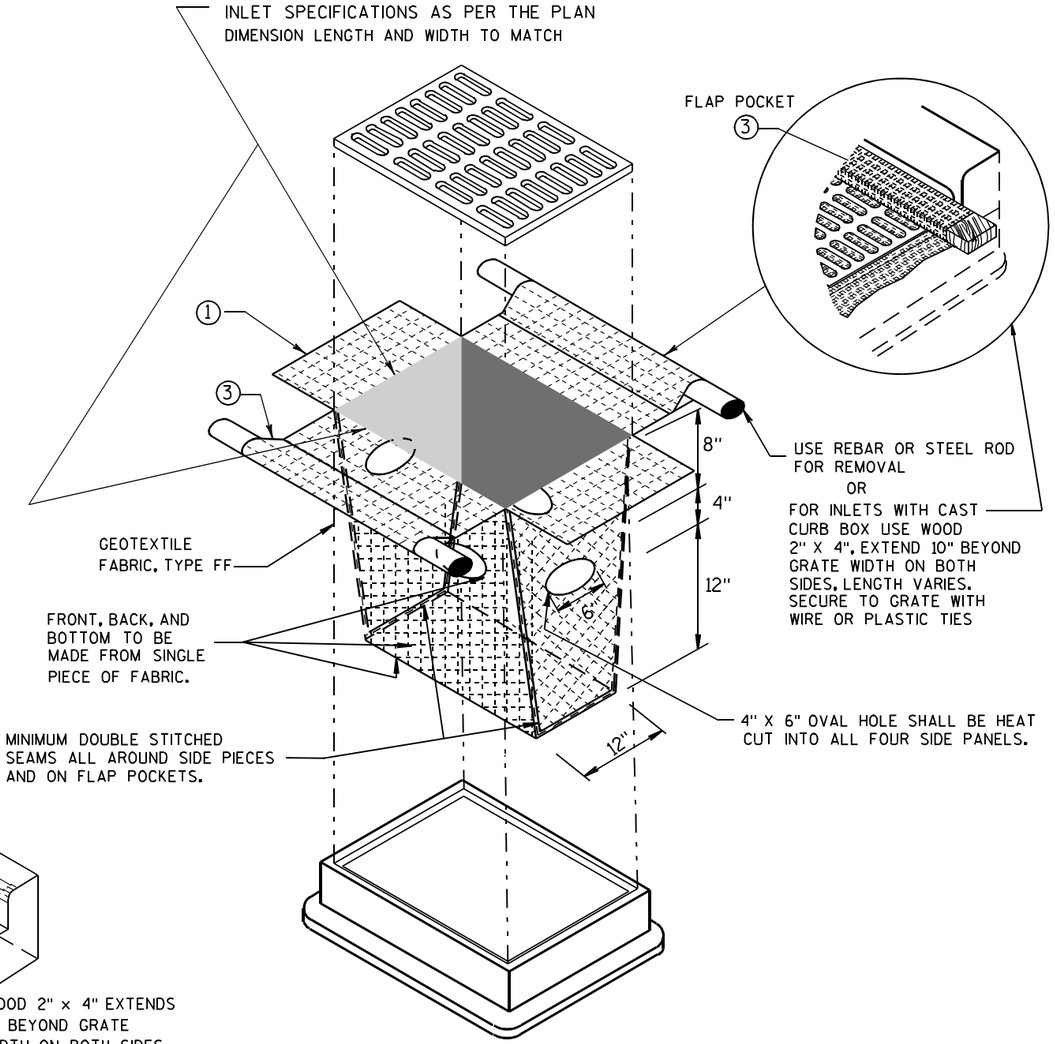

INLET PROTECTION, TYPE D

(CAN BE INSTALLED IN ANY INLET TYPE WITH
OR WITHOUT A CURB BOX AS PER NOTE ②)

GENERAL NOTES

INLET PROTECTION DEVICES SHALL BE MAINTAINED OR REPLACED AT THE DIRECTION OF THE ENGINEER.

MANUFACTURED ALTERNATIVES APPROVED AND LISTED ON THE DEPARTMENT'S EROSION CONTROL PRODUCT ACCEPTABILITY LIST MAY BE SUBSTITUTED.

WHEN REMOVING OR MAINTAINING INLET PROTECTION, CARE SHALL BE TAKEN SO THAT THE SEDIMENT TRAPPED ON THE GEOTEXTILE FABRIC DOES NOT FALL INTO THE INLET. ANY MATERIAL FALLING INTO THE INLET SHALL BE REMOVED IMMEDIATELY.

① FINISHED SIZE, INCLUDING FLAP POCKETS WHERE REQUIRED, SHALL EXTEND A MINIMUM OF 10" AROUND THE PERIMETER TO FACILITATE MAINTENANCE OR REMOVAL.

② FOR INLET PROTECTION, TYPE C (WITH CURB BOX), AN ADDITIONAL 18" OF FABRIC IS WRAPPED AROUND THE WOOD AND SECURED WITH STAPLES. THE WOOD SHALL NOT BLOCK THE ENTIRE HEIGHT OF THE CURB BOX OPENING.

③ FLAP POCKETS SHALL BE LARGE ENOUGH TO ACCEPT WOOD 2X4.

INSTALLATION NOTES

TYPE B & C

TRIM EXCESS FABRIC IN THE FLOW LINE TO WITHIN 3" OF THE GRATE.

THE CONTRACTOR SHALL DEMONSTRATE A METHOD OF MAINTENANCE, USING A SEWN FLAP, HAND HOLDS OR OTHER METHOD TO PREVENT ACCUMULATED SEDIMENT FROM ENTERING THE INLET.

TYPE D

DO NOT INSTALL INLET PROTECTION TYPE D IN INLETS SHALLOWER THAN 30", MEASURED FROM THE BOTTOM OF THE INLET TO THE TOP OF THE GRATE.

TRIM EXCESS FABRIC IN THE FLOW LINE TO WITHIN 3" OF THE GRATE.

THE INSTALLED BAG SHALL HAVE A MINIMUM SIDE CLEARANCE, BETWEEN THE INLET WALLS AND THE BAG, MEASURED AT THE BOTTOM OF THE OVERFLOW HOLES, OF 3". WHERE NECESSARY THE CONTRACTOR SHALL CINCH THE BAG, USING PLASTIC ZIP TIES, TO ACHIEVE THE 3" CLEARANCE. THE TIES SHALL BE PLACED AT A MAXIMUM OF 4" FROM THE BOTTOM OF THE BAG.

INLET PROTECTION
TYPE A, B, C, AND D

STATE OF WISCONSIN
DEPARTMENT OF TRANSPORTATION

APPROVED

10/16/02
DATE

/S/ Beth Cannestra
CHIEF ROADWAY DEVELOPMENT ENGINEER

FHWA

6
S.D.D. 8 E 10-2

METAL APRON ENDWALLS

PIPE DIA. (IN.)	MIN. THICK. (Inches) STEEL	MIN. THICK. (Inches) ALUM.	DIMENSIONS (Inches) A (±1")	B (MAX.)	H (±1")	L (±1 1/2")	L1 ①	L2 ①	W (±2")	APPROX. SLOPE	BODY
12	.064	.060	6	6	6	21	12	17 1/2	24	2 1/2 to 1	1 Pc.
15	.064	.060	7	8	6	26	14	21 3/4	30	2 1/2 to 1	1 Pc.
18	.064	.060	8	10	6	31	15	28 1/4	36	2 1/2 to 1	1 Pc.
21	.064	.060	9	12	6	36	18	29 5/8	42	2 1/2 to 1	1 Pc.
24	.064	.075	10	13	6	41	18	37 1/4	48	2 1/2 to 1	1 Pc.
30	.079	.075	12	16	8	51	18	52 1/4	60	2 1/2 to 1	1 Pc.
36	.079	.105	14	19	9	60	24	59 3/4	72	2 1/2 to 1	2 Pc.
42	.109	.105	16	22	11	69	24	75 5/8	84	2 1/2 to 1	2 Pc.
48	.109	.105	18	27	12	78	24	81	90	2 1/4 to 1	3 Pc.
54	.109	.105	18	30	12	84	30	85 1/2	102	2 1/4 to 1	3 Pc.
60	.109×	.105×	18	33	12	87	—	—	114	2 to 1	3 Pc.
66	.109×	.105×	18	36	12	87	—	—	120	2 to 1	3 Pc.
72	.109×	.105×	18	39	12	87	—	—	126	2 to 1	3 Pc.
78	.109×	.105×	18	42	12	87	—	—	132	1 1/2 to 1	3 Pc.
84	.109×	.105×	18	45	12	87	—	—	138	1 1/2 to 1	3 Pc.
90	.109×	.105×	18	37	12	87	—	—	144	1 1/2 to 1	3 Pc.
96	.109×	.105×	18	35	12	87	—	—	150	1 1/2 to 1	3 Pc.

× EXCEPT CENTER PANEL SEE GENERAL NOTES

REINFORCED CONCRETE APRON ENDWALLS

PIPE DIA. (IN.)	DIMENSIONS (Inches) T	A	B	C	D	E	G	APPROX. SLOPE
12	2	4	24	48 7/8	72 1/8	24	2	3 to 1
15	2 1/4	6	27	46	73	30	2 1/4	3 to 1
18	2 1/2	9	27	46	73	36	2 1/2	3 to 1
21	2 3/4	9	36	37 1/2	73 1/2	42	2 3/4	3 to 1
24	3	9 1/2	43 1/2	30	73 1/2	48	3	3 to 1
27	3 1/4	10 1/2	49 1/2	24	73 1/2	54	3 1/4	3 to 1
30	3 1/2	12	54	19 3/4	73 1/2	60	3 1/2	3 to 1
36	4	15	63	34 3/4	97 3/4	72	4	3 to 1
42	4 1/2	21	63	35	98	78	4 1/2	3 to 1
48	5	24	72	26	98	84	5	3 to 1
54	5 1/2	27	65	* 33 1/4 - ** 35	* 98 1/4 - ** 100	90	5 1/2	2 2/5 to 1
60	6	* 30 - ** 35	60	39	99	96	5	2 to 1
66	6 1/2	* 24 - ** 30	* 72 - ** 78	* 21 - ** 27	99	102	5 1/2	2 to 1
72	7	* 24 - ** 36	78	21	99	108	6	2 to 1
78	7 1/2	* 24 - ** 36	78	21	99	114	6 1/2	2 to 1
84	8	36	90 1/2	21	111 1/2	120	6 1/2	1 1/2 to 1
90	8 1/2	41	87 1/2	24	111 1/2	132	6 1/2	1 1/2 to 1

* MINIMUM
** MAXIMUM

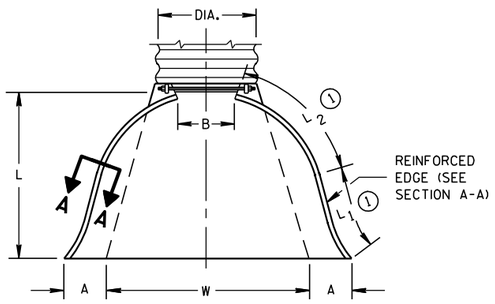

PLAN VIEW

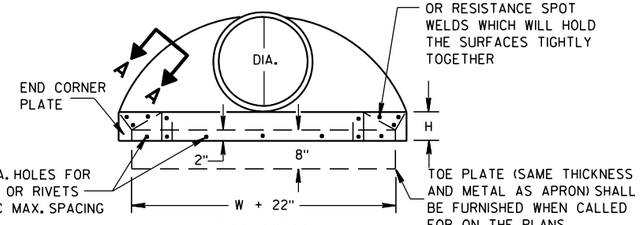

END VIEW

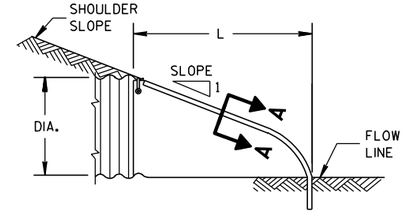

SIDE ELEVATION

METAL ENDWALLS

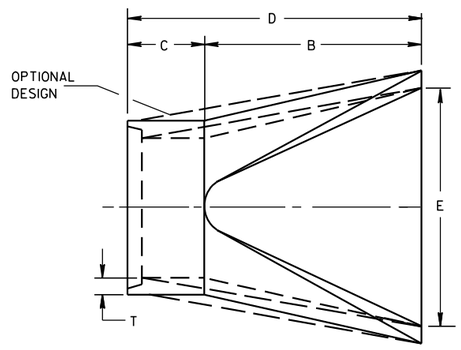

PLAN

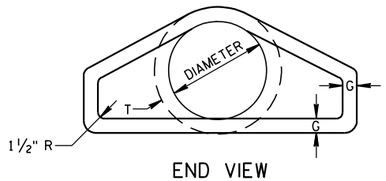

END VIEW

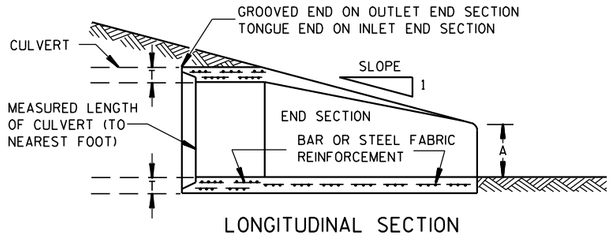

LONGITUDINAL SECTION

CONCRETE ENDWALLS

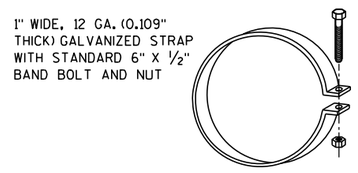

ALTERNATE FOR TYPE 1 CONNECTION

END SECTION CONNECTOR STRAP

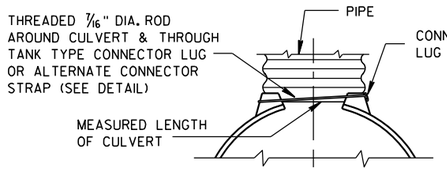

TYPE 1
FOR 12" THRU 24" CORR. PIPE

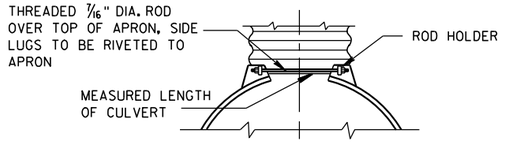

TYPE 2
FOR 30" THRU 96" CORR. PIPE

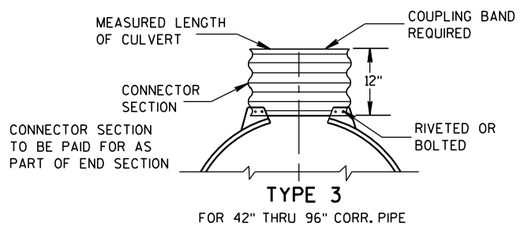

TYPE 3
FOR 42" THRU 96" CORR. PIPE

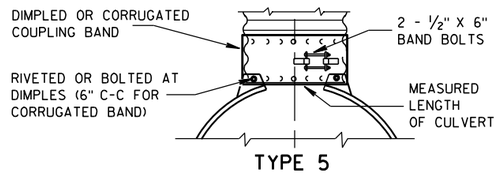

TYPE 5
ALTERNATE FOR:
ALL SIZES CORRUGATED CIRCULAR PIPE

NOTE: DIMPLED BAND FITS OVER OUTSIDE OF ENDWALL. AND CORRUGATED BAND FITS INSIDE ENDWALL. DIMPLED BAND MAY BE USED WITH HELICALLY CORRUGATED PIPE.

FOR CIRCUMFERENTIALLY CORRUGATED PIPE USE ENDWALL CONNECTION DETAILS 1, 2, 3 OR 5 AS APPLICABLE.

FOR HELICALLY CORRUGATED PIPE USE ENDWALL CONNECTION DETAILS 1, 2 OR 5.

FOR HELICALLY CORRUGATED PIPES WITH TWO CIRCUMFERENTIAL CORRUGATIONS AT EACH END USE ENDWALL CONNECTION DETAILS 1, 2 OR 3.

CONNECTION DETAILS

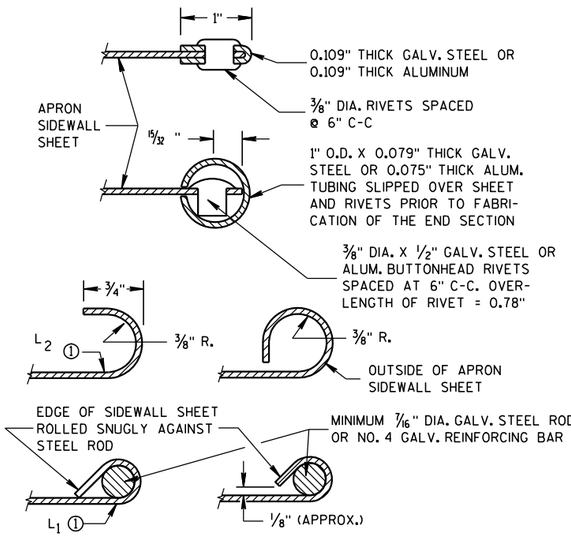

SECTION A-A

GENERAL NOTES

DETAILS OF CONSTRUCTION, MATERIALS AND WORKMANSHIP NOT SHOWN ON THIS DRAWING SHALL CONFORM TO THE PERTINENT REQUIREMENTS OF THE STANDARD SPECIFICATIONS AND THE APPLICABLE SPECIAL PROVISIONS.

CONCRETE CULVERT ENDWALLS MAY NOT BE USED WITH GALVANIZED STEEL OR ALUMINUM CULVERT PIPE OR VISE VERSA. GALVANIZED STEEL OR ALUMINUM ENDWALLS SHALL NORMALLY BE INSTALLED ON CULVERT PIPE OF THE SAME METAL.

ALL THREE PIECE STEEL APRON ENDWALLS FOR 60" DIAMETER PIPE AND LARGER SHALL HAVE 0.109" SIDES AND 0.138" CENTER PANELS. ALL THREE PIECE ALUMINUM APRON ENDWALLS FOR 60" DIAMETER PIPE AND LARGER SHALL HAVE 0.105" SIDES AND 0.134" CENTER PANELS. THE WIDTH OF CENTER PANELS SHALL BE GREATER THAN 20 PERCENT OF THE PIPE PERIMETER.

LAP SEAMS SHALL BE TIGHTLY JOINED BY GALVANIZED RIVETS OR BOLTS FOR STEEL UNITS AND ALUMINUM RIVETS AND BOLTS FOR ALUMINUM UNITS. FOR THE 60" THROUGH 96" DIAMETER APRON ENDWALL SIZES, THE REINFORCED EDGES AND CENTER PANEL SEAMS SHALL BE FURTHER REINFORCED WITH GALVANIZED STEEL OR ALUMINUM STIFFENER ANGLES. THE ANGLES SHALL BE ATTACHED BY GALVANIZED NUTS AND BOLTS FOR STEEL UNITS AND ALUMINUM NUTS AND BOLTS FOR ALUMINUM UNITS.

WHERE TWO OR MORE PIPES WITH APRON ENDWALLS ARE LAID ADJACENT TO EACH OTHER, THEY SHALL BE SEPARATED BY A DISTANCE SUFFICIENT TO PROVIDE A MINIMUM CLEARANCE OF 6 INCHES BETWEEN APRON ENDWALLS.

① FOR PIPE SIZES UP TO 60" DIAMETER, A 180° ROLLED EDGE MAY BE USED INSTEAD OF STEEL ROD REINFORCEMENT. SEE SECTION A-A.

APRON ENDWALLS FOR CULVERT PIPE

STATE OF WISCONSIN
DEPARTMENT OF TRANSPORTATION

APPROVED
11/30/94 DATE
/S/ Rory L. Rhinesmith
CHIEF ROADWAY DEVELOPMENT ENGINEER
FHWA

6

S.D.D. 8 F 1-11

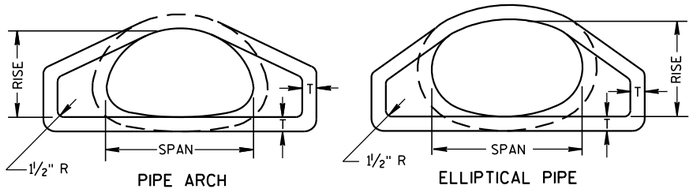

END VIEW

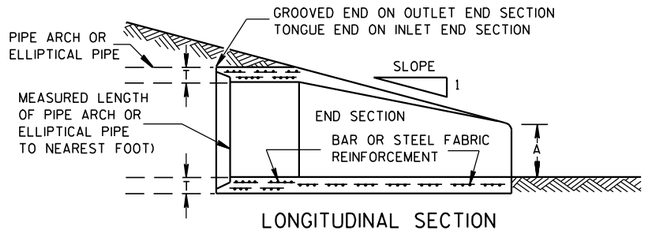

LONGITUDINAL SECTION

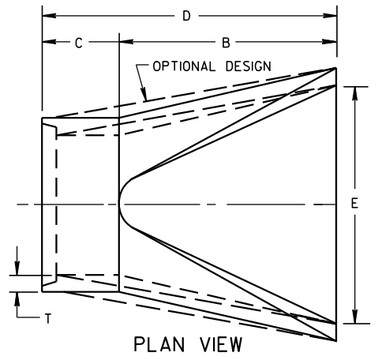

PLAN VIEW

CONCRETE ENDWALLS

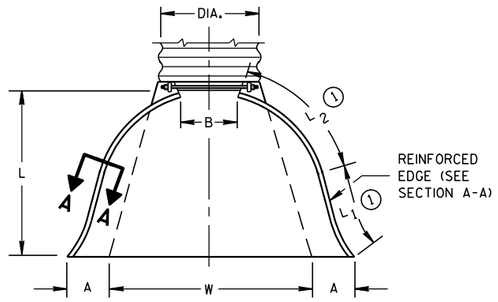

PLAN VIEW

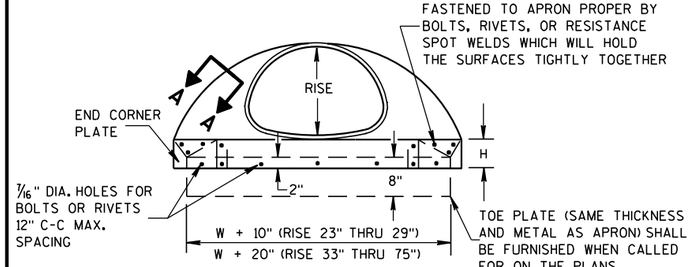

END VIEW

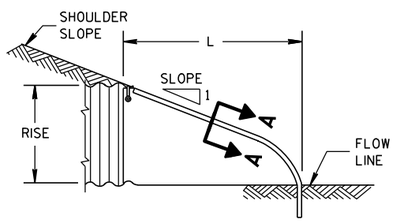

SIDE ELEVATION

METAL ENDWALLS

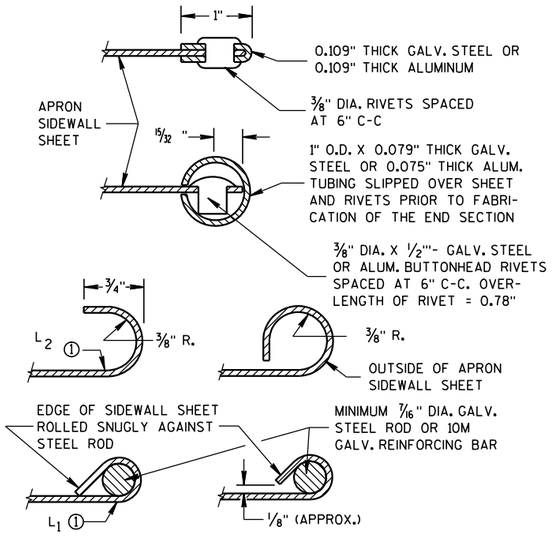

SECTION A-A

2- 2/3" X 1/2" CORRUGATIONS

EQUIV. DIA. (Inches)	(Inches) SPAN	(Inches) RISE	MIN. THICK. (Inches) STEEL	MIN. THICK. (Inches) ALUM.	DIMENSIONS (Inches) A (±1")	B (MAX.)	H (±1")	L (±1 1/2")	L1 ①	L2 ①	W (±2")	APPROX. SLOPE	BODY
15	17	13	.064	.060	7	9	6	19	14	16	30	2½ to 1	1 Pc.
18	21	15	.064	.060	7	10	6	23	14	19⅜	36	2½ to 1	1 Pc.
21	24	18	.064	.060	8	12	6	28	18	21¾	42	2½ to 1	1 Pc.
24	28	20	.064	.060	9	14	6	32	18	27½	48	2½ to 1	1 Pc.
30	35	24	.079	.075	10	16	6	39	18	37⅝	60	2½ to 1	1 Pc.
36	42	29	.079	.075	12	18	8	46	24	45⅜	75	2½ to 1	1 Pc.
42	49	33	.109	.105	13	21	9	53	24	54¾	85	2½ to 1	2 Pc.
48	57	38	.109	.105	18	26	12	63	24	68	90	2½ to 1	3 Pc.
54	64	43	.109	.105	18	30	12	70	24	72¾	102	2¼ to 1	3 Pc.
60	71	47	.109*	.105*	18	33	12	77	30	82¼	114	2¼ to 1	3 Pc.
66	77	52	.109*	.105*	18	36	12	77	—	—	126	2 to 1	3 Pc.
72	83	57	.109*	.105*	18	39	12	77	—	—	138	2 to 1	3 Pc.

3" X 1" CORRUGATIONS

EQUIV. DIA. (Inches)	(Inches) SPAN	(Inches) RISE	MIN. THICK. (Inches) STEEL	MIN. THICK. (Inches) ALUM.	DIMENSIONS (Inches) A (±1")	B (MAX.)	H (±1")	L (±1 1/2")	L1 ①	L2 ①	W (±2")	APPROX. SLOPE	BODY
48	53	41	.109	.105	18	26	12	63	24	72¾	90	2½ to 1	2 Pc.
54	60	46	.109	.105	18	30	12	70	30	82¼	102	2 to 1	2 Pc.
60	66	51	.109*	.105*	18	33	12	77	—	—	114	1½ to 1	3 Pc.
66	73	55	.109*	.105*	18	36	12	77	—	—	126	1½ to 1	3 Pc.
72	81	59	.109*	.105*	18	39	12	77	—	—	138	2 to 1	3 Pc.
78	87	63	.109*	.105*	22	38	12	77	—	—	148	1½ to 1	3 Pc.
84	95	67	.109*	.105*	22	34	12	77	—	—	162	1½ to 1	3 Pc.
90	103	71	.109*	.105*	22	38	12	77	—	—	174	1½ to 1	3 Pc.
96	112	75	.109*	.105*	24	40	12	77	—	—	174	1½ to 1	3 Pc.

NOTE: ALL SPLICES TO BE LAP RIVETED OR BOLTED.

* EXCEPT CENTER PANEL SEE GENERAL NOTES

REINFORCED CONCRETE PIPE ARCH

EQUIV. DIA. (Inches)	DIMENSIONS (Inches) ** SPAN	** RISE	T	A	B	C	D	E	APPROX. SLOPE
24	29	18	3	8½	39	33	72	48	3 to 1
30	36	22	3½	9½	50	46	96	60	3 to 1
36	44	27	4	11⅛	60	36	96	72	3 to 1
42	51	31	4½	15 13/16	60	36	96	78	3 to 1
48	58	36	5	21	60	36	96	84	3 to 1
54	65	40	5½	25½	60	36	96	90	3 to 1
60	73	45	6	31	60	36	96	96	3 to 1
72	88	54	7	31	60	39	99	120	2 to 1
84	102	62	8	28½	83	19	102	144	2 to 1

REINFORCED CONCRETE ELLIPTICAL PIPE

EQUIV. DIA. (Inches)	DIMENSIONS (Inches) ** SPAN	** RISE	T	A	B	C	D	E	APPROX. SLOPE
24	30	19	3¼	8½	39	33	72	48	3 to 1
30	38	24	3¾	9½	54	18	72	60	3 to 1
36	45	29	4½	11⅛	60	24	84	72	2½ to 1
42	53	34	5	15¾	60	36	96	78	2½ to 1
48	60	38	5½	21	60	36	96	84	2½ to 1
54	68	43	6	25½	60	36	96	90	2½ to 1
60	76	48	6½	30	60	36	96	96	2½ to 1

**NOMINAL SIZE

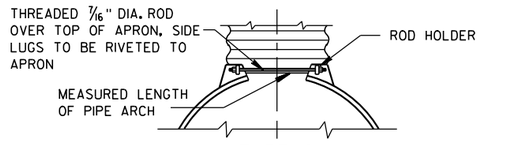

TYPE 2

FOR 17" X 13" THRU 112" X 75" PIPE ARCH

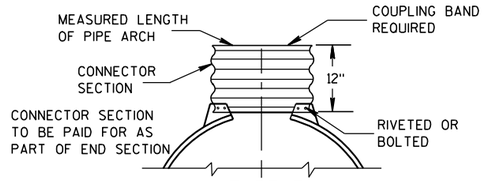

TYPE 3

FOR 64" X 43" THRU 112" X 75" PIPE ARCH

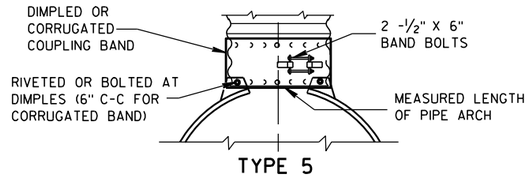

TYPE 5

ALTERNATE FOR:

ALL SIZES CORRUGATED PIPE ARCHES

NOTE: DIMPLED BAND FITS OVER OUTSIDE OF ENDWALL, AND CORRUGATED BAND FITS INSIDE ENDWALL.

CONNECTION DETAILS

GENERAL NOTES

DETAILS OF CONSTRUCTION, MATERIALS AND WORKMANSHIP NOT SHOWN ON THIS DRAWING SHALL CONFORM TO THE PERTINENT REQUIREMENTS OF THE STANDARD SPECIFICATIONS AND THE APPLICABLE SPECIAL PROVISIONS.

CONCRETE APRON ENDWALLS MAY NOT BE USED WITH GALVANIZED STEEL OR ALUMINUM CULVERT PIPE OR VISE VERSA. GALVANIZED STEEL OR ALUMINUM APRON ENDWALLS SHALL NORMALLY BE INSTALLED ON CULVERT PIPE OF THE SAME METAL.

ALL THREE PIECE STEEL APRON ENDWALLS FOR 66" X 51" PIPE ARCH AND LARGER SHALL HAVE 0.109" SIDES AND 0.138" CENTER PANELS. ALL THREE PIECE ALUMINUM APRON ENDWALLS FOR 66" X 51" PIPE ARCH AND LARGER SHALL HAVE 0.105" SIDES AND 0.134" CENTER PANELS. THE WIDTH OF CENTER PANELS SHALL BE GREATER THAN 20 PERCENT OF THE PIPE ARCH PERIMETER.

LAP SEAMS SHALL BE TIGHTLY JOINED BY GALVANIZED RIVETS OR BOLTS FOR STEEL UNITS AND ALUMINUM RIVETS AND BOLTS FOR ALUMINUM UNITS. FOR THE 77" X 52" THROUGH 112" X 75" APRON ENDWALL SIZES, THE REINFORCED EDGES AND CENTER PANEL SEAMS SHALL BE FURTHER REINFORCED WITH GALVANIZED STEEL OR ALUMINUM STIFFENER ANGLES. THE ANGLES SHALL BE ATTACHED BY GALVANIZED NUTS AND BOLTS FOR STEEL UNITS AND ALUMINUM NUTS AND BOLTS FOR ALUMINUM UNITS.

WHERE TWO OR MORE PIPES WITH APRON ENDWALLS ARE LAID ADJACENT TO EACH OTHER, THEY SHALL BE SEPARATED BY A DISTANCE SUFFICIENT TO PROVIDE A MINIMUM CLEARANCE OF 6 INCHES BETWEEN APRON ENDWALLS.

① FOR PIPE ARCH SIZES UP TO 73" X 55" A 180° ROLLED EDGE MAY BE USED INSTEAD OF STEEL ROD REINFORCEMENT. SEE SECTION A-A.

APRON ENDWALLS FOR PIPE ARCH AND ELLIPTICAL PIPE

STATE OF WISCONSIN
DEPARTMENT OF TRANSPORTATION

APPROVED

11/30/94 — DATE

/S/ Rory L. Rhinesmith — CHIEF ROADWAY DEVELOPMENT ENGINEER

FHWA

6

S.D.D. 8 F 2-1

6

S.D.D. 8 F 2-1

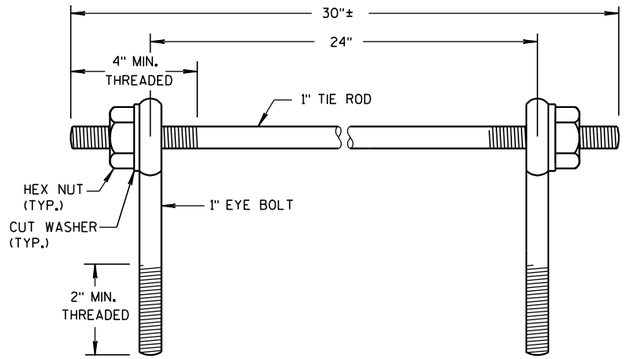

EYE BOLTS AND TIE ROD

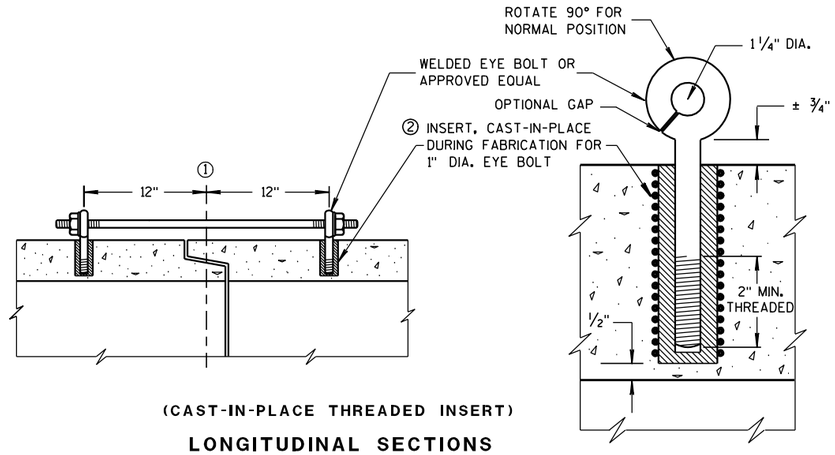

(CAST-IN-PLACE THREADED INSERT)

LONGITUDINAL SECTIONS

EYE BOLT AND TIE ROD ASSEMBLY (ALTERNATE NO. 1)

GENERAL NOTES

DETAILS OF CONSTRUCTION, MATERIALS, AND WORKMANSHIP NOT SHOWN ON THIS DRAWING SHALL CONFORM TO THE PERTINENT REQUIREMENTS OF THE STANDARD SPECIFICATIONS AND APPLICABLE SPECIAL PROVISIONS.

CONCRETE CULVERT AND STORM SEWER PIPE SHALL BE TIED TOGETHER IN THE MANNER ILLUSTRATED BY THIS DETAIL AT LOCATIONS DESIGNATED IN THE STANDARD SPECIFICATIONS AND THE PLAN. THE CONTRACTOR MAY USE EITHER ALTERNATE 1, 2 OR 3 FOR DRAINAGE STRUCTURES. ONLY ALTERNATE 1 AND 3 MAY BE USED FOR CATTLE PASSES, UNLESS OTHERWISE STATED IN THE CONTRACT. THE MATERIALS, FABRICATION AND WORK NECESSARY TO TIE THE PIPE BY THIS DETAIL WILL BE CONSIDERED INCIDENTAL TO THE PIPE AND APRON ENDWALLS IF REQUIRED.

DETAILED DRAWINGS FOR PROPOSED ALTERNATE DESIGNS FOR JOINT TIES SHALL BE SUBMITTED TO THE ENGINEER FOR APPROVAL.

JOINT TIES TO BE HOT-DIP GALVANIZED PER ASTM A 153.

① ℄ OF TONGUE AND GROOVE OR BELL AND SPIGOT JOINTS.

② THE INSIDE OF THE THREADED INSERTS SHALL BE CLEAN TO ALLOW THE INSERTION OF THREADED EYE BOLTS.

③ HOLES SHALL BE CAST-IN-PLACE OR DRILLED 12 INCHES FROM ℄ OF TONGUE AND GROOVE.

④ BOLT PROJECTION INSIDE OF PIPE SHALL NOT EXCEED 2 INCHES.

⑤ OPENING TO BE ROD DIAMETER PLUS 1 INCH.

⑥ LENGTH ADEQUATE TO EXTEND TO WITHIN 1/2 INCH OF THE INNER SURFACE OF THE PIPE.

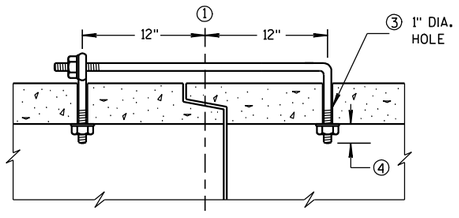

(TONGUE & GROOVE PIPE)

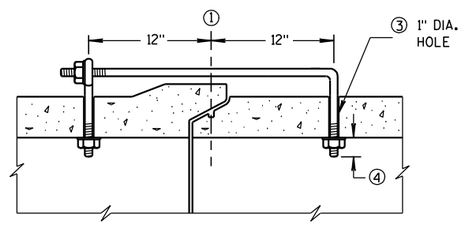

(MODIFIED BELL PIPE)

LONGITUDINAL SECTION

EYE BOLT DIMENSION TABLE

PIPE SIZE	L = LENGTH	
	TONGUE & GROOVE PIPE	MODIFIED BELL PIPE
18" TO 24"	4 1/2"	6 1/4"
30"	5"	7"
36"	5 1/2"	7"
42"	6"	
48"	6 1/2"	
60"	7 1/2"	
66"	8"	

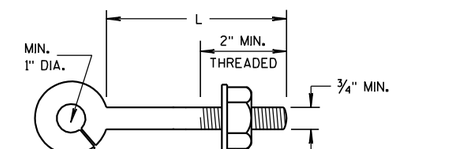

NOTE:

EYE BOLT

NOTE: TWO EYE BOLTS MAY BE USED WITH A 30" LONG THREADED ROD IN LIEU OF THE 90° BENT TIE ROD.

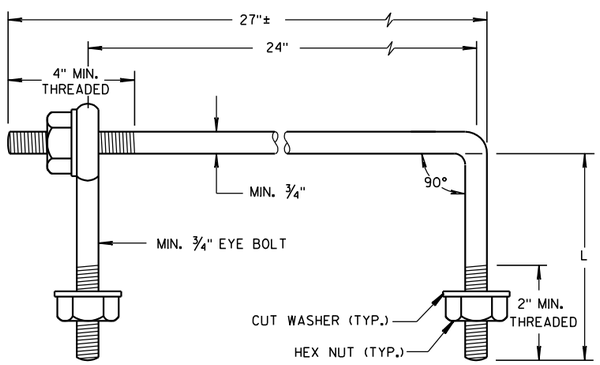

EYE BOLT AND TIE ROD

(JOINT TIES FOR 18" TO 66" DIA. CONCRETE PIPE)

EYE BOLT AND TIE ROD ASSEMBLY (ALTERNATE NO. 2)

ADJUSTABLE TIE ROD TABLE

PIPE DIAMETER	TIE ROD DIAMETER	D	L_1	N
12-60	5/8	5/8	5	1/2
66-84	3/4	3/4	5	1/2
90-108	1	1	7	1 1/16

DIMENSIONS SHOWN ARE IN INCHES

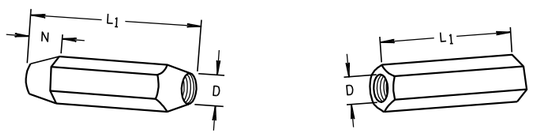

TAPERED PLAIN

RIGHT AND LEFT THREADS

SLEEVE NUTS

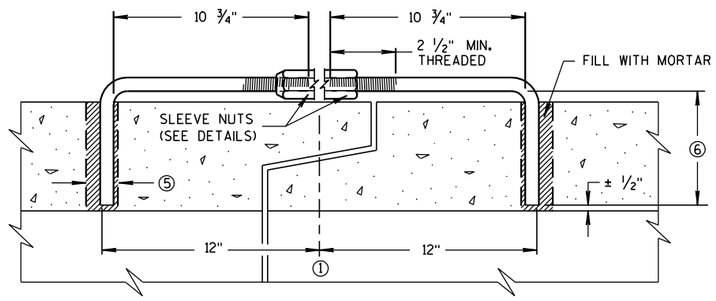

LONGITUDINAL SECTION

(JOINT TIES FOR 12" TO 108" DIA. CONCRETE PIPE)

ADJUSTABLE TIE ROD (ALTERNATE NO. 3)

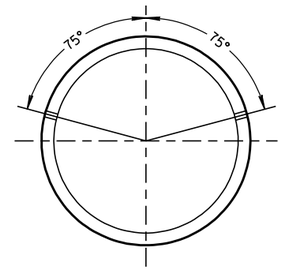

PLACEMENT OF (2) CAST-IN-PLACE INSERTS OR HOLES DURING FABRICATION FOR PIPE SECTIONS REQUIRING TIE RODS

TRANSVERSE SECTION

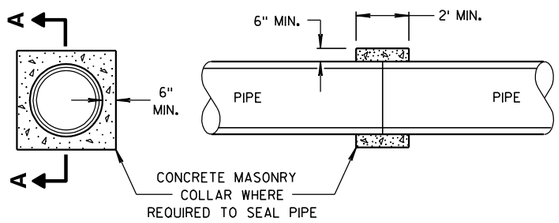

SECTION A-A

CONCRETE COLLAR DETAIL

JOINT TIES FOR CONCRETE PIPE AND CONCRETE COLLAR DETAIL

STATE OF WISCONSIN
DEPARTMENT OF TRANSPORTATION

APPROVED
6/5/2012 — DATE
/S/ Jerry H. Zogg — ROADWAY STANDARDS ENGINEER
FHWA

6

S.D.D. 8 F 4-7

6

S.D.D. 8 F 4-7

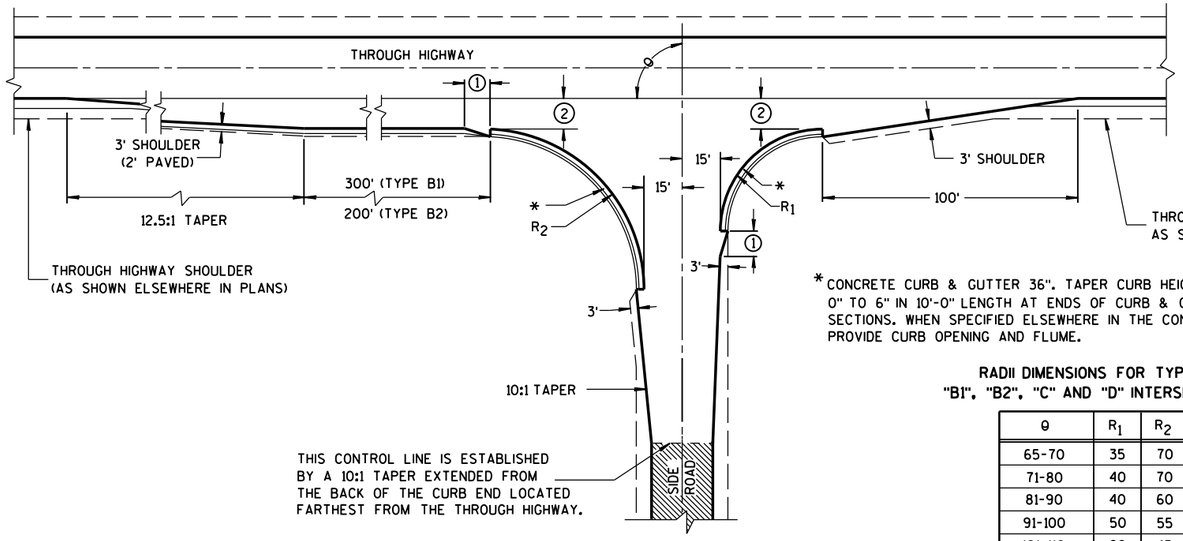

TYPE "B1" AND "B2"

*CONCRETE CURB & GUTTER 36". TAPER CURB HEIGHT 0" TO 6" IN 10'-0" LENGTH AT ENDS OF CURB & GUTTER SECTIONS. WHEN SPECIFIED ELSEWHERE IN THE CONTRACT, PROVIDE CURB OPENING AND FLUME.

RADII DIMENSIONS FOR TYPES "B1", "B2", "C" AND "D" INTERSECTIONS

θ	R_1	R_2
65-70	35	70
71-80	40	70
81-90	40	60
91-100	50	55
101-110	60	45

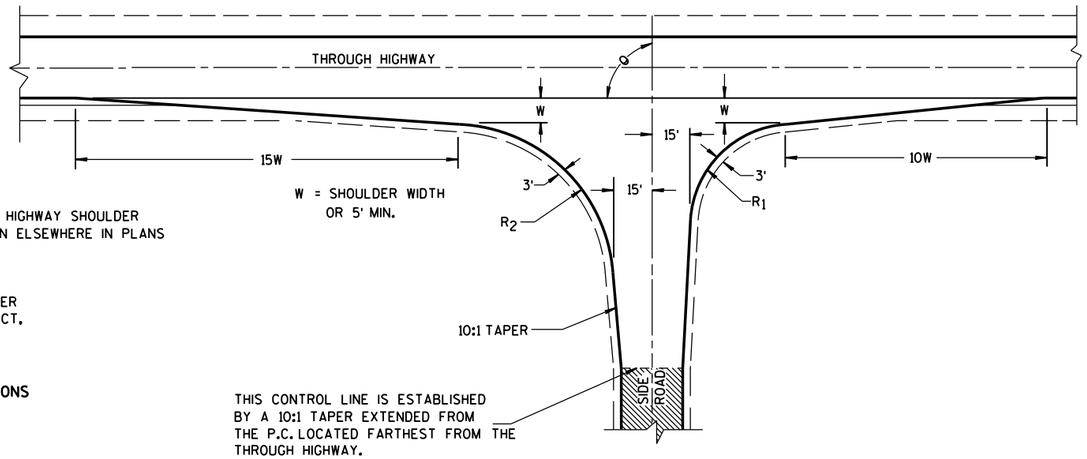

TYPE "C"

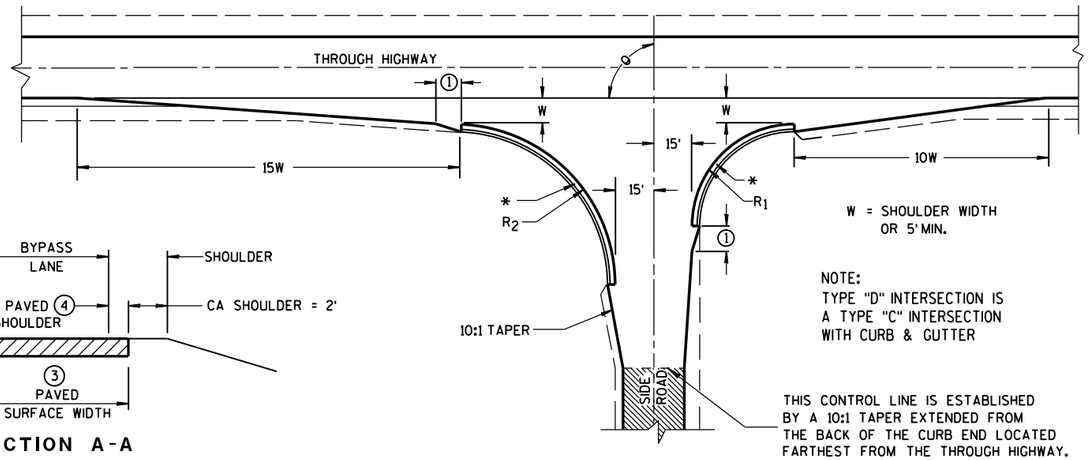

TYPE "D"

GENERAL NOTES

DESIGNS MAY BE USED INTERCHANGEABLY IN COMBINATION OR SEPARATELY FOR ANY ONE COMPLETE INTERSECTION DEPENDING UPON INTERSECTION ANGLE AND SURFACING OF EACH APPROACH ROADWAY.

SIDE ROAD SURFACING NOTE

WHEN THE SIDE ROAD IS NOT PRESENTLY PAVED, PAVEMENT SHALL BE PLACED TO THE LIMITS SHOWN UNLESS OTHERWISE PROVIDED IN THE CONTRACT. WHERE THE CONSTRUCTION LIMITS ARE BEYOND THE PAVING LIMITS, CRUSHED AGGREGATE SURFACING SHALL BE PLACED BETWEEN THE PAVING LIMITS AND CONSTRUCTION LIMITS.

WHEN THE SIDE ROAD IS PRESENTLY PAVED, NEW PAVEMENT SHALL BE PLACED TO THE LIMITS OF DESIGN AS SHOWN AND BEYOND, IF NECESSARY, TO MEET EXISTING PAVEMENT.

WHEN THE SIDE ROAD IS THE CONSTRUCTION PROJECT, THE INTERSECTION SURFACING SHALL BE THE SAME AS FOR THE PROJECT.

EXISTING PAVED SURFACE

BYPASS LANE

(1) 10-FT TYPICAL.

(2) 12-FT** PLUS ADDITIONAL WIDTH FOR BIKE LANE IF SHOWN ELSEWHERE IN THE PLAN.

**10-FT MAY BE USED ON TYPE B2 ON RESURFACING PROJECTS IF SPECIFIED IN THE CONTRACT.

(3) BYPASS LANE PAVED SURFACE WIDTH OUTSIDE OF TRAVEL LANE
-ASPHALT = 12-FT PLUS PAVED SHOULDER WIDTH.
-PC CPNCRETE = 13-FT PLUS PAVED SHOULDER WIDTH.

(4) BYPASS LANE PAVED SHOULDER WIDTH = THE GREATER OF 1-FT OR THE PAVED SHOULDER WIDTH OF THE THROUGH HIGHWAY.

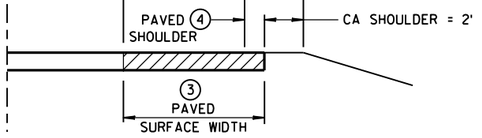

SECTION A-A
(SHOWING BYPASS LANE AND SHOULDER)

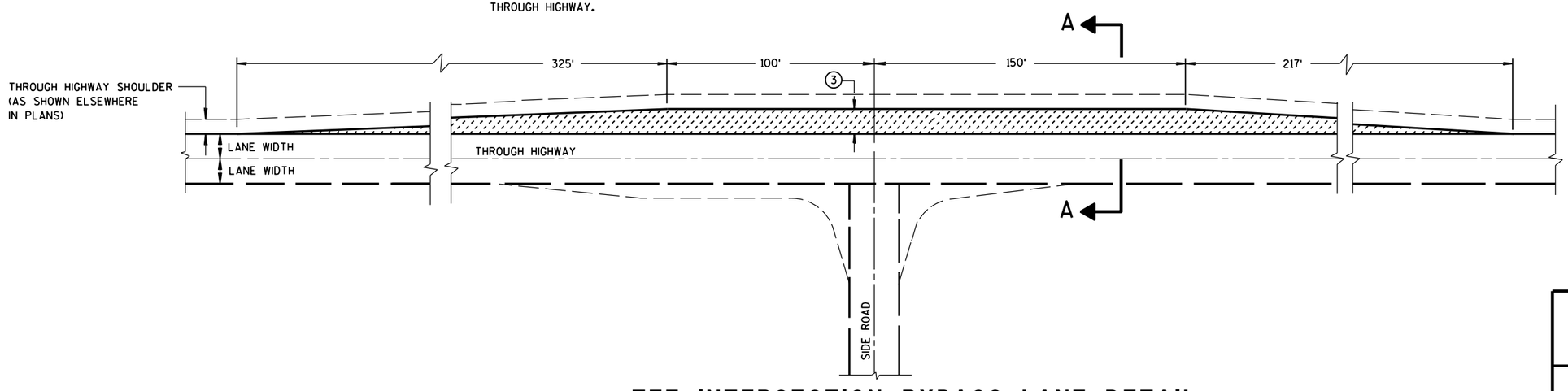

TEE INTERSECTION BYPASS LANE DETAIL

AT-GRADE SIDE ROAD INTERSECTION, TYPES "B1", "B2", "C" AND "D" AND TEE INTERSECTION BYPASS LANE

STATE OF WISCONSIN
DEPARTMENT OF TRANSPOR

6
S.D.D. 9 A 1-13a

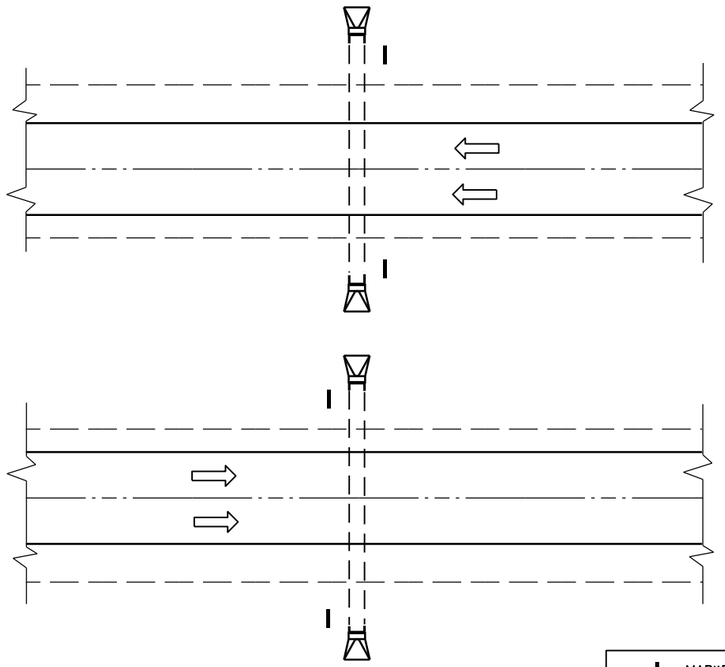

PLAN VIEW

DIVIDED HIGHWAY

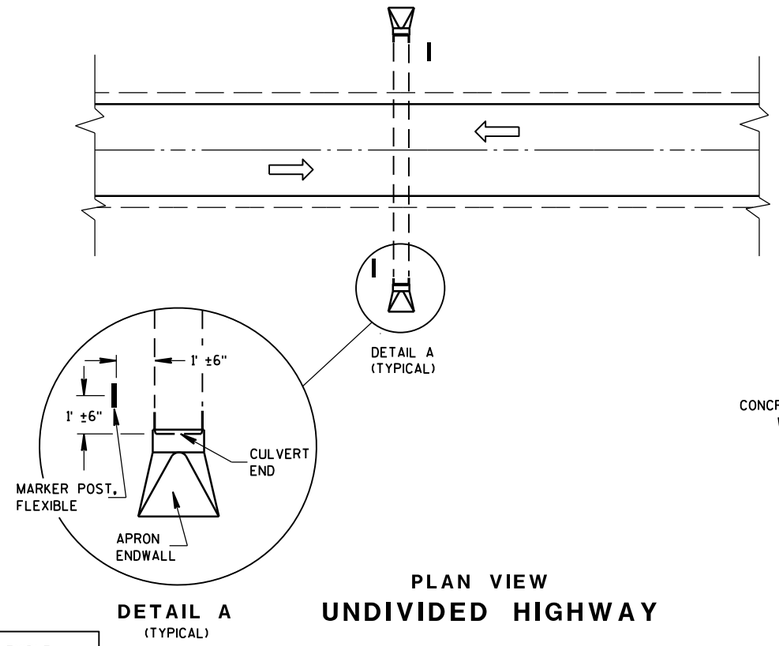

DETAIL A
(TYPICAL)

PLAN VIEW

UNDIVIDED HIGHWAY

MARKER POST, FLEXIBLE

DIRECTION OF TRAFFIC FLOW

GENERAL NOTES

DETAILS OF CONSTRUCTION, MATERIALS AND WORKMANSHIP NOT SHOWN ON THIS DRAWING SHALL CONFORM TO THE PERTINENT REQUIREMENTS OF THE STANDARD SPECIFICATIONS AND THE APPLICABLE SPECIAL PROVISIONS.

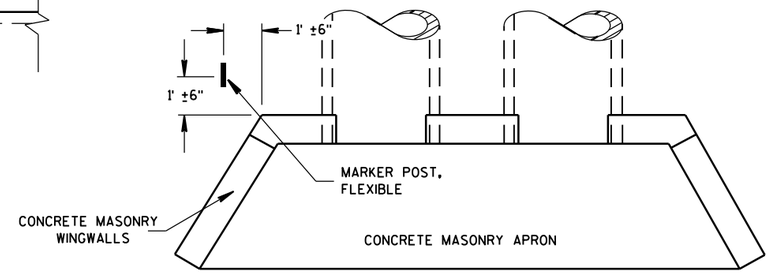

PLAN VIEW

CONCRETE MASONRY ENDWALLS FOR CULVERT PIPE AND PIPE ARCH

FLEXIBLE MARKER POST LOCATION

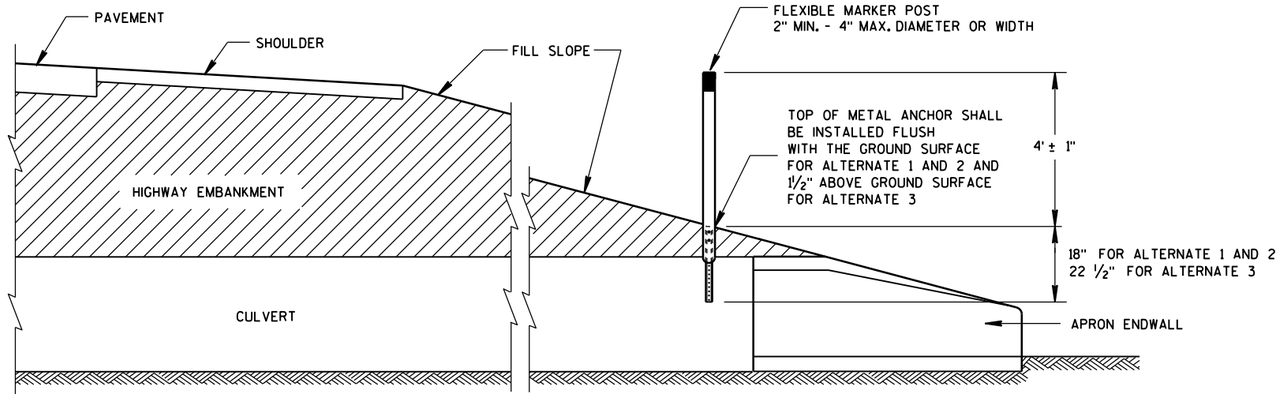

CROSS SECTION

FLEXIBLE MARKER POST

FLEXIBLE MARKER POST FOR CULVERT END

STATE OF WISCONSIN
DEPARTMENT OF TRANSPOR

6

S.D.D. 15 A 3-2a

6

S.D.D. 15 A 3-2a

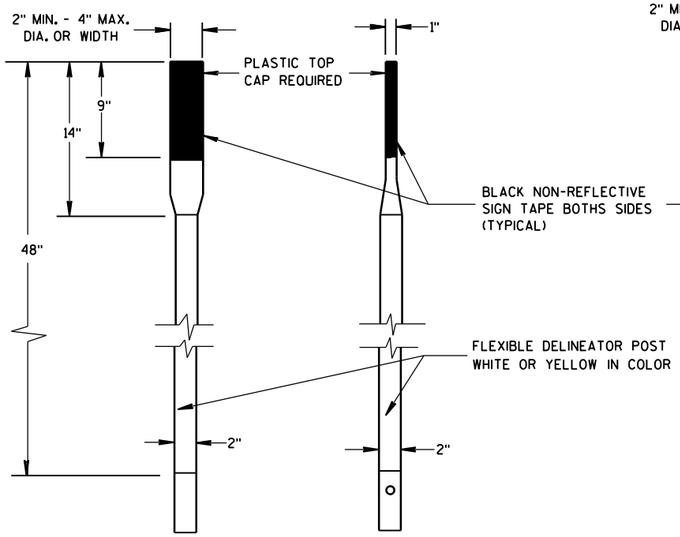

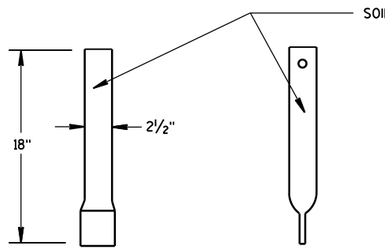

FRONT VIEW SIDE VIEW

ALTERNATE 1

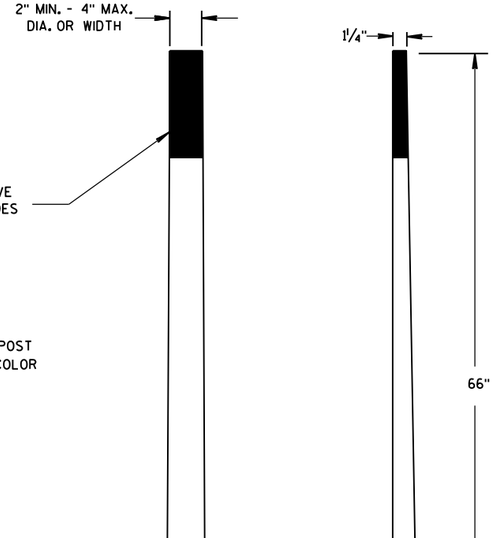

FRONT VIEW SIDE VIEW

ALTERNATE 2

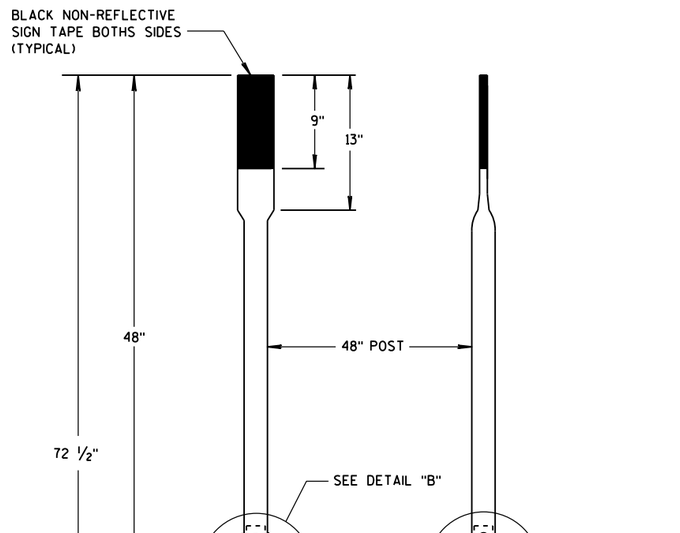

FRONT VIEW SIDE VIEW

ALTERNATE 3

FLEXIBLE MARKER POSTS

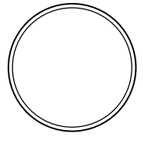

SECTION A-A

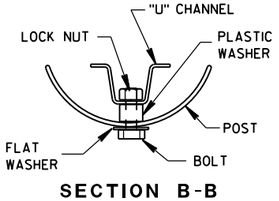

SECTION B-B

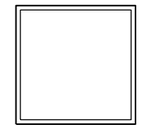

SECTION C-C

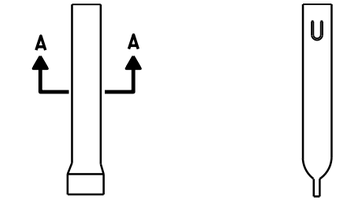

FRONT VIEW SIDE VIEW

ALTERNATE 1

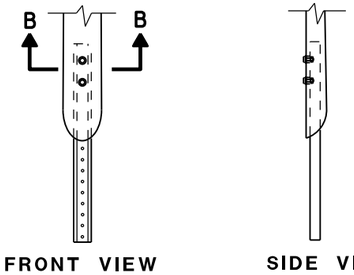

FRONT VIEW SIDE VIEW

ALTERNATE 2

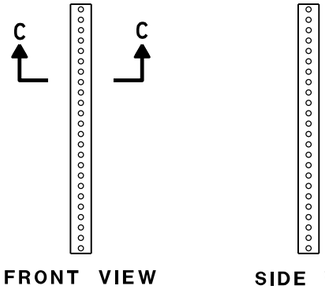

FRONT VIEW SIDE VIEW

ALTERNATE 3

FLEXIBLE MARKER POST ANCHORS

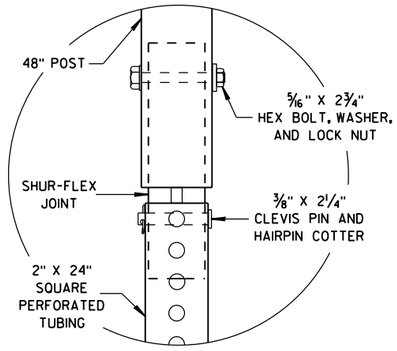

DETAIL B

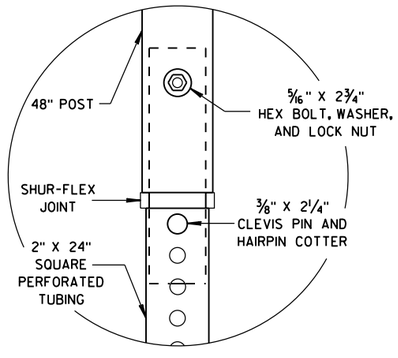

DETAIL C

FLEXIBLE MARKER POST
FOR CULVERT END

STATE OF WISCONSIN
DEPARTMENT OF TRANSPORTATION

APPROVED
10/1/2012 — DATE
/S/ Travis Feltes — STATE TRAFFIC ENGINEER
FHWA

6
S.D.D. 15 A 3-2b

NOTE: PULL OR STRETCHER POST ASSEMBLIES SHALL BE PLACED MIDWAY BETWEEN END POSTS AND CORNER POSTS WHERE A RUN OF FENCE EXCEEDS 660' BUT IS LESS THAN 1,320'. FOR RUNS OF FENCE IN EXCESS OF 1,320' MAXIMUM SPACING OF PULL OR STRETCHER POST ASSEMBLIES SHALL BE 660'± C-C.

ILLUSTRATION SHOWS POSITION OF STANDARD STEEL BRACE, DOUBLE STRAND GALVANIZED WIRE, AND THE POST TO BE EMBEDDED IN CONCRETE WHEN WIRE FENCE IS INSTALLED FROM LEFT TO RIGHT. THE BRACES SHALL BE POSITIONED ON THE OPPOSITE DIAGONALS AND THE OPPOSITE POST SHALL BE EMBEDDED IN CONCRETE WHEN WIRE FENCE IS INSTALLED FROM RIGHT TO LEFT.

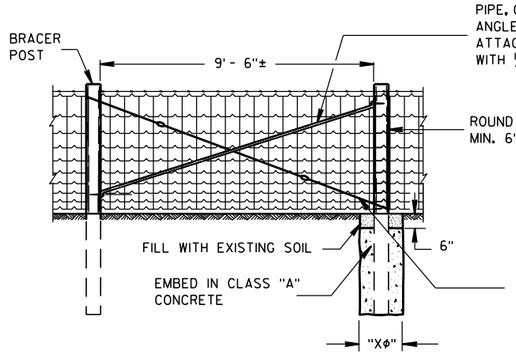

PULL OR STRETCHER POSTS ASSEMBLY

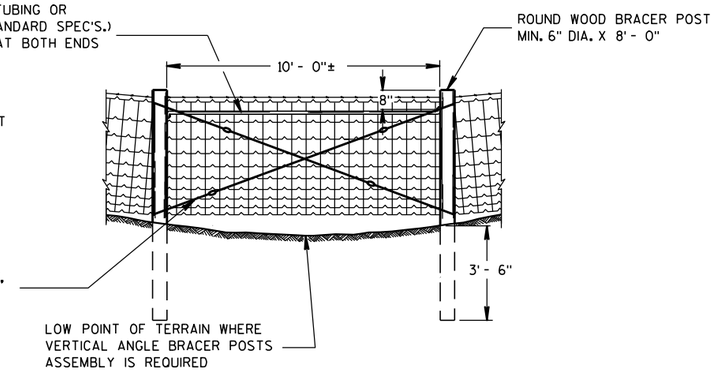

VERTICAL ANGLE BRACER POSTS ASSEMBLY

GENERAL NOTES

"XΦ" = DIAMETER OF THE POST PLUS 12".

FENCE STAPLES SHOULD NEVER BE DRIVEN VERTICALLY INTO WOOD POSTS (WITH BOTH LEGS PARALLEL WITH THE WOOD GRAIN). DOING SO CAN SEPARATE THE GRAIN AND SIGNIFICANTLY REDUCE THE HOLDING POWER. ROTATING THE STAPLES SLIGHTLY OFF VERTICAL STRADDLES THE GRAIN AND PROVIDES MORE RESISTANCE TO PULL-OUT.

DO NOT STAPLE WIRE TIGHT TO THE LINE POSTS. ALLOW MOVEMENT OF WIRE FOR EXPANSION AND CONTRACTION. STAPLE ARRANGEMENT SHALL BE THE SAME FOR ALL OTHER POSTS EXCEPT THAT THEY SHALL BE DRIVEN TIGHT TO POSTS. ALL STAPLES SHALL BE 2" X 9 GAGE AND SHALL BE MANUFACTURED FROM GALVANIZED WIRE OR HOT DIP GALVANIZED AFTER FORMING. STAPLES SHALL HAVE SLASH-CUT POINTS.

FENCE SHALL BE LOCATED 3'-0" INSIDE THE RIGHT OF WAY LINE UNLESS OTHERWISE INDICATED ON THE PLANS.

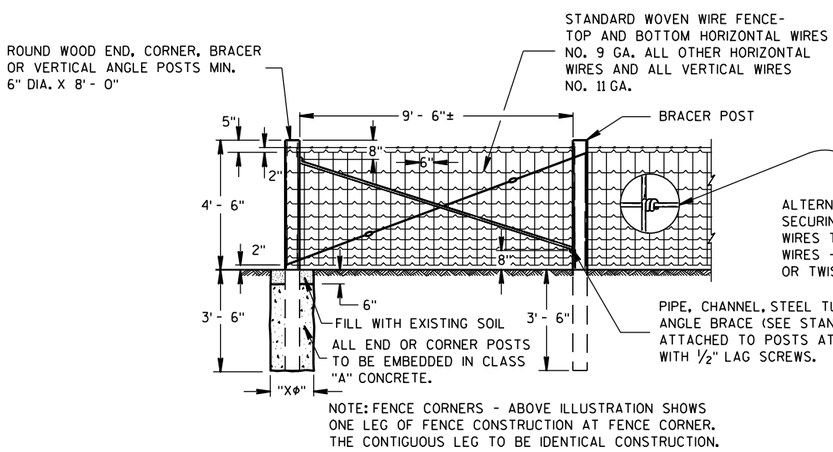

NOTE: FENCE CORNERS - ABOVE ILLUSTRATION SHOWS ONE LEG OF FENCE CONSTRUCTION AT FENCE CORNER. THE CONTIGUOUS LEG TO BE IDENTICAL CONSTRUCTION.

END OR CORNER POSTS ASSEMBLY

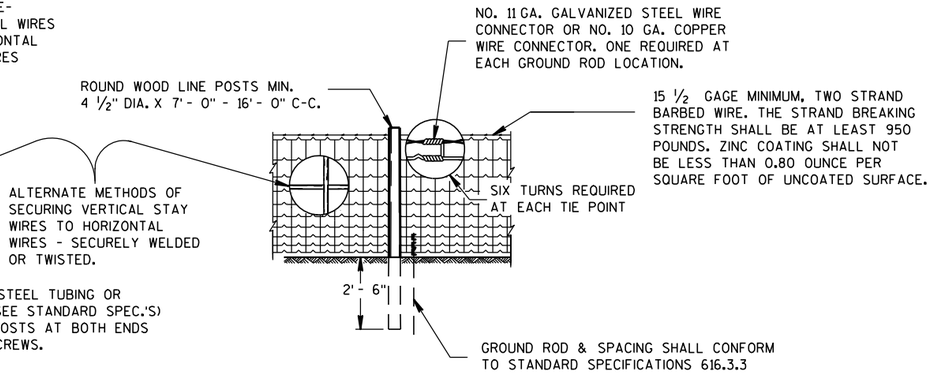

LINE FENCE CONSTRUCTION

GENERAL ROADSIDE VIEW OF WOVEN WIRE FENCE

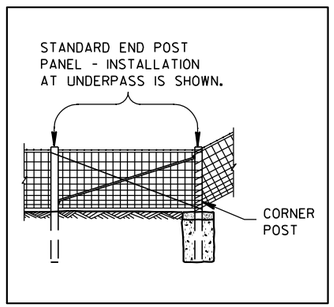

ALTERNATE FENCE DESIGN AT STRUCTURE

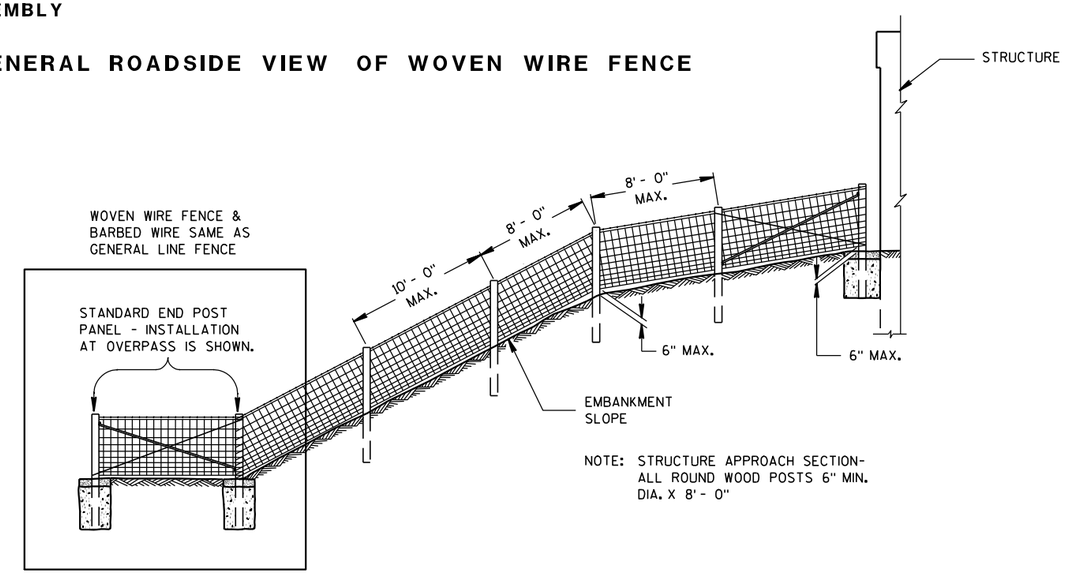

NOTE: STRUCTURE APPROACH SECTION- ALL ROUND WOOD POSTS 6" MIN. DIA. X 8' - 0"

FENCE DESIGN AT STRUCTURE APPROACH

FENCE WOVEN WIRE

STATE OF WISCONSIN
DEPARTMENT OF TRANSPORTATION

6

S.D.D. 15 B 1-8a

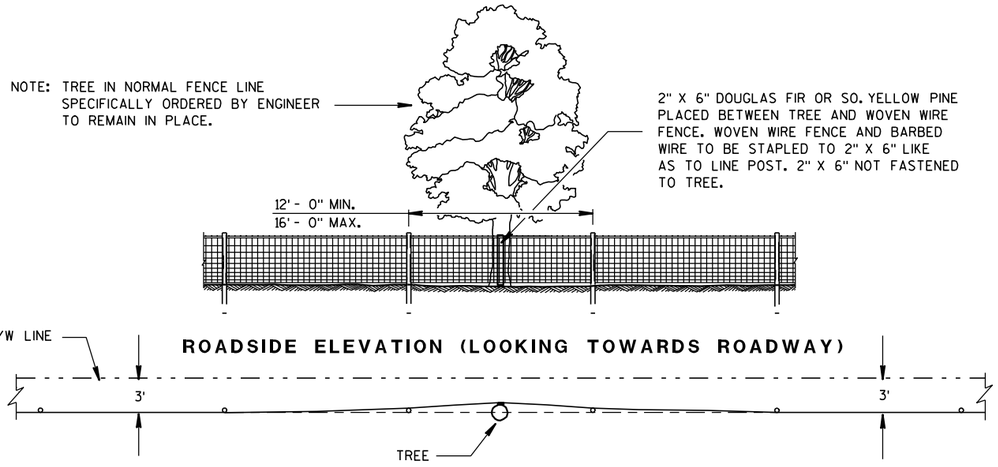

PLAN VIEW

FENCE DESIGN AT TREES REMAINING IN NORMAL FENCE LINE

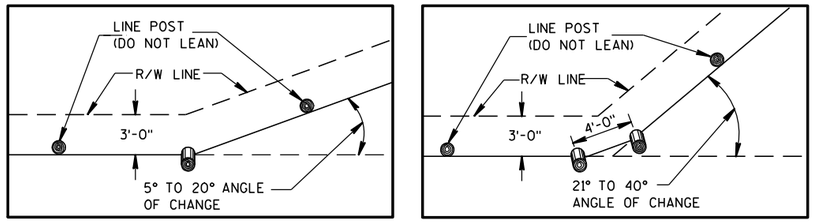

PLAN VIEW
SINGLE POST CORNER

PLAN VIEW
DOUBLE POST CORNER

RIGHT OF WAY LINE CHANGE 40° AND LESS

NOTE: SINGLE AND DOUBLE POSTS SHALL BE A MIN. 6" DIA. X 8'-0" WITH A LEAN OF 4" TOWARD THE OUTSIDE OF THE CURVE.

WHEN THE RIGHT OF WAY LINE CHANGE IS MORE THAN 40° USE THE CORNER OR STRETCHER POSTS ASSEMBLY.

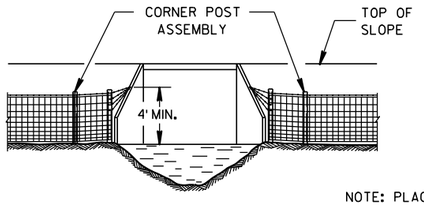

NOTE: PLACE A MINIMUM OF 4 STRANDS OF BARBED WIRE, 6" MAXIMUM CENTERS IN FAN SHAPE CONNECTED TO AN EYE BOLT ON WINGWALL OR SET A LONE POST WHEN NECESSARY TO CONNECT BARBED WIRE.

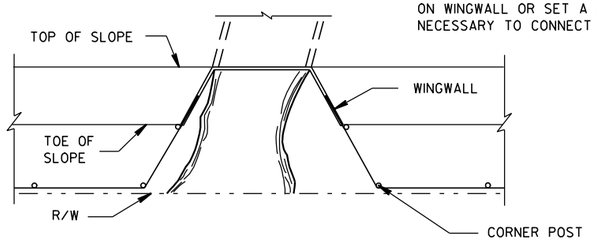

FENCE INSTALLATION TO WINGWALLS

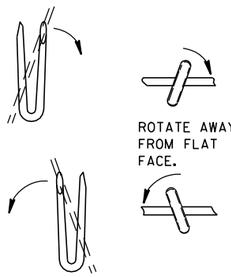

LINE POST

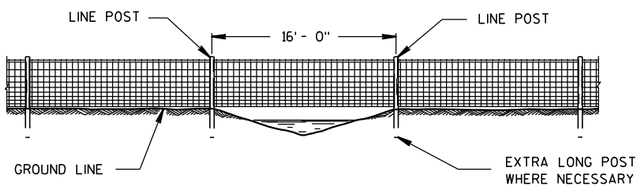

FENCE CONSTRUCTION OVER STREAM COURSES OF 15 FT. OR LESS IN WIDTH

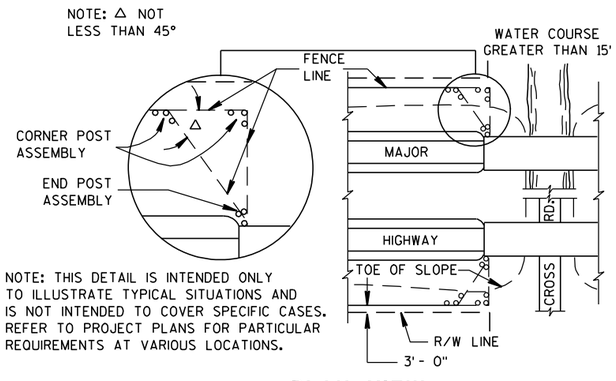

PLAN VIEW
MAJOR HIGHWAY OVERPASS OR STREAM COURSE CROSSING OF GREATER THAN 15 FT. IN WIDTH

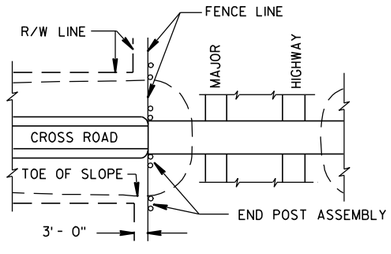

PLAN VIEW
MAJOR HIGHWAY UNDERPASS

NOTE: WHEN POSTS ARE DRIVEN THE SMALL END SHALL BE DOWN.

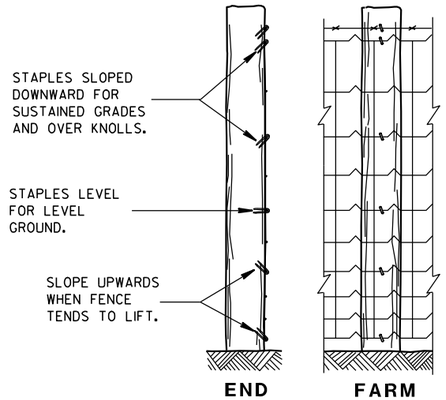

END ELEVATION **FARM SIDE ELEVATION**

FENCE MOUNTING DETAIL

FENCE LOCATION AT STRUCTURES

FENCE WOVEN WIRE

STATE OF WISCONSIN
DEPARTMENT OF TRANSPORTATION

APPROVED
4/4/2008 — DATE
/S/ Jerry H. [illegible] — ROADWAY STANDARDS ENGINEER
FHWA

S.D.D. 15 B 1-8b
6

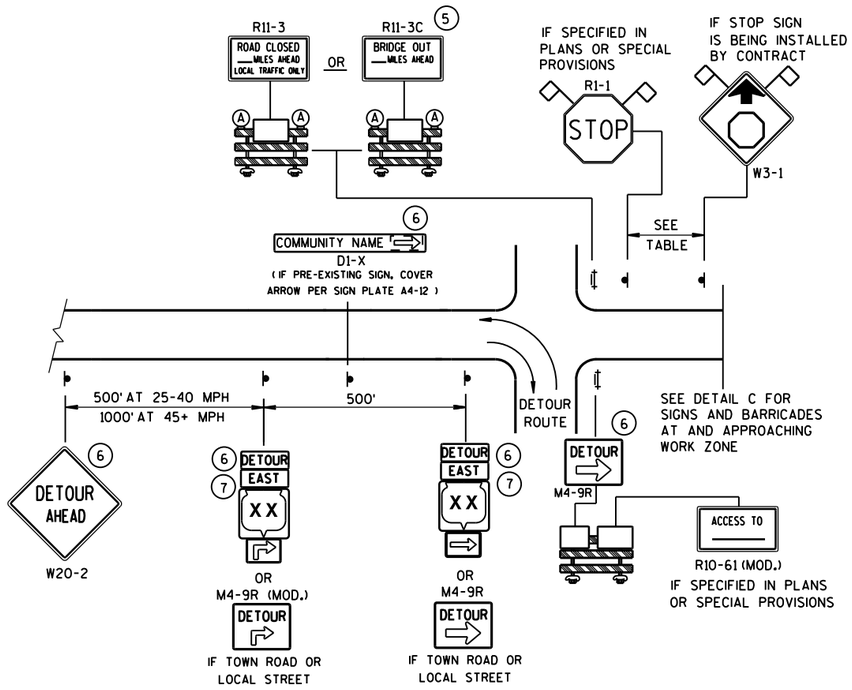

DETAIL A
MAINLINE CLOSURE WITH POSTED DETOUR

WORK ZONE GREATER THAN ½ MILE FROM DETOUR ROUTE (1000 FEET IF URBAN)

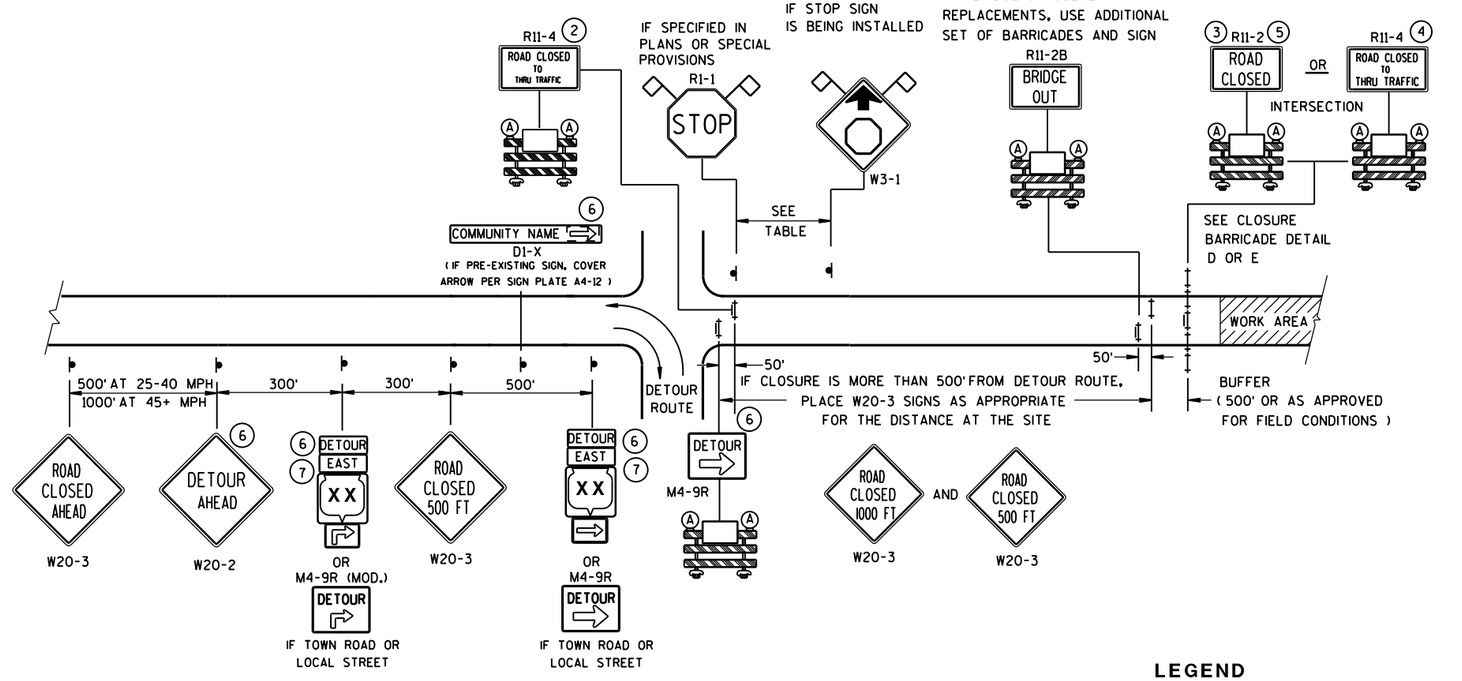

DETAIL B
MAINLINE CLOSURE WITH POSTED DETOUR

WORK ZONE LESS THAN ½ MILE FROM DETOUR ROUTE (1000 FEET IF URBAN)

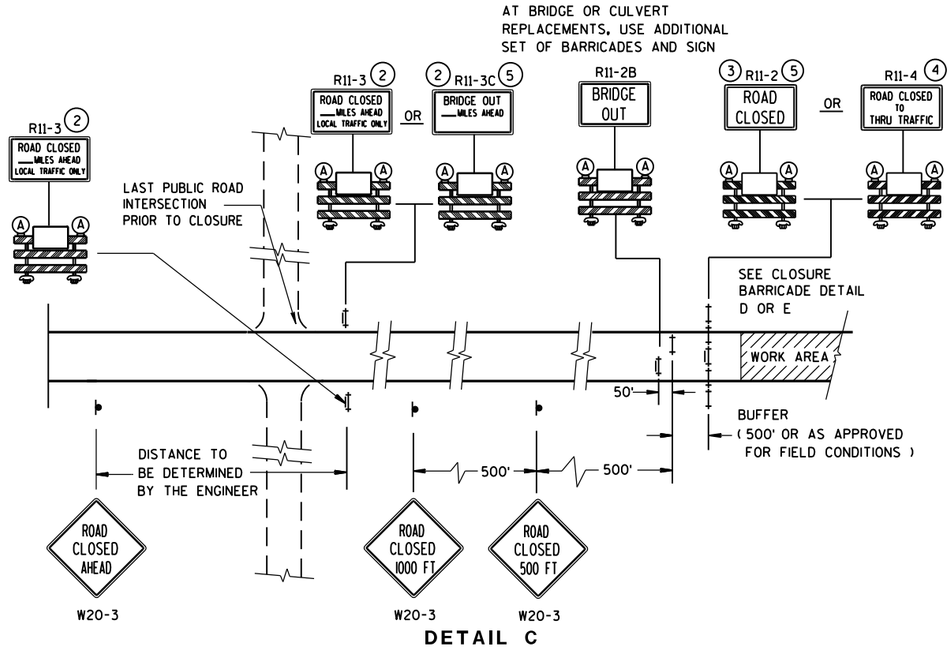

DETAIL C
MAINLINE CLOSURE, NO POSTED DETOUR

SPEED LIMIT (MPH)	"STOP AHEAD" ADVANCE WARNING DISTANCE (FT)
25	200
30	200
35	350
40	350
45	500
50	550
55	750

SEE SDD 15C2-SHEET "**b**" FOR GENERAL NOTES AND FOOTNOTES (1) THROUGH (7)

LEGEND

- SIGN ON PERMANENT SUPPORT
- TYPE III BARRICADE
- TYPE III BARRICADE WITH ATTACHED SIGN
- (A) TYPE "A" WARNING LIGHT (FLASHING)
- WORK AREA
- DETOUR / EAST — M4-8 / M3-X
- XX — M1-4; COUNTY XX — M1-5A; XX — M1-6
- M05-1 OR M06-1
- FLAGS, 16" X 16" MIN., (ORANGE)

BARRICADES AND SIGNS FOR MAINLINE CLOSURES

STATE OF WISCONSIN
DEPARTMENT OF TRANSPORTATION

8/2013 DATE — /S/ Travis Feltes STATE TRAFFIC ENGINEER — DESIGN

FHWA

6
S.D.D. 15 C 2-5a

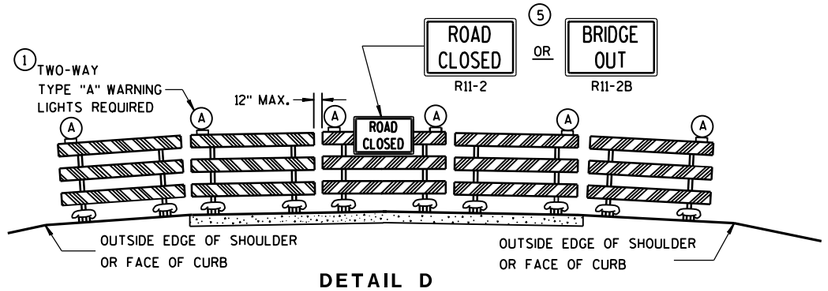

DETAIL D

ROAD CLOSURE BARRICADE DETAIL

APPROACH VIEW

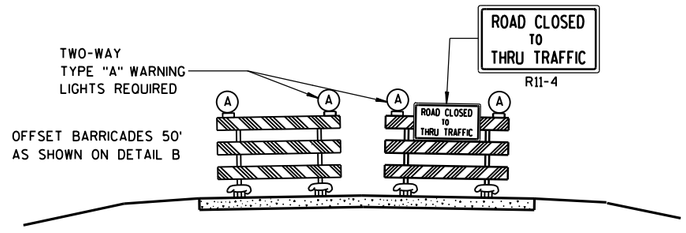

DETAIL E

LANE CLOSURE BARRICADE DETAIL

APPROACH VIEW

SEE SDD 15C2-SHEET "**a**" FOR LEGEND

GENERAL NOTES

THE EXACT NUMBER, LOCATION, AND SPACING OF ALL SIGNS AND BARRICADES SHALL BE ADJUSTED TO FIT FIELD CONDITIONS AS APPROVED BY THE ENGINEER.

ANY SIGNS TEMPORARY OR EXISTING, WHICH CONFLICT WITH TRAFFIC CONTROL "IN USE" SHALL BE REMOVED OR COVERED AS NEEDED AND AS APPROVED BY THE ENGINEER.

THE SPACING BETWEEN TRAFFIC CONTROL SIGNS SHOULD BE ADJUSTED TO NOT CONFLICT WITH AND SHOULD PROVIDE A DESIRABLE MINIMUM OF 200 FEET CLEARANCE TO EXISTING SIGNS THAT WILL REMAIN IN PLACE.

BARRICADES THAT MUST BE MOVED FOR A WORK OPERATION SHALL BE IMMEDIATELY RE-ESTABLISHED UPON COMPLETION OF THE OPERATION OR, FOR CONTINUING OPERATIONS, AT THE END OF EACH WORKING DAY.

SIGNS THAT WILL BE IN PLACE LESS THAN 7 CONTINUOUS DAYS AND NIGHTS MAY BE MOUNTED ON PORTABLE SUPPORTS.

ALL TYPE III BARRICADES SHALL HAVE RAILS REFLECTORIZED ON BOTH FACES. STRIPES SHALL BE PROPERLY SLOPED DOWN TOWARD THE TRAFFIC SIDE OR AS SHOWN IN THE ROAD CLOSURE BARRICADE DETAIL D FOR FULL ROAD CLOSURES.

TYPE "A" LOW-INTENSITY FLASHING WARNING LIGHTS SHALL BE VISIBLE ON BOTH SIDES OF THE BARRICADE.

THE R11-2, R11-3, M4-9, R11-4 AND R10-61 SIGNS PLACED ON BARRICADES SHALL COVER NO MORE THAN THE TOP RAIL. THE SIGNS SHALL NOT COVER ANY PORTION OF THE MIDDLE OR BOTTOM RAILS.

"WO AND "MO" SIGNS ARE THE SAME AS "W" AND "M" SIGNS EXCEPT THE BACKGROUND IS ORANGE.

ALL SIGNS SHALL BE 48" X 48" UNLESS OTHERWISE NOTED BELOW:
- R11-2 SHALL BE 48" X 30".
- R11-3, R11-4 AND R10-61 SHALL BE 60" X 30".
- M4-9 SHALL BE 30" X 24".
- M3-X SHALL BE 24" X 12". (36" X 18" IF NEEDED TO MATCH EXISTING SIGNS.)
- M4-8 SHALL BE 24" X 12". (30" X 15" IF NEEDED TO MATCH EXISTING SIGNS.)
- M1-4, M1-5A, AND M1-6 SHALL BE 24" X 24". (36" X 36" IF NEEDED TO MATCH EXISTING SIGNS.)
- M05-1 AND M06-1 SHALL BE 21" X 21". (30" X 30" IF NEEDED TO MATCH EXISTING SIGNS.)
- D1-X SHALL BE AS SHOWN ON SPECIFIC PROJECT SIGNING DETAIL SHEETS.
- R1-1 SHALL BE 36" X 36".

(1) TWO WARNING LIGHTS SHALL BE PROVIDED ON THE CENTER BARRICADE AND A MINIMUM OF ONE WARNING LIGHT SHALL BE PROVIDED ON EACH OF THE OTHER BARRICADES WITHIN THE ROADWAY LIMITS. SPACING OF THE WARNING LIGHTS SHALL BE UNIFORM TO THE EDGE OF ROADWAY AS SHOWN (APPROX. 8-FOOT LIGHT SPACING).

(2) THESE SIGNS AND BARRICADES ARE NOT REQUIRED IF ROAD CLOSURE BEGINS AT INTERSECTION.

(3) FOR ROAD CLOSURE WITHOUT LOCAL ACCESS TO PROJECT, SEE ROAD CLOSURE BARRICADE DETAIL D.

(4) FOR ROAD CLOSURE WITH LOCAL ACCESS TO PROJECT, SEE LANE CLOSURE BARRICADE DETAIL E.

(5) FOR BRIDGE OR CULVERT REPLACEMENTS, SUBSTITUTE "BRIDGE OUT" INSTEAD OF "ROAD CLOSED" ON R11-2 AND R11-3 SIGNS.

(6) INSTALL DETOUR AND COMMUNITY GUIDE SIGNS AND ARROWS ONLY IF SPECIFIED IN THE CONTRACT. IF THERE ARE EXISTING ROUTE MARKER ASSEMBLIES THAT WILL REMAIN IN PLACE, ADJUST THE LOCATION OF THE DETOUR ROUTE SIGNS TO CORRESPOND WITH THE EXISTING ASSEMBLIES. MODIFY EXISTING SIGNS WHERE POSSIBLE. SEE SPECIFIC PROJECT DETOUR SIGNING DETAIL SHEETS. IF DETOUR SIGNS ARE BEING INSTALLED BY OTHERS, PLACE THE CONTRACTED TRAFFIC CONTROL SIGNS TO ALLOW FOR PLACEMENT OF ALL WARNING, DETOUR AND GUIDE SIGNS AS SHOWN.

(7) "EAST" CARDINAL DIRECTION MARKERS AND RIGHT TURN ARROWS ARE SHOWN. USE OTHER CARDINAL DIRECTIONS AND ARROWS AS APPROPRIATE.

BARRICADES AND SIGNS FOR MAINLINE CLOSURES

STATE OF WISCONSIN
DEPARTMENT OF TRANSPORTATION

8/2013 — DATE
/S/ Travis Feltes — STATE TRAFFIC ENGINEER
FHWA

6

S.D.D. 15 C 2-5b

THIS DRAWING PROVIDES GENERAL GUIDANCE ON TYPICAL DETOUR SIGN LAYOUT AND SPACING. SEE PROJECT DETOUR SIGNING SHEETS FOR SPECIFIC DETAILS FOR EACH PROJECT.

GENERAL NOTES

THE EXACT NUMBER, LOCATION AND SPACING OF ALL SIGNS SHALL BE ADJUSTED TO FIT FIELD CONDITIONS AS APPROVED BY THE ENGINEER.

IF THERE ARE EXISTING ROUTE MARKER ASSEMBLIES THAT WILL REMAIN IN PLACE, ADJUST THE LOCATION OF THE DETOUR ROUTE SIGNS TO CORRESPOND WITH THE EXISTING ASSEMBLIES. SEE SPECIFIC PROJECT DETOUR SIGNING DETAIL SHEETS. MODIFY EXISTING SIGNS WHERE POSSIBLE.

THE SPACING BETWEEN TRAFFIC CONTROL AND DETOUR SIGNS SHOULD BE ADJUSTED TO NOT CONFLICT WITH AND TO PROVIDE A DESIRABLE MINIMUM OF 200 FEET CLEARANCE TO EXISTING SIGNS THAT WILL REMAIN IN PLACE.

ANY SIGNS TEMPORARY OR EXISTING, WHICH CONFLICT WITH TRAFFIC CONTROL "IN USE", SHALL BE REMOVED OR COVERED AS NEEDED AND AS APPROVED BY THE ENGINEER.

SIGNS THAT WILL BE IN PLACE LESS THAN 7 CONTINUOUS DAYS AND NIGHTS MAY BE MOUNTED ON PORTABLE SUPPORTS.

"MO" SIGNS ARE THE SAME AS "M" SIGNS EXCEPT THE BACKGROUND IS ORANGE.

SIGN SIZES SHALL BE AS FOLLOWS:

- M3-X SHALL BE 24" X 12". (36" X 18" IF NEEDED TO MATCH EXISTING SIGNS.)
- M4-8 SHALL BE 24" X 12". (30" X 15" IF NEEDED TO MATCH EXISTING SIGNS.)
- M1-4, M1-5A, AND M1-6 SHALL BE 24" X 24". (36" X 36" IF NEEDED TO MATCH EXISTING SIGNS.)
- M05-1 AND M06-1 SHALL BE 21" X 21". (30" X 30" IF NEEDED TO MATCH EXISTING SIGNS.)
- M4-9 SHALL BE 30" X 24".
- M4-8a SHALL BE 24" X 18".
- G20-51 SHALL BE 60" X 24".
- W20-2 SHALL BE 48" X 48".
- D1-X SHALL BE AS SHOWN ON SPECIFIC PROJECT SIGNING DETAIL SHEETS.

* OPTIONAL SIGNS. SEE SPECIFIC PROJECT DETOUR SIGNING DETAIL SHEETS.

** FOR A TOWN ROAD OR LOCAL STREET DETOURED ONTO A STATE TRUNK HIGHWAY, PLACE A ROAD NAME PLAQUE ABOVE THE M4-9 SIGN AS SPECIFIED IN THE CONTRACT.

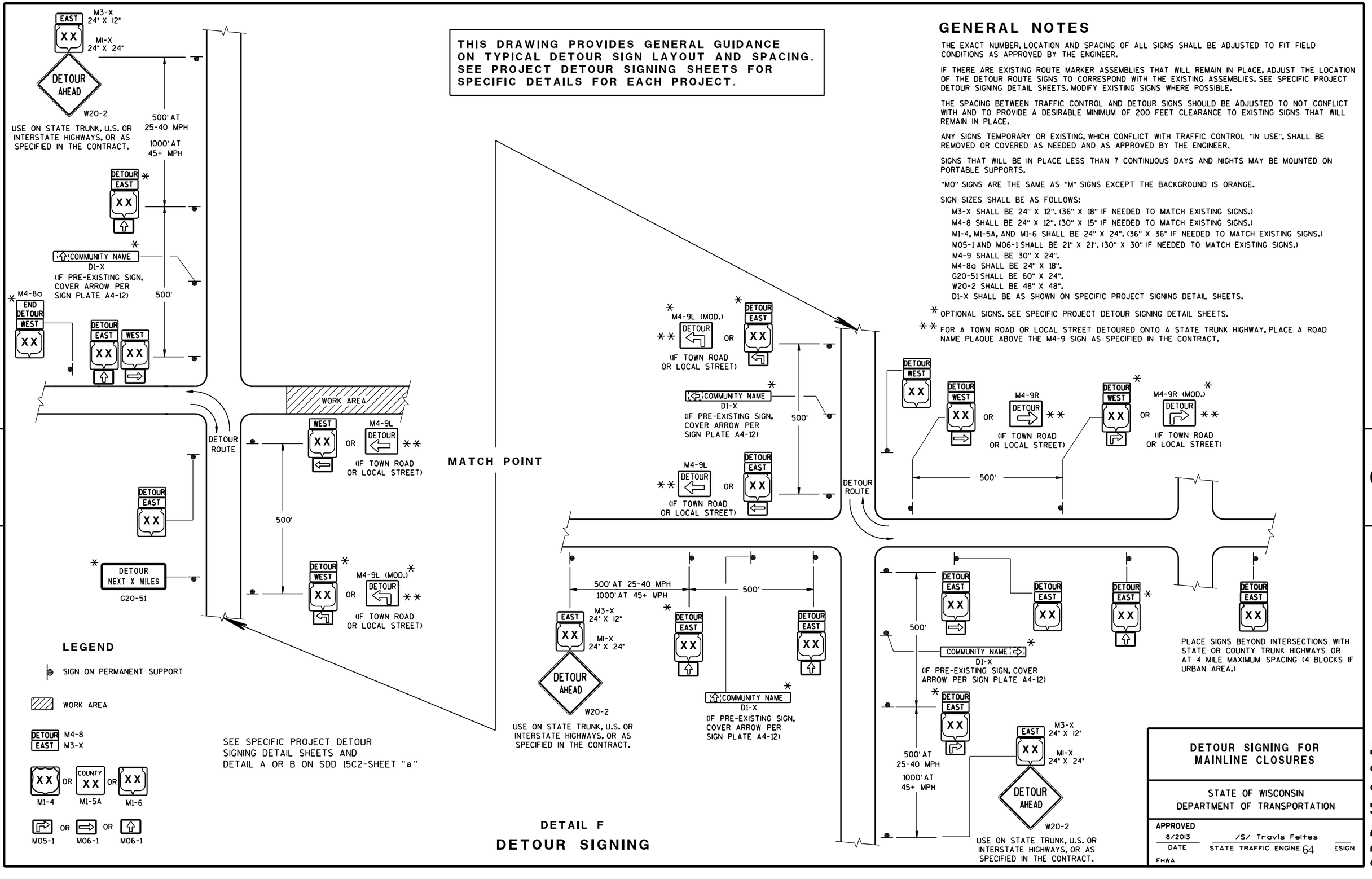

LEGEND

- SIGN ON PERMANENT SUPPORT
- WORK AREA
- DETOUR EAST — M4-8, M3-X
- XX OR COUNTY XX OR XX — M1-4, M1-5A, M1-6
- M05-1 OR M06-1 OR M06-1

SEE SPECIFIC PROJECT DETOUR SIGNING DETAIL SHEETS AND DETAIL A OR B ON SDD 15C2-SHEET "a"

DETAIL F

DETOUR SIGNING

DETOUR SIGNING FOR MAINLINE CLOSURES

STATE OF WISCONSIN
DEPARTMENT OF TRANSPORTATION

APPROVED
8/2013 — DATE
/S/ Travis Feltes — STATE TRAFFIC ENGINEER
FHWA

S.D.D. 15 C 2-5c

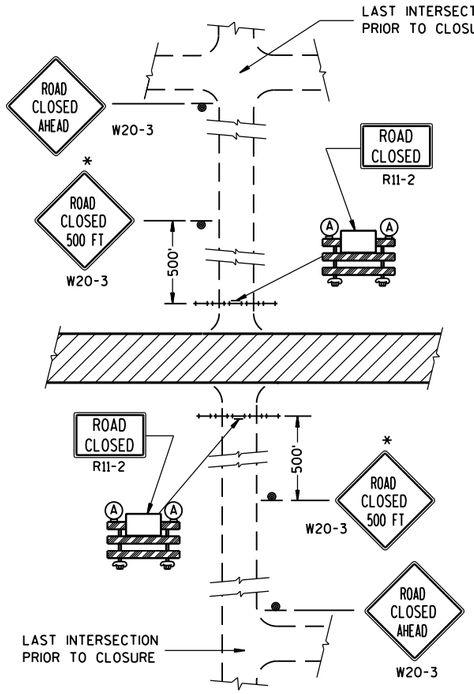

DETAIL 1

(NO ACCESS TO PROJECT)

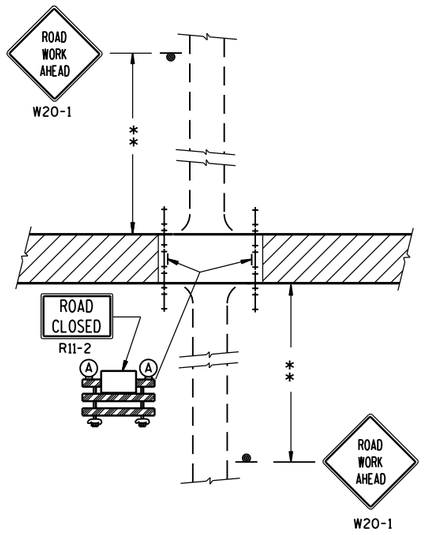

DETAIL 2

(PUBLIC CROSS-TRAFFIC MAINTAINED. NO ACCESS TO PROJECT).

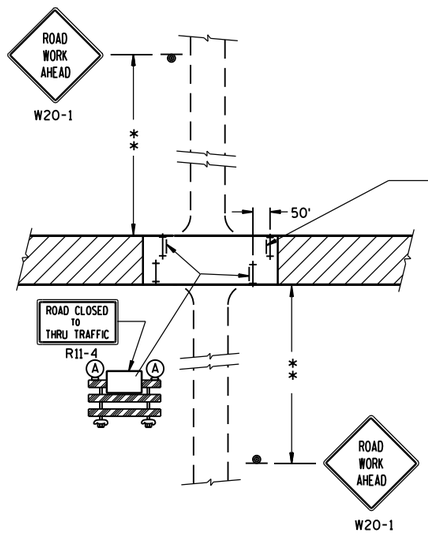

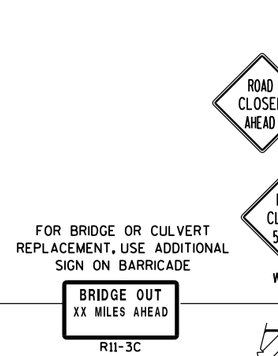

DETAIL 3

(PUBLIC CROSS-TRAFFIC MAINTAINED. CONTRACTOR, LOCAL BUSINESS AND RESIDENT ACCESS).

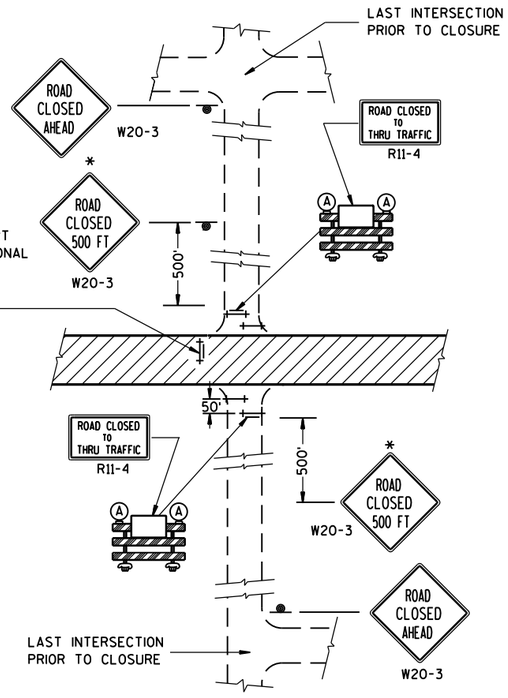

DETAIL 4

(CONTRACTOR, LOCAL BUSINESS AND RESIDENT ACCESS TO PROJECT)

GENERAL NOTES

THE EXACT NUMBER, LOCATION, AND SPACING OF ALL SIGNS AND BARRICADES SHALL BE ADJUSTED TO FIT FIELD CONDITIONS AS APPROVED BY THE ENGINEER.

ANY SIGNS TEMPORARY OR EXISTING, WHICH CONFLICT WITH TRAFFIC CONTROL "IN USE" SHALL BE REMOVED OR COVERED AS NEEDED AND AS APPROVED BY THE ENGINEER.

THE SPACING BETWEEN TRAFFIC CONTROL SIGNS SHOULD BE ADJUSTED TO NOT CONFLICT WITH AND SHOULD PROVIDE A DESIRABLE MINIMUM OF 200 FEET CLEARANCE TO EXISTING SIGNS THAT WILL REMAIN IN PLACE.

IF A "STOP" SIGN MUST BE REMOVED FOR A WORK OPERATION, A TEMPORARY "STOP" SIGN SHALL BE PLACED PRIOR TO THE SIGN REMOVAL, OR A FLAGGER SHALL BE PROVIDED UNTIL THE SIGN IS RE-ESTABLISHED.

BARRICADES THAT MUST BE MOVED FOR A WORK OPERATION SHALL BE IMMEDIATELY RE-ESTABLISHED UPON COMPLETION OF THE OPERATION OR, FOR CONTINUING OPERATIONS, AT THE END OF EACH WORKING DAY.

SIGNS THAT WILL BE IN PLACE LESS THAN 7 CONTINUOUS DAYS AND NIGHTS MAY BE MOUNTED ON PORTABLE SUPPORTS.

ALL TYPE III BARRICADES SHALL HAVE RAILS REFLECTORIZED ON BOTH FACES. STRIPES SHALL BE PROPERLY SLOPED DOWN TOWARD THE TRAFFIC SIDE OR AS SHOWN IN THE ROAD CLOSURE BARRICADE DETAIL D FOR FULL ROAD CLOSURES.

TYPE "A" LOW-INTENSITY FLASHING WARNING LIGHTS SHALL BE VISIBLE ON BOTH SIDES OF THE BARRICADE.

THE R11-2, R11-3 AND R11-4 SIGNS PLACED ON BARRICADES SHALL COVER NO MORE THAN THE TOP RAIL. THE SIGNS SHALL NOT COVER ANY PORTION OF THE MIDDLE OR BOTTOM RAILS.

ALL SIGNS SHALL BE 48" X 48" UNLESS OTHERWISE NOTED BELOW:
R11-2 SHALL BE 48" X 30".
R11-4 AND R11-3 SHALL BE 60" X 30".

*OMIT THE "ROAD CLOSED 500 FT." SIGN IF THE LAST INTERSECTION IS 500 FT. OR LESS FROM THE WORK ZONE.

**500' MAX. OR AT LAST INTERSECTION WHICHEVER IS CLOSER.

LEGEND

- SIGN ON PERMANENT SUPPORT
- TYPE III BARRICADE
- TYPE III BARRICADE WITH ATTACHED SIGN
- (A) TYPE "A" WARNING LIGHT (FLASHING)
- WORK AREA

BARRICADES AND SIGNS FOR SIDEROAD CLOSURES

STATE OF WISCONSIN
DEPARTMENT OF TRANSPORTATION

APPROVED
8/2013 — DATE
/S/ Travis Feltes — STATE TRAFFIC ENGINEER
FHWA

6

S.D.D. 15 C 3-2

6

S.D.D. 15 C 3-2

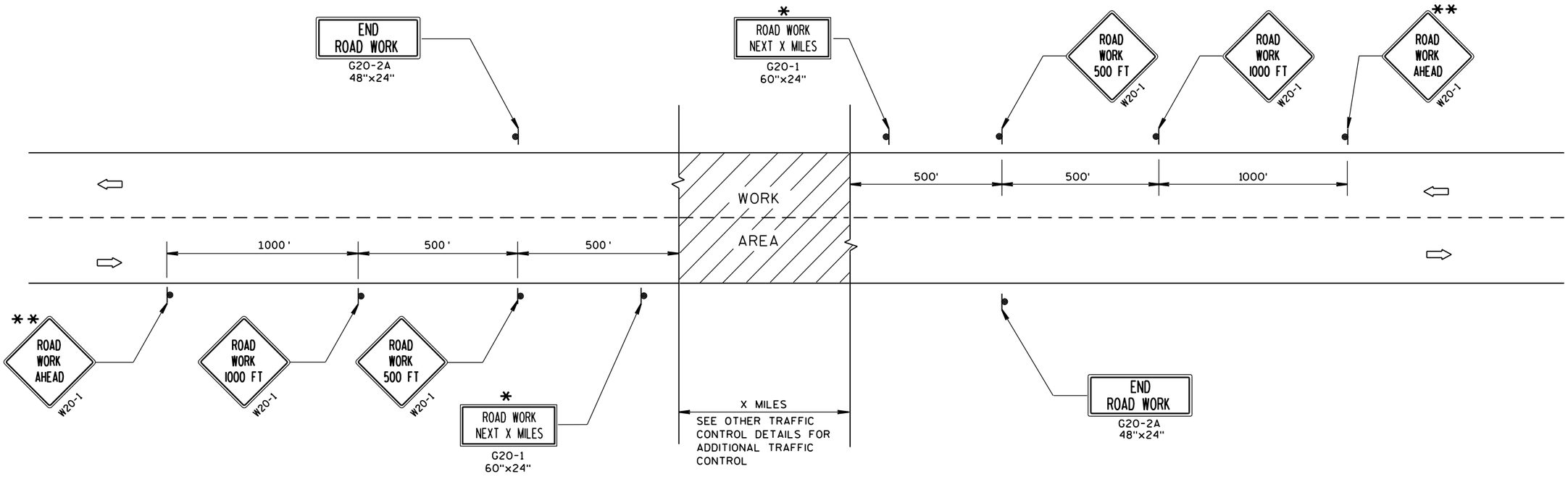

TYPICAL SIDEROAD APPROACH WARNING SIGN DETAIL

GENERAL NOTES

THE EXACT NUMBER, LOCATION, AND SPACING OF ALL SIGNS AND DEVICES SHALL BE ADJUSTED TO FIT FIELD CONDITIONS.

THE SPACING BETWEEN TRAFFIC CONTROL SIGNS SHOULD BE ADJUSTED TO NOT CONFLICT WITH AND SHOULD PROVIDE A MINIMUM OF 200 FEET (500 FEET DESIRABLE) CLEARANCE TO EXISTING SIGNS THAT WILL REMAIN IN PLACE.

ALL SIGNS ARE 48"x48" UNLESS OTHERWISE NOTED.

SIGNS THAT WILL BE IN PLACE LESS THAN 7 CONTINUOUS DAYS AND NIGHTS MAY BE MOUNTED ON PORTABLE SUPPORTS.

IF A "STOP" SIGN MUST BE REMOVED FOR A WORK OPERATION, A TEMPORARY "STOP" SIGN SHALL BE PLACED PRIOR TO THE SIGN REMOVAL, OR A FLAGGER SHALL BE PROVIDED UNTIL THE SIGN IS RE-ESTABLISHED.

* OMIT G20-1 SIGNS IF LENGTH OF WORK AREA IS 2 MILES OR LESS.

** PLACE ADDITIONAL W20-1 "ROAD WORK AHEAD" SIGN IF WORK AREA WITHIN THE PROJECT IS SEPARATED BY MORE THAN 2 MILES FROM PREVIOUS WORK AREA.

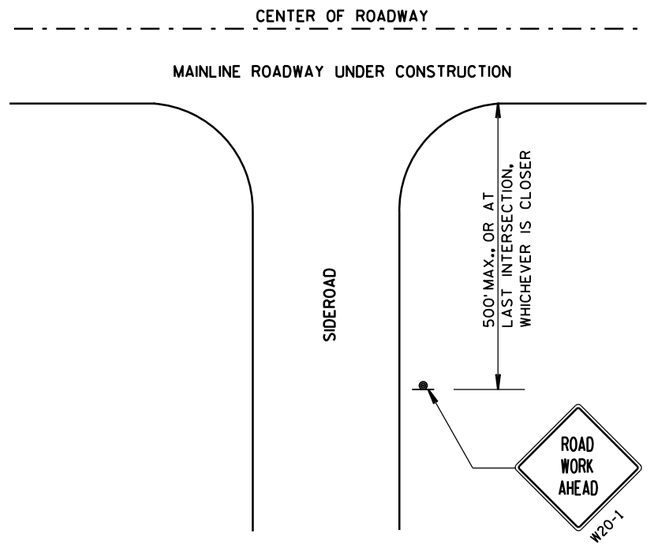

LEGEND

- SIGN ON PERMANENT SUPPORT
- DIRECTION OF TRAFFIC
- WORK AREA

TRAFFIC CONTROL, ADVANCE WARNING SIGNS 45 M.P.H. OR GREATER TWO-WAY UNDIVIDED ROAD OPEN TO TRAFFIC

STATE OF WISCONSIN
DEPARTMENT OF TRANSPORTATION

APPROVED

8/2013 — DATE

/S/ Travis Feltes — STATE TRAFFIC ENGINEER

FHWA

6

S.D.D. 15 C 4-2

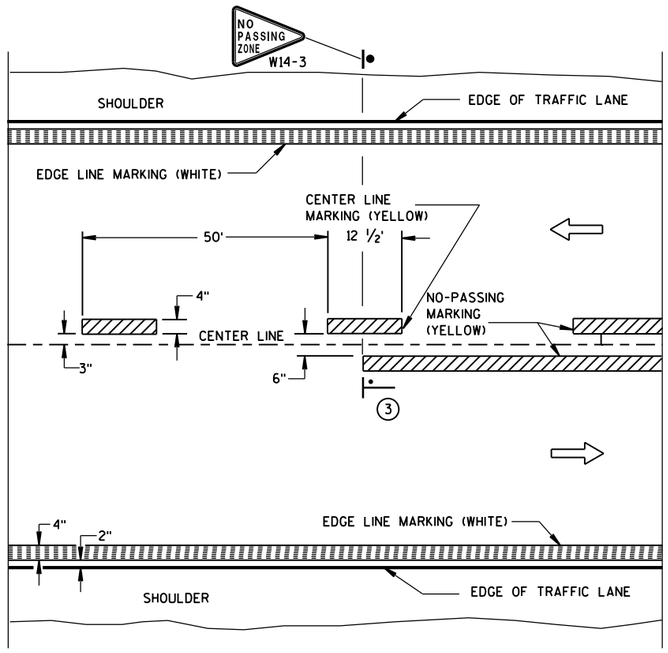

TWO WAY TRAFFIC

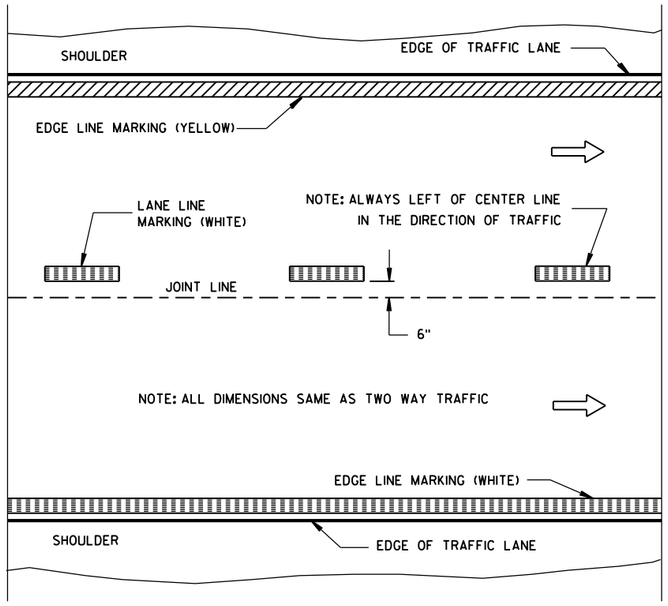

ONE WAY TRAFFIC

PERMANENT PAVEMENT MARKING

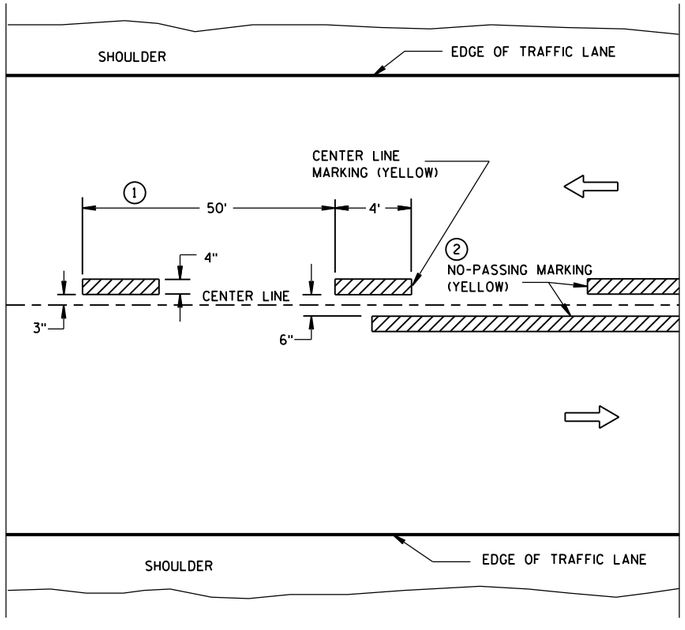

TWO WAY TRAFFIC

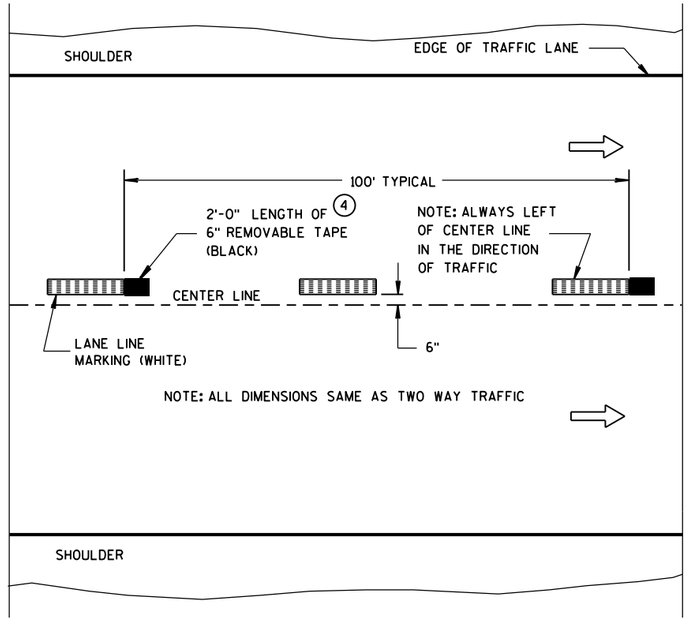

ONE WAY TRAFFIC

TEMPORARY (INTERMEDIATE) PAVEMENT MARKING

(SHOWS CYCLE FOR TEMPORARY CENTER LINE OR TEMPORARY LANE LINE MARKING)

GENERAL NOTES

DETAILS OF CONSTRUCTION NOT SHOWN ON THIS DRAWING SHALL CONFORM TO STANDARD SPECIFICATIONS AND SPECIAL PROVISIONS.

1. HALF CYCLE LENGTHS (25'±) WITH 2' MINIMUM STRIPE LENGTHS SHALL BE PROVIDED ON ROADWAYS (INCLUDING TEMPORARY TRAVELED WAYS) WITH REVERSE CURVATURE, CURVATURE OF OVER 5 DEGREES OR WHEN DIRECTED BY THE ENGINEER TO MARK UNUSUAL ALIGNMENT OF THE TRAVELED WAY.
2. NO PASSING ZONE TEMPORARY PAVEMENT MARKING IS REQUIRED TO BE PLACED, WHERE APPROPRIATE, ALONG WITH CENTERLINE TEMPORARY PAVEMENT MARKING WHEN A SAME DAY PERMANENT PAVEMENT MARKING ITEM IS INCLUDED IN THE CONTRACT.
3. NO PASSING ZONE MARKINGS ARE PLACED ACCORDING TO "T" MARKINGS. IF EXISTING NO PASSING ZONE W14-3 SIGNS ARE BEYOND 50 FEET IN EITHER DIRECTION, THE SIGNS SHALL BE MOVED TO THE "T" MARKINGS.
4. CONCRETE ONLY.

NOTE

ARROW SYMBOL (⇨) SHOWS DIRECTION OF TRAVEL

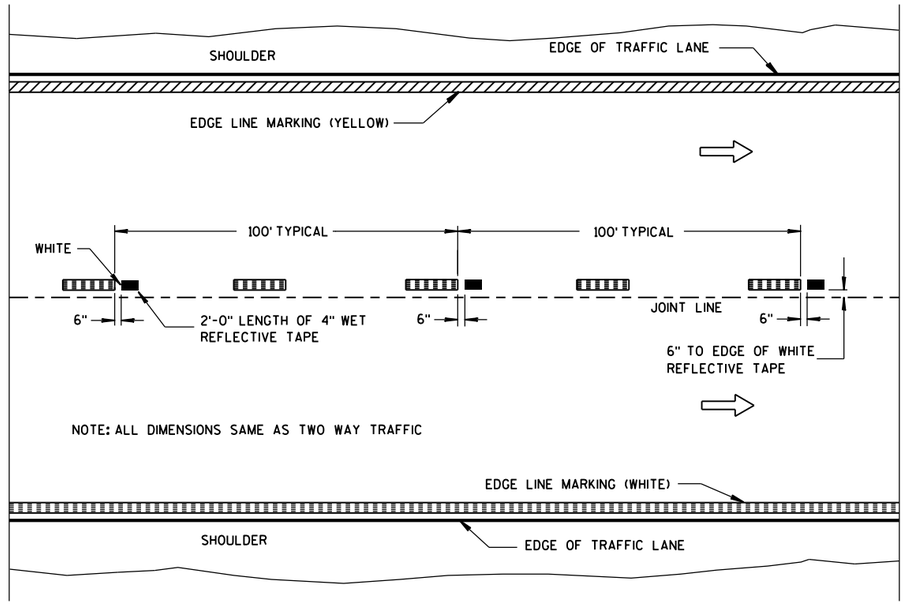

WET REFLECTIVE TAPE SUPPLEMENT TO
SPRAYED OR NON WET REFLECTIVE TAPE LANE LINE

LEGEND

"T" MARKING

POST MOUNTED SIGN

PAVEMENT MARKING (MAINLINE)

STATE OF WISCONSIN
DEPARTMENT OF TRANSPORTATION

APPROVED
5-13-2013 DATE
/S/ Travis Feltes STATE TRAFFIC E
FHWA

6

S.D.D. 15 C 8-16a

6

S.D.D. 15 C 8-16a

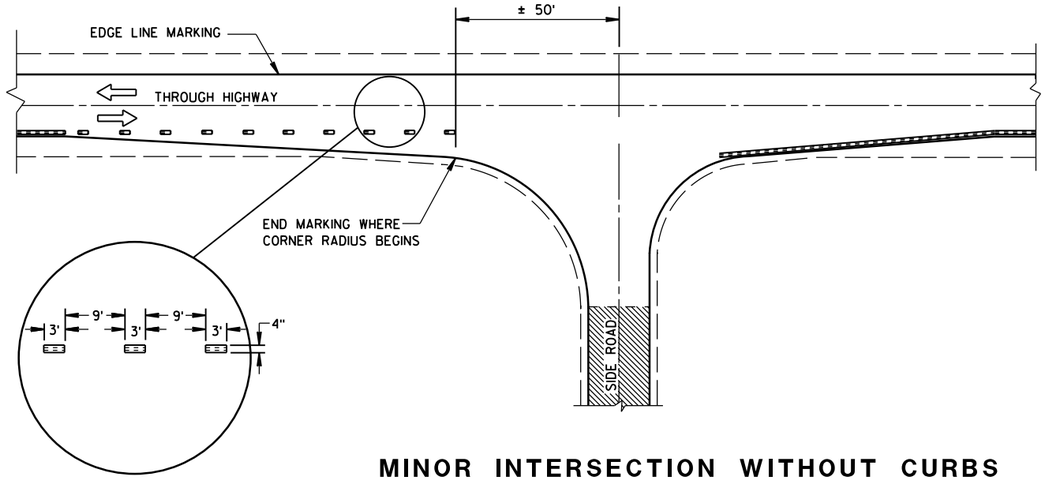

MINOR INTERSECTION WITHOUT CURBS

GENERAL NOTES

EDGE LINES SHALL BE OMITTED THROUGH INTERSECTIONS. EDGE LINES SHALL BE CONTINUED THROUGH DRIVEWAYS.

(1) WHEN DISTANCE "A" IS LESS THAN 250 FEET, OMIT LANE LINE.

(2) WHEN DISTANCE "B" IS LESS THAN 100 FEET, OMIT CHANNELIZING LANE LINE.

(3) ALTERNATIVE MARKING SHALL BE PROVIDED WHEN SPECIFIED IN THE CONTRACT. TYPICAL SITUATIONS WHERE THIS MARKING MAY BE REQUIRED ARE WHERE THE INTERSECTION IS ON A SHARP HORIZONTAL CURVE OR CREST VERTICAL CURVE IN AN UNLIGHTED AREA SUCH THAT THE EDGE LINE MAY BE MISLEADING TO THE MOTORIST OR DISAPPEAR FROM SIGHT.

(4) THE EDGE LINE IN THE TAPER AREAS OF THE BYPASS LANE AND THE BYPASS LANE SHALL BE LOCATED 1-FOOT FROM EDGE OF PAVEMENT TO THE OUTSIDE EDGE OF EDGE LINE.

(5) BARRIER LINE ENDS AT SIDE ROAD PAVEMENT/SURFACE EDGE EXTENSION.

(6) BARRIER LINE STARTS 500 FEET PRIOR TO THE BYPASS TAPER.

(7) IF THE DISTANCE BETWEEN 2 SUCCESSIVE NO-PASSING ZONES IS LESS THAN THE MINIMUM DISTANCE BETWEEN ZONES, CONNECT THE 2 ZONES.

(8) 3' LINE 9' GAP, EXCEPT RETRACE THE EXISTING LINE - GAP PATTERN WHERE EXISTING MARKINGS ARE IN PLACE.

ARROW SYMBOL (⇨) SHOWS DIRECTION OF TRAVEL

(7)

POSTED SPEED (MPH)	MINIMUM DISTANCE BETWEEN ZONES (FEET)
25 - 30	528
35 - 40	528
45 - 50	686
55	792

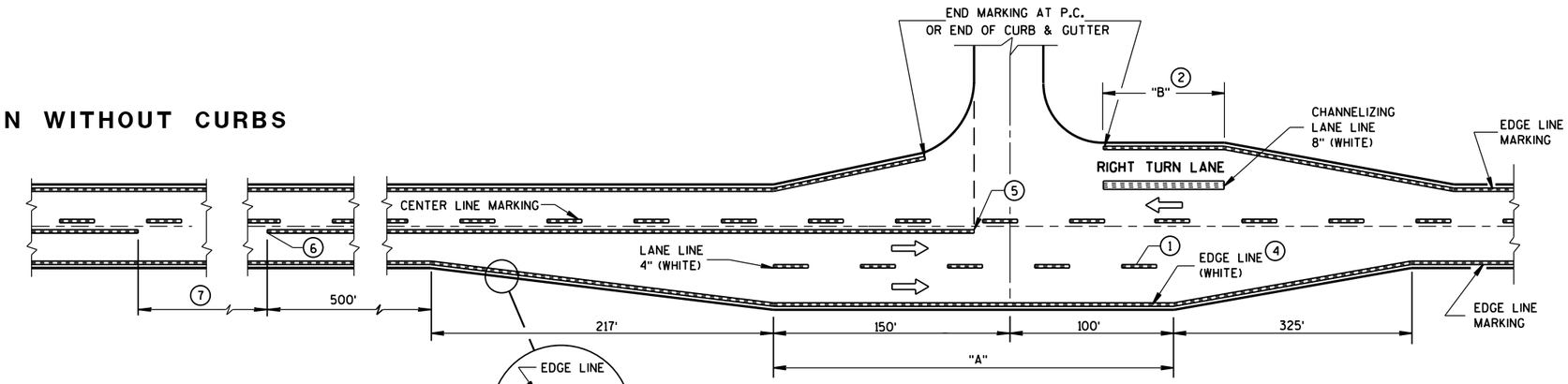

MAJOR INTERSECTIONS

(INTERSECTION WITH FULL RIGHT TURN LANE OR BYPASS LANES)

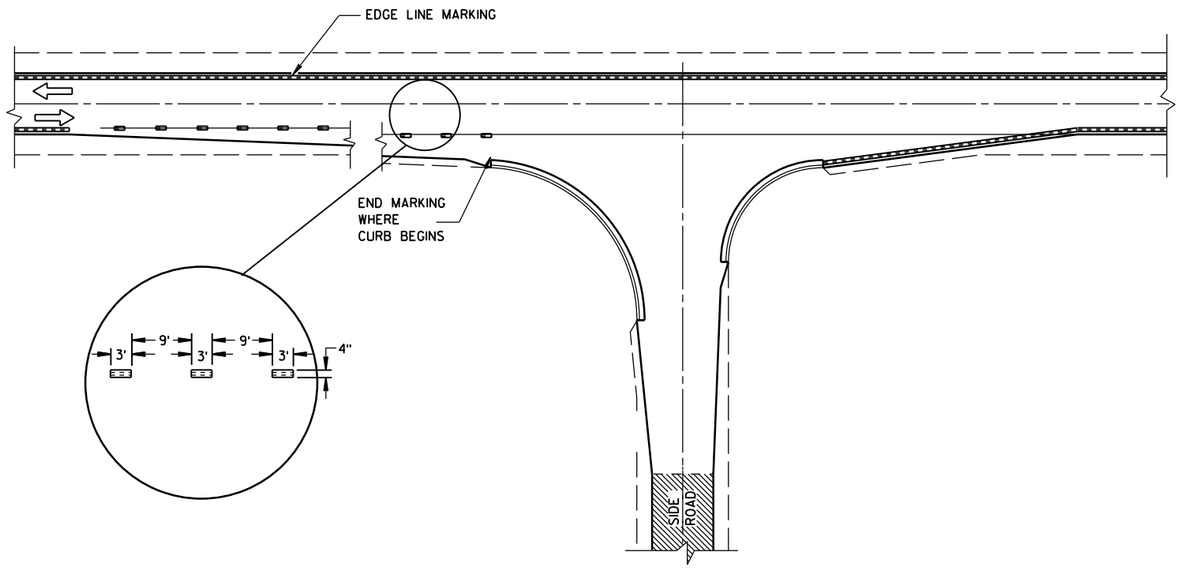

MINOR INTERSECTION WITH CURBS

(TYPICAL MARKING)

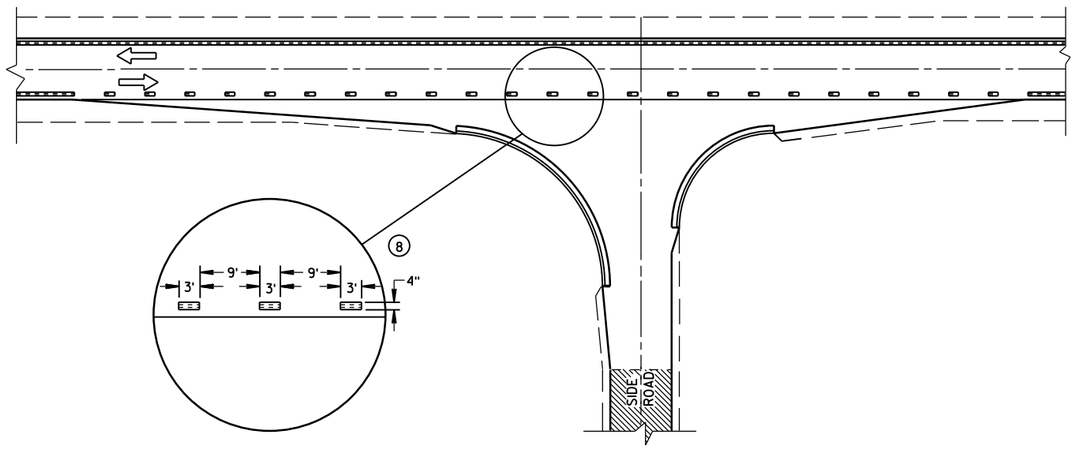

MINOR INTERSECTION WITH CURBS

(3) (FOR SPECIAL CONDITIONS AS SPECIFIED)

PAVEMENT MARKING
(INTERSECTIONS)

STATE OF WISCONSIN
DEPARTMENT OF TRANSPO

6

S.D.D. 15 C 8-16b

LEGEND

SIGN ON PORTABLE OR PERMANENT SUPPORT

DIRECTION OF TRAFFIC

WORK AREA

FLAGGER, EQUIPPED WITH STOP/SLOW PADDLE FASTENED ON SUPPORT STAFF

SIGN SPACING TABLE

SPEED LIMIT	SIGN SPACING A,B,C
25-35 MPH	200'
35-40 MPH	350'
45-55 MPH	500'

W3-4

USE OF THE "BE PREPARED TO STOP" SIGN IS OPTIONAL. WHEN USED, THIS SIGN SHALL BE LOCATED BETWEEN THE W20-7a AND W20-4 SIGNS. A 500' TYPICAL SPACING SHALL BE PROVIDED BETWEEN THE SIGNS.

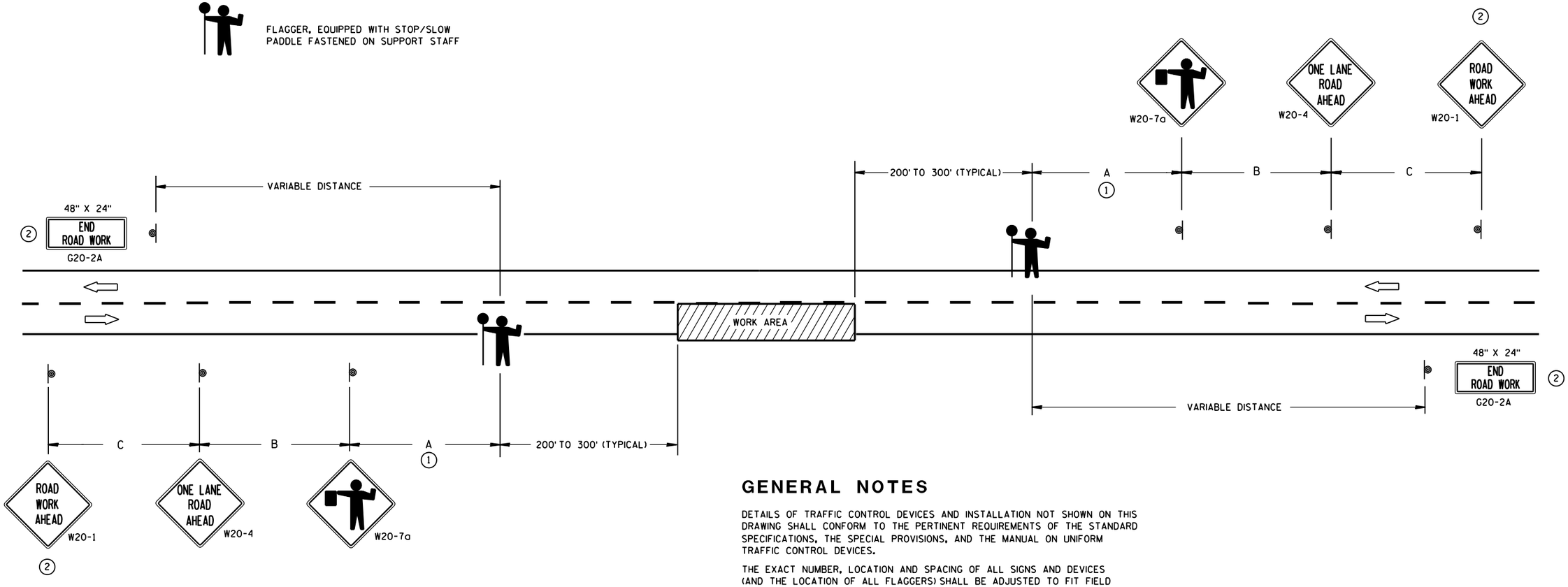

(1) FOR A MOVING WORK OPERATION,
SIGNING FOR BOTH DIRECTIONS SHALL BE REESTABLISHED (AS SIMULTANEOUSLY AS PRACTICAL) AT APPROXIMATELY 3500 FOOT INTERVALS IN THE MOVING WORK OPERATION OR AS APPROVED BY THE ENGINEER.

(2) SIGN NOT REQUIRED IF FLAGGING OPERATION OCCURS WITHIN A SIGNED ROAD WORK ZONE AREA.

GENERAL NOTES

DETAILS OF TRAFFIC CONTROL DEVICES AND INSTALLATION NOT SHOWN ON THIS DRAWING SHALL CONFORM TO THE PERTINENT REQUIREMENTS OF THE STANDARD SPECIFICATIONS, THE SPECIAL PROVISIONS, AND THE MANUAL ON UNIFORM TRAFFIC CONTROL DEVICES.

THE EXACT NUMBER, LOCATION AND SPACING OF ALL SIGNS AND DEVICES (AND THE LOCATION OF ALL FLAGGERS) SHALL BE ADJUSTED TO FIT FIELD CONDITIONS AS APPROVED BY THE ENGINEER.

THE FIRST ADVANCE WARNING SIGN SHOULD TYPICALLY BE LOCATED IN ADVANCE OF THE ANTICIPATED TRAFFIC BACKUP OR QUEUE.

WHEN A SIDE ROAD OR RAMP INTERSECTS THE FACILITY ON WHICH THE WORK IS BEING PERFORMED, ADDITIONAL TRAFFIC CONTROLS SHALL BE PROVIDED AS SPECIFIED IN THE PLANS AND/OR THE SPECIAL PROVISIONS OR AS APPROVED BY THE ENGINEER.

FLAGGERS SHALL BE IN SIGHT OF EACH OTHER OR IN DIRECT COMMUNICATION AT ALL TIMES. THEY SHALL BE EQUIPPED WITH STOP/SLOW PADDLES FASTENED ON SUPPORT STAFFS. WHEN THE FLAGGING OPERATION IS NOT IN EFFECT, COVER OR REMOVE ALL TEMPORARY TRAFFIC CONTROL SIGNS.

ALL SIGNS ARE 48" X 48" UNLESS OTHERWISE NOTED.

TRAFFIC CONTROL FOR LANE CLOSURE (SUITABLE FOR MOVING OPERATIONS)

STATE OF WISCONSIN
DEPARTMENT OF TRANSPORTATION

APPROVED
8/2013 — DATE
/S/ Travis Feltes — STATE TRAFFIC ENGINEER
FHWA

6

S.D.D. 15 C 12-4

6

S.D.D. 15 C 12-4

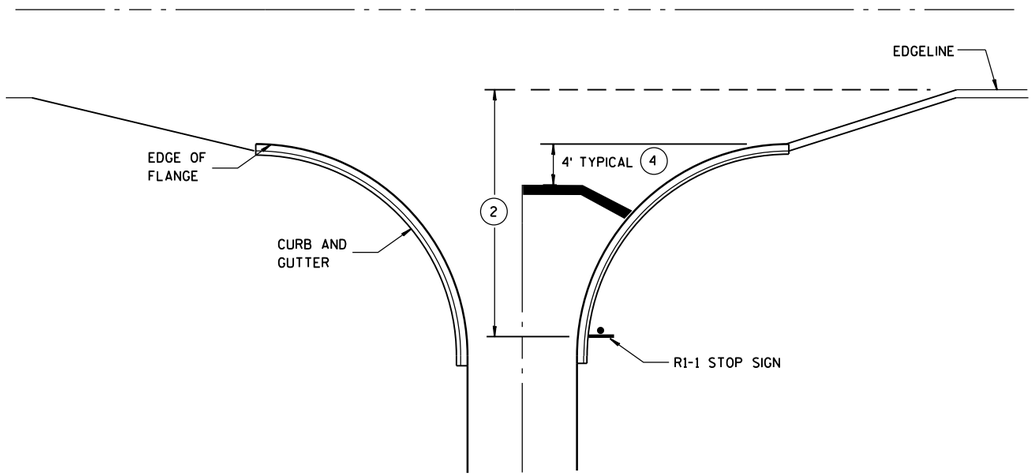

TYPICAL STOP LINE PAVEMENT MARKING WITH CURB AND GUTTER

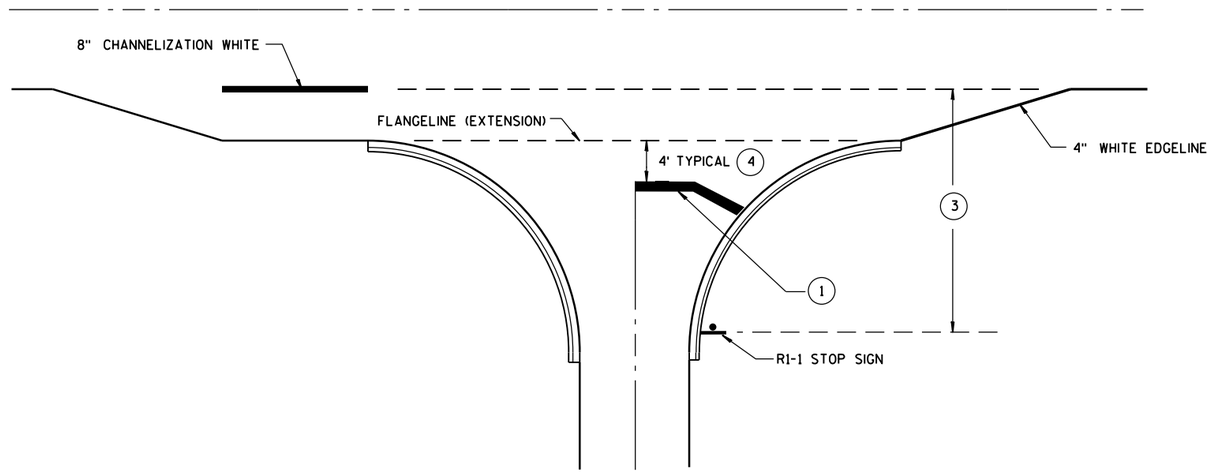

TYPICAL STOP LINE PAVEMENT MARKING FOR SIDEROADS WITH RIGHT TURN LANE

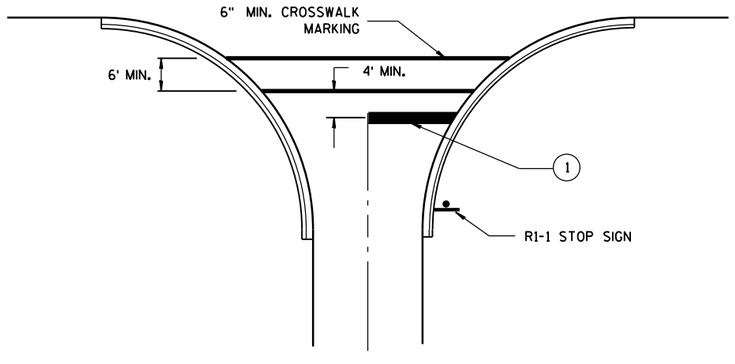

TYPICAL STOP LINE PAVEMENT MARKING FOR SIDEROADS WITH CROSSWALK MARKING

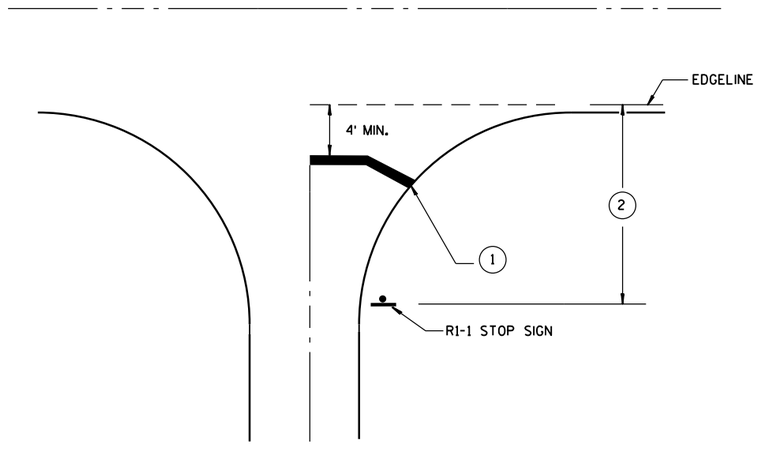

TYPICAL STOP LINE PAVEMENT MARKING WITHOUT CURB AND GUTTER

GENERAL NOTES

1. 18-INCH STOP LINES MAY BE DELETED OR ADDED BY THE PROJECT ENGINEER BASED ON VISIBILITY AND SIGHT LINES.
2. IF STOP SIGN IS LESS THAN OR EQUAL TO 40 FEET FROM THE EDGELINE THAN NO STOP LINE IS REQUIRED.
3. IF STOP SIGN IS LESS THAN OR EQUAL TO 30 FEET FROM THE FLANGELINE EXTENSION THAN NO STOP LINE IS REQUIRED.
4. MOVE CLOSER TO EDGE OF TRAVEL LANE AS NEEDED FOR VISIBILITY AND SIGHT LINES.

STOP LINE AND CROSSWALK PAVEMENT MARKING

STATE OF WISCONSIN
DEPARTMENT OF TRANSPORTATION

APPROVED

4/30/2013
DATE

/S/ Travis Feltes
STATE TRAFFIC E

FHWA

6

S.D.D. 15 C 33-1
S.D.D. 15 C 33-1

LEGEND

- TYPE III BARRICADE WITH ATTACHED SIGN
- SIGN ON PERMENENT SUPPORT
- TRAFFIC CONTROL DRUM WITH TYPE "C" STEADY BURN LIGHT
- TRAFFIC CONTROL DRUM
- FLASHING ARROW BOARD
- (A) TYPE "A" WARNING LIGHT (FLASHING)
- REMOVING PAVEMENT MARKING
- DIRECTION OF TRAFFIC
- WORK AREA

GENERAL NOTES

THE EXACT NUMBER, LOCATION, AND SPACING OF ALL SIGNS AND DEVICES SHALL BE ADJUSTED TO FIT FIELD CONDITIONS AS APPROVED BY THE ENGINEER.

THE SPACING BETWEEN SIGNS SHOULD BE ADJUSTED TO NOT CONFLICT WITH AND TO PROVIDE A MINIMUM OF 200 FEET, (500 FEET DESIREABLE) DISTANCE TO EXISTING SIGNS.

THIS LANE CLOSURE IS TYPICAL FOR CLOSING RIGHT LANE - REVERSE FOR CLOSING LEFT LANE.

ALL SIGNS ARE 48"×48" UNLESS OTHERWISE NOTED.

"WO" IS THE SAME AS "W" EXCEPT THE BACKGROUND IS ORANGE.

ANY SIGNS TEMPORARY OR EXISTING, WHICH CONFLICT WITH TRAFFIC CONTROL "IN USE" SHALL BE REMOVED OR COVERED AS NEEDED AND AS APPROVED BY THE ENGINEER. NO WARNING LIGHTS SHALL BE WORKING ON "COVERED" OR "DOWNED" SIGNS.

CONSIDER GEOMETRICS WHEN LOCATING SIGNS AND ARROW BOARD SO THE DRIVER HAS A CLEAR VIEW OF THE ARROW BOARD AND LANE CLOSURE DRUMS FOR A MINIMUM 1500 FEET IN FRONT OF DRUMS.

FOR A LANE CLOSURE THAT IS IN PLACE LESS THAN 7 CONTINUOUS DAYS AND NIGHTS, THE ADVANCED WARNING SIGNS MAY BE MOUNTED ON PORTABLE SUPPORTS.

REMOVE PAVEMENT MARKINGS IF LANE CLOSURE IS TO BE IN PLACE FOR LONGER THAN 4 OR MORE DAYS AND NIGHTS.

WARNING LIGHTS ARE NOT REQUIRED IF THE LANE CLOSURE IS A DAYTIME ONLY OPERATION.

IF THE HORIZONTAL ALIGNMENT IS SUCH THAT A CURVE MAY REQUIRE ADDITIONAL DELINEATION, THE DEVICE SPACING MAY BE DECREASED TO 50 FEET.

ADJUSTMENTS IN BUFFER SPACE NEED TO BE INCORPORATED WHEN THE LANE CLOSURE OCCURS NEAR AN INTERCHANGE EXIT OR ENTRANCE RAMP. THE LANE CLOSURE MUST MUST TAKE PLACE FAR ENOUGH IN ADVANCE OF AN EXIT OR ENTRANCE RAMP TO STILL ALLOW FOR ADEQUATE BUFFER SPACE. THE MINIMUM LENGTH OF THE BUFFER SPACE BEFORE AN EXIT RAMP SHOULD BE 1/2 THE LENGTH OF THE TRANSITION AREA. THE ENTRANCE RAMP SHOULD BE FOLLOWED BY THE ORIGINAL BUFFER SPACE LENGTH OF 800 FEET DESIRABLE PRIOR TO ANOTHER TRAFFIC CONTROL CHANGE SUCH AS A CROSSOVER MANEUVER.

* THE LEFT REVERSE CURVE SIGN (W01-4L) IS ONLY REQUIRED WHEN THIS DETAIL IS USED IN COMBINATION WITH "SINGLE LANE CROSSOVER" DETAIL.

** A SPEED LIMIT SIGN SHALL BE LOCATED 1500 FEET BEYOND THE END OF THE ACCELERATION LANE OF EACH ENTRANCE RAMP. THERE SHOULD BE A SPEED LIMIT SIGN INCORPORATED A MINIMUM OF EVERY 2 OR 3 MILES. INCLUDE A 65 MPH RESUME SPEED LIMIT SIGN 200 FEET MINIMUM (500 FEET DESIREABLE) BEYOND THE "END OF ROADWORK" SIGN.

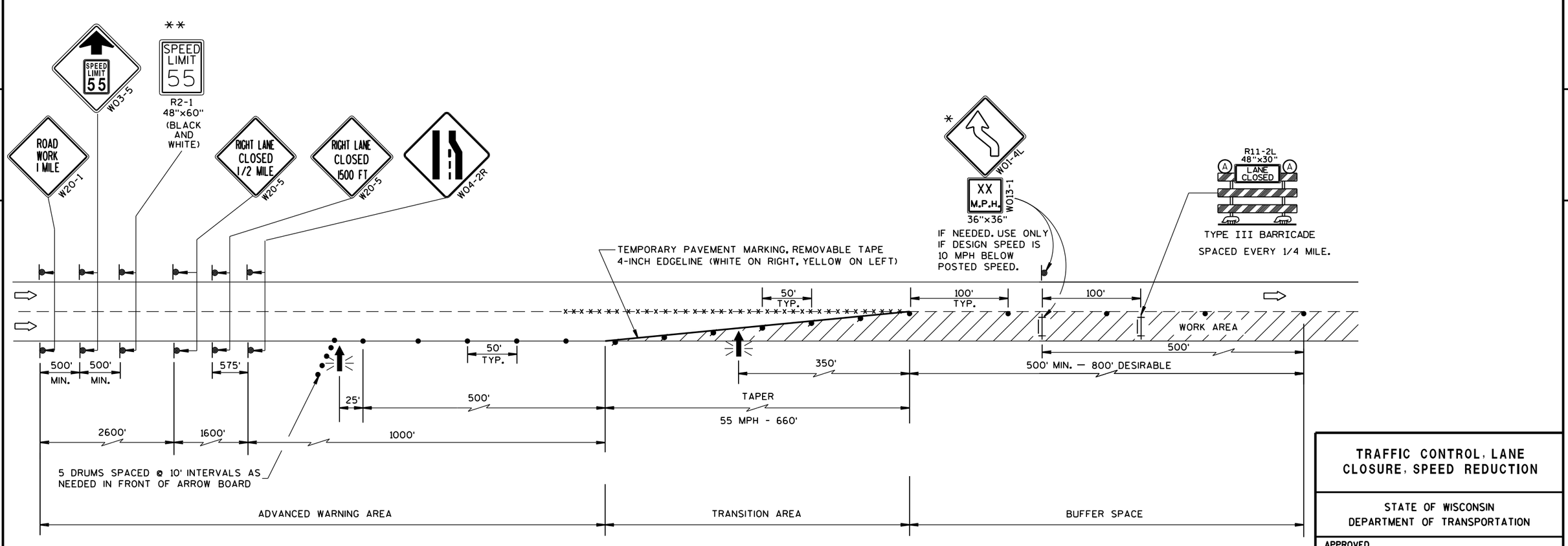

TRAFFIC CONTROL, LANE CLOSURE, SPEED REDUCTION

STATE OF WISCONSIN
DEPARTMENT OF TRANSPORTATION

APPROVED
3-2014 — DATE
/S/ Travis Feltes — STATE TRAFFIC ENGINEER
FHWA

6
S.D.D. 15 D 12-4

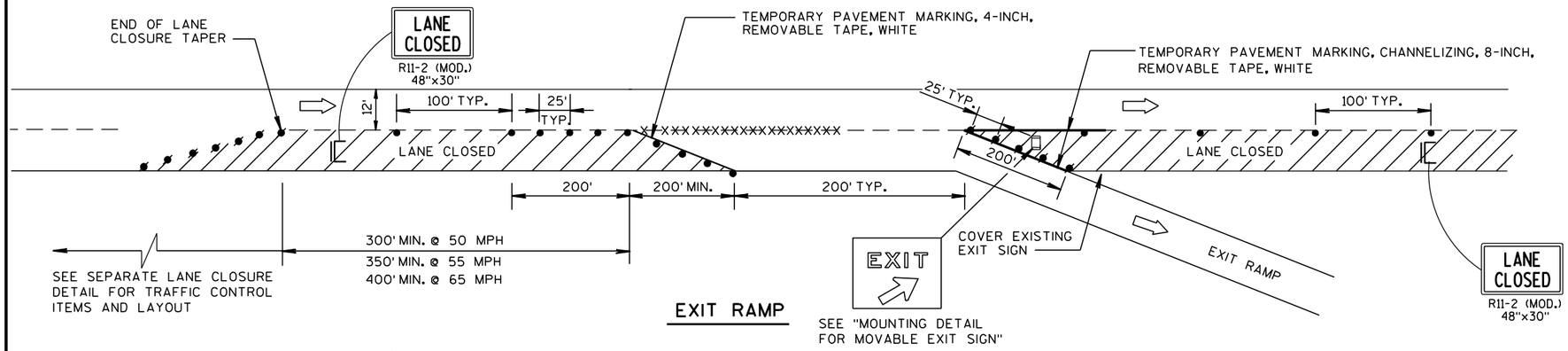

EXIT RAMP

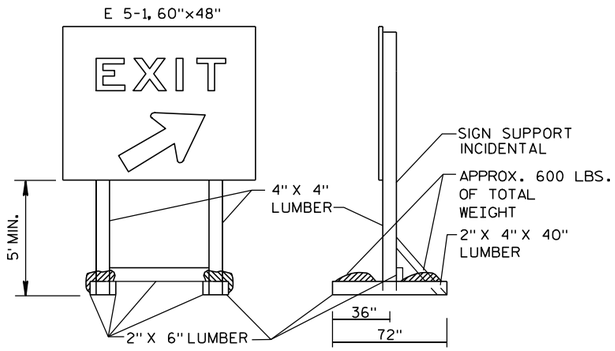

NOTE: ALL LUMBER DIMENSIONS ARE NOMINAL

MOUNTING DETAIL FOR MOVABLE EXIT SIGN

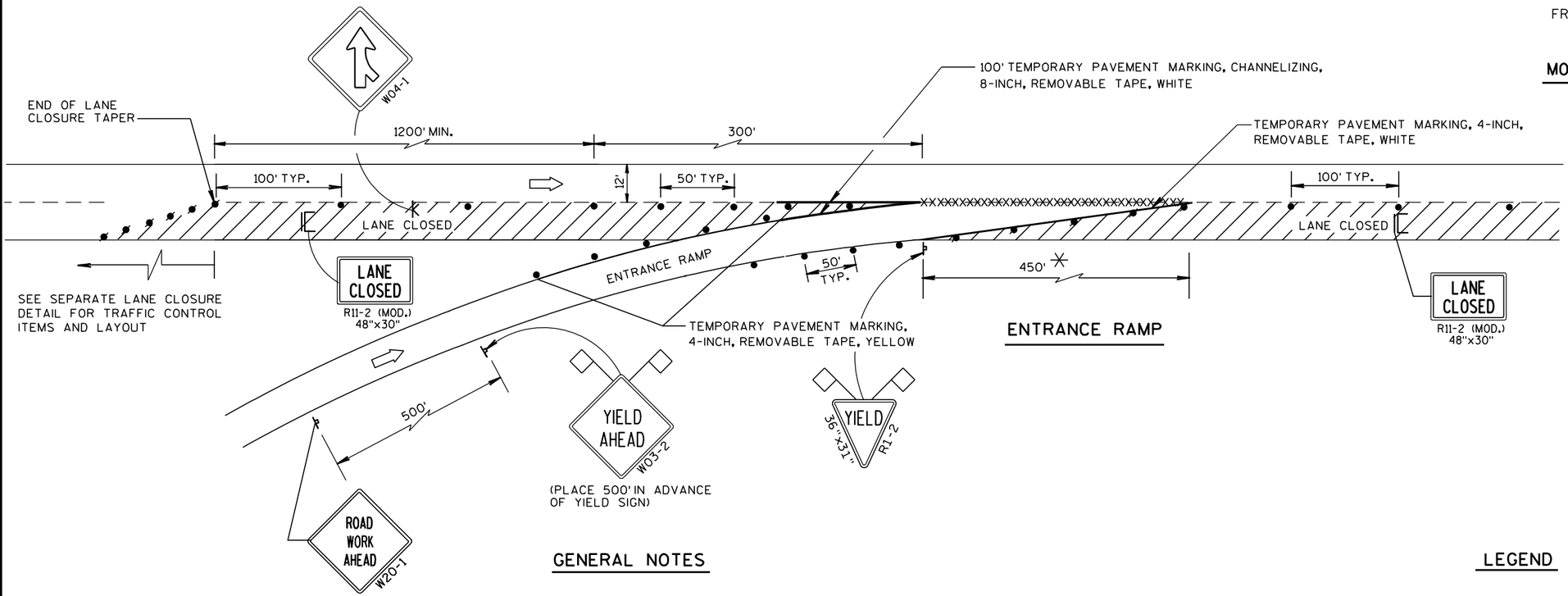

ENTRANCE RAMP

GENERAL NOTES

THE INSTALLATIONS SHOWN ON THIS SHEET ARE TYPICAL EXAMPLES AND ARE NOT INTENDED TO REPRESENT ANY PARTICULAR RAMP. AT SPECIFIC FIELD LOCATIONS, SIMILAR INSTALLATIONS SHALL BE USED AND ADJUSTED TO THE GEOMETRICS OF THE RAMP AS COORDINATED WITH THE ENGINEER.

THE EXACT NUMBER, LOCATION, AND SPACING OF ALL SIGNS AND DEVICES SHALL BE ADJUSTED TO FIT FIELD CONDITIONS AS APPROVED BY THE ENGINEER.

THE SPACING BETWEEN TRAFFIC CONTROL SIGNS SHOULD BE ADJUSTED TO NOT CONFLICT WITH AND SHOULD PROVIDE A MINIMUM OF 200 FEET, (500 FEET DESIRABLE) CLEARANCE TO EXISTING SIGNS THAT WILL REMAIN IN PLACE.

ALL SIGNS ARE 48"x48" UNLESS OTHERWISE NOTED.

"WO" IS THE SAME AS "W" EXCEPT THE BACKGROUND IS ORANGE.

SEE SEPARATE LANE CLOSURE DETAIL FOR TYPICAL SPACING OF TYPE III BARRICADES AND R11-2 (MOD.) "LANE CLOSED" SIGNS.

YIELD SIGN AND WARNING SIGNS ON ENTRANCE RAMP ARE ALSO APPROPRIATE FOR CLOSURE OF THE MAINLINE LEFT LANE. OMIT THE YIELD SIGN IF MORE THAN ONE LANE REMAINS OPEN ON THE MAINLINE AND THE RAMP TAPER IS AT LEAST AS LONG AS THE NORMAL ENTRANCE RAMP TAPER AT THE SITE.

SIGNS THAT WILL BE IN PLACE LESS THAN 7 CONTINUOUS DAYS AND NIGHTS, OR THAT WILL BE PLACED IN A CLOSED LANE, MAY BE MOUNTED ON PORTABLE SUPPORTS.

IF INDICATED IN MISCELLANEOUS QUANTITIES, SUBSTITUTE FLEXIBLE TUBULAR MARKERS FOR DRUMS IN THE GORE BETWEEN THE ENTRANCE RAMP AND MAINLINE TRAFFIC.

ANY SIGNS TEMPORARY OR EXISTING, WHICH CONFLICT WITH TRAFFIC CONTROL "IN USE" SHALL BE REMOVED OR COVERED AS NEEDED AND AS APPROVED BY THE ENGINEER.

REMOVE PAVEMENT MARKINGS AND PLACE TEMPORARY PAVEMENT MARKING, REMOVABLE TAPE IF LANE CLOSURE IS TO BE IN PLACE FOR 7 OR MORE CONTINUOUS DAYS AND NIGHTS.

WARNING LIGHTS ARE NOT REQUIRED IF THE LANE CLOSURE IS A DAYTIME ONLY OPERATION.

✳ LENGTH OF OPENING MAY BE REDUCED TO 150 FEET DURING STAGING OF WORK IN IMMEDIATE AREA OF RAMP TAPER.

LEGEND

- POST MOUNTED SIGN
- SIGN ON PORTABLE SUPPORT
- TRAFFIC CONTROL, DRUM
- TRAFFIC CONTROL, DRUM WITH WARNING LIGHT, TYPE C (STEADY-BURN)
- REMOVING PAVEMENT MARKING (SEE GENERAL NOTES)
- TYPE III BARRICADE (8' EQUIVALENT) WITH SIGN
- FLAGS, 16"x16" MIN., ORANGE
- DIRECTION OF TRAFFIC FLOW

TRAFFIC CONTROL, EXIT AND ENTRANCE RAMP WITHIN LANE CLOSURE

STATE OF WISCONSIN
DEPARTMENT OF TRANSPORTATION

APPROVED
5/24/2000 DATE
/S/ Chester J. [illegible]
CHIEF SIGNS AND MARKINGS ENGINEER
FHWA

S.D.D. 15 D 15-1

LEGEND

- TRAFFIC CONTROL DRUM
- SIGN ON PERMANENT SUPPORT
- DIRECTION OF TRAFFIC
- FLASHING ARROW BOARD
- WORK AREA

GENERAL NOTES

THIS DETAIL IS TYPICAL FOR CLOSING THE RIGHT SHOULDER. FOR CLOSING THE LEFT SHOULDER, REVERSE THE TRAFFIC CONTROL.

THIS DETAIL MAY BE USED FOR DIVIDED ROADWAYS WITH ANY NUMBER OF TRAVEL LANES.

THE EXACT NUMBER, LOCATION AND SPACING OF ALL SIGNS AND DEVICES SHALL BE ADJUSTED TO FIT FIELD CONDITIONS AS APPROVED BY THE ENGINEER.

ALL SIGNS ARE 48" X 48" UNLESS OTHERWISE NOTED.

SIGN LAYOUTS SHALL BE IN ACCORDANCE WITH THE FHWA'S MANUAL OF STANDARD HIGHWAY SIGNS OR THE WISCONSIN STANDARD SIGN PLATES.

SIGNS THAT WILL BE IN PLACE LESS THAN 7 CONTINUOUS DAYS AND NIGHTS MAY BE MOUNTED ON PORTABLE SUPPORTS.

ANY SIGNS TEMPORARY OR EXISTING, WHICH CONFLICT WITH TRAFFIC CONTROL "IN USE" SHALL BE REMOVED OR COVERED AS NEEDED AND AS APPROVED BY THE ENGINEER.

CHANNELIZING DEVICES PLACED ADJACENT TO THE WORK AREA SHALL BE PULLED BACK FROM THE TRAVEL LANE WHEN WORK IS NOT IN PROGRESS.

WHEN A RAMP INTERSECTS THE FACILITY ON WHICH THE WORK IS BEING PERFORMED, ADDITIONAL TRAFFIC CONTROLS SHALL BE PROVIDED AS SPECIFIED IN THE PLANS AND/OR THE SPECIAL PROVISIONS OR AS APPROVED BY THE ENGINEER.

*FOR SHORT DURATION SHOULDER WORK OF LESS THAN ONE HOUR, THE W21-5a SIGN MAY BE OMITTED.

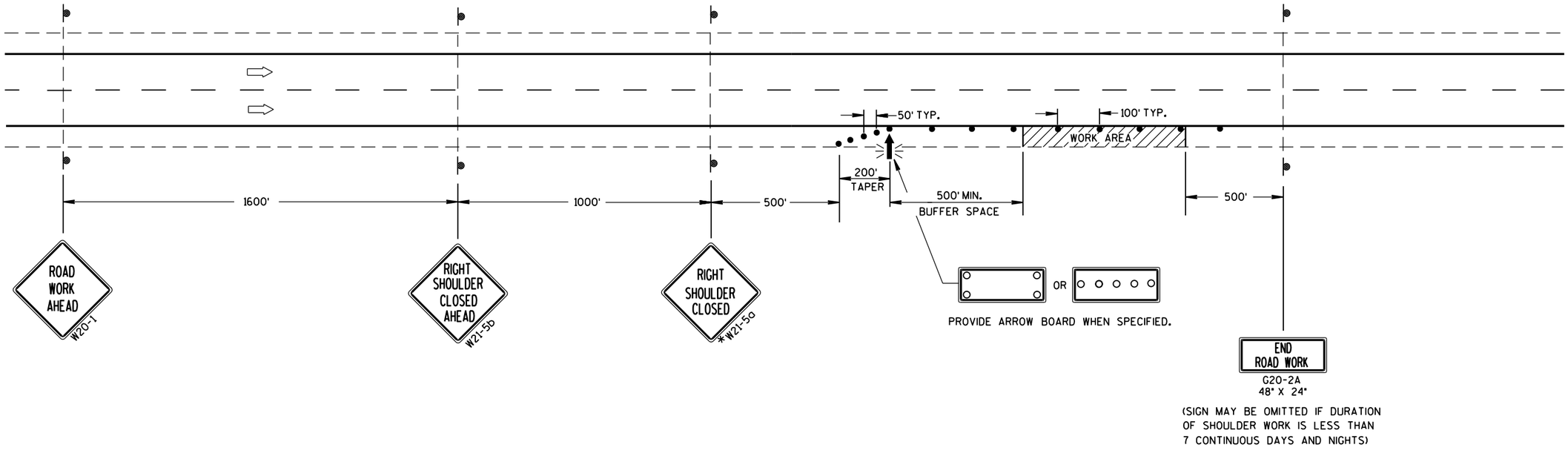

TRAFFIC CONTROL SHOULDER CLOSURE ON DIVIDED ROADWAY, SPEEDS GREATER THAN 40 MPH

STATE OF WISCONSIN
DEPARTMENT OF TRANSPORTATION

APPROVED

8/2013 DATE

/S/ Travis Feltes
STATE TRAFFIC ENGINEER

FHWA

6

S.D.D. 15 D 27-2

TYPICAL ASSEMBLIES

J1-1

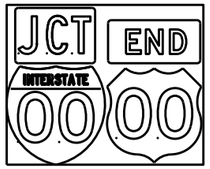

J1-2

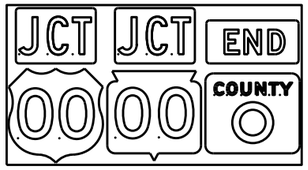

J1-3

J2-1

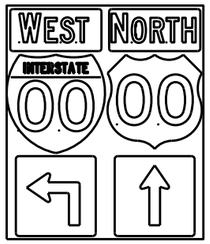

J2-2

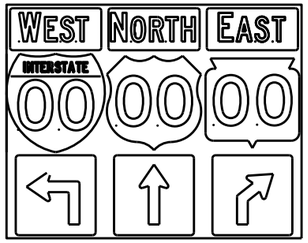

J2-3

JV

(Typical Vertical J-Assembly
See Note 10 and 11)

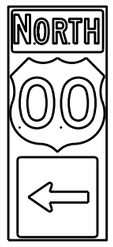

J3-1

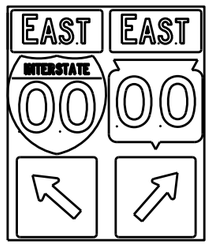

J3-2

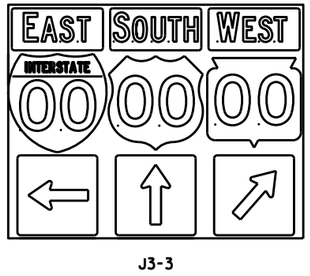

J3-3

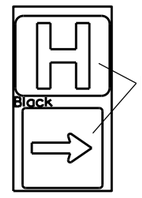

JH-1

J4-1

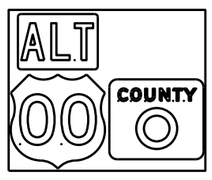

J4-2

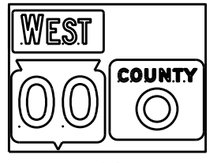

J4-2

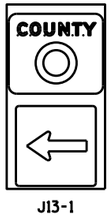

J13-1

J12-1

J32-1

J33-1

J23-1

J22-1

[blue background with interstate]

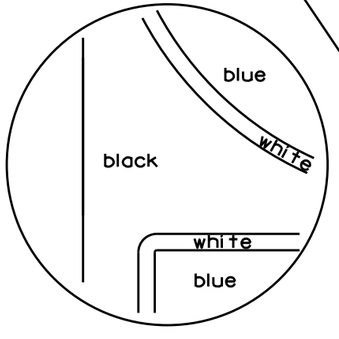

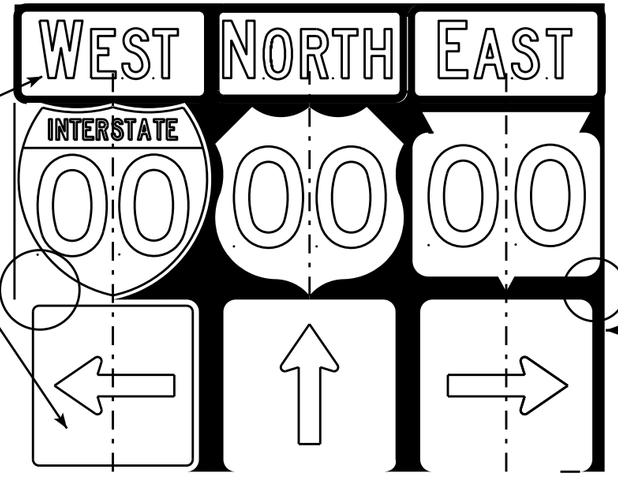

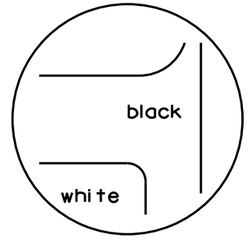

[black background]

NOTES

1. Signs are Type II - Type H Reflective - reference WIS DOT Standard Specification for HIGHWAY and STRUCTURE CONSTRUCTION latest edition.
2. Color:
   Background - Black Non-reflective
   Message - see Note 5
3. Message Series - See Note 5
4. Corners shall be square or rounded if base material is plywood. If base material is metal the corners shall be rounded.
5. The colors and message spacing on each marker shall be according to the applicable route marker panel specifications.
6. Certain marker heads require the component pieces to be the same color. As an example, all the components used with an M1-1 Interstate marker shall be blue.
7. Single panel j-assemblies shall only be used with route marker shields that are same size. If the route marker shields are different size use multiple piece component.
8. Route assemblies that have 24 inch route shields and have dimensions greater than 48 inches (both vertical and horizontal) shall have one horizontal splice between the arrows and route shields. Vertical splices shall not be used on route assemblies with a horizontal dimension of 144 inches or less. The contractor shall not use more than one vertical joint per sign and the joint shall be between route shields.
9. Route assemblies that have 36 inch shields and have dimensions greater than 48 inchs (both vertical and horizontal) shall have two horizontal splices. One horizontal splice shall be between the cardinal direction and route shields and the other horizontal splice shall be between the arrows and route shields. Vertical splices shall not be used on route assemblies with a horizontal dimension of 144 or less. The contractor shall not use more than one vertical joint per sign and the joint shall be between route shields.
10. All Vertical J Assemblies are given a Sign Code of JV
11. For JV Assemblies that have a mixture of Interstate and non Interstate shields, arrows and cardinals shall be white on blue.

ROUTE MARKERS & COMPONENTS
IN TYPICAL ASSEMBLIES

WISCONSIN DEPT OF TRANSPORTATION

APPROVED Matthew R Rauch
for State Traffic Engineer

DATE 2/06/14 PL... A2-1S.8

PROJECT NO: | SHEET NO: E

FILE NAME : C:\CAEFiles\Projects\tr_stdplate\A21S.DGN PLOT DATE : 06-FEB-2014 14:10 PLOT BY : mscsja PLOT NAME :
WISDOT/CADDS SHEET 42

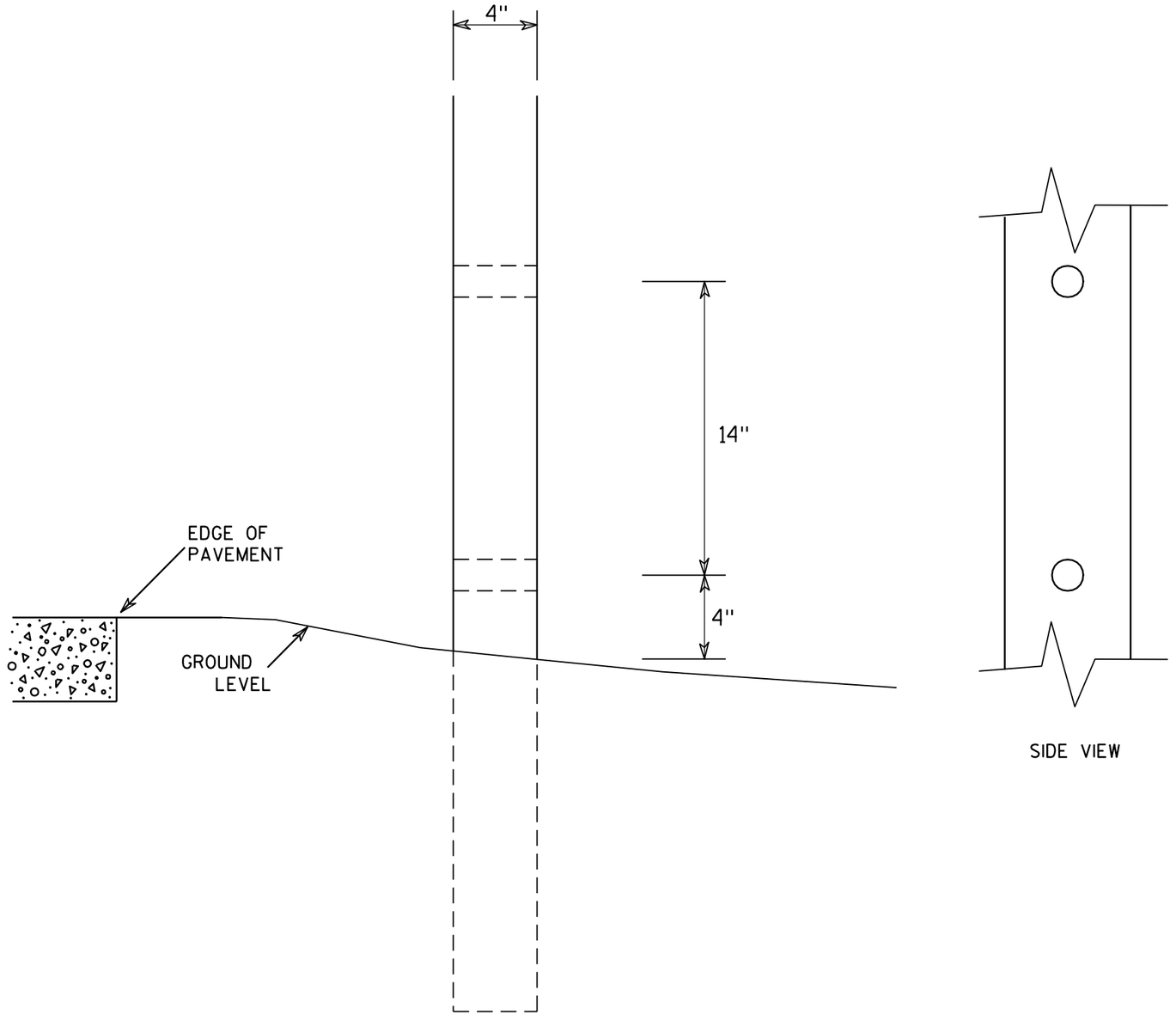

SIDE VIEW

GENERAL NOTES

1. All 4 x 6 Wood Posts shall be modified by having two 1½" diameter holes drilled perpendicular to the roadway centerline.

7

7

4 X 6 WOOD POST MODIFICATIONS

WISCONSIN DEPT OF TRANSPORTATION

APPROVED Chester J Spang for State Traffic Engineer

DATE 3/27/97 PLATE NO. A4-11.2

PROJECT NO:	HWY:	COUNTY:		SHEET NO: 75	E

URBAN AREA

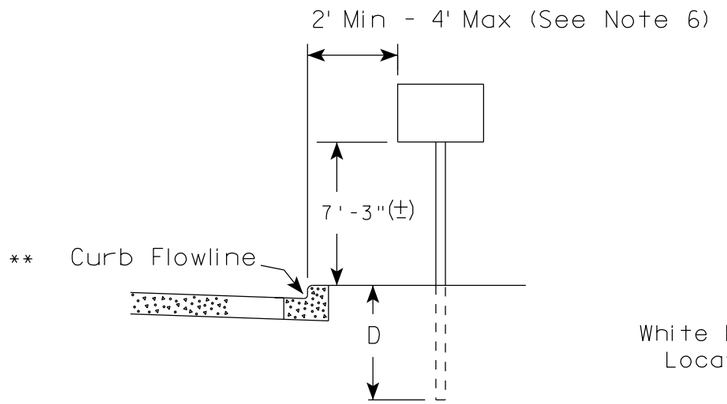

RURAL AREA (See Note 2)

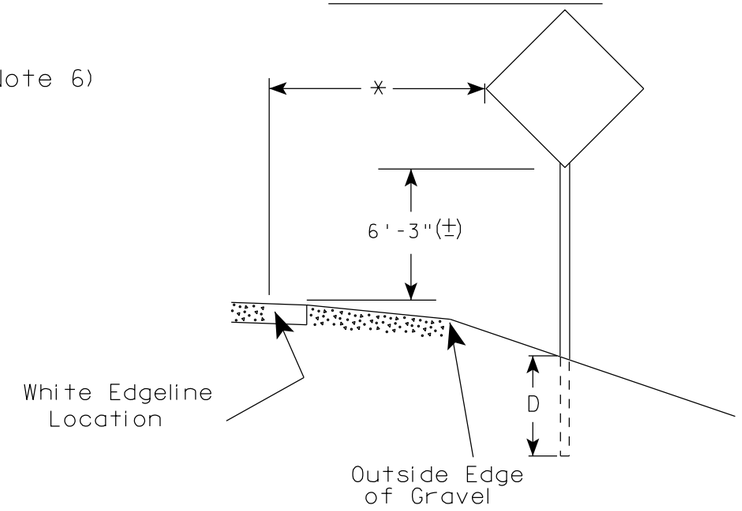

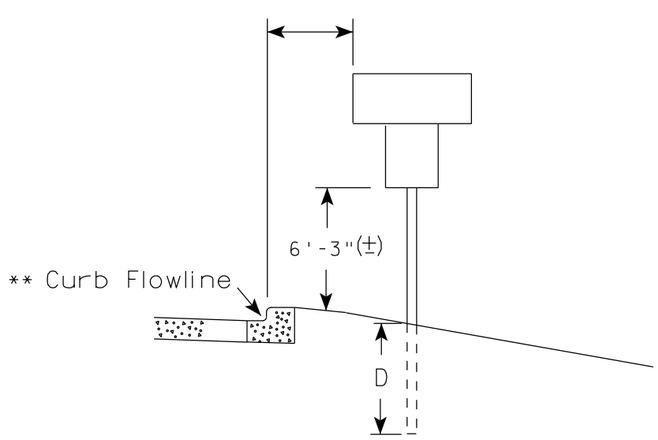

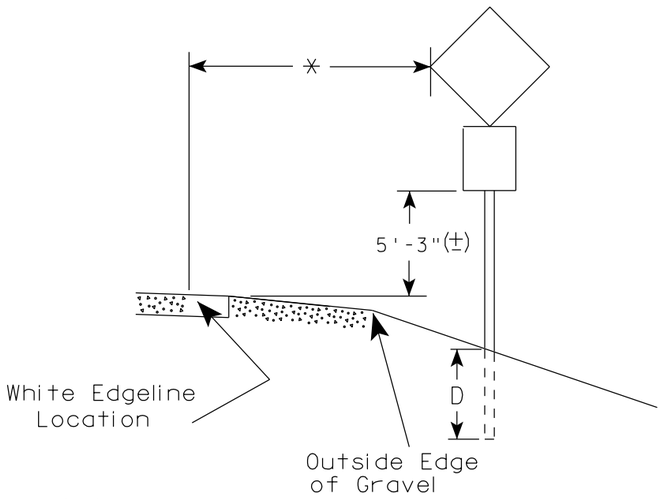

GENERAL NOTES

1. Signs wider than 4 feet, 20 sq.ft or larger, shall be mounted on multiple posts. Refer to plate A4-4.
2. If signs are mounted on barrier wall, see A4-10 sign plate.
3. For expressways and freeways, mounting height is 7'- 3" (±) or 6'-3" (±) depending upon existence of a sub-sign.
4. Minimum mounting height for J assemblies (A2-1S) is 7'-3" (±) or 6'-3" (±) per urban or rural detail respectively.
5. Minimum mounting height for signs mounted on traffic signal poles is 5'- 3" (±).
6. Offset distance shall be consistent with existing signs or consistent throughout length of project.
7. The (±) tolerance for mounting height is 3 inches.
8. Folding signs shall be mounted at a height of 5'-3" (±) or as directd by the Engineer.
9. The Double Arrow sign (W12-1) shall be mounted at a height of 2'-3" (±). The Chevron sign (W1-8), Roundabout Chevron panel (R6-4B), Enhanced Reference Markers, Clearance Markers (W5-52), Mile Markers (D10 series), In Road Object Markers (W5-54) & End of Road Markers (W5-56) shall be mounted at a height of 4'-3" (±).

POST EMBEDMENT DEPTH

Area of Sign Installation (Sq. Ft.)	D (Min)
20 or Less	4'
Greater than 20	5'

** The existence of curb and gutter does not in itself mandate the vertical clearance illustrated. That height is typically measured where there is sidewalk adjacent to the roadway or parking is permitted. In the absence of sidewalk vertical clearance is measured from the top of the curb. Offset of signs is measured from the flow line.

* 6 feet from edge of a paved shoulder or 12 feet from the edge of pavement (edge line location) or 2 feet from outside edge of gravel, whichever is greater unless directed by project engineer.

TYPICAL INSTALLATION OF PERMANENT TYPE II SIGNS ON SINGLE POSTS

WISCONSIN DEPT OF TRANSPORTATION

APPROVED Matthew R Rauch
for State Traffic Engineer

DATE 11/12/14 PLATE NO. A4-3.19

PROJECT NO:	HWY:	COUNTY:		SHEET NO:	E

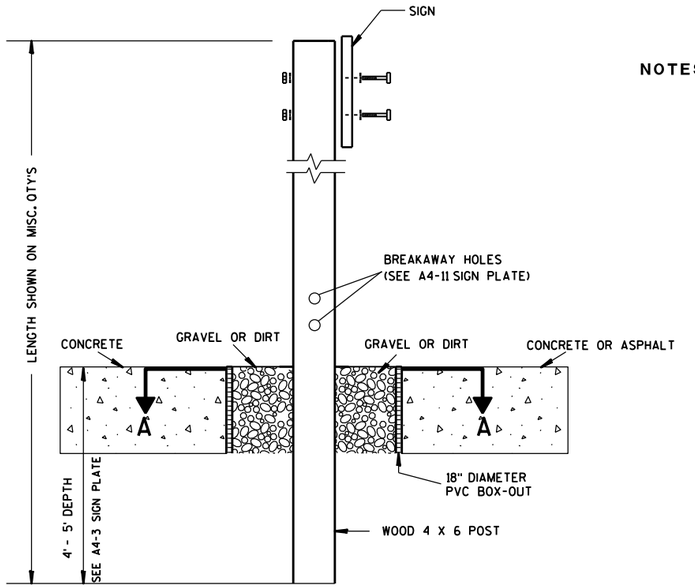

ELEVATION VIEW

DETAIL OF WOOD 4 X 6 SIGN POST IN BOX-OUT

NOTES:
1. ALL MATERIAL TO BE APPROVED BY ENGINEER PRIOR TO INSTALLATION
2. SEE SIGN PLATE A4-8 FOR SIGN HARDWARE REQUIREMENTS
3. 18 INCH X 18 INCH SQUARE BOX-OUTS MAY BE USED FOR INSTALLATIONS IN EXISTING CONCRETE OR ASPHALT LOCATIONS.

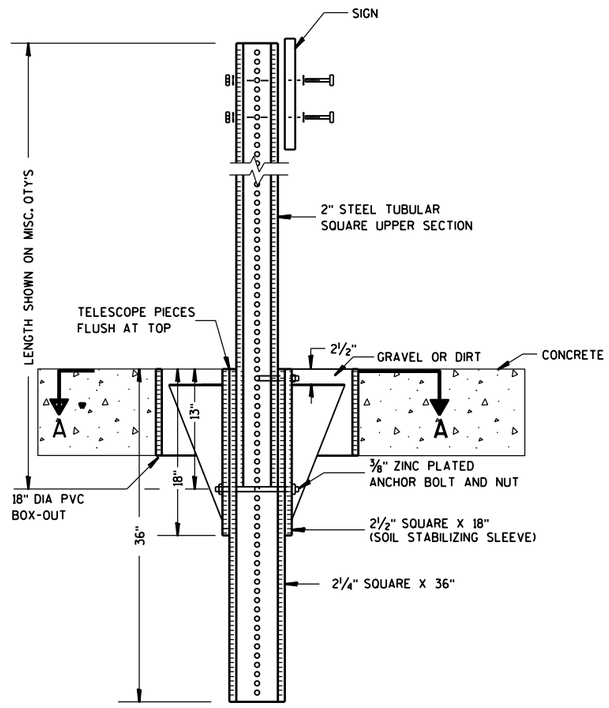

ELEVATION VIEW

DETAIL OF STEEL 2 X 2 SIGN POST IN BOX-OUT

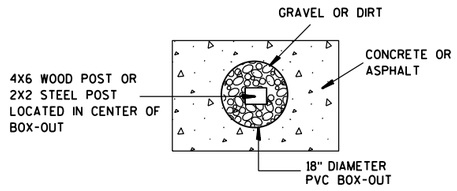

PLAN VIEW

FOR NEW CONCRETE/ASPHALT INSTALLATIONS

SIGN POST BOX-OUTS A4-3B

WISCONSIN DEPT OF TRANSPORTATION

APPROVED Matthew R Rauch
for State Traffic Engineer

DATE 1/27/14 PLATE NO. A4-3B.1

PROJECT NO:	HWY:	COUNTY:		SHEET NO:	E

URBAN AREA

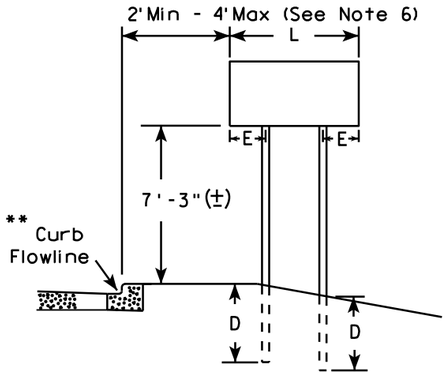

RURAL AREA (See Note 3)

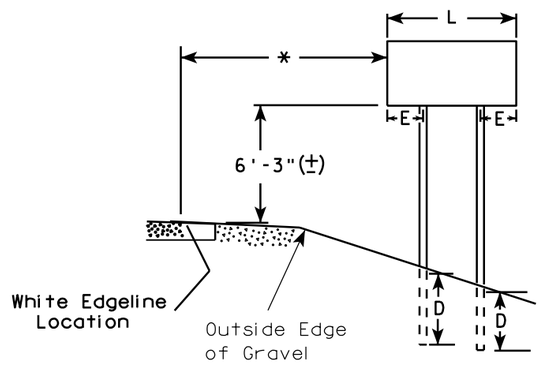

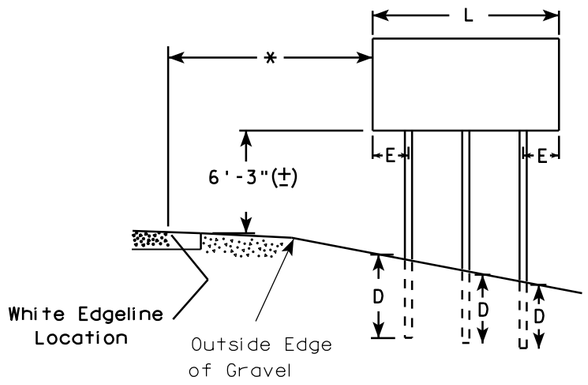

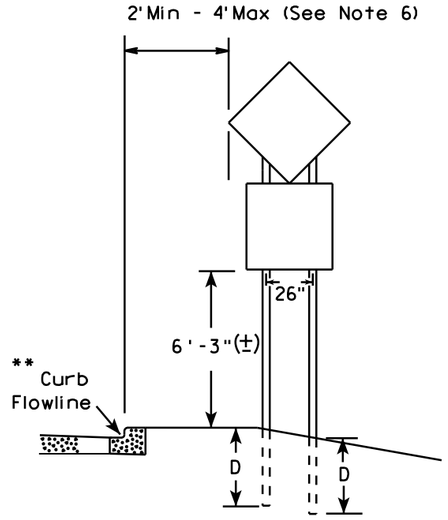

48" DIAMOND WARNING SIGN

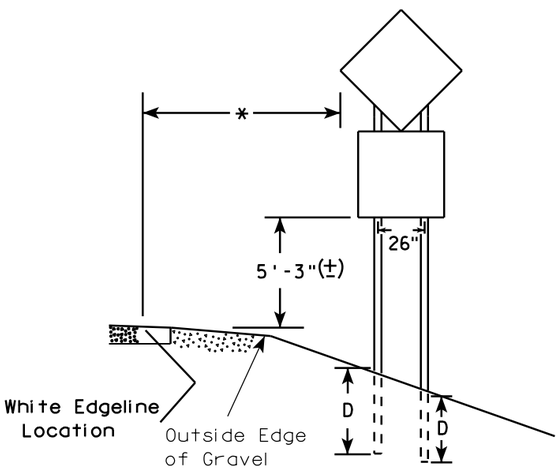

48" DIAMOND WARNING SIGN

GENERAL NOTES

1. For 3 or 4 post installations, individual post spacing shall be greater than 3'-6".
2. See tables below for required number of posts.
3. For expressways and freeways, mounting height is 7'-3" (±) or 6'-3" (±) depending upon existence of sub-sign.
4. The (±) tolerance for mounting height is 3 inches.
5. Minimum mounting height for J assemblies (A2-1S) is 7'-3" (±) or 6'-3" (±) per urban or rural detail respectively.
6. Offset distance shall be consistent with existing signs or consistent throughout length of project.
7. Folding signs shall be mounted at a height of 5'-3" (±) or as directed by the engineer.
8. The Double Arrow sign (W12-1) shall be mounted at a height of 2'-3" (±). The Chevron sign (W1-8), Roundabout Chevron panel (R6-4B), Clearance Markers (W5-52), Mile Markers (D10 series), In Road Object Markers (W5-54) & End of Road Markers (W5-56) shall be mounted at a height of 4"-3" (±).

* 6 feet from edge of a paved shoulder or 12 feet from the edge of pavement (edge line location) or 2 feet from outside edge of gravel, whichever is greater unless directed by project engineer.

** The existence of curb and gutter does not in itself mandate the vertical clearance illustrated. That height is typically measured where there is sidewalk adjacent to the roadway or parking is permitted. In the absence of sidewalk vertical clearance is measured from the top of the curb. Offset of signs is measured from the flow line.

*** See A4-3 sign plate for signs 4' or less in width or less than 20 S.F. in area.

SIGN SHAPE OTHER THAN DIAMOND (TWO POSTS REQUIRED)	
L	E
Greater than 48" Less than 60"	12"
60" to 120"	L/5

***

SIGN SHAPE OTHER THAN DIAMOND (THREE POSTS REQUIRED)	
L	E
Greater than 120" less than 168"	12"

SIGN SHAPE OTHER THAN DIAMOND (FOUR POSTS REQUIRED)	
L	E
168" and greater	12"

POST EMBEDMENT DEPTH

Area of Sign Installation (Sq. Ft.)	D (Min)
20 or Less	4'
Greater than 20	5'

TYPICAL INSTALLATION OF TYPE II SIGNS ON MULTIPLE POSTS

WISCONSIN DEPT OF TRANSPORTATION

APPROVED Matthew R Rauch
for State Traffic Engineer

DATE 11/12/14 PLATE NO. A4-4 13

PROJECT NO:	HWY:	COUNTY:		SHEET NO:	E

FILE NAME : C:\CAEFiles\Projects\tr_stdplate\A44.DGN PLOT DATE : 12-NOV-2014 14:01 PLOT BY : mscsja PLOT NAME : PLOT SCALE : 107.021305:1.000000 WISDOT/CADDS SHEET 42

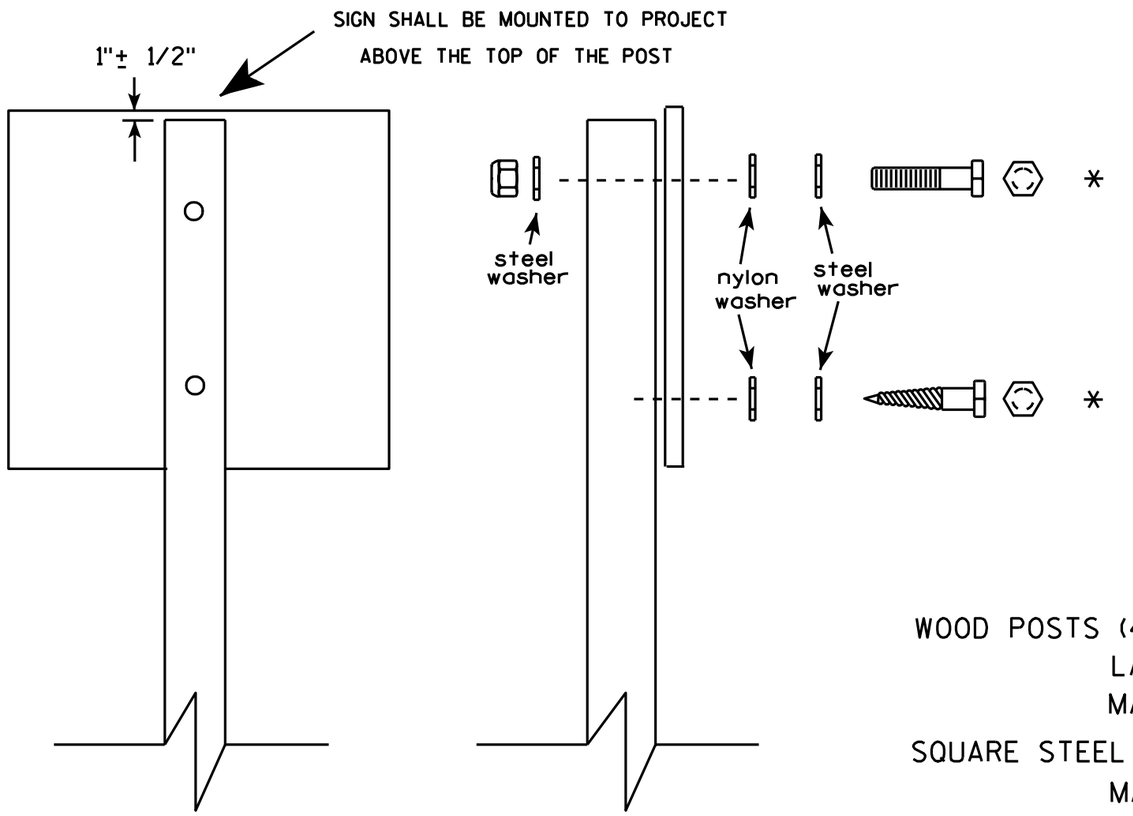

Nuts, bolts and lags used for mounting signs shall have hexagonal heads and shall be either :

a. Hot dip galvanized in accordance with ASTM Designation: A 153, Class D, or SC 3

b. Electro-galvanized in accordance with ASTM Designation : B 633, TYPE III, SC 3.

Threads on bolts and nuts shall be manufactured with sufficient allowance for the cadmium plate or galvanized coating to permit the nuts to run freely on the bolts.

WOOD POSTS (4" x 4" or 4" x 6")
LAG SCREWS - 3/8" X 3"
MACHINE BOLTS - 5/16" X 6-1/2" or 7" Length w/ nuts

SQUARE STEEL POSTS (2" x 2")
MACHINE BOLTS - 3/8" X 3-1/4" Length w/ nuts
RIVETS - 9/32 " (6605-9-6) BULB-TITE, TRI-FOLD, ALUMINUM BODY/MANDREL
O.D. FLANGE .720-.765 INCH, GRIP RANGE .042-.375 INCH

WASHERS (ALL POSTS) -
1-1/4" O.D. X 3/8" I.D. X 1/16" STEEL
1-1/4" O.D. X 3/8" I.D. X .080 NYLON for all Type H signs.

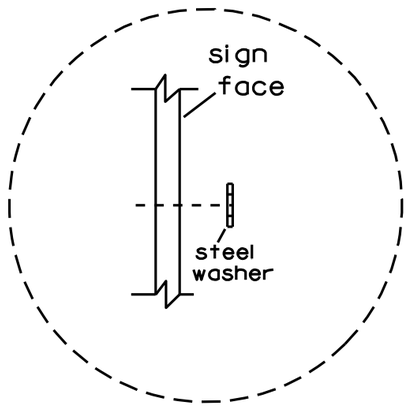

Washer Placement when Sign Has Other Than Type H or Type F Face

* Two different fastening systems are shown for illustration purposes. On any individual sign, either one or the other system shall be used. Actual number of fasteners per sign varies with the sign area, but normally there are two. For a single post installation, all signs greater than 9 sq. ft. require the use of 3 fasteners.

ATTACHMENT OF SIGNS TO POSTS

WISCONSIN DEPT OF TRANSPORTATION

APPROVED Matthew R Rauch
for State Traffic Engineer

DATE 3/23/10 PLATE NO. A4-8.7

7

7

PROJECT NO:

SHEET NO: 79 E

TELESCOPIC TUBING ANCHORS
TWO PIECE SYSTEM

2 1/4 " SQUARE
12 GAUGE
PERFORATED
GALVANIZED FINISH

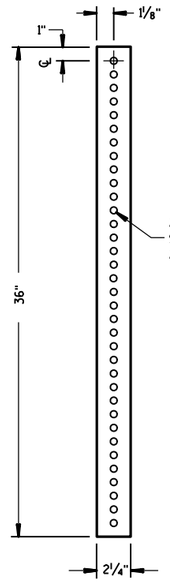

2 1/2 " SQUARE
12 GAUGE
OMNI-DIRECTIONAL
PERFORATED
SOIL STABILIZING SLEEVE
GALVANIZED FINISH

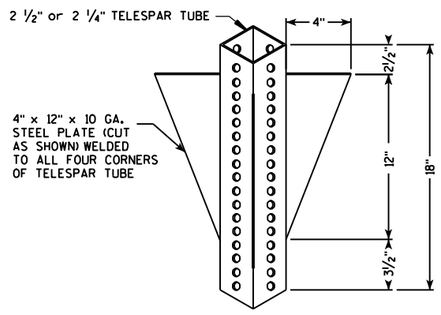

DETAIL OF TUBULAR STEEL SIGN POST
(IN POURED CONCRETE OR ASPHALT)

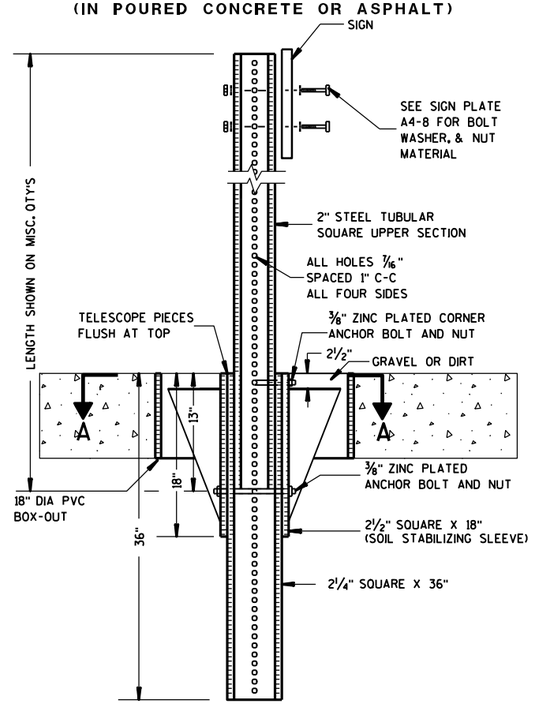

DETAIL OF TUBULAR STEEL SIGN POST
(IN LOCATIONS OTHER THAN POURED CONCRETE OR ASHALT)

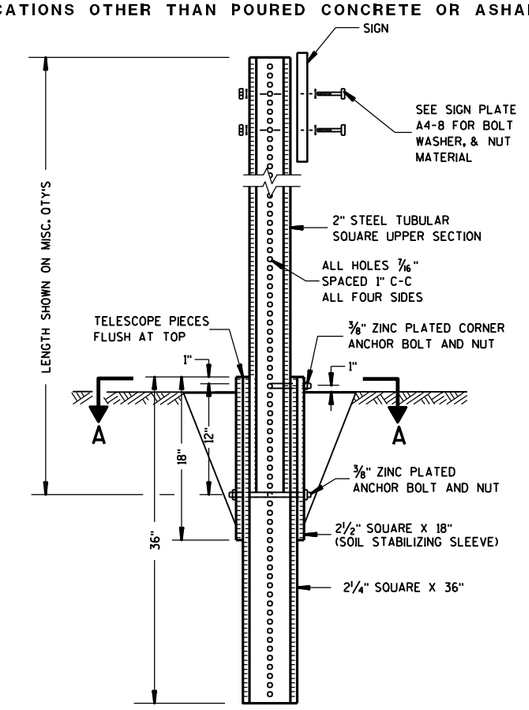

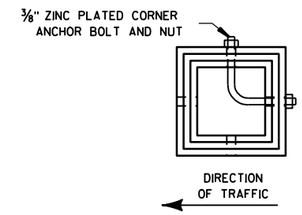

SECTION A-A

Area of Sign Installation (Sq. Ft.)	Number of Required Posts
9 or less	1
Greater than 9 less than or equal to 18	2
Greater than 18 less than or equal to 27	3

Signs wider than 3 feet or larger than 9 sq. ft shall be mounted on multiple posts (see above table).

TUBULAR STEEL SIGN POST A4-9

WISCONSIN DEPT OF TRANSPORTATION

APPROVED Matthew R Rauch
for State Traffic Engineer

DATE 5/30/12 PLATE NO. A4-9.7

PROJECT NO:	HWY:	COUNTY:		SHEET NO: 80	E

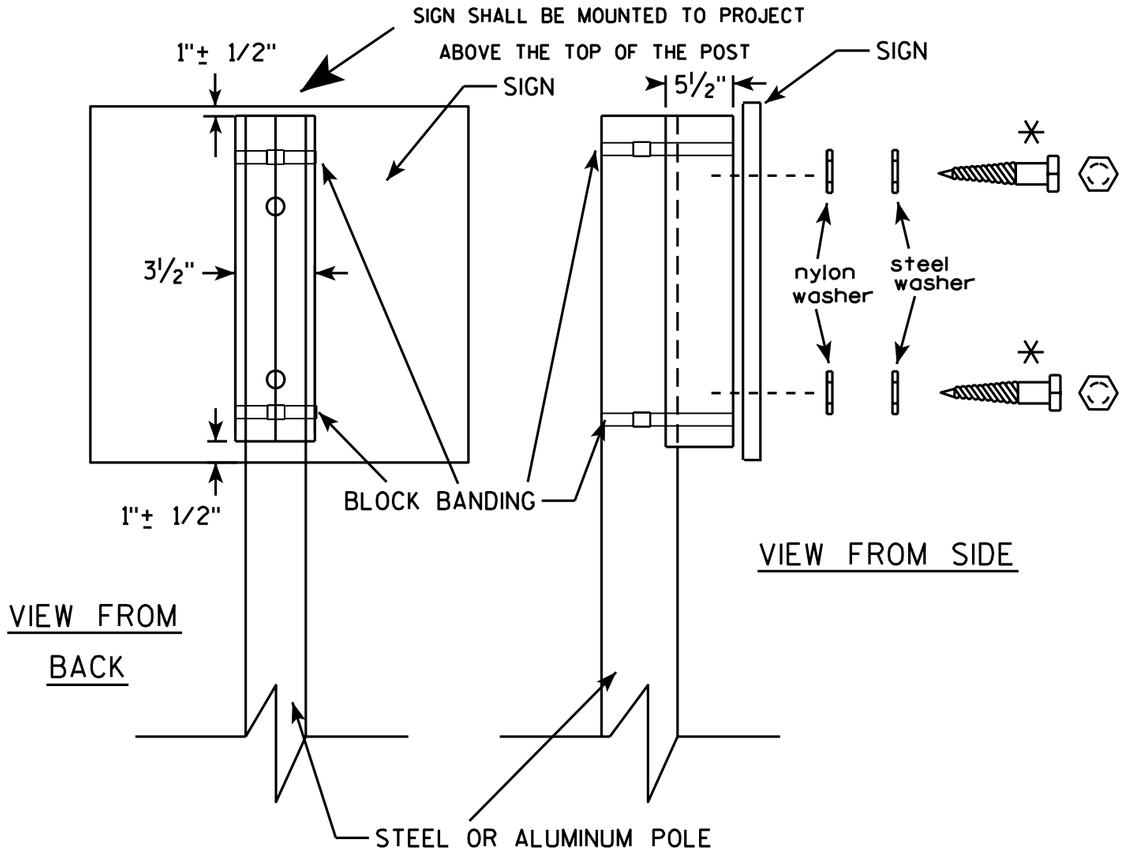

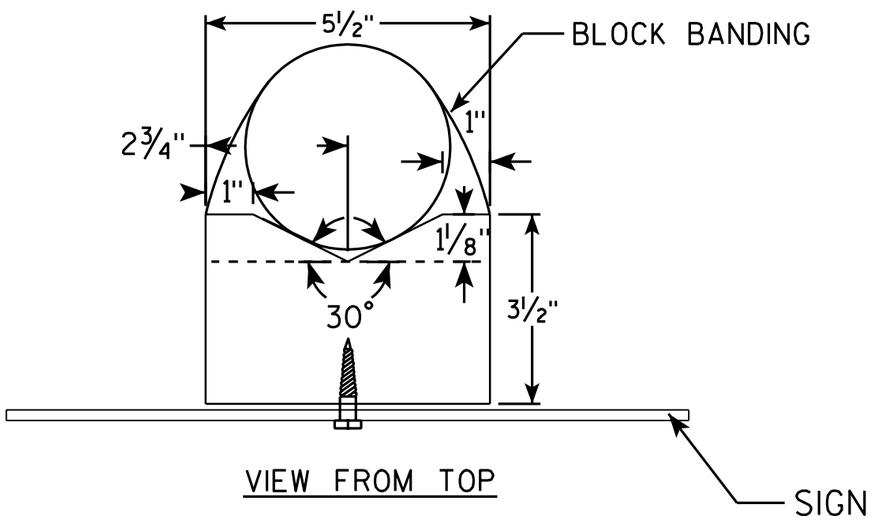

GENERAL NOTES

1. WOOD 4"X6" POST MATERIAL SHALL CONFORM TO 507.2.2 OF THE WisDOT STANDARD SPECIFICATIONS
2. BLOCK BANDING AND CLIPS SHALL BE STAINLESS STEEL, ¾" WIDTH AND 0.025" THICKNESS
3. SIGNS 3' OR GREATER IN HEIGHT SHALL UTILIZE 3 BLOCK BANDS. SIGNS UNDER 3' IN HEIGHT SHALL UTILIZE 2 BLOCK BANDS
4. ACTUAL NUMBER OF FASTENERS PER SIGN VARIES WITH THE SIGN AREA, BUT NORNALLY THERE ARE TWO. FOR SIGNS GREATER THAN 9 S.F. 3 FASTENERS SHALL BE USED.
5. ALL SIGN MOUNTING BOLTS AND WASHERS SHALL BE EITHER:
   a. Hot dip or mechanically galvanized in accordance with ASTM Designation: A 153, Class D, or
   b. Cadmium plated in accordance with ASTM Designation : B 766 TYPE 3, Class 12, or
   c. Electro-galvanized in accordance with ASTM Designation : B 633, TYPE III, SC 3.
6. ALL BOLTS SHALL HAVE HEXAGONAL HEADS.
7. STEEL WASHERS SHALL BE 1¼" O.D. X ⅜" I.D. X 1/16"
8. NYLON WASHERS SHALL BE 1¼" O.D. X ⅜" I.D. X .080 FOR TYPE H OR TYPE F FACE SIGN

✳ LAG BOLTS SHALL BE ⅜" X 2½"

BLOCK BANDING DETAIL (V-BLOCK OPTION)

WISCONSIN DEPT OF TRANSPORTATION

APPROVED Matthew R Rauch
for State Traffic Engineer

DATE 7/12/07 PLATE NO. A5-10.1

PROJECT NO:

SHEET NO: 81 E

BANDING

SINGLE SIGN

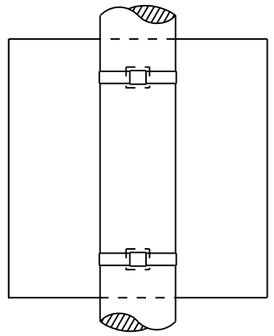

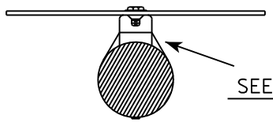

"J" ASSEMBLY

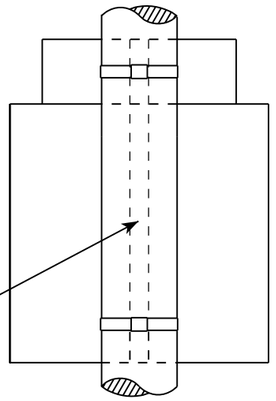

CHANNEL
SEE TYPICAL PANEL INSTALLATION SHEET

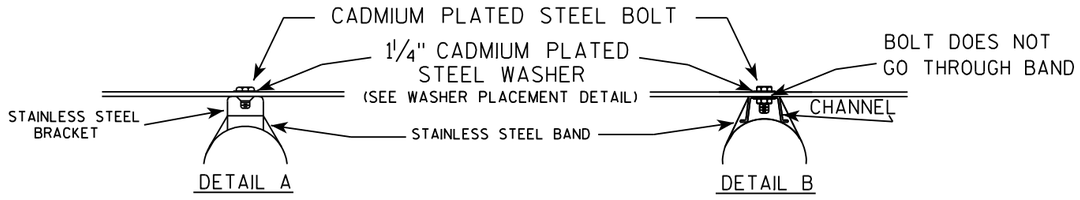

WASHER PLACEMENT

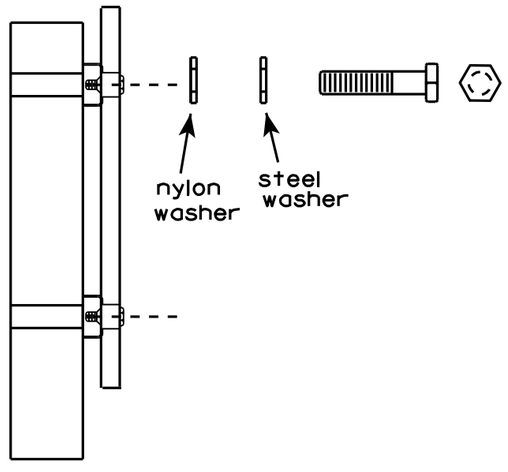

WASHERS (ALL POSTS) -
1-1/4" O.D. X 3/8" I.D. X 1/16" STEEL
1-1/4" O.D. X 3/8" I.D. X .080 NYLON
FOR ALL TYPE H SIGNS

GENERAL NOTES

1. Any sign over 3 feet in width shall use the V-Block banding method. See A5-10 standard plate.
2. Signs 3 feet or greater in height shall have three bracket bands installed. Signs less than 3 feet in height shall have two bracket bands installed.
3. Banding and assembly bracket shall be stainless steel. All bands shall be ¾" in width and 0.025" thickness.

STANDARD SIGN
SIGN BANDING DETAILS

WISCONSIN DEPT OF TRANSPORTATION

APPROVED Matthew R Rauch
for State Traffic Engineer

DATE 8/16/13 PLATE NO. A5-9.3

PROJECT NO:	HWY:	COUNTY:		SHEET NO: 82	E

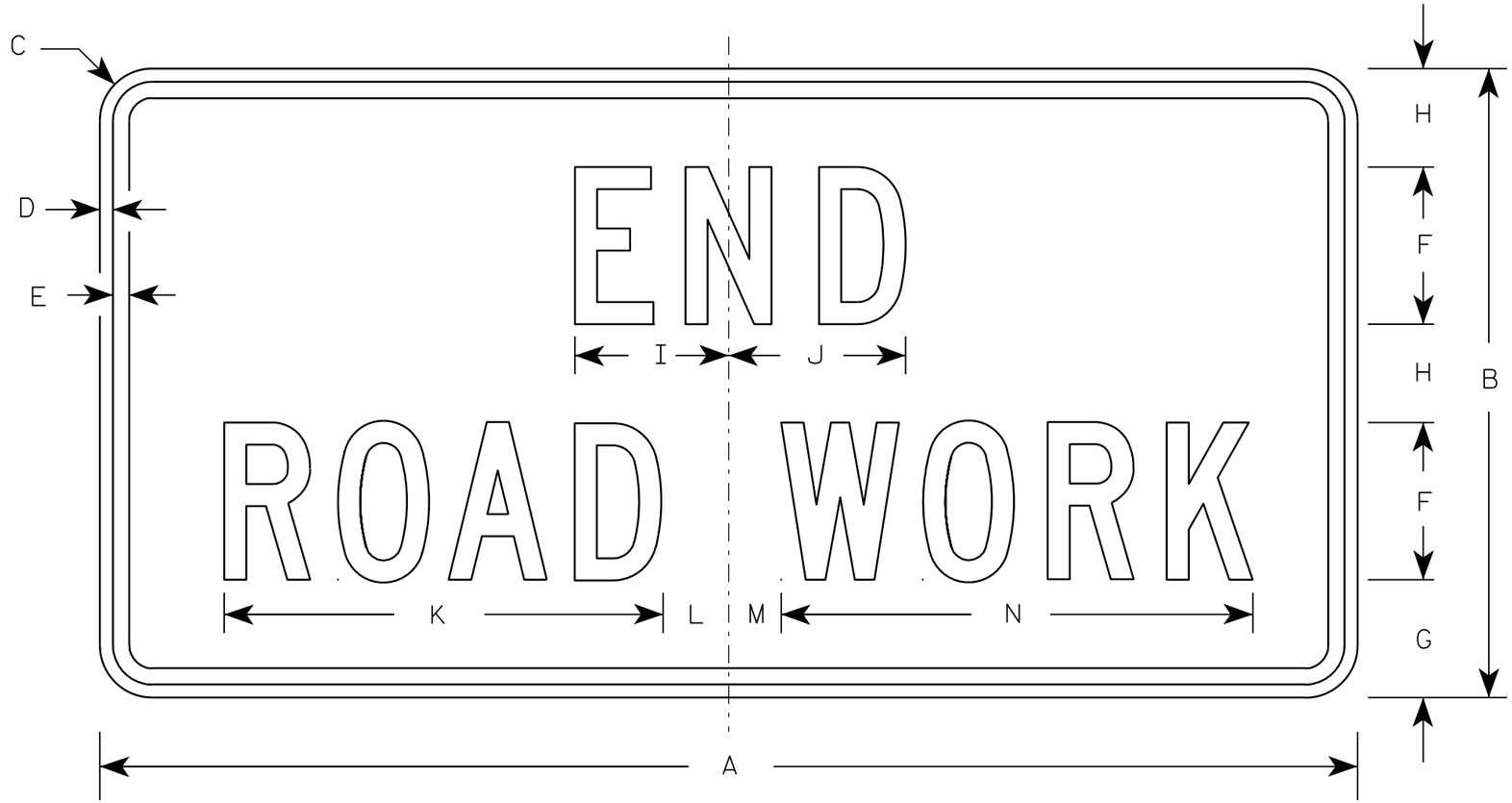

G20-2A

NOTES

1. Sign is Type II - Type F Reflective - reference WIS DOT Standard Specification for HIGHWAY and STRUCTURE CONSTRUCTION latest edition.
2. Color:
   Background - Orange
   Message - Black
3. Message Series - C
4. Corners may be square or rounded when base material is plywood but borders shall be rounded as shown. When base material is metal, the corners and borders shall be rounded.

Metric equivalent for this sign is:

SIZE	
1	900 mm X 450 mm
2	1200 mm X 600 mm
3	1200 mm X 600 mm
4	1200 mm X 600 mm
5	1200 mm X 600 mm

SIZE	A	B	C	D	E	F	G	H	I	J	K	L	M	N	O	P	Q	R	S	T	U	V	W	X	Y	Z	Area sq. ft.	Area m2
1	36	18	1 1/8	3/8	1/2	4	3 3/4	2 1/2	4 1/8	4 1/8	11 1/8	2	1	12 1/8													4.5	0.41
2	48	24	1 1/2	1/2	5/8	6	4 1/2	3 3/4	5 7/8	6 3/4	16 3/4	2 1/2	1 3/4	18 1/2													8.0	0.72
3	48	24	1 1/2	1/2	5/8	6	4 1/2	3 3/4	5 7/8	6 3/4	16 3/4	2 1/2	1 3/4	18 1/2													8.0	0.72
4	48	24	1 1/2	1/2	5/8	6	4 1/2	3 3/4	5 7/8	6 3/4	16 3/4	2 1/2	1 3/4	18 1/2													8.0	0.72
5	48	24	1 1/2	1/2	5/8	6	4 1/2	3 3/4	5 7/8	6 3/4	16 3/4	2 1/2	1 3/4	18 1/2													8.0	0.72

STANDARD SIGN
G20-2A

WISCONSIN DEPT OF TRANSPORTATION

APPROVED Matthew R Rauch
for State Traffic Engineer

DATE 9/30/09 PLATE NO. G20-2A.8

PROJECT NO:	HWY:	COUNTY:		SHEET NO: 83	E

NOTES

1. Sign is Type II - See Note 6 - reference WIS DOT Standard Specification for HIGHWAY and STRUCTURE CONSTRUCTION latest edition.
2. Color:
   Background - White & Black - See Note 6
   Message - Black
3. Message Series - See note 5
4. Corners may be square or rounded when base material is plywood but borders shall be rounded as shown. When base material is metal, the corners and borders shall be rounded.
5. Substitute appropriate numerals and adjust spacing as per Plate A10-1.
6. Permanent Signs
   Background - Type H Reflective
   Detour or other temporary signs
   Background - Reflective

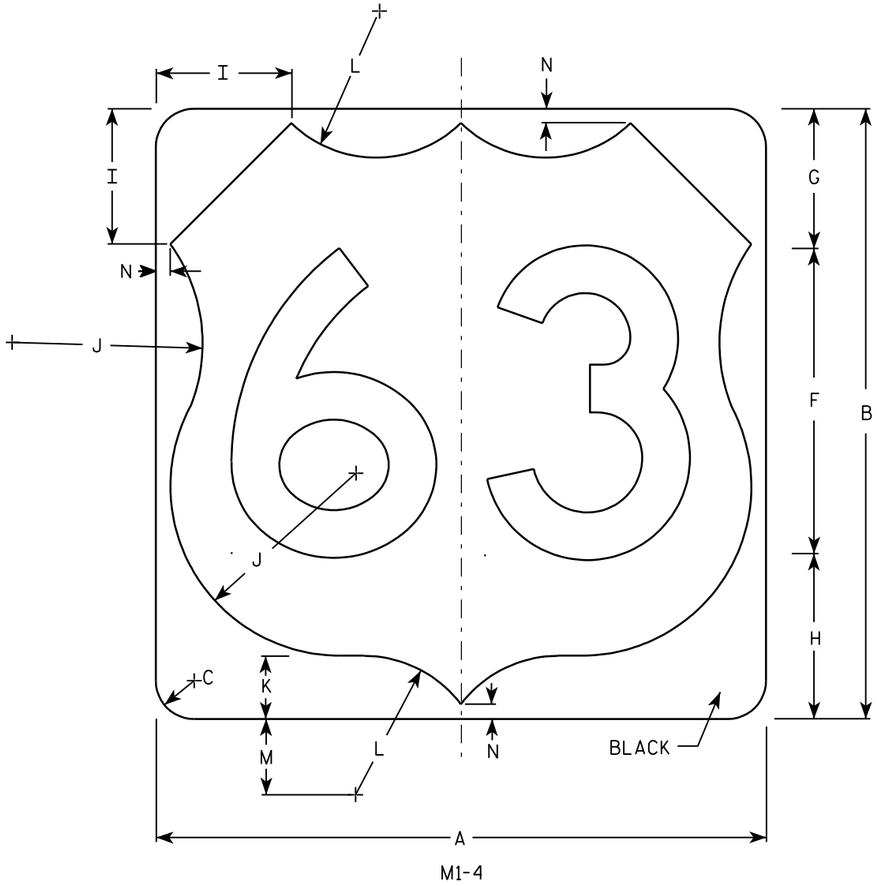

M1-4

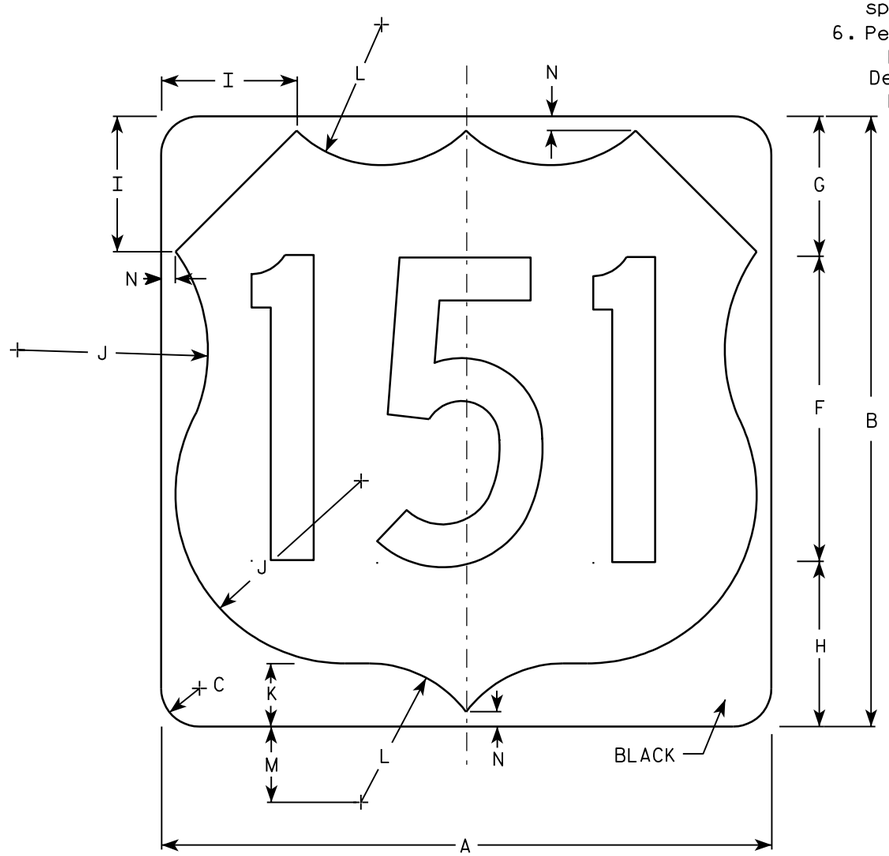

M1-4

Metric equivalent for this sign is:

SIZE	
1	
2	600 mm X 600 mm
3	900 mm X 900 mm
4	900 mm X 900 mm
5	900 mm X 900 mm

SIZE	A	B	C	D	E	F	G	H	I	J	K	L	M	N	O	P	Q	R	S	T	U	V	W	X	Y	Z	Area sq. ft.	Area m2
1																												
2	24	24	1 1/2			12	5 1/2	6 1/2	5	7 1/2	2 1/2	5 1/2	3	1/2													4.0	.36
3	36	36	2 1/4			18	8 1/4	9 1/4	7 1/4	11 1/4	3 3/4	8 1/4	4 1/2	3/4													9.0	.81
4	36	36	2 1/4			18	8 1/4	9 1/4	7 1/4	11 1/4	3 3/4	8 1/4	4 1/2	3/4													9.0	.81
5	36	36	2 1/4			18	8 1/4	9 1/4	7 1/4	11 1/4	3 3/4	8 1/4	4 1/2	3/4													9.0	.81

USH MARKER
M1-4 FOR ASSEMBLIES

WISCONSIN DEPT OF TRANSPORTATION

APPROVED Matthew R Rauch
for State Traffic Engineer

DATE 08/25/05 PLATE NO. M1-4.9

PROJECT NO: | HWY: | COUNTY: | SHEET NO: 84 | E

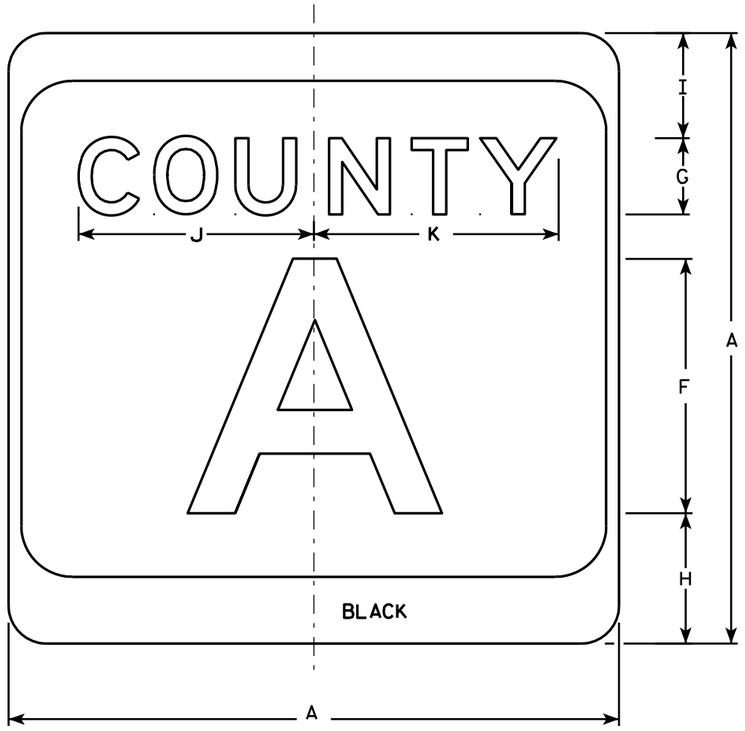

M1-5A

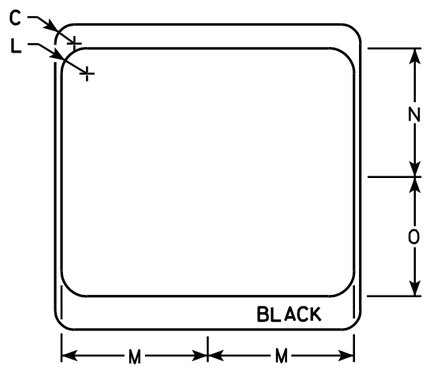

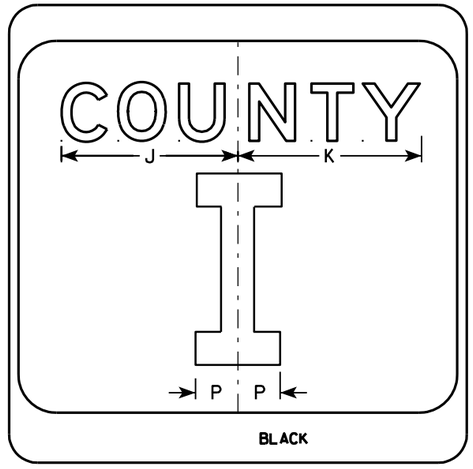

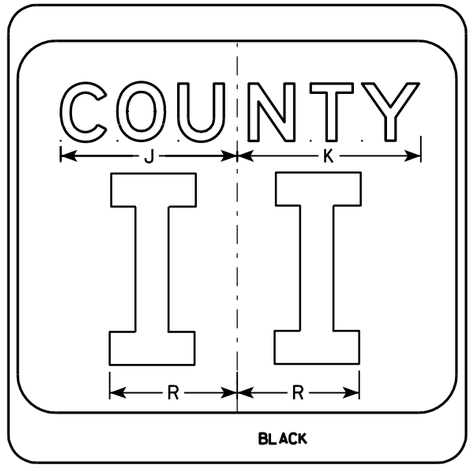

NOTES

1. Sign is Type II - see Note 7 - reference WIS DOT Standard Specification for HIGHWAY and STRUCTURE CONSTRUCTION latest edition.
2. Color:
   Background - White & Black - See Note 7
   Message - Black
3. Message Series - see Note 5
4. Corners may be square or rounded when base material is plywood but borders shall be rounded as shown. When base material is metal, the corners and borders shall be rounded.
5. Message Series E for 1 letter.
   Message Series D for 2 letters unless message is too big then Series C.
   Message Series C for 3 letters unless message is too big then Series B.
6. Substitute appropriate letters & optically center to achieve proper balance.
7. Permanent Signs
   Background - Type H Reflective
   Detour or temporary Signs
   Background - Reflective

SIZE	A	B	C	D	E	F	G	H	I	J	K	L	M	N	O	P	Q	R	S	T	U	V	W	X	Y	Z	Area sq. ft.
1																											
2	24		1 1/2			10	3	5 1/8	4 1/8	9 1/4	9 5/8	2	11 1/2	10 1/8	9 3/8	2 1/4		6 5/8									4.0
3	36		2 1/4			16	4	7 5/8	5 5/8	12 1/4	12 7/8	3	17 1/8	15 1/4	14	3 3/8		10									9.0
4	36		2 1/4			16	4	7 5/8	5 5/8	12 1/4	12 7/8	3	17 1/8	15 1/4	14	3 3/8		10									9.0
5	36		2 1/4			16	4	7 5/8	5 5/8	12 1/4	12 7/8	3	17 1/8	15 1/4	14	3 3/8		10									9.0

CTH MARKER
M1-5A FOR ASSEMBLIES

WISCONSIN DEPT OF TRANSPORTATION

APPROVED Matthew R Rauch
for State Traffic Engineer

DATE 9/27/11 PLATE NO. M1-5A.8

PROJECT NO:	HWY:	COUNTY:		SHEET NO: 85	E

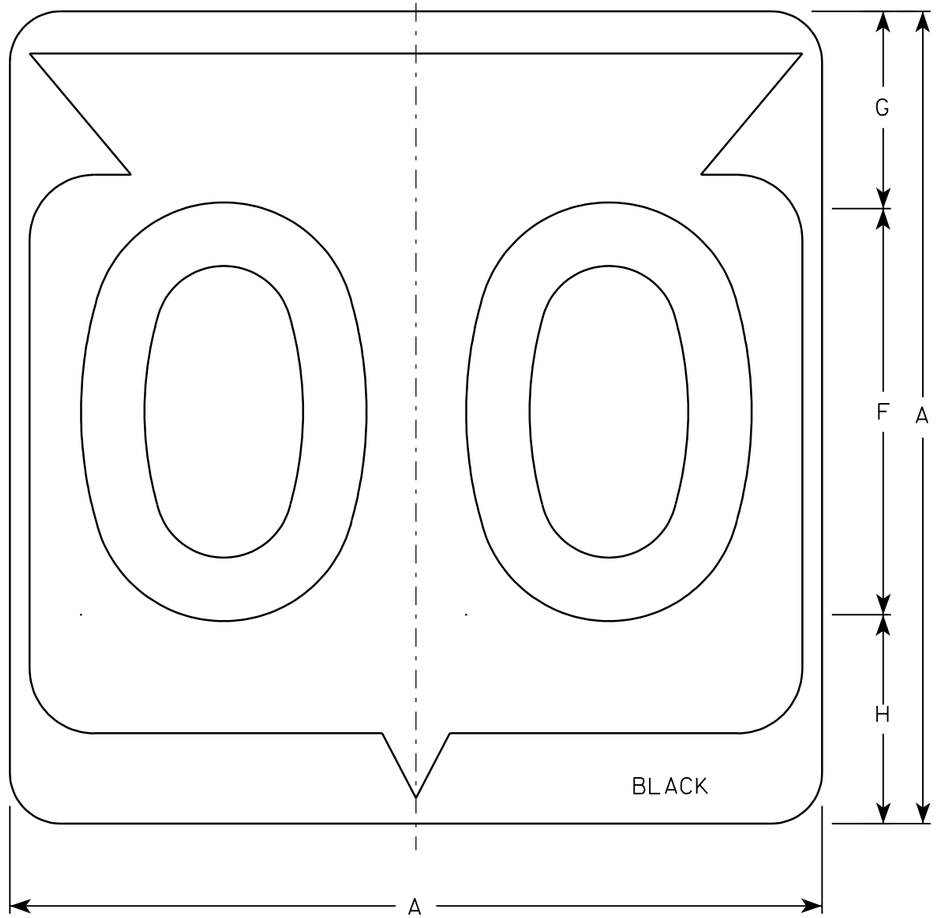

M1-6

NOTES

1. Sign is Type II - See Note 6 - reference WIS DOT Standard Specification for HIGHWAY and STRUCTURE CONSTRUCTION latest edition.
2. Color:
   Background - White & Black - See Note 6
   Message - Black
3. Message Series - See note 5
4. Corners may be square or rounded when base material is plywood but borders shall be rounded as shown. When base material is metal, the corners and borders shall be rounded.
5. Substitute appropriate Series numerals and adjust spacing as per plate A10-1.
6. Permanent Signs
   Background - Type H Reflective
   Detour or temporary Signs
   Background - Reflective

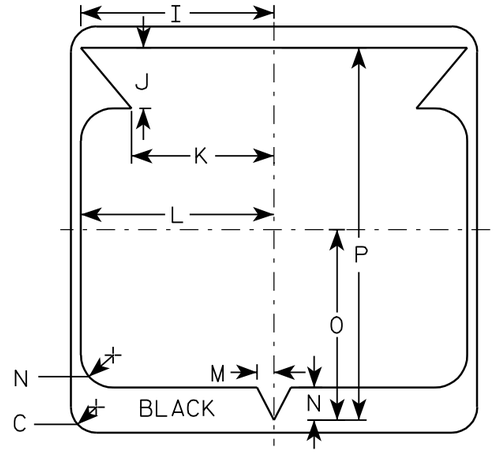

Metric equivalent for this sign is:

SIZE	
1	
2	600 mm X 600 mm
3	900 mm X 900 mm
4	900 mm X 900 mm
5	900 mm X 900 mm

SIZE	A	B	C	D	E	F	G	H	I	J	K	L	M	N	O	P	Q	R	S	T	U	V	W	X	Y	Z	Area sq. ft.	Area m2
1																												
2	24		1 1/2			12	5 1/2	6 1/2	10 1/4	2 1/2	8 7/8	11 1/2	1	1 7/8	11 1/4	21 7/8											4.0	.36
3	36		2 1/4			18	8 3/4	9 1/4	15 3/8	5 3/8	12 5/8	17 1/8	1 1/2	2 7/8	16 7/8	33											9.0	.81
4	36		2 1/4			18	8 3/4	9 1/4	15 3/8	5 3/8	12 5/8	17 1/8	1 1/2	2 7/8	16 7/8	33											9.0	.81
5	36		2 1/4			18	8 3/4	9 1/4	15 3/8	5 3/8	12 5/8	17 1/8	1 1/2	2 7/8	16 7/8	33											9.0	.81

STATE ROUTE MARKER M1-6 FOR ASSEMBLIES

WISCONSIN DEPT OF TRANSPORTATION

APPROVED Chester J Spang for State Traffic Engineer

DATE 3/20/02 PLATE NO. M1-6.9

PROJECT NO:	HWY:	COUNTY:		SHEET NO: 86	E

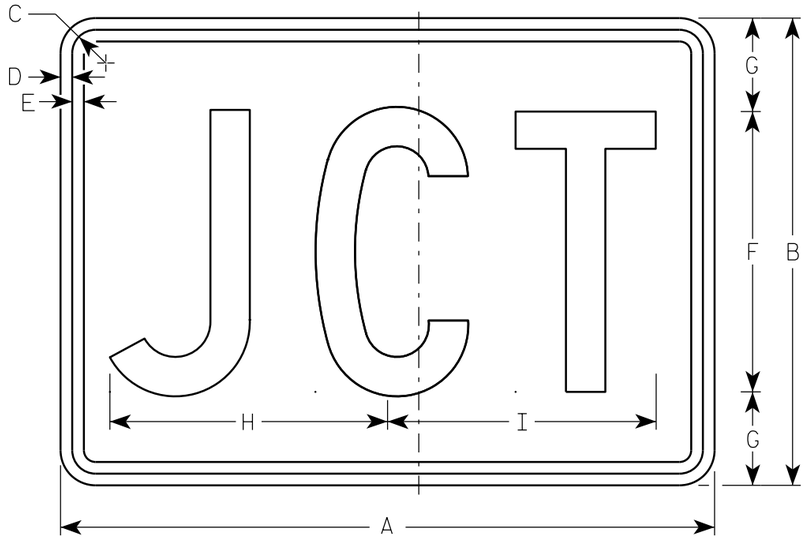

M2-1
MK2-1
MM2-1
MN2-1
MR2-1

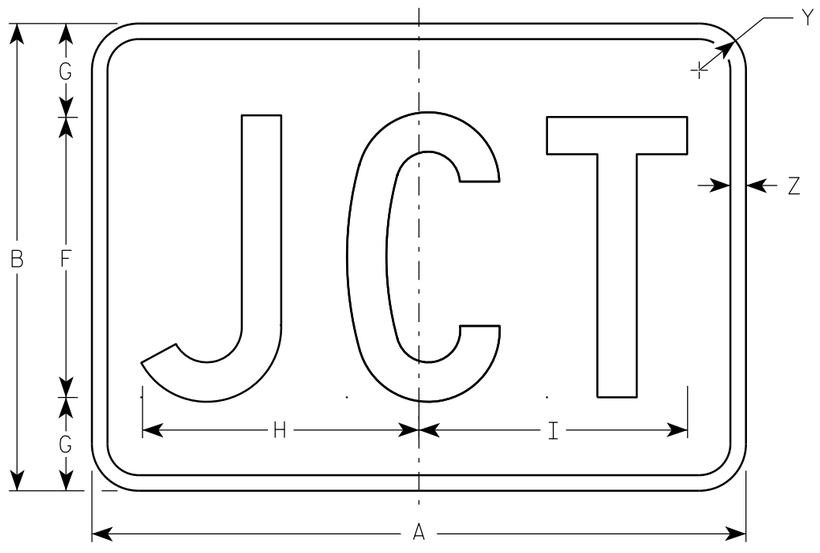

MB2-1

NOTES

1. Sign is Type II - Type H
2. Color:
   Background - See note 5
   Message - See note 5
3. Message Series - C
4. Corners may be square or rounded when base material is plywood but borders shall be rounded as shown. When base material is metal, the corners and borders shall be rounded.
5. M2-1 Background - White
   Message - Black
   MB2-1 Background - Blue
   Message - White
   MK2-1 Background - Green
   Message - White
   MM2-1 Background - White
   Message - Green
   MN2-1 Background - Brown
   Message - White
   MR2-1 Background - Brown
   Message - Yellow

SIZE	A	B	C	D	E	F	G	H	I	J	K	L	M	N	O	P	Q	R	S	T	U	V	W	X	Y	Z	Area sq. ft.
1																											
2	21	15	1 1/8	3/8	3/8	9	3	8 7/8	8 5/8																1 1/2	1/2	2.20
3	30	21	1 1/8	3/8	3/8	13	4	12 7/8	12 3/8																1 1/2	1/2	4.40
4	30	21	1 1/8	3/8	3/8	13	4	12 7/8	12 3/8																1 1/2	1/2	4.40
5	30	21	1 1/8	3/8	3/8	13	4	12 7/8	12 3/8																1 1/2	1/2	4.40

STANDARD SIGN
M2-1

WISCONSIN DEPT OF TRANSPORTATION

APPROVED Matthew R Rauch
For State Traffic Engineer

DATE 6/30/14 PLATE 87 12-1.11

PROJECT NO:	HWY:	COUNTY:		SHEET NO:	E

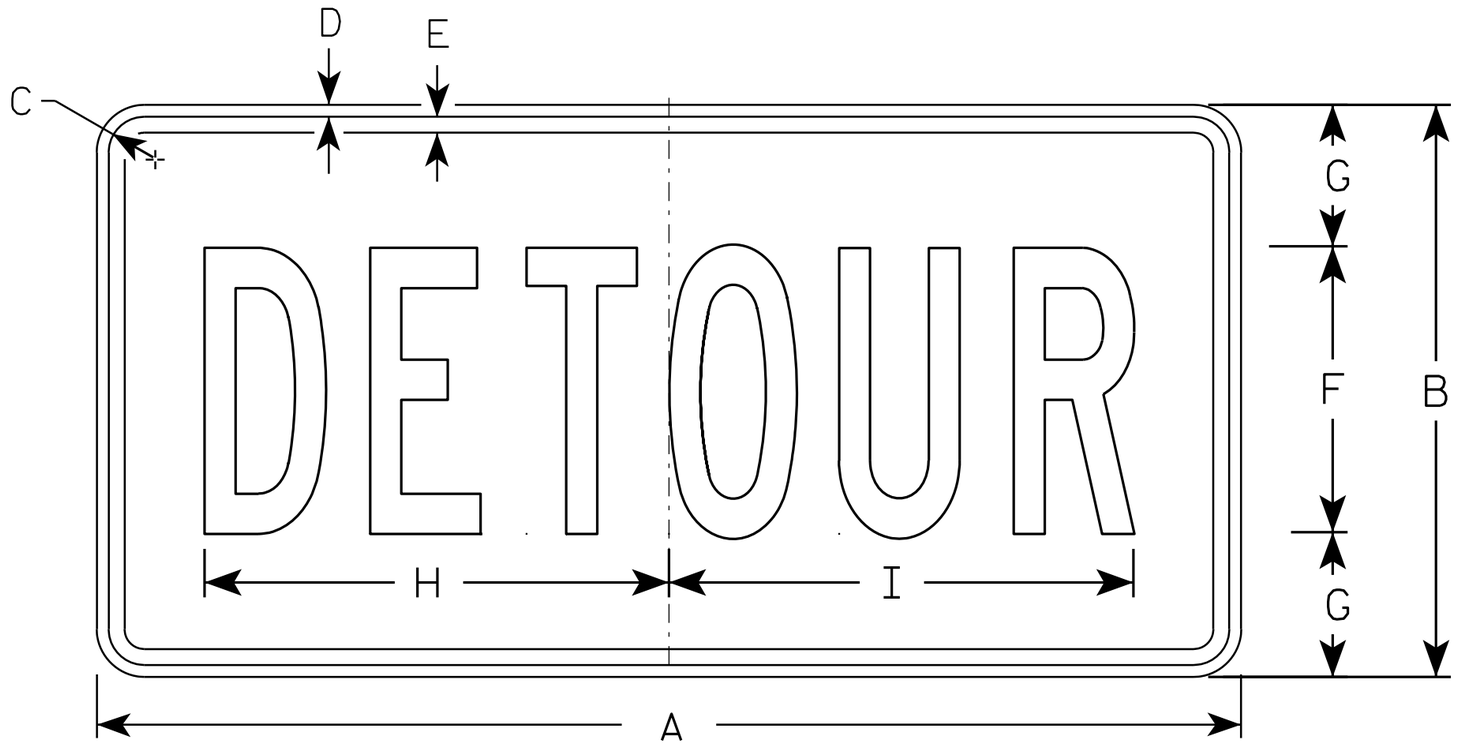

M4-8

NOTES

1. Sign is Type II - Type F Reflective - reference WIS DOT Standard Specification for HIGHWAY and STRUCTURE CONSTRUCTION latest edition.
2. Color:
   Background - Orange
   Message - Black
3. Message Series - B
4. Corners may be square or rounded when base material is plywood but borders shall be rounded as shown. When base material is metal, the corners and borders shall be rounded.

SIZE	A	B	C	D	E	F	G	H	I	J	K	L	M	N	O	P	Q	R	S	T	U	V	W	X	Y	Z	Area sq. ft.
1																											
2	24	12	1 1/8	3/8	3/8	6	3	10	10 1/4																		2.0
3	36	18	1 1/8	3/8	1/2	9	4 1/2	14 5/8	14 1/2																		4.5
4																											
5																											

STANDARD SIGN
M4-8

WISCONSIN DEPT OF TRANSPORTATION

APPROVED Matthew R Rauch
for State Traffic Engineer

DATE 11/10/10 PLATE NO. M4-8.2

PROJECT NO:	HWY:	COUNTY:		SHEET NO: 88	E

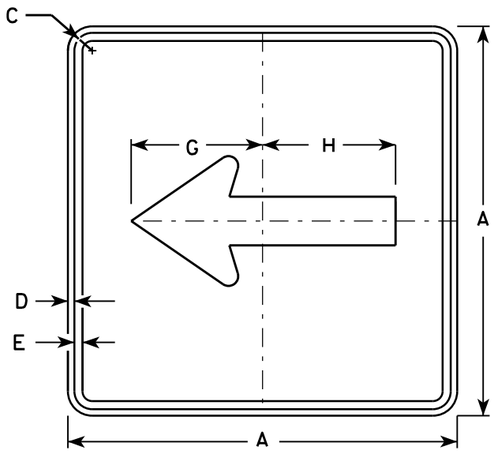

M6-1
MK6-1
MM6-1
MN6-1
MO6-1
MP6-1
MR6-1

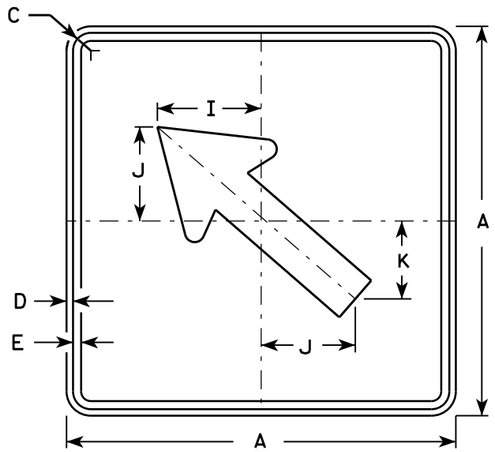

M6-2
MK6-2
MM6-2
MN6-2
MO6-2
MP6-2
MR6-2

NOTES

1. Signs are Type II - Type H except as Shown
2. Color:
   Background - See note 4
   Message - See note 4
3. Corners may be square or rounded when base material is plywood but borders shall be rounded as shown. When base material is metal, the corners and borders shall be rounded.
4. M6-1 and M6-2 Background - White
   Message - Black
   MB6-1 and MB6-2 Background - Blue
   Message - White
   MG6-1 and MG6-2 Background - Green
   Message - White
   MK6-1 and MK6-2 Background - Green
   Message - White
   MM6-1 and MM6-2 Background - White
   Message - Green
   MN6-1 and MN6-2 Background - Brown
   Message - White
   MO6-1 and MO6-2 Background - Orange - Type F Reflective
   Message - Black
   MP6-1 and MP6-2 Background - White
   Message - Blue
   MR6-1 and MR6-2 Background - Brown
   Message - Yellow

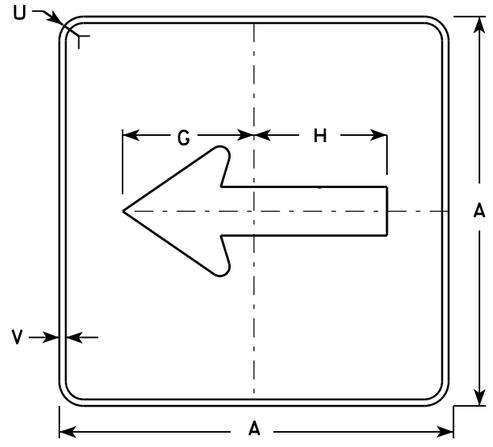

MB6-1

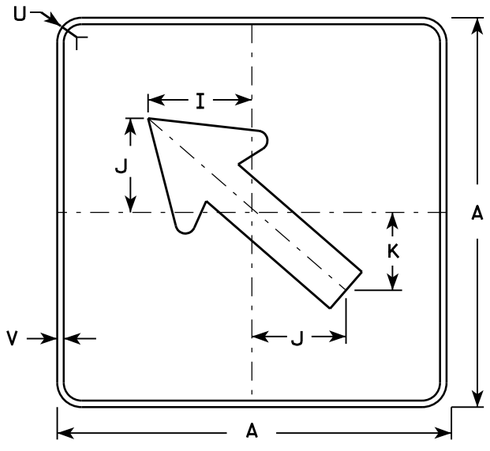

MB6-2

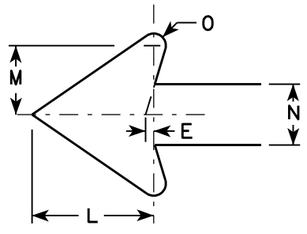

SIZE	A	B	C	D	E	F	G	H	I	J	K	L	M	N	O	P	Q	R	S	T	U	V	W	X	Y	Z	Area sq. ft.
1																											
2	21		1 1/8	3/8	3/8		7 1/2	7 1/8	5 5/8	5	4 1/4	5 1/4	3	2 5/8	1/2						1 1/2	1/2						3.06
3	30		1 3/8	1/2	5/8		10 3/4	10 1/4	8	7 1/4	6	7 1/2	4 1/4	3 3/4	3/4						1 7/8	1/2						6.25
4	30		1 3/8	1/2	5/8		10 3/4	10 1/4	8	7 1/4	6	7 1/2	4 1/4	3 3/4	3/4						1 7/8	1/2						6.25
5	30		1 3/8	1/2	5/8		10 3/4	10 1/4	8	7 1/4	6	7 1/2	4 1/4	3 3/4	3/4						1 7/8	1/2						6.25

STANDARD SIGN
M6-1 & M6-2
SERIES

WISCONSIN DEPT OF TRANSPORTATION

APPROVED Matthew R Rauch
for State Traffic Engineer

DATE 7/03/14 PLATE 89 M6-1.14

PROJECT NO: | HWY: | COUNTY: | | SHEET NO: E

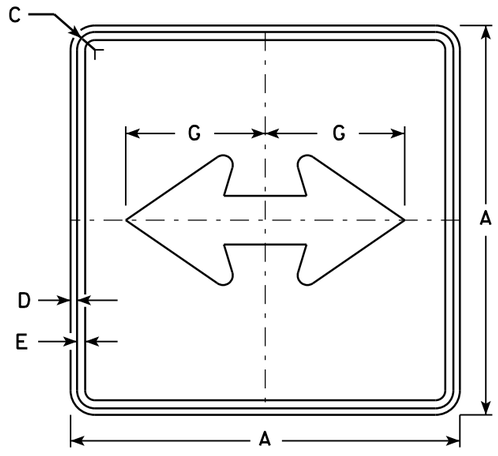

M6-4
MK6-4
MM6-4
MN6-4
MO6-4
MP6-4
MR6-4

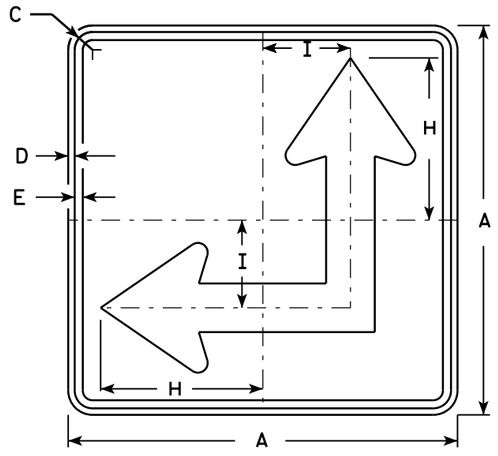

M6-6
MK6-6
MM6-6
MN6-6
MO6-6
MP6-6
MR6-6

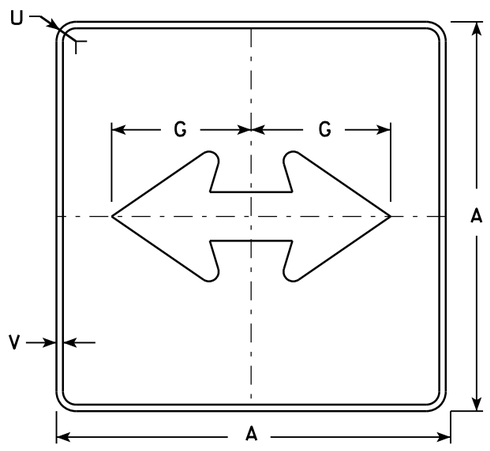

MB6-4

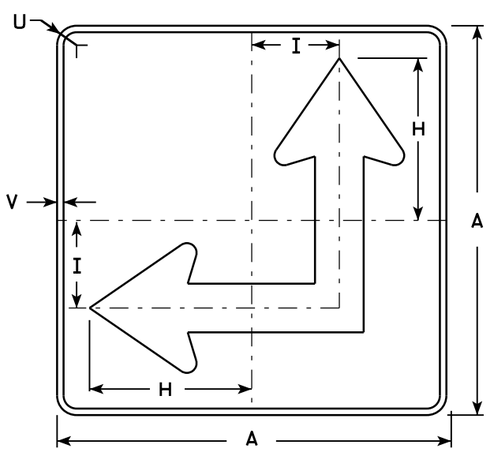

MB6-6

NOTES

1. Signs are Type II - Type H except as Shown
2. Color:
   Background - See Note 4
   Message - See Note 4
3. Corners may be square or rounded when base material is plywood but borders shall be rounded as shown. When base material is metal, the corners and borders shall be rounded.
4. M6-4 and M6-6 Background - White
   Message - Black
   MB6-4 and MB6-6 Background - Blue
   Message - White
   MK6-4 and MK6-6 Background - Green
   Message - White
   MM6-4 and MM6-6 Background - White
   Message - Green
   MN6-4 and MN6-6 Background - Brown
   Message - White
   MO6-4 and MO6-6 Background - Orange - Type F Reflective
   Message - Black
   MP6-4 and MP6-6 Background - White
   Message - Blue
   MR6-4 and MR6-6 Background - Brown
   Message - Yellow
5. M6-6R same as M6-6L except arrow points ahead and right.

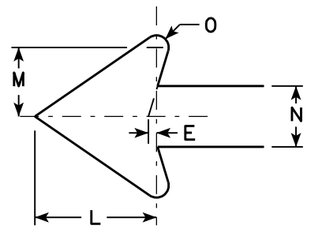

SIZE	A	B	C	D	E	F	G	H	I	J	K	L	M	N	O	P	Q	R	S	T	U	V	W	X	Y	Z	Area sq. ft.
1																											
2	21		1 1/8	3/8	3/8		7 1/2	8 3/4	4 1/4			5 1/4	3	2 5/8	1/2						1 1/2	1/2					3.06
3	30		1 3/8	1/2	5/8		10 3/4	12 1/2	6 3/4			7 1/2	4 1/4	3 3/4	3/4						1 7/8	1/2					6.25
4	30		1 3/8	1/2	5/8		10 3/4	12 1/2	6 3/4			7 1/2	4 1/4	3 3/4	3/4						1 7/8	1/2					6.25
5	30		1 3/8	1/2	5/8		10 3/4	12 1/2	6 3/4			7 1/2	4 1/4	3 3/4	3/4						1 7/8	1/2					6.25

STANDARD SIGN M6-4 & M6-6 SERIES

WISCONSIN DEPT OF TRANSPORTATION

APPROVED Matthew R Rauch for State Traffic Engineer

DATE 7/03/14 PLATE 90 M6-4.9

PROJECT NO: | HWY: | COUNTY: | SHEET NO: E

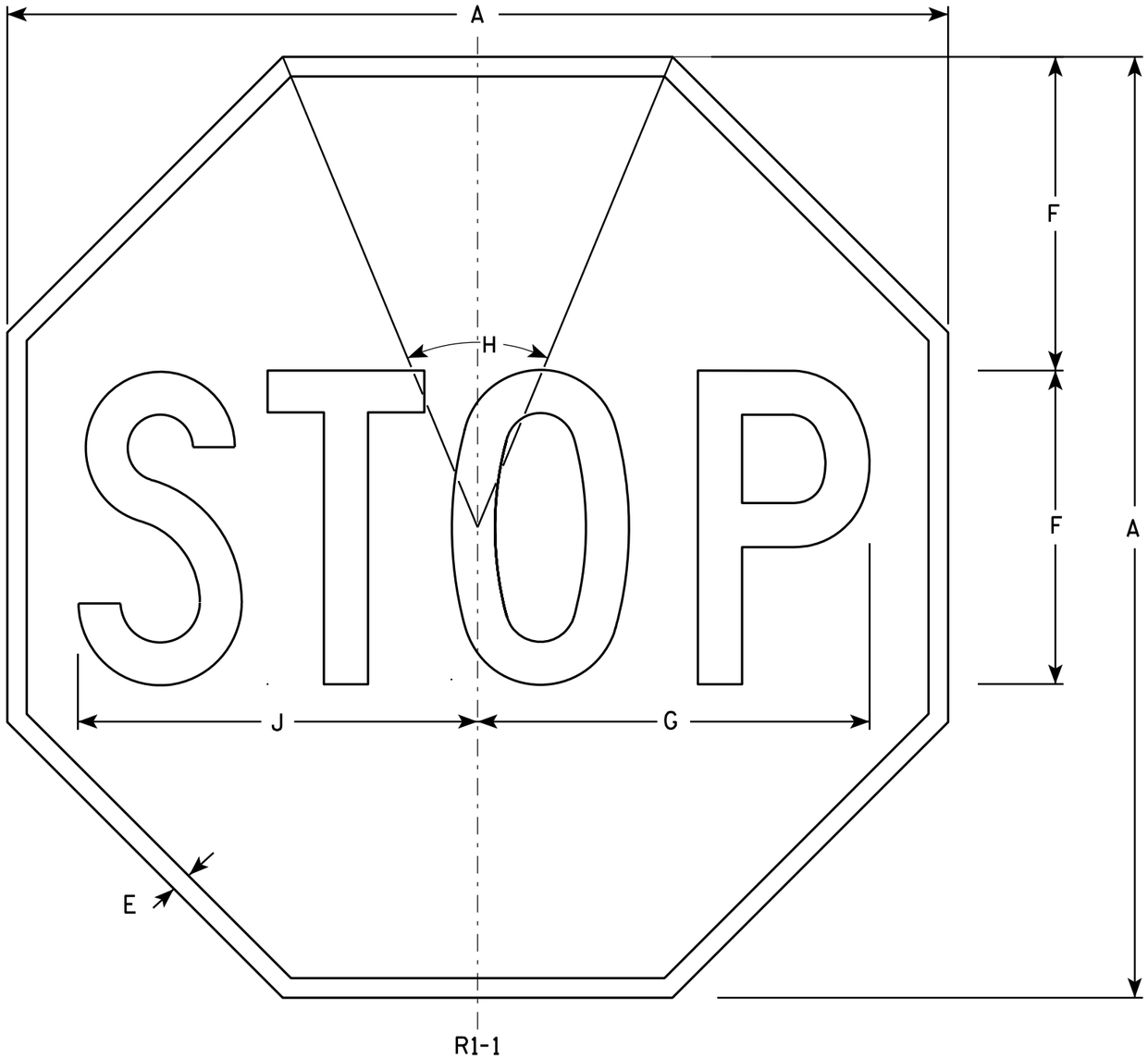

NOTES

1. Sign is Type II - Type H Reflective - reference WIS DOT Standard Specification for HIGHWAY and STRUCTURE CONSTRUCTION latest edition.
2. Color:
   Background - Red
   Message - White
3. Message Series - C

SIZE	A	B	C	D	E	F	G	H	I	J	K	L	M	N	O	P	Q	R	S	T	U	V	W	X	Y	Z	Area sq. ft.
1	24				3/8	8	10	45°		10 1/4																	3.31
2S	30				5/8	10	12 1/2	45°		12 3/4																	5.18
2M	36				3/4	12	15	45°		15 3/8																	7.46
3	36				3/4	12	15	45°		15 3/8																	7.46
4	48				1	16	20	45°		20 1/2																	13.25
5	48				1	16	20	45°		20 1/2																	13.25
6	18				3/8	6	7 3/4	45°		7 3/4																	1.86
7	12				1/4	4	5	45°		5 1/8																	0.78

STANDARD SIGN
R1-1

WISCONSIN DEPT OF TRANSPORTATION

APPROVED Matthew R Rauch
for State Traffic Engineer

DATE 12/03/10 PLATE NO. R1-1.12

PROJECT NO:	HWY:	COUNTY:		SHEET NO: 91	E

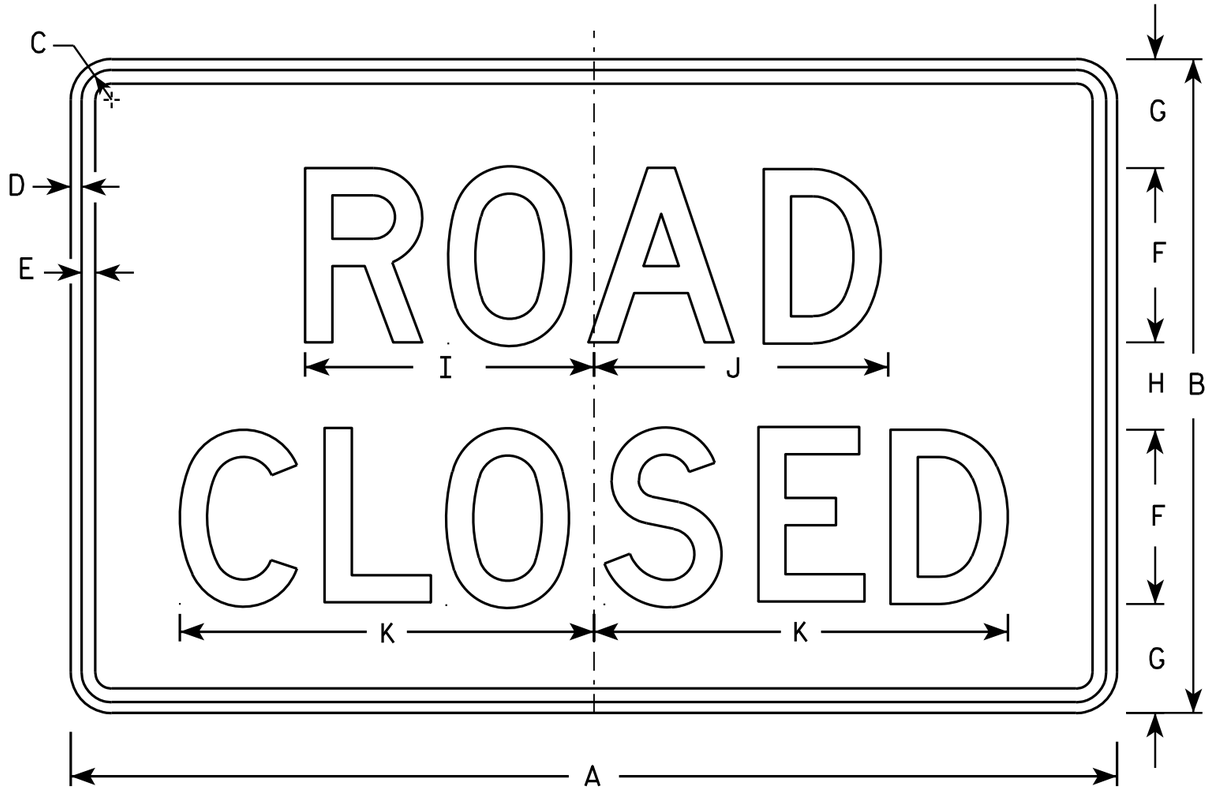

R11-2

NOTES

1. Sign is Type II - Type H Reflective - reference WIS DOT Standard Specification for HIGHWAY and STRUCTURE CONSTRUCTION latest edition.
2. Color:
   Background - White
   Message - Black
3. Message Series - D
4. Corners may be square or rounded when base material is plywood but borders shall be rounded as shown. When base material is metal, the corners and borders shall be rounded.
5. Modify the message as required.

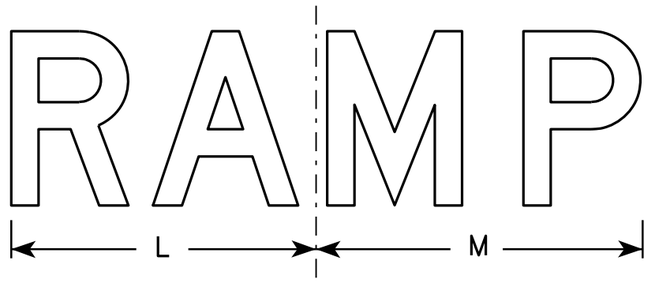

R11-2R

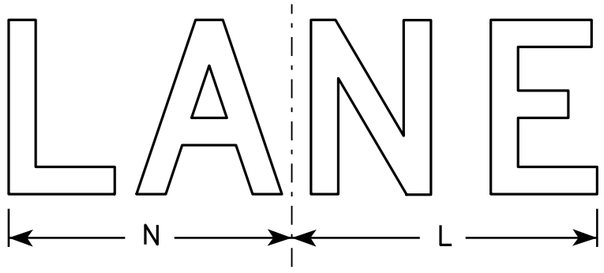

R11-2L

SIZE	A	B	C	D	E	F	G	H	I	J	K	L	M	N	O	P	Q	R	S	T	U	V	W	X	Y	Z	Area sq. ft.
1																											
2S	48	30	1 3/8	1/2	5/8	8	5	4	13 1/4	13 1/2	19	14	15	13													10.0
2M	48	30	1 3/8	1/2	5/8	8	5	4	13 1/4	13 1/2	19	14	15	13													10.0
3	48	30	1 3/8	1/2	5/8	8	5	4	13 1/4	13 1/2	19	14	15	13													10.0
4	48	30	1 3/8	1/2	5/8	8	5	4	13 1/4	13 1/2	19	14	15	13													10.0
5	48	30	1 3/8	1/2	5/8	8	5	4	13 1/4	13 1/2	19	14	15	13													10.0

STANDARD SIGN
R11-2

WISCONSIN DEPT OF TRANSPORTATION

APPROVED Matthew R Rauch
for State Traffic Engineer

DATE 4/1/11 PLATE NO. R11-2.10

PROJECT NO: | HWY: | COUNTY: | SHEET NO: 92 | E

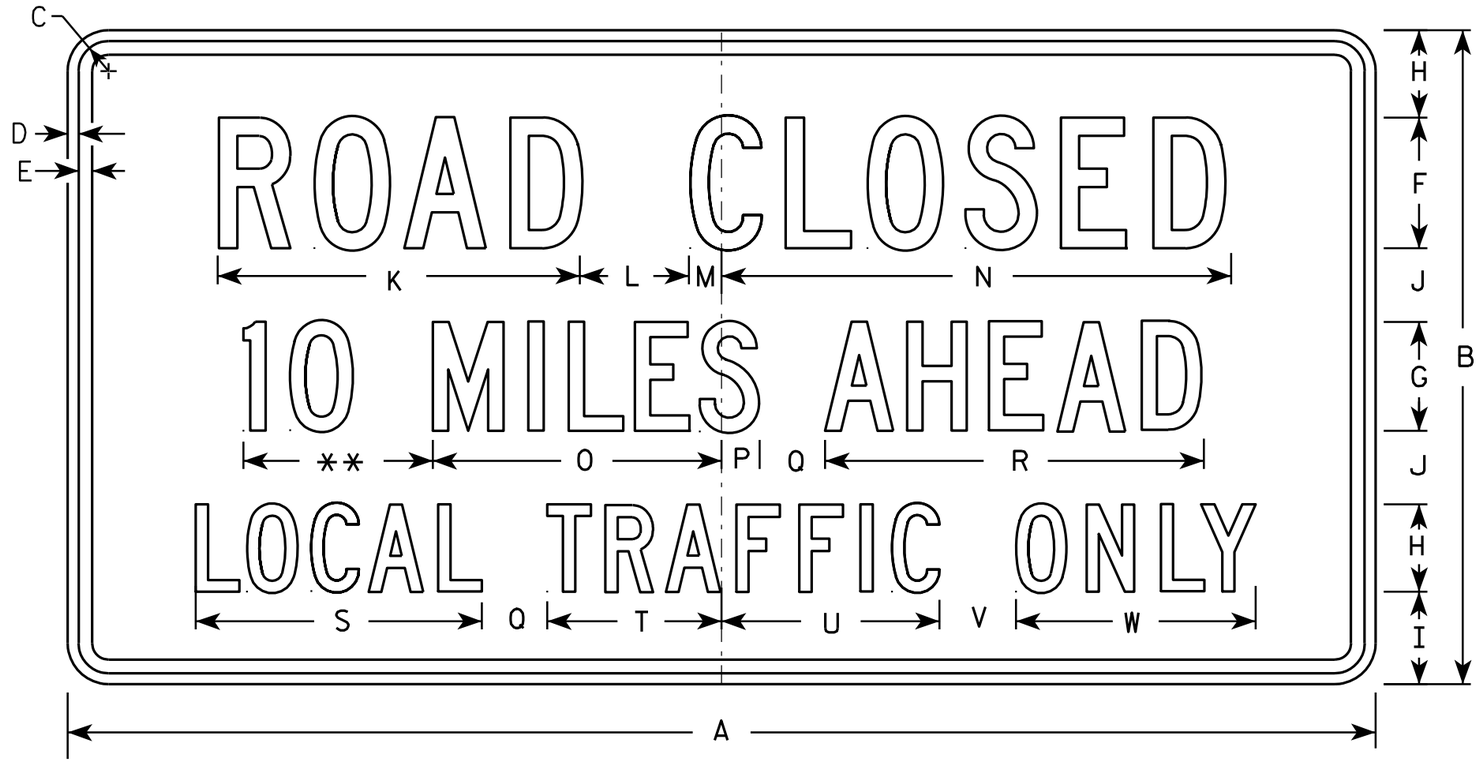

R11-3

NOTES

1. Sign is Type II - Type H Reflective - reference WIS DOT Standard Specification for HIGHWAY and STRUCTURE CONSTRUCTION latest edition.
2. Color:
   Background - White
   Message - Black
3. Message Series - C
4. Corners may be square or rounded when base material is plywood but borders shall be rounded as shown. When base material is metal, the corners and borders shall be rounded.
5. Substitute appropriate numerals and optically adjust spacing to achieve proper balance.

** See Note 5

SIZE	A	B	C	D	E	F	G	H	I	J	K	L	M	N	O	P	Q	R	S	T	U	V	W	X	Y	Z	Area sq. ft.
1	36	18	1 3/8	1/2	5/8	4	3	2 1/2	2	2	11 1/8	3	1 1/8	15 1/4	8	1 1/2	2	10 3/4	8 3/8	4 3/4	6 1/2	2	6 3/4				4.5
2S	60	30	1 3/8	1/2	5/8	6	5	4	4 1/4	3 3/8	16 5/8	5	1 1/2	23	13 1/4	1 3/4	3	17 3/8	13 1/8	8	10	3 1/2	11				12.5
2M	60	30	1 3/8	1/2	5/8	6	5	4	4 1/4	3 3/8	16 5/8	5	1 1/2	23	13 1/4	1 3/4	3	17 3/8	13 1/8	8	10	3 1/2	11				12.5
3																											
4																											
5																											

STANDARD SIGN
R11-3

WISCONSIN DEPT OF TRANSPORTATION

APPROVED Matthew R Rauch
for State Traffic Engineer

DATE 4/1/11 PLATE NO. R11-3.6

PROJECT NO: | HWY: | COUNTY: | SHEET NO: 93 | E

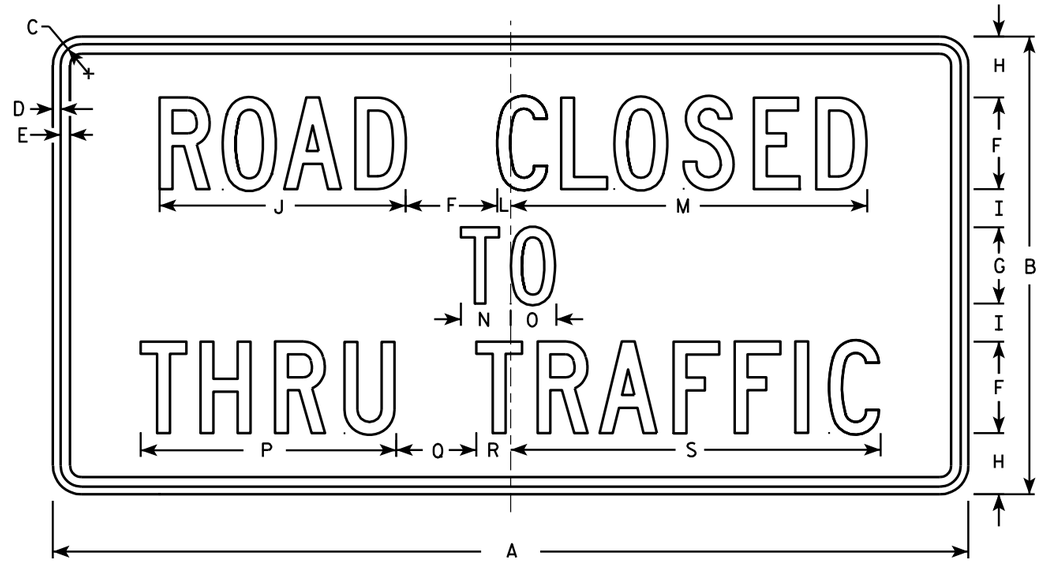

R11-4

NOTES

1. Sign is Type II - Type H Reflective - reference WIS DOT Standard Specification for HIGHWAY and STRUCTURE CONSTRUCTION latest edition.
2. Color:
   Background - White
   Message - Black
3. Message Series - C
4. Corners may be square or rounded when base material is plywood but borders shall be rounded as shown. When base material is metal, the corners and borders shall be rounded.

SIZE	A	B	C	D	E	F	G	H	I	J	K	L	M	N	O	P	Q	R	S	T	U	V	W	X	Y	Z	Area sq. ft.
1																											
2S	60	30	1 3/8	1/2	5/8	6	5	4	2 1/2	16 1/8		7/8	23 3/8	3 1/4	3	16 3/4	5 1/4	2 1/4	24 1/4								12.5
2M	60	30	1 3/8	1/2	5/8	6	5	4	2 1/2	16 1/8		7/8	23 3/8	3 1/4	3	16 3/4	5 1/4	2 1/4	24 1/4								12.5
3																											
4																											
5																											

STANDARD SIGN
R11 - 4

WISCONSIN DEPT OF TRANSPORTATION

APPROVED Matthew R Rauch for State Traffic Engineer

DATE 4/1/11 PLATE NO. R11-4.3

PROJECT NO: | HWY: | COUNTY: | SHEET NO: 94 | E

NOTES

1. Sign is Type II - Type F Reflective - reference WIS DOT Standard Specification for HIGHWAY and STRUCTURE CONSTRUCTION latest edition.
2. Color:
   Background - Yellow
   Message - Black
3. Corners may be square or rounded when base material is plywood but borders shall be rounded as shown. When base material is metal, the corners and borders shall be rounded.
4. W1-2L is the same as W1-2R except the arrow is reversed along the vertical centerline.

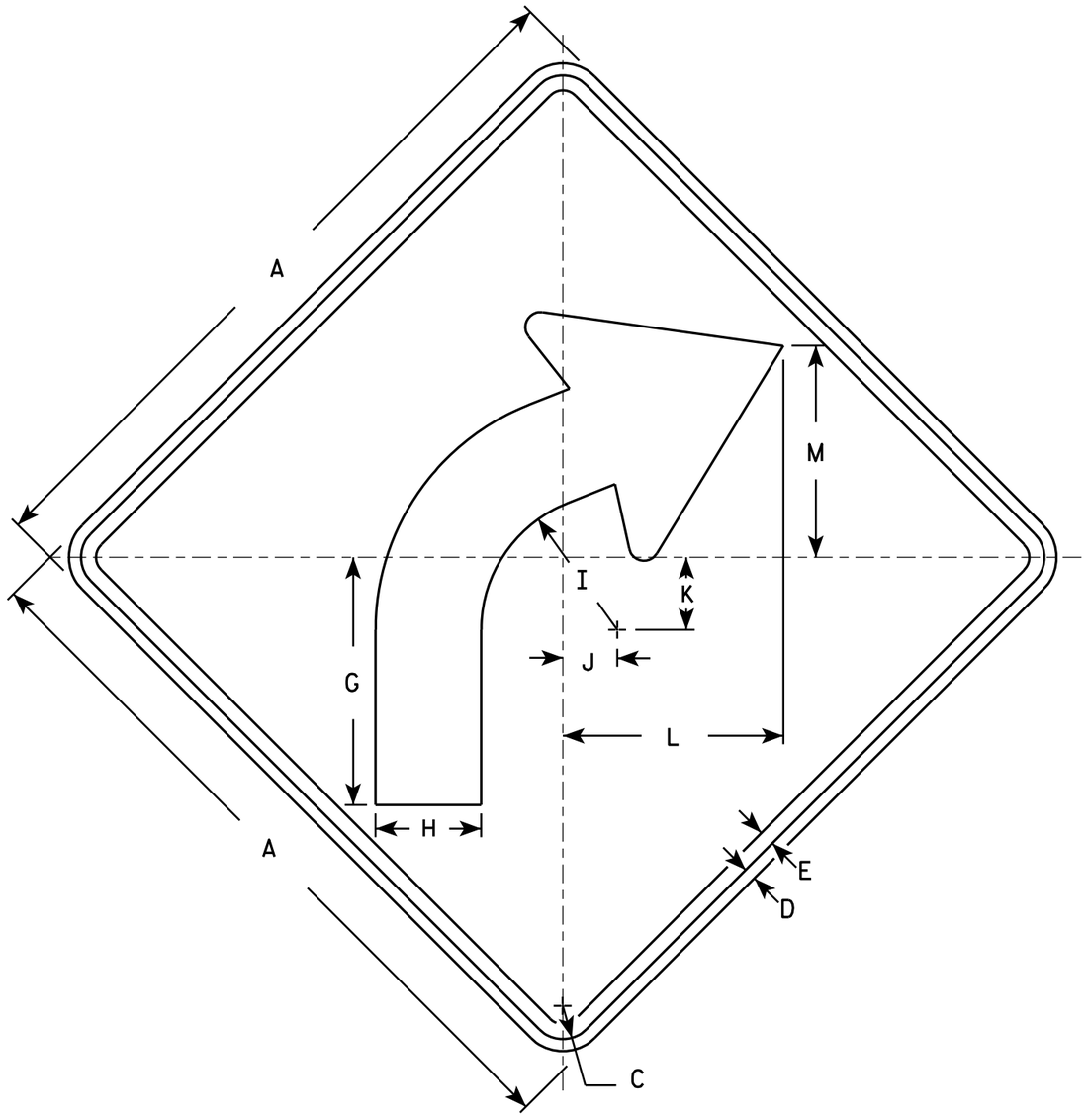

W1-2R

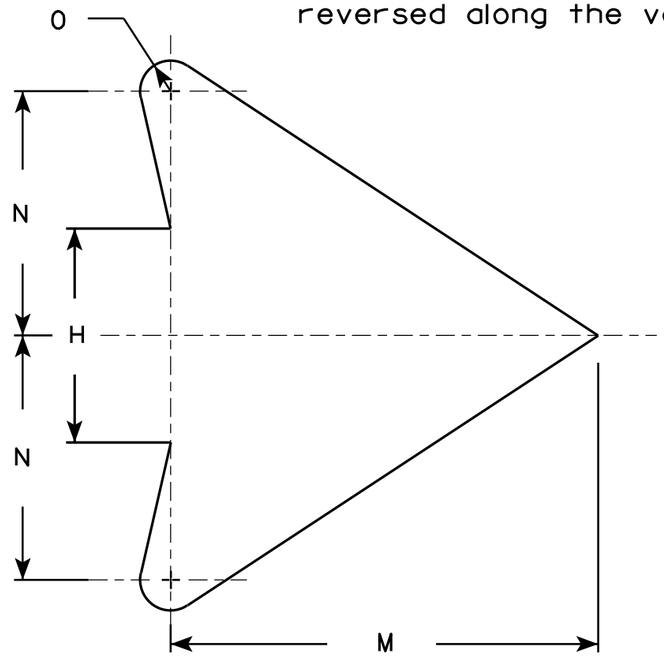

ARROW DETAIL

SIZE	A	B	C	D	E	F	G	H	I	J	K	L	M	N	O	P	Q	R	S	T	U	V	W	X	Y	Z	Area sq. ft.
1	24		1 1/8	3/8	1/2		8 1/4	3 1/2	4 1/2	1 3/4	2 3/8	7 1/4	7	4	1/2												4.0
2S	30		1 3/8	1/2	5/8		10 1/4	4 3/8	5 5/8	2 1/4	3	9 1/8	8 3/4	5	5/8												6.25
2M	36		1 5/8	5/8	3/4		12 3/8	5 1/4	6 3/4	2 5/8	3 1/2	10 7/8	10 1/2	6	3/4												9.0
3	36		1 5/8	5/8	3/4		12 3/8	5 1/4	6 3/4	2 5/8	3 1/2	10 7/8	10 1/2	6	3/4												9.0
4	36		1 5/8	5/8	3/4		12 3/8	5 1/4	6 3/4	2 5/8	3 1/2	10 7/8	10 1/2	6	3/4												9.0
5	48		2 1/4	3/4	1		16 1/2	7	9	3 1/2	4 5/8	14 1/2	14	8	1												16.0

STANDARD SIGN
W1-2

WISCONSIN DEPT OF TRANSPORTATION

APPROVED Matthew R Rauch for State Traffic Engineer

DATE 5/15/12 PLATE NO. W1-2.10

PROJECT NO:	HWY:	COUNTY:		SHEET NO: 95	E

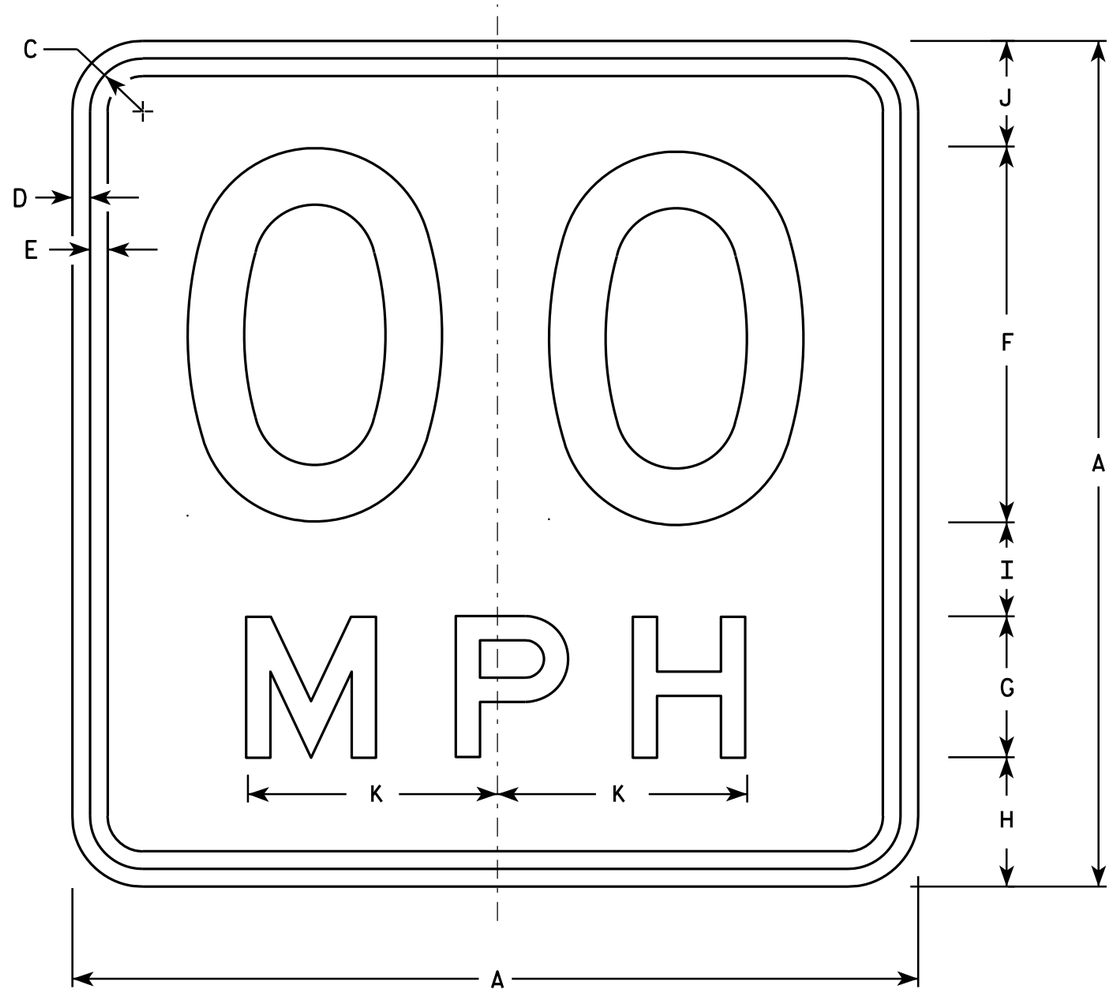

W13-1

* For 30" x 30" Warning Signs, use 18" x 18" W13-1 signs.
For 36" x 36" Warning Signs, use 24" x 24" W13-1 signs.

NOTES

1. Sign is Type II - Type F Reflective - reference WIS DOT Standard Specification for HIGHWAY and STRUCTURE CONSTRUCTION latest edition.
2. Color:
   Background - Yellow
   Message - Black
3. Message Series - See Note 6
4. Corners may be square or rounded when base material is plywood but borders shall be rounded as shown. When base material is metal, the corners and borders shall be rounded.
5. Substitute appropriate numerals and optically space about centerline to achieve proper balance.
6. Line 1 is Series D
   Line 2 is Series E

	SIZE	A	B	C	D	E	F	G	H	I	J	K	L	M	N	O	P	Q	R	S	T	U	V	W	X	Y	Z	Area sq. ft.
	1	18		1 1/8	3/8	3/8	8	3	2 3/4	2	2 1/4	5 3/8																2.25
*	2S	18		1 1/8	3/8	3/8	8	3	2 3/4	2	2 1/4	5 3/8																2.25
*	2M	18		1 1/8	3/8	3/8	8	3	2 3/4	2	2 1/4	5 3/8																2.25
	3	24		1 1/8	3/8	1/2	10	4	4	2 3/4	3 1/4	6 5/8																4.00
	4	36		1 5/8	5/8	3/4	16	6	5 1/2	4	4 1/2	10 5/8																9.00
	5	36		1 5/8	5/8	3/4	16	6	5 1/2	4	4 1/2	10 5/8																9.00

STANDARD SIGN
W13-1

WISCONSIN DEPT OF TRANSPORTATION

APPROVED Matthew R Rauch
For State Traffic Engineer

DATE 5/31/12 PLATE NO. W13-1.16

PROJECT NO: | HWY: | COUNTY: | SHEET NO: 96 | E

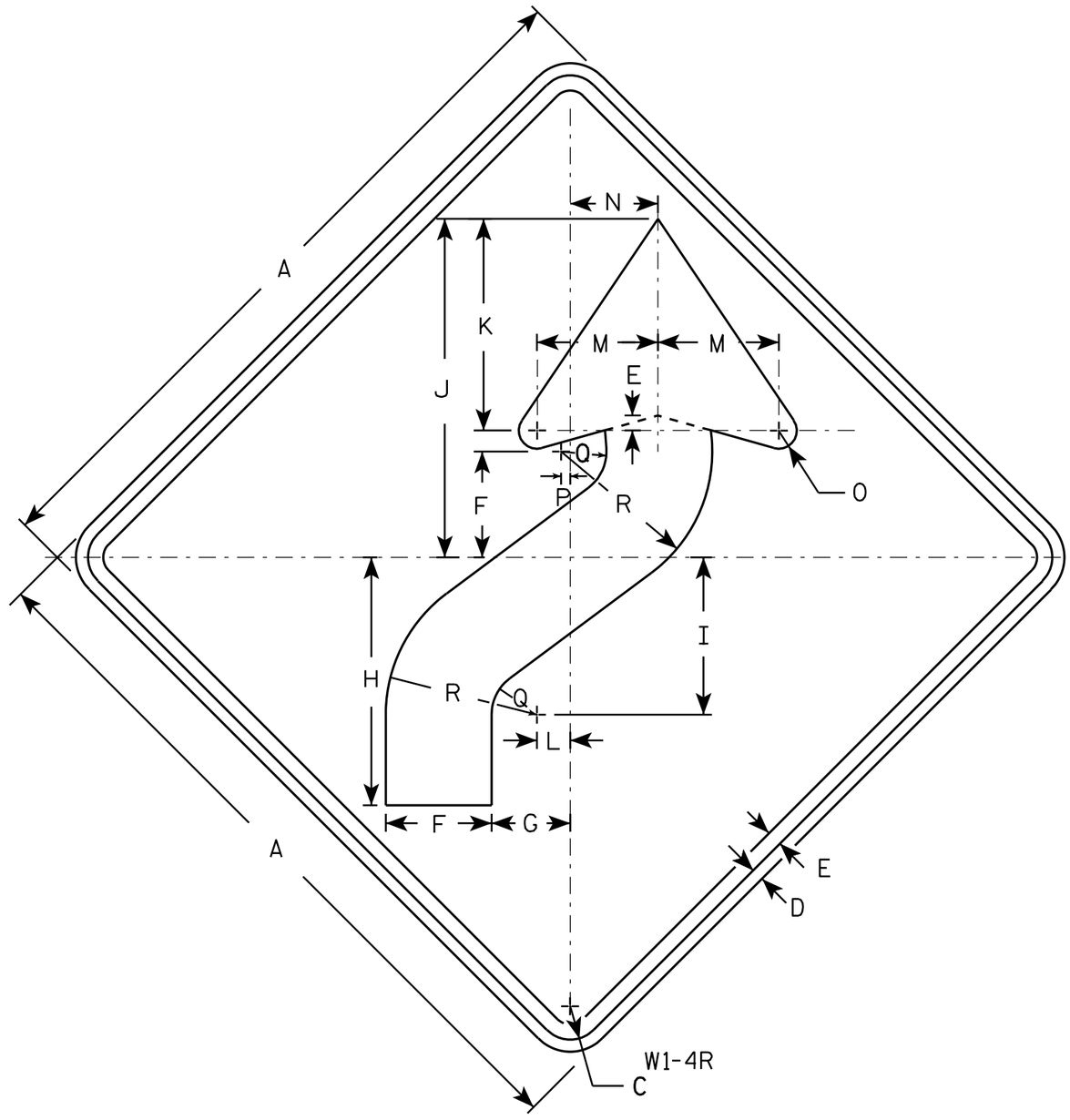

NOTES

1. Sign is Type II - Type F Reflective - reference WIS DOT Standard Specification for HIGHWAY and STRUCTURE CONSTRUCTION latest edition.
2. Color:
   Background - Yellow
   Message - Black
3. Corners may be square or rounded when base material is plywood but borders shall be rounded as shown. When base material is metal, the corners and borders shall be rounded.
4. W1-4L is the same as W1-4R except the arrow is reversed along the vertical centerline.

SIZE	A	B	C	D	E	F	G	H	I	J	K	L	M	N	O	P	Q	R	S	T	U	V	W	X	Y	Z	Area sq. ft.
1	24		1 1/8	3/8	1/2	3 1/2	2 5/8	8 1/4	5 1/4	11 1/4	7	1 1/8	4	3	5/8	1/4	1 1/2	5									4.0
2S	30		1 3/8	1/2	5/8	4 3/8	3 1/4	10 1/4	6 1/2	14	8 3/4	1 3/8	5	3 5/8	3/4	3/8	1 7/8	6 1/4									6.25
2M	36		1 5/8	5/8	3/4	5 1/4	4	12 3/8	7 7/8	16 7/8	10 1/2	1 5/8	6	4 1/2	1	1/2	2 1/4	7 1/2									9.0
3	36		1 5/8	5/8	3/4	5 1/4	4	12 3/8	7 7/8	16 7/8	10 1/2	1 5/8	6	4 1/2	1	1/2	2 1/4	7 1/2									9.0
4	36		1 5/8	5/8	3/4	5 1/4	4	12 3/8	7 7/8	16 7/8	10 1/2	1 5/8	6	4 1/2	1	1/2	2 1/4	7 1/2									9.0
5	48		2 1/4	3/4	1	7	5 1/4	16 1/2	10 1/2	22 1/2	14	2 1/4	8	6	1 1/4	5/8	3	10									16.0

STANDARD SIGN
W1-4

WISCONSIN DEPT OF TRANSPORTATION

APPROVED Matthew R Rauch
for State Traffic Engineer

DATE 5/17/12 PLATE NO. W1-4.11

PROJECT NO: | HWY: | COUNTY: | SHEET NO: 97 | E

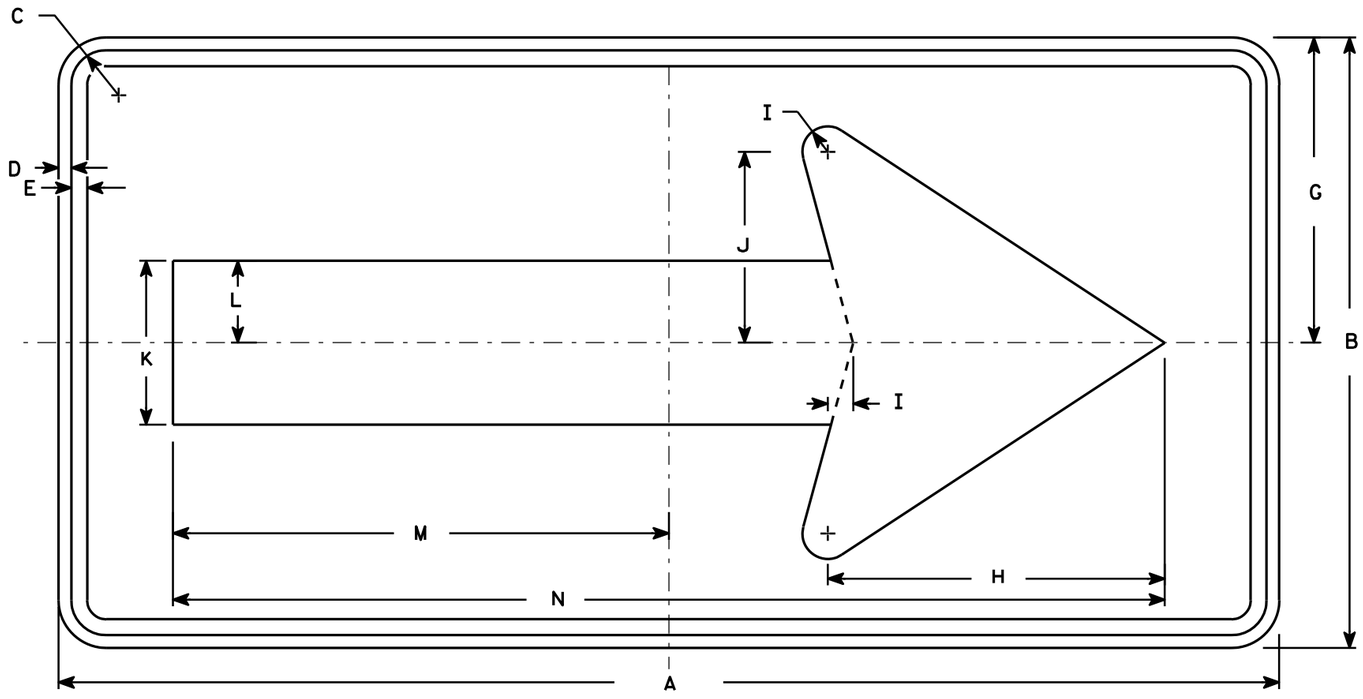

W1-6

NOTES

1. Sign is Type II - Type F Reflective - reference WIS DOT Standard Specification for HIGHWAY and STRUCTURE CONSTRUCTION latest edition.
2. Color:
   Background - Yellow
   Message - Black
3. Corners may be square or rounded when base material is plywood but borders shall be rounded as shown. When base material is metal, the corners and borders shall be rounded.

SIZE	A	B	C	D	E	F	G	H	I	J	K	L	M	N	O	P	Q	R	S	T	U	V	W	X	Y	Z	Area sq. ft.
1	36	18	1 1/8	3/8	3/8		9	10	3/4	5 5/8	4 3/4	2 3/8	14 5/8	29 1/4													4.5
2S	48	24	1 3/8	1/2	5/8		12	13 1/4	1	7 1/2	6 1/2	3 1/4	19 1/2	39													8.0
2M	48	24	1 3/8	1/2	5/8		12	13 1/4	1	7 1/2	6 1/2	3 1/4	19 1/2	39													8.0
3	60	30	1 3/8	1/2	5/8		15	16 1/4	1 1/4	9 1/4	8	4	24 3/8	48 3/4													12.5
4	60	30	1 3/8	1/2	5/8		15	16 1/4	1 1/4	9 1/4	8	4	24 3/8	48 3/4													12.5
5	96	48	2 1/4	3/4	1		24	26 1/2	2	15	13	6 1/2	39	78													32.0

STANDARD SIGN
W1-6

WISCONSIN DEPT OF TRANSPORTATION

APPROVED Matthew R Rauch
for State Traffic Engineer

DATE 6/7/10 PLATE NO. W1-6.8

PROJECT NO: | HWY: | COUNTY: | SHEET NO: 98

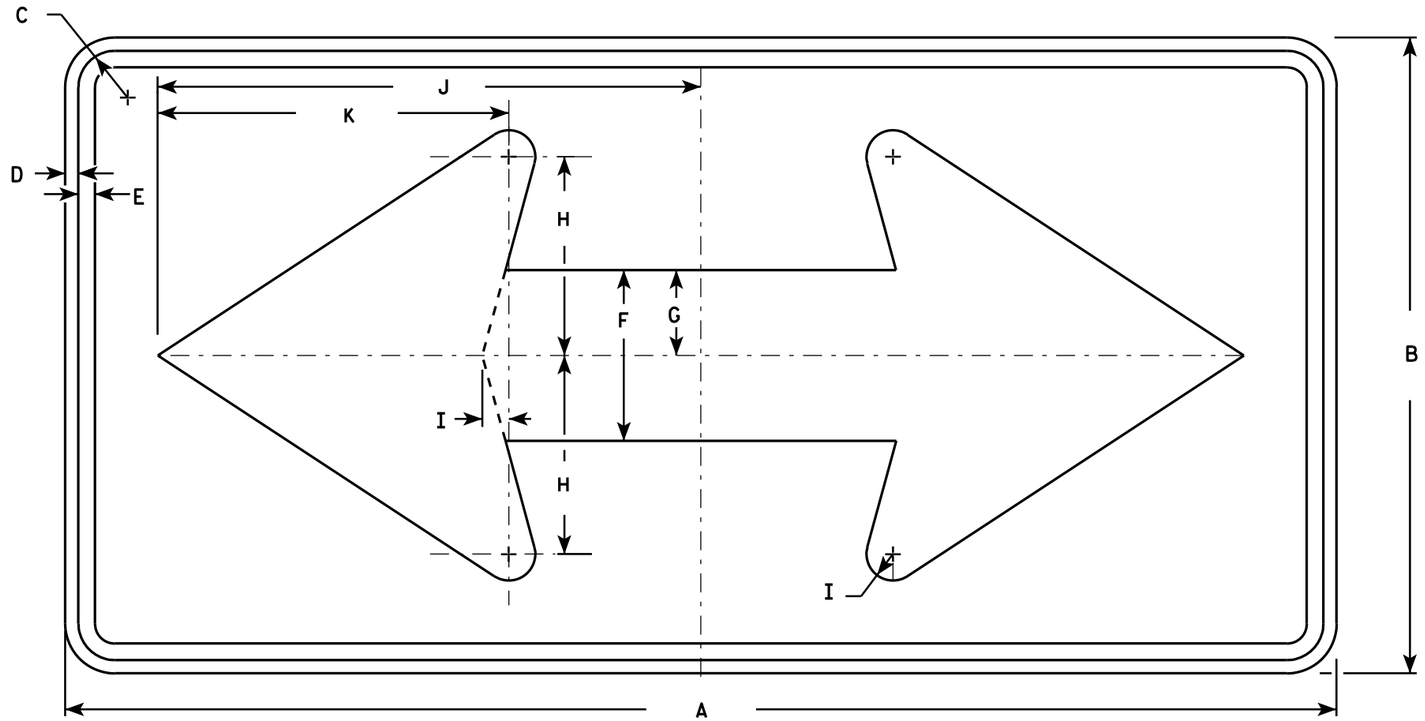

W1-7

NOTES

1. Sign is Type II - Type F Reflective - reference WIS DOT Standard Specification for HIGHWAY and STRUCTURE CONSTRUCTION latest edition.
2. Color:
   Background - Yellow
   Message - Black
3. Corners may be square or rounded when base material is plywood but borders shall be rounded as shown. When base material is metal, the corners and borders shall be rounded.

SIZE	A	B	C	D	E	F	G	H	I	J	K	L	M	N	O	P	Q	R	S	T	U	V	W	X	Y	Z	Area sq. ft.
1	36	18	1 1/8	3/8	1/2	5	2 1/2	5 3/4	3/4	15 5/8	10 1/8																4.5
2S	48	24	1 3/8	1/2	5/8	6 1/2	3 1/4	7 1/2	1	20 1/2	13 1/4																8.0
2M	48	24	1 3/8	1/2	5/8	6 1/2	3 1/4	7 1/2	1	20 1/2	13 1/4																8.0
3	60	30	1 3/8	1/2	5/8	8	4	9 1/4	1 1/4	25 3/8	16 1/4																12.5
4	60	30	1 3/8	1/2	5/8	8	4	9 1/4	1 1/4	25 3/8	16 1/4																12.5
5	96	48	2 1/4	3/4	1	13	6 1/2	15	2	41	26 1/2																32.0

STANDARD SIGN
W1-7

WISCONSIN DEPT OF TRANSPORTATION

APPROVED Matthew R Rauch
for State Traffic Engineer

DATE 6/7/10 PLATE NO. W1-7.7

PROJECT NO: | HWY: | COUNTY: | SHEET NO: 99 | E

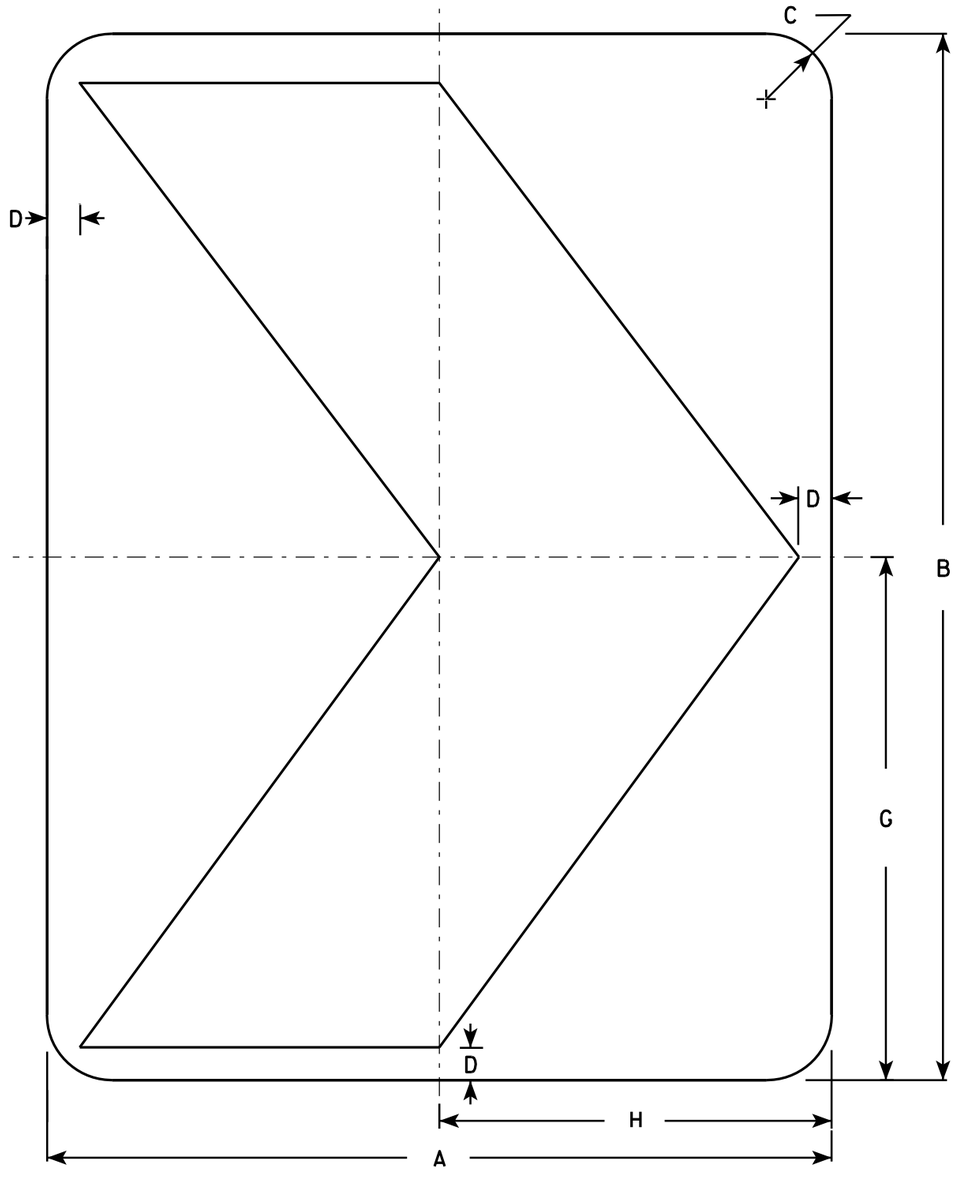

NOTES

1. Sign is Type II - Type F Reflective - reference WIS DOT Standard Specification for HIGHWAY and STRUCTURE CONSTRUCTION latest edition.
2. Color:
   Background - Yellow
   Message - Black
3. Corners may be square or rounded when base material is plywood but borders shall be rounded as shown. When base material is metal, the corners and borders shall be rounded.

W1-8

SIZE	A	B	C	D	E	F	G	H	I	J	K	L	M	N	O	P	Q	R	S	T	U	V	W	X	Y	Z	Area sq. ft.
1	12	18	1 ½	½			9	6																			1.5
2S	18	24	1 ½	¾			12	9																			3.0
2M	18	24	1 ½	¾			12	9																			3.0
3	24	30	1 ½	1			15	12																			5.0
4	30	36	1 ⅞	1 ¼			18	15																			7.5
5	36	48	2 ¼	1 ½			24	18																			12.0

STANDARD SIGN
W1-8

WISCONSIN DEPT OF TRANSPORTATION

APPROVED Matthew R Rauch
for State Traffic Engineer

DATE 6/7/10 PLATE NO. W1-8.6

PROJECT NO:

SHEET NO: 100 E

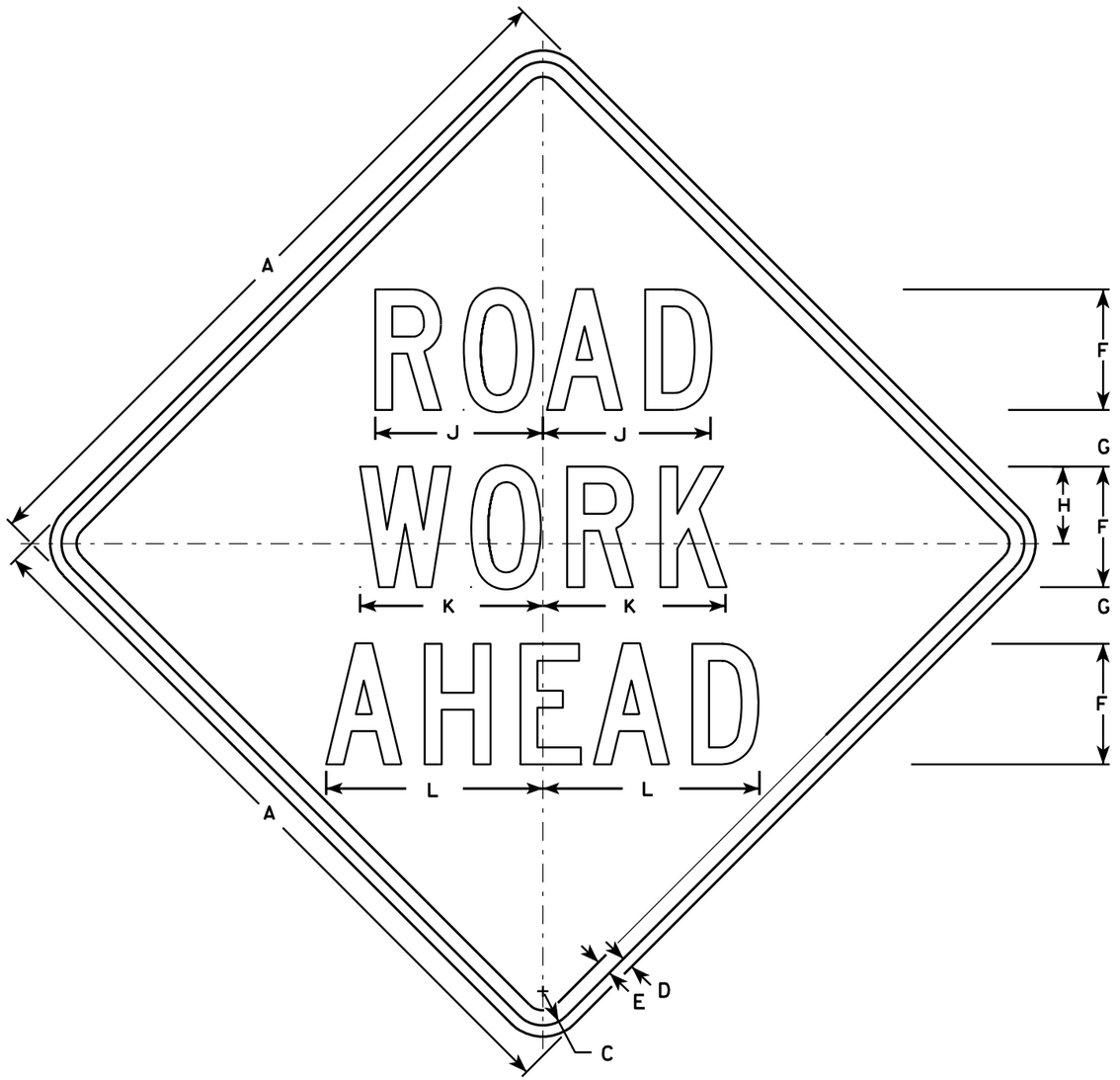

W20-1A

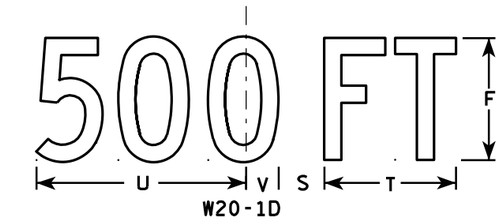

W20-1D

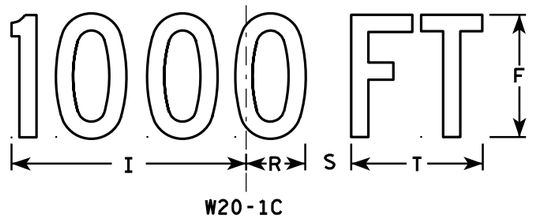

W20-1C

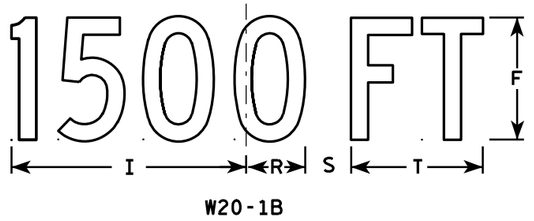

W20-1B

W20-1G

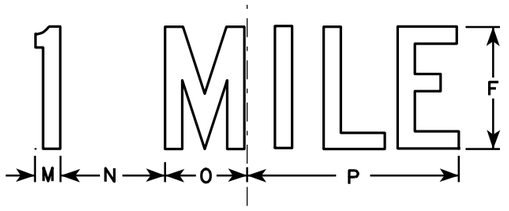

W20-1F

NOTES

1. Sign is Type II - Type F Reflective - reference WIS DOT Standard Specification for HIGHWAY and STRUCTURE CONSTRUCTION latest edition.
2. Color:
   Background - Orange
   Message - Black
3. Message Series - C
4. Corners may be square or rounded when base material is plywood but borders shall be rounded as shown. When base material is metal, the corners and borders shall be rounded.

SIZE	A	B	C	D	E	F	G	H	I	J	K	L	M	N	O	P	Q	R	S	T	U	V	W	X	Y	Z	Area sq. ft.
1	36		1 3/8	1/2	5/8	5	2 5/8	3 1/4	10 1/8	7	7 5/8	8 7/8	1 1/8	4 1/2	3 1/2	9		2 1/2	1 7/8	5 5/8	9	1 3/8	8	1 3/4	10 3/4	6	9.0
2S	48		2 1/4	3/4	1	8	3 3/4	5 1/8	15 3/8	11 1/8	12 1/8	14 3/8	1 5/8	6 7/8	5 3/8	13 7/8		3 7/8	3	8 5/8	13 3/4	2 1/8	11 7/8	2 3/4	16 3/8	9	16.0
2M	48		2 1/4	3/4	1	8	3 3/4	5 1/8	15 3/8	11 1/8	12 1/8	14 3/8	1 5/8	6 7/8	5 3/8	13 7/8		3 7/8	3	8 5/8	13 3/4	2 1/8	11 7/8	2 3/4	16 3/8	9	16.0
3	48		2 1/4	3/4	1	8	3 3/4	5 1/8	15 3/8	11 1/8	12 1/8	14 3/8	1 5/8	6 7/8	5 3/8	13 7/8		3 7/8	3	8 5/8	13 3/4	2 1/8	11 7/8	2 3/4	16 3/8	9	16.0
4	48		2 1/4	3/4	1	8	3 3/4	5 1/8	15 3/8	11 1/8	12 1/8	14 3/8	1 5/8	6 7/8	5 3/8	13 7/8		3 7/8	3	8 5/8	13 3/4	2 1/8	11 7/8	2 3/4	16 3/8	9	16.0
5	48		2 1/4	3/4	1	8	3 3/4	5 1/8	15 3/8	11 1/8	12 1/8	14 3/8	1 5/8	6 7/8	5 3/8	13 7/8		3 7/8	3	8 5/8	13 3/4	2 1/8	11 7/8	2 3/4	16 3/8	9	16.0

STANDARD SIGN
W20-1A, B, C, D, F & G

WISCONSIN DEPT OF TRANSPORTATION

APPROVED Matthew R Rauch
for State Traffic Engineer

DATE 3/18/11 PLATE NO. W20-1.9

PROJECT NO:

SHEET NO: 101 E

FILE NAME : C:\Users\PROJECTS\tr_stdplate\W201.DGN PLOT DATE : 18-MAR-2011 09:56 PLOT BY : mscj9h

WISDOT/CADDS SHEET 42

7

7

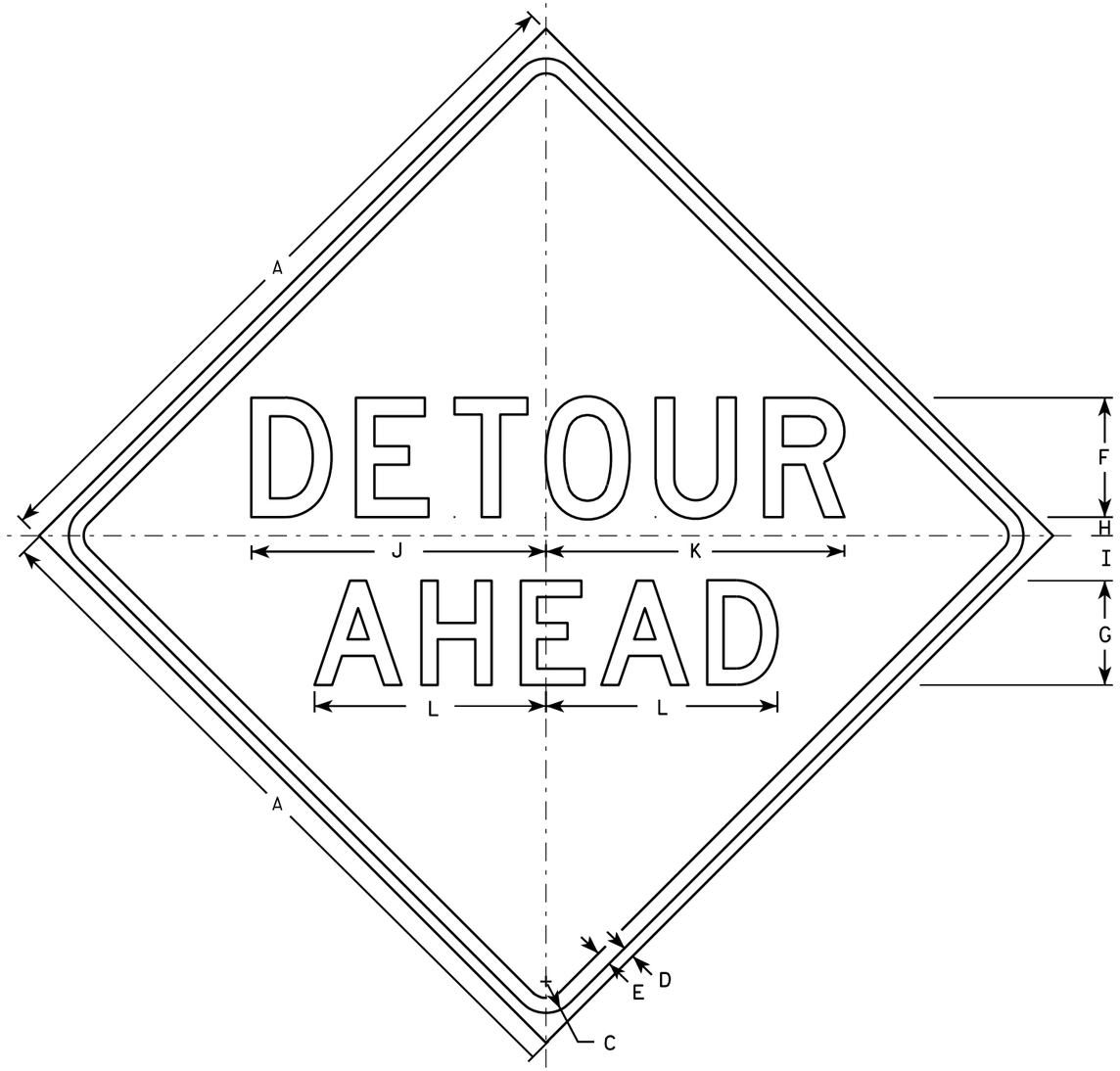

W20-2A

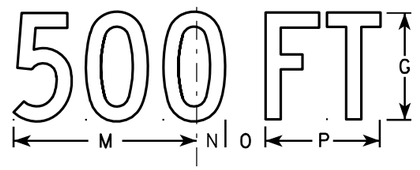

W20-2D

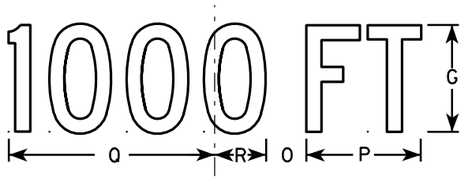

W20-2C

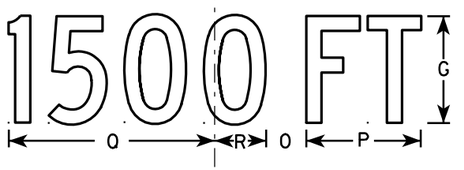

W20-2B

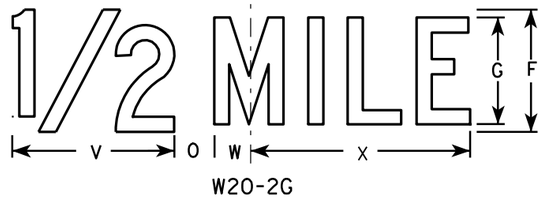

W20-2G

W20-2F

NOTES

1. Sign is Type II - Type F Reflective - reference WIS DOT Standard Specification for HIGHWAY and STRUCTURE CONSTRUCTION latest edition.
2. Color:
   Background - Orange
   Message - Black
3. Message Series - See note 5
4. Corners may be square or rounded when base material is plywood but borders shall be rounded as shown. When base material is metal, the corners and borders shall be rounded.
5. Line 1 is Series D.
   Line 2 is Series D for AHEAD and Series C for all other distances.

SIZE	A	B	C	D	E	F	G	H	I	J	K	L	M	N	O	P	O	R	S	T	U	V	W	X	Y	Z	Area sq. ft.
1	36		1 5/8	5/8	3/4	6	5	1	2 1/4	14 3/4	15	11 5/8	9	1 3/8	1 7/8	5 5/8	10 1/8	2 1/2	1 1/8	4 1/2	3 1/2	8	1 3/4	10 3/4			9.0
2S	48		2 1/4	3/4	1	8	7	1 1/4	3	19 3/4	20	15 1/2	12	1 7/8	2 5/8	7 1/2	13 1/2	3 3/8	1 1/2	6	4 5/8	10 5/8	2 3/8	14 3/8			16.0
2M	48		2 1/4	3/4	1	8	7	1 1/4	3	19 3/4	20	15 1/2	12	1 7/8	2 5/8	7 1/2	13 1/2	3 3/8	1 1/2	6	4 5/8	10 5/8	2 3/8	14 3/8			16.0
3	48		2 1/4	3/4	1	8	7	1 1/4	3	19 3/4	20	15 1/2	12	1 7/8	2 5/8	7 1/2	13 1/2	3 3/8	1 1/2	6	4 5/8	10 5/8	2 3/8	14 3/8			16.0
4	48		2 1/4	3/4	1	8	7	1 1/4	3	19 3/4	20	15 1/2	12	1 7/8	2 5/8	7 1/2	13 1/2	3 3/8	1 1/2	6	4 5/8	10 5/8	2 3/8	14 3/8			16.0
5	48		2 1/4	3/4	1	8	7	1 1/4	3	19 3/4	20	15 1/2	12	1 7/8	2 5/8	7 1/2	13 1/2	3 3/8	1 1/2	6	4 5/8	10 5/8	2 3/8	14 3/8			16.0

STANDARD SIGN
W20-2A,B,C,D,F & G

WISCONSIN DEPT OF TRANSPORTATION

APPROVED Matthew R Rauch
for State Traffic Engineer

DATE 3/18/11 PLATE NO. W20-2.6

PROJECT NO:	HWY:	COUNTY:		SHEET NO: 102	E

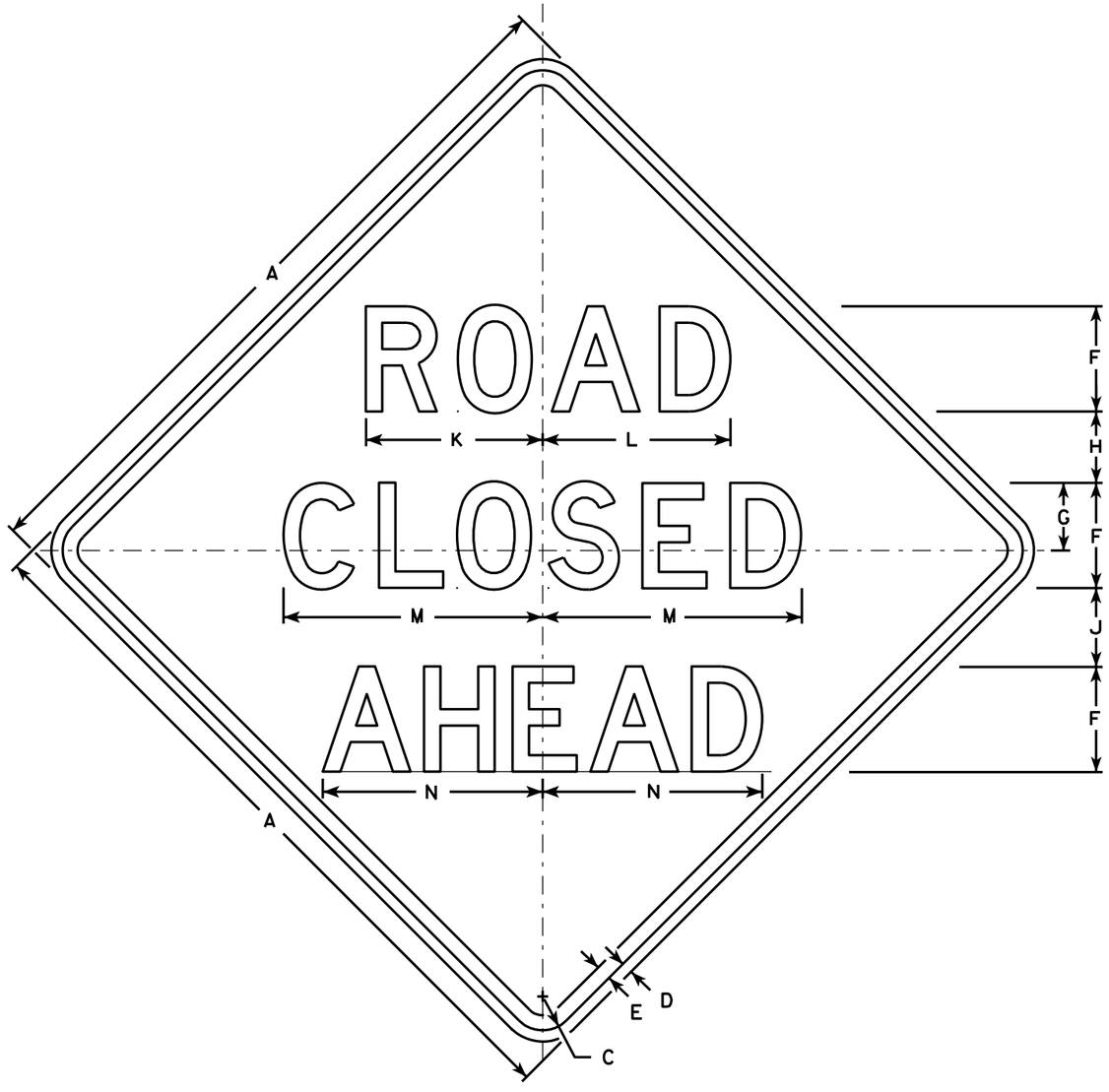

W20-3A

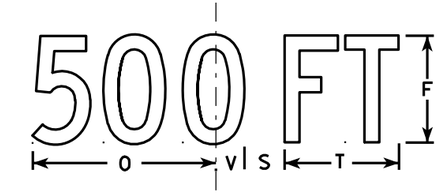

W20-3D

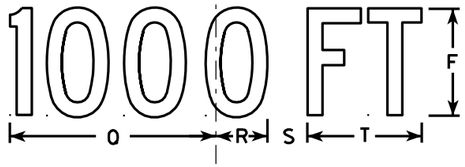

W20-3C

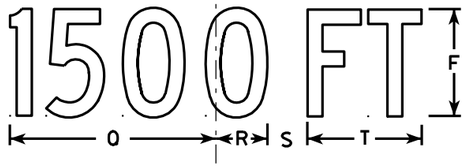

W20-3B

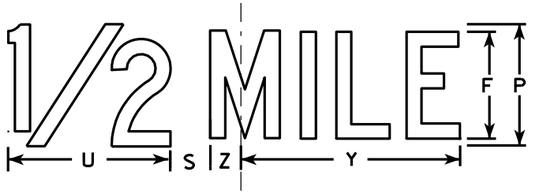

W20-3G

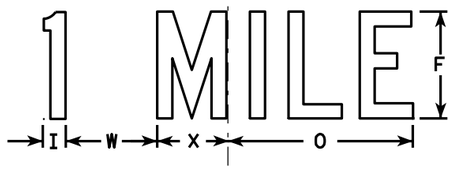

W20-3F

NOTES

1. Sign is Type II - Type F Reflective - reference WIS DOT Standard Specification for HIGHWAY and STRUCTURE CONSTRUCTION latest edition.
2. Color:
   Background - Orange
   Message - Black
3. Message Series - see note 5
4. Corners may be square or rounded when base material is plywood but borders shall be rounded as shown. When base material is metal, the corners and borders shall be rounded.
5. Lines 1 and 2 are Series D.
   Line 3 is Series D for AHEAD and Series C for all other distances.

SIZE	A	B	C	D	E	F	G	H	I	J	K	L	M	N	O	P	Q	R	S	T	U	V	W	X	Y	Z	Area sq. ft.
1	36		1 5/8	5/8	3/4	5	3 3/8	3 1/2	1 1/8	4	8 3/8	8 7/8	12 1/2	11	9	6	10 1/8	2 1/2	1 7/8	5 5/8	8	1 3/8	4 1/2	3 1/2	10 3/4	1 3/4	9.0
2S	48		2 1/4	3/4	1	7	4 1/2	4 3/4	1 1/2	5 1/4	11 3/4	12 1/2	17 1/4	14 5/8	12	8	13 1/2	3 3/8	2 5/8	7 1/2	10 5/8	1 7/8	6	4 5/8	14 3/8	2 3/8	16.0
2M	48		2 1/4	3/4	1	7	4 1/2	4 3/4	1 1/2	5 1/4	11 3/4	12 1/2	17 1/4	14 5/8	12	8	13 1/2	3 3/8	2 5/8	7 1/2	10 5/8	1 7/8	6	4 5/8	14 3/8	2 3/8	16.0
3	48		2 1/4	3/4	1	7	4 1/2	4 3/4	1 1/2	5 1/4	11 3/4	12 1/2	17 1/4	14 5/8	12	8	13 1/2	3 3/8	2 5/8	7 1/2	10 5/8	1 7/8	6	4 5/8	14 3/8	2 3/8	16.0
4	48		2 1/4	3/4	1	7	4 1/2	4 3/4	1 1/2	5 1/4	11 3/4	12 1/2	17 1/4	14 5/8	12	8	13 1/2	3 3/8	2 5/8	7 1/2	10 5/8	1 7/8	6	4 5/8	14 3/8	2 3/8	16.0
5	48		2 1/4	3/4	1	7	4 1/2	4 3/4	1 1/2	5 1/4	11 3/4	12 1/2	17 1/4	14 5/8	12	8	13 1/2	3 3/8	2 5/8	7 1/2	10 5/8	1 7/8	6	4 5/8	14 3/8	2 3/8	16.0

STANDARD SIGN
W20-3A, B, C, D, F & G

WISCONSIN DEPT OF TRANSPORTATION

APPROVED Matthew R Rauch
for State Traffic Engineer
DATE 3/18/11 PLATE NO. W20-3.7

PROJECT NO: | HWY: | COUNTY: | SHEET NO: 103 | E

W20-56A

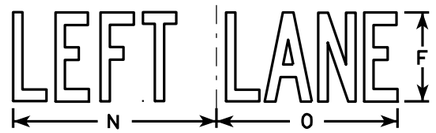

W20-55A

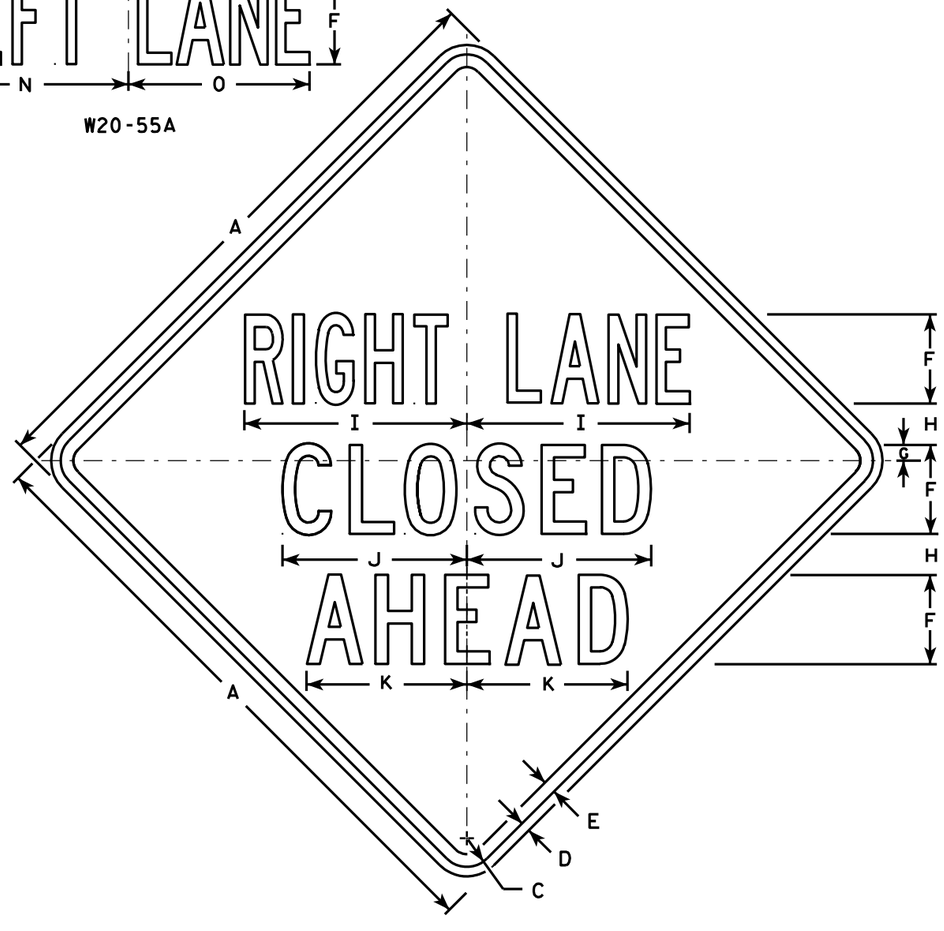

W20-5A

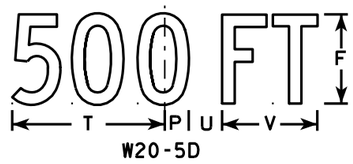

W20-5D

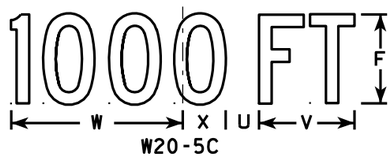

W20-5C

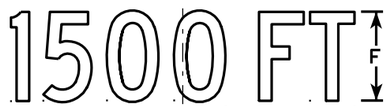

W20-5B

W20-5G

W20-5F

NOTES

1. Sign is Type II - Type F Reflective - reference WIS DOT Standard Specification for HIGHWAY and STRUCTURE CONSTRUCTION latest edition.
2. Color:
   Background - Orange
   Message - Black
3. Message Series - See Note 5
4. Corners may be square or rounded when base material is plywood but borders shall be rounded as shown. When base material is metal, the corners and borders shall be rounded.
5. " _____ LANE" is Series B.
   All other copy is Series C.

SIZE	A	B	C	D	E	F	G	H	I	J	K	L	M	N	O	P	Q	R	S	T	U	V	W	X	Y	Z	Area sq. ft.
1	36	6	1 5/8	5/8	3/4	5	1/8	2 1/2	13 1/8	10 3/4	9 1/2	14 1/4	13 5/8	12	12	1 3/8	1 1/8	4 1/2	3 1/2	9	1 1/8	5 5/8	10 1/8	2 1/2	1 3/4	8	9.0
2S	48	8	2 1/4	3/4	1	7	1 1/4	3 1/4	17 1/2	14 3/8	12 5/8	19	18 3/8	16	14 1/4	1 7/8	1 1/2	6	4 5/8	12	2 5/8	7 1/2	13 1/2	3 3/8	2 3/8	10 5/8	16.0
2M	48	8	2 1/4	3/4	1	7	1 1/4	3 1/4	17 1/2	14 3/8	12 5/8	19	18 3/8	16	14 1/4	1 7/8	1 1/2	6	4 5/8	12	2 5/8	7 1/2	13 1/2	3 3/8	2 3/8	10 5/8	16.0
3	48	8	2 1/4	3/4	1	7	1 1/4	3 1/4	17 1/2	14 3/8	12 5/8	19	18 3/8	16	14 1/4	1 7/8	1 1/2	6	4 5/8	12	2 5/8	7 1/2	13 1/2	3 3/8	2 3/8	10 5/8	16.0
4	48	8	2 1/4	3/4	1	7	1 1/4	3 1/4	17 1/2	14 3/8	12 5/8	19	18 3/8	16	14 1/4	1 7/8	1 1/2	6	4 5/8	12	2 5/8	7 1/2	13 1/2	3 3/8	2 3/8	10 5/8	16.0
5	48	8	2 1/4	3/4	1	7	1 1/4	3 1/4	17 1/2	14 3/8	12 5/8	19	18 3/8	16	14 1/4	1 7/8	1 1/2	6	4 5/8	12	2 5/8	7 1/2	13 1/2	3 3/8	2 3/8	10 5/8	16.0

STANDARD SIGN
W20-5A, B, C, D, F & G

WISCONSIN DEPT OF TRANSPORTATION

APPROVED Matthew R Rauch
for State Traffic Engineer

DATE 3/18/11 PLATE NO. W20-5.11

PROJECT NO:	HWY:	COUNTY:		SHEET NO: 104	E

FILE NAME : C:\Users\PROJECTS\tr_stdplate\W205.DGN PLOT DATE : 18-MAR-2011 12:15 PLOT BY : mscj9h PLOT NAME : PLOT SCALE : 11.918087:1.000000

WISDOT/CADDS SHEET 42

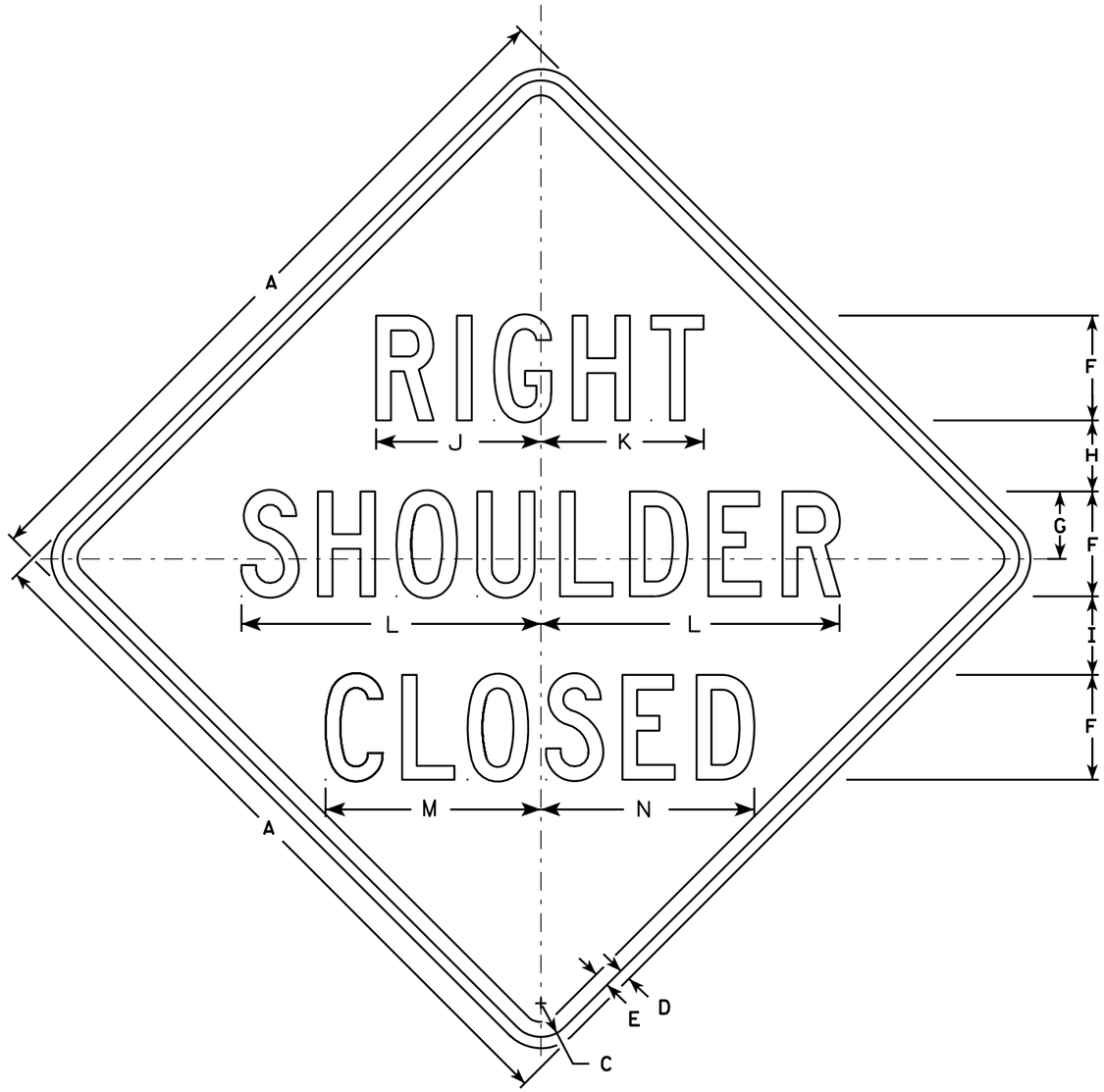

W21-5A

NOTES

1. Sign is Type II - Type F Reflective - reference WIS DOT Standard Specification for HIGHWAY and STRUCTURE CONSTRUCTION latest edition.
2. Color:
   Background - Orange
   Message - Black
3. Message Series - D
4. Corners may be square or rounded when base material is plywood but borders shall be rounded as shown. When base material is metal, the corners and borders shall be rounded.

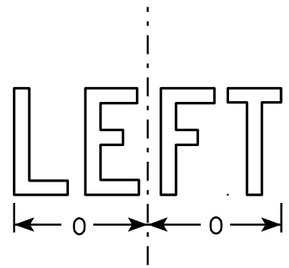

W21-5AL

SIZE	A	B	C	D	E	F	G	H	I	J	K	L	M	N	O	P	Q	R	S	T	U	V	W	X	Y	Z	Area sq. ft.
1	36		1 5/8	5/8	3/4	5	3 3/8	3 1/2	4	7 7/8	7 3/4	14 1/4	10 1/4	10 1/8	6 1/4												9.0
2S	48		2 1/4	3/4	1	7	4 1/2	4 3/4	5 1/4	11	10 7/8	20	14 3/8	14 1/4	8 3/4												16.0
2M	48		2 1/4	3/4	1	7	4 1/2	4 3/4	5 1/4	11	10 7/8	20	14 3/8	14 1/4	8 3/4												16.0
3	48		2 1/4	3/4	1	7	4 1/2	4 3/4	5 1/4	11	10 7/8	20	14 3/8	14 1/4	8 3/4												16.0
4	48		2 1/4	3/4	1	7	4 1/2	4 3/4	5 1/4	11	10 7/8	20	14 3/8	14 1/4	8 3/4												16.0
5	48		2 1/4	3/4	1	7	4 1/2	4 3/4	5 1/4	11	10 7/8	20	14 3/8	14 1/4	8 3/4												16.0

STANDARD SIGN
W21-5A

WISCONSIN DEPT OF TRANSPORTATION

APPROVED Matthew R Rauch
for State Traffic Engineer

DATE 3/21/11 PLATE NO. W21-5A.3

PROJECT NO: | HWY: | COUNTY: | SHEET NO: 105 | E

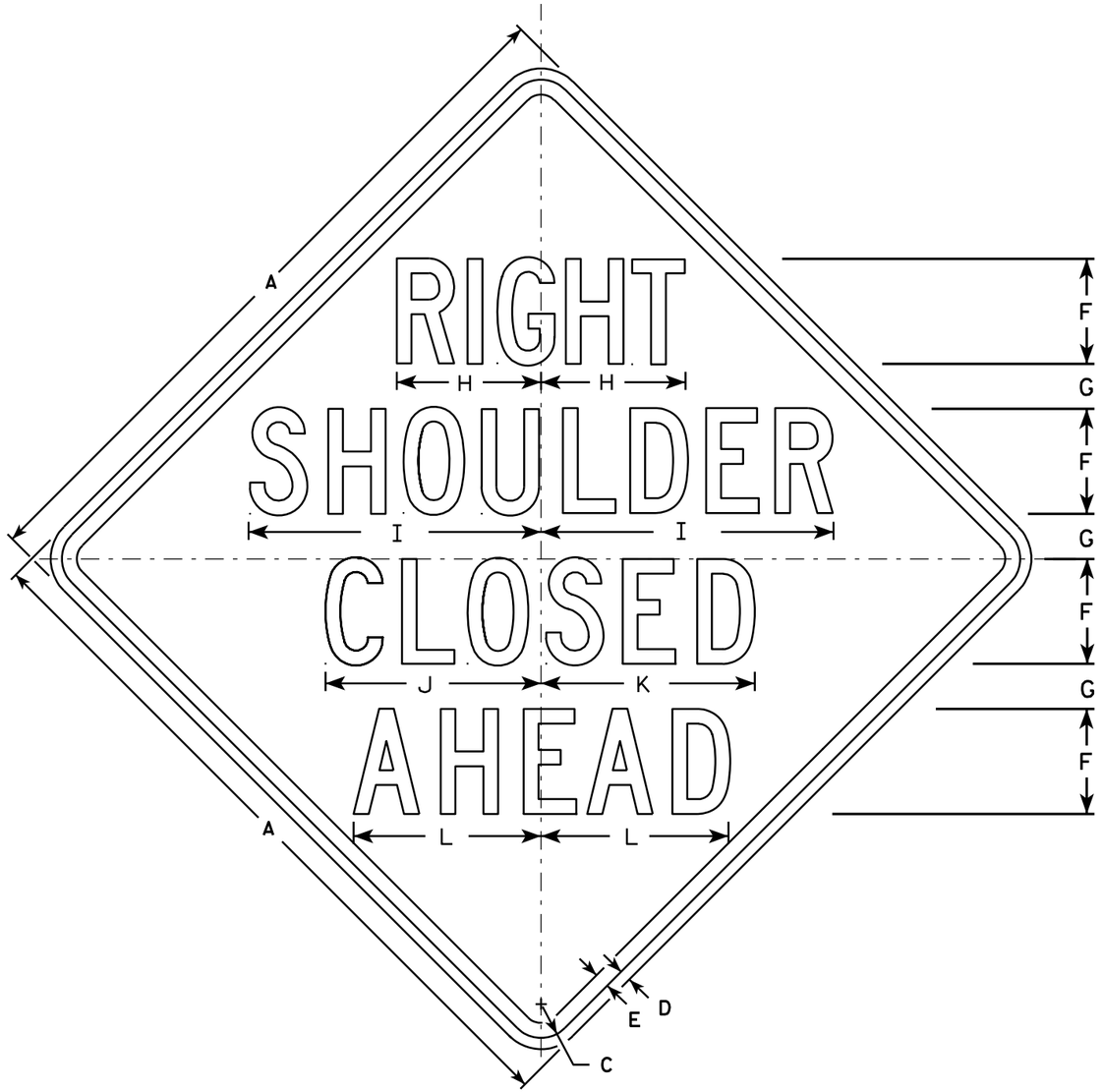

W21-5B

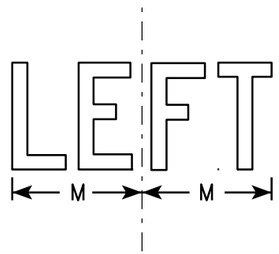

W21-5BL

NOTES

1. Sign is Type II - Type F Reflective - reference WIS DOT Standard Specification for HIGHWAY and STRUCTURE CONSTRUCTION latest edition.
2. Color:
   Background - Orange
   Message - Black
3. Message Series - C
4. Corners may be square or rounded when base material is plywood but borders shall be rounded as shown. When base material is metal, the corners and borders shall be rounded.

SIZE	A	B	C	D	E	F	G	H	I	J	K	L	M	N	O	P	Q	R	S	T	U	V	W	X	Y	Z	Area sq. ft.
1	36		1 5/8	5/8	3/4	5	2 1/4	7 3/8	14 1/4	10 1/4	10 1/8	8 7/8	6 1/4														9.0
2S	48		2 1/4	3/4	1	7	3	9 5/8	19 1/2	14 3/8	14 1/4	12 1/2	8 1/2														16.0
2M	48		2 1/4	3/4	1	7	3	9 5/8	19 1/2	14 3/8	14 1/4	12 1/2	8 1/2														16.0
3	48		2 1/4	3/4	1	7	3	9 5/8	19 1/2	14 3/8	14 1/4	12 1/2	8 1/2														16.0
4	48		2 1/4	3/4	1	7	3	9 5/8	19 1/2	14 3/8	14 1/4	12 1/2	8 1/2														16.0
5	48		2 1/4	3/4	1	7	3	9 5/8	19 1/2	14 3/8	14 1/4	12 1/2	8 1/2														16.0

STANDARD SIGN
W21-5B

WISCONSIN DEPT OF TRANSPORTATION

APPROVED Matthew R Rauch
for State Traffic Engineer

DATE 3/21/11 PLATE NO. W21-5B.3

PROJECT NO:	HWY:	COUNTY:		SHEET NO: 106	E

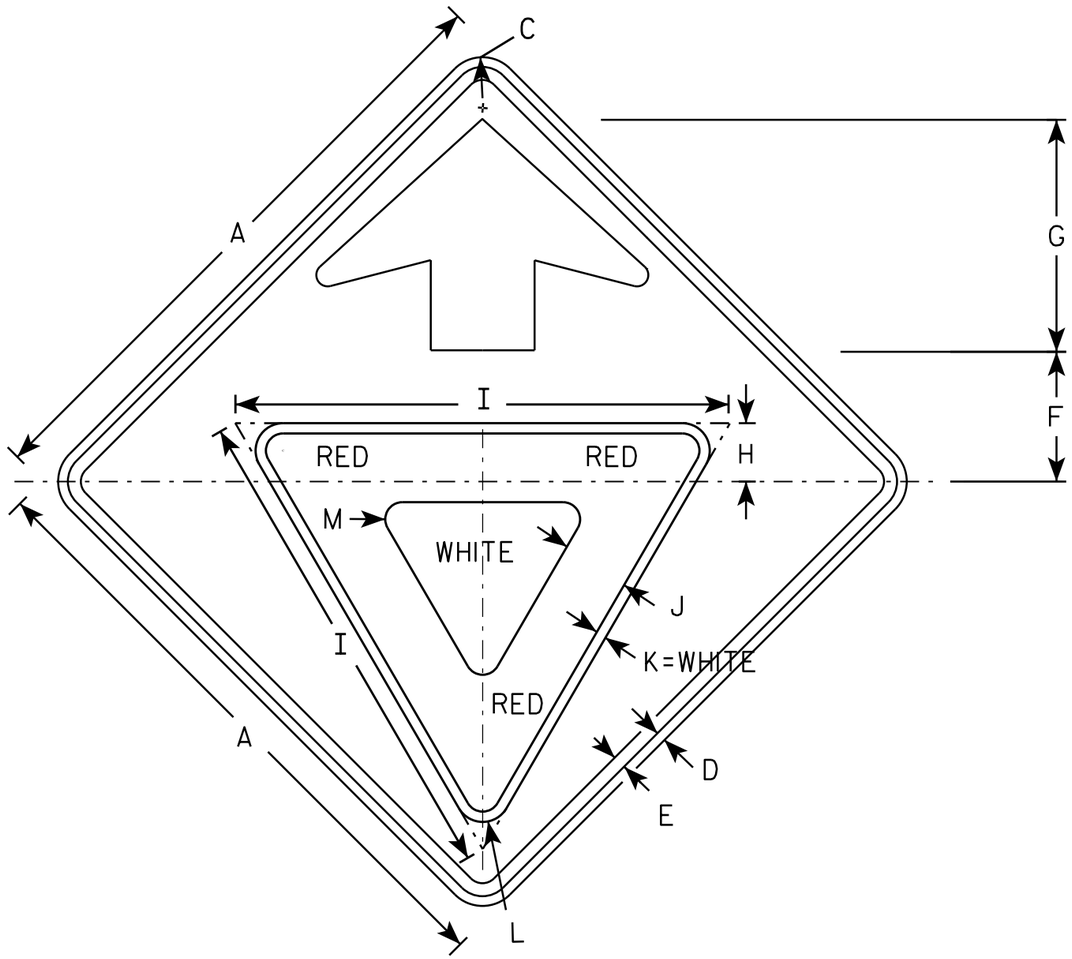

W03-2

NOTES

1. All Signs Type II - Type F Reflective - reference WIS DOT Standard Specification for HIGHWAY and STRUCTURE CONSTRUCTION latest edition.
2. Color:
   Background - ORANGE
   Arrow & Border - BLACK
   Yield Symbol - WHITE BORDER ON RED BACKGROUND

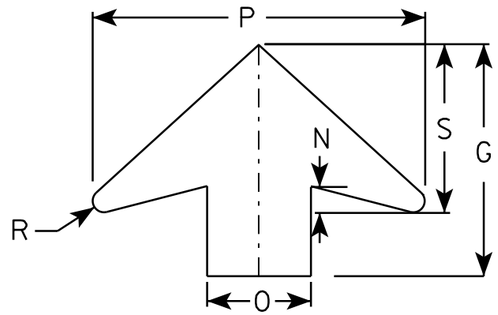

ARROW DETAIL

SIZE	A	B	C	D	E	F	G	H	I	J	K	L	M	N	O	P	Q	R	S	T	U	V	W	X	Y	Z	Area sq. ft.
1	36		1 5/8	5/8	3/4	7 1/2	13 1/2	3 3/8	28	3 3/4	5/8	1 1/2	1	1 5/8	6	19 1/4		5/8	9 3/4								9.0
2S	48		2 1/4	3/4	1	10	17 7/8	4 1/2	38	5	3/4	2 1/8	1 3/8	2	8	25 5/8		7/8	13								16.0
2M	48		2 1/4	3/4	1	10	17 7/8	4 1/2	38	5	3/4	2 1/8	1 3/8	2	8	25 5/8		7/8	13								16.0
3	48		2 1/4	3/4	1	10	17 7/8	4 1/2	38	5	3/4	2 1/8	1 3/8	2	8	25 5/8		7/8	13								16.0
4	48		2 1/4	3/4	1	10	17 7/8	4 1/2	38	5	3/4	2 1/8	1 3/8	2	8	25 5/8		7/8	13								16.0
5	48		2 1/4	3/4	1	10	17 7/8	4 1/2	38	5	3/4	2 1/8	1 3/8	2	8	25 5/8		7/8	13								16.0

STANDARD SIGN
W03-2

WISCONSIN DEPT OF TRANSPORTATION

APPROVED Matthew R Rauch
for State Traffic Engineer

DATE 11/20/13 PLATE W03-2.1

PROJECT NO:

SHEET NO: E

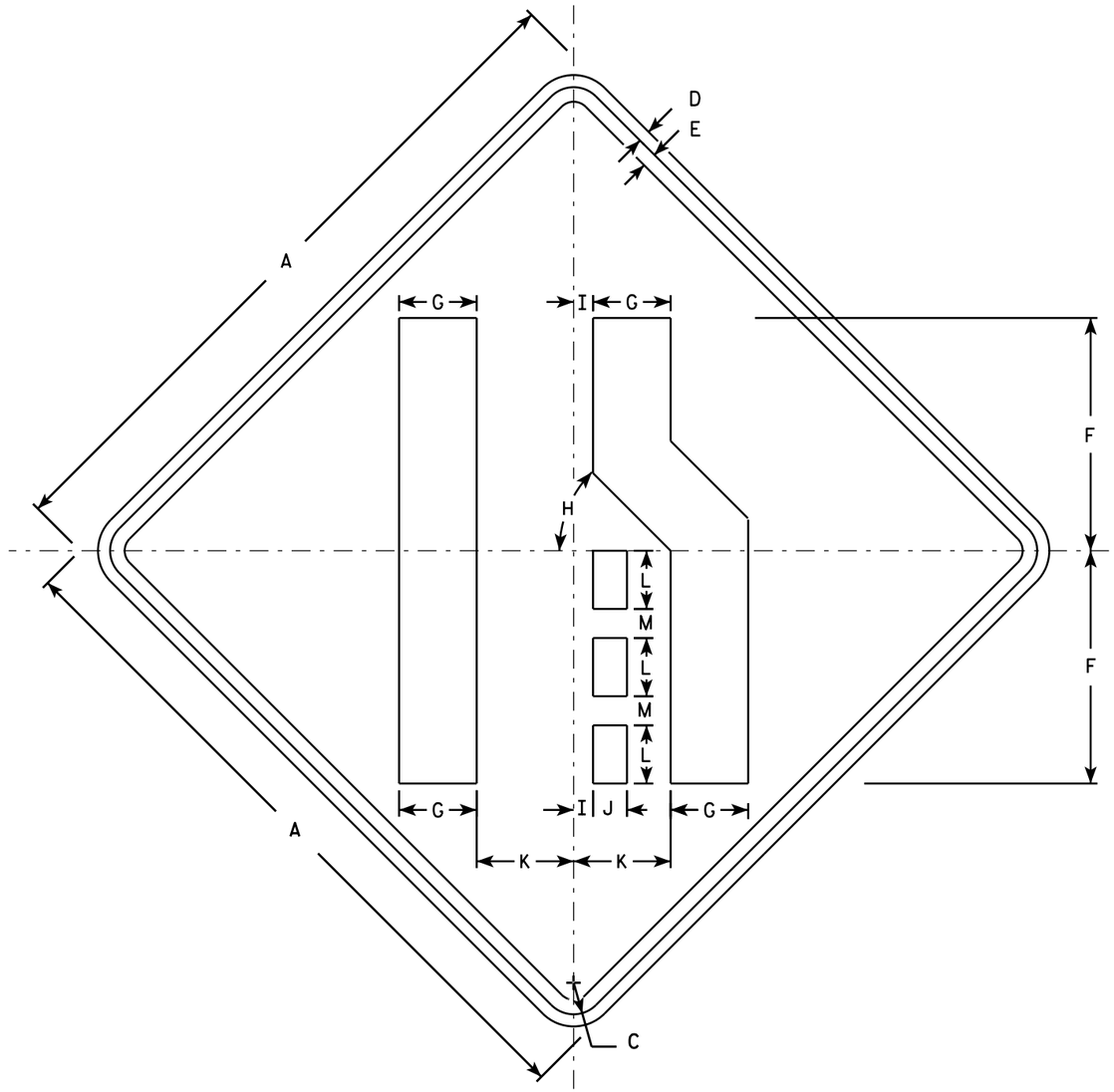

W04-2R

NOTES

1. Sign is Type II - Type F Reflective - reference WIS DOT Standard Specification for HIGHWAY and STRUCTURE CONSTRUCTION latest edition.
2. Color:
   Background - Orange
   Message - Black
3. Corners may be square or rounded when base material is plywood but borders shall be rounded as shown. When base material is metal, the corners and borders shall be rounded.
4. W04-2L is the same as W04-2R except the symbol is reversed along the vertical centerline.

SIZE	A	B	C	D	E	F	G	H	I	J	K	L	M	N	O	P	Q	R	S	T	U	V	W	X	Y	Z	Area sq. ft.
1	36		1 5/8	5/8	3/4	12	4	45°	1	1 3/4	5	3	1 1/2														9.0
2S	48		2 1/4	3/4	1	16	5 3/8	45°	1 1/4	2 3/8	6 3/4	4	2														16.0
2M	48		2 1/4	3/4	1	16	5 3/8	45°	1 1/4	2 3/8	6 3/4	4	2														16.0
3	48		2 1/4	3/4	1	16	5 3/8	45°	1 1/4	2 3/8	6 3/4	4	2														16.0
4	48		2 1/4	3/4	1	16	5 3/8	45°	1 1/4	2 3/8	6 3/4	4	2														16.0
5	48		2 1/4	3/4	1	16	5 3/8	45°	1 1/4	2 3/8	6 3/4	4	2														16.0

STANDARD SIGN
W04-2

WISCONSIN DEPT OF TRANSPORTATION

APPROVED Matthew R Rauch
for State Traffic Engineer

DATE 11/20/13 PLATE 108 W04-2.1

PROJECT NO: | SHEET NO: E

EARTHWORK SUMMARY - CTH E

STATION	AREA (SF)				INCREMENTAL VOL (CY)				CUMULATIVE VOL (CY)			
	CUT	ROCK CUT	EBS	FILL	CUT	ROCK CUT	EBS	FILL	CUT	ROCK CUT	EBS	FILL
6+95.0	46.1	0.0	0.0	0.0								
7+00.0	46.1	0.0	0.0	0.0	9	0	0	0	9	0	0	0
7+50.0	55.9	0.0	0.0	0.0	94	0	0	0	103	0	0	0
8+00.0	71.3	0.0	0.0	0.6	118	0	0	1	221	0	0	1
8+50.0	75.0	0.0	0.0	4.4	135	0	0	5	356	0	0	6
9+00.0	71.3	0.0	0.0	7.7	135	0	0	11	491	0	0	17
9+50.0	34.7	0.0	0.0	11.2	98	0	0	18	589	0	0	35
10+00.0	0.1	0.0	0.0	49.2	32	0	0	56	621	0	0	91
10+50.0	5.6	0.0	30.5	154.6	5	0	3	189	626	0	3	280
11+00.0	14.6	0.0	69.7	249.6	19	0	9	374	645	0	12	654
11+50.0	0.0	0.0	90.5	408.3	14	0	15	609	659	0	27	1,263
12+00.0	0.0	0.0	113.8	785.3	0	0	19	1,105	659	0	46	2,368
12+50.0	0.0	0.0	123.3	1,176.9	0	0	22	1,817	659	0	68	4,185
13+00.0	0.0	0.0	162.1	1,241.3	0	0	26	2,239	659	0	94	6,424
13+50.0	0.0	0.0	189.2	932.6	0	0	33	2,013	659	0	127	8,437
14+00.0	0.0	0.0	131.8	457.9	0	0	30	1,288	659	0	157	9,725
14+50.0	2.0	0.0	84.6	110.1	2	0	20	526	661	0	177	10,251
15+00.0	125.4	0.0	0.0	0.7	118	0	8	103	779	0	185	10,354
15+50.0	410.9	0.0	0.0	0.0	497	0	0	1	1,276	0	185	10,355
16+00.0	730.1	0.0	0.0	0.0	1,056	0	0	0	2,332	0	185	10,355
16+50.0	1,044.4	0.0	0.0	0.0	1,643	0	0	0	3,975	0	185	10,355
17+00.0	1,327.6	0.0	0.0	0.0	2,196	0	0	0	6,171	0	185	10,355
17+50.0	1,416.2	0.0	0.0	0.0	2,541	0	0	0	8,712	0	185	10,355
18+00.0	1,359.1	0.0	0.0	0.0	2,570	0	0	0	11,282	0	185	10,355
18+50.0	1,228.2	0.0	0.0	0.0	2,396	0	0	0	13,678	0	185	10,355
19+00.0	978.5	0.0	0.0	0.0	2,043	0	0	0	15,721	0	185	10,355
19+50.0	632.9	0.0	0.0	0.0	1,492	0	0	0	17,213	0	185	10,355
20+00.0	154.8	0.0	0.0	0.0	729	0	0	0	17,942	0	185	10,355
20+50.0	0.0	0.0	84.3	87.4	143	0	8	81	18,085	0	193	10,436
21+00.0	0.0	0.0	37.9	361.5	0	0	11	416	18,085	0	204	10,852
21+50.0	0.0	0.0	103.4	540.8	0	0	13	835	18,085	0	217	11,687
22+00.0	0.0	0.0	100.2	455.8	0	0	19	923	18,085	0	236	12,610
22+50.0	0.0	0.0	94.7	322.6	0	0	18	721	18,085	0	254	13,331
23+00.0	4.2	0.0	84.4	108.4	4	0	17	399	18,089	0	271	13,730
23+50.0	122.4	0.0	0.0	1.5	117	0	8	102	18,206	0	279	13,832
24+00.0	389.9	0.0	0.0	0.0	474	0	0	1	18,680	0	279	13,833
24+50.0	605.3	0.0	0.0	0.0	921	0	0	0	19,601	0	279	13,833
25+00.0	732.4	0.0	0.0	0.0	1,239	0	0	0	20,840	0	279	13,833
25+50.0	703.4	0.0	0.0	0.0	1,329	0	0	0	22,169	0	279	13,833
26+00.0	630.8	0.0	0.0	0.0	1,235	0	0	0	23,404	0	279	13,833
26+50.0	488.4	0.0	0.0	0.0	1,036	0	0	0	24,440	0	279	13,833
27+00.0	272.6	0.0	0.0	0.0	705	0	0	0	25,145	0	279	13,833
27+50.0	80.2	0.0	0.0	1.9	327	0	0	2	25,472	0	279	13,835
28+00.0	10.7	0.0	80.1	77.8	84	0	7	74	25,556	0	286	13,909
28+50.0	0.6	0.0	87.6	210.7	10	0	16	267	25,566	0	302	14,176
29+00.0	0.0	0.0	88.2	299.4	1	0	16	472	25,567		318	14,648
29+50.0	2.2	0.0	81.6	191.8	2	0	16	455	25,569	0	334	15,103
30+00.0	13.9	0.0	80.9	107.6	15	0	15	277	25,584	0	349	15,380
30+50.0	38.0	0.0	0.0	76.8	48	0	7	171	25,632	0	356	15,551
31+00.0	42.9	0.0	0.0	61.9	75	0	0	128	25,707	0	356	15,679

CONT'D ABOVE

EARTHWORK SUMMARY - CTH E (CONT'D)

STATION	AREA (SF)				INCREMENTAL VOL (CY)				CUMULATIVE VOL (CY)			
	CUT	ROCK CUT	EBS	FILL	CUT	ROCK CUT	EBS	FILL	CUT		EBS	FILL
31+50.0	42.0	0.0	0.0	62.2	79	0	0	115	25,786	0	356	15,794
32+00.0	73.2	0.0	0.0	81.8	107	0	0	133	25,893	0	356	15,927
32+50.0	178.9	0.0	0.0	91.1	233	0	0	160	26,126	0	356	16,087
33+00.0	377.2	4.1	0.0	70.2	515	4	0	149	26,641	4	356	16,236
33+50.0	551.0	179.9	0.0	12.9	859	170	0	77	27,500	174	356	16,313
34+00.0	619.1	467.0	0.0	0.0	1,083	599	0	12	28,583	773	356	16,325
34+50.0	831.7	521.4	0.0	0.0	1,343	915	0	0	29,926	1,688	356	16,325
35+00.0	867.2	483.8	0.0	0.0	1,573	931	0	0	31,499	2,619	356	16,325
35+50.0	760.2	331.7	0.0	0.0	1,507	755	0	0	33,006	3,374	356	16,325
36+00.0	767.9	241.4	0.0	0.0	1,415	531	0	0	34,421	3,905	356	16,325
36+50.0	656.1	2.9	0.0	0.0	1,319	226	0	0	35,740	4,131	356	16,325
36+85.0	366.7	0.0	0.0	0.0	663	2	0	0	36,403	4,133	356	16,325
37+00.0	447.0	0.0	0.0	0.0	226	0	0	0	36,629	4,133	356	16,325
37+50.0	242.7	0.0	0.0	0.0	639	0	0	0	37,268	4,133	356	16,325
38+00.0	67.5	0.0	0.0	9.5	287	0	0	9	37,555	4,133	356	16,334
38+50.0	42.2	0.0	0.0	20.7	102	0	0	28	37,657	4,133	356	16,362
39+00.0	26.4	0.0	0.0	8.1	64	0	0	27	37,721	4,133	356	16,389
39+50.0	44.9	0.0	0.0	4.6	66	0	0	12	37,787	4,133	356	16,401
40+00.0	49.7	0.0	0.0	2.3	88	0	0	6	37,875	4,133	356	16,407
40+50.0	58.4	0.0	0.0	2.8	100	0	0	5	37,975	4,133	356	16,412
41+00.0	67.7	0.0	0.0	0.1	117	0	0	3	38,092	4,133	356	16,415
41+50.0	61.8	0.0	0.0	1.0	120	0	0	1	38,212	4,133	356	16,416
42+00.0	55.5	0.0	0.0	1.3	109	0	0	2	38,321	4,133	356	16,418
42+50.0	85.7	0.0	0.0	0.1	131	0	0	1	38,452	4,133	356	16,419
43+00.0	93.1	0.0	0.0	0.1	166	0	0	0	38,618	4,133	356	16,419
43+50.0	73.9	0.0	0.0	0.7	155	0	0	1	38,773	4,133	356	16,420
44+00.0	62.6	0.0	0.0	1.5	126	0	0	2	38,899	4,133	356	16,422
44+50.0	56.1	0.0	0.0	1.8	110	0	0	3	39,009	4,133	356	16,425
45+00.0	46.8	0.0	0.0	4.8	95	0	0	6	39,104	4,133	356	16,431
45+50.0	34.4	0.0	0.0	7.7	75	0	0	12	39,179	4,133	356	16,443
46+00.0	38.7	0.0	0.0	10.0	68	0	0	16	39,247	4,133	356	16,459
46+50.0	39.9	0.0	0.0	13.7	73	0	0	22	39,320	4,133	356	16,481
47+00.0	46.4	0.0	0.0	13.4	80	0	0	25	39,400	4,133	356	16,506
47+50.0	46.1	0.0	0.0	14.3	86	0	0	26	39,486	4,133	356	16,532
48+00.0	28.1	0.0	0.0	15.3	69	0	0	27	39,555	4,133	356	16,559
48+50.0	44.8	0.0	0.0	10.6	68	0	0	24	39,623	4,133	356	16,583
49+00.0	53.7	0.0	0.0	6.2	91	0	0	16	39,714	4,133	356	16,599
49+50.0	63.4	0.0	0.0	5.6	108	0	0	11	39,822	4,133	356	16,610
50+00.0	34.6	0.0	0.0	6.5	91	0	0	11	39,913	4,133	356	16,621
50+50.0	42.1	0.0	0.0	0.5	71	0	0	6	39,984	4,133	356	16,627
50+96.4	47.5	0.0	0.0	0.0	77	0	0	0	40,061	4,133	356	16,627

EARTHWORK SUMMARY - STH 78

STATION	AREA (SF)				INCREMENTAL VOL (CY)				CUMULATIVE VOL (CY)			
	CUT	ROCK CUT	EBS	FILL	CUT	ROCK CUT	EBS	FILL	CUT	ROCK CUT	EBS	FILL
16+77.0 ST	0.0	0.0	0.0	0.0								
17+00.0 ST	5.2	0.0	0.0	0.0	2	0	0	0	2		0	0
17+50.0 ST	4.4	0.0	0.0	0.6	9	0	0	1	11	0	0	1
18+00.0 ST	28.3	0.0	0.0	0.6	30	0	0	1	41	0	0	2
18+50.0 ST	4.8	0.0	0.0	0.3	31	0	0	1	72	0	0	3
19+00.0 ST	5.0	0.0	0.0	0.0	9	0	0	0	81	0	0	3
19+50.0 ST	9.0	0.0	0.0	0.2	13	0	0	0	94	0	0	3
20+00.0 ST	46.2	0.0	0.0	1.6	51	0	0	2	145	0	0	5
20+50.0 ST	26.2	0.0	0.0	5.1	67	0	0	6	212	0	0	11
21+00.0 ST	11.1	0.0	0.0	8.9	35	0	0	13	247	0	0	24
21+50.0 ST	10.7	0.0	0.0	0.0	20	0	0	8	267	0	0	32
22+00.0 ST	14.6	0.0	0.0	0.0	23	0	0	0	290	0	0	32
22+50.0 ST	9.5	0.0	0.0	0.1	22	0	0	0	312	0	0	32
23+00.0 ST	10.7	0.0	0.0	0.0	19	0	0	0	331	0	0	32
23+50.0 ST	11.2	0.0	0.0	0.0	20	0	0	0	351	0	0	32
24+00.0 ST	11.0	0.0	0.0	0.0	21	0	0	0	372	0	0	32
24+50.0 ST	13.2	0.0	0.0	0.0	22	0	0	0	394	0	0	32
25+00.0 ST	12.5	0.0	0.0	0.0	24	0	0	0	418	0	0	32
25+50.0 ST	9.3	0.0	0.0	1.4	20	0	0	1	438	0	0	33
25+98.0 ST	9.3	0.0	0.0	1.4	17	0	0	2	455	0	0	35
		0.0				0				0		
26+51.0 ST	5.0	0.0	0.0	0.0		0				0		
27+00.0 ST	5.0	0.0	0.0	0.0	9	0	0	0	9	0	0	0
27+50.0 ST	9.0	0.0	0.0	0.0	13	0	0	0	22	0	0	0
28+00.0 ST	10.4	0.0	0.0	0.0	18	0	0	0	40	0	0	0
28+50.0 ST	11.5	0.0	0.0	0.0	20	0	0	0	60	0	0	0
29+00.0 ST	8.0	0.0	0.0	0.0	18	0	0	0	78	0	0	0
29+27.0 ST	8.0	0.0	0.0	0.0	8	0	0	0	86	0	0	0
31+25.0 ST	7.4	0.0	0.0	0.0		0						
31+50.0 ST	7.4	0.0	0.0	0.0	7	0	0	0	7	0	0	0
32+00.0 ST	12.6	0.0	0.0	0.0	19	0	0	0	26	0	0	0
32+50.0 ST	12.5	0.0	0.0	2.0	23	0	0	2	49	0	0	2
33+00.0 ST	11.2	0.0	0.0	0.0	22	0	0	2	71	0	0	4
33+49.0 ST	11.2	0.0	0.0	0.0	20	0	0	0	91	0	0	4

EARTHWORK SUMMARY - DRIVEWAY A

STATION	AREA (SF)				INCREMENTAL VOL (CY)				CUMULATIVE VOL (CY)			
	CUT	ROCK CUT	EBS	FILL	CUT	ROCK CUT	EBS	FILL	CUT	ROCK CUT	EBS	FILL
100+14.0 A	0.0	0.0	0.0	0.0								
100+25.0 A	0.0	0.0	0.0	560.4	0	0	0	114	0		0	114
100+50.0 A	0.0	0.0	0.0	333.4	0	0	0	414	0	0	0	528
100+75.0 A	0.0	0.0	0.0	244.0	0	0	0	267	0	0	0	795
101+00.0 A	0.0	0.0	0.0	71.9	0	0	0	146	0	0	0	941
101+25.0 A	0.0	0.0	0.0	25.9	0	0	0	45	0	0	0	986
101+50.0 A	1.5	0.0	0.0	2.7	1	0	0	13	1	0	0	999
101+75.0 A	10.9	0.0	0.0	0.0	6	0	0	1	7	0	0	1,000
102+00.0 A	14.2	0.0	0.0	0.0	12	0	0	0	19	0	0	1,000

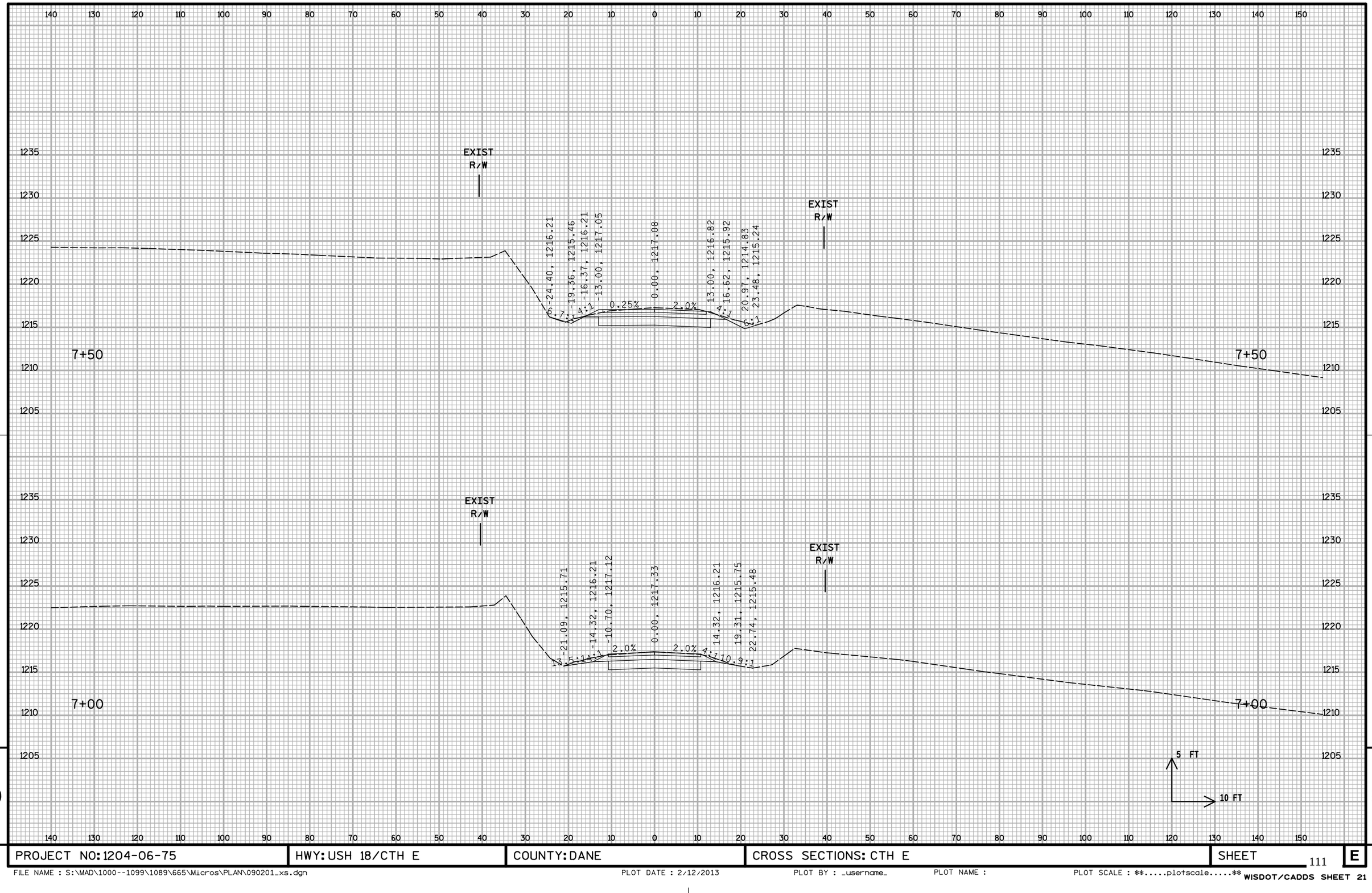

PROJECT NO: 1204-06-75	HWY: USH 18/CTH E	COUNTY: DANE	CROSS SECTIONS: CTH E	SHEET	E

FILE NAME : S:\MAD\1000--1099\1089\665\Micros\PLAN\090201_xs.dgn PLOT DATE : 2/12/2013 PLOT BY : _username_ PLOT NAME : PLOT SCALE : $$.....plotscale.....$$

WISDOT/CADDS SHEET 21

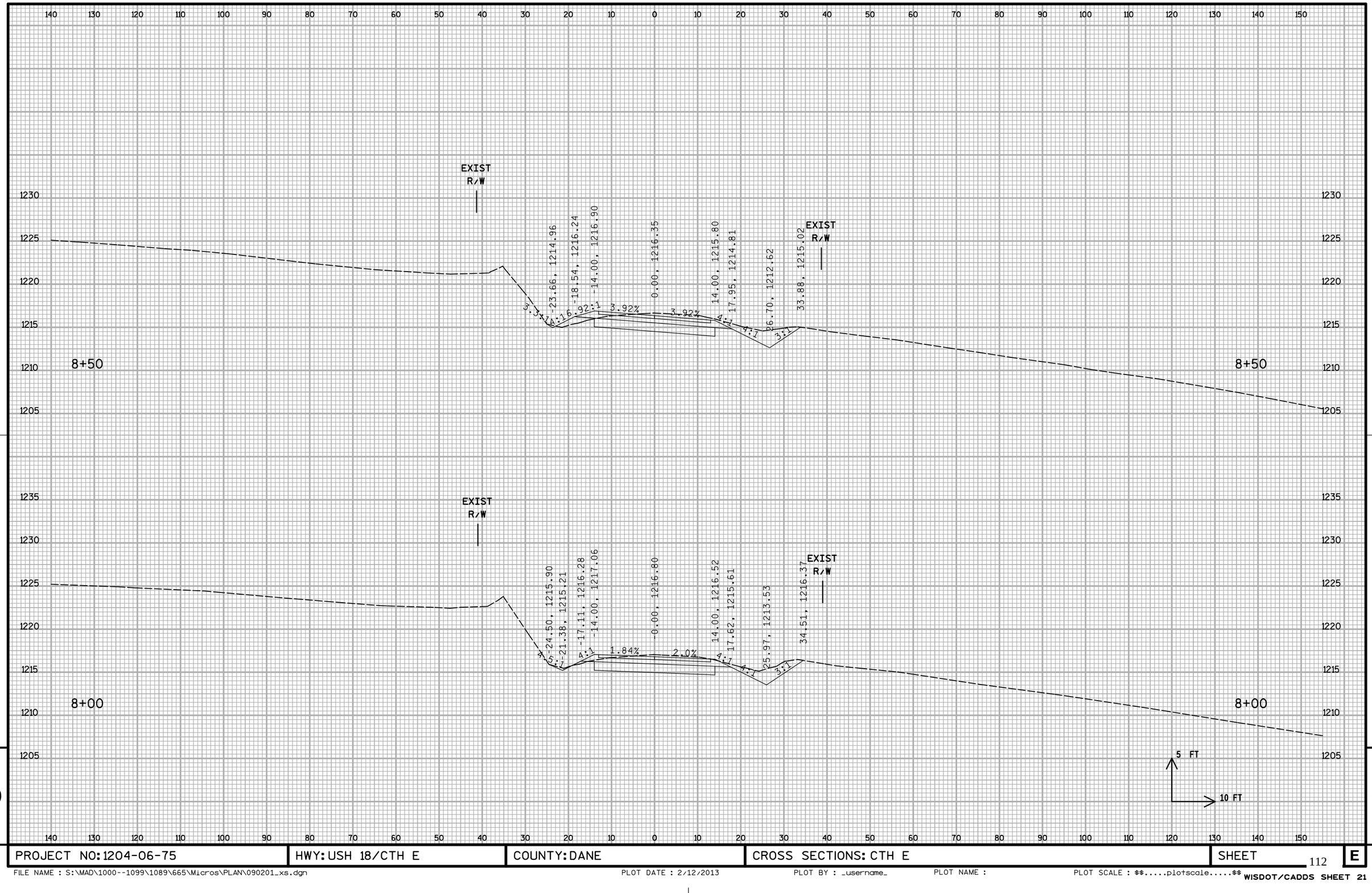

9

9

PROJECT NO: 1204-06-75	HWY: USH 18/CTH E	COUNTY: DANE	CROSS SECTIONS: CTH E	SHEET	E

FILE NAME : S:\MAD\1000--1099\1089\665\Micros\PLAN\090201_xs.dgn PLOT DATE : 2/12/2013 PLOT BY : _username_ PLOT NAME : PLOT SCALE : $$.....plotscale.....$$

WISDOT/CADDS SHEET 21

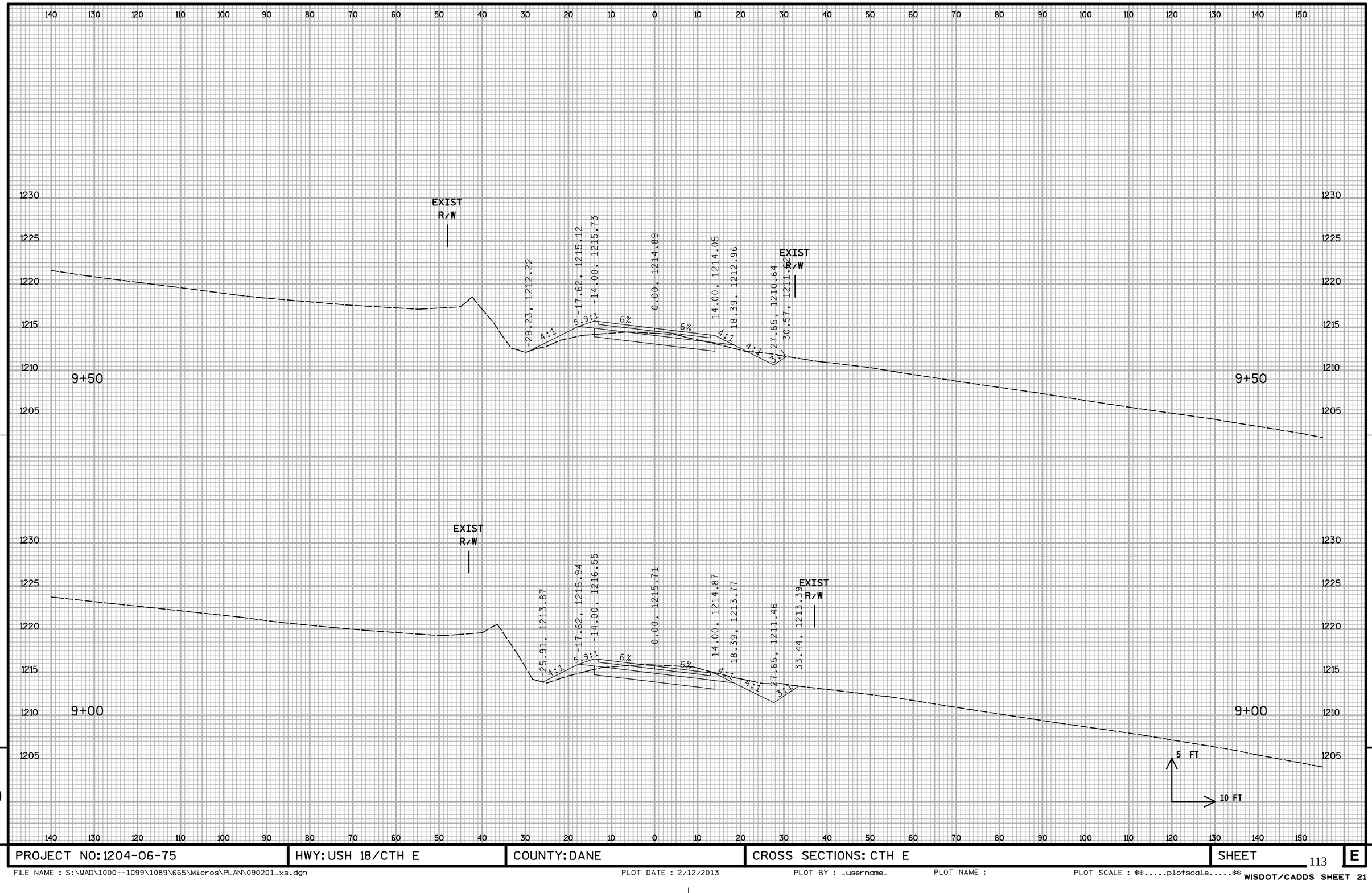

9 9

PROJECT NO: 1204-06-75	HWY: USH 18/CTH E	COUNTY: DANE	CROSS SECTIONS: CTH E	SHEET	E

FILE NAME : S:\MAD\1000--1099\1089\665\Micros\PLAN\090201_xs.dgn PLOT DATE : 2/12/2013 PLOT BY : _username_ PLOT NAME : PLOT SCALE : $$.....plotscale.....$$

WISDOT/CADDS SHEET 21

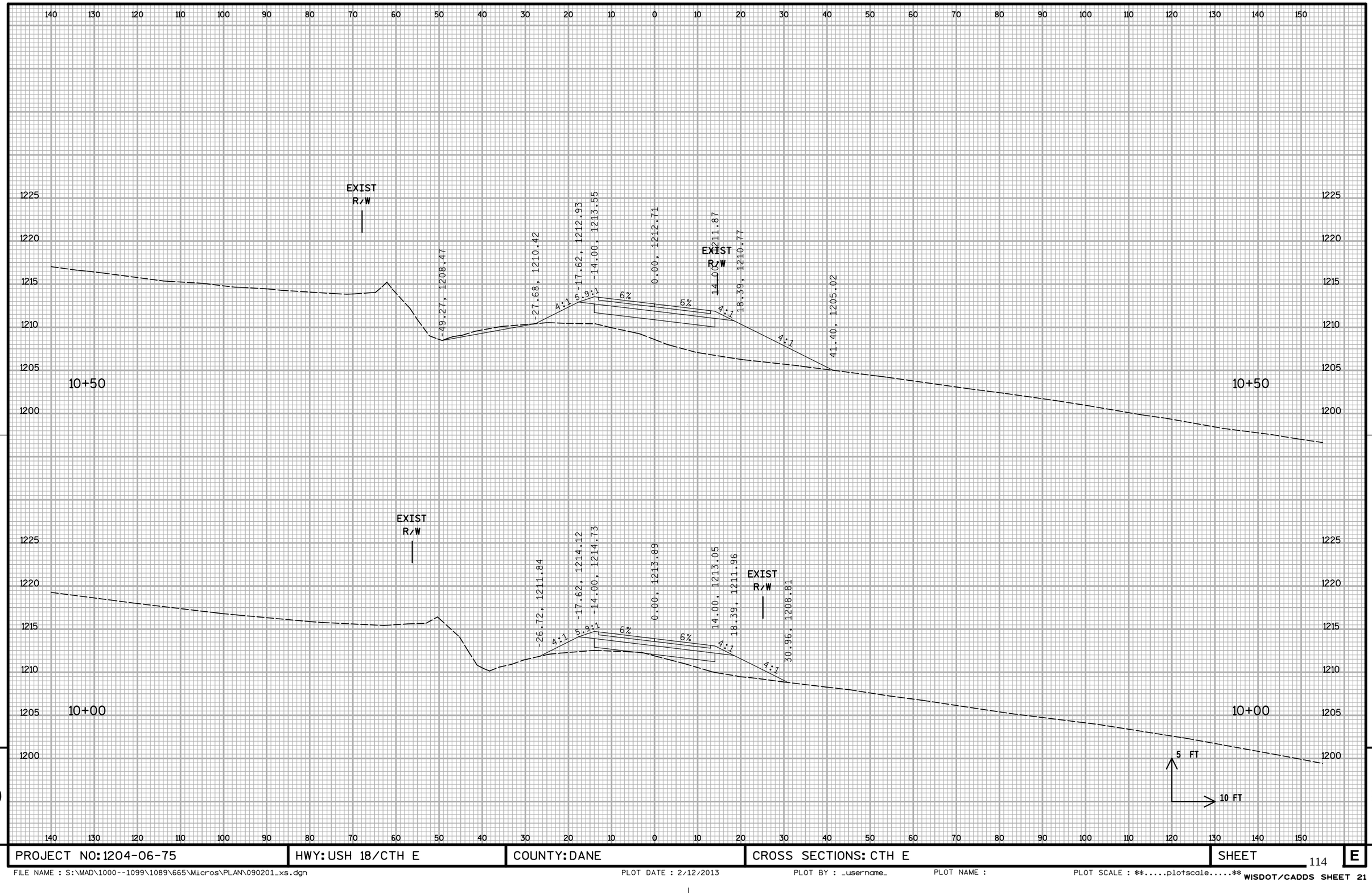

9

9

PROJECT NO: 1204-06-75	HWY: USH 18/CTH E	COUNTY: DANE	CROSS SECTIONS: CTH E	SHEET	E

FILE NAME : S:\MAD\1000--1099\1089\665\Micros\PLAN\090201_xs.dgn PLOT DATE : 2/12/2013 PLOT BY : _username_ PLOT NAME : PLOT SCALE : $$.....plotscale.....$$

WISDOT/CADDS SHEET 21

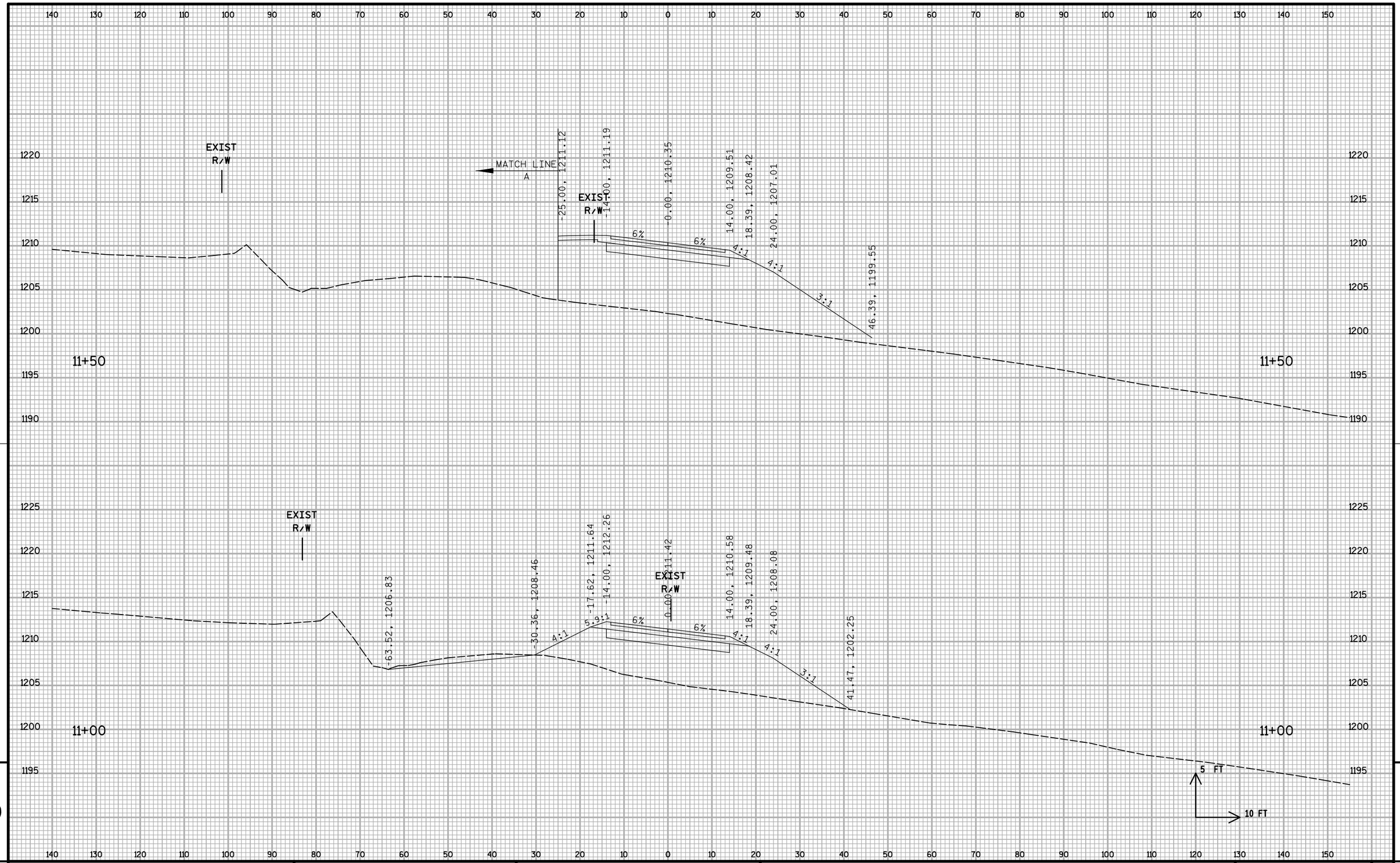

9

9

PROJECT NO: 1204-06-75	HWY: USH 18/CTH E	COUNTY: DANE	CROSS SECTIONS: CTH E	SHEET	E

FILE NAME : S:\MAD\1000--1099\1089\665\Micros\PLAN\090201_xs.dgn PLOT DATE : 2/12/2013 PLOT BY : _username_ PLOT NAME : PLOT SCALE : $$.....plotscale.....$$

WISDOT/CADDS SHEET 21

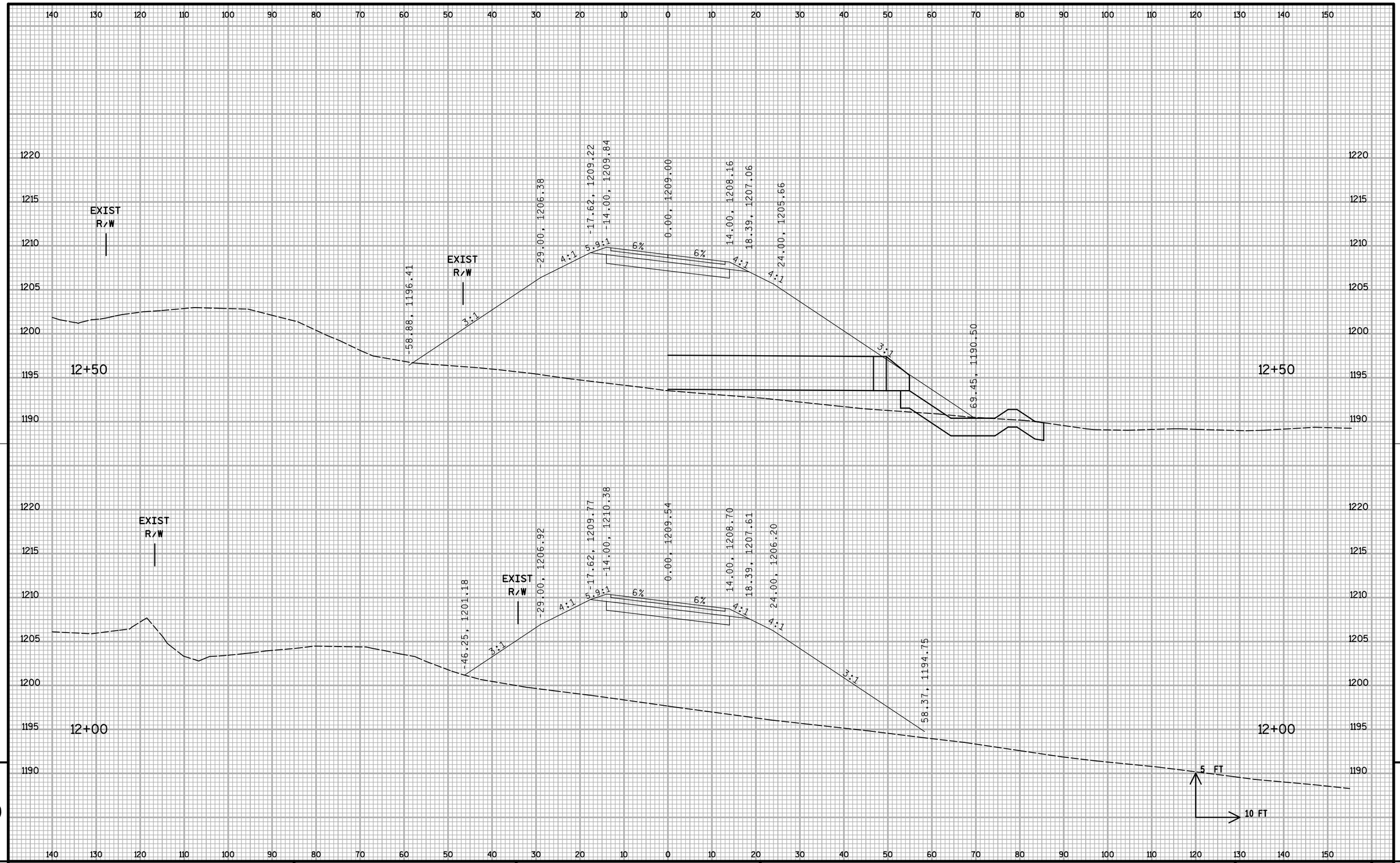

9

9

PROJECT NO: 1204-06-75	HWY: USH 18/CTH E	COUNTY: DANE	CROSS SECTIONS: CTH E	SHEET	E

FILE NAME : S:\MAD\1000--1099\1089\665\Micros\PLAN\090201_xs.dgn PLOT DATE : 2/12/2013 PLOT BY : _username_ PLOT NAME : PLOT SCALE : $$.....plotscale.....$$

WISDOT/CADDS SHEET 21

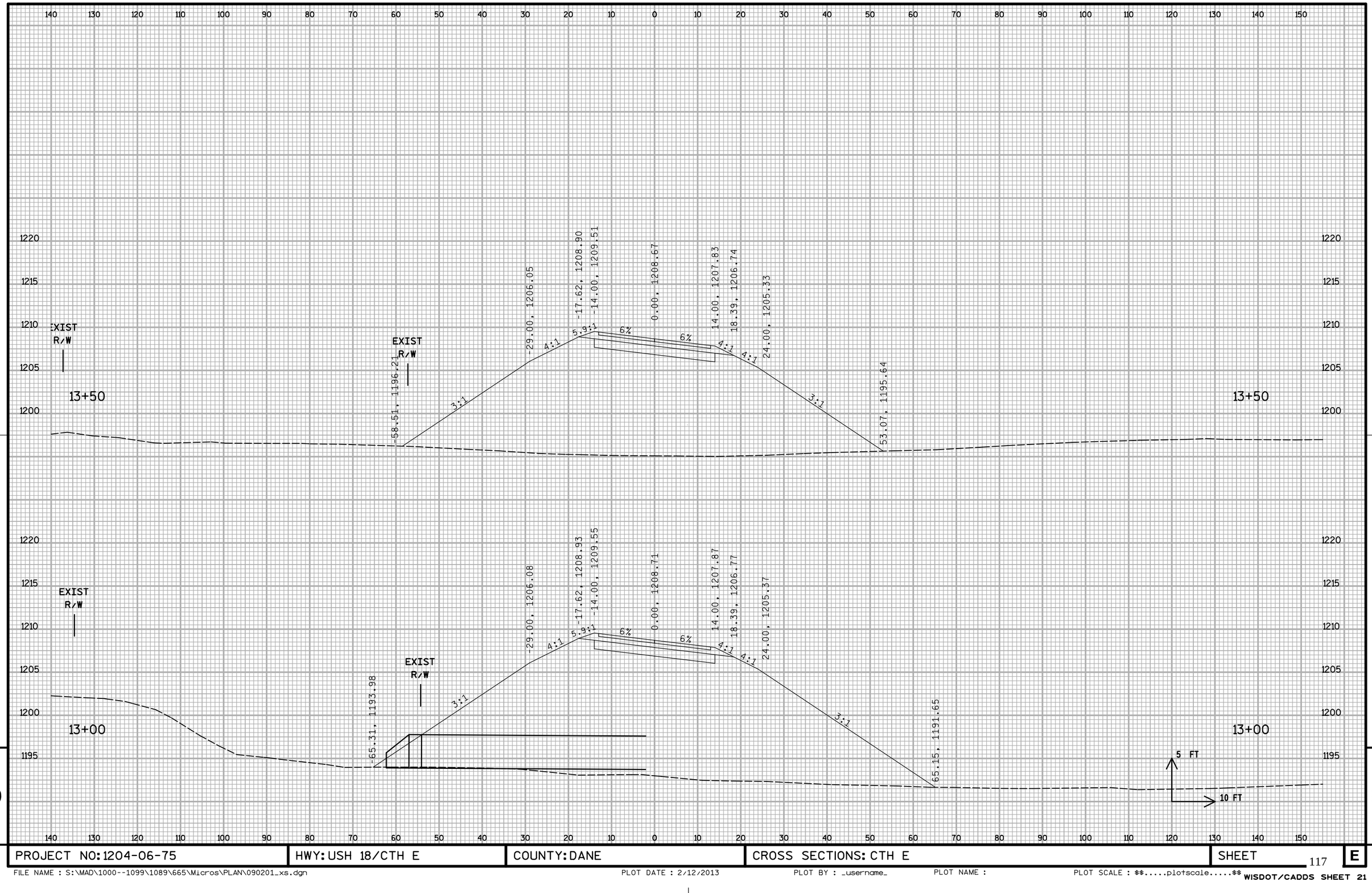

9

9

PROJECT NO: 1204-06-75	HWY: USH 18/CTH E	COUNTY: DANE	CROSS SECTIONS: CTH E	SHEET	E

FILE NAME : S:\MAD\1000--1099\1089\665\Micros\PLAN\090201_xs.dgn PLOT DATE : 2/12/2013 PLOT BY : _username_ PLOT NAME : PLOT SCALE : $$.....plotscale.....$$

WISDOT/CADDS SHEET 21

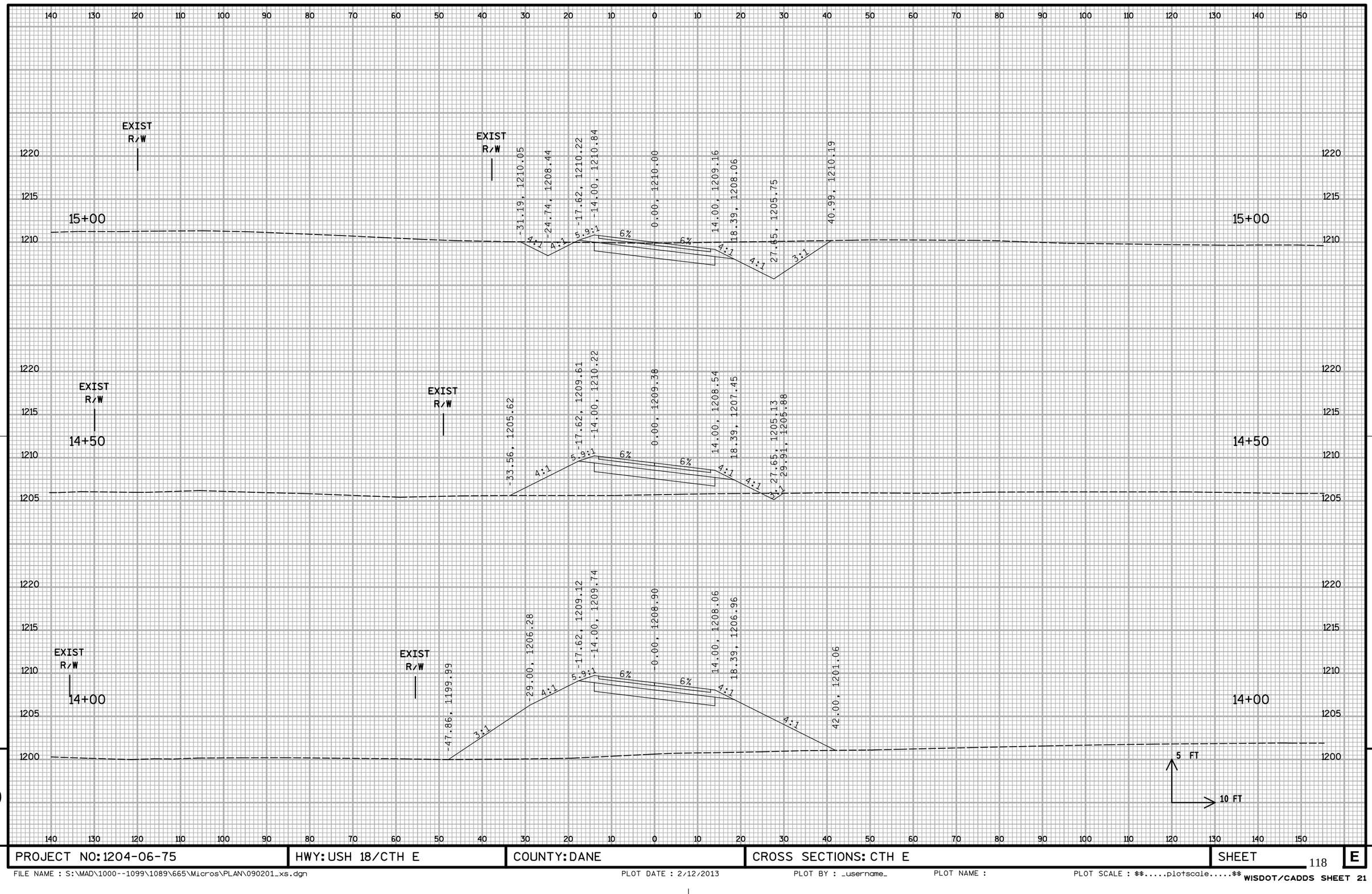

PROJECT NO: 1204-06-75	HWY: USH 18/CTH E	COUNTY: DANE	CROSS SECTIONS: CTH E	SHEET	E

FILE NAME : S:\MAD\1000--1099\1089\665\Micros\PLAN\090201_xs.dgn PLOT DATE : 2/12/2013 PLOT BY : _username_ PLOT NAME : PLOT SCALE : $$.....plotscale.....$$ WISDOT/CADDS SHEET 21

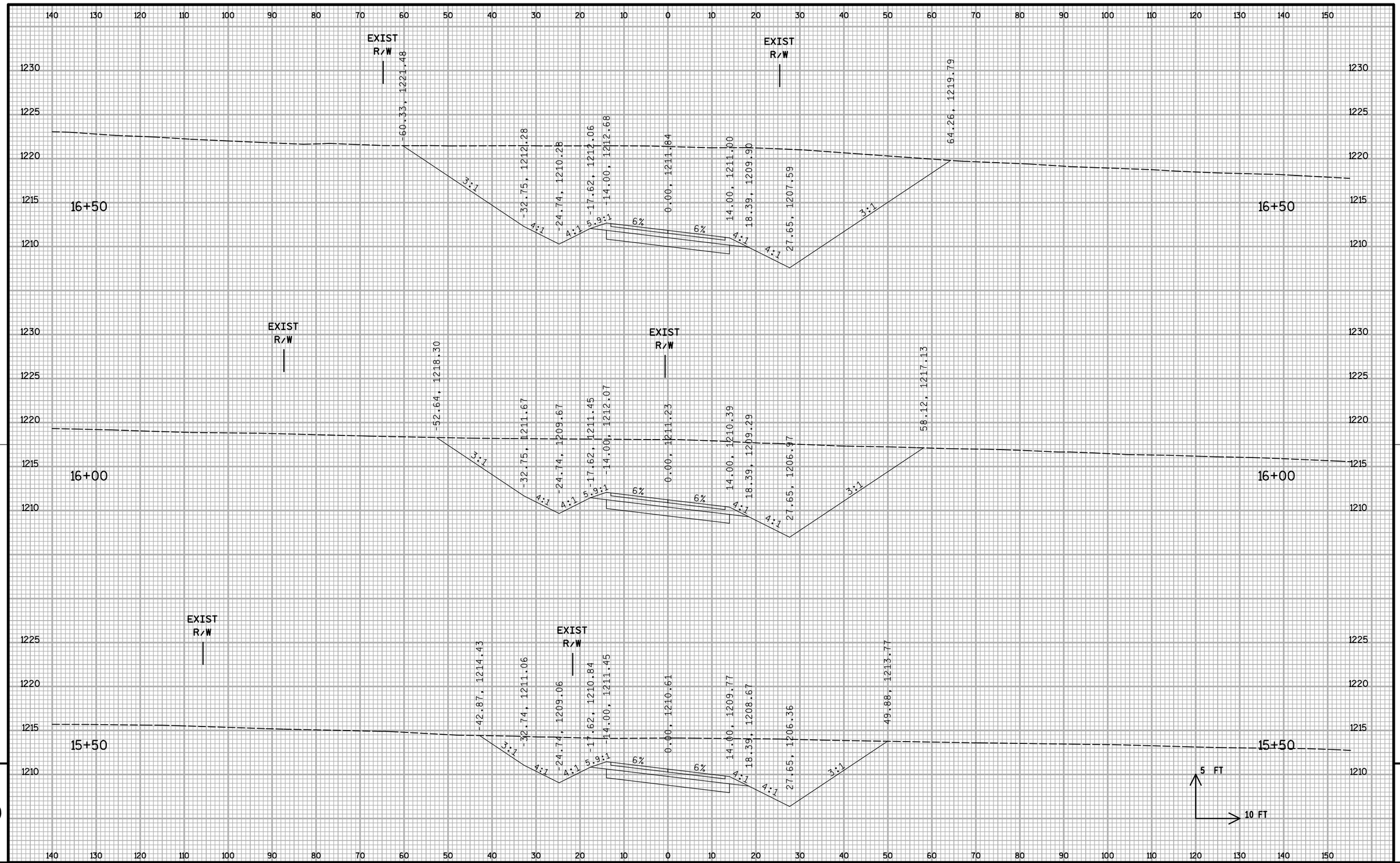

9

9

PROJECT NO: 1204-06-75	HWY: USH 18/CTH E	COUNTY: DANE	CROSS SECTIONS: CTH E	SHEET	E

FILE NAME : S:\MAD\1000--1099\1089\665\Micros\PLAN\090201_xs.dgn PLOT DATE : 2/12/2013 PLOT BY : _username_ PLOT NAME : PLOT SCALE : $$.....plotscale.....$$ WISDOT/CADDS SHEET 21

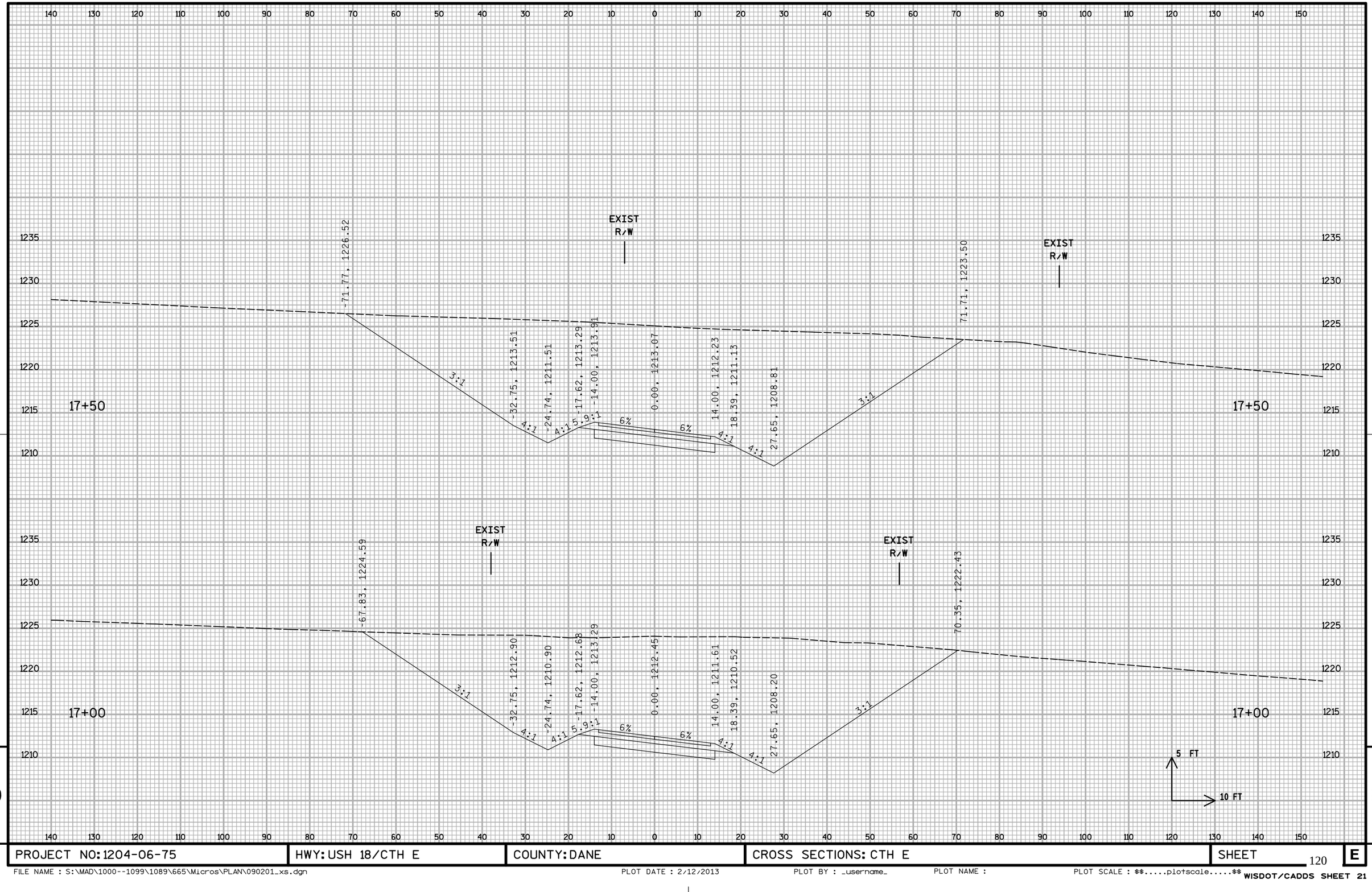

9

9

PROJECT NO: 1204-06-75	HWY: USH 18/CTH E	COUNTY: DANE	CROSS SECTIONS: CTH E	SHEET	E

FILE NAME : S:\MAD\1000--1099\1089\665\Micros\PLAN\090201_xs.dgn PLOT DATE : 2/12/2013 PLOT BY : _username_ PLOT NAME : PLOT SCALE : $$.....plotscale.....$$

WISDOT/CADDS SHEET 21

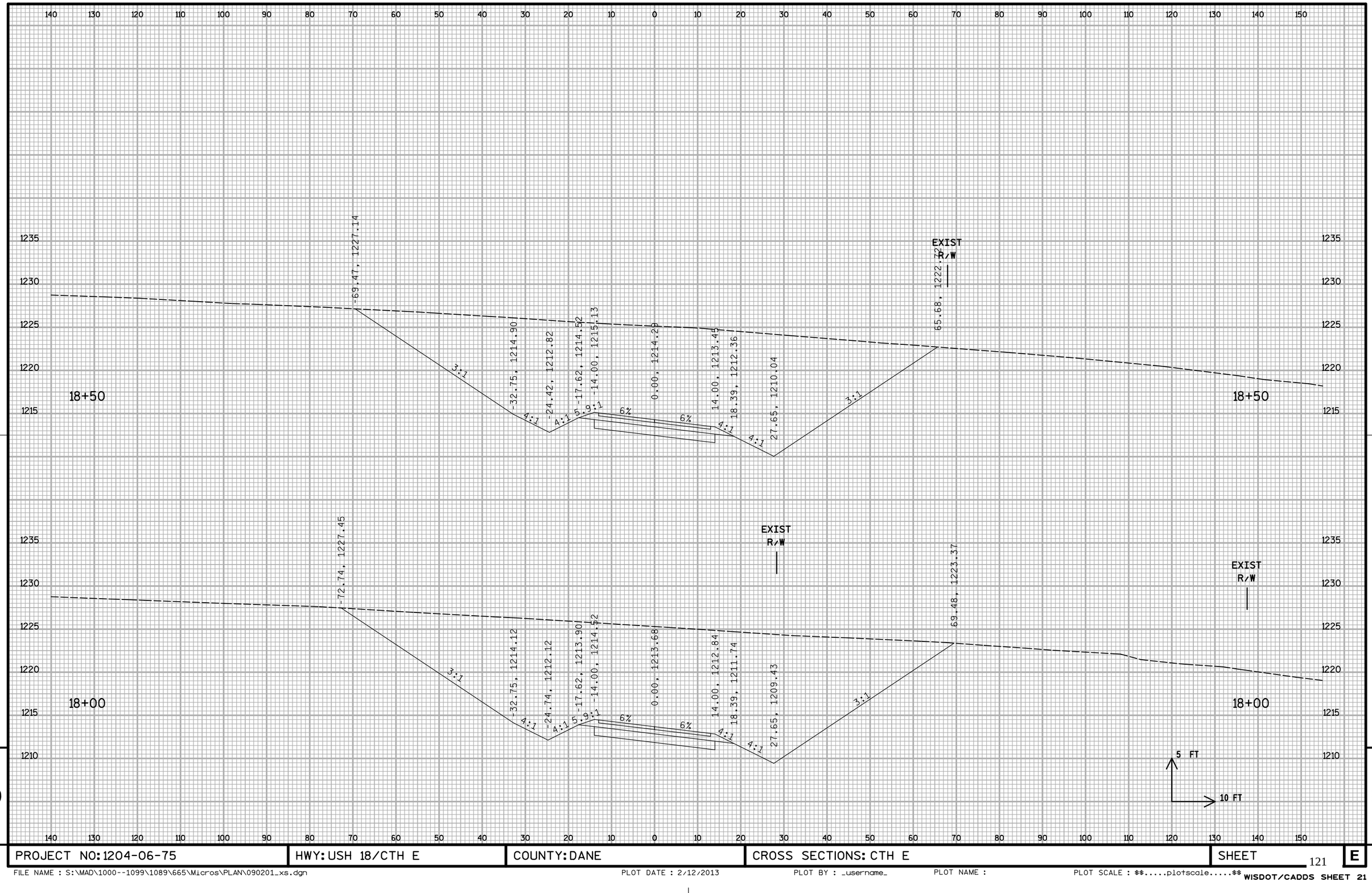

9

9

PROJECT NO: 1204-06-75	HWY: USH 18/CTH E	COUNTY: DANE	CROSS SECTIONS: CTH E	SHEET	E

FILE NAME : S:\MAD\1000--1099\1089\665\Micros\PLAN\090201_xs.dgn PLOT DATE : 2/12/2013 PLOT BY : _username_ PLOT NAME : PLOT SCALE : $$.....plotscale.....$$ WISDOT/CADDS SHEET 21

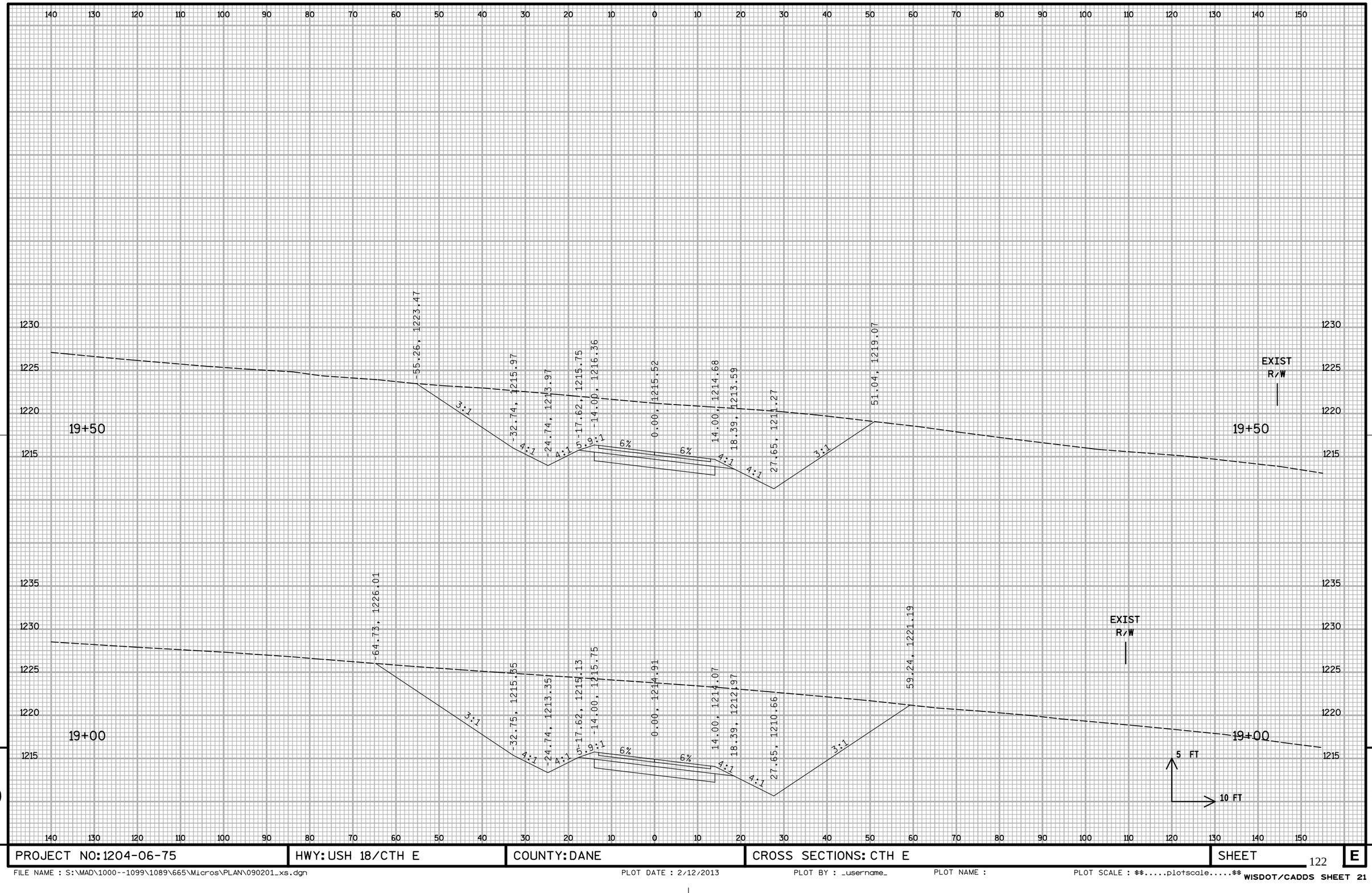

9

9

PROJECT NO: 1204-06-75	HWY: USH 18/CTH E	COUNTY: DANE	CROSS SECTIONS: CTH E	SHEET	E

FILE NAME : S:\MAD\1000--1099\1089\665\Micros\PLAN\090201_xs.dgn PLOT DATE : 2/12/2013 PLOT BY : _username_ PLOT NAME : PLOT SCALE : $$.....plotscale.....$$ WISDOT/CADDS SHEET 21

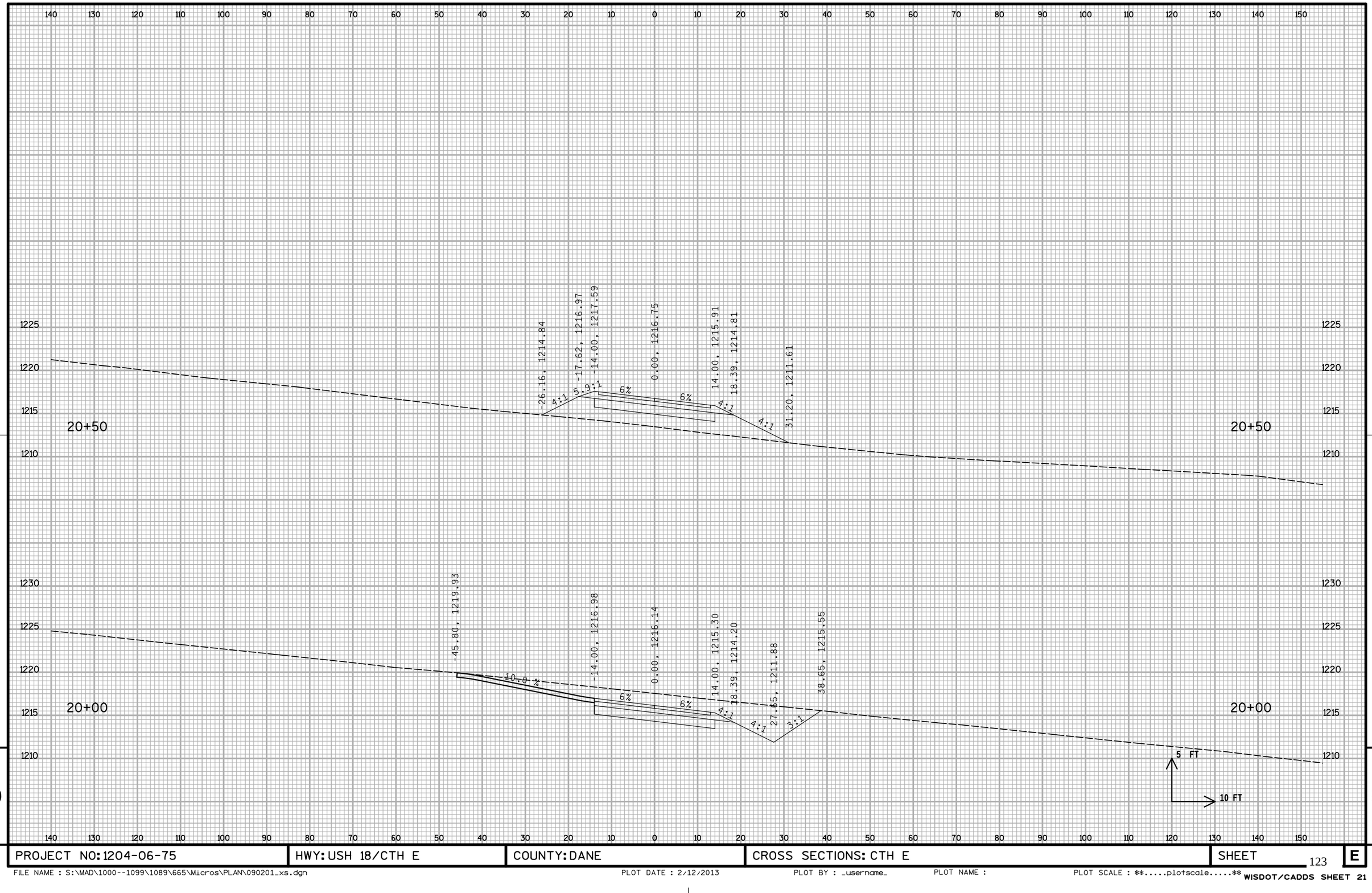

9

9

PROJECT NO: 1204-06-75	HWY: USH 18/CTH E	COUNTY: DANE	CROSS SECTIONS: CTH E	SHEET	E

FILE NAME : S:\MAD\1000--1099\1089\665\Micros\PLAN\090201_xs.dgn PLOT DATE : 2/12/2013 PLOT BY : _username_ PLOT NAME : PLOT SCALE : $$.....plotscale.....$$ WISDOT/CADDS SHEET 21

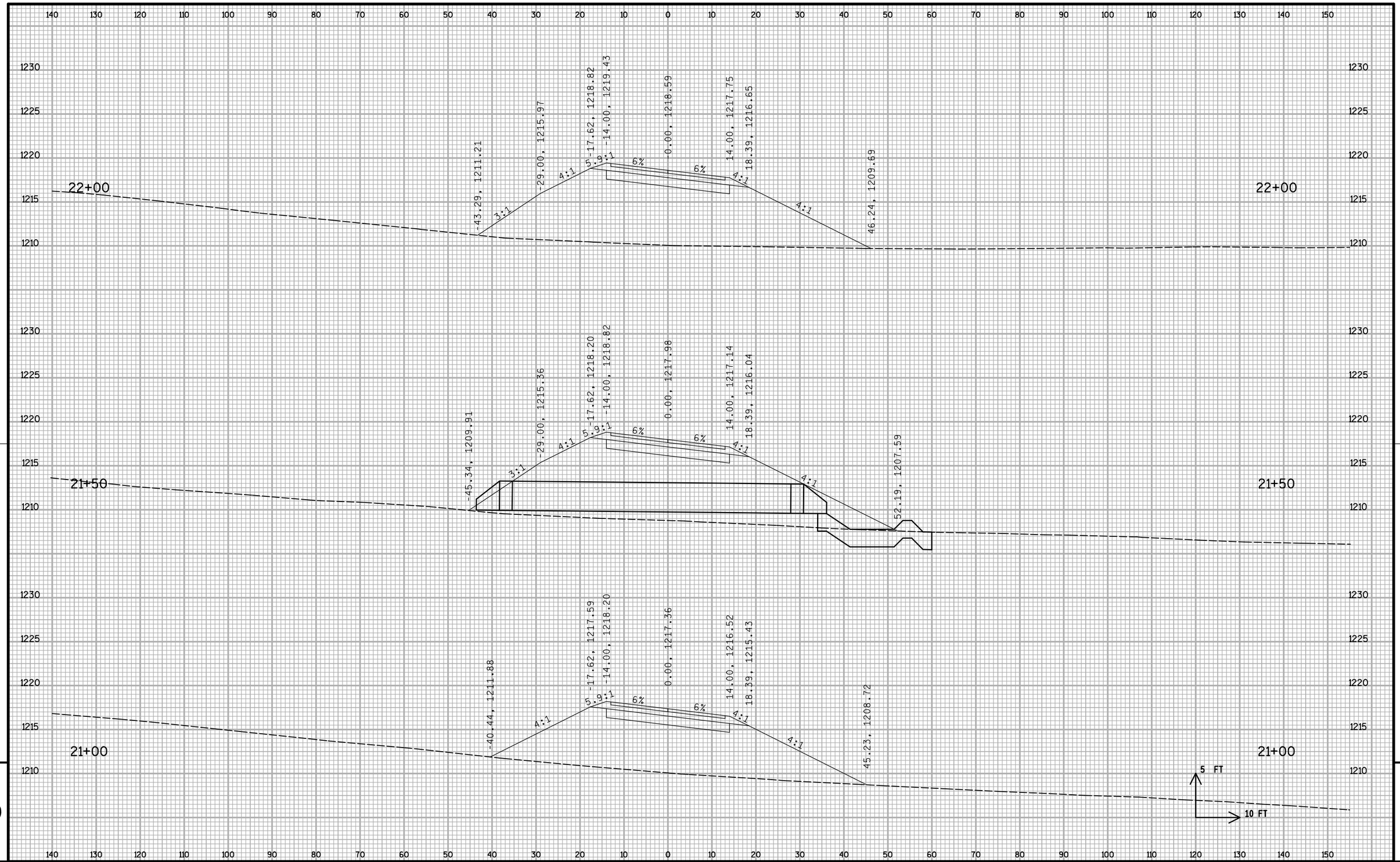

PROJECT NO: 1204-06-75	HWY: USH 18/CTH E	COUNTY: DANE	CROSS SECTIONS: CTH E	SHEET	E

FILE NAME : S:\MAD\1000--1099\1089\665\Micros\PLAN\090201_xs.dgn PLOT DATE : 2/12/2013 PLOT BY : _username_ PLOT NAME : PLOT SCALE : $$.....plotscale.....$$ WISDOT/CADDS SHEET 21

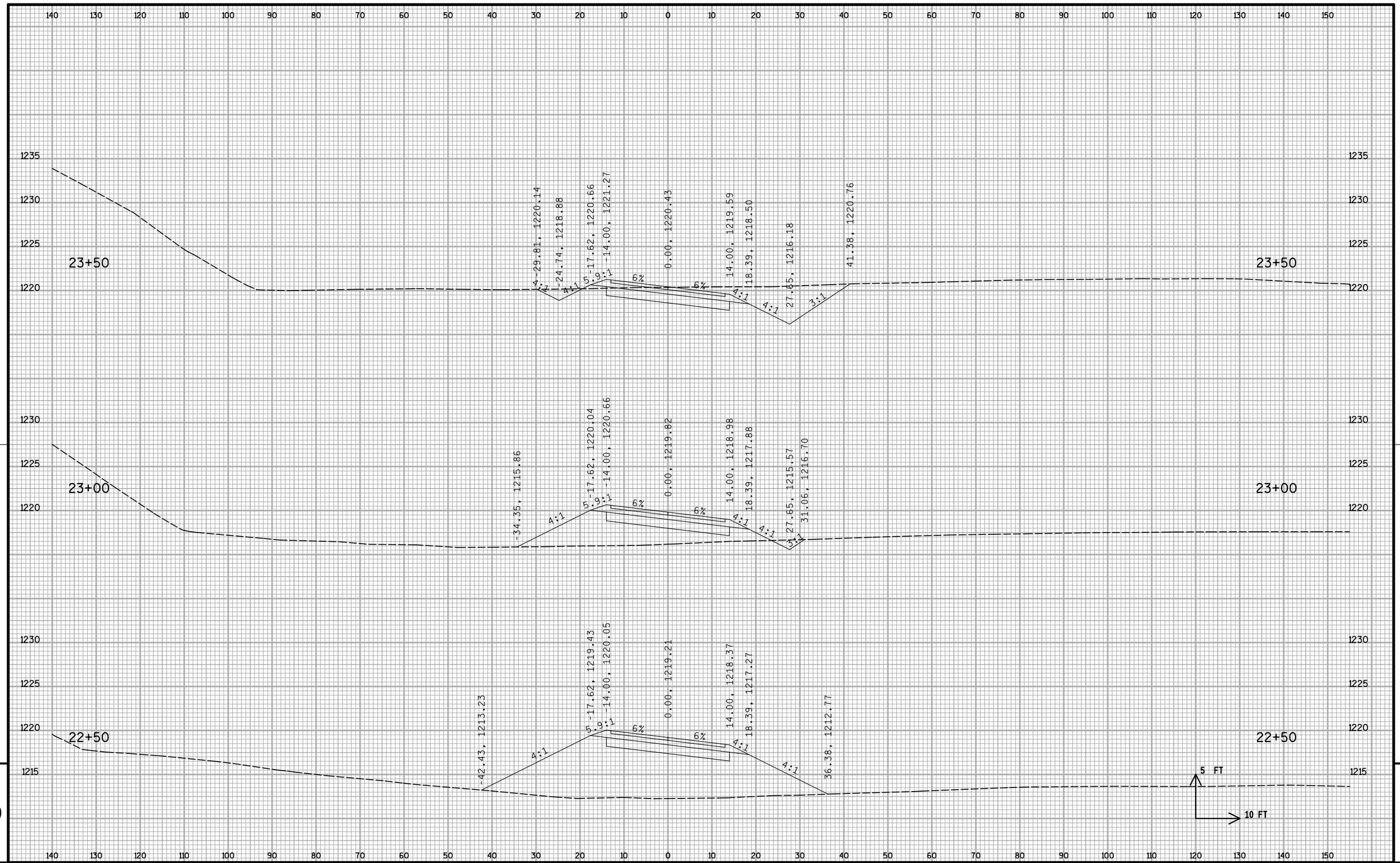

PROJECT NO: 1204-06-75	HWY: USH 18/CTH E	COUNTY: DANE	CROSS SECTIONS: CTH E	SHEET	E

FILE NAME : S:\MAD\1000--1099\1089\665\Micros\PLAN\090201_xs.dgn PLOT DATE : 2/12/2013 PLOT BY : _username_ PLOT NAME : PLOT SCALE : $$.....plotscale.....$$ WISDOT/CADDS SHEET 21

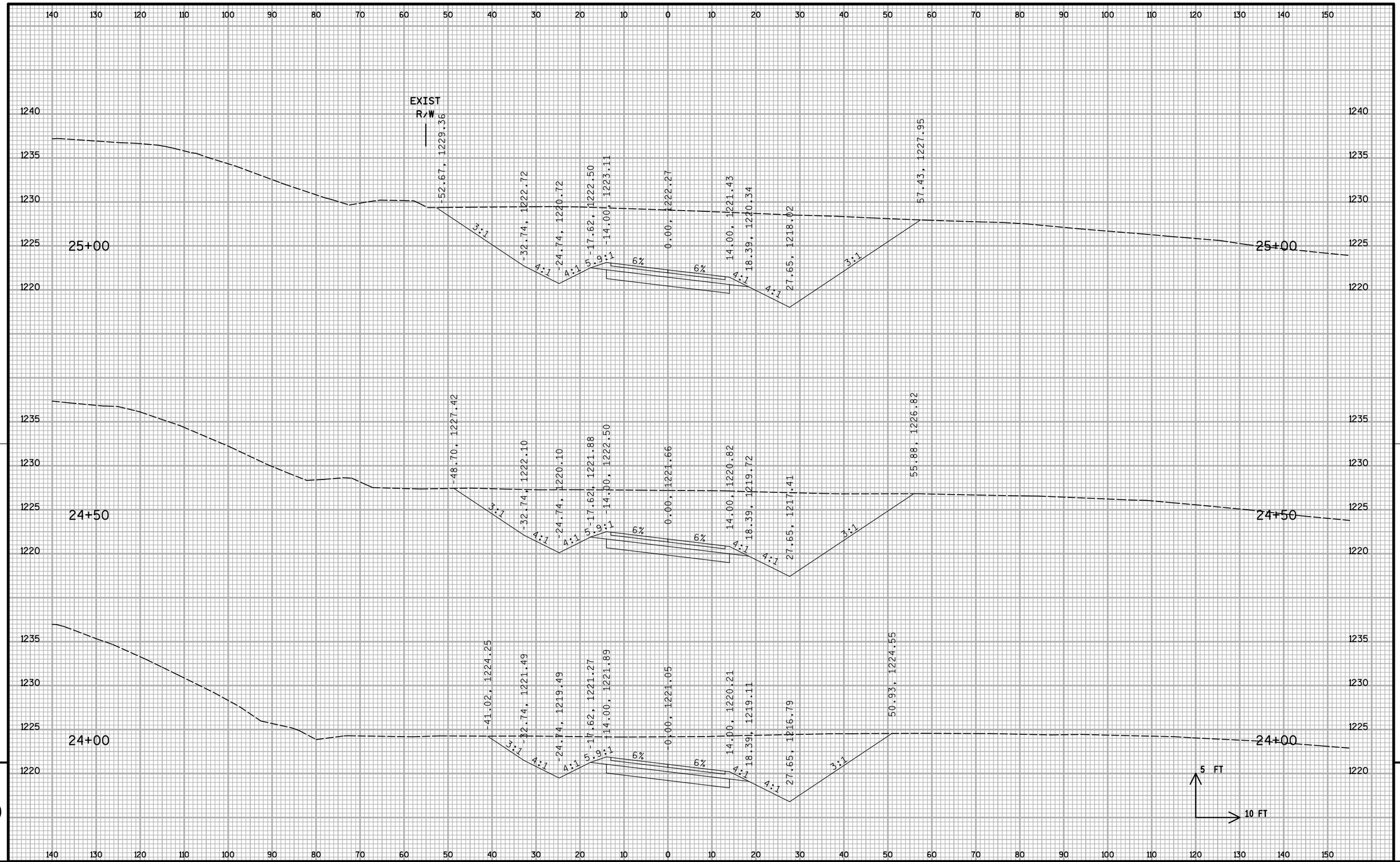

9

9

PROJECT NO: 1204-06-75	HWY: USH 18/CTH E	COUNTY: DANE	CROSS SECTIONS: CTH E	SHEET	E

FILE NAME : S:\MAD\1000--1099\1089\665\Micros\PLAN\090201_xs.dgn PLOT DATE : 2/12/2013 PLOT BY : _username_ PLOT NAME : PLOT SCALE : $$.....plotscale.....$$ WISDOT/CADDS SHEET 21

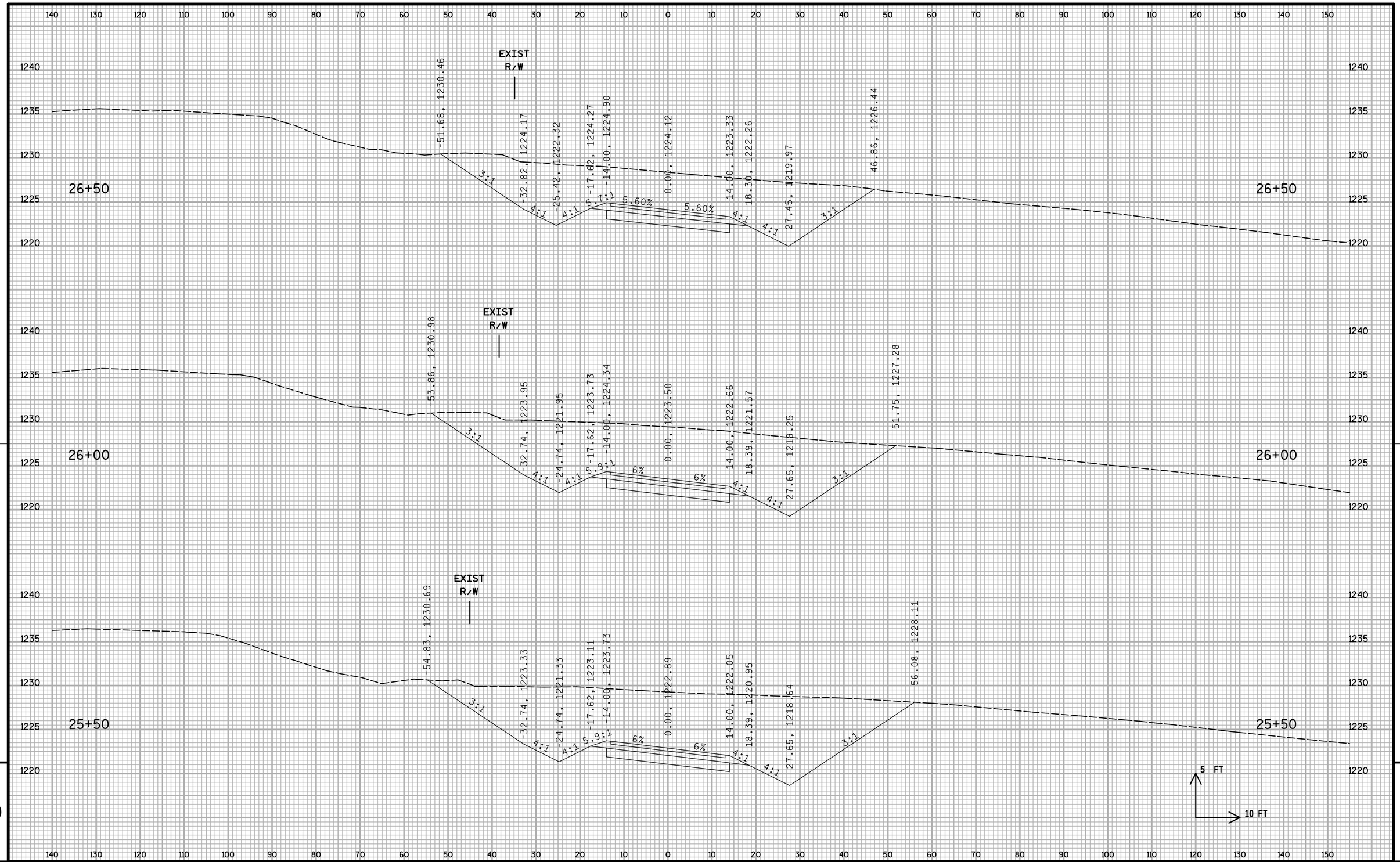

9 9

PROJECT NO: 1204-06-75	HWY: USH 18/CTH E	COUNTY: DANE	CROSS SECTIONS: CTH E	SHEET	E

FILE NAME : S:\MAD\1000--1099\1089\665\Micros\PLAN\090201_xs.dgn PLOT DATE : 2/12/2013 PLOT BY : _username_ PLOT NAME : PLOT SCALE : $$.....plotscale.....$$ WISDOT/CADDS SHEET 21

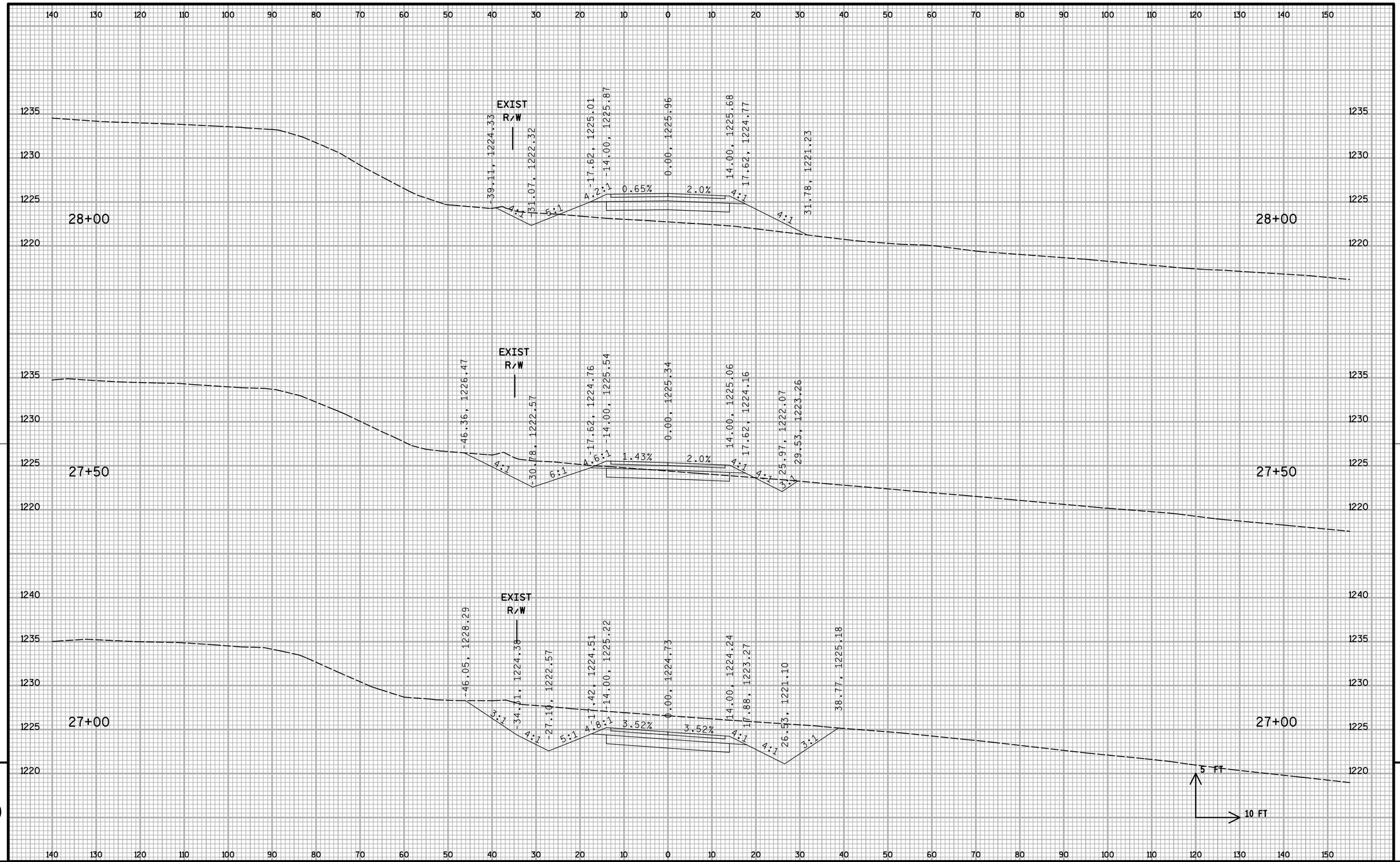

PROJECT NO: 1204-06-75	HWY: USH 18/CTH E	COUNTY: DANE	CROSS SECTIONS: CTH E	SHEET	E

FILE NAME : S:\MAD\1000--1099\1089\665\Micros\PLAN\090201_xs.dgn PLOT DATE : 2/12/2013 PLOT BY : _username_ PLOT NAME : PLOT SCALE : $$.....plotscale.....$$ WISDOT/CADDS SHEET 21

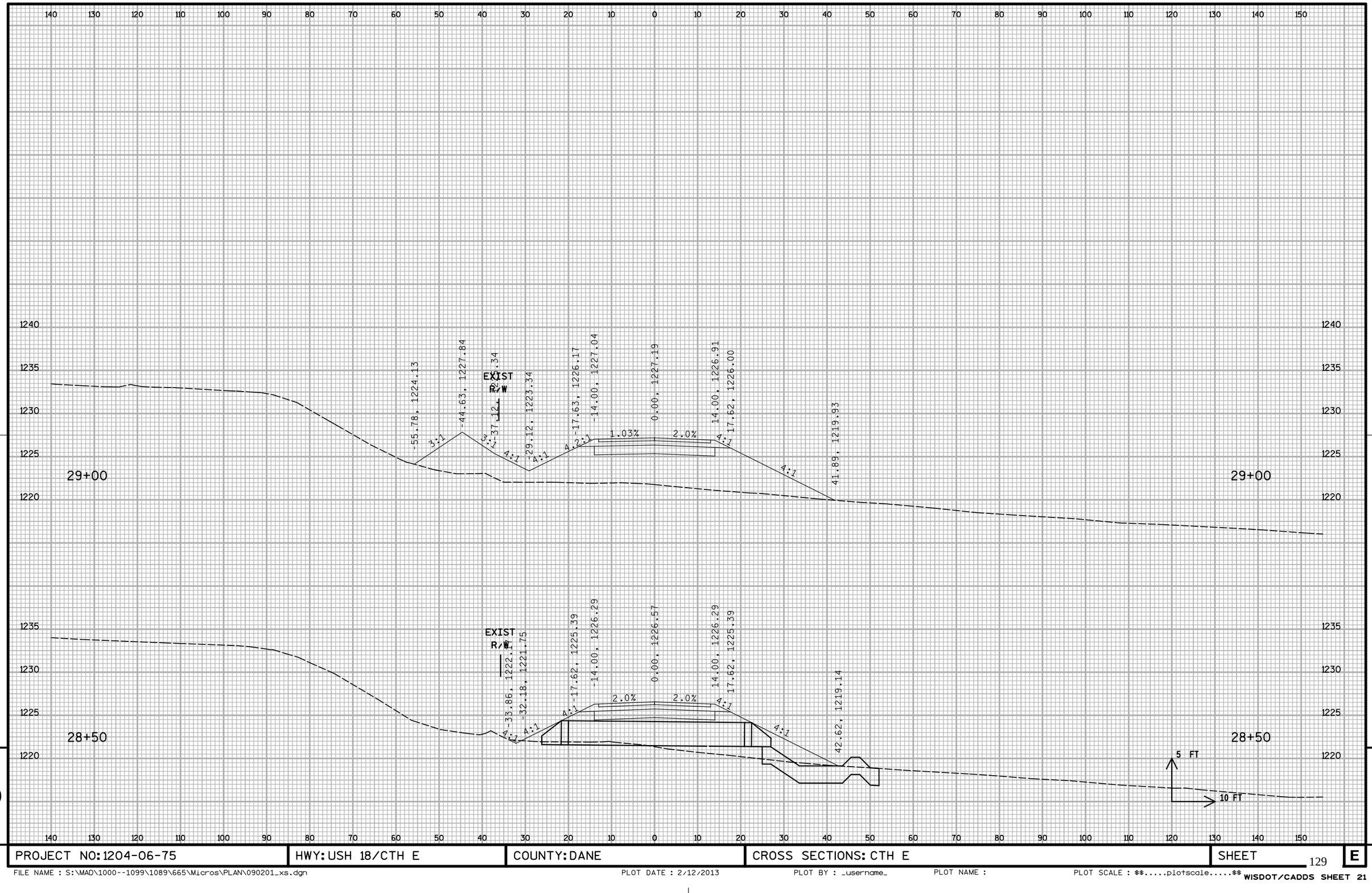

PROJECT NO: 1204-06-75	HWY: USH 18/CTH E	COUNTY: DANE	CROSS SECTIONS: CTH E	SHEET	E

FILE NAME : S:\MAD\1000--1099\1089\665\Micros\PLAN\090201_xs.dgn PLOT DATE : 2/12/2013 PLOT BY : _username_ PLOT NAME : PLOT SCALE : $$.....plotscale.....$$ WISDOT/CADDS SHEET 21

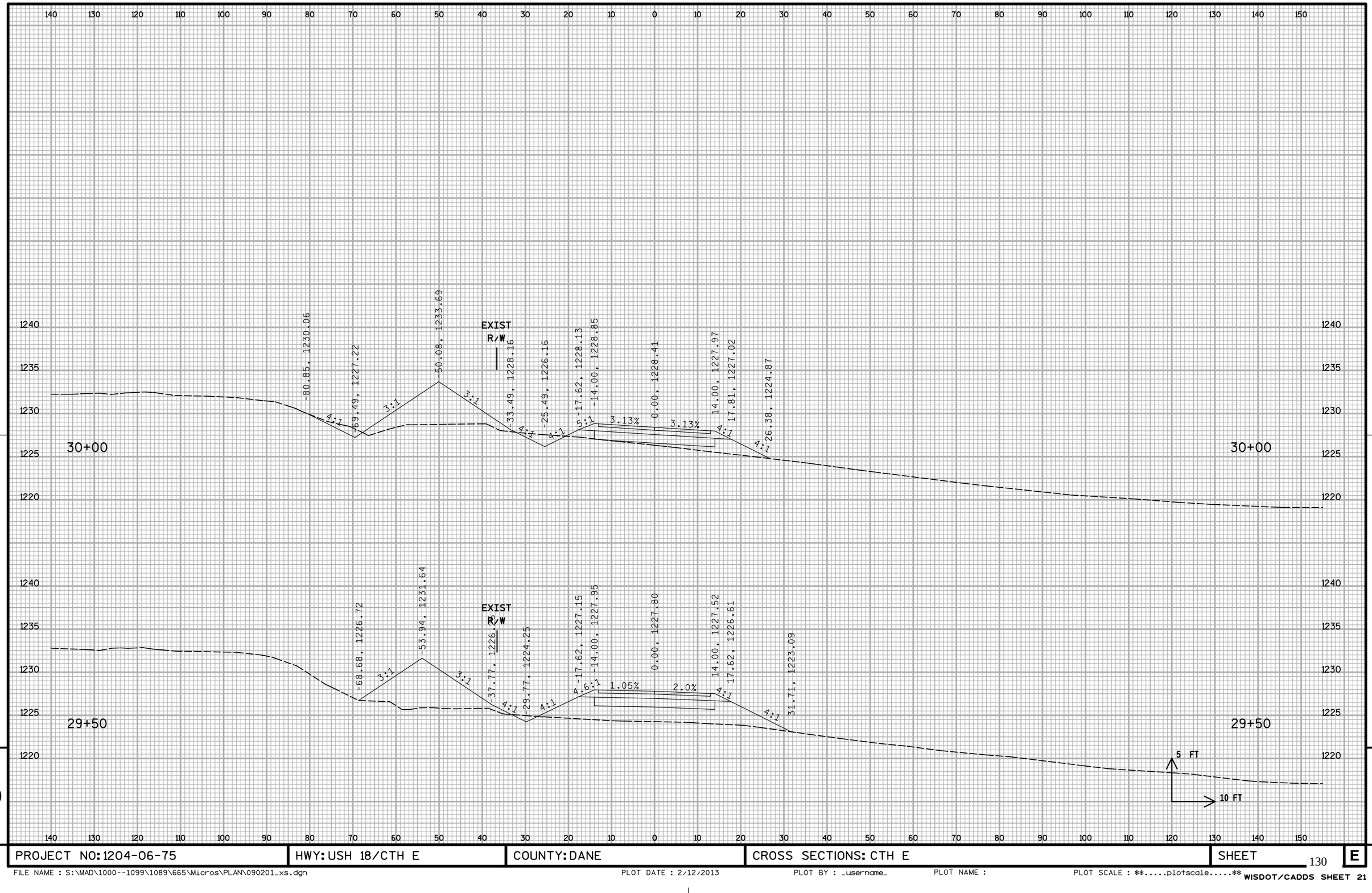

PROJECT NO: 1204-06-75	HWY: USH 18/CTH E	COUNTY: DANE	CROSS SECTIONS: CTH E	SHEET	E

FILE NAME : S:\MAD\1000--1099\1089\665\Micros\PLAN\090201_xs.dgn PLOT DATE : 2/12/2013 PLOT BY : _username_ PLOT NAME : PLOT SCALE : $$.....plotscale.....$$ WISDOT/CADDS SHEET 21

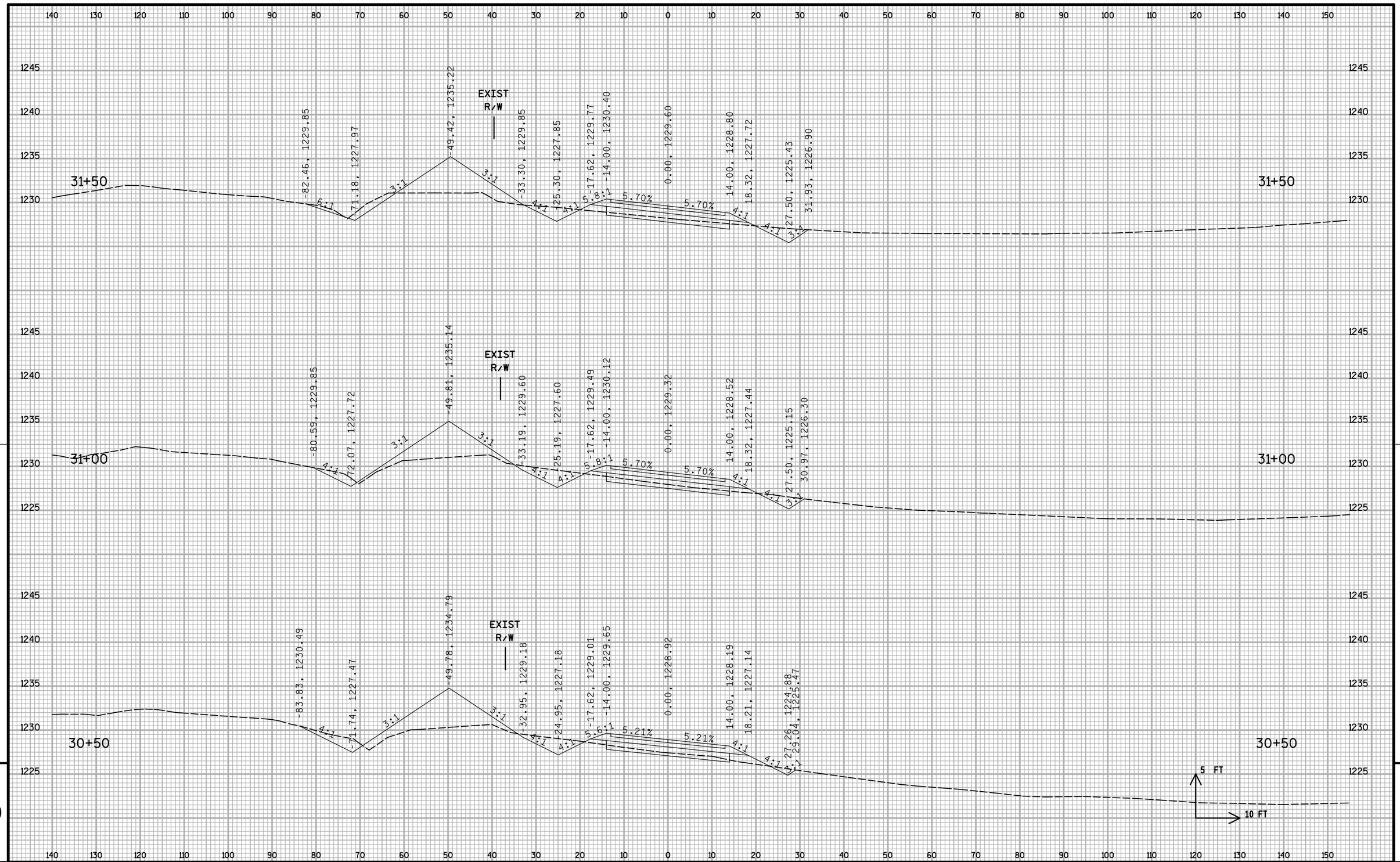

PROJECT NO: 1204-06-75	HWY: USH 18/CTH E	COUNTY: DANE	CROSS SECTIONS: CTH E	SHEET E

FILE NAME : S:\MAD\1000--1099\1089\665\Micros\PLAN\090201_xs.dgn PLOT DATE : 2/12/2013 PLOT BY : _username_ PLOT NAME : PLOT SCALE : $$.....plotscale.....$$ WISDOT/CADDS SHEET 21

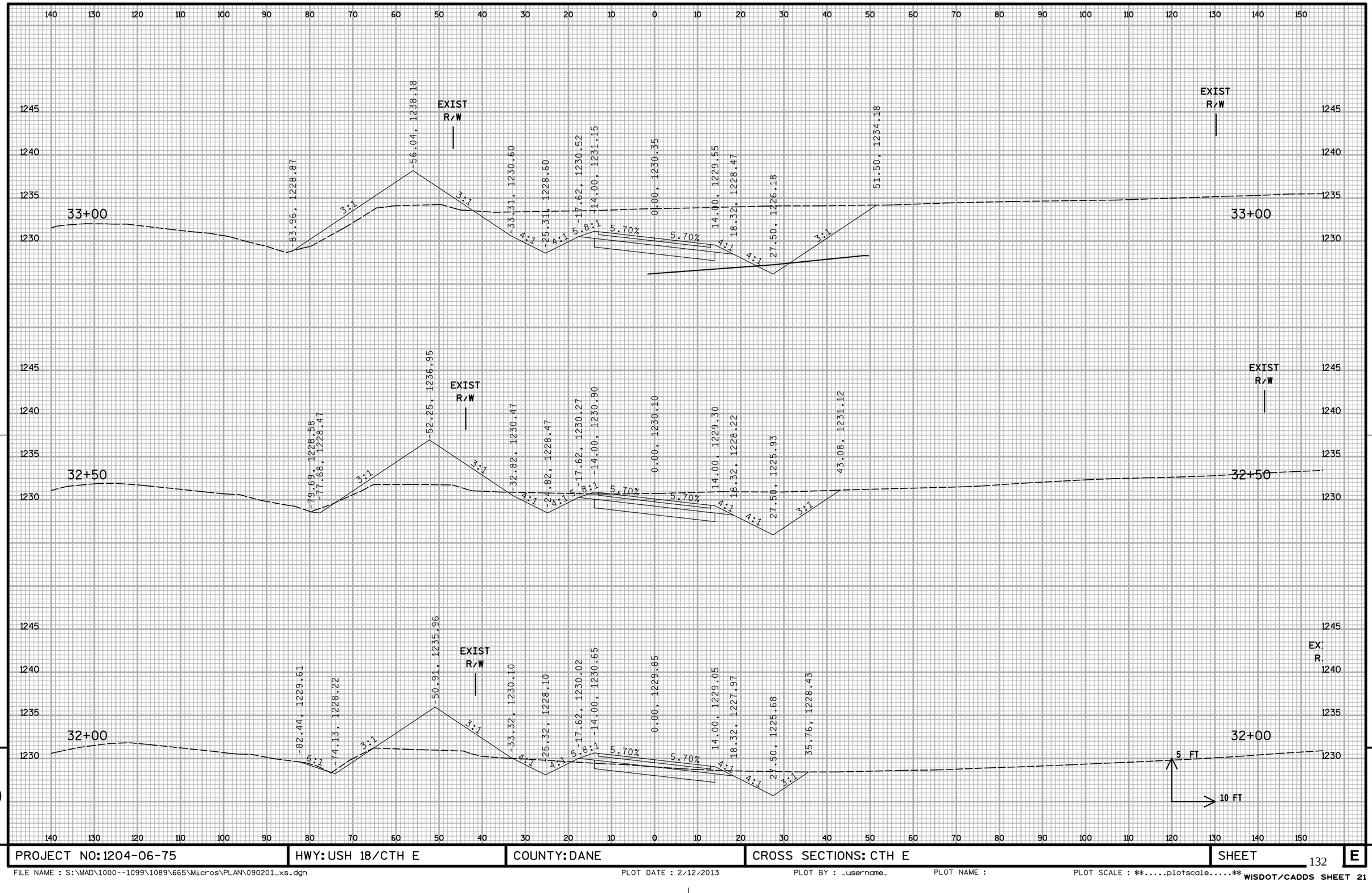

PROJECT NO: 1204-06-75	HWY: USH 18/CTH E	COUNTY: DANE	CROSS SECTIONS: CTH E	SHEET	E

FILE NAME : S:\MAD\1000--1099\1089\665\Micros\PLAN\090201_xs.dgn PLOT DATE : 2/12/2013 PLOT BY : _username_ PLOT NAME : PLOT SCALE : $$.....plotscale.....$$ WISDOT/CADDS SHEET 21

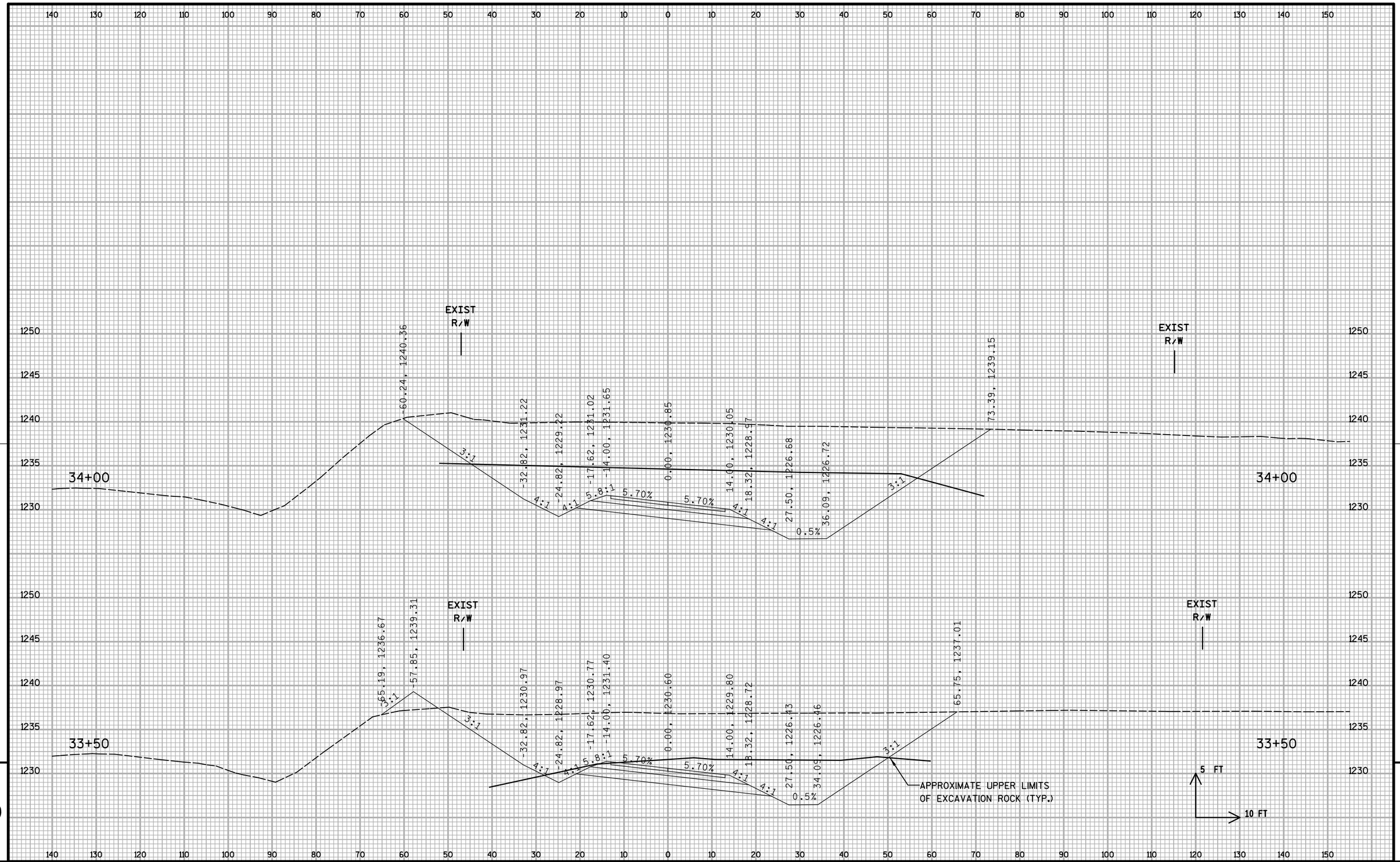

PROJECT NO: 1204-06-75	HWY: USH 18/CTH E	COUNTY: DANE	CROSS SECTIONS: CTH E	SHEET	E

FILE NAME : S:\MAD\1000--1099\1089\665\Micros\PLAN\090201_xs.dgn PLOT DATE : 2/12/2013 PLOT BY : _username_ PLOT NAME : PLOT SCALE : $$.....plotscale.....$$ WISDOT/CADDS SHEET 21

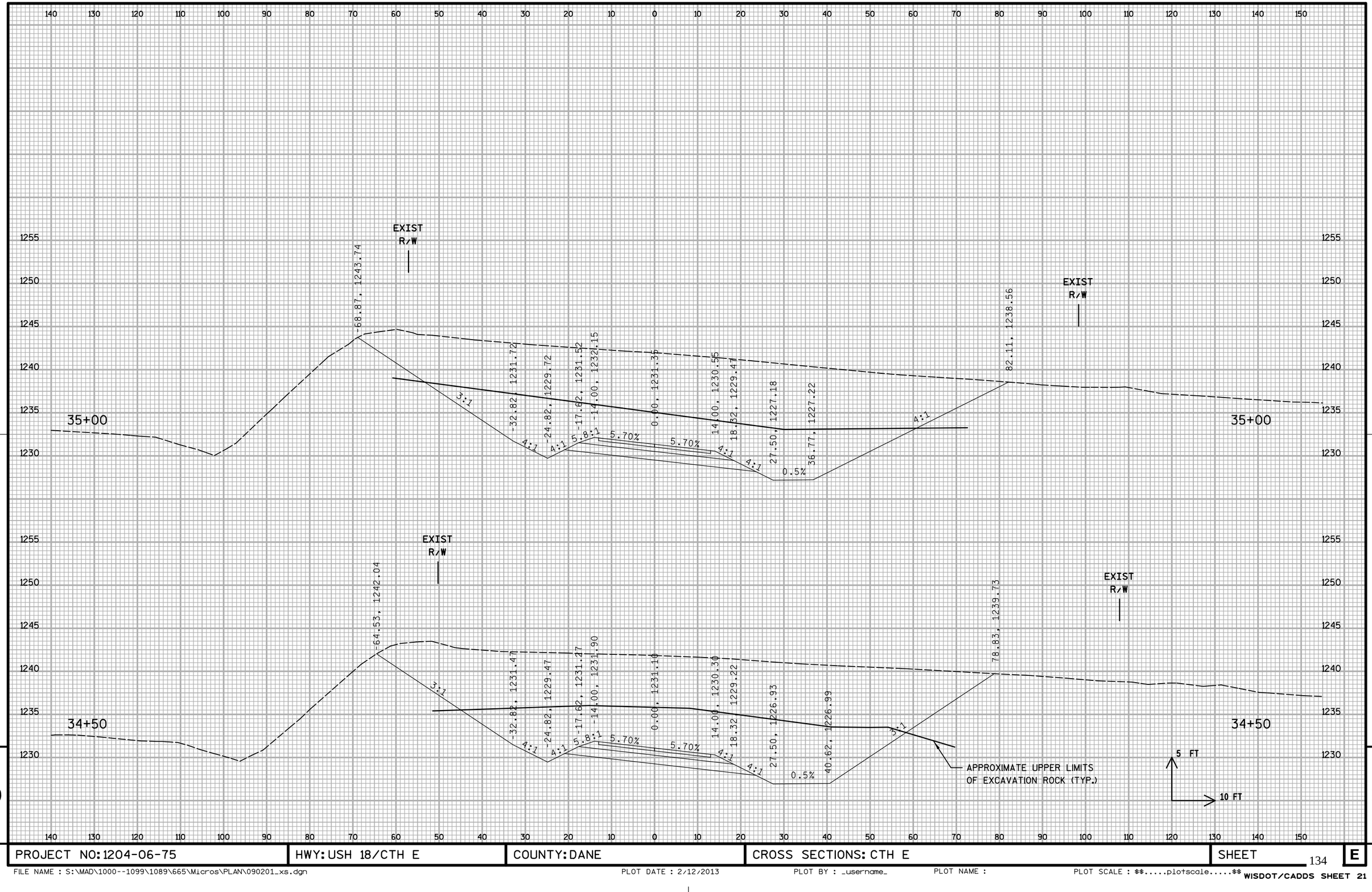

9 9

PROJECT NO: 1204-06-75	HWY: USH 18/CTH E	COUNTY: DANE	CROSS SECTIONS: CTH E	SHEET	E

FILE NAME : S:\MAD\1000--1099\1089\665\Micros\PLAN\090201_xs.dgn PLOT DATE : 2/12/2013 PLOT BY : _username_ PLOT NAME : PLOT SCALE : $$.....plotscale.....$$

WISDOT/CADDS SHEET 21

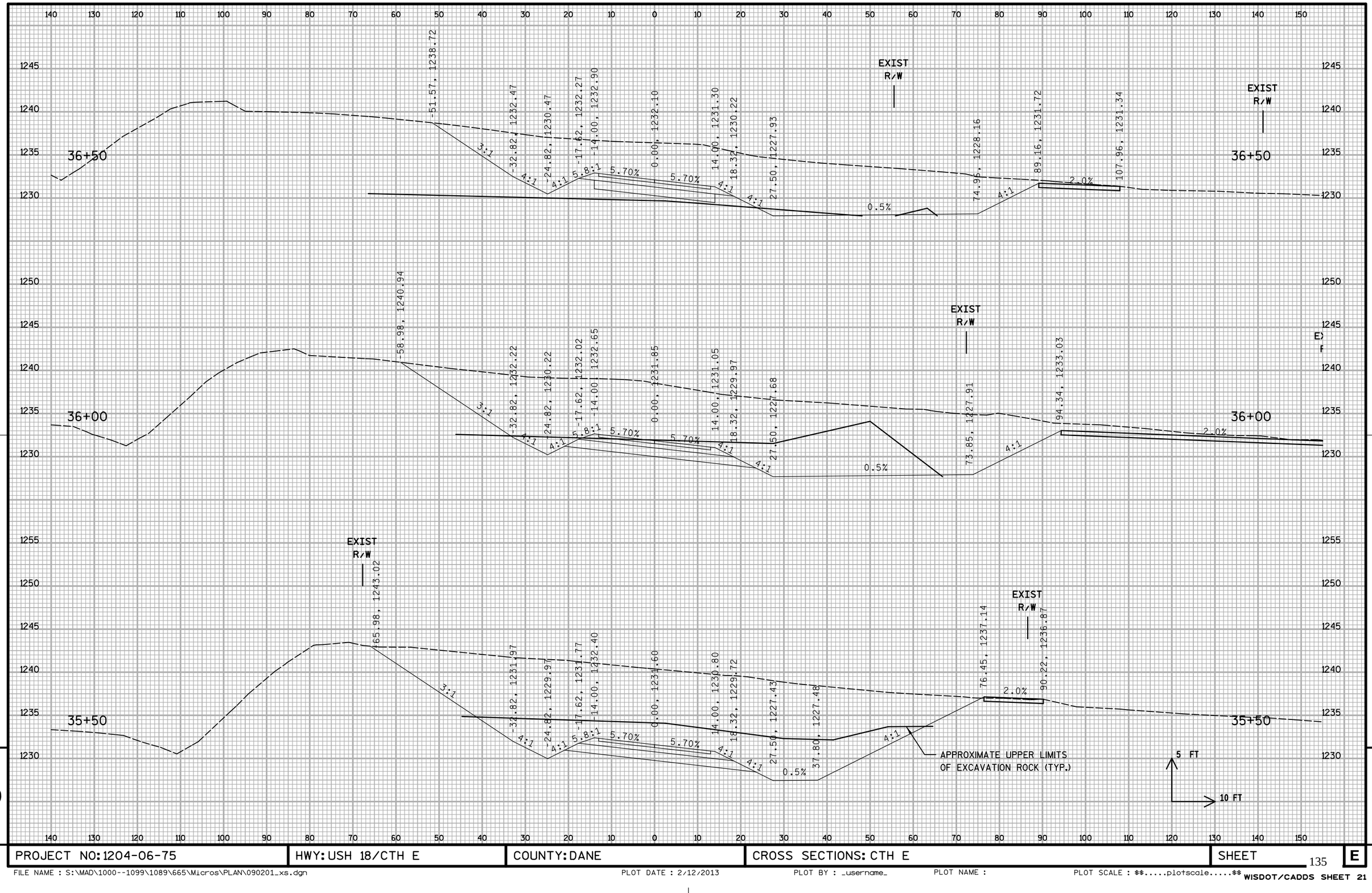

PROJECT NO: 1204-06-75	HWY: USH 18/CTH E	COUNTY: DANE	CROSS SECTIONS: CTH E	SHEET	E

FILE NAME : S:\MAD\1000--1099\1089\665\Micros\PLAN\090201_xs.dgn PLOT DATE : 2/12/2013 PLOT BY : _username_ PLOT NAME : PLOT SCALE : $$.....plotscale.....$$

WISDOT/CADDS SHEET 21

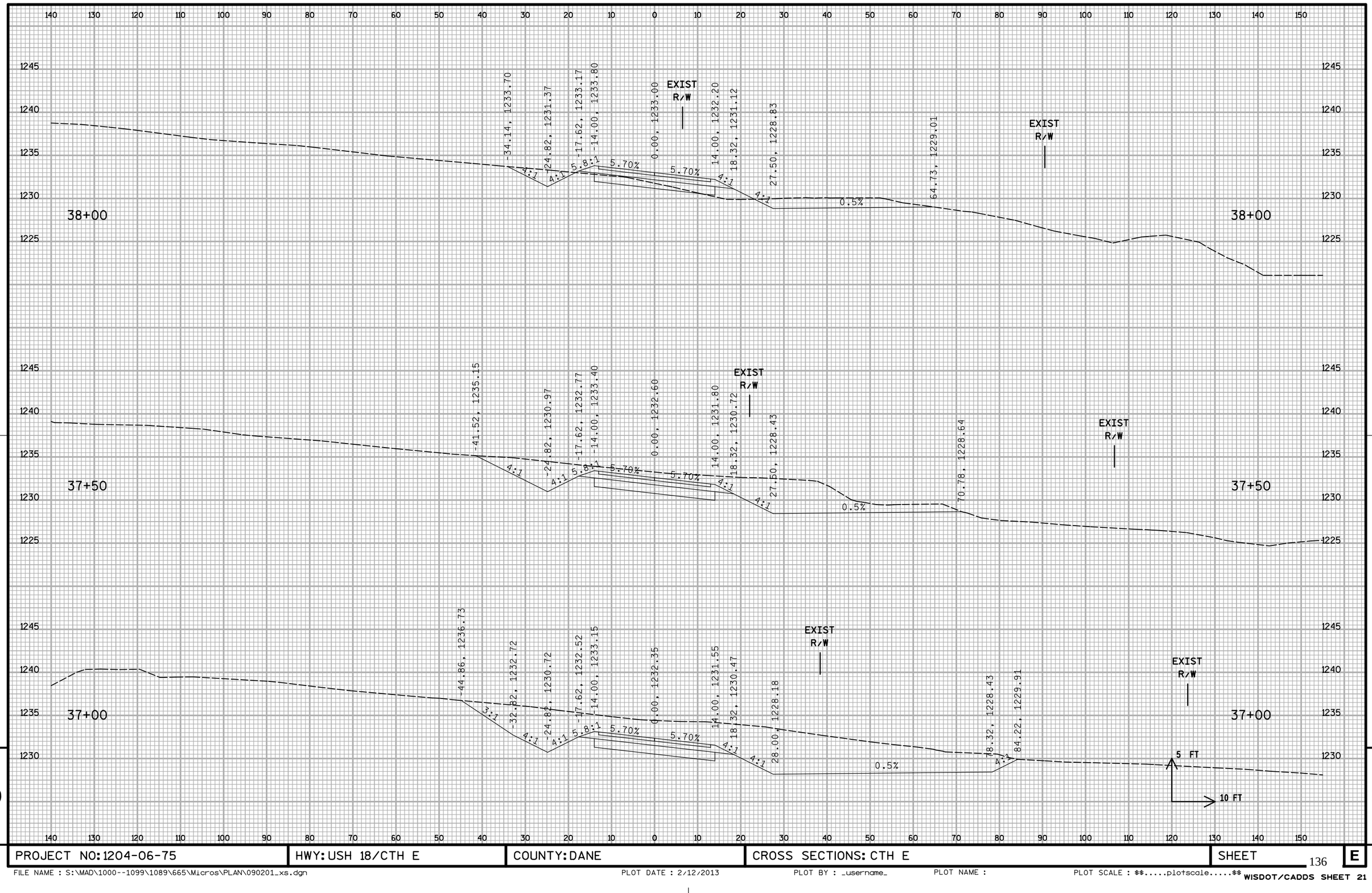

9

9

PROJECT NO: 1204-06-75	HWY: USH 18/CTH E	COUNTY: DANE	CROSS SECTIONS: CTH E	SHEET	E

FILE NAME : S:\MAD\1000--1099\1089\665\Micros\PLAN\090201_xs.dgn PLOT DATE : 2/12/2013 PLOT BY : _username_ PLOT NAME : PLOT SCALE : $$.....plotscale.....$$ WISDOT/CADDS SHEET 21

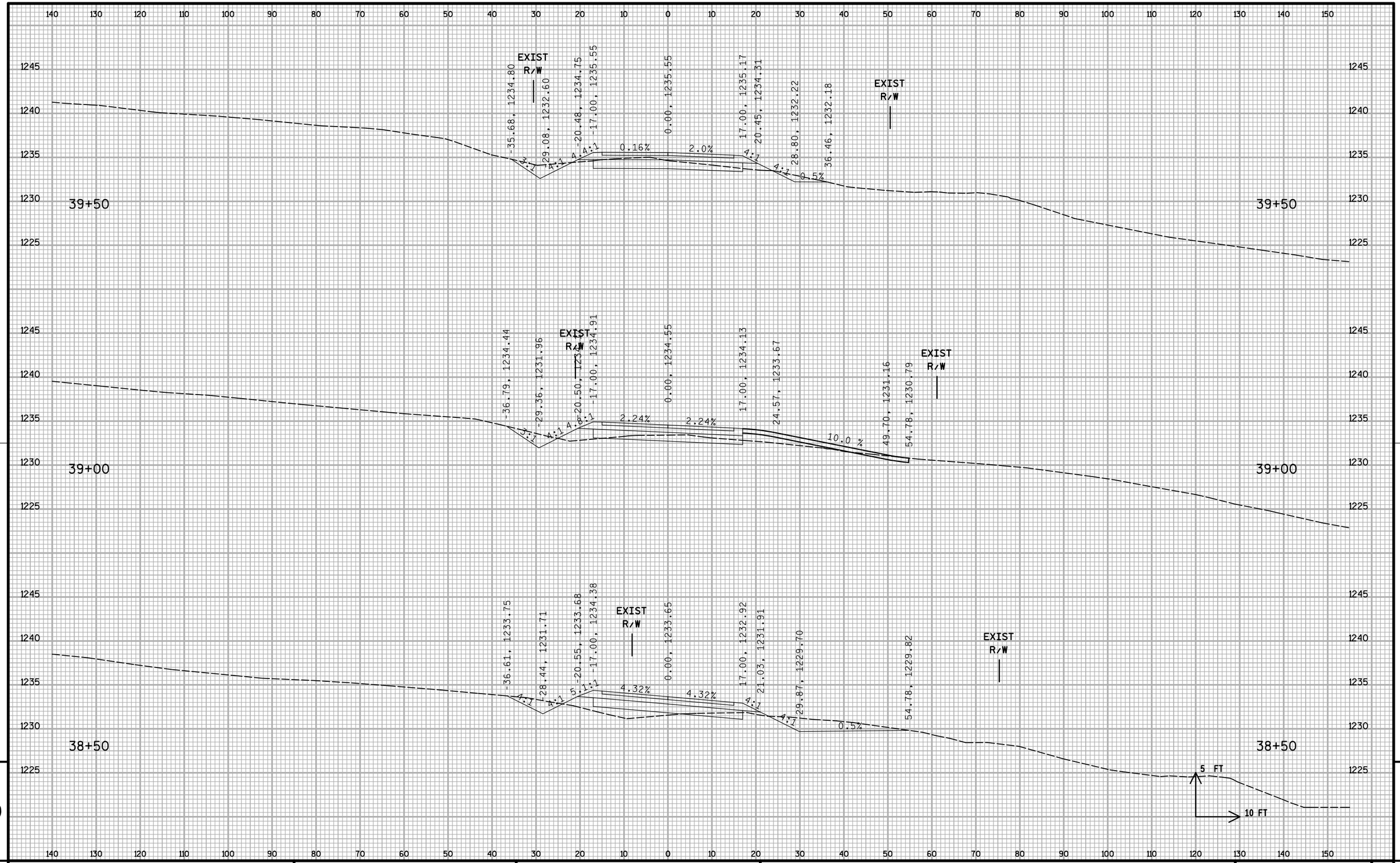

9 9

PROJECT NO: 1204-06-75	HWY: USH 18/CTH E	COUNTY: DANE	CROSS SECTIONS: CTH E	SHEET	E

FILE NAME : S:\MAD\1000--1099\1089\665\Micros\PLAN\090201_xs.dgn PLOT DATE : 2/12/2013 PLOT BY : _username_ PLOT NAME : PLOT SCALE : $$.....plotscale.....$$ WISDOT/CADDS SHEET 21

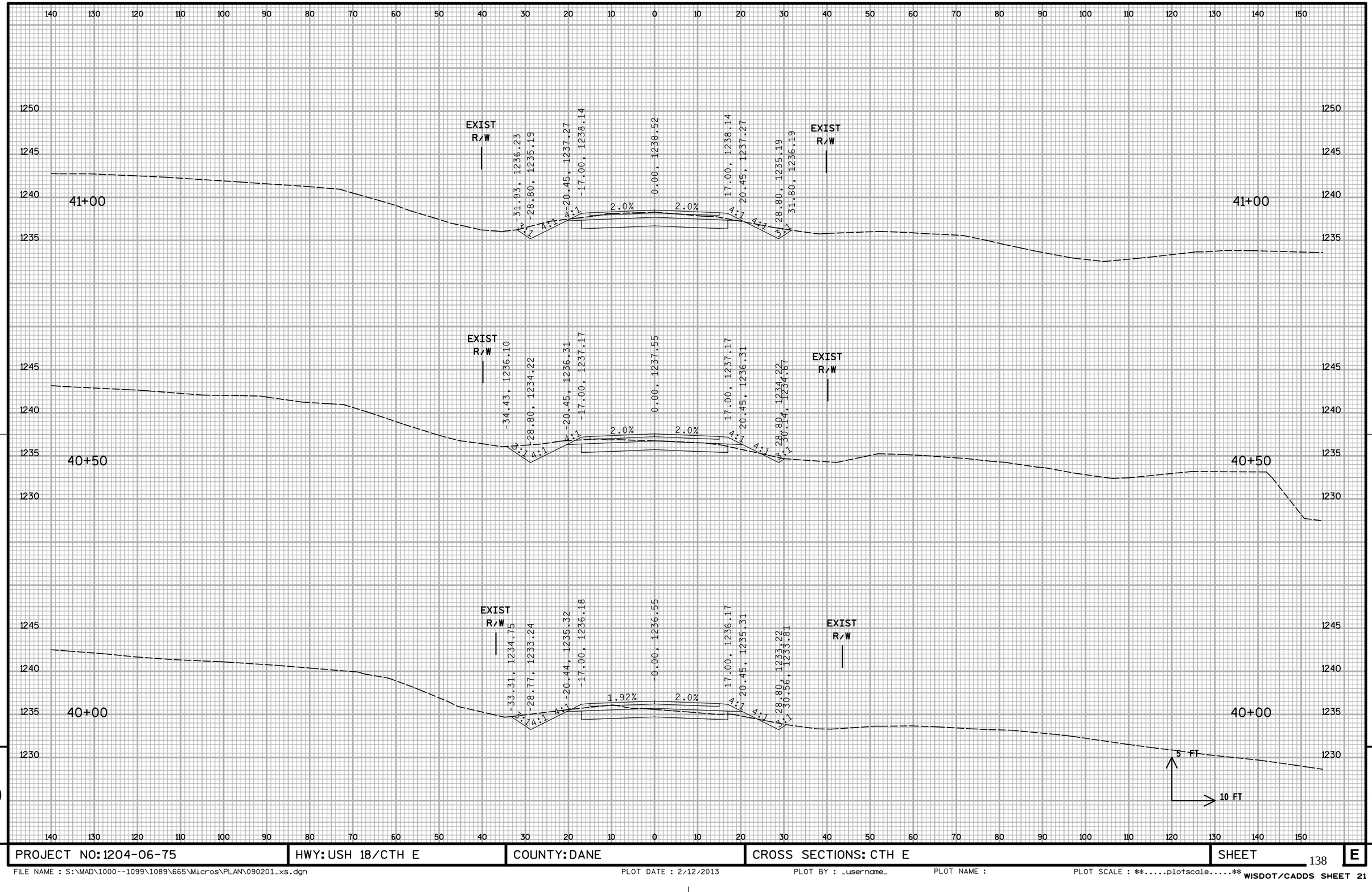

9

9

PROJECT NO: 1204-06-75	HWY: USH 18/CTH E	COUNTY: DANE	CROSS SECTIONS: CTH E	SHEET	E

FILE NAME : S:\MAD\1000--1099\1089\665\Micros\PLAN\090201_xs.dgn PLOT DATE : 2/12/2013 PLOT BY : _username_ PLOT NAME : PLOT SCALE : $$.....plotscale.....$$

WISDOT/CADDS SHEET 21

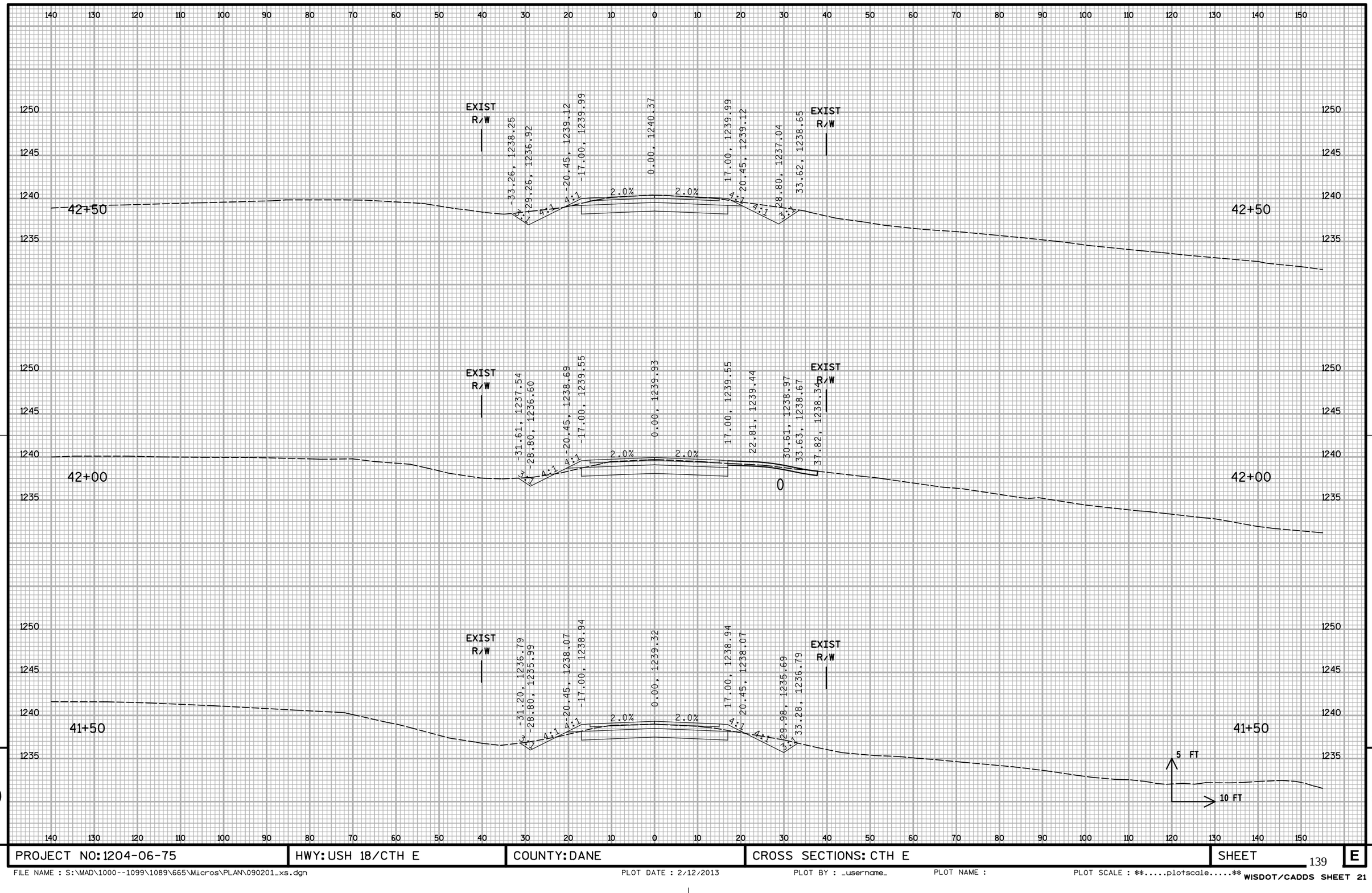

PROJECT NO: 1204-06-75	HWY: USH 18/CTH E	COUNTY: DANE	CROSS SECTIONS: CTH E	SHEET	E

FILE NAME : S:\MAD\1000--1099\1089\665\Micros\PLAN\090201_xs.dgn PLOT DATE : 2/12/2013 PLOT BY : _username_ PLOT NAME : PLOT SCALE : $$.....plotscale.....$$ WISDOT/CADDS SHEET 21

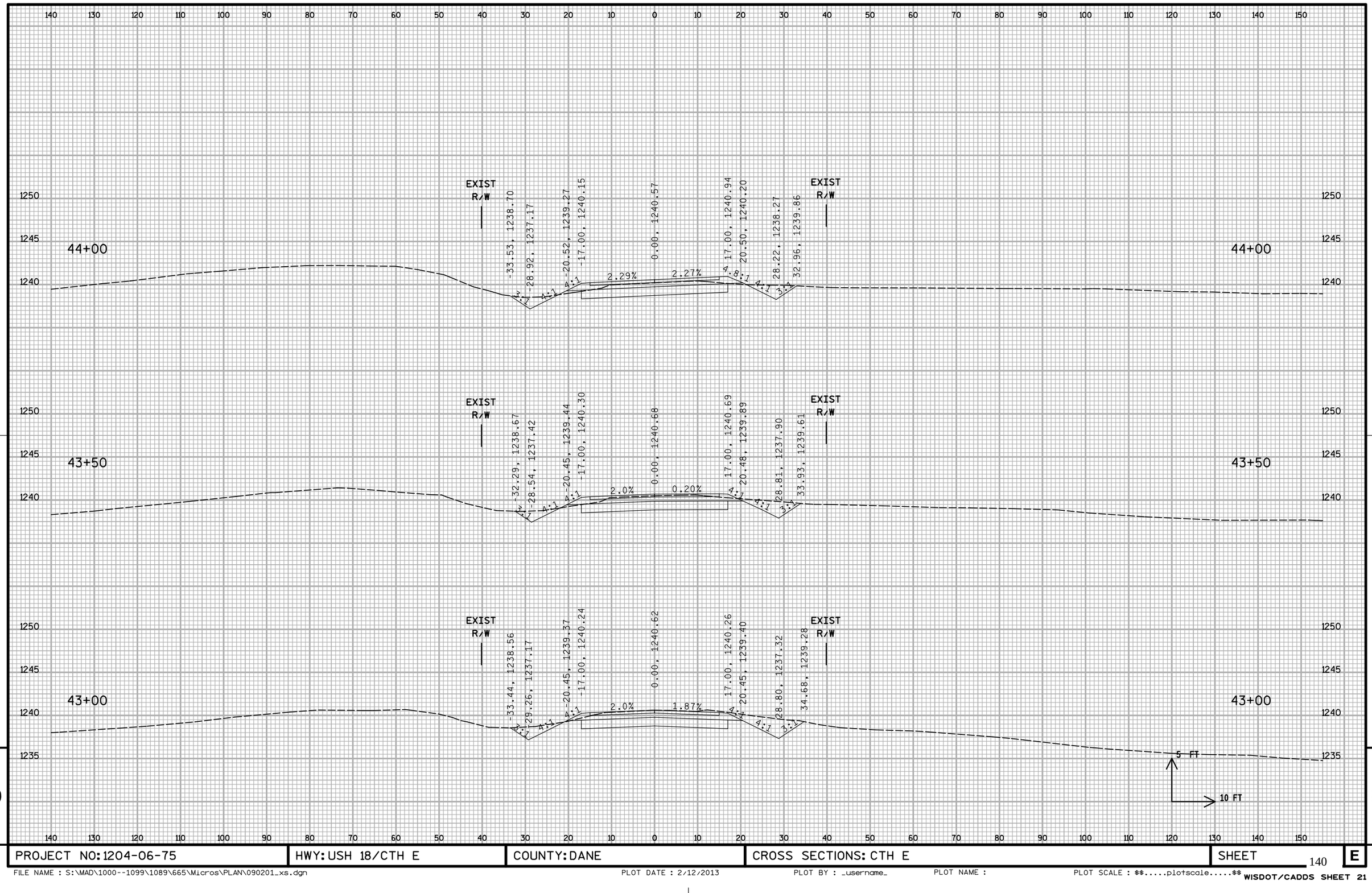

PROJECT NO: 1204-06-75	HWY: USH 18/CTH E	COUNTY: DANE	CROSS SECTIONS: CTH E	SHEET 140	E

FILE NAME : S:\MAD\1000--1099\1089\665\Micros\PLAN\090201_xs.dgn PLOT DATE : 2/12/2013 PLOT BY : _username_ PLOT NAME : PLOT SCALE : $$.....plotscale.....$$ WISDOT/CADDS SHEET 21

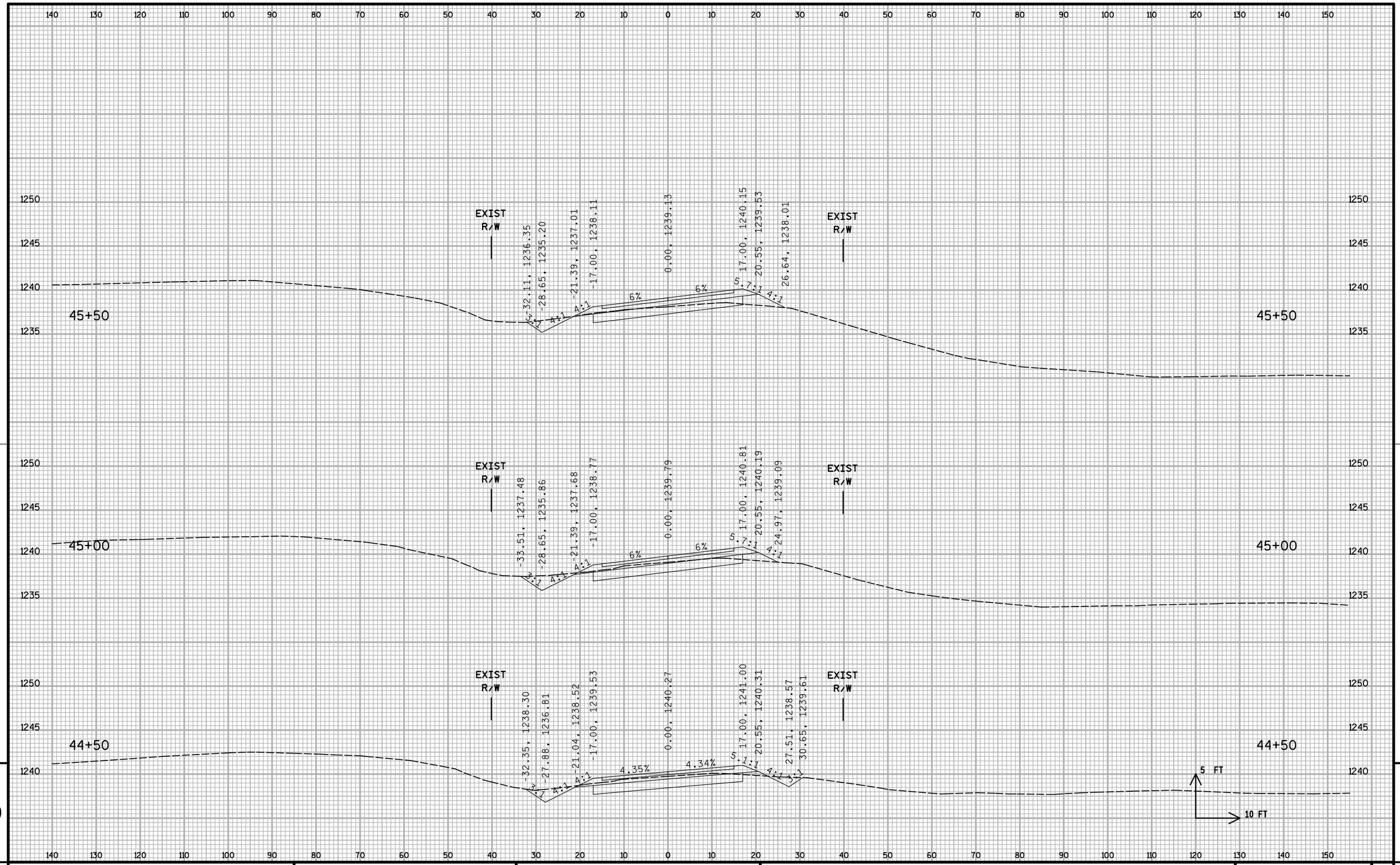

9

9

PROJECT NO: 1204-06-75	HWY: USH 18/CTH E	COUNTY: DANE	CROSS SECTIONS: CTH E	SHEET	E

FILE NAME : S:\MAD\1000--1099\1089\665\Micros\PLAN\090201_xs.dgn PLOT DATE : 2/12/2013 PLOT BY : _username_ PLOT NAME : PLOT SCALE : $$.....plotscale.....$$

WISDOT/CADDS SHEET 21

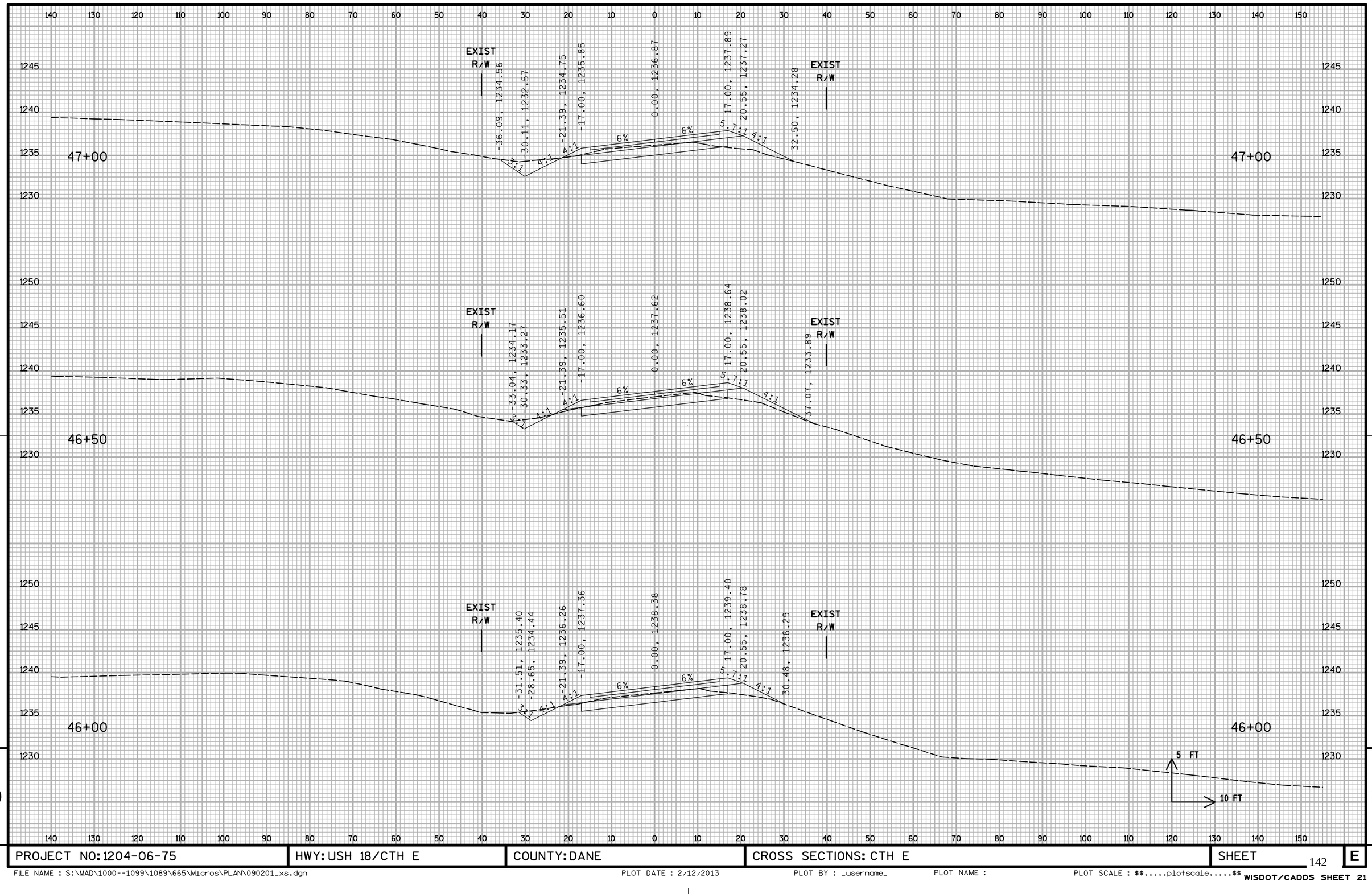

PROJECT NO: 1204-06-75	HWY: USH 18/CTH E	COUNTY: DANE	CROSS SECTIONS: CTH E	SHEET	E

FILE NAME : S:\MAD\1000--1099\1089\665\Micros\PLAN\090201_xs.dgn PLOT DATE : 2/12/2013 PLOT BY : _username_ PLOT NAME : PLOT SCALE : $$.....plotscale.....$$ WISDOT/CADDS SHEET 21

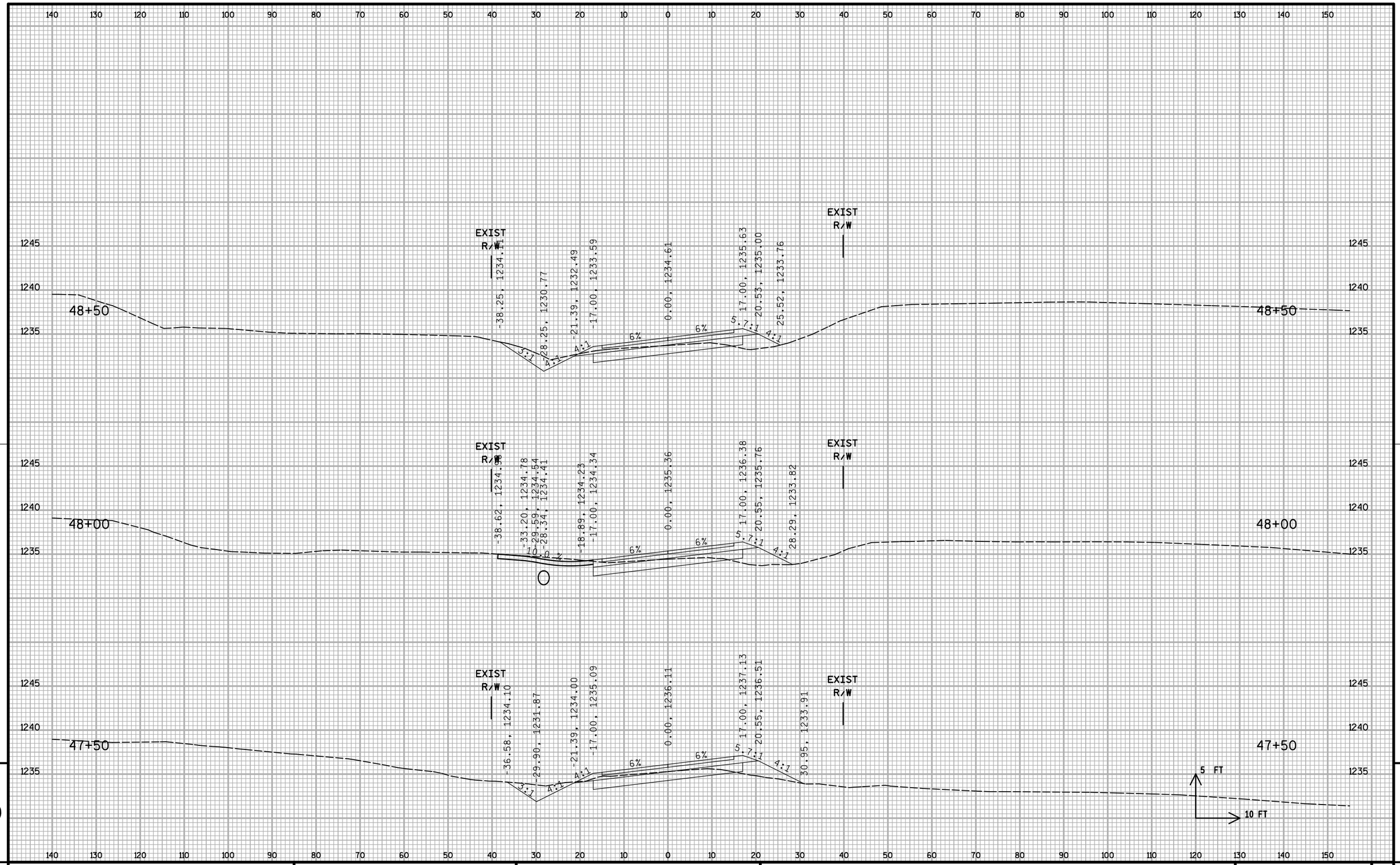

PROJECT NO: 1204-06-75	HWY: USH 18/CTH E	COUNTY: DANE	CROSS SECTIONS: CTH E	SHEET	E

FILE NAME : S:\MAD\1000--1099\1089\665\Micros\PLAN\090201_xs.dgn PLOT DATE : 2/12/2013 PLOT BY : _username_ PLOT NAME : PLOT SCALE : $$.....plotscale.....$$ WISDOT/CADDS SHEET 21

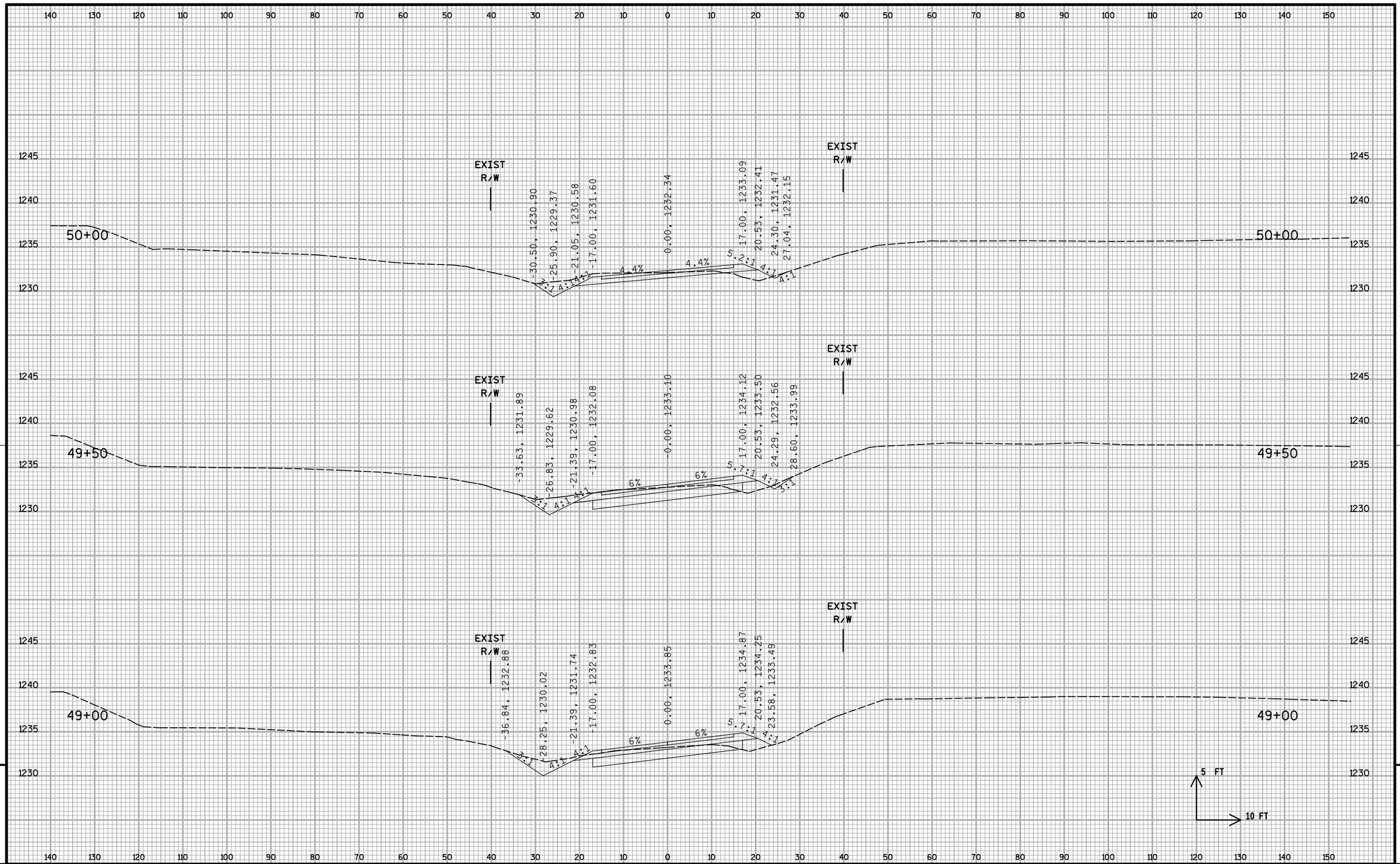

PROJECT NO: 1204-06-75	HWY: USH 18/CTH E	COUNTY: DANE	CROSS SECTIONS: CTH E	SHEET	E

FILE NAME : S:\MAD\1000--1099\1089\665\Micros\PLAN\090201_xs.dgn PLOT DATE : 2/12/2013 PLOT BY : _username_ PLOT NAME : PLOT SCALE : $$.....plotscale.....$$ WISDOT/CADDS SHEET 21

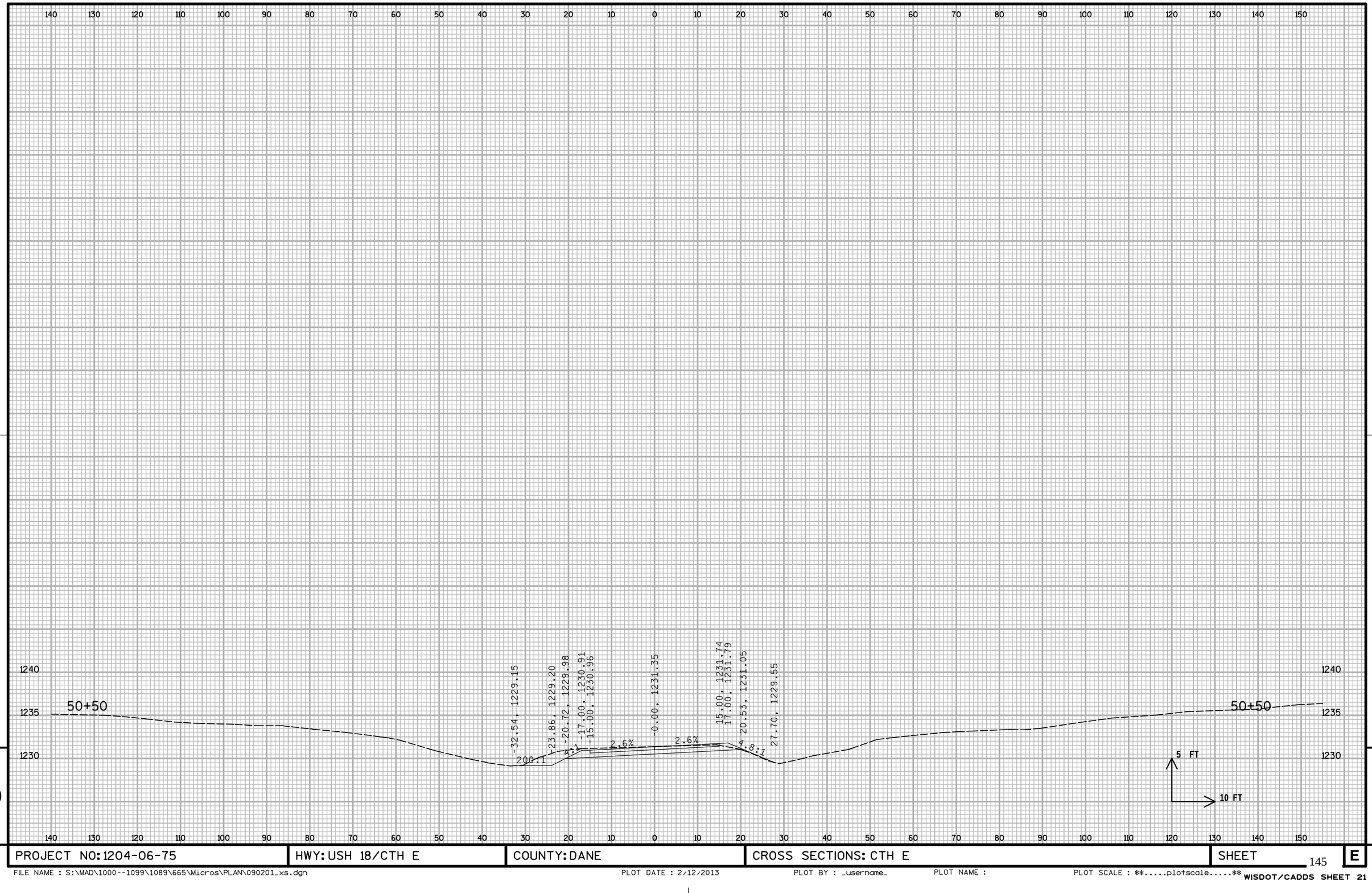

9

9

PROJECT NO: 1204-06-75	HWY: USH 18/CTH E	COUNTY: DANE	CROSS SECTIONS: CTH E	SHEET	E

FILE NAME : S:\MAD\1000--1099\1089\665\Micros\PLAN\090201_xs.dgn PLOT DATE : 2/12/2013 PLOT BY : _username_ PLOT NAME : PLOT SCALE : $$.....plotscale.....$$

WISDOT/CADDS SHEET 21

150 140 130 120 110 100 90 80 70 60 50 40 30 20 10 0 10 20 30 40 50 60 70 80 90 100 110 120 130 140

1240

1230

-25.35, 1231.98

6:1

4%

-23.86, 1232.23

-14.55, 1232.60

17+00ST

1240

1230

17+00ST

5 FT

10 FT

9

9

PROJECT NO: 1204-06-75	HWY: CTH E	COUNTY: DANE	CROSS SECTIONS: STH 78	SHEET PR[illegible]	E

FILE NAME : S:\MAD\1000--1099\1089\665\Micros\PLAN\090202_xs.dgn PLOT DATE : 11/26/2012 PLOT BY : _username_ PLOT NAME : PLOT SCALE : $$.....plotscale.....$$

WISDOT/CADDS SHEET 21

150 140 130 120 110 100 90 80 70 60 50 40 30 20 10 0 10 20 30 40 50 60 70 80 90 100 110 120 130 140

1230

1220

18+50ST

11.90, 1230.39

4%

4:1

23.68, 1229.92

24.98, 1229.60

1230

1220

18+50ST

1230

18+00ST

11.90, 1231.09

4%

4:1

23.58, 1230.62

6:1

54.51, 1225.46

1230

18+00ST

1230

17+50ST

-34.31, 1230.96

6:1

4%

-31.41, 1231.44

-22.10, 1231.81

1230

17+50ST

5 FT

10 FT

150 140 130 120 110 100 90 80 70 60 50 40 30 20 10 0 10 20 30 40 50 60 70 80 90 100 110 120 130 140

9

9

PROJECT NO: 1204-06-75	HWY: CTH E	COUNTY: DANE	CROSS SECTIONS: STH 78	SHEET PR[illegible]	E

FILE NAME : S:\MAD\1000--1099\1089\665\Micros\PLAN\090202_xs.dgn PLOT DATE : 11/26/2012 PLOT BY : _username_ PLOT NAME : PLOT SCALE : $$.....plotscale.....$$ WISDOT/CADDS SHEET 21

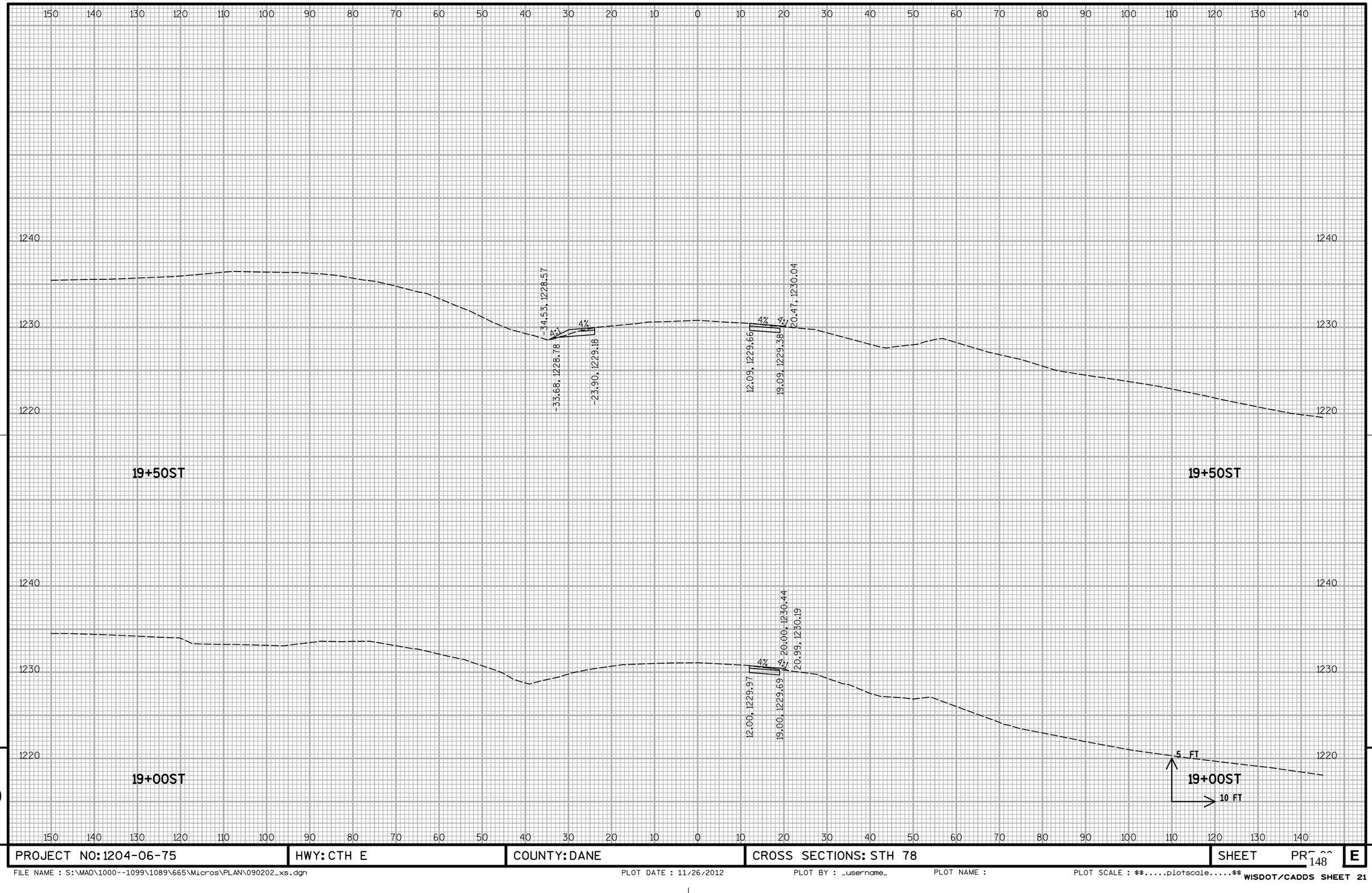

9

PROJECT NO: 1204-06-75	HWY: CTH E	COUNTY: DANE	CROSS SECTIONS: STH 78	SHEET PR...	E

FILE NAME : S:\MAD\1000--1099\1089\665\Micros\PLAN\090202_xs.dgn PLOT DATE : 11/26/2012 PLOT BY : _username_ PLOT NAME : PLOT SCALE : $$.....plotscale.....$$

WISDOT/CADDS SHEET 21

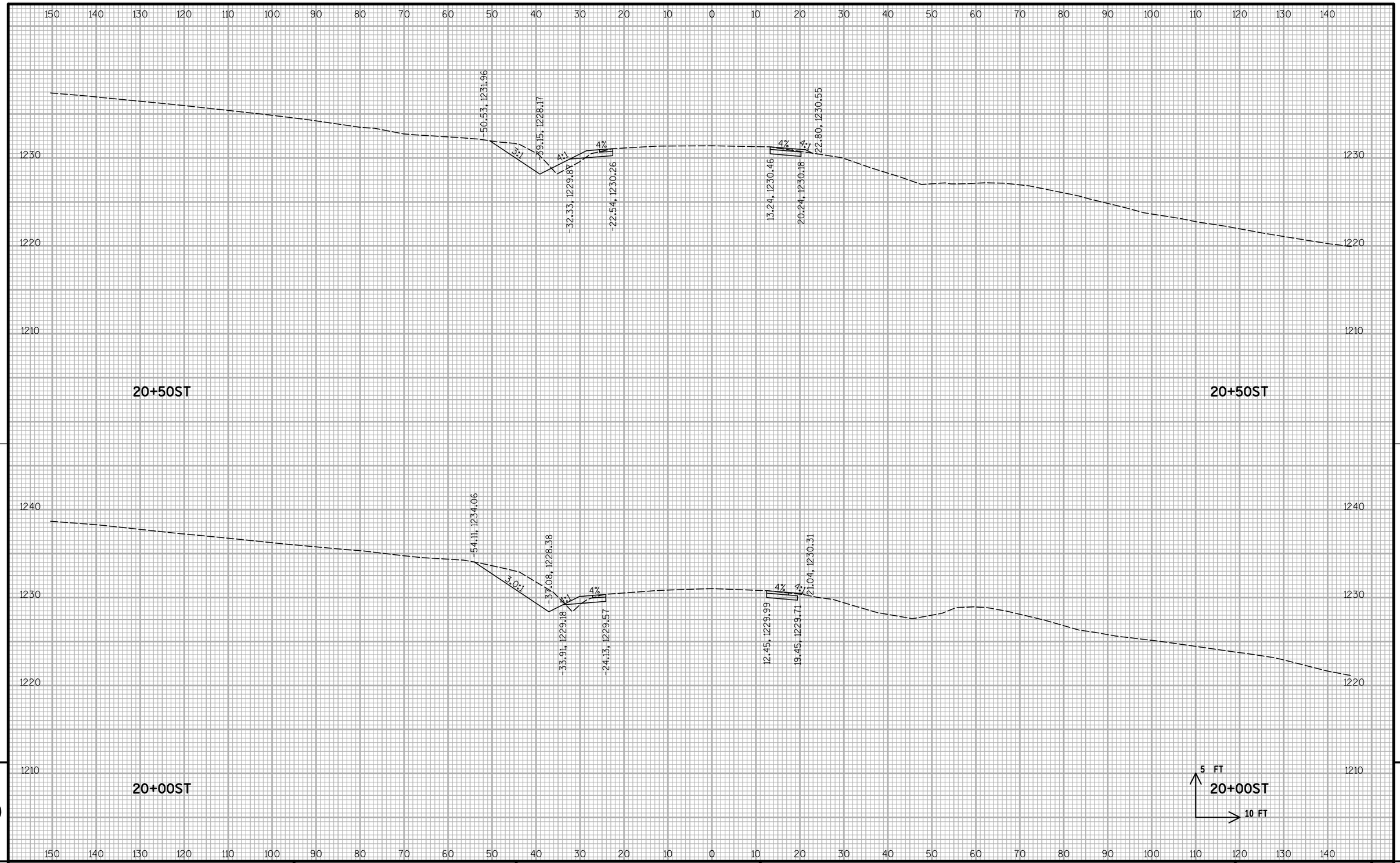

9

9

PROJECT NO: 1204-06-75	HWY: CTH E	COUNTY: DANE	CROSS SECTIONS: STH 78	SHEET PR...	E

FILE NAME : S:\MAD\1000--1099\1089\665\Micros\PLAN\090202_xs.dgn PLOT DATE : 11/26/2012 PLOT BY : _username_ PLOT NAME : PLOT SCALE : $$.....plotscale.....$$

WISDOT/CADDS SHEET 21

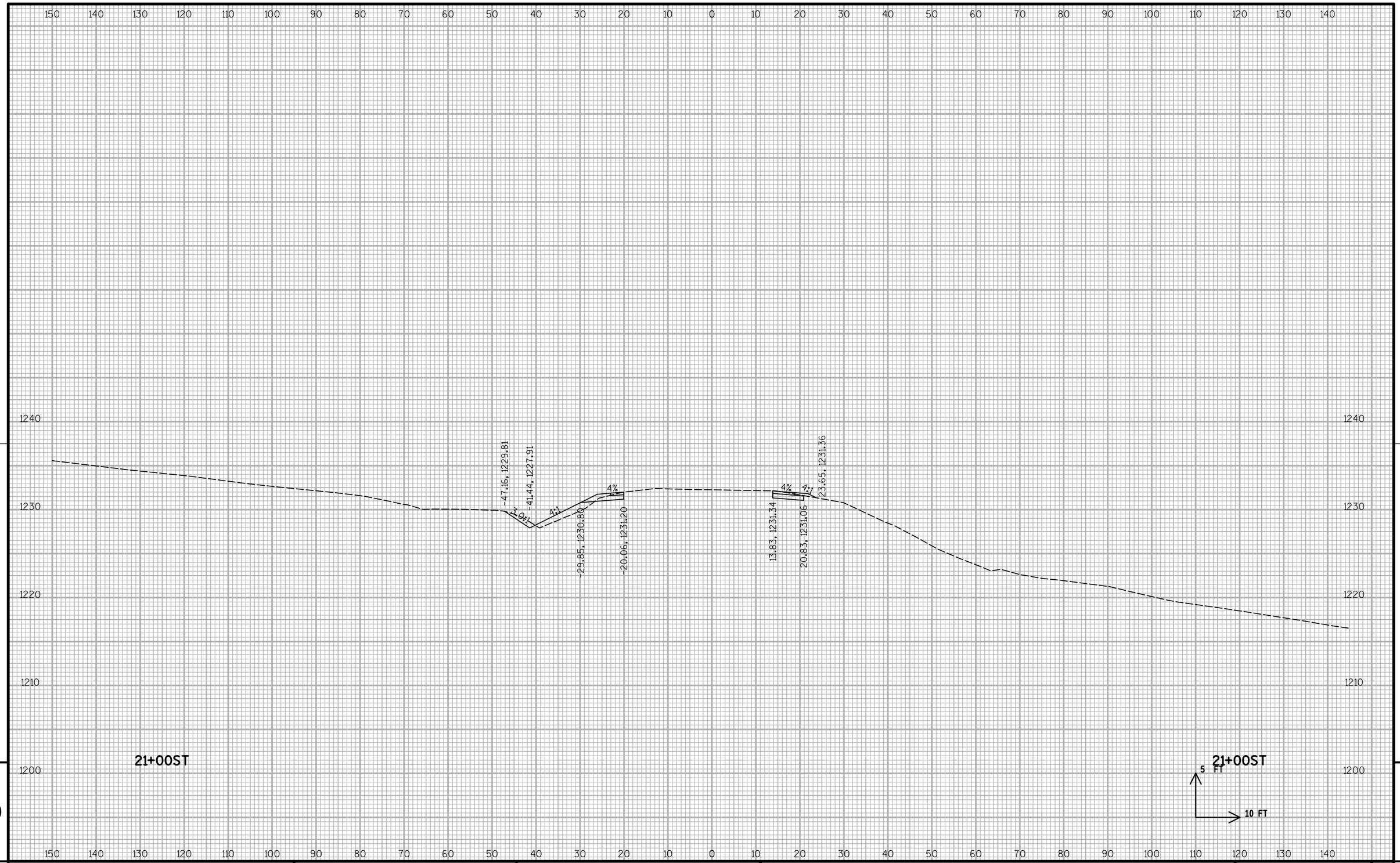

9

9

PROJECT NO: 1204-06-75	HWY: CTH E	COUNTY: DANE	CROSS SECTIONS: STH 78	SHEET PR	E

FILE NAME : S:\MAD\1000--1099\1089\665\Micros\PLAN\090202_xs.dgn PLOT DATE : 11/26/2012 PLOT BY : _username_ PLOT NAME : PLOT SCALE : $$.....plotscale.....$$

WISDOT/CADDS SHEET 21

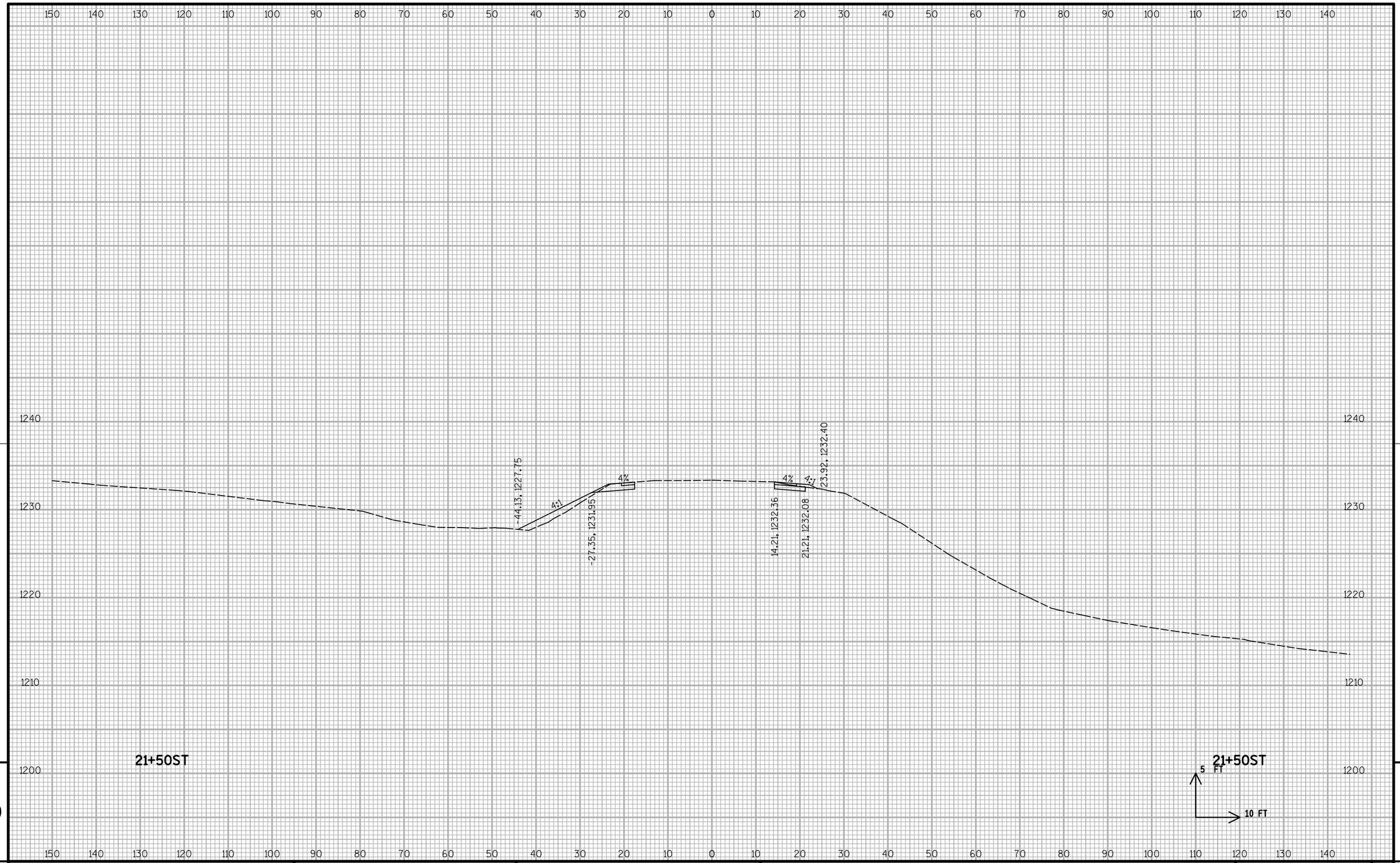

9

9

PROJECT NO: 1204-06-75	HWY: CTH E	COUNTY: DANE	CROSS SECTIONS: STH 78	SHEET PR	E

FILE NAME : S:\MAD\1000--1099\1089\665\Micros\PLAN\090202_xs.dgn PLOT DATE : 11/26/2012 PLOT BY : _username_ PLOT NAME : PLOT SCALE : $$.....plotscale.....$$ WISDOT/CADDS SHEET 21

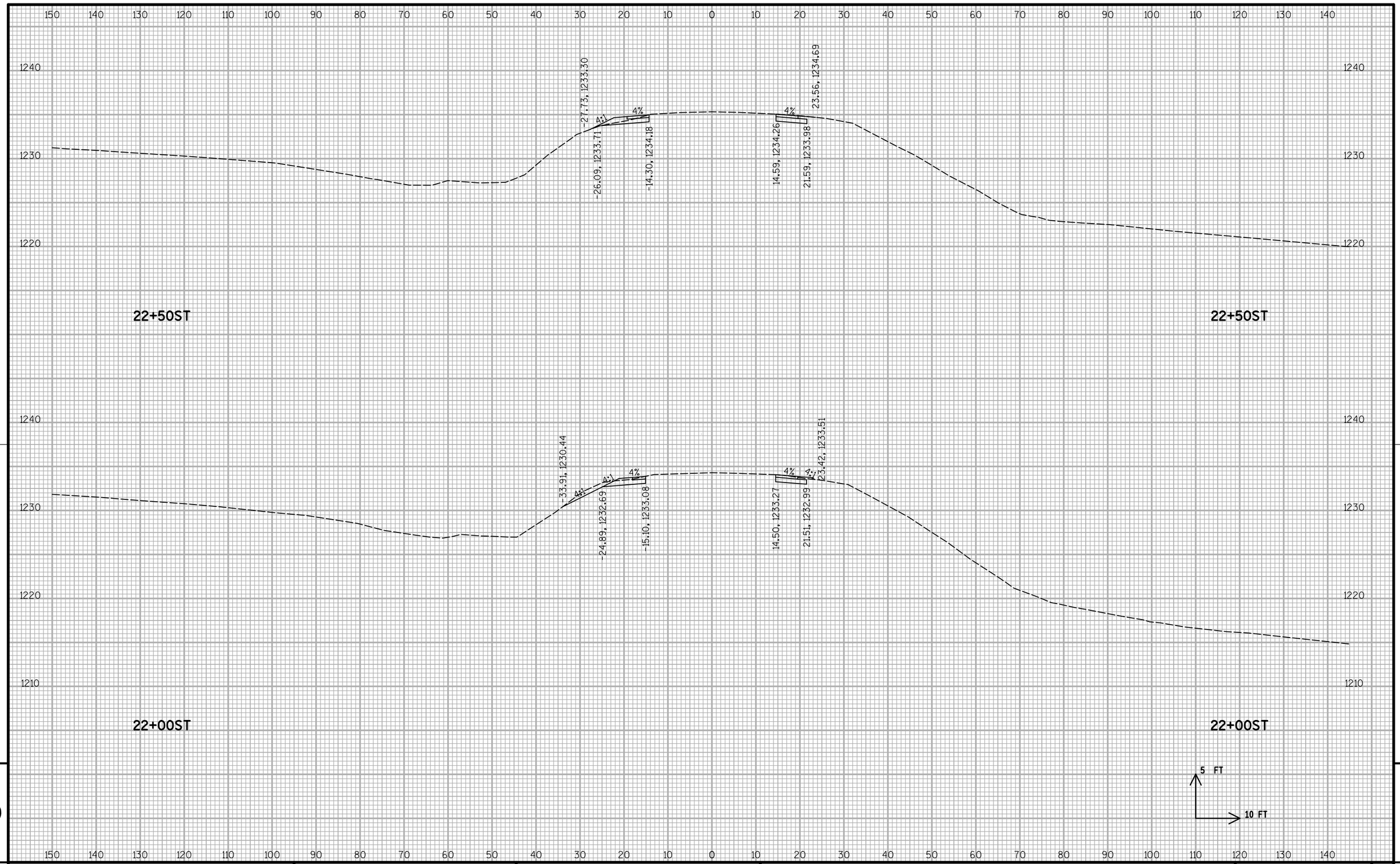

9

9

PROJECT NO: 1204-06-75	HWY: CTH E	COUNTY: DANE	CROSS SECTIONS: STH 78	SHEET PR...	E

FILE NAME : S:\MAD\1000--1099\1089\665\Micros\PLAN\090202_xs.dgn PLOT DATE : 11/26/2012 PLOT BY : _username_ PLOT NAME : PLOT SCALE : $$.....plotscale.....$$ WISDOT/CADDS SHEET 21

150 140 130 120 110 100 90 80 70 60 50 40 30 20 10 0 10 20 30 40 50 60 70 80 90 100 110 120 130 140

1240

1230

-25.29, 1235.71

4:1

4%

-13.50, 1236.19

19.79, 1236.34

4%

26.80, 1236.06

28.48, 1236.70

1240

1230

23+50ST

23+50ST

1240

1230

-25.24, 1234.77

4:1

4%

-13.46, 1235.24

16.77, 1235.40

4%

23.78, 1235.12

25.08, 1235.82

1240

1230

1220

23+00ST

23+00ST

1220

5

10 FT

9

9

150 140 130 120 110 100 90 80 70 60 50 40 30 20 10 0 10 20 30 40 50 60 70 80 90 100 110 120 130 140

PROJECT NO: 1204-06-75	HWY: CTH E	COUNTY: DANE	CROSS SECTIONS: STH 78	SHEET PR	E

FILE NAME : S:\MAD\1000--1099\1089\665\Micros\PLAN\090202_xs.dgn PLOT DATE : 11/26/2012 PLOT BY : _username_ PLOT NAME : PLOT SCALE : $$.....plotscale.....$$

WISDOT/CADDS SHEET 21

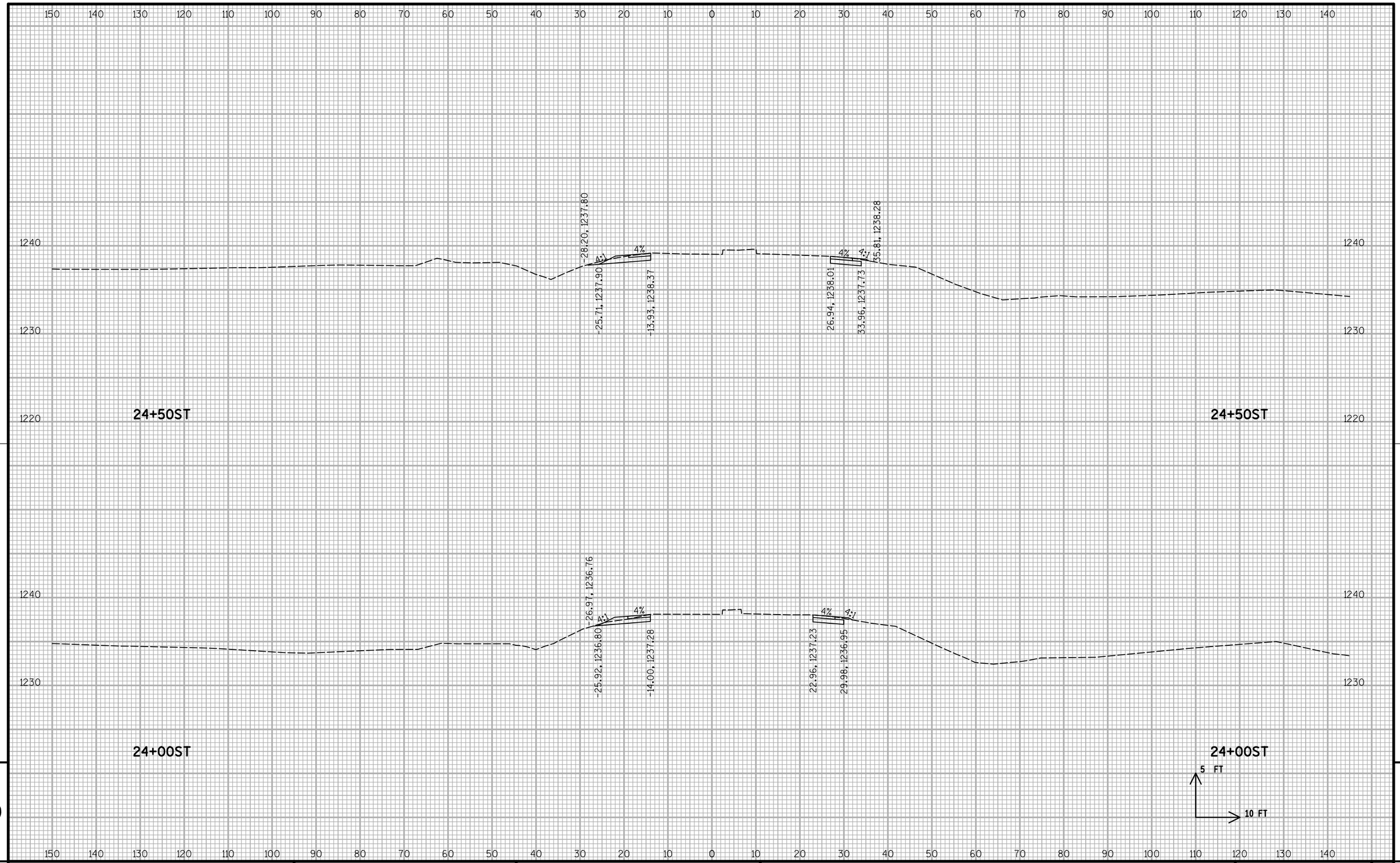

PROJECT NO: 1204-06-75	HWY: CTH E	COUNTY: DANE	CROSS SECTIONS: STH 78	SHEET PR[illegible]	E

FILE NAME : S:\MAD\1000--1099\1089\665\Micros\PLAN\090202_xs.dgn PLOT DATE : 11/26/2012 PLOT BY : _username_ PLOT NAME : PLOT SCALE : $$.....plotscale.....$$

WISDOT/CADDS SHEET 21

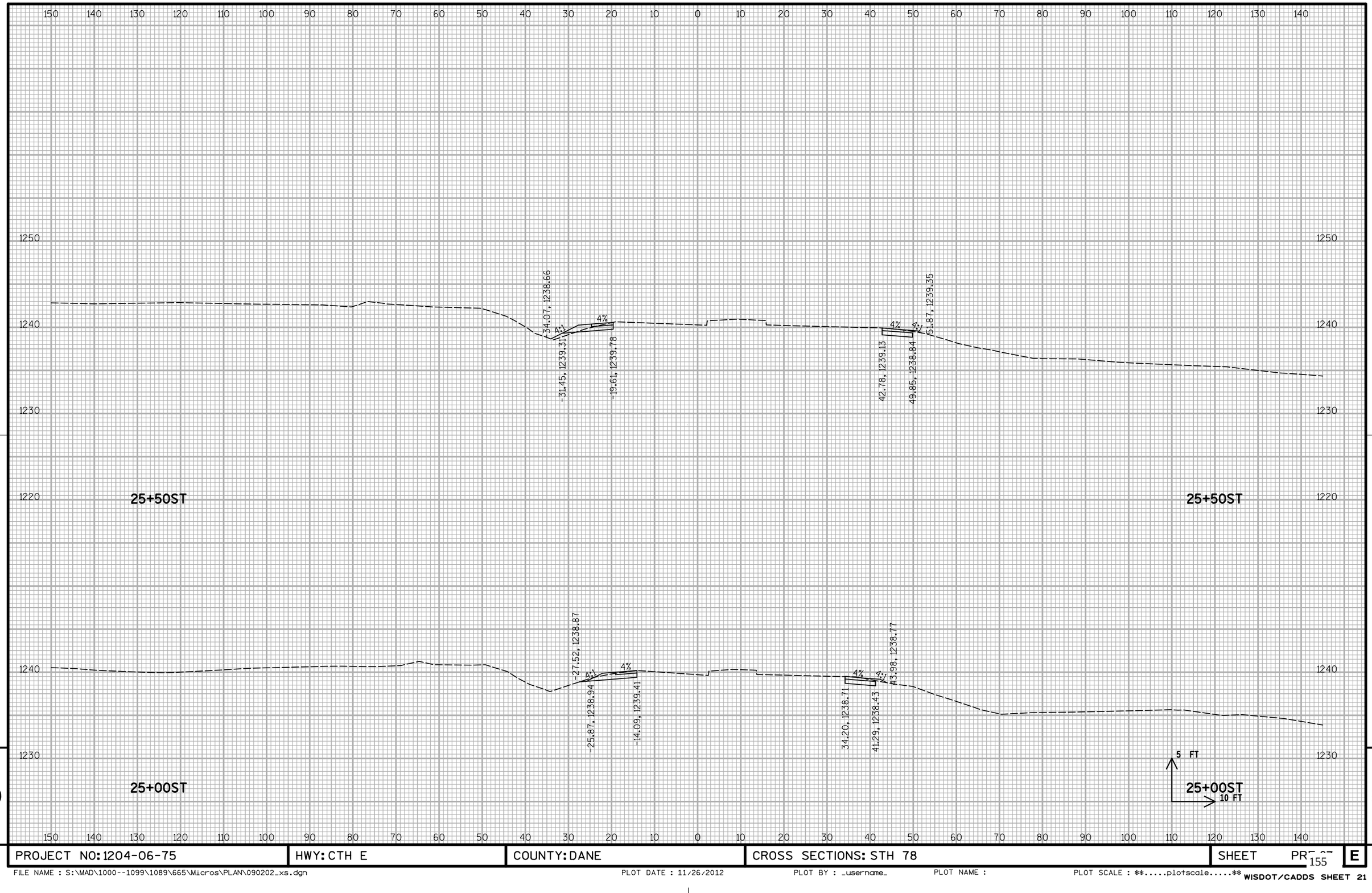

9

PROJECT NO: 1204-06-75	HWY: CTH E	COUNTY: DANE	CROSS SECTIONS: STH 78	SHEET PR...	E

FILE NAME : S:\MAD\1000--1099\1089\665\Micros\PLAN\090202_xs.dgn PLOT DATE : 11/26/2012 PLOT BY : _username_ PLOT NAME : PLOT SCALE : $$.....plotscale.....$$

WISDOT/CADDS SHEET 21

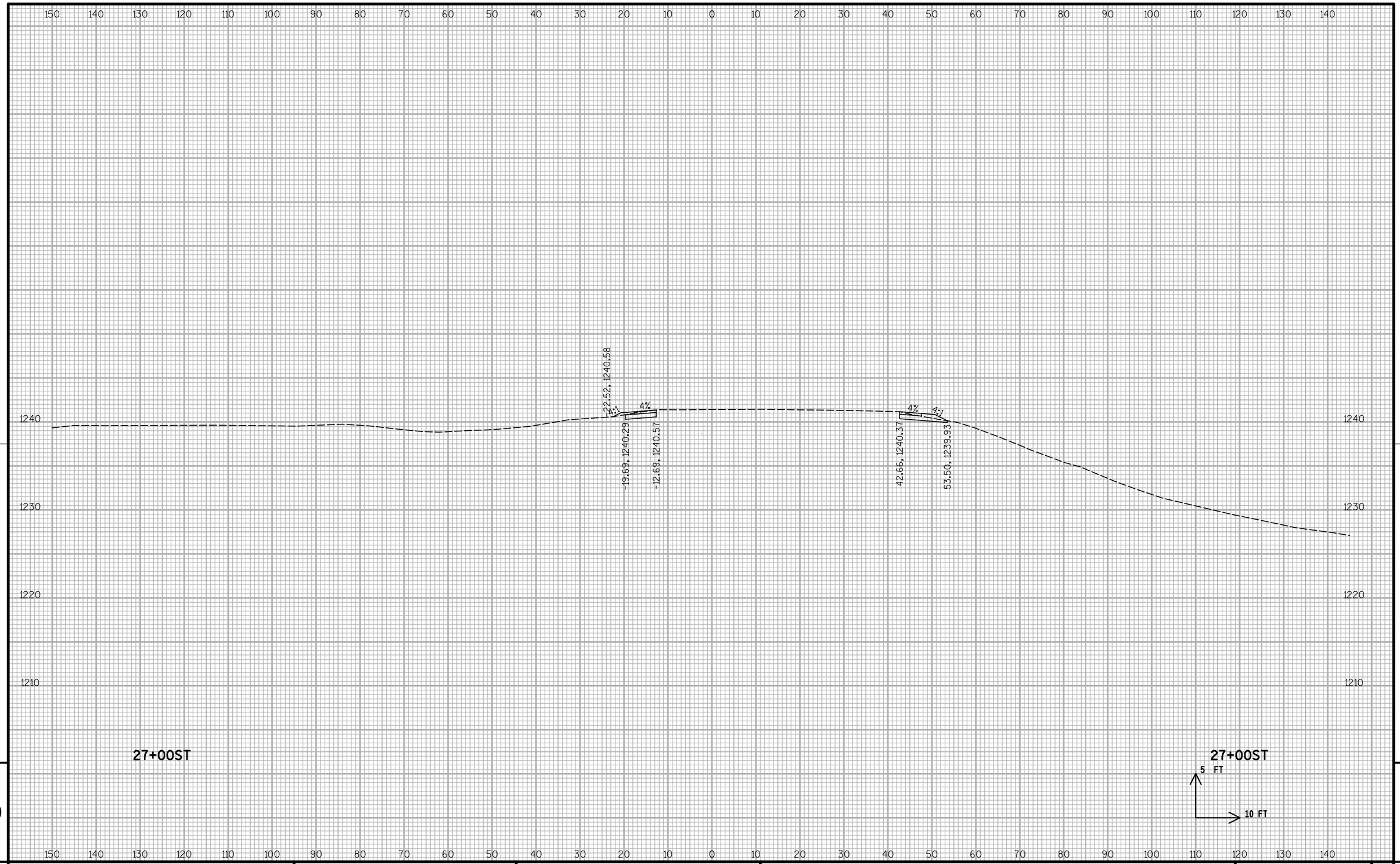

9

9

PROJECT NO: 1204-06-75	HWY: CTH E	COUNTY: DANE	CROSS SECTIONS: STH 78	SHEET PR...	E

FILE NAME : S:\MAD\1000--1099\1089\665\Micros\PLAN\090202_xs.dgn PLOT DATE : 11/26/2012 PLOT BY : _username_ PLOT NAME : PLOT SCALE : $$.....plotscale.....$$

WISDOT/CADDS SHEET 21

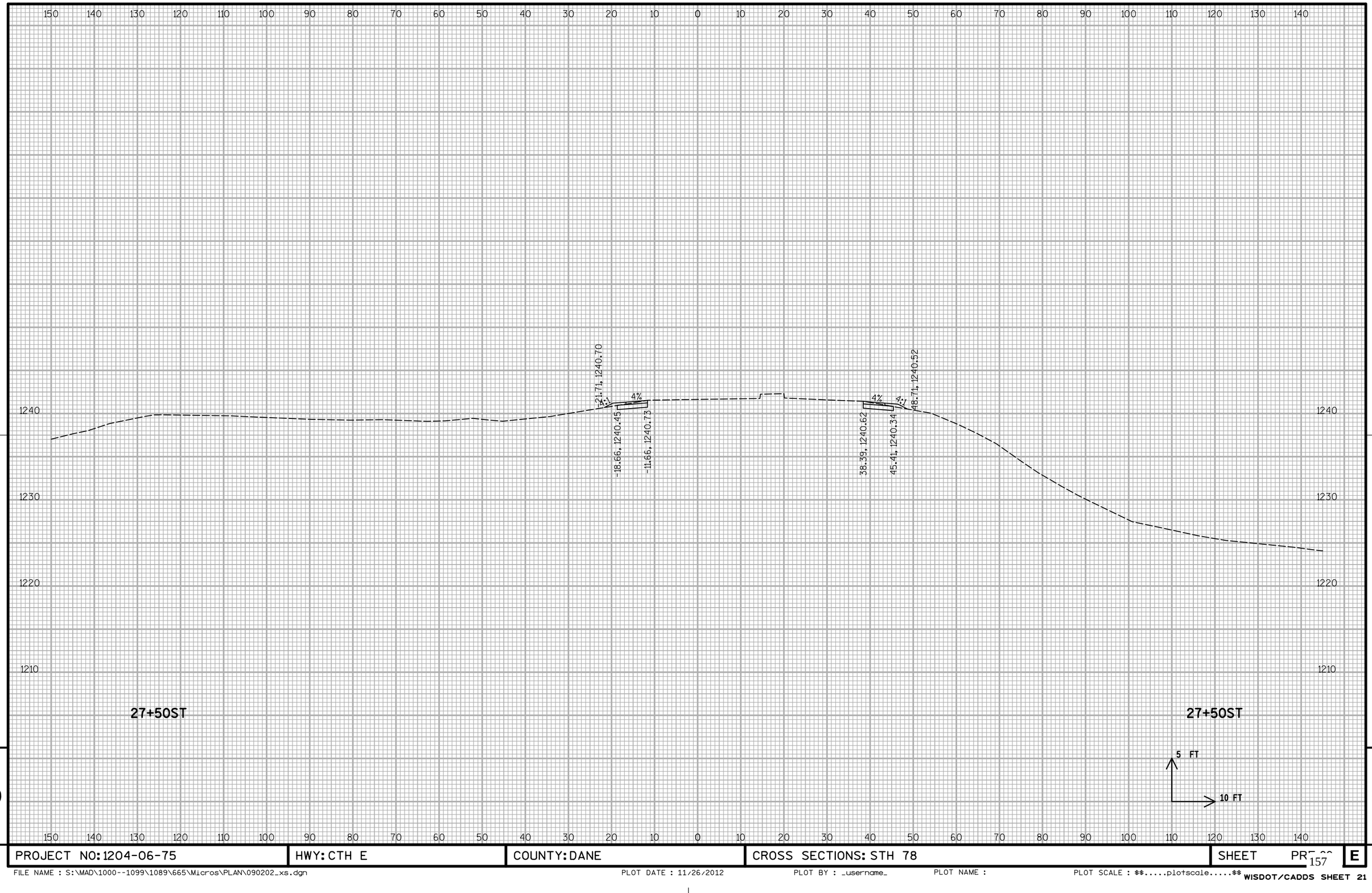

9

9

PROJECT NO: 1204-06-75	HWY: CTH E	COUNTY: DANE	CROSS SECTIONS: STH 78	SHEET PR[illegible]	E

FILE NAME : S:\MAD\1000--1099\1089\665\Micros\PLAN\090202_xs.dgn PLOT DATE : 11/26/2012 PLOT BY : _username_ PLOT NAME : PLOT SCALE : $$.....plotscale.....$$ WISDOT/CADDS SHEET 21

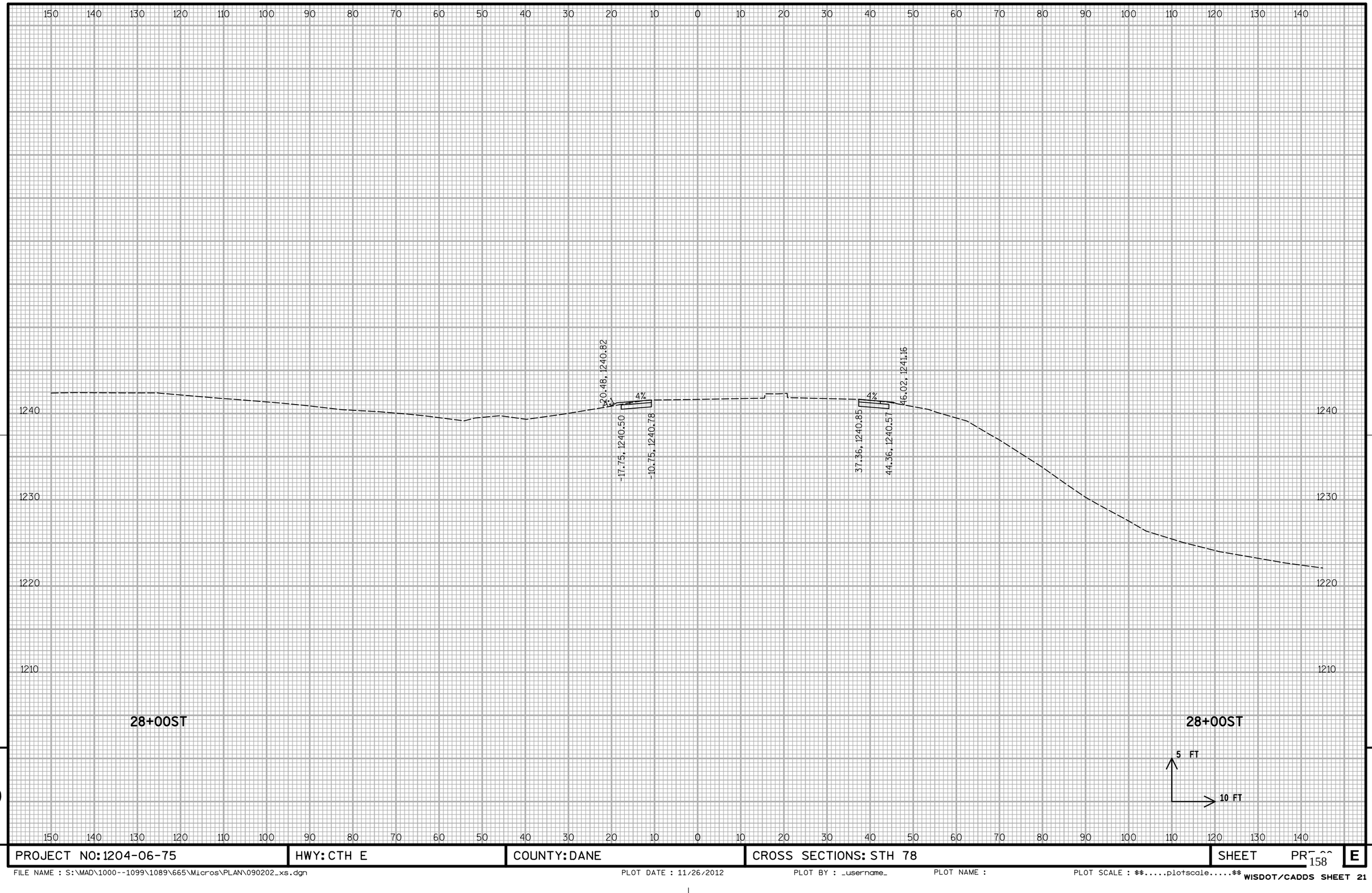

9

9

PROJECT NO: 1204-06-75	HWY: CTH E	COUNTY: DANE	CROSS SECTIONS: STH 78	SHEET PR...	E

FILE NAME : S:\MAD\1000--1099\1089\665\Micros\PLAN\090202_xs.dgn PLOT DATE : 11/26/2012 PLOT BY : _username_ PLOT NAME : PLOT SCALE : $$.....plotscale.....$$ WISDOT/CADDS SHEET 21

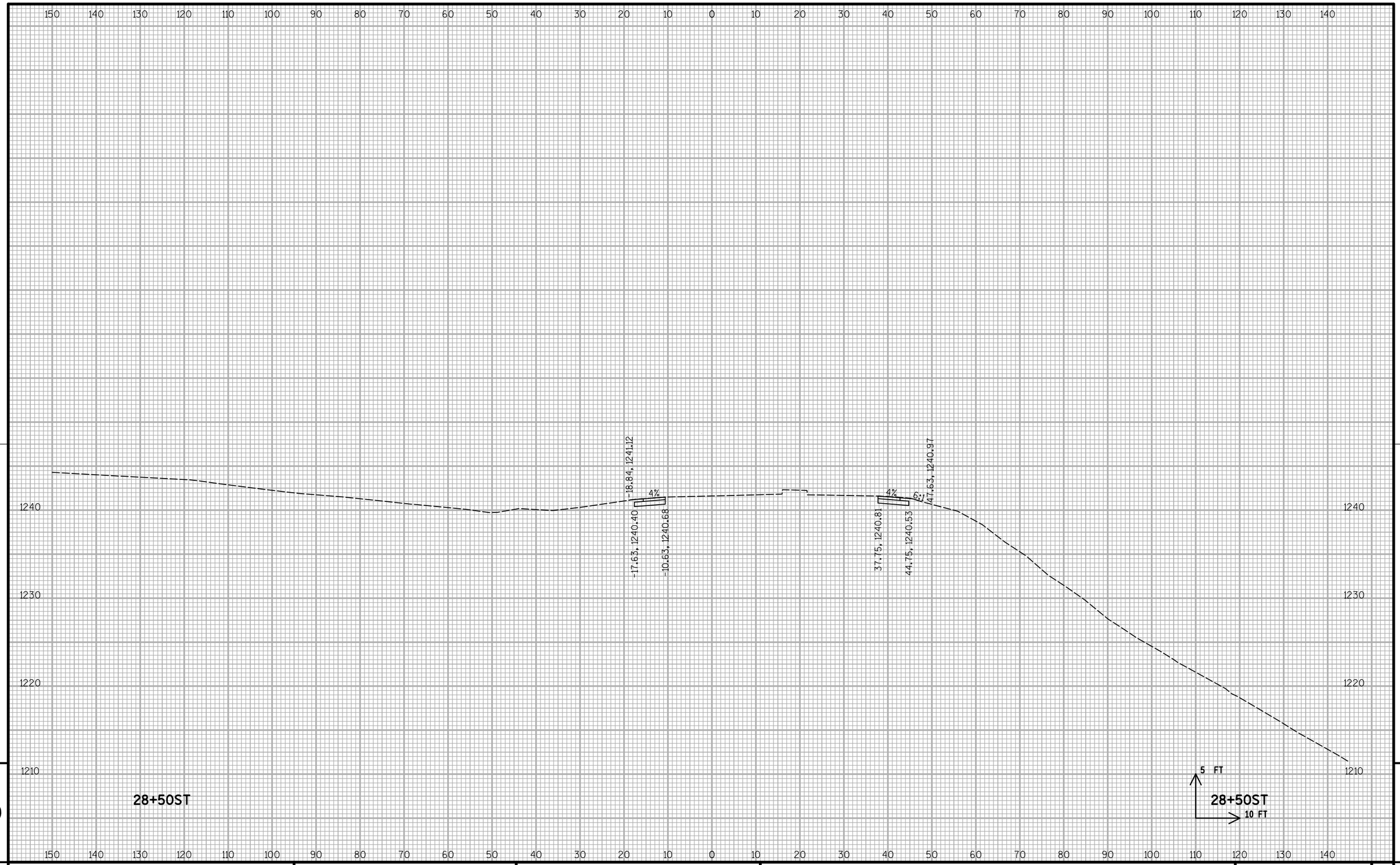

9

9

PROJECT NO: 1204-06-75	HWY: CTH E	COUNTY: DANE	CROSS SECTIONS: STH 78	SHEET PR	E

FILE NAME : S:\MAD\1000--1099\1089\665\Micros\PLAN\090202_xs.dgn PLOT DATE : 11/26/2012 PLOT BY : _username_ PLOT NAME : PLOT SCALE : $$.....plotscale.....$$ WISDOT/CADDS SHEET 21

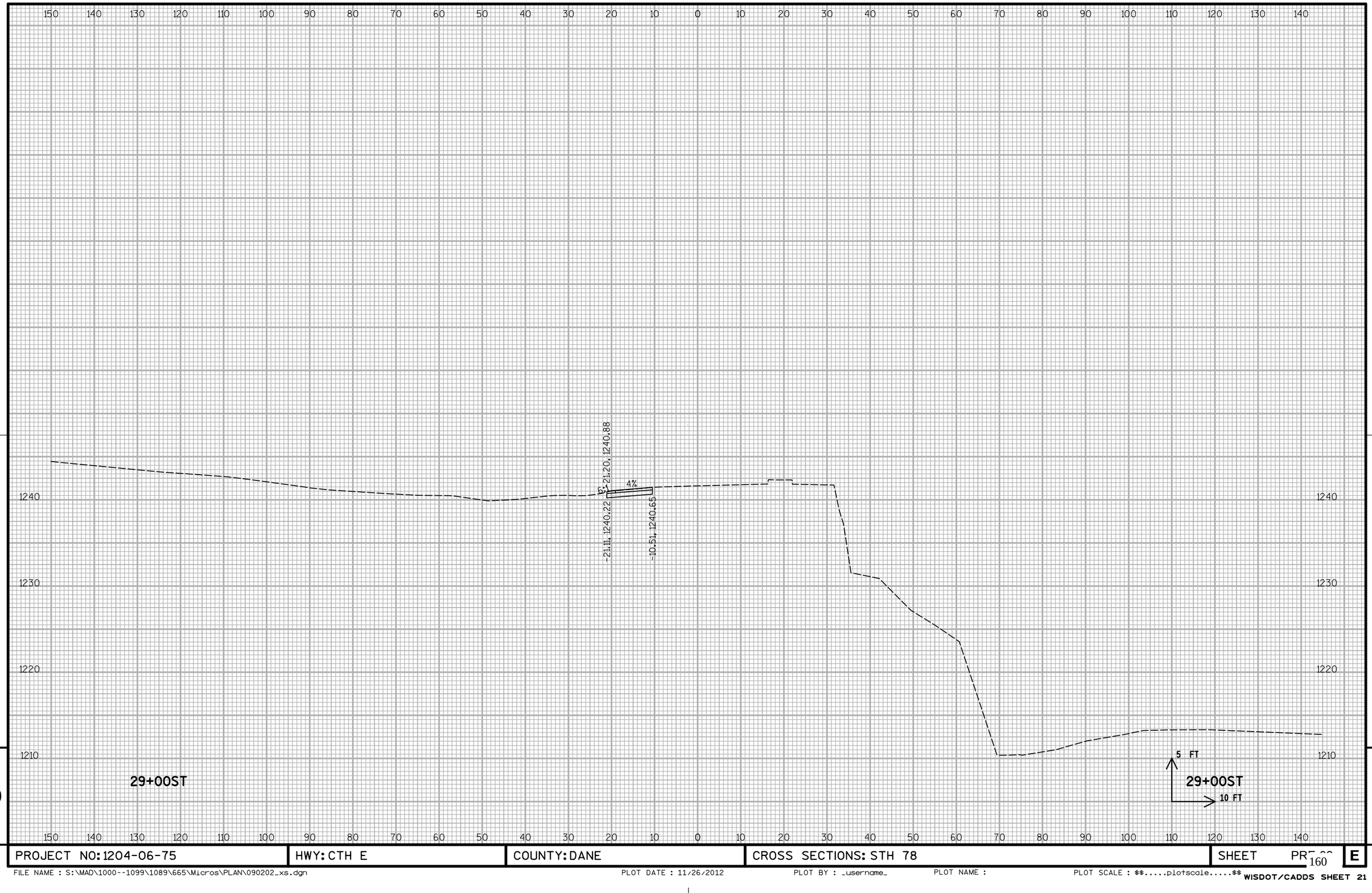

9

9

PROJECT NO: 1204-06-75	HWY: CTH E	COUNTY: DANE	CROSS SECTIONS: STH 78	SHEET PR	E

FILE NAME : S:\MAD\1000--1099\1089\665\Micros\PLAN\090202_xs.dgn PLOT DATE : 11/26/2012 PLOT BY : _username_ PLOT NAME : PLOT SCALE : $$.....plotscale.....$$

WISDOT/CADDS SHEET 21

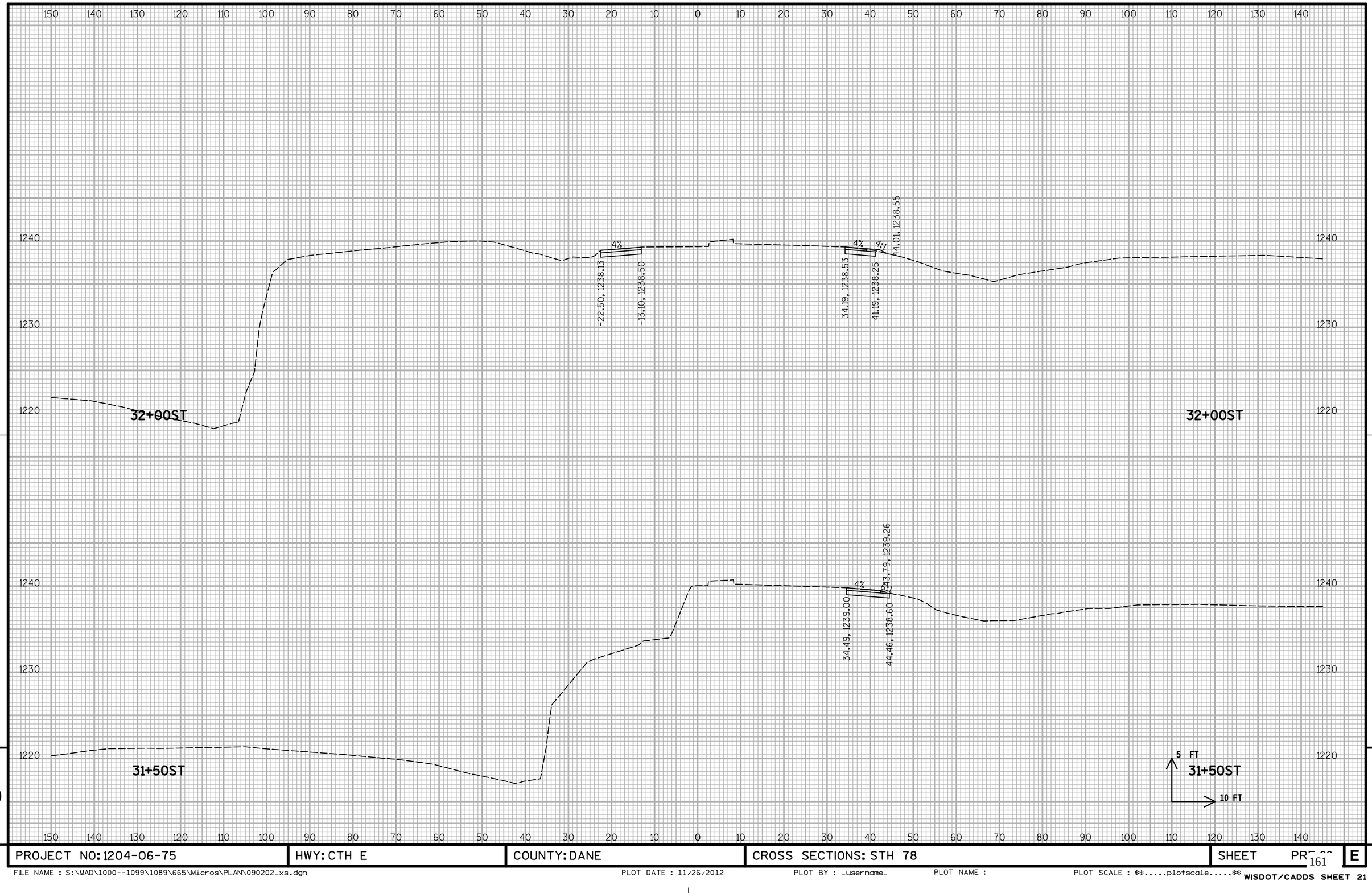

9

9

PROJECT NO: 1204-06-75	HWY: CTH E	COUNTY: DANE	CROSS SECTIONS: STH 78	SHEET PR	E

FILE NAME : S:\MAD\1000--1099\1089\665\Micros\PLAN\090202_xs.dgn PLOT DATE : 11/26/2012 PLOT BY : _username_ PLOT NAME : PLOT SCALE : $$.....plotscale.....$$

WISDOT/CADDS SHEET 21

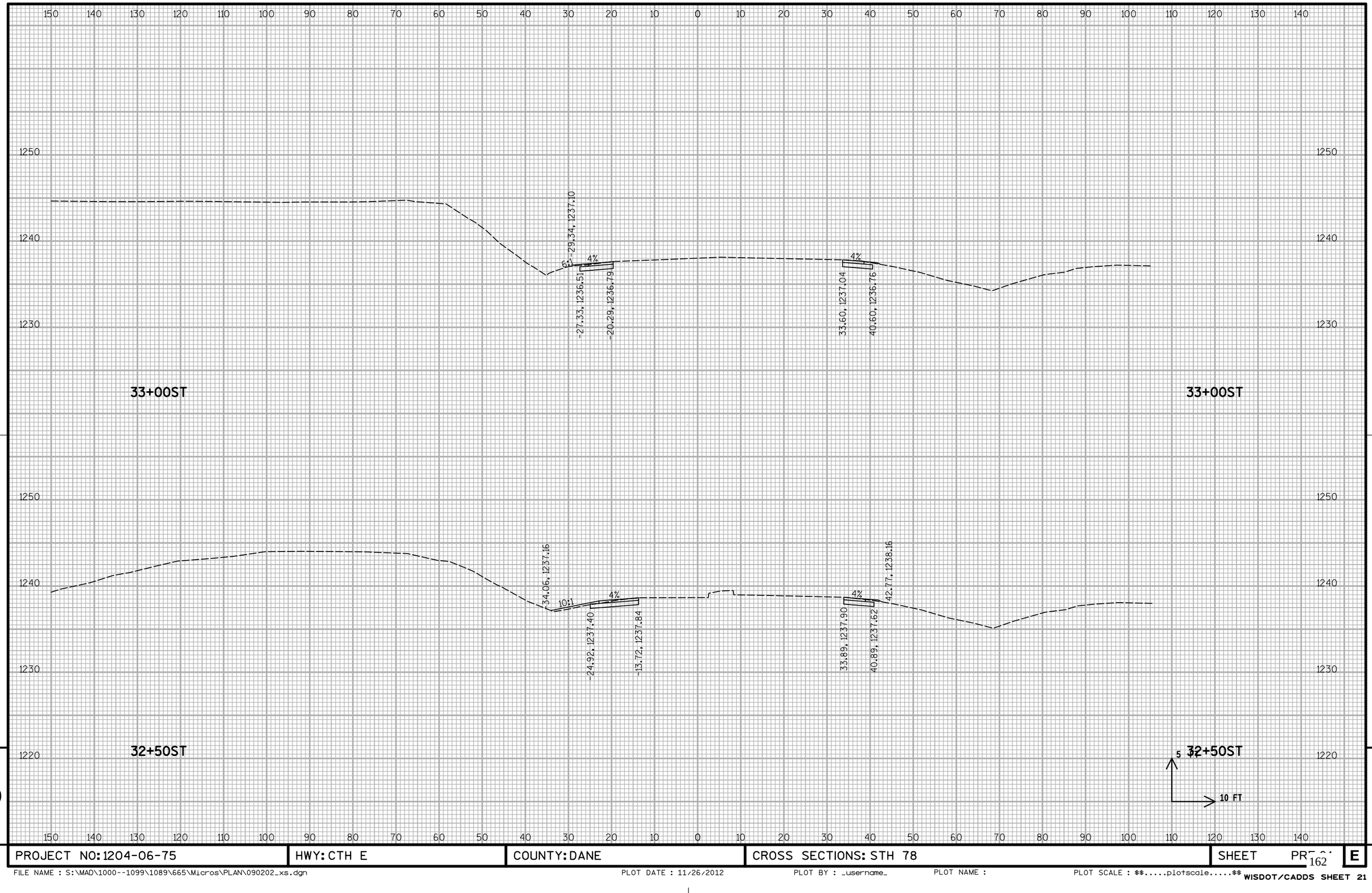

PROJECT NO: 1204-06-75	HWY: CTH E	COUNTY: DANE	CROSS SECTIONS: STH 78	SHEET PR-	E

FILE NAME : S:\MAD\1000--1099\1089\665\Micros\PLAN\090202_xs.dgn PLOT DATE : 11/26/2012 PLOT BY : _username_ PLOT NAME : PLOT SCALE : $$.....plotscale.....$$

WISDOT/CADDS SHEET 21

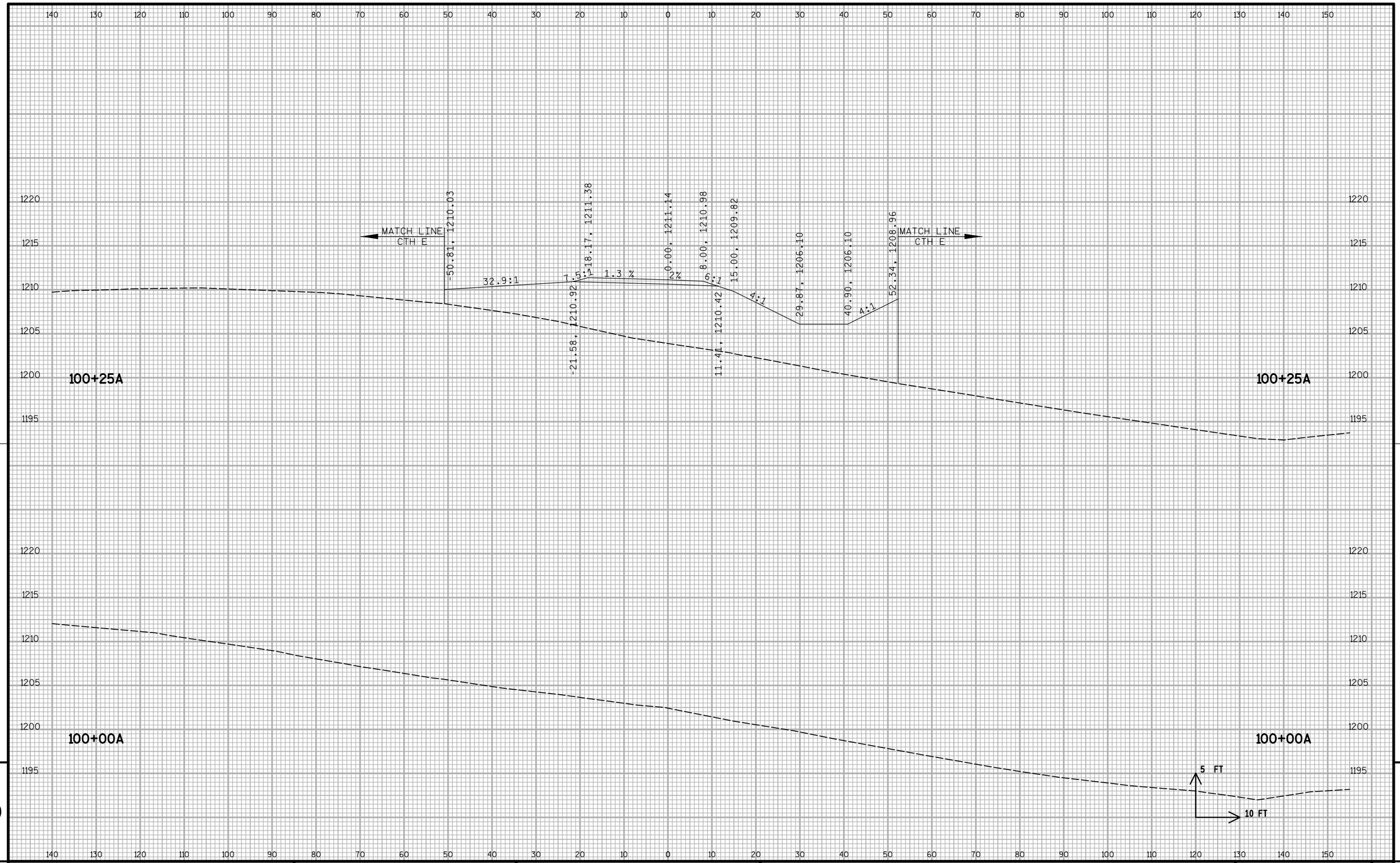

9

9

PROJECT NO: 1204-06-75	HWY: CTH E	COUNTY: DANE	CROSS SECTIONS: DRIVEWAY A	SHEET PR...	E

FILE NAME : S:\MAD\1000--1099\1089\665\Micros\PLAN\090203_xs.dgn PLOT DATE : 11/26/2012 PLOT BY : _username_ PLOT NAME : PLOT SCALE : $$.....plotscale.....$$

WISDOT/CADDS SHEET 21

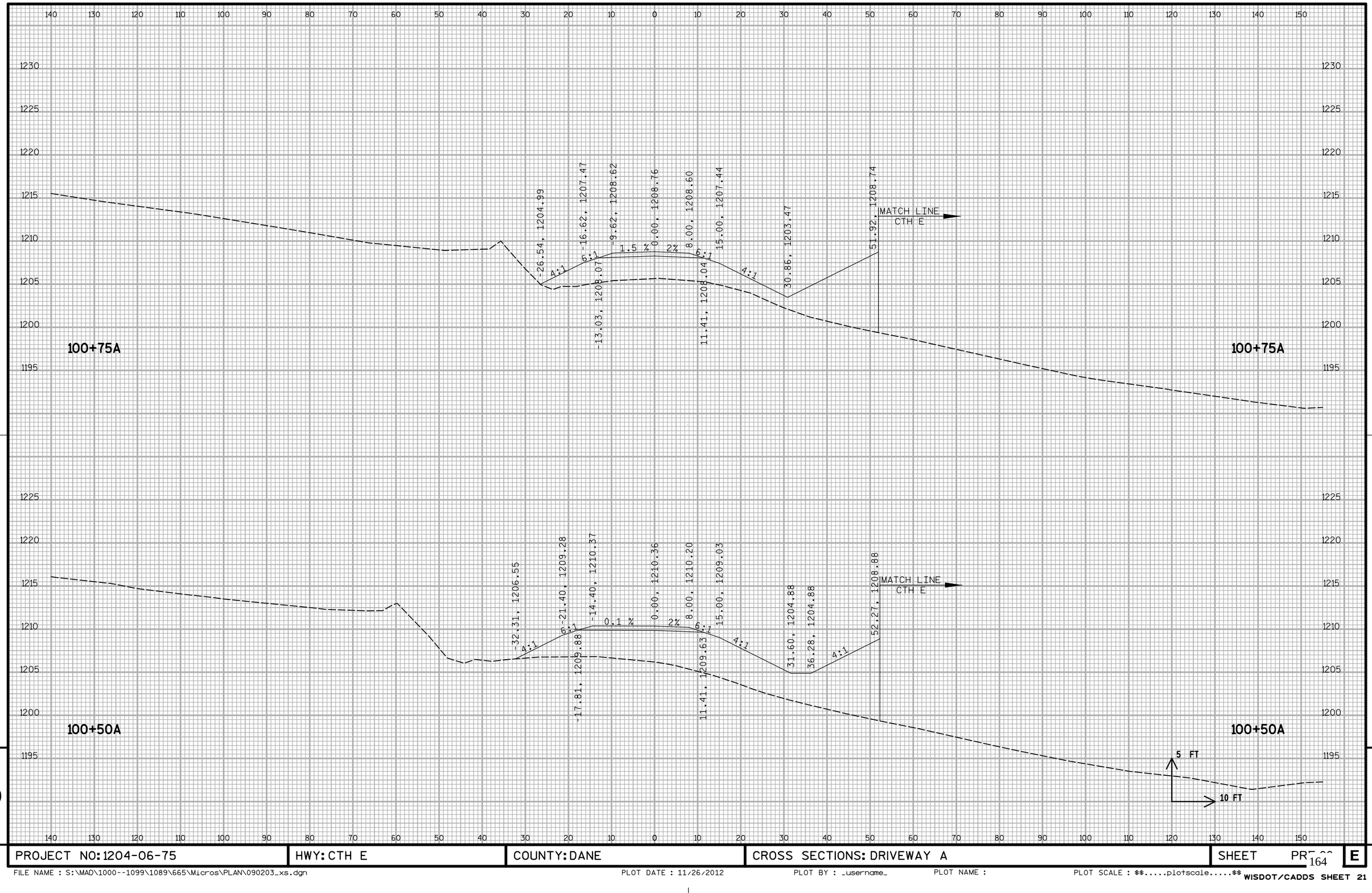

9

9

PROJECT NO: 1204-06-75	HWY: CTH E	COUNTY: DANE	CROSS SECTIONS: DRIVEWAY A	SHEET PR	E

FILE NAME : S:\MAD\1000--1099\1089\665\Micros\PLAN\090203_xs.dgn PLOT DATE : 11/26/2012 PLOT BY : _username_ PLOT NAME : PLOT SCALE : $$.....plotscale.....$$

WISDOT/CADDS SHEET 21

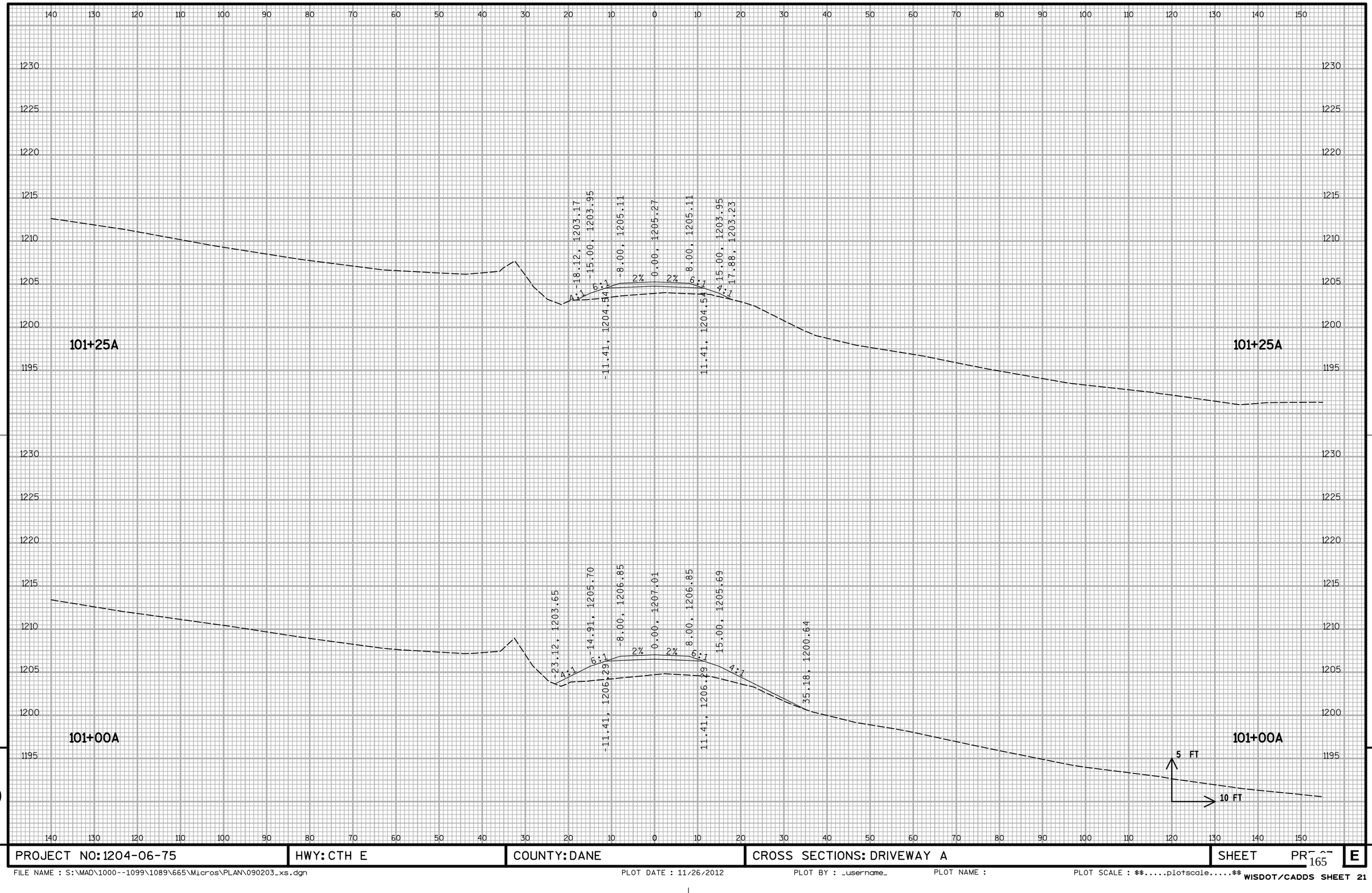

9

9

PROJECT NO: 1204-06-75	HWY: CTH E	COUNTY: DANE	CROSS SECTIONS: DRIVEWAY A	SHEET PR...	E

FILE NAME : S:\MAD\1000--1099\1089\665\Micros\PLAN\090203_xs.dgn PLOT DATE : 11/26/2012 PLOT BY : _username_ PLOT NAME : PLOT SCALE : $$.....plotscale.....$$

WISDOT/CADDS SHEET 21

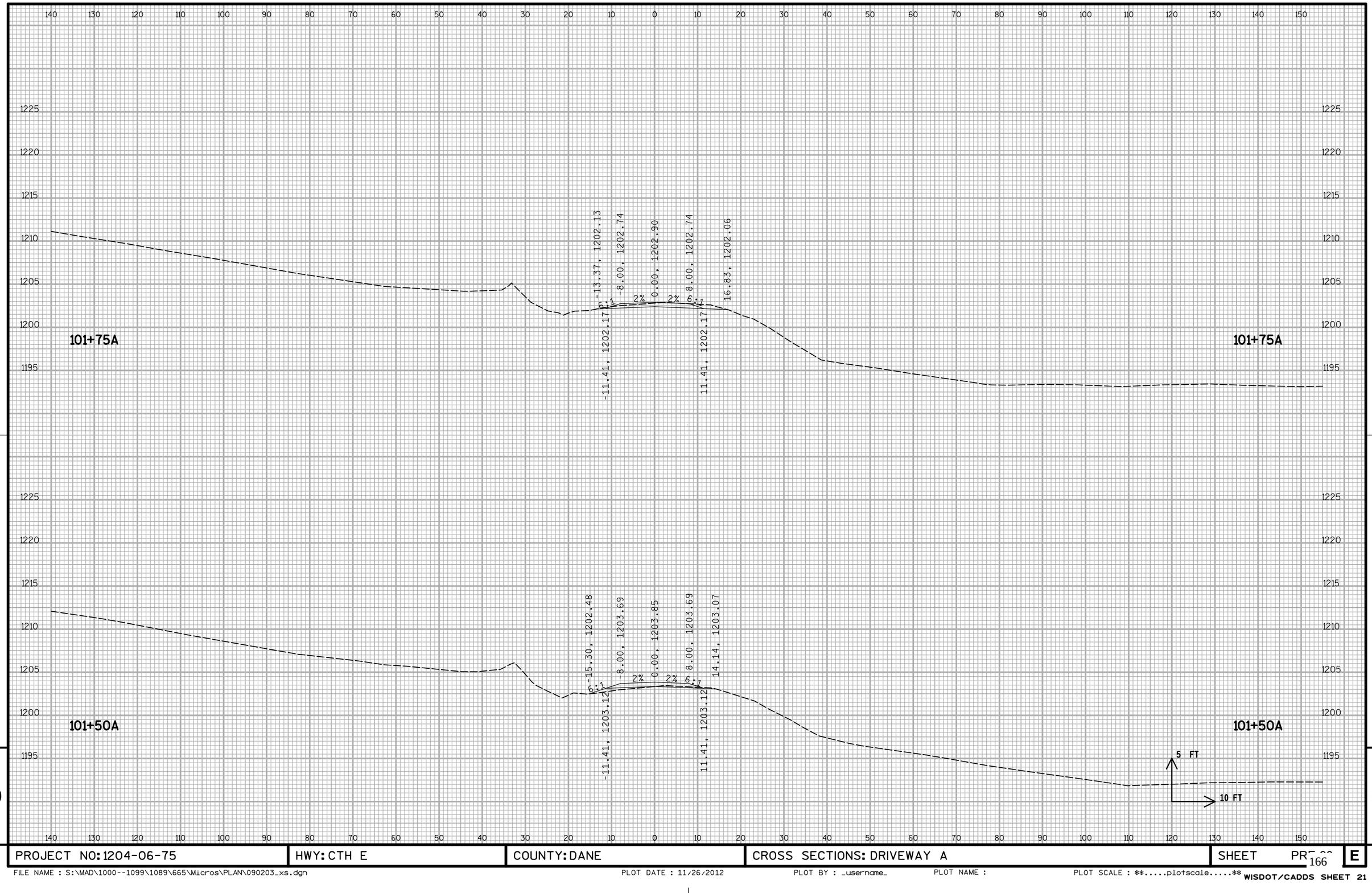

9

9

PROJECT NO: 1204-06-75	HWY: CTH E	COUNTY: DANE	CROSS SECTIONS: DRIVEWAY A	SHEET PR	E

FILE NAME : S:\MAD\1000--1099\1089\665\Micros\PLAN\090203_xs.dgn PLOT DATE : 11/26/2012 PLOT BY : _username_ PLOT NAME : PLOT SCALE : $$.....plotscale.....$$

WISDOT/CADDS SHEET 21

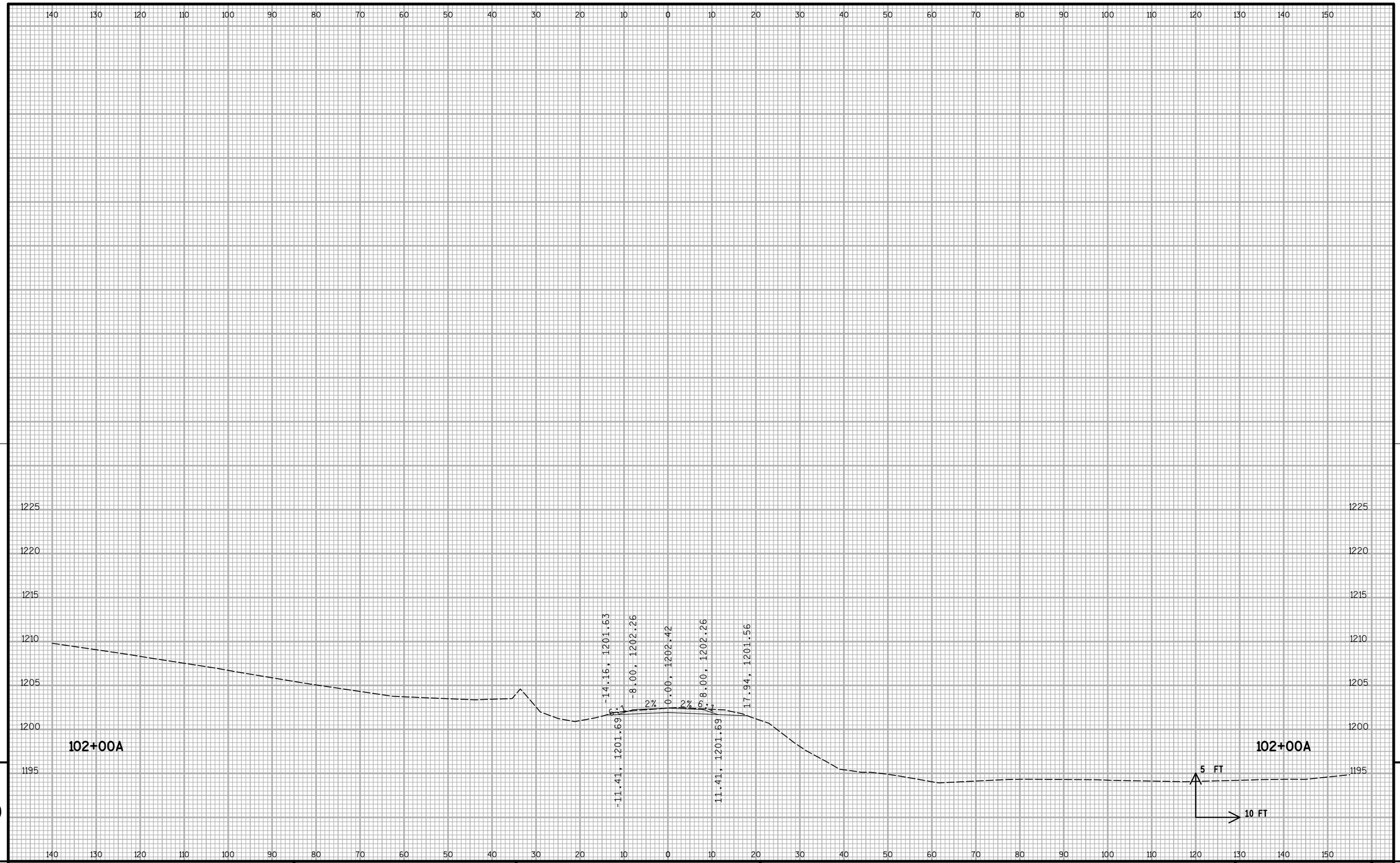

9 9

PROJECT NO: 1204-06-75	HWY: CTH E	COUNTY: DANE	CROSS SECTIONS: DRIVEWAY A	SHEET PR...	E

FILE NAME : S:\MAD\1000--1099\1089\665\Micros\PLAN\090203_xs.dgn PLOT DATE : 11/26/2012 PLOT BY : _username_ PLOT NAME : PLOT SCALE : $$.....plotscale.....$$

WISDOT/CADDS SHEET 21

Wisconsin Department of Transportation

Dedicated people creating transportation solutions
through innovation and exceptional service.

http://www.dot.wisconsin.gov