WKE

Nov 2014

PROJECT ID: 1060-38-70

WITH: NA

COUNTY: WAUKESHA

ORDER OF SHEETS

Section No.	1	Title
Section No.	2	Typical Sections and Details
Section No.	3	Estimate of Quantities
Section No.	3	Miscellaneous Quantities
~~Section No.~~	~~4~~	~~Right of Way Plat~~
Section No.	5	Plan and Profile
Section No.	6	Standard Detail Drawings
Section No.	7	Sign Plates
Section No.	8	Structure Plans
Section No.	9	Computer Earthwork Data
Section No.	9	Cross Sections

TOTAL SHEETS = 280

STATE OF WISCONSIN
DEPARTMENT OF TRANSPORTATION

PLAN OF PROPOSED IMPROVEMENT

EAST-WEST FREEWAY

DOUSMAN RD BRIDGES (B-67-79 & 80)

IH-94

WAUKESHA COUNTY

STATE PROJECT	FEDERAL PROJECT	
	PROJECT	CONTRACT
1060-38-70	WISC 2014383	1

STATE PROJECT NUMBER

1060-38-70

03

N

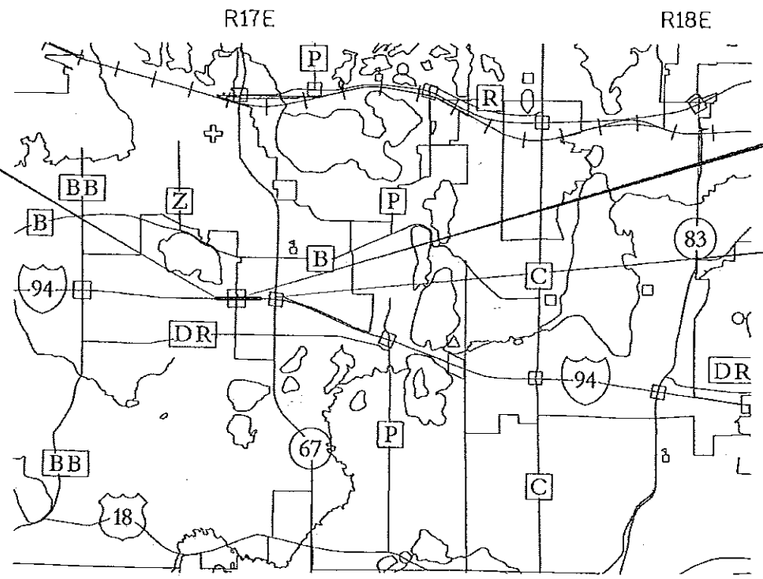

BEGIN PROJECT 1060-38-70
STA. 147+00.00
Y = 182,173.91
X = 615,228.97

STRUCTURES
B-67-339 & B-67-340

END PROJECT 1060-38-70
STA. 172+85.00

DESIGN DESIGNATION

A.A.D.T.	2015	=	43,100
A.A.D.T.	2035	=	46,500
D.H.V.		=	8.9
D.D.		=	60/40
T.		=	5.7
DESIGN SPEED		=	70
ESALS		=	18,242,700

CONVENTIONAL SYMBOLS

PLAN

- CORPORATE LIMITS
- PROPERTY LINE
- LOT LINE
- LIMITED HIGHWAY EASEMENT
- EXISTING RIGHT OF WAY
- PROPOSED OR NEW R/W LINE
- SLOPE INTERCEPT
- REFERENCE LINE
- EXISTING CULVERT
- PROPOSED CULVERT (Box or Pipe)
- COMBUSTIBLE FLUIDS (CAUTION)
- MARSH AREA
- WOODED OR SHRUB AREA

PROFILE

- GRADE LINE
- ORIGINAL GROUND
- MARSH OR ROCK PROFILE (To be noted as such) (ROCK)
- SPECIAL DITCH (LABEL)
- GRADE ELEVATION (35.35)
- CULVERT (Profile View)

UTILITIES

- ELECTRIC (E)
- FIBER OPTIC (FO)
- GAS (G)
- SANITARY SEWER (SAN)
- STORM SEWER (SS)
- TELEPHONE (T)
- WATER (W)
- UTILITY PEDESTAL
- POWER POLE
- TELEPHONE POLE

LAYOUT
SCALE 0 1 MI.

TOTAL NET LENGTH OF CENTERLINE = 0.490 MI.

COORDINATES ON THIS PLAN ARE REFERENCED TO THE WISCONSIN COUNTY COORDINATE SYSTEM (WCCS), WAUKESHA COUNTY, NAD 83 (1991).
ELEVATIONS IN THIS PLAN ARE REFERENCED TO NGVD 29.

ORIGINAL PLANS PREPARED BY

benesch
engineers · scientists · planners
Alfred Benesch & Company
1300 West Canal Street, Suite 150
Milwaukee, Wisconsin 53233
414-308-1310, FAX No. 20103.00

WISCONSIN
AMANDA E. ZACHARIAS
E-35716
MILWAUKEE, WI
PROFESSIONAL ENGINEER

7-17-14 (Date)

(Signature)

STATE OF WISCONSIN
DEPARTMENT OF TRANSPORTATION

PREPARED BY

Surveyor	ALFRED BENESCH & CO
Designer	ALFRED BENESCH & CO
Project Manager	DAVID PITTMAN
Regional Examiner	
Regional Supervisor	
C.O. Examiner	

APPROVED FOR THE DEPARTMENT

DATE: 7/21/14 (Signature)

E

UTILITY CONTACTS

WE ENERGIES (GAS & ELECTRIC)
333 W. Everett St - A299
Milwaukee, WI 53203
Mr. Latroy Brumfield
414-221-5617
latroy.brumfield@we-energies.com

OCONOMOWOC UTILITIES (WASTEWATER)
900 S Worthington Street
Oconomowoc, WI 53066
Mr. Tom Steinbach
262-569-2192
tsteinbach@oconomowoc-wi.gov

AT&T WISCONSIN.
2005 Pewaukee Road
Waukesha, WI 53188
Mr. Alper Kolcu
262-970-8494
alper.kolcu@att.com

WINDSTREAM / KDL
13935 Bishops Drive
Brookfield, WI 53005
Mr. Jim Kostuch
262-792-7938
james.kostuch@windstream.com

AT&T LEGACY.
P.O. Box 244
Lake Mills, WI 53551
Mr. William Koenig
608-628-0575
smc140@frontier.com

WisDOT STOC
433 W St. Paul Ave., STE 300
Milwaukee, WI 53203-3007
Mr. Jeff Madson
414-225-3723
jeffrey.madson@dot.wi.gov

OCONOMOWOC UTILITIES (WATER)
900 S Worthington Street
Oconomowoc, WI 53066
Mr. Scott Osborn
262-569-6421
sosborn@oconomowoc-wi.gov

OTHER AGENCIES

CITY OF OCONOMOWOC
DPW
174 E. Wisconsin Ave.
Oconomowoc, WI 53066
Mr. Mark Frye
262-569-2184
mfrye@oconomowoc-wi.gov

DNR
DNR Satellite Center
141 NW Barstow Room 180
Waukesha WI 53188
Mr. Craig Webster
262-574-2100

WisDOT
Southeast Region
141 NW Barstow Street
PO Box 798
Waukesha, WI 53187
Mr. David Pittman
262-548-6439
david.pittman@dot.wi.gov

VILLAGE OF SUMMIT
DPW
2911 N Dousman Rd,
Oconomowoc, WI 53066
Mr. Bill Miller
262-567-2757

DESIGN
Alfred Benesch & Company
1300 West Canal Street
Suite 150
Milwaukee, WI 53233
Ms. Amanda Zacharias
414-308-1320
azacharias@benesch.com

SEWRPC
W239 N1812 Rockwood Drive
PO Box 1607
Waukesha, WI 53187
Mr. John Washburn
262-547-6721
sewrpc@sewrpc.org

PAVEMENT LOCATION	TOTAL PAVEMENT THICKNESS	LAYER	TYPE	NOMINAL MAXIMUM SIZE GRADATION	ASPHALTIC MATERIAL
IH-94	1.75”	1.75” UPPER	SMA	12.5 MM	-
	1.75” – 4”	1.75” UPPER	SMA	12.5 MM	-
		0 – 2.25” LEVELING	E-30	12.5 MM	PG 64-22
	4” – 6.25”	1.75” UPPER	SMA	12.5 MM	-
		2.25” LOWER	E-30	19.0 MM	PG 64-22
		0 – 2.25” LEVELING	E-30	12.5 MM	PG 64-22
IH-94 SHOULDERS*	3.75”	1.75” UPPER	E-3	12.5 MM	PG 64-22
		2” LOWER	E-3	12.5 MM	PG 64-22
	5”	1.75” UPPER	E-3	12.5 MM	PG 64-22
		3.25” LOWER	E-3	19.0 MM	PG 64-22
DOUSMAN RD	5”	2” UPPER	E-0.3	12.5 MM	PG 58-28
		3” LOWER	E-0.3	19.0 MM	PG 58-28

* SHOULDERS CONSTRUCTED IN STAGE 1, USED FOR TEMPORARY TRAFFIC, AND REMAINING IN PLACE WILL BE 5” ASPHALTIC SURFACE TEMPORARY.

GENERAL NOTES

1. NO TREES OR SHRUBS ARE TO BE REMOVED WITHOUT THE APPROVAL OF THE ENGINEER.
2. EXCAVATION BELOW SUBGRADE (EBS) IS NOT USED TO BALANCE YARDAGE AND IS NOT SHOWN ON THE CROSS SECTIONS, BUT IS MEASURED AND PAID FOR AS COMMON EXCAVATION.
3. THE WISCONSIN DEPARTMENT OF TRANSPORTATION WILL FURNISH THE CONTRACTOR A MONUMENT WHICH SHALL BE SET IN THE STRUCTURES AS DESIGNATED BY THE ENGINEER IN THE FIELD.
4. DISTURBED AREAS WITHIN THE RIGHT-OF-WAY, EXCEPT THE AREAS WITHIN THE FINISHED SHOULDER POINTS, SHALL BE FERTILIZED, SEEDED AND MULCHED.
5. THE LOCATIONS OF EXISTING AND PROPOSED UTILITY INSTALLATIONS AS SHOWN ON THE PLANS ARE APPROXIMATE. THERE MAY BE OTHER UTILITY INSTALLATIONS WITHIN THE PROJECT AREA THAT ARE NOT SHOWN.
6. MAINLINE STAGE 1 AND 3 CROSS SECTIONS ARE REFERENCED FROM RL EB I-94.

EROSION CONTROL GENERAL NOTES

1. RE-TOPSOIL OF GRADED AREAS, AS DESIGNATED BY THE ENGINEER, IMMEDIATELY AFTER GRADING IS COMPLETED WITHIN THOSE AREAS. SEED, FERTILIZE, AND MULCH/EROSION MAT TOP-SOILED AREAS, AS DESIGNATED BY THE ENGINEER, WITHIN FIVE (5) CALENDAR DAYS AFTER PLACEMENT OF TOPSOIL. IF GRADED AREAS ARE LEFT EXPOSED FOR MORE THAN (14) CALENDAR DAYS, SEED THOSE AREAS WITH TEMPORARY SEED.
2. STOCKPILE EXCESS MATERIAL OR SPOILS ON UPLAND AREAS AWAY FROM WETLANDS, FLOODPLAINS AND WATERWAYS. STOCKPILED SOIL SHALL BE PROTECTED AGAINST EROSION. IF STOCKPILED MATERIAL IS LEFT FOR MORE THAN FOURTEEN (14) CALENDAR DAYS, SEED THE STOCKPILE WITH TEMPORARY SEED.
3. EROSION CONTROL BMP’S ARE AT SUGGESTED LOCATIONS. THE ACTUAL LOCATIONS WILL BE DETERMINED BY THE CONTRACTORS ECIP AND BY THE ENGINEER. EROSION CONTROL BMP’S SHALL BE MAINTAINED UNTIL PERMANENT VEGETATION IS ESTABLISHED OR UNTIL THE ENGINEER DETERMINES THAT THE BMP IS NO LONGER REQUIRED.
4. EXISTING WETLANDS NOT DESIGNATED FOR IMPACTS SHALL BE PROTECTED USING SAFETY FENCE. SAFETY FENCE TO BE INSTALLED PRIOR TO START OPERATION OF HEAVY EQUIPMENT IN THE VICINITY OF THE WETLANDS. LOCATION OF SAFETY FENCE TO BE STAKED AND APPROVED BY THE ENGINEER BEFORE INSTALLATION.

ORDER OF SECTION 2 SHEETS

PROJECT OVERVIEW
TYPICAL SECTIONS
CONSTRUCTION DETAILS
REMOVAL PLAN
PAVING DETAILS
PAVING GRADE DETAILS
EROSION CONTROL
PERMANENT SIGNING PLAN
PERMANENT PAVEMENT MARKING
TRAFFIC CONTROL AND CONSTRUCTION STAGING
DETOUR PLAN
ALIGNMENT PLAN

DIGGERS HOTLINE
Dial 811 or (800) 242-8511
www.DiggersHotline.com

2

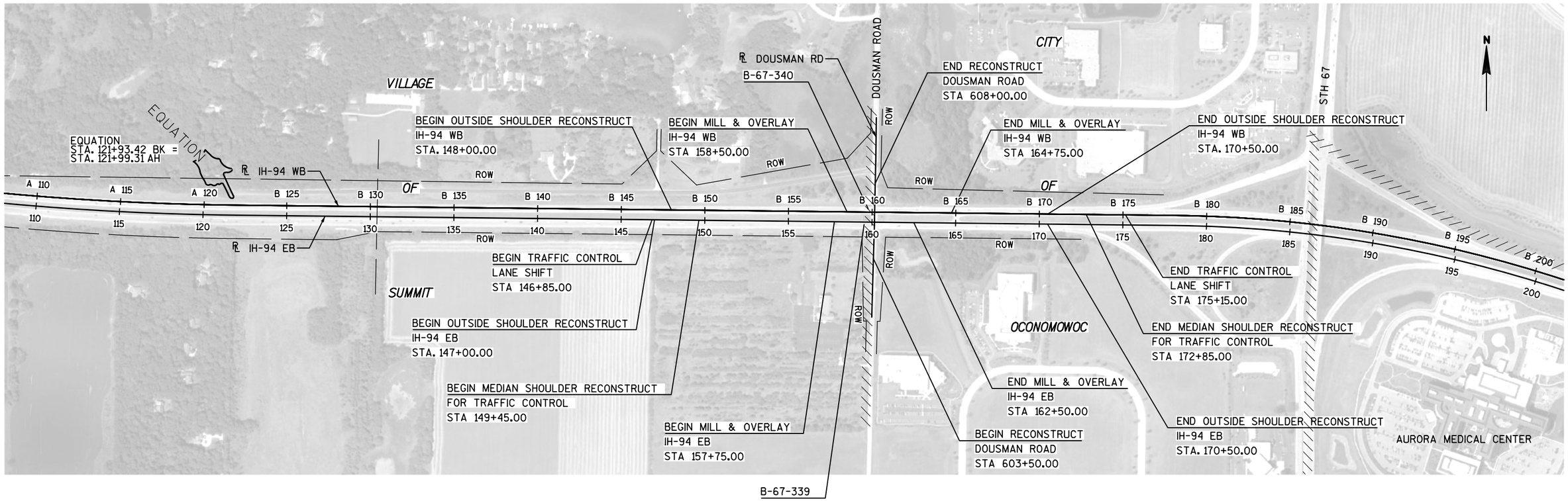

PROJECT NO: 1060-38-70	HWY: IH-94	COUNTY: WAUKESHA	PROJECT OVERVIEW	SHEET 3	E

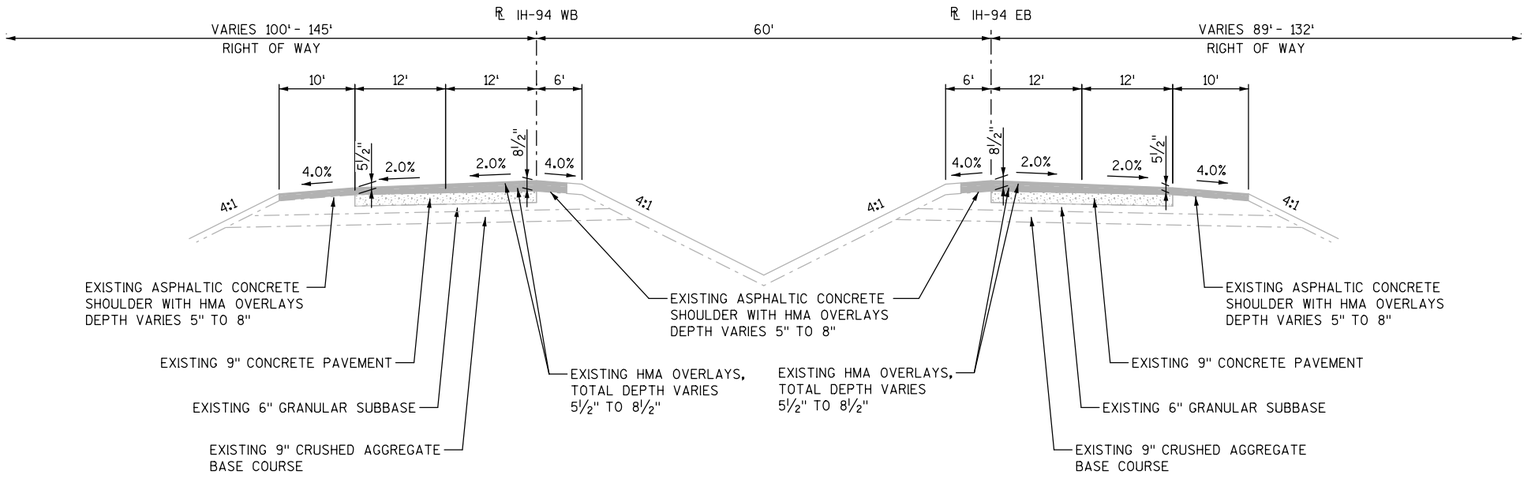

TYPICAL IH-94 EXISTING SECTION

STA 147+00 TO 170+75 EB IH-94

STA 148+00 TO 173+36 WB IH-94

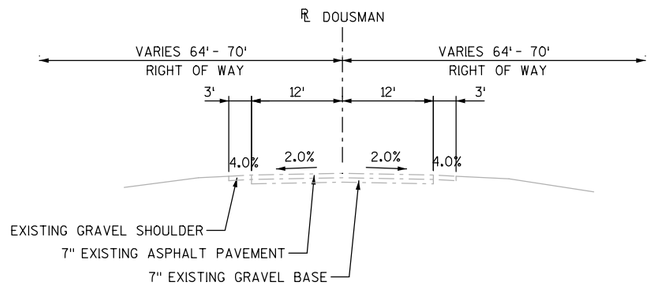

TYPICAL DOUSMAN RD EXISTING SECTION

STA 603+50 TO 608+00

PROJECT NO: 1060-38-70	HWY: IH-94	COUNTY: WAUKESHA	EXISTING TYPICAL SECTIONS	SHEET 4	E

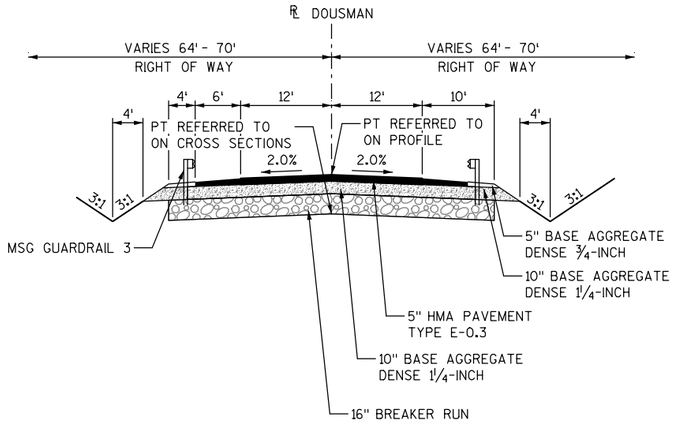

TYPICAL FINISHED SECTION DOUSMAN ROAD

STA 603+95 TO 604+85 DOUSMAN RD
STA 607+10 TO 608+00 DOUSMAN RD

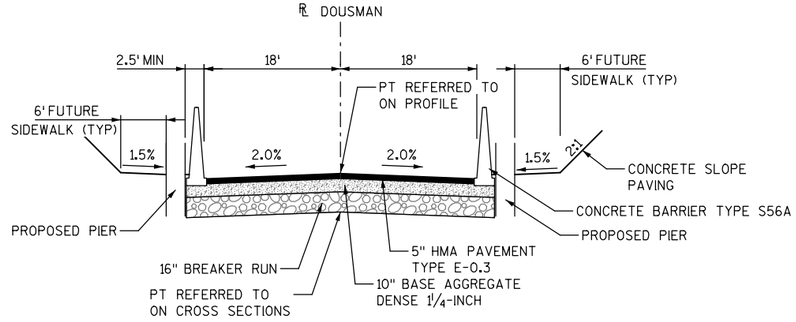

TYPICAL FINISHED SECTION DOUSMAN ROAD

STA 604+85 TO 607+10 DOUSMAN RD

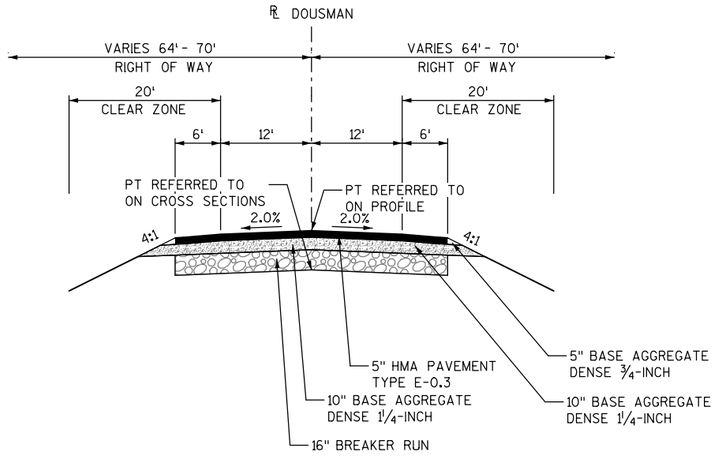

TYPICAL FINISHED SECTION DOUSMAN ROAD

STA 603+50 TO 603+95 DOUSMAN RD

PROJECT NO: 1060-38-70	HWY: IH-94	COUNTY: WAUKESHA	PROPOSED TYPICAL SECTIONS DOUSMAN ROAD	SHEET 5	E

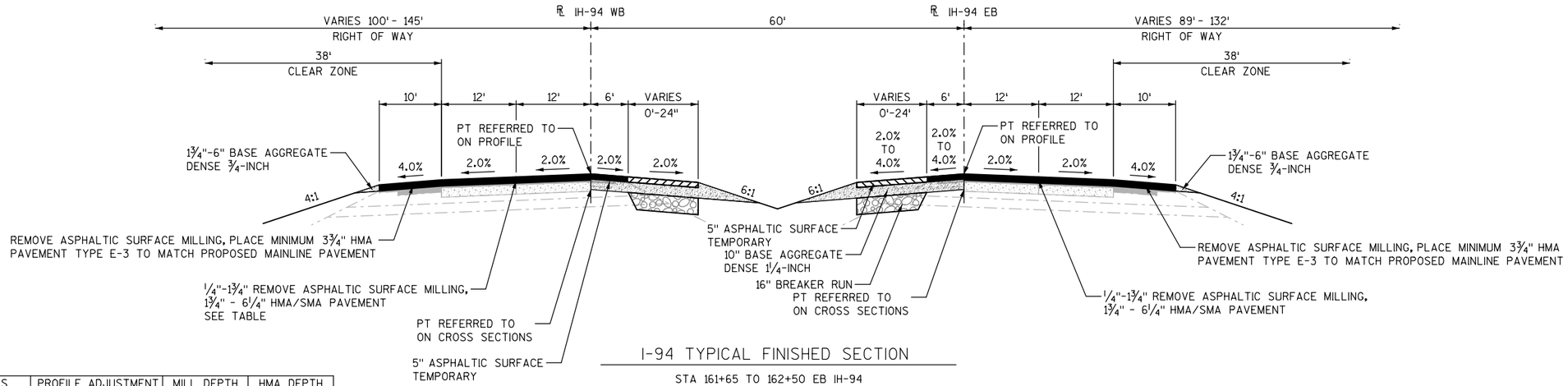

I-94 TYPICAL FINISHED SECTION

STA 161+65 TO 162+50 EB IH-94
STA 161+65 TO 164+75 WB IH-94

LOCATION	STATION LIMITS	PROFILE ADJUSTMENT	MILL DEPTH	HMA DEPTH
IH-94 EB	157+75 TO 158+90	0 TO 1½"	1¾" TO ¼"	1¾"
IH-94 EB	158+90 TO 159+36	1½" TO 2½"	¼"	1¾" TO 2¾"
IH-94 EB	160+93 TO 161+35	2¼" TO 1½"	¼"	2½" TO 1¾"
IH-94 EB	161+35 TO 162+50	1½" TO 0	¼" TO 1¾"	1¾"
IH-94 WB	158+50 TO 159+00	0 TO 1½"	1¾" TO ¼"	1¾"
IH-94 WB	159+00 TO 159+36	1½" TO 2¾"	¼"	1¾" TO 3"
IH-94 WB	160+93 TO 163+25	6" TO 3¾"	¼"	6¼" TO 4"
IH-94 WB	163+25 TO 163+95	3¾" TO 1½"	¼"	4" TO 1¾"
IH-94 WB	163+95 TO 164+75	1½" TO 0	¼" TO 1¾"	1¾"

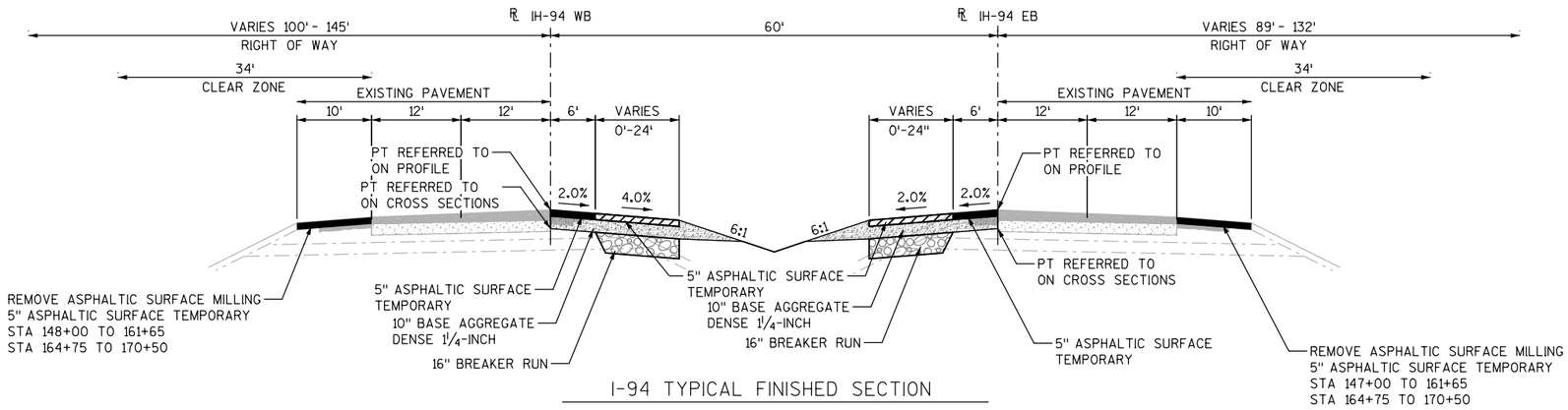

I-94 TYPICAL FINISHED SECTION

STA 149+45 TO 157+75 EB IH-94
STA 149+89 TO 158+50 WB IH-94
STA 162+50 TO 170+75 EB IH-94
STA 164+75 TO 173+36 WB IH-94

TRAFFIC CONTROL WIDENING. SAWCUT AND REMOVE AS FINAL PLAN DETAILS AND FINAL CROSS SECTIONS INDICATE

PROJECT NO: 1060-38-70	HWY: IH-94	COUNTY: WAUKESHA	PROPOSED TYPICAL SECTIONS IH-94 (AT DOUSMAN ROAD)	SHEET 6	E

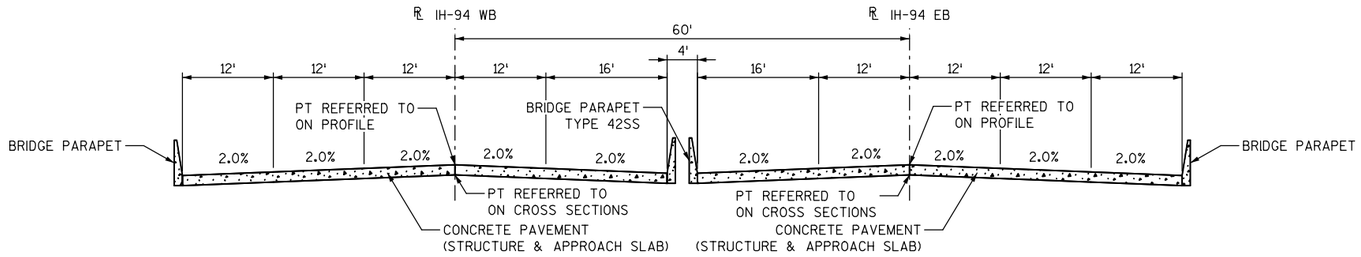

I-94 TYPICAL FINISHED SECTION

STA 159+36 TO 160+93 EB/WB IH-94

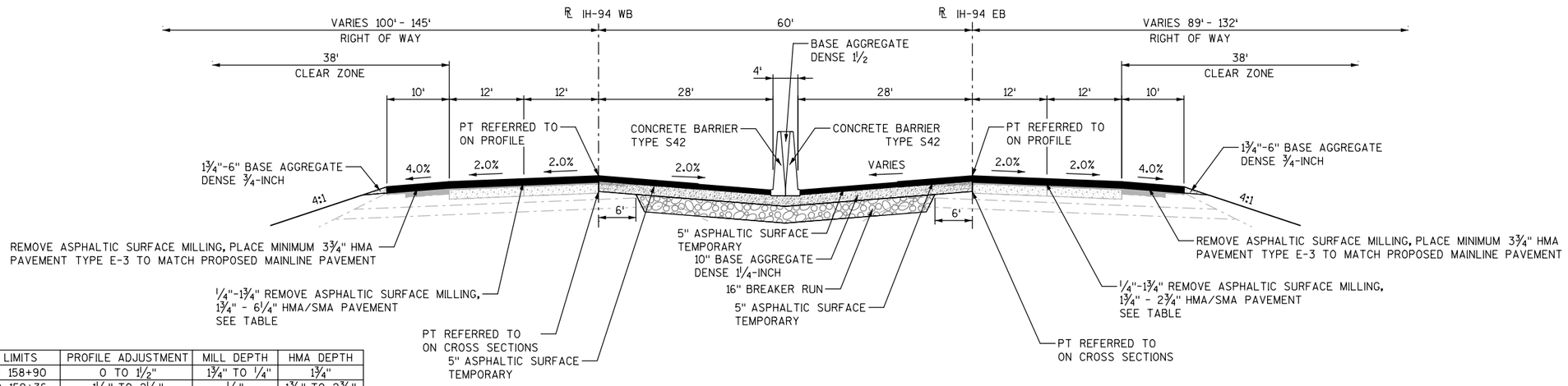

LOCATION	STATION LIMITS	PROFILE ADJUSTMENT	MILL DEPTH	HMA DEPTH
IH-94 EB	157+75 TO 158+90	0 TO 1½"	1¾" TO ¼"	1¾"
IH-94 EB	158+90 TO 159+36	1½" TO 2½"	¼"	1¾" TO 2¾"
IH-94 EB	160+93 TO 161+35	2¼" TO 1½"	¼"	2½" TO 1¾"
IH-94 EB	161+35 TO 162+50	1½" TO 0	¼" TO 1¾"	1¾"
IH-94 WB	158+50 TO 159+00	0 TO 1½"	1¾" TO ¼"	1¾"
IH-94 WB	159+00 TO 159+36	1½" TO 2¾"	¼"	1¾" TO 3"
IH-94 WB	160+93 TO 163+25	6" TO 3¾"	¼"	6¼" TO 4"
IH-94 WB	163+25 TO 163+95	3¾" TO 1½"	¼"	4" TO 1¾"
IH-94 WB	163+95 TO 164+75	1½" TO 0	¼" TO 1¾"	1¾"

I-94 TYPICAL FINISHED SECTION

STA 157+75 TO 159+36 EB IH-94
STA 158+50 TO 159+36 WB IH-94
STA 160+93 TO 161+65 EB/WB IH-94

PROJECT NO: 1060-38-70	HWY: IH-94	COUNTY: WAUKESHA	PROPOSED TYPICAL SECTIONS IH-94 (AT DOUSMAN ROAD)	SHEET 7	E

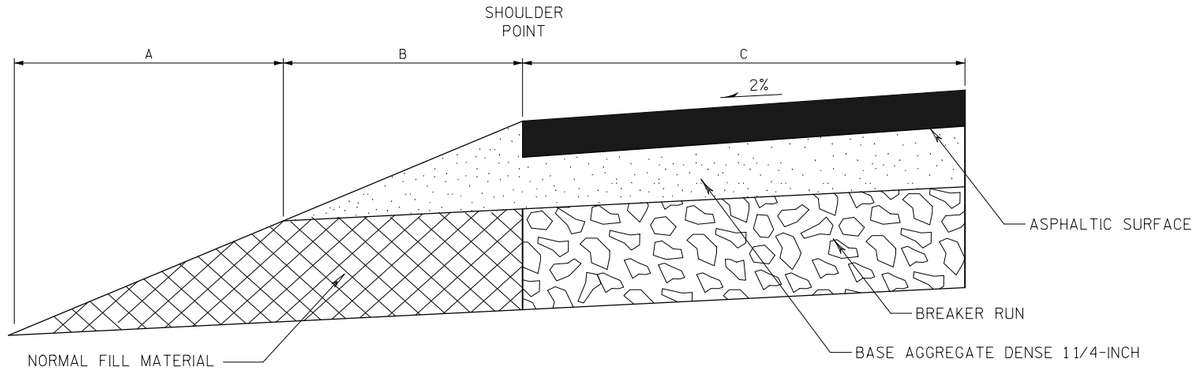

TYPICAL HALF SECTION A-A WITHOUT RELIEF TRENCH

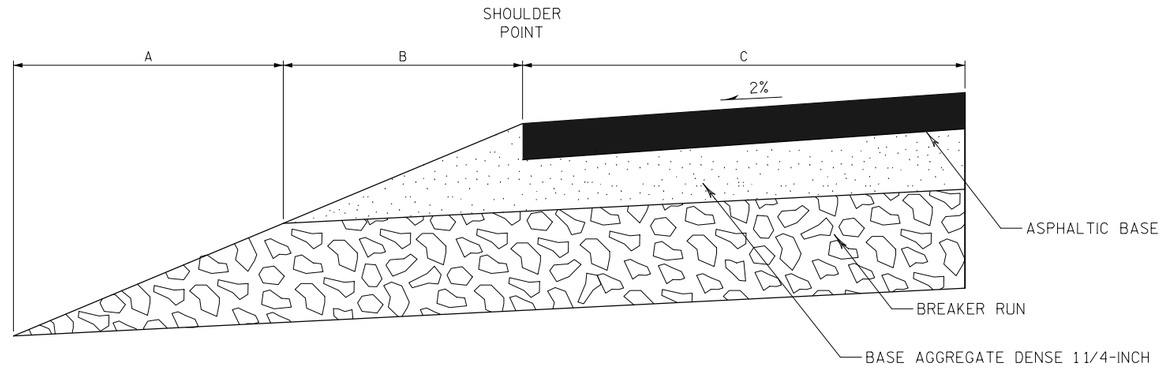

TYPICAL HALF SECTION B-B WITH RELIEF TRENCH

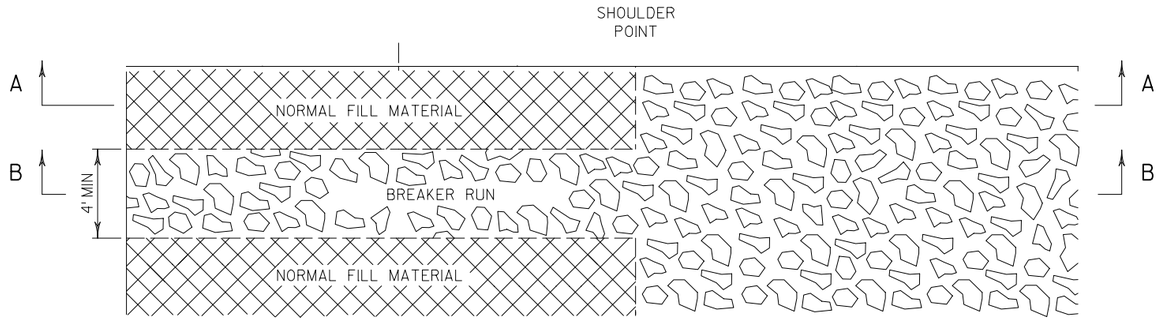

RELIEF TRENCH PLAN VIEW

RELIEF TRENCH

STAGE 1 - 151+00 WB MEDIAN
STAGE 1 - 151+50 EB MEDIAN
STAGE 1 - 153+00 WB MEDIAN
STAGE 1 -154+50 EB MEDIAN
STAGE 1 - 169+00 EB MEDIAN
STAGE 1 - 172+00 WB MEDIAN

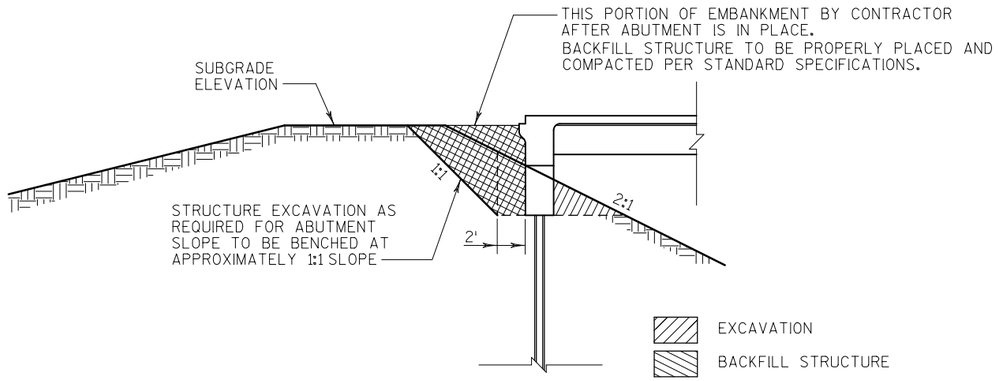

NOTE

THE EMBANKMENT CONFIGURATION SHOWN IS THE MINIMUM EMBANKMENT THAT MUST BE CONSTRUCTED PRIOR TO CONSTRUCTION OF THE ABUTMENTS.

EMBANKMENT CONSTRUCTION & BACKFILL STRUCTURE DETAIL

100729

NOTES:

1) SELECT PERMANENT CRASH CUSHION FROM CURRENT WISDOT APPROVED PRODUCTS LIST. LENGTHS OF APPROVED PRODUCTS VARY.

2) SEE MANUFACTURER'S SPECIFICATIONS FOR FOUNDATION PAD REQUIREMENTS. THE FOUNDATION PAD IS INCIDENTAL TO THE ITEM PERMANENT CRASH CUSHION.

3) SEE PAVING GRADES FOR ELEVATIONS. GRADES MAY BE ADJUSTED BY THE ENGINEER IF PAD REQUIREMENTS DIFFER FROM THIS DETAIL.

4) DETAILS OF CONSTRUCTION, MATERIALS AND WORKMANSHIP NOT SHOWN ON THIS DRAWING SHALL CONFORM TO THE PERTINENT REQUIREMENTS OF THE STANDARD SPECIFICATIONS AND THE APPLICABLE SPECIAL PROVISIONS.

5) PROVIDE 1/2-INCH CHAMFER AT BARRIER ENDS WITH CONSTRUCTION JOINTS OR WITH EXPANSION JOINTS. PROVIDE 3/4-INCH EXPANSION JOINT MATERIAL AT EXPANSION JOINTS. EXPANSION JOINTS SHALL BE PLACED AT EXPANSION JOINTS IN CONCRETE BASE, AT SIGN BRIDGE FOOTINGS, AT STRUCTURAL PARAPETS, AT PRINCIPAL WALL JOINTS, AND AT INTERRUPTIONS IN CONCRETE BARRIER (END ANCHORAGE). DO NOT CEMENT CONDUIT COUPLINGS AT EXPANSION JOINTS.

6) FOOTING MONOLITHIC OR DOWELED WITH 2 - #8 X 8" @ 2'-0"

7) WHEN SWITCHING BETWEEN SLIP FORM AND STANDARD FORM OPERATIONS, EXTEND LONGITUDINAL STEEL 3 FEET BEYOND SLIP-FORMING CUT OFF POINT. WHEN A COLD JOINT IS REQUIRED 3 FEET OF LAP OF LONGITUDINAL STEEL IS REQUIRED, LAPS TO BE FIRMLY TIED.

8) 2" CLEAR COVER TYPICAL. UNLESS OTHERWISE NOTED

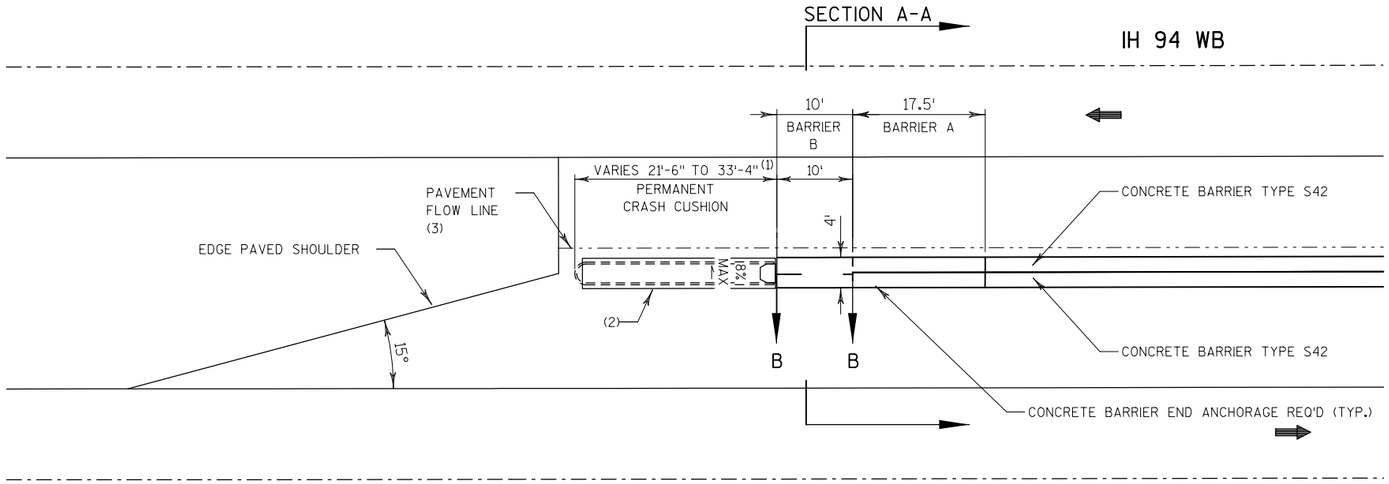

BARRIER A = CONCRETE BARRIER 42-INCH TO CONCRETE BARRIER 32-INCH TRANSITION
SEE CONSTRUCTION DETAIL (PAID AS CONCRETE BARRIER 42-INCH)

BARRIER B = CONCRETE BARRIER END ANCHORAGE 4-FT WIDTH 32-INCH
SEE CONSTRUCTION DETAIL

PLAN VIEW

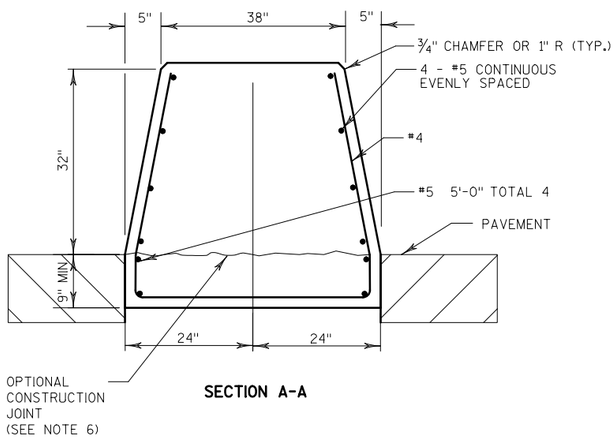

SECTION A-A

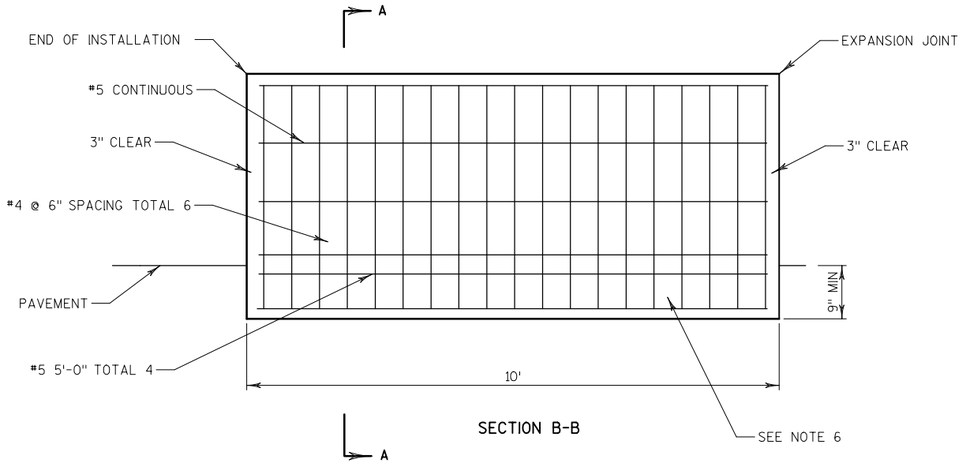

SECTION B-B

CONCRETE BARRIER END ANCHORAGE 4-FT WIDTH 32-INCH

(EXPANSION JOINT REQUIRED)

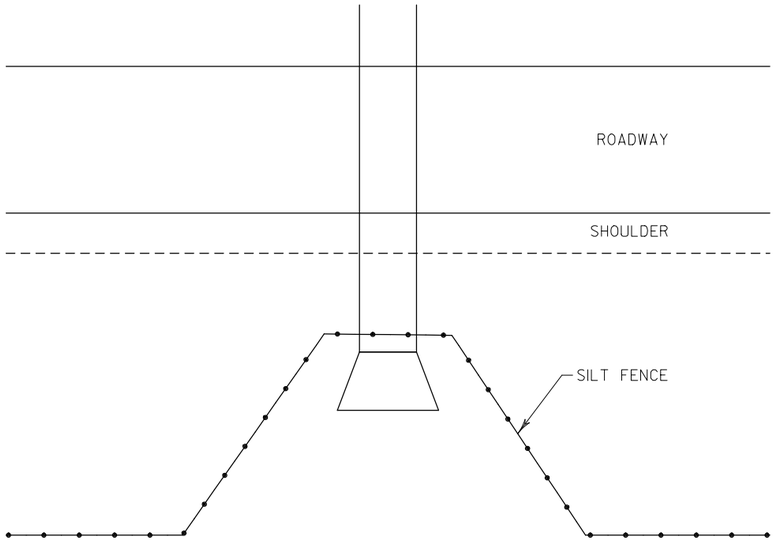

NOTE
SEE SILT FENCE SDD FOR ADDITIONAL INFORMATION.

TYPICAL SILT FENCE DETAIL AT PIPE INLET

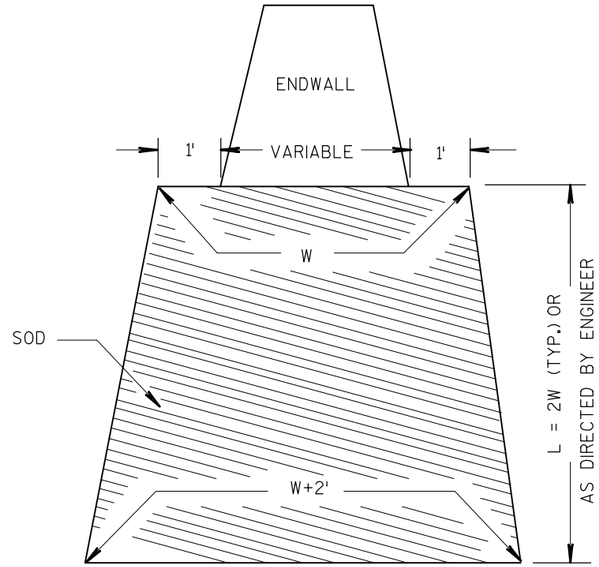

SOD TREATMENT AT CULVERTS

STA 607+05 LT & RT

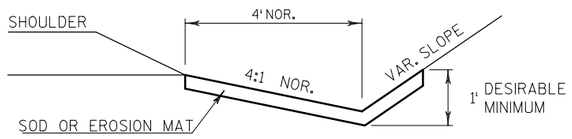

SOD OR EROSION MAT DETAIL FOR DITCHES

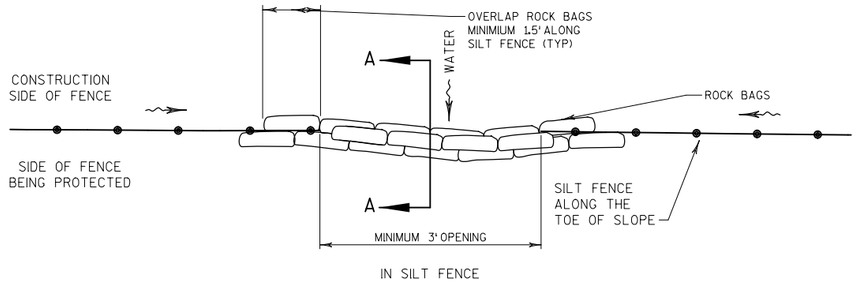

PLAN VIEW

SECTION A-A

SILT FENCE DRAINAGE OUTLET, ROCK BAGS

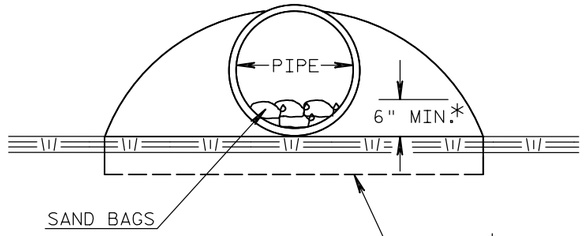

END VIEW

* OR AS DIRECTED
BY THE ENGINEER

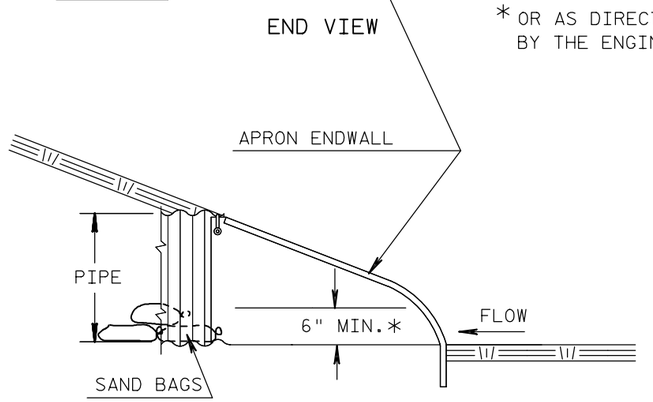

SIDE VIEW

CULVERT PIPE CHECK

2

2

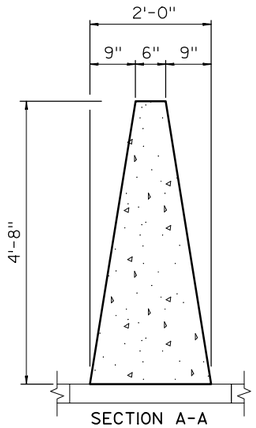

SECTION A-A

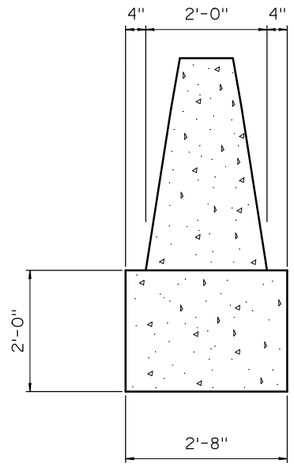

SECTION B-B

EVENLY SPACE H1 BARS.
NO. 5 BARS TO EXTEND 3' BEYOND END OF TRANSITION TIE NO. 5 BARS TO HORIZONTAL BARS IN SINGLE SLOPE BARRIER TO FORM COLD JOINT.

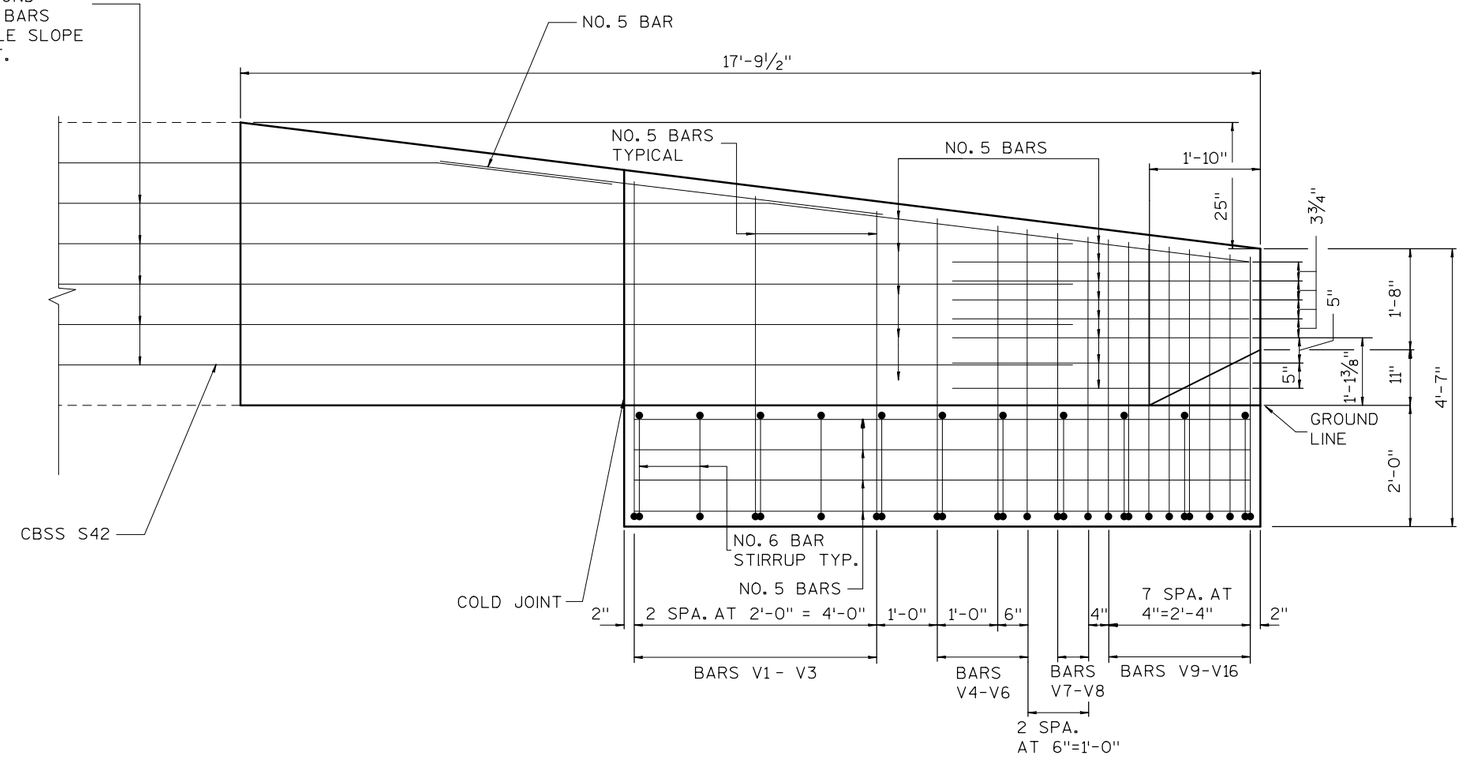

SEE SECTIONS ① THRU ⑯
ELEVATION VIEW

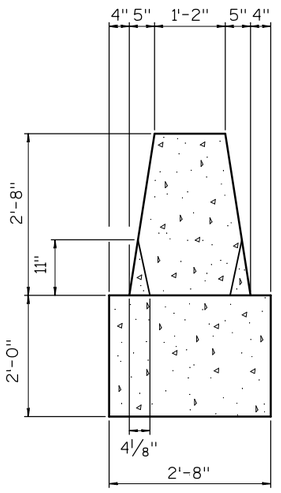

SECTION C-C

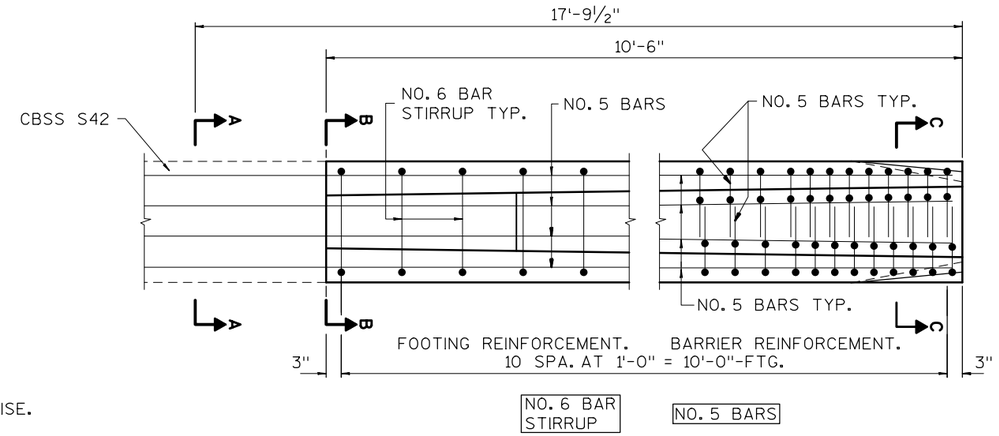

PLAN VIEW

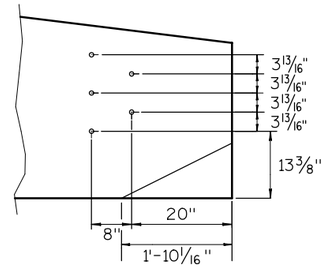

PVC PIPE LOCATIONS

GENERAL NOTES:
1. CONSTRUCT PER STANDARD SPECIFICATION 603.
2. SPLICES OF LONGITUDINAL BARS TO BE 2' LONG AND FIRMLY TIED AND FASTENED TOGETHER UNLESS NOTED OTHERWISE.
3. 4000 PSI CONCRETE AIR ENTRAINMENT PER STANDARD SPECIFICATIONS SECTION 501.
   USE ¾" BEVEL OR 1" RADIUS ON ALL EXPOSED SHARP EDGES UNLESS NOTED OTHERWISE.
   THRIE BEAM ANCHOR INCIDENTAL TO CONCRETE BARRIER ITEM.
   INSTALL SCHEDULE 40 PVC PIPE 1" DIAMETER AT LOCATIONS INDICATED.
   EXTEND PVC PIPE COMPLETELY THROUGH BARRIER.
   CUT ENDS OF PVC PIPE FLUSH WITH FINISHED FACE OF BARRIER.
   THE NUMBER IN BAR DESIGNATION REPRESENTS THE BARS LOCATION.
   2" CLEAR COVER TYPICAL.

CONCRETE BARRIER
SINGLE SLOPE 56"
THRIE BEAM ANCHOR

BAR CHART
SECTIONS V1 - V11

BAR	A	B
V1	170°-50'	3'-6"
V2	171°-20'	3'-4½"
V3	171°-30'	3'-2½"
V4	171°-25'	3'-1½"
V5	171°-15'	3'-0"
V6	171°-15'	2'-11"
V7	171°-20'	2'-10½"
V8	171°-10'	2'-9½"
V9	171°-10'	2'-9"
V10	171°-05'	2'-8½"
V11	171°-10'	2'-8"

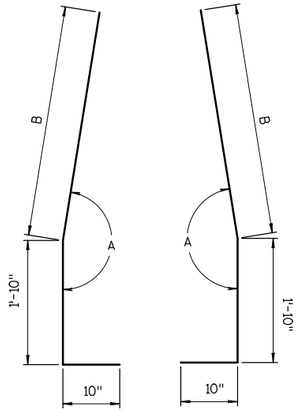

BAR BENDING DETAIL
FOR BARS V1 - V11

BAR CHART
SECTIONS V12 - V13

BAR	A	B	C
V12	2'-2"	171°-15'	2'-3½"
V13	2'-7"	171°-05'	1'-10"

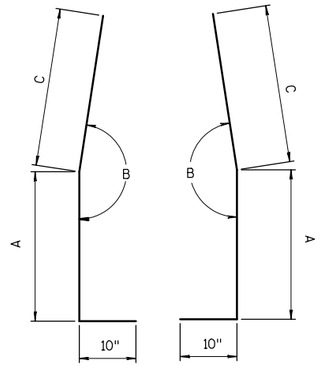

BAR BENDING DETAIL
FOR BARS V12 - V13

BAR CHART
SECTIONS V14 - V16

BAR	A	B	C	D
V14	168°-15'	159°-15'	6"	2'-0"
V15	169°-20'	161°-00'	8"	1'-10"
V16	168°-40'	160°-10'	10"	1'-8"

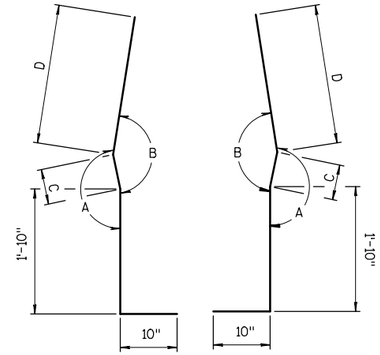

BAR BENDING DETAIL
FOR BARS V14 - V16

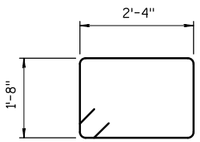

STIRRUP BAR
BENDING DETAIL

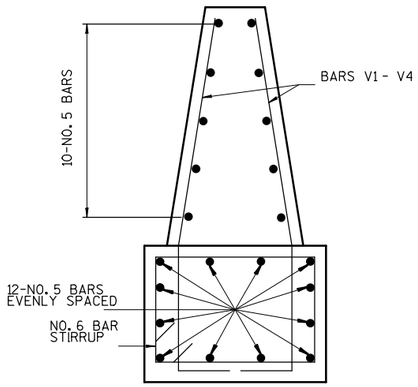

BAR DETAIL
SECTIONS V1 - V4

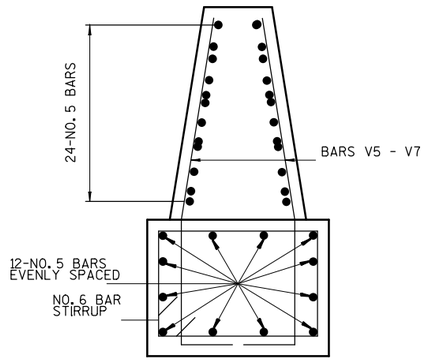

BAR DETAIL
SECTIONS V5 - V7

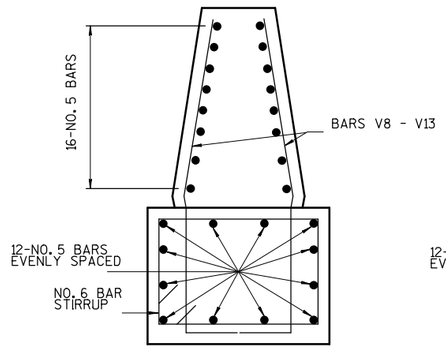

BAR DETAIL
SECTIONS V8 - V13

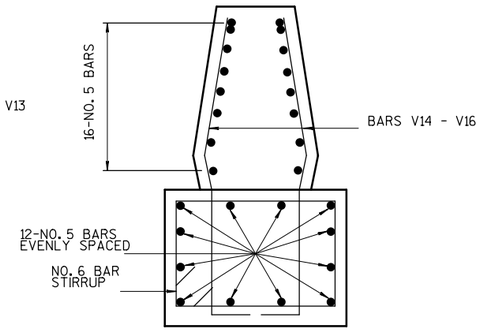

BAR DETAIL
SECTIONS V14 - V16

CONCRETE BARRIER
SINGLE SLOPE 56"
THRIE BEAM ANCHOR

2

2

N

ROW

IH-94 WB

IH-94 EB

ROW

REMOVE EXISTING GUARDRAIL

REMOVE EXISTING CULVERT
24-INCH CMP
SOUTH INVERT 868.09
NORTH INVERT 867.07

REMOVE FENCE

ROW

N DOUSMAN RD

ROW

REMOVE FENCE

REMOVE EXISTING GUARDRAIL

ROW

℄ IH-94 WB

REMOVE EXISTING CULVERT
30-INCH CMP
SOUTH INVERT 868.19
NORTH INVERT 866.38

℄ IH-94 EB

LEGEND

FINISHED PAVED SURFACE

LIMITS OF CONSTRUCTION IMPACT

NOTES

SEE PAVING DETAILS FOR SAWCUT LOCATION

UTILITIES TO BE RELOCATED BY OTHERS PRIOR TO CONSTRUCTION

PROJECT NO: 1060-38-70	HWY: IH-94	COUNTY: WAUKESHA	REMOVAL PLAN	SHEET 15	E

2

N

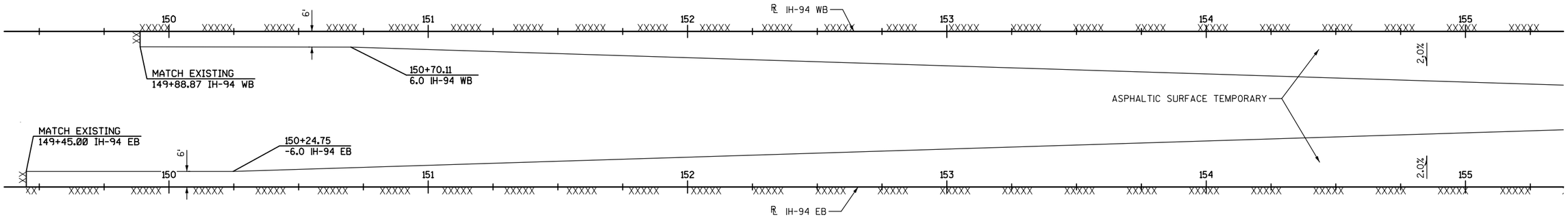

LEGEND

XXXXX SAWCUT

PROJECT NO: 1060-38-70	HWY: IH-94	COUNTY: WAUKESHA	PAVING DETAIL: STAGE 1	SHEET 16	E

2

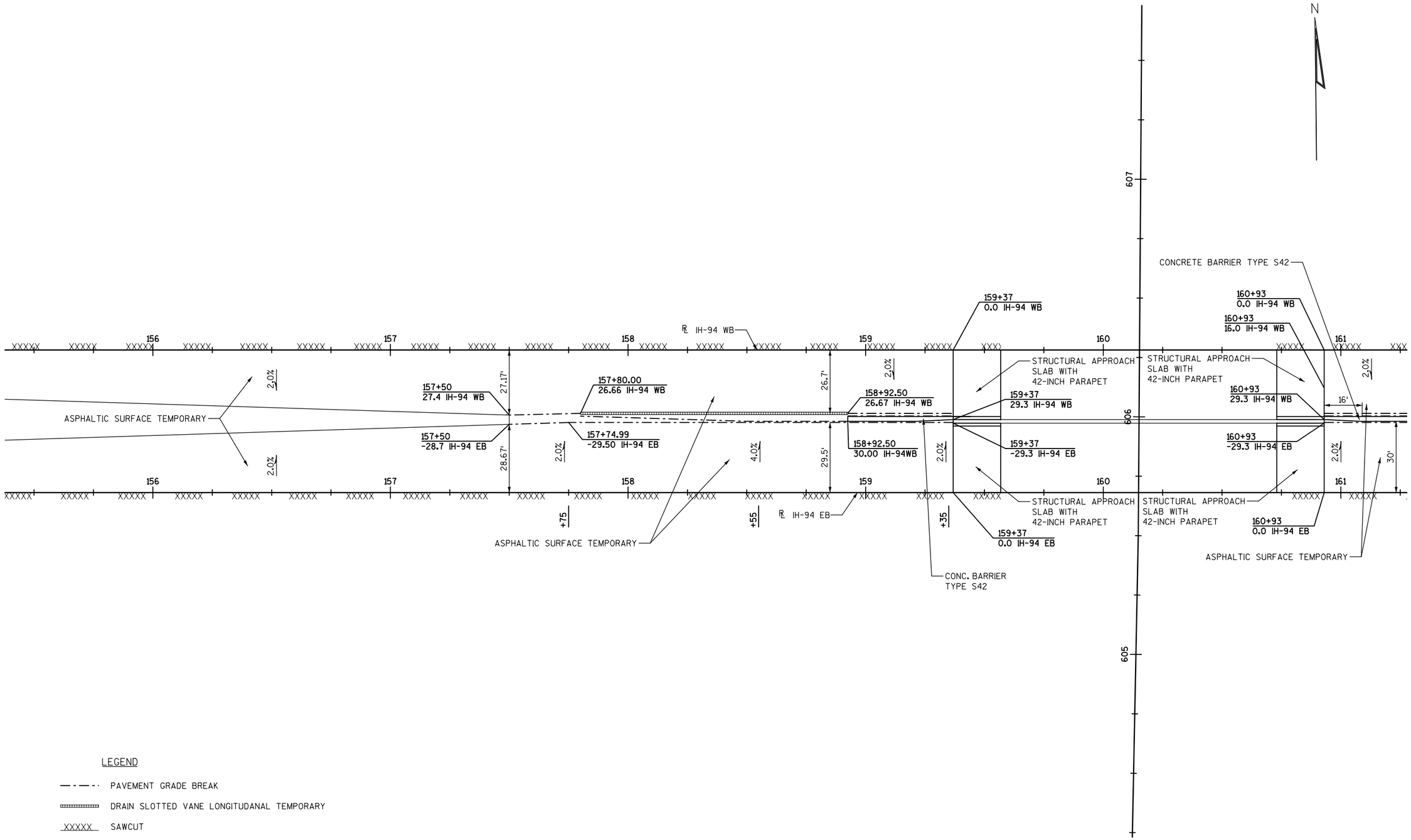

LEGEND

—·—·— PAVEMENT GRADE BREAK

DRAIN SLOTTED VANE LONGITUDANAL TEMPORARY

XXXXX SAWCUT

PROJECT NO: 1060-38-70	HWY: IH-94	COUNTY: WAUKESHA	PAVING DETAIL: STAGE 1	SHEET 17	E

2

N

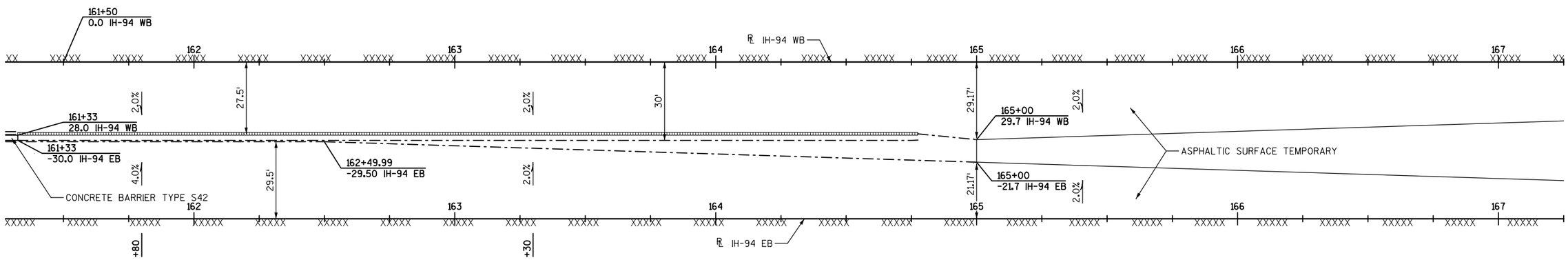

LEGEND

PAVEMENT GRADE BREAK

DRAIN SLOTTED VANE LONGITUDANAL TEMPORARY

XXXXX SAWCUT

PROJECT NO: 1060-38-70	HWY: IH-94	COUNTY: WAUKESHA	PAVING DETAIL: STAGE 1	SHEET 18	E

2

N

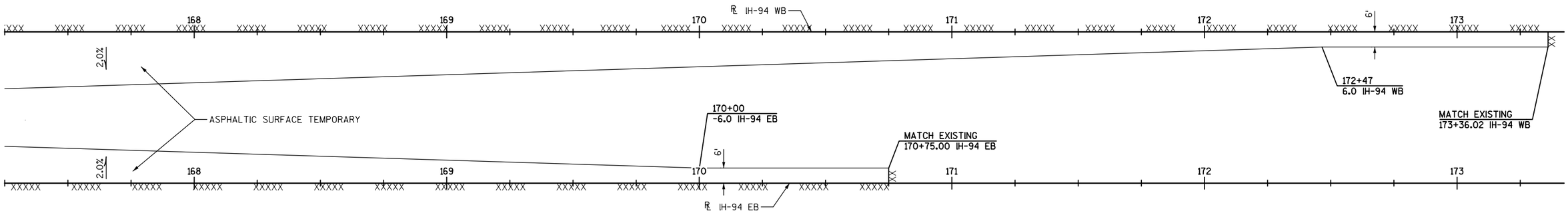

LEGEND

XXXXX SAWCUT

PROJECT NO: 1060-38-70	HWY: IH-94	COUNTY: WAUKESHA	PAVING DETAIL: STAGE 1	SHEET 19	E

2

N

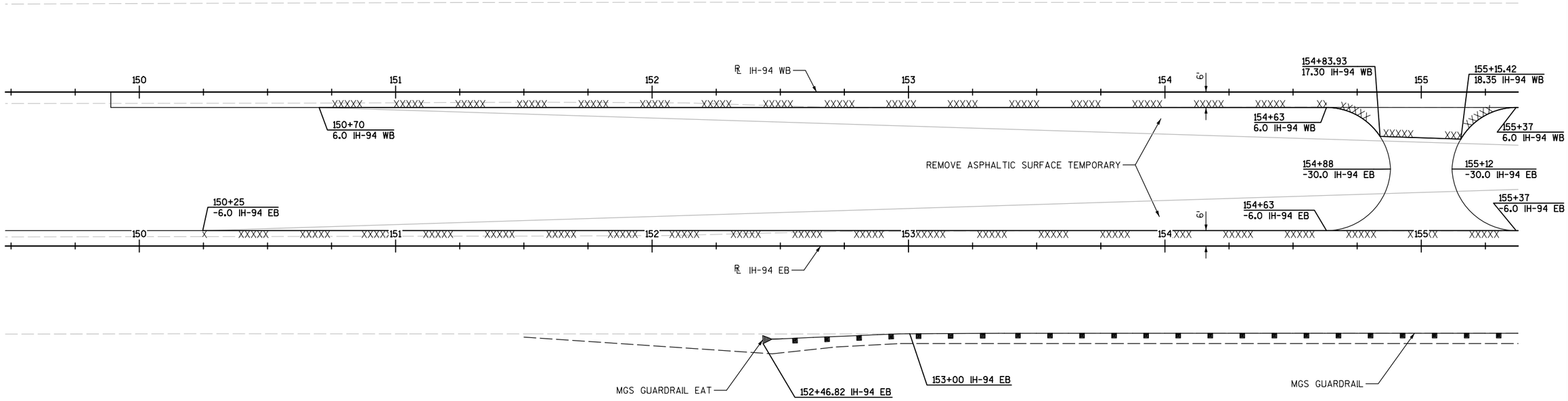

LEGEND

XXXXX SAWCUT

MGS GUARDRAIL

PROJECT NO: 1060-38-70	HWY: IH-94	COUNTY: WAUKESHA	PAVING DETAIL: FINAL	SHEET 20	E

2

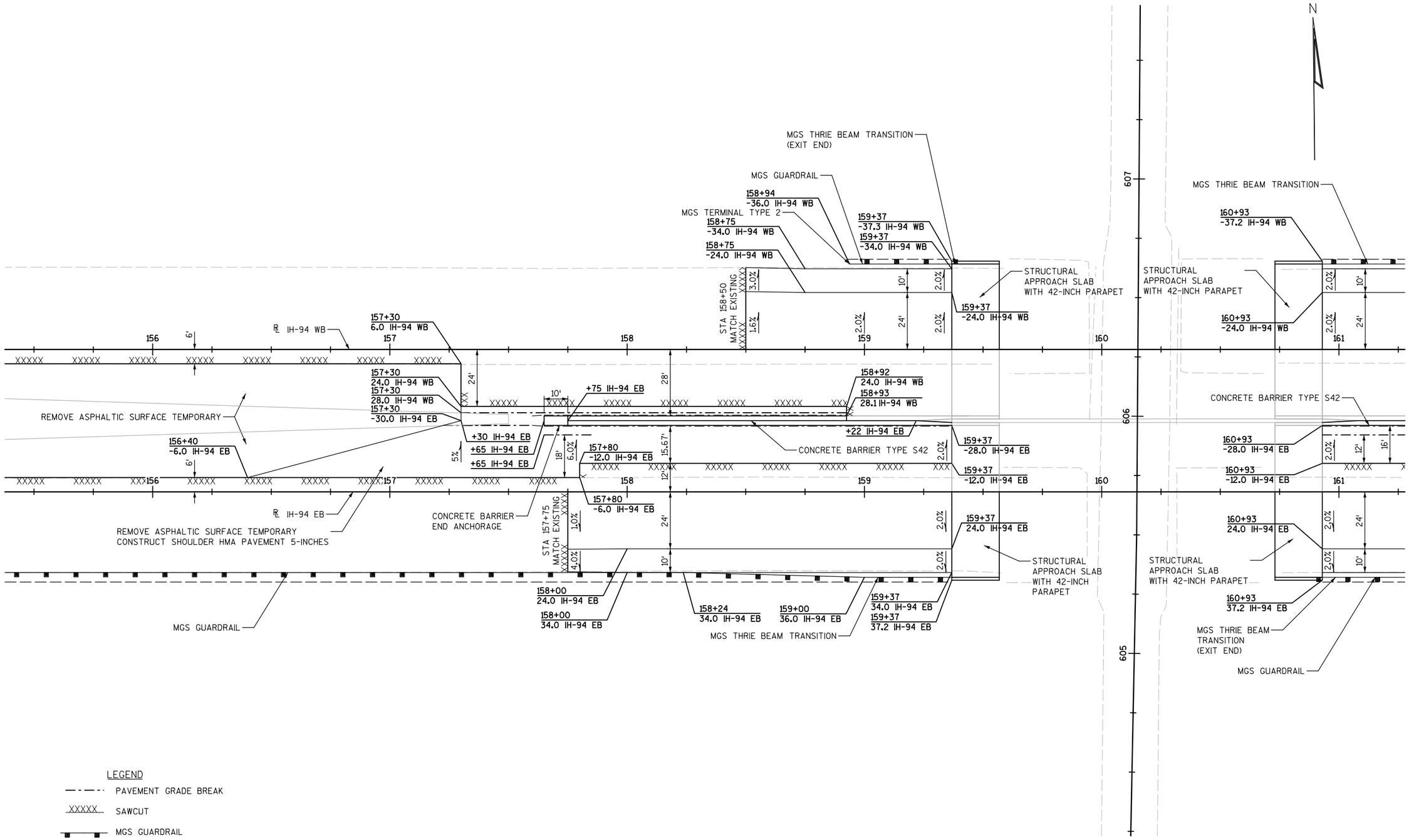

PROJECT NO: 1060-38-70	HWY: IH-94	COUNTY: WAUKESHA	PAVING DETAIL: FINAL	SHEET 21	E

2

N

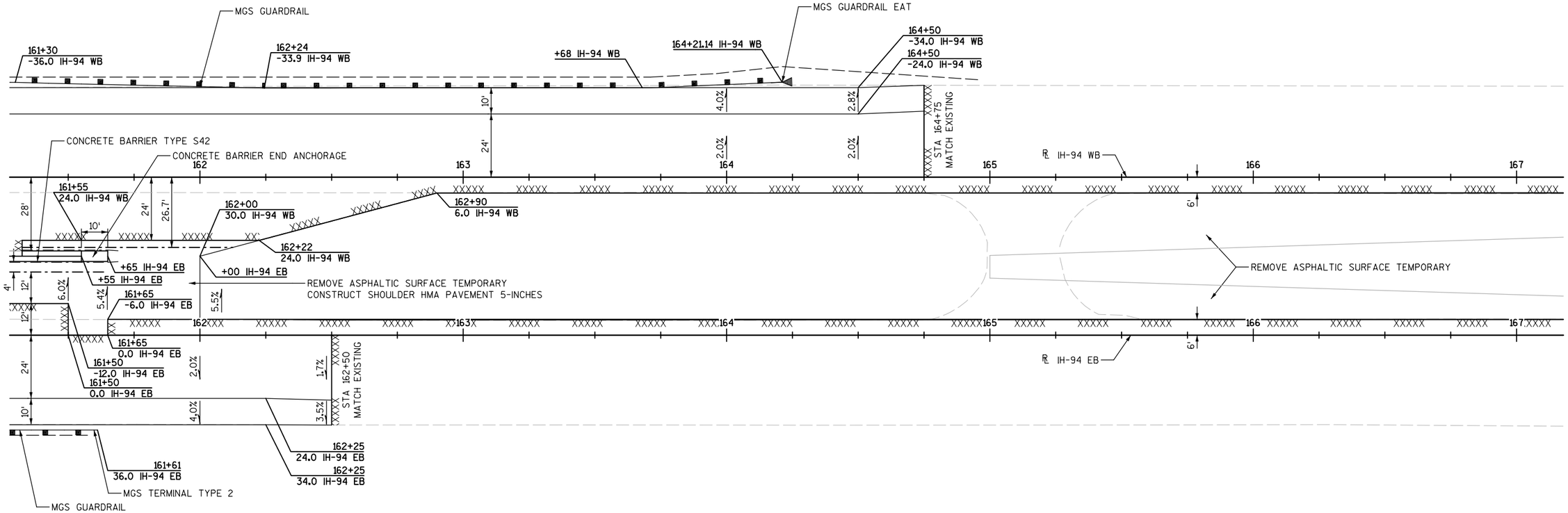

LEGEND

PAVEMENT GRADE BREAK

XXXXX SAWCUT

MGS GUARDRAIL

PROJECT NO: 1060-38-70	HWY: IH-94	COUNTY: WAUKESHA	PAVING DETAIL: FINAL	SHEET 22	E

2

N

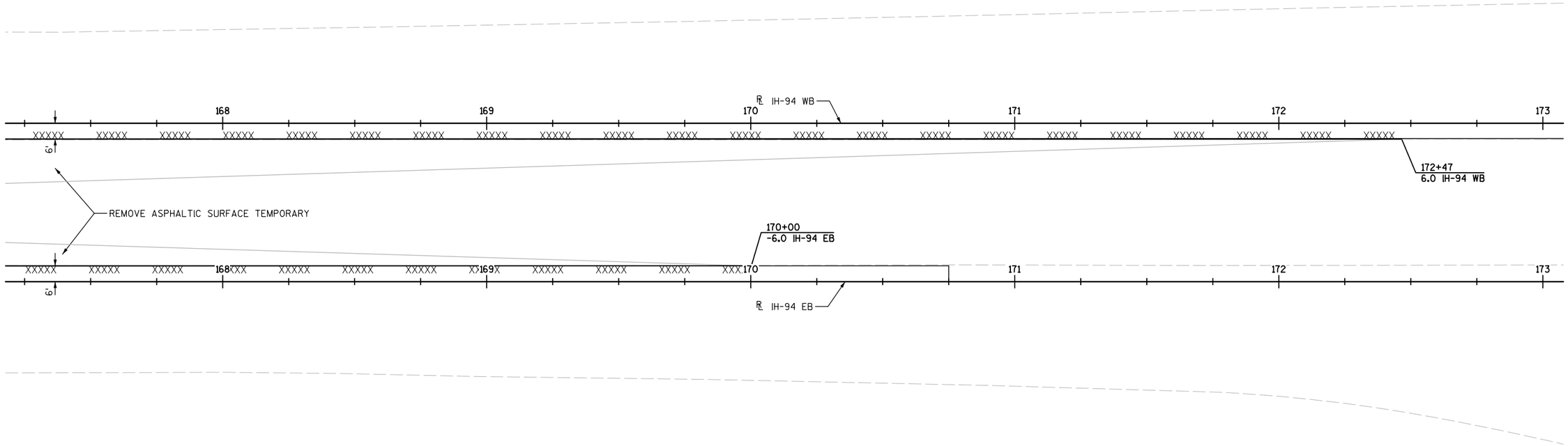

LEGEND

XXXXX SAWCUT

PROJECT NO: 1060-38-70	HWY: IH-94	COUNTY: WAUKESHA	PAVING DETAIL: FINAL	SHEET 23	E

FILE NAME : x:\20100S\20103.00\Eng_Docs\Sheets\1060-38-70\021229_pd.dgn PLOT DATE : 7/28/2014 PLOT BY : bweigand PLOT NAME : PLOT SCALE : 1:40

2

N

℄ IH-94 EB

℄ IH-94 WB

159

159

160

160

161

161

162

162

6'

6'

SLOPE PAVING, SEE STRUCTURE PLAN

MGS GUARDRAIL EAT

MGS THRIE BEAM TRANSITION

603+50
-18.0
603+50
-12.0

603+95
-20.0

604+48
-18.0

604+85
-18.0

605+30
-28.8
605+30
-22.8
605+30
-18.0

606+65
-29.9
606+65
-23.9

606+65
-19.2

606+91
-18.0

607+10
-18.0

607+47
-18.0

608+00
-20.0

608+00
-18.0
608+00
-12.0

603 604 605 606 607 608

STA 603+50
MATCH EXISTING
XXXXX

STA 608+00
MATCH EXISTING
XXXXX

6'
12'
12'
6'

4.0%
2.0%
2.0%
4.0%

CONC. BARRIER SS 56"
THRIE BEAM ANCHOR
(SEE DETAIL)

CONCRETE BARRIER
TYPE S56

DOUSMAN RD

℄ DOUSMAN RD

603+50
12.0
603+50
18.0

603+95
20.0

604+48
18.0

604+85
18.0

605+04
18.0

605+31
19.1
605+31
24.7
605+31
30.7

606+66
18.0
606+66
23.6
606+66
29.6

607+10
18.0

607+47
18.0

608+00
20.0

608+00
12.0
608+00
18.0

LEGEND

XXXXX SAWCUT

MGS GUARDRAIL

PROJECT NO: 1060-38-70	HWY: IH-94	COUNTY: WAUKESHA	PAVING DETAIL: DOUSMAN ROAD	SHEET 24	E

2

N

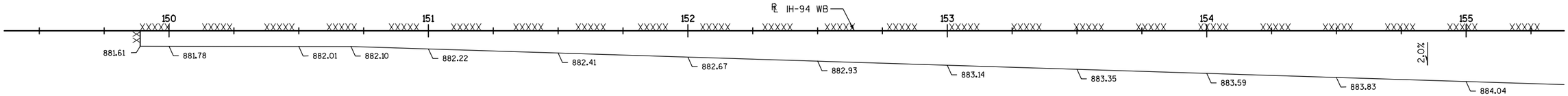

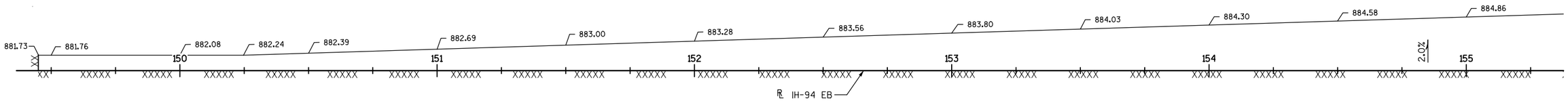

LEGEND

XXXXX SAWCUT

PROJECT NO: 1060-38-70	HWY: IH-94	COUNTY: WAUKESHA	PAVING GRADE DETAIL: STAGE 1	SHEET 25	E

FILE NAME : x:\20100S\20103.00\Eng_Docs\Sheets\1060-38-70\021316_jd.dgn PLOT DATE : 7/28/2014 PLOT BY : bweigand PLOT NAME : PLOT SCALE : 1:40

2

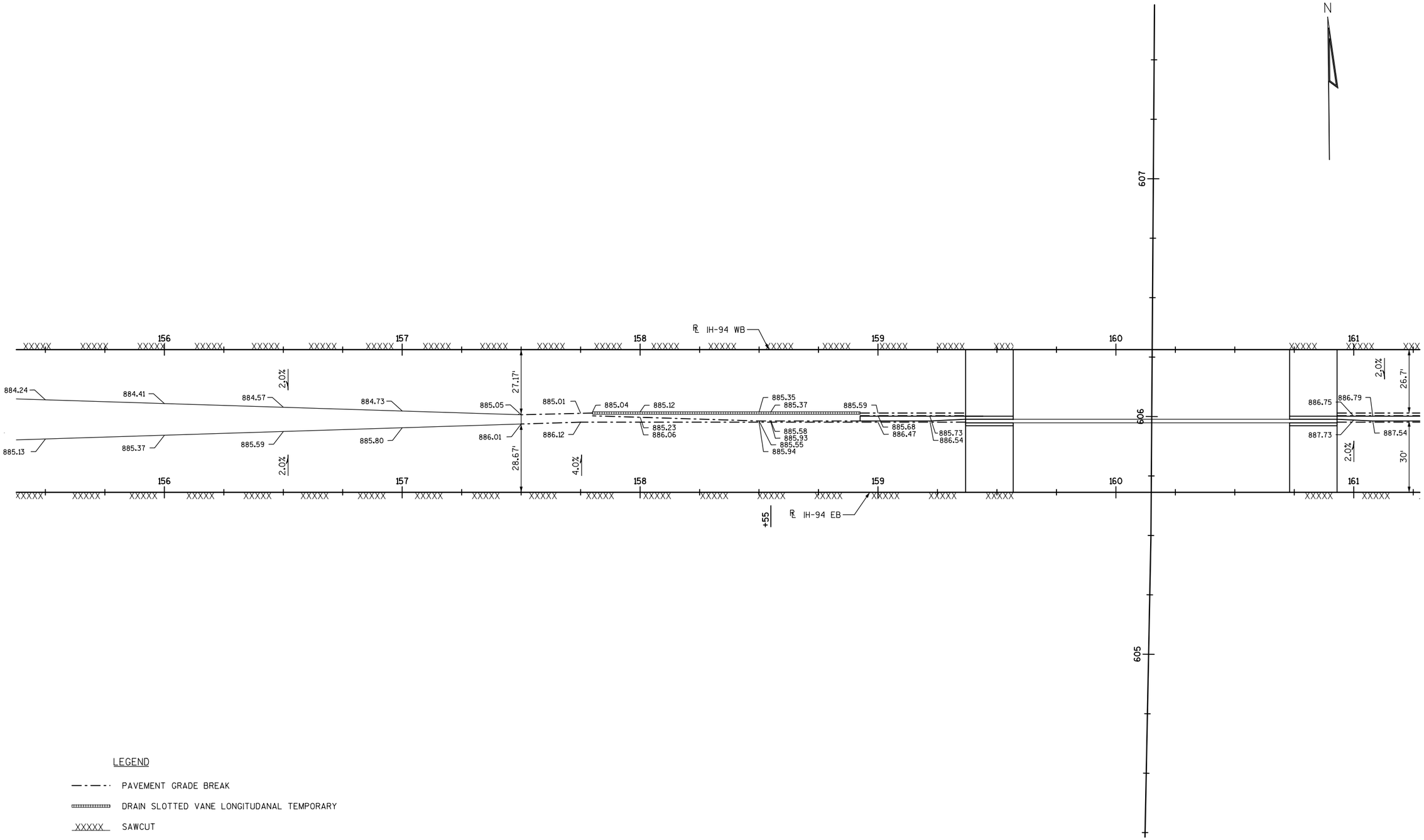

LEGEND

—·—·— PAVEMENT GRADE BREAK

DRAIN SLOTTED VANE LONGITUDANAL TEMPORARY

XXXXX SAWCUT

PROJECT NO: 1060-38-70	HWY: IH-94	COUNTY: WAUKESHA	PAVING GRADE DETAIL: STAGE 1	SHEET 26	E

2

N

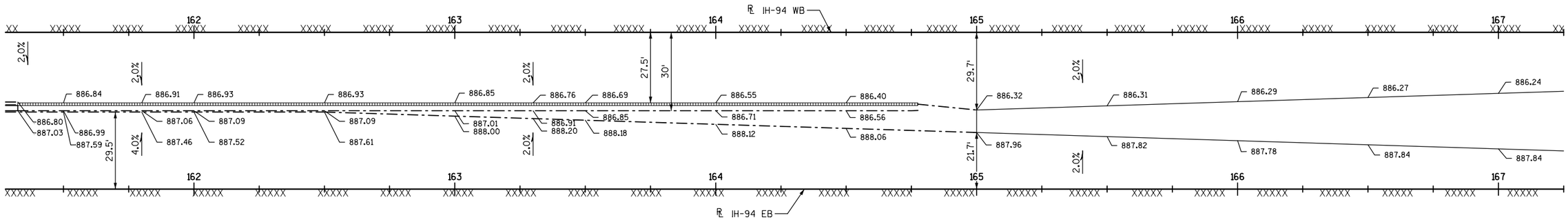

LEGEND

PAVEMENT GRADE BREAK

DRAIN SLOTTED VANE LONGITUDANAL TEMPORARY

XXXXX SAWCUT

PROJECT NO: 1060-38-70	HWY: IH-94	COUNTY: WAUKESHA	PAVING GRADE DETAIL: STAGE 1	SHEET 27	E

2

N

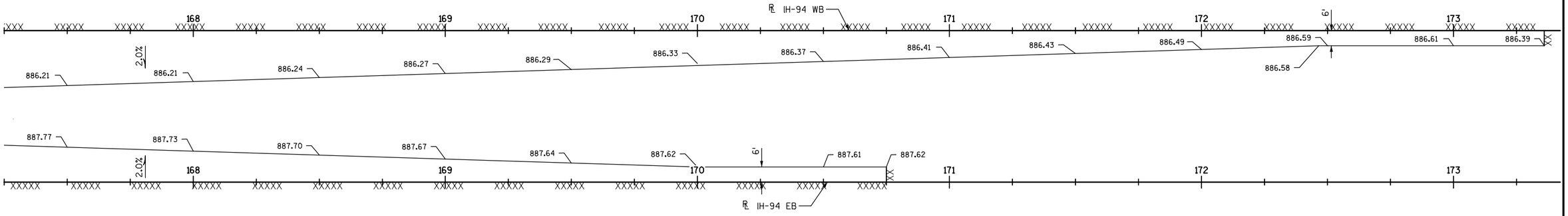

LEGEND

XXXXX SAWCUT

PROJECT NO: 1060-38-70	HWY: IH-94	COUNTY: WAUKESHA	PAVING GRADE DETAIL: STAGE 1	SHEET 28	E

2

N

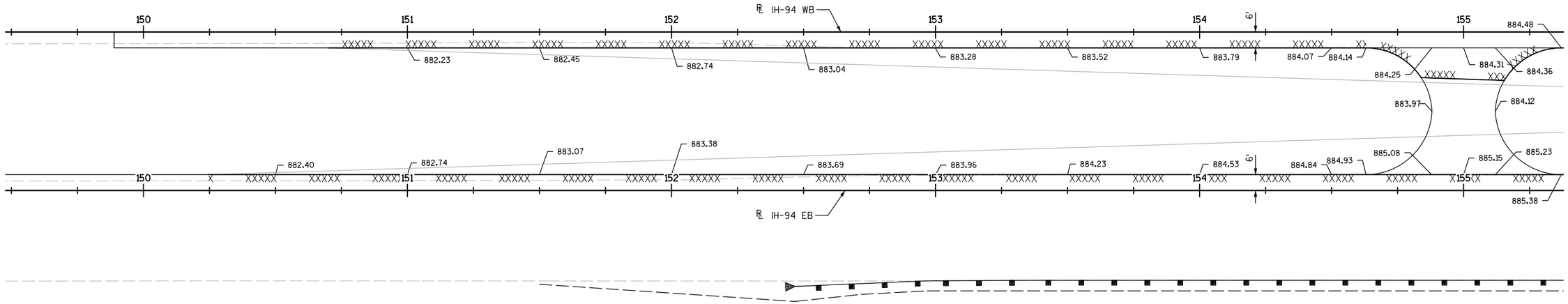

LEGEND

XXXXX SAWCUT

MGS GUARDRAIL

PROJECT NO: 1060-38-70	HWY: IH-94	COUNTY: WAUKESHA	PAVING GRADE DETAIL: FINAL	SHEET 29	E

2

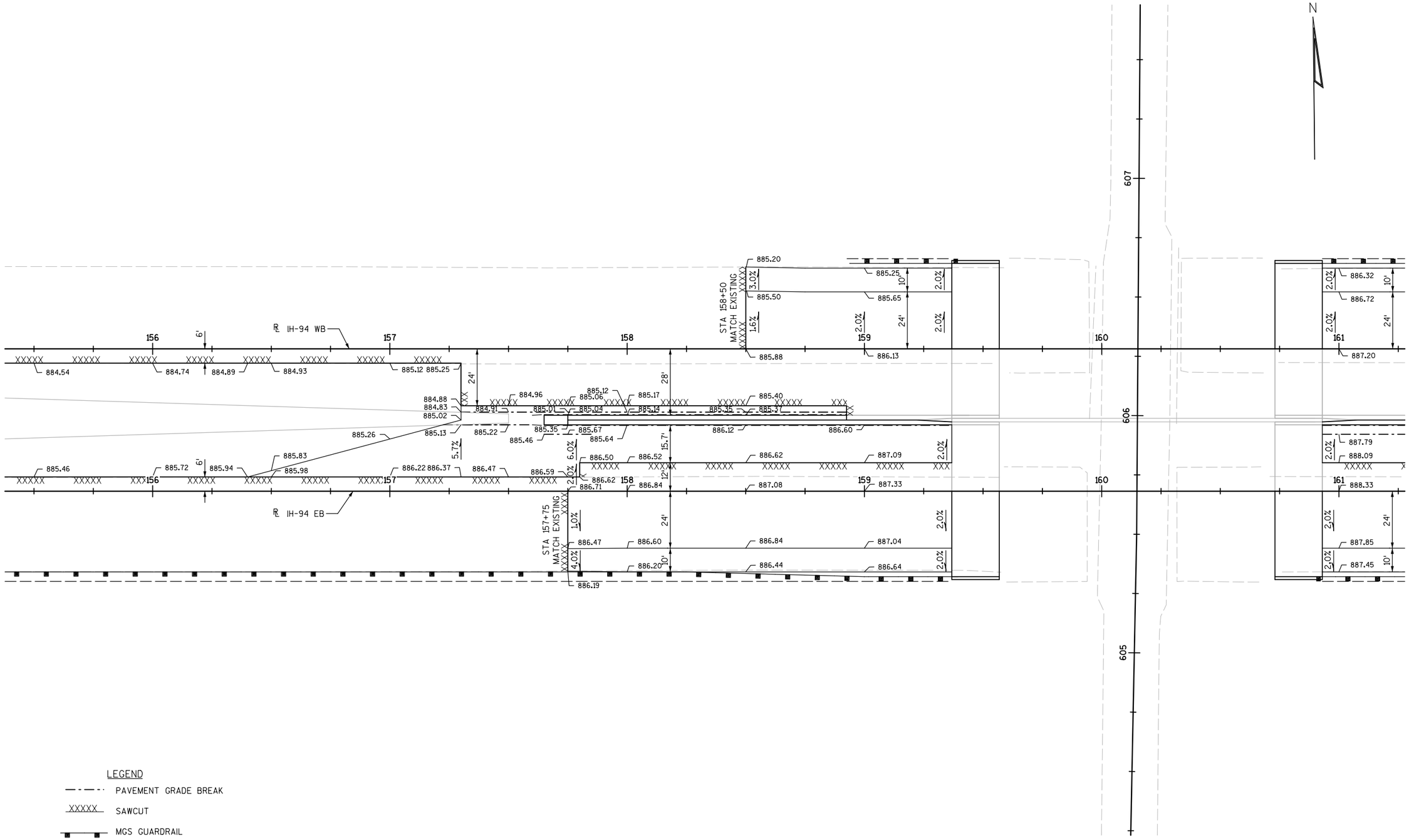

LEGEND

PAVEMENT GRADE BREAK

SAWCUT

MGS GUARDRAIL

PROJECT NO: 1060-38-70	HWY: IH-94	COUNTY: WAUKESHA	PAVING GRADE DETAIL: FINAL	SHEET 30	E

2

N

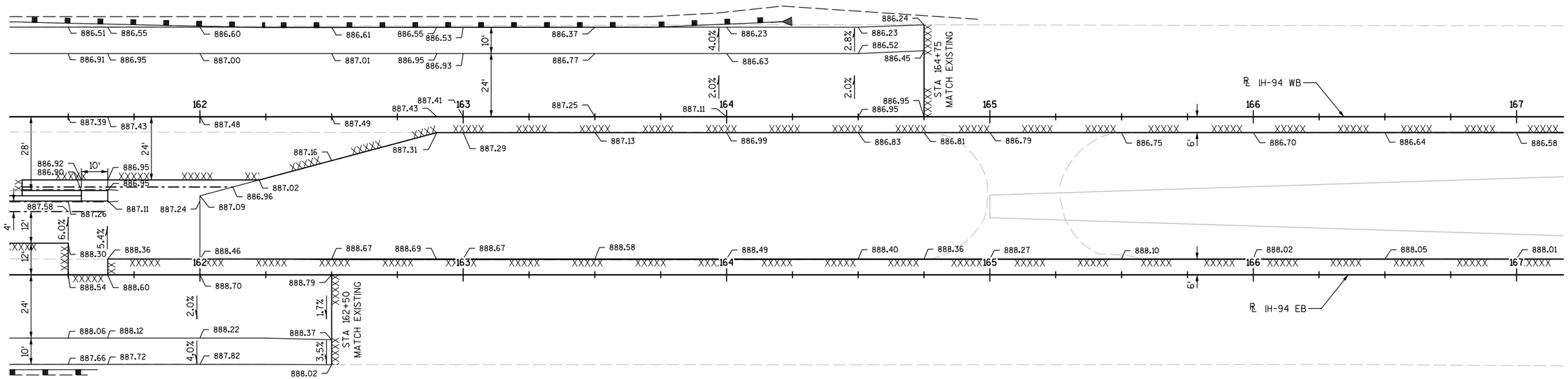

LEGEND

PAVEMENT GRADE BREAK

XXXXX SAWCUT

MGS GUARDRAIL

PROJECT NO: 1060-38-70	HWY: IH-94	COUNTY: WAUKESHA	PAVING GRADE DETAIL: FINAL	SHEET 31	E

FILE NAME : x:\20100S\20103.00\Eng_Docs\Sheets\1060-38-70\021328_jd.dgn PLOT DATE : 7/28/2014 PLOT BY : bweigand PLOT NAME : PLOT SCALE : 1:40

2

N

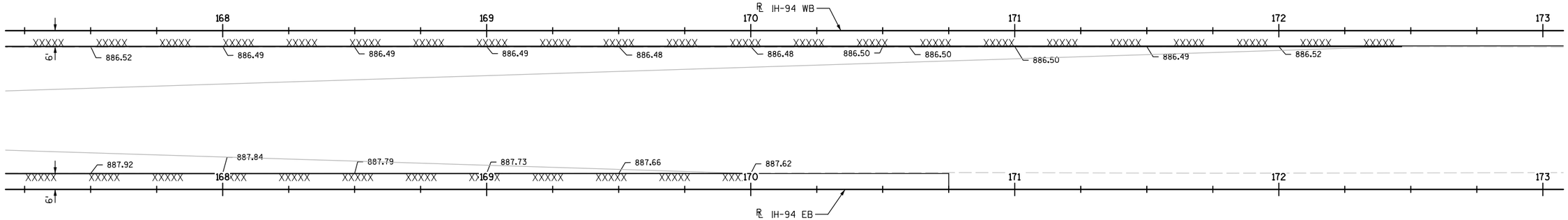

LEGEND

XXXXX SAWCUT

PROJECT NO: 1060-38-70	HWY: IH-94	COUNTY: WAUKESHA	PAVING GRADE DETAIL: FINAL	SHEET 32	E

FILE NAME : x:\20100S\20103.00\Eng_Docs\Sheets\1060-38-70\021329_jd.dgn PLOT DATE : 7/28/2014 PLOT BY : bweigand PLOT NAME : PLOT SCALE : 1:40

2

N

℄ IH-94 EB

℄ IH-94 WB

159

159

150

150

℄ DOUSMAN RD

603 604 605 606 607 608

873.19 873.31 873.55 872.26 872.38 872.62 871.36 871.46 871.70 870.69 870.81 871.05 870.42 870.54 870.78 870.36 870.48 870.72 870.01 870.05 870.29 869.67 869.79 870.03 869.13 869.26 869.50 868.80 868.94 869.18 868.76 868.86 869.10 868.62 868.74 868.98 868.58 868.70 868.94 868.55 868.66 868.90 868.43 868.55 868.79 868.37 868.49 868.73

6' 12' 2.0% 2.0% 2.0% 2.0% 12' 6'

870.62 870.53 870.35 870.26 870.05 869.96 869.81 869.72 869.62 869.53 869.48 869.39 869.30 869.21

873.19 873.31 872.26 872.38 871.34 871.46 870.69 870.81 870.42 870.54 870.36 870.48 870.00 870.05 869.66 869.79 869.13 869.26 868.82 868.94 868.74 868.86 868.62 868.74 868.58 868.70 868.55 868.66 868.43 868.55 868.37 868.49

870.51 870.60 870.25 870.34 869.97 870.06 869.73 869.82 869.55 869.64 869.41 869.50 869.18 869.27

191 191

192 192

LEGEND

XXXXX SAWCUT

MGS GUARDRAIL

PROJECT NO: 1060-38-70	HWY: IH-94	COUNTY: WAUKESHA	PAVING GRADE DETAIL: DOUSMAN ROAD	SHEET 33	E

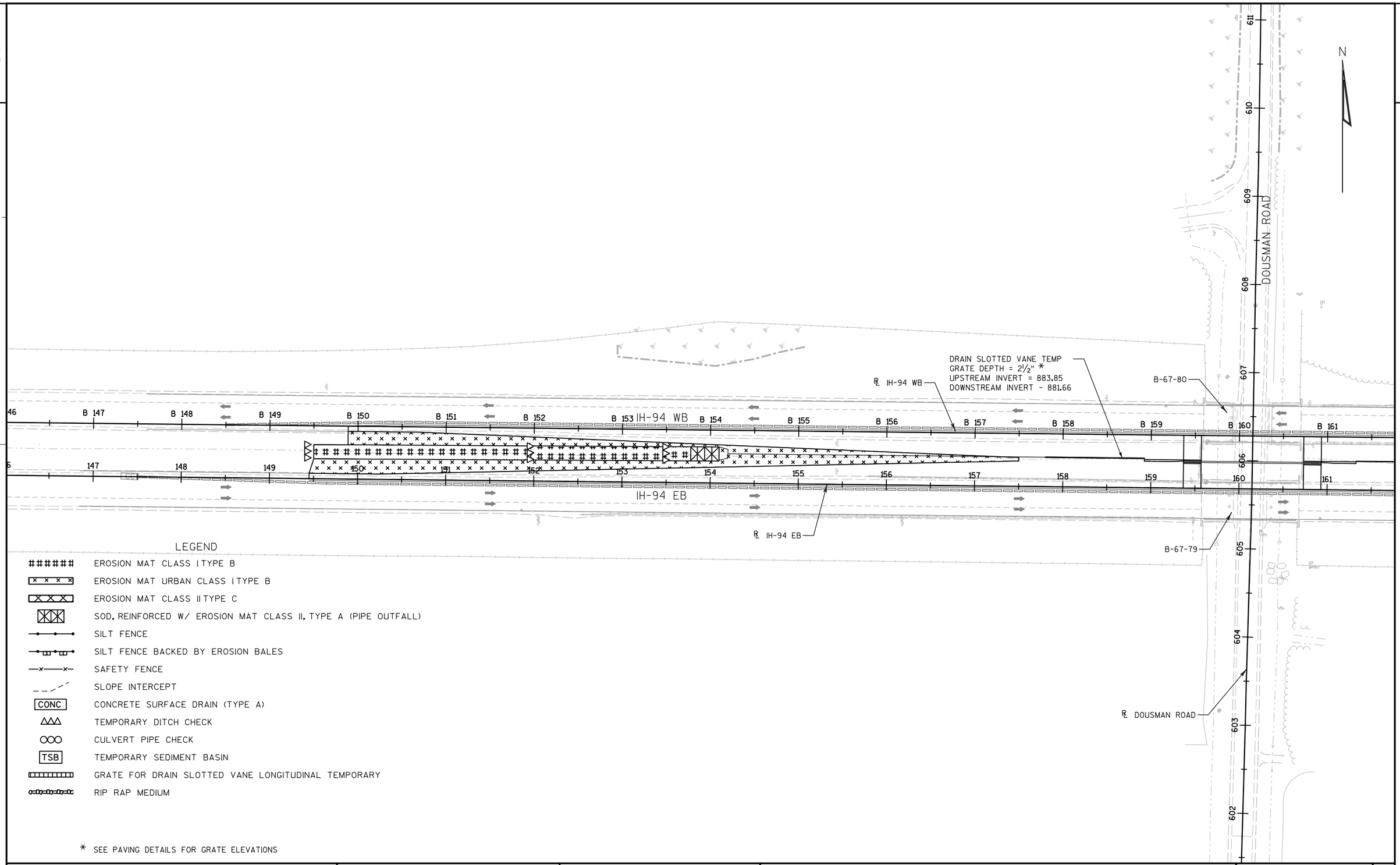

PROJECT NO: 1060-38-70	HWY: IH-94	COUNTY: WAUKESHA	EROSION CONTROL: STAGE 1	SHEET 34	E

FILE NAME : Y:\Milwaukee\20100S\20103.00\Eng_Docs\Sheets\1060-38-70\022011_ec.dgn PLOT DATE : 8/18/2014 PLOT BY : twatt PLOT NAME : PLOT SCALE : 1:100

WISDOT/CADDS SHEET 42

2

N

DRAIN SLOTTED VANE TEMP
GRATE DEPTH = VARIES *
UPSTREAM INVERT = 885.07
DOWNSTREAM INVERT = 884.13

℄ IH-94 WB

STH 67 ON-RAMP

B 163 B 164 B 165 B 166 B 167 B 168 B 169 B 170 B 171 B 172 B 173 B 174 B 175 B 176 IH-94 WB B 177 B 17

163 164 165 166 167 168 169 170 171 172 173 174 175 176 177 178

IH-94 EB

℄ IH-94 EB

STH 67 OFF-RAMP

LEGEND

- ###### EROSION MAT CLASS I TYPE B
- EROSION MAT URBAN CLASS I TYPE B
- EROSION MAT CLASS II TYPE C
- SOD, REINFORCED W/ EROSION MAT CLASS II, TYPE A (PIPE OUTFALL)
- SILT FENCE
- SILT FENCE BACKED BY EROSION BALES
- SAFETY FENCE
- SLOPE INTERCEPT
- CONC CONCRETE SURFACE DRAIN (TYPE A)
- TEMPORARY DITCH CHECK
- CULVERT PIPE CHECK
- TSB TEMPORARY SEDIMENT BASIN
- GRATE FOR DRAIN SLOTTED VANE LONGITUDINAL TEMPORARY
- RIP RAP MEDIUM

* SEE PAVING DETAILS FOR GRATE ELEVATIONS

PROJECT NO: 1060-38-70	HWY: IH-94	COUNTY: WAUKESHA	EROSION CONTROL: STAGE 1	SHEET 35	E

2

N

℄ IH-94 WB

B 147 B 148 B 149 B 150 B 151 B 152 B 153 B 154 B 155 B 156 B 157 B 158 B 159 B 160 B 161 B 162

IH-94 WB

147 148 149 150 151 152 153 154 155 156 157 158 159 160 161 162

IH-94 EB

℄ IH-94 EB

CONC

TSB

DOUSMAN ROAD

℄ DOUSMAN ROAD

611 610 609 608 607 606 605 604 603 602

LEGEND

- EROSION MAT CLASS I TYPE B
- EROSION MAT URBAN CLASS I TYPE B
- EROSION MAT CLASS II TYPE C
- SOD, REINFORCED W/ EROSION MAT CLASS II, TYPE A (PIPE OUTFALL)
- SILT FENCE
- SILT FENCE BACKED BY EROSION BALES
- SAFETY FENCE
- SLOPE INTERCEPT
- CONC — CONCRETE SURFACE DRAIN (TYPE A)
- TEMPORARY DITCH CHECK
- CULVERT PIPE CHECK
- TSB — TEMPORARY SEDIMENT BASIN
- GRATE FOR DRAIN SLOTTED VANE LONGITUDINAL TEMPORARY
- RIP RAP MEDIUM

PROJECT NO: 1060-38-70	HWY: IH-94	COUNTY: WAUKESHA	EROSION CONTROL: STAGE 2	SHEET 36	E

2

N

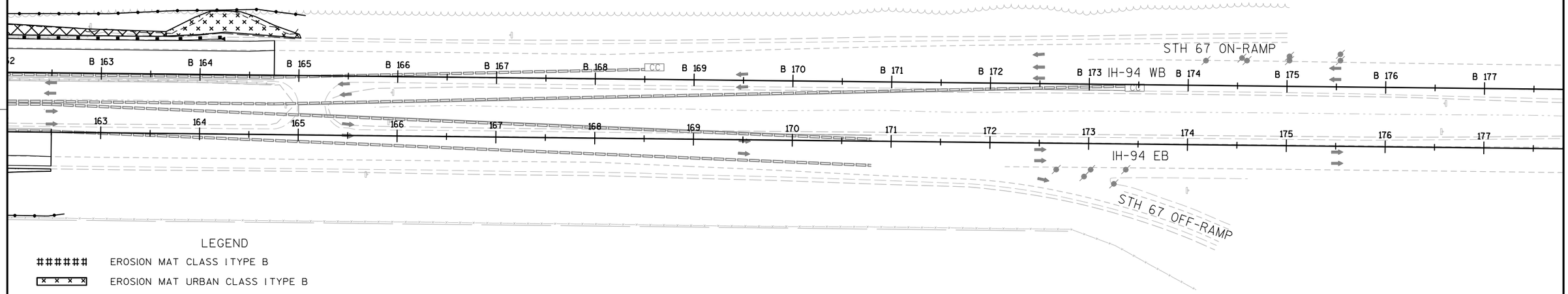

LEGEND

- ###### EROSION MAT CLASS I TYPE B
- EROSION MAT URBAN CLASS I TYPE B
- EROSION MAT CLASS II TYPE C
- SOD, REINFORCED W/ EROSION MAT CLASS II, TYPE A (PIPE OUTFALL)
- SILT FENCE
- SILT FENCE BACKED BY EROSION BALES
- SAFETY FENCE
- SLOPE INTERCEPT
- CONC — CONCRETE SURFACE DRAIN (TYPE A)
- TEMPORARY DITCH CHECK
- CULVERT PIPE CHECK
- TSB — TEMPORARY SEDIMENT BASIN
- GRATE FOR DRAIN SLOTTED VANE LONGITUDINAL TEMPORARY
- RIP RAP MEDIUM

PROJECT NO: 1060-38-70	HWY: IH-94	COUNTY: WAUKESHA	EROSION CONTROL: STAGE 2	SHEET 37	E

2

N

DOUSMAN ROAD

℄ IH-94 WB

℄ IH-94 EB

IH-94 WB

IH-94 EB

B-67-80

B-67-79

℄ DOUSMAN ROAD

B 146 B 147 B 148 B 149 B 150 B 151 B 152 B 153 B 154 B 155 B 156 B 157 B 158 B 159 B 160 B 161

146 147 148 149 150 151 152 153 154 155 156 157 158 159 160 161

611 610 609 608 607 606 605 604 603 602

LEGEND

#######	EROSION MAT CLASS I TYPE B
× × × ×	EROSION MAT URBAN CLASS I TYPE B
XXXX	EROSION MAT CLASS II TYPE C
	SOD, REINFORCED W/ EROSION MAT CLASS II, TYPE A (PIPE OUTFALL)
	SILT FENCE
	SILT FENCE BACKED BY EROSION BALES
—×—×—	SAFETY FENCE
	SLOPE INTERCEPT
CONC	CONCRETE SURFACE DRAIN (TYPE A)
△△△	TEMPORARY DITCH CHECK
○○○	CULVERT PIPE CHECK
TSB	TEMPORARY SEDIMENT BASIN
	GRATE FOR DRAIN SLOTTED VANE LONGITUDINAL TEMPORARY
	RIP RAP MEDIUM

PROJECT NO: 1060-38-70	HWY: IH-94	COUNTY: WAUKESHA	EROSION CONTROL: STAGE 3	SHEET 38	E

2

N

℄ IH-94 WB

B 162 B 163 B 164 B 165 B 166 B 167 B 168 B 169 B 170 B 171 B 172 B 173 B 174 B 175 B 176 IH-94 WB B 177

162 163 164 165 166 167 168 169 170 171 172 173 174 175 176 177

STH 67 ON-RAMP

IH-94 EB

℄ IH-94 EB

STH 67 OFF-RAMP

LEGEND

- ###### EROSION MAT CLASS I TYPE B
- EROSION MAT URBAN CLASS I TYPE B
- EROSION MAT CLASS II TYPE C
- SOD, REINFORCED W/ EROSION MAT CLASS II, TYPE A (PIPE OUTFALL)
- SILT FENCE
- SILT FENCE BACKED BY EROSION BALES
- SAFETY FENCE
- SLOPE INTERCEPT
- CONC CONCRETE SURFACE DRAIN (TYPE A)
- TEMPORARY DITCH CHECK
- CULVERT PIPE CHECK
- TSB TEMPORARY SEDIMENT BASIN
- GRATE FOR DRAIN SLOTTED VANE LONGITUDINAL TEMPORARY
- RIP RAP MEDIUM

PROJECT NO: 1060-38-70	HWY: IH-94	COUNTY: WAUKESHA	EROSION CONTROL: STAGE 3	SHEET 39	E

2

LEGEND

- EXISTING SIGN MOUNTED ON POST(S)
- EXISTING SIGN MOUNTED ON BRIDGE OR SIGN BRIDGE
- PROPOSED SIGN MOUNTED ON POST(S)
- PROPOSED SIGN MOUNTED ON BRIDGE OR SIGN BRIDGE
- (XXX) DENOTES SIGN NUMBER
- (X) INDICATES SIGN SIZE
- ESTR EXISTING SIGN TO REMAIN

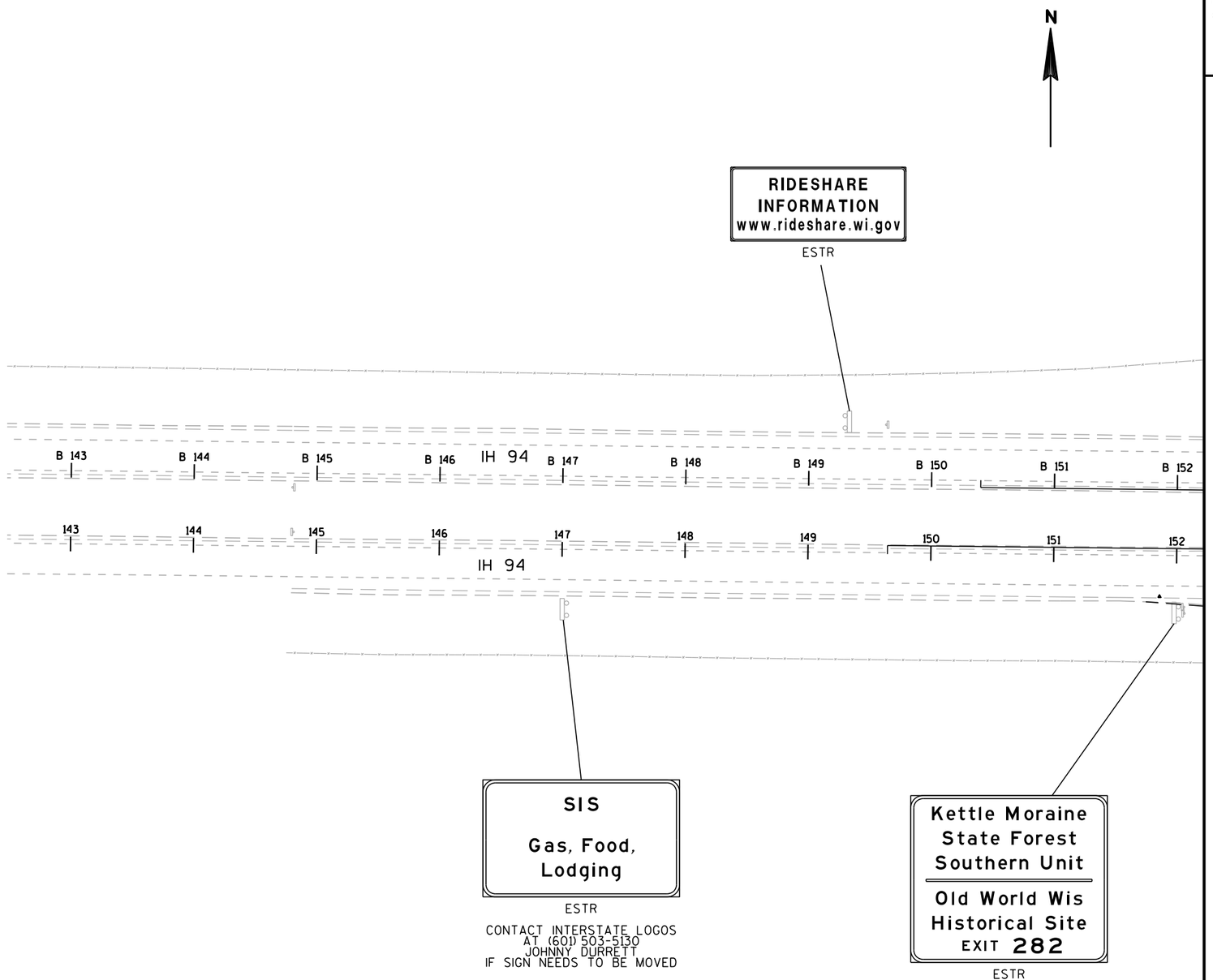

2

SHEET 1 OF 3

PROJECT NO: 1060-38-70	HWY: IH 94	COUNTY: WAUKESHA	PERMANENT SIGNING PLAN	SHEET 40	E

LEGEND

- EXISTING SIGN MOUNTED ON POST(S)
- EXISTING SIGN MOUNTED ON BRIDGE OR SIGN BRIDGE
- PROPOSED SIGN MOUNTED ON POST(S)
- PROPOSED SIGN MOUNTED ON BRIDGE OR SIGN BRIDGE
- (XXX) DENOTES SIGN NUMBER
- (X) INDICATES SIGN SIZE
- ESTR EXISTING SIGN TO REMAIN

N

DOUSMAN RD

IH 94

NEW OPENING

TO BE CLOSED OPENING

40'

EMERGENCY STOPPING ONLY
ESTR

1 Dousman Rd
M1-94
Dousman Rd
REMOVE

2 SPEED LIMIT 65
R2-1(5)
SPEED LIMIT 65
REMOVE

3 W5-52L(3)
REMOVE

4 W5-52R(3)
REMOVE

5 W5-52R(3)
REMOVE

6 W5-52L(3)
REMOVE

7 Dousman Rd
M1-94
Dousman Rd
REMOVE

8 SPEED LIMIT 35
W3-5(2M)

9 REDUCE SPEED AHEAD
9a 35 M.P.H.
REMOVE

10 EXIT 40 M.P.H.
W13-2
MOVE
150' EAST

11 EAST 94 MILE 281 .6
MOVE
REMOVE & REINSTALL AT CONCLUSION OF PROJECT

12 WEST 94 MILE 281 .6
MOVE
REMOVE & REINSTALL AT CONCLUSION OF PROJECT

13 R3-4
14 R3-4A
EXCEPT MAINTENANCE AND POLICE AUTHORIZED VEHICLES
MOVE

15 EAST 94 MILE 281 .8
MOVE
REMOVE & REINSTALL AT CONCLUSION OF PROJECT

16 WEST 94 MILE 281 .8
MOVE
REMOVE & REINSTALL AT CONCLUSION OF PROJECT

17 SPEED LIMIT 35
REMOVE
SPEED LIMIT 35
R2-1(5)

18 19

EXIT 282
67
Dousman
Oconomowoc
ESTR

SHEET 2 OF 3

PROJECT NO: 1060-38-70	HWY: IH 94	COUNTY: WAUKESHA	PERMANENT SIGNING PLAN	SHEET 41 E

FILE NAME : J:\projects\d2_10603894\70\023202_SP.dgn PLOT DATE : 10-JUN-2014 14:26 PLOT BY : mscppl PLOT NAME : PLOT SCALE : 100:1

WISDOT/CADDS SHEET 42

2

2

LEGEND

EXISTING SIGN MOUNTED ON POST(S)

EXISTING SIGN MOUNTED ON BRIDGE OR SIGN BRIDGE

PROPOSED SIGN MOUNTED ON POST(S)

PROPOSED SIGN MOUNTED ON BRIDGE OR SIGN BRIDGE

(XXX) DENOTES SIGN NUMBER

(X) INDICATES SIGN SIZE

ESTR EXISTING SIGN TO REMAIN

N

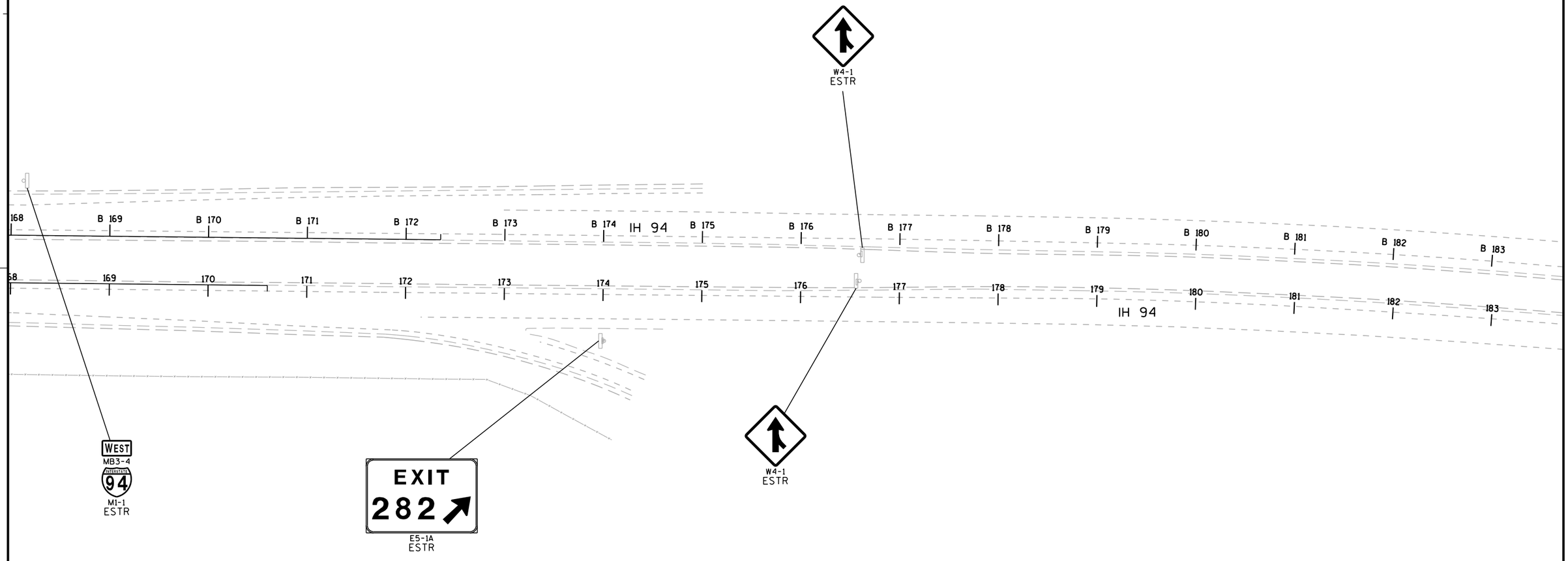

SHEET 3 OF 3

PROJECT NO: 1060-38-70	HWY: IH 94	COUNTY: WAUKESHA	PERMANENT SIGNING PLAN	SHEET 42	E

FILE NAME : J:\projects\d2_10603894\70\023203_SP.dgn PLOT DATE : 10-JUN-2014 14:26 PLOT BY : mscppl PLOT NAME : PLOT SCALE : 100:1

2

N

ROW

DOUSMAN ROAD

STA 146+85 ℄ IH-94 WB
END PAVEMENT MARKING EPOXY 4-INCH (WHITE),
MATCH EXISTING PAVEMENT MARKING

STA 146+85 ℄ IH-94 WB
END PAVEMENT MARKING GROOVED WET REFLECTIVE
CONTRAST TAPE 4-INCH (DASHED WHITE), MATCH EXISTING
PAVEMENT MARKING

STA 146+85 ℄ IH-94 WB
END PAVEMENT MARKING EPOXY 4-INCH (YELLOW),
MATCH EXISTING PAVEMENT MARKING

SLOPE INTERCEPT

B-67-340

SLOPE INTERCEPT

℄ IH-94 WB

46 B-147 B-148 B-149 B-150 B-151 B-152 B-153 B-154 IH-94 WB B-155 B-156 B-157 B-158 B-159 B-160 B-161

611 610 609 608 607 606

6 147 148 149 150 151 152 153 154 155 156 157 158 159 160 161

IH-94 EB

STA 146+85 ℄ IH-94 EB
END PAVEMENT MARKING EPOXY 4-INCH (YELLOW),
MATCH EXISTING PAVEMENT MARKING

STA 146+85 ℄ IH-94 EB
END PAVEMENT MARKING GROOVED WET REFLECTIVE
CONTRAST TAPE 4-INCH (DASHED WHITE), MATCH EXISTING
PAVEMENT MARKING

STA 146+85 ℄ IH-94 EB
END PAVEMENT MARKING EPOXY 4-INCH (WHITE),
MATCH EXISTING PAVEMENT MARKING

ROW

℄ IH-94 EB

SLOPE INTERCEPT

B-67-339

ROW

SLOPE INTERCEPT

605 604 603 602

℄ DOUSMAN ROAD

PAVEMENT MARKING LEGEND

1. PAVEMENT MARKING EPOXY 4-INCH (YELLOW)
2. PAVEMENT MARKING EPOXY 4-INCH (WHITE)
3. PAVEMENT MARKING GROOVED WET REFLECTIVE CONTRAST TAPE 4-INCH (DASHED WHITE) (12.5' LINE, 37.5' SKIP)

PROJECT NO: 1060-38-70	HWY: IH-94	COUNTY: WAUKESHA	PERMANENT PAVEMENT MARKING	SHEET 43	E

FILE NAME : x:\20100S\20103.00\Eng_Docs\Sheets\1060-38-70\024501_pm.dgn PLOT DATE : 7/30/2014 PLOT BY : bweigand PLOT NAME : PLOT SCALE : 1:100

2

N

ROW

SLOPE INTERCEPT

℄ IH-94 WB

STA 168+00 ℄ IH-94 WB
END PAVEMENT MARKING EPOXY 4-INCH (WHITE)
MATCH EXISTING STH 67 ON-RAMP PAVEMENT MARKING

STA 175+65 ℄ IH-94 WB
END PAVEMENT MARKING GROOVED WET REFLECTIVE CONTRAST TAPE 4-INCH (DASHED WHITE), MATCH EXISTING PAVEMENT MARKING

STA 175+65 ℄ IH-94 WB
END PAVEMENT MARKING EPOXY 4-INCH (YELLOW), MATCH EXISTING PAVEMENT MARKING

STH 67 ON-RAMP

B 163 B 164 B 165 B 166 B 167 B 168 B 169 B 170 B 171 B 172 B 173 B 174 B 175 B 176 IH-94 WB B 177 B 17

163 164 165 166 167 168 169 170 171 172 173 174 175 176 177 178

IH-94 EB

① ② ③

℄ IH-94 EB

ROW

STA 168+00 ℄ IH-94 EB
END PAVEMENT MARKING EPOXY 4-INCH (WHITE)
MATCH EXISTING STH 67 OFF-RAMP PAVEMENT MARKING

STH 67 OFF-RAMP

STA 175+65 ℄ IH-94 EB
END PAVEMENT MARKING GROOVED WET REFLECTIVE CONTRAST TAPE 4-INCH (DASHED WHITE), MATCH EXISTING PAVEMENT MARKING

STA 175+65 ℄ IH-94 EB
END PAVEMENT MARKING EPOXY 4-INCH (YELLOW), MATCH EXISTING PAVEMENT MARKING

PAVEMENT MARKING LEGEND

① PAVEMENT MARKING EPOXY 4-INCH (YELLOW)

② PAVEMENT MARKING EPOXY 4-INCH (WHITE)

③ PAVEMENT MARKING GROOVED WET REFLECTIVE CONTRAST TAPE 4-INCH (DASHED WHITE) (12.5' LINE, 37.5' SKIP)

PROJECT NO: 1060-38-70	HWY: IH-94	COUNTY: WAUKESHA	PERMANENT PAVEMENT MARKING	SHEET 44	E

2

N

℄ IH-94 EB

℄ IH-94 WB

IH-94 EB

IH-94 WB

159

159

160

160

161

161

162

162

604

605

606

607

608

609

N DOUSMAN RD

℄ DOUSMAN RD

ROW

STA 603+50 ℄ DOUSMAN RD
BEGIN PAVEMENT MARKING EPOXY 4-INCH (WHITE)

SLOPE INTERCEPT

STA 608+00 ℄ DOUSMAN RD
END PAVEMENT MARKING EPOXY 4-INCH (WHITE)

SLOPE INTERCEPT

STA 608+00 ℄ DOUSMAN RD
END PAVEMENT MARKING EPOXY
4-INCH (DASHED YELLOW),
MATCH EXISTING CENTER LINE
PAVEMENT MARKING

STA 608+00 ℄ DOUSMAN RD
END PAVEMENT MARKING EPOXY 4-INCH (WHITE)

ROW

STA 603+50 ℄ DOUSMAN RD
BEGIN PAVEMENT MARKING EPOXY
4-INCH (DASHED YELLOW),
MATCH EXISTING CENTER LINE
PAVEMENT MARKING

SLOPE INTERCEPT

STA 603+50 ℄ DOUSMAN RD
BEGIN PAVEMENT MARKING EPOXY 4-INCH (WHITE)

PAVEMENT MARKING LEGEND

(1) PAVEMENT MARKING EPOXY 4-INCH (WHITE)

(2) PAVEMENT MARKING EPOXY 4-INCH (DASHED YELLOW)
(12.5' LINE, 37.5' SKIP)

PROJECT NO: 1060-38-70	HWY: IH-94	COUNTY: WAUKESHA	PERMANENT PAVEMENT MARKING	SHEET 45	E

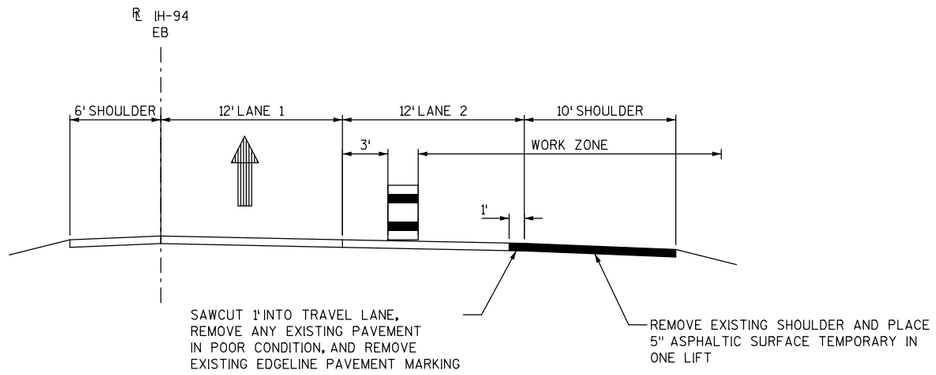

STA 147+00 TO STA 170+50 ℄ IH-94 EB
STA 148+00 TO STA 170+50 ℄ IH-94 WB

PRE-STAGE 1 CONSTRUCTION
TYPICAL SECTION
DURING NIGHT TIME CLOSURES EB IH-94
(WB IH-94 IS MIRROR IMAGE)

PRE-STAGE 1

WORK:

* SAWCUT AND COMPLETE 5" ASPHALTIC SURFACE MILLING ON THE OUTSIDE SHOULDERS AND 1' INTO "LANE 2" TRAVEL LANE.
* PAVE 5" ASPHALTIC SURFACE TEMPORARY ON THE OUTSIDE SHOULDERS IN ONE LIFT.

TRAFFIC CONTROL:

* COMPLETE WORK DURING NIGHT TIME HOURS USING SINGLE LANE CLOSURES. UTILIZE SDD TRAFFIC CONTROL, LANE CLOSURE, SPEED REDUCTION, FOR SIGNING AND TRAFFIC CONTROL DEVICE LOCATIONS.
* IF MULTIPLE NIGHT TIME CLOSURES ARE NEEDED, UTILIZE SDD TRAFFIC CONTROL SHOULDER CLOSURE ON DIVIDED ROADWAY, SPEEDS GREATER THAN 40 M.P.H., FOR SIGNING AND TRAFFIC CONTROL DEVICE LOCATIONS DURING PEAK HOURS.
* THE EXACT NUMBER, LOCATION, AND SPACING OF ALL SIGNS AND DEVICES SHALL BE ADJUSTED TO FIT FIELD CONDITIONS AS APPROVED BY THE ENGINEER.
* THE SPACING BETWEEN SIGNS SHOULD BE ADJUSTED TO NOT CONFLICT WITH AND TO PROVIDE A MINIMUM OF 200 FT, (500 FT DESIREABLE) DISTANCE TO EXISTING SIGNS.
* "WO" IS THE SAME AS "W" EXCEPT THE BACKGROUND IS ORANGE.
* ANY SIGNS TEMPORARY OR EXISTING, WHICH CONFLICT WITH TRAFFIC CONTROL "IN USE" SHALL BE REMOVED OR COVERED AS NEEDED AND AS APPROVED BY THE ENGINEER. NO WARNING LIGHTS SHALL BE WORKING OR ON "COVERED" OR "DOWNED" SIGNS.

PROJECT NO: 1060-38-70	HWY: IH-94	COUNTY: WAUKESHA	PRE-STAGE 1 TYPICAL SECTION AND NOTES	SHEET 46	E

STAGE 1

WORK:

* CONSTRUCT INSIDE LANE, SHOULDERS AND WIDENING WITH TAPERS ON BOTH EASTBOUND AND WESTBOUND IH-94.
* CONSTRUCT INSIDE HALF OF STRUCTURES B-67-339 AND B-67-340 AT DOUSMAN ROAD. SEE STRUCTURE STAGING PLANS - STAGE 1 FOR DETAILS.

TRAFFIC CONTROL:

* SHIFT TRAFFIC TO OUTSIDE LANES AND OUTSIDE SHOULDERS.
* MAINTAIN TWO LANES OF TRAFFIC IN BOTH EASTBOUND AND WESTBOUND DIRECTIONS.
* FULL CLOSURES ARE REQUIRED ON DOUSMAN ROAD FOR EXISTING DECK REMOVAL, DECK CONSTRUCTION, AND CONSTRUCTION OF THESE SIDE ROADS. PLACE TWO FIXED MESSAGE SIGNS AT THE INTERSECTION OF DELAFIELD ROAD AND DOUSMAN ROAD AND AT THE INTERSECTION OF VALLEY ROAD AND DOUSMAN ROAD TO ALERT TRAFFIC OF CLOSURES AS DIRECTED BY THE ENGINEER. SEE FIXED MESSAGE SIGN DETAIL, GENERAL NOTES & LEGEND, AND DOUSMAN ROAD DETOUR PLAN SHEET FOR MORE DETAILS.
* THE EXACT NUMBER, LOCATION, AND SPACING OF ALL SIGNS AND DEVICES SHALL BE ADJUSTED TO FIT FIELD CONDITIONS AS APPROVED BY THE ENGINEER.
* THE SPACING BETWEEN SIGNS SHOULD BE ADJUSTED TO NOT CONFLICT WITH AND TO PROVIDE A MINIMUM OF 200 FT, (500 FT DESIREABLE) DISTANCE TO EXISTING SIGNS.
* "WO" IS THE SAME AS "W" EXCEPT THE BACKGROUND IS ORANGE.
* ANY SIGNS TEMPORARY OR EXISTING, WHICH CONFLICT WITH TRAFFIC CONTROL "IN USE" SHALL BE REMOVED OR COVERED AS NEEDED AND AS APPROVED BY THE ENGINEER. NO WARNING LIGHTS SHALL BE WORKING OR ON "COVERED" OR "DOWNED" SIGNS.

* PLACE "ROAD WORK AHEAD" (W20-1) SIGN AND SUPPORT ON STH 67 WB ON-RAMP APPROXIMATELY 1000' FROM EXISTNG ON-RAMP GORE. PLACE "SPEED LIMIT 55" (R2-1) AND "WORK ZONE" (W21-62Q) SIGN AND SUPPORT ON STH 67 ON-RAMP APPROXIMATELY 500' FROM EXISTING ON-RAMP GORE.

PLACE FIXED MESSAGE SIGN AS STATED IN TRAFFIC CONTROL NOTES ON THIS PAGE

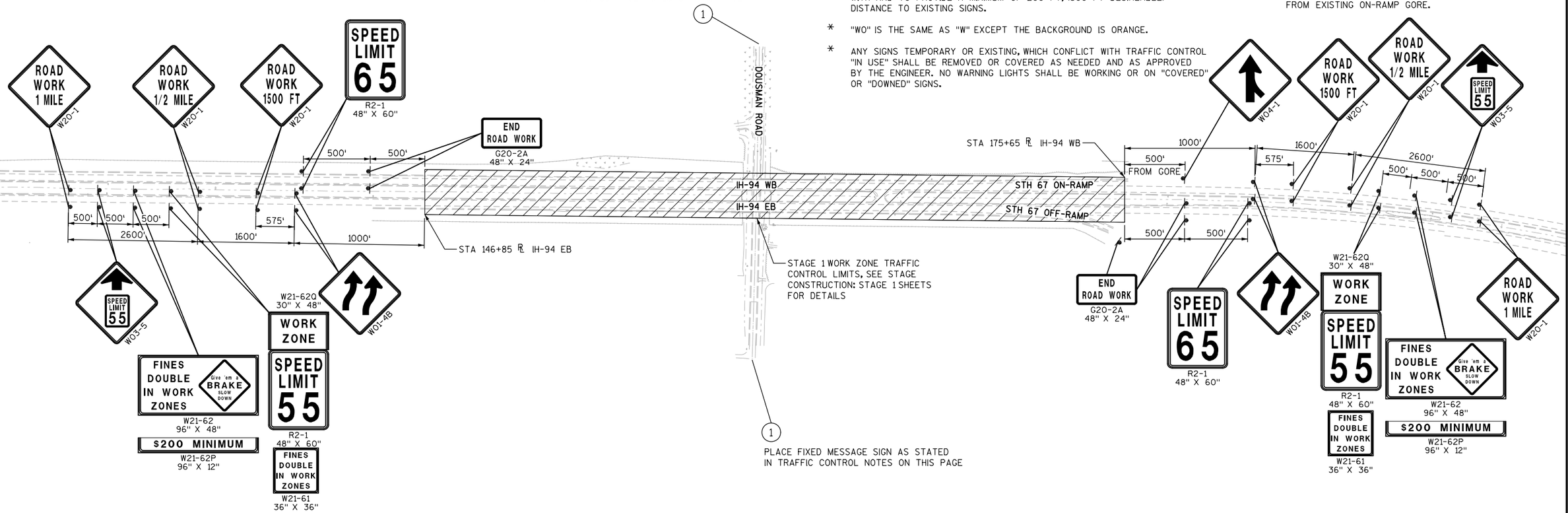

1 PLACE FIXED MESSAGE SIGN AS STATED IN TRAFFIC CONTROL NOTES ON THIS PAGE

PROJECT NO: 1060-38-70	HWY: IH-94	COUNTY: WAUKESHA	STAGE 1 - ADVANCED SIGNING AND ADDITIONAL NOTES	SHEET 47	E

FIXED MESSAGE SIGNS (DETAILS SHEETS)

GENERAL NOTES:

1. ALL SIGNS TO HAVE FLUORESCENT REFLECTIVE SHEETING - REFERENCE: "WISDOT STANDARD SPECIFICATIONS FOR ROAD AND BRIDGE CONSTRUCTION," LATEST EDITION.

2. AFTER SIGNS HAVE BEEN LOCATED IN THE FIELD, BUT BEFORE INSTALLATION, THE PROJECT ENGINEER SHALL VERIFY EACH SIGN LOCATION.

3. ALL SIGNS TO BE MOUNTED ON WOODEN POST SUPPORTS (4"x6"). THE NUMBER OF POSTS REQUIRED FOR EACH LAYOUT IS SHOWN.

4. SIGNS ON THIS SHEET TO BE PAID UNDER THE ITEM "FIXED MESSAGE SIGNS."

5. SIGNS SHALL BE BLACK NON-REFLECTIVE MESSAGE ON ORANGE FLUORESCENT REFLECTIVE BACKGROUND PER SPEC 643 & 637.
6. ALL SIGNS SHALL HAVE CAPITAL LETTERS AND NUMERALS:
   12" CAPS SHALL BE SERIES "D"
   6" CAPS SHALL BE SERIES "C"

7. ALL SIGNS SHALL HAVE BORDER & RADIUS OF BORDERS AS FOLLOWS:

SIGN AREA	WIDTH OF BORDER
GREATER THAN 150 SQ FT	3"
60-150 SQ FT	2"
LESS THAN 60 SQ FT	1"

RADIUS SMALLEST OUTSIDE DIMENSION	CORNER RADIUS
> 8 FT	12"
> 6 FT	9"
> 4 FT	6"
LESS THAN 4 FT	3"

8. BEGIN XXX XX SIGNS SHALL BE SEPARATE PANELS, BUT SHALL BE CONSIDERED AS PART OF THE SIGN AND SHOULD BE REMOVED OR COVERED AFTER THEIR EFFECTIVE DATE. THE MONTH AND DAY SHALL BE AS DIRECTED BY THE ENGINEER IN THE FIELD.

9. CONTRACTOR SHALL SUBMIT SHOP DRAWINGS TO ENGINEER FOR REVIEW PRIOR TO MANUFACTURING.

10. SIGN BASE MATERIAL SHALL BE ACCORDING TO SECTION 643 & 637.

11. SIGNS TO BE IN PLACE 10 DAYS PRIOR TO CONSTRUCTION.

(X) = SIGN NUMBER

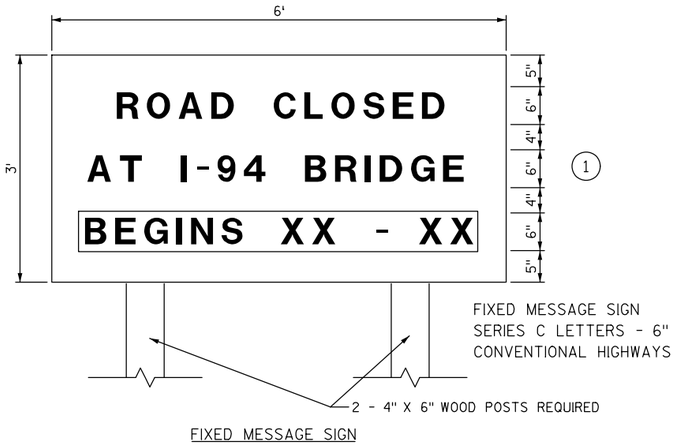

FIXED MESSAGE SIGN

FOR PLAN SHEETS

LEGEND: FIXED MESSAGE SIGNS

	EXISTING GUIDE SIGN TO BE COVERED
	FIXED MESSAGE SIGN(S) ON WOOD POST SUPPORTS
(XX)	FIXED MESSAGE SIGN NUMBER
(A1)	CONTRACTOR SHALL COVER AS DIRECTED BY THE ENGINEER ALL ROUTE MARKINGS PERTAINING TO THE PROJECT. INCIDENTAL TO WORK ZONE TRAFFIC CONTROL SIGNING.
CMS	CHANGEABLE MESSAGE SIGN

NOTES: FIXED MESSAGE SIGNS

1. CONTRACTOR SHOULD LOCATE FIXED MESSAGE SIGNS A MINIMUM OF 400' FROM ANY EXISTING TYPE "I" SIGN.

2. ALL FIXED MESSAGE SIGNS SHALL BE BLACK NON-REFLECTIVE MESSAGE ON ORANGE REFLECTIVE BACKGROUND.

3. SEE FIXED MESSAGE SIGNS AND SPECIAL MESSAGE SIGNS LAYOUT SHEETS FOR MORE INFORMATION.

4. COVER DETOUR SIGNING WHEN NOT IN USE. INCIDENTAL TO WORK ZONE TRAFFIC CONTROL SIGNING.

5. SIGNS TO BE PLACED 10 DAYS PRIOR TO CONSTRUCTION.

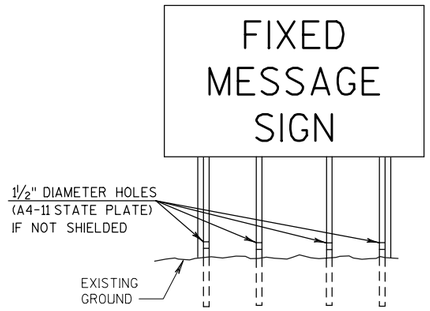

FRONT VIEW

NOTES

1. SEE TRAFFIC CONTROL SHEETS FOR SIGN LOCATIONS.

2. SEE TABLES BELOW FOR REQUIRED NUMBER OF POSTS.

* 6' FROM EDGE OF A PAVED SHOULDER OR 12' FROM THE EDGE OF PAVEMENT (EDGE LINE LOCATION) OR 2' FROM OUTSIDE EDGE OF GRAVEL, WHICHEVER IS GREATER UNLESS DIRECTED BY PROJECT ENGINEER.

** THE EXISTENCE OF CURB AND GUTTER DOES NOT IN ITSELF MANDATE THE VERTICAL CLEARANCE ILLUSTRATED. THAT HEIGHT IS TYPICALLY MEASURED WHERE THERE IS SIDEWALK ADJACENT TO THE ROADWAY OR PARKING IS PERMITTED. IN THE ABSENCE OF SIDEWALK, VERTICAL CLEARANCE IS MEASURED FROM THE TOP OF THE CURB. IF NO SIDEWALK AND NO PARKING, VERTICAL CLEARANCE MAY BE REDUCED TO 5' MINIMUM. OFFSET OF SIGNS IS MEASURED FROM THE CURB FLOWLINE.

3. 4X6 WOOD POSTS SHALL HAVE TWO HOLES PER STATE PLATE A4-11

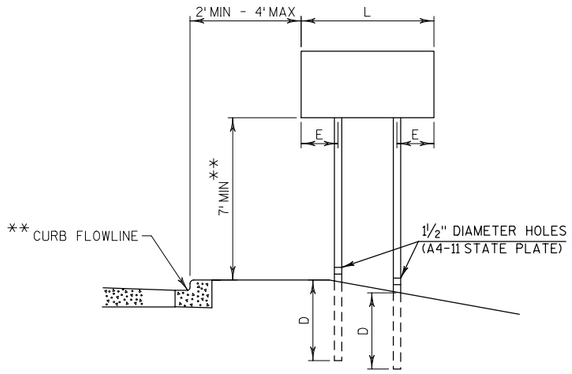

URBAN AREA

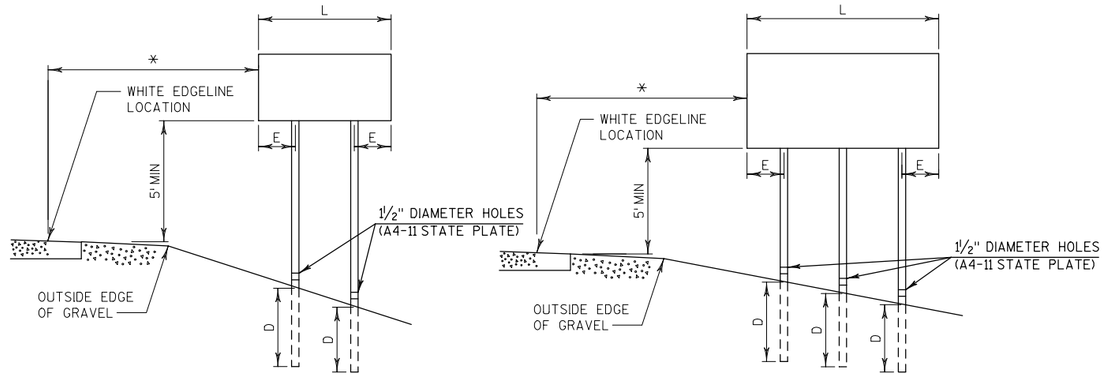

RURAL AREA

SIGN SHAPE OTHER THAN DIAMOND (TWO POSTS REQUIRED)	
L	E
GREATER THAN 48" LESS THAN 60"	12"
60" TO 120"	L/5

SIGN SHAPE OTHER THAN DIAMOND (THREE POSTS REQUIRED)	
L	E
GREATER THAN 120" LESS THAN 168"	12"

SIGN SHAPE OTHER THAN DIAMOND (FOUR POSTS REQUIRED)	
L	E
168" AND GREATER	12"

POST EMBEDMENT DEPTH

AREA OF SIGN INSTALLATION (SQ. FT.)	D (MIN)
20 OR LESS	4'
GREATER THAN 20	5'

POST MOUNTING DETAIL FOR TRAFFIC CONTROL FIXED MESSAGE SIGNS

STAGE 1

WORK:

* CONSTRUCT INSIDE LANE, SHOULDERS AND WIDENING WITH TAPERS ON BOTH EASTBOUND AND WESTBOUND IH-94.
* CONSTRUCT INSIDE HALF OF STRUCTURES B-67-339 AND B-67-340 AT DOUSMAN ROAD. SEE STRUCTURE STAGING PLANS - STAGE 1 FOR DETAILS.

TRAFFIC CONTROL:

* SHIFT TRAFFIC TO OUTSIDE LANES AND OUTSIDE SHOULDERS.
* MAINTAIN TWO LANES OF TRAFFIC IN BOTH EASTBOUND AND WESTBOUND DIRECTIONS.
* REMOVE OR COVER WITH TEMPORARY BLACK TAPE ALL CONFLICTING PAVEMENT MARKINGS.
* SEE STAGE 1 - ADVANCED SIGNING AND ADDITIONAL NOTES SHEET FOR ADVANCED SIGNING OUTSIDE OF WORK ZONE.

STAGE 1 CONSTRUCTION
TYPICAL SECTION
EB IH-94
(WB IH-94 IS MIRROR IMAGE)

NOTE:
TEMPORARY CONCRETE BARRIER LIMITS
STA 147+50 TO STA 172+50 ℄ IH-94 EB
STA 148+50 TO STA 174+25 ℄ IH-94 WB

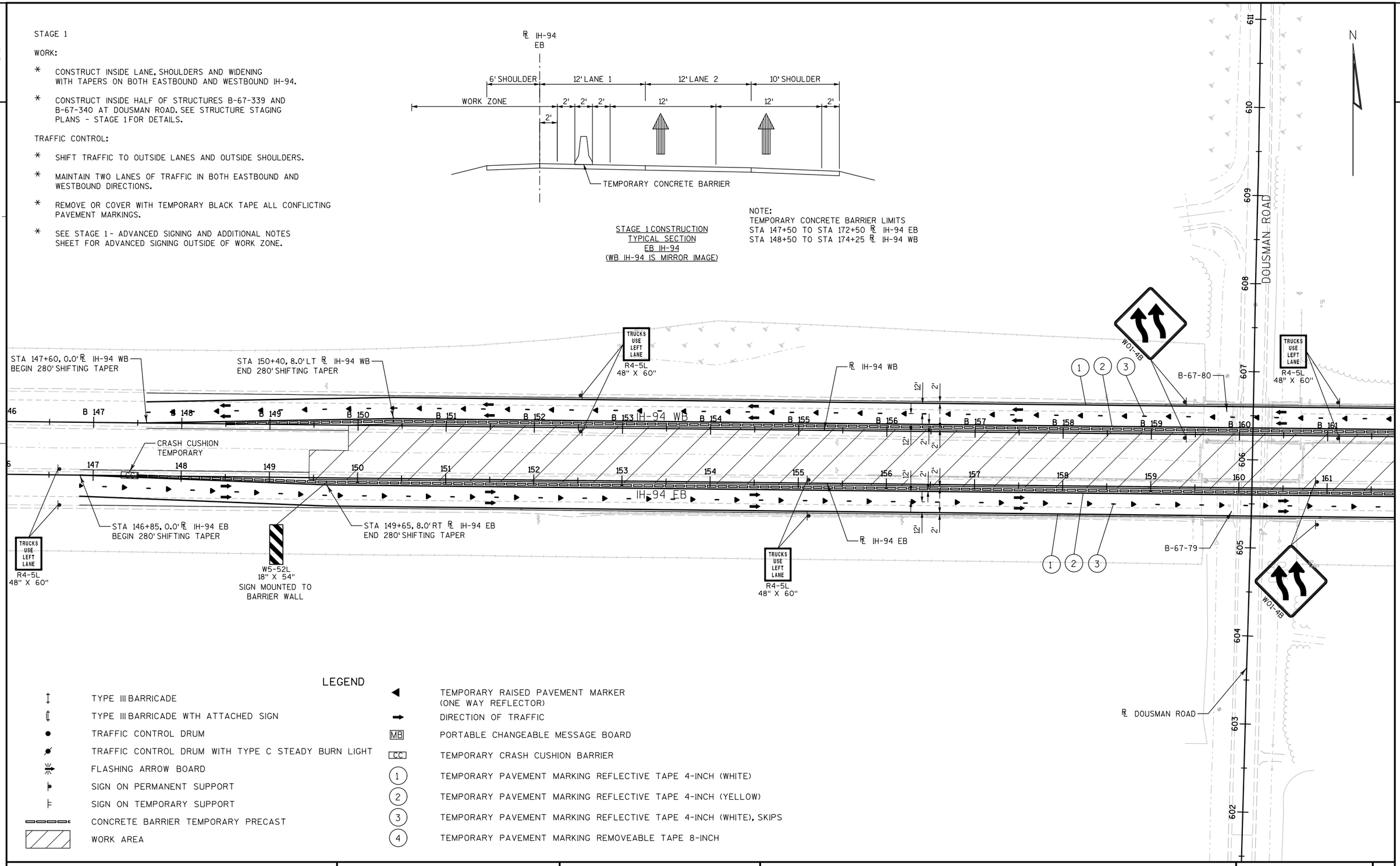

LEGEND

‡	TYPE III BARRICADE	◀	TEMPORARY RAISED PAVEMENT MARKER (ONE WAY REFLECTOR)
‡	TYPE III BARRICADE WTH ATTACHED SIGN	➡	DIRECTION OF TRAFFIC
●	TRAFFIC CONTROL DRUM	MB	PORTABLE CHANGEABLE MESSAGE BOARD
●	TRAFFIC CONTROL DRUM WITH TYPE C STEADY BURN LIGHT	CC	TEMPORARY CRASH CUSHION BARRIER
	FLASHING ARROW BOARD	1	TEMPORARY PAVEMENT MARKING REFLECTIVE TAPE 4-INCH (WHITE)
	SIGN ON PERMANENT SUPPORT	2	TEMPORARY PAVEMENT MARKING REFLECTIVE TAPE 4-INCH (YELLOW)
	SIGN ON TEMPORARY SUPPORT	3	TEMPORARY PAVEMENT MARKING REFLECTIVE TAPE 4-INCH (WHITE), SKIPS
	CONCRETE BARRIER TEMPORARY PRECAST	4	TEMPORARY PAVEMENT MARKING REMOVEABLE TAPE 8-INCH
	WORK AREA		

PROJECT NO: 1060-38-70	HWY: IH-94	COUNTY: WAUKESHA	STAGE CONSTRUCTION: STAGE 1	SHEET 50	E

2

STAGE 1

WORK:

* CONSTRUCT INSIDE LANE, SHOULDERS AND WIDENING WITH TAPERS ON BOTH EASTBOUND AND WESTBOUND IH-94.

* CONSTRUCT INSIDE HALF OF STRUCTURES B-67-339 AND B-67-340 AT DOUSMAN ROAD. SEE STRUCTURE STAGING PLANS - STAGE 1 FOR DETAILS.

TRAFFIC CONTROL:

* SHIFT TRAFFIC TO OUTSIDE LANES AND OUTSIDE SHOULDERS.

* MAINTAIN TWO LANES OF TRAFFIC IN BOTH EASTBOUND AND WESTBOUND DIRECTIONS.

* REMOVE OR COVER WITH TEMPORARY BLACK TAPE ALL CONFLICTING PAVEMENT MARKINGS.

* SEE STAGE 1 - ADVANCED SIGNING AND ADDITIONAL NOTES SHEET FOR ADVANCED SIGNING OUTSIDE OF WORK ZONE.

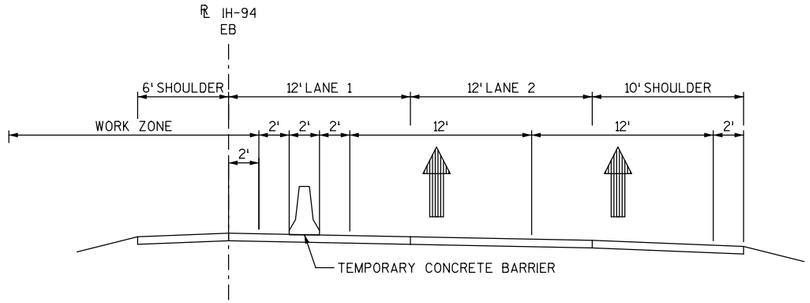

STAGE 1 CONSTRUCTION
TYPICAL SECTION
EB IH-94
(WB IH-94 IS MIRROR IMAGE)

NOTE:
TEMPORARY CONCRETE BARRIER LIMITS
STA 147+50 TO STA 172+50 ℄ IH-94 EB
STA 148+50 TO STA 174+25 ℄ IH-94 WB

N

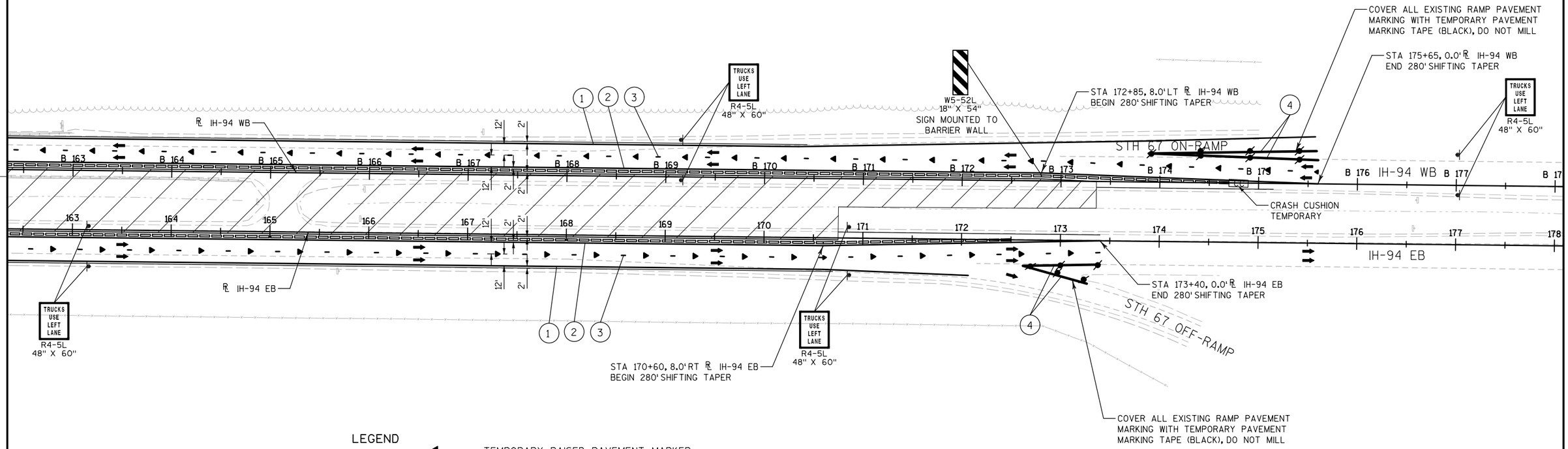

LEGEND

‡	TYPE III BARRICADE	◀	TEMPORARY RAISED PAVEMENT MARKER (ONE WAY REFLECTOR)
‡	TYPE III BARRICADE WTH ATTACHED SIGN	➡	DIRECTION OF TRAFFIC
●	TRAFFIC CONTROL DRUM	MB	PORTABLE CHANGEABLE MESSAGE BOARD
●	TRAFFIC CONTROL DRUM WITH TYPE C STEADY BURN LIGHT	CC	TEMPORARY CRASH CUSHION BARRIER
	FLASHING ARROW BOARD	1	TEMPORARY PAVEMENT MARKING REFLECTIVE TAPE 4-INCH (WHITE)
	SIGN ON PERMANENT SUPPORT	2	TEMPORARY PAVEMENT MARKING REFLECTIVE TAPE 4-INCH (YELLOW)
	SIGN ON TEMPORARY SUPPORT	3	TEMPORARY PAVEMENT MARKING REFLECTIVE TAPE 4-INCH (WHITE), SKIPS
	CONCRETE BARRIER TEMPORARY PRECAST	4	TEMPORARY PAVEMENT MARKING REMOVEABLE TAPE 8-INCH
	WORK AREA		

PROJECT NO: 1060-38-70	HWY: IH-94	COUNTY: WAUKESHA	STAGE CONSTRUCTION: STAGE 1	SHEET 51	E

STAGE 2

WORK:

* CONSTRUCT OUTSIDE LANE AND SHOULDERS ON BOTH EASTBOUND AND WESTBOUND IH-94.
* CONSTRUCT INSIDE HALF OF STRUCTURES B-67-339 AND B-67-340 AT DOUSMAN ROAD. SEE STRUCTURE STAGING PLANS - STAGE 2 FOR DETAILS.

TRAFFIC CONTROL:

* SHIFT TRAFFIC TO NEWLY CONSTRUCTED INSIDE LANE, SHOULDERS AND WIDENING WITH TAPERS.
* MAINTAIN TWO LANES OF TRAFFIC IN BOTH EASTBOUND AND WESTBOUND DIRECTIONS.
* FULL CLOSURES ARE REQUIRED ON DOUSMAN ROAD FOR EXISTING DECK REMOVAL, DECK CONSTRUCTION, AND CONSTRUCTION OF THESE SIDE ROADS. PLACE TWO FIXED MESSAGE SIGNS AT THE INTERSECTION OF DELAFIELD ROAD AND DOUSMAN ROAD AND AT THE INTERSECTION OF VALLEY ROAD AND DOUSMAN ROAD TO ALERT TRAFFIC OF CLOSURES AS DIRECTED BY THE ENGINEER. SEE FIXED MESSAGE SIGN DETAIL, GENERAL NOTES & LEGEND FROM STAGE 1, AND SEE DOUSMAN ROAD DETOUR PLAN SHEET FOR MORE DETAILS.
* THE EXACT NUMBER, LOCATION, AND SPACING OF ALL SIGNS AND DEVICES SHALL BE ADJUSTED TO FIT FIELD CONDITIONS AS APPROVED BY THE ENGINEER.
* THE SPACING BETWEEN SIGNS SHOULD BE ADJUSTED TO NOT CONFLICT WITH AND TO PROVIDE A MINIMUM OF 200 FT, (500 FT DESIREABLE) DISTANCE TO EXISTING SIGNS.
* "WO" IS THE SAME AS "W" EXCEPT THE BACKGROUND IS ORANGE.
* ANY SIGNS TEMPORARY OR EXISTING, WHICH CONFLICT WITH TRAFFIC CONTROL "IN USE" SHALL BE REMOVED OR COVERED AS NEEDED AND AS APPROVED BY THE ENGINEER. NO WARNING LIGHTS SHALL BE WORKING OR ON "COVERED" OR "DOWNED" SIGNS.
* PLACE "ROAD WORK AHEAD" (W20-1) SIGN AND SUPPORT ON STH 67 WB ON-RAMP APPROXIMATELY 1000' FROM EXISTNG ON-RAMP GORE. PLACE "SPEED LIMIT 55" (R2-1) AND "WORK ZONE" (W21-62Q) SIGN AND SUPPORT ON STH 67 ON-RAMP APPROXIMATELY 500' FROM EXISTING ON-RAMP GORE.

N

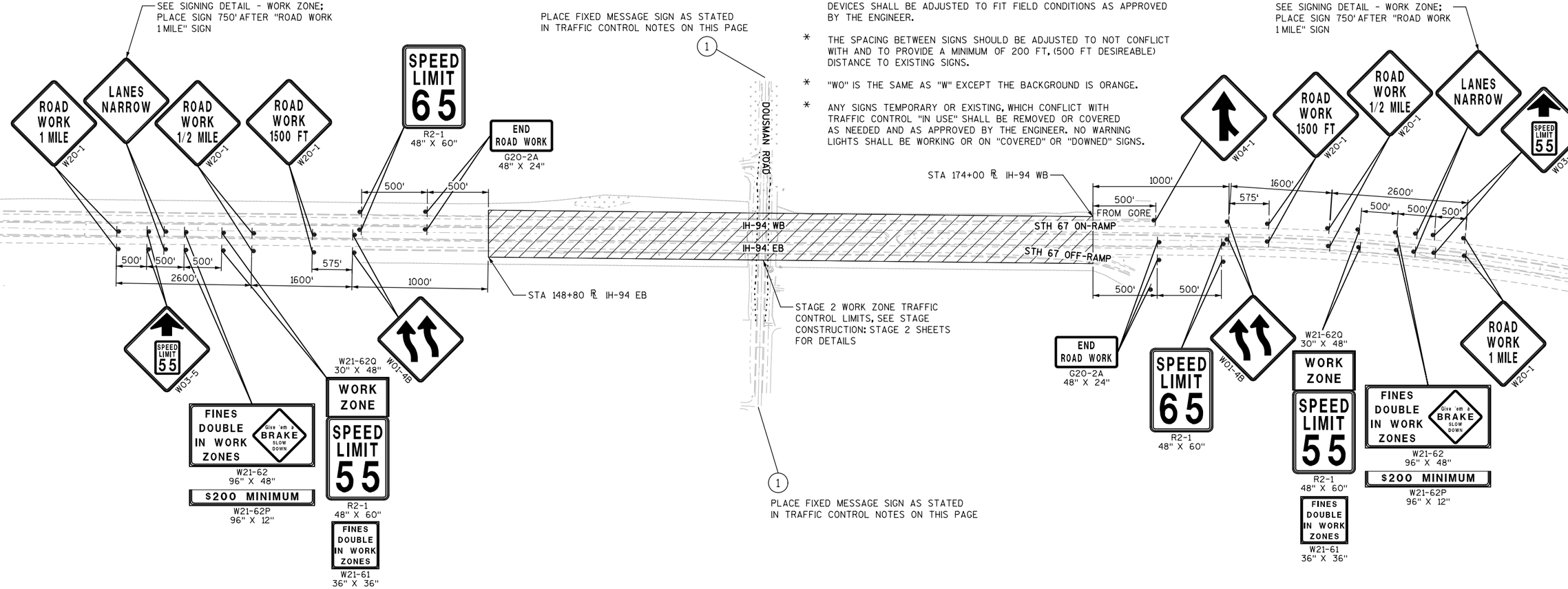

PROJECT NO: 1060-38-70	HWY: IH-94	COUNTY: WAUKESHA	STAGE 2 - ADVANCED SIGNING AND ADDITIONAL NOTES	SHEET 52	E

2

STAGE 2

WORK:

* CONSTRUCT OUTSIDE LANE AND SHOULDERS ON BOTH EASTBOUND AND WESTBOUND IH-94.
* CONSTRUCT INSIDE HALF OF STRUCTURES B-67-339 AND B-67-340 AT DOUSMAN ROAD. SEE STRUCTURE STAGING PLANS - STAGE 2 FOR DETAILS.

TRAFFIC CONTROL:

* SHIFT TRAFFIC TO NEWLY CONSTRUCTED INSIDE LANE, SHOULDERS AND WIDENING WITH TAPERS.
* MAINTAIN TWO LANES OF TRAFFIC IN BOTH EASTBOUND AND WESTBOUND DIRECTIONS.
* REMOVE OR COVER WITH TEMPORARY BLACK TAPE ALL CONFLICTING PAVEMENT MARKINGS.
* SEE STAGE 2 - ADVANCED SIGNING AND ADDITIONAL NOTES SHEET FOR ADVANCED SIGNING OUTSIDE OF WORK ZONE.

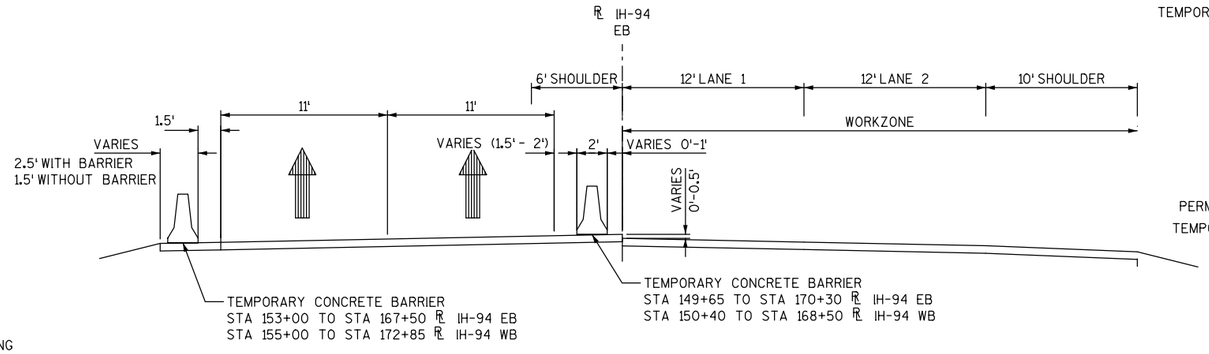

STAGE 2 CONSTRUCTION
TYPICAL SECTION
EB IH-94
(WB IH-94 IS MIRROR IMAGE)

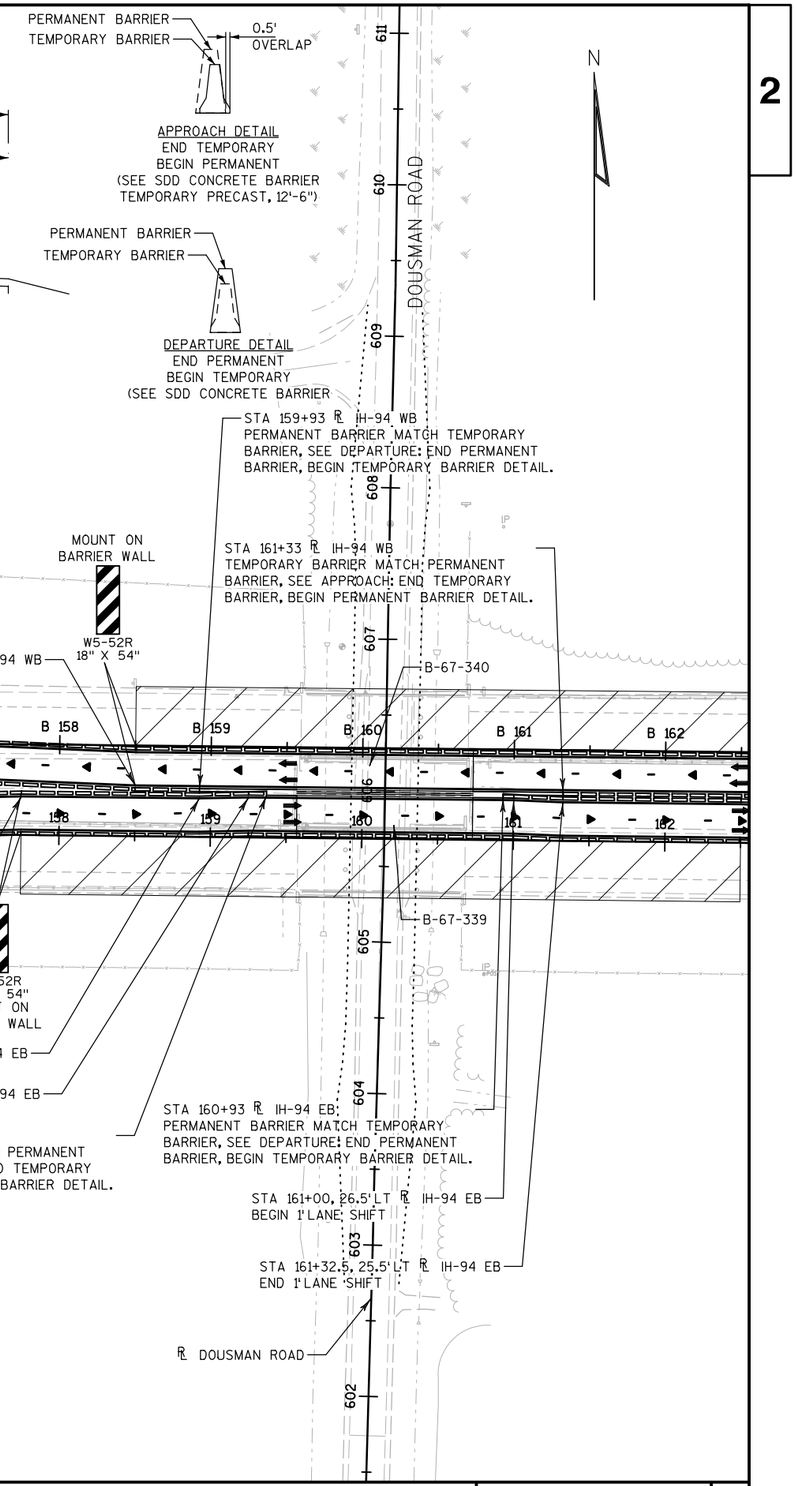

LEGEND

TYPE III BARRICADE	TEMPORARY RAISED PAVEMENT MARKER (ONE WAY REFLECTOR)
TYPE III BARRICADE WTH ATTACHED SIGN	DIRECTION OF TRAFFIC
TRAFFIC CONTROL DRUM	PORTABLE CHANGEABLE MESSAGE BOARD
TRAFFIC CONTROL DRUM WITH TYPE C STEADY BURN LIGHT	TEMPORARY CRASH CUSHION BARRIER
FLASHING ARROW BOARD	(1) TEMPORARY PAVEMENT MARKING REFLECTIVE TAPE 4-INCH (WHITE)
SIGN ON PERMANENT SUPPORT	(2) TEMPORARY PAVEMENT MARKING REFLECTIVE TAPE 4-INCH (YELLOW)
SIGN ON TEMPORARY SUPPORT	(3) TEMPORARY PAVEMENT MARKING REFLECTIVE TAPE 4-INCH (WHITE), SKIPS
CONCRETE BARRIER TEMPORARY PRECAST	(4) TEMPORARY PAVEMENT MARKING REMOVEABLE TAPE 8-INCH
WORK AREA	

PROJECT NO: 1060-38-70	HWY: IH-94	COUNTY: WAUKESHA	STAGE CONSTRUCTION: STAGE 2	SHEET 53	E

STAGE 2

WORK:

* CONSTRUCT OUTSIDE LANE AND SHOULDERS ON BOTH EASTBOUND AND WESTBOUND IH-94.
* CONSTRUCT INSIDE HALF OF STRUCTURES B-67-339 AND B-67-340 AT DOUSMAN ROAD. SEE STRUCTURE STAGING PLANS - STAGE 2 FOR DETAILS.

TRAFFIC CONTROL:

* SHIFT TRAFFIC TO NEWLY CONSTRUCTED INSIDE LANE, SHOULDERS AND WIDENING WITH TAPERS.
* MAINTAIN TWO LANES OF TRAFFIC IN BOTH EASTBOUND AND WESTBOUND DIRECTIONS.
* REMOVE OR COVER WITH TEMPORARY BLACK TAPE ALL CONFLICTING PAVEMENT MARKINGS.
* SEE STAGE 2 - ADVANCED SIGNING AND ADDITIONAL NOTES SHEET FOR ADVANCED SIGNING OUTSIDE OF WORK ZONE.

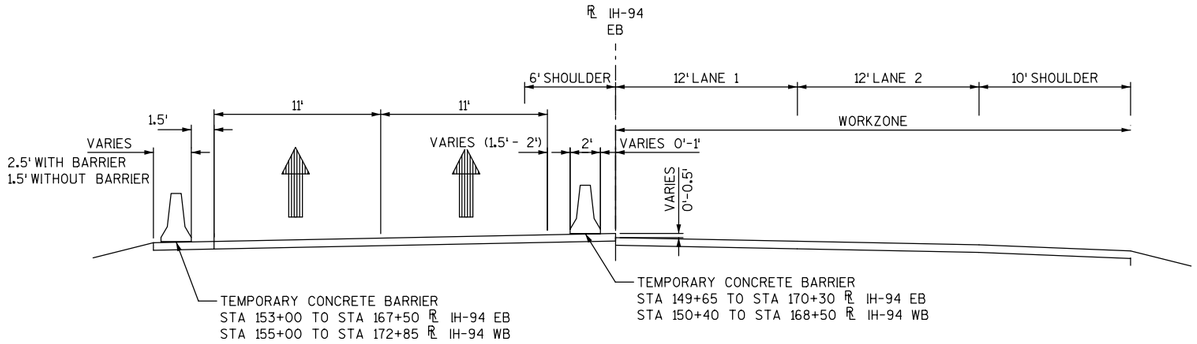

STAGE 2 CONSTRUCTION
TYPICAL SECTION
EB IH-94
(WB IH-94 IS MIRROR IMAGE)

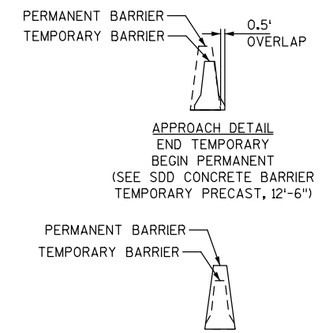

N

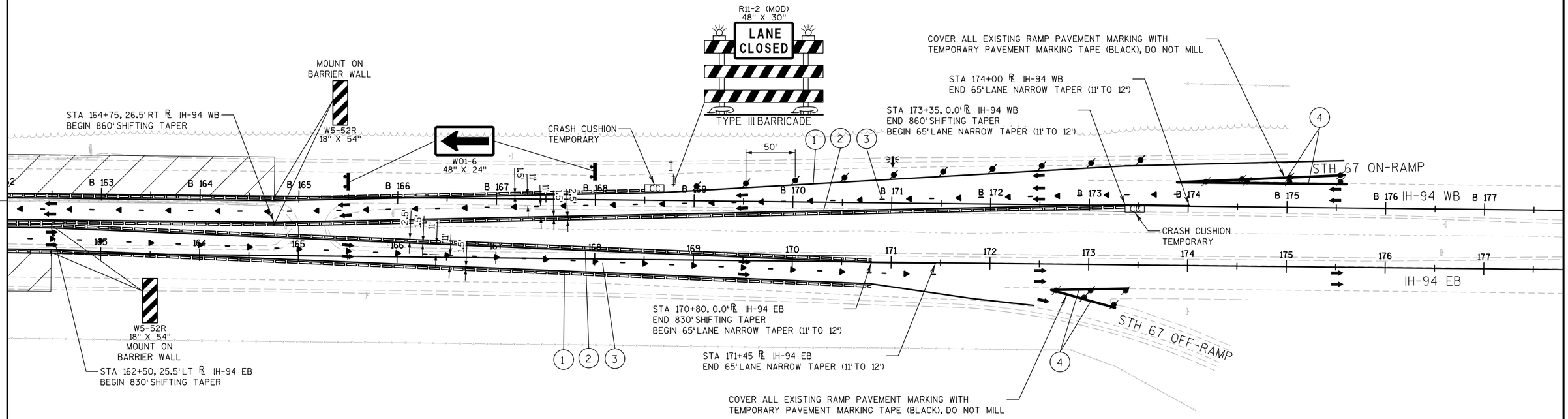

LEGEND

- TYPE III BARRICADE
- TYPE III BARRICADE WTH ATTACHED SIGN
- TRAFFIC CONTROL DRUM
- TRAFFIC CONTROL DRUM WITH TYPE C STEADY BURN LIGHT
- FLASHING ARROW BOARD
- SIGN ON PERMANENT SUPPORT
- SIGN ON TEMPORARY SUPPORT
- CONCRETE BARRIER TEMPORARY PRECAST
- WORK AREA
- TEMPORARY RAISED PAVEMENT MARKER (ONE WAY REFLECTOR)
- DIRECTION OF TRAFFIC
- MB — PORTABLE CHANGEABLE MESSAGE BOARD
- CC — TEMPORARY CRASH CUSHION BARRIER
- (1) TEMPORARY PAVEMENT MARKING REFLECTIVE TAPE 4-INCH (WHITE)
- (2) TEMPORARY PAVEMENT MARKING REFLECTIVE TAPE 4-INCH (YELLOW)
- (3) TEMPORARY PAVEMENT MARKING REFLECTIVE TAPE 4-INCH (WHITE), SKIPS
- (4) TEMPORARY PAVEMENT MARKING REMOVEABLE TAPE 8-INCH

PROJECT NO: 1060-38-70	HWY: IH-94	COUNTY: WAUKESHA	STAGE CONSTRUCTION: STAGE 2	SHEET 54	E

STAGE 3

WORK:

* SAWCUT AND REMOVE TEMPORARY PAVEMENT. 6'INSIDE PAVED SHOULDER TO REMAIN.
* GRADE MEDIAN TO FINAL ELEVATIONS.
* CONSTRUCT PERMANENT BARRIER ON EASTBOUND IH-94 APPROACHES TO BRIDGES OVER DOUSMAN RD.
* CONSTRUCT TRANSITION TO BLUNT END BARRIER, INSTALL CRASH CUSHION AND PAVED APPROACHES TO CRASH CUSHION.

TRAFFIC CONTROL:

* SHIFT TRAFFIC TO OUTSIDE LANES AND OUTSIDE SHOULDERS FOR A PORTION OF THE EASTBOUND IH-94 APPROACHES TO BRIDGE OVER DOUSMAN RD.
* PLACE TEMPORARY CONCRETE BARRIER ALONG MEDIAN SHOULDER TO PROTECT REMOVAL AND REGRADING IN THE MEDIAN.
* MAINTAIN TWO LANES OF TRAFFIC IN BOTH EASTBOUND AND WESTBOUND DIRECTIONS.
* THE EXACT NUMBER, LOCATION, AND SPACING OF ALL SIGNS AND DEVICES SHALL BE ADJUSTED TO FIT FIELD CONDITIONS AS APPROVED BY THE ENGINEER.
* THE SPACING BETWEEN SIGNS SHOULD BE ADJUSTED TO NOT CONFLICT WITH AND TO PROVIDE A MINIMUM OF 200 FT, (500 FT DESIREABLE) DISTANCE TO EXISTING SIGNS.
* "WO" IS THE SAME AS "W" EXCEPT THE BACKGROUND IS ORANGE.
* ANY SIGNS TEMPORARY OR EXISTING, WHICH CONFLICT WITH TRAFFIC CONTROL "IN USE" SHALL BE REMOVED OR COVERED AS NEEDED AND AS APPROVED BY THE ENGINEER. NO WARNING LIGHTS SHALL BE WORKING OR ON "COVERED" OR "DOWNED" SIGNS.

* PLACE "ROAD WORK AHEAD" (W20-1) SIGN AND SUPPORT ON STH 67 WB ON-RAMP APPROXIMATELY 1000' FROM EXISTNG ON-RAMP GORE. PLACE "SPEED LIMIT 55" (R2-1) AND "WORK ZONE" (W21-62Q) SIGN AND SUPPORT ON STH 67 ON-RAMP APPROXIMATELY 500' FROM EXISTING ON-RAMP GORE.

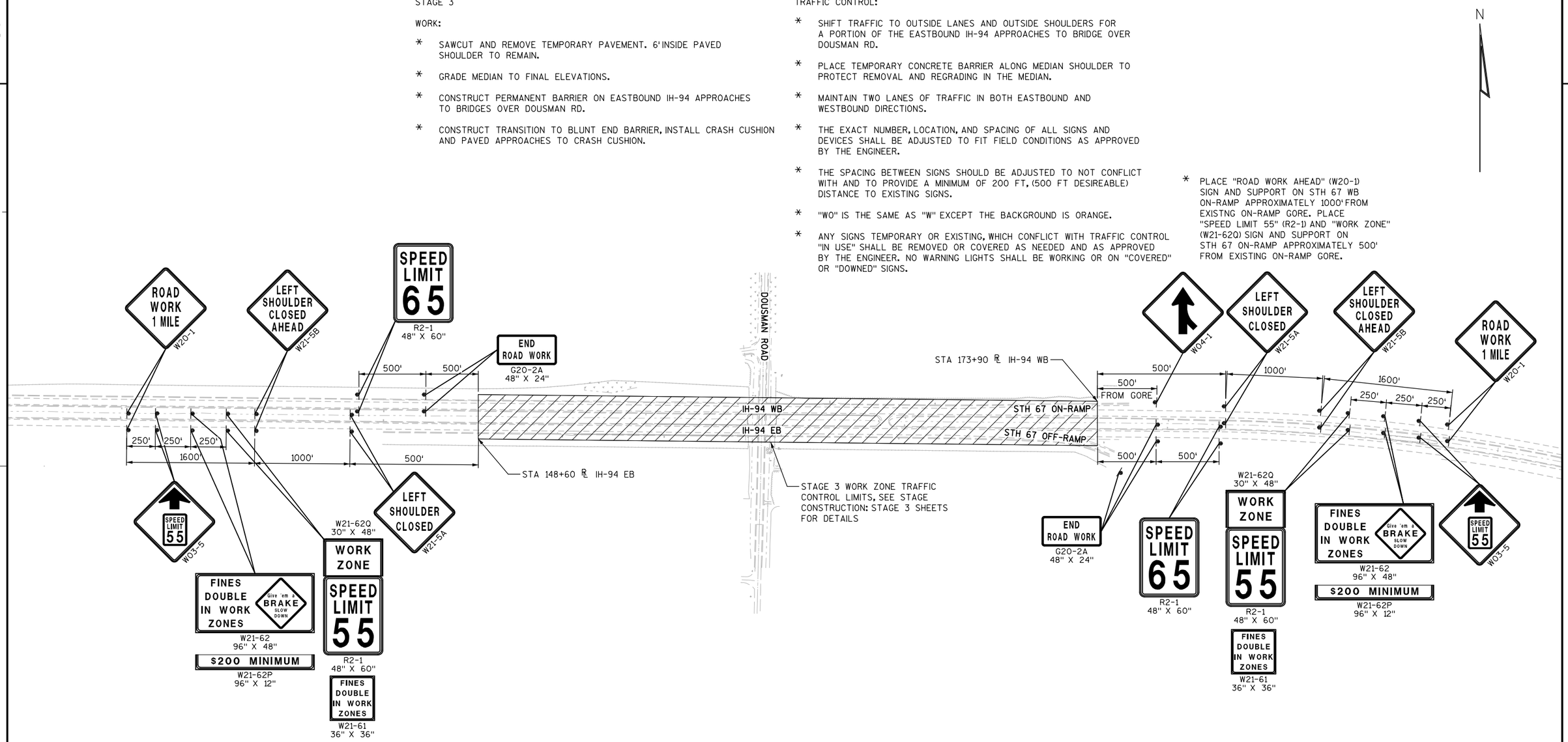

PROJECT NO: 1060-38-70	HWY: IH-94	COUNTY: WAUKESHA	STAGE 3 - ADVANCED SIGNING AND ADDITIONAL NOTES	SHEET 55	E

STAGE 3

WORK:

* SAWCUT AND REMOVE TEMPORARY PAVEMENT. 6'INSIDE PAVED SHOULDER TO REMAIN.
* GRADE MEDIAN TO FINAL ELEVATIONS.
* CONSTRUCT PERMANENT BARRIER ON EASTBOUND IH-94 APPROACHES TO BRIDGE OVER DOUSMAN RD.
* CONSTRUCT TRANSITION TO BLUNT END BARRIER, INSTALL CRASH CUSHION AND PAVED APPROACHES TO CRASH CUSHION.

TRAFFIC CONTROL:

* SHIFT TRAFFIC TO OUTSIDE LANES AND OUTSIDE SHOULDERS FOR A PORTION OF THE EASTBOUND IH-94 APPROACHES TO BRIDGE OVER DOUSMAN RD.
* PLACE TEMPORARY CONCRETE BARRIER ALONG MEDIAN SHOULDER TO PROTECT REMOVAL AND REGRADING IN THE MEDIAN.
* MAINTAIN TWO LANES OF TRAFFIC IN BOTH EASTBOUND AND WESTBOUND DIRECTIONS.
* REMOVE OR COVER WITH TEMPORARY BLACK TAPE ALL CONFLICTING PAVEMENT MARKINGS.
* UTILIZE PERMANENT PAVEMENT MARKING FOR TRAFFIC CONTROL PURPOSES, EXCEPT WHERE SHOWN.
* SEE STAGE 3 - ADVANCED SIGNING AND ADDITIONAL NOTES SHEET FOR ADVANCED SIGNING OUTSIDE OF WORK ZONE.

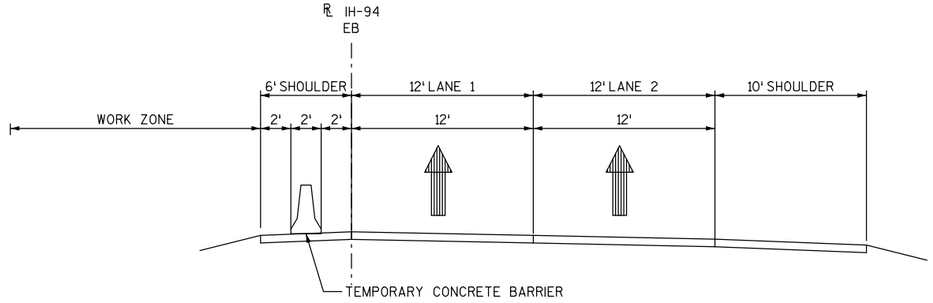

STAGE 3 CONSTRUCTION
TYPICAL SECTION
(WB IH-94 IS MIRROR IMAGE)

NOTE:
TEMPORARY CONCRETE BARRIER LIMITS
STA 148+65 TO STA 172+80 ℄ IH-94 EB
STA 149+65 TO STA 173+80 ℄ IH-94 WB

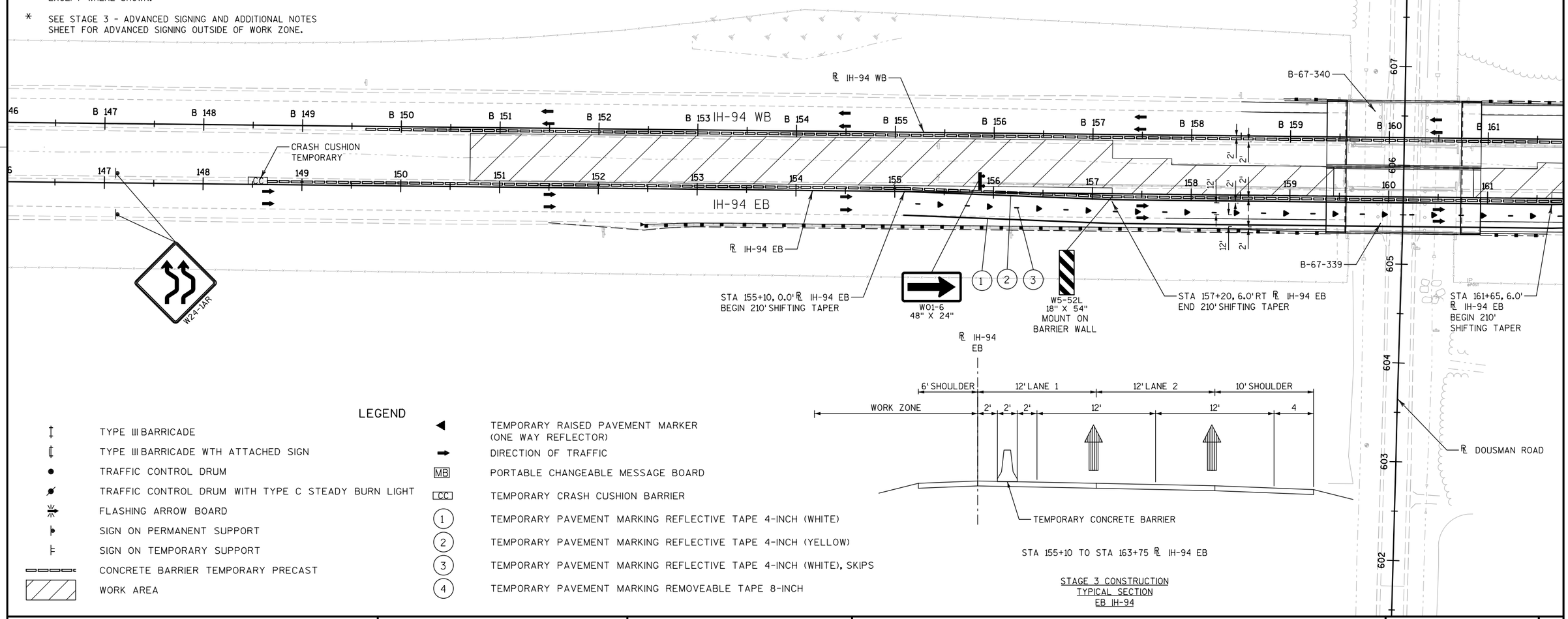

STA 155+10 TO STA 163+75 ℄ IH-94 EB

STAGE 3 CONSTRUCTION
TYPICAL SECTION
EB IH-94

LEGEND

TYPE III BARRICADE	TEMPORARY RAISED PAVEMENT MARKER (ONE WAY REFLECTOR)
TYPE III BARRICADE WTH ATTACHED SIGN	DIRECTION OF TRAFFIC
TRAFFIC CONTROL DRUM	PORTABLE CHANGEABLE MESSAGE BOARD
TRAFFIC CONTROL DRUM WITH TYPE C STEADY BURN LIGHT	TEMPORARY CRASH CUSHION BARRIER
FLASHING ARROW BOARD	(1) TEMPORARY PAVEMENT MARKING REFLECTIVE TAPE 4-INCH (WHITE)
SIGN ON PERMANENT SUPPORT	(2) TEMPORARY PAVEMENT MARKING REFLECTIVE TAPE 4-INCH (YELLOW)
SIGN ON TEMPORARY SUPPORT	(3) TEMPORARY PAVEMENT MARKING REFLECTIVE TAPE 4-INCH (WHITE), SKIPS
CONCRETE BARRIER TEMPORARY PRECAST	(4) TEMPORARY PAVEMENT MARKING REMOVEABLE TAPE 8-INCH
WORK AREA	

PROJECT NO: 1060-38-70	HWY: IH-94	COUNTY: WAUKESHA	STAGE CONSTRUCTION: STAGE 3	SHEET 56 E

STAGE 3

WORK:

* SAWCUT AND REMOVE TEMPORARY PAVEMENT. 6' INSIDE PAVED SHOULDER TO REMAIN.
* GRADE MEDIAN TO FINAL ELEVATIONS.
* CONSTRUCT PERMANENT BARRIER ON EASTBOUND IH-94 APPROACHES TO BRIDGE OVER DOUSMAN RD.
* CONSTRUCT TRANSITION TO BLUNT END BARRIER, INSTALL CRASH CUSHION AND PAVED APPROACHES TO CRASH CUSHION.

TRAFFIC CONTROL:

* SHIFT TRAFFIC TO OUTSIDE LANES AND OUTSIDE SHOULDERS FOR A PORTION OF THE EASTBOUND IH-94 APPROACHES TO BRIDGE OVER DOUSMAN RD.
* PLACE TEMPORARY CONCRETE BARRIER ALONG MEDIAN SHOULDER TO PROTECT REMOVAL AND REGRADING IN THE MEDIAN.
* MAINTAIN TWO LANES OF TRAFFIC IN BOTH EASTBOUND AND WESTBOUND DIRECTIONS.
* REMOVE OR COVER WITH TEMPORARY BLACK TAPE ALL CONFLICTING PAVEMENT MARKINGS.
* UTILIZE PERMANENT PAVEMENT MARKING FOR TRAFFIC CONTROL PURPOSES, EXCEPT WHERE SHOWN.
* SEE STAGE 3 - ADVANCED SIGNING AND ADDITIONAL NOTES SHEET FOR ADVANCED SIGNING OUTSIDE OF WORK ZONE.

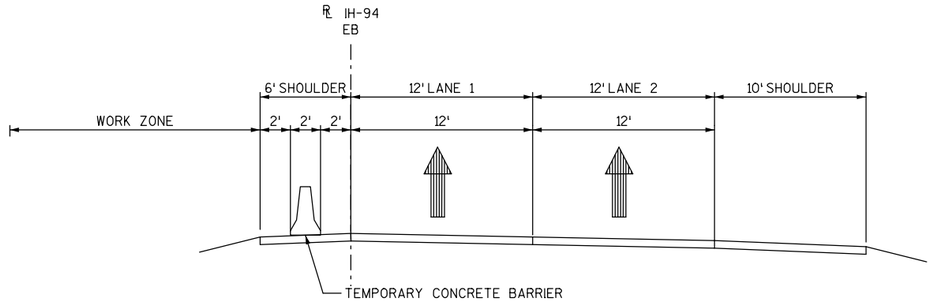

STAGE 3 CONSTRUCTION
TYPICAL SECTION
(WB IH-94 IS MIRROR IMAGE)

NOTE:
TEMPORARY CONCRETE BARRIER LIMITS
STA 148+65 TO STA 172+80 ℄ IH-94 EB
STA 149+65 TO STA 173+80 ℄ IH-94 WB

N

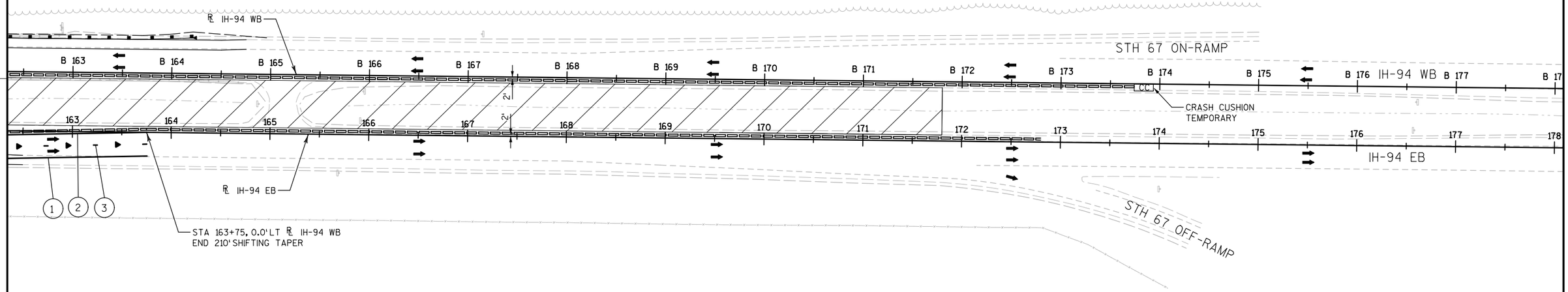

LEGEND

‡	TYPE III BARRICADE	◀	TEMPORARY RAISED PAVEMENT MARKER (ONE WAY REFLECTOR)
‡	TYPE III BARRICADE WTH ATTACHED SIGN	➡	DIRECTION OF TRAFFIC
●	TRAFFIC CONTROL DRUM	MB	PORTABLE CHANGEABLE MESSAGE BOARD
●	TRAFFIC CONTROL DRUM WITH TYPE C STEADY BURN LIGHT	CC	TEMPORARY CRASH CUSHION BARRIER
	FLASHING ARROW BOARD	(1)	TEMPORARY PAVEMENT MARKING REFLECTIVE TAPE 4-INCH (WHITE)
	SIGN ON PERMANENT SUPPORT	(2)	TEMPORARY PAVEMENT MARKING REFLECTIVE TAPE 4-INCH (YELLOW)
	SIGN ON TEMPORARY SUPPORT	(3)	TEMPORARY PAVEMENT MARKING REFLECTIVE TAPE 4-INCH (WHITE), SKIPS
	CONCRETE BARRIER TEMPORARY PRECAST	(4)	TEMPORARY PAVEMENT MARKING REMOVEABLE TAPE 8-INCH
	WORK AREA		

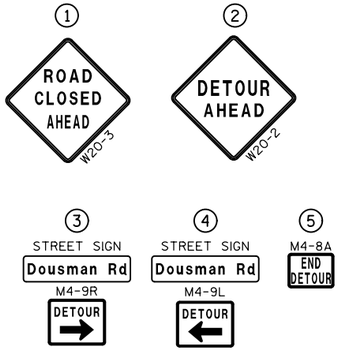

NOTES:

THE EXACT NUMBER, LOCATION AND SPACING OF ALL SIGNS SHALL BE ADJUSTED TO FIT FIELD CONDITIONS AS APPROVED BY THE ENGINEER.

IF THERE ARE EXISTING ROUTE MARKER ASSEMBLES THAT WILL REMAIN IN PLACE, ADJUST THE LOCATION OF THE DETOUR ROUTE SIGNS TO CORRESPOND WITH THE EXISTING ASSEMBLIES. MODIFY EXISTING SIGNS WHERE POSSIBLE.

THE SPACING BETWEEN TRAFFIC CONTROL AND DETOUR SIGNS SHOULD BE ADJUSTED TO NOT CONFLICT WITH AND TO PROVIDE A DESIRABLE MINIMUM OF 200 FEET CLEARANCE TO EXISTING SIGNS THAT WILL REMAIN IN PLACE.

ANY SIGNS TEMPORARY OR EXISTING, WHICH CONFLICT WITH TRAFFIC CONTROL "IN USE", SHALL BE REMOVED OR COVERED AS NEEDED AND AS APPROVED BY THE ENGINEER.

"MO" SIGNS ARE THE SAME AS "M" SIGNS EXCEPT THE BACKGROUND IS ORANGE.

SIGN SIZES SHALL BE AS FOLLOWS:
- M4-8A SHALL BE 24" X 18"
- M4-9L AND M4-9R SHALL BE 30" X 24".
- W20-2 SHALL BE 48" X 48"
- W20-3 SHALL BE 48" X 48"

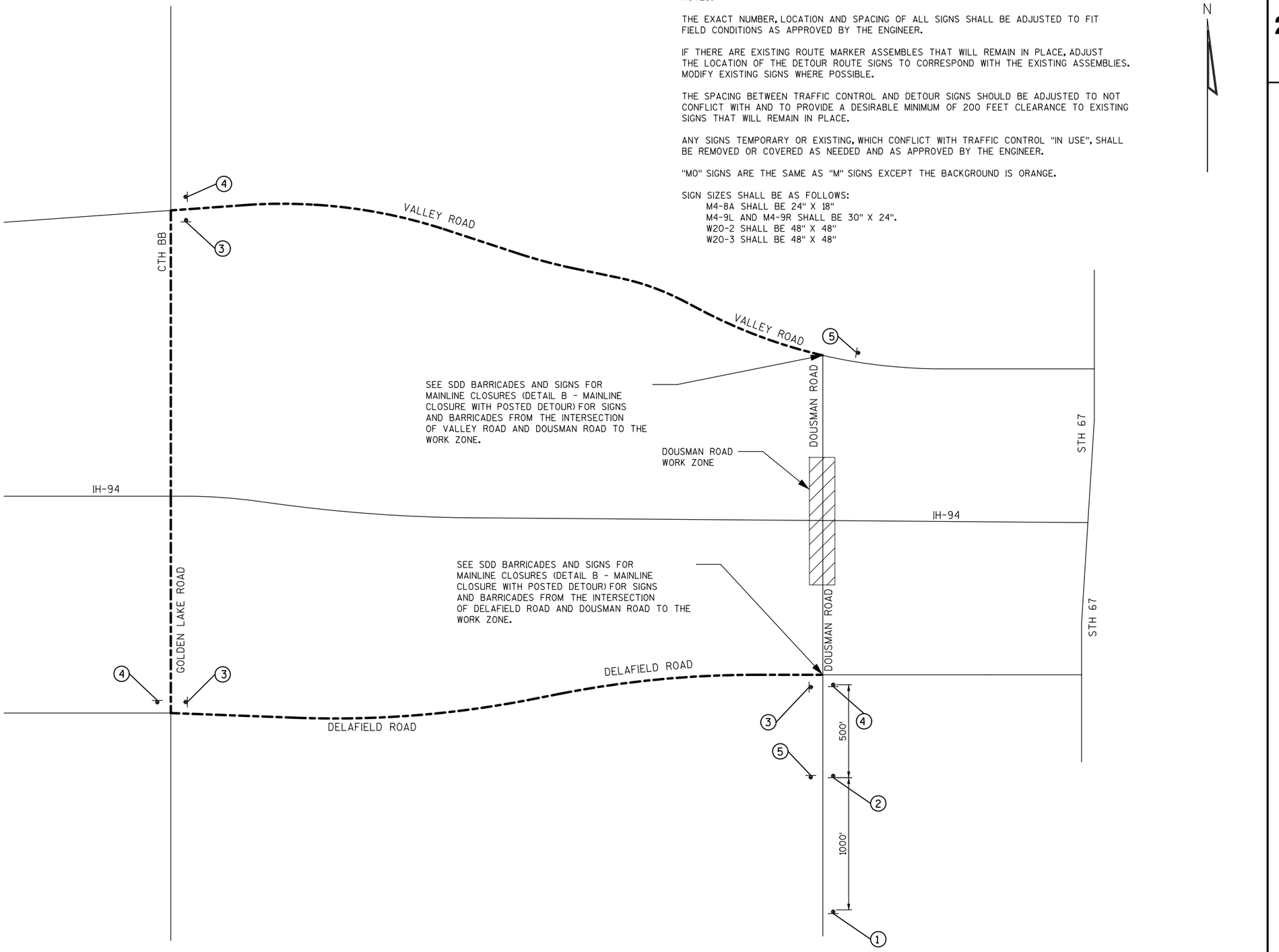

PROJECT NO: 1060-38-70	HWY: IH-94	COUNTY: WAUKESHA	DOUSMAN ROAD DETOUR	SHEET 58	E

2

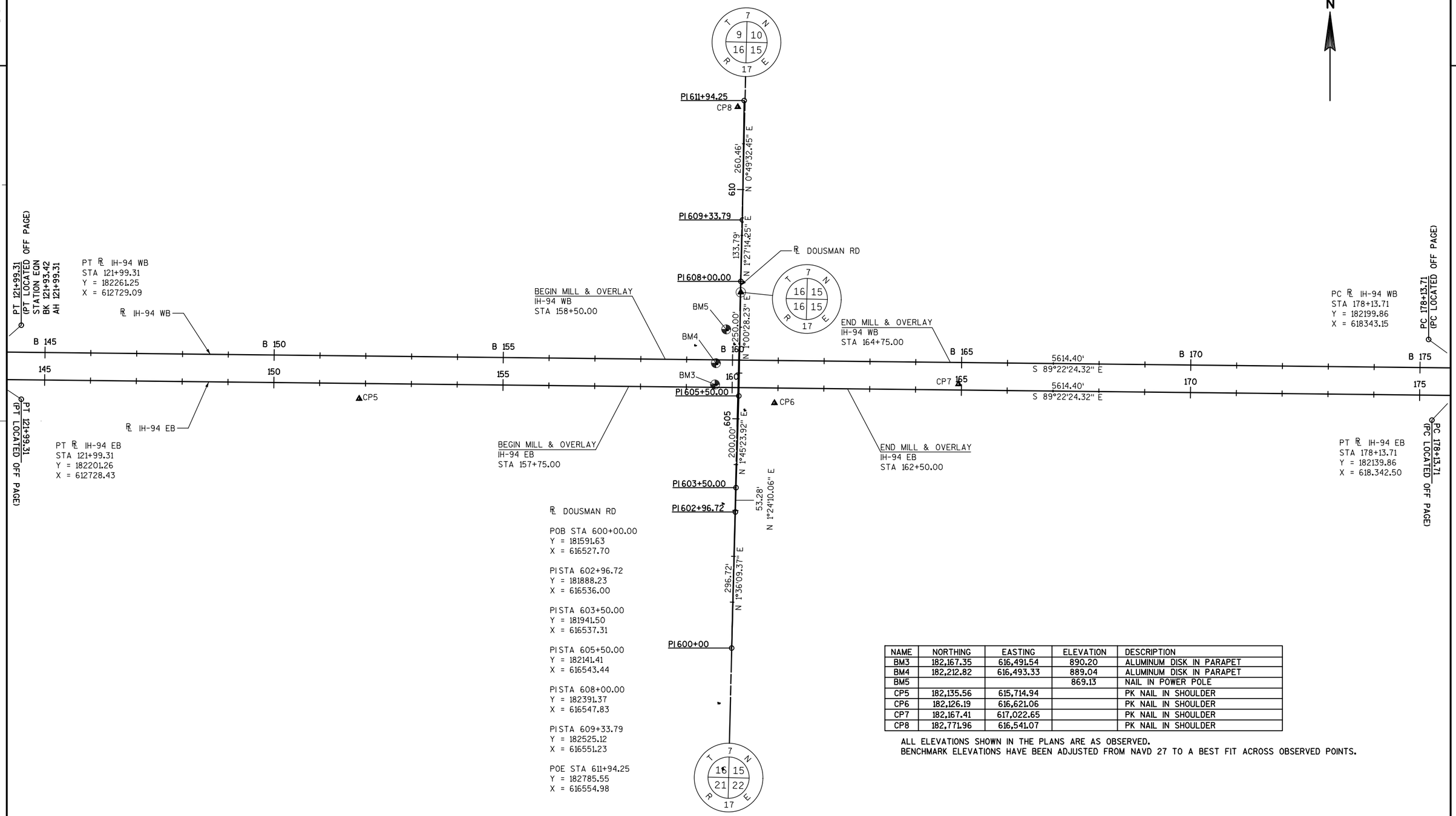

NAME	NORTHING	EASTING	ELEVATION	DESCRIPTION
BM3	182,167.35	616,491.54	890.20	ALUMINUM DISK IN PARAPET
BM4	182,212.82	616,493.33	889.04	ALUMINUM DISK IN PARAPET
BM5			869.13	NAIL IN POWER POLE
CP5	182,135.56	615,714.94		PK NAIL IN SHOULDER
CP6	182,126.19	616,621.06		PK NAIL IN SHOULDER
CP7	182,167.41	617,022.65		PK NAIL IN SHOULDER
CP8	182,771.96	616,541.07		PK NAIL IN SHOULDER

ALL ELEVATIONS SHOWN IN THE PLANS ARE AS OBSERVED.
BENCHMARK ELEVATIONS HAVE BEEN ADJUSTED FROM NAVD 27 TO A BEST FIT ACROSS OBSERVED POINTS.

DATE 19AUG14 — E S T I M A T E O F Q U A N T I T I E S

LINE NUMBER	ITEM	ITEM DESCRIPTION	UNIT	TOTAL	1060-38-70 QUANTITY
0010	108.4400	CPM PROGRESS SCHEDULE	EACH	1.000	1.000
0020	201.0105	CLEARING	STA	6.000	6.000
0030	201.0205	GRUBBING	STA	6.000	6.000
0040	203.0100	REMOVING SMALL PIPE CULVERTS	EACH	2.000	2.000
0050	203.0200	REMOVING OLD STRUCTURE (STATION) 01. 159+59 EB	LS	1.000	1.000
0060	203.0200	REMOVING OLD STRUCTURE (STATION) 02. 159+59 WB	LS	1.000	1.000
0070	204.0120	REMOVING ASPHALTIC SURFACE MILLING	SY	9,100.000	9,100.000
0080	204.0165	REMOVING GUARDRAIL	LF	1,745.000	1,745.000
0090	204.0170	REMOVING FENCE	LF	166.000	166.000
0100	204.0175	REMOVING CONCRETE SLOPE PAVING	SY	676.000	676.000
0110	205.0100	EXCAVATION COMMON **P**	CY	9,497.000	9,497.000
0120	206.1000	EXCAVATION FOR STRUCTURES BRIDGES (STRUCTURE) 01. B-67-339	LS	1.000	1.000
0130	206.1000	EXCAVATION FOR STRUCTURES BRIDGES (STRUCTURE) 02. B-67-340	LS	1.000	1.000
0140	206.6000.S	TEMPORARY SHORING	SF	530.000	530.000
0150	208.0100	BORROW **P**	CY	1,297.000	1,297.000
0160	210.0100	BACKFILL STRUCTURE	CY	449.000	449.000
0170	213.0100	FINISHING ROADWAY (PROJECT) 01. 1060-38-70	EACH	1.000	1.000
0180	305.0110	BASE AGGREGATE DENSE 3/4-INCH	TON	200.000	200.000
0190	305.0120	BASE AGGREGATE DENSE 1 1/4-INCH	TON	9,122.000	9,122.000
0200	311.0110	BREAKER RUN	TON	7,800.000	7,800.000
0210	416.1010	CONCRETE SURFACE DRAINS	CY	2.000	2.000
0220	440.4410.S	INCENTIVE IRI RIDE	DOL	3,014.000	3,014.000
0230	455.0105	ASPHALTIC MATERIAL PG58-28	TON	30.000	30.000
0240	455.0115	ASPHALTIC MATERIAL PG64-22	TON	42.000	42.000
0250	455.0605	TACK COAT	GAL	131.000	131.000
0260	460.1100	HMA PAVEMENT TYPE E-0.3	TON	530.000	530.000
0270	460.1103	HMA PAVEMENT TYPE E-3	TON	500.000	500.000
0280	460.1130	HMA PAVEMENT TYPE E-30	TON	155.000	155.000
0290	460.1700	HMA PAVEMENT TYPE SMA	TON	223.000	223.000
0300	460.2000	INCENTIVE DENSITY HMA PAVEMENT	DOL	910.000	910.000
0310	465.0125	ASPHALTIC SURFACE TEMPORARY	TON	4,200.000	4,200.000
0320	465.0400	ASPHALTIC SHOULDER RUMBLE STRIPS	LF	8,300.000	8,300.000
0330	502.0100	CONCRETE MASONRY BRIDGES **P**	CY	524.000	524.000
0340	502.3200	PROTECTIVE SURFACE TREATMENT	SY	1,960.000	1,960.000
0350	505.0405	BAR STEEL REINFORCEMENT HS BRIDGES **P**	LB	40,030.000	40,030.000
0360	505.0605	BAR STEEL REINFORCEMENT HS COATED BRIDGES **P**	LB	327,257.000	327,257.000
0370	505.0904	BAR COUPLERS NO. 4	EACH	16.000	16.000
0380	505.0905	BAR COUPLERS NO. 5	EACH	16.000	16.000
0390	505.0906	BAR COUPLERS NO. 6	EACH	39.000	39.000
0400	505.0908	BAR COUPLERS NO. 8	EACH	128.000	128.000
0410	516.0500	RUBBERIZED MEMBRANE WATERPROOFING	SY	62.000	62.000
0420	517.1015.S	CONCRETE STAINING MULTI-COLOR (STRUCTURE) 01. B-67-339	SF	423.000	423.000
0430	517.1015.S	CONCRETE STAINING MULTI-COLOR (STRUCTURE) 02. B-67-340	SF	423.000	423.000
0440	517.1050.S	ARCHITECTURAL SURFACE TREATMENT (STRUCTURE) 01. B-67-339	SF	423.000	423.000
0450	517.1050.S	ARCHITECTURAL SURFACE TREATMENT (STRUCTURE) 02. B-67-340	SF	423.000	423.000

3

DATE 19AUG14 E S T I M A T E O F Q U A N T I T I E S

LINE NUMBER	ITEM	ITEM DESCRIPTION	UNIT	TOTAL	1060-38-70 QUANTITY
0460	521.0118	CULVERT PIPE CORRUGATED STEEL 18-INCH	LF	100.000	100.000
0470	521.1012	APRON ENDWALLS FOR CULVERT PIPE STEEL 12-INCH	EACH	2.000	2.000
0480	521.1618	APRON ENDWALLS FOR CULVERT PIPE SLOPED SIDE DRAINS STEEL 18-INCH 10 TO 1	EACH	2.000	2.000
0490	522.0124	CULVERT PIPE REINFORCED CONCRETE CLASS III 24-INCH	LF	440.000	440.000
0500	522.1024	APRON ENDWALLS FOR CULVERT PIPE REINFORCED CONCRETE 24-INCH	EACH	4.000	4.000
0510	550.2128	PILING CIP CONCRETE 12 3/4 X 0.50-INCH	LF	11,876.000	11,876.000
0520	603.1142	CONCRETE BARRIER TYPE S42	LF	448.000	448.000
0530	603.1156	CONCRETE BARRIER TYPE S56	LF	450.000	450.000
0540	603.8000	CONCRETE BARRIER TEMPORARY PRECAST DELIVERED	LF	7,575.000	7,575.000
0550	603.8125	CONCRETE BARRIER TEMPORARY PRECAST INSTALLED	LF	17,525.000	17,525.000
0560	604.0400	SLOPE PAVING CONCRETE	SY	1,040.000	1,040.000
0570	606.0200	RIPRAP MEDIUM	CY	10.000	10.000
0580	612.0106	PIPE UNDERDRAIN 6-INCH	LF	20.000	20.000
0590	612.0206	PIPE UNDERDRAIN UNPERFORATED 6-INCH	LF	80.000	80.000
0600	612.0212	PIPE UNDERDRAIN UNPERFORATED 12-INCH	LF	55.000	55.000
0610	612.0406	PIPE UNDERDRAIN WRAPPED 6-INCH	LF	960.000	960.000
0620	612.0600	UNDERDRAIN TRENCH	LF	80.000	80.000
0630	612.0806	APRON ENDWALLS FOR UNDERDRAIN REINFORCED CONCRETE 6-INCH	EACH	1.000	1.000
0640	614.0150	ANCHOR ASSEMBLIES FOR STEEL PLATE BEAM GUARD	EACH	8.000	8.000
0650	614.0800	CRASH CUSHIONS PERMANENT	EACH	2.000	2.000
0660	614.0905	CRASH CUSHIONS TEMPORARY	EACH	10.000	10.000
0670	614.2300	MGS GUARDRAIL 3	LF	937.500	937.500
0680	614.2500	MGS THRIE BEAM TRANSITION	LF	252.800	252.800
0690	614.2610	MGS GUARDRAIL TERMINAL EAT	EACH	6.000	6.000
0700	614.2620	MGS GUARDRAIL TERMINAL TYPE 2	EACH	2.000	2.000
0710	616.0100	FENCE WOVEN WIRE (HEIGHT) 01. 4-FT	LF	215.000	215.000
0720	619.1000	MOBILIZATION	EACH	1.000	1.000
0730	623.0200	DUST CONTROL SURFACE TREATMENT	SY	1,700.000	1,700.000
0740	624.0100	WATER	MGAL	10.000	10.000
0750	625.0500	SALVAGED TOPSOIL	SY	19,000.000	19,000.000
0760	627.0200	MULCHING	SY	100.000	100.000
0770	628.1104	EROSION BALES	EACH	30.000	30.000
0780	628.1504	SILT FENCE	LF	1,750.000	1,750.000
0790	628.1520	SILT FENCE MAINTENANCE	LF	1,750.000	1,750.000
0800	628.1905	MOBILIZATIONS EROSION CONTROL	EACH	13.000	13.000
0810	628.1910	MOBILIZATIONS EMERGENCY EROSION CONTROL	EACH	9.000	9.000
0820	628.2004	EROSION MAT CLASS I TYPE B	SY	6,000.000	6,000.000
0830	628.2008	EROSION MAT URBAN CLASS I TYPE B	SY	10,000.000	10,000.000
0840	628.2021	EROSION MAT CLASS II TYPE A	SY	320.000	320.000
0850	628.2027	EROSION MAT CLASS II TYPE C	SY	3,210.000	3,210.000
0860	628.7504	TEMPORARY DITCH CHECKS	LF	285.000	285.000
0870	628.7555	CULVERT PIPE CHECKS	EACH	10.000	10.000
0880	628.7560	TRACKING PADS	EACH	4.000	4.000
0890	628.7570	ROCK BAGS	EACH	20.000	20.000
0900	629.0210	FERTILIZER TYPE B	CWT	9.000	9.000
0910	630.0120	SEEDING MIXTURE NO. 20	LB	530.000	530.000
0920	630.0200	SEEDING TEMPORARY	LB	520.000	520.000

3

DATE 19AUG14 E S T I M A T E O F Q U A N T I T I E S

LINE NUMBER	ITEM	ITEM DESCRIPTION	UNIT	TOTAL	1060-38-70 QUANTITY
0930	631.0300	SOD WATER	MGAL	1.000	1.000
0940	631.1100	SOD EROSION CONTROL	SY	50.000	50.000
0950	633.0100	DELINEATOR POSTS STEEL	EACH	2.000	2.000
0960	633.0500	DELINEATOR REFLECTORS	EACH	2.000	2.000
0970	634.0618	POSTS WOOD 4X6-INCH X 18-FT	EACH	8.000	8.000
0980	634.0622	POSTS WOOD 4X6-INCH X 22-FT	EACH	9.000	9.000
0990	637.2210	SIGNS TYPE II REFLECTIVE H	SF	53.000	53.000
1000	637.2230	SIGNS TYPE II REFLECTIVE F	SF	22.500	22.500
1010	638.2102	MOVING SIGNS TYPE II	EACH	11.000	11.000
1020	638.2602	REMOVING SIGNS TYPE II	EACH	10.000	10.000
1030	638.3000	REMOVING SMALL SIGN SUPPORTS	EACH	18.000	18.000
1040	642.5001	FIELD OFFICE TYPE B	EACH	1.000	1.000
1050	643.0200	TRAFFIC CONTROL SURVEILLANCE AND MAINTENANCE (PROJECT) 01. 1060-38-70	DAY	230.000	230.000
1060	643.0300	TRAFFIC CONTROL DRUMS	DAY	4,900.000	4,900.000
1070	643.0420	TRAFFIC CONTROL BARRICADES TYPE III	DAY	4,200.000	4,200.000
1080	643.0705	TRAFFIC CONTROL WARNING LIGHTS TYPE A	DAY	5,100.000	5,100.000
1090	643.0715	TRAFFIC CONTROL WARNING LIGHTS TYPE C	DAY	3,560.000	3,560.000
1100	643.0800	TRAFFIC CONTROL ARROW BOARDS	DAY	140.000	140.000
1110	643.0900	TRAFFIC CONTROL SIGNS	DAY	17,000.000	17,000.000
1120	643.0910	TRAFFIC CONTROL COVERING SIGNS TYPE I	EACH	10.000	10.000
1130	643.0920	TRAFFIC CONTROL COVERING SIGNS TYPE II	EACH	10.000	10.000
1140	643.1000	TRAFFIC CONTROL SIGNS FIXED MESSAGE	SF	72.000	72.000
1150	643.1050	TRAFFIC CONTROL SIGNS PCMS	DAY	20.000	20.000
1160	643.2000	TRAFFIC CONTROL DETOUR (PROJECT) 01. 1060-38-70	EACH	1.000	1.000
1170	643.3000	TRAFFIC CONTROL DETOUR SIGNS	DAY	2,000.000	2,000.000
1180	645.0130	GEOTEXTILE FABRIC TYPE R	SY	30.000	30.000
1190	646.0106	PAVEMENT MARKING EPOXY 4-INCH	LF	11,150.000	11,150.000
1200	646.0841.S	PAVEMENT MARKING GROOVED WET REFLECTIVE CONTRAST TAPE 4-INCH	LF	1,480.000	1,480.000
1210	649.0300	TEMPORARY PAVEMENT MARKING REFLECTIVE TAPE 4-INCH	LF	25,190.000	25,190.000
1220	649.0801	TEMPORARY PAVEMENT MARKING REMOVABLE TAPE 8-INCH	LF	1,000.000	1,000.000
1230	649.2100	TEMPORARY RAISED PAVEMENT MARKERS	EACH	250.000	250.000
1240	690.0150	SAWING ASPHALT	LF	12,500.000	12,500.000
1250	715.0502	INCENTIVE STRENGTH CONCRETE STRUCTURES	DOL	3,144.000	3,144.000
1260	ASP.1T0A	ON-THE-JOB TRAINING APPRENTICE AT $5. 00/HR	HRS	2,400.000	2,400.000
1270	ASP.1T0G	ON-THE-JOB TRAINING GRADUATE AT $5.00/HR	HRS	1,600.000	1,600.000
1280	SPV.0035	SPECIAL 01. HPC MASONRY STRUCTURES **P**	CY	1,284.000	1,284.000
1290	SPV.0045	SPECIAL 01. TRUCK OR TRAILER- MOUNTED ATTENUATOR	DAY	4.000	4.000
1300	SPV.0060	SPECIAL 01. TEMPORARY SEDIMENT BASIN	EACH	1.000	1.000
1310	SPV.0060	SPECIAL 02. MOBILIZATION EMERGENCY PAVEMENT REPAIR	EACH	2.000	2.000
1320	SPV.0060	SPECIAL 03. CONCRETE BARRIER END ANCHORAGE 4-FT WIDTH 12-INCH	EACH	2.000	2.000
1330	SPV.0060	SPECIAL 04. LANDMARK REFERENCE MONUMENTS SPECIAL	EACH	1.000	1.000
1340	SPV.0085	SPECIAL 01. BAR STEEL REINFORCEMENT HS STAINLESS STEEL BRIDGES	LB	4,624.000	4,624.000
1350	SPV.0090	SPECIAL 01. REMOVING PILING	LF	2,860.000	2,860.000

3

DATE 19AUG14 E S T I M A T E O F Q U A N T I T I E S

LINE NUMBER	ITEM	ITEM DESCRIPTION	UNIT	TOTAL	1060-38-70 QUANTITY
1360	SPV.0090	SPECIAL 02. DRAIN SLOTTED VANE LONGITUDINAL TEMPORARY	LF	1,120.000	1,120.000
1370	SPV.0105	SPECIAL 01. PAVEMENT CLEANUP PROJECT 1060-38-70	LS	1.000	1.000
1380	SPV.0105	SPECIAL 02. SURVEY PROJECT 1060-38-70	LS	1.000	1.000
1390	SPV.0165	SPECIAL 01. LONGITUDINAL GROOVING BRIDGE DECK **P**	SF	19,052.000	19,052.000
1400	SPV.0195	SPECIAL 01. COLD PATCH	TON	20.000	20.000

3

REMOVALS

LOCATION				ITEM 203.0100 REMOVING SMALL PIPE CULVERTS (EACH)	ITEMS 204.0120 REMOVING ASPHALTIC SURFACE MILLING (SY)	ITEMS 204.0165 REMOVING GUARDRAIL (LF)	ITEMS 204.0170 REMOVING FENCE (LF)	ITEMS 690.0150 SAWING ASPHALT (LF)
PreStage								
147+00	to	159+58	EB	-	1538	-	-	1258
160+76	to	170+50	EB	-	1190	-	-	974
148+00	to	159+59	WB	-	1417	-	-	1159
160+76	to	170+50	WB	-	1190	-	-	974
Stage 1								
150+00	to	170+25	EB	-	-	359.0	-	1926
	159+54			1	-	41.0		-
	160+70			1	-	41.0		-
150+50	to	170+50	WB	-	-	403.0		2141
Stage 2								
152+52	to	162+50	EB	-	-	693.0	81.0	68
158+50	to	164+75	WB	-	-	208.0	85.0	69
157+75	to	159+36	EB	-	716	-	-	-
160+93	to	162+50	EB	-	698	-	-	-
158+50	to	159+36	WB	-	382	-	-	-
160+93	to	164+75	WB	-	1698	-	-	-
DOUSMAN RD BEGIN CONSTRUCTION				-	-	-	-	36
DOUSMAN RD END CONSTRUCTION				-	-	-	-	36
Stage 3								
150+25	to	170+00 EB		-	-	-	-	1843
150+70	to	172+50 WB		-	-	-	-	1977
UNDISTRIBUTED				-	272	-	-	39
TOTALS				**2**	**9100**	**1745**	**166**	**12500**

CLEARING AND GRUBBING

LOCATION				ITEM 201.0105 CLEARING (STA)	ITEM 201.0205 GRUBBING (STA)
STAGE 2					
163+00	to	165+00	RT	2.00	2.00
603+00	to	606+00	RT	3.00	3.00
UNDISTRIBUTED				1.00	1.00
TOTALS				**6.00**	**6.00**

STAKING

LOCATION	SPV.0105.02 SURVEY PROJECT 1060-38-70 (LS)
PROJECT	1
TOTALS	**1**

CLEANUP

LOCATION	SPV.0105.01 PAVEMENT CLEANUP PROJECT 1060-38-70 (LS)
PROJECT	1
TOTALS	**1**

TEMPORARY BARRIER

STAGE	LOCATION	DURATION CALANDAR DAYS	ITEM 603.8000 CONCRETE BARRIER TEMPORARY PRECAST DELIVERED (LF)	ITEM 603.8125 CONCRETE BARRIER TEMPORARY PRECAST INSTALLED (LF)	ITEM 614.0905 CRASH CUSHIONS TEMPORARY (TL-3) (EACH)	BACK WIDTH (FT)	OBJECT MARKING PATTERN	CRASH TEST LEVEL	TRAFFIC DIRECTION	TRAFFIC LOCATION	CRASH CUSHION SHIELDS	SPV.0045.01 TRUCK OR TRAILER-MOUNTED ATTENUATOR (DAY)
TOTAL PROJECT												
Stage 1	146+85 to 173+40 EB	100	2500	2500	1	2	OM-3R	TL-3	Unidirectional	RT	Temporary Concrete Barrier	-
	147+60 to 175+65 WB	100	2620	2620	1	2	OM-3R	TL-3	Unidirectional	RT	Temporary Concrete Barrier	-
	Dousman Rd	100	-	-	-	-	-	-	-	-	-	-
Stage 2	149+45 to 170+80 EB	100	1260	3760	2	2	OM-3R & OM-3L	TL-3	Unidirectional	RT & LT	Temporary Concrete Barrier	-
	149+90 to 173+35 WB	100	840	3460	2	2	OM-3R & OM-3L	TL-3	Unidirectional	RT & LT	Temporary Concrete Barrier	-
Stage 3	148+65 to 172+80 EB	20	-	2420	1	2	OM-3R	TL-3	Unidirectional	RT	Temporary Concrete Barrier	-
	149+65 to 173+80 WB	20	-	2410	1	2	OM-3R	TL-3	Unidirectional	RT	Temporary Concrete Barrier	-
Undistributed			355	355	2	-	-	TL-3	-	-	-	4
		TOTALS	**7,575**	**17,525**	**10**							**4**

3

EARTHWORK SUMMARY

Stage	From / To Station	Location	Common Excavation (1)	(item # 205.0100)	Salvaged / Unusable Pavement Material (4)	Available Material (5)	Reduced EBS in Fill (6)	Expanded EBS Backfill (7)	Unexpanded Fill	Expanded Fill (8)	Mass Ordinate + / - (9)	Waste	Borrow	Comment:
			Cut (2)	EBS Excavation (3)			Factor 0.80	Factor 1.30		Factor 1.30			(item #208.0100)	
	149+95 - 159+35	I-94 Median	1193	0	202	991	0	0	1261	1639	-648			
	160+94 - 172+85	I-94 Median	2194	0	321	1874	0	0	1158	1506	368			
Stage 1 Subtotal			3387	0	523	2865	0	0	2419	3145	-280	0	280	
	151+50 - 159+55	I-94 EB	0	0	0	0	0	0	666	866	-866			
	160+75 - 162+60	I-94 EB	0	0	0	0	0	0	6	7	-7			
	158+50 - 159+55	I-94 WB	0	0	0	0	0	0	32	42	-42			
	160+75 - 165+00	I-94 WB	0	0	0	0	0	0	56	73	-73			
	603+00 - 608+50	Dousman Rd	3311	0	3311	0	0	0	22	29	-29			
Stage 2 Subtotal			3311	0	3311	0	0	0	782	1017	-1017	0	1017	
	149+95 - 159+35	I-94 Median	1226	0	0	1226	0	0	116	151	1075			
	160+94 - 172+85	I-94 Median	1574	0	0	1574	0	0	41	53	1521			
Stage 3 Subtotal			2799	0	0	2799	0	0	156	203	2596	2604	0	
Grand Total			9497	0	3834	5664	0	0	3357	4365	1299	2604	1297	
			Total Common Exc	9497										

1) Common Excavation is the sum of the Cut and EBS Excavation columns. Item number 205.0100
2) Salvaged/Unsuable Pavement Material is included in Cut.
3) EBS Excavation to be backfilled with Breaker Run
4) Salvaged/Unusable Pavement Material
5) Available Material = Cut - Salvaged/Unusuable Pavement Material
6) Reduced EBS in Fill - Excavated EBS material is usuable in Fills outside the 1:1 slope. EBS in Fill Reduction factor = 0.8
7) Expanded EBS Backfill - This is to be filled with Select Borrow material. EBS Backfill Factor = 1.3. Item number 208.11
8) Expanded Fill. Factor = 1.30

EROSION CONTROL

LOCATION		ITEM 628.1504 SILT FENCE (LF)	ITEM 628.1520 SILT FENCE MAINTENANCE (LF)	ITEM 628.7504 TEMPORARY DITCH CHECKS (LF)	ITEM 628.7555 CULVERT PIPE CHECKS (EACH)	ITEM 631.0300 SOD WATER (MGAL)	ITEM 631.1100 SOD EROSION CONTROL (SY)	SPV.0060.01 TEMPORARY SEDIMENT BASIN (EACH)
STAGE 1								
150+00 to 158+00	MEDIAN	-	-	36	-	-	12	-
165+00 to 173+00	MEDIAN	-	-	36	-	-	12	-
STAGE 2						-		
151+00 to 162+50	EB	1088	1088	24	-	-	-	1
158+00 to 165+00	WB	618	618	-	-	-	-	-
603+50 to 609+00	Dousman NB	-	-	12	2	-	11	-
603+50 to 609+00	Dousman SB	-	-	12	1	-	11	-
STAGE 3						-		
149+50 to 157+50	MEDIAN	-	-	60	-	-	-	-
162+00 to 173+00	MEDIAN	-	-	84	-	-	-	-
						-		
UNDISTRIBUTED		44	44	21	7	1	5	-
TOTALS		**1,750**	**1,750**	**285**	**10**	**1**	**50**	**1**

EROSION CONTROL

LOCATION	ITEM 623.0200 DUST CONTROL SURFACE TREATMENT (SY)	ITEM 624.0100 WATER (MGAL)	ITEM 628.1104 EROSION BALES (EACH)	ITEM 628.1905 MOBILIZATIONS EROSION CONTROL (EACH)	ITEM 628.1910 MOBILIZATIONS EMERGENCY EROSION CONTROL (EACH)	ITEM 628.7560 TRACKING PADS (EACH)	ITEM 628.7570 ROCK BAGS (EACH)
STAGE 1	-	-	-	5	3	-	-
STAGE 2	-	-	-	5	3	-	-
STAGE 3	-	-	-	1	1	-	-
UNDISTRIBUTED	1,700	10	30	2	2	4	20
TOTALS	**1,700**	**10**	**30**	**13**	**9**	**4**	**20**

RESTORATION

LOCATION			ITEM 627.0200 MULCHING (SY)	ITEM 628.2004 EROSION MAT CLASS I TYPE B (SY)	ITEM 628.2008 EROSION MAT URBAN CLASS I TYPE B (SY)	ITEM 628.2021 EROSION MAT CLASS II TYPE A (SY)	ITEM 628.2027 EROSION MAT CLASS II TYPE C (SY)	ITEM 629.0210 FERTILIZER TYPE B (CWT)	ITEM 630.0120 SEEDING MIXTURE NO. 20 (LB)	ITEM 630.0200 SEEDING TEMPORARY (LB)	ITEM 625.0500 SALVAGED TOPSOIL (SY)
Application Rate								7 *lbs/1000 sf*	3 *lbs/1000 sf*	3 *lbs/1000 sf*	
STAGE 1											
150+00	to 158+00	MEDIAN	-	818	1659	12	-	1.6	67	67	2477
165+00	to 173+00	MEDIAN	-	933	1538	12	-	1.6	67	67	2471
STAGE 2			-								-
151+00	to 162+50	EB	-		462	-	2160	*	71	71	2621
158+00	to 165+00	WB	-		444	-	795	*	33	33	1240
603+50	to 608+00	Dousman NB	-	612	-	-	-	*	17	17	612
603+50	to 608+00	Dousman SB	-	522	-	-	-	*	14	14	522
STAGE 3											-
149+50	to 157+50	MEDIAN	-	1227	2349	-	-	2.3	97	97	3576
162+00	to 173+00	MEDIAN	-	1778	3333	-	-	3.2	138	138	5111
UNDISTRIBUTED			100	109	214	297	255	0.3	26	16	370
* NO FERTILIZER WILL BE USED IN THE UPLAND AREAS ADJACENT TO THE WETLANDS											
		TOTALS	**100**	**6,000**	**10,000**	**320**	**3,210**	**9**	**530**	**520**	**19,000**

PAVEMENT MARKING

LOCATION			ITEM 646.0106 PAVEMENT MARKING EPOXY 4-INCH YELLOW (LF)	ITEM 646.0106 PAVEMENT MARKING EPOXY 4-INCH WHITE (LF)	ITEM 646.0841.S PAVEMENT MARKING WET REFLECTIVE TAPE 4-INCH (LF)	ITEM 649.0300 TEMPORARY PAVEMENT MARKING REFLECTIVE TAPE 4-INCH YELLOW (LF)	ITEM 649.0300 TEMPORARY PAVEMENT MARKING REFLECTIVE TAPE 4-INCH WHITE (LF)	ITEM 649.0801 TEMPORARY PAVEMENT MARKING REMOVABLE TAPE 8-INCH (LF)	ITEM 649.2100 TEMPORARY RAISED PAVEMENT MARKERS (EACH)
STAGE 1									
146+85	to 173+40	EB	--	--	--	2655	3153	145	53
147+60	to 175+65	WB	--	--	--	2800	3498	341	56
STAGE 2									
146+85	to 175+65	EB	2880	2115	725	2270	2969	145	45
146+85	to 175+65	WB	2880	2115	725	2480	3294	341	49
603+50	to 608+00	Dousman	113	900	--	--	--	--	--
STAGE 3									
155+10	to 163+75	EB	--	--	--	865	1083	--	17
UNDISTRIBUTED			50	97	30	42	81	28	30
		TOTALS	**11,150**		**1480**	**25,190**		**1,000**	**250**

FENCE

LOCATION	ITEM 616.0100 FENCE WOVEN WIRE 4-FT (LF)
604+80 to 605+28 LT	53
604+83 to 605+31 RT	51
606+66 to 607+31 LT	64
606+67 to 607+14 RT	47
TOTALS	**215**

3

MAINTENANCE CROSSOVER

LOCATION	633.0100 DELINEATOR POSTS STEEL (EACH)	633.0500 DELINEATOR REFLECTORS (EACH)
MAINTENANCE CROSSOVER	2	2
TOTALS	**2**	**2**

AGGREGATE

LOCATION				ITEM 305.0110 BASE AGGREGATE DENSE 3/4-INCH (TON)	ITEM 305.0120 BASE AGGREGATE DENSE 1 1/4-INCH (TON)	ITEM 311.0110 BREAKER RUN (TON)
Prestage						
147+00	to	170+50	EB OutsideTemp Shoulder	-	-	-
148+00	to	170+50	WB Outside Temp Shoulder	-	-	-
Stage 1						
149+45	to	159+37	EB Inside Shldr/Widening	-	1502	1126
149+89	to	159+37	WB Inside Shldr/Widening	-	1404	1041
160+93	to	170+75	EB Inside Shldr/Widening	-	1554	1217
160+93	to	173+36	WB Inside Shldr/Widening	-	2047	1644
Stage 2						
157+75	to	159+37	EB Lanes Permanent	-	-	-
158+50	to	159+37	WB Lanes Permanent	-	-	-
157+75	to	159+37	EB Outside Shldr Permanent	83	-	-
158+50	to	159+37	WB Outside Shldr Permanent	5	-	-
160+93	to	162+50	EB Lanes Permanent	-	-	-
160+93	to	164+75	WB Lanes Permanent	-	-	-
160+93	to	162+50	EB Outside Shldr Permanent	16	-	-
160+93	to	164+75	WB Outside Shldr Permanent	47	-	-
Stage 3						
155+00	to	155+00	Maintenance Crossover	-	79	-
156+40	to	159+37	EB Widening Permanent	-	-	-
157+30	to	159+37	WB Widening Permanent	-	-	-
160+93	to	162+00	EB Widening Permanent	-	-	-
161+55	to	162+22	WB Widening Permanent	-	-	-
Dousman Road						
604+00	to	608+00	Dousman	29	1444	2000
UNDISTRIBUTED				20	220	772
TOTALS				**200**	**8250**	**7800**

3

PAVEMENT

LOCATION				ITEM 455.0105 ASPHALTIC MATERIAL PG58-28 (TON)	ITEM 455.0115 ASPHALTIC MATERIAL PG64-22 (TON)	ITEM 455.0605 TACK COAT (GALLON)	ITEM 460.1100 HMA PAVEMENT TYPE E-0.3 (TON)	ITEM 460.1103 HMA PAVEMENT TYPE E-3 (TON)	ITEM 460.1130 HMA PAVEMENT TYPE E-30 (TON)	ITEM 460.1700 HMA PAVEMENT TYPE SMA (TON)	ITEM 465.0125 ASPHALTIC SURFACE TEMPORARY (TON)	ITEM 465.0400 ASPHALTIC SHOULDER RUMBLE STRIPS (LF)	SPV.0060.02 MOBILIZATIONS EMERGEMCY PAVEMENT REPAIR (EACH)	SPV.0195.01 COLD PATCH (TON)
Prestage														
147+00	to	170+50	EB OutsideTemp Shoulder	-	-	-	-	-	-	-	751	-	-	-
148+00	to	170+50	WB Outside Temp Shoulder	-	-	-	-	-	-	-	717	-	-	-
Stage 1														
149+95	to	159+37	EB Inside Shldr/Widening	-	-	-	-	-	-	-	581	-	-	-
150+40	to	159+37	WB Inside Shldr/Widening	-	-	-	-	-	-	-	540	-	-	-
160+93	to	170+25	EB Inside Shldr/Widening	-	-	-	-	-	-	-	609	-	-	-
160+93	to	172+85	WB Inside Shldr/Widening	-	-	-	-	-	-	-	809	-	-	-
Stage 2														
157+75	to	159+37	EB Lanes Permanent	-	0	11	-	-	3	42	-	-	-	-
158+50	to	159+37	WB Lanes Permanent	-	0	6	-	-	3	23	-	-	-	-
157+75	to	159+37	EB Outside Shldr Permanent	-	2	4	-	36	-	-	-	-	-	-
158+50	to	159+37	WB Outside Shldr Permanent	-	1	2	-	20	-	-	-	-	-	-
160+93	to	162+50	EB Lanes Permanent	-	0	10		-	3	41				
160+93	to	164+75	WB Lanes Permanent	-	7	26	-	-	129	100				
160+93	to	162+50	EB Outside Shldr Permanent	-	2	4	-	35	-	-				
160+93	to	164+75	WB Outside Shldr Permanent	-	4	10	-	81	-	-				
Stage 3														
155+00	to	155+00	Maintenance Crossover	-	2	-	-	40	-	-	-	-	-	-
156+40	to	159+37	EB Widening Permanent	-	8	-	-	151	-	-	-	-	-	-
157+30	to	159+37	WB Widening Permanent	-	1	-	-	26	-	-	-	-	-	-
160+93	to	162+00	EB Widening Permanent	-	4	-	-	72	-	-	-	-	-	-
161+55	to	162+22	WB Widening Permanent	-	1	-	-	13	-	-	-	-	-	-
Dousman Road														
604+00	to	608+00	Dousman	27	-	45	500	-	-	-	-	-	-	-
UNDISTRIBUTED				2	8	13	30	26	18	17	193	8300	2	20
TOTALS				**30**	**42**	**131**	**530**	**500**	**155**	**223**	**4200**	**8300**	**2**	**20**

3

DRAINAGE

UPSTREAM STA	UPSTREAM OFFSET	UPSTREAM INV ELEV		DOWNSTREAM STA	DOWNSTREAM OFFSET	DOWNSTREAM INV ELEV	ITEM 521.0118 CULVERT PIPE CURRUGATED STEEL 18-INCH (LF)	ITEM 521.1618 APRON ENDWALLS FOR CULVERT PIPE SLOPED SIDE DRAINS STEEL 18-INCH 10 TO 1 (EACH)	ITEM 522.0124 CULVERT PIPE REINFORCED CONCRETE CLASS III 24-INCH (LF)	ITEM 522.1024 APRON ENDWALLS FOR CULVERT PIPE REINFORCED CONCRETE 24-INCH (EACH)	SPV.0090.02 DRAIN SLOTTED VANE LONGITUDINAL TEMPORARY (LF)
STAGE 1											
159+37	33' LT	884.09	to	154+20	33' LT	881.58	-	-	-	-	475
161+55	32.5' LT	885.14	to	168+00	32.5' LT	884.20	-	-	-	-	645
STAGE 2											
604+85	36' LT	868.33	to	607+05	36' LT	866.68	-	-	220	2	-
604+85	36' RT	686.11	to	607+05	36' RT	867.01	-	-	220	2	-
STAGE 3											
155+50	32.5' LT	881.03	to	184+50	32.5' LT	880.48	100	2	-	-	-
UNDISTRIBUTED							-	-	-	-	-
							100	**2**	**440**	**4**	**1120**

SURFACE DRAINS

LOCATION		ITEM 416.1010 CONCRETE SURFACE DRAINS (CY)	ITEM 521.1012 APRON ENDWALLS FOR CULVERT PIPE STEEL 12-INCH (EACH)	ITEM 606.0200 RIPRAP MEDIUM (CY)	ITEM 612.0212 PIPE UNDERDRAIN UNPERFORATED 12-INCH (LF)	ITEM 645.0130 GEOTEXTILE FABRIC TYPE R (SY)	ITEM 612.0106 PIPE UNDERDRAIN 6-INCH (LF)	ITEM 612.0206 PIPE UNDERDRAIN UNPERFORATED 6-INCH (LF)	ITEM 612.0600 UNDERDRAIN TRENCH (LF)	ITEM 612.0806 APRON ENDWALLS FOR UNDERDRAIN REINFORCED CONCRETE 6-INCH (EACH)
STAGE 1										
STAGE 2										
159+28	EB	1	1	1.0	25	3	-	-	-	-
159+28	WB	1	1	1.0	30	3	-	-	-	-
607+75 RT	DOUSMAN	-	-	8.0	-	24	-	-	-	-
607+80 to 608+51	DOUSMAN	-	-	-	-	-	20	80	80	1
STAGE 3										
UNDISTRIBUTED										
	TOTALS	**2**	**2**	**10**	**55**	**30**	**20**	**80**	**80**	**1**

BARRIER

LOCATION			ITEM 603.1142 CONCRETE BARRIER TYPE S42 (LF)	ITEM 603.1156 CONCRETE BARRIER TYPE S56 (LF)	ITEM 614.0800 CRASH CUSHIONS PERMANENT (EACH)	ITEM 614.2300 MGS GUARDRAIL 3 (LF)	ITEM 614.2500 MGS THRIE BEAM TRANSITION (LF)	ITEM 614.2610 MGS GUARDRAIL TERMINAL EAT (EACH)	ITEM 614.2620 MGS GUARDRAIL TERMINAL TYPE 2 (EACH)	SPV.0060.03 CONCRETE BARRIER END ANCHORAGE 4-FT WIDTH 12-INCH (EACH)	COMMENTS
STAGE 1											
160+93	to 161+50	WB	62.0	-	-	-	-	-	-	-	-
STAGE 2											
152+50	to 159+39	EB	-	-	-	600.0	39.4	1.0	-	-	-
160+90	to 162+51	EB	-	-	-	62.5	8.2	-	1.0	-	EXIT END
158+50	to 159+39	WB	-	-	-	37.5	8.2	-	1.0	-	EXIT END
160+90	to 164+26	WB	-	-	-	237.5	39.4	1.0	-	-	-
603+95	to 607+10	NB	-	225.0	-	-	39.4	1.0	-	-	-
603+95	to 607+10	SB	-	225.0	-	-	39.4	1.0	-	-	-
607+10	to 608+00	NB	-	-	-	-	39.4	1.0	-	-	-
607+10	to 608+00	SB	-	-	-	-	39.4	1.0	-	-	-
STAGE 3											
157+45	to 159+37	EB	162.0	-	1.0	-	-	-	-	1.0	OBJECT MARKING PATTERN OM-3R, TEST CONDITIONS - TL3, BACK WIDTH 4 FEET, BIDIRECTIONAL TRAFFIC SHIELDING PERMANENT CONCRETE BARRIER IN MEDIAN
157+45	to 159+37	WB	162.0	-	-	-	-	-	-	-	
160+93	to 161+85	EB	62.0	-	-	-	-	-	-	-	
160+93	to 161+85	WB	-	-	1.0	-	-	-	-	1.0	
UNDISTRIBUTED											
TOTALS			**448**	**450**	**2**	**937.5**	**252.8**	**6**	**2**	**2**	

TRAFFIC CONTROL

STAGE	LOCATION	DURATION CALANDAR DAYS	ITEM 643.0200 TRAFFIC CONTROL SURVEILLANCE AND MAINTENANCE (DAYS)	ITEM 643.0300 TRAFFIC CONTROL DRUMS #	(DAYS)	ITEM 643.0420 TRAFFIC CONTROL BARRICADES TYPE III #	(DAYS)	ITEM 643.0705 TRAFFIC CONTROL WARNING LIGHTS TYPE A #	(DAYS)	ITEM 643.0715 TRAFFIC CONTROL WARNING LIGHTS TYPE C #	(DAYS)	ITEM 643.0800 TRAFFIC CONTROL ARROW BOARDS #	(DAYS)	ITEM 643.0900 TRAFFIC CONTROL SIGNS #	(DAYS)	ITEM 643.0910 TRAFFIC CONTROL COVERING SIGNS TYPE I (EACH)	ITEM 643.0920 TRAFFIC CONTROL COVERING SIGNS TYPE II (EACH)	ITEM 643.1000 TRAFFIC CONTROL SIGNS FIXED MESSAGE (SF)	ITEM 643.1050 TRAFFIC CONTROL SIGNS PCMS (DAYS)	ITEM 643.2000 TRAFFIC CONTROL DETOUR (1060-38-70) (EACH)	ITEM 643.3000 TRAFFIC CONTROL DETOUR SIGNS #	(DAYS)
TOTAL PROJECT			230	-	-	-	-	-	-	-	-	-	-	-	-	-	-	-	-	*1*	-	-
Pre Stage	147+00 to 170+50 EB	10	-	*53*	530	*3*	30	*6*	60	*13*	130	*2*	20	*17*	170	-	-	-	-	-	-	-
	148+00 to 170+50 WB	10	-	*52*	520	*3*	30	*6*	60	*13*	130	*2*	20	*17*	170	-	-	-	-	-	-	-
Stage 1	146+85 to 175+65 EB	100	-	*5*	500	-	-	-	-	*5*	500	-	-	*30*	3000	-	-	-	-	-	-	-
	146+85 to 175+65 WB	100	-	*7*	700	-	-	-	-	*7*	700	-	-	*35*	3500	-	-	-	-	-	-	-
	Dousman Rd	100	-	-	-	*18*	1800	*24*	2400	-	-		-	*12*	1200	-	-	*36*	-	-	*10*	1000
Stage 2	149+65 to 170+60 EB	100	-	*5*	500	-	-	-	-	*5*	500	-	-	*27*	2700	-	-	-	-	-	-	-
	150+40 to 172+85 WB	100	-	*16*	1600	*2*	200	-	-	*16*	1600	*1*	100	*33*	3300	-	-	-	-	-	-	-
	Dousman Rd	100	-	-	-	*18*	1800	*24*	2400	-	-	-	-	*12*	1200	-	-	*36*	-	-	*10*	1000
Stage 3	148+65 to 172+80 EB	20	-	-	-	-	-	-	-	-	-	-	-	*21*	420	-	-	-	-	-	-	-
	149+65 to 173+80 WB	20	-	-	-	-	-	-	-	-	-	-	-	*23*	460	-	-	-	-	-	-	-
Undistributed			-	-	550	-	*340*	-	180	-	-	-	-	-	880	10	10	-	20		-	-
		TOTALS	**230**		**4,900**		**4,200**		**5,100**		**3,560**		**140**		**17,000**	**10**	**10**	**72**	**20**	**1**		**2,000**

3

LANDMARK REFERENCE MONUMENTS SPECIAL

LOCATION	STATION	OFFSET	TOWNSHIP	RANGE	SECTION CORNER	SPV.0060.04 LANDMARK REFERENCE MONUMENTS SPECIAL (EACH)
DOUSMAN ROAD	607+76	0'	T7N	R17E	15/16	1
		TOTAL				**1**

3

TYPE II PERMANENT SIGNING -

Project ID:1060-38-70 Dousman Rd Waukesha County													
SIGN NO.	SIGN CODE & SIZE	SIGN MESSAGE	SIGN SIZE W [IN.]	x	H [IN.]	**637.2210** SIGNS TYPE II REFLC H [SF]	**637.2230** SIGNS TYPE II REFLC F [SF]	**638.2602** REM SIGNS TYPE II (EA)	**638.3000** REM SMALL SIGN SUP (EA)	**634.0618** WOOD POSTS 4"X 6"x18' [EA]	**634.0622** WOOD POSTS 4"X 6"x22' [EA]	**638.2102** MOVE SIGNS TYPE II [EA]	REMARKS / NEW SIGN LOCATION
1	M1-94	DOUSMAN RD	96	x	21	14.000	--	1	2	--	2	--	--
2	R2-1 (5)	SPD LIM 65	48	x	60	20.000	--	1	1	--	1	--	--
3	W5-52R	--	--	x	--	--	--	1	1	--	--	--	--
4	W5-52L (3)	--	18	x	54	--	6.750	1	1	1	--	--	--
5	W5-52L (3)	--	18	x	54	--	6.750	1	1	1	--	--	--
6	W5-52R (3)	--	--	x	--	--	--	1	1	--	--	--	--
7	M1-94	DOUSMAN RD	96	x	21	14.000	--	1	2	--	2	--	--
8	W3-5(2M)	SPD LIM 35 AHEAD	36	x	36	--	9.000	--	--	--	1	--	--
9	--	REDUCE SPD AHEAD	--	x	--	--	--	1	1	--	--	--	--
9a	--	35 MPH	--	x	--	--	--	1	--	--	--	--	--
10	W13-2	EXIT 40 MPH SIGN	--	x	--	--	--	--	--	--	1	1	MOVE SIGN 150' EAST OF EXISTING
11	D10-5	--	--	x	--	--	--	--	1	1	--	1	
12	D10-5	--	--	x	--	--	--	--	1	1	--	1	
13	R3-4	--	--	x	--	--	--	--	1	1	--	1	
14	R3-4a	--	--	x	--	--	--	--	--	--	--	1	Mount under sign # 13
15	D10-5	--	--	x	--	--	--	--	1	1	--	1	
16	D10-5	--	--	x	--	--	--	--	1	1	--	1	
17	R2-1 (2s)	--	24	x	30	5	--	1	1	1	--	--	
18	R3-4	--	--	x	--	--	--	--	--	--	--	1	Mount on backside of sign#13
19	R3-4a	--	--	x	--	--	--	--	--	--	--	1	Mount under sign # 18
	Undistributed								2		2	2	
TOTAL=						53.000	22.500	10	18	8	9	11	

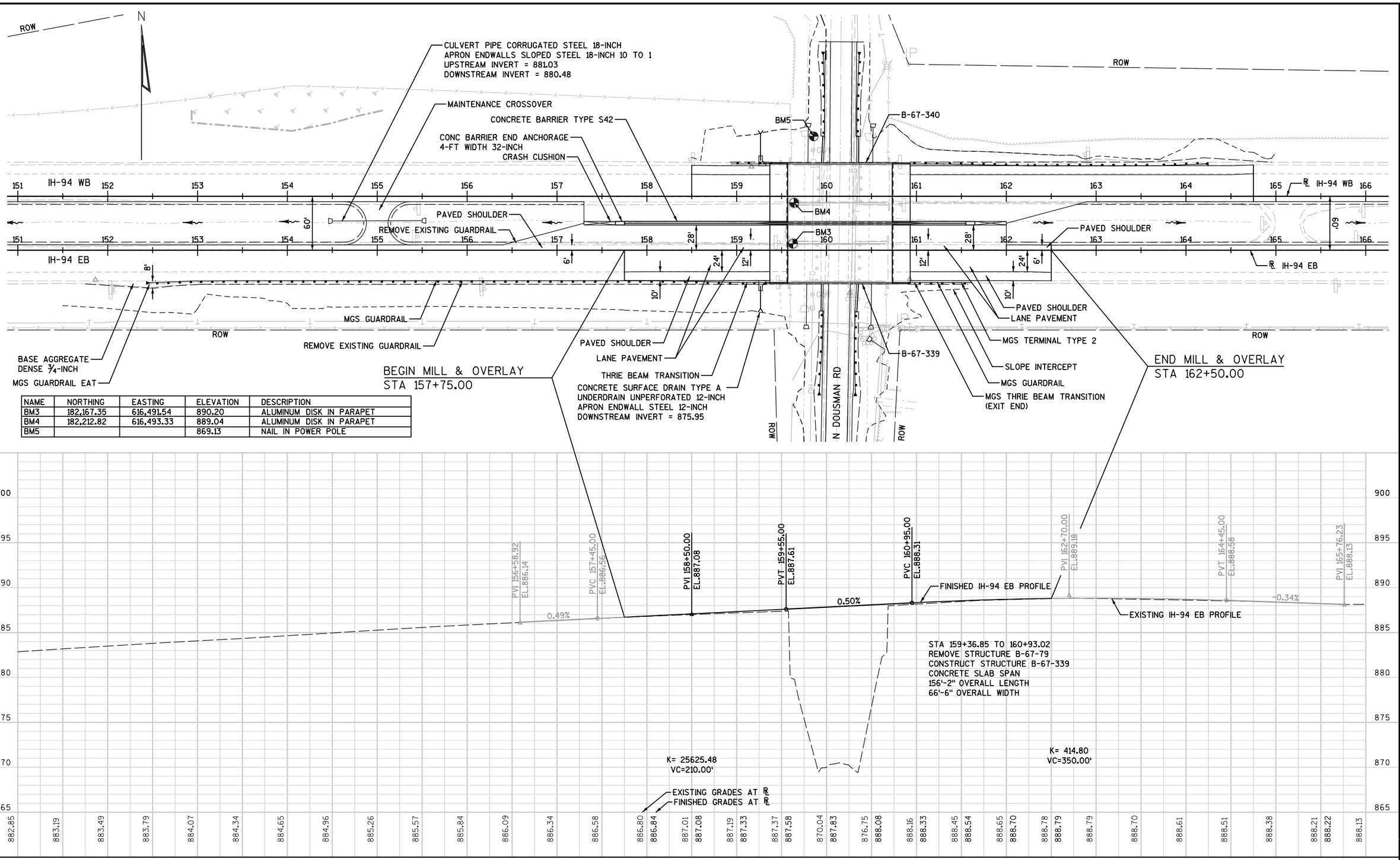

NAME	NORTHING	EASTING	ELEVATION	DESCRIPTION
BM3	182,167.35	616,491.54	890.20	ALUMINUM DISK IN PARAPET
BM4	182,212.82	616,493.33	889.04	ALUMINUM DISK IN PARAPET
BM5			869.13	NAIL IN POWER POLE

5

5

PROJECT NO:1060-38-70	HWY:IH-94	COUNTY:WAUKESHA	PLAN PROFILE : IH-94 EASTBOUND	SHEET 74	E

FILE NAME : x:\20100S\20103.00\Eng_Docs\Sheets\1060-38-70\050145_pp.dgn PLOT DATE : 7/30/2014 PLOT BY : bweigand PLOT NAME : PLOT SCALE : 1:100

WISDOT/CADDS SHEET 30

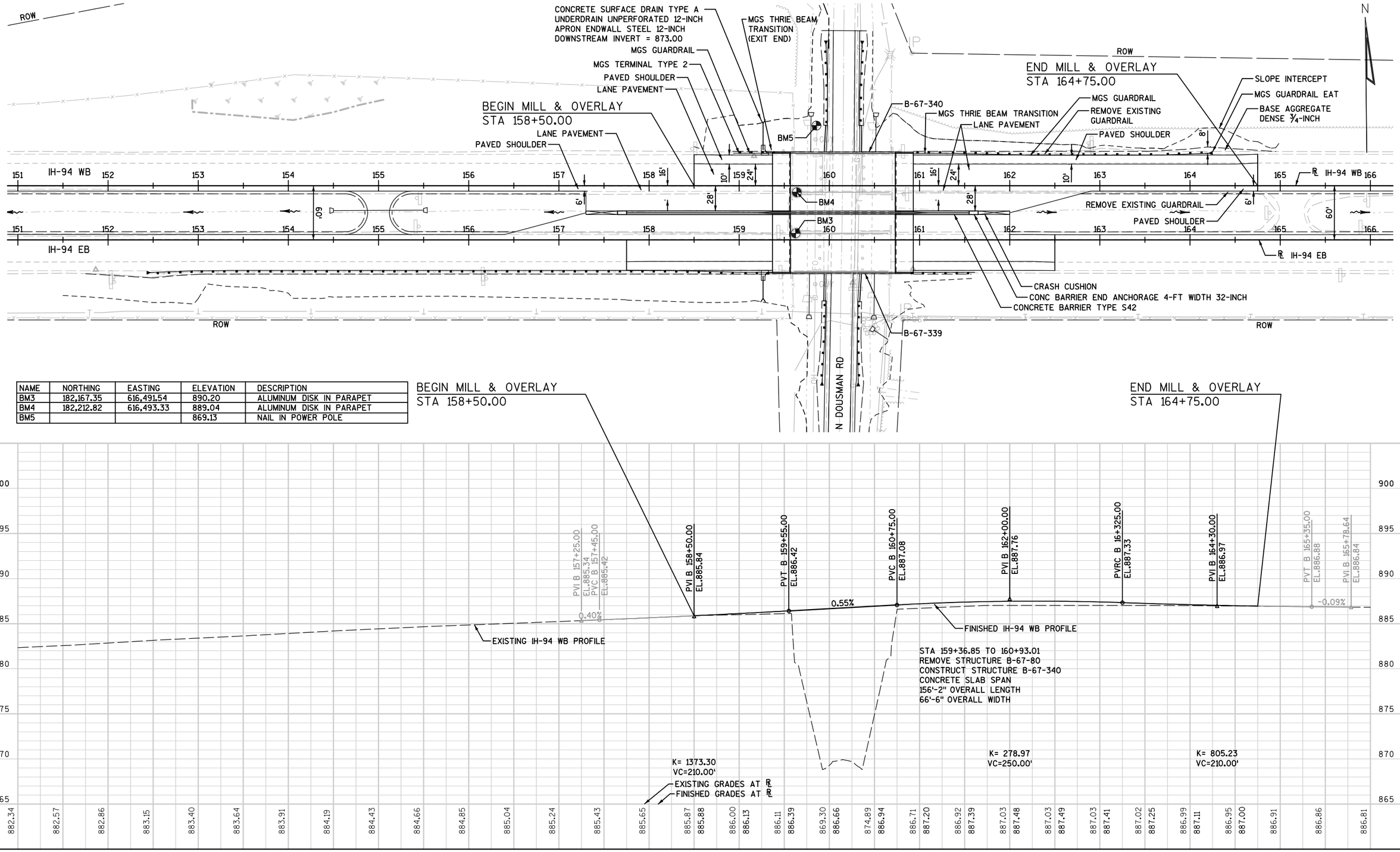

NAME	NORTHING	EASTING	ELEVATION	DESCRIPTION
BM3	182,167.35	616,491.54	890.20	ALUMINUM DISK IN PARAPET
BM4	182,212.82	616,493.33	889.04	ALUMINUM DISK IN PARAPET
BM5			869.13	NAIL IN POWER POLE

PROJECT NO: 1060-38-70	HWY: IH-94	COUNTY: WAUKESHA	PLAN PROFILE : IH-94 WESTBOUND	SHEET 75	E

FILE NAME : x:\20100S\20103.00\Eng_Docs\Sheets\1060-38-70\050155_pp.dgn PLOT DATE : 7/30/2014 PLOT BY : bweigand PLOT NAME : PLOT SCALE : 1:100

WISDOT/CADDS SHEET 30

NAME	NORTHING	EASTING	ELEVATION	DESCRIPTION
BM3	182,167.35	616,491.54	890.20	ALUMINUM DISK IN PARAPET
BM4	182,212.82	616,493.33	889.04	ALUMINUM DISK IN PARAPET
BM5			869.13	NAIL IN POWER POLE

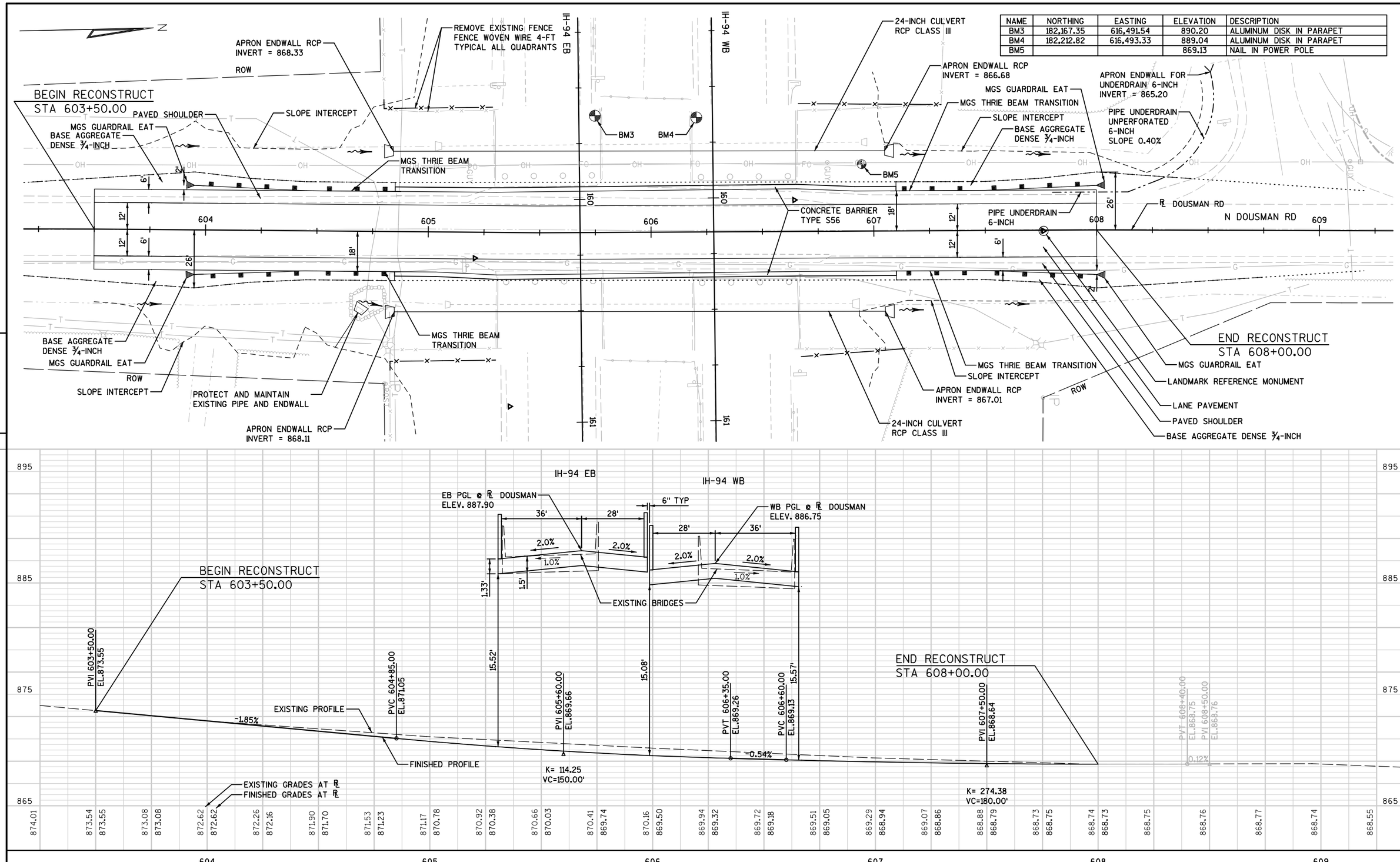

PROJECT NO:1060-38-70	HWY:IH-94	COUNTY:WAUKESHA	PLAN PROFILE : N DOUSMAN RD	SHEET 76	E

FILE NAME : x:\20100S\20103.00\Eng_Docs\Sheets\1060-38-70\050160_pp.dgn PLOT DATE : 7/30/2014 PLOT BY : bweigand PLOT NAME : PLOT SCALE : 1:40

WISDOT/CADDS SHEET 30

Standard Detail Drawing List

08D02-06	CONCRETE SURFACE DRAINS FLUME TYPE AT STRUCTURES
08D14-01	SLOTTED VANE DRAIN
08E04-02	SOD OR MASONRY AND SOD DITCH CHECKS
08E08-03	TYPICAL INSTALLATIONS OF EROSION BALES / TEMPORARY DITCH CHECKS
08E09-06	SILT FENCE
08E14-01	TRACKING PAD
08F01-11	APRON ENDWALLS FOR CULVERT PIPE
08F04-07	JOINT TIES FOR CONCRETE PIPE AND CONCRETE COLLAR DETAIL
08F05-01	CLASS "B" BEDDING FOR CULVERT PIPE OR STORM SEWER
08F06-04	REINFORCED CONCRETE APRON ENDWALL FOR PIPE UNDERDRAIN
08F07-05	STEEL APRON ENDWALLS FOR CULVERT PIPE AND PIPE ARCH SLOPED SIDE FRAINS
08F08-02	STEEL APRON ENDWALLS FOR CULVERT PIPE AND PIPE ARCH SLOPED CROSS DRAINS
11A01-05	MAINTENANCE CROSSOVER FOR FREEWAYS
12A03-10	NAME PLATE (STRUCTURES)
13A05-05A	SHOULDER RUMBLE STRIP, MILLING
13A05-05B	SHOULDER RUMBLE STRIP, MILLING
14B07-13A	CONCRETE BARRIER TEMPORARY PRECAST, 12'-6"
14B07-13B	CONCRETE BARRIER TEMPORARY PRECAST, 12'-6"
14B07-13C	CONCRETE BARRIER TEMPORARY PRECAST, 12'-6"
14B07-13D	CONCRETE BARRIER TEMPORARY PRECAST, 12'-6"
14B07-13E	CONCRETE BARRIER TEMPORARY PRECAST, 12'-6"
14B07-13F	CONCRETE BARRIER TEMPORARY PRECAST, 12'-6"
14B07-13G	CONCRETE BARRIER TEMPORARY PRECAST, 12'-6"
14B07-13H	CONCRETE BARRIER TEMPORARY PRECAST, 12'-6"
14B08-01A	CRASH CUSHION/SAND BARREL ARRAY AND OTHER TEMPORARY BARRIER LAYOUT DETAILS
14B08-01B	CRASH CUSHION/SAND BARREL ARRAY AND OTHER TEMPORARY BARRIER LAYOUT DETAILS
14B08-01C	CRASH CUSHION/SAND BARREL ARRAY AND OTHER TEMPORARY BARRIER LAYOUT DETAILS
14B08-01D	CRASH CUSHION/SAND BARREL ARRAY AND OTHER TEMPORARY BARRIER LAYOUT DETAILS
14B08-01E	CRASH CUSHION/SAND BARREL ARRAY AND OTHER TEMPORARY BARRIER LAYOUT DETAILS
14B32-02A	CONCRETE BARRIER SINGLE SLOPE (CBSS)
14B32-02B	CONCRETE BARRIER SINGLE SLOPE (CBSS)
14B32-02C	CONCRETE BARRIER SINGLE SLOPE (CBSS)
14B32-02D	CONCRETE BARRIER SINGLE SLOPE (CBSS)
14B32-02E	CONCRETE BARRIER SINGLE SLOPE (CBSS)
14B33-01H	CONCRETE BARRIER SINGLE SLOPE 42" THRIE BEAM ANCHOR
14B34-01B	56" CONCRETE BARRIER SINGLE SLOPE CLASS B
14B39-01E	42-INCH SSCB TO 56-INCH SSCB HEIGHT TRANSITION
14B42-02A	MIDWEST GUARDRAIL SYSTEM (MGS) GUARDRAIL
14B42-02B	MIDWEST GUARDRAIL SYSTEM (MGS) GUARDRAIL
14B42-02C	MIDWEST GUARDRAIL SYSTEM (MGS) GUARDRAIL
14B44-01A	MIDWEST GUARDRAIL SYSTEM ENERGY ABSORBING TERMINAL (MGS)
14B44-01B	MIDWEST GUARDRAIL SYSTEM ENERGY ABSORBING TERMINAL (MGS)
14B44-01C	MIDWEST GUARDRAIL SYSTEM ENERGY ABSORBING TERMINAL (MGS)
14B45-03A	MIDWEST GUARDRAIL SYSTEM THRIE BEAM TRANSITION (MGS)
14B45-03B	MIDWEST GUARDRAIL SYSTEM THRIE BEAM TRANSITION (MGS)
14B45-03C	MIDWEST GUARDRAIL SYSTEM THRIE BEAM TRANSITION (MGS)
14B45-03D	MIDWEST GUARDRAIL SYSTEM THRIE BEAM TRANSITION (MGS)
14B45-03E	MIDWEST GUARDRAIL SYSTEM THRIE BEAM TRANSITION (MGS)
14B45-03F	MIDWEST GUARDRAIL SYSTEM THRIE BEAM TRANSITION (MGS)
14B45-03G	MIDWEST GUARDRAIL SYSTEM THRIE BEAM TRANSITION (MGS)
14B45-03H	MIDWEST GUARDRAIL SYSTEM THRIE BEAM TRANSITION (MGS)
14B45-03I	MIDWEST GUARDRAIL SYSTEM THRIE BEAM TRANSITION (MGS)
14B45-03J	MIDWEST GUARDRAIL SYSTEM THRIE BEAM TRANSITION (MGS)
15A02-08	DELINEATOR POST, DELINEATOR, AND DELINEATOR BRACKET WITH REFLECTIVE SHEETING
15B01-08A	FENCE WOVEN WIRE
15B01-08B	FENCE WOVEN WIRE
15C02-05A	BARRICADES AND SIGNS FOR MAINLINE CLOSURES
15C02-05B	BARRICADES AND SIGNS FOR MAINLINE CLOSURES
15C02-05C	DETOUR SIGNING FOR MAINLINE CLOSURES
15C04-02	TRAFFIC CONTROL, ADVANCE WARNING SIGNS 45 M.P.H. OR GREATER TWO-WAY UNDIVIDED ROAD OPEN TO TRAFFIC
15C05-02	TRAFFIC CONTROL, ADVANCE WARNING SIGNS 40 M.P.H. OR LESS
15C08-16A	PAVEMENT MARKING (MAINLINE)
15D03-02	TRAFFIC CONTROL, LANE CLOSURE, SPEEDS GREATER THAN 40 M.P.H. WITH BARRIER
15D04-01	TRAFFIC CONTROL, RAMP CONSTRUCTION STAGING
15D12-03	TRAFFIC CONTROL, LANE CLOSURE, SPEEDS GREATER THAN 40 M.P.H.
15D27-02	TRAFFIC CONTROL, SHOULDER CLOSURE ON DIVIDED ROADWAY, SPEEDS GREATER THAN 40 MPH
16A01-06	LANDMARK REFERENCE MONUMENTS AND COVERS

6

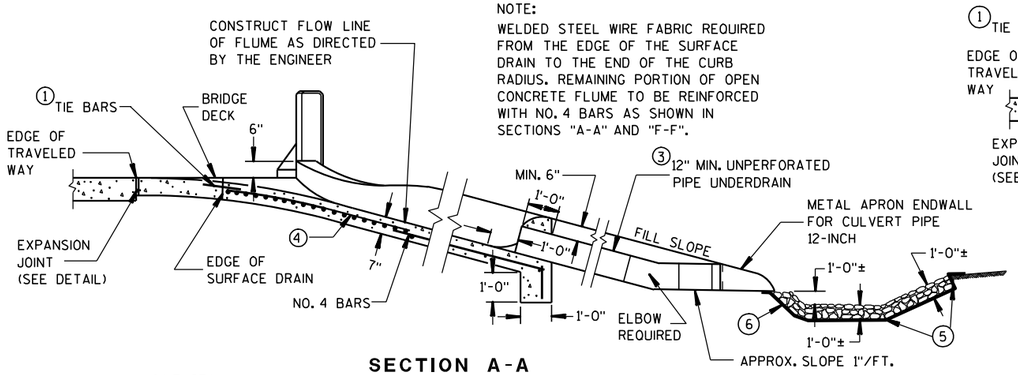

SECTION A-A

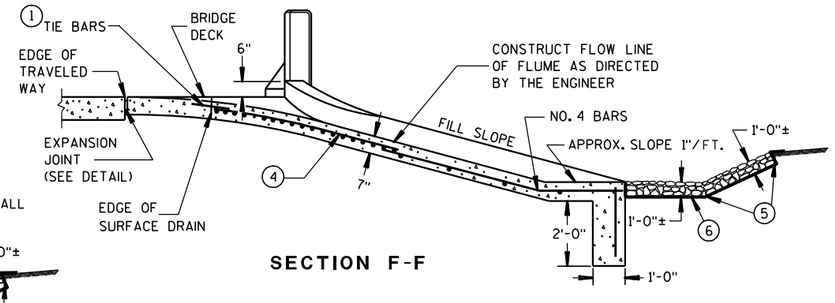

SECTION F-F

GENERAL NOTES

DETAILS OF CONSTRUCTION, MATERIALS, AND WORKMANSHIP NOT SHOWN ON THIS DRAWING SHALL CONFORM TO THE PERTINENT REQUIREMENTS OF THE STANDARD SPECIFICATIONS AND THE APPLICABLE SPECIAL PROVISIONS.

ALL STEEL REINFORCEMENT SHALL BE EMBEDDED 2 INCHES CLEAR UNLESS OTHERWISE SHOWN OR NOTED.

(1) NO. 4 X 2'-0" TIE BARS SPACED AT 3'-0" CENTERS TO BE USED ONLY WHEN ADJACENT TO P.C. CONCRETE.

(2) NO. 4 X 2'-0" TIE BARS SPACED AT 12" CENTERS TO BE PLACED BY BRIDGE CONTRACTOR, OR DRILLED TIE BARS PLACED AS DIRECTED BY THE ENGINEER.

(3) PIPE UNDERDRAIN MAY BE ANY OF THE MATERIALS LISTED IN SECTION 612.2 OF THE STANDARD SPECIFICATIONS EXCEPT DRAIN TILE.

(4) MINIMUM REINFORCEMENT SHALL BE 6" X 6" - W4.0 X W4.0 OR NO. 3 BARS LONGITUDINAL AND TRANSVERSE SPACING 12" C-C.

(5) LIMITS OF ADDITIONAL RIPRAP WHEN SPECIAL DITCH IS REQUIRED.

(6) GEOTEXTILE FABRIC, TYPE 'R"

(7) HOT POURED SEALANT UNLESS OTHERWISE SPECIFIED.

(8) THIS DIMENSION MAY VARY DEPENDING ON THE SPACING OF POSTS FOR THE STEEL PLATE BEAM GUARD. THE TYPICAL LOCATION FOR THE SURFACE DRAIN IS WHERE THE POST SPACING WIDENS TO 3'-1½".

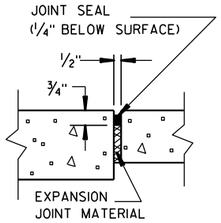

EXPANSION JOINT DETAIL

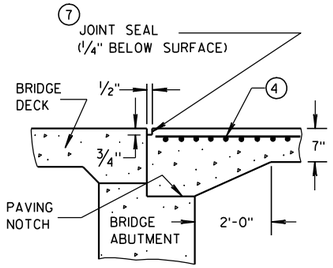

SECTION D-D

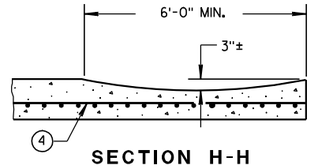

SECTION H-H

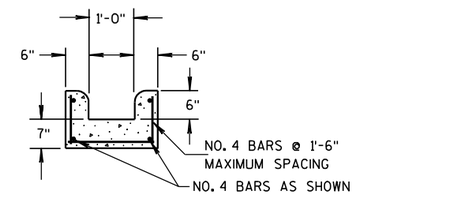

SECTION E-E

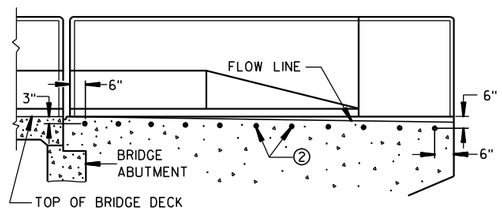

LOCATION OF TIE BARS IN WINGWALL

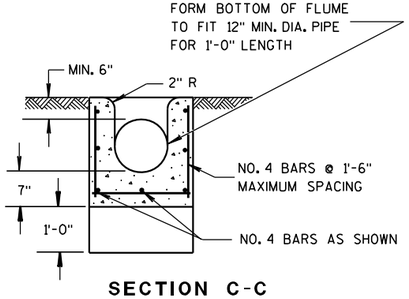

SECTION C-C

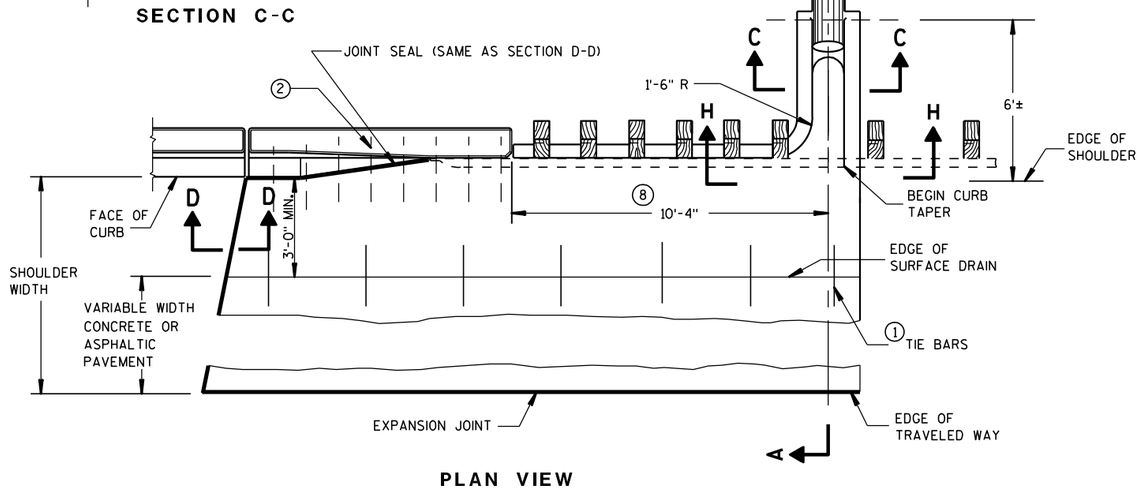

PLAN VIEW
SURFACE DRAIN WITH PIPE
TYPE "A"

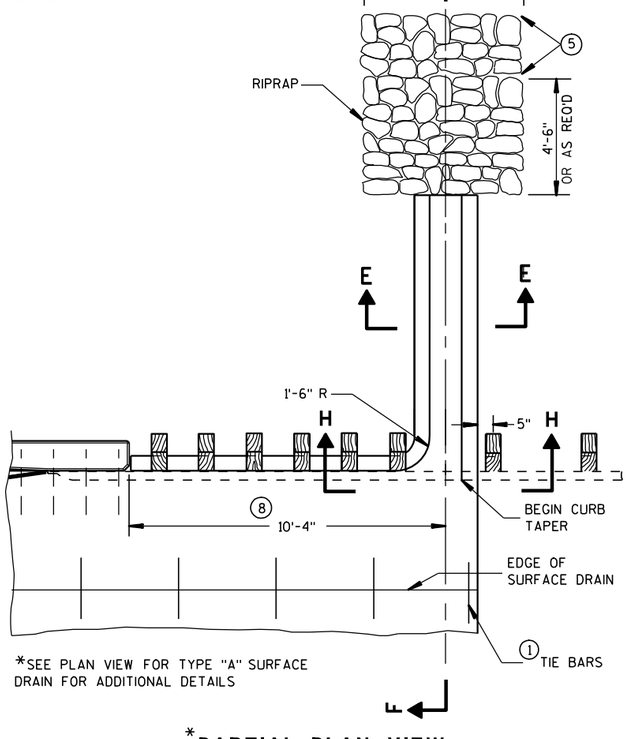

*SEE PLAN VIEW FOR TYPE "A" SURFACE DRAIN FOR ADDITIONAL DETAILS

*PARTIAL PLAN VIEW
SURFACE DRAIN WITHOUT PIPE
TYPE "B"

CONCRETE SURFACE DRAINS
FLUME TYPE
AT STRUCTURES

STATE OF WISCONSIN
DEPARTMENT OF TRANSPORTATION

APPROVED
9/4/08 DATE
/S/ Jerry H. Zogg
ROADWAY STANDARDS ENGINEER
78
FHWA

6

S.D.D. 8 D 2-6

6

S.D.D. 8 D 2-6

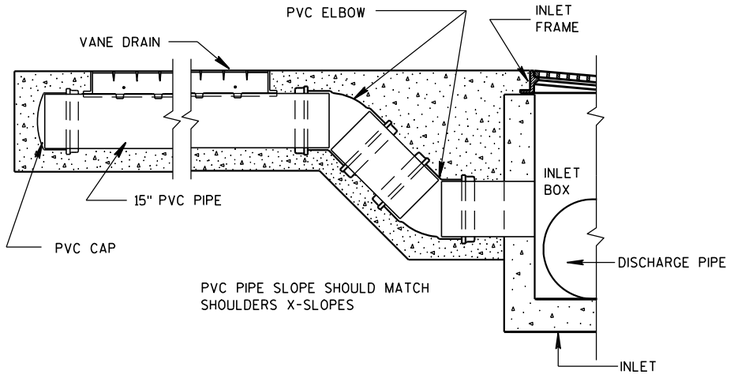

TYPICAL SLOTTED VANE DRAIN CONFIGURATION

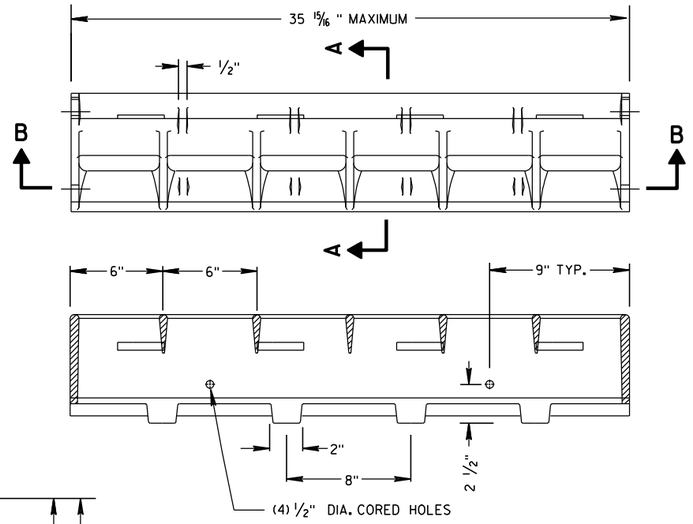

SECTION B-B

SLOTTED VANE DRAIN DETAIL

(APPROXIMATE WEIGHT 87 LBS.)

GENERAL NOTES

DETAILS OF CONSTRUCTION, MATERIALS AND WORKMANSHIP NOT SHOWN ON THIS DRAWING SHALL CONFORM TO THE PERTINENT REQUIREMENTS OF THE STANDARD SPECIFICATIONS AND THE APPLICABLE SPECIAL PROVISIONS.

ENCASEMENT: THE ENCASING MATERIAL AROUND THE PIPE SHALL BE IN ACCORDANCE WITH SPECIFICATIONS OF 501.4.3.3 FOR CONCRETE PAVEMENT.

THE PIPE USED SHALL BE A 15" DIAMETER SDR-35 POLYVINYL CHLORIDE SEWER PIPE. THE PIPE SHALL CONFORM TO THE REQUIREMENTS SET FORTH IN STANDARD SPECIFICATION 612.2.6

SURFACE DRAIN: BEFORE PAVING OVER THE DRAIN, COVER THE TOP OF THE DRAIN TO KEEP MATERIAL OUT OF THE PIPE. THE FINISHED GRADE SHOULD BE FLUSH WITH THE TOP OF THE DRAIN.

THE ANGLE OF THE DRAIN TO THE FLOW OF WATER SHOULD BE AS CLOSE TO 90° AS POSSIBLE.

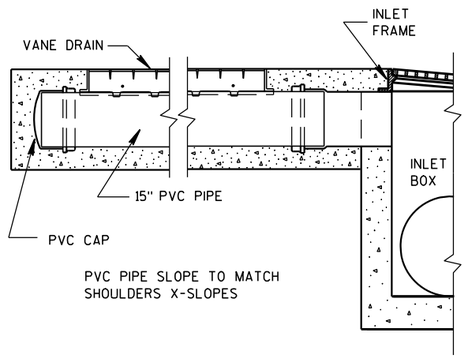

TYPICAL SLOTTED VANE DRAIN CONFIGURATION

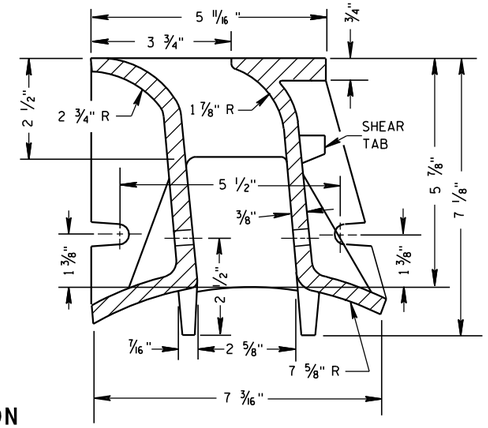

SECTION A-A

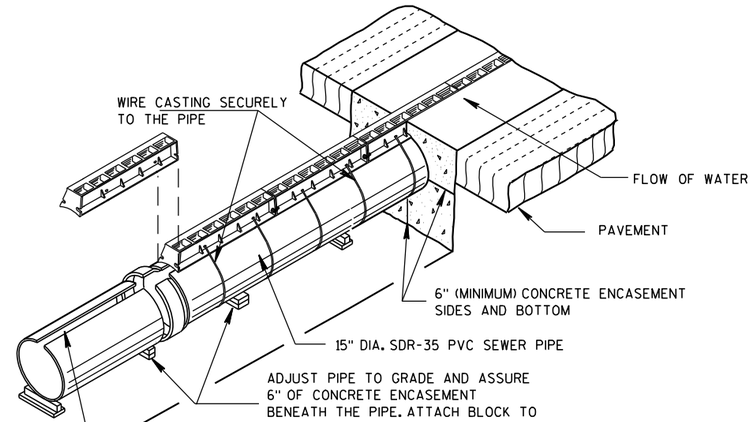

INSTALLATION OF SLOTTED VANE DRAIN

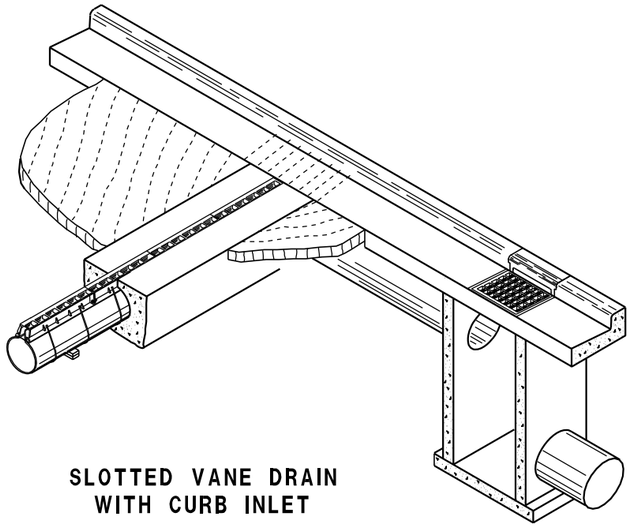

SLOTTED VANE DRAIN WITH CURB INLET

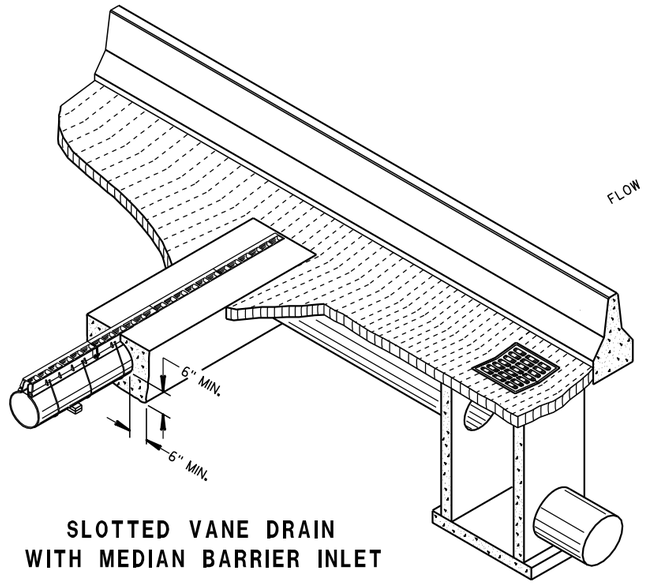

SLOTTED VANE DRAIN WITH MEDIAN BARRIER INLET

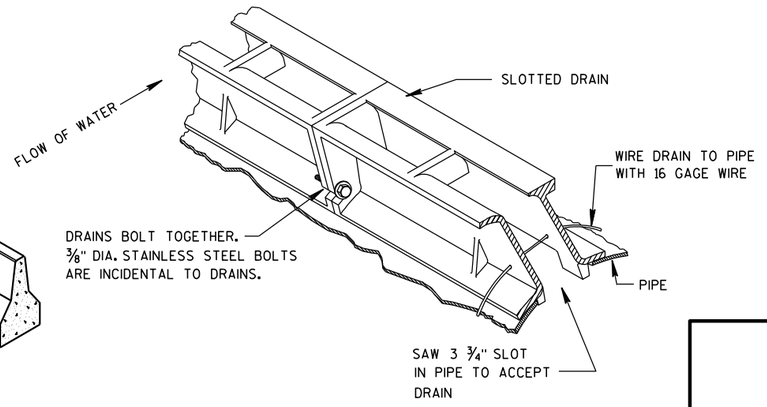

ISOMETRIC VIEW

SLOTTED VANE DRAIN

STATE OF WISCONSIN
DEPARTMENT OF TRANSPORTATION

APPROVED
6/13/00 DATE
/S/ Rory L. Rhinehart
CHIEF ROADWAY DEVELOPMENT ENGINEER
FHWA

6 S.D.D. 8 D 14-1

6 S.D.D. 8 D 14-1

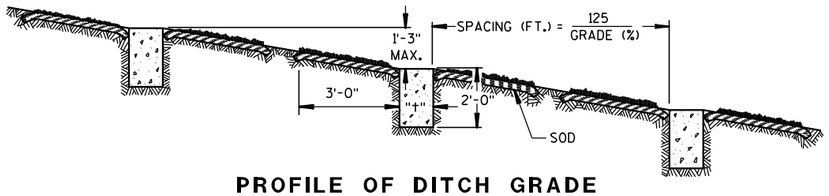

PROFILE OF DITCH GRADE

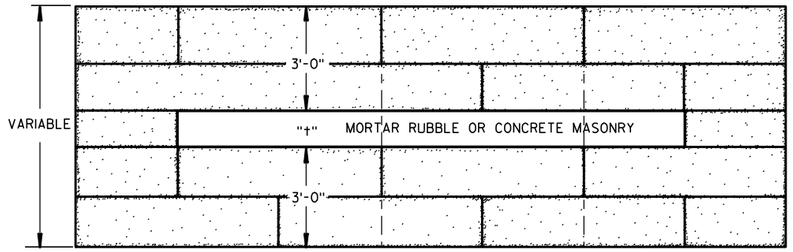

PLAN VIEW SHOWING MASONRY AND SOD

"+" - MASONRY THICKNESS SHALL BE 0'-9" FOR CONCRETE AND 1'-0" FOR MORTAR RUBBLE.

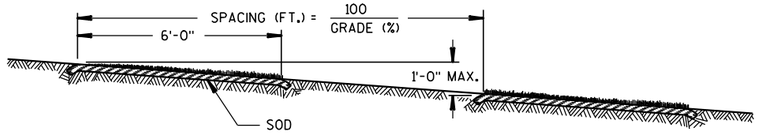

PROFILE OF DITCH GRADE

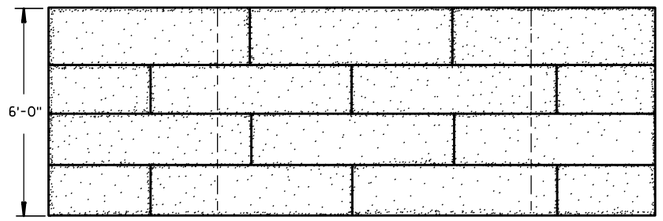

PLAN VIEW SHOWING SOD

GENERAL NOTES

DETAILS OF CONSTRUCTION, MATERIALS AND WORKMANSHIP NOT SHOWN ON THIS DRAWING SHALL CONFORM TO THE PERTINENT REQUIREMENTS OF THE STANDARD SPECIFICATIONS AND THE APPLICABLE SPECIAL PROVISIONS.

ALTERNATE DESIGNS FOR DITCH CHECKS, OF THE MATERIAL OR COMBINATION OF MATERIALS SHOWN HEREON, MAY BE USED UPON WRITTEN PERMISSION OF THE ENGINEER.

SOD STRIPS FOR DITCH CHECKS MAY BE PLACED EITHER TRANSVERSELY OR LONGITUDINALLY TO THE DIRECTION OF WATER FLOW.

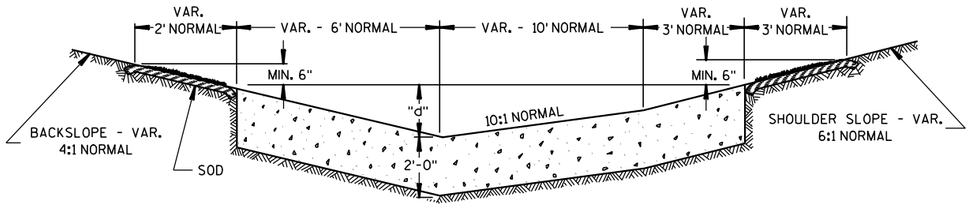

SIDE DITCH CROSS SECTION

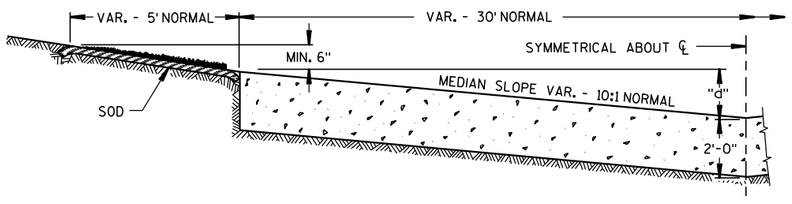

MEDIAN DITCH CROSS SECTION

"d" - THE MINIMUM DEPTH OF THE MASONRY PORTION OF THE DITCH CHECKS SHALL BE EQUAL TO THE MAXIMUM DEPTH OF FLOW. THE NORMAL "d" WILL BE 1'-6".

MASONRY AND SOD DITCH CHECKS

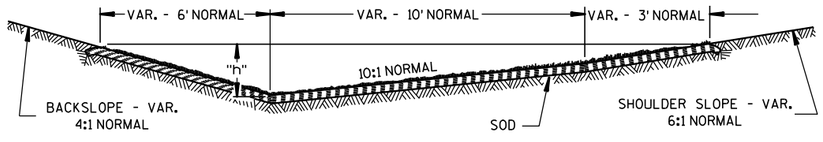

SIDE DITCH CROSS SECTION

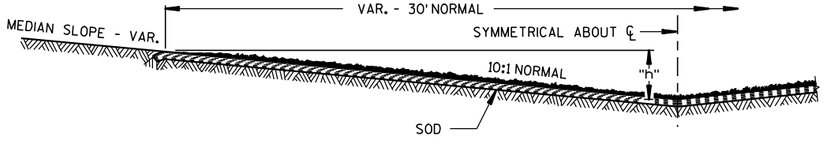

MEDIAN DITCH CROSS SECTION

"h" - THE MINIMUM HEIGHT OF DITCH TO BE SODDED SHALL BE EQUAL TO THE MAXIMUM DEPTH OF FLOW PLUS 6". THE NORMAL "h" WILL BE 1'-6".

SOD DITCH CHECKS

SOD OR MASONRY AND SOD DITCH CHECKS

STATE OF WISCONSIN
DEPARTMENT OF TRANSPORTATION

APPROVED

9/7/71 — DATE

/S/ L.C. Harris — ACTING CHIEF DESIG

FHWA

R

6

S.D.D. 8 E 4-2

6

S.D.D. 8 E 4-2

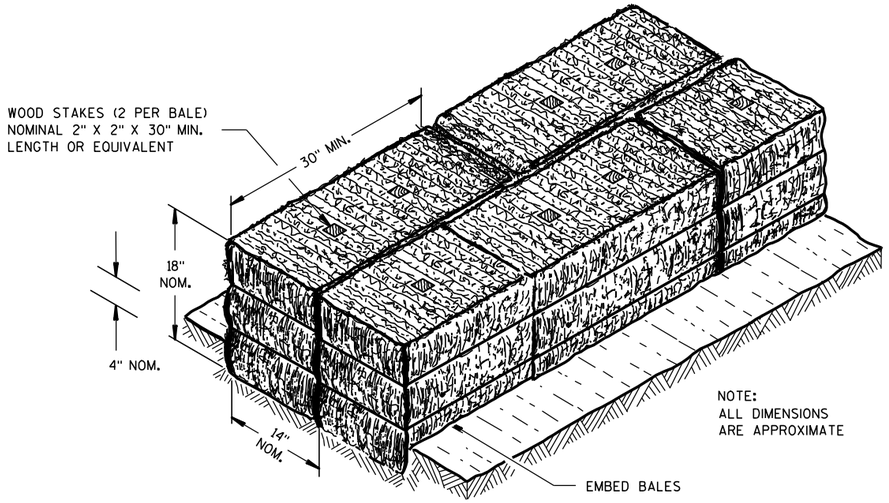

SECTION A-A

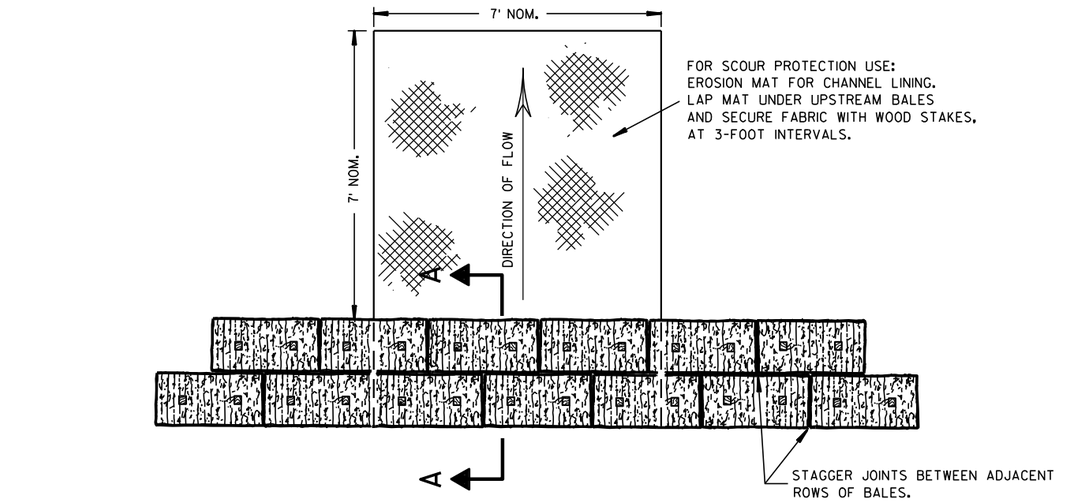

PLAN VIEW

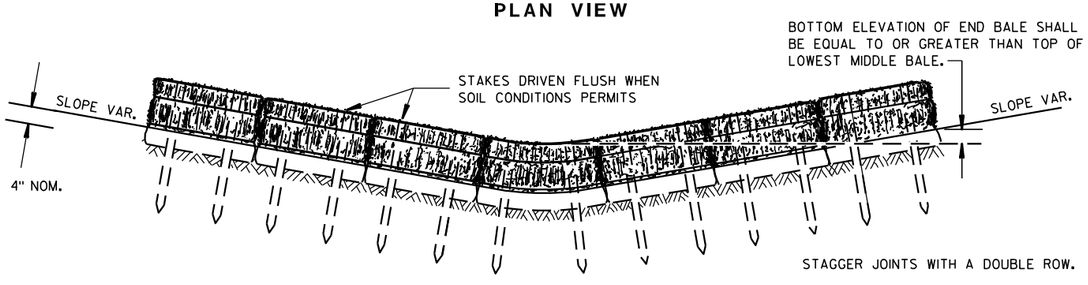

FRONT ELEVATION

TEMPORARY DITCH CHECK USING EROSION BALES (1)

GENERAL NOTES

DETAILS OF CONSTRUCTION, MATERIALS AND WORKMANSHIP NOT SHOWN ON THIS DRAWING SHALL CONFORM TO THE PERTINENT REQUIREMENTS OF THE STANDARD SPECIFICATIONS AND THE APPLICABLE SPECIAL PROVISIONS.

(1) TEMPORARY DITCH CHECKS EITHER EROSION BALES OR MANUFACTURED SHALL BE PAID FOR UNDER THE BID ITEM OF TEMPORARY DITCH CHECK. THE DEPARTMENT WILL NOT PAY FOR TEMPORARY DITCH CHECKS CONSTRUCTED OF A SINGLE ROW OF EROSION BALES.

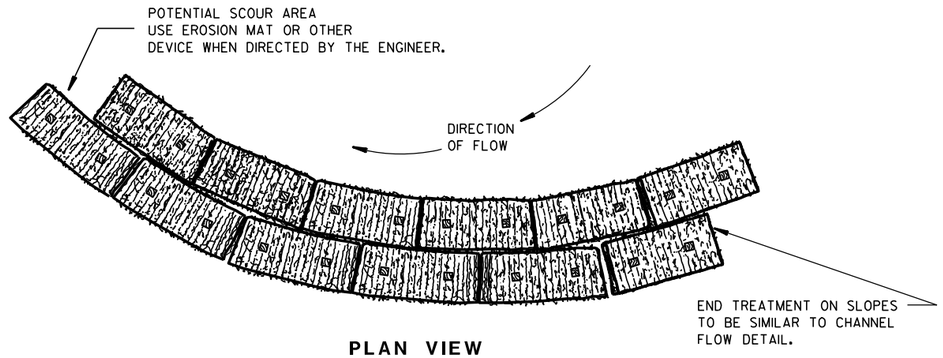

PLAN VIEW

WHEN ALTERING THE DIRECTION OF FLOW

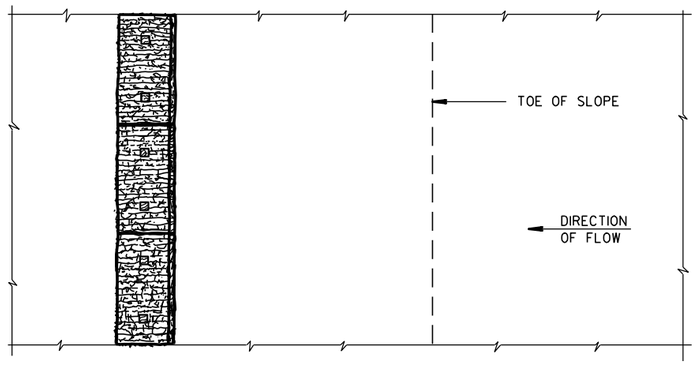

PLAN VIEW

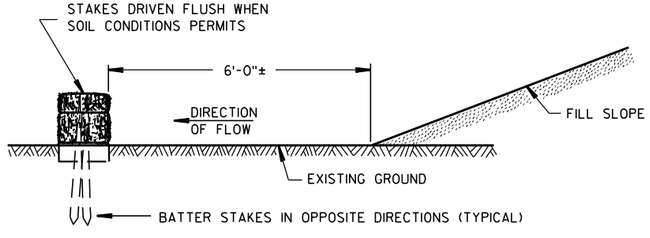

FRONT ELEVATION

WHEN EXISTING GROUND SLOPES AWAY FROM FILL SLOPE

EROSION BALES FOR SHEET FLOW

TYPICAL INSTALLATIONS OF EROSION BALES / TEMPORARY DITCH CHECKS

STATE OF WISCONSIN
DEPARTMENT OF TRANSPORTATION

APPROVED

6/04/02 — DATE

/S/ Beth Cannestra — CHIEF ROADWAY DEVELOPMENT ENGINEER

FHWA

6

S.D.D. 8 E 8-3

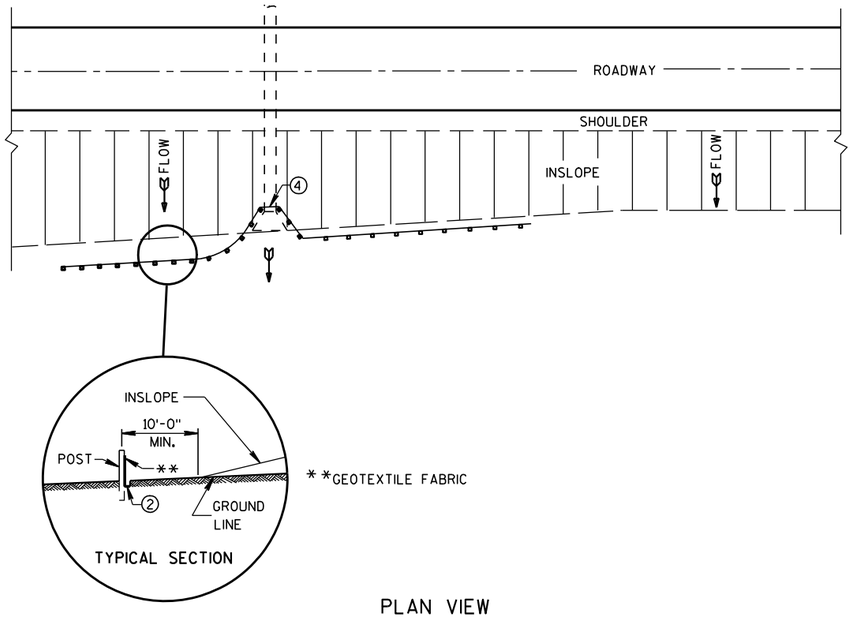

PLAN VIEW

TYPICAL APPLICATION OF SILT FENCE

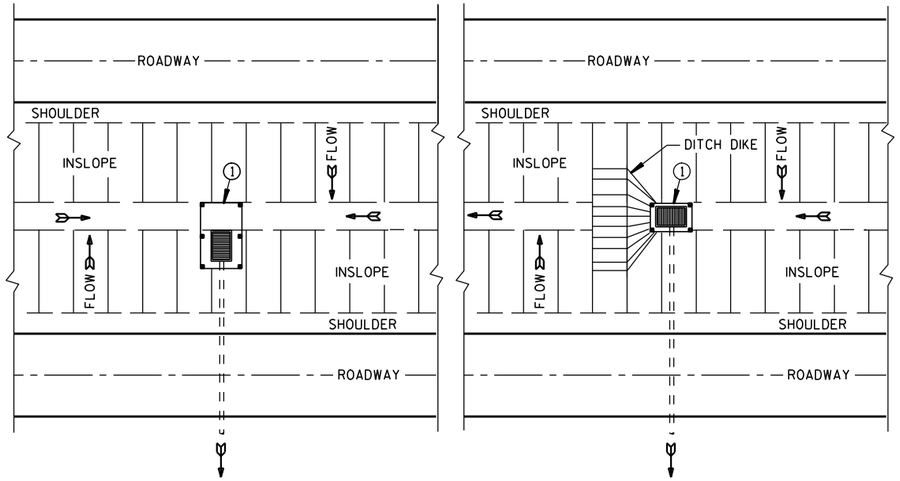

PLAN VIEW

SILT FENCE AT MEDIAN SURFACE DRAINS

GENERAL NOTES

DETAILS OF CONSTRUCTION NOT SHOWN ON THIS DRAWING SHALL CONFORM TO THE PERTINENT REQUIREMENTS OF THE STANDARD SPECIFICATIONS AND APPLICABLE SPECIAL PROVISIONS.

① HORIZONTAL BRACE REQUIRED WITH 2" X 4" WOODEN FRAME OR EQUIVALENT AT TOP OF POSTS.

② FOR MANUAL INSTALLATIONS THE TRENCH SHALL BE A MINIMUM OF 4" WIDE & 6" DEEP TO BURY AND ANCHOR THE GEOTEXTILE FABRIC. FOLD MATERIAL TO FIT TRENCH AND BACKFILL & COMPACT TRENCH WITH EXCAVATED SOIL.

③ WOOD POSTS SHALL BE A MINIMUM SIZE OF 1⅛" X 1⅛" OF OAK OR HICKORY.

④ SILT FENCE TO EXTEND ACROSS THE TOP OF THE PIPE.

⑤ CONSTRUCT SILT FENCE FROM A CONTINUOUS ROLL IF POSSIBLE BY CUTTING LENGTHS TO AVOID JOINTS. IF A JOINT IS NECESSARY USE ONE OF THE FOLLOWING TWO METHODS; A) OVERLAP THE END POSTS AND TWIST, OR ROTATE, AT LEAST 180 DEGREES, B) HOOK THE END OF EACH SILT FENCE LENGTH.

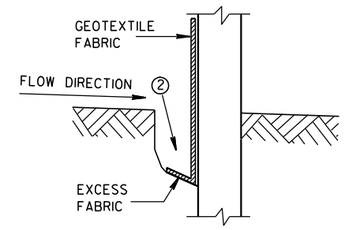

TRENCH DETAIL

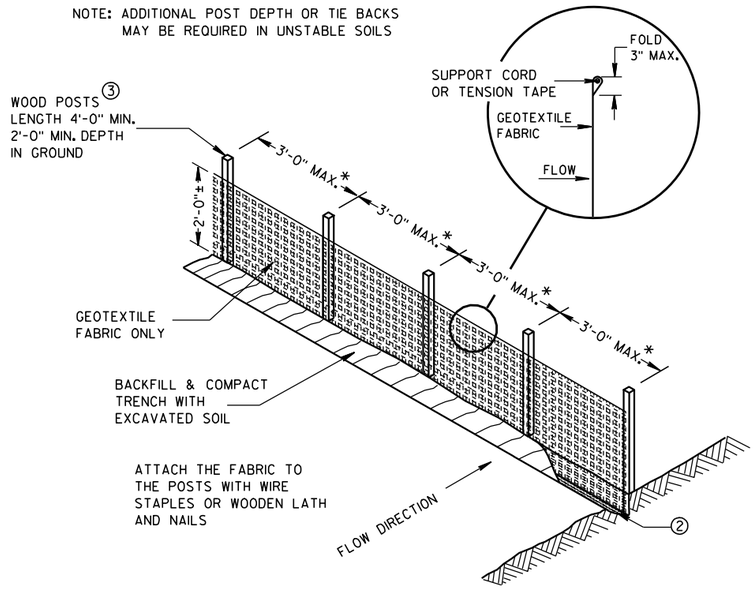

SILT FENCE

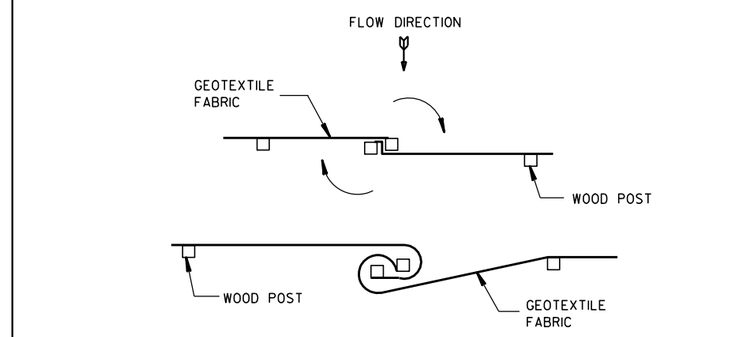

TWIST METHOD

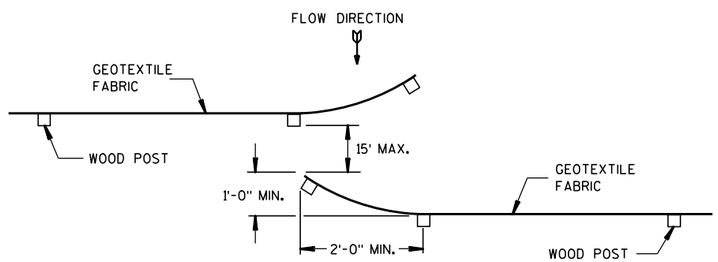

HOOK METHOD

JOINING TWO LENGTHS OF SILT FENCE ⑤

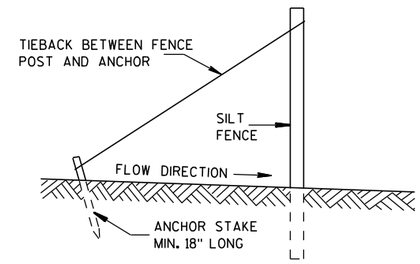

SILT FENCE TIE BACK

(WHEN REQUIRED BY THE ENGINEER)

SILT FENCE

STATE OF WISCONSIN
DEPARTMENT OF TRANSPORTATION

APPROVED
4-29-05 DATE
/S/ Beth Cannestra
CHIEF ROADWAY DEVELOPMENT ENGINEER
FHWA

6

S.D.D. 8 E 9-6

6

S.D.D. 8 E 9-6

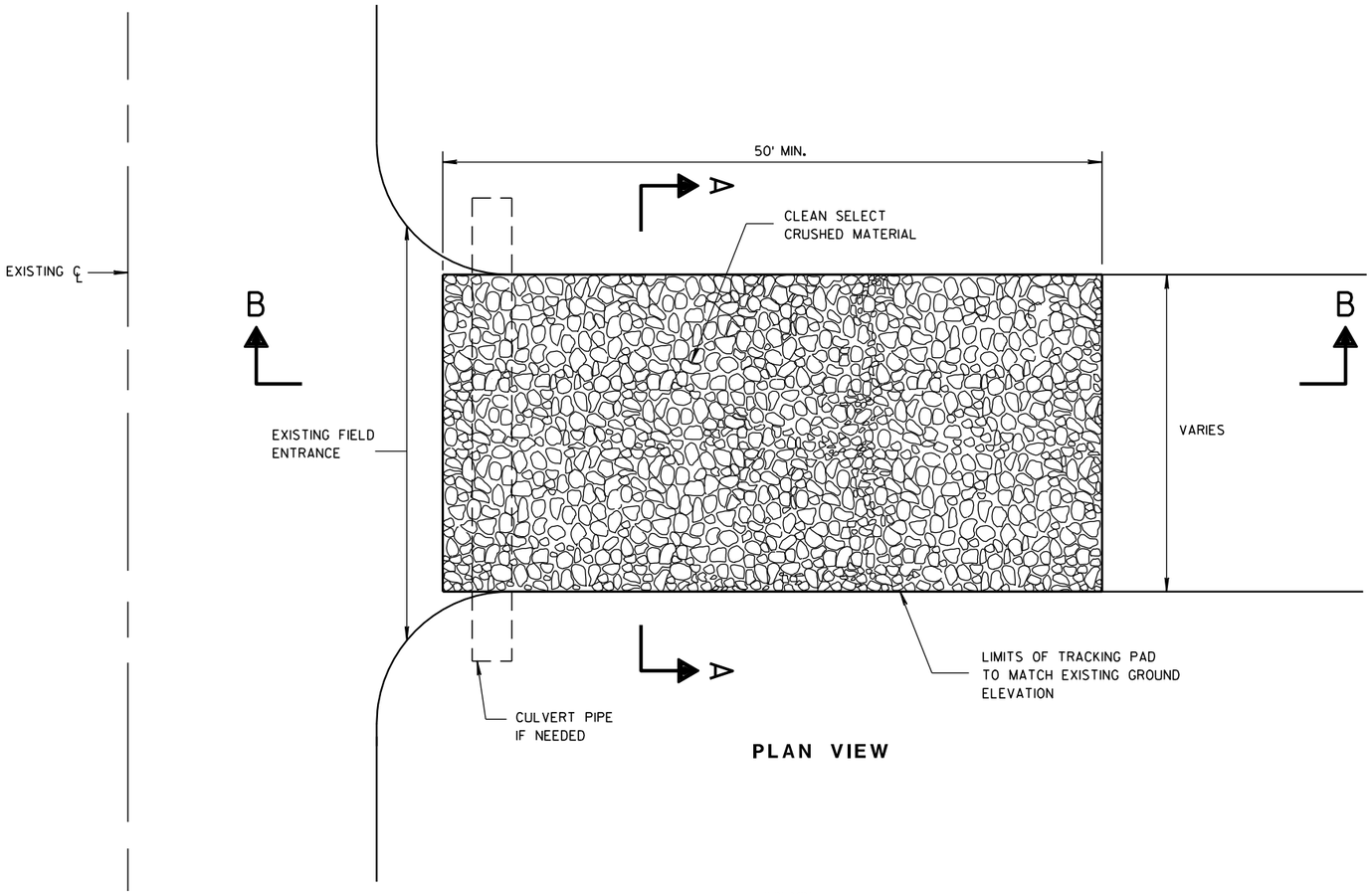

PLAN VIEW

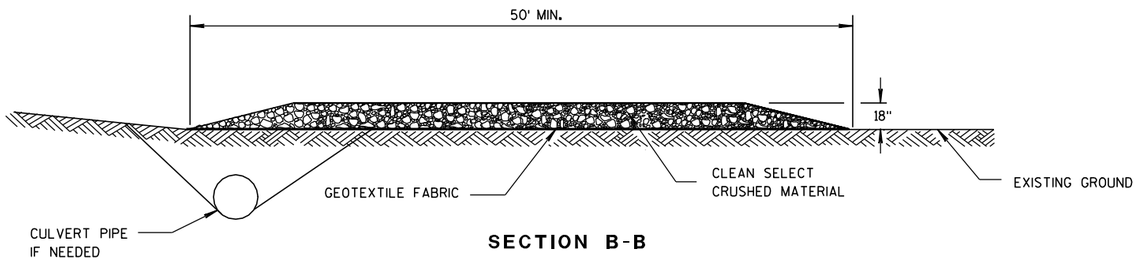

SECTION B-B

GENERAL NOTES

DETAILS OF CONSTRUCTION, MATERIALS AND WORKMANSHIP NOT SHOWN ON THIS DRAWING SHALL CONFORM TO THE PERTINENT REQUIREMENTS OF THE STANDARD SPECIFICATIONS AND THE APPLICABLE SPECIAL PROVISIONS.

TRACKING PAD SHALL BE INSPECTED DAILY. DEFICIENT AREAS SHALL BE REPAIRED OR REPLACED IMMEDIATELY.

TRACKING PAD TO BE REMOVED AFTER CONSTRUCTION IS COMPLETED.

TRACKING PAD SHALL BE THE FULL WIDTH OF THE EGRESS POINT.

SURFACE WATER MUST BE PREVENTED FROM PASSING THROUGH THE TRACKING PAD. FLOWS SHALL BE DIVERTED AWAY, AROUND OR CONVEYED UNDER THE TRACKING PAD.

CULVERT PIPE OR OTHER BMP USED TO DIVERT WATER AWAY, AROUND OR UNDER THE TRACKING PAD SHALL BE DESIGNED TO CONVEY THE 2 YEAR - 24 HOUR EVENT.

THE COST OF ADDITIONAL BMP TO DIVERT WATER ARE INCIDENTAL TO THE TRACKING PAD BID ITEM.

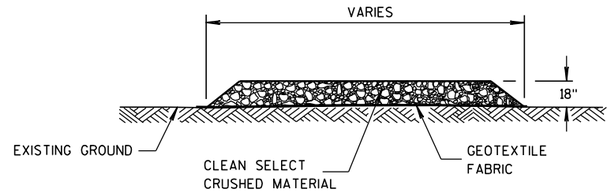

SECTION A-A

TRACKING PAD

TRACKING PAD

STATE OF WISCONSIN
DEPARTMENT OF TRANSPORTATION

APPROVED
3/24/2011 — DATE
/S/ Jerry H. Zoda — ROADWAY STANDARDS ENGINEER
83
ENT
FHWA

6
S.D.D. 8 E 14-1

METAL APRON ENDWALLS

PIPE DIA. (IN.)	MIN. THICK. (Inches) STEEL	MIN. THICK. (Inches) ALUM.	DIMENSIONS (Inches) A (±1")	B (MAX.)	H (±1")	L (±1 1/2")	L1 ①	L2 ①	W (±2")	APPROX. SLOPE	BODY
12	.064	.060	6	6	6	21	12	17 1/2	24	2 1/2 to 1	1 Pc.
15	.064	.060	7	8	6	26	14	21 3/4	30	2 1/2 to 1	1 Pc.
18	.064	.060	8	10	6	31	15	28 1/4	36	2 1/2 to 1	1 Pc.
21	.064	.060	9	12	6	36	18	29 5/8	42	2 1/2 to 1	1 Pc.
24	.064	.075	10	13	6	41	18	37 1/4	48	2 1/2 to 1	1 Pc.
30	.079	.075	12	16	8	51	18	52 1/4	60	2 1/2 to 1	1 Pc.
36	.079	.105	14	19	9	60	24	59 3/4	72	2 1/2 to 1	2 Pc.
42	.109	.105	16	22	11	69	24	75 5/8	84	2 1/2 to 1	2 Pc.
48	.109	.105	18	27	12	78	24	81	90	2 1/4 to 1	3 Pc.
54	.109	.105	18	30	12	84	30	85 1/2	102	2 1/4 to 1	3 Pc.
60	.109×	.105×	18	33	12	87	—	—	114	2 to 1	3 Pc.
66	.109×	.105×	18	36	12	87	—	—	120	2 to 1	3 Pc.
72	.109×	.105×	18	39	12	87	—	—	126	2 to 1	3 Pc.
78	.109×	.105×	18	42	12	87	—	—	132	1 1/2 to 1	3 Pc.
84	.109×	.105×	18	45	12	87	—	—	138	1 1/2 to 1	3 Pc.
90	.109×	.105×	18	37	12	87	—	—	144	1 1/2 to 1	3 Pc.
96	.109×	.105×	18	35	12	87	—	—	150	1 1/2 to 1	3 Pc.

× EXCEPT CENTER PANEL SEE GENERAL NOTES

REINFORCED CONCRETE APRON ENDWALLS

PIPE DIA. (IN.)	DIMENSIONS (Inches) T	A	B	C	D	E	G	APPROX. SLOPE
12	2	4	24	48 7/8	72 1/8	24	2	3 to 1
15	2 1/4	6	27	46	73	30	2 1/4	3 to 1
18	2 1/2	9	27	46	73	36	2 1/2	3 to 1
21	2 3/4	9	36	37 1/2	73 1/2	42	2 3/4	3 to 1
24	3	9 1/2	43 1/2	30	73 1/2	48	3	3 to 1
27	3 1/4	10 1/2	49 1/2	24	73 1/2	54	3 1/4	3 to 1
30	3 1/2	12	54	19 3/4	73 1/2	60	3 1/2	3 to 1
36	4	15	63	34 3/4	97 3/4	72	4	3 to 1
42	4 1/2	21	63	35	98	78	4 1/2	3 to 1
48	5	24	72	26	98	84	5	3 to 1
54	5 1/2	27	65	* 33 1/4 - ** 35	* 98 1/4 - ** 100	90	5 1/2	2 2/5 to 1
60	6	* 30 - ** 35	60	39	99	96	5	2 to 1
66	6 1/2	* 24 - ** 30	* 72 - ** 78	* 21 - ** 27	99	102	5 1/2	2 to 1
72	7	* 24 - ** 36	78	21	99	108	6	2 to 1
78	7 1/2	* 24 - ** 36	78	21	99	114	6 1/2	2 to 1
84	8	36	90 1/2	21	111 1/2	120	6 1/2	1 1/2 to 1
90	8 1/2	41	87 1/2	24	111 1/2	132	6 1/2	1 1/2 to 1

*MINIMUM
**MAXIMUM

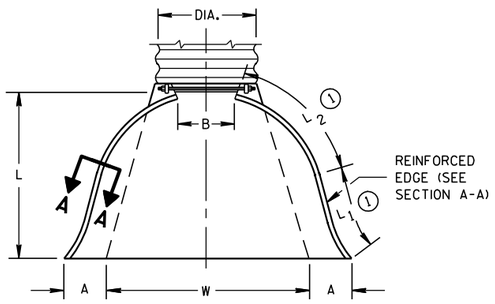

PLAN VIEW

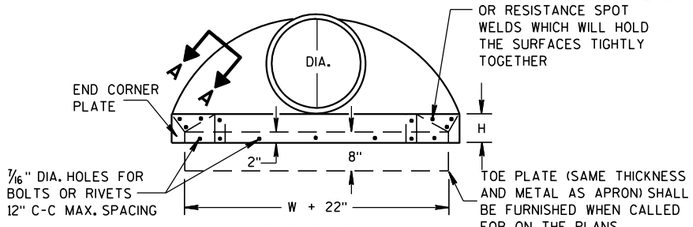

END VIEW

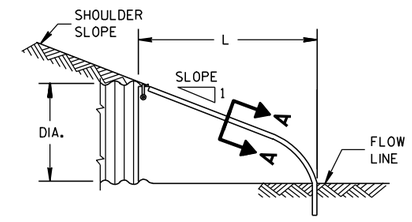

SIDE ELEVATION

METAL ENDWALLS

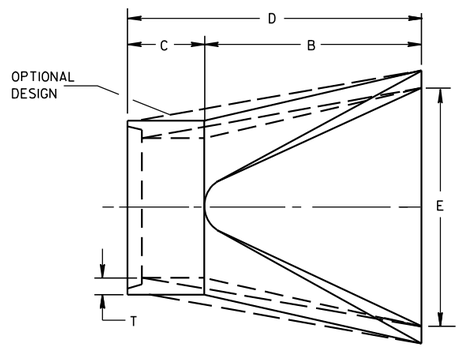

PLAN

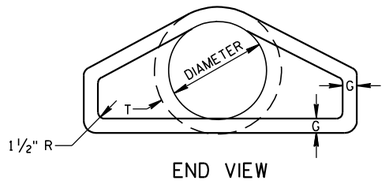

END VIEW

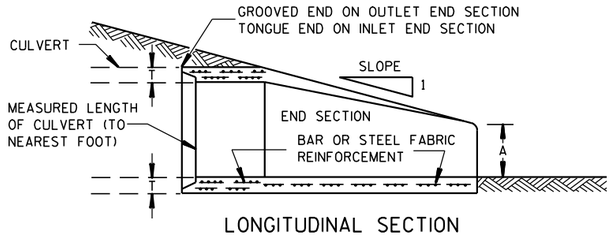

LONGITUDINAL SECTION

CONCRETE ENDWALLS

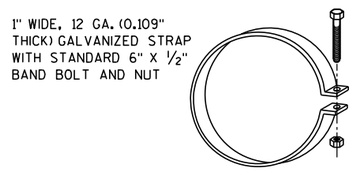

ALTERNATE FOR TYPE 1 CONNECTION

END SECTION CONNECTOR STRAP

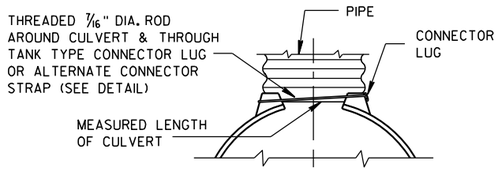

TYPE 1
FOR 12" THRU 24" CORR. PIPE

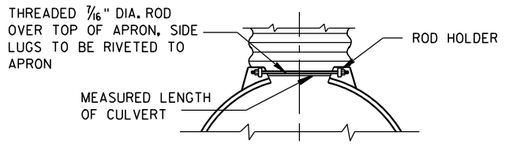

TYPE 2
FOR 30" THRU 96" CORR. PIPE

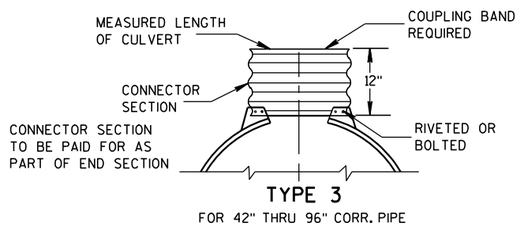

TYPE 3
FOR 42" THRU 96" CORR. PIPE

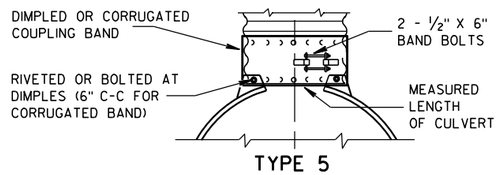

TYPE 5
ALTERNATE FOR:
ALL SIZES CORRUGATED CIRCULAR PIPE

NOTE: DIMPLED BAND FITS OVER OUTSIDE OF ENDWALL. AND CORRUGATED BAND FITS INSIDE ENDWALL. DIMPLED BAND MAY BE USED WITH HELICALLY CORRUGATED PIPE.

FOR CIRCUMFERENTIALLY CORRUGATED PIPE USE ENDWALL CONNECTION DETAILS 1, 2, 3 OR 5 AS APPLICABLE.

FOR HELICALLY CORRUGATED PIPE USE ENDWALL CONNECTION DETAILS 1, 2 OR 5.

FOR HELICALLY CORRUGATED PIPES WITH TWO CIRCUMFERENTIAL CORRUGATIONS AT EACH END USE ENDWALL CONNECTION DETAILS 1, 2 OR 3.

CONNECTION DETAILS

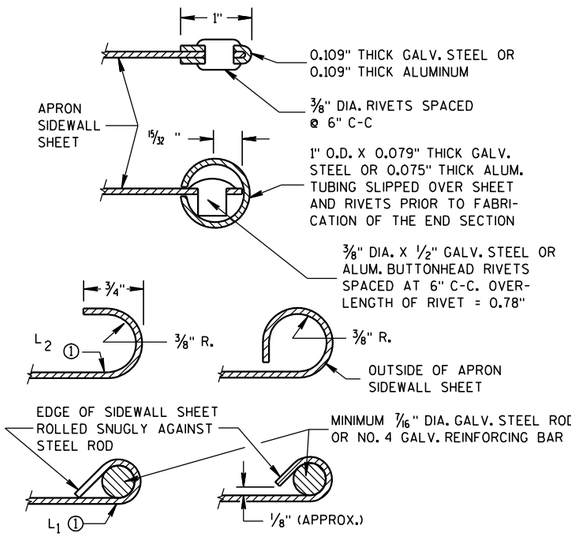

SECTION A-A

GENERAL NOTES

DETAILS OF CONSTRUCTION, MATERIALS AND WORKMANSHIP NOT SHOWN ON THIS DRAWING SHALL CONFORM TO THE PERTINENT REQUIREMENTS OF THE STANDARD SPECIFICATIONS AND THE APPLICABLE SPECIAL PROVISIONS.

CONCRETE CULVERT ENDWALLS MAY NOT BE USED WITH GALVANIZED STEEL OR ALUMINUM CULVERT PIPE OR VISE VERSA. GALVANIZED STEEL OR ALUMINUM ENDWALLS SHALL NORMALLY BE INSTALLED ON CULVERT PIPE OF THE SAME METAL.

ALL THREE PIECE STEEL APRON ENDWALLS FOR 60" DIAMETER PIPE AND LARGER SHALL HAVE 0.109" SIDES AND 0.138" CENTER PANELS. ALL THREE PIECE ALUMINUM APRON ENDWALLS FOR 60" DIAMETER PIPE AND LARGER SHALL HAVE 0.105" SIDES AND 0.134" CENTER PANELS. THE WIDTH OF CENTER PANELS SHALL BE GREATER THAN 20 PERCENT OF THE PIPE PERIMETER.

LAP SEAMS SHALL BE TIGHTLY JOINED BY GALVANIZED RIVETS OR BOLTS FOR STEEL UNITS AND ALUMINUM RIVETS AND BOLTS FOR ALUMINUM UNITS. FOR THE 60" THROUGH 96" DIAMETER APRON ENDWALL SIZES, THE REINFORCED EDGES AND CENTER PANEL SEAMS SHALL BE FURTHER REINFORCED WITH GALVANIZED STEEL OR ALUMINUM STIFFENER ANGLES. THE ANGLES SHALL BE ATTACHED BY GALVANIZED NUTS AND BOLTS FOR STEEL UNITS AND ALUMINUM NUTS AND BOLTS FOR ALUMINUM UNITS.

WHERE TWO OR MORE PIPES WITH APRON ENDWALLS ARE LAID ADJACENT TO EACH OTHER, THEY SHALL BE SEPARATED BY A DISTANCE SUFFICIENT TO PROVIDE A MINIMUM CLEARANCE OF 6 INCHES BETWEEN APRON ENDWALLS.

① FOR PIPE SIZES UP TO 60" DIAMETER, A 180° ROLLED EDGE MAY BE USED INSTEAD OF STEEL ROD REINFORCEMENT. SEE SECTION A-A.

APRON ENDWALLS FOR CULVERT PIPE

STATE OF WISCONSIN
DEPARTMENT OF TRANSPORTATION

APPROVED
11/30/94 — DATE
/S/ Rory L. Rhinesmith — CHIEF ROADWAY DEVELOPMENT ENGINEER
FHWA

6
S.D.D. 8 F 1-11

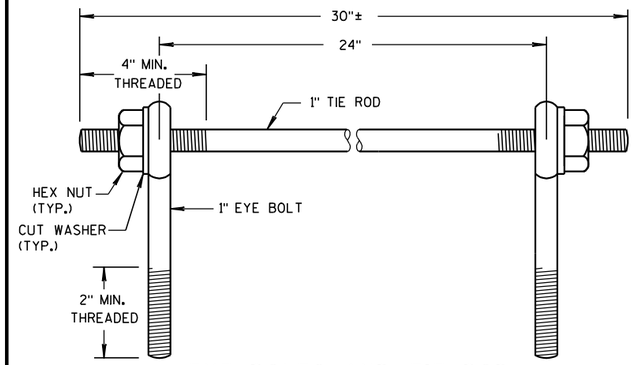

EYE BOLTS AND TIE ROD

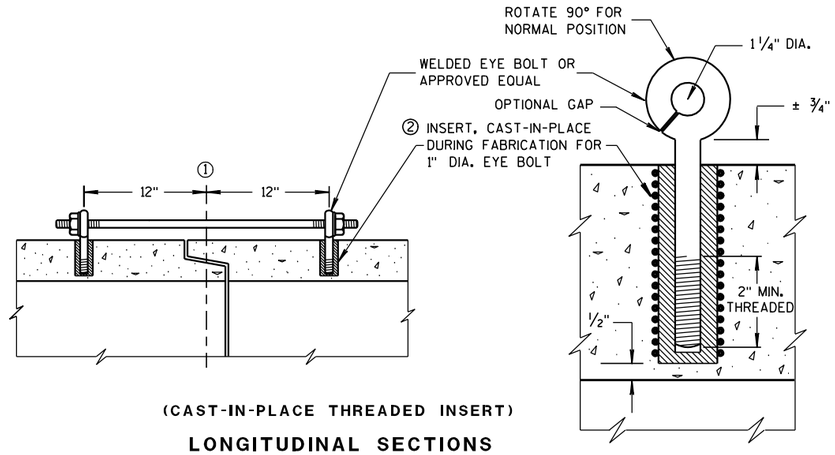

(CAST-IN-PLACE THREADED INSERT)

LONGITUDINAL SECTIONS

EYE BOLT AND TIE ROD ASSEMBLY (ALTERNATE NO. 1)

GENERAL NOTES

DETAILS OF CONSTRUCTION, MATERIALS, AND WORKMANSHIP NOT SHOWN ON THIS DRAWING SHALL CONFORM TO THE PERTINENT REQUIREMENTS OF THE STANDARD SPECIFICATIONS AND APPLICABLE SPECIAL PROVISIONS.

CONCRETE CULVERT AND STORM SEWER PIPE SHALL BE TIED TOGETHER IN THE MANNER ILLUSTRATED BY THIS DETAIL AT LOCATIONS DESIGNATED IN THE STANDARD SPECIFICATIONS AND THE PLAN. THE CONTRACTOR MAY USE EITHER ALTERNATE 1, 2 OR 3 FOR DRAINAGE STRUCTURES. ONLY ALTERNATE 1 AND 3 MAY BE USED FOR CATTLE PASSES, UNLESS OTHERWISE STATED IN THE CONTRACT. THE MATERIALS, FABRICATION AND WORK NECESSARY TO TIE THE PIPE BY THIS DETAIL WILL BE CONSIDERED INCIDENTAL TO THE PIPE AND APRON ENDWALLS IF REQUIRED.

DETAILED DRAWINGS FOR PROPOSED ALTERNATE DESIGNS FOR JOINT TIES SHALL BE SUBMITTED TO THE ENGINEER FOR APPROVAL.

JOINT TIES TO BE HOT-DIP GALVANIZED PER ASTM A 153.

① ℄ OF TONGUE AND GROOVE OR BELL AND SPIGOT JOINTS.

② THE INSIDE OF THE THREADED INSERTS SHALL BE CLEAN TO ALLOW THE INSERTION OF THREADED EYE BOLTS.

③ HOLES SHALL BE CAST-IN-PLACE OR DRILLED 12 INCHES FROM ℄ OF TONGUE AND GROOVE.

④ BOLT PROJECTION INSIDE OF PIPE SHALL NOT EXCEED 2 INCHES.

⑤ OPENING TO BE ROD DIAMETER PLUS 1 INCH.

⑥ LENGTH ADEQUATE TO EXTEND TO WITHIN 1/2 INCH OF THE INNER SURFACE OF THE PIPE.

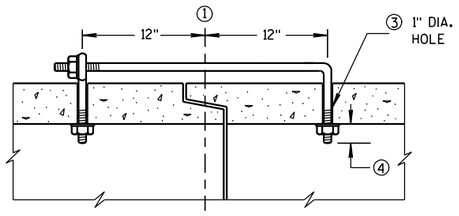

(TONGUE & GROOVE PIPE)

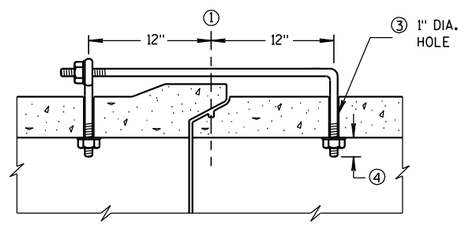

(MODIFIED BELL PIPE)

LONGITUDINAL SECTION

EYE BOLT DIMENSION TABLE

PIPE SIZE	L = LENGTH	
	TONGUE & GROOVE PIPE	MODIFIED BELL PIPE
18" TO 24"	4 1/2"	6 1/4"
30"	5"	7"
36"	5 1/2"	7"
42"	6"	
48"	6 1/2"	
60"	7 1/2"	
66"	8"	

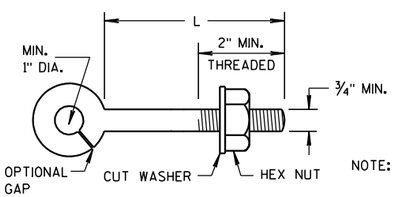

NOTE:

EYE BOLT

NOTE: TWO EYE BOLTS MAY BE USED WITH A 30" LONG THREADED ROD IN LIEU OF THE 90° BENT TIE ROD.

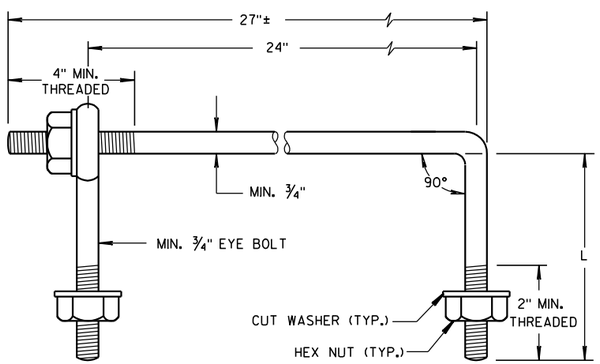

EYE BOLT AND TIE ROD

(JOINT TIES FOR 18" TO 66" DIA. CONCRETE PIPE)

EYE BOLT AND TIE ROD ASSEMBLY (ALTERNATE NO. 2)

ADJUSTABLE TIE ROD TABLE

PIPE DIAMETER	TIE ROD DIAMETER	D	L_1	N
12-60	5/8	5/8	5	1/2
66-84	3/4	3/4	5	1/2
90-108	1	1	7	1 1/16

DIMENSIONS SHOWN ARE IN INCHES

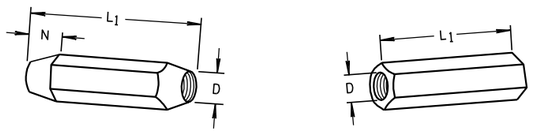

TAPERED PLAIN

RIGHT AND LEFT THREADS

SLEEVE NUTS

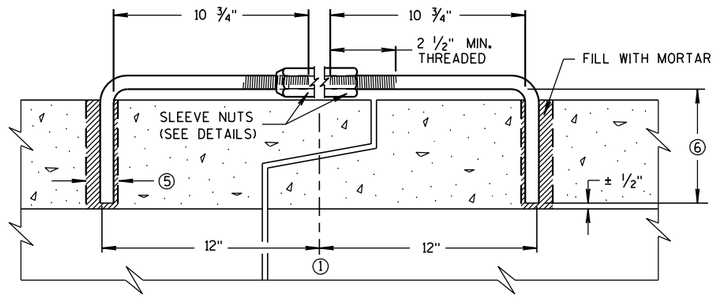

LONGITUDINAL SECTION

(JOINT TIES FOR 12" TO 108" DIA. CONCRETE PIPE)

ADJUSTABLE TIE ROD (ALTERNATE NO. 3)

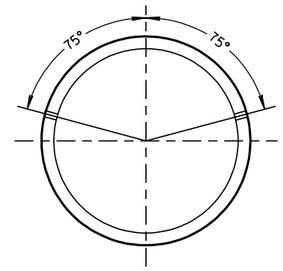

PLACEMENT OF (2) CAST-IN-PLACE INSERTS OR HOLES DURING FABRICATION FOR PIPE SECTIONS REQUIRING TIE RODS

TRANSVERSE SECTION

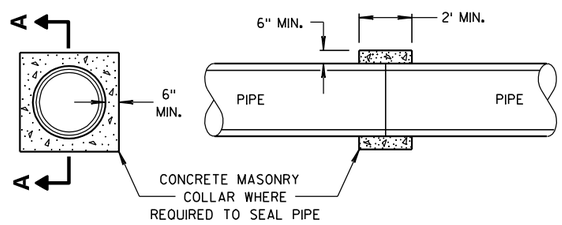

SECTION A-A

CONCRETE COLLAR DETAIL

JOINT TIES FOR CONCRETE PIPE AND CONCRETE COLLAR DETAIL

STATE OF WISCONSIN
DEPARTMENT OF TRANSPORTATION

APPROVED
6/5/2012 — DATE
/S/ Jerry H. Zogg — ROADWAY STANDARDS ENGINEER
FHWA

6

S.D.D. 8 F 4-7

6

S.D.D. 8 F 4-7

GENERAL NOTES

DETAILS OF CONSTRUCTION, MATERIALS AND WORKMANSHIP NOT SHOWN ON THIS DRAWING SHALL CONFORM TO THE STANDARD SPECIFICATIONS AND THE APPLICABLE SPECIAL PROVISIONS.

THE SHAPED SUBGRADE WITH GRANULAR FOUNDATION IS AN EQUAL ALTERNATE TO THE GRANULAR FOUNDATION EXCEPT WHERE ROCK IS ENCOUNTERED.

① WHERE ROCK, HARD PAN OR FRAGMENTED MATERIAL IS ENCOUNTERED, THE TRENCH SHALL BE EXCAVATED BELOW THE BOTTOM OF THE PIPE AN AMOUNT EQUAL TO ½ INCH PER FOOT OF PROPOSED EMBANKMENT ABOVE THE TOP OF THE PIPE, BUT NOT LESS THAN 6 INCHES.

② TRENCH SHALL BE BACKFILLED AS REQUIRED BY STANDARD SPECIFICATIONS; SECTION 520 FOR PIPE CULVERTS AND SECTION 607 FOR STORM SEWERS.

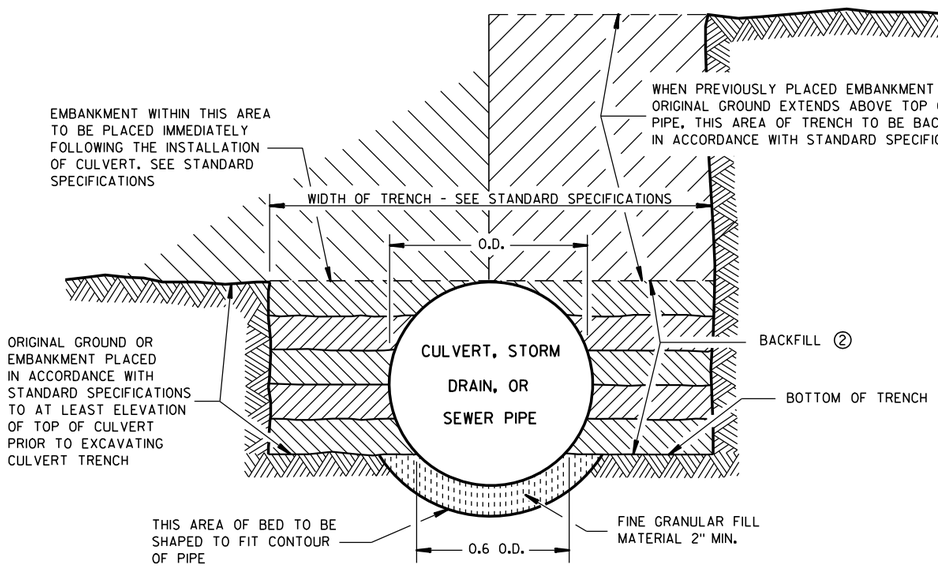

SHAPED SUBGRADE WITH GRANULAR FOUNDATION

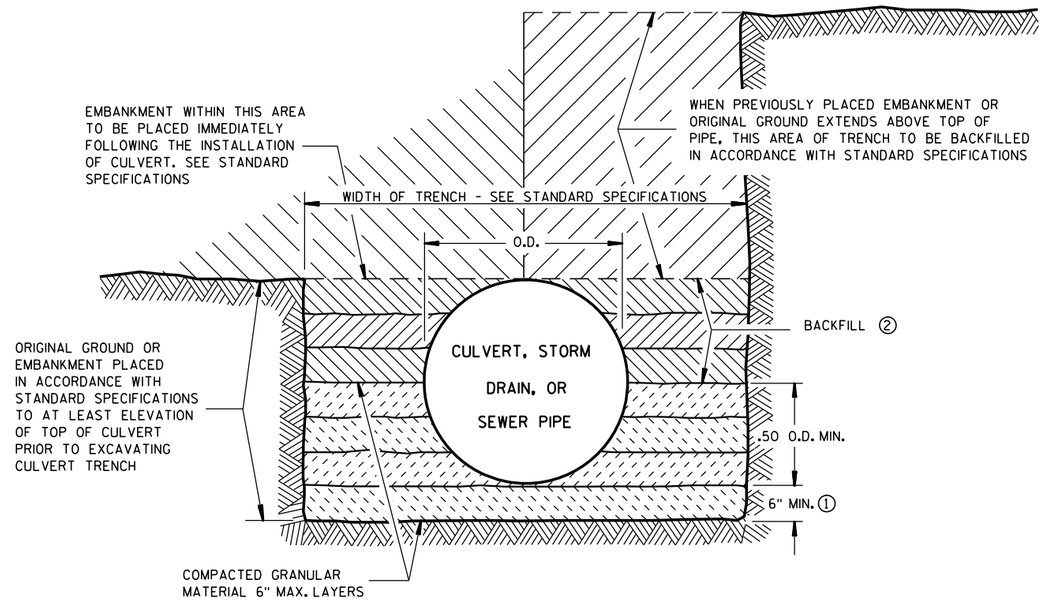

GRANULAR FOUNDATION

CLASS "B" BEDDING

CLASS "B" BEDDING FOR CULVERT PIPE OR STORM SEWER	
STATE OF WISCONSIN DEPARTMENT OF TRANSPORTATION	
APPROVED	
4/7/83 DATE	/S/ D. L. Strand STATE DESIGN ENGINEER
FHWA	HWYS

6

S.D.D. 8 F 5-1

6

S.D.D. 8 F 5-1

DIMENSIONS IN INCHES											
PIPE DIA.	A	B	C	D	E	F	G	H	J	L	Z
**4	6	12	5 1/4	9	8	32	36	11	2 3/8	6 1/2	4
6	8	14	7 1/4	11	10	42	44	13	3 5/8	8 1/2	6

**APRON ENDWALL FOR 6 INCH DIAMETER PIPE MAY BE SUBSTITUTED FOR THIS SIZE PROVIDED THE HOLE IN THE HEADWALL IS SIZED AND LOCATED TO CONFORM TO THE 4 INCH DIAMETER PIPE DIMENSIONS (C & J)

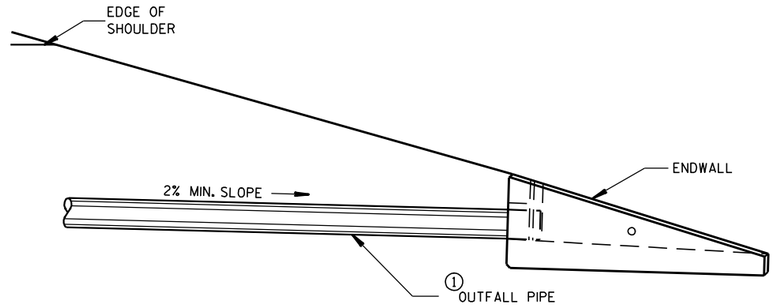

INSTALLATION DETAIL

GENERAL NOTES

DETAILS OF CONSTRUCTION, MATERIALS AND WORKMANSHIP NOT SHOWN ON THIS DRAWING SHALL CONFORM TO THE PERTINENT REQUIREMENTS OF THE STANDARD SPECIFICATIONS AND THE APPLICABLE SPECIAL PROVISIONS.

ALTERNATIVE DESIGNS WHICH PROVIDE EQUIVALENT CAPACITY AND STRENGTH MAY BE USED WHEN APPROVED BY THE ENGINEER. ENDWALL MAY BE EITHER PRECAST OR CAST-IN-PLACE CONCRETE.

THE UNDERDRAIN PIPE SHALL BE FULLY INSERTED AND SEALED INTO THE ENDWALL WITH CEMENT MORTAR PRIOR TO BACKFILLING AROUND THE STRUCTURE.

THE UPPERMOST POINT OF THE ENDWALL SHALL BE PLACED FLUSH WITH THE ROADWAY SLOPE. ADJACENT EMBANKMENT SLOPES SHALL BE SHAPED TO FIT THE SIDES AND TOE OF THE ENDWALL. EXACT PLACEMENT OF THE OUTFALL PIPE AND ENDWALL SHALL BE DETERMINED BY THE ENGINEER TO MATCH THE ELEVATIONS AND FLOW DIRECTION OF THE ROADSIDE DITCH.

① THE OUTFALL PIPE UNDERDRAIN AND FITTINGS SHALL CONFORM TO THE REQUIREMENTS OF THE SPECIFICATION FOR POLY (VINYL CHORIDE) (PVC) PLASTIC DRAIN, WASTE AND VENT PIPE AND FITTINGS, ASTM DESIGNATION: D 2665, SCHEDULE 40 PVC OR THE STANDARD SPECIFICATION FOR TYPE PSM POLY (VINYL CHORIDE) (PVC) SEWER PIPE AND FITTINGS, ASTM DESIGNATION: D 3034, TYPE PSM SDR 23.5 PVC SEWER PIPE, ALL JOINTS SHALL BE SOLVENT WELDED.

THE OUTFALL PIPE INCLUDING ALL FITTINGS AND THE RODENT SHIELD SHALL BE MEASURED AND PAID FOR AS PIPE UNDERDRAIN UNPERFORATED.

② THE RODENT SHIELD SHALL BE A PVC GRATE SIMILAR TO THIS DETAIL. THE GRATE IS COMMERCIALLY AVAILABLE AS A FLOOR STRAINER. A PIPE COUPLING IS REQUIRED FOR THE ATTACHMENT OF THIS SHIELD TO THE OUTFALL PIPE. THE SHIELD SHALL BE FASTENED TO THE PIPE COUPLING WITH TWO OR MORE NO. 10 X 1-INCH STAINLESS STEEL SHEET METAL SCREWS.

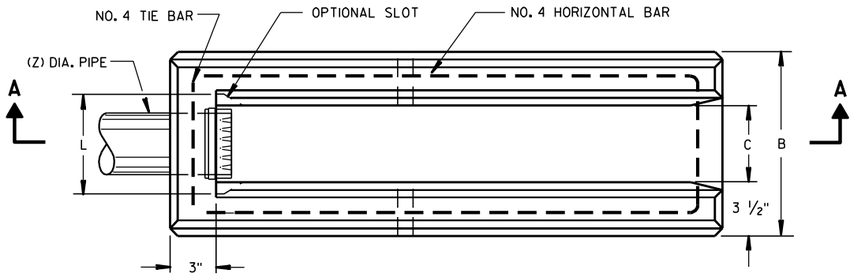

PLAN VIEW

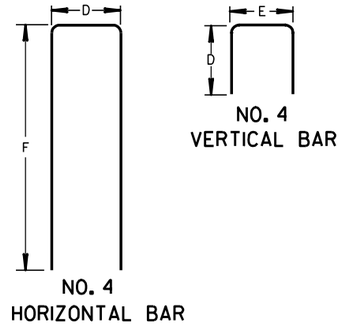

BAR STEEL REINFORCEMENT DETAILS

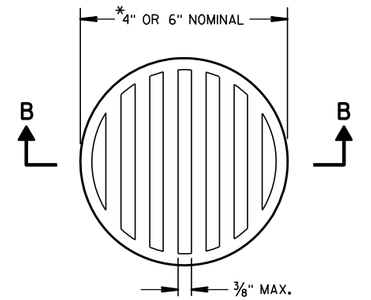

NOTE: ORIENT SHIELD SO SLOTS ARE VERTICAL.

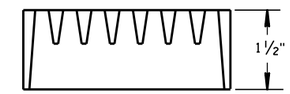

SECTION B-B

② RODENT SHIELD

*NOTE: DIMENSIONS ARE APPROXIMATE. THE GRATE IS SIZED TO FIT INTO A PIPE COUPLING.

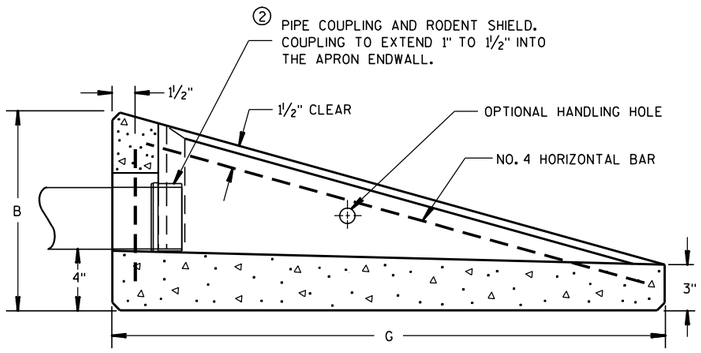

SECTION A-A

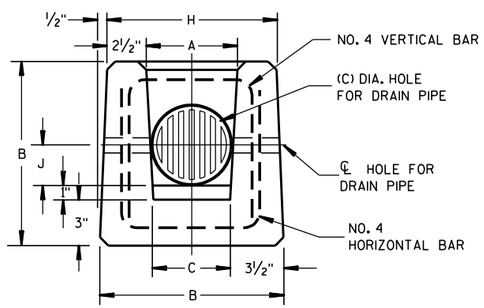

END VIEW

CONCRETE APRON ENDWALL FOR UNDERDRAIN

REINFORCED CONCRETE APRON ENDWALL FOR PIPE UNDERDRAIN

STATE OF WISCONSIN
DEPARTMENT OF TRANSPORTATION

APPROVED
3/10/98 DATE
/S/ Rory L. Rhinesmith
CHIEF ROADWAY DEVELOPMENT ENGINEER
FHWA

6
S.D.D. 8 F 6-4

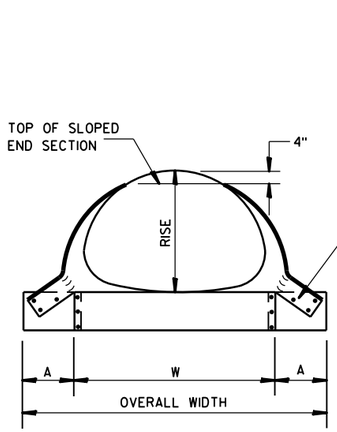

FRONT VIEW

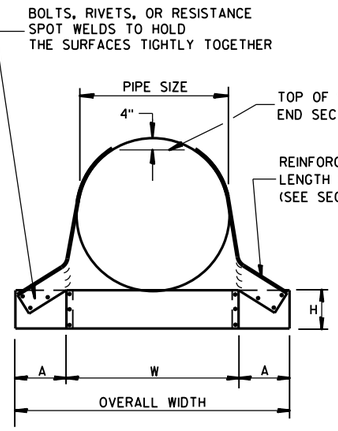

FRONT VIEW

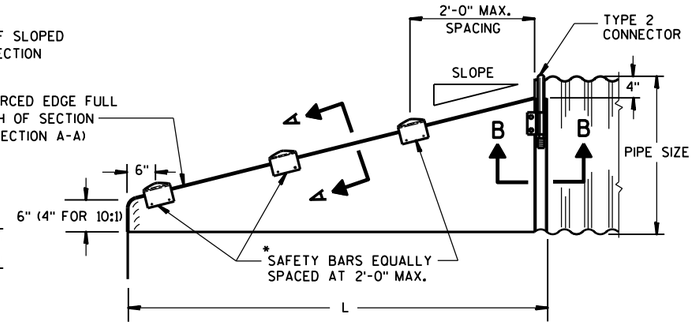

SIDE VIEW

GENERAL NOTES

DETAILS OF CONSTRUCTION, MATERIALS AND WORKMANSHIP NOT SHOWN ON THIS DRAWING SHALL CONFORM TO THE PERTINENT REQUIREMENTS OF THE STANDARD SPECIFICATIONS AND THE APPLICABLE SPECIAL PROVISIONS.

SLOPED END SECTIONS SHALL CONFORM TO THE REQUIREMENTS OF THE STANDARD SPECIFICATIONS, SECTION 521 FOR STEEL APRON ENDWALLS.

SAFETY BARS SHALL BE FABRICATED FROM GALVANIZED STEEL PIPE MEETING THE REQUIREMENTS OF ASTM A-53, GRADE B, SCHEDULE 40 OR APPROVED EQUAL.

STEEL APRON ENDWALLS FOR CULVERT PIPE
SLOPED SIDE DRAINS

PIPE DIA. (IN.)	MIN. THICK. (Inches)	DIMENSIONS (Inches)				L DIMENSIONS					
		A	H	W	OVERALL WIDTH	SLOPE	LENGTH INCHES	SLOPE	LENGTH INCHES	SLOPE	LENGTH INCHES
15	.064	8	6	21	37	4:1	20	6:1	30	10:1	70
18	.064	8	6	24	40	4:1	32	6:1	48	10:1	100
21	.064	8	6	27	43	4:1	44	6:1	66	10:1	130
24	.064	8	6	30	46	4:1	56	6:1	84	10:1	160
30	.109	12	9	36	60	4:1	80	6:1	120	10:1	220
36	.109	12	9	42	66	4:1	104	6:1	156	10:1	280
42	.109	16	12	48	80	4:1	128	6:1	192	——	——
48	.109	16	12	54	86	4:1	152	6:1	228	——	——
54	.109	16	12	60	92	4:1	176	6:1	264	——	——
60	.109	16	12	66	98	4:1	200	6:1	300	——	——

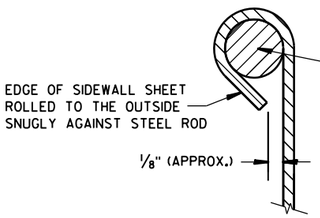

SECTION A-A

*NOTE:
THREE SAFETY BARS ARE SHOWN. ACTUAL NUMBER OF BARS REQUIRED AT A 2'-0" C-C MAX. SPACING WILL VARY DEPENDING ON THE LENGTH OF THE END SECTION.

3" GALVANIZED PIPE. FLATTEN ENDS, THEN BEND OUTSIDE 4" TO MATCH END SECTION SIDES.

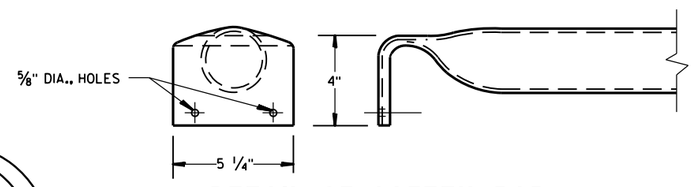

DETAIL OF SAFETY BAR

STEEL APRON ENDWALLS FOR PIPE ARCH
SLOPED SIDE DRAINS

EQUIV. DIA. (Inches)	(Inches) SPAN	(Inches) RISE	MIN. THICK. (Inches) ①	DIMENSIONS (Inches) A	H	W	OVERALL WIDTH	L DIMENSIONS SLOPE	LENGTH INCHES	SLOPE	LENGTH INCHES	SLOPE	LENGTH INCHES
15	17	13	.064 *	7	6	30	44	4:1	19	6:1	30	10:1 ②	70
18	21	15	.064 *	8	6	27	43	4:1	20	6:1	30	10:1	70
21	24	18	.064 *	8	6	30	46	4:1	32	6:1	48	10:1	100
24	28	20	.064 *	8	6	34	50	4:1	40	6:1	60	10:1	120
30	35	24	.079 *	12	9	41	65	4:1	56	6:1	84	10:1	160
36	42	29	.109 *	12	9	48	72	4:1	76	6:1	114	10:1	210
42	49	33	.109	16	12	55	87	4:1	92	6:1	138	——	——
48	57	38	.109	16	12	63	95	4:1	112	6:1	168	——	——
54	64	43	.109	16	12	70	102	4:1	132	6:1	198	——	——

① * MINIMUM THICKNESS OF ALL 10:1 SLOPED SIDE DRAINS IS 0.109".
② ACTUAL SLOPE GREATER THAN 10:1.

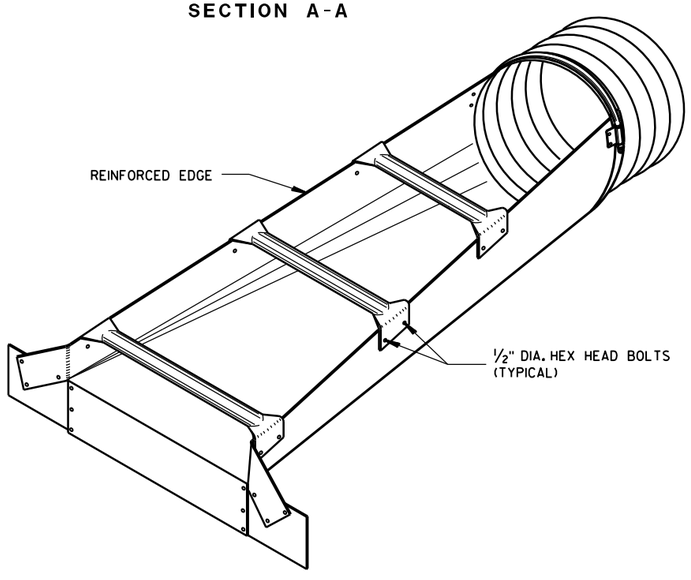

ISOMETRIC VIEW

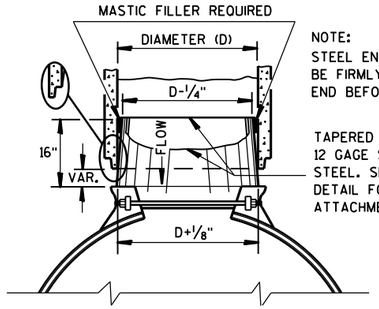

STEEL ADAPTER SLEEVE FOR CONCRETE PIPE

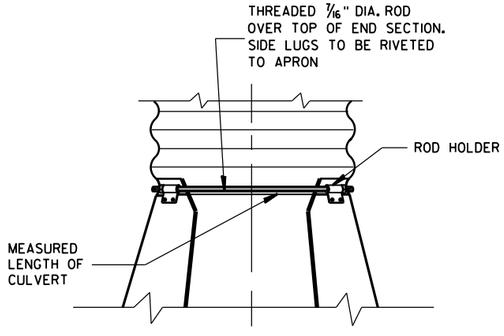

TYPE 2
CONNECTION DETAIL

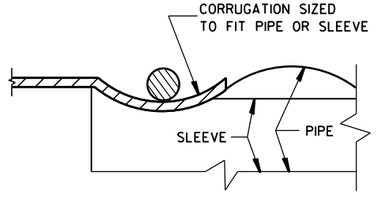

SECTION B-B

STEEL APRON ENDWALLS FOR CULVERT PIPE AND PIPE ARCH SLOPED SIDE DRAINS

STATE OF WISCONSIN
DEPARTMENT OF TRANSPORTATION

APPROVED
9/14/2012 — DATE
/S/ Jerry H. Zoda — ROADWAY STANDARDS DEVELOPMENT ENGINEER
FHWA

6

S.D.D. 8 F 7-5

6

S.D.D. 8 F 7-5

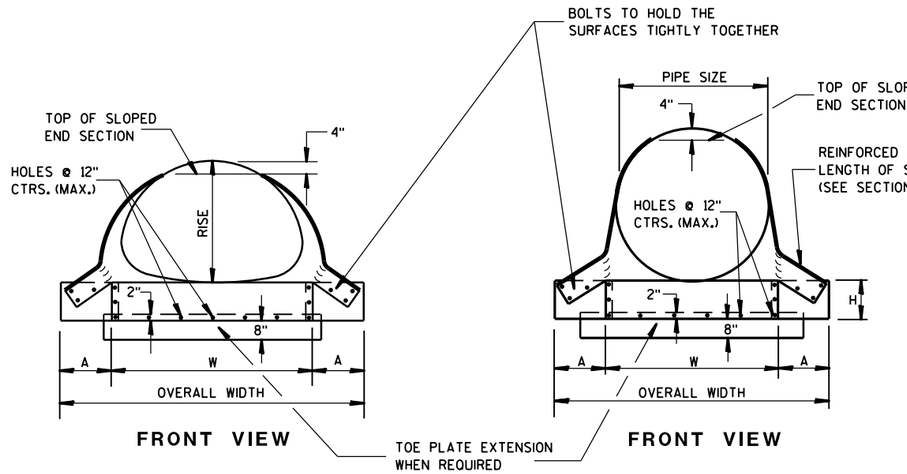

FRONT VIEW

FRONT VIEW

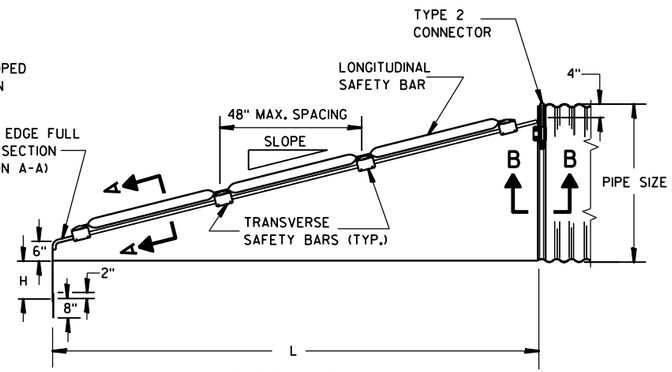

SIDE VIEW
(48" SIZE ILLUSTRATED)

GENERAL NOTES

DETAILS OF CONSTRUCTION, MATERIALS AND WORKMANSHIP NOT SHOWN ON THIS DRAWING SHALL CONFORM TO THE PERTINENT REQUIREMENTS OF THE STANDARD SPECIFICATIONS AND APPLICABLE SPECIAL PROVISIONS.

SAFETY GRATES SHALL BE FABRICATED FROM 3-INCH DIAMETER GALVANIZED PIPE MEETING THE REQUIREMENTS OF ASTM A-53, GRADE B, SCHEDULE 40 OR APPROVED EQUAL. THE LONGITUDINAL BAR SHALL BE WELDED TO THE TRANSVERSE BARS WHERE THE BARS CROSS. THE NUMBER OF TRANSVERSE BARS REQUIRED WILL VARY DEPENDING ON THE LENGTH OF THE END SECTION.

SLOPED STEEL ENDWALLS LOCATED AT THE ENDS OF CONCRETE CULVERT PIPE SHALL BE FURNISHED WITH STEEL ADAPTER SLEEVES.

STEEL APRON ENDWALLS FOR CULVERT PIPE CROSS DRAINS

PIPE DIA. (IN.)	MIN. THICK.		DIMENSIONS (Inches)				L DIMENSIONS			
	IN.	GAGE	A	H	W	OVERALL WIDTH	SLOPE	LENGTH INCHES	SLOPE	LENGTH INCHES
36	.109	12	12	9	42	66	4:1	104	6:1	156
42	.109	12	16	12	48	80	4:1	128	6:1	192
48	.109	12	16	12	54	86	4:1	152	6:1	228
54	.109	12	16	12	60	92	4:1	176	6:1	264
60	.109	12	16	12	66	98	4:1	200	6:1	300

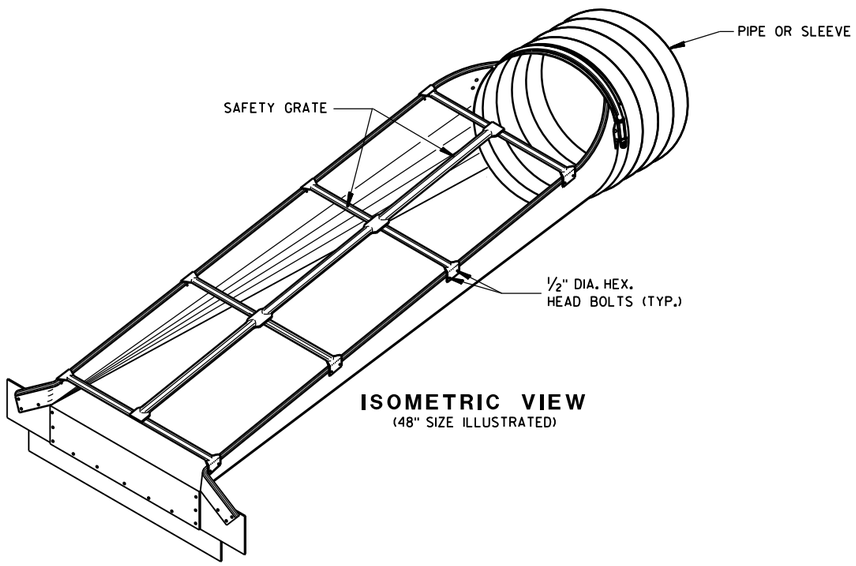

ISOMETRIC VIEW
(48" SIZE ILLUSTRATED)

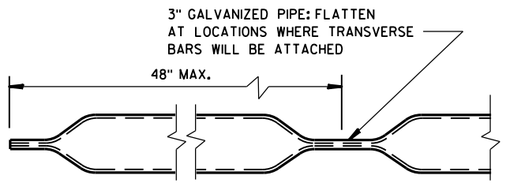

LONGITUDINAL SAFETY BAR

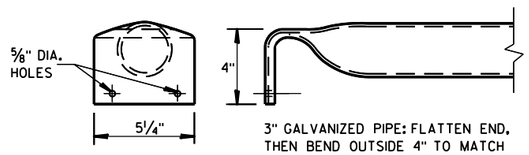

TRANSVERSE SAFETY BAR

STEEL APRON ENDWALLS FOR PIPE ARCH SLOPED CROSS DRAINS

EQUIV. DIA. (IN.)	INCHES		MIN. THICK.		DIMENSIONS (Inches)				L DIMENSIONS			
	SPAN	RISE	IN.	GAGE	A	H	W	OVERALL WIDTH	SLOPE	LENGTH INCHES	SLOPE	LENGTH INCHES
30	35	24	.079	14	12	9	41	65	4:1	56	6:1	84
36	42	29	.109	12	12	9	48	72	4:1	76	6:1	114
42	49	33	.109	12	16	12	55	87	4:1	92	6:1	138
48	57	38	.109	12	16	12	63	95	4:1	112	6:1	168
54	64	43	.109	12	16	12	70	102	4:1	132	6:1	198
60	71	47	.109	12	16	12	77	109	4:1	148	6:1	222

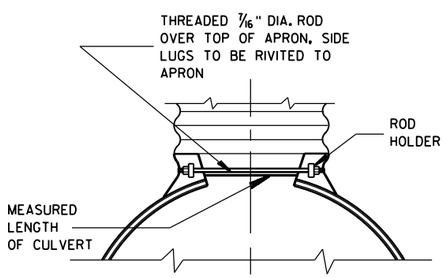

TYPE 2 CONNECTOR DETAIL

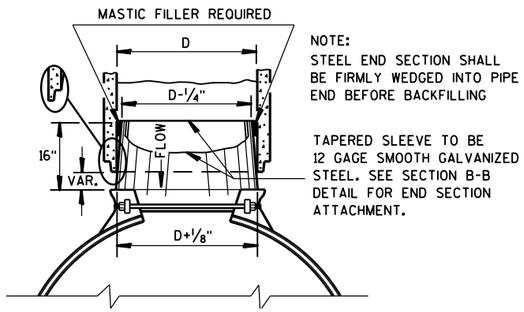

STEEL ADAPTER SLEEVE FOR CONCRETE PIPE

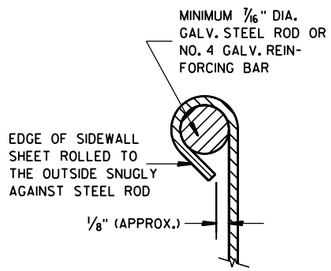

SECTION A-A

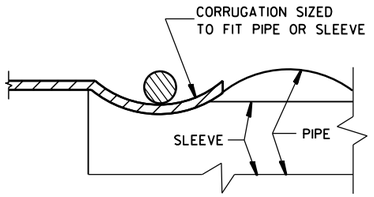

SECTION B-B

STEEL APRON ENDWALLS FOR CULVERT PIPE AND PIPE ARCH SLOPED CROSS DRAINS

STATE OF WISCONSIN
DEPARTMENT OF TRANSPORTATION

APPROVED
6/5/2012 — DATE
/S/ Jerry H. Zogg — ROADWAY STANDARDS ENGINEER
FHWA

6

S.D.D. 8 F 8-2

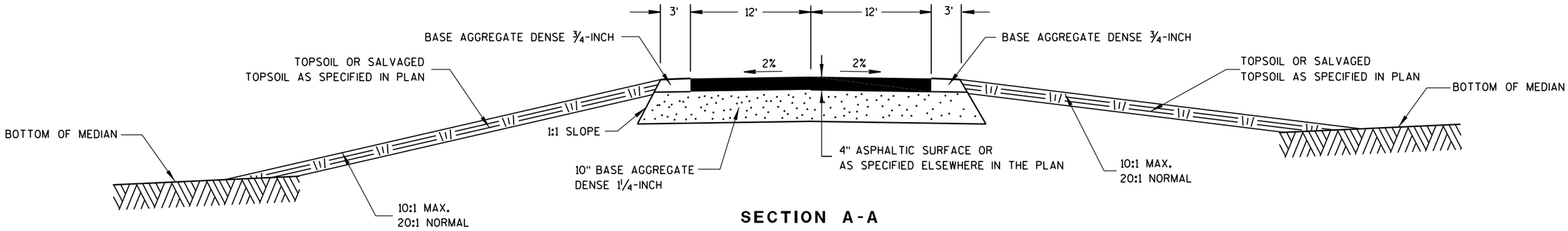

SECTION A-A

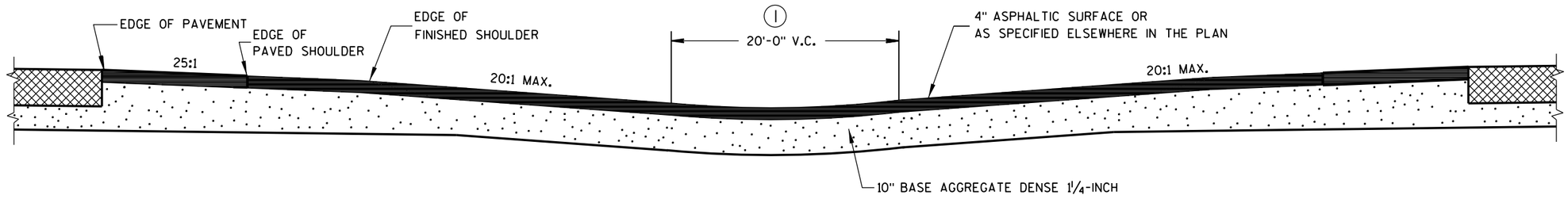

SECTION B-B

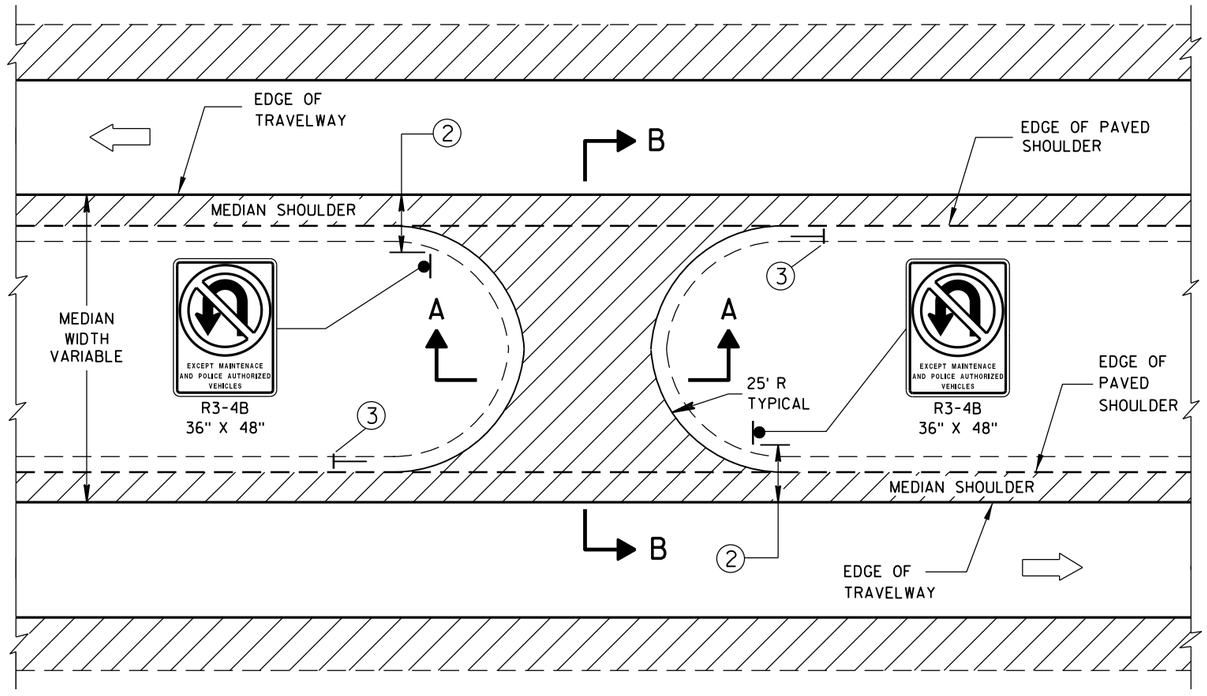

PLAN VIEW

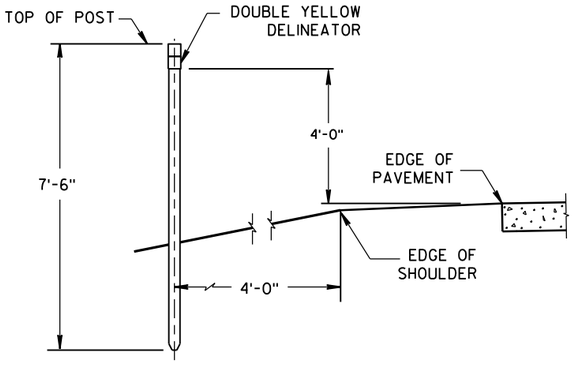

DOUBLE YELLOW DELINEATOR INSTALLATION

GENERAL NOTES

DETAILS OF CONSTRUCTION, MATERIALS AND WORKMANSHIP NOT SHOWN ON THIS DRAWING SHALL CONFORM TO THE PERTINENT REQUIREMENTS OF THE STANDARD SPECIFICATIONS AND THE APPLICABLE SPECIAL PROVISIONS.

(1) ADJUST VERTICAL CURVE LOCATION LATERALLY TO MAINTAIN 20:1 MAX.

(2) SIGNING DETAILS AND SPECIFICATIONS ARE PROVIDED ELSEWHERE IN THE CONTRACT.

(3) INSTALL DOUBLE YELLOW DELINEATOR. SEE STANDARD DETAIL DRAWING 15A2.

MAINTENANCE CROSSOVER FOR FREEWAYS

STATE OF WISCONSIN
DEPARTMENT OF TRANSPORTATION

APPROVED

8/2013 — DATE

/S/ Jerry H. Zogg — ROADWAY STANDARDS DEVELOPMENT ENGINEER

FHWA

6

S.D.D. 11 A 1-5

6

S.D.D. 11 A 1-5

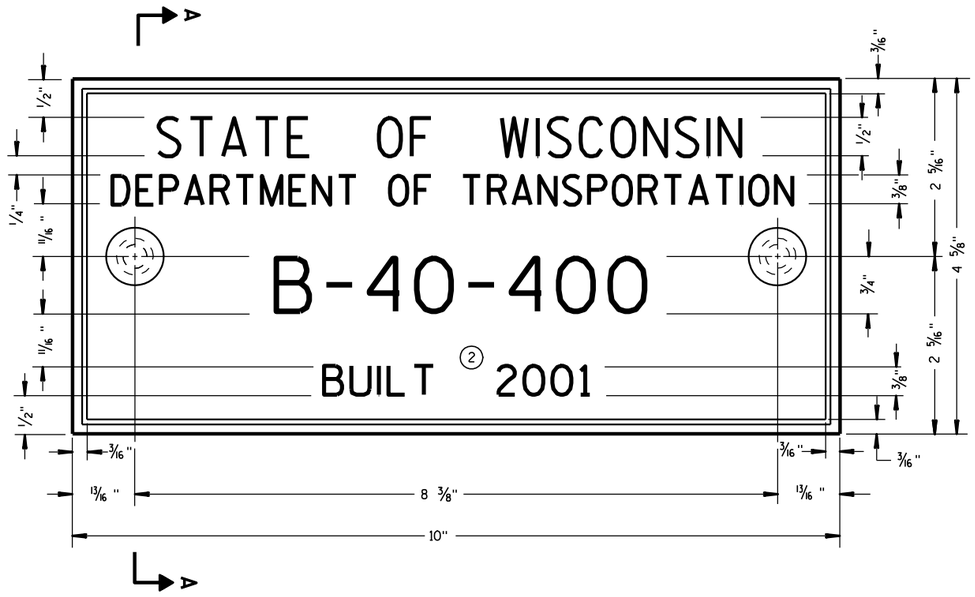

TYPICAL NAME PLATE
(BRIDGES, CULVERTS, AND RETAINING WALLS)

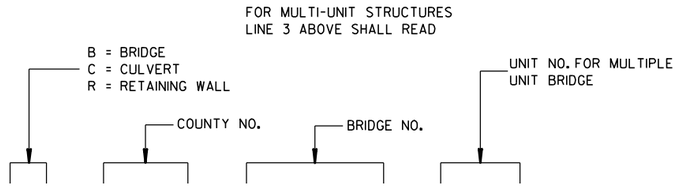

NUMBERING DESIGNATION
MULTI-UNIT STRUCTURES

GENERAL NOTES

NAME PLATES TO BE INSTALLED ON BRIDGES, CULVERTS, AND RETAINING WALLS SHALL CONFORM TO THE REQUIREMENTS OF SECTION 502.3.11 OF THE STANDARD SPECIFICATIONS.

THE BRIDGE NUMBER AND YEAR BUILT SHOWN ON THIS DRAWING ARE EXAMPLES ONLY. SEE CONSTRUCTION PLANS FOR INDIVIDUAL NUMBERING AND YEAR BUILT.

(1) EPOXY RESIN SHALL BE FROM AN APPROVED MANUFACTURER AND USED IN ACCORDANCE WITH MANUFACTURER'S RECOMMENDATIONS.

(2) REHABILITATION OF AN EXISTING STRUCTURE SHOULD USE THE DATE OF ORIGINAL STRUCTURE CONSTRUCTION.

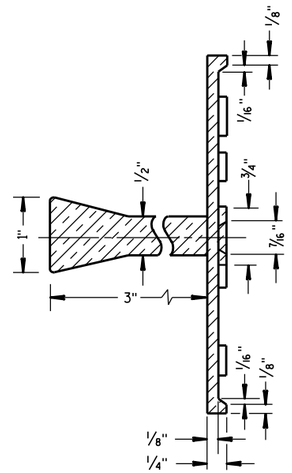

SECTION A-A

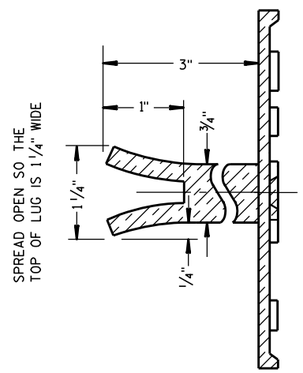

ALTERNATE LUG

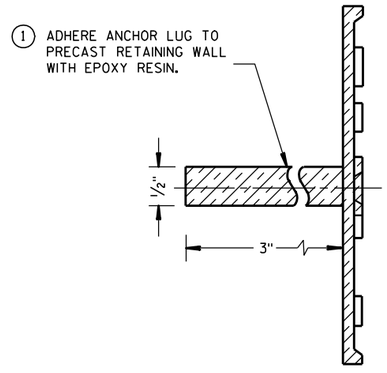

ALTERNATE LUG
(FOR ATTACHMENT TO PRECAST STRUCTURES)

NAME PLATE (STRUCTURES)

STATE OF WISCONSIN
DEPARTMENT OF TRANSPORTATION

APPROVED

3/26/10 DATE

/S/ Scot Beck CHIEF STRUCTURAL DEVELOPMENT ENGINEER

FHWA

6

S.D.D. 12 A 3-10

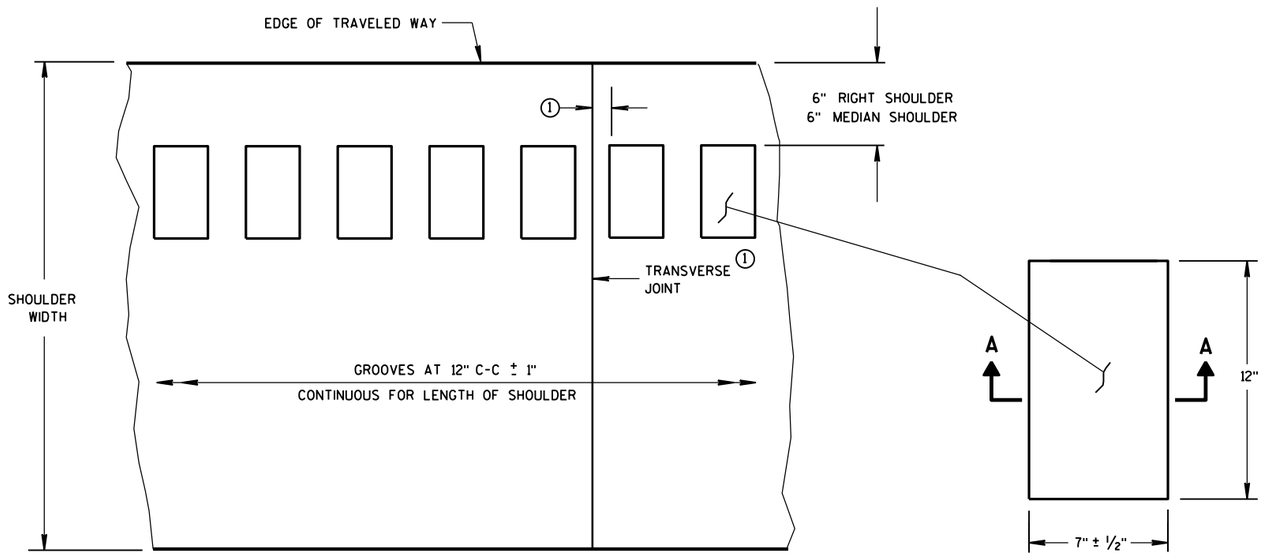

PLAN VIEW
SHOULDER WITH GROOVES

PLAN VIEW
(SINGLE GROOVE)

PLACEMENT DETAIL FOR MILLED RUMBLE STRIP

GENERAL NOTES

DETAILS OF CONSTRUCTION SHOWN ON THIS DRAWING SHALL CONFORM TO THE PERTINENT REQUIREMENTS OF THE STANDARD SPECIFICATIONS AND APPLICABLE SPECIAL PROVISIONS.

RUMBLE STRIPS ON EXPRESSWAYS

DO NOT INSTALL RUMBLE STRIPS ACROSS SIDE ROAD INTERSECTIONS, COMMERCIAL DRIVEWAYS, PRIVATE DRIVEWAYS OR ADJACENT TO RIGHT TURN LANES, LEFT TURN LANES, TURN LANE TAPERS, BRIDGE DECKS, BRIDGE APPROACHES, OR 100 FEET IN ADVANCE OF RAILROAD CROSSING. THE ATTACHED STANDARD DETAIL DRAWING SHOWS THE LOCATION OF THE RUMBLE STRIPS AT INTERCHANGE AREAS.

(1) CONCRETE PAVEMENT - RUMBLE STRIPS SHALL BE A MINIMUM OF 6" AWAY FROM TRANSVERSE JOINTS.

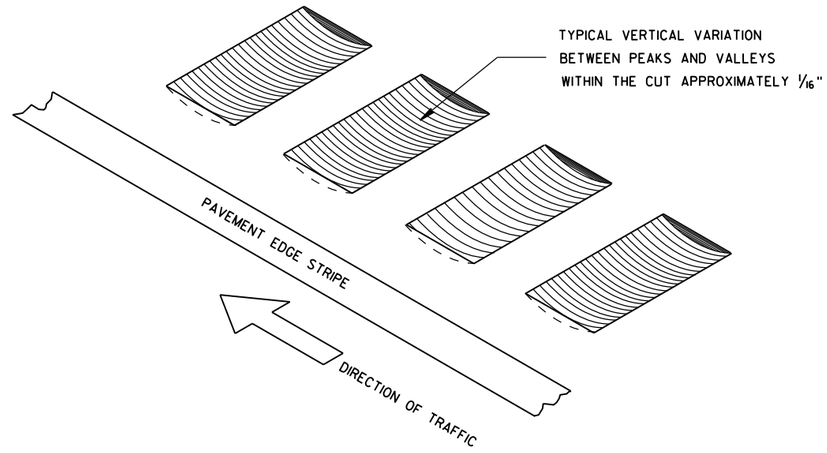

ISOMETRIC

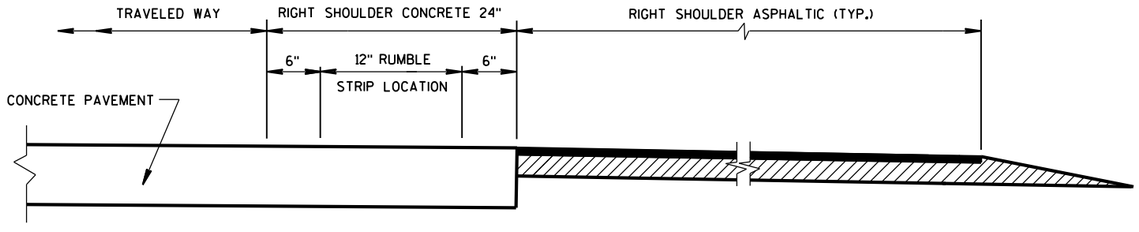

SECTION VIEW
CONCRETE PAVEMENT EXTENDS INTO RIGHT SHOULDER)

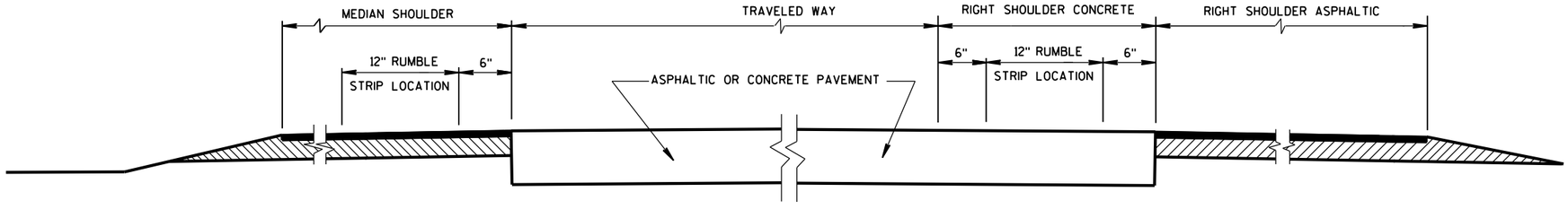

SECTION VIEW

TYPICAL LOCATIONS OF SHOULDER RUMBLE STRIPS IN RURAL DIVIDED HIGHWAYS

(ONE ROADWAY IS SHOWN)

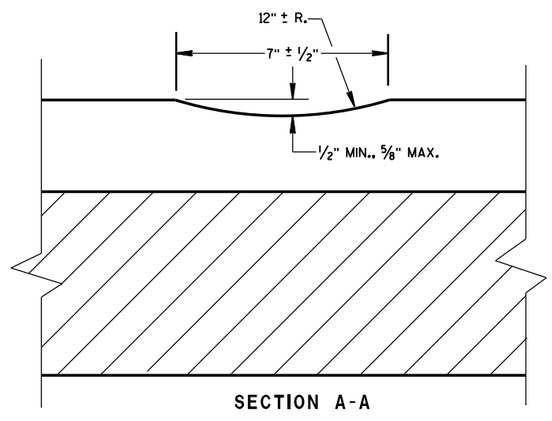

SECTION A-A

SHOULDER RUMBLE STRIP, MILLING

STATE OF WISCONSIN
DEPARTMENT OF TRANSPOR

6

S.D.D. 13 A 5-5a

6

S.D.D. 13 A 5-5a

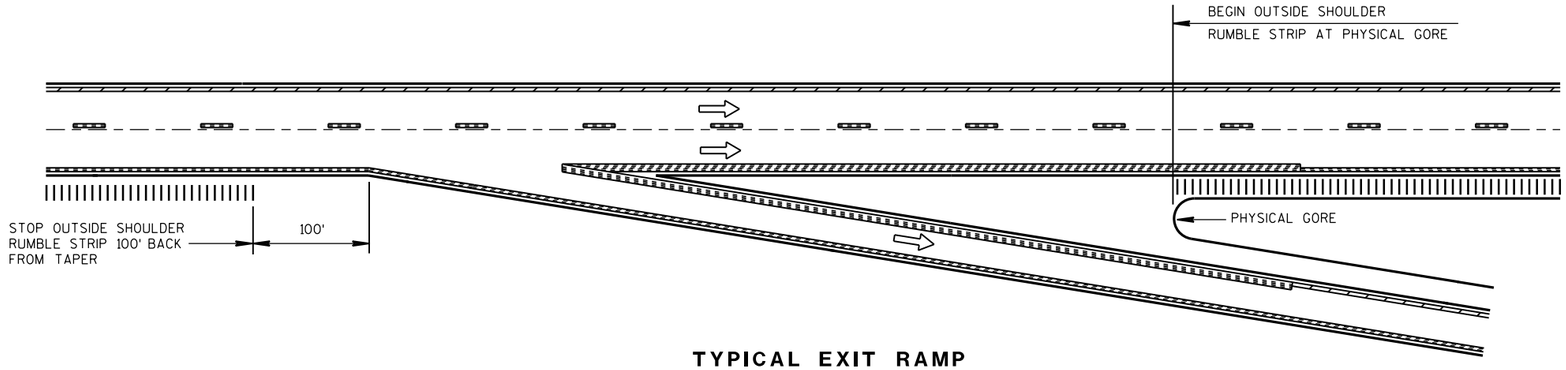

TYPICAL EXIT RAMP

NOTES:

NO RUMBLE STRIP ON EXIT, DIRECTIONAL, OR ENTRANCE RAMPS, EXCEPT NEAR THE ENTRANCE TAPER END AND ALONG THE PARALLEL RAMP AREA AS SHOWN.

PAVEMENT MARKING DETAILS AND SPECIFICATIONS ARE PROVIDED ELSEWHERE IN THE CONTRACT.

NOTE:
ARROW SYMBOL (⇨)
SHOWS DIRECTION OF TRAVEL

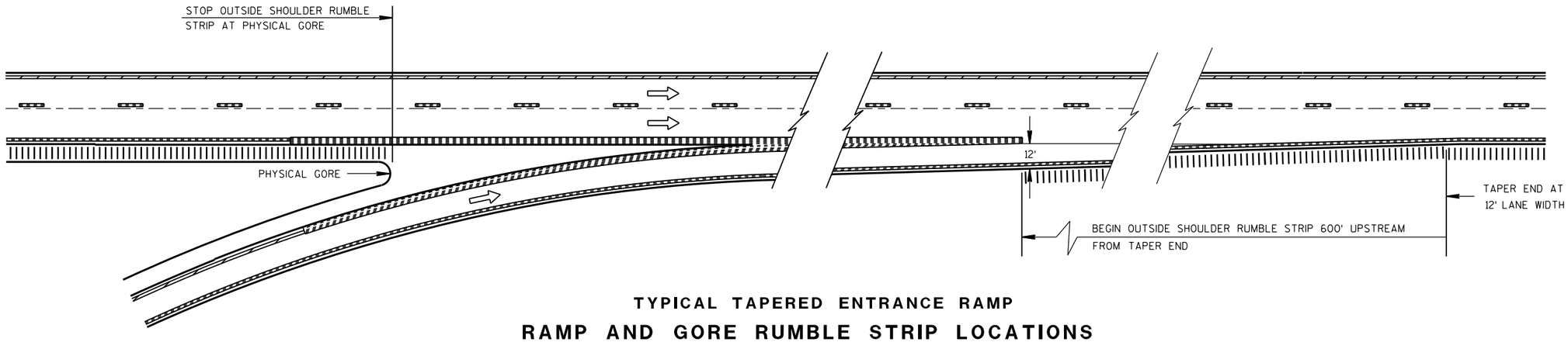

TYPICAL TAPERED ENTRANCE RAMP

RAMP AND GORE RUMBLE STRIP LOCATIONS

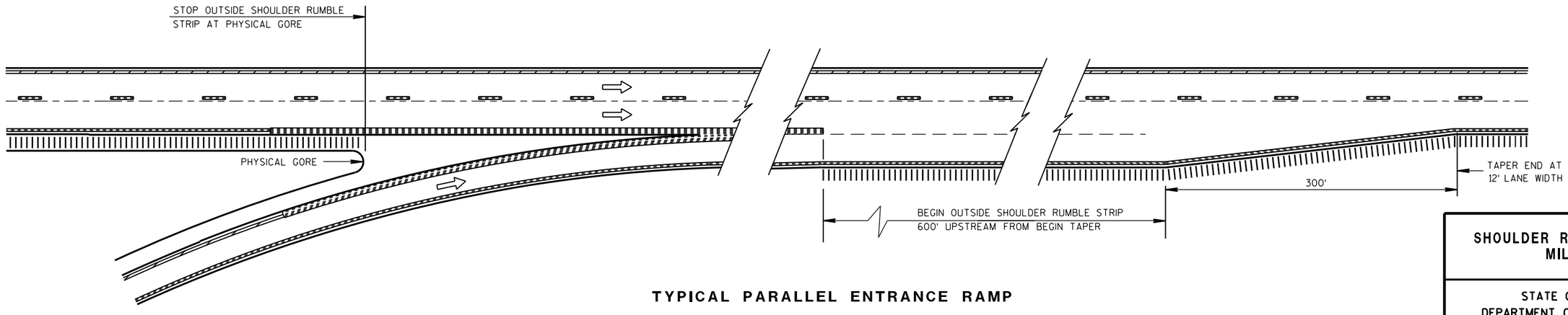

TYPICAL PARALLEL ENTRANCE RAMP

RAMP AND GORE RUMBLE STRIP LOCATIONS

SHOULDER RUMBLE STRIP, MILLING

STATE OF WISCONSIN
DEPARTMENT OF TRANSPORTATION

APPROVED

12/17/2012
DATE

/S/ Jerry H. Zoga
ROADWAY STANDARDS ENGINEER

FHWA

6

S.D.D. 13 A 5-5b

6

S.D.D. 13 A 5-5b

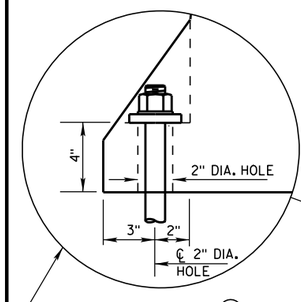

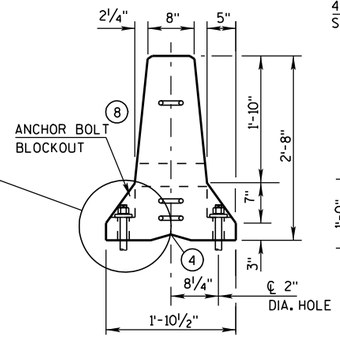

END VIEW

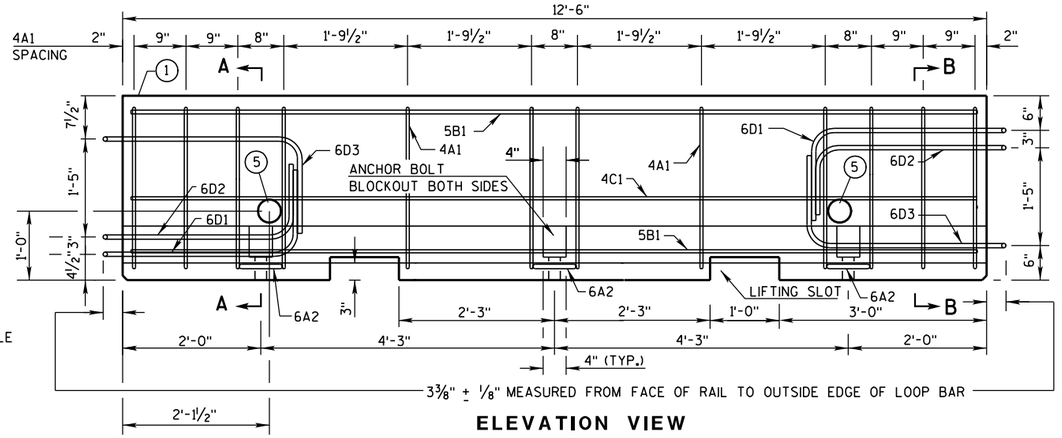

ELEVATION VIEW

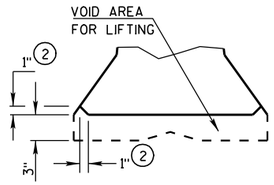

DETAIL "B"
LIFTING SLOT DETAIL

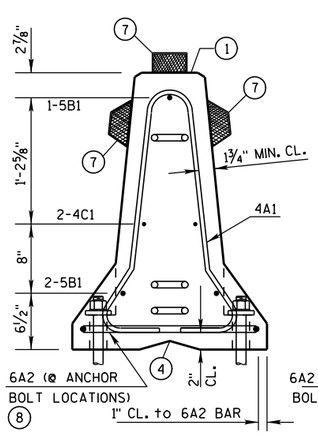

SECTION A-A
(STIRRUP PLACEMENT)

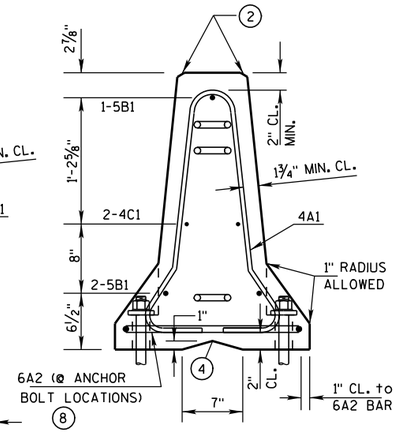

SECTION B-B
(STIRRUP PLACEMENT)

PLAN VIEW

DETAILS OF BARRIER SECTION

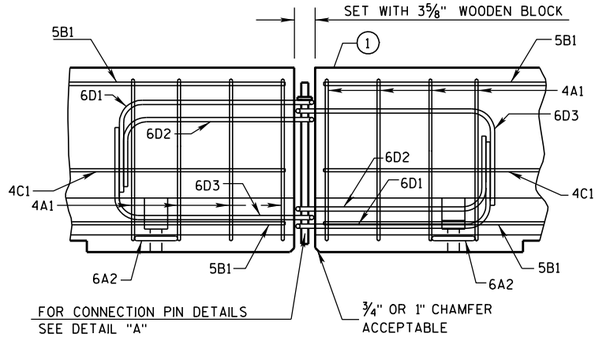

DETAILS OF BARRIER CONNECTION

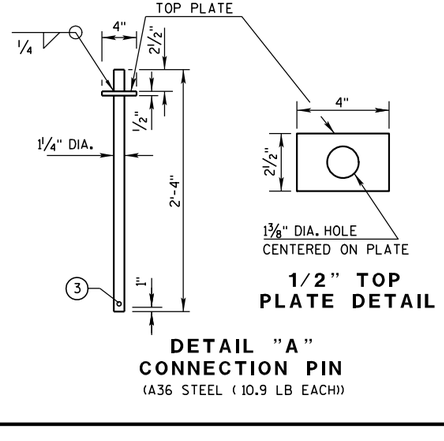

1/2" TOP PLATE DETAIL

DETAIL "A"
CONNECTION PIN
(A36 STEEL (10.9 LB EACH))

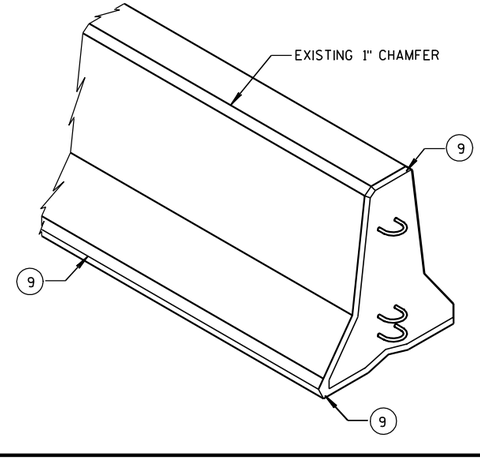

GENERAL NOTES

THESE GENERAL NOTES APPLY TO SHEETS 14B7-13(a) THRU 14B7-13(h).

DO NOT INTERMIX CONCRETE BARRIER TEMPORARY PRCAST, 12'-6" (CBTP12.5) WITH OTHER TEMPORARY CONCRETE BARRIERS.

USE ASTM A-615, GRADE 60, DEFORMED STEEL BARS FOR BARS 4A1, 6A2, 5B1 AND 4C1 IN THE BARRIER SECTION AND FOR 4V1, 4V2, 4V3, 4V4, 4V5, 4V6, 4F1, 4F2 AND 5F3 IN THE BARRIER TAPER SECTION.

LOOP BARS 6D1, 6D2 AND 6D3 SHALL BE ¾" SMOOTH STEEL BARS WITH A MINIMUM YIELD STRENGTH OF 60 KSI, A TENSILE STRENGTH OF NOT LESS THAN 1.25 TIMES THE YIELD STRENGTH BUT A MINIMUM OF 80 KSI, A MINIMUM 14% ELONGATION IN 8 INCHES AND PASSING A 180 DEGREE BEND TEST USING A 3-½" PIN BEND DIAMETER FOR BEND TESTS. THE LOOPS SHALL BE INSTALLED WITHIN ⅛" OF THE PLAN DIMENSION.

CONSTRUCT LIFTING SLOTS AS SPECIFIED ON THE PLANS TO FACILITATE THE DRAINAGE OF WATER AFTER INSTALLATION.

PLACE BARRIER ON A PAVED SURFACE. REMOVE ALL LOOSE DIRT AND SAND FROM THE ROADWAY SURFACE PRIOR TO PLACEMENT OF THE BARRIER.

INSTALL MECHANICAL OR EPOXY ANCHORS PER MANUFACTURER'S RECOMMENDATIONS. PROVIDE MANUFACTURER'S INFORMATION TO PROJECT ENGINEER.

(1) MARK ONE END OF EACH BARRIER PERMANENTLY BY FORMING INTO THE BARRIER THE FOLLOWING INFORMATION:
- a. TYPE: WICBTP
- b. MANUFACTURER
- c. DATE MANUFACTURED (MONTH AND YEAR)

(2) 1" CHAMFER TO PREVENT SPALLING.

(3) A ⅜" HOLE IN THE CONNECTION PIN, AT THE LOCATION SHOWN, IS ACCEPTABLE, BUT NOT REQUIRED..

(4) "V" NOTCH IS OPTIONAL.

(5) THE 4" DIAMETER, 11 GAUGE STEEL, ROUND MECHANICAL TUBING SLEEVE FOR LIFTING (OPTIONAL).

(6) NEVER USE LOOP BARS (6D1, 6D2 OR 6D3) TO LIFT, MOVE OR REPOSITION THE BARRIER.

(7) USE DELINEATORS CONFORMING TO SECTION 633 OF THE STANDARD SPECIFICATIONS. CONTRACTOR MAY USE ALTERNATE SHAPES AND HOUSING. INSTALL DELINEATORS ACCORDING TO MANUFACTURES INSTRUCTION. INSTALL YELLOW REFLECTORS WHEN BARRIER IS LOCATED TO THE LEFT OF TRAFFIC AND WHITE REFLECTORS WHEN BARRIER IS LOCATED TO THE RIGHT OF TRAFFIC. SPACE DELINEATORS A MAXIMUM OF 25 FEET APART. PROVIDE TOP MOUNTED DELINEATORS IN ADDITION TO THE SIDE MOUNTED DELINEATORS ON ALL BARRIER INSTALLATIONS LOCATED ON A CURVED ALIGNMENT LONGER THAN 200 FEET AND ON BARRIERS USED TO SEPARATE OPPOSING TRAFFIC.

(8) SEE SHEET D FOR ANCHORING CRITERIA.

(9) 1" CHAMFER OPTIONAL.

CONCRETE BARRIER TEMPORARY PRECAST, 12'-6"

STATE OF WISCONSIN
DEPARTMENT OF TRANSPO.....

6
S.D.D. 14 B 7-13a

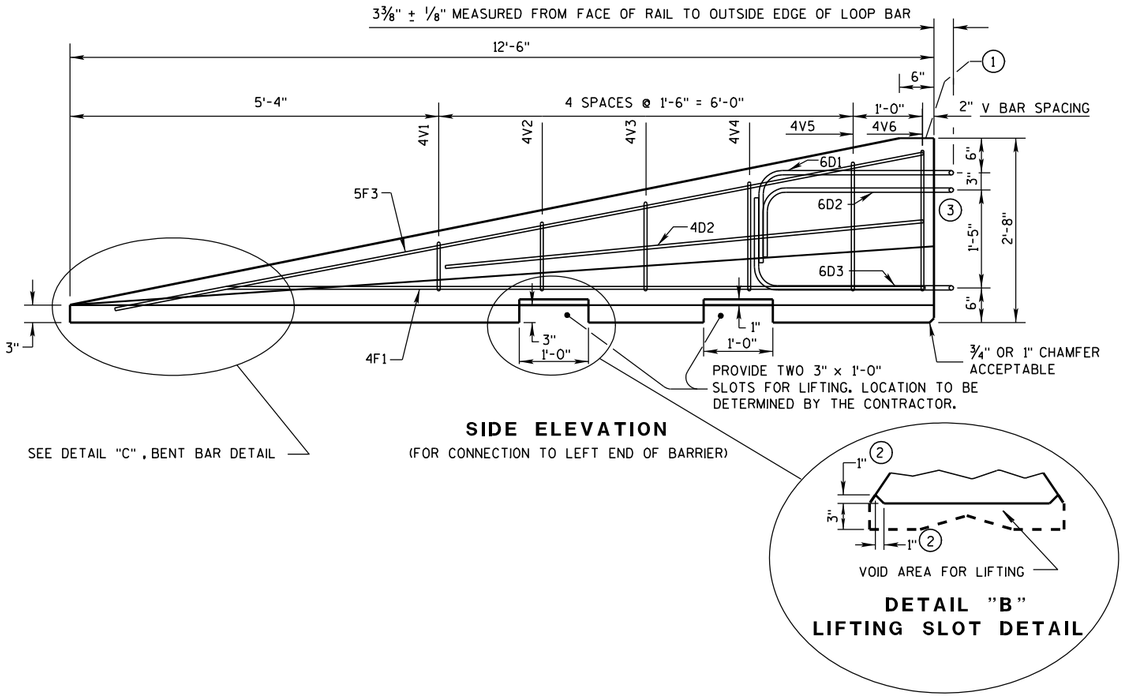

SIDE ELEVATION

(FOR CONNECTION TO LEFT END OF BARRIER)

DETAIL "B"
LIFTING SLOT DETAIL

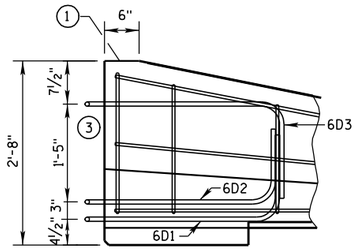

SIDE ELEVATION

LOOP BAR ASSEMBLY INVERTED
FOR OPPOSITE END.
(FOR CONNECTION TO RIGHT END OF BARRIER)

GENERAL NOTES

1. MARK ONE END OF EACH BARRIER PERMANENTLY BY FORMING INTO THE BARRIER THE FOLLOWING INFORMATION:
   a. TYPE WICBTP
   b. MANUFACTURER
   c. DATE MANUFACTURED (MONTH AND YEAR)
2. 1" CHAMFER TO PREVENT SPALLING.
3. NEVER USE LOOP BARS (6D1, 6D2 OR 6D3) TO LIFT, MOVE OR REPOSITION THE BARRIER.

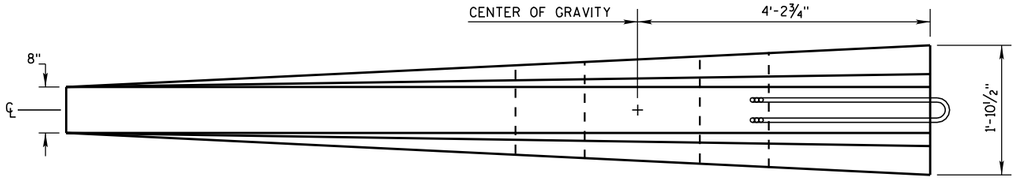

PLAN VIEW

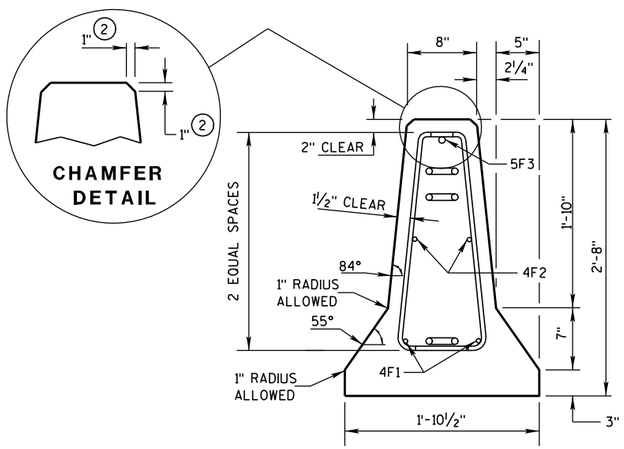

END SECTION

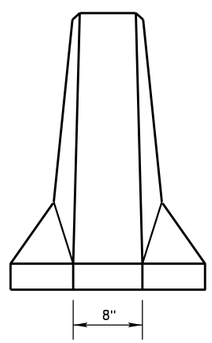

FRONT ELEVATION

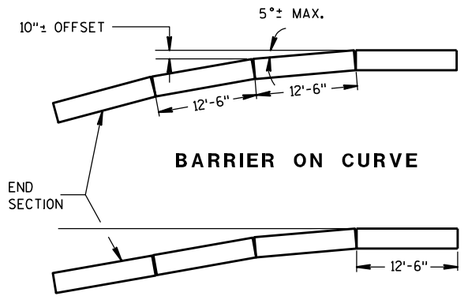

BARRIER ON CURVE

FLARE AT BARRIER END

POSTED SPEED, (MPH)	FLARE RATE
40 OR LESS	6:1
45 OR GREATER	8:1

DETAILS OF BARRIER TAPER SECTION

CONCRETE BARRIER
TEMPORARY PRECAST, 12'-6"

STATE OF WISCONSIN
DEPARTMENT OF TRANSPORTATION

6

S.D.D. 14 B 7-13b

BARRIER TAPER SECTION BILL OF MATERIALS

(PER 12'-6" BARRIER TAPER SECTION)

BAR	BAR SIZE	NO. OF BARS	LENGTH FT.
4V1	4	2	1'-11"
4V2	4	2	2'-2"
4V3	4	2	2'-6"
4V4	4	2	2'-9"
4V5	4	2	3'-2"
4V6	4	2	3'-4"
4F1	4	2	12'-0"
4F2	4	2	7'-6"
5F3	5	1	11'-9"
LOOP ASSEMBLY			
6D1	6	1	8'-5"
6D2	6	1	7'-7"
6D3	6	1	8'-6"

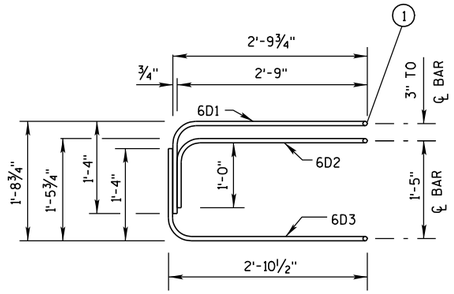

ELEVATION
LOOP BAR ASSEMBLY

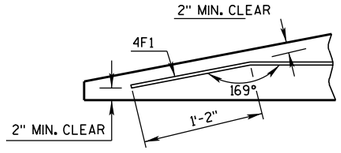

DETAIL "C"
BENT BAR DETAIL

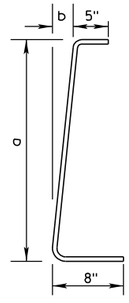

BAR	a	b
V1	10"	1"
V2	1'-1"	1¼"
V3	1'-5"	1⅝"
V4	1'-8"	1⅞"
V5	2'-0½"	2⅜"
V6	2'-3"	2¾"

4V BARS
2 AT EACH SIZE REQUIRED
FOR STIRRUP ASSEMBLY

TAPER BARRIER SECTION

GENERAL NOTES

(1) NEVER USE LOOP BARS (6D1, 6D2 OR 6D3) TO LIFT, MOVE OR REPOSITION THE BARRIER.

BARRIER SECTION BILL OF MATERIALS

(PER 12'-6" BARRIER SECTION)

BAR	BAR SIZE	NO. OF BARS	LENGTH FT.
4A1	4	12	6'-0"
6A2	6	6	2'-11"
5B1	5	3	12'-2"
4C1	4	2	12'-2"
LOOP ASSEMBLY			
6D1	6	2	8'-5"
6D2	6	2	7'-7"
6D3	6	2	8'-6"

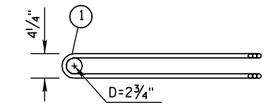

PLAN VIEW
LOOP BAR ASSEMBLY
(MARKED END SHOWN, INVERT FOR OTHER END)

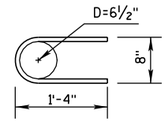

6A2

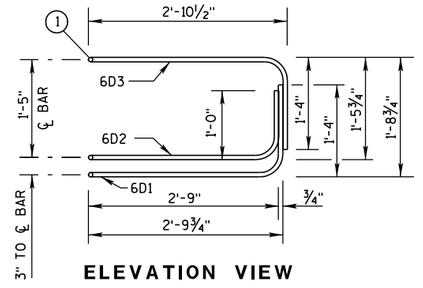

ELEVATION VIEW

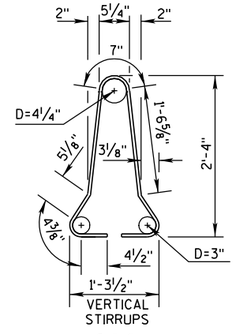

4A1

BARRIER SECTION

CONCRETE BARRIER
TEMPORARY PRECAST, 12'-6"

STATE OF WISCONSIN
DEPARTMENT OF TRANSPORTATION

6

S.D.D. 14 B 7-13c

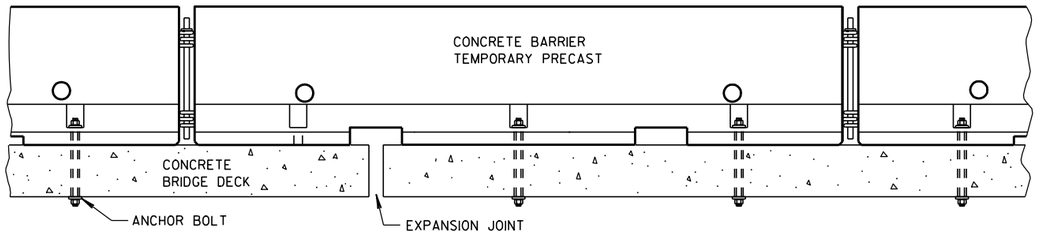

TREATMENT AT BRIDGE DECK EXPANSION JOINTS

(NO SINGLE CONCRETE BARRIER SECTION SHALL BE ANCHORED TO BOTH THE BRIDGE DECK AND THE APPROACH SLAB. ALL ANCHOR BOLT LOCATIONS SHALL BE ANCHORED TO THE DECK IN ACCORDANCE WITH THE DETAIL. NO MORE THAN ONE ANCHOR BOLT SHALL BE ELIMINATED FROM A BARRIER SECTION WHEN SPANNING AN EXPANSION JOINT.)

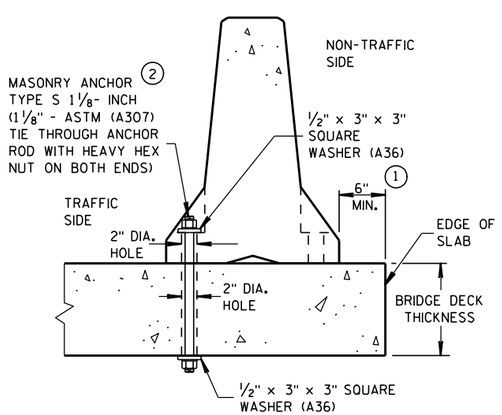

THROUGH BOLTED ANCHOR INSTALLATION ON BRIDGE DECK

(DO NOTUSE ON CONCRETE BRIDGE DECK WITH ASPHALT OVERLAY)

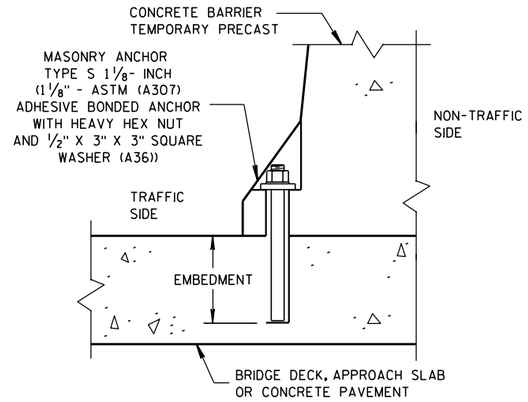

REMOVABLE ADHESIVE BONDED ANCHOR INSTALLATION ON CONCRETE BRIDGE DECK, CONCRETE APPROACH SLAB, OR CONCRETE PAVEMENT

2

(DO NOT USE ON CONCRETE WITH AN ASPHALTIC OVERLAY)

GENERAL NOTES

1. CONCRETE BARRIER TEMPORARY PRECAST, 12'-6" SHALL BE ANCHORED IF:
   THE DISTANCE TO A 2 FOOT OR GREATER DROPOFF THAT IS STEEPER THAN 3H : 1V, FOR EXAMPLE THE EDGE OF A BRIDGE DECK OR A DROPOFF AT THE EDGE OF PAVEMENT, IS LESS THAN 4 FEET FROM THE SIDE OF THE BARRIER CLOSEST TO THE DROPOFF AND THE POSTED SPEED IS 45 MPH OR GREATER, OR

   THE DISTANCE TO A 2 FOOT OR GREATER DROPOFF THAT IS STEEPER THAN 3H : 1V, FOR EXAMPLE THE EDGE OF A BRIDGE DECK OR A DROPOFF AT THE EDGE OF PAVEMENT. IS LESS THAN 2 FEET FROM THE SIDE OF THE BARRIER CLOSEST TO THE DROPOFF AND THE POSTED SPEED IS 40 MPH OR LESS.

2. ANCHORING IS INCIDENTAL TO CONCRETE BARRIER TEMPORARY PRECAST.

   WITH THE APPROVAL OF THE ENGINEER, REMOVABLE ADHESIVE BONDED (EPOXY) ANCHOR BOLT INSTALLATION MAY BE USED IN LIEU OF THROUGH BOLTED ANCHOR INSTALLATION. THE ADHESIVE BONDED ANCHOR BOLT MUST BE REMOVABLE. USE ASTM (A307) MASONRY ANCHORS TYPE S 1⅛-INCH, EMBEDDED TO A DEPTH SUFFICIENT TO DEVELOP THE ULTIMATE CAPACITY OF THE ANCHOR BOLT AND PROVIDE DOCUMENTATION TO CONFIRM THIS.

   UPON REMOVAL OR RELOCATION OF THE BARRIER UNITS, REMOVE ALLANCHOR BOLTS AND COMPLETELY FILL IN THE REMAINING HOLES IN CONCRETE BRIDGE DECKS, CONCRETE APPROACH SLABS AND CONCRETE PAVEMENTS THAT ARE TO REMAIN, WITH A NON-SHRINK COMMERICAL GROUT OR EPOXY MATERIAL IDENTIFIED ON THE CURRENT WISDOT APPROVED PRODUCTS LIST.

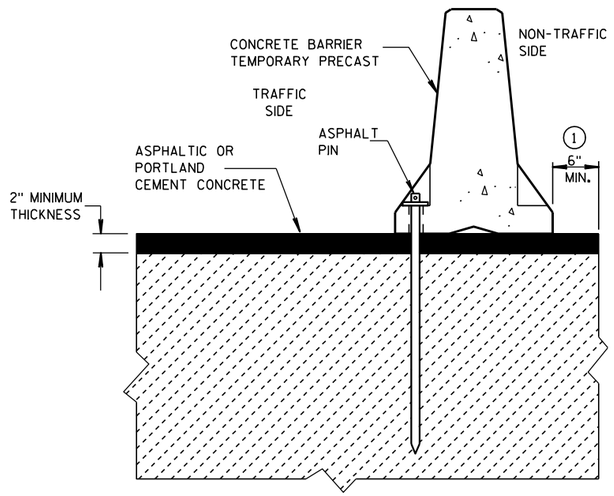

STAKE DOWN INSTALLATION FOR ASPHALTIC OR PORTLAND CEMENT CONCRETE SURFACE

(STAKING IS INCIDENTAL TO CONCRETE BARRIER TEMPORARY PRECAST)

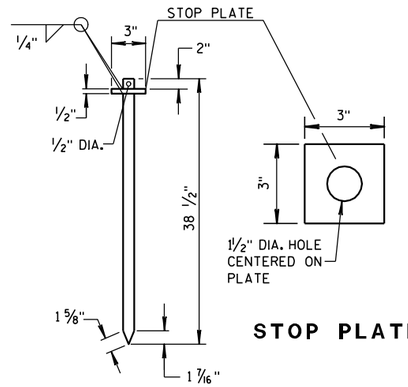

STOP PLATE

ASPHALT PIN

(ASTM A36 STEEL)

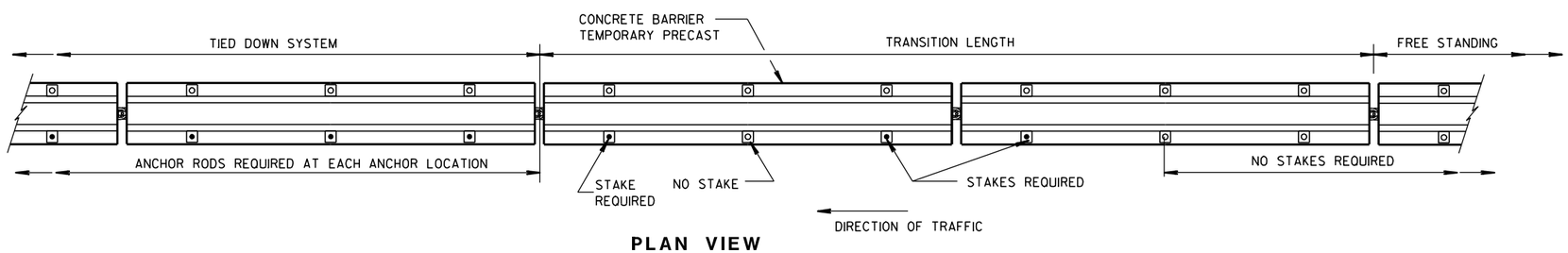

PLAN VIEW

FREE STANDING TRANSITION TO TIED-DOWN SYSTEM

(PLACE TRANSITION IN A TANGENT SECTION OF BARRIER PARALLEL TO THE ROADWAY. IF TRANSITION OCCURS ON STRUCTURAL SLAB, ANCHOR AS SHOWN.)

CONCRETE BARRIER TEMPORARY PRECAST, 12'-6"

STATE OF WISCONSIN
DEPARTMENT OF TRANSPO...

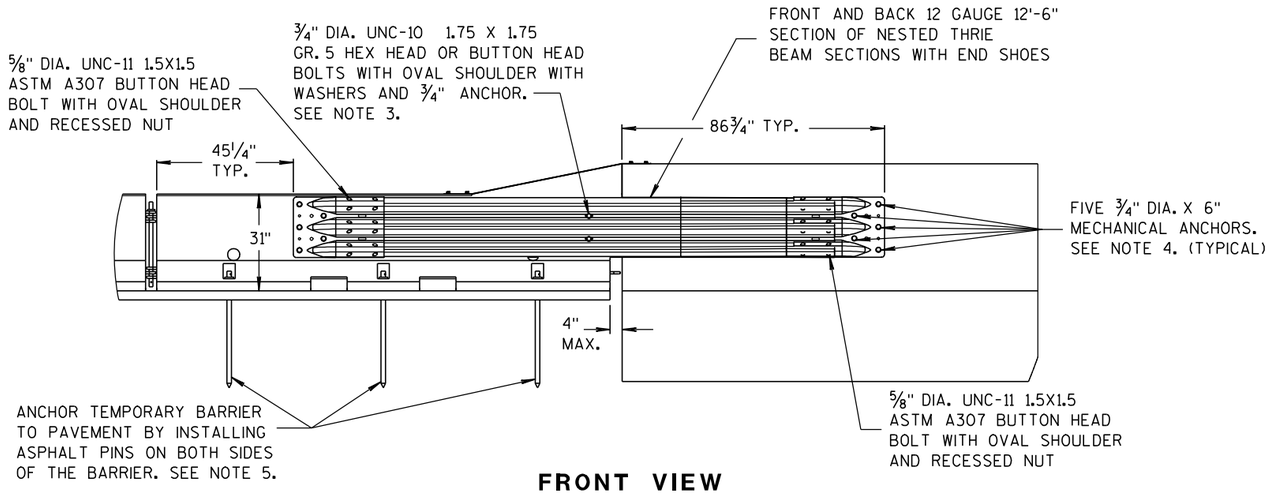

FRONT VIEW

NOTES

1. CAP END PLATE PLACED FLUSH WITH UPSTREAM END OF PERMANENT BARRIER OR PARAPET.
2. THRIE BEAM PIECES ARE OFFSET 15 1/4" TO PREVENT INTERFERENCE FROM THE ANCHORS ON OPPOSING SIDES.
3. MINIMUM MECHANICAL OR EPOXY ANCHOR STRENGTH REQUIREMENTS: ULTIMATE TENSILE LOAD 9.48 KIPS AND ULTIMATE SHEAR LOAD 10.48 KIPS.
4. MINIMUM MECHANICAL OR EPOXY ANCHOR STRENGTH REQUIREMENTS: ULTIMATE TENSILE LOAD 17.9 KIPS AND ULTIMATE SHEAR LOAD 21.96 KIPS.
5. MAY BE USED ON CONCRETE OR ASPHALT PAVEMENTS. ASPHALT OPTION SHOWN. FOR CONCRETE OPTION SEE OTHER DETAILS.
6. MINIMUM MECHANICAL OR EPOXY ANCHOR STRENGTH REQUIREMENTS: ULTIMATE TENSILE LOAD 12.14 KIPS AND ULTIMATE SHEAR LOAD 17.5 KIPS.

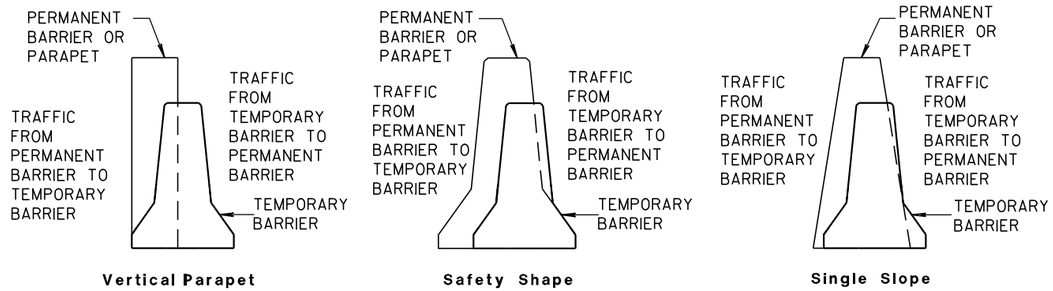

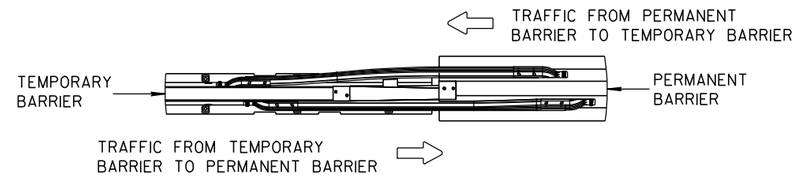

TEMPORARY BARRIER PLACEMENT FOR BI-DIRECTIONAL TRANSITION TO TIED-DOWN SYSTEM

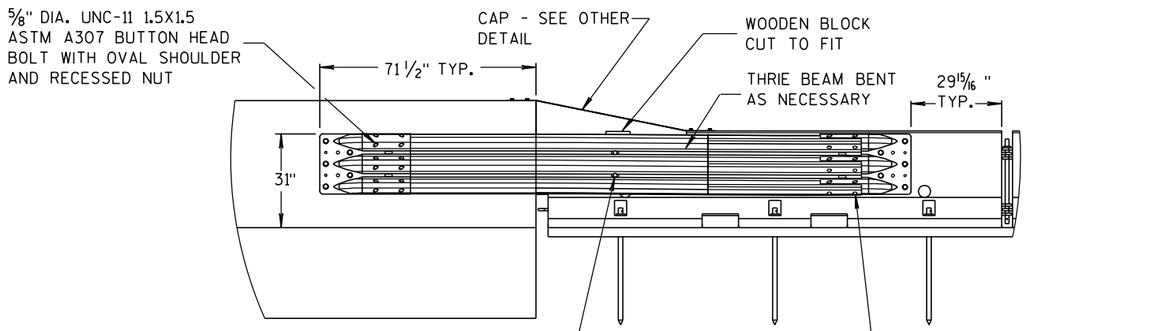

BACK VIEW

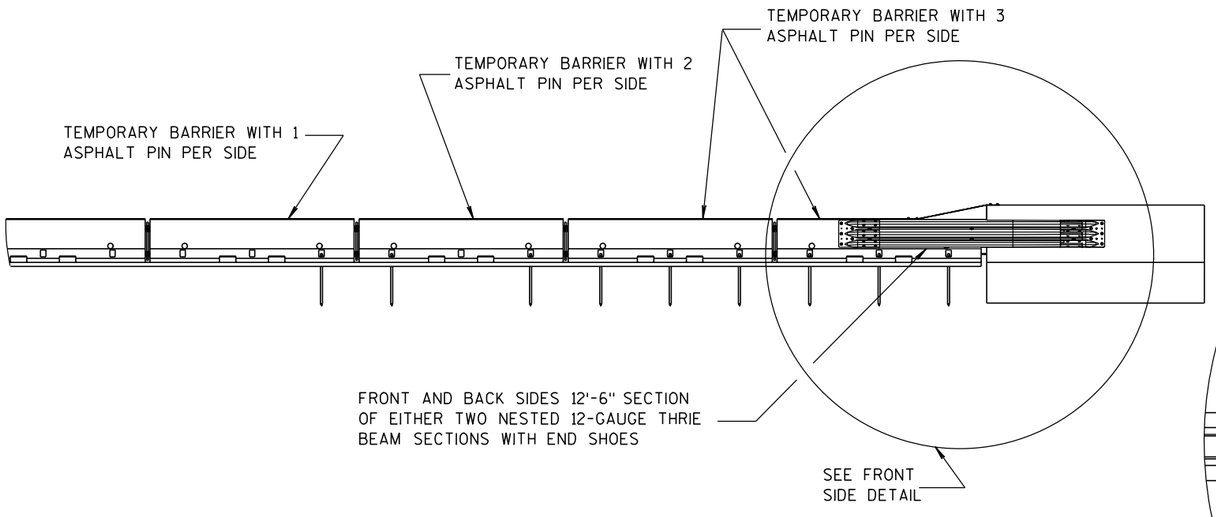

FRONT VIEW

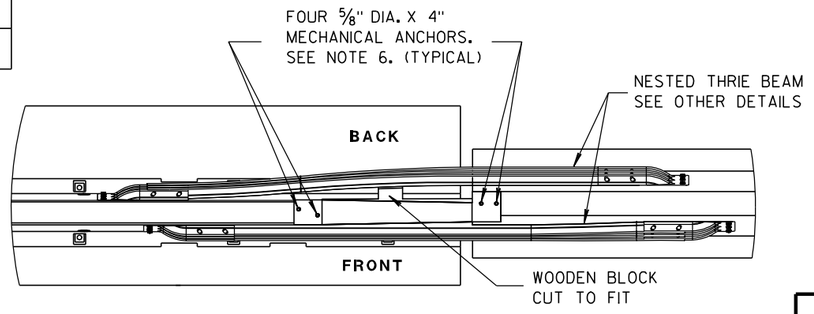

PLAN VIEW

BI-DIRECTIONAL TRANSITION TO TIED-DOWN SYSTEM

CONCRETE BARRIER TEMPORARY PRECAST, 12'-6"

STATE OF WISCONSIN
DEPARTMENT OF TRANSPO...

6
S.D.D. 14 B 7-13e

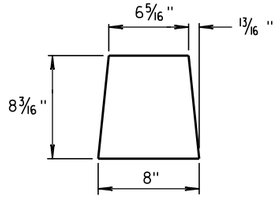

GUSSET 1

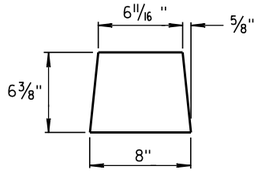

GUSSET 2

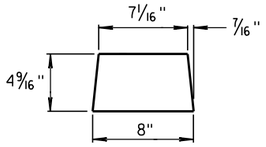

GUSSET 3

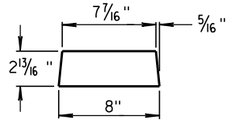

GUSSET 4

GUSSETS

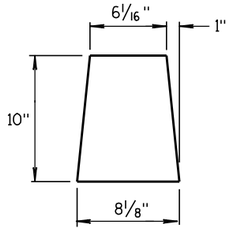

END PLATE

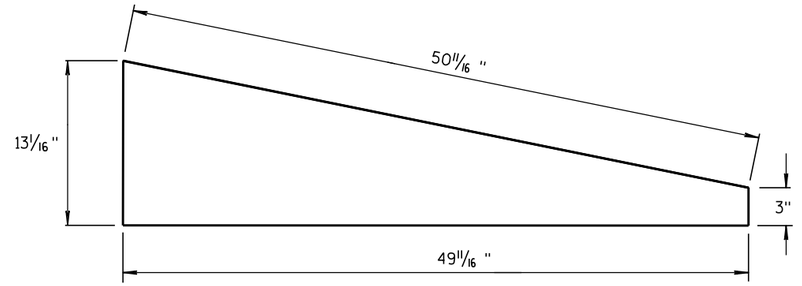

SIDE PLATE

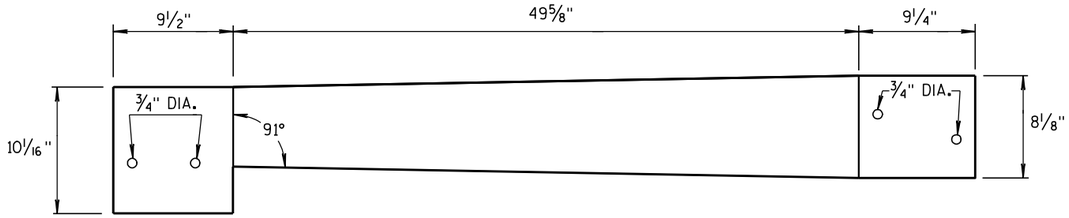

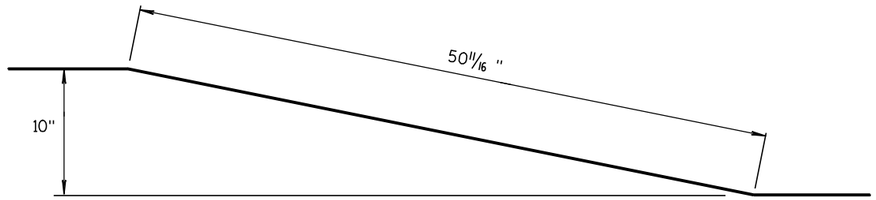

TOP PLATE

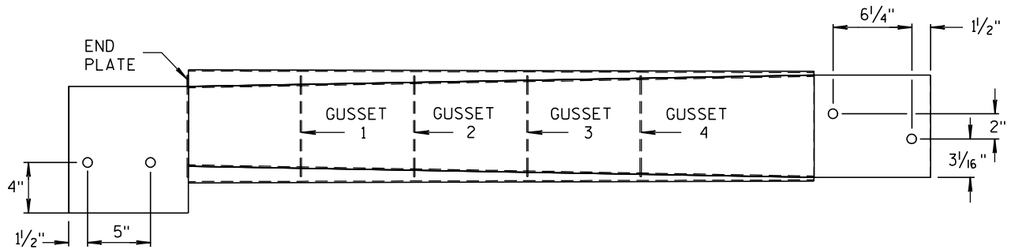

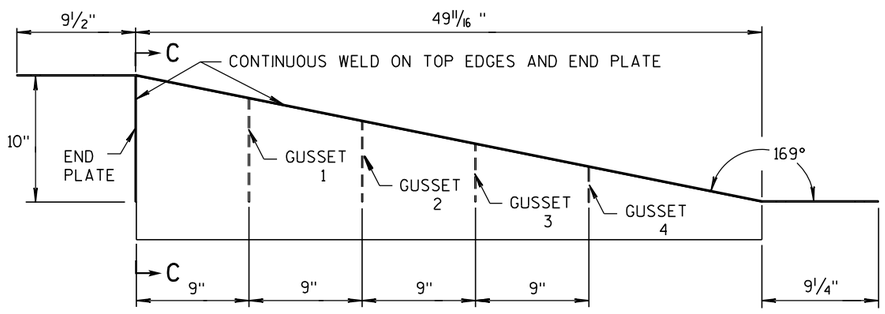

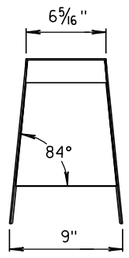

SECTION C-C

NOTES

1. FOUR GUSSETS AND END PLATE ARE STITCH WELDED ON THREE SIDES.
2. TWO TRIANGULAR SIDE PLATES ARE STITCH WELDED TO TOP PLATE, END PLATE, AND GUSSETS.

CAP DETAILS FOR TEMPORARY CONCRETE BARRIER TO 42" PERMANENT CONCRETE BARRIER

SIDE, TOP AND END PLATES FOR CAP FROM TEMPORARY CONCRETE BARRIER TO 42" PERMANENT CONCRETE BARRIER

SIDE PLATES, TOP PLATE, END PLATE AND GUSSETS ARE 12 GAUGE ASTM A36 GALVANIZED STEEL.

CONCRETE BARRIER
TEMPORARY PRECAST, 12'-6"

STATE OF WISCONSIN
DEPARTMENT OF TRANSPO...

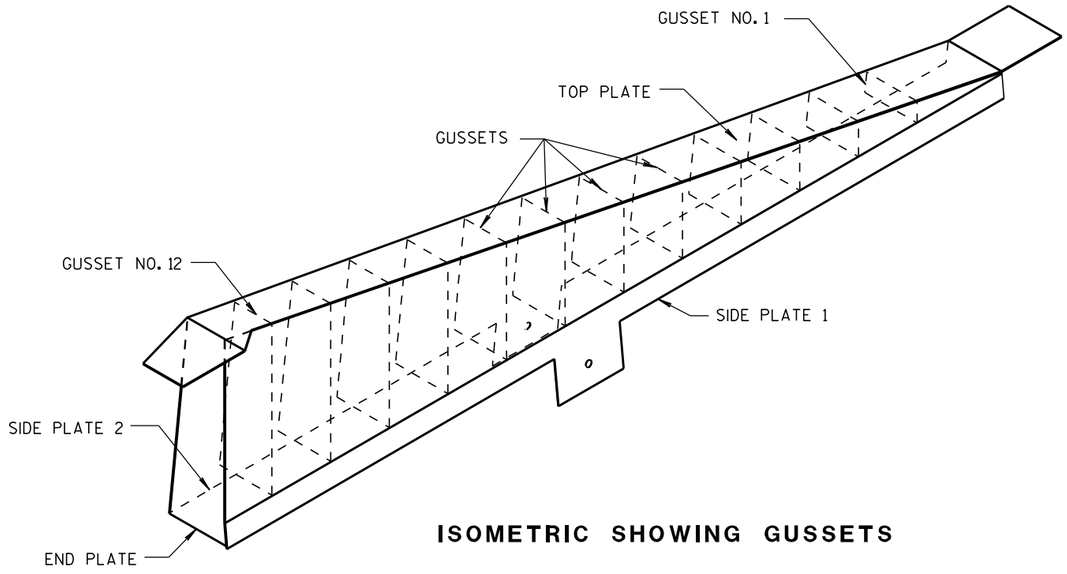

ISOMETRIC SHOWING GUSSETS

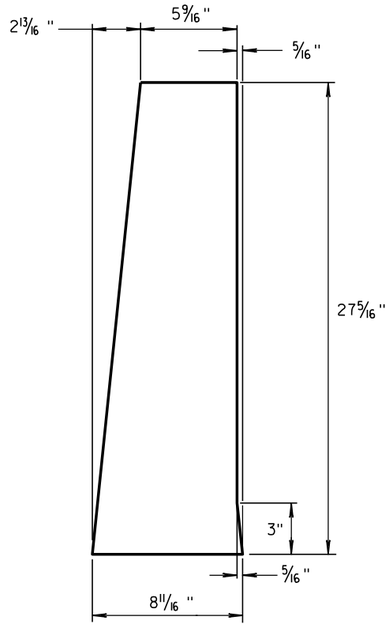

END PLATE

1/8" STEEL PLATE

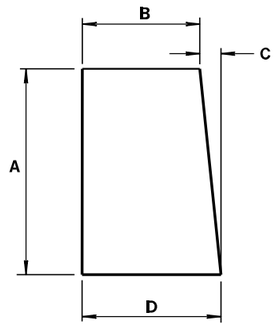

GUSSETS 1 - 12

ALL GUSSETS 1/8" STEEL PLATE

GUSSET DIMENSIONS

GUSSET NO.	A	B	C	D
1	2 7/8"	7 3/4"	1/4"	8
2	4 11/16 "	7 9/16 "	1/2"	8
3	6 1/2"	7 3/8"	11/16 "	8 1/16 "
4	8 5/16 "	7 3/16 "	7/8"	8 1/16 "
5	10 1/8"	7"	1 1/16 "	8 1/16 "
6	11 15/16 "	6 13/16 "	1 1/4"	8 1/16 "
7	13 3/4"	6 5/8"	1 7/16 "	8 1/16 "
8	15 9/16 "	6 7/16 "	1 9/16 "	8 1/16 "
9	17 3/8"	6 1/4"	1 13/16 "	8 1/16 "
10	19 3/16 "	6 1/16 "	1 15/16 "	8 1/16 "
11	21"	5 7/8"	2 3/16 "	8 1/16 "
12	22 13/16 "	5 11/16 "	2 5/16 "	8 1/16 "

SIDE PLATES, TOP PLATE, END PLATE AND GUSSETS ARE 12 GAUGE ASTM A36 STEEL AND GALVANIZED.

GUSSETS AND END PLATE ARE STITCH WELDED ON 3 SIDES. TWO TRIANGULAR SIDE PLATES ARE STITCH WELDED TO TOP PLATE, END PLATE AND GUSSETS.

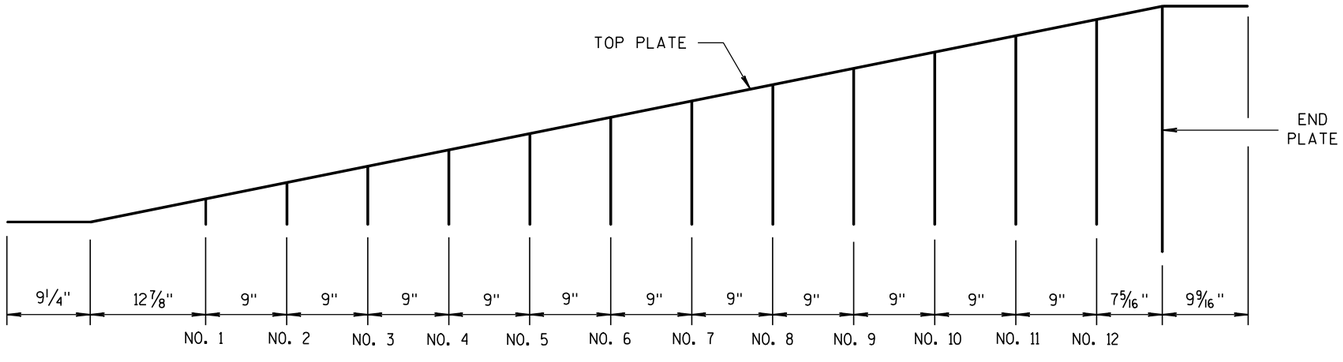

GUSSET LOCATION

CAP DETAILS FOR TEMPORARY CONCRETE BARRIER TO 56" PERMANENT CONCRETE BARRIER

CONCRETE BARRIER TEMPORARY PRECAST, 12'-6"

STATE OF WISCONSIN
DEPARTMENT OF TRANSPO...

6

S.D.D. 14 B 7-13g

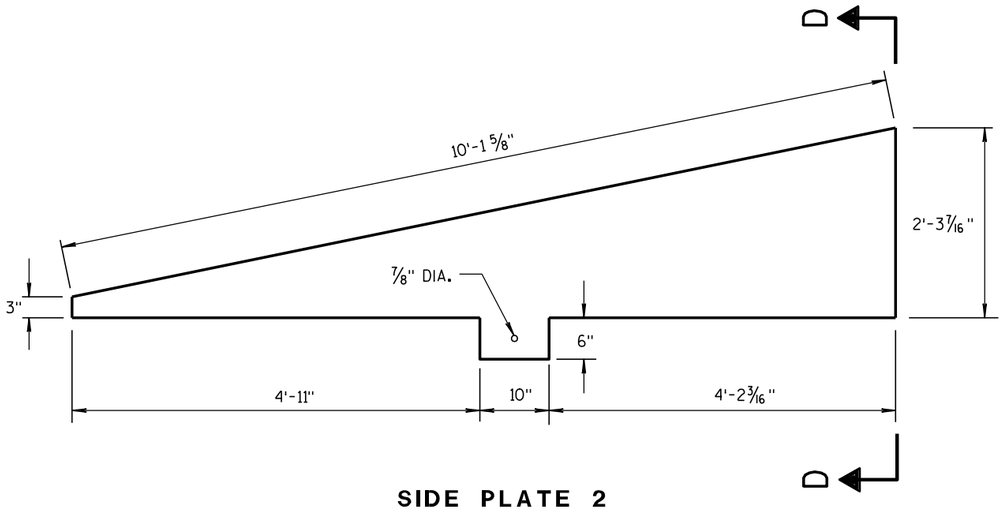

SIDE PLATE 2

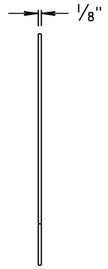

END VIEW

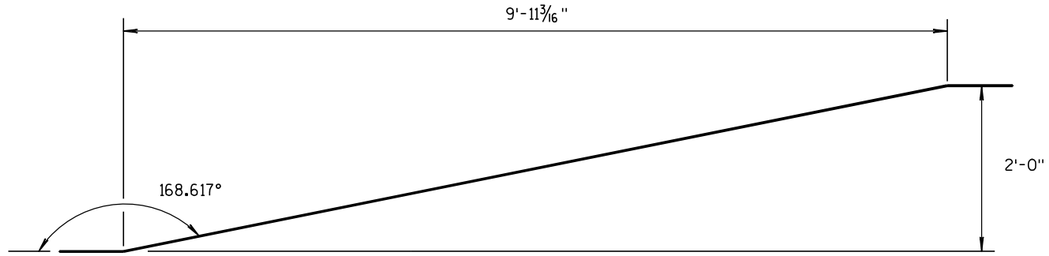

SIDE VIEW

TOP PLATE

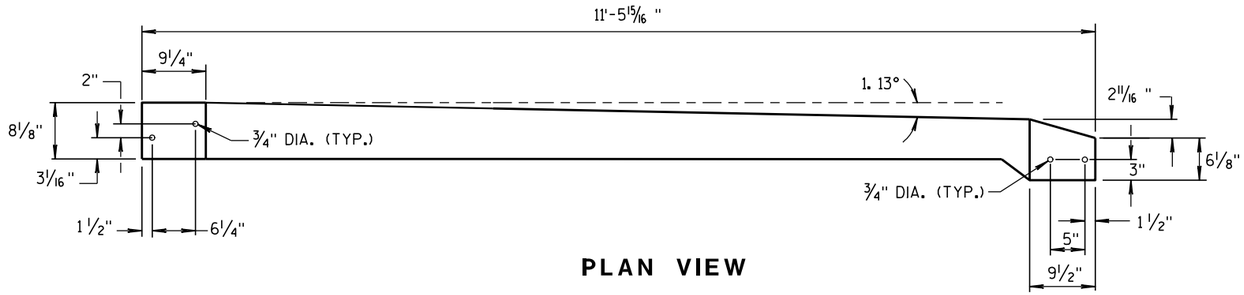

PLAN VIEW

TOP PLATE

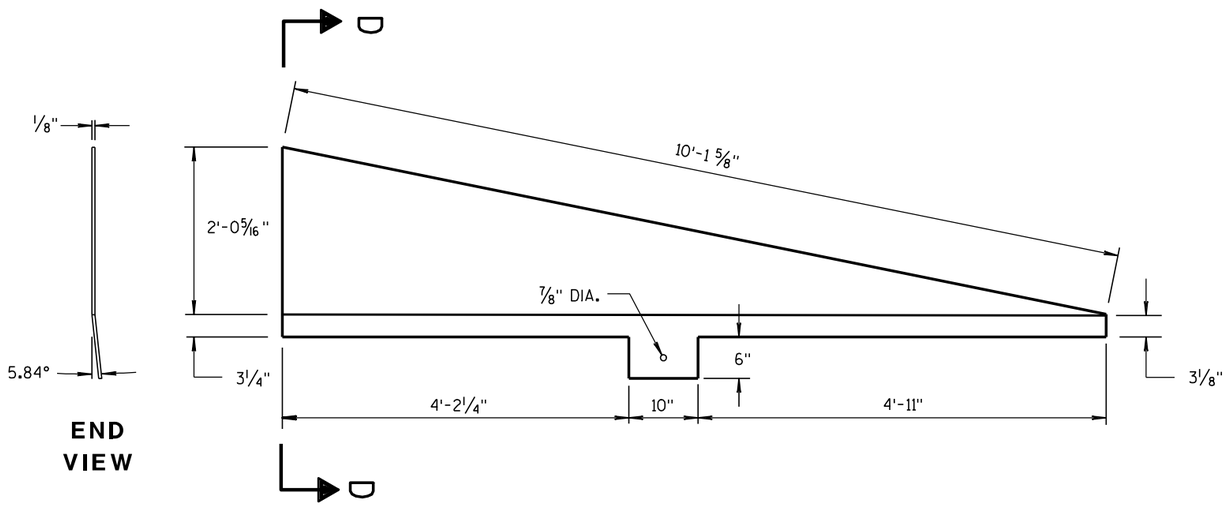

END VIEW

SIDE PLATE 1

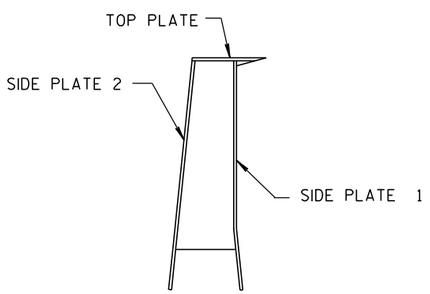

SECTION D-D

CAP DETAILS FOR TEMPORARY CONCRETE BARRIER TO 56" PERMANENT CONCRETE BARRIER

CONCRETE BARRIER
TEMPORARY PRECAST, 12'-6"

STATE OF WISCONSIN
DEPARTMENT OF TRANSPORTATION

APPROVED
8/31/2012
DATE
/S/ Jerry H. ---
ROADWAY STANDARDS ENGINEER
FHWA

6

S.D.D. 14 B 7-13h

6

S.D.D. 14 B 7-13h

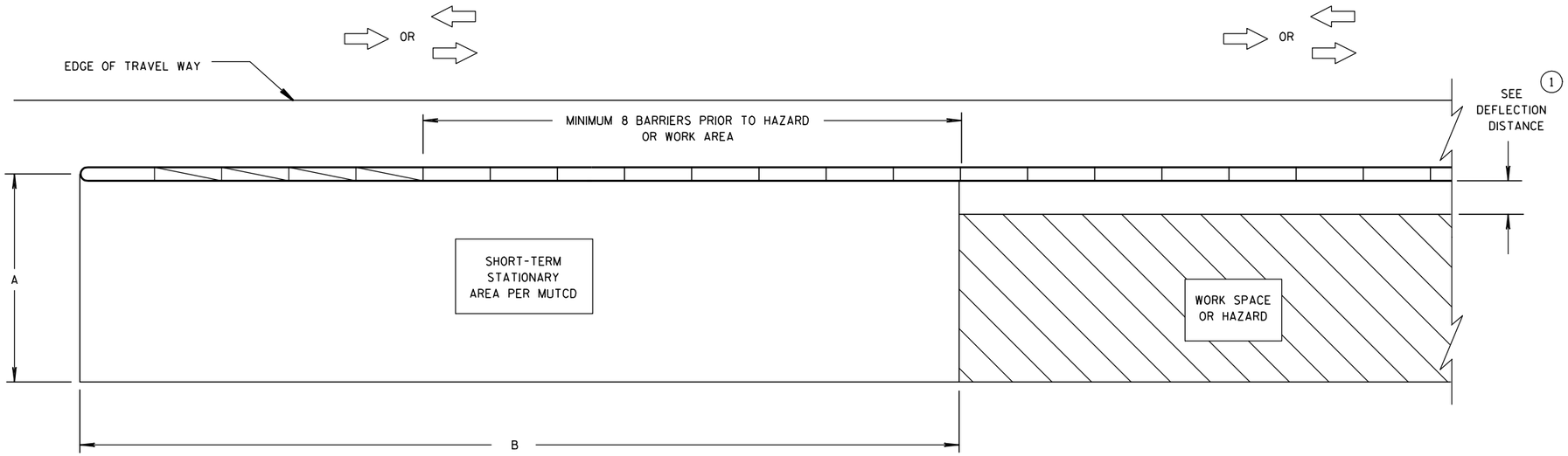

CRASH CUSHION/SAND BARREL ARRAY AND TEMPORARY BARRIER INSTALLATION FOR TRAFFIC ON ONE SIDE OF BARRIER

DIMENSION A TABLE (2)

FACILITY	POSTED SPEED MPH	DIMENSION A	
		MIN. FT	MAX. FT
FREEWAY/EXPRESSWAY	ALL	15	20
NON-FREEWAY/EXPRESSWAY	GREATER THAN OR EQUAL TO 45	10	15
NON-FREEWAY/EXPRESSWAY	LESS THAN 45	8	10
AADT LESS THAN 1,500	ALL	8	10

DIMENSION B TABLE (2)

POSTED SPEEDS MPH	DIMENSION B FT
20	115
25	155
30	200
35	250
40	305
45	360
50	425
55	495
60	570
65	645

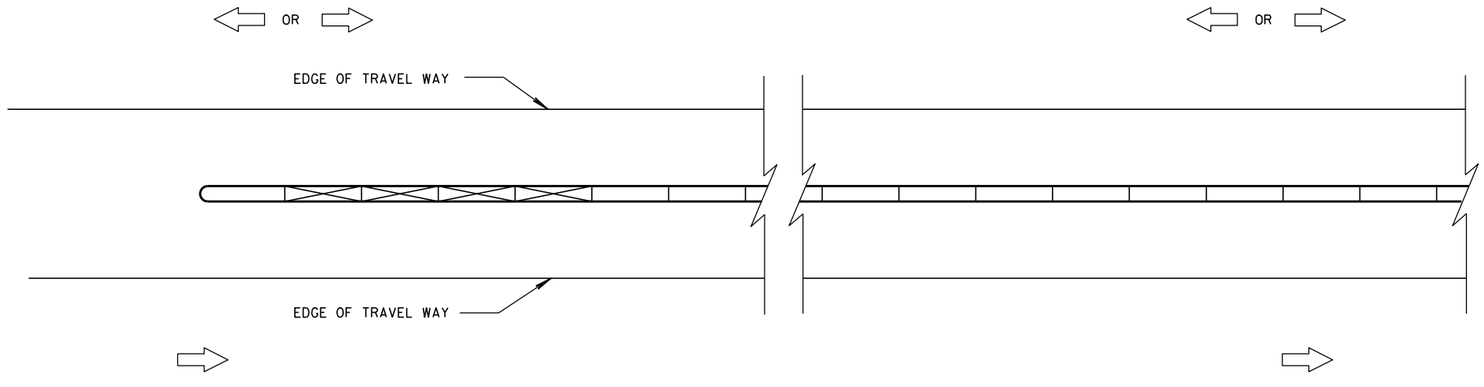

CRASH CUSHION/SAND BARREL ARRAY AND TEMPORARY BARRIER INSTALLATION FOR TRAFFIC ON BOTH SIDES OF BARRIER

LEGEND

- DIRECTION OF TRAVEL
- CRASH CUSHION OR SAND BARREL ARRAY
- SEE FREE STANDING TRANSITION TO TIED-DOWN SYSTEM DETAILS
- SEE BI-DIRECTIONAL TRANSITION TO TIED-DOWN SYSTEM DETAILS
- 3 PINS PLACED ON TRAFFIC SIDE OF BARRIER
- PERMANENT CONCRETE BARRIER OR CONCRETE PARAPET
- FREE STANDING TEMPORARY BARRIER

GENERAL NOTES

SEE STANDARD DETAIL DRAWING 14B7 FOR MORE INFORMATION.

DETAILS PROVIDE A GENERAL LAYOUT OF TEMPORARY CONCRETE BARRIER, CRASH CUSHIONS, SAND BARREL ARRAYS AND TIE DOWN TRANSITIONS. DETAILS PROVIDED MAY NOT FIT ALL POSSIBLE SITUATIONS OR SITE CONDITIONS. SEE OTHER SECTIONS OF THE CONTRACT OR PROJECT ENGINEER FOR MORE DETAILS.

ADDITIONAL TEMPORARY BARRIER MAY BE REQUIRED TO PROTECT TRAVELING PUBLIC FROM HAZARDS, CONTRACTOR'S OPERATIONS OR TO CONTROL TRAFFIC.

TEMPORARY BARRIER MAY BE REQUIRED TO BE ANCHORED TO PAVEMENT OR BRIDGE DECK.

FOR DETAILS ON CRASH CUSHION OR SAND BARREL ARRAYS SEE OTHER SECTIONS OF THE PLAN AND MANUFACTURE'S DETAILS.

SLOPES LEADING TO TEMPORARY BARRIER, CRASH CUSHION OR SAND BARREL ARRAY ARE 10:1 OR LESS.

(1) FOR DEFLECTION INFORMATION SEE STANDARD DETAIL DRAWING 14B7.

(2) VALUES PROVIDED MAY NOT FIT ALL POSSIBLE SITUATIONS OR SITE CONDITIONS. SEE OTHER SECTIONS OF THE CONTRACT OR PROJECT ENGINEER FOR MORE DETAILS.

CRASH CUSHION/SAND BARREL ARRAY AND OTHER TEMPORARY BARRIER LAYOUT DETAILS

STATE OF WISCONSIN
DEPARTMENT OF TRANSPORTATION

6

S.D.D. 14 B 8-1a

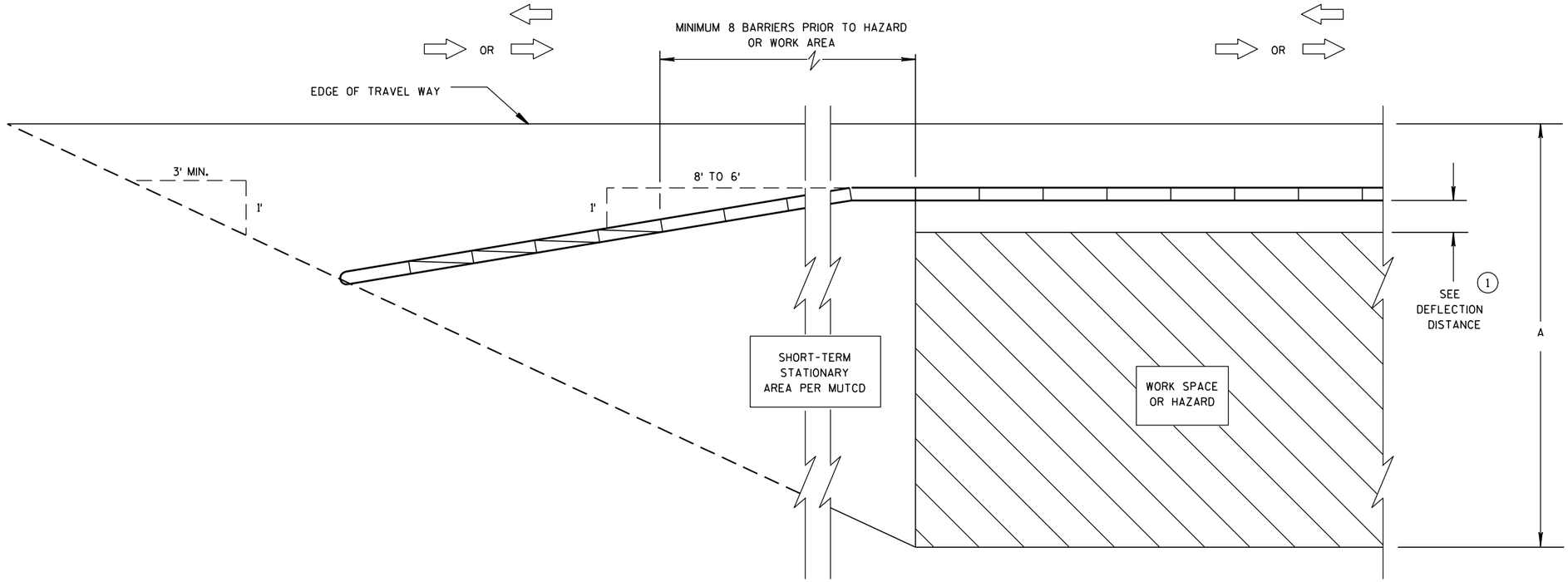

CRASH CUSHION/SAND BARREL ARRAY AND TEMPORARY BARRIER INSTALLATION FOR TRAFFIC ON ONE SIDE - FLARED INSTALLATION

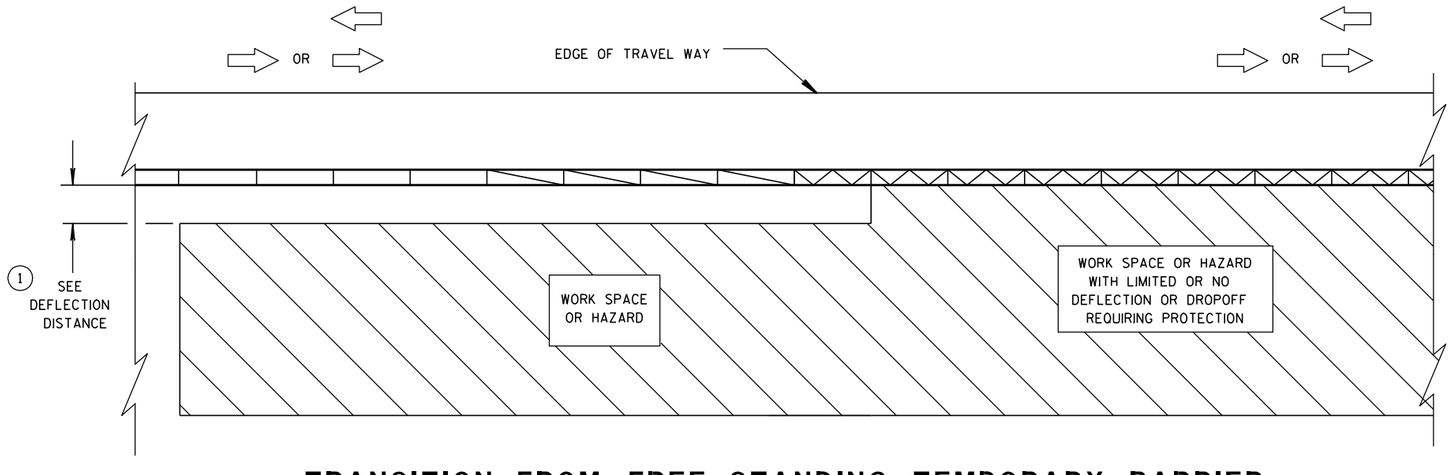

TRANSITION FROM FREE STANDING TEMPORARY BARRIER TO ANCHORED BARRIER

LEGEND

- DIRECTION OF TRAVEL
- CRASH CUSHION OR SAND BARREL ARRAY
- SEE FREE STANDING TRANSITION TO TIED-DOWN SYSTEM DETAILS
- SEE BI-DIRECTIONAL TRANSITION TO TIED-DOWN SYSTEM DETAILS
- 3 PINS PLACED ON TRAFFIC SIDE OF BARRIER
- PERMANENT CONCRETE BARRIER OR CONCRETE PARAPET
- FREE STANDING TEMPORARY BARRIER

CRASH CUSHION/SAND BARREL ARRAY AND OTHER TEMPORARY BARRIER LAYOUT DETAILS

STATE OF WISCONSIN
DEPARTMENT OF TRANSPORTATION

6

S.D.D. 14 B 8-1b

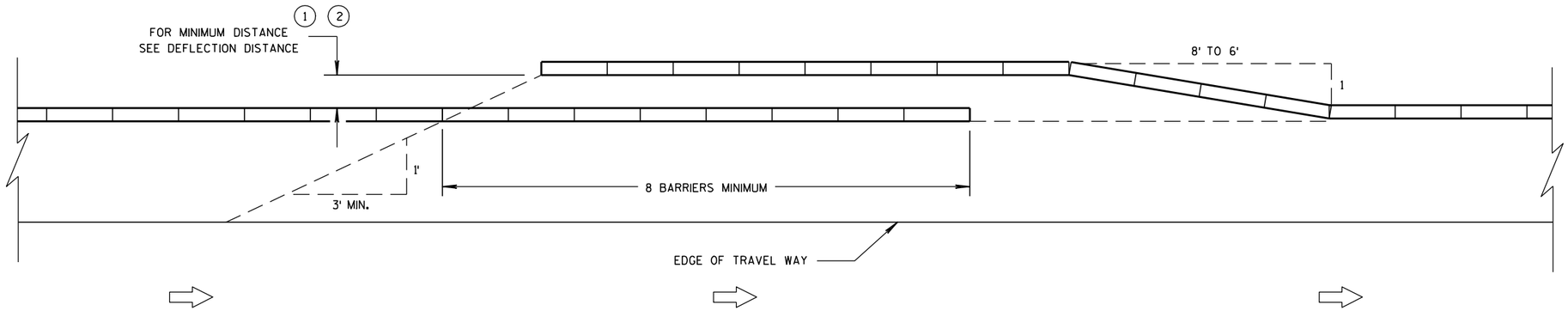

TEMPORARY BARRIER OVERLAP - ONE-WAY TRAFFIC

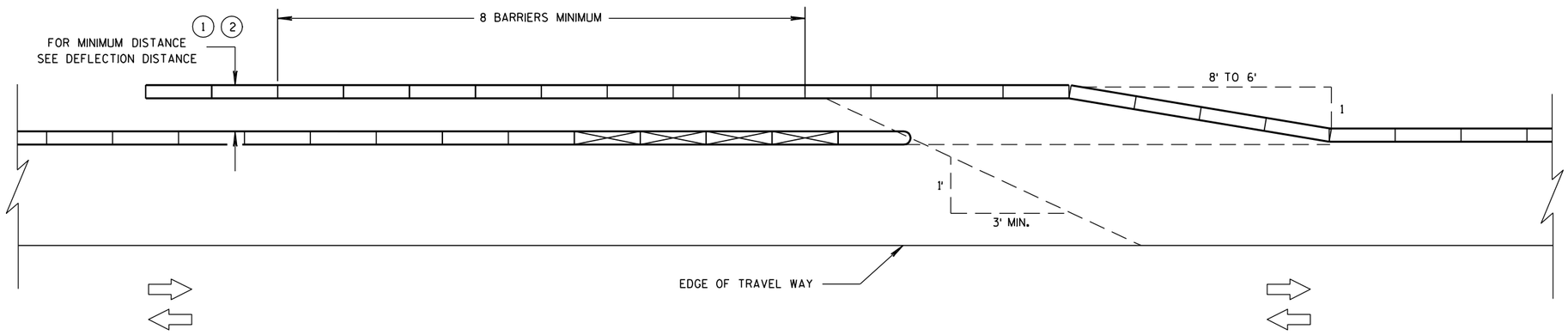

TEMPORARY BARRIER OVERLAP - TWO-WAY TRAFFIC

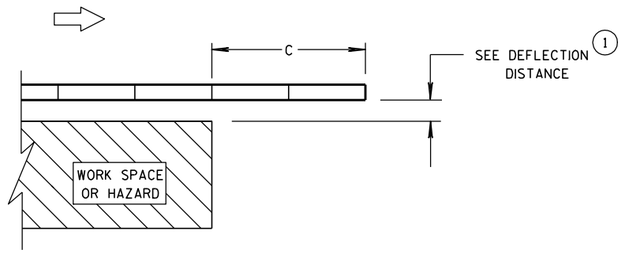

ENDING TEMPORARY BARRIER DOWNSTREAM - UNANCHORED

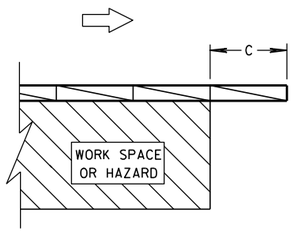

ENDING TEMPORARY BARRIER DOWNSTREAM - ANCHORED

LEGEND

- DIRECTION OF TRAVEL
- CRASH CUSHION OR SAND BARREL ARRAY
- SEE FREE STANDING TRANSITION TO TIED-DOWN SYSTEM DETAILS
- SEE BI-DIRECTIONAL TRANSITION TO TIED-DOWN SYSTEM DETAILS
- 3 PINS PLACED ON TRAFFIC SIDE OF BARRIER
- PERMANENT CONCRETE BARRIER OR CONCRETE PARAPET
- FREE STANDING TEMPORARY BARRIER

CRASH CUSHION/SAND BARREL ARRAY AND OTHER TEMPORARY BARRIER LAYOUT DETAILS

STATE OF WISCONSIN
DEPARTMENT OF TRANSPORTATION

6

S.D.D. 14 B 8-1c

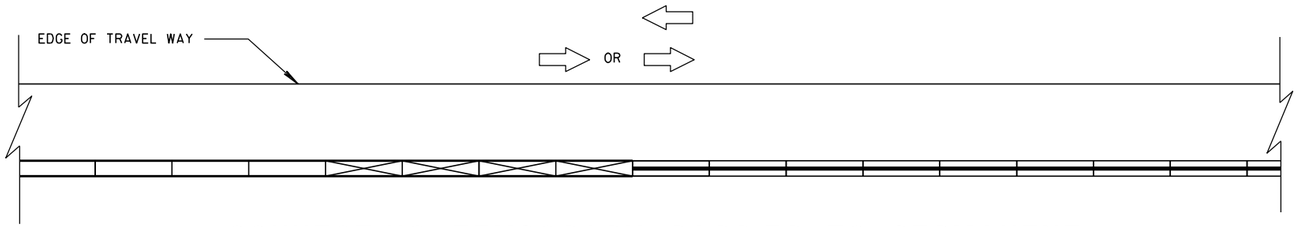

CONNECTING TEMPORARY BARRIER TO PERMANENT
CONCRETE BARRIER-TRAFFIC ON ONE SIDE

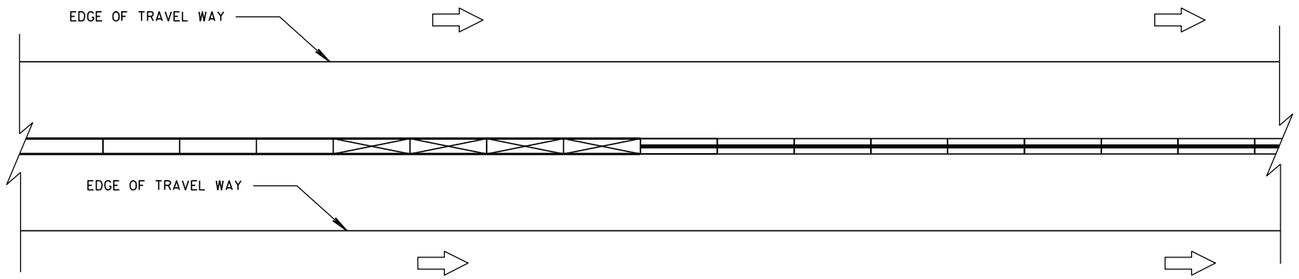

CONNECTING TEMPORARY BARRIER TO PERMANENT
CONCRETE BARRIER-TRAFFIC ON BOTH SIDES

LEGEND

DIRECTION OF TRAVEL

CRASH CUSHION OR
SAND BARREL ARRAY

SEE FREE STANDING TRANSITION
TO TIED-DOWN SYSTEM DETAILS

SEE BI-DIRECTIONAL TRANSITION
TO TIED-DOWN SYSTEM DETAILS

3 PINS PLACED ON
TRAFFIC SIDE OF BARRIER

PERMANENT CONCRETE BARRIER
OR CONCRETE PARAPET

FREE STANDING TEMPORARY
BARRIER

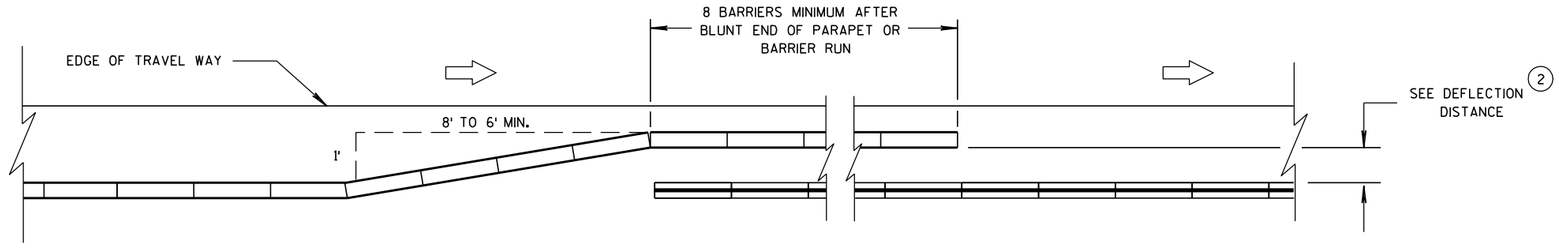

OVERLAPPING TEMPORARY BARRIER AND PERMANENT BARRIER -
ONE WAY TRAFFIC

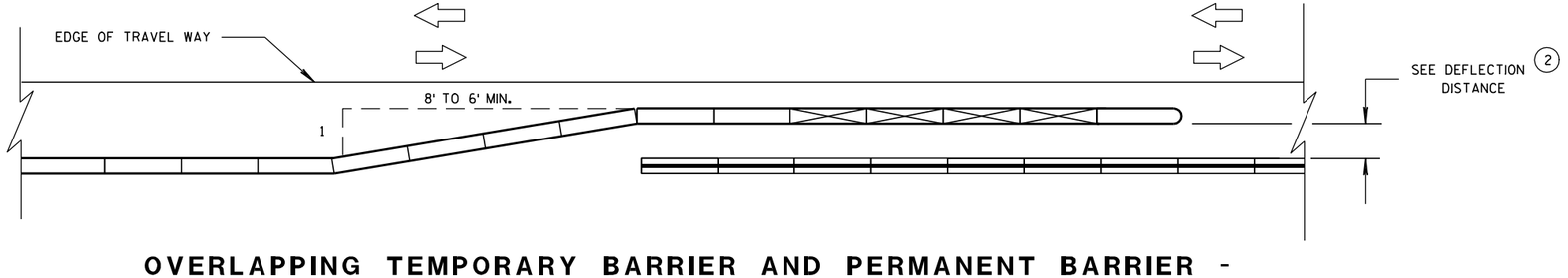

OVERLAPPING TEMPORARY BARRIER AND PERMANENT BARRIER -
TWO WAY TRAFFIC

CRASH CUSHION/SAND BARREL
ARRAY AND OTHER TEMPORARY
BARRIER LAYOUT DETAILS

STATE OF WISCONSIN
DEPARTMENT OF TRANSPO...

6
S.D.D. 14 B 8-1d

LEGEND

DIRECTION OF TRAVEL

CRASH CUSHION OR SAND BARREL ARRAY

SEE FREE STANDING TRANSITION TO TIED-DOWN SYSTEM DETAILS

SEE BI-DIRECTIONAL TRANSITION TO TIED-DOWN SYSTEM DETAILS

3 PINS PLACED ON TRAFFIC SIDE OF BARRIER

PERMANENT CONCRETE BARRIER OR CONCRETE PARAPET

FREE STANDING TEMPORARY BARRIER

DIMENSION C TABLE (2)

AVAILABLE DEFLECTION DISTANCE	MINIMUM LENGTH OF BARRIER BEYOND HAZARD FT
GREATER THAN 8'	12.5
LESS THAN OR EQUAL TO 8' BUT GREATER THAN 4'	50
LESS THAN OR EQUAL TO 4'	100

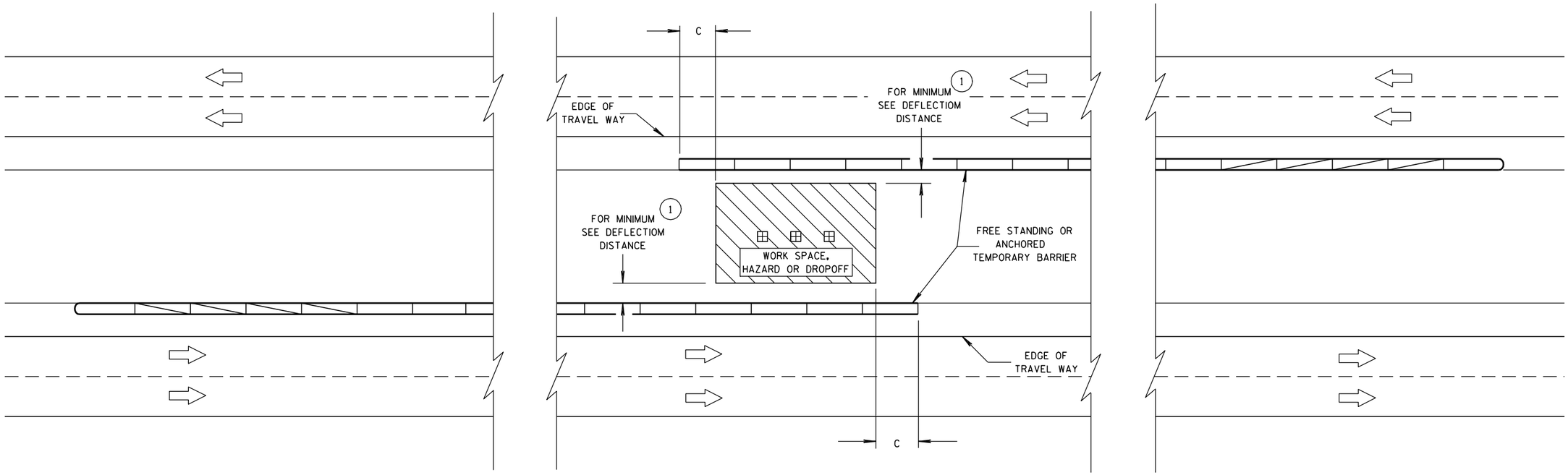

6

6

S.D.D. 14 B 8-1e

S.D.D. 14 B 8-1e

CRASH CUSHION/SAND BARREL ARRAY AND OTHER TEMPORARY BARRIER LAYOUT DETAILS

STATE OF WISCONSIN
DEPARTMENT OF TRANSPORTATION

APPROVED

8/31/2012
DATE

/S/ Jerry H. Zogg
ROADWAY STANDARDS ENGINNER

FHWA

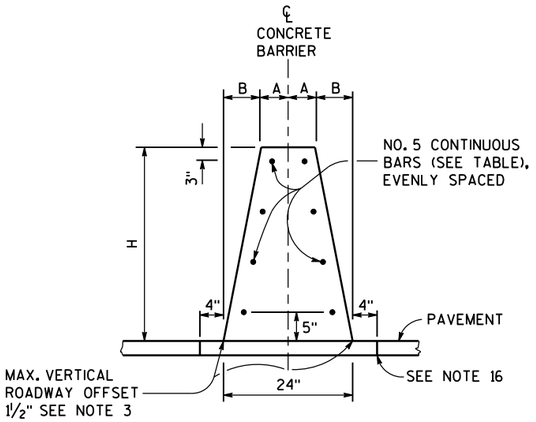

32-INCH, 36-INCH OR 42-INCH SINGLE SLOPE CONCRETE BARRIER (TYPE S32, TYPE S36, AND TYPE S42)

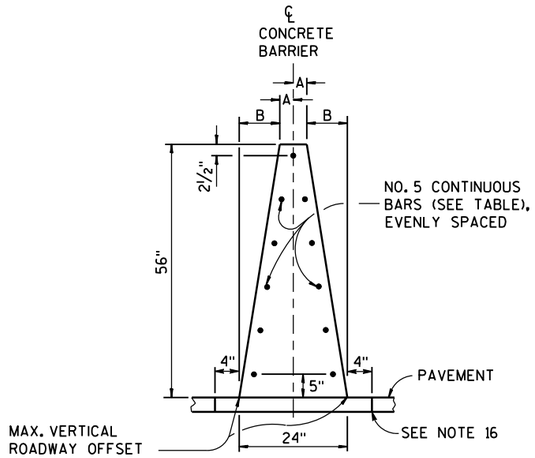

56-INCH SINGLE SLOPE CONCRETE BARRIER (TYPE S56)

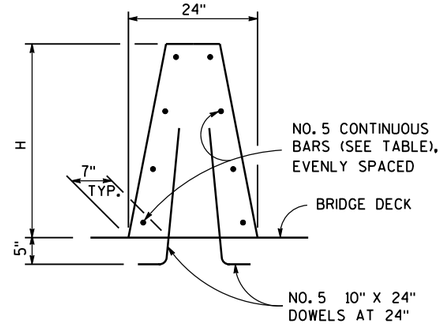

SINGLE SLOPE CONCRETE BARRIER ON BRIDGE

NON OUTER PARAPET APPLICATION

GENERAL NOTES

1. WHERE THE CONCRETE BARRIER IS ADDED TO THE FACE OF EXISTING CONCRETE STRUCTURE, MATCH EXISTING WEEP HOLES.
2. EXPANSION JOINTS IN CONCRETE BARRIER SHALL BE LOCATED AT ALL DECK, PAVEMENT AND PRINCIPAL WALL JOINTS. EXPANSION JOINT FILLER MATERIAL SHALL BE THE SAME SIZE AS JOINT OR ½" MINIMUM.
3. WHERE VERTICAL ROADWAY OFFSET IS GREATER THAN 1½", USE TYPE A
4. PLACE BARRIER PERPENDICULAR TO SHOULDER GRADE, UNLESS INDICATED IN PLAN.
5. EXCEPT IN ANCHORS, VERTICAL REINFORCING STIRRUP NOT REQUIRED FOR ROADWAY OFFSETS LESS THAN 1'-0".
6. FOR TYPE S32, TYPE S36, TYPE S42, AND S56 MONOLITHIC FOOTING OR DOWELED FOOTING WITH 2-#8 x 8" @ 2'-0".
7. STAGGER LAPPING OF LONGITUDINAL STEEL. MINIMUM OVERLAP OF STEEL 2 FEET. BARS AT LAPS TO BE FIRMLY TIED OR CONNECTED.
8. 4000 PSI CONCRETE AIR ENTRAINMENT PER STANDARD SPECIFICATION 501.
9. WHEN SWITCHING BETWEEN SLIP FORM AND CAST-IN-PLACE OPERATIONS, EXTEND LONGITUDINAL STEEL 3 FEET BEYOND SLIP-FORMING CUT OFF POINT. EXPOSED STEEL INTO NEXT POURS REINFORCEMENT. LAPS TO BE FIRMLY TIED.
10. USE ¾" BEVEL OR 1" RADIUS ON ALL EXPOSED SHARP EDGES UNLESS OTHERWISE NOTED.
11. 2" CLEAR COVER TYPICAL.
12. COLD-JOINTS MAY BE USED BETWEEN ANCHOR INSTALLATIONS. WHEN A COLD JOINT IS NEEDED, 3 FEET OF LAP OF LONGITUDINAL STEEL IS REQUIRED. LAPS TO BE FIRMLY TIED.
13. IN TYPE S32, TYPE S36, TYPE S42 AND TYPE S56 NO ADDITIONAL VERTICAL STEEL NEEDED. IN TYPE S32A, TYPE S36A, TYPE S42A AND TYPE S56A REQUIRES VERTICAL STEEL. SEE OTHER DETAIL.
14. IN TYPE S32, TYPE S36, TYPE S42 AND TYPE S56 DEPTH OF FOOTING 10". IN TYPE S32A, TYPE S36A, TYPE S42A AND TYPE S56A MATCH TOTAL HEIGHT OF SINGLE SLOPE BARRIER RETAINING WALL.
15. FOR ALL BARRIER TYPES SHOWN, ANCHOR IS REQUIRED AT CONCRETE BARRIER ENDS AND AT INTERRUPTIONS IN CONCRETE BARRIER. ANCHOR MAY BE AS SHOWN ON DRAWING OR DETAILS SHOWN ON S.D.D. 14B33. ANCHORS INCIDENTAL TO CBSS.
16. CONCRETE PAD UNDER CBSS MAY BE PLACED INTEGRAL WITH BARRIER, PLACED SEPARATELY OR PLACED WITH CONCRETE SHOULDER AND SAWED FULL DEPTH. SAWING OF CONCRETE SHOULDER IS INCIDENTAL TO CONCERET BARRIER BID ITEM. CONCRETE PAD MINIMUM DEPTH IS 6 INCHES, OR EQUAL TO THE DEPTH OF THE CONCRETE SHOULDER.

BARRIER HEIGHT H INCHES	A INCHES	B INCHES	NUMBER OF NO. 5 BARS EACH
32	7	5	8
36	6¼	5¾	8
42	5¼	6¾	10
56	3	9	11

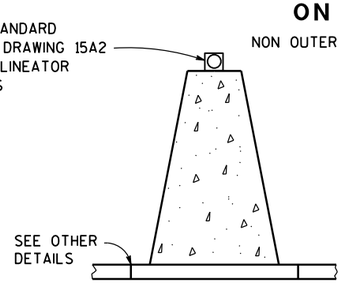

DELINEATION

DELINEATOR SPACING ON HORIZONTAL CURVES

RADIUS OF CURVE	APPROXIMATE SPACING ON CURVE
50 FEET	20 FEET
115 FEET	25 FEET
180 FEET	35 FEET
250 FEET	40 FEET
300 FEET	50 FEET
400 FEET	55 FEET
500 FEET	65 FEET
600 FEET	70 FEET
700 FEET	75 FEET
800 FEET	80 FEET
900 FEET	85 FEET
1000 FEET	90 FEET

DELINEATOR SPACING ON RADIUS GREATER THAN 1000 FEET OR TANGENT SECTIONS

	LENGTH OF BARRIER	REFLECTOR SPACING	NO. SURFACES REFLECTORIZED	MIN. NO. REFLECTORS
ONE WAY TRAFFIC	< 200'	50' C-C	1	3
	> 200'	100' C-C	1	
TWO WAY TRAFFIC	< 200'	25' C-C	1	6
	> 200'	50' C-C	1	
TWO WAY TRAFFIC	< 200'	50' C-C	2	3
	> 200'	100' C-C	2	

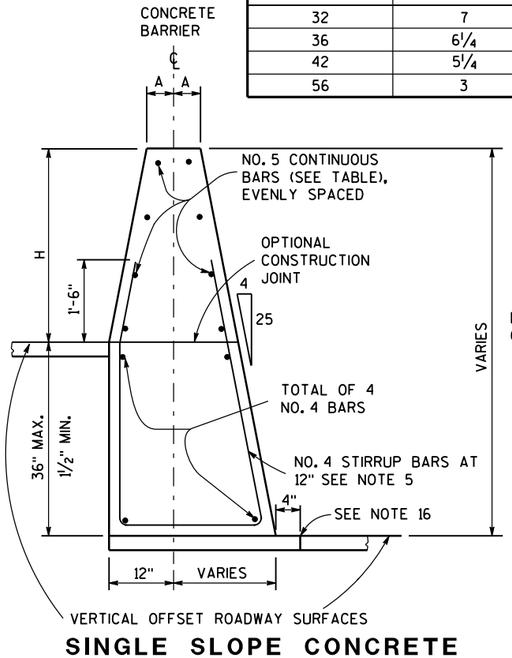

SINGLE SLOPE CONCRETE BARRIER AND RETAINING WALL (TYPE S32A, TYPE S36A, TYPE S42A, TYPE S56A)

(BETWEEN ADJACENT ROADWAYS)

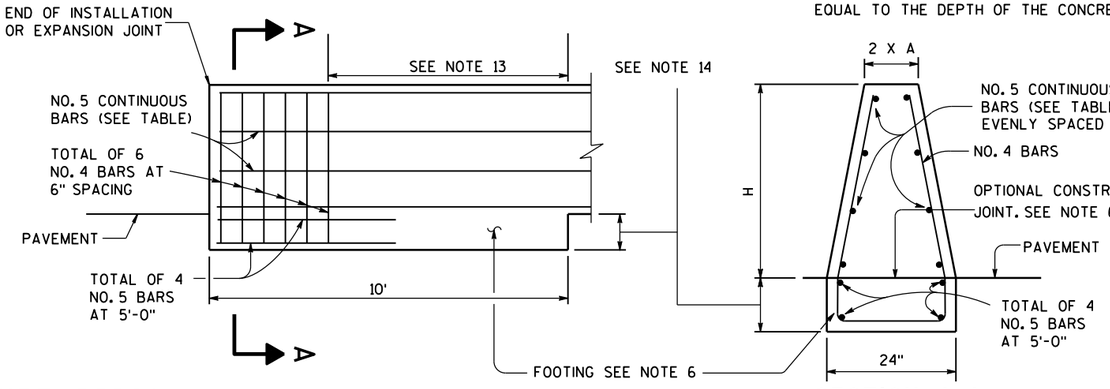

END ANCHOR SINGLE SLOPE CONCRETE BARRIER

AT CONSTRUCTION JOINT

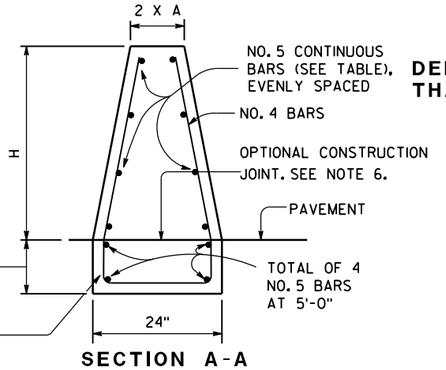

SECTION A-A

CONCRETE BARRIER SINGLE SLOPE (CBSS)

STATE OF WISCONSIN
DEPARTMENT OF TRANSPOI

6
S.D.D. 14 B 32-2a

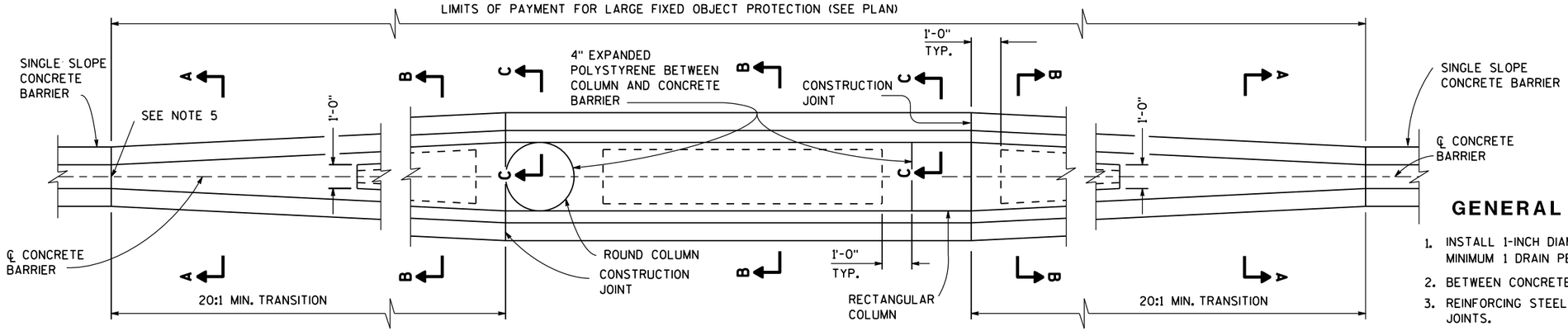

LARGE FIXED OBJECTS PROTECTION
TYPE S32, TYPE S36, TYPE S42, TYPE S56

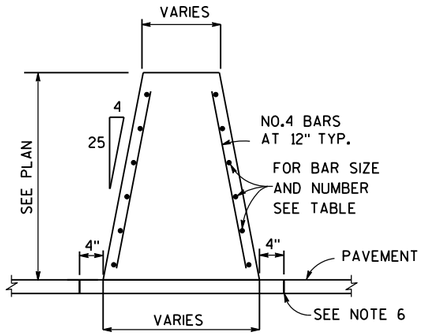

SECTION A-A

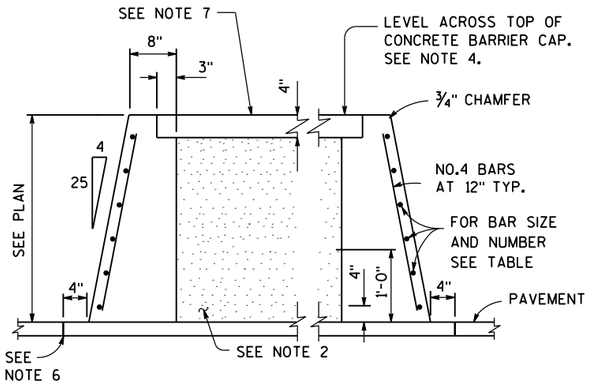

SECTION B-B

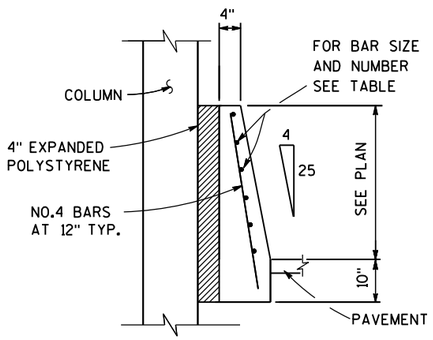

SECTION C-C

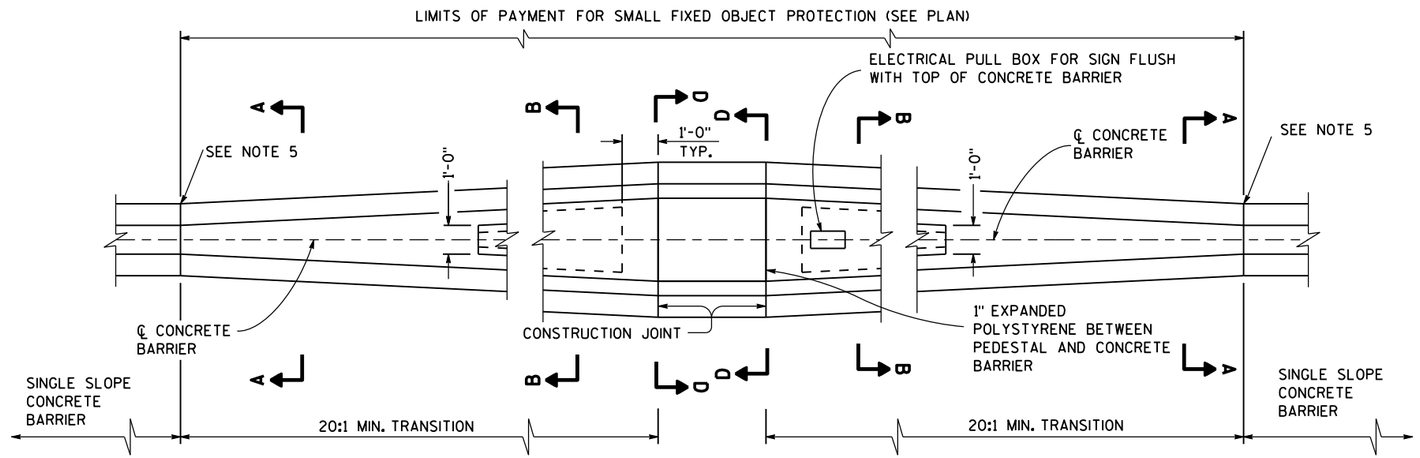

SMALL FIXED OBJECTS PROTECTION
TYPE S32, TYPE S36, TYPE S42, TYPE S56

GENERAL NOTES

1. INSTALL 1-INCH DIAMETER DRAIN PIPE EVERY 20 FEET OF CROSS SECTION B-B. MINIMUM 1 DRAIN PER CAVITY.
2. BETWEEN CONCRETE BARRIER WALLS FILL WITH GRANULAR BACKFILL GRADE 2
3. REINFORCING STEEL SHALL EXTEND CONTINUOUS THROUGH CONSTRUCTION JOINTS.
4. ADJUST HEIGHT OF CONCRETE BARRIER WALL ON LOW SIDE OF OFFSET OR SUPERELEVATED ROADWAYS TO PROVIDE LEVEL GRADE ACROSS TOP OF CONCRETE CAP.
5. IF FIXED OBJECT PROTECTION IS INSTALLED FIRST, USE COLD JOINTS. IF CBSS PLACED FIRST, USE EXPANSION JOINT.
6. CONCRETE PAD UNDER CBSS MAY BE PLACED INTEGRAL WITH BARRIER, PLACED SEPARATELY OR PLACED WITH CONCRETE SHOULDER AND SAWED FULL DEPTH. SAWING OF CONCRETE SHOULDER IS INCIDENTAL TO CONCRETE BARRIER BID ITEM. CONCRETE PAD MINIMUM DEPTH IS 6 INCHES, OR EQUAL TO THE DEPTH OF THE CONCRETE SHOULDER.
7. USE NO. 3 BAR SPACED 12 INCHES CENTER TO CENTER (PLACED IN EACH DIRECTION) OR EQUIVALENT WIRE MESH.

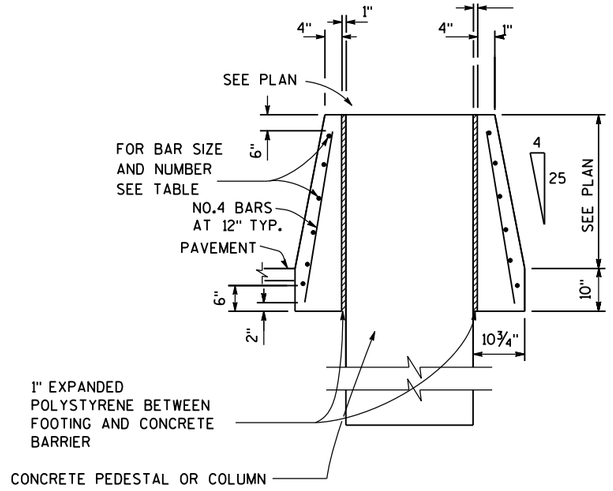

SECTION D-D

BARRIER HEIGHT H INCHES	BAR SIZE	NUMBER OF BARS EACH
32	4	6
36	4	6
42	5	6
56	5	9

CONCRETE BARRIER SINGLE SLOPE (CBSS)

STATE OF WISCONSIN
DEPARTMENT OF TRANSPOI

6

S.D.D. 14 B 32-2b

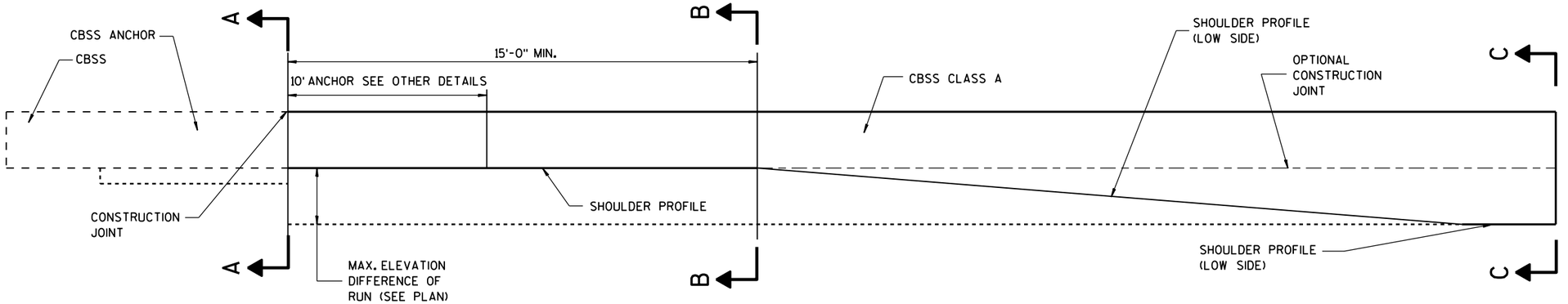

ELEVATION VIEW
TRANSITION TO CBSS CLASS A
(TYPE S32A, TYPE S36A, TYPE S42A, TYPE S56A)

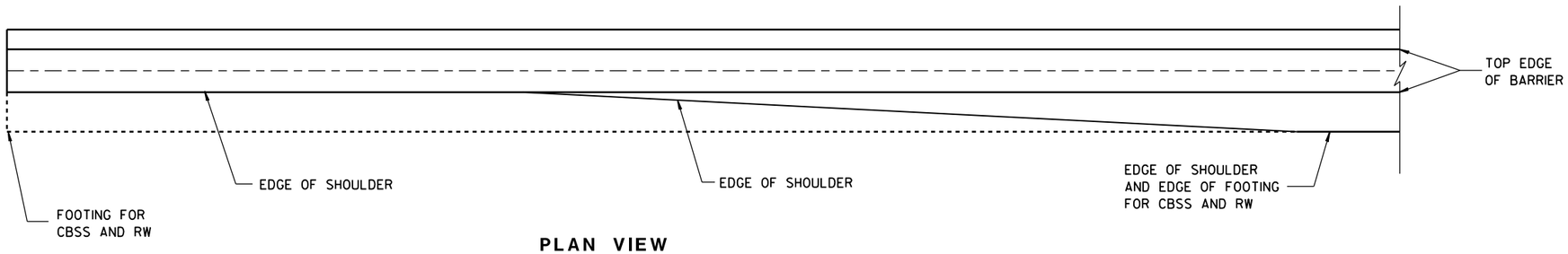

PLAN VIEW
TRANSITION TO CBSS CLASS A
(TYPE S32A, TYPE S36A, TYPE S42A, TYPE S56A)

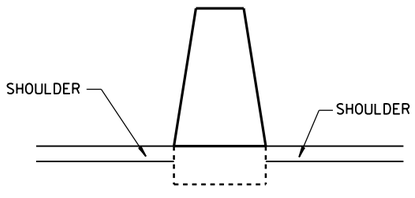

SECTION A-A

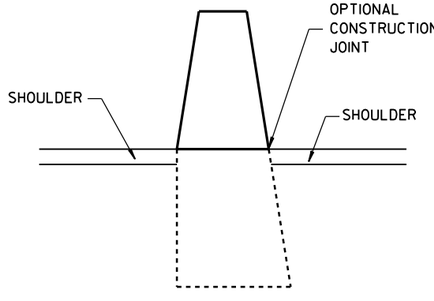

SECTION B-B

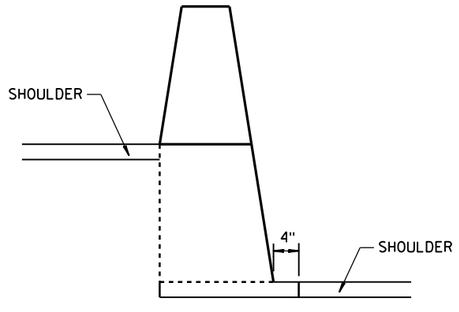

SECTION C-C

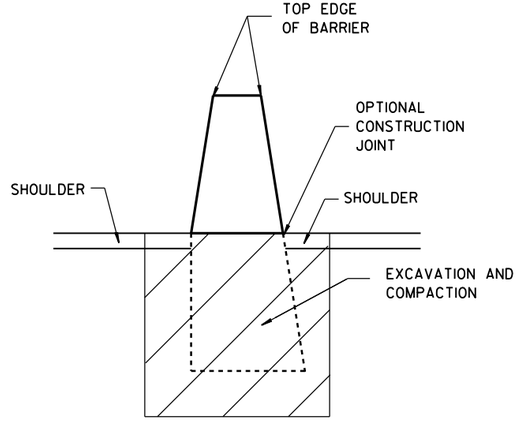

CONCRETE BARRIER SINGLE SLOPE (CBSS)

STATE OF WISCONSIN
DEPARTMENT OF TRANSPOR

6
S.D.D. 14 B 32-2c

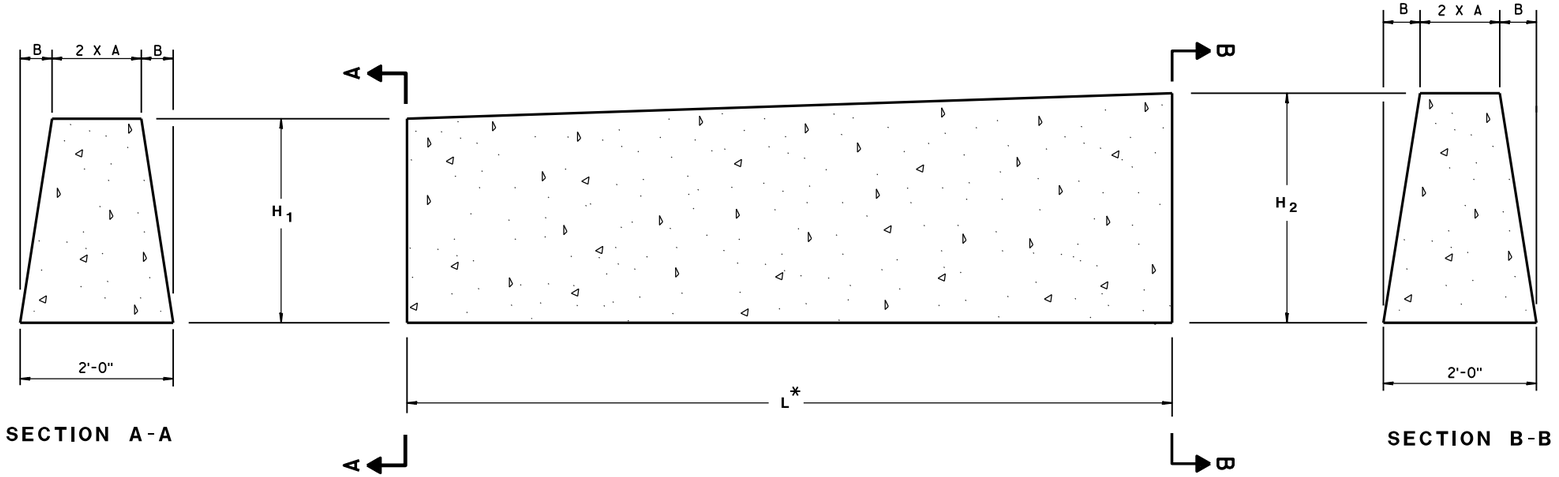

SECTION A-A

SECTION B-B

DOUBLE COLD JOINT HEIGHT TRANSITION

BARRIER DIMENSIONS

BARRIER HEIGHT INCHES	A INCHES	B INCHES
32	7	5
36	6 1/4	5 3/4
42	5 1/4	6 3/4
56	3	9

MULTIPLE HEIGHT TRANSITIONS MAY BE USED IN SEQUENCE TO GET TO APPROPRIATE HEIGHT.

USE COLD JOINT TO CONNECT MULTIPLE HEIGHT TRANSITIONS.

BARRIER BARS

H_1	H_2	L*	NUMBER OF NO. 5 BARS
32"	36"	10'-0"	8
36"	42"	10'-6"	10
42"	56"	24'-6"	11

* LENGTH OF DOUBLE COLD JOINT INCLUDED IN THE TOTAL LENGTH OF CBSS.

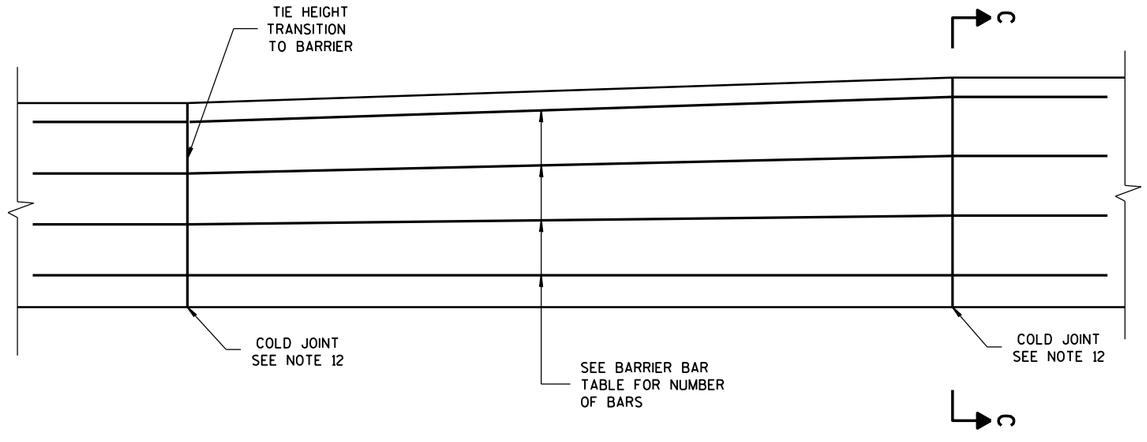

STEEL REINFORCEMENT DETAIL

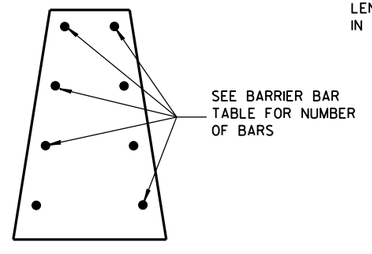

SECTION C-C

CONCRETE BARRIER SINGLE SLOPE

STATE OF WISCONSIN
DEPARTMENT OF TRANSPORTATION

APPROVED

5-10-2013 DATE

/S/ Jerry H. Zoda
ROADWAY STANDARDS DEVELOPMENT ENGINEER

FHWA

6

S.D.D. 14 B 32-2d

6

S.D.D. 14 B 32-2d

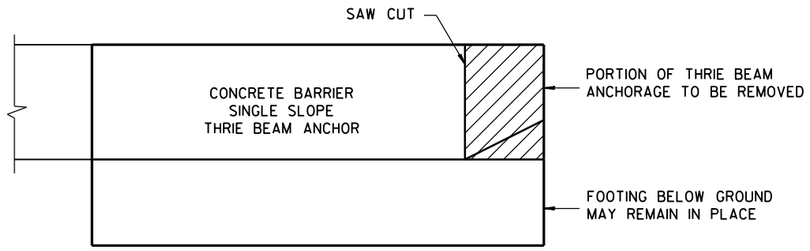

REMOVAL AREA OF
32" CONCRETE THRIE BEAM ANCHORAGE

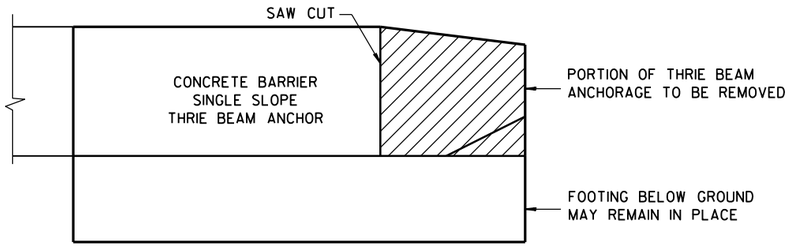

REMOVAL AREA OF CONCRETE THRIE BEAM
ANCHORAGE WITH HEIGHT GREATER THAN 32"

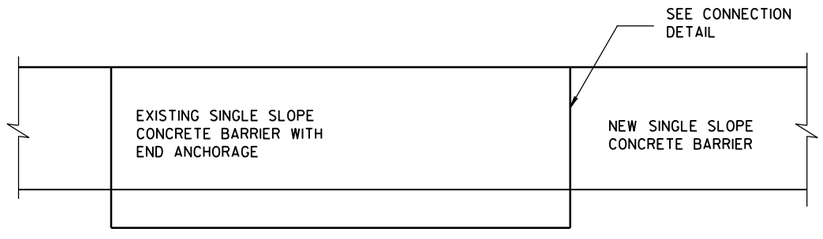

ELEVATION VIEW OF CONCRETE
BARRIER EXTENSION NEAR END ANCHORAGE

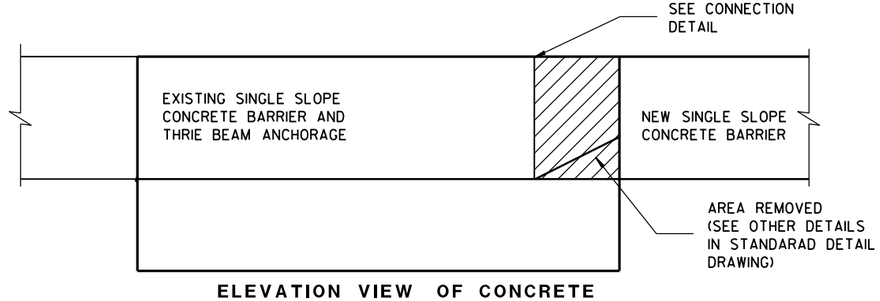

ELEVATION VIEW OF CONCRETE
BARRIER EXTENSION NEAR THRIE BEAM TERMINAL

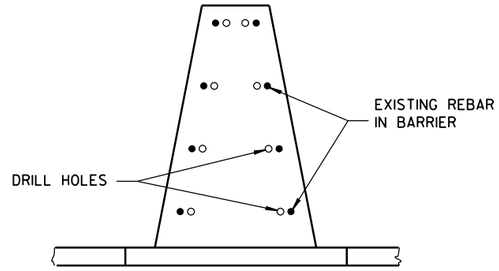

SECTION A-A

GENERAL NOTES

1. THE NUMBER OF DRILL HOLES IS EQUAL TO THE NUMBER OF REBAR IN BARRIER (SEE OTHER DETAILS).
2. MINIMUM DEPTH OF DRILL HOLES IS 1'-3".
3. DRILL HOLES TO BE A MINIMUM OF 4 INCHES FROM THE EDGE OF CONCRETE.
4. INSTALL EPOXY COATED NO. 5 BARS IN DRILL HOLES.
5. END ANCHORAGE MAY OR MAY NOT BE PRESENT ON EXISTING BARRIER.
6. REMOVE THRIE BEAM ANCHORAGE AS SHOWN.
7. ALL ITEMS INCLUDED WITH CONCRETE BARRIER ITEMS EXCEPT FOR REMOVAL.

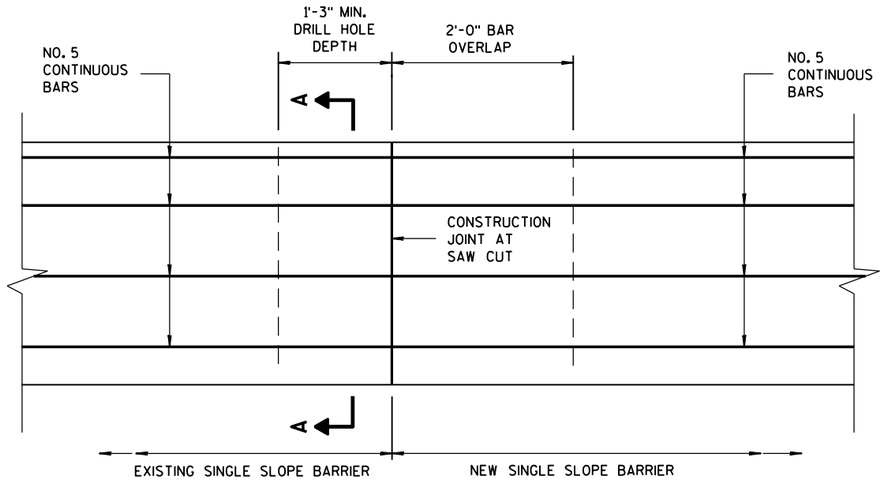

CONNECTION OF EXISTING SINGLE SLOPE CONCRETE BARRIER TO
NEW SINGLE SLOPE CONCRETE BARRIER

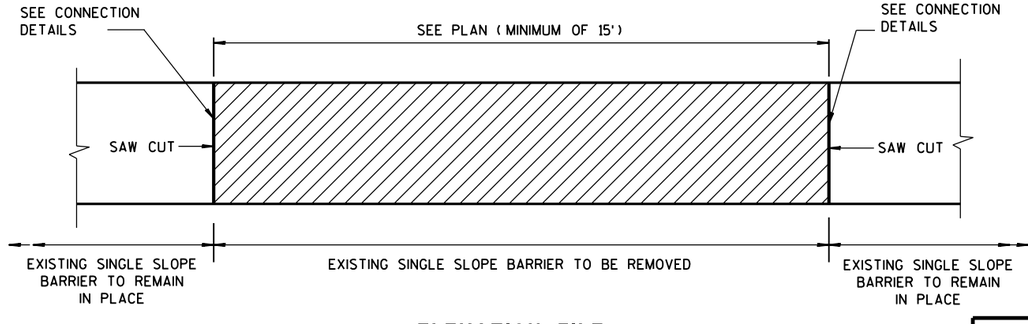

ELEVATION FILE
BARRIER REMOVAL AND REPLACEMENT

CONCRETE BARRIER
SINGLE SLOPE

STATE OF WISCONSIN
DEPARTMENT OF TRANSPORTATION

APPROVED

5-10-2013
DATE

/S/ Jerry H. Zoaa
ROADWAY STANDARDS DEVELOPMENT ENGINEER

FHWA

RETROFIT OR REPAIR SINGLE SLOPE CONCRETE BARRIER

6

S.D.D. 14 B 32-2e

BAR CHART
SECTIONS V1 - V11

BAR	A	B
V1	170°-50'	3'-4½"
V2	171°-20'	3'-4½"
V3	171°-30'	3'-2½"
V4	171°-25'	3'-1½"
V5	171°-15'	3'-0"
V6	171°-15'	2'-11"
V7	171°-20'	2'-10½"
V8	171°-10'	2'-9½"
V9	171°-10'	2'-9"
V10	171°-05'	2'-8½"
V11	171°-10'	2'-8"

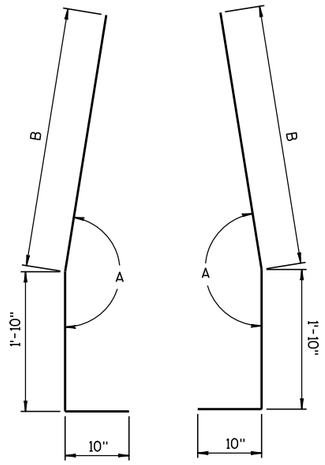

BAR BENDING DETAIL
FOR BARS V1 - V11

BAR CHART
SECTIONS V12 - V13

BAR	A	B	C
V12	2'-2"	171°-15'	2'-3½"
V13	2'-7"	171°-05'	1'-10"

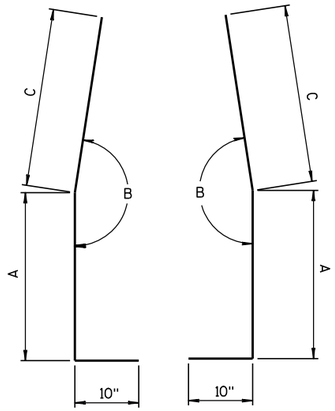

BAR BENDING DETAIL
FOR BARS V12 - V13

BAR CHART
SECTIONS V14 - V16

BAR	A	B	C	D
V14	168°-15'	159°-15'	6"	2'-0"
V15	169°-20'	161°-00'	8"	1'-10"
V16	168°-40'	160°-10'	10"	1'-8"

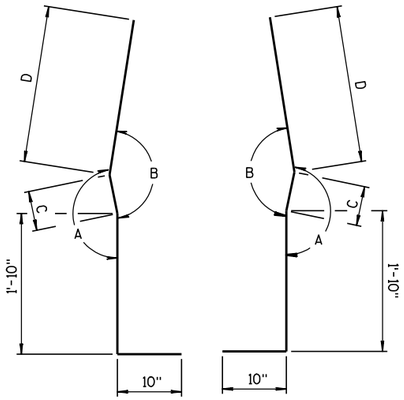

BAR BENDING DETAIL
FOR BARS V14 - V16

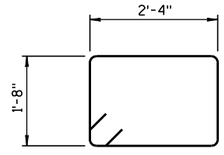

STIRRUP BAR
BENDING DETAIL

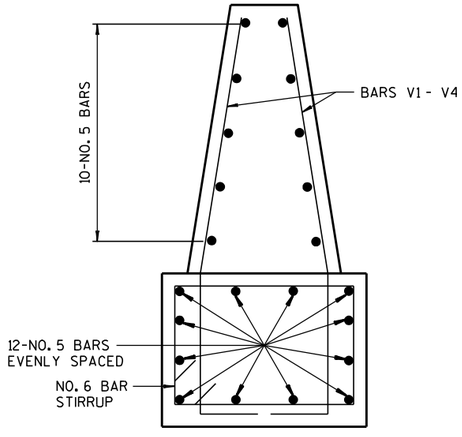

BAR DETAIL
SECTIONS V1 - V4

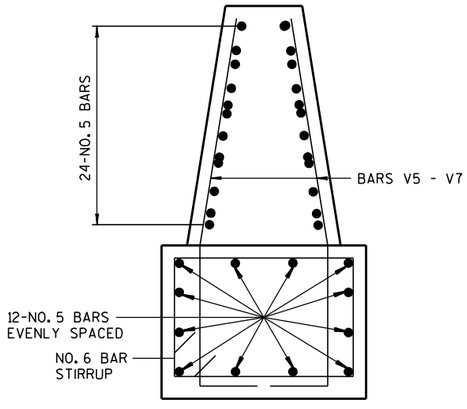

BAR DETAIL
SECTIONS V5 - V7

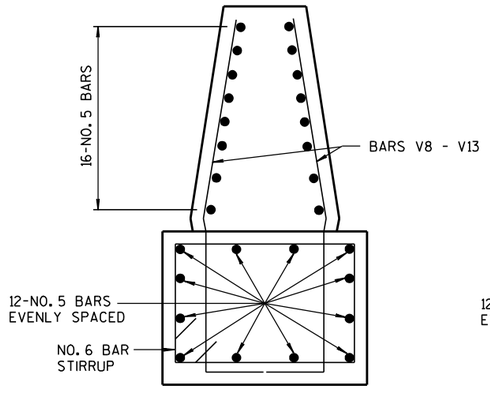

BAR DETAIL
SECTIONS V8 - V13

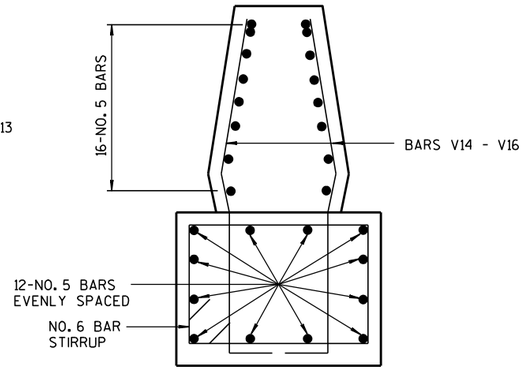

BAR DETAIL
SECTIONS V14 - V16

CONCRETE BARRIER
SINGLE SLOPE 42"
THRIE BEAM ANCHOR

STATE OF WISCONSIN
DEPARTMENT OF TRANSPORTATION

APPROVED
6-3-2010 DATE
/S/ Jerry H. Z---
ROADWAY STANDARDS ENGINEER

FHWA

6
S.D.D. 14 B 33-1h

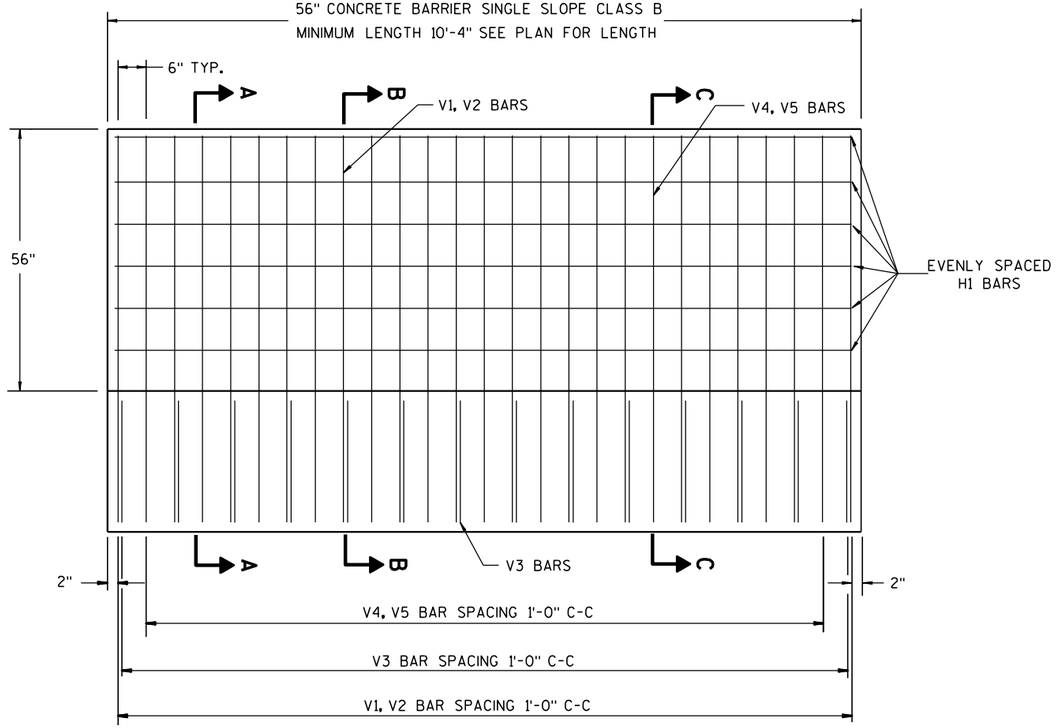

ELEVATION VIEW

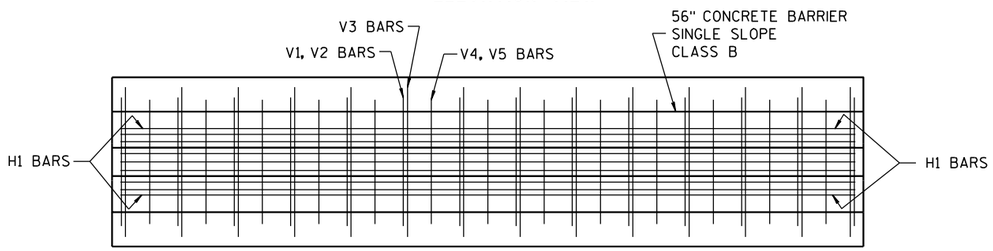

PLAN VIEW

GENERAL NOTES

CONSTRUCT PER STANDARD SPECIFICATION 603.

SPLICES OF LONGITUDINAL BARS TO BE 2'LONG AND FIRMLY TIED AND FASTENED TOGETHER UNLESS NOTED OTHERWISE.

4000 PSI CONCRETE AIR ENTRAINMENT PER STANDARD SPECIFICATIONS 501.

USE ¾" BEVEL OR 1" RADIUS ON ALL EXPOSED SHARP EDGES UNLESS NOTED OTHERWISE.

THE NUMBER IN BAR DESIGNATION REPRESENTS THE BARS LOCATION.

2" CLEAR COVER TYPICAL.

WHERE THE CONCRETE BARRIER IS ADDED TO THE FACE OF EXISTING CONCRETE STRUCTURE, MATCH EXISTING WEEP HOLES.

PAVEMENT AND PRINCIPAL WALL JOINTS. EXPANSION JOINT FILLER MATERIAL

PLACE BARRIER PERPENDICULAR TO SHOULDER GRADE, UNLESS INDICATED IN PLAN.

WHEN SWITCHING BETWEEN SLIP FORM AND CAST-IN-PLACE OPERATIONS, EXTEND LONGITUDINAL STEEL 3 FEET BEYOND SLIP-FORMING CUT OFF POINT. EXPOSED STEEL INTO NEXT POURS REINFORCMENT. LAPS TO BE FIRMLY TIED.

IF REQUIRED USE THRIE BEAM ANCHOR. NO OTHER ANCHOR REQUIRED.

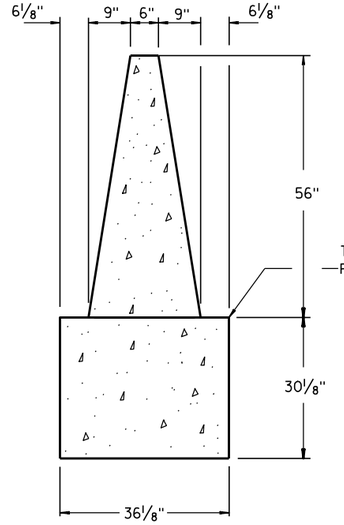

SECTION A-A

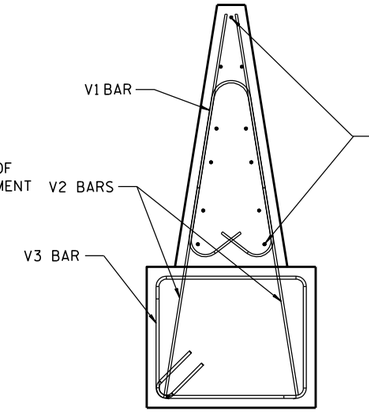

SECTION B-B

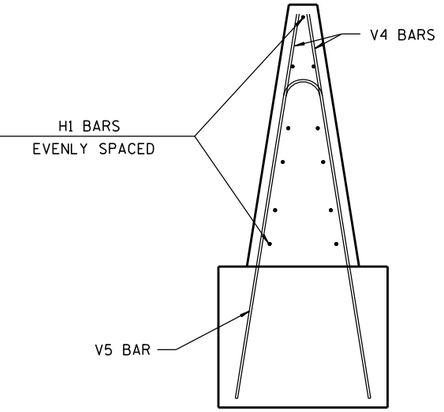

SECTION C-C

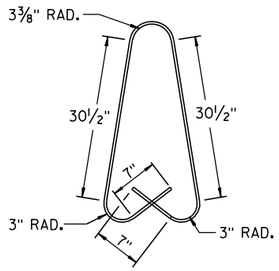

V1 BAR BENDING DETAIL
V1 BARS ARE NO. 4 BARS

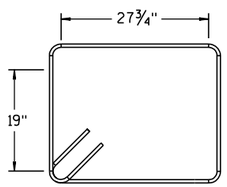

V3 BAR BENDING DETAIL
V3 BARS ARE NO. 6 BARS

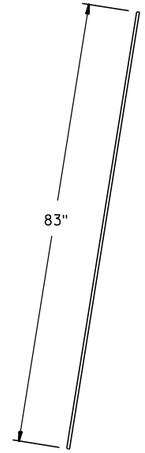

V2 BAR BENDING DETAIL
V2 BARS ARE NO. 5 BARS

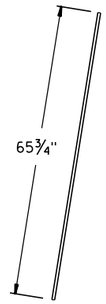

V4 BAR BENDING DETAIL
V4 BARS ARE NO. 5 BARS

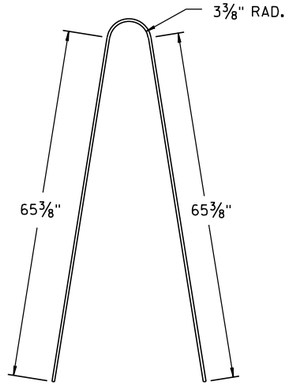

V5 BAR BENDING DETAIL
V4 BARS ARE NO. 6 BARS

56" CONCRETE BARRIER SINGLE SLOPE CLASS B

STATE OF WISCONSIN
DEPARTMENT OF TRANSPORTATION

6
S.D.D. 14 B 34-1b

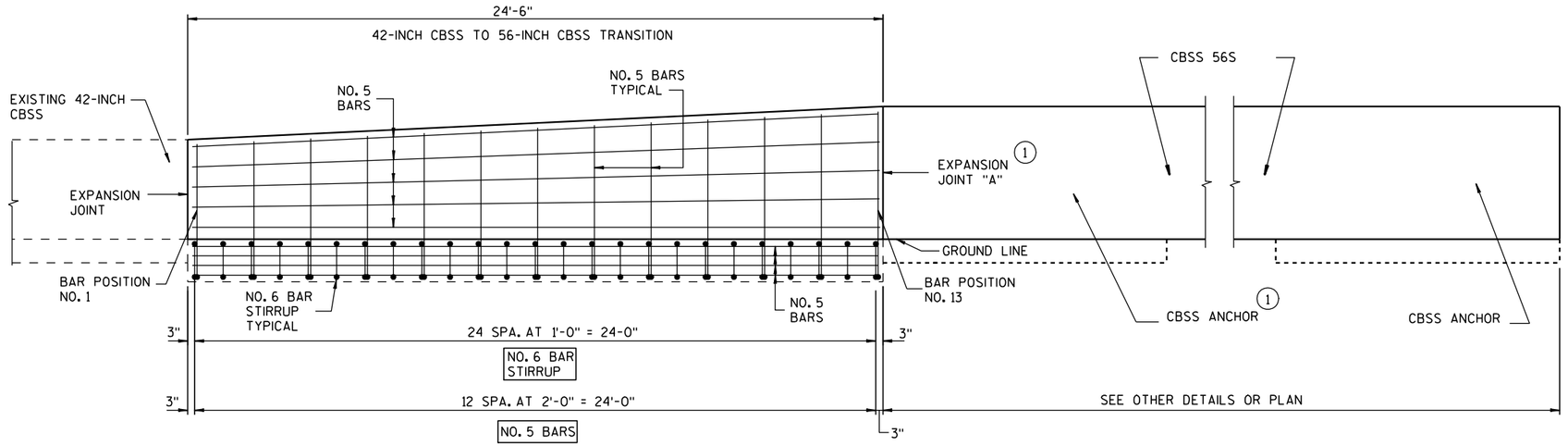

ELEVATION VIEW

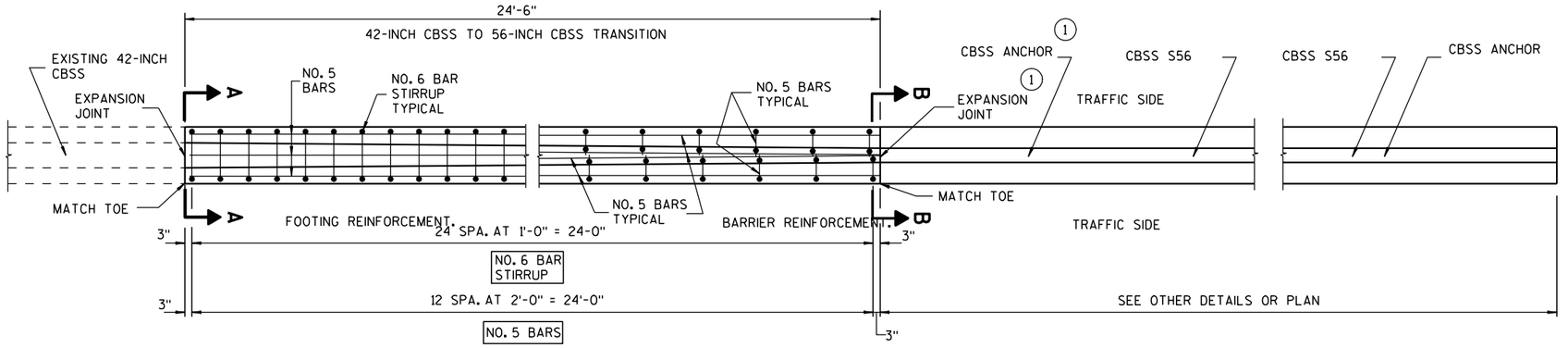

PLAN VIEW

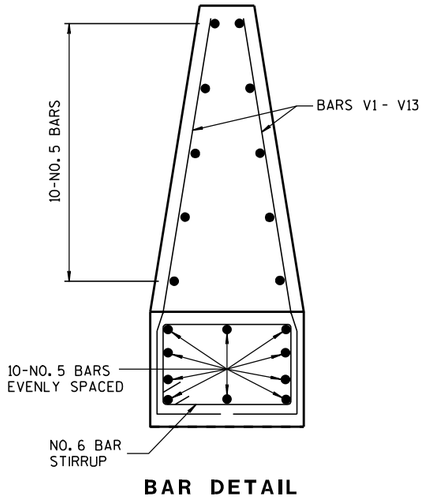

BAR DETAIL
BAR POSITION NO. 1 - NO. 13

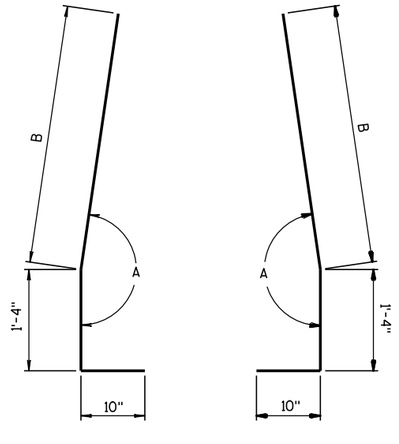

BAR BENDING DETAIL
FOR BARS V1 - V13

BAR CHART SECTIONS V1 - V13

BAR	A	B
V1	170°-50'	3'-4½"
V2	170°-50'	3'-6"
V3	170°-55'	3'-7"
V4	171°	3'-8"
V5	170°-55'	3'-9½"
V6	170°-50'	3'-10½"
V7	170°-50'	3'-11½"

BAR	A	B
V8	170°-55'	4'-0½"
V9	170°-50'	4'-2"
V10	170°-50'	4'-3"
V11	170°-50'	4'-4½"
V12	170°-55'	4'-5½"
V13	170°-50'	4'-6½"

GENERAL NOTES

CONSTRUCT PER STANDARD SPECIFICATION 603.

SPLICES OF LONGITUDINAL BARS TO BE 2'LONG AND FIRMLY TIED AND FASTENED TOGETHER UNLESS NOTED OTHERWISE.

4000 PSI CONCRETE AIR ENTRAINMENT PER STANDARD SPECIFICATIONS 501.

USE ¾" BEVEL OR 1" RADIUS ON ALL EXPOSED SHARP EDGES UNLESS NOTED OTHERWISE.

THE NUMBER IN BAR DESIGNATION REPRESENTS THE BARS LOCATION.

2" CLEAR COVER TYPICAL.

(1) EXPANSION JOINT "A" MAY BE REPLACED WITH A COLD-JOINT PROVIDED THAT 3 FEET OF LAP OF LONGITUDINAL STEEL IS PROVIDED. IF COLD-JOINT IS USED ANCHOR NOT REQUIRED.

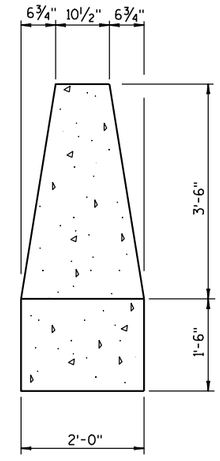

SECTION A-A

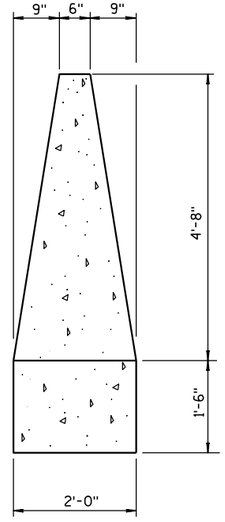

SECTION B-B

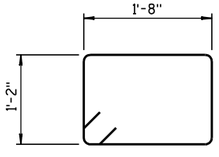

STIRRUP BAR
BENDING DETAIL

42-INCH SINGLE SLOPE CONCRETE BARRIER TO 56-INCH SINGLE SLOPE CONCRETE BARRIER HEIGHT TRANSITION

STATE OF WISCONSIN
DEPARTMENT OF TRANSPORTATION

APPROVED
6-3-2010 DATE
/S/ Jerry H. [illegible]
ROADWAY STANDARDS ENGINEER
FHWA

6

S.D.D. 14 B 39-1e

6

S.D.D. 14 B 39-1e

GENERAL NOTES

1. WOOD OR STEEL POSTS (w6X9 OR w6X8.5) MAY BE USED. DO NOT INTERMIX WOOD AND STEEL POSTS. INSTALL STEEL POSTS WITH HOLES ON APPROACHING TRAFFIC SIDE.

2. USE WOOD OR APPROVED PLASTIC BLOCKOUTS. WOOD BLOCKOUTS MAY BE CONSTRUCTED OUT OF TWO OR MORE WOOD BLOCKOUTS. SEE ALTERNATE WOOD BLOCKOUT DETAIL. DIMENSIONS OF APPROVED PLASTIC BLOCKOUTS MAY VARY.

3. IF ROCK IS ENCOUNTERED DURING EXCAVATION, PROVIDE A HOLE 12 INCHES IN DIAMETER EXTENDING 20 INCHES DEEP INTO THE ROCK. PLACE APPROXIMATELY 2½ INCHES OF GRANULAR MATERIAL IN THE BOTTOM OF THE HOLE. CUT THE POSTS THE TO LENGTH AMD INSTALL. BACKFILL WITH EXCAVATED MATERIAL AND COMPACT. BACKFILL IS TO BE FREE OF LARGE ROCKS.

4. WHEN THE DISTANCE FROM BACK OF POST TO SHOULDER HINGE POINT IS LESS THAN 2 FEET INSTALL LONGER POST AT HALF POST SPACING (K).

5. FOR NEW MGS INSTALLATION TOP OF W-BEAM RAIL TOLERANCE IS ± 1". FOR EXISTING MGS INSTALLATION TOP OF W-BEAM IS BETWEEN 27¾" TO 32".

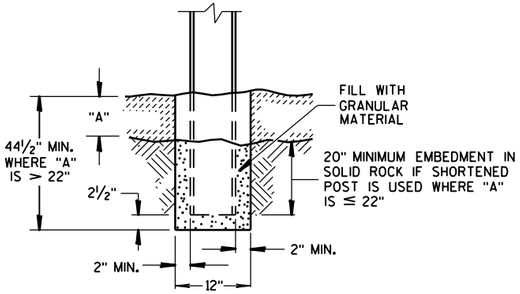

END VIEW
SETTING STEEL OR WOOD POST IN ROCK ③

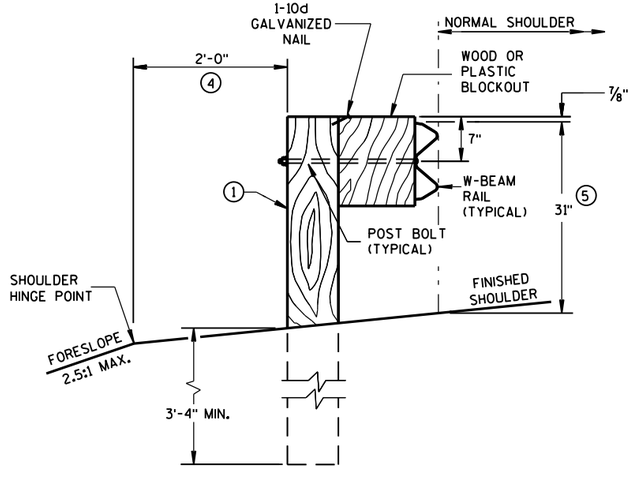

END VIEW
LOCATED ALONG A ROADWAY SHOULDER
STANDARD INSTALLATION

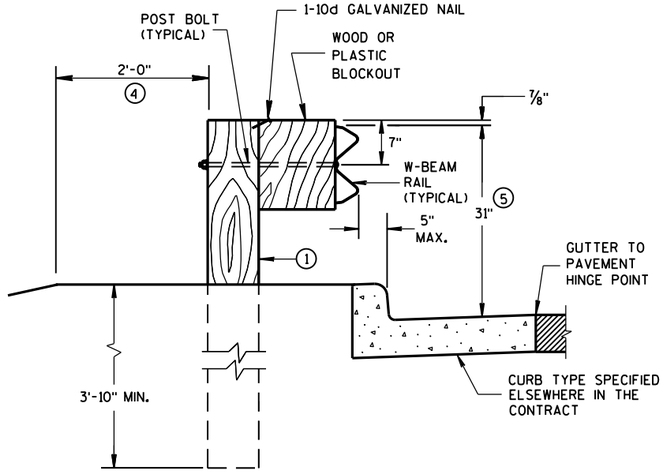

END VIEW
LOCATED ALONG A CURBED ROADWAY

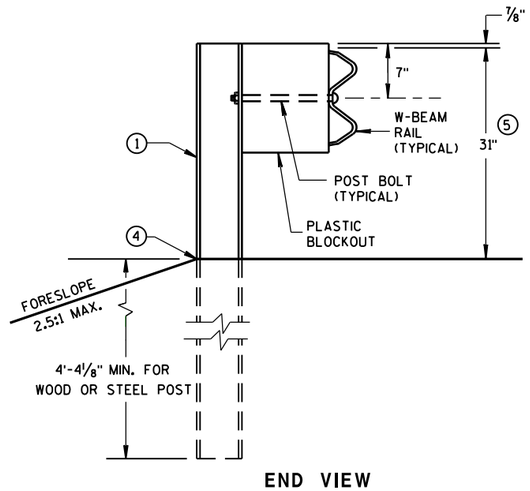

END VIEW
MGS LONGER POST AT HALFPOST SPACING W BEAM (K)

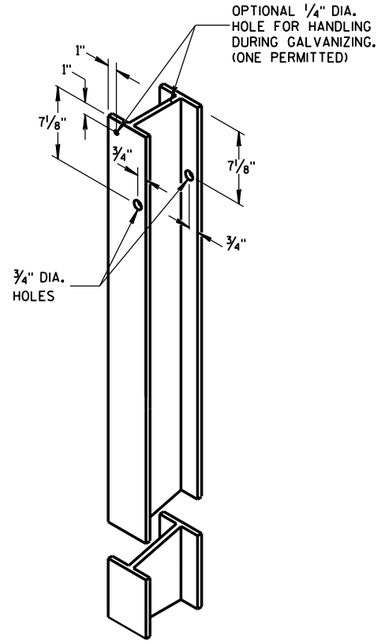

STEEL POST &
HOLE PUNCHING DETAIL
(w6X9) ①

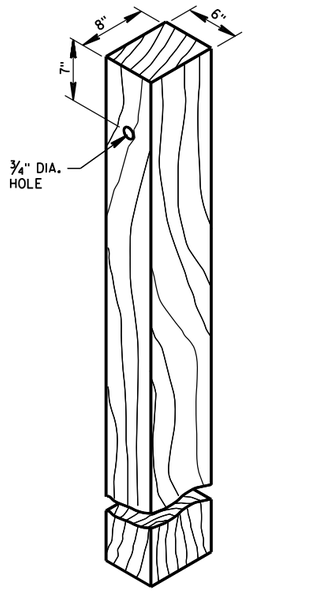

WOOD POST
(6" X 8") NOMINAL ①

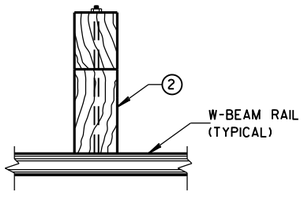

PLAN VIEW
WOOD POST,
BLOCKOUT & BEAM

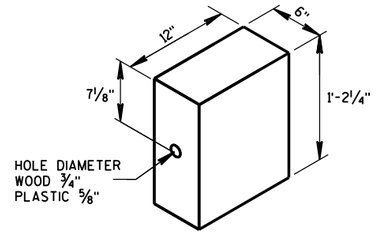

WOOD OR
PLASTIC BLOCKOUT ②

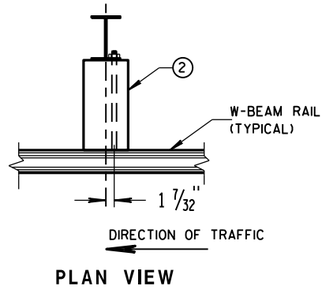

PLAN VIEW
STEEL POST,
PLASTIC BLOCKOUT & BEAM

MIDWEST GUARDRAIL SYSTEM
(MGS) GUARDRAIL

STATE OF WISCONSIN
DEPARTMENT OF TRANSPOI

6
S.D.D. 14 B 42-2a

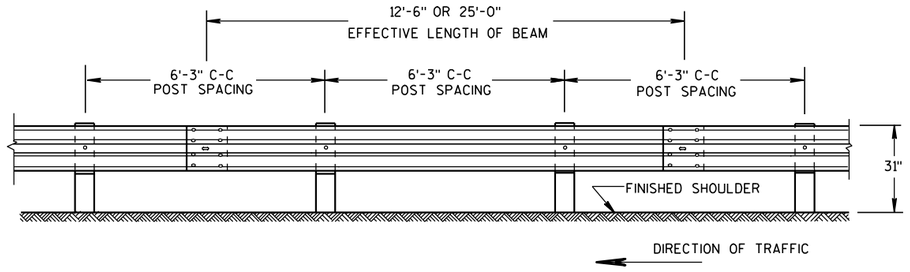

FRONT VIEW

POST SPACING STANDARD INSTALLATION

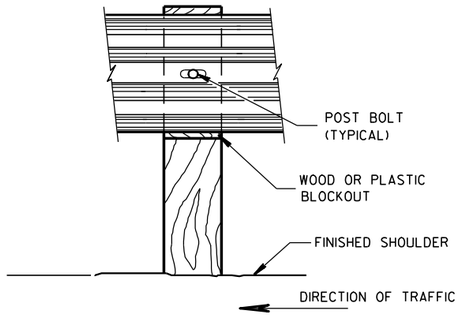

FRONT VIEW AT WOOD POST

GENERAL NOTES

1. PROVIDE TYPE "H" SILVER REFLECTIVE SHEETING ON ALL REFLECTORS EXCEPT THOSE LOCATED ALONG THE LEFT EDGE OF ONE-WAY ROADWAYS, WHICH SHALL BE PROVIDED WITH TYPE "H" YELLOW REFLECTIVE SHEETING.
2. DO NOT INSTALL REFLECTORS ON THE FIRST 50 FEET OF THE APPROACH END OF THE ENERGY ABSORBING TERMINAL. RAIL SPLICE LOCATIONS ARE THE ONLY ACCEPTABLE LOCATIONS FOR REFLECTORS.
3. REVERSE EVERY OTHER REFLECTOR FOR 2-WAY VISIBILITY. THE CONTRACTOR MAY FURNISH TWO-SIDED REFLECTORS IN LIEU OF ONE-SIDED REFLECTORS.
4. PROVIDE AN ANGLE OF BEND OF 90° ± 1° FOR TWO-SIDED REFLECTORS.
5. 25 FEET OF HALF POST SPACING IS REQUIRED ON APPROACH AND DEPARTURE ENDS OF QUARTER POST SPACING.

POST BOLTS ARE A 5/8" DIAMETER ASTM A307 GUARDRAIL BOLT. A POST BOLT REQUIRES 5/8" DIAMETER A563A DOUBLE RECESSED (DR) HEAVY HEX NUT AND 5/8" DIAMETER F844 FLAT WASHER. POST BOLTS MAY BE LONGER IF MULTIPLE BLOCKOUTS ARE BEING USED.

GUARD RAIL SPLICE BOLTS ARE A 5/8" DIAMETER ASTM A307 GUARDRAIL HEAD BOLT. A GUARDRAIL SPLICE BOLT REQUIRES 5/8" DIAMETER A563A DOUBLE RECESSED (DR) HEAVY HEX NUT.

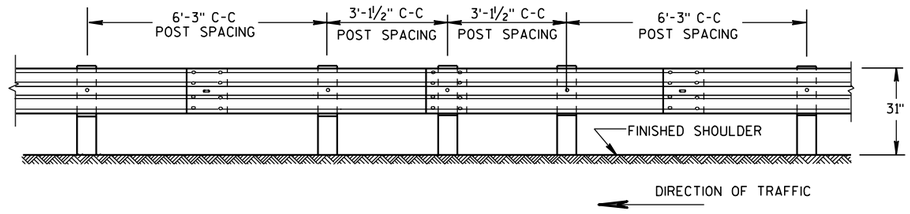

FRONT VIEW

HALF POST SPACING (HS) AND HALF POST SPACING WITH LONGER POSTS (K)

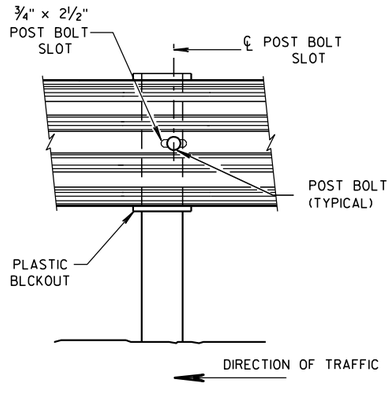

FRONT VIEW AT STEEL POST

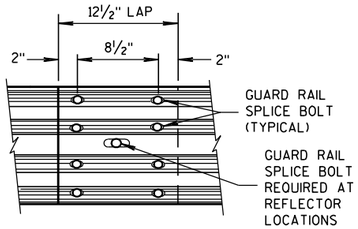

FRONT VIEW

MID-SPAN BEAM SPLICE

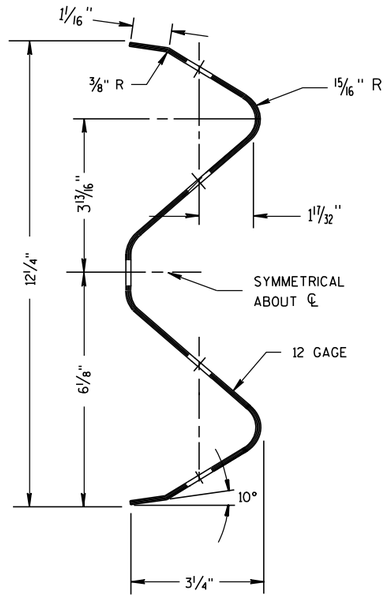

SECTION THRU W-BEAM RAIL

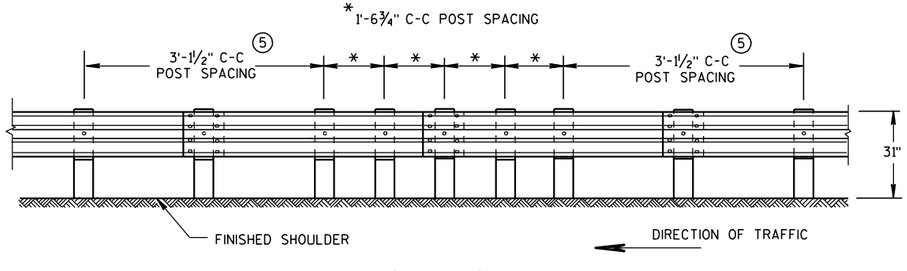

FRONT VIEW

QUARTER POST SPACING (QS)

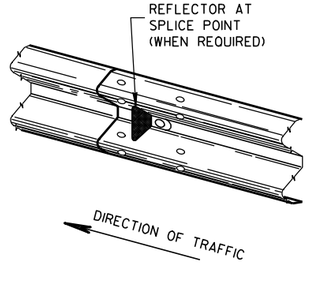

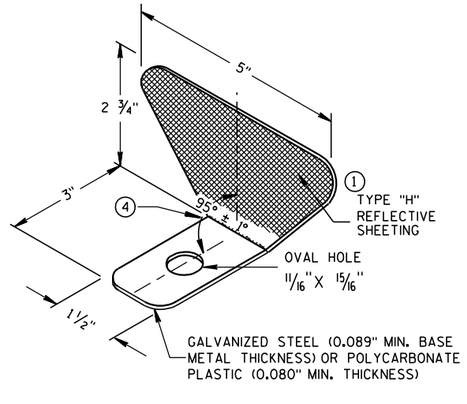

ONE SIDED REFLECTOR DETAIL AND TYPICAL INSTALLATION ①

REFLECTOR SPACING ②

	BEAM GUARD LENGTH	REFLECTOR SPACING	NO. SURFACES REFLECTORIZED	MIN. NO. REFLECTORS
ONE WAY TRAFFIC	< 200' > 200'	50' C-C 100' C-C	1 1	3
TWO WAY TRAFFIC	< 200' > 200'	25' C-C 50' C-C	1 1 ③	6
TWO WAY TRAFFIC	< 200' > 200'	50' C-C 100' C-C	2 2 ④	3

MIDWEST GUARDRAIL SYSTEM
(MGS) GUARDRAIL

STATE OF WISCONSIN
DEPARTMENT OF TRANSPORTATION

S.D.D. 14 B 42-2b

6

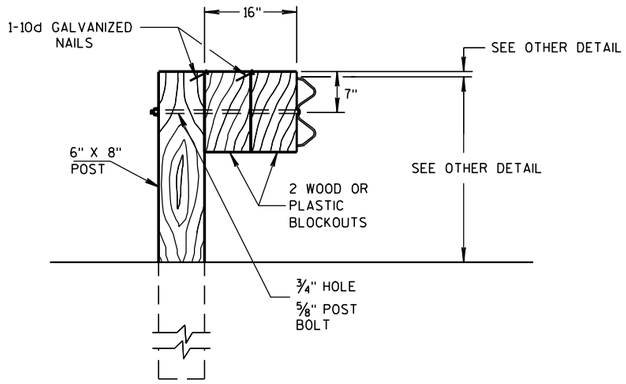

DETAIL FOR 16" BLOCKOUT DEPTH

IT IS ACCEPTABLE TO USE BLOCKOUTS UP TO 16" DEEP TO INCREASE THE POST OFFSET TO AVOID UNDERGROUND OBSTACLES. THERE IS NO LIMIT TO THE NUMBER OF POSTS THAT CAN HAVE ADDITIONAL BLOCKOUTS UP TO 16" DEEP.

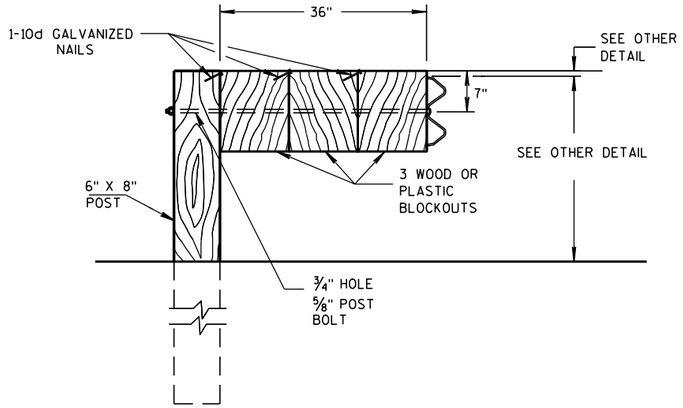

DETAIL FOR 36" BLOCKOUT DEPTH

NOTES: UNDER SPECIAL CIRCUMSTANCES, SUCH AS AVOIDING OBSTACLES THAT ARE NOT RELOCATED, IT IS ACCEPTABLE TO INSTALL ADDITIONAL BLOCKOUTS TO OBTAIN UP TO 36" DEPTH FOR ONE OR TWO POSTS IN A SECTION OF GUARDRAIL.

DO NOT USE 16" OR 36" BLOCKOUTS IF IT CAUSES THE POST TO BE DRIVEN BEYOND SHOULDER HINGE POINT OR CAUSES A FIXED OBJECT TO BE WITHIN THE DEFLECTION DISTANCE OF THE BARRIER.

NOTE: 1. ALL FILLETS SHALL HAVE A MINIMUM RADIUS OF 1/16".
2. IF THE BOLT EXTENDS MORE THAN ¼" FROM THE NUT THE BOLT SHOULD BE TRIMMED BACK.

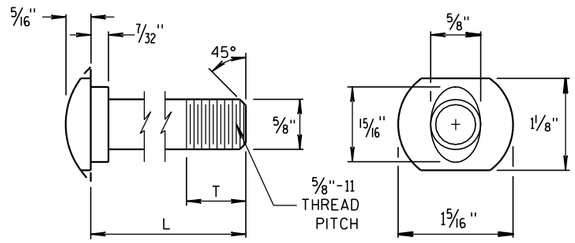

POST BOLT TABLE

L	T (MIN.)
1¼"	1⅛"
2"	1¾"
10"	4"
14"	4 1/16"
18"	4"
21"	4 1/16"
25"	4"

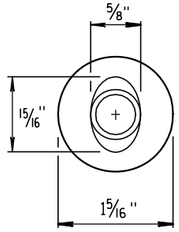

ALTERNATE BOLT HEAD

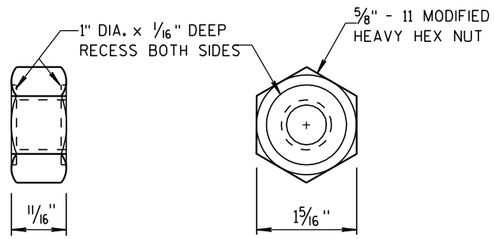

POST BOLT AND RECESS NUT

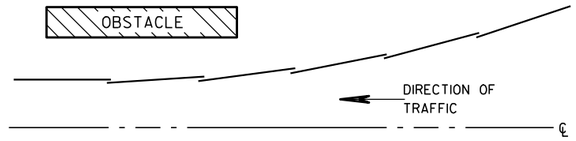

PLAN VIEW

BEAM LAPPING DETAIL

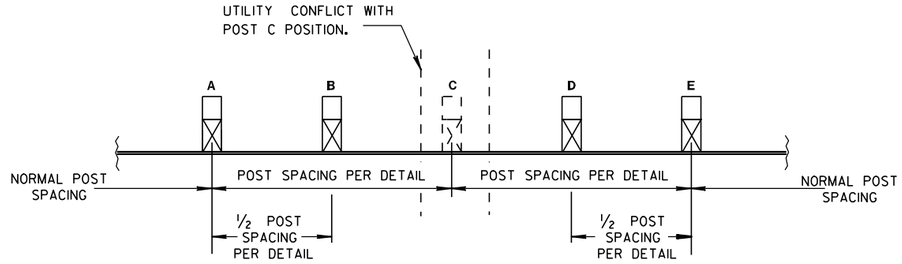

POST DRIVING FOR CONTINUOUS UNDERGROUND OBSTRUCTION

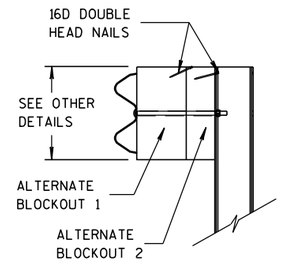

SIDE VIEW

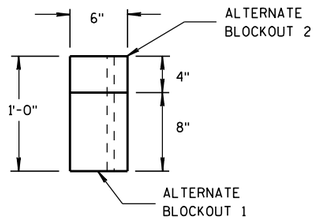

TOP VIEW

ALTERNATE WOOD BLOCKOUT DETAIL

MIDWEST GUARDRAIL SYSTEM (MGS) GUARDRAIL

STATE OF WISCONSIN
DEPARTMENT OF TRANSPORTATION

APPROVED

11/15/2011
DATE

/S/ Jerry H. [illegible]
ROADWAY STANDARDS ENGINEER

FHWA

ENT

6

S.D.D. 14 B 42-2c

6

S.D.D. 14 B 42-2c

GENERAL NOTES

(A) THE SLOPE IN THE AREA BOUNDED BY THE EXTENDED VEHICLE RUNOUT PATH (EVRP), THE HINGE POINT LINE (HPL),AND THE CLEAR ZONE LIMITS (CZL) SHALL BE 4:1 OR FLATTER.

(B) AFTER FINAL ASSEMBLY, RECHECK CABLE TO BE SURE IT IS TAUT AND HAS NOT RELAXED.

(C) DIFFERENT MANUFACTURES REQUIRE DIFFERENT PERFORATED W-BEAM RAIL END PANELS. SEE MANUFACTURES INFORMATION.

(D) THE TOP OF THE STEEL TUBE ON POST 1 AND POST 2 SHALL NOT BE MORE THAN 3" ABOVE THE FINISH GROUND ELEVATION.

(F) SHEETING IS ATTACHED TO 0.040 ALUMINUM SHEET AND ATTACHED TO E.A.T. HEAD USING 4 STAINLESS STEEL SELF-TAPPING SCREWS. ONE SCREW PER CORNER OF E.A.T.

(G) ½" DIAMETER X 3" LONG LAG BOLT AND WASHER.

(H) HARDWARE VARIES BETWEEN DIFFERENT MANUFACTURES. SEE MANUFACTURE'S DRAWING FOR INFORMATION.

(I) DIMENSIONS MAY VARY. SEE MANUFACTURE'S INFORMATION.

SEE SDD 14B42 FOR MORE INFORMATION.

* DO NOT ATTACH BLOCKOUTS TO POSTS 1 AND 2.

DO NOT INSTALL REFLECTORS ON THE FIRST 50 FEET OF THE APPROACH END OF THE ENERGY ABSORBING TERMINAL.

W-BEAM RAIL SPLICES ARE LOCATED AT POST NUMBER 3, AND BETWEEN POST 5 AND 6, BETWEEN POSTS 7 AND 8, AND MIDDLE OF THE SPAN AFTER POST 9.

PATTERN AND COLORS ON REFLECTIVE SHEETING TYPE H ARE TO CONFORM TO OM3-L OR OM3-R OF THE MANUAL ON UNIFORM TRAFFIC CONTROL DEVICES.

THE CENTER OF THE UPPER 3½" DIAMETER HOLE ON POST NUMBER 3 THROUGH POST 9 IS TO BE FLUSH WITH THE GROUND LINE (± ¾")

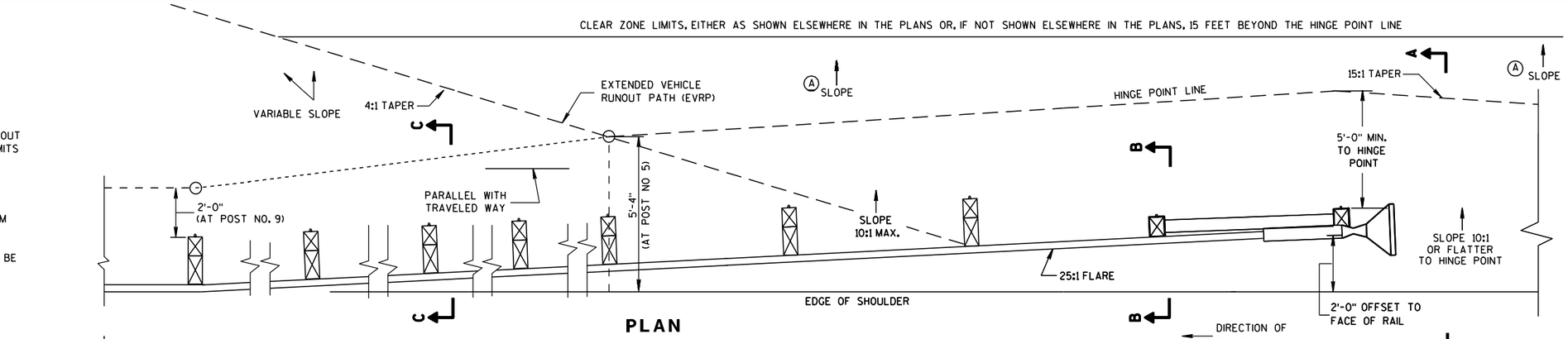

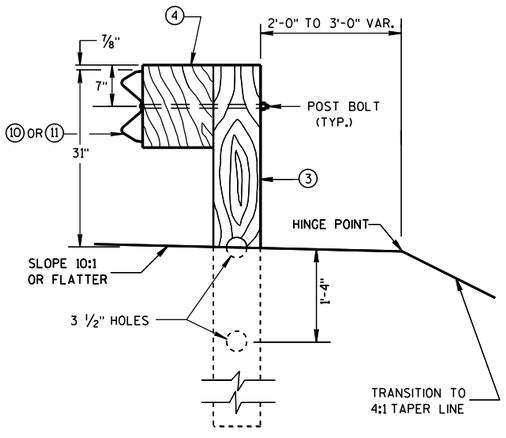

SECTION C-C
TYPICAL AT POST NOS. 3-9

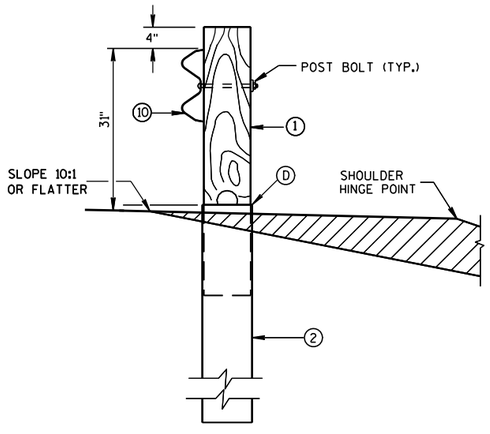

SECTION B-B
TYPICAL AT POST NO. 2*

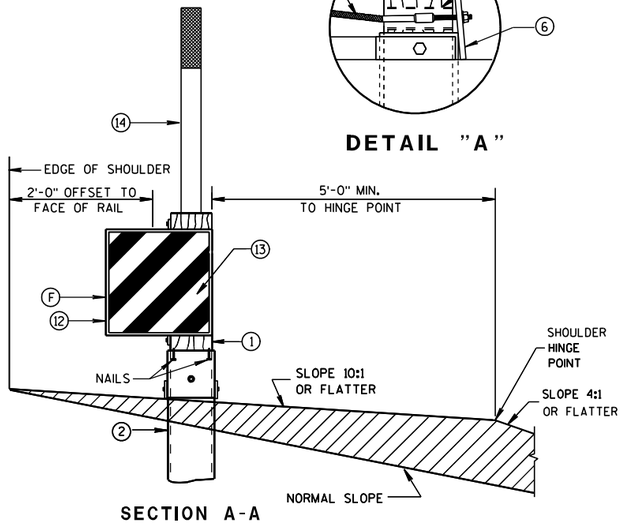

SECTION A-A
TYPICAL AT POST NO. 1*

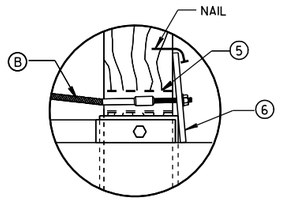

DETAIL "A"

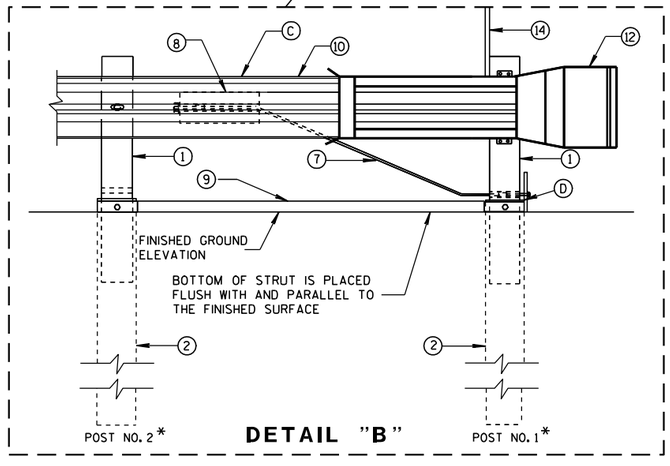

DETAIL "B"

MIDWEST GUARDRAIL SYSTEM ENERGY ABSORBING TERMINAL (MGS)

STATE OF WISCONSIN
DEPARTMENT OF TRANSPORTATION

S.D.D. 14 B 44-1a

6

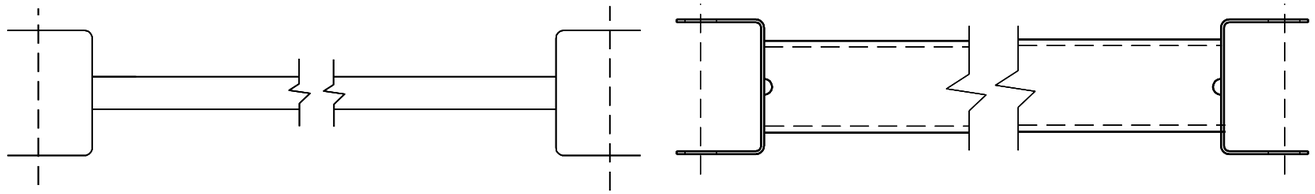

GENERIC GROUND STRUT (9) (H)

BILL OF MATERIALS

PART NO.	DESCRIPTION MATERIALS PROVIDED BY MGS EAT MANUFACTURER. SEE MANUFACTURER'S DETAILS FOR MORE INFORMATION.
(1)	WOOD BREAKAWAY POST
(2)	6" X 8" X 0.188", 6'-0" LONG FOUNDATION TUBE AT POSTS 1 AND 2
(3)	WOOD CRT
(4)	WOOD BLOCKOUT
(5)	PIPE SLEEVE
(6)	BEARING PLATE
(7)	BCT CABLE ASSEMBLY
(8)	ANCHOR CABLE BOX
(9)	GROUND STRUT
(10)	PERFORATED W-BEAM RAIL END PANEL, 12'-6" LONG.
(11)	STANDARD W-BEAM RAIL. MULTIPLE SECTIONS REQUIRED. SECTIONS VARY IN LENGTH.
(12)	END SECTION EAT
(13)	0.040" ALUMINUM SHEET WITH REFLECTIVE SHEETING TYPE H (ONLY THE SHEETING IS SUPPLIED BY THE MANUFACTURER)
(14)	EAT MARKER POST - YELLOW (SEE APPROVED PRODUCTS LIST)

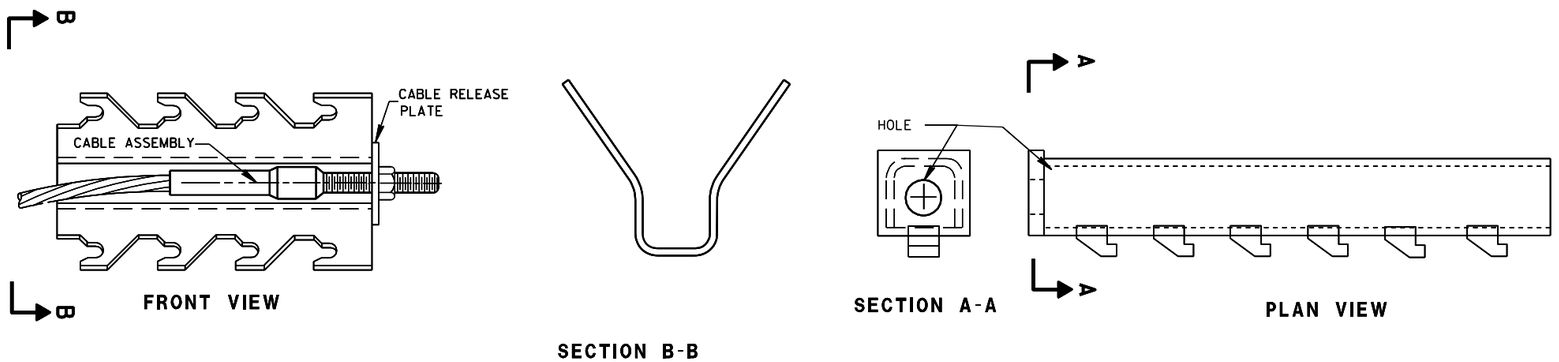

FRONT VIEW

SECTION B-B

SECTION A-A

PLAN VIEW

GENERIC ANCHOR CABLE BOX (8) (H)

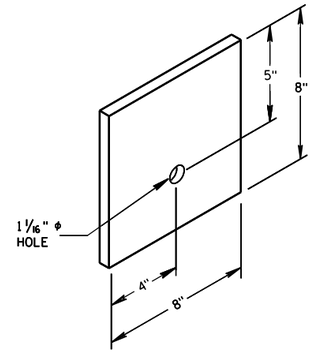

BEARING PLATE (6)

MIDWEST GUARDRAIL SYSTEM
ENERGY ABSORBING TERMINAL
(MGS)

STATE OF WISCONSIN
DEPARTMENT OF TRANSPORTATION

6

S.D.D. 14 B 44-1b

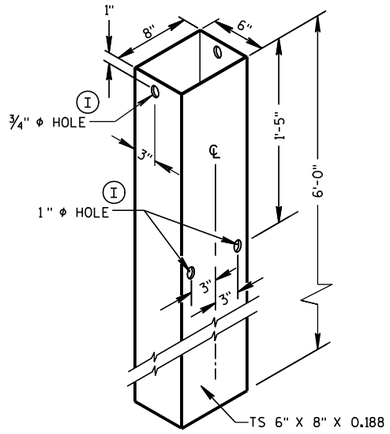

FOUNDATION TUBE (2)

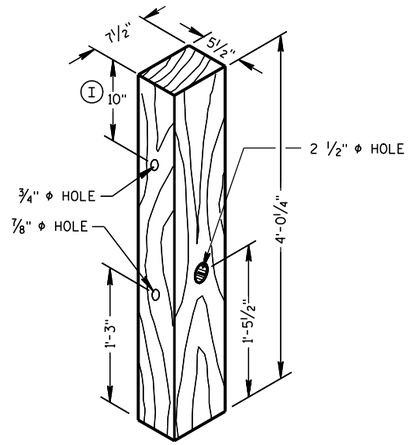

POSTS NUMBER 1 AND 2

WOOD BREAKAWAY POST (1)

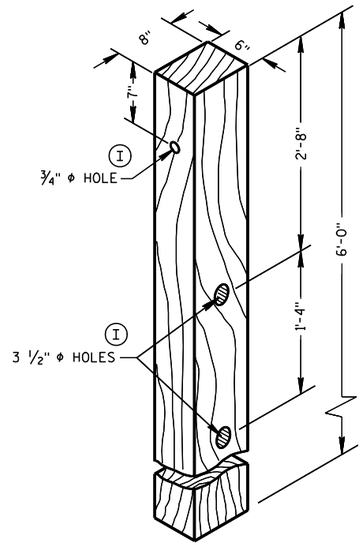

POSTS NUMBER 3-9

WOOD CRT POST (3)

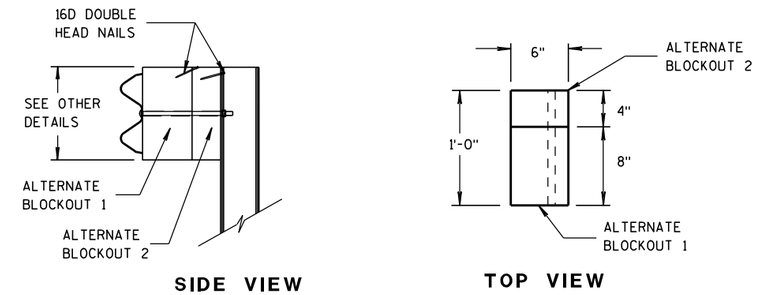

SIDE VIEW

TOP VIEW

ALTERNATE WOOD BLOCKOUT DETAIL

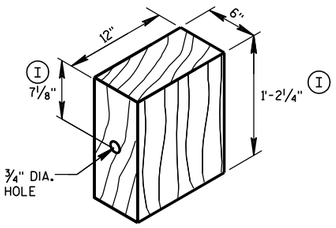

WOOD BLOCKOUT (4)

REQ'D. AT ALL POSTS EXCEPT POST NO'S 1 & 2

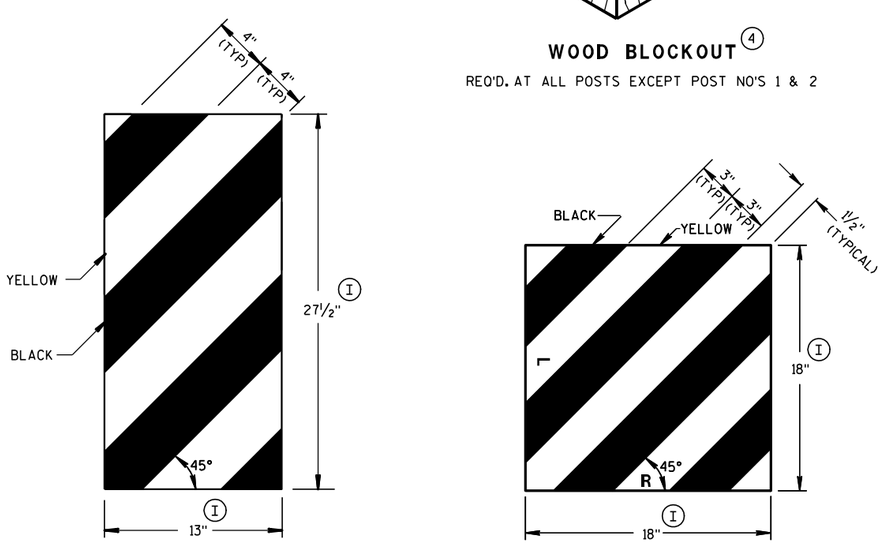

GENERIC REFLECTIVE SHEETING (13) (H)

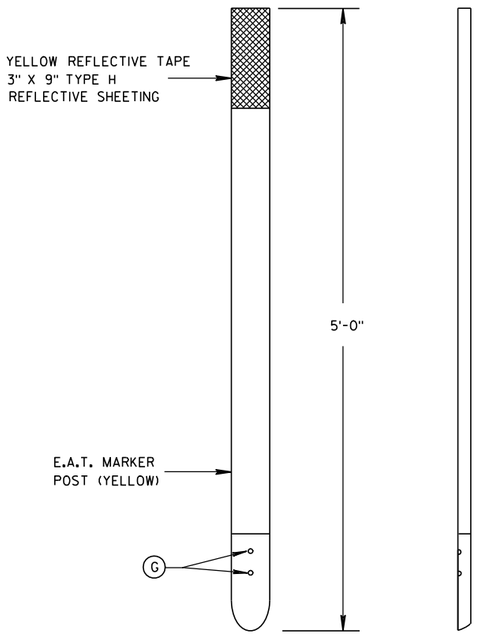

FRONT VIEW

SIDE VIEW

E.A.T. MARKER POST (14)

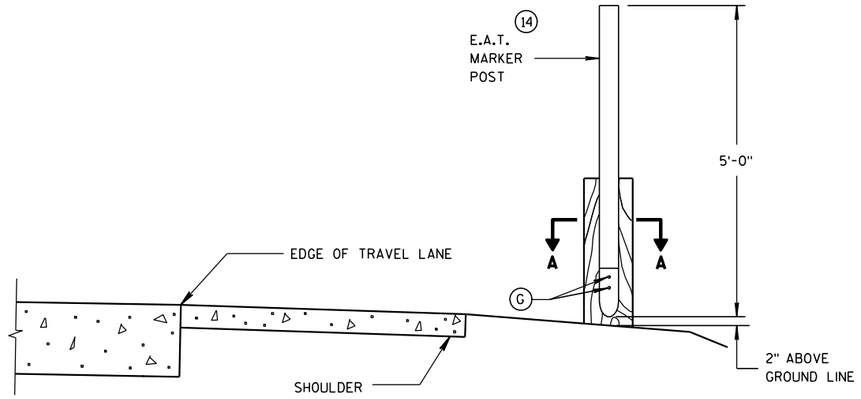

TYPICAL INSTALLATION OF E.A.T. MARKER POST BACKSIDE OF POST NO. 1

(E.A.T. AND RAIL REMOVED FOR CLARITY)

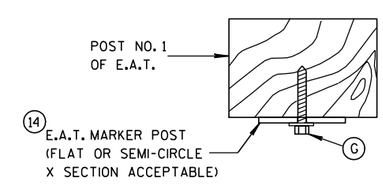

SECTION A-A

MIDWEST GUARDRAIL SYSTEM ENERGY ABSORBING TERMINAL (MGS)

STATE OF WISCONSIN
DEPARTMENT OF TRANSPORTATION

APPROVED
5/23/2011 — DATE
/S/ Jerry H. Zogg — ROADWAY STANDARDS DEVELOPMENT ENGINEER
FHWA

6
S.D.D. 14 B 44-1c
120

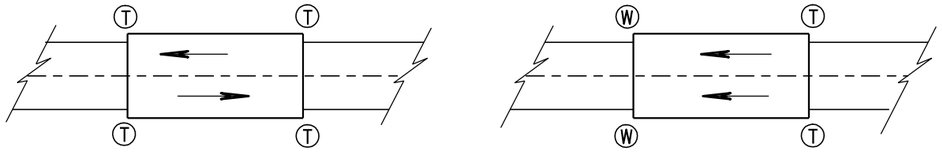

TWO WAY TRAFFIC

ONE WAY TRAFFIC

Ⓣ THRIE BEAM CONNECTION

Ⓦ W-BEAM CONNECTION WHEN REQUIRED

TYPICAL LOCATIONS OF THRIE BEAM AND W-BEAM CONNECTIONS TO BRIDGE

GENERAL NOTES

BOLT THE THRIE BEAM TO ALL POSTS AND BLOCKOUTS. DRILL OR PUNCH BOLT HOLES IN THE BEAM IF THE POST SPACING IS LESS THAN 6'-3.

IF ROCK IS ENCOUNTERED, REMOVE ROCK TO FULL DEPTH OF POST PLUS 2½", AND 12" DIAMETER AROUND POST. SEE 14B42 FOR MORE DETAILS.

TRANSITION USES STEEL POSTS ONLY.

SEE STANDARD DETAIL DRAWING 14 B 42 FOR MORE INFORMATION.

Ⓐ BRIDGE RAILING TYPE "W" DOES NOT REQUIRE A TERMINAL CONNECTOR.

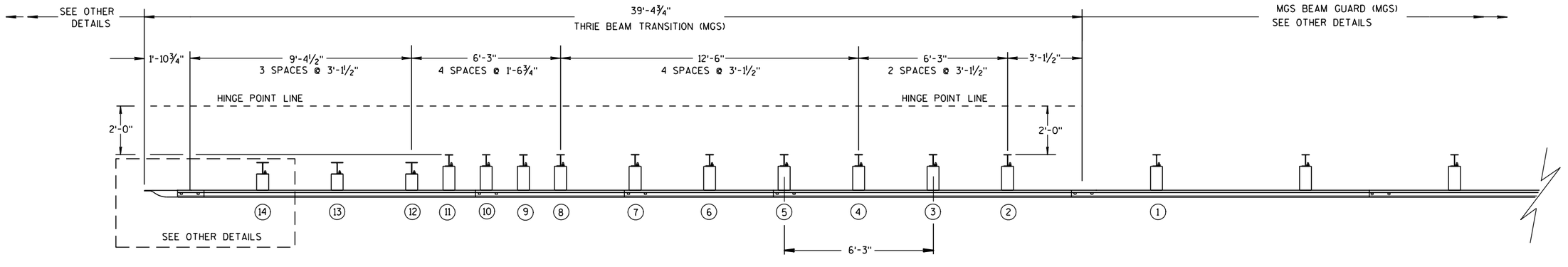

PLAN VIEW

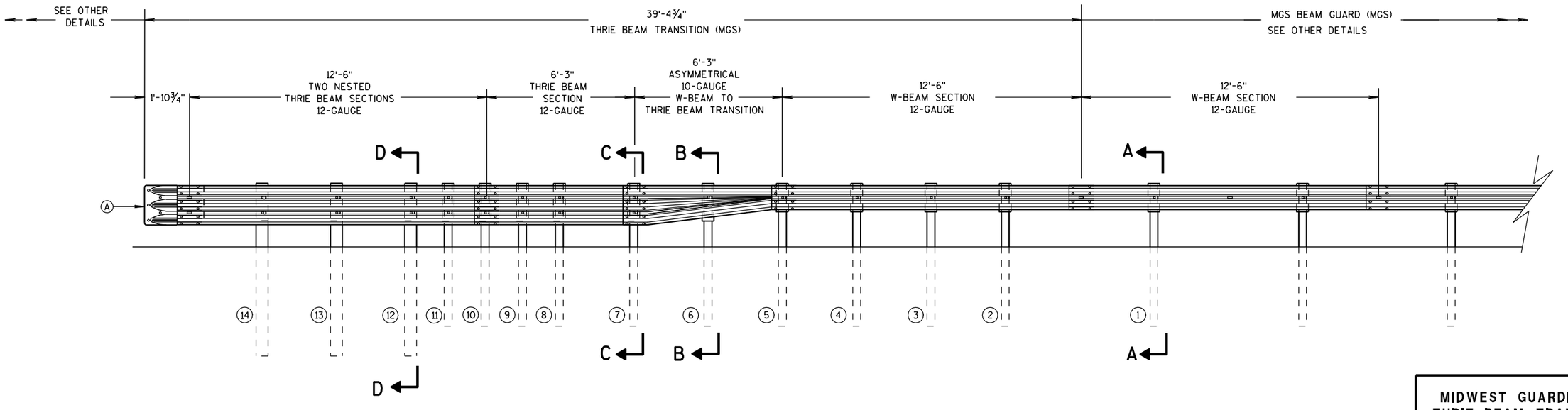

ELEVATION VIEW

MIDWEST GUARDRAIL SYSTEM THRIE BEAM TRANSITION

MIDWEST GUARDRAIL SYSTEM
THRIE BEAM TRANSITION (MGS)

STATE OF WISCONSIN
DEPARTMENT OF TRANSPORTATION

6
S.D.D. 14 B 45-3a

GENERAL NOTES

(B) TOLERANCE FOR TOP OF W-BEAM RAIL IS ± 1".

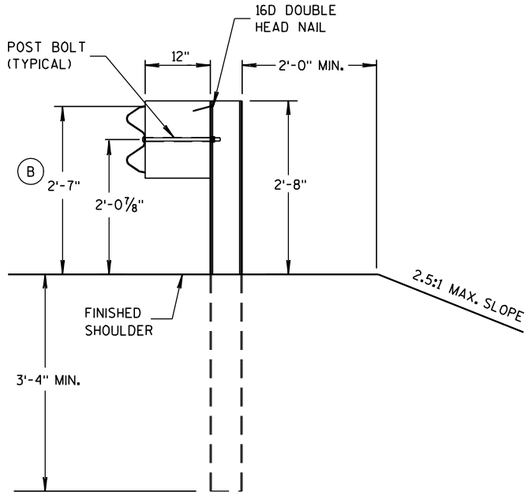

SECTION A-A

POSTS 1-5

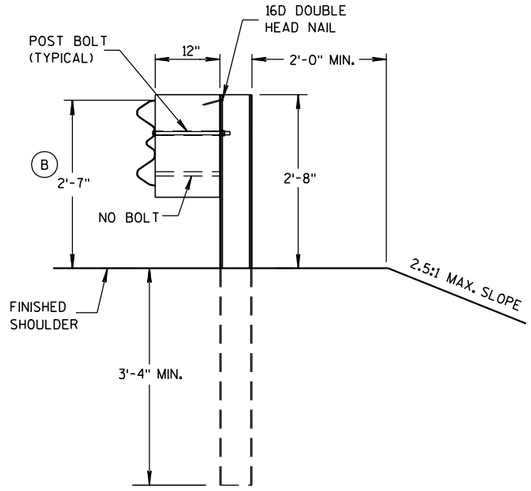

SECTION B-B

POST 6

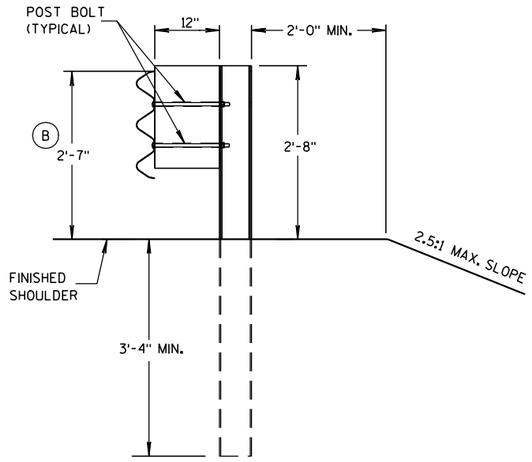

SECTION C-C

POSTS 7-11

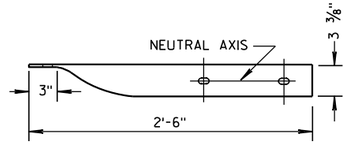

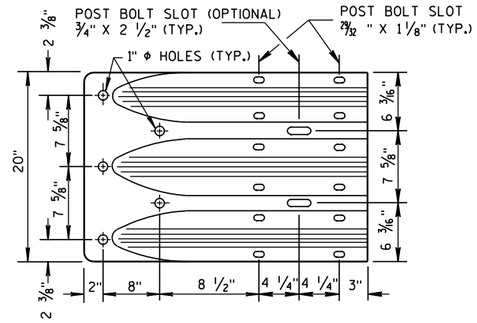

THRIE BEAM TERMINAL CONNECTOR

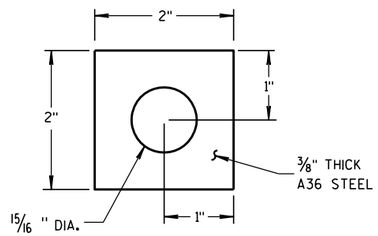

PLATE WASHER DETAIL

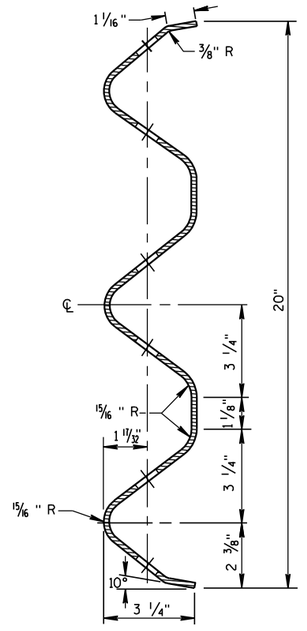

SECTION THRU THRIE BEAM RAIL ELEMENT

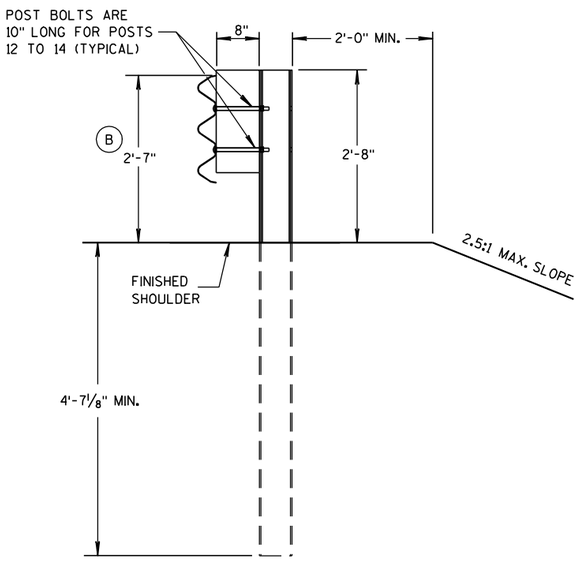

SECTION D-D

POSTS 12-14

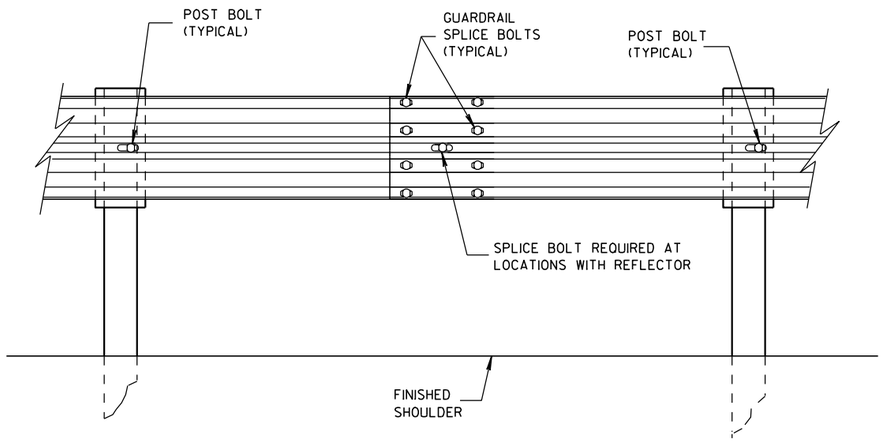

SPLICE DETAIL

MIDWEST GUARDRAIL SYSTEM
THRIE BEAM TRANSITION (MGS)

STATE OF WISCONSIN
DEPARTMENT OF TRANSPORTATION

6
S.D.D. 14 B 45-3b

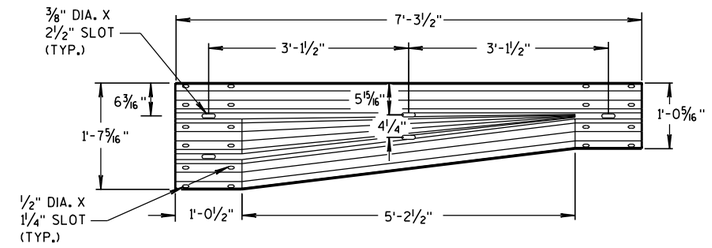

W-BEAM TO THRIE BEAM TRANSITION SECTION

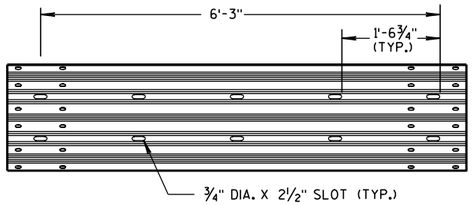

6'-3" THRIE BEAM SECTION

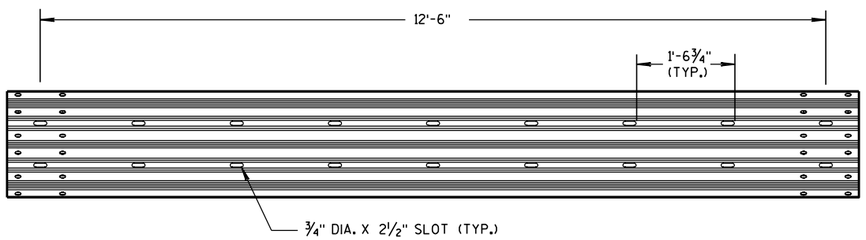

12'-6" THRIE BEAM SECTION

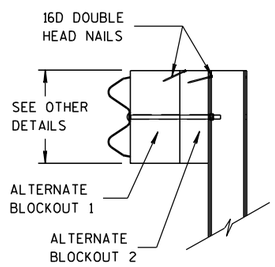

SIDE VIEW

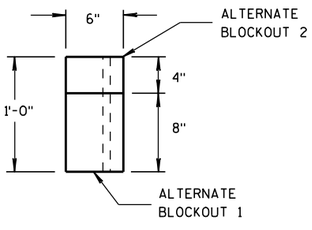

TOP VIEW

ALTERNATE WOOD BLOCKOUT DETAIL

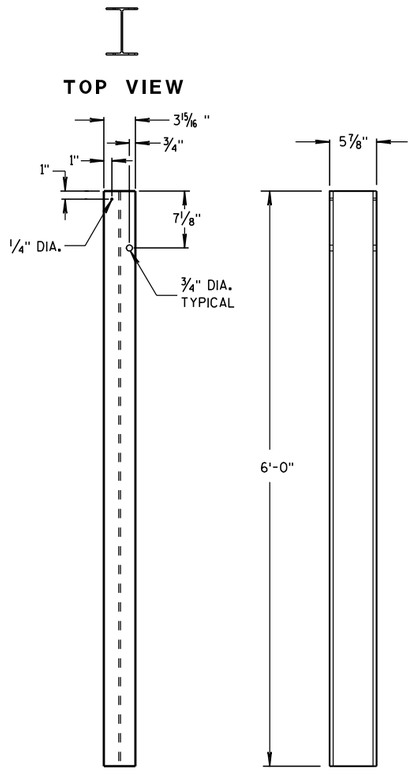

STEEL POSTS 1-5

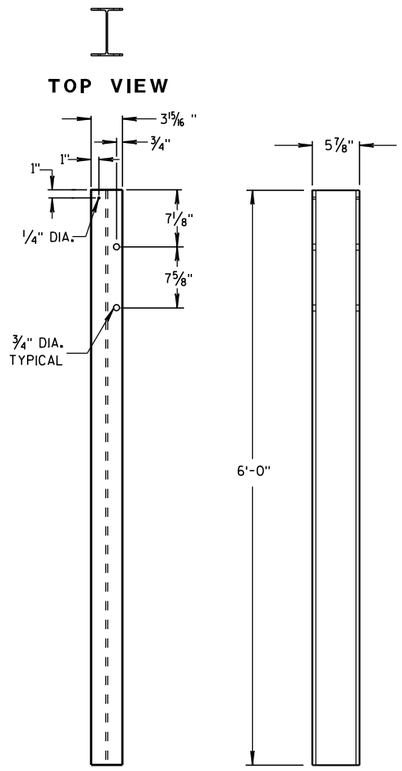

STEEL POSTS 6-11

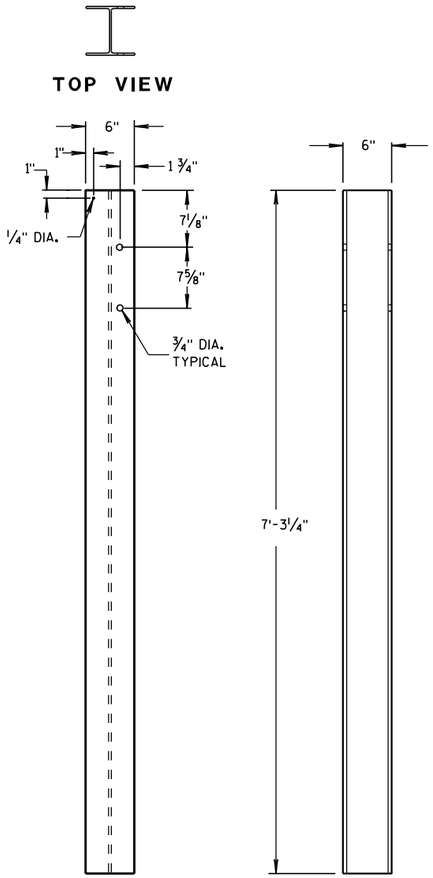

STEEL POSTS 12-14

1 WOOD BLOCKS MAY BE CONSTRUCTED OUT OF 2 WOOD BLOCKS. SEE ALTERNATE WOOD BLOCK DETAIL.

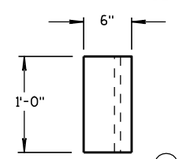

TOP VIEW (1)

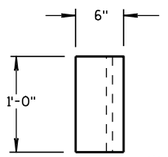

TOP VIEW (1)

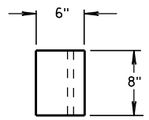

TOP VIEW

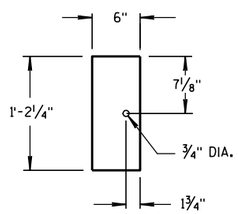

FRONT VIEW

BLOCKOUT POSTS 1-5

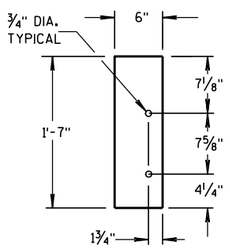

FRONT VIEW

BLOCKOUT POSTS 6-11

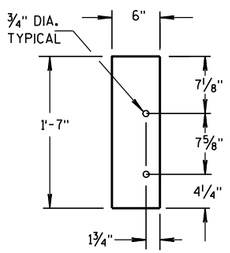

FRONT VIEW

BLOCKOUT POSTS 12-14

STEEL POST SIZES

POST NUMBER	SECTION TYPE	LENGTH
1	W6x9	72"
2	W6x9	72"
3	W6x9	72"
4	W6x9	72"
5	W6x9	72"
6	W6x9	72"
7	W6x9	72"
8	W6x9	72"
9	W6x9	72"
10	W6x9	72"
11	W6x9	72"
12	W6x15	87 1/8"
13	W6x15	87 1/8"
14	W6x15	87 1/8"

MIDWEST GUARDRAIL SYSTEM
THRIE BEAM TRANSITION (MGS)

STATE OF WISCONSIN
DEPARTMENT OF TRANSPORTATION

6
S.D.D. 14 B 45-3c

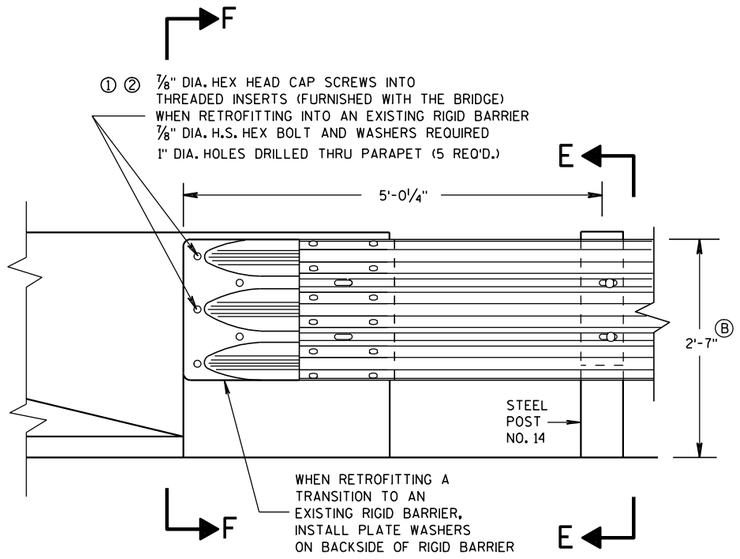

FRONT VIEW

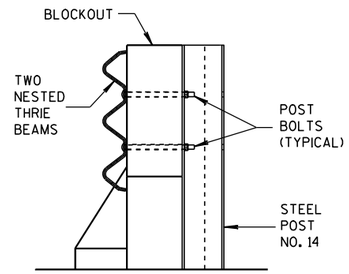

SECTION E-E

GENERAL NOTES

THESE ARE TYPICAL CONNECTION DETAILS. ADJUST THE POSTION OF CONNECTIONS TO EXISTING BRIDGES TO FIT THE ACTUAL BRIDGE AND SITE DIMENSIONS.

① DRILLING BOLT HOLES THROUGH THE PARAPET, BOLTS, NUTS, WASHERS AND REPAIRING DAMAGED CONCRETE ARE INCIDENTAL TO THE CONTRACT.

② BOLTS MAY BE A325 BOLTS OR A449 BOLTS. BOLT LENGTH AND THREADING LENGTH ARE TO ALLOW FOR A TIGHT CONNECTION BETWEEN RIGID BARRIER AND THRIE BEAM CONNECTION PLATE. CONTRACTOR IS TO FIELD VERIFY BOLT LENGTH AND THREAD LENGTH. ONE ROUND WASHER REQUIRED BETWEEN BOLT HEAD AND THRIE BEAM CONNECTOR PLATE. BOLTS THAT EXTEND THROUGH THE PARAPET AND OUT THE BACK FACE REQUIRE A HARDENED ROUND STEEL WASHER THAT IS 2" O.D. X 5/8" THICK AND ONE PLATE WASHER. REPAIR ANY DAMAGED CONCRETE FROM BOLT INSTALLATION.

③ THE RECESS FOR A W-BEAM CONNECTION, WHICH EXISTS ON SOME PARAPETS OF THIS TYPE, SHALL BE FILLED WITH A TREATED TIMBER BLOCKOUT. BLOCKOUT SIZE IS 1'-6" X 2'-0" X 3 1/2".

Ⓑ TOLERANCE FOR TOP OF BEAM IS ± 1".

THRIE BEAM CONNECTION TO BRIDGE PARAPET WITH SQUARE ENDS

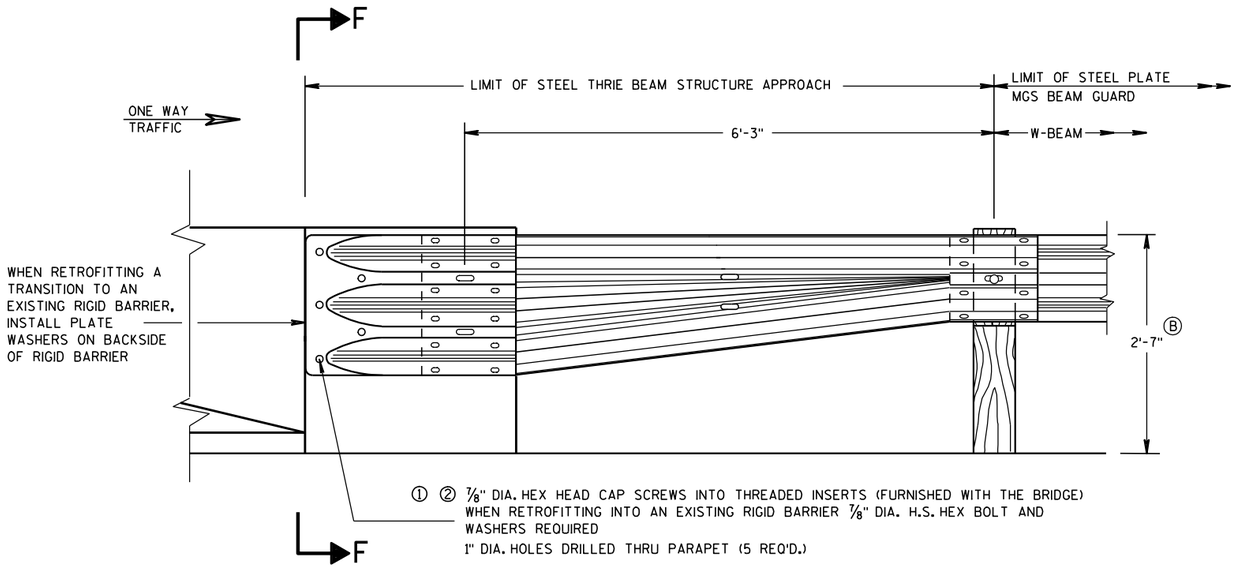

FRONT VIEW

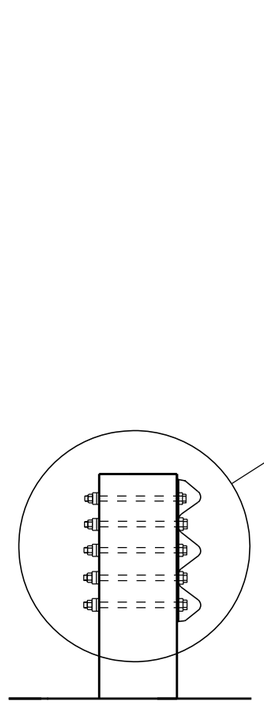

SECTION F-F

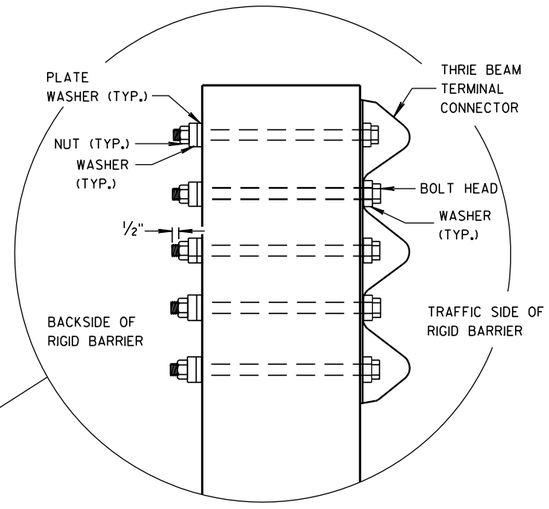

W BEAM TRANSITION AND CONNECTION TO BRIDGE PARAPETS WITH SQUARE ENDS

(USE ONLY ON THE TRAFFIC EXIT END OF ONE WAY BRIDGES)

MIDWEST GUARDRAIL SYSTEM
THRIE BEAM TRANSITION (MGS)

STATE OF WISCONSIN
DEPARTMENT OF TRANSPORTATION

APPROVED

8/31/2012 — DATE

/S/ Jerry H. [illegible] — ROADWAY STANDARDS [illegible] ENGINEER

FHWA

6
S.D.D. 14 B 45-3d

GENERAL NOTES

THESE ARE TYPICAL CONNECTION DETAILS. ADJUST THE POSTION OF CONNECTIONS TO EXISTING BRIDGES TO FIT THE ACTUAL BRIDGE AND SITE DIMENSIONS.

① DRILLING BOLT HOLES THROUGH THE PARAPET, BOLTS, NUTS, WASHERS AND REPAIRING DAMAGED CONCRETE ARE INCIDENTAL TO THE CONTRACT.

② BOLTS MAY BE A325 BOLTS OR A449 BOLTS. BOLT LENGTH AND THREADING LENGTH ARE TO ALLOW FOR A TIGHT CONNECTION BETWEEN RIGID BARRIER AND THRIE BEAM CONNECTION PLATE. CONTRACTOR IS TO FIELD VERIFY BOLT LENGTH AND THREAD LENGTH. ONE ROUND WASHER REQUIRED BETWEEN BOLT HEAD AND THRIE BEAM CONNECTOR PLATE. BOLTS THAT EXTEND THROUGH THE PARAPET AND OUT THE BACK FACE REQUIRE A HARDENED ROUND STEEL WASHER THAT IS 2" O.D. X 5/8" THICK AND ONE PLATE WASHER. REPAIR ANY DAMAGED CONCRETE FROM BOLT INSTALLATION.

③ THE RECESS FOR A W-BEAM CONNECTION, WHICH EXISTS ON SOME PARAPETS OF THIS TYPE, SHALL BE FILLED WITH A TREATED TIMBER BLOCKOUT. BLOCKOUT SIZE IS 1'-6" X 2'-0" X 3 1/2". BLOCK IS INCIDENTAL TO THE CONTRACT.

④ BOLT, NUT AND WASHERS NOT REQUIRED FOR THIS LOCATION WHEN RETROFITTING AN EXISTING PAPAPET AND THE HOLE IS EITHER ABOVE PARAPET OR WITHIN 4 INCHES OF THE EDGE OF PARAPET.

Ⓑ TOLERANCE FOR TOP OF BEAM IS ± 1".

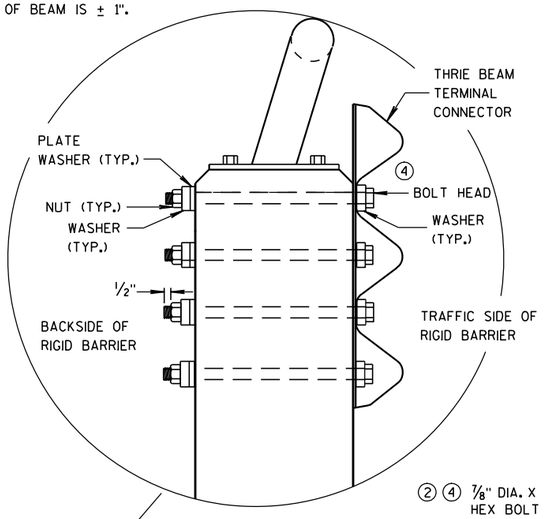

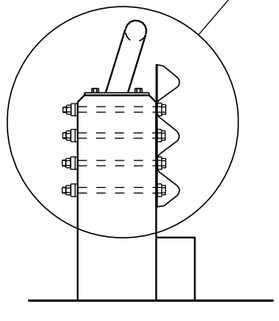

SECTION G-G

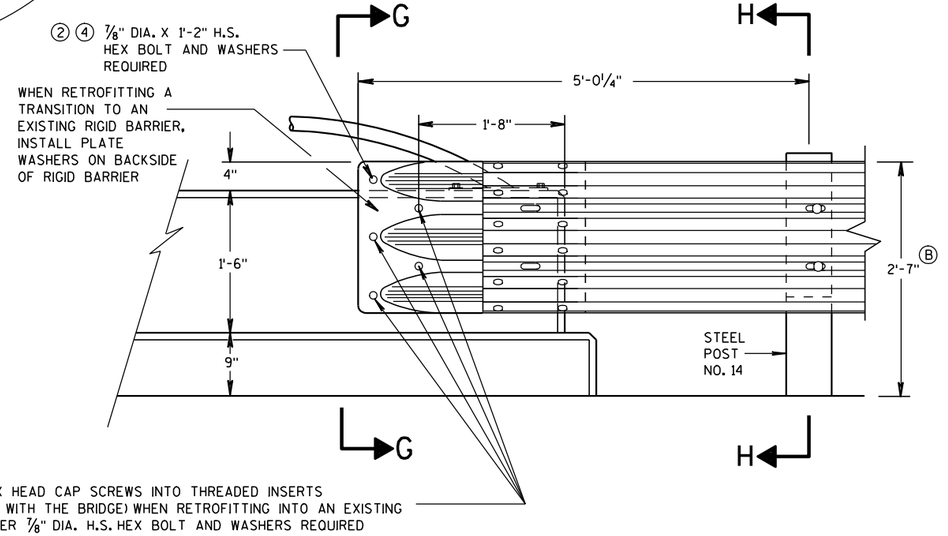

FRONT VIEW

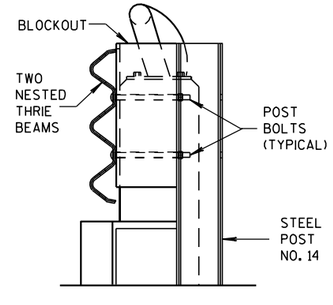

SECTION H-H

THRIE BEAM CONNECTION TO VERTICAL FACED PARAPETS

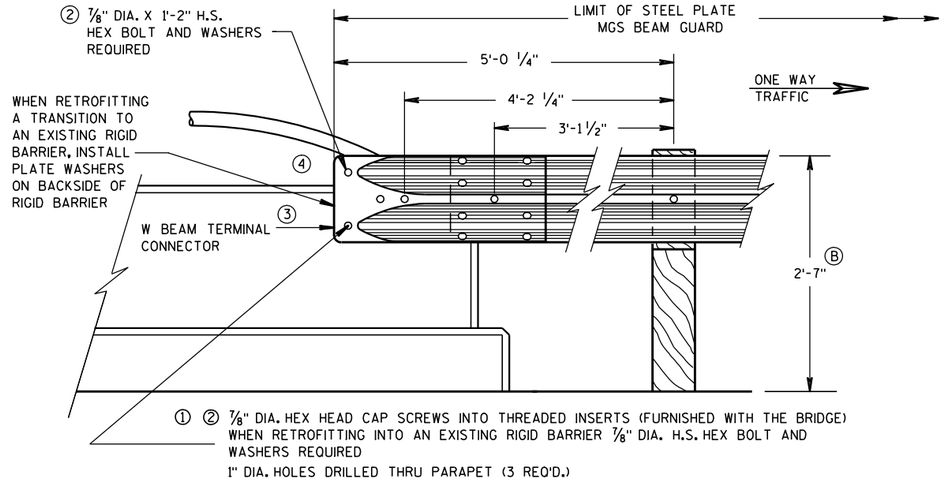

FRONT VIEW

W BEAM CONNECTION TO VERTICAL FACE PARAPET
(USE ONLY ON THE TRAFFIC EXIT END OF ONE WAY BRIDGES)

MIDWEST GUARDRAIL SYSTEM
THRIE BEAM TRANSITION (MGS)

STATE OF WISCONSIN
DEPARTMENT OF TRANSPORTATION

APPROVED

8-31-2012 — DATE

/S/ Jerry H. Zogg — ROADWAY STANDARDS DEVELOPMENT ENGINEER

FHWA

6

S.D.D. 14 B 45-3e

6

S.D.D. 14 B 45-3e

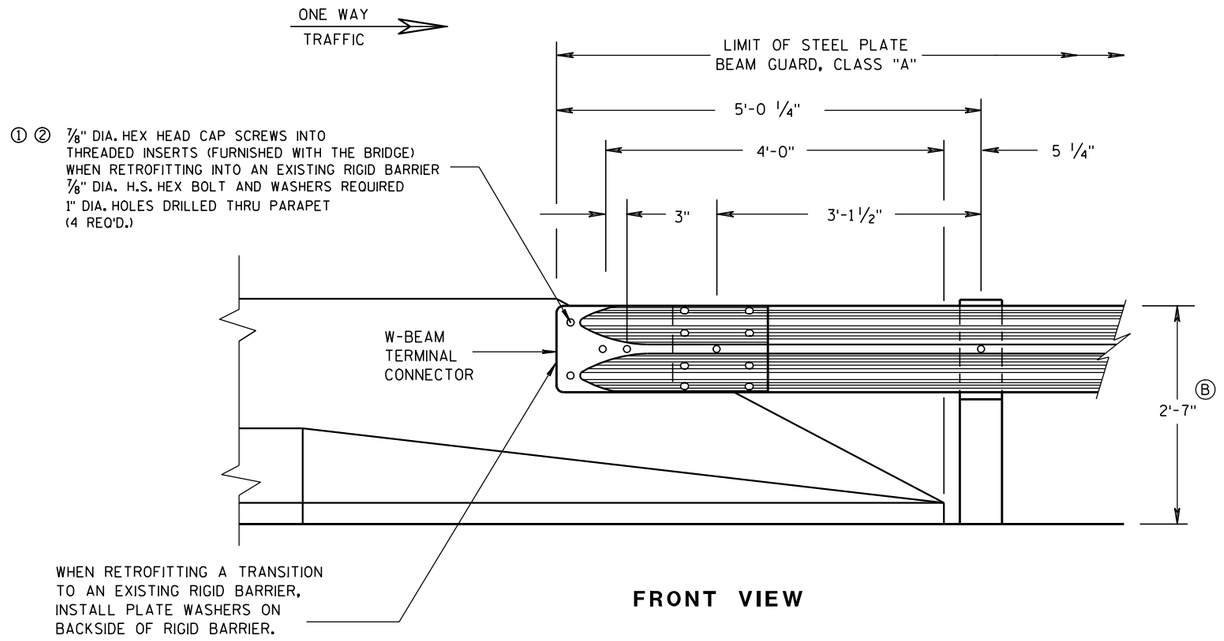

FRONT VIEW

W BEAM CONNECTION TO PARAPETS WITH SLOPED ENDS

(USE ONLY AT TRAFFIC EXIT END OF ONE WAY BRIDGE)

GENERAL NOTES

① DRILLING BOLT HOLES THROUGH THE PARAPET, BOLTS, NUTS, WASHERS AND REPAIRING DAMAGED CONCRETE ARE INCIDENTAL TO THE CONTRACT.

② BOLTS MAY BE A325 BOLTS OR A449 BOLTS. BOLT LENGTH AND THREADING LENGTH ARE TO ALLOW FOR A TIGHT CONNECTION BETWEEN RIGID BARRIER AND THRIE BEAM CONNECTION PLATE. CONTRACTOR IS TO FIELD VERIFY BOLT LENGTH AND THREAD LENGTH. ONE ROUND WASHER REQUIRED BETWEEN BOLT HEAD AND THRIE BEAM CONNECTOR PLATE. BOLTS THAT EXTEND THROUGH THE PARAPET AND OUT THE BACK FACE REQUIRE A HARDENED ROUND STEEL WASHER THAT IS 2" O.D. X 5/8" THICK AND ONE PLATE WASHER. REPAIR ANY DAMAGED CONCRETE FROM BOLT INSTALLATION.

Ⓑ TOLERANCE FOR TOP OF BEAM IS ± 1".

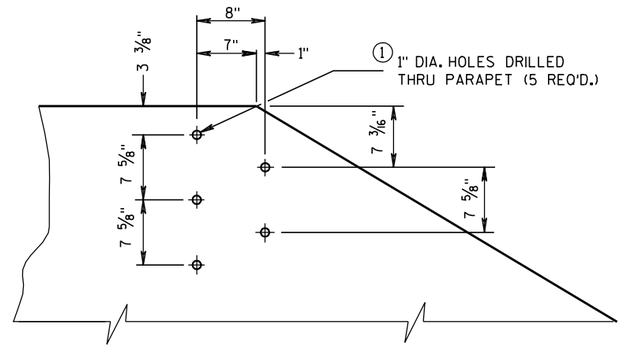

DRILL HOLE LOCATION AND PATTERN FOR THRIE BEAM CONNECTION

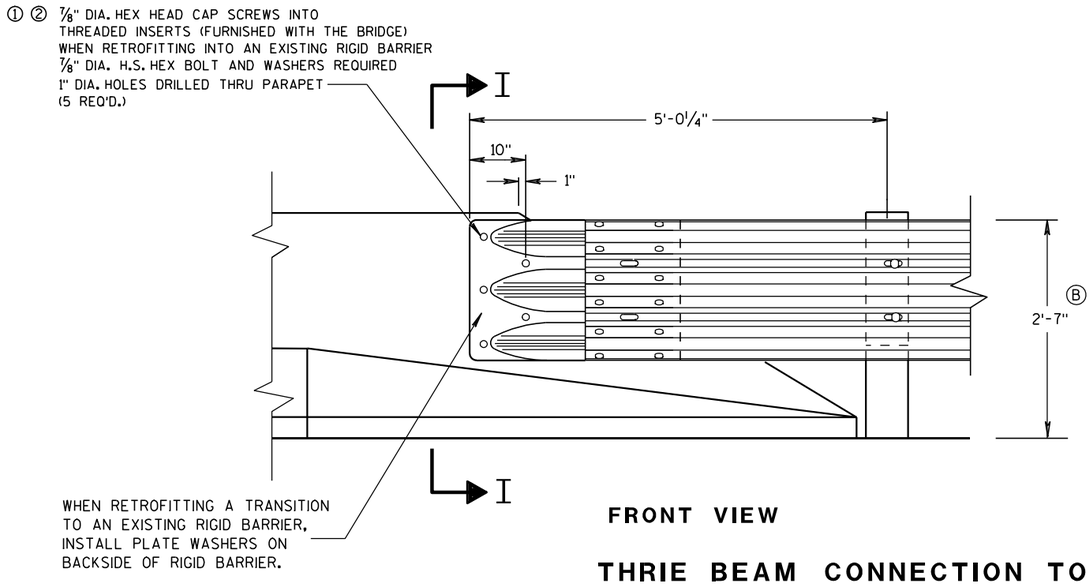

FRONT VIEW

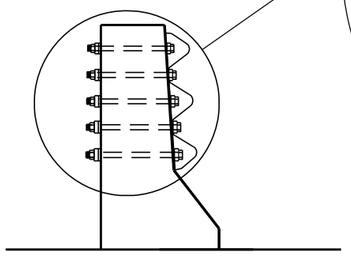

SECTION I-I

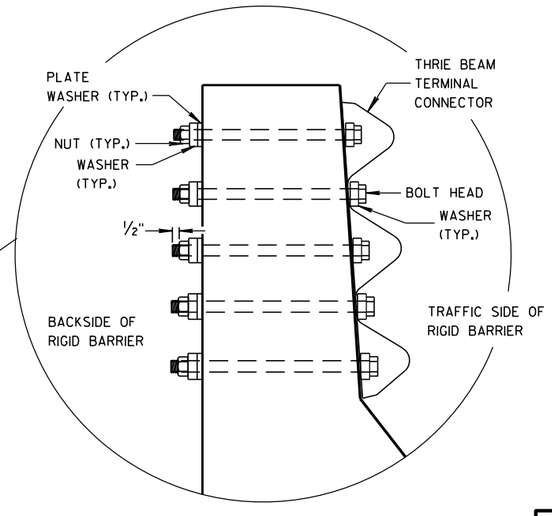

THRIE BEAM CONNECTION TO BRIDGE PARAPETS WITH SLOPED ENDS

MIDWEST GUARDRAIL SYSTEM
THRIE BEAM TRANSITION (MGS)

STATE OF WISCONSIN
DEPARTMENT OF TRANSPORTATION

APPROVED

8/31/2012 — DATE

/S/ Jerry H. Zogg — ROADWAY STANDARDS ENGINEER

FHWA

ENT

6

S.D.D. 14 B 45-3f

6

S.D.D. 14 B 45-3f

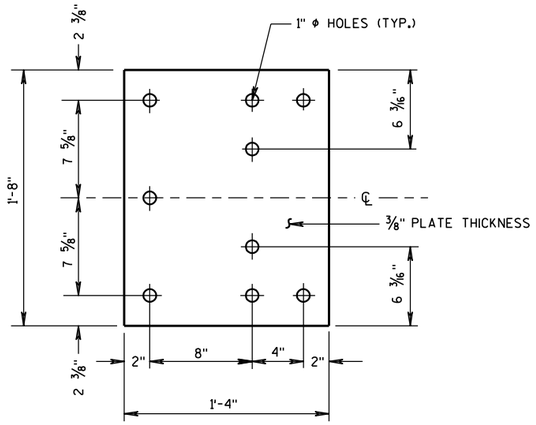

BACK-UP PLATE DETAIL

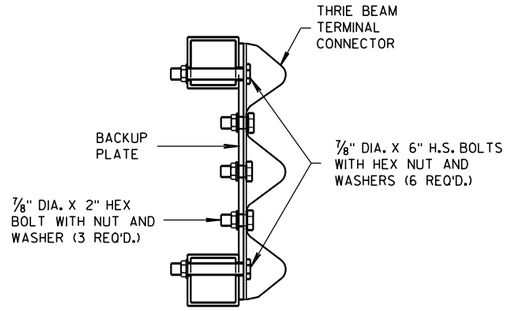

SECTION J-J

GENERAL NOTES

(1) DRILLING HOLES THROUGH THE PAPRPET, BOLTS, NUTS, WASHERS AND REPAIRING DAMAGED CONCRETE ARE INCIDENTAL TO THE CONTRACT.

(B) TOLERANCE FOR TOP OF BEAM IS ± 1".

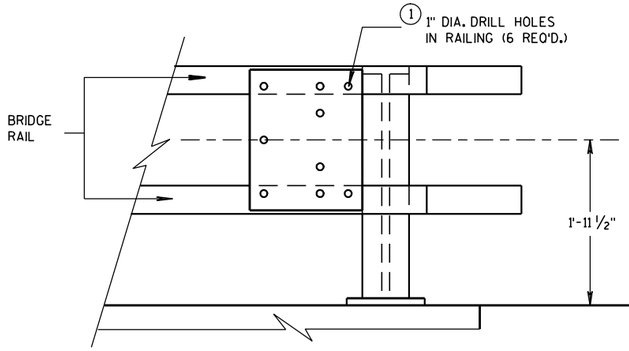

BACK-UP PLATE MOUNTING ONTO BRIDGE RAILING

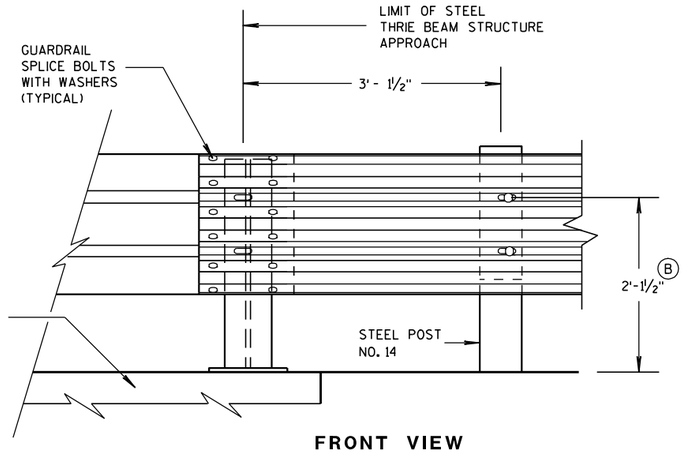

FRONT VIEW

THRIE BEAM CONNECTION TO STEEL RAILING TYPE "W"

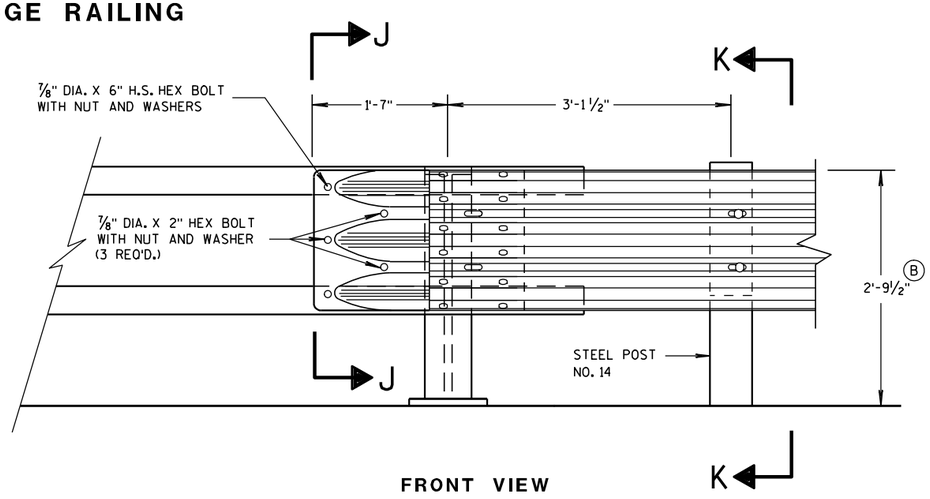

FRONT VIEW

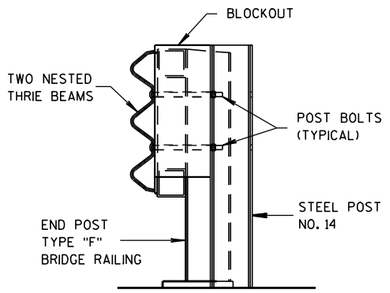

SECTION K-K

THRIE BEAM CONNECTION TO TUBULAR RAILING TYPE "F"

MIDWEST GUARDRAIL SYSTEM THRIE BEAM TRANSITION (MGS)
STATE OF WISCONSIN DEPARTMENT OF TRANSPORTATION
APPROVED 8/31/2012 DATE /S/ Jerry H. Zogg ROADWAY STANDARDS DEVELOPMENT ENGINEER FHWA

6

S.D.D. 14 B 45-3g

6

S.D.D. 14 B 45-3g

GENERAL NOTES

(B) TOLERANCE FOR TOP OF W-BEAM RAIL IS ± 1".

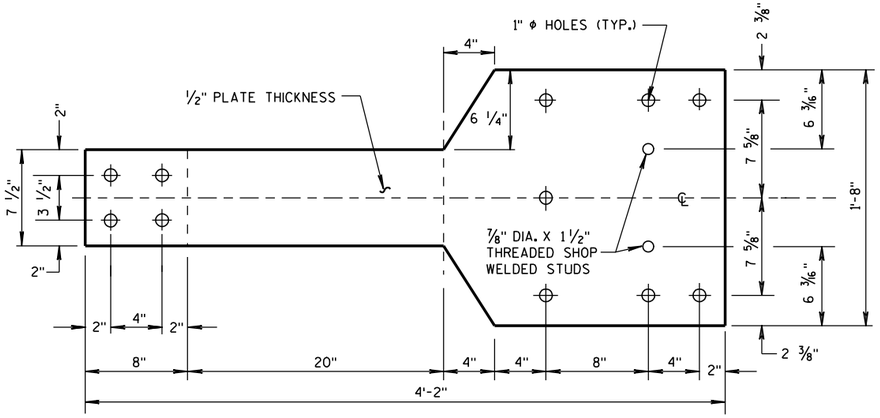

FRONT VIEW

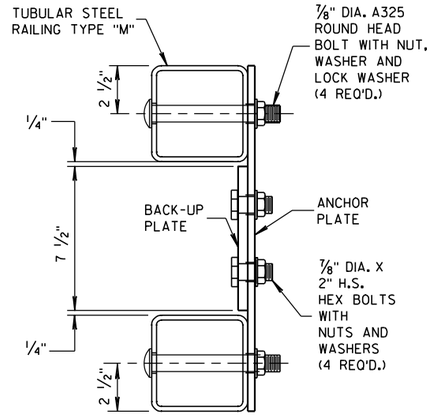

SECTION L-L

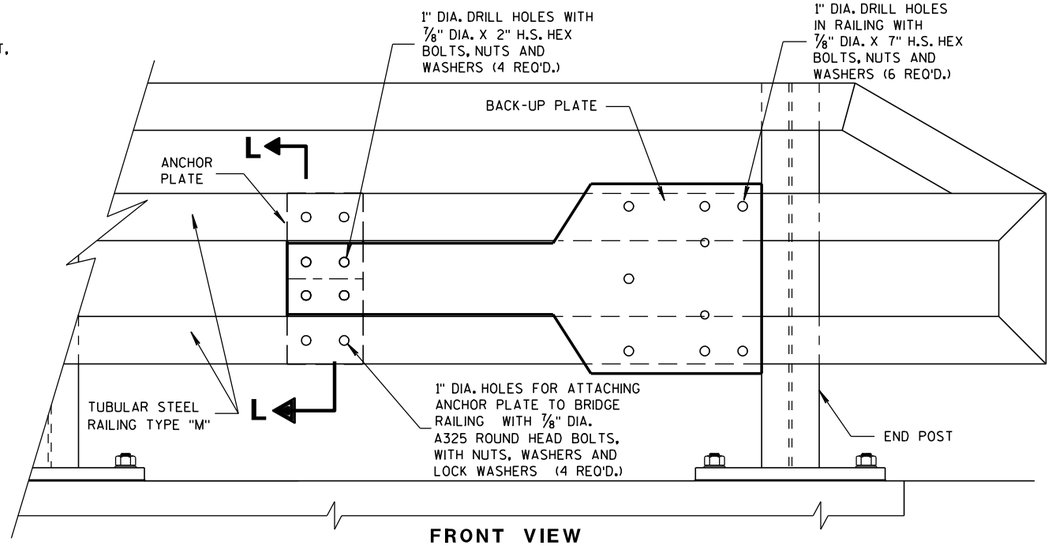

FRONT VIEW

ANCHOR AND BACK-UP PLATE MOUNTING TO BRIDGE RAILING, TYPE "M"

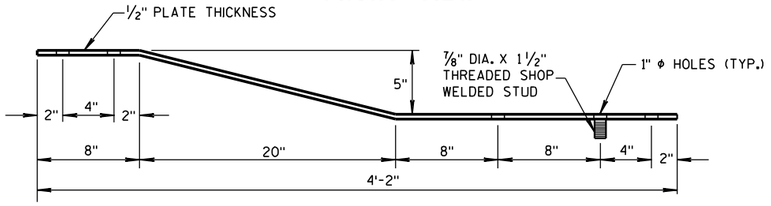

PLAN VIEW

BACK-UP PLATE DETAIL, TYPE "M"

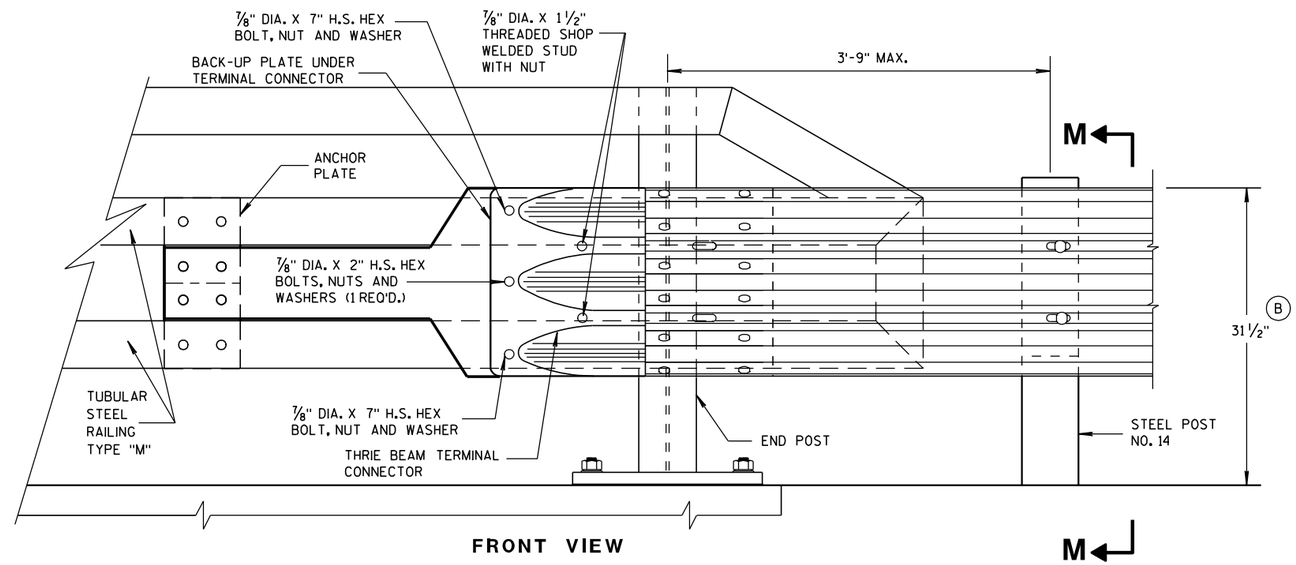

FRONT VIEW

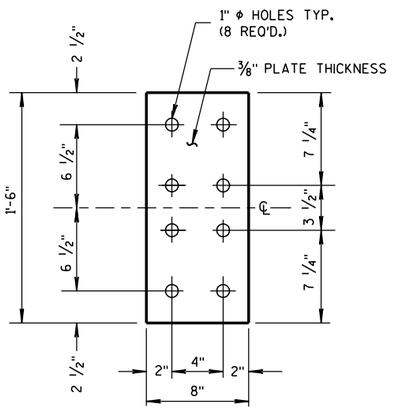

FRONT VIEW

ANCHOR PLATE DETAIL, TYPE "M"

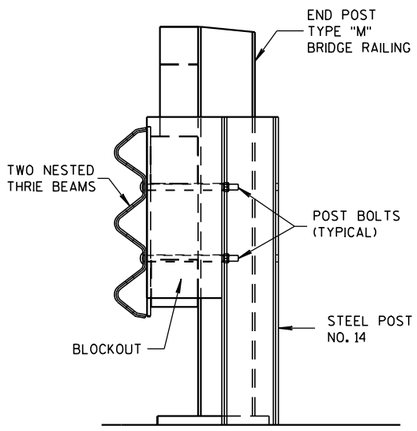

SECTION M-M

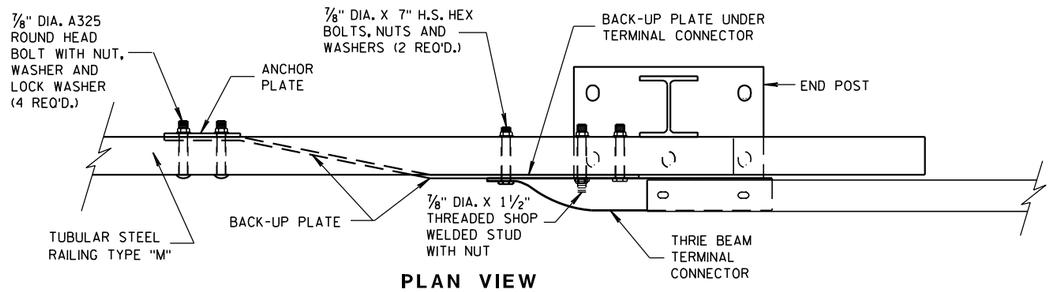

PLAN VIEW

THRIE BEAM CONNECTION TO TUBULAR RAILING, TYPE "M"

MIDWEST GUARDRAIL SYSTEM
THRIE BEAM TRANSITION (MGS)

STATE OF WISCONSIN
DEPARTMENT OF TRANSPORTATION

APPROVED
8-31-2012 DATE
/S/ Jerry H. [illegible]
ROADWAY STANDARDS ENGINEER

FHWA ENT

6

S.D. 14 B 45-3h

6

S.D. 14 B 45-3h

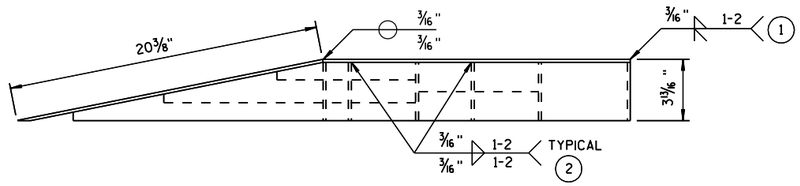

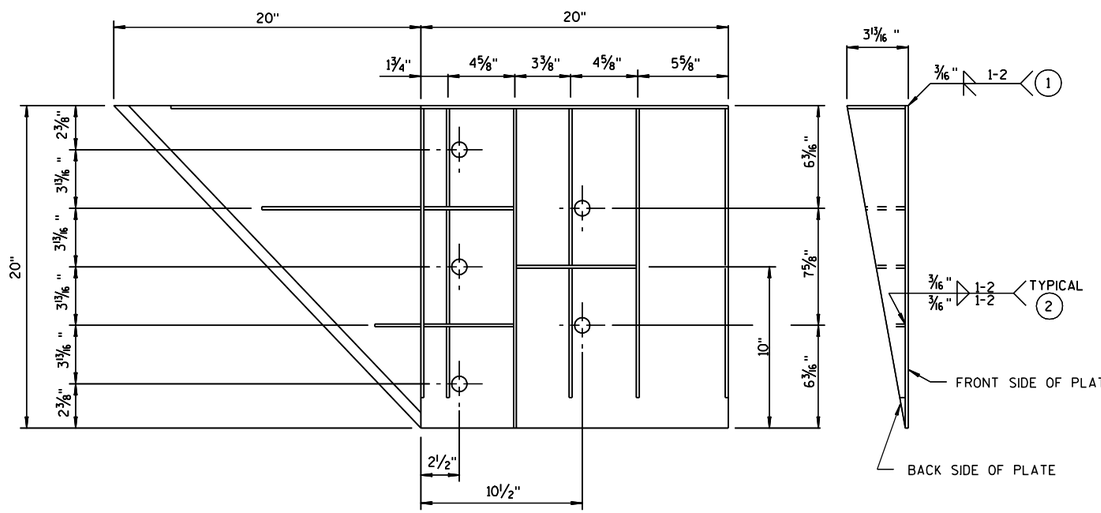

WELDING INSTRUCTION

(VIEWED FROM BACK SIDE OF PLATE)

GENERAL NOTES

COVER PLATE PANELS ARE 3/16" THICK.

ALL STIFFENERS ARE 1/4" THICK.

CONNECTOR PLATE SHALL BE FABRICATED FROM ASTM GRADE A36 STEEL AND GALVANIZED.

FOR GALVANIZED REQUIREMENTS, SEE SECTION 614 OF THE STANDARD SPECIFICATIONS.

ALL HOLE DIAMETERS SHALL BE 1".

FOR OPPOSITE SIDE INSTALLATION MIRROR DRAWINGS.

(1) STIFFENERS LOCATED AT THE OUTSIDE EDGES OF THE COVER PLATES SHALL BE WELDED AS FOLLOWS:
SINGLE BEVEL GROOVE WELD ON EXTERNAL SIDES AND 3/16" FILLET WELD BY 1" LONG SPACED AT 2" ON INTERNAL SIDES.

(2) STIFFENERS LOCATED ON THE INSIDE OF THE COVER PLATE SHALL BE WELDED AS FOLLOWS:
3/16" FILLET WELD BY 1" LONG SPACED AT 2".

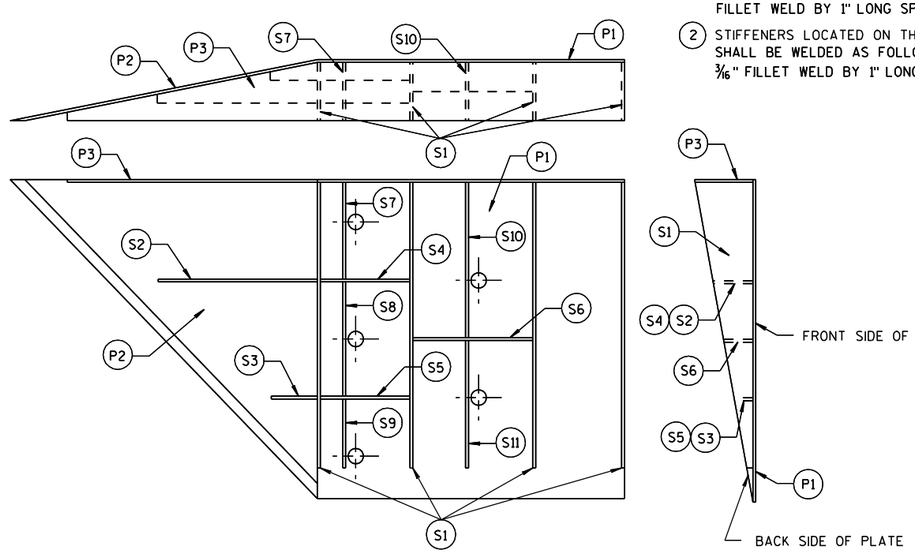

PLATE AND STIFFENER IDENTIFICATION

(VIEWED FROM BACK SIDE OF PLATE)

CONNECTOR PLATE DIMENSION (PER ASSEMBLY)

PLATE	QUANTITY	SHAPE	SIZE (A x B x C x D)	THICKNESS
P1	1		20" x 20"	3/16"
P2	1		20" x 20" x 28 9/16"	3/16"
P3	1		39" x 3 5/8" x 20" x 19 5/16"	3/16"
S1	4		18 7/16" x 3 5/8" x 18 3/4"	1/4"
S2	1		10 1/4" x 2 7/16" x 10 3/8" x 1/2"	1/4"
S3	1		3" x 1 1/16" x 3 1/8" x 1/2"	1/4"
S4	1		6 1/8" x 2 7/16"	1/4"
S5	1		6 1/8" x 1 1/16"	1/4"
S6	1		7 3/4" x 1 3/4"	1/4"
S7	1		2 9/16" x 6" x 3 5/8" x 5 7/8"	1/4"
S8	1		1 5/32" x 7 1/2" x 2 1/2" x 7 3/8"	1/4"
S9	1		6 1/16" x 6 3/16" x 1 3/32"	1/4"
S10	1		1 7/8" x 9 7/8" x 3 5/8" x 9 11/16"	1/4"
S11	1		8 1/2" x 8 3/4" x 1 13/16"	1/4"

SINGLE SLOPE CONNECTION PLATE

MIDWEST GUARDRAIL SYSTEM
THRIE BEAM TRANSITION (MGS)

STATE OF WISCONSIN
DEPARTMENT OF TRANSPORTATION

APPROVED
8/31/2012
DATE
/S/ Jerry H ...
ROADWAY STANDARDS ENGINEER
FHWA

6

S.D.D. 14 B 45-3i

6

S.D.D. 14 B 45-3i

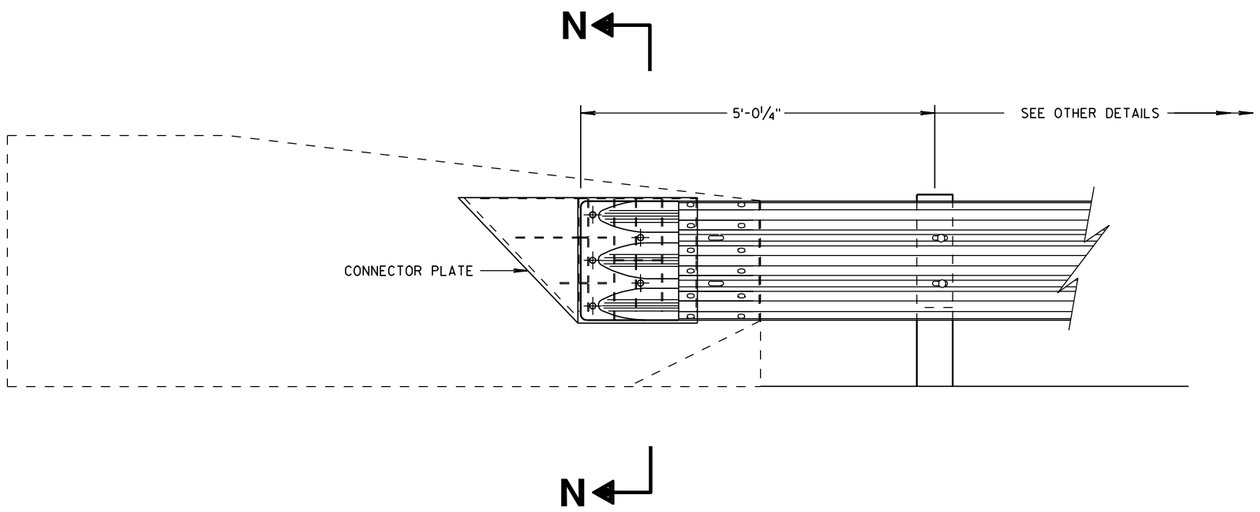

THRIE BEAM CONNECTION TO SINGLE SLOPE BARRIER

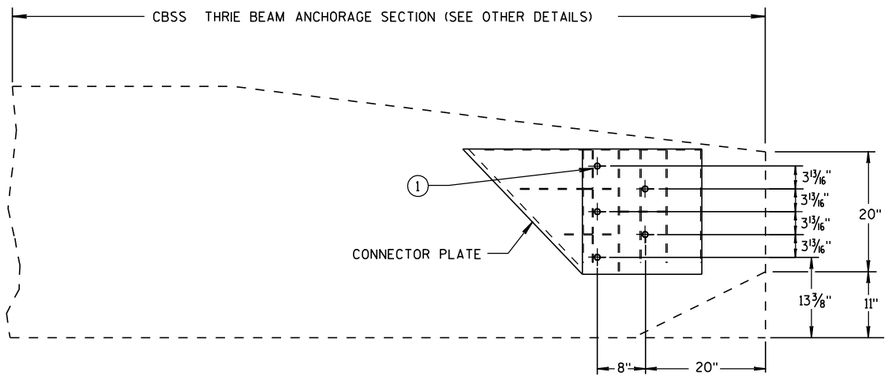

SINGLE SLOPE CONNECTION PLATE PLACEMENT

GENERAL NOTES

CONNECTOR PLATE, DRILLING BOLT HOLES THROUGH THE PARAPET, BOLTS, NUTS, WASHERS AND REPAIRING DAMAGED CONCRETE ARE INCIDENTAL TO THE CONTRACT.

(1) BOLTS MAY BE A325 BOLTS OR A449 BOLTS. BOLT LENGTH AND THREADING LENGTH ARE TO ALLOW FOR A TIGHT CONNECTION BETWEEN RIGID BARRIER AND THRIE BEAM CONNECTION PLATE. CONTRACTOR IS TO FIELD VERIFY BOLT LENGTH AND THREAD LENGTH. ONE ROUND WASHER REQUIRED BETWEEN BOLT HEAD AND THRIE BEAM CONNECTOR PLATE. BOLTS THAT EXTEND THROUGH THE PARAPET AND OUT THE BACK FACE REQUIRE A HARDENED ROUND STEEL WASHER THAT IS 2" O.D. X ⅝" THICK AND ONE PLATE WASHER. REPAIR ANY DAMAGED CONCRETE FROM BOLT INSTALLATION.

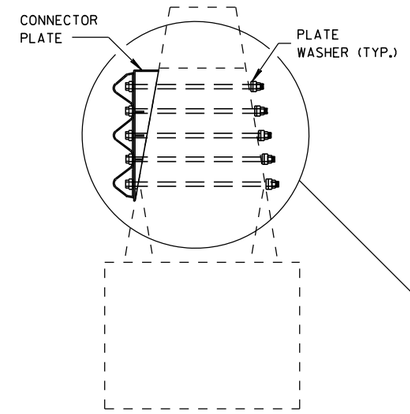

SECTION N-N

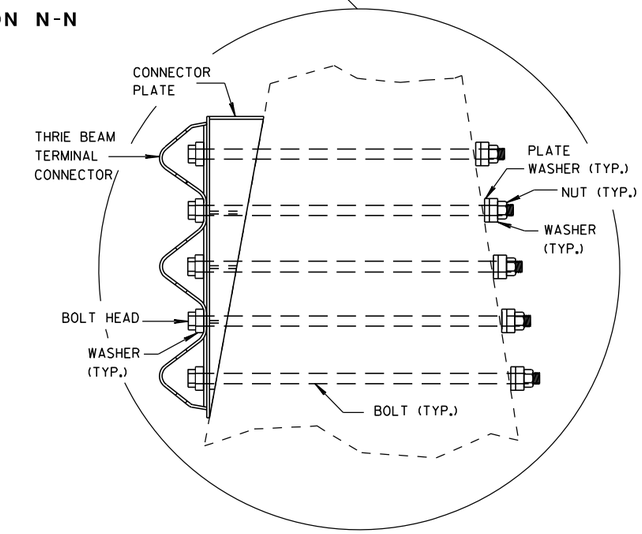

MIDWEST GUARDRAIL SYSTEM
THRIE BEAM TRANSITION (MGS)

STATE OF WISCONSIN
DEPARTMENT OF TRANSPORTATION

APPROVED

8/31/2012
DATE

/S/ Jerry H. [illegible]
ROADWAY STANDARDS ENGINEER

FHWA

6

S.D.D. 14 B 45-3j

6

S.D.D. 14 B 45-3j

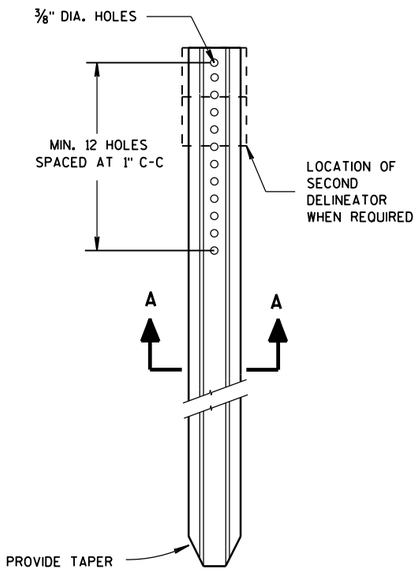

DELINEATOR POST

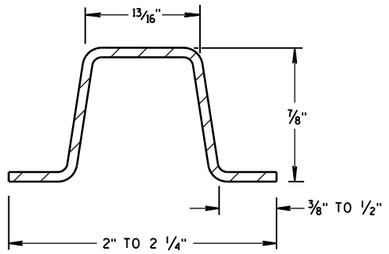

SECTION A-A

WEIGHT 1.12 LBS PER FT. ± 0.1 LB.

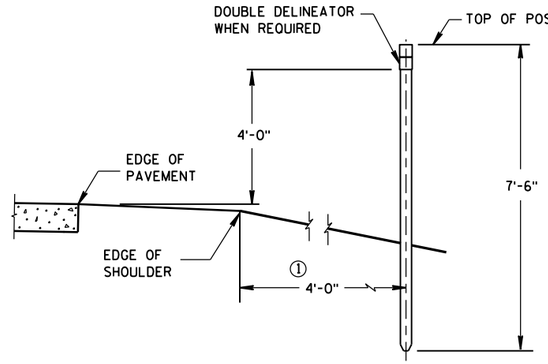

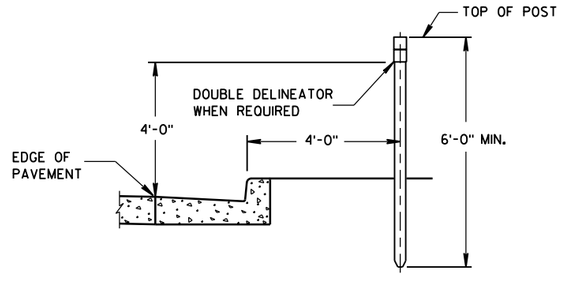

TYPICAL INSTALLATIONS OF DELINEATOR POSTS

GENERAL NOTES

DETAILS OF CONSTRUCTION NOT SHOWN ON THIS DRAWING SHALL CONFORM TO THE PERTINENT REQUIREMENTS OF THE STANDARD SPECIFICATIONS AND THE APPLICABLE SPECIAL PROVISIONS.

① DELINEATORS SHALL BE PLACED AT A CONSTANT DISTANCE FROM THE EDGE OF THE SHOULDER FOR THE LENGTH OF THE INSTALLATION.

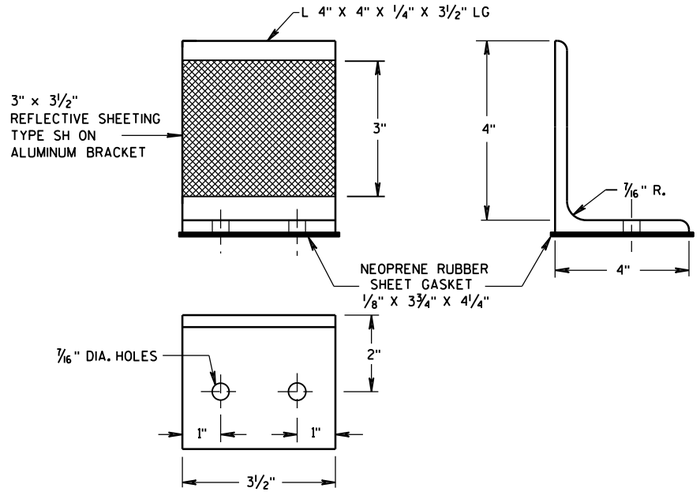

DELINEATOR BRACKET

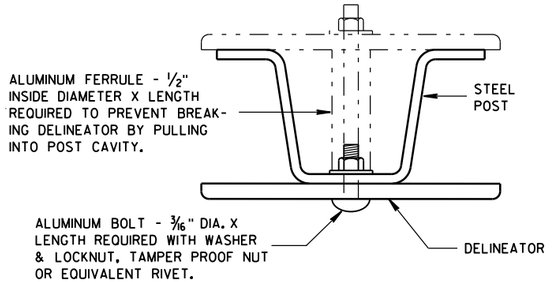

MOUNTING DETAIL FOR DELINEATOR

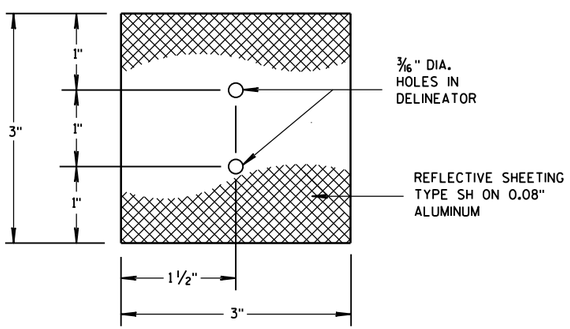

3"x 3" DELINEATOR

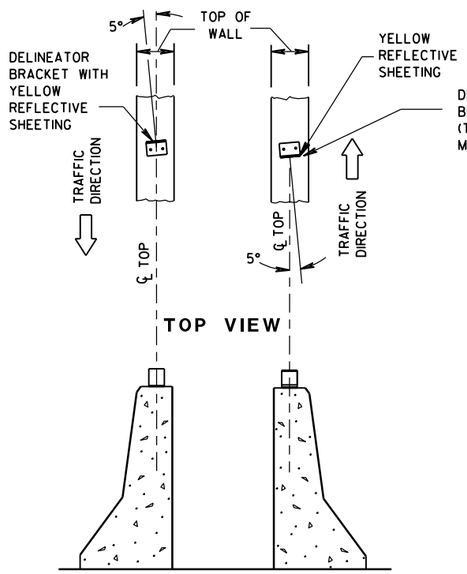

DOUBLE BARRIERS IN MEDIAN

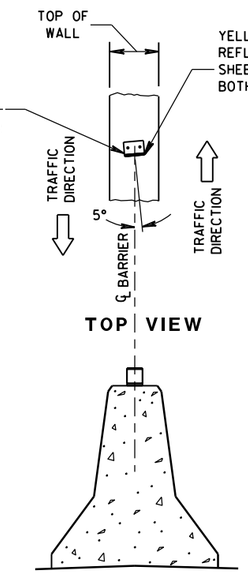

MEDIAN BARRIER

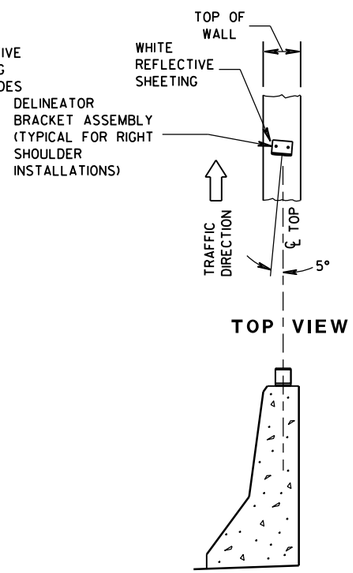

BARRIER LOCATED TO RT. OF TRAFFIC FLOW

LOCATION AND AIMING DETAILS FOR DELINEATOR BRACKETS MOUNTED ON CONCRETE BARRIERS

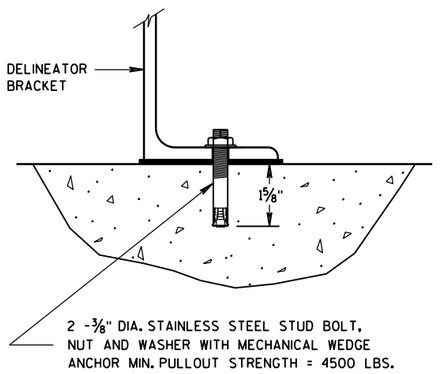

DELINEATOR BRACKET MOUNTING DETAIL

DELINEATOR POST, DELINEATOR, AND DELINEATOR BRACKET WITH REFLECTIVE SHEETING

STATE OF WISCONSIN
DEPARTMENT OF TRANSPORTATION

APPROVED
7/2013 — DATE
/S/ Travis Feltes — STATE TRAFFIC E
FHWA

6

S.D.D. 15 A 2-8

6

S.D.D. 15 A 2-8

NOTE: PULL OR STRETCHER POST ASSEMBLIES SHALL BE PLACED MIDWAY BETWEEN END POSTS AND CORNER POSTS WHERE A RUN OF FENCE EXCEEDS 660' BUT IS LESS THAN 1,320'. FOR RUNS OF FENCE IN EXCESS OF 1,320' MAXIMUM SPACING OF PULL OR STRETCHER POST ASSEMBLIES SHALL BE 660'± C-C.

ILLUSTRATION SHOWS POSITION OF STANDARD STEEL BRACE, DOUBLE STRAND GALVANIZED WIRE, AND THE POST TO BE EMBEDDED IN CONCRETE WHEN WIRE FENCE IS INSTALLED FROM LEFT TO RIGHT. THE BRACES SHALL BE POSITIONED ON THE OPPOSITE DIAGONALS AND THE OPPOSITE POST SHALL BE EMBEDDED IN CONCRETE WHEN WIRE FENCE IS INSTALLED FROM RIGHT TO LEFT.

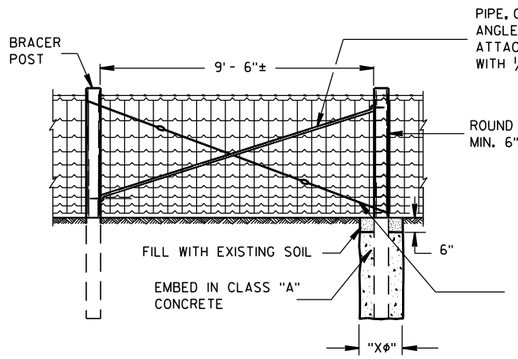

PULL OR STRETCHER POSTS ASSEMBLY

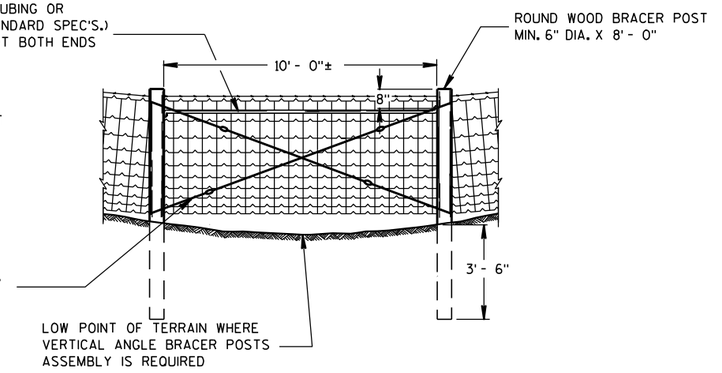

VERTICAL ANGLE BRACER POSTS ASSEMBLY

GENERAL NOTES

"XΦ" = DIAMETER OF THE POST PLUS 12".

FENCE STAPLES SHOULD NEVER BE DRIVEN VERTICALLY INTO WOOD POSTS (WITH BOTH LEGS PARALLEL WITH THE WOOD GRAIN). DOING SO CAN SEPARATE THE GRAIN AND SIGNIFICANTLY REDUCE THE HOLDING POWER. ROTATING THE STAPLES SLIGHTLY OFF VERTICAL STRADDLES THE GRAIN AND PROVIDES MORE RESISTANCE TO PULL-OUT.

DO NOT STAPLE WIRE TIGHT TO THE LINE POSTS. ALLOW MOVEMENT OF WIRE FOR EXPANSION AND CONTRACTION. STAPLE ARRANGEMENT SHALL BE THE SAME FOR ALL OTHER POSTS EXCEPT THAT THEY SHALL BE DRIVEN TIGHT TO POSTS. ALL STAPLES SHALL BE 2" X 9 GAGE AND SHALL BE MANUFACTURED FROM GALVANIZED WIRE OR HOT DIP GALVANIZED AFTER FORMING. STAPLES SHALL HAVE SLASH-CUT POINTS.

FENCE SHALL BE LOCATED 3'-0" INSIDE THE RIGHT OF WAY LINE UNLESS OTHERWISE INDICATED ON THE PLANS.

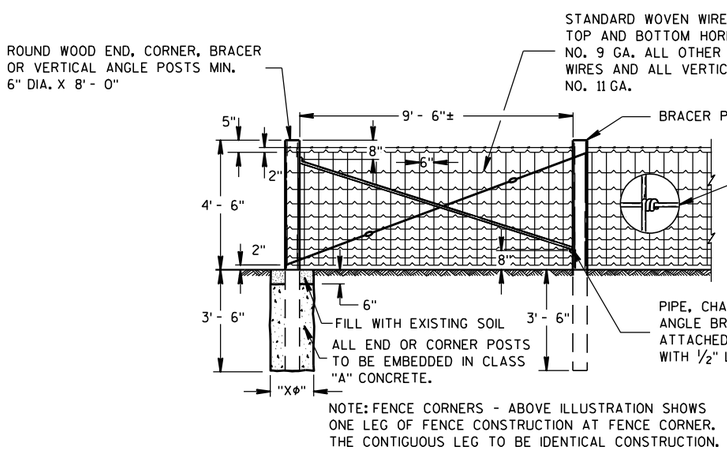

NOTE: FENCE CORNERS - ABOVE ILLUSTRATION SHOWS ONE LEG OF FENCE CONSTRUCTION AT FENCE CORNER. THE CONTIGUOUS LEG TO BE IDENTICAL CONSTRUCTION.

END OR CORNER POSTS ASSEMBLY

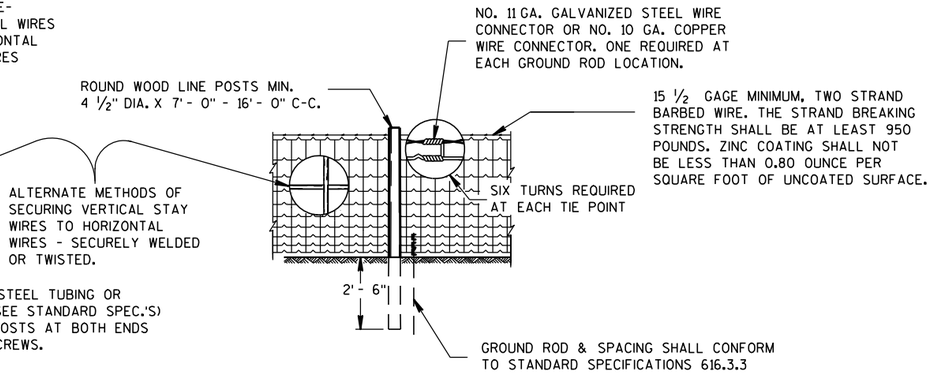

LINE FENCE CONSTRUCTION

GENERAL ROADSIDE VIEW OF WOVEN WIRE FENCE

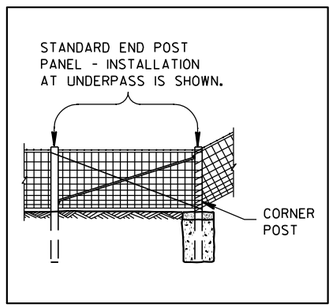

ALTERNATE FENCE DESIGN AT STRUCTURE

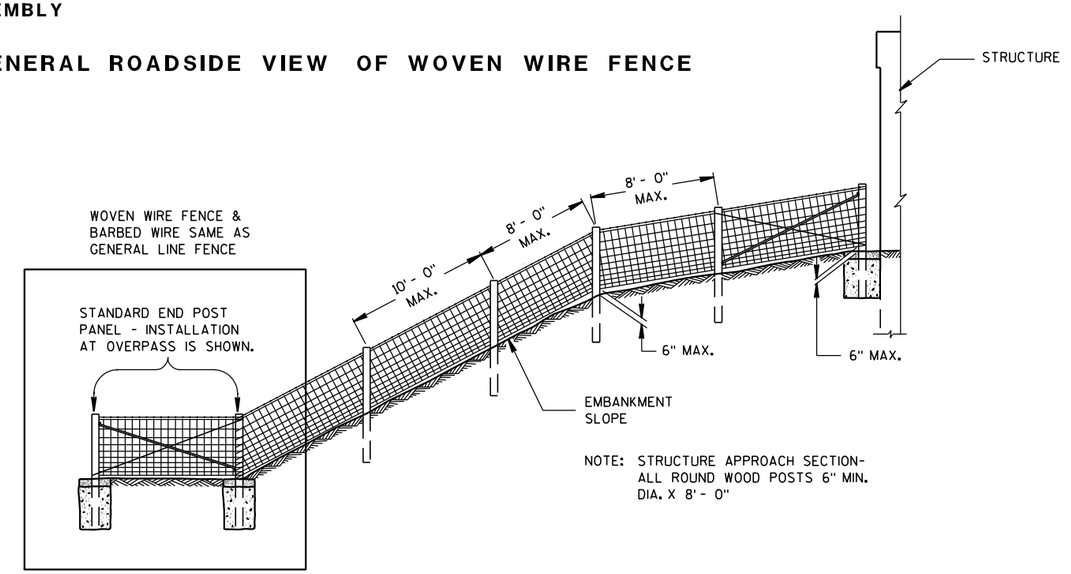

NOTE: STRUCTURE APPROACH SECTION- ALL ROUND WOOD POSTS 6" MIN. DIA. X 8' - 0"

FENCE DESIGN AT STRUCTURE APPROACH

FENCE WOVEN WIRE

STATE OF WISCONSIN
DEPARTMENT OF TRANSPORTATION

6

S.D.D. 15 B 1-8a

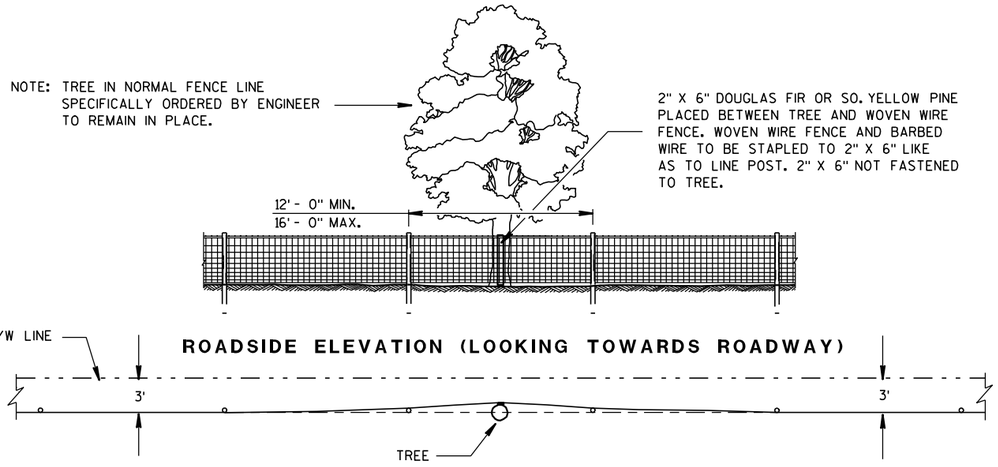

PLAN VIEW

FENCE DESIGN AT TREES REMAINING IN NORMAL FENCE LINE

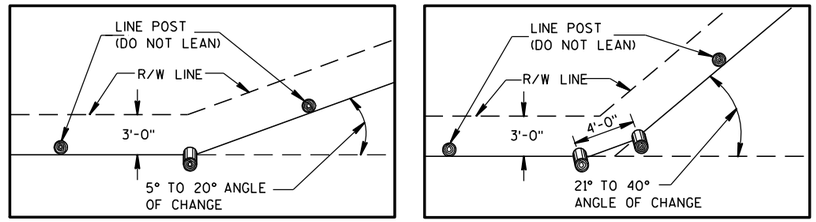

PLAN VIEW
SINGLE POST CORNER

PLAN VIEW
DOUBLE POST CORNER

RIGHT OF WAY LINE CHANGE 40° AND LESS

NOTE: SINGLE AND DOUBLE POSTS SHALL BE A MIN. 6" DIA. X 8'-0" WITH A LEAN OF 4" TOWARD THE OUTSIDE OF THE CURVE.

WHEN THE RIGHT OF WAY LINE CHANGE IS MORE THAN 40° USE THE CORNER OR STRETCHER POSTS ASSEMBLY.

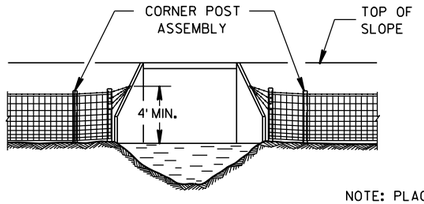

NOTE: PLACE A MINIMUM OF 4 STRANDS OF BARBED WIRE, 6" MAXIMUM CENTERS IN FAN SHAPE CONNECTED TO AN EYE BOLT ON WINGWALL OR SET A LONE POST WHEN NECESSARY TO CONNECT BARBED WIRE.

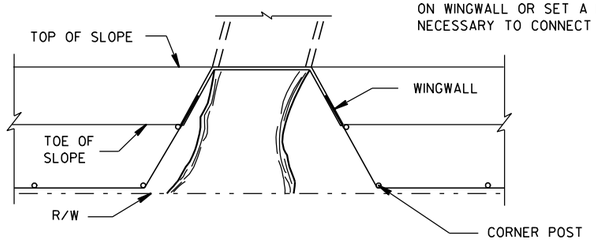

FENCE INSTALLATION TO WINGWALLS

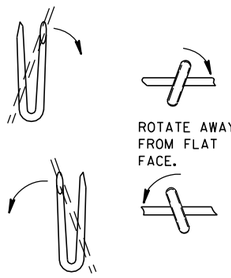

LINE POST

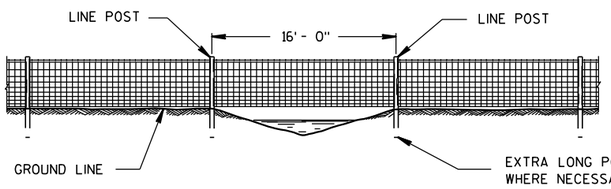

FENCE CONSTRUCTION OVER STREAM COURSES OF 15 FT. OR LESS IN WIDTH

NOTE: WHEN POSTS ARE DRIVEN THE SMALL END SHALL BE DOWN.

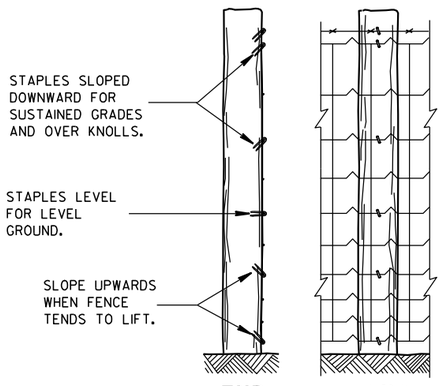

END ELEVATION **FARM SIDE ELEVATION**

FENCE MOUNTING DETAIL

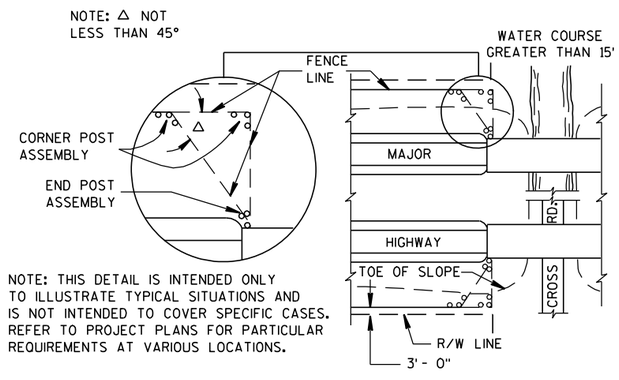

PLAN VIEW
MAJOR HIGHWAY OVERPASS OR STREAM COURSE CROSSING OF GREATER THAN 15 FT. IN WIDTH

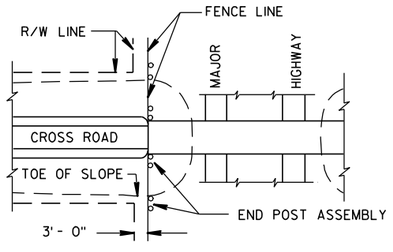

PLAN VIEW
MAJOR HIGHWAY UNDERPASS

FENCE LOCATION AT STRUCTURES

FENCE WOVEN WIRE

STATE OF WISCONSIN
DEPARTMENT OF TRANSPORTATION

APPROVED
4/4/2008 — DATE
/S/ Jerry H. ... — ROADWAY STANDARDS ENGINEER
FHWA

6

S.D.D. 15 B 1-8b

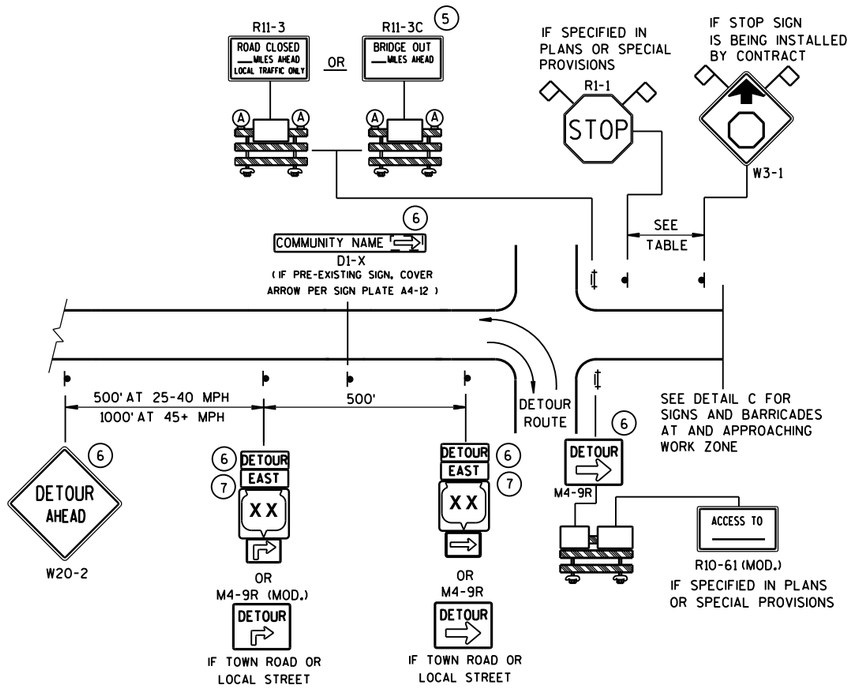

DETAIL A
MAINLINE CLOSURE WITH POSTED DETOUR

WORK ZONE GREATER THAN ½ MILE FROM DETOUR ROUTE (1000 FEET IF URBAN)

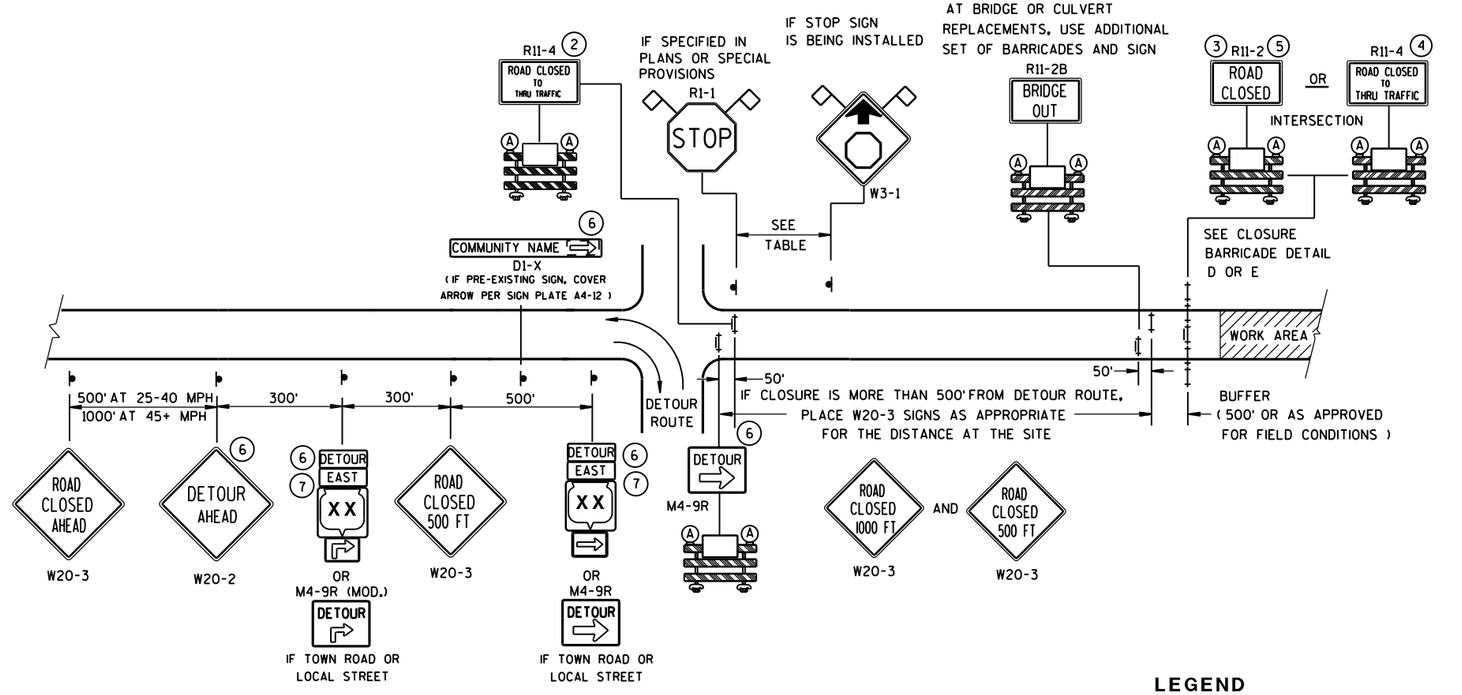

DETAIL B
MAINLINE CLOSURE WITH POSTED DETOUR

WORK ZONE LESS THAN ½ MILE FROM DETOUR ROUTE (1000 FEET IF URBAN)

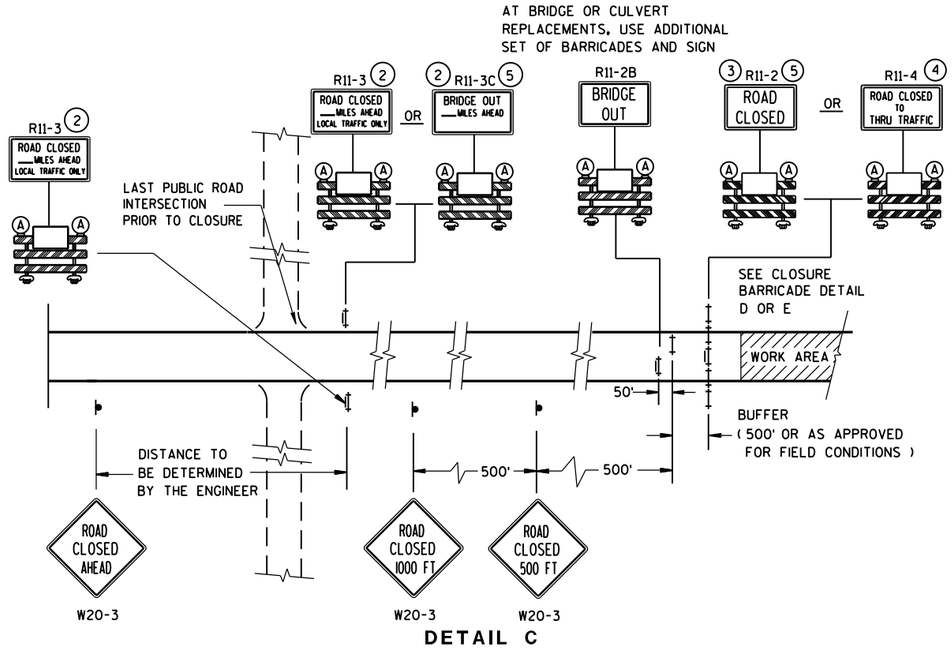

DETAIL C
MAINLINE CLOSURE, NO POSTED DETOUR

SPEED LIMIT (MPH)	"STOP AHEAD" ADVANCE WARNING DISTANCE (FT)
25	200
30	200
35	350
40	350
45	500
50	550
55	750

SEE SDD 15C2-SHEET "**b**"
FOR GENERAL NOTES
AND FOOTNOTES ① THROUGH ⑦

LEGEND

- SIGN ON PERMANENT SUPPORT
- TYPE III BARRICADE
- TYPE III BARRICADE WITH ATTACHED SIGN
- (A) TYPE "A" WARNING LIGHT (FLASHING)
- WORK AREA
- DETOUR / EAST — M4-8 / M3-X
- XX — M1-4; COUNTY XX — M1-5A; XX — M1-6
- M05-1 OR M06-1
- FLAGS, 16" X 16" MIN., (ORANGE)

BARRICADES AND SIGNS FOR MAINLINE CLOSURES

STATE OF WISCONSIN
DEPARTMENT OF TRANSPORTATION

8/2013 DATE — /S/ Travis Feltes STATE TRAFFIC ENGINEER — DESIGN

FHWA

6
S.D.D. 15 C 2-5a

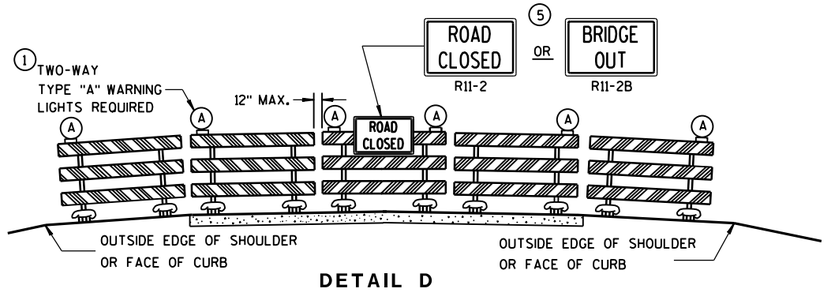

DETAIL D

ROAD CLOSURE BARRICADE DETAIL

APPROACH VIEW

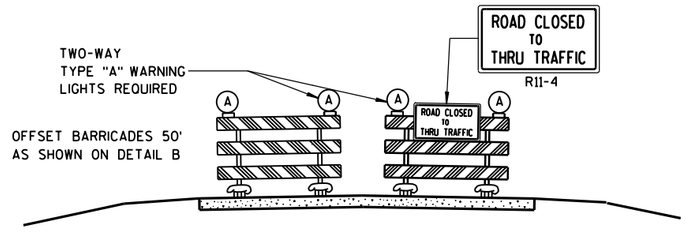

DETAIL E

LANE CLOSURE BARRICADE DETAIL

APPROACH VIEW

SEE SDD 15C2-SHEET "**a**" FOR LEGEND

GENERAL NOTES

THE EXACT NUMBER, LOCATION, AND SPACING OF ALL SIGNS AND BARRICADES SHALL BE ADJUSTED TO FIT FIELD CONDITIONS AS APPROVED BY THE ENGINEER.

ANY SIGNS TEMPORARY OR EXISTING, WHICH CONFLICT WITH TRAFFIC CONTROL "IN USE" SHALL BE REMOVED OR COVERED AS NEEDED AND AS APPROVED BY THE ENGINEER.

THE SPACING BETWEEN TRAFFIC CONTROL SIGNS SHOULD BE ADJUSTED TO NOT CONFLICT WITH AND SHOULD PROVIDE A DESIRABLE MINIMUM OF 200 FEET CLEARANCE TO EXISTING SIGNS THAT WILL REMAIN IN PLACE.

BARRICADES THAT MUST BE MOVED FOR A WORK OPERATION SHALL BE IMMEDIATELY RE-ESTABLISHED UPON COMPLETION OF THE OPERATION OR, FOR CONTINUING OPERATIONS, AT THE END OF EACH WORKING DAY.

SIGNS THAT WILL BE IN PLACE LESS THAN 7 CONTINUOUS DAYS AND NIGHTS MAY BE MOUNTED ON PORTABLE SUPPORTS.

ALL TYPE III BARRICADES SHALL HAVE RAILS REFLECTORIZED ON BOTH FACES. STRIPES SHALL BE PROPERLY SLOPED DOWN TOWARD THE TRAFFIC SIDE OR AS SHOWN IN THE ROAD CLOSURE BARRICADE DETAIL D FOR FULL ROAD CLOSURES.

TYPE "A" LOW-INTENSITY FLASHING WARNING LIGHTS SHALL BE VISIBLE ON BOTH SIDES OF THE BARRICADE.

THE R11-2, R11-3, M4-9, R11-4 AND R10-61 SIGNS PLACED ON BARRICADES SHALL COVER NO MORE THAN THE TOP RAIL. THE SIGNS SHALL NOT COVER ANY PORTION OF THE MIDDLE OR BOTTOM RAILS.

"WO AND "MO" SIGNS ARE THE SAME AS "W" AND "M" SIGNS EXCEPT THE BACKGROUND IS ORANGE.

ALL SIGNS SHALL BE 48" X 48" UNLESS OTHERWISE NOTED BELOW:
- R11-2 SHALL BE 48" X 30".
- R11-3, R11-4 AND R10-61 SHALL BE 60" X 30".
- M4-9 SHALL BE 30" X 24".
- M3-X SHALL BE 24" X 12". (36" X 18" IF NEEDED TO MATCH EXISTING SIGNS.)
- M4-8 SHALL BE 24" X 12". (30" X 15" IF NEEDED TO MATCH EXISTING SIGNS.)
- M1-4, M1-5A, AND M1-6 SHALL BE 24" X 24". (36" X 36" IF NEEDED TO MATCH EXISTING SIGNS.)
- M05-1 AND M06-1 SHALL BE 21" X 21". (30" X 30" IF NEEDED TO MATCH EXISTING SIGNS.)
- D1-X SHALL BE AS SHOWN ON SPECIFIC PROJECT SIGNING DETAIL SHEETS.
- R1-1 SHALL BE 36" X 36".

(1) TWO WARNING LIGHTS SHALL BE PROVIDED ON THE CENTER BARRICADE AND A MINIMUM OF ONE WARNING LIGHT SHALL BE PROVIDED ON EACH OF THE OTHER BARRICADES WITHIN THE ROADWAY LIMITS. SPACING OF THE WARNING LIGHTS SHALL BE UNIFORM TO THE EDGE OF ROADWAY AS SHOWN (APPROX. 8-FOOT LIGHT SPACING).

(2) THESE SIGNS AND BARRICADES ARE NOT REQUIRED IF ROAD CLOSURE BEGINS AT INTERSECTION.

(3) FOR ROAD CLOSURE WITHOUT LOCAL ACCESS TO PROJECT, SEE ROAD CLOSURE BARRICADE DETAIL D.

(4) FOR ROAD CLOSURE WITH LOCAL ACCESS TO PROJECT, SEE LANE CLOSURE BARRICADE DETAIL E.

(5) FOR BRIDGE OR CULVERT REPLACEMENTS, SUBSTITUTE "BRIDGE OUT" INSTEAD OF "ROAD CLOSED" ON R11-2 AND R11-3 SIGNS.

(6) INSTALL DETOUR AND COMMUNITY GUIDE SIGNS AND ARROWS ONLY IF SPECIFIED IN THE CONTRACT. IF THERE ARE EXISTING ROUTE MARKER ASSEMBLIES THAT WILL REMAIN IN PLACE, ADJUST THE LOCATION OF THE DETOUR ROUTE SIGNS TO CORRESPOND WITH THE EXISTING ASSEMBLIES. MODIFY EXISTING SIGNS WHERE POSSIBLE. SEE SPECIFIC PROJECT DETOUR SIGNING DETAIL SHEETS. IF DETOUR SIGNS ARE BEING INSTALLED BY OTHERS, PLACE THE CONTRACTED TRAFFIC CONTROL SIGNS TO ALLOW FOR PLACEMENT OF ALL WARNING, DETOUR AND GUIDE SIGNS AS SHOWN.

(7) "EAST" CARDINAL DIRECTION MARKERS AND RIGHT TURN ARROWS ARE SHOWN. USE OTHER CARDINAL DIRECTIONS AND ARROWS AS APPROPRIATE.

BARRICADES AND SIGNS FOR MAINLINE CLOSURES

STATE OF WISCONSIN
DEPARTMENT OF TRANSPORTATION

8/2013 DATE

/S/ Travis Feltes
STATE TRAFFIC ENGINEER

FHWA

6

S.D.D. 15 C 2-5b

THIS DRAWING PROVIDES GENERAL GUIDANCE ON TYPICAL DETOUR SIGN LAYOUT AND SPACING. SEE PROJECT DETOUR SIGNING SHEETS FOR SPECIFIC DETAILS FOR EACH PROJECT.

GENERAL NOTES

THE EXACT NUMBER, LOCATION AND SPACING OF ALL SIGNS SHALL BE ADJUSTED TO FIT FIELD CONDITIONS AS APPROVED BY THE ENGINEER.

IF THERE ARE EXISTING ROUTE MARKER ASSEMBLIES THAT WILL REMAIN IN PLACE, ADJUST THE LOCATION OF THE DETOUR ROUTE SIGNS TO CORRESPOND WITH THE EXISTING ASSEMBLIES. SEE SPECIFIC PROJECT DETOUR SIGNING DETAIL SHEETS. MODIFY EXISTING SIGNS WHERE POSSIBLE.

THE SPACING BETWEEN TRAFFIC CONTROL AND DETOUR SIGNS SHOULD BE ADJUSTED TO NOT CONFLICT WITH AND TO PROVIDE A DESIRABLE MINIMUM OF 200 FEET CLEARANCE TO EXISTING SIGNS THAT WILL REMAIN IN PLACE.

ANY SIGNS TEMPORARY OR EXISTING, WHICH CONFLICT WITH TRAFFIC CONTROL "IN USE", SHALL BE REMOVED OR COVERED AS NEEDED AND AS APPROVED BY THE ENGINEER.

SIGNS THAT WILL BE IN PLACE LESS THAN 7 CONTINUOUS DAYS AND NIGHTS MAY BE MOUNTED ON PORTABLE SUPPORTS.

"MO" SIGNS ARE THE SAME AS "M" SIGNS EXCEPT THE BACKGROUND IS ORANGE.

SIGN SIZES SHALL BE AS FOLLOWS:

- M3-X SHALL BE 24" X 12". (36" X 18" IF NEEDED TO MATCH EXISTING SIGNS.)
- M4-8 SHALL BE 24" X 12". (30" X 15" IF NEEDED TO MATCH EXISTING SIGNS.)
- M1-4, M1-5A, AND M1-6 SHALL BE 24" X 24". (36" X 36" IF NEEDED TO MATCH EXISTING SIGNS.)
- M05-1 AND M06-1 SHALL BE 21" X 21". (30" X 30" IF NEEDED TO MATCH EXISTING SIGNS.)
- M4-9 SHALL BE 30" X 24".
- M4-8a SHALL BE 24" X 18".
- G20-51 SHALL BE 60" X 24".
- W20-2 SHALL BE 48" X 48".
- D1-X SHALL BE AS SHOWN ON SPECIFIC PROJECT SIGNING DETAIL SHEETS.

* OPTIONAL SIGNS. SEE SPECIFIC PROJECT DETOUR SIGNING DETAIL SHEETS.

** FOR A TOWN ROAD OR LOCAL STREET DETOURED ONTO A STATE TRUNK HIGHWAY, PLACE A ROAD NAME PLAQUE ABOVE THE M4-9 SIGN AS SPECIFIED IN THE CONTRACT.

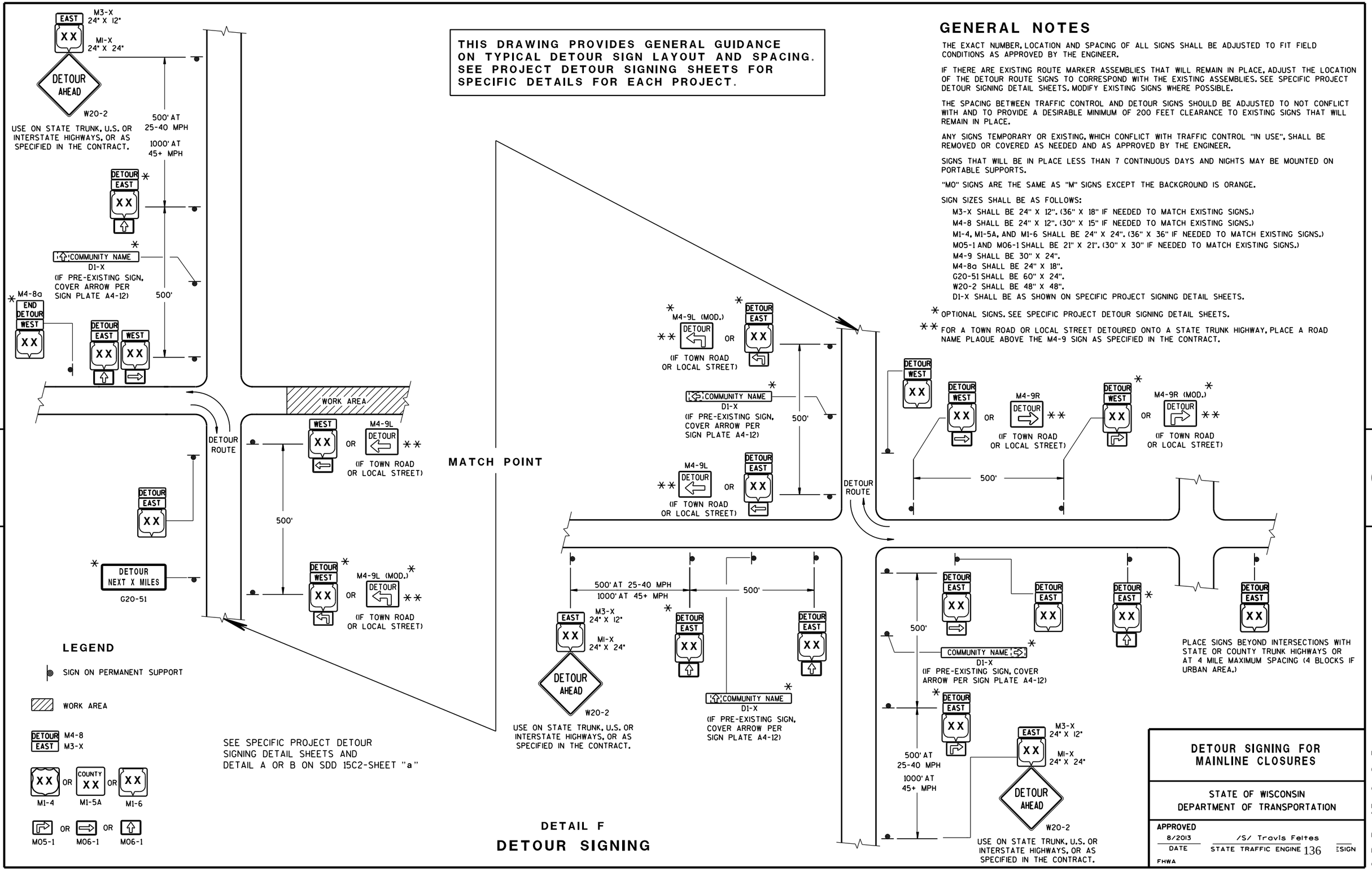

LEGEND

- SIGN ON PERMANENT SUPPORT
- WORK AREA
- DETOUR EAST — M4-8, M3-X
- XX OR COUNTY XX OR XX — M1-4, M1-5A, M1-6
- M05-1 OR M06-1 OR M06-1

SEE SPECIFIC PROJECT DETOUR SIGNING DETAIL SHEETS AND DETAIL A OR B ON SDD 15C2-SHEET "a"

DETAIL F

DETOUR SIGNING

DETOUR SIGNING FOR MAINLINE CLOSURES

STATE OF WISCONSIN
DEPARTMENT OF TRANSPORTATION

APPROVED
8/2013 — DATE
/S/ Travis Feltes — STATE TRAFFIC ENGINEER

FHWA

S.D.D. 15 C 2-5c

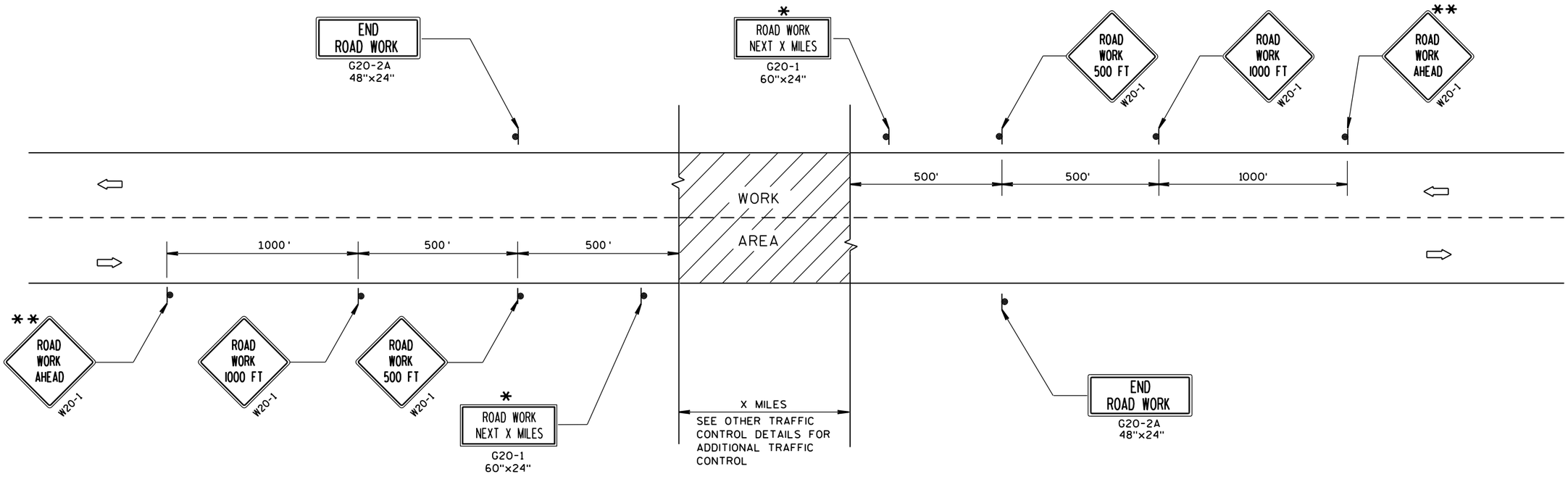

TYPICAL SIDEROAD APPROACH WARNING SIGN DETAIL

GENERAL NOTES

THE EXACT NUMBER, LOCATION, AND SPACING OF ALL SIGNS AND DEVICES SHALL BE ADJUSTED TO FIT FIELD CONDITIONS.

THE SPACING BETWEEN TRAFFIC CONTROL SIGNS SHOULD BE ADJUSTED TO NOT CONFLICT WITH AND SHOULD PROVIDE A MINIMUM OF 200 FEET (500 FEET DESIRABLE) CLEARANCE TO EXISTING SIGNS THAT WILL REMAIN IN PLACE.

ALL SIGNS ARE 48"x48" UNLESS OTHERWISE NOTED.

SIGNS THAT WILL BE IN PLACE LESS THAN 7 CONTINUOUS DAYS AND NIGHTS MAY BE MOUNTED ON PORTABLE SUPPORTS.

IF A "STOP" SIGN MUST BE REMOVED FOR A WORK OPERATION, A TEMPORARY "STOP" SIGN SHALL BE PLACED PRIOR TO THE SIGN REMOVAL, OR A FLAGGER SHALL BE PROVIDED UNTIL THE SIGN IS RE-ESTABLISHED.

* OMIT G20-1 SIGNS IF LENGTH OF WORK AREA IS 2 MILES OR LESS.

** PLACE ADDITIONAL W20-1 "ROAD WORK AHEAD" SIGN IF WORK AREA WITHIN THE PROJECT IS SEPARATED BY MORE THAN 2 MILES FROM PREVIOUS WORK AREA.

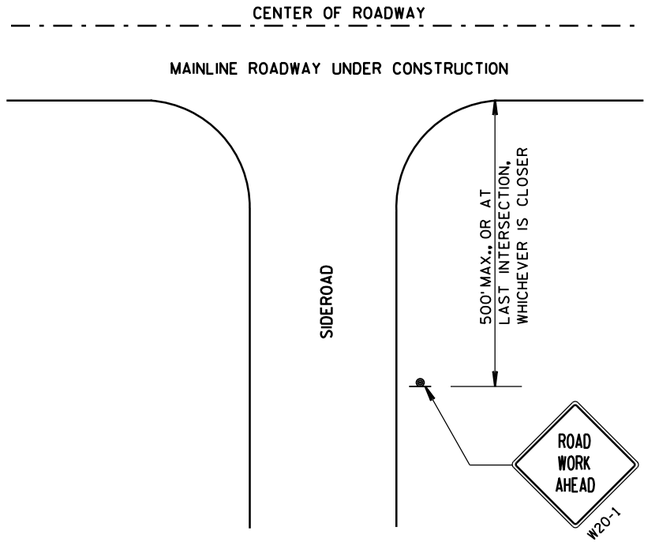

LEGEND

- SIGN ON PERMANENT SUPPORT
- DIRECTION OF TRAFFIC
- WORK AREA

TRAFFIC CONTROL, ADVANCE WARNING SIGNS 45 M.P.H. OR GREATER TWO-WAY UNDIVIDED ROAD OPEN TO TRAFFIC

STATE OF WISCONSIN
DEPARTMENT OF TRANSPORTATION

APPROVED

8/2013 — DATE

/S/ Travis Feltes — STATE TRAFFIC ENGINEER

FHWA

SIGN

6

S.D.D. 15 C 4-2

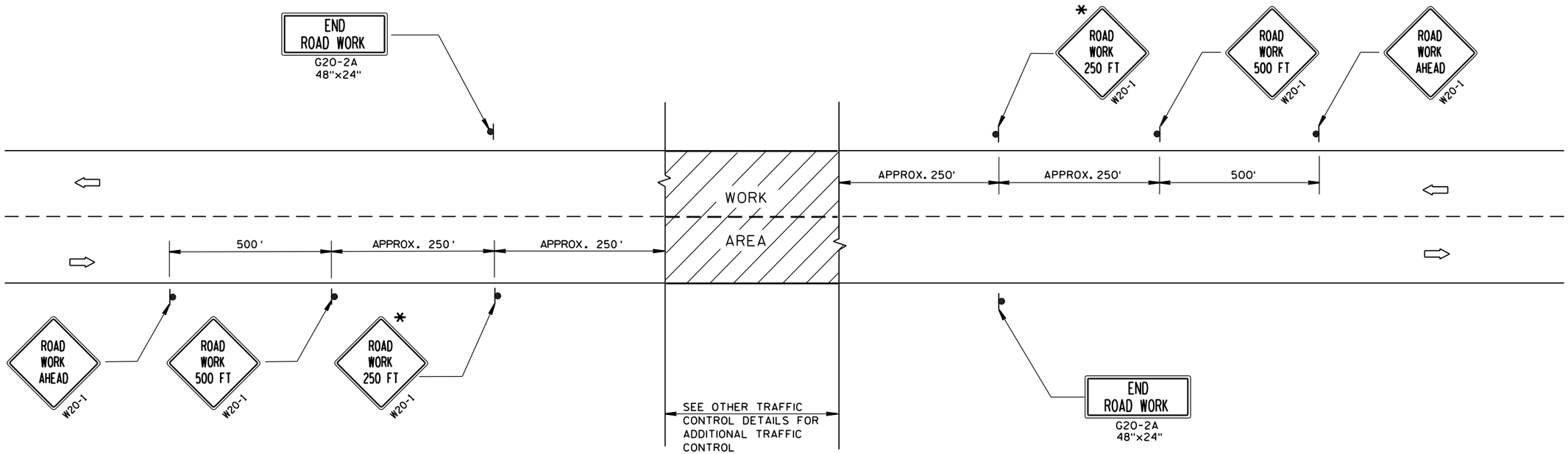

TYPICAL SIDEROAD APPROACH WARNING SIGN DETAIL

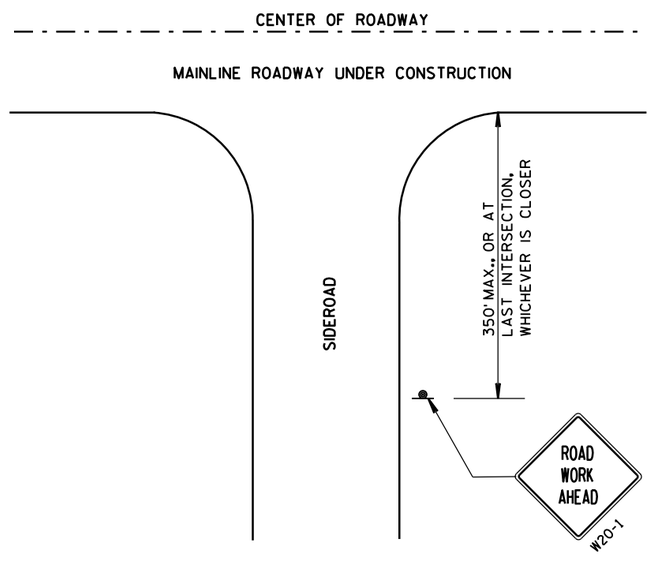

GENERAL NOTES

THE EXACT NUMBER, LOCATION, AND SPACING OF ALL SIGNS AND DEVICES SHALL BE ADJUSTED TO FIT FIELD CONDITIONS.

THE SPACING BETWEEN TRAFFIC CONTROL SIGNS SHOULD BE ADJUSTED TO NOT CONFLICT WITH AND SHOULD PROVIDE A DESIRABLE MINIMUM OF 200 FEET CLEARANCE TO EXISTING SIGNS THAT WILL REMAIN IN PLACE.

ALL SIGNS ARE 48"x48" UNLESS OTHERWISE NOTED. IF NECESSARY DUE TO SPACE CONSTRAINTS, 36"x36" SIGNS MAY BE USED INSTEAD OF 48"x48" SIGNS.

SIGNS THAT WILL BE IN PLACE LESS THAN 7 CONTINUOUS DAYS AND NIGHTS MAY BE MOUNTED ON PORTABLE SUPPORTS.

IF A "STOP" SIGN MUST BE REMOVED FOR A WORK OPERATION, A TEMPORARY "STOP" SIGN SHALL BE PLACED PRIOR TO THE SIGN REMOVAL, OR A FLAGGER SHALL BE PROVIDED UNTIL THE SIGN IS RE-ESTABLISHED.

* THE THIRD W20-1 SIGN IS REQUIRED ONLY IF THERE IS AN INTERSECTION BETWEEN THE "ROAD WORK 500 FT" SIGN AND THE WORK ZONE. ADJUST THE PLACEMENT OF THIS SIGN BASED ON INTERSECTION LOCATION AND OTHER FIELD CONDITIONS.

LEGEND

- SIGN ON PERMANENT SUPPORT
- DIRECTION OF TRAFFIC
- WORK AREA

TRAFFIC CONTROL, ADVANCE WARNING SIGNS 40 M.P.H. OR LESS TWO-WAY UNDIVIDED ROAD OPEN TO TRAFFIC

STATE OF WISCONSIN
DEPARTMENT OF TRANSPORTATION

APPROVED

8/2013 — DATE

/S/ Travis Feltes — STATE TRAFFIC ENGINEER

FHWA

SIGN

6

S.D.D. 15 C 5-2

6

S.D.D. 15 C 5-2

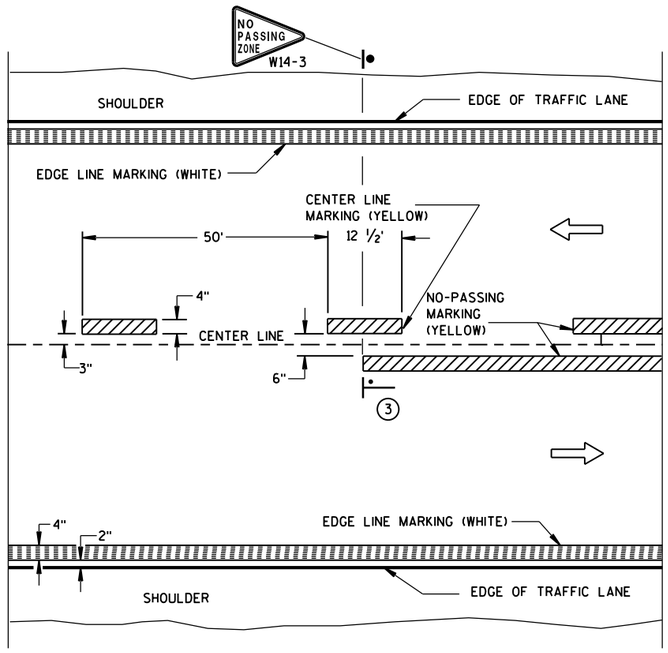

TWO WAY TRAFFIC

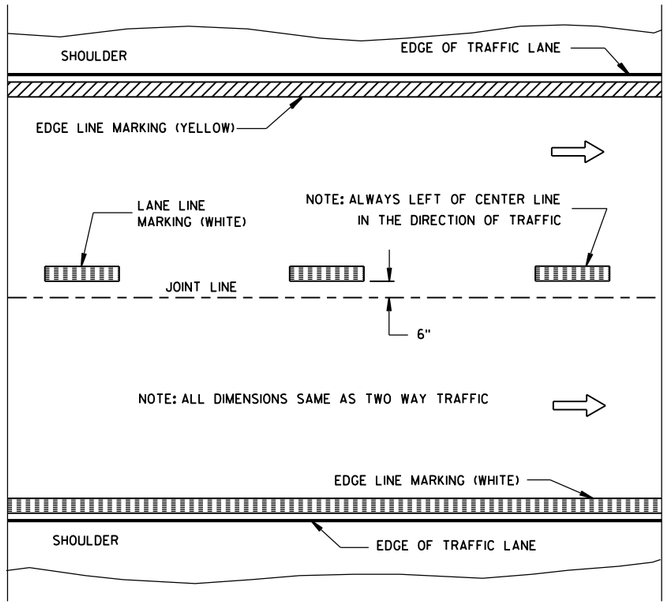

ONE WAY TRAFFIC

PERMANENT PAVEMENT MARKING

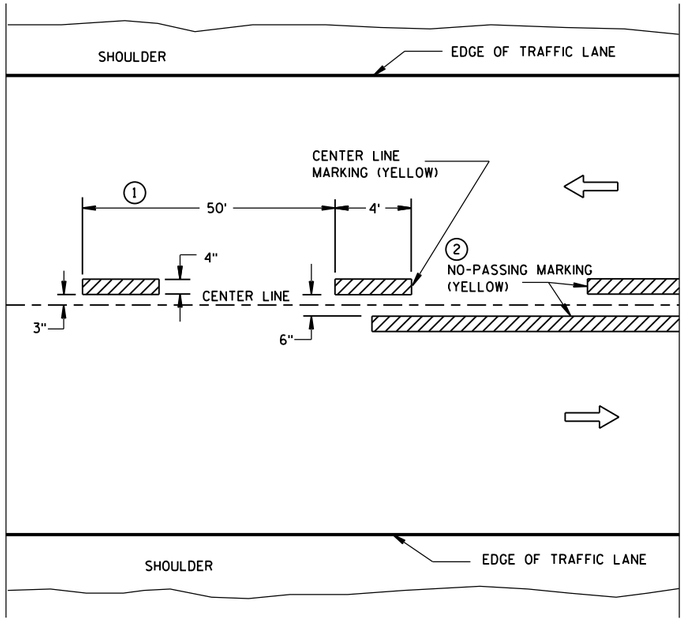

TWO WAY TRAFFIC

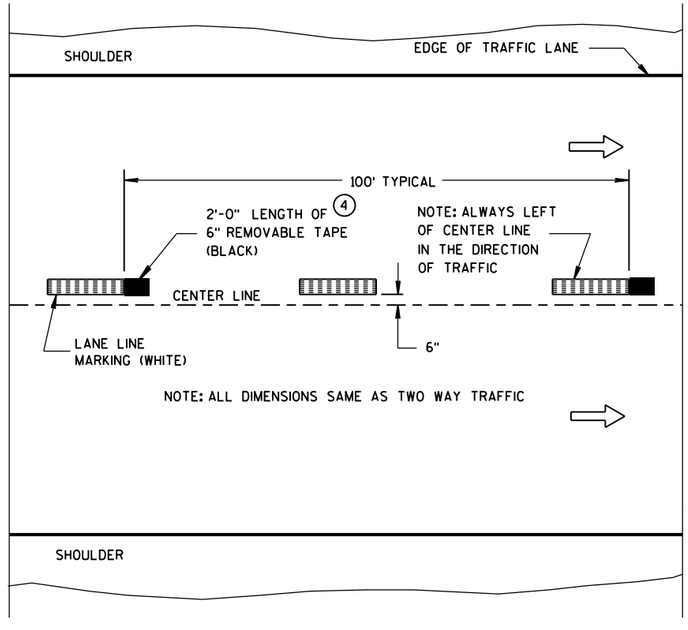

ONE WAY TRAFFIC

TEMPORARY (INTERMEDIATE) PAVEMENT MARKING

(SHOWS CYCLE FOR TEMPORARY CENTER LINE OR TEMPORARY LANE LINE MARKING)

GENERAL NOTES

DETAILS OF CONSTRUCTION NOT SHOWN ON THIS DRAWING SHALL CONFORM TO STANDARD SPECIFICATIONS AND SPECIAL PROVISIONS.

1. HALF CYCLE LENGTHS (25'±) WITH 2' MINIMUM STRIPE LENGTHS SHALL BE PROVIDED ON ROADWAYS (INCLUDING TEMPORARY TRAVELED WAYS) WITH REVERSE CURVATURE, CURVATURE OF OVER 5 DEGREES OR WHEN DIRECTED BY THE ENGINEER TO MARK UNUSUAL ALIGNMENT OF THE TRAVELED WAY.
2. NO PASSING ZONE TEMPORARY PAVEMENT MARKING IS REQUIRED TO BE PLACED, WHERE APPROPRIATE, ALONG WITH CENTERLINE TEMPORARY PAVEMENT MARKING WHEN A SAME DAY PERMANENT PAVEMENT MARKING ITEM IS INCLUDED IN THE CONTRACT.
3. NO PASSING ZONE MARKINGS ARE PLACED ACCORDING TO "T" MARKINGS. IF EXISTING NO PASSING ZONE W14-3 SIGNS ARE BEYOND 50 FEET IN EITHER DIRECTION, THE SIGNS SHALL BE MOVED TO THE "T" MARKINGS.
4. CONCRETE ONLY.

NOTE

ARROW SYMBOL (⇨) SHOWS DIRECTION OF TRAVEL

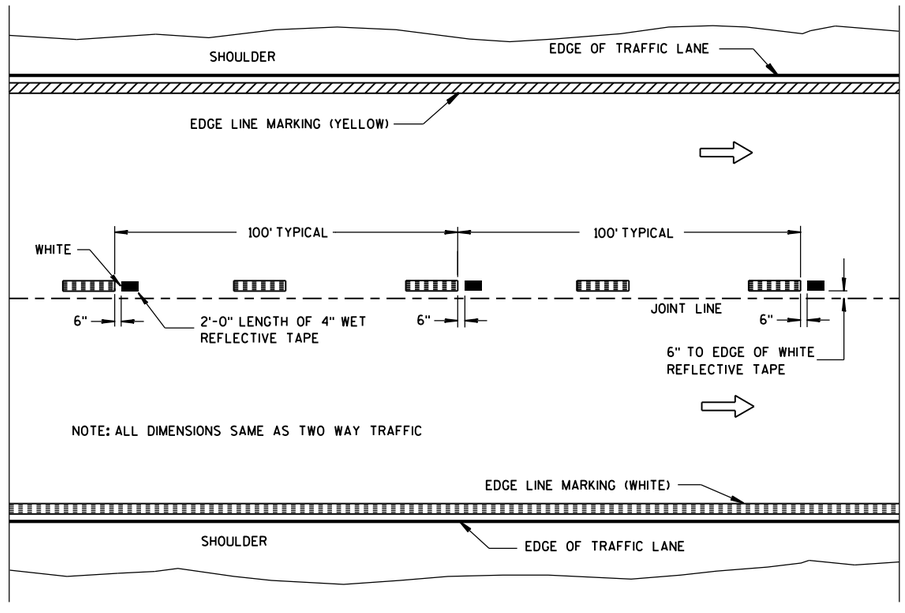

WET REFLECTIVE TAPE SUPPLEMENT TO
SPRAYED OR NON WET REFLECTIVE TAPE LANE LINE

LEGEND

"T" MARKING

POST MOUNTED SIGN

PAVEMENT MARKING (MAINLINE)

STATE OF WISCONSIN
DEPARTMENT OF TRANSPORTATION

APPROVED
5-13-2013 DATE
/S/ Travis Feltes STATE TRAFFIC E
FHWA

6

S.D.D. 15 C 8-16a

6

S.D.D. 15 C 8-16a

LEGEND

- SIGN ON PERMANENT SUPPORT
- TRAFFIC CONTROL DRUM WITH TYPE "C" STEADY BURN LIGHT
- TRAFFIC CONTROL DRUM
- FLASHING ARROW BOARD
- REMOVING PAVEMENT MARKING
- CONCRETE BARRIER TEMPORARY PRECAST
- DIRECTION OF TRAFFIC
- WORK AREA

W057-52
36"x24"

INSTALL ON EACH APPROACH AT THE CLOSEST INTERSECTION WITH A STATE OR COUNTY TRUNK HIGHWAY, OR AS DIRECTED BY THE ENGINEER. WIDTH ON SIGN TO BE APPROX. 1 FOOT LESS THAN AVAILABLE WIDTH (OMIT IF AVAILABLE WIDTH IS MORE THAN 16 FEET).

LOCATED 500 FEET IN ADVANCE OF R2-1 SIGN AND 500 FEET BEYOND THE "ROAD WORK 1 MILE" SIGN.

R2-1
48"x60"
(BLACK AND WHITE)

IF THE REGULATORY SPEED HAS BEEN REDUCED, A SPEED LIMIT SIGN SHALL BE LOCATED 1500 FEET BEYOND THE END OF THE ACCELERATION LANE OF EACH ENTRANCE RAMP. THERE SHOULD BE A SPEED LIMIT SIGN INCORPORATED A MINIMUM OF EVERY 2 OR 3 MILES.

* INCLUDE RESUME SPEED LIMIT SIGN A MINIMUM OF 200 FEET (500 FEET DESIRABLE) AFTER END ROAD WORK SIGNS.

GENERAL NOTES

THIS LANE CLOSURE IS TYPICAL FOR CLOSING RIGHT LANE - REVERSE FOR CLOSING LEFT LANE.

THE EXACT NUMBER, LOCATION, AND SPACING OF ALL SIGNS AND DEVICES SHALL BE ADJUSTED TO FIT FIELD CONDITIONS AS APPROVED BY THE ENGINEER.

THE SPACING BETWEEN SIGNS SHOULD BE ADJUSTED TO NOT CONFLICT WITH AND TO PROVIDE A MINIMUM OF 200 FEET (500 FEET DESIRABLE) CLEARANCE TO EXISTING SIGNS.

ALL SIGNS ARE 48"x48" UNLESS OTHERWISE NOTED.

"WO" IS THE SAME AS "W" EXCEPT THE BACKGROUND IS ORANGE.

ANY SIGNS TEMPORARY OR EXISTING, WHICH CONFLICT WITH TRAFFIC CONTROL "IN USE" SHALL BE REMOVED OR COVERED AS NEEDED OR AS APPROVED BY THE ENGINEER.

(1) CONSIDER ROADWAY GEOMETRICS WHEN LOCATING SIGNS AND ARROW BOARD SO THE DRIVER HAS A CLEAR VIEW OF THE ARROW BOARD AND LANE CLOSURE DRUMS FOR A MINIMUM 1500 FEET IN FRONT OF DRUM TAPER.

FOR A LANE CLOSURE THAT IS IN PLACE LESS THAN 7 CONTINUOUS DAYS AND NIGHTS, THE ADVANCED WARNING SIGNS MAY BE MOUNTED ON PORTABLE SUPPORTS.

REMOVE PAVEMENT MARKINGS IF LANE CLOSURE IS TO BE IN PLACE FOR 4 OR MORE CONTINUOUS DAYS AND NIGHTS.

IF THE HORIZONTAL ALIGNMENT IS SUCH THAT A CURVE MAY REQUIRE ADDITIONAL DELINEATION, THE DEVICE SPACING MAY BE DECREASED TO 50 FEET.

ADJUSTMENTS IN BUFFER SPACE NEED TO BE INCORPORATED WHEN THE LANE CLOSURE OCCURS NEAR AN INTERCHANGE EXIT OR ENTRANCE RAMP OR INTERSECTION. THE LANE CLOSURE MUST TAKE PLACE FAR ENOUGH IN ADVANCE OF AN EXIT OR ENTRANCE RAMP TO STILL ALLOW FOR ADEQUATE BUFFER SPACE. THE MINIMUM LENGTH OF THE BUFFER SPACE BEFORE AN EXIT RAMP SHOULD BE 1/2 THE LENGTH OF THE TRANSITION AREA. THE ENTRANCE RAMP SHOULD BE FOLLOWED BY THE ORIGINAL BUFFER SPACE LENGTH OF 800 FEET DESIRABLE PRIOR TO ANOTHER TRAFFIC CONTROL CHANGE SUCH AS A CROSSOVER MANEUVER.

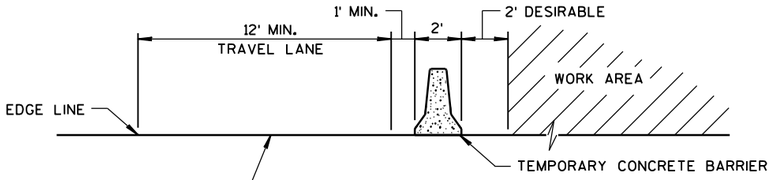

TYPICAL SECTION

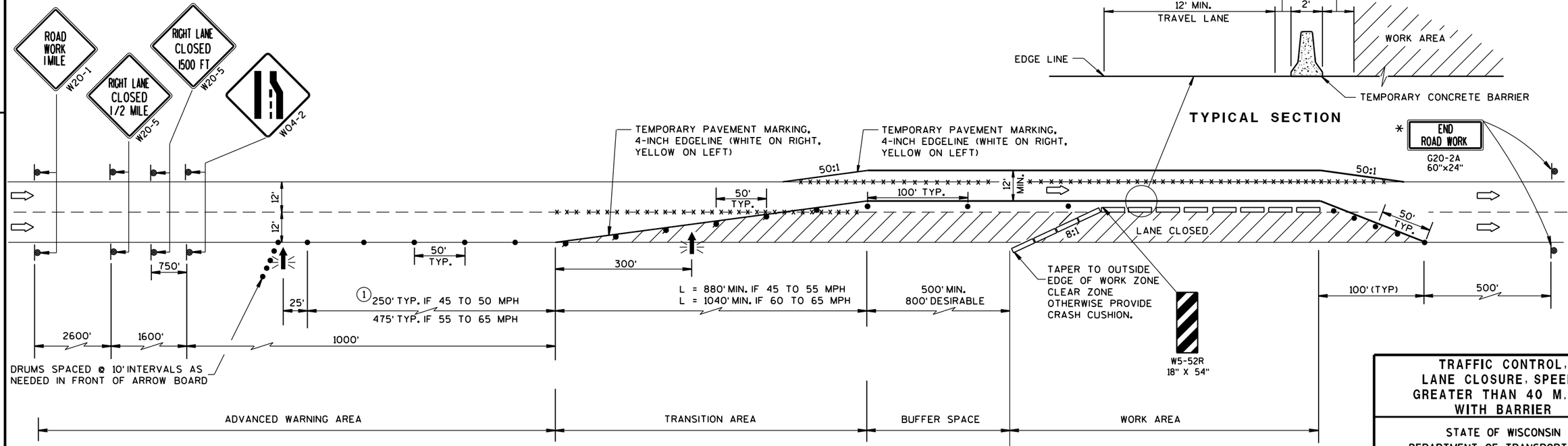

TRAFFIC CONTROL, LANE CLOSURE, SPEEDS GREATER THAN 40 M.P.H. WITH BARRIER

STATE OF WISCONSIN
DEPARTMENT OF TRANSPORTATION

APPROVED
8/2013 (DATE) /S/ Travis Feltes (STATE TRAFFIC ENGINEER) (SIGN)
FHWA

6

S.D.D. 15 D 3-2

6

S.D.D. 15 D 3-2

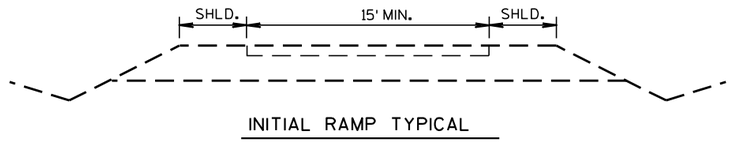

INITIAL RAMP TYPICAL

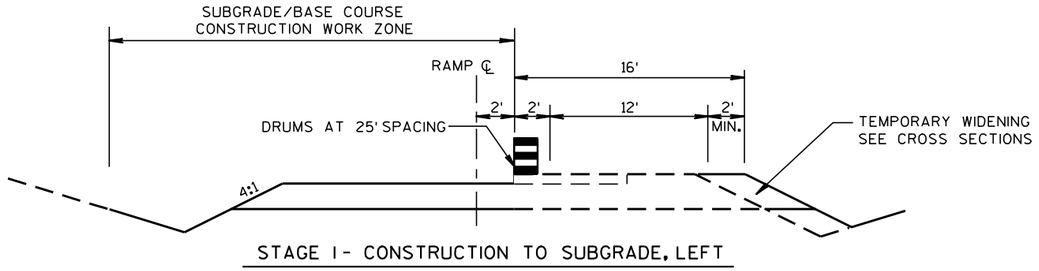

STAGE I - CONSTRUCTION TO SUBGRADE, LEFT

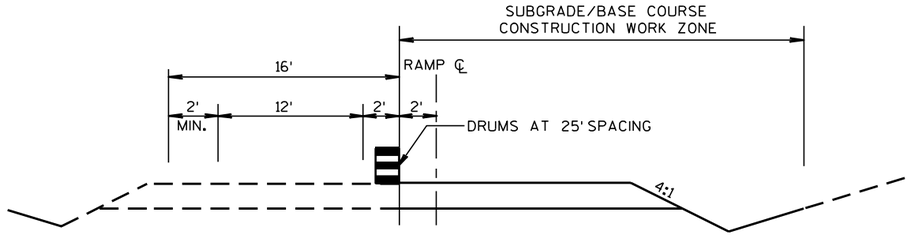

STAGE II - CONSTRUCTION TO SUBGRADE, RIGHT

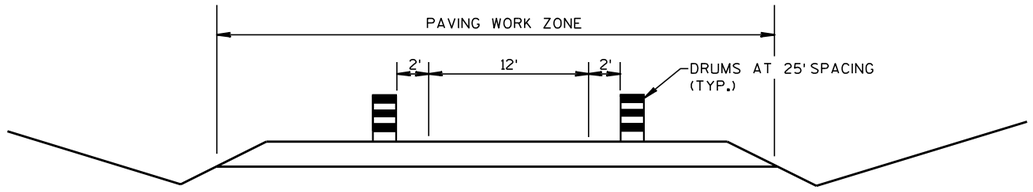

STAGE III - TRAFFIC ON BASE COURSE

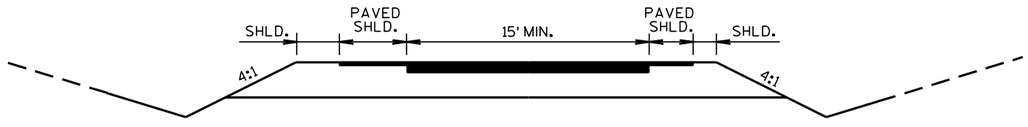

STAGE IV - PAVING

GENERAL NOTES :

WORK SHALL BE SCHEDULED FOR ALL STAGES TO MINIMIZE INCONVENIENCE TO THE TRAFFIC USING THE RAMP WHILE IT IS ONLY BASE COURSE.

IN STAGE III, A MINIMUM 12' LANE WIDTH SHALL BE DELINEATED WITH DRUMS ALONG BOTH EDGES AT ALL TIMES UNTIL PAVED AND PAVEMENT MARKINGS ARE PLACED.

TRAFFIC CONTROL, RAMP CONSTRUCTION STAGING

STATE OF WISCONSIN
DEPARTMENT OF TRANSPORTATION

APPROVED

7-14-94
DATE

/S/ Chester J. [illegible]
DIRECTOR, OFFICE [illegible]

FHWA

6

S.D.D. 15 D 4-1

LEGEND

- TYPE III BARRICADE WITH ATTACHED SIGN
- SIGN ON PERMENENT SUPPORT
- POST WITH ATTACHED SIGN IN DRUM
- TRAFFIC CONTROL DRUM WITH TYPE "C" STEADY BURN LIGHT
- TRAFFIC CONTROL DRUM
- FLASHING ARROW BOARD
- (A) TYPE "A" WARNING LIGHT (FLASHING)
- REMOVING PAVEMENT MARKING
- DIRECTION OF TRAFFIC
- WORK AREA

GENERAL NOTES

THE EXACT NUMBER, LOCATION, AND SPACING OF ALL SIGNS AND DEVICES SHALL BE ADJUSTED TO FIT FIELD CONDITIONS AS APPROVED BY THE ENGINEER.

THE SPACING BETWEEN SIGNS SHOULD BE ADJUSTED TO NOT CONFLICT WITH AND TO PROVIDE A MINIMUM OF 200 FEET, (500 FEET DESIREABLE) DISTANCE TO EXISTING SIGNS.

THIS LANE CLOSURE IS TYPICAL FOR CLOSING RIGHT LANE - REVERSE FOR CLOSING LEFT LANE.

ALL SIGNS ARE 48"×48" UNLESS OTHERWISE NOTED.

"WO" IS THE SAME AS "W" EXCEPT THE BACKGROUND IS ORANGE.

ANY SIGNS TEMPORARY OR EXISTING, WHICH CONFLICT WITH TRAFFIC CONTROL "IN USE" SHALL BE REMOVED OR COVERED AS NEEDED AND AS APPROVED BY THE ENGINEER. NO WARNING LIGHTS SHALL BE WORKING ON "COVERED" OR "DOWNED" SIGNS.

CONSIDER GEOMETRICS WHEN LOCATING SIGNS AND ARROW BOARD SO THE DRIVER HAS A CLEAR VIEW OF THE ARROW BOARD AND LANE CLOSURE DRUMS FOR A MINIMUM 1500 FEET IN FRONT OF DRUMS.

FOR A LANE CLOSURE THAT IS IN PLACE LESS THAN 7 CONTINUOUS DAYS AND NIGHTS, THE ADVANCED WARNING SIGNS MAY BE MOUNTED ON PORTABLE SUPPORTS.

REMOVE PAVEMENT MARKINGS IF LANE CLOSURE IS TO BE IN PLACE FOR LONGER THAN 4 OR MORE DAYS AND NIGHTS.

WARNING LIGHTS ARE NOT REQUIRED IF THE LANE CLOSURE IS A DAYTIME ONLY OPERATION.

IF THE HORIZONTAL ALIGNMENT IS SUCH THAT A CURVE MAY REQUIRE ADDITIONAL DELINEATION, THE DEVICE SPACING MAY BE DECREASED TO 50 FEET.

ADJUSTMENTS IN BUFFER SPACE NEED TO BE INCORPORATED WHEN THE LANE CLOSURE OCCURS NEAR AN INTERCHANGE EXIT OR ENTRANCE RAMP. THE LANE CLOSURE MUST MUST TAKE PLACE FAR ENOUGH IN ADVANCE OF AN EXIT OR ENTRANCE RAMP TO STILL ALLOW FOR ADEQUATE BUFFER SPACE. THE MINIMUM LENGTH OF THE BUFFER SPACE BEFORE AN EXIT RAMP SHOULD BE 1/2 THE LENGTH OF THE TRANSITION AREA. THE ENTRANCE RAMP SHOULD BE FOLLOWED BY THE ORIGINAL BUFFER SPACE LENGTH OF 800 FEET DESIRABLE PRIOR TO ANOTHER TRAFFIC CONTROL CHANGE SUCH AS A CROSSOVER MANEUVER.

* THE LEFT REVERSE CURVE SIGN (WO1-4L) IS ONLY REQUIRED WHEN THIS DETAIL IS USED IN COMBINATION WITH "SINGLE LANE CROSSOVER" DETAIL.

LOCATED 500 FEET IN ADVANCE OF R2-1 SIGN AND 500 FEET BEYOND THE "ROAD WORK 1 MILE" SIGN.

R2-1
48"×60"
(BLACK AND WHITE)

IF THE REGULATORY SPEED HAS BEEN REDUCED, A SPEED LIMIT SIGN SHALL BE LOCATED 1500 FEET BEYOND THE END OF THE ACCELERATION LANE OF EACH ENTRANCE RAMP. THERE SHOULD BE A SPEED LIMIT SIGN INCORPORATED A MINIMUM OF EVERY 2 OR 3 MILES.

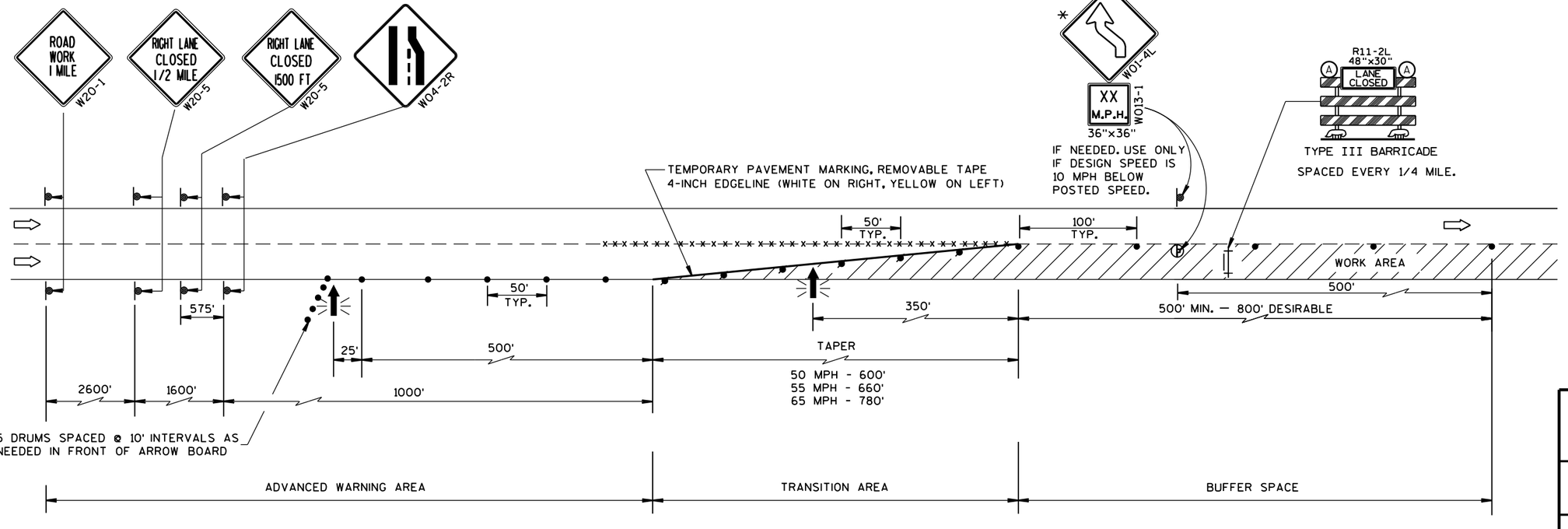

TRAFFIC CONTROL, LANE CLOSURE, SPEEDS GREATER THAN 40 M.P.H.

STATE OF WISCONSIN
DEPARTMENT OF TRANSPORTATION

APPROVED
8/2013 — DATE
/S/ Travis Feltes — STATE TRAFFIC ENGINEER
FHWA

6
S.D.D. 15 D 12-3

LEGEND

- TRAFFIC CONTROL DRUM
- SIGN ON PERMANENT SUPPORT
- DIRECTION OF TRAFFIC
- FLASHING ARROW BOARD
- WORK AREA

GENERAL NOTES

THIS DETAIL IS TYPICAL FOR CLOSING THE RIGHT SHOULDER. FOR CLOSING THE LEFT SHOULDER, REVERSE THE TRAFFIC CONTROL.

THIS DETAIL MAY BE USED FOR DIVIDED ROADWAYS WITH ANY NUMBER OF TRAVEL LANES.

THE EXACT NUMBER, LOCATION AND SPACING OF ALL SIGNS AND DEVICES SHALL BE ADJUSTED TO FIT FIELD CONDITIONS AS APPROVED BY THE ENGINEER.

ALL SIGNS ARE 48" X 48" UNLESS OTHERWISE NOTED.

SIGN LAYOUTS SHALL BE IN ACCORDANCE WITH THE FHWA'S MANUAL OF STANDARD HIGHWAY SIGNS OR THE WISCONSIN STANDARD SIGN PLATES.

SIGNS THAT WILL BE IN PLACE LESS THAN 7 CONTINUOUS DAYS AND NIGHTS MAY BE MOUNTED ON PORTABLE SUPPORTS.

ANY SIGNS TEMPORARY OR EXISTING, WHICH CONFLICT WITH TRAFFIC CONTROL "IN USE" SHALL BE REMOVED OR COVERED AS NEEDED AND AS APPROVED BY THE ENGINEER.

CHANNELIZING DEVICES PLACED ADJACENT TO THE WORK AREA SHALL BE PULLED BACK FROM THE TRAVEL LANE WHEN WORK IS NOT IN PROGRESS.

WHEN A RAMP INTERSECTS THE FACILITY ON WHICH THE WORK IS BEING PERFORMED, ADDITIONAL TRAFFIC CONTROLS SHALL BE PROVIDED AS SPECIFIED IN THE PLANS AND/OR THE SPECIAL PROVISIONS OR AS APPROVED BY THE ENGINEER.

*FOR SHORT DURATION SHOULDER WORK OF LESS THAN ONE HOUR, THE W21-5a SIGN MAY BE OMITTED.

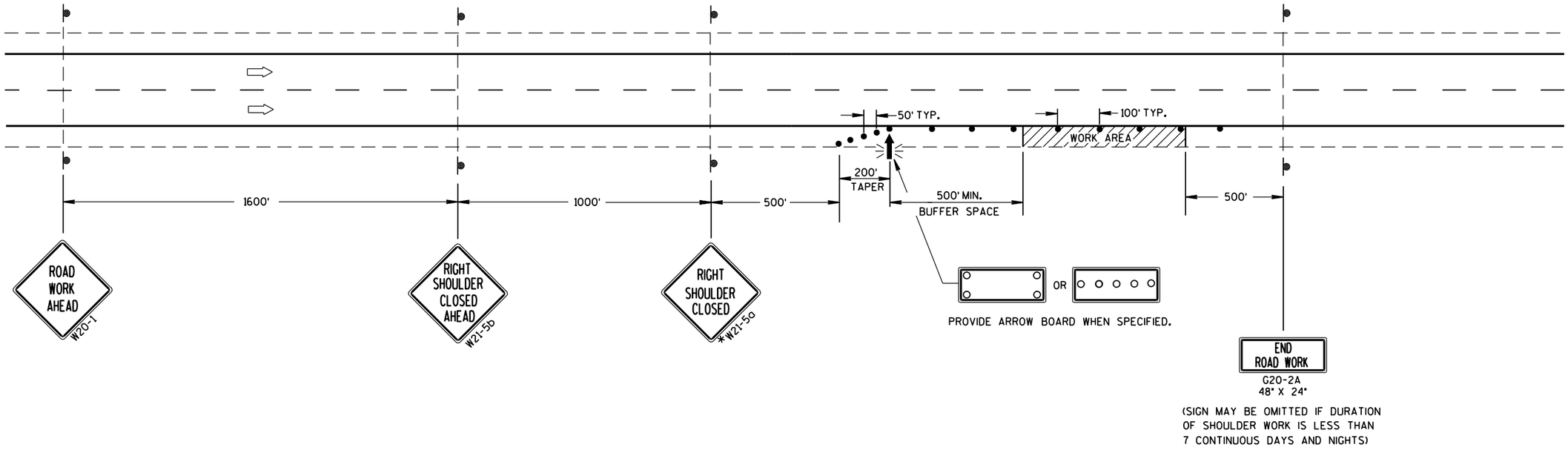

TRAFFIC CONTROL SHOULDER CLOSURE ON DIVIDED ROADWAY, SPEEDS GREATER THAN 40 MPH

STATE OF WISCONSIN
DEPARTMENT OF TRANSPORTATION

APPROVED

8/2013 DATE

/S/ Travis Feltes
STATE TRAFFIC ENGINEER

FHWA

6

S.D.D. 15 D 27-2

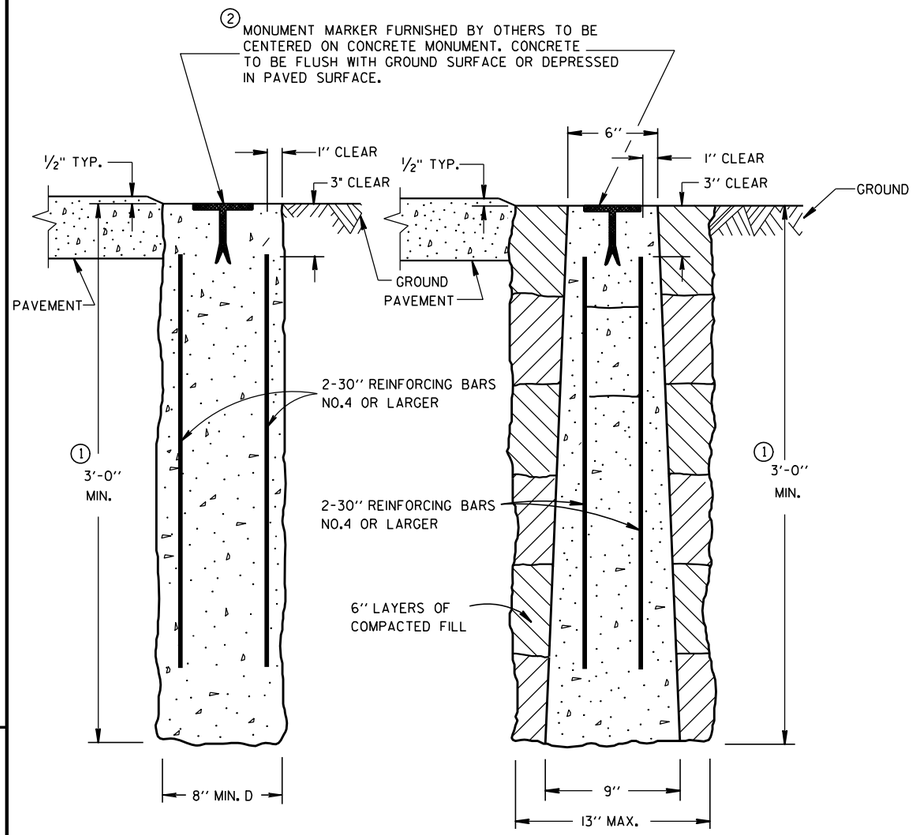

CAST-IN-PLACE PRECAST

CONCRETE MONUMENTS

TYPE A

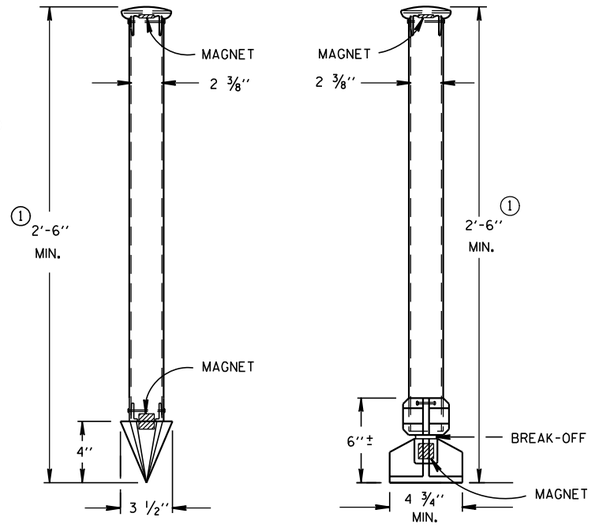

TYPE C DRIVE-IN MONUMENT

TYPE D BREAK-OFF MONUMENT

ALUMINUM MONUMENTS

(INCLUDES MARKER)

GENERAL NOTES

DETAILS OF CONSTRUCTION, MATERIALS AND WORKMANSHIP NOT SHOWN ON THIS DRAWING SHALL CONFORM TO THE PERTINENT REQUIREMENTS OF THE STANDARD SPECIFICATIONS AND THE APPLICABLE SPECIAL PROVISIONS.

DETAILED DRAWINGS OF PROPOSED ALTERNATE DESIGNS FOR METAL MONUMENTS OR MONUMENT COVERS SHALL BE SUBMITTED TO THE ENGINEER FOR APPROVAL.

INSTALLED METAL MONUMENTS MUST BE EASILY DETECTED WITH A DIP NEEDLE. INSERT PERMANENT MAGNETS SHALL BE ATTACHED NEAR THE TOP AND BOTTOM OF THOSE MONUMENTS CONSTRUCTED OF A METAL ALLOY WHICH IS NOT ATTRACTIVE TO A DIP NEEDLE.

THE CAST IRON MONUMENT COVER SHALL BE A "NON-ROCKING" TYPE. ADJUSTMENT OF THE COVER TO GRADE MAY BE ACCOMPLISHED BY THE USE OF MORTAR AND BRICK, OR BY EITHER PRECAST OR CAST-IN-PLACE REINFORCED CONCRETE GRADE RINGS.

MONUMENTS SHALL BE LOCATED AND PLACED AT THE DIRECTION OF THE ENGINEER.

ALUMINUM MONUMENTS AND MONUMENT COVERS SHALL BE MADE FROM AN ALUMINUM AND MAGNESIUM ALLOY AS DETERMINED BY THE MANUFACTURER.

THE MONUMENT COVERS DETAILED ON THIS DRAWING ARE NOT EQUAL ALTERNATES. MONUMENT COVERS SHALL BE CAST IRON UNLESS ALUMINUM IS SPECIFIED ELSEWHERE IN THE CONTRACT.

MONUMENT SHALL BE CAST-IN-PLACE CONCRETE UNLESS PRECAST CONCRETE OR ALUMINUM MONUMENTS ARE SPECIFIED IN THE CONTRACT OR PERMITTED BY THE ENGINEER.

① MINIMUM LENGTH SHALL BE 4'-0" FOR MONUMENTS INSTALLED IN PAVED AREAS.

② AN OFFICIAL COUNTY MONUMENT MARKER SUPPLIED BY A COUNTY MAY BE REQUIRED FOR SOME SECTION CORNERS AND WITNESS MONUMENTS INSTEAD OF THIS WIS DOT MARKER.

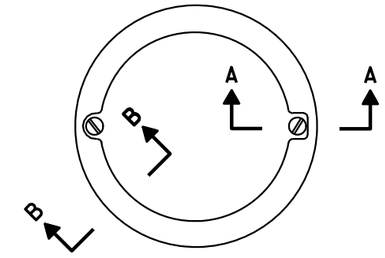

TOP VIEW

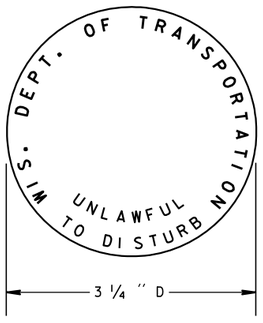

② WIS DOT MONUMENT MARKER LOGO FOR TYPES "A", "C" & "D"

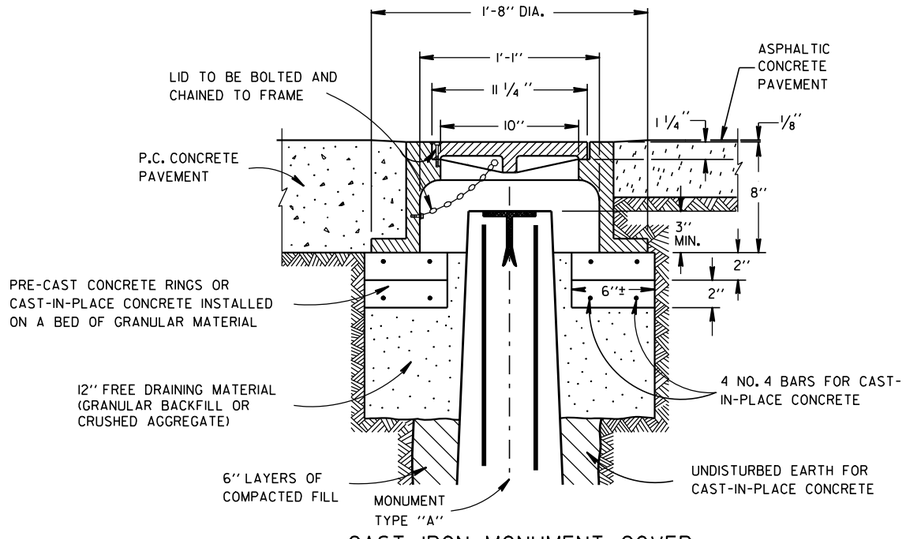

CAST IRON MONUMENT COVER

(APPROXIMATE WEIGHT - 95 LBS.)

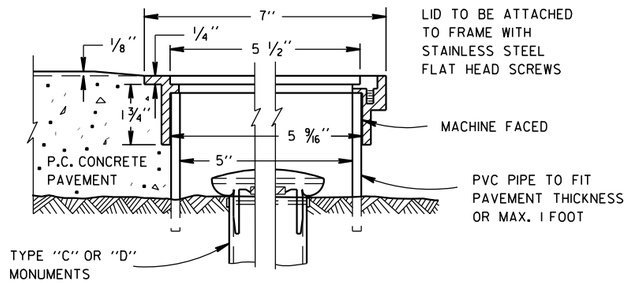

SECTION B-B SECTION A-A

ALUMINUM MONUMENT COVER

(APPROXIMATE WEIGHT 2 LBS)

(FOR CONCRETE PAVEMENT ONLY)

LANDMARK REFERENCE MOUNMENTS AND COVERS

STATE OF WISCONSIN
DEPARTMENT OF TRANSPORTATION

APPROVED
9/22/1999 DATE
/S/ Rory L. Rhinesmith
CHIEF ROADWAY DEVELOPMENT ENGINEER
FHWA

6
S.D.D. 16 A 1-6

GENERAL NOTES:

1. DETAILS OF CONSTRUCTION, MATERIALS, AND WORKMANSHIP NOT SHOWN ON THIS DRAWING SHALL CONFORM TO THE PERTINENT REQUIREMENTS OF THE STANDARD SPECIFICATIONS, THE SPECIAL PROVISIONS, AND THE PLANS.

2. UNLESS OTHERWISE NOTED, ALL SIGNS SHOWN ON THIS SHEET ARE "SIGNS, TYPE II".

3. UNLESS OTHERWISE NOTED, TYPE II SIGNS ON THIS SHEET SHALL HAVE "TYPE H REFLECTIVE SHEETING" AND, "TYPE H MESSAGE MATERIAL". TYPE I SIGNS SHALL HAVE TYPE SH REFLECTIVE SHEETING.

4. UNLESS OTHERWISE NOTED, ALL SIGNS SHOWN ON THIS SHEET SHALL HAVE A GREEN BACKGROUND AND WHITE MESSAGE.

5. TYPE II SIGNS ALL UPPER CASE MESSAGE (EXCEPT ON SHIELDS OR WHERE OTHERWISE NOTED) SHALL BE "SERIES E. ALL LOWER CASE MESSAGE WITH AN INITIAL UPPER CASE LETTER SHALL BE "SERIES E.

6. TYPE I SIGNS - ALL UPPER CASE MESSAGE (EXCEPT ON SHIELDS OR WHERE OTHERWISE NOTED) SHALL BE SERIES "E" MODIFIED. ALL LOWER CASE MESSAGE WITH AN INITIAL UPPER CASE LETTER SHALL BE SERIES "E" MODIFIED. ALL CAP WORDS ARE "SERIES E"

7. UNLESS OTHERWISE NOTED, ALL SIGNS SHOWN ON THIS SHEET SHALL HAVE "TYPE A" OR "TYPE C" ARROWS AS SHOWN. SEE THE STANDARD SIGN PLATES FOR FURTHER DETAILS.

8. SEE THE STANDARD SIGN PLATES FOR FURTHER DETAILS ON ROUTE MARKER SHIELDS.

9. THE SIGN NUMBER IS DENOTED IN THE CIRCLE NEAR EACH DETAIL.

10. NUMBER FRACTIONS FOR INTERCHANGE SEQUENCE SIGNS SHALL BE SERIES "E" PER PLATES ALL-7 AND ALL-10

11. DO NOT SCALE.

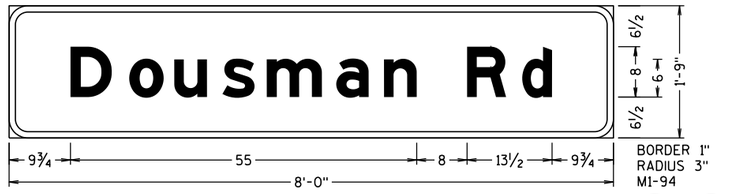

1 7

7

7

SHEET 1 OF 1

PROJECT NO: 1060-38-70	HWY: IH 94	COUNTY: MILWAUKEE	SIGNING DETAIL - TYPE II SIGNS	SCALE: 0 ½" 1"	SHEET 145 E

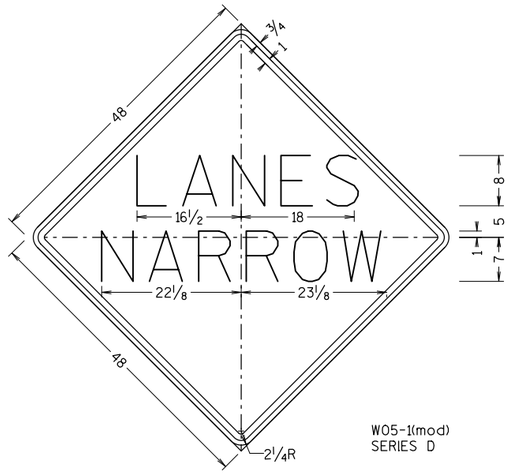

TYPE II
ORANGE-BACKGROUND
BLACK-COPY

7

7

SHEET 1 OF 1

PROJECT NO: 1060-38-70	HWY: IH-94	COUNTY: WAUKESHA	SIGNING DETAIL - WORK ZONE	SCALE: 0 ½" 1"	SHEET 146	E

FILE NAME : Y:\milwaukee\20100S\20103.00\Eng_Docs\Sheets\1060-38-70\070101_sd.dgn PLOT DATE : 7/28/2014 PLOT BY : bweigand PLOT NAME : PLOT SCALE : 1:48.125

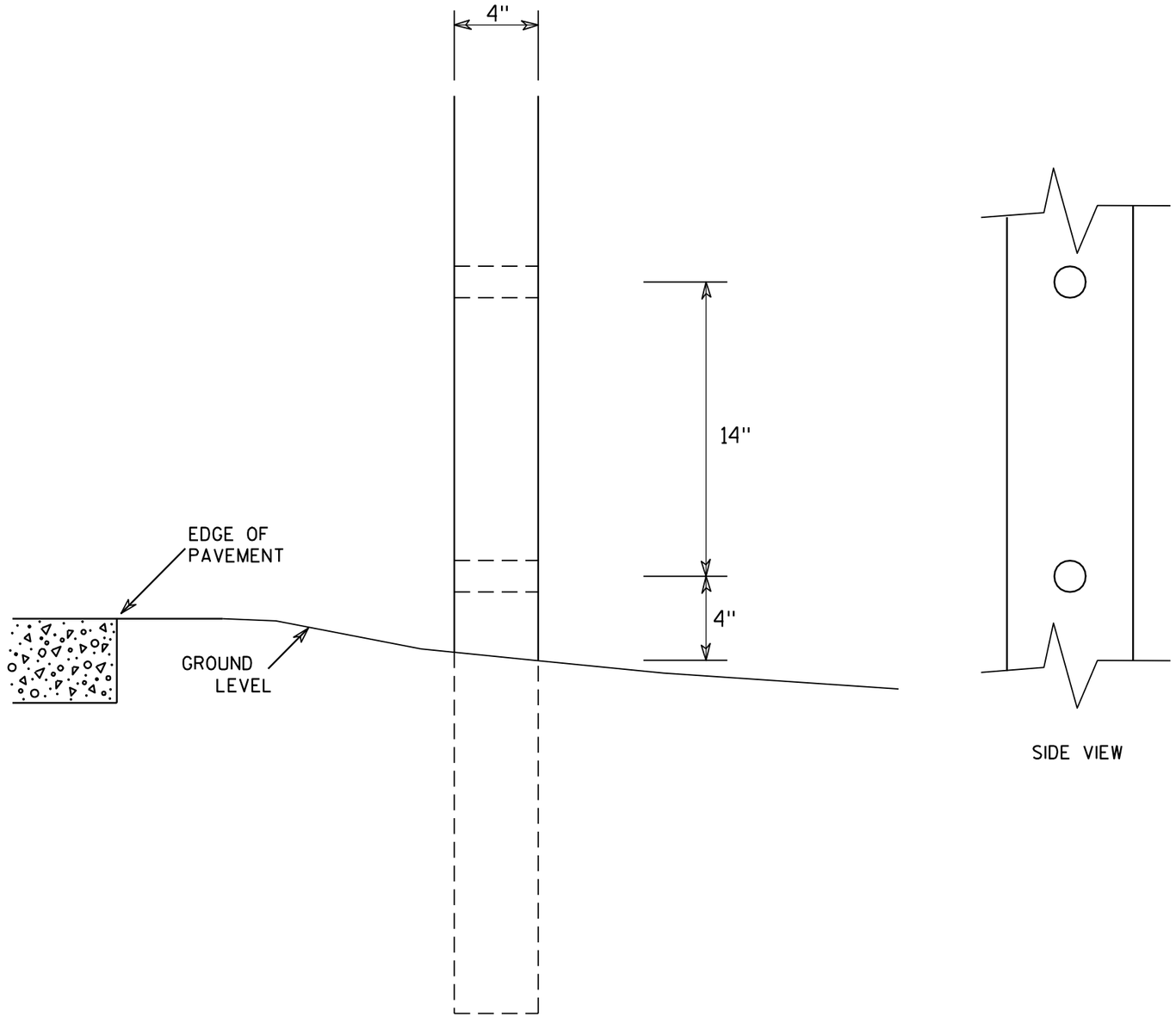

SIDE VIEW

GENERAL NOTES

1. All 4 x 6 Wood Posts shall be modified by having two 1½" diameter holes drilled perpendicular to the roadway centerline.

4 X 6 WOOD POST MODIFICATIONS

WISCONSIN DEPT OF TRANSPORTATION

APPROVED Chester J Spang
for State Traffic Engineer

DATE 3/27/97 PLATE NO. A4-11.2

PROJECT NO:	HWY:	COUNTY:		SHEET NO: 147	E

URBAN AREA

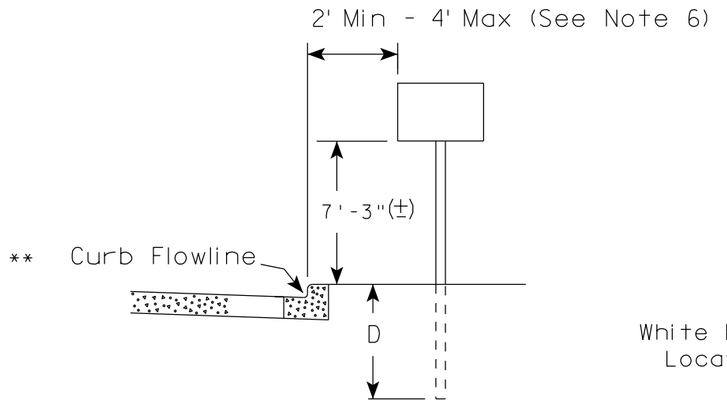

RURAL AREA (See Note 2)

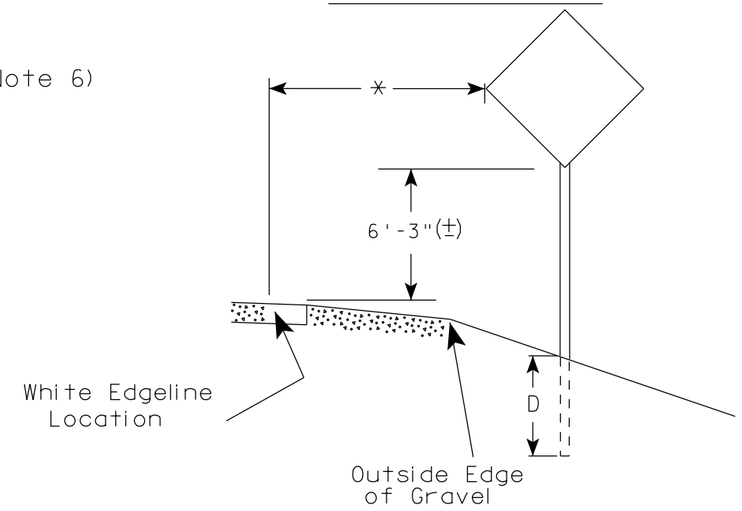

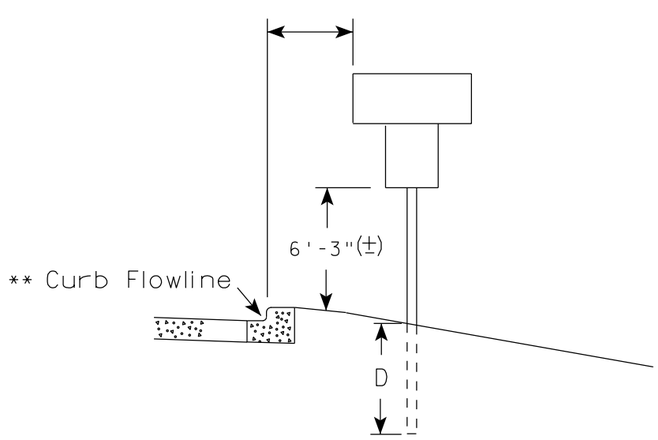

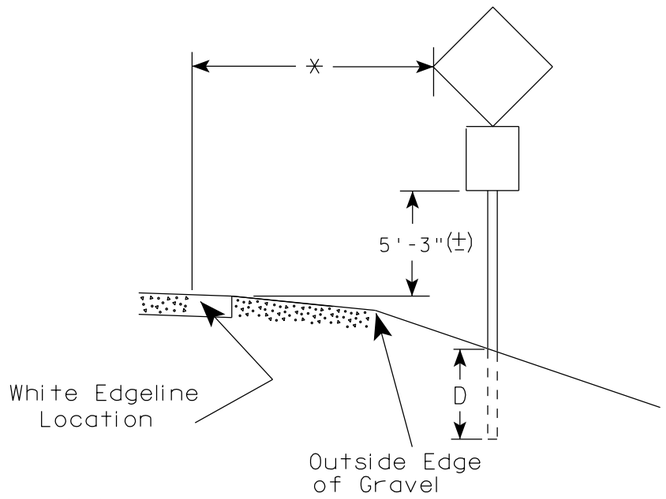

** The existence of curb and gutter does not in itself mandate the vertical clearance illustrated. That height is typically measured where there is sidewalk adjacent to the roadway or parking is permitted. In the absence of sidewalk vertical clearance is measured from the top of the curb. Offset of signs is measured from the flow line.

* 6 feet from edge of a paved shoulder or 12 feet from the edge of pavement (edge line location) or 2 feet from outside edge of gravel, whichever is greater unless directed by project engineer.

GENERAL NOTES

1. Signs wider than 4 feet, 20 sq.ft or larger, shall be mounted on multiple posts. Refer to plate A4-4.
2. If signs are mounted on barrier wall, see A4-10 sign plate.
3. For expressways and freeways, mounting height is 7'- 3" (±) or 6'-3" (±) depending upon existence of a sub-sign.
4. Minimum mounting height for J assemblies (A4-5) is 7'-3" (±) or 6'-3" (±) per urban or rural detail respectively.
5. Minimum mounting height for signs mounted on traffic signal poles is 5'- 3" (±).
6. Offset distance shall be consistent with existing signs or consistent throughout length of project.
7. The (±) tolerance for mounting height is 3 inches.
8. Folding stop signs (R1-1F) shall be mounted at a height of 5'-3" (±) or as directed by the Engineer.
9. The Double Arrow sign (W12-1) shall be mounted at a height of 2'-3" (±). The Chevron sign (W1-8), Roundabout Chevron panel (R6-4B), Enhanced Reference Markers, Clearance Markers (W5-52), Mile Markers (D10 series) & End of Rod Markers (W5-56 & W5-56A) shall be mounted at a height of 4'-3" (+).

POST EMBEDMENT DEPTH

Area of Sign Installation (Sq. Ft.)	D (Min)
20 or Less	4'
Greater than 20	5'

TYPICAL INSTALLATION OF PERMANENT TYPE II SIGNS ON SINGLE POSTS

WISCONSIN DEPT OF TRANSPORTATION

APPROVED Matthew R Rauch
for State Traffic Engineer

DATE 9/30/13 PLATE NO. A4-3.18

PROJECT NO:	HWY:	COUNTY:		SHEET NO:	E

7

7

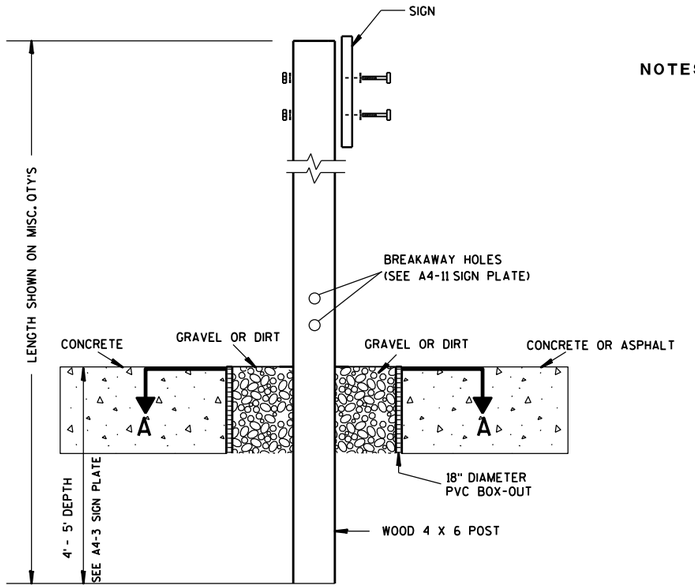

ELEVATION VIEW

DETAIL OF WOOD 4 X 6 SIGN POST IN BOX-OUT

NOTES:
1. ALL MATERIAL TO BE APPROVED BY ENGINEER PRIOR TO INSTALLATION
2. SEE SIGN PLATE A4-8 FOR SIGN HARDWARE REQUIREMENTS
3. 18 INCH X 18 INCH SQUARE BOX-OUTS MAY BE USED FOR INSTALLATIONS IN EXISTING CONCRETE OR ASPHALT LOCATIONS.

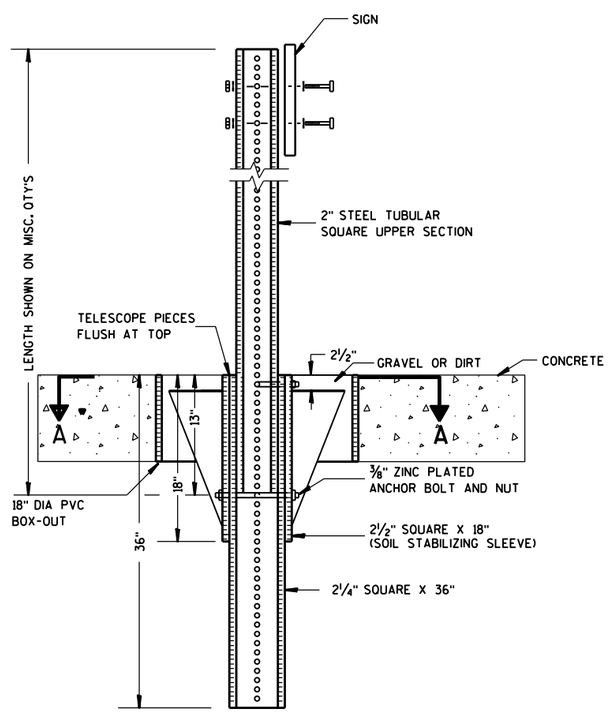

ELEVATION VIEW

DETAIL OF STEEL 2 X 2 SIGN POST IN BOX-OUT

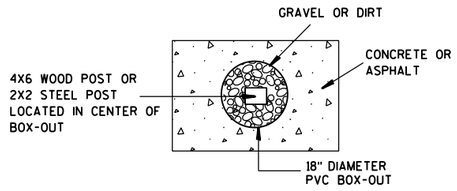

PLAN VIEW

FOR NEW CONCRETE/ASPHALT INSTALLATIONS

SIGN POST BOX-OUTS A4-3B

WISCONSIN DEPT OF TRANSPORTATION

APPROVED Matthew R Rauch
for State Traffic Engineer

DATE 1/27/14 PLATE NO. A4-3B.1

PROJECT NO:	HWY:	COUNTY:		SHEET NO:	E

FILE NAME : C:\CAEFiles\Projects\tr_stdplate\A43B.DGN PLOT DATE : 27-JAN-2014 09:48 PLOT BY : mscsja PLOT NAME : PLOT SCALE : 13.659812:1.000000 WISDOT/CADDS SHEET 42

URBAN AREA

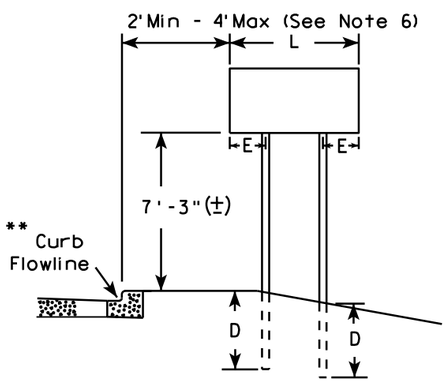

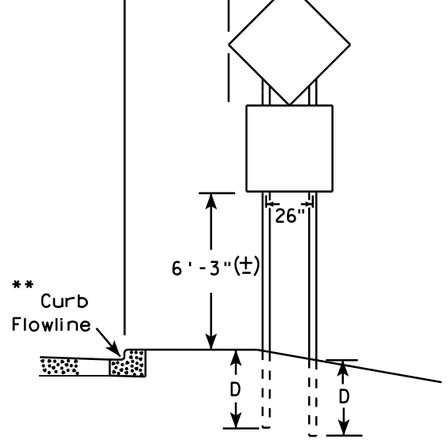

48" DIAMOND WARNING SIGN

RURAL AREA (See Note 3)

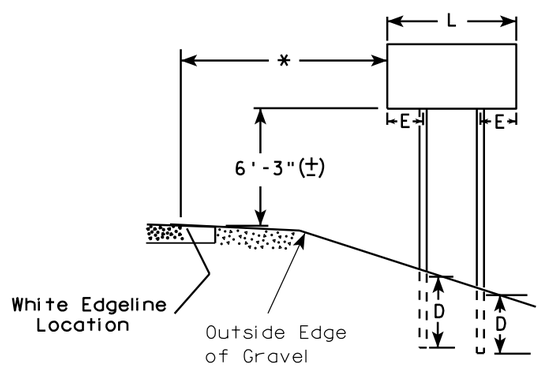

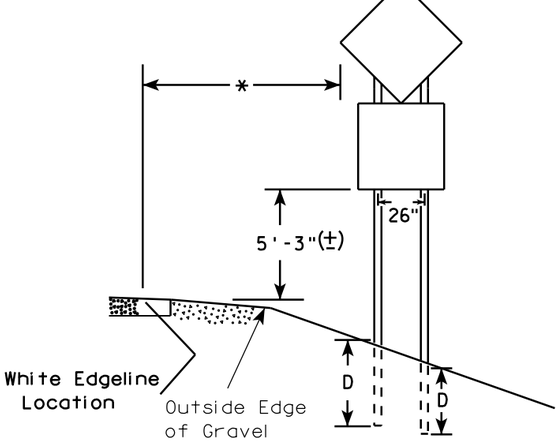

48" DIAMOND WARNING SIGN

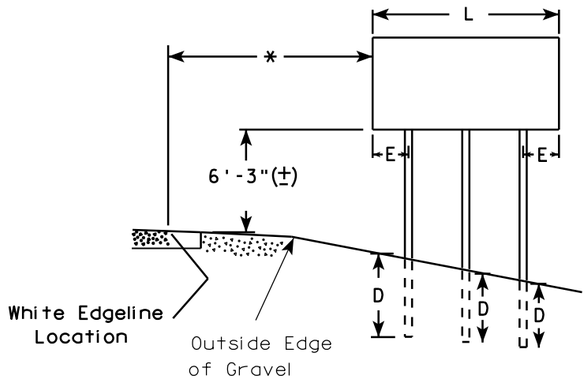

GENERAL NOTES

1. For 3 or 4 post installations, individual post spacing shall be greater than 3'-6".
2. See tables below for required number of posts.
3. For expressways and freeways, mounting height is 7'-3" (±) or 6'-3" (±) depending upon existence of sub-sign.
4. The (±) tolerance for mounting height is 3 inches.
5. Minimum mounting height for J assemblies (A4-5) is 7'-3" (±) or 6'-3" (±) per urban or rural detail respectively.
6. Offset distance shall be consistent with existing signs or consistent throughout length of project.
7. Folding stop signs (R1-1F) shall be mounted at a height of 5'-3" (±) or as directed by the engineer.
8. The Double Arrow sign (W12-1) shall be mounted at a height of 2'-3" (±). The Chevron sign (W1-8), Roundabout Chevron panel (R6-4B), Clearance Markers (W5-52), Mile Markers (D10 series) & End of Road Markers (W5-56 & W5-56A) shall be mounted at a height of 4"-3" (±).

* 6 feet from edge of a paved shoulder or 12 feet from the edge of pavement (edge line location) or 2 feet from outside edge of gravel, whichever is greater unless directed by project engineer.

** The existence of curb and gutter does not in itself mandate the vertical clearance illustrated. That height is typically measured where there is sidewalk adjacent to the roadway or parking is permitted. In the absence of sidewalk vertical clearance is measured from the top of the curb. Offset of signs is measured from the flow line.

*** See A4-3 sign plate for signs 4' or less in width or less than 20 S.F. in area.

SIGN SHAPE OTHER THAN DIAMOND (TWO POSTS REQUIRED)	
L	E
Greater than 48" Less than 60"	12"
60" to 120"	L/5

***

SIGN SHAPE OTHER THAN DIAMOND (THREE POSTS REQUIRED)	
L	E
Greater than 120" less than 168"	12"

SIGN SHAPE OTHER THAN DIAMOND (FOUR POSTS REQUIRED)	
L	E
168" and greater	12"

POST EMBEDMENT DEPTH

Area of Sign Installation (Sq. Ft.)	D (Min)
20 or Less	4'
Greater than 20	5'

TYPICAL INSTALLATION OF TYPE II SIGNS ON MULTIPLE POSTS

WISCONSIN DEPT OF TRANSPORTATION

APPROVED Matthew R Rauch
for State Traffic Engineer

DATE 4/29/14 PLATE NO. A4-4 13

150

PROJECT NO:	HWY:	COUNTY:		SHEET NO:	E

FILE NAME : C:\CAEFiles\Projects\tr_stdplate\A44.DGN PLOT DATE : 30-APR-2014 13:10 PLOT BY : mscsja PLOT NAME : PLOT SCALE : 107.021305:1.000000

WISDOT/CADDS SHEET 42

7

7

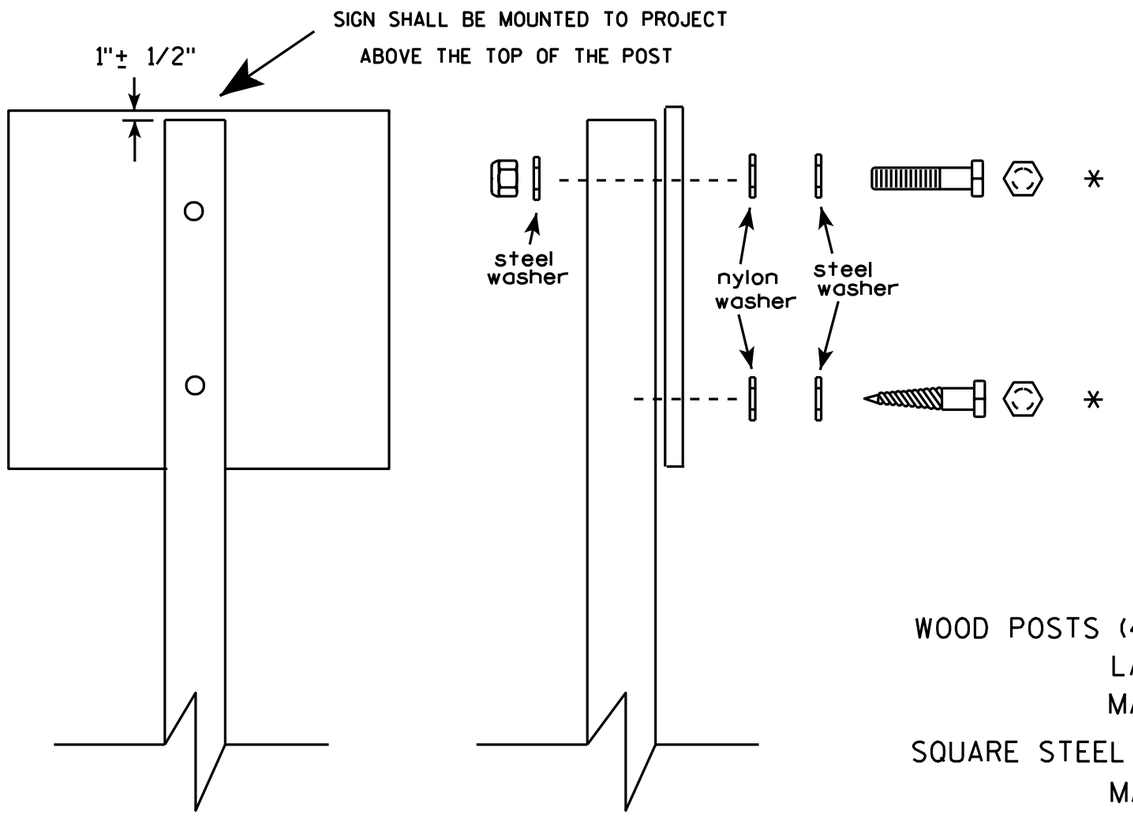

Nuts, bolts and lags used for mounting signs shall have hexagonal heads and shall be either :

a. Hot dip galvanized in accordance with ASTM Designation: A 153, Class D, or SC 3

b. Electro-galvanized in accordance with ASTM Designation : B 633, TYPE III, SC 3.

Threads on bolts and nuts shall be manufactured with sufficient allowance for the cadmium plate or galvanized coating to permit the nuts to run freely on the bolts.

WOOD POSTS (4" x 4" or 4" x 6")
LAG SCREWS - 3/8" X 3"
MACHINE BOLTS - 5/16" X 6-1/2" or 7" Length w/ nuts

SQUARE STEEL POSTS (2" x 2")
MACHINE BOLTS - 3/8" X 3-1/4" Length w/ nuts
RIVETS - 9/32 " (6605-9-6) BULB-TITE, TRI-FOLD, ALUMINUM BODY/MANDREL
O.D. FLANGE .720-.765 INCH, GRIP RANGE .042-.375 INCH

WASHERS (ALL POSTS) -
1-1/4" O.D. X 3/8" I.D. X 1/16" STEEL
1-1/4" O.D. X 3/8" I.D. X .080 NYLON for all Type H signs.

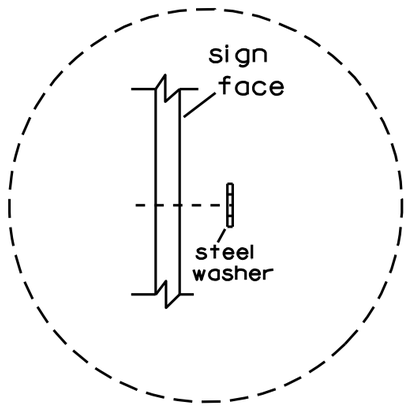

Washer Placement when Sign Has Other Than Type H or Type F Face

* Two different fastening systems are shown for illustration purposes. On any individual sign, either one or the other system shall be used. Actual number of fasteners per sign varies with the sign area, but normally there are two. For a single post installation, all signs greater than 9 sq. ft. require the use of 3 fasteners.

ATTACHMENT OF SIGNS TO POSTS

WISCONSIN DEPT OF TRANSPORTATION

APPROVED Matthew R Rauch
for State Traffic Engineer

DATE 3/23/10 PLATE NO. A4-8.7

7

7

PROJECT NO:

SHEET NO: 151 E

TELESCOPIC TUBING ANCHORS
TWO PIECE SYSTEM

2 1/4 " SQUARE
12 GAUGE
PERFORATED
GALVANIZED FINISH

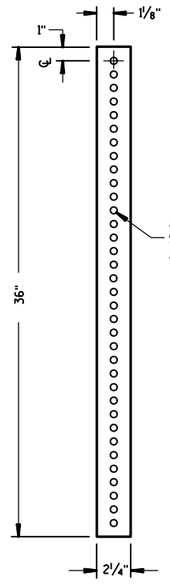

2 1/2 " SQUARE
12 GAUGE
OMNI-DIRECTIONAL
PERFORATED
SOIL STABILIZING SLEEVE
GALVANIZED FINISH

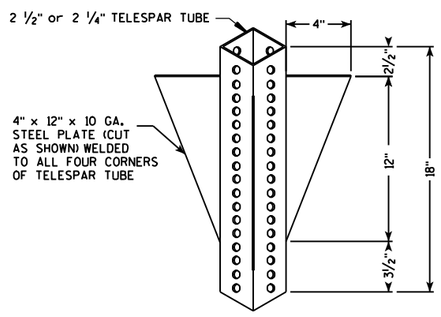

DETAIL OF TUBULAR STEEL SIGN POST
(IN POURED CONCRETE OR ASPHALT)

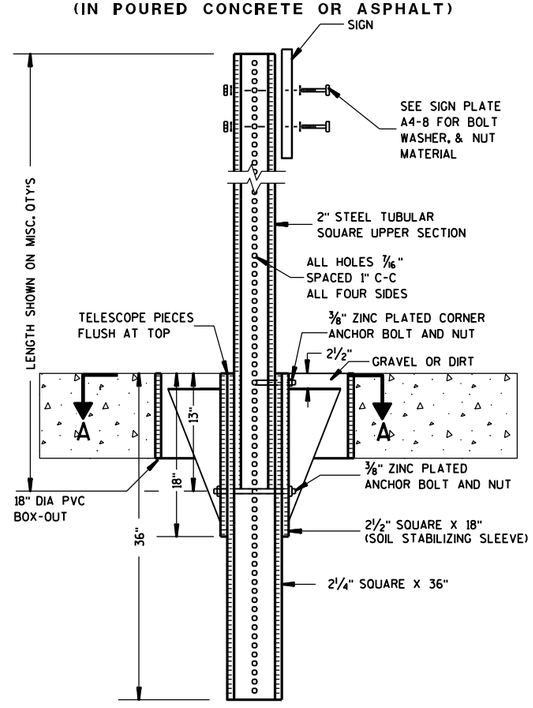

DETAIL OF TUBULAR STEEL SIGN POST
(IN LOCATIONS OTHER THAN POURED CONCRETE OR ASHALT)

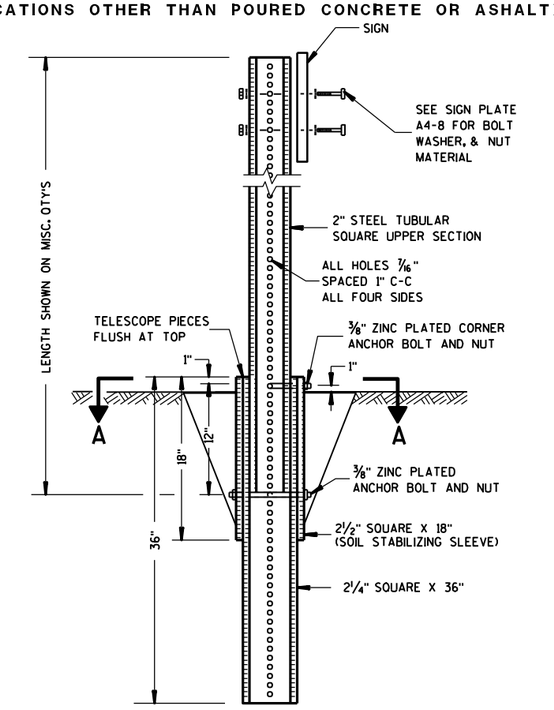

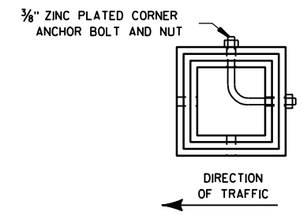

SECTION A-A

Area of Sign Installation (Sq. Ft.)	Number of Required Posts
9 or less	1
Greater than 9 less than or equal to 18	2
Greater than 18 less than or equal to 27	3

Signs wider than 3 feet or larger than 9 sq. ft shall be mounted on multiple posts (see above table).

TUBULAR STEEL SIGN POST A4-9

WISCONSIN DEPT OF TRANSPORTATION

APPROVED Matthew R Rauch
for State Traffic Engineer

DATE 5/30/12 PLATE NO. A4-9.7

PROJECT NO:	HWY:	COUNTY:		SHEET NO: 152	E

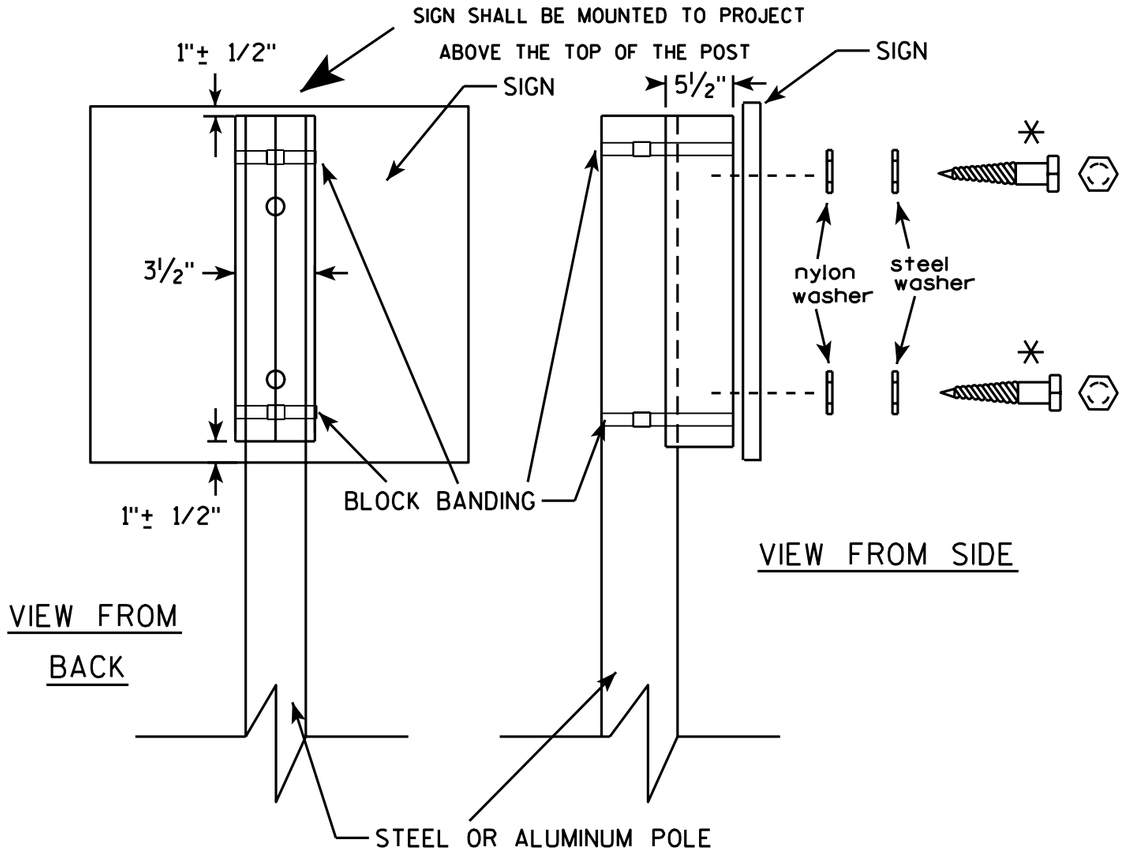

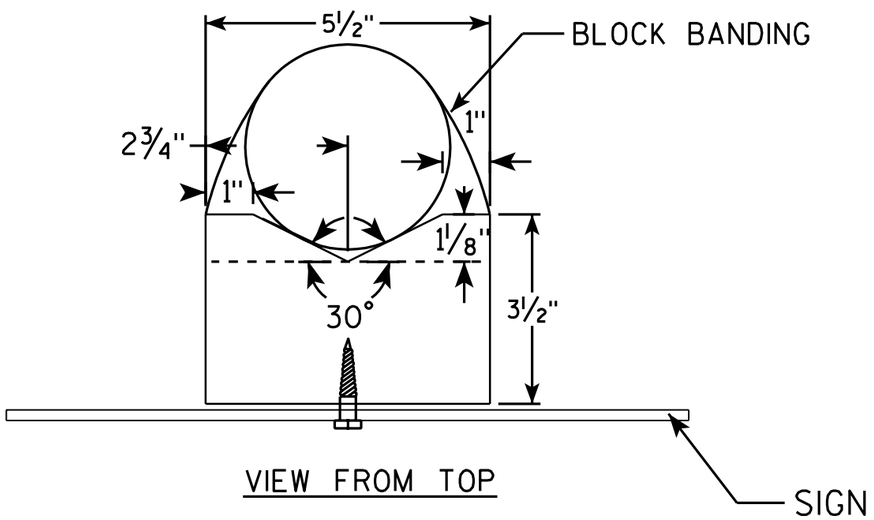

GENERAL NOTES

1. WOOD 4"X6" POST MATERIAL SHALL CONFORM TO 507.2.2 OF THE WisDOT STANDARD SPECIFICATIONS
2. BLOCK BANDING AND CLIPS SHALL BE STAINLESS STEEL, ¾" WIDTH AND 0.025" THICKNESS
3. SIGNS 3' OR GREATER IN HEIGHT SHALL UTILIZE 3 BLOCK BANDS. SIGNS UNDER 3' IN HEIGHT SHALL UTILIZE 2 BLOCK BANDS
4. ACTUAL NUMBER OF FASTENERS PER SIGN VARIES WITH THE SIGN AREA, BUT NORNALLY THERE ARE TWO. FOR SIGNS GREATER THAN 9 S.F. 3 FASTENERS SHALL BE USED.
5. ALL SIGN MOUNTING BOLTS AND WASHERS SHALL BE EITHER:
   a. Hot dip or mechanically galvanized in accordance with ASTM Designation: A 153, Class D, or
   b. Cadmium plated in accordance with ASTM Designation : B 766 TYPE 3, Class 12, or
   c. Electro-galvanized in accordance with ASTM Designation : B 633, TYPE III, SC 3.
6. ALL BOLTS SHALL HAVE HEXAGONAL HEADS.
7. STEEL WASHERS SHALL BE 1¼" O.D. X ⅜" I.D. X 1/16"
8. NYLON WASHERS SHALL BE 1¼" O.D. X ⅜" I.D. X .080 FOR TYPE H OR TYPE F FACE SIGN

✳ LAG BOLTS SHALL BE ⅜" X 2½"

BLOCK BANDING DETAIL (V-BLOCK OPTION)

WISCONSIN DEPT OF TRANSPORTATION

APPROVED Matthew R Rauch
for State Traffic Engineer

DATE 7/12/07 PLATE NO. A5-10.1

PROJECT NO:

SHEET NO: 153 E

BANDING

SINGLE SIGN

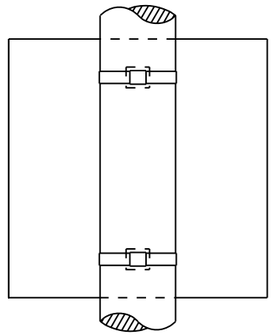

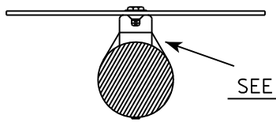

"J" ASSEMBLY

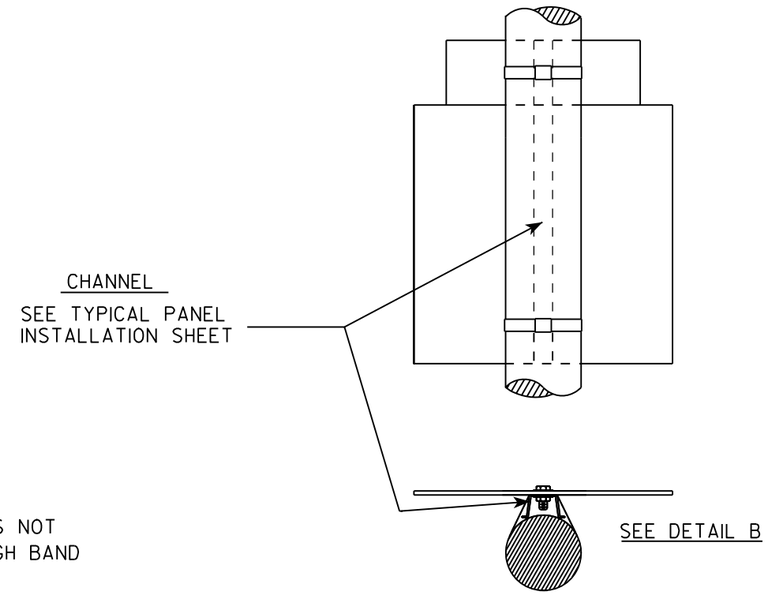

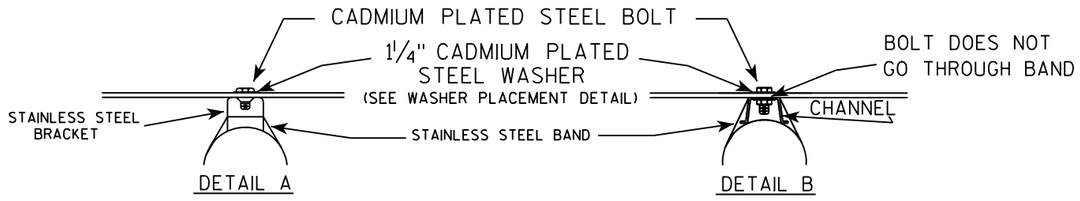

WASHER PLACEMENT

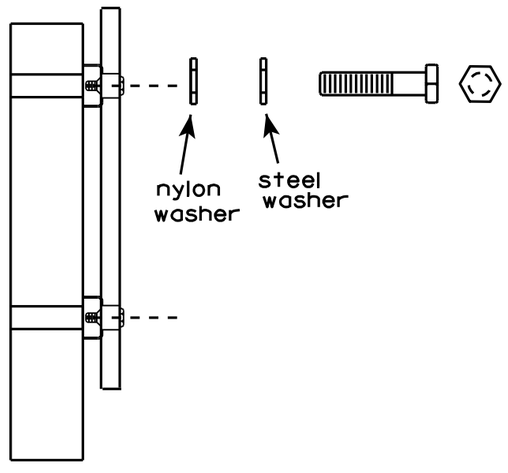

WASHERS (ALL POSTS) -
1-1/4" O.D. X 3/8" I.D. X 1/16" STEEL
1-1/4" O.D. X 3/8" I.D. X .080 NYLON
FOR ALL TYPE H SIGNS

GENERAL NOTES

1. Any sign over 3 feet in width shall use the V-Block banding method. See A5-10 standard plate.
2. Signs 3 feet or greater in height shall have three bracket bands installed. Signs less than 3 feet in height shall have two bracket bands installed.
3. Banding and assembly bracket shall be stainless steel. All bands shall be 3/4" in width and 0.025" thickness.

STANDARD SIGN
SIGN BANDING DETAILS

WISCONSIN DEPT OF TRANSPORTATION

APPROVED Matthew R Rauch for State Traffic Engineer

DATE 8/16/13 PLATE NO. A5-9.3

PROJECT NO:	HWY:	COUNTY:		SHEET NO: 154	E

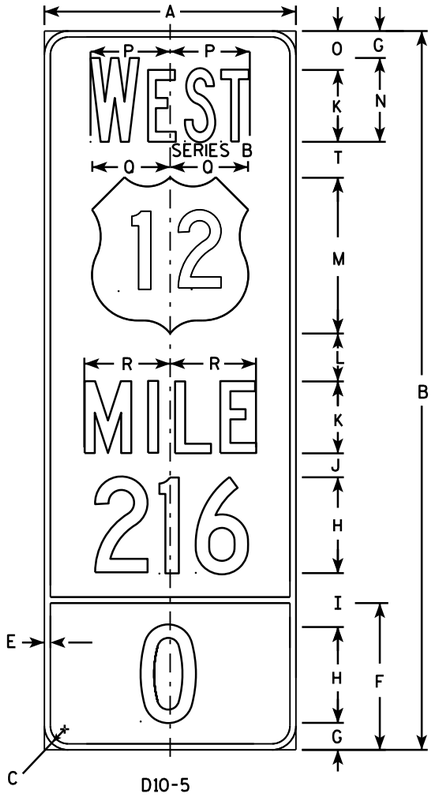

D10-5

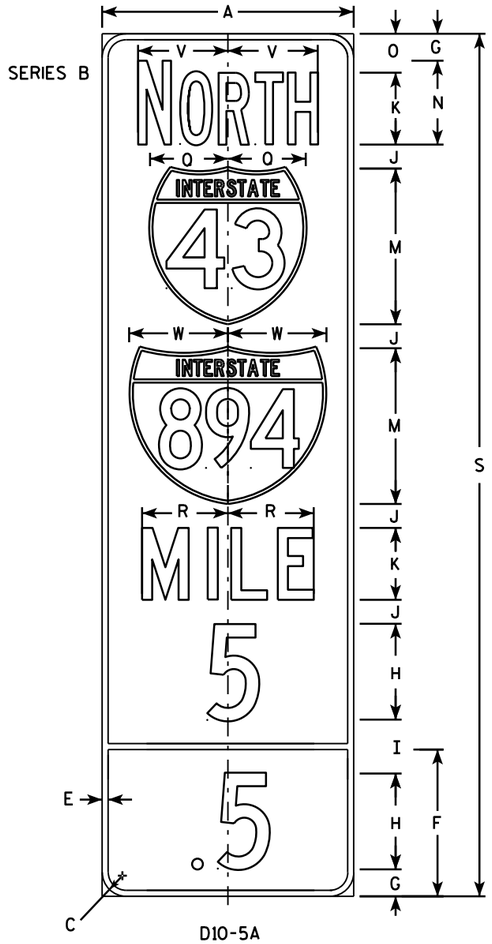

D10-5A

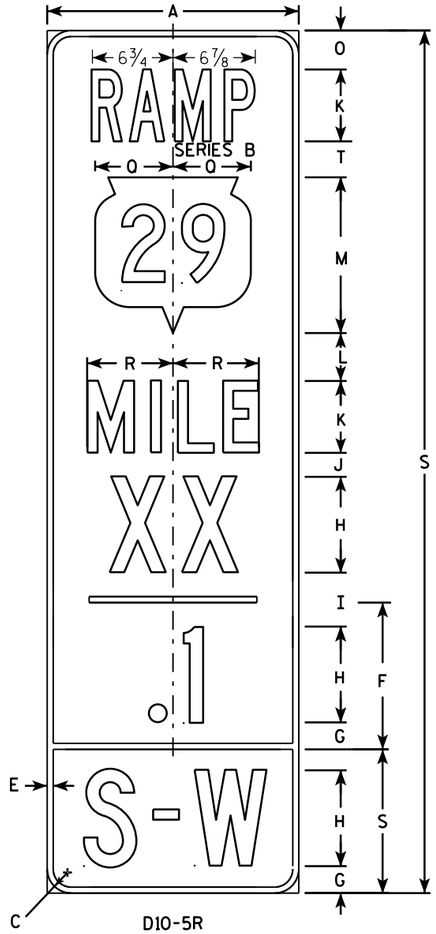

D10-5R

NOTES

1. Sign is Type II - Type H Reflective
2. Color:
   Background - BLUE
   Message - WHITE
3. Interstate Shield Color
   Background - Top Red
   - Bottom Blue
   Message - White
4. Message Series - C or as noted on the Sign.
5. Corners may be square or rounded when base material is plywood but borders shall be rounded as shown. When base material is metal, the corners and borders shall be rounded.
6. The decimal point is required for all digits except "0".
7. Optically adjust mileage numbers about the centerline of the sign to achieve proper balance.
8. Optically adjust Ramp direction letters about the centerline of the sign to achieve proper balance.

SERIES B

SERIES B

SIZE	A	B	C	D	E	F	G	H	I	J	K	L	M	N	O	P	O	R	S	T	U	V	W	X	Y	Z	D10-5 Area sq. ft.	D10-5A Area sq. ft.	D10-5R Area sq. ft.
1																													
2																													
3																													
4	21	60	1 ½		½	12 ¼	2 ¼	8	4 ½	2	6	4	13	7	3 ¼	6 ⅝	6 ½	7 ⅛	72	3		7 ½	8 ¼				8.75	10.5	10.5
5	21	60	1 ½		½	12 ¼	2 ¼	8	4 ½	2	6	4	13	7	3 ¼	6 ⅝	6 ½	7 ⅛	72	3		7 ½	8 ¼				8.75	10.5	10.5

STANDARD SIGN
D10-5

WISCONSIN DEPT OF TRANSPORTATION

APPROVED Matthew R Rauch
for State Traffic Engineer

DATE 6/26/14 PL 155 D10-5.2

PROJECT NO:

SHEET NO: E

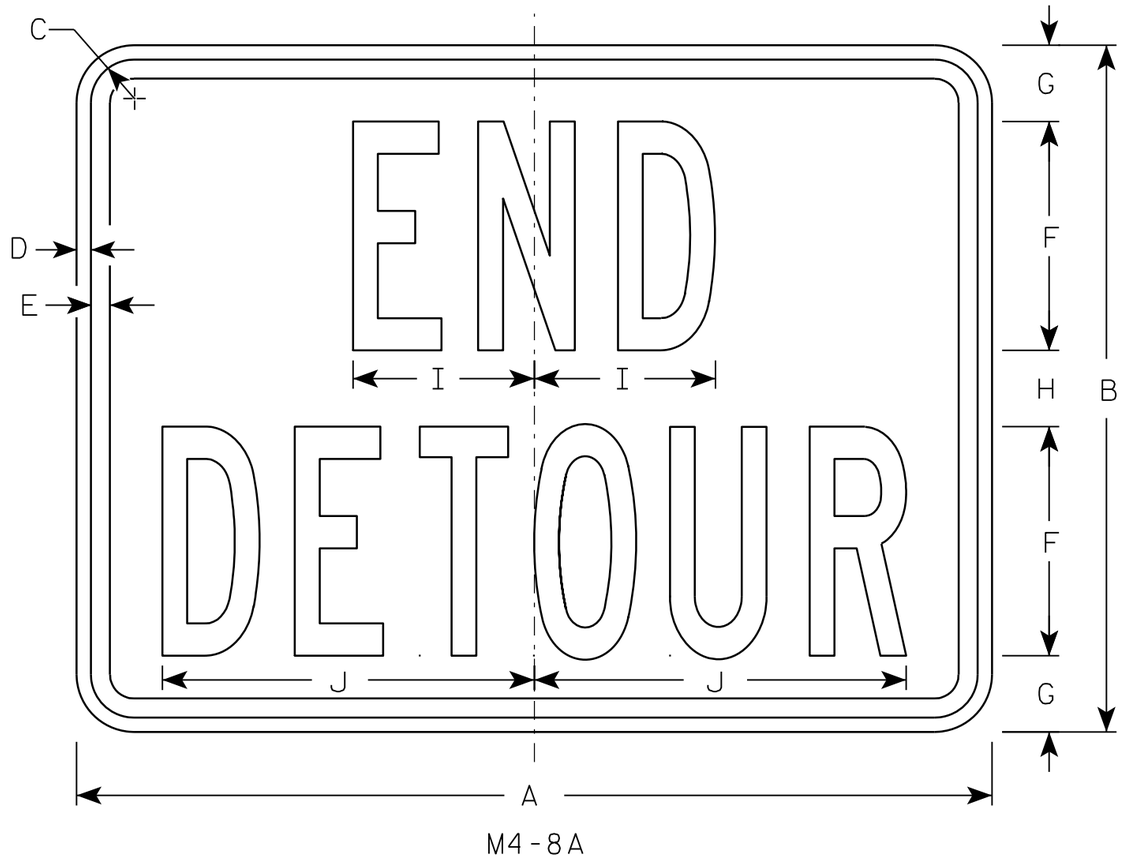

M4-8A

NOTES

1. Sign is Type II - Type F Reflective - reference WIS DOT Standard Specification for HIGHWAY and STRUCTURE CONSTRUCTION latest edition.
2. Color:
   Background - Orange
   Message - Black
3. Message Series - B
4. Corners may be square or rounded when base material is plywood but borders shall be rounded as shown. When base material is metal, the corners and borders shall be rounded.

SIZE	A	B	C	D	E	F	G	H	I	J	K	L	M	N	O	P	Q	R	S	T	U	V	W	X	Y	Z	Area sq. ft.
1																											
2	24	18	1 1/8	3/8	1/2	6	2	2	4 3/4	9 3/4																	3.0
3	30	24	1 1/8	3/8	1/2	8	2 1/2	3	6 3/4	13																	5.0
4																											
5																											

STANDARD SIGN
M4-8A

WISCONSIN DEPT OF TRANSPORTATION

APPROVED Matthew R Rauch
for State Traffic Engineer

DATE 3/9/11 PLATE NO. M4-8A.2

PROJECT NO:	HWY:	COUNTY:		SHEET NO: 156	E

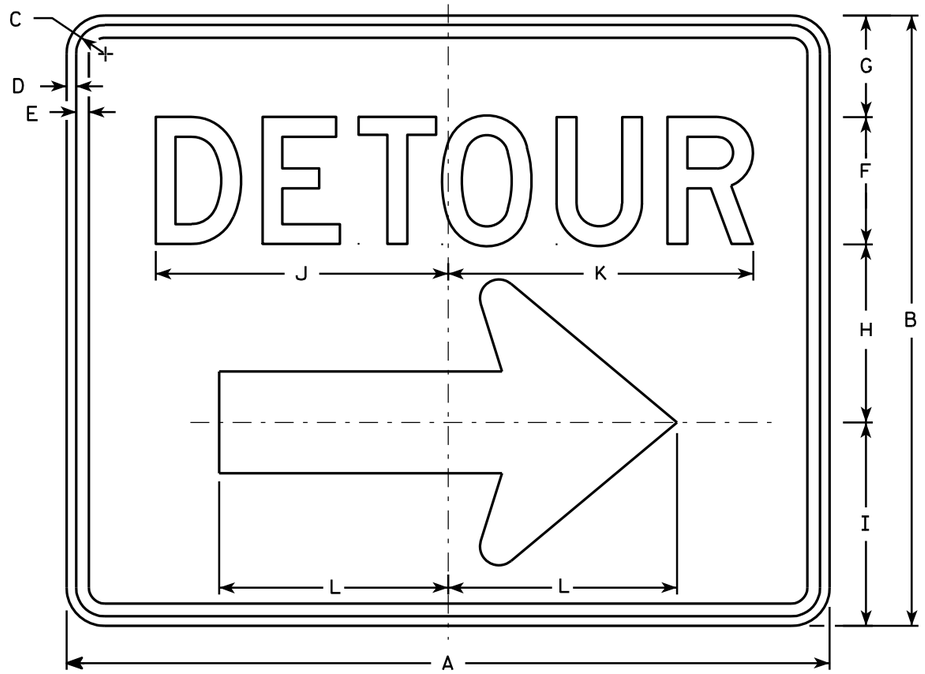

M4-9R

NOTES

1. Sign is Type II - Type F Reflective - reference WIS DOT Standard Specification for HIGHWAY and STRUCTURE CONSTRUCTION latest edition.
2. Color:
   Background - Orange
   Message - Black
3. Message Series - D
4. Corners may be square or rounded when base material is plywood but borders shall be rounded as shown. When base material is metal, the corners and borders shall be rounded.
5. M4-9L is the same as M4-9R except the arrow is reversed.

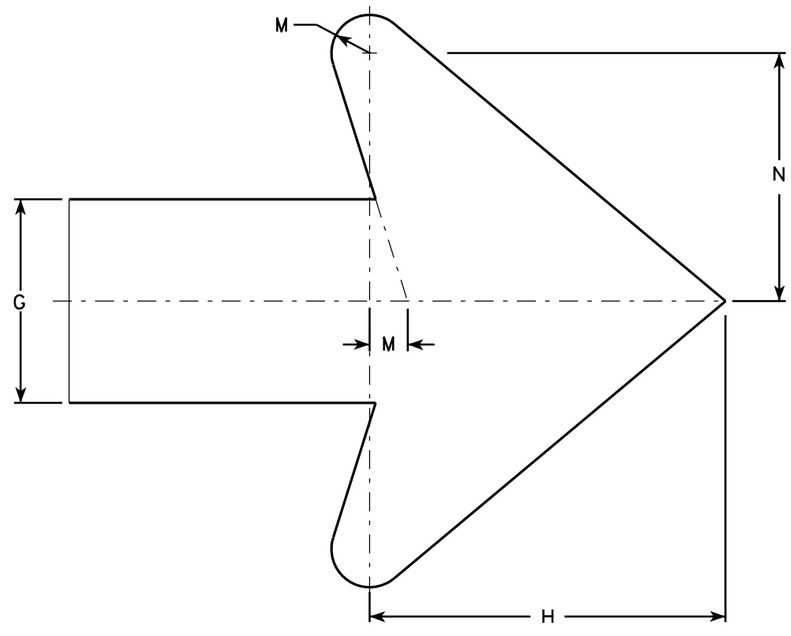

Arrow Detail

SIZE	A	B	C	D	E	F	G	H	I	J	K	L	M	N	O	P	Q	R	S	T	U	V	W	X	Y	Z	Area sq. ft.
1																											
2	30	24	1 1/8	3/8	1/2	5	4	7	8	11 1/2	12	9	3/4	4 7/8													5.00
3	30	24	1 1/8	3/8	1/2	5	4	7	8	11 1/2	12	9	3/4	4 7/8													5.00
4	48	36	1 3/8	1/2	5/8	8	6	10 1/2	11 5/8	20 5/8	20 1/2	13 1/4	1 1/8	6 7/8													12.0
5	48	36	1 3/8	1/2	5/8	8	6	10 1/2	11 5/8	20 5/8	20 1/2	13 1/4	1 1/8	6 7/8													12.0

STANDARD SIGN
M4-9 R & L

WISCONSIN DEPT OF TRANSPORTATION

APPROVED Matthew R Rauch
for State Traffic Engineer

DATE 3/9/11 PLATE NO. M4-9R.4

PROJECT NO:	HWY:	COUNTY:		SHEET NO: 157	E

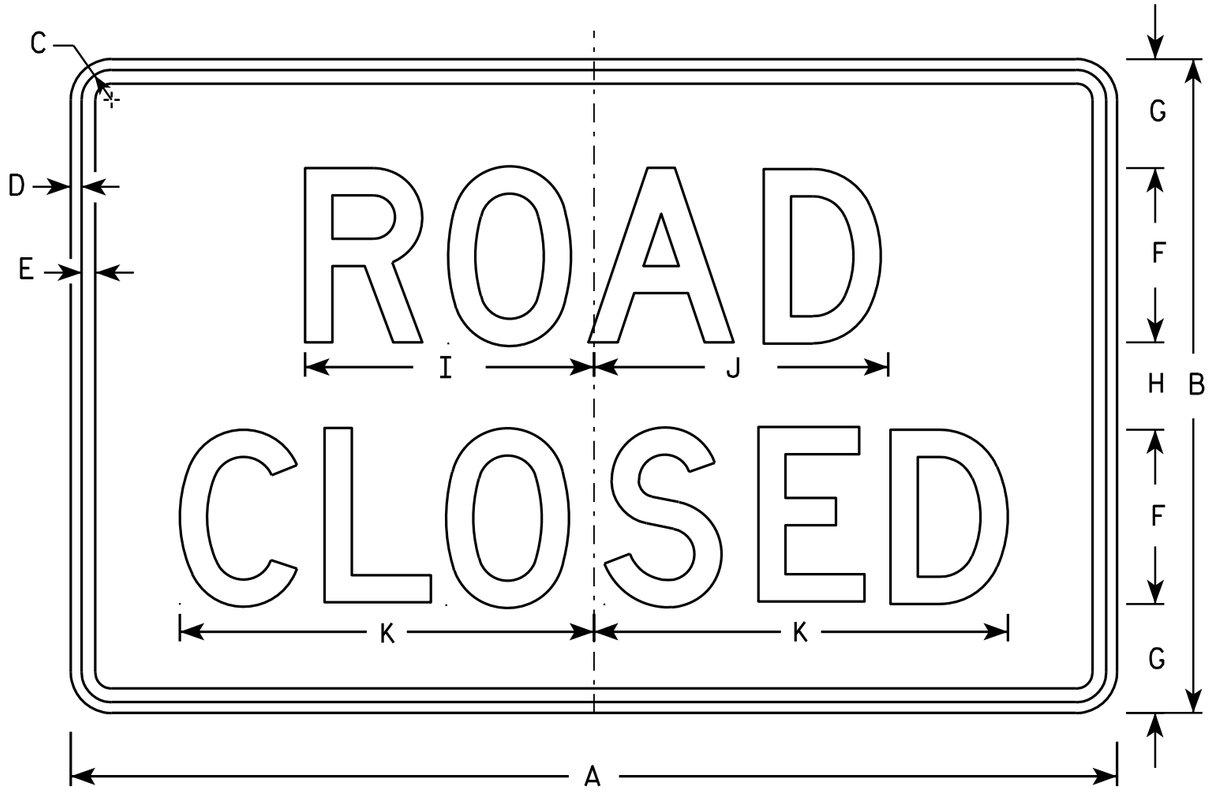

R11-2

NOTES

1. Sign is Type II - Type H Reflective - reference WIS DOT Standard Specification for HIGHWAY and STRUCTURE CONSTRUCTION latest edition.
2. Color:
   Background - White
   Message - Black
3. Message Series - D
4. Corners may be square or rounded when base material is plywood but borders shall be rounded as shown. When base material is metal, the corners and borders shall be rounded.
5. Modify the message as required.

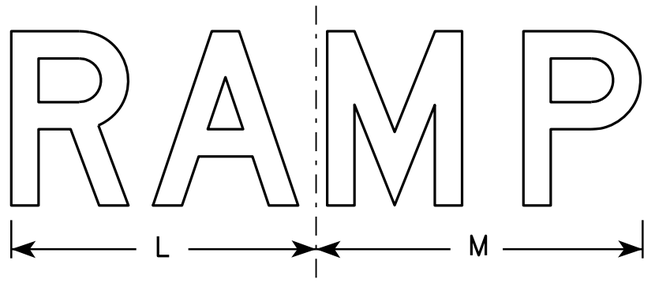

R11-2R

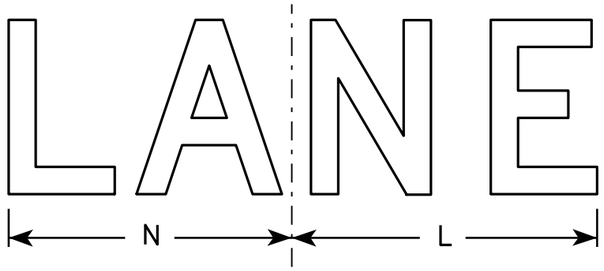

R11-2L

SIZE	A	B	C	D	E	F	G	H	I	J	K	L	M	N	O	P	Q	R	S	T	U	V	W	X	Y	Z	Area sq. ft.
1																											
2S	48	30	1 3/8	1/2	5/8	8	5	4	13 1/4	13 1/2	19	14	15	13													10.0
2M	48	30	1 3/8	1/2	5/8	8	5	4	13 1/4	13 1/2	19	14	15	13													10.0
3	48	30	1 3/8	1/2	5/8	8	5	4	13 1/4	13 1/2	19	14	15	13													10.0
4	48	30	1 3/8	1/2	5/8	8	5	4	13 1/4	13 1/2	19	14	15	13													10.0
5	48	30	1 3/8	1/2	5/8	8	5	4	13 1/4	13 1/2	19	14	15	13													10.0

STANDARD SIGN
R11-2

WISCONSIN DEPT OF TRANSPORTATION

APPROVED Matthew R Rauch
for State Traffic Engineer

DATE 4/1/11 PLATE NO. R11-2.10

PROJECT NO: | HWY: | COUNTY: | SHEET NO: 158 | E

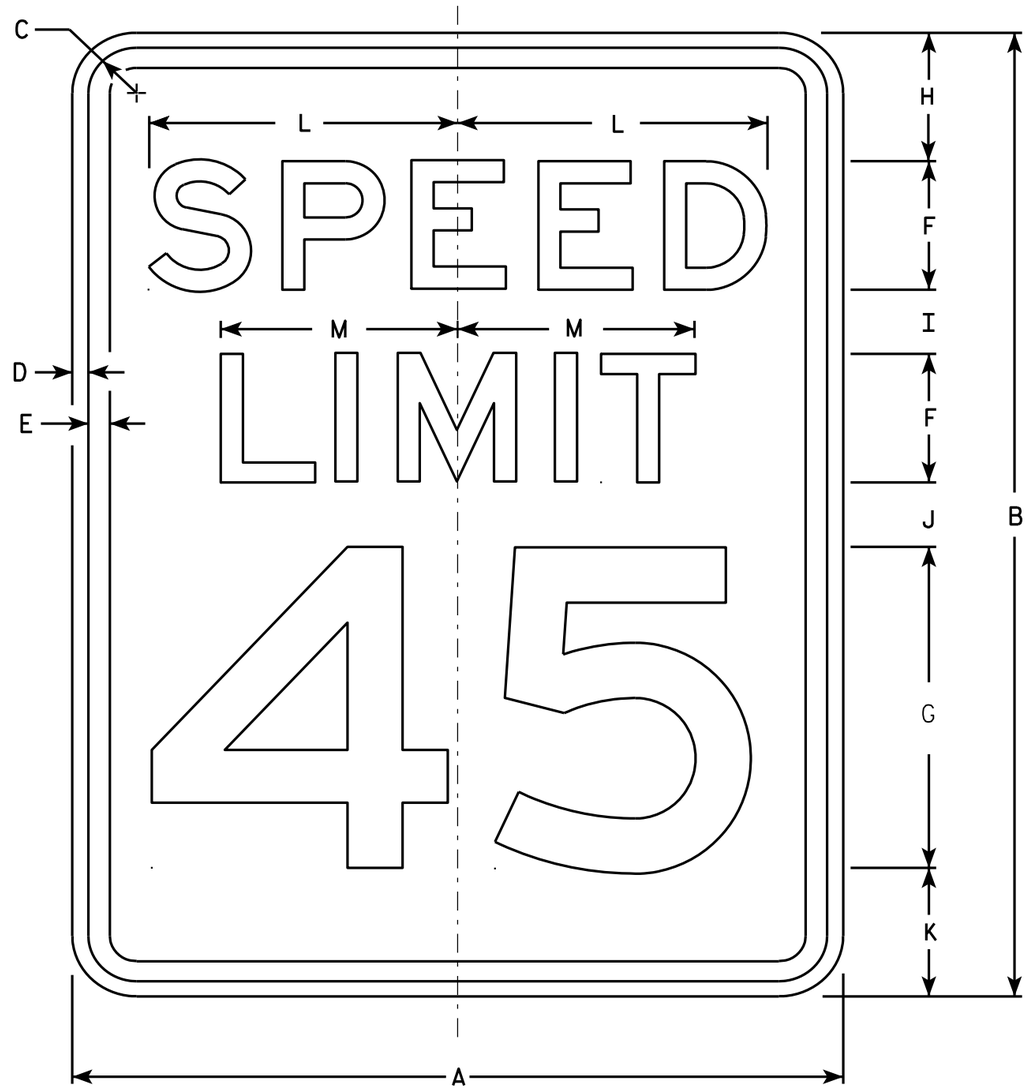

R2-1

NOTES

1. Sign is Type II - Type H Reflective - reference WIS DOT Standard Specification for HIGHWAY and STRUCTURE CONSTRUCTION latest edition.
2. Color:
   Background - White
   Message - Black
3. Message Series - E
4. Corners may be square or rounded when base material is plywood but borders shall be rounded as shown. When base material is metal, the corners and borders shall be rounded.
5. Substitute appropriate numerals and optically adjust spacing to achieve proper balance.

SIZE	A	B	C	D	E	F	G	H	I	J	K	L	M	N	O	P	Q	R	S	T	U	V	W	X	Y	Z	Area sq. ft.
1	18	24	1 1/8	3/8	1/2	3	8	3	2	2	3	7 1/4	5 1/2														3.0
2S	24	30	1 1/8	3/8	1/2	4	10	3	2 1/4	3 3/8	3 3/8	9 5/8	7 3/8														5.0
2M	30	36	1 3/8	1/2	5/8	5	12	5	2 1/2	2 1/2	4	12	9 1/4														7.5
3	36	48	1 3/8	1/2	5/8	6	14	6	5	5	6	14 3/8	11														12.0
4	36	48	1 3/8	1/2	5/8	6	14	6	5	5	6	14 3/8	11														12.0
5	48	60	2 1/4	3/4	1	8	20	6	4 1/2	6 3/4	6 3/4	19 1/4	14 5/8														20.0

STANDARD SIGN
R2-1

WISCONSIN DEPT OF TRANSPORTATION

APPROVED Matthew R Rauch
for State Traffic Engineer

DATE 5/26/10 PLATE NO. R2-1.13

PROJECT NO: | HWY: | COUNTY: | SHEET NO: 159 | E

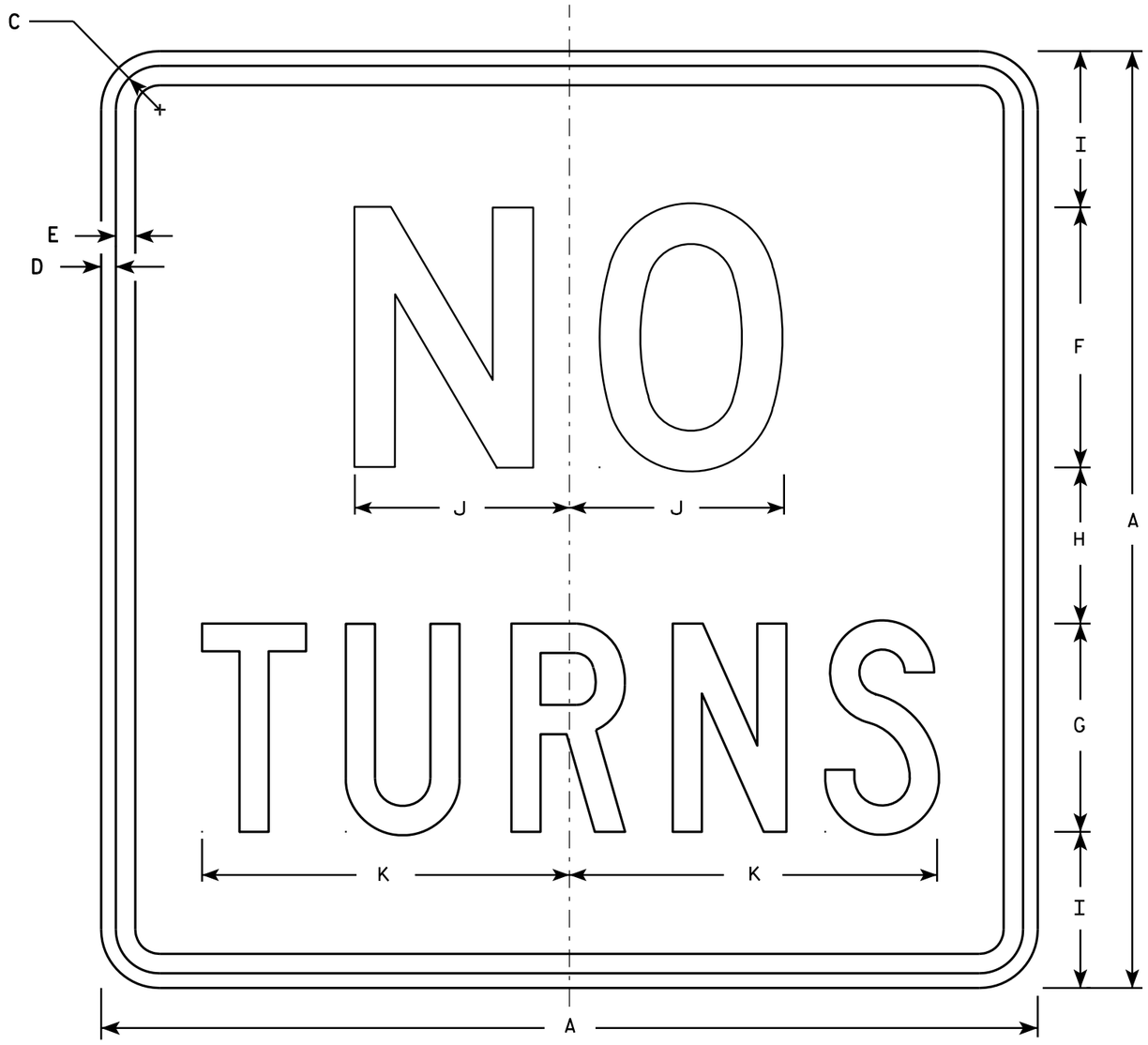

R3-3

NOTES

1. Sign is Type II - Type H Reflective - reference WIS DOT Standard Specification for HIGHWAY and STRUCTURE CONSTRUCTION latest edition.
2. Color:
   Background - White
   Message - Black
3. Message Series - See Note 5
4. Corners may be square or rounded when base material is plywood but borders shall be rounded as shown. When base material is metal, the corners and borders shall be rounded.
5. Line 1 is Series D and Line 2 is Series C.

SIZE	A	B	C	D	E	F	G	H	I	J	K	L	M	N	O	P	Q	R	S	T	U	V	W	X	Y	Z	Area sq. ft.
1																											
2S	24		1 1/8	3/8	1/2	6	5	4	4 1/2	5 1/8	8 3/4																4.0
2M	36		1 5/8	5/8	3/4	10	8	6	6	8 1/4	14 1/8																9.0
3	36		1 5/8	5/8	3/4	10	8	6	6	8 1/4	14 1/8																9.0
4	36		1 5/8	5/8	3/4	10	8	6	6	8 1/4	14 1/8																9.0
5	48		2 1/4	3/4	1	12	10	8	9	10 1/4	17 5/8																16.0

STANDARD SIGN
R3-3

WISCONSIN DEPT OF TRANSPORTATION

APPROVED Matthew R Rauch
for State Traffic Engineer

DATE 12/08/10 PLATE NO. R3-3.10

PROJECT NO: | HWY: | COUNTY: | SHEET NO: 160 | E

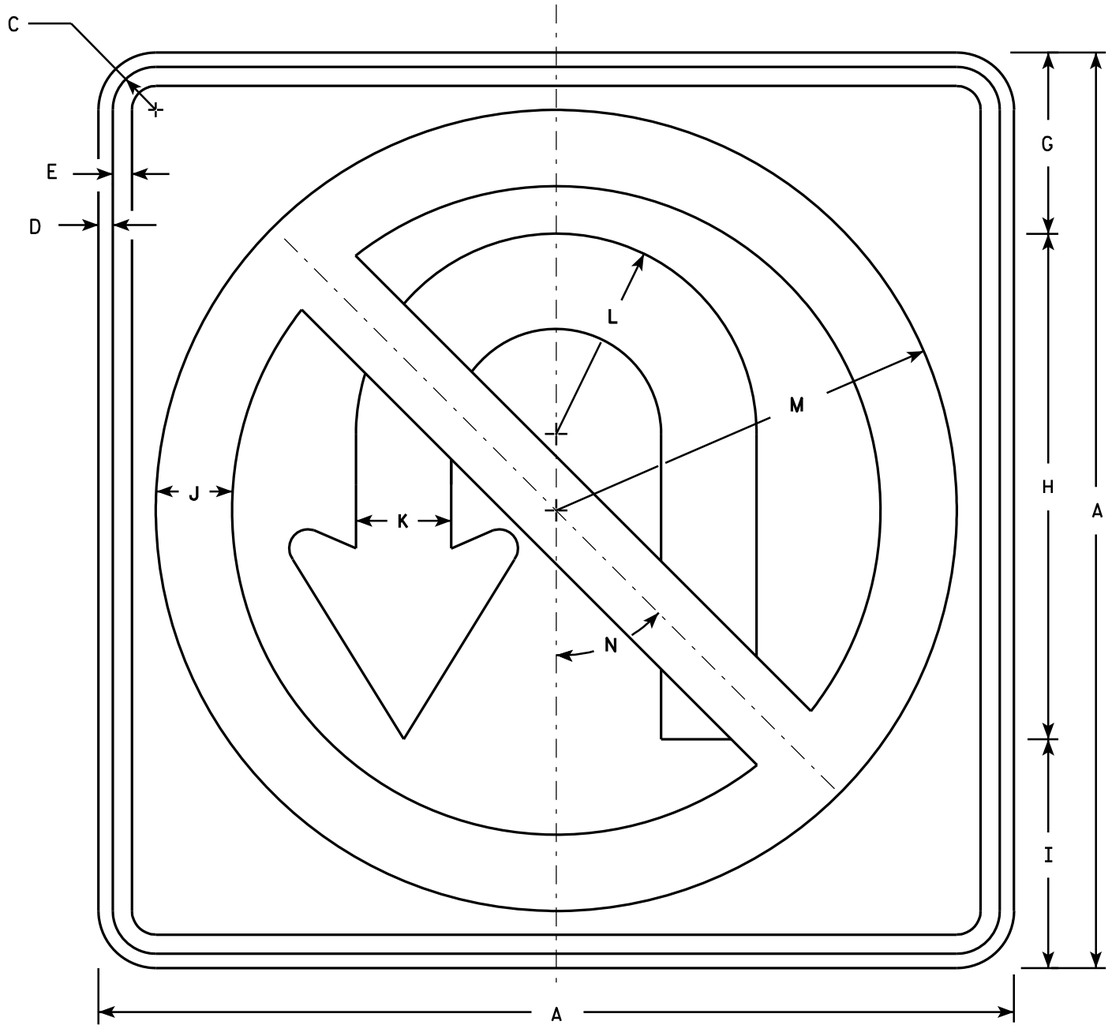

R3-4

NOTES

1. Sign is Type II - Type H Reflective - reference WIS DOT Standard Specification for HIGHWAY and STRUCTURE CONSTRUCTION latest edition.
2. Color:
   Background - White
   Message - See note 4
3. Corners may be square or rounded when base material is plywood but borders shall be rounded as shown. When base material is metal, the corners and borders shall be rounded.
4. Border & Arrow are non reflective black, the circle with diagonal bar is reflective red.

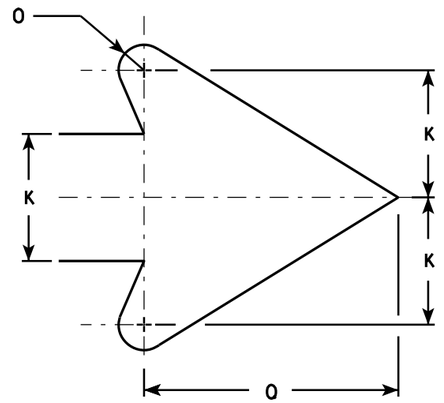

ARROW DETAIL

SIZE	A	B	C	D	E	F	G	H	I	J	K	L	M	N	O	P	Q	R	S	T	U	V	W	X	Y	Z	Area sq. ft.
1																											
2S	24		1 1/8	3/8	1/2		4 3/4	13 1/4	6	2	2 1/2	5 1/4	10 1/2	45°	1/2		5										4.0
2M	36		1 5/8	5/8	3/4		7 1/8	19 7/8	9	3	3 3/4	7 7/8	15 3/4	45°	3/4		7 5/8										9.0
3	36		1 5/8	5/8	3/4		7 1/8	19 7/8	9	3	3 3/4	7 7/8	15 3/4	45°	3/4		7 5/8										9.0
4	36		1 5/8	5/8	3/4		7 1/8	19 7/8	9	3	3 3/4	7 7/8	15 3/4	45°	3/4		7 5/8										9.0
5	36		1 5/8	5/8	3/4		7 1/8	19 7/8	9	3	3 3/4	7 7/8	15 3/4	45°	3/4		7 5/8										9.0

STANDARD SIGN
R3-4

WISCONSIN DEPT OF TRANSPORTATION

APPROVED Matthew R Rauch
for State Traffic Engineer

DATE 12/08/10 PLATE NO. R3-4.11

PROJECT NO:	HWY:	COUNTY:		SHEET NO: 161	E

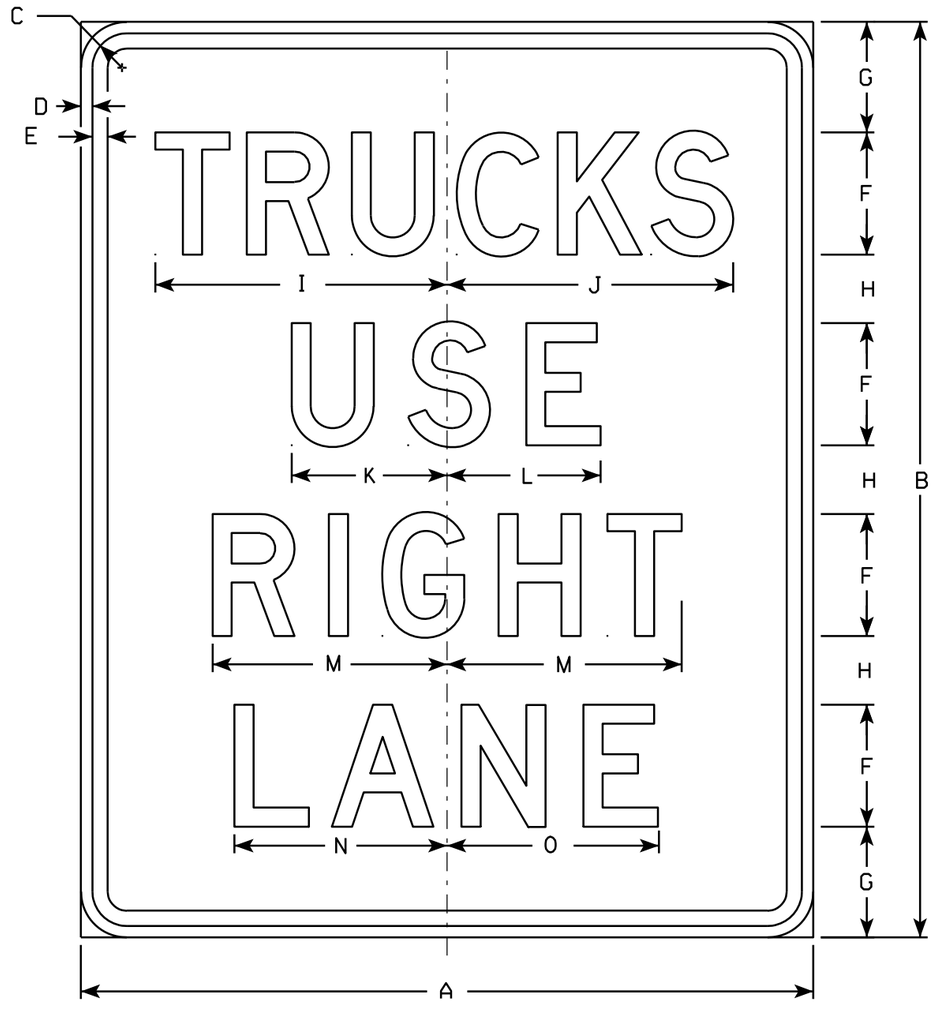

R4-5

NOTES

1. Sign is Type II - Type H Reflective - reference WIS DOT Standard Specification for HIGHWAY and STRUCTURE CONSTRUCTION latest edition.
2. Color:
   Background - White
   Message - Black
3. Message Series - D
4. Corners may be square or rounded when base material is plywood but borders shall be rounded as shown. When base material is metal, the corners and borders shall be rounded.
5. R4-5L & R4-5C are the same as R4-5 except LEFT or CENTER replaces RIGHT as order by code.

R4-5L

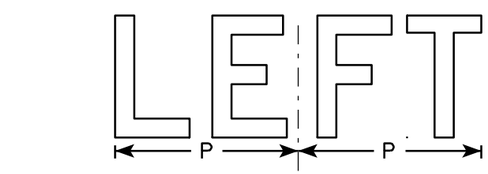

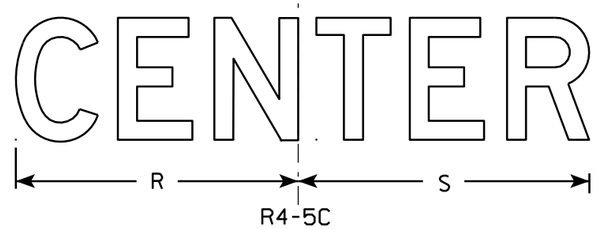

R4-5C

SIZE	A	B	C	D	E	F	G	H	I	J	K	L	M	N	O	P	Q	R	S	T	U	V	W	X	Y	Z	Area sq. ft.
1																											
2S	24	30	1 1/8	3/8	1/2	4	3 5/8	2 1/4	9 5/8	9 3/8	5 1/8	5 1/8	7 3/4	7 1/4	7	6		9 1/4	9 1/2								5.0
2M	24	30	1 1/8	3/8	1/2	4	3 5/8	2 1/4	9 5/8	9 3/8	5 1/8	5 1/8	7 3/4	7 1/4	7	6		9 1/4	9 1/2								5.0
3																											
4	36	48	2 1/4	5/8	3/4	6	6	4	14 3/8	14 1/8	7 7/8	7 7/8	12 1/4	10 3/4	10 1/2	9 5/8		13 7/8	14 1/4								12.0
5	48	60	2 1/4	3/4	1	8	7 1/4	4 1/2	19 1/8	18 3/4	10 1/4	10 1/8	15 3/8	14	13 7/8	12		18 1/2	19 1/8								20.0

STANDARD SIGN
R4-5

WISCONSIN DEPT OF TRANSPORTATION

APPROVED Matthew R Rauch
for State Traffic Engineer

DATE 3/25/2011 PLATE NO. R4-5.3

PROJECT NO: | HWY: | COUNTY: | SHEET NO: 162 | E

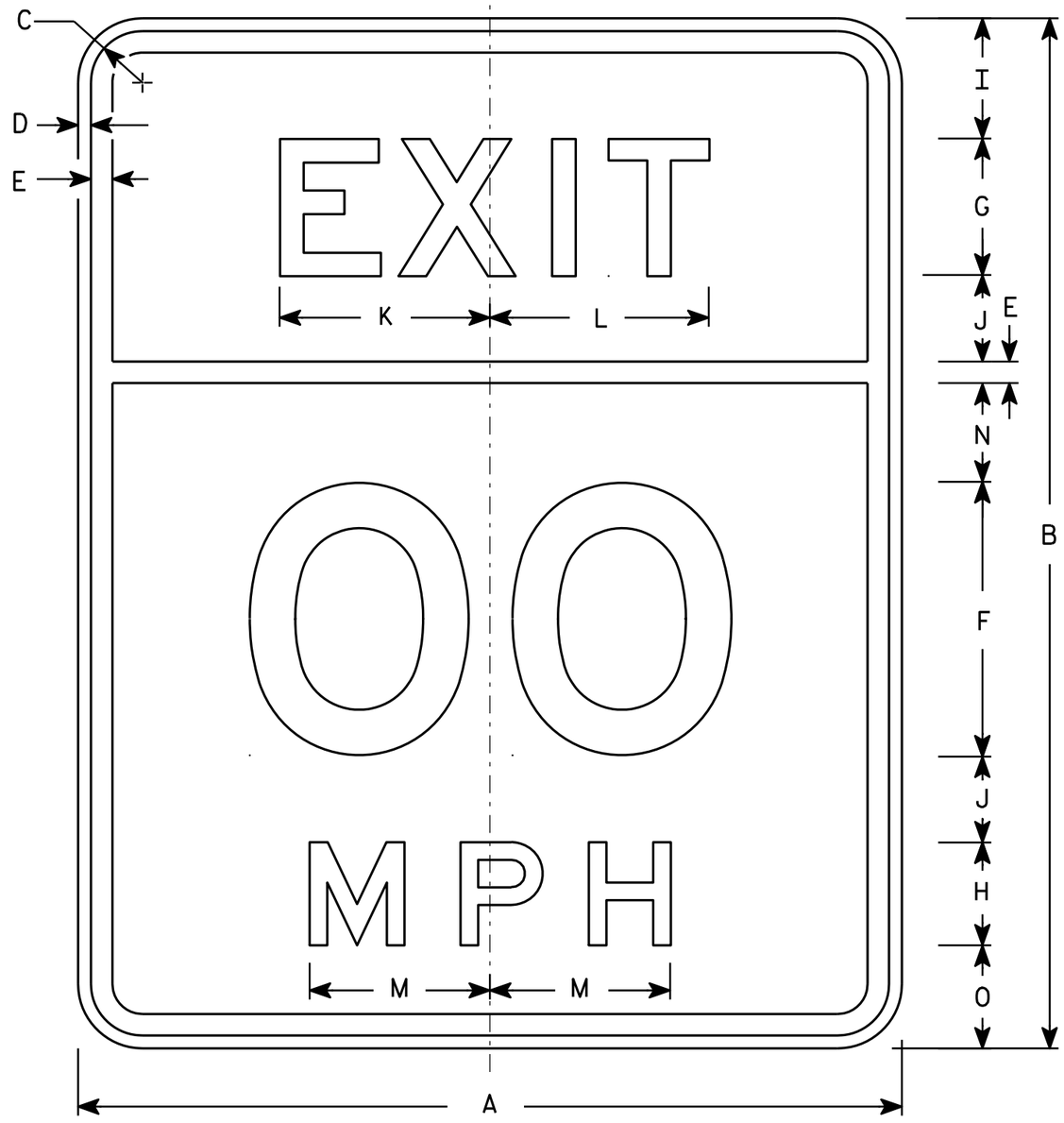

W13-2

NOTES

1. Sign is Type II - Type F Reflective - reference WIS DOT Standard Specification for HIGHWAY and STRUCTURE CONSTRUCTION latest edition.
2. Color:
   Background - Yellow
   Message - Black
3. Message Series - E
4. Corners may be square or rounded when base material is plywood but borders shall be rounded as shown. When base material is metal, the corners and borders shall be rounded.
5. Substitute appropriate numerals and optically space about centerline to achieve proper balance.

SIZE	A	B	C	D	E	F	G	H	I	J	K	L	M	N	O	P	Q	R	S	T	U	V	W	X	Y	Z	Area sq. ft.
1																											
2S	24	30	1 1/2	3/8	5/8	8	4	3	3 1/2	2 1/2	6 1/8	6 3/8	5 1/4	2 7/8	3												5.0
2M	24	30	1 1/2	3/8	5/8	8	4	3	3 1/2	2 1/2	6 1/8	6 3/8	5 1/4	2 7/8	3												5.0
3	36	48	2 1/4	5/8	7/8	12	6	4	6	4	9 1/4	9 1/2	7 1/8	5 1/8	6												12.0
4	36	48	2 1/4	5/8	7/8	12	6	4	6	4	9 1/4	9 1/2	7 1/8	5 1/8	6												12.0
5	48	60	2 1/4	3/4	1	16	8	6	7	5	12 1/4	12 3/4	10 5/8	5 3/4	6												20.0

STANDARD SIGN
W13-2

WISCONSIN DEPT OF TRANSPORTATION

APPROVED Matthew R Rauch
for State Traffic Engineer

DATE 5/31/12 PLATE NO. W13-2.9

PROJECT NO: | HWY: | COUNTY: | SHEET NO: 163 | E

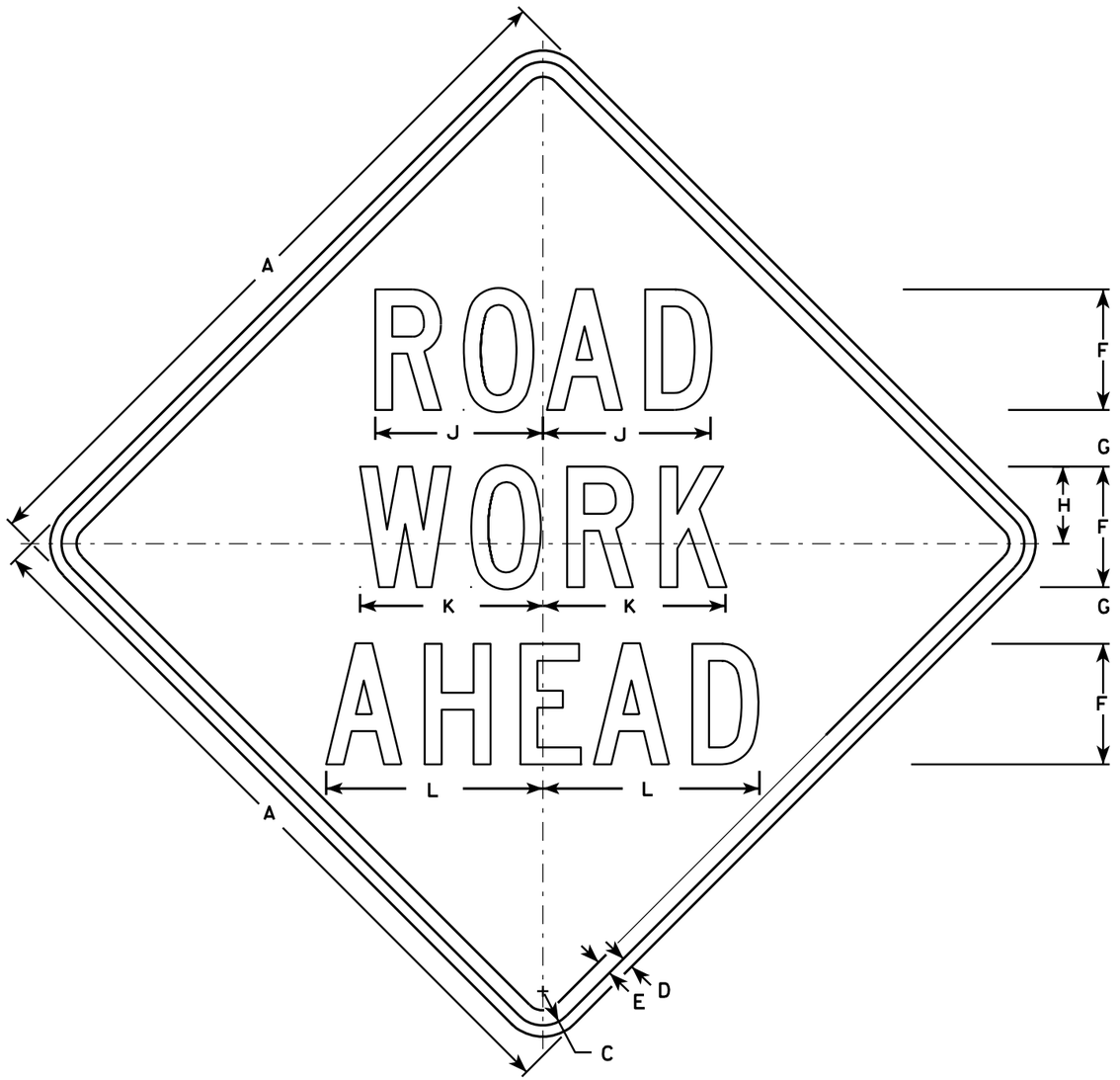

W20-1A

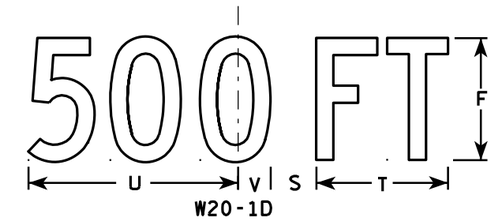

W20-1D

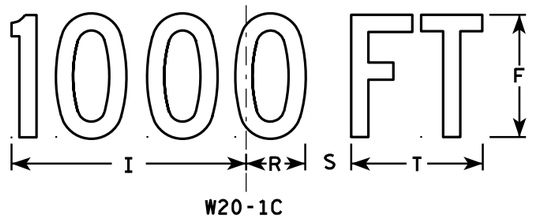

W20-1C

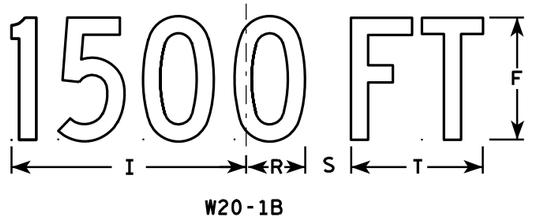

W20-1B

W20-1G

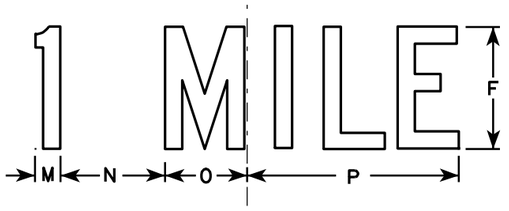

W20-1F

NOTES

1. Sign is Type II - Type F Reflective - reference WIS DOT Standard Specification for HIGHWAY and STRUCTURE CONSTRUCTION latest edition.
2. Color:
   Background - Orange
   Message - Black
3. Message Series - C
4. Corners may be square or rounded when base material is plywood but borders shall be rounded as shown. When base material is metal, the corners and borders shall be rounded.

SIZE	A	B	C	D	E	F	G	H	I	J	K	L	M	N	O	P	Q	R	S	T	U	V	W	X	Y	Z	Area sq. ft.
1	36		1 3/8	1/2	5/8	5	2 5/8	3 1/4	10 1/8	7	7 5/8	8 7/8	1 1/8	4 1/2	3 1/2	9		2 1/2	1 7/8	5 5/8	9	1 3/8	8	1 3/4	10 3/4	6	9.0
2S	48		2 1/4	3/4	1	8	3 3/4	5 1/8	15 3/8	11 1/8	12 1/8	14 3/8	1 5/8	6 7/8	5 3/8	13 7/8		3 7/8	3	8 5/8	13 3/4	2 1/8	11 7/8	2 3/4	16 3/8	9	16.0
2M	48		2 1/4	3/4	1	8	3 3/4	5 1/8	15 3/8	11 1/8	12 1/8	14 3/8	1 5/8	6 7/8	5 3/8	13 7/8		3 7/8	3	8 5/8	13 3/4	2 1/8	11 7/8	2 3/4	16 3/8	9	16.0
3	48		2 1/4	3/4	1	8	3 3/4	5 1/8	15 3/8	11 1/8	12 1/8	14 3/8	1 5/8	6 7/8	5 3/8	13 7/8		3 7/8	3	8 5/8	13 3/4	2 1/8	11 7/8	2 3/4	16 3/8	9	16.0
4	48		2 1/4	3/4	1	8	3 3/4	5 1/8	15 3/8	11 1/8	12 1/8	14 3/8	1 5/8	6 7/8	5 3/8	13 7/8		3 7/8	3	8 5/8	13 3/4	2 1/8	11 7/8	2 3/4	16 3/8	9	16.0
5	48		2 1/4	3/4	1	8	3 3/4	5 1/8	15 3/8	11 1/8	12 1/8	14 3/8	1 5/8	6 7/8	5 3/8	13 7/8		3 7/8	3	8 5/8	13 3/4	2 1/8	11 7/8	2 3/4	16 3/8	9	16.0

STANDARD SIGN
W20-1A, B, C, D, F & G

WISCONSIN DEPT OF TRANSPORTATION

APPROVED Matthew R Rauch
for State Traffic Engineer

DATE 3/18/11 PLATE NO. W20-1.9

PROJECT NO:

SHEET NO: 164 E

FILE NAME : C:\Users\PROJECTS\tr_stdplate\W201.DGN PLOT DATE : 18-MAR-2011 09:56 PLOT BY : mscj9h

WISDOT/CADDS SHEET 42

7

7

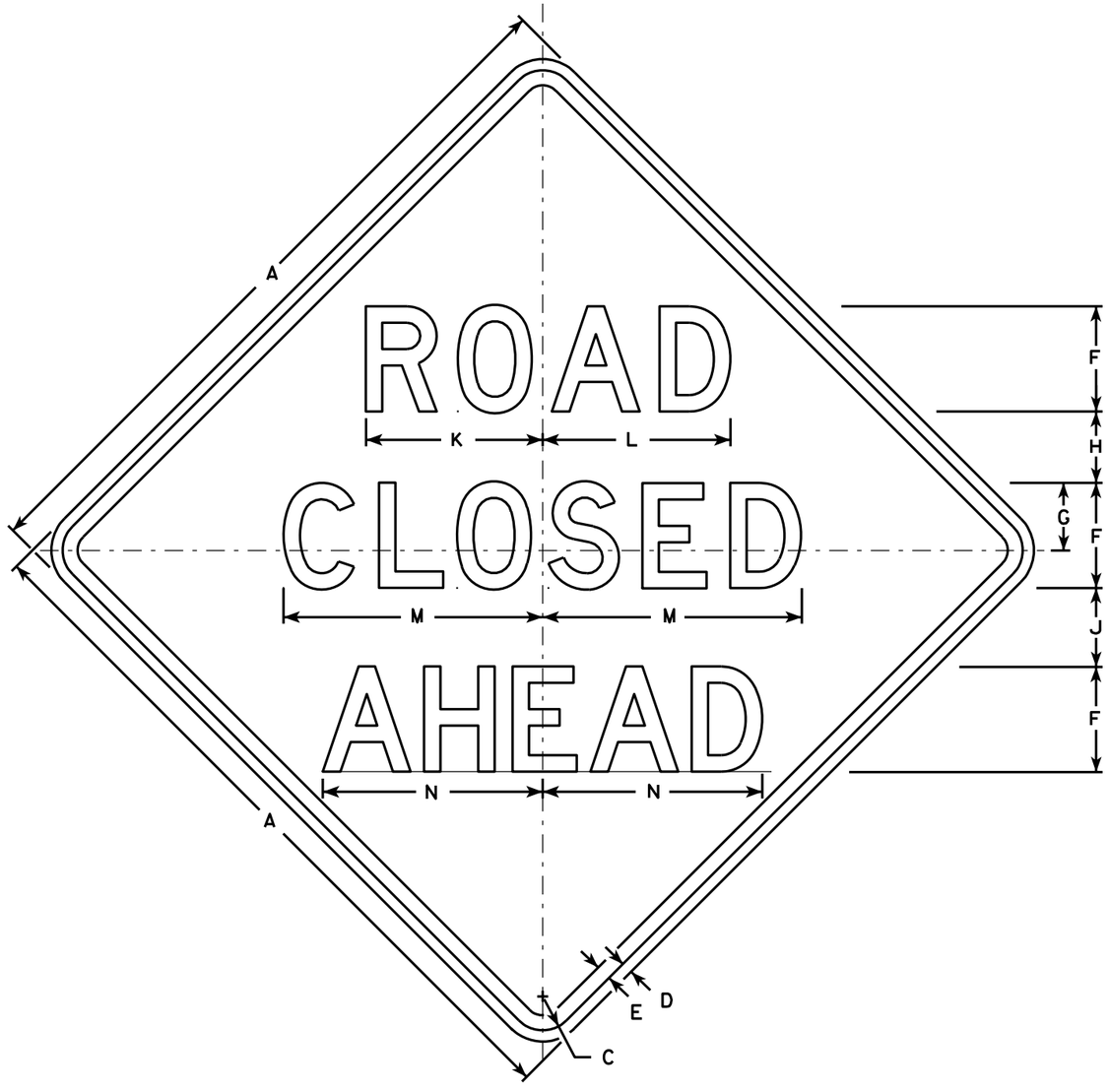

W20-3A

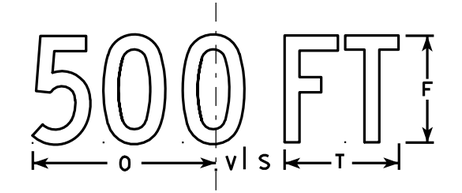

W20-3D

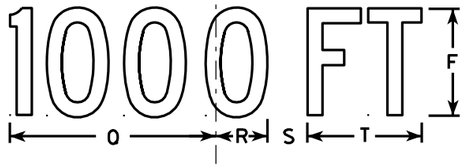

W20-3C

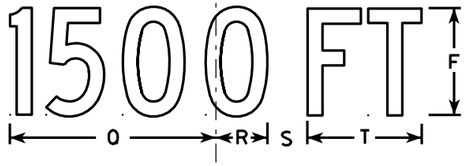

W20-3B

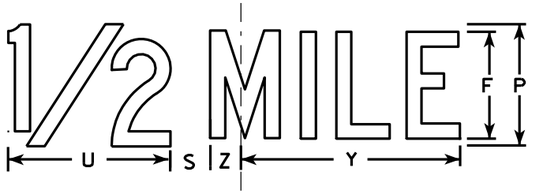

W20-3G

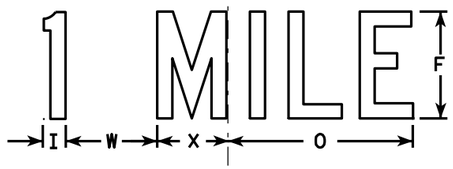

W20-3F

NOTES

1. Sign is Type II - Type F Reflective - reference WIS DOT Standard Specification for HIGHWAY and STRUCTURE CONSTRUCTION latest edition.
2. Color:
   Background - Orange
   Message - Black
3. Message Series - see note 5
4. Corners may be square or rounded when base material is plywood but borders shall be rounded as shown. When base material is metal, the corners and borders shall be rounded.
5. Lines 1 and 2 are Series D.
   Line 3 is Series D for AHEAD and Series C for all other distances.

SIZE	A	B	C	D	E	F	G	H	I	J	K	L	M	N	O	P	Q	R	S	T	U	V	W	X	Y	Z	Area sq. ft.
1	36		1 5/8	5/8	3/4	5	3 3/8	3 1/2	1 1/8	4	8 3/8	8 7/8	12 1/2	11	9	6	10 1/8	2 1/2	1 7/8	5 5/8	8	1 3/8	4 1/2	3 1/2	10 3/4	1 3/4	9.0
2S	48		2 1/4	3/4	1	7	4 1/2	4 3/4	1 1/2	5 1/4	11 3/4	12 1/2	17 1/4	14 5/8	12	8	13 1/2	3 3/8	2 5/8	7 1/2	10 5/8	1 7/8	6	4 5/8	14 3/8	2 3/8	16.0
2M	48		2 1/4	3/4	1	7	4 1/2	4 3/4	1 1/2	5 1/4	11 3/4	12 1/2	17 1/4	14 5/8	12	8	13 1/2	3 3/8	2 5/8	7 1/2	10 5/8	1 7/8	6	4 5/8	14 3/8	2 3/8	16.0
3	48		2 1/4	3/4	1	7	4 1/2	4 3/4	1 1/2	5 1/4	11 3/4	12 1/2	17 1/4	14 5/8	12	8	13 1/2	3 3/8	2 5/8	7 1/2	10 5/8	1 7/8	6	4 5/8	14 3/8	2 3/8	16.0
4	48		2 1/4	3/4	1	7	4 1/2	4 3/4	1 1/2	5 1/4	11 3/4	12 1/2	17 1/4	14 5/8	12	8	13 1/2	3 3/8	2 5/8	7 1/2	10 5/8	1 7/8	6	4 5/8	14 3/8	2 3/8	16.0
5	48		2 1/4	3/4	1	7	4 1/2	4 3/4	1 1/2	5 1/4	11 3/4	12 1/2	17 1/4	14 5/8	12	8	13 1/2	3 3/8	2 5/8	7 1/2	10 5/8	1 7/8	6	4 5/8	14 3/8	2 3/8	16.0

STANDARD SIGN
W20-3A, B, C, D, F & G

WISCONSIN DEPT OF TRANSPORTATION

APPROVED Matthew R Rauch
for State Traffic Engineer
DATE 3/18/11 PLATE NO. W20-3.7

PROJECT NO: | HWY: | COUNTY: | SHEET NO: 165 | E

7

FILE NAME : C:\Users\PROJECTS\tr_stdplate\W203.DGN PLOT DATE : 18-MAR-2011 12:08 PLOT BY : mscj9h PLOT NAME : PLOT SCALE : 9.931739:1.000000
WISDOT/CADDS SHEET 42

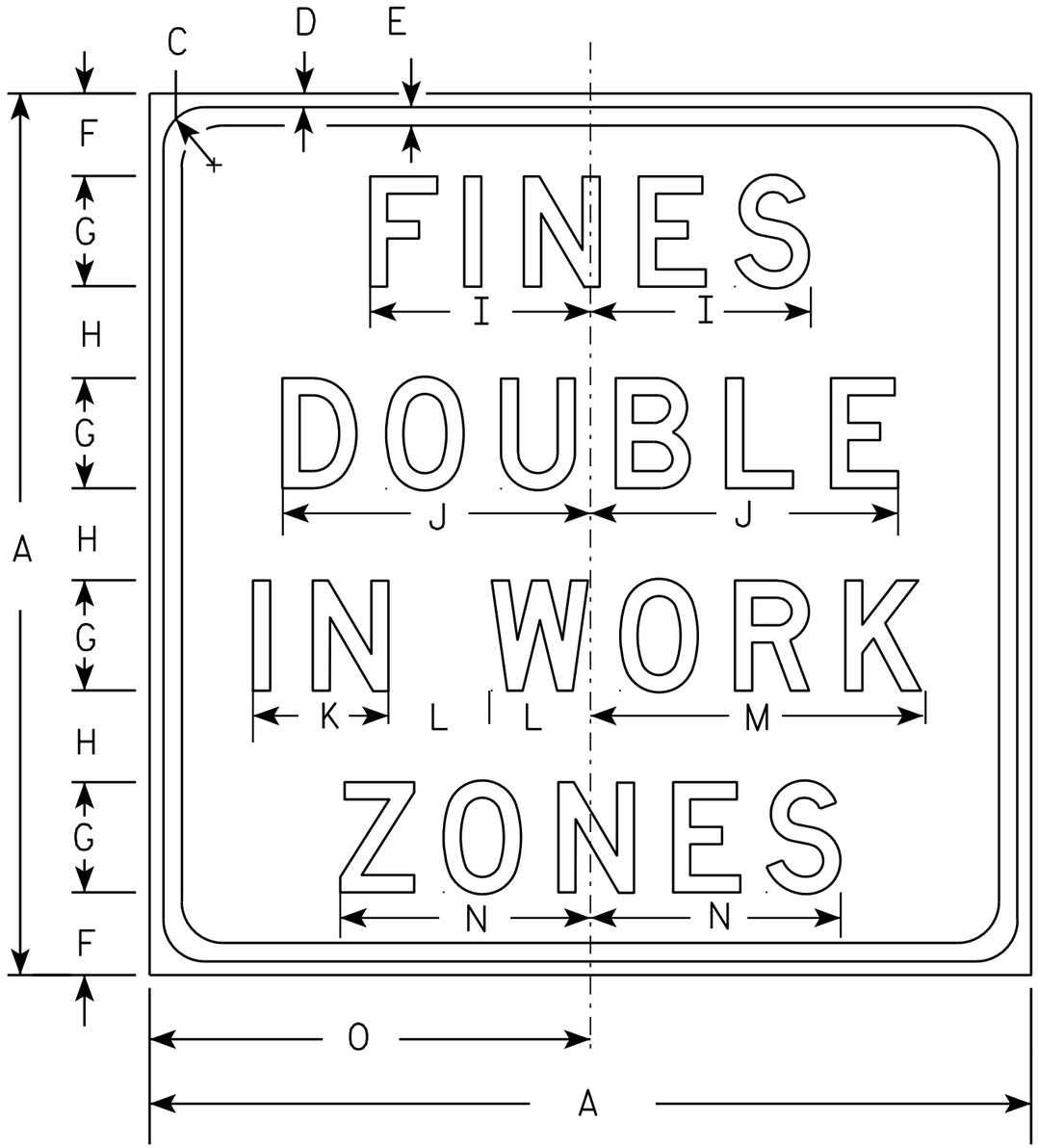

W21-61

NOTES

1. Sign is Type II - Type H Reflective - reference WIS DOT Standard Specification for HIGHWAY and STRUCTURE CONSTRUCTION latest edition.
2. Color:
   Background - White
   Message - Black
3. Message Series - D
4. Corners may be square or rounded when base material is plywood but borders shall be rounded as shown. When base material is metal, the corners and borders shall be rounded.

SIZE	A	B	C	D	E	F	G	H	I	J	K	L	M	N	O	P	Q	R	S	T	U	V	W	X	Y	Z	Area sq. ft.
1	24		1 1/8	3/8	1/2	2 1/4	3	2 1/2	6	8 3/8	3 3/4	2 3/4	9 1/8	6 7/8	12												4.0
2S	36		1 5/8	5/8	3/4	3 3/8	4 1/2	3 3/4	9	12 5/8	5 1/2	4 1/8	13 3/4	10 1/4	18												9.0
2M	36		1 5/8	5/8	3/4	3 3/8	4 1/2	3 3/4	9	12 5/8	5 1/2	4 1/8	13 3/4	10 1/4	18												9.0
3	48		2 1/4	3/4	1	4 1/2	6	5	12	16 3/4	7 3/8	5 1/2	18 1/4	13 5/8	24												16.0
4																											
5																											

STANDARD SIGN
W21-61

WISCONSIN DEPT OF TRANSPORTATION

APPROVED Matthew R Rauch
For State Traffic Engineer

DATE 3/21/11 PLATE NO. W21-61.4

PROJECT NO:	HWY:	COUNTY:		SHEET NO: 166	E

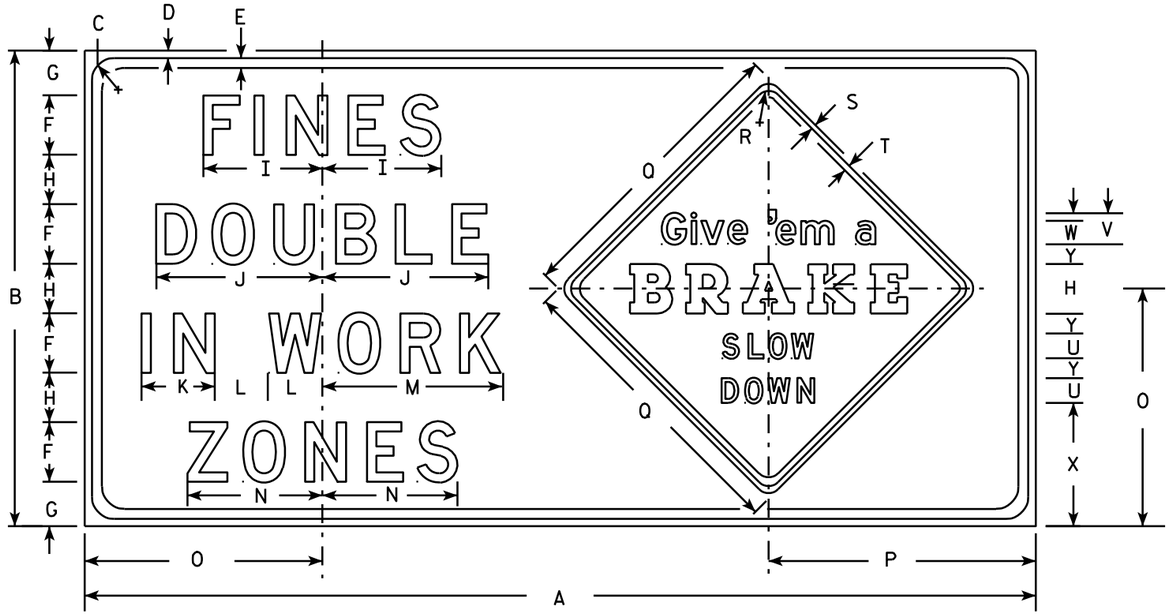

W21-62

NOTES

1. Sign is Type II - Type H Reflective - reference WIS DOT Standard Specification for HIGHWAY and STRUCTURE CONSTRUCTION latest edition.
2. Color:
   Background - White - (See Note 5)
   Message - Black
3. Message Series -
   Fines Double Message - All lines are Series D
   Give 'em a Brake -
   Line one is Series E, line two is a Special Graphic Series and lines three and four are Series D.
4. The base material shall be plywood. Corners may be square or rounded, but borders shall be rounded as shown. The base material for Give 'em a Brake sign can be a seperate sheet of aluminum with the corners and borders rounded as shown. This seperate panel shall then be attached to the plywood with aluminum or stainless steel sheet metal screws.
5. Background for the Give 'em a Brake sign shall be Type F reflective orange.

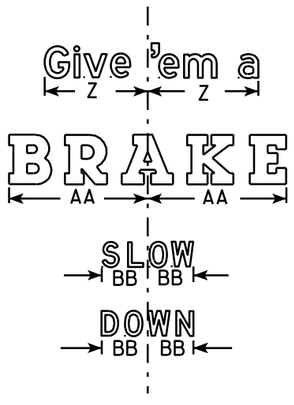

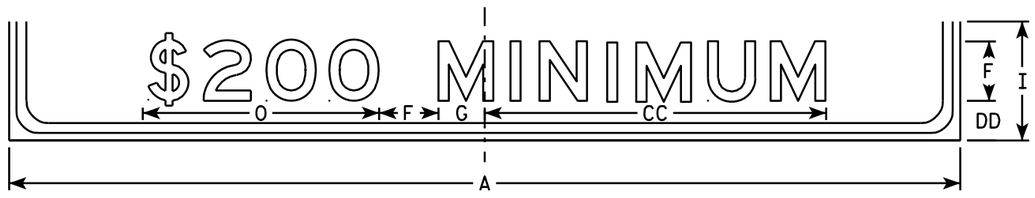

W21-62P

SIZE	A	B	C	D	E	F	G	H	I	J	K	L	M	N	O	P	Q	R	S	T	U	V	W	X	Y	Z	AA	BB	CC	DD	Area sq. ft.
1																															
2S																															
2M																															
3	96	48	2 1/4	3/4	1	6	4 1/2	5	12	16 3/4	7 3/8	5 1/2	18 1/4	13 5/8	24	27	30	1 3/8	1/2	5/8	2 1/2	3 1/8	2 3/8	12 1/2	2	10 3/4	14	4 5/8	34 1/2	4	32.0
4																															
5																															

STANDARD SIGN
W21-62

WISCONSIN DEPT OF TRANSPORTATION

APPROVED Matthew R Rauch
for State Traffic Engineer

DATE 3/21/11 PLATE NO. W21-62.5

PROJECT NO:	HWY:	COUNTY:		SHEET NO: 167	E

FILE NAME : C:\Users\PROJECTS\tr_stdplate\W2162.DGN PLOT DATE : 21-MAR-2011 10:25 PLOT BY : mscj9h PLOT NAME : PLOT SCALE : 15.294877:1.000000

WISDOT/CADDS SHEET 42

7

7

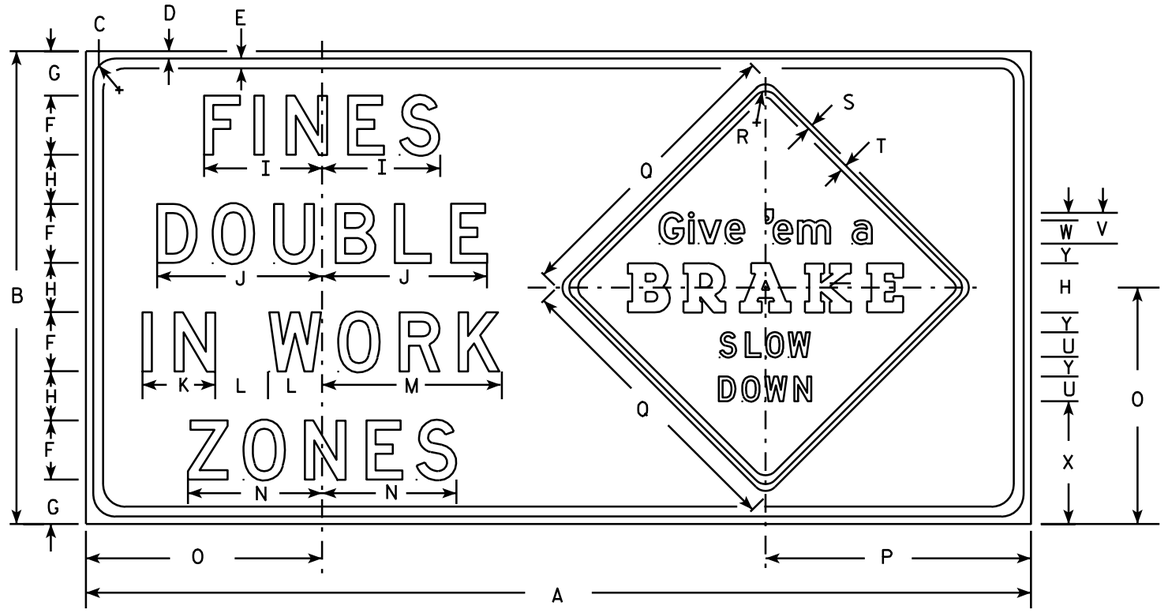

W21-62

NOTES

1. Sign is Type II - Type H Reflective - reference WIS DOT Standard Specification for HIGHWAY and STRUCTURE CONSTRUCTION latest edition.
2. Color:
   Background - White - (See Note 5)
   Message - Black
3. Message Series -
   Fines Double Message - All lines are Series D
   Give 'em a Brake -
   Line one is Series E, line two is a Special Graphic Series and lines three and four are Series D.
4. The base material shall be plywood. Corners may be square or rounded, but borders shall be rounded as shown. The base material for Give 'em a Brake sign can be a seperate sheet of aluminum with the corners and borders rounded as shown. This seperate panel shall then be attached to the plywood with aluminum or stainless steel sheet metal screws.
5. Background for the Give 'em a Brake sign shall be Type F reflective orange.

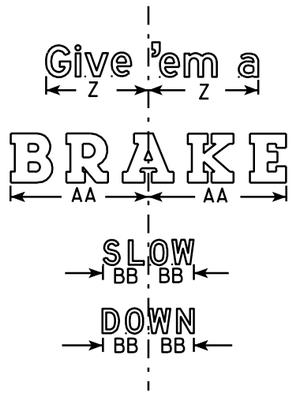

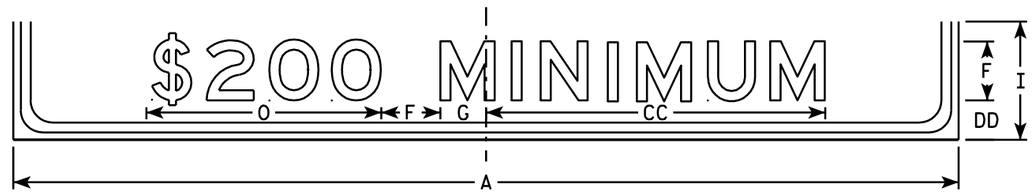

W21-62P

Metric equivalent for this sign is:

SIZE	
1	
2	
3	2400 mm X 1200 mm
4	
5	

SIZE	A	B	C	D	E	F	G	H	I	J	K	L	M	N	O	P	O	R	S	T	U	V	W	X	Y	Z	AA	BB	CC	DD	Area sq. ft.	Area m2
1																																
2																																
3	96	48	2 1/4	3/4	1	6	4 1/2	5	12	16 3/4	7 3/8	5 1/2	18 1/4	13 5/8	24	27	30	1 3/8	1/2	5/8	2 1/2	3 1/8	2 3/8	12 1/2	2	10 3/4	14	4 5/8	34 1/2	4	32.0	2.88
4																																
5																																

STANDARD SIGN
W21-62

WISCONSIN DEPT OF TRANSPORTATION

APPROVED Matthew R Rauch
for State Traffic Engineer

DATE 4/16/07 PLATE NO. W21-62.4

PROJECT NO:	HWY:	COUNTY:		SHEET NO: 168	E

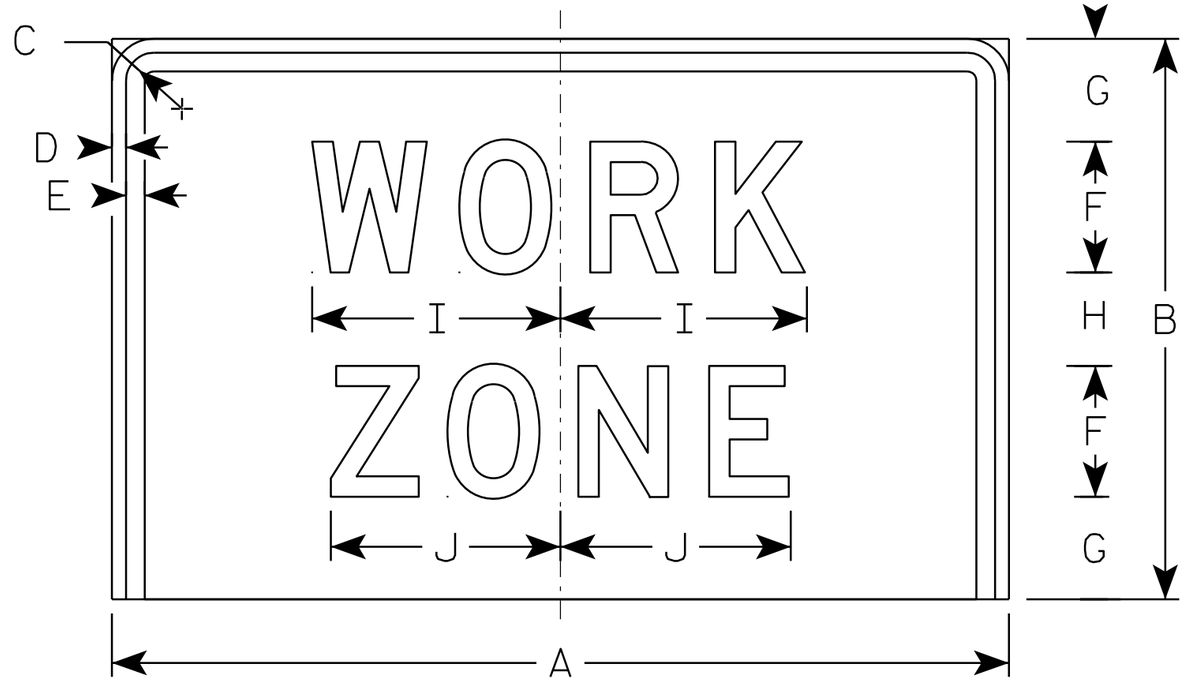

W21-62Q

NOTES

1. Sign is Type II - Type F - reference WIS DOT Standard Specification for HIGHWAY and STRUCTURE CONSTRUCTION latest edition.
2. Color:
   Background - Orange
   Message - Black
3. Message Series - D

SIZE	A	B	C	D	E	F	G	H	I	J	K	L	M	N	O	P	Q	R	S	T	U	V	W	X	Y	Z	Area sq. ft.
1																											
2S	48	30	2 1/4	3/4	1	7	5 1/2	5	13 1/4	12 1/4																	10.0
2M	48	30	2 1/4	3/4	1	7	5 1/2	5	13 1/4	12 1/4																	10.0
3																											
4																											
5																											

STANDARD SIGN
W21-62Q

WISCONSIN DEPT OF TRANSPORTATION

APPROVED Matthew R Rauch
for State Traffic Engineer

DATE 3/21/11 PLATE NO. W21-620.2

PROJECT NO:	HWY:	COUNTY:		SHEET NO: 169	E

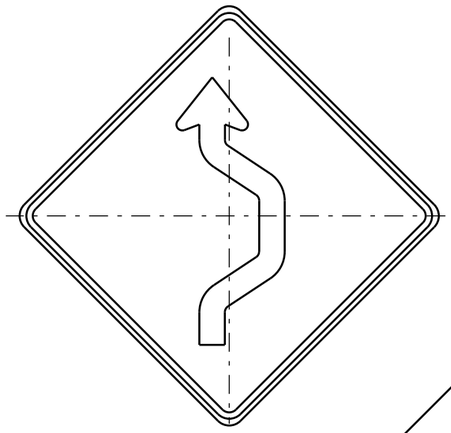

W24-1R

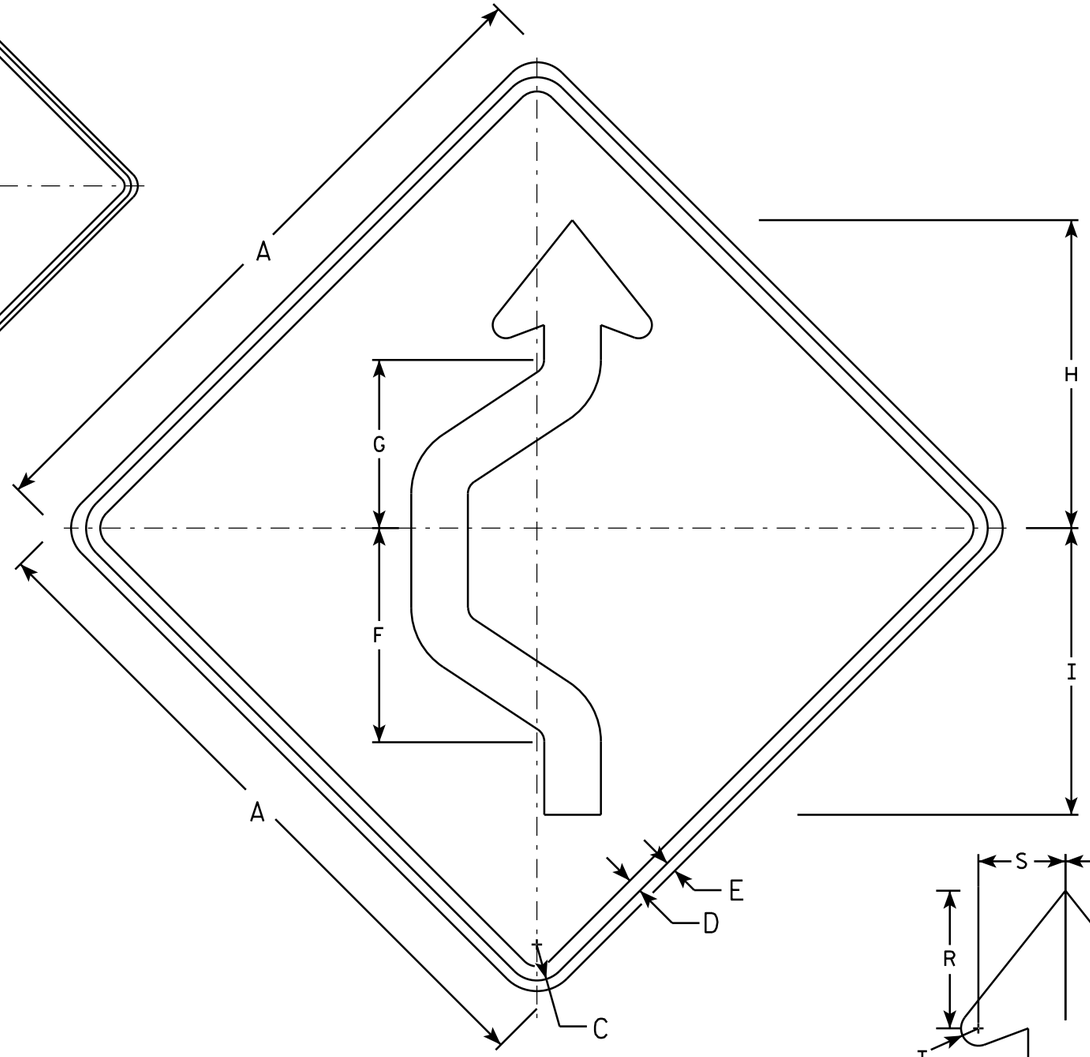

W24-1L

NOTES

1. Sign is Type II - Type F Reflective - reference WIS DOT Standard Specification for HIGHWAY and STRUCTURE CONSTRUCTION latest edition.
2. Color:
   Background - Yellow
   Message - Black
3. Corners may be square or rounded when base material is plywood but borders shall be rounded as shown. When base material is metal, the corners and borders shall be rounded.
4. W24-1R is the same as W24-1L except reversed along the vertical centerline.

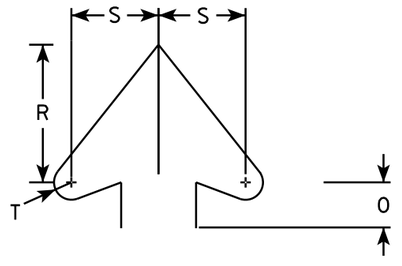

Arrowhead Detail

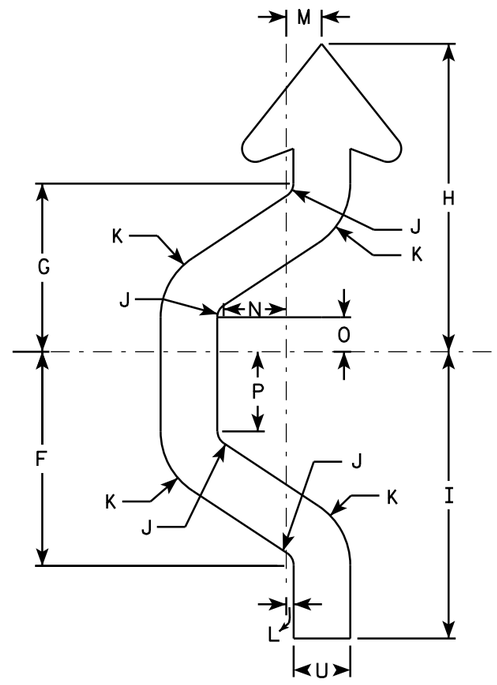

Arrow Detail

SIZE	A	B	C	D	E	F	G	H	I	J	K	L	M	N	O	P	Q	R	S	T	U	V	W	X	Y	Z	Area sq. ft.
1																											
2S	36		1 3/8	5/8	1/2	11 3/8	8 7/8	16 3/8	15 1/4	3/4	3 3/4	3/8	2	3 3/8	1 7/8	4 1/4		5 1/2	3 1/2	5/8	3						9
2M	36		1 3/8	5/8	1/2	11 3/8	8 7/8	16 3/8	15 1/4	3/4	3 3/4	3/8	2	3 3/8	1 7/8	4 1/4		5 1/2	3 1/2	5/8	3						9
3																											
4																											
5																											

STANDARD SIGN
W24-1 L & R

WISCONSIN DEPT OF TRANSPORTATION

APPROVED Matthew R Rauch
for State Traffic Engineer

DATE 9/25/2013 PLATE W24-1.3

PROJECT NO:	HWY:	COUNTY:		SHEET NO:	E

FILE NAME : C:\CAEFiles\Projects\tr_stdplate\W241L.DGN PLOT DATE : 25-SEP-2013 13:00 PLOT BY : mscsja PLOT NAME : PLOT SCALE : 10.702132:1.000000 WISDOT/CADDS SHEET 42

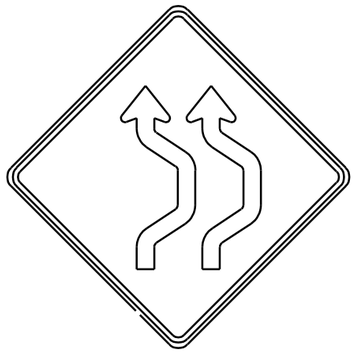

W24-1AR

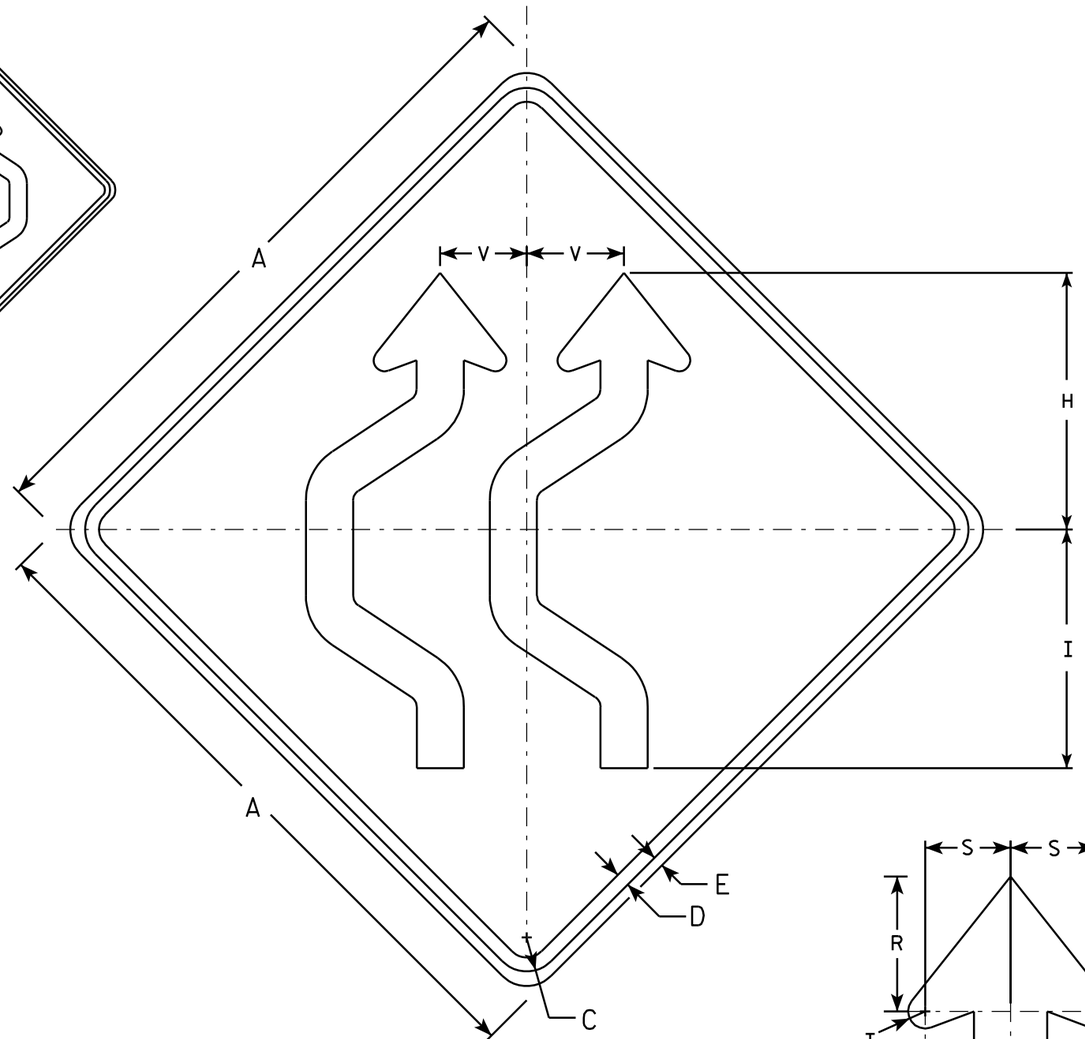

W24-1AL

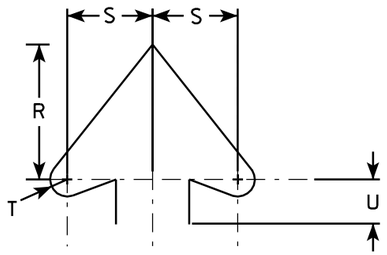

Arrowhead Detail

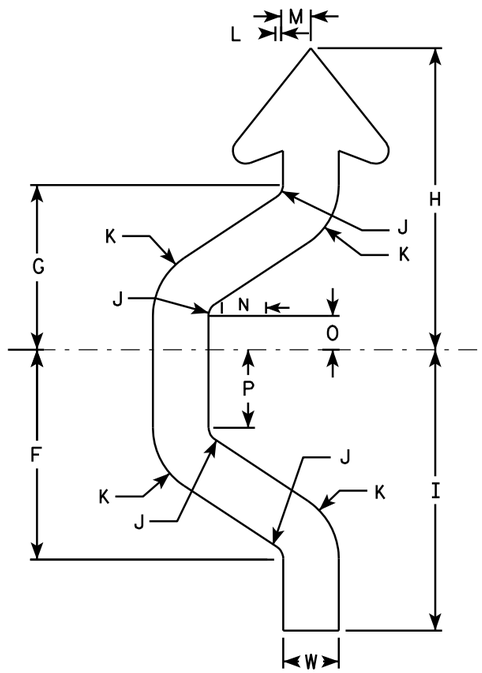

Arrow Detail

NOTES

1. Sign is Type II - Type F Reflective - reference WIS DOT Standard Specification for HIGHWAY and STRUCTURE CONSTRUCTION latest edition.
2. Color:
   Background - Orange
   Message - Black
3. Corners may be square or rounded when base material is plywood but borders shall be rounded as shown. When base material is metal, the corners and borders shall be rounded.
4. W24-1R is the same as W24-1L except reversed along the vertical centerline.

SIZE	A	B	C	D	E	F	G	H	I	J	K	L	M	N	O	P	O	R	S	T	U	V	W	X	Y	Z	Area sq. ft.
1	36		1 3/8	5/8	1/2	9 1/2	7 1/2	13 3/4	12 3/4	5/8	3 1/8	3/8	1 5/8	2 3/8	1 1/2	3 1/2		4 5/8	3	5/8	1 1/2	4 3/4	2 1/2				9
2S	48		2 1/4	1	3/4	12 7/8	10 1/8	18 1/2	17 1/4	7/8	4 1/4	3/8	2 1/8	3 1/4	2	4 3/4		6 1/4	4	3/4	2 1/8	6 1/4	3 3/8				16
2M	48		2 1/4	1	3/4	12 7/8	10 1/8	18 1/2	17 1/4	7/8	4 1/4	3/8	2 1/8	3 1/4	2	4 3/4		6 1/4	4	3/4	2 1/8	6 1/4	3 3/8				16
3	48		2 1/4	1	3/4	12 7/8	10 1/8	18 1/2	17 1/4	7/8	4 1/4	3/8	2 1/8	3 1/4	2	4 3/4		6 1/4	4	3/4	2 1/8	6 1/4	3 3/8				16
4	48		2 1/4	1	3/4	12 7/8	10 1/8	18 1/2	17 1/4	7/8	4 1/4	3/8	2 1/8	3 1/4	2	4 3/4		6 1/4	4	3/4	2 1/8	6 1/4	3 3/8				16
5	48		2 1/4	1	3/4	12 7/8	10 1/8	18 1/2	17 1/4	7/8	4 1/4	3/8	2 1/8	3 1/4	2	4 3/4		6 1/4	4	3/4	2 1/8	6 1/4	3 3/8				16

STANDARD SIGN
W24-1AL

WISCONSIN DEPT OF TRANSPORTATION

APPROVED Matthew R Rauch
for State Traffic Engineer

DATE 3/21/11 PLATE NO. W24-1AL.2

PROJECT NO:	HWY:	COUNTY:		SHEET NO: 171	E

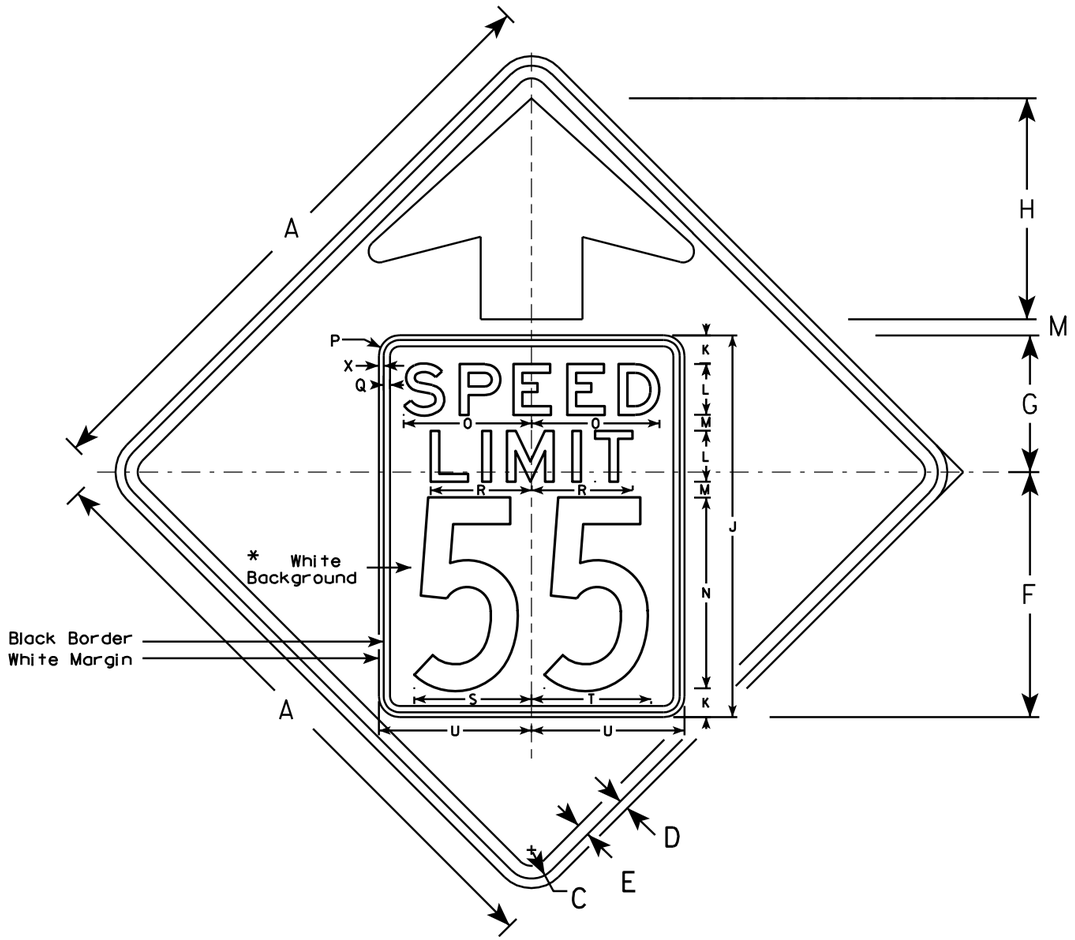

W3-5

NOTES

1. Sign is Type II - Type F Reflective - reference WIS DOT Standard Specification for HIGHWAY and STRUCTURE CONSTRUCTION latest edition.
2. Color: *
   Background - YELLOW*
   Message - BLACK
3. Message Series - C for numbers Series E for wording
4. Substitute appropriate numerals and optically adjust spacing to achieve proper balance

*Speed Limit Sign shall have a White Background

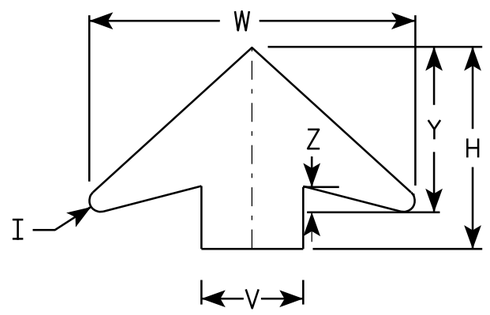

ARROW DETAIL

SIZE	A	B	C	D	E	F	G	H	I	J	K	L	M	N	O	P	Q	R	S	T	U	V	W	X	Y	Z	Area sq. ft.
1																											
2S	36		1 5/8	5/8	3/4	14 1/2	9 1/2	11 1/2	5/8	24	2	3	1	12	7 1/8	1 1/2	3/8	5 3/4	7 1/4	7 1/8	9	6	19 1/4	3/8	9 3/4	1 5/8	9.0
2M	36		1 5/8	5/8	3/4	14 1/2	9 1/2	11 1/2	5/8	24	2	3	1	12	7 1/8	1 1/2	3/8	5 3/4	7 1/4	7 1/8	9	6	19 1/4	3/8	9 3/4	1 5/8	9.0
3	36		1 5/8	5/8	3/4	14 1/2	9 1/2	11 1/2	5/8	24	2	3	1	12	7 1/8	1 1/2	3/8	5 3/4	7 1/4	7 1/8	9	6	19 1/4	3/8	9 3/4	1 5/8	9.0
4	48		2 1/4	3/4	1	19 1/4	10 3/4	17 3/8	7/8	30	2 1/4	4	1 1/4	15	10	1 5/8	1/2	8	9 1/4	9 3/8	12	8	25 5/8	3/8	13	2	16.0
5	48		2 1/4	3/4	1	19 1/4	10 3/4	17 3/8	7/8	30	2 1/4	4	1 1/4	15	10	1 5/8	1/2	8	9 1/4	9 3/8	12	8	25 5/8	3/8	13	2	16.0

STANDARD SIGN
W3-5

WISCONSIN DEPT OF TRANSPORTATION

APPROVED Matthew R Rauch
for State Traffic Engineer

DATE 5/29/12 PLATE NO. W3-5.5

PROJECT NO:

SHEET NO: 172 E

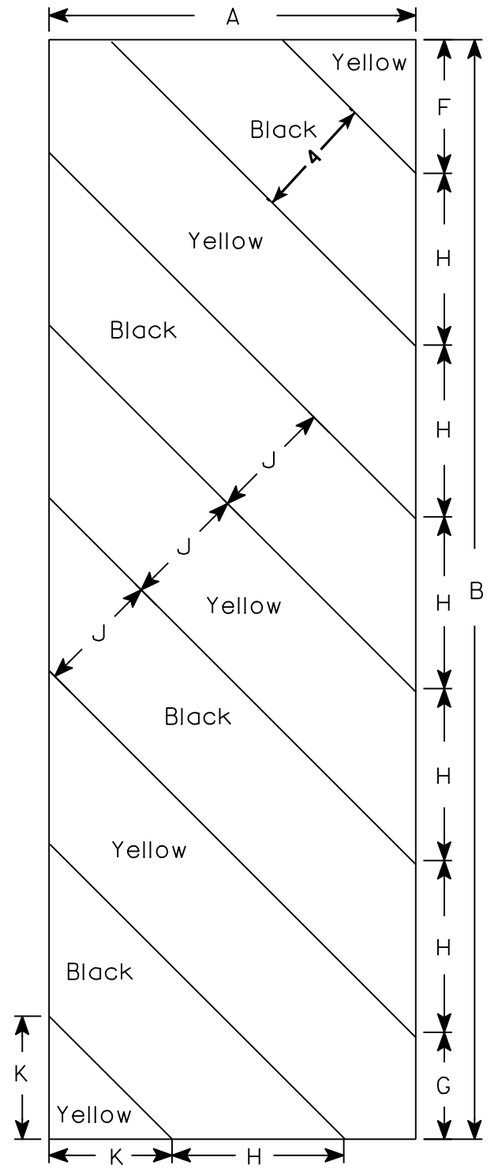

W5-52L

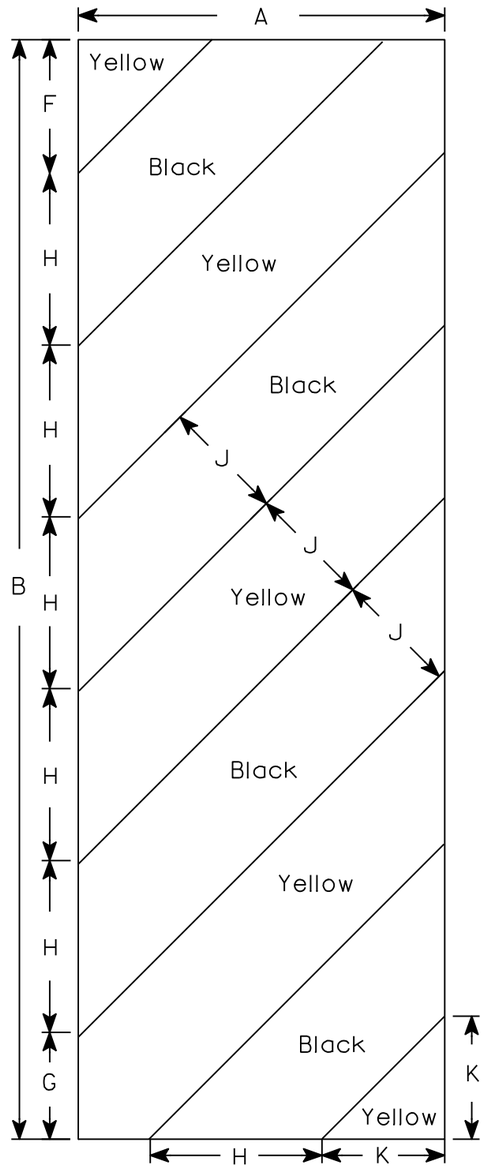

W5-52R

NOTES

1. Sign is Type II - Type F Reflective - reference WIS DOT Standard Specification for HIGHWAY and STRUCTURE CONSTRUCTION latest edition.
2. Color:
   Background - Yellow
   Message - Black
3. Corners may be square or rounded when base material is plywood but borders shall be rounded as shown. When base material is metal, the corners and borders shall be rounded.
4. Alternate colors of stripes as shown.

SIZE	A	B	C	D	E	F	G	H	I	J	K	L	M	N	O	P	Q	R	S	T	U	V	W	X	Y	Z	Area sq. ft.
1																											
2S	12	36				4 3/8	3 1/2	5 5/8	45°	4	4																3.0
2M	12	36				4 3/8	3 1/2	5 5/8	45°	4	4																3.0
3	18	54				6	5 1/2	8 1/2	45°	6	6 9/16																6.75
4																											
5																											

STANDARD SIGN

W5-52L & W5-52R

WISCONSIN DEPT OF TRANSPORTATION

APPROVED Matthew R Rauch
for State Traffic Engineer

DATE 5/29/12 PLATE NO. W5-52.9

PROJECT NO: | HWY: | COUNTY: | SHEET NO: 173 | E

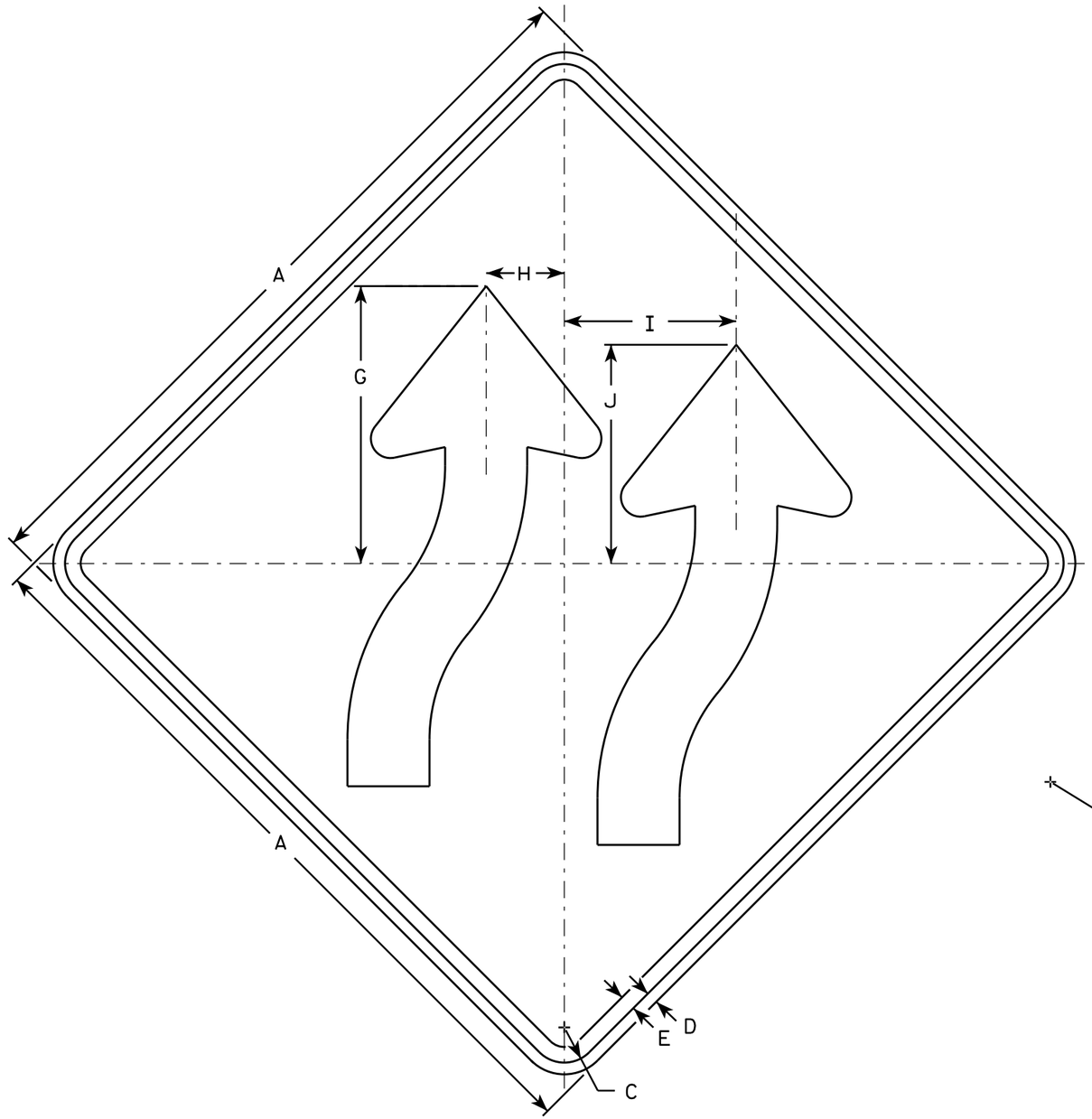

W01-4bR

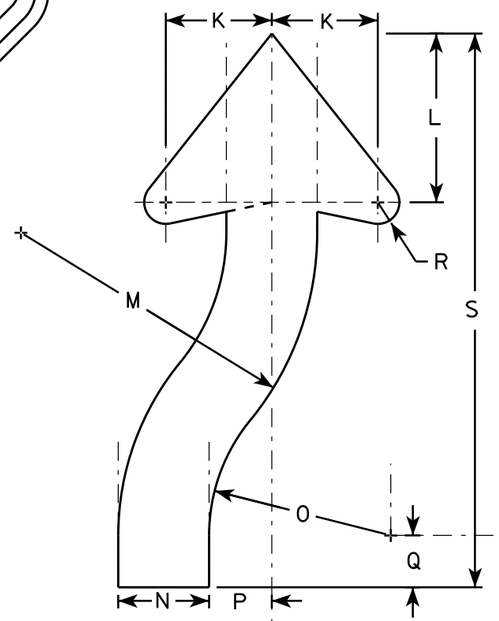

NOTES

1. Sign is Type II - Type F Reflective - reference WIS DOT Standard Specification for HIGHWAY and STRUCTURE CONSTRUCTION latest edition.
2. Color:
   Background - Orange
   Message - Black
3. Corners may be square or rounded when base material is plywood but borders shall be rounded as shown. When base material is metal, the corners and borders shall be rounded.
4. W01-4bL is the same as W014-bR exept arrows are reversed along the vertical centerline

SIZE	A	B	C	D	E	F	G	H	I	J	K	L	M	N	O	P	Q	R	S	T	U	V	W	X	Y	Z	Area sq. ft.
1	36		1 5/8	5/8	3/4		13 3/8	3 3/4	8 1/4	10 1/2	4 5/8	7 3/8	12 7/8	3 7/8	7 7/8	2 3/4	2 1/4	7/8	24								9.0
2S	48		2 1/4	3/4	1		17 3/4	5	11	14	6 1/8	9 3/4	17 1/8	5 1/4	10 1/2	3 5/8	3	1 1/4	32								16.0
2M	48		2 1/4	3/4	1		17 3/4	5	11	14	6 1/8	9 3/4	17 1/8	5 1/4	10 1/2	3 5/8	3	1 1/4	32								16.0
3	48		2 1/4	3/4	1		17 3/4	5	11	14	6 1/8	9 3/4	17 1/8	5 1/4	10 1/2	3 5/8	3	1 1/4	32								16.0
4	48		2 1/4	3/4	1		17 3/4	5	11	14	6 1/8	9 3/4	17 1/8	5 1/4	10 1/2	3 5/8	3	1 1/4	32								16.0
5	48		2 1/4	3/4	1		17 3/4	5	11	14	6 1/8	9 3/4	17 1/8	5 1/4	10 1/2	3 5/8	3	1 1/4	32								16.0

STANDARD SIGN
W01-4b

WISCONSIN DEPT OF TRANSPORTATION

APPROVED Matthew R Rauch
for State Traffic Engineer

DATE 11/18/13 PLATE NO. W01-4b.1

PROJECT NO:	HWY:	COUNTY:		SHEET NO:	E

FILE NAME : C:\CAEfiles\Projects\tr_stdplate\W014B.DGN PLOT DATE : 28-FEB-2014 11:36 PLOT BY : mscj9h PLOT NAME : PLOT SCALE : 8.756290:1.000000
WISDOT/CADDS SHEET 42

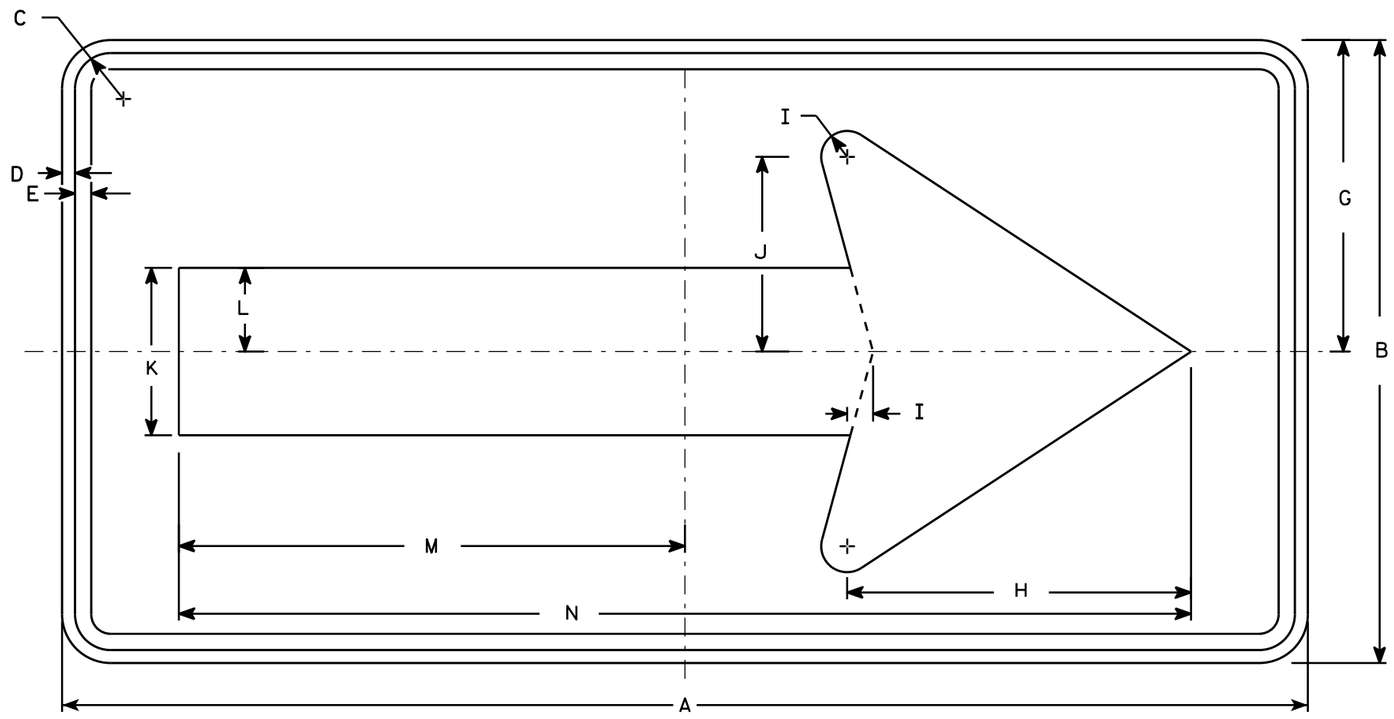

W01-6

NOTES

1. Sign is Type II - Type F Reflective - reference WIS DOT Standard Specification for HIGHWAY and STRUCTURE CONSTRUCTION latest edition.
2. Color:
   Background - Orange
   Message - Black
3. Corners may be square or rounded when base material is plywood but borders shall be rounded as shown. When base material is metal, the corners and borders shall be rounded.

SIZE	A	B	C	D	E	F	G	H	I	J	K	L	M	N	O	P	Q	R	S	T	U	V	W	X	Y	Z	Area sq. ft.
1																											
2S	48	24	1 3/8	1/2	5/8		12	13 1/4	1	7 1/2	6 1/2	3 1/4	19 1/2	39													8.0
2M	48	24	1 3/8	1/2	5/8		12	13 1/4	1	7 1/2	6 1/2	3 1/4	19 1/2	39													8.0
3	60	30	1 3/8	1/2	5/8		15	16 1/4	1 1/4	9 1/4	8	4	24 3/8	48 3/4													12.5
4	60	30	1 3/8	1/2	5/8		15	16 1/4	1 1/4	9 1/4	8	4	24 3/8	48 3/4													12.5
5	60	30	1 3/8	1/2	5/8		15	16 1/4	1 1/4	9 1/4	8	4	24 3/8	48 3/4													12.5

STANDARD SIGN
W01-6

WISCONSIN DEPT OF TRANSPORTATION

APPROVED Matthew R Rauch
for State Traffic Engineer

DATE 11/18/13 PLATE W01-6.1

PROJECT NO: | HWY: | COUNTY: | SHEET NO: E

FILE NAME : C:\CAEfiles\Projects\tr_stdplate\W016.DGN PLOT DATE : 28-FEB-2014 11:37 PLOT BY : mscj9h PLOT NAME : PLOT SCALE : 5.837526:1.000000 WISDOT/CADDS SHEET 42

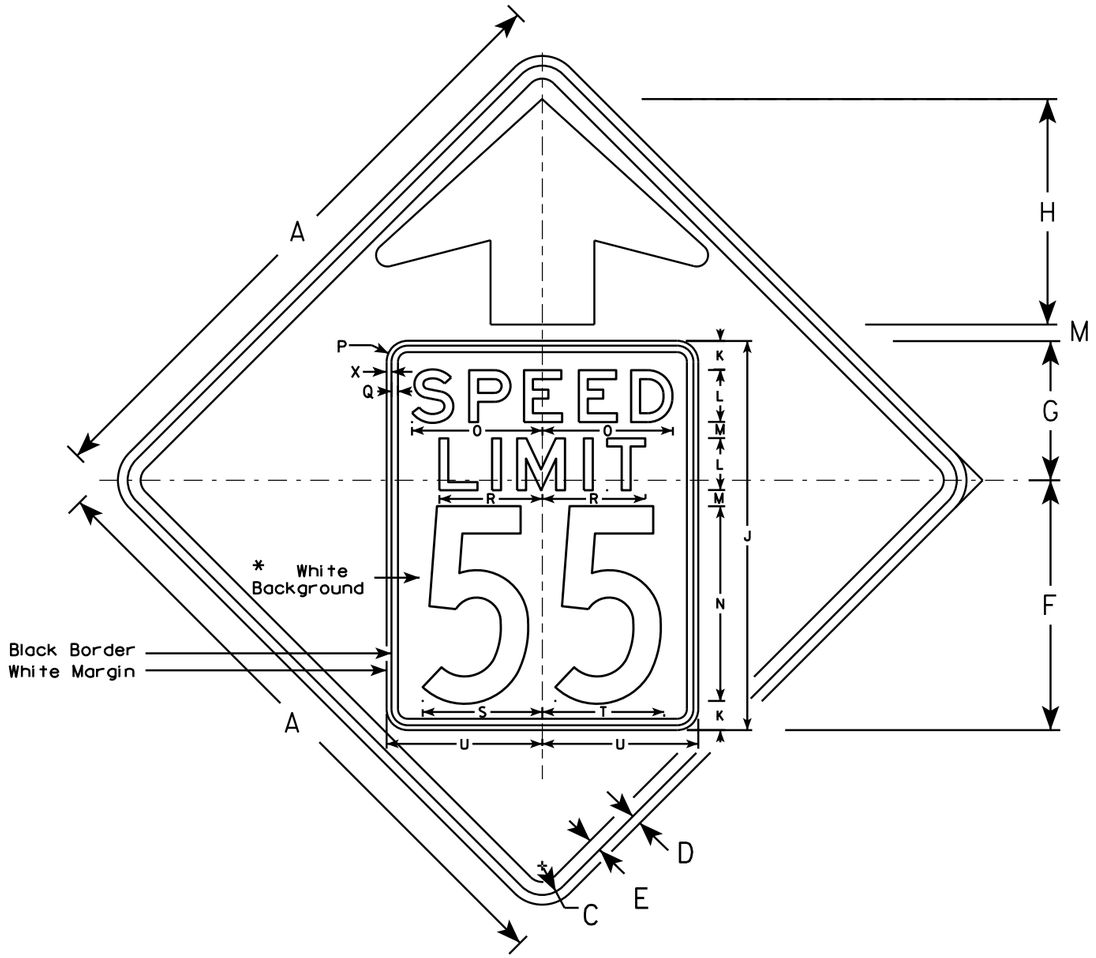

W03-5

NOTES

1. Sign is Type II - Type F Reflective - reference WIS DOT Standard Specification for HIGHWAY and STRUCTURE CONSTRUCTION latest edition.
2. Color: *
   Background - ORANGE*
   Message - BLACK
3. Message Series - C for numbers Series E for wording
4. Substitute appropriate numerals and optically adjust spacing to achieve proper balance

*Speed Limit Sign shall have a White Background

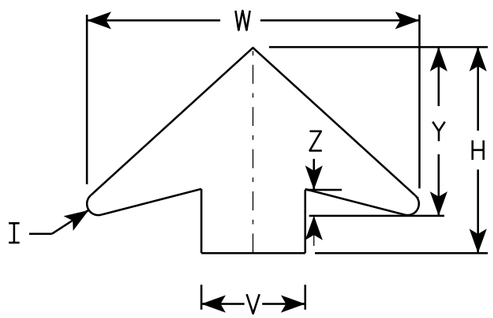

ARROW DETAIL

SIZE	A	B	C	D	E	F	G	H	I	J	K	L	M	N	O	P	Q	R	S	T	U	V	W	X	Y	Z	Area sq. ft.
1	36		1 5/8	5/8	3/4	14 1/2	9 1/2	11 1/2	5/8	24	2	3	1	12	7 1/8	1 1/2	3/8	5 3/4	7 1/4	7 1/8	9	6	19 1/4	3/8	9 3/4	1 5/8	9.0
2S	48		2 1/4	3/4	1	19 1/4	10 3/4	17 3/8	7/8	30	2 1/4	4	1 1/4	15	10	1 5/8	1/2	8	9 1/4	9 3/8	12	8	25 5/8	3/8	13	2	16.0
2M	48		2 1/4	3/4	1	19 1/4	10 3/4	17 3/8	7/8	30	2 1/4	4	1 1/4	15	10	1 5/8	1/2	8	9 1/4	9 3/8	12	8	25 5/8	3/8	13	2	16.0
3	48		2 1/4	3/4	1	19 1/4	10 3/4	17 3/8	7/8	30	2 1/4	4	1 1/4	15	10	1 5/8	1/2	8	9 1/4	9 3/8	12	8	25 5/8	3/8	13	2	16.0
4	48		2 1/4	3/4	1	19 1/4	10 3/4	17 3/8	7/8	30	2 1/4	4	1 1/4	15	10	1 5/8	1/2	8	9 1/4	9 3/8	12	8	25 5/8	3/8	13	2	16.0
5	48		2 1/4	3/4	1	19 1/4	10 3/4	17 3/8	7/8	30	2 1/4	4	1 1/4	15	10	1 5/8	1/2	8	9 1/4	9 3/8	12	8	25 5/8	3/8	13	2	16.0

STANDARD SIGN
W03-5

WISCONSIN DEPT OF TRANSPORTATION

APPROVED Matthew R Rauch
for State Traffic Engineer

DATE 11/20/13 PLATE W03-5.1

PROJECT NO: SHEET NO: E

FILE NAME : C:\CAEFiles\Projects\tr_stdplate\W035.DGN PLOT DATE : 20-NOV-2013 11:32 PLOT BY : mscsja

WISDOT/CADDS SHEET 42

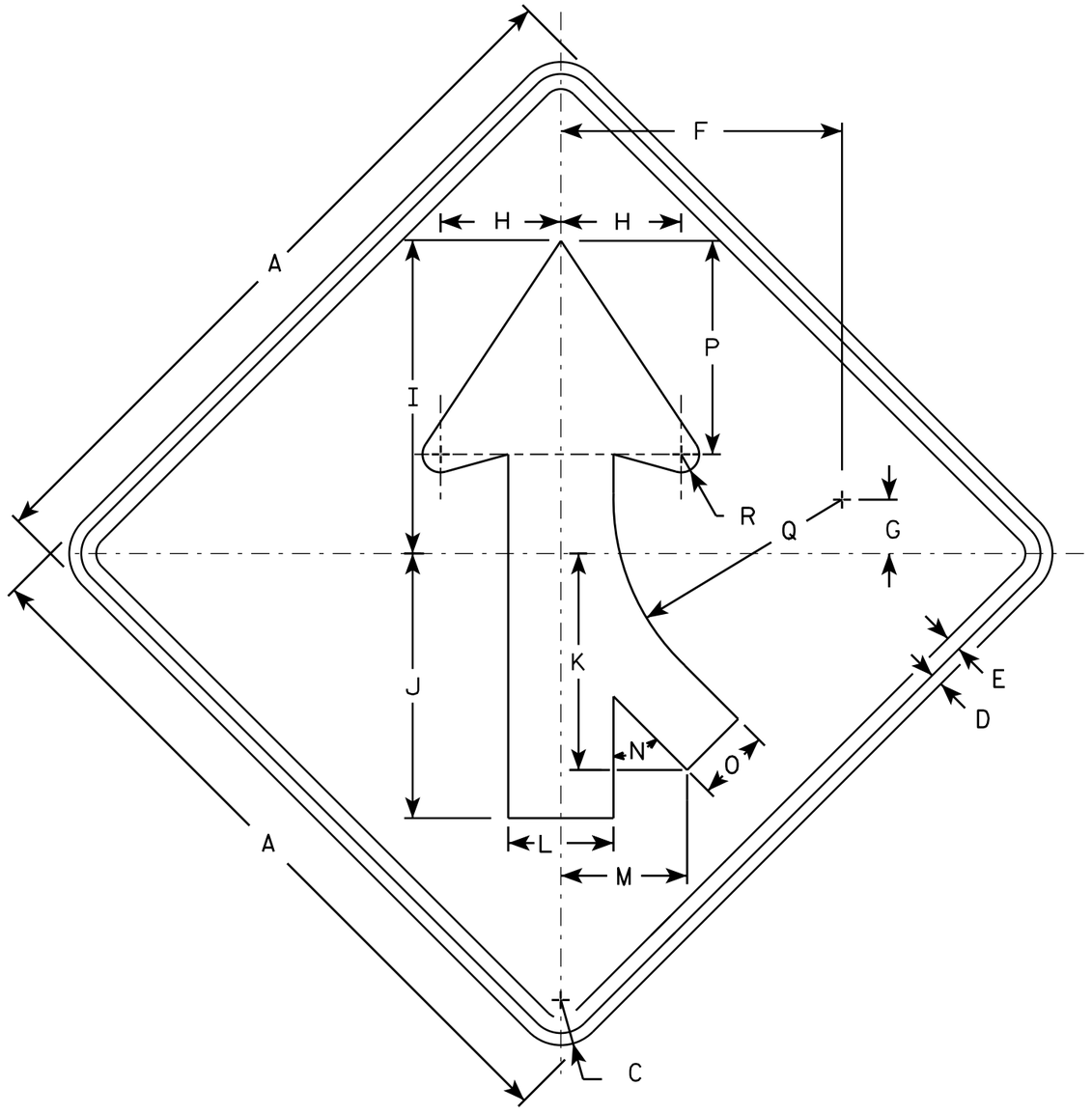

W04-1R

NOTES

1. Sign is Type II - Type F Reflective - reference WIS DOT Standard Specification for HIGHWAY and STRUCTURE CONSTRUCTION latest edition.
2. Color:
   Background - Orange
   Message - Black
3. Corners may be square or rounded when base material is plywood but borders shall be rounded as shown. When base material is metal, the corners and borders shall be rounded.
4. W4-1L is the same as W4-1R except the arrow is reversed along the vertical centerline.

SIZE	A	B	C	D	E	F	G	H	I	J	K	L	M	N	O	P	Q	R	S	T	U	V	W	X	Y	Z	Area sq. ft.
1	36		1 5/8	5/8	3/4	14	2 3/4	6	15 3/4	13 1/4	10 1/4	5 1/4	6 3/8	45°	3 5/8	10 5/8	11 3/8	7/8									9.0
2S	48		2 1/4	3/4	1	18 3/4	3 5/8	8	20 1/2	17 1/2	14 3/8	7	8 3/8	45°	4 3/4	14 1/4	15 1/4	1 1/4									16.0
2M	48		2 1/4	3/4	1	18 3/4	3 5/8	8	20 1/2	17 1/2	14 3/8	7	8 3/8	45°	4 3/4	14 1/4	15 1/4	1 1/4									16.0
3	48		2 1/4	3/4	1	18 3/4	3 5/8	8	20 1/2	17 1/2	14 3/8	7	8 3/8	45°	4 3/4	14 1/4	15 1/4	1 1/4									16.0
4	48		2 1/4	3/4	1	18 3/4	3 5/8	8	20 1/2	17 1/2	14 3/8	7	8 3/8	45°	4 3/4	14 1/4	15 1/4	1 1/4									16.0
5	48		2 1/4	3/4	1	18 3/4	3 5/8	8	20 1/2	17 1/2	14 3/8	7	8 3/8	45°	4 3/4	14 1/4	15 1/4	1 1/4									16.0

STANDARD SIGN
W04-1

WISCONSIN DEPT OF TRANSPORTATION

APPROVED Matthew R Rauch
for State Traffic Engineer

DATE 11/20/13 PLATE NO. W04-1.1

PROJECT NO: | HWY: | COUNTY: | SHEET NO: E

STATE PROJECT NUMBER
1060-38-70

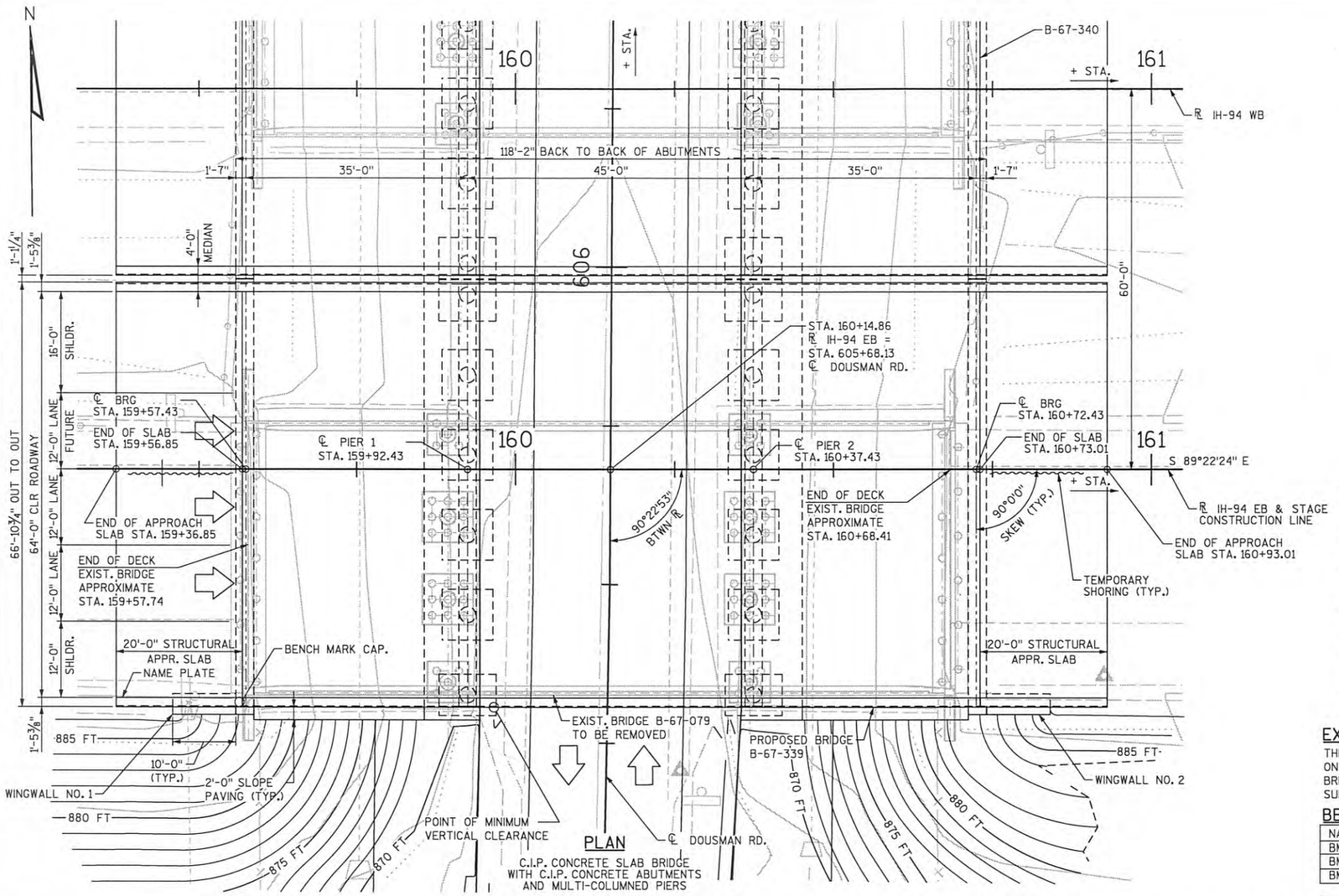

PLAN

C.I.P. CONCRETE SLAB BRIDGE WITH C.I.P. CONCRETE ABUTMENTS AND MULTI-COLUMNED PIERS

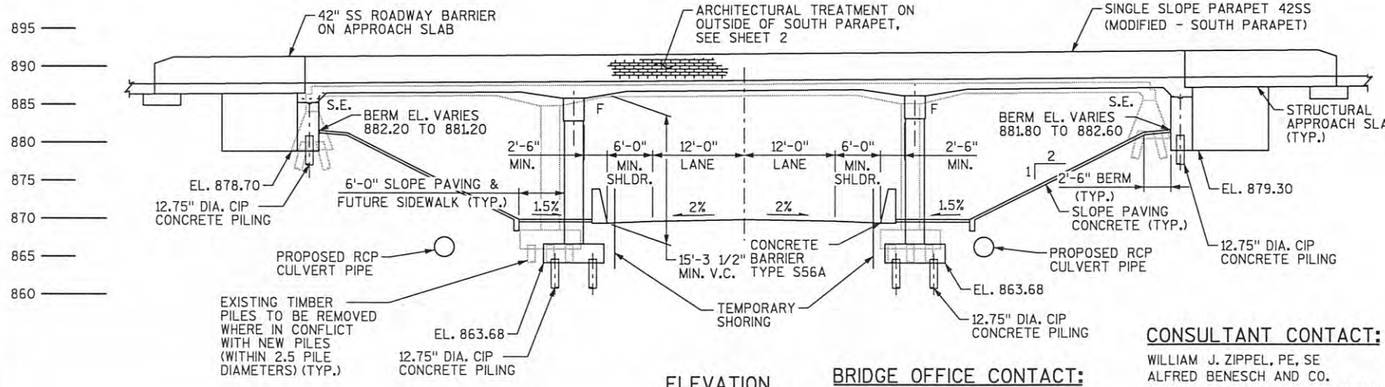

ELEVATION

DESIGN DATA

LIVE LOAD:

DESIGN LOADING HL-93
INVENTORY RATING FACTOR 1.06
OPERATING RATING FACTOR 1.38
WISCONSIN STANDARD PERMIT VEHICLE (Wis-SPV) = 250 KIPS
DESIGN ACCOUNTS FOR FUTURE WEARING SURFACE = 20 PSF

ULTIMATE DESIGN STRESSES:

CONCRETE MASONRY SUPERSTRUCTURE	fc'= 4000 PSI
ALL OTHER	fc'= 3500 PSI
STEEL REINFORCEMENT HIGH STRENGTH BAR, GRADE 60	fy = 60 KSI

FOUNDATION DATA:

PLACE PIERS AND ABUTMENTS ON PILING CIP CONCRETE 12 3/4 X 0.500-INCH WITH A REQUIRED DRIVING RESISTANCE OF 130 TONS/PILE* AT PIERS AND 95 TONS/PILE* AT ABUTMENTS AS DETERMINED BY THE MODIFIED GATES DYNAMIC EQUATION.

* THE FACTORED AXIAL RESISTANCE OF PILES IN COMPRESSION USED FOR DESIGN IS THE REQUIRED DRIVING RESISTANCE MULTIPLIED BY A RESISTANCE FACTOR OF 0.5 USING MODIFIED GATES TO DETERMINE DRIVEN PILE CAPACITY.

EST. PILE LENGTHS: 75 FT AT W. ABUT.
60 FT AT PIER 1
60 FT AT PIER 2
75 FT AT E. ABUT.

TRAFFIC DATA DOUSMAN RD:

AADT (2015) = 1400
AADT (2035) = 1700
DESIGN SPEED = 50 MPH.

TRAFFIC DATA IH-94:

AADT (2015) = 43100
AADT (2035) = 46500
TRUCK % = 16.2%
D = 60/40
DESIGN SPEED = 70 MPH.

LIST OF DRAWINGS:

1. GENERAL PLAN AND ELEVATION
2. STAGED CONSTRUCTION CROSS-SECTIONS
3. QUANTITIES & GENERAL NOTES
4. SUBSURFACE EXPLORATION
5. WEST ABUTMENT PLAN & ELEVATION
6. EAST ABUTMENT PLAN & ELEVATION
7. WEST ABUTMENT DETAILS
8. EAST ABUTMENT DETAILS
9. PIERS 1& 2
10. PIERS 1& 2 DETAILS
11. SUPERSTRUCTURE
12. SUPERSTRUCTURE PLAN
13. SUPERSTRUCTURE DETAILS
14. STRUCTURAL APPROACH SLABS
15. STRUCTURAL APPROACH SLAB DETAILS
16. SINGLE SLOPE PARAPET 42SS MODIFIED

WISCONSIN
WILLIAM J. ZIPPEL
38868-006
MILWAUKEE, WI
PROFESSIONAL ENGINEER
7/29/2014

EXISTING STRUCTURE:

THE EXISTING BRIDGE (B-67-79) IS A THREE SPAN CONCRETE SLAB BRIDGE FOUNDED ON MULTI COLUMN CONCRETE PIERS AND CONCRETE STUB ABUTMENTS. THE EXISTING BRIDGE IS 112'-2" LONG AND THE DECK IS 42'-6" WIDE. THE FOUNDATIONS ARE SUPPORTED ON TIMBER PILING.

BENCHMARKS

NAME	NORTHING	EASTING	ELEVATION	DESCRIPTION
BM3	182,167.35	616,491.54	890.20	ALUMINUM DISK IN PARAPET
BM4	182,212.82	616,493.33	889.04	ALUMINUM DISK IN PARAPET
BM5			869.13	NAIL IN POWER POLE

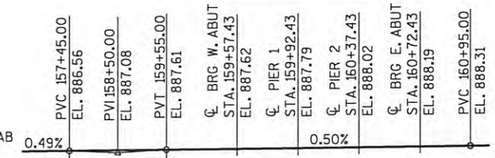

PROFILE GRADE LINE IH-94 EB

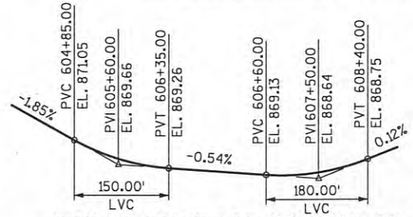

PROFILE GRADE LINE DOUSMAN RD.

CONSULTANT CONTACT:

WILLIAM J. ZIPPEL, PE, SE
ALFRED BENESCH AND CO.
1300 WEST CANAL STREET, SUITE 150
MILWAUKEE, WI 53233
PHONE: 414-308-1321

BRIDGE OFFICE CONTACT:

WILLIAM DREHER, PE
(608) 266-8489

NO.	DATE	REVISION	BY

benesch engineers · scientists · planners
Alfred Benesch & Company
1300 West Canal Street, Suite 150
Milwaukee, Wisconsin 53233
414-308-1310 Job No. 20103.00

STATE OF WISCONSIN
DEPARTMENT OF TRANSPORTATION

ACCEPTED William C. Dreher KAR 08/18/14
CHIEF STRUCTURES DESIGN ENGINEER — DATE

STRUCTURE B-67-339

IH-94 EB OVER DOUSMAN RD.

COUNTY: WAUKESHA — ~~TOWN/CITY~~/VILLAGE: SUMMIT

DESIGN SPEC.: AASHTO LRFD BRIDGE DESIGN SPECIFICATIONS

DESIGNED BY	JOB	DESIGN CK'D.	RMM	DRAWN BY	CS/MAK	PLANS CK'D.	RMM

GENERAL PLAN AND ELEVATION

SHEET 1 OF 16

178

FILE = 081010_B670339_01GP&E.DGN
SCALE = 1:20

8

8

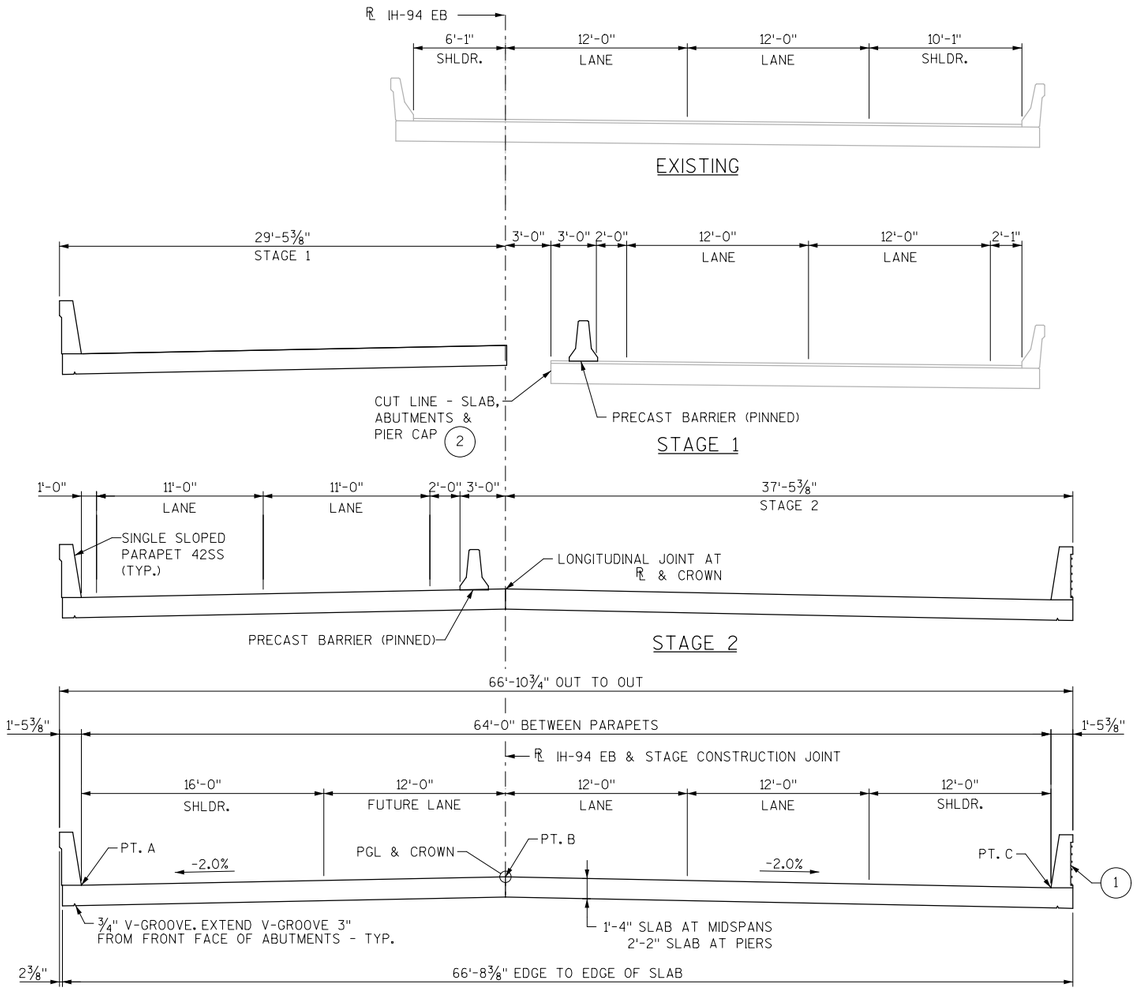

TYPICAL CROSS SECTION

(LOOKING EAST)

(1) FINISH OF ARCHITECTURAL SURFACE TREATMENT AT THE BACK FACE OF THE PARAPET SHALL ACHIEVE THE LOOK OF "NEW BRICK" WITH MAXIMUM RELIEF OF 3/16". SEE SPECIAL PROVISION FOR "ARCHITECTURAL SURFACE TREATMENT BRICK, B-67-339" AND "CONCRETE STAINING MULTI-COLOR BRICK, B-67-339".

(2) SAWCUT SHALL BE CLEAN, VERTICAL AND FULL DEPTH OF MEMBER BEING CUT. REMAINING CONCRETE BEYOND CUTLINE SHALL BE KEPT SOUND AND IN GOOD CONDITION TO SUPPORT VEHICLE LOADS. COST OF SAWCUTTING IS INCLUDED IN COST OF REMOVING OLD STRUCTURE (159+59).

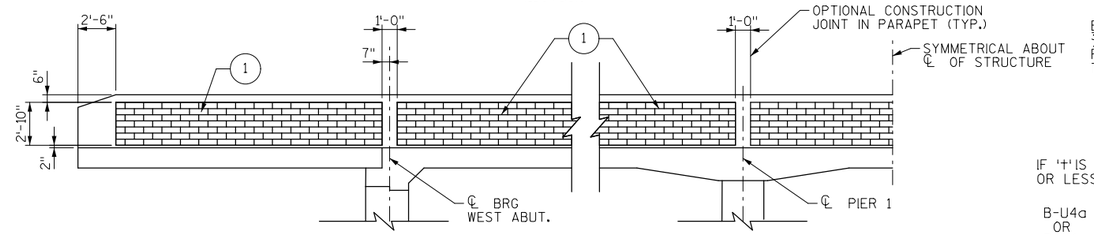

ELEVATION - SOUTH FACE OF SOUTH PARAPET

SHOWING PARAPET DIMENSIONS AND ARCHITECTURAL SURFACE TREATMENT LIMITS

TOP OF DECK ELEVATIONS

LOCATION	STATION	PT. A (EDGE OF DECK)	PT. B (PGL/CONSTR. JT.)	PT. C (EDGE OF DECK)
END OF SLAB	159+56.85	887.06	887.62	886.90
CL BRG. WEST ABUT.	159+57.43	887.06	887.62	886.90
0.1	159+60.93	887.08	887.64	886.92
0.2	159+64.43	887.09	887.65	886.93
0.3	159+67.93	887.11	887.67	886.95
0.4	159+71.43	887.13	887.69	886.97
0.5	159+74.93	887.15	887.71	886.99
0.6	159+78.43	887.16	887.72	887.00
0.7	159+81.93	887.18	887.74	887.02
0.8	159+85.43	887.20	887.76	887.04
0.9	159+88.93	887.22	887.78	887.06
CL PIER 1	159+92.43	887.23	887.79	887.07
0.1	159+96.93	887.26	887.82	887.10
0.2	160+01.43	887.28	887.84	887.12
0.3	160+05.93	887.30	887.86	887.14
0.4	160+10.43	887.32	887.88	887.16
0.5	160+14.93	887.35	887.91	887.19
0.6	160+19.43	887.37	887.93	887.21
0.7	160+23.93	887.39	887.95	887.23
0.8	160+28.43	887.41	887.97	887.25
0.9	160+32.93	887.44	888.00	887.28
CL PIER 2	160+37.43	887.46	888.02	887.30
0.1	160+40.93	887.48	888.04	887.32
0.2	160+44.43	887.49	888.05	887.33
0.3	160+47.93	887.51	888.07	887.35
0.4	160+51.43	887.53	888.09	887.37
0.5	160+54.93	887.55	888.11	887.39
0.6	160+58.43	887.56	888.12	887.40
0.7	160+61.93	887.58	888.14	887.42
0.8	160+65.43	887.60	888.16	887.44
0.9	160+68.93	887.62	888.18	887.46
CL BRG. EAST ABUT.	160+72.43	887.63	888.19	887.47
END OF SLAB	160+73.01	887.64	888.20	887.48

STATE PROJECT NUMBER

1060-38-70

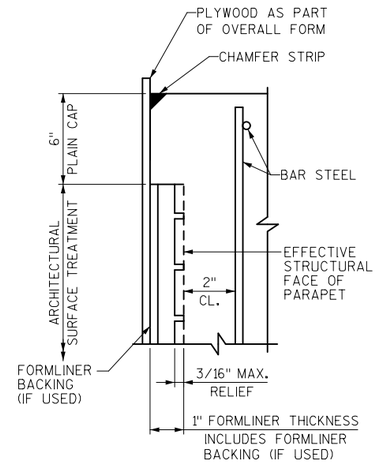

SECTION THRU FORMLINER

NOTE

FORMLINER COURSING ON PARAPETS SHALL BE PARALLEL TO TOP OF PARAPET.

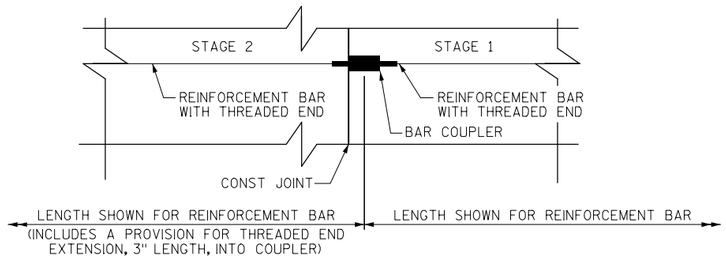

BAR COUPLER DETAIL

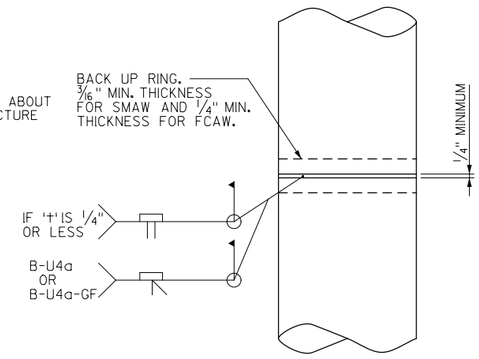

CAST-IN-PLACE 'PIPE PILE'

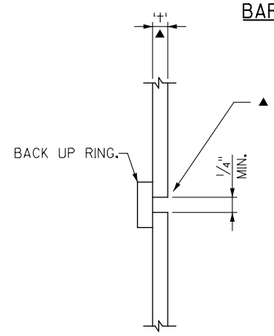

CIP PILE WELD DETAIL

NO.	DATE	REVISION	BY

STATE OF WISCONSIN
DEPARTMENT OF TRANSPORTATION
STRUCTURES DESIGN SECTION

STRUCTURE B-67-339

DRAWN BY: MAK | PLANS CK'D.: RMM

STAGED CONSTRUCTION CROSS-SECTIONS

SHEET 2 OF 16

179

8

8

FILE= 081030_B670339_02STAGECONST.DGN
SCALE = 1:10

TOTAL ESTIMATED QUANTITIES

BID ITEM NUMBER	BID ITEMS	UNIT	WEST APPR. SLAB	W. ABUT.	PIER 1	PIER 2	E. ABUT.	EAST APPR. SLAB	SUPER	TOTAL	TOTAL STAGE 1	TOTAL STAGE 2
203.0200	REMOVING OLD STRUCTURE (STATION 159+59 EB)	LS	----	----	----	----	----	----	----	1	----	----
204.0175	REMOVING CONCRETE SLOPE PAVING	SY	----	169	----	----	169	----	----	338	90	248
206.1000	EXCAVATION FOR STRUCTURES BRIDGES (B-67-339)	LS	----	0.5	----	----	0.5	----	----	1	----	----
206.6000.S	TEMPORARY SHORING	SF	----	130	----	----	150	----	----	280	140	140
210.0100	BACKFILL STRUCTURE	CY	----	125	----	----	125	----	----	250	109	141
305.0120	BASE AGGREGATE DENSE 1¼- INCH	TON	----	218	----	----	218	----	----	436	191	245
502.0100	CONCRETE MASONRY, BRIDGES	CY	----	56	79	79	56	----	----	270	118	152
502.3200	PROTECTIVE SURFACE TREATMENT	SY	----	19	----	----	19	----	942	980	429	551
505.0405	BAR STEEL REINFORCEMENT HS BRIDGES	LB	----	5,109	5,024	5,024	5,109	----	----	20,266	9,540	10,726
505.0605	BAR STEEL REINFORCEMENT HS COATED BRIDGES	LB	15,035	708	11,262	11,313	708	15,036	109,876	163,938	73,580	90,358
505.0904	BAR COUPLERS NO. 4 BARS	EACH	----	4	----	----	4	----	----	8	8	0
505.0905	BAR COUPLERS NO. 5 BARS	EACH	----	----	4	4	----	----	----	8	8	0
505.0906	BAR COUPLERS NO. 6 BARS	EACH	----	10	----	----	10	----	----	20	20	0
505.0908	BAR COUPLERS NO. 8 BARS	EACH	12	8	12	12	8	12	----	64	64	0
516.0500	RUBBERIZED MEMBRANE WATERPROOFING	SY	----	16	----	----	16	----	----	32	18	14
517.1015.S.01	CONCRETE STAINING MULTI-COLOR B-67-339	SF	----	----	----	----	----	----	423	423	0	423
517.1050.S.01	ARCHITECTURAL SURFACE TREATMENT B-67-339	SF	----	----	----	----	----	----	423	423	0	423
550.2128	PILING CIP CONCRETE 12 3/4 X 0.500-INCH	LF	----	800	2,167	2,167	807	----	----	5,941	2,898	3,043
604.0400	SLOPE PAVING CONCRETE	SY	----	260	----	----	260	----	----	520	228	292
612.0406	PIPE UNDERDRAIN WRAPPED 6-INCH	LF	----	240	----	----	240	----	----	480	210	270
614.0150	ANCHOR ASSEMBLIES FOR STEEL PLATE BEAM GUARD	EACH	----	2	----	----	2	----	----	4	2	2
SPV.0035.01	HPC MASONRY STRUCTURES	CY	89	----	----	----	----	89	464	642	280	362
SPV.0085.01	BAR STEEL REINFORCEMENT HS STAINLESS STEEL BRIDGES	LB	----	----	----	----	----	----	2,312	2,312	1,020	1,292
SPV.0090.01	REMOVING PILING	LF	----	260	560	560	120	----	----	1,500	260	1,240
SPV.0165.01	LONGITUDINAL GROOVING BRIDGE DECK	SF	1,220	----	----	----	----	1,220	7,086	9,526	4,138	5,388
	NON-BID ITEMS											
	JOINT FILLER											
	NAME PLATE											
	NON-BITUMINOUS JOINT SEALER											
	POLYETHYLENE SHEETS											

GENERAL NOTES:

1. DRAWINGS SHALL NOT BE SCALED. BAR STEEL REINFORCEMENT SHALL BE EMBEDDED 2" CLEAR UNLESS OTHERWISE SHOWN OR NOTED.
2. SLAB FALSEWORK SHALL BE SUPPORTED ON PILES OR THE SUBSTRUCTURE UNLESS AN ALTERNATE METHOD IS APPROVED BY THE ENGINEER.
3. THE FIRST OR FIRST TWO DIGITS OF THE BAR MARK SIGNIFIES THE BAR SIZE.
4. THE SLOPE OF THE FILL IN FRONT OF THE ABUTMENTS SHALL BE COVERED WITH SLOPE PAVING CONCRETE TO THE EXTENT SHOWN.
5. THE EXISTING GROUND LINE SHALL BE USED AS THE UPPER LIMITS OF EXCAVATION AT THE PIERS.
6. THE UPPER LIMITS OF EXCAVATION FOR STRUCTURES FOR THE ABUTMENTS SHALL BE THE BOTTOM OF SLOPE PROTECTION.
7. AT THE BACKFACE OF ABUTMENT ALL VOLUME WHICH CANNOT BE PLACED BEFORE ABUTMENT CONSTRUCTION AND IS NOT OCCUPIED BY THE NEW STRUCTURE SHALL BE BACKFILLED WITH STRUCTURE BACKFILL.

STATE PROJECT NUMBER
1060-38-70

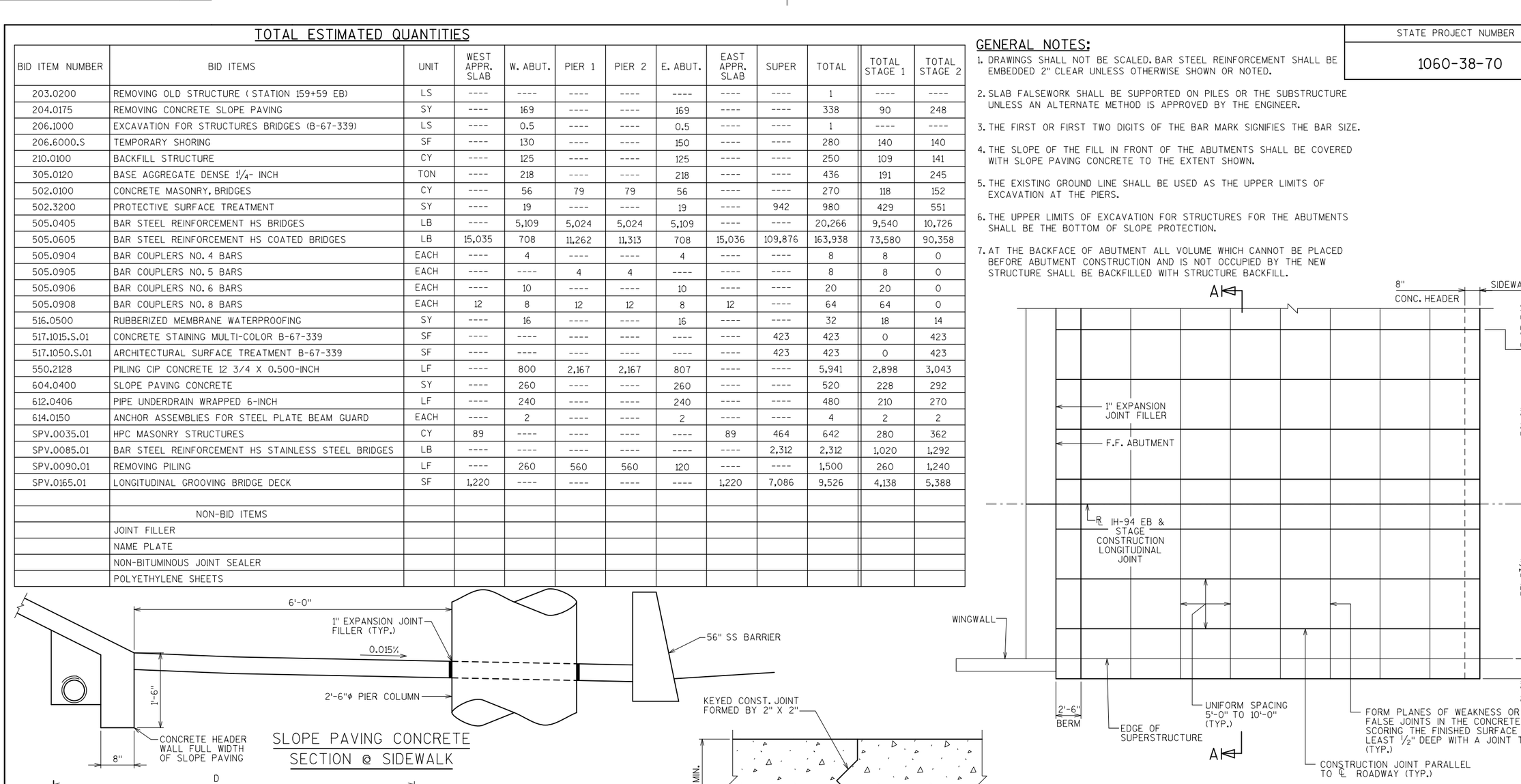

SLOPE PAVING CONCRETE SECTION @ SIDEWALK

SLOPE PAVING CONCRETE TYPICAL SECTION

CONSTRUCTION JOINT

SLOPE PAVING CONCRETE - PLAN
(WEST ABUTMENT SLOPE SHOWN; EAST ABUTMENT SLOPE SIMILAR AND OPPOSITE HAND)

SECTION A-A

NO.	DATE	REVISION	BY

STATE OF WISCONSIN
DEPARTMENT OF TRANSPORTATION
STRUCTURES DESIGN SECTION

STRUCTURE B-67-339

DRAWN BY: MAK | PLANS CK'D.: RMM

QUANTITIES & GENERAL NOTES

SHEET 3 OF 16

180

FILE= 081030_B670339_030UAN.DGN
SCALE = 1:10

8

8

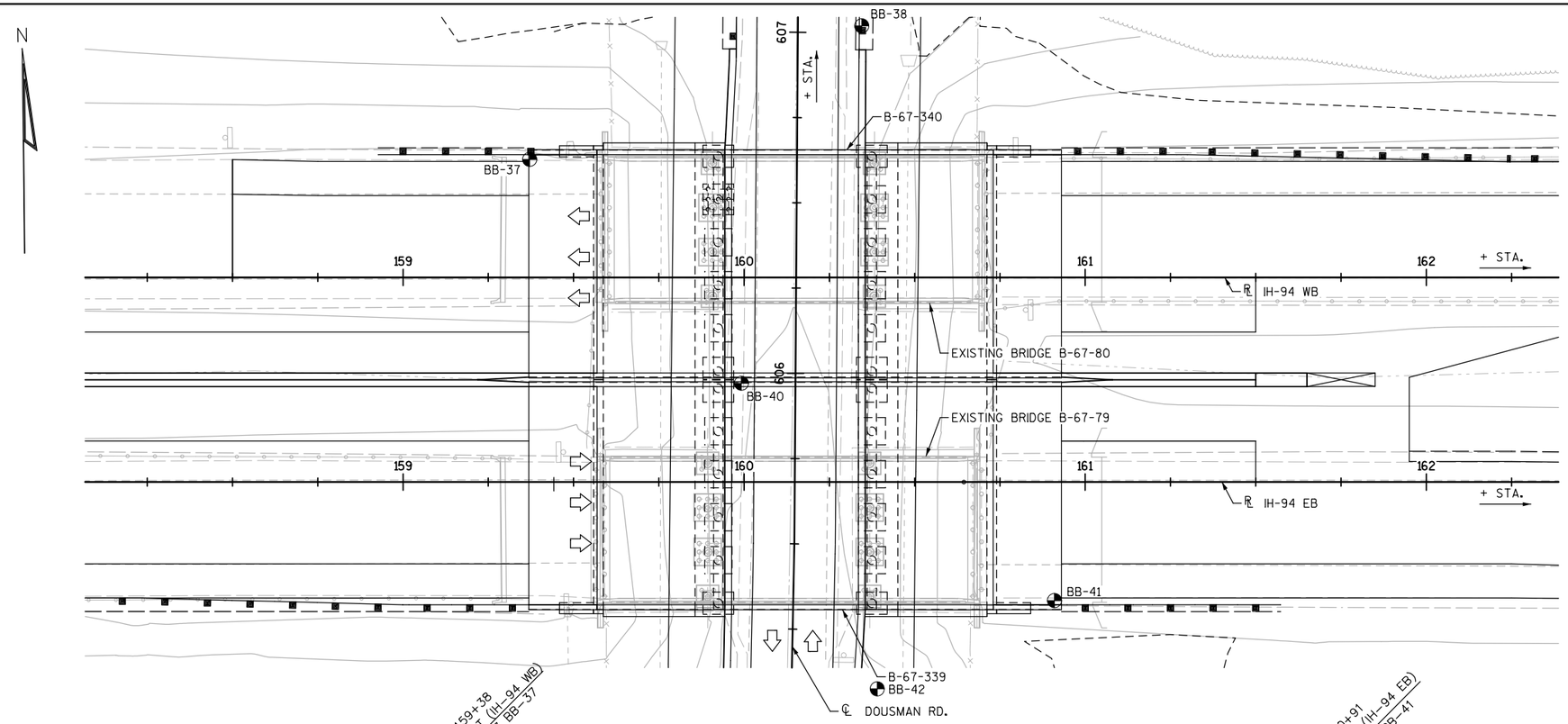

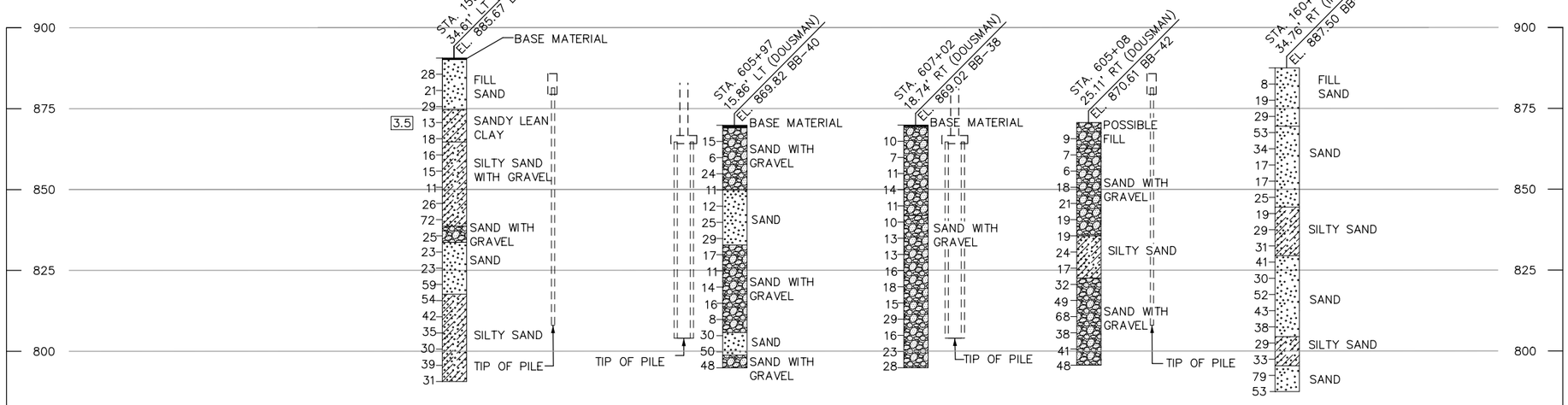

NOTES:

FOUNDATION DESIGN PARAMETERS ARE BASED ON RECOMMODATIONS FROM THE GEOTECHNICAL EXPLORATION REPORT DATED JULY, 2013 BY HIMALAYAN CONSULTANTS, LLC, AVAILABLE FROM WISDOT.

REFER TO THE GEOTECHNICAL REPORT FOR FULL SOIL DESCRIPTIONS AND DETAILS OF BORING LOGS.

HISTORIC BORINGS ARE AVAILABLE UPON REQUEST FROM WISDOT.

CONTACT THE WISCONSIN DEPARTMENT OF TRANSPORTATION FOR THE GEOTECHNICAL REPORT AND BORING LOGS.

EXISTING FOOTINGS ARE SHOWN FOR EXISTING STRUCTURES. ACTUAL LOCATIONS MAY VARY. CONTRACTOR SHALL VERIFY LOCATIONS IN THE FIELD.

STATE PROJECT NUMBER

1060-38-70

ABBREVIATIONS

F — FINE M — MEDIUM C — COARSE
WS — WEATHERED SO — SOUND

MATERIAL SYMBOLS

TOPSOIL, SILT, SANDSTONE, SAND, PEAT, LIMESTONE, GRAVEL, CLAY, IGNEOUS ROCK

LEGEND OF PROBING

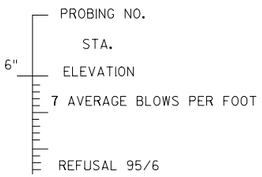

LEGEND OF BORING

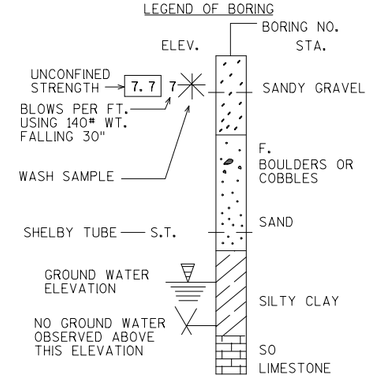

UNLESS OTHERWISE SPECIFIED, THE BLOWS PER FOOT AT THE LOCATIONS INDICATED ARE BASED ON DRIVING A 2" O.D. X 1.4" I.D. SPLIT SPOON SAMPLER WITH A 140# HAMMER HAVING A FREE FALL OF 30". THE BLOW COUNT IS TAKEN IN UNDISTURBED SOIL IMMEDIATELY BELOW A CASED OR OPEN HOLE ELIMINATING SIDE FRICTION ON THE DRIVE PIPE.

SUBSURFACE EXPLORATION FOR FOUNDATION DESIGN AND BIDDERS INFORMATION

TO OBTAIN RELATIVE DATA CONCERNING THE CHARACTER OF MATERIAL IN AND UPON WHICH THE FOUNDATION MIGHT BE BUILT, BORINGS AND/OR SOUNDINGS WERE MADE AT POINTS APPROXIMATELY AS INDICATED ON THIS DRAWING. THE DATA PRESENTED HEREIN REPRESENTS THE FINDINGS OF THE SUBSURFACE EXPLORATIONS MADE. HOWEVER, BECAUSE THE DEPTHS INVESTIGATED ARE LIMITED AND THE AREA OF THE BORINGS AND/OR SOUNDINGS IS VERY SMALL IN RELATION TO THE ENTIRE AREA, THE WISCONSIN DEPARTMENT OF TRANSPORTATION DOES NOT WARRANT CONDITIONS BELOW THE DEPTHS INVESTIGATED OR THAT THE CLASSIFICATION OF MATERIAL ENCOUNTERED IN THESE INVESTIGATIONS IS NECESSARILY TYPICAL OF THE ENTIRE SITE.

NO.	DATE	REVISION	BY

STATE OF WISCONSIN
DEPARTMENT OF TRANSPORTATION
STRUCTURES DESIGN SECTION

STRUCTURE B-67-339

DRAWN BY MAK | PLANS CK'D. RMM

SUBSURFACE EXPLORATION

SHEET 4 OF 16

181

FILE= 081030_B670339_04SUB.DGN
SCALE = 1:40

8

8

STATE PROJECT NUMBER
1060-38-70

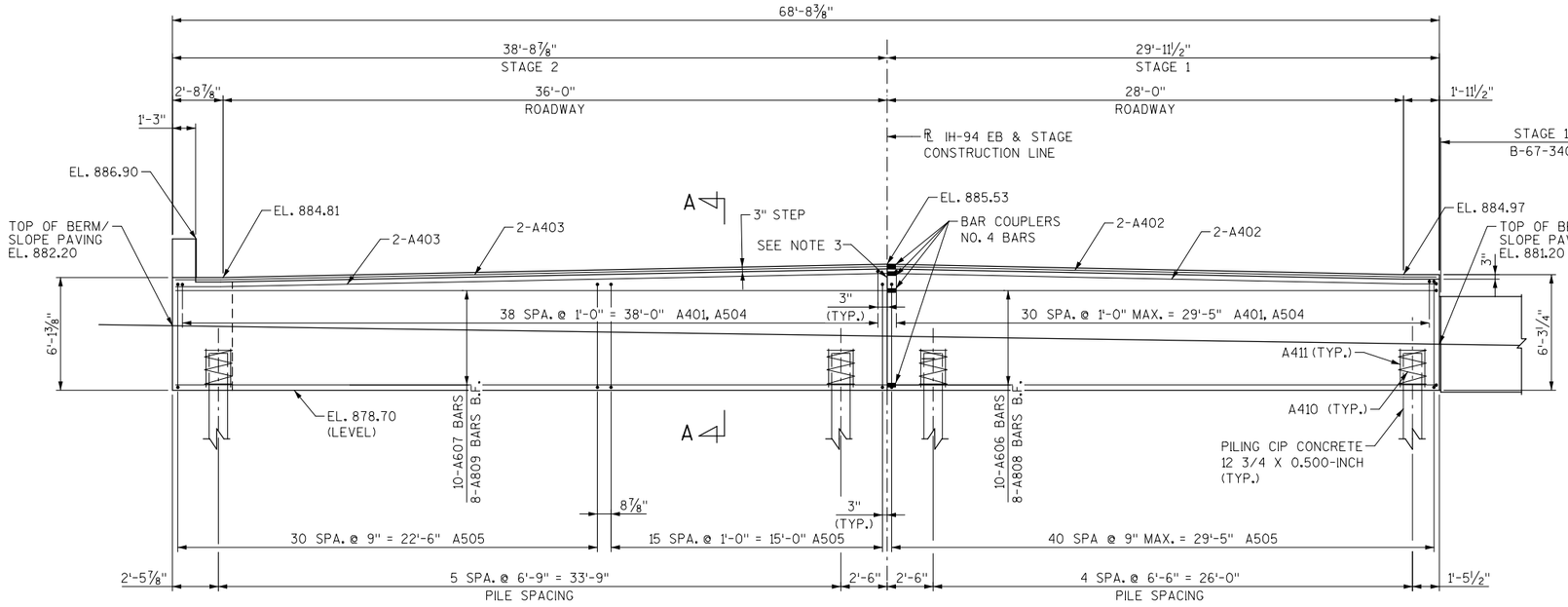

ELEVATION
(LOOKING WEST)

PLACE ABUTMENTS ON PILING CIP CONCRETE 12 3/4 X 0.500-INCH WITH A REQUIRED DRIVING RESISTANCE OF 95 TONS/PILE AT ABUTMENTS AS DETERMINED BY THE MODIFIED GATES DYNAMIC EQUATION.

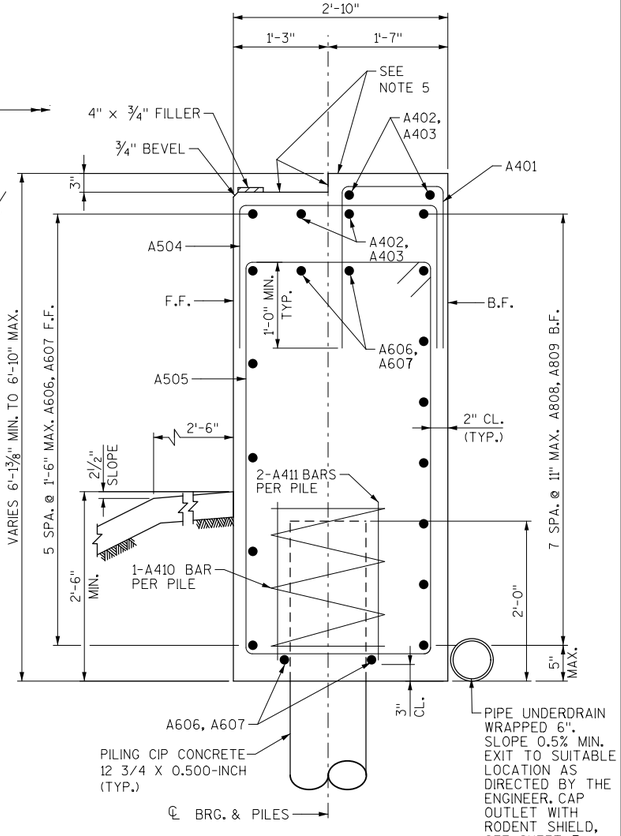

SECTION A-A

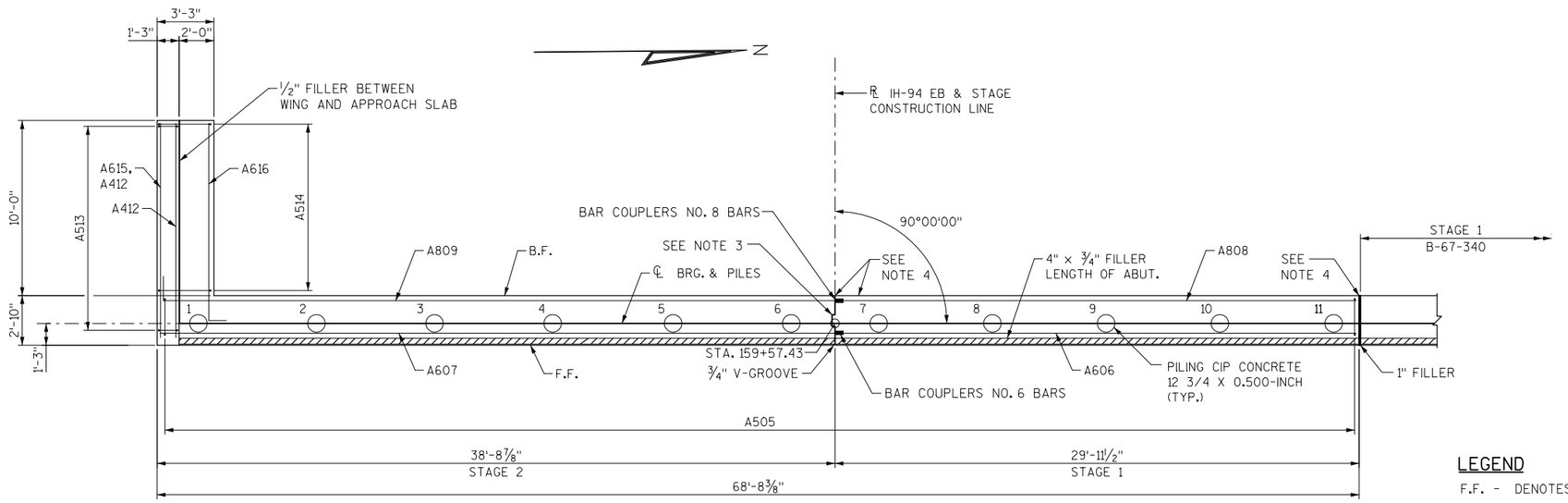

PLAN & PILE LAYOUT

NOTES

1. EXCAVATE TO BOTTOM OF ABUTMENTS BEFORE DRIVING PILES.
2. DO NOT PLACE FILL ABOVE 3'-0" FROM BOTTOM OF ABUTMENT, UNTIL SUPERSTRUCTURE IS IN PLACE.
3. VERT. CONST. JOINT KEYWAY FORMED BY BEVELED 2x8.
4. 18" RUBBERIZED MEMBRANE WATERPROOFING. SEAL ALL VERTICAL AND HORIZONTAL JOINTS ON THE BACK FACE OF THE ABUTMENT AND WING.
5. STEEL TROWEL TOP SURFACE OF ABUTMENT. PLACE MULTIPLE LAYERS OF POLYETHYLENE SHEET OVER ENTIRE ABUTMENT BEFORE PLACING SUPERSTRUCTURE. TOTAL THICKNESS OF SHEETS SHALL BE AT LEAST 0.03".

LEGEND

F.F. - DENOTES FRONT FACE

B.F. - DENOTES BACK FACE

NO.	DATE	REVISION	BY

STATE OF WISCONSIN
DEPARTMENT OF TRANSPORTATION
STRUCTURES DESIGN SECTION

STRUCTURE B-67-339

DRAWN BY	MAK	PLANS CK'D.	RMM

WEST ABUTMENT PLAN & ELEVATION

SHEET 5 OF 16

182

8

8

FILE= 081040_B670339_05WESTABUT.DGN
SCALE = 1:8

STATE PROJECT NUMBER

1060-38-70

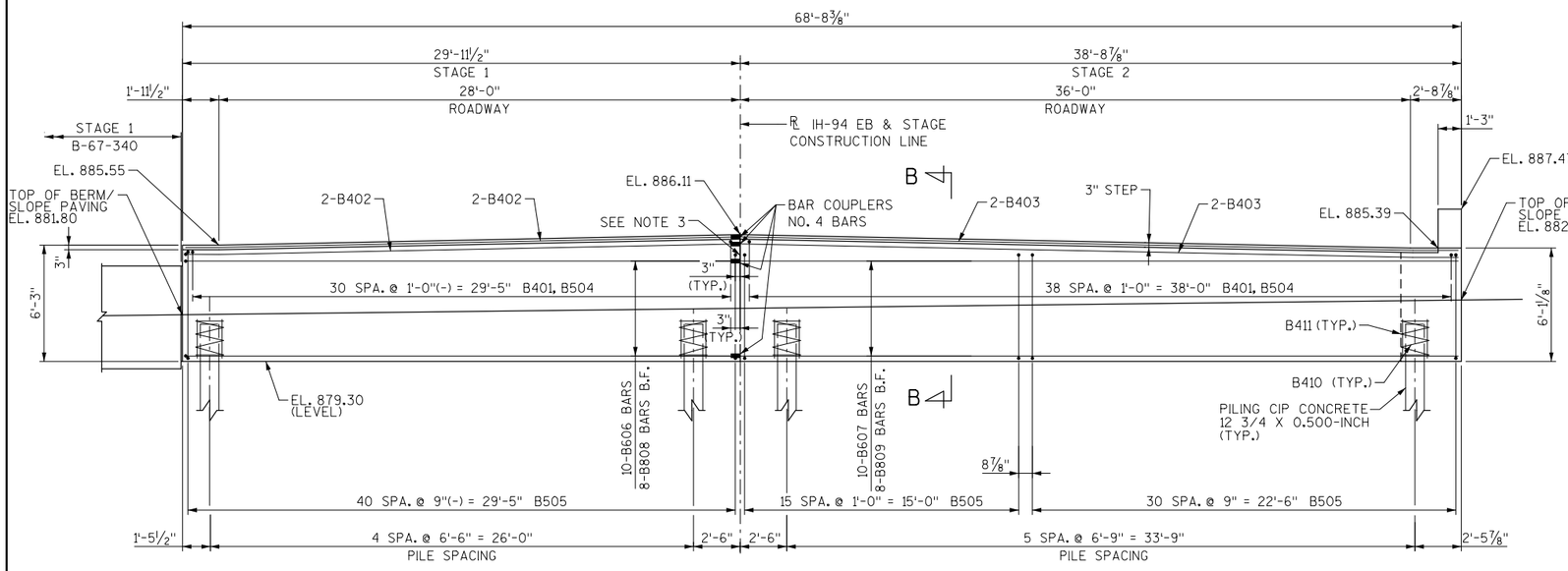

ELEVATION

(LOOKING EAST)

PLACE ABUTMENTS ON PILING CIP CONCRETE 12 3/4 X 0.500-INCH WITH A REQUIRED DRIVING RESISTANCE OF 95 TONS/PILE AT ABUTMENTS AS DETERMINED BY THE MODIFIED GATES DYNAMIC EQUATION.

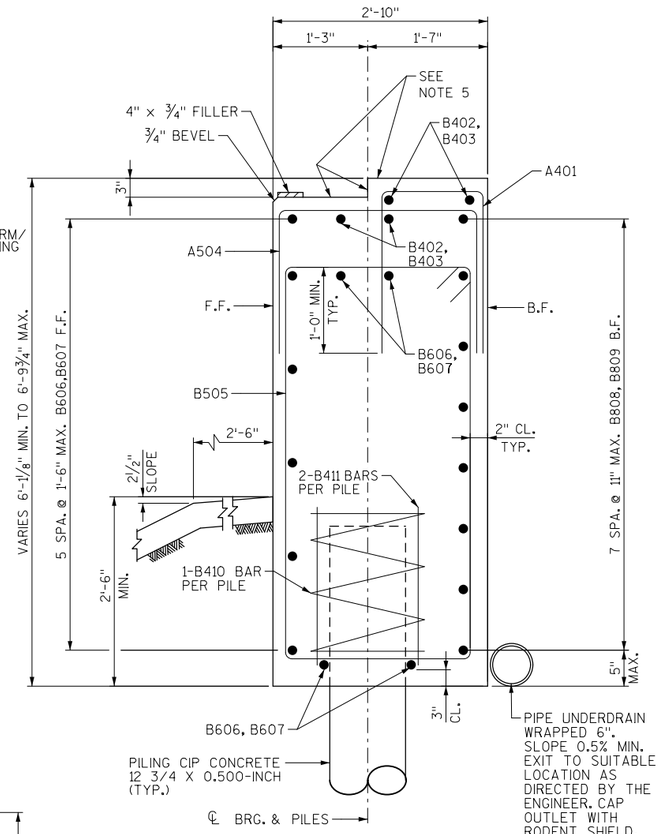

SECTION B-B

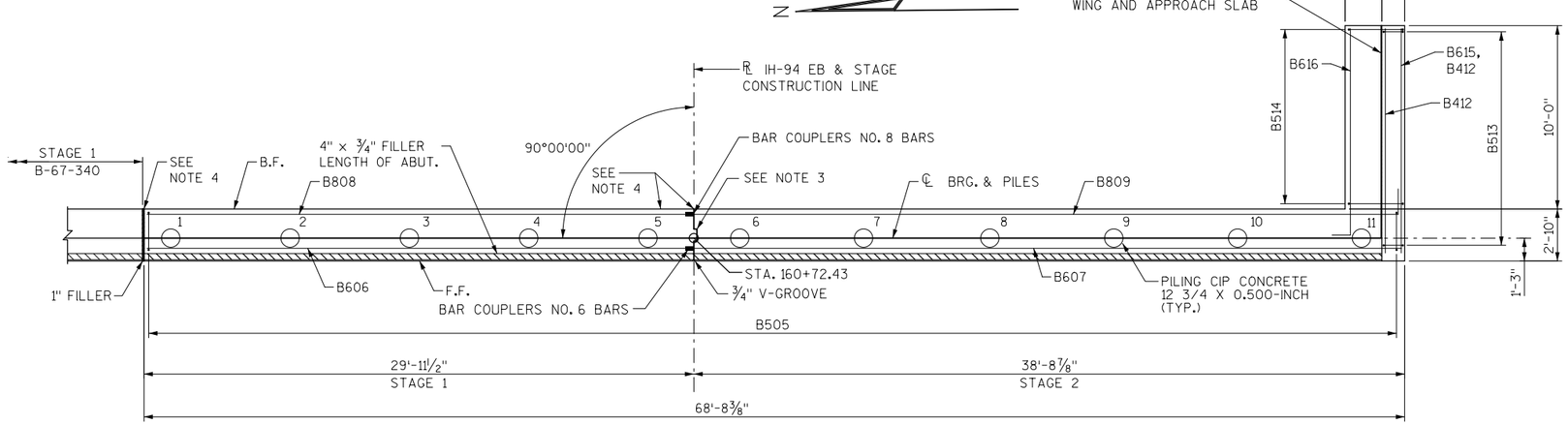

PLAN & PILE LAYOUT

NOTES

1. EXCAVATE TO BOTTOM OF ABUTMENTS BEFORE DRIVING PILES.
2. DO NOT PLACE FILL ABOVE 3'-0" FROM BOTTOM OF ABUTMENT, UNTIL SUPERSTRUCTURE IS IN PLACE.
3. VERT. CONST. JOINT KEYWAY FORMED BY BEVELED 2x8.
4. 18" RUBBERIZED MEMBRANE WATERPROOFING. SEAL ALL VERTICAL AND HORIZONTAL JOINTS ON THE BACK FACE OF THE ABUTMENT AND WING.
5. STEEL TROWEL TOP SURFACE OF ABUTMENT. PLACE MULTIPLE LAYERS OF POLYETHYLENE SHEET OVER ENTIRE ABUTMENT BEFORE PLACING SUPERSTRUCTURE. TOTAL THICKNESS OF SHEETS SHALL BE AT LEAST 0.03"

LEGEND

F.F. - DENOTES FRONT FACE

B.F. - DENOTES BACK FACE

NO.	DATE	REVISION	BY

STATE OF WISCONSIN
DEPARTMENT OF TRANSPORTATION
STRUCTURES DESIGN SECTION

STRUCTURE B-67-339

DRAWN BY MAK | PLANS CK'D. RMM

EAST ABUTMENT PLAN & ELEVATION

SHEET 6 OF 16

183

FILE= 081040_B670339_06EASTABUT.DGN
SCALE = 1:8

8

8

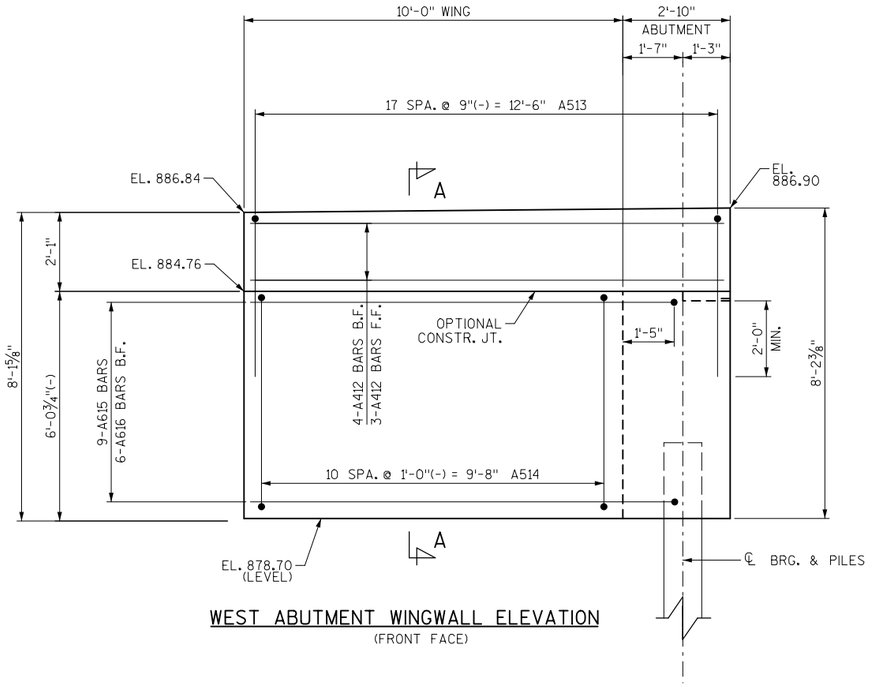

WEST ABUTMENT WINGWALL ELEVATION
(FRONT FACE)

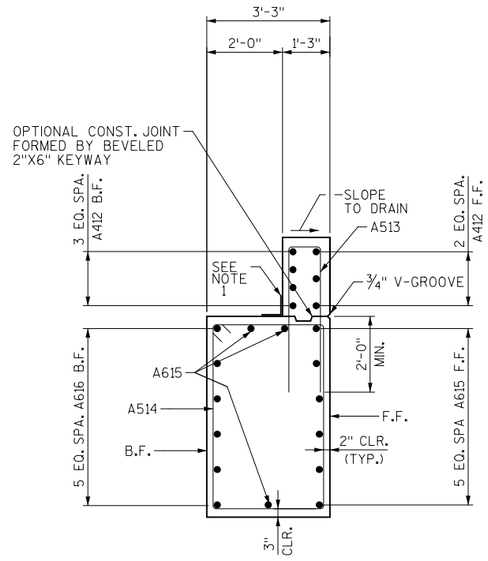

SECTION A-A

BILL OF BARS

	BAR NO.	COATED BAR	NO. REQ'D STAGE 1	NO. REQ'D STAGE 2	LENGTH	BENT BAR	BUNDLED	CUT BARS	708# COATED 5,109# UNCOATED LOCATION
	A401		31	39	5'-9"	X			TOP VERTICAL-U
*	A402		4	0	29'-6"				TOP HORIZONTAL
	A403		0	4	38'-10"				TOP HORIZONTAL
	A504		31	39	6'-5"	X			TOP VERTICAL-U
	A505		41	47	15'-8"	X			MAIN STIRRUP
*	A606		10	0	29'-6"				TOP HORIZONTAL
	A607		0	10	38'-10"				TOP HORIZONTAL
*	A808		8	0	29'-6"				MAIN HORIZONTAL
	A809		0	8	40'-0"	X			MAIN HORIZONTAL
	A410		5	6	28'-0"	X			PILE SPIRAL
	A411		10	12	2'-3"				PILE VERTICAL
	A412	X	0	7	12'-6"				WING TOP HORIZONTAL
	A513	X	0	18	9'-0"	X			WING VERTICAL-U
	A514	X	0	11	17'-8"	X			WING STIRRUP
	A615	X	0	9	12'-6"				WING HORIZONTAL
	A616	X	0	6	12'-1"	X			WING HORIZONTAL

NOTES: THE FIRST OR FIRST TWO DIGITS OF THE BAR MARK SIGNIFIES THE BAR SIZE.

BENDING DIMENSIONS ARE OUT TO OUT OF BARS.

* BAR COUPLER REQUIRED, SEE SHEET 2.

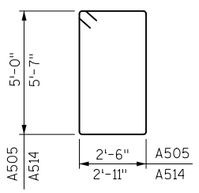

A505, A514

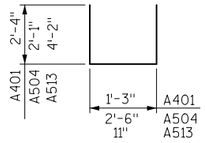

A401, A504, A513

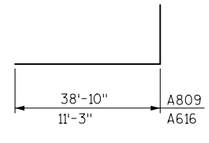

A809, A616

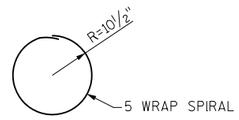

A410

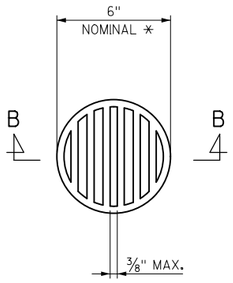

NOTE: ORIENT SHIELD SO SLOTS ARE VERTICAL.

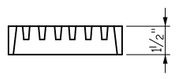

SECTION B-B

* NOTE: DIMENSIONS ARE APPROXIMATE. THE GRATE IS SIZED TO FIT INTO A PIPE COUPLING.

THE RODENT SHIELD SHALL BE A PVC GRATE SIMILAR TO THIS DETAIL. THE GRATE IS COMMERCIALLY AVAILABLE AS A FLOOR STRAINER. A PIPE COUPLING IS REQUIRED FOR THE ATTACHMENT OF THE SHIELD TO THE OUTFALL PIPE. THE SHIELD SHALL BE FASTENED TO THE PIPE COUPLING WITH TWO OR MORE NO. 10 X 1-INCH STAINLESS STEEL SHEET METAL SCREWS.

COST OF RODENT SHIELD IS INCLUDED IN THE COST OF PIPE-UNDERDRAIN WRAPPED 6-INCH.

RODENT SHIELD

NOTES

1. 18" RUBBERIZED MEMBRANE WATERPROOFING. SEAL ALL VERTICAL AND HORIZONTAL JOINTS ON THE BACK FACE OF THE ABUTMENT AND WING.

LEGEND

F.F. DENOTES FRONT FACE

B.F. DENOTES BACK FACE

NO.	DATE	REVISION	BY

STATE OF WISCONSIN
DEPARTMENT OF TRANSPORTATION
STRUCTURES DESIGN SECTION

STRUCTURE B-67-339

DRAWN BY MAK | PLANS CK'D. RMM

WEST ABUTMENT DETAILS

SHEET 7 OF 16

184

8

8

FILE= 08040_B670339_07WESTABDT.DGN
SCALE = 1:4

STATE PROJECT NUMBER

1060-38-70

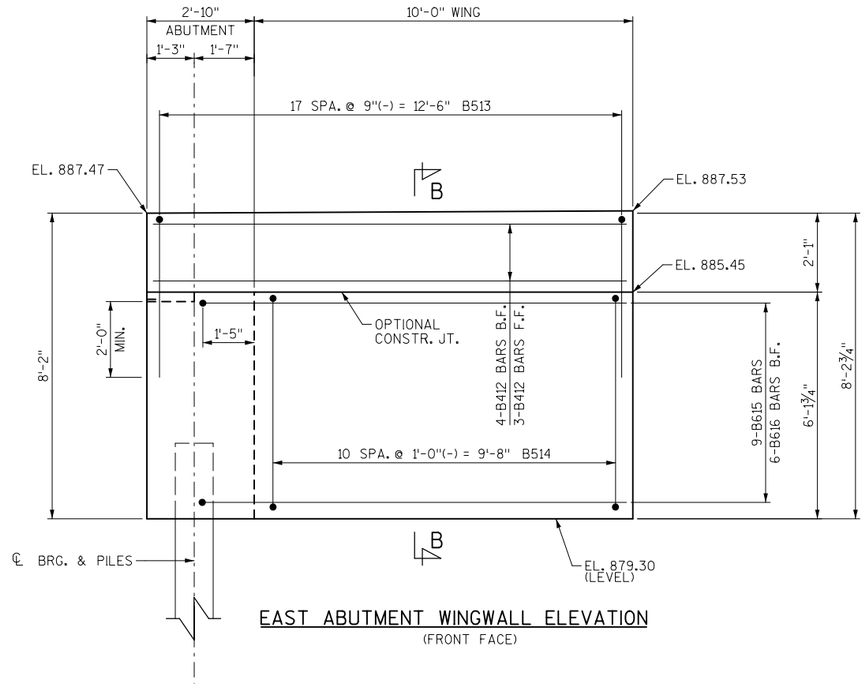

EAST ABUTMENT WINGWALL ELEVATION

(FRONT FACE)

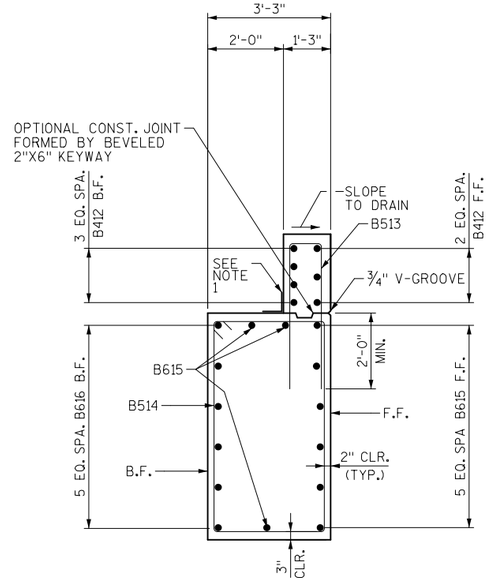

SECTION B-B

BILL OF BARS

	BAR NO.	COATED BAR	NO. REQ'D STAGE 1	NO. REQ'D STAGE 2	LENGTH	BENT BAR	BUNDLED	CUT BARS	708# COATED 5,109# UNCOATED LOCATION
	B401		31	39	5'-9"	X			TOP VERTICAL-U
*	B402		4	0	29'-6"				TOP HORIZONTAL
	B403		0	4	38'-10"				TOP HORIZONTAL
	B504		31	39	6'-5"	X			TOP VERTICAL-U
	B505		41	47	15'-8"	X			MAIN STIRRUP
*	B606		10	0	29'-6"				TOP HORIZONTAL
	B607		0	10	38'-10"				TOP HORIZONTAL
*	B808		8	0	29'-6"				MAIN HORIZONTAL
	B809		0	8	40'-0"	X			MAIN HORIZONTAL
	B410		5	6	28'-0"	X			PILE SPIRAL
	B411		10	12	2'-3"				PILE VERTICAL
	B412	X	0	7	12'-6"				WING TOP HORIZONTAL
	B513	X	0	18	9'-0"	X			WING VERTICAL-U
	B514	X	0	11	17'-8"	X			WING STIRRUP
	B615	X	0	9	12'-6"				WING HORIZONTAL
	B616	X	0	6	12'-1"	X			WING HORIZONTAL

NOTES: THE FIRST OR FIRST TWO DIGITS OF THE BAR MARK SIGNIFIES THE BAR SIZE.

BENDING DIMENSIONS ARE OUT TO OUT OF BARS.

* BAR COUPLER REQUIRED, SEE SHEET 2.

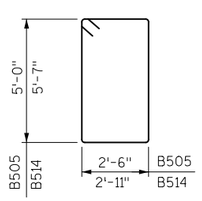

B505, B514

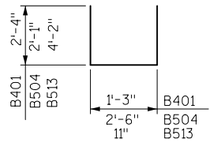

B401, B504, B513

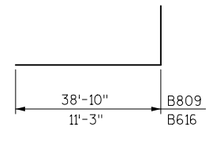

B809, B616

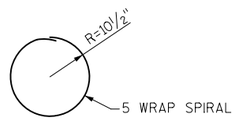

B410

NOTES

1. 18" RUBBERIZED MEMBRANE WATERPROOFING. SEAL ALL VERTICAL AND HORIZONTAL JOINTS ON THE BACK FACE OF THE ABUTMENT AND WING.

LEGEND

F.F. DENOTES FRONT FACE

B.F. DENOTES BACK FACE

NO.	DATE	REVISION	BY

STATE OF WISCONSIN
DEPARTMENT OF TRANSPORTATION
STRUCTURES DESIGN SECTION

STRUCTURE B-67-339

DRAWN BY MAK | PLANS CK'D. RMM

EAST ABUTMENT DETAILS

SHEET 8 OF 16

185

8

8

FILE= 081040_B670339_08EASTABDT.DGN
SCALE = 1:4

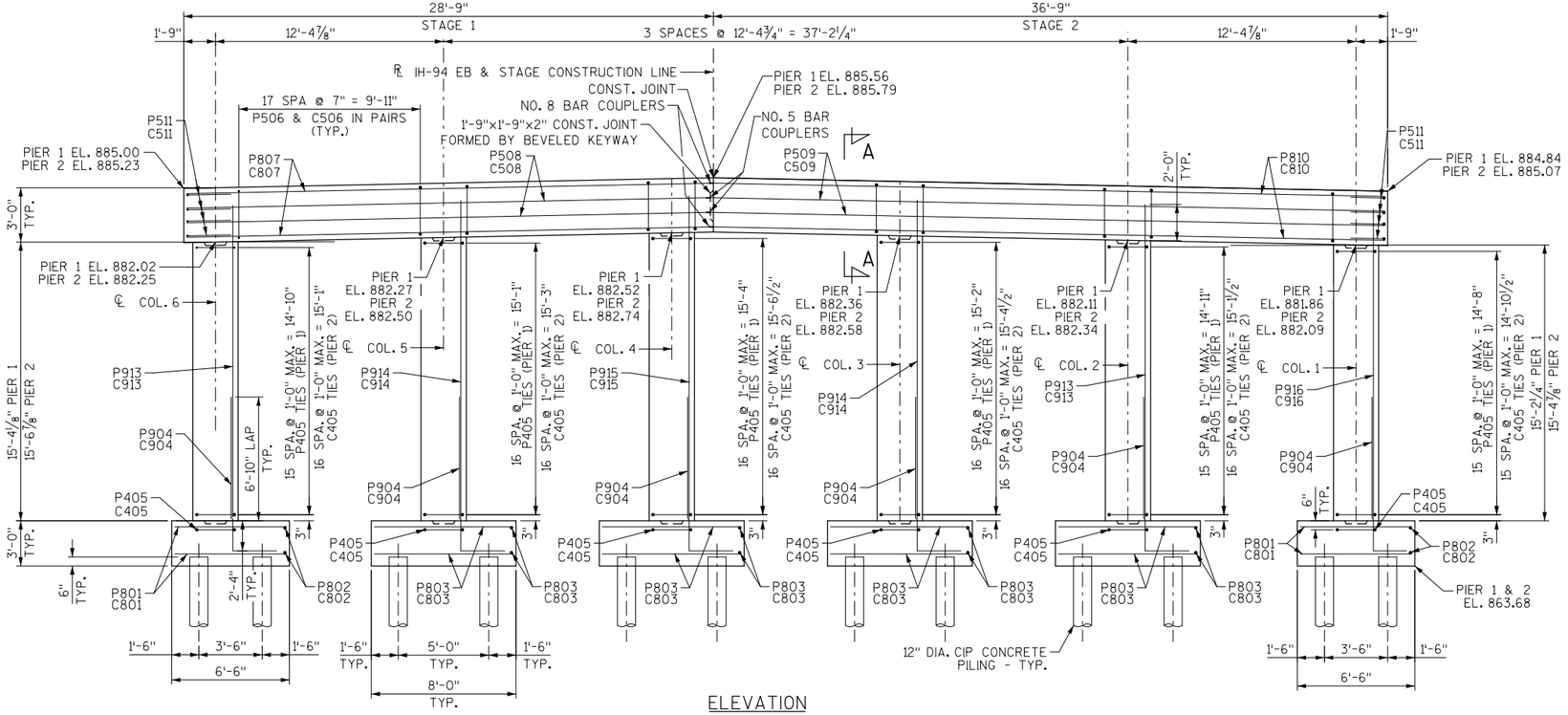

ELEVATION

(LOOKING EAST)

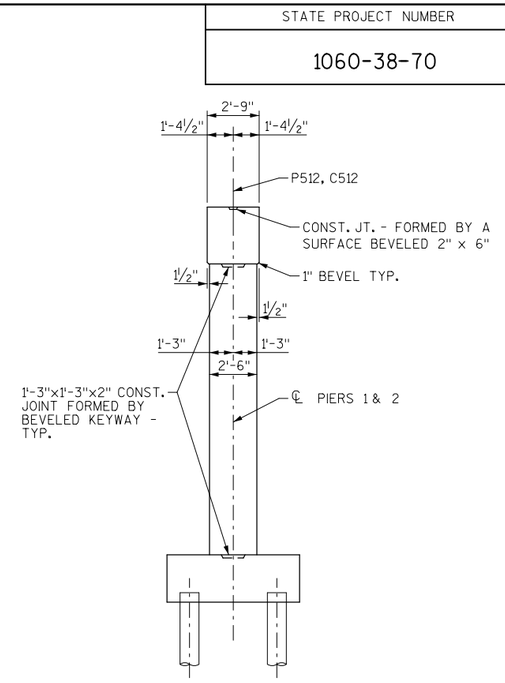

END VIEW

(LOOKING NORTH)

PLACE PIERS ON PILING CIP CONCRETE 12 3/4 X 0.500-INCH WITH A REQUIRED DRIVING RESISTANCE OF 130 TONS/PILE AT PIERS AS DETERMINED BY THE MODIFIED GATES DYNAMIC EQUATION.

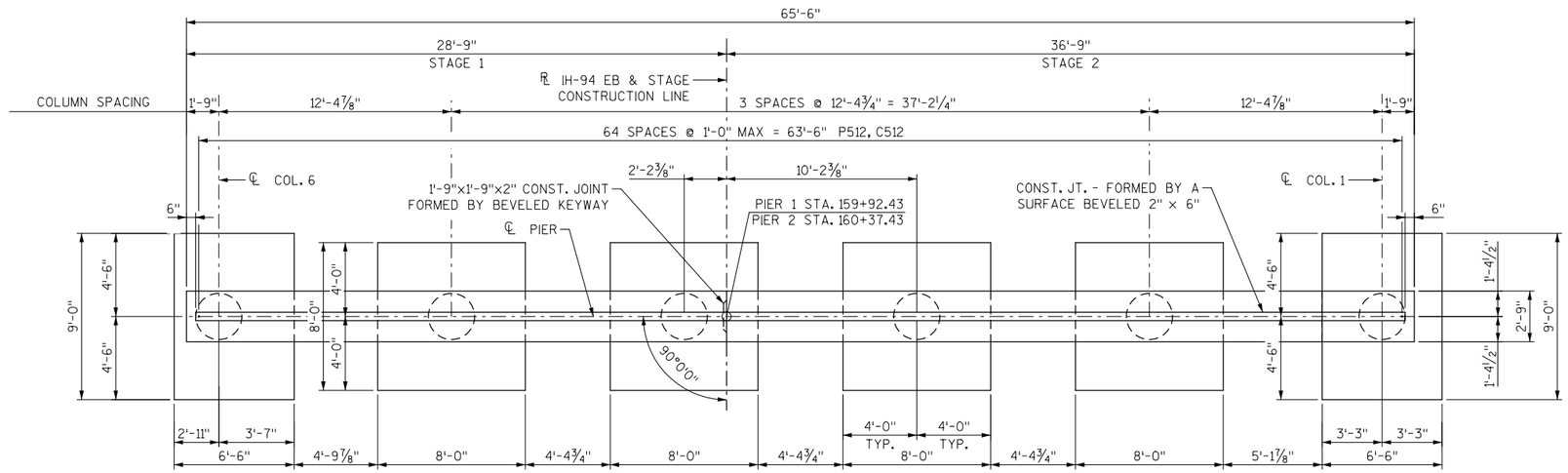

PLAN

N

NOTES: PXXX BARS DENOTE PIER 1 BARS.

CXXX BARS DENOTE PIER 2 BARS.

NO.	DATE	REVISION	BY

STATE OF WISCONSIN
DEPARTMENT OF TRANSPORTATION
STRUCTURES DESIGN SECTION

STRUCTURE B-67-339

DRAWN BY MAK | PLANS CK'D. MLM

PIERS 1 & 2

SHEET 9 OF 16

186

STATE PROJECT NUMBER

1060-38-70

FILE= 081040_B670339_09PIER.DGN
SCALE = 1:8

8

8

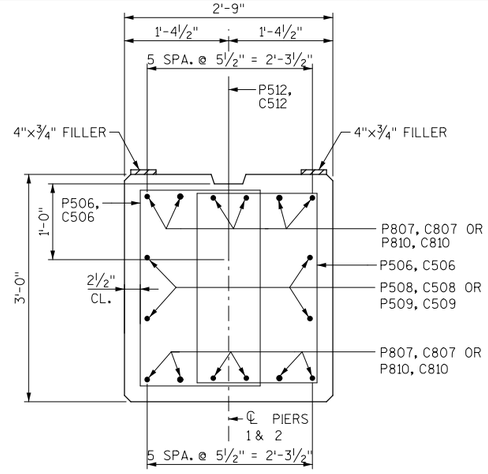

SECTION A-A

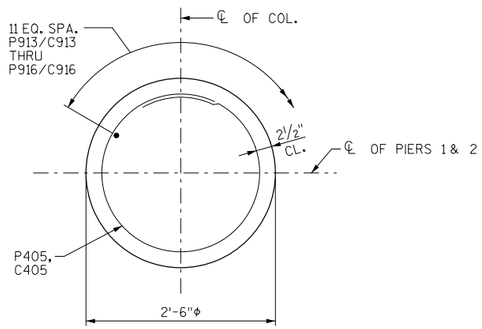

TYPICAL SECTION THRU COLUMN

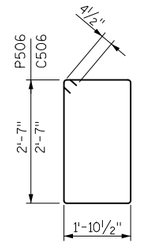

P506 & C506

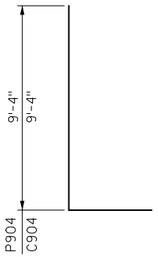

P904 & C904

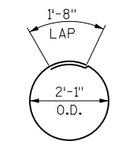

P405 & C405

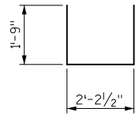

P511 & C511

BILL OF BARS

	BAR NO.	COATED BAR	NO. REQ'D STAGE 1	NO. REQ'D STAGE 2	LENGTH	BENT BAR	BUNDLED	CUT BARS	22,575# COATED 10,048# UNCOATED LOCATION
	P801		20	20	6'-2"				FOOTING-HORIZ.
	P802		20	20	8'-8"				FOOTING-HORIZ.
	P803		84	84	7'-8"				FOOTING-HORIZ.
	P904	X	33	33	10'-8"	X			FOOTING DOWELS - COLUMN VERT
	P405	X	53	52	8'-3"	X			COLUMN STIRRUPS
	P506	X	76	104	9'-7"	X			CAP STIRRUPS
*	P807	X	12		28'-3"				CAP-HORIZ-TOP & BTM
*	P508	X	4		28'-3"				CAP-HORIZ-SIDES
	P509	X		4	36'-10"				CAP-HORIZ-SIDES
	P810	X		12	36'-10"				CAP-HORIZ-TOP & BTM
	P511	X	4	4	5'-6"	X			CAP-HORIZ-ENDS
	P512	X	29	36	2'-0"				CAP DOWELS
	P913	X	11	11	17'-6"				COLUMN VERT
	P914	X	11	11	17'-9"				COLUMN VERT
	P915	X	11		17'-11"				COLUMN VERT
	P916	X		11	17'-3"				COLUMN VERT
	C801		20	20	6'-2"				FOOTING-HORIZ.
	C802		20	20	8'-8"				FOOTING-HORIZ.
	C803		84	84	7'-8"				FOOTING-HORIZ.
	C904	X	33	33	10'-8"	X			FOOTING DOWELS - COLUMN VERT
	C405	X	54	53	8'-3"	X			COLUMN STIRRUPS
	C506	X	76	104	9'-7"	X			CAP STIRRUPS
*	C807	X	12		28'-3"				CAP-HORIZ-TOP & BTM
*	C508	X	4		28'-3"				CAP-HORIZ-SIDES
	C509	X		4	36'-10"				CAP-HORIZ-SIDES
	C810	X		12	36'-10"				CAP-HORIZ-TOP & BTM
	C511	X	4	4	5'-6"	X			CAP-HORIZ-ENDS
	C512	X	29	36	2'-0"				CAP DOWELS
	C913	X	11	11	17'-8"				COLUMN VERT
	C914	X	11	11	17'-11"				COLUMN VERT
	C915	X	11		18'-2"				COLUMN VERT
	C916	X		11	17'-5"				COLUMN VERT

NOTES: THE FIRST OR FIRST TWO DIGITS OF THE BAR MARK SIGNIFIES THE BAR SIZE.

BENDING DIMENSIONS ARE OUT TO OUT OF BARS.

* BAR COUPLER REQUIRED - SEE SHEET 2.

N

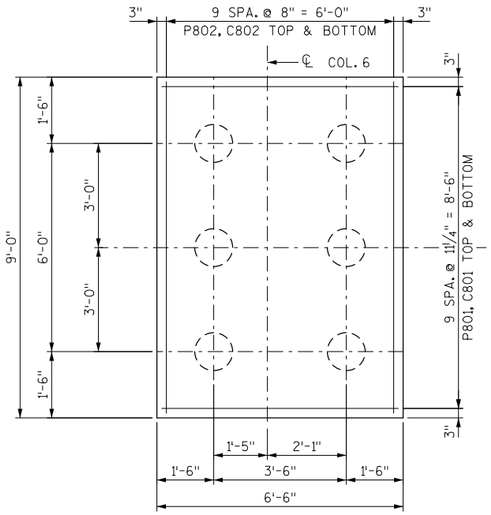

FOOTING PLAN - COL. 6

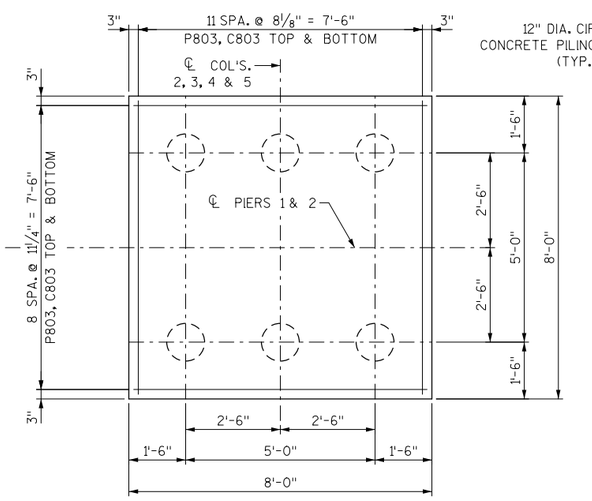

FOOTING PLAN - COL'S. 2, 3, 4 & 5

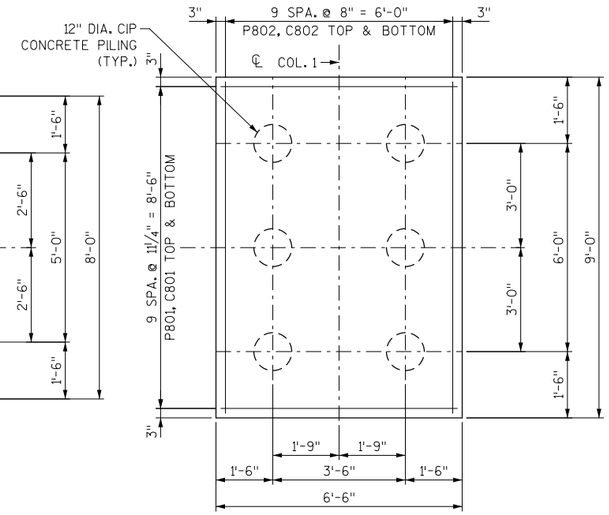

FOOTING PLAN - COL. 1

NO.	DATE	REVISION	BY

STATE OF WISCONSIN
DEPARTMENT OF TRANSPORTATION
STRUCTURES DESIGN SECTION

STRUCTURE B-67-339

DRAWN BY MAK | PLANS CK'D. MLM

PIERS 1& 2 DETAILS

SHEET 10 OF 16

187

STATE PROJECT NUMBER

1060-38-70

8

8

FILE = 081040_B670339_10PRDT.DGN
SCALE = 1:4

STATE PROJECT NUMBER
1060-38-70

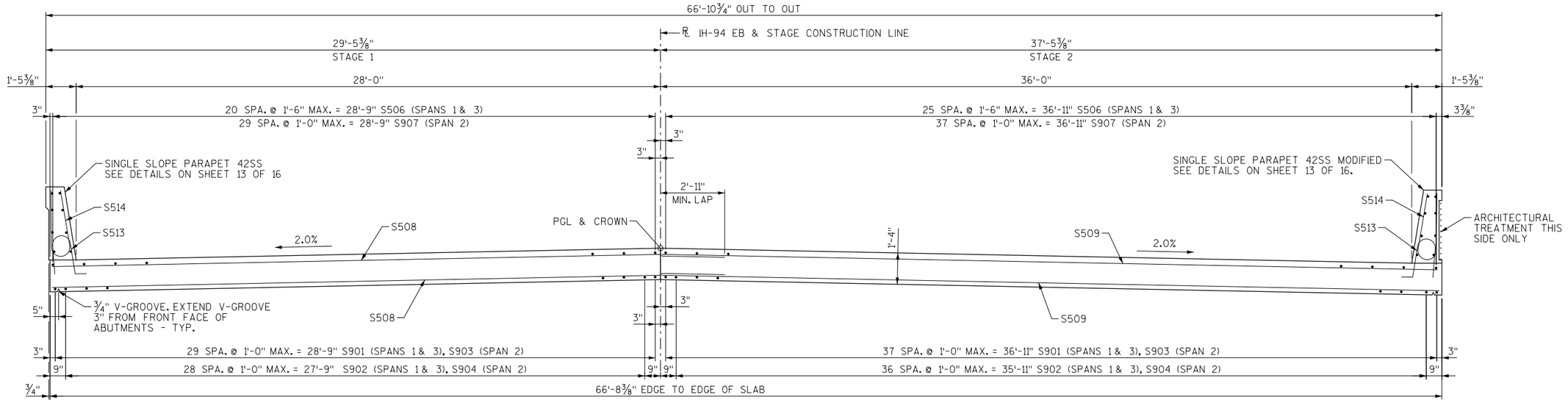

CROSS SECTION THRU ROADWAY - IN SPAN

(LOOKING EAST)

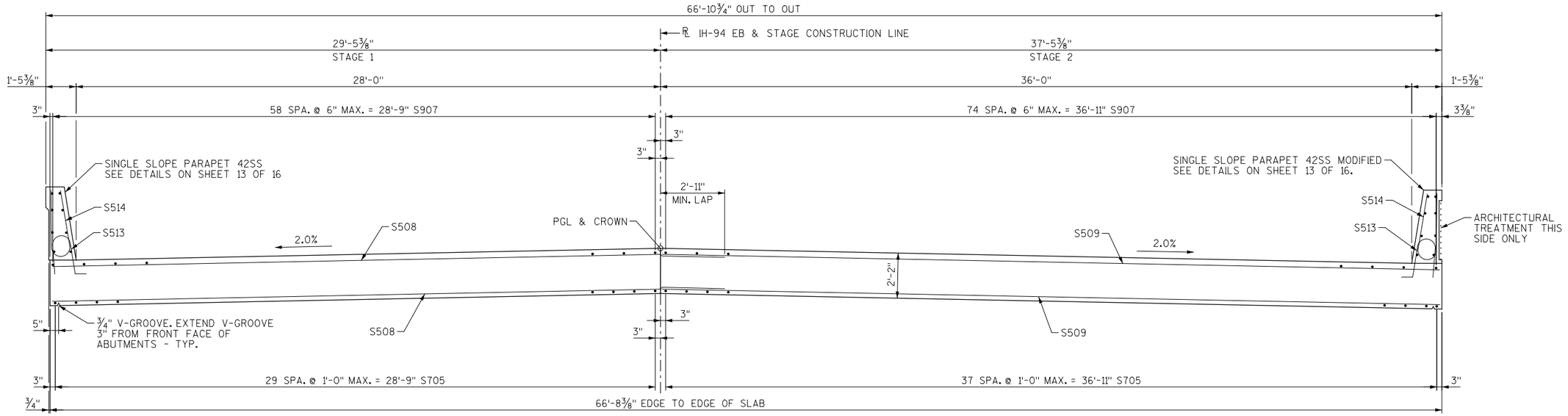

CROSS SECTION THRU ROADWAY - AT PIER

(LOOKING EAST)

NOTES:

1. TOP TRANSVERSE BARS IN SLAB SHALL BE SUPPORTED BY INDIVIDUAL BARS CHAIRS AT APPROXIMATELY 3'-0" CENTERS EACH WAY. BOTTOM LONGITUDINAL BARS SHALL BE SUPPORTED BY CONTINUOUS BAR CHAIRS AT APPROXIMATELY 4'-0" CENTERS.
2. ALL SLAB THICKNESS DIMENSIONS ARE MINIMUM. ANY TOLERANCES NECESSARY TO CORRECT CONSTRUCTION DISCREPANCIES ARE TO BE PLUS (+).
3. PRIOR TO RELEASING SLAB FALSEWORK, TAKE TOP OF SLAB ELEVATIONS AT THE ℄ OF ABUTMENTS, THE ℄ OF PIERS AND AT 5/10 PTS. TO VERIFY CAMBER. TAKE ELEVATIONS ALONG GUTTER LINES AND CROWN OR ℄.

NO.	DATE	REVISION	BY

STATE OF WISCONSIN
DEPARTMENT OF TRANSPORTATION
STRUCTURES DESIGN SECTION

STRUCTURE B-67-339

DRAWN BY MAK | PLANS CK'D. RMM

SUPERSTRUCTURE

SHEET 11 OF 16

188

FILE= 081040_B6703339_11SUPER.DGN
SCALE = 1:5.3333

8

8

STATE PROJECT NUMBER
1060-38-70

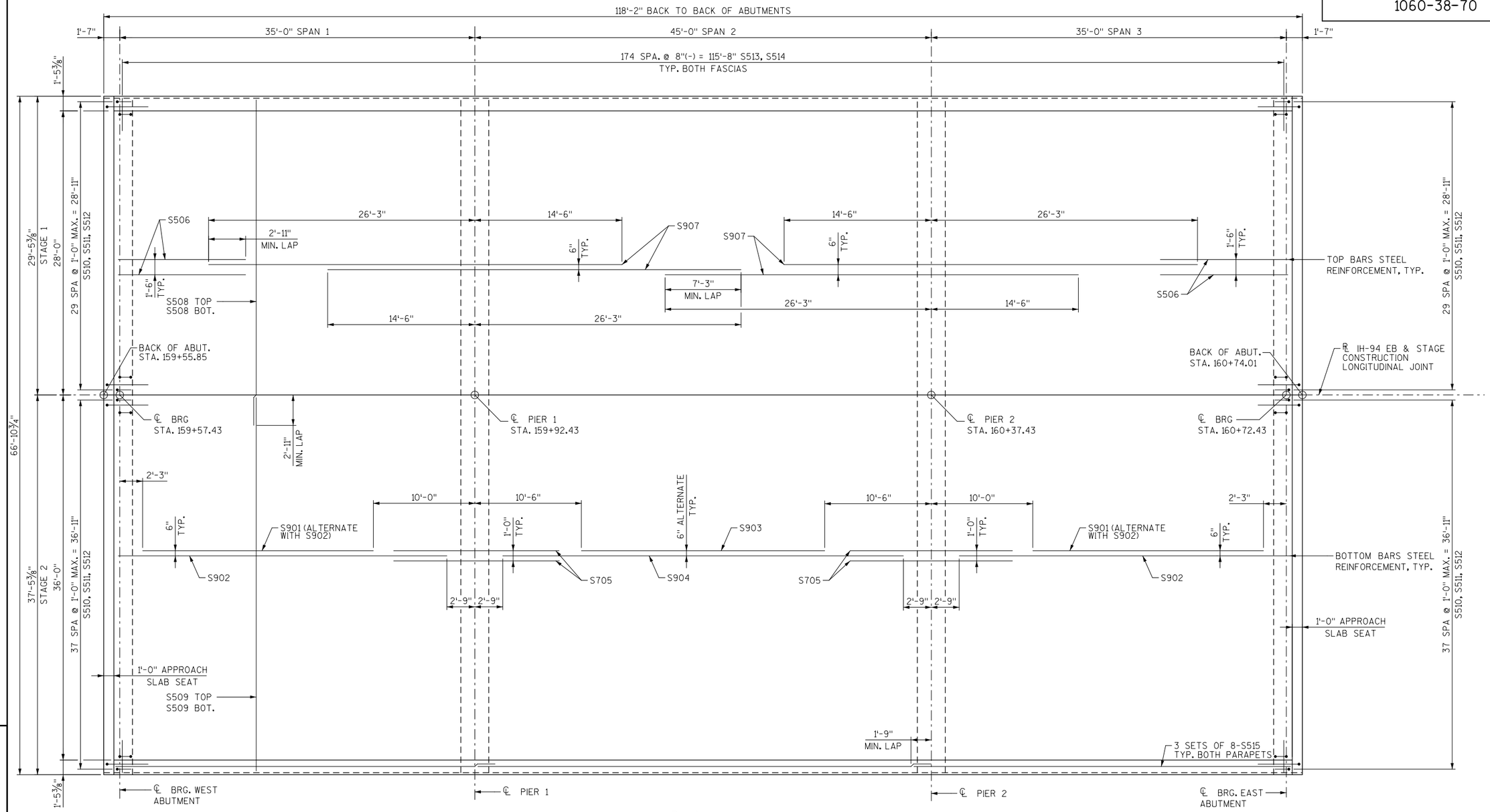

PLAN

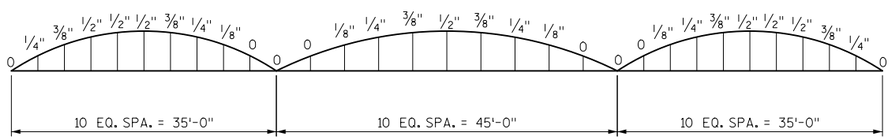

CAMBER DIAGRAM

CAMBER SPANS AS SHOWN TO PROVIDE FOR DEADLOAD DEFLECTION & FUTURE CREEP. CAMBER DOES NOT INCLUDE ALLOWANCE FOR FORM SETTLEMENT.

NO.	DATE	REVISION	BY

STATE OF WISCONSIN
DEPARTMENT OF TRANSPORTATION
STRUCTURES DESIGN SECTION

STRUCTURE B-67-339

DRAWN BY MAK | PLANS CK'D. RMM

SUPERSTRUCTURE PLAN

SHEET 12 OF 16

189

8

8

FILE= 081040_B670339_12SUPERDT.DGN
SCALE = 1:10

STATE PROJECT NUMBER
1060-38-70

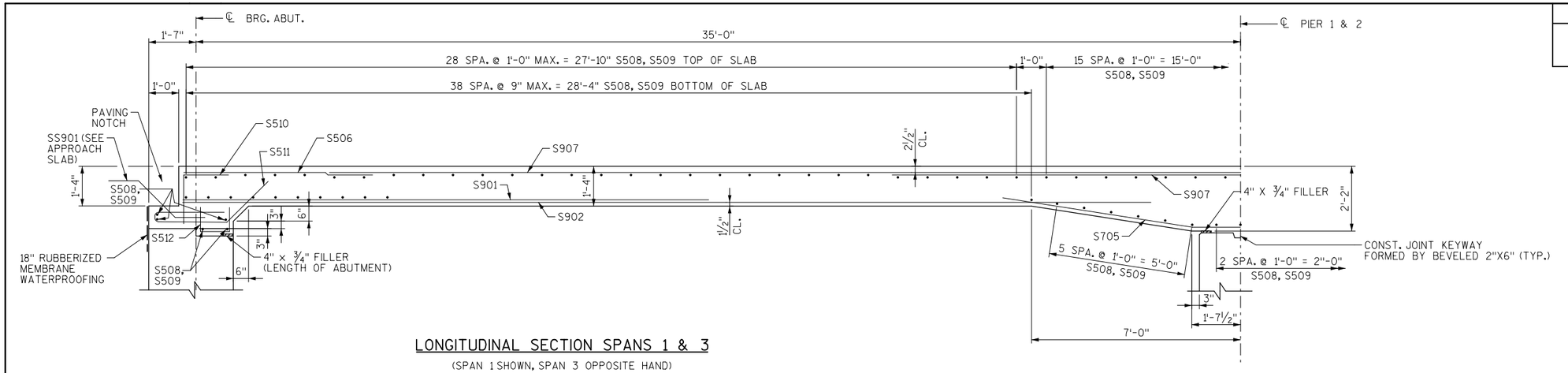

LONGITUDINAL SECTION SPANS 1 & 3

(SPAN 1 SHOWN, SPAN 3 OPPOSITE HAND)

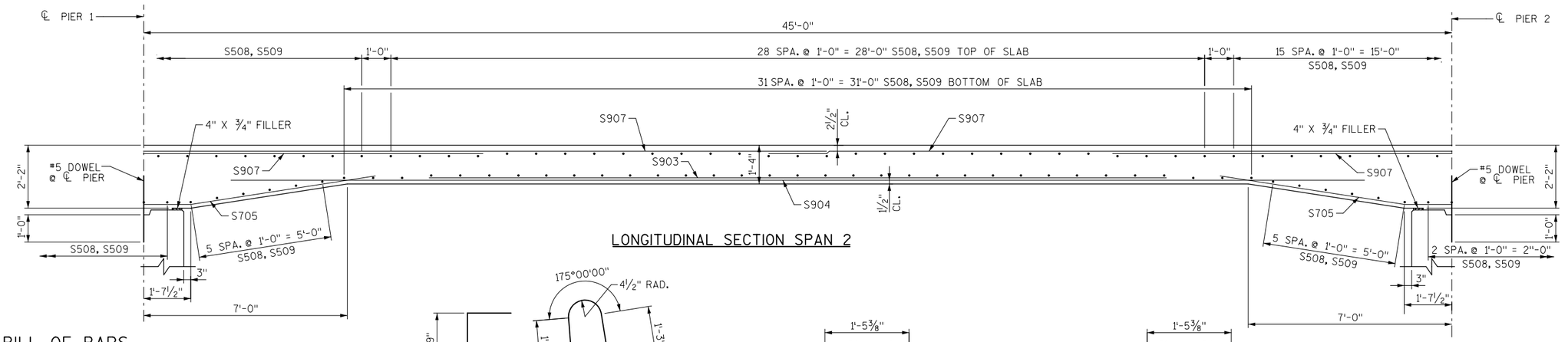

LONGITUDINAL SECTION SPAN 2

BILL OF BARS

NOTE: THE FIRST OR FIRST TWO DIGITS OF THE BAR MARK SIGNIFIES THE BAR SIZE.

BAR NO.	COATED BAR	NO. REQ'D STAGE 1	NO. REQ'D STAGE 2	LENGTH	BENT BAR	BUNDLED	CUT BARS	109,876# COATED 0# UNCOATED LOCATION
S901	X	60	76	22'-9"				SLAB LONG. BOT, SPAN 1 & 3
S902	X	58	74	32'-8"				SLAB LONG. BOT, SPAN 1 & 3
S903	X	30	38	24'-0"				SLAB LONG. BOT, SPAN 2
S904	X	29	37	39'-6"				SLAB LONG. BOT, SPAN 2
S705	X	60	76	16'-9"	X			SLAB LONG BOT, PIER
S506	X	42	52	12'-1"				SLAB LONG. TOP , SPAN 1 & 3
S907	X	118	150	40'-9"				SLAB LONG. TOP, PIER
S508	X	269	0	32'-1"				SLAB TRANS.
S509	X	0	269	37'-2"				SLAB TRANS.
S510	X	60	76	3'-4"	X			SLAB @ ABUT. HAUNCH
S511	X	60	76	7'-0"	X			SLAB @ ABUT. HAUNCH
S512	X	60	76	2'-7"	X			SLAB @ ABUT. HAUNCH
S513	X	175	175	4'-5"	X			PARAPET VERTICAL
S514	X	175	175	6'-8"	X			PARAPET VERTICAL
S515	X	24	24	40'-0"				PARAPET HORIZONTAL

DIMENSIONS IN BENDING DETAILS ARE OUT TO OUT OF BARS.

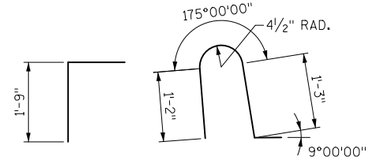

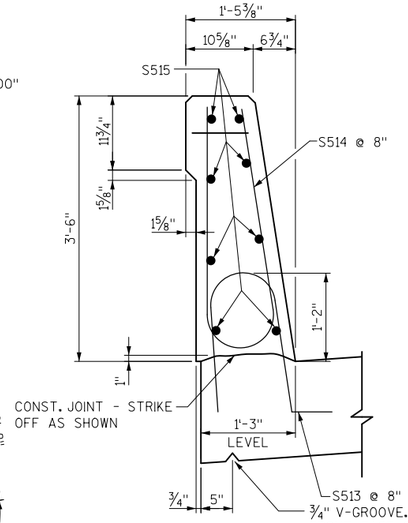

SECTION THRU NORTH PARAPET ON BRIDGE

(SINGLE SLOPE PARAPET 42SS)

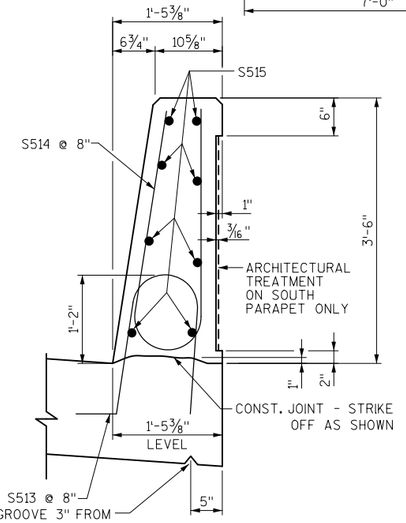

SECTION THRU SOUTH PARAPET ON BRIDGE

(SINGLE SLOPE PARAPET 42SS MODIFIED)

NOTES:

1. FOR SS901 BAR LOCATION AND BILL OF BARS, SEE SHEET 15.

NO.	DATE	REVISION	BY

STATE OF WISCONSIN
DEPARTMENT OF TRANSPORTATION
STRUCTURES DESIGN SECTION

STRUCTURE B-67-339

DRAWN BY MAK | PLANS CK'D. RMM

SUPERSTRUCTURE DETAILS

SHEET 13 OF 16

190

8

8

FILE= 08040_B670339_13SUPERDET.DGN
SCALE = 1:4

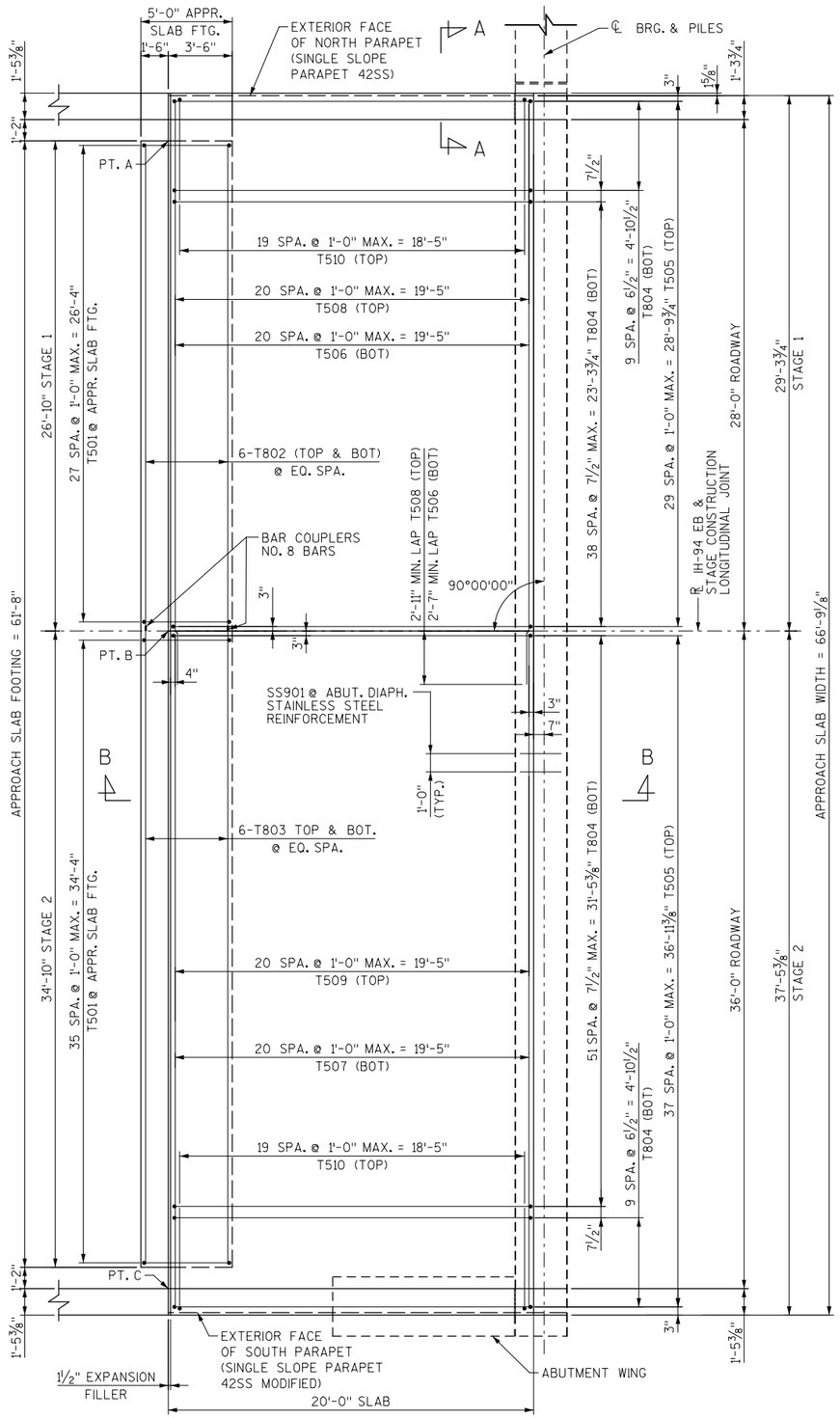

APPROACH SLAB PLAN
(WEST ABUTMENT SHOWN, EAST ABUTMENT SIMILAR OPPOSITE HAND)

BILL OF BARS

STAINLESS STEEL

BAR NO.	COATED BAR	NO. REQ'D STAGE 1	NO. REQ'D STAGE 2	LENGTH	BENT BAR	BUNDLED	CUT BARS	0# COATED 2,312# UNCOATED STAINLESS STEEL LOCATION
SS901		60	76	5'-0"	X			ABUT. DIAPH. TO APPROACH SLAB

	BAR NO.	COATED BAR	NO. REQ'D STAGE 1	NO. REQ'D STAGE 2	LENGTH	BENT BAR	BUNDLED	CUT BARS	27,383# COATED 0# UNCOATED LOCATION
*	T501	X	56	72	11'-10"	X			FOOTING STIRRUP
*	T802	X	24	0	26'-5"				FOOTING HORIZONTAL
	T803	X	0	24	34'-11"				FOOTING HORIZONTAL
	T804	X	98	124	21'-5"	X			BOTTOM LONGITUDINAL
	T505	X	60	76	19'-7"				TOP LONGITUDINAL
	T506	X	42	0	31'-10"				BOTTOM TRANSVERSE
	T507	X	0	42	37'-2"				BOTTOM TRANSVERSE
	T508	X	42	0	32'-2"				TOP TRANSVERSE
	T509	X	0	42	37'-2"				TOP TRANSVERSE
	T510	X	40	40	4'-1"	X			TOP TRANSVERSE

NOTES: THE FIRST OR FIRST TWO DIGITS OF THE BAR MARK SIGNIFIES THE BAR SIZE.

BENDING DIMENSIONS ARE OUT TO OUT OF BARS.

* BAR COUPLER REQUIRED, SEE SHEET 2.

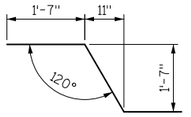

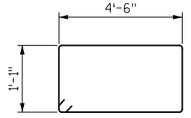

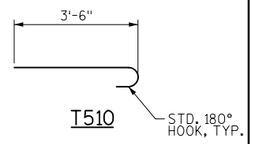

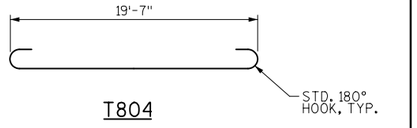

POINT	WEST ABUT. APPROACH SLAB STATION	WEST ABUT. APPROACH SLAB ELEVATION	EAST ABUT. APPROACH SLAB STATION	EAST ABUT. APPROACH SLAB ELEVATION
A (STAGE 1)	159+36.86	886.96	160+93.01	887.74
B (CONST. JT.)	159+36.86	887.52	160+93.01	888.30
C (STAGE 2)	159+36.86	886.80	160+93.01	887.58

NOTES:

1. FOR NORTH PARAPET DETAILS ON APPROACH SLAB (SINGLE SLOPE PARAPET 42SS), SEE SHEET 15.
2. FOR SOUTH PARAPET DETAILS ON APPROACH SLAB (SINGLE SLOPE PARAPET 42SS MODIFIED), SEE SHEET 16.

STATE PROJECT NUMBER

1060-38-70

NO.	DATE	REVISION	BY

STATE OF WISCONSIN
DEPARTMENT OF TRANSPORTATION
STRUCTURES DESIGN SECTION

STRUCTURE B-67-339

DRAWN BY MAK | PLANS CK'D. RMM

STRUCTURAL APPROACH SLABS

SHEET 14 OF 16

191

FILE= 081040_B6T0339_14APPR.DGN
SCALE = 1:8

8

8

STATE PROJECT NUMBER

1060-38-70

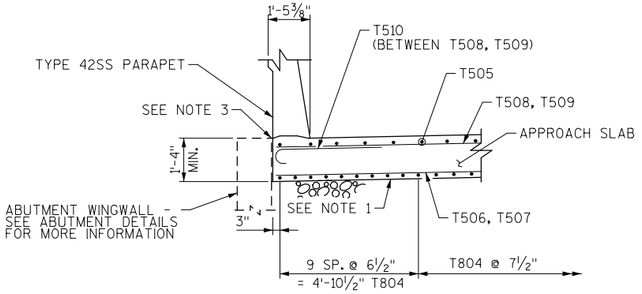

SECTION A-A

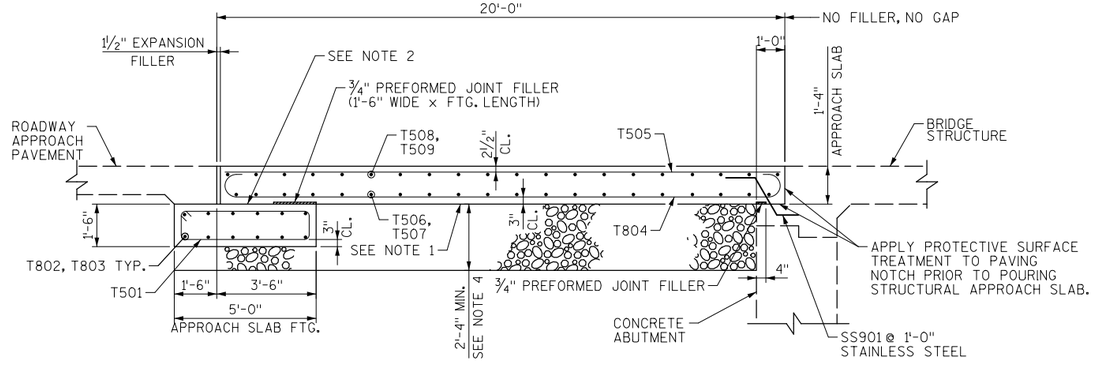

SECTION B-B THRU APPROACH SLAB

NOTES:
1. PLACE MULTIPLE LAYERS (0.03" MIN. TOTAL THK.) OF POLYETHYLENE SHEETS OVER THE ENTIRE TOP OF SUBGRADE, BENEATH SLAB.
2. STEEL TROWEL TOP SURFACE OF FOOTING AND PLACE MULTIPLE LAYERS (0.03" MIN. TOTAL THK.) OF POLYETHYLENE SHEETS OVER ENTIRE TOP OF FOOTING.
3. SEAL ALL EXPOSED HORIZONTAL AND VERTICAL SURFACES OF ½" FILLER WITH NON-STAINING GRAY NON-BITUMINOUS JOINT SEALER. (1" DEEP AND HOLD ⅛" BELOW SURFACE OF CONCRETE). EXTEND SEALER 3" BELOW GUTTERLINE AT INSIDE FACE.
4. BELOW THE APPROACH SLAB FOOTING AND APPROACH SLAB, PLACE BASE AGGREGATE DENSE 1-¼ INCH.

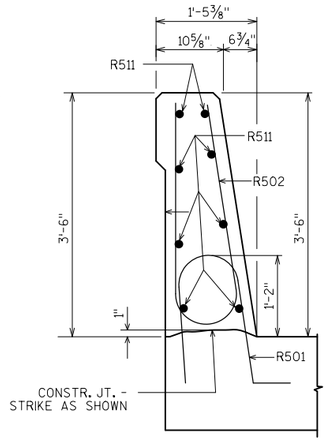

SECTION C-C

(SINGLE SLOPE PARAPET 42SS)

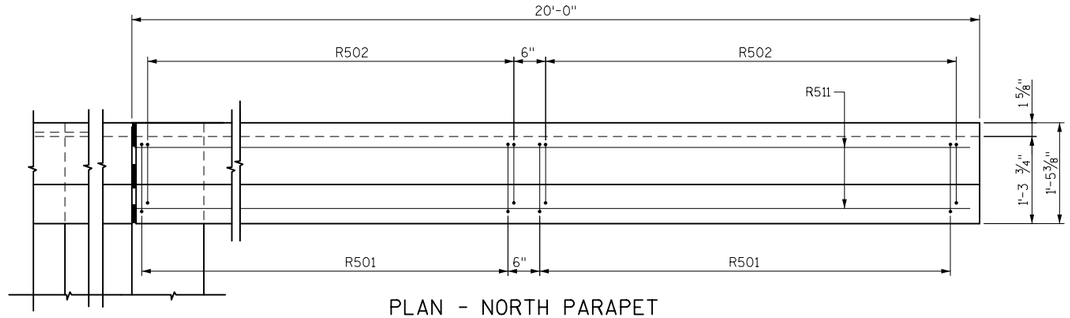

PLAN - NORTH PARAPET

(SINGLE SLOPE PARAPET 42SS ON APPROACH SLAB)

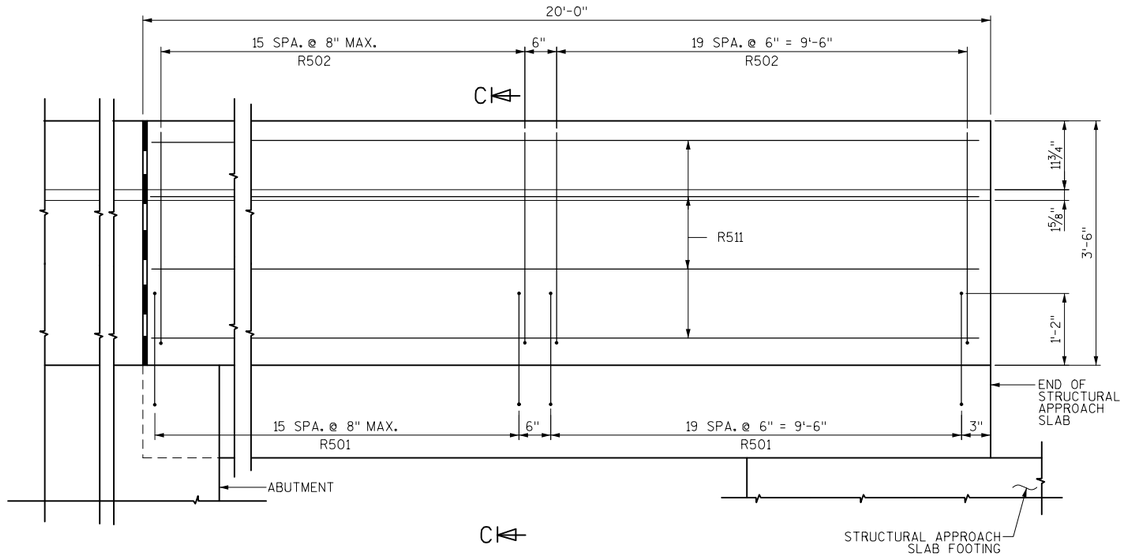

TYPICAL OUTSIDE ELEVATION - NORTH PARAPET

(SINGLE SLOPE PARAPET 42SS ON APPROACH SLAB)

8

8

NO.	DATE	REVISION	BY

STATE OF WISCONSIN
DEPARTMENT OF TRANSPORTATION
STRUCTURES DESIGN SECTION

STRUCTURE B-67-339

DRAWN BY	MAK	PLANS CK'D.	RMM

STRUCTURAL APPROACH SLAB DETAILS

SHEET 15 OF 16

192

FILE= 081040_B670339_15APDT.DGN
SCALE = 1:5.3333

STATE PROJECT NUMBER

1060-38-70

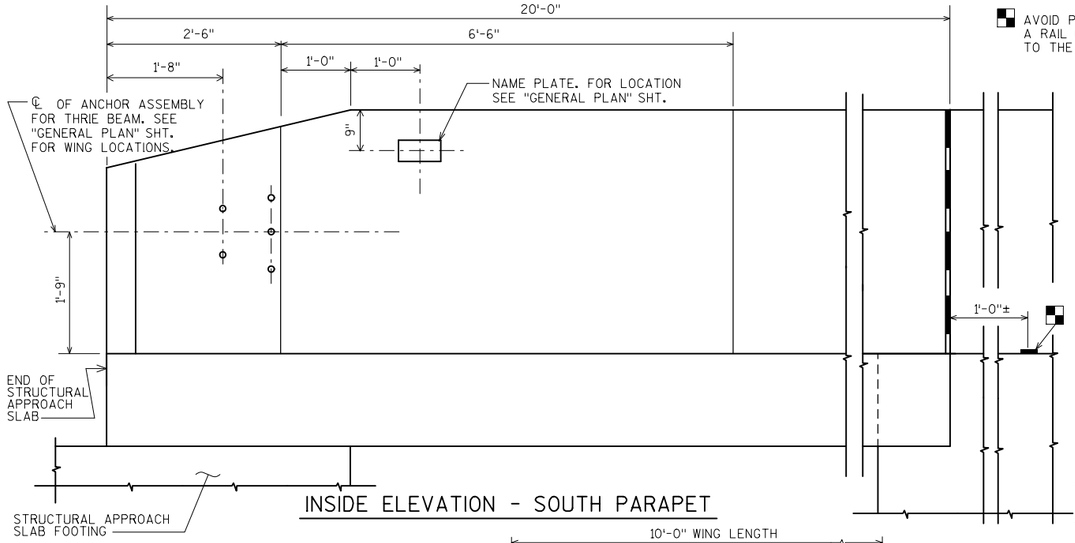

INSIDE ELEVATION - SOUTH PARAPET

AVOID PLACING A BENCH MARK CAP BELOW A RAIL OR FENCE SYSTEM THAT IS ATTACHED TO THE TOP OF THE PARAPET.

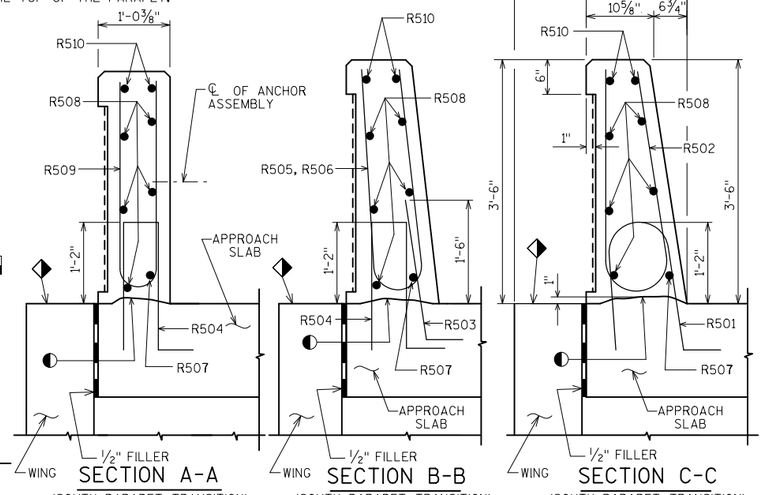

SECTION A-A
(SOUTH PARAPET TRANSITION)

SECTION B-B
(SOUTH PARAPET TRANSITION)

SECTION C-C
(SOUTH PARAPET TRANSITION)

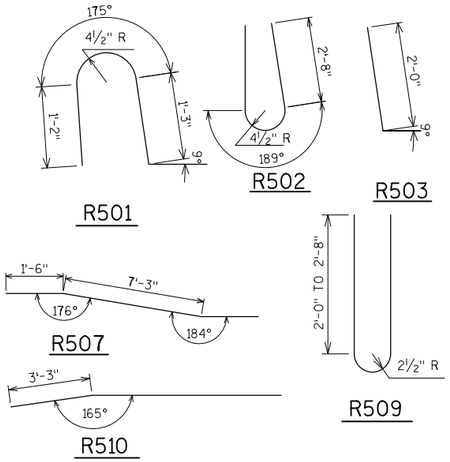

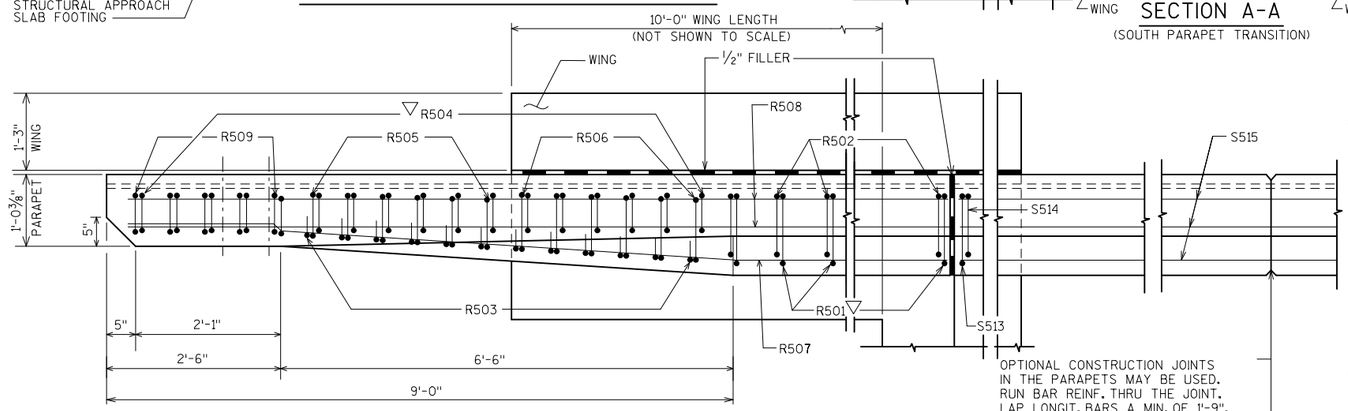

PLAN - SOUTH PARAPET

OPTIONAL CONSTRUCTION JOINTS IN THE PARAPETS MAY BE USED. RUN BAR REINF. THRU THE JOINT. LAP LONGIT. BARS A MIN. OF 1'-9". MIN. JOINT SPACING OF 80'-0". DEFINE CONST. JOINT WITH A ¾" - 'V' GROOVE. SEE ARCHITECTURAL DETAIL FOR ALLOWABLE JOINT LOCATIONS.

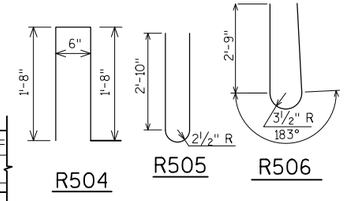

R504 R505 R506

◐ CONST. JOINT - STRIKE OFF AS SHOWN.

◆ SLOPE FOR DRAINAGE

▽ R501 AND R504 BARS TO BE TIED TO STRUCTURAL APPROACH SLAB STEEL BEFORE STRUCTURAL APPROACH SLAB IS POURED.

BILL OF BARS

FOR STRUCTURAL APPROACH SLAB PARAPETS

BAR NO.	COATED BAR	NO. REQ'D STAGE 1	NO. REQ'D STAGE 2	LENGTH	BENT BAR	BUNDLED	CUT BARS	2,688# COATED 0# UNCOATED LOCATION
R501	X	72	36	4'-5"	X			PARAPET VERTICAL
R502	X	72	36	6'-8"	X			PARAPET VERTICAL
R503	X	0	24	2'-9"	X			PARAPET VERTICAL
R504	X	0	36	4'-4"	X			PARAPET VERTICAL
R505	X	0	12	6'-5"	X			PARAPET VERTICAL
R506	X	0	12	6'-6"	X			PARAPET VERTICAL
R507	X	0	2	19'-6"	X			PARAPET HORIZONTAL
R508	X	16	10	19'-6"				PARAPET HORIZONTAL
R509	X	0	12	5'-5"	X		X	PARAPET VERTICAL
R510	X	0	4	19'-6"	X			PARAPET HORIZONTAL
R511	X	16	0	19'-7"				PARAPET HORIZONTAL

NOTES: THE FIRST OR FIRST TWO DIGITS OF THE BAR MARK SIGNIFIES THE BAR SIZE.

BENDING DIMENSIONS ARE OUT TO OUT OF BARS.

LENGTH SHOWN FOR CUT BARS IS AN AVERAGE LENGTH AND SHOULD ONLY BE USED FOR BAR WEIGHT CALCULATIONS. SEE BAR SERIES TABLE FOR ACTUAL LENGTH.

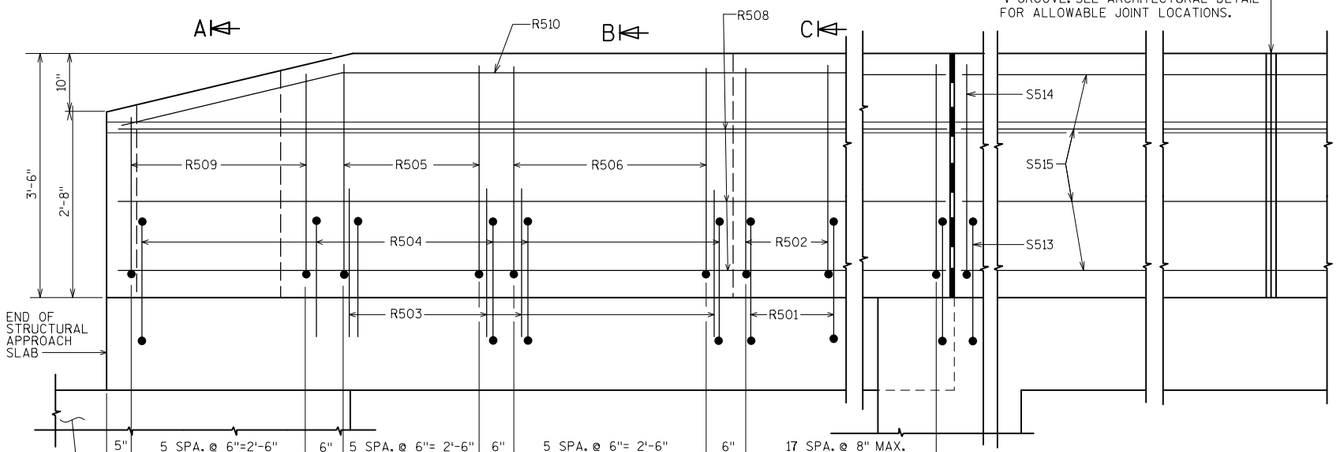

TYPICAL OUTSIDE ELEVATION - SOUTH PARAPET

(WING NOT SHOWN FOR CLARITY)

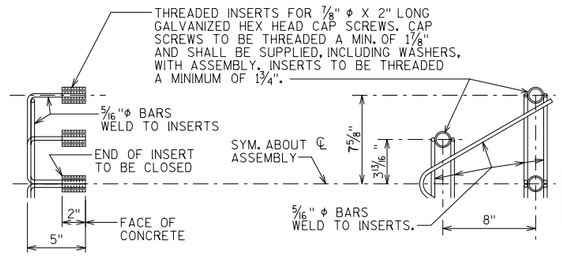

DETAIL OF ANCHOR ASSEMBLY

NOTE: HEX HEAD CAP SCREWS & WASHERS TO BE GALVANIZED IN ACCORDANCE WITH AASHTO M232 CLASS C.

ASSEMBLY SHALL BE BID ITEM "ANCHOR ASSEMBLIES FOR STEEL PLATE BEAM GUARD", EACH.

BAR SERIES TABLE

MARK	NO. REQ'D.	LENGTH
R509	2 SERIES OF 6	4'-9" TO 6'-1"

NO.	DATE	REVISION	BY

STATE OF WISCONSIN
DEPARTMENT OF TRANSPORTATION
STRUCTURES DESIGN SECTION

STRUCTURE B-67-339

DRAWN BY	MAK	PLANS CK'D.	RMM

SINGLE SLOPE PARAPET 42SS MODIFIED

SHEET 16 OF 16

193

FILE= 081040_B670339_16PRPT.DGN
SCALE = 1:2.1759

8

8

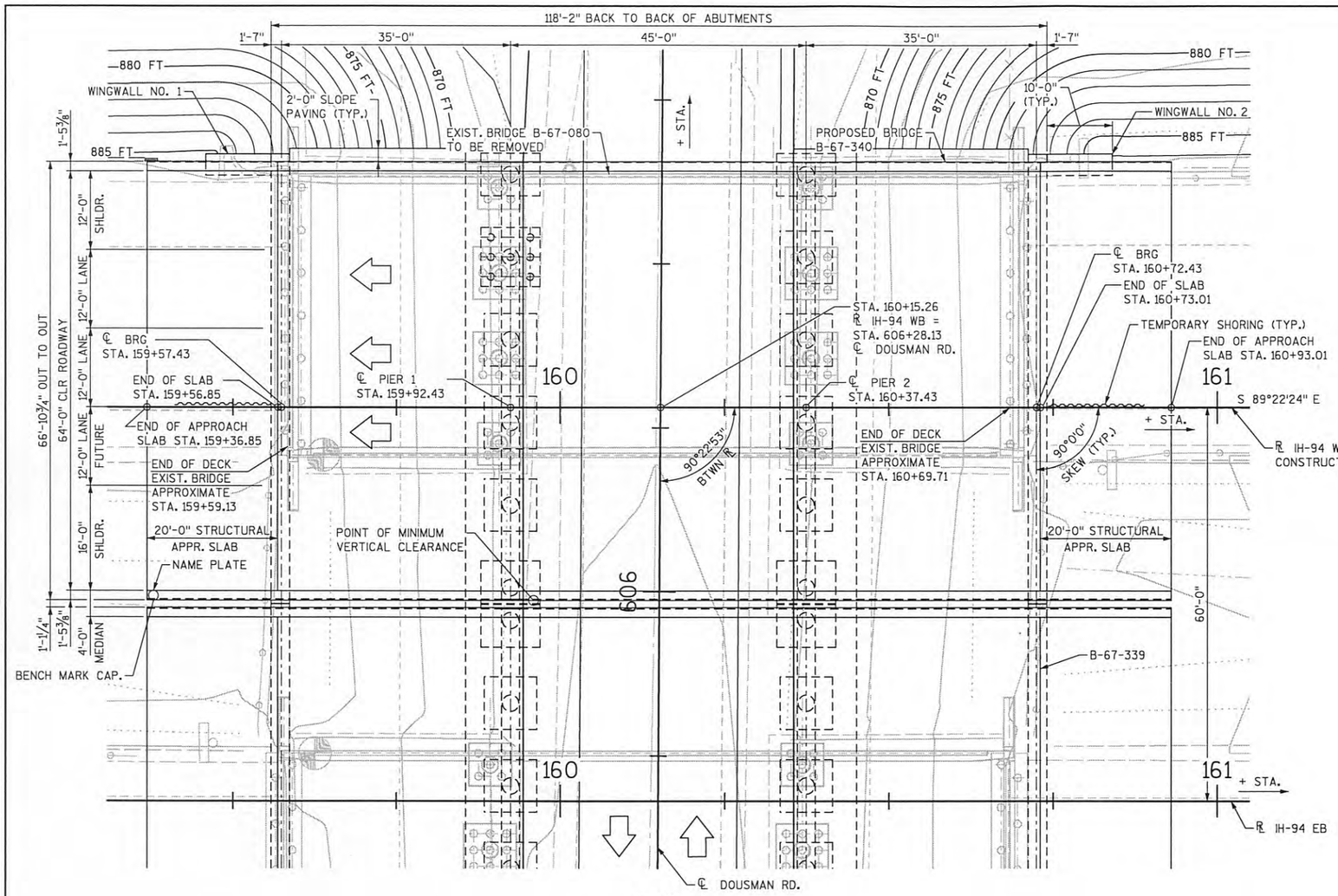

PLAN

C.I.P. CONCRETE SLAB BRIDGE
WITH C.I.P. CONCRETE ABUTMENTS
AND MULTI-COLUMNED PIERS

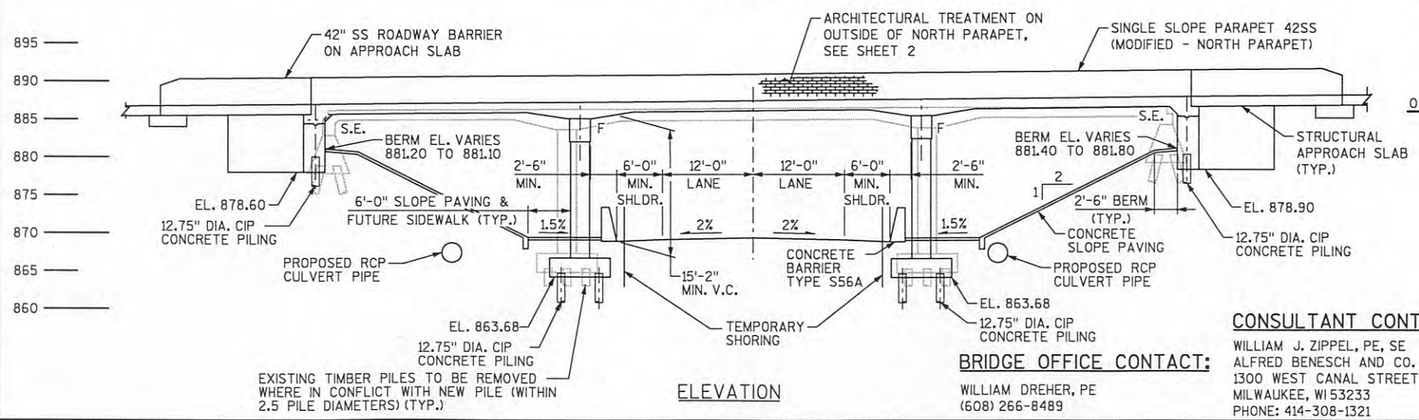

ELEVATION

DESIGN DATA

LIVE LOAD:

DESIGN LOADING HL-93
INVENTORY RATING FACTOR 1.06
OPERATING RATING FACTOR 1.38
WISCONSIN STANDARD PERMIT VEHICLE (WIs-SPV) = 250 KIPS
DESIGN ACCOUNTS FOR FUTURE WEARING SURFACE = 20 PSF

ULTIMATE DESIGN STRESSES:

CONCRETE MASONRY SUPERSTRUCTURE	fc' = 4000 PSI
ALL OTHER	fc' = 3500 PSI
STEEL REINFORCEMENT HIGH STRENGTH BAR, GRADE 60	fy = 60 KSI

FOUNDATION DATA:

PLACE PIERS AND ABUTMENTS ON PILING CIP CONCRETE 12 3/4 X 0.500-INCH WITH A REQUIRED DRIVING RESISTANCE OF 130 TONS/PILE* AT PIERS AND 93 TONS/PILE* AT ABUTMENTS AS DETERMINED BY THE MODIFIED GATES DYNAMIC EQUATION.

* THE FACTORED AXIAL RESISTANCE OF PILES IN COMPRESSION USED FOR DESIGN IS THE REQUIRED DRIVING RESISTANCE MULTIPLIED BY A RESISTANCE FACTOR OF 0.5 USING MODIFIED GATES TO DETERMINE DRIVEN PILE CAPACITY.

EST. PILE LENGTHS: 75 FT AT W. ABUT.
60 FT AT PIER 1
60 FT AT PIER 2
75 FT AT E. ABUT.

TRAFFIC DATA DOUSMAN RD:

AADT (2015) = 1400
AADT (2035) = 1700
DESIGN SPEED = 50 MPH.

TRAFFIC DATA IH-94:

AADT (2015) = 43100
AADT (2035) = 46500
TRUCK % = 16.2%
D = 60/40
DESIGN SPEED = 70 MPH.

LIST OF DRAWINGS:

1. GENERAL PLAN AND ELEVATION
2. STAGED CONSTRUCTION CROSS-SECTIONS
3. QUANTITIES & GENERAL NOTES
4. SUBSURFACE EXPLORATION
5. WEST ABUTMENT PLAN & ELEVATION
6. EAST ABUTMENT PLAN & ELEVATION
7. WEST ABUTMENT DETAILS
8. EAST ABUTMENT DETAILS
9. PIERS 1 & 2
10. PIERS 1 & 2 DETAILS
11. SUPERSTRUCTURE
12. SUPERSTRUCTURE PLAN
13. SUPERSTRUCTURE DETAILS
14. STRUCTURAL APPROACH SLABS
15. STRUCTURAL APPROACH SLAB DETAILS
16. SINGLE SLOPE PARAPET 42SS MODIFIED

EXISTING STRUCTURE:

THE EXISTING BRIDGE (B-67-0080) IS A THREE SPAN CONCRETE SLAB BRIDGE FOUNDED ON MULTI COLUMN CONCRETE PIERS AND CONCRETE STUB ABUTMENTS. THE EXISTING BRIDGE IS 112'-2" LONG AND THE DECK IS 42'-6" WIDE. THE FOUNDATIONS ARE SUPPORTED ON TIMBER PILING.

BENCHMARKS

NAME	NORTHING	EASTING	ELEVATION	DESCRIPTION
BM3	182,167.35	616,491.54	890.20	ALUMINUM DISK IN PARAPET
BM4	182,212.82	616,493.33	889.04	ALUMINUM DISK IN PARAPET
BM5			869.13	NAIL IN POWER POLE

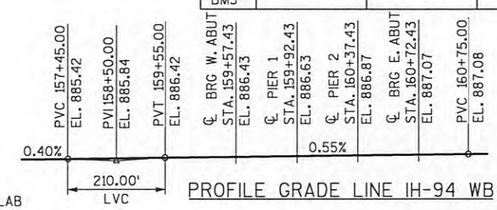

PROFILE GRADE LINE IH-94 WB

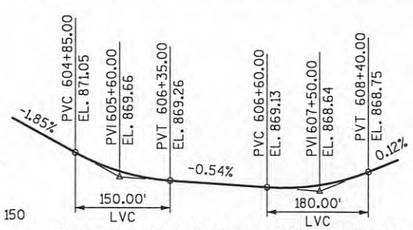

PROFILE GRADE LINE DOUSMAN RD.

CONSULTANT CONTACT:

WILLIAM J. ZIPPEL, PE, SE
ALFRED BENESCH AND CO.
1300 WEST CANAL STREET, SUITE 150
MILWAUKEE, WI 53233
PHONE: 414-308-1321

BRIDGE OFFICE CONTACT:

WILLIAM DREHER, PE
(608) 266-8489

WISCONSIN
WILLIAM J. ZIPPEL
38868-006
MILWAUKEE, WI
PROFESSIONAL ENGINEER
7/29/2014

STATE PROJECT NUMBER
1060-38-70

NO.	DATE	REVISION	BY

benesch engineers · scientists · planners
Alfred Benesch & Company
1300 West Canal Street, Suite 150
Milwaukee, Wisconsin 53233
414-308-1310 Job No. 20103.00

STATE OF WISCONSIN
DEPARTMENT OF TRANSPORTATION

ACCEPTED William C. Dreher KAR 08/18/14
CHIEF STRUCTURES DESIGN ENGINEER — DATE

STRUCTURE B-67-340
IH-94 WB OVER DOUSMAN RD.

COUNTY: WAUKESHA — ~~TOWN/CITY~~/VILLAGE: SUMMIT
DESIGN SPEC.: AASHTO LRFD BRIDGE DESIGN SPECIFICATIONS

DESIGNED BY	JOB	DESIGN CK'D.	RMM	DRAWN BY	CS/MAK	PLANS CK'D.	RMM

GENERAL PLAN AND ELEVATION

SHEET 1 OF 16

194

8

8

FILE = 08201_B670340_01GP&E.DGN
SCALE = 1:20

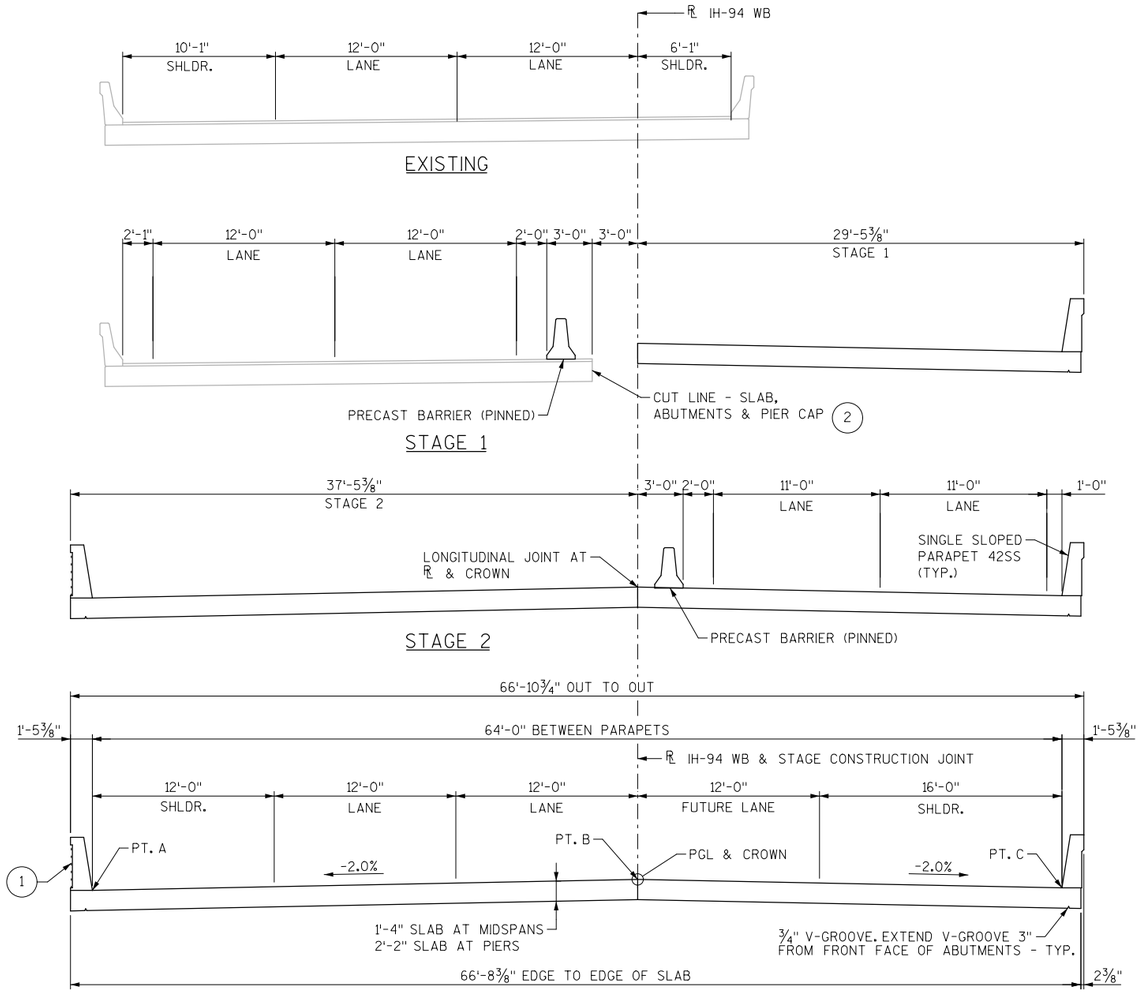

TYPICAL CROSS SECTION

(LOOKING EAST)

(1) FINISH OF ARCHITECTURAL SURFACE TREATMENT AT THE BACK FACE OF THE PARAPET SHALL ACHIEVE THE LOOK OF "NEW BRICK" WITH MAXIMUM RELIEF OF 3/16". SEE SPECIAL PROVISION FOR "ARCHITECTURAL SURFACE TREATMENT BRICK, B-67-340" AND "CONCRETE STAINING MULTI-COLOR BRICK, B-67-340".

(2) SAWCUT SHALL BE CLEAN, VERTICAL AND FULL DEPTH OF MEMBER BEING CUT. REMAINING CONCRETE BEYOND CUTLINE SHALL BE KEPT SOUND AND IN GOOD CONDITION TO SUPPORT VEHICLE LOADS. COST OF SAWCUTTING IS INCLUDED IN COST OF REMOVING OLD STRUCTURE (159+59).

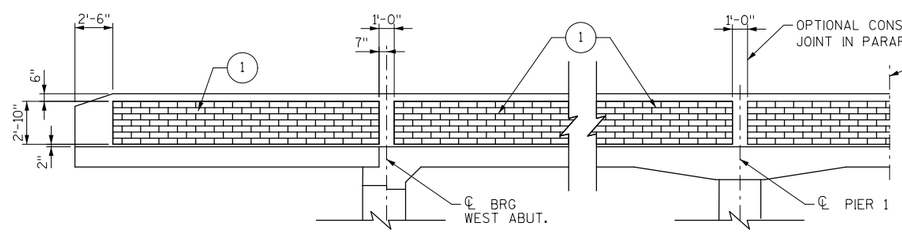

ELEVATION - NORTH FACE OF NORTH PARAPET

SHOWING PARAPET DIMENSIONS AND ARCHITECTURAL SURFACE TREATMENT LIMITS

TOP OF DECK ELEVATIONS

LOCATION	STATION	PT. A (EDGE OF DECK)	PT. B (PGL/CONSTR. JT.)	PT. C (EDGE OF DECK)
END OF SLAB	159+56.85	885.71	886.43	885.87
CL BRG. WEST ABUT.	159+57.43	885.71	886.43	885.87
0.1	159+60.93	885.73	886.45	885.89
0.2	159+64.43	885.75	886.47	885.91
0.3	159+67.93	885.77	886.49	885.93
0.4	159+71.43	885.79	886.51	885.95
0.5	159+74.93	885.81	886.53	885.97
0.6	159+78.43	885.83	886.55	885.99
0.7	159+81.93	885.84	886.56	886.00
0.8	159+85.43	885.86	886.58	886.02
0.9	159+88.93	885.88	886.60	886.04
CL PIER 1	159+92.43	885.90	886.62	886.06
0.1	159+96.93	885.93	886.65	886.09
0.2	160+01.43	885.95	886.67	886.11
0.3	160+05.93	885.98	886.70	886.14
0.4	160+10.43	886.00	886.72	886.16
0.5	160+14.93	886.03	886.75	886.19
0.6	160+19.43	886.05	886.77	886.21
0.7	160+23.93	886.08	886.80	886.24
0.8	160+28.43	886.10	886.82	886.26
0.9	160+32.93	886.13	886.85	886.29
CL PIER 2	160+37.43	886.15	886.87	886.31
0.1	160+40.93	886.17	886.89	886.33
0.2	160+44.43	886.19	886.91	886.35
0.3	160+47.93	886.21	886.93	886.37
0.4	160+51.43	886.23	886.95	886.39
0.5	160+54.93	886.25	886.97	886.41
0.6	160+58.43	886.27	886.99	886.43
0.7	160+61.93	886.28	887.00	886.44
0.8	160+65.43	886.30	887.02	886.46
0.9	160+68.93	886.32	887.04	886.48
CL BRG. EAST ABUT.	160+72.43	886.34	887.06	886.50
END OF SLAB	160+73.01	886.35	887.07	886.51

STATE PROJECT NUMBER

1060-38-70

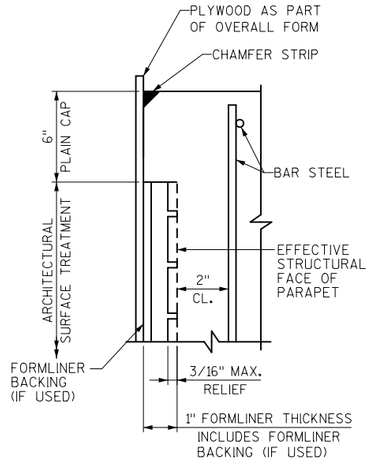

SECTION THRU FORMLINER

NOTE

FORMLINER COURSING ON PARAPETS SHALL BE PARALLEL TO TOP OF PARAPET.

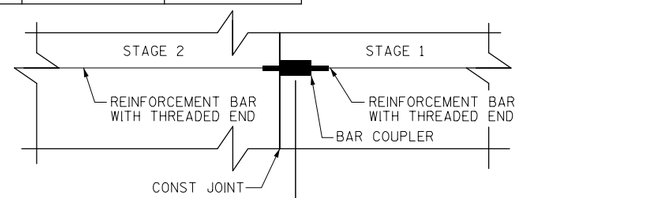

BAR COUPLER DETAIL

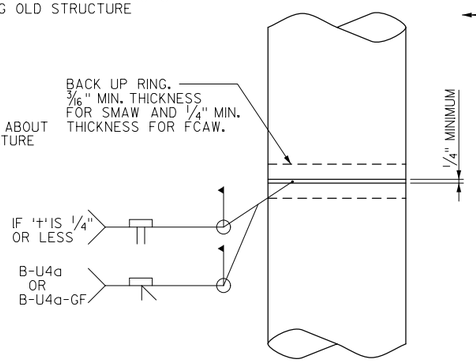

CAST-IN-PLACE 'PIPE PILE'

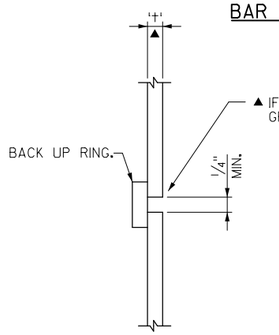

CIP PILE WELD DETAIL

NO.	DATE	REVISION	BY

STATE OF WISCONSIN
DEPARTMENT OF TRANSPORTATION
STRUCTURES DESIGN SECTION

STRUCTURE B-67-340

DRAWN BY MAK | PLANS CK'D. RMM

STAGED CONSTRUCTION CROSS-SECTIONS

SHEET 2 OF 16

195

8

8

FILE= 082030_B670340_02STAGECONST.DGN
SCALE = 1:10

TOTAL ESTIMATED QUANTITIES

BID ITEM NUMBER	BID ITEMS	UNIT	WEST APPR. SLAB	W. ABUT.	PIER 1	PIER 2	E. ABUT.	EAST APPR. SLAB	SUPER	TOTAL	TOTAL STAGE 1	TOTAL STAGE 2
203.0200	REMOVING OLD STRUCTURE (STATION 159+59 WB)	LS	----	----	----	----	----	----	----	1	----	----
204.0175	REMOVING CONCRETE SLOPE PAVING	SY	----	169	----	----	169	----	----	338	90	248
206.1000	EXCAVATION FOR STRUCTURES BRIDGES (B-67-340)	LS	----	0.5	----	----	0.5	----	----	1	----	----
206.6000.S	TEMPORARY SHORING	SF	----	120	----	----	130	----	----	250	125	125
210.0100	BACKFILL STRUCTURE	CY	----	95	----	----	104	----	----	199	87	112
305.0120	BASE AGGREGATE DENSE 1¼- INCH	TON	----	218	----	----	218	----	----	436	191	245
502.0100	CONCRETE MASONRY, BRIDGES	CY	----	47	78	79	50	----	----	254	111	143
502.3200	PROTECTIVE SURFACE TREATMENT	SY	----	19	----	----	19	----	942	980	429	551
505.0405	BAR STEEL REINFORCEMENT HS BRIDGES	LB	----	4,807	5,024	5,024	4,909	----	----	19,764	9,310	10,454
505.0605	BAR STEEL REINFORCEMENT HS COATED BRIDGES	LB	15,035	684	10,964	11,031	693	15,036	109,876	163,319	73,283	90,036
505.0904	BAR COUPLERS NO. 4 BARS	EACH	----	4	----	----	4	----	----	8	8	0
505.0905	BAR COUPLERS NO. 5 BARS	EACH	----	----	4	4	----	----	----	8	8	0
505.0906	BAR COUPLERS NO. 6 BARS	EACH	----	9	----	----	10	----	----	19	19	0
505.0908	BAR COUPLERS NO. 8 BARS	EACH	12	8	12	12	8	12	----	64	64	0
516.0500	RUBBERIZED MEMBRANE WATERPROOFING	SY	----	15	----	----	15	----	----	30	13	17
517.1015.S.02	CONCRETE STAINING MULTI-COLOR B-67-340	SF	----	----	----	----	----	----	423	423	0	423
517.1050.S.02	ARCHITECTURAL SURFACE TREATMENT B-67-340	SF	----	----	----	----	----	----	423	423	0	423
550.2128	PILING CIP CONCRETE 12 3/4 X 0.500-INCH	LF	----	799	2,167	2,167	802	----	----	5,935	2,895	3,040
604.0400	SLOPE PAVING CONCRETE	SY	----	260	----	----	260	----	----	520	224	296
612.0406	PIPE UNDERDRAIN WRAPPED 6-INCH	LF	----	240	----	----	240	----	----	480	202	278
614.0150	ANCHOR ASSEMBLIES FOR STEEL PLATE BEAM GUARD	EACH	----	2	----	----	2	----	----	4	2	2
SPV.0035.01	HPC MASONRY STRUCTURES	CY	89	----	----	----	----	89	464	642	280	362
SPV.0085.01	BAR STEEL REINFORCEMENT HS STAINLESS STEEL BRIDGES	LB	----	----	----	----	----	----	2,312	2,312	1,020	1,292
SPV.0090.01	REMOVING PILING	LF	----	120	560	560	120	----	----	1,360	240	1,120
SPV.0165.01	LONGITUDINAL GROOVING BRIDGE DECK	SF	1,220	----	----	----	----	1,220	7,086	9,526	4,138	5,388
	NON-BID ITEMS											
	JOINT FILLER											
	NAME PLATE											
	NON-BITUMINOUS JOINT SEALER											
	POLYETHYLENE SHEETS											

STATE PROJECT NUMBER

1060-38-70

GENERAL NOTES:

1. DRAWINGS SHALL NOT BE SCALED. BAR STEEL REINFORCEMENT SHALL BE EMBEDDED 2" CLEAR UNLESS OTHERWISE SHOWN OR NOTED.
2. SLAB FALSEWORK SHALL BE SUPPORTED ON PILES OR THE SUBSTRUCTURE UNLESS AN ALTERNATE METHOD IS APPROVED BY THE ENGINEER.
3. THE FIRST OR FIRST TWO DIGITS OF THE BAR MARK SIGNIFIES THE BAR SIZE.
4. THE SLOPE OF THE FILL IN FRONT OF THE ABUTMENTS SHALL BE COVERED WITH SLOPE PAVING CONCRETE TO THE EXTENT SHOWN.
5. THE EXISTING GROUND LINE SHALL BE USED AS THE UPPER LIMITS OF EXCAVATION AT THE PIERS.
6. THE UPPER LIMITS OF EXCAVATION FOR STRUCTURES FOR THE ABUTMENTS SHALL BE THE BOTTOM OF SLOPE PROTECTION.
7. AT THE BACKFACE OF ABUTMENT ALL VOLUME WHICH CANNOT BE PLACED BEFORE ABUTMENT CONSTRUCTION AND IS NOT OCCUPIED BY THE NEW STRUCTURE SHALL BE BACKFILLED WITH STRUCTURE BACKFILL.

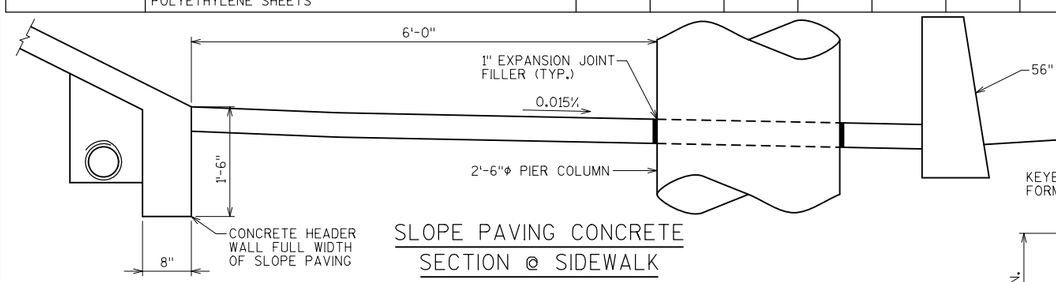

SLOPE PAVING CONCRETE SECTION @ SIDEWALK

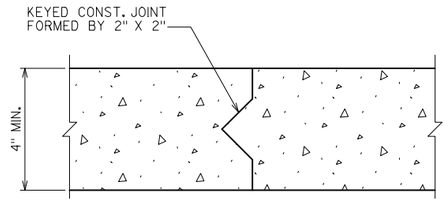

CONSTRUCTION JOINT

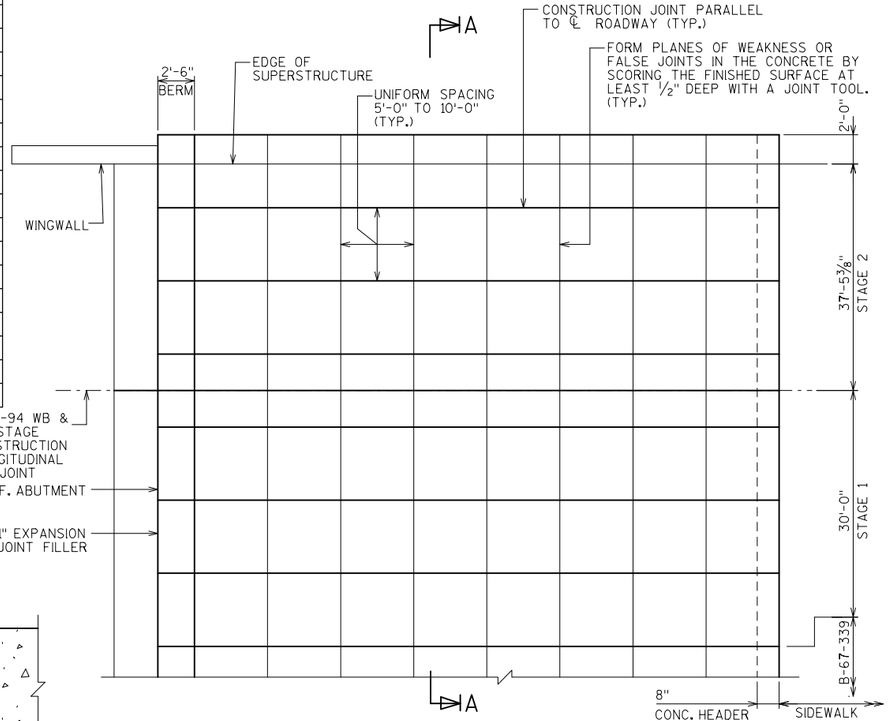

SLOPE PAVING CONCRETE - PLAN

(WEST ABUTMENT SLOPE SHOWN; EAST ABUTMENT SLOPE SIMILAR AND OPPOSITE HAND)

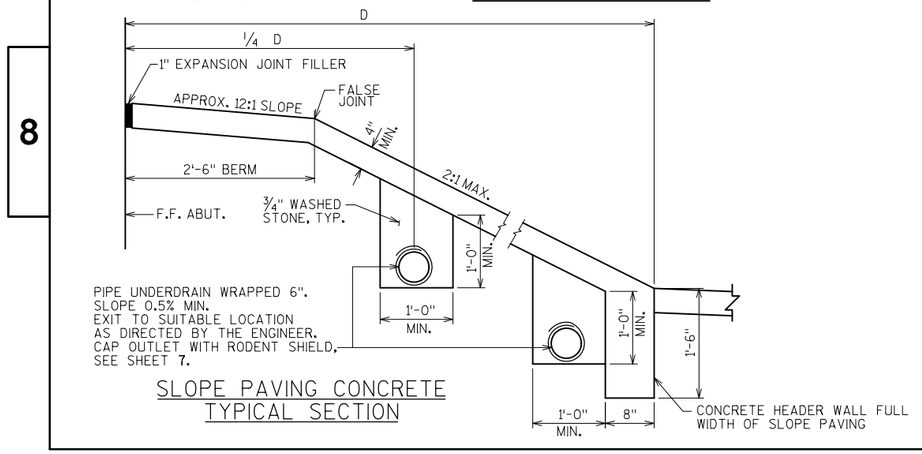

SLOPE PAVING CONCRETE TYPICAL SECTION

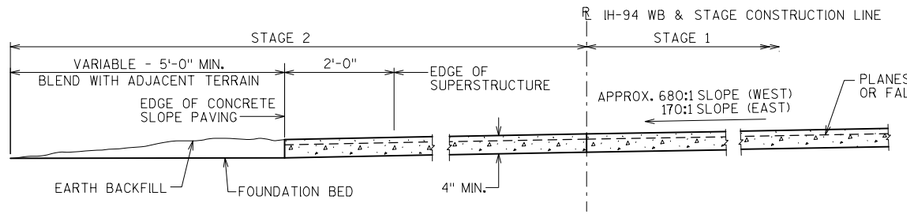

SECTION A-A

NO.	DATE	REVISION	BY

STATE OF WISCONSIN
DEPARTMENT OF TRANSPORTATION
STRUCTURES DESIGN SECTION

STRUCTURE B-67-340

DRAWN BY MAK | PLANS CK'D. RMM

QUANTITIES & GENERAL NOTES

SHEET 3 OF 16

196

8

8

FILE= 082030_B670340_03QUAN.DGN
SCALE = 1:10

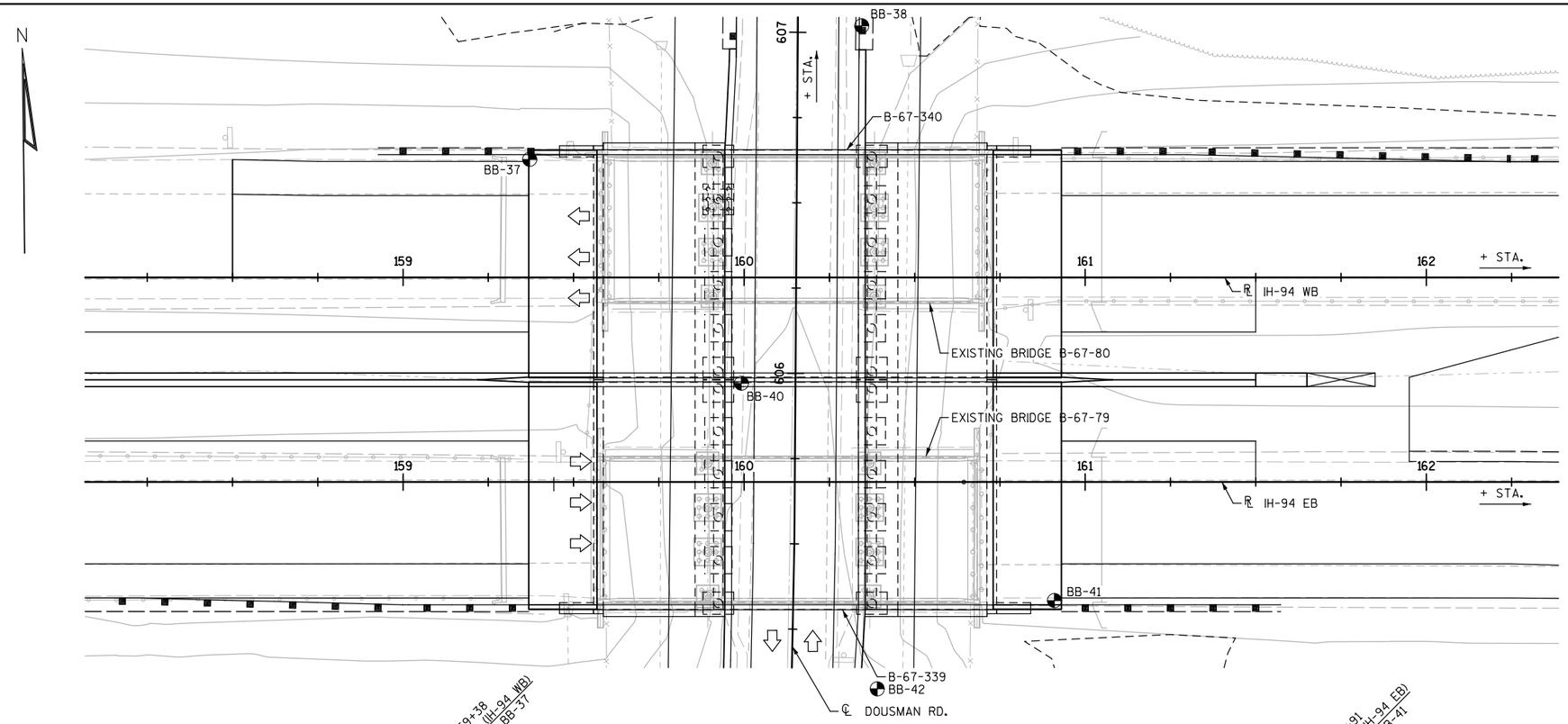

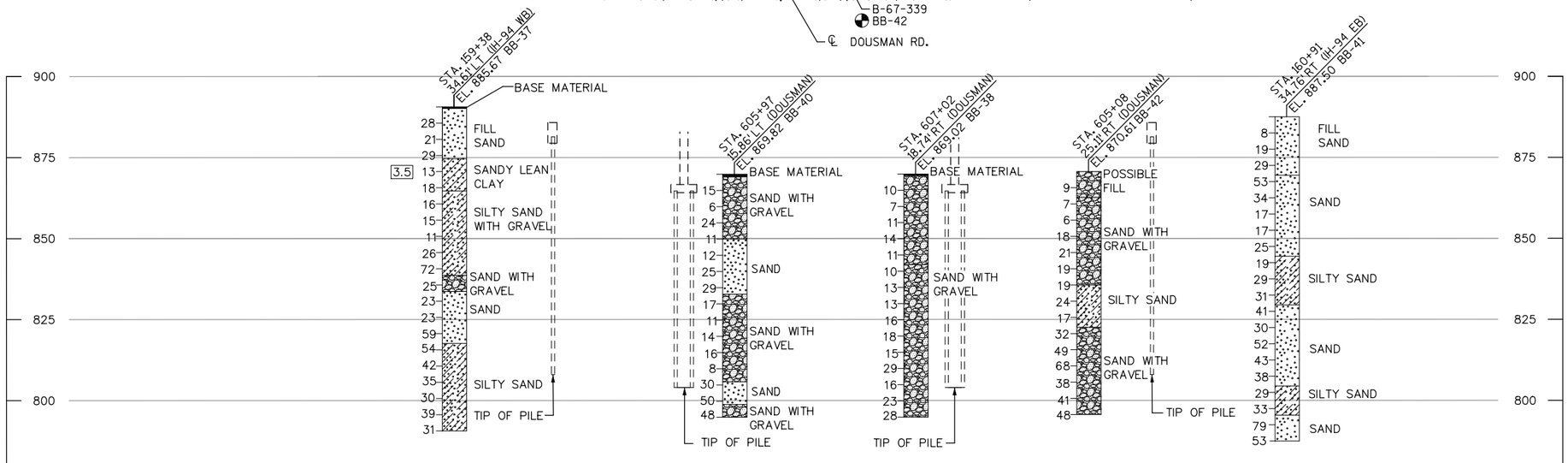

NOTES:

FOUNDATION DESIGN PARAMETERS ARE BASED ON RECOMMODATIONS FROM THE GEOTECHNICAL EXPLORATION REPORT DATED JULY, 2013 BY HIMALAYAN CONSULTANTS, LLC, AVAILABLE FROM WISDOT.

REFER TO THE GEOTECHNICAL REPORT FOR FULL SOIL DESCRIPTIONS AND DETAILS OF BORING LOGS.

HISTORIC BORINGS ARE AVAILABLE UPON REQUEST FROM WISDOT.

CONTACT THE WISCONSIN DEPARTMENT OF TRANSPORTATION FOR THE GEOTECHNICAL REPORT AND BORING LOGS.

EXISTING FOOTINGS ARE SHOWN FOR EXISTING STRUCTURES. ACTUAL LOCATIONS MAY VARY. CONTRACTOR SHALL VERIFY LOCATIONS IN THE FIELD.

STATE PROJECT NUMBER

1060-38-70

ABBREVIATIONS

F — FINE M — MEDIUM C — COARSE
WS — WEATHERED SO — SOUND

MATERIAL SYMBOLS

TOPSOIL, SILT, SANDSTONE, SAND, PEAT, LIMESTONE, GRAVEL, CLAY, IGNEOUS ROCK

LEGEND OF PROBING

95/6=95 BLOWS FOR 6" PENETRATION PROBING TAKEN WITH A 350# WT. FALLING 18" ON A 2" O.D. POINT.

PROBING NO.
STA.
ELEVATION
7 AVERAGE BLOWS PER FOOT
REFUSAL 95/6

LEGEND OF BORING

BORING NO.
ELEV.
STA.
UNCONFINED STRENGTH — 7.7
7
BLOWS PER FT. USING 140# WT. FALLING 30"
WASH SAMPLE
SHELBY TUBE — S.T.
GROUND WATER ELEVATION
NO GROUND WATER OBSERVED ABOVE THIS ELEVATION
SANDY GRAVEL
F. BOULDERS OR COBBLES
SAND
SILTY CLAY
SO LIMESTONE

UNLESS OTHERWISE SPECIFIED, THE BLOWS PER FOOT AT THE LOCATIONS INDICATED ARE BASED ON DRIVING A 2" O.D. X 1.4" I.D. SPLIT SPOON SAMPLER WITH A 140# HAMMER HAVING A FREE FALL OF 30". THE BLOW COUNT IS TAKEN IN UNDISTURBED SOIL IMMEDIATELY BELOW A CASED OR OPEN HOLE ELIMINATING SIDE FRICTION ON THE DRIVE PIPE.

SUBSURFACE EXPLORATION FOR FOUNDATION DESIGN AND BIDDERS INFORMATION

TO OBTAIN RELATIVE DATA CONCERNING THE CHARACTER OF MATERIAL IN AND UPON WHICH THE FOUNDATION MIGHT BE BUILT, BORINGS AND/OR SOUNDINGS WERE MADE AT POINTS APPROXIMATELY AS INDICATED ON THIS DRAWING. THE DATA PRESENTED HEREIN REPRESENTS THE FINDINGS OF THE SUBSURFACE EXPLORATIONS MADE. HOWEVER, BECAUSE THE DEPTHS INVESTIGATED ARE LIMITED AND THE AREA OF THE BORINGS AND/OR SOUNDINGS IS VERY SMALL IN RELATION TO THE ENTIRE AREA, THE WISCONSIN DEPARTMENT OF TRANSPORTATION DOES NOT WARRANT CONDITIONS BELOW THE DEPTHS INVESTIGATED OR THAT THE CLASSIFICATION OF MATERIAL ENCOUNTERED IN THESE INVESTIGATIONS IS NECESSARILY TYPICAL OF THE ENTIRE SITE.

NO.	DATE	REVISION	BY

STATE OF WISCONSIN
DEPARTMENT OF TRANSPORTATION
STRUCTURES DESIGN SECTION

STRUCTURE B-67-340

DRAWN BY | PLANS CK'D.

SUBSURFACE EXPLORATION

SHEET 4 OF 16

197

8

8

FILE= 082040_B670340_04SUB.DGN
SCALE = 1:40

STATE PROJECT NUMBER

1060-38-70

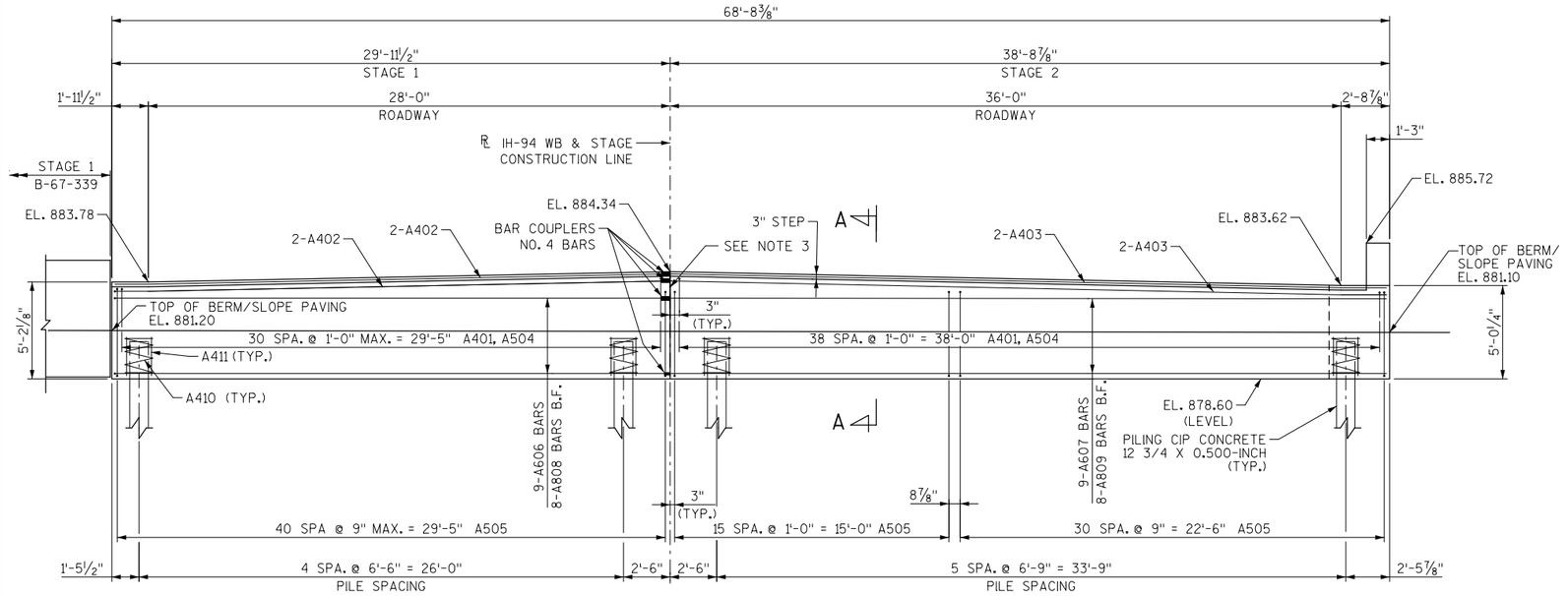

ELEVATION
(LOOKING WEST)

PLACE ABUTMENTS ON PILING CIP CONCRETE 12 3/4 X 0.500-INCH WITH A REQUIRED DRIVING RESISTANCE OF 93 TONS/PILE AT ABUTMENTS AS DETERMINED BY THE MODIFIED GATES DYNAMIC EQUATION.

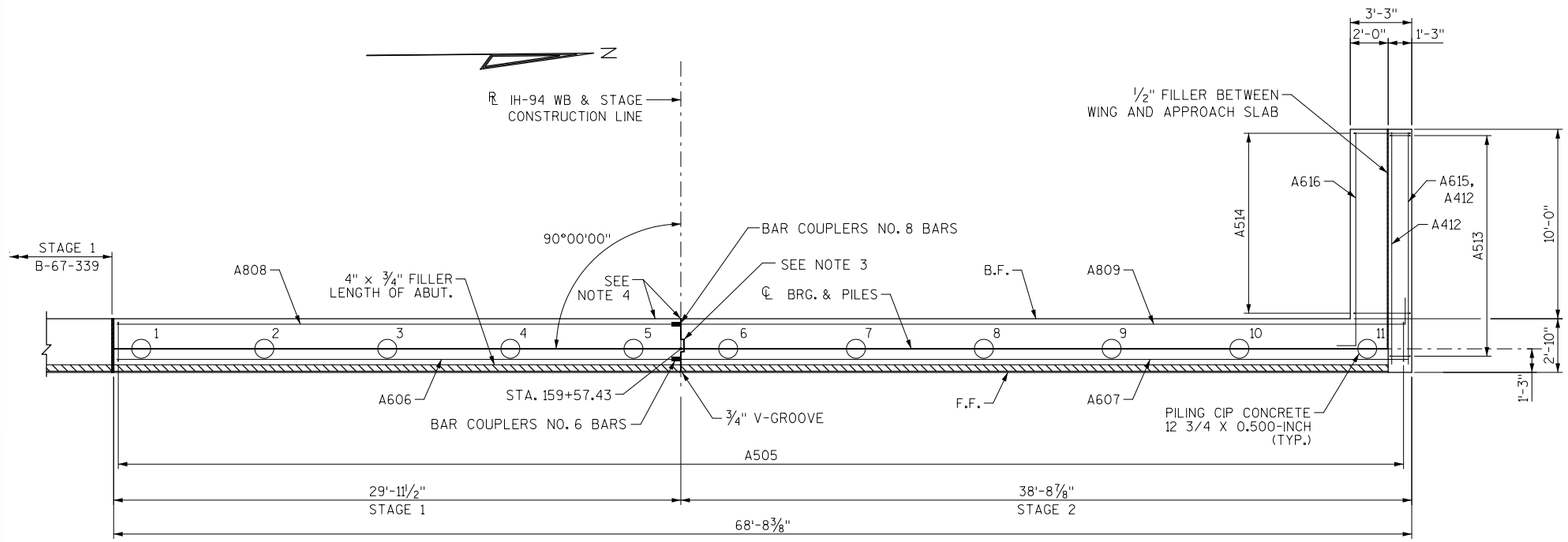

PLAN & PILE LAYOUT

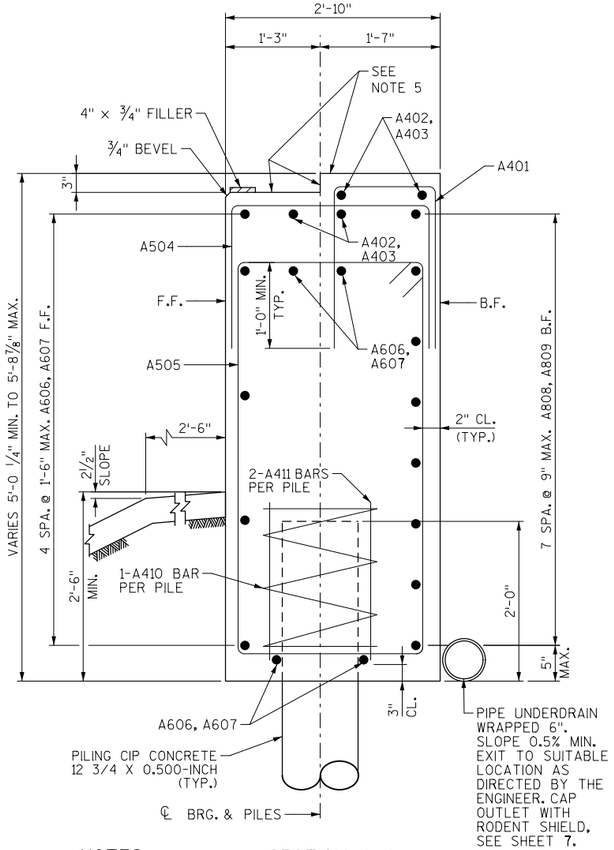

SECTION A-A

NOTES

1. EXCAVATE TO BOTTOM OF ABUTMENTS BEFORE DRIVING PILES.
2. DO NOT PLACE FILL ABOVE 3'-0" FROM BOTTOM OF ABUTMENT, UNTIL SUPERSTRUCTURE IS IN PLACE.
3. VERT. CONST. JOINT KEYWAY FORMED BY BEVELED 2x8.
4. 18" RUBBERIZED MEMBRANE WATERPROOFING. SEAL ALL VERTICAL AND HORIZONTAL JOINTS ON THE BACK FACE OF THE ABUTMENT AND WING.
5. STEEL TROWEL TOP SURFACE OF ABUTMENT. PLACE MULTIPLE LAYERS OF POLYETHYLENE SHEET OVER ENTIRE ABUTMENT BEFORE PLACING SUPERSTRUCTURE. TOTAL THICKNESS OF SHEETS SHALL BE AT LEAST 0.03"

LEGEND

F.F. - DENOTES FRONT FACE

B.F. - DENOTES BACK FACE

NO.	DATE	REVISION	BY

STATE OF WISCONSIN
DEPARTMENT OF TRANSPORTATION
STRUCTURES DESIGN SECTION

STRUCTURE B-67-340

DRAWN BY MAK | PLANS CK'D. RMM

WEST ABUTMENT PLAN & ELEVATION

SHEET 5 OF 16

198

8

8

FILE= 082040_B670340_05WESTABUT.DGN
SCALE = 1:8

STATE PROJECT NUMBER
1060-38-70

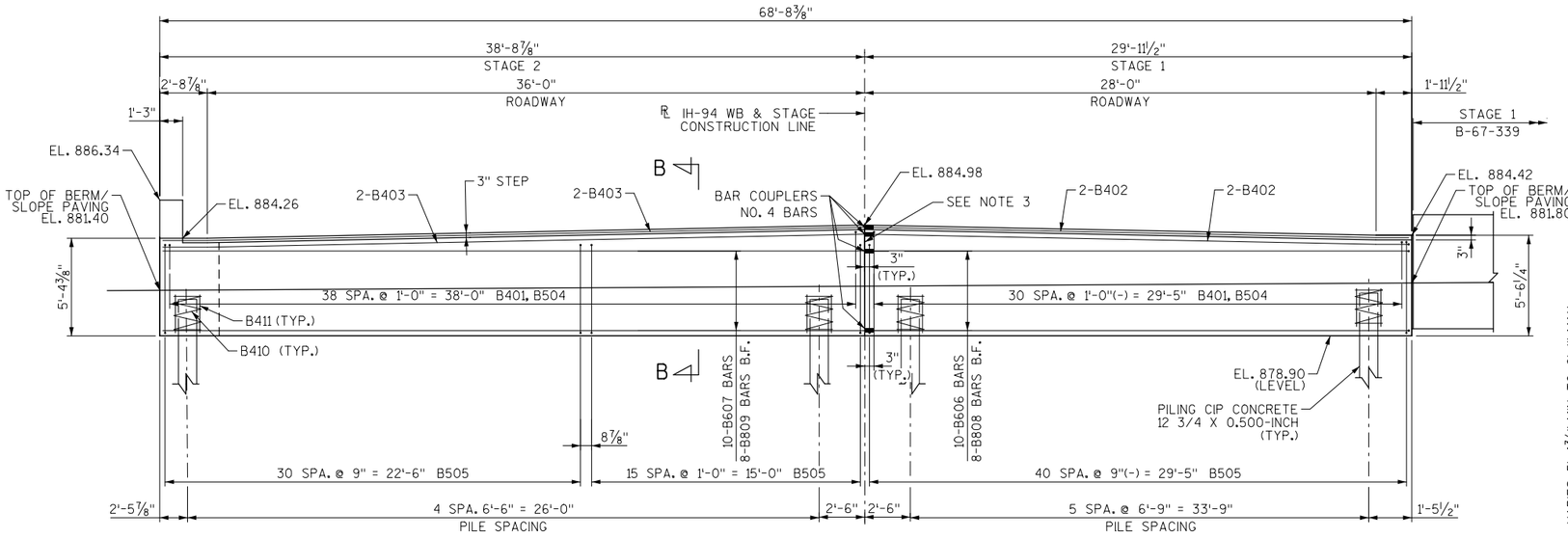

ELEVATION
(LOOKING EAST)

PLACE ABUTMENTS ON PILING CIP CONCRETE 12 3/4 X 0.500-INCH WITH A REQUIRED DRIVING RESISTANCE OF 93 TONS/PILE AT ABUTMENTS AS DETERMINED BY THE MODIFIED GATES DYNAMIC EQUATION.

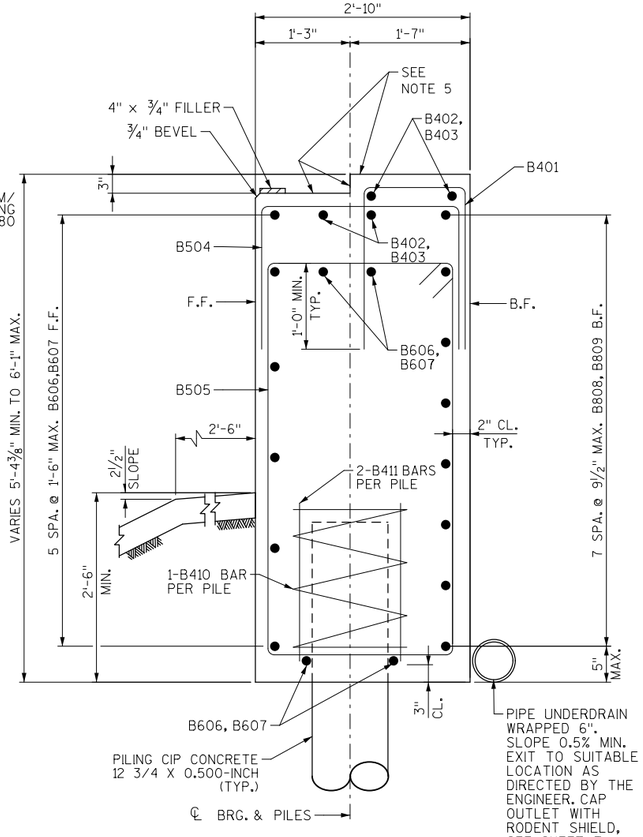

SECTION B-B

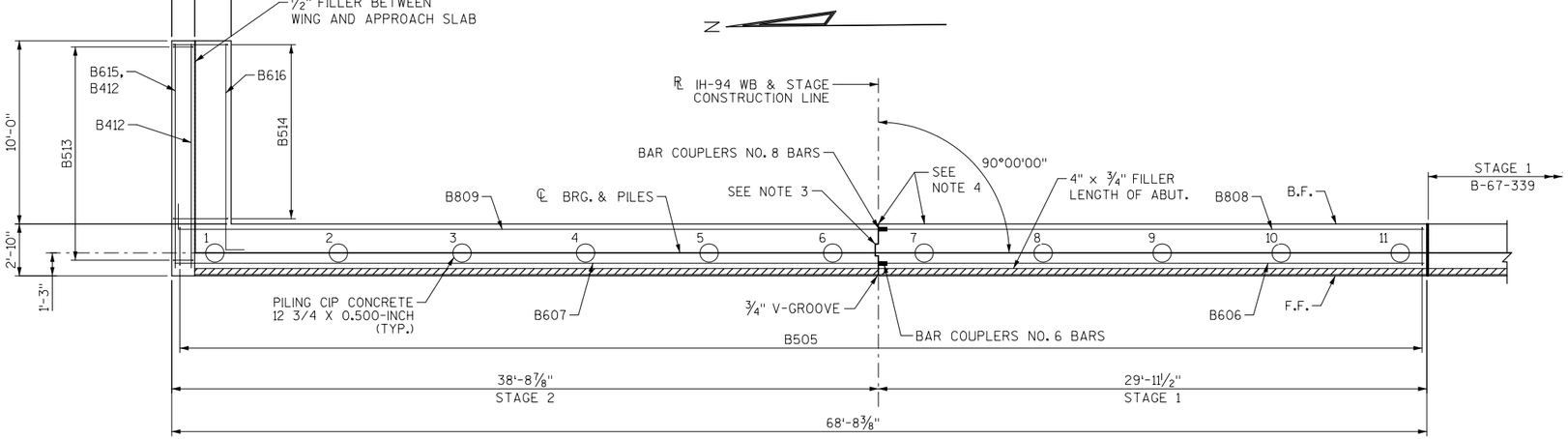

PLAN & PILE LAYOUT

NOTES

1. EXCAVATE TO BOTTOM OF ABUTMENTS BEFORE DRIVING PILES.
2. DO NOT PLACE FILL ABOVE 3'-0" FROM BOTTOM OF ABUTMENT, UNTIL SUPERSTRUCTURE IS IN PLACE.
3. VERT. CONST. JOINT KEYWAY FORMED BY BEVELED 2x8.
4. 18" RUBBERIZED MEMBRANE WATERPROOFING. SEAL ALL VERTICAL AND HORIZONTAL JOINTS ON THE BACK FACE OF THE ABUTMENT AND WING.
5. STEEL TROWEL TOP SURFACE OF ABUTMENT. PLACE MULTIPLE LAYERS OF POLYETHYLENE SHEET OVER ENTIRE ABUTMENT BEFORE PLACING SUPERSTRUCTURE. TOTAL THICKNESS OF SHEETS SHALL BE AT LEAST 0.03"

LEGEND

F.F. - DENOTES FRONT FACE

B.F. - DENOTES BACK FACE

NO.	DATE	REVISION	BY

STATE OF WISCONSIN
DEPARTMENT OF TRANSPORTATION
STRUCTURES DESIGN SECTION

STRUCTURE B-67-340

DRAWN BY MAK | PLANS CK'D. RMM

EAST ABUTMENT PLAN & ELEVATION

SHEET 6 OF 16

199

8

8

FILE= 082040_B670340_06EASTABUT.DGN
SCALE = 1:8

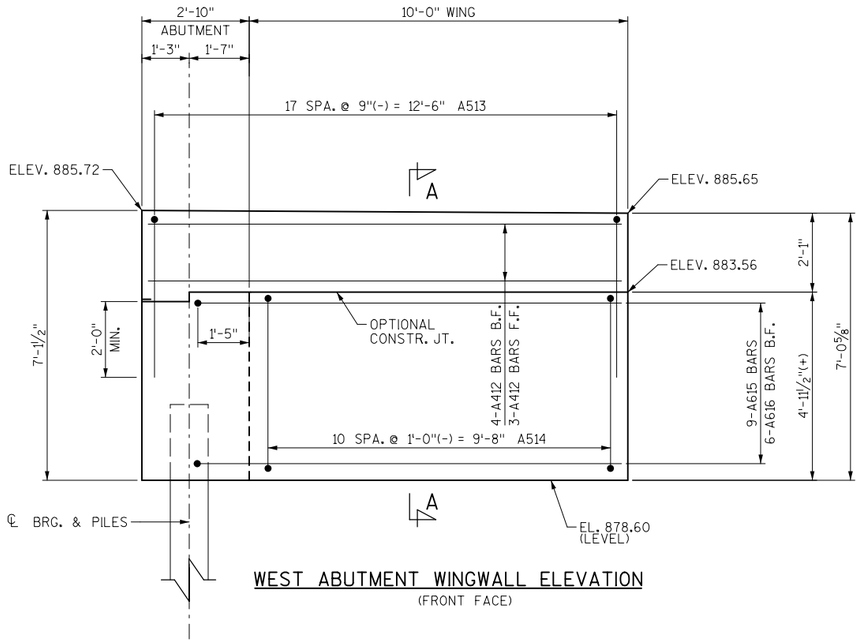

WEST ABUTMENT WINGWALL ELEVATION
(FRONT FACE)

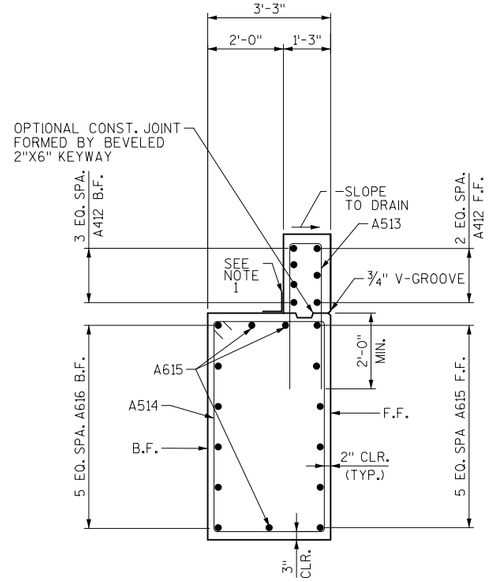

SECTION A-A

STATE PROJECT NUMBER

1060-38-70

BILL OF BARS

	BAR NO.	COATED BAR	NO. REQ'D STAGE 1	NO. REQ'D STAGE 2	LENGTH	BENT BAR	BUNDLED	CUT BARS	684# COATED 4,807# UNCOATED LOCATION
	A401		31	39	5'-9"	X			TOP VERTICAL-U
*	A402		4	0	29'-6"				TOP HORIZONTAL
	A403		0	4	38'-10"				TOP HORIZONTAL
	A504		31	39	6'-5"	X			TOP VERTICAL-U
	A505		41	47	13'-6"	X			MAIN STIRRUP
*	A606		9	0	29'-6"				TOP HORIZONTAL
	A607		0	9	38'-10"				TOP HORIZONTAL
*	A808		8	0	29'-6"				MAIN HORIZONTAL
	A809		0	8	40'-0"	X			MAIN HORIZONTAL
	A410		5	6	28'-0"	X			PILE SPIRAL
	A411		10	12	2'-3"				PILE VERTICAL
	A412	X	0	7	12'-6"				WING TOP HORIZONTAL
	A513	X	0	18	9'-0"	X			WING VERTICAL-U
	A514	X	0	11	15'-6"	X			WING STIRRUP
	A615	X	0	9	12'-6"				WING HORIZONTAL
	A616	X	0	6	12'-1"	X			WING HORIZONTAL

NOTES: THE FIRST OR FIRST TWO DIGITS OF THE BAR MARK SIGNIFIES THE BAR SIZE.

BENDING DIMENSIONS ARE OUT TO OUT OF BARS.

* BAR COUPLER REQUIRED, SEE SHEET 2.

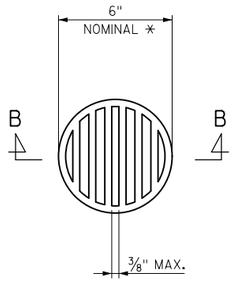

NOTE: ORIENT SHIELD SO SLOTS ARE VERTICAL.

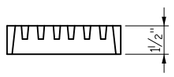

SECTION B-B

* NOTE: DIMENSIONS ARE APPROXIMATE. THE GRATE IS SIZED TO FIT INTO A PIPE COUPLING.

THE RODENT SHIELD SHALL BE A PVC GRATE SIMILAR TO THIS DETAIL. THE GRATE IS COMMERCIALLY AVAILABLE AS A FLOOR STRAINER. A PIPE COUPLING IS REQUIRED FOR THE ATTACHMENT OF THE SHIELD TO THE OUTFALL PIPE. THE SHIELD SHALL BE FASTENED TO THE PIPE COUPLING WITH TWO OR MORE NO. 10 X 1-INCH STAINLESS STEEL SHEET METAL SCREWS.

COST OF RODENT SHIELD IS INCLUDED IN THE COST OF PIPE-UNDERDRAIN WRAPPED 6-INCH.

RODENT SHIELD

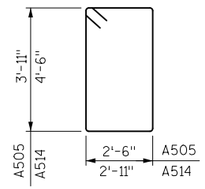

A505, A514

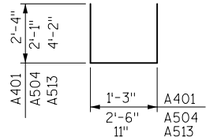

A401, A504, A513

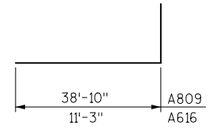

A809, A616

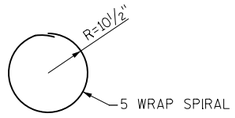

A410

NOTES

1. 18" RUBBERIZED MEMBRANE WATERPROOFING. SEAL ALL VERTICAL AND HORIZONTAL JOINTS ON THE BACK FACE OF THE ABUTMENT AND WING.

LEGEND

F.F. DENOTES FRONT FACE

B.F. DENOTES BACK FACE

NO.	DATE	REVISION	BY

STATE OF WISCONSIN
DEPARTMENT OF TRANSPORTATION
STRUCTURES DESIGN SECTION

STRUCTURE B-67-340

DRAWN BY MAK | PLANS CK'D. RMM

WEST ABUTMENT DETAILS

SHEET 7 OF 16

200

8

8

FILE= 082040_B670340_07WESTABDT.DGN
SCALE = 1:4

STATE PROJECT NUMBER
1060-38-70

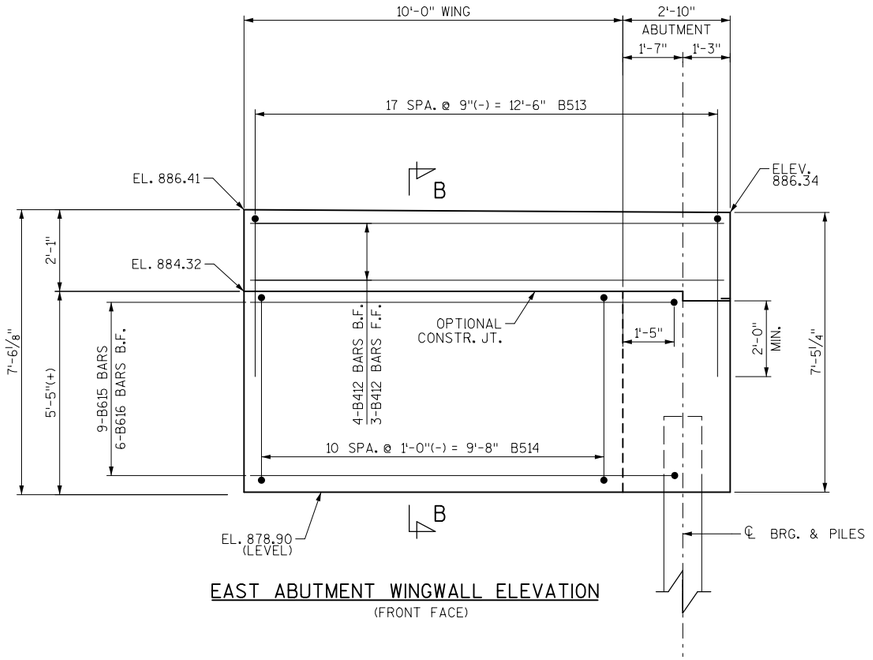

EAST ABUTMENT WINGWALL ELEVATION
(FRONT FACE)

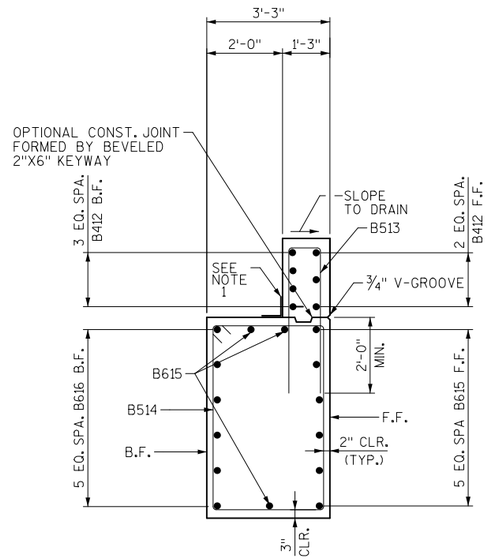

SECTION B-B

BILL OF BARS

	BAR NO.	COATED BAR	NO. REQ'D STAGE 1	NO. REQ'D STAGE 2	LENGTH	BENT BAR	BUNDLED	CUT BARS	693# COATED 4,909# UNCOATED LOCATION
	B401		31	39	5'-9"	X			TOP VERTICAL-U
*	B402		4	0	29'-6"				TOP HORIZONTAL
	B403		0	4	38'-10"				TOP HORIZONTAL
	B504		31	39	6'-5"	X			TOP VERTICAL-U
	B505		41	47	14'-2"	X			MAIN STIRRUP
*	B606		10	0	29'-6"				TOP HORIZONTAL
	B607		0	10	38'-10"				TOP HORIZONTAL
*	B808		8	0	29'-6"				MAIN HORIZONTAL
	B809		0	8	40'-0"	X			MAIN HORIZONTAL
	B410		5	6	28'-0"	X			PILE SPIRAL
	B411		10	12	2'-3"				PILE VERTICAL
	B412	X	0	7	12'-6"				WING TOP HORIZONTAL
	B513	X	0	18	9'-0"	X			WING VERTICAL-U
	B514	X	0	11	16'-4"	X			WING STIRRUP
	B615	X	0	9	12'-6"				WING HORIZONTAL
	B616	X	0	6	12'-1"	X			WING HORIZONTAL

NOTES: THE FIRST OR FIRST TWO DIGITS OF THE BAR MARK SIGNIFIES THE BAR SIZE.

BENDING DIMENSIONS ARE OUT TO OUT OF BARS.

* BAR COUPLER REQUIRED, SEE SHEET 2.

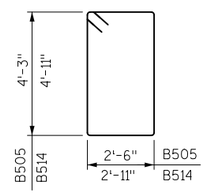

B505, B514

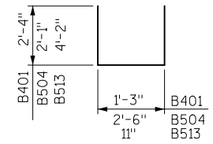

B401, B504, B513

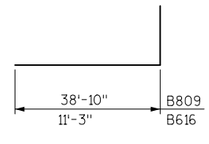

B809, B616

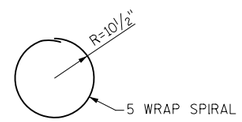

A410

NOTES

1. 18" RUBBERIZED MEMBRANE WATERPROOFING. SEAL ALL VERTICAL AND HORIZONTAL JOINTS ON THE BACK FACE OF THE ABUTMENT AND WING.

LEGEND

F.F. DENOTES FRONT FACE

B.F. DENOTES BACK FACE

NO.	DATE	REVISION	BY

STATE OF WISCONSIN
DEPARTMENT OF TRANSPORTATION
STRUCTURES DESIGN SECTION

STRUCTURE B-67-340

DRAWN BY MAK | PLANS CK'D. RMM

EAST ABUTMENT DETAILS

SHEET 8 OF 16

201

8

8

FILE= 082040_B670340_08EASTABDT.DGN
SCALE = 1:4

STATE PROJECT NUMBER
1060-38-70

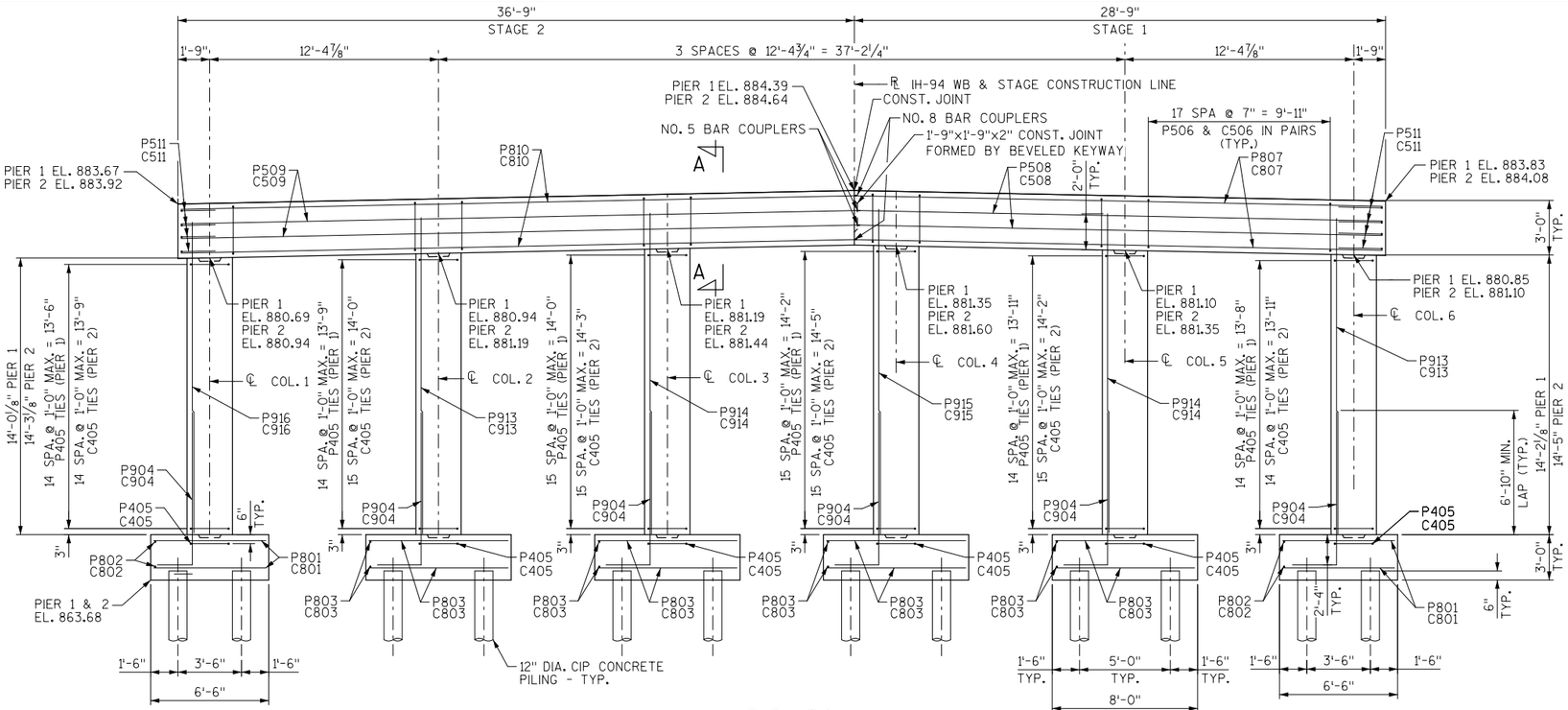

ELEVATION

(LOOKING EAST)

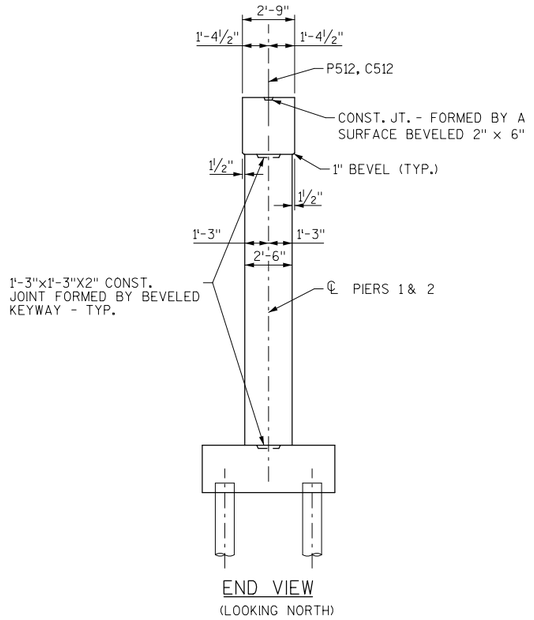

END VIEW

(LOOKING NORTH)

PLACE PIERS ON PILING CIP CONCRETE 12 3/4 X 0.500-INCH WITH A REQUIRED DRIVING RESISTANCE OF 130 TONS/PILE AT PIERS AS DETERMINED BY THE MODIFIED GATES DYNAMIC EQUATION.

N

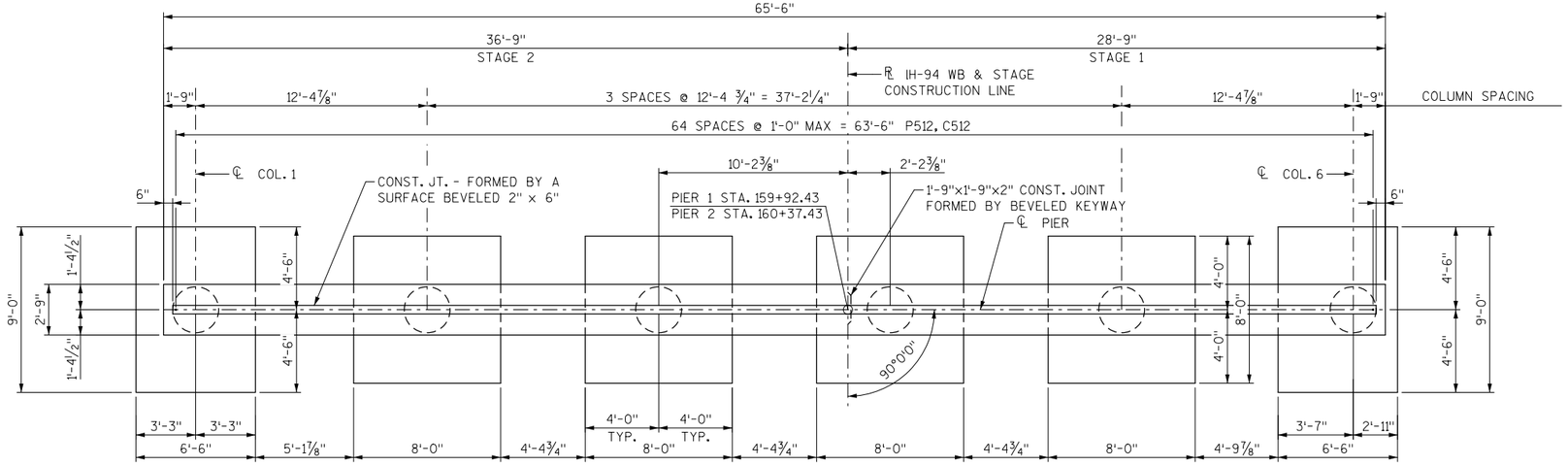

PLAN

NOTES: PXXX BARS DENOTE PIER 1 BARS.

CXXX BARS DENOTE PIER 2 BARS.

NO.	DATE	REVISION	BY

STATE OF WISCONSIN
DEPARTMENT OF TRANSPORTATION
STRUCTURES DESIGN SECTION

STRUCTURE B-67-340

DRAWN BY	MAK	PLANS CK'D.	MLM

PIERS 1 & 2

SHEET 9 OF 16

202

FILE= 082040_B670340_09PIER.DGN

SCALE = 1:8

8

8

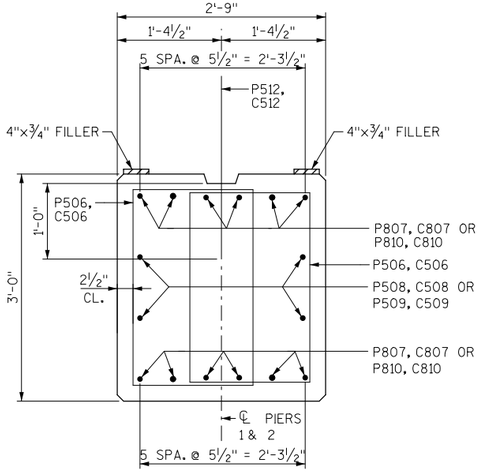

SECTION A-A

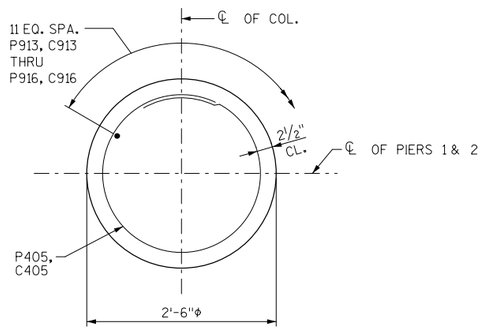

TYPICAL SECTION THRU COLUMN

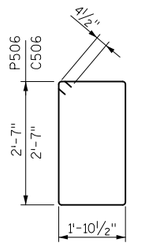

P506 & C506

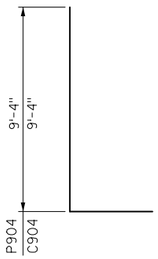

P904 & C904

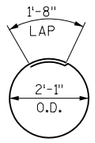

P405 & C405

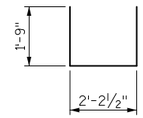

P511 & C511

STATE PROJECT NUMBER

1060-38-70

BILL OF BARS

	BAR NO.	COATED BAR	NO. REQ'D STAGE 1	NO. REQ'D STAGE 2	LENGTH	BENT BAR	BUNDLED	CUT BARS	21,995# COATED 10,048# UNCOATED LOCATION
	P801		20	20	6'-2"				FOOTING-HORIZ.
	P802		20	20	8'-8"				FOOTING-HORIZ.
	P803		84	84	7'-8"				FOOTING-HORIZ.
	P904	X	33	33	10'-8"	X			FOOTING DOWELS - COLUMN VERT
	P405	X	49	49	8'-3"	X			COLUMN STIRRUPS
	P506	X	76	104	9'-7"	X			CAP STIRRUPS
*	P807	X	12		28'-3"				CAP-HORIZ-TOP & BTM
*	P508	X	4		28'-3"				CAP-HORIZ-SIDES
	P509	X		4	36'-10"				CAP-HORIZ-SIDES
	P810	X		12	36'-10"				CAP-HORIZ-TOP & BTM
	P511	X	4	4	5'-9"	X			CAP-HORIZ-ENDS
	P512	X	29	36	2'-0"				CAP DOWELS
	P913	X	11	11	16'-4"				COLUMN VERT
	P914	X	11	11	16'-7"				COLUMN VERT
	P915	X	11		16'-9"				COLUMN VERT
	P916	X		11	16'-1"				COLUMN VERT
	C801		20	20	6'-2"				FOOTING-HORIZ.
	C802		20	20	8'-8"				FOOTING-HORIZ.
	C803		84	84	7'-8"				FOOTING-HORIZ.
	C904	X	33	33	10'-8"	X			FOOTING DOWELS - COLUMN VERT
	C405	X	50	50	8'-3"	X			COLUMN STIRRUPS
	C506	X	76	104	9'-7"	X			CAP STIRRUPS
*	C807	X	12		28'-3"				CAP-HORIZ-TOP & BTM
*	C508	X	4		28'-3"				CAP-HORIZ-SIDES
	C509	X		4	36'-10"				CAP-HORIZ-SIDES
	C810	X		12	36'-10"				CAP-HORIZ-TOP & BTM
	C511	X	4	4	5'-9"	X			CAP-HORIZ-ENDS
	C512	X	29	36	2'-0"				CAP DOWELS
	C913	X	11	11	16'-7"				COLUMN VERT
	C914	X	11	11	16'-10"				COLUMN VERT
	C915	X	11		17'-0"				COLUMN VERT
	C916	X		11	16'-4"				COLUMN VERT

NOTES: THE FIRST OR FIRST TWO DIGITS OF THE BAR MARK SIGNIFIES THE BAR SIZE.

BENDING DIMENSIONS ARE OUT TO OUT OF BARS.

* BAR COUPLER REQUIRED - SEE SHEET 2.

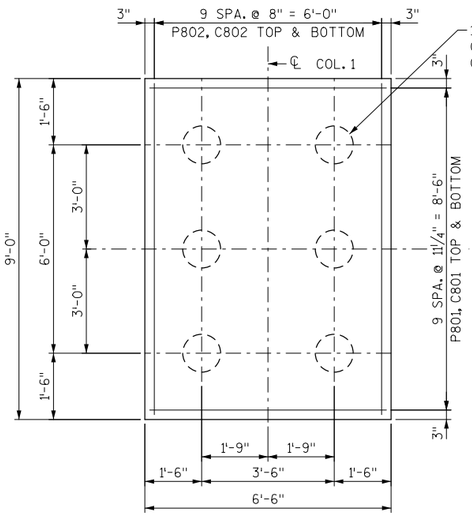

FOOTING PLAN - COL. 1

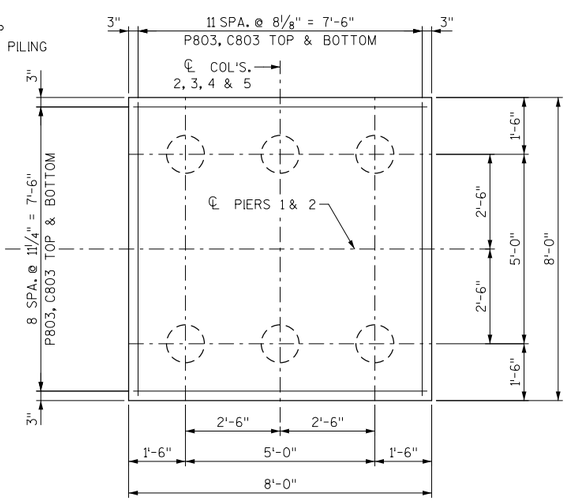

FOOTING PLAN - COL'S. 2, 3, 4 & 5

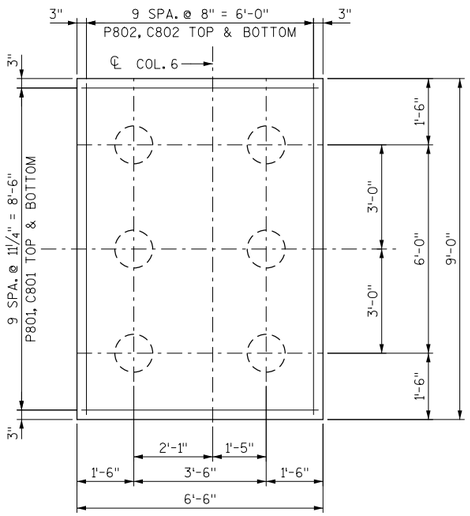

FOOTING PLAN - COL. 6

NO.	DATE	REVISION	BY

STATE OF WISCONSIN
DEPARTMENT OF TRANSPORTATION
STRUCTURES DESIGN SECTION

STRUCTURE B-67-340

DRAWN BY MAK | PLANS CK'D. MLM

PIERS 1 & 2 DETAILS

SHEET 10 OF 16

203

8

8

FILE= 082040_B670340_10PRDT.DGN
SCALE = 1:4

STATE PROJECT NUMBER
1060-38-70

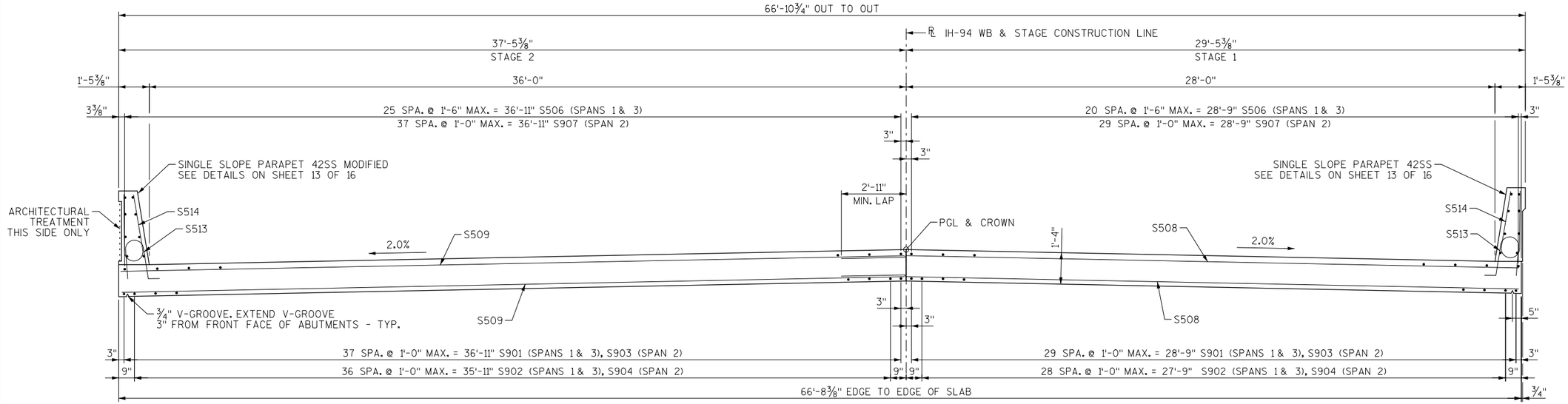

CROSS SECTION THRU ROADWAY - IN SPAN

(LOOKING EAST)

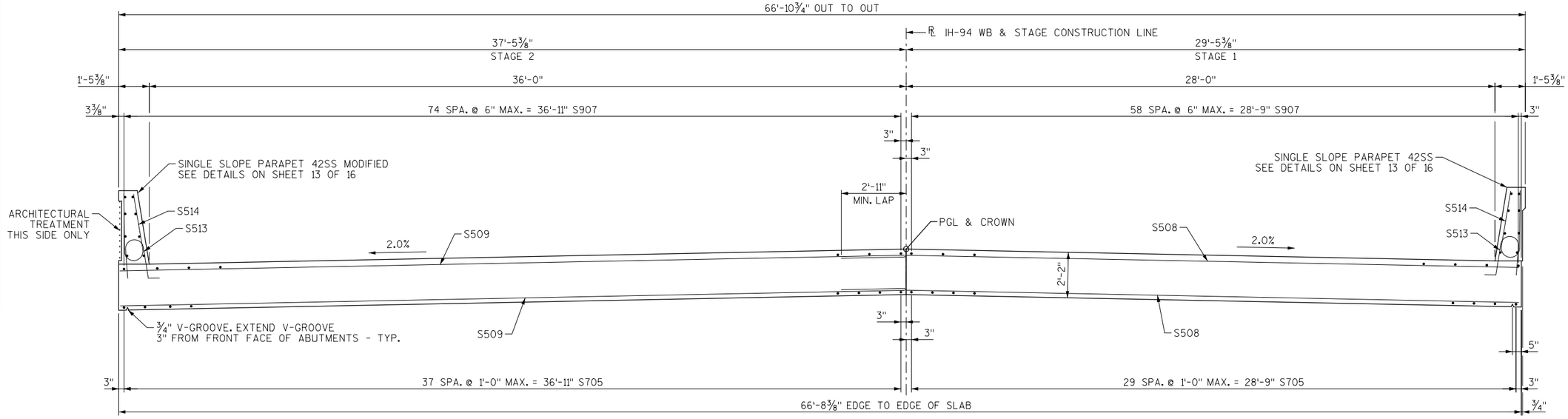

CROSS SECTION THRU ROADWAY - AT PIER

(LOOKING EAST)

NOTES:

1. TOP TRANSVERSE BARS IN SLAB SHALL BE SUPPORTED BY INDIVIDUAL BARS CHAIRS AT APPROXIMATELY 3'-0" CENTERS EACH WAY. BOTTOM LONGITUDINAL BARS SHALL BE SUPPORTED BY CONTINUOUS BAR CHAIRS AT APPROXIMATELY 4'-0" CENTERS.
2. ALL SLAB THICKNESS DIMENSIONS ARE MINIMUM. ANY TOLERANCES NECESSARY TO CORRECT CONSTRUCTION DISCREPANCIES ARE TO BE PLUS (+).
3. PRIOR TO RELEASING SLAB FALSEWORK, TAKE TOP OF SLAB ELEVATIONS AT THE ℄ OF ABUTMENTS, THE ℄ OF PIERS AND AT 5/10 PTS. TO VERIFY CAMBER. TAKE ELEVATIONS ALONG GUTTER LINES AND CROWN OR ℄.

NO.	DATE	REVISION	BY

STATE OF WISCONSIN
DEPARTMENT OF TRANSPORTATION
STRUCTURES DESIGN SECTION

STRUCTURE B-67-340

DRAWN BY	MAK	PLANS CK'D.	RMM

SUPERSTRUCTURE

SHEET 11 OF 16

204

8

8

FILE= 082040_B6T0340_11SUPER.DGN
SCALE = 1:5.3333

STATE PROJECT NUMBER

1060-38-70

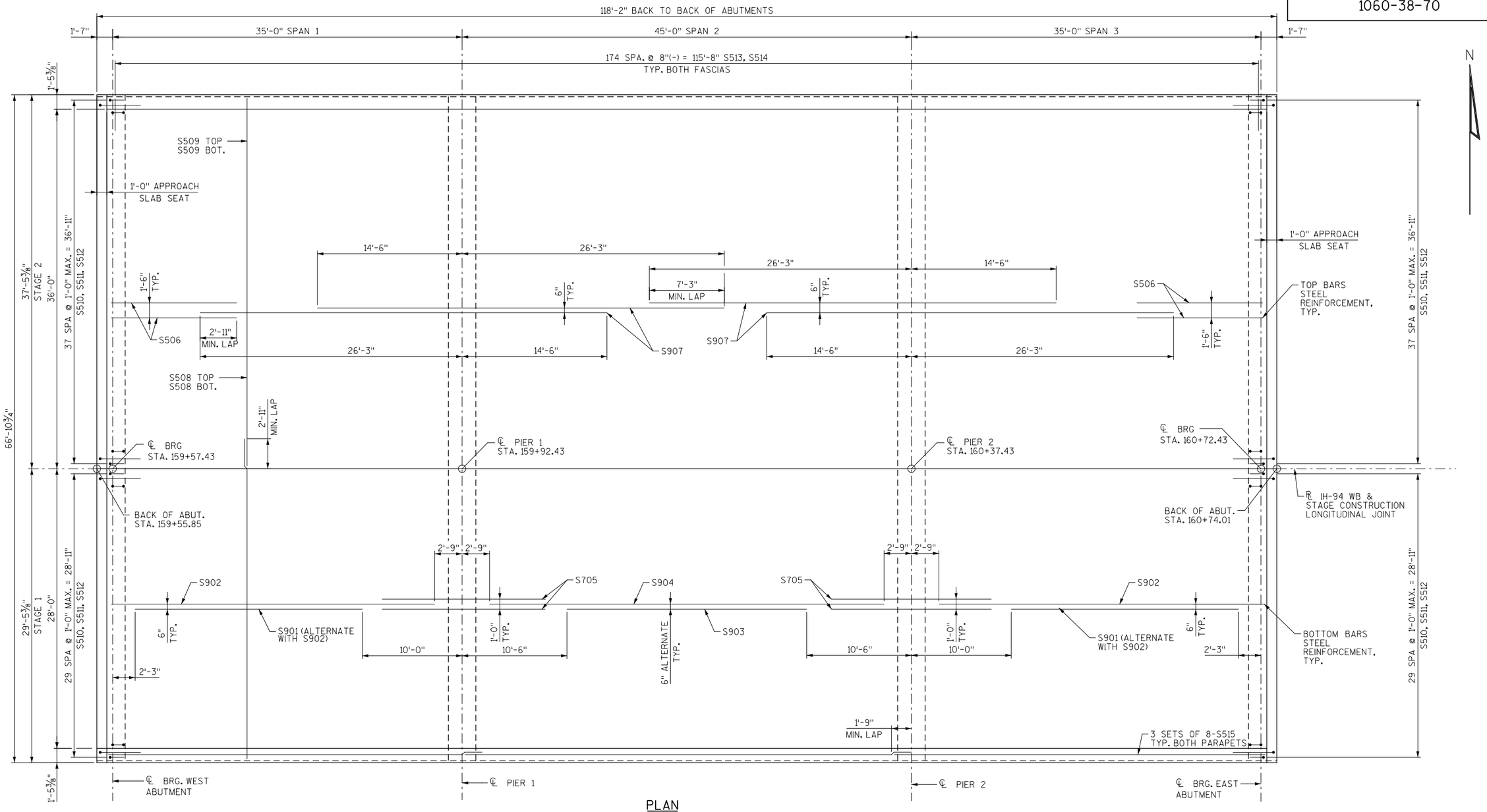

PLAN

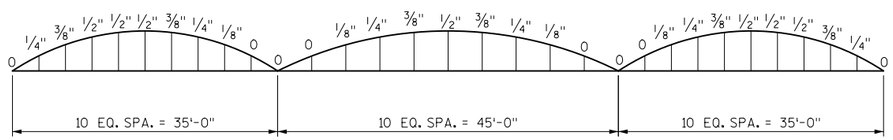

CAMBER DIAGRAM

CAMBER SPANS AS SHOWN TO PROVIDE FOR DEADLOAD DEFLECTION & FUTURE CREEP. CAMBER DOES NOT INCLUDE ALLOWANCE FOR FORM SETTLEMENT.

NO.	DATE	REVISION	BY

STATE OF WISCONSIN
DEPARTMENT OF TRANSPORTATION
STRUCTURES DESIGN SECTION

STRUCTURE B-67-340

DRAWN BY MAK | PLANS CK'D. RMM

SUPERSTRUCTURE PLAN

SHEET 12 OF 16

205

8

8

FILE= 082040_B670340_12SUPERDK.DGN
SCALE = 1:10

STATE PROJECT NUMBER
1060-38-70

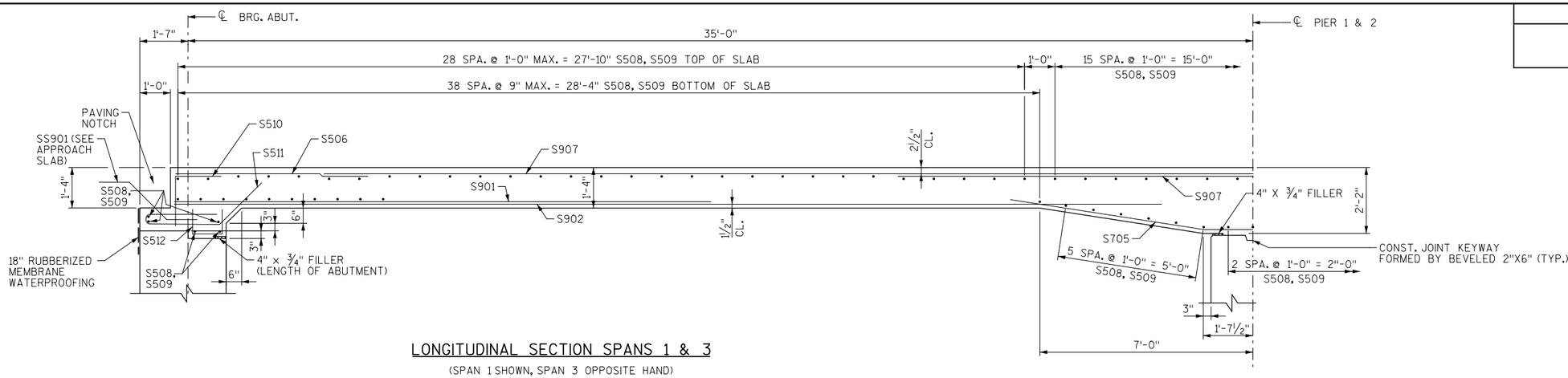

LONGITUDINAL SECTION SPANS 1 & 3

(SPAN 1 SHOWN, SPAN 3 OPPOSITE HAND)

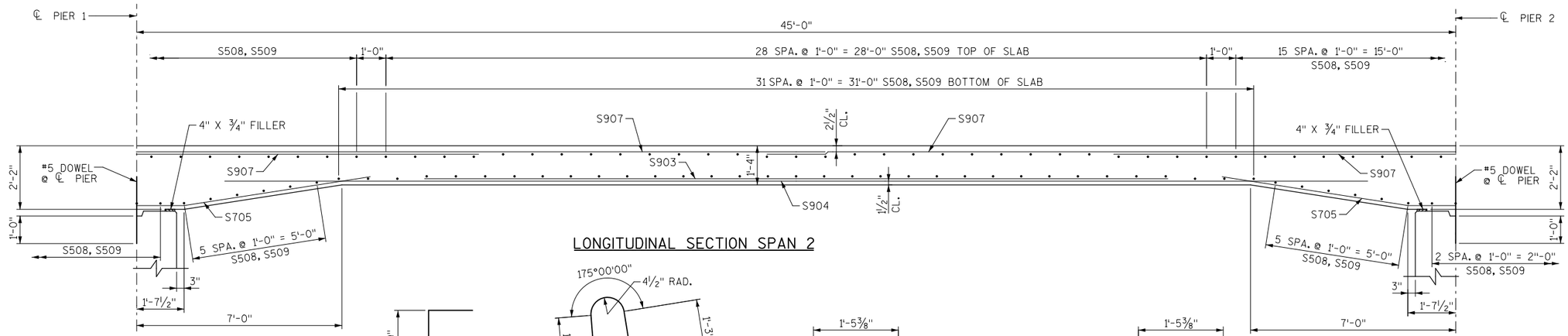

LONGITUDINAL SECTION SPAN 2

BILL OF BARS

NOTE: THE FIRST OR FIRST TWO DIGITS OF THE BAR MARK SIGNIFIES THE BAR SIZE.

BAR NO.	COATED BAR	NO. REQ'D STAGE 1	NO. REQ'D STAGE 2	LENGTH	BENT BAR	BUNDLED	CUT BARS	109,876# COATED 0# UNCOATED LOCATION
S901	X	60	76	22'-9"				SLAB LONG. BOT, SPAN 1 & 3
S902	X	58	74	32'-8"				SLAB LONG. BOT, SPAN 1 & 3
S903	X	30	38	24'-0"				SLAB LONG. BOT, SPAN 2
S904	X	29	37	39'-6"				SLAB LONG. BOT, SPAN 2
S705	X	60	76	16'-9"	X			SLAB LONG BOT, PIER
S506	X	42	52	12'-1"				SLAB LONG. TOP , SPAN 1 & 3
S907	X	118	150	40'-9"				SLAB LONG. TOP, PIER
S508	X	269	0	32'-1"				SLAB TRANS.
S509	X	0	269	37'-2"				SLAB TRANS.
S510	X	60	76	3'-4"	X			SLAB @ ABUT. HAUNCH
S511	X	60	76	7'-0"	X			SLAB @ ABUT. HAUNCH
S512	X	60	76	2'-7"	X			SLAB @ ABUT. HAUNCH
S513	X	175	175	4'-5"	X			PARAPET VERTICAL
S514	X	175	175	6'-8"	X			PARAPET VERTICAL
S515	X	24	24	40'-0"				PARAPET HORIZONTAL

DIMENSIONS IN BENDING DETAILS ARE OUT TO OUT OF BARS.

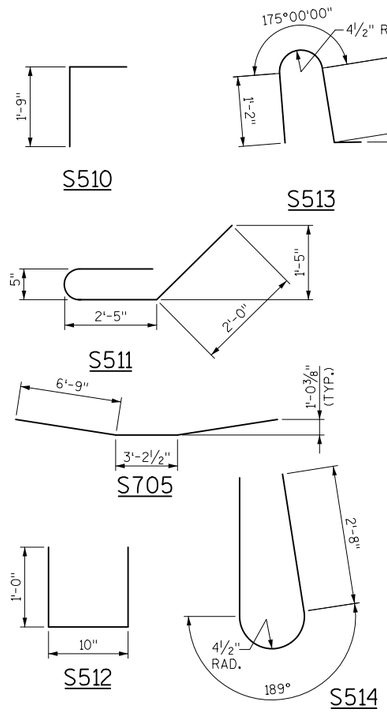

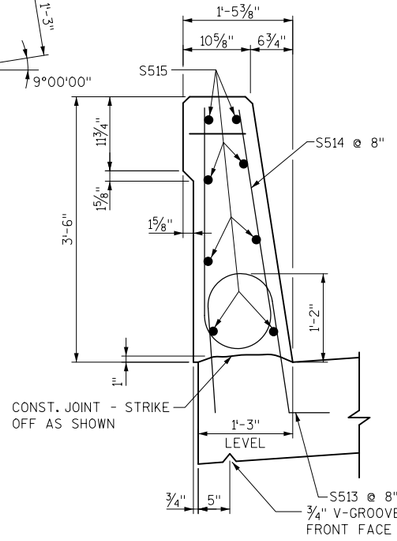

SECTION THRU SOUTH PARAPET ON BRIDGE

(SINGLE SLOPE PARAPET 42SS)

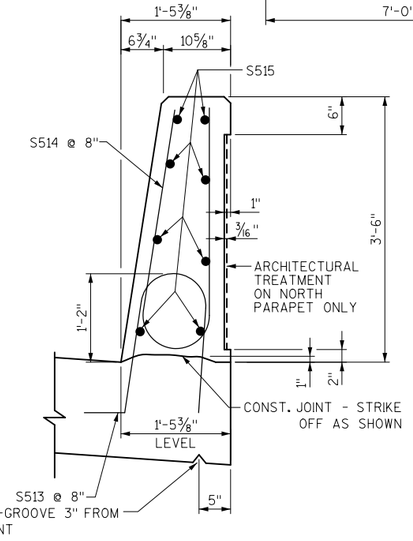

SECTION THRU NORTH PARAPET ON BRIDGE

(SINGLE SLOPE PARAPET 42SS MODIFIED)

NOTES:

1. FOR SS901 BAR LOCATION AND BILL OF BARS, SEE SHEET 15.

NO.	DATE	REVISION	BY

STATE OF WISCONSIN
DEPARTMENT OF TRANSPORTATION
STRUCTURES DESIGN SECTION

STRUCTURE B-67-340

DRAWN BY MAK | PLANS CK'D. RMM

SUPERSTRUCTURE DETAILS

SHEET 13 OF 16

206

FILE= 082040_B670340_13SUPERDOT.DGN

SCALE = 1:4

8

8

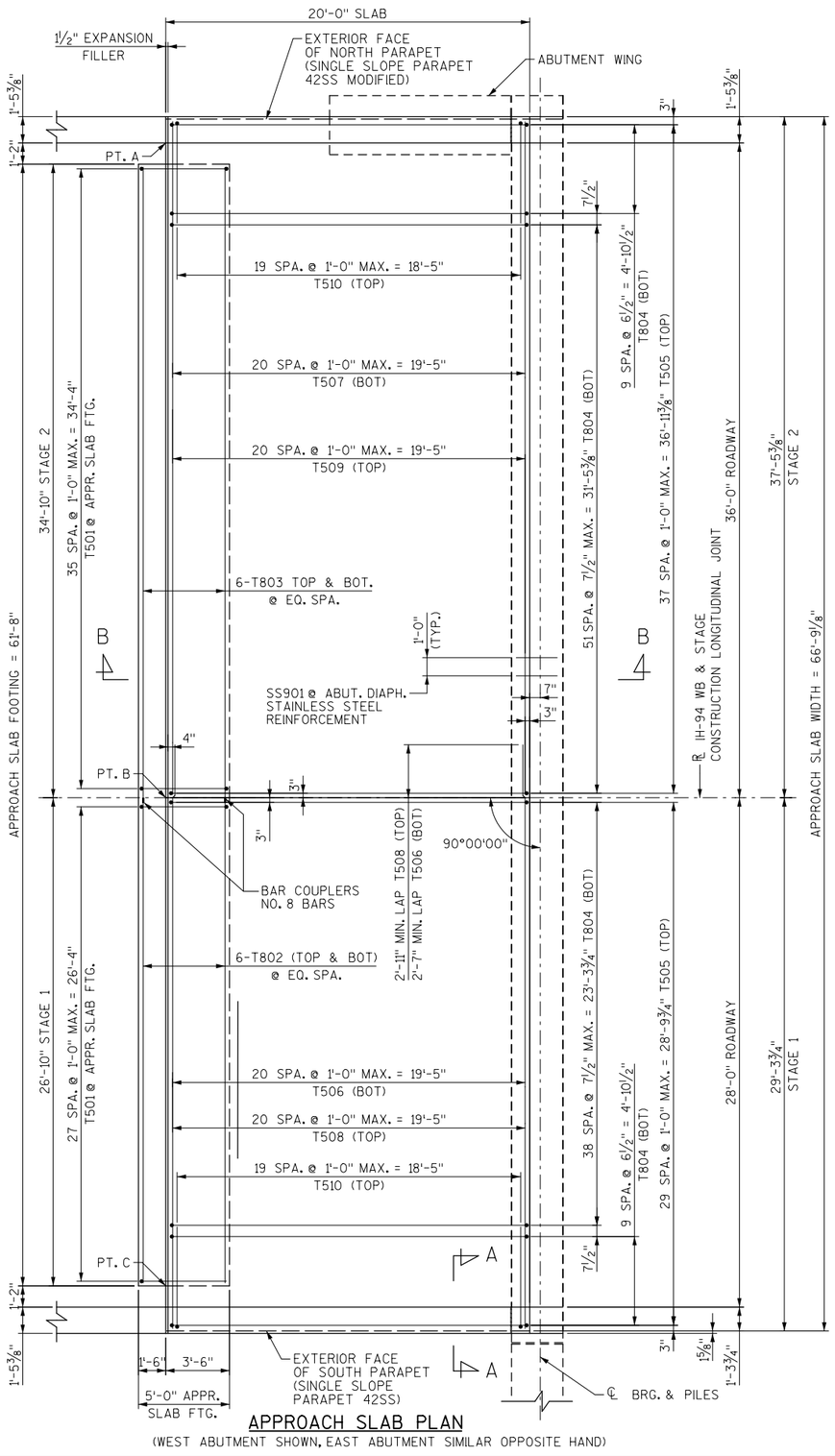

APPROACH SLAB PLAN

(WEST ABUTMENT SHOWN, EAST ABUTMENT SIMILAR OPPOSITE HAND)

BILL OF BARS

STAINLESS STEEL →

BAR NO.	COATED BAR	NO. REQ'D STAGE 1	NO. REQ'D STAGE 2	LENGTH	BENT BAR	BUNDLED	CUT BARS	0# COATED 2,312# UNCOATED STAINLESS STEEL LOCATION
SS901		60	76	5'-0"	X			ABUT. DIAPH. TO APPROACH SLAB

	BAR NO.	COATED BAR	NO. REQ'D STAGE 1	NO. REQ'D STAGE 2	LENGTH	BENT BAR	BUNDLED	CUT BARS	27,383# COATED 0# UNCOATED LOCATION
*	T501	X	56	72	11'-10"	X			FOOTING STIRRUP
*	T802	X	24	0	26'-5"				FOOTING HORIZONTAL
	T803	X	0	24	34'-11"				FOOTING HORIZONTAL
	T804	X	98	124	21'-5"	X			BOTTOM LONGITUDINAL
	T505	X	60	76	19'-7"				TOP LONGITUDINAL
	T506	X	42	0	31'-10"				BOTTOM TRANSVERSE
	T507	X	0	42	37'-2"				BOTTOM TRANSVERSE
	T508	X	42	0	32'-2"				TOP TRANSVERSE
	T509	X	0	42	37'-2"				TOP TRANSVERSE
	T510	X	40	40	4'-1"	X			TOP TRANSVERSE

NOTES: THE FIRST OR FIRST TWO DIGITS OF THE BAR MARK SIGNIFIES THE BAR SIZE.

BENDING DIMENSIONS ARE OUT TO OUT OF BARS.

* BAR COUPLER REQUIRED, SEE SHEET 2.

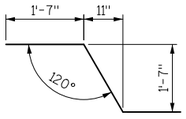

SS901

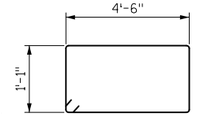

T501

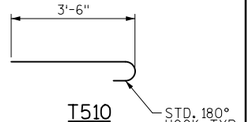

T510

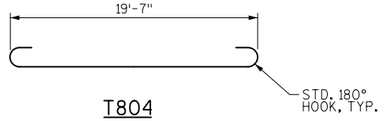

T804

POINT	WEST ABUT. APPROACH SLAB STATION	WEST ABUT. APPROACH SLAB ELEVATION	EAST ABUT. APPROACH SLAB STATION	EAST ABUT. APPROACH SLAB ELEVATION
A (STAGE 2)	159+36.85	885.60	160+93.01	886.46
B (CONST. JT.)	159+36.85	886.32	160+93.01	887.18
C (STAGE 1)	159+36.85	885.76	160+93.01	886.62

NOTES:

1. FOR SOUTH PARAPET DETAILS ON APPROACH SLAB (SINGLE SLOPE PARAPET 42SS), SEE SHEET 15.
2. FOR NORTH PARAPET DETAILS ON APPROACH SLAB (SINGLE SLOPE PARAPET 42SS MODIFIED), SEE SHEET 16.

STATE PROJECT NUMBER

1060-38-70

NO.	DATE	REVISION	BY

STATE OF WISCONSIN
DEPARTMENT OF TRANSPORTATION
STRUCTURES DESIGN SECTION

STRUCTURE B-67-340

DRAWN BY MAK | PLANS CK'D. RMM

STRUCTURAL APPROACH SLABS

SHEET 14 OF 16

207

8

8

FILE= 082040_B6703401_14APPR.DGN
SCALE = 1:8

STATE PROJECT NUMBER

1060-38-70

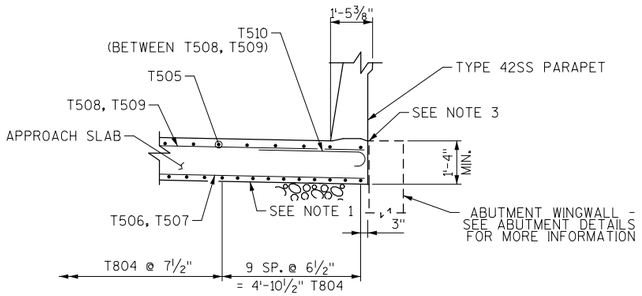

SECTION A-A

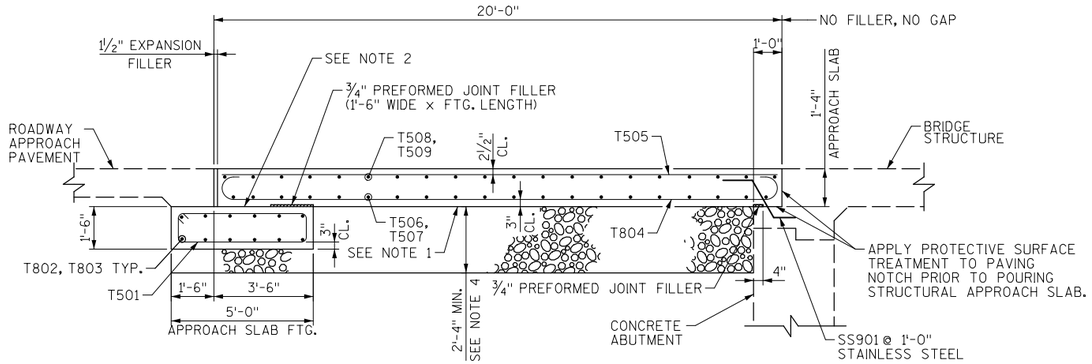

SECTION B-B THRU APPROACH SLAB

NOTES:
1. PLACE MULTIPLE LAYERS (0.03" MIN. TOTAL THK.) OF POLYETHYLENE SHEETS OVER THE ENTIRE TOP OF SUBGRADE, BENEATH SLAB.

2. STEEL TROWEL TOP SURFACE OF FOOTING AND PLACE MULTIPLE LAYERS (0.03" MIN. TOTAL THK.) OF POLYETHYLENE SHEETS OVER ENTIRE TOP OF FOOTING.

3. SEAL ALL EXPOSED HORIZONTAL AND VERTICAL SURFACES OF 1/2" FILLER WITH NON-STAINING GRAY NON-BITUMINOUS JOINT SEALER. (1" DEEP AND HOLD 1/8" BELOW SURFACE OF CONCRETE). EXTEND SEALER 3" BELOW GUTTERLINE AT INSIDE FACE.

4. BELOW THE APPROACH SLAB FOOTING AND APPROACH SLAB, PLACE BASE AGGREGATE DENSE 1-1/4 INCH.

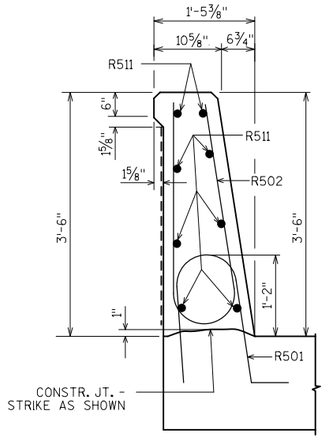

SECTION C-C

(SINGLE SLOPE PARAPET 42SS)

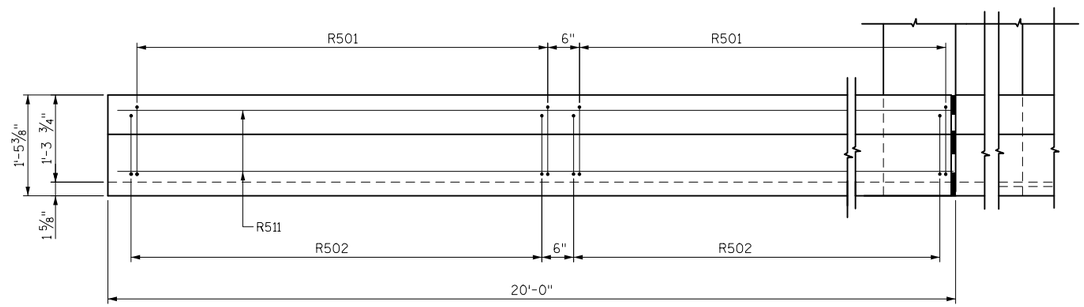

PLAN - SOUTH PARAPET

(SINGLE SLOPE PARAPET 42SS ON APPROACH SLAB)

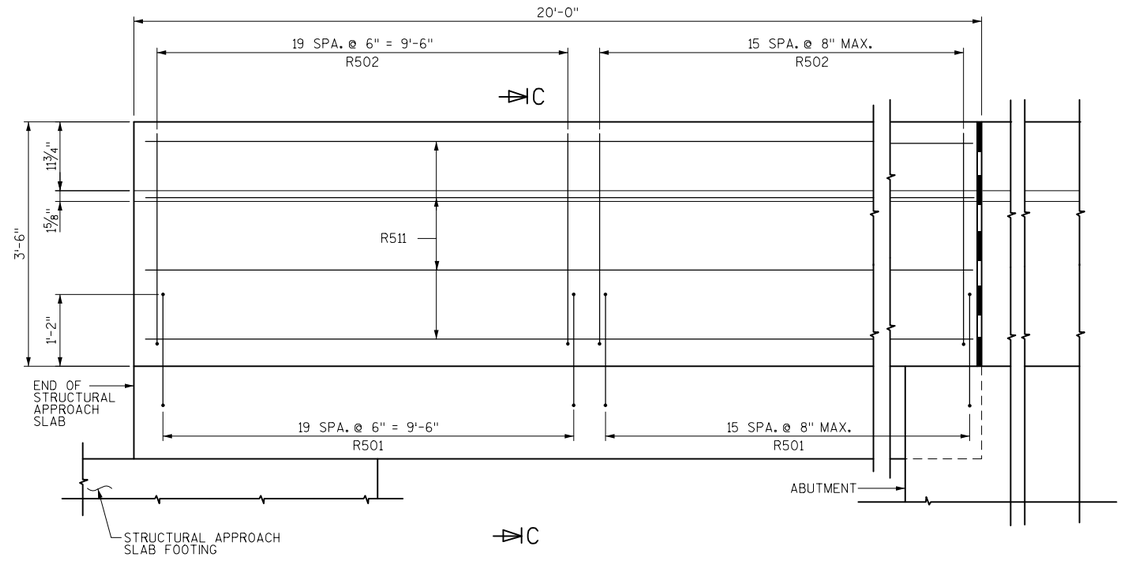

TYPICAL OUTSIDE ELEVATION - SOUTH PARAPET

(SINGLE SLOPE PARAPET 42SS ON APPROACH SLAB)

8

8

NO.	DATE	REVISION	BY

STATE OF WISCONSIN
DEPARTMENT OF TRANSPORTATION
STRUCTURES DESIGN SECTION

STRUCTURE B-67-340

DRAWN BY MAK | PLANS CK'D. RMM

STRUCTURAL APPROACH SLAB DETAILS

SHEET 15 OF 16

208

FILE= 082040_B67O340_15APDT.DGN
SCALE = 1:5.3333

STATE PROJECT NUMBER

1060-38-70

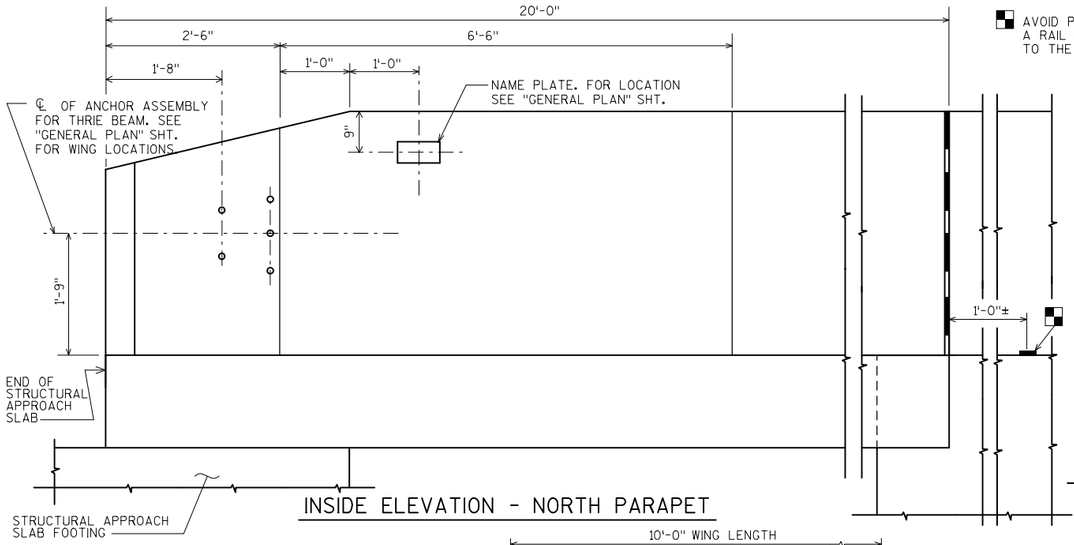

INSIDE ELEVATION - NORTH PARAPET

■ AVOID PLACING A BENCH MARK CAP BELOW A RAIL OR FENCE SYSTEM THAT IS ATTACHED TO THE TOP OF THE PARAPET.

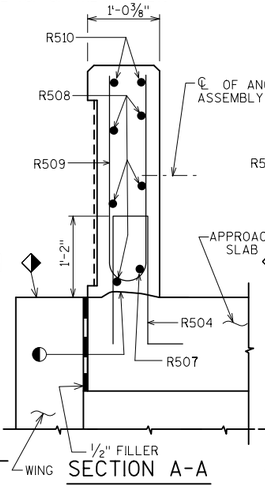

SECTION A-A

(NORTH PARAPET TRANSITION)

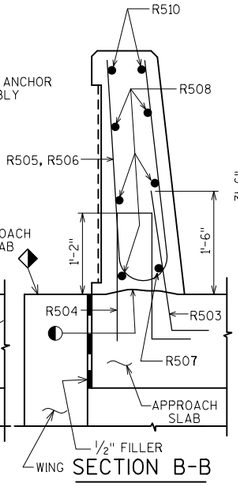

SECTION B-B

(NORTH PARAPET TRANSITION)

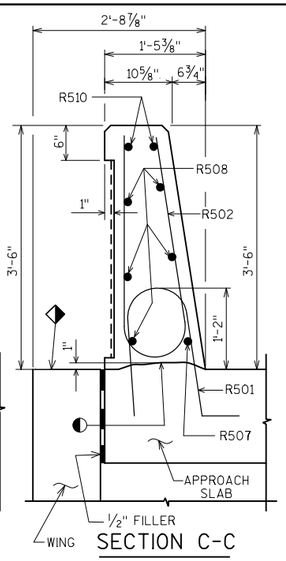

SECTION C-C

(NORTH PARAPET TRANSITION)

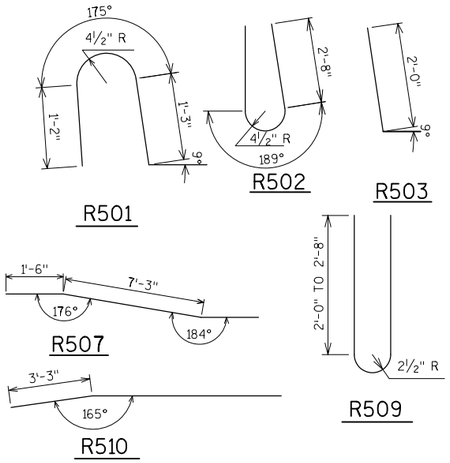

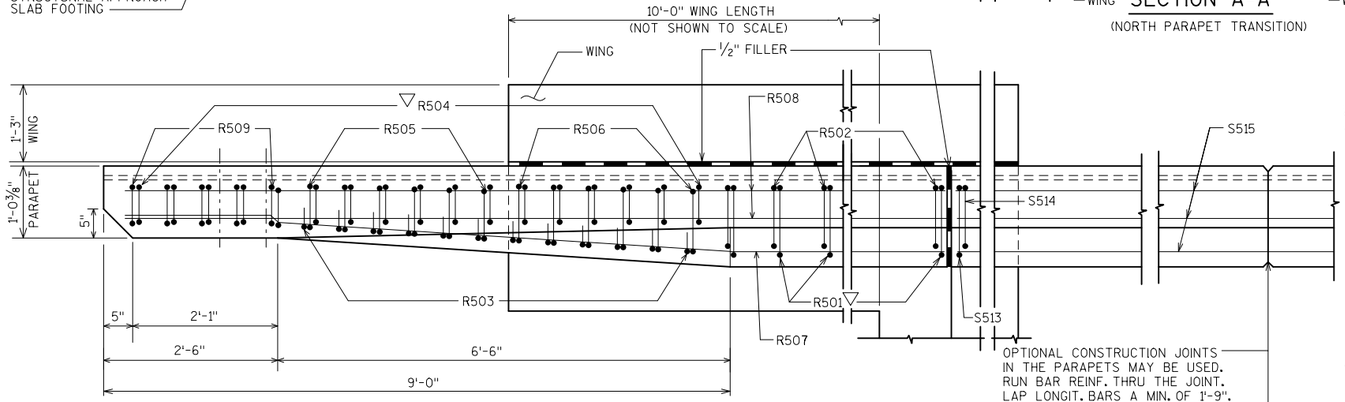

PLAN - NORTH PARAPET

OPTIONAL CONSTRUCTION JOINTS IN THE PARAPETS MAY BE USED. RUN BAR REINF. THRU THE JOINT. LAP LONGIT. BARS A MIN. OF 1'-9". MIN. JOINT SPACING OF 80'-0". DEFINE CONST. JOINT WITH A ¾" - 'V' GROOVE. SEE ARCHITECTURAL DETAIL FOR ALLOWABLE JOINT LOCATIONS.

◐ CONST. JOINT - STRIKE OFF AS SHOWN.

◆ SLOPE FOR DRAINAGE

▽ R501 AND R504 BARS TO BE TIED TO STRUCTURAL APPROACH SLAB STEEL BEFORE STRUCTURAL APPROACH SLAB IS POURED.

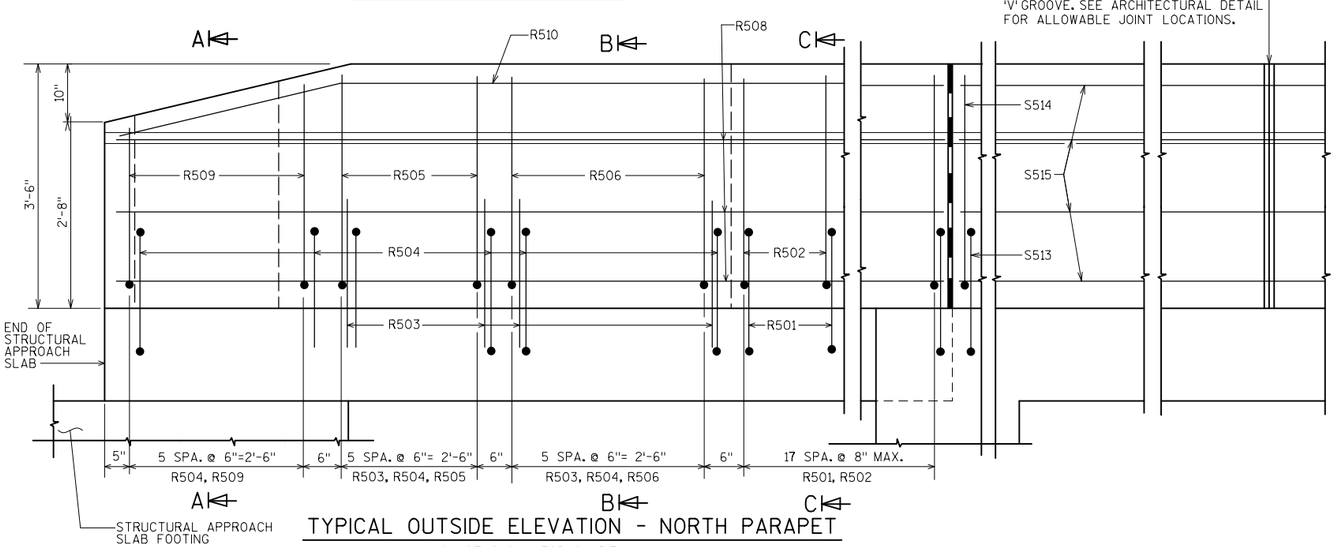

TYPICAL OUTSIDE ELEVATION - NORTH PARAPET

(WING NOT SHOWN FOR CLARITY)

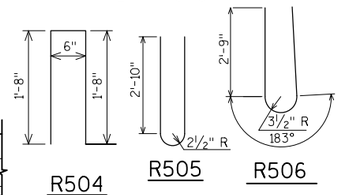

BILL OF BARS

FOR STRUCTURAL APPROACH SLAB PARAPETS

BAR NO.	COATED BAR	NO. REQ'D STAGE 1	NO. REQ'D STAGE 2	LENGTH	BENT BAR	BUNDLED	CUT BARS	2,688# COATED 0# UNCOATED LOCATION
R501	X	72	36	4'-5"	X			PARAPET VERTICAL
R502	X	72	36	6'-8"	X			PARAPET VERTICAL
R503	X	0	24	2'-9"	X			PARAPET VERTICAL
R504	X	0	36	4'-4"	X			PARAPET VERTICAL
R505	X	0	12	6'-5"	X			PARAPET VERTICAL
R506	X	0	12	6'-6"	X			PARAPET VERTICAL
R507	X	0	2	19'-6"	X			PARAPET HORIZONTAL
R508	X	16	10	19'-6"				PARAPET HORIZONTAL
R509	X	0	12	5'-5"	X		X	PARAPET VERTICAL
R510	X	0	4	19'-6"	X			PARAPET HORIZONTAL
R511	X	16	0	19'-7"				PARAPET HORIZONTAL

NOTES: THE FIRST OR FIRST TWO DIGITS OF THE BAR MARK SIGNIFIES THE BAR SIZE.

BENDING DIMENSIONS ARE OUT TO OUT OF BARS.

LENGTH SHOWN FOR CUT BARS IS AN AVERAGE LENGTH AND SHOULD ONLY BE USED FOR BAR WEIGHT CALCULATIONS. SEE BAR SERIES TABLE FOR ACTUAL LENGTH.

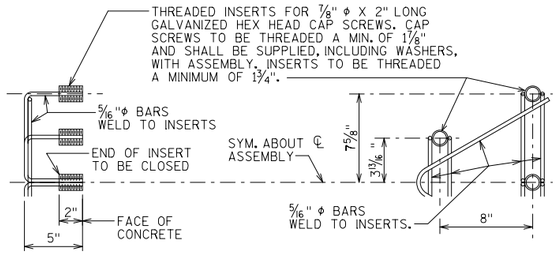

DETAIL OF ANCHOR ASSEMBLY

NOTE: HEX HEAD CAP SCREWS & WASHERS TO BE GALVANIZED IN ACCORDANCE WITH AASHTO M232 CLASS C.

ASSEMBLY SHALL BE BID ITEM "ANCHOR ASSEMBLIES FOR STEEL PLATE BEAM GUARD", EACH.

BAR SERIES TABLE

MARK	NO. REQ'D.	LENGTH
R509	2 SERIES OF 6	4'-9" TO 6'-1"

NO.	DATE	REVISION	BY

STATE OF WISCONSIN
DEPARTMENT OF TRANSPORTATION
STRUCTURES DESIGN SECTION

STRUCTURE B-67-340

DRAWN BY: MAK | PLANS CK'D.: RMM

SINGLE SLOPE PARAPET 42SS MODIFIED

SHEET 16 OF 16

209

8

8

FILE= 082040_B67O340_16PRPT.DGN

SCALE = 1:2.1759

I-94 MEDIAN, STAGE 1

STATION	Real Station	Distance	AREA (SF) Cut	Salvaged / Unusable Pavement Material	Fill	EBS	Incremental Vol (CY) (Unadjusted) Cut Note 1	Salvaged / Unusable Pavement Material Note 2	Fill Note 3	EBS	Cumulative Vol (CY) Cut 1.00 Note 1	Expanded Fill 1.30	Expanded EBS Backfill 1.30 Note 5	Reduced Marsh in Fill 0.60 Note 6	Reduced EBS In Fill 0.80 Note 7	Mass Ordinate Note 8
149+45.00	14945		7	6	24	0	0	0	0	0	0	0	0	0	0	0
149+50.00	14950	5	7	6	25	0	1	1	5	0	1	6	0	0	0	-6
149+89.00	14989	39	17	6	12	0	17	9	26	0	19	40	0	0	0	-31
150+00.00	15000	11	17	6	25	0	7	2	8	0	25	50	0	0	0	-37
150+50.00	15050	50	14	6	26	0	29	11	48	0	54	112	0	0	0	-81
151+00.00	15100	50	18	6	34	0	29	11	56	0	84	185	0	0	0	-136
151+50.00	15150	50	23	6	44	0	37	11	72	0	121	279	0	0	0	-203
152+00.00	15200	50	27	6	50	0	46	11	86	0	167	391	0	0	0	-281
152+50.00	15250	50	31	6	53	0	54	11	95	0	221	514	0	0	0	-362
153+00.00	15300	50	35	6	55	0	62	11	100	0	282	644	0	0	0	-440
153+50.00	15350	50	39	6	56	0	69	11	103	0	351	777	0	0	0	-516
154+00.00	15400	50	40	6	56	0	73	11	104	0	425	912	0	0	0	-589
154+50.00	15450	50	41	6	54	0	76	11	102	0	500	1045	0	0	0	-657
155+00.00	15500	50	43	6	50	0	78	11	97	0	578	1170	0	0	0	-715
155+50.00	15550	50	46	6	46	0	82	11	89	0	661	1287	0	0	0	-760
156+00.00	15600	50	44	6	40	0	83	11	80	0	743	1391	0	0	0	-793
156+50.00	15650	50	44	6	34	0	81	11	69	0	824	1480	0	0	0	-812
157+00.00	15700	50	45	6	28	0	82	11	57	0	907	1554	0	0	0	-815
157+45.00	15745	45	48	6	11	0	77	10	32	0	984	1596	0	0	0	-790
157+50.00	15750	5	48	6	11	0	9	1	2	0	992	1599	0	0	0	-785
157+75.00	15775	25	48	6	11	0	45	6	10	0	1037	1612	0	0	0	-760
158+00.00	15800	25	51	6	8	0	46	6	9	0	1083	1624	0	0	0	-731
158+50.00	15850	50	56	6	4	0	100	11	11	0	1182	1638	0	0	0	-657
158+55.00	15855	5	57	6	3	0	11	1	1	0	1193	1639	0	0	0	-648
						Column totals	1193	202	1261	0						

I-94 MEDIAN, STAGE 1

STATION	Real Station	Distance	AREA (SF) Cut	Salvaged / Unusable Pavement Material	FILL	EBS	Incremental Vol (CY) (Unadjusted) Cut Note 1	Salvaged / Unusable Pavement Note 2	FILL Note 3	EBS	Cumulative Vol (CY) Cut 1.00 Note 1	Expanded Fill 1.30	Expanded EBS Backfill 1.30 Note 5	Reduced EBS In Fill 0.80 Note 7	Mass Ordinate Note 8
158+93.00	15893	0	56	6	3	0	0	0	0	0	0	0	0	0	0
159+00.00	15900	7	56	6	3	0	15	2	1	0	15	1	0	0	12
159+35.00	15935	35	55	6	1	0	72	8	3	0	86	4	0	0	73
160+94.00	16094	159	52	6	0	0	314	35	4	0	400	9	0	0	347
161+00.00	16100	6	50	6	1	0	11	1	0	0	412	9	0	0	357
161+33.00	16133	33	47	6	4	0	59	7	3	0	471	13	0	0	405
161+50.00	16150	17	47	6	6	0	30	4	3	0	500	16	0	0	427
161+80.00	16180	30	49	6	8	0	53	7	8	0	553	26	0	0	463
162+00.00	16200	20	46	6	11	0	35	4	7	0	589	36	0	0	484
162+50.00	16250	50	43	6	19	0	83	11	28	0	672	72	0	0	520
163+00.00	16300	50	41	6	17	0	78	11	33	0	750	116	0	0	543
163+30.00	16330	30	41	6	12	0	46	7	16	0	795	137	0	0	561
163+50.00	16350	20	44	6	8	0	31	4	7	0	826	146	0	0	578
164+00.00	16400	50	57	6	2	0	93	11	9	0	919	158	0	0	648
164+50.00	16450	50	74	6	0	0	121	11	2	0	1040	160	0	0	756
165+00.00	16500	50	102	6	3	0	163	11	2	0	1204	164	0	0	905
165+50.00	16550	50	77	6	7	0	166	11	9	0	1369	175	0	0	1048
166+00.00	16600	50	47	6	36	0	115	11	39	0	1484	226	0	0	1101
166+50.00	16650	50	45	6	46	0	85	11	76	0	1568	324	0	0	1076
167+00.00	16700	50	42	6	55	0	81	11	93	0	1649	445	0	0	1025
167+50.00	16750	50	40	6	60	0	76	11	106	0	1725	583	0	0	952
168+00.00	16800	50	37	6	65	0	71	11	116	0	1797	733	0	0	862
168+50.00	16850	50	35	6	70	0	66	11	125	0	1863	896	0	0	754
169+00.00	16900	50	32	6	64	0	62	11	124	0	1925	1058	0	0	643
169+50.00	16950	50	28	6	50	0	55	11	106	0	1980	1195	0	0	550
170+00.00	17000	50	26	6	35	0	49	11	79	0	2029	1298	0	0	485
170+50.00	17050	50	24	6	36	0	47	11	66	0	2076	1384	0	0	435
170+80.00	17080	30	16	6	13	0	23	7	27	0	2098	1420	0	0	415
171+00.00	17100	20	15	6	19	0	12	4	12	0	2110	1435	0	0	407
171+50.00	17150	50	13	6	11	0	26	11	28	0	2136	1471	0	0	386
172+00.00	17200	50	10	6	8	0	21	11	18	0	2157	1494	0	0	372
172+50.00	17250	50	7	6	0	0	15	11	8	0	2172	1505	0	0	366
173+00.00	17300	50	7	6	0	0	13	11	1	0	2185	1505	0	0	367
173+36.00	17336	36	7	6	0	0	9	8	0	0	2194	1506	0	0	368
						Column totals	2194	321	1158	0					

I-94 EB, STAGE 2

STATION	Real Station	Distance	AREA (SF) Cut	AREA (SF) Salvaged / Unusable Pavement Material	AREA (SF) FILL	AREA (SF) EBS	Incremental Vol (CY) (Unadjusted) Cut Note 1	Incremental Vol (CY) (Unadjusted) Salvaged / Unusable Pavement Note 2	Incremental Vol (CY) (Unadjusted) FILL Note 3	Incremental Vol (CY) (Unadjusted) EBS	Cumulative Vol (CY) Cut 1.00 Note 1	Cumulative Vol (CY) Expanded Fill 1.30	Cumulative Vol (CY) Expanded EBS Backfill 1.30 Note 5	Cumulative Vol (CY) Reduced EBS In Fill 0.80 Note 7	Mass Ordinate Note 8
151+50.00	15150	0	0	0	6	0	0	0	0	0	0	0	0	0	0
152+00.00	15200	50	0	0	23	0	0	0	27	0	0	35	0	0	-35
152+50.00	15250	50	0	0	34	0	0	0	53	0	0	104	0	0	-104
153+00.00	15300	50	0	0	11	0	0	0	42	0	0	158	0	0	-158
153+50.00	15350	50	0	0	7	0	0	0	17	0	0	180	0	0	-180
154+00.00	15400	50	0	0	13	0	0	0	19	0	0	204	0	0	-204
154+50.00	15450	50	0	0	19	0	0	0	30	0	0	243	0	0	-243
155+00.00	15500	50	0	0	21	0	0	0	37	0	0	291	0	0	-291
155+50.00	15550	50	0	0	26	0	0	0	43	0	0	347	0	0	-347
156+00.00	15600	50	0	0	31	0	0	0	53	0	0	416	0	0	-416
156+50.00	15650	50	0	0	33	0	0	0	60	0	0	493	0	0	-493
157+00.00	15700	50	0	0	29	0	0	0	57	0	0	568	0	0	-568
157+50.00	15750	50	0	0	28	0	0	0	53	0	0	636	0	0	-636
158+00.00	15800	50	0	0	25	0	0	0	49	0	0	700	0	0	-700
158+50.00	15850	50	0	0	33	0	0	0	54	0	0	770	0	0	-770
159+00.00	15900	50	0	0	24	0	0	0	53	0	0	838	0	0	-838
159+35.00	15935	35	0	0	9	0	0	0	21	0	0	866	0	0	-866
						Column totals	0	0	666	0					

I-94 EB, STAGE 2

STATION	Real Station	Distance	AREA (SF) Cut	AREA (SF) Salvaged / Unusable Pavement Material	AREA (SF) FILL	AREA (SF) EBS	Incremental Vol (CY) (Unadjusted) Cut Note 1	Incremental Vol (CY) (Unadjusted) Salvaged / Unusable Pavement Note 2	Incremental Vol (CY) (Unadjusted) FILL Note 3	Incremental Vol (CY) (Unadjusted) EBS	Cumulative Vol (CY) Cut 1.00 Note 1	Cumulative Vol (CY) Expanded Fill 1.30	Cumulative Vol (CY) Expanded EBS Backfill 1.30 Note 5	Cumulative Vol (CY) Reduced EBS In Fill 0.80 Note 7	Mass Ordinate Note 8
160+94.00	16074	0	0	0	3	0	0	0	0	0	0	0	0	0	0
161+00.00	16100	26	0	0	2	0	0	0	3	0	0	3	0	0	-3
161+50.00	16150	50	0	0	1	0	0	0	3	0	0	7	0	0	-7
162+00.00	16200	50	0	0	0	0	0	0	0	0	0	7	0	0	-7
162+50.00	16250	50	0	0	0	0	0	0	0	0	0	7	0	0	-7
						Column totals	0	0	6	0					

I-94 WB, STAGE 2

STATION	Real Station	Distance	AREA (SF) Cut	AREA (SF) Salvaged / Unusable Pavement Material	AREA (SF) FILL	AREA (SF) EBS	Incremental Vol (CY) (Unadjusted) Cut Note 1	Incremental Vol (CY) (Unadjusted) Salvaged / Unusable Pavement Note 2	Incremental Vol (CY) (Unadjusted) FILL Note 3	Incremental Vol (CY) (Unadjusted) EBS	Cumulative Vol (CY) Cut 1.00 Note 1	Cumulative Vol (CY) Expanded Fill 1.30	Cumulative Vol (CY) Expanded EBS Backfill 1.30 Note 5	Cumulative Vol (CY) Reduced EBS In Fill 0.80 Note 7	Mass Ordinate Note 8
B 158+50.00	15850	0	0	0	0	0	0	0	0	0	0	0	0	0	0
B 159+00.00	15900	50	0	0	10	0	0	0	9	0	0	12	0	0	-12
B 159+35.00	15935	35	0	0	25	0	0	0	23	0	0	42	0	0	-42
					Column totals		0	0	32	0					

I-94 WB, STAGE 2

STATION	Real Station	Distance	AREA (SF) Cut	AREA (SF) Salvaged / Unusable Pavement Material	AREA (SF) FILL	AREA (SF) EBS	Incremental Vol (CY) (Unadjusted) Cut Note 1	Incremental Vol (CY) (Unadjusted) Salvaged / Unusable Pavement Note 2	Incremental Vol (CY) (Unadjusted) FILL Note 3	Incremental Vol (CY) (Unadjusted) EBS	Cumulative Vol (CY) Cut 1.00 Note 1	Cumulative Vol (CY) Expanded Fill 1.30	Cumulative Vol (CY) Expanded EBS Backfill 1.30 Note 5	Cumulative Vol (CY) Reduced EBS In Fill 0.80 Note 7	Mass Ordinate Note 8
B 160+95.00	16095	0	0	0	17	0	0	0	0	0	0	0	0	0	0
B 161+00.00	16100	5	0	0	14	0	0	0	3	0	0	4	0	0	-4
B 161+50.00	16150	50	0	0	8	0	0	0	20	0	0	29	0	0	-29
B 162+00.00	16200	50	0	0	4	0	0	0	11	0	0	44	0	0	-44
B 162+50.00	16250	50	0	0	1	0	0	0	5	0	0	51	0	0	-51
B 163+00.00	16300	50	0	0	0	0	0	0	1	0	0	52	0	0	-52
B 163+50.00	16350	50	0	0	0	0	0	0	0	0	0	52	0	0	-52
B 164+00.00	16400	50	0	0	4	0	0	0	4	0	0	58	0	0	-58
B 164+21.14	16421	21	0	0	7	0	0	0	5	0	0	64	0	0	-64
B 164+50.00	16450	29	0	0	2	0	0	0	5	0	0	70	0	0	-70
B 165+00.00	16500	50	0	0	1	0	0	0	2	0	0	73	0	0	-73
					Column totals		0	0	56	0					

DOUSMAN ROAD, STAGE 2

STATION	Real Station	Distance	AREA (SF) Cut	AREA (SF) Salvaged / Unusable Pavement Material	AREA (SF) FILL	AREA (SF) EBS	Incremental Vol (CY) (Unadjusted) Cut Note 1	Incremental Vol (CY) (Unadjusted) Salvaged / Unusable Pavement Note 2	Incremental Vol (CY) (Unadjusted) FILL Note 3	Incremental Vol (CY) (Unadjusted) EBS	Cumulative Vol (CY) Cut 1.00 Note 1	Cumulative Vol (CY) Expanded Fill 1.30	Cumulative Vol (CY) Expanded EBS Backfill 1.30 Note 5	Cumulative Vol (CY) Reduced EBS In Fill 0.80 Note 7	Mass Ordinate Note 8
603+00.00	60300	0	0	0	0	0	0	0	0	0	0	0	0	0	0
603+50.00	60350	50	123	123	0	0	114	114	0	0	114	0	0	0	0
603+95.00	60395	45	138	138	2	0	217	217	1	0	331	2	0	0	-2
604+00.00	60400	5	132	132	1	0	25	25	0	0	356	2	0	0	-2
604+20.00	60420	20	136	136	0	0	99	99	0	0	455	2	0	0	-2
604+45.00	60445	25	139	139	0	0	128	128	0	0	583	2	0	0	-2
604+50.00	60450	5	142	142	0	0	26	26	0	0	609	2	0	0	-2
604+85.00	60485	35	156	156	0	0	193	193	0	0	802	3	0	0	-3
605+00.00	60500	15	119	119	7	0	76	76	2	0	878	6	0	0	-6
605+50.00	60550	50	287	287	2	0	375	375	8	0	1254	16	0	0	-16
606+00.00	60600	50	306	306	0	0	549	549	2	0	1803	18	0	0	-18
606+50.00	60650	50	269	269	1	0	533	533	1	0	2335	20	0	0	-20
607+00.00	60700	50	124	124	4	0	364	364	5	0	2699	27	0	0	-27
607+05.00	60705	5	130	130	1	0	23	23	0	0	2723	27	0	0	-27
607+50.00	60750	45	135	135	0	0	221	221	1	0	2944	28	0	0	-28
607+75.00	60775	25	132	132	0	0	124	124	0	0	3068	28	0	0	-28
608+00.00	60800	25	131	131	0	0	122	122	0	0	3189	28	0	0	-28
608+50.00	60850	50	0	0	0	0	121	121	0	0	3311	29	0	0	-29
					Column totals		3311	3311	22	0					

I-94 MEDIAN, STAGE 3

STATION	Real Station	Distance	AREA (SF) Cut	AREA (SF) Salvaged / Unusable Pavement Material	AREA (SF) FILL	AREA (SF) EBS	Incremental Vol (CY) (Unadjusted) Cut Note 1	Incremental Vol (CY) (Unadjusted) Salvaged / Unusable Pavement Note 2	Incremental Vol (CY) (Unadjusted) FILL Note 3	Incremental Vol (CY) (Unadjusted) EBS	Cumulative Vol (CY) Cut 1.00 Note 1	Cumulative Vol (CY) Expanded Fill 1.30	Cumulative Vol (CY) Expanded EBS Backfill 1.30 Note 5	Cumulative Vol (CY) Reduced EBS In Fill 0.80 Note 7	Mass Ordinate Note 8
149+45.00	14945	0	0	0	0	0	0	0	0	0	0	0	0	0	0
149+50.00	14950	5	0	0	0	0	0	0	0	0	0	0	0	0	0
149+89.00	14989	39	0	0	36	0	0	0	26	0	0	34	0	0	-34
150+00.00	15000	11	0	0	20	0	0	0	11	0	0	48	0	0	-48
150+50.00	15050	50	0	0	10	0	0	0	28	0	0	85	0	0	-85
151+00.00	15100	50	3	0	4	0	3	0	13	0	3	102	0	0	-98
151+50.00	15150	50	11	0	1	0	13	0	5	0	17	108	0	0	-92
152+00.00	15200	50	19	0	0	0	28	0	1	0	45	110	0	0	-65
152+50.00	15250	50	28	0	0	0	44	0	0	0	88	110	0	0	-22
153+00.00	15300	50	37	0	0	0	60	0	0	0	148	110	0	0	38
153+50.00	15350	50	45	0	0	0	76	0	0	0	223	110	0	0	113
154+00.00	15400	50	52	0	0	0	90	0	0	0	314	110	0	0	203
154+50.00	15450	50	59	0	0	0	103	0	0	0	417	110	0	0	307
155+00.00	15500	50	4	0	16	0	58	0	15	0	475	130	0	0	345
155+50.00	15550	50	70	0	0	0	68	0	15	0	543	150	0	0	393
156+00.00	15600	50	74	0	0	0	133	0	0	0	675	150	0	0	525
156+50.00	15650	50	73	0	0	0	136	0	0	0	811	150	0	0	662
157+00.00	15700	50	65	0	0	0	129	0	0	0	940	150	0	0	790
157+45.00	15745	45	46	0	0	0	92	0	0	0	1032	150	0	0	883
157+50.00	15750	5	46	0	0	0	8	0	0	0	1041	150	0	0	891
157+75.00	15775	25	40	0	0	0	40	0	0	0	1081	150	0	0	931
158+00.00	15800	25	29	0	0	0	32	0	0	0	1113	150	0	0	963
158+50.00	15850	50	23	0	0	0	48	0	0	0	1160	150	0	0	1010
158+55.00	15855	5	22	0	0	0	4	0	0	0	1164	150	0	0	1014
158+93.00	15893	38	20	0	0	0	29	0	0	0	1194	150	0	0	1044
159+00.00	15900	7	20	0	0	0	5	0	0	0	1199	150	0	0	1049
159+35.00	15935	35	21	0	0	0	27	0	0	0	1226	151	0	0	1075
						Column totals	1226	0	116	0					

I-94 MEDIAN, STAGE 3

STATION	Real Station	Distance	AREA (SF) Cut	AREA (SF) Salvaged / Unusable Pavement Material	AREA (SF) FILL	AREA (SF) EBS	Incremental Vol (CY) (Unadjusted) Cut Note 1	Incremental Vol (CY) (Unadjusted) Salvaged / Unusable Pavement Note 2	Incremental Vol (CY) (Unadjusted) FILL Note 3	Incremental Vol (CY) (Unadjusted) EBS	Cumulative Vol (CY) Cut 1.00 Note 1	Cumulative Vol (CY) Expanded Fill 1.30	Cumulative Vol (CY) Expanded EBS Backfill 1.30 Note 5	Cumulative Vol (CY) Reduced EBS In Fill 0.80 Note 7	Mass Ordinate Note 8
160+94.00	16094	0	21	0	0	0	0	0	0	0	0	0	0	0	0
161+00.00	16100	6	21	0	0	0	5	0	0	0	5	0	0	0	5
161+33.00	16133	33	26	0	0	0	29	0	0	0	33	0	0	0	33
161+50.00	16150	17	26	0	0	0	16	0	0	0	50	0	0	0	49
161+80.00	16180	30	38	0	0	0	36	0	0	0	85	0	0	0	85
162+00.00	16200	20	38	0	0	0	28	0	0	0	114	0	0	0	113
162+50.00	16250	50	48	0	0	0	80	0	0	0	193	0	0	0	193
163+00.00	16300	50	72	0	0	0	111	0	0	0	305	1	0	0	304
163+30.00	16330	30	74	0	0	0	81	0	0	0	386	1	0	0	385
163+50.00	16350	20	73	0	0	0	55	0	0	0	441	1	0	0	440
164+00.00	16400	50	70	0	0	0	133	0	0	0	574	1	0	0	573
164+50.00	16450	50	67	0	0	0	127	0	0	0	701	1	0	0	700
165+00.00	16500	50	65	0	0	0	122	0	0	0	823	1	0	0	822
165+50.00	16550	50	62	0	0	0	118	0	0	0	941	1	0	0	940
166+00.00	16600	50	59	0	0	0	112	0	0	0	1053	1	0	0	1052
166+50.00	16650	50	54	0	0	0	104	0	0	0	1157	1	0	0	1156
167+00.00	16700	50	49	0	0	0	95	0	0	0	1253	1	0	0	1252
167+50.00	16750	50	41	0	0	0	83	0	0	0	1336	1	0	0	1335
168+00.00	16800	50	34	0	0	0	70	0	0	0	1406	1	0	0	1405
168+50.00	16850	50	26	0	0	0	56	0	0	0	1461	1	0	0	1460
169+00.00	16900	50	17	0	0	0	40	0	0	0	1501	1	0	0	1500
169+50.00	16950	50	10	0	3	0	25	0	3	0	1526	5	0	0	1520
170+00.00	17000	50	6	0	11	0	15	0	13	0	1541	22	0	0	1519
170+50.00	17050	50	4	0	4	0	10	0	14	0	1551	40	0	0	1511
170+80.00	17080	30	3	0	6	0	4	0	6	0	1555	47	0	0	1508
171+00.00	17100	20	7	0	1	0	4	0	2	0	1559	50	0	0	1508
171+50.00	17150	50	3	0	0	0	9	0	1	0	1568	51	0	0	1517
172+00.00	17200	50	1	0	1	0	4	0	1	0	1572	52	0	0	1520
172+50.00	17250	50	0	0	0	0	1	0	0	0	1574	53	0	0	1521
173+00.00	17300	50	0	0	0	0	0	0	0	0	1574	53	0	0	1521
						Column totals	1574	0	41	0					

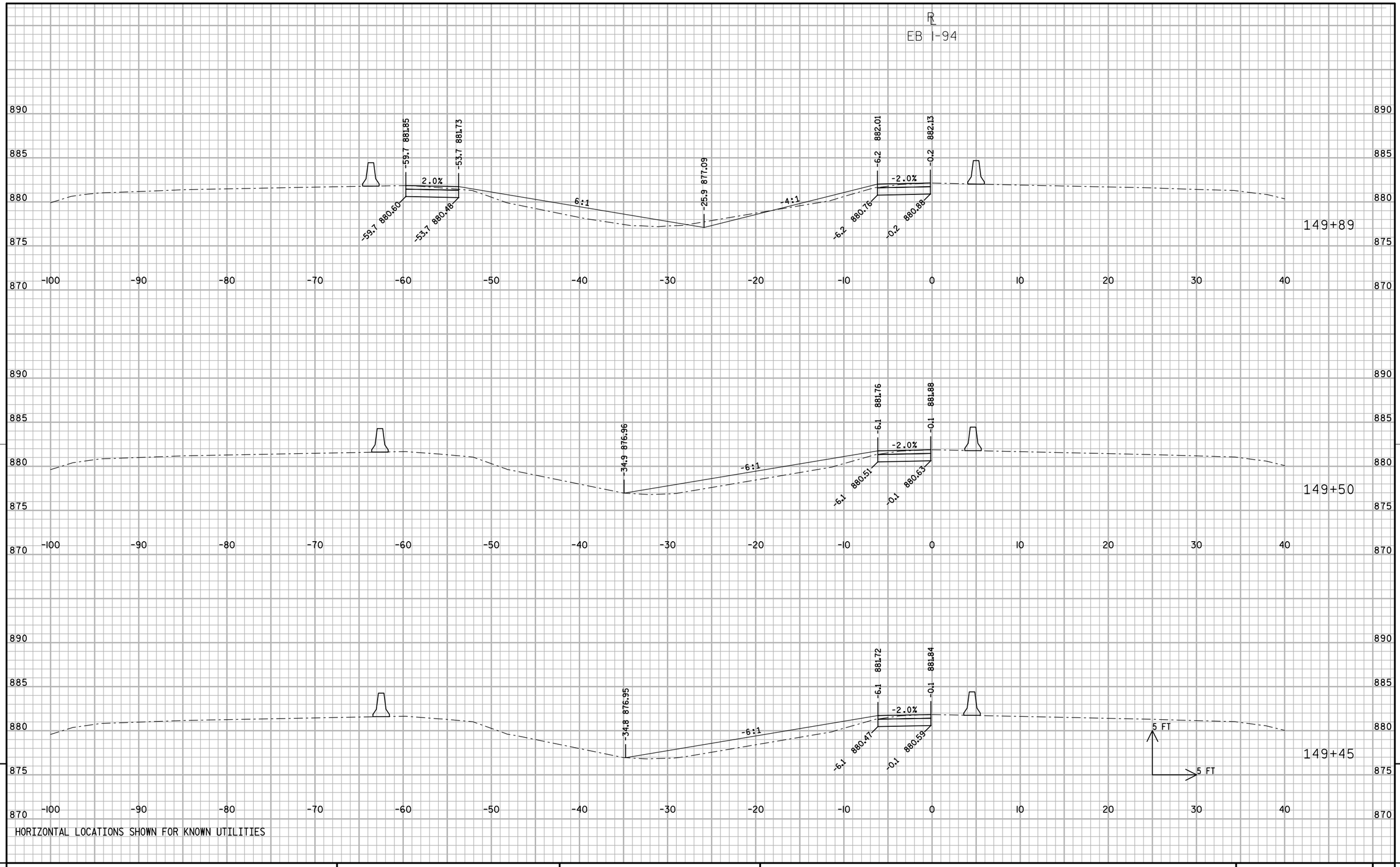

HORIZONTAL LOCATIONS SHOWN FOR KNOWN UTILITIES

PROJECT NO: 1060-38-70	HWY: IH-94	COUNTY: WAUKESHA	CROSS SECTIONS: STAGE 1 IH-94 AT DOUSMAN ROAD	SHEET 214	E

FILE NAME : x:\20100S\20103.00\Eng_Docs\Sheets\1060-38-70\090241_xs.dgn PLOT DATE : 7/28/2014 PLOT BY : bweigand PLOT NAME : PLOT SCALE : 1:10

WISDOT/CADDS SHEET 21

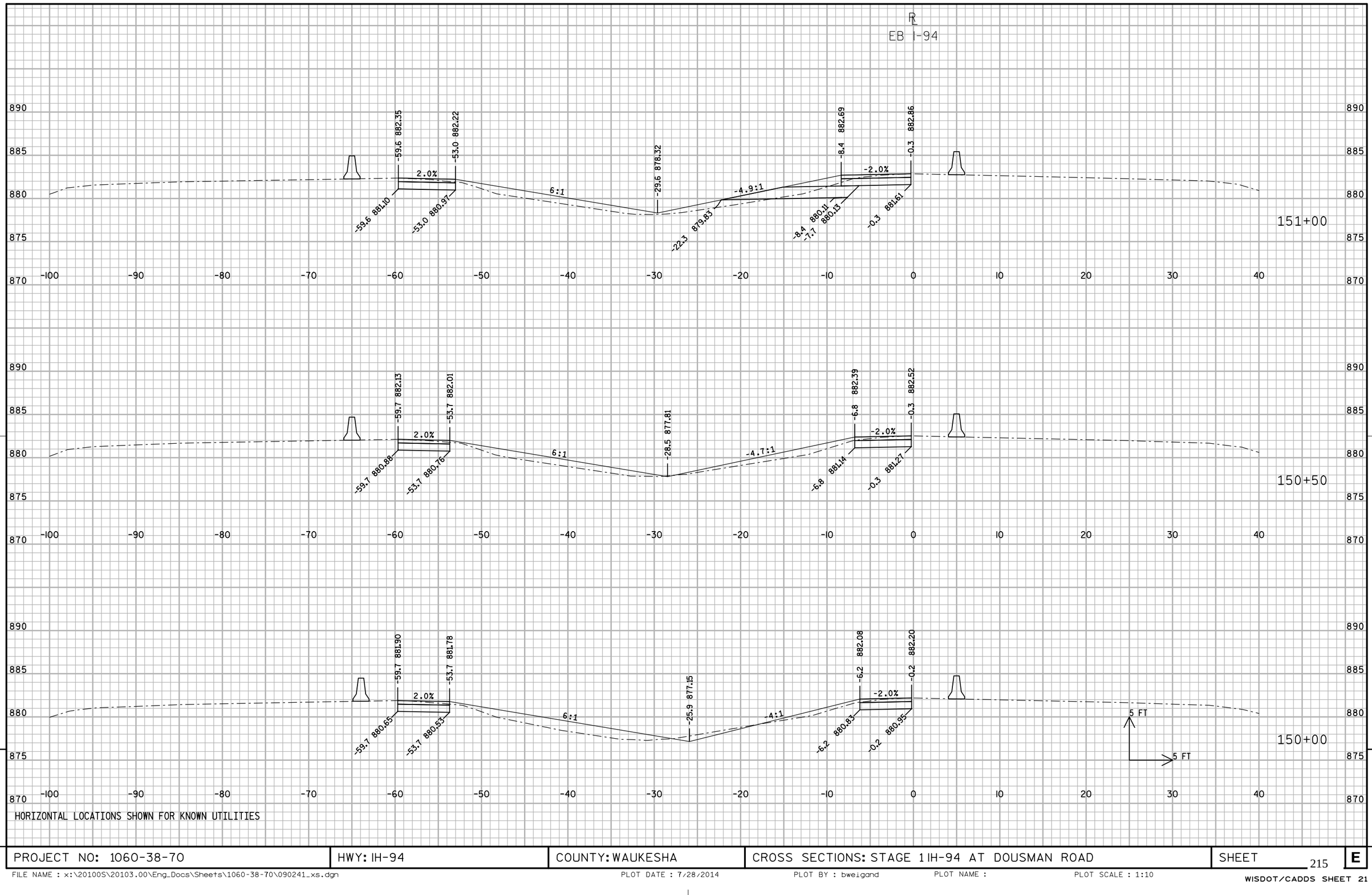

HORIZONTAL LOCATIONS SHOWN FOR KNOWN UTILITIES

PROJECT NO: 1060-38-70	HWY: IH-94	COUNTY: WAUKESHA	CROSS SECTIONS: STAGE 1 IH-94 AT DOUSMAN ROAD	SHEET 215	E

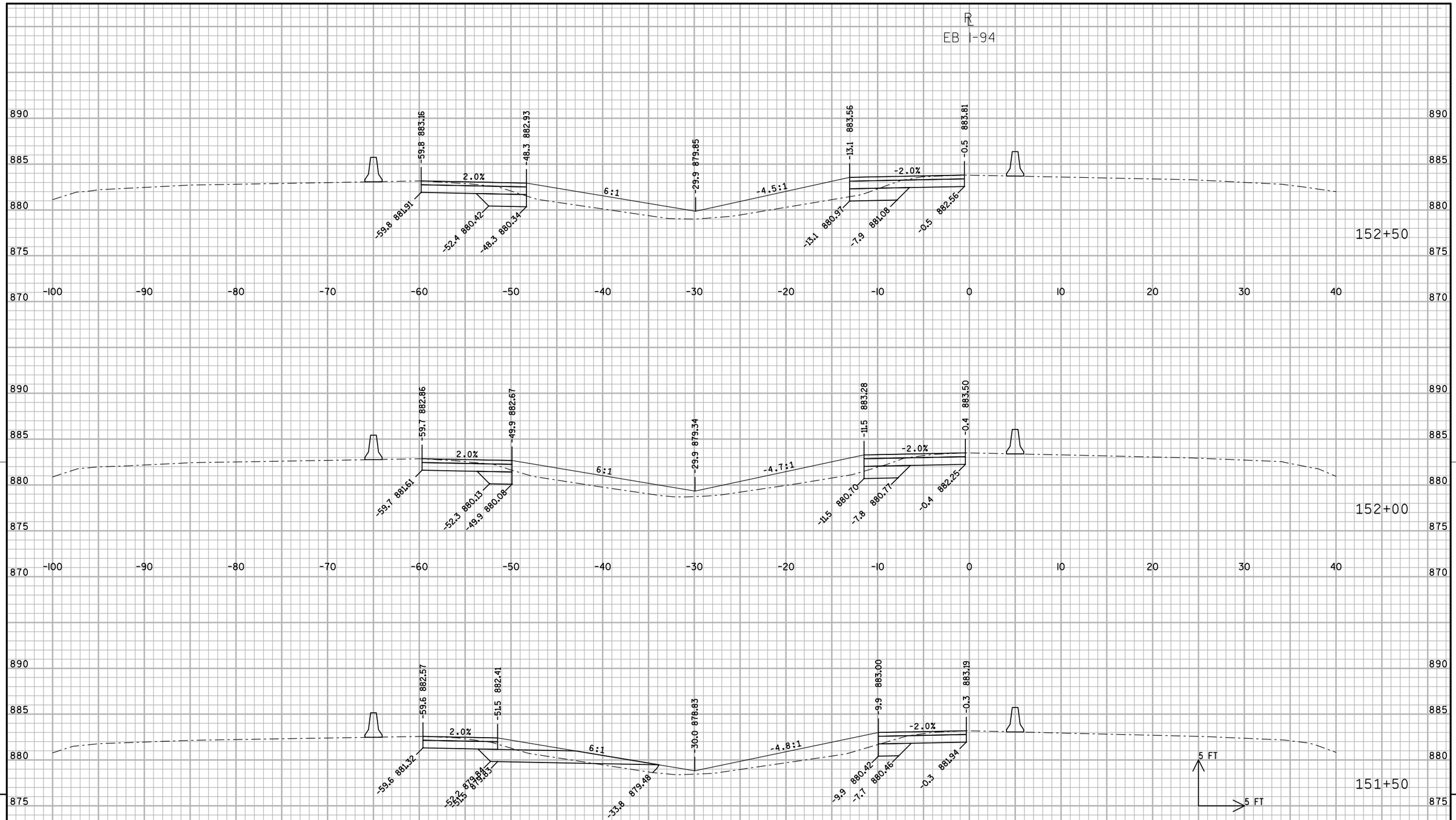

9

HORIZONTAL LOCATIONS SHOWN FOR KNOWN UTILITIES

9

PROJECT NO: 1060-38-70	HWY: IH-94	COUNTY: WAUKESHA	CROSS SECTIONS: STAGE 1 IH-94 AT DOUSMAN ROAD	SHEET 216	E

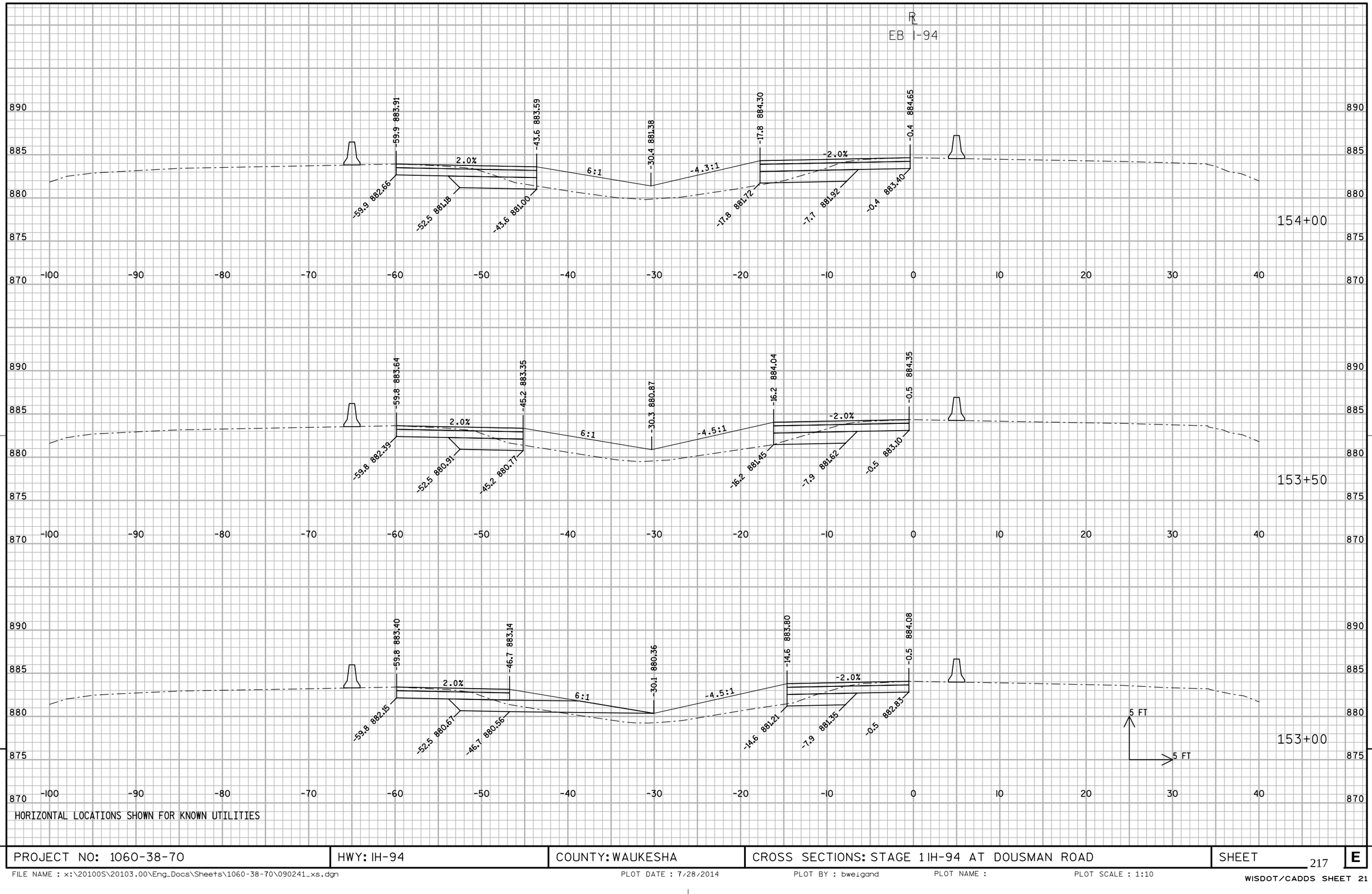

HORIZONTAL LOCATIONS SHOWN FOR KNOWN UTILITIES

PROJECT NO: 1060-38-70	HWY: IH-94	COUNTY: WAUKESHA	CROSS SECTIONS: STAGE 1 IH-94 AT DOUSMAN ROAD	SHEET 217	E

FILE NAME : x:\20100S\20103.00\Eng_Docs\Sheets\1060-38-70\090241_xs.dgn PLOT DATE : 7/28/2014 PLOT BY : bweigand PLOT NAME : PLOT SCALE : 1:10

WISDOT/CADDS SHEET 21

R
EB I-94

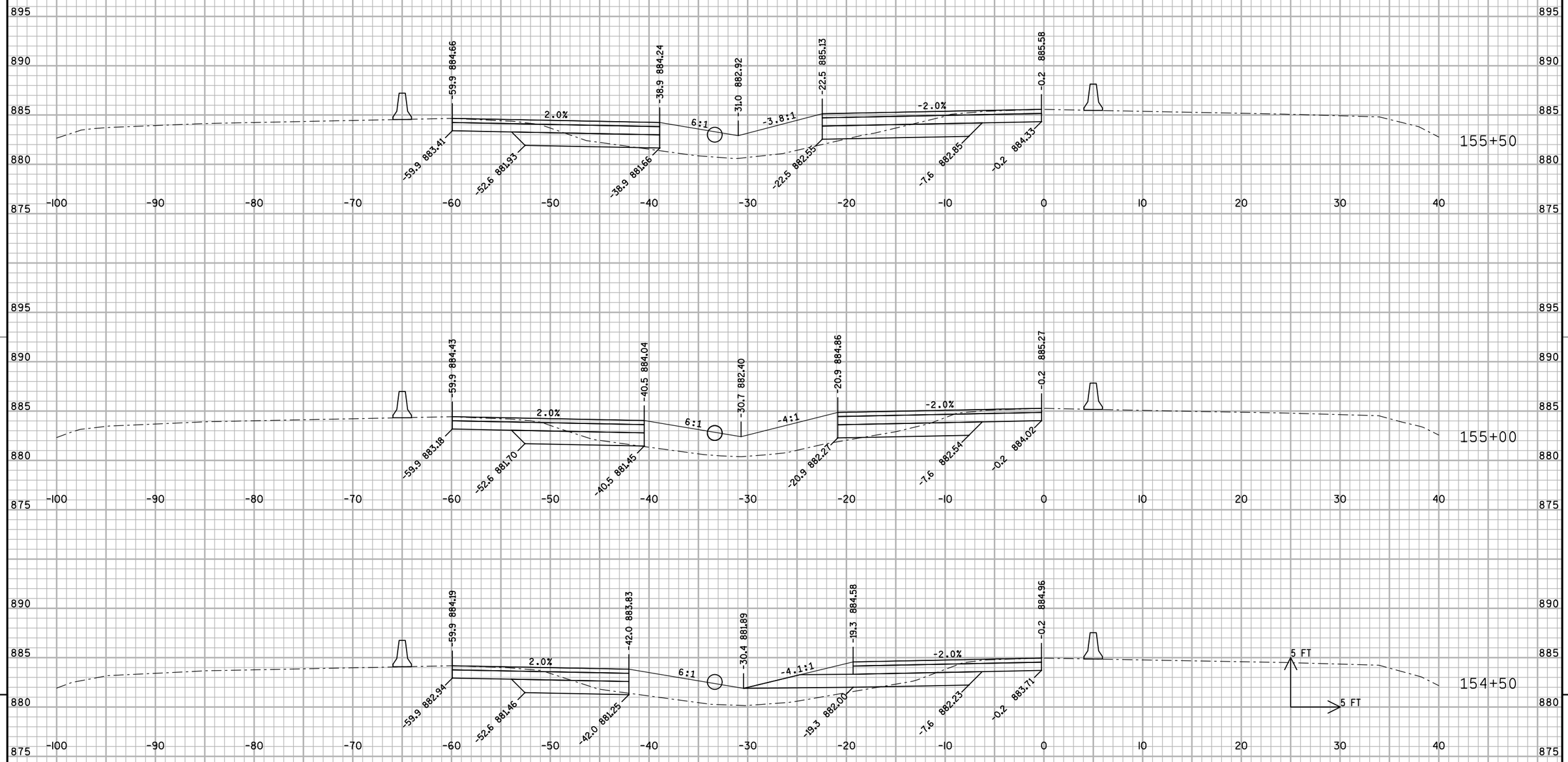

HORIZONTAL LOCATIONS SHOWN FOR KNOWN UTILITIES

PROJECT NO: 1060-38-70	HWY: IH-94	COUNTY: WAUKESHA	CROSS SECTIONS: STAGE 1 IH-94 AT DOUSMAN ROAD	SHEET 218	E

FILE NAME : x:\20100S\20103.00\Eng_Docs\Sheets\1060-38-70\090241_xs.dgn PLOT DATE : 7/28/2014 PLOT BY : bweigand PLOT NAME : PLOT SCALE : 1:10

WISDOT/CADDS SHEET 21

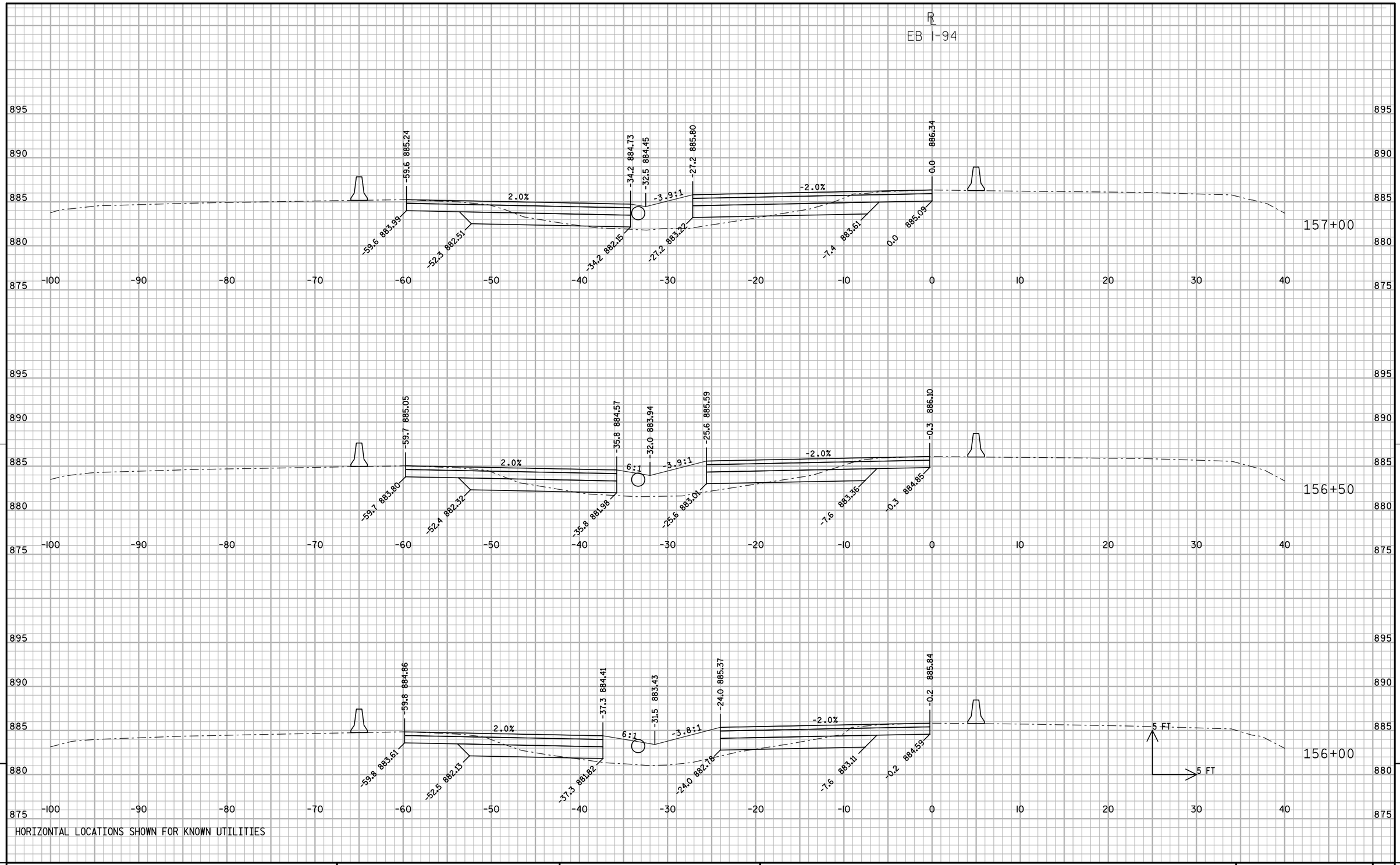

HORIZONTAL LOCATIONS SHOWN FOR KNOWN UTILITIES

PROJECT NO: 1060-38-70	HWY: IH-94	COUNTY: WAUKESHA	CROSS SECTIONS: STAGE 1 IH-94 AT DOUSMAN ROAD	SHEET 219	E

FILE NAME : x:\20100S\20103.00\Eng_Docs\Sheets\1060-38-70\090241_xs.dgn PLOT DATE : 7/28/2014 PLOT BY : bweigand PLOT NAME : PLOT SCALE : 1:10

WISDOT/CADDS SHEET 21

9

HORIZONTAL LOCATIONS SHOWN FOR KNOWN UTILITIES

9

PROJECT NO: 1060-38-70	HWY: IH-94	COUNTY: WAUKESHA	CROSS SECTIONS: STAGE 1 IH-94 AT DOUSMAN ROAD	SHEET 220	E

FILE NAME : x:\20100S\20103.00\Eng_Docs\Sheets\1060-38-70\090241_xs.dgn PLOT DATE : 7/28/2014 PLOT BY : bweigand PLOT NAME : PLOT SCALE : 1:10

WISDOT/CADDS SHEET 21

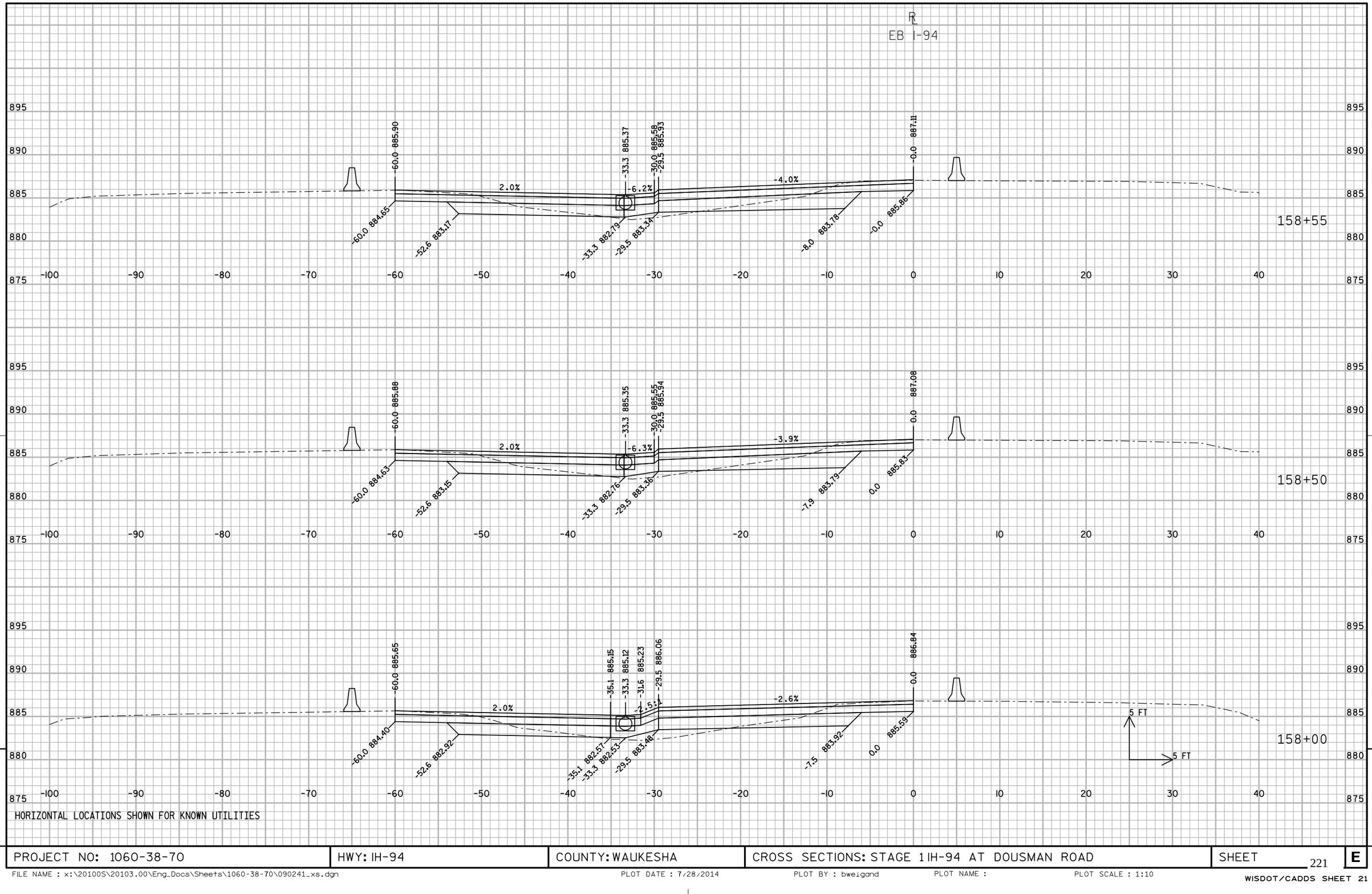

HORIZONTAL LOCATIONS SHOWN FOR KNOWN UTILITIES

PROJECT NO: 1060-38-70	HWY: IH-94	COUNTY: WAUKESHA	CROSS SECTIONS: STAGE 1 IH-94 AT DOUSMAN ROAD	SHEET 221	E

FILE NAME : x:\20100S\20103.00\Eng_Docs\Sheets\1060-38-70\090241_xs.dgn PLOT DATE : 7/28/2014 PLOT BY : bweigand PLOT NAME : PLOT SCALE : 1:10

WISDOT/CADDS SHEET 21

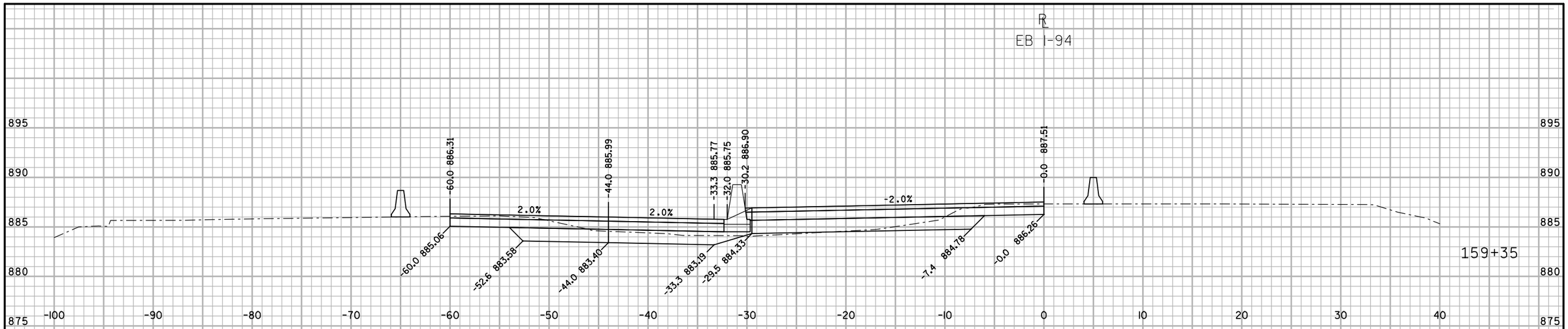

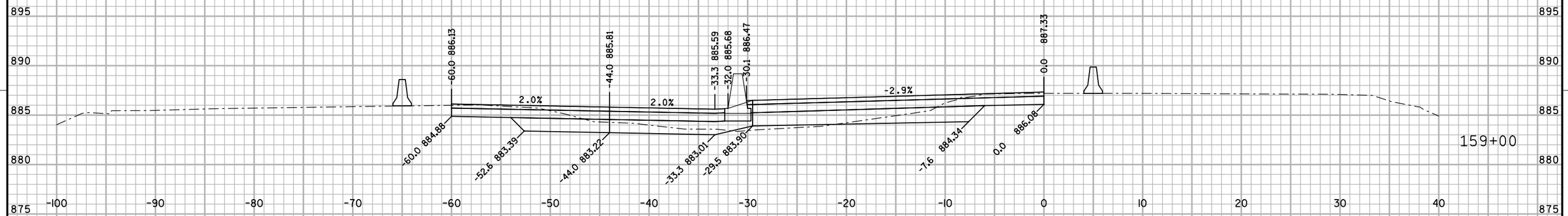

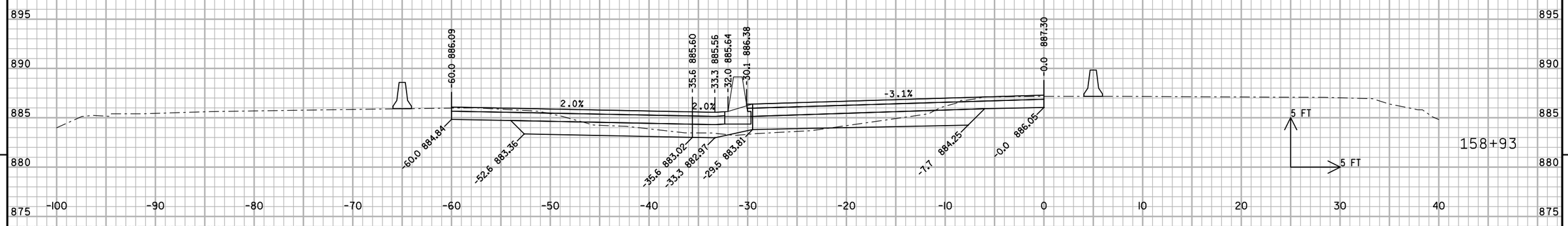

9

HORIZONTAL LOCATIONS SHOWN FOR KNOWN UTILITIES

9

PROJECT NO: 1060-38-70	HWY: IH-94	COUNTY: WAUKESHA	CROSS SECTIONS: STAGE 1 IH-94 AT DOUSMAN ROAD	SHEET 222	E

FILE NAME : x:\20100S\20103.00\Eng_Docs\Sheets\1060-38-70\090241_xs.dgn PLOT DATE : 7/28/2014 PLOT BY : bweigand PLOT NAME : PLOT SCALE : 1:10

WISDOT/CADDS SHEET 21

HORIZONTAL LOCATIONS SHOWN FOR KNOWN UTILITIES

PROJECT NO: 1060-38-70	HWY: IH-94	COUNTY: WAUKESHA	CROSS SECTIONS: STAGE 1 IH-94 AT DOUSMAN ROAD	SHEET 223	E

FILE NAME : x:\20100S\20103.00\Eng_Docs\Sheets\1060-38-70\090241_xs.dgn PLOT DATE : 7/28/2014 PLOT BY : bweigand PLOT NAME : PLOT SCALE : 1:10

WISDOT/CADDS SHEET 21

HORIZONTAL LOCATIONS SHOWN FOR KNOWN UTILITIES

PROJECT NO: 1060-38-70	HWY: IH-94	COUNTY: WAUKESHA	CROSS SECTIONS: STAGE 1 IH-94 AT DOUSMAN ROAD	SHEET 224	E

FILE NAME : x:\20100S\20103.00\Eng_Docs\Sheets\1060-38-70\090241_xs.dgn PLOT DATE : 7/28/2014 PLOT BY : bweigand PLOT NAME : PLOT SCALE : 1:10

WISDOT/CADDS SHEET 21

HORIZONTAL LOCATIONS SHOWN FOR KNOWN UTILITIES

PROJECT NO: 1060-38-70	HWY: IH-94	COUNTY: WAUKESHA	CROSS SECTIONS: STAGE 1 IH-94 AT DOUSMAN ROAD	SHEET 225	E

FILE NAME : x:\20100S\20103.00\Eng_Docs\Sheets\1060-38-70\090241_xs.dgn PLOT DATE : 7/28/2014 PLOT BY : bweigand PLOT NAME : PLOT SCALE : 1:10

WISDOT/CADDS SHEET 21

HORIZONTAL LOCATIONS SHOWN FOR KNOWN UTILITIES

PROJECT NO: 1060-38-70	HWY: IH-94	COUNTY: WAUKESHA	CROSS SECTIONS: STAGE 1 IH-94 AT DOUSMAN ROAD	SHEET 226	E

FILE NAME : x:\20100S\20103.00\Eng_Docs\Sheets\1060-38-70\090241_xs.dgn PLOT DATE : 7/28/2014 PLOT BY : bweigand PLOT NAME : PLOT SCALE : 1:10

WISDOT/CADDS SHEET 21

HORIZONTAL LOCATIONS SHOWN FOR KNOWN UTILITIES

PROJECT NO: 1060-38-70	HWY: IH-94	COUNTY: WAUKESHA	CROSS SECTIONS: STAGE 1 IH-94 AT DOUSMAN ROAD	SHEET 227	E

FILE NAME : x:\20100S\20103.00\Eng_Docs\Sheets\1060-38-70\090241_xs.dgn PLOT DATE : 7/28/2014 PLOT BY : bweigand PLOT NAME : PLOT SCALE : 1:10

WISDOT/CADDS SHEET 21

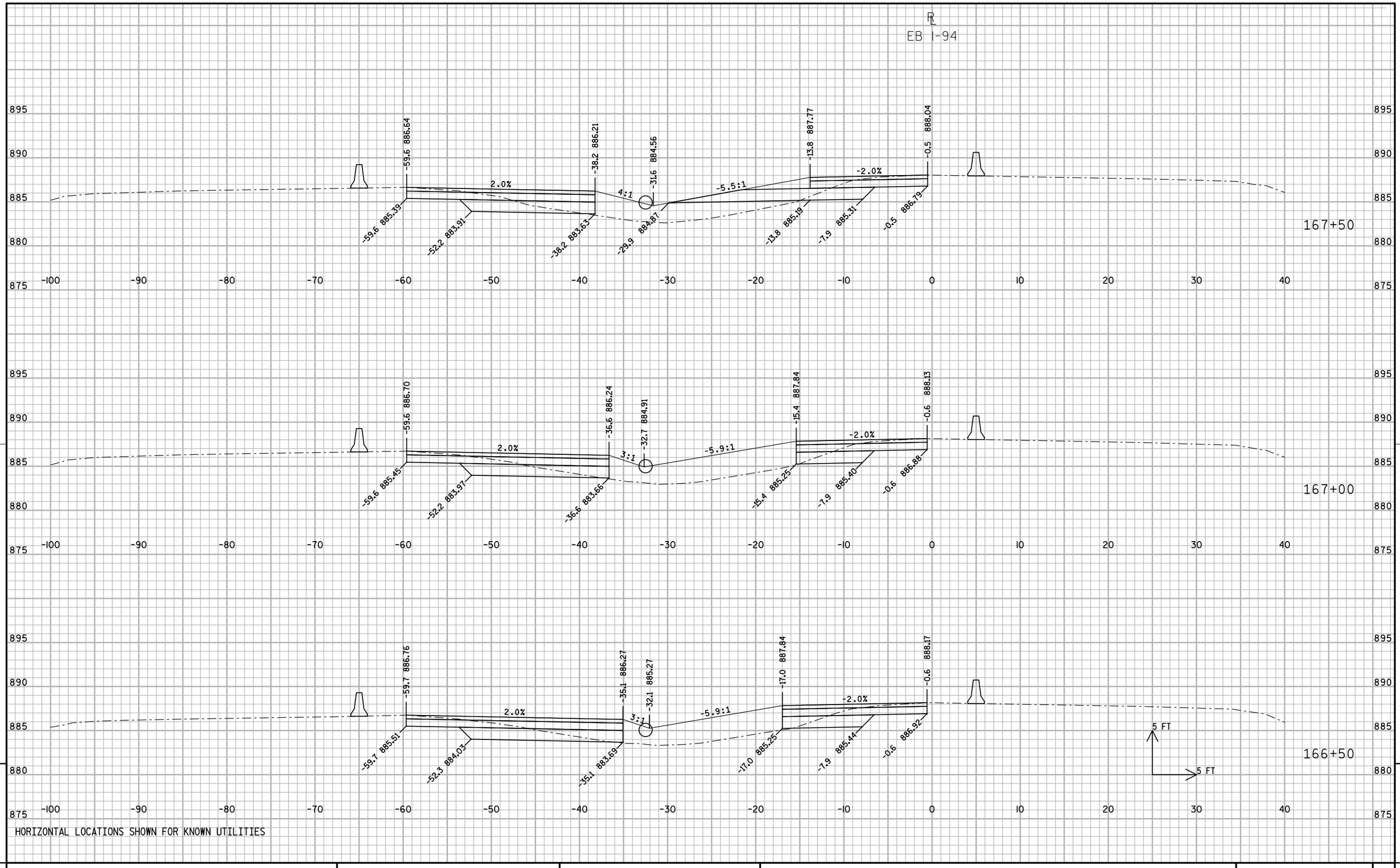

HORIZONTAL LOCATIONS SHOWN FOR KNOWN UTILITIES

PROJECT NO: 1060-38-70	HWY: IH-94	COUNTY: WAUKESHA	CROSS SECTIONS: STAGE 1 IH-94 AT DOUSMAN ROAD	SHEET 228	E

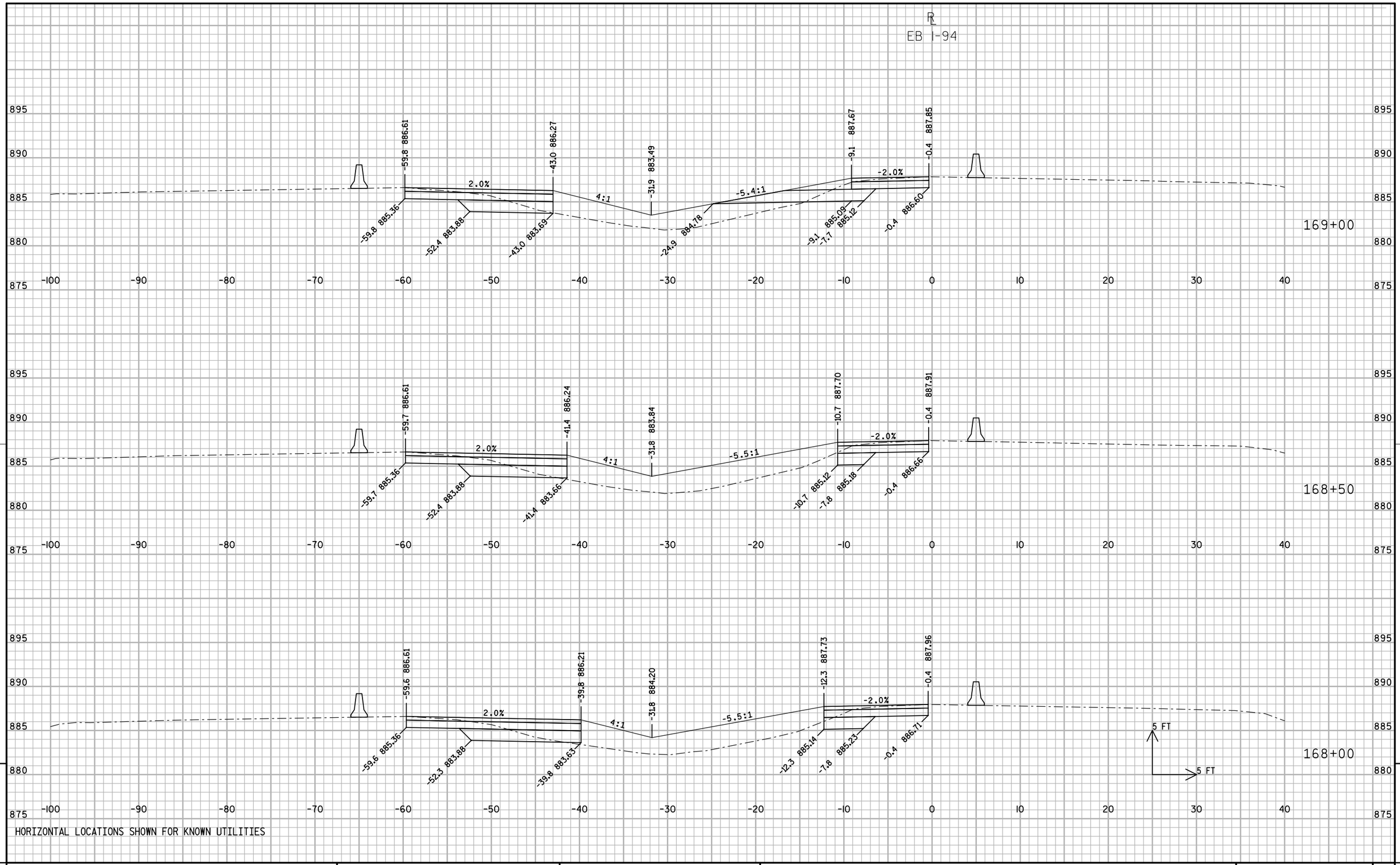

9

HORIZONTAL LOCATIONS SHOWN FOR KNOWN UTILITIES

9

PROJECT NO: 1060-38-70	HWY: IH-94	COUNTY: WAUKESHA	CROSS SECTIONS: STAGE 1 IH-94 AT DOUSMAN ROAD	SHEET 229	E

FILE NAME : x:\20100S\20103.00\Eng_Docs\Sheets\1060-38-70\090241_xs.dgn PLOT DATE : 7/28/2014 PLOT BY : bweigand PLOT NAME : PLOT SCALE : 1:10

WISDOT/CADDS SHEET 21

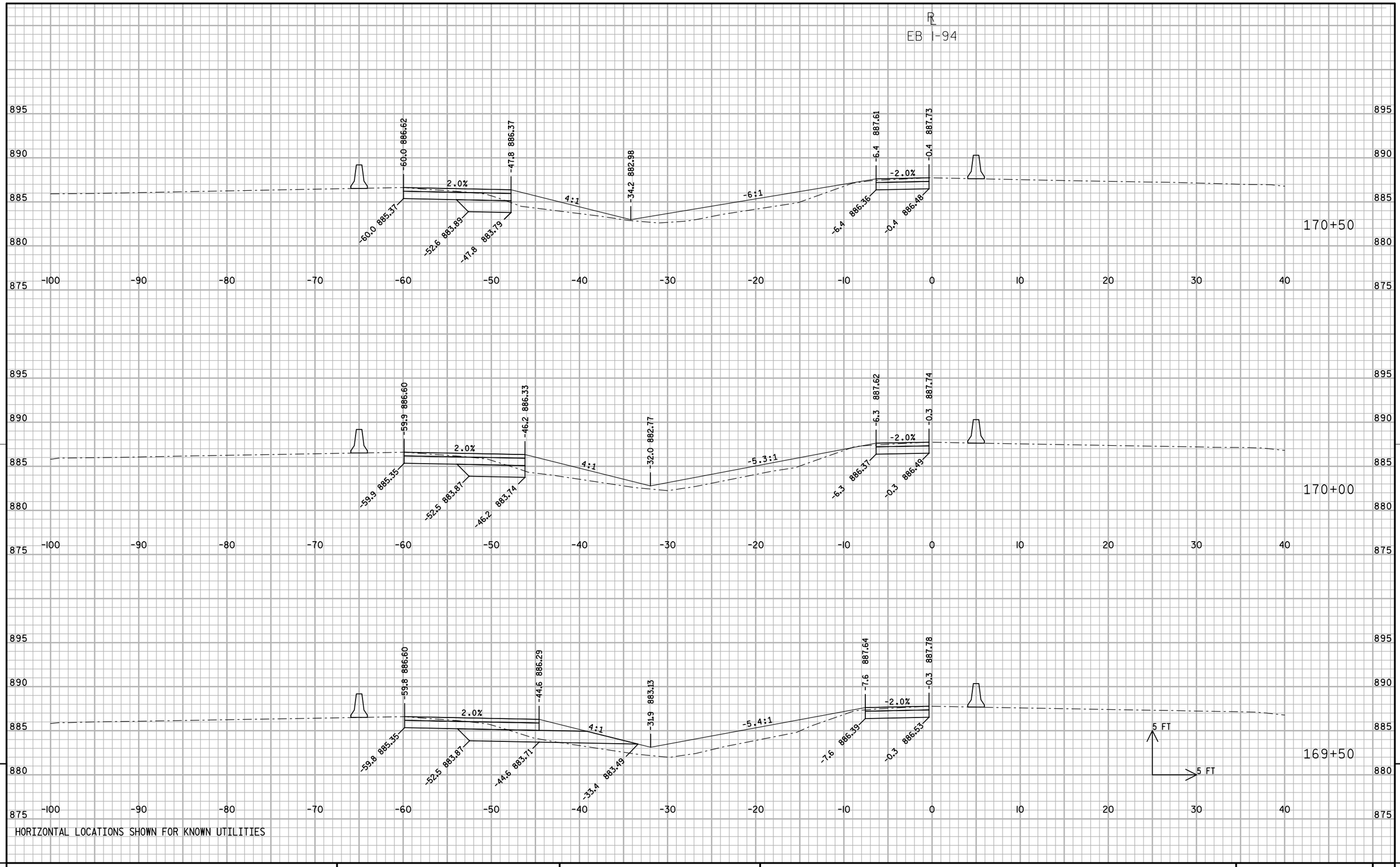

9

HORIZONTAL LOCATIONS SHOWN FOR KNOWN UTILITIES

9

PROJECT NO: 1060-38-70	HWY: IH-94	COUNTY: WAUKESHA	CROSS SECTIONS: STAGE 1 IH-94 AT DOUSMAN ROAD	SHEET 230	E

FILE NAME : x:\20100S\20103.00\Eng_Docs\Sheets\1060-38-70\090241_xs.dgn PLOT DATE : 7/28/2014 PLOT BY : bweigand PLOT NAME : PLOT SCALE : 1:10

WISDOT/CADDS SHEET 21

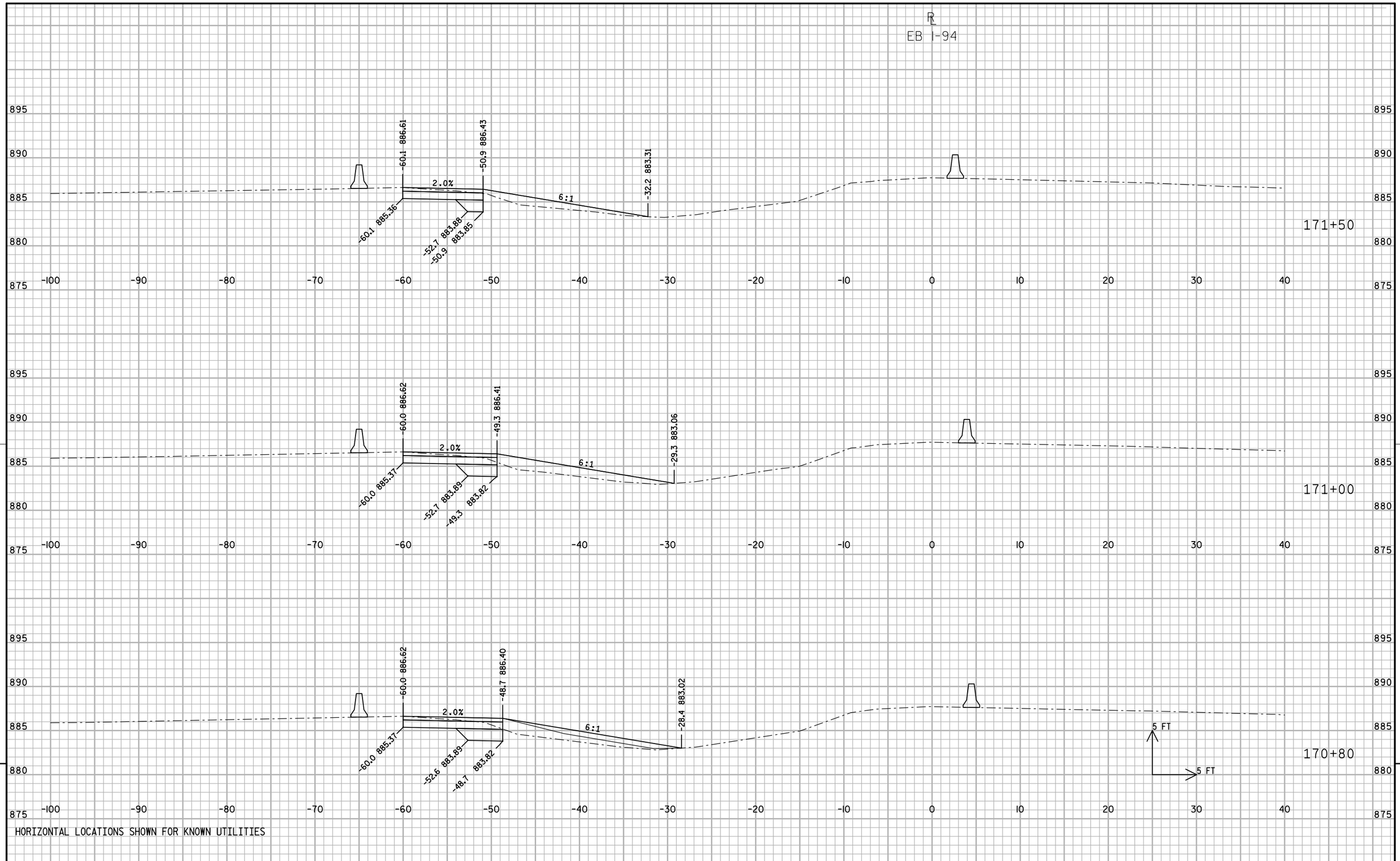

HORIZONTAL LOCATIONS SHOWN FOR KNOWN UTILITIES

PROJECT NO: 1060-38-70	HWY: IH-94	COUNTY: WAUKESHA	CROSS SECTIONS: STAGE 1 IH-94 AT DOUSMAN ROAD	SHEET 231	E

FILE NAME : x:\20100S\20103.00\Eng_Docs\Sheets\1060-38-70\090241_xs.dgn PLOT DATE : 7/28/2014 PLOT BY : bweigand PLOT NAME : PLOT SCALE : 1:10

WISDOT/CADDS SHEET 21

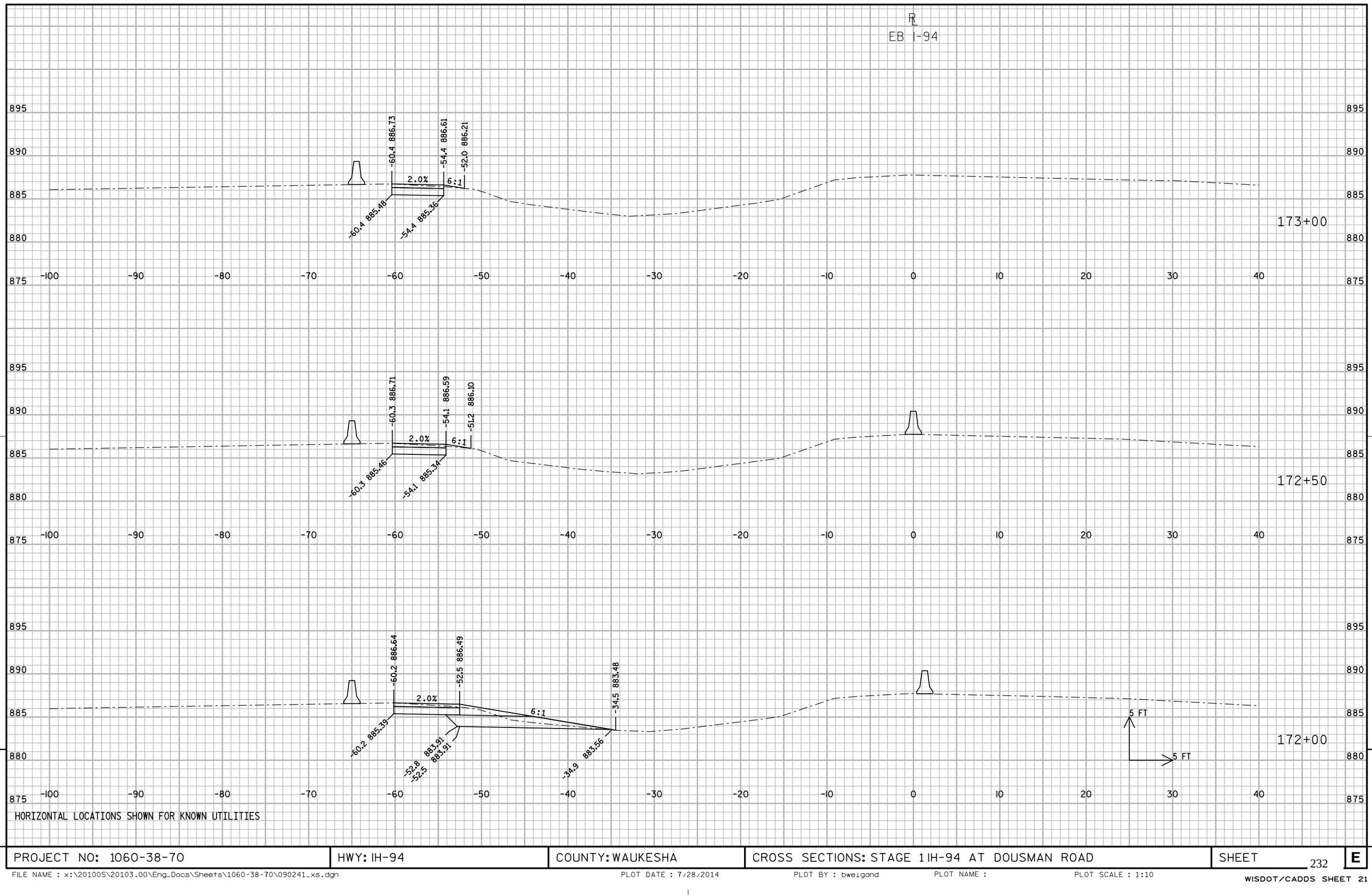

HORIZONTAL LOCATIONS SHOWN FOR KNOWN UTILITIES

PROJECT NO: 1060-38-70	HWY: IH-94	COUNTY: WAUKESHA	CROSS SECTIONS: STAGE 1 IH-94 AT DOUSMAN ROAD	SHEET 232	E

R
EB 1-94

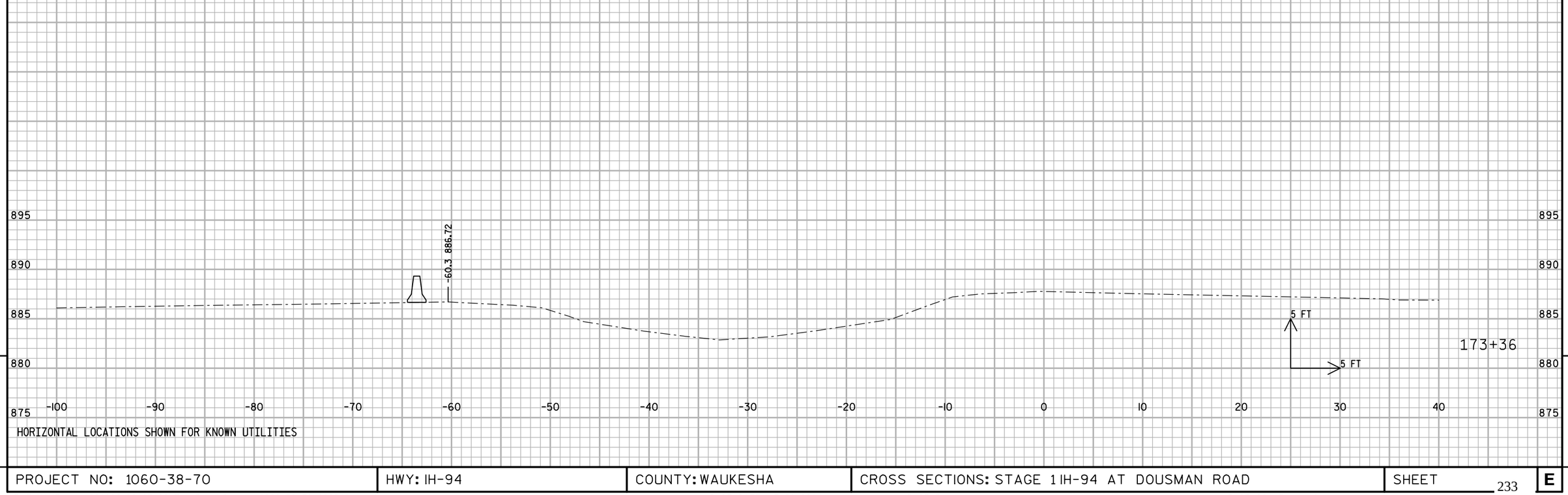

9

HORIZONTAL LOCATIONS SHOWN FOR KNOWN UTILITIES

9

PROJECT NO: 1060-38-70	HWY: IH-94	COUNTY: WAUKESHA	CROSS SECTIONS: STAGE 1 IH-94 AT DOUSMAN ROAD	SHEET 233	E

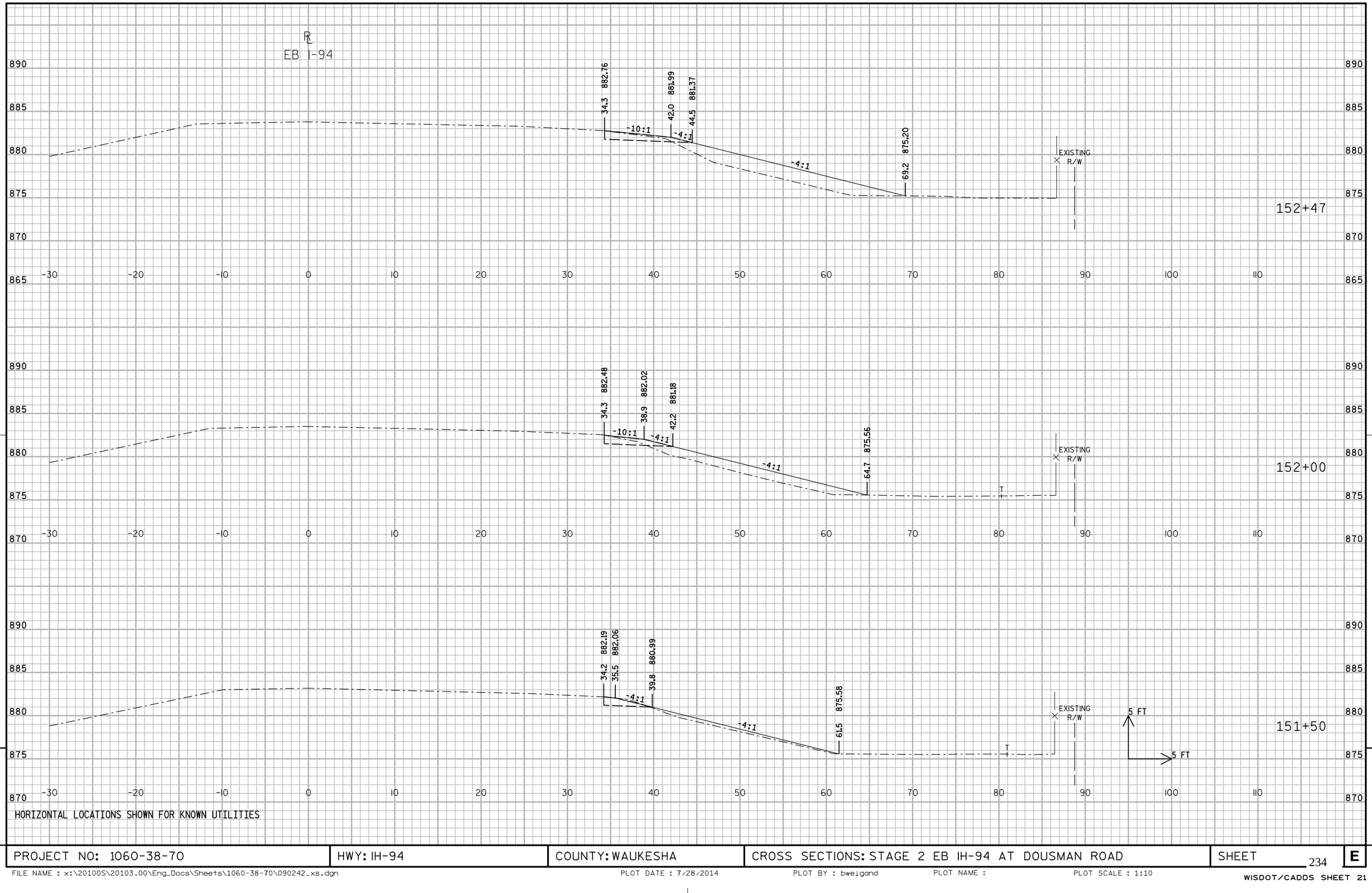

HORIZONTAL LOCATIONS SHOWN FOR KNOWN UTILITIES

PROJECT NO: 1060-38-70	HWY: IH-94	COUNTY: WAUKESHA	CROSS SECTIONS: STAGE 2 EB IH-94 AT DOUSMAN ROAD	SHEET 234	E

FILE NAME : x:\20100S\20103.00\Eng_Docs\Sheets\1060-38-70\090242_xs.dgn PLOT DATE : 7/28/2014 PLOT BY : bweigand PLOT NAME : PLOT SCALE : 1:10

WISDOT/CADDS SHEET 21

℄
EB I-94

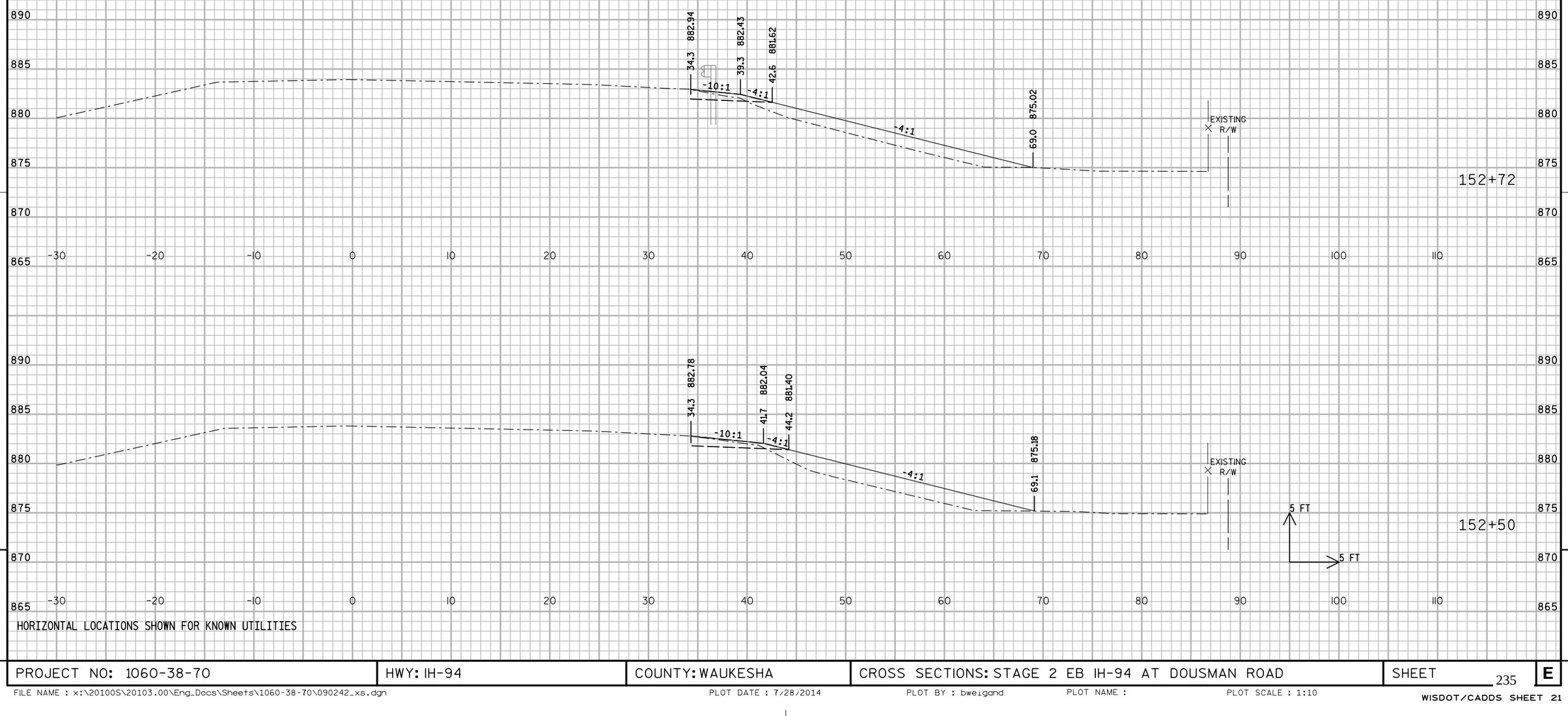

HORIZONTAL LOCATIONS SHOWN FOR KNOWN UTILITIES

PROJECT NO: 1060-38-70	HWY: IH-94	COUNTY: WAUKESHA	CROSS SECTIONS: STAGE 2 EB IH-94 AT DOUSMAN ROAD	SHEET 235	E

℄
EB I-94

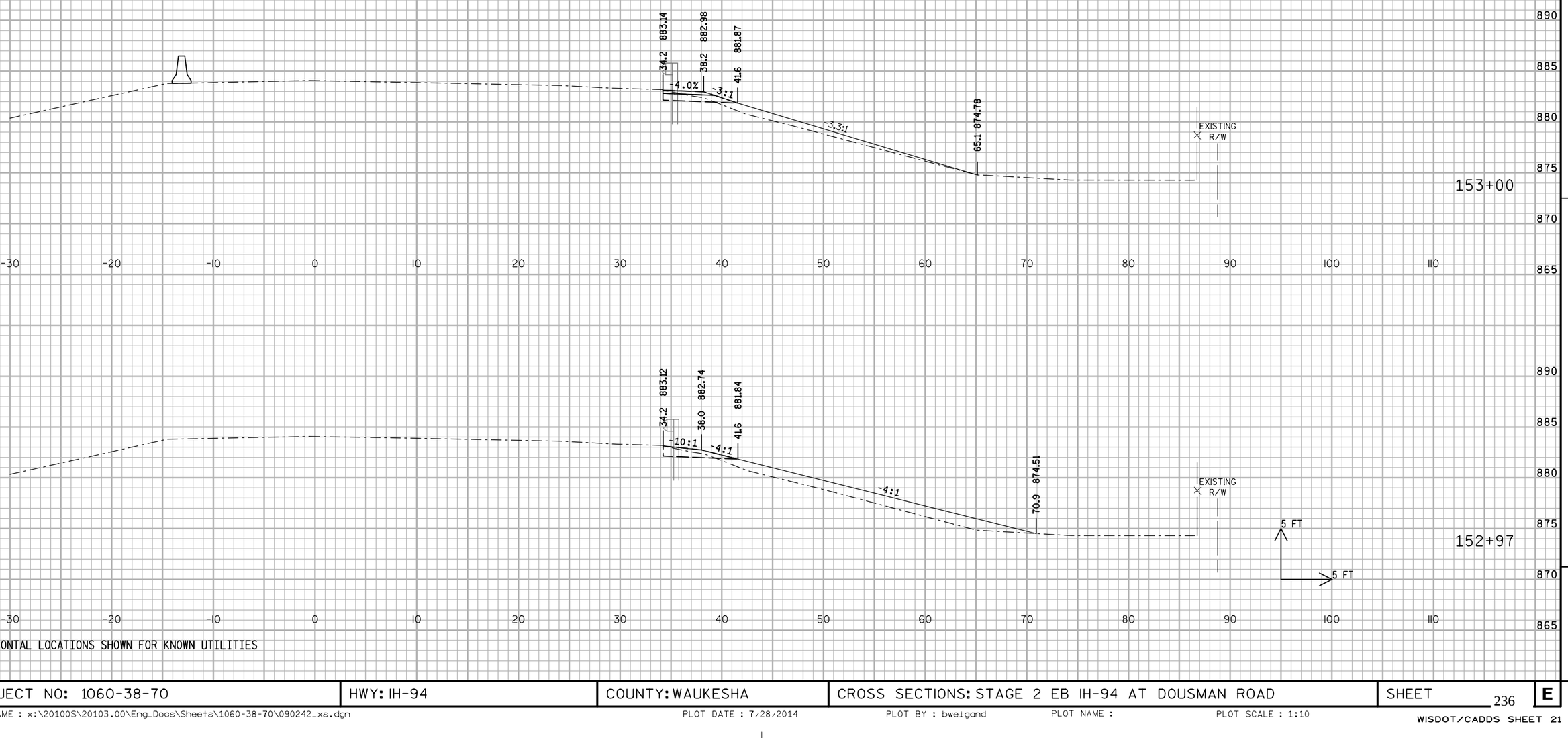

HORIZONTAL LOCATIONS SHOWN FOR KNOWN UTILITIES

PROJECT NO: 1060-38-70	HWY: IH-94	COUNTY: WAUKESHA	CROSS SECTIONS: STAGE 2 EB IH-94 AT DOUSMAN ROAD	SHEET 236	E

℄
EB I-94

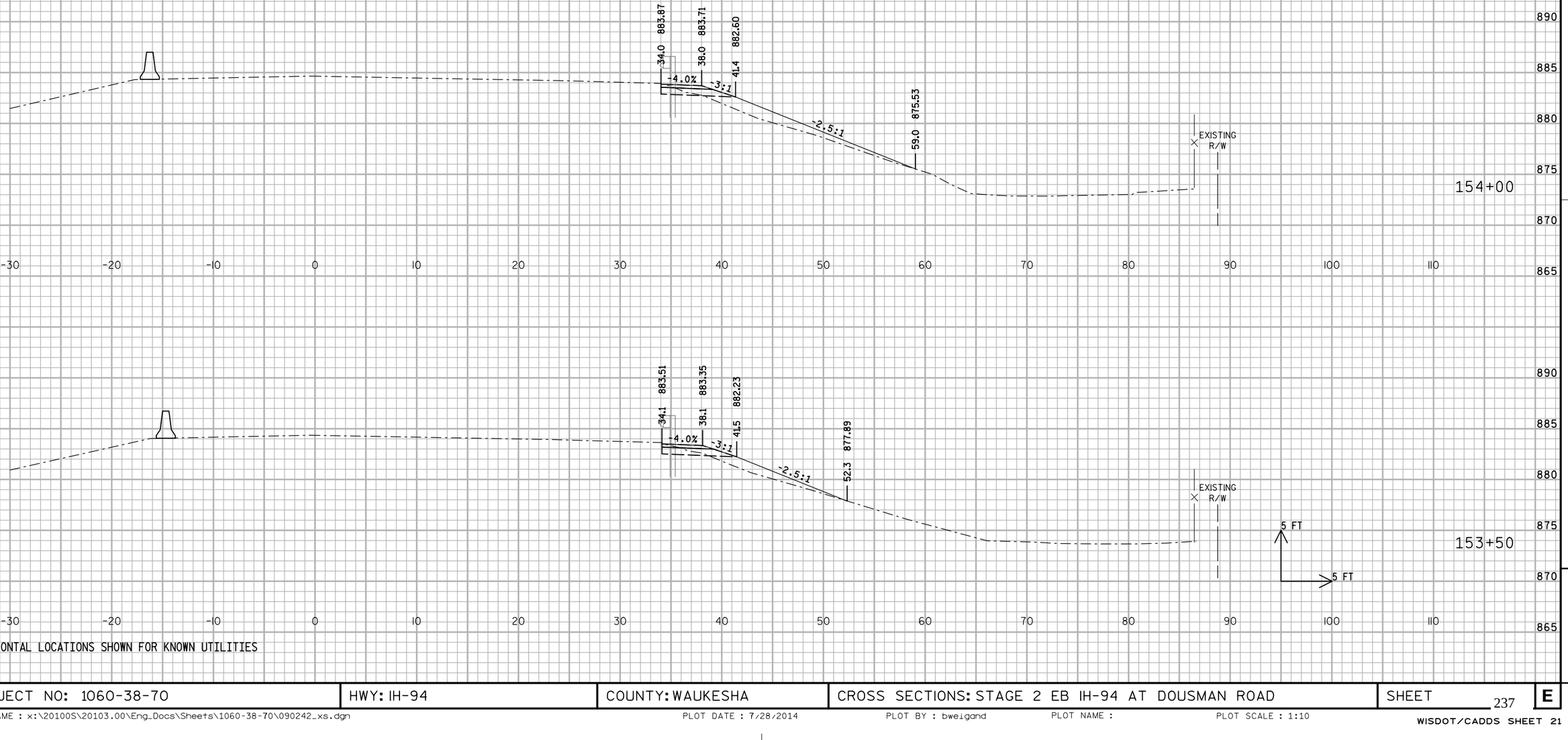

HORIZONTAL LOCATIONS SHOWN FOR KNOWN UTILITIES

PROJECT NO: 1060-38-70	HWY: IH-94	COUNTY: WAUKESHA	CROSS SECTIONS: STAGE 2 EB IH-94 AT DOUSMAN ROAD	SHEET 237	E

FILE NAME : x:\20100S\20103.00\Eng_Docs\Sheets\1060-38-70\090242_xs.dgn PLOT DATE : 7/28/2014 PLOT BY : bweigand PLOT NAME : PLOT SCALE : 1:10

WISDOT/CADDS SHEET 21

℄
EB I-94

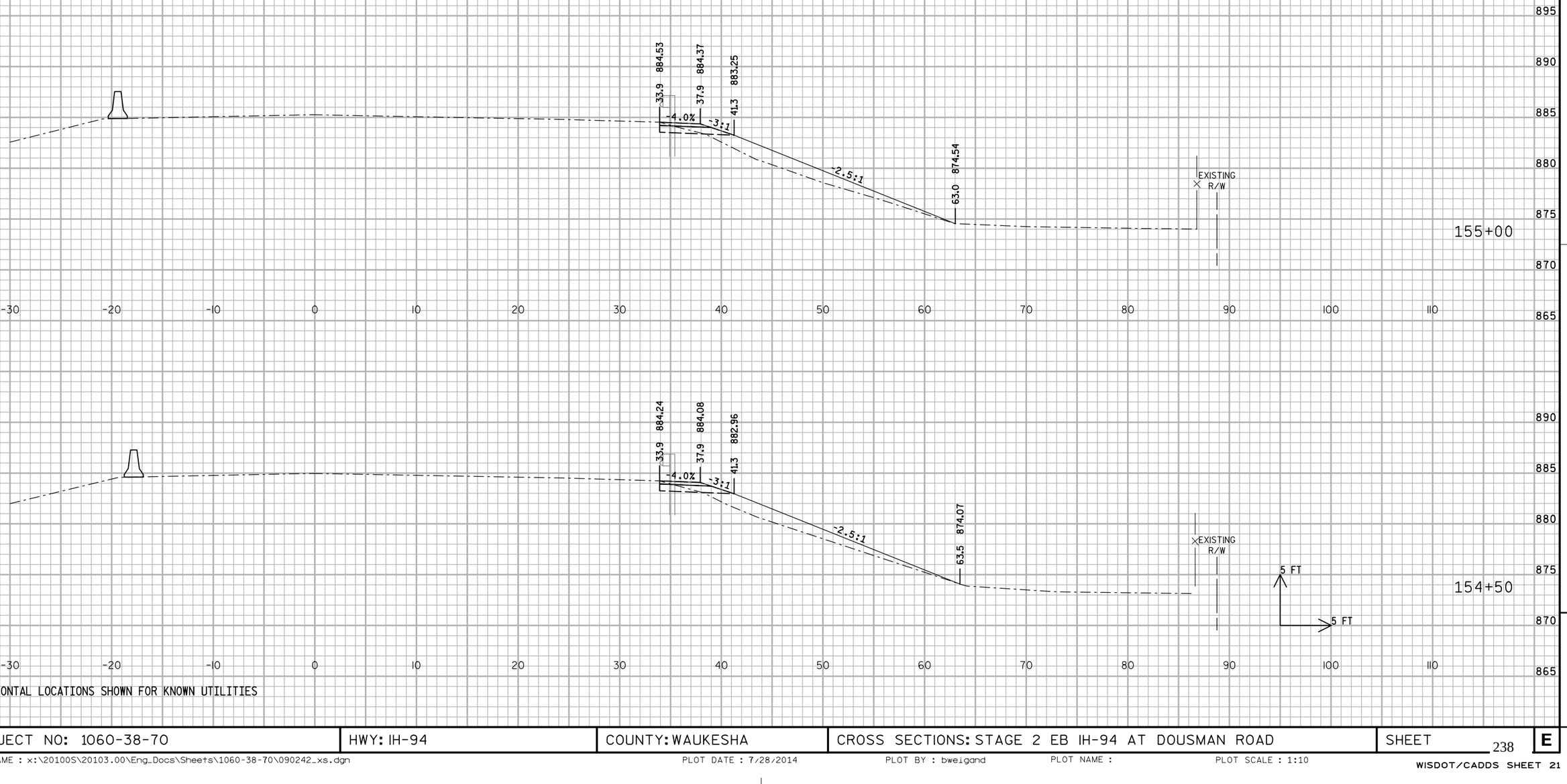

HORIZONTAL LOCATIONS SHOWN FOR KNOWN UTILITIES

PROJECT NO: 1060-38-70	HWY: IH-94	COUNTY: WAUKESHA	CROSS SECTIONS: STAGE 2 EB IH-94 AT DOUSMAN ROAD	SHEET 238	E

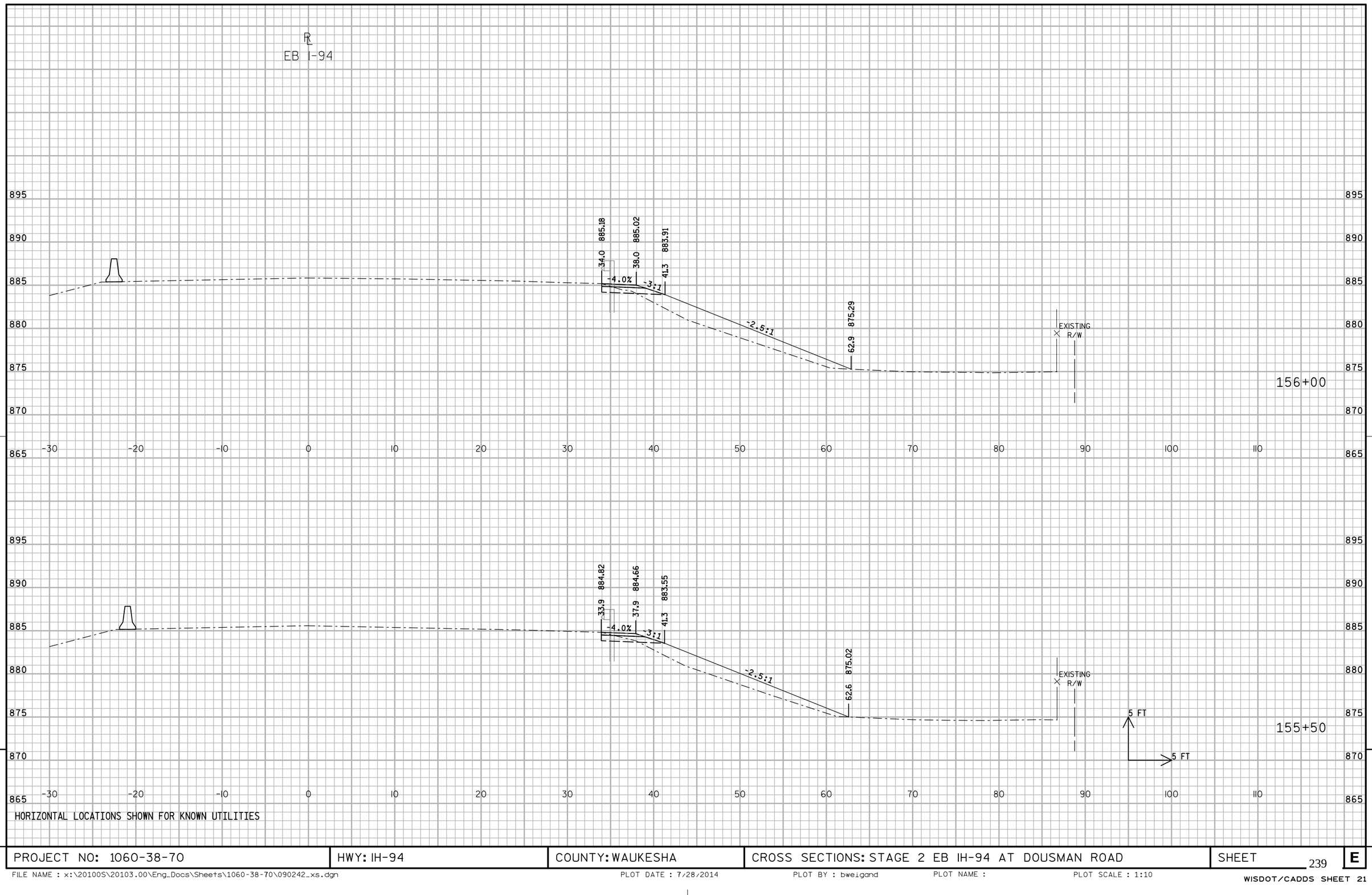

HORIZONTAL LOCATIONS SHOWN FOR KNOWN UTILITIES

PROJECT NO: 1060-38-70	HWY: IH-94	COUNTY: WAUKESHA	CROSS SECTIONS: STAGE 2 EB IH-94 AT DOUSMAN ROAD	SHEET 239	E

FILE NAME : x:\20100S\20103.00\Eng_Docs\Sheets\1060-38-70\090242_xs.dgn PLOT DATE : 7/28/2014 PLOT BY : bweigand PLOT NAME : PLOT SCALE : 1:10

WISDOT/CADDS SHEET 21

℄
EB I-94

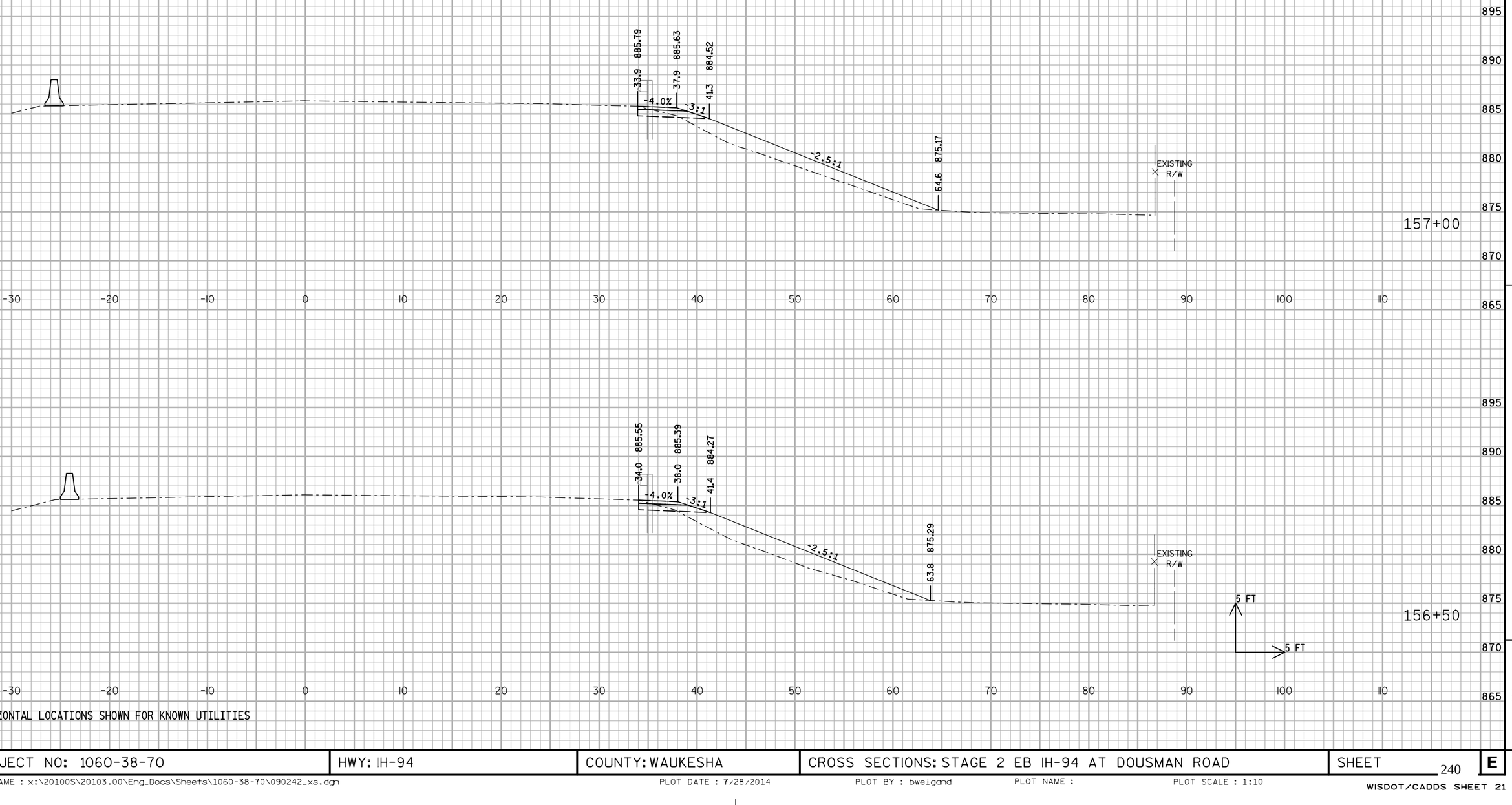

HORIZONTAL LOCATIONS SHOWN FOR KNOWN UTILITIES

PROJECT NO: 1060-38-70	HWY: IH-94	COUNTY: WAUKESHA	CROSS SECTIONS: STAGE 2 EB IH-94 AT DOUSMAN ROAD	SHEET 240	E

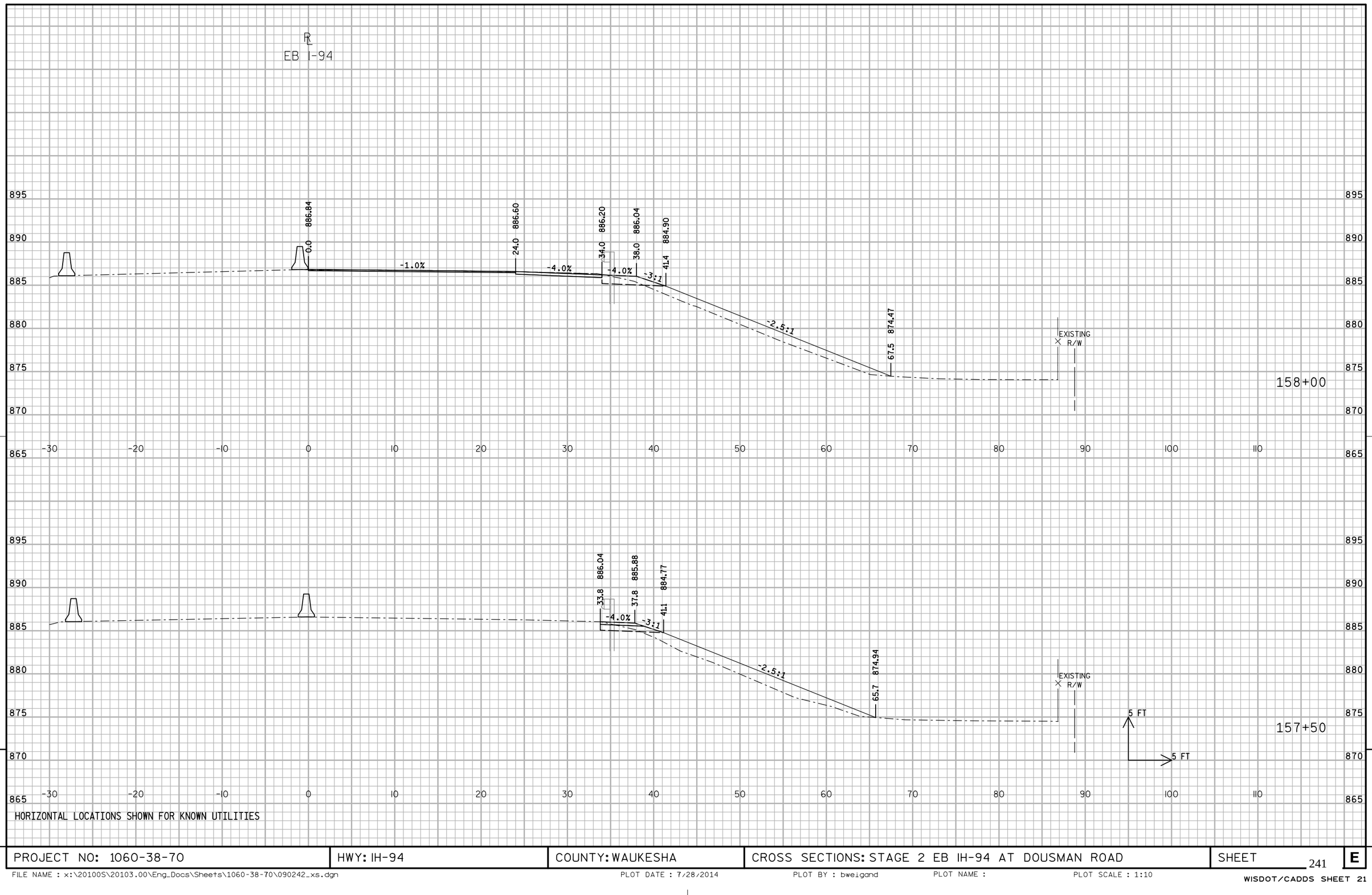

HORIZONTAL LOCATIONS SHOWN FOR KNOWN UTILITIES

PROJECT NO: 1060-38-70	HWY: IH-94	COUNTY: WAUKESHA	CROSS SECTIONS: STAGE 2 EB IH-94 AT DOUSMAN ROAD	SHEET 241	E

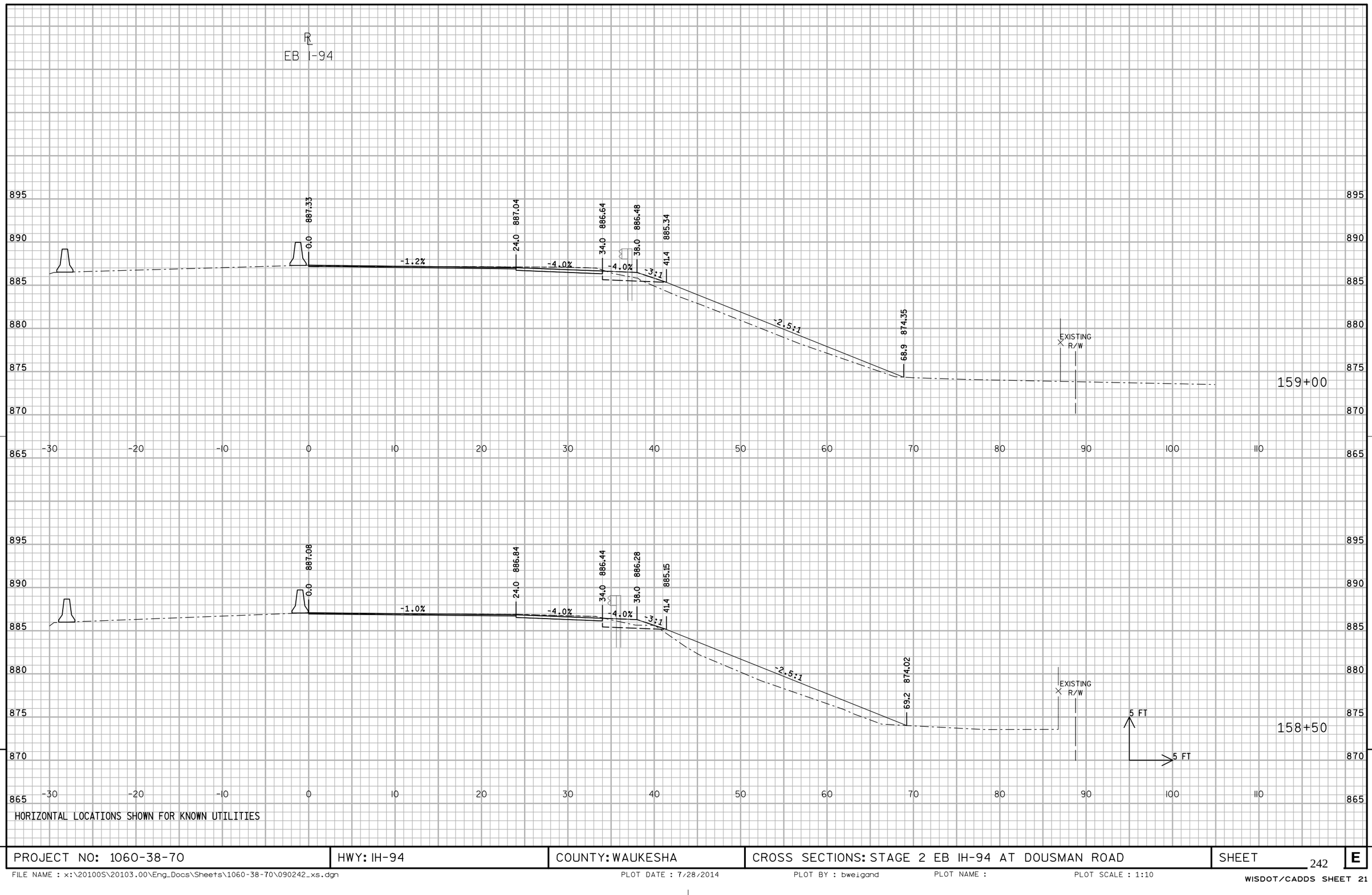

9

HORIZONTAL LOCATIONS SHOWN FOR KNOWN UTILITIES

9

PROJECT NO: 1060-38-70	HWY: IH-94	COUNTY: WAUKESHA	CROSS SECTIONS: STAGE 2 EB IH-94 AT DOUSMAN ROAD	SHEET 242	E

FILE NAME : x:\20100S\20103.00\Eng_Docs\Sheets\1060-38-70\090242_xs.dgn PLOT DATE : 7/28/2014 PLOT BY : bweigand PLOT NAME : PLOT SCALE : 1:10

WISDOT/CADDS SHEET 21

℄
EB I-94

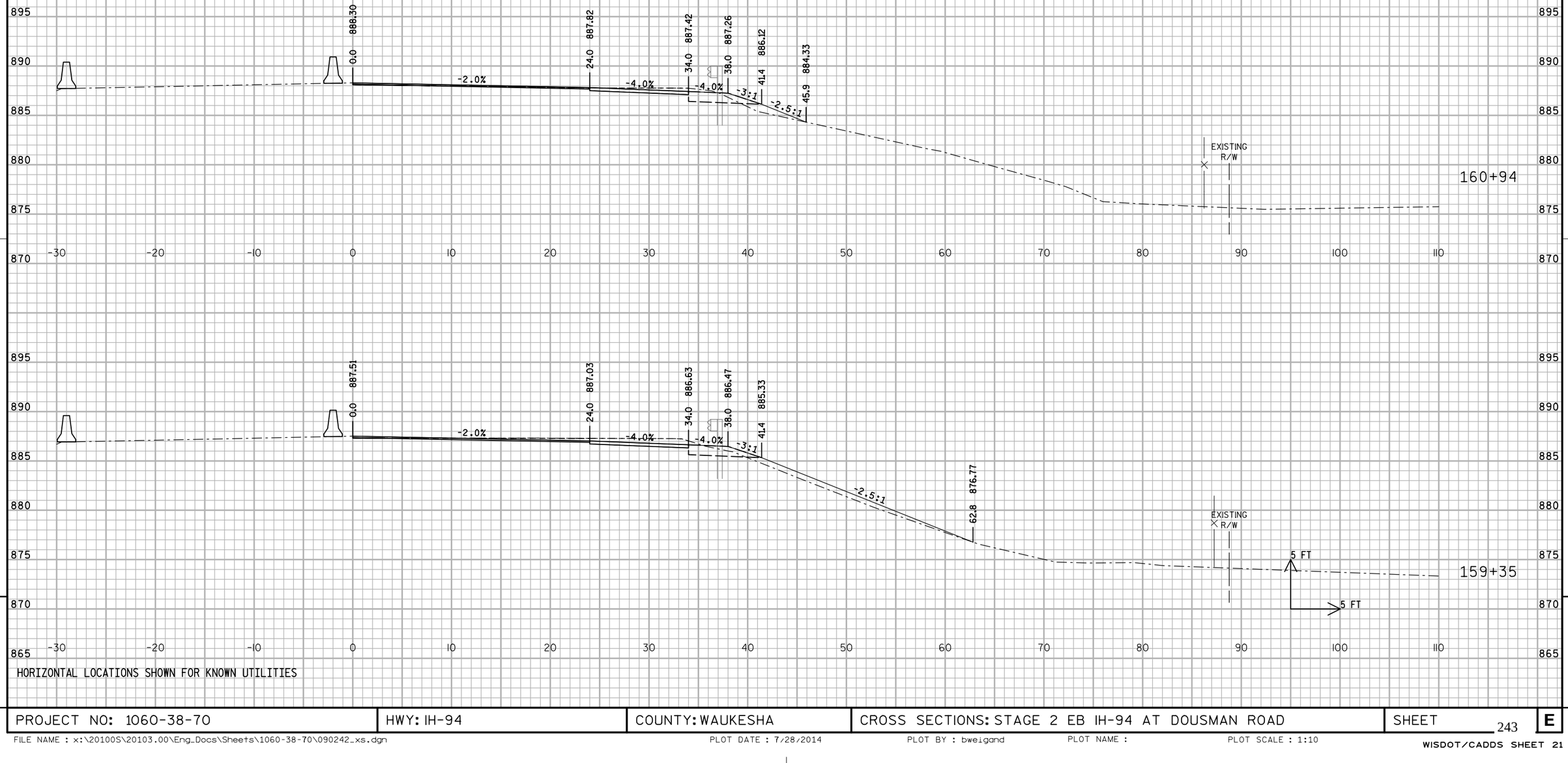

HORIZONTAL LOCATIONS SHOWN FOR KNOWN UTILITIES

PROJECT NO: 1060-38-70	HWY: IH-94	COUNTY: WAUKESHA	CROSS SECTIONS: STAGE 2 EB IH-94 AT DOUSMAN ROAD	SHEET 243	E

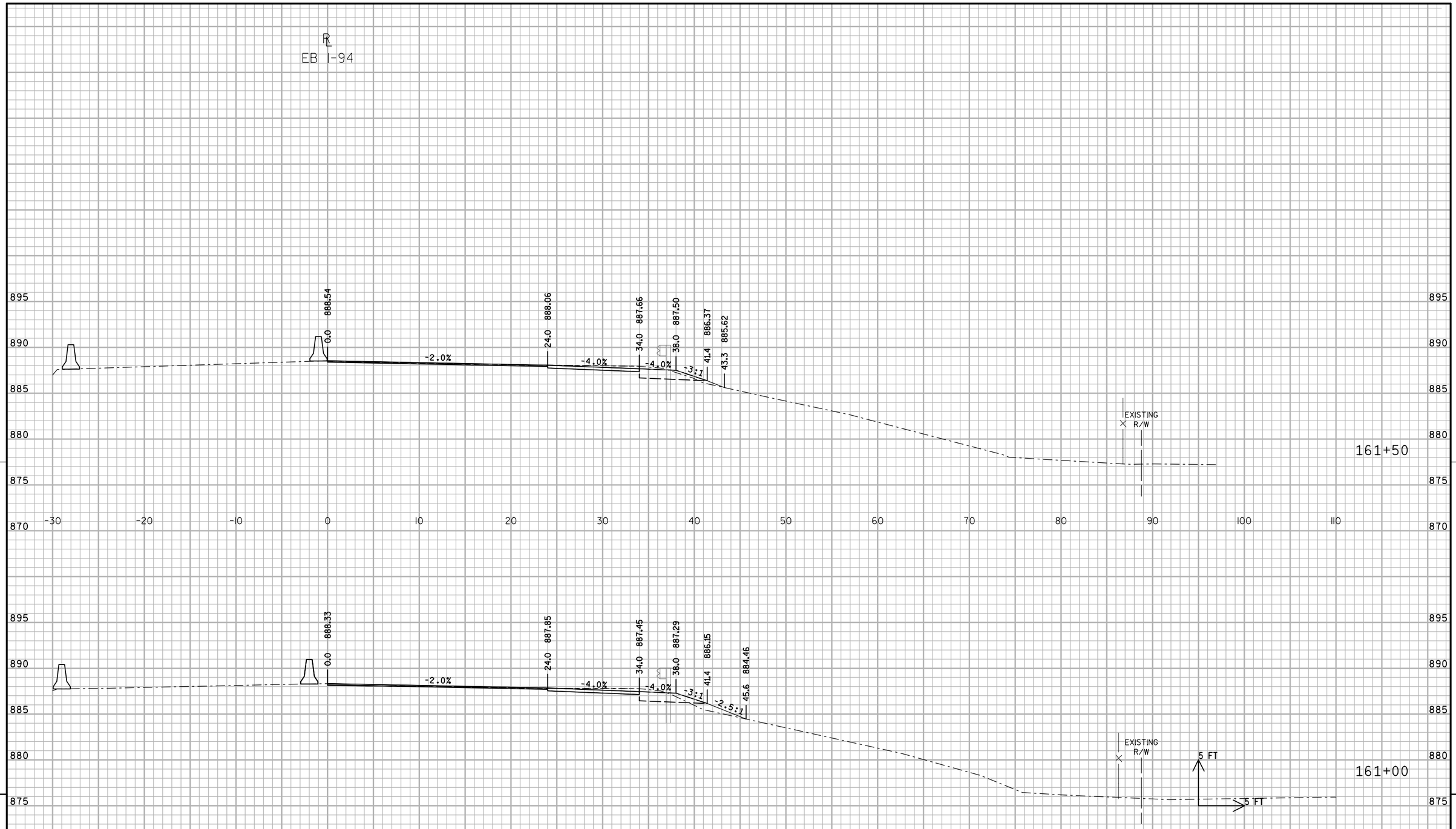

HORIZONTAL LOCATIONS SHOWN FOR KNOWN UTILITIES

PROJECT NO: 1060-38-70	HWY: IH-94	COUNTY: WAUKESHA	CROSS SECTIONS: STAGE 2 EB IH-94 AT DOUSMAN ROAD	SHEET 244	E

℄
EB I-94

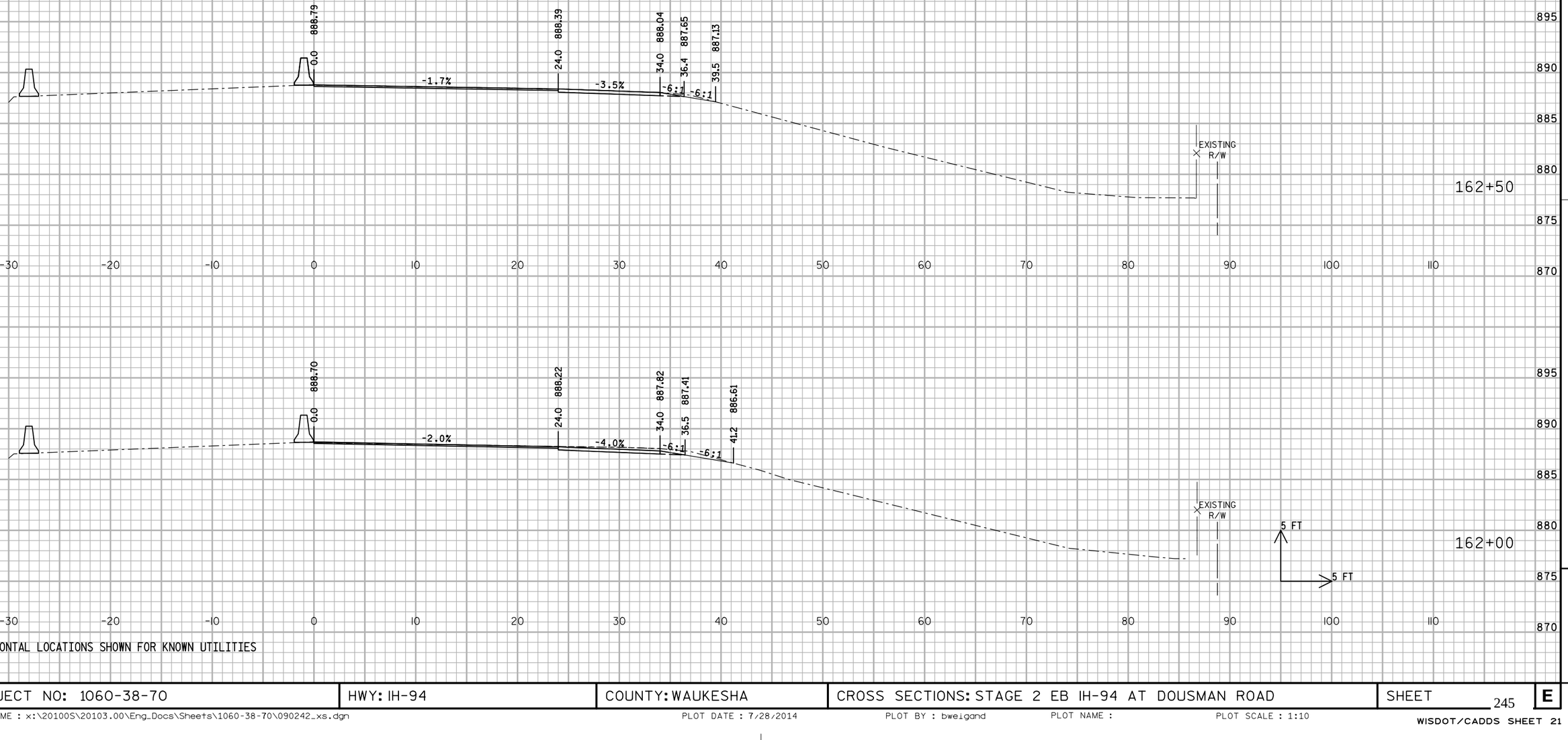

HORIZONTAL LOCATIONS SHOWN FOR KNOWN UTILITIES

PROJECT NO: 1060-38-70	HWY: IH-94	COUNTY: WAUKESHA	CROSS SECTIONS: STAGE 2 EB IH-94 AT DOUSMAN ROAD	SHEET 245	E

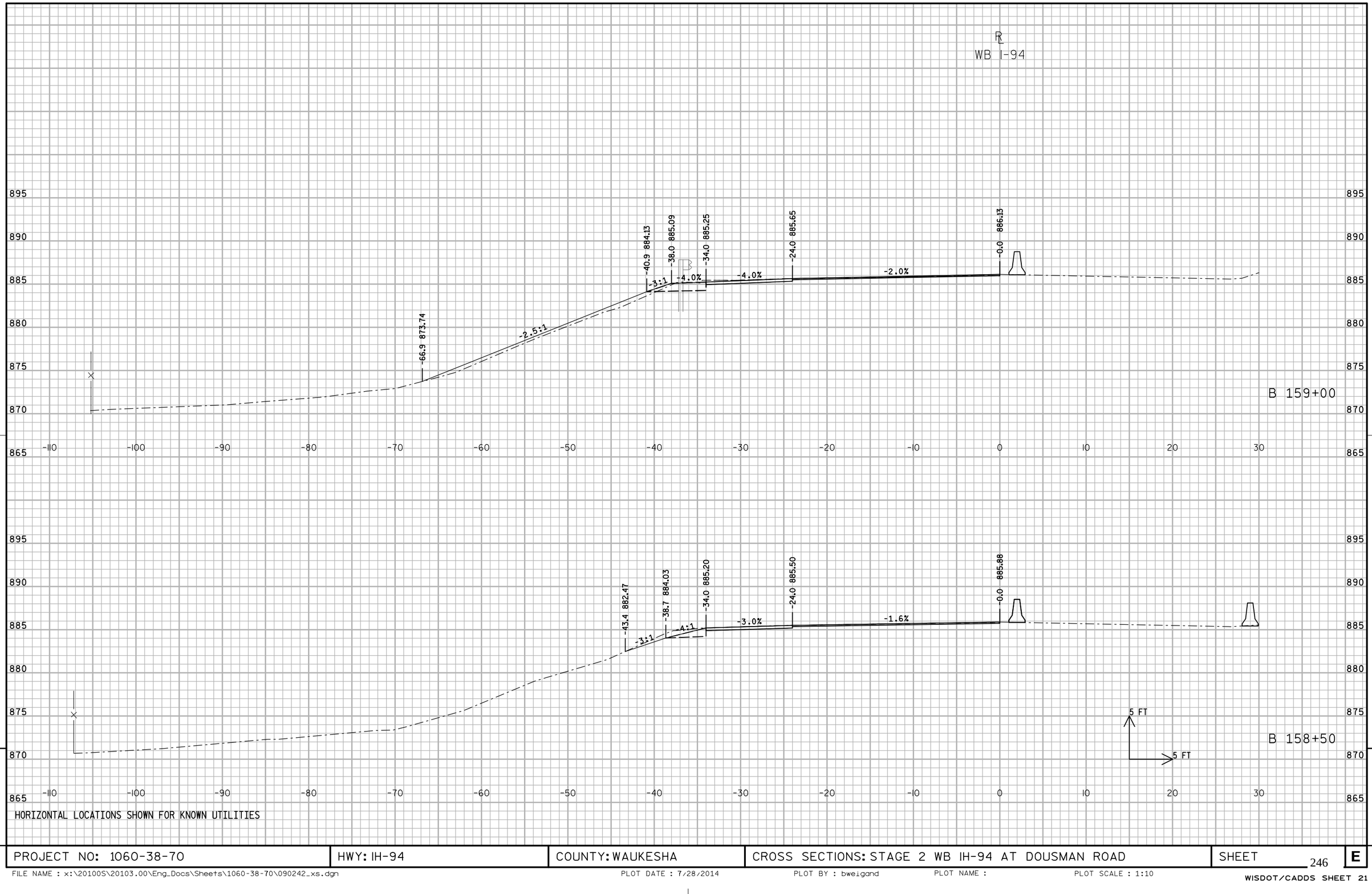

9

HORIZONTAL LOCATIONS SHOWN FOR KNOWN UTILITIES

9

PROJECT NO: 1060-38-70	HWY: IH-94	COUNTY: WAUKESHA	CROSS SECTIONS: STAGE 2 WB IH-94 AT DOUSMAN ROAD	SHEET 246	E

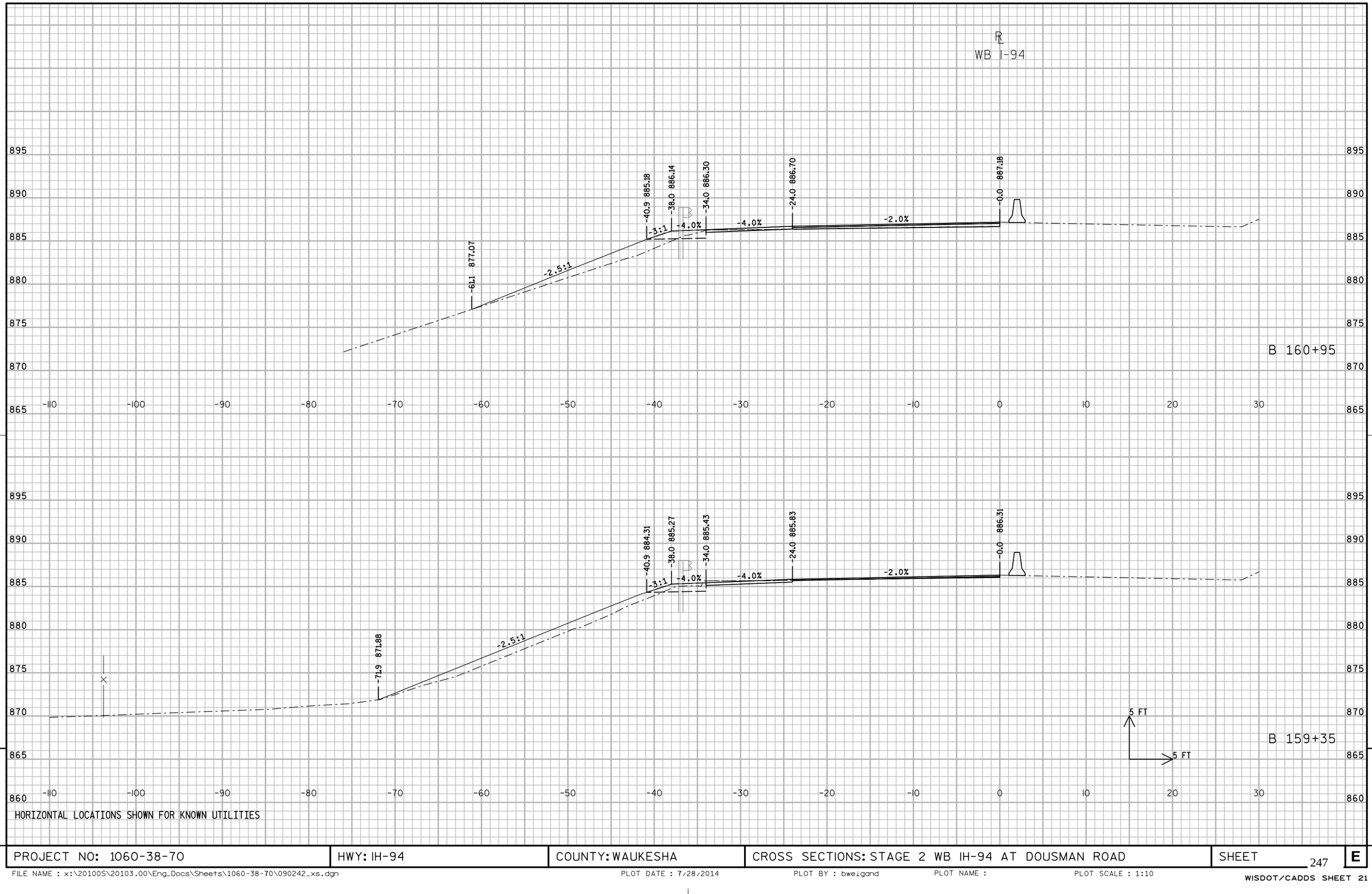

HORIZONTAL LOCATIONS SHOWN FOR KNOWN UTILITIES

PROJECT NO: 1060-38-70	HWY: IH-94	COUNTY: WAUKESHA	CROSS SECTIONS: STAGE 2 WB IH-94 AT DOUSMAN ROAD	SHEET 247	E

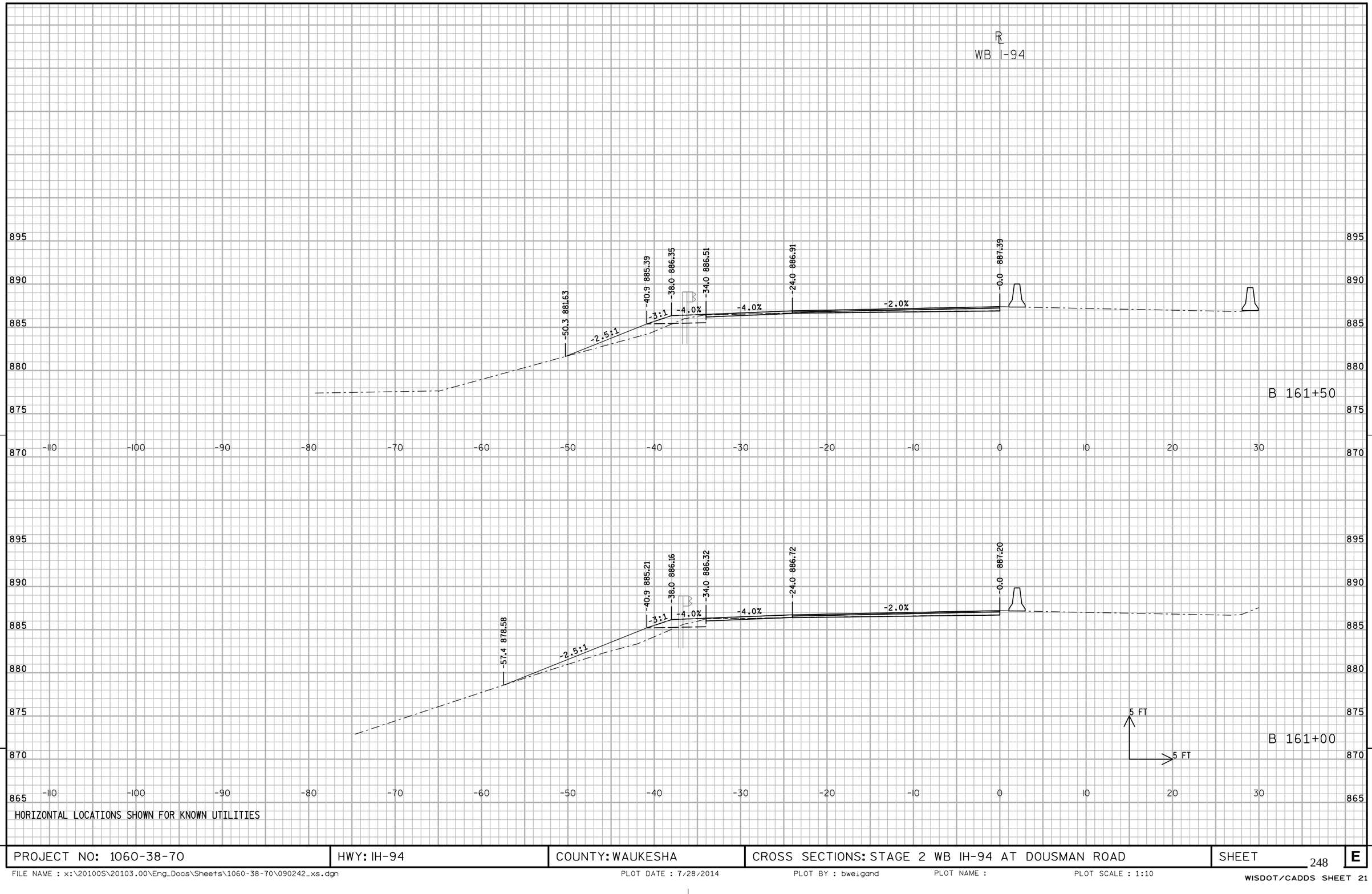

9

HORIZONTAL LOCATIONS SHOWN FOR KNOWN UTILITIES

9

PROJECT NO: 1060-38-70	HWY: IH-94	COUNTY: WAUKESHA	CROSS SECTIONS: STAGE 2 WB IH-94 AT DOUSMAN ROAD	SHEET 248	E

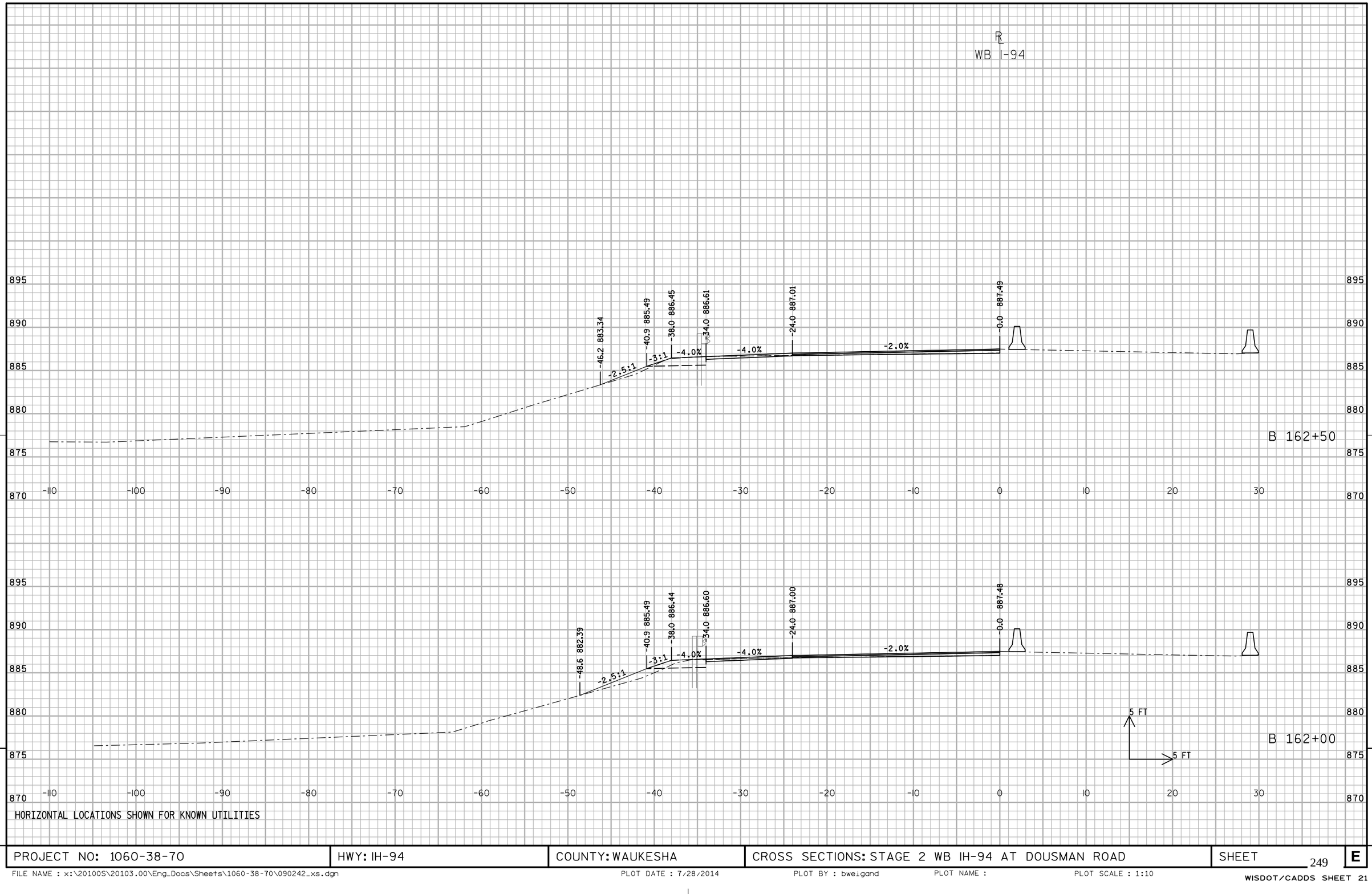

9

HORIZONTAL LOCATIONS SHOWN FOR KNOWN UTILITIES

9

PROJECT NO: 1060-38-70	HWY: IH-94	COUNTY: WAUKESHA	CROSS SECTIONS: STAGE 2 WB IH-94 AT DOUSMAN ROAD	SHEET 249	E

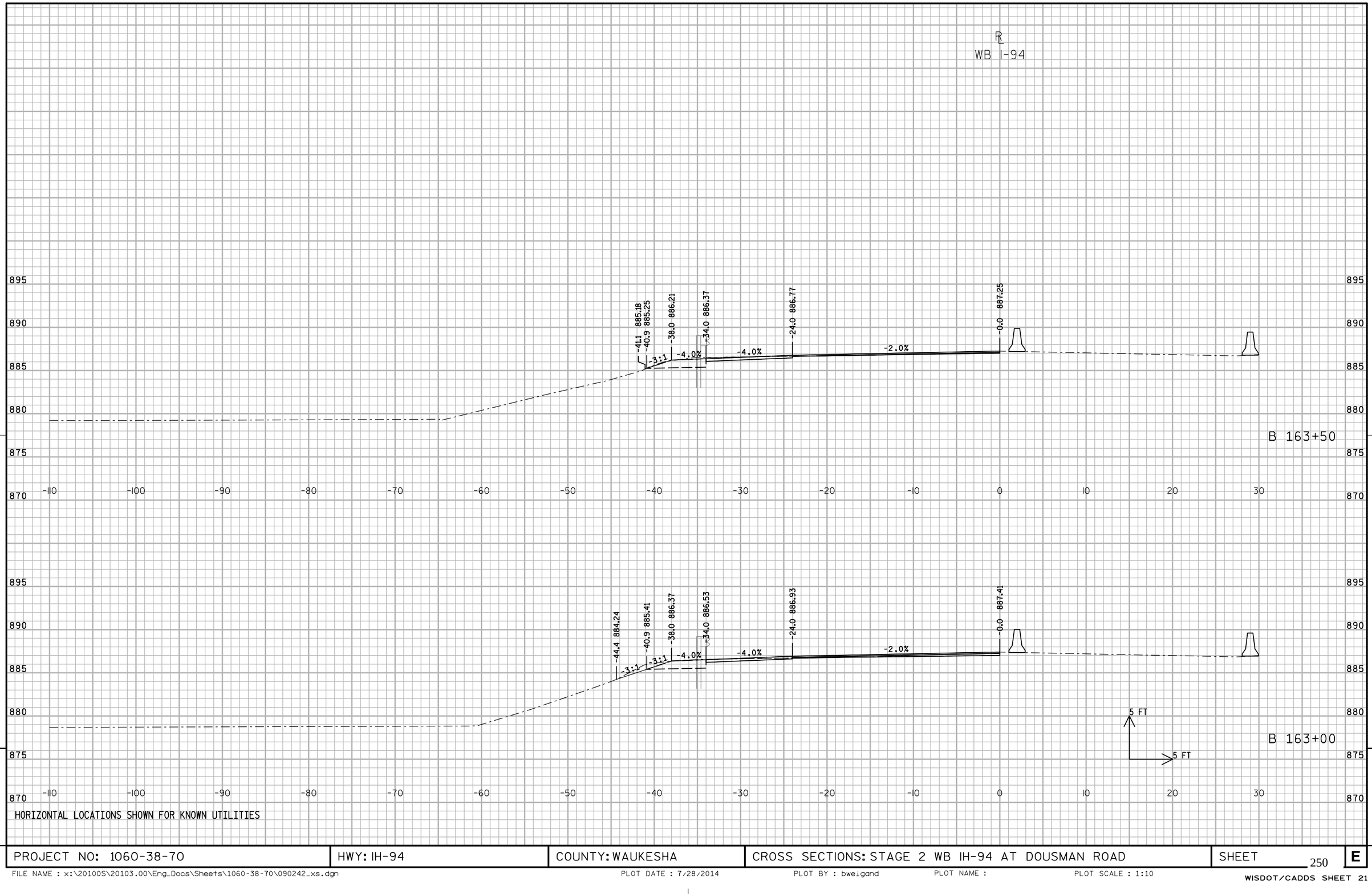

9

HORIZONTAL LOCATIONS SHOWN FOR KNOWN UTILITIES

9

PROJECT NO: 1060-38-70	HWY: IH-94	COUNTY: WAUKESHA	CROSS SECTIONS: STAGE 2 WB IH-94 AT DOUSMAN ROAD	SHEET 250	E

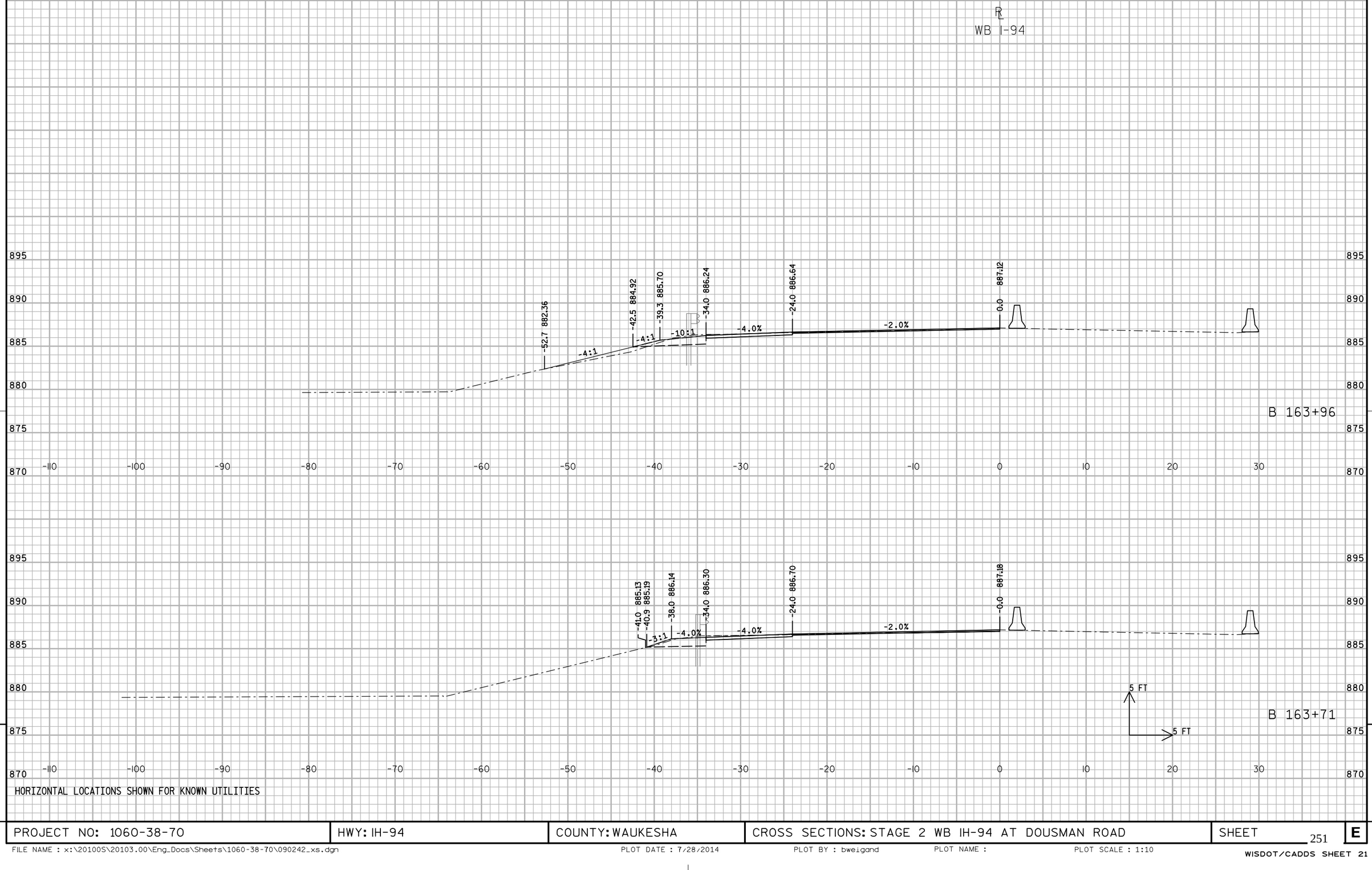

HORIZONTAL LOCATIONS SHOWN FOR KNOWN UTILITIES

PROJECT NO: 1060-38-70	HWY: IH-94	COUNTY: WAUKESHA	CROSS SECTIONS: STAGE 2 WB IH-94 AT DOUSMAN ROAD	SHEET 251	E

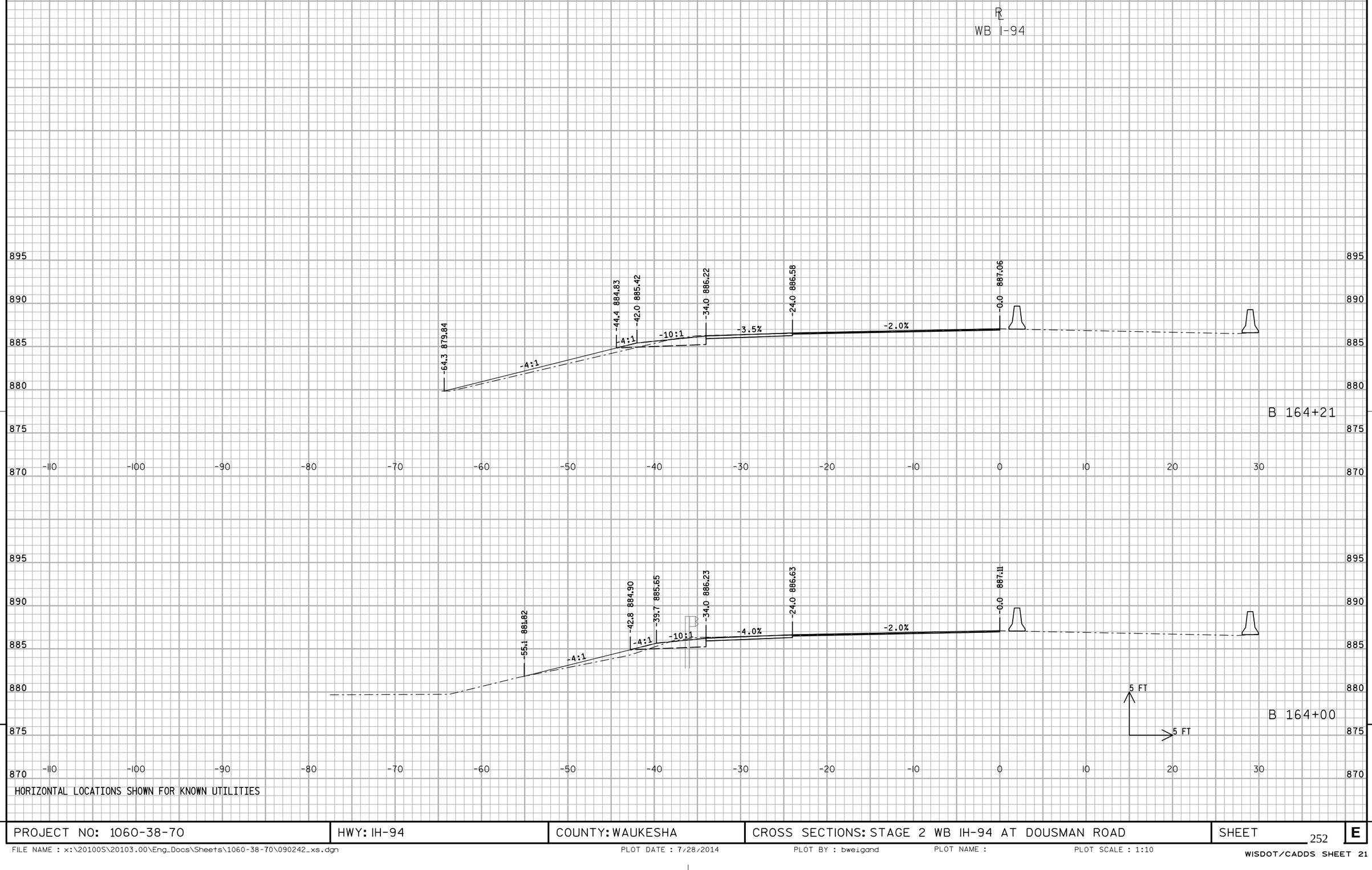

9

HORIZONTAL LOCATIONS SHOWN FOR KNOWN UTILITIES

9

PROJECT NO: 1060-38-70	HWY: IH-94	COUNTY: WAUKESHA	CROSS SECTIONS: STAGE 2 WB IH-94 AT DOUSMAN ROAD	SHEET 252	E

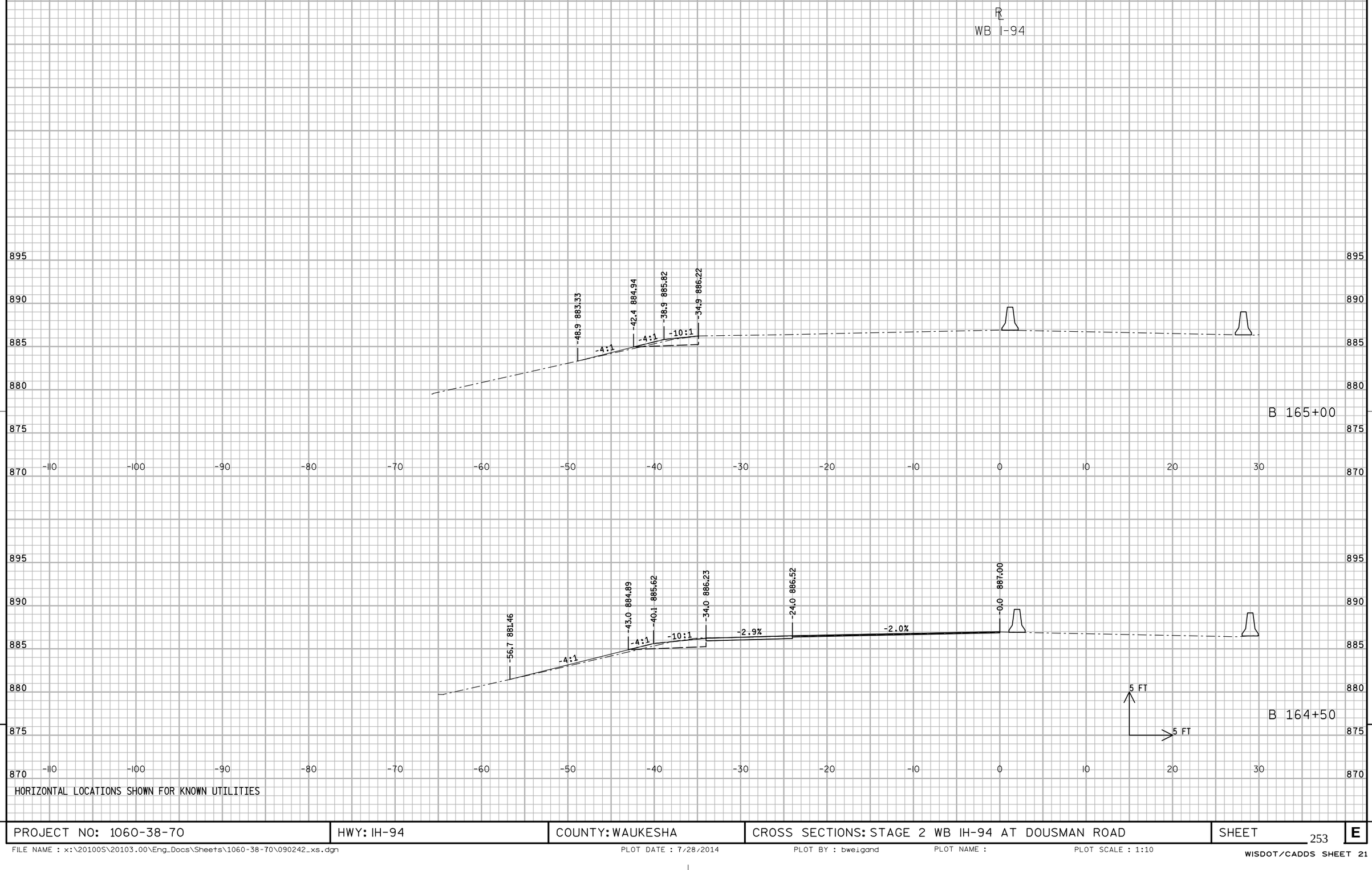

HORIZONTAL LOCATIONS SHOWN FOR KNOWN UTILITIES

PROJECT NO: 1060-38-70	HWY: IH-94	COUNTY: WAUKESHA	CROSS SECTIONS: STAGE 2 WB IH-94 AT DOUSMAN ROAD	SHEET 253	E

FILE NAME : x:\20100S\20103.00\Eng_Docs\Sheets\1060-38-70\090242_xs.dgn PLOT DATE : 7/28/2014 PLOT BY : bweigand PLOT NAME : PLOT SCALE : 1:10

WISDOT/CADDS SHEET 21

R

EB I-94

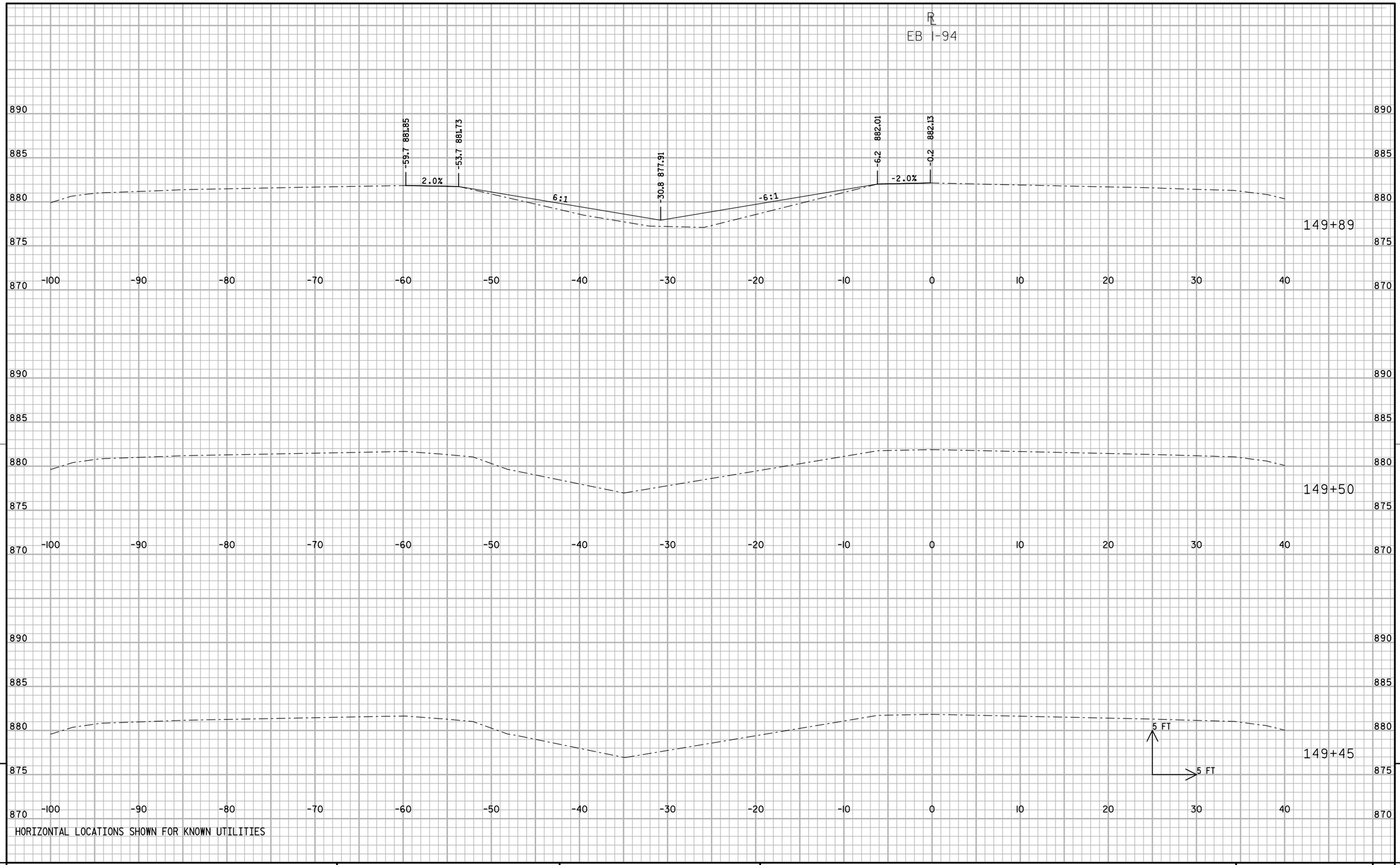

HORIZONTAL LOCATIONS SHOWN FOR KNOWN UTILITIES

PROJECT NO: 1060-38-70	HWY: IH-94	COUNTY: WAUKESHA	CROSS SECTIONS: STAGE 3 IH-94 AT DOUSMAN ROAD	SHEET 254	E

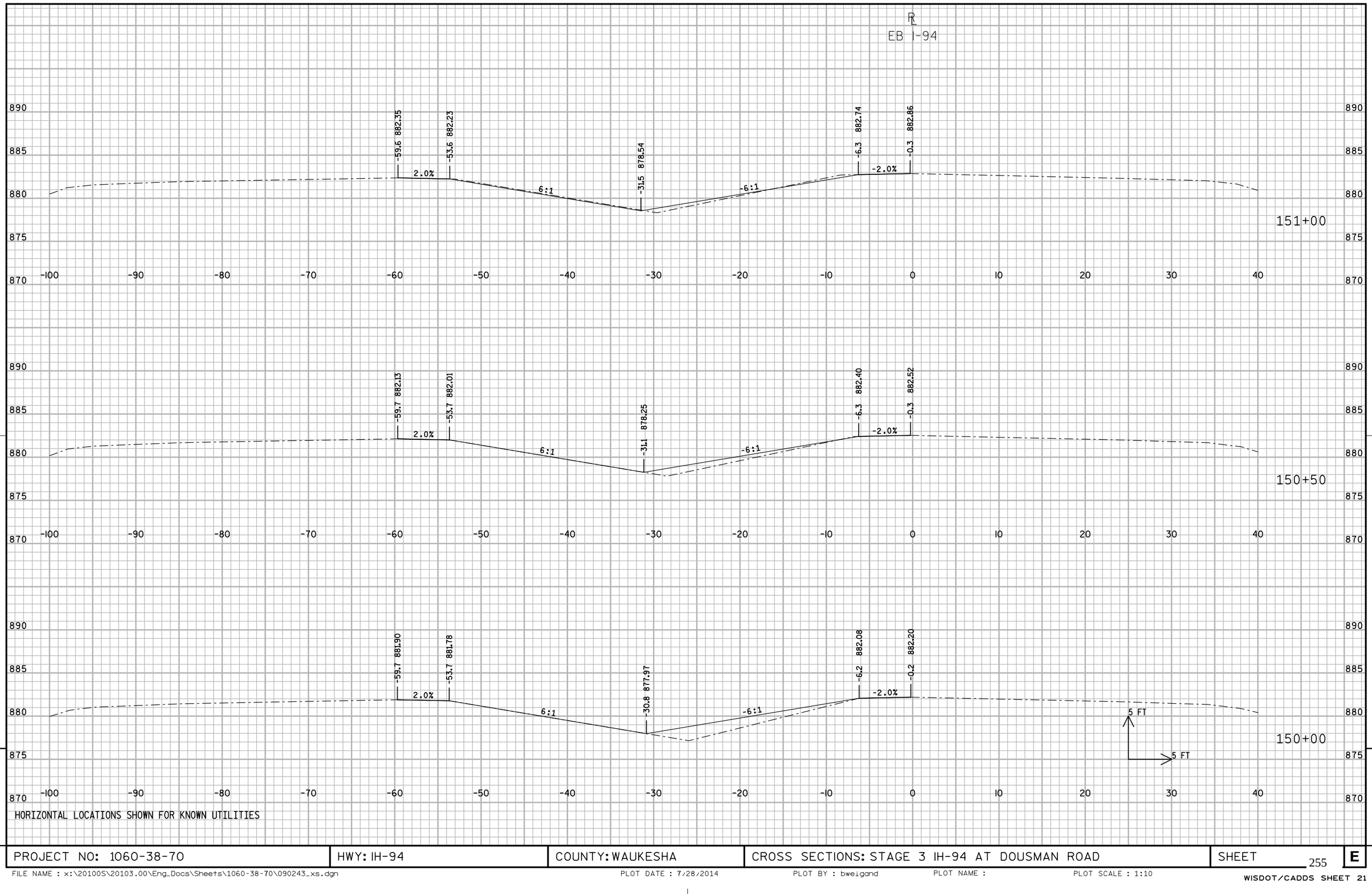

HORIZONTAL LOCATIONS SHOWN FOR KNOWN UTILITIES

PROJECT NO: 1060-38-70	HWY: IH-94	COUNTY: WAUKESHA	CROSS SECTIONS: STAGE 3 IH-94 AT DOUSMAN ROAD	SHEET 255	E

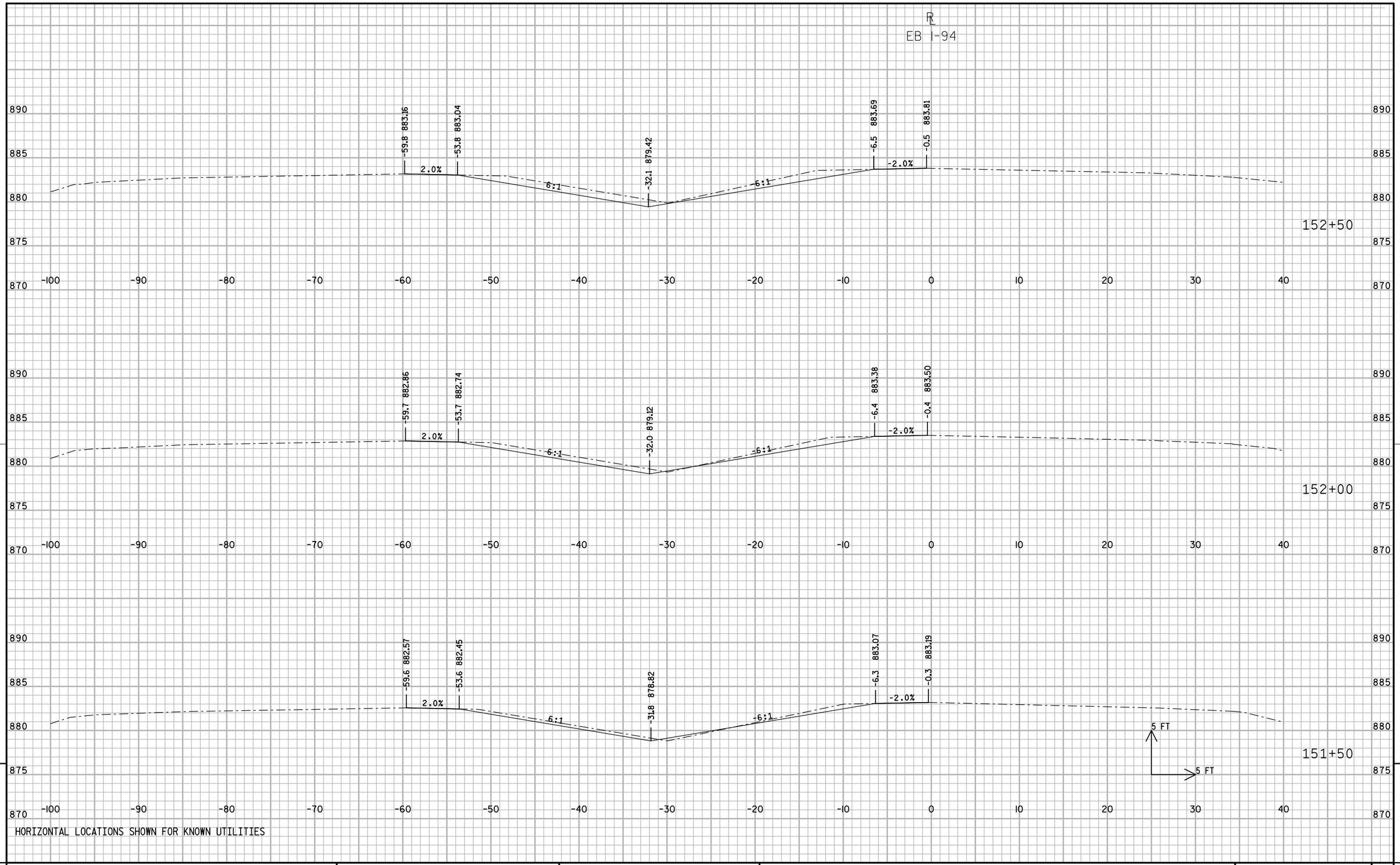

HORIZONTAL LOCATIONS SHOWN FOR KNOWN UTILITIES

PROJECT NO: 1060-38-70	HWY: IH-94	COUNTY: WAUKESHA	CROSS SECTIONS: STAGE 3 IH-94 AT DOUSMAN ROAD	SHEET 256	E

FILE NAME : x:\20100S\20103.00\Eng_Docs\Sheets\1060-38-70\090243_xs.dgn PLOT DATE : 7/28/2014 PLOT BY : bweigand PLOT NAME : PLOT SCALE : 1:10

WISDOT/CADDS SHEET 21

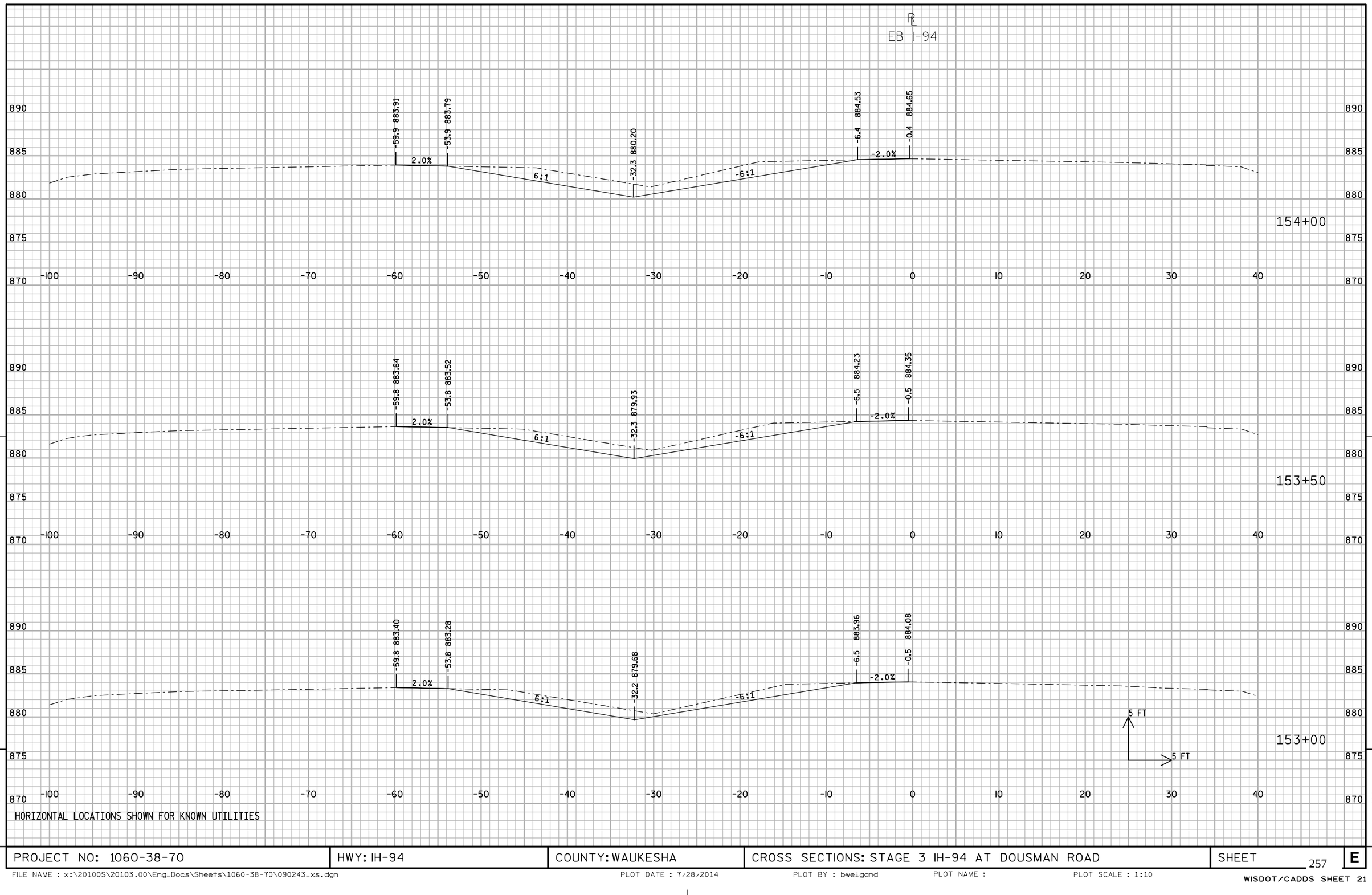

HORIZONTAL LOCATIONS SHOWN FOR KNOWN UTILITIES

PROJECT NO: 1060-38-70	HWY: IH-94	COUNTY: WAUKESHA	CROSS SECTIONS: STAGE 3 IH-94 AT DOUSMAN ROAD	SHEET 257	E

FILE NAME : x:\20100S\20103.00\Eng_Docs\Sheets\1060-38-70\090243_xs.dgn PLOT DATE : 7/28/2014 PLOT BY : bweigand PLOT NAME : PLOT SCALE : 1:10

WISDOT/CADDS SHEET 21

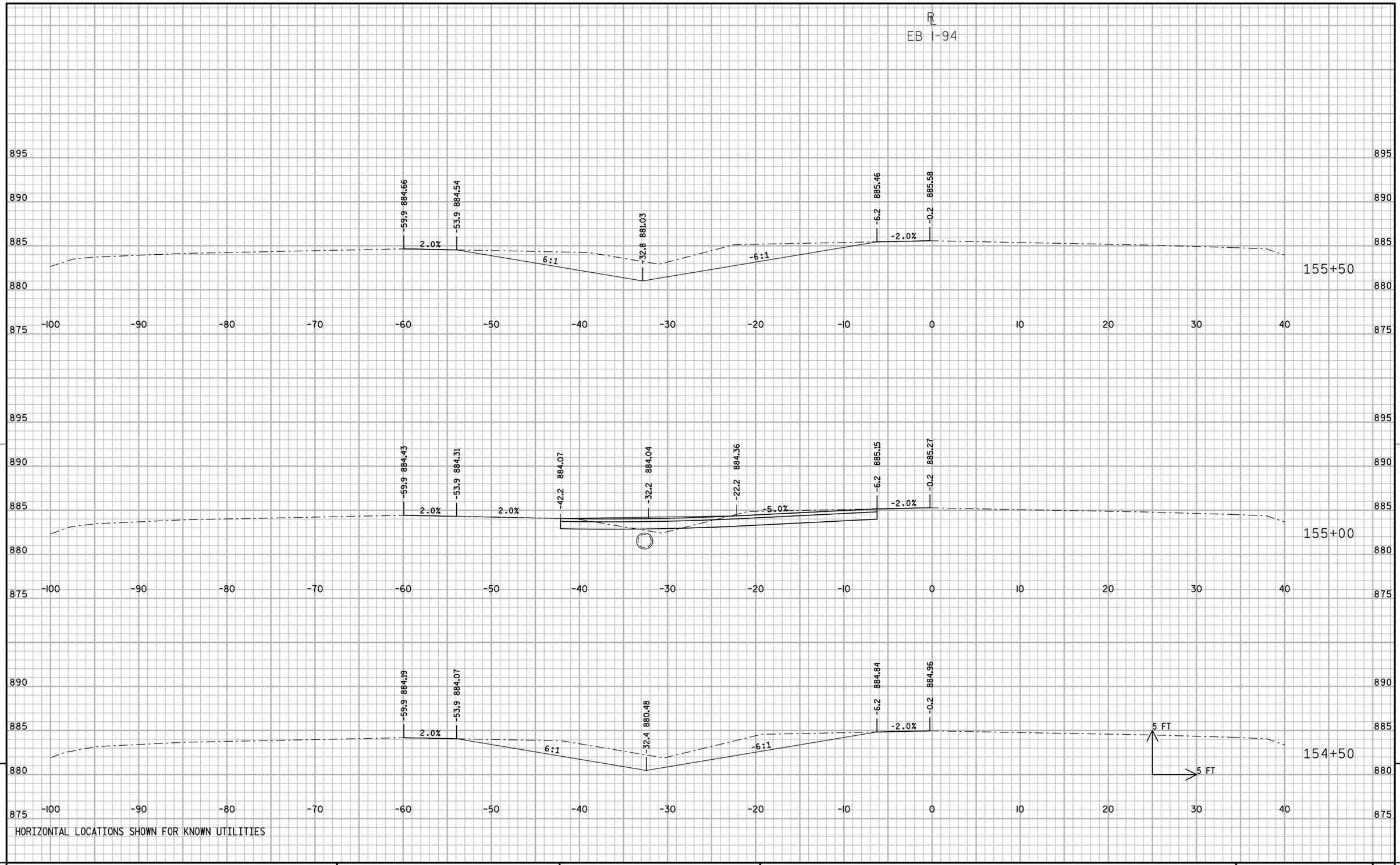

HORIZONTAL LOCATIONS SHOWN FOR KNOWN UTILITIES

PROJECT NO: 1060-38-70	HWY: IH-94	COUNTY: WAUKESHA	CROSS SECTIONS: STAGE 3 IH-94 AT DOUSMAN ROAD	SHEET 258	E

FILE NAME : x:\20100S\20103.00\Eng_Docs\Sheets\1060-38-70\090243_xs.dgn PLOT DATE : 7/28/2014 PLOT BY : bweigand PLOT NAME : PLOT SCALE : 1:10

WISDOT/CADDS SHEET 21

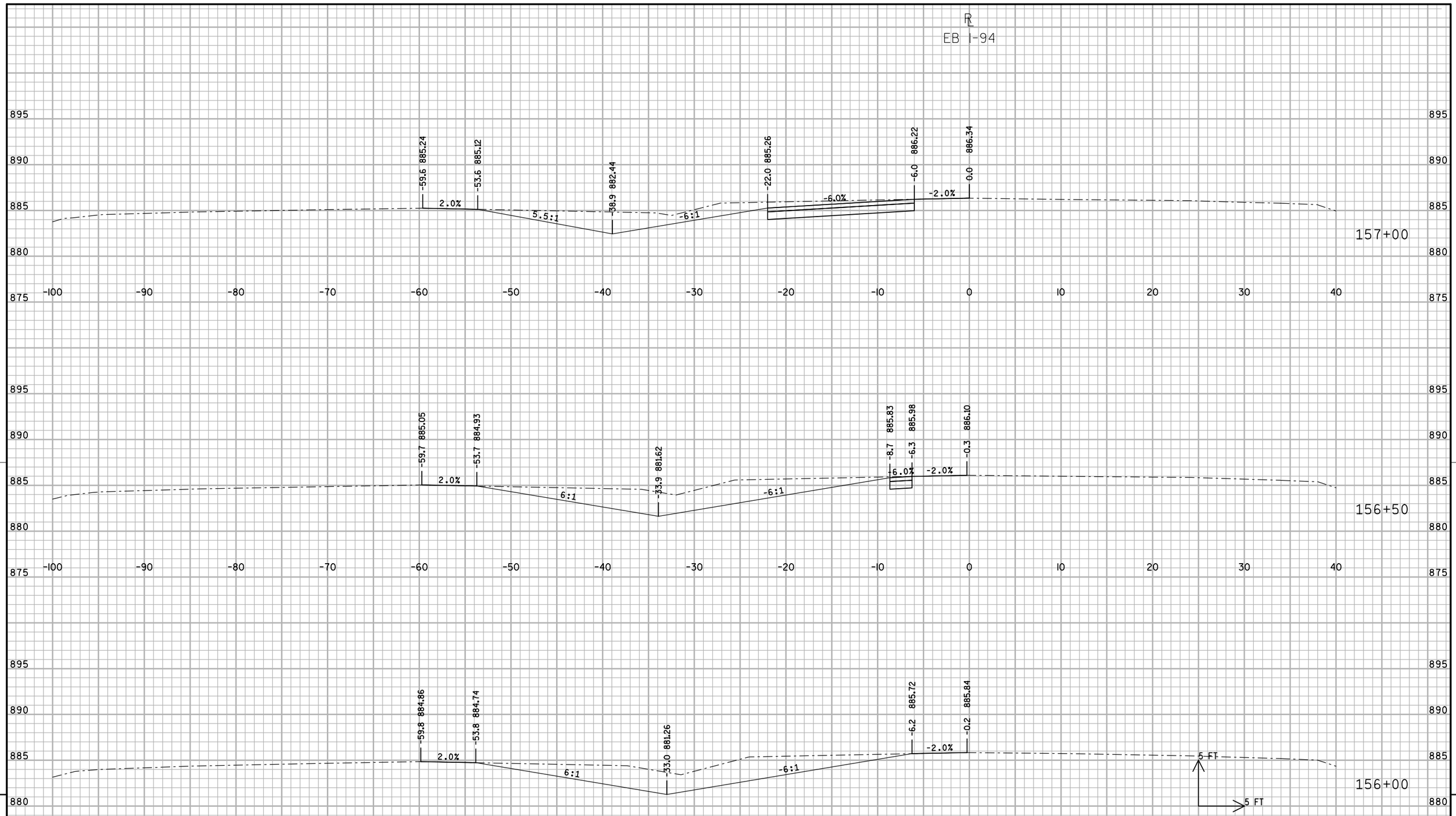

9

HORIZONTAL LOCATIONS SHOWN FOR KNOWN UTILITIES

9

PROJECT NO: 1060-38-70	HWY: IH-94	COUNTY: WAUKESHA	CROSS SECTIONS: STAGE 3 IH-94 AT DOUSMAN ROAD	SHEET 259	E

HORIZONTAL LOCATIONS SHOWN FOR KNOWN UTILITIES

PROJECT NO: 1060-38-70	HWY: IH-94	COUNTY: WAUKESHA	CROSS SECTIONS: STAGE 3 IH-94 AT DOUSMAN ROAD	SHEET 260	E

9

HORIZONTAL LOCATIONS SHOWN FOR KNOWN UTILITIES

9

PROJECT NO: 1060-38-70	HWY: IH-94	COUNTY: WAUKESHA	CROSS SECTIONS: STAGE 3 IH-94 AT DOUSMAN ROAD	SHEET	E

FILE NAME : x:\20100S\20103.00\Eng_Docs\Sheets\1060-38-70\090243_xs.dgn PLOT DATE : 7/28/2014 PLOT BY : bweigand PLOT NAME : PLOT SCALE : 1:10

R

EB I-94

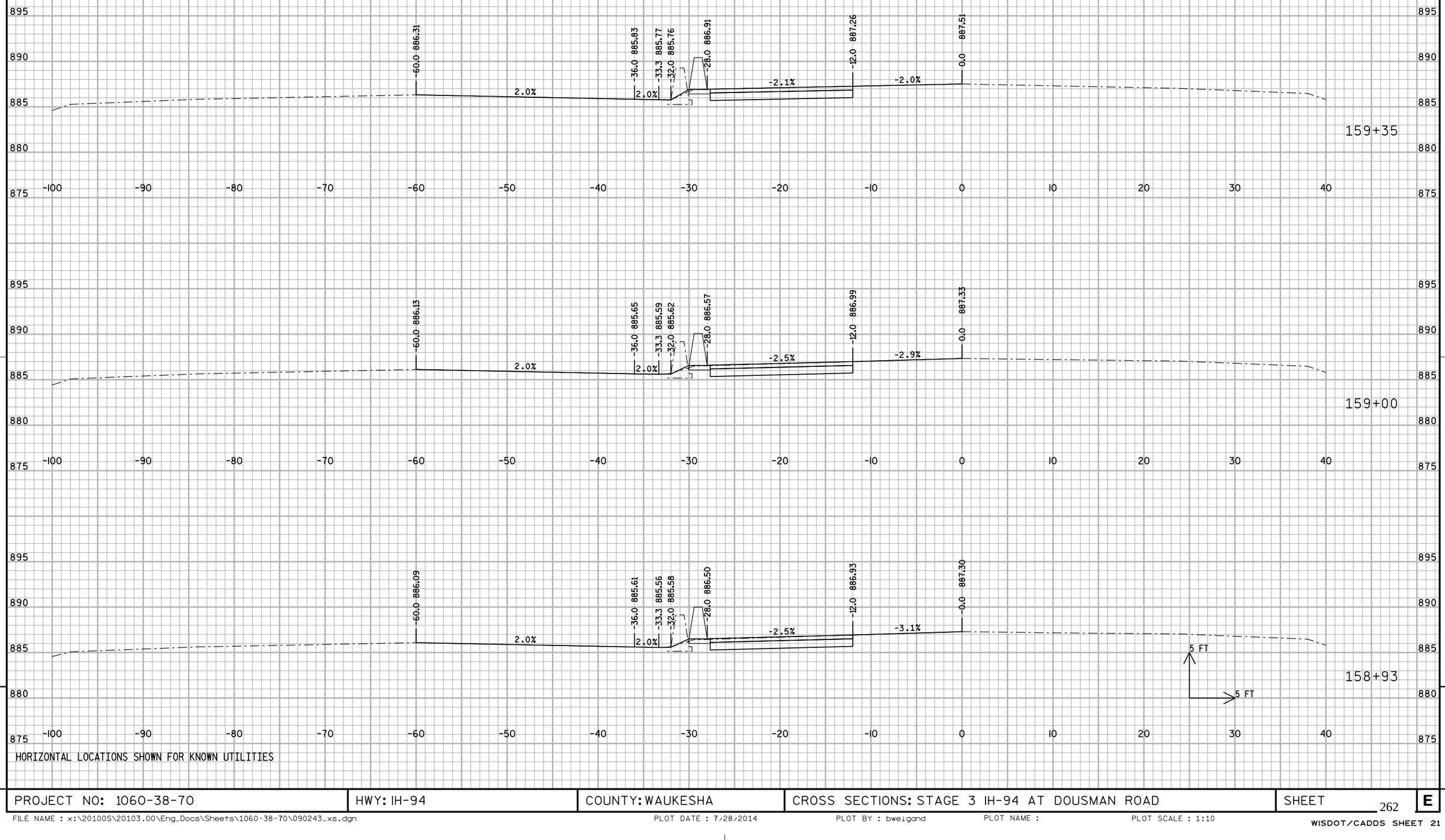

HORIZONTAL LOCATIONS SHOWN FOR KNOWN UTILITIES

PROJECT NO: 1060-38-70	HWY: IH-94	COUNTY: WAUKESHA	CROSS SECTIONS: STAGE 3 IH-94 AT DOUSMAN ROAD	SHEET 262	E

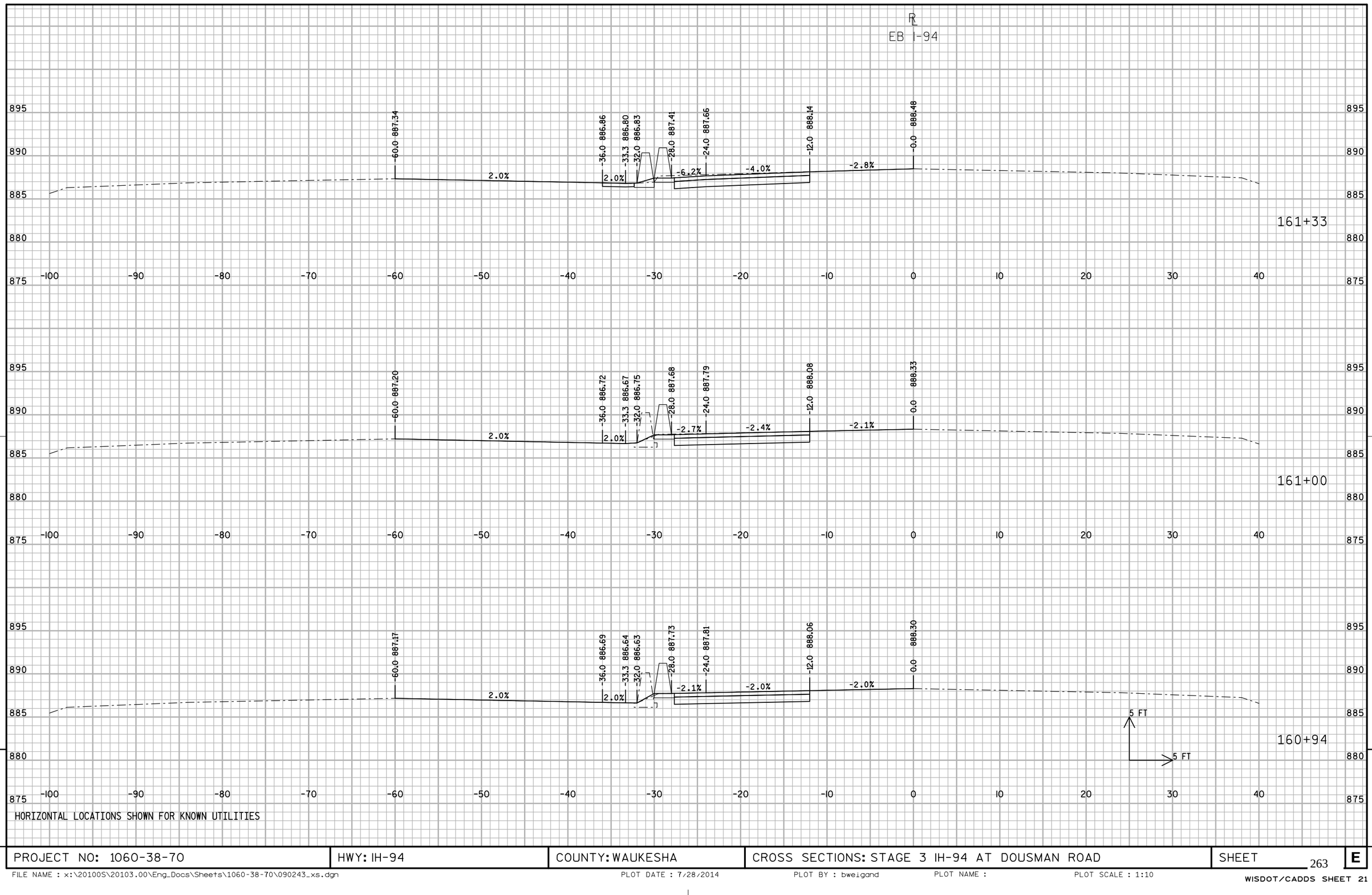

HORIZONTAL LOCATIONS SHOWN FOR KNOWN UTILITIES

PROJECT NO: 1060-38-70	HWY: IH-94	COUNTY: WAUKESHA	CROSS SECTIONS: STAGE 3 IH-94 AT DOUSMAN ROAD	SHEET 263	E

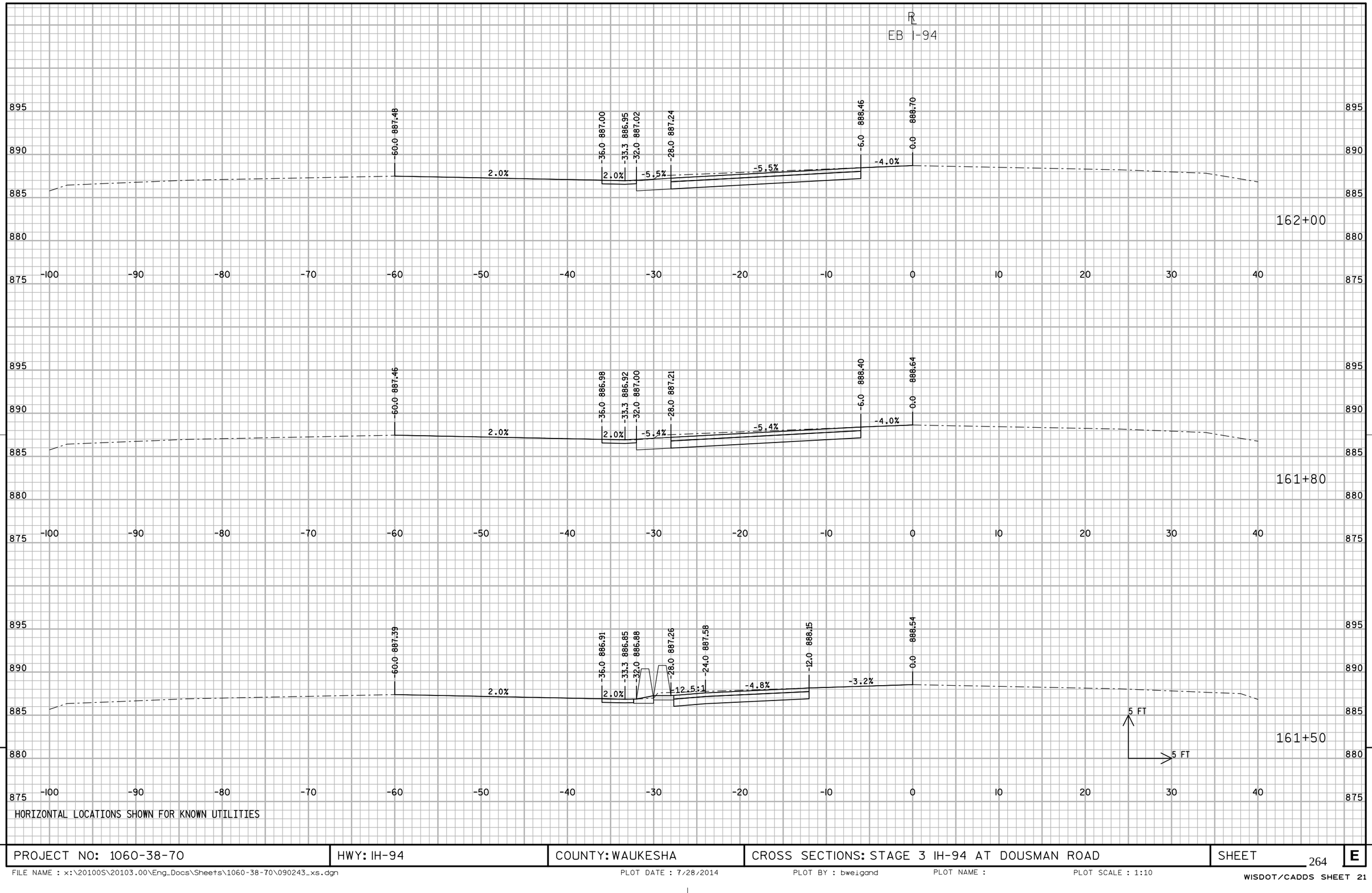

HORIZONTAL LOCATIONS SHOWN FOR KNOWN UTILITIES

PROJECT NO: 1060-38-70	HWY: IH-94	COUNTY: WAUKESHA	CROSS SECTIONS: STAGE 3 IH-94 AT DOUSMAN ROAD	SHEET 264	E

FILE NAME : x:\20100S\20103.00\Eng_Docs\Sheets\1060-38-70\090243_xs.dgn PLOT DATE : 7/28/2014 PLOT BY : bweigand PLOT NAME : PLOT SCALE : 1:10

WISDOT/CADDS SHEET 21

R

EB I-94

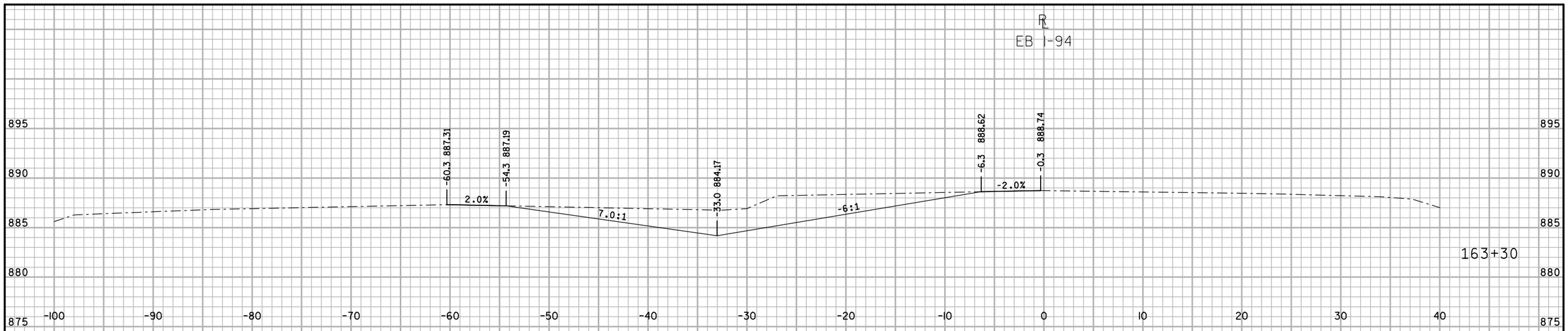

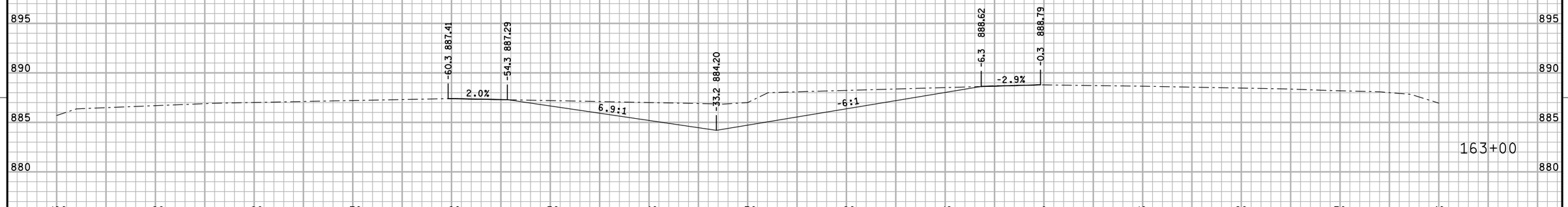

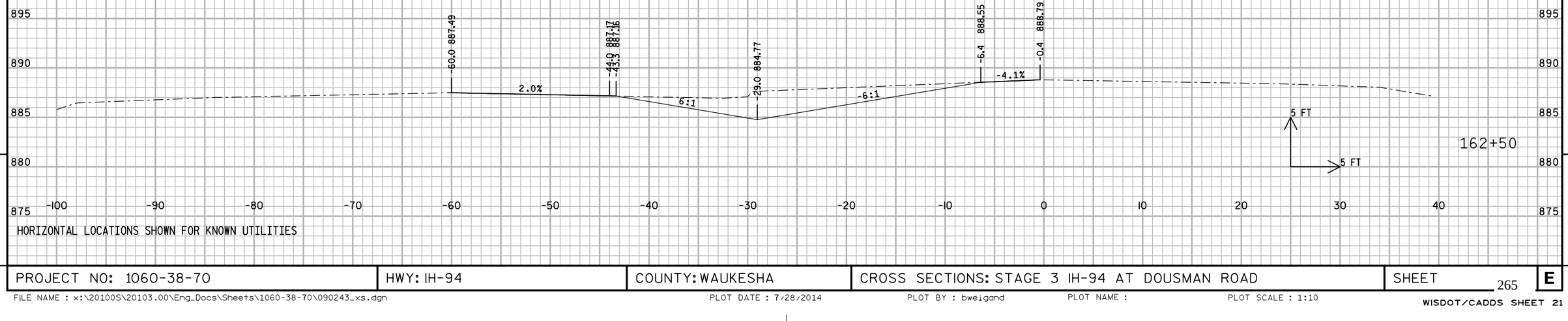

9

HORIZONTAL LOCATIONS SHOWN FOR KNOWN UTILITIES

9

PROJECT NO: 1060-38-70	HWY: IH-94	COUNTY: WAUKESHA	CROSS SECTIONS: STAGE 3 IH-94 AT DOUSMAN ROAD	SHEET 265	E

FILE NAME : x:\20100S\20103.00\Eng_Docs\Sheets\1060-38-70\090243_xs.dgn PLOT DATE : 7/28/2014 PLOT BY : bweigand PLOT NAME : PLOT SCALE : 1:10

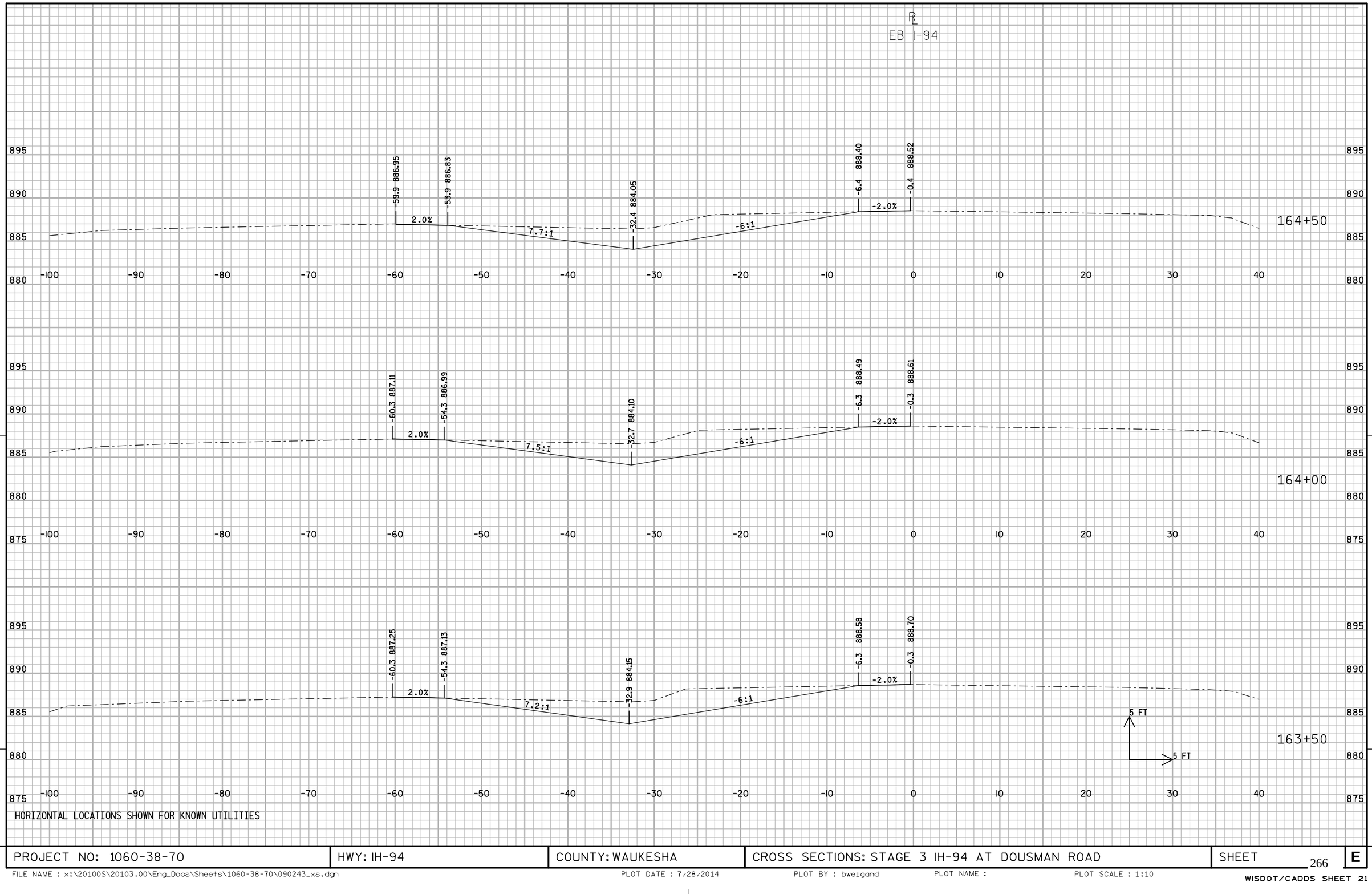

HORIZONTAL LOCATIONS SHOWN FOR KNOWN UTILITIES

PROJECT NO: 1060-38-70	HWY: IH-94	COUNTY: WAUKESHA	CROSS SECTIONS: STAGE 3 IH-94 AT DOUSMAN ROAD	SHEET 266	E

FILE NAME : x:\20100S\20103.00\Eng_Docs\Sheets\1060-38-70\090243_xs.dgn PLOT DATE : 7/28/2014 PLOT BY : bweigand PLOT NAME : PLOT SCALE : 1:10

WISDOT/CADDS SHEET 21

R

EB I-94

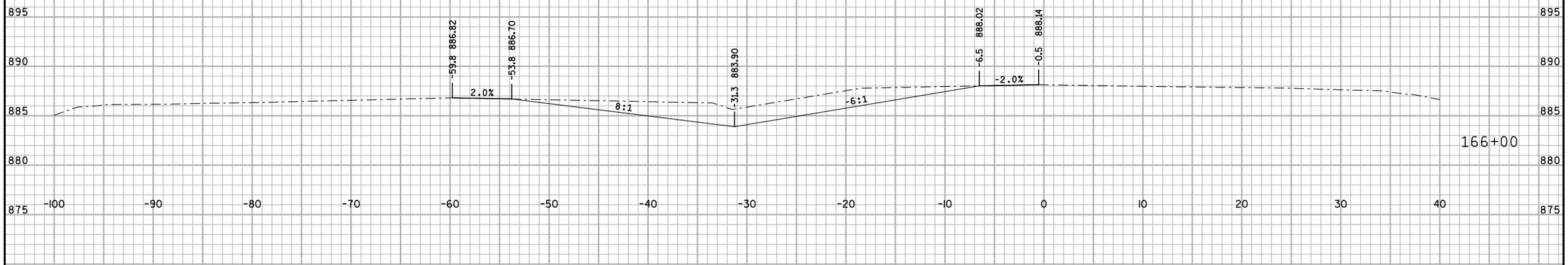

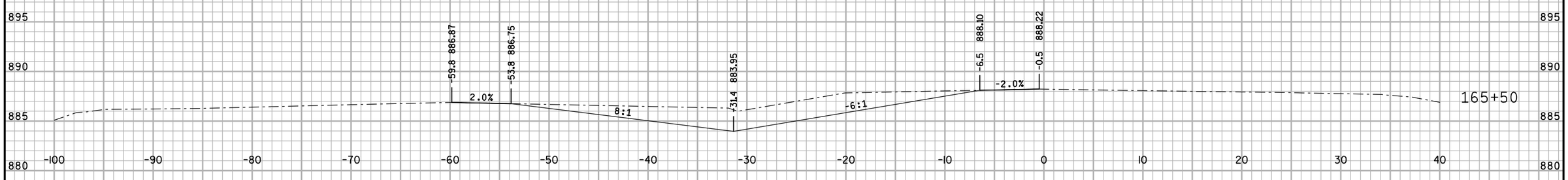

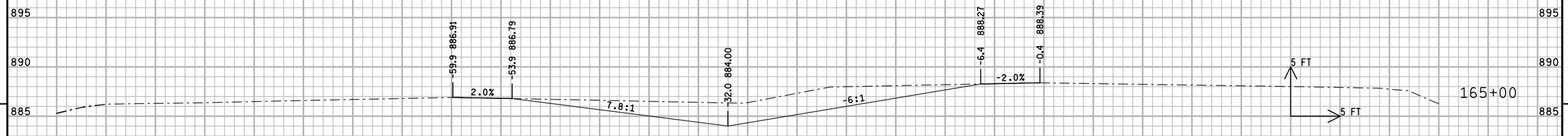

9

HORIZONTAL LOCATIONS SHOWN FOR KNOWN UTILITIES

9

PROJECT NO: 1060-38-70	HWY: IH-94	COUNTY: WAUKESHA	CROSS SECTIONS: STAGE 3 IH-94 AT DOUSMAN ROAD	SHEET 267	E

FILE NAME : x:\20100S\20103.00\Eng_Docs\Sheets\1060-38-70\090243_xs.dgn PLOT DATE : 7/28/2014 PLOT BY : bweigand PLOT NAME : PLOT SCALE : 1:10

WISDOT/CADDS SHEET 21

HORIZONTAL LOCATIONS SHOWN FOR KNOWN UTILITIES

PROJECT NO: 1060-38-70	HWY: IH-94	COUNTY: WAUKESHA	CROSS SECTIONS: STAGE 3 IH-94 AT DOUSMAN ROAD	SHEET 268	E

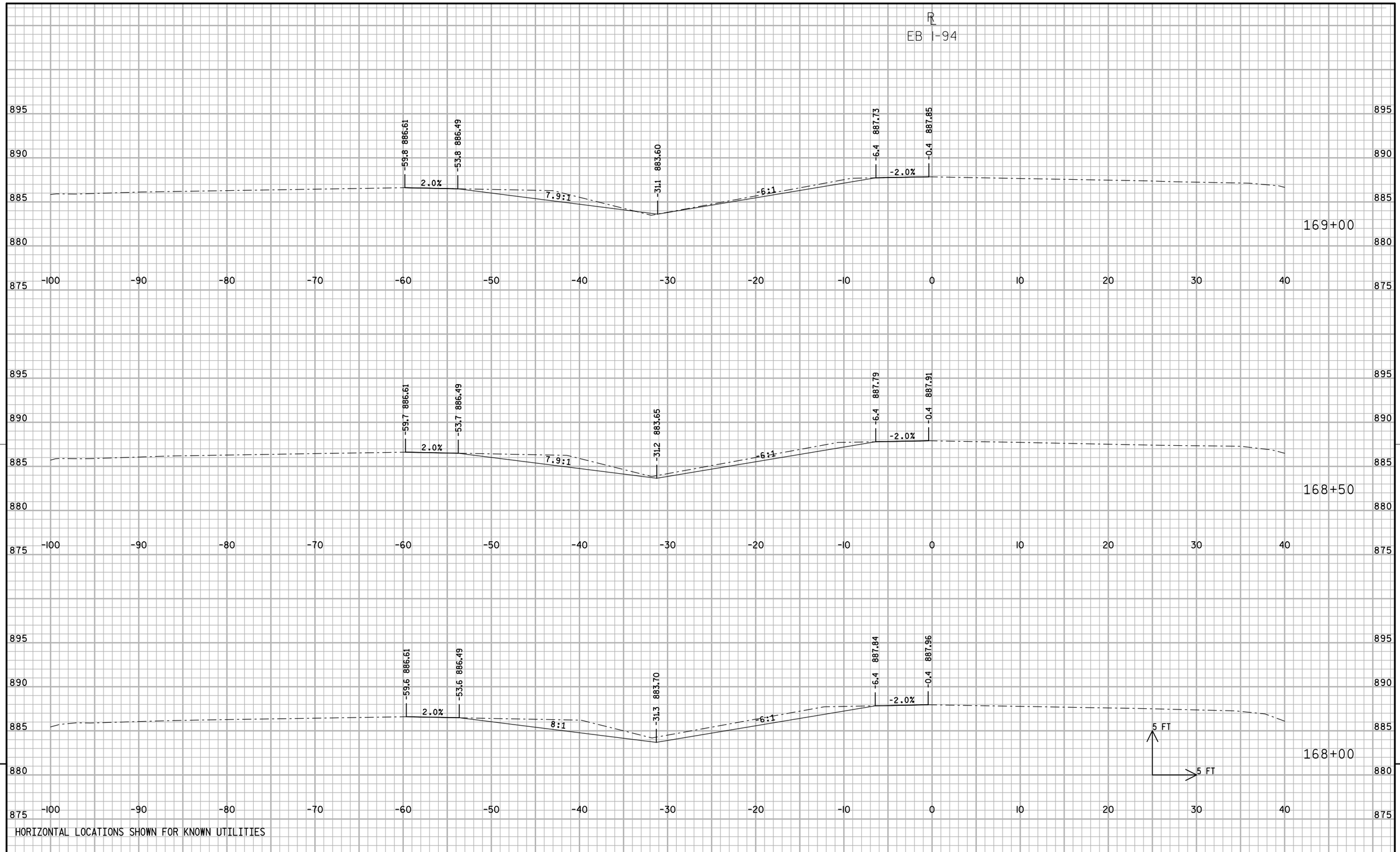

9

HORIZONTAL LOCATIONS SHOWN FOR KNOWN UTILITIES

9

PROJECT NO: 1060-38-70	HWY: IH-94	COUNTY: WAUKESHA	CROSS SECTIONS: STAGE 3 IH-94 AT DOUSMAN ROAD	SHEET 269	E

FILE NAME : x:\20100S\20103.00\Eng_Docs\Sheets\1060-38-70\090243_xs.dgn PLOT DATE : 7/28/2014 PLOT BY : bweigand PLOT NAME : PLOT SCALE : 1:10

WISDOT/CADDS SHEET 21

R

EB I-94

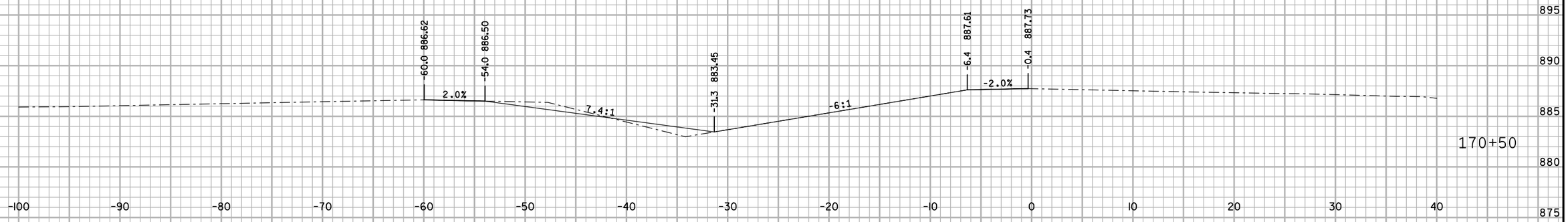

170+50

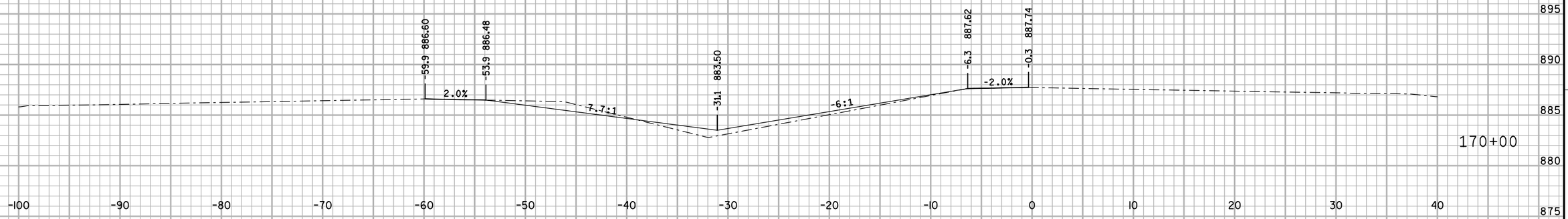

170+00

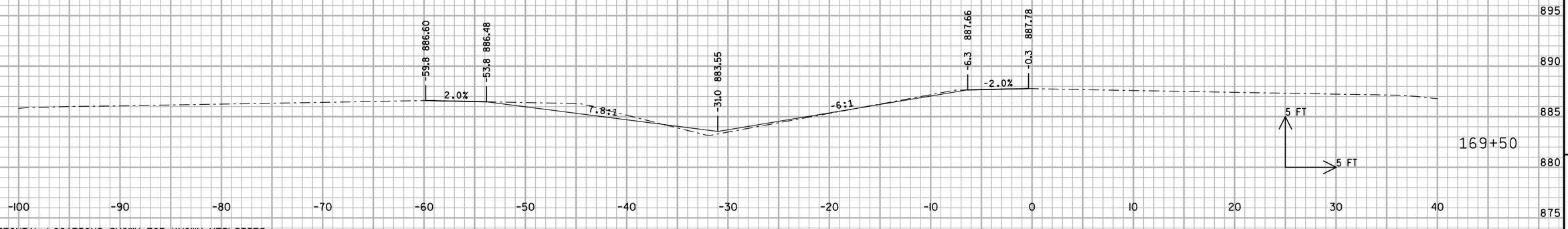

169+50

9

HORIZONTAL LOCATIONS SHOWN FOR KNOWN UTILITIES

9

PROJECT NO: 1060-38-70	HWY: IH-94	COUNTY: WAUKESHA	CROSS SECTIONS: STAGE 3 IH-94 AT DOUSMAN ROAD	SHEET 270	E

FILE NAME : x:\20100S\20103.00\Eng_Docs\Sheets\1060-38-70\090243_xs.dgn PLOT DATE : 7/28/2014 PLOT BY : bweigand PLOT NAME : PLOT SCALE : 1:10

WISDOT/CADDS SHEET 21

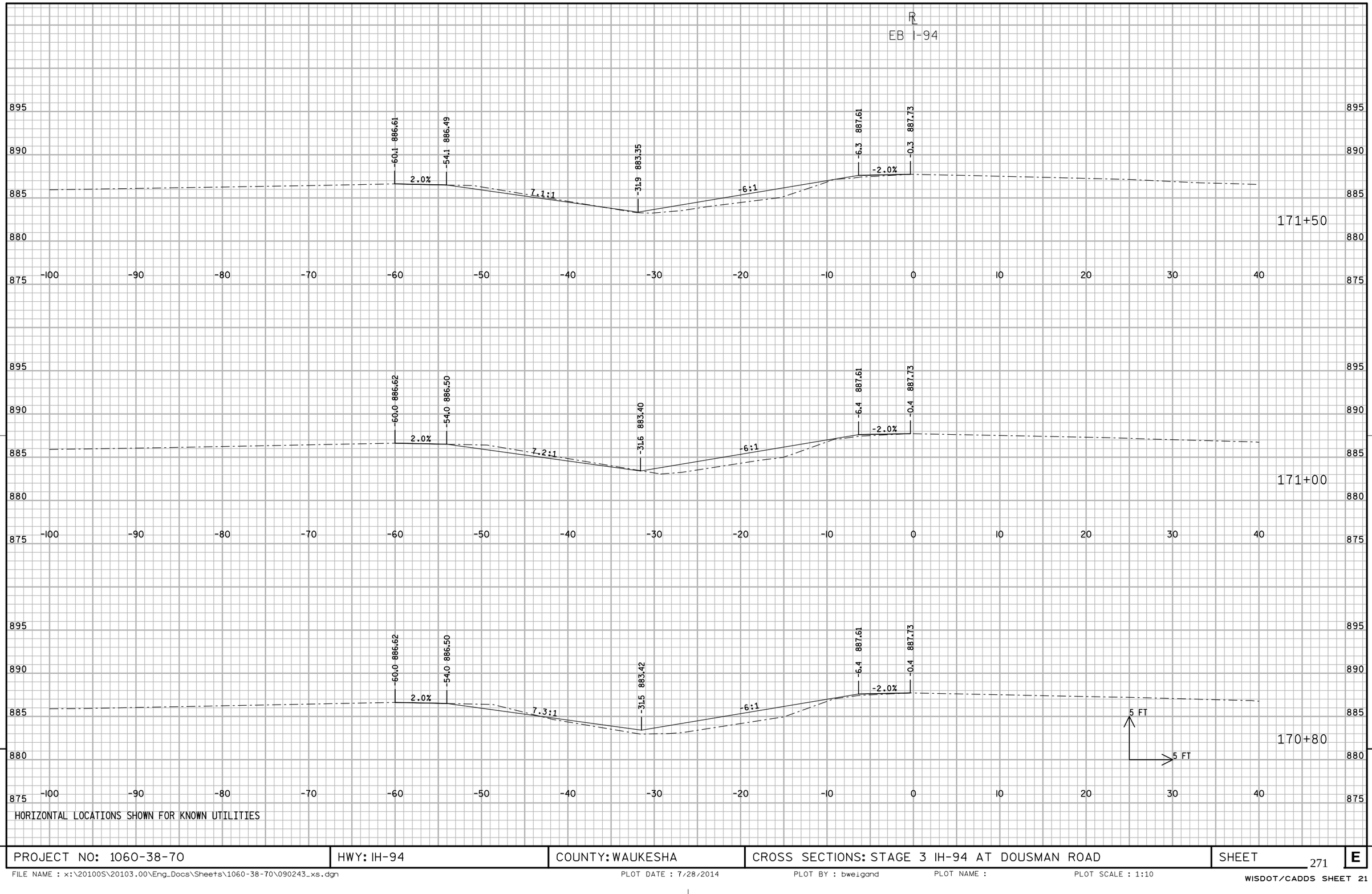

HORIZONTAL LOCATIONS SHOWN FOR KNOWN UTILITIES

PROJECT NO: 1060-38-70	HWY: IH-94	COUNTY: WAUKESHA	CROSS SECTIONS: STAGE 3 IH-94 AT DOUSMAN ROAD	SHEET 271	E

FILE NAME : x:\20100S\20103.00\Eng_Docs\Sheets\1060-38-70\090243_xs.dgn PLOT DATE : 7/28/2014 PLOT BY : bweigand PLOT NAME : PLOT SCALE : 1:10

WISDOT/CADDS SHEET 21

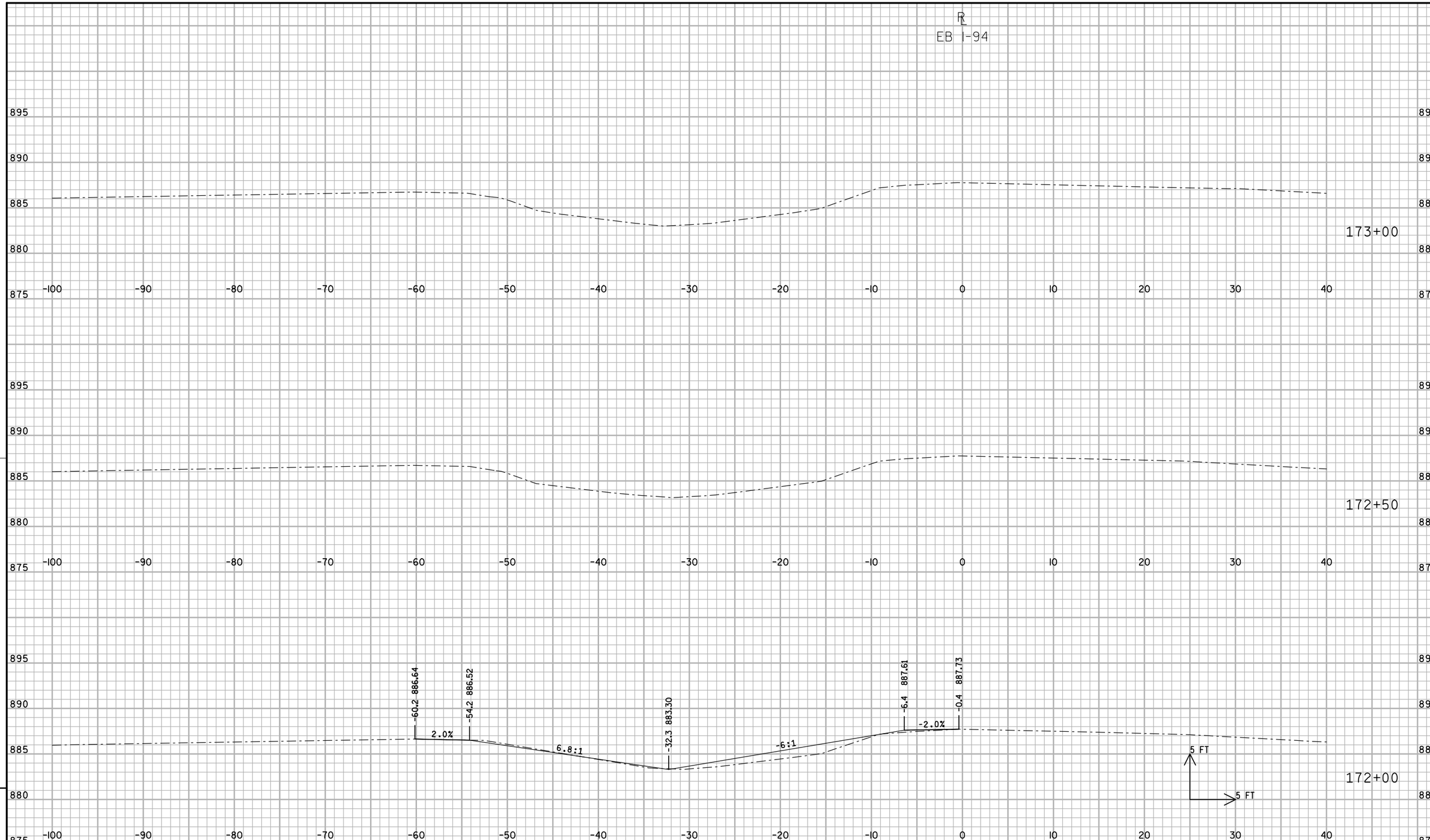

HORIZONTAL LOCATIONS SHOWN FOR KNOWN UTILITIES

9

9

PROJECT NO: 1060-38-70	HWY: IH-94	COUNTY: WAUKESHA	CROSS SECTIONS: STAGE 3 IH-94 AT DOUSMAN ROAD	SHEET 272	E

FILE NAME : x:\20100S\20103.00\Eng_Docs\Sheets\1060-38-70\090243_xs.dgn PLOT DATE : 7/28/2014 PLOT BY : bweigand PLOT NAME : PLOT SCALE : 1:10

WISDOT/CADDS SHEET 21

DOUSMAN ROAD

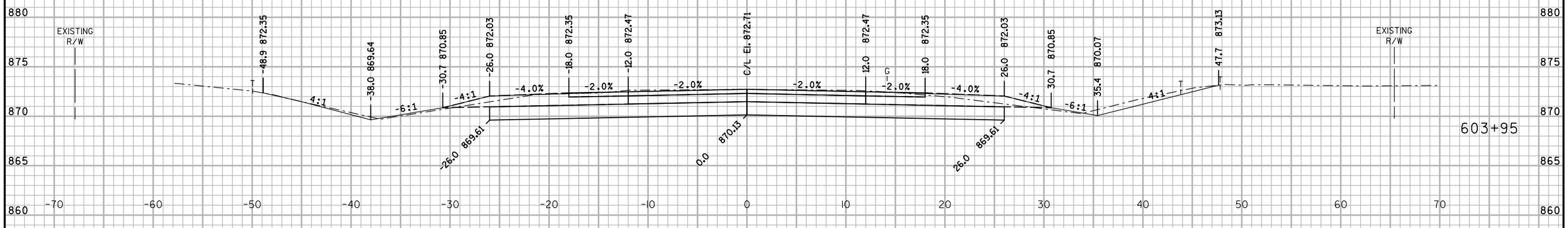

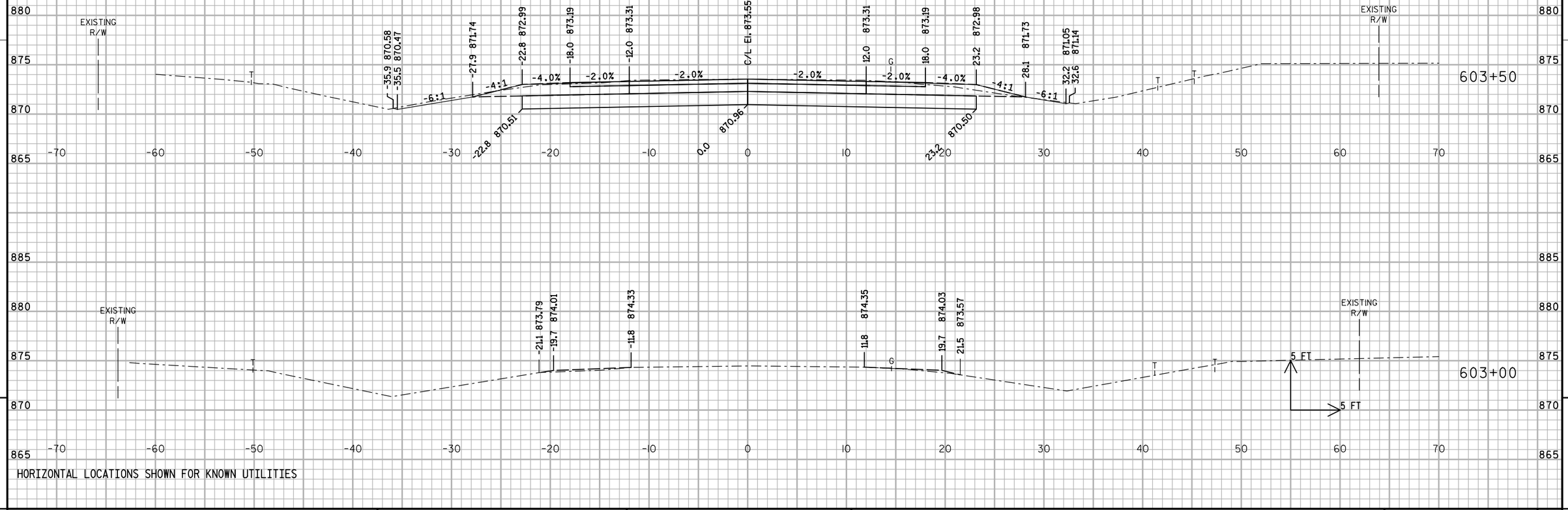

HORIZONTAL LOCATIONS SHOWN FOR KNOWN UTILITIES

PROJECT NO: 1060-38-70	HWY: IH-94	COUNTY: WAUKESHA	CROSS SECTIONS: DOUSMAN ROAD	SHEET 273	E

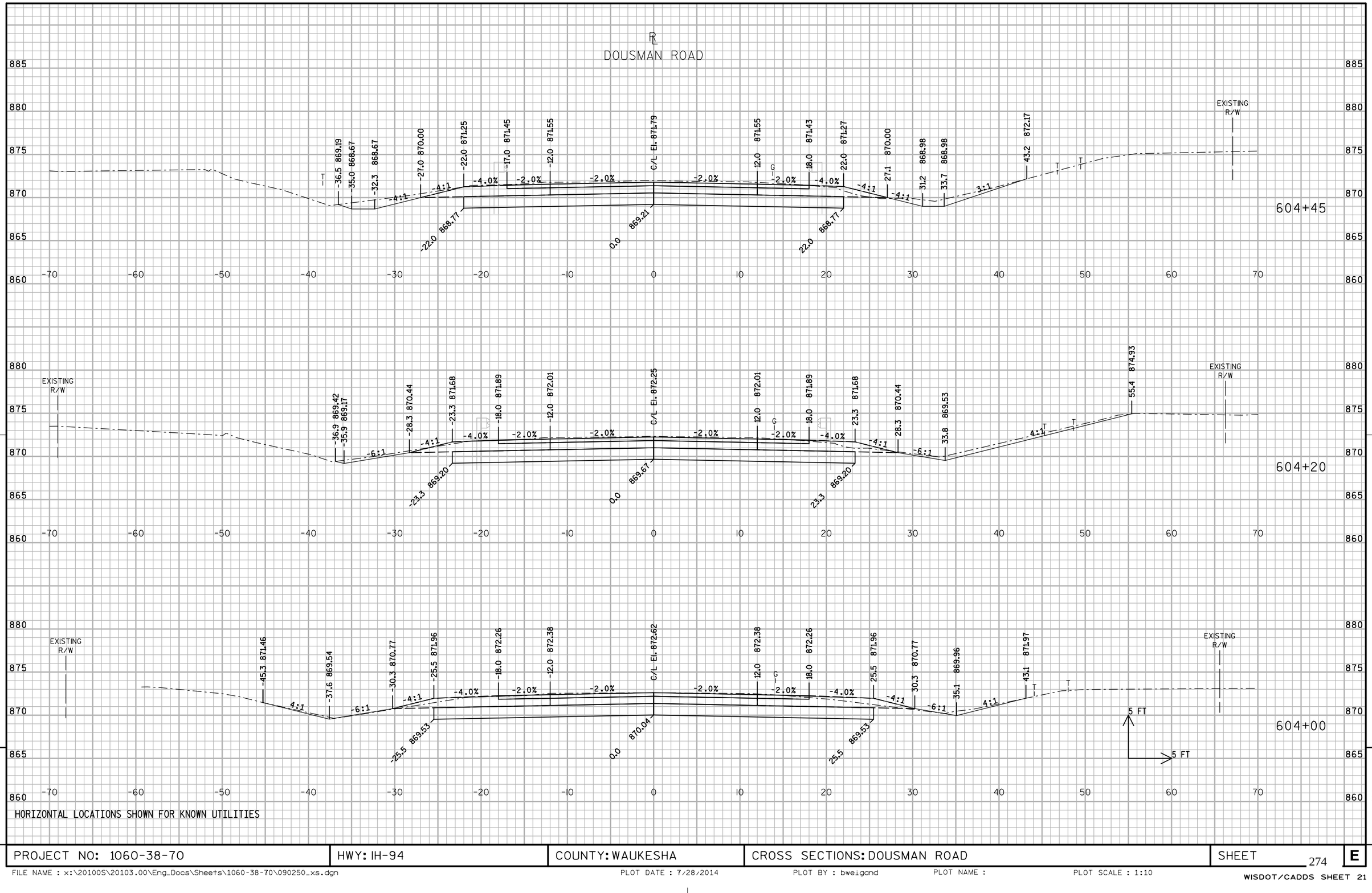

HORIZONTAL LOCATIONS SHOWN FOR KNOWN UTILITIES

PROJECT NO: 1060-38-70	HWY: IH-94	COUNTY: WAUKESHA	CROSS SECTIONS: DOUSMAN ROAD	SHEET 274	E

DOUSMAN ROAD

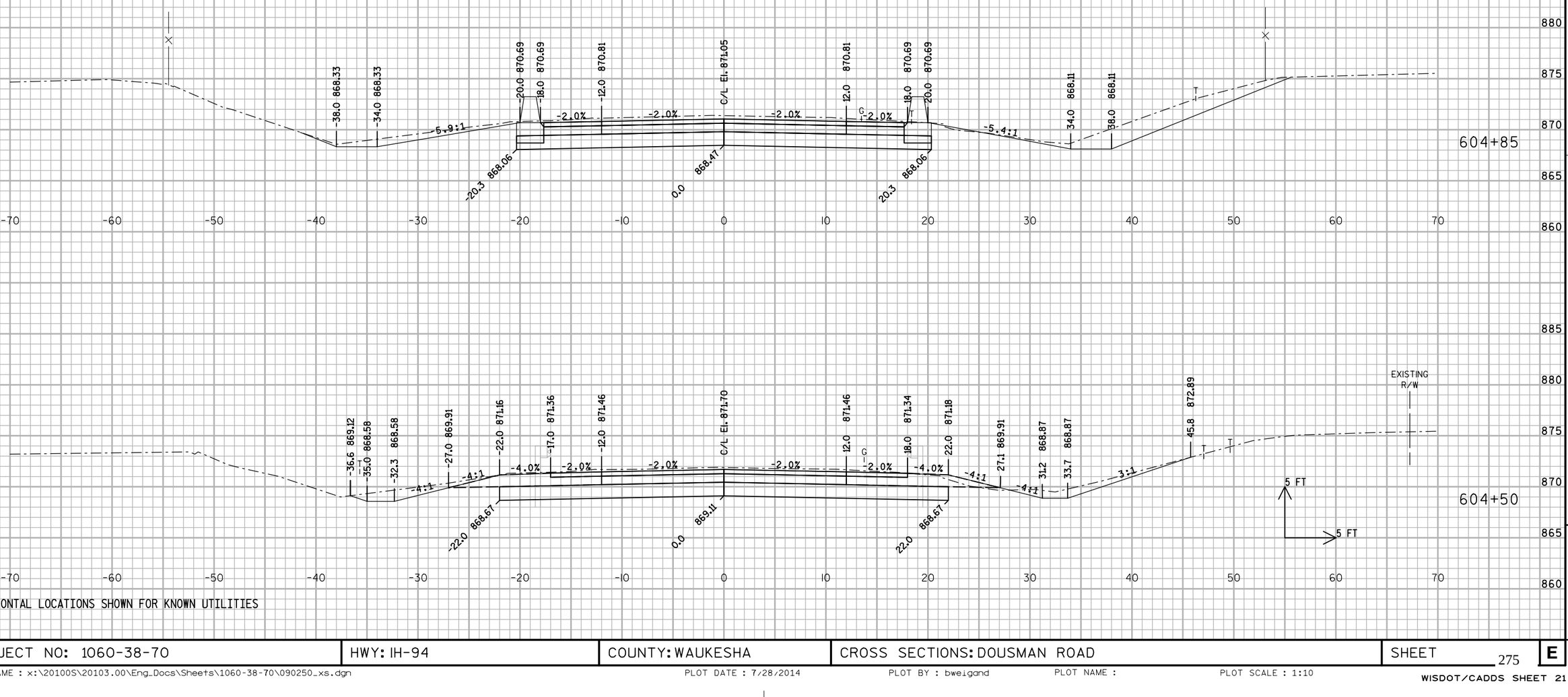

HORIZONTAL LOCATIONS SHOWN FOR KNOWN UTILITIES

PROJECT NO: 1060-38-70	HWY: IH-94	COUNTY: WAUKESHA	CROSS SECTIONS: DOUSMAN ROAD	SHEET 275	E

℄
DOUSMAN ROAD

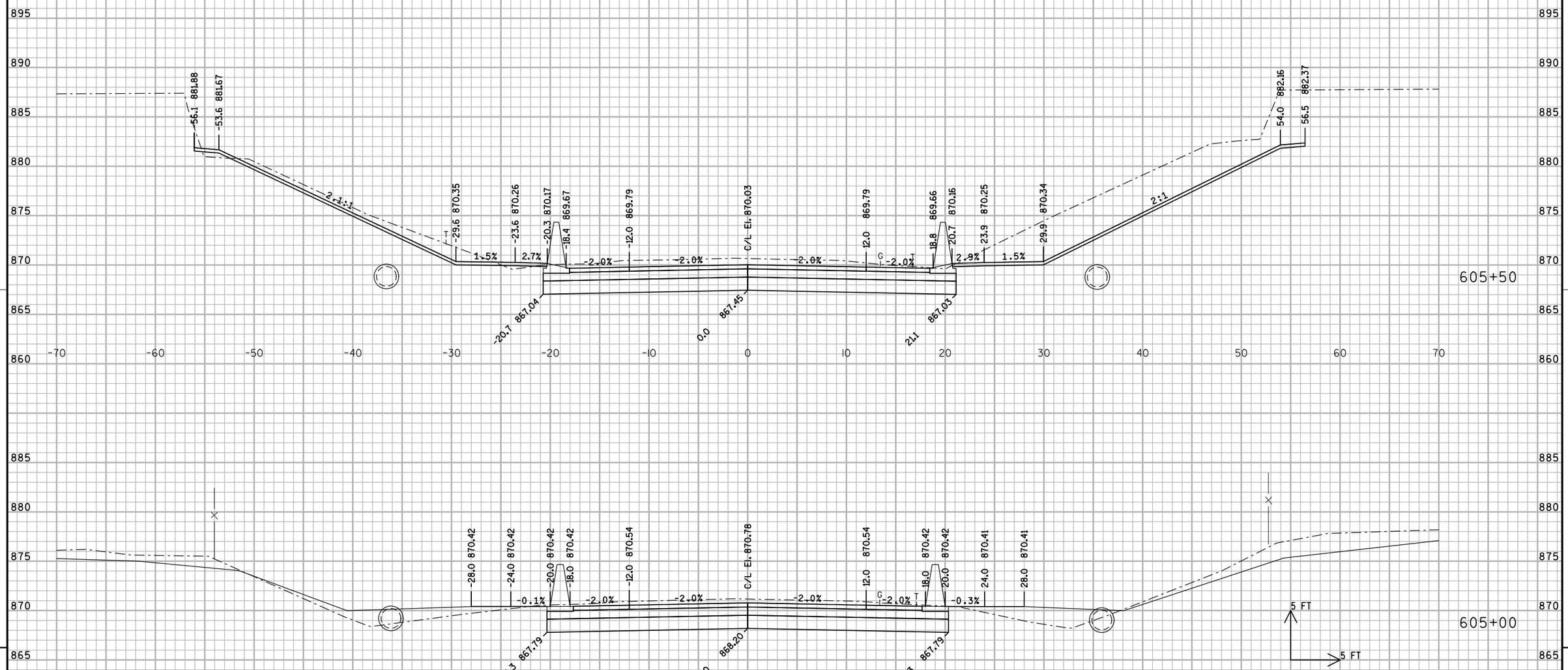

HORIZONTAL LOCATIONS SHOWN FOR KNOWN UTILITIES

PROJECT NO: 1060-38-70	HWY: IH-94	COUNTY: WAUKESHA	CROSS SECTIONS: DOUSMAN ROAD	SHEET 276	E

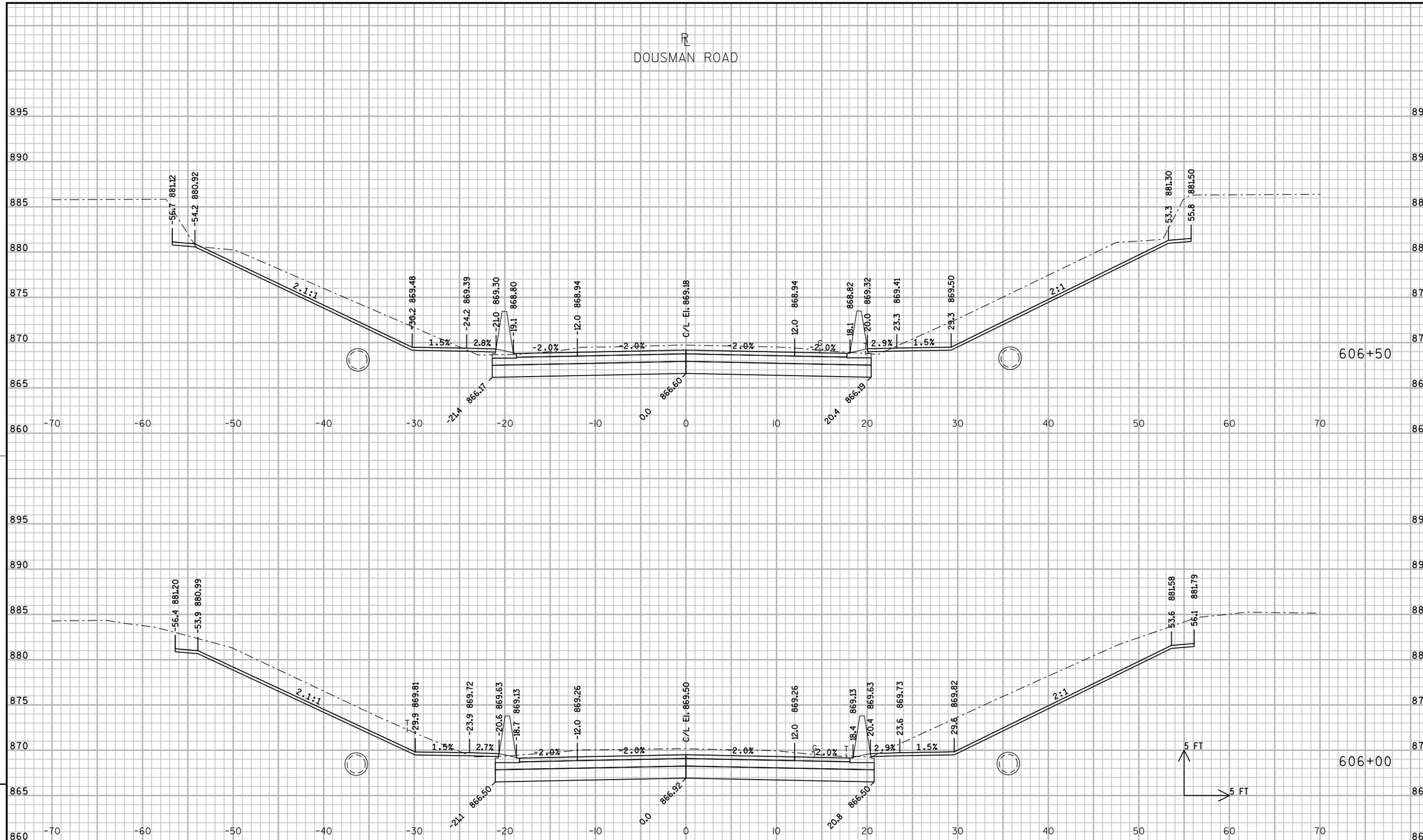

HORIZONTAL LOCATIONS SHOWN FOR KNOWN UTILITIES

PROJECT NO: 1060-38-70	HWY: IH-94	COUNTY: WAUKESHA	CROSS SECTIONS: DOUSMAN ROAD	SHEET 277	E

FILE NAME : x:\20100S\20103.00\Eng_Docs\Sheets\1060-38-70\090250_xs.dgn PLOT DATE : 7/28/2014 PLOT BY : bweigand PLOT NAME : PLOT SCALE : 1:10

WISDOT/CADDS SHEET 21

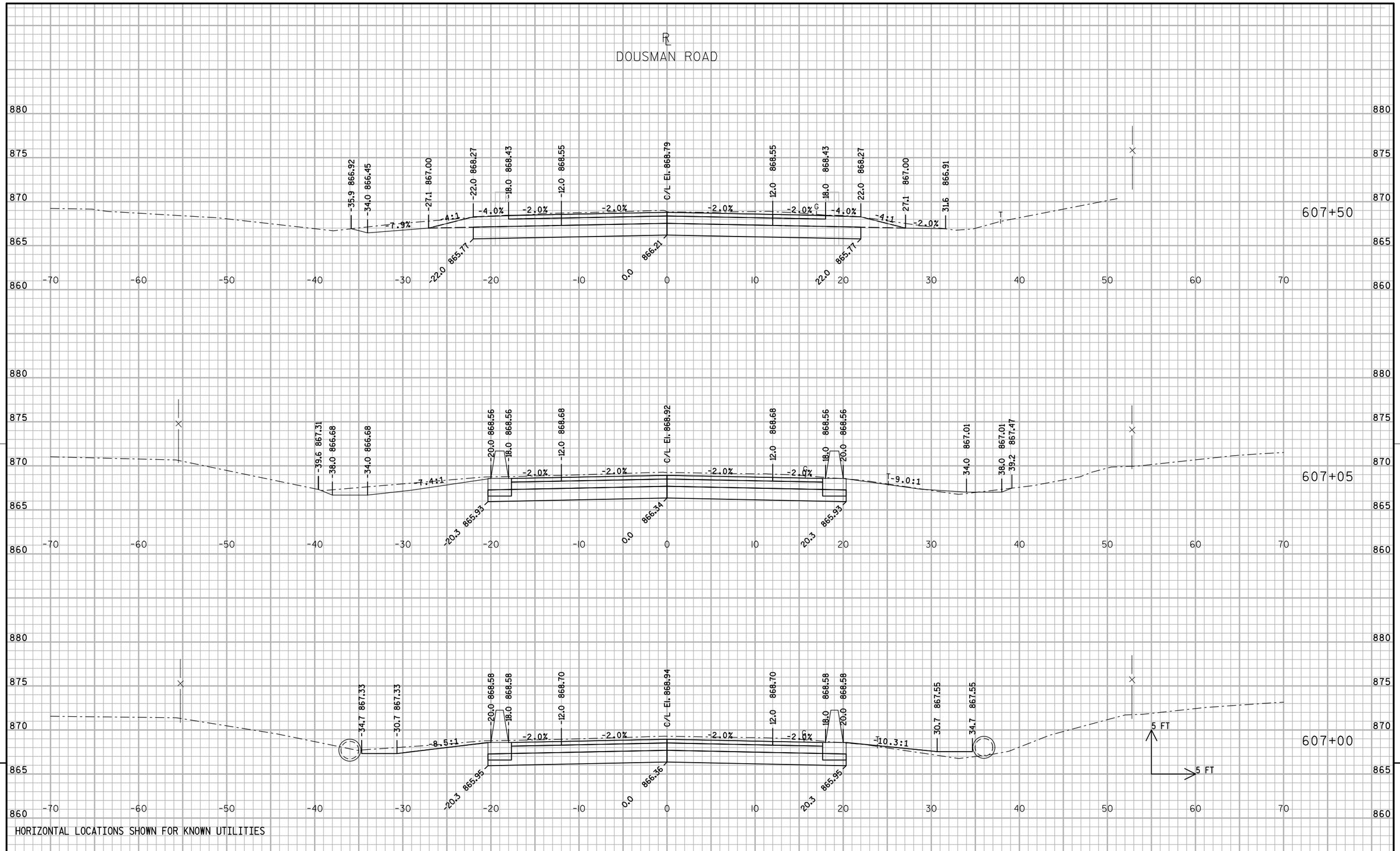

HORIZONTAL LOCATIONS SHOWN FOR KNOWN UTILITIES

PROJECT NO: 1060-38-70	HWY: IH-94	COUNTY: WAUKESHA	CROSS SECTIONS: DOUSMAN ROAD	SHEET 278	E

FILE NAME : x:\20100S\20103.00\Eng_Docs\Sheets\1060-38-70\090250_xs.dgn PLOT DATE : 7/28/2014 PLOT BY : bweigand PLOT NAME : PLOT SCALE : 1:10

R
℄
DOUSMAN ROAD

608+50

-22.7 868.16
-11.7 868.60
11.7 868.47
22.7 868.04
EXISTING R/W
-46.0 865.29

608+00

-30.7 866.87
-26.0 868.05
-18.0 868.37
-12.0 868.49
C/L El. 868.73
12.0 868.49
18.0 868.37
26.0 868.05
30.7 866.87
31.6 866.85
-4:1
-4.0%
-2.0%
-2.0%
-2.0%
-2.0%
-4.0%
-4:1
EXISTING R/W
-26.0 865.63
-25.0 865.54
0.0 866.15
26.0 865.63

607+75

-35.3 866.65
-34.0 866.33
-28.3 866.93
-23.3 868.18
-18.0 868.39
-12.0 868.51
C/L El. 868.75
12.0 868.51
18.0 868.39
23.3 868.18
28.3 866.93
31.7 866.87
-9.4:1
-4:1
-4.0%
-2.0%
-2.0%
-2.0%
-2.0%
-4.0%
-4:1
-2.0%
5 FT
5 FT
-23.3 865.70
0.0 866.17
23.3 865.70

-70 -60 -50 -40 -30 -20 -10 0 10 20 30 40 50 60 70
860 865 870 875 880

HORIZONTAL LOCATIONS SHOWN FOR KNOWN UTILITIES

PROJECT NO: 1060-38-70	HWY: IH-94	COUNTY: WAUKESHA	CROSS SECTIONS: DOUSMAN ROAD	SHEET 279	E

FILE NAME : x:\20100S\20103.00\Eng_Docs\Sheets\1060-38-70\090250_xs.dgn PLOT DATE : 7/28/2014 PLOT BY : bweigand PLOT NAME : PLOT SCALE : 1:10

WISDOT/CADDS SHEET 21

Wisconsin Department of Transportation

Dedicated people creating transportation solutions
through innovation and exceptional service.

http://www.dot.wisconsin.gov