WKE

PROJECT ID: 3220-03-62

WITH:

COUNTY: KENOSHA

JULY 2014

ORDER OF SHEETS

TOTAL SHEETS = 162

STATE PROJECT	FEDERAL PROJECT	
	PROJECT	CONTRACT
3220-03-62		

STATE OF WISCONSIN
DEPARTMENT OF TRANSPORTATION

ROADWAY MAINTENANCE

52ND STREET- CITY OF KENOSHA

STH 31 TO STH 32

STH 158

KENOSHA COUNTY

STATE PROJECT NUMBER
3220-03-62

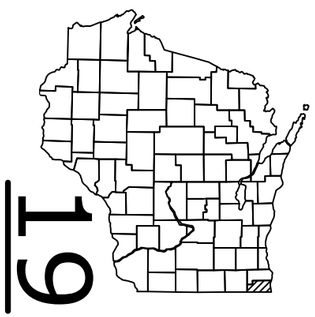

N

DESIGN DESIGNATION

A.A.D.T. (2015)	=	11,800 TO 19,300
A.A.D.T. (2035)	=	13,000 TO 24,100
D.H.V.	=	4.7%
D.D.	=	59/41
T.	=	5.4%
DESIGN SPEED	=	35-40 MPH
ESALS	=	6,270,700

CONVENTIONAL SYMBOLS

PLAN

CORPORATE LIMITS
PROPERTY LINE
LOT LINE
LIMITED HIGHWAY EASEMENT
EXISTING RIGHT OF WAY
PROPOSED OR NEW R/W LINE
SLOPE INTERCEPT
REFERENCE LINE
EXISTING CULVERT
PROPOSED CULVERT (Box or Pipe)
COMBUSTIBLE FLUIDS — CAUTION
MARSH AREA
WOODED OR SHRUB AREA

PROFILE

GRADE LINE
ORIGINAL GROUND
MARSH OR ROCK PROFILE (To be noted as such) — ROCK
SPECIAL DITCH — LABEL
GRADE ELEVATION — 95.36
CULVERT (Profile View)

UTILITIES

ELECTRIC — E
FIBER OPTIC — FO
GAS — G
SANITARY SEWER — SAN
STORM SEWER — SS
TELEPHONE — T
WATER — W
UTILITY PEDESTAL
POWER POLE
TELEPHONE POLE

BEGIN PROJECT
3220-03-62
STA. 195+80
Y=135,613.382
X=613,865.160

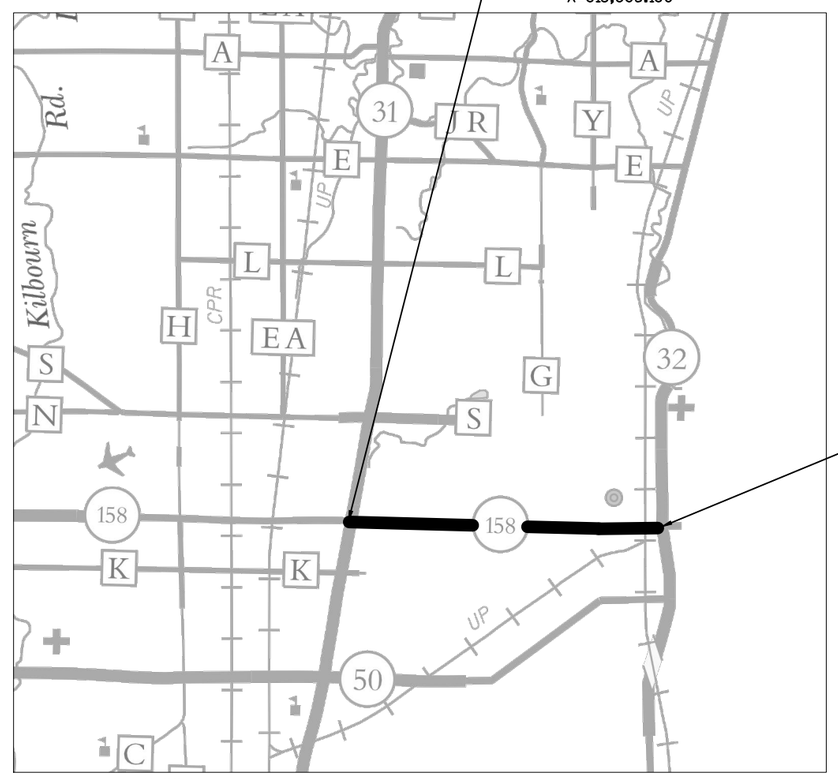

T-2-N

T-1-N

END PROJECT
3220-03-62
STA. 346+90

R-22-E

LAYOUT

SCALE 0 2 MI.

TOTAL NET LENGTH OF CENTERLINE = 2.862 MI.

HORIZONTAL POSITIONS SHOWN ON THIS PLAN ARE WISCONSIN COUNTY COORDINATES, KENOSHA COUNTY, NAD83 (2007), IN U.S. SURVEY FEET. VALUES ARE GRID COORDINATES, GRID BEARINGS, AND GRID DISTANCES. GRID DISTANCES MAY BE USED AS GROUND DISTANCES.

ELEVATIONS SHOWN ON THE PLAN ARE REFERENCED TO THE NORTH AMERICAN VERTICAL DATUM NAVD 88 (2007)

STATE OF WISCONSIN
DEPARTMENT OF TRANSPORTATION

PREPARED BY

Surveyor	WISDOT
Designer	JEFF GUENETTE
Project Manager	JEFF GUENETTE
Regional Examiner	
Regional Supervisor	ANITA PUSCH
C.O. Examiner	

APPROVED FOR THE DEPARTMENT

DATE: 1/22/14 Jeff Guenette (Signature)

E

GENERAL NOTES

THE CONTRACTOR SHALL NOTIFY DIGGERS HOTLINE AND AFFECTED UTILITIES PRIOR TO THE START OF WORK. ANY UTILITY WHICH IS NOT A MEMBER OF DIGGERS HOTLINE MUST BE CONTACTED SEPARATELY.

THE LOCATIONS OF EXISTING AND PROPOSED UTILITY INSTALLATIONS AS SHOWN ON THE PLANS ARE APPROXIMATE. THERE MAY BE OTHER UTILITY INSTALLATIONS WITHIN THE PROJECT LOCATION THAT ARE NOT SHOWN.

OBTAIN APPROVAL FROM THE ENGINEER FOR THE LOCATIONS OF LONGITUDINAL JOINTS IN HMA PAVEMENT PRIOR TO PAVING OPERATIONS.

THE CONTRACTOR WILL MAINTAIN ACCESS TO ALL DRIVEWAYS AND BUSINESSES AT ALL TIMES.

A SAWED JOINT WILL BE REQUIRED WHERE NEW PAVEMENT IS TO MEET AN EXISTING PAVED SURFACE.

TRAFFIC CONTROL LOCATIONS AS SHOWN IN THE PLAN ARE SUGGESTED LOCATIONS. EXACT LOCATIONS WILL BE DETERMINED BY THE ENGINEER IN THE FIELD.

ALL SIGN LOCATIONS SHALL BE REVIEWED BY THE ENGINEER PRIOR TO INSTALLATION.

STORM SEWER REHBILITATION WORK IS BASED ON A "LOOK THROUGH THE GRATE" SURVEY. ACTUAL WORK MAY BE ADJUSTED BY THE ENGINEER IN THE FIELD.

THE CONTRACTOR SHALL FIELD VERIFY RELATED DRAINAGE INFORMATION IN THE PLAN PRIOR TO ORDERING DRAINAGE STRUCTURES.

NO TREES OR SHRUBS SHALL BE REMOVED UNLESS DESIGNATED FOR REMOVAL BY THE ENGINEER.

RE-TOPSOIL GRADED AREAS, AS DESIGNATED BY THE ENGINEER, IMMEDIATELY AFTER GRADING IS COMPLETED WITHIN THOSE AREAS. SOD AND FERTILIZE TOP-SOILED AREAS, AS DESIGNATED BY THE ENGINEER, WITHIN FIVE (5) CALENDAR DAYS AFTER PLACEMENT OF TOPSOIL. IF GRADED AREAS ARE LEFT EXPOSED FOR MORE THAN (14) CALENDAR DAYS, SEED THOSE AREAS WITH TEMPORARY SEED.

STOCKPILE EXCESS MATERIAL OR SPOILS ON UPLAND AREAS AWAY FROM WETLANDS, FLOODPLAINS AND WATERWAYS. STOCKPILED SOIL SHALL BE PROTECTED AGAINST EROSION. IF STOCKPILED MATERIAL IS LEFT FOR MORE THAN FOURTEEN (14) CALENDAR DAYS, SEED THE STOCKPILE WITH TEMPORARY SEED.

EROSION CONTROL BMP'S ARE AT SUGGESTED LOCATIONS. THE ACTUAL LOCATIONS WILL BE DETERMINED BY THE CONTRACTORS ECIP AND BY THE ENGINEER. EROSION CONTROL BMP'S SHALL BE MAINTAINED UNTIL PERMANENT VEGATAION IS ESTABLISHED OR UNTIL THE ENGINEER DETERMINES THAT THE BMP IS NO LONGER REQUIRED.

THE CONTRACTOR MUST CONTACT THE PROJECT ENGINEER AND SEWRPC (DON SIMON OR JOHN WASHBURN) AT LEAST TWO WEEKS PRIOR TO WORK NEAR ANY PUBLIC SURVEY MONUMENT.

IF AN EXISTING SIGN IS TO BE REMOVED AND REPLACED WITH A NEW SIGN, DO NOT REMOVE THE EXISTING SIGN PRIOR TO INSTALLATION OF THE THE NEW SIGN.

TRAFFIC CONTROL GENERAL NOTES

THE EXACT NUMBER, LOCATION, AND SPACING OF ALL SIGNS AND DEVICES SHALL BE ADJUSTED TO FIT FIELD CONDITIONS OR AS DIRECTED BY THE ENGINEER

FLAGGING OPERATIONS ARE ONLY ALLOWED DURING MILLING AND PAVING OPERATIONS AT SIDEROADS. SEE FLAGGING DETAIL SHEET FOR PLACEMENT OF TRAFFIC CONTROL DEVICES.

ALL SIGNS ARE 48" X 48" UNLESS OTHERWISE NOTED IN THE PLAN.

TEMPORARY PAVEMENT MARKING REMOVABLE TAPE 4-INCH SHALL BE CUT THROUGH IT'S FULL WIDTH AND THICKNESS AT 25-FOOT INTERVALS TO CONTROL RAVELING.

COVER EXISTING PAVEMENT MARKING 12.5' SKIPS IN LANE CLOSURE TAPERS WITH TEMPORARY PAVEMENT MARKING REMOVABLE TAPE 4-INCH, BLACK.

ORDER OF SHEETS

HMA PAVING

	THICKNESS	HMA TYPE	ASPHALTIC MATERIAL	GRADATION
UPPER LAYER	2 1/2 INCH	E-3	PG 64-22	12.5 mm

DIGGERS HOTLINE

Dial 811 or (800) 242-8511

www.DiggersHotline.com

UTILITY CONTACTS

ATC MANAGEMENT, INC
MIKE OLSEN
PO BOX 47
WAUKESHA, WI 53187-0047
PHONE: (920) 338-6582

AT&T WISCONSIN
DAVE SCHOLD
4420 COUNTY LINE ROAD
RACINE, WI 53403
PHONE: (262) 553-4174

CITY OF KENOSHA WATER UTILITY
IAN BAGLEY
4401 GREEN BAY ROAD
KENOSHA, WI 53144
PHONE: (262) 653-4304

MIDWEST FIBER NETWORKS
RICHARD TRGOVEC
3701 W. BURNHAM STREET, STE C
MILWAUKEE, WI 53215
PHONE: (414) 672-5612

PAETEC BUSINESS SERVICES
JOHN LOUIS
1858 WRIGHT STREET
MADISON, WI 53704
PHONE: (608) 818-5009

TIME WARNER CABLE
LUKAS LACROSSE
1320 N. MARTIN LUTHER KING JR. DR.
MILWAUKEE, WI 53212
PHONE: (414) 908-4766

WE ENERGIES - ELECTRIC
BRYAN STOEHR - CONSTRUCTION
500 S 116TH STREET
WEST ALLIS, WI 53214
PHONE: (414) 416-6059
LATROY BRUMFIELD - GENERAL
333 W EVERETT ST - A29
MILWAUKEE, WI 53203
PHONE: (414) 221-5617

WE ENERGIES - GAS
CHRIS DEGRAVE - CONSTRUCTION
7815 NORTHWESTERN AVE
RACINE, WI 53406
PHONE: (262) 939-9814
LATROY BRUMFIELD - GENERAL
333 W EVERETT ST - A29
MILWAUKEE, WI 53203
PHONE: (414) 221-5617

OTHER CONTACTS

CITY OF KENOSHA
SHELLY BILLINGSLEY
625 52ND STREET
KENOSHA, WI 53140
PHONE: (262) 653-4150

KENOSHA COUNTY PUBLIC WORKS
GARY SIPSMA
19600 75TH STREET
PO BOX 609
BRISTOL, WI 53104
PHONE: (262) 857-1870

WI DNR LIAISON
CRAIG WEBSTER
141 NW BARSTOW STREET, ROOM 180
WAUKESHA, WI 53188
PHONE: (262) 574-2141
FAX: (262) 574-2128

WISDOT PROJECT MANAGER
JEFF GUENETTE
141 NW BARSTOW STREET
P.O. BOX 798
WAUKESHA, WI 53187-0798
PHONE: (262) 548-8663

AMTRAK
ROBERT WERTH
433 W ST PAUL AVE, RM 112
MILWAUKEE, WI 53203-3097
PHONE: (414) 271-9470

CITY OF KENOSHA POLICE DEPARTMENT
JOHN MORRISSEY, CHIEF OF POLICE
1000 55TH STREET
KENOSHA, WI 53140
PHONE: (262) 605-5200

CITY OF KENOSHA FIRE DEPARTMENT
JOHN THOMSEN, FIRE CHIEF
625 52ND STREET
KENOSHA, WI 53140
PHONE: (262) 653-4100

UNION PACIFIC RAILROAD COMPANY
JOHN VENICE
101 NORTH WACKER DRIVE, SUITE 1920
CHICAGO, IL 60606
PHONE: (312) 777-2043
FAX: (402) 233-2769
JNVENICE@UP.COM

SOUTHEASTERN WISCONSIN REGIONAL PLANNING COMMISSION
DON SIMON AND JOHN WASHBURN
W239 N1812 ROCKWOOD DRIVE
P.O. BOX 1607
WAUKESHA, WI 53187-1607
PHONE: (262) 547-6721
FAX: (262) 547-1103
SEWRPC@SEWRPC.ORG

CITY OF KENOSHA - TRANSIT
RON IWEN
4303 39TH AVE
KENOSHA, WI 53144
PHONE: (262) 653-4290

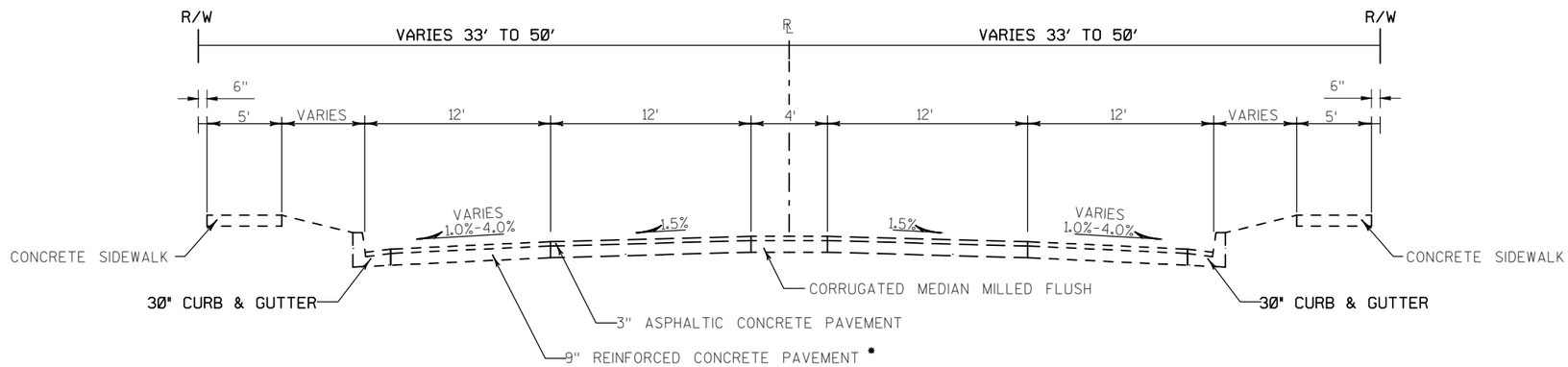

EXISTING TYPICAL SECTION
STH 158
STA. 195+80 TO STA. 347+00

*NOTE
HYPERBOLIC CROWN ON UNDERLYING CONCRETE PAVEMENT FOR INSIDE LANES. SEE CONSTRUCTION DETAIL.

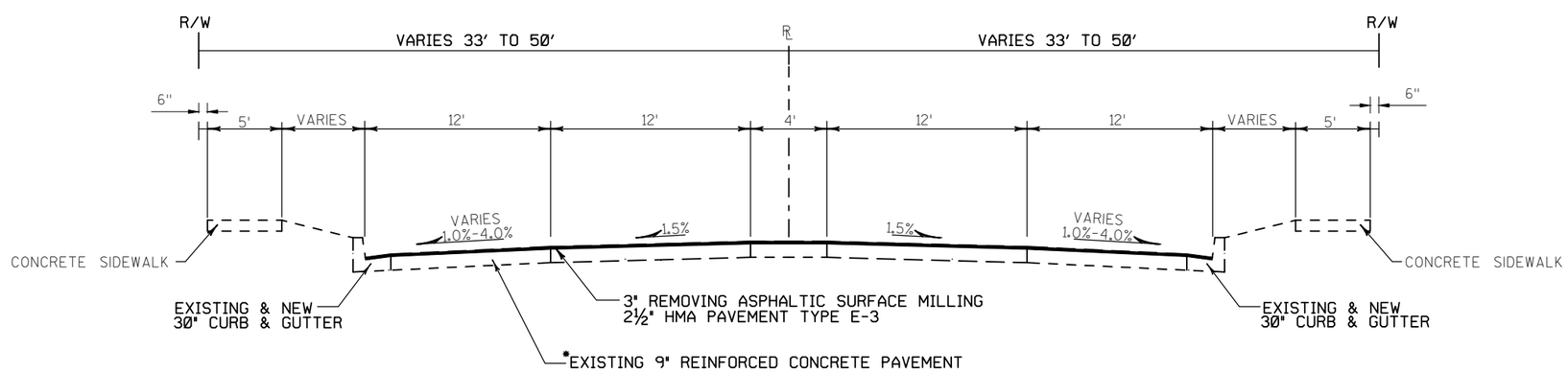

PROPOSED TYPICAL SECTION
STH 158
STA. 195+80 TO STA. 347+00

*NOTE
EXISTING HYPERBOLIC CROWN ON UNDERLYING CONCRETE PAVEMENT FOR INSIDE LANES. SEE CONSTRUCTION DETAIL FOR DEPTHS OF MILLING, REMOVING CONCRETE SURFACE PARTIAL DEPTH, AND HMA PAVEMENT.

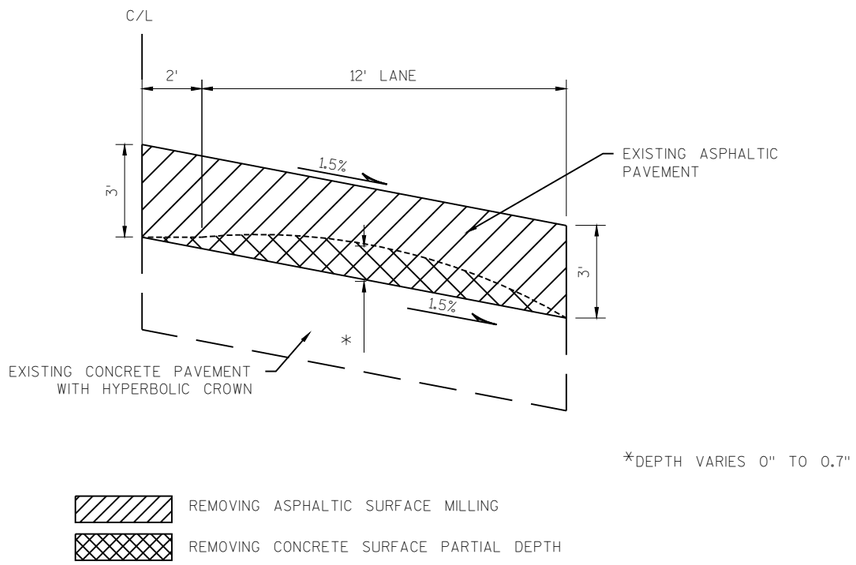

REMOVING EXISTING PAVEMENT ON INSIDE LANES

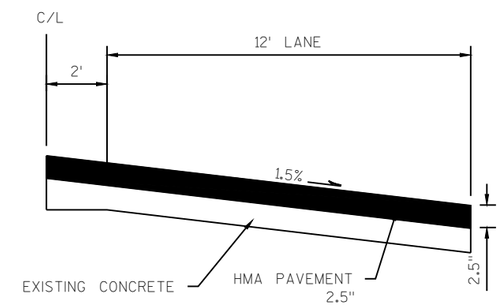

HMA PAVEMENT ON INSIDE LANES

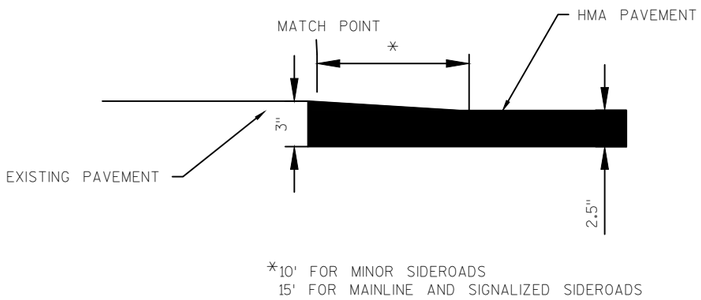

PAVING DETAIL - MATCH POINTS

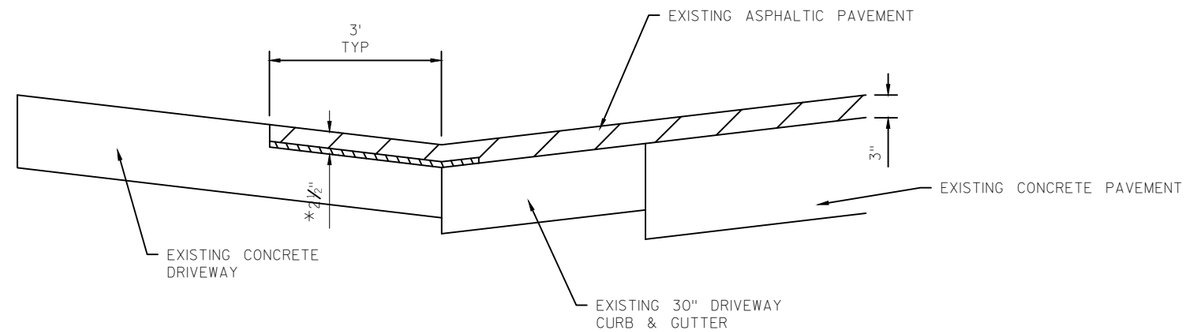

*1¼" REMOVING ASPHALTIC SURFACE MILLING
1¼" REMOVING CONCRETE SURFACE PARTIAL DEPTH

DRIVEWAY MILLING LIMITS

REMOVING ASPHALTIC SURFACE MILLING

REMOVING CONCRETE SURFACE PARTIAL DEPTH

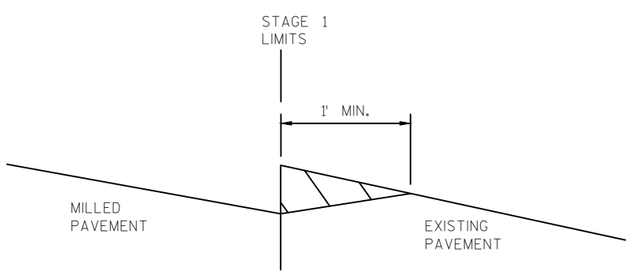

STAGE 1

REMOVE WEDGE, PAID FOR AS REMOVING ASPHALTIC SURFACE MILLING

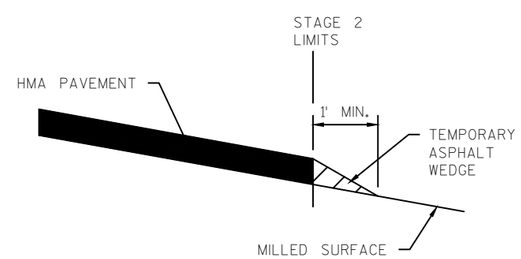

STAGE 2

PLACE TEMPORARY ASPHALT WEDGE (PAPER JOINT) PAID AS ASPHALTIC SURFACE TEMPORARY. REMOVAL IS INCIDENTAL TO ASPHALTIC SURFACE TEMPORARY

UNEVEN ASPHALTIC PAVEMENT JOINTS

USE AT INTERSECTIONS, TURN LANES, AND COMMERCIAL DRIVEWAYS

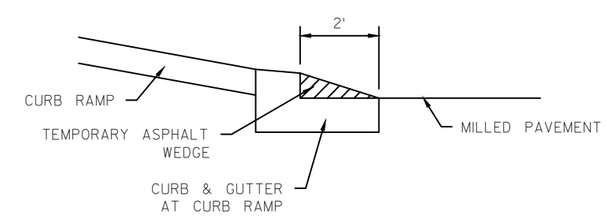

PLACE TEMPORARY ASPHALT WEDGE (PAPER JOINT) PAID AS ASPHALTIC SURFACE TEMPORARY. REMOVAL IS INCIDENTAL TO ASPHALTIC SURFACE TEMPORARY

UNEVEN ASPHALTIC PAVEMENT JOINTS

USE AT CURB RAMPS

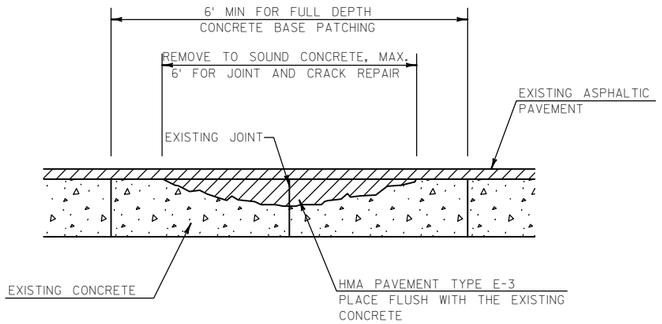

JOINT AND CRACK REPAIR DETAIL

NOTE:
WHEN THE DEPTH OF DETERIORATED CONCRETE IS GREATER THAN 4", REMOVE TO FULL DEPTH AND MEASURE AND PAY FOR UNDER THE APPROPRIATE BASE PATCH ITEM.

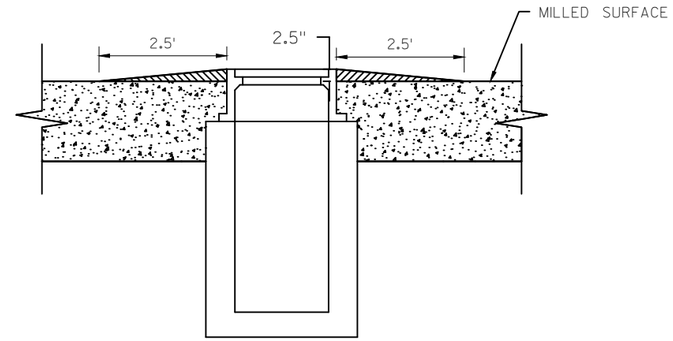

ASPHALTIC WEDGING PAID FOR
AS ASPHALTIC SURFACE TEMPORARY

NOTE:
ASPHALTIC WEDGING WILL BE REMOVED PRIOR TO PAVING. REMOVAL IS INCIDENTAL TO ASPHALTIC SURFACE TEMPORARY
LOCATIONS SHOWN IN THE MISC. QUANTITIES OR AS DETERMINED BY THE ENGINEER IN THE FIELD.

ASPHALTIC WEDGING DETAIL

MANHOLE OR WATER VALVE

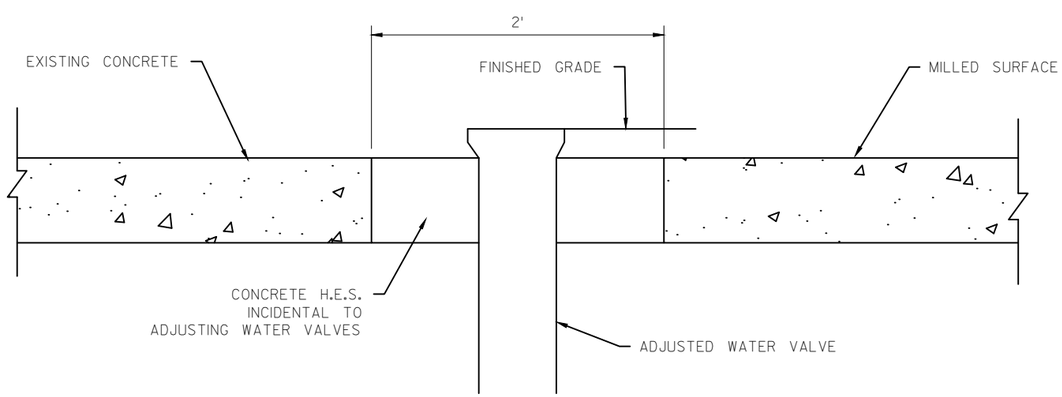

ADJUSTING WATER VALVES

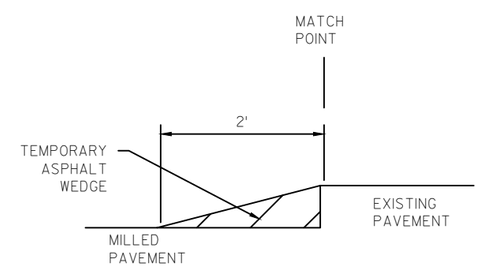

UNEVEN ASPHALTIC PAVEMENT JOINTS

USE AT MATCH POINTS

PLACE TEMPORARY ASPHALT WEDGE (PAPER JOINT) PAID AS ASPHALTIC SURFACE TEMPORARY. REMOVAL IS INCIDENTAL.

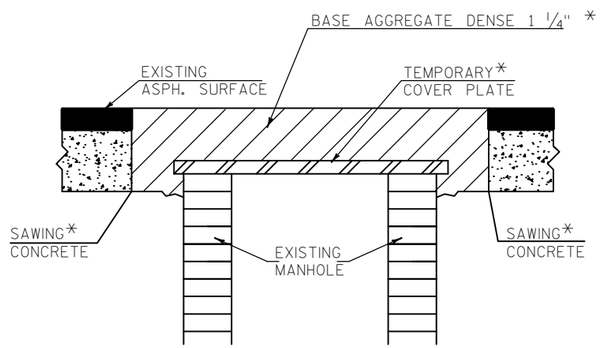

STEP 1

PRIOR TO REMOVING ASPH. SURF.

A. REMOVE AND STORE MANHOLE COVER

B. FURNISH AND INSTALL TEMP. COVER PLATE.

C. BACKFILL USING BASE AGGREGATE DENSE 1 1/4"

* TO BE PAID FOR UNDER THE APPROPRIATE ITEMS

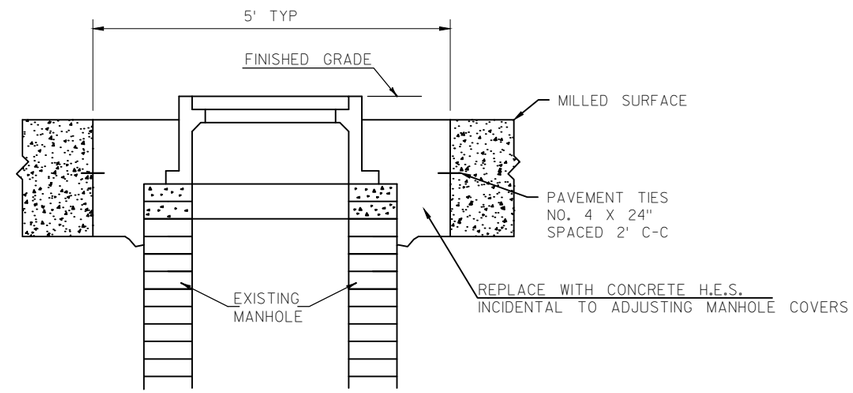

STEP 2

AFTER MILLING ASPHALT PAVEMENT

A. EXCAVATE AND REMOVE TEMPORARY COVER PLATE.

B. ADJUST MANHOLE AND REINSTALL MANHOLE COVER TO FINISH GRADE.

NOTE: USE ASPHALTIC SURFACE TEMPORARY INSTEAD OF BASE AGGREGATE IF MANHOLE IS WITHIN SIGNALIZED INTERSECTION OR TURN LANE.

ADJUSTING MANHOLE COVERS, ADJUSTING WATER VAULTS, AND ADJUSTING SANITARY MANHOLE COVERS

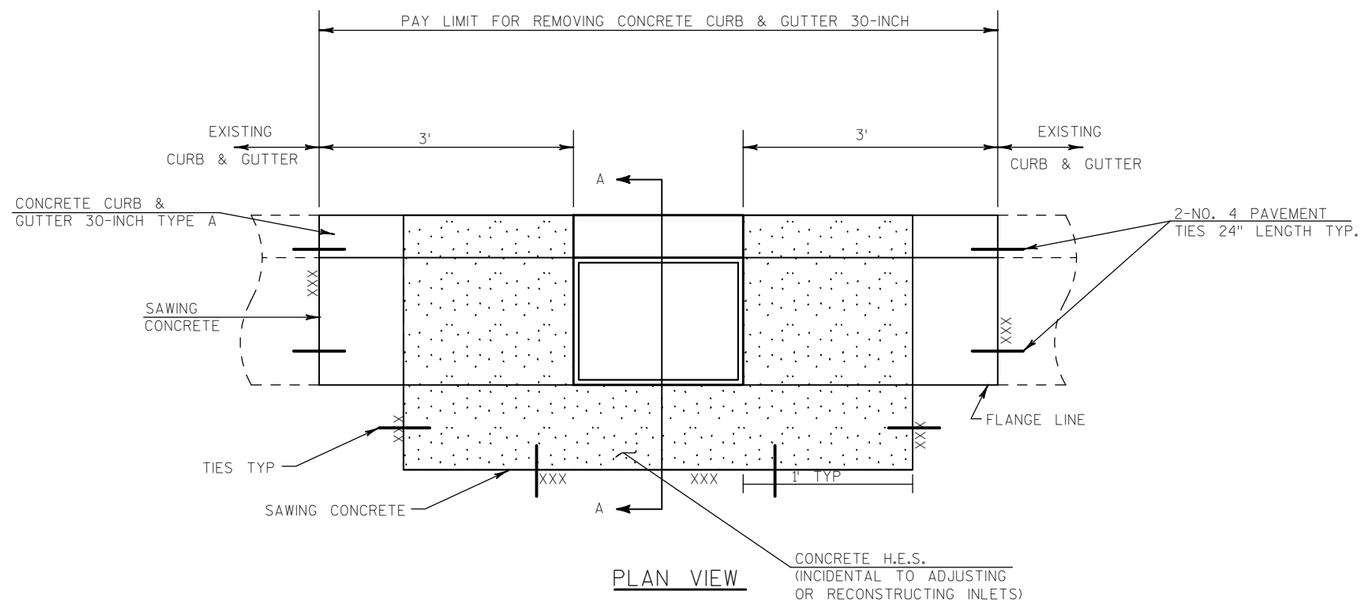

PLAN VIEW

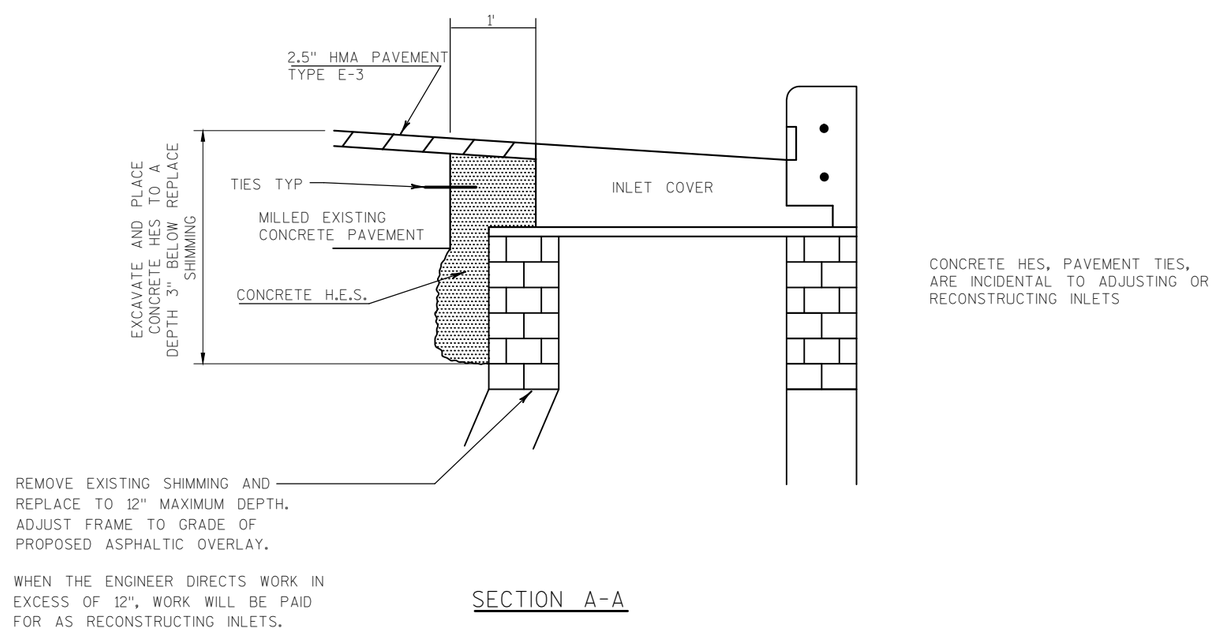

SECTION A-A

ADJUSTING/RECONSTRUCTING INLET

PROJECT NO: 3220-03-62	HWY: STH 158	COUNTY: KENOSHA	CONSTRUCTION DETAIL	SHEET 9	E

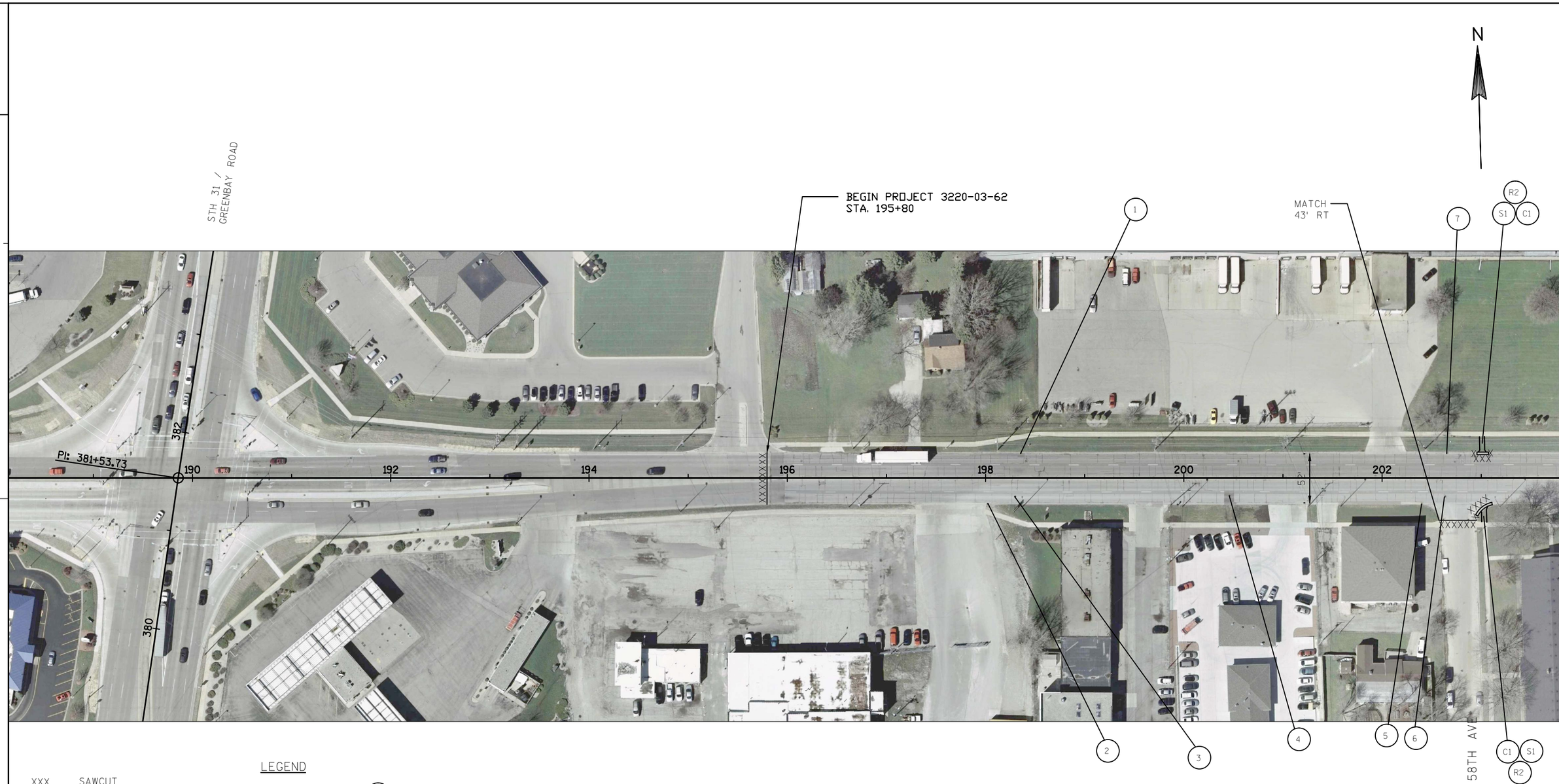

LEGEND

XXX	SAWCUT
XX	STORM SEWER STRUCTURE (NO WORK REQUIRED)
XX	STORM SEWER STRUCTURE (WORK REQUIRED)
S1	CONCRETE SIIDEWALK 5-INCH
C1	CONCRETE CURB & GUTTER 30-INCH TYPE A
C2	CONCRETE CURB PEDESTRIAN
R1	CURB RAMP TYPE 1
R1A	CURB RAMP TYPE 1A
R2	CURB RAMP TYPE 2
R4A1	CURB RAMP TYPE 4A1
R4B1	CURB RAMP TYPE 4B1
R7A	CURB RAMP TYPE 7A
R7B	CURB RAMP TYPE 7B

PROJECT NO: 3220-03-62	HWY: STH 158	COUNTY: KENOSHA	PLAN SHEETS	SHEET 10	E

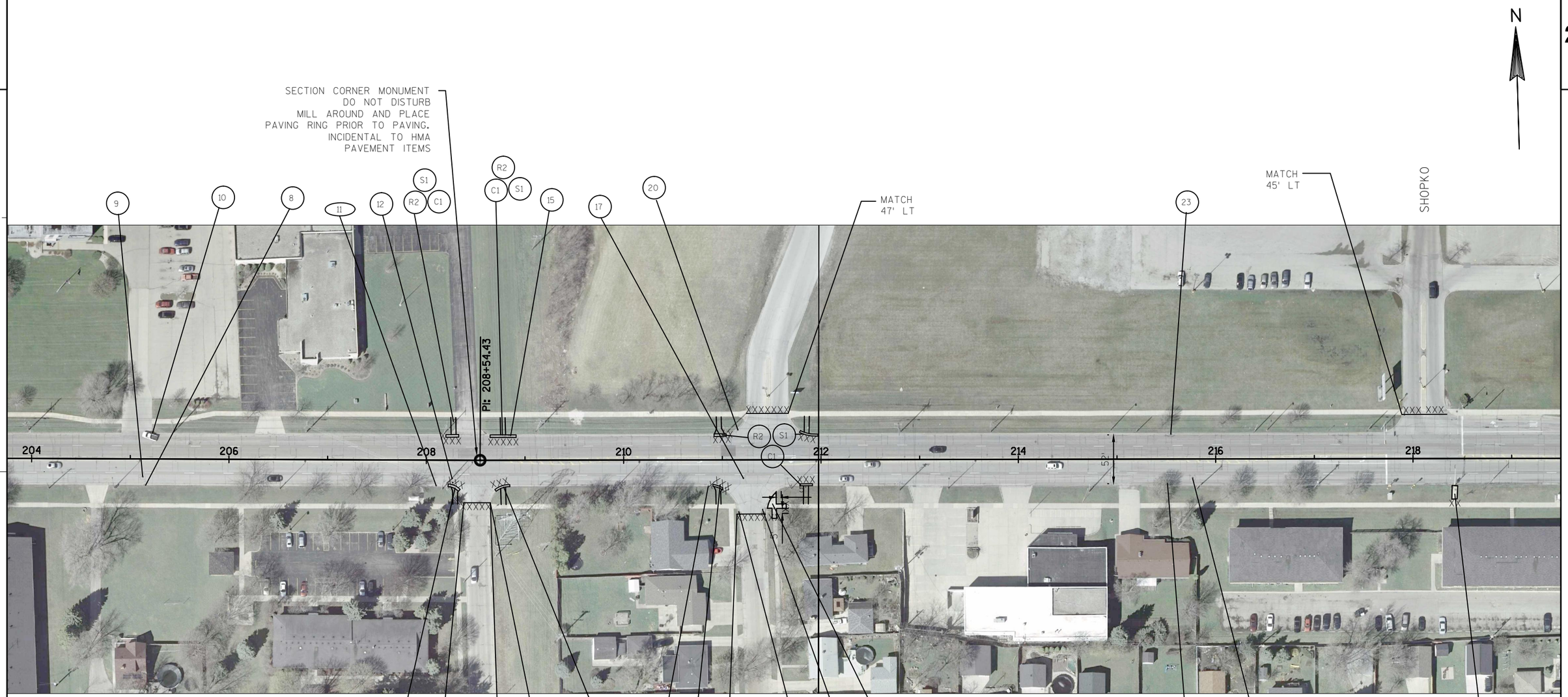

LEGEND

XXX	SAWCUT
XX	STORM SEWER STRUCTURE (NO WORK REQUIRED)
XX	STORM SEWER STRUCTURE (WORK REQUIRED)
S1	CONCRETE SIIDEWALK 5-INCH
C1	CONCRETE CURB & GUTTER 30-INCH TYPE A
C2	CONCRETE CURB PEDESTRIAN
R1	CURB RAMP TYPE 1
R1A	CURB RAMP TYPE 1A
R2	CURB RAMP TYPE 2
R4A1	CURB RAMP TYPE 4A1
R4B1	CURB RAMP TYPE 4B1
R7A	CURB RAMP TYPE 7A
R7B	CURB RAMP TYPE 7B

PROJECT NO: 3220-03-62	HWY: STH 158	COUNTY: KENOSHA	PLAN SHEETS	SHEET 11	E

LEGEND

XXX	SAWCUT
XX	STORM SEWER STRUCTURE (NO WORK REQUIRED)
XX	STORM SEWER STRUCTURE (WORK REQUIRED)
S1	CONCRETE SIIDEWALK 5-INCH
C1	CONCRETE CURB & GUTTER 30-INCH TYPE A
C2	CONCRETE CURB PEDESTRIAN
R1	CURB RAMP TYPE 1
R1A	CURB RAMP TYPE 1A
R2	CURB RAMP TYPE 2
R4A1	CURB RAMP TYPE 4A1
R4B1	CURB RAMP TYPE 4B1
R7A	CURB RAMP TYPE 7A
R7B	CURB RAMP TYPE 7B

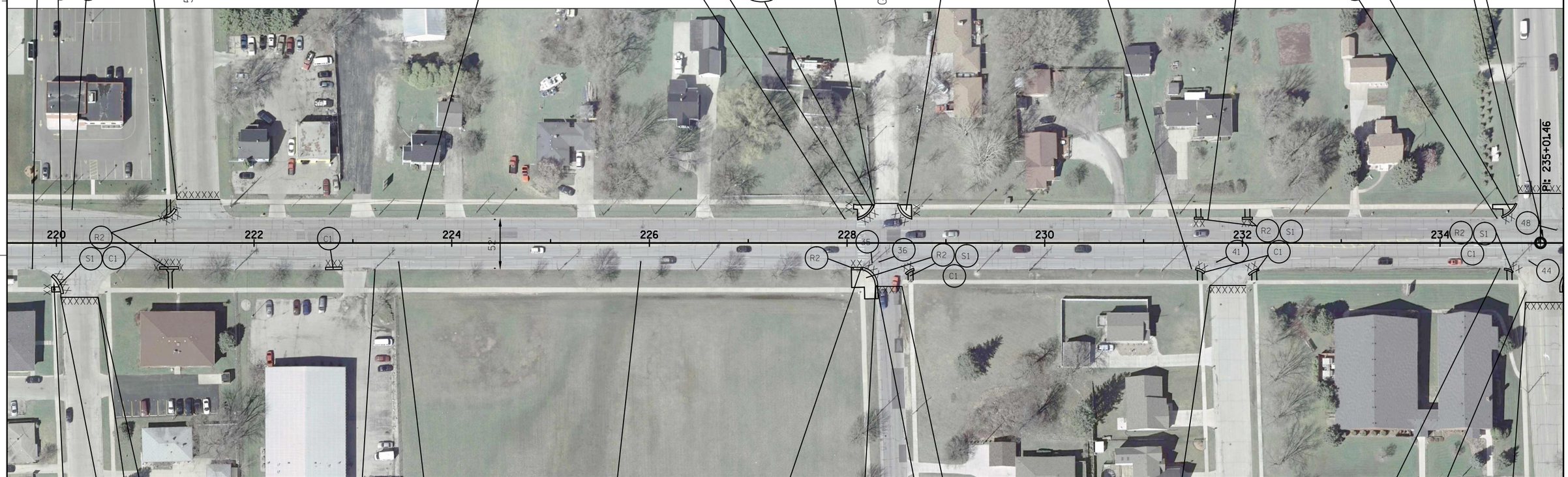

PROJECT NO:3220-03-62	HWY: STH 158	COUNTY: KENOSHA	PLAN SHEETS	SHEET 12	E

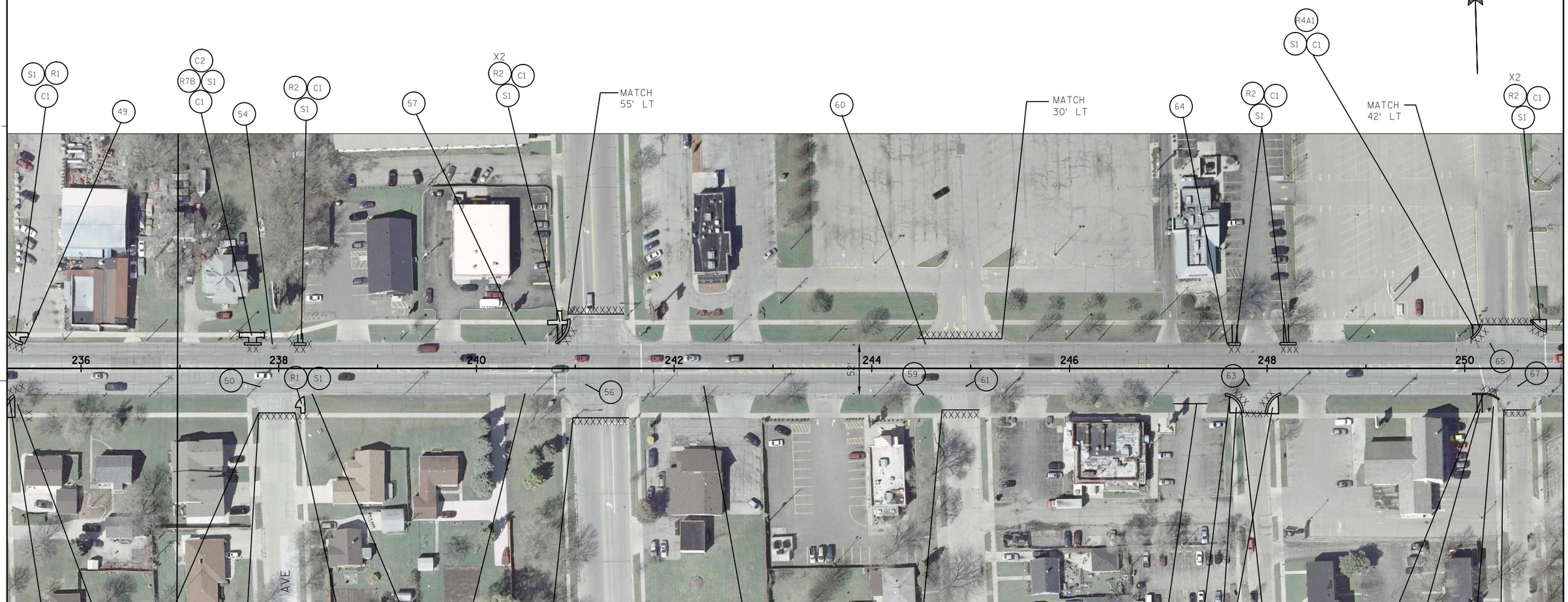

LEGEND

XXX	SAWCUT
XX	STORM SEWER STRUCTURE (NO WORK REQUIRED)
XX	STORM SEWER STRUCTURE (WORK REQUIRED)
S1	CONCRETE SIIDEWALK 5-INCH
C1	CONCRETE CURB & GUTTER 30-INCH TYPE A
C2	CONCRETE CURB PEDESTRIAN
R1	CURB RAMP TYPE 1
R1A	CURB RAMP TYPE 1A
R2	CURB RAMP TYPE 2
R4A1	CURB RAMP TYPE 4A1
R4B1	CURB RAMP TYPE 4B1
R7A	CURB RAMP TYPE 7A
R7B	CURB RAMP TYPE 7B

PROJECT NO:3220-03-62	HWY: STH 158	COUNTY: KENOSHA	PLAN SHEETS	SHEET 13	E

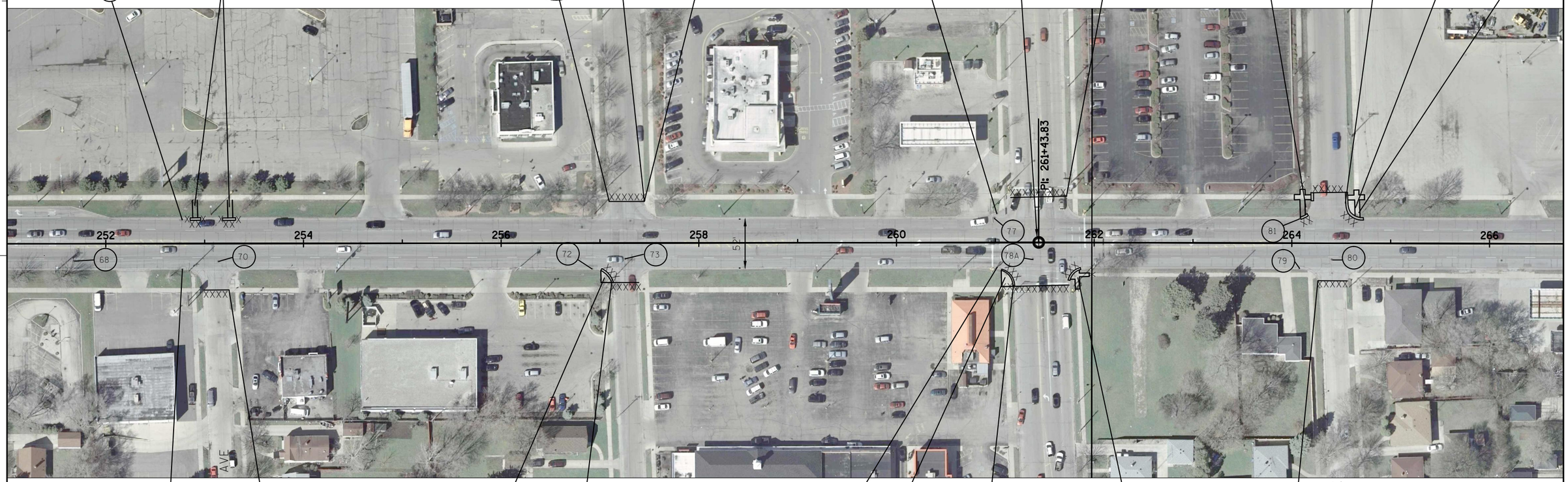

LEGEND

XXX	SAWCUT
XX	STORM SEWER STRUCTURE (NO WORK REQUIRED)
XX	STORM SEWER STRUCTURE (WORK REQUIRED)
S1	CONCRETE SIIDEWALK 5-INCH
C1	CONCRETE CURB & GUTTER 30-INCH TYPE A
C2	CONCRETE CURB PEDESTRIAN
R1	CURB RAMP TYPE 1
R1A	CURB RAMP TYPE 1A
R2	CURB RAMP TYPE 2
R4A1	CURB RAMP TYPE 4A1
R4B1	CURB RAMP TYPE 4B1
R7A	CURB RAMP TYPE 7A
R7B	CURB RAMP TYPE 7B

PROJECT NO:3220-03-62	HWY: STH 158	COUNTY: KENOSHA	PLAN SHEETS	SHEET 14	E

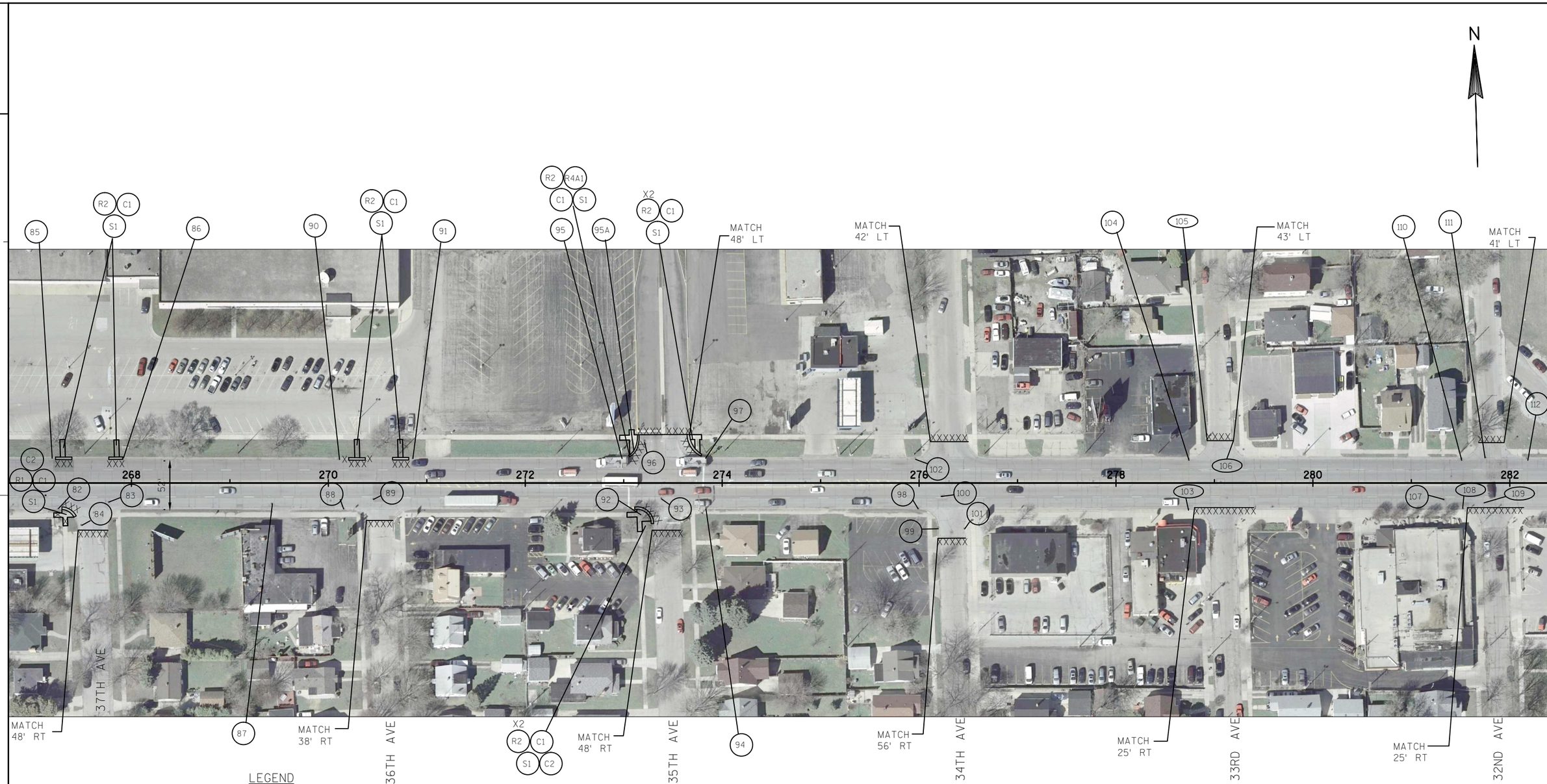

LEGEND

XXX	SAWCUT
XX	STORM SEWER STRUCTURE (NO WORK REQUIRED)
XX	STORM SEWER STRUCTURE (WORK REQUIRED)
S1	CONCRETE SIIDEWALK 5-INCH
C1	CONCRETE CURB & GUTTER 30-INCH TYPE A
C2	CONCRETE CURB PEDESTRIAN
R1	CURB RAMP TYPE 1
R1A	CURB RAMP TYPE 1A
R2	CURB RAMP TYPE 2
R4A1	CURB RAMP TYPE 4A1
R4B1	CURB RAMP TYPE 4B1
R7A	CURB RAMP TYPE 7A
R7B	CURB RAMP TYPE 7B

PROJECT NO:	HWY: STH 158	COUNTY: KENOSHA	PLAN SHEETS	SHEET 15	E

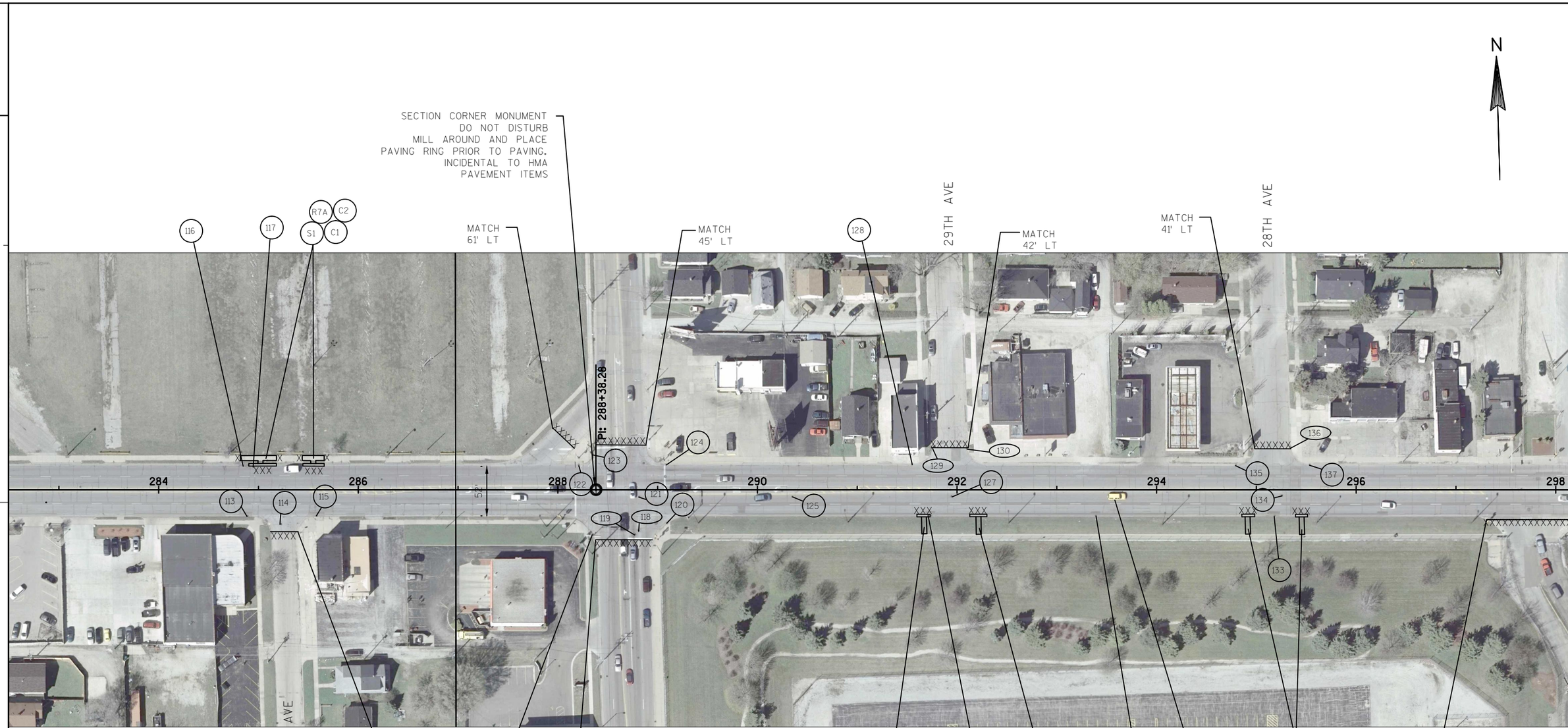

LEGEND

XXX	SAWCUT		
XX	STORM SEWER STRUCTURE (NO WORK REQUIRED)	R1	CURB RAMP TYPE 1
XX	STORM SEWER STRUCTURE (WORK REQUIRED)	R1A	CURB RAMP TYPE 1A
S1	CONCRETE SIIDEWALK 5-INCH	R2	CURB RAMP TYPE 2
C1	CONCRETE CURB & GUTTER 30-INCH TYPE A	R4A1	CURB RAMP TYPE 4A1
C2	CONCRETE CURB PEDESTRIAN	R4B1	CURB RAMP TYPE 4B1
		R7A	CURB RAMP TYPE 7A
		R7B	CURB RAMP TYPE 7B

PROJECT NO:3220-03-62	HWY:STH 158	COUNTY:KENOSHA	PLAN SHEETS	SHEET 16	E

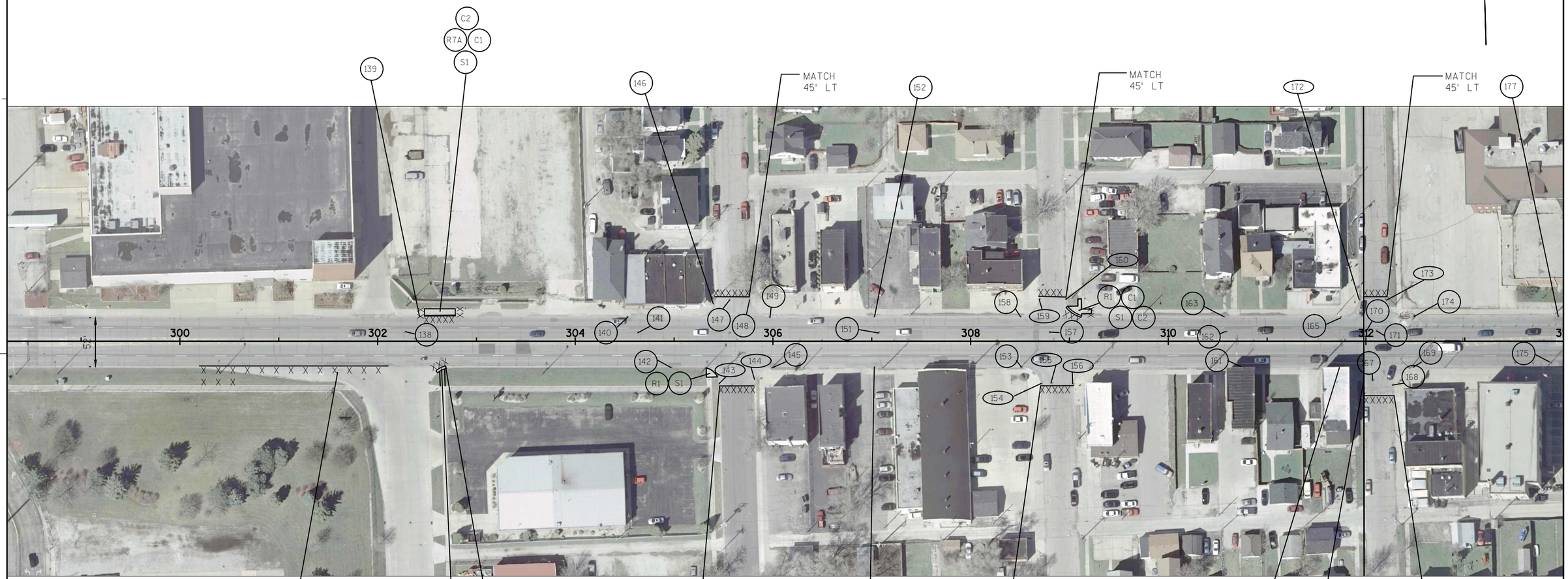

LEGEND

XXX	SAWCUT
XX	STORM SEWER STRUCTURE (NO WORK REQUIRED)
XX	STORM SEWER STRUCTURE (WORK REQUIRED)
S1	CONCRETE SIIDEWALK 5-INCH
C1	CONCRETE CURB & GUTTER 30-INCH TYPE A
C2	CONCRETE CURB PEDESTRIAN
R1	CURB RAMP TYPE 1
R1A	CURB RAMP TYPE 1A
R2	CURB RAMP TYPE 2
R4A1	CURB RAMP TYPE 4A1
R4B1	CURB RAMP TYPE 4B1
R7A	CURB RAMP TYPE 7A
R7B	CURB RAMP TYPE 7B

PROJECT NO:3220-03-62	HWY: STH 158	COUNTY: KENOSHA	PLAN SHEETS	SHEET 17	E

LEGEND

XXX	SAWCUT
XX	STORM SEWER STRUCTURE (NO WORK REQUIRED)
XX	STORM SEWER STRUCTURE (WORK REQUIRED)
S1	CONCRETE SIIDEWALK 5-INCH
C1	CONCRETE CURB & GUTTER 30-INCH TYPE A
C2	CONCRETE CURB PEDESTRIAN
R1	CURB RAMP TYPE 1
R1A	CURB RAMP TYPE 1A
R2	CURB RAMP TYPE 2
R4A1	CURB RAMP TYPE 4A1
R4B1	CURB RAMP TYPE 4B1
R7A	CURB RAMP TYPE 7A
R7B	CURB RAMP TYPE 7B

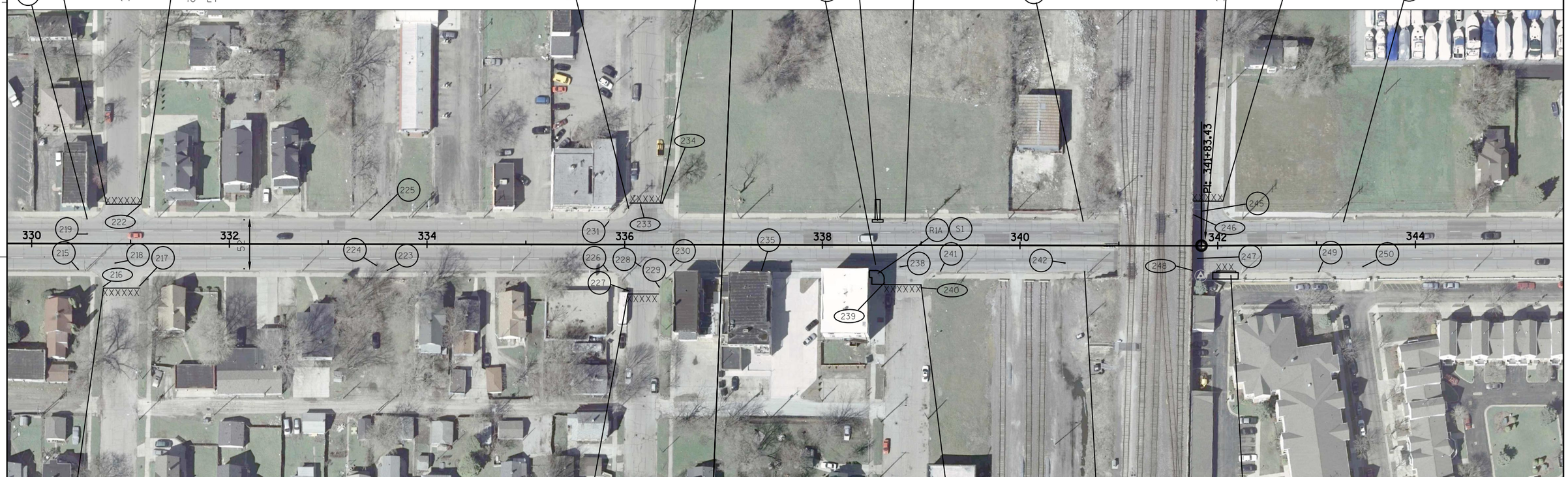

LEGEND

XXX	SAWCUT
XX	STORM SEWER STRUCTURE (NO WORK REQUIRED)
XX	STORM SEWER STRUCTURE (WORK REQUIRED)
S1	CONCRETE SIIDEWALK 5-INCH
C1	CONCRETE CURB & GUTTER 30-INCH TYPE A
C2	CONCRETE CURB PEDESTRIAN
R1	CURB RAMP TYPE 1
R1A	CURB RAMP TYPE 1A
R2	CURB RAMP TYPE 2
R4A1	CURB RAMP TYPE 4A1
R4B1	CURB RAMP TYPE 4B1
R7A	CURB RAMP TYPE 7A
R7B	CURB RAMP TYPE 7B

PROJECT NO: 3220-03-62	HWY: STH 158	COUNTY: KENOSHA	PLAN SHEETS	SHEET 19	E

2

N

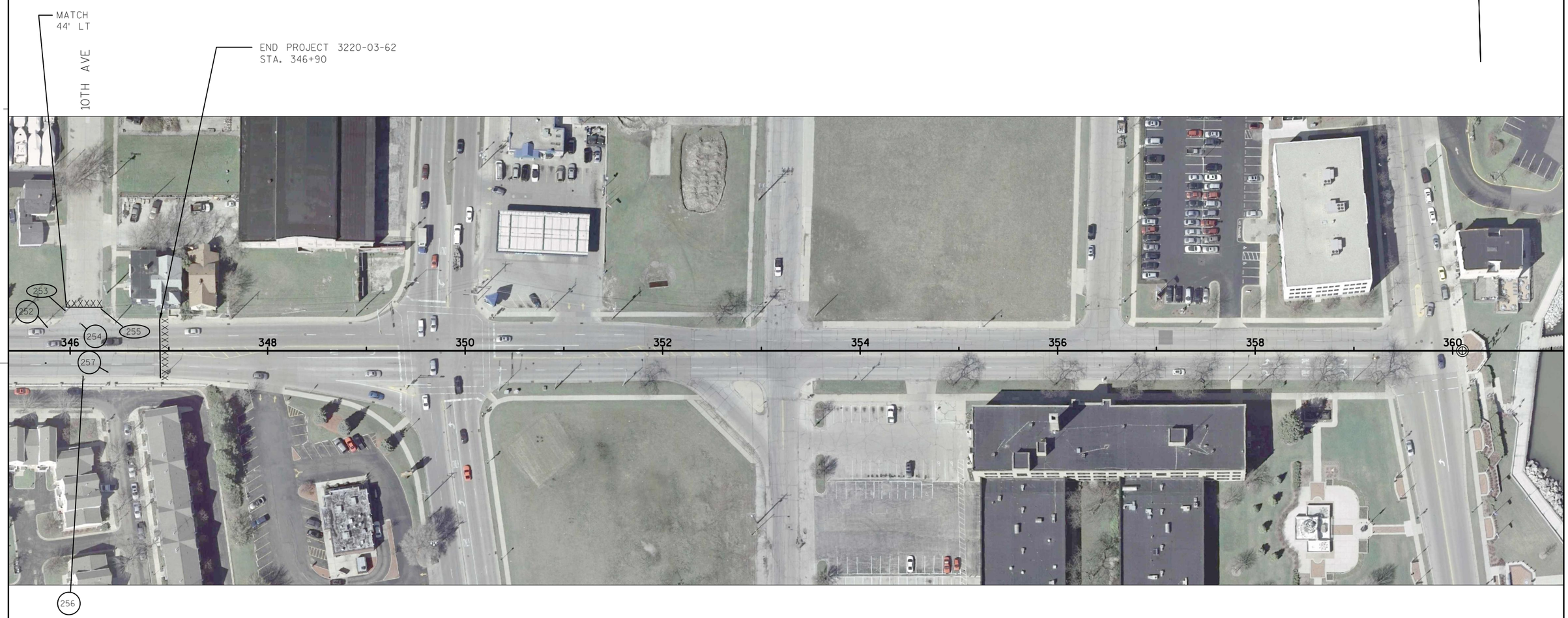

LEGEND

XXX	SAWCUT
XX	STORM SEWER STRUCTURE (NO WORK REQUIRED)
XX	STORM SEWER STRUCTURE (WORK REQUIRED)
S1	CONCRETE SIIDEWALK 5-INCH
C1	CONCRETE CURB & GUTTER 30-INCH TYPE A
C2	CONCRETE CURB PEDESTRIAN
R1	CURB RAMP TYPE 1
R1A	CURB RAMP TYPE 1A
R2	CURB RAMP TYPE 2
R4A1	CURB RAMP TYPE 4A1
R4B1	CURB RAMP TYPE 4B1
R7A	CURB RAMP TYPE 7A
R7B	CURB RAMP TYPE 7B

2

N

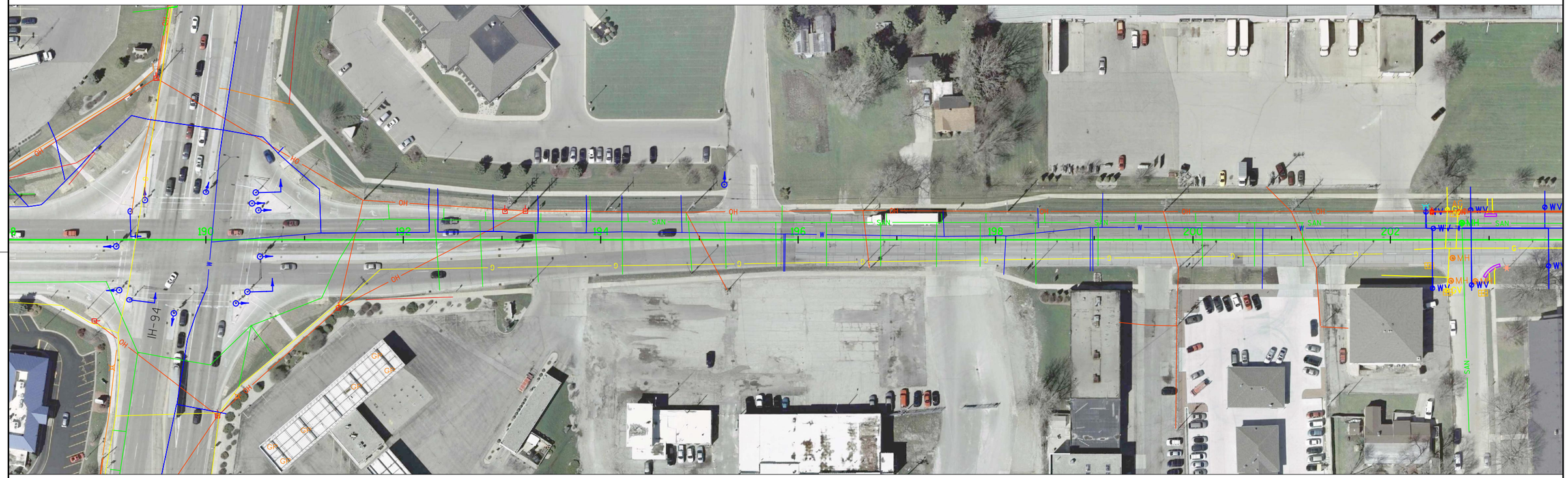

FOR INFORMATION ONLY

PROJECT NO: 3220-03-62	HWY: STH 158	COUNTY: KENOSHA	UTILITY PLAN	SHEET 21	E

FILE NAME : N:\PDS\C3D\CAD\32200302\023001_UP.DWG PLOT DATE : 1/21/2014 8:29 AM PLOT BY : WAGNER, SCOTT H PLOT NAME : PLOT SCALE : ==========

WISDOT/CADDS SHEET 42

2

2

N

SHOPKO

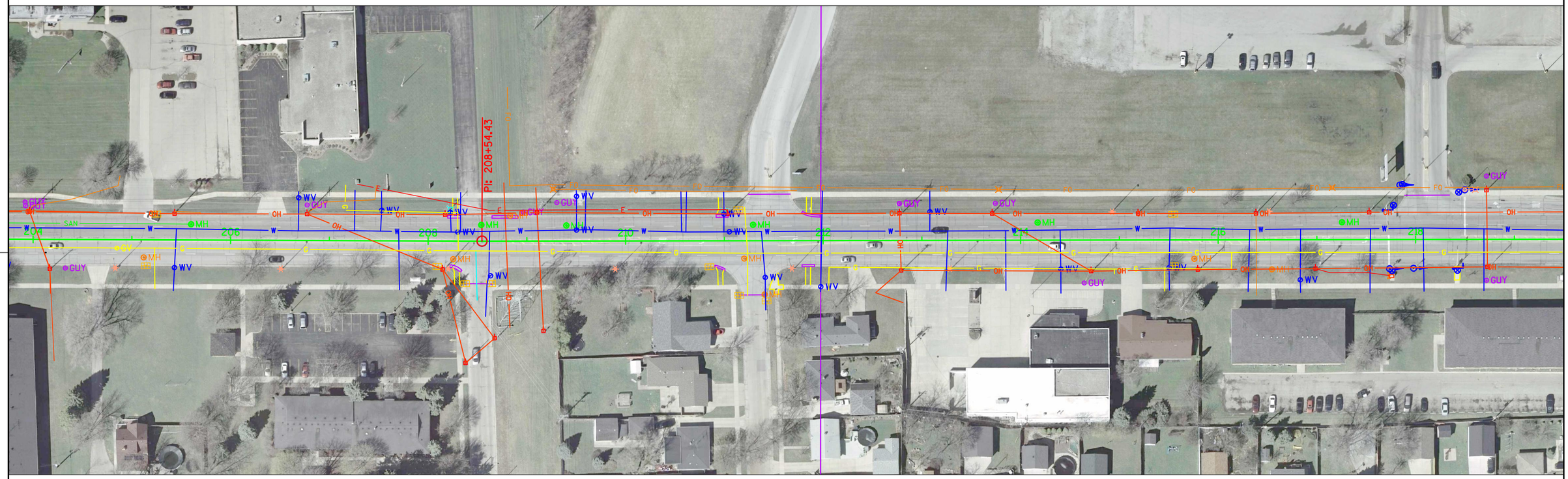

56TH AVE

55TH AVE

FOR INFORMATION ONLY

PROJECT NO:3220-03-62	HWY:STH 158	COUNTY:KENOSHA	UTILITY PLAN	SHEET 22	E

FILE NAME :N:\PDS\C3D\CAD\32200302\023002_UP.DWG PLOT DATE :1/21/2014 8:30 AM PLOT BY :WAGNER, SCOTT H PLOT NAME : PLOT SCALE :

WISDOT/CADDS SHEET 42

2

52ND AVE

GRAVEL RD.

47TH AVE

N

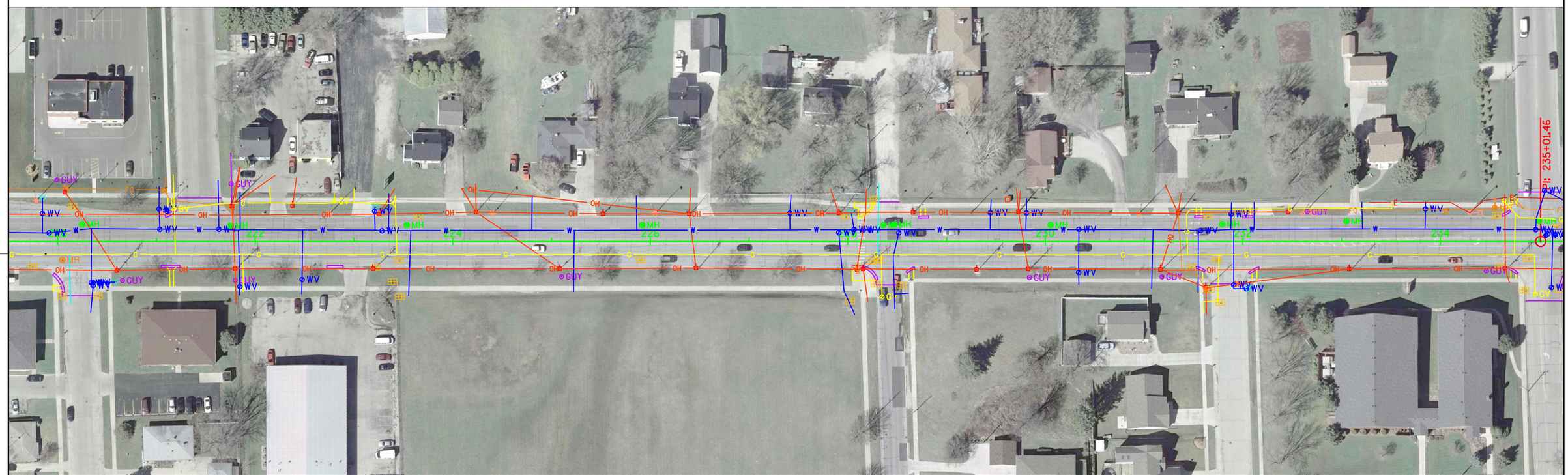

52ND AVE

49TH AVE

48TH AVE

47TH AVE

FOR INFORMATION ONLY

PROJECT NO: 3220-03-62	HWY: STH 158	COUNTY: KENOSHA	UTILITY PLAN	SHEET 23	E

FILE NAME : N:\PDS\C3D\CAD\32200302\023003_UP.DWG PLOT DATE : 1/21/2014 8:30 AM PLOT BY : WAGNER, SCOTT H PLOT NAME : PLOT SCALE : ==========

WISDOT/CADDS SHEET 42

2

2

N

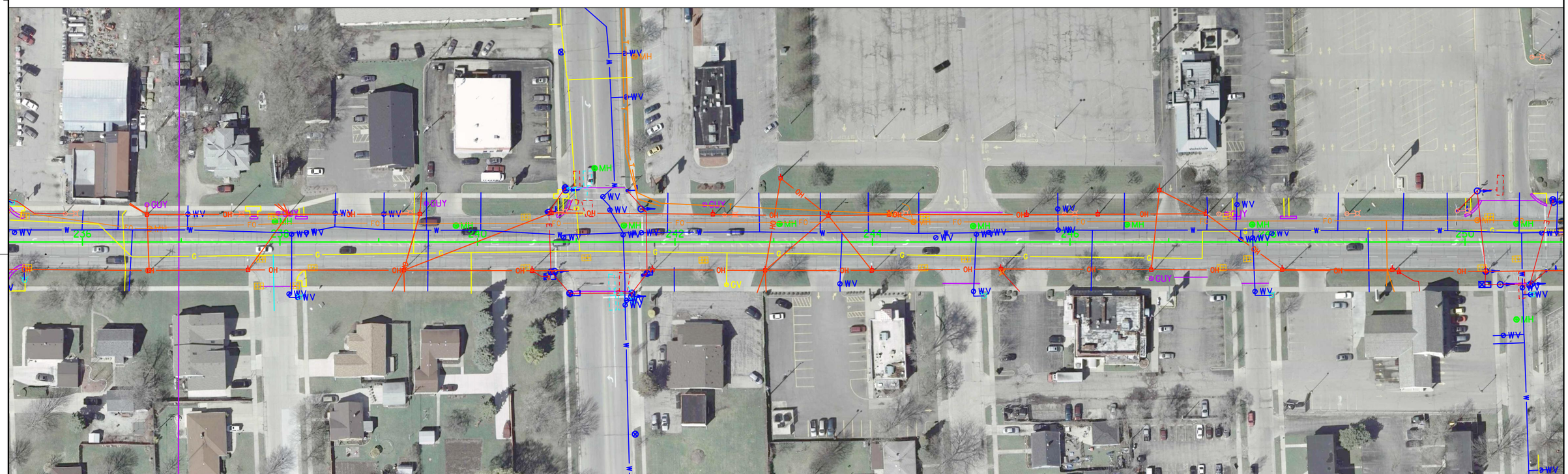

46TH AVE

PERSHING BLVD

44TH AVE

43RD AVE

42ND AVE

FOR INFORMATION ONLY

PROJECT NO: 3220-03-62	HWY: STH 158	COUNTY: KENOSHA	UTILITY PLAN	SHEET 24	E

FILE NAME : N:\PDS\C3D\CAD\32200302\023004_UP.DWG PLOT DATE : 1/21/2014 8:30 AM PLOT BY : WAGNER, SCOTT H PLOT NAME : ---------- PLOT SCALE : ==========

WISDOT/CADDS SHEET 42

2

2

N

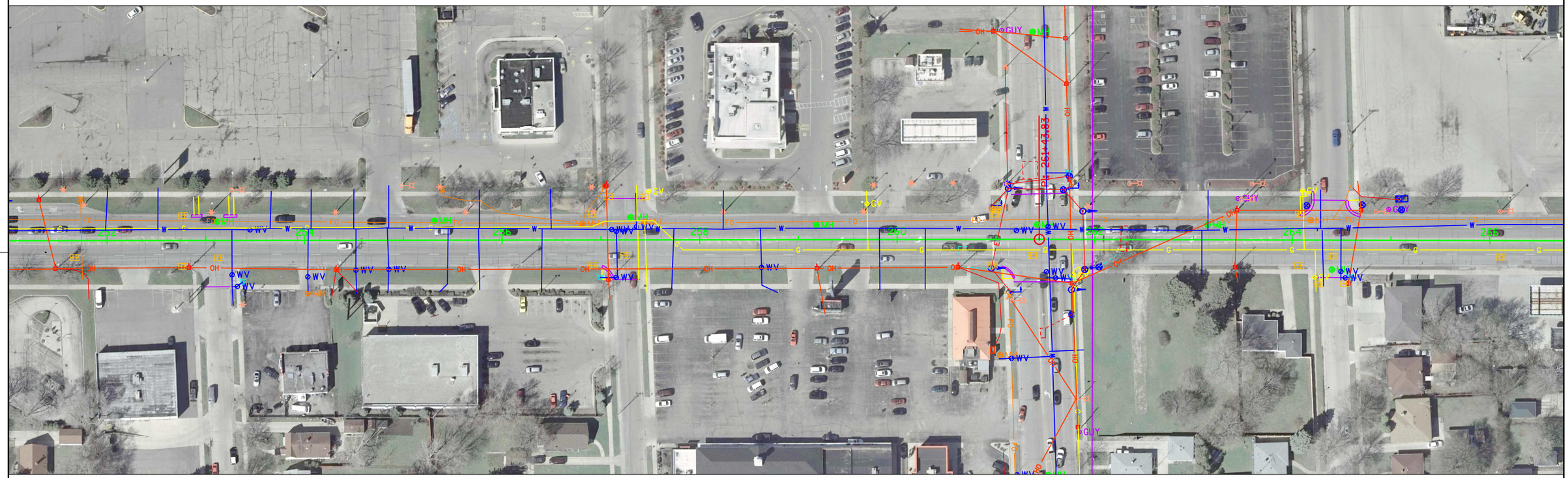

41ST AVE

40TH AVE

39TH AVE

38TH AVE

FOR INFORMATION ONLY

PROJECT NO: 3220-03-62	HWY: STH 158	COUNTY: KENOSHA	UTILITY PLAN	SHEET 25	E

FILE NAME : N:\PDS\C3D\CAD\32200302\023005_UP.DWG PLOT DATE : 1/21/2014 8:30 AM PLOT BY : WAGNER, SCOTT H PLOT NAME : ---------- PLOT SCALE : ==========

WISDOT/CADDS SHEET 42

2

2

N

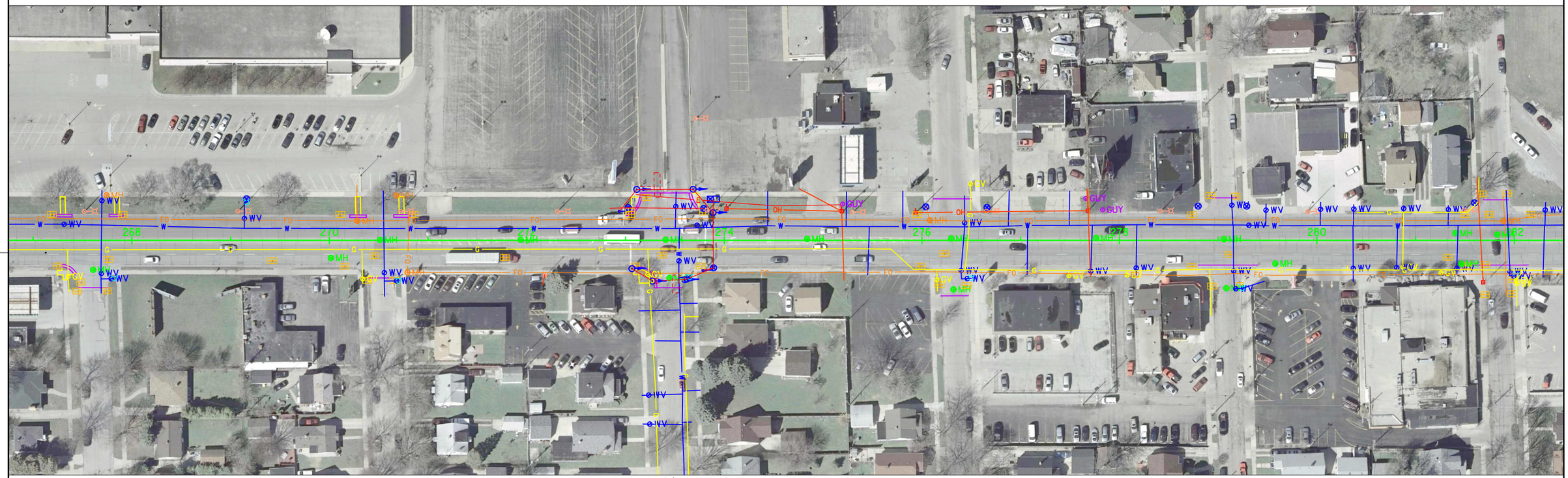

37TH AVE

36TH AVE

35TH AVE

34TH AVE

33RD AVE

32ND AVE

FOR INFORMATION ONLY

PROJECT NO:3220-03-62	HWY:STH 158	COUNTY:KENOSHA	UTILITY PLAN	SHEET 26	E

FILE NAME :N:\PDS\C3D\CAD\32200302\023006_UP.DWG PLOT DATE :1/21/2014 8:31 AM PLOT BY :WAGNER, SCOTT H PLOT NAME : ---------- PLOT SCALE : ==========

WISDOT/CADDS SHEET 42

2

2

N

29TH AVE

28TH AVE

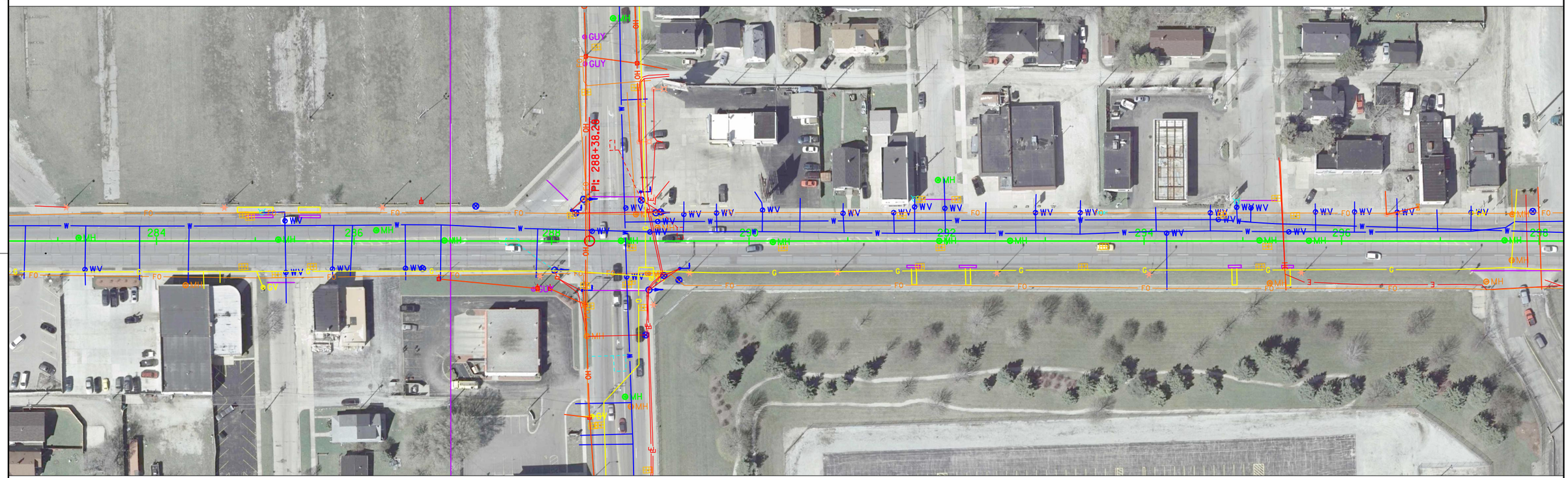

31ST AVE

30TH AVE
(WOOD RD)

FOR INFORMATION ONLY

PROJECT NO: 3220-03-62	HWY: STH 158	COUNTY: KENOSHA	UTILITY PLAN	SHEET 27	E

2

2

N

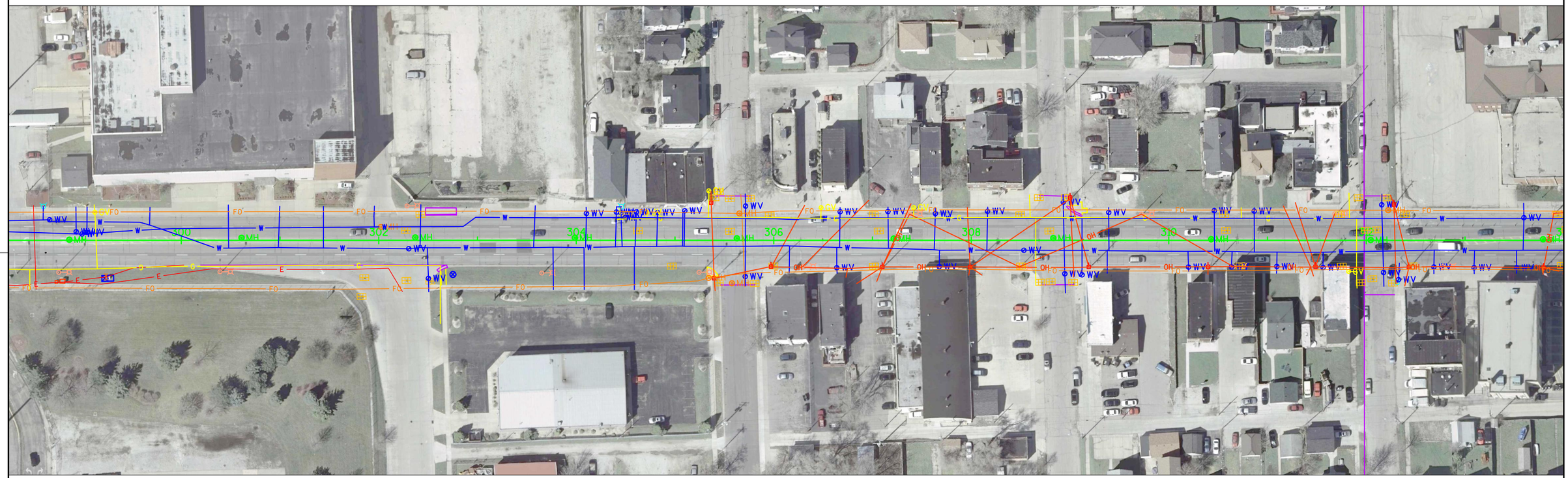

26TH AVE

25TH AVE

24TH AVE

23RD AVE

FOR INFORMATION ONLY

PROJECT NO:3220-03-62	HWY:STH 158	COUNTY:KENOSHA	UTILITY PLAN	SHEET 28	E

FILE NAME :N:\PDS\C3D\CAD\32200302\023008_UP.DWG PLOT DATE :1/21/2014 8:31 AM PLOT BY :WAGNER, SCOTT H PLOT NAME : PLOT SCALE :

WISDOT/CADDS SHEET 42

2

N

22ND AVE

19TH AVE

18TH AVE

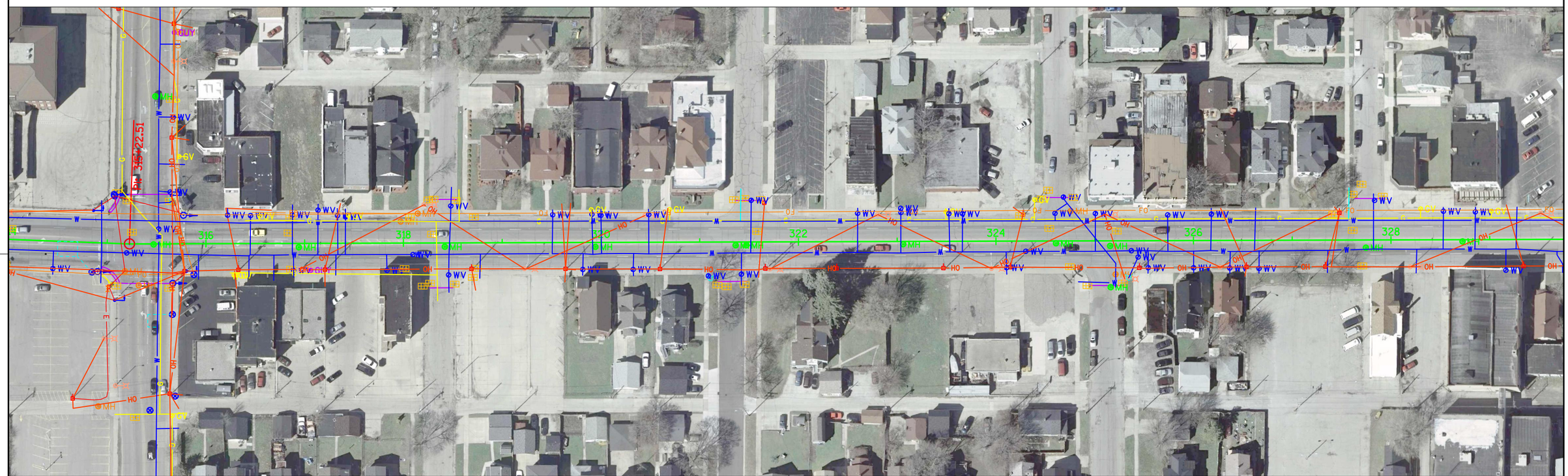

21ST AVE

20TH AVE

19TH AVE

FOR INFORMATION ONLY

PROJECT NO:3220-03-62	HWY:STH 158	COUNTY:KENOSHA	UTILITY PLAN	SHEET 29	E

FILE NAME :N:\PDS\C3D\CAD\32200302\023009_UP.DWG PLOT DATE :1/21/2014 8:31 AM PLOT BY :WAGNER, SCOTT H PLOT NAME : PLOT SCALE :

WISDOT/CADDS SHEET 42

2

2

N

17TH AVE

CNW RAILROAD

13TH AVE

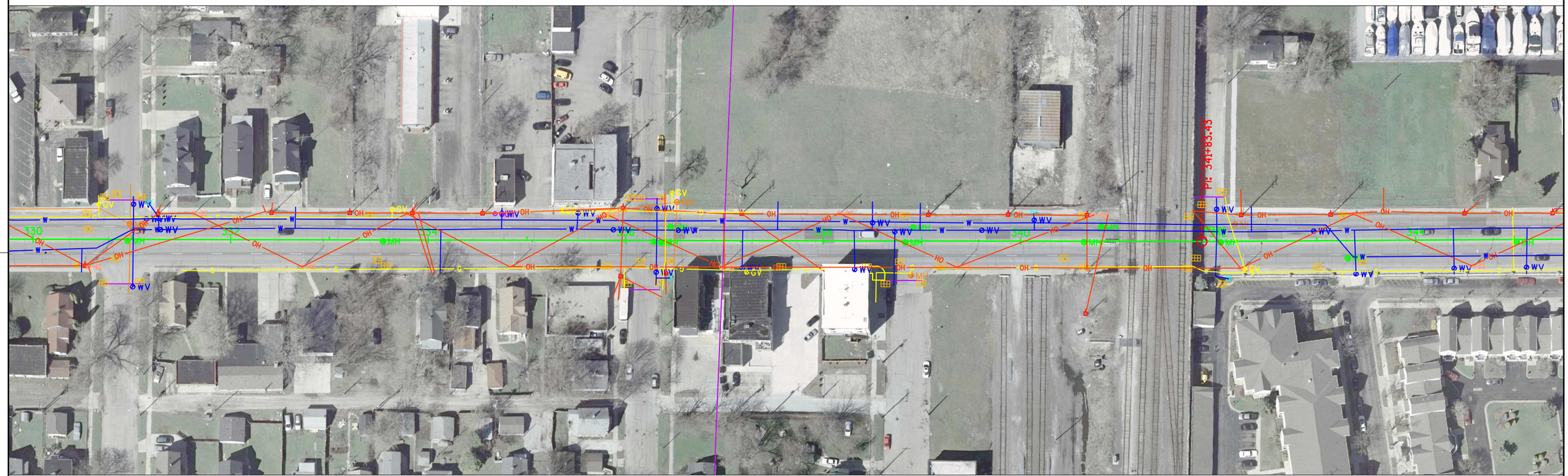

14TH AVE

13TH CT

FOR INFORMATION ONLY

PROJECT NO: 3220-03-62	HWY: STH 158	COUNTY: KENOSHA	UTILITY PLAN	SHEET 30	E

FILE NAME : N:\PDS\C3D\CAD\32200302\023010_UP.DWG PLOT DATE : 1/21/2014 8:32 AM PLOT BY : WAGNER, SCOTT H PLOT NAME : PLOT SCALE : ==========

WISDOT/CADDS SHEET 42

2

2

N

10TH AVE

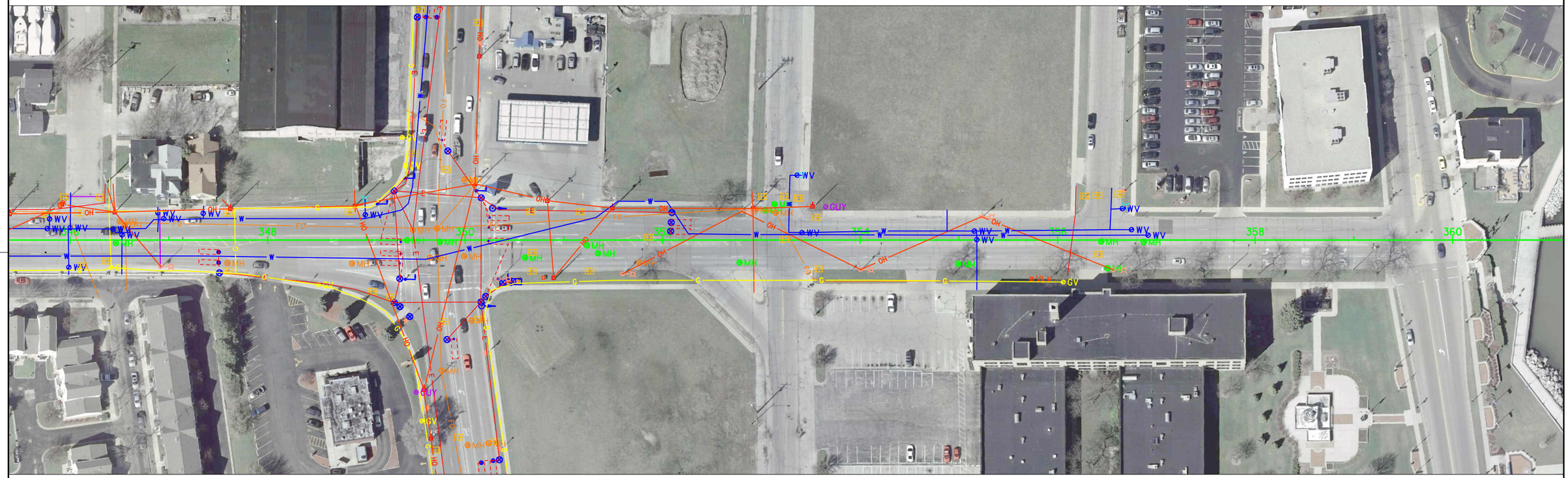

FOR INFORMATION ONLY

PROJECT NO:3220-03-62	HWY:STH 158	COUNTY:KENOSHA	UTILITY PLAN	SHEET 31	E

FILE NAME :N:\PDS\C3D\CAD\32200302\023011_UP.DWG PLOT DATE :1/21/2014 8:32 AM PLOT BY :WAGNER, SCOTT H PLOT NAME : PLOT SCALE :

WISDOT/CADDS SHEET 42

2

LEGEND

- EXISTING SIGN MOUNTED ON POST(S)
- EXISTING SIGN MOUNTED ON BRIDGE OR SIGN BRIDGE
- PROPOSED SIGN MOUNTED ON POST(S)
- PROPOSED SIGN MOUNTED ON BRIDGE OR SIGN BRIDGE
- EXISTING LIGHT OR SIGNAL POLE
- SIGN BRIDGE
- CANTILEVER SIGN BRIDGE
- (XXX) DENOTES SIGN NUMBER
- (XX) INDICATES SIGN SIZE
- ESTR EXISTING SIGN TO REMAIN
- [XX] DATE OF EXISTING SIGN

NOTE:
INTERSECTION SIGNING AT STH 31
COMPLETED IN 2009

N

2

[09]
ESTR

SPEED LIMIT 35
ESTR

TREE CITY USA
ARBOR DAY FOUNDATION
30 Years
ESTR

SIGN IS THE RESPONSIBILITY OF CITY OF KENOSHA

NIGHT PARKING
ALT. SIDE PARKING
SNOW EMERGENCY
NO PARKING 24 HOURS
ESTR

SIGN IS THE RESPONSIBILITY OF CITY OF KENOSHA

NO PARKING ANY TIME
3
R7-1D(2S)
MOUNT ON POWER POLE
REMOVE

SHEET 1 OF 26

PROJECT NO:3220-03-62	HWY:STH 158	COUNTY:KENOSHA	PERMANENT SIGNING	SHEET 32	E

2

LEGEND

- EXISTING SIGN MOUNTED ON POST(S)
- EXISTING SIGN MOUNTED ON BRIDGE OR SIGN BRIDGE
- PROPOSED SIGN MOUNTED ON POST(S)
- PROPOSED SIGN MOUNTED ON BRIDGE OR SIGN BRIDGE
- EXISTING LIGHT OR SIGNAL POLE
- SIGN BRIDGE
- CANTILEVER SIGN BRIDGE
- (XXX) DENOTES SIGN NUMBER
- (X) INDICATES SIGN SIZE
- ESTR EXISTING SIGN TO REMAIN

N

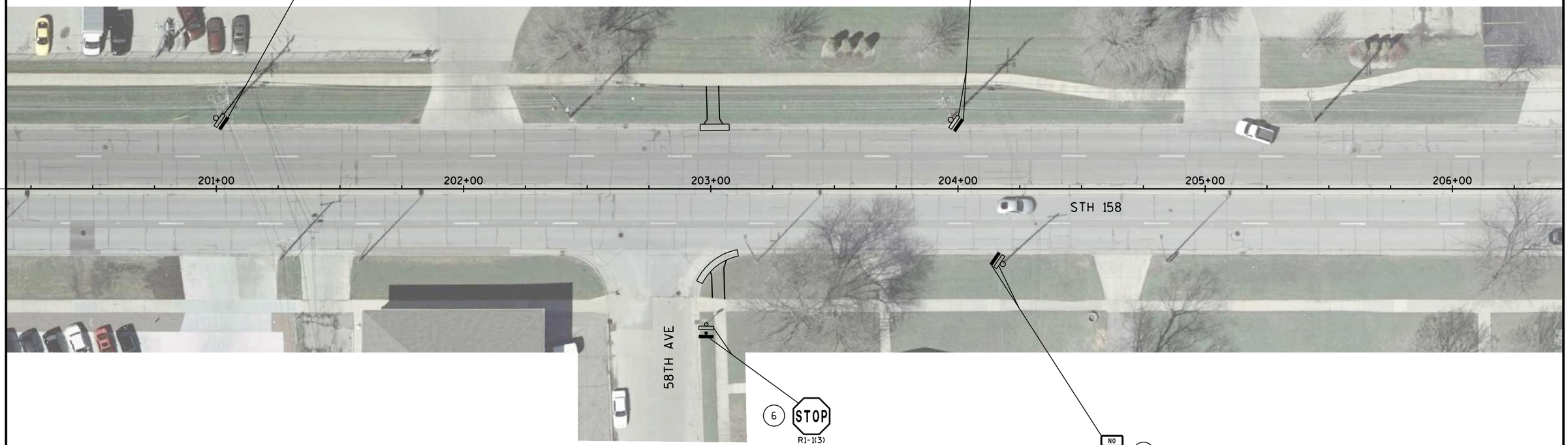

2

SHEET 2 OF 26

PROJECT NO:3220-03-62	HWY:STH 158	COUNTY:KENOSHA	PERMANENT SIGNING	SHEET 33	E

2

LEGEND

- EXISTING SIGN MOUNTED ON POST(S)
- EXISTING SIGN MOUNTED ON BRIDGE OR SIGN BRIDGE
- PROPOSED SIGN MOUNTED ON POST(S)
- PROPOSED SIGN MOUNTED ON BRIDGE OR SIGN BRIDGE
- EXISTING LIGHT OR SIGNAL POLE
- SIGN BRIDGE
- CANTILEVER SIGN BRIDGE
- (XXX) DENOTES SIGN NUMBER
- (X) INDICATES SIGN SIZE
- ESTR EXISTING SIGN TO REMAIN

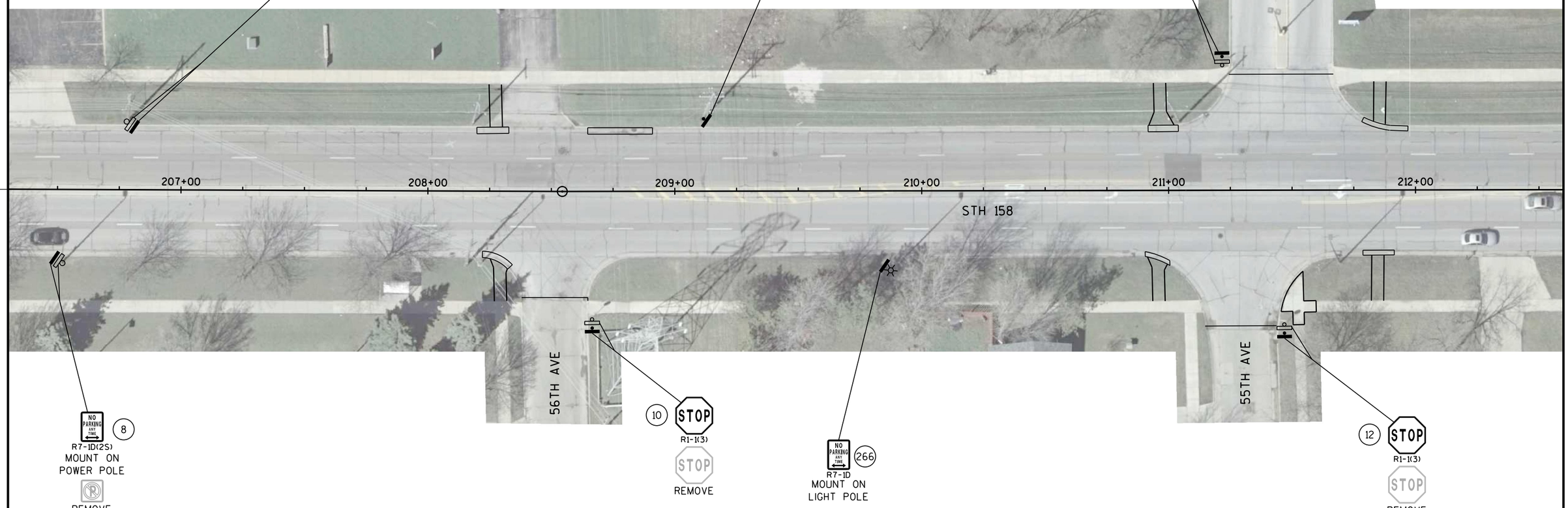

2

SHEET 3 OF 26

PROJECT NO:3220-03-62	HWY:STH 158	COUNTY:KENOSHA	PERMANENT SIGNING	SHEET 34	E

2

LEGEND

- EXISTING SIGN MOUNTED ON POST(S)
- EXISTING SIGN MOUNTED ON BRIDGE OR SIGN BRIDGE
- PROPOSED SIGN MOUNTED ON POST(S)
- PROPOSED SIGN MOUNTED ON BRIDGE OR SIGN BRIDGE
- EXISTING LIGHT OR SIGNAL POLE
- SIGN BRIDGE
- CANTILEVER SIGN BRIDGE
- (XXX) DENOTES SIGN NUMBER
- (X) INDICATES SIGN SIZE
- ESTR EXISTING SIGN TO REMAIN

N

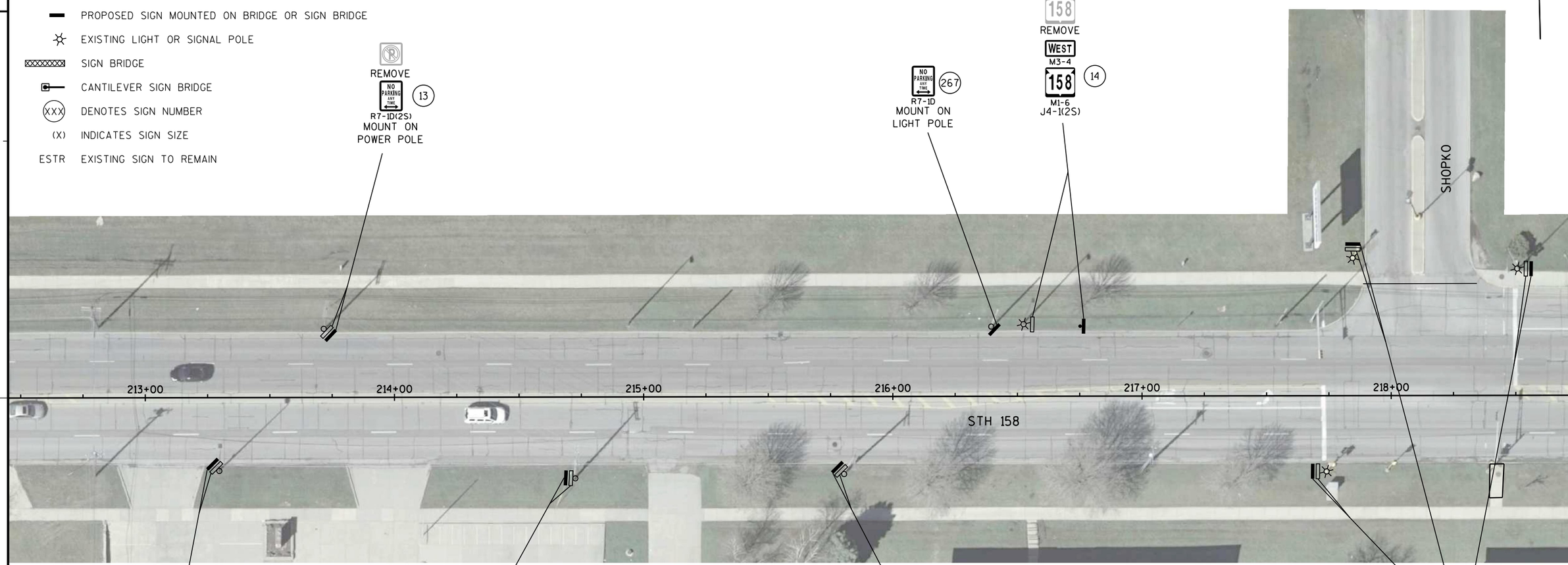

SHEET 4 OF 26

PROJECT NO:3220-03-62	HWY:STH 158	COUNTY:KENOSHA	PERMANENT SIGNING	SHEET 35	E

LEGEND

- EXISTING SIGN MOUNTED ON POST(S)
- EXISTING SIGN MOUNTED ON BRIDGE OR SIGN BRIDGE
- PROPOSED SIGN MOUNTED ON POST(S)
- PROPOSED SIGN MOUNTED ON BRIDGE OR SIGN BRIDGE
- EXISTING LIGHT OR SIGNAL POLE
- SIGN BRIDGE
- CANTILEVER SIGN BRIDGE
- (XXX) DENOTES SIGN NUMBER
- (X) INDICATES SIGN SIZE
- ESTR EXISTING SIGN TO REMAIN

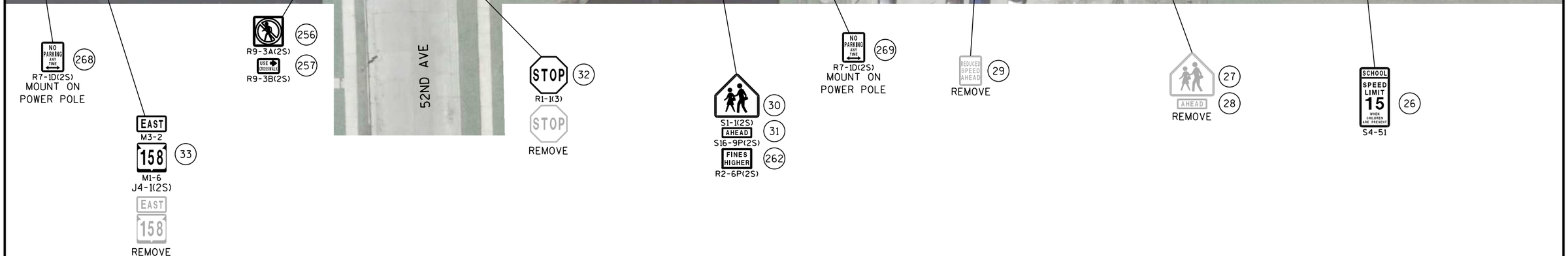

SHEET 5 OF 26

PROJECT NO:3220-03-62	HWY:STH 158	COUNTY:KENOSHA	PERMANENT SIGNING	SHEET 36	E

2

LEGEND

- EXISTING SIGN MOUNTED ON POST(S)
- EXISTING SIGN MOUNTED ON BRIDGE OR SIGN BRIDGE
- PROPOSED SIGN MOUNTED ON POST(S)
- PROPOSED SIGN MOUNTED ON BRIDGE OR SIGN BRIDGE
- EXISTING LIGHT OR SIGNAL POLE
- SIGN BRIDGE
- CANTILEVER SIGN BRIDGE
- (XXX) DENOTES SIGN NUMBER
- (X) INDICATES SIGN SIZE
- ESTR EXISTING SIGN TO REMAIN

N

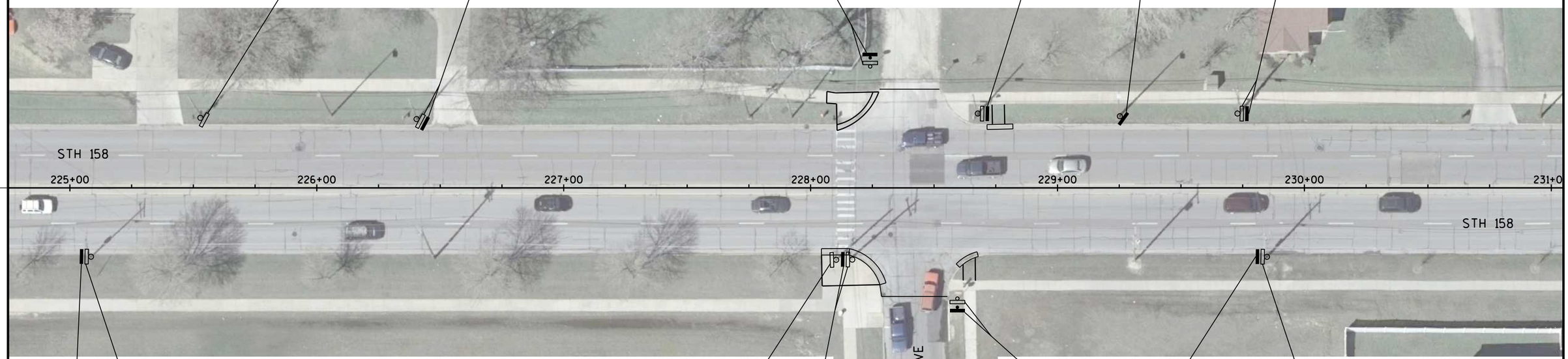

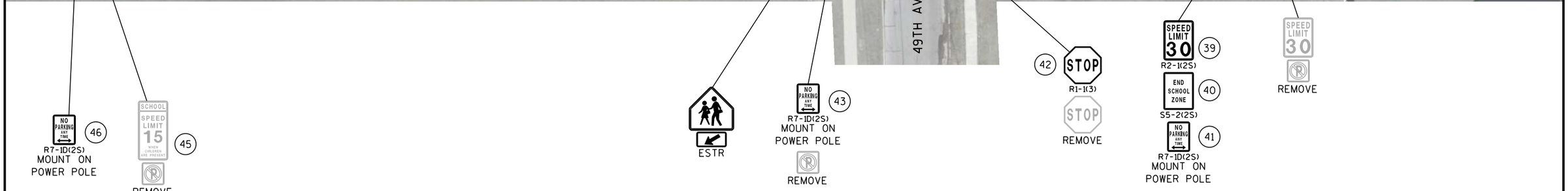

SHEET 6 OF 26

PROJECT NO:3220-03-62	HWY:STH 158	COUNTY:KENOSHA	PERMANENT SIGNING	SHEET 37	E

2

LEGEND

- EXISTING SIGN MOUNTED ON POST(S)
- EXISTING SIGN MOUNTED ON BRIDGE OR SIGN BRIDGE
- PROPOSED SIGN MOUNTED ON POST(S)
- PROPOSED SIGN MOUNTED ON BRIDGE OR SIGN BRIDGE
- EXISTING LIGHT OR SIGNAL POLE
- SIGN BRIDGE
- CANTILEVER SIGN BRIDGE
- (XXX) DENOTES SIGN NUMBER
- (X) INDICATES SIGN SIZE
- ESTR EXISTING SIGN TO REMAIN

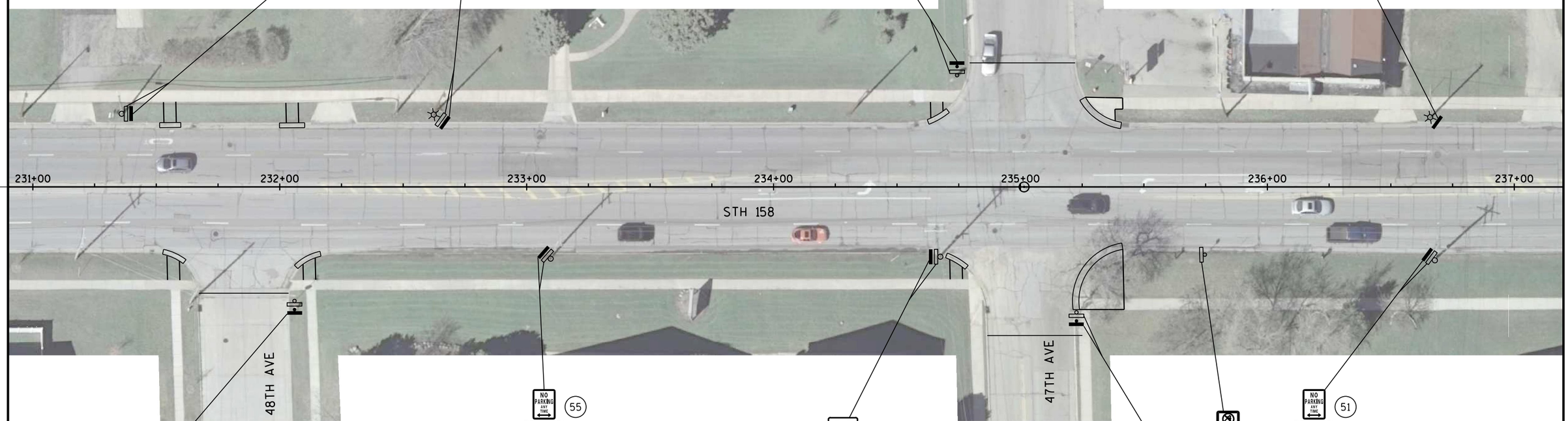

2

SHEET 7 OF 26

PROJECT NO:3220-03-62	HWY:STH 158	COUNTY:KENOSHA	PERMANENT SIGNING	SHEET 38	E

2

LEGEND

- EXISTING SIGN MOUNTED ON POST(S)
- EXISTING SIGN MOUNTED ON BRIDGE OR SIGN BRIDGE
- PROPOSED SIGN MOUNTED ON POST(S)
- PROPOSED SIGN MOUNTED ON BRIDGE OR SIGN BRIDGE
- EXISTING LIGHT OR SIGNAL POLE
- SIGN BRIDGE
- CANTILEVER SIGN BRIDGE
- (XXX) DENOTES SIGN NUMBER
- (X) INDICATES SIGN SIZE
- ESTR EXISTING SIGN TO REMAIN

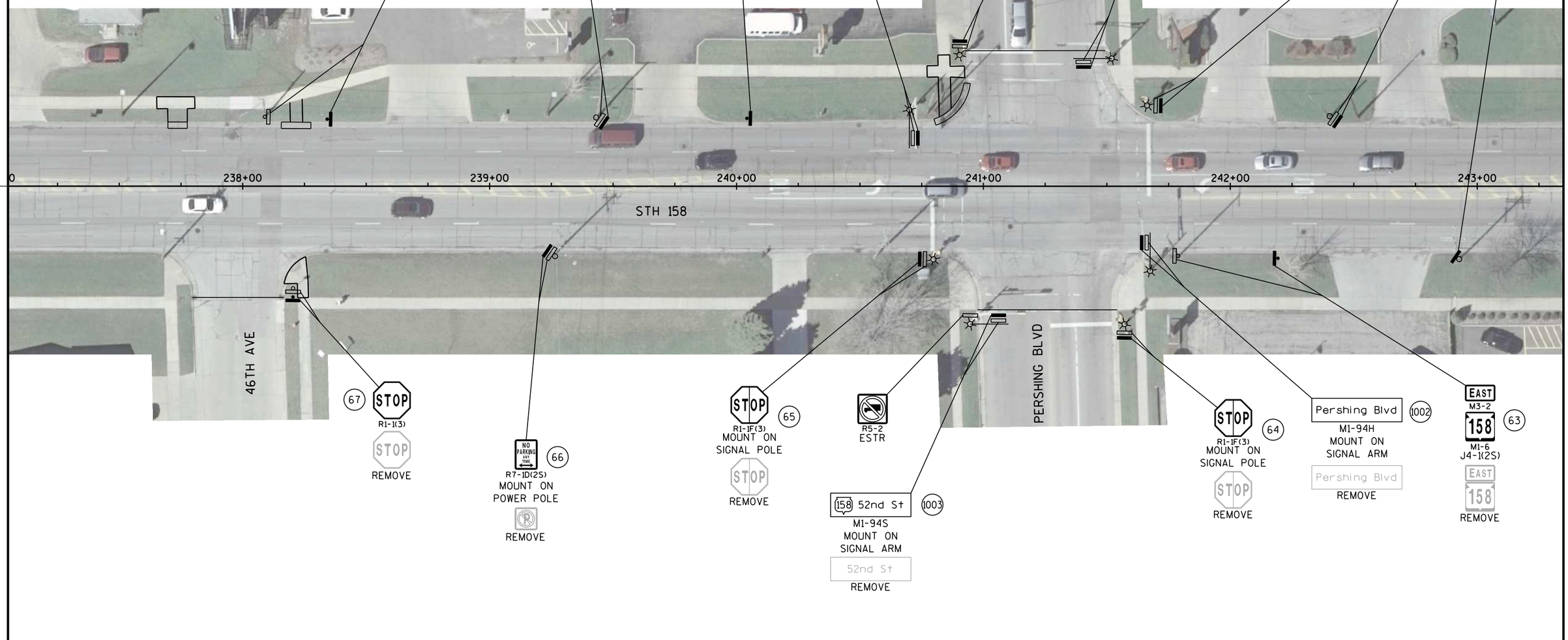

SHEET 8 OF 26

PROJECT NO:3220-03-62	HWY:STH 158	COUNTY:KENOSHA	PERMANENT SIGNING	SHEET 39	E

2

LEGEND

- EXISTING SIGN MOUNTED ON POST(S)
- EXISTING SIGN MOUNTED ON BRIDGE OR SIGN BRIDGE
- PROPOSED SIGN MOUNTED ON POST(S)
- PROPOSED SIGN MOUNTED ON BRIDGE OR SIGN BRIDGE
- EXISTING LIGHT OR SIGNAL POLE
- SIGN BRIDGE
- CANTILEVER SIGN BRIDGE
- (XXX) DENOTES SIGN NUMBER
- (X) INDICATES SIGN SIZE
- ESTR EXISTING SIGN TO REMAIN

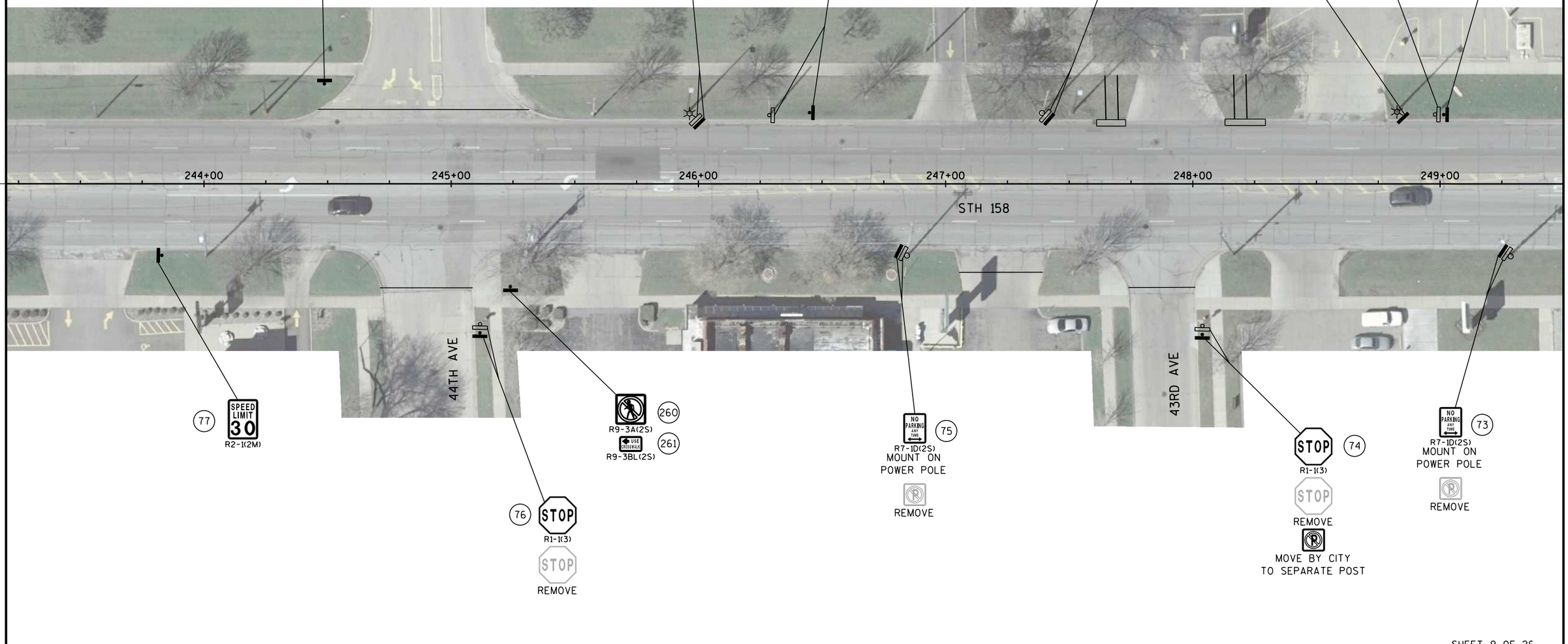

SHEET 9 OF 26

PROJECT NO:3220-03-62	HWY:STH 158	COUNTY:KENOSHA	PERMANENT SIGNING	SHEET 40	E

FILE NAME : N:\PDS\C3D\CAD\32200302\Sign\023209_ps.dgn PLOT DATE : 09-JAN-2014 08:32 PLOT BY : mscppl PLOT NAME : PLOT SCALE : 40:1

WISDOT/CADDS SHEET 42

2

LEGEND

- EXISTING SIGN MOUNTED ON POST(S)
- EXISTING SIGN MOUNTED ON BRIDGE OR SIGN BRIDGE
- PROPOSED SIGN MOUNTED ON POST(S)
- PROPOSED SIGN MOUNTED ON BRIDGE OR SIGN BRIDGE
- EXISTING LIGHT OR SIGNAL POLE
- SIGN BRIDGE
- CANTILEVER SIGN BRIDGE
- (XXX) DENOTES SIGN NUMBER
- (X) INDICATES SIGN SIZE
- ESTR EXISTING SIGN TO REMAIN

N

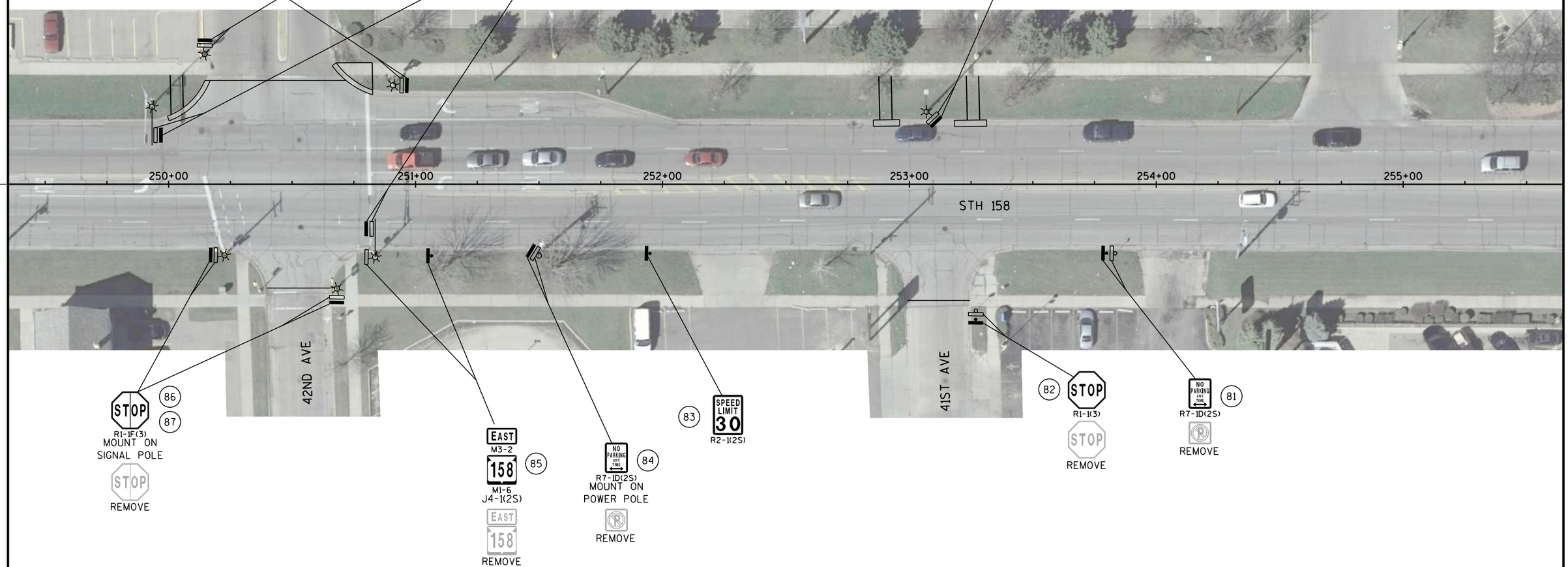

SHEET 10 OF 26

PROJECT NO:3220-03-62	HWY:STH 158	COUNTY:KENOSHA	PERMANENT SIGNING	SHEET 41	E

LEGEND

- EXISTING SIGN MOUNTED ON POST(S)
- EXISTING SIGN MOUNTED ON BRIDGE OR SIGN BRIDGE
- PROPOSED SIGN MOUNTED ON POST(S)
- PROPOSED SIGN MOUNTED ON BRIDGE OR SIGN BRIDGE
- EXISTING LIGHT OR SIGNAL POLE
- SIGN BRIDGE
- CANTILEVER SIGN BRIDGE
- (XXX) DENOTES SIGN NUMBER
- (X) INDICATES SIGN SIZE
- ESTR EXISTING SIGN TO REMAIN

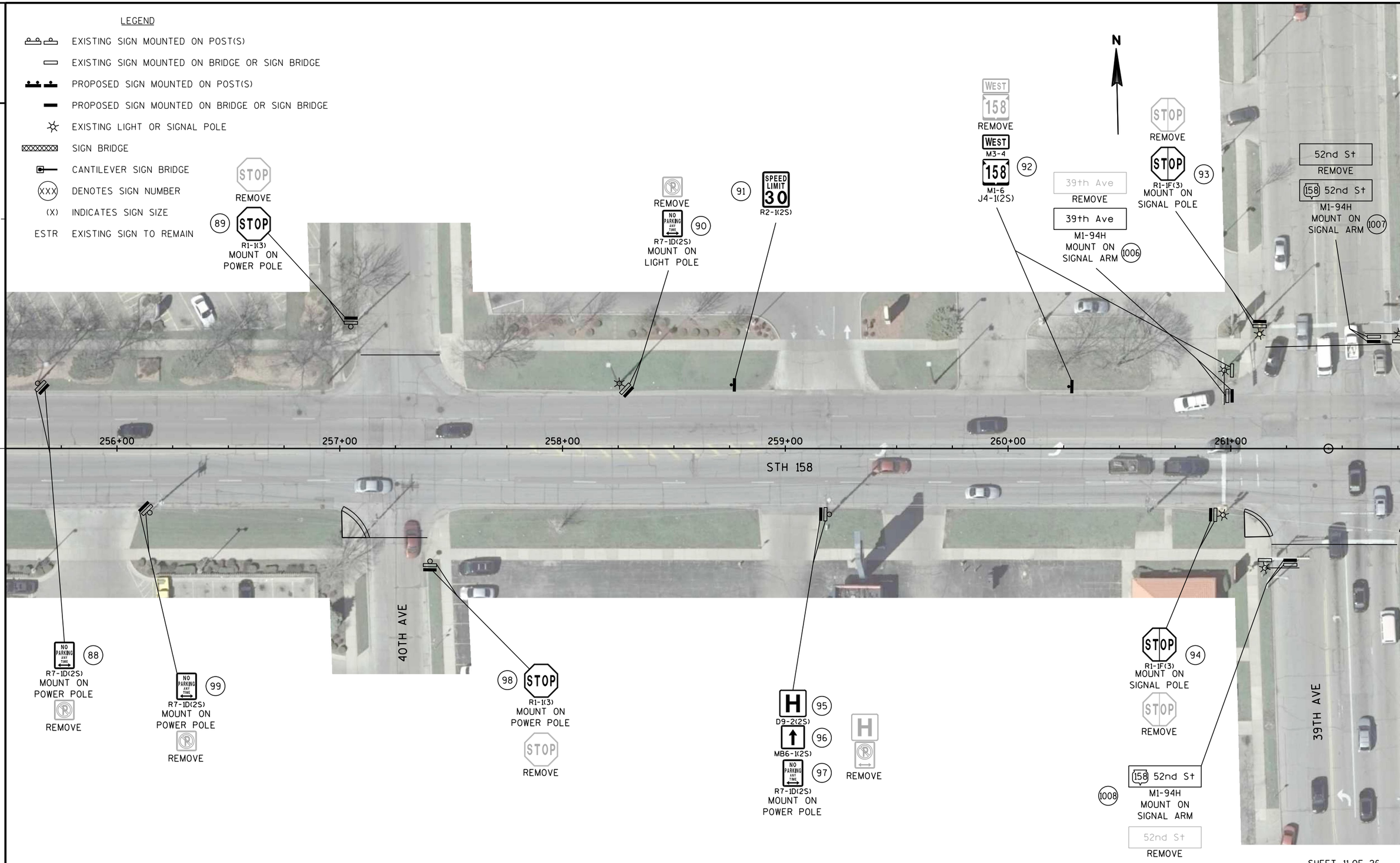

SHEET 11 OF 26

PROJECT NO:3220-03-62	HWY:STH 158	COUNTY:KENOSHA	PERMANENT SIGNING	SHEET 42	E

LEGEND

- EXISTING SIGN MOUNTED ON POST(S)
- EXISTING SIGN MOUNTED ON BRIDGE OR SIGN BRIDGE
- PROPOSED SIGN MOUNTED ON POST(S)
- PROPOSED SIGN MOUNTED ON BRIDGE OR SIGN BRIDGE
- EXISTING LIGHT OR SIGNAL POLE
- SIGN BRIDGE
- CANTILEVER SIGN BRIDGE
- (XXX) DENOTES SIGN NUMBER
- (X) INDICATES SIGN SIZE
- ESTR EXISTING SIGN TO REMAIN

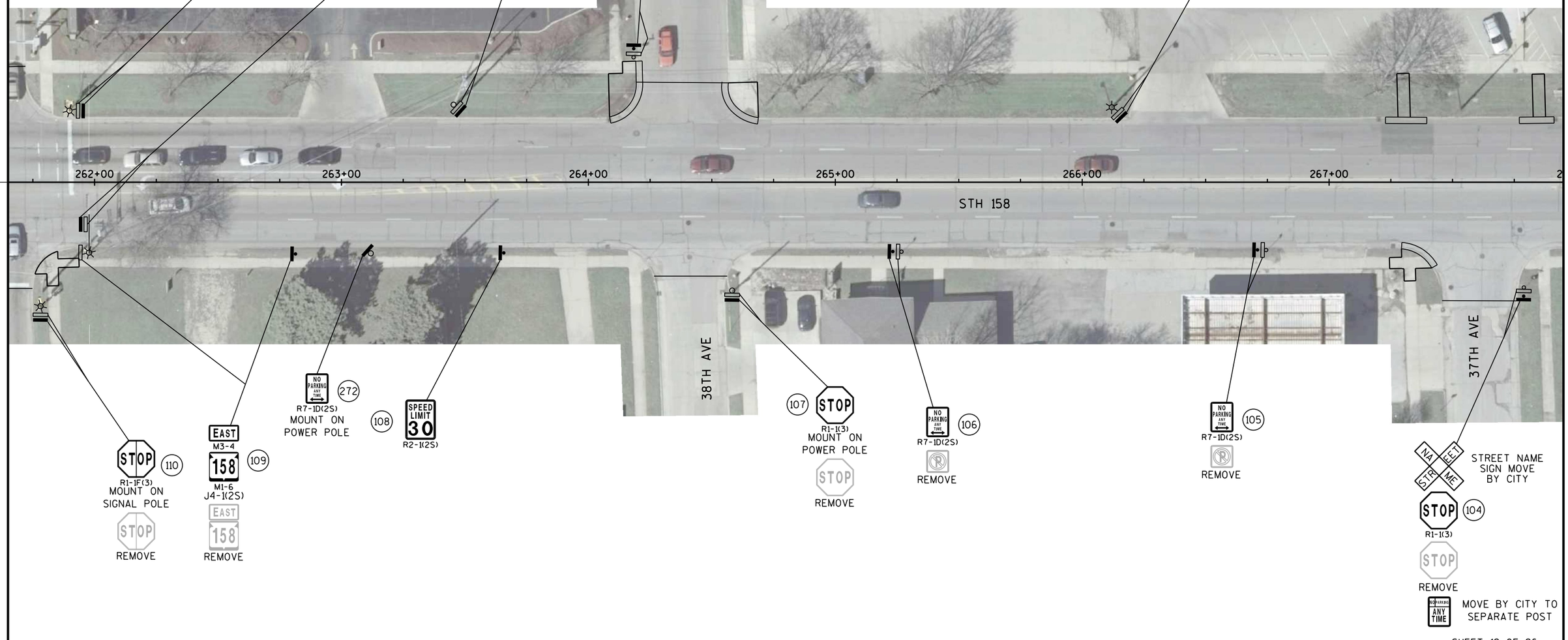

SHEET 12 OF 26

PROJECT NO: 3220-03-62	HWY: STH 158	COUNTY: KENOSHA	PERMANENT SIGNING	SHEET 43	E

2

LEGEND

- EXISTING SIGN MOUNTED ON POST(S)
- EXISTING SIGN MOUNTED ON BRIDGE OR SIGN BRIDGE
- PROPOSED SIGN MOUNTED ON POST(S)
- PROPOSED SIGN MOUNTED ON BRIDGE OR SIGN BRIDGE
- EXISTING LIGHT OR SIGNAL POLE
- SIGN BRIDGE
- CANTILEVER SIGN BRIDGE
- (XXX) DENOTES SIGN NUMBER
- (X) INDICATES SIGN SIZE
- ESTR EXISTING SIGN TO REMAIN

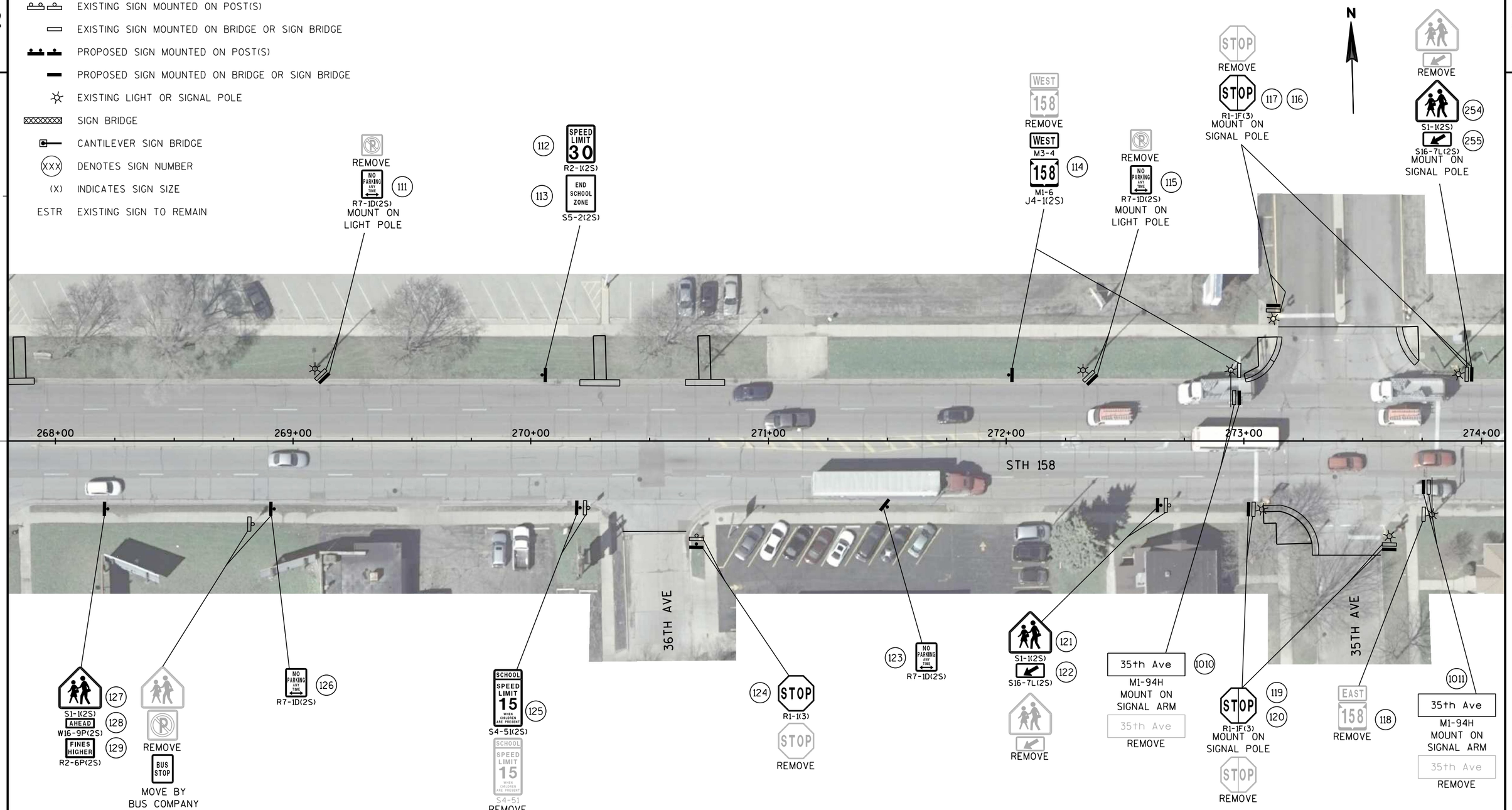

SHEET 13 OF 26

PROJECT NO:3220-03-62	HWY:STH 158	COUNTY:KENOSHA	PERMANENT SIGNING	SHEET 44	E

2

LEGEND

- EXISTING SIGN MOUNTED ON POST(S)
- EXISTING SIGN MOUNTED ON BRIDGE OR SIGN BRIDGE
- PROPOSED SIGN MOUNTED ON POST(S)
- PROPOSED SIGN MOUNTED ON BRIDGE OR SIGN BRIDGE
- EXISTING LIGHT OR SIGNAL POLE
- SIGN BRIDGE
- CANTILEVER SIGN BRIDGE
- (XXX) DENOTES SIGN NUMBER
- (X) INDICATES SIGN SIZE
- ESTR EXISTING SIGN TO REMAIN

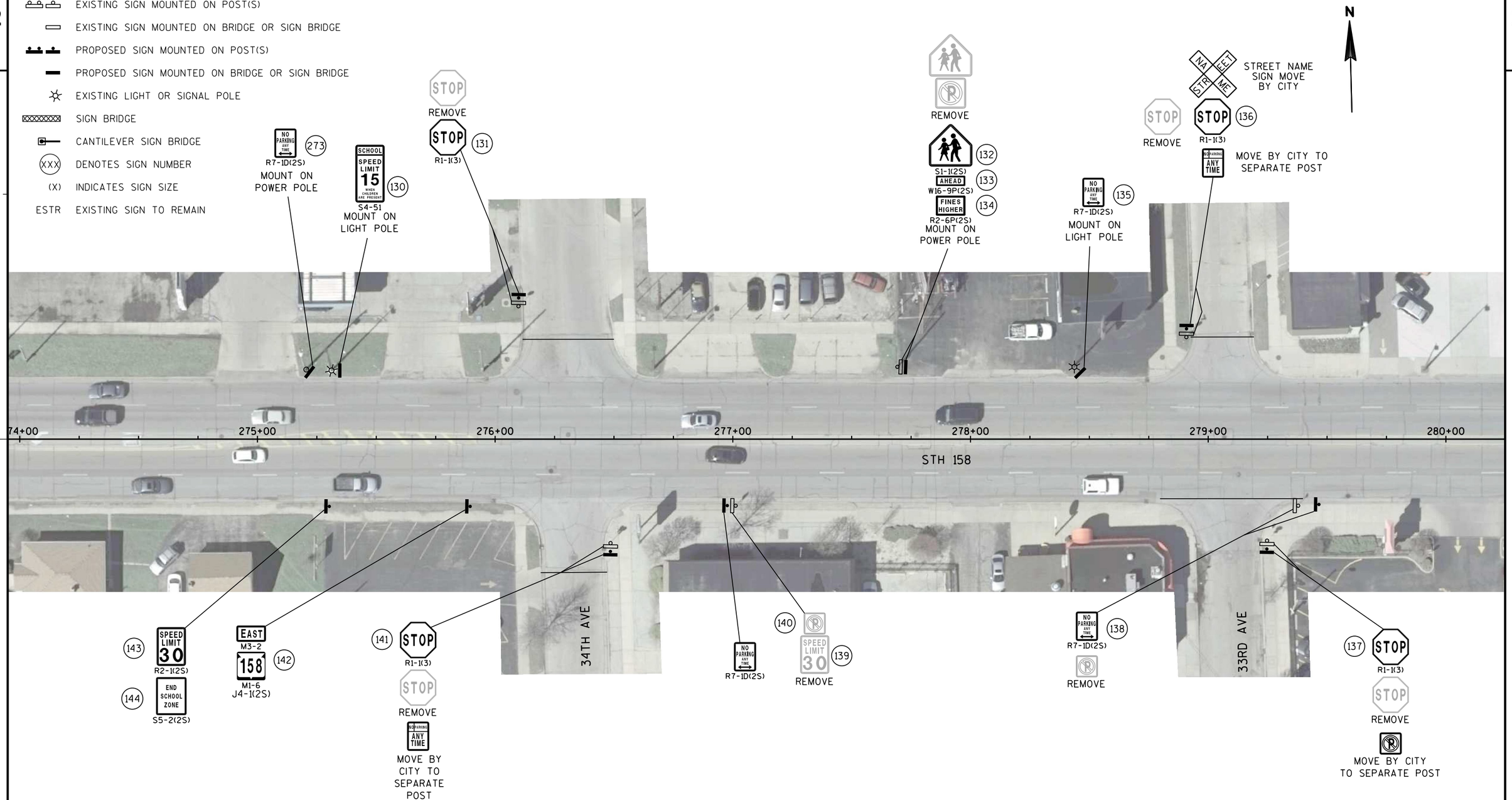

SHEET 14 OF 26

PROJECT NO:3220-03-62	HWY:STH 158	COUNTY:KENOSHA	PERMANENT SIGNING	SHEET 45	E

2

LEGEND

- EXISTING SIGN MOUNTED ON POST(S)
- EXISTING SIGN MOUNTED ON BRIDGE OR SIGN BRIDGE
- PROPOSED SIGN MOUNTED ON POST(S)
- PROPOSED SIGN MOUNTED ON BRIDGE OR SIGN BRIDGE
- EXISTING LIGHT OR SIGNAL POLE
- SIGN BRIDGE
- CANTILEVER SIGN BRIDGE
- (XXX) DENOTES SIGN NUMBER
- (X) INDICATES SIGN SIZE
- ESTR EXISTING SIGN TO REMAIN

N

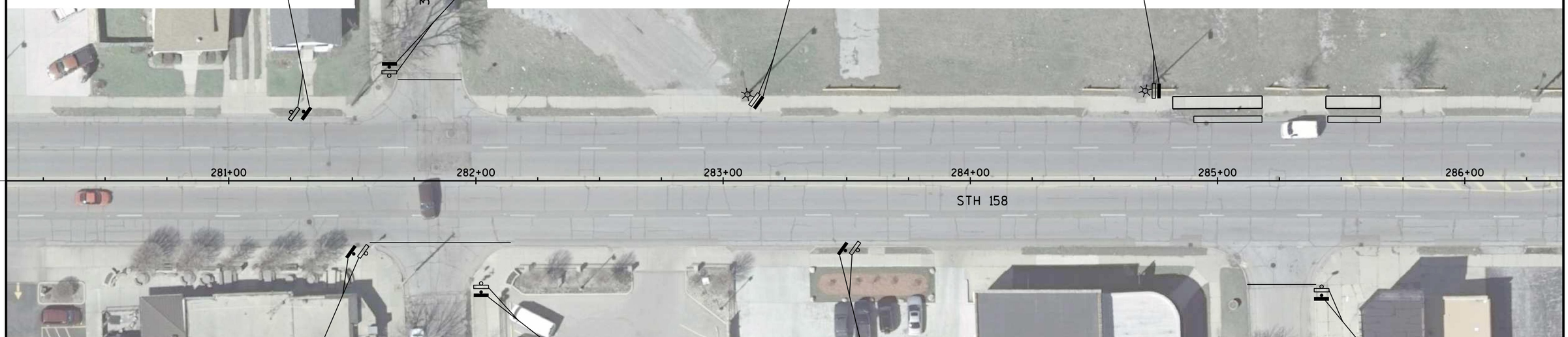

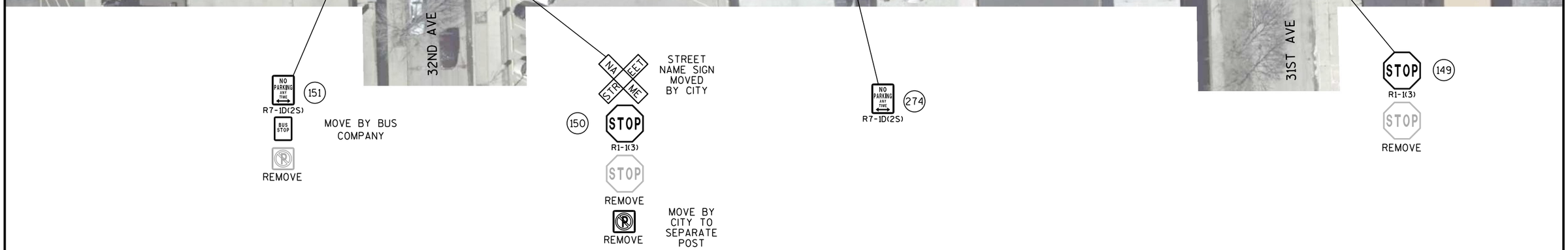

SHEET 15 OF 26

PROJECT NO:3220-03-62	HWY:STH 158	COUNTY:KENOSHA	PERMANENT SIGNING	SHEET 46	E

LEGEND

- EXISTING SIGN MOUNTED ON POST(S)
- EXISTING SIGN MOUNTED ON BRIDGE OR SIGN BRIDGE
- PROPOSED SIGN MOUNTED ON POST(S)
- PROPOSED SIGN MOUNTED ON BRIDGE OR SIGN BRIDGE
- EXISTING LIGHT OR SIGNAL POLE
- SIGN BRIDGE
- CANTILEVER SIGN BRIDGE
- (XXX) DENOTES SIGN NUMBER
- (X) INDICATES SIGN SIZE
- ESTR EXISTING SIGN TO REMAIN

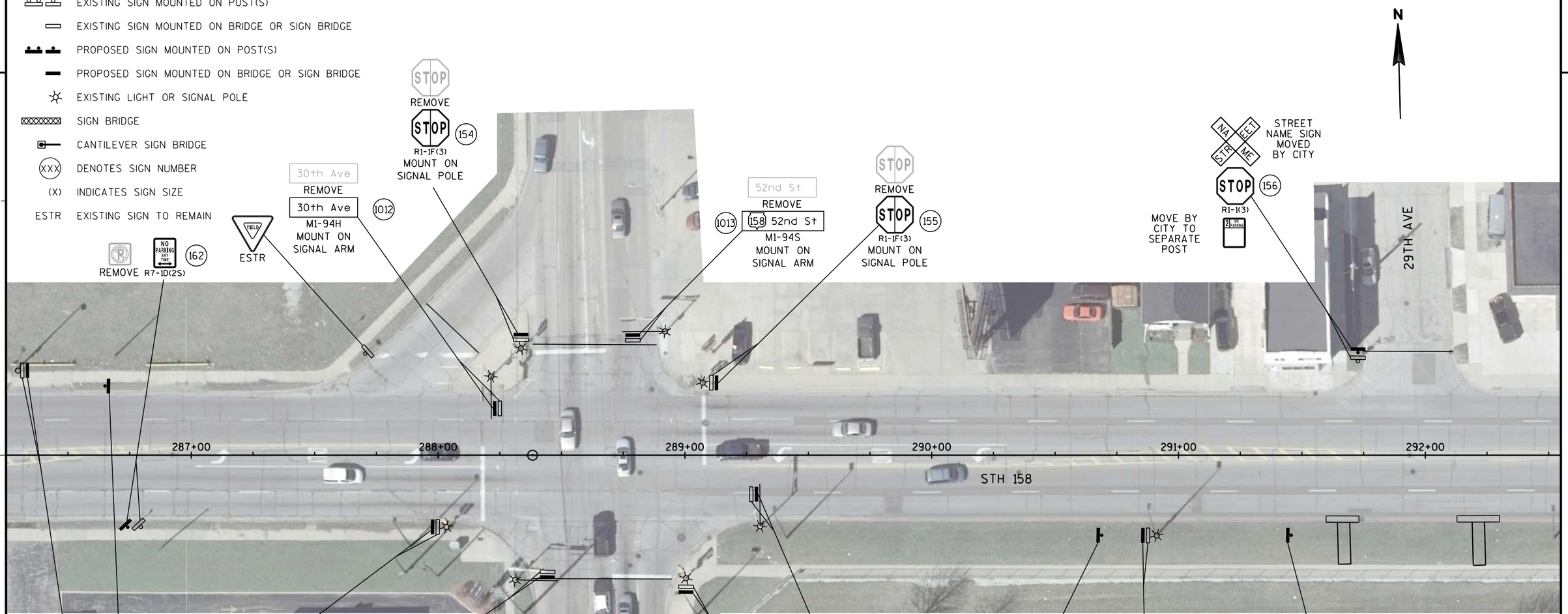

SHEET 16 OF 26

PROJECT NO:3220-03-62	HWY:STH 158	COUNTY:KENOSHA	PERMANENT SIGNING	SHEET 47	E

2

LEGEND

- EXISTING SIGN MOUNTED ON POST(S)
- EXISTING SIGN MOUNTED ON BRIDGE OR SIGN BRIDGE
- PROPOSED SIGN MOUNTED ON POST(S)
- PROPOSED SIGN MOUNTED ON BRIDGE OR SIGN BRIDGE
- EXISTING LIGHT OR SIGNAL POLE
- SIGN BRIDGE
- CANTILEVER SIGN BRIDGE
- (XXX) DENOTES SIGN NUMBER
- (X) INDICATES SIGN SIZE
- ESTR EXISTING SIGN TO REMAIN

N

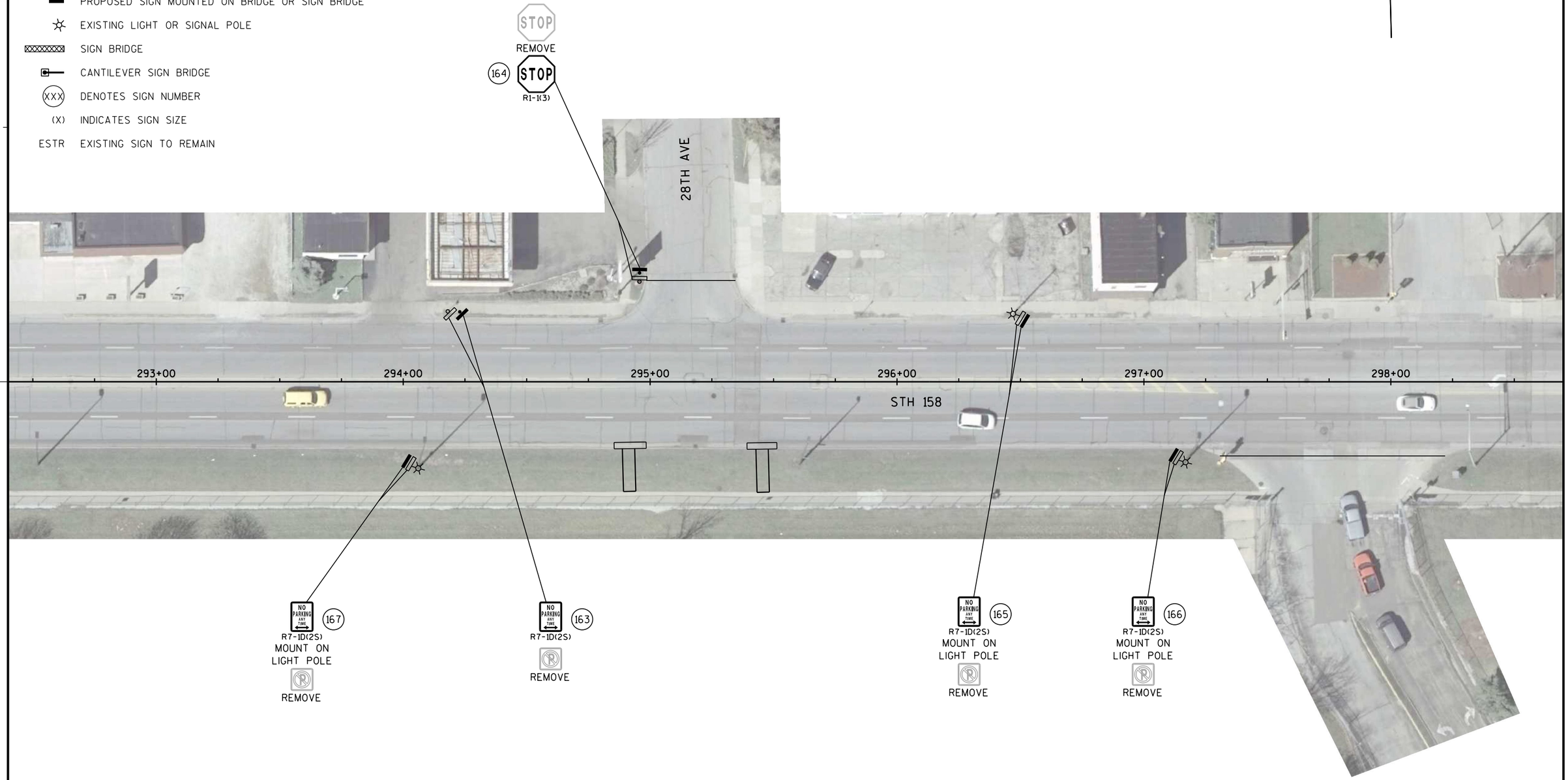

2

SHEET 17 OF 26

PROJECT NO:3220-03-62	HWY:STH 158	COUNTY:KENOSHA	PERMANENT SIGNING	SHEET 48	E

2

LEGEND

- EXISTING SIGN MOUNTED ON POST(S)
- EXISTING SIGN MOUNTED ON BRIDGE OR SIGN BRIDGE
- PROPOSED SIGN MOUNTED ON POST(S)
- PROPOSED SIGN MOUNTED ON BRIDGE OR SIGN BRIDGE
- EXISTING LIGHT OR SIGNAL POLE
- SIGN BRIDGE
- CANTILEVER SIGN BRIDGE
- (XXX) DENOTES SIGN NUMBER
- (X) INDICATES SIGN SIZE
- ESTR EXISTING SIGN TO REMAIN

N

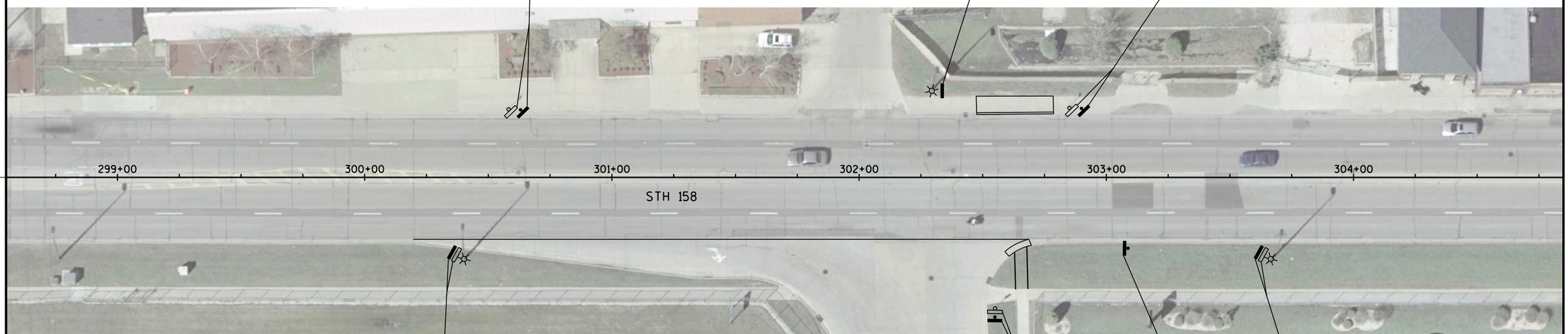

SHEET 18 OF 26

PROJECT NO:3220-03-62	HWY:STH 158	COUNTY:KENOSHA	PERMANENT SIGNING	SHEET 49	E

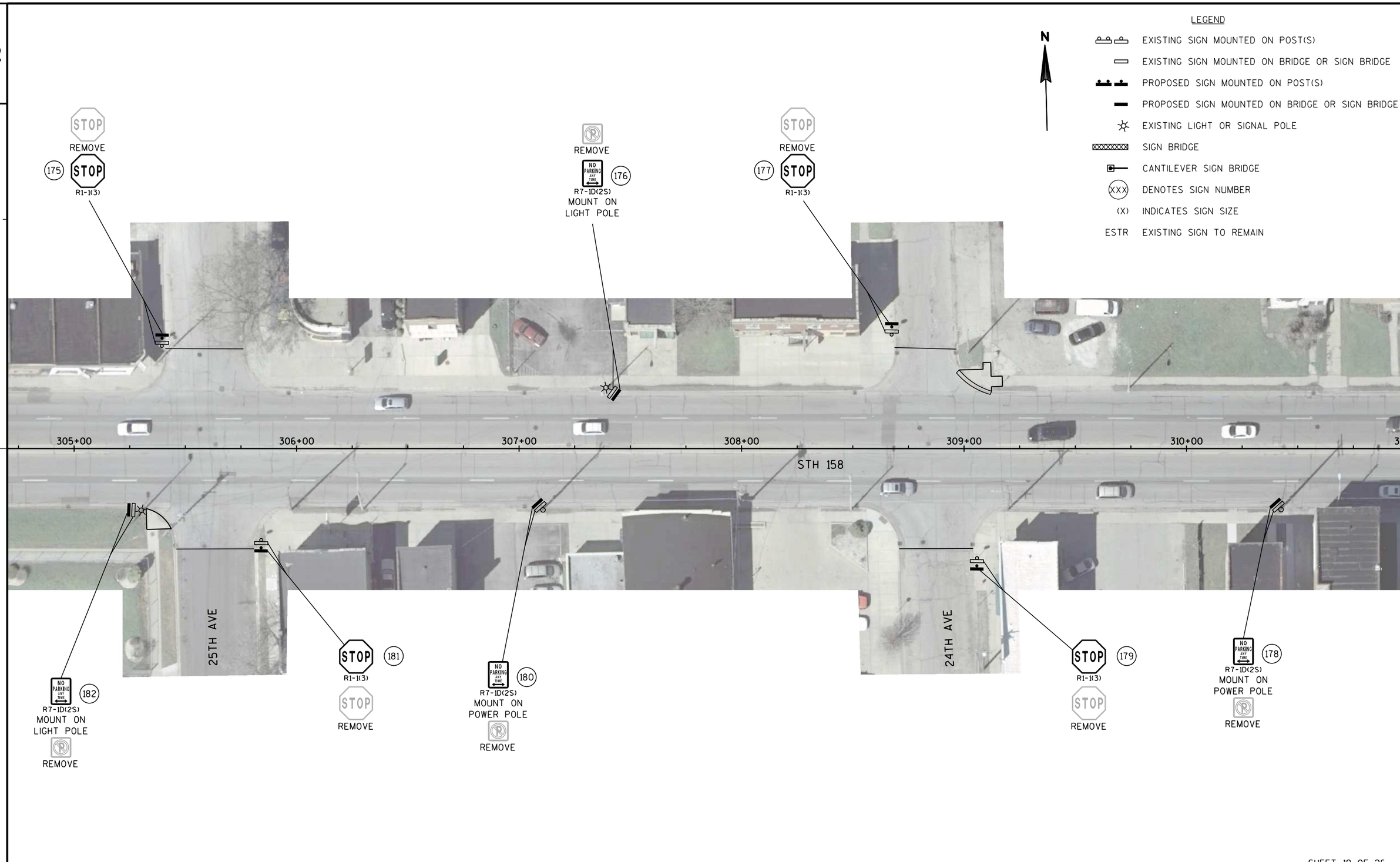

SHEET 19 OF 26

PROJECT NO:3220-03-62	HWY:STH 158	COUNTY:KENOSHA	PERMANENT SIGNING	SHEET 50	E

2

LEGEND

- EXISTING SIGN MOUNTED ON POST(S)
- EXISTING SIGN MOUNTED ON BRIDGE OR SIGN BRIDGE
- PROPOSED SIGN MOUNTED ON POST(S)
- PROPOSED SIGN MOUNTED ON BRIDGE OR SIGN BRIDGE
- EXISTING LIGHT OR SIGNAL POLE
- SIGN BRIDGE
- CANTILEVER SIGN BRIDGE
- (XXX) DENOTES SIGN NUMBER
- (X) INDICATES SIGN SIZE
- ESTR EXISTING SIGN TO REMAIN

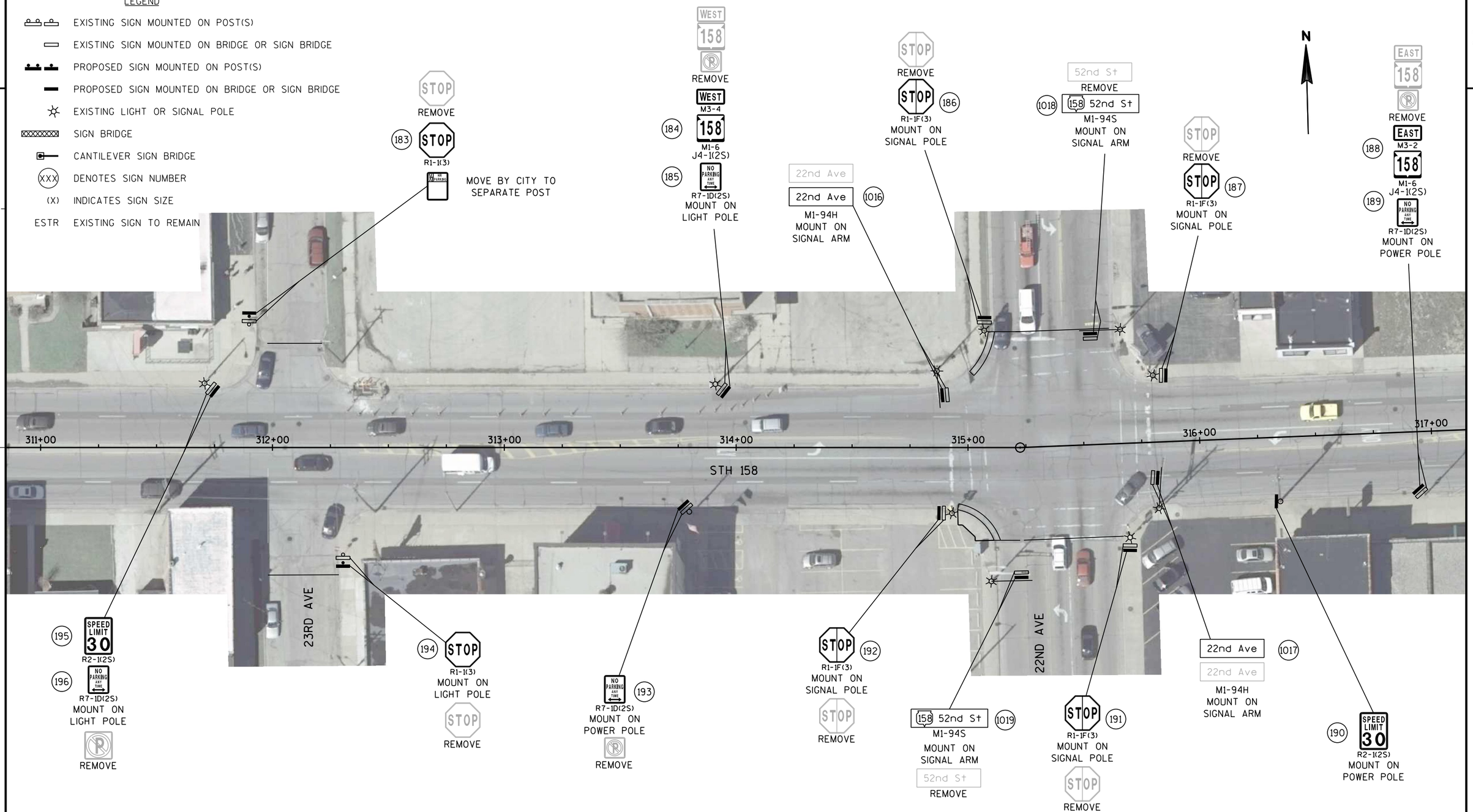

SHEET 20 OF 26

PROJECT NO:3220-03-62	HWY:STH 158	COUNTY:KENOSHA	PERMANENT SIGNING	SHEET 51	E

LEGEND

- EXISTING SIGN MOUNTED ON POST(S)
- EXISTING SIGN MOUNTED ON BRIDGE OR SIGN BRIDGE
- PROPOSED SIGN MOUNTED ON POST(S)
- PROPOSED SIGN MOUNTED ON BRIDGE OR SIGN BRIDGE
- EXISTING LIGHT OR SIGNAL POLE
- SIGN BRIDGE
- CANTILEVER SIGN BRIDGE
- (XXX) DENOTES SIGN NUMBER
- (X) INDICATES SIGN SIZE
- ESTR EXISTING SIGN TO REMAIN

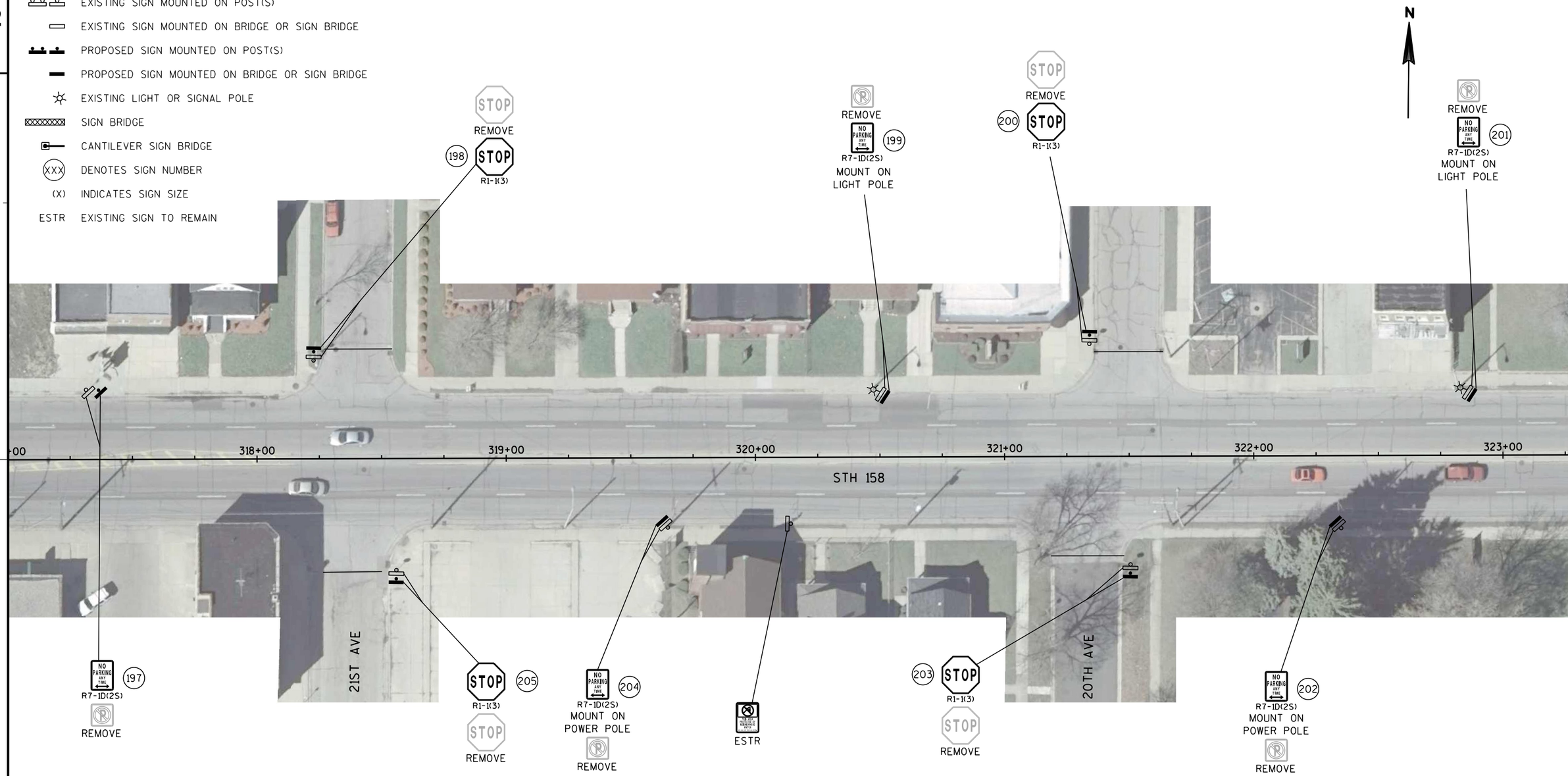

SHEET 21 OF 26

PROJECT NO: 3220-03-62	HWY: STH 158	COUNTY: KENOSHA	PERMANENT SIGNING	SHEET 52	E

2

LEGEND

- EXISTING SIGN MOUNTED ON POST(S)
- EXISTING SIGN MOUNTED ON BRIDGE OR SIGN BRIDGE
- PROPOSED SIGN MOUNTED ON POST(S)
- PROPOSED SIGN MOUNTED ON BRIDGE OR SIGN BRIDGE
- EXISTING LIGHT OR SIGNAL POLE
- SIGN BRIDGE
- CANTILEVER SIGN BRIDGE
- (XXX) DENOTES SIGN NUMBER
- (X) INDICATES SIGN SIZE
- ESTR EXISTING SIGN TO REMAIN

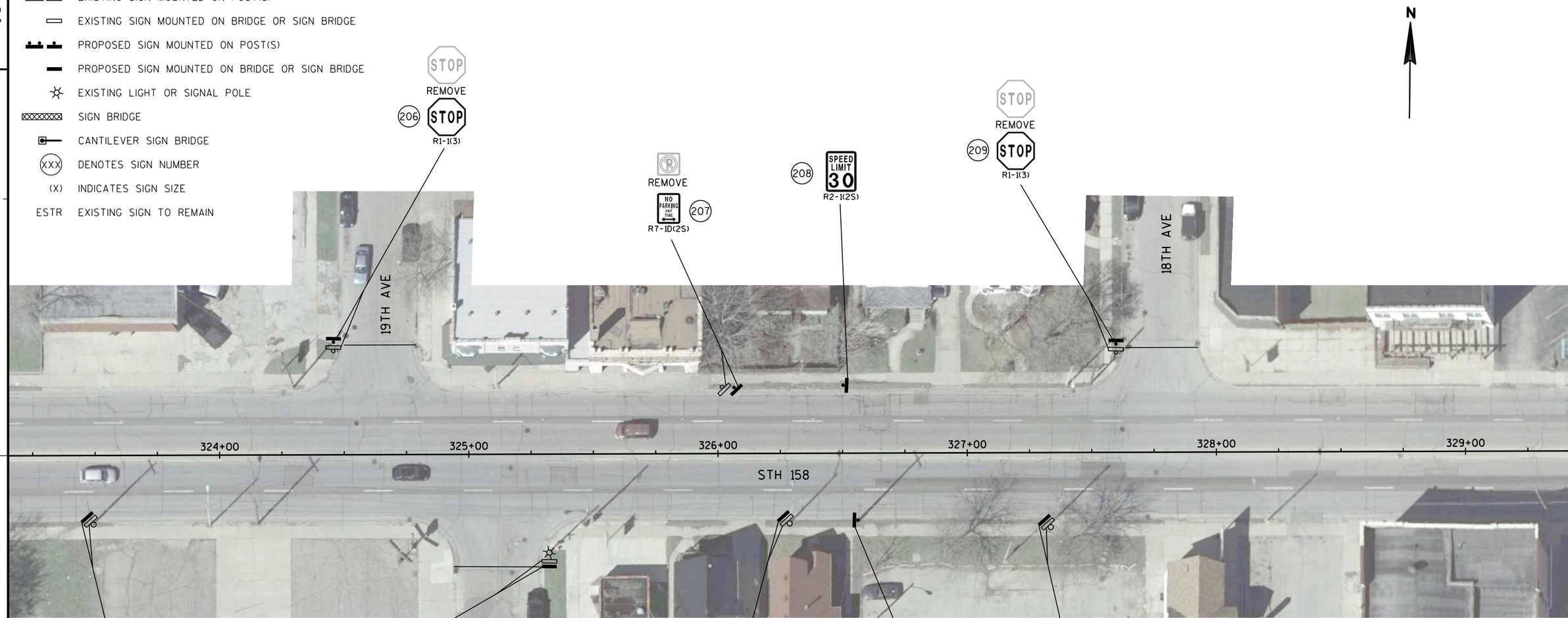

2

SHEET 22 OF 26

PROJECT NO:3220-03-62	HWY:STH 158	COUNTY:KENOSHA	PERMANENT SIGNING	SHEET 53	E

LEGEND

- EXISTING SIGN MOUNTED ON POST(S)
- EXISTING SIGN MOUNTED ON BRIDGE OR SIGN BRIDGE
- PROPOSED SIGN MOUNTED ON POST(S)
- PROPOSED SIGN MOUNTED ON BRIDGE OR SIGN BRIDGE
- EXISTING LIGHT OR SIGNAL POLE
- SIGN BRIDGE
- CANTILEVER SIGN BRIDGE
- (XXX) DENOTES SIGN NUMBER
- (X) INDICATES SIGN SIZE
- ESTR EXISTING SIGN TO REMAIN

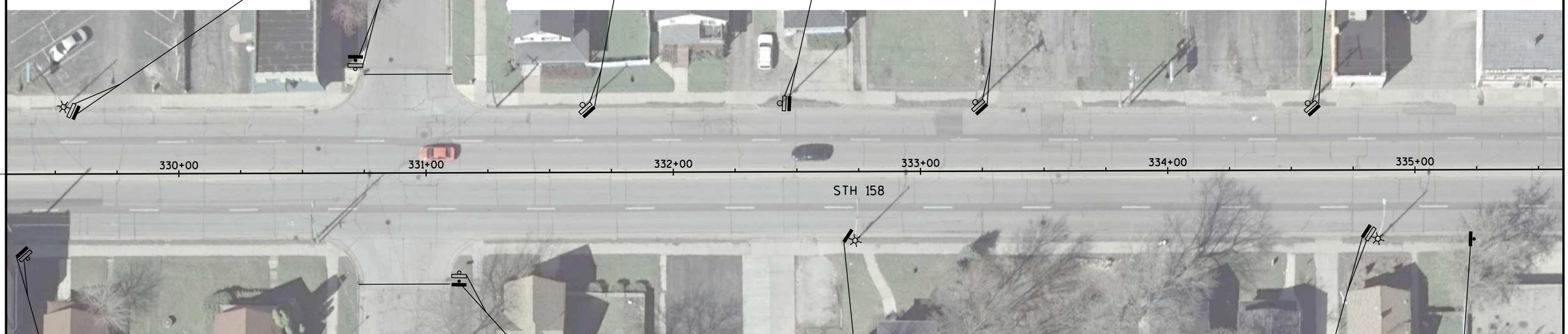

REMOVE
215
R7-1D(2S)
MOUNT ON LIGHT POLE

STOP
REMOVE
216
STOP
R1-1(3)

REMOVE
217
R7-1D(2S)
MOUNT ON POWER POLE

SPEED LIMIT 30
REMOVE
218
SPEED LIMIT 30
R2-1(2S)
MOUNT ON POWER POLE

REMOVE
219
R7-1D(2S)
MOUNT ON POWER POLE

REMOVE
220
R7-1D(2S)
MOUNT ON POWER POLE

224
R7-1D(2S)
MOUNT ON POWER POLE
REMOVE

223
STOP
R1-1(3)
STOP
REMOVE

222
R7-1D(2S)
MOUNT ON LIGHT POLE

221
R7-1D(2S)
MOUNT ON LIGHT POLE
REMOVE

250
14'-4"
W12-2(2M)
251
AHEAD
W16-9P(2M)

SHEET 23 OF 26

PROJECT NO:3220-03-62	HWY:STH 158	COUNTY:KENOSHA	PERMANENT SIGNING	SHEET 54	E

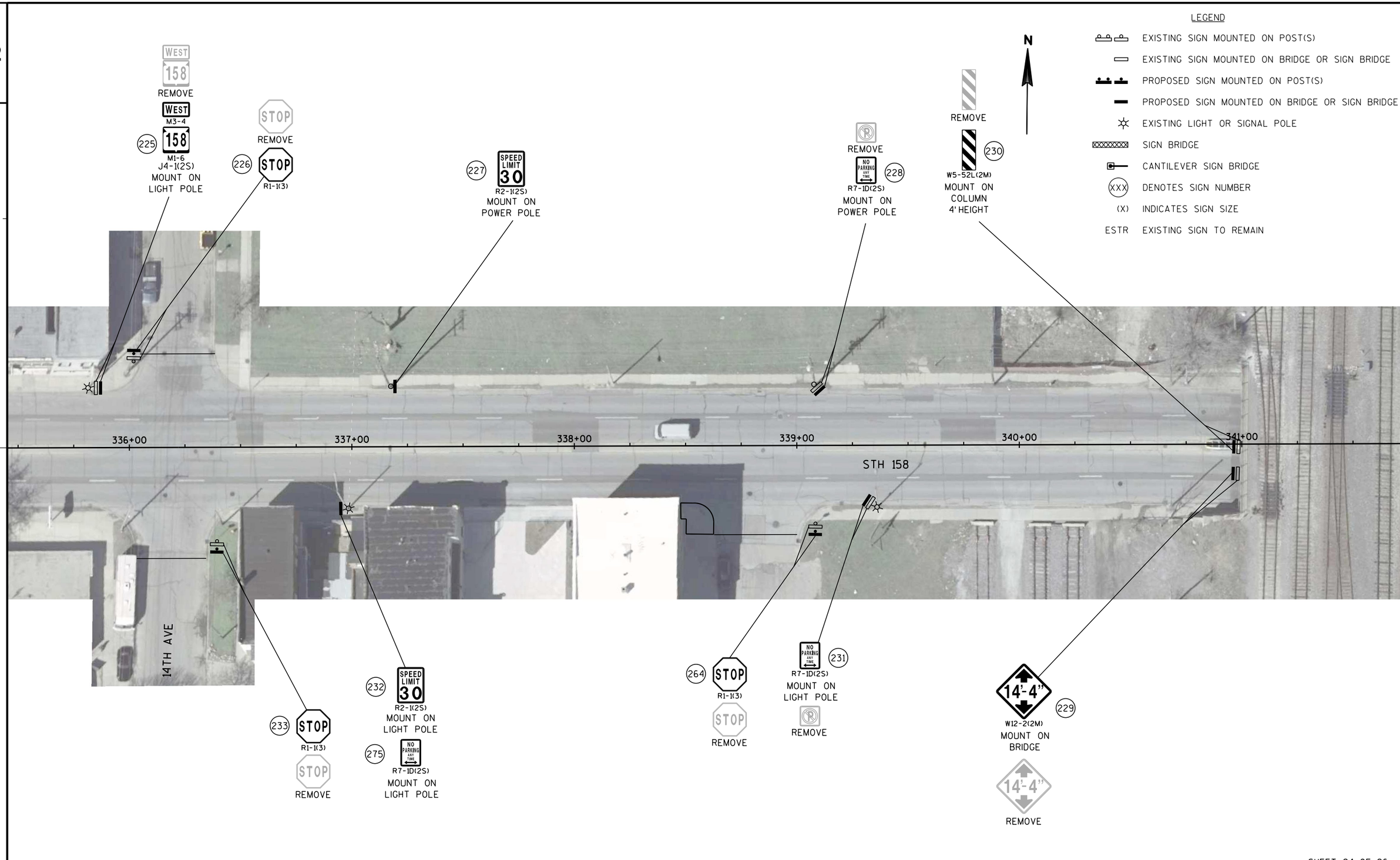

SHEET 24 OF 26

PROJECT NO:3220-03-62	HWY:STH 158	COUNTY:KENOSHA	PERMANENT SIGNING	SHEET 55	E

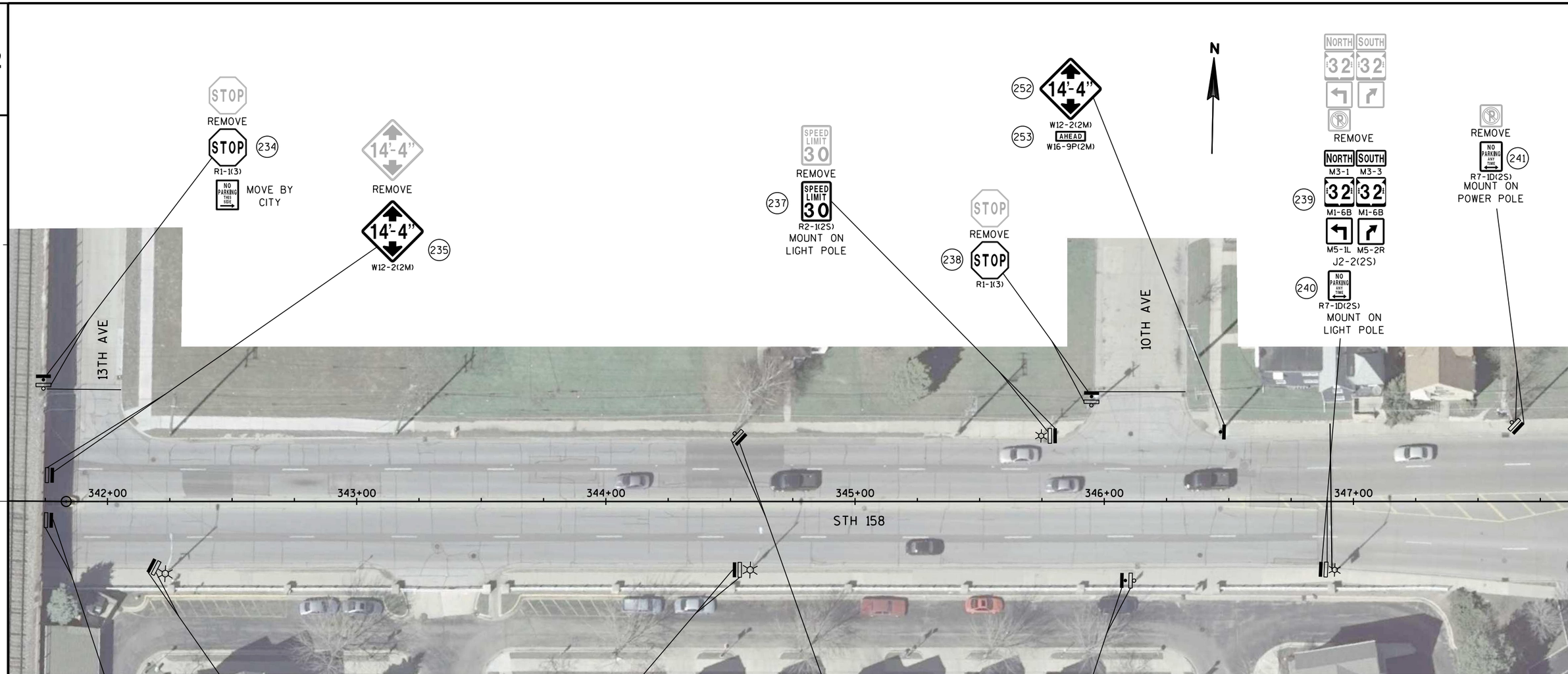

LEGEND

- EXISTING SIGN MOUNTED ON POST(S)
- EXISTING SIGN MOUNTED ON BRIDGE OR SIGN BRIDGE
- PROPOSED SIGN MOUNTED ON POST(S)
- PROPOSED SIGN MOUNTED ON BRIDGE OR SIGN BRIDGE
- EXISTING LIGHT OR SIGNAL POLE
- SIGN BRIDGE
- CANTILEVER SIGN BRIDGE
- (XXX) DENOTES SIGN NUMBER
- (X) INDICATES SIGN SIZE
- ESTR EXISTING SIGN TO REMAIN

SHEET 25 OF 26

PROJECT NO:3220-03-62	HWY:STH 158	COUNTY:KENOSHA	PERMANENT SIGNING	SHEET 56	E

2

LEGEND

- EXISTING SIGN MOUNTED ON POST(S)
- EXISTING SIGN MOUNTED ON BRIDGE OR SIGN BRIDGE
- PROPOSED SIGN MOUNTED ON POST(S)
- PROPOSED SIGN MOUNTED ON BRIDGE OR SIGN BRIDGE
- EXISTING LIGHT OR SIGNAL POLE
- SIGN BRIDGE
- CANTILEVER SIGN BRIDGE
- (XXX) DENOTES SIGN NUMBER
- (X) INDICATES SIGN SIZE
- ESTR EXISTING SIGN TO REMAIN

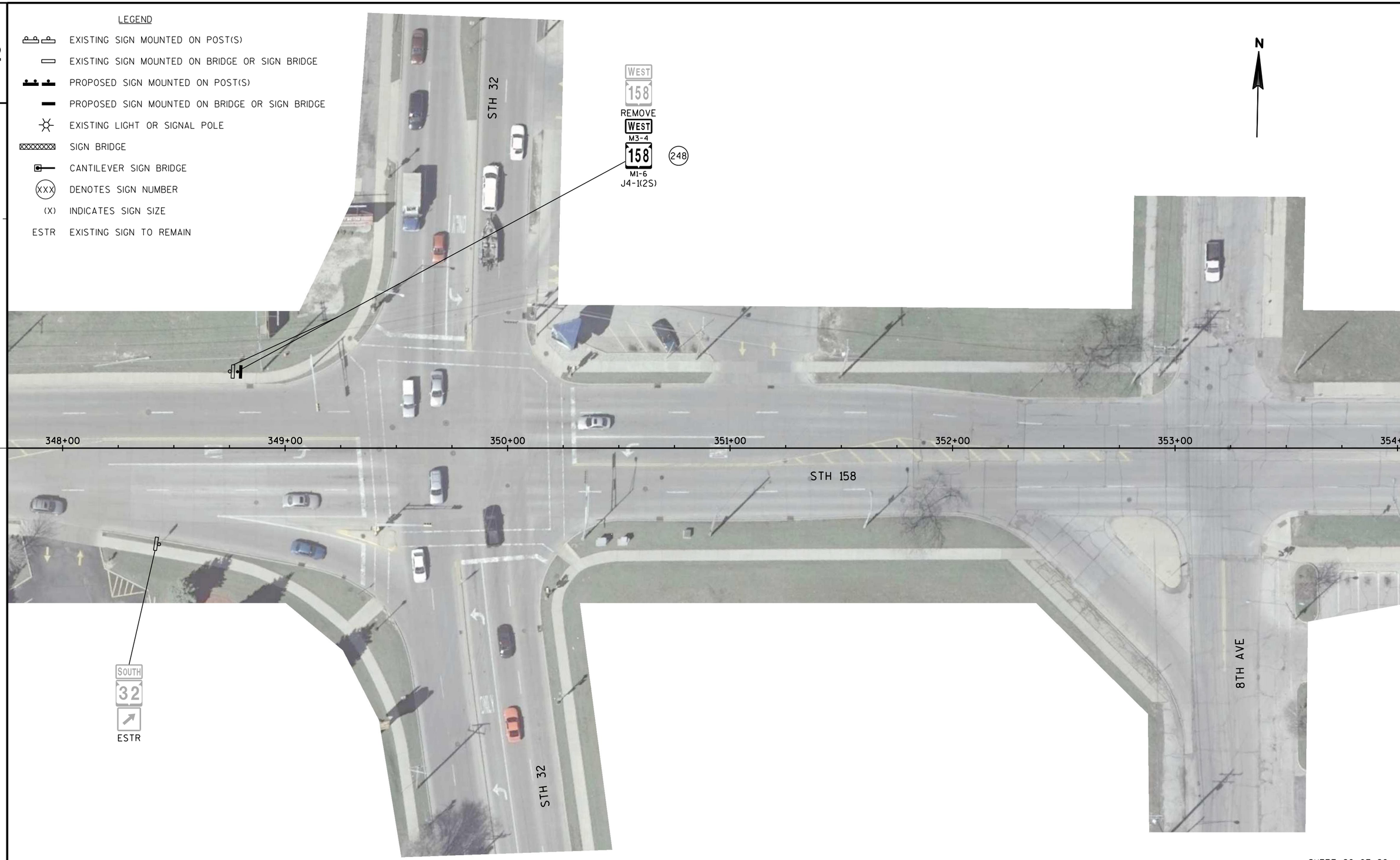

2

SHEET 26 OF 26

PROJECT NO:3220-03-62	HWY:STH 158	COUNTY:KENOSHA	PERMANENT SIGNING	SHEET 57	E

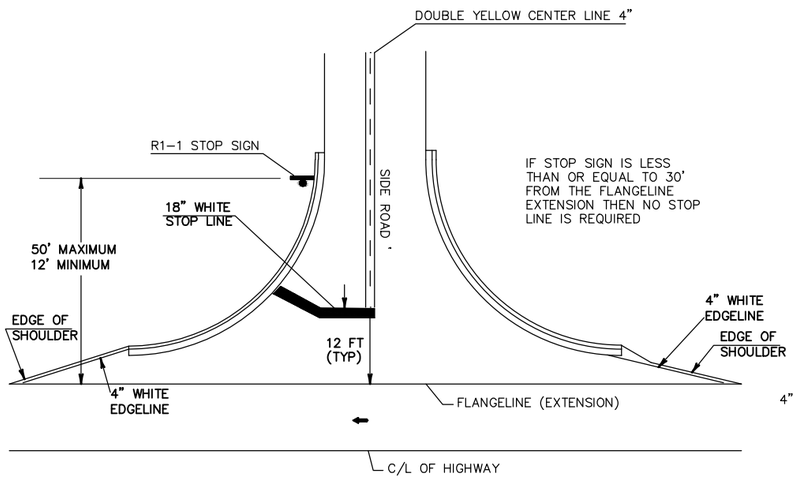

TYPICAL PAVEMENT MARKING FOR SIDEROADS

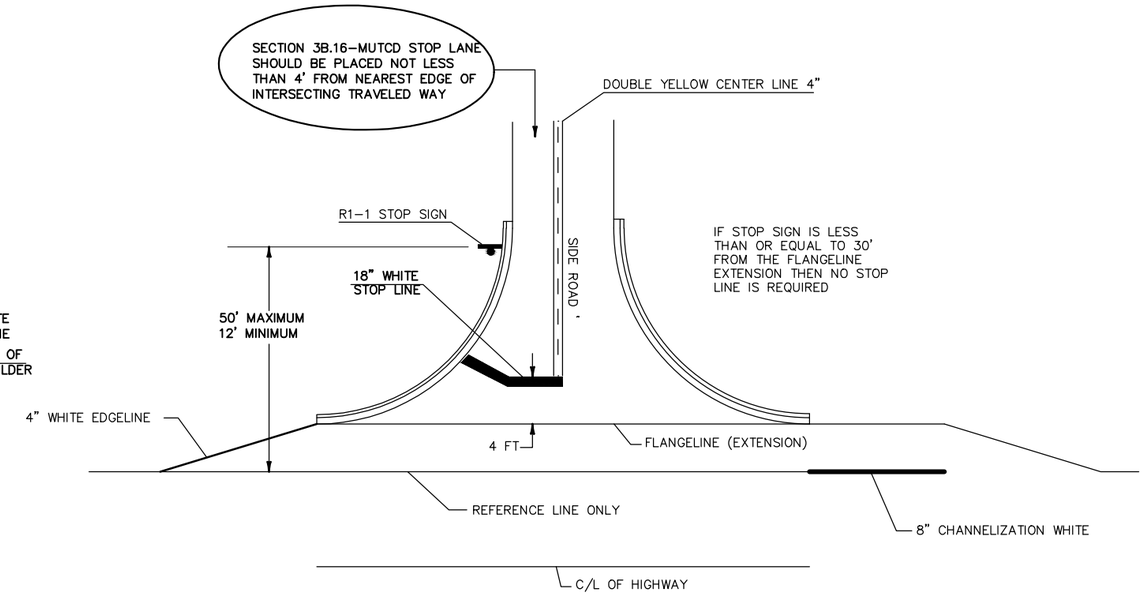

TYPICAL PAVEMENT MARKING FOR SIDEROADS WITH RIGHT TURN LANE

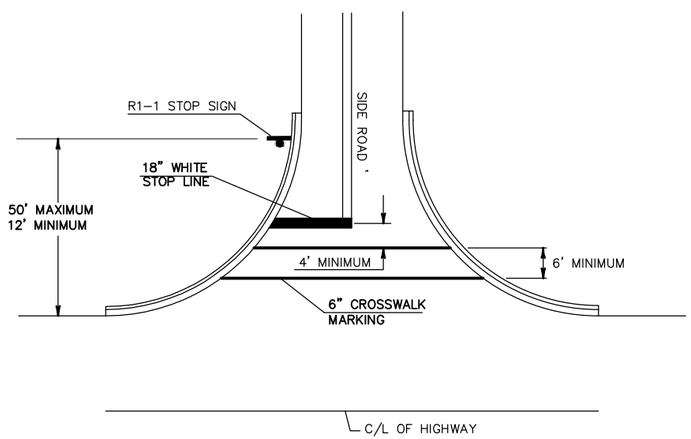

TYPICAL PAVEMENT MARKING FOR SIDEROADS WITH CROSSWALK MARKING

NOTES:
18-INCH STOP LINES MAY BE DELETED OR ADDED BY THE PROJECT ENGINEER BASED ON VISIBILITY AND SIGHT LINES.

STOP LINES REQUIRED WHERE:

- CROSSWALK MARKINGS EXIST OR BEING PROVIDED
- LARGE RADII
- OFFSET LEFT TURNS WHERE STOP BAR FOR LEFT TURN IS SET BACK FROM THRU MOVEMENT.

2

N

PAVEMENT MARKING GROOVED PREFORMED THERMOPLASTIC CROSSWALK SPECIAL

PROJECT NO:3220-03-62	HWY:STH 158	COUNTY:KENOSHA	PAVEMENT MARKING DETAIL	SHEET 59	E

2

2

LEGEND

1. PAVEMENT MARKING EPOXY 4-INCH (DOUBLE YELLOW)
2. PAVEMENT MARKING GROOVED WET REFLECTIVE TAPE 4-INCH (12.5' LINE, WHITE)
3. PAVEMENT MARKING GROOVED WET REFLECTIVE TAPE 8-INCH (WHITE)
4. PAVEMENT MARKING DIAGONAL EPOXY 12-INCH (YELLOW)
5. PAVEMENT MARKING GROOVED PREFORMED THERMOPLASTIC ARROWS TYPE 2
6. PAVEMENT MARKING GROOVED PREFORMED THERMOPLASTIC STOP LINE 18-INCH
7. PAVEMENT MARKING GROOVED PREFORMED THERMOPLASTIC CROSSWALK 6-INCH
8. PAVEMENT MARKING GROOVED PREFORMED THERMOPLASTIC CROSSWALK SPECIAL
9. PAVEMENT MARKING GROOVED PREFORMED THERMOPLASTIC WORDS

NOTE: - DIMENSIONS ARE TO FACE OF CURB
- DIAGONALS ARE 10' CENTER TO CENTER
- 4' MEDIAN IS OUSIDE EDGE TO OUTSIDE EDGE OF 4-INCH DOUBLE DOUBLE YELLOW PAVEMENT MARKINGS.

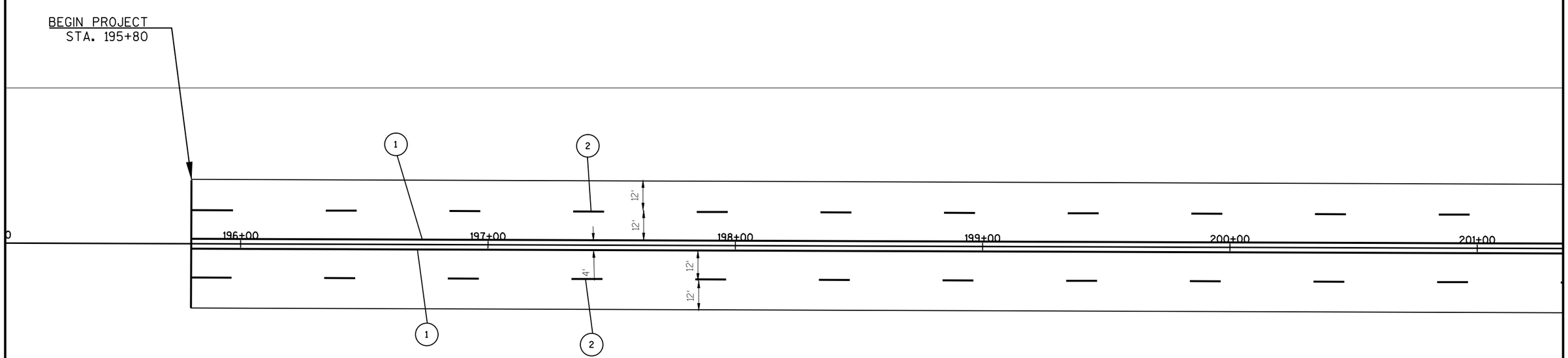

PROJECT NO:3220-03-62	HWY:STH 158	COUNTY:KENOSHA	PAVEMENT MARKING	SHEET 60	E

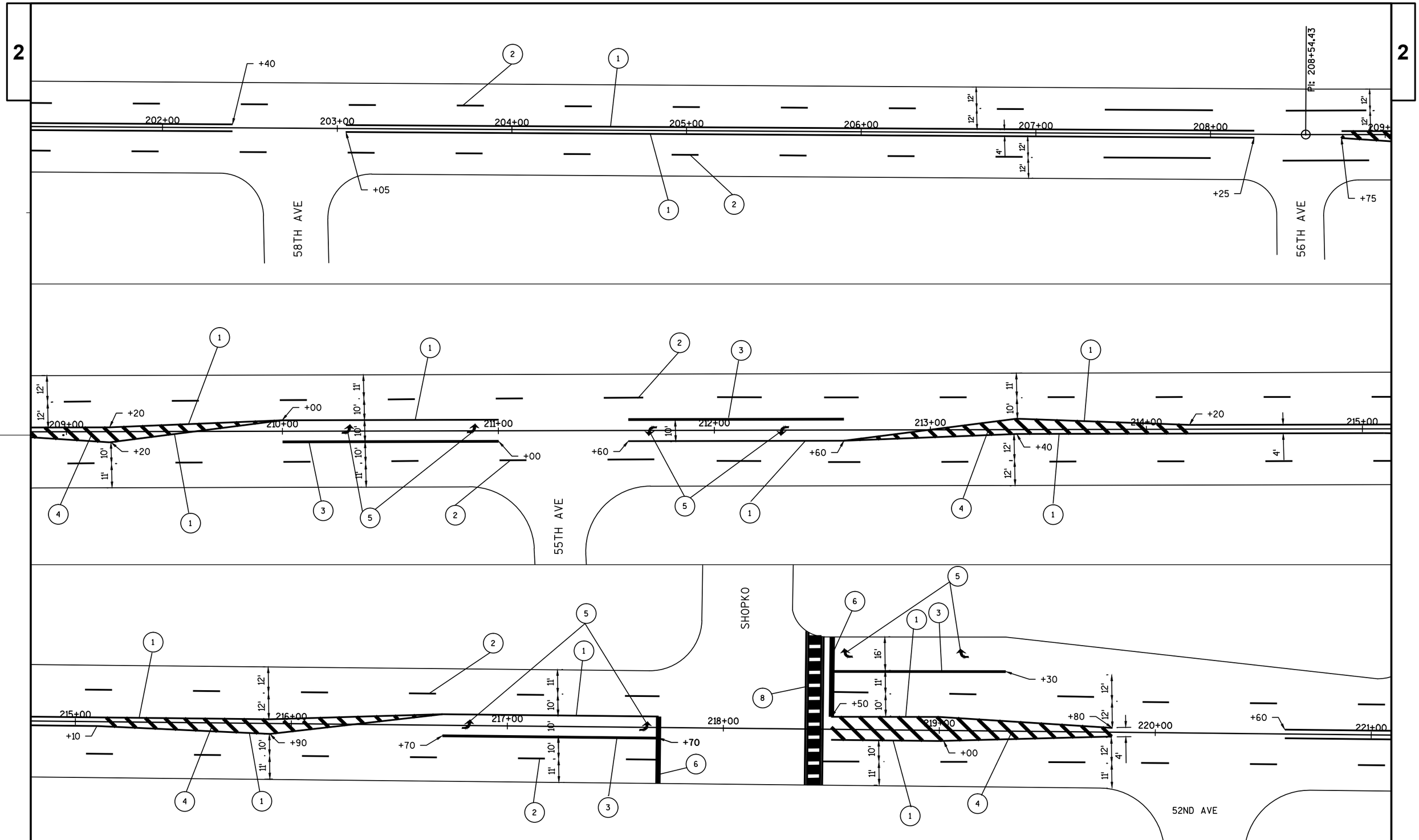

PROJECT NO:3220-03-62	HWY:STH 158	COUNTY:KENOSHA	PAVEMENT MARKING	SHEET	E

FILE NAME : N:\PDS\C3D\CAD\32200302\024502_PM.DWG PLOT DATE : 1/21/2014 9:33 AM PLOT BY : WAGNER, SCOTT H PLOT NAME : PLOT SCALE : **********

WISDOT/CADDS SHEET 42

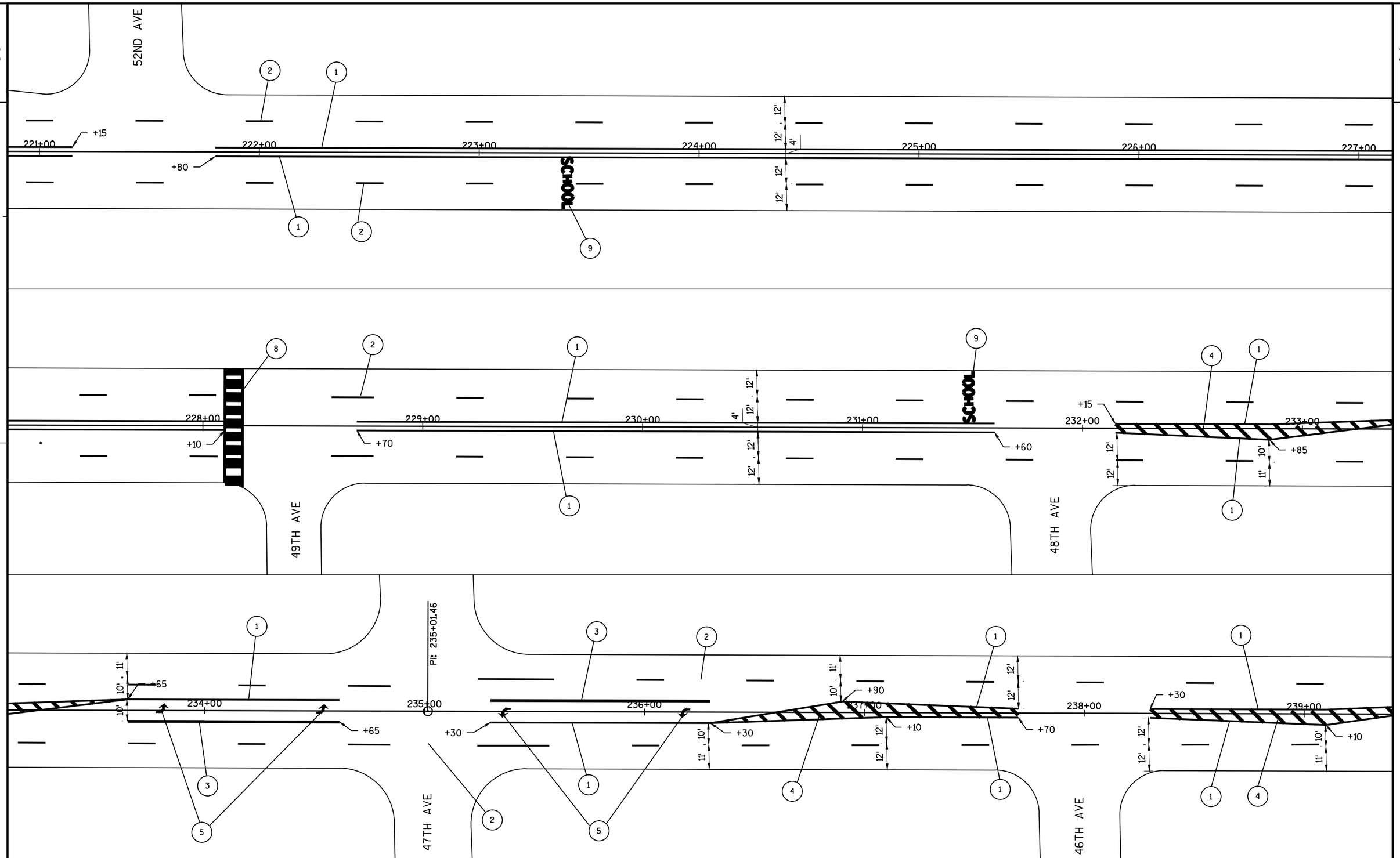

PROJECT NO:3220-03-62	HWY:STH 158	COUNTY:KENOSHA	PAVEMENT MARKING	SHEET 62	E

FILE NAME : N:\PDS\C3D\CAD\32200302\024503_PM.DWG PLOT DATE : 1/21/2014 9:33 AM PLOT BY : WAGNER, SCOTT H PLOT NAME : PLOT SCALE : **********

WISDOT/CADDS SHEET 42

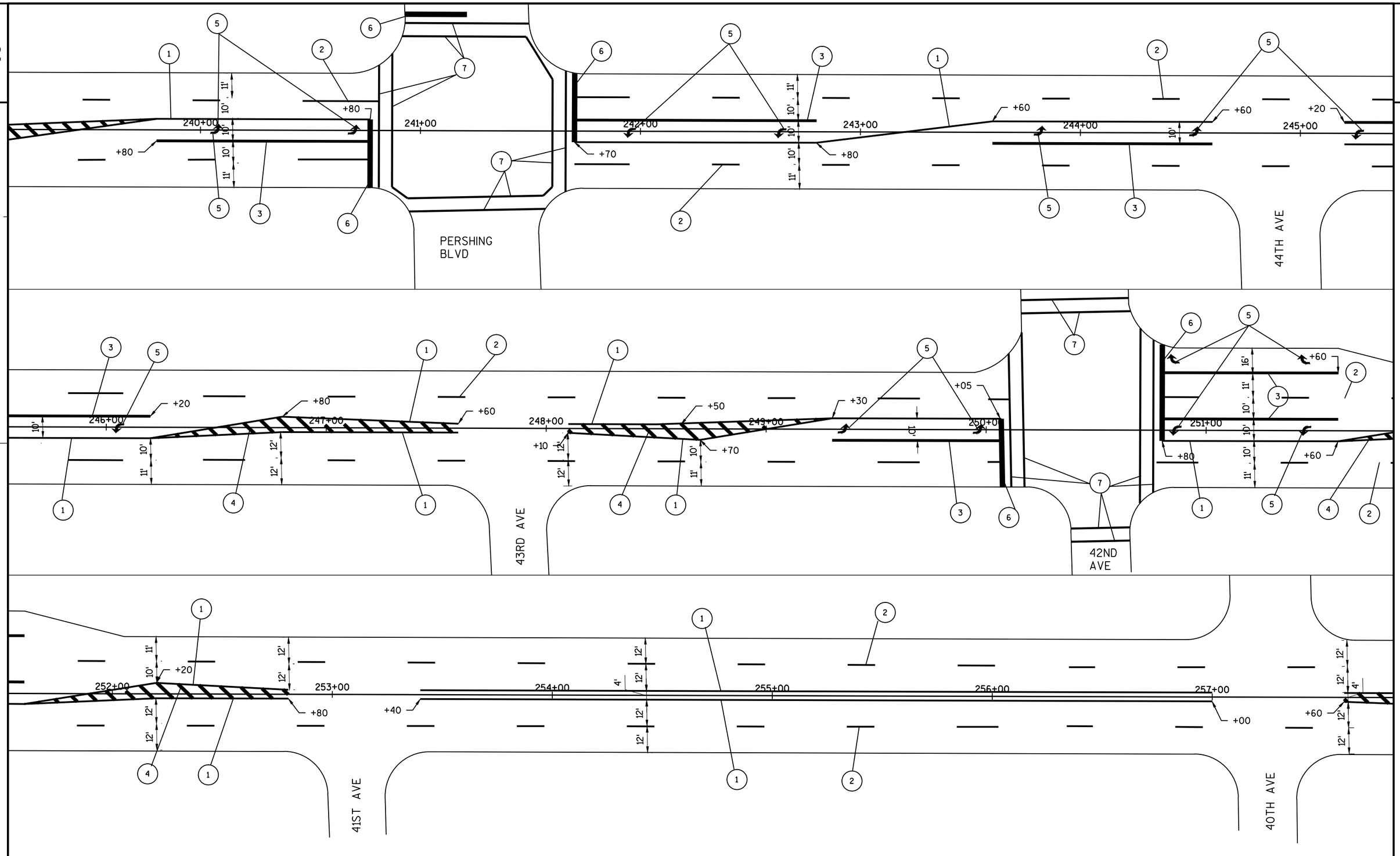

PROJECT NO:3220-03-62	HWY:STH 158	COUNTY:KENOSHA	PAVEMENT MARKING	SHEET 63	E

FILE NAME : N:\PDS\C3D\CAD\32200302\024504_PM.DWG PLOT DATE : 1/22/2014 9:44 AM PLOT BY : WAGNER, SCOTT H PLOT NAME : PLOT SCALE : **********

WISDOT/CADDS SHEET 42

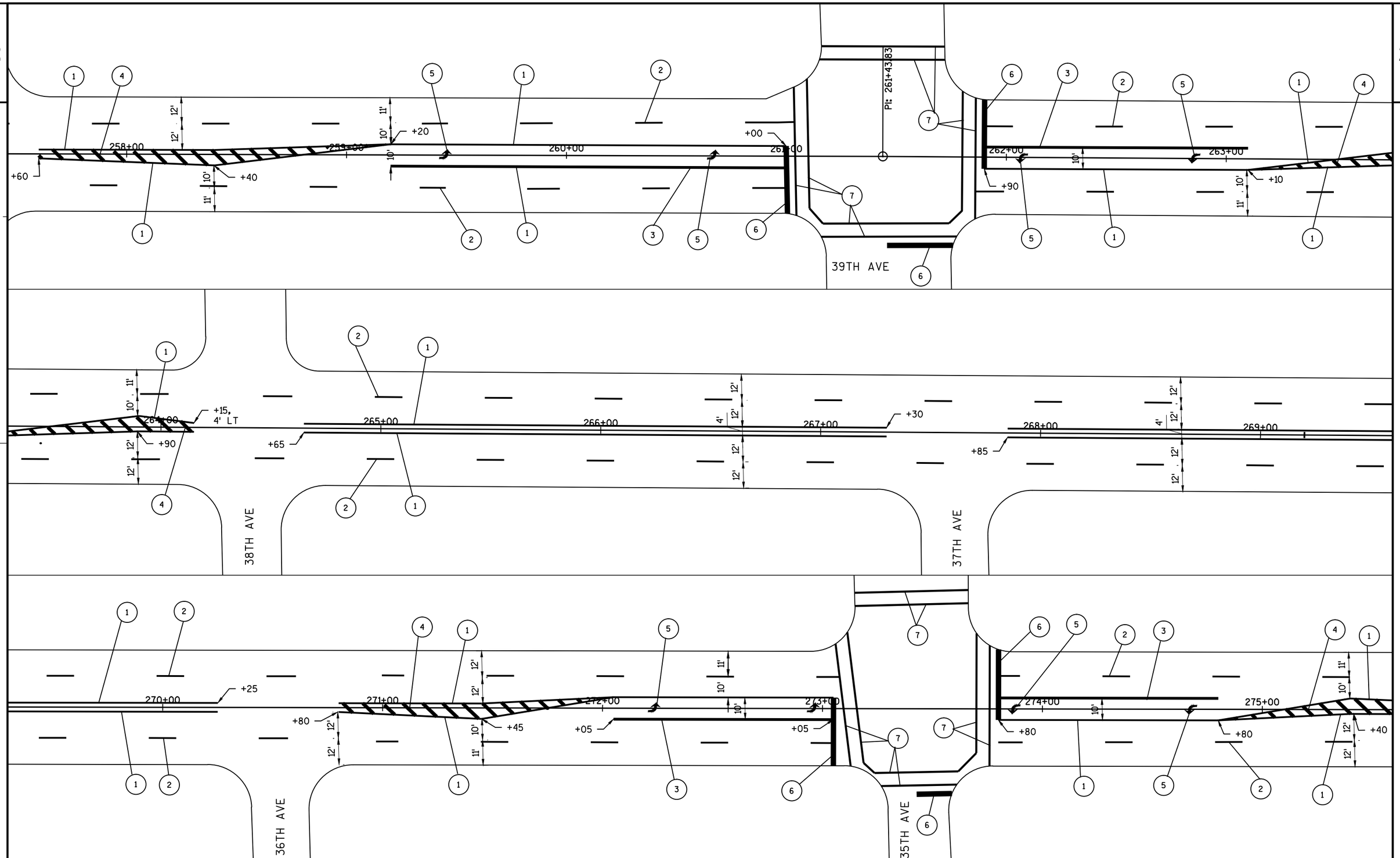

PROJECT NO:3220-03-62	HWY:STH 158	COUNTY:KENOSHA	PAVEMENT MARKING	SHEET 64	E

FILE NAME : N:\PDS\C3D\CAD\32200302\024505_PM.DWG PLOT DATE : 1/21/2014 9:33 AM PLOT BY : WAGNER, SCOTT H PLOT NAME : PLOT SCALE : **********

WISDOT/CADDS SHEET 42

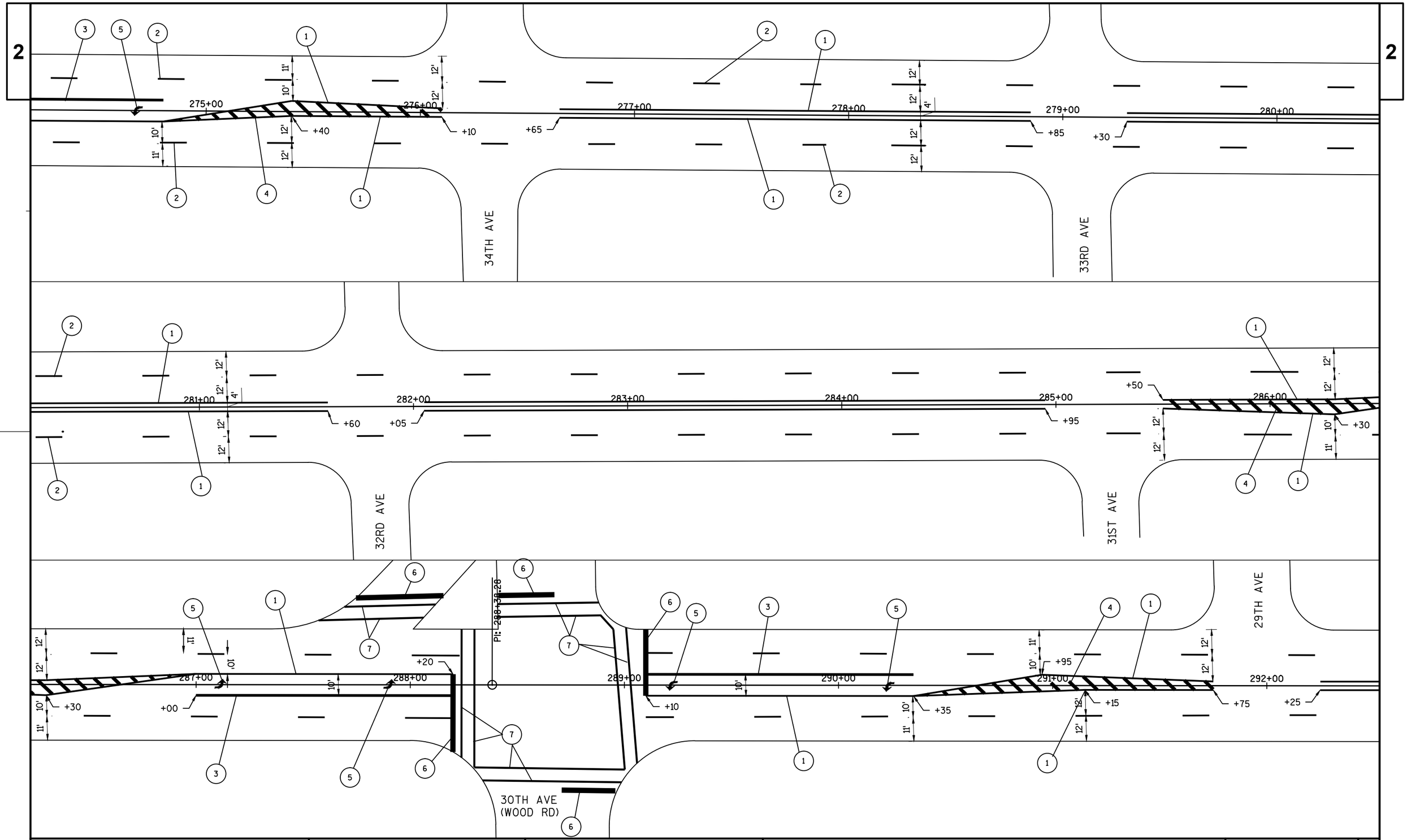

PROJECT NO:3220-03-62	HWY:STH 158	COUNTY:KENOSHA	PAVEMENT MARKING	SHEET 65	E

FILE NAME : N:\PDS\C3D\CAD\32200302\024506_PM.DWG PLOT DATE : 1/21/2014 9:33 AM PLOT BY : WAGNER, SCOTT H PLOT NAME : PLOT SCALE : **********

WISDOT/CADDS SHEET 42

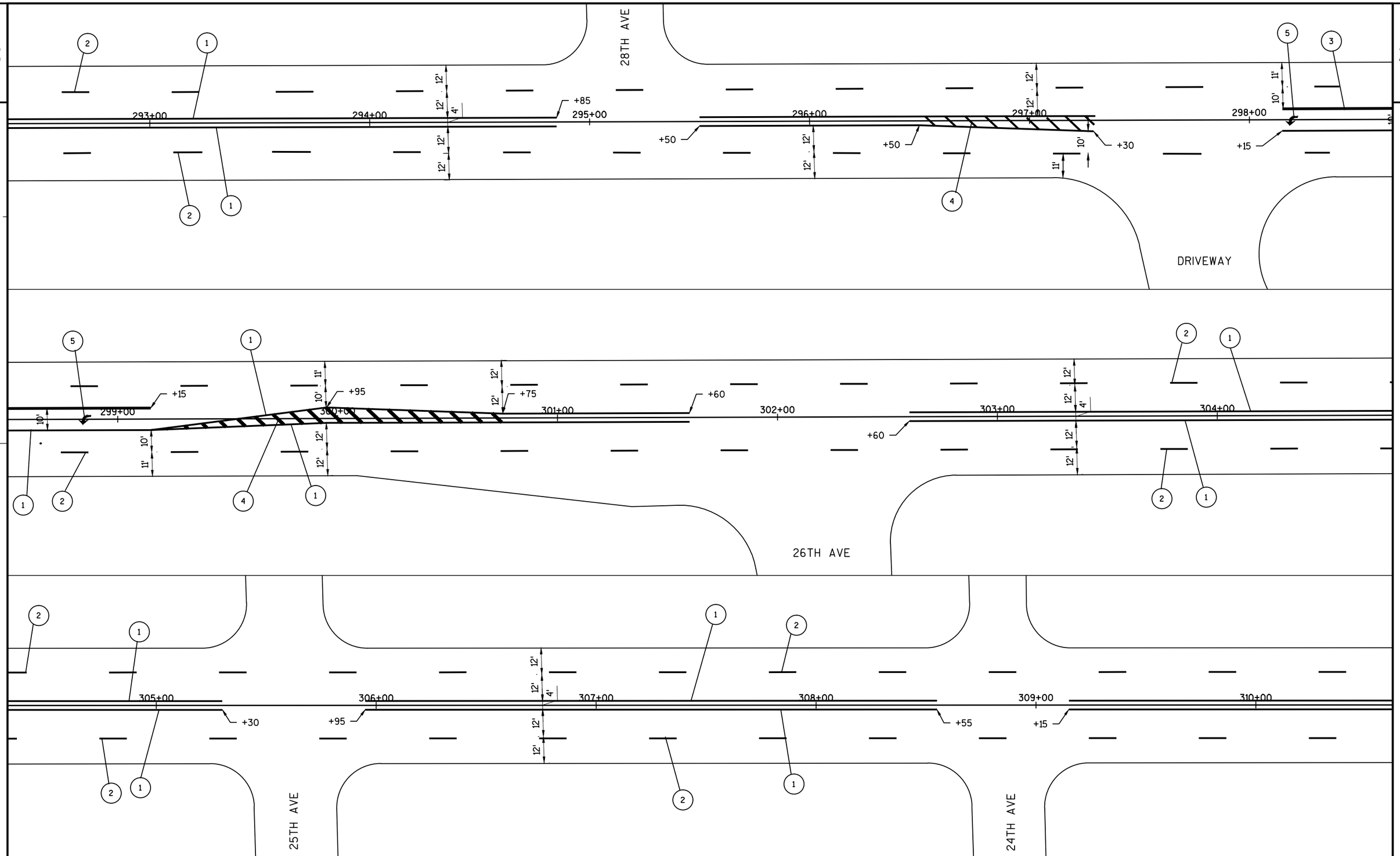

PROJECT NO:3220-03-62	HWY:STH 158	COUNTY:KENOSHA	PAVEMENT MARKING	SHEET 66	E

FILE NAME : N:\PDS\C3D\CAD\32200302\024507_PM.DWG PLOT DATE : 1/21/2014 9:33 AM PLOT BY : WAGNER, SCOTT H PLOT NAME : PLOT SCALE : **********

WISDOT/CADDS SHEET 42

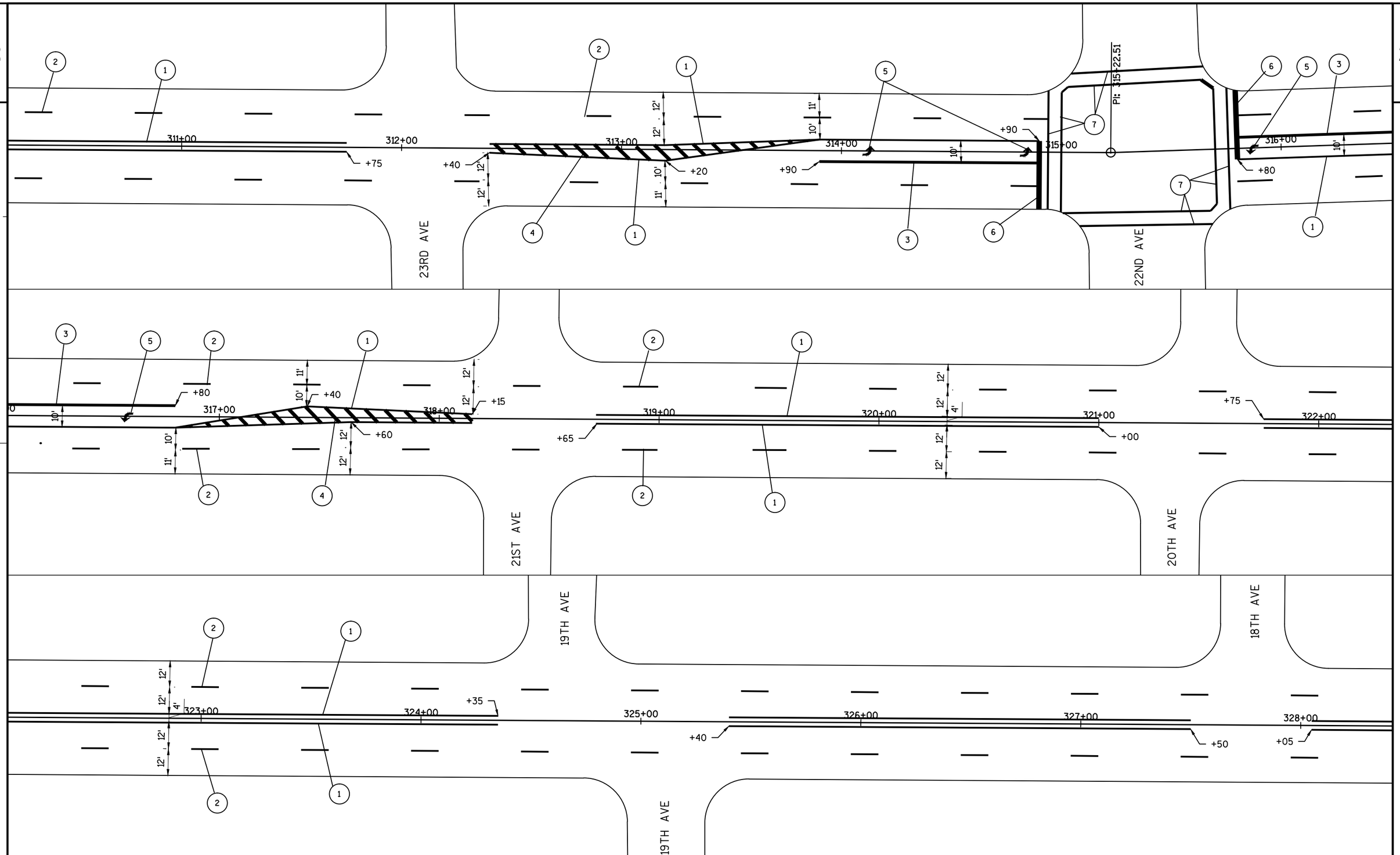

PROJECT NO:3220-03-62	HWY:STH 158	COUNTY:KENOSHA	PAVEMENT MARKING	SHEET 67	E

FILE NAME : N:\PDS\C3D\CAD\32200302\024509_PM.DWG PLOT DATE : 1/21/2014 9:33 AM PLOT BY : WAGNER, SCOTT H PLOT NAME : PLOT SCALE : **********

WISDOT/CADDS SHEET 42

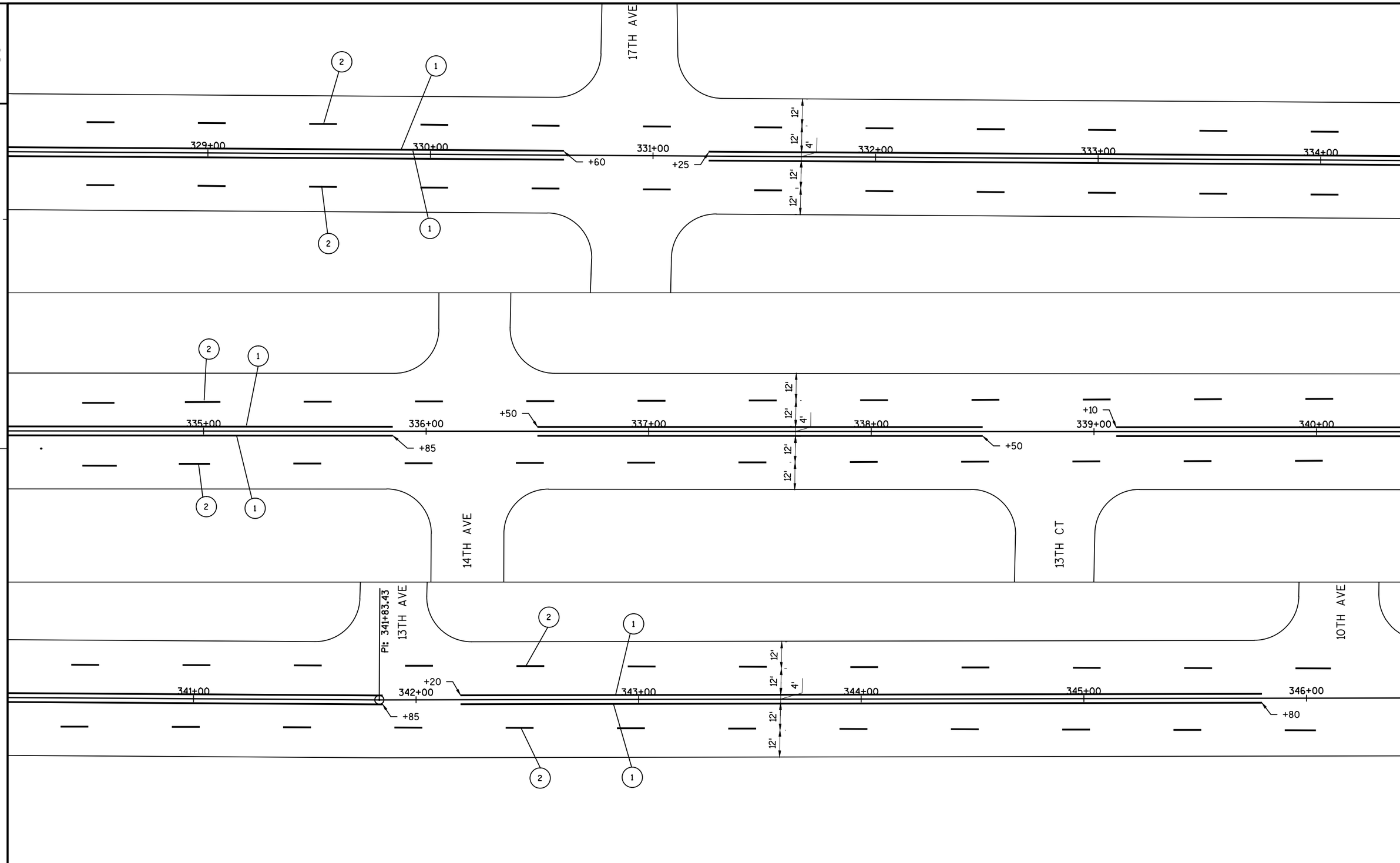

PROJECT NO:3220-03-62	HWY:STH 158	COUNTY:KENOSHA	PAVEMENT MARKING	SHEET 68	E

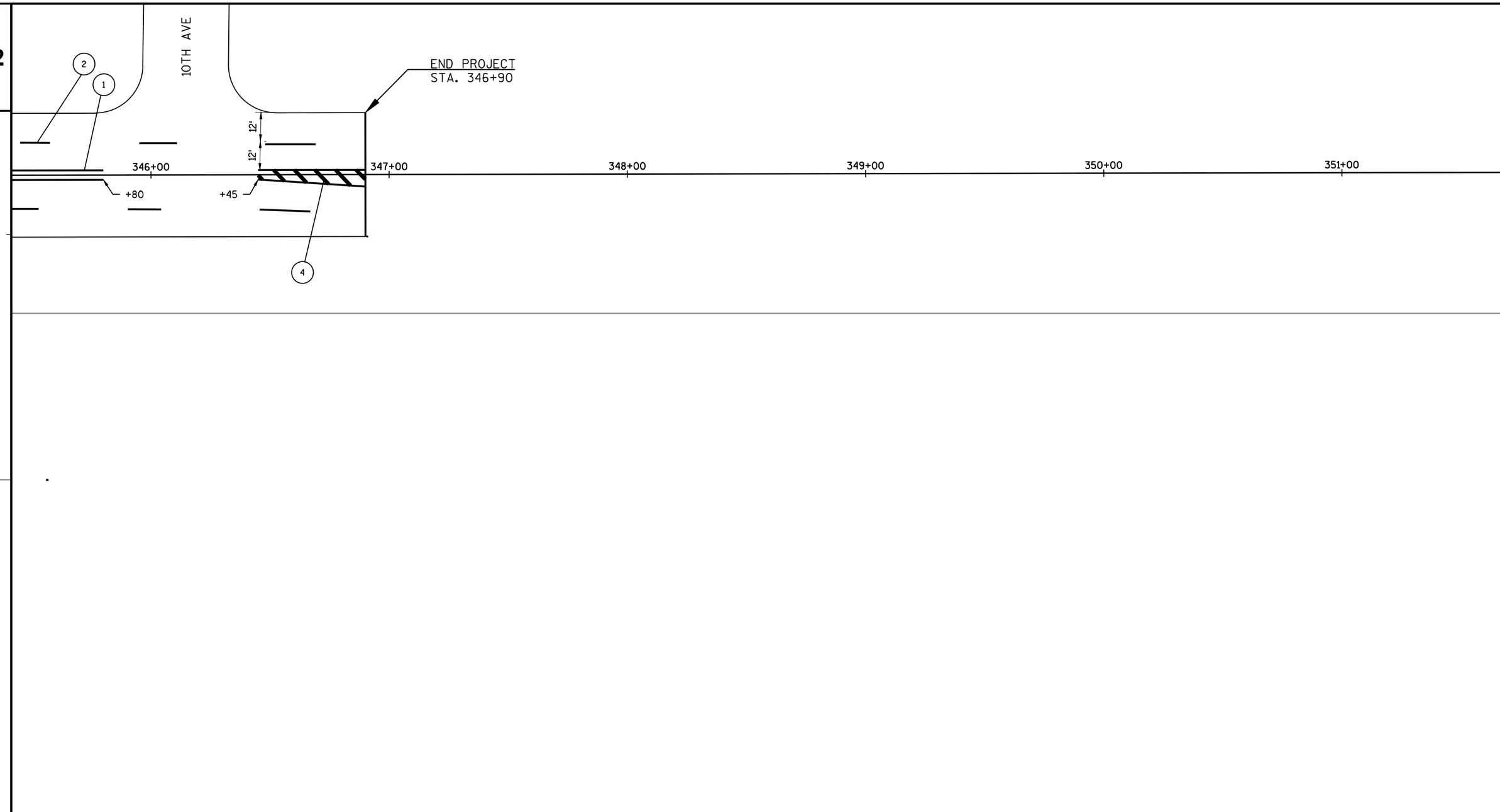

PROJECT NO:3220-03-62	HWY:STH 158	COUNTY:KENOSHA	PAVEMENT MARKING	SHEET 69	E

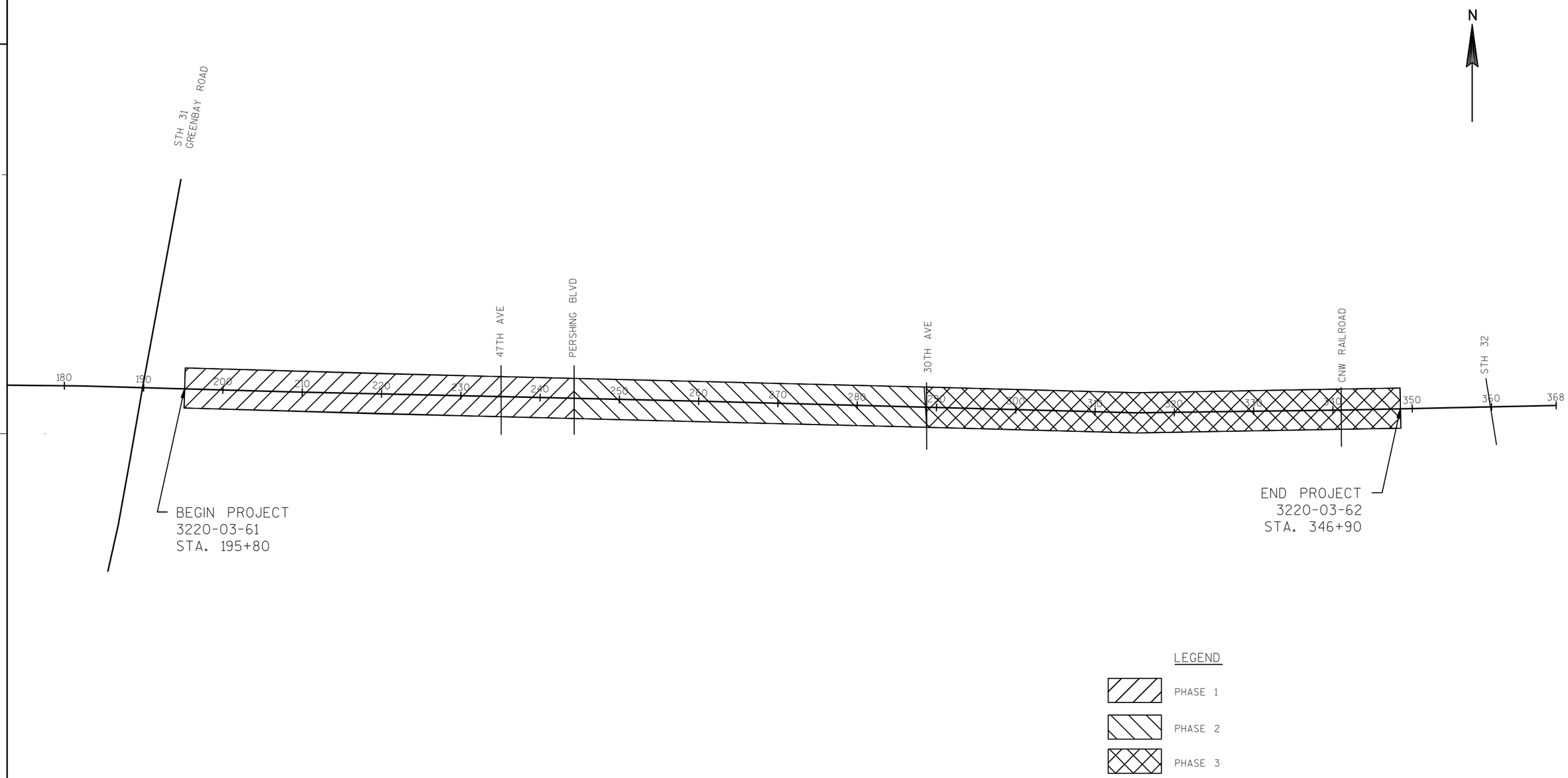
N
STH 31
GREENBAY ROAD
47TH AVE
PERSHING BLVD
30TH AVE
CNW RAILROAD
STH 32
180
190
200
210
220
230
240
250
260
270
280
290
300
310
320
330
340
350
360
368
BEGIN PROJECT
3220-03-61
STA. 195+80
END PROJECT
3220-03-62
STA. 346+90
LEGEND
PHASE 1
PHASE 2
PHASE 3

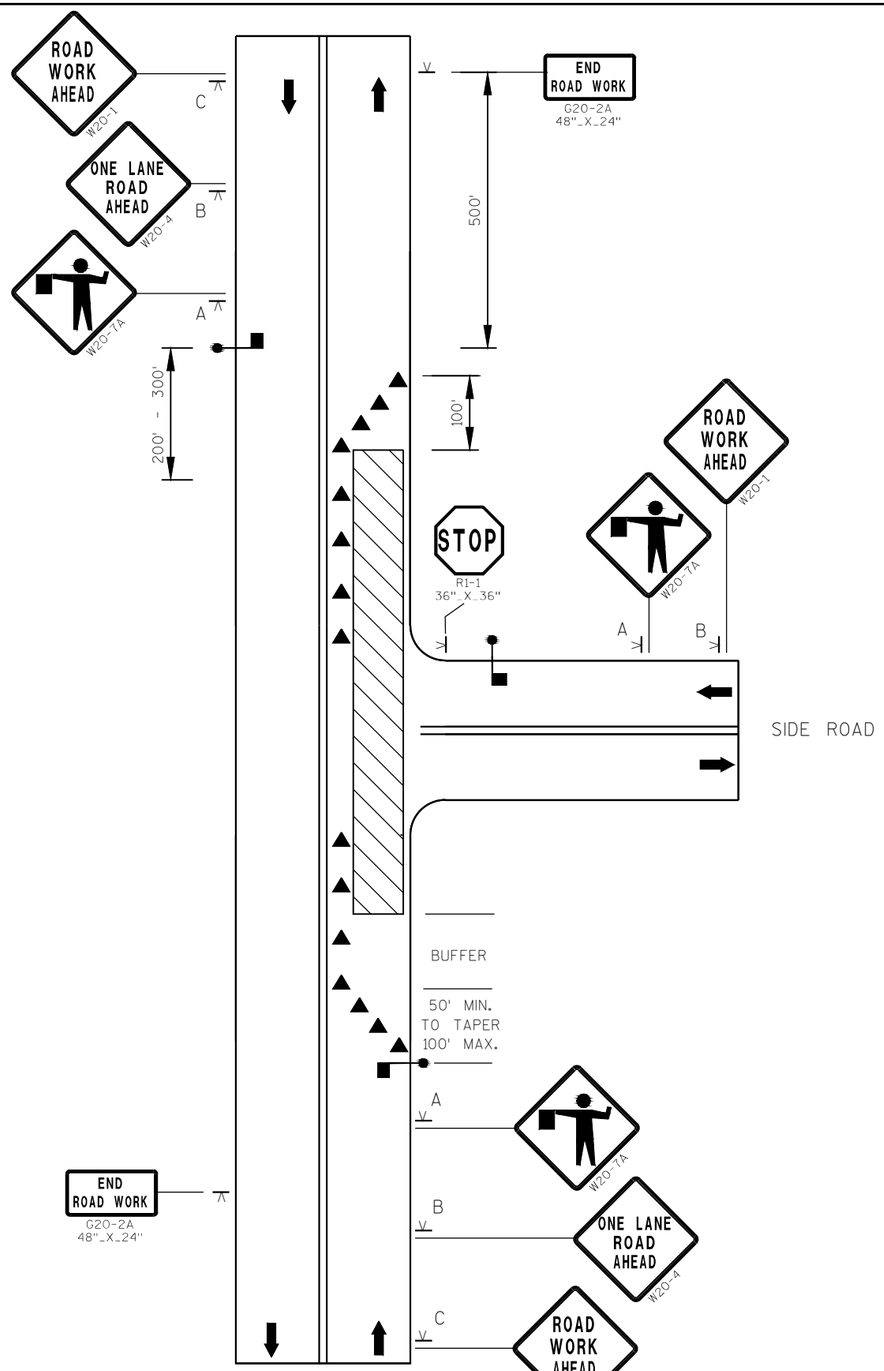

LANE CLOSURE THROUGH AN INTERSECTION
FLAGGER ON SIDE ROAD
(WORK AREA ON THROUGH ROAD)

LEGEND

- CHANNELIZING DEVICE
- PORTABLE SIGN SUPPORT
- WORK AREA
- TRAFFIC FLOW
- FLAGGER

SPEED LIMIT (MPH)	SIGN SPACING A, B, C ,(FT)	BUFFER (FT)
25	200	55
30	200	85
35	350	120
40	350	170
45	500	220
50	500	280
55	500	335

NOTES

1. DEPENDING ON TRAFFIC CONDITIONS, CONSIDER ADDITIONAL TRAFFIC CONTROL ON THE SIDE ROAD APPROACHES, SUCH AS FLAGGERS AND APPROPRIATE SIGNS.

GENERAL NOTES

DETAILS OF TRAFFIC CONTROL DEVICES AND INSTALLATION NOT SHOWN ON THIS DRAWING SHALL CONFORM TO THE PERTINENT REQUIREMENTS OF THE STANDARD SPECIFICATION, THE SPECIAL PROVISIONS, AND THE MANUAL ON UNIFORM TRAFFIC CONTROL DEVICES.

THE EXACT NUMBER, LOCATION AND SPACING OF ALL SIGNS AND DEVICES (AND THE LOCATION OF ALL FLAGGERS) SHALL BE ADJUSTED TO FIT FIELD CONDITIONS AS DIRECTED BY THE ENGINEER.

THE FIRST ADVANCE WARNING SIGN SHOULD TYPICALLY BE LOCATED IN ADVANCE OF THE ANTICIPATED TRAFFIC BACKUP QUEUE.

FLAGGERS SHALL BE IN SIGHT OF EACH OTHER OR IN DIRECT COMMUNICATION AT ALL TIMES. THEY SHALL BE EQUIPPED WITH STOP/SLOW PADDLES FASTENED ON SUPPORT STAFFS. WHEN THE FLAGGING OPERATION IS NOT IN EFFECT, THE "FLAGGER AHEAD", THE "ROAD CONSTRUCTION AHEAD" AND THE ONE LANE ROAD AHEAD" SIGN SHALL BE COVERED OR REMOVED AND THE HIGHWAY RESTORED TO NORMAL OPERATION.

ALL SIGNS ARE 48" X 48" UNLESS OTHERWISE NOTED.

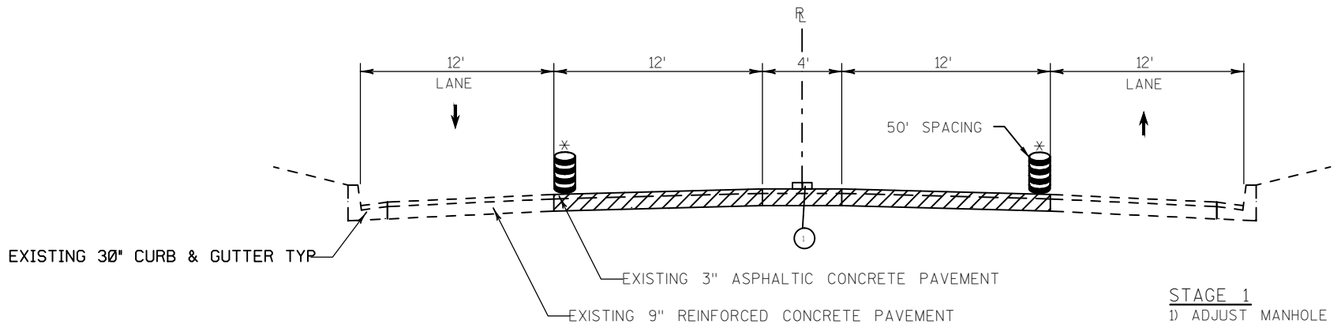

STAGE 1
PHASE 1,2,3

STAGE 1
1) ADJUST MANHOLE COVERS
2) BASE PATCHING SHES CONCRETE
3) MILL 3" ASPHALTIC PAVEMENT
4) PAVE 2½" OF HMA PAVEMENT TYPE E-3.
5) TEMPORARY PAVEMENT MARKINGS (4" YELLOW TAPE)

* EXCEPT IN THE IMMEDIATE VICINITY OF MILLING AND PAVING OPERATIONS RESET DRUMS AS SOON AS POSSIBLE

LIMITS OF WORK

PAVEMENT MARKING EPOXY 4-INCH (DOUBLE YELLOW)

(1) TEMPORARY PAVEMENT MARKING REMOVABLE TAPE 4-INCH (YELLOW)

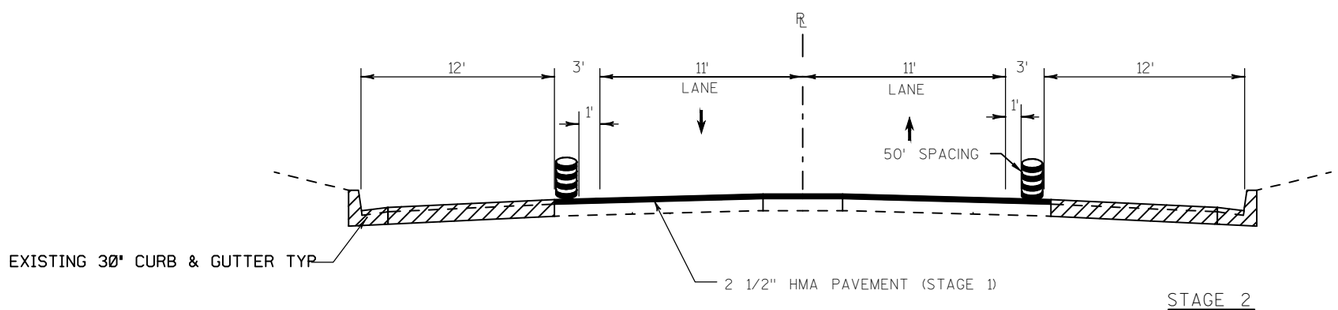

STAGE 2
PHASE 1,2,3

STAGE 2
1) ADJUST INLET / MANHOLE COVERS
2) BASE PATCHING SHES CONCRETE
3) MILL 3" ASPHALTIC PAVEMENT
4) PAVE 2½" OF HMA PAVEMENT TYPE E-3.
5) CONCRETE CURB, CURB RAMPS, SIDEWALK, DRIVEWAYS
6) PAVEMENT MARKINGS

LIMITS OF WORK

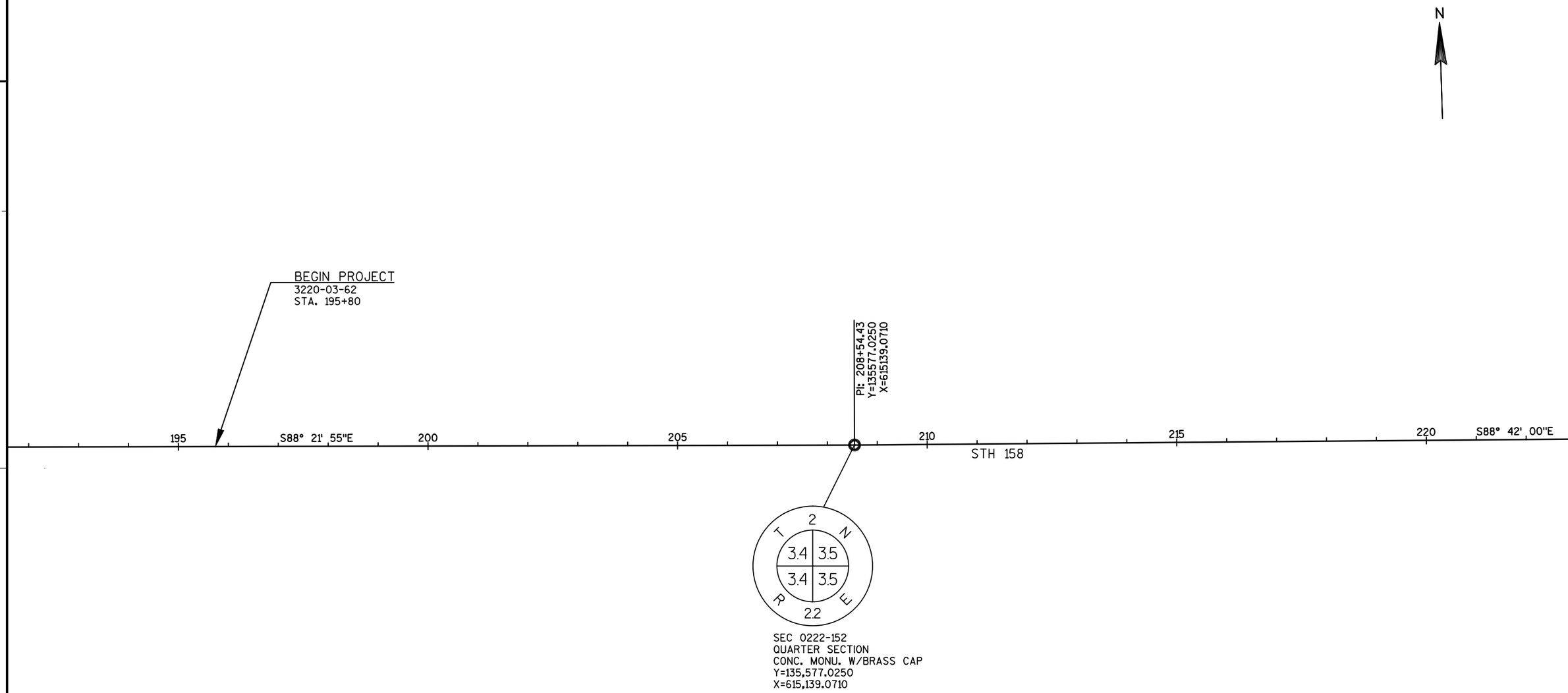

NOTE:

THIS PROJECT IS BASED ON WISDOT MONUMENT "SOMERS S GPS"
NAD 83 (2007) VALUES 42°36'14.73131" NORTH LATITUDE & 087°52'41.21507"
WEST LONGITUDE AND NAD 83 (2007) KENOSHA COUNTY COORDINATE VALUES
N 141,197.055963, E 614,396.467786 NAVD 88 (2007) ELEVATIONS 723.86

PROJECT NO:3220-03-62	HWY:STH 158	COUNTY:KENOSHA	ALIGNMENT PLAN	SHEET 73	E

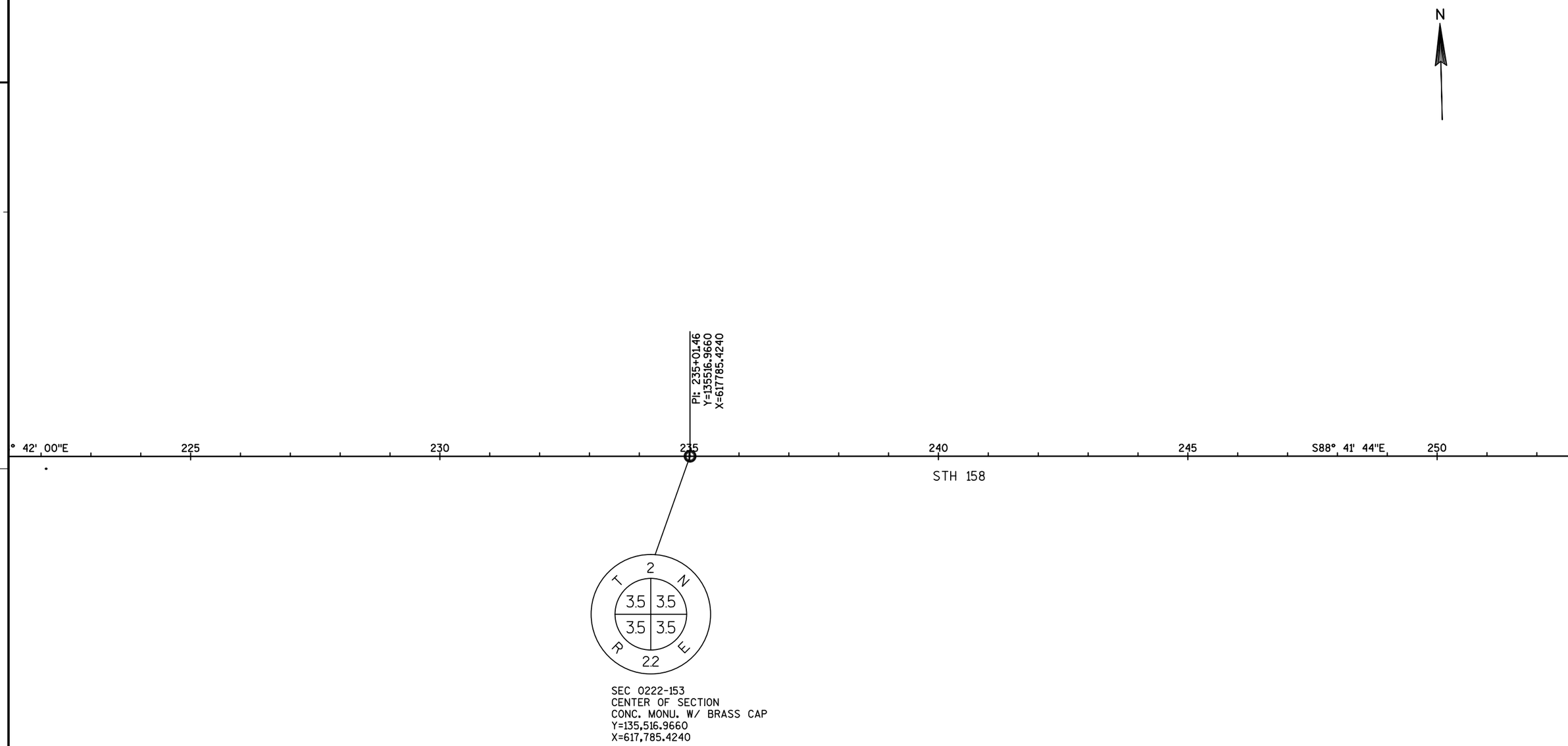
N
PI= 235+01.46
Y=135516.9660
X=617785.4240
° 42' 00"E
225
230
235
240
245
S88° 41' 44"E
250
STH 158
2
T
N
3.5
3.5
3.5
3.5
R
E
2.2
SEC 0222-153
CENTER OF SECTION
CONC. MONU. W/ BRASS CAP
Y=135,516.9660
X=617,785.4240

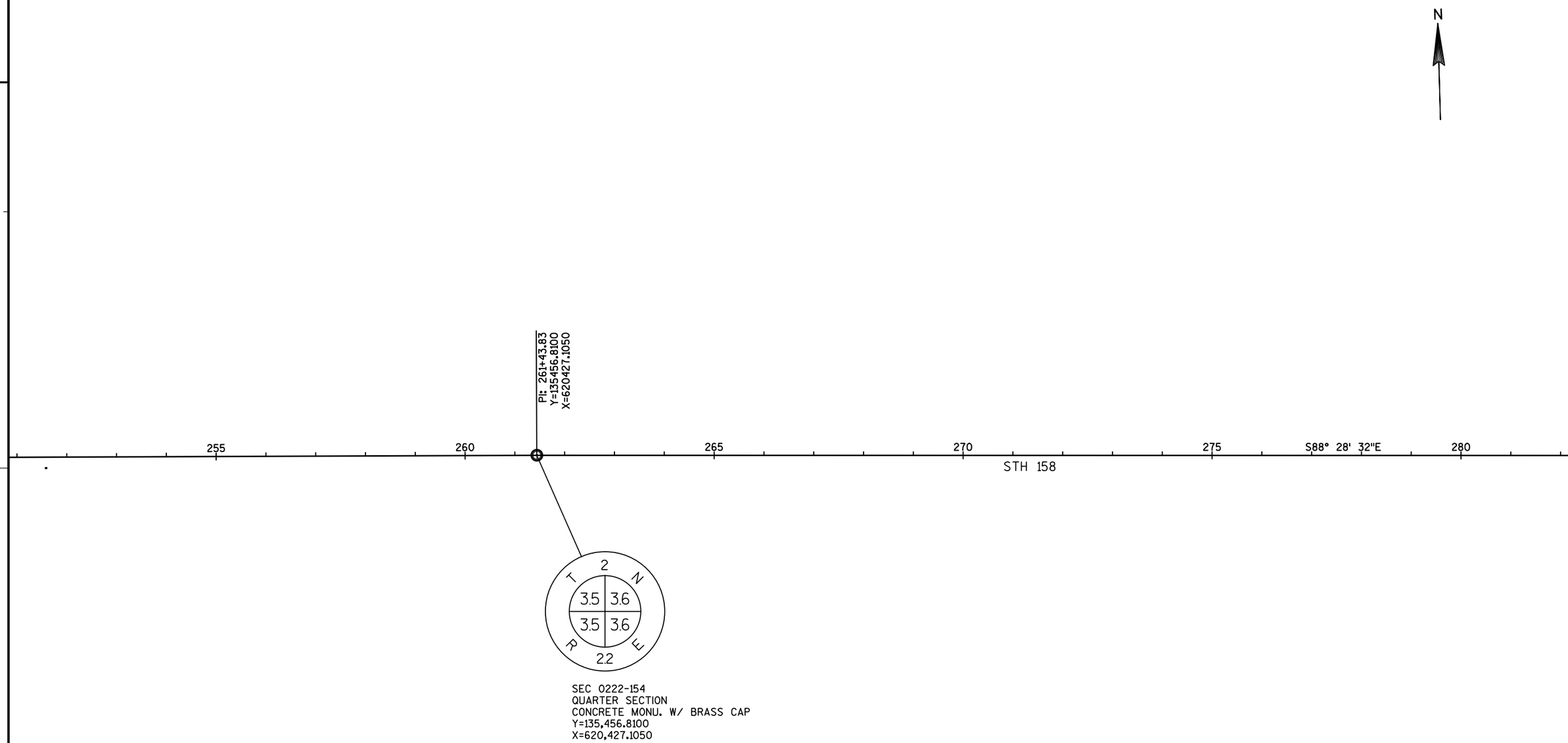

PROJECT NO:3220-03-62	HWY:STH 158	COUNTY:KENOSHA	ALIGNMENT PLAN	SHEET 75	E

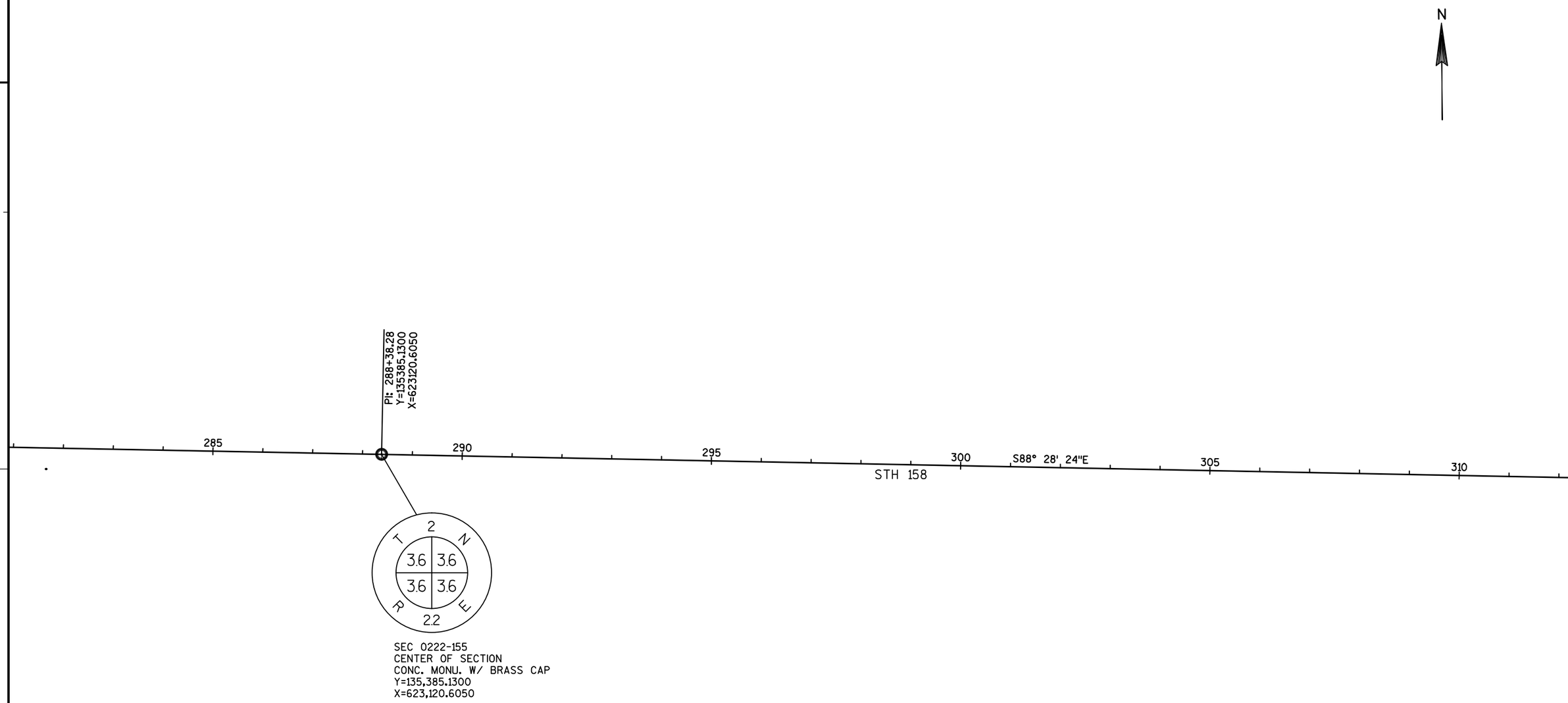

PROJECT NO:3220-03-62	HWY:STH 158	COUNTY:KENOSHA	ALIGNMENT PLAN	SHEET 76	E

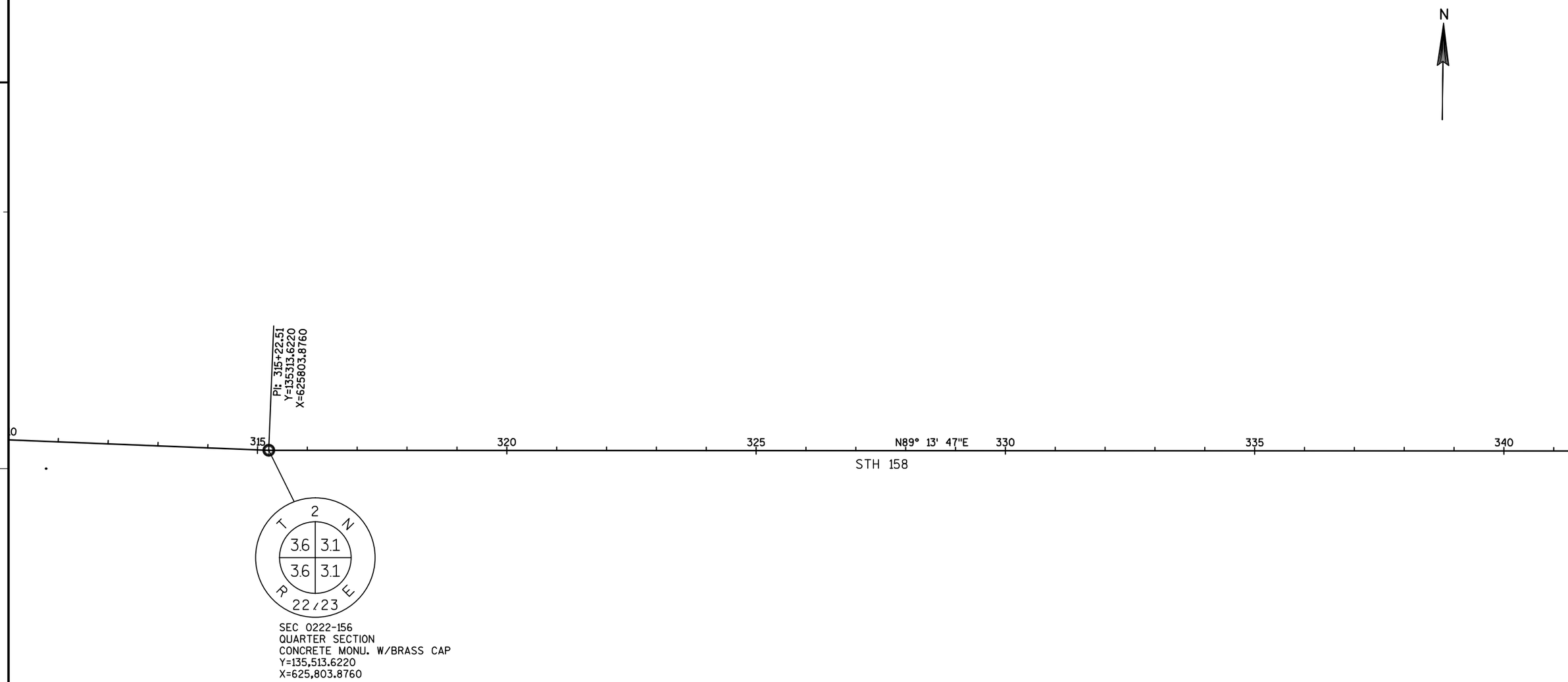
N
PI: 315+22.51
Y=135313.6220
X=625803.8760
0
315
320
325
N89° 13' 47"E
330
335
340
STH 158
2
T
N
3.6
3.1
3.6
3.1
R
E
22/23
SEC 0222-156
QUARTER SECTION
CONCRETE MONU. W/BRASS CAP
Y=135,513.6220
X=625,803.8760

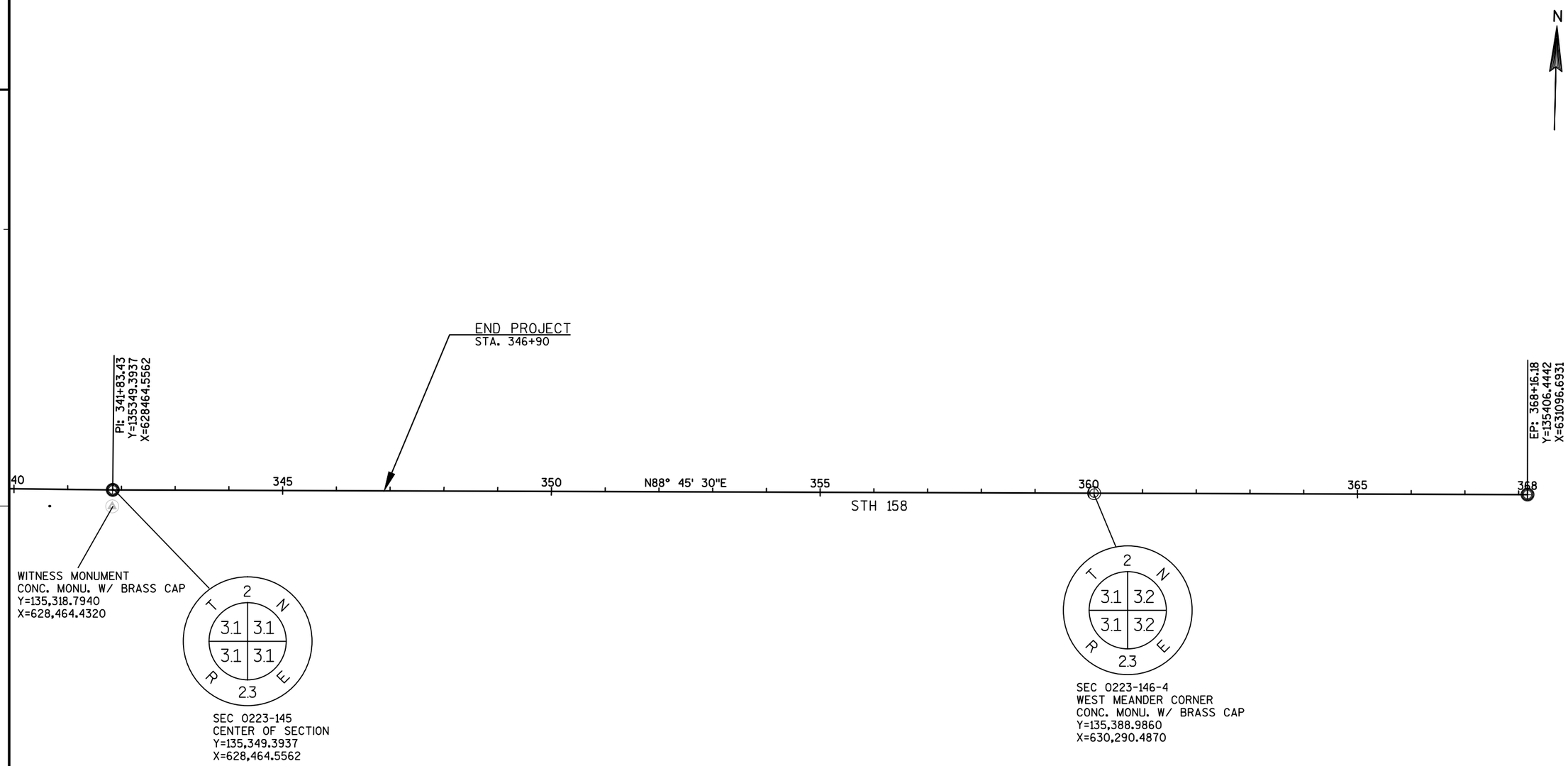

PROJECT NO:3220-03-62	HWY:STH 158	COUNTY:KENOSHA	ALIGNMENT PLAN	SHEET 78	E

3

DATE 30APR14 E S T I M A T E O F Q U A N T I T I E S

LINE NUMBER	ITEM	ITEM DESCRIPTION	UNIT	TOTAL	3220-03-62 QUANTITY
0010	204.0109.S	REMOVING CONCRETE SURFACE PARTIAL DEPTH	SF	433,100.000	433,100.000
0020	204.0120	REMOVING ASPHALTIC SURFACE MILLING	SY	95,700.000	95,700.000
0030	204.0150	REMOVING CURB & GUTTER	LF	1,905.000	1,905.000
0040	204.0155	REMOVING CONCRETE SIDEWALK	SY	545.000	545.000
0050	213.0100	FINISHING ROADWAY (PROJECT) 01. 3220-03-62	EACH	1.000	1.000
0060	305.0120	BASE AGGREGATE DENSE 1 1/4-INCH	TON	715.000	715.000
0070	390.0403	BASE PATCHING CONCRETE SHES	SY	2,810.000	2,810.000
0080	416.0610	DRILLED TIE BARS	EACH	2,086.000	2,086.000
0090	416.0620	DRILLED DOWEL BARS	EACH	5,760.000	5,760.000
0100	440.4410.S	INCENTIVE IRI RIDE	DOL	22,896.000	22,896.000
0110	455.0115	ASPHALTIC MATERIAL PG64-22	TON	755.000	755.000
0120	455.0605	TACK COAT	GAL	2,370.000	2,370.000
0130	460.1103	HMA PAVEMENT TYPE E-3	TON	13,700.000	13,700.000
0140	460.2000	INCENTIVE DENSITY HMA PAVEMENT	DOL	8,770.000	8,770.000
0150	465.0125	ASPHALTIC SURFACE TEMPORARY	TON	160.000	160.000
0160	601.0409	CONCRETE CURB & GUTTER 30-INCH TYPE A	LF	2,270.000	2,270.000
0170	601.0600	CONCRETE CURB PEDESTRIAN	LF	255.000	255.000
0180	602.0410	CONCRETE SIDEWALK 5-INCH	SF	7,850.000	7,850.000
0190	602.0505	CURB RAMP DETECTABLE WARNING FIELD YELLOW	SF	648.000	648.000
0200	611.0420	RECONSTRUCTING MANHOLES	EACH	1.000	1.000
0210	611.0430	RECONSTRUCTING INLETS	EACH	16.000	16.000
0220	611.0603	INLET COVERS TYPE A-S	EACH	2.000	2.000
0230	611.0639	INLET COVERS TYPE H-S	EACH	6.000	6.000
0240	611.8110	ADJUSTING MANHOLE COVERS	EACH	79.000	79.000
0250	611.8115	ADJUSTING INLET COVERS	EACH	96.000	96.000
0260	611.8120.S	COVER PLATES TEMPORARY	EACH	181.000	181.000
0270	619.1000	MOBILIZATION	EACH	1.000	1.000
0280	625.0500	SALVAGED TOPSOIL	SY	740.000	740.000
0290	628.1504	SILT FENCE	LF	100.000	100.000
0300	628.1520	SILT FENCE MAINTENANCE	LF	100.000	100.000
0310	628.1905	MOBILIZATIONS EROSION CONTROL	EACH	6.000	6.000
0320	628.1910	MOBILIZATIONS EMERGENCY EROSION CONTROL	EACH	10.000	10.000
0330	628.7015	INLET PROTECTION TYPE C	EACH	25.000	25.000
0340	628.7020	INLET PROTECTION TYPE D	EACH	147.000	147.000
0350	628.7570	ROCK BAGS	EACH	10.000	10.000
0360	629.0210	FERTILIZER TYPE B	CWT	0.480	0.480
0370	630.0200	SEEDING TEMPORARY	LB	15.000	15.000
0380	631.0300	SOD WATER	MGAL	18.000	18.000
0390	631.1000	SOD LAWN	SY	740.000	740.000
0400	634.0816	POSTS TUBULAR STEEL 2X2-INCH X 16-FT	EACH	101.000	101.000
0410	637.2210	SIGNS TYPE II REFLECTIVE H	SF	1,186.398	1,186.398
0420	637.2215	SIGNS TYPE II REFLECTIVE H FOLDING	SF	201.420	201.420
0430	637.2230	SIGNS TYPE II REFLECTIVE F	SF	115.500	115.500
0440	638.2602	REMOVING SIGNS TYPE II	EACH	234.000	234.000
0450	638.3000	REMOVING SMALL SIGN SUPPORTS	EACH	69.000	69.000
0460	642.5401	FIELD OFFICE TYPE D	EACH	1.000	1.000
0470	643.0200	TRAFFIC CONTROL SURVEILLANCE AND MAINTENANCE (PROJECT) 01. 3220-03-62	DAY	202.000	202.000
0480	643.0300	TRAFFIC CONTROL DRUMS	DAY	103,171.000	103,171.000
0490	643.0410	TRAFFIC CONTROL BARRICADES TYPE II	DAY	6,732.000	6,732.000
0500	643.0420	TRAFFIC CONTROL BARRICADES TYPE III	DAY	11,889.000	11,889.000
0510	643.0705	TRAFFIC CONTROL WARNING LIGHTS TYPE A	DAY	30,510.000	30,510.000

3

3

DATE 30APR14 E S T I M A T E O F Q U A N T I T I E S

LINE NUMBER	ITEM	ITEM DESCRIPTION	UNIT	TOTAL	3220-03-62 QUANTITY
0520	643.0715	TRAFFIC CONTROL WARNING LIGHTS TYPE C	DAY	48,611.000	48,611.000
0530	643.0900	TRAFFIC CONTROL SIGNS	DAY	33,474.000	33,474.000
0540	643.1050	TRAFFIC CONTROL SIGNS PCMS	DAY	40.000	40.000
0550	646.0106	PAVEMENT MARKING EPOXY 4-INCH	LF	45,300.000	45,300.000
0560	646.0881.S	PAVEMENT MARKING GROOVED WET REFLECTIVE TAPE 4-INCH	LF	7,550.000	7,550.000
0570	646.0883.S	PAVEMENT MARKING GROOVED WET REFLECTIVE TAPE 8-INCH	LF	2,280.000	2,280.000
0580	647.0726	PAVEMENT MARKING DIAGONAL EPOXY 12-INCH	LF	2,010.000	2,010.000
0590	649.0400	TEMPORARY PAVEMENT MARKING REMOVABLE TAPE 4-INCH	LF	27,980.000	27,980.000
0600	650.5500	CONSTRUCTION STAKING CURB GUTTER AND CURB & GUTTER	LF	1,180.000	1,180.000
0610	650.8000	CONSTRUCTION STAKING RESURFACING REFERENCE	LF	15,110.000	15,110.000
0620	650.9910	CONSTRUCTION STAKING SUPPLEMENTAL CONTROL (PROJECT) 01. 3220-03-62	LS	1.000	1.000
0630	653.0900	ADJUSTING PULL BOXES	EACH	2.000	2.000
0640	690.0150	SAWING ASPHALT	LF	2,690.000	2,690.000
0650	690.0250	SAWING CONCRETE	LF	21,910.000	21,910.000
0660	SPV.0060	SPECIAL 01. ADJUSTING SANITARY MANHOLE COVERS	EACH	95.000	95.000
0670	SPV.0060	SPECIAL 02. ADJUSTING WATER VALVES	EACH	127.000	127.000
0680	SPV.0060	SPECIAL 03. ADJUSTING WATER VAULT	EACH	6.000	6.000
0690	SPV.0060	SPECIAL 04. PAVEMENT MARKING GROOVED PREFORMED THERMOPLASTIC ARROWS TYPE 2	EACH	44.000	44.000
0700	SPV.0060	SPECIAL 05. PAVEMENT MARKING GROOVED PREFORMED THERMOPLASTIC WORDS	EACH	2.000	2.000
0710	SPV.0090	SPECIAL 01. PAVEMENT MARKING GROOVED PRE FORMED THERMOPLASTIC STOP LINE 18-INCH	LF	620.000	620.000
0720	SPV.0090	SPECIAL 02. PAVEMENT MARKING GROOVED PREFORMED THERMOPLASTIC CROSSWALK 6-INCH	LF	2,880.000	2,880.000
0730	SPV.0090	SPECIAL 03. PAVEMENT MARKING GROOVED PRE FORMED THERMOPLASTIC CROSSWALK SPECIAL	LF	120.000	120.000
0740	SPV.0195	SPECIAL 01. JOINT AND CRACK REPAIR	TON	410.000	410.000

3

3

REMOVALS

LOCATION	204.0109.S REMOVING CONCRETE SURFACE PARTIAL DEPTH SF	204.0120 REMOVING ASPHALTIC SURFACE MILLING SY	204.0150 REMOVING CURB & GUTTER LF	204.0155 REMOVING CONCRETE SIDEWALK SY
STAGE 1				
STA 195+80 - PERSHING BLVD	127,000	14,400	--	--
PERSHING BLVD - 30TH AVE	132,800	15,200	--	--
30TH AVE - STA 346+90	163,200	18,400	--	--
STAGE 2				
STA 195+80 - PERSHING BLVD	2,100	14,300	670	200
PERSHING BLVD - 30TH AVE	4,150	15,400	675	240
30TH AVE - STA 346+90	3,850	18,000	560	105
TOTAL	433,100	95,700	1,905	545

BASE AGGREGATE DENSE

LOCATION	305.0120 1 1/4-INCH TON
CATEGORY 0010	
STAGE 1	40
STAGE 2**	495
CATEGORY 0020	
STAGE 1	105
STAGE 2	75
CATEGORY 0010 TOTAL	535
CATEGORY 0020 TOTAL	180

** 3" DEPTH UNDER CONCRETE SIDEWALK,
6" DEPTH UNDER CONCRETE CURB AND GUTTER

SAWING

LOCATION	690.0150 SAWING ASPHALT LF	690.0250 SAWING CONCRETE LF
STAGE 1	170	6,800
STAGE 2	2,520	11,860
TOTAL	2,690	18,660

3

ASPHALT

LOCATION	455.0115 ASPHALTIC MATERIAL PG64-22 TON	455.0605 TACK COAT GAL	460.1103 HMA PAVEMENT TYPE E-3 TON	465.0125 ASPHALTIC SURFACE TEMPORARY TON	SPV.0195.01 JOINT AND CRACK REPAIR TON
STAGE 1					
UNDISTRIBUTED	--	--	--	--	200
STA 195+80 - PERSHING BLVD	110	350	2,030	--	--
PERSHING BLVD - 30TH AVE	115	370	2,120	5	--
30TH AVE - STA 346+90	145	450	2,610	2	--
STAGE 2					
UNDISTRIBUTED	--	--	--	--	210
STA 195+80 - PERSHING BLVD	115	360	2,080	35	--
PERSHING BLVD - 30TH AVE	125	390	2,250	65	--
30TH AVE - STA 346+90	145	450	2,610	53	--
TOTAL	755	2,370	13,700	160	410

CONCRETE

LOCATION	390.0403 BASE PATCHING CONCRETE SHES SY	* 416.0610 DRILLED TIE BARS EACH	416.0620 DRILLED DOWEL BARS EACH	601.0409 CONCRETE CURB & GUTTER 30-INCH TYPE A LF	601.0600 CONCRETE CURB PEDESTRIAN LF	602.0410 CONCRETE SIDEWALK 5-INCH SF	602.0505 CURB RAMP DETECTABLE WARNING FIELD YELLOW SF
STAGE 1							
UNDISTRIBUTED	1,410	--	2,820	--	--	--	--
STAGE 2							
UNDISTRIBUTED	1,400	--	2,940	--	--	--	--
STA 195+80 - PERSHING BLVD	--	285	--	760	30	3,400	288
PERSHING BLVD - 30TH AVE	--	258	--	770	130	2,950	256
30TH AVE - STA 346+90	--	95	--	740	95	1,500	104
TOTAL	2,810	638	5,760	2,270	255	7,850	648

NOTE: UNLESS OTHERWISE NOTED, ALL ITEMS ARE CATEGORY 0010
* ADDITIONAL QUANTITIES SHOWN ELSEWHERE

3

EXISTING DRAINAGE STRUCTURE WORK*

No.	STATION	OFFSET	EXISTING STRUCTURE TYPE		COVER TYPE	WORK CODE	EROSION CONTROL INLET PROTECTION	REMARKS
1	198+35	26' LT	INLET	2 x 2 - FT	A-S	A	D	--
2	198+02	26' RT	INLET	2 x 2 - FT	A-S	A	D	--
3	198+30	18.8' RT	MANHOLE	4-FT DIA	C	B	--	--
4	200+46	17.8' RT	MANHOLE	4-FT DIA	C	B	--	--
5	202+40	26' RT	INLET	2 x 2 - FT	A-S	A	D	--
6	202+64	18.7' RT	MANHOLE	4-FT DIA	C	B	--	--
7	202+65	26' LT	INLET	2 x 2 - FT	A-S	A	D	--
8	205+15	26' RT	INLET	2 x 2 - FT	A-S	A	D	--
9	205+13	18' RT	MANHOLE	5-FT DIA	C	B	--	--
10	205+25	26' LT	INLET	2 x 2 - FT	A-S	A	D	--
11	208+09	26' RT	INLET	2 x 2 - FT	A-S	--	D	NO WORK REQUIRED
12	208+25	18.3' RT	MANHOLE	5-FT DIA	C	B	--	--
13	208+38	43' RT	INLET	2 x 2 - FT	A-S	--	C	NO WORK REQUIRED
14	208+64	43' RT	INLET	2 x 2 - FT	A-S	--	C	NO WORK REQUIRED
15	208+83	26' LT	MANHOLE	4-FT DIA	C	B	--	--
16	210+85	26' RT	INLET	2 x 2 - FT	A-S	A	D	--
17	211+20	18' RT	MANHOLE	5-FT DIA	C	B	--	--
18	211+15	55' RT	INLET	2 x 2 - FT	A-S	F	D	--
19	211+41	54.5' RT	MANHOLE	4-FT DIA	C	--	--	NO WORK REQUIRED
20	211+14	31.4' LT	INLET	2 x 2 - FT	A-S	A	D	--
21	215+55	26' RT	INLET	2 x 2 - FT	A-S	A	D	--
22	215+76	19.1' RT	MANHOLE	5-FT DIA	C	B	--	--
23	215+55	26' LT	INLET	2 x 2 - FT	A-S	A	D	--
24	219+75	26 ' RT	INLET	2 x 2 - FT	SLOTS	A	D	--
25	220+05	18.7' RT	MANHOLE	5-FT DIA	C	B	--	--
26	220+15	35.1' RT	INLET	2 x 2 - FT	A-S	A	D	--
27	220+05	55.1 ' RT	INLET	2 x 2 - FT	SLOTS	--	C	NO WORK REQUIRED
28	220+40	55.1' RT	INLET	2 x 2 - FT	SLOTS	--	C	NO WORK REQUIRED
29	223+22	26' RT	INLET	2 x 2 - FT	A-S	A	D	--
30	223+46	18.8' RT	MANHOLE	5-FT DIA	C	B	--	--
31	223+65	26' LT	INLET	2 x 2 - FT	A-S	A	D	--
32	225+90	18.6' RT	MANHOLE	5-FT DIA	C	B	--	--
33	228+09	26' RT	INLET	2 x 2 - FT	A-S	A	D	--
34	228+28	43' RT	INLET	2 x 2 - FT	A-S	A	C	--
35	228+25	19.7' RT	MANHOLE	5-FT DIA	C	B	--	--
36	228+32	18.5' RT	MANHOLE	5-FT DIA	C	B	--	--
37	228+55	44.2' RT	INLET	2 x 2 - FT	A-S	--	C	NO WORK REQUIRED
38	227+98	26' LT	INLET	2 x 2 - FT	A-S	A	D	--
39	228+27	42.7' LT	MANHOLE	4-FT DIA	C	--	--	NO WORK REQUIRED
40	231+47	26' RT	INLET	2 x 2 - FT	A-S	A	D	--
41	231+73	18.7' RT	MANHOLE	5-FT DIA	C	B	--	--
42	231+65	26' LT	INLET	2 x 2 - FT	A-S	A	D	--
43	234+60	26' RT	INLET	2.5 x 3 - FT	VANE	E	D	--
44	234+89	17.4' RT	MANHOLE	5-FT DIA	C	B	--	--
45	234+85	49' RT	INLET	2.5 x 3 - FT	VANE	E	D	--
46	235+21	49' RT	INLET	2.5 x 3 - FT	VANE	E	D	--

EXISTING DRAINAGE STRUCTURE WORK CONTINUED*

No.	STATION	OFFSET	EXISTING STRUCTURE TYPE		COVER TYPE	WORK CODE	EROSION CONTROL INLET PROTECTION	REMARKS
47	234+57	26' LT	INLET	2 x 2 - FT	A-S	A	D	--
48	235+17	14.4' LT	MANHOLE	5-FT DIA	C	B	--	--
49	235+42	26' LT	INLET	2.5 x 3 - FT	VANE	E	D	--
50	237+81	17.4' RT	MANHOLE	5-FT DIA	C	B	--	--
51	237+79	44.7' RT	INLET	2 x 2 - FT	A-S	--	C	NO WORK REQUIRED
52	238+15	44.4' RT	INLET	2 x 2 - FT	A-S	--	C	NO WORK REQUIRED
53	238+33	26' RT	INLET	2 x 2 - FT	A-S	A	D	--
54	237+93	26' LT	INLET	2 x 2 - FT	A-S	A	D	--
55	240+49	26' RT	INLET	2 x 2 - FT	A-S	A	D	--
56	241+10	16' RT	MANHOLE	5-FT DIA	C	B	--	--
57	240+49	26' LT	MANHOLE	3-FT DIA	C	B	D	--
58	242+29	18.3' RT	MANHOLE	5-FT DIA	C	B	--	--
59	244+51	26' RT	INLET	2 x 2 - FT	A-S	C	D	--
60	244+53	26' LT	MANHOLE	3-FT DIA	C	D	--	--
61	244+95	17.3' RT	MANHOLE	5-FT DIA	C	B	--	--
62	247+54	26' RT	INLET	2 x 2 - FT	A-S	A	D	--
63	247+80	17' RT	MANHOLE	5-FT DIA	C	B	--	--
64	247+60	26' LT	INLET	2 x 2 - FT	A-S	A	D	--
65	250+24	26' LT	MANHOLE	4-FT DIA	C	B	--	--
66	250+18	26' RT	INLET	2 x 2 - FT	A-S	A	D	--
67	250+52	17.2' RT	MANHOLE	5-FT DIA	C	B	--	--
68	251+67	17.2' RT	MANHOLE	5-FT DIA	C	B	--	--
69	252+77	26' RT	INLET	2 x 2 - FT	A-S	A	D	--
70	253+13	17.7' RT	MANHOLE	5-FT DIA	C	B	--	--
71	252+77	26' LT	MANHOLE	4-FT DIA	C	F	D	--
72	256+92	25.9' RT	INLET	2 x 2 - FT	A-S	C	D	--
73	257+25	15.8' RT	MANHOLE	5-FT DIA	C	B	--	--
74	257+07	43.8' LT	INLET	2 x 2 - FT	A-S	--	D	NO WORK REQUIRED
75	257+44	43.5' LT	INLET	2 x 2 - FT	A-S	--	D	NO WORK REQUIRED
76	261+01	30.3' LT	INLET	2 x 2 - FT	A-S	A	D	--
77	260+98	26' LT	MANHOLE	4-FT DIA	C	B	--	--
78	260+97	26' RT	INLET	2 x 2 - FT	A-S	A	D	--
78A	261+37	16.1' RT	MANHOLE	4-FT DIA	C	B	--	--
79	264+07	26' RT	INLET	2 x 2 - FT	A-S	A	D	--
80	264+40	16.1' RT	MANHOLE	5-FT DIA	C	B	--	--
81	264+08	26' LT	INLET	2 x 2 - FT	A-S	A	D	--
82	267+25	26' RT	INLET	2 x 2 - FT	A-S	A	D	--
83	267+76	19.2' RT	MANHOLE	5-FT DIA	C	B	--	--
84	267+48	42.1' RT	MANHOLE	5-FT DIA	C	B	--	--
85	267+19	26' LT	INLET	2 x 2.5 - FT	A-S	A	D	--
86	267+91	26' LT	INLET	2 x 2.5 - FT	A-S	A	D	--
87	269+42	20.6' RT	MANHOLE	5-FT DIA	C	B	--	--
88	270+15	26' RT	INLET	2 x 2 - FT	A-S	A	D	--
89	270+45	15.6' RT	MANHOLE	5-FT DIA	C	B	--	--
90	270+11	26' LT	INLET	2 x 2 - FT	A-S	A	D	--
91	270+85	26' LT	INLET	2 x 2 - FT	SLOTS	A	D	--
92	273+10	26' RT	INLET	2 x 2 - FT	A-S	C	D	--
93	273+37	15' RT	MANHOLE	5-FT DIA	C	B	--	--

NOTE: UNLESS OTHERWISE NOTED, ALL ITEMS ARE CATEGORY 0010
* ADDITIONAL QUANTITIES SHOWN ELSEWHERE

3

3

EXISTING DRAINAGE STRUCTURE WORK CONTINUED*

No.	STATION	OFFSET	EXISTING STRUCTURE TYPE		EXISTING COVER TYPE	WORK CODE	EROSION CONTROL INLET PROTECTION	REMARKS
94	273+76	26' RT	INLET	2 x 2 - FT	A-S	A	D	--
95	273+05	29.4' LT	INLET	2 x 2 - FT	A-S	A	D	--
95A	273+04	26' LT	MANHOLE	4-FT DIA	C	B	--	--
96	273+21	43.4' LT	MANHOLE	4-FT DIA	C	B	--	--
97	273+79	28.7' LT	INLET	2 x 2 - FT	SLOTS	A	D	--
98	275+98	26' RT	INLET	2 x 2 - FT	A-S	C	D	--
99	276+18	44.9' RT	INLET	2 x 2 - FT	A-S	A	D	--
100	276+23	13.2' RT	MANHOLE	5-FT DIA	C	B	--	--
101	276+45	45.6' RT	INLET	2 x 2 - FT	SLOTS	A	D	--
102	275+95	26' LT	INLET	2 x 2 - FT	A-S	C	D	--
103	278+73	26' RT	INLET	2 x 2 - FT	SLOTS	--	D	NO WORK REQUIRED
104	278+73	26' LT	INLET	2 x 2 - FT	SLOTS	C	D	--
105	278+92	45.3' LT	INLET	2 x 2 - FT	SLOTS	--	D	NO WORK REQUIRED
106	279+18	44.7' LT	INLET	2 x 2 - FT	SLOTS	--	D	NO WORK REQUIRED
107	281+32	17.1' RT	MANHOLE	5-FT DIA	C	B	--	--
108	281+52	26' RT	INLET	2.5 x 3 - FT	VANE	--	D	NO WORK REQUIRED
109	281+71	24.4' RT	MANHOLE	4-FT DIA	C	--	--	NO WORK REQUIRED
110	281+50	26' LT	INLET	2 x 2 - FT	A-S	A	D	--
111	281+74	26 ' LT	MANHOLE	6-FT DIA	C	B	--	--
112	282+16	26' LT	INLET	2 x 2 - FT	SLOTS	A	D	--
113	284+88	26' RT	INLET	2 x 2 - FT	A-S	A	D	--
114	285+22	34' RT	MANHOLE	5-FT DIA	C	B	--	--
115	285+57	26' RT	INLET	2 x 2 - FT	A-S	A	D	--
116	284+88	26' LT	INLET	2 x 2 - FT	SLOTS	C	D	--
117	284+95	24' LT	MANHOLE	6-FT DIA	C	B	--	--
118	288+80	40.8' RT	MANHOLE	5-FT DIA	C	--	--	NO WORK REQUIRED
119	288+77	44.4' RT	MANHOLE	5-FT DIA	C	--	--	NO WORK REQUIRED
120	289+09	33.5' RT	INLET	2 x 2 - FT	SLOTS	C	D	--
121	288+81	6.8' RT	MANHOLE	5-FT DIA	C	B	--	--
122	288+20	26' LT	INLET	2 x 2 - FT	A-S	A	D	--
122A	288+34	45' RT	INLET	2.5 x 3 - FT	H-S	A	D	--
123	288+36	42.3' LT	INLET	2.5 x 3 - FT	H-S	A	D	--
124	289+08	26' LT	INLET	2 x 2 - FT	SLOTS	C	D	--
125	290+34	6.8' RT	MANHOLE	5-FT DIA	C	B	--	--
126	291+73	26' RT	INLET	2 x 2 - FT	SLOTS	A	D	--
127	291+94	6.6' RT	MANHOLE	5-FT DIA	C	B	--	--
128	291+55	26' LT	INLET	2 x 2 - FT	A-S	A	D	--
129	291+74	42.2' LT	INLET	2 x 2 - FT	A-S	--	C	NO WORK REQUIRED
130	292+10	42' LT	INLET	2 x 2 - FT	A-S	--	C	NO WORK REQUIRED
131	293+38	26' RT	INLET	2 x 2 - FT	SLOTS	A	D	--
132	293+60	5.5' RT	MANHOLE	5-FT DIA	C	B	--	--
133	295+18	26' RT	INLET	2 x 2 - FT	A-S	A	D	--
134	295+25	5.4' RT	MANHOLE	5-FT DIA	C	B	--	--
135	294+79	26' LT	INLET	2 x 2 - FT	A-S	C	D	--
136	295+34	43.2' LT	INLET	2 x 2 - FT	A-S	--	C	NO WORK REQUIRED
137	295+53	26' LT	INLET	2 x 2 - FT	A-S	A	D	--
138	302+28	10.1' LT	MANHOLE	5-FT DIA	C	B	--	--
139	302+42	26' LT	INLET	2 x 2 - FT	A-S	C	D	--

EXISTING DRAINAGE STRUCTURE WORK CONTINUED*

No.	STATION	OFFSET	EXISTING STRUCTURE TYPE		EXISTING COVER TYPE	WORK CODE	EROSION CONTROL INLET PROTECTION	REMARKS
140	304+52	26' LT	INLET	2 x 2 - FT	A-S	A	D	--
141	304+63	9.7' LT	MANHOLE	5-FT DIA	C	B	--	--
142	304+97	26' RT	INLET	2 x 2 - FT	SLOTS	A	D	--
143	305+44	43' RT	INLET	2 x 2 - FT	A-S	--	C	NO WORK REQUIRED
144	305+81	43.7' RT	INLET	2 x 2.5 - FT	A-S	--	C	NO WORK REQUIRED
145	306+00	26' RT	INLET	2 x 2 - FT	A-S	A	D	--
146	305+40	43' LT	INLET	2 x 2 - FT	A-S	A	D	--
147	305+55	42.3' LT	MANHOLE	5-FT DIA	C	B	--	--
148	305+76	42.6' LT	INLET	2 x 2 - FT	A-S	A	C	--
149	305+96	26' LT	INLET	2 x 3 - FT	VANE	E	D	--
150	307+01	26' RT	INLET	2 x 2 - FT	SLOTS	A	D	--
151	307+06	9.5' LT	MANHOLE	5-FT DIA	C	B	--	--
152	307+01	26' LT	INLET	2 x 2 - FT	A-S	A	D	--
153	308+50	26' RT	INLET	2 x 2 - FT	A-S	A	D	--
154	308+70	42.3' RT	INLET	2 x 2.5 - FT	A-S	--	D	NO WORK REQUIRED
155	308+80	41.8' RT	MANHOLE	6-FT DIA	C	--	--	NO WORK REQUIRED
156	309+03	42.6' RT	INLET	2 x 2 - FT	A-S	--	D	NO WORK REQUIRED
157	308+79	9.5' LT	MANHOLE	5-FT DIA	C	B	--	--
158	308+50	26' LT	INLET	2 x 2 - FT	A-S	A	D	--
159	308+68	43.3' LT	INLET	5-FT DIA	A-S	--	D	NO WORK REQUIRED
160	308+96	43.4' LT	INLET	2 x 2 - FT	SLOTS	--	D	NO WORK REQUIRED
161	310+73	26' RT	INLET	2 x 2 - FT	SLOTS	A	D	--
162	310+58	10.1' LT	MANHOLE	5-FT DIA	C	B	--	--
163	310+56	26' LT	INLET	2 x 2 - FT	A-S	A	D	--
164	311+75	26' RT	INLET	2 x 2 - FT	A-S	A	D	--
165	311+74	26' LT	INLET	2 x 2 - FT	A-S	A	D	--
166	311+94	42.8' RT	INLET	2 x 2.5 - FT	A-S	A	C	--
167	312+06	38.8' RT	MANHOLE	6-FT DIA	C	B	--	--
168	312+27	43.3' RT	INLET	2 x 2.5 - FT	A-S	A	C	--
169	312+47	26' RT	INLET	2 x 2 - FT	A-S	A	D	--
170	312+00	10.3' LT	MANHOLE	5-FT DIA	C	B	--	--
171	312+11	10.6' LT	MANHOLE	5-FT DIA	C	B	--	--
172	311+92	43.2' LT	INLET	2 x 2 - FT	A-S	--	D	NO WORK REQUIRED
173	312+20	42.9' LT	INLET	2 x 2 - FT	SLOTS	--	C	NO WORK REQUIRED
174	312+39	26' LT	INLET	2 x 3 - FT	VANE	E	D	--
175	313+98	26' RT	MANHOLE	4-FT DIA	C	B	--	--
176	314+03	11.2' LT	MANHOLE	5-FT DIA	C	B	--	--
177	313+94	26' LT	INLET	2 x 2 - FT	A-S	A	D	--
178	315+25	11.8' LT	MANHOLE	4-FT DIA	C	B	--	--
179	315+19	43.4' LT	MANHOLE	5-FT DIA	C	B	--	--
179A	315+08	51.4' LT	INLET	2 x 2 - FT	A-S	C	D	--
180	315+64	42.9' LT	INLET	2 x 2 - FT	A-S	A	D	--
181	316+86	26' RT	INLET	2 x 2 - FT	A-S	A	D	--
182	316+84	10.5' LT	MANHOLE	5-FT DIA	C	B	--	--
183	316+86	26' LT	INLET	2 x 2 - FT	A-S	A	D	--
184	318+01	26' RT	INLET	2 x 2 - FT	A-S	A	D	--
185	318+07	26' LT	INLET	2 x 2 - FT	SLOTS	A	D	--
186	318+19	43.6' RT	INLET	5-FT DIA	A-S	--	C	NO WORK REQUIRED

NOTE: UNLESS OTHERWISE NOTED, ALL ITEMS ARE CATEGORY 0010
* ADDITIONAL QUANTITIES SHOWN ELSEWHERE

3

3

EXISTING DRAINAGE STRUCTURE WORK CONTINUED*

No.	STATION	OFFSET	EXISTING STRUCTURE TYPE		EXISTING COVER TYPE	WORK CODE	EROSION CONTROL INLET PROTECTION	REMARKS
187	318+27	40.8' RT	MANHOLE	5-FT DIA	C	--	--	NO WORK REQUIRED
188	318+52	41.7' RT	INLET	2 x 3 - FT	SLOTS	--	C	NO WORK REQUIRED
189	318+74	26' RT	INLET	2 x 2 - FT	A-S	A	D	--
190	318+29	8.8' LT	MANHOLE	5-FT DIA	C	B	--	--
191	318+25	43.5' LT	INLET	2 x 2 - FT	A-S	--	C	NO WORK REQUIRED
192	318+31	44.3' LT	INLET	5-FT DIA	C	--	D	NO WORK REQUIRED
193	318+53	42.8' LT	INLET	2 x 2 - FT	SLOTS	--	C	NO WORK REQUIRED
194	318+71	26' LT	INLET	2 x 2 - FT	A-S	A	D	--
195	321+18	43.4' RT	INLET	2 x 2 - FT	A-S	--	D	NO WORK REQUIRED
196	321+27	45.2' RT	MANHOLE	4-FT DIA	C	--	--	NO WORK REQUIRED
197	321+45	43' RT	INLET	2 x 2 - FT	SLOTS	--	D	NO WORK REQUIRED
198	321+58	10.5' LT	MANHOLE	5-FT DIA	C	B	--	--
199	321+35	42.8' LT	INLET	2 x 2 - FT	A-S	--	D	NO WORK REQUIRED
200	321+45	44' LT	MANHOLE	5-FT DIA	C	--	--	NO WORK REQUIRED
201	321+62	42.9' LT	INLET	2 x 2 - FT	A-S	--	D	NO WORK REQUIRED
202	324+75	26' RT	INLET	2 x 2 - FT	SLOTS	A	D	--
203	324+93	45.3' RT	INLET	2 x 3 - FT	SLOTS	--	D	NO WORK REQUIRED
204	325+28	42.8' RT	INLET	2 x 2 - FT	A-S	--	D	NO WORK REQUIRED
205	324+54	12.8' LT	MANHOLE	4-FT DIA	C	B	--	--
206	324+25	26' LT	INLET	2 x 2.5 - FT	SLOTS	A	D	--
207	324+46	42.6' LT	INLET	2 x 2 - FT	A-S	--	D	NO WORK REQUIRED
208	324+79	44' LT	INLET	2 x 2 - FT	A-S	--	D	NO WORK REQUIRED
209	325+22	9.9' LT	MANHOLE	5-FT DIA	C	B	--	--
210	327+71	26' RT	INLET	2 x 2 - FT	A-S	A	D	--
211	327+42	26' LT	INLET	2 x 2.5 - FT	A-S	A	D	--
212	327+61	9.9' LT	MANHOLE	5-FT DIA	C	B	--	--
213	327+61	46' LT	INLET	2 x 2 - FT	A-S	--	D	NO WORK REQUIRED
214	327+92	44' LT	INLET	2 x 2 - FT	A-S	--	D	NO WORK REQUIRED
215	330+46	26' RT	INLET	2 x 2 - FT	A-S	A	D	--
216	330+71	43.8' RT	INLET	2 x 2 - FT	A-S	--	D	NO WORK REQUIRED
217	331+08	42.6' RT	INLET	2 x 2 - FT	A-S	C	D	--
218	330+83	19.6' RT	MANHOLE	4-FT DIA	C	B	--	--
219	330+56	10.2' LT	MANHOLE	4-FT DIA	C	B	--	--
220	330+54	26' LT	INLET	2 x 2 - FT	A-S	A	D	--
221	330+72	43' LT	INLET	2 x 2 - FT	SLOTS	--	D	NO WORK REQUIRED
222	331+09	43' LT	INLET	2 x 2 - FT	SLOTS	--	D	NO WORK REQUIRED
223	333+57	26' RT	INLET	2 x 2 - FT	A-S	A	D	--
224	333+48	20.5' RT	MANHOLE	4-FT DIA	C	B	--	--
225	333+41	26' LT	MANHOLE	4-FT DIA	C	B	--	--
226	335+81	26' RT	INLET	2 x 2.5 - FT	SLOTS	A	D	--
227	336+01	43.5' RT	INLET	2 x 2 - FT	A-S	A	D	--
228	336+15	21.4' RT	MANHOLE	5-FT DIA	C	B	--	--
229	336+34	42' RT	INLET	2 x 2 - FT	SLOTS	A	D	--
230	336+45	20.8' RT	MANHOLE	5-FT DIA	C	B	--	--
231	335+83	26' LT	INLET	2 x 2 - FT	A-S	C	D	--
232	336+04	42.9' LT	INLET	2 x 3 - FT	A-S	--	C	NO WORK REQUIRED
233	336+15	42.6' LT	MANHOLE	5-FT DIA	C	--	--	NO WORK REQUIRED
234	336+37	43' LT	INLET	2 x 2 - FT	A-S	--	D	NO WORK REQUIRED

EXISTING DRAINAGE STRUCTURE WORK CONTINUED*

No.	STATION	OFFSET	EXISTING STRUCTURE TYPE		EXISTING COVER TYPE	WORK CODE	EROSION CONTROL INLET PROTECTION	REMARKS
235	337+58	26' RT	INLET	2 x 3 - FT	VANE	A	D	--
236	338+44	26' RT	INLET	2 x 2 - FT	A-S	A	D	--
237	338+82	26' LT	INLET	2 x 3 - FT	SLOTS	A	D	--
238	338+77	21' RT	MANHOLE	5-FT DIA	C	B	--	--
239	338+63	43.4' RT	INLET	2 x 2 - FT	A-S	--	C	NO WORK REQUIRED
240	339+00	42.7' RT	INLET	2 x 2 - FT	A-S	--	C	NO WORK REQUIRED
241	339+19	26' RT	INLET	2 x 2.5 - FT	SLOTS	A	D	--
242	340+44	17.4' RT	MANHOLE	4-FT DIA	C	B	--	--
243	340+64	26' RT	INLET	2 x 2 - FT	A-S	C	D	--
244	340+63	26' LT	INLET	2 x 2 - FT	A-S	C	D	--
245	341+84	37.3' LT	MANHOLE	4-FT DIA	C	B	--	--
246	341+71	26' LT	INLET	2 x 2 - FT	SLOTS	--	D	NO WORK REQUIRED
247	341+78	16.8' RT	MANHOLE	4-FT DIA	C	B	--	--
248	341+69	26' RT	INLET	2 x 2 - FT	SLOTS	--	D	NO WORK REQUIRED
249	343+01	26' RT	INLET	2 x 2.5 - FT	A-S	A	D	--
250	343+46	21.3' RT	MANHOLE	5-FT DIA	C	B	--	--
251	343+26	26' LT	INLET	2 x 2 - FT	A-S	A	D	--
252	345+76	26' LT	INLET	2 x 2.5 - FT	A-S	A	D	--
253	345+95	43.7' LT	INLET	2 x 2 - FT	A-S	--	C	NO WORK REQUIRED
254	346+09	27.5' LT	MANHOLE	4-FT DIA	C	B	--	--
255	346+31	43.2' LT	INLET	2 x 2 - FT	A-S	--	D	NO WORK REQUIRED
256	346+12	26' RT	INLET	2 x 2 - FT	SLOTS	A	D	--
257	346+37	21.2' RT	MANHOLE	5-FT DIA	C	B	--	--

EXISTING DRAINAGE STRUCTURE WORK QUANTITY SUMMARY

WORK CODE	QUANTITY	UNIT	ITEM	DESCRIPTION
A	96	EACH	611.8115	ADJUSTING INLET COVERS
B	79	EACH	611.8110	ADJUSTING MANHOLE COVERS
C	16	EACH	611.0430	RECONSTRUCTING INLETS
D	1	EACH	611.0420	RECONSTRUCTING MANHOLES
E	6	EACH	611.0639	INLET COVERS TYPE H-S
F	2	EACH	611.0603	INLET COVERS TYPE A-S
	640	EACH	416.0610	DRILLED TIE BARS*
	80	EACH	611.8120.S	COVER PLATES TEMPORARY
	25	EACH	628.7015	INLET PROTECTION TYPE C
	147	EACH	628.7020	INLET PROTECTION TYPE D

NOTE: UNLESS OTHERWISE NOTED, ALL ITEMS ARE CATEGORY 0010
* ADDITIONAL QUANTITIES SHOWN ELSEWHERE

3

TRAFFIC CONTROL

	643.0200 SURVEILLANCE AND MAINTENANCE 3220-03-62	643.0300 DRUMS		643.0410 BARRICADES TYPE II		643.0420 BARRICADES TYPE III		643.0705 WARNING LIGHTS TYPE A		643.0715 WARNING LIGHTS TYPE C		643.0900 SIGNS		643.1050 SIGNS PCMS		
	DAYS	EACH	DAYS	EACH	DAYS	EACH	DAYS	EACH	DAYS	EACH	DAYS	EACH	DAYS	EACH	DAYS	ESTIMATED DURATION
STAGE 1																
STA 195+80 - PERSHING BLVD	--	359	8,616	--	--	35	840	70	1,680	140	3,360	101	2,424	2	20	24
PERSHING BLVD - 30TH AVE	--	381	7,197	--	--	48	864	96	1,728	200	3,600	113	2,034	--	--	18
30TH AVE - STA 346+90	--	441	13,866	--	--	51	1,581	102	3,162	224	6,944	152	4,712	--	--	31
STAGE 2																
STA 195+80 - PERSHING BLVD	--	470	17,860	54	2,052	41	1,558	136	5,168	185	7,030	149	5,662	2	10	38
PERSHING BLVD - 30TH AVE	--	630	24,840	72	2,808	82	3,198	236	9,204	311	12,129	222	8,658	2	10	39
30TH AVE - STA 346+90	--	591	30,792	36	1,872	74	3,848	184	9,568	299	15,548	192	9,984	--	--	52
TOTAL	202		103,171		6,732		11,889		30,510		48,611		33,474		40	

PAVEMENT MARKING

	646.0106 EPOXY	646.0881.S GROOVED WET REFLECTIVE TAPE	646.0883.S GROOVED WET REFLECTIVE TAPE	647.0726 DIAGONAL EPOXY	SPV.0060.04 GROOVED PREFORMED THERMOPLASTIC	SPV.0060.05 GROOVED PREFORMED THERMOPLASTIC	SPV.0090.01 GROOVED PREFORMED THERMOPLASTIC	SPV.0090.02 GROOVED PREFORMED THERMOPLASTIC	SPV.0090.03 GROOVED PREFORMED THERMOPLASTIC
	4-INCH	4-INCH	8-INCH	12-INCH	ARROWS	WORDS	STOP LINE	CROSSWALK	
	YELLOW	12.5' LINE		YELLOW	TYPE 2		18-INCH	6-INCH	SPECIAL
LOCATION	LF	LF	LF	LF	EACH	EACH	LF	LF	LF
STA 195+80 - PERSHING BLVD	14,300	2,250	790	780	16	2	160	490	120
PERSHING BLVD - 30TH AVE	13,350	2,400	1,190	810	22	--	400	1,910	--
30TH AVE - STA 346+90	17,650	2,900	300	420	6	--	60	480	--
TOTAL	45,300	7,550	2,280	2,010	44	2	620	2,880	120

TEMPORARY PAVEMENT MARKING

	649.0400 REMOVABLE TAPE 4-INCH		
	BLACK	YELLOW	WHITE
	12.5' LINE	SOLID	SOLID
LOCATION	LF	LF	LF
STAGE 1			
STA 195+80 - PERSHING BLVD	70	520	--
PERSHING BLVD - 30TH AVE	70	530	--
30TH AVE - STA 346+90	70	530	--
STAGE 2			
STA 195+80 - PERSHING BLVD	--	7,720	520
PERSHING BLVD - 30TH AVE	--	7,640	530
30TH AVE - STA 346+90	--	9,250	530
SUBTOTAL	210	26,190	1,580
TOTAL		27,980	

CONSTRUCTION STAKING

	650.5500** CURB GUTTER AND CURB & GUTTER	650.8000 RESURFACING REFERENCE
LOCATION	LF	LF
STA 195+80 - PERSHING BLVD	500	4,520
PERSHING BLVD - 30TH AVE	490	4,800
30TH AVE - STA 346+90	190	5,790
TOTAL	1,180	15,110

** FOR CURB AND GUTTER AROUND RADII

NOTE: UNLESS OTHERWISE NOTED, ALL ITEMS ARE CATEGORY 0010

3

LANDSCAPING AND EROSION CONTROL

LOCATION	625.0500 SALVAGED TOPSOIL SY	628.1504 SILT FENCE LF	628.1520 SILT FENCE MAINTENANCE LF	628.7570 ROCK BAGS EACH	629.0210 FERTILIZER TYPE B CWT	630.0200 SEEDING TEMPORARY LB	631.0300 SOD WATER MGAL	631.1000 SOD LAWN SY
STAGE 2								
STA 195+80 - PERSHING BLVD	200	--	--	--	0.13	--	5	200
PERSHING BLVD - 30TH AVE	230	--	--	--	0.15	--	5	230
30TH AVE - STA 346+90	160	--	--	--	0.1	--	4	160
UNDISTRIBUTED (25%)	150	100	100	10	0.1	15	4	150
TOTAL	740	100	100	10	0.48	15	18	740

ELECTRICAL WORK

LOCATION	653.0900 ADJUSTING PULL BOXES EACH
STA 218+42 RT	1
STA 264+15 LT	1
TOTAL	2

EROSION CONTROL

LOCATON	628.1905 MOBILIZATIONS EROSION CONTROL EACH	628.1910 MOBILIZATIONS EMERGENCY EROSION CONTROL EACH
TOTAL	6	10

3

WATER VAULT WORK

CATEGORY 0020 NO.	STATION	OFFSET	SPV.0060.03 ADJUSTING WATER VAULT EACH	* 416.0610 DRILLED TIE BARS EACH	* 611.8120.S COVER PLATES TEMPORARY EACH	* 690.0250 SAWING CONCRETE LF
1	286+22	10' LT	1	8	1	20
2	289+07	13' LT	1	8	1	20
3	302+02	13' LT	1	8	1	20
4	317+95	22' LT	1	8	1	20
5	325+20	35' RT	1	8	1	20
6	342+17	18' LT	1	8	1	20
	TOTAL		6	48	6	120

SANITARY SEWER WORK QUANTITY SUMMARY

CATEGORY 0020

QUANTITY	UNIT	ITEM	DESCRIPTION
95	EACH	SPV.0060.01	ADJUSTING SANITARY MANHOLE COVERS
760	EACH	416.0610	DRILLED TIE BARS*
95	EACH	611.8120.S	COVER PLATES TEMPORARY*
1,900	LF	690.0250	SAWING CONCRETE*

NOTE: UNLESS OTHERWISE NOTED, ALL ITEMS ARE CATEGORY 0010
* ADDITIONAL QUANTITIES SHOWN ELSEWHERE

3

SANITARY SEWER WORK

CATEGORY 0020			SPV.0060.01 ADJUSTING SANITARY MANHOLE COVERS	* 416.0610 DRILLED TIE BARS	* 611.8120.S COVER PLATES TEMPORARY	* 690.0250 SAWING CONCRETE	
NO.	STATION	OFFSET	EACH	EACH	EACH	LF	NOTES
1	196+14	17.5' LT	1	8	1	20	
2	198+40	17.5' LT	1	8	1	20	
3	200+55	17.5' LT	1	8	1	20	
4	202+72	17' LT	1	8	1	20	
5	205+60	16' LT	1	8	1	20	
6	208+54	16.5' LT	1	8	1	20	
7	209+40	16' LT	1	8	1	20	
8	211+29	16' LT	1	8	1	20	
9	214+17	18' LT	1	8	1	20	
10	217+25	17.5' LT	1	8	1	20	
11	220+25	17.5' LT	1	8	1	20	
12	221+75	16' LT	1	8	1	20	
13	223+53	16.5' LT	1	8	1	20	
14	225+92	16.5' LT	1	8	1	20	
15	228+36	16.5' LT	1	8	1	20	
16	228+47	17' LT	1	8	1	20	
17	230+05	16.5' LT	1	8	1	20	
18	231+79	17.5' LT	1	8	1	20	
19	233+05	20.5' LT	1	8	1	20	
20	235+00	20.5' LT	1	8	1	20	
21	237+95	20.5' LT	1	8	1	20	
22	239+78	16.5' LT	1	8	1	20	
23	241+48	16.5' LT	1	8	1	20	
24	243+06	18' LT	1	8	1	20	
25	245+02	16' LT	1	8	1	20	
26	246+58	17.5' LT	1	8	1	20	
27	247+85	17.5' LT	1	8	1	20	
28	250+52	18.5' LT	1	8	1	20	NEW CASTING
29	253+11	19' LT	1	8	1	20	
30	255+31	19.5' LT	1	8	1	20	
31	257+30	23' LT	1	8	1	20	
32	259+18	15' LT	1	8	1	20	
33	261+42	15' LT	1	8	1	20	
34	263+14	15' LT	1	8	1	20	
35	264+40	30' RT	1	8	1	20	
36	267+60	30' RT	1	8	1	20	
37	270+02	18' RT	1	8	1	20	
38	270+51	1' LT	1	8	1	20	
39	271+94	1' LT	1	8	1	20	
40	273+41	1' LT	1	8	1	20	
41	273+45	38' RT	1	8	1	20	
42	274+84	1.5' LT	1	8	1	20	
43	276+30	2' LT	1	8	1	20	
44	276+32	50' RT	1	8	1	20	
45	277+76	2.5' LT	1	8	1	20	
46	279+06	1.5' LT	1	8	1	20	
47	279+58	23.5' RT	1	8	1	20	
48	281+40	7' LT	1	8	1	20	
49	281+47	23.5' RT	1	8	1	20	
50	281+83	6' LT	1	8	1	20	

SANITARY SEWER WORK CONTINUED

CATEGORY 0020			SPV.0060.01 ADJUSTING SANITARY MANHOLE COVERS	* 416.0610 DRILLED TIE BARS	* 611.8120.S COVER PLATES TEMPORARY	* 690.0250 SAWING CONCRETE	
NO.	STATION	OFFSET	EACH	EACH	EACH	LF	NOTES
51	283+21	3' LT	1	8	1	20	
52	285+23	1.5' LT	1	8	1	20	
53	286+92	1' LT	1	8	1	20	
54	288+70	0' RT	1	8	1	20	
55	290+24	1' RT	1	8	1	20	
56	291+93	0' RT	1	8	1	20	
57	292+64	0' RT	1	8	1	20	
58	295+17	0.5' LT	1	8	1	20	
59	295+67	0' RT	1	8	1	20	
60	297+65	1' LT	1	8	1	20	
61	298+87	1' LT	1	8	1	20	
62	300+61	2.5' LT	1	8	1	20	
63	302+37	3' LT	1	8	1	20	
64	303+99	2.5' LT	1	8	1	20	
65	305+63	2' LT	1	8	1	20	
66	307+22	2' LT	1	8	1	20	
67	308+83	2.5' LT	1	8	1	20	NEW CASTING
68	310+43	1' LT	1	8	1	20	
69	312+05	0' RT	1	8	1	20	
70	313+79	1' LT	1	8	1	20	
71	315+47	1' RT	1	8	1	20	
72	316+94	4' RT	1	8	1	20	
73	318+42	4' RT	1	8	1	20	
74	319+95	4.5' RT	1	8	1	20	
75	321+37	3.5' RT	1	8	1	20	
76	321+47	3' RT	1	8	1	20	
77	323+06	3' RT	1	8	1	20	
78	324+61	2.5' RT	1	8	1	20	
79	325+16	5' RT	1	8	1	20	
80	327+75	8' RT	1	8	1	20	
81	328+73	2' RT	1	8	1	20	
82	330+96	1.5' RT	1	8	1	20	
83	333+54	1.5' RT	1	8	1	20	
84	336+29	1.5' RT	1	8	1	20	
85	336+36	2' RT	1	8	1	20	
86	336+46	13.5' LT	1	8	1	20	
87	338+83	1.5' RT	1	8	1	20	
88	338+91	13.5' LT	1	8	1	20	
89	340+64	1' RT	1	8	1	20	
90	340+82	15' LT	1	8	1	20	
91	341+90	12' LT	1	8	1	20	
92	342+03	1' RT	1	8	1	20	
93	343+31	17.5' RT	1	8	1	20	
94	345+02	2.5' RT	1	8	1	20	
95	346+47	2' RT	1	8	1	20	

3

* ADDITIONAL QUANTITIES SHOWN ELSEWHERE

3

WATER VALVE WORK

CATEGORY 0020 NO.	STATION	OFFSET	SPV.0060.02 ADJUSTING WATER VALVES EACH	* 690.0250 SAWING CONCRETE LF
1	198+09	4' LT	1	10
2	202+43	11.5' LT	1	10
3	208+30	9' LT	1	10
4	208+63	35' RT	1	10
5	209+50	11' LT	1	10
6	211+00	27' LT	1	--
7	211+05	9' LT	1	10
8	211+41	37' RT	1	10
9	219+85	28' LT	1	10
10	219+94	9' LT	1	10
11	220+34	42' RT	1	10
12	220+36	41.5' RT	1	10
13	220+36	45' RT	1	10
14	221+03	12' LT	1	10
15	221+63	12.5' LT	1	10
16	223+28	11' LT	1	10
17	227+91	9' LT	1	10
18	228+06	12' LT	1	10
19	228+16	12' LT	1	10
20	228+52	9' LT	1	10
21	230+34	12.5' LT	1	10
22	231+57	11' LT	1	10
23	234+97	12' LT	1	10
24	235+07	6' LT	1	10
25	235+09	8' LT	1	10
26	235+13	47' RT	1	10
27	235+31	9.5' LT	1	10
28	238+12	8' LT	1	10
29	238+27	9.5' LT	1	10
30	240+87	4.5' LT	1	10
31	241+27	46' LT	1	10
32	241+34	32.5' LT	1	10
33	241+47	7' LT	1	10
34	241+66	9.5' LT	1	10
35	244+65	4' LT	1	10
36	245+05	8' LT	1	10
37	245+18	9.5' LT	1	10
38	245+88	12' LT	1	10
39	247+69	38' LT	1	--
40	247+73	2.5' LT	1	10
41	247+85	4' LT	1	10
42	248+05	9' LT	1	10
43	250+78	9' LT	1	10
44	253+26	35' RT	1	10
45	253+45	10.5' LT	1	10
SUBTOTAL			45	430

WATER VALVE WORK CONTINUED

CATEGORY 0020 NO.	STATION	OFFSET	SPV.0060.02 ADJUSTING WATER VALVES EACH	* 690.0250 SAWING CONCRETE LF
46	257+11	10.5' LT	1	10
47	257+16	38' RT	1	10
48	257+16	9' LT	1	10
49	257+36	13' LT	1	10
50	261+21	9' LT	1	10
51	261+51	32.5' RT	1	10
52	261+53	13' LT	1	10
53	261+60	39' RT	1	10
54	264+15	12' LT	1	10
55	264+25	10' LT	1	10
56	264+50	32' RT	1	10
57	267+31	16.5' LT	1	10
58	267+69	33.5' RT	1	10
59	269+14	22' LT	1	10
60	270+56	33' RT	1	10
61	273+51	34.5' LT	1	10
62	273+54	21' RT	1	10
63	273+72	15.5' LT	1	10
64	276+40	30.5' RT	1	10
65	276+43	18' LT	1	10
66	276+46	39' RT	1	10
67	279+14	35.5' LT	1	10
68	279+31	15' LT	1	10
69	285+30	20.5' LT	1	10
70	285+31	32' RT	1	10
71	288+41	10' LT	1	10
72	288+75	33' LT	1	10
73	288+76	36' RT	1	10
74	289+00	9' LT	1	10
75	289+08	20' LT	1	10
76	291+68	36' LT	1	--
77	291+98	33' LT	1	10
78	294+23	8' LT	1	10
79	294+75	22' LT	1	10
80	294+95	37' LT	1	--
81	295+08	33.5' LT	1	10
82	295+47	9.5' LT	1	10
83	298+67	21' LT	1	10
84	298+94	9' LT	1	10
85	299+00	6.5' LT	1	10
86	299+05	8' LT	1	10
87	302+30	8.5' RT	1	10
88	304+50	23' LT	1	10
89	305+71	36.5' RT	1	10
90	305+71	35' LT	1	10
SUBTOTAL			45	430

WATER VALVE WORK CONTINUED

CATEGORY 0020 NO.	STATION	OFFSET	SPV.0060.02 ADJUSTING WATER VALVES EACH	* 690.0250 SAWING CONCRETE LF
91	308+53	10' RT	1	10
92	308+93	38.5' LT	1	10
93	308+95	34' RT	1	10
94	312+16	36' LT	1	10
95	312+18	32.5' RT	1	10
96	313+60	23' LT	1	10
97	315+20	9' RT	1	10
98	315+52	15' LT	1	10
99	318+10	11.5' RT	1	10
100	318+46	32.5' RT	1	10
101	318+48	37.5' LT	1	10
102	321+42	32.5' RT	1	10
103	324+30	10.5' RT	1	10
104	324+60	28' LT	1	10
105	325+37	10' RT	1	10
106	325+44	16.5' RT	1	10
107	327+84	40' LT	1	10
108	331+02	35.5' LT	1	10
109	331+15	21' LT	1	10
110	331+27	21' LT	1	10
111	331+29	10' LT	1	10
112	335+88	11' LT	1	10
113	336+31	32' RT	1	10
114	336+32	32.5' LT	1	10
115	336+53	10.5' LT	1	10
116	338+50	18' LT	1	10
117	338+73	9.5' LT	1	10
118	33961	11' LT	1	10
119	34014	21.5' LT	1	10
120	34199	32.5' LT	1	10
121	34297	10' LT	1	10
122	34339	33.5' RT	1	10
123	34577	11.5' LT	1	10
124	34579	21.5' LT	1	10
125	34600	12.5' LT	1	10
126	34643	11' LT	1	10
127	34653	5.5' LT	1	10
SUBTOTAL			37	370
TOTAL			127	1,230

* ADDITIONAL QUANTITIES SHOWN ELSEWHERE

3

3

SIGN NO.	SIGN CODE & SIZE	SIGN MESSAGE	SIGN SIZE W [IN.]	x	H [IN.]	637.2210 SIGNS TYPE II REFLC H [SF]	637.2215 SIGNS TYPE II REFLC H FOLDING [SF]	637.2230 SIGNS TYPE II REFLC F [SF]	638.2602 REM SIGNS TYPE II [EA]	638.3000 REM SMALL SIGN SUP [EA]	634.0816 POSTS TUBULAR STEEL 2"X 2"x16' [EA]	MOUNT ON SAME POST AS SIGN #	REMARKS / NEW SIGN LOCATION
1	R7-1D(2S)	--	18	x	24	3.000	--	--	1	--	--	--	MOUNT ON POWER POLE
2	R7-1D(2S)	--	18	x	24	3.000	--	--	1	--	--	--	MOUNT ON POWER POLE
3	R7-1D(2S)	--	18	x	24	3.000	--	--	1	--	--	--	MOUNT ON POWER POLE
4	R7-1D(2S)	--	18	x	24	3.000	--	--	1	--	--	--	MOUNT ON POWER POLE
5	R7-1D(2S)	--	18	x	24	3.000	--	--	1	--	--	--	MOUNT ON POWER POLE
6	R1-1(3)	--	36	x	36	7.460	--	--	1	1	1	--	--
7	R7-1D(2S)	--	18	x	24	3.000	--	--	1	--	--	--	MOUNT ON POWER POLE
8	R7-1D(2S)	--	18	x	24	3.000	--	--	1	--	--	--	MOUNT ON POWER POLE
9	R2-1(2S)	35 MPH	24	x	30	5.000	--	--	1	--	--	--	MOUNT ON POWER POLE
10	R1-1(3)	--	36	x	36	7.460	--	--	1	1	1	--	--
11	R1-1(3)	--	36	x	36	7.460	--	--	1	1	1	--	--
12	R1-1(3)	--	36	x	36	7.460	--	--	1	1	1	--	--
13	R7-1D(2S)	--	18	x	24	3.000	--	--	1	--	--	--	MOUNT ON POWER POLE
14	J4-1(2S)	--	24	x	36	6.000	--	--	1	--	1	--	--
	M3-4	--	24	x	12								
	M1-6	STH 158	24	x	24								
15	R1-1F(3)	--	36	x	36	--	7.460	--	1	--	--	--	MOUNT ON SIGNAL POLE
16	R1-1F(3)	--	36	x	36	--	7.460	--	1	--	--	--	MOUNT ON SIGNAL POLE
17	R1-1F(3)	--	36	x	36	--	7.460	--	1	--	--	--	MOUNT ON SIGNAL POLE
18	R7-1D(2S)	--	18	x	24	3.000	--	--	1	--	--	--	MOUNT ON POWER POLE
19	R2-1(2S)	35 MPH	24	x	30	5.000	--	--	1	--	--	--	MOUNT ON POWER POLE
20	R7-1D(2S)	--	18	x	24	3.000	--	--	1	--	--	--	MOUNT ON POWER POLE
21	R7-1D(2S)	--	18	x	24	3.000	--	--	1	--	--	--	MOUNT ON POWER POLE
22	R1-1(3)	--	36	x	36	7.460	--	--	1	1	1	--	--
23	R2-1(2S)	35 MPH	24	x	30	5.000	--	--	--	--	1	--	--
24	S5-2(2S)	--	24	x	30	5.000	--	--	--	--	--	#23	--
25	R7-1D(2S)	--	18	x	24	3.000	--	--	1	--	--	--	MOUNT ON POWER POLE
26	S4-51(2S)	15 MPH	24	x	48	8.000	--	--	--	--	1	--	--
27	S1-1	--	--	x	--	--	--	--	1	--	--	--	--
28	WF16-9P	--	--	x	--	--	--	--	1	--	--	--	--
29	--	REDUCED SPEED AHEAD	--	x	--	--	--	--	1	1	--	--	--

3

SIGN NO.	SIGN CODE & SIZE	SIGN MESSAGE	SIGN SIZE W [IN.]	x	H [IN.]	637.2210 SIGNS TYPE II REFLC H [SF]	637.2215 SIGNS TYPE II REFLC H FOLDING [SF]	637.2230 SIGNS TYPE II REFLC F [SF]	638.2602 REM SIGNS TYPE II [EA]	638.3000 REM SMALL SIGN SUP [EA]	634.0816 POSTS TUBULAR STEEL 2"X 2"x16' [EA]	MOUNT ON SAME POST AS SIGN #	REMARKS / NEW SIGN LOCATION
30	S1-1(2S)	--	36	x	36	--	--	6.750	--	--	1	--	--
31	S16-9P(2S)	--	30	x	18	--	--	3.750	--	--	--	#30	--
32	R1-1(3)	--	36	x	36	7.460	--	--	1	1	1	--	--
33	J4-1(2S)	--	24	x	36	6.000	--	--	1	--	1	--	--
	M3-2	--	24	x	12								
	M1-6	STH 158	24	x	24								
34	R2-1	--	--	x	--	--	--	--	1	--	--	--	--
35	R7-1D(2S)	--	18	x	24	3.000	--	--	1	--	--	--	MOUNT ON POWER POLE
36	R1-1(3)	--	36	x	36	7.460	--	--	1	1	1	--	--
37	S1-1(2S)	--	36	x	36	--	--	6.750	1	--	--	--	MOUNT ON POWER POLE
38	S4-51(2S)	15 MPH	24	x	48	8.000	--	--	1	--	--	--	MOUNT ON POWER POLE
39	R2-1(2S)	30 MPH	24	x	30	5.000	--	--	1	--	--	--	MOUNT ON POWER POLE
40	S5-2(2S)	--	24	x	30	5.000	--	--	--	--	--	--	MOUNT ON POWER POLE
41	R7-1D(2S)	--	18	x	24	3.000	--	--	1	--	--	--	MOUNT ON POWER POLE
42	R1-1(3)	--	36	x	36	7.460	--	--	1	1	1	--	--
43	R7-1D(2S)	--	18	x	24	3.000	--	--	1	--	--	--	MOUNT ON POWER POLE
44	**NOT USED**	--	--	x	--	--	--	--	--	--	--	--	--
45	S4-51	--	--	x	--	--	--	--	1	--	--	--	--
46	R7-1D(2S)	--	18	x	24	3.000	--	--	1	--	--	--	MOUNT ON POWER POLE
47	S1-1(2S)	--	36	x	36	--	--	6.750	1	--	--	--	MOUNT ON POWER POLE
48	R7-1D(2S)	--	18	x	24	3.000	--	--	1	--	--	--	MOUNT ON LIGHT POLE
49	R1-1(3)	--	36	x	36	7.460	--	--	1	1	1	--	--
50	R7-1D(2S)	--	18	x	24	3.000	--	--	--	--	--	--	MOUNT ON LIGHT POLE
51	R7-1D(2S)	--	18	x	24	3.000	--	--	1	--	--	--	MOUNT ON POWER POLE
52	R1-1(3)	--	36	x	36	7.460	--	--	1	1	1	--	--
53	D9-2(2S)	--	24	x	24	4.000	--	--	1	--	--	--	MOUNT ON POWER POLE
54	MB6-1(2S)	--	21	x	21	3.063	--	--	--	--	--	--	MOUNT ON POWER POLE
55	R7-1D(2S)	--	18	x	24	3.000	--	--	1	--	--	--	MOUNT ON POWER POLE
56	R1-1(3)	--	36	x	36	7.460	--	--	1	1	1	--	--

3

SIGN NO.	SIGN CODE & SIZE	SIGN MESSAGE	SIGN SIZE W [IN.]	x	H [IN.]	637.2210 SIGNS TYPE II REFLC H [SF]	637.2215 SIGNS TYPE II REFLC H FOLDING [SF]	637.2230 SIGNS TYPE II REFLC F [SF]	638.2602 REM SIGNS TYPE II [EA]	638.3000 REM SMALL SIGN SUP [EA]	634.0816 POSTS TUBULAR STEEL 2"X 2"x16' [EA]	MOUNT ON SAME POST AS SIGN #	REMARKS / NEW SIGN LOCATION
57	J4-1(2S)	--	24	x	36	6.000	--	--	1	--	1	--	--
	M3-4	--	24	x	12								
	M1-6	STH 158	24	x	24								
58	R7-1D(2S)	--	18	x	24	3.000	--	--	1	--	--	--	MOUNT ON POWER POLE
59	R2-1(2S)	30 MPH	24	x	30	5.000	--	--	--	--	1	--	--
60	R1-1F(3)	--	36	x	36	--	7.460	--	1	--	--	--	MOUNT ON SIGNAL POLE
61	R1-1F(3)	--	36	x	36	--	7.460	--	1	--	--	--	MOUNT ON SIGNAL POLE
62	R7-1D(2S)	--	18	x	24	3.000	--	--	1	--	--	--	MOUNT ON POWER POLE
63	J4-1(2S)	--	24	x	36	6.000	--	--	1	--	1	--	--
	M3-2	--	24	x	12								
	M1-6	STH 158	24	x	24								
64	R1-1F(3)	--	36	x	36	--	7.460	--	1	--	--	--	MOUNT ON SIGNAL POLE
65	R1-1F(3)	--	36	x	36	--	7.460	--	1	--	--	--	MOUNT ON SIGNAL POLE
66	R7-1D(2S)	--	18	x	24	3.000	--	--	1	--	--	--	MOUNT ON POWER POLE
67	R1-1(3)	--	36	x	36	7.460	--	--	1	1	1	--	--
68	R7-1D(2S)	--	18	x	24	3.000	--	--	1	--	--	--	MOUNT ON LIGHT POLE
69	J4-1(2S)	--	24	x	36	6.000	--	--	1	--	1	--	--
	M3-4	--	24	x	12								
	M1-6	STH 158	24	x	24								
70	R7-1D(2S)	--	18	x	24	3.000	--	--	1	--	--	--	MOUNT ON POWER POLE
71	R7-1D(2S)	--	18	x	24	3.000	--	--	1	--	--	--	MOUNT ON LIGHT POLE
72	R2-1(2S)	30 MPH	24	x	30	5.000	--	--	1	1	1	--	--
73	R7-1D(2S)	--	18	x	24	3.000	--	--	1	--	--	--	MOUNT ON POWER POLE
74	R1-1(3)	--	36	x	36	7.460	--	--	1	1	1	--	--
75	R7-1D(2S)	--	18	x	24	3.000	--	--	1	--	--	--	MOUNT ON POWER POLE
76	R1-1(3)	--	36	x	36	7.460	--	--	1	1	1	--	--
77	R2-1(2S)	30 MPH	24	x	30	5.000	--	--	--	--	1	--	--
78	R1-1F(3)	--	36	x	36	--	7.460	--	1	--	--	--	MOUNT ON SIGNAL POLE
79	R1-1F(3)	--	36	x	36	--	7.460	--	1	--	--	--	MOUNT ON SIGNAL POLE

3

SIGN NO.	SIGN CODE & SIZE	SIGN MESSAGE	SIGN SIZE W [IN.]	x	H [IN.]	637.2210 SIGNS TYPE II REFLC H [SF]	637.2215 SIGNS TYPE II REFLC H FOLDING [SF]	637.2230 SIGNS TYPE II REFLC F [SF]	638.2602 REM SIGNS TYPE II [EA]	638.3000 REM SMALL SIGN SUP [EA]	634.0816 POSTS TUBULAR STEEL 2"X 2"x16' [EA]	MOUNT ON SAME POST AS SIGN #	REMARKS / NEW SIGN LOCATION
80	R7-1D(2S)	--	18	x	24	3.000	--	--	1	--	--	--	MOUNT ON LIGHT POLE
81	R7-1D(2S)	--	18	x	24	3.000	--	--	1	1	1	--	--
82	R1-1(3)	--	36	x	36	7.460	--	--	1	1	1	--	--
83	R2-1(2S)	30 MPH	24	x	30	5.000	--	--	--	--	1	--	--
84	R7-1D(2S)	--	18	x	24	3.000	--	--	1	--	--	--	MOUNT ON POWER POLE
85	J4-1(2S)	--	24	x	36	6.000	--	--	1	--	1	--	--
	M3-2	--	24	x	12								
	M1-6	STH 158	24	x	24								
86	R1-1F(3)	--	36	x	36	--	7.460	--	1	--	--	--	MOUNT ON SIGNAL POLE
87	R1-1F(3)	--	36	x	36	--	7.460	--	1	--	--	--	MOUNT ON SIGNAL POLE
88	R7-1D(2S)	--	18	x	24	3.000	--	--	1	--	--	--	MOUNT ON POWER POLE
89	R1-1(3)	--	36	x	36	7.460	--	--	1	1	1	--	--
90	R7-1D(2S)	--	18	x	24	3.000	--	--	1	--	--	--	MOUNT ON LIGHT POLE
91	R2-1(2S)	30 MPH	24	x	30	5.000	--	--	--	--	1	--	--
92	J4-1(2S)	--	24	x	36	6.000	--	--	1	--	1	--	--
	M3-4	--	24	x	12								
	M1-6	STH 158	24	x	24								
93	R1-1F(3)	--	36	x	36	--	7.460	--	1	--	--	--	MOUNT ON SIGNAL POLE
94	R1-1F(3)	--	36	x	36	--	7.460	--	1	--	--	--	MOUNT ON SIGNAL POLE
95	D9-2(2S)	--	24	x	24	4.000	--	--	1	--	--	--	MOUNT ON POWER POLE
96	MB6-1(2S)	--	21	x	21	3.063	--	--	--	--	--	--	MOUNT ON POWER POLE
97	R7-1D(2S)	--	18	x	24	3.000	--	--	1	--	--	--	MOUNT ON POWER POLE
98	R1-1(3)	--	36	x	36	7.460	--	--	1	1	1	--	--
99	R7-1D(2S)	--	18	x	24	3.000	--	--	1	--	--	--	MOUNT ON POWER POLE
100	R1-1F(3)	--	36	x	36	--	7.460	--	1	--	--	--	MOUNT ON SIGNAL POLE
101	R7-1D(2S)	--	18	x	24	3.000	--	--	1	--	--	--	MOUNT ON POWER POLE
102	R1-1(3)	--	36	x	36	7.460	--	--	1	1	1	--	--
103	R7-1D(2S)	--	18	x	24	3.000	--	--	1	--	--	--	MOUNT ON LIGHT POLE
104	R1-1(3)	--	36	x	36	7.460	--	--	1	1	1	--	--
105	R7-1D(2S)	--	18	x	24	3.000	--	--	1	1	1	--	--
106	R7-1D(2S)	--	18	x	24	3.000	--	--	1	1	1	--	--
107	R1-1(3)	--	36	x	36	7.460	--	--	1	--	--	--	MOUNT ON POWER POLE

3

SIGN NO.	SIGN CODE & SIZE	SIGN MESSAGE	SIGN SIZE W [IN.]	x	H [IN.]	637.2210 SIGNS TYPE II REFLC H [SF]	637.2215 SIGNS TYPE II REFLC H FOLDING [SF]	637.2230 SIGNS TYPE II REFLC F [SF]	638.2602 REM SIGNS TYPE II [EA]	638.3000 REM SMALL SIGN SUP [EA]	634.0816 POSTS TUBULAR STEEL 2"X 2"x16' [EA]	MOUNT ON SAME POST AS SIGN #	REMARKS / NEW SIGN LOCATION
108	R2-1(2S)	30 MPH	24	x	30	5.000	--	--	--	--	1	--	--
109	J4-1(2S)	--	24	x	36	6.000	--	--	1	--	1	--	--
	M3-4	--	24	x	12								
	M1-6	STH 158	24	x	24								
110	R1-1F(3)	--	36	x	36	--	7.460	--	1	--	--	--	MOUNT ON SIGNAL POLE
111	R7-1D(2S)	--	18	x	24	3.000	--	--	1	--	--	--	MOUNT ON LIGHT POLE
112	R2-1(2S)	30 MPH	24	x	30	5.000	--	--	--	--	1	--	--
113	S5-2(2S)	--	24	x	30	5.000	--	--	--	--	--	#112	--
114	J4-1(2S)	--	24	x	36	6.000	--	--	1	--	1	--	--
	M3-4	--	24	x	12								
	M1-6	STH 158	24	x	24								
115	R7-1D(2S)	--	18	x	24	3.000	--	--	1	--	--	--	MOUNT ON LIGHT POLE
116	R1-1F(3)	--	36	x	36	--	7.460	--	1	--	--	--	MOUNT ON SIGNAL POLE
117	R1-1F(3)	--	36	x	36	--	7.460	--	1	--	--	--	MOUNT ON SIGNAL POLE
118	J4-1	--	--	x	--	--	--	--	1	--	--	--	--
119	R1-1F(3)	--	36	x	36	--	7.460	--	1	--	--	--	MOUNT ON SIGNAL POLE
120	R1-1F(3)	--	36	x	36	--	7.460	--	1	--	--	--	MOUNT ON SIGNAL POLE
121	S1-1(2S)	--	36	x	36	--	--	6.750	1	1	1	--	--
122	S16-7L(2S)	--	30	x	18	--	--	3.750	1	--	--	#121	--
123	R7-1D(2S)	--	18	x	24	3.000	--	--	--	--	1	--	--
124	R1-1(3)	--	36	x	36	7.460	--	--	1	1	1	--	--
125	S4-51(2S)	15 MPH	24	x	48	8.000	--	--	1	1	1	--	--
126	R7-1D(2S)	--	18	x	24	3.000	--	--	1	--	1	--	--
127	S1-1(2S)	--	36	x	36	--	--	6.750	1	1	1	--	--
128	S16-9P(2S)	--	30	x	18	--	--	3.750	--	--	--	#127	--
129	R2-6P(2S)	--	24	x	18	3.000	--	--	--	--	--	#127	--
130	S4-51(2S)	15 MPH	24	x	48	8.000	--	--	--	--	--	--	MOUNT ON LIGHT POLE
131	R1-1(3)	--	36	x	36	7.460	--	--	1	1	1	--	--
132	S1-1(2S)	--	36	x	36	--	--	6.750	1	--	--	--	MOUNT ON POWER POLE
133	W16-9P(2S)	--	30	x	18	--	--	3.750	--	--	--	--	MOUNT ON POWER POLE
134	R2-6P(2S)	--	24	x	18	3.000	--	--	--	--	--	--	MOUNT ON POWER POLE

3

SIGN NO.	SIGN CODE & SIZE	SIGN MESSAGE	SIGN SIZE W [IN.]	x	H [IN.]	637.2210 SIGNS TYPE II REFLC H [SF]	637.2215 SIGNS TYPE II REFLC H FOLDING [SF]	637.2230 SIGNS TYPE II REFLC F [SF]	638.2602 REM SIGNS TYPE II [EA]	638.3000 REM SMALL SIGN SUP [EA]	634.0816 POSTS TUBULAR STEEL 2"X 2"x16' [EA]	MOUNT ON SAME POST AS SIGN #	REMARKS / NEW SIGN LOCATION
135	R7-1D(2S)	--	18	x	24	3.000	--	--	1	--	--	--	MOUNT ON LIGHT POLE
136	R1-1(3)	--	36	x	36	7.460	--	--	1	1	1	--	--
137	R1-1(3)	--	36	x	36	7.460	--	--	1	1	1	--	--
138	R7-1D(2S)	--	18	x	24	3.000	--	--	1	1	1	--	--
139	R2-1	--	--	x	--	--	--	--	1	--	--	--	--
140	R7-1D(2S)	--	18	x	24	3.000	--	--	1	1	1	--	--
141	R1-1(3)	--	36	x	36	7.460	--	--	1	1	1	--	--
142	J4-1(2S)	--	24	x	36	6.000	--	--	--	--	1	--	--
	M3-2	--	24	x	12								
	M1-6	STH 158	24	x	24								
143	R2-1(2S)	30 MPH	24	x	30	5.000	--	--	--	--	1	--	--
144	S5-2(2S)	--	24	x	30	5.000	--	--	--	--	--	#143	--
145	R7-1D(2S)	--	18	x	24	3.000	--	--	1	1	1	--	--
146	R1-1(3)	--	36	x	36	7.460	--	--	1	1	1	--	--
147	R7-1D(2S)	--	18	x	24	3.000	--	--	1	--	--	--	MOUNT ON LIGHT POLE
148	R2-1(2S)	30 MPH	24	x	30	5.000	--	--	1	--	--	--	MOUNT ON LIGHT POLE
149	R1-1(3)	--	36	x	36	7.460	--	--	1	1	1	--	--
150	R1-1(3)	--	36	x	36	7.460	--	--	1	1	1	--	--
151	R7-1D(2S)	--	18	x	24	3.000	--	--	1	1	1	--	--
152	J4-1(2S)	--	24	x	36	6.000	--	--	1	--	1	--	--
	M3-4	--	24	x	12								
	M1-6	STH 158	24	x	24								
153	R7-1D(2S)	--	18	x	24	3.000	--	--	1	--	--	--	MOUNT ON POWER POLE
154	R1-1F(3)	--	36	x	36	--	7.460	--	1	--	--	--	MOUNT ON SIGNAL POLE
155	R1-1F(3)	--	36	x	36	--	7.460	--	1	--	--	--	MOUNT ON SIGNAL POLE
156	R1-1(3)	--	36	x	36	7.460	--	--	1	1	1	--	--
157	R2-1(2S)	30 MPH	24	x	30	5.000	--	--	--	--	1	--	--
158	R7-1D(2S)	--	18	x	24	3.000	--	--	1	--	--	--	MOUNT ON LIGHT POLE

3

SIGN NO.	SIGN CODE & SIZE	SIGN MESSAGE	SIGN SIZE W [IN.]	x	H [IN.]	637.2210 SIGNS TYPE II REFLC H [SF]	637.2215 SIGNS TYPE II REFLC H FOLDING [SF]	637.2230 SIGNS TYPE II REFLC F [SF]	638.2602 REM SIGNS TYPE II [EA]	638.3000 REM SMALL SIGN SUP [EA]	634.0816 POSTS TUBULAR STEEL 2"X 2"x16' [EA]	MOUNT ON SAME POST AS SIGN #	REMARKS / NEW SIGN LOCATION
159	J4-1(2S)	--	24	x	36	6.000	--	--	1	--	1	--	--
	M3-2	--	24	x	12								
	M1-6	STH 158	24	x	24								
160	R1-1F(3)	--	36	x	36	--	7.460	--	1	--	--	--	MOUNT ON SIGNAL POLE
161	R1-1F(3)	--	36	x	36	--	7.460	--	1	--	--	--	MOUNT ON SIGNAL POLE
162	R7-1D(2S)	--	18	x	24	3.000	--	--	1	1	1	--	--
163	R7-1D(2S)	--	18	x	24	3.000	--	--	1	1	1	--	--
164	R1-1(3)	--	36	x	36	7.460	--	--	1	1	1	--	--
165	R7-1D(2S)	--	18	x	24	3.000	--	--	1	--	--	--	MOUNT ON LIGHT POLE
166	R7-1D(2S)	--	18	x	24	3.000	--	--	1	--	--	--	MOUNT ON LIGHT POLE
167	R7-1D(2S)	--	18	x	24	3.000	--	--	1	--	--	--	MOUNT ON LIGHT POLE
168	R7-1D(2S)	--	18	x	24	3.000	--	--	1	1	1	--	--
169	R2-1(2S)	30 MPH	24	x	30	5.000	--	--	--	--	--	--	MOUNT ON LIGHT POLE
170	R7-1D(2S)	--	18	x	24	3.000	--	--	1	1	1	--	--
171	R7-1D(2S)	--	18	x	24	3.000	--	--	1	--	--	--	MOUNT ON LIGHT POLE
172	R2-1(2S)	30 MPH	24	x	30	5.000	--	--	--	--	1	--	--
173	R1-1(3)	--	36	x	36	7.460	--	--	1	1	1	--	--
174	R7-1D(2S)	--	18	x	24	3.000	--	--	1	--	--	--	MOUNT ON LIGHT POLE
175	R1-1(3)	--	36	x	36	7.460	--	--	1	1	1	--	--
176	R7-1D(2S)	--	18	x	24	3.000	--	--	1	--	--	--	MOUNT ON LIGHT POLE
177	R1-1(3)	--	36	x	36	7.460	--	--	1	1	1	--	--
178	R7-1D(2S)	--	18	x	24	3.000	--	--	1	--	--	--	MOUNT ON POWER POLE
179	R1-1(3)	--	36	x	36	7.460	--	--	1	1	1	--	--
180	R7-1D(2S)	--	18	x	24	3.000	--	--	1	--	--	--	MOUNT ON POWER POLE
181	R1-1(3)	--	36	x	36	7.460	--	--	1	1	1	--	--
182	R7-1D(2S)	--	18	x	24	3.000	--	--	1	--	--	--	MOUNT ON LIGHT POLE
183	R1-1(3)	--	36	x	36	7.460	--	--	1	1	1	--	--
184	J4-1(2S)	--	24	x	36	6.000	--	--	1	--	--	--	MOUNT ON LIGHT POLE
	M3-4	--	24	x	12								
	M1-6	STH 158	24	x	24								

3

SIGN NO.	SIGN CODE & SIZE	SIGN MESSAGE	SIGN SIZE W [IN.]	x	H [IN.]	637.2210 SIGNS TYPE II REFLC H [SF]	637.2215 SIGNS TYPE II REFLC H FOLDING [SF]	637.2230 SIGNS TYPE II REFLC F [SF]	638.2602 REM SIGNS TYPE II [EA]	638.3000 REM SMALL SIGN SUP [EA]	634.0816 POSTS TUBULAR STEEL 2"X 2"x16' [EA]	MOUNT ON SAME POST AS SIGN #	REMARKS / NEW SIGN LOCATION
185	R7-1D(2S)	--	18	x	24	3.000	--	--	1	--	--	--	MOUNT ON LIGHT POLE
186	R1-1F(3)	--	36	x	36	--	7.460	--	1	--	--	--	MOUNT ON SIGNAL POLE
187	R1-1F(3)	--	36	x	36	--	7.460	--	1	--	--	--	MOUNT ON SIGNAL POLE
188	J4-1(2S)	--	24	x	36	6.000	--	--	1	--	--	--	MOUNT ON POWER POLE
	M3-2	--	24	x	12								
	M1-6	STH 158	24	x	24								
189	R7-1D(2S)	--	18	x	24	3.000	--	--	1	--	--	--	MOUNT ON POWER POLE
190	R2-1(2S)	30 MPH	24	x	30	5.000	--	--	--	--	--	--	MOUNT ON POWER POLE
191	R1-1F(3)	--	36	x	36	--	7.460	--	1	--	--	--	MOUNT ON SIGNAL POLE
192	R1-1F(3)	--	36	x	36	--	7.460	--	1	--	--	--	MOUNT ON SIGNAL POLE
193	R7-1D(2S)	--	18	x	24	3.000	--	--	1	--	--	--	MOUNT ON POWER POLE
194	R1-1(3)	--	36	x	36	7.460	--	--	1	1	1	--	--
195	R2-1(2S)	30 MPH	24	x	30	5.000	--	--	--	--	--	--	MOUNT ON LIGHT POLE
196	R7-1D(2S)	--	18	x	24	3.000	--	--	1	--	--	--	MOUNT ON LIGHT POLE
197	R7-1D(2S)	--	18	x	24	3.000	--	--	1	1	1	--	--
198	R1-1(3)	--	36	x	36	7.460	--	--	1	1	1	--	--
199	R7-1D(2S)	--	18	x	24	3.000	--	--	1	--	--	--	MOUNT ON LIGHT POLE
200	R1-1(3)	--	36	x	36	7.460	--	--	1	1	1	--	--
201	R7-1D(2S)	--	18	x	24	3.000	--	--	1	--	--	--	MOUNT ON LIGHT POLE
202	R7-1D(2S)	--	18	x	24	3.000	--	--	1	--	--	--	MOUNT ON POWER POLE
203	R1-1(3)	--	36	x	36	7.460	--	--	1	1	1	--	--
204	R7-1D(2S)	--	18	x	24	3.000	--	--	1	--	--	--	MOUNT ON POWER POLE
205	R1-1(3)	--	36	x	36	7.460	--	--	1	1	1	--	--
206	R1-1(3)	--	36	x	36	7.460	--	--	1	1	1	--	--
207	R7-1D(2S)	--	18	x	24	3.000	--	--	1	1	1	--	--
208	R2-1(2S)	30 MPH	24	x	30	5.000	--	--	--	--	1	--	--
209	R1-1(3)	--	36	x	36	7.460	--	--	1	1	1	--	--
210	R7-1D(2S)	--	18	x	24	3.000	--	--	1	--	--	--	MOUNT ON POWER POLE
211	R2-1(2S)	30 MPH	24	x	30	5.000	--	--	--	--	--	--	MOUNT ON POWER POLE
212	R7-1D(2S)	--	18	x	24	3.000	--	--	1	--	--	--	MOUNT ON POWER POLE
213	R1-1(3)	--	36	x	36	7.460	--	--	1	--	--	--	MOUNT ON LIGHT POLE

3

SIGN NO.	SIGN CODE & SIZE	SIGN MESSAGE	SIGN SIZE W [IN.]	x	H [IN.]	637.2210 SIGNS TYPE II REFLC H [SF]	637.2215 SIGNS TYPE II REFLC H FOLDING [SF]	637.2230 SIGNS TYPE II REFLC F [SF]	638.2602 REM SIGNS TYPE II [EA]	638.3000 REM SMALL SIGN SUP [EA]	634.0816 POSTS TUBULAR STEEL 2"X 2"x16' [EA]	MOUNT ON SAME POST AS SIGN #	REMARKS / NEW SIGN LOCATION
214	R7-1D(2S)	--	18	x	24	3.000	--	--	1	--	--	--	MOUNT ON POWER POLE
215	R7-1D(2S)	--	18	x	24	3.000	--	--	1	--	--	--	MOUNT ON LIGHT POLE
216	R1-1(3)	--	36	x	36	7.460	--	--	1	1	1	--	--
217	R7-1D(2S)	--	18	x	24	3.000	--	--	1	--	--	--	MOUNT ON POWER POLE
218	R2-1(2S)	30 MPH	24	x	30	5.000	--	--	1	--	--	--	MOUNT ON POWER POLE
219	R7-1D(2S)	--	18	x	24	3.000	--	--	1	--	--	--	MOUNT ON POWER POLE
220	R7-1D(2S)	--	18	x	24	3.000	--	--	1	--	--	--	MOUNT ON POWER POLE
221	R7-1D(2S)	--	18	x	24	3.000	--	--	1	--	--	--	MOUNT ON LIGHT POLE
222	R7-1D(2S)	--	18	x	24	3.000	--	--	--	--	--	--	MOUNT ON LIGHT POLE
223	R1-1(3)	--	36	x	36	7.460	--	--	1	1	1	--	--
224	R7-1D(2S)	--	18	x	24	3.000	--	--	1	--	--	--	MOUNT ON POWER POLE
225	J4-1(2S)	--	24	x	36	6.000	--	--	1	--	--	--	MOUNT ON LIGHT POLE
	M3-4	--	24	x	12								
	M1-6	STH 158	24	x	24								
226	R1-1(3)	--	36	x	36	7.460	--	--	1	1	1	--	--
227	R2-1(2S)	30 MPH	24	x	30	5.000	--	--	--	--	--	--	MOUNT ON POWER POLE
228	R7-1D(2S)	--	18	x	24	3.000	--	--	1	--	--	--	MOUNT ON POWER POLE
229	W12-2(2M)	14'-4"	36	x	36	--	--	9.000	1	--	--	--	MOUNT ON BRIDGE
230	W5-52L(2M)	--	12	x	36	--	--	3.000	1	--	--	--	MOUNT TO COLUMN 4' HEIGHT
231	R7-1D(2S)	--	18	x	24	3.000	--	--	1	--	--	--	MOUNT ON LIGHT POLE
232	R2-1(2S)	30 MPH	24	x	30	5.000	--	--	--	--	--	--	MOUNT ON LIGHT POLE
233	R1-1(3)	--	36	x	36	7.460	--	--	1	1	1	--	--
234	R1-1(3)	--	36	x	36	7.460	--	--	1	1	1	--	--
235	W12-2(2M)	14'-4"	36	x	36	--	--	9.000	1	--	--	--	MOUNT ON BRIDGE
236	R7-1D(2S)	--	18	x	24	3.000	--	--	1	--	--	--	MOUNT ON POWER POLE
237	R2-1(2S)	30 MPH	24	x	30	5.000	--	--	1	--	--	--	MOUNT ON LIGHT POLE
238	R1-1(3)	--	36	x	36	7.460	--	--	1	1	1	--	--

3

SIGN NO.	SIGN CODE & SIZE	SIGN MESSAGE	SIGN SIZE W [IN.]	x	H [IN.]	637.2210 SIGNS TYPE II REFLC H [SF]	637.2215 SIGNS TYPE II REFLC H FOLDING [SF]	637.2230 SIGNS TYPE II REFLC F [SF]	638.2602 REM SIGNS TYPE II [EA]	638.3000 REM SMALL SIGN SUP [EA]	634.0816 POSTS TUBULAR STEEL 2"X 2"x16' [EA]	MOUNT ON SAME POST AS SIGN #	REMARKS / NEW SIGN LOCATION
239	J2-2(2S)	--	48	x	57	19.000	--	--	1	--	--	--	MOUNT ON LIGHT POLE
	M3-1	--	24	x	12								
	M1-6B	STH 32	24	x	24								
	M5-1L	--	21	x	21								
	M3-3	--	24	x	12								
	M1-6B	STH 32	24	x	24								
	M5-2R	--	21	x	21								
240	R7-1D(2S)	--	18	x	24	3.000	--	--	1	--	--	--	MOUNT ON LIGHT POLE
241	R7-1D(2S)	--	18	x	24	3.000	--	--	1	--	--	--	MOUNT ON POWER POLE
242	D9-2(2S)	--	24	x	24	4.000	--	--	1	1	1	--	--
243	MB6-1(2S)	--	21	x	21	3.063	--	--	1	--	--	#242	--
244	J1-1(2S)	--	24	x	39	6.500	--	--	1	--	--	--	MOUNT ON LIGHT POLE
	M2-1	--	21	x	15								
	M1-6B	STH 32	24	x	24								
245	R7-1D(2S)	--	18	x	24	3.000	--	--	1	--	--	--	MOUNT ON LIGHT POLE
246	R7-1D(2S)	--	18	x	24	3.000	--	--	1	--	--	--	MOUNT ON LIGHT POLE
247	W5-52L(2M)	--	12	x	36	--	--	3.000	1	--	--	--	MOUNT ON COLUMN 4' HEIGHT
248	J4-1(2S)	--	24	x	36	6.000	--	--	1	1	1	--	--
	M3-4	--	24	x	12								
	M1-6	STH 158	24	x	24								
249	R7-1D(2S)	--	18	x	24	3.000	--	--	1	--	--	--	MOUNT ON POWER POLE - SHEET 3 OF 26
250	W12-2(2M)	14'-4"	36	x	36	--	--	9.000	--	--	1	--	SHEET 23 OF 26
251	W16-9P(2M)	--	30	x	18	--	--	3.750	--	--	--	#250	SHEET 23 OF 26
252	W12-2(2M)	14'-4"	36	x	36	--	--	9.000	--	--	--	--	MOUNT ON POWER POLE - SHEET 25 OF 26
253	W16-9P(2M)	--	30	x	18	--	--	3.750	--	--	--	#252	SHEET 25 OF 26
254	S1-1(2S)	--	36	x	36	--	--	6.750	--	--	--	--	MOUNT ON SIGNAL POLE - SHEET 13
255	S16-7L(2S)	--	30	x	18	--	--	3.750	--	--	--	--	MOUNT ON SIGNAL POLE - SHEET 13
256	R9-3A(2S)	--	18	x	18	2.250	--	--	--	--	1	--	SHEET 5 OF 26
257	R9-3BR(2S)	--	18	x	12	1.500	--	--	--	--	--	#256	SHEET 5 OF 26
258	R9-3A(2S)	--	18	x	18	2.250	--	--	--	--	1	--	SHEET 9 OF 26

3

SIGN NO.	SIGN CODE & SIZE	SIGN MESSAGE	SIGN SIZE W [IN.]	x	H [IN.]	637.2210 SIGNS TYPE II REFLC H [SF]	637.2215 SIGNS TYPE II REFLC H FOLDING [SF]	637.2230 SIGNS TYPE II REFLC F [SF]	638.2602 REM SIGNS TYPE II [EA]	638.3000 REM SMALL SIGN SUP [EA]	634.0816 POSTS TUBULAR STEEL 2"X 2"x16' [EA]	MOUNT ON SAME POST AS SIGN #	REMARKS / NEW SIGN LOCATION
259	R9-3BR(2S)	--	18	x	12	1.500	--	--	--	--	--	#258	SHEET 9 OF 26
260	R9-3A(2S)	--	18	x	18	2.250	--	--	--	--	1	--	SHEET 9 OF 26
261	R9-3BL(2S)	--	18	x	12	1.500	--	--	--	--	--	#260	SHEET 9 OF 26
262	R2-6P(2S)	--	24	x	18	3.000	--	--	--	--	--	#30	SHEET 5 OF 26
263	R2-6P(2S)	--	24	x	18	3.000	--	--	--	--	--	#47	SHEET 7 OF 26
264	R1-1(3)	--	36	x	36	7.460	--	--	1	1	1	--	SHEET 24 OF 26
265	R7-1D(2S)	--	18	x	24	3.000	--	--	--	--	--	--	MOUNT ON POWER POLE - SHEET 3 OF 26
266	R7-1D(2S)	--	18	x	24	3.000	--	--	--	--	--	--	MOUNT ON LIGHT POLE - SHEET 3 OF 26
267	R7-1D(2S)	--	18	x	24	3.000	--	--	--	--	--	--	MOUNT ON POWER POLE - SHEET 4 OF 26
268	R7-1D(2S)	--	18	x	24	3.000	--	--	--	--	--	--	MOUNT ON POWER POLE - SHEET 5 OF 26
269	R7-1D(2S)	--	18	x	24	3.000	--	--	--	--	--	--	MOUNT ON POWER POLE - SHEET 5 OF 26
270	R7-1D(2S)	--	18	x	24	3.000	--	--	--	--	--	--	MOUNT ON LIGHT POLE - SHEET 6 OF 26
271	R7-1D(2S)	--	18	x	24	3.000	--	--	--	--	--	--	MOUNT ON POWER POLE - SHEET 8 OF 26
272	R7-1D(2S)	--	18	x	24	3.000	--	--	--	--	1	--	--
273	R7-1D(2S)	--	18	x	24	3.000	--	--	--	--	--	--	MOUNT ON POWER POLE - SHEET 14 OF 26
274	R7-1D(2S)	--	18	x	24	3.000	--	--	--	--	1	--	SHEET 15 OF 26
275	R7-1D(2S)	--	18	x	24	3.000	--	--	--	--	--	--	SHEET 24 OF 26
	--	--	--	x	--	--	--	--	--	--	--	--	--
	TOTALS					1027.398 *	201.420	115.500	214 *	69	101		

3

* ADDITIONAL QUANTITIES SHOWN ELSEWHERE

TYPE II PERMANENT SIGNING -

SIGN NO.	SIGN CODE & SIZE	SIGN MESSAGE	SIGN SIZE W [IN.]	x	H [IN.]	637.2210 SIGNS TYPE II REFLC H [SF]	638.2602 REM SIGNS TYPE II [EA]	REMARKS / NEW SIGN LOCATION
1000	M1-94H	PERSHING BLVD	78	x	18	9.750	1	MOUNT ON SIGNAL ARM
1001	M1-94S	[SHIELD] 52ND ST	72	x	18	9.000	1	MOUNT ON SIGNAL ARM
1002	M1-94H	PERSHING BLVD	78	x	18	9.750	1	MOUNT ON SIGNAL ARM
1003	M1-94S	[SHIELD] 52ND ST	72	x	18	9.000	1	MOUNT ON SIGNAL ARM
1004	M1-94H	42ND AVE	54	x	18	6.750	1	MOUNT ON SIGNAL ARM
1005	M1-94H	42ND AVE	54	x	18	6.750	1	MOUNT ON SIGNAL ARM
1006	M1-94H	39TH AVE	54	x	18	6.750	1	MOUNT ON SIGNAL ARM
1007	M1-94S	[SHIELD] 52ND ST	72	x	18	9.000	1	MOUNT ON SIGNAL ARM
1008	M1-94S	[SHIELD] 52ND ST	72	x	18	9.000	1	MOUNT ON SIGNAL ARM
1009	M1-94H	39TH AVE	54	x	18	6.750	1	MOUNT ON SIGNAL ARM
1010	M1-94H	35TH AVE	54	x	18	6.750	1	MOUNT ON SIGNAL ARM
1011	M1-94H	35TH AVE	54	x	18	6.750	1	MOUNT ON SIGNAL ARM
1012	M1-94H	30TH AVE	54	x	18	6.750	1	MOUNT ON SIGNAL ARM
1013	M1-94S	[SHIELD] 52ND ST	72	x	18	9.000	1	MOUNT ON SIGNAL ARM
1014	M1-94H	30TH AVE	54	x	18	6.750	1	MOUNT ON SIGNAL ARM
1015	M1-94S	[SHIELD] 52ND ST	72	x	18	9.000	1	MOUNT ON SIGNAL ARM
1016	M1-94H	22ND AVE	54	x	18	6.750	1	MOUNT ON SIGNAL ARM
1017	M1-94H	22ND AVE	54	x	18	6.750	1	MOUNT ON SIGNAL ARM
1018	M1-94S	[SHIELD] 52ND ST	72	x	18	9.000	1	MOUNT ON SIGNAL ARM
1019	M1-94S	[SHIELD] 52ND ST	72	x	18	9.000	1	MOUNT ON SIGNAL ARM
	TOTALS					159.000 *	20 *	

* ADDITIONAL QUANTITIES SHOWN ELSEWHERE

Standard Detail Drawing List

08A05-19A	INLET COVERS TYPE A, H, A-S, H-S & Z
08A05-19B	INLET COVERS TYPE B, B-A, C, MS, MS-A, & WM
08A05-19C	INLET COVERS TYPE F, HM, HM-S, S, T, V, HM-GJ, & HM-GJ-S
08A05-19D	INLET COVER TYPE BW, MANHOLE COVERS, TYPE K, J, J-S, L & M
08B09-01	MANHOLES 3-FT, 4-FT, 5-FT, 6-FT, 7-FT AND 8-FT DIAMETER
08C07-01	INLETS 2X2-FT, 2X2.5-FT, 2X3-FT AND 2.5X3-FT
08D01-17	CONCRETE CURB, CONCRETE CURB AND GUTTER AND TIES
08D05-15A	CURB RAMPS TYPES 1 AND 1-A
08D05-15B	CURB RAMPS TYPES 2 AND 3
08D05-15C	CURB RAMPS TYPES 4A AND 4A1
08D05-15D	CURB RAMPS TYPE 4B AND 4B1
08D05-15E	CURB RAMPS TYPES 5, 6, 7A, 7B & 8
08E09-06	SILT FENCE
08E10-02	INLET PROTECTION TYPE A, B, C AND D
09B04-10	PULL BOX
13C14-04A	BASE PATCHING CONCRETE
13C14-04B	BASE PATCHING CONCRETE
13C14-04C	BASE PATCHING CONCRETE
15C05-02	TRAFFIC CONTROL, ADVANCE WARNING SIGNS 40 M.P.H. OR LESS
15C07-12B	PAVEMENT MARKING WORDS
15C07-12C	PAVEMENT MARKING ARROWS
15C08-16A	PAVEMENT MARKING (MAINLINE)
15C08-16B	PAVEMENT MARKING (INTERSECTIONS)
15C08-16E	PAVEMENT MARKING (LEFT TURN LANE)
15C08-16F	PAVEMENT MARKING (ISLANDS)
15C19-02B	MOVING PAVEMENT MARKING OPERATION MULTI-LANE UNDIVIDED ROADWAY
15D20-02	TRAFFIC CONTROL, SINGLE LANE CLOSURE, NON-FREEWAY/EXPRESSWAY
15D21-02	TRAFFIC CONTROL, INTERSECTION WITHIN SINGLE LANE CLOSURE
15D30-01	TRAFFIC CONTROL, SIDEWALK CLOSURE

6

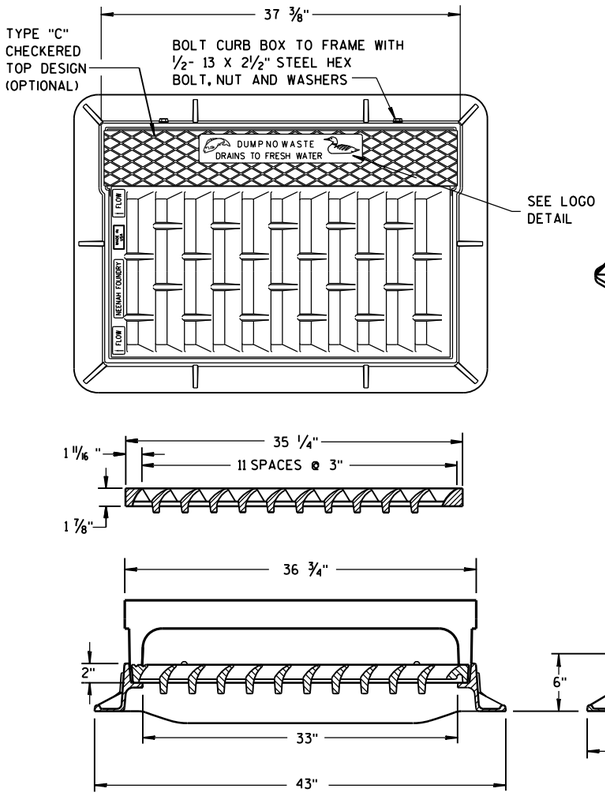

NOTE:
GRATE IS REVERSIBLE.

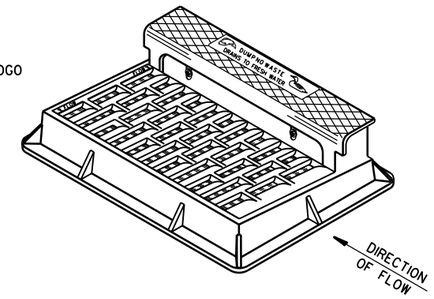

NOTE: CURB BOX HEIGHT ADJUSTABLE 6" TO 9"

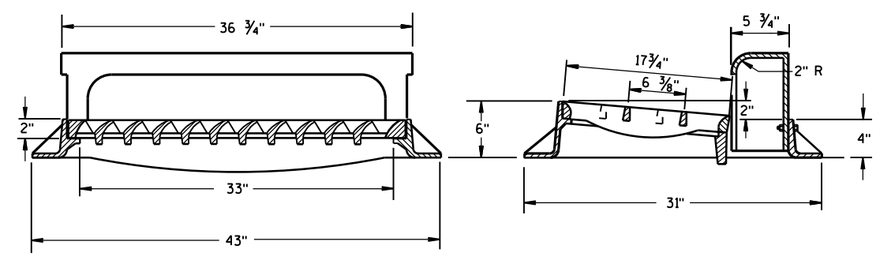

TYPE "H"

NOTE: EITHER CASTING IS ACCEPTABLE

1 1/8" DIAGONAL BARS WITH 1 5/8" OPENINGS

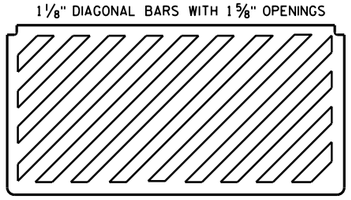

SPECIAL GRATE FOR TYPE "H" COVER

(MEASURES 35 1/4" X 17 3/4" X 2")

(NOTED AS TYPE H-S ON DRAINAGE TABLE)

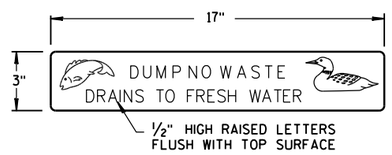

LOGO DETAIL

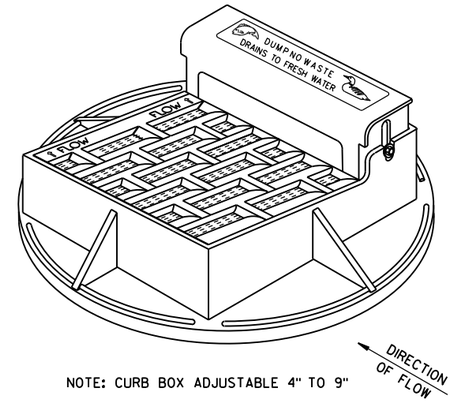

NOTE: CURB BOX ADJUSTABLE 4" TO 9"

NOTE:
GRATE IS REVERSIBLE.

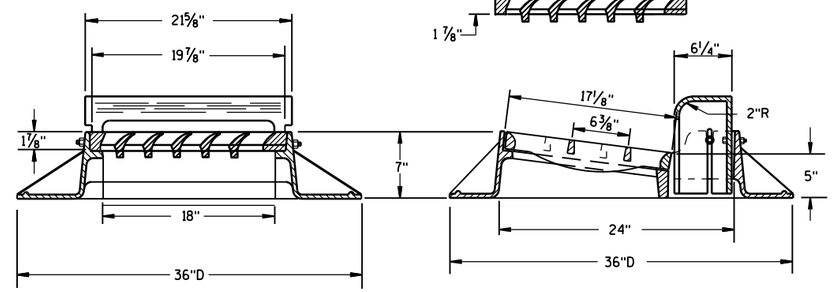

TYPE "A"

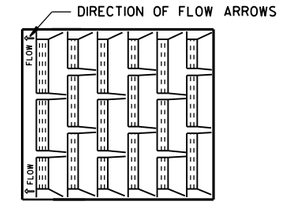

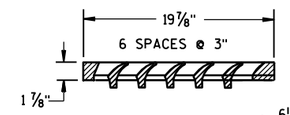

1" DIAGONAL BARS WITH 1 1/2" OPENINGS

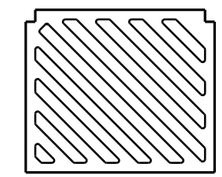

SPECIAL GRATE FOR TYPE "A" COVER

(MEASURES 19 3/4" X 17" X 1 7/8")

(NOTED AS TYPE A-S ON DRAINAGE TABLE)

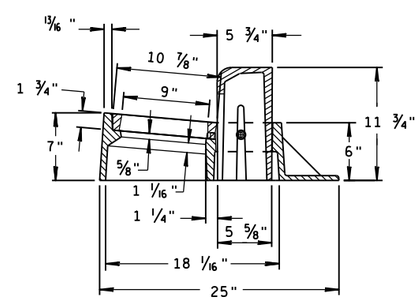

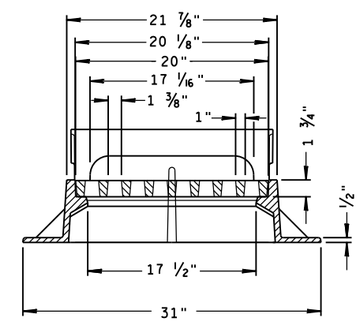

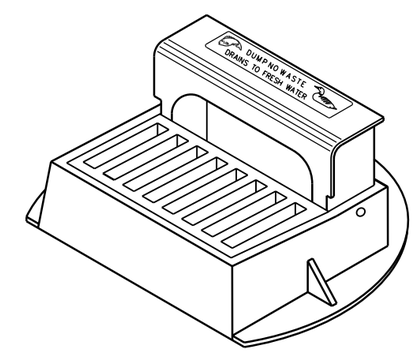

TYPE "Z"

GENERAL NOTES

DETAILS OF CONSTRUCTION, MATERIALS AND WORKMANSHIP NOT SHOWN ON THIS DRAWING SHALL CONFORM TO THE PERTINENT REQUIREMENTS OF THE STANDARD SPECIFICATIONS AND THE APPLICABLE SPECIAL PROVISIONS.

DETAIL DRAWINGS FOR PROPOSED ALTERNATE DESIGNS FOR CATCH BASIN, MANHOLE AND INLET COVERS SHALL BE SUBMITTED TO THE ENGINEER FOR APPROVAL PROVIDING THAT SUCH ALTERNATE DESIGNS MAKE PROVISION FOR EQUIVALENT CAPACITY AND STRENGTH.

ROUND FRAMES AND COVERS SHALL HAVE CONTINUOUSLY MACHINED BEARING SURFACES TO PREVENT ROCKING AND RATTLING.

INLET COVERS
TYPE A, H, A-S, H-S & Z

STATE OF WISCONSIN
DEPARTMENT OF TRANSPORTATION

APPROVED
11-27-13 — DATE
/S/ Jerry H. Zogg — ROADWAY STANDARDS DEVELOPMENT ENGINEER
FHWA

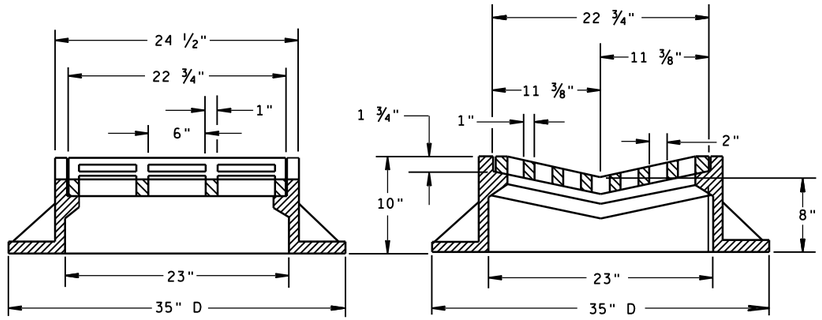

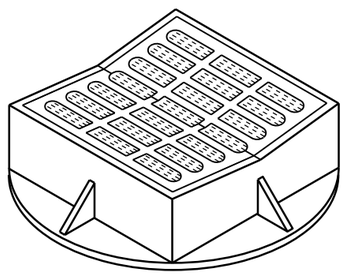

TYPE "B"

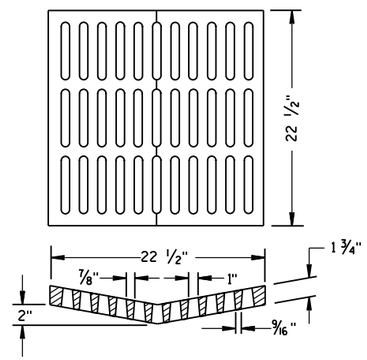

ALTERNATIVE GRATE FOR TYPE "B" COVER

USE WHERE PEDESTRIAN OR BICYCLE TRAFFIC IS POSSIBLE.

NOTED AS TYPE B-A ON THE DRAINAGE TABLE

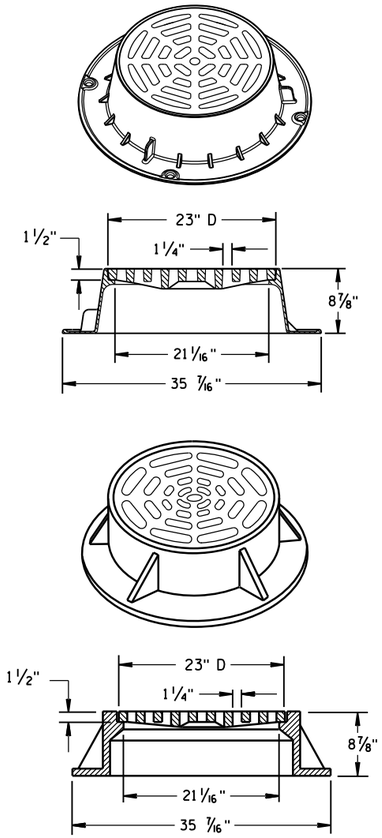

TYPE "C"

NOTE: EITHER CASTING IS ACCEPTABLE

GENERAL NOTES

DETAILS OF CONSTRUCTION, MATERIALS AND WORKMANSHIP NOT SHOWN ON THIS DRAWING SHALL CONFORM TO THE PERTINENT REQUIREMENTS OF THE STANDARD SPECIFICATIONS AND THE APPLICABLE SPECIAL PROVISIONS.

DETAIL DRAWINGS FOR PROPOSED ALTERNATE DESIGNS FOR CATCH BASIN, MANHOLE AND INLET COVERS SHALL BE SUBMITTED TO THE ENGINEER FOR APPROVAL PROVIDING THAT SUCH ALTERNATE DESIGNS MAKE PROVISION FOR EQUIVALENT CAPACITY AND STRENGTH.

ROUND FRAMES AND COVERS SHALL HAVE CONTINUOUSLY MACHINED BEARING SURFACES TO PREVENT ROCKING AND RATTLING.

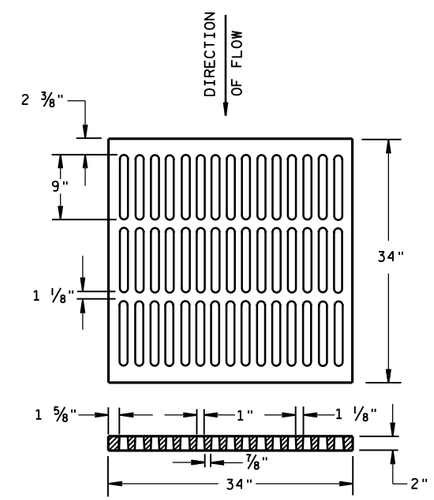

ALTERNATIVE TYPE "MS"

USE WHERE PEDESTRIAN OR BICYCLE TRAFFIC IS PERMITTED

NOTED AS TYPE MS-A ON THE DRAINAGE TABLE

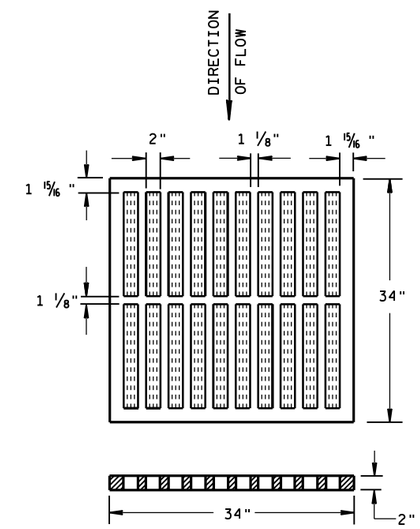

TYPE "MS"

USE ON FREEWAYS AND EXPRESSWAYS

NOTED AS TYPE MS ON DRAINAGE TABLE

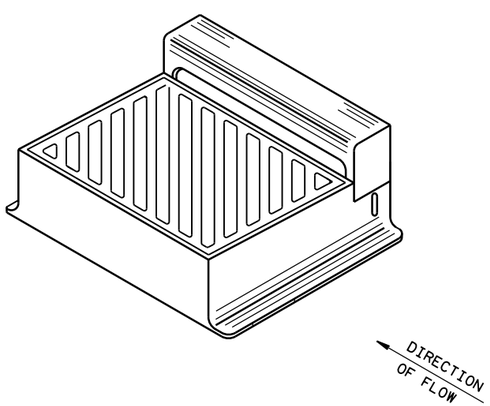

DIAGONAL SLOTS, SHALL BE ORIENTED TO THE DIRECTION OF FLOW AS ILLUSTRATED. GRATES ARE MANUFACTURED TO BE REVERSIBLE.

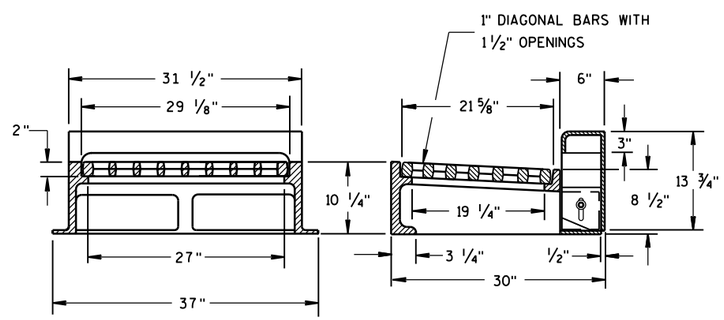

NOTE: CURB BOX HEIGHT ADJUSTABLE 6" TO 9"

TYPE "WM"

6

6

S.D.D. 8 A 5-19b

S.D.D. 8 A 5-19b

INLET COVERS
TYPE B, B-A, C,
MS, MS-A, & WM

STATE OF WISCONSIN
DEPARTMENT OF TRANSPORTATION

APPROVED

11/27/2013 — DATE

/S/ Jerry H. Zogg — ROADWAY STANDARDS DEVELOPMENT ENGINEER

FHWA

GENERAL NOTES

DETAILS OF CONSTRUCTION, MATERIALS AND WORKMANSHIP NOT SHOWN ON THIS DRAWING SHALL CONFORM TO THE PERTINENT REQUIREMENTS OF THE STANDARD SPECIFICATIONS AND THE APPLICABLE SPECIAL PROVISIONS.

DETAIL DRAWINGS FOR PROPOSED ALTERNATE DESIGNS FOR INLET COVERS SHALL BE SUBMITTED TO THE ENGINEER FOR APPROVAL PROVIDING THAT SUCH ALTERNATE DESIGNS MAKE PROVISION FOR EQUIVALENT CAPACITY AND STRENGTH.

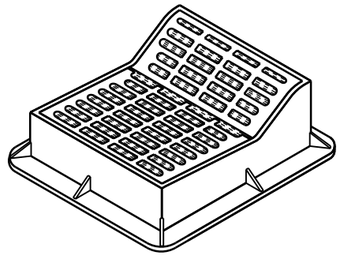

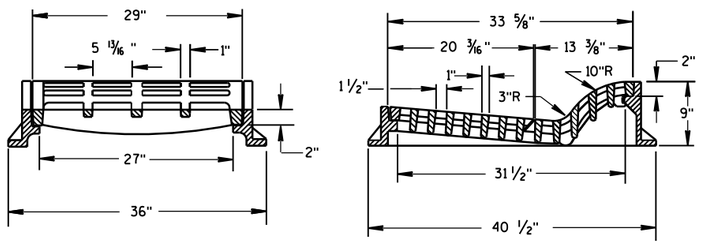

TYPE "F"

USE WITH TYPES A & D CONCRETE CURB & GUTTER, 36 INCH.

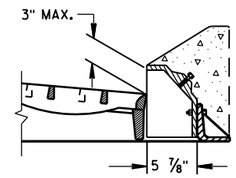

ALTERNATIVE CURB BOX FOR TYPE "HM" COVER

USE WITH TYPES G & J CONCRETE CURB & GUTTER, 30 INCH
NOTED AS TYPE HM-GJ ON DRAINAGE TABLE

NOTE:
SPECIAL GRATE FOR THE
TYPE "H" COVER MAY ALSO BE
USED FOR THE TYPE "HM-GJ" COVER
NOTED AS TYPE HM-GJ-S ON DRAINAGE TABLE

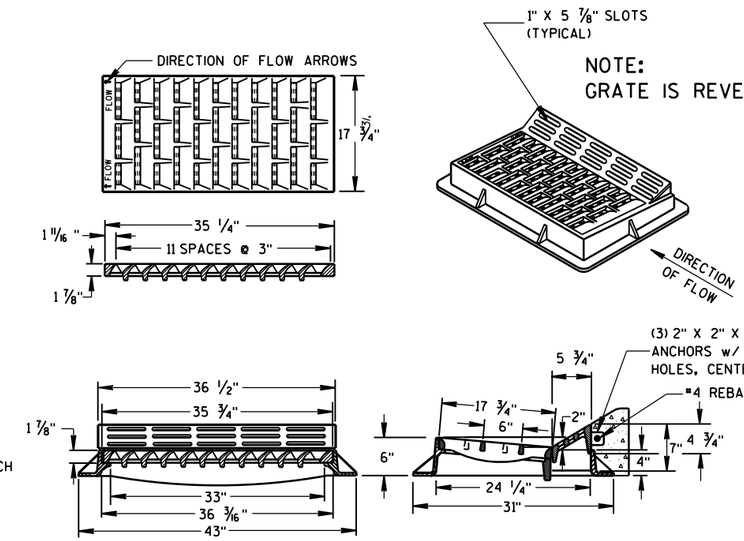

NOTE:
GRATE IS REVERSIBLE.

TYPE "HM"

USE WITH TYPES A & D CONCRETE CURB & GUTTER, 36 INCH.

NOTE:
SPECIAL GRATE FOR THE
TYPE "H" COVER MAY ALSO BE
USED FOR THE TYPE "HM" COVER
NOTED AS TYPE HM-S ON DRAINAGE TABLE

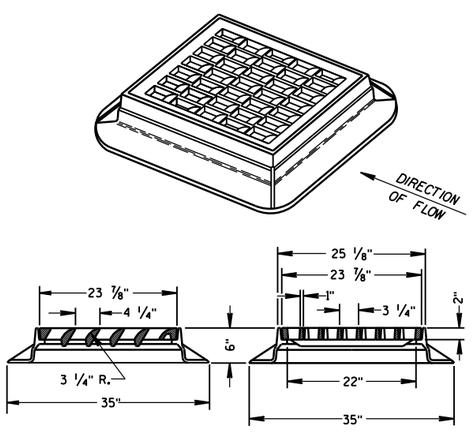

TYPE "S"

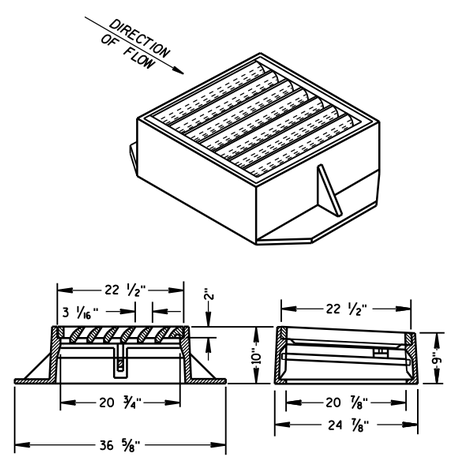

TYPE "V"

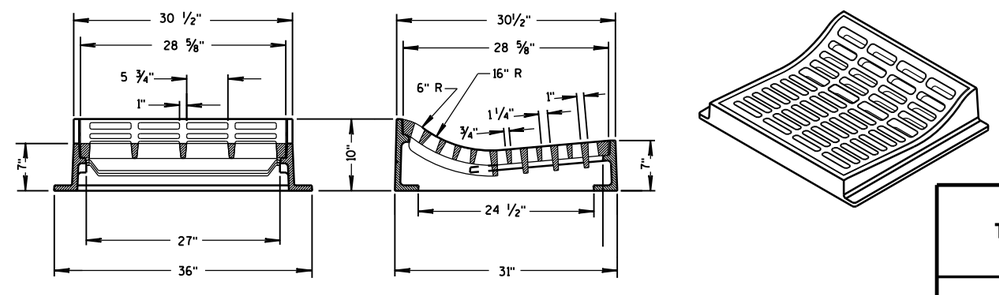

TYPE "T"

USE WITH TYPES R & T CONCRETE CURB & GUTTER, 36 INCH.

INLET COVERS
TYPE F, HM, HM-S, S, T, V, HM-GJ, & HM-GJ-S

STATE OF WISCONSIN
DEPARTMENT OF TRANSPORTATION

APPROVED
11/27/2013 — DATE
/S/ Jerry H. Zogg — ROADWAY STANDARDS DEVELOPMENT ENGINEER
FHWA

6

S.D.D. 8 A 5-19c

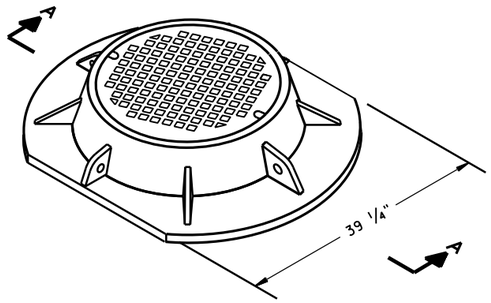

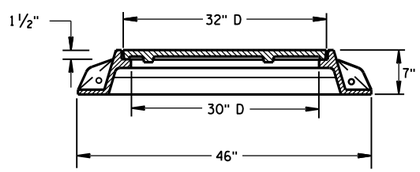

SECTION A-A
TYPE "K"

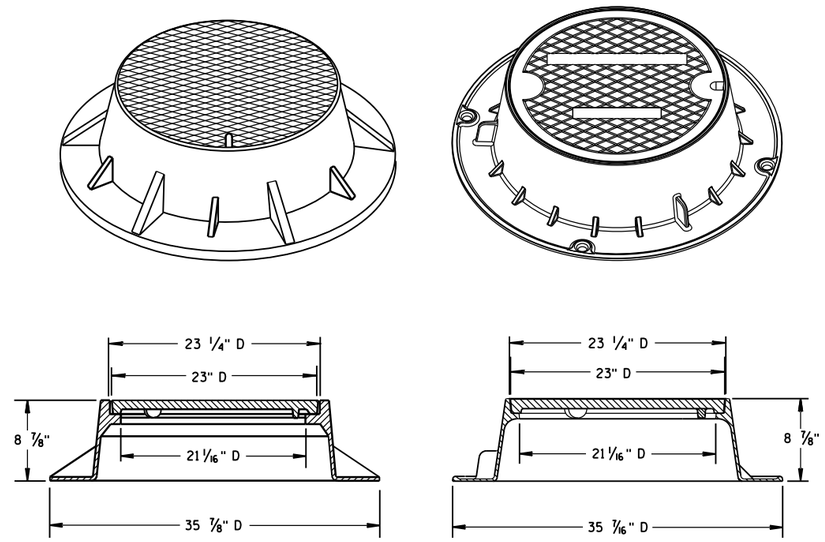

TYPE "J"
NOTE: EITHER CASTING IS ACCEPTABLE

GENERAL NOTES

DETAILS OF CONSTRUCTION, MATERIALS AND WORKMANSHIP NOT SHOWN ON THIS DRAWING SHALL CONFORM TO THE PERTINENT REQUIREMENTS OF THE STANDARD SPECIFICATIONS AND THE APPLICABLE SPECIAL PROVISIONS.

DETAIL DRAWINGS FOR PROPOSED ALTERNATE DESIGNS FOR MANHOLE COVERS SHALL BE SUBMITTED TO THE ENGINEER FOR APPROVAL PROVIDING THAT SUCH ALTERNATE DESIGNS MAKE PROVISION FOR EQUIVALENT CAPACITY AND STRENGTH.

ROUND FRAMES AND COVERS SHALL HAVE CONTINUOUSLY MACHINED BEARING SURFACES TO PREVENT ROCKING AND RATTLING.

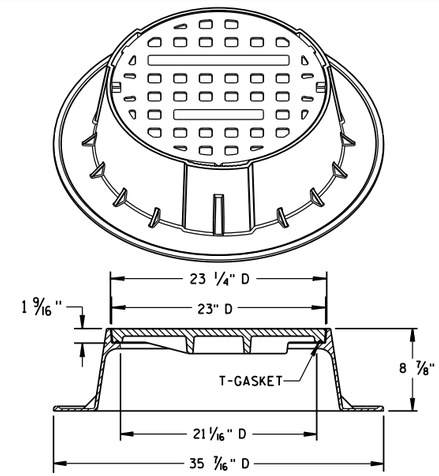

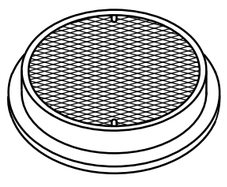

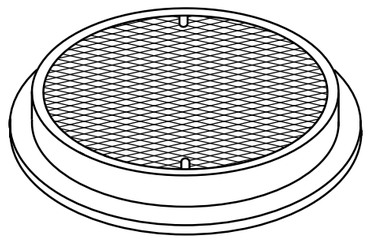

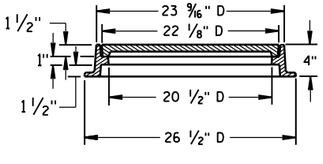

TYPE "L"

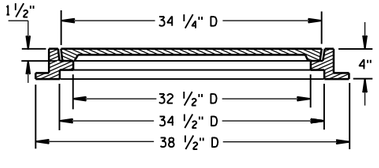

TYPE "M"

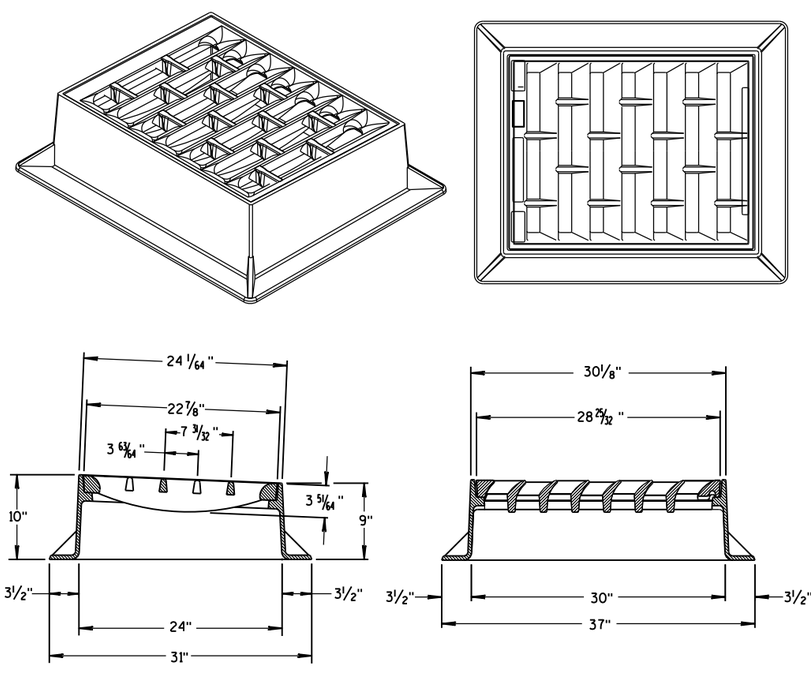

INLET COVER TYPE "BW"

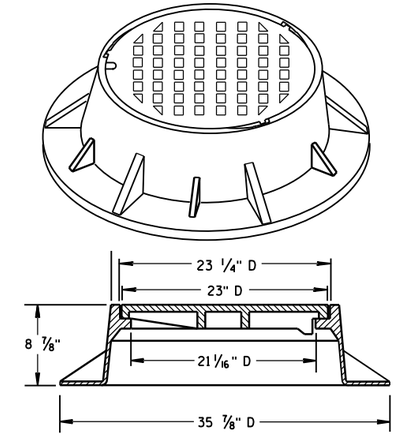

TYPE "J" SPECIAL
TYPE "B" NON-ROCKING SELF-SEAL LID
(NOTED AS TYPE J-S ON THE DRAINAGE TABLE)
NOTE: EITHER CASTING IS ACCEPTABLE

INLET COVER TYPE BW
MANHOLE COVERS, TYPE K, J, J-S, L & M

STATE OF WISCONSIN
DEPARTMENT OF TRANSPORTATION

APPROVED
11/27/2013 — DATE
/S/ Jerry H. Zogg — ROADWAY STANDARDS DEVELOPMENT ENGINEER
FHWA

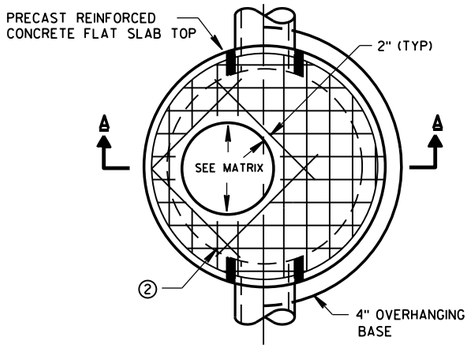

PLAN VIEW CIRCULAR OPENING

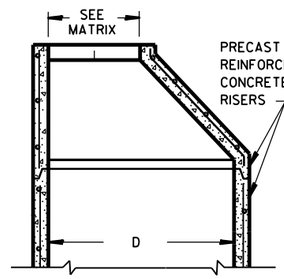

OPTIONAL PRECAST REINFORCED CONCRETE ECCENTRIC TOP

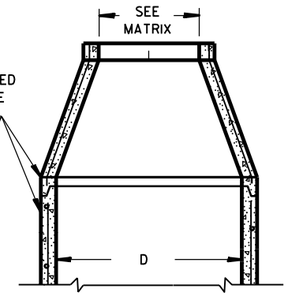

OPTIONAL PRECAST REINFORCED CONCRETE CONCENTRIC TOP

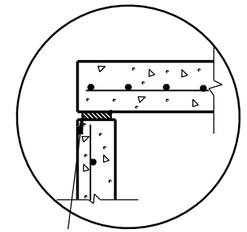

TOP WITH PLAIN END JOINT

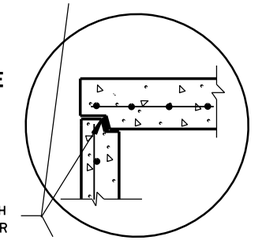

JOINTS TO BE SEALED WITH A BUTYL RUBBER SEAL PER SEALANT MANUFACTURERS RECOMMENDATIONS CONFORMING TO ASTM C990 (TYP)

TOP WITH TONGUE AND GROOVE JOINT

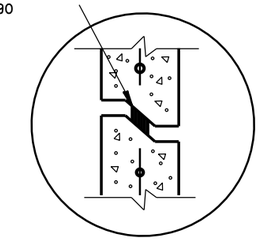

RISER WITH TONGUE AND GROOVE JOINT

DETAIL "B"

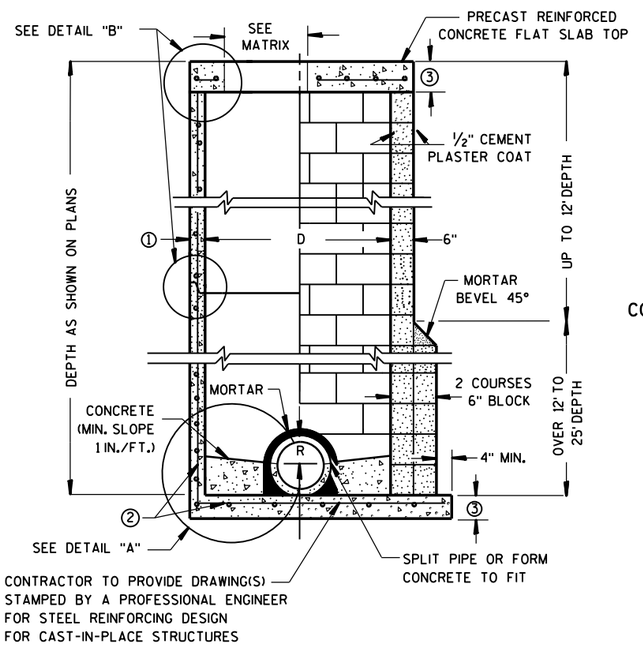

PRECAST REINFORCED CONCRETE WITH MONOLITHIC BASE

CONCRETE BLOCK WITH CAST-IN-PLACE OR PRECAST REINFORCED CONCRETE BASE ②

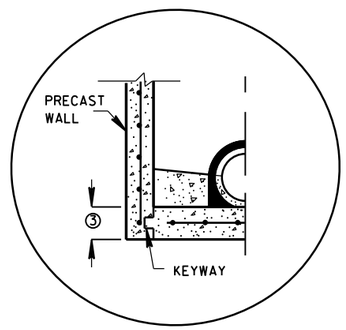

PRECAST REINFORCED CONCRETE WITH INTEGRAL BASE OPTION

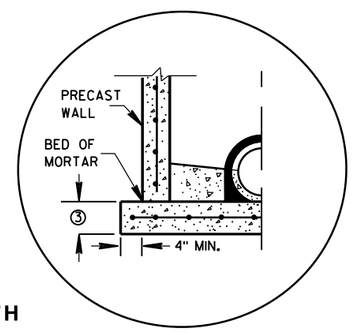

SEPARATE PRECAST REINFORCED CONCRETE BASE OPTION

DETAIL "A"

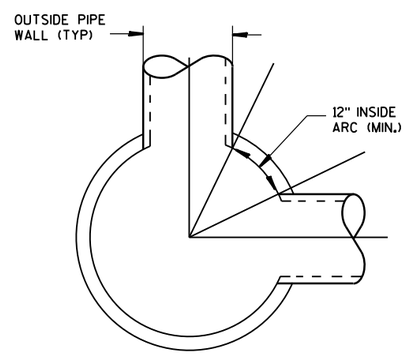

DETAIL "C"

GENERAL NOTES

DETAILS OF CONSTRUCTION, MATERIALS AND WORKMANSHIP NOT SHOWN ON THIS DRAWING SHALL CONFORM TO THE PERTINENT REQUIREMENTS OF THE STANDARD SPECIFICATIONS AND THE APPLICABLE SPECIAL PROVISIONS.

UNLESS OTHERWISE AUTHORIZED IN WRITING BY THE ENGINEER, THE CONTRACTOR SHALL NOT ORDER AND DELIVER PRECAST MANHOLE UNITS REQUIRED FOR THE PROJECT UNTIL A LIST OF SIZES IS FURNISHED BY THE ENGINEER.

DETAILED DRAWINGS FOR PROPOSED ALTERNATE DESIGNS FOR UNDERGROUND DRAINAGE STRUCTURES SHALL BE SUBMITTED TO THE ENGINEER FOR APPROVAL PROVIDING THAT SUCH ALTERNATE DESIGNS MAKE PROVISION FOR EQUIVALENT CAPACITY AND STRENGTH.

ALL DRAINAGE STRUCTURES ARE DESIGNATED ON THE PLANS AS "MANHOLES 3X3-L", "CATCH BASINS 4-B", "INLETS 2X3-H", ETC. THE FIRST NUMBERS DESIGNATE THE SIZE OF THE STRUCTURE, AND THE FOLLOWING LETTER DESIGNATES THE TYPE OF COVER TO BE USED TO COMPRISE THE COMPLETE UNIT.

BASES SHALL BE PLACED ON A BED OF MATERIAL AT LEAST 6 INCHES IN DEPTH, WHICH MEETS THE REQUIREMENTS OF GRANULAR BACKFILL. THIS BEDDING SHALL BE COMPACTED AND PROVIDE UNIFORM SUPPORT FOR THE ENTIRE AREA OF THE BASE.

PRECAST REINFORCED CONE TOPS (ECCENTRIC OR CONCENTRIC) OR PRECAST REINFORCED FLAT SLAB TOPS MAY BE USED ON CONCRETE BLOCK STRUCTURES. THE CONE TOPS SHALL BE INSTALLED ON A BED OF MORTAR.

ECCENTRIC CONE TOPS MAY BE USED ON ALL STRUCTURES, AND CONCENTRIC CONE TOPS SHALL BE USED ONLY ON STRUCTURES 5 FEET OR LESS IN DEPTH, UNLESS OTHERWISE DIRECTED BY THE ENGINEER.

STEPS MEETING AASHTO M199 AND THE FOLLOWING REQUIREMENTS SHALL BE INSTALLED IN ALL STRUCTURES OVER 5 FEET IN DEPTH: 16 INCH C-C MAXIMUM SPACING; PROJECT A MINIMUM CLEAR DISTANCE OF 4 INCHES FROM THE WALL AT THE POINT OF EMBEDMENT; MINIMUM LENGTH OF 10 INCHES; MINIMUM WALL EMBEDMENT OF 3 INCHES. FERROUS METAL STEPS NOT PAINTED OR TREATED TO RESIST CORROSION SHALL HAVE A MINIMUM CROSS SECTIONAL DIMENSION OF 1 INCH.

STEPS OF APPROVED POLYPROPYLENE PLASTIC COATED REINFORCEMENT BAR ARE ACCEPTABLE. REINFORCING BAR MUST BE A MINIMUM OF ½" AND MEET THE REQUIREMENTS OF ASTM A615.

CERTIFICATION SHALL BE PROVIDED THAT INSTALLED STEPS WHEN TESTED IN ACCORDANCE WITH SECTION 10 OF AASHTO T280 CAN WITHSTAND A VERTICAL LOAD OF 800 LBS. AND A HORIZONTAL LOAD OF 400 LBS.

ALL BAR STEEL REINFORCEMENT SHALL BE EMBEDDED 2 INCHES CLEAR UNLESS OTHERWISE SHOWN OR NOTED.

CONCRETE BLOCK WILL NOT BE PERMITED FOR STRUCTURES GREATER THAN 4 FEET IN DIAMETER.

PRECAST REINFORCED RISERS SHALL HAVE A TONGUE AND GROOVE JOINT WITH TONGUE UP OR DOWN.

ALL PRECAST MANHOLE UNITS SHALL CONFORM TO THE PERTINENT REQUIREMENTS OF AASHTO DESIGNATION M 199.

4" OVERHANGING BASES ARE REQUIRED FOR ALL CONCRETE BLOCK INSTALLATIONS. 4" OVERHANG IS REQUIRED WHEN SEPARATE PRECAST BASE IS PROVIDED. OVERHANG IS NOT REQUIRED ON PRECAST STRUCTURES WITH AN INTEGRAL OR MONOLITHIC BASE.

FOR ADDITIONAL CONFIGURATIONS, MAINTAIN A MINIMUM OF 12 INCHES AS MEASURED FROM THE INSIDE OF THE STRUCTURE WALL BETWEEN THE OUTSIDE PIPE WALLS OF ADJACENT PIPES. SEE DETAIL "C".

① MINIMUM WALL THICKNESS SHALL BE 4 INCHES FOR 3-FT, 5 INCHES FOR 4-FT, 6 INCHES FOR 5-FT, 7 INCHES FOR 6-FT, 8 INCHES FOR 7-FT AND 9 INCHES FOR 8-FT DIAMETER PRECAST MANHOLES.

② FOR PRECAST MANHOLES PROVIDE REINFORCING STEEL IN ACCORDANCE TO AASHTO M199.

③ PRECAST FLAT SLAB TOPS AND BASES WITH A DIAMETER OF 48" AND LESS SHALL HAVE A MINIMUM THICKNESS OF 6". PRECAST FLAT SLAB TOPS AND BASES WITH A DIAMETER LARGER THAN 48" SHALL HAVE A MINIMUM THICKNESS OF 8".

MANHOLE COVER OPENING MATRIX

MANHOLE COVER TYPE	C	ALL J'S	K	L	M
OPENING SIZE (FT)					
2 DIA.	X	X		X	
3 DIA.			X		X

PIPE MATRIX

MANHOLE SIZE	MAXIMUM INSIDE PIPE DIAMETER FOR TWO PIPES	
	180° SEPARATION (IN)	90° SEPARATION (IN)
3-FT	15	12
4-FT	24	18
5-FT	36	24
6-FT	42	36
7-FT	48	36
8-FT	60	42

MANHOLES 3-FT, 4-FT, 5-FT, 6-FT, 7-FT AND 8-FT DIAMETER

STATE OF WISCONSIN
DEPARTMENT OF TRANSPORTATION

APPROVED
6/5/2012 — DATE
/S/ Jerry H. Zogg
ROADWAY STANDARDS DEVELOPMENT ENGINEER
FHWA

MANHOLES 3-FT, 4-FT, 5-FT, 6-FT, 7-FT AND 8-FT DIAMETER

6

S.D.D. 8 B 9-1

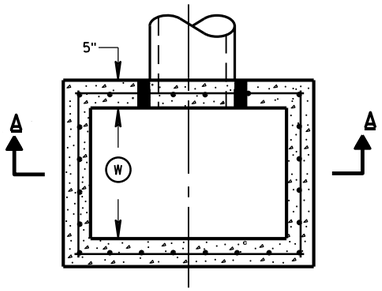

PLAN VIEW

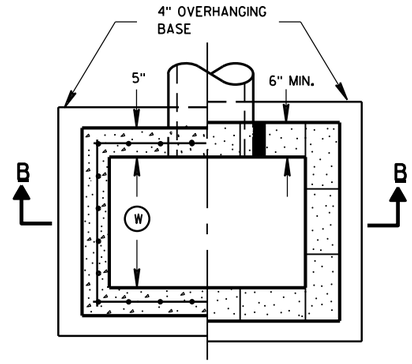

PLAN VIEW

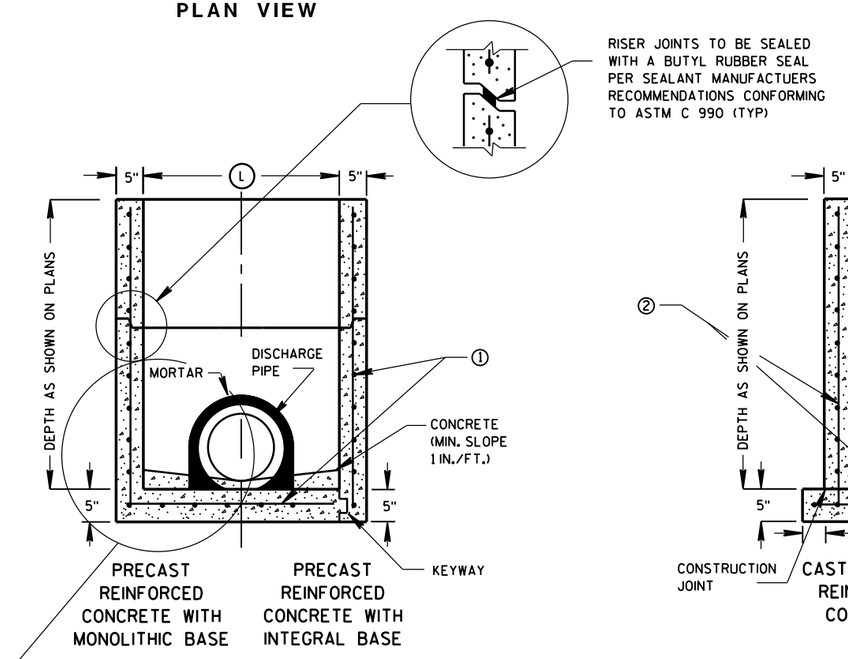

SECTION A-A

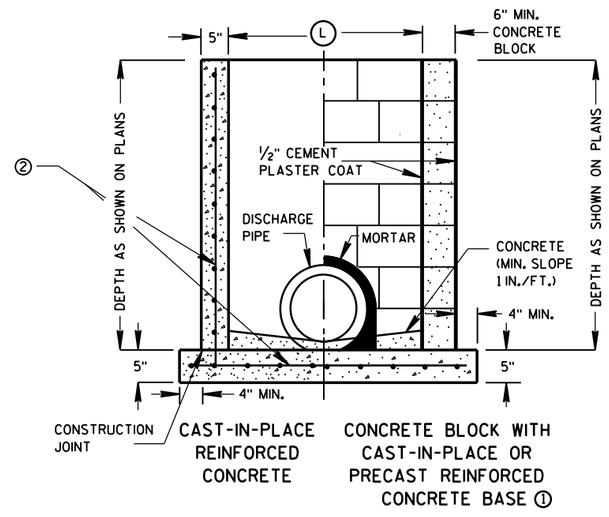

SECTION B-B

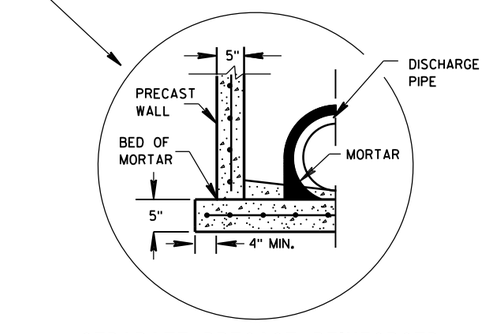

SEPARATE PRECAST REINFORCED CONCRETE BASE OPTION

GENERAL NOTES

DETAILS OF CONSTRUCTION, MATERIALS AND WORKMANSHIP NOT SHOWN ON THIS DRAWING SHALL CONFORM TO THE PERTINENT REQUIREMENTS OF THE STANDARD SPECIFICATIONS AND THE APPLICABLE SPECIAL PROVISIONS.

UNLESS OTHERWISE AUTHORIZED IN WRITING BY THE ENGINEER, THE CONTRACTOR SHALL NOT ORDER AND DELIVER PRECAST INLET UNITS REQUIRED FOR THE PROJECT UNTIL A LIST OF SIZES IS FURNISHED BY THE ENGINEER.

DETAILED DRAWINGS FOR PROPOSED ALTERNATE DESIGNS FOR UNDERGROUND DRAINAGE STRUCTURES SHALL BE SUBMITTED TO THE ENGINEER FOR APPROVAL PROVIDING THAT SUCH ALTERNATE DESIGNS MAKE PROVISION FOR EQUIVALENT CAPACITY AND STRENGTH.

ALL PRECAST INLET UNITS SHALL CONFORM TO THE PERTINENT REQUIREMENTS OF ASTM C 913.

ALL DRAINAGE STRUCTURES ARE DESIGNATED ON THE PLANS AS "MANHOLES 3X3-L", "CATCH BASINS 4-B", "INLETS 2X3-H", ETC. THE FIRST NUMBERS DESIGNATES THE SIZE OF THE STRUCTURE, AND THE FOLLOWING LETTER DESIGNATES THE TYPE OF COVER TO BE USED TO COMPRISE THE COMPLETE UNIT.

BASES SHALL BE PLACED ON A BED OF MATERIAL AT LEAST 6 INCHES IN DEPTH, WHICH MEETS THE REQUIREMENTS OF GRANULAR BACKFILL. THIS BEDDING SHALL BE COMPACTED AND PROVIDE UNIFORM SUPPORT FOR THE ENTIRE AREA OF THE BASE.

ALL BAR STEEL REINFORCEMENT SHALL BE EMBEDDED 2 INCHES CLEAR UNLESS OTHERWISE SHOWN OR NOTED.

PRECAST REINFORCED RISERS SHALL HAVE A TONGUE AND GROOVE JOINT WITH TONGUE UP OR DOWN.

4" OVERHANGING BASES ARE REQUIRED FOR CAST-IN-PLACE REINFORCED CONCRETE AND CONCRETE BLOCK INSTALLATIONS.
4" OVERHANG IS REQUIRED WHEN SEPARATE PRECAST BASE IS PROVIDED.
OVERHANG IS NOT REQUIRED ON PRECAST STRUCTURES WITH AN INTEGRAL OR MONOLITHIC BASE.

MAXIMUM INSIDE PIPE DIAMETER DETERMINED BY 3 INCH CLEARANCE ON EACH SIDE OF THE OUTSIDE WALL OF THE PIPE. SEE DETAIL "A". ASSUMES PIPE ENTERS PERPENDICULAR TO THE STRUCTURE.

① FOR PRECAST INLETS PROVIDE REINFORCING STEEL IN ACCORDANCE TO ASTM C 913.

② CONTRACTOR TO PROVIDE DRAWING(S) STAMPED BY A PROFESSIONAL ENGINEER FOR STEEL REINFORCING DESIGN FOR CAST-IN-PLACE STRUCTURES.

INLET COVER MATRIX

INLET SIZE		INLET COVER TYPE	ALL A'S	ALL B'S	BW	F	ALL H'S	S	T	V	WM
	WIDTH (W) (FT)	LENGTH (L) (FT)									
2X2-FT	2	2	X	X				X		X	
2X2.5-FT	2	2.5			X			X	X	X	X
2X3-FT	2	3					X				
2.5X3-FT	2.5	3				X					

PIPE MATRIX

INLET SIZE	MAXIMUM INSIDE PIPE DIAMETER	
	WIDTH (IN)	LENGTH (IN)
2X2-FT	12	12
2X2.5-FT	12	18
2X3-FT	12	24
2.5X3-FT	18	24

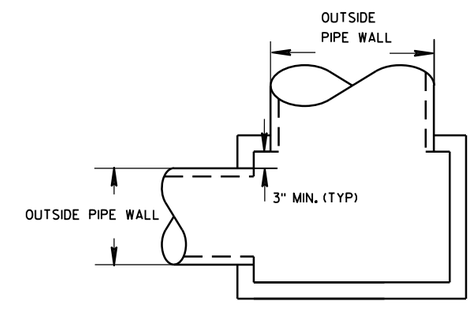

DETAIL "A"

INLETS 2X2-FT, 2X2.5-FT, 2X3-FT AND 2.5X3-FT

STATE OF WISCONSIN
DEPARTMENT OF TRANSPORTATION

APPROVED
6/5/2012 — DATE
/S/ Jerry H. Zogg — ROADWAY STANDARDS DE ENGINEER
FHWA

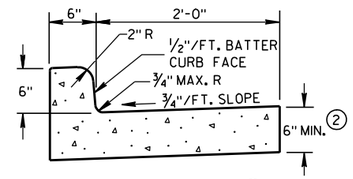

TYPES A & D ①

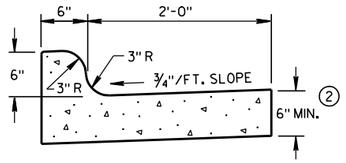

TYPES K & L ①

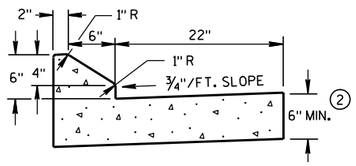

6" SLOPED CURB TYPES G & J ①

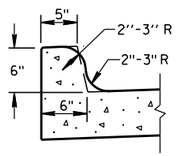

OPTIONAL CURB SHAPE FOR TYPES K & L ①

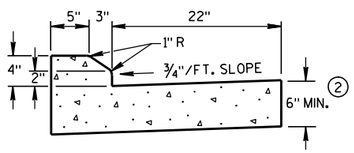

4" SLOPED CURB TYPES G & J ①

CONCRETE CURB & GUTTER 30"

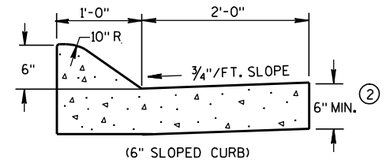

(6" SLOPED CURB)

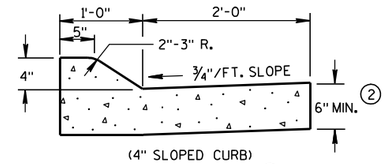

(4" SLOPED CURB)

TYPES A & D ①

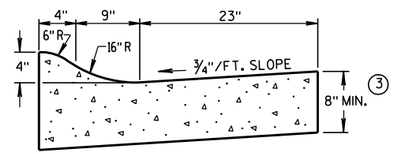

4" SLOPED CURB TYPES R & T ① ④

CONCRETE CURB & GUTTER 36"

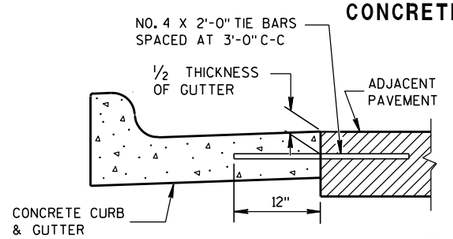

TYPICAL TIE BAR LOCATION ①

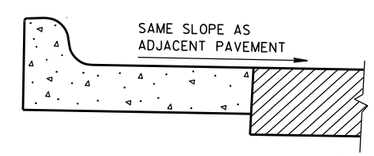

REVERSE SLOPE GUTTER ⑤
(TYPICAL FOR ALL CURB & GUTTER TYPES)

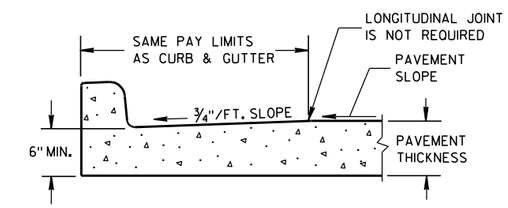

PARTIAL SECTION OF PAVEMENT WITH INTEGRAL CURB & GUTTER

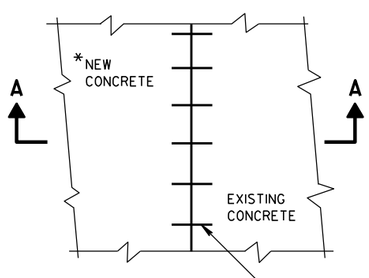

*NEW CURB & GUTTER, SURFACE DRAINS, CONCRETE PAVEMENT OR OTHER NEW CONCRETE.

PLAN VIEW

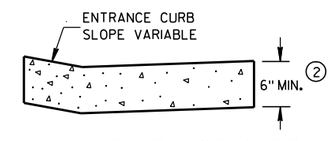

DRIVEWAY ENTRANCE CURB
(WHEN DIRECTED BY THE ENGINEER)

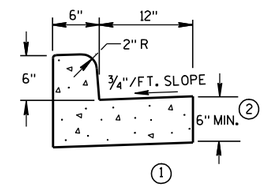

① TYPES A & D

CONCRETE CURB & GUTTER 18"

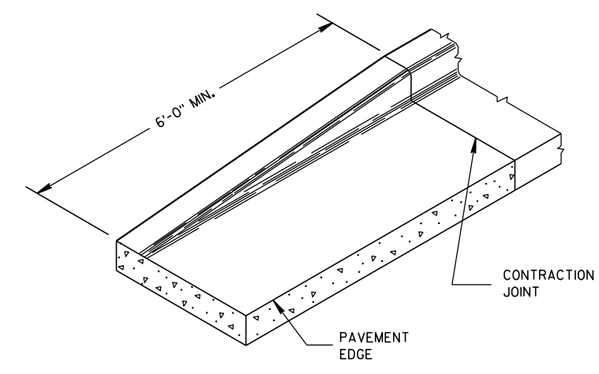

END SECTION CURB & GUTTER

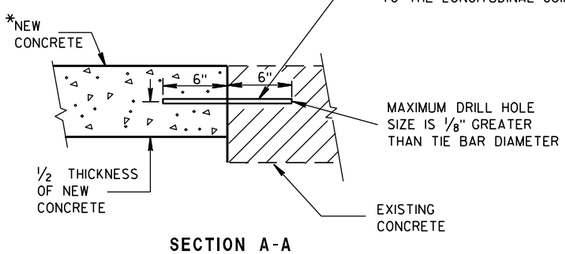

SECTION A-A

TIE BARS DRILLED INTO EXISTING PAVEMENT

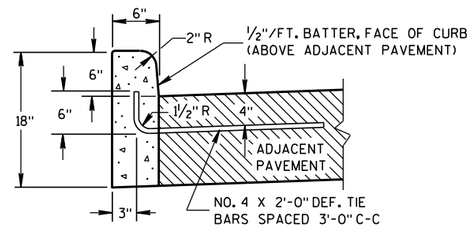

① TYPES A & D

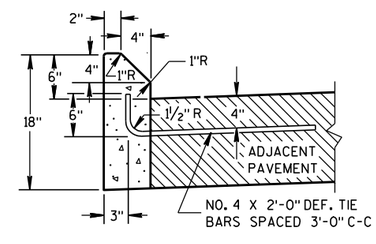

① TYPES G & J

CONCRETE CURB

GENERAL NOTES

DETAILS OF CONSTRUCTION, MATERIALS AND WORKMANSHIP NOT SHOWN ON THIS DRAWING SHALL CONFORM TO THE PERTINENT REQUIREMENTS OF THE CONTRACT.

PAVEMENT TIES AND TIE BARS SHALL BE EPOXY COATED IN CONFORMANCE WITH SUBSECTION 505.2.6.2 OF THE STANDARD SPECIFICATIONS.

INTEGRAL CURB & GUTTER SHALL CONFORM TO THE DETAILS SHOWN FOR CONCRETE CURB & GUTTER INCLUDING THE TRANSVERSE GUTTER SLOPE. A LONGITUDINAL CONSTRUCTION JOINT IS NOT REQUIRED WITH INTEGRAL CURB AND GUTTER.

WHERE THE TRANSVERSE JOINTS IN THE PAVEMENT ARE REQUIRED TO BE SEALED, THE JOINTS IN THE INTEGRAL CURB AND GUTTER SHALL BE SEALED TO THE FACE OF CURB WITH THE SAME TYPE OF SEALANT. THE COST OF FURNISHING AND INSTALLING THIS SEALANT SHALL BE INCIDENTAL TO THE ITEM CONCRETE CURB AND GUTTER.

UNLESS OTHERWISE SHOWN ON THE TYPICAL CROSS SECTIONS, THE BASE AGGREGATE AND COMMON EXCAVATION LIMITS ARE 2'-0" BEHIND THE BACK OF CURBS.

① TIE BARS ARE REQUIRED FOR CURB AND GUTTER TYPES A, G, K AND R.

② THE BOTTOM OF CURB AND GUTTER MAY BE CONSTRUCTED EITHER LEVEL OR PARALLEL TO THE SLOPE OF THE SUBGRADE OR BASE AGGREGATE PROVIDED A 6" MINIMUM GUTTER THICKNESS IS MAINTAINED.

③ THE BOTTOM OF CURB AND GUTTER MAY BE CONSTRUCTED EITHER LEVEL OR PARALLEL TO THE SLOPE OF THE SUBGRADE OR BASE AGGREGATE PROVIDED A 8" MINIMUM GUTTER THICKNESS IS MAINTAINED.

④ THE FACE OF CURB IS 6" FROM THE BACK OF CURB.

⑤ WHEN REVERSE SLOPE GUTTER IS REQUIRED, THE LOCATION(S) WILL BE SHOWN ELSEWHERE IN THE PLAN.

CONCRETE CURB, CONCRETE CURB & GUTTER AND TIES

STATE OF WISCONSIN
DEPARTMENT OF TRANSPORTATION

APPROVED
9/4/08 — DATE
/S/ Jerry H. Zaeske — ROADWAY STANDARDS ENGINEER
FHWA

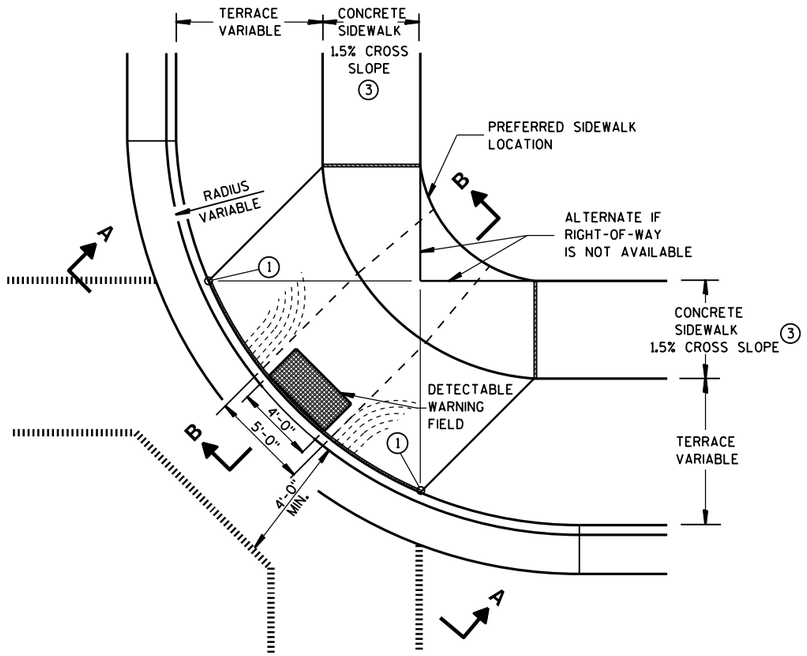

PLAN VIEW

TYPE 1 RAMP

(CENTER OF CORNER RADIUS)

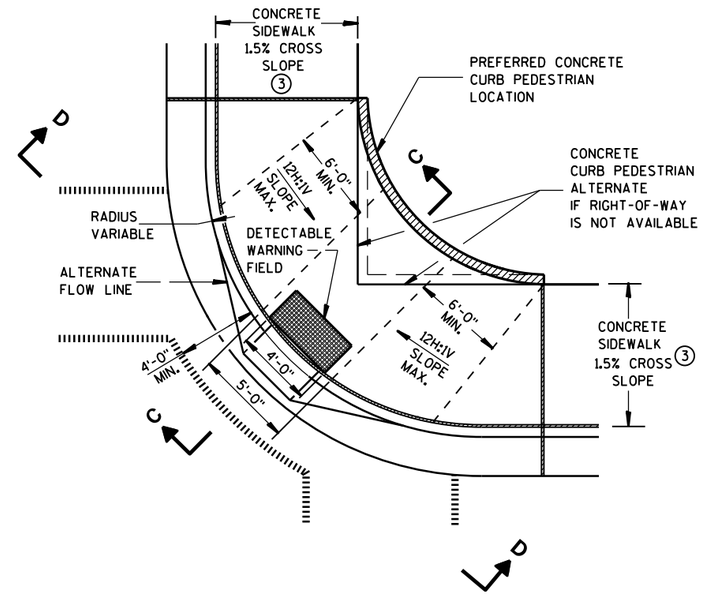

PLAN VIEW

TYPE 1-A RAMP

(NO TERRACE)

GENERAL NOTES

DETAILS OF CONSTRUCTION, MATERIALS AND WORKMANSHIP NOT SHOWN ON THIS DRAWING SHALL CONFORM TO THE PERTINENT REQUIREMENTS OF THE STANDARD SPECIFICATIONS AND THE APPLICABLE SPECIAL PROVISIONS.

RAMPS SHALL BE BUILT AT 12H:1V OR FLATTER. WHEN NECESSARY, THE SIDEWALK ELEVATION MAY BE LOWERED TO MEET THE HIGH POINT ON THE RAMP.

TYPE 1 RAMPS SHALL HAVE A NORMAL SIDEWALK APRON AND CURB ON BOTH SIDES OF RAMP.

DETECTABLE WARNING FIELD SHALL BE MEASURED AND PAID BY THE SQUARE FOOT AS "CURB RAMP DETECTABLE WARNING FIELD". THE CONCRETE PEDESTRIAN CURB, IF NEEDED, SHALL BE MEASURED AND PAID BY THE LINEAL FOOT AS "CONCRETE CURB PEDESTRIAN". CONCRETE SIDEWALK IN THE CURB RAMP AREA SHALL BE MEASURED AND PAID BY THE SQUARE FOOT AS CONCRETE SIDEWALK, INCLUDING THE AREA UNDER THE DETECTABLE WARNING FIELD.

SELECT CURB RAMP DETECTABLE WARNING FIELD MATERIALS AND DEVICES FROM THE DEPARTMENT'S APPROVED MATERIALS LIST. THE COLOR OF THE DETECTABLE WARNING FIELD IS SPECIFIED ELSEWHERE AND IS INCIDENTAL TO THE BID ITEM OF "CURB RAMP DETECTABLE WARNING FIELD".

DETECTABLE WARNING FIELDS THAT ARE INSTALLED AS A GROUP OR SIDE BY SIDE, SHALL BE FROM THE SAME MANUFACTURER.

SURFACE TEXTURE OF THE RAMP SHALL BE OBTAINED BY COARSE BROOMING TRANSVERSE TO THE SLOPE OF THE RAMP.

① THIS POINT IS AN EXTENSION OF OUTSIDE EDGE OF APPROACHING SIDEWALK WHERE IT MEETS THE BACK OF CONCRETE CURB.

② GRADE CHANGE BETWEEN GUTTER FLAG SLOPE AND THE CURB RAMP SLOPE SHALL NOT EXCEED 11%. PROVIDE DRAINAGE AWAY FROM CURB RAMP AT GUTTER FLAG INTERFACE.

③ ±0.5% CONSTRUCTION TOLERANCE IN SIDEWALK CROSS SLOPE. THE SIDEWALK CROSS SLOPE SHALL NOT EXCEED 2% WITHOUT PRIOR APPROVAL FROM THE ENGINEER.

LEGEND

- ½" EXPANSION JOINT-SIDEWALK
- CONTRACTION JOINT FIELD LOCATED
- PAVEMENT MARKING CROSSWALK (WHITE)
- ALTERNATIVE LAYOUT

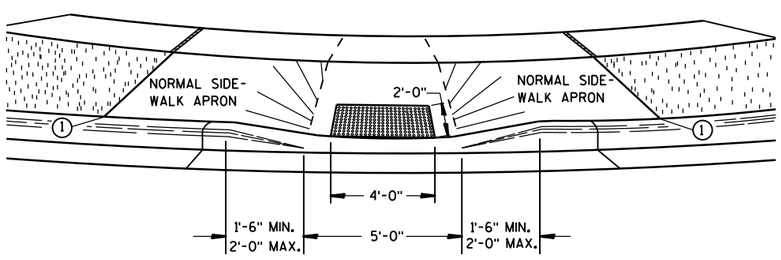

VIEW A-A

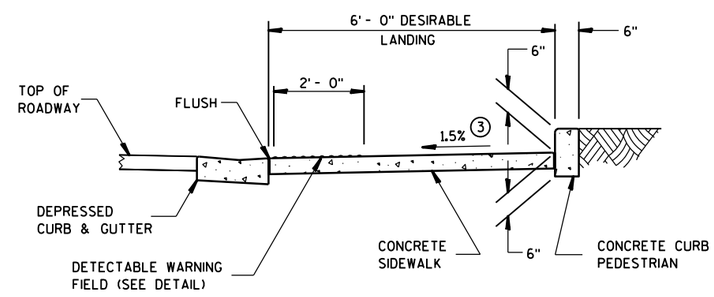

SECTION C-C

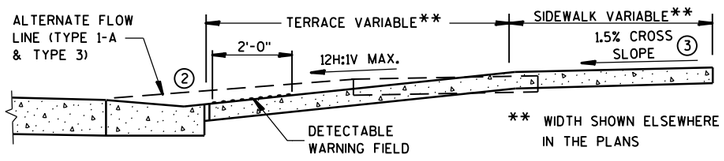

SECTION B-B

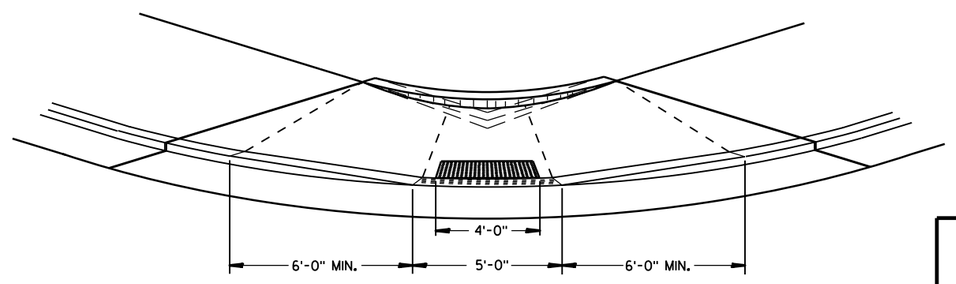

VIEW D-D

CURB RAMPS
TYPES 1 AND 1-A

STATE OF WISCONSIN
DEPARTMENT OF TRANSPORTATION

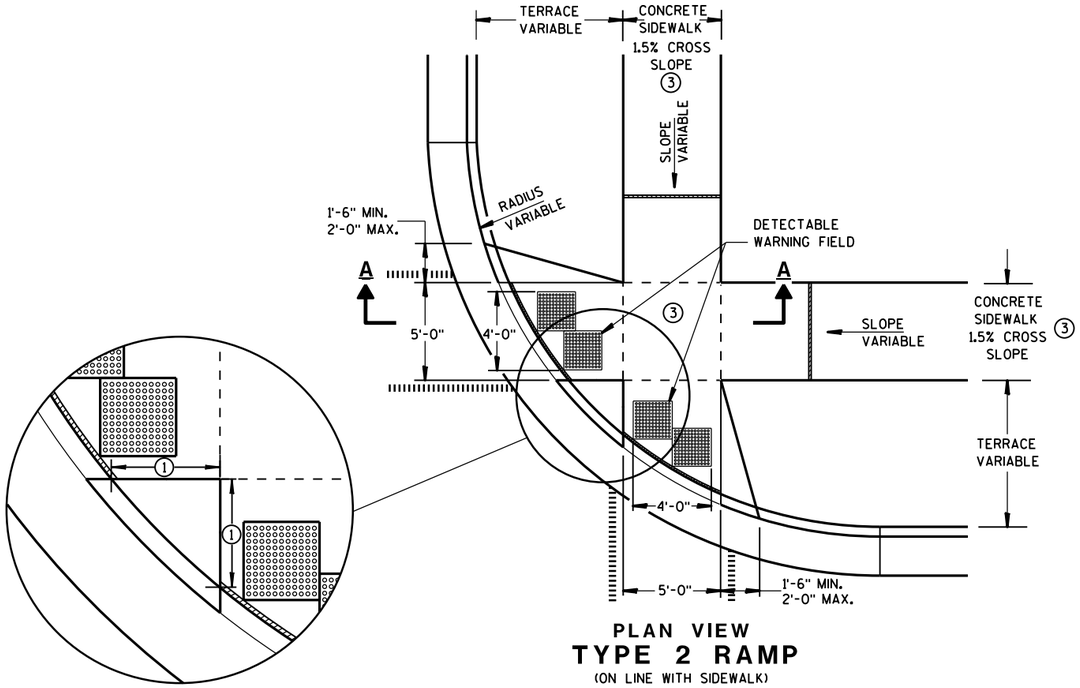

PLAN VIEW
TYPE 2 RAMP
(ON LINE WITH SIDEWALK)

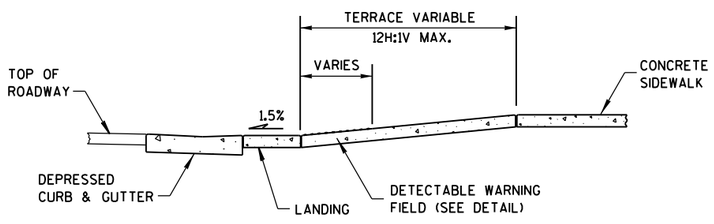

SECTION A-A

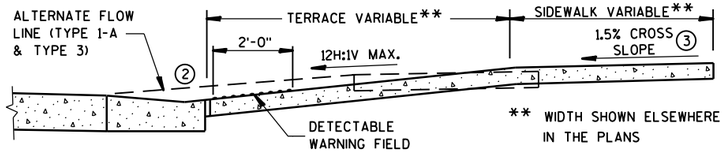

SECTION B-B

GENERAL NOTES

USE THE TYPE 3 RAMP ONLY WHEN A TYPE 1 OR TYPE 2 CANNOT BE ACHIEVED BECAUSE OF FIELD CONDITIONS.

DETECTABLE WARNING FIELDS THAT ARE INSTALLED AS A GROUP OR SIDE BY SIDE, SHALL BE FROM THE SAME MANUFACTURER.

① WHEN THIS DISTANCE IS LESS THAN 6'-0" IT MAY BE DIFFICULT TO ACHIEVE A 12H:1V SLOPE, OR FLATTER, ON THE RAMP. REDUCE CURB HEIGHT IN TRIANGLE AREA TO ACHIEVE 12H:1V SLOPE, OR FLATTER, ON RAMP. 2" MINIMUM CURB HEIGHT.

② GRADE CHANGE BETWEEN GUTTER FLAG SLOPE AND THE CURB RAMP SLOPE SHALL NOT EXCEED 11%. PROVIDE DRAINAGE AWAY FROM CURB RAMP AT GUTTER FLAG INTERFACE.

③ ±0.5% CONSTRUCTION TOLERANCE IN SIDEWALK CROSS SLOPE. THE SIDEWALK CROSS SLOPE SHALL NOT EXCEED 2% WITHOUT PRIOR APPROVAL FROM THE ENGINEER.

LEGEND

- ½" EXPANSION JOINT-SIDEWALK
- CONTRACTION JOINT FIELD LOCATED
- PAVEMENT MARKING CROSSWALK (WHITE)
- ALTERNATIVE LAYOUT

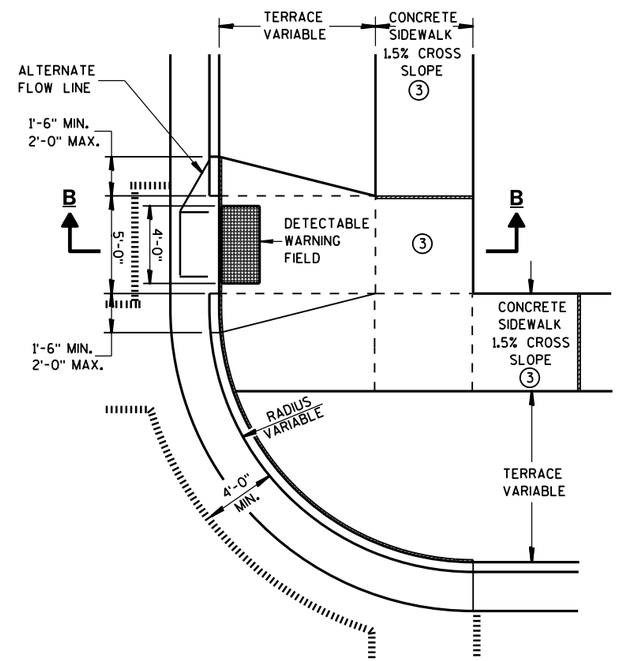

PLAN VIEW
TYPE 3 RAMP
(OUTSIDE OF CROSSWALK AREA)

6

6

CURB RAMPS
TYPES 2 AND 3

STATE OF WISCONSIN
DEPARTMENT OF TRANSPO

S.D.D. 8 D 5-15b

S.D.D. 8 D 5-15b

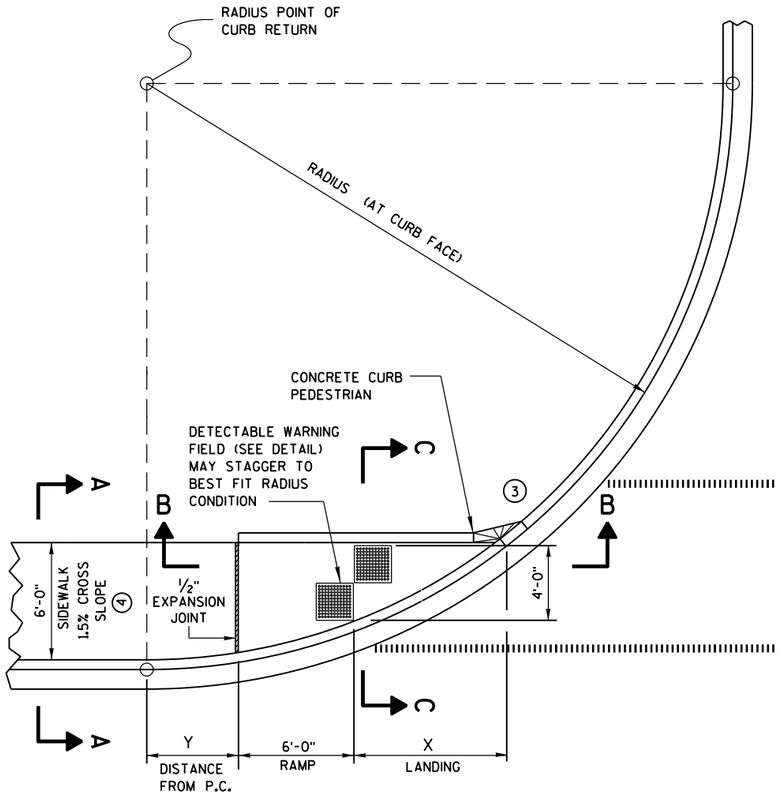

CURB RAMP TYPE 4A
PLAN VIEW

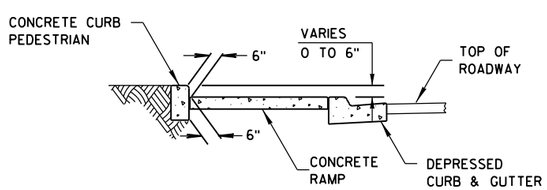

SECTION C-C FOR TYPE 4A

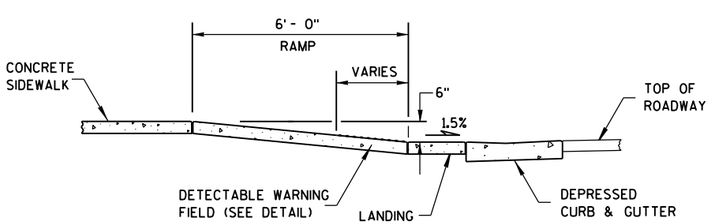

SECTION B-B FOR TYPE 4A

RADIUS (AT CURB FACE)	X	Y
20 FEET	6'-1¾"	2'-7¼"
30 FEET	7'-11¾"	4'-8¼"
40 FEET	9'-5¼"	6'-5"
50 FEET	10'-8¾"	7'-11¼"
60 FEET	11'-10¼"	9'-3½"

INTERMEDIATE RADII CAN BE INTERPOLATED

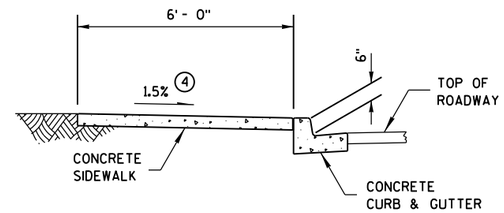

SECTION A-A FOR TYPE 4A

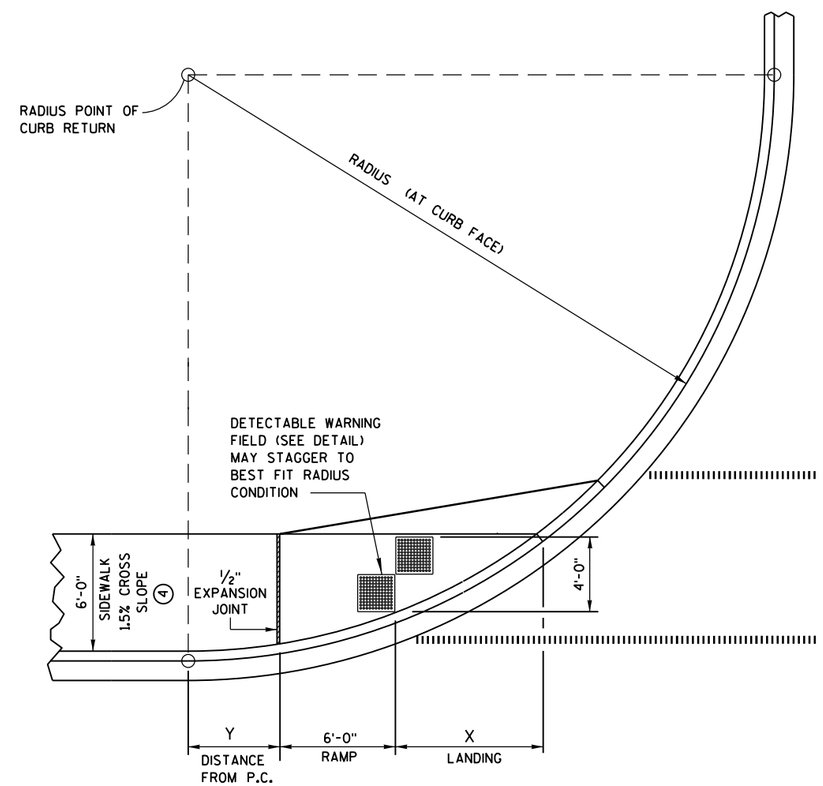

CURB RAMP TYPE 4A1
PLAN VIEW

GENERAL NOTES

AVOID PLACING DRAINAGE STRUCTURES, JUNCTION BOXES OR OTHER OBSTRUCTIONS IN FRONT OF RAMP ACCESS AREAS.

RAMP SLOPES SHALL NOT BE STEEPER THAN 12:1.

DETECTABLE WARNING FIELDS THAT ARE INSTALLED AS A GROUP OR SIDE BY SIDE, SHALL BE FROM THE SAME MANUFACTURER.

(3) INSTALL TRANSITION NOSE. (INCIDENTAL TO OTHER PAY ITEMS.) DO NOT MARK TRANSITION NOSE.

(4) ±0.5% CONSTRUCTION TOLERANCE IN SIDEWALK CROSS SLOPE. THE SIDEWALK CROSS SLOPE SHALL NOT EXCEED 2% WITHOUT PRIOR APPROVAL FROM THE ENGINEER.

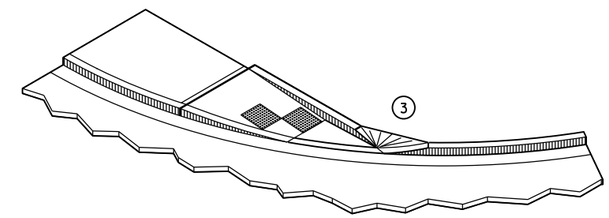

ISOMETRIC VIEW FOR TYPE 4A

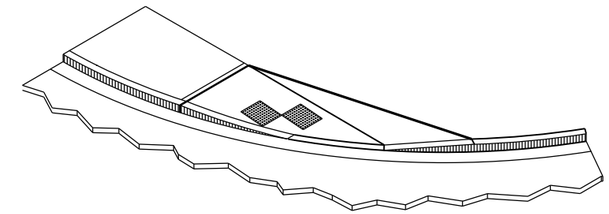

ISOMETRIC VIEW FOR TYPE 4A1

LEGEND

- ½" EXPANSION JOINT-SIDEWALK
- CONTRACTION JOINT FIELD LOCATED
- PAVEMENT MARKING CROSSWALK (WHITE)

CURB RAMPS
TYPES 4A AND 4A1

STATE OF WISCONSIN
DEPARTMENT OF TRANSPO

6

S.D.D. 8 D 5-15c

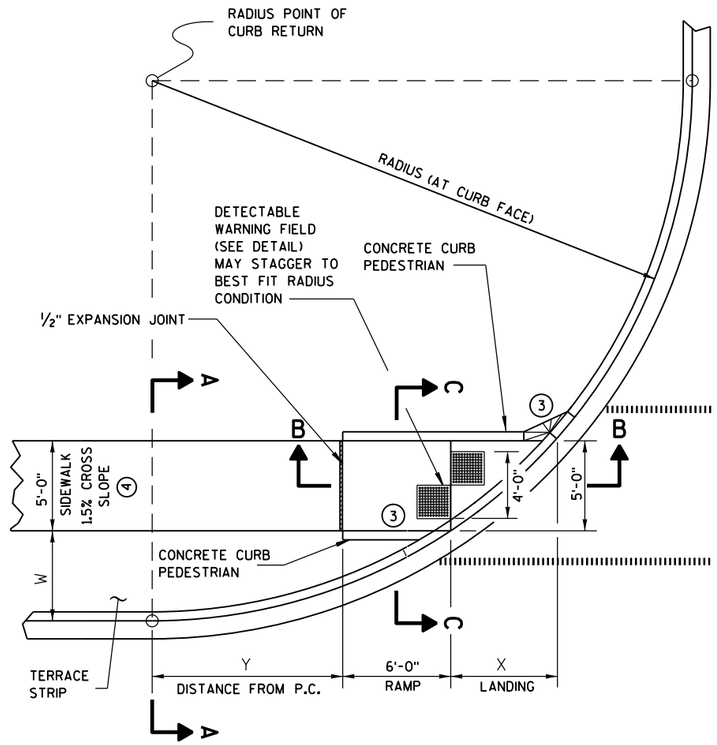

CURB RAMP TYPE 4B
PLAN VIEW

LEGEND

- 1/2" EXPANSION JOINT-SIDEWALK
- CONTRACTION JOINT FIELD LOCATED
- PAVEMENT MARKING CROSSWALK (WHITE)

RADIUS (AT CURB FACE)	W = 3' - 0"		W = 4' - 0"		W = 5' - 0"		W = 6' - 0"		W = 7' - 0"	
	X	Y	X	Y	X	Y	X	Y	X	Y
20 FEET	5'-5 1/2"	4'-6 1/2"	4'-8 1/2"	6'-0"	4'-1"	7'-2 3/4"	3'-7"	8'-3 1/2"	3'-1 1/2"	9'-2 1/2"
30 FEET	7'-3 3/4"	7'-1"	6'-5 1/2"	8'-11 1/2"	5'-9 1/4"	10'-7"	5'-2 1/2"	12'-0"	4'-8 3/4"	13'-3 1/4"
40 FEET	8'-9 1/2"	9'-2 1/2"	7'-10"	11'-5 1/4"	7'-1"	13'-4 1/2"	6'-5 3/4"	15'-3/4"	5'-11 1/2"	16'-7 1/4"
50 FEET	10'-3/4"	11'-3/4"	9'-1/4"	13'-7 1/4"	8'-2 1/2"	15'-9 1/2"	7'-6 1/2"	17'-9"	6'-11 3/4"	19'-6 1/4"
60 FEET	11'-2 1/2"	12'-8 3/4"	10'-3/4"	15'-6 1/2"	9'-2 1/4"	17'-11 3/4"	8'-5 3/4"	20'-1 3/4"	7'-10 1/2"	22'-1 1/2"

INTERMEDIATE RADII CAN BE INTERPOLATED

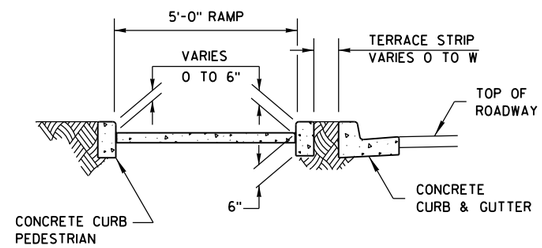

SECTION C-C FOR TYPE 4B

GENERAL NOTES

AVOID PLACING DRAINAGE STRUCTURES, JUNCTION BOXES OR OTHER OBSTRUCTIONS IN FRONT OF RAMP ACCESS AREAS.

RAMP SLOPES SHALL NOT BE STEEPER THAN 12:1.

DETECTABLE WARNING FIELDS THAT ARE INSTALLED AS A GROUP OR SIDE BY SIDE, SHALL BE FROM THE SAME MANUFACTURER.

(3) INSTALL TRANSITION NOSE. (INCIDENTAL TO OTHER PAY ITEMS.) DO NOT MARK TRANSITION NOSE.

(4) ±0.5% CONSTRUCTION TOLERANCE IN SIDEWALK CROSS SLOPE. THE SIDEWALK CROSS SLOPE SHALL NOT EXCEED 2% WITHOUT PRIOR APPROVAL FROM THE ENGINEER.

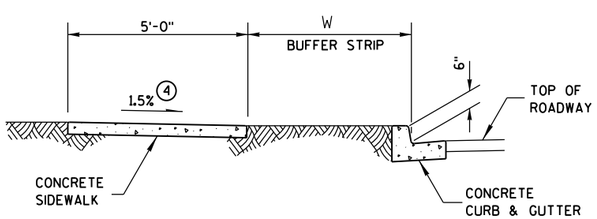

SECTION A-A FOR TYPE 4B

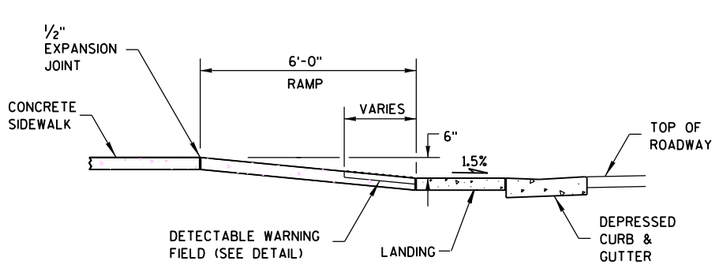

SECTION B-B FOR TYPE 4B

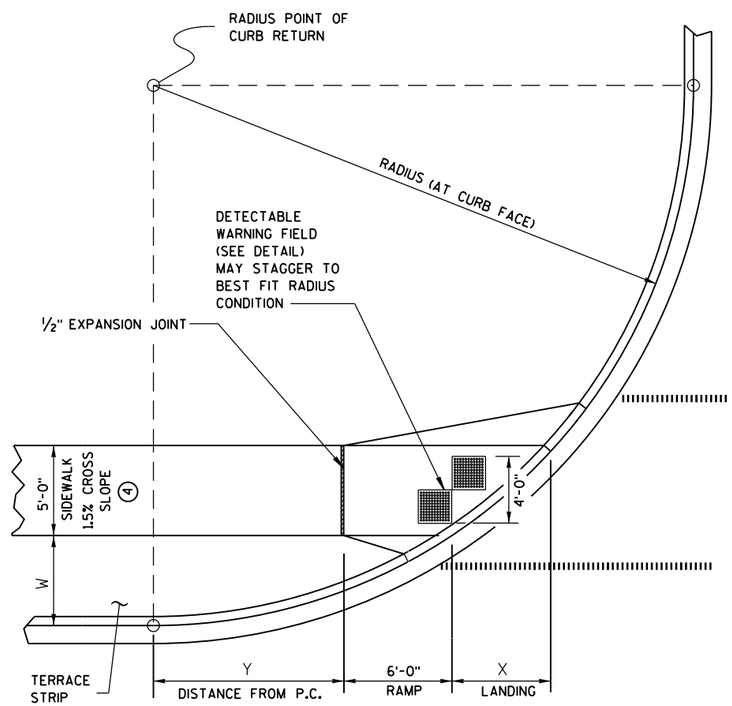

CURB RAMP TYPE 4B1
PLAN VIEW

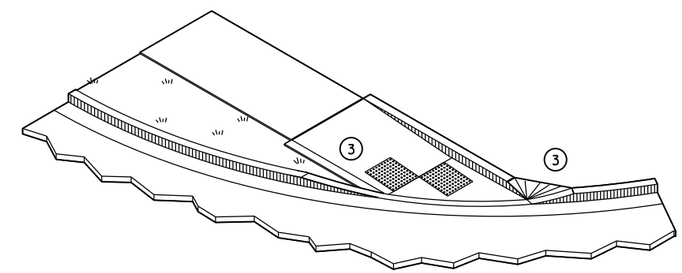

ISOMETRIC VIEW FOR TYPE 4B

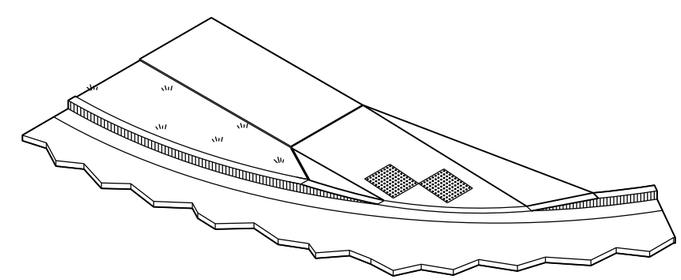

ISOMETRIC VIEW FOR TYPE 4B1

CURB RAMPS
TYPE 4B AND 4B1

STATE OF WISCONSIN
DEPARTMENT OF TRANSPOR

6

S.D.D. 8 D 5-15d

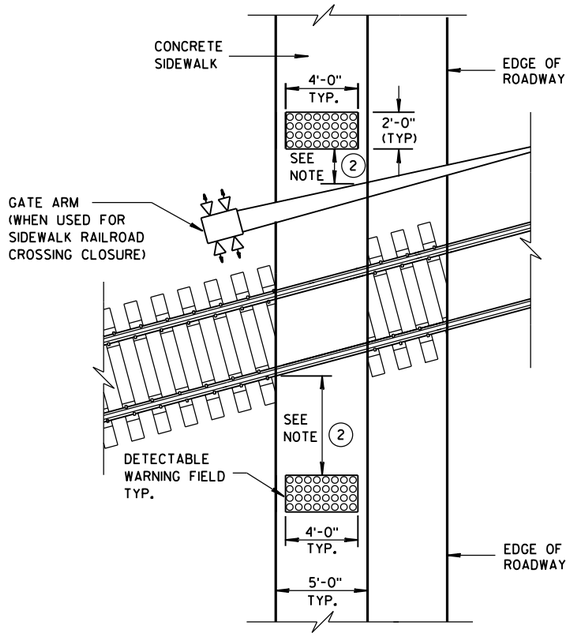

TYPE 8
DETECTABLE WARNINGS AT RAILROAD CROSSING

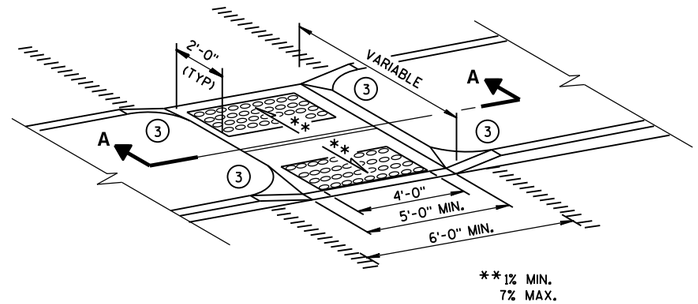

MEDIAN ISLAND
NON-ELEVATED CROSSING
TYPE 5

GENERAL NOTES

SIDEWALK CROSS SLOPE SHALL NOT EXCEED 2%.

DETECTABLE WARNING FIELDS THAT ARE INSTALLED AS A GROUP OR SIDE BY SIDE, SHALL BE FROM THE SAME MANUFACTURER.

1. SLOPE SIDEWALK TOWARD LANDING AS SHOWN WHERE THERE IS NO TERRACE OR WHERE THE TERRACE WIDTH IS LESS THAN 6 FEET WIDE.
2. THE EDGE OF THE DETECTABLE WARNING FIELD NEAREST TO A RAILROAD CROSSING SHALL BE 1.5 FEET ± 0.1' FROM THE FACE OF THE GATE ARM IF THE GATE ARM EXTENDS ACROSS THE SIDEWALK. WHERE THERE IS NO PEDESTRIAN GATE, THE EDGE OF THE DETECTABLE WARNING FIELD NEAREST TO THE RAILROAD CROSSING SHALL BE 15 FEET FROM THE NEAREST RAIL.
3. INSTALL TRANSITION NOSE. (INCIDENTAL TO OTHER PAY ITEMS.) DO NOT MARK TRANSITION NOSE.
4. ±0.5% CONSTRUCTION TOLERANCE IN SIDEWALK CROSS SLOPE. THE SIDEWALK CROSS SLOPE SHALL NOT EXCEED 2% WITHOUT PRIOR APPROVAL FROM THE ENGINEER.

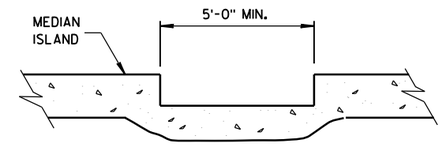

SECTION A-A

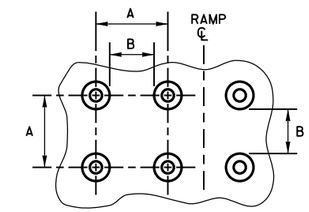

PLAN VIEW

	MIN.	MAX.
A	1.6"	2.4"
B	0.65"	1.5"
C	*	*
D	0.9"	1.4"

* THE C DIMENSION IS 50% TO 65% OF THE D DIMENSION.

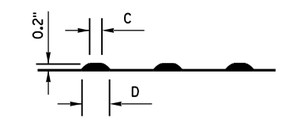

ELEVATION VIEW

TRUNCATED DOMES
DETECTABLE WARNING PATTERN DETAIL

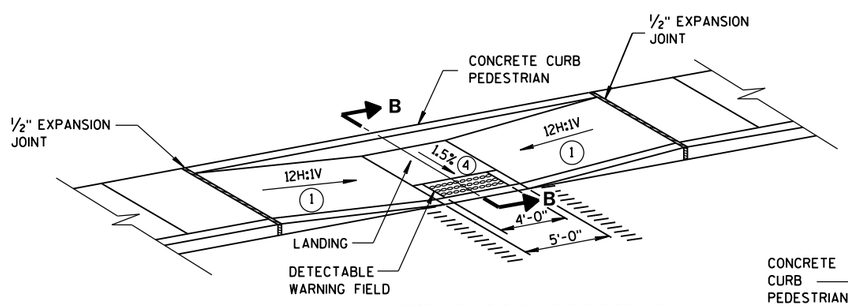

MID-BLOCK CROSSING
TYPE 7A

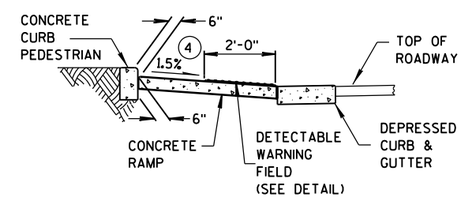

SECTION B-B

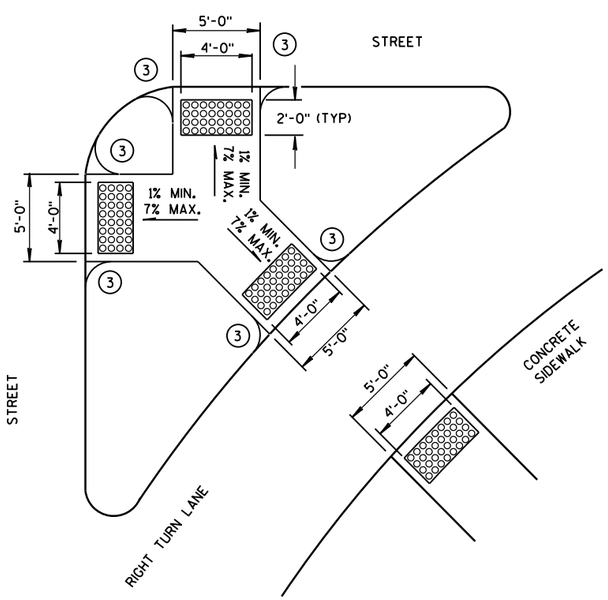

TYPE 6
DETECTABLE WARNING AT ISLANDS

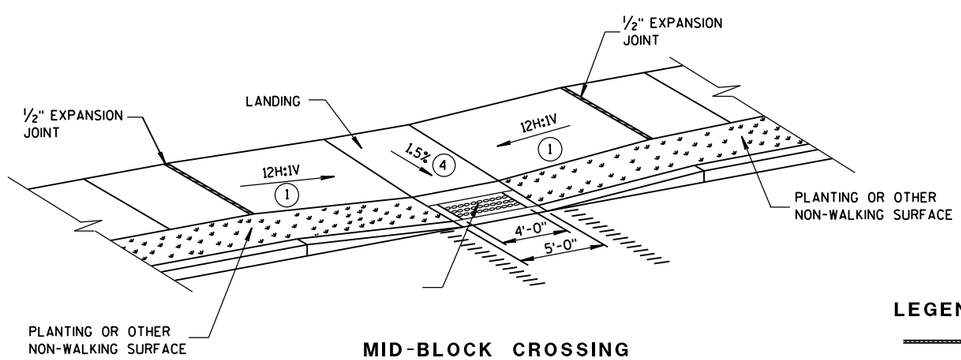

MID-BLOCK CROSSING
TYPE 7B

NOTE: THESE PARALLEL AND PARALLEL/PERPENDICULAR CURB RAMPS MAY BE USED AT INTERSECTIONS AND MID BLOCK LOCATIONS.

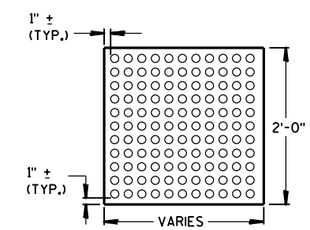

PLAN VIEW
DETECTABLE WARNING FIELD (TYPICAL)

LEGEND

- ½" EXPANSION JOINT-SIDEWALK
- CONTRACTION JOINT FIELD LOCATED
- PAVEMENT MARKING CROSSWALK (WHITE)

CURB RAMPS
TYPES 5, 6, 7A, 7B & 8

STATE OF WISCONSIN
DEPARTMENT OF TRANSPORTATION

APPROVED
2-6-2013 — DATE
/S/ Jerry H. Zogg — ROADWAY STANDARDS DEVELOPMENT ENGINEER
FHWA

6

6

S.D.D. 8 D 5-15e

S.D.D. 8 D 5-15e

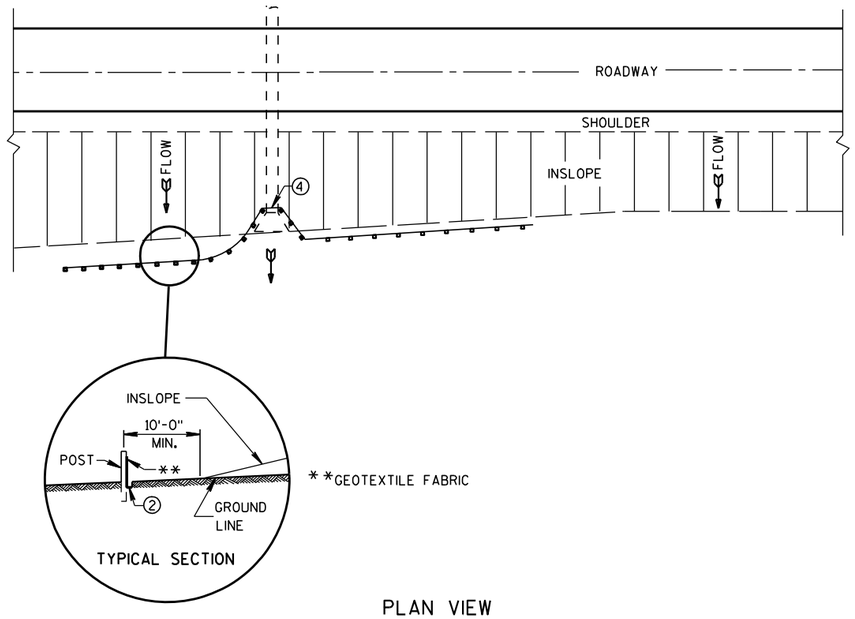

PLAN VIEW

TYPICAL APPLICATION OF SILT FENCE

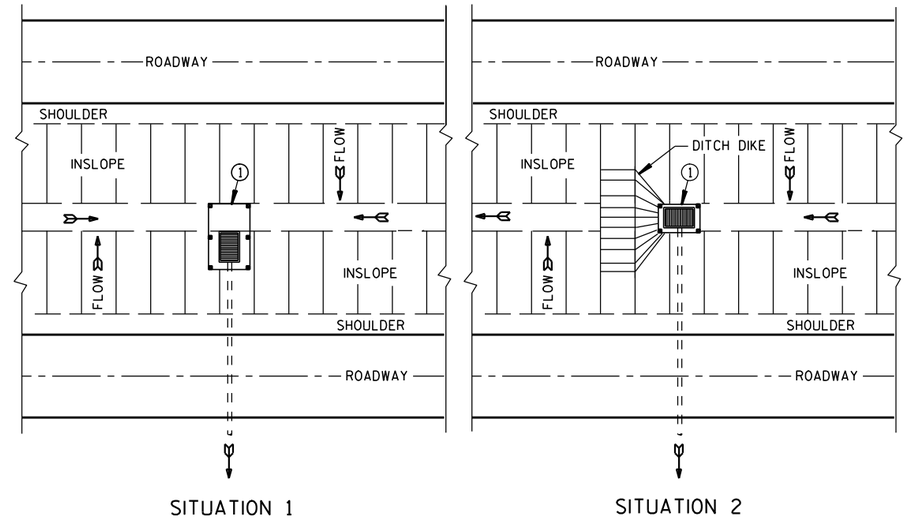

PLAN VIEW

SILT FENCE AT MEDIAN SURFACE DRAINS

GENERAL NOTES

DETAILS OF CONSTRUCTION NOT SHOWN ON THIS DRAWING SHALL CONFORM TO THE PERTINENT REQUIREMENTS OF THE STANDARD SPECIFICATIONS AND APPLICABLE SPECIAL PROVISIONS.

① HORIZONTAL BRACE REQUIRED WITH 2" X 4" WOODEN FRAME OR EQUIVALENT AT TOP OF POSTS.

② FOR MANUAL INSTALLATIONS THE TRENCH SHALL BE A MINIMUM OF 4" WIDE & 6" DEEP TO BURY AND ANCHOR THE GEOTEXTILE FABRIC. FOLD MATERIAL TO FIT TRENCH AND BACKFILL & COMPACT TRENCH WITH EXCAVATED SOIL.

③ WOOD POSTS SHALL BE A MINIMUM SIZE OF 1⅛" X 1⅛" OF OAK OR HICKORY.

④ SILT FENCE TO EXTEND ACROSS THE TOP OF THE PIPE.

⑤ CONSTRUCT SILT FENCE FROM A CONTINUOUS ROLL IF POSSIBLE BY CUTTING LENGTHS TO AVOID JOINTS. IF A JOINT IS NECESSARY USE ONE OF THE FOLLOWING TWO METHODS; A) OVERLAP THE END POSTS AND TWIST, OR ROTATE, AT LEAST 180 DEGREES. B) HOOK THE END OF EACH SILT FENCE LENGTH.

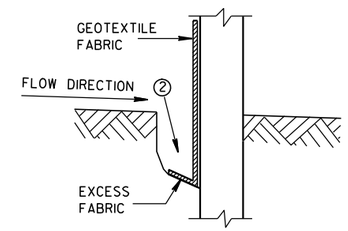

TRENCH DETAIL

NOTE: ADDITIONAL POST DEPTH OR TIE BACKS MAY BE REQUIRED IN UNSTABLE SOILS

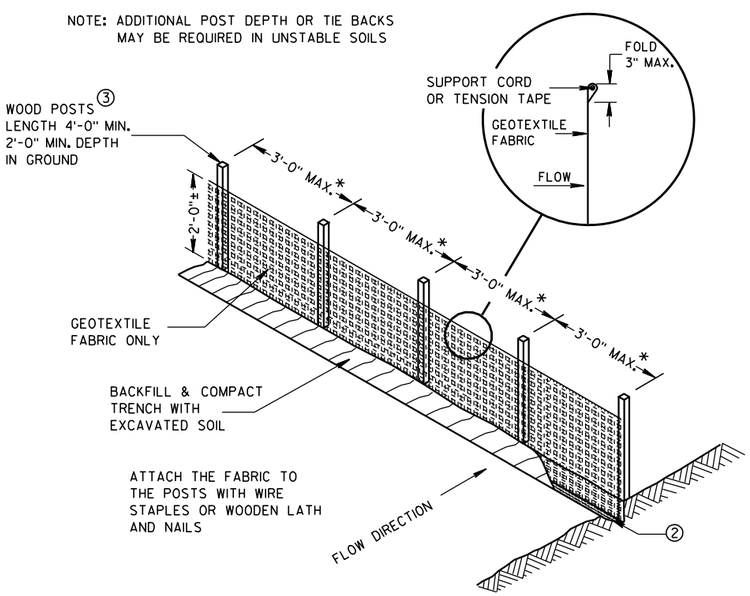

*NOTE: 8'-0" POST SPACING ALLOWED IF A WOVEN GEOTEXTILE FABRIC IS USED.

SILT FENCE

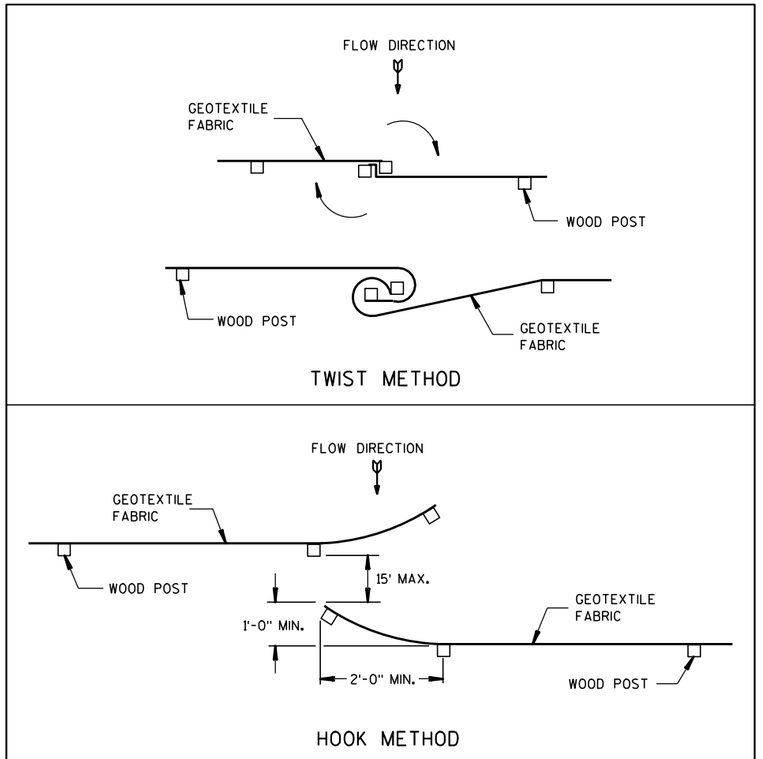

JOINING TWO LENGTHS OF SILT FENCE ⑤

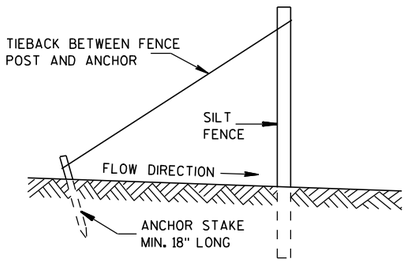

SILT FENCE TIE BACK

(WHEN REQUIRED BY THE ENGINEER)

SILT FENCE
STATE OF WISCONSIN DEPARTMENT OF TRANSPORTATION
APPROVED 4-29-05 /S/ Beth Cann----- DATE CHIEF ROADWAY DEVELOP ENGINEER FHWA

6

6

S.D.D. 8 E 9-6

S.D.D. 8 E 9-6

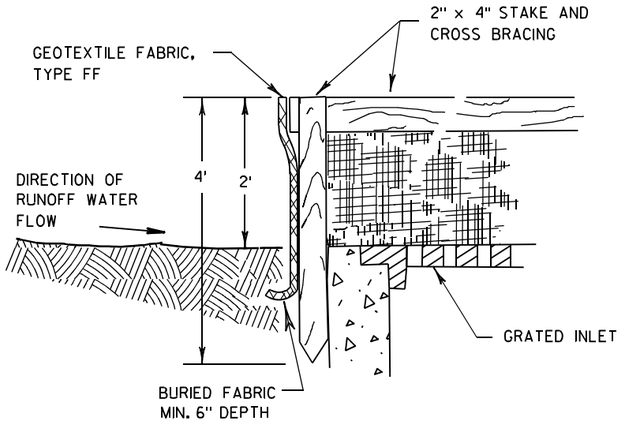

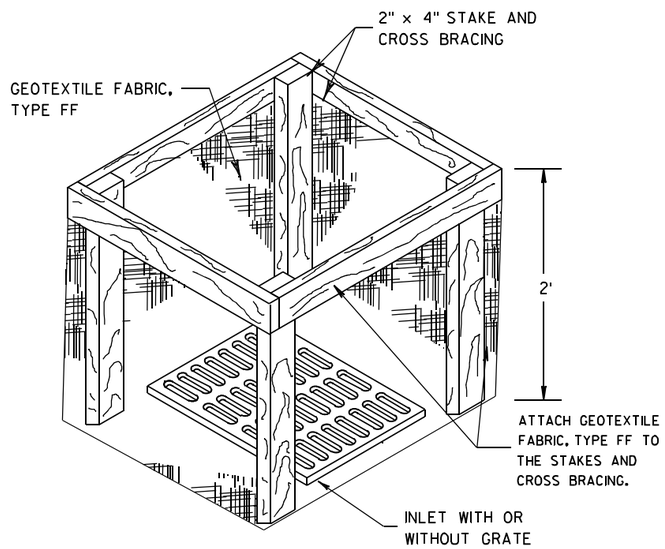

INLET PROTECTION, TYPE A

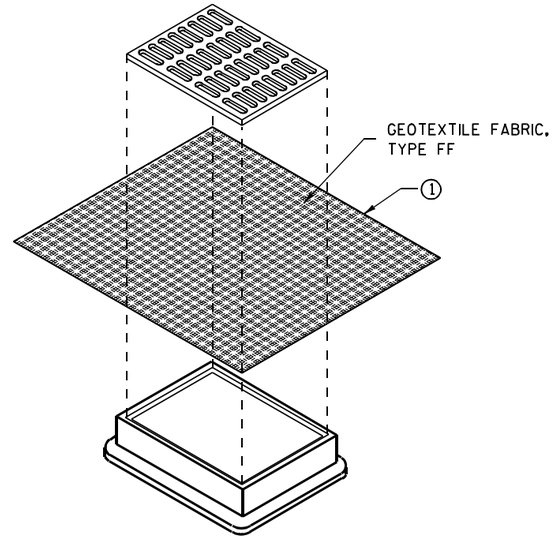

INLET PROTECTION, TYPE B (WITHOUT CURB BOX)

(CAN BE INSTALLED IN ANY INLET WITHOUT A CURB BOX)

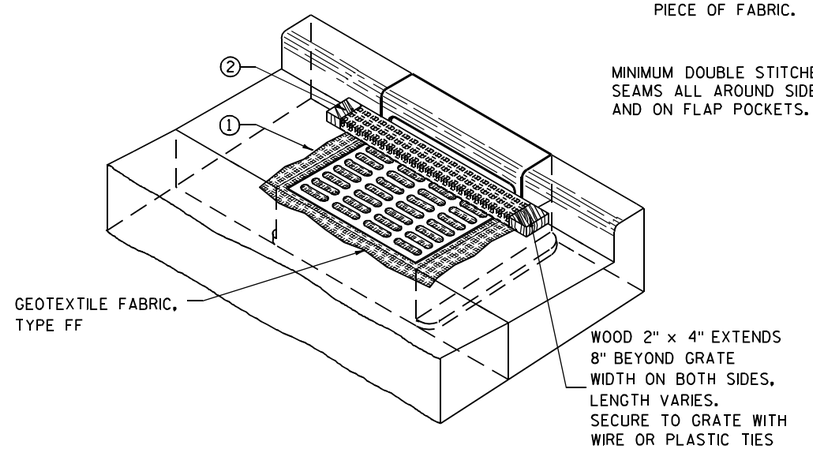

INLET PROTECTION, TYPE C (WITH CURB BOX)

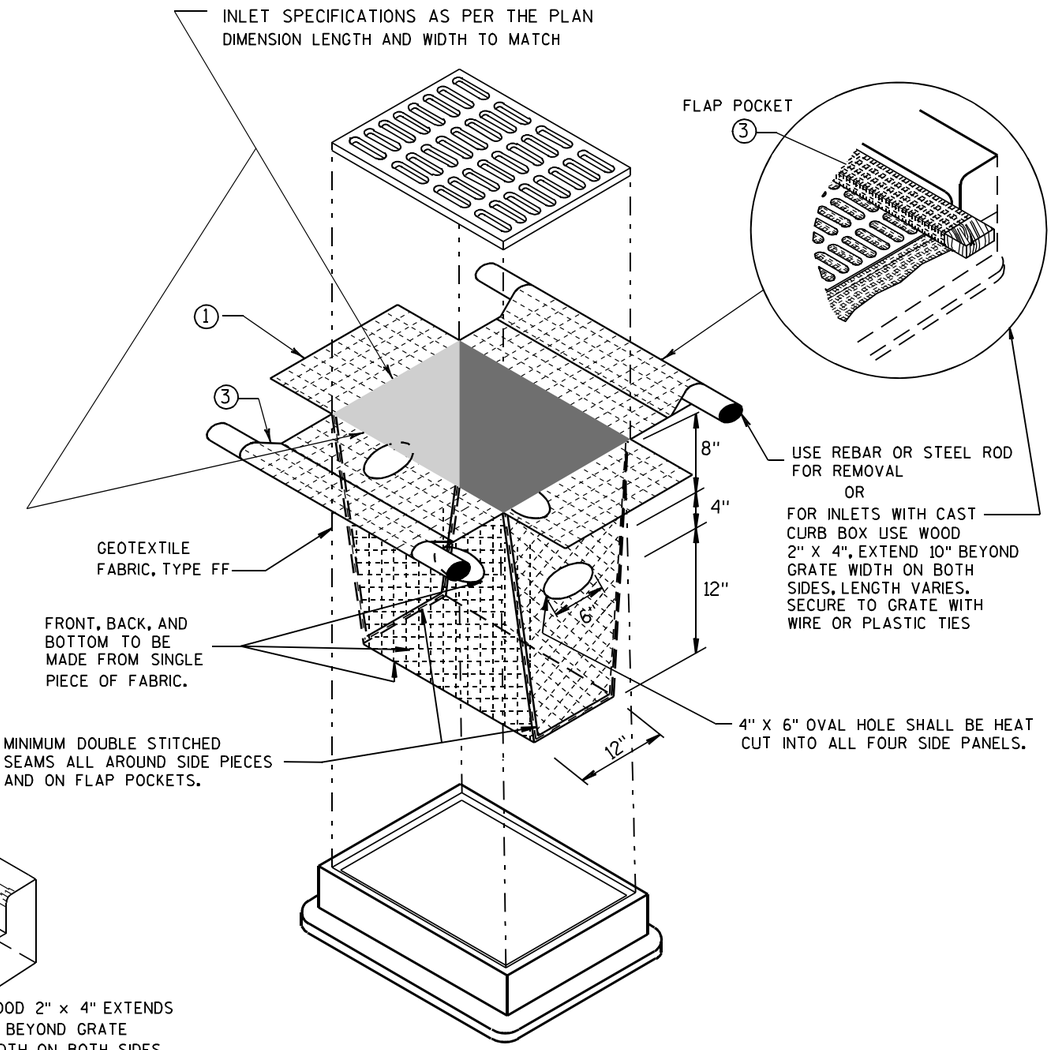

INLET PROTECTION, TYPE D

(CAN BE INSTALLED IN ANY INLET TYPE WITH OR WITHOUT A CURB BOX AS PER NOTE 2)

GENERAL NOTES

INLET PROTECTION DEVICES SHALL BE MAINTAINED OR REPLACED AT THE DIRECTION OF THE ENGINEER.

MANUFACTURED ALTERNATIVES APPROVED AND LISTED ON THE DEPARTMENT'S EROSION CONTROL PRODUCT ACCEPTABILITY LIST MAY BE SUBSTITUTED.

WHEN REMOVING OR MAINTAINING INLET PROTECTION, CARE SHALL BE TAKEN SO THAT THE SEDIMENT TRAPPED ON THE GEOTEXTILE FABRIC DOES NOT FALL INTO THE INLET. ANY MATERIAL FALLING INTO THE INLET SHALL BE REMOVED IMMEDIATELY.

1. FINISHED SIZE, INCLUDING FLAP POCKETS WHERE REQUIRED, SHALL EXTEND A MINIMUM OF 10" AROUND THE PERIMETER TO FACILITATE MAINTENANCE OR REMOVAL.
2. FOR INLET PROTECTION, TYPE C (WITH CURB BOX), AN ADDITIONAL 18" OF FABRIC IS WRAPPED AROUND THE WOOD AND SECURED WITH STAPLES. THE WOOD SHALL NOT BLOCK THE ENTIRE HEIGHT OF THE CURB BOX OPENING.
3. FLAP POCKETS SHALL BE LARGE ENOUGH TO ACCEPT WOOD 2X4.

INSTALLATION NOTES

TYPE B & C

TRIM EXCESS FABRIC IN THE FLOW LINE TO WITHIN 3" OF THE GRATE.

THE CONTRACTOR SHALL DEMONSTRATE A METHOD OF MAINTENANCE, USING A SEWN FLAP, HAND HOLDS OR OTHER METHOD TO PREVENT ACCUMULATED SEDIMENT FROM ENTERING THE INLET.

TYPE D

DO NOT INSTALL INLET PROTECTION TYPE D IN INLETS SHALLOWER THAN 30", MEASURED FROM THE BOTTOM OF THE INLET TO THE TOP OF THE GRATE.

TRIM EXCESS FABRIC IN THE FLOW LINE TO WITHIN 3" OF THE GRATE.

THE INSTALLED BAG SHALL HAVE A MINIMUM SIDE CLEARANCE, BETWEEN THE INLET WALLS AND THE BAG, MEASURED AT THE BOTTOM OF THE OVERFLOW HOLES, OF 3". WHERE NECESSARY THE CONTRACTOR SHALL CINCH THE BAG, USING PLASTIC ZIP TIES, TO ACHIEVE THE 3" CLEARANCE. THE TIES SHALL BE PLACED AT A MAXIMUM OF 4" FROM THE BOTTOM OF THE BAG.

INLET PROTECTION TYPE A, B, C, AND D

STATE OF WISCONSIN
DEPARTMENT OF TRANSPORTATION

APPROVED
10/16/02 — DATE
/S/ Beth Cannestra — CHIEF ROADWAY DEVELOPMENT ENGINEER
FHWA

6

S.D.D. 8 E 10-2

TABLE OF NOMINAL DIMENSIONS AND WEIGHTS

DIMENSION IN INCHES		CORRUGATED STEEL PIPE								
PIPE DIAMETER (INSIDE)	A	12	12	12	18	18	18	24	24	24
PIPE LENGTH **	B	24	30	36	24	30	36	36	42	48
WALL THICKNESS	C	0.064	0.064	0.064	0.064	0.064	0.064	0.064	0.064	0.064
COVER	D	10 1/4	10 1/4	10 1/4	16 1/4	16 1/4	16 1/4	22 1/4	22 1/4	22 1/4
FRAME	E	14 1/2	14 1/2	14 1/2	20 1/2	20 1/2	20 1/2	26 1/2	26 1/2	26 1/2
FRAME	F	8 1/2	8 1/2	8 1/2	14 1/2	14 1/2	14 1/2	20 1/2	20 1/2	20 1/2
FRAME	G	11 1/2	11 1/2	11 1/2	17 1/2	17 1/2	17 1/2	23 1/2	23 1/2	23 1/2
WEIGHT IN POUNDS *										
FRAME AND COVER		60	60	60	110	110	110	155	155	155

* THE ACTUAL WEIGHT OF THE MANHOLE FRAME AND COVER MAY VARY WITHIN 5 PERCENT PLUS OR MINUS OF THE WEIGHTS SHOWN.

** NORMALLY USED LENGTHS. THE PROJECT ENGINEER SHALL DETERMINE IF PIPE LENGTHS, OTHER THAN THOSE SPECIFIED, SHALL BE USED, TO A MAXIMUM OF 48" (CONTINUOUS LENGTH, NON-SPLICED). THE ADDITIONAL LENGTH SHALL BE INCIDENTAL TO THE PULL BOX BID PRICE.

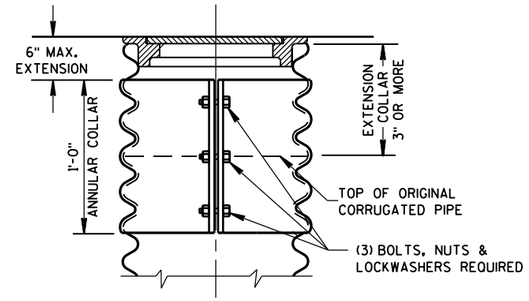

CORRUGATED PIPE EXTENDER

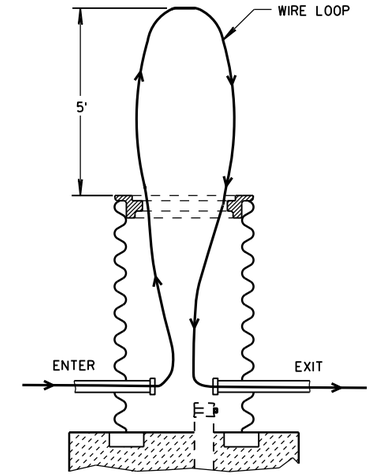

MEASUREMENT DETAIL FOR WIRE/CABLE IN THE PULL BOX

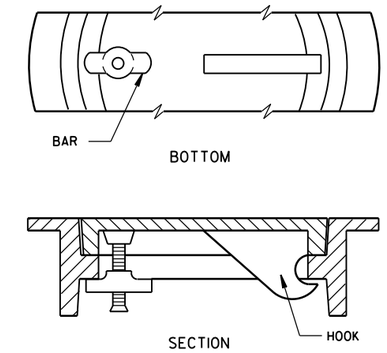

ALTERNATE COVER (LOCKING)

TIGHTENING BAR TYPE

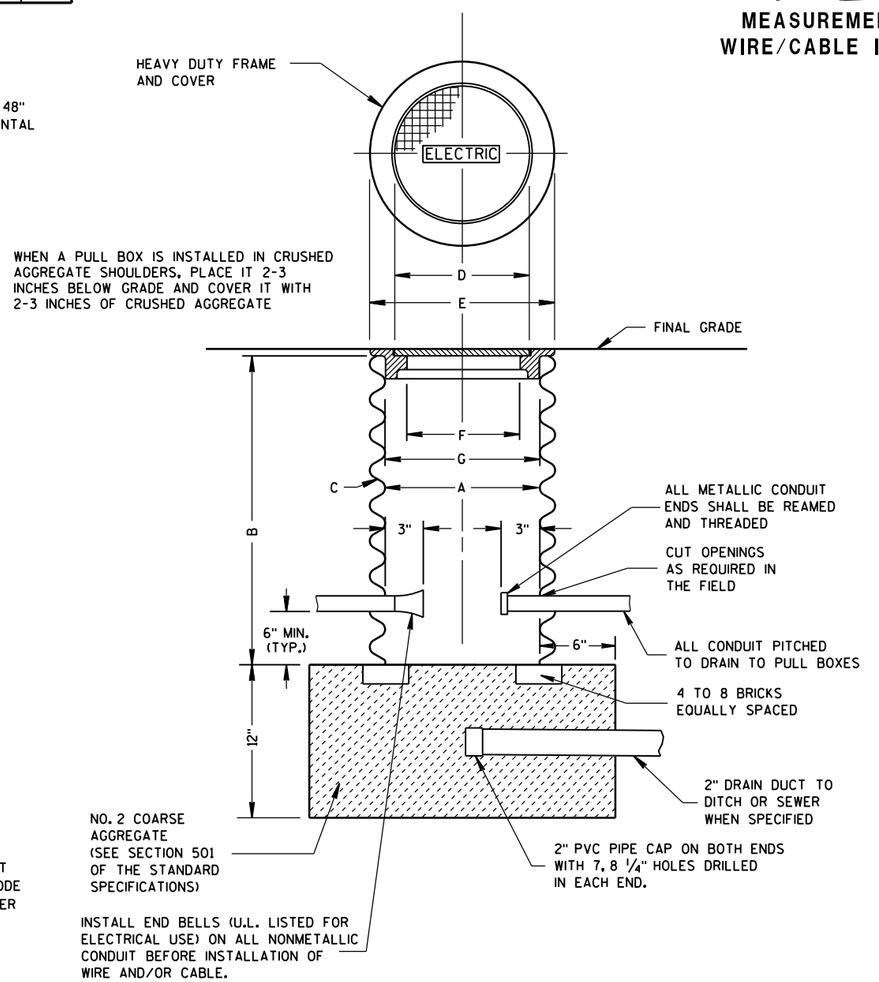

PULL BOX

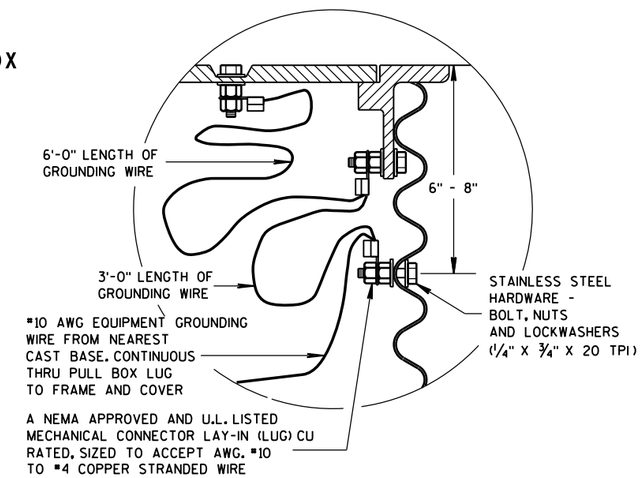

EQUIPMENT GROUNDING LUG AND LOCATION IN STEEL PULL BOXES

GENERAL NOTES

DETAILS OF CONSTRUCTION, MATERIALS AND WORKMANSHIP NOT SHOWN ON THIS DRAWING SHALL CONFORM TO THE PERTINENT REQUIREMENTS OF THE CONTRACT.

ALL FRAMES AND COVERS SHALL BE HEAVY DUTY TYPE, SUITABLE FOR VEHICULAR TRAFFIC LOADS.

PULL BOXES LOCATED IN THE ROADWAYS SHALL HAVE LOCKING COVERS.

ENTRANCE HOLES INTO PULL BOXES SHALL BE CUT WITH A CIRCULAR HOLE SAW OR HYDRAULIC CONDUIT PUNCH. HOLE SIZE SHALL BE THE OUTSIDE DIAMETER OF THE CONDUIT THAT IS TO FIT IN THE OPENING PLUS NO MORE THAN 1/4".

THE CONTRACTOR SHALL NOT INSTALL WIRE IN ANY PULL BOX UNTIL ITS INSTALLATION HAS BEEN INSPECTED AND ACCEPTED BY THE ENGINEER.

GROUNDING LUGS (MECHANICAL CONNECTORS) SHALL BE U.L. LISTED AND APPROVED FOR USE WITH COPPER WIRE.

GROUNDING LUGS ARE NOT REQUIRED IN PULL BOXES WHEN VOLTAGES OF LESS THAN 50 VOLTS AC ARE THE ONLY VOLTAGES ENCOUNTERED IN THE BOXES.

ALL METALLIC CONDUIT IN WHICH WIRE AND/OR CABLE IS TO BE INSTALLED, SHALL BE BUSHED BEFORE INSTALLATION OF THE WIRE AND/OR CABLE.

S.D.D. 9B2, "CONDUIT", APPLIES TO THIS DRAWING.

WHEN PULL BOXES ARE INSTALLED FOR FUTURE USE, DO NOT INSTALL THE EQUIPMENT GROUNDING LUG. THE EQUIPMENT GROUNDING LUG, THE EQUIPMENT GROUNDING ELECTRODE AND THE EQUIPMENT GROUNDING CONDUCTOR SHALL BE REQUIRED AND INSTALLED UNDER A FUTURE WIRING CONTRACT.

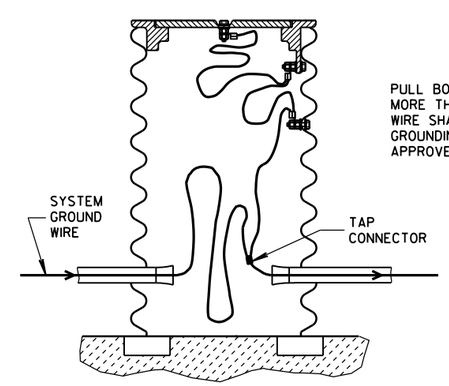

EQUIPMENT GROUNDING LUG AND LOCATION IN STEEL PULL BOXES

PULL BOX

STATE OF WISCONSIN
DEPARTMENT OF TRANSPORTATION

APPROVED
2-7-2013 — DATE
/S/ Ahmet Demirbilek — STATE ELECTRICAL
FHWA

GENERAL NOTES

SAW CUT, DRILL, AND LIFT OUT EXISTING CONCRETE PAVEMENT WITHIN THE BOUNDARIES OF CONCRETE REPAIR AREAS. THE CONTRACTOR MAY MAKE ADDITIONAL SAW CUTS INSIDE THE REPAIR LIMITS TO REDUCE WEIGHT AND SIZE OF CONCRETE PIECES. ADDITIONAL SAW CUTS ARE NOT PAID FOR BY THE DEPARTMENT.

PROVIDE 6-FOOT MINIMUM DISTANCE FROM BOUNDARIES OF CONCRETE REPAIR AREAS TO ADJACENT TRANSVERSE JOINT OR CRACK.

THE LENGTH OF THE REPAIRS MAY VARY FROM THE DIMENSIONS SHOWN IF THE EXISTING CONCRETE PAVEMENT IS NONDOWELED AND THE PAVEMENT IS TO BE OVERLAID AFTER REPAIRING.

(1) DOWEL BARS MIGHT NOT EXIST.

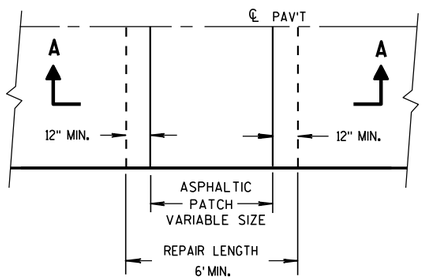

PLAN VIEW

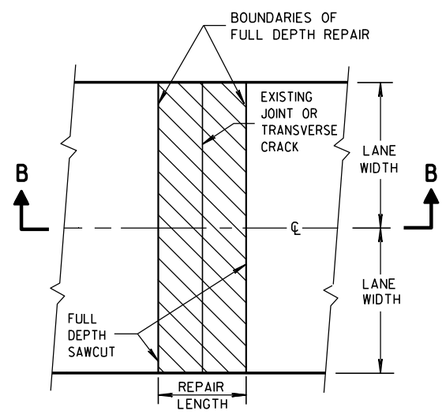

PLAN VIEW
(DOUBLE LANE REPAIR)

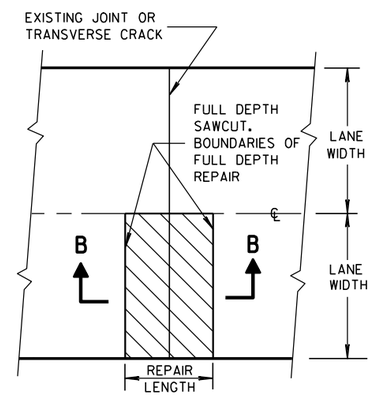

PLAN VIEW
(SINGLE LANE REPAIR)

FULL DEPTH CONCRETE PAVEMENT REMOVAL

(SEE NOTE)

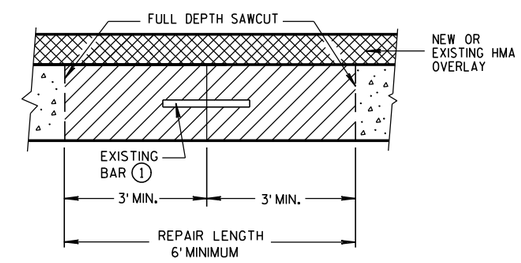

SECTION B-B

CONCRETE REMOVAL

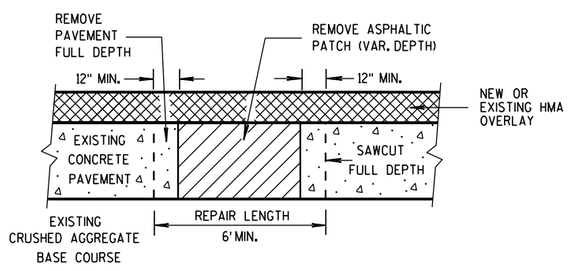

SECTION A-A

HMA PATCH REMOVAL

BASE PATCHING CONCRETE

STATE OF WISCONSIN
DEPARTMENT OF TRANSPORTATION

6

S.D.D. 13 C 14-4a

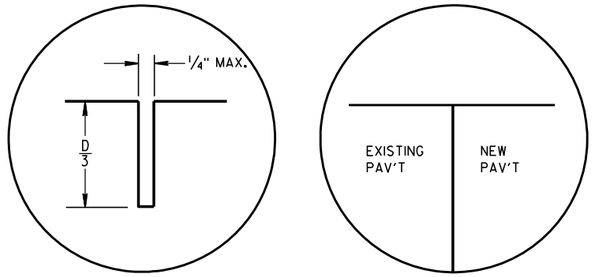

C1 C2

TRANSVERSE JOINTS

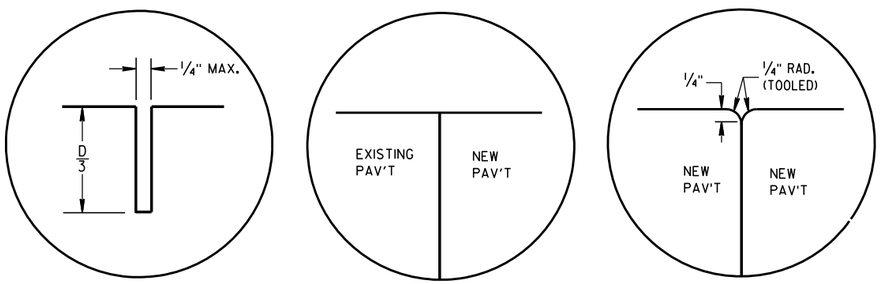

L1 L2 L3

LONGITUDINAL JOINTS

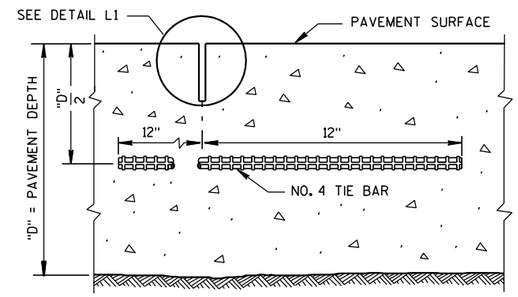

SECTION C-C

SAWED LONGITUDINAL JOINT

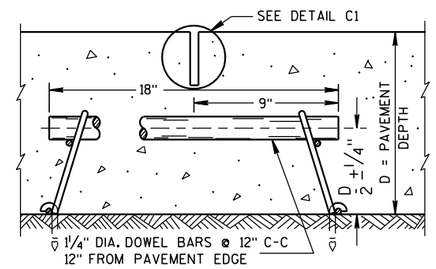

SECTION F-F

CONTRACTION JOINT

GENERAL NOTES

INSTALL DOWEL BARS PARALLEL TO THE PAVEMENT CENTERLINE AND PAVEMENT SURFACE.

CONCRETE BASE PATCHES OF EXISTING NONDOWELED CONCRETE PAVEMENTS DO NOT NEED TO BE DOWELED.

DO NOT SEAL OR FILL JOINTS.

ANCHOR DOWEL BARS AND TIE BARS INTO DRILLED HOLES WITH AN EPOXY.

PROVIDE A MINIMUM DISTANCE OF 24 INCHES FROM AN EXISTING TRANSVERSE JOINT OR THE EDGE OF REPLACEMENT TO THE CENTER OF THE TIE BAR NEAREST THAT JOINT OR EDGE.

(1) APPLY A THIN UNIFORM COATING OF SURFACE TREATMENT TO THE FREE END OF DOWEL BARS TO PREVENT BONDING.

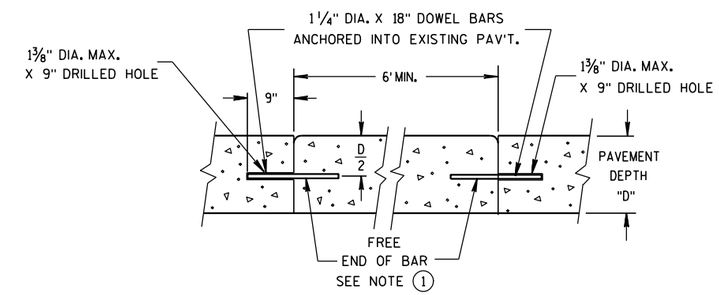

SECTION D-D

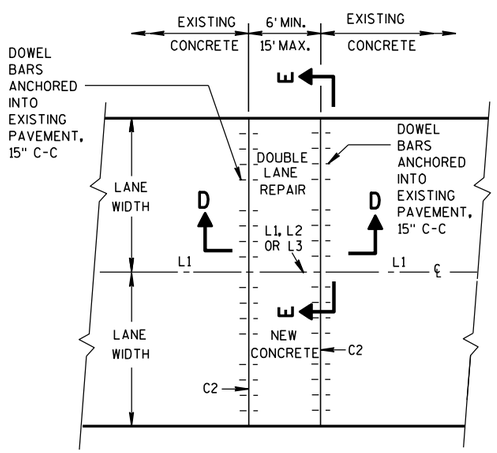

PLAN VIEW

MULTI-LANE CONCRETE BASE PATCH 15' MAXIMUM LENGTH

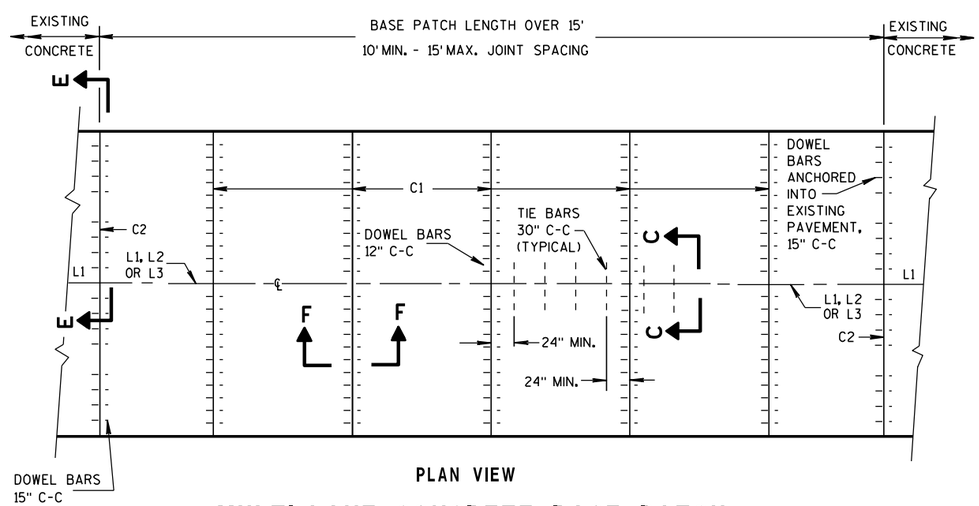

PLAN VIEW

MULTI-LANE CONCRETE BASE PATCH GREATER THAN 15' IN LENGTH

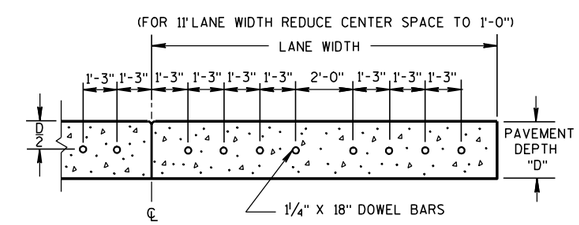

SECTION E-E

SPACING OF DOWEL BARS ANCHORED INTO EXISTING PAVEMENT

BASE PATCHING CONCRETE

STATE OF WISCONSIN
DEPARTMENT OF TRANSPORTATION

6

6

S.D.D. 13 C 14-4b

S.D.D. 13 C 14-4b

GENERAL NOTES

1. USE AN ENGINEER-APPROVED BOND BREAKER FOR SINGLE LANE BASE PATCHES UP TO 15 FEET IN LENGTH.

2. WITH THE APPROVAL OF THE ENGINEER, FOR SINGLE LANE PAVEMENT REPLACEMENTS LESS THAN 30 FEET IN LENGTH, DRILLED TIE BARS MAY BE INSTALLED ON 6:1 SKEW HORIZONTALLY, DIRECTION OF SKEW ALTERNATING WITH EACH SUCCESSIVE BAR. DRIVE SKEWED TIE BARS TO A DEPTH OF 6 INCHES AND TO SUCH A DIAMETER AS TO PROVIDE A TIGHT DRIVEN FIT.

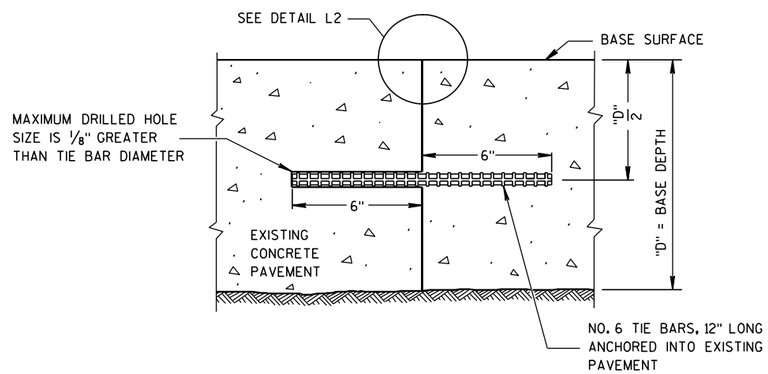

SECTION G-G

TIE BARS ANCHORED INTO EXISTING PAVEMENT

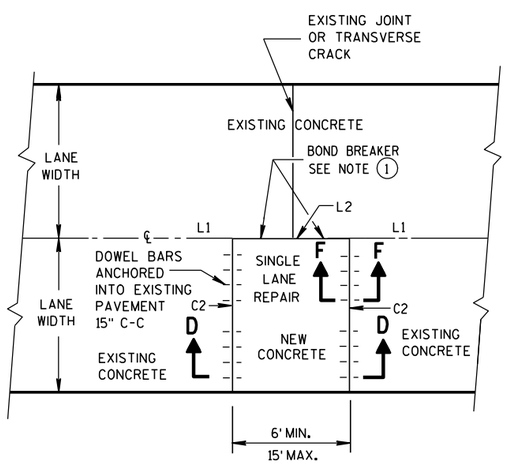

PLAN VIEW

SINGLE LANE CONCRETE BASE PATCH 15' MAXIMUM LENGTH

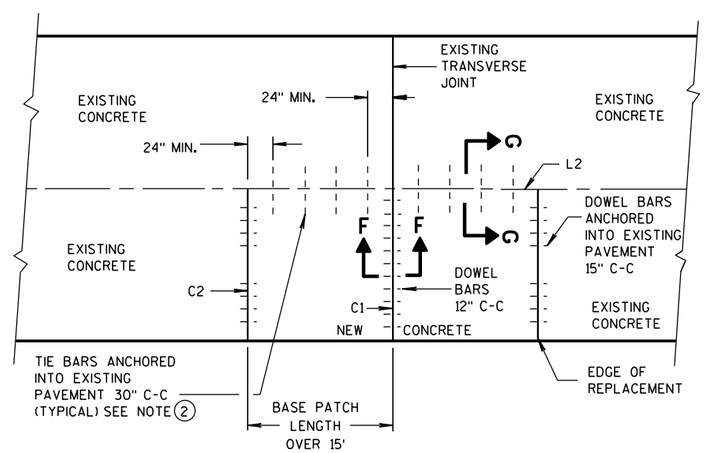

PLAN VIEW

SINGLE LANE CONCRETE BASE PATCH GREATER THAN 15' IN LENGTH

BASE PATCHING CONCRETE

STATE OF WISCONSIN
DEPARTMENT OF TRANSPORTATION

APPROVED
12-11-2009 /S/ Deb Bischoff
DATE PAVEMENT POLICY & DE NEER
FHWA

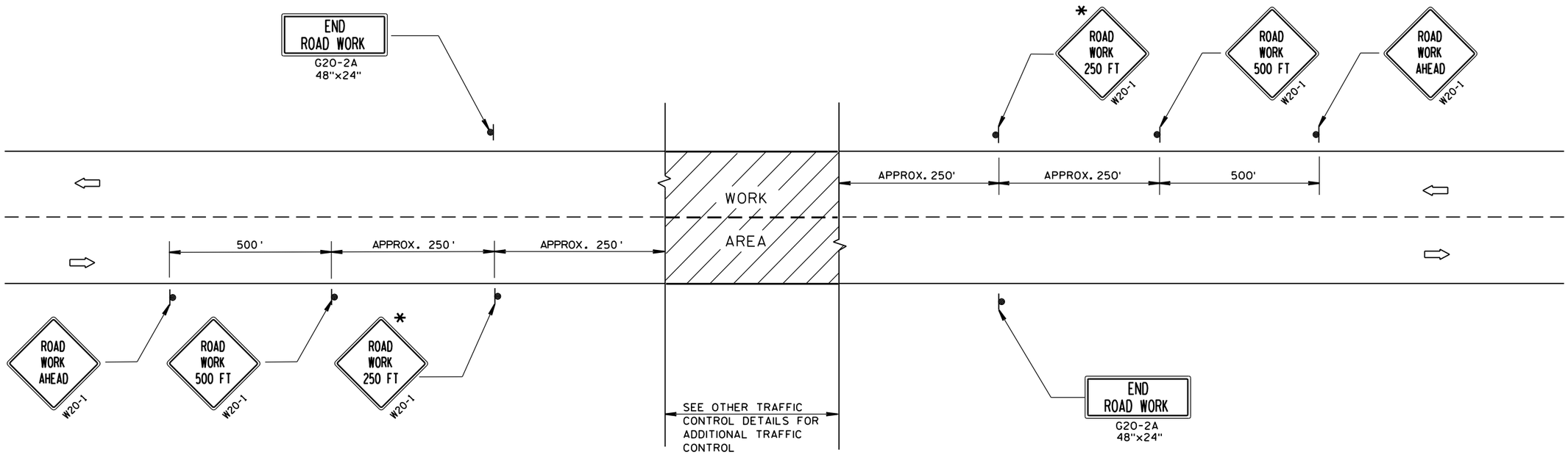

6

TYPICAL SIDEROAD APPROACH WARNING SIGN DETAIL

6

GENERAL NOTES

THE EXACT NUMBER, LOCATION, AND SPACING OF ALL SIGNS AND DEVICES SHALL BE ADJUSTED TO FIT FIELD CONDITIONS.

THE SPACING BETWEEN TRAFFIC CONTROL SIGNS SHOULD BE ADJUSTED TO NOT CONFLICT WITH AND SHOULD PROVIDE A DESIRABLE MINIMUM OF 200 FEET CLEARANCE TO EXISTING SIGNS THAT WILL REMAIN IN PLACE.

ALL SIGNS ARE 48"x48" UNLESS OTHERWISE NOTED. IF NECESSARY DUE TO SPACE CONSTRAINTS, 36"x36" SIGNS MAY BE USED INSTEAD OF 48"x48" SIGNS.

SIGNS THAT WILL BE IN PLACE LESS THAN 7 CONTINUOUS DAYS AND NIGHTS MAY BE MOUNTED ON PORTABLE SUPPORTS.

IF A "STOP" SIGN MUST BE REMOVED FOR A WORK OPERATION, A TEMPORARY "STOP" SIGN SHALL BE PLACED PRIOR TO THE SIGN REMOVAL, OR A FLAGGER SHALL BE PROVIDED UNTIL THE SIGN IS RE-ESTABLISHED.

* THE THIRD W20-1 SIGN IS REQUIRED ONLY IF THERE IS AN INTERSECTION BETWEEN THE "ROAD WORK 500 FT" SIGN AND THE WORK ZONE. ADJUST THE PLACEMENT OF THIS SIGN BASED ON INTERSECTION LOCATION AND OTHER FIELD CONDITIONS.

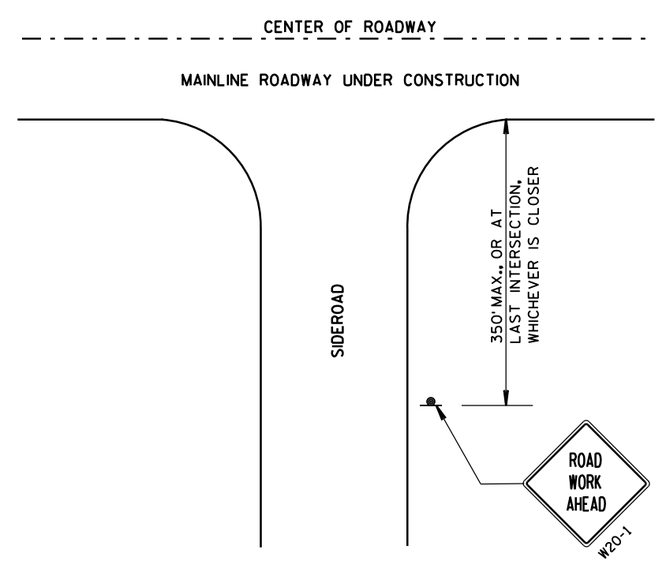

LEGEND

- SIGN ON PERMANENT SUPPORT
- DIRECTION OF TRAFFIC
- WORK AREA

TRAFFIC CONTROL, ADVANCE WARNING SIGNS 40 M.P.H. OR LESS TWO-WAY UNDIVIDED ROAD OPEN TO TRAFFIC

STATE OF WISCONSIN
DEPARTMENT OF TRANSPORTATION

APPROVED
8/2013 — DATE
/S/ Travis Feltes — STATE TRAFFIC ENGINEER
SIGN
FHWA

S.D.D. 15 C 5-2

S.D.D. 15 C 5-2

GENERAL NOTES

DETAILS OF INSTALLATION, MATERIALS AND WORKMANSHIP NOT SHOWN ON THIS DRAWING SHALL CONFORM TO THE PERTINENT REQUIREMENTS OF THE STANDARD SPECIFICATIONS AND APPLICABLE SPECIAL PROVISIONS.

ALL LETTERS, ARROWS AND SYMBOLS SHALL BE IN CONFORMANCE WITH REQUIREMENTS INCLUDED IN "STANDARD ALPHABETS FOR HIGHWAY SIGNS AND PAVEMENT MARKING" BOOK BY THE FEDERAL HIGHWAY ADMINISTRATION. ALL LETTERS, ARROWS AND SYMBOLS SHALL BE WHITE AND REFLECTORIZED. SMALL DIFFERENCES IN DIMENSIONS WITHIN THE TOLERANCES OF THAT BOOK ARE ACCEPTABLE.

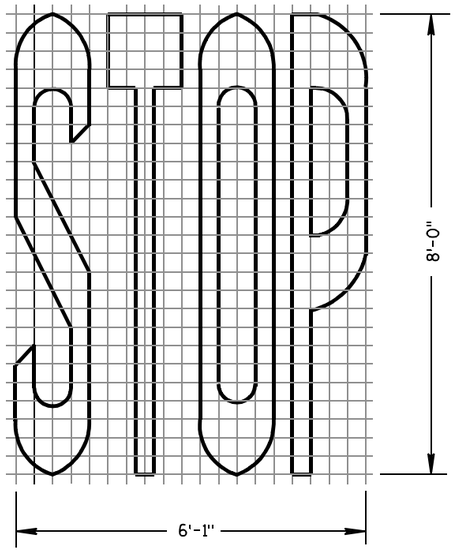

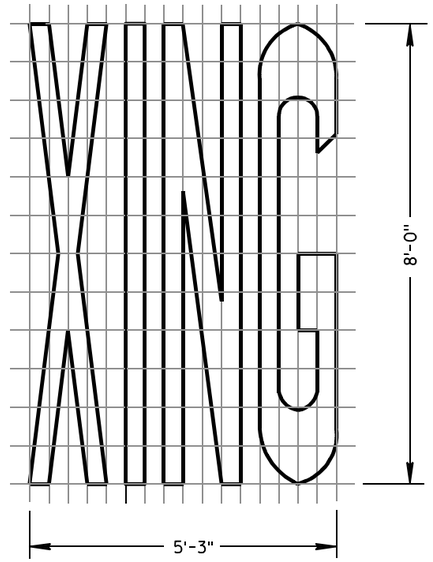

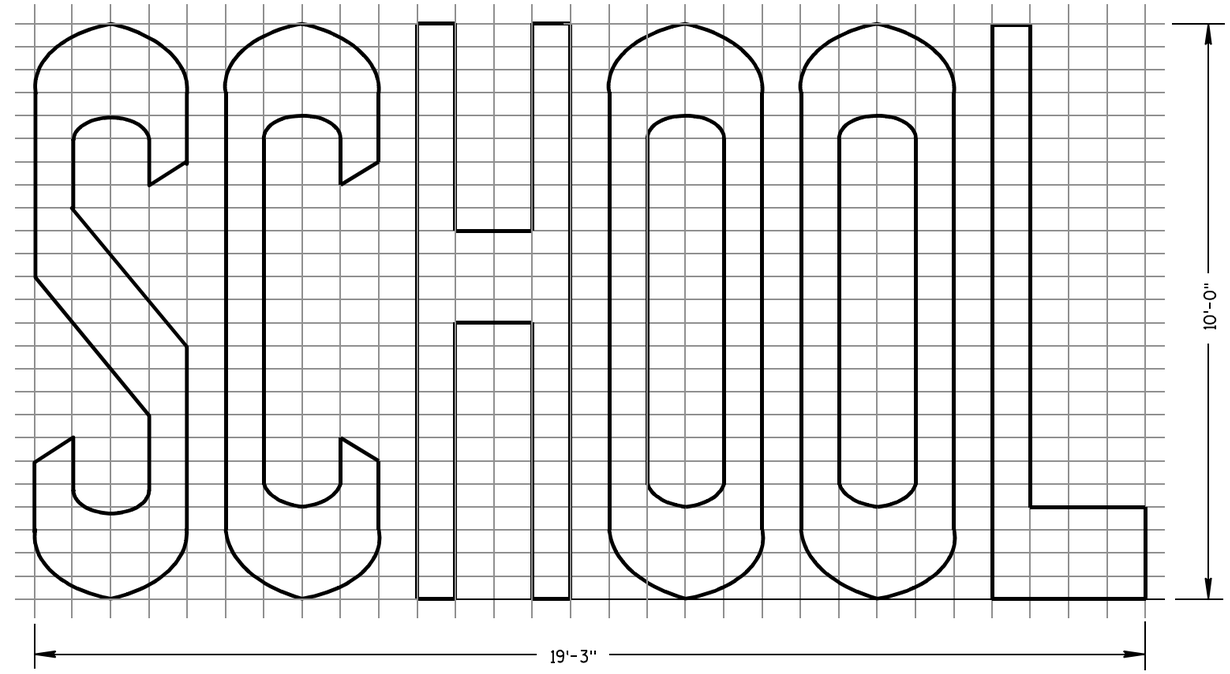

TWO-LANE

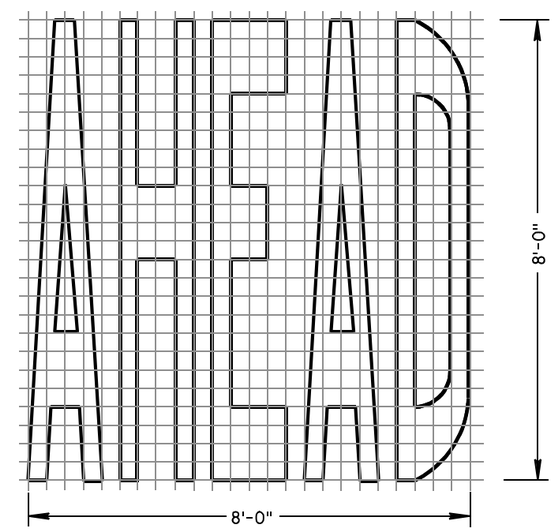

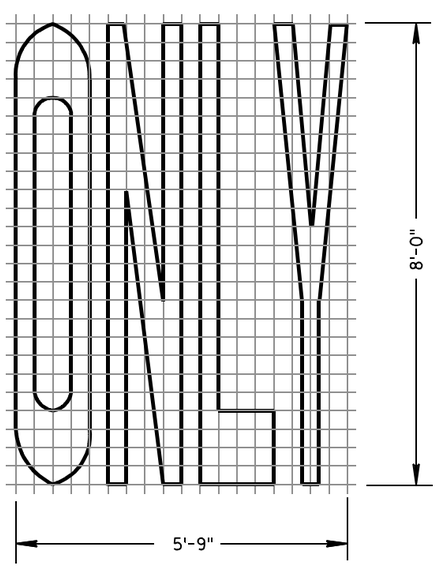

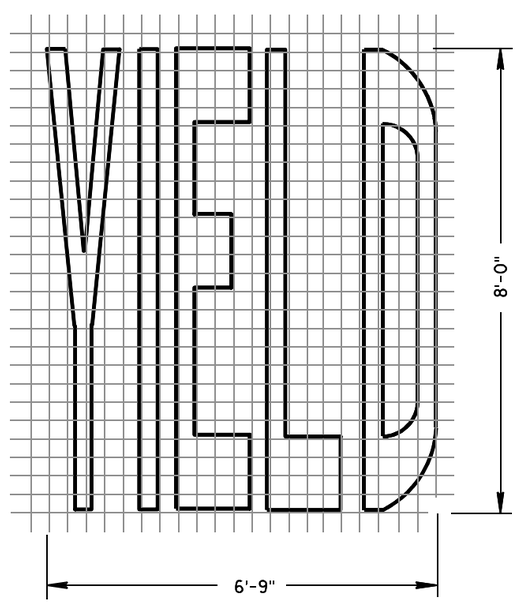

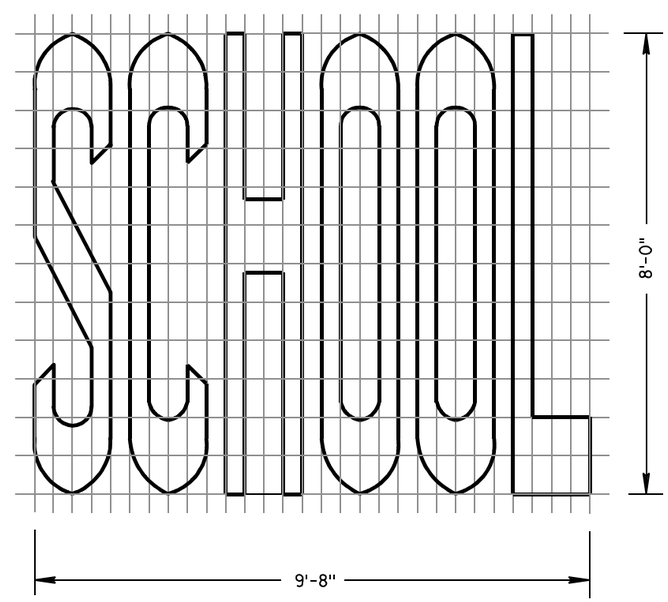

SINGLE-LANE

PAVEMENT MARKING WORDS
STATE OF WISCONSIN DEPARTMENT OF TRANSPORTATION
APPROVED 7-1-11 DATE — /S/ Thomas N. Notbohm STATE TRAFFIC ENGINEER — IGN FHWA

6

6

S.D.D. 15 C 7-12b

S.D.D. 15 C 7-12b

GENERAL NOTES

DETAILS OF INSTALLATION, MATERIALS AND WORKMANSHIP NOT SHOWN ON THIS DRAWING SHALL CONFORM TO THE PERTINENT REQUIREMENTS OF THE STANDARD SPECIFICATIONS AND APPLICABLE SPECIAL PROVISIONS.

ALL LETTERS, ARROWS AND SYMBOLS SHALL BE IN CONFORMANCE WITH REQUIREMENTS INCLUDED IN "STANDARD ALPHABETS FOR HIGHWAY SIGNS AND PAVEMENT MARKING" BOOK BY THE FEDERAL HIGHWAY ADMINISTRATION. ALL LETTERS, ARROWS AND SYMBOLS SHALL BE WHITE AND REFLECTORIZED. SMALL DIFFERENCES IN DIMENSIONS WITHIN THE TOLERANCES OF THAT BOOK ARE ACCEPTABLE.

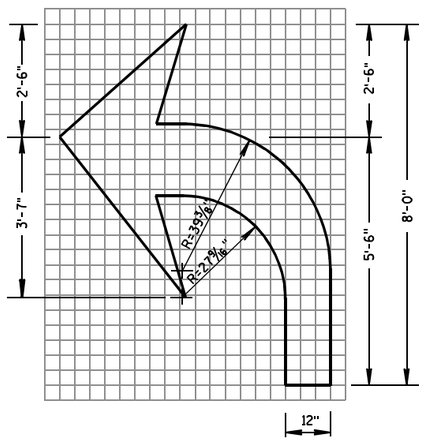

TYPE 2

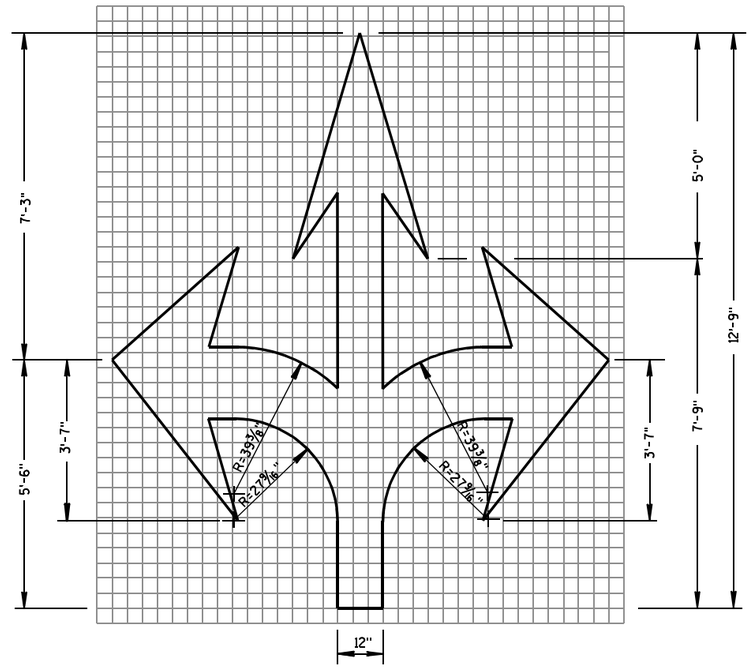

TYPE 6

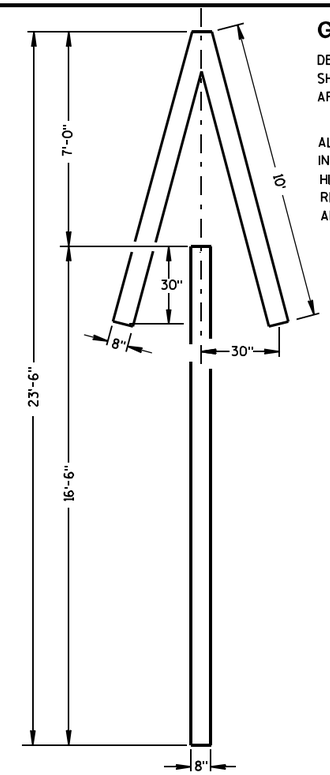

TYPE 4

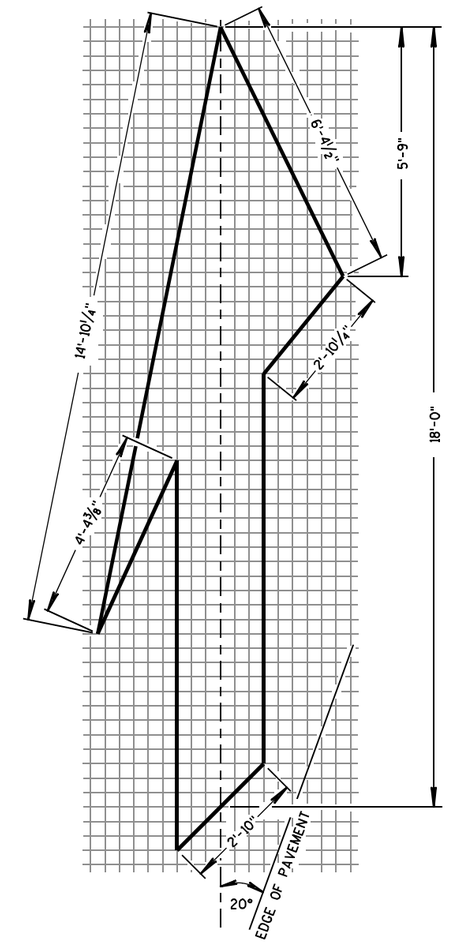

TYPE 5 LANE DROP ARROW

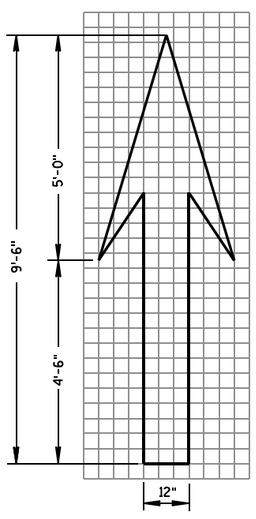

TYPE 1

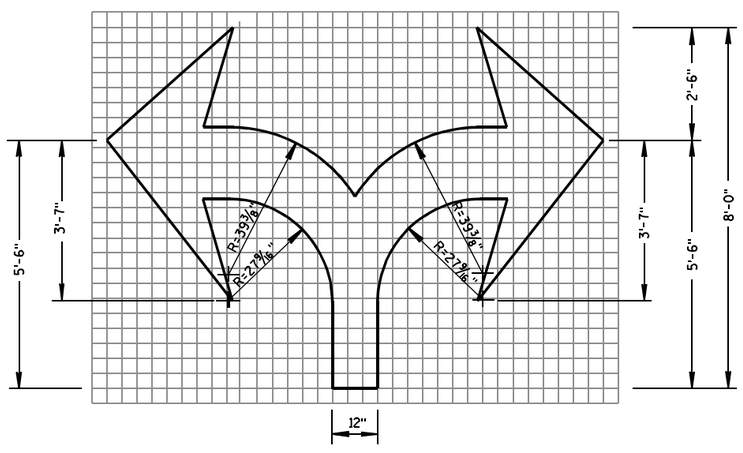

TYPE 7

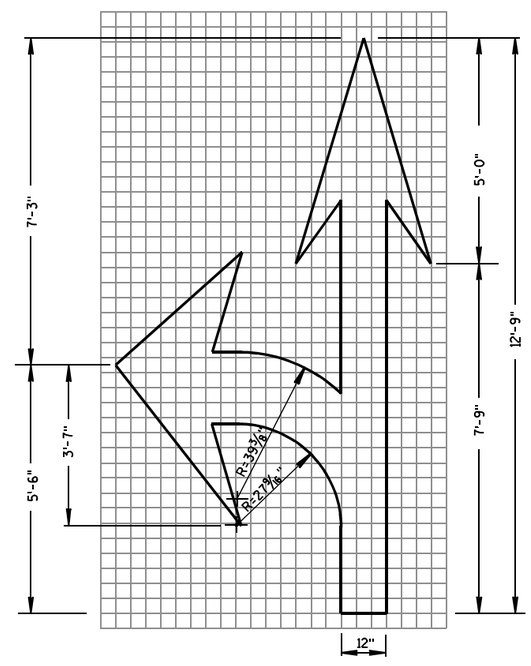

TYPE 3

PAVEMENT MARKING ARROWS

STATE OF WISCONSIN
DEPARTMENT OF TRANSPORTATION

APPROVED

7/1/11	/S/ Thomas N. Nothohm
DATE	STATE TRAFFIC ENGINEER

FHWA

6

6

S.D.D. 15 C 7-12c

S.D.D. 15 C 7-12c

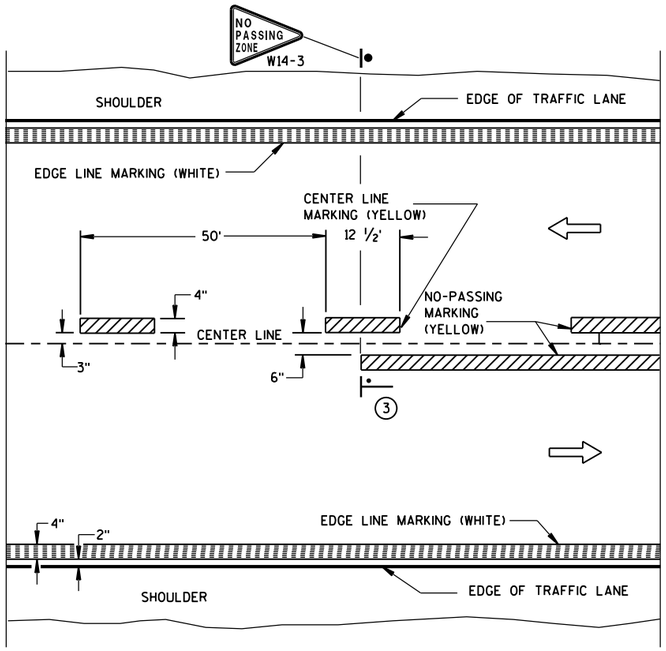

TWO WAY TRAFFIC

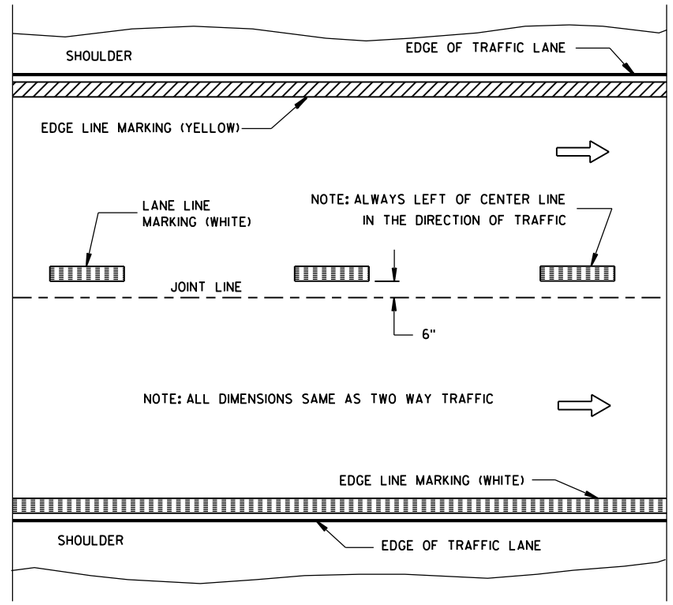

ONE WAY TRAFFIC

PERMANENT PAVEMENT MARKING

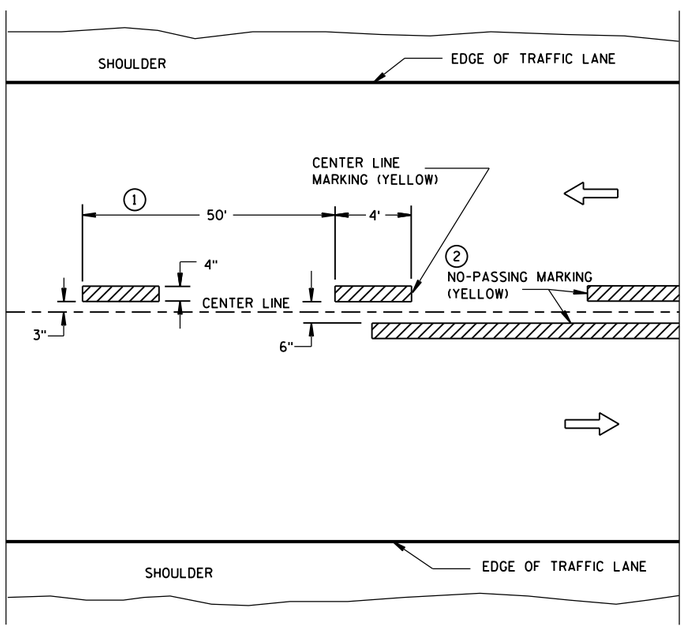

TWO WAY TRAFFIC

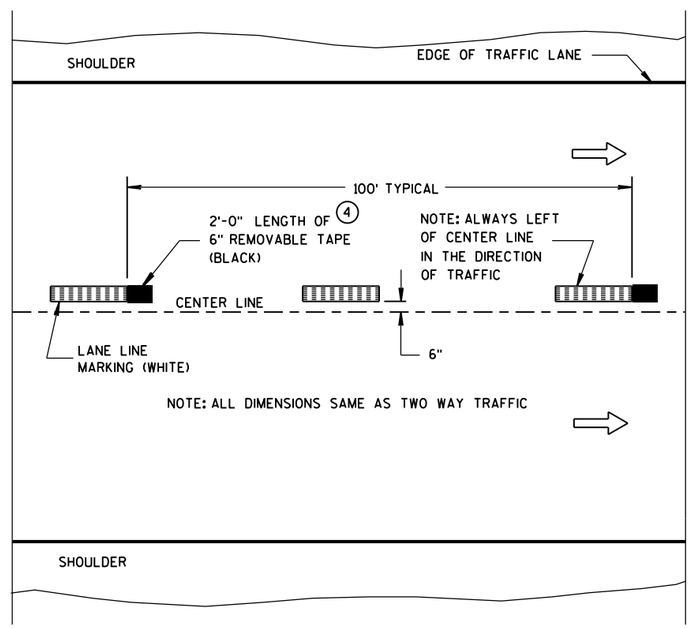

ONE WAY TRAFFIC

TEMPORARY (INTERMEDIATE) PAVEMENT MARKING

(SHOWS CYCLE FOR TEMPORARY CENTER LINE OR TEMPORARY LANE LINE MARKING)

GENERAL NOTES

DETAILS OF CONSTRUCTION NOT SHOWN ON THIS DRAWING SHALL CONFORM TO STANDARD SPECIFICATIONS AND SPECIAL PROVISIONS.

1. HALF CYCLE LENGTHS (25'±) WITH 2' MINIMUM STRIPE LENGTHS SHALL BE PROVIDED ON ROADWAYS (INCLUDING TEMPORARY TRAVELED WAYS) WITH REVERSE CURVATURE, CURVATURE OF OVER 5 DEGREES OR WHEN DIRECTED BY THE ENGINEER TO MARK UNUSUAL ALIGNMENT OF THE TRAVELED WAY.
2. NO PASSING ZONE TEMPORARY PAVEMENT MARKING IS REQUIRED TO BE PLACED, WHERE APPROPRIATE, ALONG WITH CENTERLINE TEMPORARY PAVEMENT MARKING WHEN A SAME DAY PERMANENT PAVEMENT MARKING ITEM IS INCLUDED IN THE CONTRACT.
3. NO PASSING ZONE MARKINGS ARE PLACED ACCORDING TO "T" MARKINGS. IF EXISTING NO PASSING ZONE W14-3 SIGNS ARE BEYOND 50 FEET IN EITHER DIRECTION, THE SIGNS SHALL BE MOVED TO THE "T" MARKINGS.
4. CONCRETE ONLY.

NOTE

ARROW SYMBOL (⇨) SHOWS DIRECTION OF TRAVEL

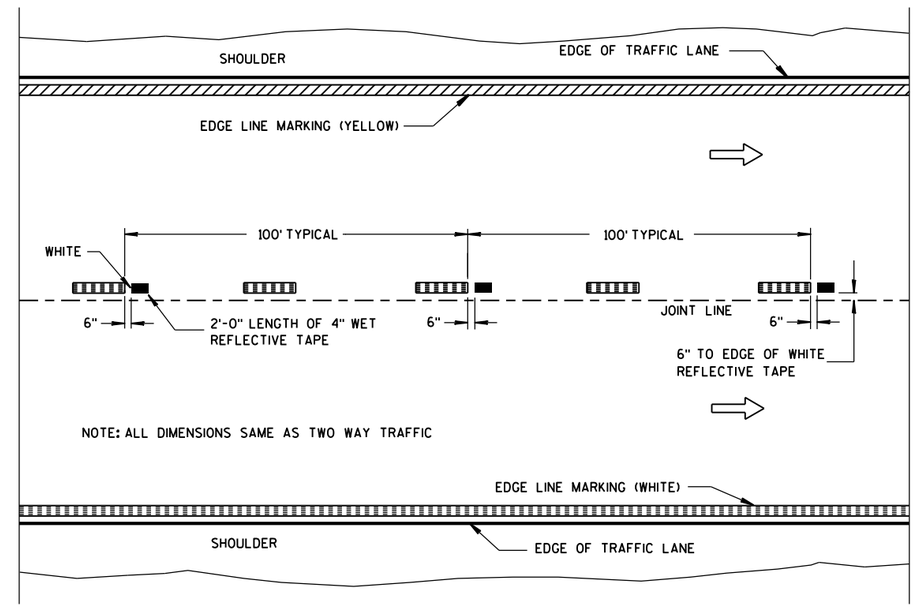

WET REFLECTIVE TAPE SUPPLEMENT TO SPRAYED OR NON WET REFLECTIVE TAPE LANE LINE

LEGEND

"T" MARKING

POST MOUNTED SIGN

PAVEMENT MARKING (MAINLINE)

STATE OF WISCONSIN
DEPARTMENT OF TRANSPORTATION

APPROVED
5-13-2013 /S/ Travis Feltes
DATE STATE TRAFFIC E
FHWA

6

S.D.D. 15 C 8-16a

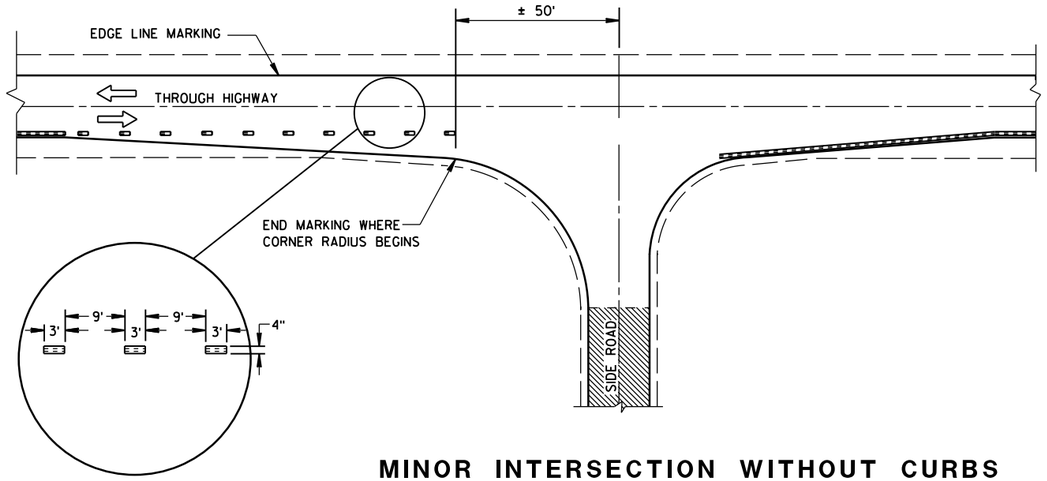

MINOR INTERSECTION WITHOUT CURBS

GENERAL NOTES

EDGE LINES SHALL BE OMITTED THROUGH INTERSECTIONS. EDGE LINES SHALL BE CONTINUED THROUGH DRIVEWAYS.

1. WHEN DISTANCE "A" IS LESS THAN 250 FEET, OMIT LANE LINE.
2. WHEN DISTANCE "B" IS LESS THAN 100 FEET, OMIT CHANNELIZING LANE LINE.
3. ALTERNATIVE MARKING SHALL BE PROVIDED WHEN SPECIFIED IN THE CONTRACT. TYPICAL SITUATIONS WHERE THIS MARKING MAY BE REQUIRED ARE WHERE THE INTERSECTION IS ON A SHARP HORIZONTAL CURVE OR CREST VERTICAL CURVE IN AN UNLIGHTED AREA SUCH THAT THE EDGE LINE MAY BE MISLEADING TO THE MOTORIST OR DISAPPEAR FROM SIGHT.
4. THE EDGE LINE IN THE TAPER AREAS OF THE BYPASS LANE AND THE BYPASS LANE SHALL BE LOCATED 1-FOOT FROM EDGE OF PAVEMENT TO THE OUTSIDE EDGE OF EDGE LINE.
5. BARRIER LINE ENDS AT SIDE ROAD PAVEMENT/SURFACE EDGE EXTENSION.
6. BARRIER LINE STARTS 500 FEET PRIOR TO THE BYPASS TAPER.
7. IF THE DISTANCE BETWEEN 2 SUCCESSIVE NO-PASSING ZONES IS LESS THAN THE MINIMUM DISTANCE BETWEEN ZONES, CONNECT THE 2 ZONES.
8. 3' LINE 9' GAP, EXCEPT RETRACE THE EXISTING LINE - GAP PATTERN WHERE EXISTING MARKINGS ARE IN PLACE.

ARROW SYMBOL (⇨) SHOWS DIRECTION OF TRAVEL

(7)

POSTED SPEED (MPH)	MINIMUM DISTANCE BETWEEN ZONES (FEET)
25 - 30	528
35 - 40	528
45 - 50	686
55	792

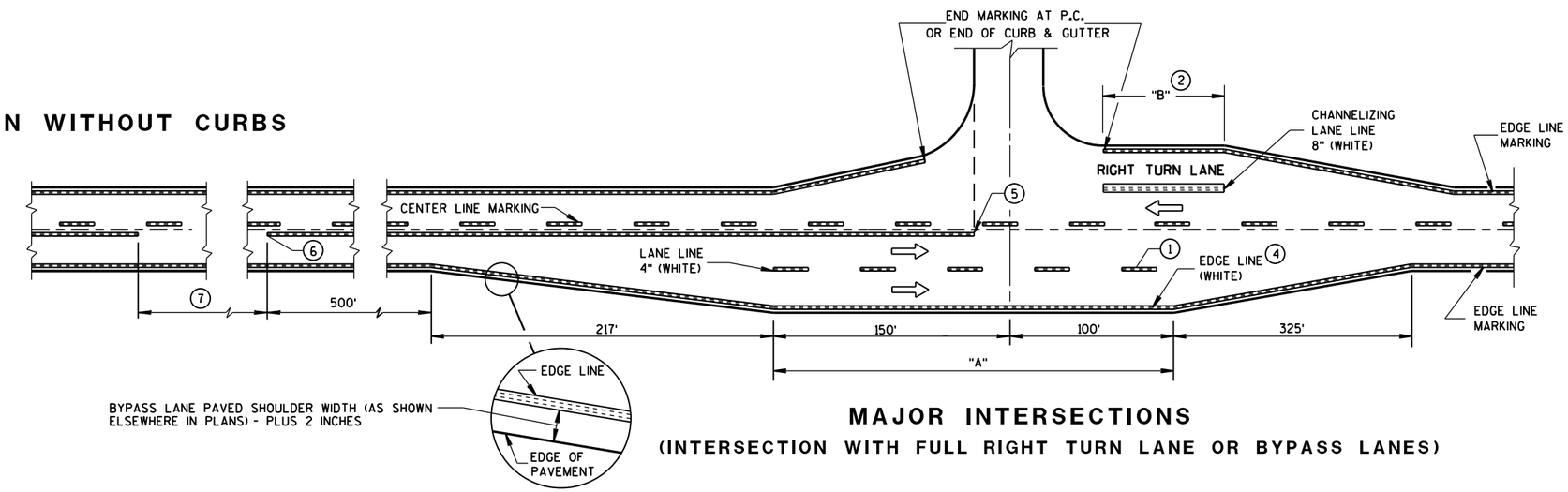

MAJOR INTERSECTIONS

(INTERSECTION WITH FULL RIGHT TURN LANE OR BYPASS LANES)

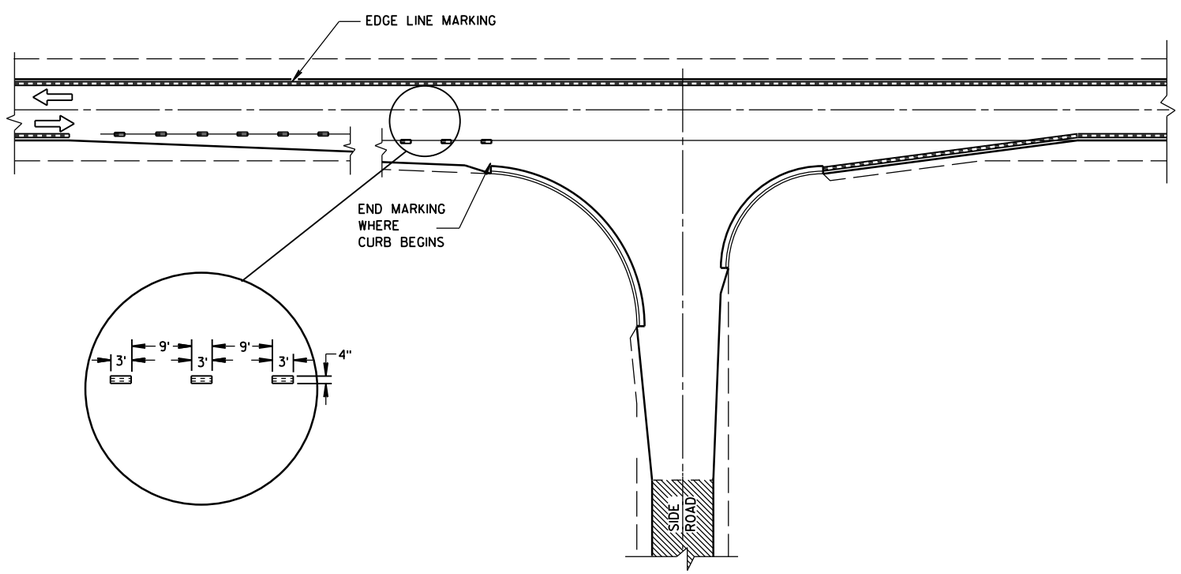

MINOR INTERSECTION WITH CURBS

(TYPICAL MARKING)

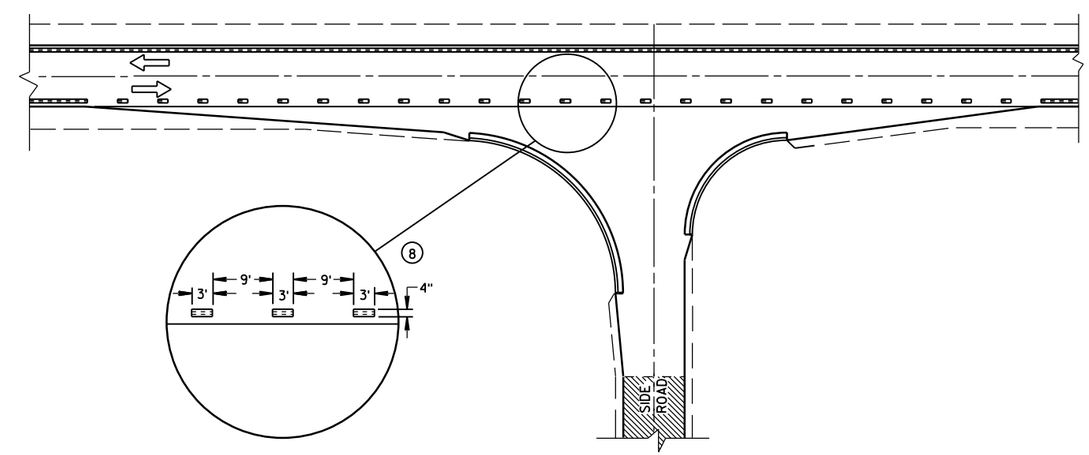

MINOR INTERSECTION WITH CURBS

(3) (FOR SPECIAL CONDITIONS AS SPECIFIED)

PAVEMENT MARKING
(INTERSECTIONS)

STATE OF WISCONSIN
DEPARTMENT OF TRANSPO

6

S.D.D. 15 C 8-16b

6

S.D.D. 15 C 8-16b

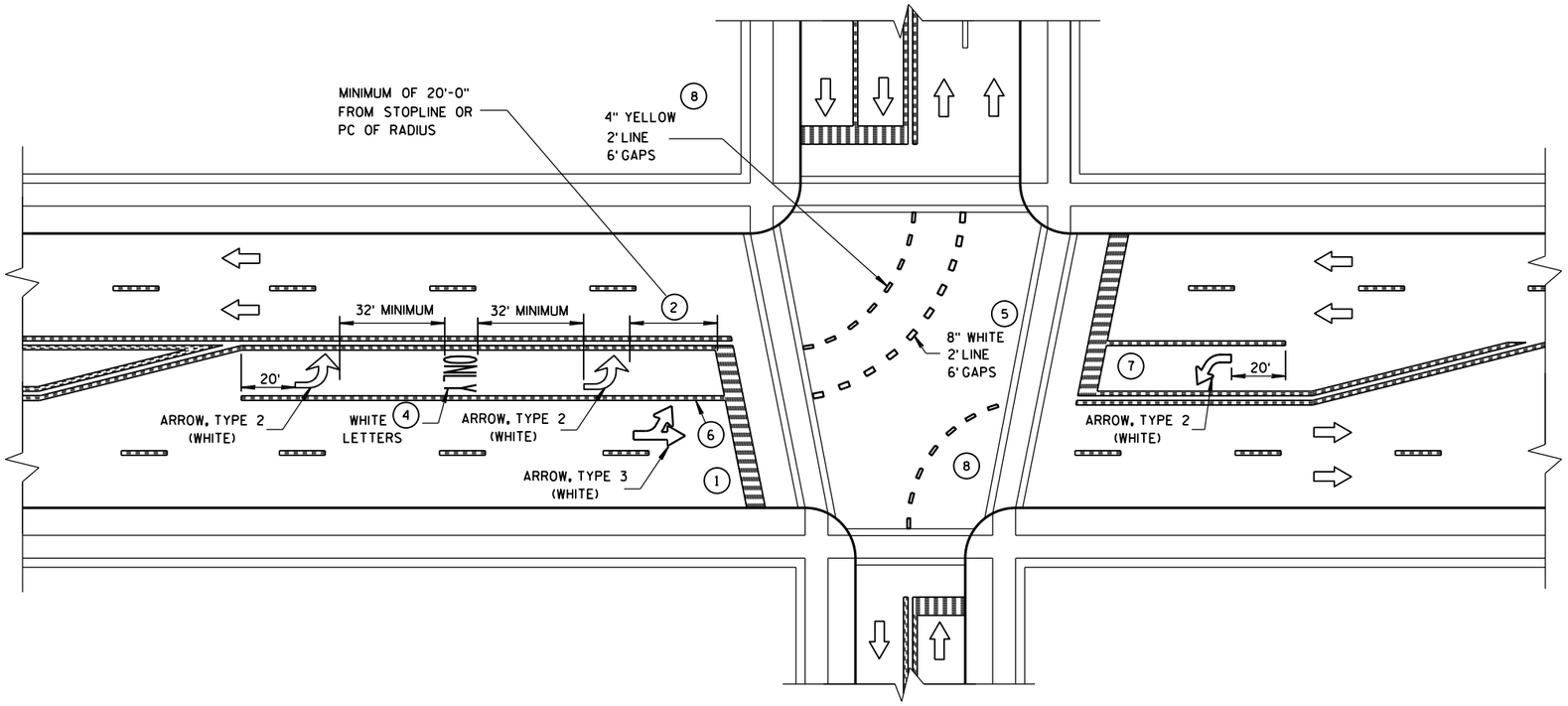

GENERAL NOTES

1. STOP BAR IS REQUIRED ONLY WHEN SPECIFIED IN THE CONTRACT.
2. DISTANCE MAY BE ADJUSTED TO ACCOMODATE SHORT LEFT TURN LANES. AS APPROVED BY THE ENGINEER.
3. A SET OF ARROWS IS REQUIRED EVERY 400 FEET OR NEAR INTERSECTIONS OR DRIVEWAYS WITH TURNING TRAFFIC.
4. ADD EXTRA SETS OF ONE ARROW AND ONE ONLY PER 160 FEET OR WHEN ON A CURVE.
5. 8" WHITE WITH 2' LINE 6' GAPS FOR DUAL TURN LANE.
6. 8" WHITE
7. ADD SECOND ARROW WHEN TURN BAY IS GREATER THAN OR EQUAL TO 108 FEET.
8. REQUIRED ONLY WHEN SPECIFIED IN THE CONTRACT.

NOTE:
ARROW SYMBOL (⇨)
SHOWS DIRECTION OF TRAVEL

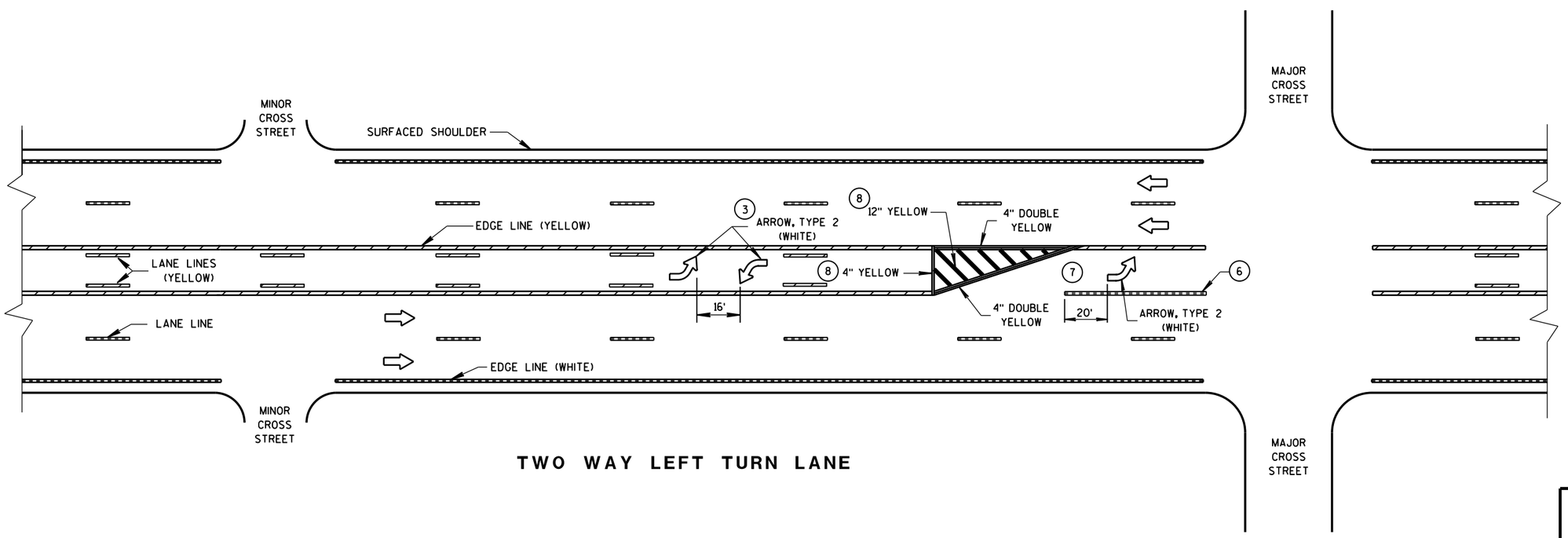

TWO WAY LEFT TURN LANE

PAVEMENT MARKING
(LEFT TURN LANE)

STATE OF WISCONSIN
DEPARTMENT OF TRANSPORTATION

6

S.D.D. 15 C 8-16e

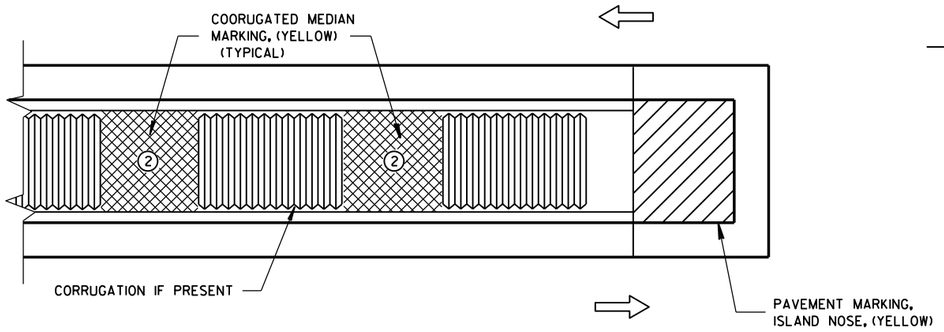

MEDIAN ISLAND WITH SQUARE BLUNT NOSE

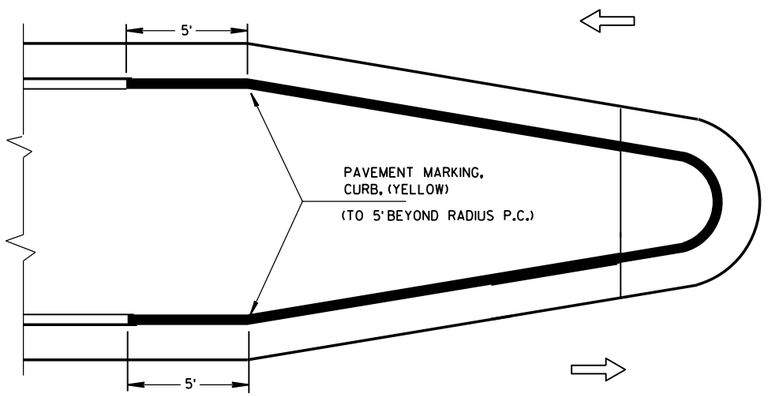

MEDIAN ISLAND WITH ROUND BLUNT NOSE

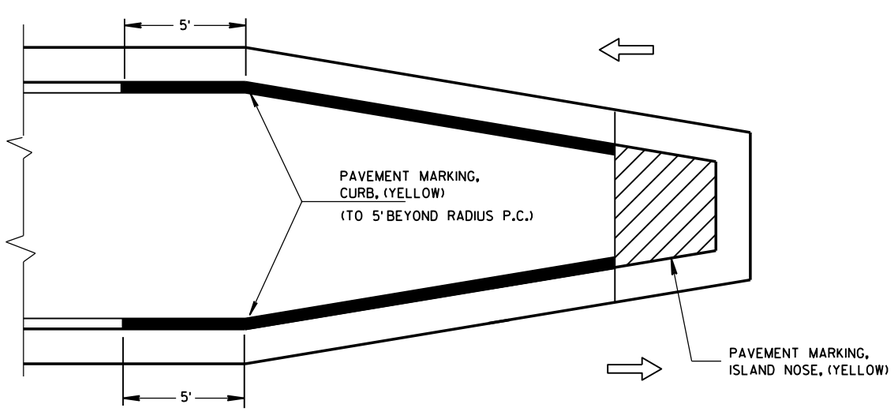

MEDIAN ISLAND WITH SLOPED NOSE

TYPICAL PLACEMENT OF PAVEMENT MARKING ON MEDIAN ISLANDS

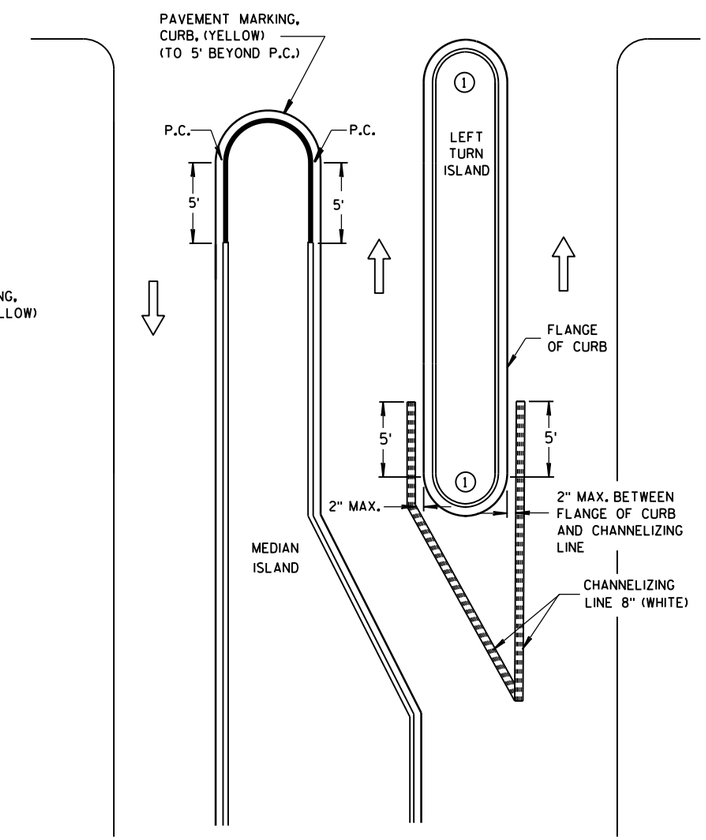

LEFT TURN & MEDIAN ISLAND

GENERAL NOTES

1. DO NOT MARK CURB NOSES THAT SEPARATE LANES OF TRAFFIC TRAVELING IN THE SAME DIRECTION.

2. WHEN CONCRETE CORRUGATED MEDIAN IS CONSTRUCTED TO SEPARATE TRAFFIC OPERATING IN THE OPPOSING DIRECTION YELLOW PAVEMENT MARKING SHALL BE APPLIED TO THE FLAT PORTION OF THE CONCRETE CORRUGATED MEDIAN. THE ITEM OF PAVEMENT MARKING, CONCRETE CORRUGATED MEDIAN, WILL BE MEASURED IN PLACE AND AND ACCEPTED IN ACCORDANCE WITH THE CONTRACT AND PAID FOR AT THE CONTRACT UNIT PRICE PER SQUARE FOOT.

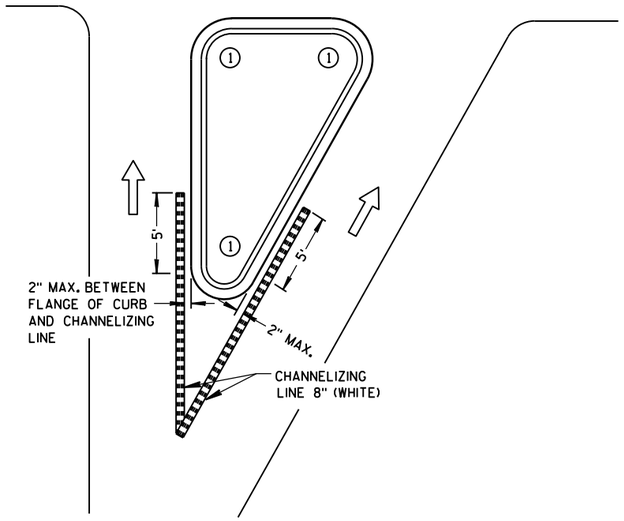

RIGHT TURN ISLAND

LEGEND

- ISLAND NOSE MARKING
- CURB MARKING
- CORRUGATED MEDIAN MARKING
- DIRECTION OF TRAVEL

PAVEMENT MARKING
(ISLANDS)

STATE OF WISCONSIN
DEPARTMENT OF TRANSPOI

6

6

S.D.D. 15 C 8-16f

S.D.D. 15 C 8-16f

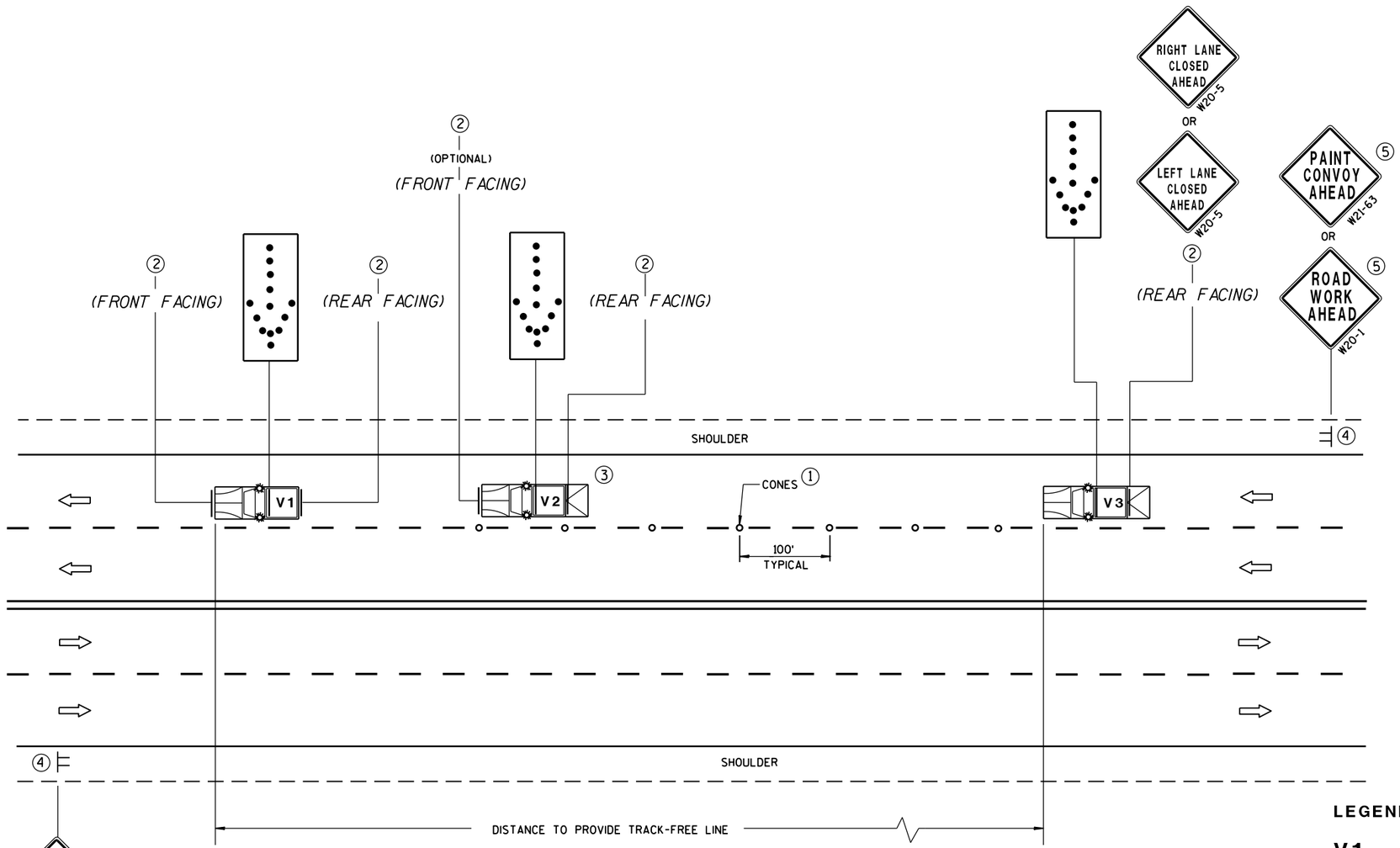

GENERAL NOTES

ALL VEHICLES SHALL BE EQUIPPED WITH TWO 360 DEGREE HIGH INTENSITY YELLOW FLASHING LIGHTS OR STROBE LIGHTS AND OPERATED WITH HEADLIGHTS TURNED ON.

ALL VEHICLES SHALL BE EQUIPPED WITH REAR FACING TYPE B OR C FLASHING ARROW PANEL. SIGNS PLACED ON VEHICLES MUST NOT OBSCURE THE ARROW PANEL.

ALL SIGNS ARE 48" X 48" UNLESS OTHERWISE SPECIFIED.

IF SPEED LIMIT IS 40 MPH OR LESS STATIONARY SIGNS MAY BE OMITTED IF CONES ARE USED.

ALTERNATE SIGN MESSAGES, SUCH AS "PAINT CREW AHEAD" OR "ROAD PAINTING AHEAD" MAY BE USED.

DISTANCE BETWEEN VEHICLES MAY VARY ACCORDING TO TERRAIN, SIGHT DISTANCE, PAINT DRYING TIME, AND OTHER FACTORS. WHENEVER ADEQUATE STOPPING SIGHT DISTANCE EXISTS TO THE REAR, SHADOW VEHICLES SHOULD MAINTAIN THE MINIMUM DISTANCE FROM THE WORK VEHICLE AND PROCEED AT THE SAME SPEED AS THE WORK VEHICLE. SHADOW VEHICLES SHOULD SLOW DOWN IN ADVANCE OF VERTICAL OR HORIZONTAL CURVES THAT RESTRICT SIGHT DISTANCE.

WHEN WORK ACTIVITY BLOCKS THE LEFT LANE, REVERSE TRAFFIC CONTROL.

WHEN A RAMP INTERSECTS THE FACILITY ON WHICH THE WORK IS BEING PERFORMED, PROVIDE ADDITIONAL TRAFFIC CONTROLS AS SPECIFIED IN THE CONTRACT OR AS APPROVED BY THE ENGINEER.

USE AN ATTENUATOR ON THE REARMOST VEHICLE THAT BLOCKS ALL OR PART OF THE TRAFFIC LANE.

FOR EDGELINE MARKING OR IF CONES ARE NOT USED, POSITION THE REARMOST SHADOW VEHICLE ON THE SHOULDER AS SHOWN IN THE MUTCD IF THE SHOULDER HAS ADEQUATE WIDTH.

WHEN NO WORK ACTIVITY IS TAKING PLACE, REMOVE OR TURN THE STATIONARY WARNING SIGNS AWAY FROM TRAFFIC.

THIS DRAWING SHALL BE USED FOR CENTERLINE OR EDGELINE OR LANELINE MARKING FOR MULTILANE UNDIVIDED ROADWAYS.

1. CONES MAY BE OMITTED ON PAINTED LINE IF APPROVED BY THE ENGINEER. CONSIDER PAVEMENT MARKING DRY OR CURE TIMES AND TRAFFIC VOLUME.
2. USE STANDARD SIGN W21-64 WITH APPROPRIATE ARROW.

   WET PAINT (W21-64) OR WET PAINT (W21-64)

3. OPTIONAL TRUCK-MOUNTED ATTENUATOR.
4. SIGNS SHALL BE REPEATED APPROXIMATELY EVERY THREE MILES.
5. IF CONSTRUCTION WORK ZONE SIGNS ARE IN PLACE, W20-1 OR W21-63 ARE NOT REQUIRED.

PAINT CONVOY AHEAD W21-63 (5)
OR
ROAD WORK AHEAD W20-1 (5)

LEGEND

V1	LEAD VEHICLE
V2	SHADOW VEHICLE
V3	TRAIL VEHICLE WITH TMA
TMA	TRUCK-MOUNTED ATTENUATOR
	SIGN ON TEMPORARY SUPPORT
	DIRECTION OF TRAFFIC
	CONES
	FLASHING ARROW PANEL (MERGE)

MOVING PAVEMENT MARKING OPERATIONS MULTI-LANE UNDIVIDED ROADWAY

MOVING PAVEMENT MARKING OPERATION
MULTI-LANE UNDIVIDED ROADWAY

STATE OF WISCONSIN
DEPARTMENT OF TRANSPORTATION

APPROVED
5/3/2013 — DATE
/S/ Travis Feltes — STATE TRAFFIC EN
FHWA

6

S.D.D. 15 C 19-2b

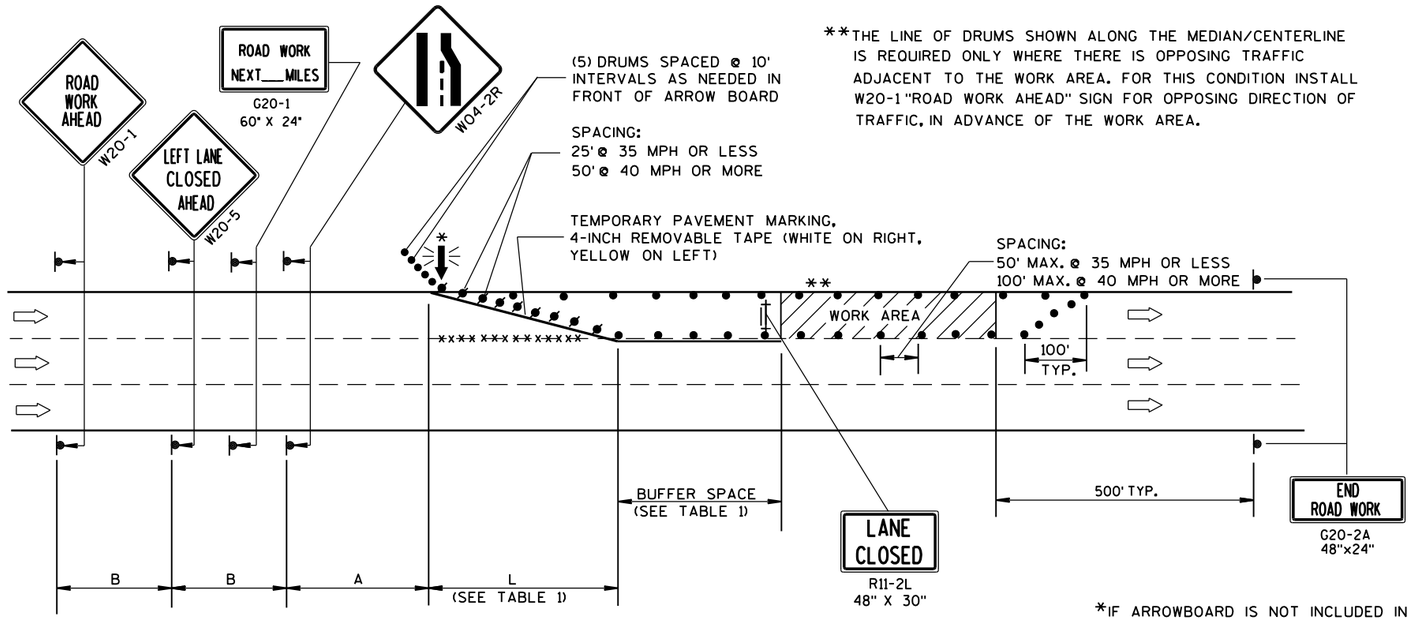

**THE LINE OF DRUMS SHOWN ALONG THE MEDIAN/CENTERLINE IS REQUIRED ONLY WHERE THERE IS OPPOSING TRAFFIC ADJACENT TO THE WORK AREA. FOR THIS CONDITION INSTALL W20-1 "ROAD WORK AHEAD" SIGN FOR OPPOSING DIRECTION OF TRAFFIC, IN ADVANCE OF THE WORK AREA.

B=400' AT 25-30 MPH
700' AT 35-40 MPH
1000' AT 45-55 MPH

A=200' AT 25-30 MPH
350' AT 35-40 MPH
500' AT 45-55 MPH

(PLACE BARRICADE AND SIGN APPROX. EVERY 1000' ACROSS THE CLOSED LANE)

*IF ARROWBOARD IS NOT INCLUDED IN MISCELLANEOUS QUANTITIES, SUBSTITUTE A TYPE III BARRICADE WITH W01-6 SIGN IN THE LANE CLOSURE TAPER.

W01-6
48"x24"

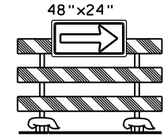

GENERAL NOTES

THIS LANE CLOSURE DETAIL IS TYPICAL FOR CLOSING THE LEFT LANE. FOR A RIGHT LANE CLOSURE, REVERSE THE TRAFFIC CONTROL.

THIS DETAIL MAY BE USED FOR ROADWAYS WITH EITHER TWO OR THREE LANES IN EACH DIRECTION.

THE EXACT NUMBER, LOCATION, AND SPACING OF ALL SIGNS AND DEVICES SHALL BE ADJUSTED TO FIT FIELD CONDITIONS AS APPROVED BY THE ENGINEER.

THE SPACING BETWEEN TRAFFIC CONTROL SIGNS SHOULD BE ADJUSTED TO NOT CONFLICT WITH AND SHOULD PROVIDE A DESIRABLE MINIMUM OF 200 FEET CLEARANCE TO EXISTING SIGNS THAT WILL REMAIN IN PLACE.

ALL SIGNS ARE 48"x48" UNLESS OTHERWISE NOTED. IF NECESSARY DUE TO SPACE CONSTRAINTS IN URBAN AREAS, 36" X 36" SIGNS MAY BE USED IF APPROVED BY DISTRICT TRAFFIC UNIT.

"WO" SIGNS ARE THE SAME AS "W" SIGNS EXCEPT THE BACKGROUND IS ORANGE.

SIGNS THAT WILL BE IN PLACE LESS THAN 7 CONTINUOUS DAYS AND NIGHTS, OR THAT WILL BE PLACED IN A CLOSED LANE, MAY BE MOUNTED ON PORTABLE SUPPORTS.

ANY SIGNS TEMPORARY OR EXISTING, WHICH CONFLICT WITH TRAFFIC CONTROL "IN USE" SHALL BE REMOVED OR COVERED AS NEEDED AND AS APPROVED BY THE ENGINEER.

REMOVE PAVEMENT MARKINGS AND PLACE TEMPORARY PAVEMENT MARKING, REMOVABLE TAPE IF LANE CLOSURE IS TO BE IN PLACE FOR 4 OR MORE CONTINUOUS DAYS AND NIGHTS.

ON UNDIVIDED ROADWAYS, OMIT THE SIGNS SHOWN ON LEFT SIDE OF ROAD.

W20-1, G20-1 AND G20-2A SIGNS ARE NOT REQUIRED IF THE LANE CLOSURE IS WITHIN A LARGER WORK ZONE WHERE THESE SIGNS ARE ALREADY PRESENT.

OMIT G20-1 SIGNS IF LENGTH OF WORK AREA IS 2 MILES OR LESS.

CONSIDER GEOMETRICS WHEN LOCATING SIGNS AND ARROWBOARDS SO THE APPROACHING DRIVER HAS A CLEAR VIEW OF THE ARROWBOARDS AND LANE CLOSURE DRUMS.

PLACE THE ARROWBOARD AS CLOSE AS POSSIBLE TO THE BEGINNING OF THE LANE CLOSURE TAPER, PREFERABLY ON THE SHOULDER OR TERRACE.

CHANNELIZING DEVICES PLACED ADJACENT TO WORK AREA SHALL BE PULLED BACK FROM THE TRAVEL LANE WHEN WORK IS NOT IN PROGRESS.

BARRICADES IN A CLOSED LANE THAT MUST BE MOVED FOR A WORK OPERATION SHALL BE IMMEDIATELY RE-ESTABLISHED UPON COMPLETION OF THE OPERATION OR, FOR CONTINUING OPERATIONS, AT THE END OF EACH WORKING DAY.

WARNING LIGHTS ARE NOT REQUIRED IF THE LANE CLOSURE IS A DAYTIME ONLY OPERATION.

TABLE 1
TAPER AND BUFFER SPACE
FOR 12' LANE WIDTH

S	L	BUFFER SPACE
25	125'	55'
30	180'	85'
35	245'	120'
40	320'	170'
45	540'	220'
50	600'	280'
55	660'	335'

FOR LANE WIDTH OTHER THAN 12':

L = WS AT 45 MPH OR GREATER

$L = \frac{WS^2}{60}$ AT 40 MPH OR LESS

L = TAPER LENGTH IN FEET

S = NON-CONSTRUCTION SPEED LIMIT (MPH)

W = WIDTH OF LANE CLOSURE

LEGEND

- TYPE III BARRICADE WITH ATTACHED SIGN
- SIGN ON PERMANENT SUPPORT
- TRAFFIC CONTROL DRUM WITH TYPE "C" STEADY BURN LIGHT
- TRAFFIC CONTROL DRUM
- FLASHING ARROW BOARD
- DIRECTION OF TRAFFIC
- REMOVING PAVEMENT MARKING (SEE GENERAL NOTES)
- WORK AREA

TRAFFIC CONTROL,
SINGLE LANE CLOSURE,
NON-FREEWAY/EXPRESSWAY

STATE OF WISCONSIN
DEPARTMENT OF TRANSPORTATION

APPROVED
8/2013 — DATE
/S/ Travis Feltes — STATE TRAFFIC ENGINE
FHWA

6

S.D.D. 15 D 20-2

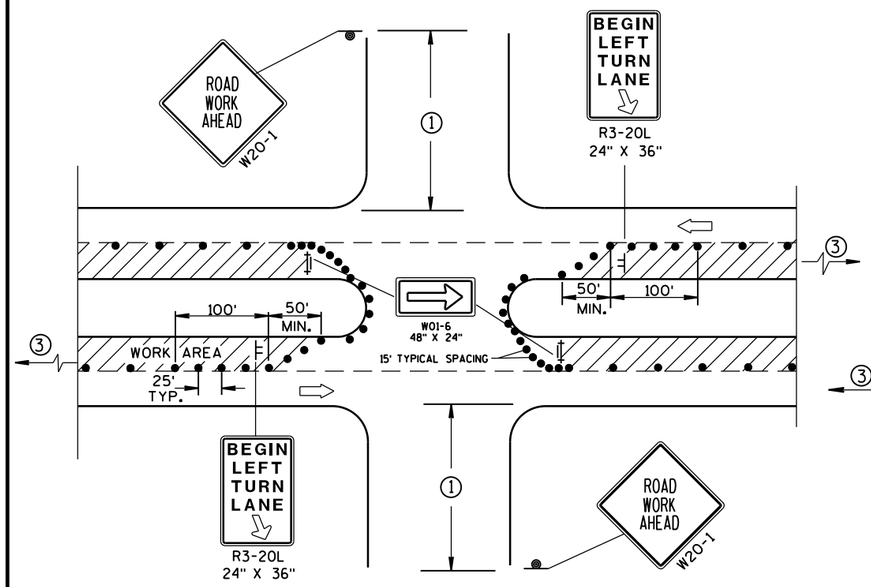

DETAIL A

FOR LEFT LANE CLOSURE AT INTERSECTION OR MEDIAN OPENING

PROVIDE TURN LANES AT INTERSECTIONS WHENEVER STAGING OF WORK ALLOWS. TAPER AND TURN LANE LENGTHS BASED ON FIELD CONDITIONS AS APPROVED BY THE ENGINEER.

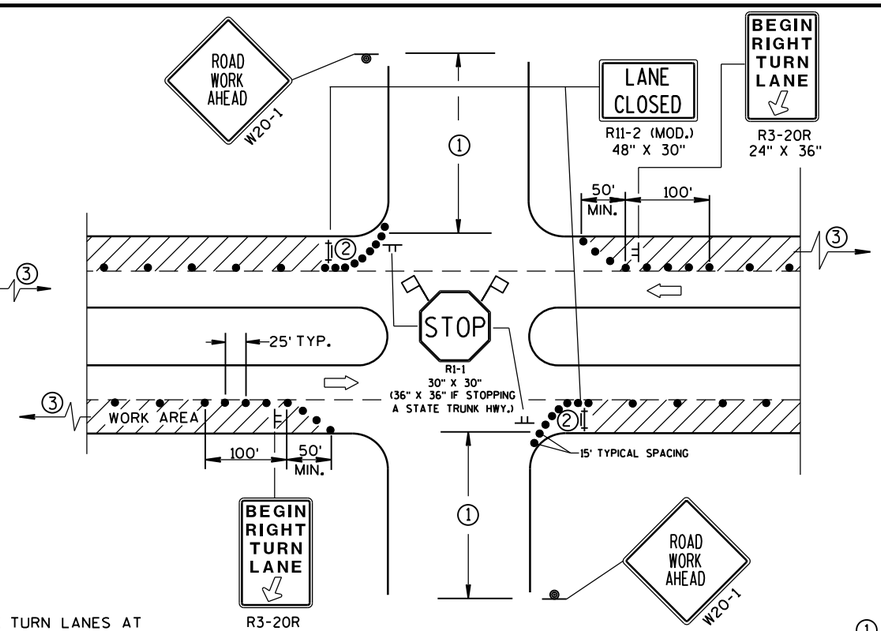

DETAIL B

FOR RIGHT LANE CLOSURE AT INTERSECTION

GENERAL NOTES

THE EXACT NUMBER, LOCATION, AND SPACING OF ALL SIGNS AND DEVICES SHALL BE ADJUSTED TO FIT FIELD CONDITIONS AS APPROVED BY THE ENGINEER.

THE SPACING BETWEEN SIGNS SHOULD BE ADJUSTED TO NOT CONFLICT WITH AND SHOULD PROVIDE A DESIRABLE MINIMUM OF 200 FEET CLEARANCE TO EXISTING SIGNS THAT WILL REMAIN IN PLACE.

ALL SIGNS ARE 48"x48" UNLESS OTHERWISE NOTED. IF NECESSARY DUE TO SPACE CONSTRAINTS IN URBAN AREAS, 36" X 36" SIGNS MAY BE USED IF APPROVED BY DISTRICT TRAFFIC UNIT.

"WO" SIGNS ARE THE SAME AS "W" SIGNS EXCEPT THE BACKGROUND IS ORANGE.

SIGN LAYOUTS SHALL BE IN ACCORDANCE WITH THE FHWA'S MANUAL OF STANDARD HIGHWAY SIGNS OR THE WISCONSIN STANDARD SIGN PLATES.

SIGNS THAT WILL BE IN PLACE LESS THAN 7 CONTINUOUS DAYS AND NIGHTS, OR THAT WILL BE PLACED IN A CLOSED LANE, MAY BE MOUNTED ON PORTABLE SUPPORTS.

ANY SIGNS TEMPORARY OR EXISTING, WHICH CONFLICT WITH TRAFFIC CONTROL "IN USE" SHALL BE REMOVED OR COVERED AS NEEDED AND AS APPROVED BY THE ENGINEER.

CHANNELIZING DEVICES PLACED ADJACENT TO WORK AREA SHALL BE PULLED BACK FROM THE TRAVEL LANE WHEN WORK IS NOT IN PROGRESS.

BARRICADES IN A CLOSED LANE THAT MUST BE MOVED FOR A WORK OPERATION SHALL BE IMMEDIATELY RE-ESTABLISHED UPON COMPLETION OF THE OPERATION OR, FOR CONTINUING OPERATIONS, AT THE END OF EACH WORKING DAY.

① 500' TYPICAL OR AT LAST INTERSECTION, WHICHEVER IS CLOSER.
350' IF 35-40 MPH.
200' IF 25-30 MPH.

② ALSO USE BARRICADE AND 15-FOOT TYPICAL DRUM SPACING AT COMMERCIAL DRIVEWAYS.

③ SEE SEPARATE LANE CLOSURE DETAIL FOR ADDITIONAL TRAFFIC CONTROL.

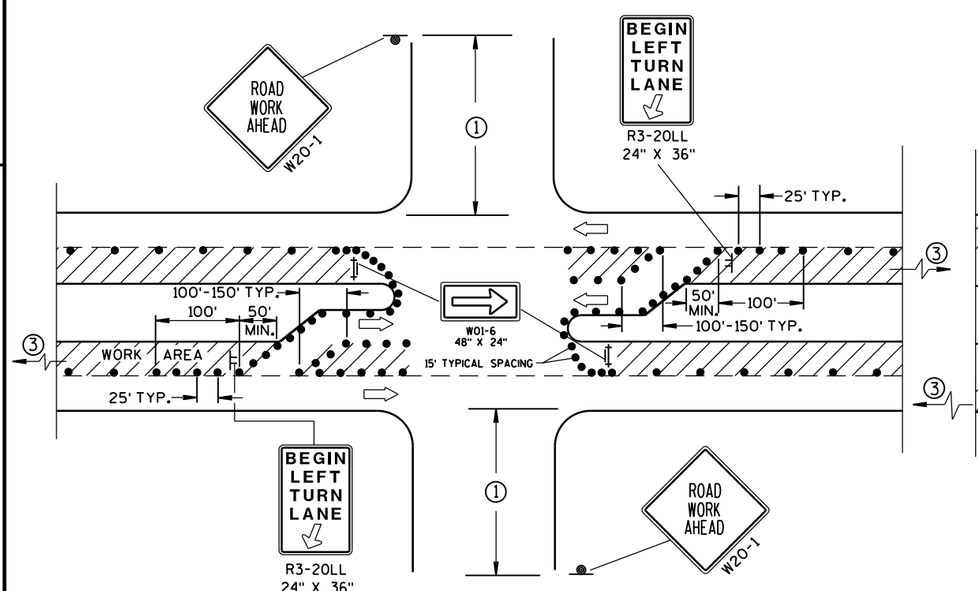

DETAIL C

FOR LEFT LANE CLOSURE AT INTERSECTION OR MEDIAN OPENING (WITH LEFT TURN BAY OPEN)

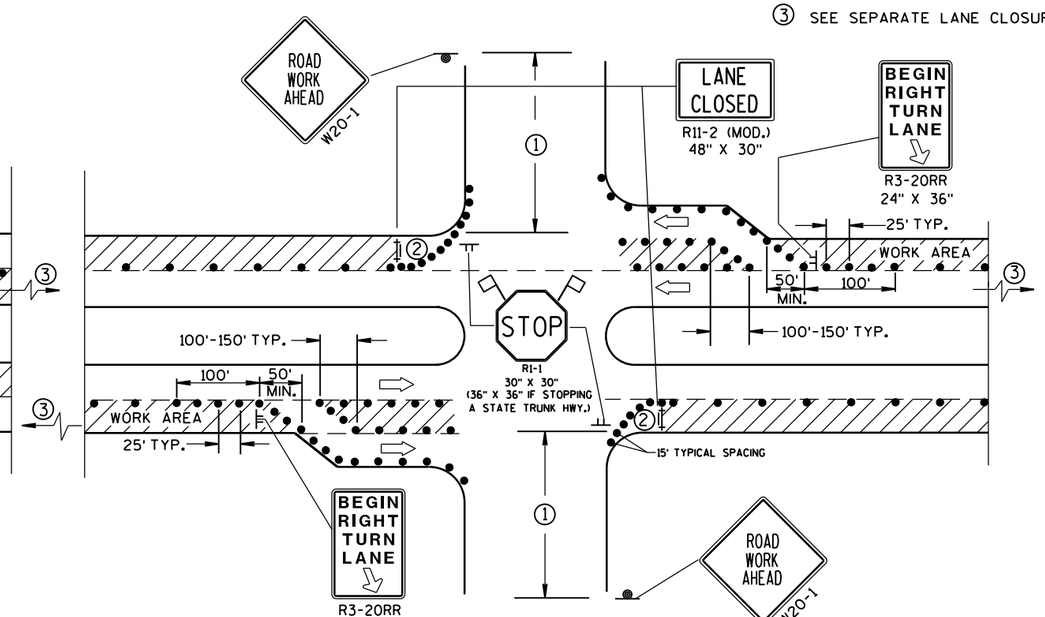

DETAIL D

FOR RIGHT LANE CLOSURE AT INTERSECTION (WITH RIGHT TURN BAY OPEN)

LEGEND

- TRAFFIC CONTROL DRUM
- SIGN ON PERMANENT SUPPORT
- SIGN ON TEMPORARY SUPPORT (5' MIN. MOUNTING HEIGHT)
- TYPE III BARRICADE WITH ATTACHED SIGN AND TYPE "A" WARNING LIGHT (FLASHING)
- DIRECTION OF TRAFFIC
- FLAGS, 16" X 16" MIN., (ORANGE)
- WORK AREA

TRAFFIC CONTROL, INTERSECTION WITHIN SINGLE LANE CLOSURE

STATE OF WISCONSIN
DEPARTMENT OF TRANSPORTATION

APPROVED
8/2013 — DATE
/S/ Travis Feltes — STATE TRAFFIC ENGINEER
FHWA

WARNING OF LOCALIZED SIDEWALK WORK AREAS

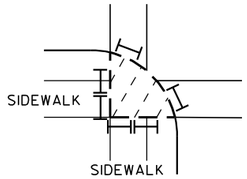

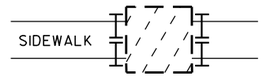

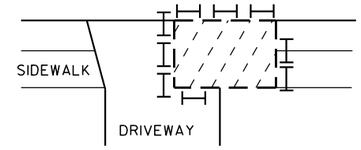

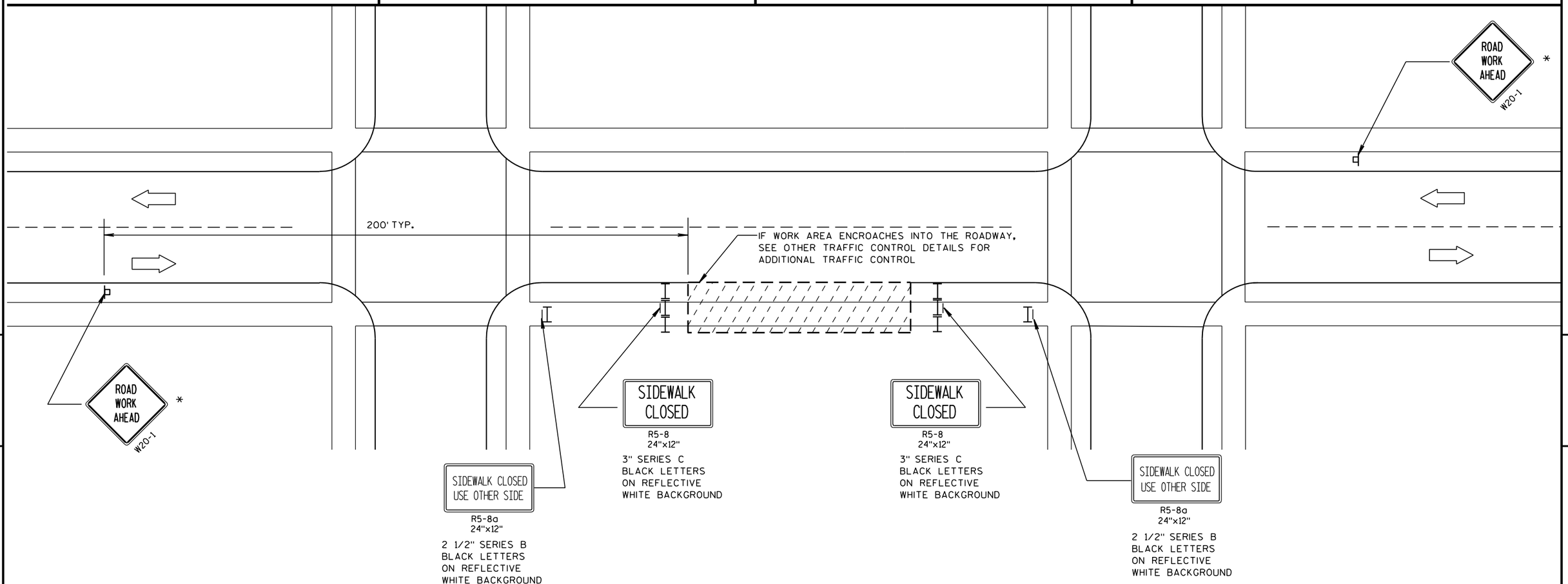

LEGEND

- POST MOUNTED SIGN
- TYPE II BARRICADE WITH/WITHOUT SIGN (ALL WITH ONE WARNING LIGHT, TYPE A, LOW-INTENSITY FLASHING)
- WORK AREA
- DIRECTION OF TRAFFIC FLOW

GENERAL NOTES :

ALL SIGNS ARE 48"x48" UNLESS OTHERWISE NOTED. IF NECESSARY DUE TO SPACE CONSTRAINTS, 36"x36" SIGNS MAY BE USED INSTEAD OF 48"x48" SIGNS, IF APPROVED BY DISTRICT TRAFFIC UNIT.

THE EXACT LOCATION AND PLACEMENT OF ALL SIGNS AND DEVICES SHALL BE ADJUSTED TO FIT FIELD CONDITIONS.

"WO" SIGNS ARE THE SAME AS "W" SIGNS EXCEPT THE BACKGROUND IS ORANGE.

* "ROAD WORK AHEAD" SIGNS ARE NOT REQUIRED IF THE SIDEWALK CLOSURE OCCURS WITHIN A LARGER WORK ZONE WHERE ADVANCE WARNING SIGNS ARE ALREADY PRESENT, OR IF THE WORK AREA AND EQUIPMENT ARE MORE THAN 2 FEET BEHIND THE CURB.

WARNING SIGNS THAT WILL BE IN PLACE LESS THAN 7 CONTINUOUS DAYS AND NIGHTS MAY BE MOUNTED ON PORTABLE SUPPORTS.

TRAFFIC CONTROL, SIDEWALK CLOSURE

TRAFFIC CONTROL, SIDEWALK CLOSURE

STATE OF WISCONSIN
DEPARTMENT OF TRANSPORTATION

APPROVED
5/23/2000 /S/ Chester J. [illegible]
DATE CHIEF SIGNS AND MARK[illegible]NEER
FHWA

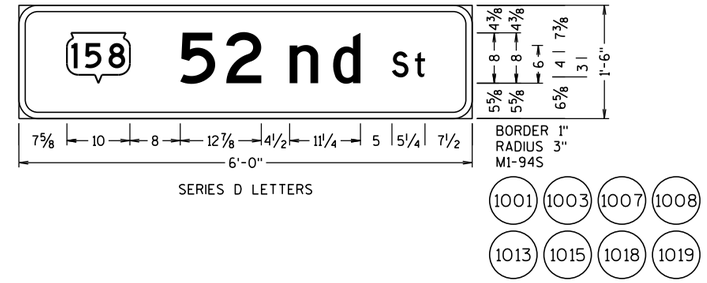

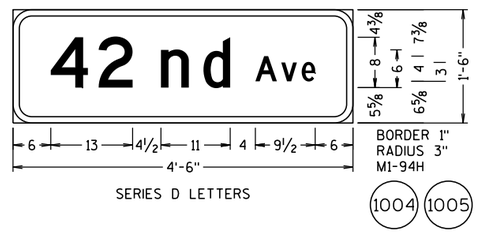

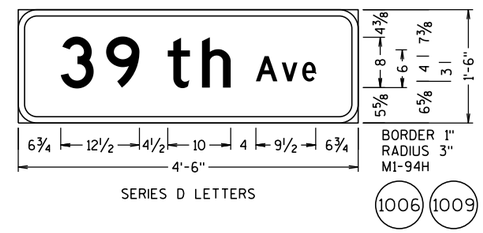

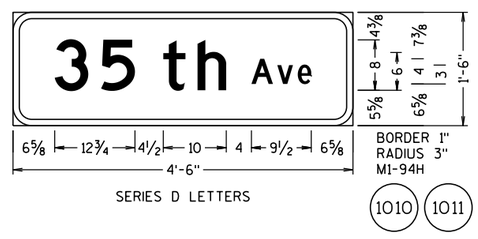

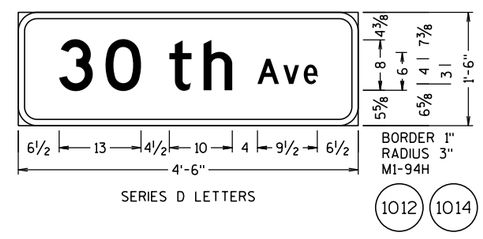

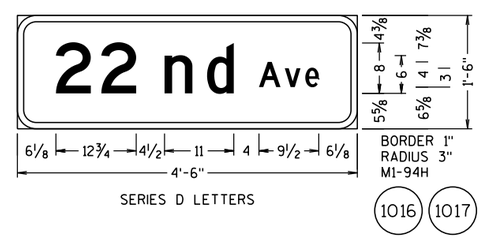

GENERAL NOTES:

1. DETAILS OF CONSTRUCTION, MATERIALS, AND WORKMANSHIP NOT SHOWN ON THIS DRAWING SHALL CONFORM TO THE PERTINENT REQUIREMENTS OF THE STANDARD SPECIFICATIONS, THE SPECIAL PROVISIONS, AND THE PLANS.
2. UNLESS OTHERWISE NOTED, ALL SIGNS SHOWN ON THIS SHEET ARE "SIGNS, TYPE II".
3. UNLESS OTHERWISE NOTED, TYPE II SIGNS ON THIS SHEET SHALL HAVE "TYPE H REFLECTIVE SHEETING" AND, "TYPE H MESSAGE MATERIAL". TYPE I SIGNS SHALL HAVE TYPE SH REFLECTIVE SHEETING.
4. UNLESS OTHERWISE NOTED, ALL SIGNS SHOWN ON THIS SHEET SHALL HAVE A GREEN BACKGROUND AND WHITE MESSAGE.
5. TYPE II SIGNS ALL UPPER CASE MESSAGE (EXCEPT ON SHIELDS OR WHERE OTHERWISE NOTED) SHALL BE "SERIES E. ALL LOWER CASE MESSAGE WITH AN INITIAL UPPER CASE LETTER SHALL BE "SERIES E.
6. TYPE I SIGNS - ALL UPPER CASE MESSAGE (EXCEPT ON SHIELDS OR WHERE OTHERWISE NOTED) SHALL BE SERIES "E" MODIFIED. ALL LOWER CASE MESSAGE WITH AN INITIAL UPPER CASE LETTER SHALL BE SERIES "E" MODIFIED. ALL CAP WORDS ARE "SERIES E"
7. UNLESS OTHERWISE NOTED, ALL SIGNS SHOWN ON THIS SHEET SHALL HAVE "TYPE A" OR "TYPE C" ARROWS AS SHOWN. SEE THE STANDARD SIGN PLATES FOR FURTHER DETAILS.
8. SEE THE STANDARD SIGN PLATES FOR FURTHER DETAILS ON ROUTE MARKER SHIELDS.
9. THE SIGN NUMBER IS DENOTED IN THE CIRCLE NEAR EACH DETAIL.
10. NUMBER FRACTIONS FOR INTERCHANGE SEQUENCE SIGNS SHALL BE SERIES "E" PER PLATES A11-7 AND A11-10
11. DO NOT SCALE.

7

7

SHEET 1 OF 1

PROJECT NO:3220-03-62	HWY:STH 158	COUNTY:KENOSHA	SIGNING DETAIL - TYPE II SIGNS	SCALE: 0 ½" 1"	SHEET 131	E

TYPICAL ASSEMBLIES

J1-1

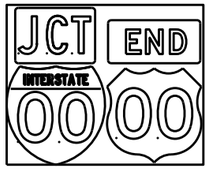

J1-2

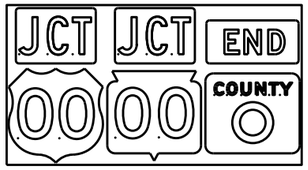

J1-3

J2-1

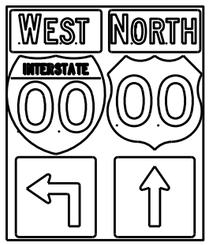

J2-2

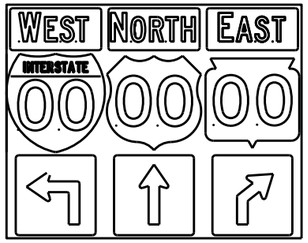

J2-3

JV

(Typical Vertical J-Assembly
See Note 10 and 11)

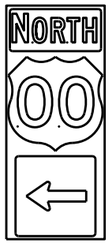

J3-1

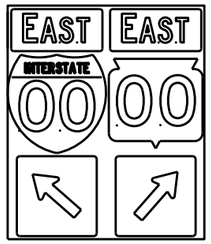

J3-2

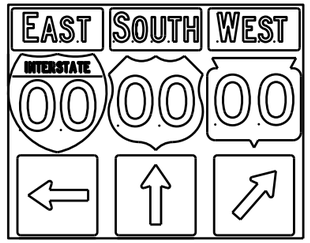

J3-3

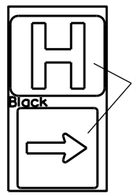

Blue Background

JH-1

J4-1

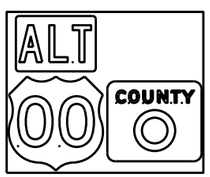

J4-2

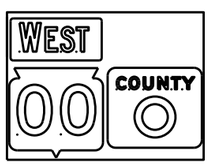

J4-2

J13-1

J12-1

J32-1

J33-1

J23-1

J22-1

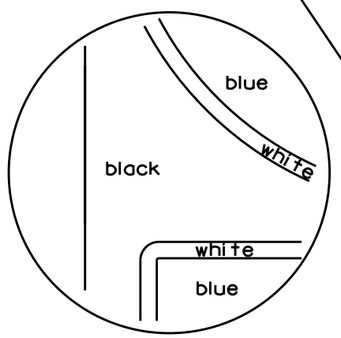

[blue background with interstate]

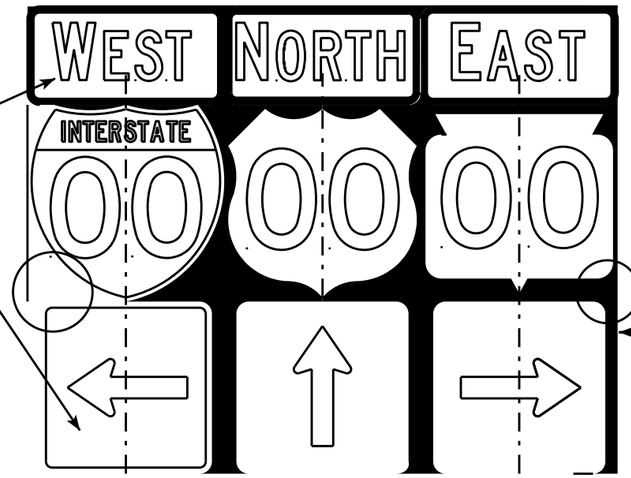

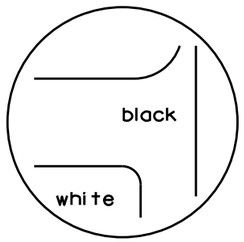

[black background]

NOTES

1. Signs are Type II - Type H Reflective - reference WIS DOT Standard Specification for HIGHWAY and STRUCTURE CONSTRUCTION latest edition.
2. Color:
   Background - Black Non-reflective
   Message - see Note 5
3. Message Series - See Note 5
4. Corners shall be square or rounded if base material is plywood. If base material is metal the corners shall be rounded.
5. The colors and message spacing on each marker shall be according to the applicable route marker panel specifications.
6. Certain marker heads require the component pieces to be the same color. As an example, all the components used with an M1-1 Interstate marker shall be blue.
7. Single panel j-assemblies shall only be used with route marker shields that are same size. If the route marker shields are different size use multiple piece component.
8. Route assemblies that have 24 inch route shields and have dimensions greater than 48 inches (both vertical and horizontal) shall have one horizontal splice between the arrows and route shields. Vertical splices shall not be used on route assemblies with a horizontal dimension of 144 inches or less. The contractor shall not use more than one vertical joint per sign and the joint shall be between route shields.
9. Route assemblies that have 36 inch shields and have dimensions greater than 48 inchs (both vertical and horizontal) shall have two horizontal splices. One horizontal splice shall be between the cardinal direction and route shields and the other horizontal splice shall be between the arrows and route shields. Vertical splices shall not be used on route assemblies with a horizontal dimension of 144 or less. The contractor shall not use more than one vertical joint per sign and the joint shall be between route shields.
10. All Vertical J Assemblies are given a Sign Code of JV
11. For JV Assemblies that have a mixture of Interstate and non Interstate shields, arrows and cardinals shall be white on blue.

ROUTE MARKERS & COMPONENTS IN TYPICAL ASSEMBLIES

WISCONSIN DEPT OF TRANSPORTATION

APPROVED Matthew R Rauch
for State Traffic Engineer

DATE 2/06/14 PLATE A2-1S.8

PROJECT NO: SHEET NO: E

URBAN AREA

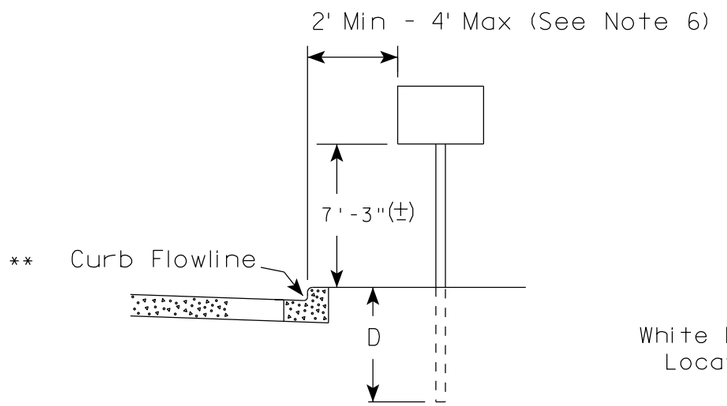

RURAL AREA (See Note 2)

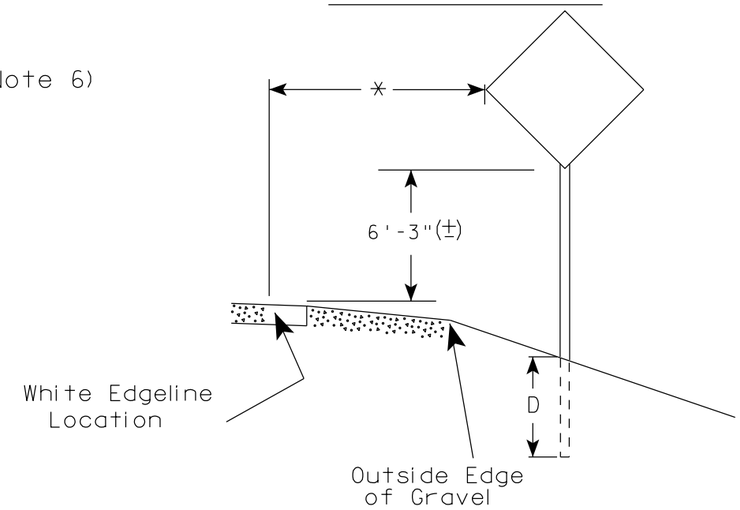

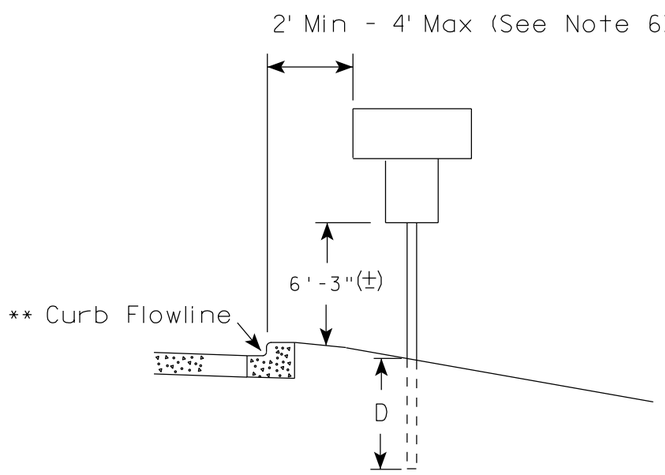

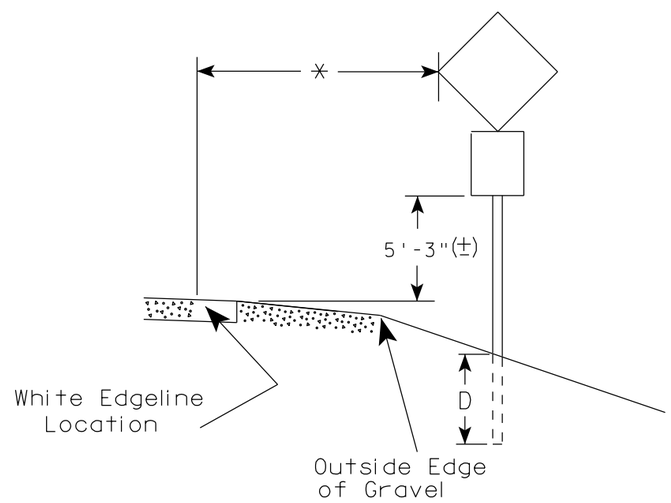

** The existence of curb and gutter does not in itself mandate the vertical clearance illustrated. That height is typically measured where there is sidewalk adjacent to the roadway or parking is permitted. In the absence of sidewalk vertical clearance is measured from the top of the curb. Offset of signs is measured from the flow line.

* 6 feet from edge of a paved shoulder or 12 feet from the edge of pavement (edge line location) or 2 feet from outside edge of gravel, whichever is greater unless directed by project engineer.

GENERAL NOTES

1. Signs wider than 4 feet, 20 sq.ft or larger, shall be mounted on multiple posts. Refer to plate A4-4.
2. If signs are mounted on barrier wall, see A4-10 sign plate.
3. For expressways and freeways, mounting height is 7'- 3" (±) or 6'-3" (±) depending upon existence of a sub-sign.
4. Minimum mounting height for J assemblies (A4-5) is 7'-3" (±) or 6'-3" (±) per urban or rural detail respectively.
5. Minimum mounting height for signs mounted on traffic signal poles is 5'- 3" (±).
6. Offset distance shall be consistent with existing signs or consistent throughout length of project.
7. The (±) tolerance for mounting height is 3 inches.
8. Folding stop signs (R1-1F) shall be mounted at a height of 5'-3" (±) or as directed by the Engineer.
9. The Double Arrow sign (W12-1) shall be mounted at a height of 2'-3" (±). The Chevron sign (W1-8), Roundabout Chevron panel (R6-4B), Enhanced Reference Markers, Clearance Markers (W5-52), Mile Markers (D10 series) & End of Rod Markers (W5-56 & W5-56A) shall be mounted at a height of 4'-3" (+).

POST EMBEDMENT DEPTH

Area of Sign Installation (Sq. Ft.)	D (Min)
20 or Less	4'
Greater than 20	5'

TYPICAL INSTALLATION OF PERMANENT TYPE II SIGNS ON SINGLE POSTS

WISCONSIN DEPT OF TRANSPORTATION

APPROVED Matthew R Rauch for State Traffic Engineer

DATE 9/30/13 PLATE NO. A4-3.18

PROJECT NO:	HWY:	COUNTY:		SHEET NO:	E

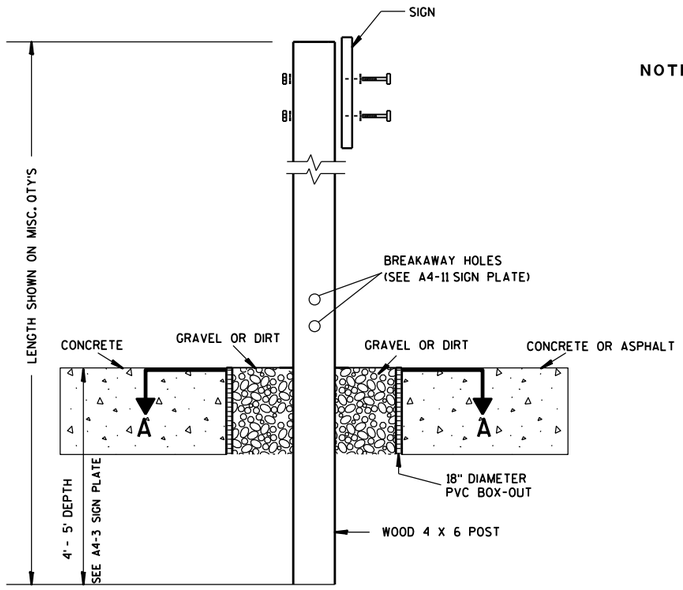

ELEVATION VIEW

DETAIL OF WOOD 4 X 6 SIGN POST IN BOX-OUT

NOTES:
1. ALL MATERIAL TO BE APPROVED BY ENGINEER PRIOR TO INSTALLATION
2. SEE SIGN PLATE A4-8 FOR SIGN HARDWARE REQUIREMENTS
3. 18 INCH X 18 INCH SQUARE BOX-OUTS MAY BE USED FOR INSTALLATIONS IN EXISTING CONCRETE OR ASPHALT LOCATIONS.

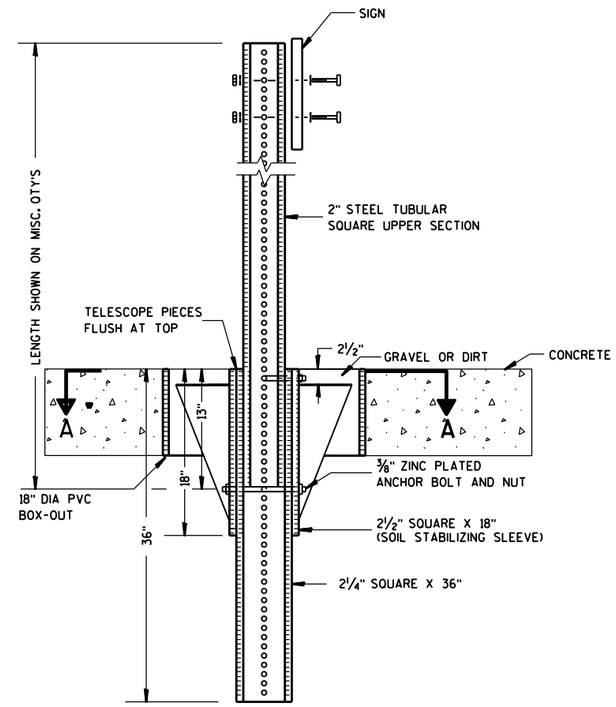

ELEVATION VIEW

DETAIL OF STEEL 2 X 2 SIGN POST IN BOX-OUT

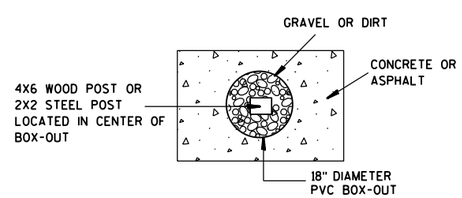

PLAN VIEW

FOR NEW CONCRETE/ASPHALT INSTALLATIONS

SIGN POST
BOX-OUTS
A4-3B

WISCONSIN DEPT OF TRANSPORTATION

APPROVED Matthew R Rauch
for State Traffic Engineer

DATE 1/27/14 PLATE NO. A4-3B.1

PROJECT NO:	HWY:	COUNTY:		SHEET NO:	E

URBAN AREA

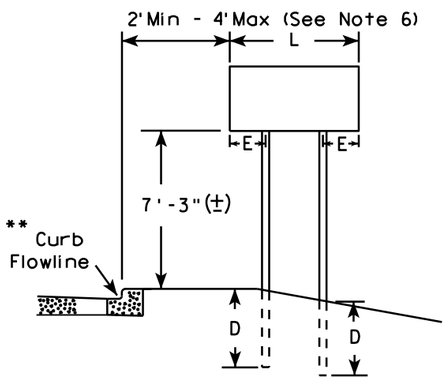

RURAL AREA (See Note 3)

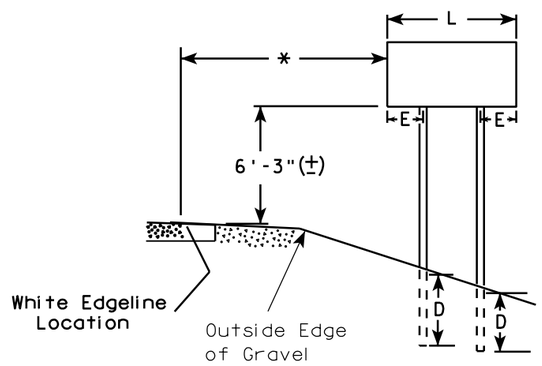

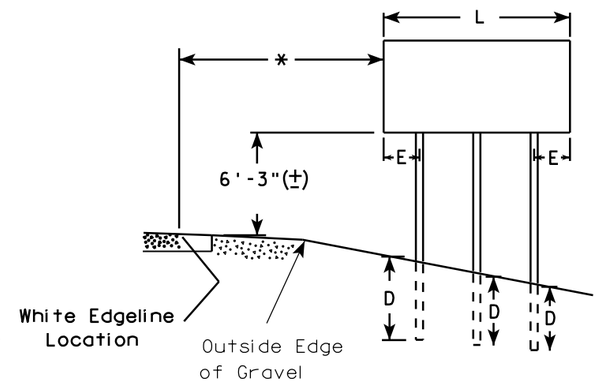

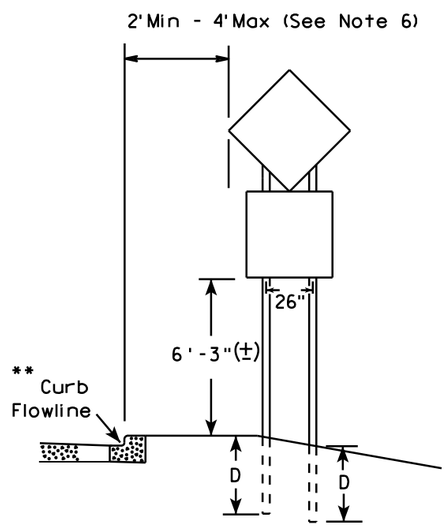

48" DIAMOND WARNING SIGN

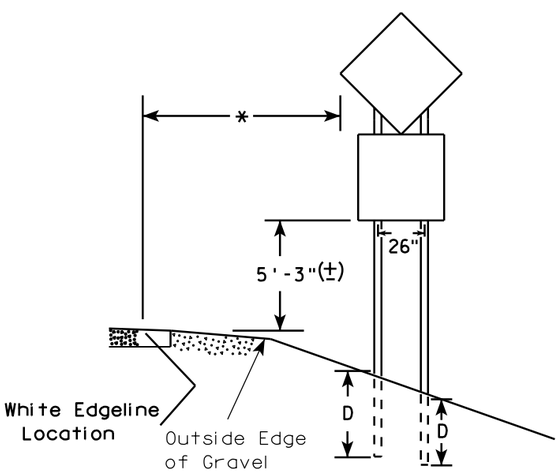

48" DIAMOND WARNING SIGN

GENERAL NOTES

1. For 3 or 4 post installations, individual post spacing shall be greater than 3'-6".
2. See tables below for required number of posts.
3. For expressways and freeways, mounting height is 7'-3" (±) or 6'-3" (±) depending upon existence of sub-sign.
4. The (±) tolerance for mounting height is 3 inches.
5. Minimum mounting height for J assemblies (A4-5) is 7'-3" (±) or 6'-3" (±) per urban or rural detail respectively.
6. Offset distance shall be consistent with existing signs or consistent throughout length of project.
7. Folding stop signs (R1-1F) shall be mounted at a height of 5'-3" (±) or as directed by the engineer.
8. The Double Arrow sign (W12-1) shall be mounted at a height of 2'-3" (±). The Chevron sign (W1-8), Roundabout Chevron panel (R6-4B), Clearance Markers (W5-52), Mile Markers (D10 series) & End of Road Markers (W5-56 & W5-56A) shall be mounted at a height of 4"-3" (±).

* 6 feet from edge of a paved shoulder or 12 feet from the edge of pavement (edge line location) or 2 feet from outside edge of gravel, whichever is greater unless directed by project engineer.

** The existence of curb and gutter does not in itself mandate the vertical clearance illustrated. That height is typically measured where there is sidewalk adjacent to the roadway or parking is permitted. In the absence of sidewalk vertical clearance is measured from the top of the curb. Offset of signs is measured from the flow line.

*** See A4-3 sign plate for signs 4' or less in width or 20 S.F. or less in area.

SIGN SHAPE OTHER THAN DIAMOND (TWO POSTS REQUIRED)	
L	E
*** Greater than 48" Less than 60"	12"
60" to 120"	L/5

SIGN SHAPE OTHER THAN DIAMOND (THREE POSTS REQUIRED)	
L	E
Greater than 120" less than 168"	12"

SIGN SHAPE OTHER THAN DIAMOND (FOUR POSTS REQUIRED)	
L	E
168" and greater	12"

POST EMBEDMENT DEPTH

Area of Sign Installation (Sq. Ft.)	D (Min)
20 or Less	4'
Greater than 20	5'

TYPICAL INSTALLATION OF TYPE II SIGNS ON MULTIPLE POSTS

WISCONSIN DEPT OF TRANSPORTATION

APPROVED Matthew R Rauch
for State Traffic Engineer

DATE 9/30/13 PLATE NO. A4-4 12

PROJECT NO:	HWY:	COUNTY:		SHEET NO:	E

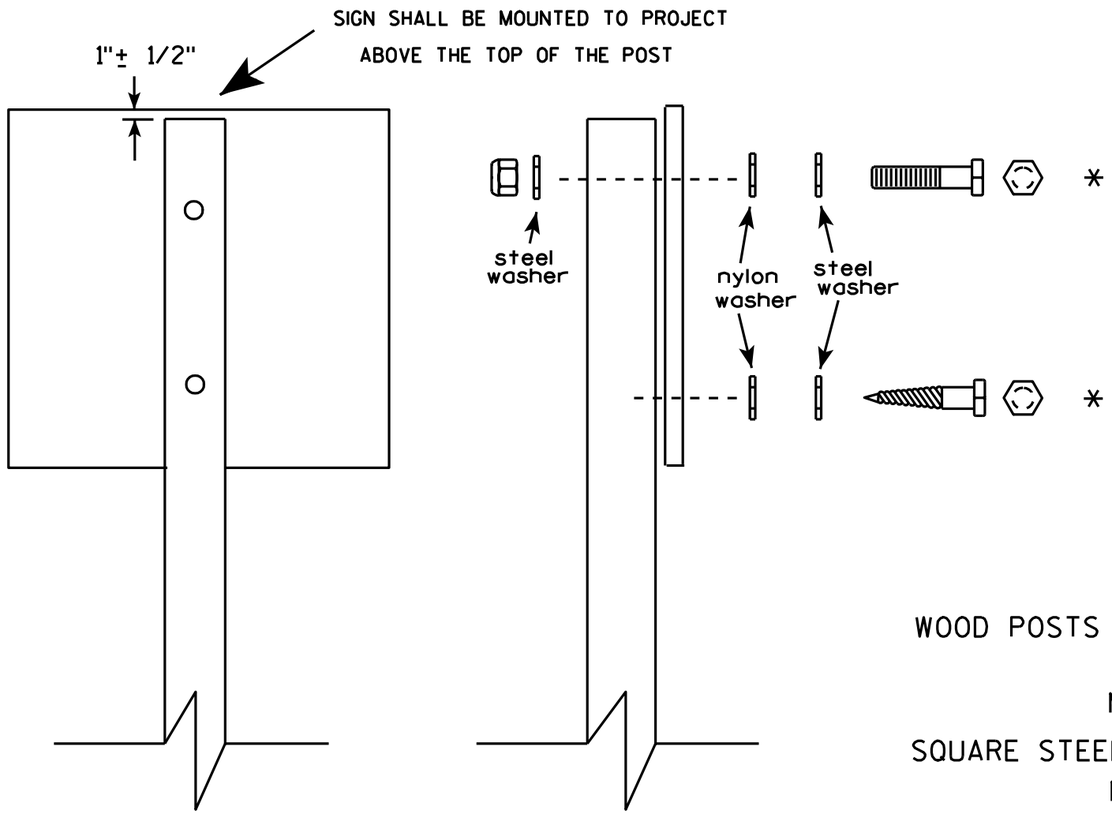

Nuts, bolts and lags used for mounting signs shall have hexagonal heads and shall be either :

a. Hot dip galvanized in accordance with ASTM Designation: A 153, Class D, or SC 3

b. Electro-galvanized in accordance with ASTM Designation : B 633, TYPE III, SC 3.

Threads on bolts and nuts shall be manufactured with sufficient allowance for the cadmium plate or galvanized coating to permit the nuts to run freely on the bolts.

WOOD POSTS (4" x 4" or 4" x 6")

LAG SCREWS - 3/8" X 3"

MACHINE BOLTS - 5/16" X 6-1/2" or 7" Length w/ nuts

SQUARE STEEL POSTS (2" x 2")

MACHINE BOLTS - 3/8" X 3-1/4" Length w/ nuts

RIVETS - 9/32 " (6605-9-6) BULB-TITE, TRI-FOLD, ALUMINUM BODY/MANDREL O.D. FLANGE .720-.765 INCH, GRIP RANGE .042-.375 INCH

WASHERS (ALL POSTS) -

1-1/4" O.D. X 3/8" I.D. X 1/16" STEEL

1-1/4" O.D. X 3/8" I.D. X .080 NYLON for all Type H signs.

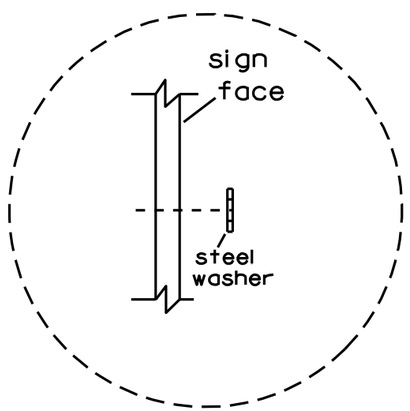

Washer Placement when Sign Has Other Than Type H or Type F Face

* Two different fastening systems are shown for illustration purposes. On any individual sign, either one or the other system shall be used. Actual number of fasteners per sign varies with the sign area, but normally there are two. For a single post installation, all signs greater than 9 sq. ft. require the use of 3 fasteners.

ATTACHMENT OF SIGNS TO POSTS

WISCONSIN DEPT OF TRANSPORTATION

APPROVED Matthew R Rauch
for State Traffic Engineer

DATE 3/23/10 PLATE NO. A4-8.7

TELESCOPIC TUBING ANCHORS
TWO PIECE SYSTEM

2 1/4" SQUARE
12 GAUGE
PERFORATED
GALVANIZED FINISH

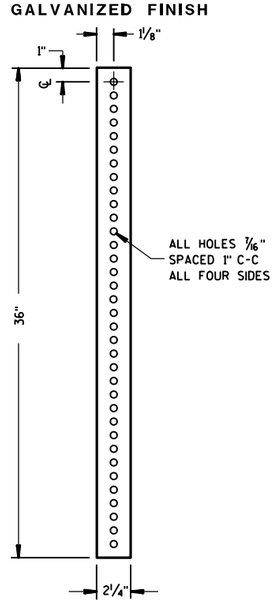

2 1/2" SQUARE
12 GAUGE
OMNI-DIRECTIONAL
PERFORATED
SOIL STABILIZING SLEEVE
GALVANIZED FINISH

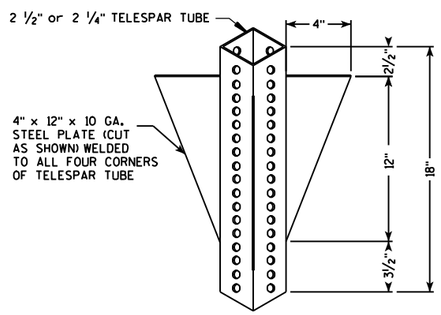

DETAIL OF TUBULAR STEEL SIGN POST
(IN POURED CONCRETE OR ASPHALT)

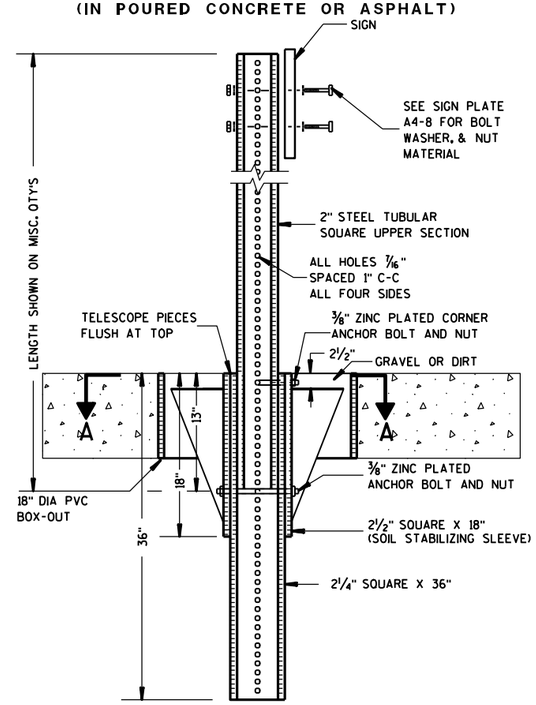

DETAIL OF TUBULAR STEEL SIGN POST
(IN LOCATIONS OTHER THAN POURED CONCRETE OR ASHALT)

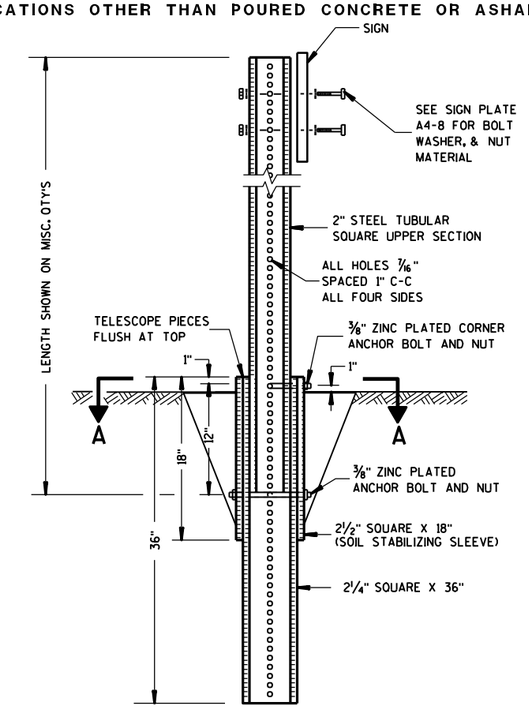

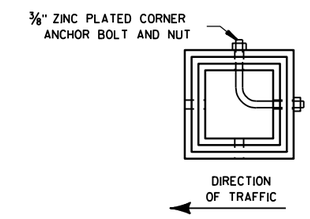

SECTION A-A

Area of Sign Installation (Sq. Ft.)	Number of Required Posts
9 or less	1
Greater than 9 less than or equal to 18	2
Greater than 18 less than or equal to 27	3

Signs wider than 3 feet or larger than 9 sq. ft shall be mounted on multiple posts (see above table).

TUBULAR STEEL
SIGN POST
A4-9

WISCONSIN DEPT OF TRANSPORTATION

APPROVED Matthew R Rauch
for State Traffic Engineer
DATE 5/30/12 PLATE NO. A4-9.7

7

7

PROJECT NO:	HWY:	COUNTY:		SHEET NO: 137	E

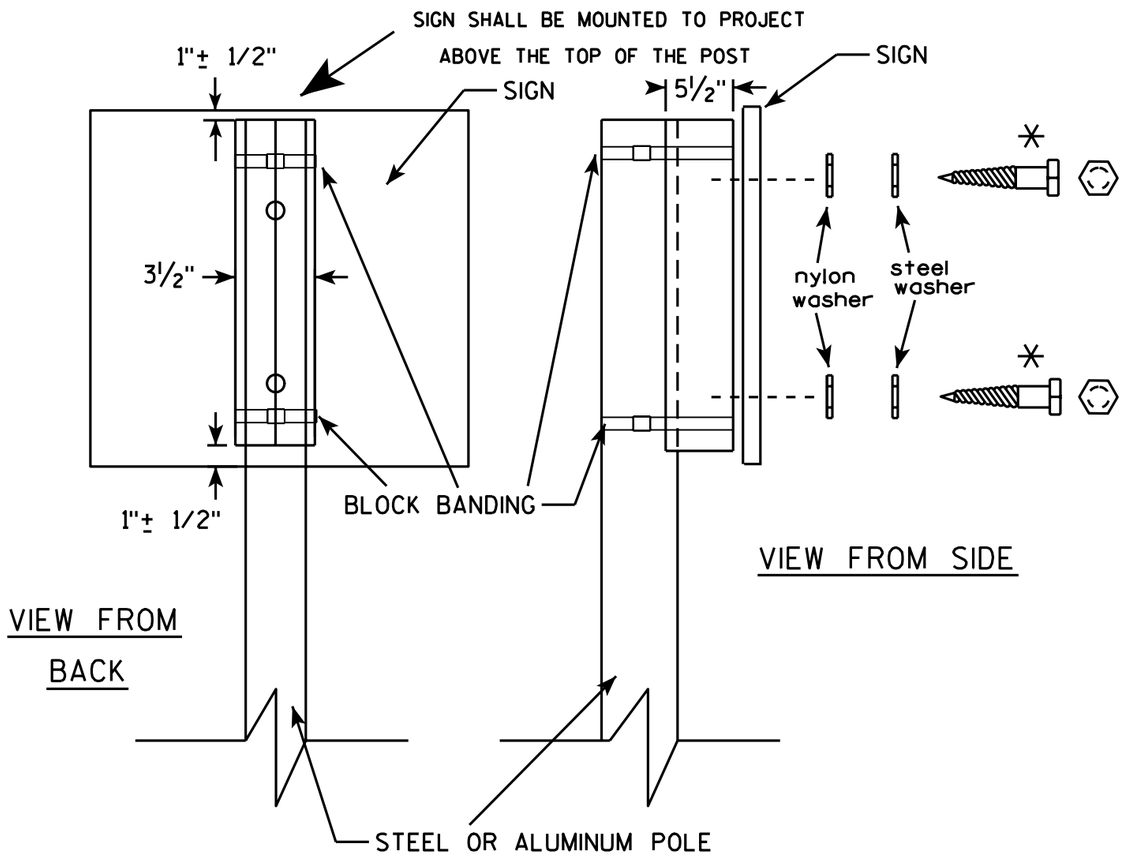

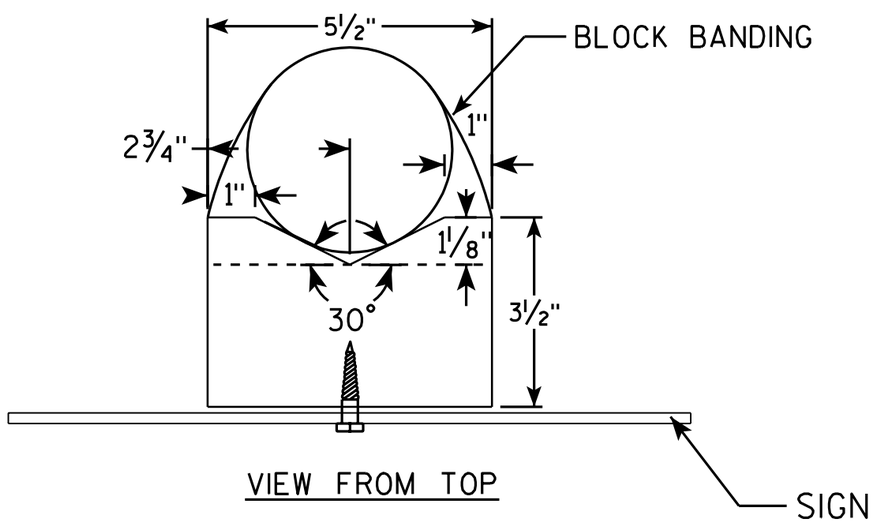

GENERAL NOTES

1. WOOD 4"X6" POST MATERIAL SHALL CONFORM TO 507.2.2 OF THE WisDOT STANDARD SPECIFICATIONS
2. BLOCK BANDING AND CLIPS SHALL BE STAINLESS STEEL, ¾" WIDTH AND 0.025" THICKNESS
3. SIGNS 3' OR GREATER IN HEIGHT SHALL UTILIZE 3 BLOCK BANDS. SIGNS UNDER 3' IN HEIGHT SHALL UTILIZE 2 BLOCK BANDS
4. ACTUAL NUMBER OF FASTENERS PER SIGN VARIES WITH THE SIGN AREA, BUT NORNALLY THERE ARE TWO. FOR SIGNS GREATER THAN 9 S.F. 3 FASTENERS SHALL BE USED.
5. ALL SIGN MOUNTING BOLTS AND WASHERS SHALL BE EITHER:
   a. Hot dip or mechanically galvanized in accordance with ASTM Designation: A 153, Class D, or
   b. Cadmium plated in accordance with ASTM Designation : B 766 TYPE 3, Class 12, or
   c. Electro-galvanized in accordance with ASTM Designation : B 633, TYPE III, SC 3.
6. ALL BOLTS SHALL HAVE HEXAGONAL HEADS.
7. STEEL WASHERS SHALL BE 1¼" O.D. X ⅜" I.D. X 1/16"
8. NYLON WASHERS SHALL BE 1¼" O.D. X ⅜" I.D. X .080 FOR TYPE H OR TYPE F FACE SIGN

✳ LAG BOLTS SHALL BE ⅜" X 2½"

BLOCK BANDING DETAIL
(V-BLOCK OPTION)

WISCONSIN DEPT OF TRANSPORTATION

APPROVED Matthew R Rauch
for State Traffic Engineer

DATE 7/12/07 PLATE NO. A5-10.1

PROJECT NO:				SHEET NO: 138	E

BANDING

SINGLE SIGN

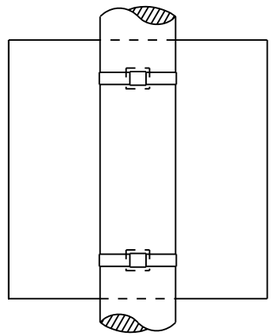

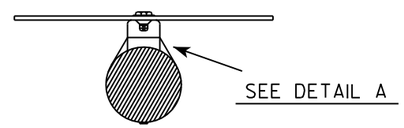

"J" ASSEMBLY

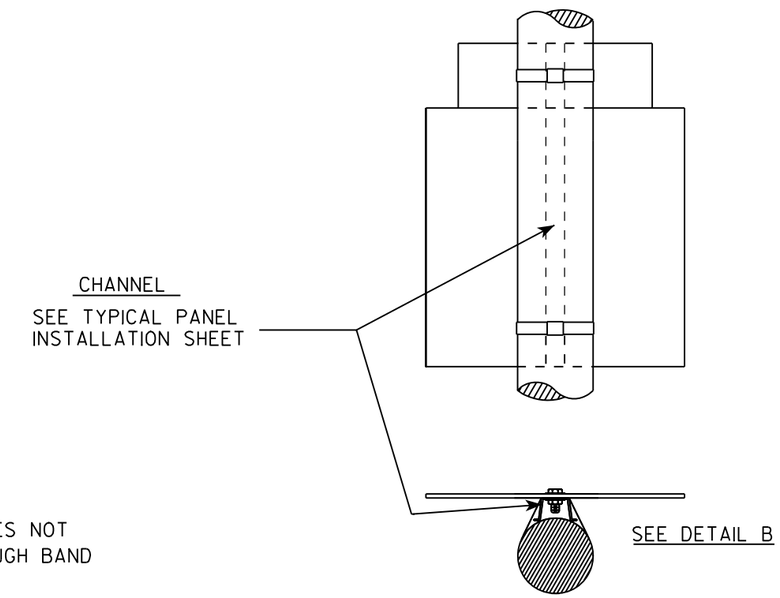

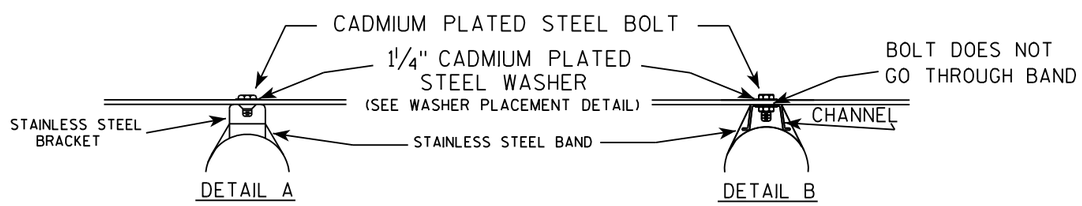

WASHER PLACEMENT

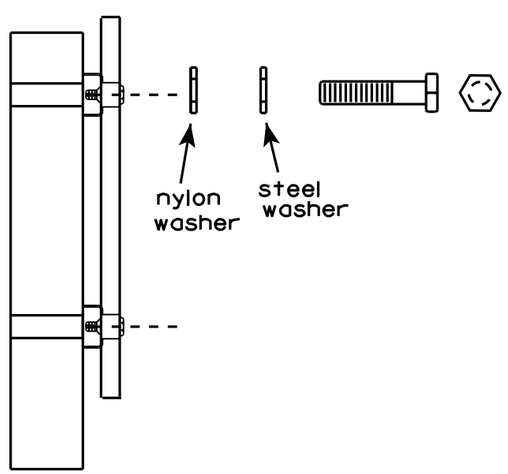

WASHERS (ALL POSTS) -

1-1/4" O.D. X 3/8" I.D. X 1/16" STEEL

1-1/4" O.D. X 3/8" I.D. X .080 NYLON

FOR ALL TYPE H SIGNS

GENERAL NOTES

1. Any sign over 3 feet in width shall use the V-Block banding method. See A5-10 standard plate.
2. Signs 3 feet or greater in height shall have three bracket bands installed. Signs less than 3 feet in height shall have two bracket bands installed.
3. Banding and assembly bracket shall be stainless steel. All bands shall be ¾" in width and 0.025" thickness.

STANDARD SIGN

SIGN BANDING DETAILS

WISCONSIN DEPT OF TRANSPORTATION

APPROVED Matthew R Rauch for State Traffic Engineer

DATE 8/16/13 PLATE NO. A5-9.3

PROJECT NO:	HWY:	COUNTY:		SHEET NO: 139	E

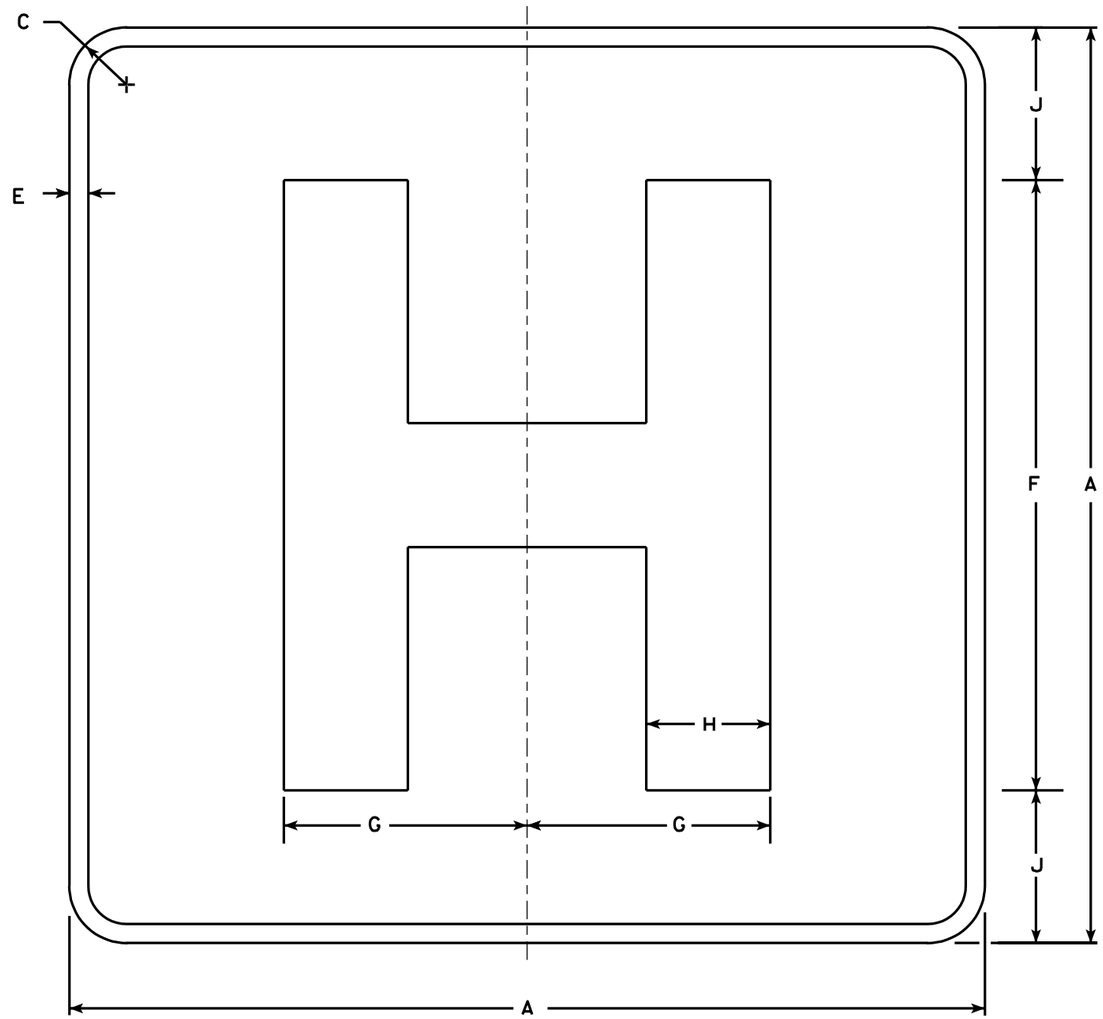

D9-2

NOTES

1. Sign is Type II - Type H Reflective - reference WIS DOT Standard Specification for HIGHWAY and STRUCTURE CONSTRUCTION latest edition.
2. Color:
   Background - Blue
   Message - White - Type H Reflective
3. Message Series - E Modified
4. Corners may be square or rounded when base material is plywood but borders shall be rounded as shown. When base material is metal, the corners and borders shall be rounded.

Metric equivalent for this sign is:

SIZE	
1	450 mmX 450 mm
2	600 mmX 600 mm
3	900 mmX 900 mm
4	X
5	X

SIZE	A	B	C	D	E	F	G	H	I	J	K	L	M	N	O	P	Q	R	S	T	U	V	W	X	Y	Z	Area sq. ft.
1	18		1 1/8		1/2	12	4 3/4	2 3/8		3																	4.0
2	24		1 1/2		1/2	16	6 3/8	3 1/4		4																	4.0
3	36		2 1/4		3/4	24	9 1/2	4 7/8		6																	9.0
4																											
5																											

STANDARD SIGN
D9-2

WISCONSIN DEPT OF TRANSPORTATION

APPROVED Chester J Spang
for State Traffic Engineer

DATE 1/15/02 PLATE NO. D9-2.4

PROJECT NO:

SHEET NO: 140 E

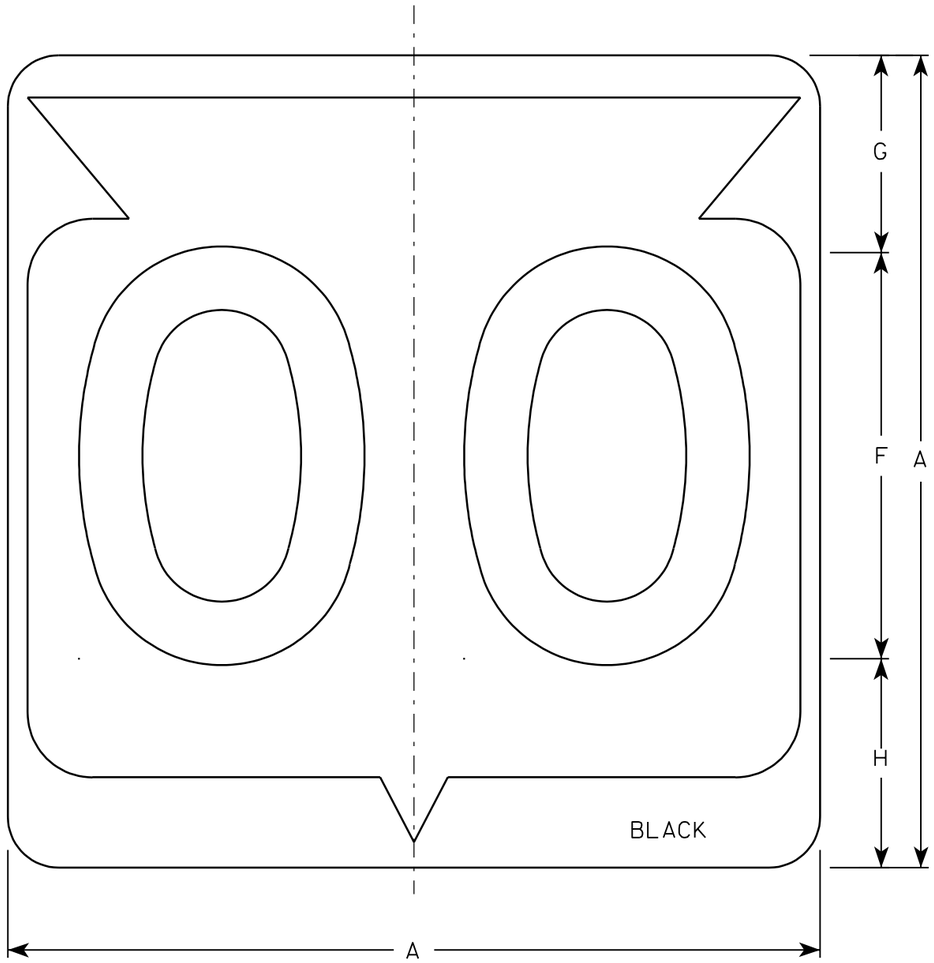

M1-6

NOTES

1. Sign is Type II - See Note 6 - reference WIS DOT Standard Specification for HIGHWAY and STRUCTURE CONSTRUCTION latest edition.
2. Color:
   Background - White & Black - See Note 6
   Message - Black
3. Message Series - See note 5
4. Corners may be square or rounded when base material is plywood but borders shall be rounded as shown. When base material is metal, the corners and borders shall be rounded.
5. Substitute appropriate Series numerals and adjust spacing as per plate A10-1.
6. Permanent Signs
   Background - Type H Reflective
   Detour or temporary Signs
   Background - Reflective

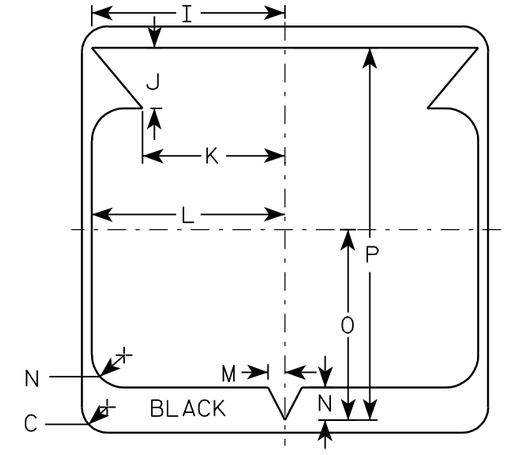

Metric equivalent for this sign is:

SIZE	
1	
2	600 mm X 600 mm
3	900 mm X 900 mm
4	900 mm X 900 mm
5	900 mm X 900 mm

SIZE	A	B	C	D	E	F	G	H	I	J	K	L	M	N	O	P	Q	R	S	T	U	V	W	X	Y	Z	Area sq. ft.	Area m2
1																												
2	24		1 1/2			12	5 1/2	6 1/2	10 1/4	2 1/2	8 7/8	11 1/2	1	1 7/8	11 1/4	21 7/8											4.0	.36
3	36		2 1/4			18	8 3/4	9 1/4	15 3/8	5 3/8	12 5/8	17 1/8	1 1/2	2 7/8	16 7/8	33											9.0	.81
4	36		2 1/4			18	8 3/4	9 1/4	15 3/8	5 3/8	12 5/8	17 1/8	1 1/2	2 7/8	16 7/8	33											9.0	.81
5	36		2 1/4			18	8 3/4	9 1/4	15 3/8	5 3/8	12 5/8	17 1/8	1 1/2	2 7/8	16 7/8	33											9.0	.81

STATE ROUTE MARKER
M1-6 FOR ASSEMBLIES

WISCONSIN DEPT OF TRANSPORTATION

APPROVED Chester J Spang
for State Traffic Engineer

DATE 3/20/02 PLATE NO. M1-6.9

PROJECT NO: | HWY: | COUNTY: | SHEET NO: 141 | E

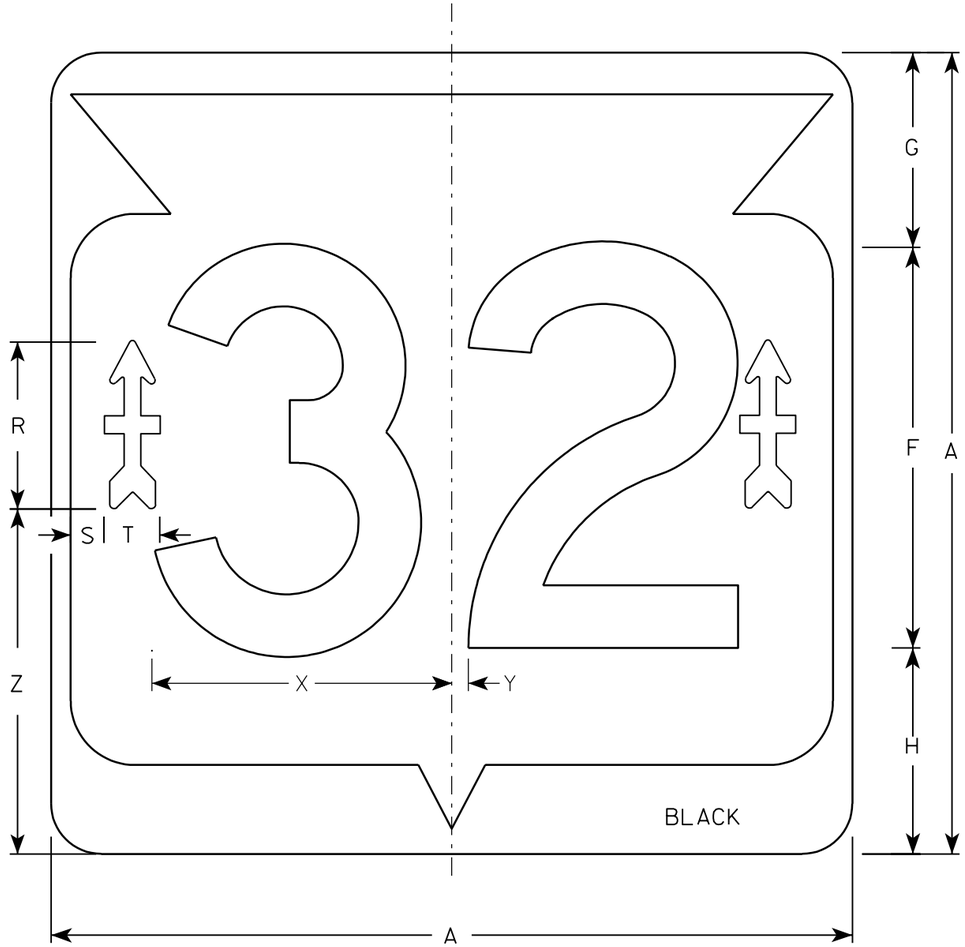

M1-6B

NOTES

1. Sign is Type II - Type H - reference WIS DOT Standard Specification for HIGHWAY and STRUCTURE CONSTRUCTION latest edition.
2. Color:
   Background - White & Black
   Message - Black
   Arrow - Type H Reflective Red
3. Message Series - D
4. Corners may be square or rounded when base material is plywood but borders shall be rounded as shown. When base material is metal, the corners and borders shall be rounded.

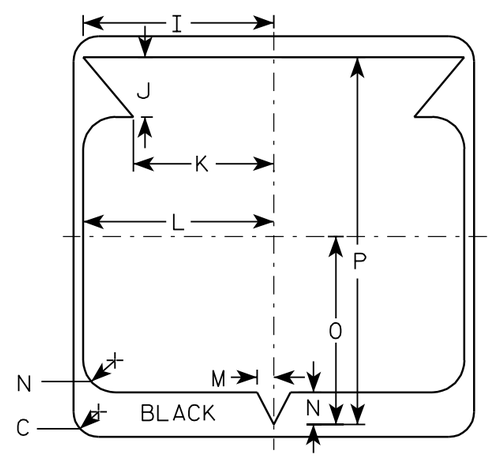

32nd DIVISION ARROW
ACTUAL SIZE

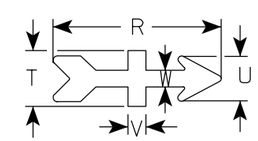

Metric equivalent for this sign is:

SIZE	
1	
2	600 mm X 600 mm
3	900 mm X 900 mm
4	900 mm X 900 mm
5	900 mm X 900 mm

SIZE	A	B	C	D	E	F	G	H	I	J	K	L	M	N	O	P	Q	R	S	T	U	V	W	X	Y	Z	Area sq. ft.	Area m2
1																												
2	24		1 1/2			12	5 1/2	6 1/2	10 1/4	2 1/2	8 7/8	11 1/2	1	1 7/8	11 1/4	21 7/8		5 1/8	3/4	1 7/8	1 1/2	5/8	5/8	9	1/2	10 1/2	4.0	.36
3	36		2 1/4			18	8 3/4	9 1/4	15 3/8	5 3/8	12 5/8	17 1/8	1 1/2	2 7/8	16 7/8	33		7 1/2	1 1/2	2 1/2	2	7/8	3/4	13 1/2	3/4	15 1/2	9.0	.81
4	36		2 1/4			18	8 3/4	9 1/4	15 3/8	5 3/8	12 5/8	17 1/8	1 1/2	2 7/8	16 7/8	33		7 1/2	1 1/2	2 1/2	2	7/8	3/4	13 1/2	3/4	15 1/2	9.0	.81
5	36		2 1/4			18	8 3/4	9 1/4	15 3/8	5 3/8	12 5/8	17 1/8	1 1/2	2 7/8	16 7/8	33		7 1/2	1 1/2	2 1/2	2	7/8	3/4	13 1/2	3/4	15 1/2	9.0	.81

STATE ROUTE MARKER "32"
M1-6B FOR ASSEMBLIES

WISCONSIN DEPT OF TRANSPORTATION

APPROVED Matthew R Rauch
for State Traffic Engineer

DATE 12/5/05 PLATE NO. M1-6B.2

PROJECT NO:	HWY:	COUNTY:		SHEET NO: 142	E

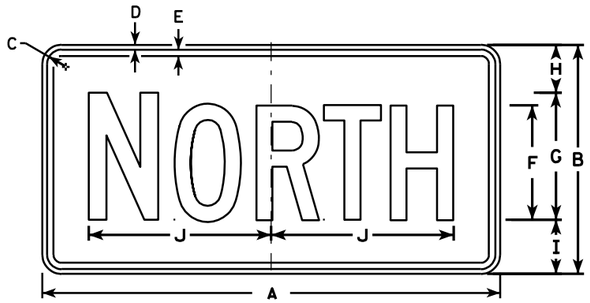

M3-1
MK3-1
MO3-1

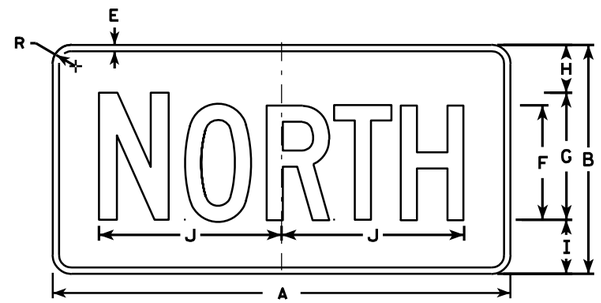

MB3-1
MG3-1
MM3-1
MN3-1

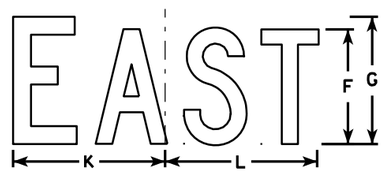

M3-2
MK3-2
MO3-2

MB3-2
MG3-2
MM3-2
MN3-2

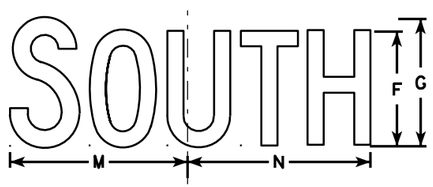

M3-3
MK3-3
MO3-3

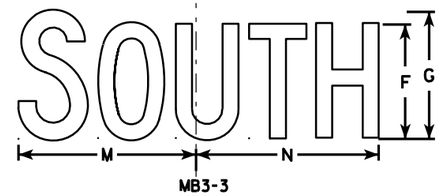

MB3-3
MG3-3
MM3-3
MN3-3

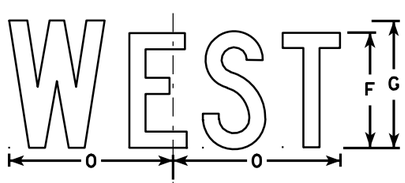

M3-4
MK3-4
MO3-4

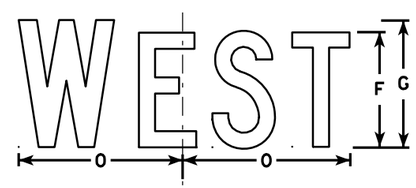

MB3-4
MG3-4
MM3-4
MN3-4

NOTES

1. All Signs Type II - See Note 5 - reference WIS DOT Standard Specification for HIGHWAY and STRUCTURE CONSTRUCTION latest edition.
2. Color:
   Background - See note 5
   Message - See note 5
3. Message Series - C
4. Corners may be square or rounded when base material is plywood but borders shall be rounded as shown. When base material is metal, the corners and borders shall be rounded.
5. M3-1 thru M3-4 Background - White - Type H Reflective
   (Detour or temporary signs - Reflective)
   Message - Black
   MB3-1 thru MB3-4 Background - Blue
   Message - White - Type H Reflective
   (Detour or temporary signs - Reflective)
   MG3-1 thru MG3-4 Background - Green
   Message - White - Type H Reflective
   MK3-1 thru MK3-4 Background - Green
   Message - White - Type H Reflective
   MM3-1 thru MM3-4 Background - White - Type H Reflective
   Message - Green
   MN3-1 thru MN3-4 Background - Brown
   Message - White - Type H Reflective
   MO3-1 thru MO3-4 Background - Orange - Reflective
   Message - Black
6. Note the first letter of each direction is larger than the remainder of the message.

SIZE	A	B	C	D	E	F	G	H	I	J	K	L	M	N	O	P	Q	R	S	T	U	V	W	X	Y	Z	Area sq. ft.
1																											
2	24	12	1 1/8	3/8	3/8	6	7	2 1/4	2 3/4	10 1/4	7 7/8	8 3/8	10 1/4	9 3/4	8 3/4			1 1/2									2.00
3	36	18	1 1/8	3/8	1/2	9	10	3 3/4	4 1/4	14 3/8	12	12 1/8	14	14 1/8	13			1 1/2									4.5
4	36	18	1 1/8	3/8	1/2	9	10	3 3/4	4 1/4	14 3/8	12	12 1/8	14	14 1/8	13			1 1/2									4.5
5	36	18	1 1/8	3/8	1/2	9	10	3 3/4	4 1/4	14 3/8	12	12 1/8	14	14 1/8	13			1 1/2									4.5

STANDARD SIGNS
M3-1 thur M3-4
SERIES

WISCONSIN DEPT OF TRANSPORTATION

APPROVED Matthew R Rauch
for State Traffic Engineer

DATE 11/10/10 PLATE NO. M3-1.12

PROJECT NO: | HWY: | COUNTY: | SHEET NO: 143 | E

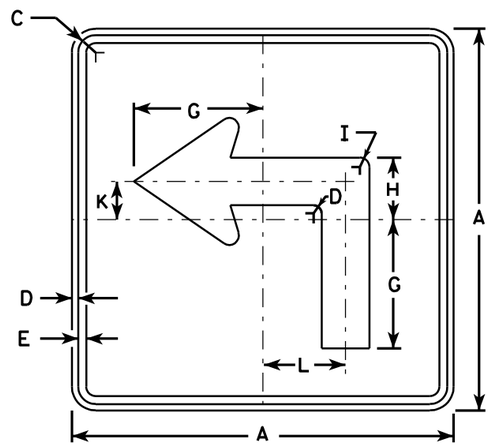

M5-1L
MK5-1L
MM5-1L
MO5-1L
MP5-1L
MR5-1L

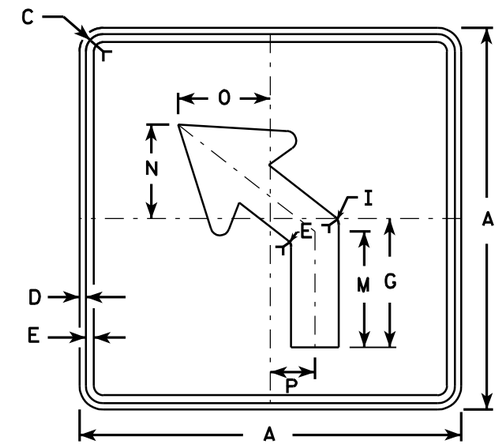

M5-2L
MK5-2L
MM5-2L
MO5-2L
MP5-2L
MR5-2L

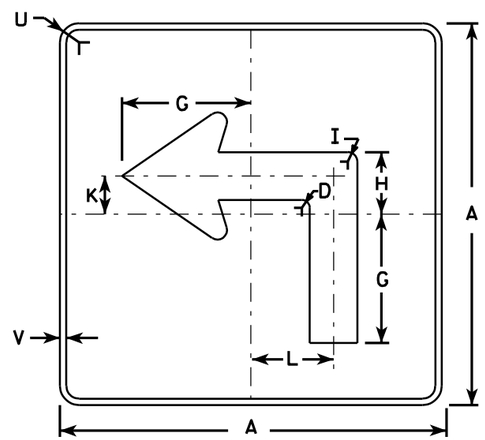

MB5-1L
MG5-1L
MN5-1L

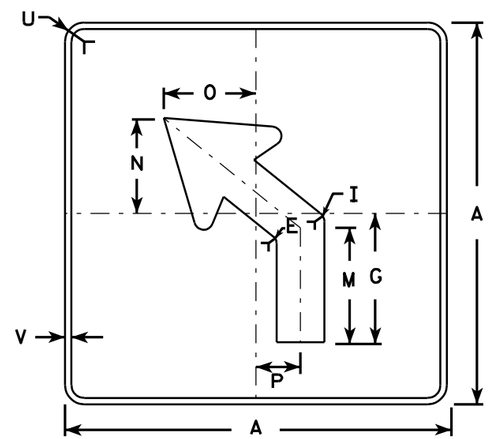

MB5-2L
MG5-2L
MN5-2L

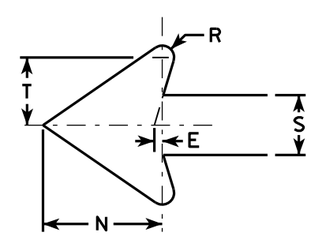

NOTES

1. Signs are Type II - See Note 4 - reference WIS DOT Standard Specification for HIGHWAY and STRUCTURE CONSTRUCTION latest edition.
2. Color:
   Background - See note 4
   Message - See note 4
3. Corners may be square or rounded when base material is plywood but borders shall be rounded as shown. When base material is metal, the corners and borders shall be rounded.
4. M5-1 and M5-2 Background - White - Type H Reflective
   Message - Black
   MB5-1 and MB5-2 Background - Blue
   Message - White - Type H Reflective
   MG5-1 and MG5-2 Background - Green
   Message - White - Type H Reflective
   MK5-1 and MK5-2 Background - Green
   Message - White Type H Reflective
   MM5-1 and MM5-2 Background - White - Type H Reflective
   Message - Green
   MN5-1 and MN5-2 Background - Brown
   Message - White - Type H Reflective
   MO5-1 and MO5-2 Background - Orange - Type F Reflective
   Message - Black
   MP5-1 and MP5-2 Background - White - Type H Reflective
   Message - Blue
   MR5-1 and MR5-2 Background - Brown
   Message - Yellow - Type H Reflective
5. M5-1R same as M5-1L except arrow points right.
6. M5-2R same as M5-2L except arrow tilts right.

SIZE	A	B	C	D	E	F	G	H	I	J	K	L	M	N	O	P	Q	R	S	T	U	V	W	X	Y	Z	Area sq. ft.
1																											
2	21		1 1/8	3/8	3/8		7	3 3/8	5/8		2 1/8	4 1/2	6 3/8	5 1/4	5	2 1/2		1/2	2 5/8	3	1 1/2	1/2					3.06
3	30		1 3/8	1/2	5/8		10 1/8	4 7/8	7/8		3	6 1/2	9 1/8	7 1/2	7 1/4	3 1/2		3/4	3 3/4	4 1/4	1 7/8	1/2					6.25
4	30		1 3/8	1/2	5/8		10 1/8	4 7/8	7/8		3	6 1/2	9 1/8	7 1/2	7 1/4	3 1/2		3/4	3 3/4	4 1/4	1 7/8	1/2					6.25
5	30		1 3/8	1/2	5/8		10 1/8	4 7/8	7/8		3	6 1/2	9 1/8	7 1/2	7 1/4	3 1/2		3/4	3 3/4	4 1/4	1 7/8	1/2					6.25

STANDARD SIGN
M5-1 & M5-2

WISCONSIN DEPT OF TRANSPORTATION

APPROVED Matthew R Rauch
for State Traffic Engineer

DATE 7/29/13 PLATE NO. M5-1.12

PROJECT NO: | HWY: | COUNTY: | SHEET NO: 144 | E

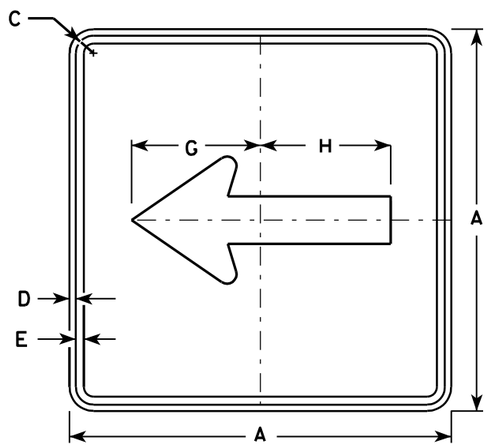

M6-1
MK6-1
MM6-1
MO6-1
MP6-1
MR6-1

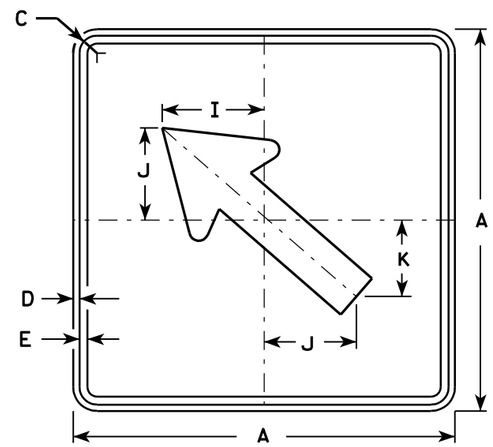

M6-2
MK6-2
MM6-2
MO6-2
MP6-2
MR6-2

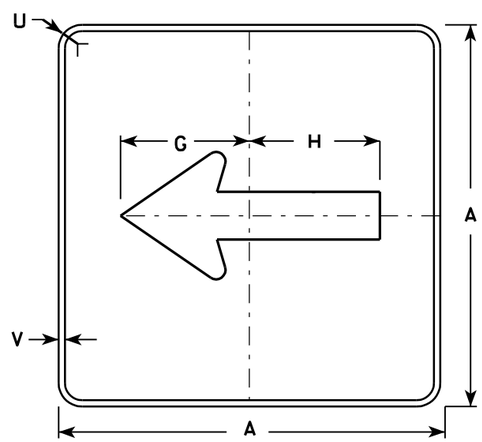

MB6-1
MG6-1
MN6-1

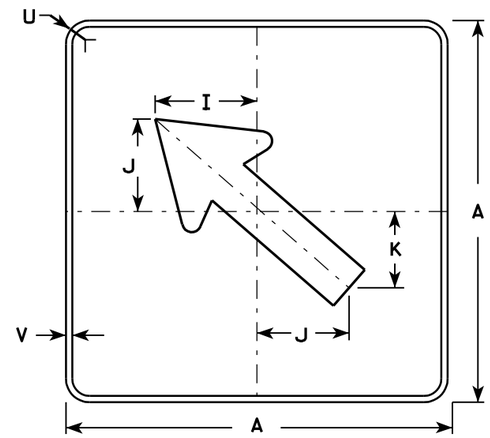

MB6-2
MG6-2
MN6-2

NOTES

1. Signs are Type II - See Note 4 - reference WIS DOT Standard Specification for HIGHWAY and STRUCTURE CONSTRUCTION latest edition.
2. Color:
   Background - See note 4
   Message - See note 4
3. Corners may be square or rounded when base material is plywood but borders shall be rounded as shown. When base material is metal, the corners and borders shall be rounded.
4. M6-1 and M6-2 Background - White - Type H Reflective
   Message - Black

   MB6-1 and MB6-2 Background - Blue
   Message - White - Type H Reflective

   MG6-1 and MG6-2 Background - Green
   Message - White - Type H Reflective

   MK6-1 and MK6-2 Background - Green
   Message - White - Type H Reflective

   MM6-1 and MM6-2 Background - White - Type H Reflective
   Message - Green

   MN6-1 and MN6-2 Background - Brown
   Message - White - Type H Reflective

   MO6-1 and MO6-2 Background - Orange - Type F Reflective
   Message - Black

   MP6-1 and MP6-2 Background - White - Type H Reflective
   Message - Blue

   MR6-1 and MR6-2 Background - Brown
   Message - Yellow - Type H Reflective

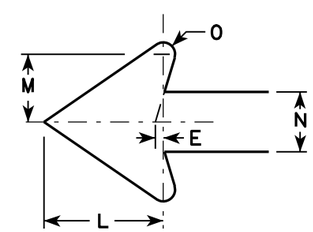

SIZE	A	B	C	D	E	F	G	H	I	J	K	L	M	N	O	P	Q	R	S	T	U	V	W	X	Y	Z	Area sq. ft.
1																											
2	21		1 1/8	3/8	3/8		7 1/2	7 1/8	5 5/8	5	4 1/4	5 1/4	3	2 5/8	1/2						1 1/2	1/2					3.06
3	30		1 3/8	1/2	5/8		10 3/4	10 1/4	8	7 1/4	6	7 1/2	4 1/4	3 3/4	3/4						1 7/8	1/2					6.25
4	30		1 3/8	1/2	5/8		10 3/4	10 1/4	8	7 1/4	6	7 1/2	4 1/4	3 3/4	3/4						1 7/8	1/2					6.25
5	30		1 3/8	1/2	5/8		10 3/4	10 1/4	8	7 1/4	6	7 1/2	4 1/4	3 3/4	3/4						1 7/8	1/2					6.25

STANDARD SIGN
M6-1 & M6-2
SERIES

WISCONSIN DEPT OF TRANSPORTATION

APPROVED Matthew R Rauch
for State Traffic Engineer

DATE 7/29/13 PLATE NO. M6-1.13

PROJECT NO: | HWY: | COUNTY: | SHEET NO: 145 | E

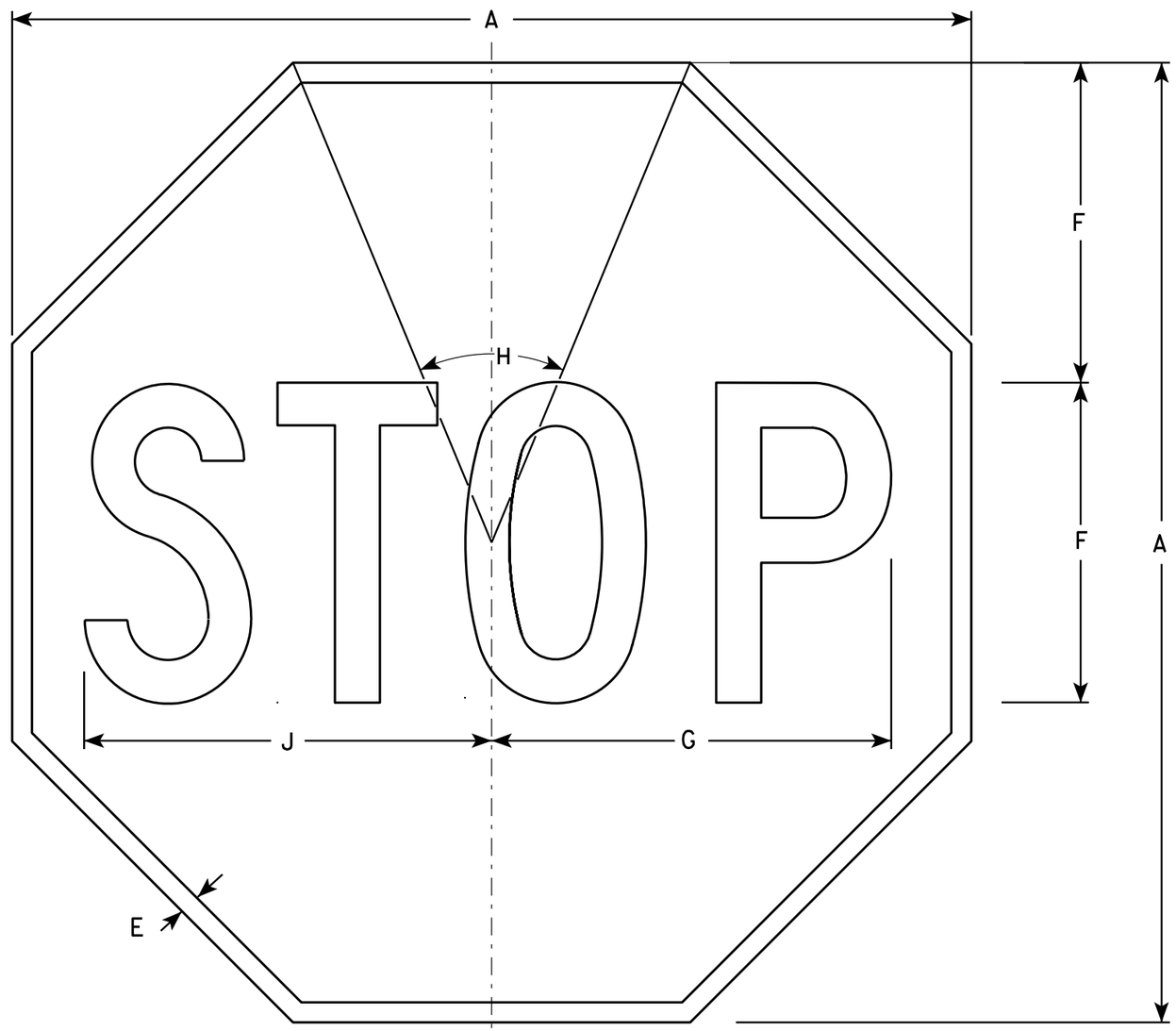

R1-1

NOTES

1. Sign is Type II - Type H Reflective - reference WIS DOT Standard Specification for HIGHWAY and STRUCTURE CONSTRUCTION latest edition.
2. Color:
   Background - Red
   Message - White
3. Message Series - C

SIZE	A	B	C	D	E	F	G	H	I	J	K	L	M	N	O	P	Q	R	S	T	U	V	W	X	Y	Z	Area sq. ft.
1	24				3/8	8	10	45°		10 1/4																	3.31
2S	30				5/8	10	12 1/2	45°		12 3/4																	5.18
2M	36				3/4	12	15	45°		15 3/8																	7.46
3	36				3/4	12	15	45°		15 3/8																	7.46
4	48				1	16	20	45°		20 1/2																	13.25
5	48				1	16	20	45°		20 1/2																	13.25
6	18				3/8	6	7 3/4	45°		7 3/4																	1.86
7	12				1/4	4	5	45°		5 1/8																	0.78

STANDARD SIGN
R1-1

WISCONSIN DEPT OF TRANSPORTATION

APPROVED Matthew R Rauch
for State Traffic Engineer

DATE 12/03/10 PLATE NO. R1-1.12

PROJECT NO: | HWY: | COUNTY: | SHEET NO: 146 | E

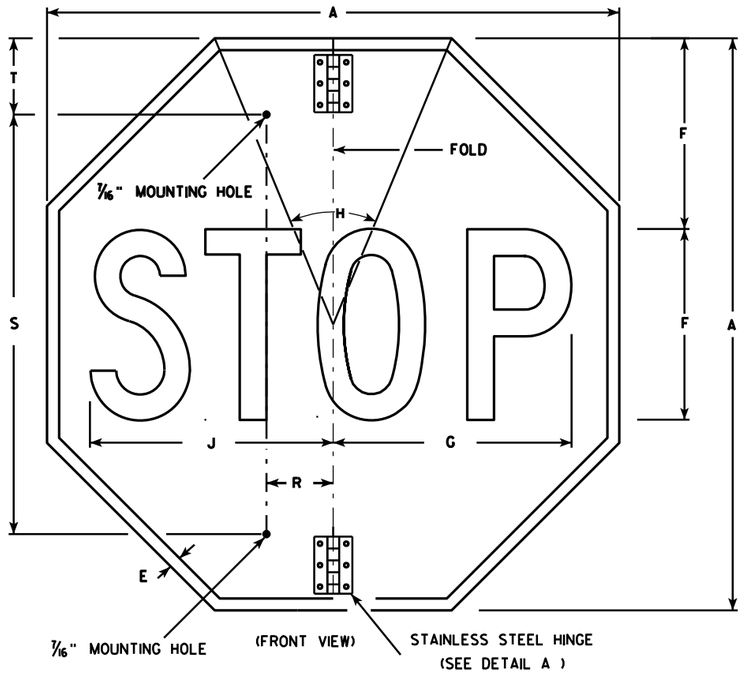

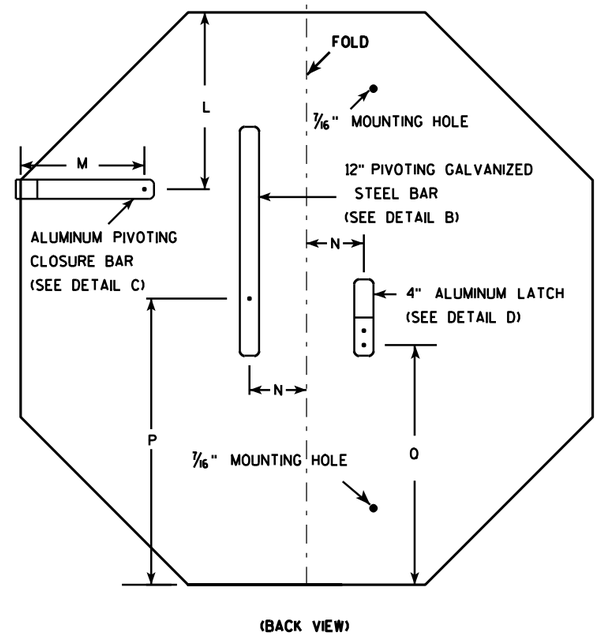

NOTES

1. Sign is Type II - Type H Reflective - reference WIS DOT Standard Specification for HIGHWAY and STRUCTURE CONSTRUCTION latest edition.
2. Color:
   Background - Red
   Message - White
3. Message Series - C
4. All hardware used on the folding STOP sign installation shall conform to 637.2.4 of the WIS DOT Standard Specification.

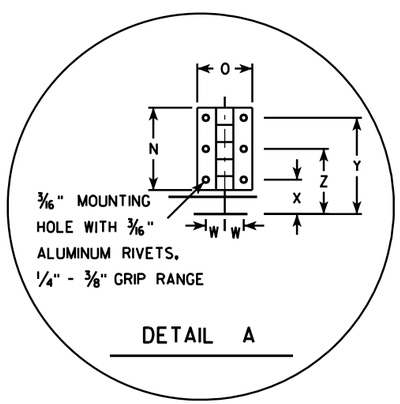

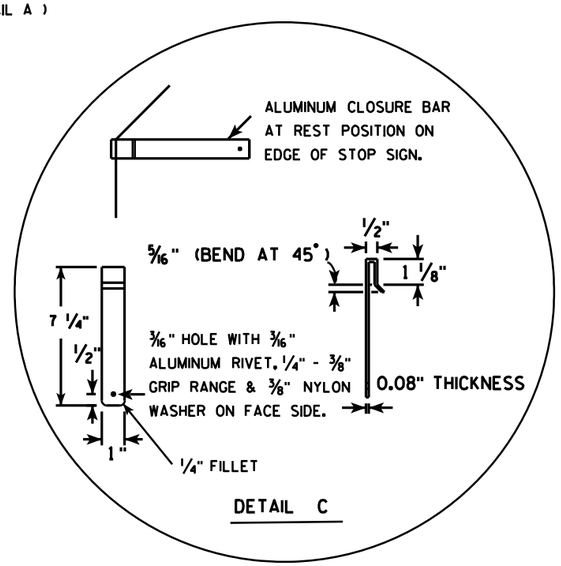

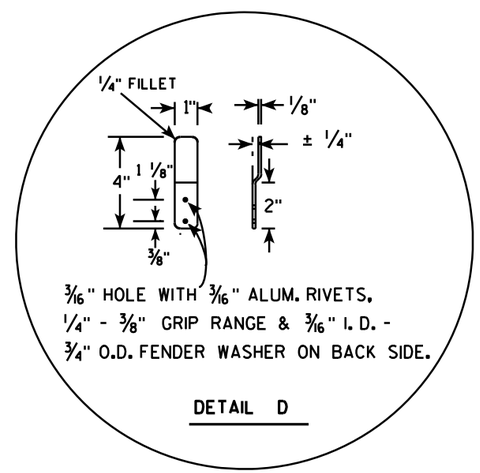

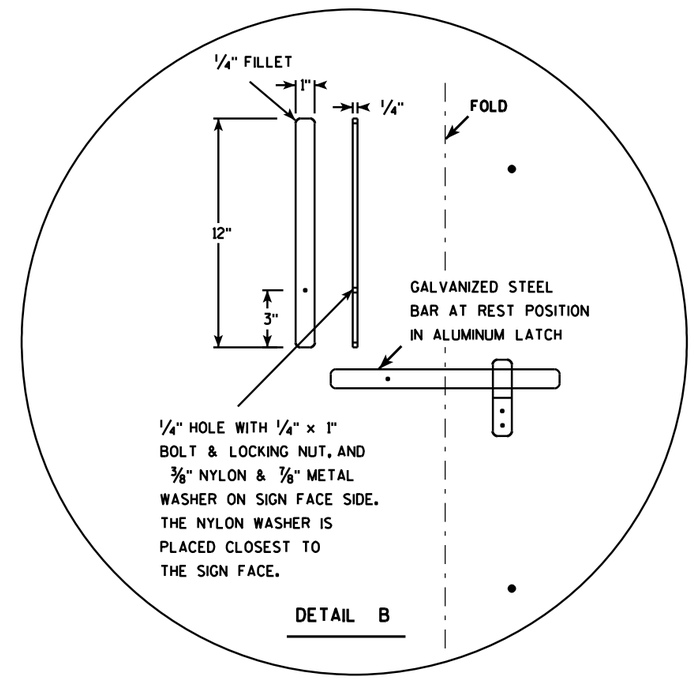

SIZE	A	B	C	D	E	F	G	H	I	J	K	L	M	N	O	P	Q	R	S	T	U	V	W	X	Y	Z	Area sq. ft.
1																											
2S	30				5/8	10	12 1/2	45		12 3/4		9 1/4	6 1/2	3	2	15	12 3/8	2 1/2	22	5			11/16	1 1/4	3 1/2	2 3/8	5.18
2M	36				3/4	12	15	45		15 3/8		11	6 1/2	3	2	18	15 3/8	2 1/2	26	5			11/16	1 1/4	3 1/2	2 3/8	7.46
3	36				3/4	12	15	45		15 3/8		11	6 1/2	3	2	18	15 3/8	2 1/2	26	5			11/16	1 1/4	3 1/2	2 3/8	7.46
4																											
5																											

STANDARD SIGN
R1-1F

WISCONSIN DEPT OF TRANSPORTATION

APPROVED Matthew R Rauch
for State Traffic Engineer

DATE 12/03/10 PLATE NO. R1-1F.3

PROJECT NO:	HWY:	COUNTY:		SHEET NO: 147	E

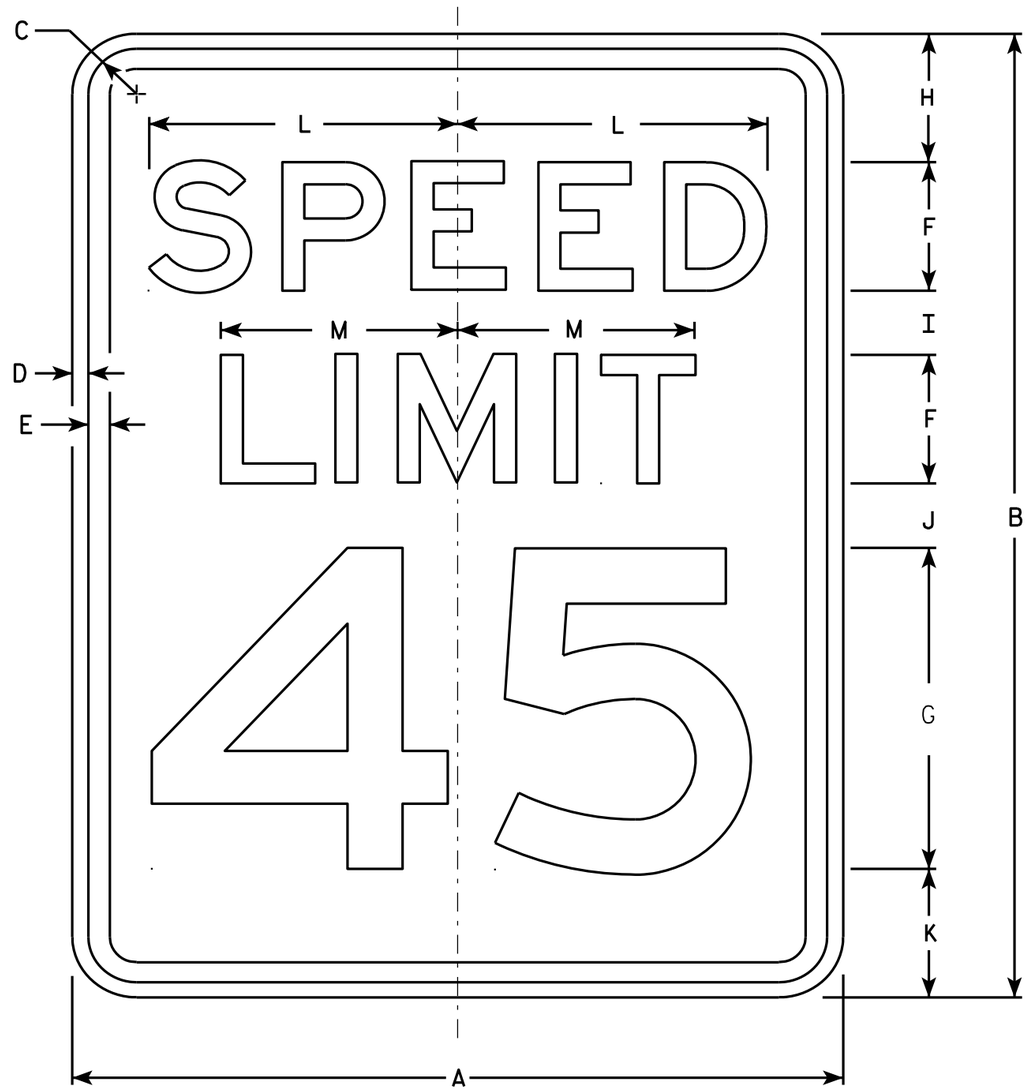

R2-1

NOTES

1. Sign is Type II - Type H Reflective - reference WIS DOT Standard Specification for HIGHWAY and STRUCTURE CONSTRUCTION latest edition.
2. Color:
   Background - White
   Message - Black
3. Message Series - E
4. Corners may be square or rounded when base material is plywood but borders shall be rounded as shown. When base material is metal, the corners and borders shall be rounded.
5. Substitute appropriate numerals and optically adjust spacing to achieve proper balance.

SIZE	A	B	C	D	E	F	G	H	I	J	K	L	M	N	O	P	Q	R	S	T	U	V	W	X	Y	Z	Area sq. ft.
1	18	24	1 1/8	3/8	1/2	3	8	3	2	2	3	7 1/4	5 1/2														3.0
2S	24	30	1 1/8	3/8	1/2	4	10	3	2 1/4	3 3/8	3 3/8	9 5/8	7 3/8														5.0
2M	30	36	1 3/8	1/2	5/8	5	12	5	2 1/2	2 1/2	4	12	9 1/4														7.5
3	36	48	1 3/8	1/2	5/8	6	14	6	5	5	6	14 3/8	11														12.0
4	36	48	1 3/8	1/2	5/8	6	14	6	5	5	6	14 3/8	11														12.0
5	48	60	2 1/4	3/4	1	8	20	6	4 1/2	6 3/4	6 3/4	19 1/4	14 5/8														20.0

STANDARD SIGN
R2-1

WISCONSIN DEPT OF TRANSPORTATION

APPROVED Matthew R Rauch
for State Traffic Engineer

DATE 5/26/10 PLATE NO. R2-1.13

PROJECT NO: | HWY: | COUNTY: | SHEET NO: 148 | E

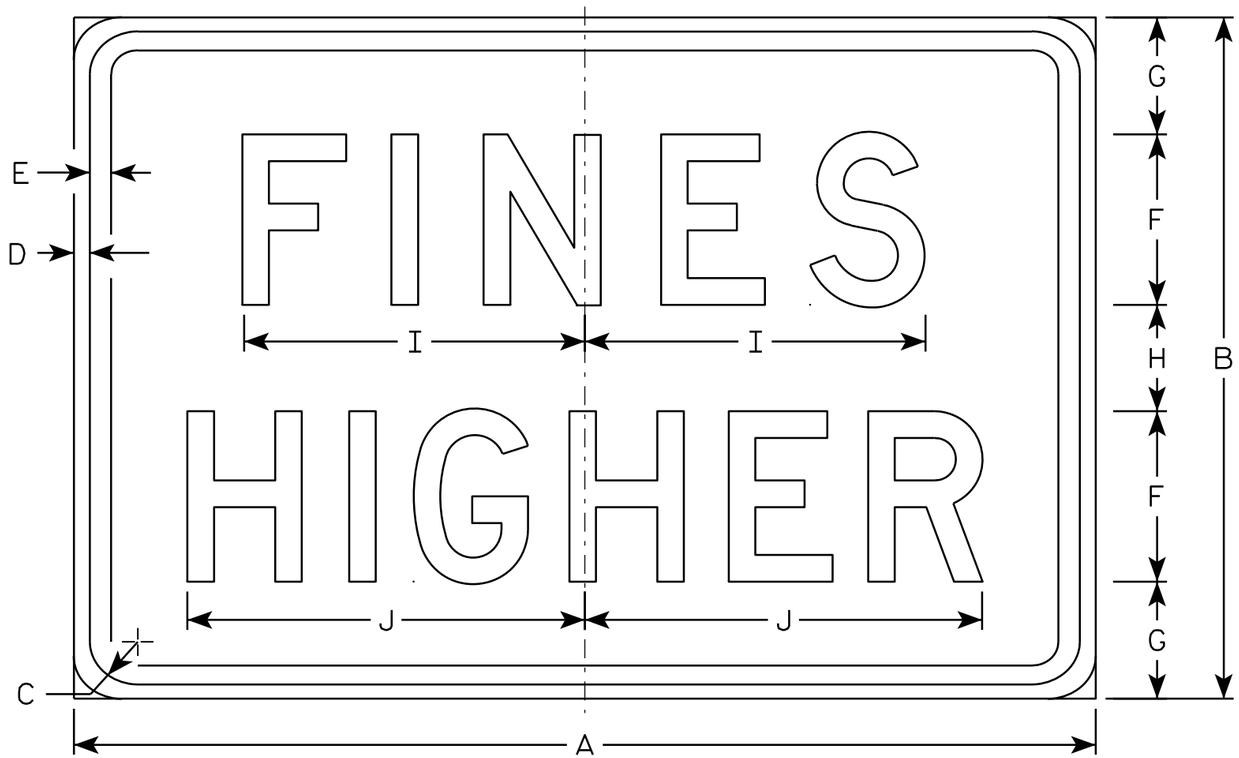

R2-6P

NOTES

1. Sign is Type II - Type H Reflective - reference WIS DOT Standard Specification for HIGHWAY and STRUCTURE CONSTRUCTION latest edition.
2. Color:
   Background - White
   Message - Black
3. Message Series - D
4. Corners may be square or rounded when base material is plywood but borders shall be rounded as shown. When base material is metal, the corners and borders shall be rounded.

SIZE	A	B	C	D	E	F	G	H	I	J	K	L	M	N	O	P	Q	R	S	T	U	V	W	X	Y	Z	Area sq. ft.
1																											
2S	24	18	1 1/8	3/8	3/8	4	3 1/2	3	7 5/8	9 1/4																	3.0
2M	24	18	1 1/8	3/8	3/8	4	3 1/2	3	7 5/8	9 1/4																	3.0
3	36	24	1 1/8	3/8	1/2	6	4 1/8	3 3/4	12	14																	6.0
4	36	24	1 1/8	3/8	1/2	6	4 1/8	3 3/4	12	14																	6.0
5	48	36	1 3/8	1/2	5/8	8	7	6	15 1/8	19																	12.0

STANDARD SIGN
R2-6P

WISCONSIN DEPT OF TRANSPORTATION

APPROVED Matthew R Rauch
for State Traffic Engineer

DATE 12/20/10 PLATE NO. R2-6P.2

PROJECT NO: | HWY: | COUNTY: | SHEET NO: 149 | E

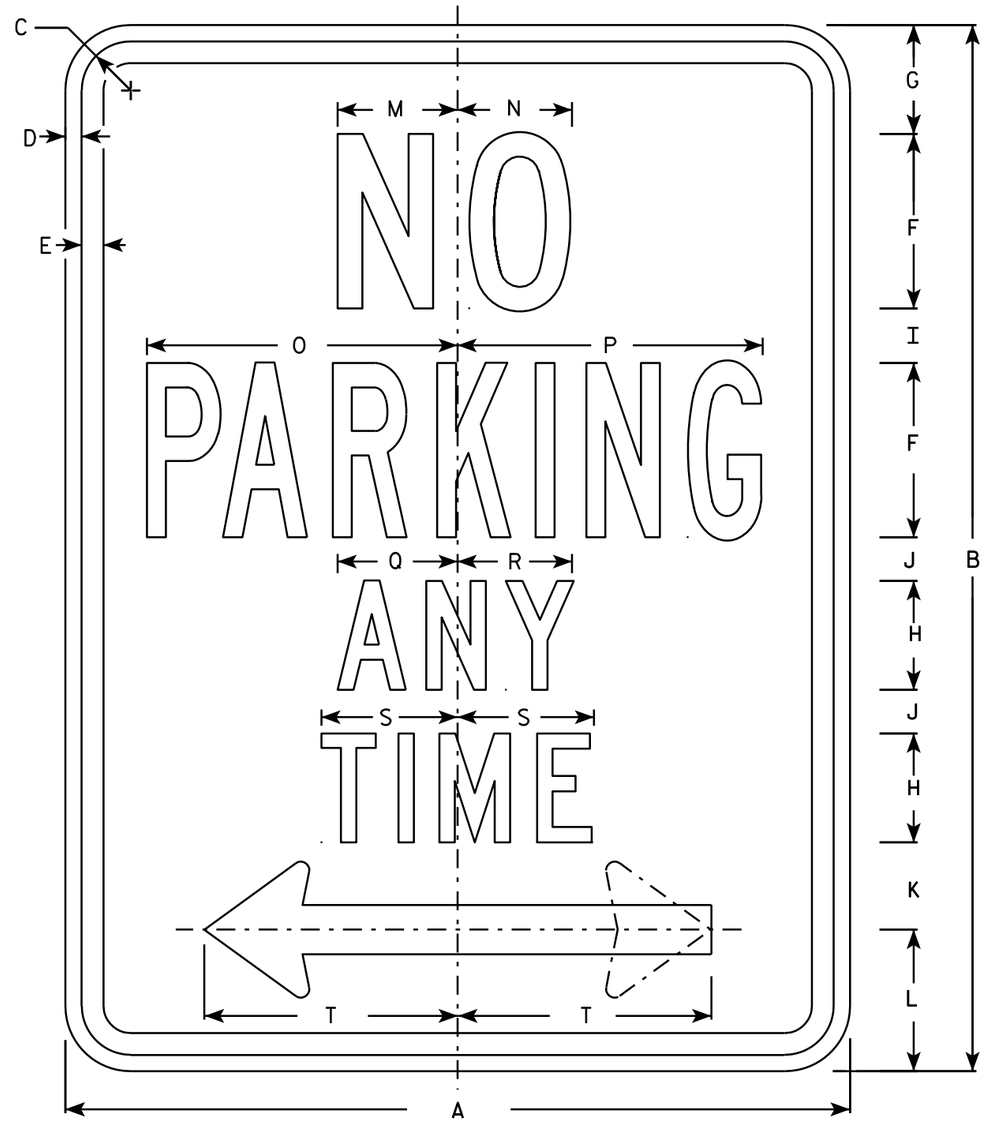

R7-1

NOTES

1. Sign is Type II - Type H Reflective - reference WIS DOT Standard Specification for HIGHWAY and STRUCTURE CONSTRUCTION latest edition.
2. Color:
   Background - White
   Message - Red
3. Message Series - See Note 5
4. Corners may be square or rounded when base material is plywood but borders shall be rounded as shown. When base material is metal, the corners and borders shall be rounded.
5. Lines 1, 3 and 4 are series C, line 2 is series B.
6. R7-1D (double arrow)
   R7-1L (left arrow)
   R7-1R (right arrow)

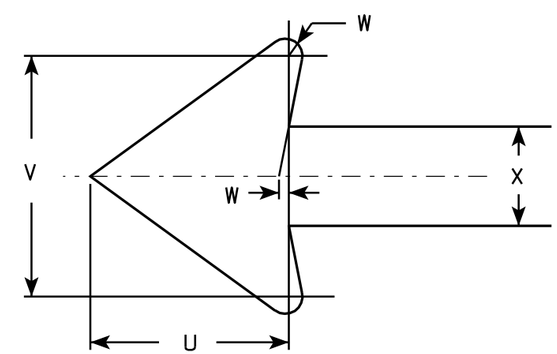

SIZE	A	B	C	D	E	F	G	H	I	J	K	L	M	N	O	P	Q	R	S	T	U	V	W	X	Y	Z	Area sq. ft.
1	12	18	1 1/8	3/8	3/8	3	1 7/8	2	7/8	5/8	1 1/2	2 1/2	2	2	4 7/8	4 7/8	2 1/4	2 1/8	2 1/2	3 7/8	1 1/2	1 3/4	1/8	3/4			1.5
2S	18	24	1 1/8	3/8	1/2	4	2 1/2	2 1/2	1 1/4	1	2	3 1/4	2 3/4	2 5/8	7 1/8	7	2 3/4	2 5/8	3 1/8	5 7/8	2 1/4	2 5/8	1/4	1 1/8			3.0
2M	24	30	1 1/8	3/8	1/2	5	3	3	2	1 1/4	2 1/2	4	3 1/4	3 3/8	9 1/4	9 1/4	3 1/4	3 1/4	3 3/4	7 3/4	3	3 1/2	1/4	1 1/2			5.0
3	24	30	1 1/8	3/8	1/2	5	3	3	2	1 1/4	2 1/2	4	3 1/4	3 3/8	9 1/4	9 1/4	3 1/4	3 1/4	3 3/4	7 3/4	3	3 1/2	1/4	1 1/2			5.0
4																											
5																											

STANDARD SIGN
R7-1

WISCONSIN DEPT OF TRANSPORTATION

APPROVED Matthew R Rauch
for State Traffic Engineer

DATE 3/31/2011 PLATE NO. R7-1.9

PROJECT NO:	HWY:	COUNTY:		SHEET NO: 150	E

R9-3

NOTES

1. Sign is Type II - Type H Reflective - reference WIS DOT Standard Specification for HIGHWAY and STRUCTURE CONSTRUCTION latest edition.
2. Color:
   Background - White
   Message - Black
3. Message Series - See note 5
4. Corners may be square or rounded when base material is plywood but borders shall be rounded as shown. When base material is metal, the corners and borders shall be rounded.
5. Lines 1 & 3 are Series C
   Line 2 is Series B

SIZE	A	B	C	D	E	F	G	H	I	J	K	L	M	N	O	P	Q	R	S	T	U	V	W	X	Y	Z	Area sq. ft.
1																											
2S	12	18	1 1/8	3/8	3/8	3	2	2 1/4	3 1/2	4 7/8																	1.5
2M	12	18	1 1/8	3/8	3/8	3	2	2 1/4	3 1/2	4 7/8																	1.5
3																											
4																											
5																											

STANDARD SIGN
R9-3

WISCONSIN DEPT OF TRANSPORTATION

APPROVED Matthew R Rauch
for State Traffic Engineer

DATE 4/1/2011 PLATE NO. R9-3.6

PROJECT NO: | HWY: | COUNTY: | SHEET NO: 151 | E

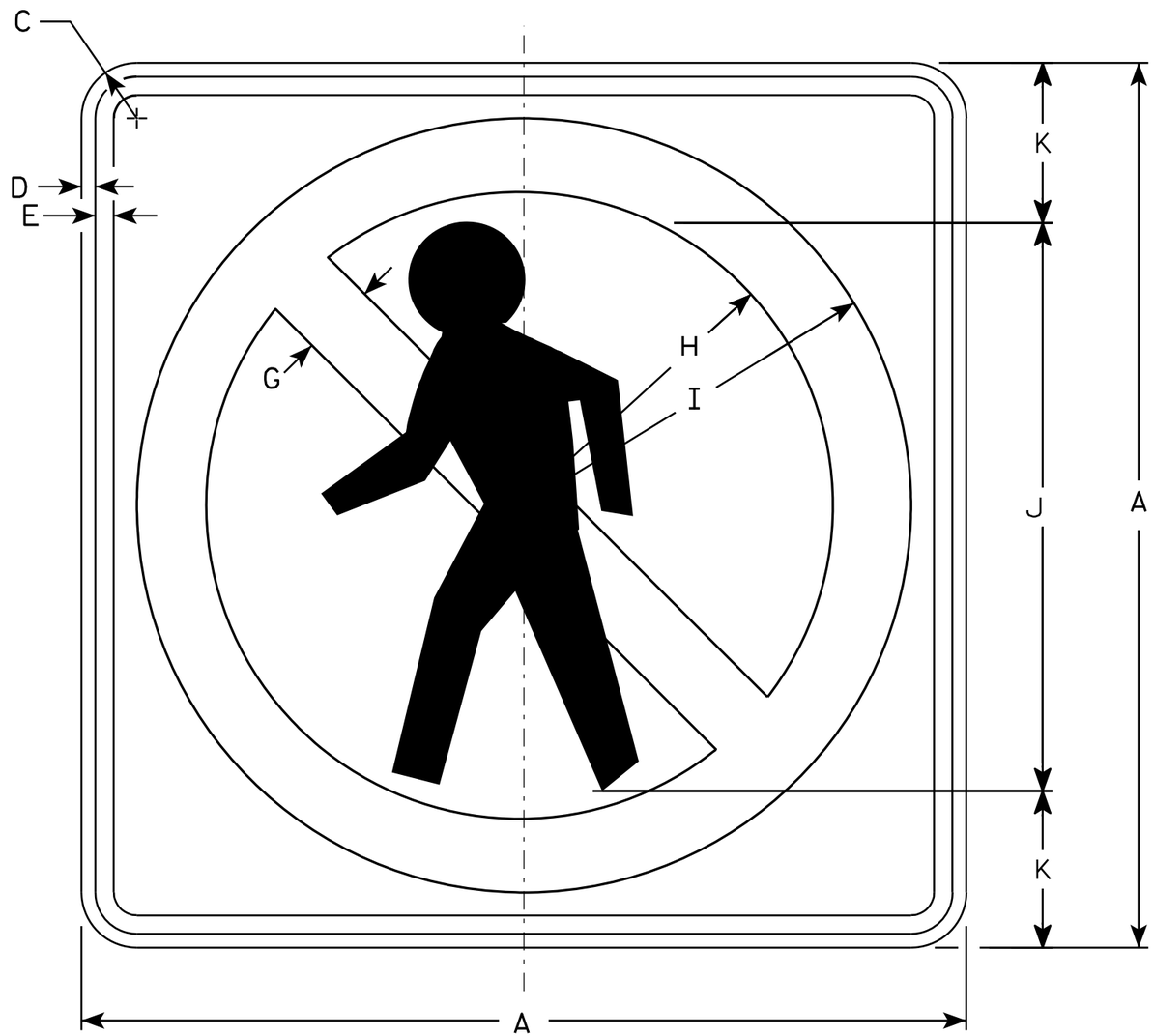

R9-3A

NOTES

1. Sign is Type II - Type H Reflective - reference WIS DOT Standard Specification for HIGHWAY and STRUCTURE CONSTRUCTION latest edition.
2. Color:
   Background - White
   Message - See note 4
3. Corners may be square or rounded when base material is plywood but borders shall be rounded as shown. When base material is metal, the corners and borders shall be rounded.
4. Border & Pedistrian are non-reflective black. Circle with diagonal bar is reflective red.

SIZE	A	B	C	D	E	F	G	H	I	J	K	L	M	N	O	P	Q	R	S	T	U	V	W	X	Y	Z	Area sq. ft.
1																											
2S	18		1 1/8	3/8	3/8		1 1/2	6 1/4	7 7/8	12	3																2.25
2M	18		1 1/8	3/8	3/8		1 1/2	6 1/4	7 7/8	12	3																2.25
3																											
4	24		1 1/8	3/8	1/2		2	8 1/2	10 1/2	15	4																4.00
5																											

STANDARD SIGN
R9-3A

WISCONSIN DEPT OF TRANSPORTATION

APPROVED Matthew R Rauch
for State Traffic Engineer

DATE 6/4/10 PLATE NO. R9-3A.2

PROJECT NO:	HWY:	COUNTY:		SHEET NO: 152	E

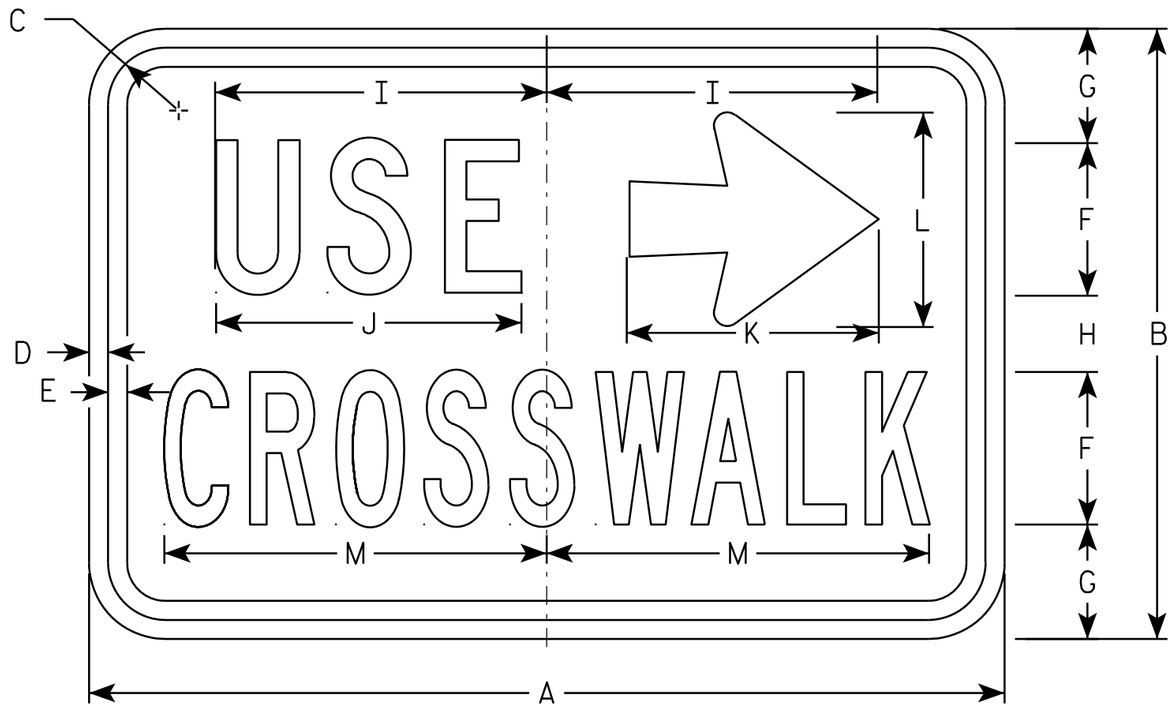

R9-3BR

NOTES

1. Sign is Type II - Type H Reflective - reference WIS DOT Standard Specification for HIGHWAY and STRUCTURE CONSTRUCTION latest edition.
2. Color:
   Background - White
   Message - Black
3. Message Series - C Line 1, Series B Line 2
4. Corners may be square or rounded when base material is plywood but borders shall be rounded as shown. When base material is metal, the corners and borders shall be rounded.
5. R9-3BL is the same as R9-3BR except USE and the arrow are switched.

SIZE	A	B	C	D	E	F	G	H	I	J	K	L	M	N	O	P	Q	R	S	T	U	V	W	X	Y	Z	Area sq. ft.
1																											
2S	18	12	1 1/8	3/8	3/8	3	2 1/4	1 1/2	6 1/2	6	5	4 1/4	7 1/2														1.5
2M	18	12	1 1/8	3/8	3/8	3	2 1/4	1 1/2	6 1/2	6	5	4 1/4	7 1/2														1.5
3																											
4																											
5																											

STANDARD SIGN
R9-3BR&L

WISCONSIN DEPT OF TRANSPORTATION

APPROVED Matthew R Rauch
for State Traffic Engineer

DATE 6/4/10 PLATE NO. R9-3B.2

PROJECT NO: | HWY: | COUNTY: | SHEET NO: 153 | E

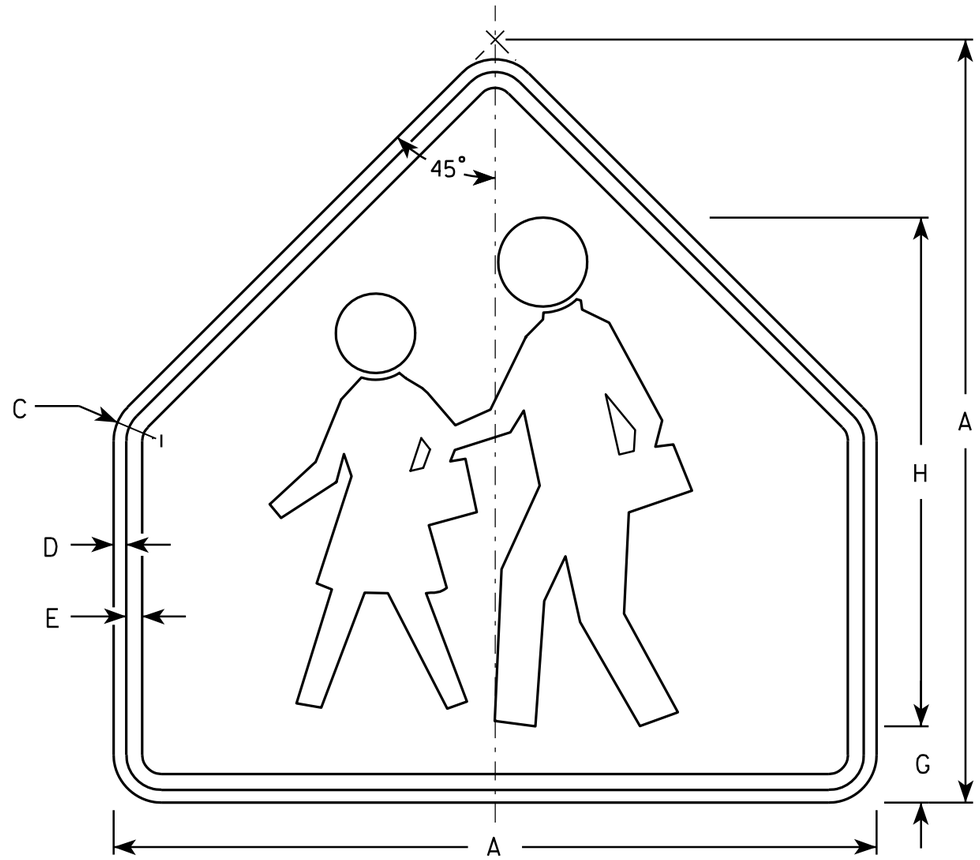

S1-1

NOTES

1. Sign is Type II - Type F Reflective - reference WIS DOT Standard Specification for HIGHWAY and STRUCTURE CONSTRUCTION latest edition.
2. Color:
   Background - Yellow-Green
   Message - Black
3. Corners may be square or rounded when base material is plywood but borders shall be rounded as shown. When base material is metal, the corners and borders shall be rounded.

SIZE	A	B	C	D	E	F	G	H	I	J	K	L	M	N	O	P	Q	R	S	T	U	V	W	X	Y	Z	Area sq. ft.
1	30		1 3/8	1/2	5/8		3	20																			4.69
2	36		1 5/8	5/8	3/4		3 1/2	24																			6.75
3	36		1 5/8	5/8	3/4		3 1/2	24																			6.75
4	48		2 1/4	3/4	1		4 3/4	32																			12
5																											

STANDARD SIGN
S1-1

WISCONSIN DEPT OF TRANSPORTATION

APPROVED Matthew R Rauch
for State Traffic Engineer
DATE 6/30/05 PLATE NO. S1-1.8

PROJECT NO: | HWY: | COUNTY: | SHEET NO: 154 | E

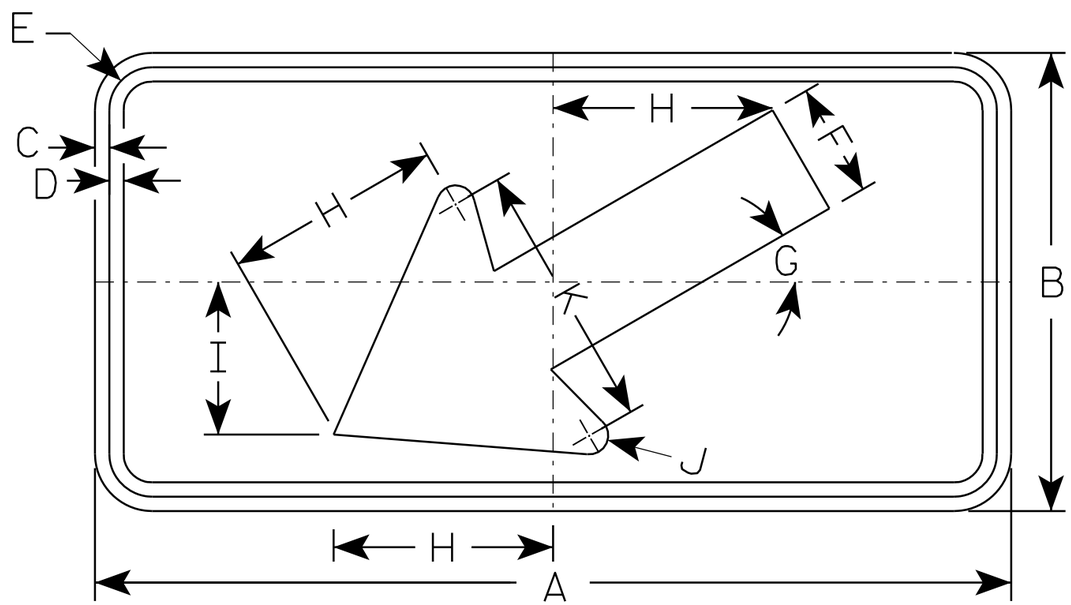

S16-7L

NOTES

1. Sign is Type II - Type F Reflective - reference WIS DOT Standard Specification for HIGHWAY and STRUCTURE CONSTRUCTION latest edition.
2. Color:
   Background - Yellow-Green
   Message - Black
3. Corners may be square or rounded when base material is plywood but borders shall be rounded as shown. When base material is metal, the corners and borders shall be rounded.
4. S16-7R are the same as S16-7L except the arrow is reversed along the vertical centerline.

SIZE	A	B	C	D	E	F	G	H	I	J	K	L	M	N	O	P	Q	R	S	T	U	V	W	X	Y	Z	Area sq. ft.
1	24	12	3/8	3/8	1 1/8	3	30°	5 3/4	4	1/2	7																2.0
2S	30	18	3/8	1/2	1 1/8	4 1/2	30°	8 1/2	6	5/8	10 1/4																3.75
2M	30	18	3/8	1/2	1 1/8	4 1/2	30°	8 1/2	6	5/8	10 1/4																3.75
3	30	18	3/8	1/2	1 1/8	4 1/2	30°	8 1/2	6	5/8	10 1/4																3.75
4	48	24	1/2	5/8	1 3/8	6	30°	11 1/2	8	1	14																8.0
5																											

STANDARD SIGN
S16-7

WISCONSIN DEPT OF TRANSPORTATION

APPROVED Matthew R Rauch
for State Traffic Engineer

DATE 7/22/13 PLATE NO. S16-7.1

PROJECT NO: | HWY: | COUNTY: | SHEET NO: 155 | E

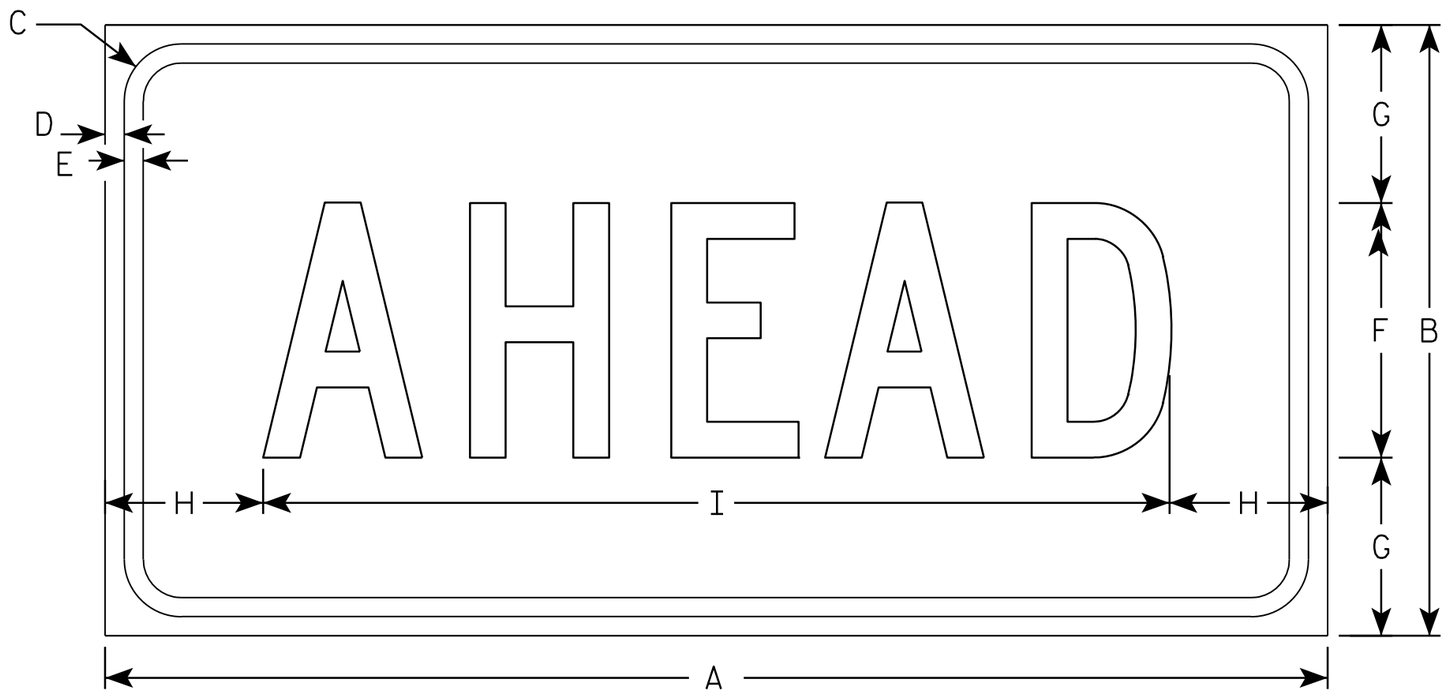

S16-9P

NOTES

1. Sign is Type II - Type F Reflective - reference WIS DOT Standard Specification for HIGHWAY and STRUCTURE CONSTRUCTION latest edition.
2. Color:
   Background - Yellow-Green
   Message - Black
3. Message Series - C
4. Corners may be square or rounded when base material is plywood but borders shall be rounded as shown. When base material is metal, the corners and borders shall be rounded.

SIZE	A	B	C	D	E	F	G	H	I	J	K	L	M	N	O	P	Q	R	S	T	U	V	W	X	Y	Z	Area sq. ft.
1	24	12	1 1/8	3/8	3/8	5	3 1/2	3 1/8	17 3/4																		2.0
2S	30	18	1 1/8	3/8	1/2	7	5 1/2	2 3/4	24 1/2																		3.75
2M	30	18	1 1/8	3/8	1/2	7	5 1/2	2 3/4	24 1/2																		3.75
3	30	18	1 1/8	3/8	1/2	7	3 1/2	2 3/4	24 1/2																		3.75
4	48	24	1 3/8	1/2	5/8	10	7	6 1/8	35 3/4																		8.0
5																											

STANDARD SIGN
S16-9P

WISCONSIN DEPT OF TRANSPORTATION

APPROVED Matthew R Rauch
for State Traffic Engineer

DATE 7/22/13 PLATE NO. S16-9P.1

PROJECT NO: | HWY: | COUNTY: | SHEET NO: 156 | E

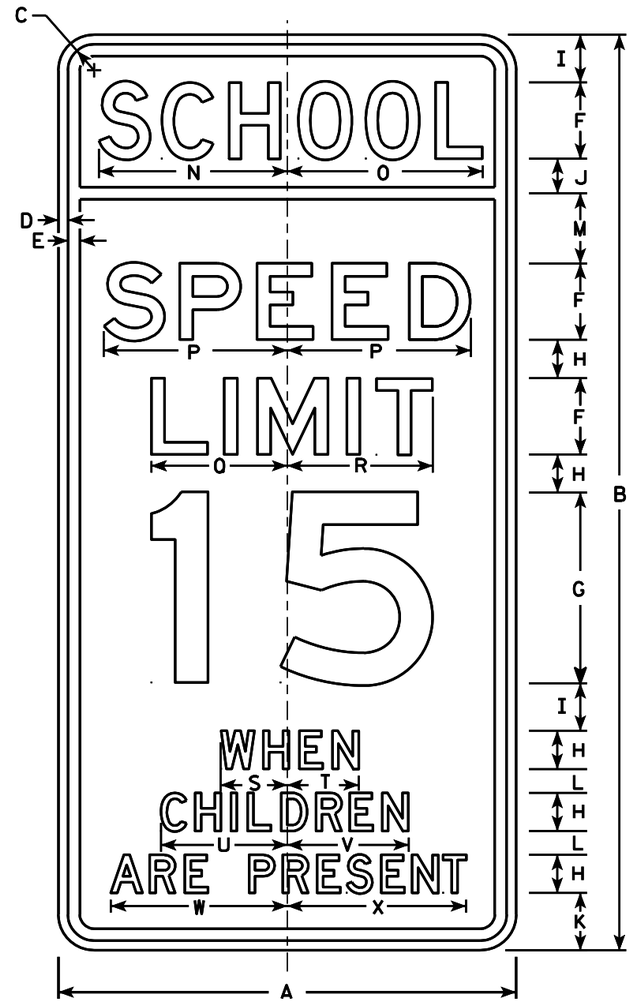

S4-51

NOTES

1. Sign is Type II - reference WIS DOT Standard Specification for HIGHWAY and STRUCTURE CONSTRUCTION latest edition. (See note 5).
2. Color:
   Background - See note 5
   Message - Black
3. Message Series - See note 6
4. Corners may be square or rounded when base material is plywood but borders shall be rounded as shown. When base material is metal, the corners and borders shall be rounded.
5. Top panel (SCHOOL) background - Yellow Green -Type F Reflective. Lower panel background - White -Type H Reflective.
6. From top to bottom:
   Lines 1, 5, 6 & 7 are series D
   Lines 2, 3 & 4 are series E
7. Line 4 substitute appropriate numerals and adjust spacing to achieve proper balance.

Metric equivalent for this sign is:

SIZE	
1	
2	600 mm X 1200 mm
3	900 mm X 1800 mm
4	
5	

SIZE	A	B	C	D	E	F	G	H	I	J	K	L	M	N	O	P	Q	R	S	T	U	V	W	X	Y	Z	Area sq. ft.	Area m2
1																												
2	24	48	1 3/8	1/2	5/8	4	10	2	2 1/2	1 3/4	3	1 1/4	3 3/4	9 7/8	10 1/4	9 5/8	7 1/8	7 5/8	3 1/2	3 3/8	6 5/8	6 3/8	9 1/4	9 3/8			8.00	0.72
3	36	72	2 1/4	3/4	1	6	15	3	3 3/4	2 3/4	4 1/2	1 7/8	5 1/2	15	15 1/4	14 1/2	11 1/4	11 1/2	5 1/2	5 3/4	10	9 3/4	14	14 1/8			18.00	1.62
4																												
5																												

STANDARD SIGN
S4-51

WISCONSIN DEPT OF TRANSPORTATION

APPROVED Matthew R Rauch
for State Traffic Engineer

DATE 4/26/10 PLATE NO. S4-51.9

PROJECT NO:	HWY:	COUNTY:		SHEET NO: 157	E

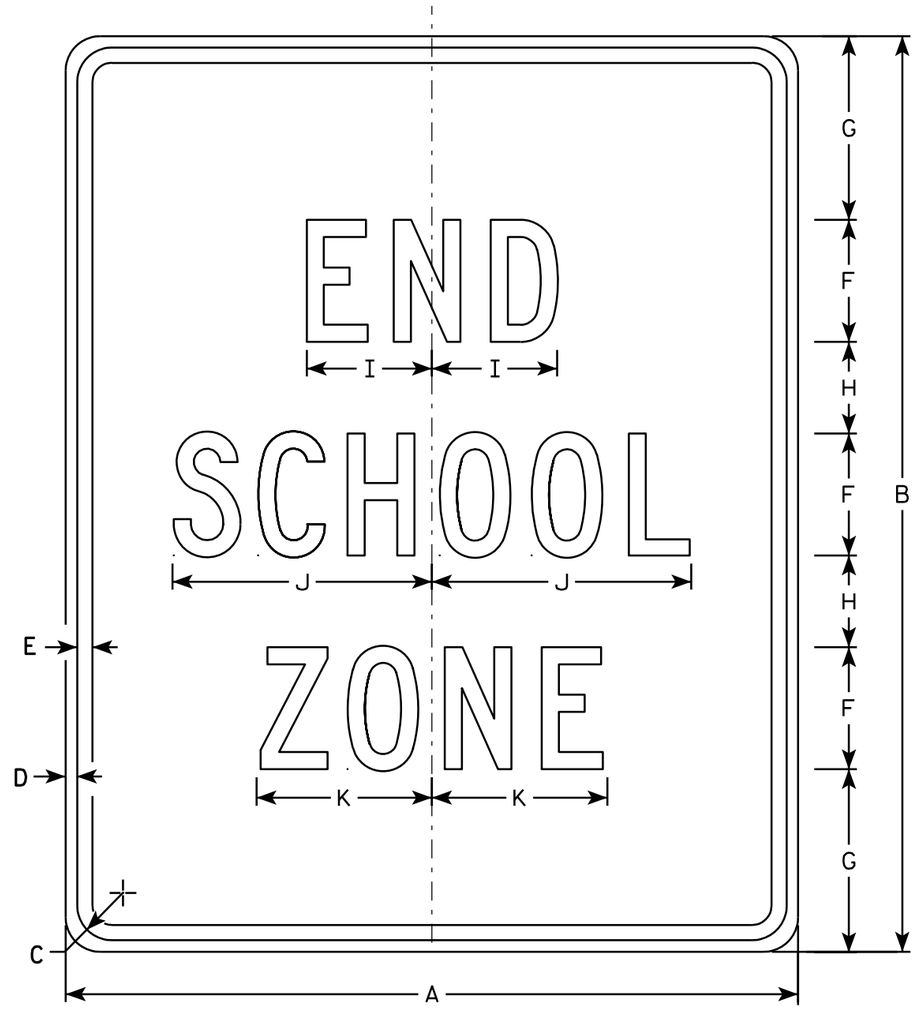

S5-2

NOTES

1. Sign is Type II - Type H Reflective - reference WIS DOT Standard Specification for HIGHWAY and STRUCTURE CONSTRUCTION latest edition.
2. Color:
   Background - White
   Message - Black
3. Message Series - C
4. Corners may be square or rounded when base material is plywood but borders shall be rounded as shown. When base material is metal, the corners and borders shall be rounded.

SIZE	A	B	C	D	E	F	G	H	I	J	K	L	M	N	O	P	Q	R	S	T	U	V	W	X	Y	Z	Area sq. ft.
1																											
2	24	30	1 1/8	3/8	1/2	4	6	3	4 1/8	8 1/2	5 3/4																5.0
3	36	42	1 5/8	5/8	3/4	6	7	5	6 1/8	12 5/8	8 5/8																10.5
4																											
5																											

STANDARD SIGN
S5-2

WISCONSIN DEPT OF TRANSPORTATION

APPROVED Matthew R Rauch
for State Traffic Engineer

DATE 3/8/11 PLATE NO. S5-2.2

PROJECT NO: | HWY: | COUNTY: | SHEET NO: 158 | E

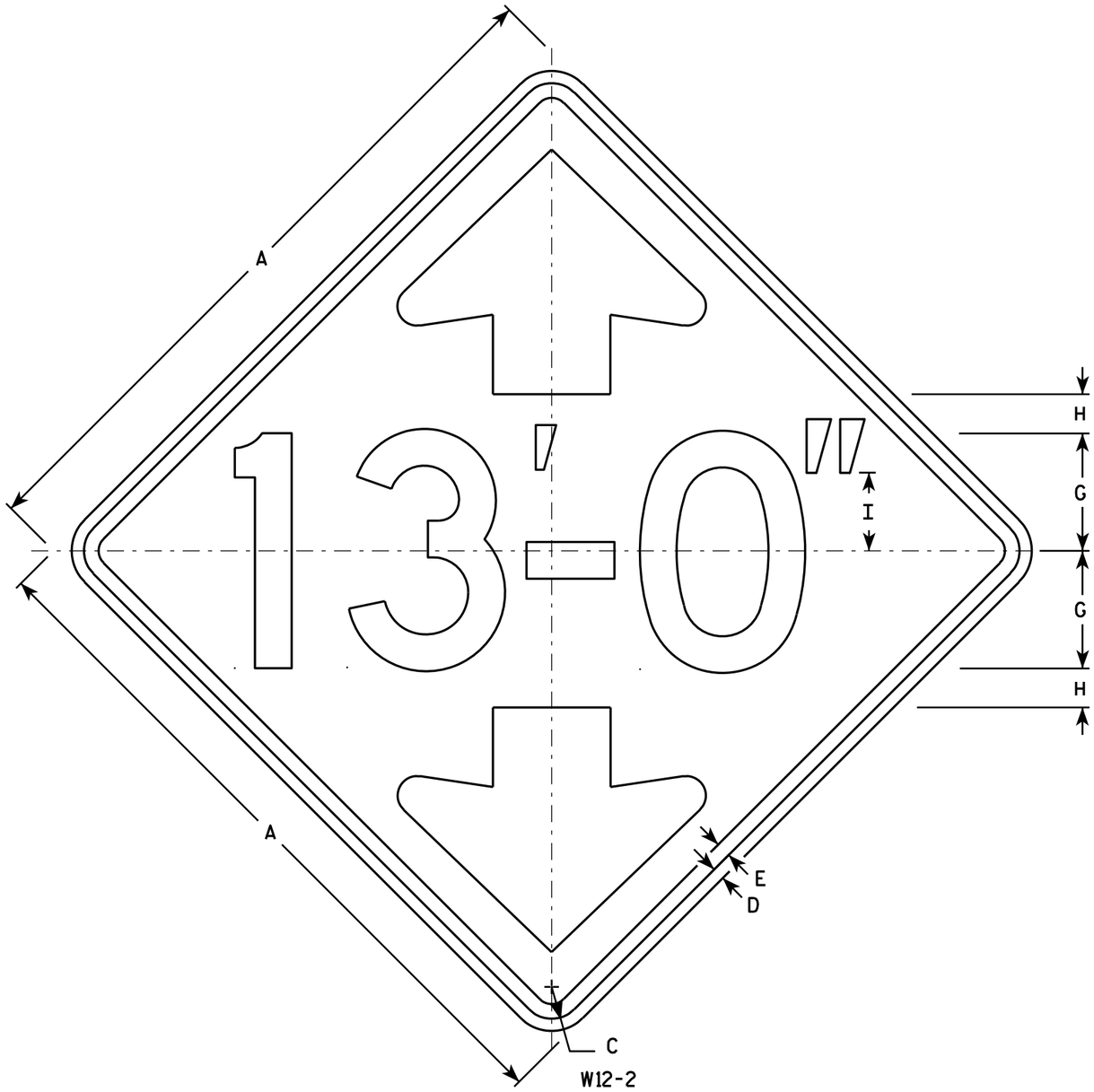

W12-2

NOTES

1. Sign is Type II - Type F Reflective - reference WIS DOT Standard Specification for HIGHWAY and STRUCTURE CONSTRUCTION latest edition.
2. Color:
   Background - Yellow
   Message - Black
3. Message Series - D
4. Corners may be square or rounded when base material is plywood but borders shall be rounded as shown. When base material is metal, the corners and borders shall be rounded.
5. Substitute appropriate numerals and optically adjust spacing of numerals, hyphen, foot & inch marks to achieve proper balance.

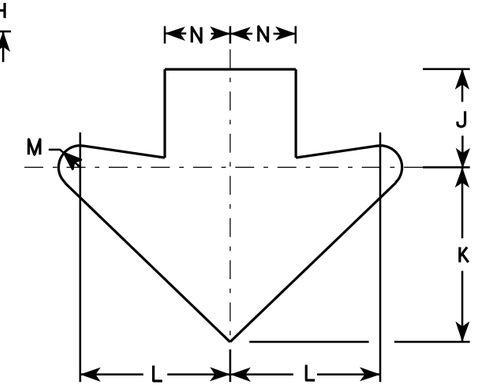

Arrow Detail

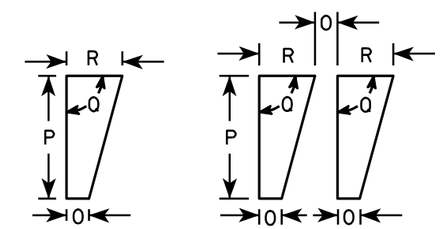

Foot Mark & Inch Mark Detail

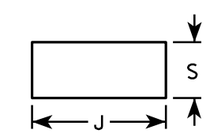

Hyphen Detail

SIZE	A	B	C	D	E	F	G	H	I	J	K	L	M	N	O	P	Q	R	S	T	U	V	W	X	Y	Z	Area sq. ft.
1	30		1 3/8	1/2	5/8		5	1 5/8	3 3/8	3 3/4	6 5/8	5 3/4	3/4	2 1/2	1/2	2 1/4	90°	1	1 5/8								6.25
2S	36		1 5/8	5/8	3/4		6	2	4	4 1/2	8	6 7/8	1	3	1/2	2 3/4	90°	1 1/4	1 7/8								9.00
2M	36		1 5/8	5/8	3/4		6	2	4	4 1/2	8	6 7/8	1	3	1/2	2 3/4	90°	1 1/4	1 7/8								9.00
3	36		1 5/8	5/8	3/4		6	2	4	4 1/2	8	6 7/8	1	3	1/2	2 3/4	90°	1 1/4	1 7/8								9.00
4	36		1 5/8	5/8	3/4		6	2	4	4 1/2	8	6 7/8	1	3	1/2	2 3/4	90°	1 1/4	1 7/8								9.00
5	48		2 1/4	3/4	1		8	2 5/8	5 1/2	5 7/8	10 5/8	9 1/4	1 3/8	4	5/8	3 5/8	90°	1 5/8	2 1/2								16.00

STANDARD SIGN
W12-2

WISCONSIN DEPT OF TRANSPORTATION

APPROVED Matthew R Rauch
for State Traffic Engineer

DATE 3/13/13 PLATE NO. W12-2.9

PROJECT NO:	HWY:	COUNTY:		SHEET NO: 159	E

NOTES

1. Sign is Type II - Type F Reflective - reference WIS DOT Standard Specification for HIGHWAY and STRUCTURE CONSTRUCTION latest edition.
2. Color:
   Background - Yellow
   Message - Black
3. Message Series - C
4. Corners may be square or rounded when base material is plywood but borders shall be rounded as shown. When base material is metal, the corners and borders shall be rounded.

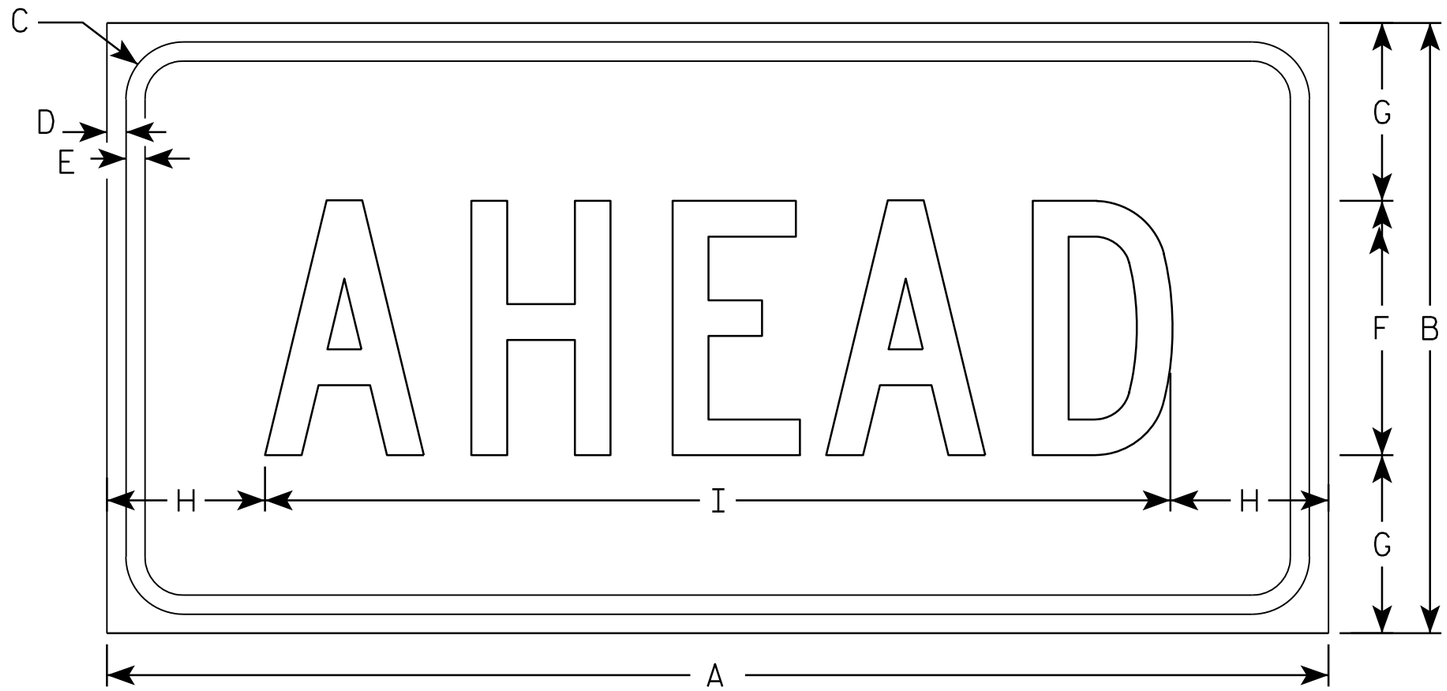

W16-9P

SIZE	A	B	C	D	E	F	G	H	I	J	K	L	M	N	O	P	Q	R	S	T	U	V	W	X	Y	Z	Area sq. ft.
1																											
2S	24	12	1 1/8	3/8	3/8	5	3 1/2	3 1/8	17 3/4																		2.0
2M	30	18	1 1/8	3/8	1/2	7	5 1/2	2 3/4	24 1/2																		3.75
3	30	18	1 1/8	3/8	1/2	7	3 1/2	2 3/4	24 1/2																		3.75
4	48	24	1 3/8	1/2	5/8	10	7	6 1/8	35 3/4																		8.0
5																											

STANDARD SIGN
W16-9P

WISCONSIN DEPT OF TRANSPORTATION

APPROVED Matthew R Rauch
for State Traffic Engineer

DATE 12/28/10 PLATE NO. W16-9P.6

PROJECT NO: | HWY: | COUNTY: | SHEET NO: 160 | E

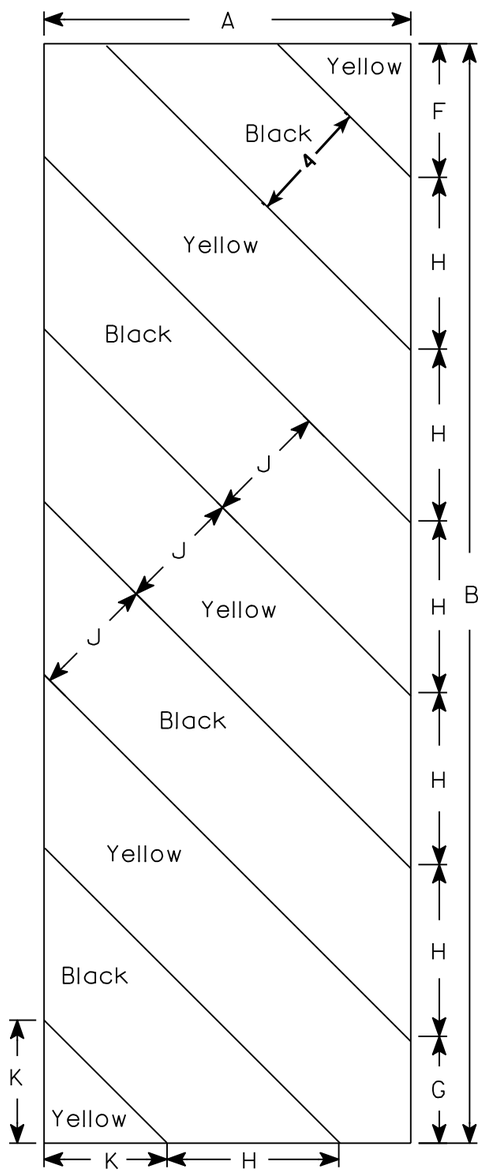

W5-52L

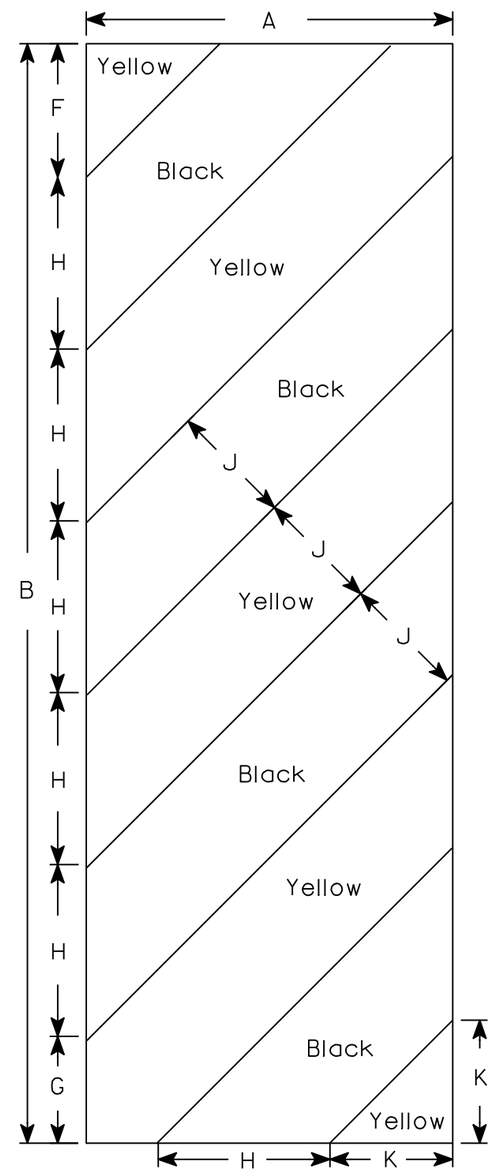

W5-52R

NOTES

1. Sign is Type II - Type F Reflective - reference WIS DOT Standard Specification for HIGHWAY and STRUCTURE CONSTRUCTION latest edition.
2. Color:
   Background - Yellow
   Message - Black
3. Corners may be square or rounded when base material is plywood but borders shall be rounded as shown. When base material is metal, the corners and borders shall be rounded.
4. Alternate colors of stripes as shown.

SIZE	A	B	C	D	E	F	G	H	I	J	K	L	M	N	O	P	Q	R	S	T	U	V	W	X	Y	Z	Area sq. ft.
1																											
2S	12	36				4 3/8	3 1/2	5 5/8	45°	4	4																3.0
2M	12	36				4 3/8	3 1/2	5 5/8	45°	4	4																3.0
3	18	54				6	5 1/2	8 1/2	45°	6	6 9/16																6.75
4																											
5																											

STANDARD SIGN
W5-52L & W5-52R

WISCONSIN DEPT OF TRANSPORTATION

APPROVED Matthew R Rauch
for State Traffic Engineer

DATE 5/29/12 PLATE NO. W5-52.9

PROJECT NO: | HWY: | COUNTY: | SHEET NO: 161 | E

Wisconsin Department of Transportation

Dedicated people creating transportation solutions through innovation and exceptional service.

http://www.dot.wisconsin.gov