MAD JULY2014

PROJECT ID: 1161-00-65
WITH:

COUNTY: COLUMBIA

01

ORDER OF SHEETS

Section No. 1 Title
Section No. 2 Project Overview, General Notes, Typical Sections, Permanent Signing, and Traffic Control
Section No. 3 Miscellaneous Quantities
~~Section No. 4 Right of Way Plat~~
Section No. 5 Plan
Section No. 6 Standard Detail Drawings
Section No. 7 Sign Plates
~~Section No. 8 Structure Plans~~
~~Section No. 9 Cross Sections~~

TOTAL SHEETS = 120

STATE PROJECT	FEDERAL PROJECT	
	PROJECT	CONTRACT
1161-00-65	WISC 2014259	1

STATE OF WISCONSIN
DEPARTMENT OF TRANSPORTATION

STATE HIGHWAY REHABILITATION - MAINTENANCE PROJECT

MADISON - PACKWAUKEE

STH 78 - USH 51

IH 39

COLUMBIA COUNTY

N

STATE PROJECT NUMBER
1161-00-65

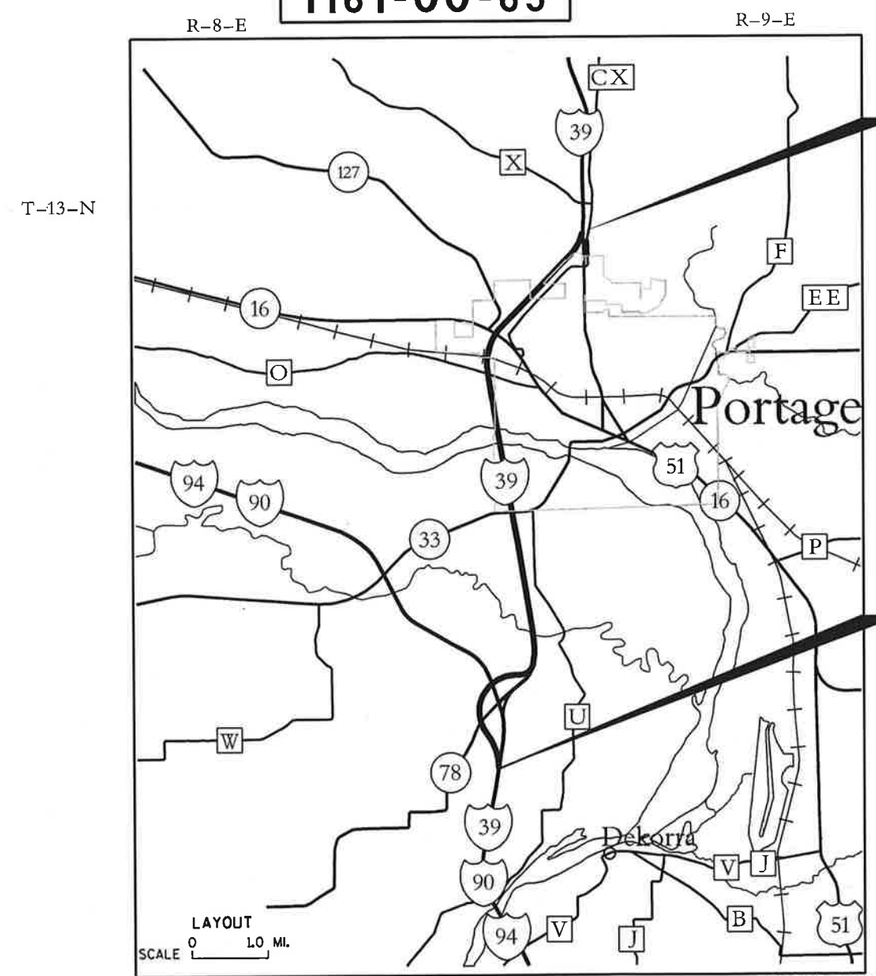

END PROJECT
STA. 536+61.83'SB'

BEGIN PROJECT
STA. 112+58.80'SB'
Y = 372950.7282
X = 528921.5390

TOTAL NET LENGTH OF CENTERLINE = 8.031 MI.

Coordinates on this plan are referenced to the Wisconsin County Coordinate System (WCCS), Columbia County.

DESIGN DESIGNATION

A.A.D.T. 2014	=	16,900 ; 8,600 SB
A.A.D.T. 2034	=	22,800 ; 11,600 SB
D.H.V.	=	13.3
D.D.	=	57/43
T.	=	27.7%
DESIGN SPEED	=	70 MPH
ESALS	=	N/A

CONVENTIONAL SYMBOLS

PLAN

CORPORATE LIMITS
PROPERTY LINE
LOT LINE
LIMITED HIGHWAY EASEMENT
EXISTING RIGHT OF WAY
PROPOSED OR NEW R/W LINE
SLOPE INTERCEPT
REFERENCE LINE
EXISTING CULVERT
PROPOSED CULVERT (Box or Pipe)
COMBUSTIBLE FLUIDS — CAUTION
MARSH AREA
WOODED OR SHRUB AREA

ORIGINAL PLANS PREPARED BY

KL Engineering
[A] Better Experience

WISCONSIN
MIKE D. SCARMON
E-37613
EVANSVILLE, WI
PROFESSIONAL ENGINEER

DATE: 02/01/14 (Signature)

STATE OF WISCONSIN
DEPARTMENT OF TRANSPORTATION

PREPARED BY

Surveyor	KL ENGINEERING, INC.
Designer	KL ENGINEERING, INC.
Project Manager	LALITHA BALACHANDRAN
Regional Examiner	
Regional Supervisor	WILLIAM STROBEL
C.O. Examiner	

APPROVED FOR THE DEPARTMENT
DATE: 3/17/14 William Strobel (Signature)

E

DIGGERS HOTLINE

Dial 811 or (800) 242-8511

www.DiggersHotline.com

UTILITY CONTACTS

AT&T LEGACY
JMC ENGINEERS & ASSOCIATES
WILLIAM KOENIG
PO BOX 244
LAKE MILLS, WI 53551
608-628-0575
JMC140@FRONTIER.COM

ATC MANAGEMENT, INC.
MIKE OLSEN
801 O'KEEFE ROAD
PO BOX 6113
DE PERE, WI 54115
920-338-6582
MOLSEN@ATCLLC.COM

ALLIANT ENERGY (ELECTRICITY)
JASON HOGAN
4902 N BILTMORE LANE, SUITE 1000
MADISON, WI 53718
608-458-4871
JASONHOGAN@ALLIANTENERGY.COM

ALLIANT ENERGY (GAS/PETROLEUM)
JASON HOGAN
4902 N BILTMORE LANE, SUITE 1000
MADISON, WI 53718
608-458-4871
JASONHOGAN@ALLIANTENERGY.COM

CHARTER COMMUNICATIONS
BRANDON STORM
2701 DANIELS STREET
MADISON, WI 53718
608-274-3822
BRANDON.STORM@CHARTERCOM.COM

FRONTIER NORTH INC.
ROBERT CHURCH
2222 WEST WISCONSIN STREET
PORTAGE, WI 53901
608-742-1817
ROBERT.CHURCH@FTR.COM

MERRIMAC COMMUNICATIONS LTD
KIRK OLSON
327 PALLISADES STREET
MERRIMAC, WI 53561
608-493-2291
KOLSON@MERR.COM

NORTHERN NATURAL GAS COMPANY
JIM CARLSON
8101 BIRCHWOOD COURT, SUITE F
JOHNSTON, IA 50131
515-226-2016
JIM.CARLSON@NNGCO.COM

WISDOT
JEFF MADSON
433 W. ST. PAUL AVENUE, SUITE 300
MILWAUKEE, WI 53203
414-225-3723
JEFFERY.MADSON@DOT.WI.GOV

PORTAGE WATER UTILITY
BOB REDELINGS
115 WEST PLEASANT STREET
PORTAGE, WI 53901
608-742-2176
BOB.REDELINGS@PORTAGEWI.GOV

DNR AREA LIAISON

CATHY BLESER
DEPARTMENT OF NATURAL RESOURCES
3911 FISH HATCHERY ROAD
FITCHBURG, WI 53711
(608) 275-3308
CATHY.BLESER@DNR.WI.GOV

DESIGN CONTACT

CONSULTANT PROJECT MANAGER
MIKE SCARMON, P.E.
KL ENGINEERING, INC.
5950 SEMINOLE CENTRE COURT, SUITE 200
MADISON, WI 53711
(608) 663-1218
MSCARMON@KLENGINEERING.COM

WISDOT CONTACT

DEPARTMENT PROJECT MANAGER
LALITHA BALACHANDRAN, P.E.
WISDOT SOUTHWEST REGION
2101 WRIGHT STREET
MADISON, WI 53704
(608) 243-3382
LALITHA.BALACHANDRAN@DOT.WI.GOV

ORDER OF SECTION 2 DETAIL SHEETS

GENERAL NOTES
PROJECT OVERVIEW
TYPICAL SECTIONS
CONSTRUCTION DETAILS
SIGNING
TRAFFIC CONTROL
ALIGNMENT DIAGRAM

ABBREVIATIONS

AEW	APRON ENDWALL
AGG	AGGREGATE
BAD	BASE AGGREGATE DENSE
BM	BENCH MARK
C&G	CURB AND GUTTER
C/L	CENTER OR CONSTRUCTION LINE
CMCP	CULVERT PIPE CORRUGATED METAL
CONC	CONCRETE
CP	CULVERT PIPE
CPRC	CULVERT PIPE REINFORCED CONCRETE
CSD	CONCRETE SURFACE DRAIN
CY	CUBIC YARD
D	DEGREE OF CURVE
Δ	DELTA
DISCH	DISCHARGE
EAT	ENERGY ABSORBING TERMINAL
FE	FIELD ENTRANCE
HMA	HOT MIX ASPHALT
INV	INVERT
L	LENGTH OF CURVE
LHF	LEFT HAND FORWARD
LT	LEFT
MIN	MINIMUM
M/L	MATCHLINE
NB	NORTHBOUND
NC	NORMAL CROWN
PAVT	PAVEMENT
PC	POINT OF CURVE
PCC	POINT OF COMPOUND CURVE
PE	PRIVATE ENTRANCE
PI	POINT OF INTERSECTION
PLE	PERMANENT LIMITED EASEMENT
PT	POINT OF TANGENT
R	RADIUS OF CURVE
R/L	REFERENCE LINE
R/W	RIGHT OF WAY
RC	REVERSE CROWN
RCAEW	APRON ENDWALL FOR CULVERT PIPE REINFORCED CONCRETE
REQD	REQUIRED
RHF	RIGHT HAND FORWARD
RO	RUN OFF LENGTH
RRSP	RAILROAD SPIKE
RT	RIGHT
SALV	SALVAGED
SAPBC	SALVAGED ASPHALTIC PAVEMENT BASE COURSE
SB	SOUTHBOUND
SDD	STANDARD DETAIL DRAWINGS
SE	SUPER ELEVATION
SF	SQUARE FOOT
SSPRC	STORM SEWER PIPE REINFORCED CONCRETE
STA	STATION
SY	SQUARE YARD
T	TANGENT LENGTH
TLE	TEMPORARY LIMITED EASEMENT
VCL	VERTICAL CURVE LENGTH
VPC	POINT OF VERTICAL CURVE
VPI	POINT OF VERTICAL INTERSECTION
VPT	POINT OF VERTICAL TANGENT

GENERAL NOTES

CURVE DATA IS BASED ON THE ARC DEFINITION.

WHEN THE QUANTITIY OF THE ITEMS OF BASE AGGREGATE, OR HMA IS MEASURED FOR PAYMENT BY THE TON OR CUBIC YARD, THE DEPTH OR THICKNESS OF THE LAYERS SHOWN ON THE PLAN IS APPROXIMATE AND THE ACTUAL THICKNESS WILL DEPEND ON THE DISTRIBUTION OF THE MATERIAL AS DIRECTED BY THE ENGINEER.

THE LOCATIONS OF EXISTING AND PROPOSED UTILITY INSTALLATIONS AS SHOWN ON THE PLANS ARE APPROXIMATE. THERE ARE UTILITY FACILITIES WITHIN THE PROJECT AREA THAT ARE NOT SHOWN ON THE PLANS. THE CONTRACTOR SHALL COORDINATE HIS CONSTUCTION ACTIVITIES WITH A CALL TO DIGGERS HOTLINE AND/OR A DIRECT CALL TO THE UTILITIES THAT HAVE FACILITIES IN THE AREA. NOT ALL UTILITIES ARE MEMBERS OF DIGGERS HOTLINE.

PURSUANT TO CHAPTER 59 OF THE WISCONSIN STATUTES, SEARCH FOR EVIDENCE OF A LANDMARK IN ALL AREAS WHERE SUCH A LANDMARK MAY EXIST.

REMOVAL OF ANY SURVEY MARKER REQUIRES APPROVAL OF THE ENGINEER.

STATIONING OF CONCRETE PAVEMENT REPAIR & REPLACEMENT LOCATIONS IN PLAN ARE APPROXIMATE. VERIFY LOCATIONS WITH ENGINEER.

PLAN REMOVAL AREAS ARE APPROXIMATE. EXACT LIMITS SHALL BE DETERMINED IN THE FIELD.

SAWING CONCRETE WILL BE MEASURED AND PAID FOR ONLY ONCE WHEN REPAIRS ARE ADJACENT ALONG THE C/L OF THE SB LANES (IN BOTH OUTSIDE **AND** MEDIAN LANES).

OVERSAWING INTO PAVEMENT THAT IS TO REMAIN TO FACILITATE REMOVAL OF REPAIR AREAS SHALL BE SEALED WITH AN APPROVED EPOXY. THE OVERSAWING AND EPOXY ARE INCIDENTAL TO BID ITEMS 416.1710, 416.1715, 416.1720 & 416.1725.

IN CONCRETE PAVEMENT REPLACEMENT SECTIONS, THE NEW JOINTS SHOULD MATCH ADJACENT CONCRETE JOINT. THE NEW TINING SHOULD MATCH THE ADJACENT PAVEMENT PATTERN.

THE ENGINEER WILL DETERMINE THE EXACT LOCATION OF EROSION CONTROL ITEMS. MAINTAIN ALL EROSION CONTROL MEASURES UNTIL THE ENGINEER DETERMINES THE MEASURE IS NO LONGER NECESSARY. THE CONTRACTOR WILL REMOVE EROSION CONTROL ITEMS AT THE DIRECTION OF THE ENGINEER.

DO NOT DRIVE EQUIPMENT OR STORE EQUIPMENT OR MATERIAL IN WETLANDS, WATERWAYS OR ENVIRONMENTALLY SENSITIVE AREAS ADJACENT TO THE PROJECT.

THIS PROJECT INCLUDES REPLACEMENT OF PAVEMENT MARKING ALONG IH 39 SB AND ALL OFF AND ON RAMPS TO THE SIDE ROAD INTERSECTIONS.

REPAIR AREAS IN THE OUTSIDE SHOULDER WILL BE IDENTIFIED BY THE ENGINEER IN THE FIELD AND REPAIRED PRIOR TO STAGE 1 SHOULDER AND MEDIAN LANE PROPOSED WORK.

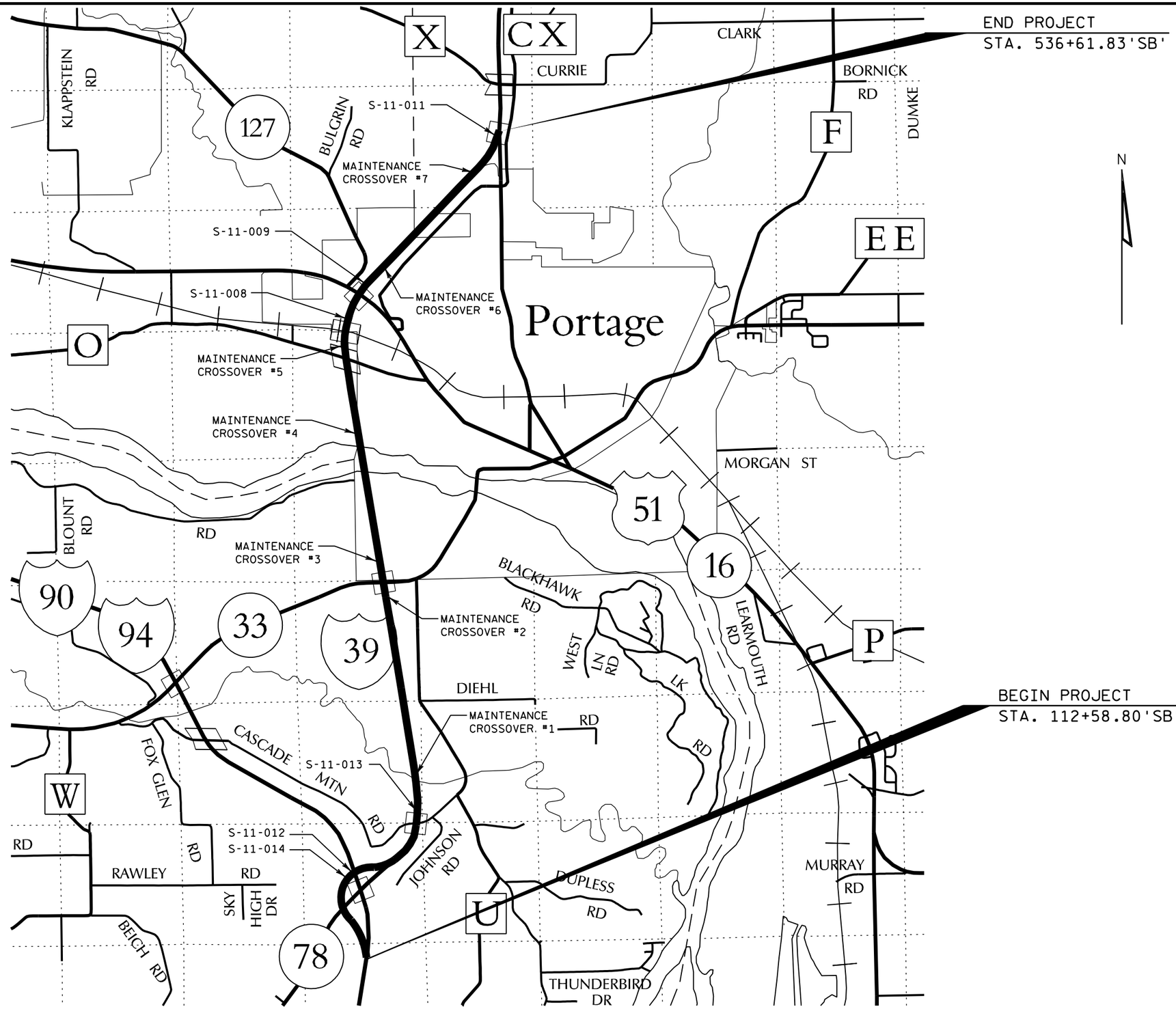

NET LENGTH OF ROADWAY (SB) = 8.031 MI.

PROJECT NO:1161-00-65	HWY:IH 39	COUNTY:COLUMBIA	PROJECT OVERVIEW	SHEET 3	E

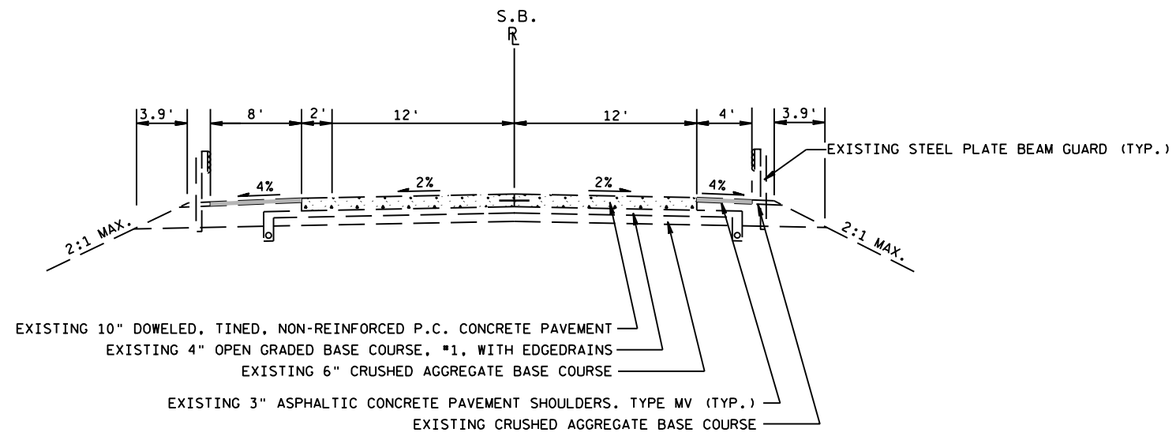

TYPICAL EXISTING SECTION, IH 39

STA. 112+58.8 SB - STA. 119+67 SB
STA. 125+54 SB - STA. 156+02 SB
STA. 160+65 SB - STA. 164+93 SB

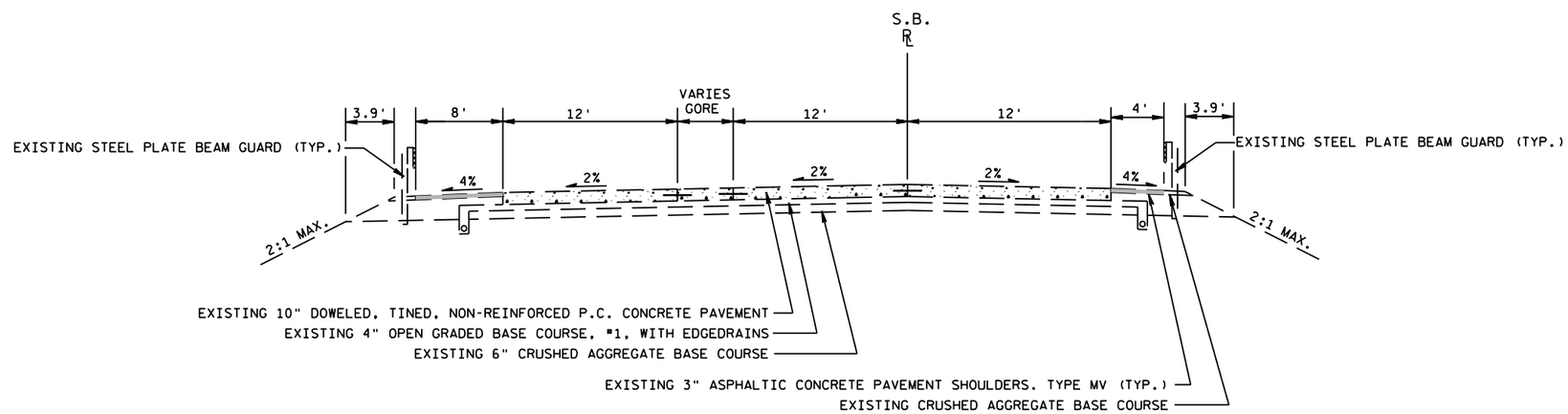

TYPICAL EXISTING SECTION, IH 39

STA. 119+67 SB - STA. 125+54 SB
STA. 156+02 SB - STA. 160+65 SB

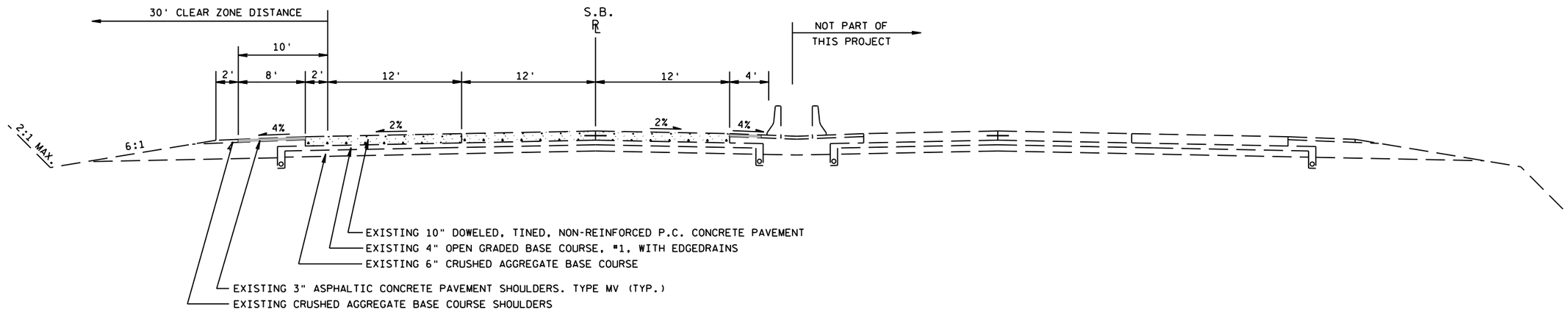

TYPICAL EXISTING SECTION, IH 39

STA. 176+98 SB - STA. 180+60 SB
STA. 185+52 SB - STA. 197+65 SB

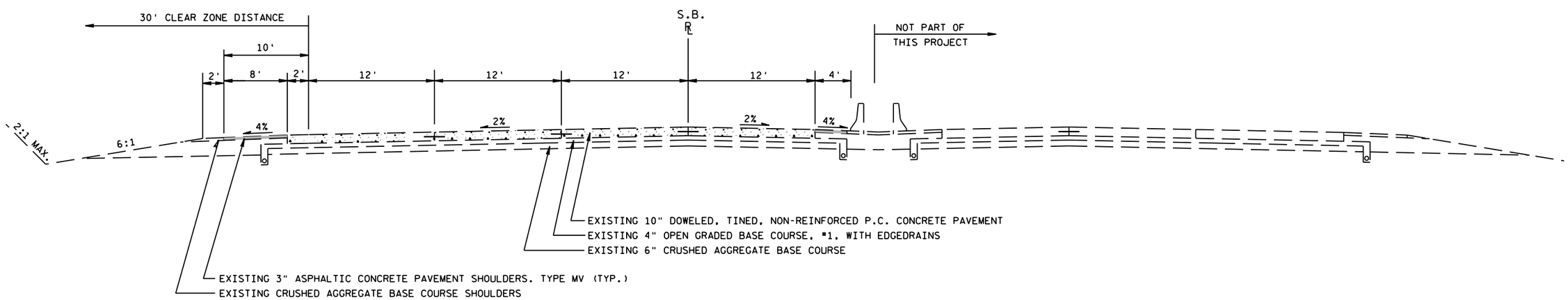

TYPICAL EXISTING SECTION, IH 39

STA. 164+93 SB - STA. 176+98 SB
STA. 180+60 SB - STA. 185+52 SB

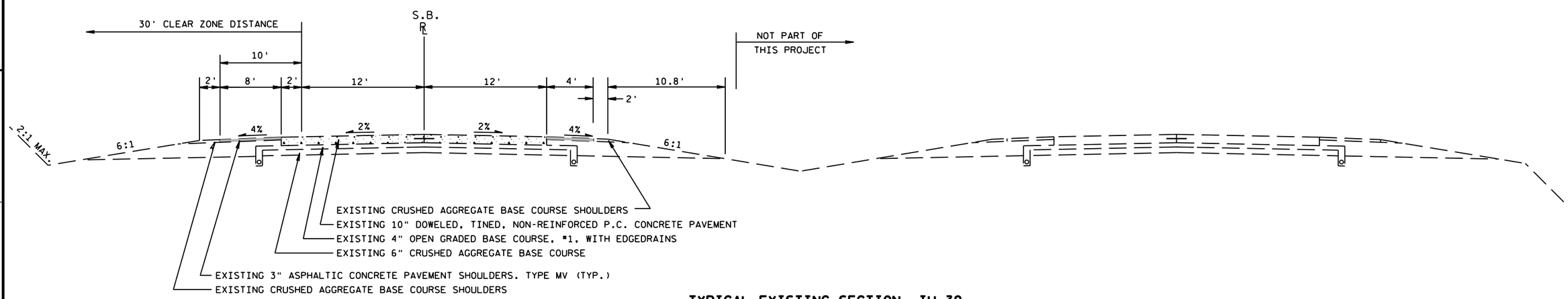

TYPICAL EXISTING SECTION, IH 39

STA. 201+61 SB - STA. 291+28 SB
STA. 295+73 SB - STA. 302+44 SB
STA. 309+35 SB - STA. 406+90 SB
STA. 411+40 SB - STA. 416+96 SB
STA. 425+85 SB - STA. 493+66 SB

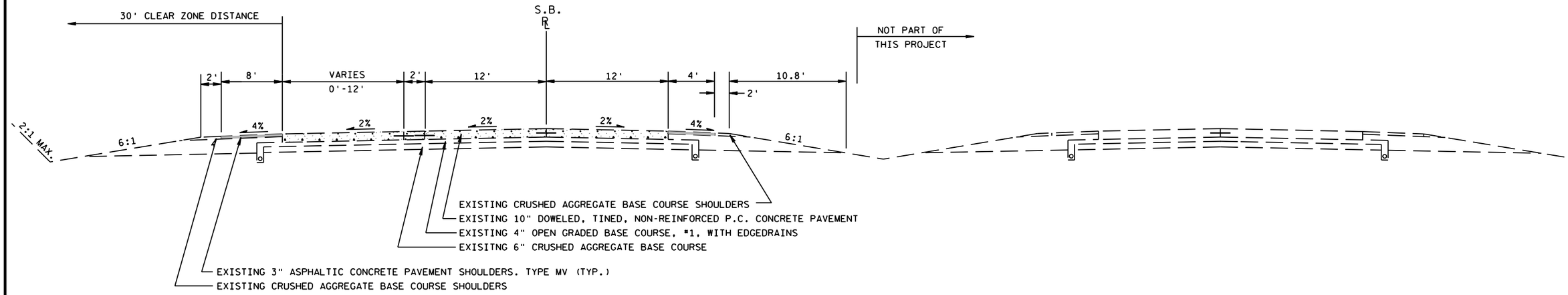

TYPICAL EXISTING SECTION, IH 39 (RAMP ACCELERATION/DECELERATION LANES)

STA. 197+65 SB - STA. 201+61 SB
STA. 291+28 SB - STA. 295+73 SB
STA. 302+44 SB - STA. 309+35 SB
STA. 406+90 SB - STA. 411+40 SB
STA. 416+96 SB - STA. 425+85 SB
STA. 493+66 SB - STA. 500+30.8 SB

PROJECT NO:1161-00-65	HWY:IH 39	COUNTY: COLUMBIA	TYPICAL SECTIONS	SHEET 6	E

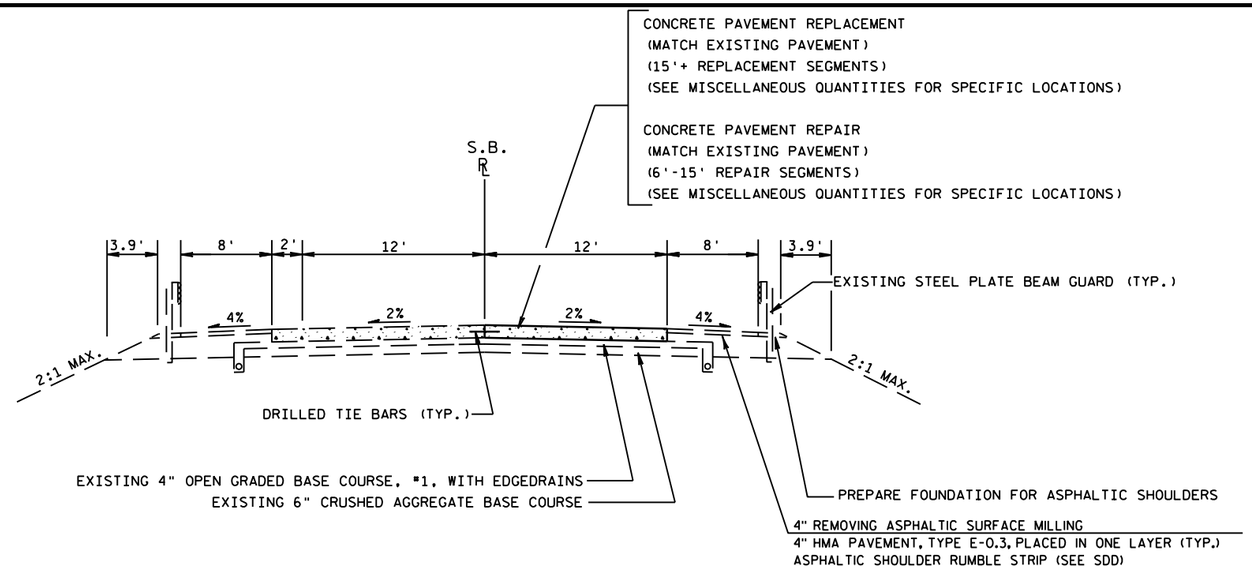

TYPICAL FINISHED SECTION, IH 39

STA. 112+58.8 SB - STA. 119+67 SB
STA. 125+54 SB - STA. 156+02 SB
STA. 160+65 SB - STA. 164+93 SB

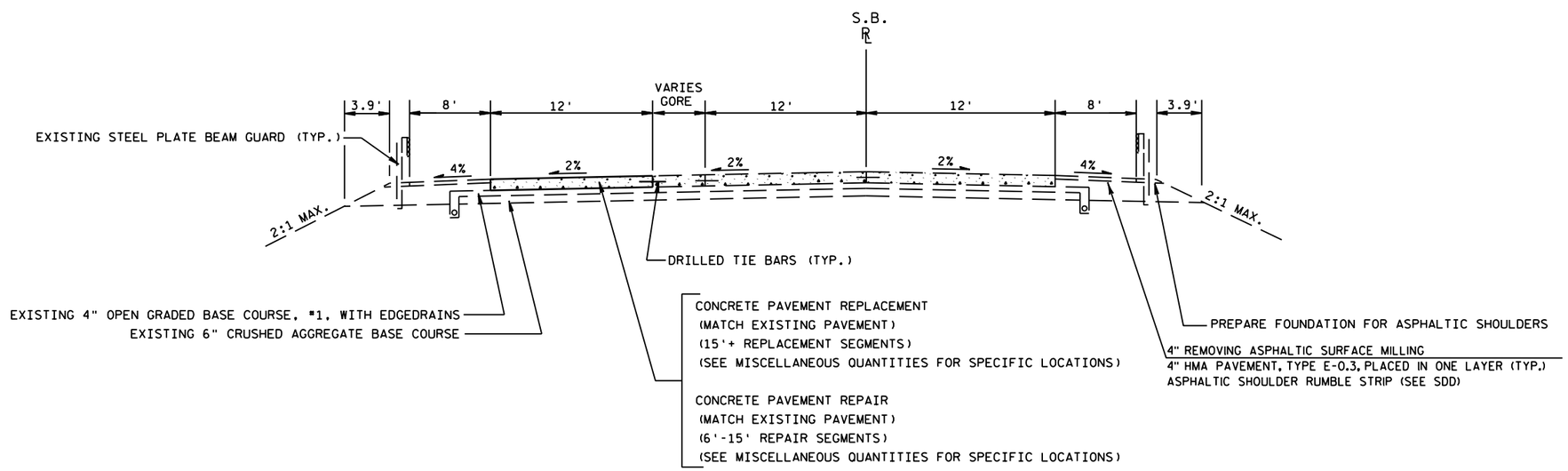

TYPICAL FINISHED SECTION, IH 39

STA. 119+67 SB - STA. 125+54 SB
STA. 156+02 SB - STA. 160+65 SB

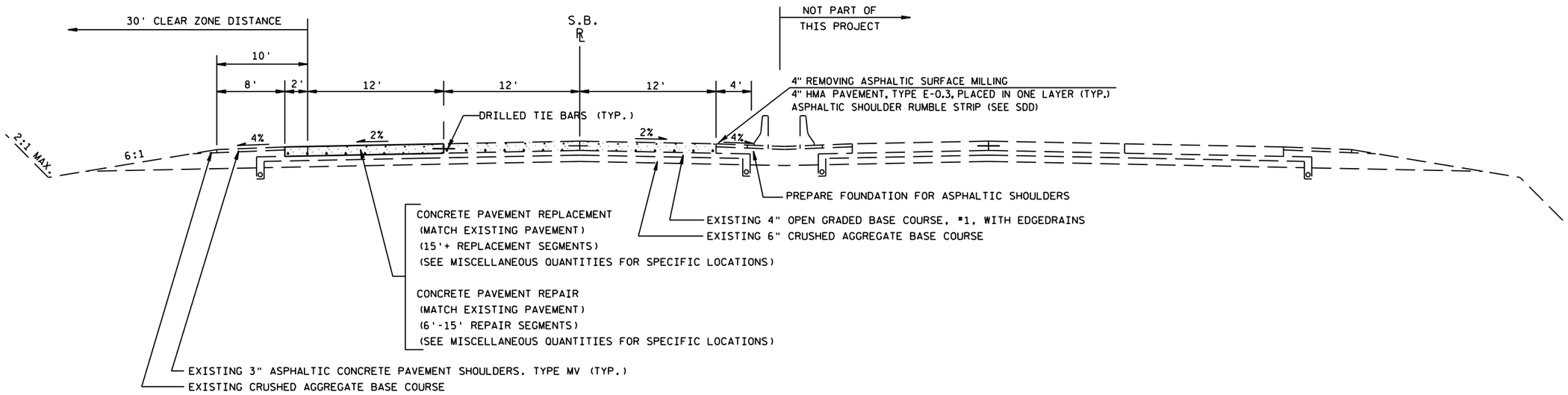

TYPICAL FINISHED SECTION, IH 39

STA. 176+98 SB - STA. 180+60 SB
STA. 185+52 SB - STA. 197+65 SB

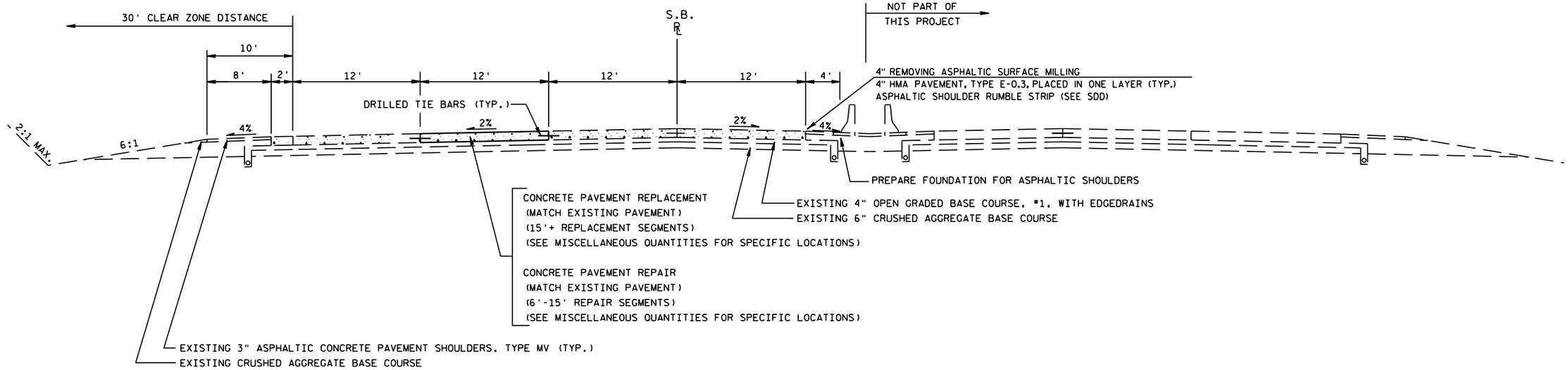

TYPICAL FINISHED SECTION, IH 39

STA. 164+93 SB - STA. 176+98 SB
STA. 180+60 SB - STA. 185+52 SB

PROJECT NO:1161-00-65	HWY:IH 39	COUNTY: COLUMBIA	TYPICAL SECTIONS	SHEET 8	E

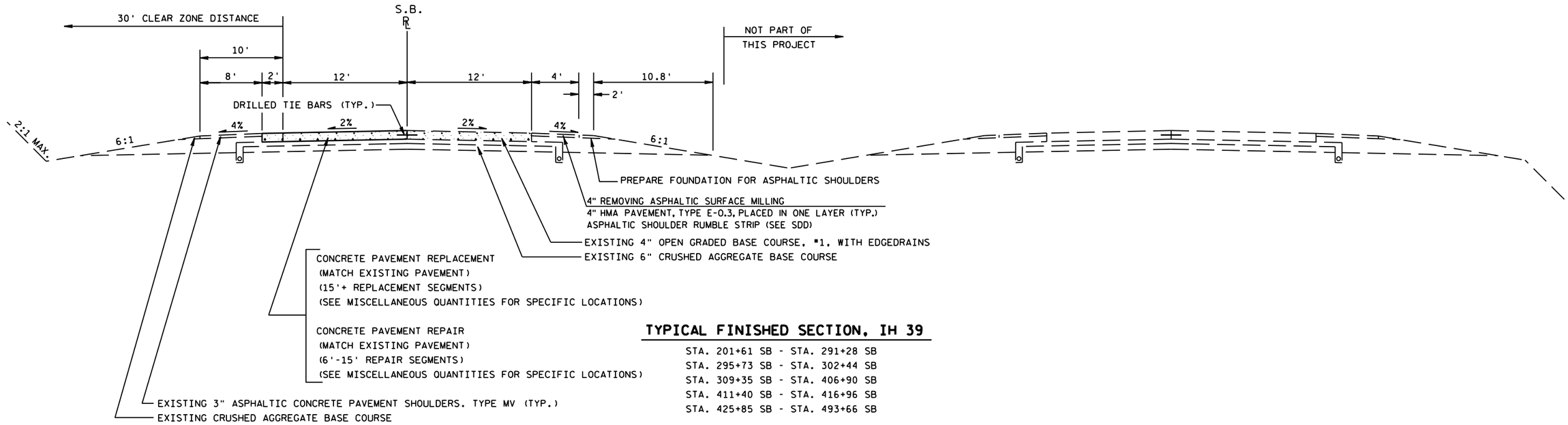

TYPICAL FINISHED SECTION, IH 39

STA. 201+61 SB - STA. 291+28 SB
STA. 295+73 SB - STA. 302+44 SB
STA. 309+35 SB - STA. 406+90 SB
STA. 411+40 SB - STA. 416+96 SB
STA. 425+85 SB - STA. 493+66 SB

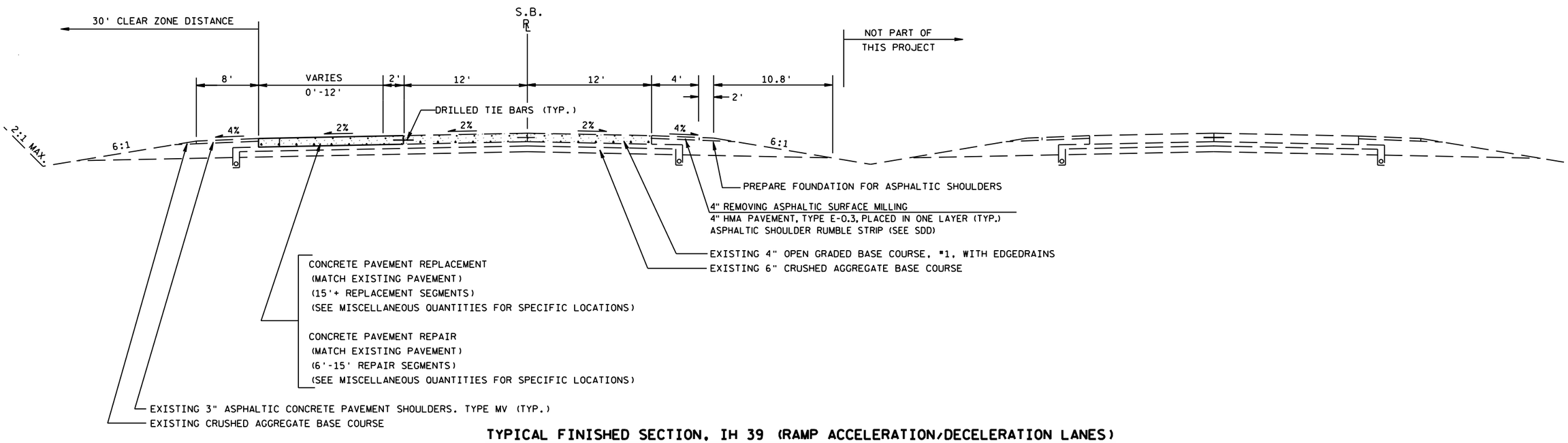

TYPICAL FINISHED SECTION, IH 39 (RAMP ACCELERATION/DECELERATION LANES)

STA. 197+65 SB - STA. 201+61 SB
STA. 291+28 SB - STA. 295+73 SB
STA. 302+44 SB - STA. 309+35 SB
STA. 406+90 SB - STA. 411+40 SB
STA. 416+96 SB - STA. 425+85 SB
STA. 493+66 SB - STA. 500+30.8 SB

PROJECT NO: 1161-00-65	HWY: IH 39	COUNTY: COLUMBIA	TYPICAL SECTIONS	SHEET 9	E

2

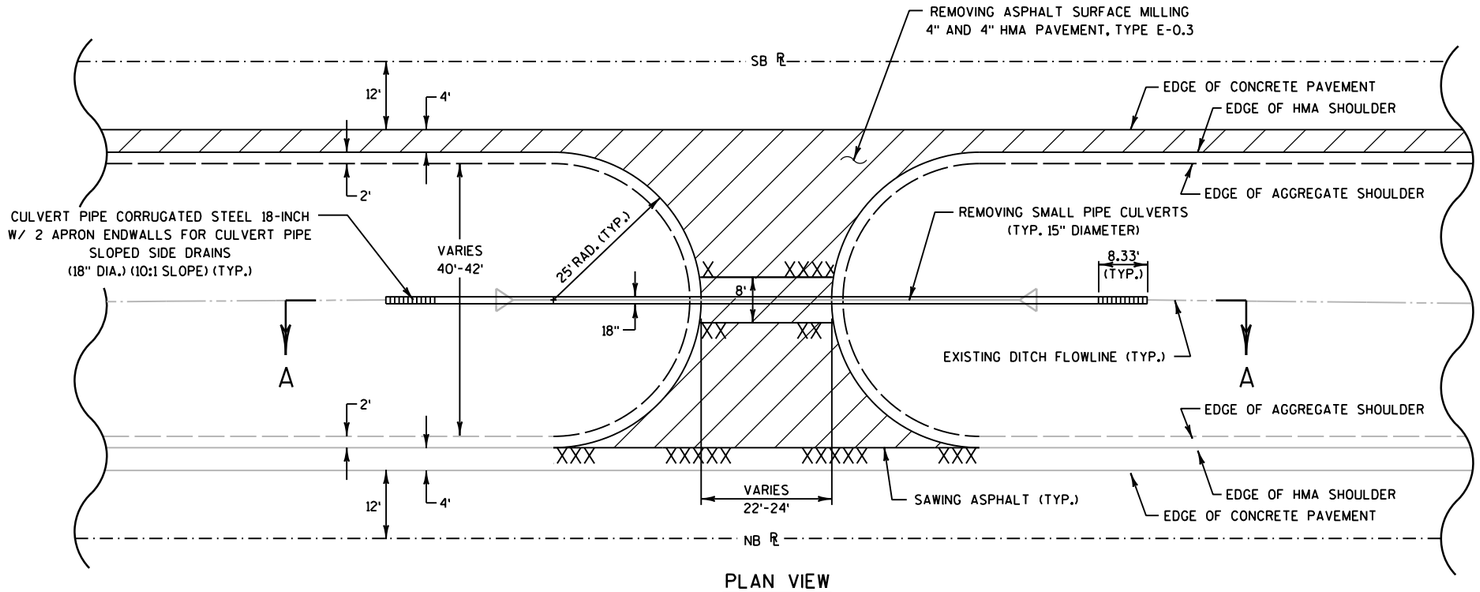

PLAN VIEW

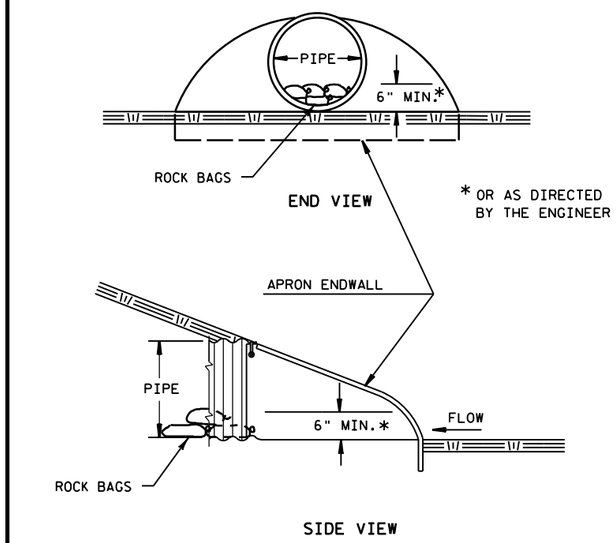

CULVERT PIPE CHECKS

AT INLET LOCATIONS

2

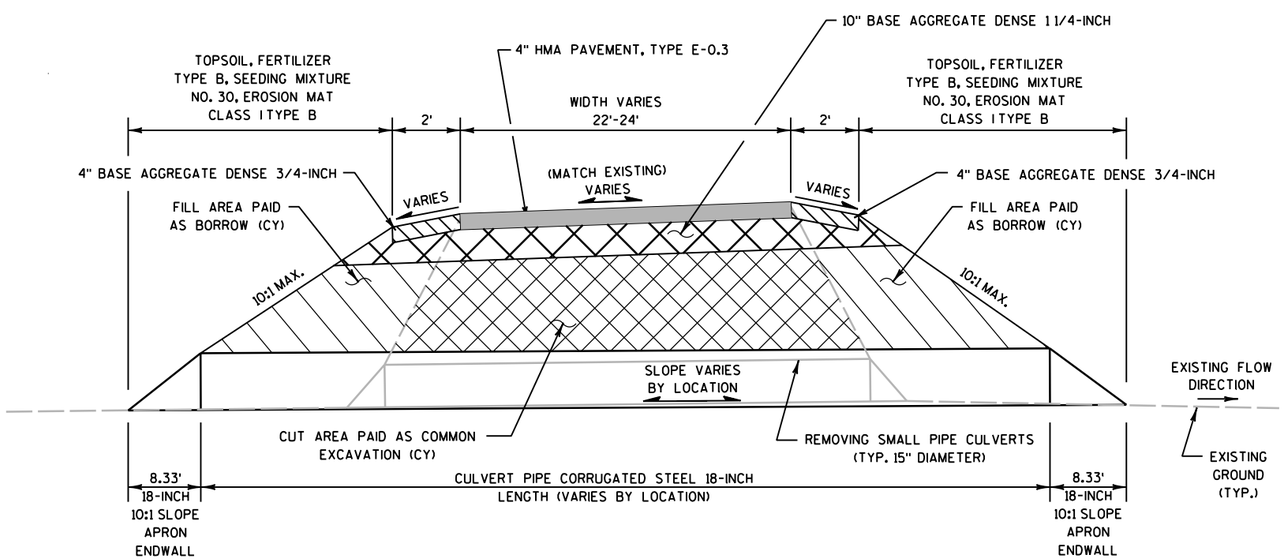

SECTION A-A

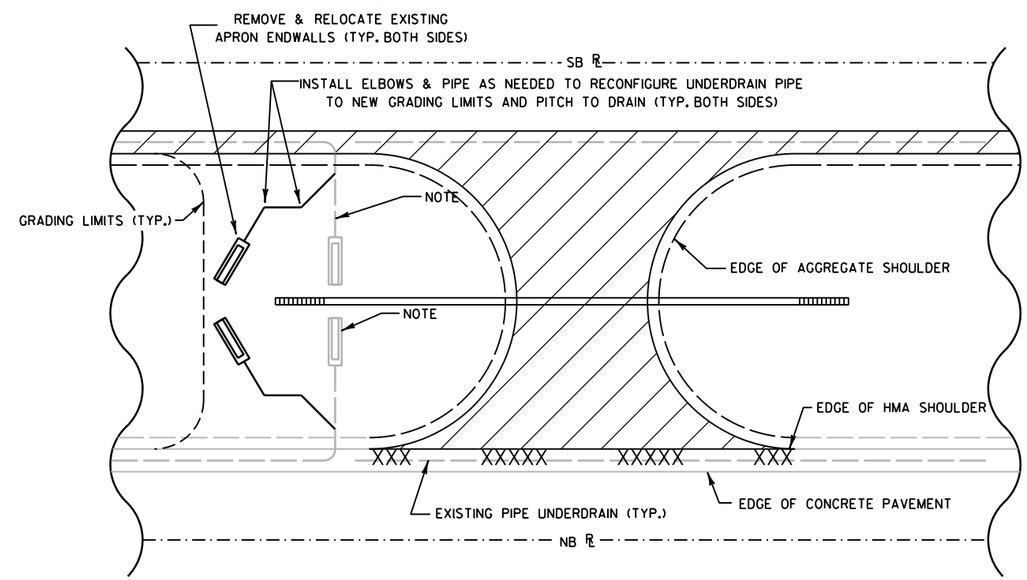

EDGEDRAIN DETAIL

NOTE:

INSTALL ALL UNDERDRAIN PIPE & APRON ENDWALLS IN ACCORDANCE WITH S.D.D. "EDGEDRAIN OUTLET OUTFALL MARKERS".
ALL WORK INCIDENTAL TO BID ITEM "RECONFIGURE EDGEDRAIN PIPE".

TYPICAL MAINTENANCE CROSSOVER DETAIL

(SEE INDIVIDUAL LOCATION DETAIL SHEETS)

PROJECT NO:1161-00-65	HWY:IH 39	COUNTY:COLUMBIA	CONSTRUCTION DETAILS	SHEET 10	E

2

MAINTENANCE CROSSOVER #1				
SOUTH	NORTH	TOTAL		ITEM
21 CY	10 CY	31 CY	205.0100	COMMON EXCAVATION
14 CY	26 CY	40 CY	208.0100	BORROW
--	--	63 LF	521.0118	CULVERT PIPE CORRUGATED STEEL 18-INCH
224 SY	234 SY	458 SY	628.2004	EROSION MAT CLASS I TYPE B
1 EA.	1 EA.	2 EA.	204.0220	REMOVING INLETS
1 EA.	1 EA.	2 EA.	204.9060.S.01	REMOVING CONCRETE END BLOCK
20 LF	0 LF	20 LF	SPV.0090.01	RECONFIGURE EDGEDRAIN PIPE
10 TON	10 TON	20 TON	305.0110	BASE AGGREGATE DENSE 3/4-INCH
224 SY	234 SY	458 SY	625.0100	TOPSOIL
0.15 CWT	0.14 CWT	0.29 CWT	629.0210	FERTILIZER TYPE B
4 LB	4 LB	8 LB	630.0130	SEEDING MIXTURE NO. 30
1 EA.	1 EA.	2 EA.	521.1618	APRON ENDWALLS FOR CULVERT STEEL PIPE SIDE DRAIN STEEL 18-INCH 10:1
--	--	1 EA	203.0100	REMOVING SMALL PIPE CULVERTS
--	--	110 LF	690.0150	SAWING ASPHALT
--	--	4 GAL	455.0605	TACK COAT
--	--	2 TON	455.0105	ASPHALTIC MATERIAL PG58-28
--	--	33 TON	460.1100	HMA PAVEMENT TYPE E-0.3
--	--	150 SY	204.0120	REMOVING ASPHALTIC SURFACE MILLING
--	--	15 TON	305.0120	BASE AGGREGATE DENSE 1 1/4-INCH
1	1	2	628.7555	CULVERT PIPE CHECKS

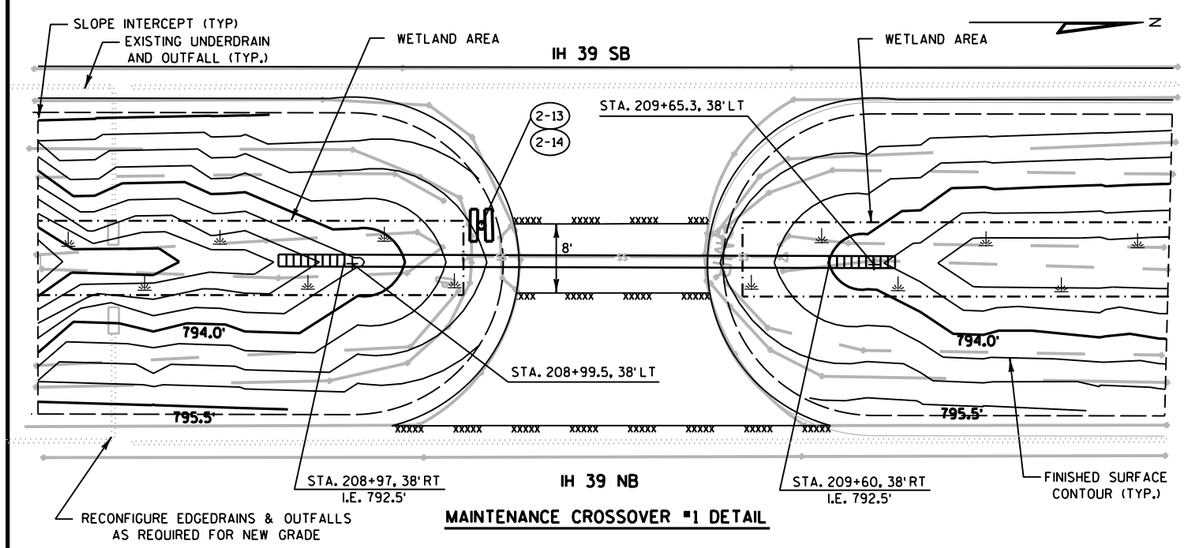

MAINTENANCE CROSSOVER #1 DETAIL

MAINTENANCE CROSSOVER #2				
SOUTH	NORTH	TOTAL		ITEM
24 CY	14 CY	38 CY	205.0100	COMMON EXCAVATION
10 CY	12 CY	22 CY	208.0100	BORROW
--	--	52 LF	521.0118	CULVERT PIPE CORRUGATED STEEL 18-INCH
214 SY	208 SY	422 SY	628.2004	EROSION MAT CLASS I TYPE B
0 EA.	0 EA.	0 EA.	204.0220	REMOVING INLETS
0 EA.	0 EA.	0 EA.	204.9060.S.01	REMOVING CONCRETE END BLOCK
96 LF	0 LF	96 LF	SPV.0090.01	RECONFIGURE EDGEDRAIN PIPE
10 TON	10 TON	20 TON	305.0110	BASE AGGREGATE DENSE 3/4-INCH
214 SY	208 SY	422 SY	625.0100	TOPSOIL
0.13 CWT	0.13 CWT	0.26 CWT	629.0210	FERTILIZER TYPE B
4 LB	4 LB	8 LB	630.0130	SEEDING MIXTURE NO. 30
1 EA.	1 EA.	2 EA.	521.1618	APRON ENDWALLS FOR CULVERT STEEL PIPE SIDE DRAIN STEEL 18-INCH 10:1
--	--	1 EA	203.0100	REMOVING SMALL PIPE CULVERTS
--	--	110 LF	690.0150	SAWING ASPHALT
--	--	4 GAL	455.0605	TACK COAT
--	--	2 TON	455.0105	ASPHALTIC MATERIAL PG58-28
--	--	33 TON	460.1100	HMA PAVEMENT TYPE E-0.3
--	--	150 SY	204.0120	REMOVING ASPHALTIC SURFACE MILLING
--	--	15 TON	305.0120	BASE AGGREGATE DENSE 1 1/4-INCH
1	1	2	628.7555	CULVERT PIPE CHECKS

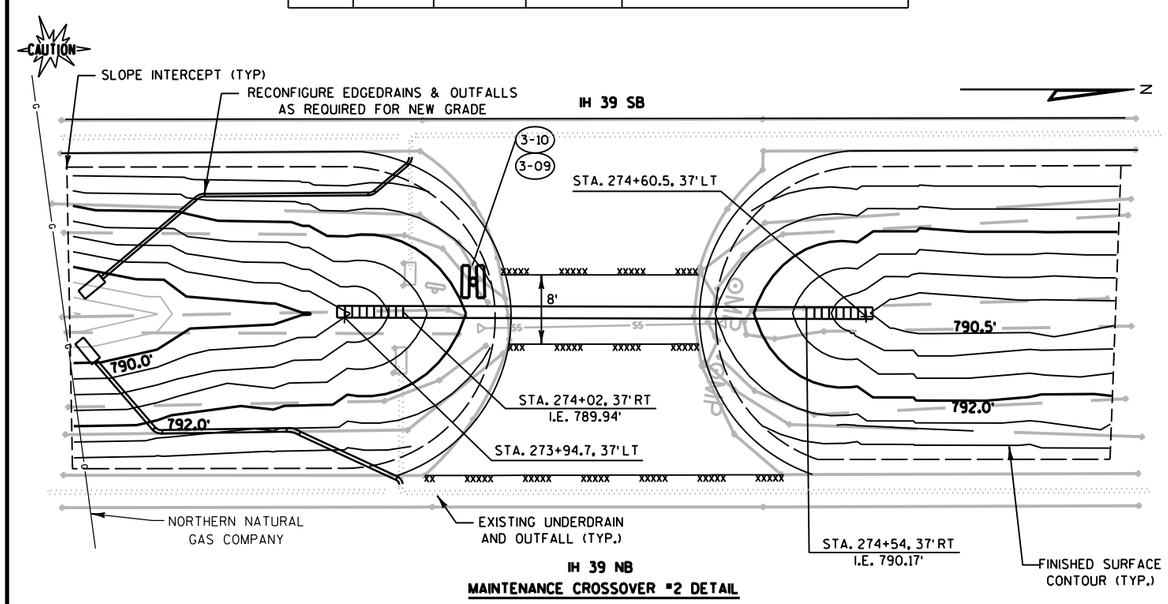

MAINTENANCE CROSSOVER #2 DETAIL

2

PROJECT NO: 1161-00-65	HWY: IH 39	COUNTY: COLUMBIA	CONSTRUCTION DETAILS	SHEET 11	E

2

MAINTENANCE CROSSOVER #3				
SOUTH	NORTH	TOTAL		ITEM
10 CY	10 CY	20 CY	205.0100	COMMON EXCAVATION
10 CY	10 CY	20 CY	208.0100	BORROW
--	--	0 LF	521.0118	CULVERT PIPE CORRUGATED STEEL 18-INCH
62 SY	63 SY	125 SY	628.2004	EROSION MAT CLASS I TYPE B
0 EA.	0 EA.	0 EA.	204.0220	REMOVING INLETS
0 EA.	0 EA.	0 EA.	204.9060.S.01	REMOVING CONCRETE END BLOCK
0 LF	0 LF	0 LF	SPV.0090.01	RECONFIGURE EDGEDRAIN PIPE
10 TON	10 TON	20 TON	305.0110	BASE AGGREGATE DENSE 3/4-INCH
62 SY	63 SY	125 SY	625.0100	TOPSOIL
0.04 CWT	0.04 CWT	0.08 CWT	629.0210	FERTILIZER TYPE B
1 LB	1 LB	2 LB	630.0130	SEEDING MIXTURE NO. 30
0 EA.	0 EA.	0 EA.	521.1618	APRON ENDWALLS FOR CULVERT STEEL PIPE SIDE DRAIN STEEL 18-INCH 10:1
--	--	0 EA	203.0100	REMOVING SMALL PIPE CULVERTS
--	--	60 LF	690.0150	SAWING ASPHALT
--	--	4 GAL	455.0605	TACK COAT
--	--	2 TON	455.0105	ASPHALTIC MATERIAL PG58-28
--	--	33 TON	460.1100	HMA PAVEMENT TYPE E-0.3
--	--	150 SY	204.0120	REMOVING ASPHALTIC SURFACE MILLING
--	--	0 TON	305.0120	BASE AGGREGATE DENSE 1 1/4-INCH

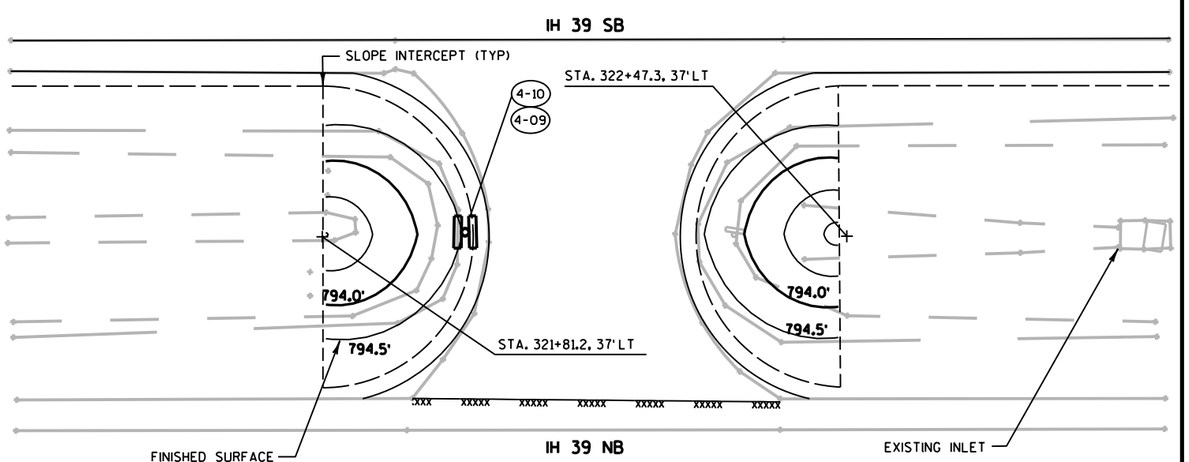

MAINTENANCE CROSSOVER #3 DETAIL

MAINTENANCE CROSSOVER #4				
SOUTH	NORTH	TOTAL		ITEM
10 CY	10 CY	20 CY	205.0100	COMMON EXCAVATION
10 CY	10 CY	20 CY	208.0100	BORROW
--	--	57 LF	521.0118	CULVERT PIPE CORRUGATED STEEL 18-INCH
96 SY	132 SY	228 SY	628.2004	EROSION MAT CLASS I TYPE B
0 EA.	0 EA.	0 EA.	204.9060.S.01	REMOVING CONCRETE END BLOCK
20 LF	0 LF	20 LF	SPV.0090.01	RECONFIGURE EDGEDRAIN PIPE
10 TON	10 TON	20 TON	305.0110	BASE AGGREGATE DENSE 3/4-INCH
96 SY	132 SY	228 SY	625.0100	TOPSOIL
0.06 CWT	0.08 CWT	0.14 CWT	629.0210	FERTILIZER TYPE B
2 LB	2 LB	4 LB	630.0130	SEEDING MIXTURE NO. 30
1 EA.	1 EA.	2 EA.	521.1618	APRON ENDWALLS FOR CULVERT STEEL PIPE SIDE DRAIN STEEL 18-INCH 10:1
--	--	1 EA	203.0100	REMOVING SMALL PIPE CULVERTS
--	--	110 LF	690.0150	SAWING ASPHALT
--	--	4 GAL	455.0605	TACK COAT
--	--	2 TON	455.0105	ASPHALTIC MATERIAL PG58-28
--	--	33 TON	460.1100	HMA PAVEMENT TYPE E-0.3
--	--	150 SY	204.0120	REMOVING ASPHALTIC SURFACE MILLING
--	--	15 TON	305.0120	BASE AGGREGATE DENSE 1 1/4-INCH
1 EA.	0 EA.	1 EA.	611.3901	INLETS MEDIAN 1 GRATE
1 EA.	0 EA.	1 EA.	611.0642	INLET COVERS TYPE MS
1 EA.	0 EA.	1 EA.	628.7010	INLET PROTECTION TYPE B
1	1	2	628.7555	CULVERT PIPE CHECKS

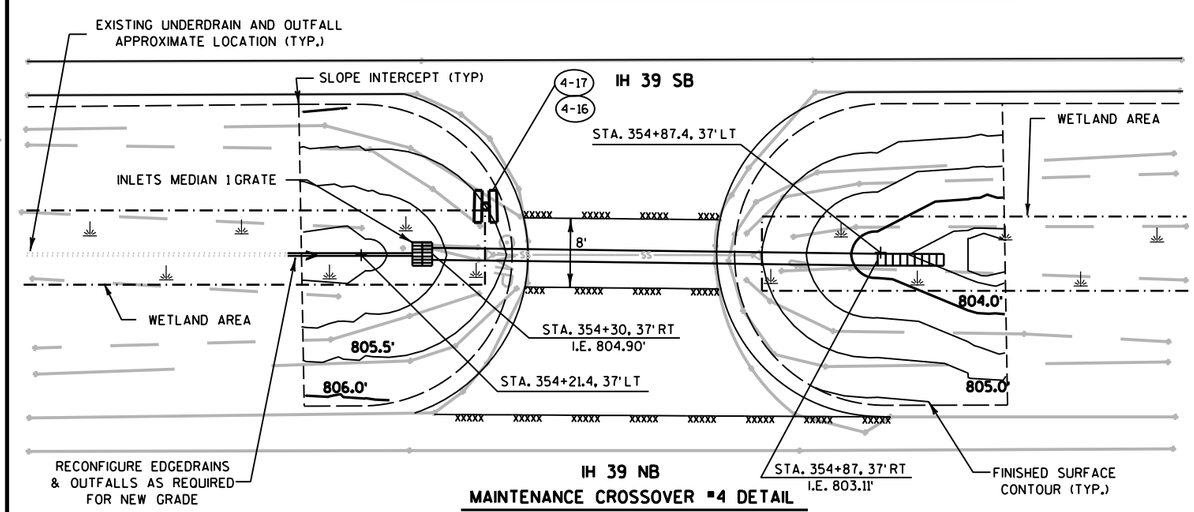

MAINTENANCE CROSSOVER #4 DETAIL

2

PROJECT NO: 1161-00-65	HWY: IH 39	COUNTY: COLUMBIA	CONSTRUCTION DETAILS	SHEET 12	E

MAINTENANCE CROSSOVER #5				
SOUTH	NORTH	TOTAL		ITEM
10 CY	10 CY	20 CY	205.0100	COMMON EXCAVATION
30 CY	10 CY	40 CY	208.0100	BORROW
--	--	101 LF	521.0118	CULVERT PIPE CORRUGATED STEEL 18-INCH
265 SY	147 SY	412 SY	628.2004	EROSION MAT CLASS I TYPE B
1 EA.	1 EA.	2 EA.	204.0220	REMOVING INLETS
1 EA.	1 EA.	2 EA.	204.9060.S.01	REMOVING CONCRETE END BLOCK
0 LF	0 LF	0 LF	SPV.0090.01	RECONFIGURE EDGEDRAIN PIPE
10 TON	10 TON	20 TON	305.0110	BASE AGGREGATE DENSE 3/4-INCH
265 SY	147 SY	412 SY	625.0100	TOPSOIL
0.17 CWT	0.09 CWT	0.26 CWT	629.0210	FERTILIZER TYPE B
5 LB	3 LB	8 LB	630.0130	SEEDING MIXTURE NO. 30
1 EA.	1 EA.	2 EA.	521.1618	APRON ENDWALLS FOR CULVERT STEEL PIPE SIDE DRAIN STEEL 18-INCH 10:1
--	--	1 EA	203.0100	REMOVING SMALL PIPE CULVERTS
--	--	110 LF	690.0150	SAWING ASPHALT
--	--	4 GAL	455.0605	TACK COAT
--	--	2 TON	455.0105	ASPHALTIC MATERIAL PG58-28
--	--	33 TON	460.1100	HMA PAVEMENT TYPE E-0.3
--	--	150 SY	204.0120	REMOVING ASPHALTIC SURFACE MILLING
--	--	15 TON	305.0120	BASE AGGREGATE DENSE 1 1/4-INCH
1	1	2	628.7555	CULVERT PIPE CHECKS

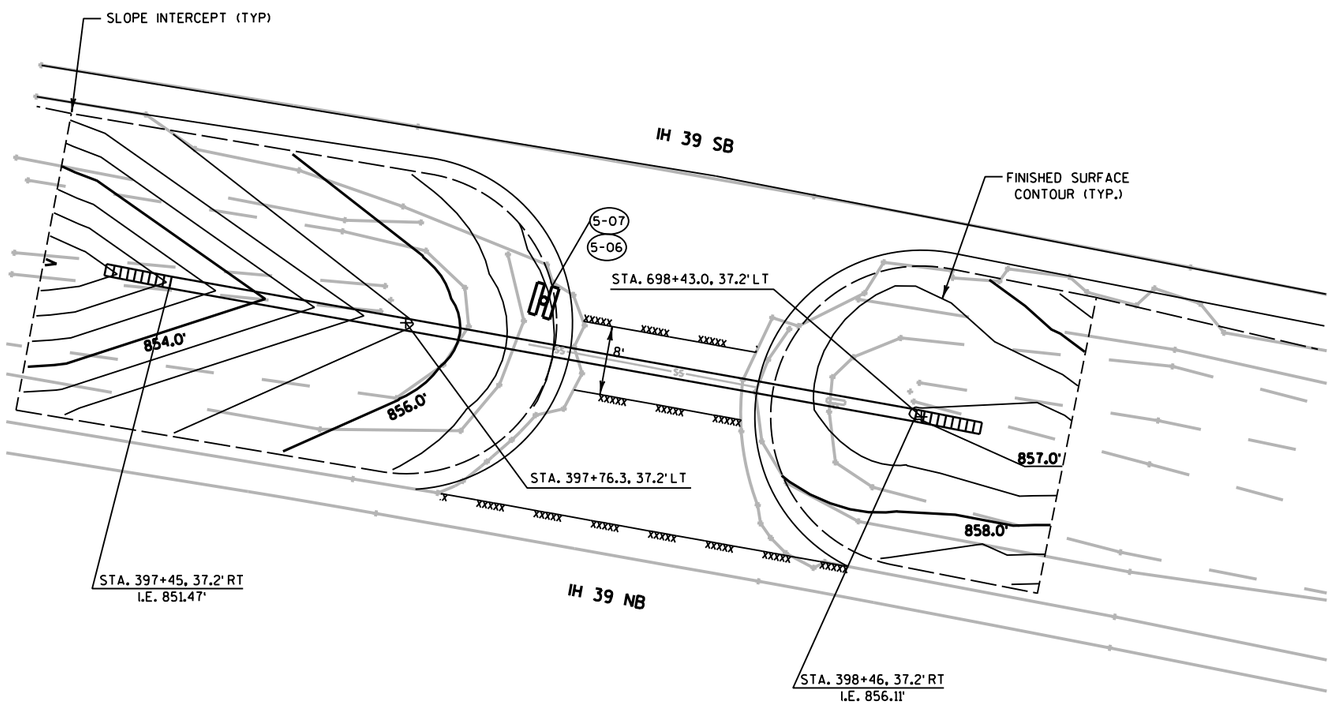

MAINTENANCE CROSSOVER #5 DETAIL

N

PROJECT NO: 1161-00-65	HWY: IH 39	COUNTY: COLUMBIA	CONSTRUCTION DETAILS	SHEET 13	E

FILE NAME : G:\WDOTCO\12029 (2012-2014 design work orders)\Work Order 04 (IH 39 Pavement Repairs)\DGN\PLAN SHEETS\021001_cd.dgn PLOT DATE : 4/11/2014 PLOT BY : KL Engineering PLOT NAME : PLOT SCALE :

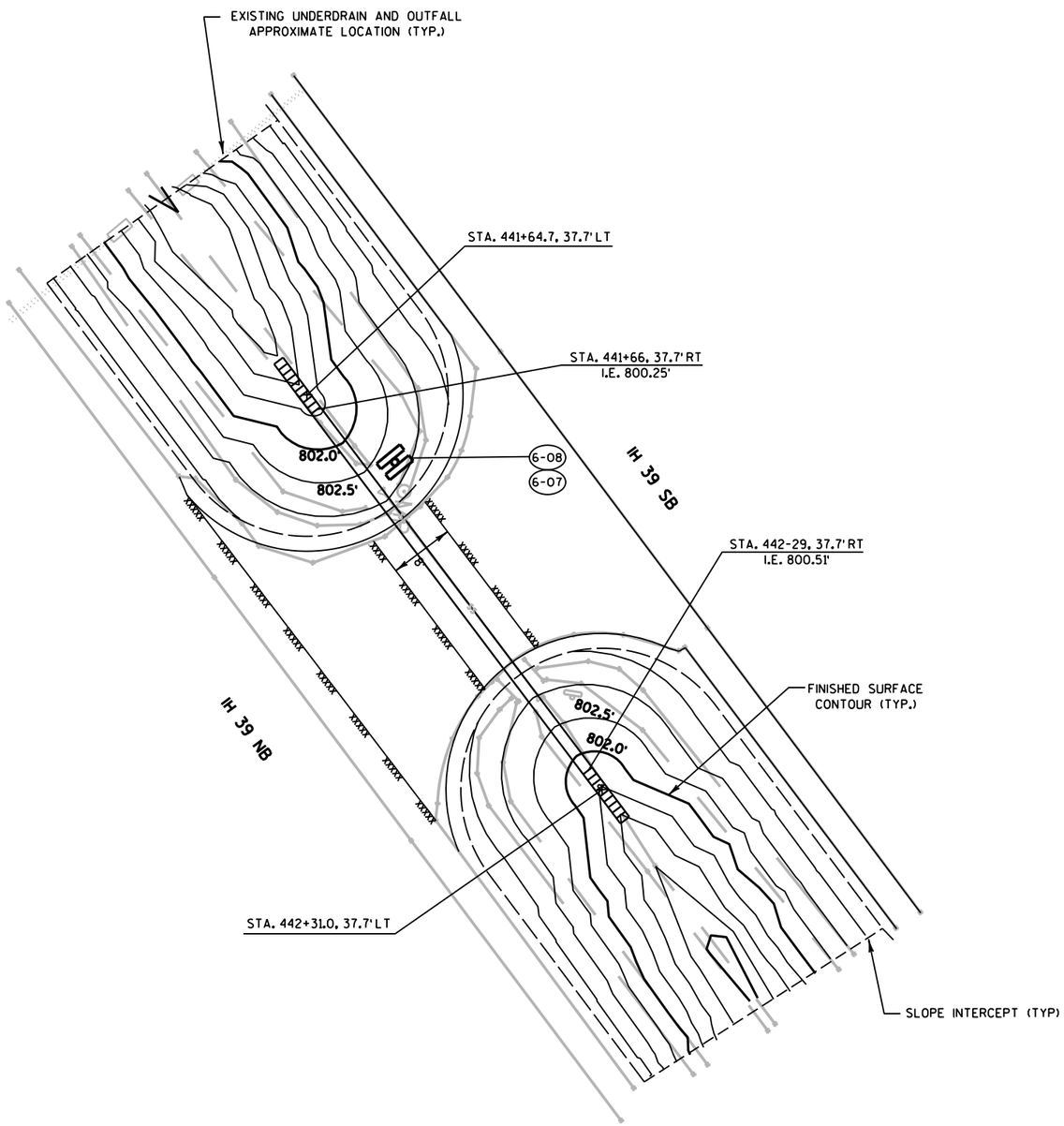

MAINTENANCE CROSSOVER #6 DETAIL

MAINTENANCE CROSSOVER #6				
SOUTH	NORTH	TOTAL		ITEM
12 CY	24 CY	36 CY	205.0100	COMMON EXCAVATION
14 CY	12 CY	26 CY	208.0100	BORROW
--	--	63 LF	521.0118	CULVERT PIPE CORRUGATED STEEL 18-INCH
213 SY	224 SY	437 SY	628.2004	EROSION MAT CLASS I TYPE B
0 EA.	1 EA.	1 EA.	204.0220	REMOVING INLETS
0 EA.	1 EA.	1 EA.	204.9060.S.01	REMOVING CONCRETE END BLOCK
30 LF	0 LF	30 LF	SPV.0090.01	RECONFIGURE EDGEDRAIN PIPE
10 TON	10 TON	20 TON	305.0110	BASE AGGREGATE DENSE 3/4-INCH
213 SY	224 SY	437 SY	625.0100	TOPSOIL
0.13 CWT	0.14 CWT	0.27 CWT	629.0210	FERTILIZER TYPE B
4 LB	4 LB	8 LB	630.0130	SEEDING MIXTURE NO. 30
1 EA.	1 EA.	2 EA.	521.1618	APRON ENDWALLS FOR CULVERT STEEL PIPE SIDE DRAIN STEEL 18-INCH 10:1
--	--	1 EA	203.0100	REMOVING SMALL PIPE CULVERTS
--	--	110 LF	690.0150	SAWING ASPHALT
--	--	4 GAL	455.0605	TACK COAT
--	--	2 TON	455.0105	ASPHALTIC MATERIAL PG58-28
--	--	33 TON	460.1100	HMA PAVEMENT TYPE E-0.3
--	--	150 SY	204.0120	REMOVING ASPHALTIC SURFACE MILLING
--	--	15 TON	305.0120	BASE AGGREGATE DENSE 1 1/4-INCH
1	1	2	628.7555	CULVERT PIPE CHECKS

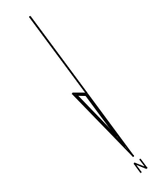

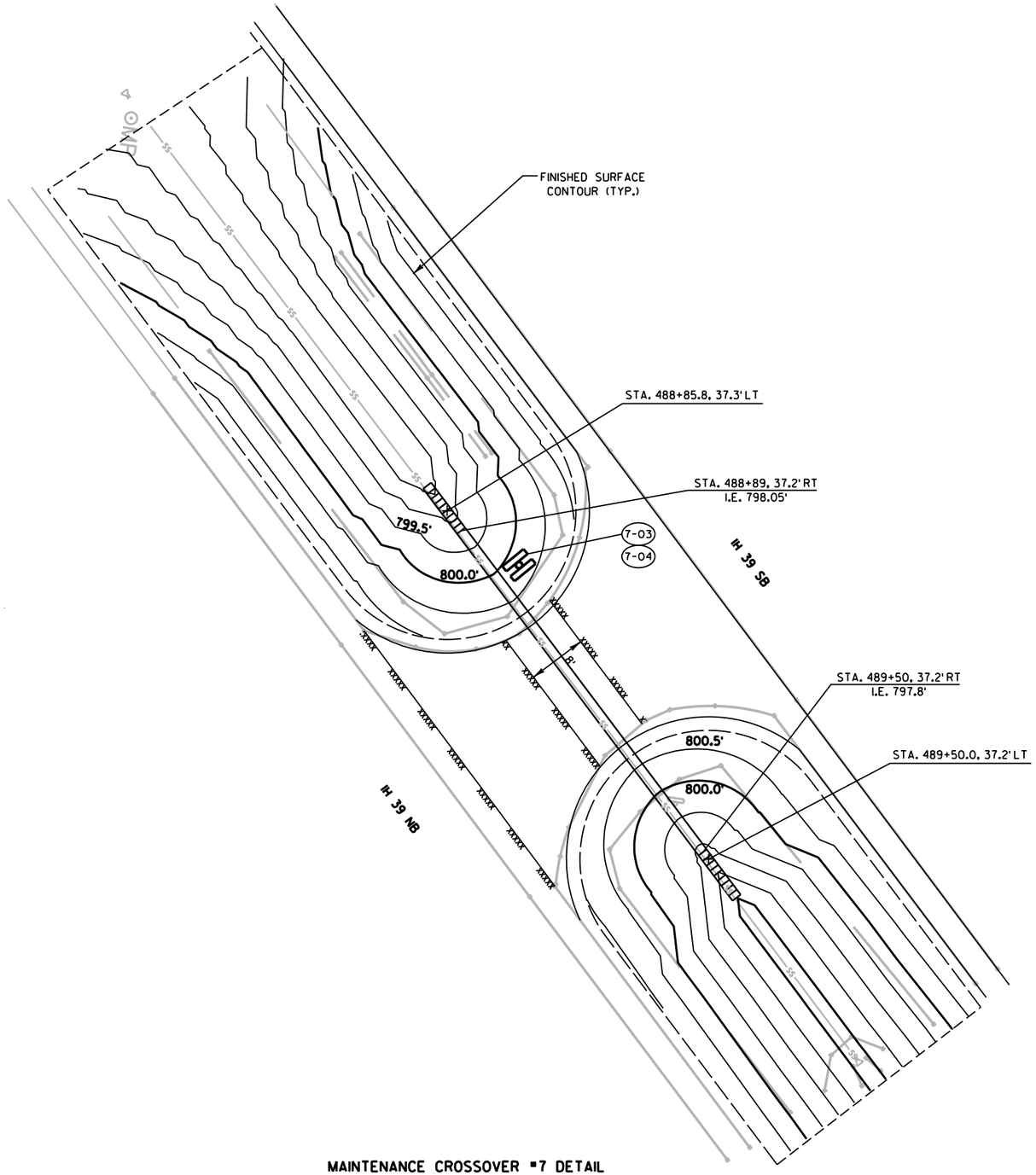

MAINTENANCE CROSSOVER #7 DETAIL

MAINTENANCE CROSSOVER #7				
SOUTH	NORTH	TOTAL		ITEM
135 CY	65 CY	200 CY	205.0100	COMMON EXCAVATION
10 CY	10 CY	20 CY	208.0100	BORROW
--	--	61 LF	521.0118	CULVERT PIPE CORRUGATED STEEL 18-INCH
368 SY	249 SY	617 SY	628.2004	EROSION MAT CLASS I TYPE B
1 EA.	1 EA.	2 EA.	204.0220	REMOVING INLETS
1 EA.	1 EA.	2 EA.	204.9060.S.01	REMOVING CONCRETE END BLOCK
0 LF	0 LF	0 LF	SPV.0090.01	RECONFIGURE EDGEDRAIN PIPE
10 TON	10 TON	20 TON	305.0110	BASE AGGREGATE DENSE 3/4-INCH
368 SY	249 SY	617 SY	625.0100	TOPSOIL
0.23 CWT	0.16 CWT	0.39 CWT	629.0210	FERTILIZER TYPE B
7 LB	4 LB	11 LB	630.0130	SEEDING MIXTURE NO. 30
1 EA.	1 EA.	2 EA.	521.1618	APRON ENDWALLS FOR CULVERT STEEL PIPE SIDE DRAIN STEEL 18-INCH 10:1
--	--	1 EA	203.0100	REMOVING SMALL PIPE CULVERTS
--	--	110 LF	690.0150	SAWING ASPHALT
--	--	4 GAL	455.0605	TACK COAT
--	--	2 TON	455.0105	ASPHALTIC MATERIAL PG58-28
--	--	33 TON	460.1100	HMA PAVEMENT TYPE E-0.3
--	--	150 SY	204.0120	REMOVING ASPHALTIC SURFACE MILLING
--	--	15 TON	305.0120	BASE AGGREGATE DENSE 1 1/4-INCH
1	1	2	628.7555	CULVERT PIPE CHECKS

2

2

SIGNING LEGEND

SIGN-REMOVE AND REPLACE

SIGN-REMOVE EXISTING

SIGN-PLACE NEW

SINGLE POST, TYPE 2 SIGNS

DOUBLE POSTS, TYPE 2 SIGNS

DOUBLE POSTS, TYPE 1 SIGNS

NOTE:
ALL EXISTING SIGNS NOT SHOWN ON PLANS ARE TO REMAIN.

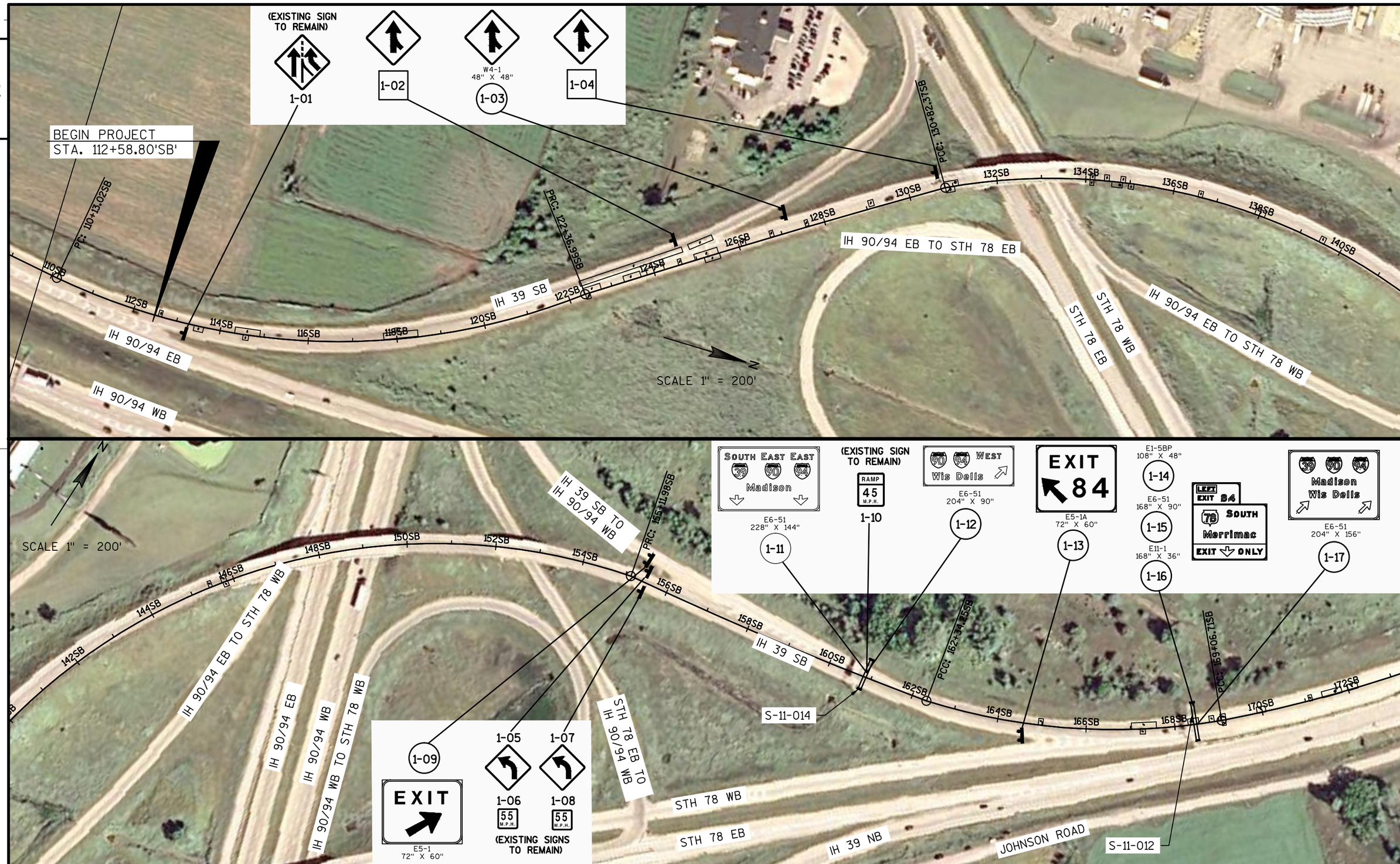

PROJECT NO:1161-00-65	HWY:IH 39	COUNTY:COLUMBIA	PERMANENT SIGNING	SHEET 17	E

FILE NAME : G:\WDOTCO\12029 (2012-2014 DESIGN WORK ORDERS)\WORK ORDER 04 (IH 39 PAVEMENT REPAIRS)\CIVIL3D\SHEETSPLAN\11610065_SIGNINGPERMANENT.DWG 1/17/2014 PLOT BY : KL ENGINEERING PLOT NAME : ---------- PLOT SCALE : 1 IN:200 FT

WISDOT/CADDS SHEET 42

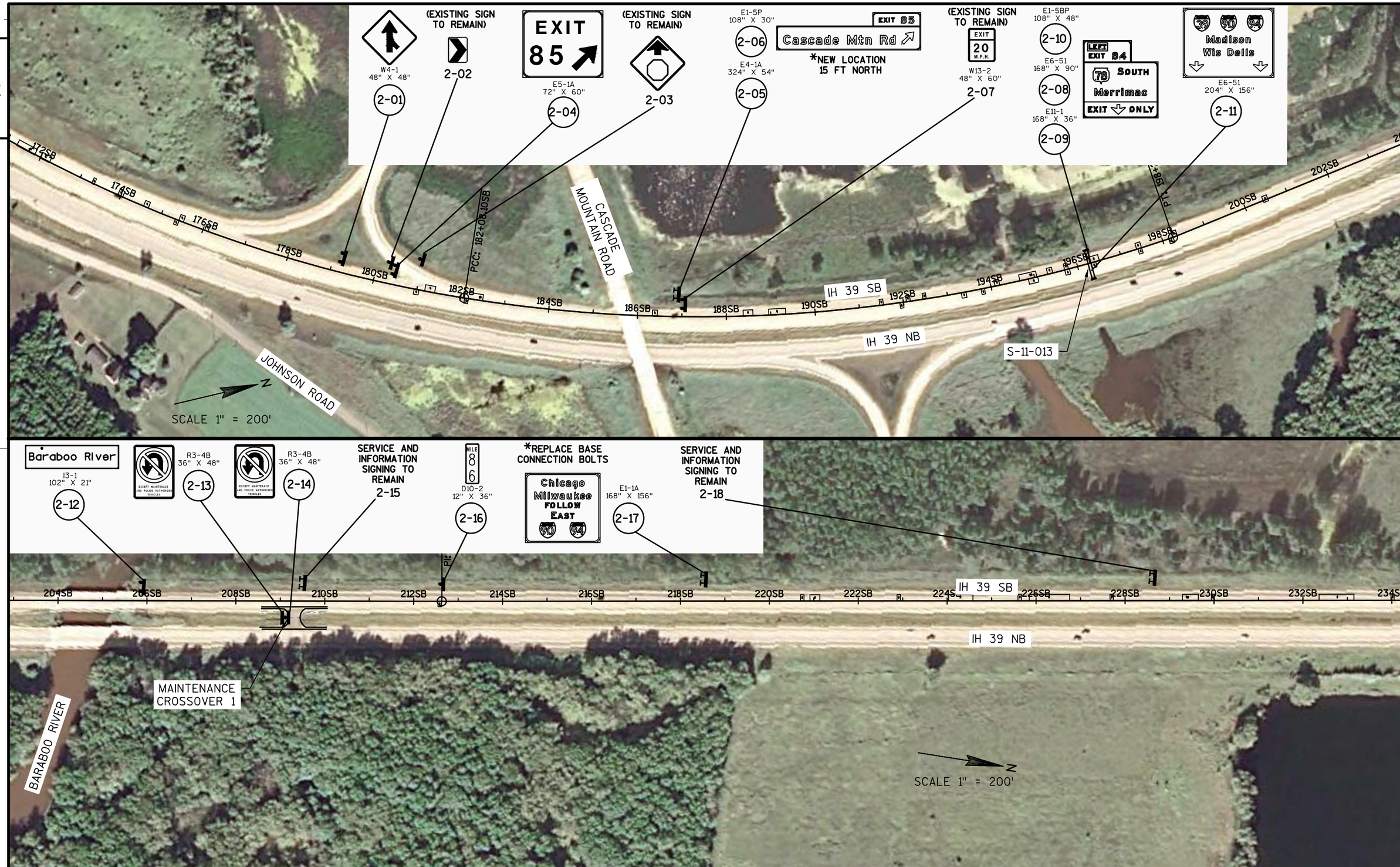

PROJECT NO:1161-00-65	HWY:IH 39	COUNTY:COLUMBIA	PERMANENT SIGNING	SHEET 18	E

FILE NAME : G:\WDOTCO\12029 (2012-2014 DESIGN WORK ORDERS)\WORK ORDER 04 (IH 39 PAVEMENT REPAIRS)\CIVIL3D\SHEETSPLAN\11610065_SIGNINGPERMANENT.DWG 1/17/2014 PLOT BY : KL ENGINEERING PLOT NAME : ---------- PLOT SCALE : 1 IN:200 FT

WISDOT/CADDS SHEET 42

PROJECT NO:1161-00-65	HWY:IH 39	COUNTY:COUNTY:COLUMBIA	PERMANENT SIGNING	SHEET 19	E

FILE NAME : G:\WDOTCO\12029 (2012-2014 DESIGN WORK ORDERS)\WORK ORDER 04 (IH 39 PAVEMENT REPAIRS)\CIVIL3D\SHEETSPLAN\11610065_SIGNINGPERMANENT.DWG 1/30/2014 PLOT BY : KL ENGINEERING PLOT NAME : PLOT SCALE : 1 IN:200 FT

WISDOT/CADDS SHEET 42

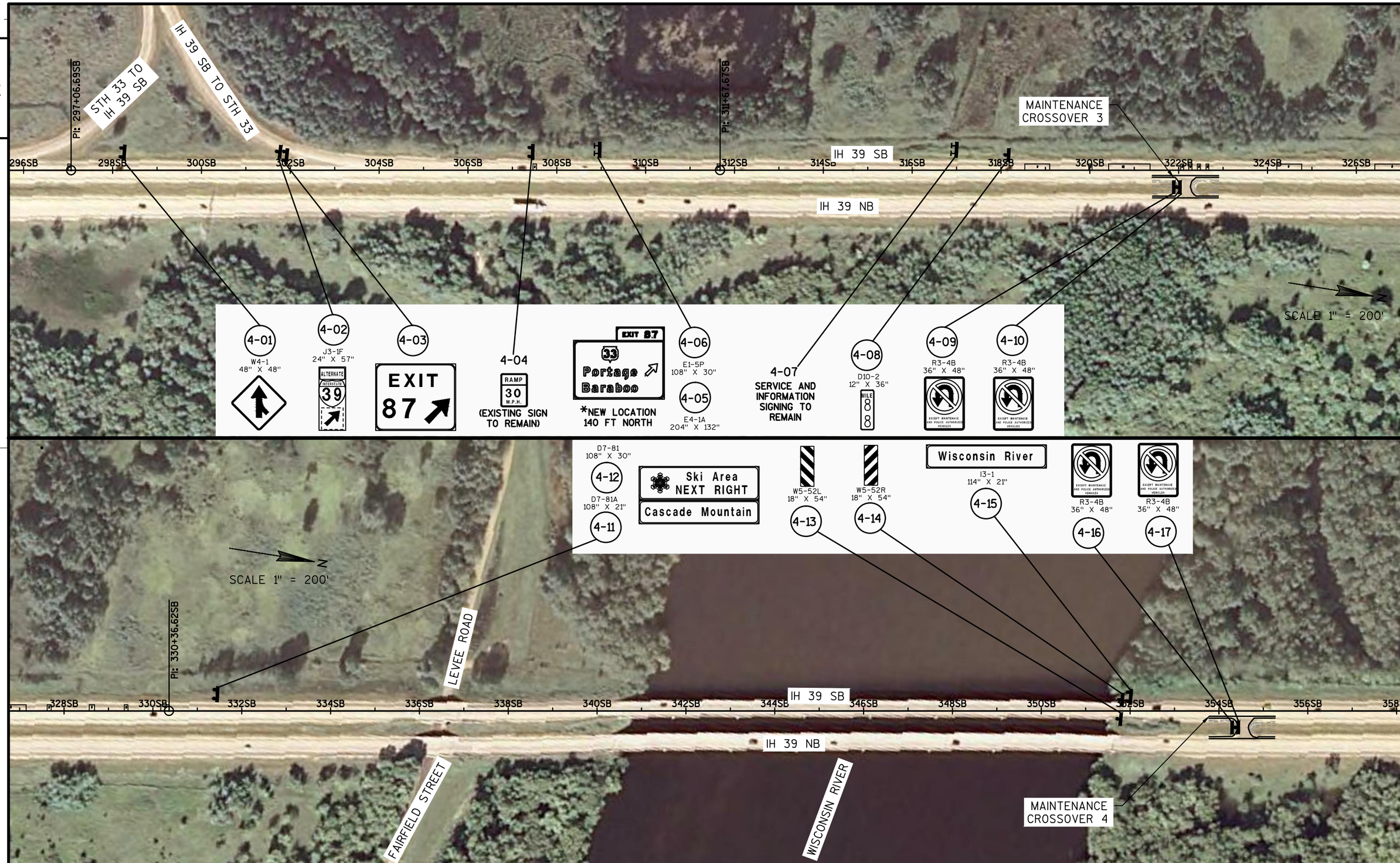

PROJECT NO:1161-00-65	HWY:IH 39	COUNTY:COLUMBIA	PERMANENT SIGNING	SHEET 20	E

FILE NAME : G:\WDOTCO\12029 (2012-2014 DESIGN WORK ORDERS)\WORK ORDER 04 (IH 39 PAVEMENT REPAIRS)\CIVIL3D\SHEETSPLAN\11610065_SIGNINGPLAN.DWG PLOT DATE : 1/17/2014 PLOT BY : KL ENGINEERING PLOT NAME : PLOT SCALE : 1 IN:200 FT

WISDOT/CADDS SHEET 42

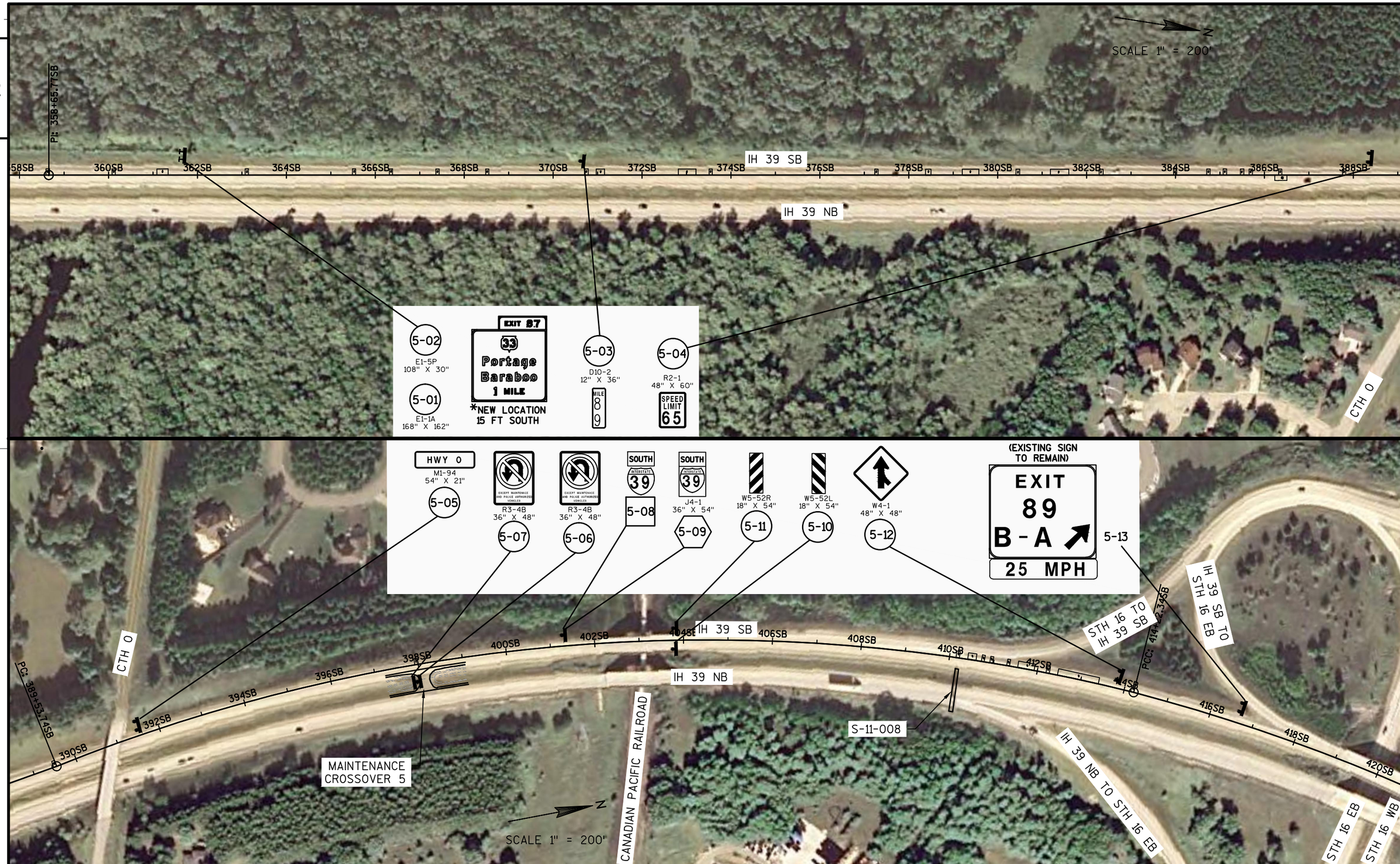

PROJECT NO:1161-00-65	HWY:IH 39	COUNTY:COLUMBIA	PERMANENT SIGNING	SHEET 21	E

FILE NAME : G:\WDOTCO\12029 (2012-2014 DESIGN WORK ORDERS)\WORK ORDER 04 (IH 39 PAVEMENT REPAIRS)\CIVIL3D\SHEETSPLAN\11610065_SIGNINGPERMANENT.DWG 1/17/2014 PLOT BY : KL ENGINEERING PLOT NAME : ---------- PLOT SCALE : 1 IN:200 FT

WISDOT/CADDS SHEET 42

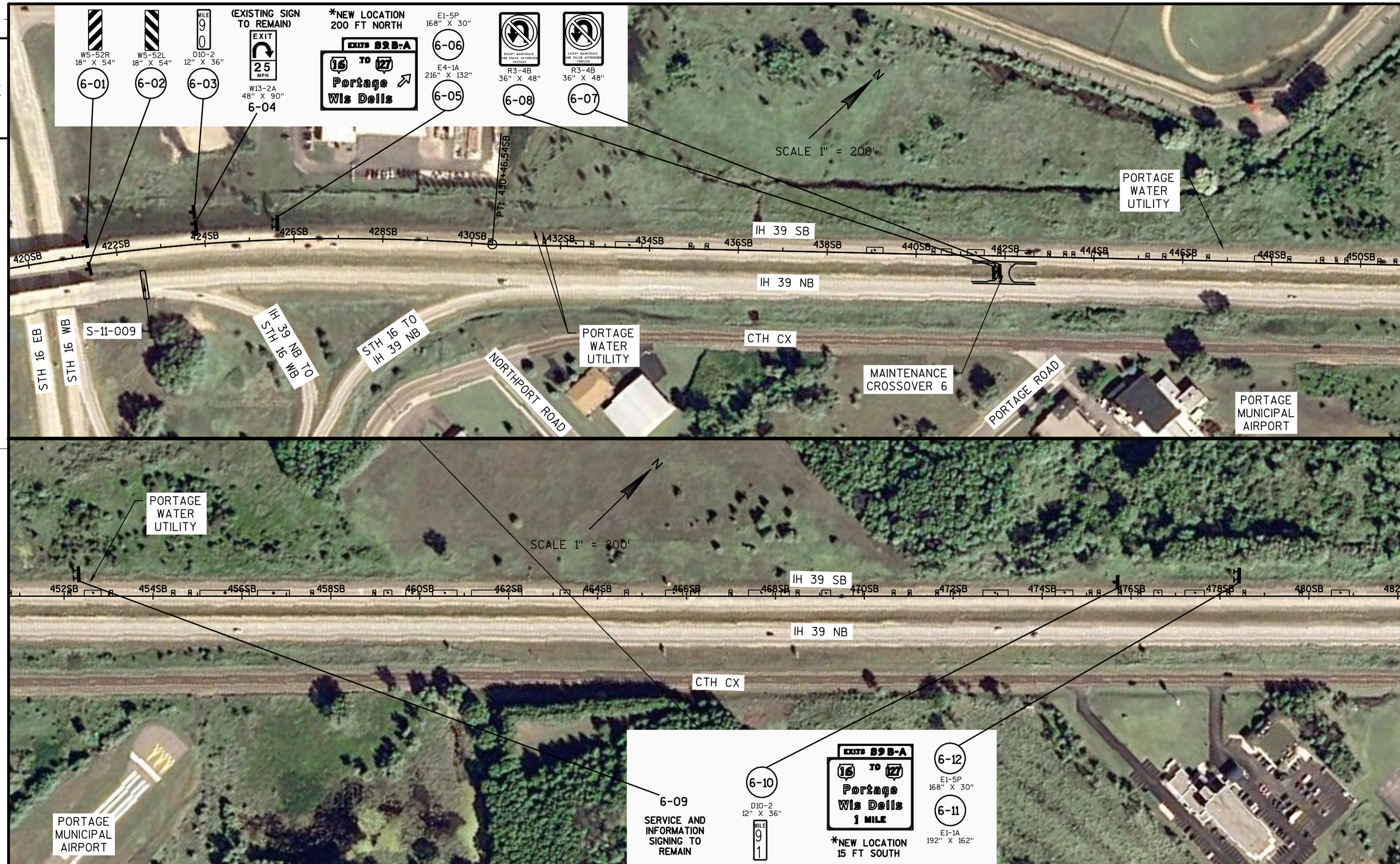

PROJECT NO:1161-00-65	HWY:IH 39	COUNTY:COLUMBIA	PERMANENT SIGNING	SHEET 22	E

FILE NAME : G:\WDOTCO\12029 (2012-2014 DESIGN WORK ORDERS)\WORK ORDER 04 (IH 39 PAVEMENT REPAIRS)\CIVIL3D\SHEETSPLAN\11610065_SIGNINGPLAN.DWG 1/17/2014 PLOT BY : KL ENGINEERING PLOT NAME : PLOT SCALE : 1 IN:200 FT

WISDOT/CADDS SHEET 42

PROJECT NO:1161-00-65	HWY:IH 39	COUNTY:COUNTY:COLUMBIA	PERMANENT SIGNING	SHEET 23	E

FILE NAME : G:\WDOTCO\12029 (2012-2014 DESIGN WORK ORDERS)\WORK ORDER 04 (IH 39 PAVEMENT REPAIRS)\CIVIL3D\SHEETSPLAN\11610065_SIGNINGPERMANENT.DWG 1/17/2014 PLOT BY : KL ENGINEERING PLOT NAME : ---------- PLOT SCALE : 1 IN:200 FT

WISDOT/CADDS SHEET 42

2

GENERAL NOTES

THE EXACT NUMBER, LOCATION, AND SPACING OF ALL SIGNS AND DEVICES SHALL BE ADJUSTED TO FIT FIELD CONDITIONS AS APPROVED BY THE ENGINEER.

THE SPACING BETWEEN SIGNS SHOULD BE ADJUSTED TO NOT CONFLICT WITH AND TO PROVIDE A MINIMUM OF 200 FEET, (500 FEET DESIREABLE) DISTANCE TO EXISTING SIGNS.

THIS LANE CLOSURE IS TYPICAL FOR CLOSING MEDIAN LANE - MIRROR FOR CLOSING OUTSIDE LANE.

ALL SIGNS ARE 48"x48" UNLESS OTHERWISE NOTED.

"WO" IS THE SAME AS "W" EXCEPT THE BACKGROUND IS ORANGE.

ANY SIGNS TEMPORARY OR EXISTING, WHICH CONFLICT WITH TRAFFIC CONTROL "IN USE" SHALL BE REMOVED OR COVERED AS NEEDED AND AS APPROVED BY THE ENGINEER. NO WARNING LIGHTS SHALL BE WORKING ON "COVERED" OR "DOWNED" SIGNS.

(1) CONSIDER GEOMETRICS WHEN LOCATING SIGNS AND ARROW BOARD SO THE DRIVER HAS A CLEAR VIEW OF THE ARROW BOARD AND LANE CLOSURE DRUMS FOR A MINIMUM 1500 FEET IN FRONT OF DRUMS.

THE ADVANCED WARNING SIGNS MAY BE MOUNTED ON PORTABLE SUPPORTS.

WARNING LIGHTS ARE NOT REQUIRED IF THE LANE CLOSURE IS A DAYTIME ONLY OPERATION.

IF THE HORIZONTAL ALIGNMENT IS SUCH THAT A CURVE MAY REQUIRE ADDITIONAL DELINEATION, THE DEVICE SPACING MAY BE DECREASED TO 50 FEET.

IF LANE CLOSURE IS MORE THAN 1 MILE, PLACE A TYPE III BARRICADE APPROXIMATELY EVERY 1/4 MILE ACROSS THE CLOSED LANE TO HELP ENFORCE THE DRUM LINE.

ADJUSTMENTS IN BUFFER SPACE NEED TO BE INCORPORATED WHEN THE LANE CLOSURE OCCURS NEAR AN INTERCHANGE EXIT OR ENTRANCE RAMP. THE LANE CLOSURE MUST MUST TAKE PLACE FAR ENOUGH IN ADVANCE OF AN EXIT OR ENTRANCE RAMP TO STILL ALLOW FOR ADEQUATE BUFFER SPACE. THE MINIMUM LENGTH OF THE BUFFER SPACE BEFORE AN EXIT RAMP SHOULD BE 1/2 THE LENGTH OF THE TRANSITION AREA. THE ENTRANCE RAMP SHOULD BE FOLLOWED BY THE ORIGINAL BUFFER SPACE LENGTH OF 800 FEET DESIRABLE PRIOR TO ANOTHER TRAFFIC CONTROL CHANGE SUCH AS A CROSSOVER MANEUVER.

DETERMINE THE APPROPRIATE NUMBER OF POSTS FOR EACH SIGN INSTALLATION BASED ON TYPE OF POSTS USED AND TOTAL SF OF SIGN(S).

PLACE PORTABLE CHANGEABLE MESSAGE SIGN PRIOR TO THE FIRST WORK ZONE FOR THE DURATION OF THIS PROJECT.

LEGEND

- POST(S) WITH ATTACHED SIGN
- TRAFFIC CONTROL DRUM WITH WARNING LIGHT TYPE C
- TRAFFIC CONTROL DRUM
- TRAFFIC CONTOL ARROW BOARD
- TRAFFIC CONTOL BARRICADES TYPE III
- DIRECTION OF TRAFFIC
- PCMS TRAFFIC CONTROL SIGNS PCMS

N

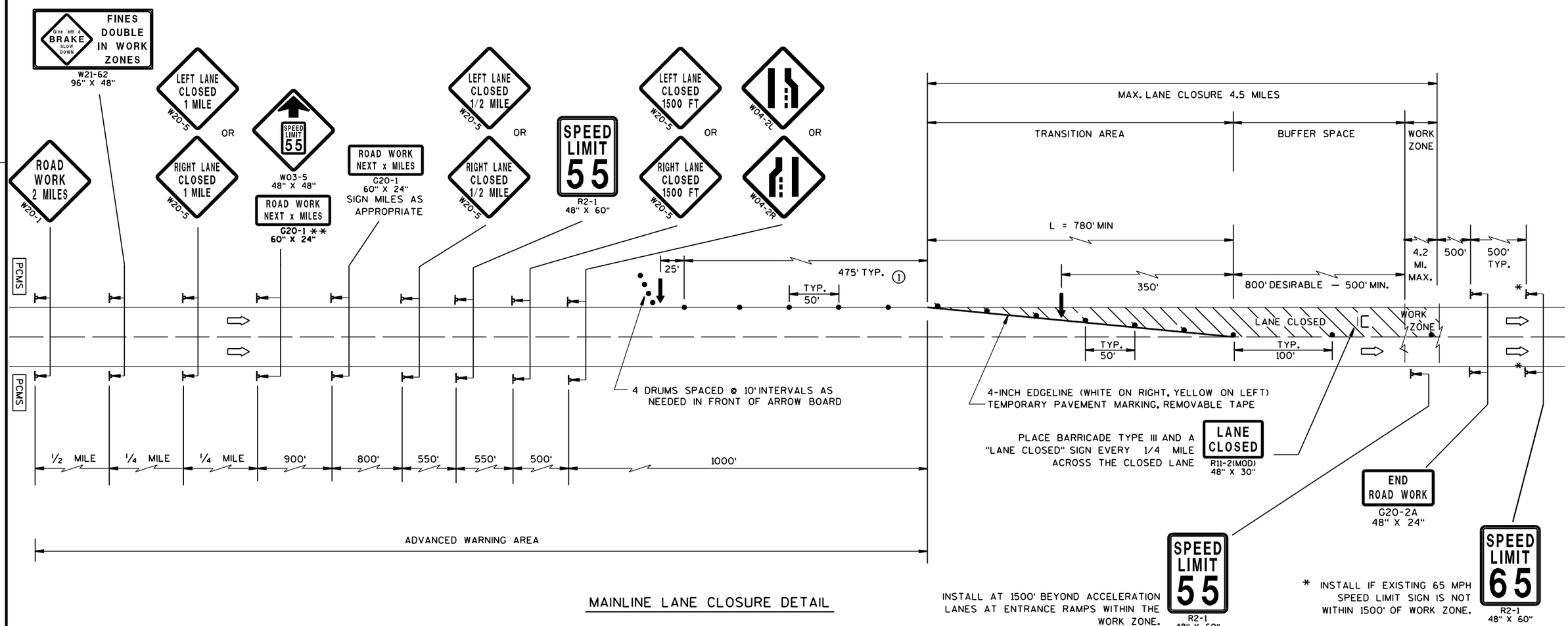

MAINLINE LANE CLOSURE DETAIL

PROJECT NO: 1161-00-65	HWY: IH 39	COUNTY: COLUMBIA	TRAFFIC CONTROL - LANE CLOSURE MAINLINE	SHEET 24	E

2

GENERAL NOTES

THE INSTALLATIONS SHOWN ON THIS SHEET ARE TYPICAL EXAMPLES AND ARE NOT INTENDED TO REPRESENT ANY PARTICULAR RAMP. AT SPECIFIC FIELD LOCATIONS, SIMILAR INSTALLATIONS SHALL BE USED AND ADJUSTED TO THE GEOMETRICS OF THE RAMP AS COORDINATED WITH THE ENGINEER.

THE EXACT NUMBER, LOCATION, AND SPACING OF ALL SIGNS AND DEVICES SHALL BE ADJUSTED TO FIT FIELD CONDITIONS AS APPROVED BY THE ENGINEER.

THE SPACING BETWEEN TRAFFIC CONTROL SIGNS SHOULD BE ADJUSTED TO NOT CONFLICT WITH AND SHOULD PROVIDE A MINIMUM OF 200 FEET, (500 FEET DESIRABLE) CLEARANCE TO EXISTING SIGNS THAT WILL REMAIN IN PLACE.

ALL SIGNS ARE 48"x48" UNLESS OTHERWISE NOTED.

"WO" IS THE SAME AS "W" EXCEPT THE BACKGROUND IS ORANGE.

SEE SEPARATE LANE CLOSURE DETAIL FOR TYPICAL SPACING OF TYPE III BARRICADES AND R11-2 (MOD.) "LANE CLOSED" SIGNS.

YIELD SIGN AND WARNING SIGNS ON ENTRANCE RAMP ARE ALSO APPROPRIATE FOR CLOSURE OF THE MAINLINE MEDIAN LANE. OMIT THE YIELD SIGN IF MORE THAN ONE LANE REMAINS OPEN ON THE MAINLINE AND THE RAMP TAPER IS AT LEAST AS LONG AS THE NORMAL ENTRANCE RAMP TAPER AT THE SITE.

SIGNS MAY BE MOUNTED ON PORTABLE SUPPORTS.

ANY SIGNS TEMPORARY OR EXISTING, WHICH CONFLICT WITH TRAFFIC CONTROL "IN USE" SHALL BE REMOVED OR COVERED AS NEEDED AND AS APPROVED BY THE ENGINEER.

WARNING LIGHTS ARE NOT REQUIRED IF THE LANE CLOSURE IS A DAYTIME ONLY OPERATION.

LEGEND

- POST(S) MOUNTED SIGN
- SIGN ON PORTABLE SUPPORT
- TRAFFIC CONTROL DRUM
- TRAFFIC CONTROL DRUM WITH WARNING LIGHT TYPE C
- TRAFFIC CONTROL BARRICADE TYPE III WITH SIGN
- FLAGS, 16"x16" MIN., ORANGE, INCIDENTAL
- DIRECTION OF TRAFFIC FLOW

N

2

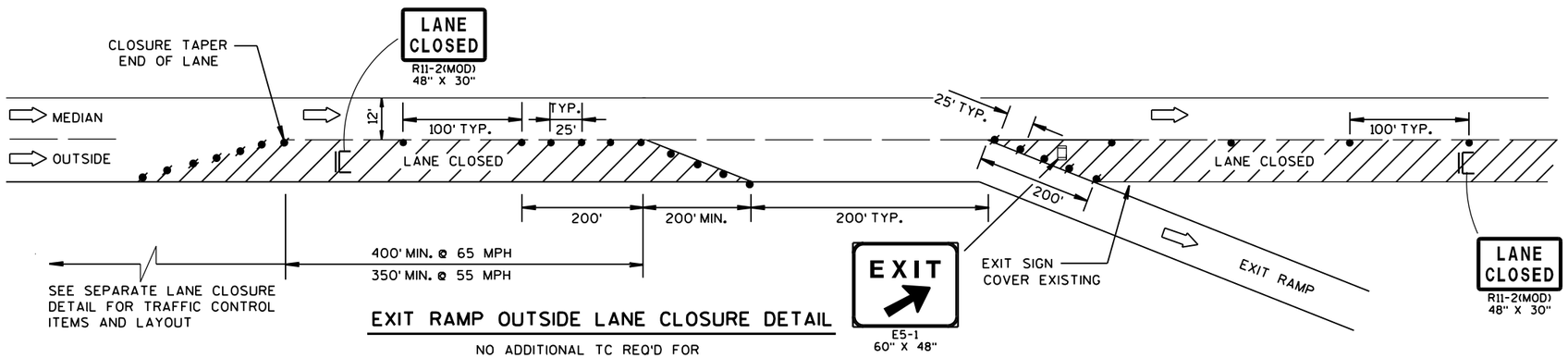

EXIT RAMP OUTSIDE LANE CLOSURE DETAIL

NO ADDITIONAL TC REQ'D FOR
LAEFT LANE CLOUSRES AT EXIT RAMPS

MOUNTING FOR MOVABLE EXIT SIGN DETAIL

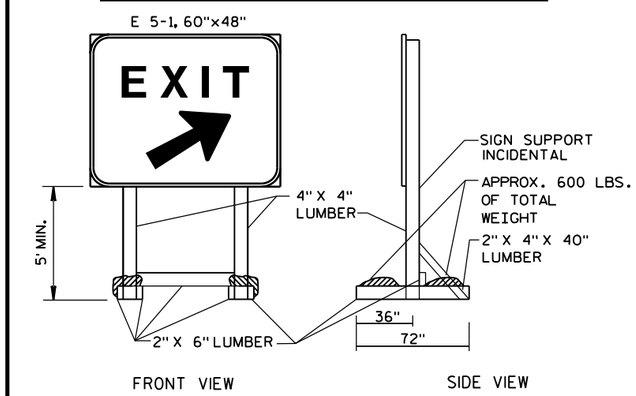

NOTE: ALL LUMBER DIMENSIONS ARE NOMINAL

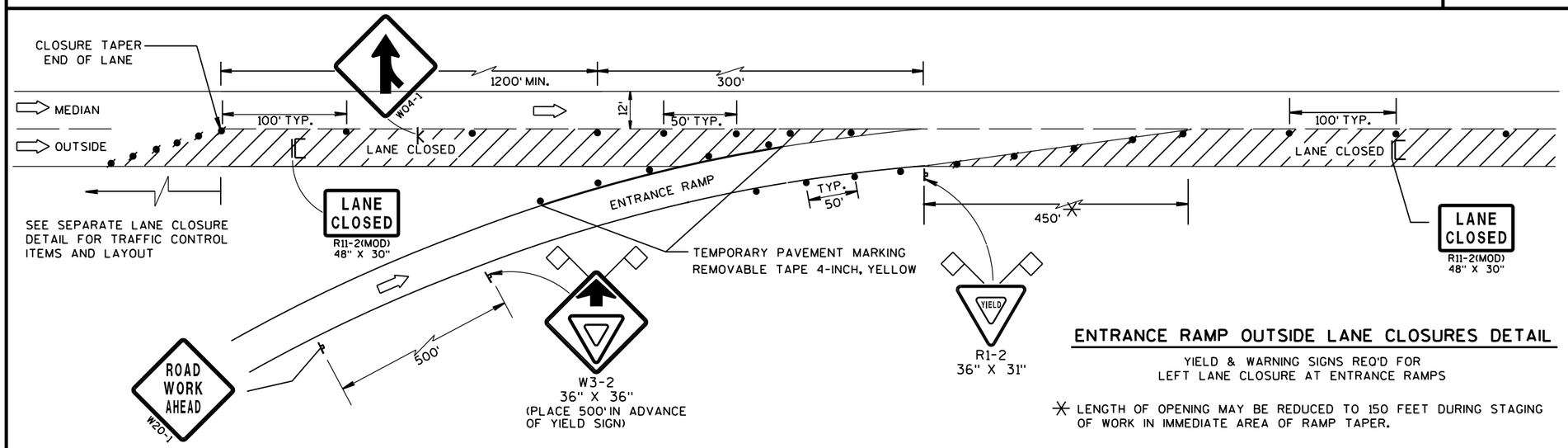

ENTRANCE RAMP OUTSIDE LANE CLOSURES DETAIL

YIELD & WARNING SIGNS REQ'D FOR
LEFT LANE CLOSURE AT ENTRANCE RAMPS

* LENGTH OF OPENING MAY BE REDUCED TO 150 FEET DURING STAGING OF WORK IN IMMEDIATE AREA OF RAMP TAPER.

ADVANCE WARNING SIGNS AT INTERCHANGES DETAIL

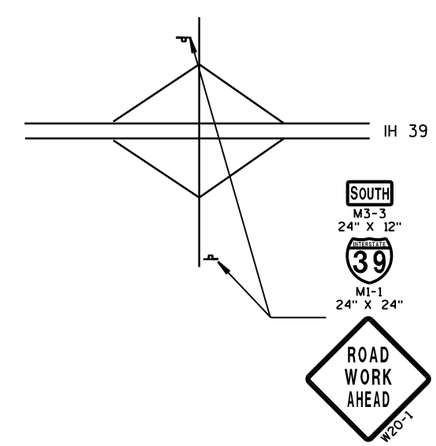

PROJECT NO: 1161-00-65	HWY: IH 39	COUNTY: COLUMBIA	TRAFFIC CONTROL - RAMP WITHIN MAINLINE LANE CLOSURE	SHEET 25	E

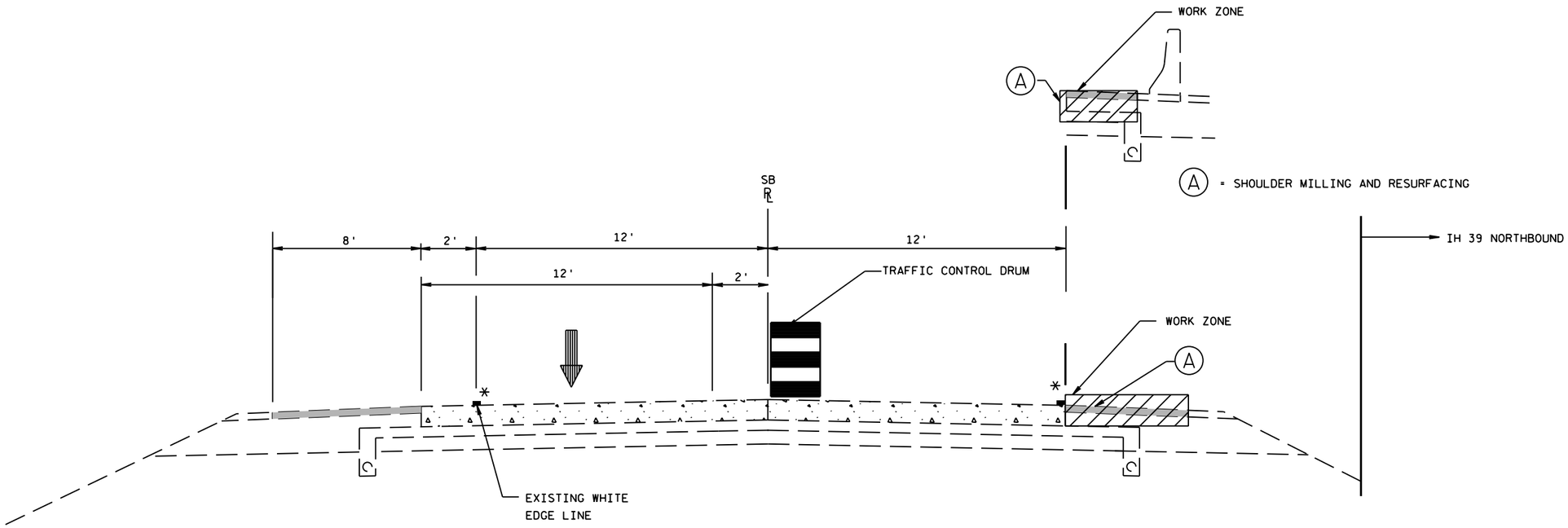

MEDIAN SHOULDER WORK (MILL & OVERLAY)

LOOKING NORTH

* DO NOT REMOVE EDGELINE MARKINGS. USE TRAFFIC CONTROL DRUMS TO ESTABLISH EDGE.

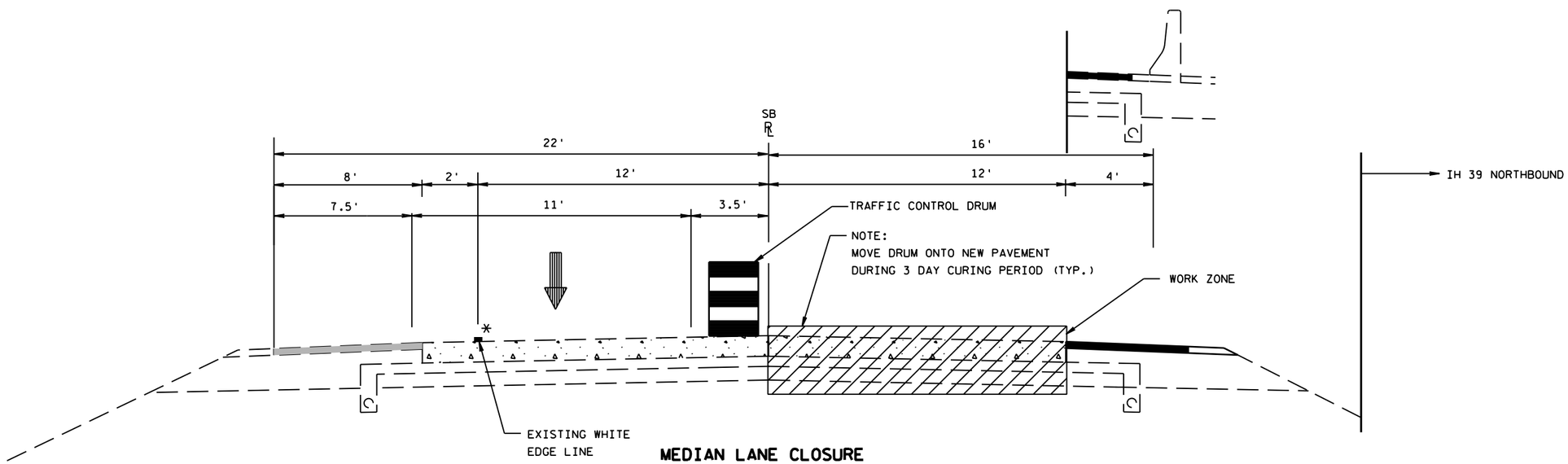

MEDIAN LANE CLOSURE

LOOKING NORTH

PROJECT NO:1161-00-65	HWY:IH 39	COUNTY: COLUMBIA	STAGE 1 TRAFFIC CONTROL DETAIL	SHEET 26	E

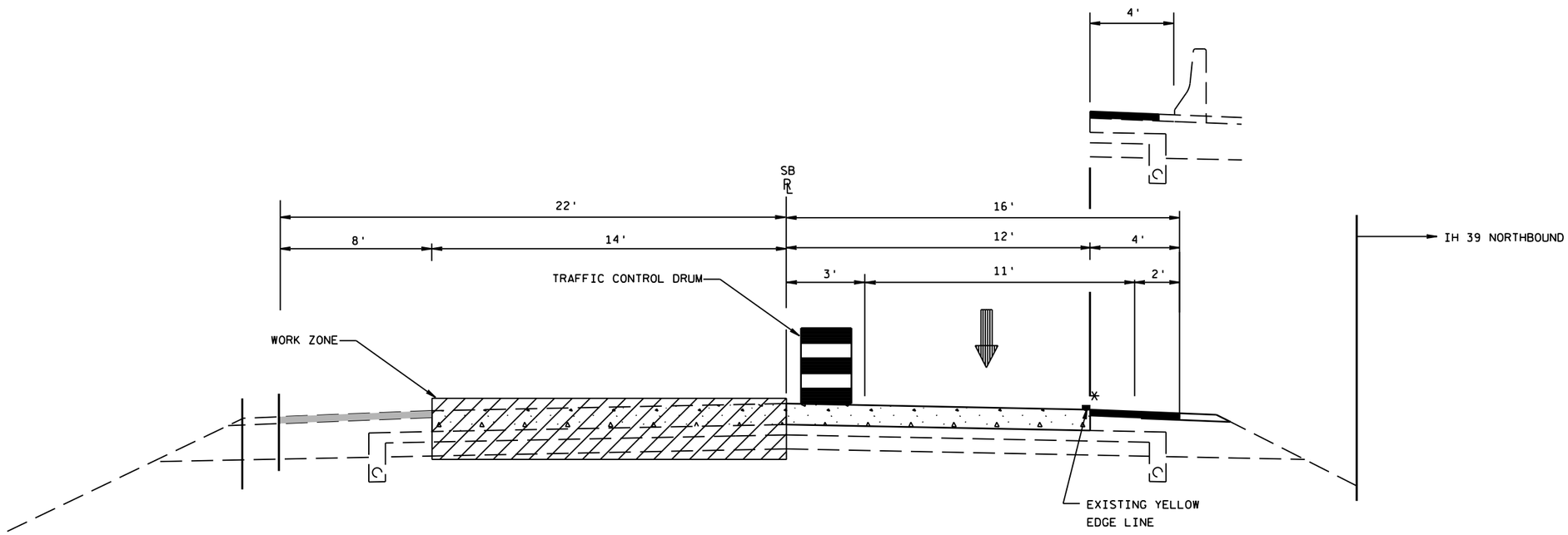

OUTSIDE LANE CLOSURE

LOOKING NORTH

* DO NOT REMOVE EDGELINE MARKINGS. USE TRAFFIC CONTROL DRUMS TO ESTABLISH EDGE.

LEGEND

START OF CONSTRUCTION:
- MILL & OVERLAY OUTSIDE SHOULDER IN SPECIFIC AREAS AS IDENTIFIED BY THE FIELD ENGINEER.

(1) SEGMENT 1: STA. 500+31 - STA. 464+60
- REPAIR CONCRETE PAVEMENT IN OUTSIDE LANE
- SIGN STRUCTURE S-11-011
- APPLY PAVEMENT MARKING (PER S.D.D. 15C19-2C)

(2) SEGMENT 2: STA. 464+60 - STA. 430+46
- REPAIR CONCRETE PAVEMENT IN OUTSIDE LANE
- APPLY PAVEMENT MARKING (PER S.D.D. 15C19-2C)

(3) SEGMENT 3: STA. 414+22 - STA. 307+47
- REPAIR CONCRETE PAVEMENT IN OUTSIDE LANE
- APPLY PAVEMENT MARKING (PER S.D.D. 15C19-2C)

(4) SEGMENT 4: STA. 297+07 - STA. 236+76
- REPAIR CONCRETE PAVEMENT IN OUTSIDE LANE
- APPLY PAVEMENT MARKING (PER S.D.D. 15C19-2C)

(5) SEGMENT 5: STA. 236+76 - STA. 164+92
- REPAIR CONCRETE PAVEMENT IN OUTSIDE LANE
- SIGN STRUCTURE S-11-012,S-11-013
- IH 39 SB TO CASCADE MTN RD OFF RAMP CLOSED TRAFFIC FOLLOW DETOUR
- APPLY PAVEMENT MARKING (PER S.D.D. 15C19-2C)

(6) SEGMENT 6: STA. 164+92 - STA. 112+58
- REPAIR CONCRETE PAVEMENT IN OUTSIDE LANE
- SIGN STRUCTURE S-11-014
- STH 78 TO IH 39 SB ON RAMP CLOSED TRAFFIC FOLLOW DETOUR
- APPLY PAVEMENT MARKING (PER S.D.D. 15C19-2C)

(7) SEGMENT 7: STA. 500+31 - STA. 334+25
- MILL & OVERLAY MEDIAN SHOULDER
- REPAIR CONCRETE PAVEMENT IN MEDIAN LANE
- COMPLETE CONSTRUCTION ON MAINTENANCE CROSSOVERS #4, #5, #6, & #7
- SIGN STRUCTURE S-11-008, S-11-009, S-11-011 NB IH 39 SHOULDER CLOSURE IN EFFECT
- APPLY PAVEMENT MARKING (PER S.D.D. 15C19-2C)

(8) SEGMENT 8: STA. 334+25 - STA. 112+58
- MILL & OVERLAY MEDIAN SHOULDER
- REPAIR CONCRETE PAVEMENT IN MEDIAN/CENTER LANES
- COMPLETE CONSTRUCTION ON MAINTENANCE CROSSOVERS #1, #2, & #3
- SIGN STRUCTURE S-11-014, S-11-012, S-11-013 NB IH 39 SHOULDER CLOSURE IN EFFECT
- APPLY PAVEMENT MARKING (PER S.D.D. 15C19-2C)

END OF CONSTRUCTION:
- CONSTRUCT PERMANENT SIGNING (PROJECT LENGTH)

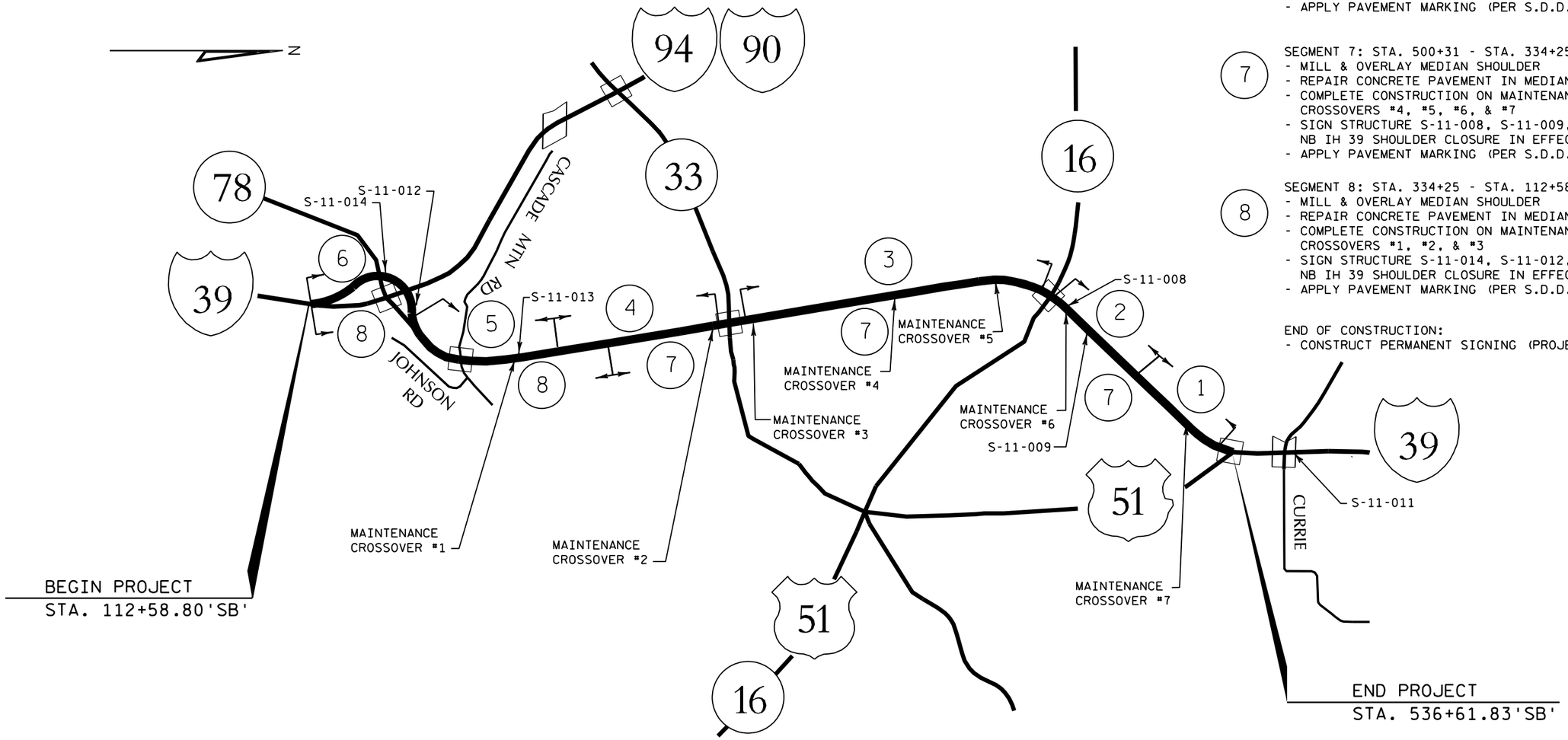

PROJECT NO:1161-00-65	HWY:IH 39	COUNTY:COLUMBIA	TRAFFIC CONTROL OVERVIEW	SHEET 28	E

2

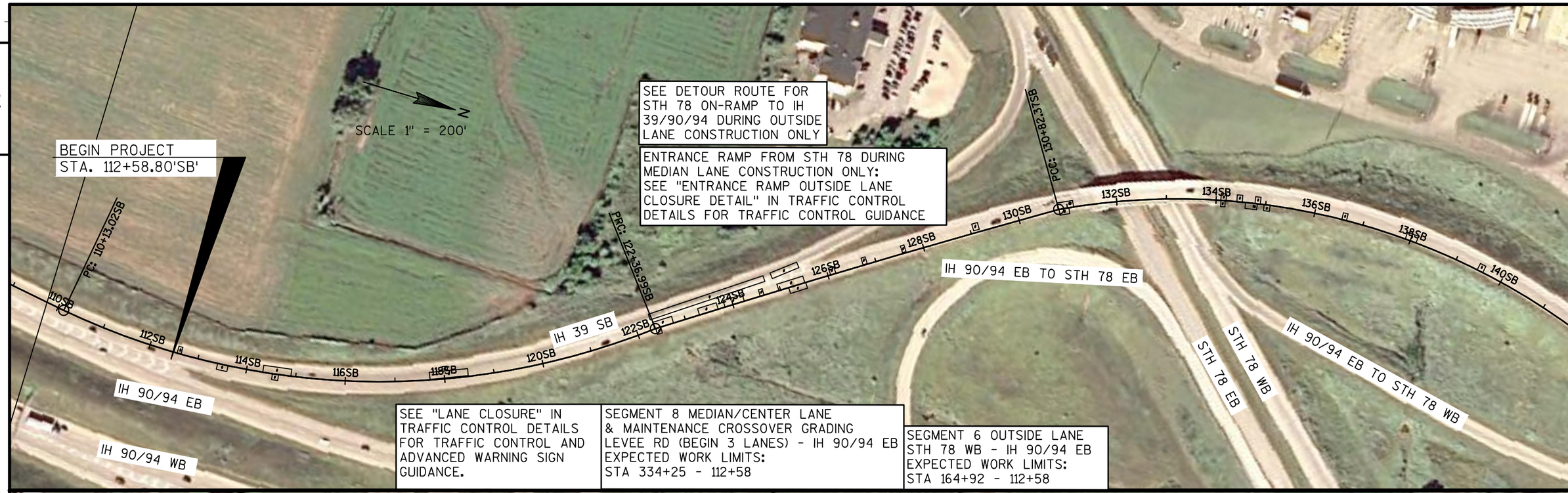

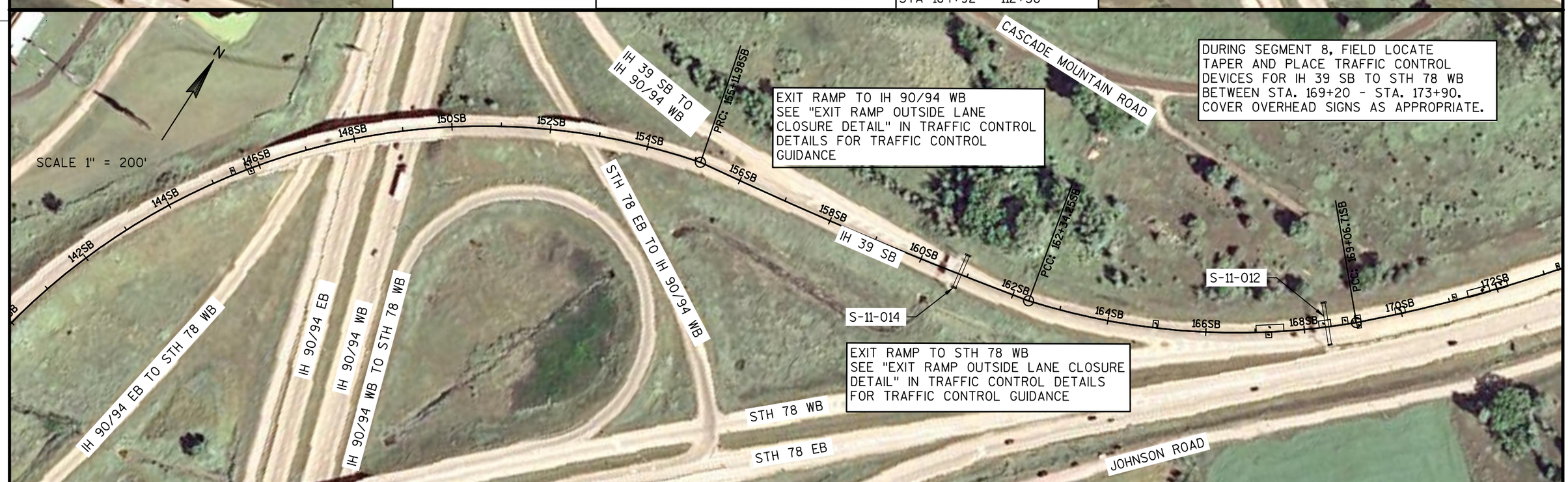

2

PROJECT NO:1161-00-65	HWY:IH 39	COUNTY:COLUMBIA	TRAFFIC CONTROL	SHEET 29	E

2

DURING SEGMENT 8, FIELD LOCATE TAPER AND PLACE TRAFFIC CONTROL DEVICES FOR IH 39 SB TO STH 78 WB BETWEEN STA. 169+20 - STA. 173+90. COVER OVERHEAD SIGNS AS APPROPRIATE.

ENTRANCE RAMP FROM CASCADE MTN RD SEE "ENTRANCE RAMP OUTSIDE LANE CLOSURE DETAIL" IN TRAFFIC CONTROL DETAILS FOR TRAFFIC CONTROL GUIDANCE

EXIT RAMP TO CASCADE MTN RD DURING MEDIAN LANE CONSTRUCTION ONLY: SEE "EXIT RAMP OUTSIDE LANE CLOSURE DETAIL" IN TRAFFIC CONTROL DETAILS FOR TRAFFIC CONTROL GUIDANCE

SEE DETOUR ROUTE FOR IH 39 SB TO CASCADE MTN RD DURING OUTSIDE LANE CONSTRUCTION ONLY

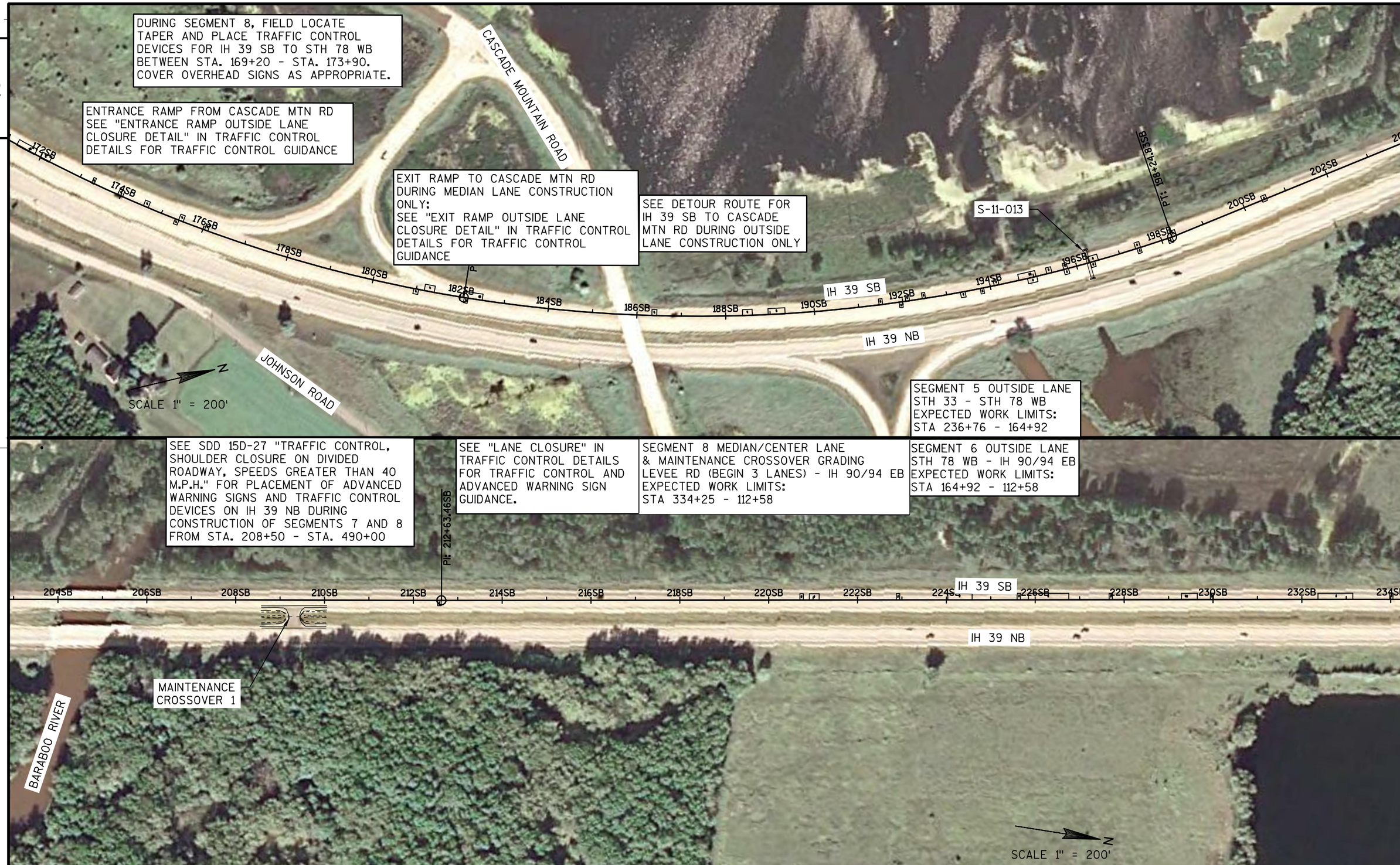

SEGMENT 5 OUTSIDE LANE STH 33 - STH 78 WB EXPECTED WORK LIMITS: STA 236+76 - 164+92

SEE SDD 15D-27 "TRAFFIC CONTROL, SHOULDER CLOSURE ON DIVIDED ROADWAY, SPEEDS GREATER THAN 40 M.P.H." FOR PLACEMENT OF ADVANCED WARNING SIGNS AND TRAFFIC CONTROL DEVICES ON IH 39 NB DURING CONSTRUCTION OF SEGMENTS 7 AND 8 FROM STA. 208+50 - STA. 490+00

SEE "LANE CLOSURE" IN TRAFFIC CONTROL DETAILS FOR TRAFFIC CONTROL AND ADVANCED WARNING SIGN GUIDANCE.

SEGMENT 8 MEDIAN/CENTER LANE & MAINTENANCE CROSSOVER GRADING LEVEE RD (BEGIN 3 LANES) - IH 90/94 EB EXPECTED WORK LIMITS: STA 334+25 - 112+58

SEGMENT 6 OUTSIDE LANE STH 78 WB - IH 90/94 EB EXPECTED WORK LIMITS: STA 164+92 - 112+58

2

PROJECT NO:1161-00-65	HWY:IH 39	COUNTY:COLUMBIA	TRAFFIC CONTROL	SHEET 30	E

2

2

SCALE 1" = 200'

N

PI: 239+50.33SB

IH 39 SB

234SB 236SB 238SB 240SB 242SB 244SB 246SB 248SB 250SB 252SB 254SB 256SB 258SB 260SB 262SB 264SB

IH 39 NB

SEE "LANE CLOSURE" IN TRAFFIC CONTROL DETAILS FOR TRAFFIC CONTROL AND ADVANCED WARNING SIGN GUIDANCE.

SEGMENT 8 MEDIAN/CENTER LANE & MAINTENANCE CROSSOVER GRADING LEVEE RD (BEGIN 3 LANES) - IH 90/94 EB EXPECTED WORK LIMITS: STA 334+25 - 112+58

SEGMENT 5 OUTSIDE LANE STH 33 - STH 78 WB EXPECTED WORK LIMITS: STA 236+76 - 164+92

SEGMENT 4 OUTSIDE LANE STH 33 - STH 78 WB EXPECTED WORK LIMITS: STA 297+07 - 236+76

SEE SDD 15D-27 "TRAFFIC CONTROL, SHOULDER CLOSURE ON DIVIDED ROADWAY, SPEEDS GREATER THAN 40 M.P.H." FOR PLACEMENT OF ADVANCED WARNING SIGNS AND TRAFFIC CONTROL DEVICES ON IH 39 NB DURING CONSTRUCTION OF SEGMENTS 7 AND 8 FROM STA. 208+50 - STA. 490+00

IH 39 SB TO STH 33

STH 33

ENTRANCE RAMP FROM STH 33 SEE "ENTRANCE RAMP OUTSIDE LANE CLOSURE DETAIL" IN TRAFFIC CONTROL DETAILS FOR TRAFFIC CONTROL GUIDANCE

PI: 274+31.10SB

GAS UTILITY

266SB 268SB 270SB 272SB 274SB 276SB 278SB 280SB 282SB 284SB 286SB 288SB 290SB 292SB 294SB 296SB

IH 39 SB

IH 39 NB

IH 39 NB TO STH 33

STH 33 TO IH 39 NB

MAINTENANCE CROSSOVER 2

PROJECT NO:1161-00-65	HWY:IH 39	COUNTY:COLUMBIA	TRAFFIC CONTROL	SHEET 31	E

FILE NAME : G:\WDOTCO\12029 (2012-2014 DESIGN WORK ORDERS)\WORK ORDER 04 (IH 39 PAVEMENT REPAIRS)\CIVIL3D\SHEETSPLAN\11610065_TC.DWG PLOT DATE : 1/17/2014 PLOT BY : KL ENGINEERING PLOT NAME : ---------- PLOT SCALE : 1 IN:200 FT

WISDOT/CADDS SHEET 42

2

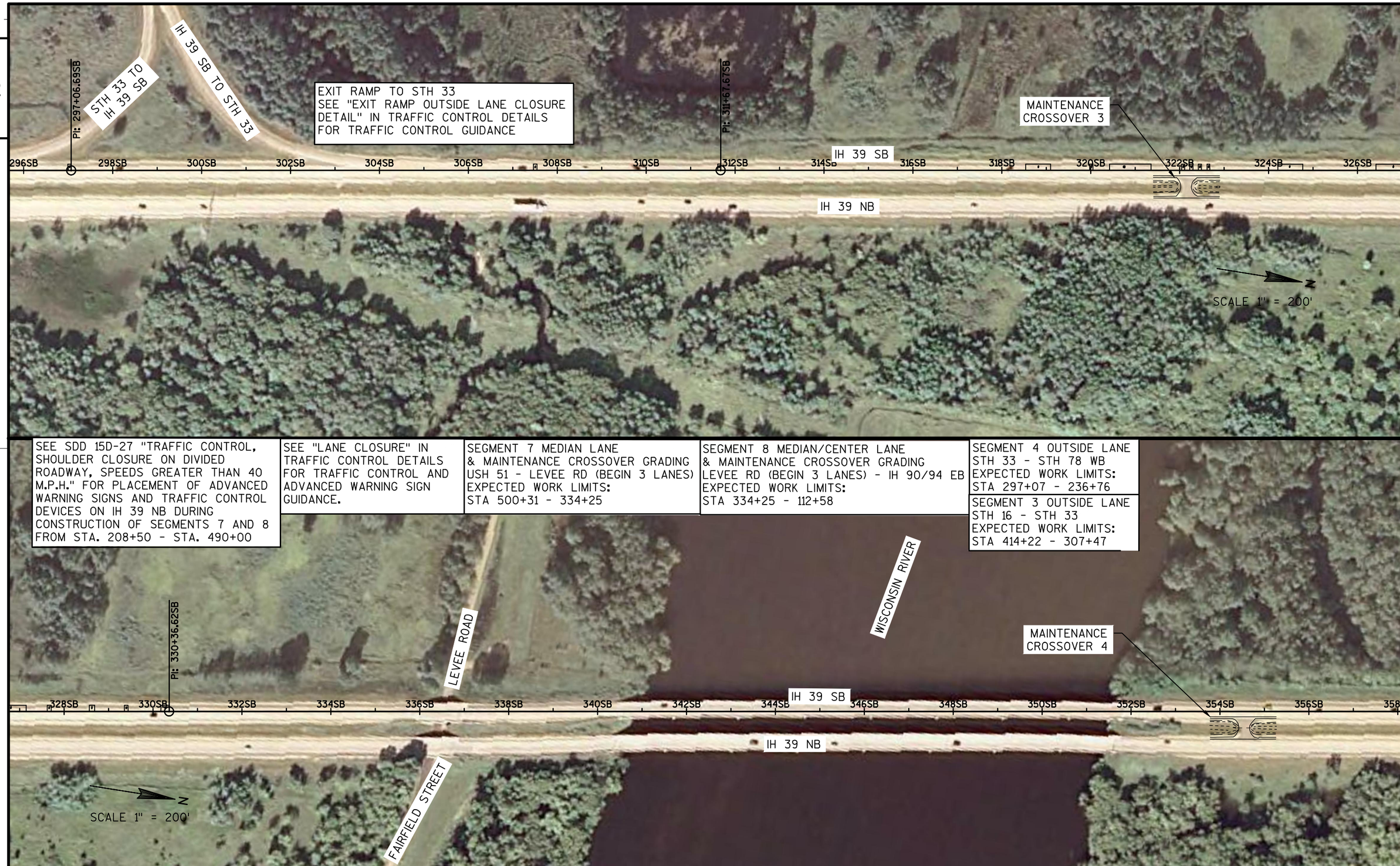

2

PROJECT NO:1161-00-65	HWY:IH 39	COUNTY:COUNTY:COLUMBIA	TRAFFIC CONTROL	SHEET 32	E

FILE NAME : G:\WDOTCO\12029 (2012-2014 DESIGN WORK ORDERS)\WORK ORDER 04 (IH 39 PAVEMENT REPAIRS)\CIVIL3D\SHEETSPLAN\11610065_TC.DWG PLOT DATE : 1/17/2014 PLOT BY : KL ENGINEERING PLOT NAME : ---------- PLOT SCALE : 1 IN:200 FT

WISDOT/CADDS SHEET 42

2

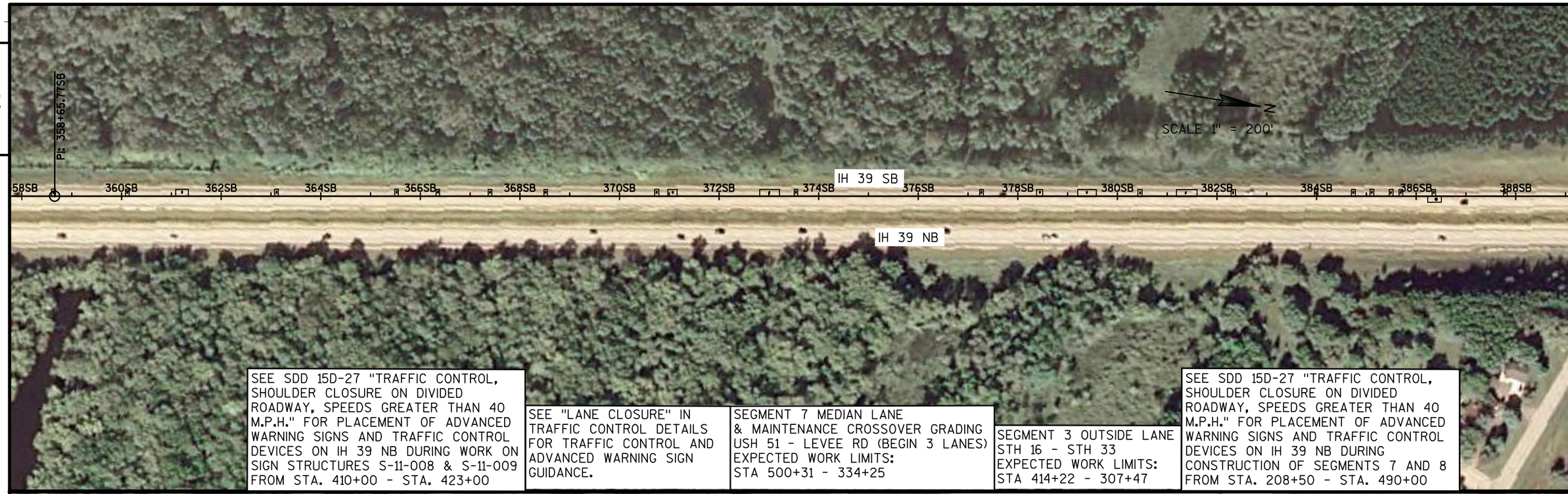

2

PROJECT NO:1161-00-65	HWY:IH 39	COUNTY:COLUMBIA	TRAFFIC CONTROL	SHEET 33	E

2

COLUMBIA DRIVE

PORTAGE WATER UTILITY

PT: 430+46.54SB

SCALE 1" = 200'

N

PORTAGE WATER UTILITY

IH 39 SB

420SB 422SB 424SB 426SB 428SB 430SB 432SB 434SB 436SB 438SB 440SB 442SB 444SB 446SB 448SB 450SB

IH 39 NB

S-11-009

STH 16 EB

STH 16 WB

IH 39 NB TO STH 16 WB

STH 16 TO IH 39 NB

CTH CX

NORTHPORT ROAD

MAINTENANCE CROSSOVER 6

PORTAGE ROAD

PORTAGE MUNICIPAL AIRPORT

SEE "LANE CLOSURE" IN TRAFFIC CONTROL DETAILS FOR TRAFFIC CONTROL AND ADVANCED WARNING SIGN GUIDANCE.

SEGMENT 7 MEDIAN LANE & MAINTENANCE CROSSOVER GRADING USH 51 - LEVEE RD (BEGIN 3 LANES) EXPECTED WORK LIMITS: STA 500+31 - 334+25

SEGMENT 2 OUTSIDE LANE USH 51 - STH 16 EXPECTED WORK LIMITS: STA 464+60 - 430+46

SEGMENT 1 OUTSIDE LANE USH 51 - STH 16 EXPECTED WORK LIMITS: STA 500+31 - 464+60

SEE SDD 15D-27 "TRAFFIC CONTROL, SHOULDER CLOSURE ON DIVIDED ROADWAY, SPEEDS GREATER THAN 40 M.P.H." FOR PLACEMENT OF ADVANCED WARNING SIGNS AND TRAFFIC CONTROL DEVICES ON IH 39 NB DURING CONSTRUCTION OF SEGMENTS 7 AND 8 FROM STA. 208+50 - STA. 490+00

SEE SDD 15D-27 "TRAFFIC CONTROL, SHOULDER CLOSURE ON DIVIDED ROADWAY, SPEEDS GREATER THAN 40 M.P.H." FOR PLACEMENT OF ADVANCED WARNING SIGNS AND TRAFFIC CONTROL DEVICES ON IH 39 NB DURING WORK ON SIGN STRUCTURES S-11-008 & S-11-009 FROM STA. 410+00 - STA. 423+00

PORTAGE WATER UTILITY

452SB 454SB 456SB 458SB 460SB 462SB 464SB 466SB 468SB 470SB 472SB 474SB 476SB 478SB 480SB 482SB

IH 39 SB

IH 39 NB

CTH CX

N

SCALE 1" = 200'

PORTAGE MUNICIPAL AIRPORT

PROJECT NO:1161-00-65	HWY:IH 39	COUNTY:COLUMBIA	TRAFFIC CONTROL	SHEET 34	E

FILE NAME : G:\WDOTCO\12029 (2012-2014 DESIGN WORK ORDERS)\WORK ORDER 04 (IH 39 PAVEMENT REPAIRS)\CIVIL3D\SHEETSPLAN\11610065_TC.DWG PLOT DATE : 1/17/2014 PLOT BY : KL ENGINEERING PLOT NAME : ---------- PLOT SCALE : 1 IN:200 FT

WISDOT/CADDS SHEET 42

2

ENTRANCE RAMP FROM USH 51
SEE "ENTRANCE RAMP OUTSIDE LANE CLOSURE DETAIL" IN TRAFFIC CONTROL DETAILS FOR TRAFFIC CONTROL GUIDANCE

482SB 484SB 486SB 488SB 490SB 492SB 494SB 496SB 498SB 500SB 502SB 504SB 506SB 508SB 510SB 512SB 514

PC: 497+62.70SB

IH 39 SB

IH 39 NB

USH 51 TO IH 39 SB

USH 51

USH 51 NB TO IH 39 NB

IH 39 NB TO USH 51

MAINTENANCE CROSSOVER 7

CTH CX

CTH CX

N

SCALE 1" = 200'

SEE SDD 15D-27 "TRAFFIC CONTROL, SHOULDER CLOSURE ON DIVIDED ROADWAY, SPEEDS GREATER THAN 40 M.P.H." FOR PLACEMENT OF ADVANCED WARNING SIGNS AND TRAFFIC CONTROL DEVICES ON IH 39 NB DURING CONSTRUCTION OF SEGMENTS 7 AND 8 FROM STA. 208+50 - STA. 490+00

SEE "LANE CLOSURE" IN TRAFFIC CONTROL DETAILS FOR TRAFFIC CONTROL AND ADVANCED WARNING SIGN GUIDANCE.

SEGMENT 7 MEDIAN LANE
& MAINTENANCE CROSSOVER GRADING
USH 51 - LEVEE RD (BEGIN 3 LANES)
EXPECTED WORK LIMITS:
STA 500+31 - 334+25

SEGMENT 1 OUTSIDE LANE
USH 51 - STH 16
EXPECTED WORK LIMITS:
STA 500+31 - 464+60

N

SCALE 1" = 200'

CURRIE ROAD

END PROJECT
STA. 536+61.83'SB'

IH 39 SB TO USH 51

EXIT RAMP TO USH 51
SEE "EXIT RAMP OUTSIDE LANE CLOSURE DETAIL" IN TRAFFIC CONTROL DETAILS FOR TRAFFIC CONTROL GUIDANCE

PT: 518+28.52SB

EP: 538+00.00SB

S-11-011

514SB 516SB 518SB 520SB 522SB 524SB 526SB 528SB 530SB 532SB 534SB 536SB 538SB

IH 39 SB

IH 39 SB

2

PROJECT NO:1161-00-65	HWY:IH 39	COUNTY:COLUMBIA	TRAFFIC CONTROL	SHEET 35	E

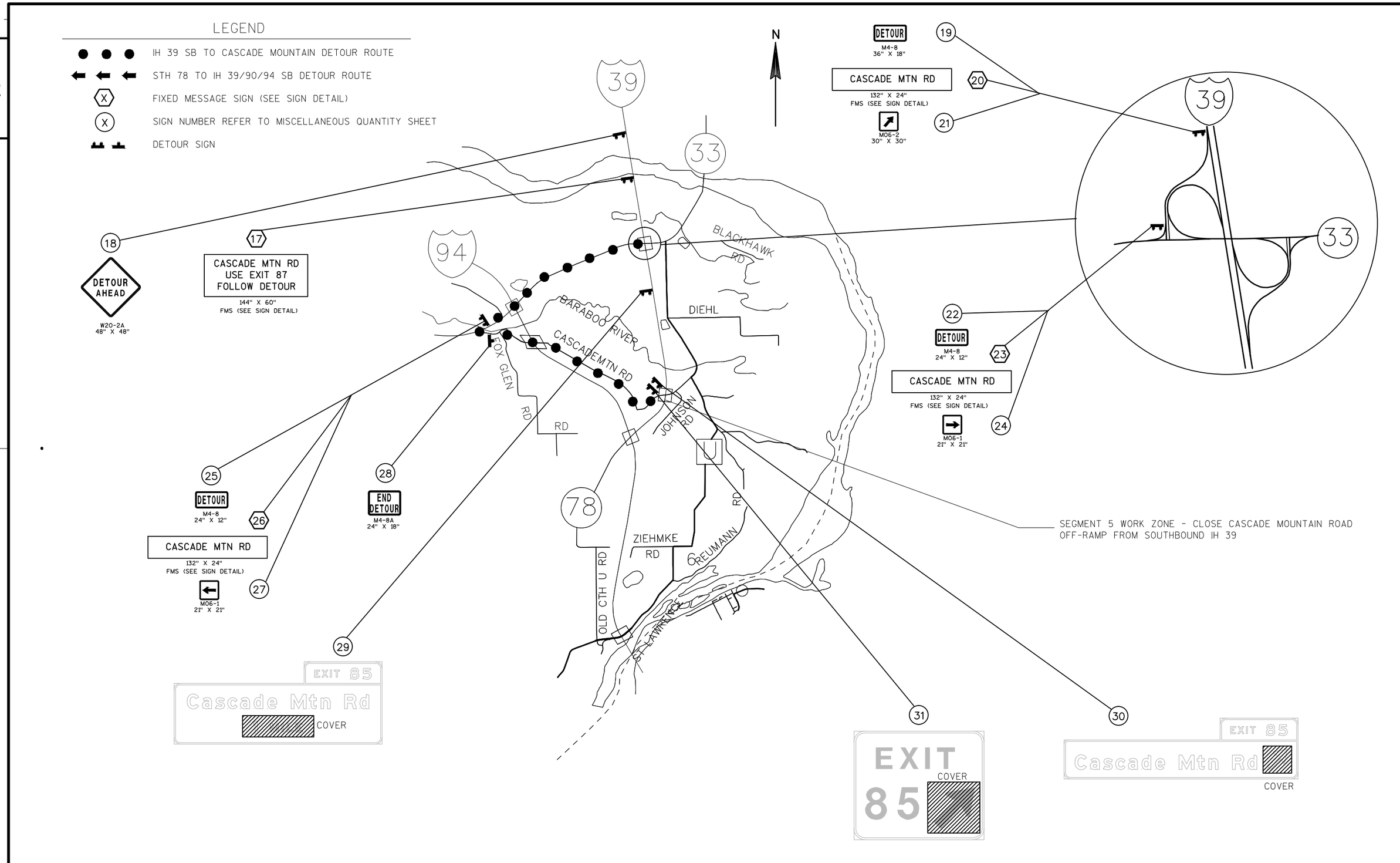

PROJECT NO:1161-00-65	HWY:IH 39	COUNTY:COLUMBIA	DETOUR PLAN - SEGMENT 5	SHEET 36	E

FILE NAME : G:\WDOTCO\12029 (2012-2014 DESIGN WORK ORDERS)\WORK ORDER 04 (IH 39 PAVEMENT REPAIRS)\CIVIL3D\SHEETSPLAN\11610065_DETOUR PLAN.DWG PLOT DATE : 1/28/2014 PLOT BY : KL ENGINEERING PLOT NAME : ---------- PLOT SCALE : ********** WISDOT/CADDS SHEET 42

LEGEND

- IH 39 SB TO CASCADE MOUNTAIN DETOUR ROUTE
- STH 78 TO IH 39/90/94 SB DETOUR ROUTE
- FIXED MESSAGE SIGN (SEE SIGN DETAIL)
- SIGN NUMBER REFER TO MISCELLANEOUS QUANTITY SHEET
- DETOUR SIGN

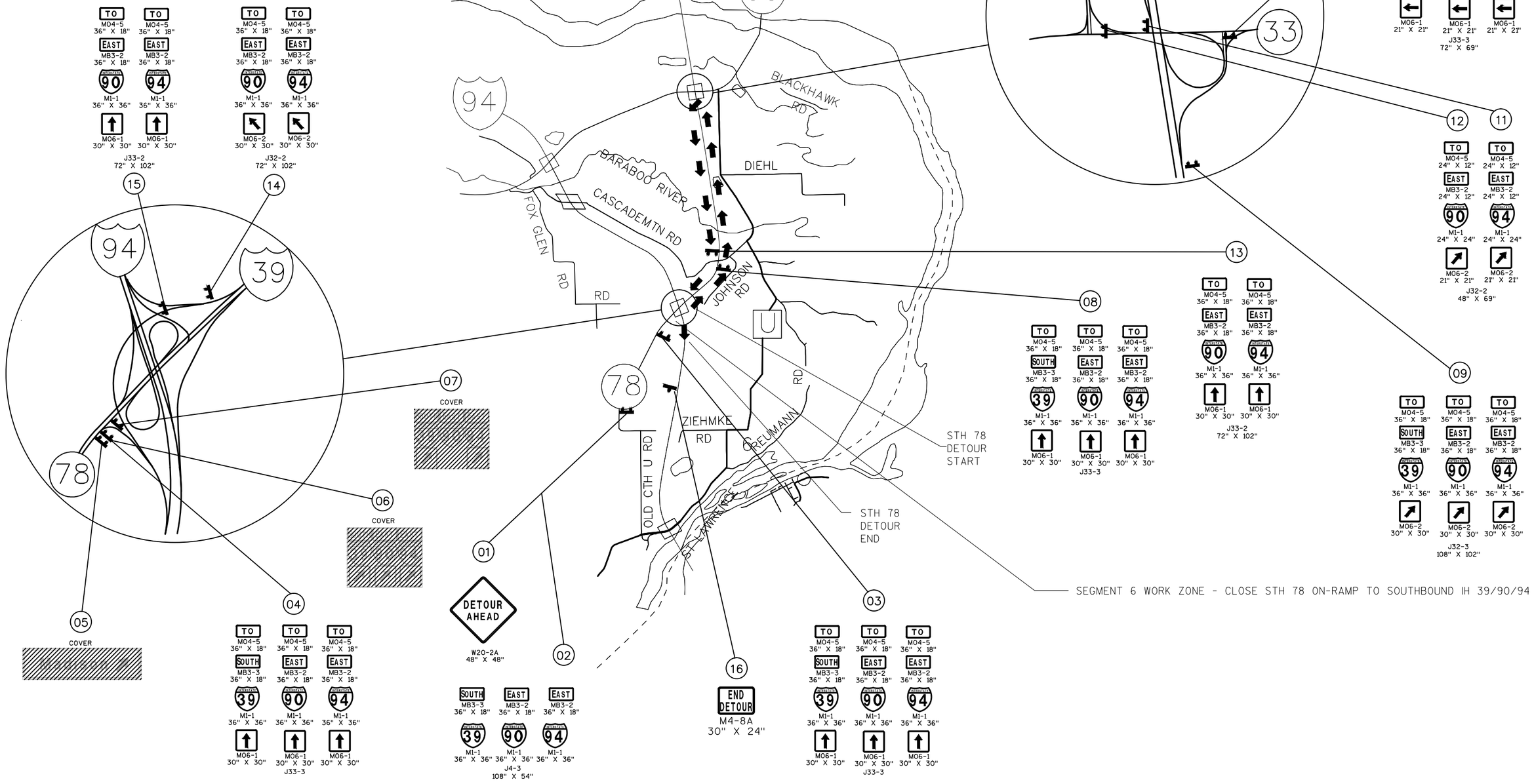

PROJECT NO:1161-00-65	HWY:IH 39	COUNTY:COUNTY:COLUMBIA	DETOUR PLAN - SEGMENT 6	SHEET 37	E

2

P.I. DATA

STA. 100+00.00SB
N: 371707.653
E: 528744.666

CURVE DATA

P.I. STA. 116+62.09SB
N: 373349.778
E: 529001.395
DELTA: 47°10'29.94"
DEG: 03°51'15.39"
L: 1223.965'
T: 649.072'
R: 1486.552'
PC STA. 110+13.02SB
PT STA. 122+36.99SB

CURVE DATA

P.I. STA. 126+59.72SB
N: 374205.744
E: 528357.573
DELTA: 01°58'29.48"
DEG: 00°14'00.98"
L: 845.384'
T: 422.734'
R: 24526.821'
PC STA. 122+36.99SB
PT STA. 130+82.37SB

CURVE DATA

P.I. STA. 147+83.47SB
N: 376078.806
E: 527359.559
DELTA: 103°08'37.03"
DEG: 04°14'42.98"
L: 2429.612'
T: 1701.099'
R: 1349.637'
PC STA. 130+82.37SB
PT STA. 155+11.98SB

CURVE DATA

P.I. STA. 158+73.31SB
N: 376534.184
E: 529369.329
DELTA: 04°37'29.30"
DEG: 00°38'25.16"
L: 722.263'
T: 361.328'
R: 8947.965'
PC STA. 155+11.98SB
PT STA. 162+34.25SB

CURVE DATA

P.I. STA. 165+76.93SB
N: 376702.847
E: 530052.562
DELTA: 27°11'07.57"
DEG: 04°02'33.58"
L: 672.464'
T: 342.685'
R: 1417.279'
PC STA. 162+34.25SB
PT STA. 169+06.71SB

CURVE DATA

P.I. STA. 175+67.07SB
N: 377390.964
E: 530782.405
DELTA: 23°58'41.32"
DEG: 01°50'33.01"
L: 1301.389'
T: 660.361'
R: 3109.670'
PC STA. 169+06.71SB
PT STA. 182+08.01SB

CURVE DATA

P.I. STA. 190+33.14SB
N: 378763.579
E: 531349.905
DELTA: 28°09'31.34"
DEG: 01°44'30.16"
L: 1616.726'
T: 825.036'
R: 3289.624'
PC STA. 182+08.01SB
PT STA. 198+24.83SB

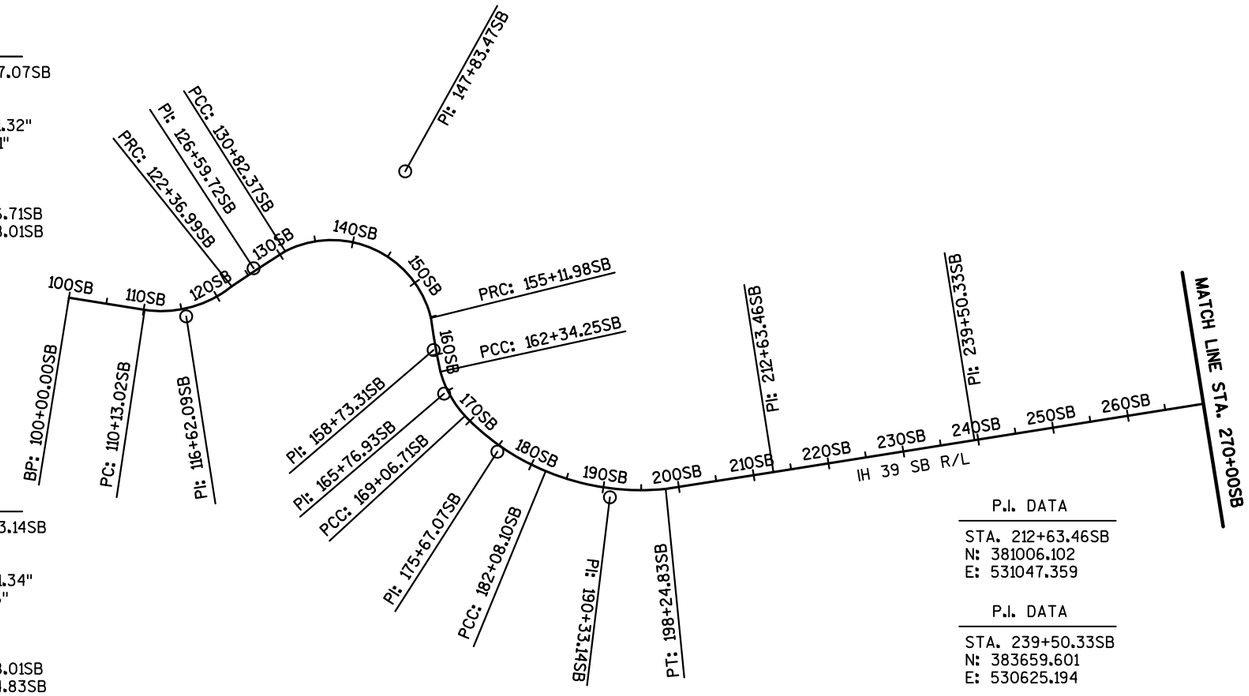

P.I. DATA

STA. 212+63.46SB
N: 381006.102
E: 531047.359

P.I. DATA

STA. 239+50.33SB
N: 383659.601
E: 530625.194

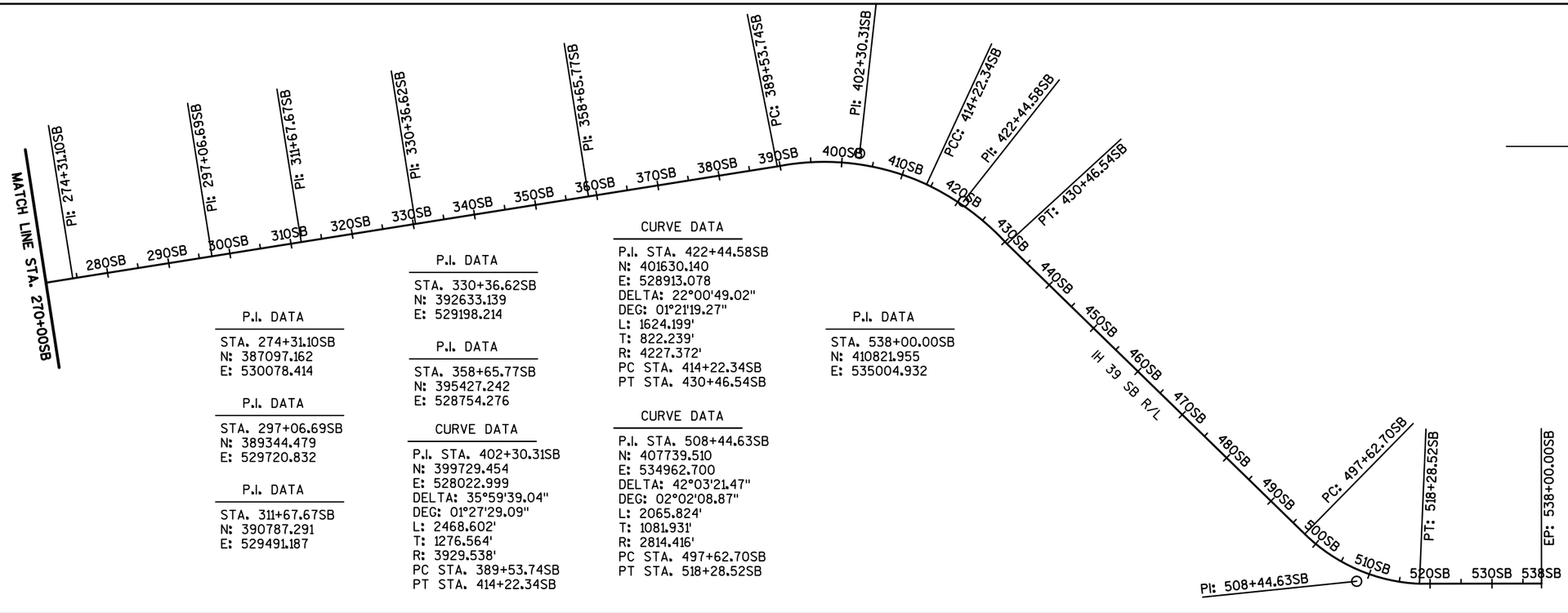

P.I. DATA

STA. 274+31.10SB
N: 387097.162
E: 530078.414

P.I. DATA

STA. 297+06.69SB
N: 389344.479
E: 529720.832

P.I. DATA

STA. 311+67.67SB
N: 390787.291
E: 529491.187

P.I. DATA

STA. 330+36.62SB
N: 392633.139
E: 529198.214

P.I. DATA

STA. 358+65.77SB
N: 395427.242
E: 528754.276

CURVE DATA

P.I. STA. 402+30.31SB
N: 399729.454
E: 528022.999
DELTA: 35°59'39.04"
DEG: 01°27'29.09"
L: 2468.602'
T: 1276.564'
R: 3929.538'
PC STA. 389+53.74SB
PT STA. 414+22.34SB

CURVE DATA

P.I. STA. 422+44.58SB
N: 401630.140
E: 528913.078
DELTA: 22°00'49.02"
DEG: 01°21'19.27"
L: 1624.199'
T: 822.239'
R: 4227.372'
PC STA. 414+22.34SB
PT STA. 430+46.54SB

CURVE DATA

P.I. STA. 508+44.63SB
N: 407739.510
E: 534962.700
DELTA: 42°03'21.47"
DEG: 02°02'08.87"
L: 2065.824'
T: 1081.931'
R: 2814.416'
PC STA. 497+62.70SB
PT STA. 518+28.52SB

P.I. DATA

STA. 538+00.00SB
N: 410821.955
E: 535004.932

2

PROJECT NO:1161-00-65	HWY:IH 39	COUNTY:COUNTY:COLUMBIA	ALIGNMENT DIAGRAM	SHEET 38	E

3

DATE 23MAY14 E S T I M A T E O F Q U A N T I T I E S

LINE NUMBER	ITEM	ITEM DESCRIPTION	UNIT	TOTAL	1161-00-65 QUANTITY
0010	203.0100	REMOVING SMALL PIPE CULVERTS	EACH	6.000	6.000
0020	204.0120	REMOVING ASPHALTIC SURFACE MILLING	SY	17,302.000	17,302.000
0030	204.0220	REMOVING INLETS	EACH	7.000	7.000
0040	204.9060.S	REMOVING (ITEM DESCRIPTION) 01. CONCRETE END BLOCK	EACH	7.000	7.000
0050	205.0100	EXCAVATION COMMON	CY	365.000	365.000
0060	208.0100	BORROW	CY	188.000	188.000
0070	211.0400	PREPARE FOUNDATION FOR ASPHALTIC SHOULDERS	STA	361.000	361.000
0080	213.0100	FINISHING ROADWAY (PROJECT) 01. 1161-00-65	EACH	1.000	1.000
0090	305.0110	BASE AGGREGATE DENSE 3/4-INCH	TON	400.000	400.000
0100	305.0120	BASE AGGREGATE DENSE 1 1/4-INCH	TON	90.000	90.000
0110	416.0610	DRILLED TIE BARS	EACH	1,970.000	1,970.000
0120	416.0620	DRILLED DOWEL BARS	EACH	3,346.000	3,346.000
0130	416.1710	CONCRETE PAVEMENT REPAIR	SY	2,447.000	2,447.000
0140	416.1715	CONCRETE PAVEMENT REPAIR SHES	SY	100.000	100.000
0150	416.1720	CONCRETE PAVEMENT REPLACEMENT	SY	7,304.000	7,304.000
0160	416.1725	CONCRETE PAVEMENT REPLACEMENT SHES	SY	40.000	40.000
0170	455.0105	ASPHALTIC MATERIAL PG58-28	TON	210.000	210.000
0180	455.0605	TACK COAT	GAL	433.000	433.000
0190	460.1100	HMA PAVEMENT TYPE E-0.3	TON	3,808.000	3,808.000
0200	460.2000	INCENTIVE DENSITY HMA PAVEMENT	DOL	2,240.000	2,240.000
0210	465.0400	ASPHALTIC SHOULDER RUMBLE STRIP	LF	37,100.000	37,100.000
0220	521.0118	CULVERT PIPE CORRUGATED STEEL 18-INCH	LF	397.000	397.000
0230	521.1618	APRON ENDWALLS FOR CULVERT PIPE SLOPED SIDE DRAINS STEEL 18-INCH 10 TO 1	EACH	12.000	12.000
0240	611.0642	INLET COVERS TYPE MS	EACH	1.000	1.000
0250	611.3901	INLETS MEDIAN 1 GRATE	EACH	1.000	1.000
0260	619.1000	MOBILIZATION	EACH	1.000	1.000
0270	625.0100	TOPSOIL	SY	2,699.000	2,699.000
0280	628.1905	MOBILIZATIONS EROSION CONTROL	EACH	1.000	1.000
0290	628.1910	MOBILIZATIONS EMERGENCY EROSION CONTROL	EACH	1.000	1.000
0300	628.2004	EROSION MAT CLASS I TYPE B	SY	2,700.000	2,700.000
0310	628.7010	INLET PROTECTION TYPE B	EACH	1.000	1.000
0320	628.7555	CULVERT PIPE CHECKS	EACH	12.000	12.000
0330	629.0210	FERTILIZER TYPE B	CWT	2.000	2.000
0340	630.0130	SEEDING MIXTURE NO. 30	LB	49.000	49.000
0350	634.0410	POSTS WOOD 4X4-INCH X 10-FT	EACH	2.000	2.000
0360	634.0612	POSTS WOOD 4X6-INCH X 12-FT	EACH	9.000	9.000
0370	634.0614	POSTS WOOD 4X6-INCH X 14-FT	EACH	1.000	1.000
0380	634.0616	POSTS WOOD 4X6-INCH X 16-FT	EACH	20.000	20.000
0390	634.0618	POSTS WOOD 4X6-INCH X 18-FT	EACH	21.000	21.000
0400	635.0200	SIGN SUPPORTS STRUCTURAL STEEL HS	LB	8,962.000	8,962.000
0410	636.0100	SIGN SUPPORTS CONCRETE MASONRY	CY	13.000	13.000
0420	636.0500	SIGN SUPPORTS STEEL REINFORCEMENT	LB	784.000	784.000
0430	637.1210	SIGNS TYPE I REFLECTIVE H	SF	2,981.000	2,981.000
0440	637.2210	SIGNS TYPE II REFLECTIVE H	SF	474.000	474.000
0450	637.2230	SIGNS TYPE II REFLECTIVE F	SF	121.000	121.000
0460	638.2602	REMOVING SIGNS TYPE II	EACH	48.000	48.000
0470	638.3000	REMOVING SMALL SIGN SUPPORTS	EACH	48.000	48.000
0480	642.5001	FIELD OFFICE TYPE B	EACH	1.000	1.000
0490	643.0200	TRAFFIC CONTROL SURVEILLANCE AND MAINTENANCE (PROJECT) 01. 1161-00-65	DAY	70.000	70.000
0500	643.0300	TRAFFIC CONTROL DRUMS	DAY	13,703.000	13,703.000

3

3

DATE 23MAY14 E S T I M A T E O F Q U A N T I T I E S

LINE NUMBER	ITEM	ITEM DESCRIPTION	UNIT	TOTAL	1161-00-65 QUANTITY
0510	643.0420	TRAFFIC CONTROL BARRICADES TYPE III	DAY	817.000	817.000
0520	643.0705	TRAFFIC CONTROL WARNING LIGHTS TYPE A	DAY	356.000	356.000
0530	643.0715	TRAFFIC CONTROL WARNING LIGHTS TYPE C	DAY	1,805.000	1,805.000
0540	643.0800	TRAFFIC CONTROL ARROW BOARDS	DAY	150.000	150.000
0550	643.0900	TRAFFIC CONTROL SIGNS	DAY	2,926.000	2,926.000
0560	643.0910	TRAFFIC CONTROL COVERING SIGNS TYPE I	EACH	4.000	4.000
0570	643.0920	TRAFFIC CONTROL COVERING SIGNS TYPE II	EACH	17.000	17.000
0580	643.1000	TRAFFIC CONTROL SIGNS FIXED MESSAGE	SF	126.000	126.000
0590	643.1050	TRAFFIC CONTROL SIGNS PCMS	DAY	75.000	75.000
0600	643.2000	TRAFFIC CONTROL DETOUR (PROJECT) 01. 1161-00-65	EACH	1.000	1.000
0610	643.3000	TRAFFIC CONTROL DETOUR SIGNS	DAY	826.000	826.000
0620	646.0106	PAVEMENT MARKING EPOXY 4-INCH	LF	103,575.000	103,575.000
0630	646.0126	PAVEMENT MARKING EPOXY 8-INCH	LF	8,385.000	8,385.000
0640	646.0600	REMOVING PAVEMENT MARKINGS	LF	321.000	321.000
0650	647.0156	PAVEMENT MARKING ARROWS EPOXY TYPE 1	EACH	1.000	1.000
0660	647.0566	PAVEMENT MARKING STOP LINE EPOXY 18-INCH	LF	75.000	75.000
0670	647.0736	PAVEMENT MARKING DIAGONAL EPOXY 18-INCH	LF	100.000	100.000
0680	647.0746	PAVEMENT MARKING DIAGONAL EPOXY 24-INCH	LF	630.000	630.000
0690	649.0400	TEMPORARY PAVEMENT MARKING REMOVABLE TAPE 4-INCH	LF	6,720.000	6,720.000
0700	650.6000	CONSTRUCTION STAKING PIPE CULVERTS	EACH	6.000	6.000
0710	650.8000	CONSTRUCTION STAKING RESURFACING REFERENCE	LF	36,100.000	36,100.000
0720	690.0150	SAWING ASPHALT	LF	760.000	760.000
0730	690.0250	SAWING CONCRETE	LF	18,360.000	18,360.000
0740	715.0415	INCENTIVE STRENGTH CONCRETE PAVEMENT	DOL	830.000	830.000
0750	ASP.1T0A	ON-THE-JOB TRAINING APPRENTICE AT $5. 00/HR	HRS	300.000	300.000
0760	ASP.1T0G	ON-THE-JOB TRAINING GRADUATE AT $5.00/HR	HRS	150.000	150.000
0770	SPV.0045	SPECIAL 01. TRUCK OR TRAILER-MOUNTED ATTENUATOR	DAY	21.000	21.000
0780	SPV.0060	SPECIAL 01. REALIGN HANDRAIL LOCKING PIN HOLE	EACH	1.000	1.000
0790	SPV.0060	SPECIAL 02. REPLACE SAFETY CHAIN ASSEMBLY	EACH	3.000	3.000
0800	SPV.0060	SPECIAL 03. REPLACE HANDRAIL HINGE PIN	EACH	1.000	1.000
0810	SPV.0060	SPECIAL 04. REPLACE MISSING CONDUIT PLUG	EACH	1.000	1.000
0820	SPV.0060	SPECIAL 05. TENSION ANCHOR ROD	EACH	4.000	4.000
0830	SPV.0060	SPECIAL 06. REMOVE GROUT PAD	EACH	8.000	8.000
0840	SPV.0060	SPECIAL 07. SECURE TYPE II SIGN	EACH	1.000	1.000
0850	SPV.0060	SPECIAL 08. REPLACE SIGN PANEL CONNECTOR	EACH	29.000	29.000
0860	SPV.0060	SPECIAL 09. REPLACE SIGN BRIDGE ID PLAQUE	EACH	3.000	3.000
0870	SPV.0060	SPECIAL 10. TENSION POST TO TRUSS CONNECTION BOLT	EACH	8.000	8.000
0880	SPV.0090	SPECIAL 01. RECONFIGURE EDGEDRAIN PIPE	LF	166.000	166.000

3

ALL ITEMS ARE CATEGORY 0010 UNLESS NOTED OTHERWISE

3

HMA PAVEMENT ITEMS

	STATION - STATION	LOCATION	204.0120 REMOVING ASPHALTIC SURFACE MILLING (SY)	211.0400 PREP FOUNDATION FOR ASPHALTIC SHOULDERS (STA)	305.0110 BASE AGRREGATE DENSE 3/4-INCH (TON)	305.0120 BASE AGGREGATE DENSE 1 1/4-INCH (TON)	455.0105 ASPHALTIC MATERIAL PG58-28 (TON)	455.0605 TACK COAT (GAL)	460.1100 HMA PAVEMENT TYPE E-0.3 (TON)	465.0400 ASPHALTIC SHOULDER RUMBLE STRIP (LF)	650.8000 CONSTRUCTION STAKING RESURFACING REFERENCE (LF)	690.0150 SAWING ASPHALT (LF)
SEGMENT 7	500+31 - 334+25	IH 39 LEFT SHOULDER	6,570	148	--	--	79	164	1,445	14,800	14,800	--
	354+50	MAINTENANCE CROSSOVER 4	150	--	20	15	2	4	33	--	--	110
	398+00	MAINTENANCE CROSSOVER 5	150	--	20	15	2	4	33	--	--	110
	442+00	MAINTENANCE CROSSOVER 6	150	--	20	15	2	4	33	--	--	110
	489+00	MAINTENANCE CROSSOVER 7	150	--	20	15	2	4	33	--	--	110
	SEGMENT 7 SUBTOTAL		7,170	148	80	60	87	179	1,577	14,800	14,800	440
SEGMENT 8	334+24 - 112+58	IH 39 LEFT SHOULDER	9,460	213	--	--	114	237	2,081	21,300	21,300	--
	209+50	MAINTENANCE CROSSOVER 1	150	--	20	15	2	4	33	--	--	110
	274+50	MAINTENANCE CROSSOVER 2	150	--	20	15	2	4	33	--	--	110
	322+00	MAINTENANCE CROSSOVER 3	150	--	20	--	2	4	33	--	--	60
	SEGMENT 8 SUBTOTAL		9,910	213	60	30	120	248	2,180	21,300	21,300	280
	SUBTOTALS		17,080	361	140	90	207	427	3,758	36,100	36,100	720
	UNDISTRIBUTED TOTALS*		222	--	260	--	3	6	50	1,000	--	40
	PROJECT TOTAL		**17,302**	**361**	**400**	**90**	**210**	**433**	**3,808**	**37,100**	**36,100**	**760**

*UNDISTRIBUTED TOTALS AS DETERMINED BELOW:
ITEMS 204.0120 / 460.1100 / 455.0105 / 455.0605 / 465.0400 -1000 LF AT 2-FT WIDTH FOR MISCELLANEOUS REPAIR OF IH 39 SB OUTSIDE SHOULDER
ITEM 690.0150 - 5% ADDITIONAL QUANTITY FOR POSSIBILITY OF OUTSIDE SHOULDER WORK
ITEMS 305.0110 - 1 MILE OF ADDITIONAL QUANTITY AT 2-FT WIDTH AND DEPTH 4-INCH FOR MEDIAN SHOULDER WORK

MAINTENANCE CROSSOVERS TABLE 1

MAINTENANCE CROSSOVER	BEGIN STA	END STA	203.0100 REMOVING SMALL PIPE CULVERTS (EACH)	204.0220 REMOVING INLETS (EACH)	204.9060.S.01 REMOVING CONCRETE END BLOCK (EACH)	205.0100 EXCAVATION COMMON (CY)	208.0100 BORROW (CY)	625.0100 TOP SOIL (SY)
1	208+50	210+50	1	2	2	31	40	458
2	273+00	275+00	1	--	--	38	22	422
3	321+00	323+00	--	--	--	20	20	125
4	353+50	355+50	1	--	--	20	20	228
5	397+00	399+00	1	2	2	20	40	412
6	441+00	443+00	1	1	1	36	26	437
7	488+00	490+00	1	2	2	200	20	617
PROJECT TOTALS			6	7	7	365	188	2,699

MOBILIZATIONS EROSION CONTROL

LOCATION	628.1905 (EACH)	628.1910 EMERGENCY (EACH)
PROJECT	1	1
PROJECT TOTALS	**1**	**1**

MAINTENANCE CROSSOVERS TABLE 2

MAINTENANCE CROSSOVER	BEGIN STA	END STA	PIPE THICKNESS STEEL IN	521.0118 CULVERT PIPE CORRUGATED STEEL 18-INCH (LF)	521.1618 APRON ENDWALLS FOR CULVERT PIPE SLOPED SIDE DRAINS STEEL 18-INCH 10 TO 1 (EACH)	611.0642 INLET COVERS TYPE MS (EACH)	611.3901 INLETS MEDIAN 1 GRATE (EACH)	628.2004 EROSION MAT CLASS 1 TYPE B (SY)	628.7010 INLET PROTECTION TYPE B (EACH)	628.7555 CULVERT PIPE CHECKS (EACH)	629.0210 FERTILIZER TYPE B (CWT)	630.0130 SEEDING MIXTURE NO. 30 (LB)	650.6000 CONSTRUCTION STAKING PIPE CULVERTS (EACH)	SPV.0090.01 RECONFIGURE EDGEDRAIN PIPE (LF)
1	208+50	210+50	0.064	63	2	--	--	458	--	2	0.29	8	1	20
2	273+00	275+00	0.064	52	2	--	--	422	--	2	0.26	8	1	96
3	321+00	323+00	--	--	--	--	--	125	--	--	0.08	2	--	--
4	353+50	355+50	0.064	57	2	1	1	228	1	2	0.14	4	1	20
5	397+00	399+00	0.064	101	2	--	--	412	--	2	0.26	8	1	--
6	441+00	443+00	0.064	63	2	--	--	437	--	2	0.27	8	1	30
7	488+00	490+00	0.064	61	2	--	--	617	--	2	0.39	11	1	--
PROJECT TOTALS				397	12	1	1	2,700	1	12	2	49	6	166

ALL ITEMS ARE CATEGORY 0010 UNLESS NOTED OTHERWISE

CONCRETE PAVEMENT REPLACEMENTS AND REPAIRS

CONSTRUCTION SEGMENT	SURVEY AREA	BEGIN STATION	END STATION	LOCATION	416.0610 DRILLED TIE BARS (EACH)	416.0620 DRILLED DOWEL BARS (EACH)	416.1710 CONCRETE PAVEMENT REPAIR (SY)	416.1715 CONCRETE PAVEMENT REPAIR SHES (SY)	416.1720 CONCRETE PAVEMENT REPLACEMENT (SY)	416.1725 CONCRETE PAVEMENT REPLACEMENT SHES (SY)	690.0250 SAWING CONCRETE (LF)
SEGMENT 7	293/294	386+23	386+51	MEDIAN	9	8	--	--	37	--	67
SEGMENT 7 TOTALS					9	8	0	0	37	0	67
SUBTOTALS FROM ALL PREVIOUS SEGMENTS					9	8	0	0	37	0	67
SEGMENT 8	295	239+42	239+51	MEDIAN	--	8	12	--	-	--	30
	296	212+55	212+63	MEDIAN	--	8	11	--	-	--	28
	214	198+14	198+25	MEDIAN	--	8	14	--	-	--	33
	216	197+41	197+50	MEDIAN	--	8	12	--	-	--	30
	218	196+32	196+42	MEDIAN	--	8	14	--	-	--	33
	220	195+70	195+81	MEDIAN	--	8	15	--	-	--	34
	223	194+86	195+07	MEDIAN	7	8	--	--	29	--	55
	226	193+77	193+85	MEDIAN	--	8	11	--	-	--	28
	227	193+32	193+43	MEDIAN	--	8	15	--	-	--	34
	230	191+92	192+00	MEDIAN	--	8	10	--	-	--	27
	237	182+09	182+18	MEDIAN	--	8	11	--	-	--	29
	239	180+94	181+05	MEDIAN	--	8	15	--	-	--	34
	242	175+34	175+43	MEDIAN	--	8	12	--	-	--	30
	252	169+07	169+15	MEDIAN	--	8	11	--	-	--	28
	256	167+22	167+33	MEDIAN	--	8	15	--	-	--	35
	259	145+75	145+86	MEDIAN	--	8	15	--	-	--	35
	264	134+97	135+09	MEDIAN	--	8	16	--	-	--	36
	266/267	134+60	134+84	MEDIAN	8	8	--	--	32	--	60
	270	134+10	134+19	MEDIAN	--	8	11	--	-	--	29
	272	130+83	131+03	MEDIAN	6	8	--	--	27	--	52
	279	125+18	125+53	MEDIAN	13	8	--	--	48	--	83
	284	122+37	122+48	MEDIAN	--	8	14	--	-	--	33
	287	114+53	114+65	MEDIAN	--	8	17	--	-	--	37
	288	113+41	113+62	MEDIAN	7	8	--	--	29	--	55
	290	124+90	125+48	MEDIAN	21	8	--	--	77	--	127
	291	122+33	124+76	MEDIAN	96	8	--	--	324	--	498
	292	117+97	118+07	MEDIAN	--	0	11	--	-	--	30
SEGMENT 8 TOTALS					158	208	261	0	566	0	1563
SUBTOTALS FROM ALL PREVIOUS SEGMENTS					167	216	261	0	603	0	1630
SEGMENT 1	1	500+24	500+31	OUTSIDE	2	10	11	--	-	--	28
	2	499+80	499+90	OUTSIDE	2	10	16	--	-	--	34
	3	498+64	499+18	OUTSIDE	20	10	--	--	84	--	122
	4	498+09	498+45	OUTSIDE	13	10	--	--	56	--	86
	5	497+43	497+63	OUTSIDE	6	10	--	--	32	--	54
	6	494+61	494+68	OUTSIDE	2	10	11	--	-	--	28
	7	493+89	493+96	OUTSIDE	2	10	11	--	-	--	28
	8	493+53	493+71	OUTSIDE	6	10	--	--	28	--	50
	9	492+95	493+01	OUTSIDE	2	10	9	--	-	--	25
	10	491+88	492+08	OUTSIDE	6	10	--	--	32	--	54
	11	491+35	491+55	OUTSIDE	6	10	--	--	32	--	54
	12	490+99	491+06	OUTSIDE	2	10	11	--	-	--	28
	13	490+81	490+87	OUTSIDE	2	10	9	--	-	--	26
	14	490+45	490+65	OUTSIDE	6	10	--	--	31	--	53
	15	490+08	490+14	OUTSIDE	2	10	10	--	-	--	27
	16	489+73	489+94	OUTSIDE	7	10	--	--	33	--	56
	17	489+34	489+58	OUTSIDE	8	10	--	--	38	--	62
	18	488+63	488+70	OUTSIDE	2	10	11	--	-	--	28
	19	488+11	488+32	OUTSIDE	7	10	--	--	33	--	56
	20	487+70	487+95	OUTSIDE	8	10	--	--	39	--	64
	21	487+21	487+41	OUTSIDE	6	10	--	--	32	--	54
	22	487+03	487+09	OUTSIDE	2	10	9	--	-	--	26
	23	486+78	486+85	OUTSIDE	2	10	11	--	-	--	28
	24	486+48	486+54	OUTSIDE	2	10	10	--	-	--	27
	25	486+12	486+19	OUTSIDE	--	10	11	--	-	--	28
	26	485+58	485+64	OUTSIDE	--	10	10	--	-	--	27
	27	484+31	484+69	OUTSIDE	14	10	--	--	60	--	90
	28	483+23	483+30	OUTSIDE	--	10	12	--	-	--	29
	29	482+68	483+06	OUTSIDE	14	10	--	--	60	--	90
	30	482+32	482+39	OUTSIDE	--	10	11	--	-	--	28
	31	480+51	480+91	OUTSIDE	14	10	--	--	63	--	94
SEGMENT 1 SUBTOTALS (CONTINUED ON NEXT)					165	310	172	0	653	0	1484
COMPLETE SHEET SUBTOTALS					332	526	432	0	1256	0	3114

CONCRETE PAVEMENT REPLACEMENTS AND REPAIRS (CONT)

CONSTRUCTION SEGMENT	SURVEY AREA	BEGIN STATION	END STATION	LOCATION	416.0610 DRILLED TIE BARS (EACH)	416.0620 DRILLED DOWEL BARS (EACH)	416.1710 CONCRETE PAVEMENT REPAIR (SY)	416.1715 CONCRETE PAVEMENT REPAIR SHES (SY)	416.1720 CONCRETE PAVEMENT REPLACEMENT (SY)	416.1725 CONCRETE PAVEMENT REPLACEMENT SHES (SY)	690.0250 SAWING CONCRETE (LF)
COMPLETE SUBTOTALS FROM PREVIOUS SHEET					332	526	432	0	1256	0	3114
SEGMENT 1 SUBTOTALS FROM PREVIOUS SHEET					165	310	172	0	653	0	1484
SEGMENT 1 (CONTINUED)	32	479+78	479+85	OUTSIDE	--	10	11	--	-	--	28
	33	478+52	478+58	OUTSIDE	--	10	9	--	-	--	26
	34	478+16	478+23	OUTSIDE	--	10	12	--	-	--	29
	35	477+21	477+65	OUTSIDE	16	10	--	--	69	--	102
	36	476+52	476+70	OUTSIDE	6	10	--	--	29	--	51
	37	476+15	476+22	OUTSIDE	--	10	11	--	-	--	28
	38	475+71	475+79	OUTSIDE	--	10	12	--	-	--	29
	39	475+24	475+31	OUTSIDE	--	10	11	--	-	--	28
	40	475+06	475+12	OUTSIDE	--	10	9	--	-	--	26
	41	474+30	474+70	OUTSIDE	14	10	--	--	62	--	93
	42	472+67	473+24	OUTSIDE	21	10	--	--	89	--	128
	43	471+94	472+15	OUTSIDE	7	10	--	--	33	--	56
	44	471+60	471+67	OUTSIDE	--	10	10	--	-	--	27
	45	470+99	471+06	OUTSIDE	--	10	11	--	-	--	28
	46	470+63	470+70	OUTSIDE	--	10	11	--	-	--	28
	47	469+75	469+97	OUTSIDE	7	10	--	--	35	--	58
	48	469+04	469+24	OUTSIDE	6	10	--	--	32	--	54
	49	468+46	468+54	OUTSIDE	--	10	12	--	-	--	29
	50	468+13	468+31	OUTSIDE	6	10	--	--	29	--	51
	51	467+40	467+95	OUTSIDE	20	10	--	--	86	--	124
	52	466+96	467+03	OUTSIDE	--	10	12	--	-	--	29
	53	466+10	466+29	OUTSIDE	6	10	--	--	30	--	52
	54	465+53	465+91	OUTSIDE	14	10	--	--	60	--	91
	55	464+61	464+69	OUTSIDE	--	10	13	--	-	--	31
SEGMENT 1 TOTALS					288	550	315	0	1207	0	2710
SUBTOTALS FROM ALL PREVIOUS SEGMENTS					455	766	576	0	1810	0	4340
SEGMENT 2	56	463+69	464+10	OUTSIDE	15	10	--	--	65	--	97
	57	463+16	463+38	OUTSIDE	7	10	--	--	35	--	58
	58	461+16	462+30	OUTSIDE	44	10	--	--	177	--	241
	59	460+29	460+84	OUTSIDE	20	10	--	--	86	--	124
	60	459+69	459+96	OUTSIDE	9	10	--	--	43	--	69
	61	459+20	459+38	OUTSIDE	6	10	--	--	28	--	50
	62	458+95	459+01	OUTSIDE	--	10	10	--	-	--	27
	63	457+55	457+62	OUTSIDE	--	10	11	--	-	--	28
	64/65	456+35	457+07	OUTSIDE	27	10	--	--	112	--	158
	66/67	455+06	456+17	OUTSIDE	43	10	--	--	173	--	236
	68	454+80	454+86	OUTSIDE	--	10	9	--	-	--	26
	69	454+42	454+50	OUTSIDE	--	10	12	--	-	--	29
	70	453+03	453+10	OUTSIDE	--	10	11	--	-	--	28
	71	452+46	452+84	OUTSIDE	14	10	--	--	60	--	90
	72	452+09	452+16	OUTSIDE	--	10	11	--	-	--	28
	73	450+75	450+82	OUTSIDE	--	10	10	--	-	--	27
	74	450+38	450+46	OUTSIDE	--	10	12	--	-	--	29
	75	449+64	449+71	OUTSIDE	--	10	11	--	-	--	28
	76	449+42	449+46	OUTSIDE	--	10	9	--	-	--	26
	77	449+10	449+17	OUTSIDE	--	10	12	--	-	--	29
	78	448+36	448+43	OUTSIDE	--	10	11	--	-	--	28
	79	447+61	447+99	OUTSIDE	14	10	--	--	60	--	90
	80	446+53	446+60	OUTSIDE	--	10	11	--	-	--	28
	81	445+98	446+22	OUTSIDE	8	10	--	--	37	--	61
	82	445+55	445+62	OUTSIDE	--	10	12	--	-	--	29
	83	445+17	445+25	OUTSIDE	--	10	12	--	-	--	29
	84	443+95	444+32	OUTSIDE	13	10	--	--	58	--	88
	85	443+50	443+57	OUTSIDE	--	10	11	--	-	--	28
	86	443+32	443+39	OUTSIDE	--	10	11	--	-	--	28
	87	442+95	443+02	OUTSIDE	--	10	11	--	-	--	28
	88	442+28	442+65	OUTSIDE	13	10	--	--	58	--	88
	89	441+84	441+91	OUTSIDE	--	10	12	--	-	--	29
	90	441+15	441+53	OUTSIDE	14	10	--	--	60	--	90
	91	440+57	440+80	OUTSIDE	8	10	--	--	36	--	60
	92	440+35	440+43	OUTSIDE	--	10	12	--	-	--	29
	93	438+88	439+26	OUTSIDE	13	10	--	--	59	--	89
SEGMENT 2 SUBTOTALS (CONTINUED ON NEXT SHEET)					268	360	219	0	1147	0	2250
COMPLETE SHEET SUBTOTALS					723	1126	794	0	2957	0	6590

ALL ITEMS ARE CATEGORY 0010 UNLESS NOTED OTHERWISE

CONCRETE PAVEMENT REPLACEMENTS AND REPAIRS (CONT)

CONSTRUCTION SEGMENT	SURVEY AREA	BEGIN STATION	END STATION	LOCATION	416.0610 DRILLED TIE BARS (EACH)	416.0620 DRILLED DOWEL BARS (EACH)	416.1710 CONCRETE PAVEMENT REPAIR (SY)	416.1715 CONCRETE PAVEMENT REPAIR SHES (SY)	416.1720 CONCRETE PAVEMENT REPLACEMENT (SY)	416.1725 CONCRETE PAVEMENT REPLACEMENT SHES (SY)	690.0250 SAWING CONCRETE (LF)
COMPLETE SUBTOTALS FROM PREVIOUS SHEET					723	1126	794	0	2957	0	6590
SEGMENT 2 SUBTOTALS FROM PREVIOUS SHEET					268	360	219	0	1147	0	2250
SEGMENT 2 (CONTINUED)	94	435+25	435+33	OUTSIDE	--	10	12	--	-	--	30
	95	434+89	434+96	OUTSIDE	--	10	11	--	-	--	28
	96	433+23	433+83	OUTSIDE	22	10	--	--	93	--	133
	97	432+67	432+75	OUTSIDE	1	10	12	--	-	--	29
	98	432+15	432+52	OUTSIDE	13	10	--	--	58	--	88
	99	431+60	431+67	OUTSIDE	--	10	11	--	-	--	28
	100	430+38	430+46	OUTSIDE	--	10	12	--	-	--	30
SEGMENT 2 TOTALS					304	430	277	0	1298	0	2616
SUBTOTALS FROM ALL PREVIOUS SEGMENTS					759	1196	852	0	3108	0	6956
SEGMENT 3	101	414+15	414+22	OUTSIDE	--	10	11	--	-	--	28
	102	412+46	413+40	OUTSIDE	36	10	--	--	147	--	202
	103	412+20	412+28	OUTSIDE	--	10	12	--	-	--	29
	104	411+55	411+93	OUTSIDE	13	10	--	--	59	--	89
	105	411+30	411+37	OUTSIDE	--	10	10	--	-	--	27
	106	410+92	410+99	OUTSIDE	--	10	11	--	-	--	28
	107	410+73	410+79	OUTSIDE	--	10	10	--	-	--	27
	108	410+41	410+60	OUTSIDE	6	10	--	--	30	--	52
	109	410+15	410+23	OUTSIDE	--	10	12	--	-	--	29
	110	397+92	398+00	OUTSIDE	--	10	12	--	-	--	30
	111	389+47	389+54	OUTSIDE	--	10	11	--	-	--	28
	112	387+76	387+83	OUTSIDE	--	10	12	--	-	--	29
	113	386+32	386+39	OUTSIDE	--	10	11	--	-	--	28
	114	385+66	385+73	OUTSIDE	--	10	12	--	-	--	29
	115	385+46	385+54	OUTSIDE	--	10	12	--	-	--	29
	116	385+08	385+15	OUTSIDE	--	10	12	--	-	--	29
	117	384+70	384+78	OUTSIDE	--	10	12	--	-	--	30
	118	383+96	384+03	OUTSIDE	--	10	11	--	-	--	28
	119	382+28	382+37	OUTSIDE	--	10	13	--	-	--	31
	120	381+19	381+60	OUTSIDE	15	10	--	--	64	--	96
	121	380+41	380+50	OUTSIDE	--	10	13	--	-	--	31
	122	379+21	379+58	OUTSIDE	13	10	--	--	59	--	89
	123	378+38	378+50	OUTSIDE	--	10	19	--	-	--	39
	124	377+24	377+31	OUTSIDE	--	10	12	--	-	--	29
	125	373+51	373+58	OUTSIDE	--	10	11	--	-	--	28
	126	372+82	373+22	OUTSIDE	14	10	--	--	62	--	93
	127	370+97	371+16	OUTSIDE	6	10	--	--	29	--	51
	128	370+71	370+79	OUTSIDE	--	10	13	--	-	--	31
	129	368+49	368+56	OUTSIDE	--	10	11	--	-	--	28
	130	367+37	367+44	OUTSIDE	--	10	11	--	-	--	28
	131	366+32	366+39	OUTSIDE	--	10	11	--	-	--	28
	132	365+49	365+56	OUTSIDE	--	10	11	--	-	--	28
	133	363+08	363+15	OUTSIDE	--	10	12	--	-	--	29
	134	361+09	361+35	OUTSIDE	9	10	--	--	40	--	65
	135	360+08	360+16	OUTSIDE	--	10	12	--	-	--	29
	136	358+60	358+68	OUTSIDE	--	10	12	--	-	--	30
	137	330+18	330+37	OUTSIDE	6	10	--	--	29	--	51
	138	329+36	329+44	OUTSIDE	--	10	12	--	-	--	30
	139	328+57	328+69	OUTSIDE	--	10	19	--	-	--	38
	140	327+62	327+71	OUTSIDE	--	10	14	--	-	--	32
	141	326+42	327+15	OUTSIDE	28	10	--	--	114	--	160
	142	324+21	324+77	OUTSIDE	21	10	--	--	88	--	126
	143	322+62	322+68	OUTSIDE	--	10	10	--	-	--	27
	144	322+42	322+49	OUTSIDE	--	10	11	--	-	--	28
	145	322+23	322+30	OUTSIDE	--	10	12	--	-	--	29
	146	322+05	322+12	OUTSIDE	--	10	11	--	-	--	28
	147/148	320+43	321+36	OUTSIDE	36	10	--	--	145	--	200
	149	319+98	320+05	OUTSIDE	--	10	12	--	-	--	29
	150	318+54	319+10	OUTSIDE	21	10	--	--	88	--	126
	151	311+61	311+68	OUTSIDE	--	10	10	--	-	--	27
	152	307+47	307+55	OUTSIDE	--	10	12	--	-	--	30
SEGMENT 3 TOTALS					224	510	453	0	954	0	2515
COMPLETE SHEET SUBTOTALS					983	1706	1306	0	4062	0	9471

CONCRETE PAVEMENT REPLACEMENTS AND REPAIRS (CONT)

CONSTRUCTION SEGMENT	SURVEY AREA	BEGIN STATION	END STATION	LOCATION	416.0610 DRILLED TIE BARS (EACH)	416.0620 DRILLED DOWEL BARS (EACH)	416.1710 CONCRETE PAVEMENT REPAIR (SY)	416.1715 CONCRETE PAVEMENT REPAIR SHES (SY)	416.1720 CONCRETE PAVEMENT REPLACEMENT (SY)	416.1725 CONCRETE PAVEMENT REPLACEMENT SHES (SY)	690.0250 SAWING CONCRETE (LF)
COMPLETE SUBTOTALS FROM PREVIOUS SHEET					983	1706	1306	0	4062	0	9471
SEGMENT 4	153	297+00	297+07	OUTSIDE	--	10	12	--	-	--	29
	154	294+47	294+54	OUTSIDE	--	10	11	--	-	--	28
	155	291+93	292+00	OUTSIDE	--	10	12	--	-	--	29
	156	291+28	291+64	OUTSIDE	13	10	--	--	56	--	86
	157	290+12	290+19	OUTSIDE	--	10	11	--	-	--	28
	158/159	289+57	289+83	OUTSIDE	9	10	--	--	40	--	65
	160	288+86	288+93	OUTSIDE	--	10	10	--	-	--	27
	161	288+03	288+39	OUTSIDE	13	10	--	--	56	--	86
	162	287+42	287+49	OUTSIDE	--	10	11	--	-	--	28
	163	287+23	287+30	OUTSIDE	--	10	12	--	-	--	29
	164/165	286+55	286+94	OUTSIDE	14	10	--	--	62	--	93
	166	286+22	286+29	OUTSIDE	--	10	11	--	-	--	28
	167	285+85	285+93	OUTSIDE	--	10	12	--	-	--	29
	168/169	285+13	285+38	OUTSIDE	8	10	--	--	39	--	64
	170	284+81	284+88	OUTSIDE	--	10	11	--	-	--	28
	171	284+58	284+66	OUTSIDE	--	10	12	--	-	--	29
	172	283+91	284+30	OUTSIDE	14	10	--	--	61	--	92
	173	283+57	283+75	OUTSIDE	6	10	--	--	28	--	50
	174	283+03	283+27	OUTSIDE	8	10	--	--	39	--	63
	175	282+77	282+85	OUTSIDE	--	10	12	--	-	--	29
	176	282+41	282+49	OUTSIDE	--	10	12	--	-	--	29
	177	281+91	282+09	OUTSIDE	6	10	--	--	28	--	50
	178	281+66	281+73	OUTSIDE	--	10	10	--	-	--	27
	179	281+47	281+55	OUTSIDE	--	10	12	--	-	--	29
	180	280+46	280+64	OUTSIDE	6	10	--	--	29	--	51
	181	279+85	279+92	OUTSIDE	--	10	11	--	-	--	28
	182	278+94	279+02	OUTSIDE	--	10	12	--	-	--	29
	183	274+24	274+31	OUTSIDE	--	10	12	--	-	--	29
	184	264+30	264+38	OUTSIDE	--	10	12	--	-	--	29
	185	260+10	260+64	OUTSIDE	20	10	--	--	84	--	122
	186	250+98	251+05	OUTSIDE	--	10	11	--	-	--	28
	187	249+97	250+69	OUTSIDE	27	10	--	--	112	--	158
	188/189	247+80	248+34	OUTSIDE	20	10	--	--	84	--	122
	190	246+53	247+07	OUTSIDE	20	10	--	--	85	--	123
	191	242+48	242+55	OUTSIDE	--	10	11	--	-	--	28
	192	241+58	241+65	OUTSIDE	--	10	11	--	-	--	28
	193	240+32	240+38	OUTSIDE	--	10	9	--	-	--	26
	194	240+13	240+20	OUTSIDE	--	10	12	--	-	--	29
	195	239+30	239+51	OUTSIDE	7	10	--	--	32	--	55
	196	238+49	238+57	OUTSIDE	--	10	12	--	-	--	30
	197/198	236+77	237+31	OUTSIDE	20	10	--	--	84	--	122
SEGMENT 4 SUBTOTALS					211	410	280	0	919	0	2112
SUBTOTALS FROM ALL PREVIOUS SEGMENTS					1194	2116	1586	0	4981	0	11583
SEGMENT 5	199	234+78	235+14	OUTSIDE	13	10	--	--	56	--	86
	200	233+98	234+05	OUTSIDE	--	10	11	--	-	--	28
	201	232+37	233+15	OUTSIDE	30	10	--	--	122	--	170
	202	229+94	230+01	OUTSIDE	--	10	11	--	-	--	28
	203/204	229+29	229+65	OUTSIDE	13	10	--	--	56	--	86
	205	227+66	227+74	OUTSIDE	--	10	12	--	-	--	29
	206	225+85	226+76	OUTSIDE	35	10	--	--	142	--	196
	207	225+59	225+67	OUTSIDE	--	10	12	--	-	--	29
	208	224+03	224+58	OUTSIDE	20	10	--	--	85	--	123
	209	222+87	222+95	OUTSIDE	--	10	12	--	-	--	29
	210	220+92	221+14	OUTSIDE	7	10	--	--	35	--	59
	211	220+71	220+78	OUTSIDE	--	10	12	--	-	--	29
	212	200+44	200+55	OUTSIDE	--	10	18	--	-	--	37
	213	198+24	198+35	OUTSIDE	--	10	17	--	-	--	36
	215	197+39	197+50	OUTSIDE	--	10	18	--	-	--	37
	217	196+29	196+51	OUTSIDE	7	10	--	--	34	--	57
	219	195+70	195+79	OUTSIDE	--	10	13	--	-	--	31
SEGMENT 5 SUBTOTALS (CONTINUED ON NEXT SHEET)					125	170	135	0	530	0	1090
COMPLETE SHEET SUBTOTALS					1319	2286	1720	0	5511	0	12673

ALL ITEMS ARE CATEGORY 0010 UNLESS NOTED OTHERWISE

CONCRETE PAVEMENT REPLACEMENTS AND REPAIRS (CONT)

CONSTRUCTION SEGMENT	SURVEY AREA	BEGIN STATION	END STATION	LOCATION	416.0610 DRILLED TIE BARS (EACH)	416.0620 DRILLED DOWEL BARS (EACH)	416.1710 CONCRETE PAVEMENT REPAIR (SY)	416.1715 CONCRETE PAVEMENT REPAIR SHES (SY)	416.1720 CONCRETE PAVEMENT REPLACEMENT (SY)	416.1725 CONCRETE PAVEMENT REPLACEMENT SHES (SY)	690.0250 SAWING CONCRETE (LF)
COMPLETE SUBTOTALS FROM PREVIOUS SHEET					1319	2286	1720	0	5511	0	12673
SEGMENT 5 SUBTOTALS FROM PREVIOUS SHEET					125	170	135	0	530	0	1090
SEGMENT 5 (CONTINUED)	221	195+31	195+42	OUTSIDE	--	10	18	--	-	--	37
	222/224	194+66	195+06	OUTSIDE	14	10	--	--	62	--	93
	225	194+09	194+20	OUTSIDE	--	10	16	--	-	--	35
	228	192+45	192+52	OUTSIDE	--	10	12	--	-	--	29
	229	192+07	192+16	OUTSIDE	--	10	13	--	-	--	31
	231	191+47	191+55	OUTSIDE	--	10	12	--	-	--	30
	232	188+96	189+34	OUTSIDE	14	10	--	--	60	--	90
	233	188+39	188+60	OUTSIDE	7	10	--	--	34	--	57
	234	186+34	186+45	OUTSIDE	--	10	17	--	-	--	36
	235/236	182+06	182+50	OUTSIDE	16	10	--	--	69	--	102
	238	181+18	181+41	OUTSIDE	8	10	--	--	36	--	60
	240	176+04	176+12	OUTSIDE	--	10	12	--	-	--	30
	241	175+42	175+52	OUTSIDE	--	10	16	--	-	--	35
	243	174+56	174+68	OUTSIDE	--	10	18	--	-	--	37
	244	173+93	174+05	OUTSIDE	--	10	19	--	-	--	38
	245	173+29	173+35	OUTSIDE	--	10	9	--	-	--	26
	246	171+99	172+23	OUTSIDE	8	10	--	--	37	--	61
	247/248	171+40	171+85	OUTSIDE	17	10	--	--	71	--	105
	249	171+09	171+17	OUTSIDE	--	10	12	--	-	--	30
	250	169+89	170+09	OUTSIDE	6	10	--	--	32	--	54
	251	169+05	169+17	OUTSIDE	--	10	19	--	-	--	38
	253	168+79	168+90	OUTSIDE	--	10	17	--	-	--	36
	254	168+31	168+55	OUTSIDE	8	10	--	--	38	--	62
	255	167+03	167+59	OUTSIDE	21	10	--	--	88	--	126
	257	164+92	165+02	OUTSIDE	--	10	16	--	-	--	34
SEGMENT 5 SUBTOTALS					244	420	362	0	1057	0	2402
SUBTOTALS FROM ALL PREVIOUS SEGMENTS					1438	2536	1948	0	6038	0	13985
SEGMENT 6	258	145+73	145+84	OUTSIDE	--	10	18	--	-	--	37
	260	145+42	145+50	OUTSIDE	--	10	12	--	-	--	29
	261	139+47	139+60	OUTSIDE	--	10	19	--	-	--	39
	262	137+90	138+13	OUTSIDE	8	10	--	--	37	--	61
	263	136+56	136+66	OUTSIDE	--	10	15	--	-	--	33
	265	134+79	134+89	OUTSIDE	--	10	16	--	-	--	35
	268	134+42	134+53	OUTSIDE	--	10	17	--	-	--	36
	269	134+10	134+21	OUTSIDE	--	10	16	--	-	--	35
	271/273	130+81	131+13	OUTSIDE	11	10	--	--	49	--	77
	274	129+06	129+18	OUTSIDE	--	10	19	--	-	--	38
	275	127+56	127+64	OUTSIDE	--	10	12	--	-	--	29
	276	126+74	126+82	OUTSIDE	--	10	13	--	-	--	31
	277	126+05	126+16	OUTSIDE	--	10	17	--	-	--	36
	278	124+97	125+51	OUTSIDE	20	10	--	--	85	--	123
	280	124+58	124+66	OUTSIDE	--	10	12	--	-	--	30
	281	123+84	124+24	OUTSIDE	15	10	--	--	63	--	95
	282	123+30	123+69	OUTSIDE	14	10	--	--	61	--	92
	283	122+36	122+76	OUTSIDE	14	10	--	--	62	--	93
	285	117+71	118+48	OUTSIDE	29	10	--	--	120	--	168
	286	114+33	114+90	OUTSIDE	21	10	--	--	89	--	128
	289	112+57	112+65	OUTSIDE	--	10	12	--	-	--	30
SEGMENT 6 TOTALS					132	210	199	0	566	0	1275
TOTALS FROM ALL SEGMENTS					1570	2746	2147	0	6604	0	15260
UNDISTRIBUTED TOTALS*					400	600	300	100	700	40	3100
PROJECT TOTALS					**1,970**	**3,346**	**2,447**	**100**	**7,304**	**40**	**18,360**

*UNDISTRIBUTED TOTALS AS DETERMINED BELOW:
ITEMS 416.0610 / 416.0620 / 690.0250 - 20% ADDITIONAL QUANTITY TO ACCOUNT FOR PAVEMENT DETERIORATION SINCE JUNE 2013 WHEN SURVEY WAS COMPLETED.
ITEMS 416.1710 / 416.1720 - 10% ADDITIONAL QUANTITY TO ACCOUNT FOR PAVEMENT DETERIORATION SINCE JUNE 2013 WHEN SURVEY WAS COMPLETED.
ITEM 416.1715 - QUANTITY ESTIMATED FOR 5 REPAIR AREAS (ONE 14-FT X 12-FT AREA = 20 SY @ 5 AREAS = 100 SY) REQUIRING SHES AT TIME OF CONSTRUCTION.
ITEM 416.1725 - QUANTITY ESTIMATED FOR 1 REPLACEMENT AREA (ONE 30-FT X 12-FT AREA = 40 SY) REQUIRING SHES AT TIME OF CONSTRUCTION.

3

PERMANENT SIGNING TYPE II

SIGN #	SIGN CODE	SIGN SIZE	SIGN SIZE IN	634.0410 POSTS WOOD 4X4-IN 10 FT (EACH)	634.0612 POSTS WOOD 4X6-IN 12 FT (EACH)	634.0614 POSTS WOOD 4X6-IN 14 FT (EACH)	634.0616 POSTS WOOD 4X6-IN 16 FT (EACH)	634.0618 POSTS WOOD 4X6-IN 18 FT (EACH)	638.2602 REMOVING SIGNS TYPE II (EACH)	637.2210 SIGNS TYPE II REFLECTIVE H (SF)	637.2230 SIGNS TYPE II REFLECTIVE F (SF)	638.3000 REMOVING SMALL SIGN SUPPORTS (EACH)	SIGN MOUNTED ON SAME POST AS	REMARKS
1-02	W4-1	(5)	48X48	--	--	--	--	--	1	--	--	1	--	MERGING TRAFFIC SYMBOL (RIGHT)
1-03	W4-1	(5)	48X48	--	--	--	--	2	1	--	16.00	1	--	MERGING TRAFFIC SYMBOL (RIGHT)
1-04	W4-1	(5)	48X48	--	--	--	--	--	1	--	--	1	--	MERGING TRAFFIC SYMBOL (RIGHT)
1-09	E5-1	(5)	72X60	--	--	--	--	2	1	30.00	--	2	--	EXIT (ARROW)
1-13	E5-1	(5)	72X60	--	--	--	2	--	1	30.00	--	2	--	EXIT (ARROW)
2-01	W4-1	(5)	48X48	--	--	--	--	2	1	--	16.00	1	--	MERGING TRAFFIC SYMBOL (RIGHT)
2-04	E5-1A	(5)	72X60	--	--	--	--	2	1	30.00	--	2	--	EXIT NUMBER (ARROW) 1-4 DIGITS
2-12	I3-1	(5)	102X21	--	2	--	--	--	1	14.88	--	2	--	LAKE OR RIVER NAME
2-13	R3-4B	(5)	36X48	--	--	--	1	--	1	12.00	--	1	2-14	NO U TURN SIGN COMBINED W/MAINT&POLICE
2-14	R3-4B	(5)	36X48	--	--	--	--	--	1	12.00	--	--	2-13	NO U TURN SIGN COMBINED W/MAINT&POLICE
2-16	D10-2	(5)	12X36	--	--	1	--	--	1	3.00	--	1	--	MILEPOST MARKER (2 DIGITS)
3-06	D10-2	(5)	12X36	--	--	--	1	--	1	3.00	--	1	--	MILEPOST MARKER (2 DIGITS)
3-07	R2-1	(5)	48X60	--	--	--	--	--	1	--	--	1	--	SPEED LIMIT 65 MPH
3-08	R2-1	(5)	48X60	--	--	--	2	--	--	20.00	--	--	--	SPEED LIMIT 65 MPH
3-09	R3-4B	(5)	36X48	--	--	--	1	--	1	12.00	--	1	3-10	NO U TURN SIGN COMBINED W/MAINT&POLICE
3-10	R3-4B	(5)	36X48	--	--	--	--	--	1	12.00	--	--	3-09	NO U TURN SIGN COMBINED W/MAINT&POLICE
3-11	J4-1	(5)	36X54	--	--	--	--	--	1	--	--	1	--	REASSURANCE ASSEMBLY
3-12	J4-1	(5)	36X54	--	--	--	--	1	--	13.50	--	--	--	REASSURANCE ASSEMBLY
4-01	W4-1	(5)	48X48	--	--	--	--	2	1	--	16.00	1	--	MERGING TRAFFIC SYMBOL (RIGHT)
4-02	J3-1F	(5)	24X57	--	--	--	--	1	1	9.50	--	1	--	DIRECTIONAL ASSEMBLY (FOLDING)
4-03	E5-1A	(5)	72X60	--	--	--	--	2	1	30.00	--	2	--	EXIT NUMBER (ARROW) 1-4 DIGITS
4-08	D10-2	(5)	12X36	--	--	--	1	--	1	3.00	--	1	--	MILEPOST MARKER (2 DIGITS)
4-09	R3-4B	(5)	36X48	--	1	--	--	--	1	12.00	--	1	4-10	NO U TURN SIGN COMBINED W/MAINT&POLICE
4-10	R3-4B	(5)	36X48	--	--	--	--	--	1	12.00	--	--	4-09	NO U TURN SIGN COMBINED W/MAINT&POLICE
4-11	D7-81A	2M	108X21	--	--	--	--	--	1	15.75	--	--	4-12	SKI AREA CASCADE MOUNTAIN
4-12	D7-81	2M	108X30	--	--	--	--	2	1	22.50	--	2	4-11	SKI AREA NEXT RIGHT
4-13	W5-52L	(3)	18X54	1	--	--	--	--	1	--	6.75	1	--	CLEARANCE STRIPER DOWN RIGHT
4-14	W5-52R	(3)	18X54	1	--	--	--	--	1	--	6.75	1	--	CLEARANCE STRIPER DOWN LEFT
4-15	I3-1	(5)	114X21	--	--	--	2	--	1	16.63	--	2	--	LAKE OR RIVER NAME
4-16	R3-4B	(5)	36X48	--	--	--	1	--	1	12.00	--	1	4-17	NO U TURN SIGN COMBINED W/MAINT&POLICE
4-17	R3-4B	(5)	36X48	--	--	--	--	--	1	12.00	--	--	4-16	NO U TURN SIGN COMBINED W/MAINT&POLICE
5-03	D10-2	(5)	12X36	--	--	--	1	--	1	3.00	--	1	--	MILEPOST MARKER (2 DIGITS)
5-04	R2-1	(5)	48X60	--	--	--	2	--	1	20.00	--	1	--	SPEED LIMIT 65 MPH
5-05	M1-94	(5)	54X21	--	--	--	2	--	1	7.88	--	1	--	HWY O
5-06	R3-4B	(5)	36X48	--	--	--	1	--	1	12.00	--	--	5-07	NO U TURN SIGN COMBINED W/MAINT&POLICE
5-07	R3-4B	(5)	36X48	--	--	--	--	--	1	12.00	--	1	5-06	NO U TURN SIGN COMBINED W/MAINT&POLICE
5-08	J4-1	(5)	36X54	--	--	--	--	--	1	--	--	1	--	REASSURANCE ASSEMBLY
5-09	J4-1	(5)	36X54	--	--	--	--	1	--	13.50	--	--	--	REASSURANCE ASSEMBLY
5-10	W5-52L	(3)	18X54	--	1	--	--	--	1	--	6.75	1	--	CLEARANCE STRIPER DOWN RIGHT
5-11	W5-52R	(3)	18X54	--	1	--	--	--	1	--	6.75	1	--	CLEARANCE STRIPER DOWN LEFT
5-12	W4-1	(5)	48X48	--	2	--	--	--	1	--	16.00	2	--	MERGING TRAFFIC SYMBOL (RIGHT)
6-01	W5-52R	(3)	18X54	--	1	--	--	--	1	--	6.75	1	--	CLEARANCE STRIPER DOWN LEFT
6-02	W5-52L	(3)	18X54	--	1	--	--	--	1	--	6.75	1	--	CLEARANCE STRIPER DOWN RIGHT
6-03	D10-2	(5)	12X36	--	--	--	1	--	1	3.00	--	1	--	MILEPOST MARKER (2 DIGITS)
6-07	R3-4B	(5)	36X48	--	--	--	1	--	1	12.00	--	1	6-08	NO U TURN SIGN COMBINED W/MAINT&POLICE
6-08	R3-4B	(5)	36X48	--	--	--	--	--	1	12.00	--	--	6-07	NO U TURN SIGN COMBINED W/MAINT&POLICE
6-10	D10-2	(5)	12X36	--	--	--	1	--	1	3.00	--	1	--	MILEPOST MARKER 90
7-01	J4-1	(5)	36X54	--	--	--	--	--	1	--	--	1	--	REASSURANCE ASSEMBLY
7-02	J4-1	(5)	36X54	--	--	--	--	1	--	13.50	--	--	--	REASSURANCE ASSEMBLY
7-03	R3-4B	(5)	36X48	--	--	--	--	1	1	12.00	--	1	7-04	NO U TURN SIGN COMBINED W/MAINT&POLICE
7-04	R3-4B	(5)	36X48	--	--	--	--	--	1	12.00	--	--	7-03	NO U TURN SIGN COMBINED W/MAINT&POLICE
7-05	W4-1	(5)	48X48	--	--	--	--	2	1	--	16.00	1	--	MERGING TRAFFIC SYMBOL (RIGHT)
			PROJECT TOTALS	**2**	**9**	**1**	**20**	**21**	**48**	**474**	**121**	**48**		

3

PERMANENT SIGNING TYPE I

SIGN #	SIGN CODE	SIGN SIZE W IN	X	H IN	STEEL POST TYPE	635.0200 SIGN SUPPORTS STRUCTURAL STEEL HS (LB)	636.0100 SIGN SUPPORTS CONCRETE MASONRY (CY)	636.0500 SIGN SUPPORTS STEEL REINFORCEMENT (LB)	637.1210 SIGNS TYPE 1 REFLECTIVE H (SF)	SIGN MOUNTED ON STRUCTURE OR SIGN POST	REMARKS	NOTES
1-11	E6-51	228	X	144	--	--	--	--	228	S-11-14	ADVANCED EXIT GUIDE SIGN (OVERHEAD)	
1-12	E6-51	204	X	90	--	--	--	--	128	S-11-14	ADVANCED EXIT GUIDE SIGN (OVERHEAD)	
1-14	E1-5-BP	108	X	48	--	--	--	--	36	S-11-12	EXIT NUMBER FOR E1-1 & E4-1 (LEFT EXIT)	
1-15	E6-51	168	X	90	--	--	--	--	105	S-11-12	ADVANCED EXIT GUIDE SIGN (OVERHEAD)	
1-16	E11-1	168	X	36	--	--	--	--	42	S-11-12	EXIT (SINGLE DOWN ARROW) ONLY	
1-17	E6-51	204	X	156	--	--	--	--	221	S-11-12	ADVANCED EXIT GUIDE SIGN (OVERHEAD)	
2-05	E4-1A	324	X	54	A	825	1.6	98	122	--	EXIT DIRECTION SIGN WITH ARROW	
2-06	E1-5-P	108	X	30	--	--	--	--	23	2-05	EXIT NUMBER FOR E1-1 & E4-1	
2-08	E6-51	168	X	90	--	--	--	--	105	S-11-13	ADVANCED EXIT GUIDE SIGN (OVERHEAD)	
2-09	E11-1	168	X	36	--	--	--	--	42	S-11-13	EXIT (SINGLE DOWN ARROW) ONLY	
2-10	E1-5-BP	108	X	48	--	--	--	--	36	S-11-13	EXIT NUMBER FOR E1-1 & E4-1 (LEFT EXIT)	
2-11	E6-51	204	X	156	--	--	--	--	221	S-11-13	ADVANCED EXIT GUIDE SIGN (OVERHEAD)	
2-17	E1-1A	168	X	156	B	1046	--	--	182	--	ADVANCE EXIT GUIDE SIGN, FOLLOW EAST	USE EXISTING CONCRETE BASE
3-01	E1-1A	288	X	84	B	881	1.6	98	168	--	ADVANCE EXIT GUIDE SIGN, 1 MILE	
3-02	E1-5-P	108	X	30	--	--	--	--	23	3-01	EXIT NUMBER FOR E1-1 & E4-1	
3-03	E1-1A	180	X	126	B	985	1.6	98	158	--	ADVANCE EXIT GUIDE SIGN, 1.5 MILE	
3-04	E1-5-BP	108	X	48	--	--	--	--	36	3-03	EXIT NUMBER FOR E1-1 & E4-1 (LEFT EXIT)	
3-05	E1-1A	180	X	162	B	1081	1.6	98	203	--	ADVANCE EXIT GUIDE SIGN, 2 MILE	
4-05	E4-1A	204	X	132	B	990	1.6	98	187	--	EXIT DIRECTION SIGN WITH ARROW	
4-06	E1-5-P	108	X	30	--	--	--	--	23	4-05	EXIT NUMBER FOR E1-1 & E4-1	
5-01	E1-1A	168	X	162	B	1078	1.6	98	189	--	ADVANCE EXIT GUIDE SIGN, 1 MILE	
5-02	E1-5-P	108	X	30	--	--	--	--	23	5-01	EXIT NUMBER FOR E1-1 & E4-1	
6-05	E4-1A	216	X	132	B	993	1.6	98	198		EXIT DIRECTION SIGN WITH ARROW	
6-06	E1-5-P	168	X	30	--	--	--	--	35	6-06	EXIT NUMBER FOR E1-1 & E4-1	
6-11	E1-1A	192	X	162	B	1083	1.6	98	216	--	ADVANCE EXIT GUIDE SIGN, 1 MILE	
6-12	E1-5-P	168	X	30	--	--	--	--	35	6-12	EXIT NUMBER FOR E1-1 & E4-1	
PROJECT TOTALS						**8962**	**13**	**784**	**2981**			

ALL ITEMS ARE CATEGORY 0010 UNLESS NOTED OTHERWISE

TRAFFIC CONTROL DETOUR SIGNS AND COVERING SIGNS

SIGN #	LOCATION	SIGN CODE	SIGN SIZE	SIZE W X H	NUMBER IN SERVICE	APPROX. SERVICE PERIOD 7 DAYS	643.0910 COVERING SIGNS TYPE I (EACH)	643.0920 * COVERING SIGNS TYPE II (EACH)	643.1000 SIGNS FIXED MESSAGE (SF)	643.3000 DETOUR SIGNS (DAYS)	SIGN MOUNTED ON SAME POST AS	REMARKS
01	1 MILE SOUTH OF JCT 90/94	W20-2A	(5)	48X48	1	7	--	--	--	7	02	DETOUR AHEAD
02	1 MILE SOUTH OF JCT 90/94	MB3-3	(5)	30X15	1	7	--	--	--	7	01	SOUTH (BLUE)
	"	MB3-2	(5)	30X15	1	7	--	--	--	7		EAST (BLUE)
	"	MB3-2	(5)	30X15	1	7	--	--	--	7		EAST (BLUE)
	"	M1-1	(5)	36X36	1	7	--	--	--	7		INTERSTATE SHIELD ROUTE MARKER (2 DIGIT)
	"	M1-1	(5)	36X36	1	7	--	--	--	7		INTERSTATE SHIELD ROUTE MARKER (2 DIGIT)
	"	M1-1	(5)	36X36	1	7	--	--	--	7		INTERSTATE SHIELD ROUTE MARKER (2 DIGIT)
03	1,500 FT SOUTH OF EB 90/94 ENTRANCE RAMP	M4-5	(4)	36X18	1	7	--	--	--	7	--	TO - (ORANGE)
	"	M4-5	(4)	36X18	1	7	--	--	--	7	--	TO - (ORANGE)
	"	M4-5	(4)	36X18	1	7	--	--	--	7	--	TO - (ORANGE)
	"	MB3-3	(5)	30X15	1	7	--	--	--	7	--	SOUTH (BLUE)
	"	MB3-2	(5)	30X15	1	7	--	--	--	7	--	EAST (BLUE)
	"	MB3-2	(5)	30X15	1	7	--	--	--	7	--	EAST (BLUE)
	"	M1-1	(5)	36X36	1	7	--	--	--	7	--	INTERSTATE SHIELD ROUTE MARKER (2 DIGIT)
	"	M1-1	(5)	36X36	1	7	--	--	--	7	--	INTERSTATE SHIELD ROUTE MARKER (2 DIGIT)
	"	M1-1	(5)	36X36	1	7	--	--	--	7	--	INTERSTATE SHIELD ROUTE MARKER (2 DIGIT)
	"	MO6-1	(5)	30X30	1	7	--	--	--	7	--	RIGHT, LEFT, OR AHEAD ARROW - (ORANGE)
	"	MO6-1	(5)	30X30	1	7	--	--	--	7	--	RIGHT, LEFT, OR AHEAD ARROW - (ORANGE)
	"	MO6-1	(5)	30X30	1	7	--	--	--	7	--	RIGHT, LEFT, OR AHEAD ARROW - (ORANGE)
04	NEXT TO SIGN 06, EXISTING DIRECTIONAL ASSEMBLY	M4-5	(4)	36X18	1	7	--	--	--	7	--	TO - (ORANGE)
	"	M4-5	(4)	36X18	1	7	--	--	--	7	--	TO - (ORANGE)
	"	M4-5	(4)	36X18	1	7	--	--	--	7	--	TO - (ORANGE)
	"	MB3-3	(5)	30X15	1	7	--	--	--	7	--	SOUTH (BLUE)
	"	MB3-3	(5)	30X15	1	7	--	--	--	7	--	SOUTH (BLUE)
	"	MB3-2	(5)	30X15	1	7	--	--	--	7	--	EAST (BLUE)
	"	M1-1	(5)	36X36	1	7	--	--	--	7	--	INTERSTATE SHIELD ROUTE MARKER (2 DIGIT)
	"	M1-1	(5)	36X36	1	7	--	--	--	7	--	INTERSTATE SHIELD ROUTE MARKER (2 DIGIT)
	"	M1-1	(5)	36X36	1	7	--	--	--	7	--	INTERSTATE SHIELD ROUTE MARKER (2 DIGIT)
	"	MO6-1	(5)	30X30	1	7	--	--	--	7	--	RIGHT, LEFT, OR AHEAD ARROW - (ORANGE)
	"	MO6-1	(5)	30X30	1	7	--	--	--	7	--	RIGHT, LEFT, OR AHEAD ARROW - (ORANGE)
	"	MO6-1	(5)	30X30	1	7	--	--	--	7	--	RIGHT, LEFT, OR AHEAD ARROW - (ORANGE)
05	TYPE 1 (MADISON; TILTED DIRECTIONAL ARROW)				--	7	1	--	--		--	SIGN COVER UP, SEE PLAN SHEET
06	TYPE 1 (DIRECTIONAL ASSEMBLY - 39/90/94)				--	7	--	1	--	--	--	SIGN COVER UP, SEE PLAN SHEET
07	TYPE 1 (DIRECTIONAL ASSEMBLY - 39/90/94)				--	7	--	1	--	--	--	SIGN COVER UP, SEE PLAN SHEET
08	NEXT TO EXISTING DIRECTIONAL ASSEMBLY PRIOR TO CASCADE MTN INTERCHANGE	M4-5	(4)	36X18	1	7	--	--	--	7	--	TO - (ORANGE)
	"	M4-5	(4)	36X18	1	7	--	--	--	7	--	TO - (ORANGE)
	"	M4-5	(4)	36X18	1	7	--	--	--	7	--	TO - (ORANGE)
	"	MB3-3	(5)	30X15	1	7	--	--	--	7	--	SOUTH (BLUE)
	"	MB3-2	(5)	30X15	1	7	--	--	--	7	--	EAST (BLUE)
	"	MB3-2	(5)	30X15	1	7	--	--	--	7	--	EAST (BLUE)
	"	M1-1	(5)	36X36	1	7	--	--	--	7	--	INTERSTATE SHIELD ROUTE MARKER (2 DIGIT)
	"	M1-1	(5)	36X36	1	7	--	--	--	7	--	INTERSTATE SHIELD ROUTE MARKER (2 DIGIT)
	"	M1-1	(5)	36X36	1	7	--	--	--	7	--	INTERSTATE SHIELD ROUTE MARKER (2 DIGIT)
	"	MO6-1	(5)	30X30	1	7	--	--	--	7	--	RIGHT, LEFT, OR AHEAD ARROW - (ORANGE)
	"	MO6-1	(5)	30X30	1	7	--	--	--	7	--	RIGHT, LEFT, OR AHEAD ARROW - (ORANGE)
	"	MO6-1	(5)	30X30	1	7	--	--	--	7	--	RIGHT, LEFT, OR AHEAD ARROW - (ORANGE)
09	NEXT TO EXISTING DIRECTIONAL ASSEMBLY PRIOR TO HWY 33 INTERCHANGE	M4-5	(4)	36X18	1	7	--	--	--	7	--	TO - (ORANGE)
	"	M4-5	(4)	36X18	1	7	--	--	--	7	--	TO - (ORANGE)
	"	M4-5	(4)	36X18	1	7	--	--	--	7	--	TO - (ORANGE)
	"	MB3-3	(5)	30X15	1	7	--	--	--	7	--	SOUTH (BLUE)
	"	MB3-2	(5)	30X15	1	7	--	--	--	7	--	EAST (BLUE)
	"	MB3-2	(5)	30X15	1	7	--	--	--	7	--	EAST (BLUE)
	"	M1-1	(5)	36X36	1	7	--	--	--	7	--	INTERSTATE SHIELD ROUTE MARKER (2 DIGIT)
	"	M1-1	(5)	36X36	1	7	--	--	--	7	--	INTERSTATE SHIELD ROUTE MARKER (2 DIGIT)
	"	M1-1	(5)	36X36	1	7	--	--	--	7	--	INTERSTATE SHIELD ROUTE MARKER (2 DIGIT)
	"	MO6-2	(5)	30X30	1	7	--	--	--	7	--	TILT RIGHT OR LEFT ARROW - (ORANGE)
	"	MO6-2	(5)	30X30	1	7	--	--	--	7	--	TILT RIGHT OR LEFT ARROW - (ORANGE)
	"	MO6-2	(5)	30X30	1	7	--	--	--	7	--	TILT RIGHT OR LEFT ARROW - (ORANGE)
10	NEXT TO EXISTING DIRECTIONAL ASSEMBLY AT END OF HWY 33 EXIT RAMP	M4-5	2M	24X12	1	7	--	--	--	7	--	TO - (ORANGE)
	"	M4-5	2M	24X12	1	7	--	--	--	7	--	TO - (ORANGE)
	"	M4-5	2M	24X12	1	7	--	--	--	7	--	TO - (ORANGE)
	"	MB3-3	2M	24X12	1	7	--	--	--	7	--	SOUTH (BLUE)
	"	MB3-2	2M	24X12	1	7	--	--	--	7	--	EAST (BLUE)
	"	MB3-2	2M	24X12	1	7	--	--	--	7	--	EAST (BLUE)
	"	M1-1	2M	24X24	1	7	--	--	--	7	--	INTERSTATE SHIELD ROUTE MARKER (2 DIGIT)
	"	M1-1	2M	24X24	1	7	--	--	--	7	--	INTERSTATE SHIELD ROUTE MARKER (2 DIGIT)
	"	M1-1	2M	24X24	1	7	--	--	--	7	--	INTERSTATE SHIELD ROUTE MARKER (2 DIGIT)
	"	MO6-2	2M	21X21	1	7	--	--	--	7	--	TILT RIGHT OR LEFT ARROW - (ORANGE)
	"	MO6-2	2M	21X21	1	7	--	--	--	7	--	TILT RIGHT OR LEFT ARROW - (ORANGE)
	"	MO6-2	2M	21X21	1	7	--	--	--	7	--	TILT RIGHT OR LEFT ARROW - (ORANGE)
	SUBTOTALS (CONTINUED ON NEXT SHEET)						1	2	--	469		

* ADDITIONAL QUANTITY FOUND ELSEWHERE IN PLANSET

TRAFFIC CONTROL DETOUR SIGNS AND COVERING SIGNS, CONTINUED

SIGN #	LOCATION	SIGN CODE	SIGN SIZE	SIZE W X H	NUMBER IN SERVICE	APPROX. SERVICE PERIOD 7 DAYS	643.0910 COVERING SIGNS TYPE I (EACH)	643.0920 * COVERING SIGNS TYPE II (EACH)	643.1000 SIGNS FIXED MESSAGE (SF)	643.3000 DETOUR SIGNS (DAYS)	SIGN MOUNTED ON SAME POST AS	REMARKS
	SUBTOTALS FROM PREVIOUS SHEET	--	--	--	--	--	1	2	--	469	--	TO - (ORANGE)
11	NEXT TO EXISTING DIRECTIONAL ASSEMBLY PRIOR TO SB 39 ENTRANCE RAMP	M4-5	2M	24X12	1	7	--	--	--	7	--	TO - (ORANGE)
	"	M4-5	2M	24X12	1	7	--	--	--	7	--	TO - (ORANGE)
	"	MB3-2	2M	24X12	1	7	--	--	--	7	--	EAST (BLUE)
	"	MB3-2	2M	24X12	1	7	--	--	--	7	--	EAST (BLUE)
	"	M1-1	2M	24X24	1	7	--	--	--	7	--	INTERSTATE SHIELD ROUTE MARKER (2 DIGIT)
	"	M1-1	2M	24X24	1	7	--	--	--	7	--	INTERSTATE SHIELD ROUTE MARKER (2 DIGIT)
	"	MO6-2	2M	21X21	1	7	--	--	--	7	--	TILT RIGHT OR LEFT ARROW - (ORANGE)
	"	MO6-2	2M	21X21	1	7	--	--	--	7	--	TILT RIGHT OR LEFT ARROW - (ORANGE)
12	NEXT TO EXISTING DIRECTIONAL ASSEMBLY FOLLOWING SB 39 EXITRAMP	M4-5	2M	24X12	1	7	--	--	--	7	--	TO - (ORANGE)
	"	M4-5	2M	24X12	1	7	--	--	--	7	--	TO - (ORANGE)
	"	MB3-2	2M	24X12	1	7	--	--	--	7	--	EAST (BLUE)
	"	MB3-2	2M	24X12	1	7	--	--	--	7	--	EAST (BLUE)
	"	M1-1	2M	24X24	1	7	--	--	--	7	--	INTERSTATE SHIELD ROUTE MARKER (2 DIGIT)
	"	M1-1	2M	24X24	1	7	--	--	--	7	--	INTERSTATE SHIELD ROUTE MARKER (2 DIGIT)
	"	MO6-2	2M	21X21	1	7	--	--	--	7	--	TILT RIGHT OR LEFT ARROW - (ORANGE)
	"	MO6-2	2M	21X21	1	7	--	--	--	7	--	TILT RIGHT OR LEFT ARROW - (ORANGE)
13	NEXT TO EXISTING CASCADE MTN RD EXT SIGN WITH DIRECTIONAL ARROW	M4-5	(4)	36X18	1	7	--	--	--	7	--	TO - (ORANGE)
	"	M4-5	(4)	36X18	1	7	--	--	--	7	--	TO - (ORANGE)
	"	MB3-2	(5)	30X15	1	7	--	--	--	7	--	EAST (BLUE)
	"	MB3-2	(5)	30X15	1	7	--	--	--	7	--	EAST (BLUE)
	"	M1-1	(5)	36X36	1	7	--	--	--	7	--	INTERSTATE SHIELD ROUTE MARKER (2 DIGIT)
	"	M1-1	(5)	36X36	1	7	--	--	--	7	--	INTERSTATE SHIELD ROUTE MARKER (2 DIGIT)
	"	MO6-1	(5)	30X30	1	7	--	--	--	7	--	RIGHT, LEFT, OR AHEAD ARROW - (ORANGE)
	"	MO6-1	(5)	30X30	1	7	--	--	--	7	--	RIGHT, LEFT, OR AHEAD ARROW - (ORANGE)
14	AT WB 90/94 EXIT RAMP GORE	M4-5	(4)	36X18	1	7	--	--	--	7	--	TO - (ORANGE)
	"	M4-5	(4)	36X18	1	7	--	--	--	7	--	TO - (ORANGE)
	"	MB3-2	(5)	30X15	1	7	--	--	--	7	--	EAST (BLUE)
	"	MB3-2	(5)	30X15	1	7	--	--	--	7	--	EAST (BLUE)
	"	M1-1	(5)	36X36	1	7	--	--	--	7	--	INTERSTATE SHIELD ROUTE MARKER (2 DIGIT)
	"	M1-1	(5)	36X36	1	7	--	--	--	7	--	INTERSTATE SHIELD ROUTE MARKER (2 DIGIT)
	"	MO6-2	(5)	30X30	1	7	--	--	--	7	--	TILT RIGHT OR LEFT ARROW - (ORANGE)
	"	MO6-2	(5)	30X30	1	7	--	--	--	7	--	TILT RIGHT OR LEFT ARROW - (ORANGE)
15	AFTER WB 90/94 EXIT RAMP GORE	M4-5	(4)	36X18	1	7	--	--	--	7	--	TO - (ORANGE)
	"	M4-5	(4)	36X18	1	7	--	--	--	7	--	TO - (ORANGE)
	"	MB3-2	(5)	30X15	1	7	--	--	--	7	--	EAST (BLUE)
	"	MB3-2	(5)	30X15	1	7	--	--	--	7	--	EAST (BLUE)
	"	M1-1	(5)	36X36	1	7	--	--	--	7	--	INTERSTATE SHIELD ROUTE MARKER (2 DIGIT)
	"	M1-1	(5)	36X36	1	7	--	--	--	7	--	INTERSTATE SHIELD ROUTE MARKER (2 DIGIT)
16	AFTER ENTRANCE RAMP FOR SB 39 TO EB 90/94	M4-8A	(3)	30X24	1	7	--	--	--	7	--	END DETOUR
17	NEXT TO EXISTING TYPE 1 SIGN FOR EXIT 87, 1 MILE PRIOR TO INTERCHANGE				1	7	--	--	60	7	--	
18	1,500 FT NORTH OF WB 33 EXIT RAMP	W20-2A	(5)	48X48	1	7			--	7	--	DETOUR AHEAD
19	NEXT TO EXISTING DIRECTIONAL ASSEMBLY AT WB 33 EXIT RAMP	M4-8	(3)	36X18	1	7	--	--		7	20, 21	DETOUR
20	NEXT TO EXISTING DIRECTIONAL ASSEMBLY AT WB 33 EXIT RAMP			144X30	1	7	--	--	22	7	19, 21	
21	NEXT TO EXISTING DIRECTIONAL ASSEMBLY AT WB 33 EXIT RAMP	MO6-2	(5)	30X30	1	7			--	7	19, 20	TILT RIGHT OR LEFT ARROW - (ORANGE)
22	NEXT TO EXISTING DIRECTIONAL ASSEMBLY AT END OF WB 33 EXIT RAMP	M4-8	2M	24X12	1	7	--	--	--	7	23, 24	DETOUR
23	NEXT TO EXISTING DIRECTIONAL ASSEMBLY AT END OF WB 33 EXIT RAMP				1	7	--	--	22	7	22, 24	
24	NEXT TO EXISTING DIRECTIONAL ASSEMBLY AT END OF WB 33 EXIT RAMP	MO6-1	2M	21X21	1	7	--	--	--	7	22, 23	RIGHT, LEFT, OR AHEAD ARROW - (ORANGE)
25	NEXT TO EXISTING SKI AREA DIRECTIONAL ARROW, PRIOR TO CASCADE MTN RD	M4-8	2M	24X12	1	7	--	--	--	7	26, 27	DETOUR
26	NEXT TO EXISTING SKI AREA DIRECTIONAL ARROW, PRIOR TO CASCADE MTN RD				1	7	--	--	22	7	25, 27	
27	NEXT TO EXISTING SKI AREA DIRECTIONAL ARROW, PRIOR TO CASCADE MTN RD	MO6-1	2M	21X21	1	7	--	--	--	7	25, 26	RIGHT, LEFT, OR AHEAD ARROW - (ORANGE)
28	500 FT AFTER CASCADE MTN RD AND HWY 33 INTERSECTION	M4-8A	2M	24X18	1	7	--	--	--	7	--	END DETOUR
29	TYPE 1 (EXIT 85 - CASCADE MTN RD - 1 MILE)				--	7	1	--	--	--	--	SIGN COVER UP, SEE PLAN SHEET
30	TYPE 1 (EXIT 85 - CASCADE MTN RD)				--	7	1	--	--	--	--	SIGN COVER UP, SEE PLAN SHEET
31	TYPE 1 (EXIT 85 WITH TILTED DIRECTIONAL ARROW)				--	7	1	--	--		--	SIGN COVER UP, SEE PLAN SHEET
	SUBTOTALS						4	2	126	826		
	PROJECT TOTALS						**4**	**2**	**126**	**826**		

* ADDITIONAL QUANTITY FOUND ELSEWHERE IN PLANSET

ALL ITEMS ARE CATEGORY 0010 UNLESS NOTED OTHERWISE

TRAFFIC CONTROL

STA - STA	LOCATION	DAYS	643.0300 DRUMS (DAYS)	643.0420 BARRICADES TYPE III (DAYS)	643.0705 WARNING LIGHTS TYPE A (DAYS)	643.0715 WARNING LIGHTS TYPE C (DAYS)	643.0800 ARROW BOARD (DAYS)	643.0900 SIGNS (DAYS)	643.0920 ** COVERING SIGNS TYPE II (EACH)	643.1050 SIGNS PCMS (DAYS)	646.0600 REMOVING PAVEMENT MARKINGS (LF)	649.0400 TEMPORARY PAVEMENT MARKING REMOVABLE TAPE 4-IN (WHITE) (LF)	SPV.0045.01 TRUCK OR TRAILER-MOUNTED ATTENUATOR (DAYS)	REMARKS
STA 336+54 - 536+62	SEGMENT 7													
LEFT LANE		14	532	14	56	224	28	350	0	14	0	800	2	CONSTRUCTION DETAIL - TRAFFIC CONTROL LANE CLOSURE
		14	2800	210	0	0	0	238	1	0	0	0	0	CONSTRUCTION DETAIL - WITHIN LANE CLOSURE
		14	2380	0	0	0	14	112	0	0	0	0	0	SDD 15 D 27 : SHOULDER CLOSURE ON DIVIDED ROADWAY
		14	350	0	0	0	0	126	0	0	0	0	0	SDD 15 D 27 : SHOULDER CLOSURE ON DIVIDED ROADWAY
	SEGMENT 7 SUBTOTAL		3332	224	56	224	28	588	1	14	0	800	2	
STA 112+59 - STA 336+54	SEGMENT 8													
LEFT / CENTER LANES		14	532	14	56	224	28	350	0	14	0	800	2	CONSTRUCTION DETAIL - TRAFFIC CONTROL LANE CLOSURE
		14	3136	238	0	0	0	280	1	0	300	0	0	CONSTRUCTION DETAIL - WITHIN LANE CLOSURE
		14	1960	0	0	0	14	112	0	0	0	0	0	SDD 15 D 27 : SHOULDER CLOSURE ON DIVIDED ROADWAY
	SEGMENT 8 SUBTOTAL		3668	252	56	224	28	630	1	14	300	800	2	
STA 508+00 - STA 536+62	SEGMENT 1													
RIGHT LANE		7	266	7	28	112	14	175	0	7	0	800	2	CONSTRUCTION DETAIL - TRAFFIC CONTROL LANE CLOSURE
		7	161	14	0	0	0	14	0	0	0	0	0	CONSTRUCTION DETAIL - WITHIN LANE CLOSURE
	SB Off-Ramp (USH 51)	7	168	0	0	56	0	7	1	0	0	0	0	CONSTRUCTION DETAIL - EXIT RAMP RIGHT LANE CLOSURE DETAIL
	SEGMENT 1 SUBTOTAL		595	21	28	168	14	196	1	7	0	800	2	
STA 420+00 - STA 508+00	SEGMENT 2													
RIGHT LANE		7	266	7	28	112	14	175	0	7	0	800	2	CONSTRUCTION DETAIL - TRAFFIC CONTROL LANE CLOSURE
		7	525	49	0	0	0	56	0	0	0	0	0	CONSTRUCTION DETAIL - WITHIN LANE CLOSURE
	SB On-Ramp (USH 51)	7	175	0	0	63	0	28	0	0	0	0	0	CONSTRUCTION DETAIL - ENTRANCE RAMP RIGHT LANE CLOSURE DETAIL
	SB Off-Ramp (STH 16)	7	168	0	0	56	0	7	1	0	0	0	0	CONSTRUCTION DETAIL - EXIT RAMP RIGHT LANE CLOSURE DETAIL
	SEGMENT 2 SUBTOTAL		1134	56	28	231	14	266	1	7	0	800	2	
STA 292+00 - STA 420+00	SEGMENT 3													
RIGHT LANE		7	266	7	28	112	14	175	0	7	0	800	2	CONSTRUCTION DETAIL - TRAFFIC CONTROL LANE CLOSURE
		7	707	70	0	0	0	77	1	0	0	0	0	CONSTRUCTION DETAIL - WITHIN LANE CLOSURE
	IH 39 SB TO STH 16 OFF-RAMP	7	168	0	0	56	0	7	1	0	0	0	0	CONSTRUCTION DETAIL - EXIT RAMP RIGHT LANE CLOSURE DETAIL
	STH 16 TO IH 39 SB ON-RAMP	7	175	0	0	63	0	28	0	0	0	0	0	CONSTRUCTION DETAIL - ENTRANCE RAMP RIGHT LANE CLOSURE DETAIL
	IH 39 SB TO STH 33 OFF-RAMP	7	168	0	0	56	0	7	1	0	0	0	0	CONSTRUCTION DETAIL - EXIT RAMP RIGHT LANE CLOSURE DETAIL
	STH 33 TO IH 39 SB ON-RAMP	7	175	0	0	63	0	28	0	0	0	0	0	CONSTRUCTION DETAIL - ENTRANCE RAMP RIGHT LANE CLOSURE DETAIL
	SEGMENT 3 SUBTOTAL		1659	77	28	350	14	322	3	7	0	800	2	
STA 201+00 - STA 292+00	SEGMENT 4													
RIGHT LANE		7	266	7	28	112	14	175	0	7	0	800	2	CONSTRUCTION DETAIL - TRAFFIC CONTROL LANE CLOSURE
		7	588	49	0	0	0	56	1	0	0	0	0	CONSTRUCTION DETAIL - WITHIN LANE CLOSURE
	STH 33 TO IH 39 SB ON-RAMP	7	175	0	0	63	0	28	0	0	0	0	0	CONSTRUCTION DETAIL - ENTRANCE RAMP RIGHT LANE CLOSURE DETAIL
	SEGMENT 4 SUBTOTAL		1029	56	28	175	14	259	1	7	0	800	2	
STA 168+00 - STA 201+00	SEGMENT 5													
RIGHT LANE		7	266	7	28	112	14	175	0	7	0	800	2	CONSTRUCTION DETAIL - TRAFFIC CONTROL LANE CLOSURE
		7	182	21	0	0	0	28	0	0	0	0	0	CONSTRUCTION DETAIL - WITHIN LANE CLOSURE
	IH 39 SB TO CASCADE MNT RD OFF-RAMP	7	112	28	28	0	0	42	1	0	0	0	0	SDD 15 D 16 - EXIT RAMP CLOSURE
	CASCADE MNT RD TO IH 39 SB ON-RAMP	7	175	0	0	63	0	28	0	0	0	0	0	CONSTRUCTION DETAIL - ENTRANCE RAMP RIGHT LANE CLOSURE DETAIL
	SEGMENT 5 SUBTOTAL		735	56	56	175	14	273	1	7	0	800	2	
STA 112+59 - STA 168+00	SEGMENT 6													
RIGHT LANE		7	266	7	28	112	14	175	0	7	0	800	2	CONSTRUCTION DETAIL - TRAFFIC CONTROL LANE CLOSURE
		7	350	28	0	0	0	28	0	0	0	0	0	CONSTRUCTION DETAIL - WITHIN LANE CLOSURE
	IH 39 SB TO IH 90/94 WB OFF-RAMP	7	168	0	0	56	0	7	0	0	1	0	0	CONSTRUCTION DETAIL - EXIT RAMP RIGHT LANE CLOSURE DETAIL
	STH 78 TO IH 39/90/94 SB	7	112	0	28	0	0	42	1	0	0	0	0	SDD 15 D 16 - EXIT RAMP CLOSURE
	SEGMENT 6 SUBTOTAL		896	35	56	168	14	252	1	7	1	800	2	
	UNDISTRIBUTED TOTALS*		655	40	20	90	10	140	5	5	20	320	5	
	PROJECT TOTALS		**13,703**	**817**	**356**	**1,805**	**150**	**2,926**	**15**	**75**	**321**	**6,720**	**21**	

*UNDISTRIBUTED TOTALS AS DETERMINED BELOW:
ALL TRAFFIC CONTROL ITEMS - 5% ADDITIONAL QUANTITY ADDED TO TOTAL
** ADDITIONAL QUANTITY FOUND ELSEWHERE IN PLANSET

ALL ITEMS ARE CATEGORY 0010 UNLESS NOTED OTHERWISE

PAVEMENT MARKING

BEGIN STA - END STA	LOCATION	646.0106 EPOXY 4-INCH (WHITE) (LF)	LANE LINE 12.5' LINE / 37.5' GAP (WHITE) (LF)	LANE LINE 3' LINE / 9' GAP (WHITE) (LF	EPOXY 4-INCH (YELLOW) (LF)	646.0126 EPOXY 8-INCH (WHITE) (LF)	LANE LINE 3' LINE / 9' GAP (WHITE) (LF)	647.0156 ARROWS EPOXY TYPE 1 (EACH)	647.0566 STOP LINE EPOXY 18-INCH (LF)	647.0736 DIAGONAL EPOXY 18-INCH (YELLOW) (LF)	647.0746 DIAGONAL EPOXY 24-INCH (WHITE) (LF)
PROJECT START - CASCADE MOUNTAIN ROAD											
112+00 - 186+00	RT / LT	7,400	1,850	-	7,400	-	-	-	-	-	-
119+50 - 126+50	GORE	-	-	-	-	1,400	-	-	-	-	150
154+00 - 161+00	GORE	-	-	-	-	1,100	-	-	-	-	250
163+00 - 167+50	GORE	-	-	-	-	875	-	-	-	-	140
174+00 - 177+50	GORE	-	-	-	-	725	-	-	-	-	-
180+00 - 182+50	GORE	-	-	-	-	500	-	-	-	-	90
182+50 - 185+00	LT	-	-	80	-	-	-	-	-	-	-
167+50 - 186+00	RT	-	-	-	-	-	470	-	-	-	-
	SUBTOTALS		16,730				5,070	0	0	0	630
HWY 78 RAMP											
126+50 - 131+00	ON-RAMP	550	-	-	550	-	-	-	-	-	-
	SUBTOTALS		1,100				0	0	0	0	0
CASCADE MOUNTAIN RD RAMPS											
177+50 - 182+00	OFF-RAMP	575	-	-	525	100	-	1	30	-	-
179+50 - 182+00	ON-RAMP	625	-	-	615	-	-	-	-	50	-
	SUBTOTALS		2,340				100	1	30	50	0
CASCADE MOUNTAIN ROAD - STH 33											
186+00 - 292+00	RT / LT	10,600	2,650	-	10,600	-	-	-	-	-	-
186+00 - 201+00	RT	-	-	-	-	-	375	-	-	-	-
	SUBTOTALS		23,850				375	0	0	0	0
STH 33 - STH 16											
292+00 - 420+00	RT / LT	12,800	3,200	-	12,800	-	-	-	-	-	-
304+50 - 308+00	LT	-	-	90	-	-	-	-	-	-	-
408+00 - 411+75	GORE	-	-	-	-	750	-	-	-	-	-
415+00 - 420+00	LT	-	-	155	-	-	-	-	-	-	-
	SUBTOTALS		29,045				750	0	0	0	0
STH 33 RAMPS											
292+00 - 302+00	OFF-RAMP	1,175	-	-	1,175	215	-	-	30	-	-
292+00 - 299+00	ON-RAMP	1,360	-	-	1,400	300	-	-	-	-	-
	SUBTOTALS		5,110				515	0	30	0	0
STH 16 RAMPS											
415+00 - 420+00	OFF-RAMP	1,250	-	-	1,275	250	-	-	15	-	-
412+00 - 420+00	ON-RAMP	1,250	-	-	1,075	325	-	-	-	-	-
	SUBTOTALS		4,850				575	0	15	0	0
USH 51 RAMPS											
497+50 - 508+00	ON-RAMP	1,050	-	-	1,050	-	-	-	-	50	-
	SUBTOTALS		2,100				0	0	0	50	0
STH 16 - PROJECT END											
420+00 - 502+00	RT / LT	8,200	2,050	-	8,200	-	-	-	-	-	-
493+00 - 499+00	GORE	-	-	-	-	1,000	-	-	-	-	-
	SUBTOTALS		18,450				1,000	0	0	0	0
	PROJECT TOTALS		**103,575**				**8,385**	**1**	**75**	**100**	**630**

PROJECT NO:1161-00-65	HWY:IH 39	COUNTY:COLUMBIA	PLAN DETAILS	SHEET 51	E

FILE NAME : G:\WDOTCO\12029 (2012-2014 DESIGN WORK ORDERS)\WORK ORDER 04 (IH 39 PAVEMENT REPAIRS)\CIVIL3D\SHEETSPLAN\11610065_PLAN NOTES.DWG PLOT DATE : 4/11/2014 PLOT BY : KL ENGINEERING PLOT NAME : ---------- PLOT SCALE : 1 IN:200 FT

WISDOT/CADDS SHEET 42

PROJECT NO:1161-00-65	HWY:IH 39	COUNTY:COLUMBIA	PLAN DETAILS	SHEET 52	E

FILE NAME : G:\WDOTCO\12029 (2012-2014 DESIGN WORK ORDERS)\WORK ORDER 04 (IH 39 PAVEMENT REPAIRS)\CIVIL3D\SHEETSPLAN\11610065_PLAN NOTES.DWG PLOT DATE : 4/11/2014 PLOT BY : KL ENGINEERING PLOT NAME : ---------- PLOT SCALE : 1 IN:200 FT

WISDOT/CADDS SHEET 42

PROJECT NO:1161-00-65	HWY:IH 39	COUNTY:COLUMBIA	PLAN DETAILS	SHEET 53	E

FILE NAME : G:\WDOTCO\12029 (2012-2014 DESIGN WORK ORDERS)\WORK ORDER 04 (IH 39 PAVEMENT REPAIRS)\CIVIL3D\SHEETSPLAN\11610065_PLAN NOTES.DWG PLOT DATE : 4/11/2014 PLOT BY : KL ENGINEERING PLOT NAME : PLOT SCALE : 1 IN:200 FT

WISDOT/CADDS SHEET 42

PROJECT NO:1161-00-65	HWY:IH 39	COUNTY:COLUMBIA	PLAN DETAILS	SHEET 54	E

FILE NAME : G:\WDOTCO\12029 (2012-2014 DESIGN WORK ORDERS)\WORK ORDER 04 (IH 39 PAVEMENT REPAIRS)\CIVIL3D\SHEETSPLAN\11610065_PLAN NOTES.DWG PLOT DATE : 4/11/2014 PLOT BY : KL ENGINEERING PLOT NAME : PLOT SCALE : 1 IN:200 FT

WISDOT/CADDS SHEET 42

PROJECT NO:1161-00-65	HWY:IH 39	COUNTY:COLUMBIA	PLAN DETAILS	SHEET 55	E

FILE NAME : G:\WDOTCO\12029 (2012-2014 DESIGN WORK ORDERS)\WORK ORDER 04 (IH 39 PAVEMENT REPAIRS)\CIVIL3D\SHEETSPLAN\11610065_PLAN NOTES.DWG PLOT DATE : 4/11/2014 PLOT BY : KL ENGINEERING PLOT NAME : ---------- PLOT SCALE : 1 IN:200 FT

WISDOT/CADDS SHEET 42

PROJECT NO:1161-00-65	HWY:IH 39	COUNTY:COLUMBIA	PLAN DETAILS	SHEET 56	E

FILE NAME : G:\WDOTCO\12029 (2012-2014 DESIGN WORK ORDERS)\WORK ORDER 04 (IH 39 PAVEMENT REPAIRS)\CIVIL3D\SHEETSPLAN\11610065_PLAN NOTES.DWG PLOT DATE : 4/11/2014 PLOT BY : KL ENGINEERING PLOT NAME : PLOT SCALE : 1 IN:200 FT

WISDOT/CADDS SHEET 42

5

5

PROJECT NO:1161-00-65	HWY:IH 39	COUNTY:COLUMBIA	PLAN DETAILS	SHEET 57	E

Standard Detail Drawing List

08A05-19B	INLET COVERS TYPE B, B-A, C, MS, MS-A, & WM
08C08-01	INLETS MEDIAN 1 AND 2 GRATE
08D15-04A	EDGEDRAIN OUTLET AND OUTFALL MARKERS
08E10-02	INLET PROTECTION TYPE A, B, C AND D
08F06-04	REINFORCED CONCRETE APRON ENDWALL FOR PIPE UNDERDRAIN
08F07-05	STEEL APRON ENDWALLS FOR CULVERT PIPE AND PIPE ARCH SLOPED SIDE FRAINS
11A01-05	MAINTENANCE CROSSOVER FOR FREEWAYS
12A04-03	STRUCTURE IDENTIFICATION PLAQUES, RAMP GATES, SIGN BRIDGES & OVERHEAD SIGN SUPPORTS & TRAFFIC SIGNALS
13A05-05A	SHOULDER RUMBLE STRIP, MILLING
13A05-05B	SHOULDER RUMBLE STRIP, MILLING
13C09-11A	CONCRETE PAVEMENT REPAIR AND REPLACEMENT
13C09-11B	CONCRETE PAVEMENT REPAIR AND REPLACEMENT
13C09-11C	CONCRETE PAVEMENT REPAIR AND REPLACEMENT
15C07-12C	PAVEMENT MARKING ARROWS
15C08-16A	PAVEMENT MARKING (MAINLINE)
15C19-02C	MOVING PAVEMENT MARKING OPERATION MULTI-LANE DIVIDED ROADWAY
15C31-01A	PAVEMENT MARKING (RAMPS AND GORES)
15C31-01B	LANE DROP PAVEMENT MARKING
15C31-01D	PAVEMENT MARKING FOR PARALLEL ON-RAMP AND PARALLEL OFF-RAMP
15C33-01	STOP LINE AND CROSSWALK PAVEMENT MARKING
15D16-02	TRAFFIC CONTROL, EXIT RAMP CLOSURE
15D27-02	TRAFFIC CONTROL, SHOULDER CLOSURE ON DIVIDED ROADWAY, SPEEDS GREATER THAN 40 MPH

6

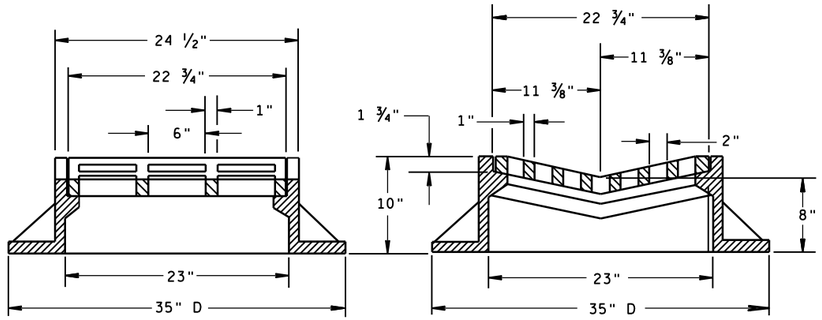

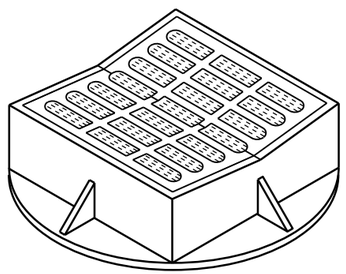

TYPE "B"

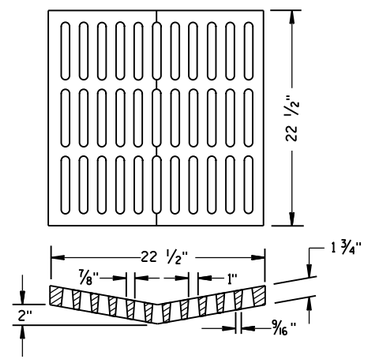

ALTERNATIVE GRATE FOR TYPE "B" COVER

USE WHERE PEDESTRIAN OR BICYCLE TRAFFIC IS POSSIBLE.

NOTED AS TYPE B-A ON THE DRAINAGE TABLE

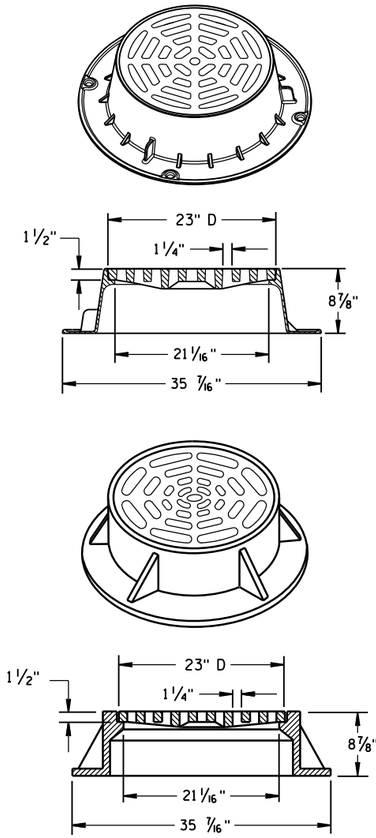

TYPE "C"

NOTE: EITHER CASTING IS ACCEPTABLE

GENERAL NOTES

DETAILS OF CONSTRUCTION, MATERIALS AND WORKMANSHIP NOT SHOWN ON THIS DRAWING SHALL CONFORM TO THE PERTINENT REQUIREMENTS OF THE STANDARD SPECIFICATIONS AND THE APPLICABLE SPECIAL PROVISIONS.

DETAIL DRAWINGS FOR PROPOSED ALTERNATE DESIGNS FOR CATCH BASIN, MANHOLE AND INLET COVERS SHALL BE SUBMITTED TO THE ENGINEER FOR APPROVAL PROVIDING THAT SUCH ALTERNATE DESIGNS MAKE PROVISION FOR EQUIVALENT CAPACITY AND STRENGTH.

ROUND FRAMES AND COVERS SHALL HAVE CONTINUOUSLY MACHINED BEARING SURFACES TO PREVENT ROCKING AND RATTLING.

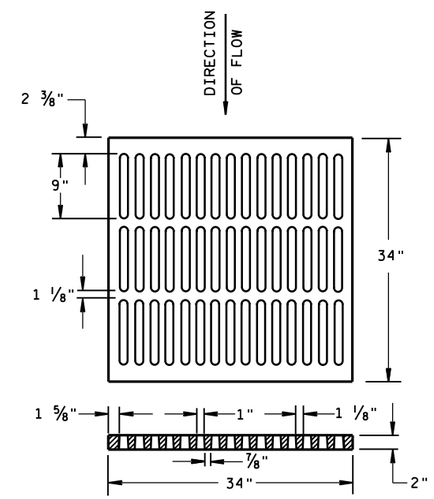

ALTERNATIVE TYPE "MS"

USE WHERE PEDESTRIAN OR BICYCLE TRAFFIC IS PERMITTED

NOTED AS TYPE MS-A ON THE DRAINAGE TABLE

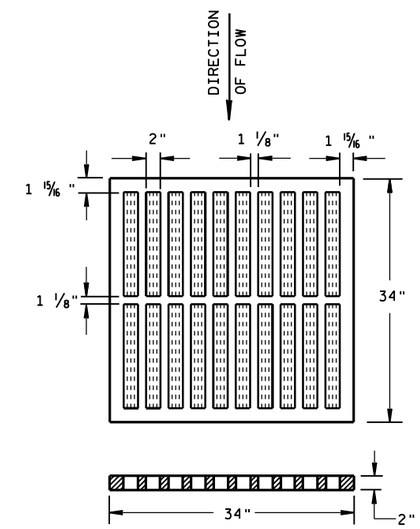

TYPE "MS"

USE ON FREEWAYS AND EXPRESSWAYS

NOTED AS TYPE MS ON DRAINAGE TABLE

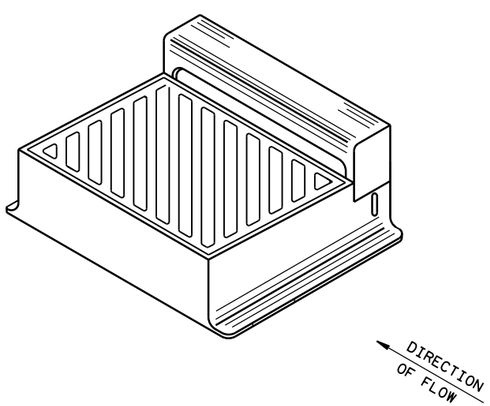

DIAGONAL SLOTS, SHALL BE ORIENTED TO THE DIRECTION OF FLOW AS ILLUSTRATED. GRATES ARE MANUFACTURED TO BE REVERSIBLE.

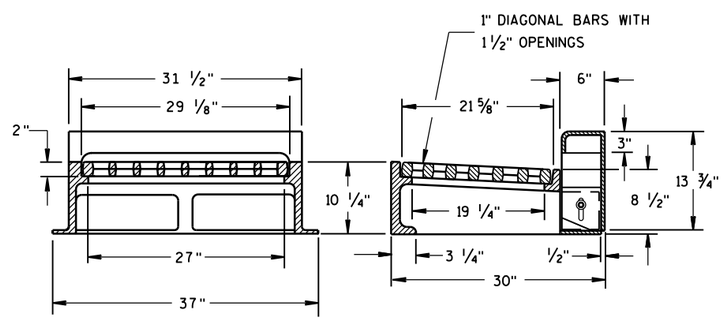

NOTE: CURB BOX HEIGHT ADJUSTABLE 6" TO 9"

TYPE "WM"

6

6

S.D.D. 8 A 5-19b

S.D.D. 8 A 5-19b

INLET COVERS
TYPE B, B-A, C, MS, MS-A, & WM

STATE OF WISCONSIN
DEPARTMENT OF TRANSPORTATION

APPROVED

11/27/2013 — DATE

/S/ Jerry H. Zogg — ROADWAY STANDARDS DEVELOPMENT ENGINEER

FHWA

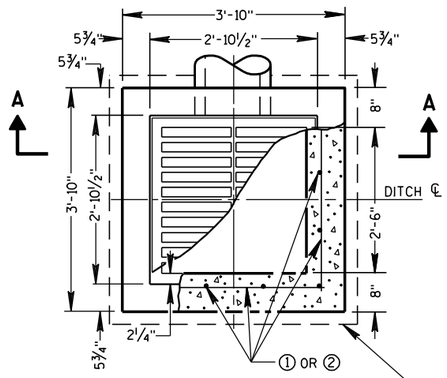

PLAN VIEW

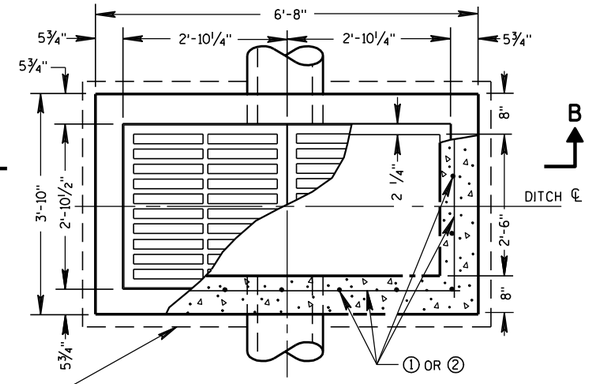

PLAN VIEW

4" OVERHANGING BASE ON REINFORCED CAST-IN-PLACE CONCRETE INLETS

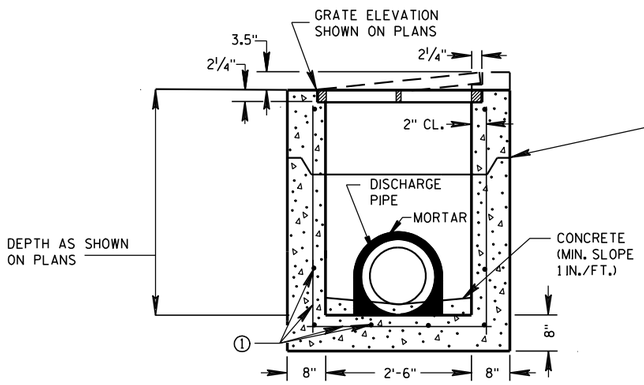

PRECAST REINFORCED CONCRETE SECTION A-A

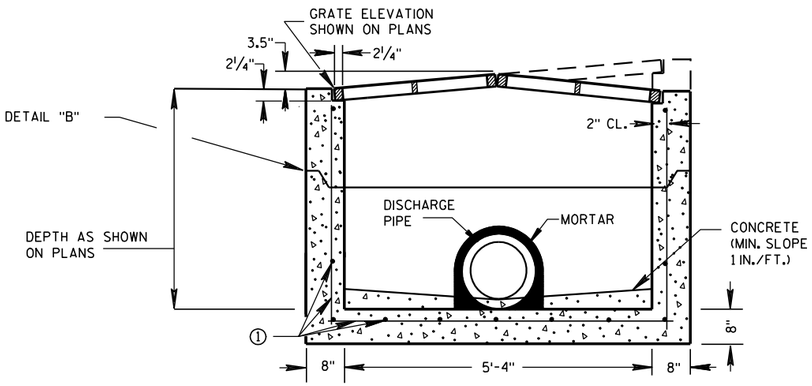

PRECAST REINFORCED CONCRETE SECTION B-B

GENERAL NOTES

DETAILS OF CONSTRUCTION, MATERIALS AND WORKMANSHIP NOT SHOWN ON THIS DRAWING SHALL CONFORM TO THE PERTINENT REQUIREMENTS OF THE STANDARD SPECIFICATIONS AND THE APPLICABLE SPECIAL PROVISIONS.

UNLESS OTHERWISE AUTHORIZED IN WRITING BY THE ENGINEER, THE CONTRACTOR SHALL NOT ORDER AND DELIVER PRECAST INLET UNITS REQUIRED FOR THE PROJECT UNTIL A LIST OF SIZES IS FURNISHED BY THE ENGINEER.

DETAILED DRAWINGS FOR PROPOSED ALTERNATE DESIGNS FOR INLETS WHICH MAY INCLUDE PRECAST REINFORCED CONCRETE INLETS, SHALL BE SUBMITTED TO THE ENGINEER FOR APPROVAL PROVIDING THAT SUCH ALTERNATE DESIGNS MAKE PROVISION FOR EQUIVALENT CAPACITY AND STRENGTH.

ALL MEDIAN INLETS ARE DESIGNATED ON THE PLANS AS "INLETS, 1G-MS", ETC. THE FIRST NUMBER AND LETTER DESIGNATE THE TYPE OF STRUCTURE, AND THE FOLLOWING LETTERS DESIGNATE THE TYPE OF COVER TO BE USED TO COMPRISE THE COMPLETE UNIT.

ALL BAR STEEL REINFORCEMENT SHALL BE EMBEDDED 2 INCHES CLEAR UNLESS OTHERWISE SHOWN OR NOTED.

PRECAST REINFORCED RISERS SHALL HAVE A TONGUE AND GROOVE JOINT WITH TONGUE UP OR DOWN.

ALL PRECAST INLET UNITS SHALL CONFORM TO THE PERTINENT REQUIREMENTS OF ASTM C 913.

MAXIMUM INSIDE PIPE DIAMETER DETERMINED BY 3" CLEARANCE ON EACH SIDE OF THE OUTSIDE WALL OF THE PIPE. SEE DETAIL "A". ASSUMES PIPE ENTERS PERPENDICULAR TO THE STRUCTURE.

① FOR PRECAST INLETS PROVIDE REINFORCING STEEL IN ACCORDANCE TO ASTM C 913.

② CONTRACTOR TO PROVIDE DRAWING(S) STAMPED BY A PROFESSIONAL ENGINEER FOR STEEL REINFORCING DESIGN FOR CAST-IN-PLACE STRUCTURES.

PIPE MATRIX

	MAXIMUM INSIDE PIPE DIAMETER	
INLET SIZE	WIDTH (IN)	LENGTH (IN)
1 GRATE	18	18
2 GRATE	18	42

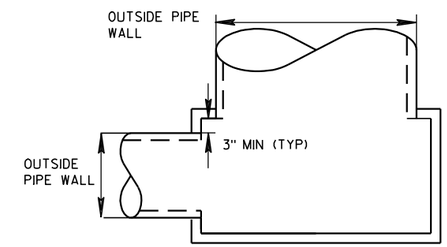

DETAIL "A"

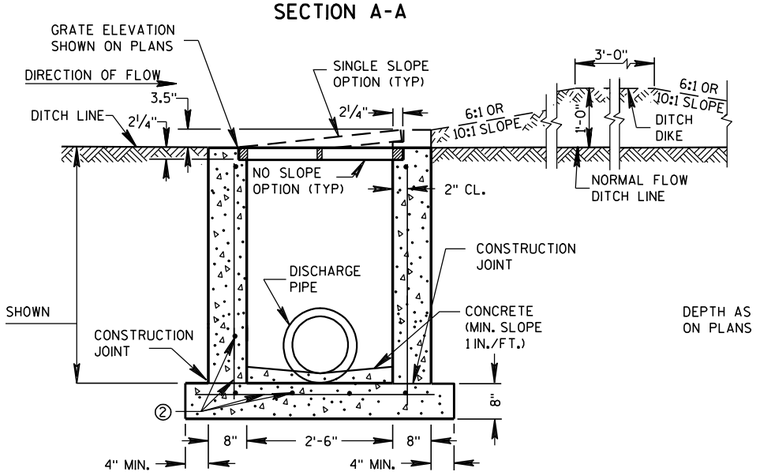

REINFORCED CAST-IN-PLACE CONCRETE SECTION A-A

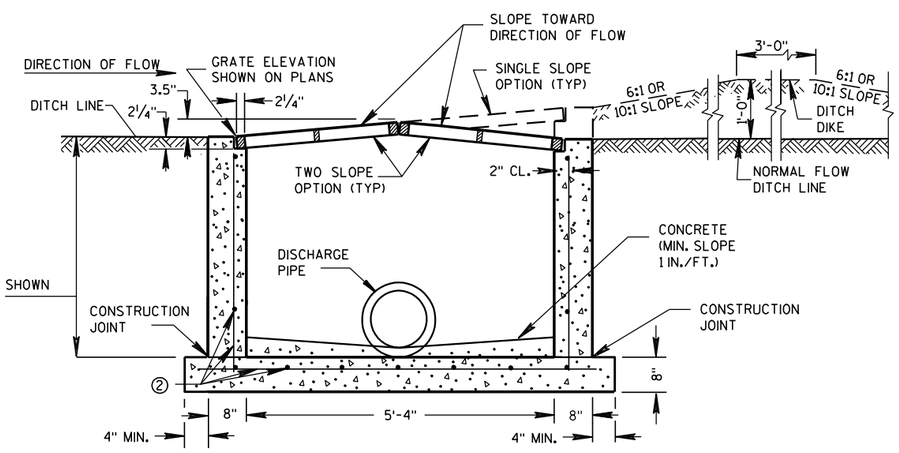

REINFORCED CAST-IN-PLACE CONCRETE SECTION B-B

JOINTS TO BE SEALED WITH A BUTYL RUBBER SEAL PER SEALANT MANUFACTURERS RECOMMENDATIONS CONFORMING TO ASTM C 990 (TYP)

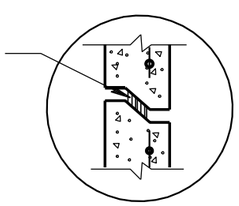

DETAIL "B"

INLETS MEDIAN 1 GRATE

INLETS MEDIAN 2 GRATE

INLETS MEDIAN 1 AND 2 GRATE

STATE OF WISCONSIN
DEPARTMENT OF TRANSPORTATION

APPROVED
6/5/2012 — DATE
/S/ Jerry H. Zogg — ROADWAY STANDARDS DEVELOPMENT ENGINEER
FHWA

GENERAL NOTES

DETAILS OF CONSTRUCTION, MATERIALS AND WORKMANSHIP NOT SHOWN ON THIS DRAWING SHALL CONFORM TO THE PERTINENT REQUIREMENTS OF THE STANDARD SPECIFICATIONS AND THE APPLICABLE SPECIAL PROVISIONS.

(1) UNPERFORATED PIPE UNDERDRAIN AND FITTINGS FURNISHED FOR OUTFALL PIPE SHALL MEET THE REQUIREMENTS OF ONE OF THE FOLLOWING SPECIFICATIONS:

POLYVINYL CHLORIDE (PVC) PLASTIC DRAIN, WASTE, AND VENT PIPE AND FITTINGS, ASTM D 2665, SCHEDULE 40 PVC.

TYPE PSM POLYVINYL CHLORIDE (PVC) SEWER PIPE AND FITTINGS, ASTM D 3034, SDR 23.5 PVC SEWER PIPE.

(2) MAXIMUM SPACING OF EDGEDRAIN OUTLETS SHALL BE 250 FEET UNLESS OTHERWISE SPECIFIED IN THE CONTRACT OR DIRECTED BY THE ENGINEER.

(3) EDGEDRAIN SHALL BE CONNECTED TO INLETS REGARDLESS OF FLOW DIRECTION FOR DRAINAGE AND MAINTENANCE ACCESS.

(4) EDGEDRAIN SHALL BE LAID PARALLEL TO THE GRADE OF ROADWAY.

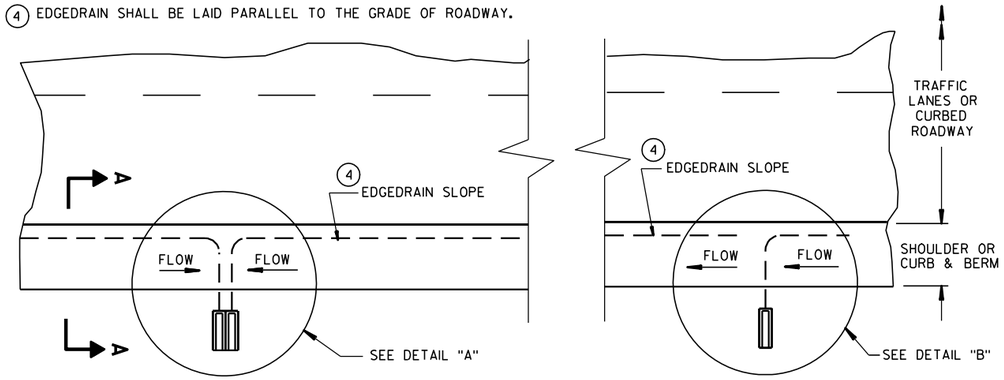

PLAN VIEW

ROADWAY WITH SHOULDERS OR CURBS

(EDGEDRAIN OUTLETS TO ROADSIDE)(2)

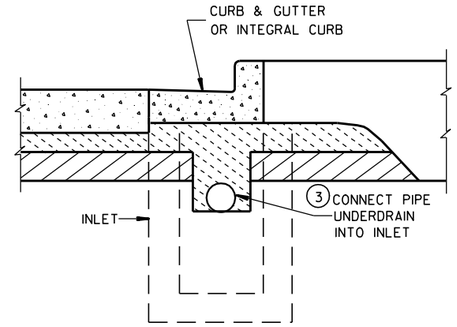

SECTION B-B

URBAN CROSS SECTION

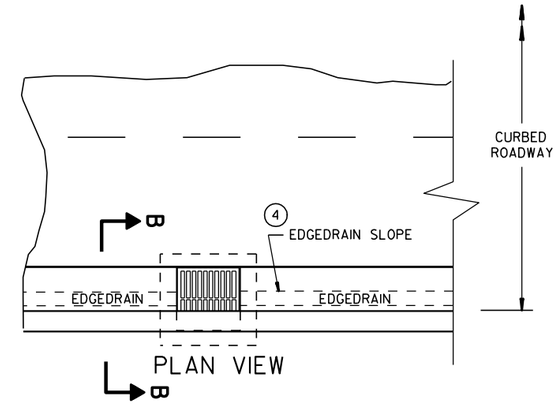

PLAN VIEW

ROADWAY WITH CURBS

(EDGEDRAIN CONNECTS INTO INLET STRUCTURE)

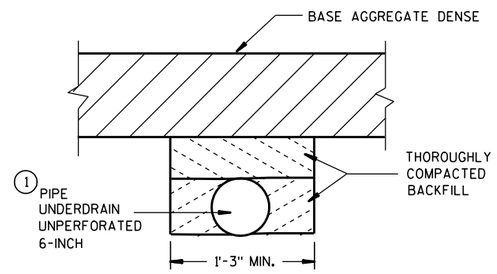

SECTION C-C

(TRENCH FOR OUTFALL PIPE)

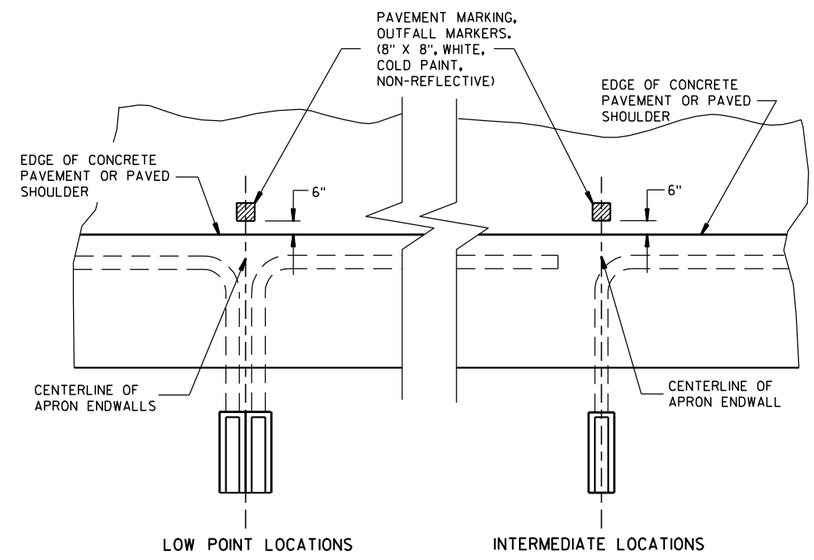

PLAN VIEW

PAVEMENT MARKING FOR OUTFALL MARKERS

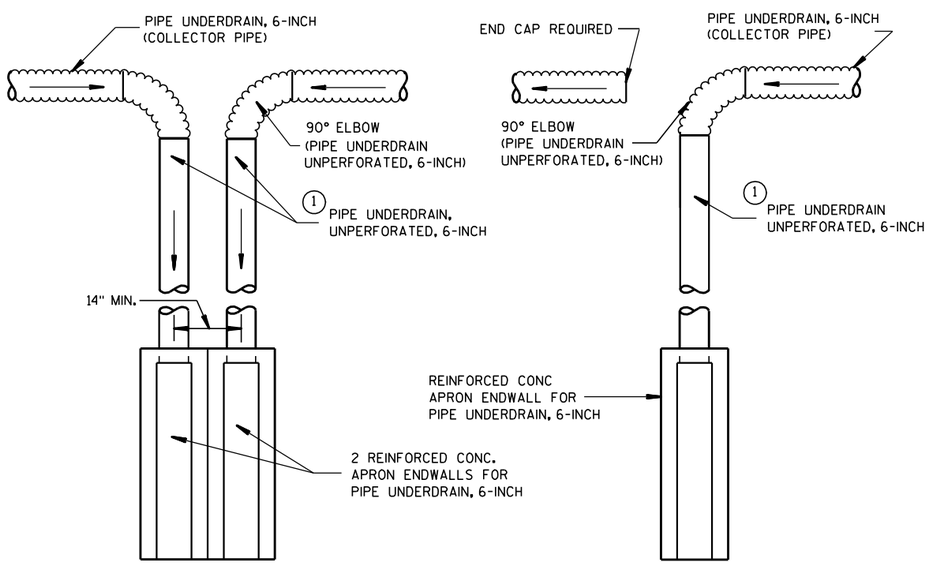

DETAIL "A"
TO BE USED AT LOW POINT LOCATIONS

DETAIL "B"
TO BE USED AT INTERMEDIATE LOCATIONS

TYPICAL DRAIN OUT DETAILS

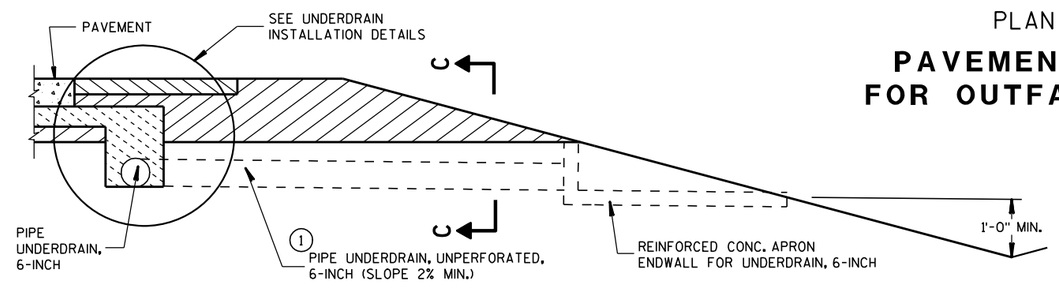

SECTION A-A

RURAL CROSS SECTION

EDGEDRAIN OUTLET AND OUTFALL MARKERS

STATE OF WISCONSIN
DEPARTMENT OF TRANSPORTATION

6

6

S.D.D. 8 D 15-4a

S.D.D. 8 D 15-4a

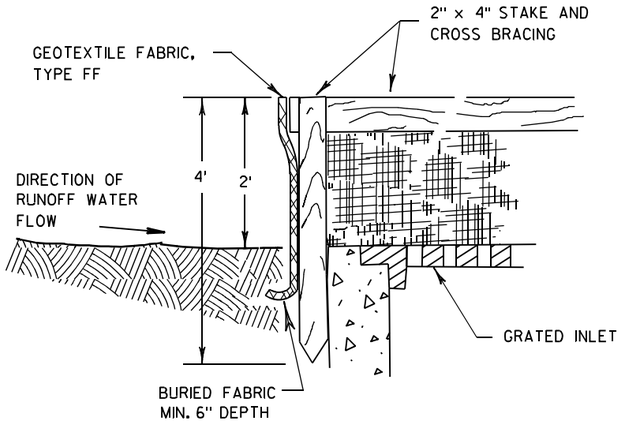

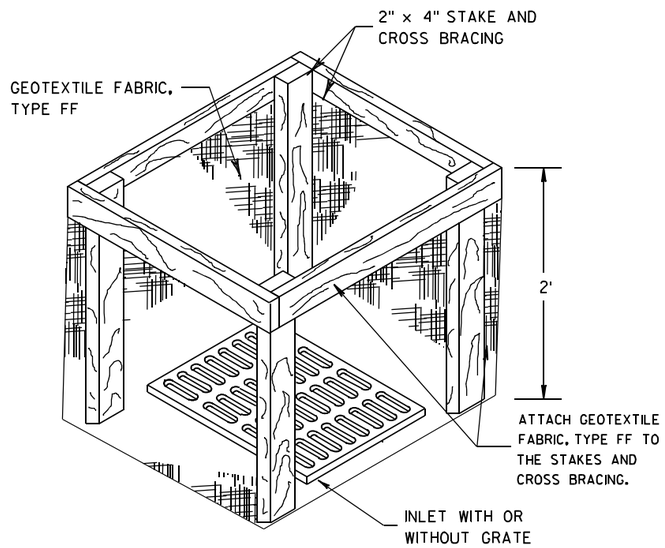

INLET PROTECTION, TYPE A

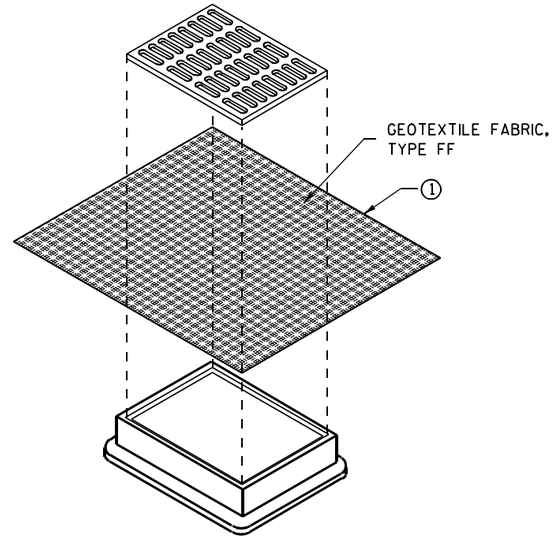

INLET PROTECTION, TYPE B (WITHOUT CURB BOX)

(CAN BE INSTALLED IN ANY INLET WITHOUT A CURB BOX)

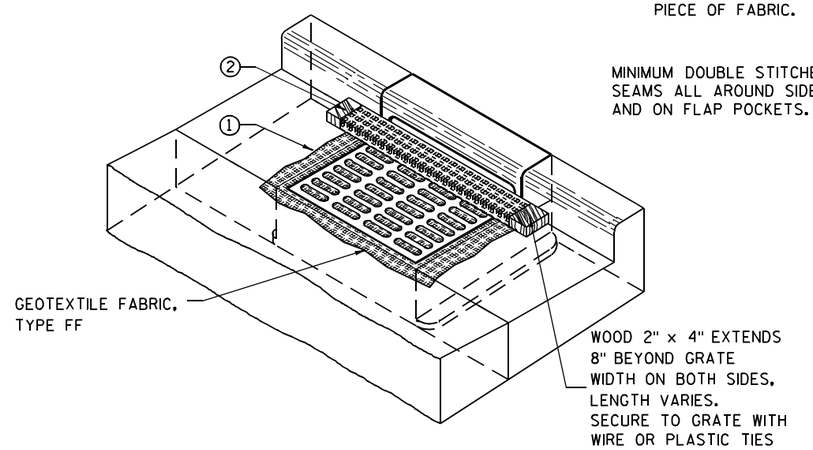

INLET PROTECTION, TYPE C (WITH CURB BOX)

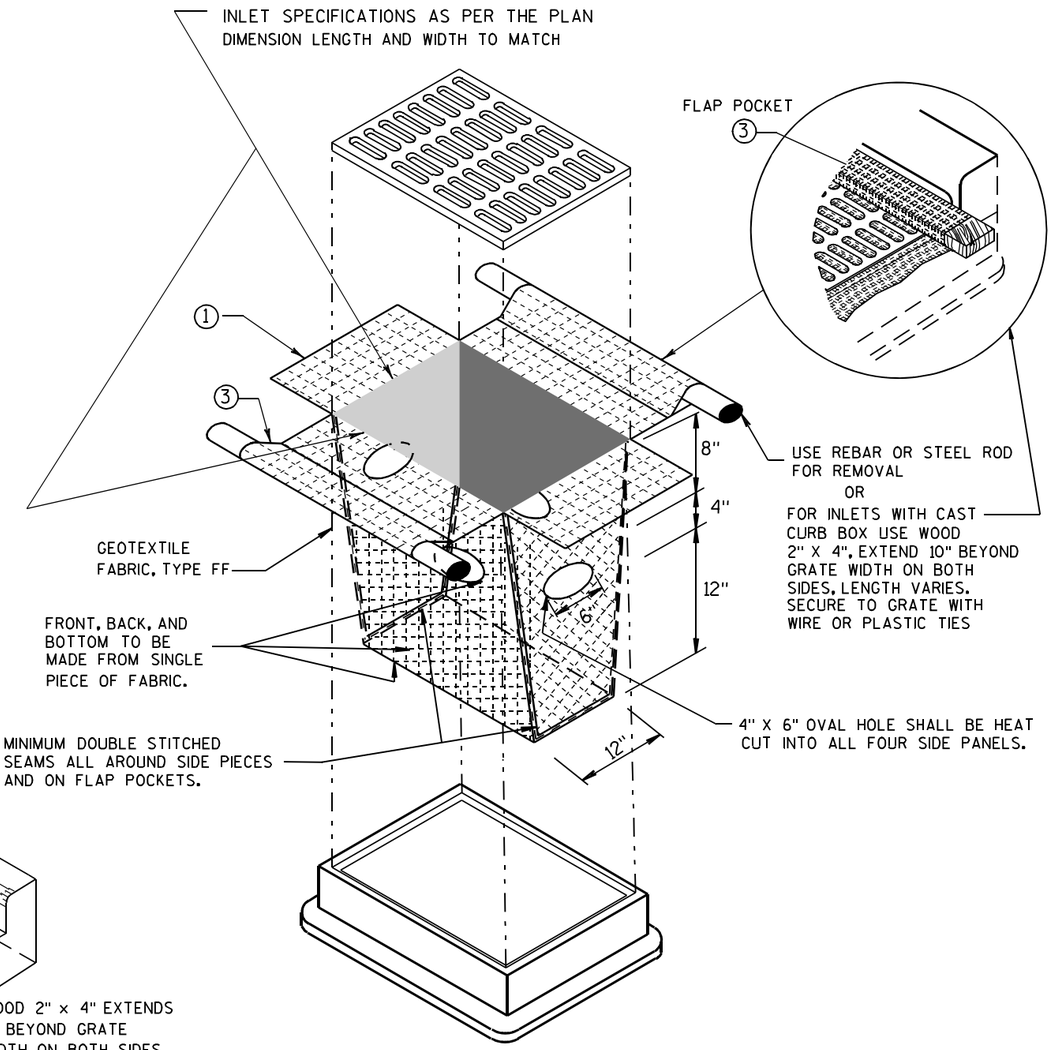

INLET PROTECTION, TYPE D

(CAN BE INSTALLED IN ANY INLET TYPE WITH OR WITHOUT A CURB BOX AS PER NOTE 2)

GENERAL NOTES

INLET PROTECTION DEVICES SHALL BE MAINTAINED OR REPLACED AT THE DIRECTION OF THE ENGINEER.

MANUFACTURED ALTERNATIVES APPROVED AND LISTED ON THE DEPARTMENT'S EROSION CONTROL PRODUCT ACCEPTABILITY LIST MAY BE SUBSTITUTED.

WHEN REMOVING OR MAINTAINING INLET PROTECTION, CARE SHALL BE TAKEN SO THAT THE SEDIMENT TRAPPED ON THE GEOTEXTILE FABRIC DOES NOT FALL INTO THE INLET. ANY MATERIAL FALLING INTO THE INLET SHALL BE REMOVED IMMEDIATELY.

1. FINISHED SIZE, INCLUDING FLAP POCKETS WHERE REQUIRED, SHALL EXTEND A MINIMUM OF 10" AROUND THE PERIMETER TO FACILITATE MAINTENANCE OR REMOVAL.
2. FOR INLET PROTECTION, TYPE C (WITH CURB BOX), AN ADDITIONAL 18" OF FABRIC IS WRAPPED AROUND THE WOOD AND SECURED WITH STAPLES. THE WOOD SHALL NOT BLOCK THE ENTIRE HEIGHT OF THE CURB BOX OPENING.
3. FLAP POCKETS SHALL BE LARGE ENOUGH TO ACCEPT WOOD 2X4.

INSTALLATION NOTES

TYPE B & C

TRIM EXCESS FABRIC IN THE FLOW LINE TO WITHIN 3" OF THE GRATE.

THE CONTRACTOR SHALL DEMONSTRATE A METHOD OF MAINTENANCE, USING A SEWN FLAP, HAND HOLDS OR OTHER METHOD TO PREVENT ACCUMULATED SEDIMENT FROM ENTERING THE INLET.

TYPE D

DO NOT INSTALL INLET PROTECTION TYPE D IN INLETS SHALLOWER THAN 30", MEASURED FROM THE BOTTOM OF THE INLET TO THE TOP OF THE GRATE.

TRIM EXCESS FABRIC IN THE FLOW LINE TO WITHIN 3" OF THE GRATE.

THE INSTALLED BAG SHALL HAVE A MINIMUM SIDE CLEARANCE, BETWEEN THE INLET WALLS AND THE BAG, MEASURED AT THE BOTTOM OF THE OVERFLOW HOLES, OF 3". WHERE NECESSARY THE CONTRACTOR SHALL CINCH THE BAG, USING PLASTIC ZIP TIES, TO ACHIEVE THE 3" CLEARANCE. THE TIES SHALL BE PLACED AT A MAXIMUM OF 4" FROM THE BOTTOM OF THE BAG.

INLET PROTECTION TYPE A, B, C, AND D

STATE OF WISCONSIN
DEPARTMENT OF TRANSPORTATION

APPROVED
10/16/02 — DATE
/S/ Beth Cannestra — CHIEF ROADWAY DEVELOPMENT ENGINEER
FHWA

6

S.D.D. 8 E 10-2

DIMENSIONS IN INCHES											
PIPE DIA.	A	B	C	D	E	F	G	H	J	L	Z
**4	6	12	5 1/4	9	8	32	36	11	2 3/8	6 1/2	4
6	8	14	7 1/4	11	10	42	44	13	3 5/8	8 1/2	6

**APRON ENDWALL FOR 6 INCH DIAMETER PIPE MAY BE SUBSTITUTED FOR THIS SIZE PROVIDED THE HOLE IN THE HEADWALL IS SIZED AND LOCATED TO CONFORM TO THE 4 INCH DIAMETER PIPE DIMENSIONS (C & J)

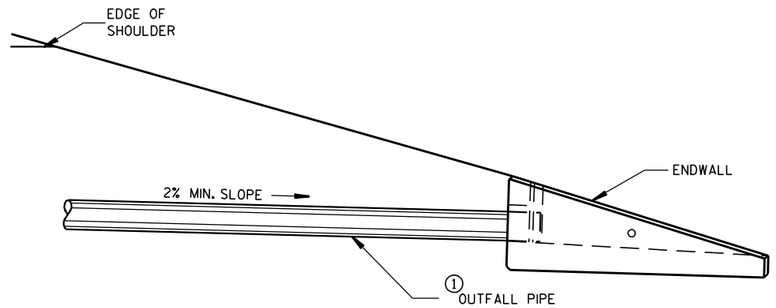

INSTALLATION DETAIL

GENERAL NOTES

DETAILS OF CONSTRUCTION, MATERIALS AND WORKMANSHIP NOT SHOWN ON THIS DRAWING SHALL CONFORM TO THE PERTINENT REQUIREMENTS OF THE STANDARD SPECIFICATIONS AND THE APPLICABLE SPECIAL PROVISIONS.

ALTERNATIVE DESIGNS WHICH PROVIDE EQUIVALENT CAPACITY AND STRENGTH MAY BE USED WHEN APPROVED BY THE ENGINEER. ENDWALL MAY BE EITHER PRECAST OR CAST-IN-PLACE CONCRETE.

THE UNDERDRAIN PIPE SHALL BE FULLY INSERTED AND SEALED INTO THE ENDWALL WITH CEMENT MORTAR PRIOR TO BACKFILLING AROUND THE STRUCTURE.

THE UPPERMOST POINT OF THE ENDWALL SHALL BE PLACED FLUSH WITH THE ROADWAY SLOPE. ADJACENT EMBANKMENT SLOPES SHALL BE SHAPED TO FIT THE SIDES AND TOE OF THE ENDWALL. EXACT PLACEMENT OF THE OUTFALL PIPE AND ENDWALL SHALL BE DETERMINED BY THE ENGINEER TO MATCH THE ELEVATIONS AND FLOW DIRECTION OF THE ROADSIDE DITCH.

① THE OUTFALL PIPE UNDERDRAIN AND FITTINGS SHALL CONFORM TO THE REQUIREMENTS OF THE SPECIFICATION FOR POLY (VINYL CHORIDE) (PVC) PLASTIC DRAIN, WASTE AND VENT PIPE AND FITTINGS, ASTM DESIGNATION: D 2665, SCHEDULE 40 PVC OR THE STANDARD SPECIFICATION FOR TYPE PSM POLY (VINYL CHORIDE) (PVC) SEWER PIPE AND FITTINGS, ASTM DESIGNATION: D 3034, TYPE PSM SDR 23.5 PVC SEWER PIPE, ALL JOINTS SHALL BE SOLVENT WELDED.

THE OUTFALL PIPE INCLUDING ALL FITTINGS AND THE RODENT SHIELD SHALL BE MEASURED AND PAID FOR AS PIPE UNDERDRAIN UNPERFORATED.

② THE RODENT SHIELD SHALL BE A PVC GRATE SIMILAR TO THIS DETAIL. THE GRATE IS COMMERCIALLY AVAILABLE AS A FLOOR STRAINER. A PIPE COUPLING IS REQUIRED FOR THE ATTACHMENT OF THIS SHIELD TO THE OUTFALL PIPE. THE SHIELD SHALL BE FASTENED TO THE PIPE COUPLING WITH TWO OR MORE NO. 10 X 1-INCH STAINLESS STEEL SHEET METAL SCREWS.

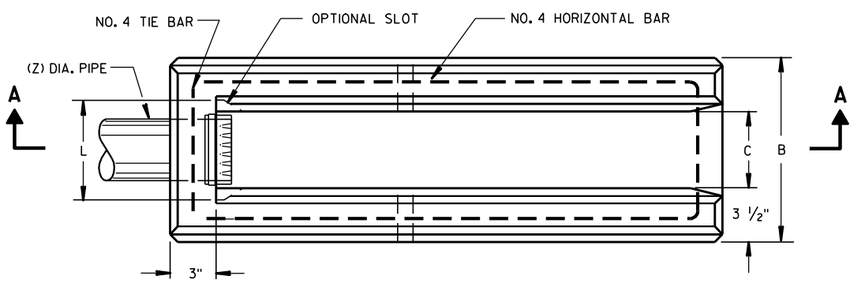

PLAN VIEW

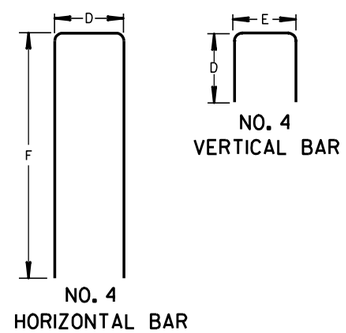

BAR STEEL REINFORCEMENT DETAILS

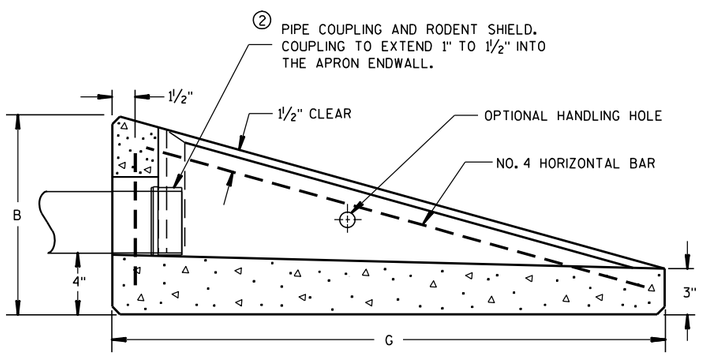

SECTION A-A

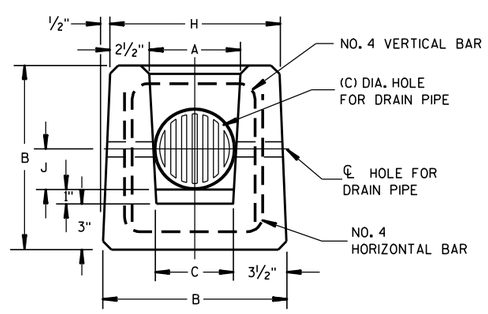

END VIEW

CONCRETE APRON ENDWALL FOR UNDERDRAIN

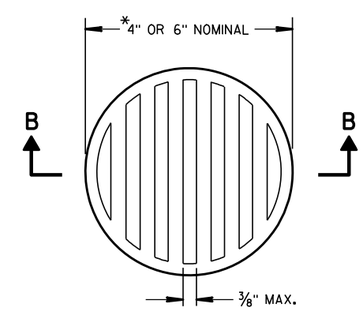

② RODENT SHIELD

NOTE: ORIENT SHIELD SO SLOTS ARE VERTICAL.

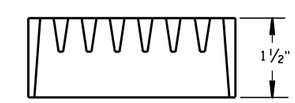

SECTION B-B

*NOTE: DIMENSIONS ARE APPROXIMATE. THE GRATE IS SIZED TO FIT INTO A PIPE COUPLING.

REINFORCED CONCRETE APRON ENDWALL FOR PIPE UNDERDRAIN

STATE OF WISCONSIN
DEPARTMENT OF TRANSPORTATION

APPROVED
3/10/98 — DATE
/S/ Rory L. Rhinesmith — CHIEF ROADWAY DEVELOPMENT ENGINEER
FHWA

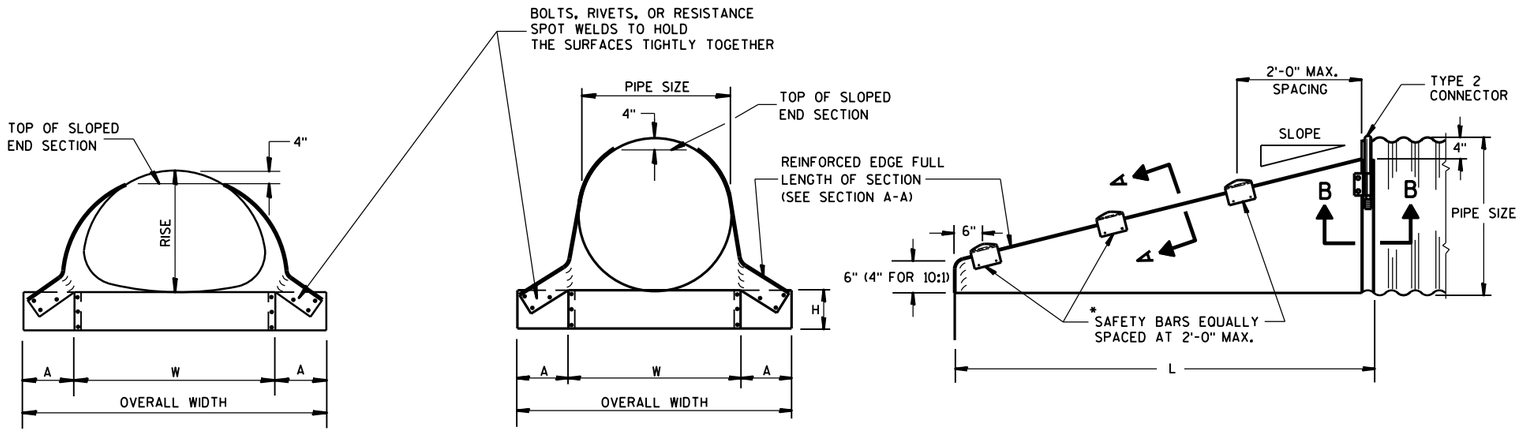

FRONT VIEW

FRONT VIEW

SIDE VIEW

GENERAL NOTES

DETAILS OF CONSTRUCTION, MATERIALS AND WORKMANSHIP NOT SHOWN ON THIS DRAWING SHALL CONFORM TO THE PERTINENT REQUIREMENTS OF THE STANDARD SPECIFICATIONS AND THE APPLICABLE SPECIAL PROVISIONS.

SLOPED END SECTIONS SHALL CONFORM TO THE REQUIREMENTS OF THE STANDARD SPECIFICATIONS, SECTION 521 FOR STEEL APRON ENDWALLS.

SAFETY BARS SHALL BE FABRICATED FROM GALVANIZED STEEL PIPE MEETING THE REQUIREMENTS OF ASTM A-53, GRADE B, SCHEDULE 40 OR APPROVED EQUAL.

STEEL APRON ENDWALLS FOR CULVERT PIPE SLOPED SIDE DRAINS

PIPE DIA. (IN.)	MIN. THICK. (Inches)	DIMENSIONS (Inches)				L DIMENSIONS					
		A	H	W	OVERALL WIDTH	SLOPE	LENGTH INCHES	SLOPE	LENGTH INCHES	SLOPE	LENGTH INCHES
15	.064	8	6	21	37	4:1	20	6:1	30	10:1	70
18	.064	8	6	24	40	4:1	32	6:1	48	10:1	100
21	.064	8	6	27	43	4:1	44	6:1	66	10:1	130
24	.064	8	6	30	46	4:1	56	6:1	84	10:1	160
30	.109	12	9	36	60	4:1	80	6:1	120	10:1	220
36	.109	12	9	42	66	4:1	104	6:1	156	10:1	280
42	.109	16	12	48	80	4:1	128	6:1	192	——	——
48	.109	16	12	54	86	4:1	152	6:1	228	——	——
54	.109	16	12	60	92	4:1	176	6:1	264	——	——
60	.109	16	12	66	98	4:1	200	6:1	300	——	——

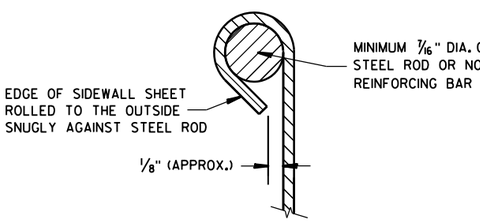

SECTION A-A

*NOTE:
THREE SAFETY BARS ARE SHOWN. ACTUAL NUMBER OF BARS REQUIRED AT A 2'-0" C-C MAX. SPACING WILL VARY DEPENDING ON THE LENGTH OF THE END SECTION.

3" GALVANIZED PIPE. FLATTEN ENDS, THEN BEND OUTSIDE 4" TO MATCH END SECTION SIDES.

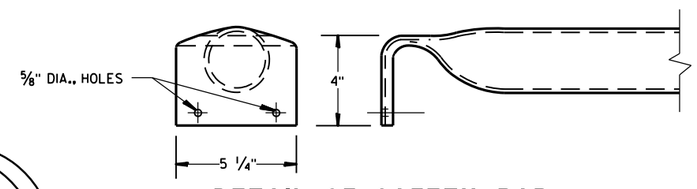

DETAIL OF SAFETY BAR

STEEL APRON ENDWALLS FOR PIPE ARCH SLOPED SIDE DRAINS

EQUIV. DIA. (Inches)	(Inches)		MIN. THICK. (Inches) ①	DIMENSIONS (Inches)				L DIMENSIONS					
	SPAN	RISE		A	H	W	OVERALL WIDTH	SLOPE	LENGTH INCHES	SLOPE	LENGTH INCHES	SLOPE	LENGTH INCHES
15	17	13	.064 *	7	6	30	44	4:1	19	6:1	30	10:1 ②	70
18	21	15	.064 *	8	6	27	43	4:1	20	6:1	30	10:1	70
21	24	18	.064 *	8	6	30	46	4:1	32	6:1	48	10:1	100
24	28	20	.064 *	8	6	34	50	4:1	40	6:1	60	10:1	120
30	35	24	.079 *	12	9	41	65	4:1	56	6:1	84	10:1	160
36	42	29	.109 *	12	9	48	72	4:1	76	6:1	114	10:1	210
42	49	33	.109	16	12	55	87	4:1	92	6:1	138	——	——
48	57	38	.109	16	12	63	95	4:1	112	6:1	168	——	——
54	64	43	.109	16	12	70	102	4:1	132	6:1	198	——	——

① * MINIMUM THICKNESS OF ALL 10:1 SLOPED SIDE DRAINS IS 0.109".
② ACTUAL SLOPE GREATER THAN 10:1.

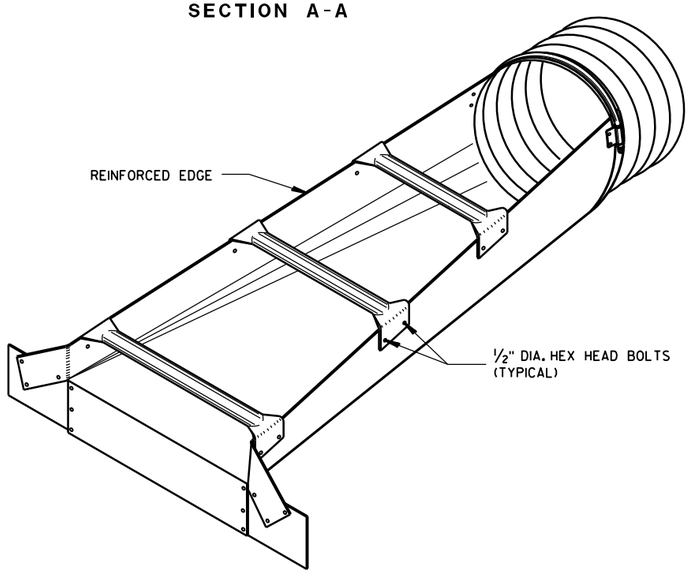

ISOMETRIC VIEW

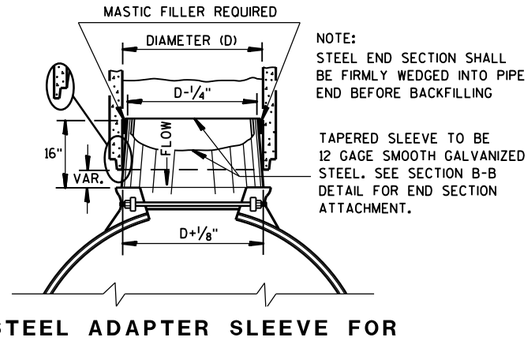

NOTE:
STEEL END SECTION SHALL BE FIRMLY WEDGED INTO PIPE END BEFORE BACKFILLING

TAPERED SLEEVE TO BE 12 GAGE SMOOTH GALVANIZED STEEL. SEE SECTION B-B DETAIL FOR END SECTION ATTACHMENT.

STEEL ADAPTER SLEEVE FOR CONCRETE PIPE

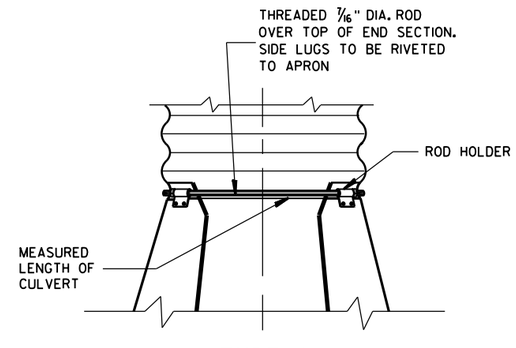

TYPE 2 CONNECTION DETAIL

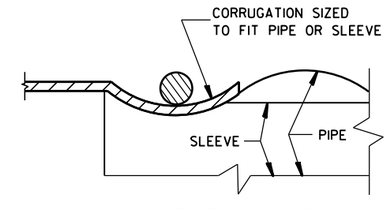

SECTION B-B

STEEL APRON ENDWALLS FOR CULVERT PIPE AND PIPE ARCH SLOPED SIDE DRAINS

STATE OF WISCONSIN
DEPARTMENT OF TRANSPORTATION

APPROVED
9/14/2012 — DATE
/S/ Jerry H. Zogg — ROADWAY STANDARDS DEVELOPMENT ENGINEER
FHWA

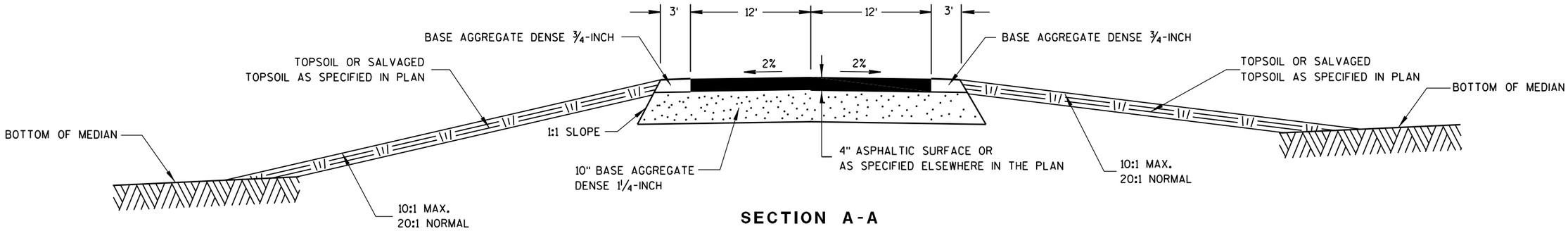

SECTION A-A

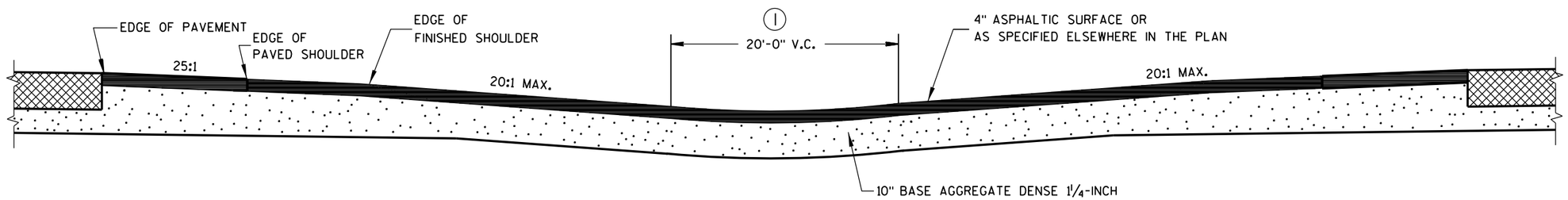

SECTION B-B

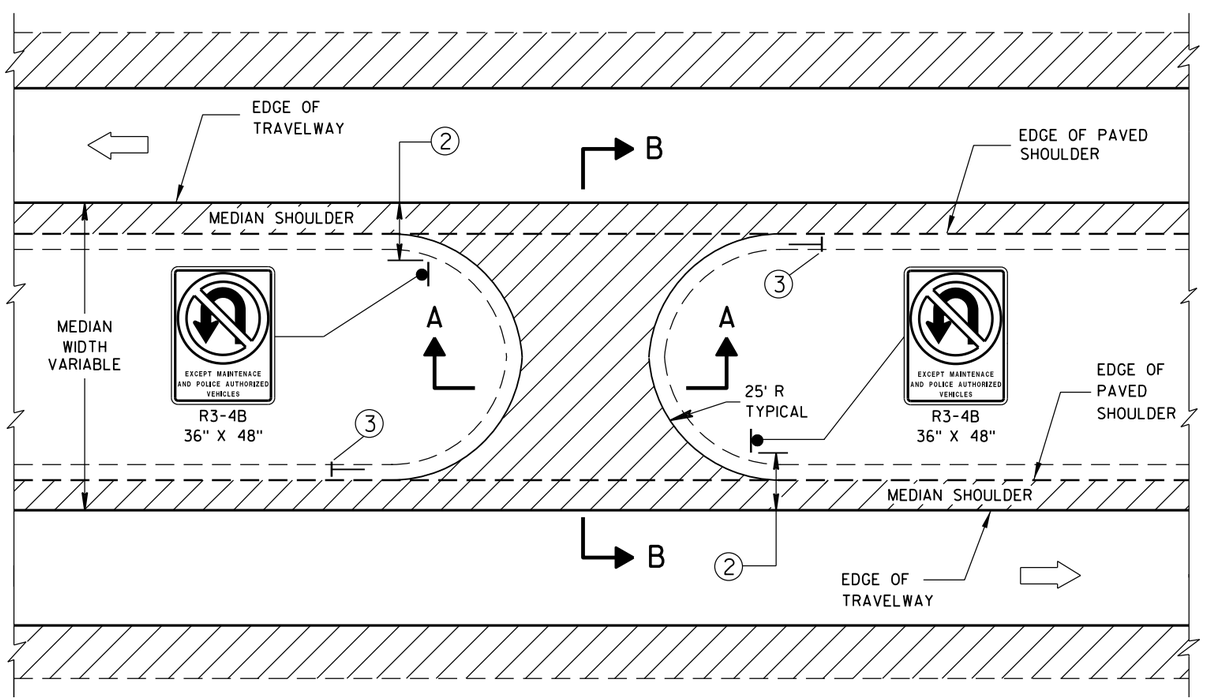

PLAN VIEW

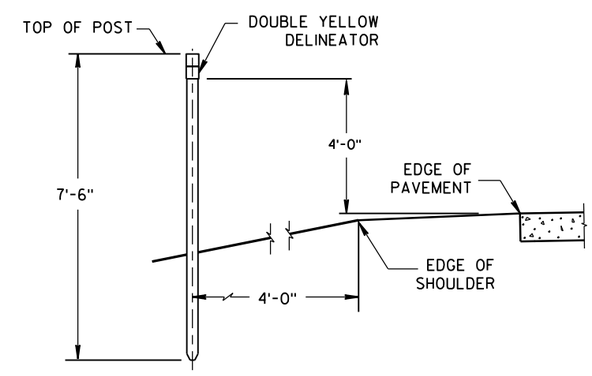

DOUBLE YELLOW
DELINEATOR INSTALLATION

GENERAL NOTES

DETAILS OF CONSTRUCTION, MATERIALS AND WORKMANSHIP NOT SHOWN ON THIS DRAWING SHALL CONFORM TO THE PERTINENT REQUIREMENTS OF THE STANDARD SPECIFICATIONS AND THE APPLICABLE SPECIAL PROVISIONS.

1. ADJUST VERTICAL CURVE LOCATION LATERALLY TO MAINTAIN 20:1 MAX.
2. SIGNING DETAILS AND SPECIFICATIONS ARE PROVIDED ELSEWHERE IN THE CONTRACT.
3. INSTALL DOUBLE YELLOW DELINEATOR. SEE STANDARD DETAIL DRAWING 15A2.

MAINTENANCE CROSSOVER
FOR FREEWAYS

STATE OF WISCONSIN
DEPARTMENT OF TRANSPORTATION

APPROVED

8/2013	/S/ Jerry H. Zogg
DATE	ROADWAY STANDARDS DEVELOPMENT ENGINEER

FHWA

6

S.D.D. 11 A 1-5

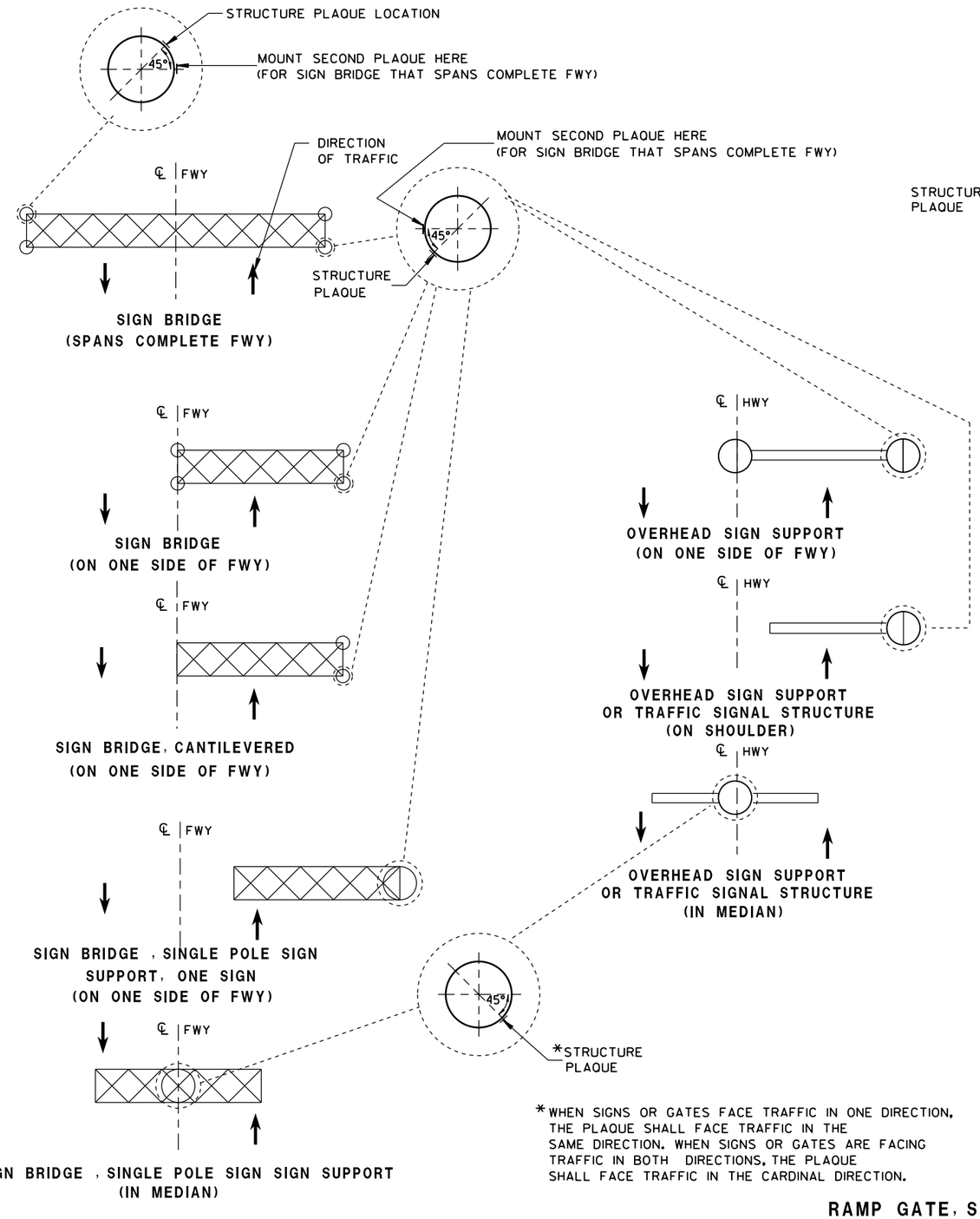

LOCATION OF RAMP GATE, SIGN BRIDGE, OVERHEAD SIGN SUPPORT & TRAFFIC SIGNAL STRUCTURE PLAQUES

* WHEN SIGNS OR GATES FACE TRAFFIC IN ONE DIRECTION, THE PLAQUE SHALL FACE TRAFFIC IN THE SAME DIRECTION. WHEN SIGNS OR GATES ARE FACING TRAFFIC IN BOTH DIRECTIONS, THE PLAQUE SHALL FACE TRAFFIC IN THE CARDINAL DIRECTION.

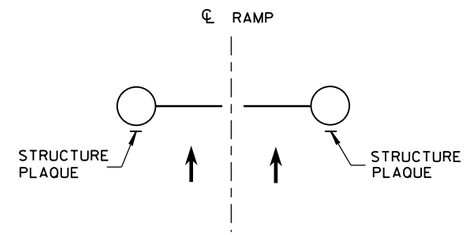

RAMP GATE
(ACROSS FWY ON-RAMP)

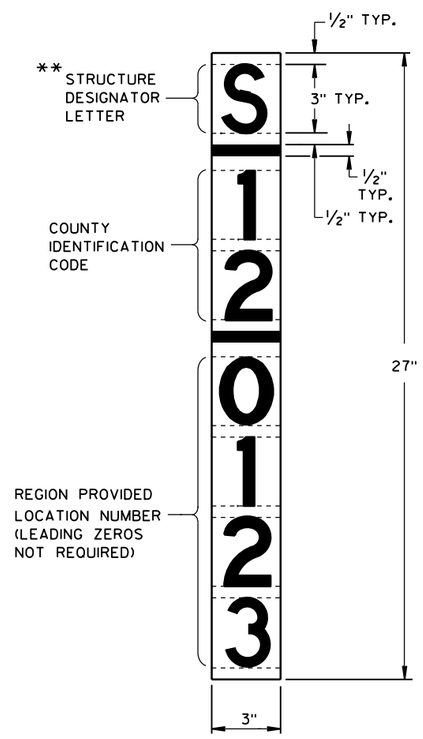

** LETTER "G" UTILIZED FOR RAMP GATES. LETTER "S" UTILIZED FOR SIGN BRIDGES, OVERHEAD SIGN SUPPORTS, AND TRAFFIC SIGNALS.

RAMP GATE, SIGN BRIDGE, OVERHEAD SIGN SUPPORT AND TRAFFIC SIGNAL STRUCTURE PLAQUE FOR SIGN BRIDGES AND OVERHEAD SIGN SUPPORT WHICH ARE NOT STRUCTURE MOUNTED

GENERAL NOTES

DETAILS OF CONSTRUCTION AND WORKMANSHIP NOT SHOWN IN THIS DRAWING SHALL CONFORM TO THE PERTINENT REQUIREMENTS OF THE CONTRACT.

PLAQUES SHALL BE INCIDENTAL TO ALL NEW INSTALLATIONS.

IF THE PROPOSED SIGN BRIDGE OR OVERHEAD SIGN SUPPORT IS REPLACING AN EXISTING SIGN BRIDGE OR OVERHEAD SIGN SUPPORT, A NEW IDENTIFICATION PLAQUE WILL BE REQUIRED.

FASTEN TOP, CENTER AND BOTTOM OF PLAQUE TO POLE OR OTHER LOCATION AS FOLLOWS:

GALVANIZED STEEL SHAFT - 3 STAINLESS STEEL POP RIVETS

A588 STEEL SHAFT - SHIM FOR DRAINAGE WITH STAINLESS WASHERS; FASTEN WITH STAINLESS SELF-TAPPING SCREWS

ALUMINUM SHAFTS - 3 ALUMINUM POP RIVETS

MOUNTING HEIGHT SHALL BE APPROXIMATELY 5.0' ABOVE CURB OR SHOULDER. ADJUST IF IT IS KNOWN THAT REQUIRED TRAFFIC SIGNS WILL OBSTRUCT.

PLAQUE MATERIALS:

BASE - SHEET ALUMINUM, 0.060" THICK.

FACE - WHITE, SELF-ADHESIVE VINYL SHEETING, NON-RETROREFLECTIVE

LINES - BLACK, 1/2" WIDE, SELF-ADHESIVE

CHARACTERS:- BLACK, SELF ADHESIVE, SERIES "D", SIZE AS SHOWN.

FOR SIGN BRIDGES, STRUCTURE MOUNTED, THE STRUCTURE PLAQUE SHALL BE MOUNTED HORIZONTALLY AS SHOWN ON THE DRAWING. THE STRUCTURE PLAQUE SHALL BE MOUNTED HORIZONTALLY TO THE BACK OF THE SIGN, BETWEEN THE ALUMINUM EXTRUSIONS, NEAR THE TOP LEFT HAND CORNER OF THE SIGN. THE BASE MATERIAL SHALL BE OMITTED AND THE FACE ADHERED DIRECTLY TO THE ALUMINUM SURFACE. PRIOR TO ADHERING THE MATERIAL, THE ALUMINUM SURFACE SHALL BE SMOOTH, CLEAN AND DRY.

WHERE SIGN BRIDGE ILLUMINATION IS PROVIDED, THE STRUCTURE MUST ALSO HAVE A SIGN BRIDGE CIRCUIT PLAQUE AS SHOWN IN THE ELECTRICAL DETAILS.

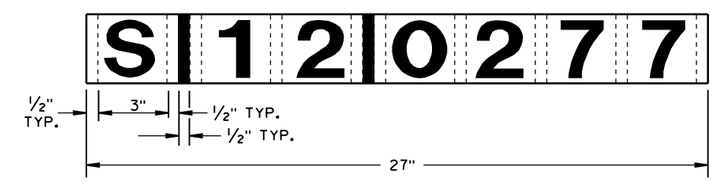

IDENTIFICATION PLAQUE FOR SIGN BRIDGE, STRUCTURE MOUNTED

STRUCTURE IDENTIFICATION PLAQUES, RAMP GATES, SIGN BRIDGES, OVERHEAD SIGN SUPPORTS, & TRAFFIC SIGNALS

STATE OF WISCONSIN
DEPARTMENT OF TRANSPORTATION

APPROVED
12/4/2012 — DATE
/S/ Travis Feltes — STATE TRAFFIC ENGINEER
FHWA

6

S.D.D. 12 A 4-3

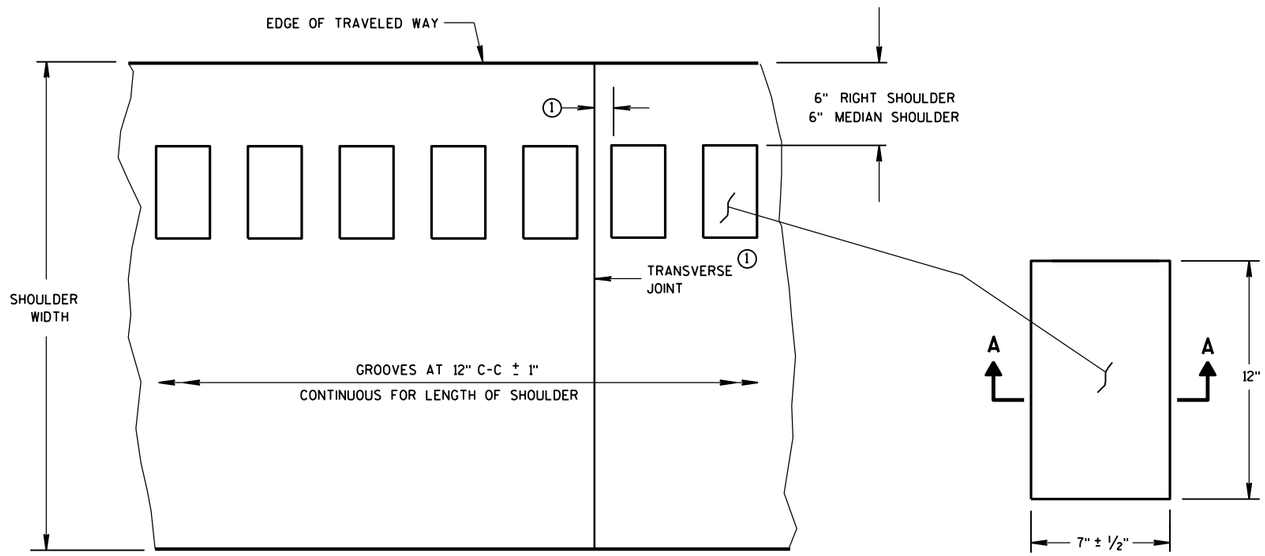

PLAN VIEW
SHOULDER WITH GROOVES

PLAN VIEW
(SINGLE GROOVE)

PLACEMENT DETAIL FOR MILLED RUMBLE STRIP

GENERAL NOTES

DETAILS OF CONSTRUCTION SHOWN ON THIS DRAWING SHALL CONFORM TO THE PERTINENT REQUIREMENTS OF THE STANDARD SPECIFICATIONS AND APPLICABLE SPECIAL PROVISIONS.

RUMBLE STRIPS ON EXPRESSWAYS

DO NOT INSTALL RUMBLE STRIPS ACROSS SIDE ROAD INTERSECTIONS, COMMERCIAL DRIVEWAYS, PRIVATE DRIVEWAYS OR ADJACENT TO RIGHT TURN LANES, LEFT TURN LANES, TURN LANE TAPERS, BRIDGE DECKS, BRIDGE APPROACHES, OR 100 FEET IN ADVANCE OF RAILROAD CROSSING. THE ATTACHED STANDARD DETAIL DRAWING SHOWS THE LOCATION OF THE RUMBLE STRIPS AT INTERCHANGE AREAS.

(1) CONCRETE PAVEMENT - RUMBLE STRIPS SHALL BE A MINIMUM OF 6" AWAY FROM TRANSVERSE JOINTS.

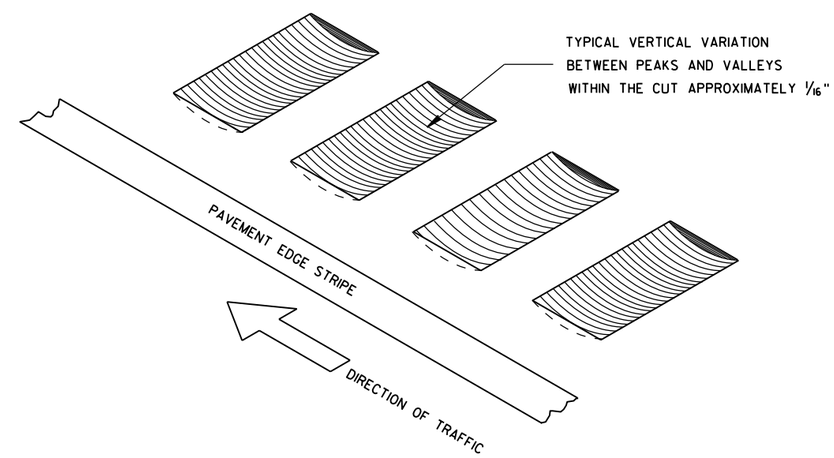

ISOMETRIC

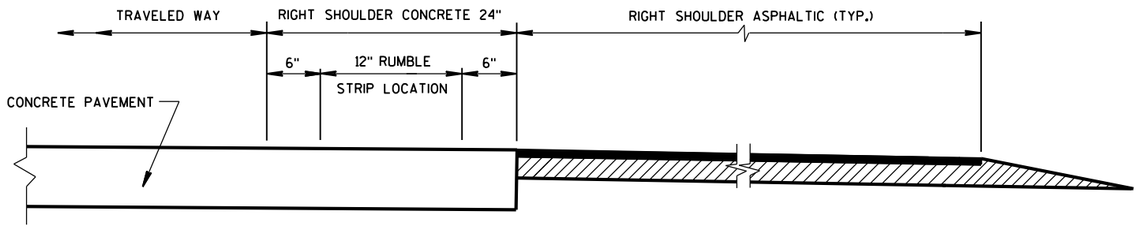

SECTION VIEW
CONCRETE PAVEMENT EXTENDS INTO RIGHT SHOULDER)

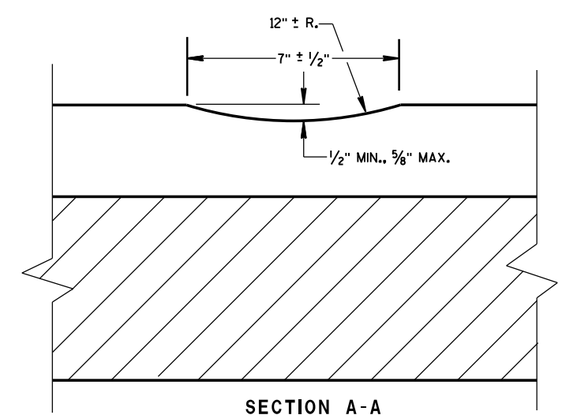

SECTION A-A

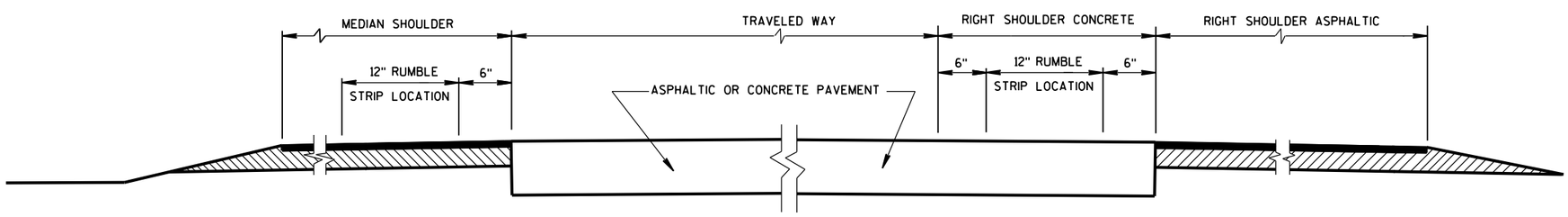

SECTION VIEW

TYPICAL LOCATIONS OF SHOULDER RUMBLE STRIPS
IN RURAL DIVIDED HIGHWAYS

(ONE ROADWAY IS SHOWN)

SHOULDER RUMBLE STRIP, MILLING

STATE OF WISCONSIN
DEPARTMENT OF TRANSPOR

6
S.D.D. 13 A 5-5a

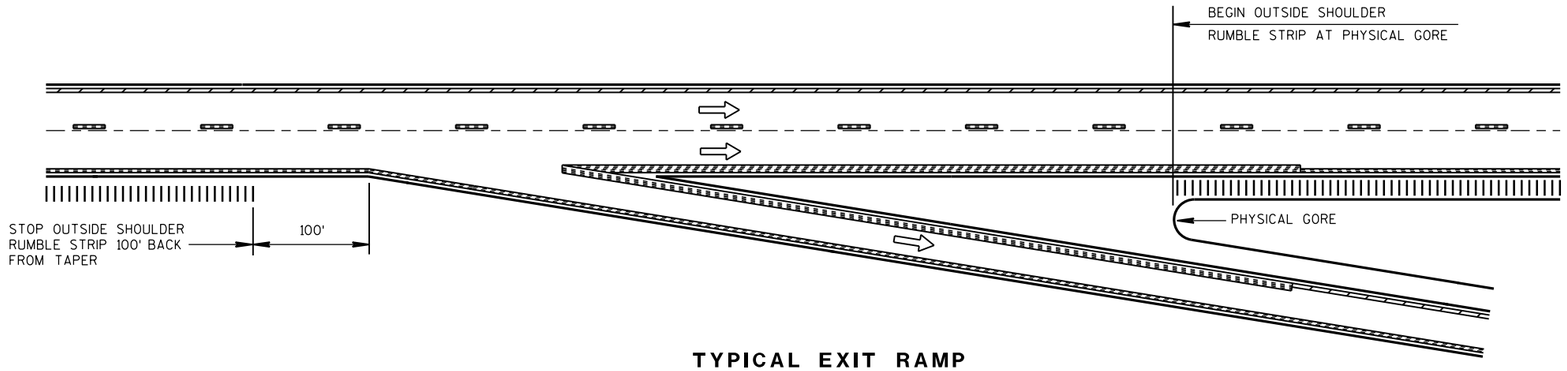

TYPICAL EXIT RAMP

NOTES:

NO RUMBLE STRIP ON EXIT, DIRECTIONAL, OR ENTRANCE RAMPS, EXCEPT NEAR THE ENTRANCE TAPER END AND ALONG THE PARALLEL RAMP AREA AS SHOWN.

PAVEMENT MARKING DETAILS AND SPECIFICATIONS ARE PROVIDED ELSEWHERE IN THE CONTRACT.

NOTE:
ARROW SYMBOL (⇨)
SHOWS DIRECTION OF TRAVEL

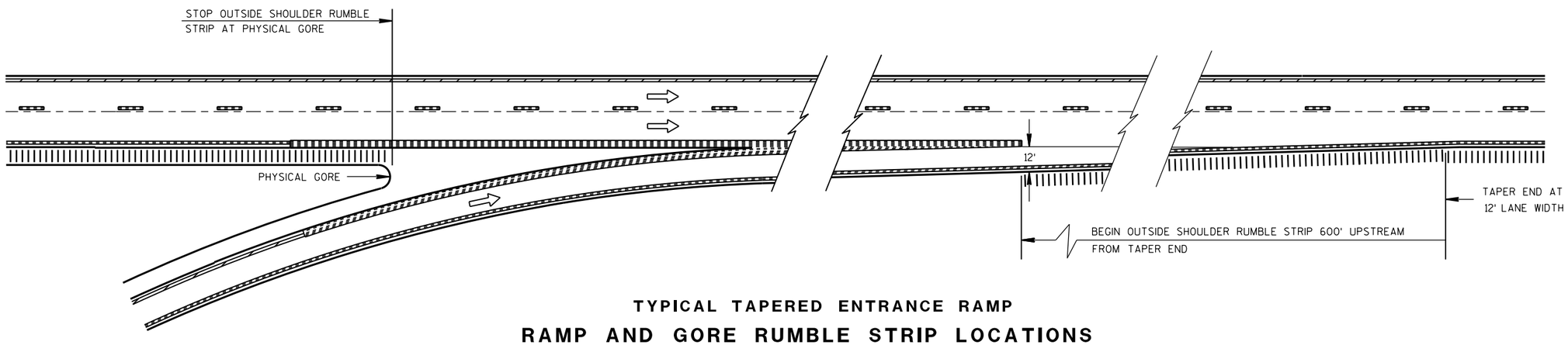

TYPICAL TAPERED ENTRANCE RAMP

RAMP AND GORE RUMBLE STRIP LOCATIONS

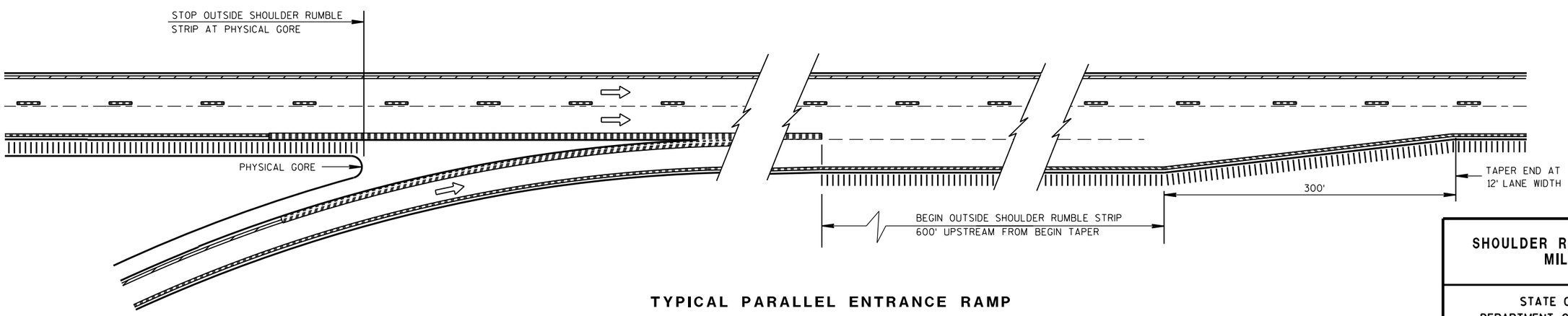

TYPICAL PARALLEL ENTRANCE RAMP

RAMP AND GORE RUMBLE STRIP LOCATIONS

SHOULDER RUMBLE STRIP, MILLING

STATE OF WISCONSIN
DEPARTMENT OF TRANSPORTATION

APPROVED
12/17/2012 — DATE
/S/ Jerry H. Zogg — ROADWAY STANDARDS DEVELOPMENT ENGINEER
FHWA

6

S.D.D. 13 A 5-5b

GENERAL NOTES

SAW CUT, DRILL, AND LIFT OUT EXISTING CONCRETE PAVEMENT WITHIN THE BOUNDARIES OF CONCRETE REPAIR AREAS. THE CONTRACTOR MAY MAKE ADDITIONAL SAW CUTS INSIDE THE REPAIR LIMITS TO REDUCE WEIGHT AND SIZE OF CONCRETE PIECES. ADDITIONAL SAW CUTS ARE NOT PAID FOR BY THE DEPARTMENT.

PROVIDE A 6-FOOT MINIMUM DISTANCE FROM BOUNDARIES OF CONCRETE REPAIR AREAS TO ADJACENT TRANSVERSE JOINT OR CRACK IN THE SAME LANE.

THE LENGTH OF THE REPAIRS MAY VARY FROM THE DIMENSIONS SHOWN IF THE EXISTING CONCRETE PAVEMENT IS NONDOWELED AND THE PAVEMENT IS TO BE OVERLAID AFTER REPAIRING.

(1) DOWEL BARS MIGHT NOT EXIST.

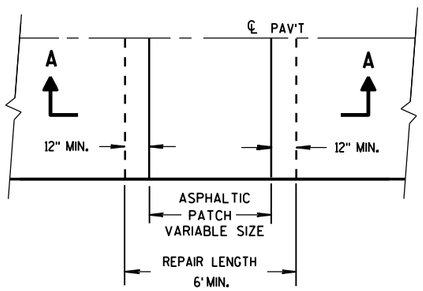

PLAN VIEW

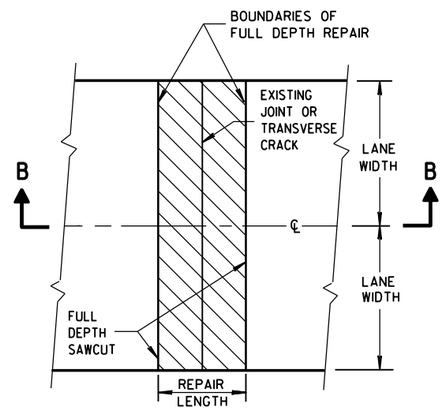

PLAN VIEW
(DOUBLE LANE REPAIR)

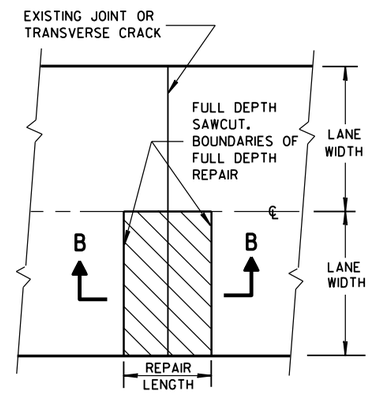

PLAN VIEW
(SINGLE LANE REPAIR)

FULL DEPTH CONCRETE PAVEMENT REMOVAL

(SEE NOTE)

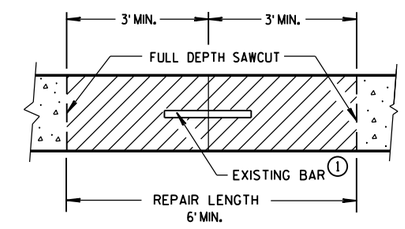

SECTION B-B

CONCRETE REMOVAL

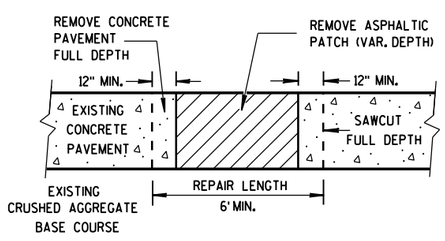

SECTION A-A

HMA PATCH REMOVAL

6

6

CONCRETE PAVEMENT REPAIR AND REPLACEMENT

STATE OF WISCONSIN
DEPARTMENT OF TRANSPO

S.D.D. 13 C 9-11a

S.D.D. 13 C 9-11a

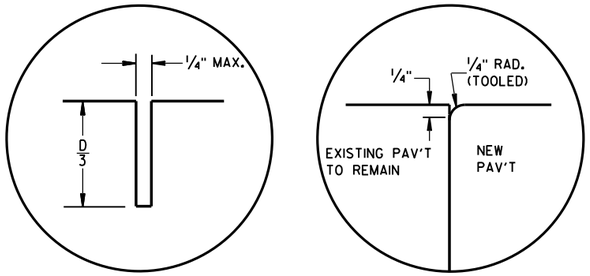

C1 C2

TRANSVERSE JOINTS

TIE BAR TABLE

PAVEMENT DEPTH "D"	CLEAR COVER "C"	MAXIMUM TIE BAR SPACING "S" PAVEMENT WIDTH 24' OR 26'	MAXIMUM TIE BAR SPACING "S" PAVEMENT WIDTH ≥30'
6, 6 1/2"	3"±1/2"	48"	42"
7, 7 1/2"	3 1/4"±1"	45"	36"
8, 8 1/2"	3 3/4"±1"	39"	30"
9, 9 1/2"	4 1/4"±1"	33"	27"
10, 10 1/2"	4 3/4"±1"	30"	24"
11, 11 1/2"	5 1/4"±1"	27"	21"
12"	5 3/4"±1"	24"	21"

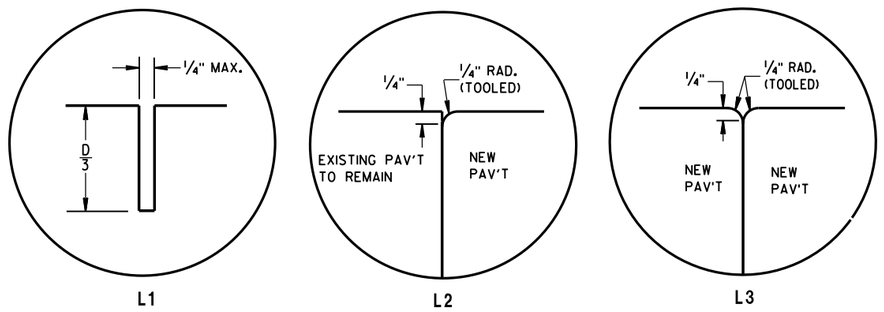

L1 L2 L3

LONGITUDINAL JOINTS

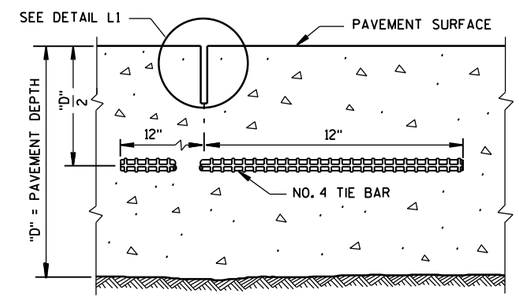

SECTION C-C

SAWED LONGITUDINAL JOINT

GENERAL NOTES

INSTALL DOWEL BARS PARALLEL TO THE PAVEMENT CENTERLINE AND PAVEMENT SURFACE.

CONCRETE PAVEMENT REPAIRS OF EXISTING NONDOWELED CONCRETE PAVEMENTS DO NOT NEED TO BE DOWELED.

DO NOT SEAL OR FILL JOINTS.

ANCHOR DOWEL BARS AND TIE BARS INTO DRILLED HOLES WITH AN EPOXY.

FOR MULTI-LANE CONCRETE PAVEMENT REPLACEMENTS, PROVIDE A MINIMUM DISTANCE OF 15 INCHES FROM ALL TRANSVERSE JOINTS OR EDGES OF REPLACEMENT TO THE CENTER OF THE TIE BAR NEAREST THAT JOINT OR EDGE.

(1) APPLY A THIN UNIFORM COATING OF SURFACE TREATMENT TO THE FREE END OF DOWEL BARS TO PREVENT BONDING.

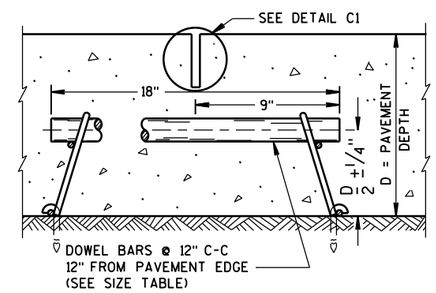

SECTION F-F

CONTRACTION JOINT

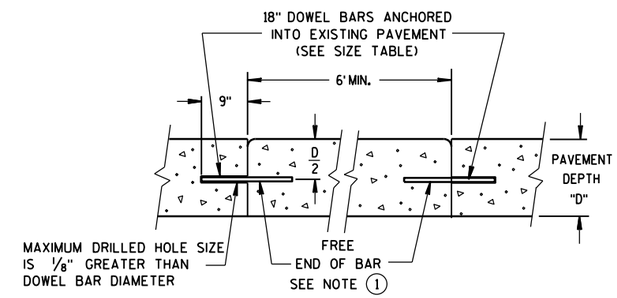

SECTION D-D

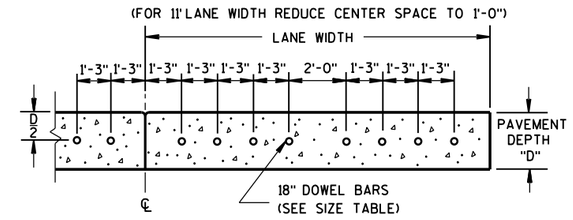

SECTION E-E

DRILLED DOWEL BAR CONSTRUCTION JOINT

PAVEMENT DEPTH, DOWEL BAR SIZE AND JOINT SPACING TABLE

PAVEMENT DEPTH (D)	DOWEL BAR DIAMETER	CONTRACTION JOINT SPACING
5 1/2", 6", 6 1/2"	NONE	12'
7", 7 1/2"	1"	14'
8", 8 1/2"	1 1/4"	15'
9", 9 1/2"	1 1/4"	15'
10" & ABOVE	1 1/2"	15'

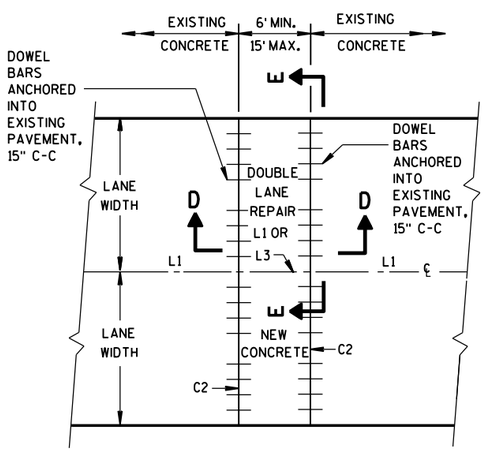

PLAN VIEW

MULTI-LANE CONCRETE PAVEMENT REPAIR

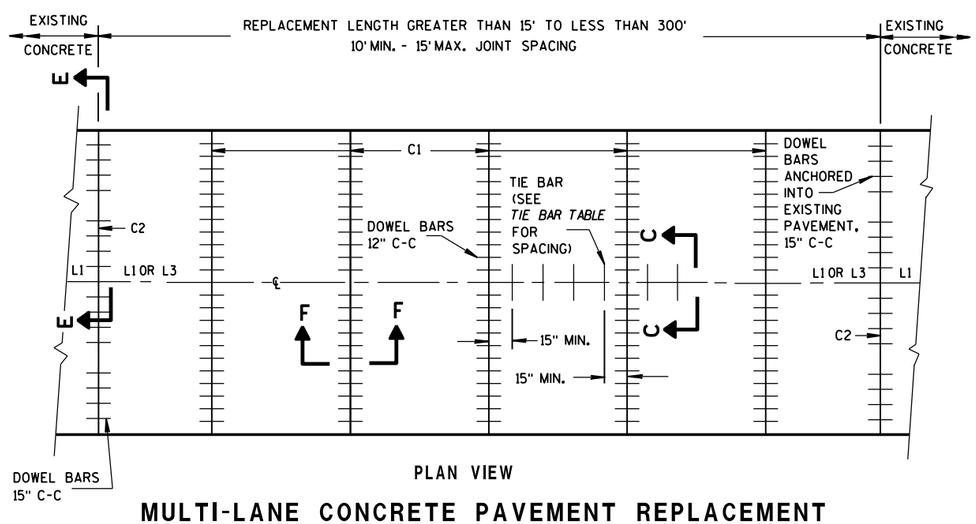

PLAN VIEW

MULTI-LANE CONCRETE PAVEMENT REPLACEMENT

CONCRETE PAVEMENT REPAIR AND REPLACEMENT

STATE OF WISCONSIN
DEPARTMENT OF TRANSPOI

GENERAL NOTES

1. WITH THE APPROVAL OF THE ENGINEER, FOR SINGLE LANE PAVEMENT REPLACEMENTS LESS THAN 30 FEET IN LENGTH, THE CONTRACTOR MAY INSTALL DRILLED TIE BARS ON 6:1 SKEW HORIZONTALLY. DIRECTION OF SKEW ALTERNATING WITH EACH SUCCESSIVE BAR. DRIVE SKEWED TIE BARS TO A DEPTH OF 6 INCHES AND TO SUCH A DIAMETER AS TO PROVIDE A TIGHT DRIVEN FIT.

2. USE AN ENGINEER-APPROVED BOND BREAKER (E.G. RELEASE AGENT, CURING COMPOUND) FOR SINGLE LANE REPAIRS UP TO 15 FEET IN LENGTH.

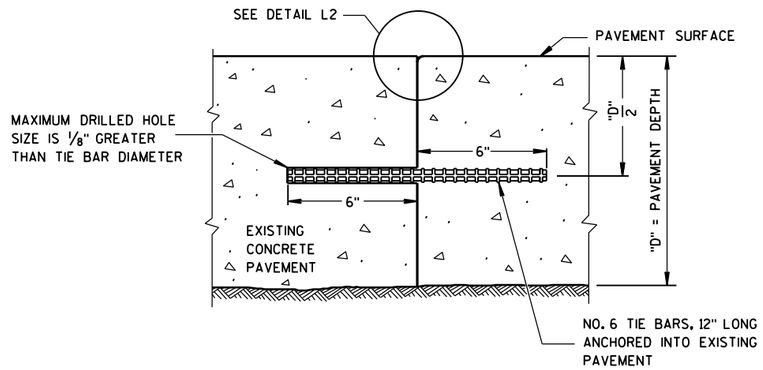

SECTION G-G

TIE BARS ANCHORED INTO EXISTING PAVEMENT

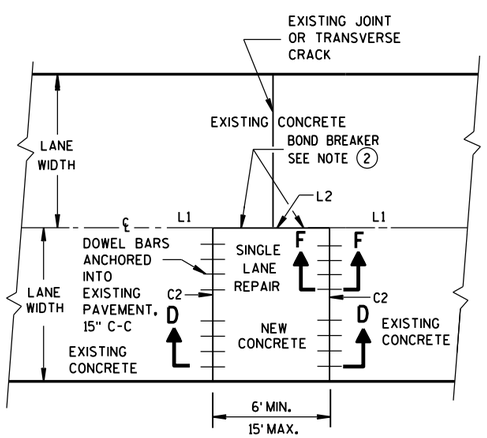

PLAN VIEW

SINGLE LANE CONCRETE PAVEMENT REPAIR

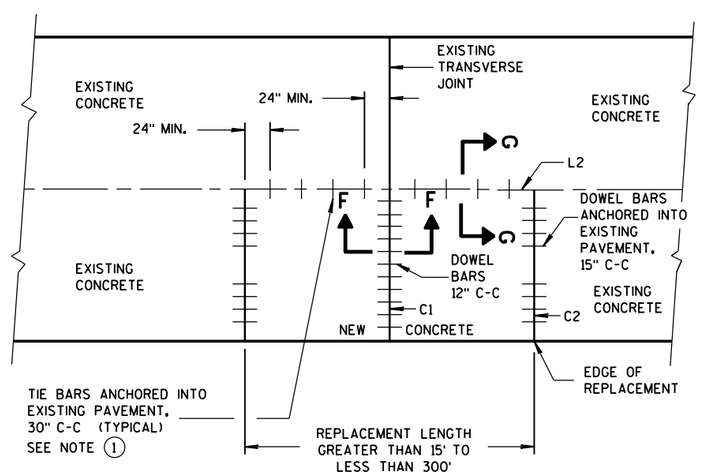

PLAN VIEW

SINGLE LANE CONCRETE PAVEMENT REPLACEMENT

CONCRETE PAVEMENT REPAIR AND REPLACEMENT

STATE OF WISCONSIN
DEPARTMENT OF TRANSPORTATION

APPROVED

12-2013 — DATE

/S/ Deb Bischoff — PAVEMENT POLICY & DE' ... IEER

FHWA

6

S.D.D. 13 C 9-11c

GENERAL NOTES

DETAILS OF INSTALLATION, MATERIALS AND WORKMANSHIP NOT SHOWN ON THIS DRAWING SHALL CONFORM TO THE PERTINENT REQUIREMENTS OF THE STANDARD SPECIFICATIONS AND APPLICABLE SPECIAL PROVISIONS.

ALL LETTERS, ARROWS AND SYMBOLS SHALL BE IN CONFORMANCE WITH REQUIREMENTS INCLUDED IN "STANDARD ALPHABETS FOR HIGHWAY SIGNS AND PAVEMENT MARKING" BOOK BY THE FEDERAL HIGHWAY ADMINISTRATION. ALL LETTERS, ARROWS AND SYMBOLS SHALL BE WHITE AND REFLECTORIZED. SMALL DIFFERENCES IN DIMENSIONS WITHIN THE TOLERANCES OF THAT BOOK ARE ACCEPTABLE.

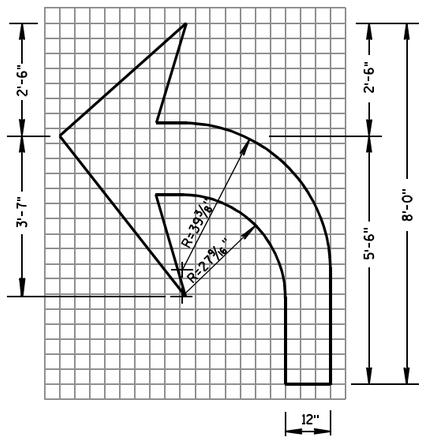

TYPE 2

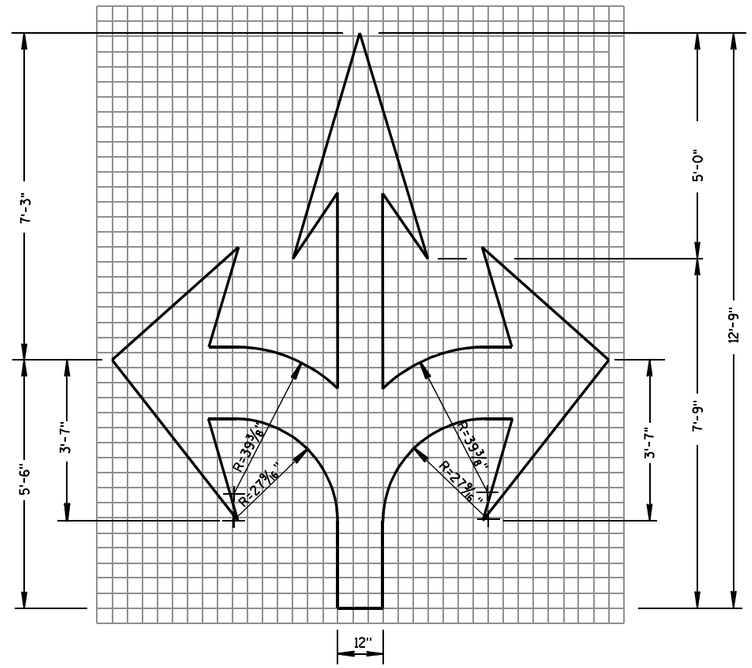

TYPE 6

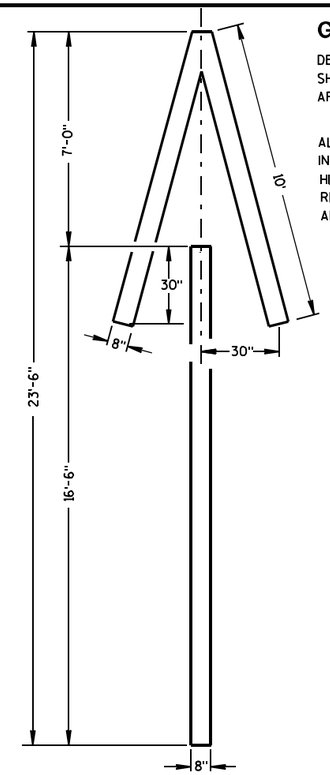

TYPE 4

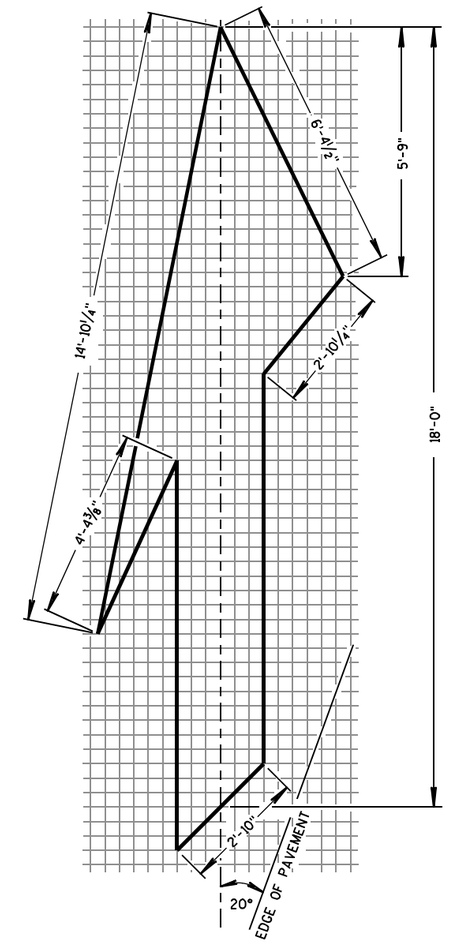

TYPE 5 LANE DROP ARROW

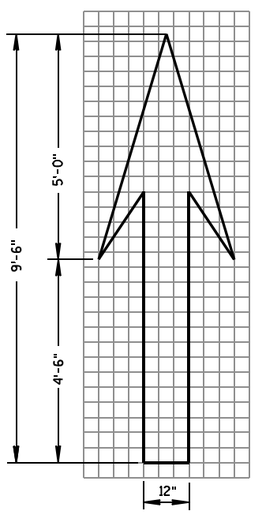

TYPE 1

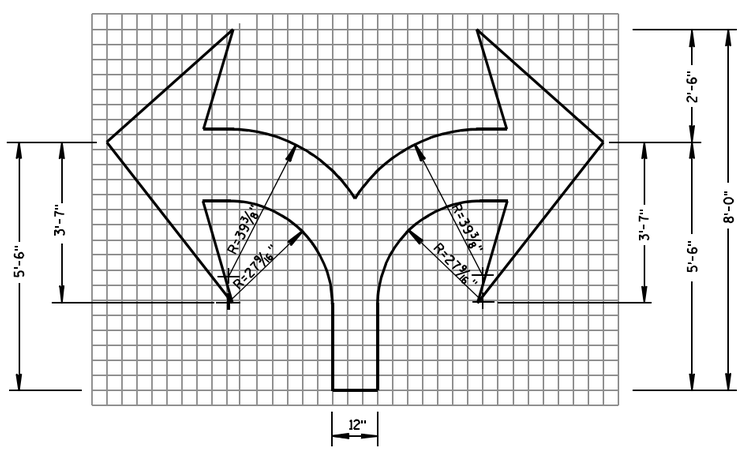

TYPE 7

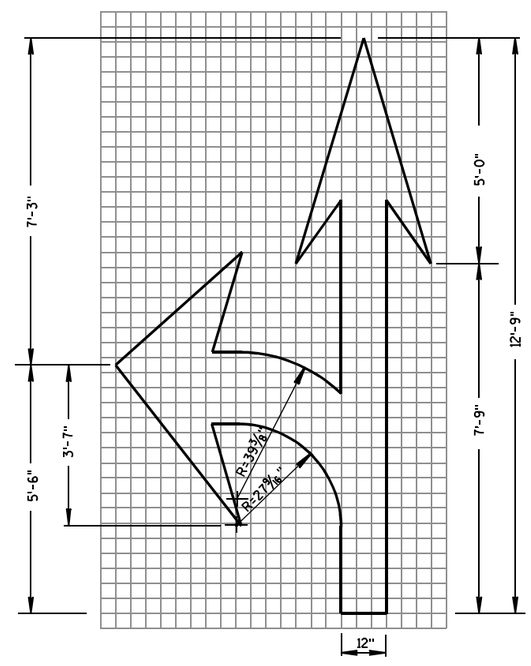

TYPE 3

PAVEMENT MARKING ARROWS

STATE OF WISCONSIN
DEPARTMENT OF TRANSPORTATION

APPROVED

7/1/11	/S/ Thomas N. Nothohm
DATE	STATE TRAFFIC ENGINEER

FHWA

6

6

S.D.D. 15 C 7-12c

S.D.D. 15 C 7-12c

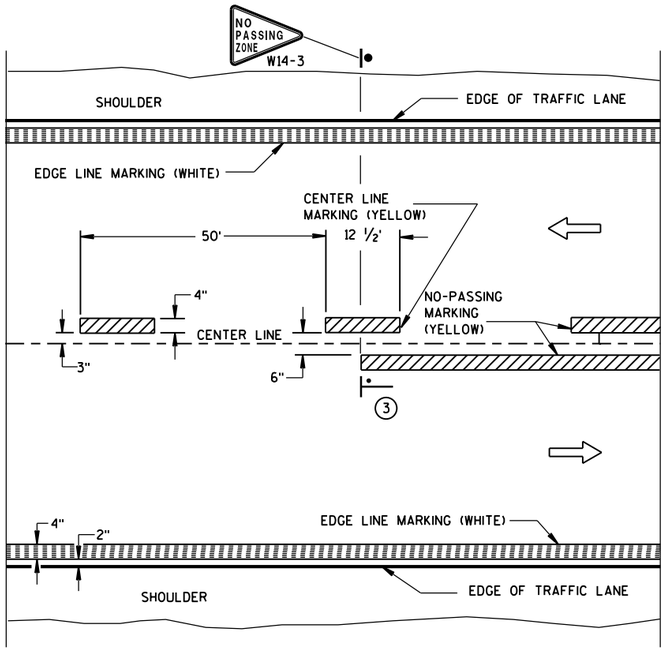

TWO WAY TRAFFIC

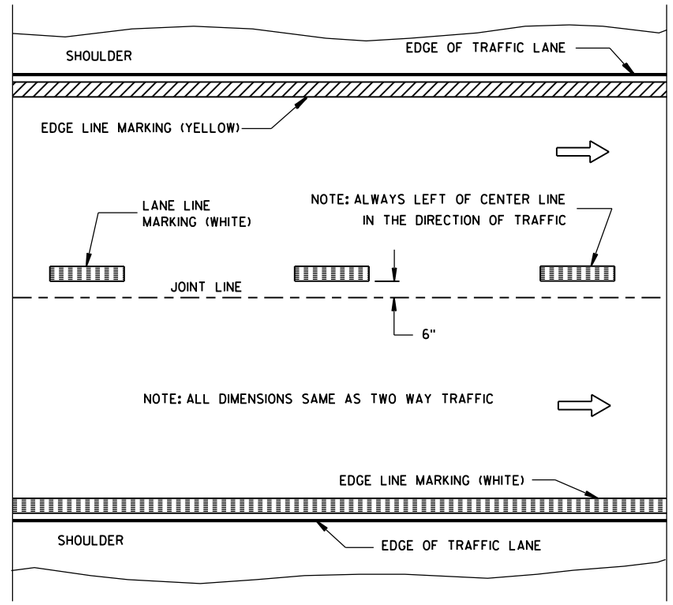

ONE WAY TRAFFIC

PERMANENT PAVEMENT MARKING

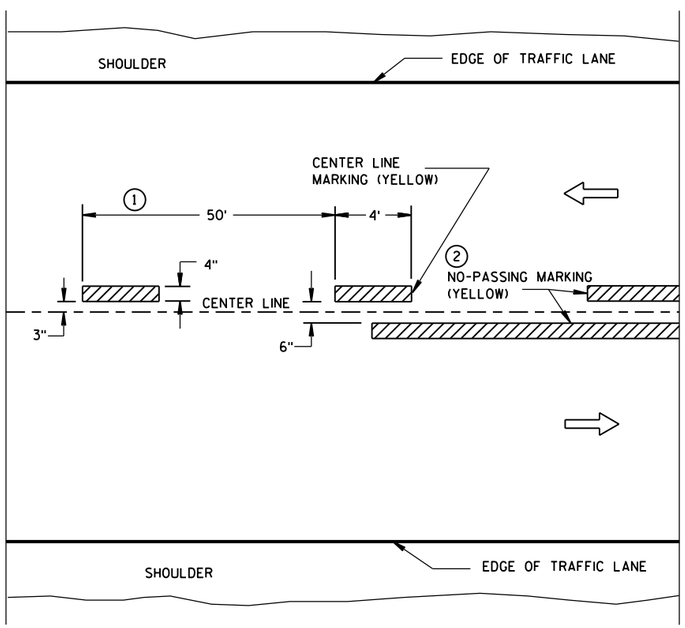

TWO WAY TRAFFIC

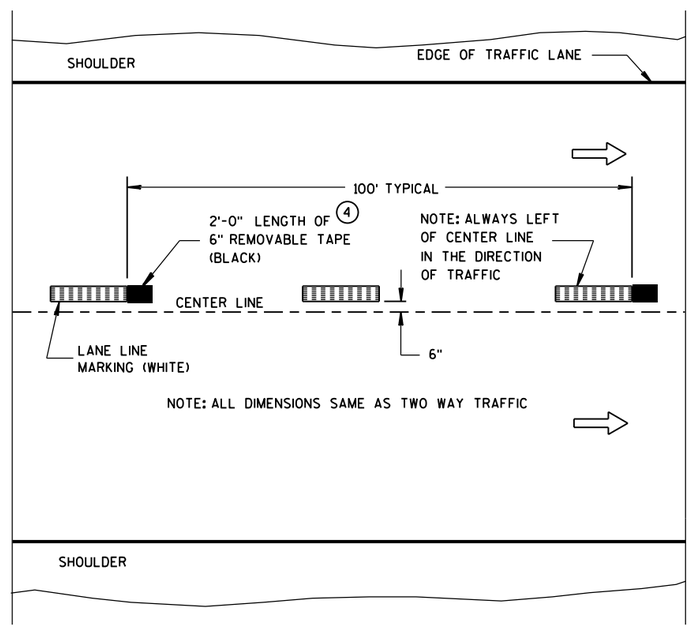

ONE WAY TRAFFIC

TEMPORARY (INTERMEDIATE) PAVEMENT MARKING

(SHOWS CYCLE FOR TEMPORARY CENTER LINE OR TEMPORARY LANE LINE MARKING)

GENERAL NOTES

DETAILS OF CONSTRUCTION NOT SHOWN ON THIS DRAWING SHALL CONFORM TO STANDARD SPECIFICATIONS AND SPECIAL PROVISIONS.

1. HALF CYCLE LENGTHS (25'±) WITH 2' MINIMUM STRIPE LENGTHS SHALL BE PROVIDED ON ROADWAYS (INCLUDING TEMPORARY TRAVELED WAYS) WITH REVERSE CURVATURE, CURVATURE OF OVER 5 DEGREES OR WHEN DIRECTED BY THE ENGINEER TO MARK UNUSUAL ALIGNMENT OF THE TRAVELED WAY.
2. NO PASSING ZONE TEMPORARY PAVEMENT MARKING IS REQUIRED TO BE PLACED, WHERE APPROPRIATE, ALONG WITH CENTERLINE TEMPORARY PAVEMENT MARKING WHEN A SAME DAY PERMANENT PAVEMENT MARKING ITEM IS INCLUDED IN THE CONTRACT.
3. NO PASSING ZONE MARKINGS ARE PLACED ACCORDING TO "T" MARKINGS. IF EXISTING NO PASSING ZONE W14-3 SIGNS ARE BEYOND 50 FEET IN EITHER DIRECTION, THE SIGNS SHALL BE MOVED TO THE "T" MARKINGS.
4. CONCRETE ONLY.

NOTE

ARROW SYMBOL (⇨) SHOWS DIRECTION OF TRAVEL

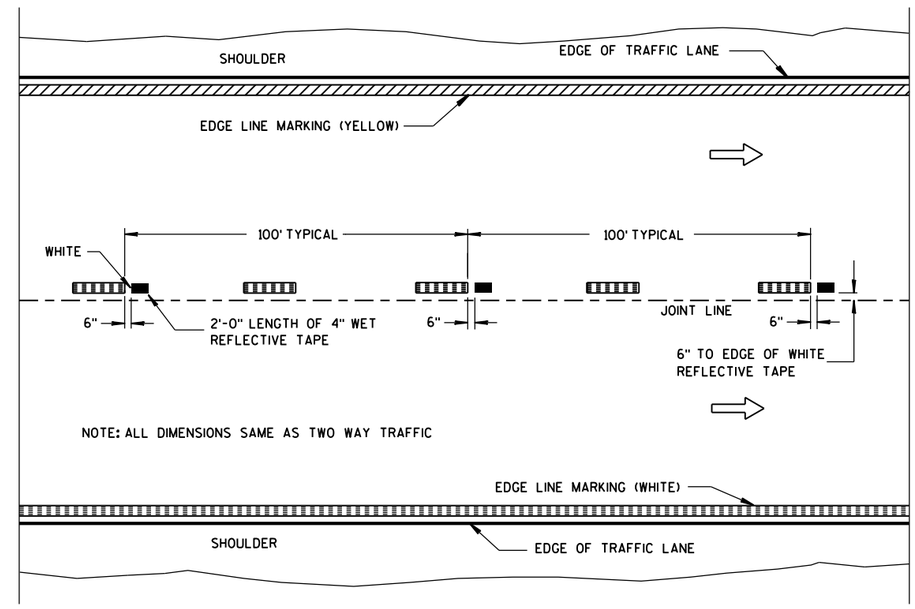

WET REFLECTIVE TAPE SUPPLEMENT TO SPRAYED OR NON WET REFLECTIVE TAPE LANE LINE

LEGEND

"T" MARKING

POST MOUNTED SIGN

PAVEMENT MARKING (MAINLINE)	
STATE OF WISCONSIN DEPARTMENT OF TRANSPORTATION	
APPROVED 5-13-2013 DATE	/S/ Travis Feltes STATE TRAFFIC E
FHWA	

6

6

S.D.D. 15 C 8-16a

S.D.D. 15 C 8-16a

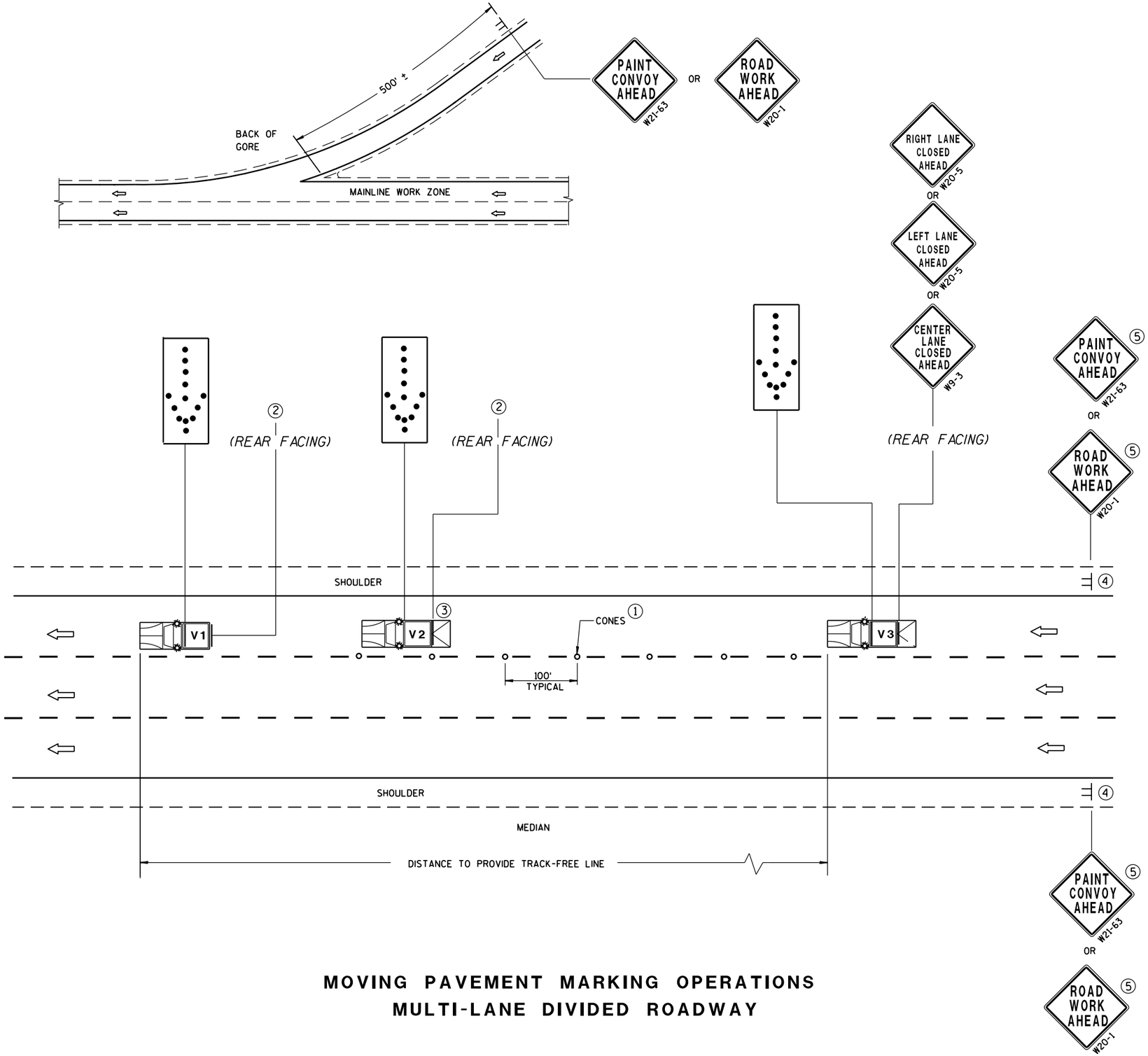

MOVING PAVEMENT MARKING OPERATIONS
MULTI-LANE DIVIDED ROADWAY

GENERAL NOTES

ALL VEHICLES SHALL BE EQUIPPED WITH TWO 360 DEGREE HIGH INTENSITY YELLOW FLASHING LIGHTS OR STROBE LIGHTS AND OPERATED WITH HEADLIGHTS TURNED ON.

ALL VEHICLES SHALL BE EQUIPPED WITH REAR FACING TYPE B OR C FLASHING ARROW PANEL. SIGNS PLACED ON VEHICLES MUST NOT OBSCURE THE ARROW PANEL.

ALL SIGNS ARE 48" X 48" UNLESS OTHERWISE SPECIFIED.

IF SPEED LIMIT IS 40 MPH OR LESS STATIONARY SIGNS MAY BE OMITTED IF CONES ARE USED.

ALTERNATE SIGN MESSAGES, SUCH AS "PAINT CREW AHEAD" OR "ROAD PAINTING AHEAD" MAY BE USED.

DISTANCE BETWEEN VEHICLES MAY VARY ACCORDING TO TERRAIN, SIGHT DISTANCE, PAINT DRYING TIME, AND OTHER FACTORS. WHENEVER ADEQUATE STOPPING SIGHT DISTANCE EXISTS TO THE REAR, SHADOW VEHICLES SHOULD MAINTAIN THE MINIMUM DISTANCE FROM THE WORK VEHICLE AND PROCEED AT THE SAME SPEED AS THE WORK VEHICLE. SHADOW VEHICLES SHOULD SLOW DOWN IN ADVANCE OF VERTICAL OR HORIZONTAL CURVES THAT RESTRICT SIGHT DISTANCE.

WHEN WORK ACTIVITY BLOCKS THE LEFT LANE, REVERSE TRAFFIC CONTROL.

WHEN A RAMP INTERSECTS THE FACILITY ON WHICH THE WORK IS BEING PERFORMED, PROVIDE ADDITIONAL TRAFFIC CONTROLS AS SPECIFIED IN THE CONTRACT OR AS APPROVED BY THE ENGINEER.

USE AN ATTENUATOR ON THE REARMOST VEHICLE THAT BLOCKS ALL OR PART OF THE TRAFFIC LANE.

FOR EDGELINE MARKING OR IF CONES ARE NOT USED, POSITION THE REARMOST SHADOW VEHICLE ON THE SHOULDER AS SHOWN IN THE MUTCD IF THE SHOULDER HAS ADEQUATE WIDTH. USE DOUBLE ARROWS WHEN CONVOY IS IN CENTER LANE ONLY.

WHEN NO WORK ACTIVITY IS TAKING PLACE, REMOVE OR TURN THE STATIONARY WARNING SIGNS AWAY FROM TRAFFIC.

THIS DRAWING SHALL BE USED FOR EDGELINE OR LANELINE MARKING FOR MULTILANE DIVIDED ROADWAYS.

① CONES MAY BE OMITTED ON PAINTED LINE IF APPROVED BY THE ENGINEER. CONSIDER PAVEMENT MARKING DRY OR CURE TIMES AND TRAFFIC VOLUME.

② USE STANDARD SIGN W21-64 WITH APPROPRIATE ARROW.

WET PAINT W21-64 OR WET PAINT W21-64

③ OPTIONAL TRUCK-MOUNTED ATTENUATOR.

④ SIGNS SHALL BE REPEATED AFTER EVERY ON RAMP OR EVERY THREE MILES.

⑤ IF CONSTRUCTION WORK ZONE SIGNS ARE IN PLACE, W20-1 OR W21-63 ARE NOT REQUIRED.

LEGEND

V1	LEAD VEHICLE
V2	SHADOW VEHICLE
V3	TRAIL VEHICLE WITH TMA
TMA	TRUCK-MOUNTED ATTENUATOR
	SIGN ON TEMPORARY SUPPORT
	DIRECTION OF TRAFFIC
	CONES
	FLASHING ARROW PANEL (MERGE)

MOVING PAVEMENT MARKING OPERATION
MULTI-LANE DIVIDED ROADWAY

STATE OF WISCONSIN
DEPARTMENT OF TRANSPORTATION

APPROVED
5/3/2013 — DATE
/S/ Travis Feltes — STATE TRAFFIC E
FHWA

6

S.D.D. 15 C 19-2c

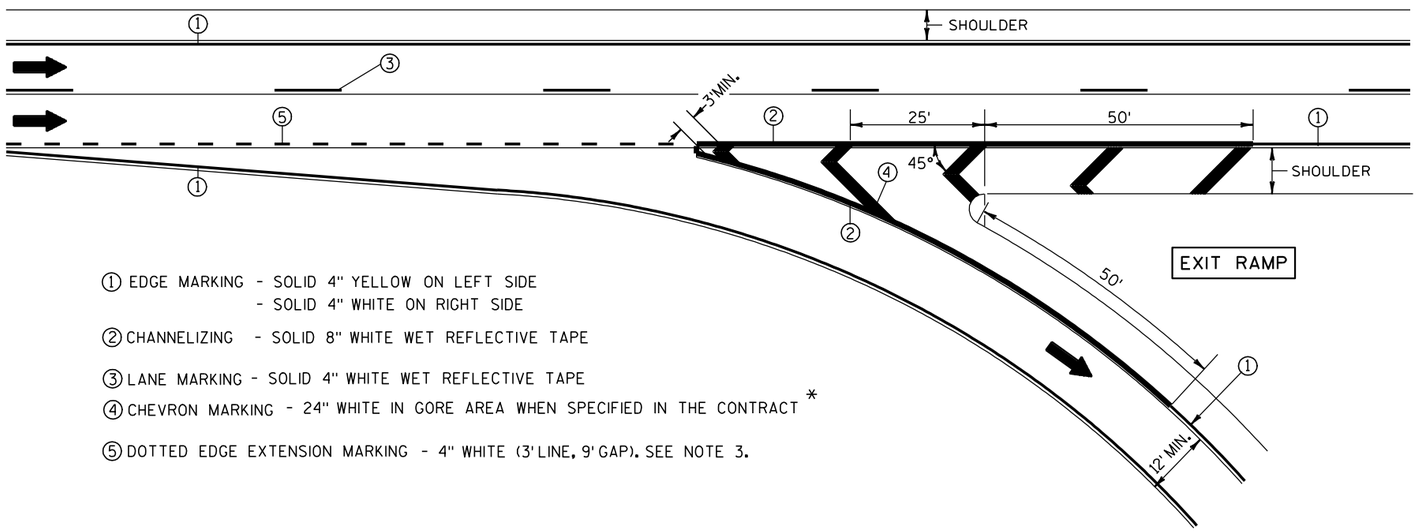

① EDGE MARKING - SOLID 4" YELLOW ON LEFT SIDE
- SOLID 4" WHITE ON RIGHT SIDE

② CHANNELIZING - SOLID 8" WHITE WET REFLECTIVE TAPE

③ LANE MARKING - SOLID 4" WHITE WET REFLECTIVE TAPE

④ CHEVRON MARKING - 24" WHITE IN GORE AREA WHEN SPECIFIED IN THE CONTRACT *

⑤ DOTTED EDGE EXTENSION MARKING - 4" WHITE (3' LINE, 9' GAP). SEE NOTE 3.

NOTES:

1. ARROWS SHOWN ON THIS MARKING PLAN DESIGNATE TRAFFIC FLOW, AND SHALL NOT BE TAKEN AS PROPOSED PAVEMENT MARKINGS.

2. PLACE WHITE EDGE OF TAPE 6" LEFT FROM JOINT.

3. 3' LINE 9' GAP, EXCEPT RETRACE THE EXISTING LINE-GAP PATTERN WHERE EXISTING MARKINGS ARE IN PLACE.

4. RETRACE EXISTING DIAGONAL MARKINGS.

* REFER TO DESIGN NOTES.

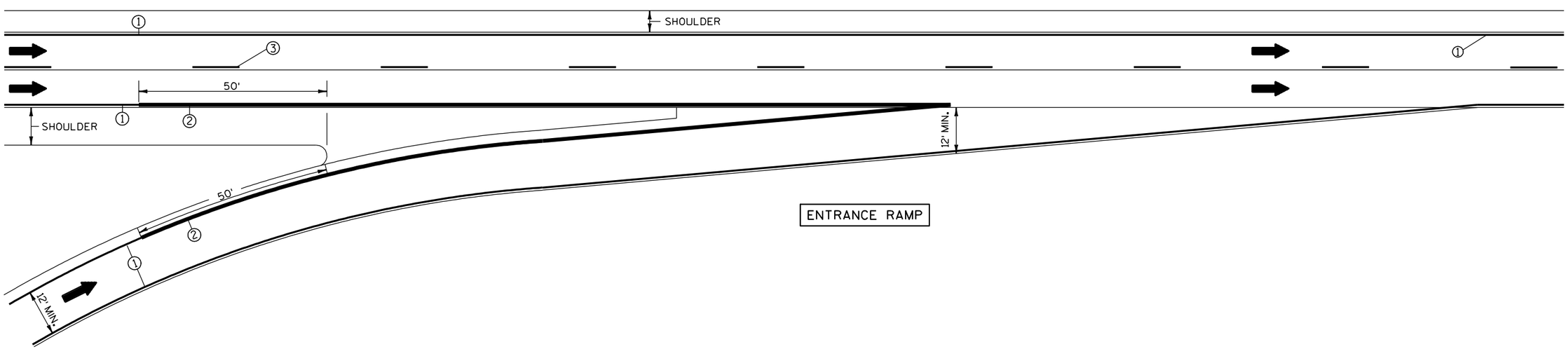

6

6

S.D.D. 15 C 31-1a

S.D.D. 15 C 31-1a

PAVEMENT MARKING
(RAMPS AND GORES)

STATE OF WISCONSIN
DEPARTMENT OF TRANSPORTATION

NOTES:

1. SEE STANDARD DETAIL DRAWING 15 C 10 FOR SPRAYED OR NON WET REFLECTIVE LINE SEGMENTS.

2. ARROWS SHOWN ON THIS MARKING PLAN DESIGNATE TRAFFIC FLOW, AND SHALL NOT BE TAKEN AS PROPOSED PAVEMENT MARKINGS.

3. PLACE WHITE EDGE OF TAPE 6" LEFT FROM JOINT.

4. 3' LINE 9' GAP, EXCEPT RETRACE THE EXISTING LINE-GAP PATTERN WHERE EXISTING MARKINGS ARE IN PLACE.

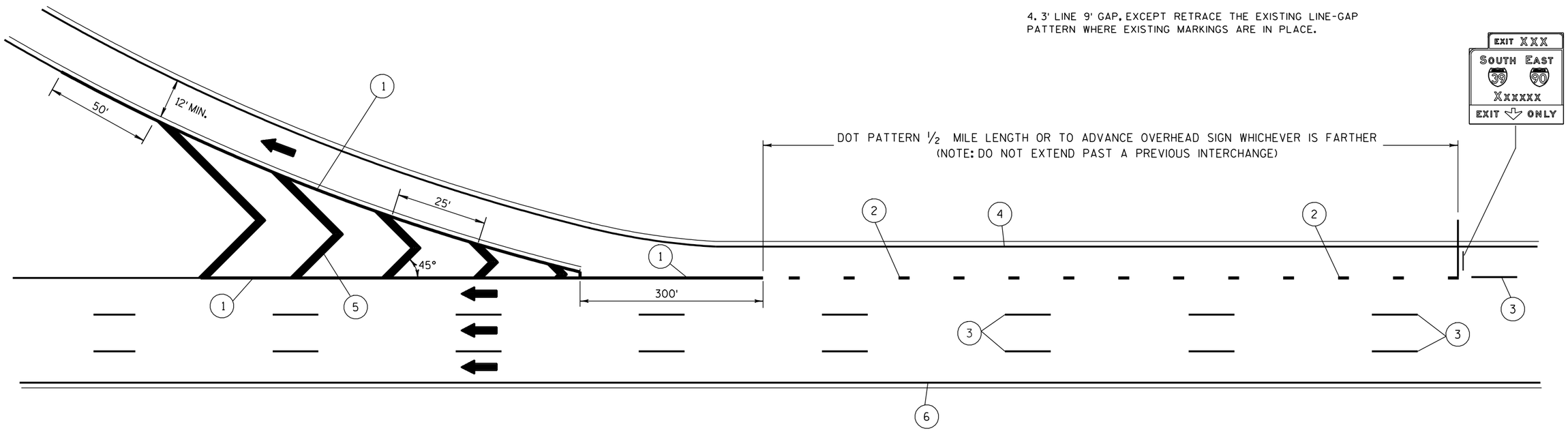

1. CHANNELIZING - SOLID 8" WHITE WET RELECTIVE TAPE
2. 3' LINE, 9' GAP SOLID 8" WHITE WET REFLECTIVE TAPE. SEE NOTE 4.
3. SOLID 4" WHITE WET REFLECTIVE TAPE
4. 4" WHITE EDGELINE
5. CHEVRON MARKING - 24" WHITE WHEN SPECIFIED IN THE CONTRACT
6. 4" YELLOW EDGELINE

LANE DROP PAVEMENT MARKING

STATE OF WISCONSIN
DEPARTMENT OF TRANSPORTATION

6

S.D.D. 15 C 31-1b

NOTES:

1. AHEAD ARROWS SHOWN ON THIS MARKING PLAN DESIGNATE TRAFFIC FLOW, AND SHALL NOT BE TAKEN AS PROPOSED PAVEMENT MARKINGS.
2. PLACE WHITE EDGE OF TAPE 6" LEFT FROM JOINT.
3. RETRACE EXISTING DIAGONAL MARKINGS.

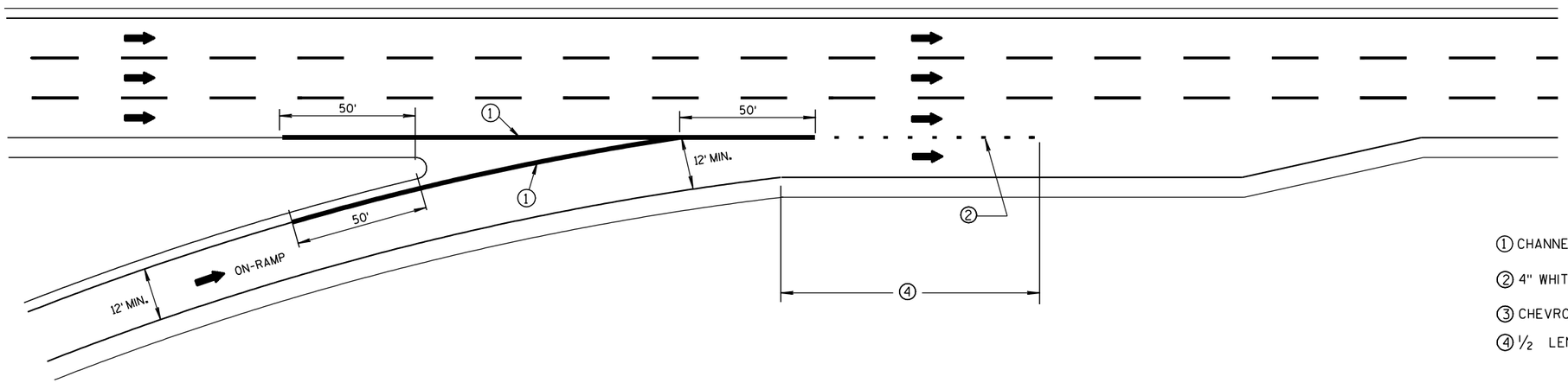

1 CHANNELIZING - SOLID 8" WHITE WET REFLECTIVE TAPE IN GORE AREA.

2 4" WHITE (3' LINE, 9' GAP).

3 CHEVRON MARKING - 24" WHITE WHEN SPECIFIED IN THE CONTRACT.

4 ½ LENGTH OF FULL WIDTH ACCELERATION LANE.

SERVICE INTERCHANGE PAVEMENT MARKING FOR PARALLEL ENTRANCE-RAMP

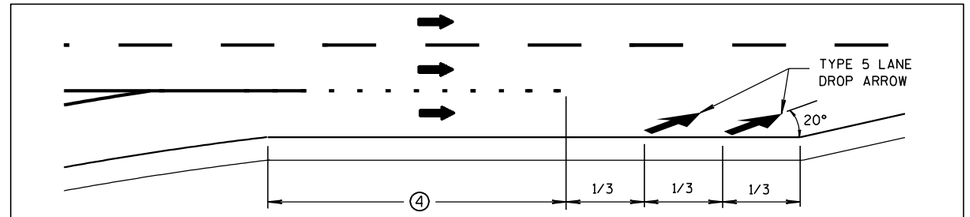

ARROWS AT 1/3 POINTS

WHEN SPECIFIED IN THE CONTRACT

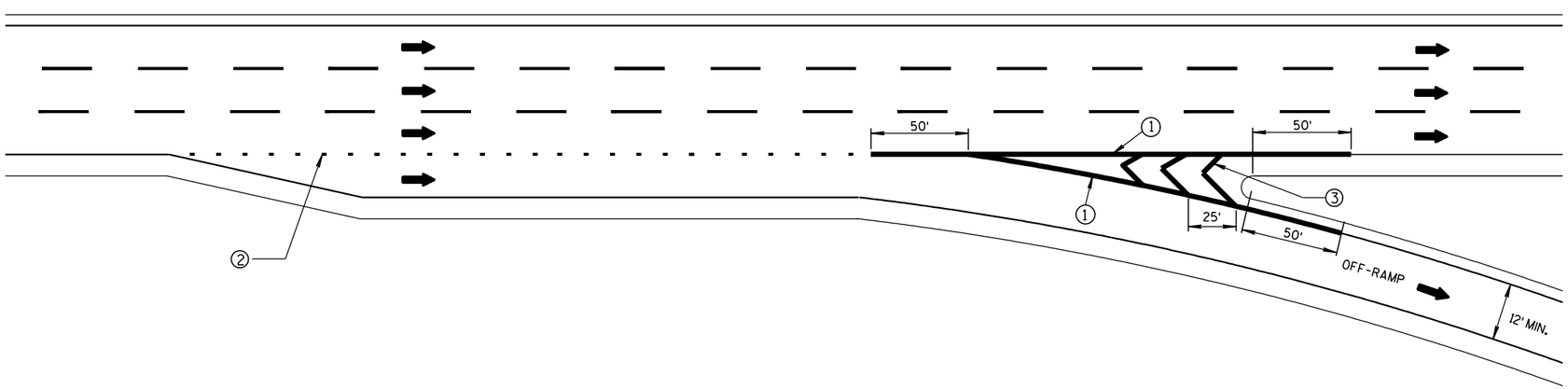

SERVICE INTERCHANGE PAVEMENT MARKING FOR PARALLEL EXIT-RAMP

PAVEMENT MARKING FOR PARALLEL ON-RAMP AND PARALLEL OFF-RAMP

STATE OF WISCONSIN
DEPARTMENT OF TRANSPORTATION

APPROVED

6/23/2011 — DATE

/S/ Thomas N. Notbohm — STATE TRAFFIC ENGINEER — SIGN

FHWA

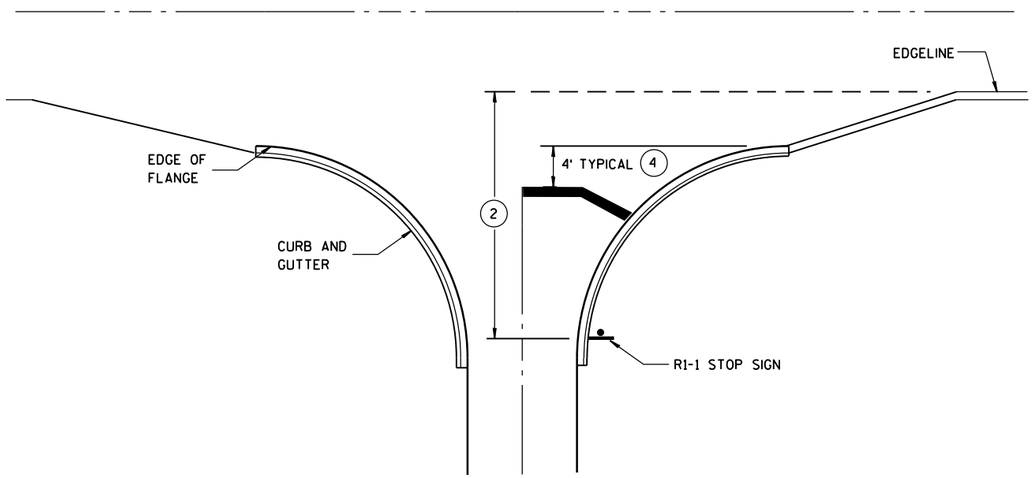

TYPICAL STOP LINE PAVEMENT MARKING WITH CURB AND GUTTER

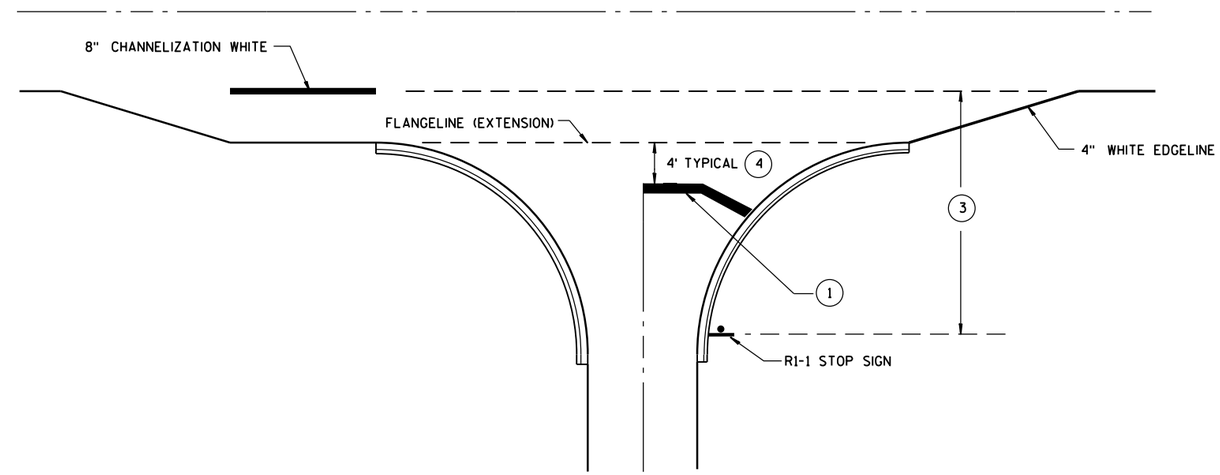

TYPICAL STOP LINE PAVEMENT MARKING FOR SIDEROADS WITH RIGHT TURN LANE

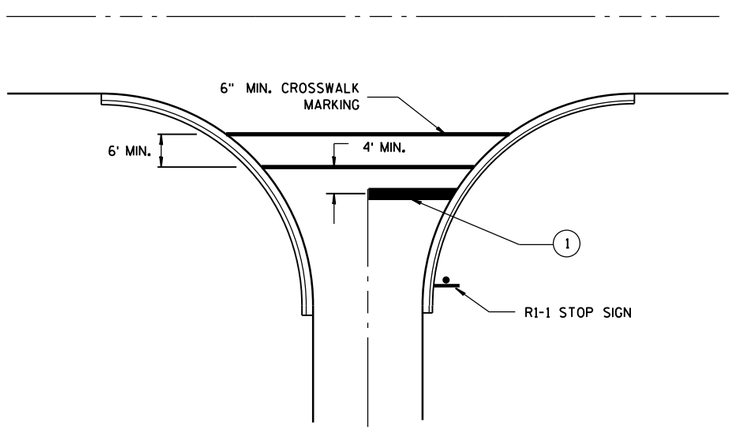

TYPICAL STOP LINE PAVEMENT MARKING FOR SIDEROADS WITH CROSSWALK MARKING

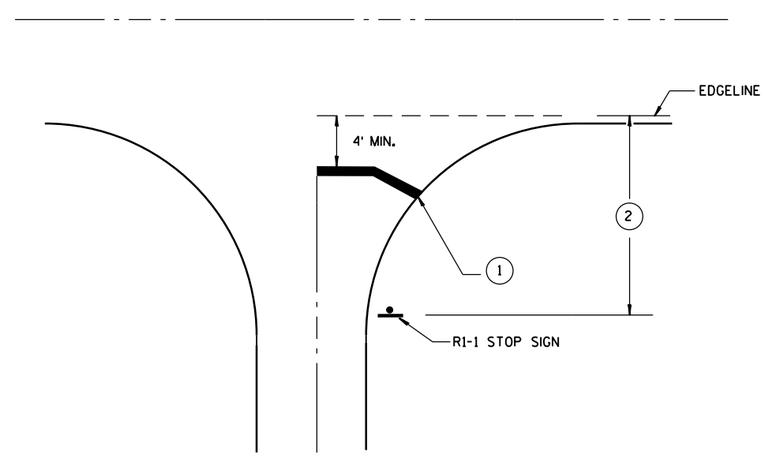

TYPICAL STOP LINE PAVEMENT MARKING WITHOUT CURB AND GUTTER

GENERAL NOTES

1. 18-INCH STOP LINES MAY BE DELETED OR ADDED BY THE PROJECT ENGINEER BASED ON VISIBILITY AND SIGHT LINES.
2. IF STOP SIGN IS LESS THAN OR EQUAL TO 40 FEET FROM THE EDGELINE THAN NO STOP LINE IS REQUIRED.
3. IF STOP SIGN IS LESS THAN OR EQUAL TO 30 FEET FROM THE FLANGELINE EXTENSION THAN NO STOP LINE IS REQUIRED.
4. MOVE CLOSER TO EDGE OF TRAVEL LANE AS NEEDED FOR VISIBILITY AND SIGHT LINES.

STOP LINE AND CROSSWALK PAVEMENT MARKING

STATE OF WISCONSIN
DEPARTMENT OF TRANSPORTATION

APPROVED
4/30/2013 — DATE
/S/ Travis Feltes — STATE TRAFFIC E
FHWA

LEGEND

- TYPE III BARRICADE
- TYPE III BARRICADE WITH ATTACHED SIGN
- TRAFFIC CONTROL DRUM
- SIGN ON PERMANENT SUPPORT
- (A) TYPE "A" WARNING LIGHT (FLASHING)
- DIRECTION OF TRAFFIC

GENERAL NOTES

THIS RAMP CLOSURE DETAIL IS TYPICAL FOR CLOSING A RIGHT SIDE EXIT RAMP. FOR A LEFT SIDE EXIT RAMP, REVERSE THE TRAFFIC CONTROL.

THE EXACT NUMBER, LOCATION, AND SPACING OF ALL SIGNS AND DEVICES SHALL BE ADJUSTED TO FIT FIELD CONDITIONS AS APPROVED BY THE ENGINEER.

THE SPACING BETWEEN TRAFFIC CONTROL SIGNS SHOULD BE ADJUSTED TO NOT CONFLICT WITH AND SHOULD PROVIDE A MINIMUM OF 200 FEET (500 FEET DESIRABLE) CLEARANCE TO EXISTING SIGNS THAT WILL REMAIN IN PLACE.

ALL SIGNS ARE 48" X 48" UNLESS OTHERWISE NOTED.

SIGNS THAT WILL BE IN PLACE LESS THAN 7 CONTINUOUS DAYS AND NIGHTS MAY BE MOUNTED ON PORTABLE SUPPORTS.

ANY SIGNS TEMPORARY OR EXISTING, WHICH CONFLICT WITH TRAFFIC CONTROL "IN USE" SHALL BE REMOVED OR COVERED AS NEEDED AND AS APPROVED BY THE ENGINEER.

PLACE TEMPORARY PAVEMENT MARKING, REMOVABLE TAPE IF RAMP CLOSURE IS TO BE IN PLACE FOR 4 OR MORE CONTINUOUS DAYS AND NIGHTS.

WORK AREAS WITH A DROPOFF ALONG THE EDGE OF AN OPEN TRAVEL LANE SHALL BE LEVELED WITH TEMPORARY FILL WHEN THE CONTRACTOR IS NOT WORKING ADJACENT TO THE TRAVEL LANE. DRUMS SHALL BE PLACED ENTIRELY OUTSIDE THE TRAVEL LANE, ALLOWING THE FULL UNOBSTRUCTED LANE WIDTH, WHEN THE WORK IS NOT IN PROGRESS.

WHERE MEDIAN BARRIER IS IN PLACE, SIGNS SHOWN ON LEFT SIDE OF ROADWAY MAY BE OMITTED FOR RIGHT SIDE RAMP CLOSURES OF LESS THAN 12-HOUR DURATION.

*W20-1 AND G20-2A SIGNS ARE NOT REQUIRED IF THE RAMP CLOSURE IS WITHIN A LARGER WORK ZONE WHERE THESE SIGNS ARE ALREADY PRESENT.

** PLACE "RAMP WILL BE CLOSED" SIGN 10 CALENDAR DAYS PRIOR TO CLOSURE OR AS DIRECTED BY THE ENGINEER. SEE WISCONSIN STANDARD SIGN PLATES FOR SIGN LAYOUT.

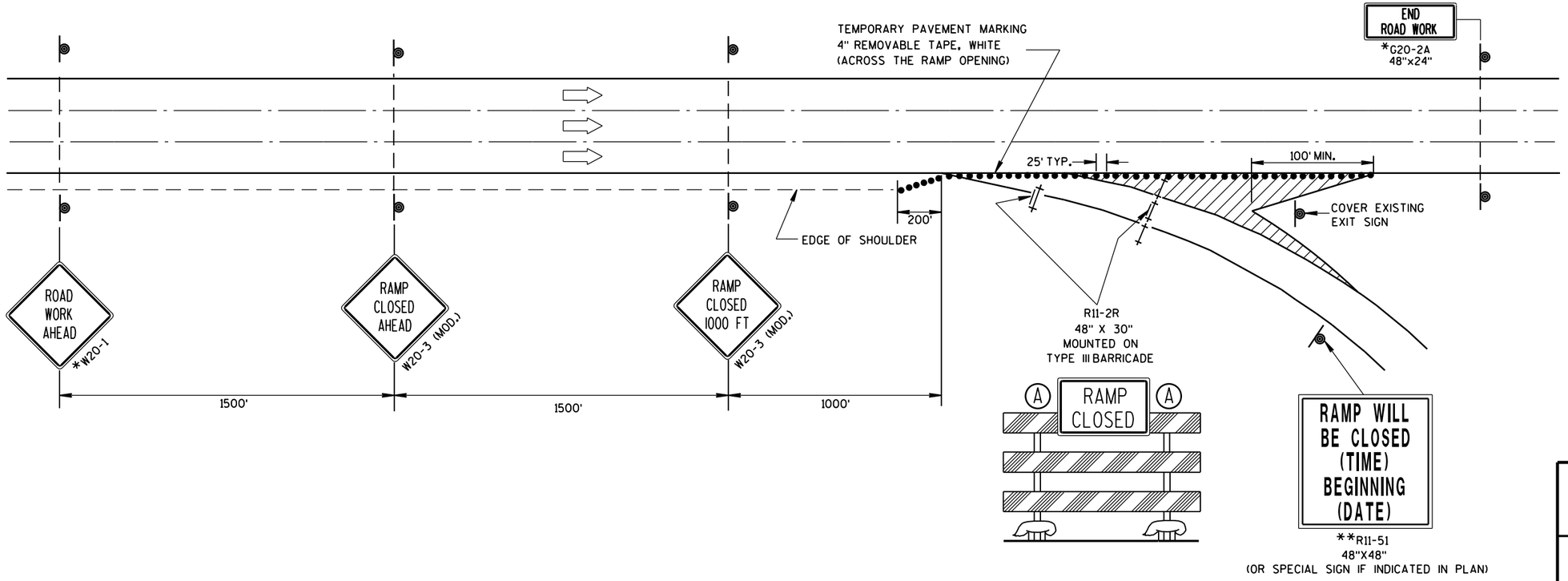

TRAFFIC CONTROL, EXIT RAMP CLOSURE	
STATE OF WISCONSIN DEPARTMENT OF TRANSPORTATION	
APPROVED 8/2013 DATE	/S/ Travis Feltes STATE TRAFFIC ENGINEER
FHWA	

LEGEND

- TRAFFIC CONTROL DRUM
- SIGN ON PERMANENT SUPPORT
- DIRECTION OF TRAFFIC
- FLASHING ARROW BOARD
- WORK AREA

GENERAL NOTES

THIS DETAIL IS TYPICAL FOR CLOSING THE RIGHT SHOULDER. FOR CLOSING THE LEFT SHOULDER, REVERSE THE TRAFFIC CONTROL.

THIS DETAIL MAY BE USED FOR DIVIDED ROADWAYS WITH ANY NUMBER OF TRAVEL LANES.

THE EXACT NUMBER, LOCATION AND SPACING OF ALL SIGNS AND DEVICES SHALL BE ADJUSTED TO FIT FIELD CONDITIONS AS APPROVED BY THE ENGINEER.

ALL SIGNS ARE 48" X 48" UNLESS OTHERWISE NOTED.

SIGN LAYOUTS SHALL BE IN ACCORDANCE WITH THE FHWA'S MANUAL OF STANDARD HIGHWAY SIGNS OR THE WISCONSIN STANDARD SIGN PLATES.

SIGNS THAT WILL BE IN PLACE LESS THAN 7 CONTINUOUS DAYS AND NIGHTS MAY BE MOUNTED ON PORTABLE SUPPORTS.

ANY SIGNS TEMPORARY OR EXISTING, WHICH CONFLICT WITH TRAFFIC CONTROL "IN USE" SHALL BE REMOVED OR COVERED AS NEEDED AND AS APPROVED BY THE ENGINEER.

CHANNELIZING DEVICES PLACED ADJACENT TO THE WORK AREA SHALL BE PULLED BACK FROM THE TRAVEL LANE WHEN WORK IS NOT IN PROGRESS.

WHEN A RAMP INTERSECTS THE FACILITY ON WHICH THE WORK IS BEING PERFORMED, ADDITIONAL TRAFFIC CONTROLS SHALL BE PROVIDED AS SPECIFIED IN THE PLANS AND/OR THE SPECIAL PROVISIONS OR AS APPROVED BY THE ENGINEER.

*FOR SHORT DURATION SHOULDER WORK OF LESS THAN ONE HOUR, THE W21-5a SIGN MAY BE OMITTED.

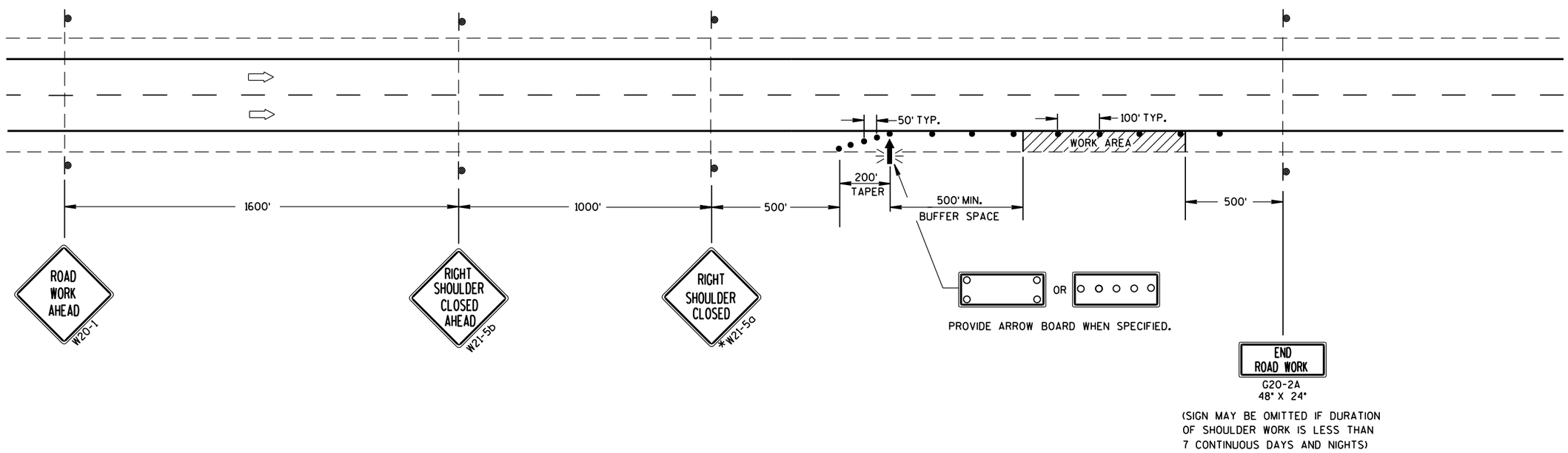

TRAFFIC CONTROL SHOULDER CLOSURE ON DIVIDED ROADWAY, SPEEDS GREATER THAN 40 MPH

STATE OF WISCONSIN
DEPARTMENT OF TRANSPORTATION

APPROVED

8/2013 — DATE

/S/ Travis Feltes — STATE TRAFFIC ENGINE ESIGN

FHWA

6

S.D.D. 15 D 27-2

A= 60 SQ. FT.
BORDER= 3/4"
RADIUS= 2 1/4"

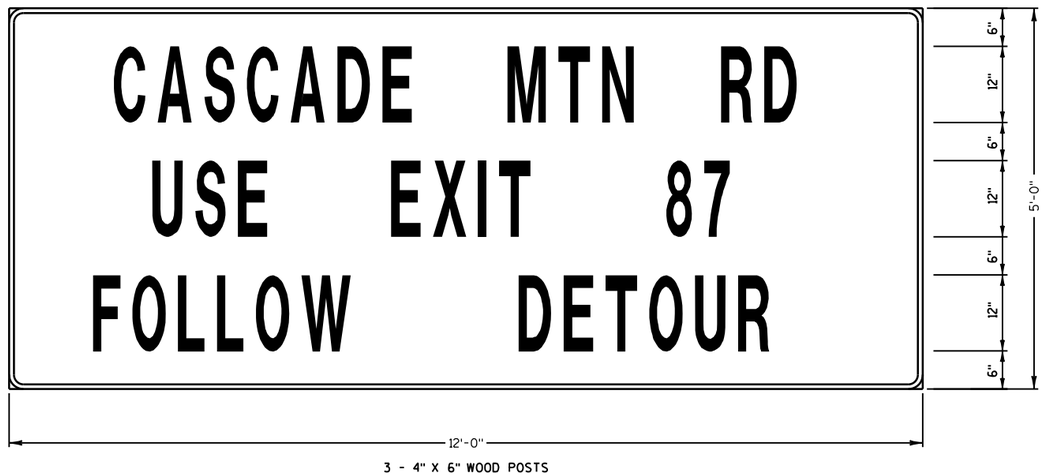

A= 22 SQ. FT.
BORDER= 3/4"
RADIUS= 2 1/4"

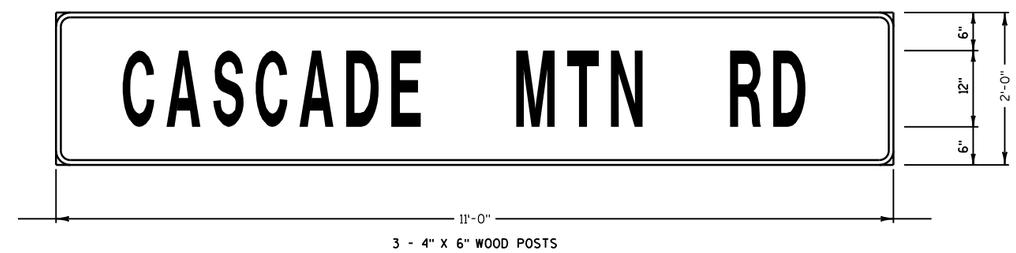

7

GENERAL NOTES:

ALL SIGNS TO HAVE STANDARD REFLECTIVE SHEETING - REFERENCE: "WIDOT STANDARD SPECIFICATIONS FOR ROAD AND BRIDGE CONSTRUCTION", LATEST EDITION.

AFTER SIGNS HAVE BEEN LOCATED IN THE FIELD, BUT BEFORE INSTALLATION, THE SIGNING AND MARKING SUPERVISOR SHALL VERIFY EACH SIGN LOCATION.

ALL SIGNS TO BE MOUNTED ON WOODEN POST SUPPORTS (4"X6"). THE NUMBER OF POSTS RRQUIRED FOR EACH LAYOUT IS SHOWN.

THE SIGNS ON THIS SHEET TO BE PAID UNDER THE ITEM "FIXED MESSAGE SIGNS".

SIGNS SHALL BE BLACK NON-REFLECTIVE MESSAGE ON ORANGE REFLECTIVE BACKGROUND PER SPEC 643.2.9.3.

ALL SIGNS SHALL HAVE CAPITAL LETTERS AND NUMERALS:
12" CAPS SHALL BE SERIES "D"
6" CAPS SHALL BE SERIES "C"

CONTRACTOR SHALL SUBMIT SHOP DRAWINGS TO ENGINEER FOR REVIEW PRIOR TO MANUFACTURING.

SIGN BASE MATERIAL SHALL BE ACCORDING TO SECTION 637.2.1.2.

SIGNS TO BE PLACED 10 DAYS PRIOR TO CONSTRUCTION.

CONTRACTOR TO LOCATE FIXED MESSAGE SIGNS A MINIMUM OF 400' FROM ANY EXISTING TYPE "I" SIGNS.

7

PROJECT NO: 1161-00-65	HWY: IH 39	COUNTY: COLUMBIA	FIXED MESSAGE SIGN DETAILS	SHEET 81	E

NOTES

1. All Signs Type II - Type H Reflective - reference WIS DOT Standard Specification for HIGHWAY and STRUCTURE CONSTRUCTION latest edition.
2. Color:
   Background - GREEN
   Message - WHITE
3. Message Series - E

I3-1

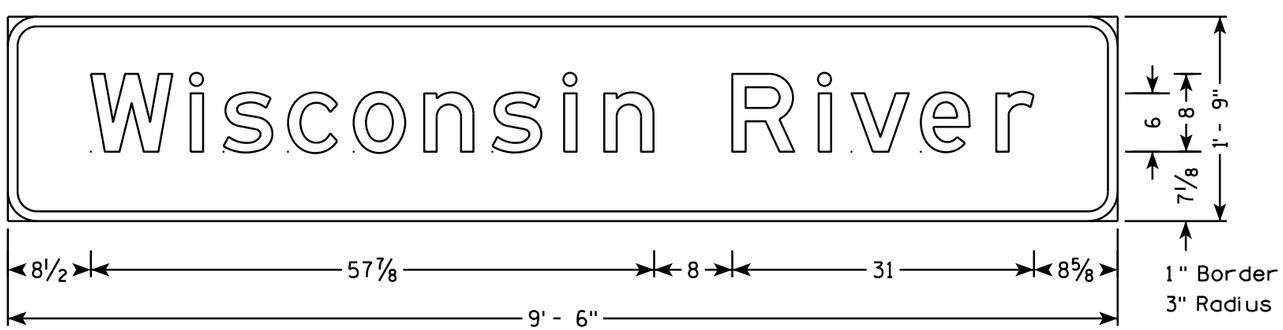

I3-1

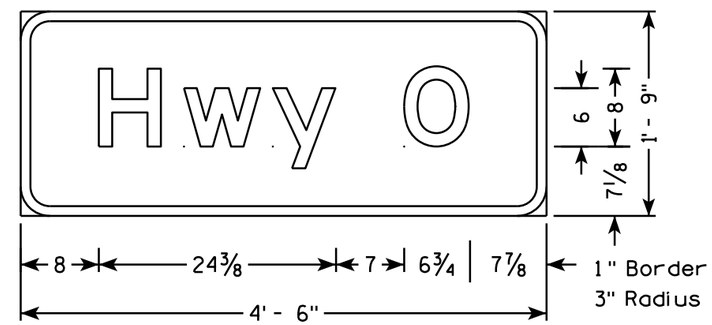

M1-94

7

7

PROJECT NO: 1161-00-65	HWY: 139	COUNTY: COLUMBIA	PERMANENT SIGNING	SHEET NO:	E

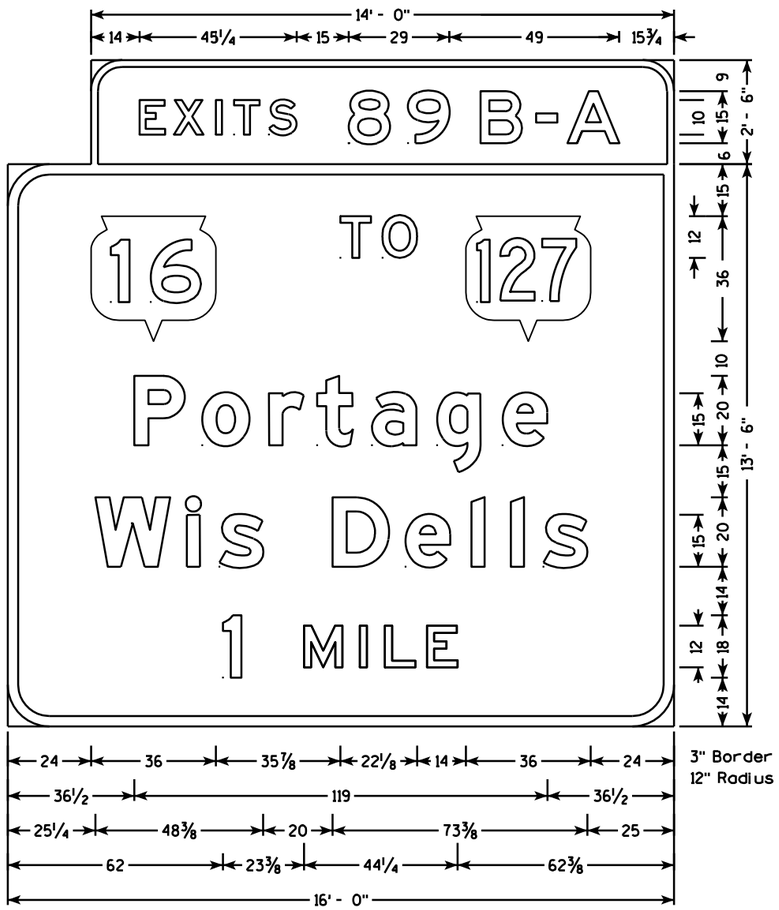

E1-1A

NOTES

1. All Signs are Type I - Type SH Reflective - reference WIS DOT Standard Specification for HIGHWAY and STRUCTURE CONSTRUCTION latest edition.
2. Color:
   Background - Green
   Message - White
3. Message Series - E Modified except all cap WORDS are Series E

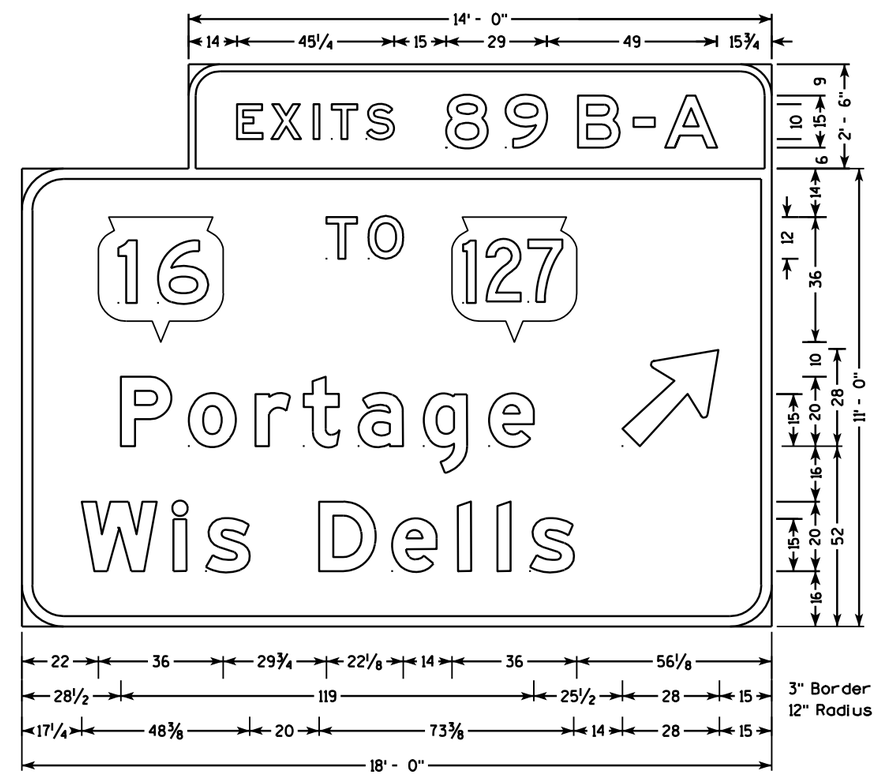

E4-1A

7

7

PROJECT NO: 1161-00-65	HWY: 139	COUNTY: COLUMBIA	PERMANENT SIGNING	SHEET NO: 83	E

NOTES

1. All Signs are Type I - Type SH Reflective - reference WIS DOT Standard Specification for HIGHWAY and STRUCTURE CONSTRUCTION latest edition.
2. Color:
   Background - Green
   Message - White
3. Message Series - E Modified except all cap WORDS are Series E

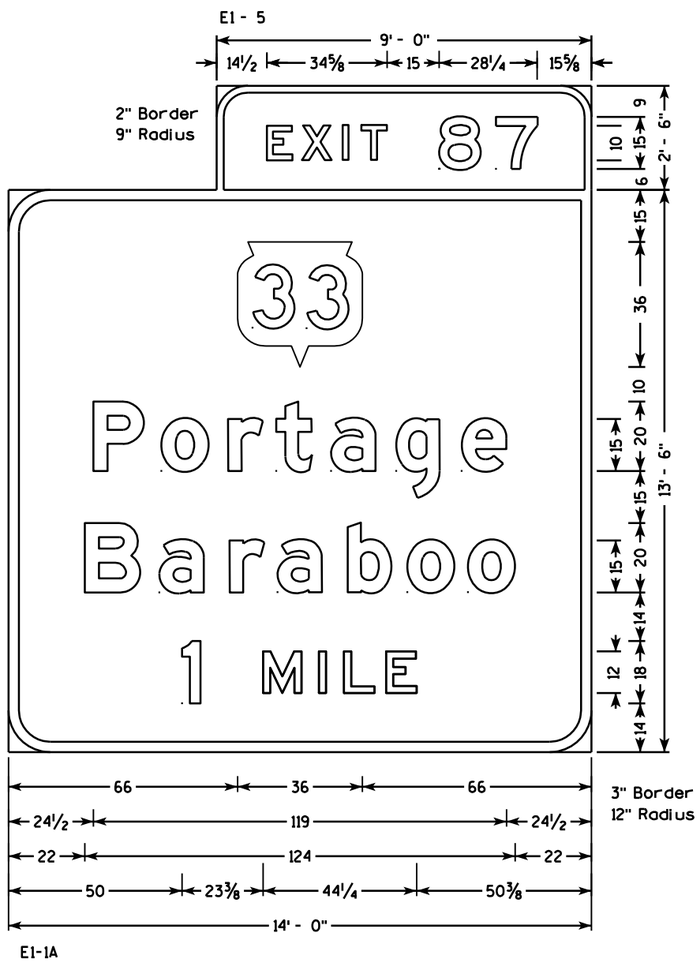

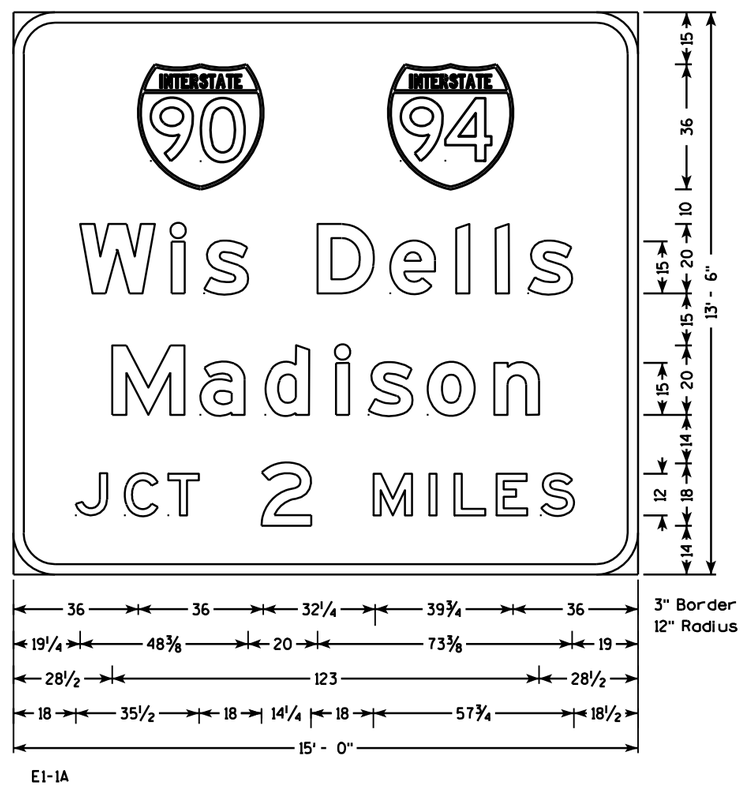

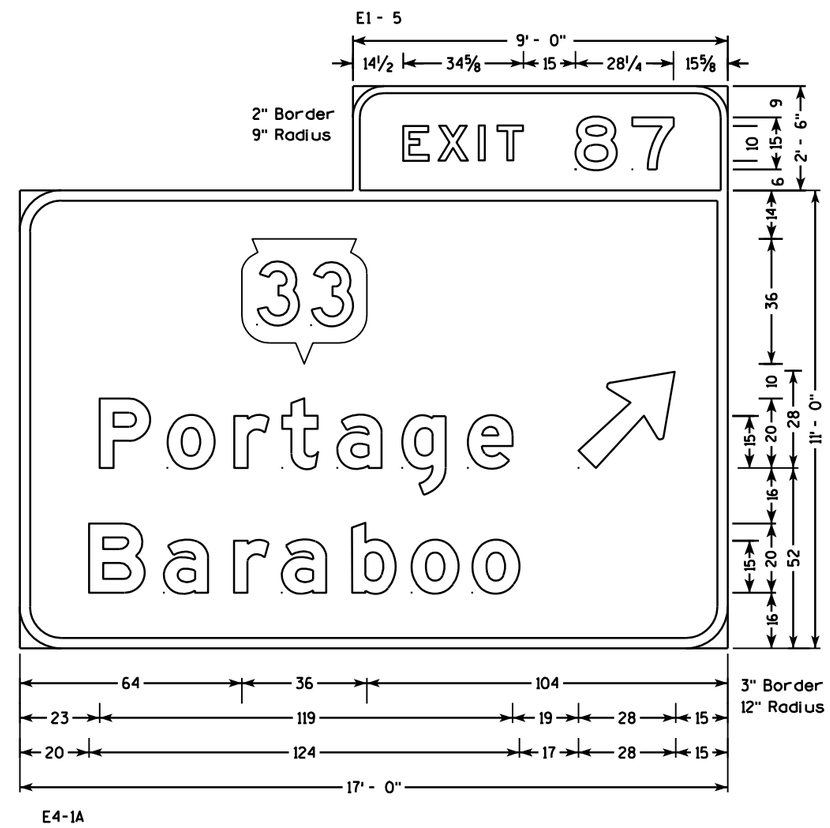

7

7

PROJECT NO: 1161-00-65	HWY: 139	COUNTY: COLUMBIA	PERMANENT SIGNING	SHEET NO: 84	E

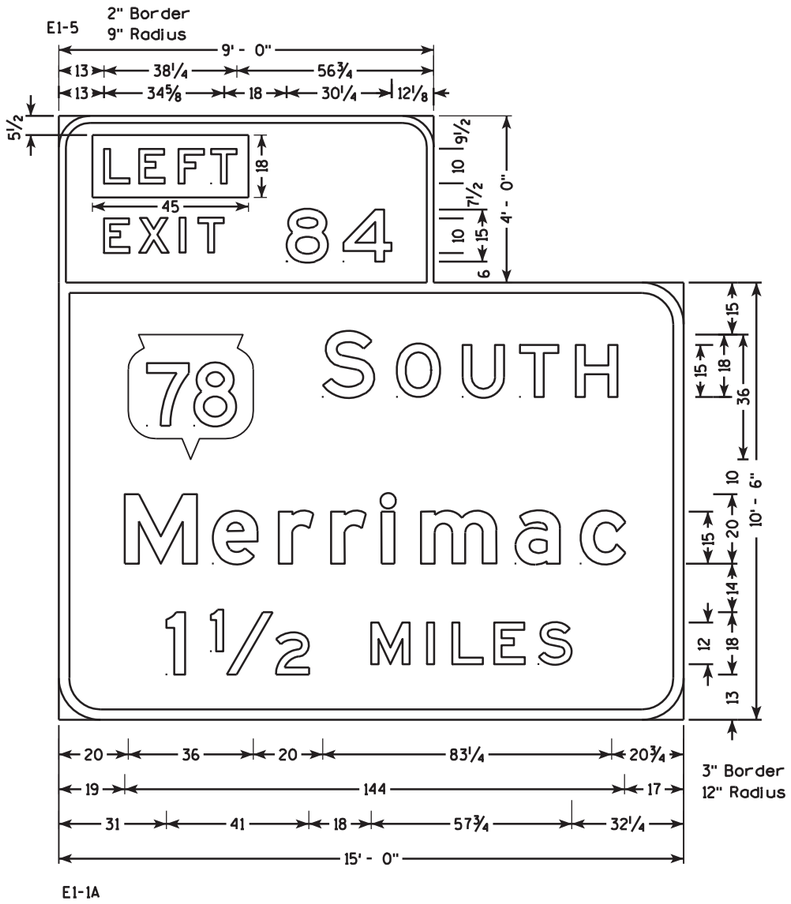

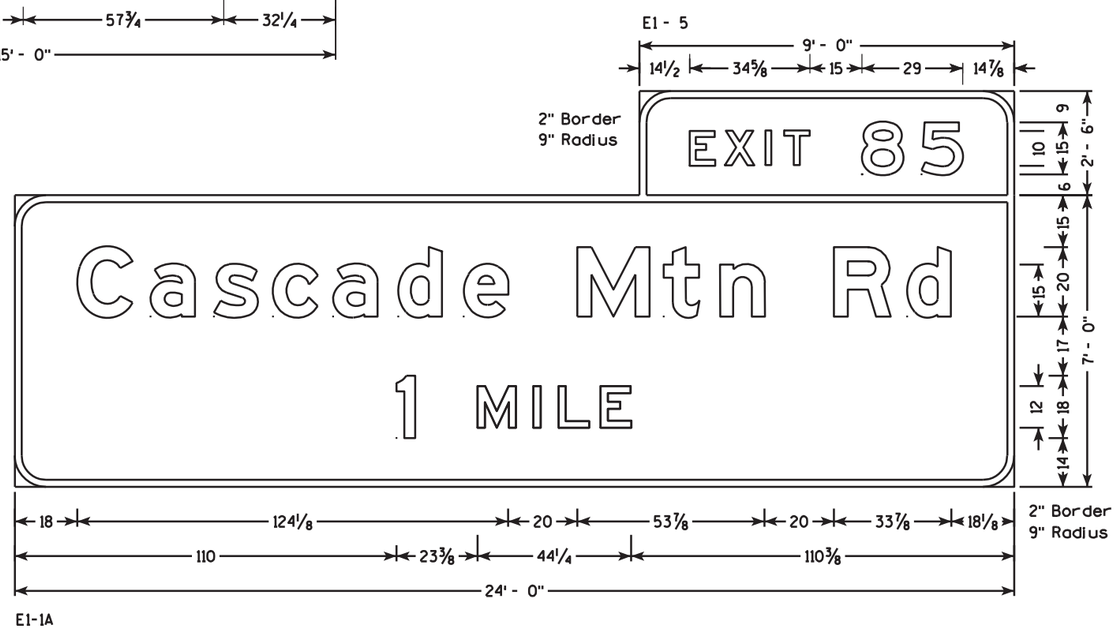

NOTES

1. All Signs are Type I - Type SH Reflective - reference WIS DOT Standard Specification for HIGHWAY and STRUCTURE CONSTRUCTION latest edition.
2. Color:
   Background - Green except LEFT in E1-5 and E11-1 shall be Yellow
   Message - White except LEFT in E1-5 and E11-1 shall be Black
3. Message Series - E Modified except all cap WORDS are Series E

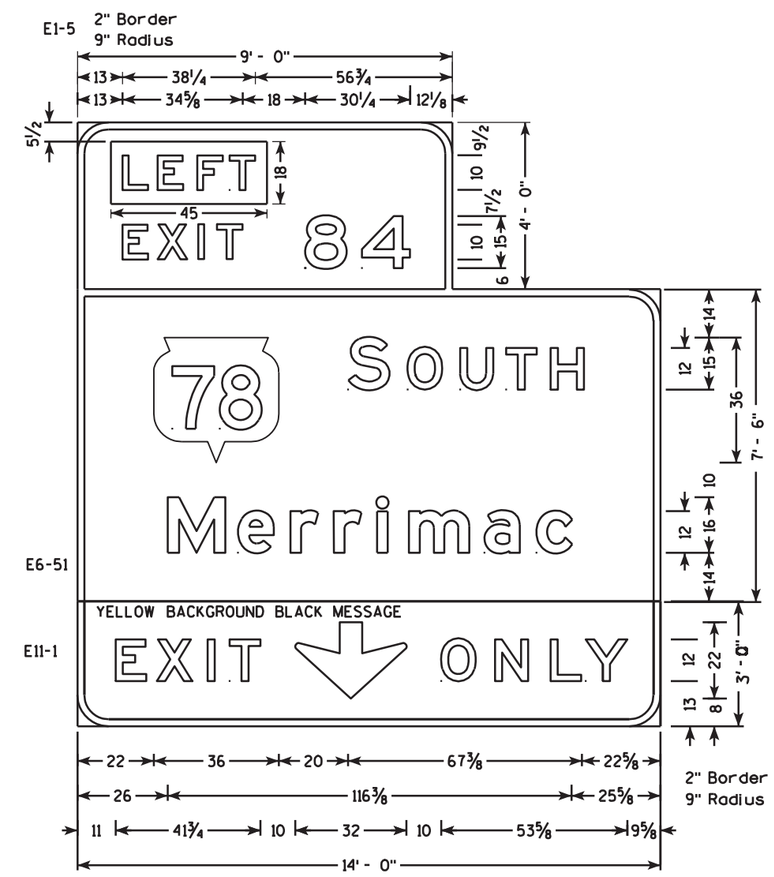

7

7

PROJECT NO: 1161-00-65	HWY: 139	COUNTY: COLUMBIA	PERMANENT SIGNING	SHEET NO: 85	E

NOTES

1. All Signs are Type I - Type SH Reflective - reference WIS DOT Standard Specification for HIGHWAY and STRUCTURE CONSTRUCTION latest edition.
2. Color:
   Background - Green
   Message - White
3. Message Series - E Modified except all cap WORDS are Series E

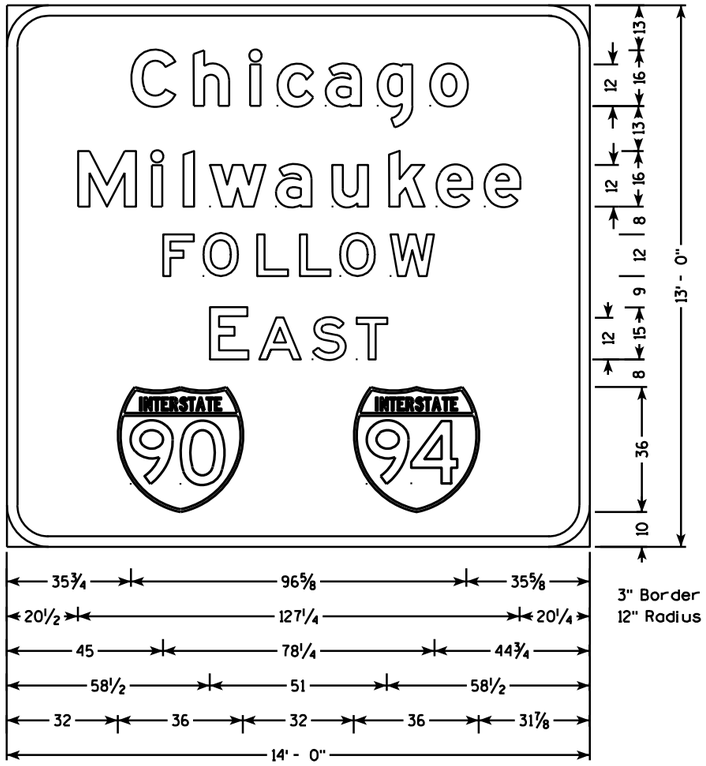

E1-1A

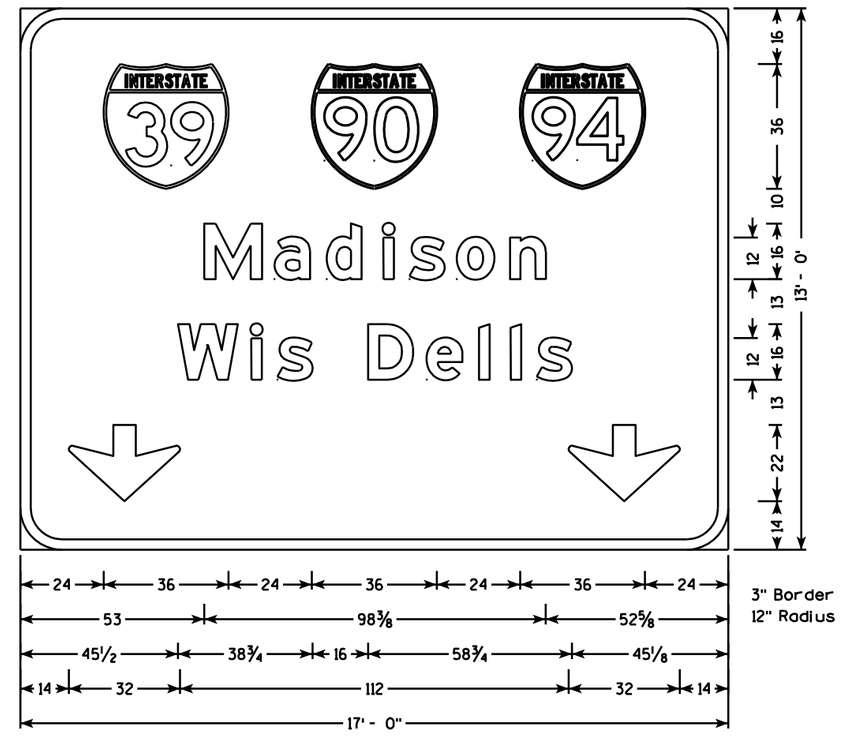

E6-51

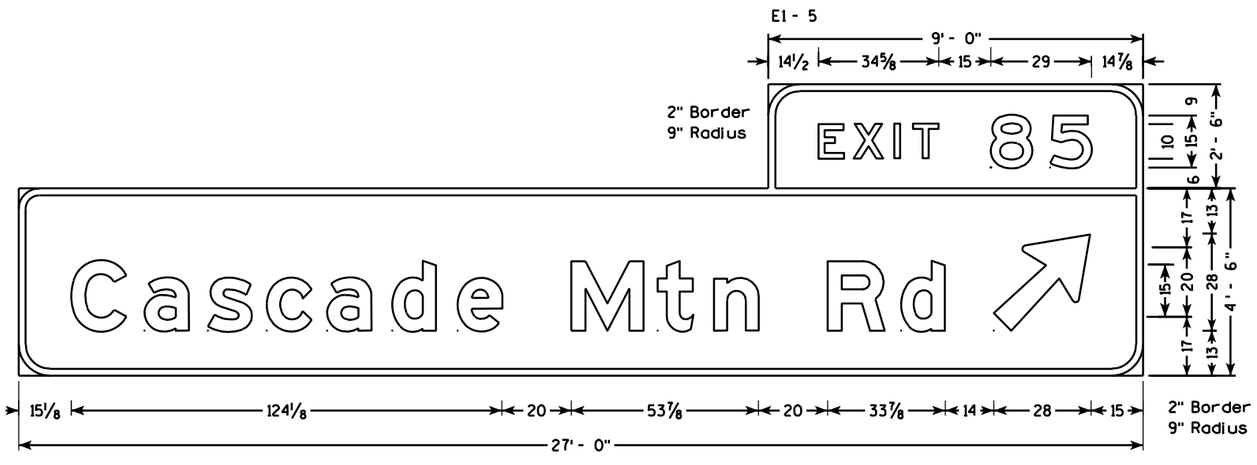

E4-1A

7

7

PROJECT NO: 1161-00-65	HWY: 139	COUNTY: COLUMBIA	PERMANENT SIGNING	SHEET NO: 86	E

NOTES

1. All Signs are Type I - Type SH Reflective - reference WIS DOT Standard Specification for HIGHWAY and STRUCTURE CONSTRUCTION latest edition.
2. Color:
   Background - Green
   Message - White
3. Message Series - E Modified except all cap WORDS are Series E

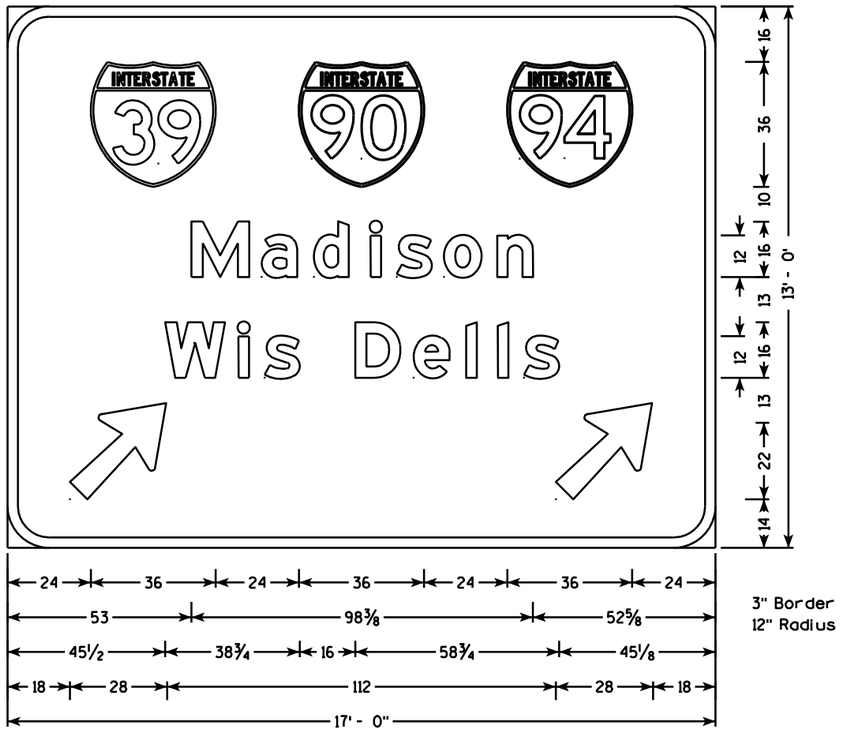

E6-51

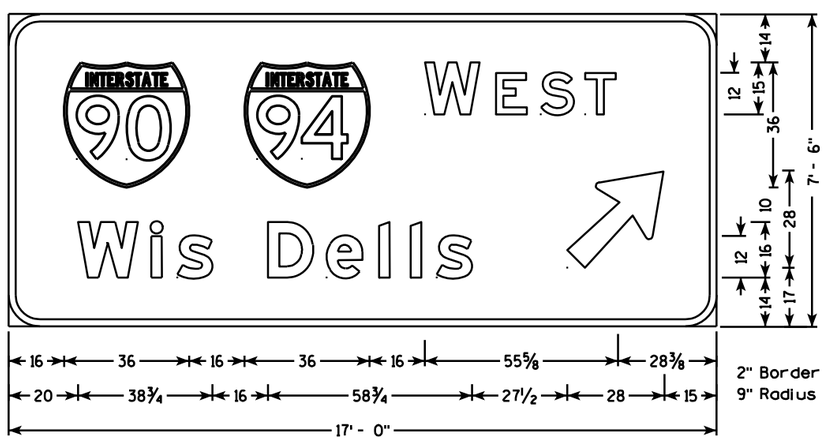

E6-51

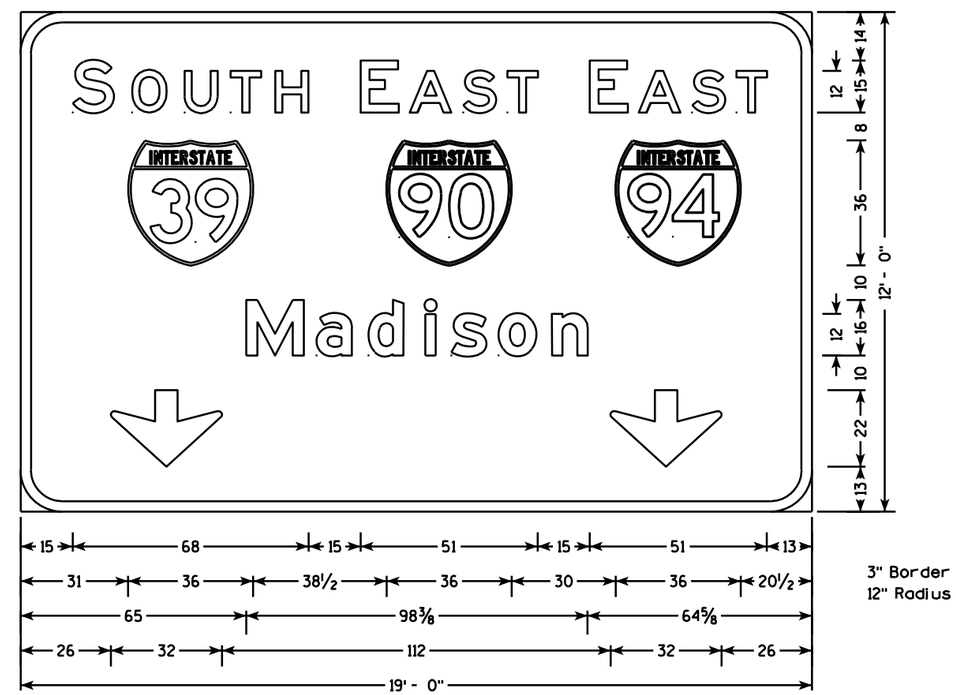

E6-51

7

7

PROJECT NO: 1161-00-65	HWY: 139	COUNTY: COLUMBIA	PERMANENT SIGNING	SHEET NO: 87	E

TYPICAL ASSEMBLIES

J1-1

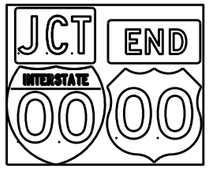

J1-2

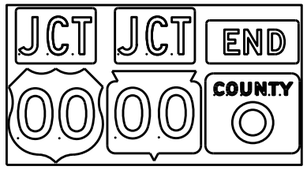

J1-3

J2-1

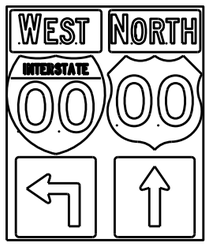

J2-2

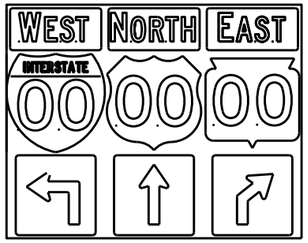

J2-3

JV

(Typical Vertical J-Assembly
See Note 10 and 11)

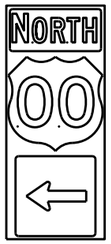

J3-1

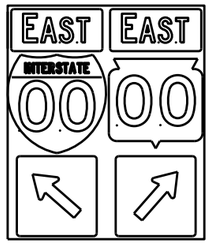

J3-2

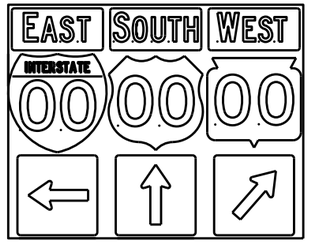

J3-3

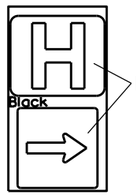

Blue Background

JH-1

J4-1

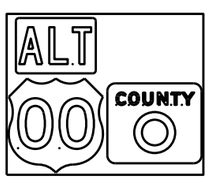

J4-2

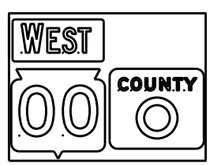

J4-2

J13-1

J12-1

J32-1

J33-1

J23-1

J22-1

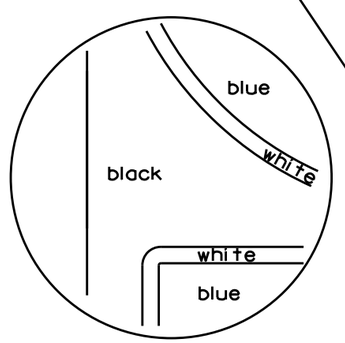

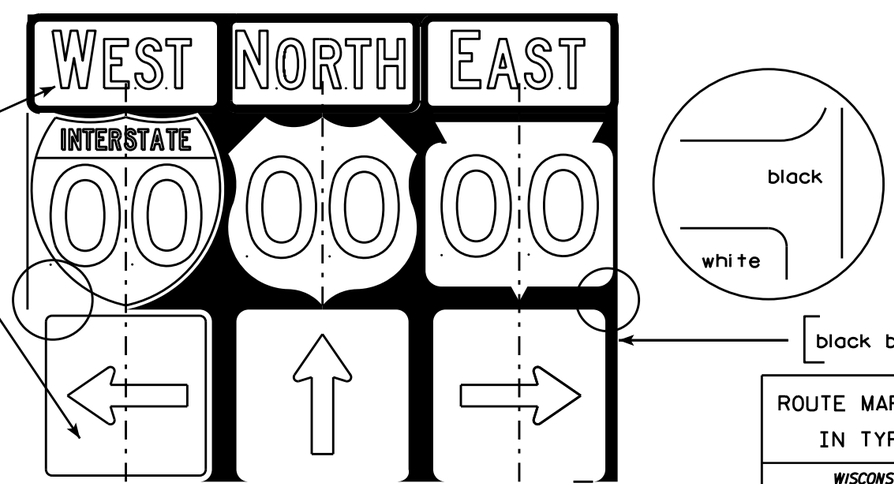

NOTES

1. Signs are Type II - Type H Reflective - reference WIS DOT Standard Specification for HIGHWAY and STRUCTURE CONSTRUCTION latest edition.
2. Color:
   Background - Black Non-reflective
   Message - see Note 5
3. Message Series - See Note 5
4. Corners shall be square or rounded if base material is plywood. If base material is metal the corners shall be rounded.
5. The colors and message spacing on each marker shall be according to the applicable route marker panel specifications.
6. Certain marker heads require the component pieces to be the same color. As an example, all the components used with an M1-1 Interstate marker shall be blue.
7. Single panel j-assemblies shall only be used with route marker shields that are same size. If the route marker shields are different size use multiple piece component.
8. Route assemblies that have 24 inch route shields and have dimensions greater than 48 inches (both vertical and horizontal) shall have one horizontal splice between the arrows and route shields. Vertical splices shall not be used on route assemblies with a horizontal dimension of 144 inches or less. The contractor shall not use more than one vertical joint per sign and the joint shall be between route shields.
9. Route assemblies that have 36 inch shields and have dimensions greater than 48 inchs (both vertical and horizontal) shall have two horizontal splices. One horizontal splice shall be between the cardinal direction and route shields and the other horizontal splice shall be between the arrows and route shields. Vertical splices shall not be used on route assemblies with a horizontal dimension of 144 or less. The contractor shall not use more than one vertical joint per sign and the joint shall be between route shields.
10. All Vertical J Assemblies are given a Sign Code of JV
11. For JV Assemblies that have a mixture of Interstate and non Interstate shields, arrows and cardinals shall be white on blue.

ROUTE MARKERS & COMPONENTS
IN TYPICAL ASSEMBLIES

WISCONSIN DEPT OF TRANSPORTATION

APPROVED Matthew R Rauch
for State Traffic Engineer

DATE 2/06/14 PLATE A2-1S.8

PROJECT NO: | SHEET NO: E

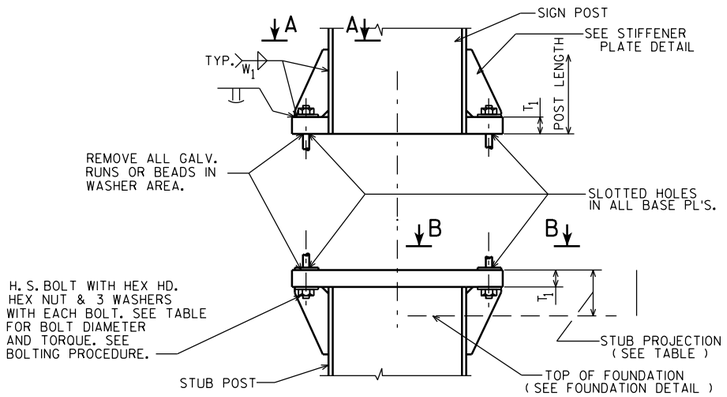

SIGN POST AND STUB POST ELEVATION

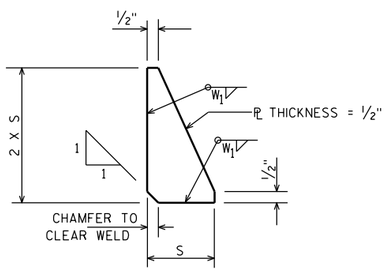

STIFFENER PLATE DETAIL

(SEE TABLE FOR DIMENSIONS)

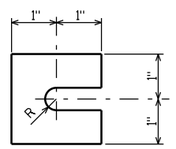

FURNISH 2 @ .012" ± THICK AND 2 @ .032" ± THICK SHIMS PER POST. SHIMS SHALL BE FABRICATED FROM BRASS SHIM STOCK OR STRIP CONFORMING TO A.S.T.M.- B36.

SHIM DETAIL

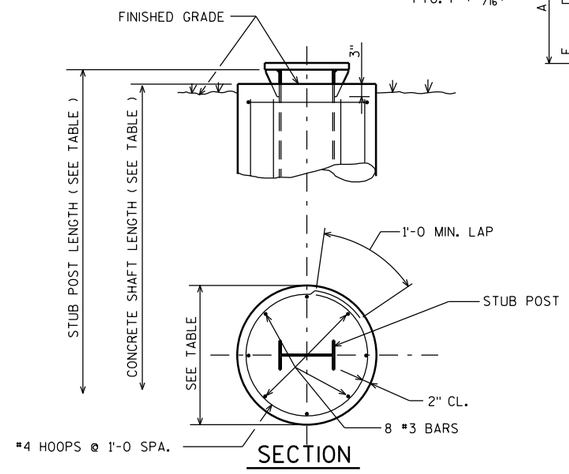

SECTION

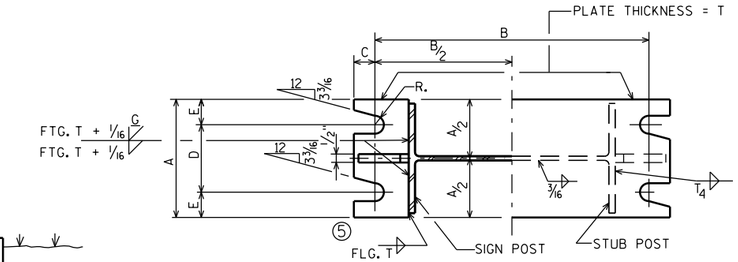

SECTION A-A SECTION B-B

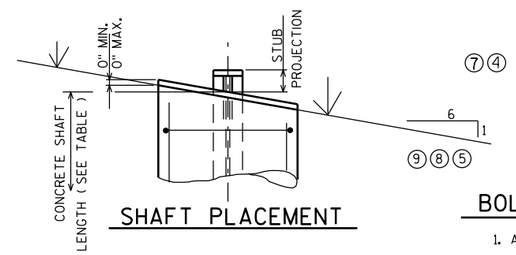

SHAFT PLACEMENT

DESIGN DATA

WIND PRESSURE = 75 M.P.H.
WIND COMPONENTS - NORMAL = 1.0 TRANSVERSE = 0.0
ICE LOAD = 3 P.S.F.

GROUP LOADS	PERCENT OF ALLOWABLE STRESS
1. DEAD	100
2. DEAD & WIND	140
3. DEAD, ICE & 1/2 WIND▲	140

▲25 P.S.F. MIN.

ALLOWABLE SOIL PRESSURE = 1 1/2 T / SQ. FT.
WIND LOAD WAS APPLIED TO THE AREA OF THE SIGN AND TO THE SUPPORTING MEMBERS.
ICE LOAD WAS APPLIED TO ONE FACE OF THE SIGN AND AROUND THE SURFACE OF THE SUPPORTING MEMBERS.

GENERAL NOTES

DRAWINGS SHALL NOT BE SCALED.
DESIGN CONFORMS WITH A.A.S.H.T.O. SPECIFICATIONS 1985.
ALL POSTS, POST STUBS & ATTACHMENTS SHALL BE A.S.T.M. A709 GRADE 50.
⑨ THE POST, BASE PLATES, UPPER SIX INCHES OF STUB POST FLANGE SPLICE PLATE AND FUSE PLATE SHALL BE GALVANIZED AFTER FABRICATION.
H.S. BOLTS, WASHERS & NUTS SHALL BE A325 GALVANIZED WHEN POSTS, POST STUBS AND ATTACHMENTS ARE A709 GRADE 50 AND GALVANIZED.

BOLTING PROCEDURE - BASE CONNECTION

1. ASSEMBLE SIGN POST TO STUB POST WITH BOLTS AND ONE OF THE FLAT WASHERS ON EACH BOLT BETW. PLATES.
2. SHIM AS REQ'D. TO PLUMB POST.
3. PRIOR TO BOLT TIGHTENING LUBRICATE BASE CONNECTION BOLTS WITH BEESWAX OR OTHER HIGH-WAX LUBRICANT.
4. TIGHTEN ALL BOLTS THE MAXIMUM POSSIBLE WITH 12" OR 15" WRENCH TO BED WASHERS & SHIMS AND TO CLEAN BOLT THREADS, THEN LOOSEN EACH BOLT IN TURN AND RETIGHTEN IN A SYSTEMATIC ORDER TO THE PRESCRIBED TORQUE. (SEE TABLE)
5. BURR THREADS AT JUNCTION WITH NUT USING A CENTER PUNCH TO PREVENT NUT LOOSENING.

NOTE:
TIGHTEN THE HIGH STRENGTH BOLTS TO THE TORQUE SHOWN. DO NOT OVERTIGHTEN.

QUANTITIES FOR 1 FOOTING		
	CONC. MASONRY C.Y.	REINF. STEEL LBS.
A	0.6	34
B	0.8	49
C	0.9	50
D	0.9	56
⑦ E	1.0	62

	TYPE	#3	#4
REINF.	A	8 @ 4'-5	5 @ 6'-3
	B	8 @ 6'-5	7 @ 6'-3
	C	8 @ 6'-11	7 @ 6'-3
	D	8 @ 7'-5	8 @ 6'-3
⑦	E	8 @ 7'-11	9 @ 6'-3

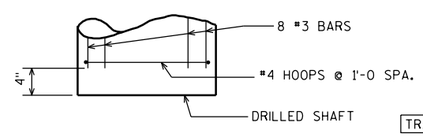

FOUNDATION DETAIL

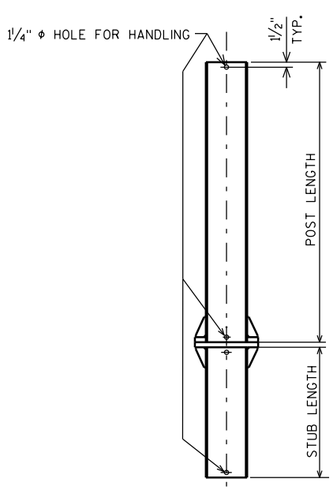

POST DETAIL

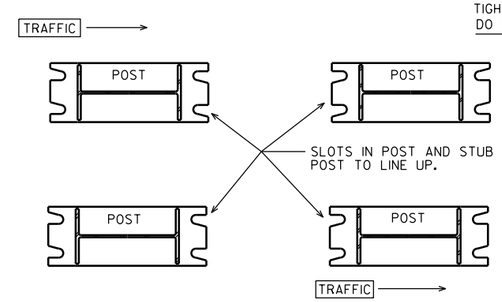

POST SLOT ORIENTATION ⑦

	TYPE	POST SIZE \ DIMENSION	BOLT SIZE & TORQUE	A	B	C	D	E	T_1	T_4	W_1	R	S	STUB LENGTH	STUB PROJECTION	SHAFT DIAMETER	SHAFT LENGTH	K	
			BASE CONNECTION DATA TABLE											FOUNDATION DATA				②	
④	A	W10"X12.0 #/FT.	3/4" Φ @ 75#-FT.	5 1/4"	1'-0 3/8	7/8"	3 1/2"	7/8'	1"	3/16"	5/16"	13/32 "	2 1/8"	3'-6	3"	2'-0 Φ	5'-0	76.0#	④
④	B	W12"X16.0 #/FT.	7/8" Φ @ 85#-FT.	5 1/2"	1'-4 1/4	1"	3 1/2"	1"	1 1/4"	1/4"	5/16"	15/32 "	3"	5'-6	3"	2'-0 Φ	7'-0	146.5#	④
	C	W12"X19.0 #/FT.	7/8" Φ @ 85#-FT.	5 1/2"	1'-4 1/4	1"	3 1/2"	1"	1 1/2"	5/16"	5/16"	15/32 "	3"	6'-0	3"	2'-0 Φ	7'-6	182.1#	
	D	W12"X22.0 #/FT.	7/8" Φ @ 85#-FT.	5 1/2"	1'-4 1/4	1"	3 1/2"	1"	1 1/2"	3/8"	5/16"	15/32 "	3"	6'-6	3"	2'-0 Φ	8'-0	210.5#	
③	E	W12"X26.0 #/FT.	1" Φ @ 90#-FT.	7"	1'-4 1/4	1 1/4"	4"	1 1/2"	1 1/2"	3/8"	5/16"	17/32 "	3"	7'-0	3"	2'-0 Φ	8'-6	293.0#	③

① ⑥ ①

STRUCTURAL CARBON STEEL PAY WTS. (1 POST) = K+ (POST LENGTH X POST WT.)
" K " INCLUDES STUB, BASE PLATES, STIFFS., BOLTS, AND WASHERS.

WISCONSIN DEPT OF TRANSPORTATION
APPROVED Matthew R Rauch for State Traffic Engineer
DATE 2/06/14 PLATE NO. A3-1.14

NO.	DATE	REVISION
⑩	1-21-14	LUBRICATION OF BASE BOLTS
⑨	4-26-11	REMOVE NON-GALVANIZED
⑧	10-30-96	NOT GALVANIZED/GALVANIZED
⑦	10-30-92	QUANT., A588 EXCEPT., ADD SLOT VIEW
⑥	8-24-87	BASE CONN. WELD
⑤	10-13-81	BASE CONN. WELD & FUSE PL WASHERS
④	10-19-79	POST A & B, A572 GR. 50, & K
②	11-28-78	"K" ③ 4-23-79 TYPE "E"
①	5-4-78	T_1, T_2 & W_1

STATE OF WISCONSIN
DEPARTMENT OF TRANSPORTATION
DIVISION OF HIGHWAYS

TYPE A, B, C, D, & E

CONST. SPEC. 2011 | DRAWN BY JPH | PLANS CK'D.

FTG. & SIGN SUPPORT DETAILS GROUND MOUNT BREAK-AWAY SIGNS

SHEET 89

PROJECT NO: | HWY: | COUNTY: | SHEET NO: E

7 7

STUB AND MASONRY ANCHOR DETAILS

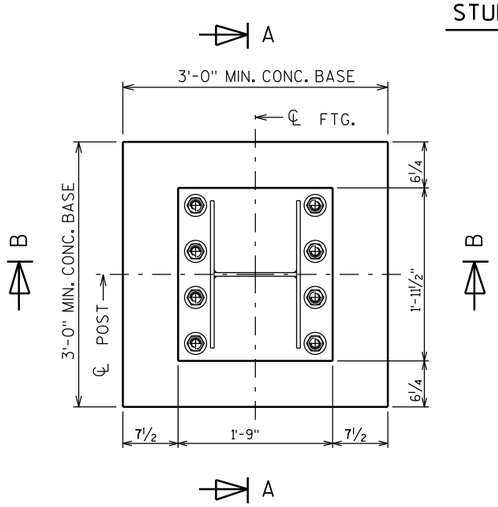

STUB SECTION

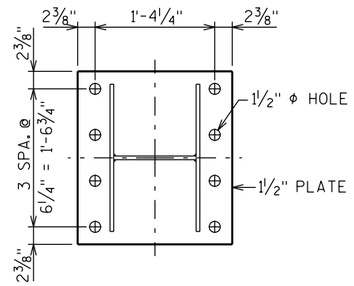

BASE PLATE

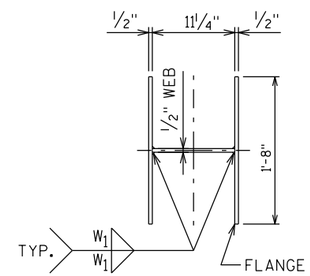

STUB

◐ SEE PLATE NO. A3-1 FOR DETAILS

◕ MASONRY ANCHORS TYPE S 1¼-INCHES (ADHESIVE). ALLOWABLE PULL OUT CAPACITY 14,995 KIPS. EMBED 1'-3" IN ROCK.

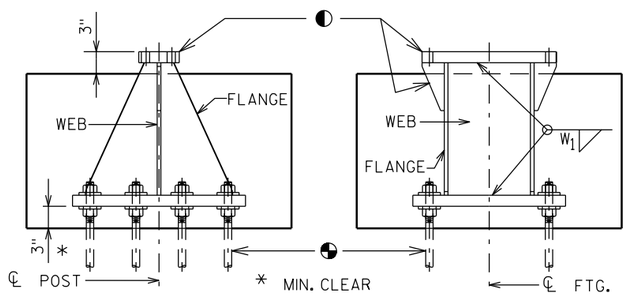

SECTION A

SECTION B

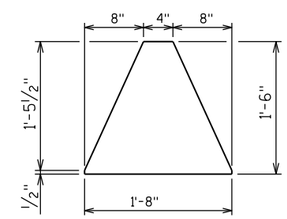

FLANGE

GENERAL NOTES

1. Quantities per Base:
   - REINFORCING BAR STEEL = 62 LBS
   - CONCRETE = 0.6 C.Y.
   - STEEL WEIGHT = 335 LBS
2. All materials, except anchor rod, nuts and washers, are to be A.S.T.M. A709 grade 50. All materials to be galvanized after fabrication.
3. If the contractor encounters rock before reaching the footing depth, per the A3-1 Sign Detail, determine the pull-out capacity of a test adhesive anchor installed in the rock. If the test result equals or exceeds the pull-out capacity of 14,995 KIPS, the contractor may install the breakaway stub for rock, according to this detail.

CONCRETE BASE AND REINFORCING STEEL DETAILS

CONCRETE BASE SECTION

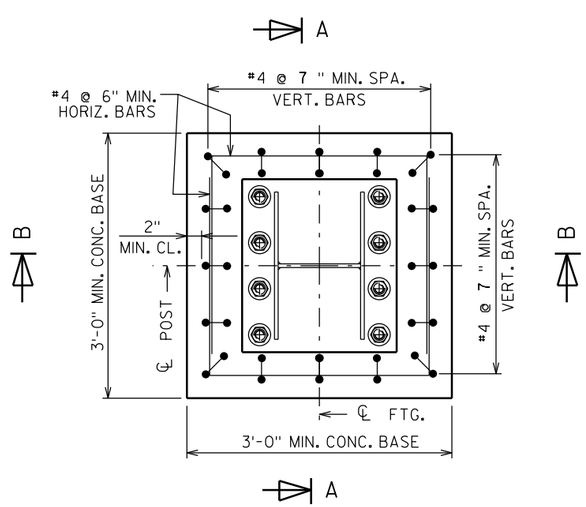

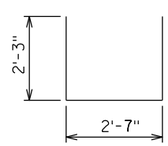

HORIZONTAL BAR

8 BARS @ 6'-11" LENGTH

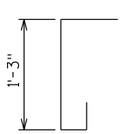

VERTICAL BARS

16 BARS @ 2'-4" LENGTH
MAY BE PLACED IN SKEW
FOR CLEARANCE NEED

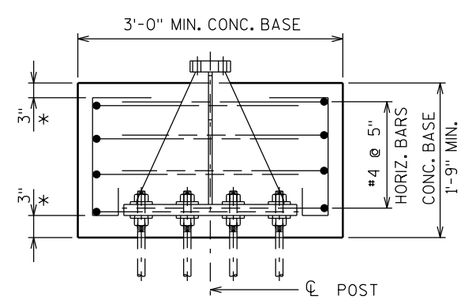

SECTION A

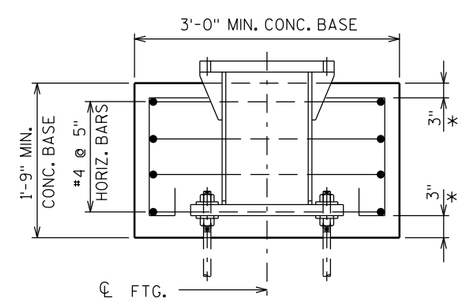

SECTION B

* MIN. CLEAR

ALTERNATE BREAK-AWAY
BASE ON ROCK
A3-1M

WISCONSIN DEPT OF TRANSPORTATION

APPROVED Matthew R Rauch
for State Traffic Engineer

DATE 2/06/2014 PLAN NO. A3-1M.1

PROJECT NO:	HWY:	COUNTY:		SHEET NO:	E

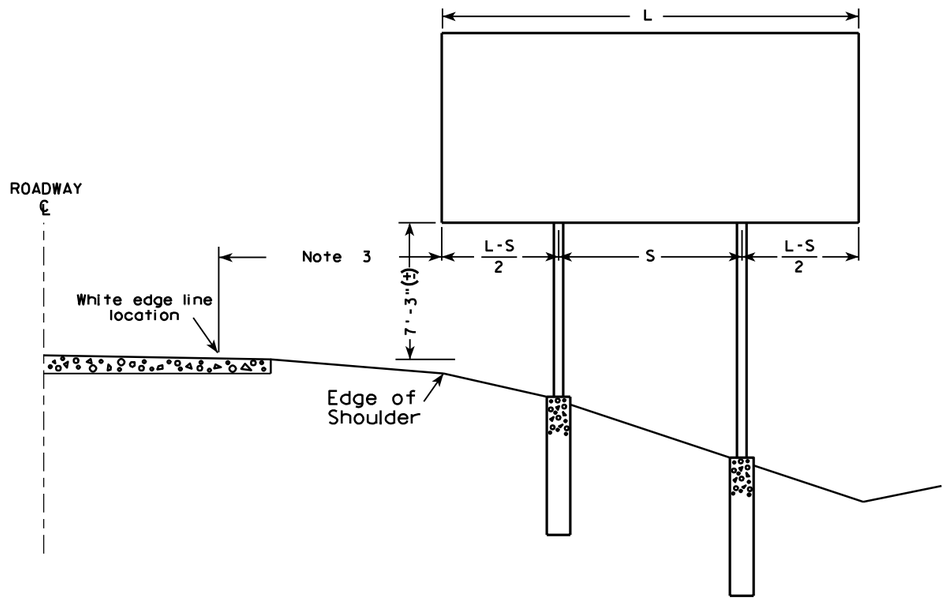

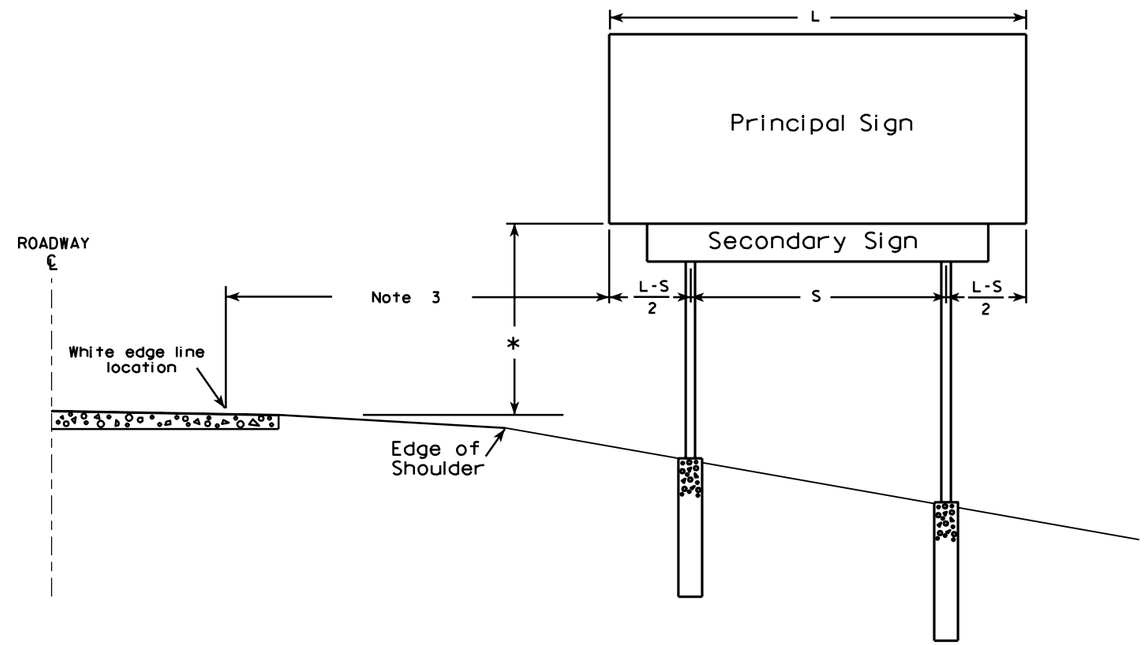

GENERAL NOTES

1. For a 2 post installation, S equals 3L/5, but shall not be less than 9 ft.
2. For a 3 post installation, S equals 5L/7, but shall not be less than 18 ft., and the space between any two posts shall not be less than 9 ft.
3. Unless noted in the plan, the sign offset distance shall be a minimum of 17'-6", desirable 30'-0".
4. The (±) tolerance shown on this sheet is 3 in.
5. The vertical sign height clearance detailed is measured from the bottom of the sign to the near edge of pavement.
6. Post lengths shown in the miscellaneous quantities are estimated lengths. The contractor shall verify post lengths at the time of final grading.
7. Refer to the Traffic Guidelines Manual for further guidance on minimum vertical clearance requirements.

* Clearance is 8'-3"(±) when the secondary sign is 3 ft. or less in height. For secondary signs larger than 3 ft., the clearance to the bottom of the secondary sign shall be 5'-3"(±).

7

7

TYPICAL INSTALLATION OF TYPE I SIGNS

WISCONSIN DEPT OF TRANSPORTATION

APPROVED Matthew R Rauch
for State Traffic Engineer

DATE 4/02/08 PLATE NO. A4-1.9

PROJECT NO:				SHEET NO: 91	E

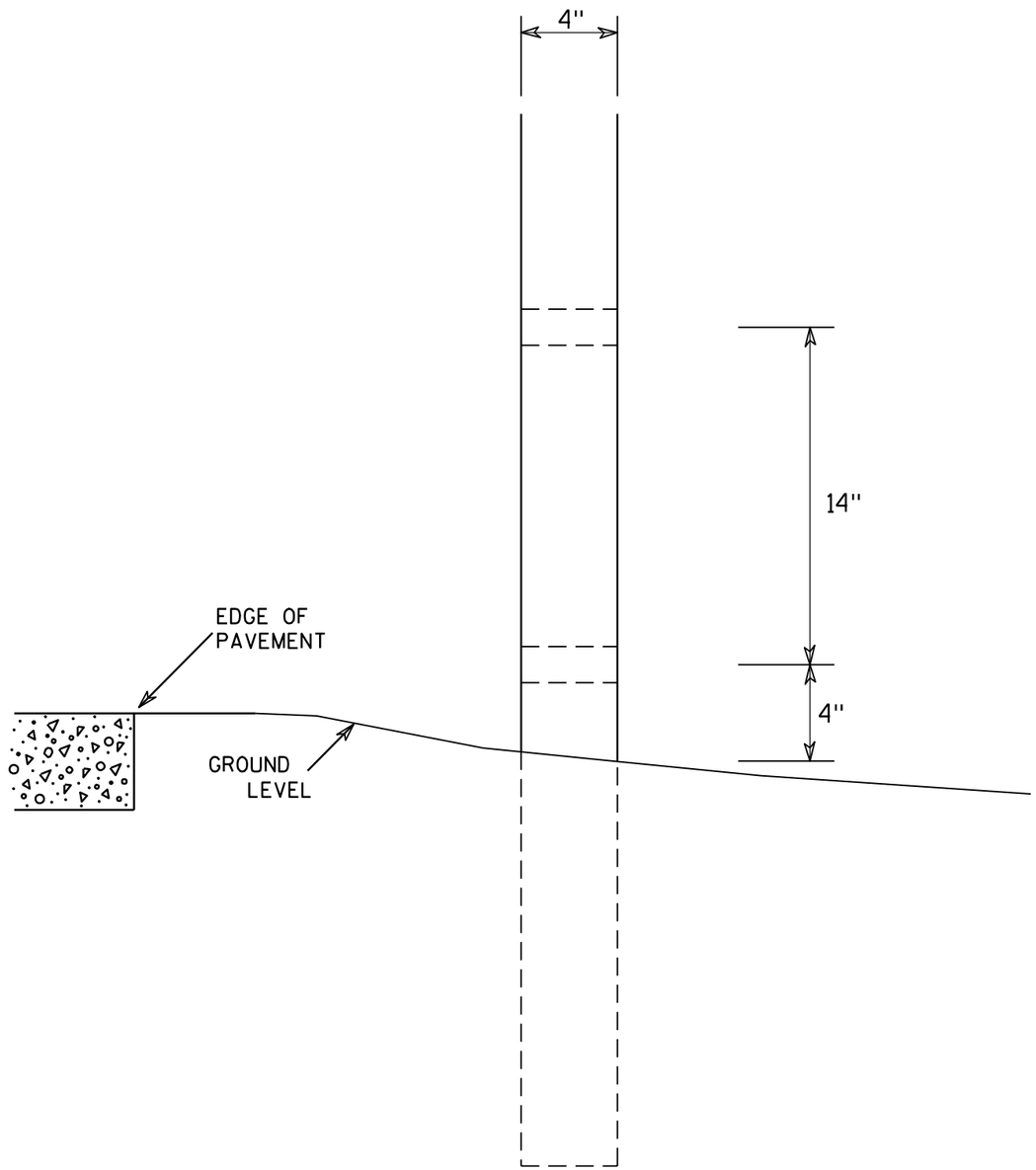

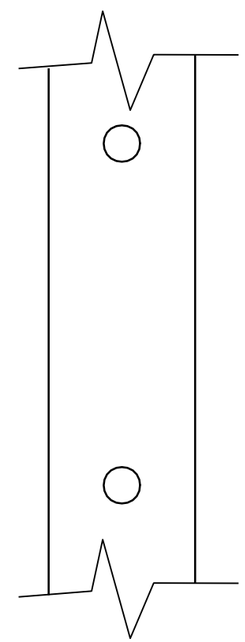

SIDE VIEW

GENERAL NOTES

1. All 4 x 6 Wood Posts shall be modified by having two 1½" diameter holes drilled perpendicular to the roadway centerline.

4 X 6 WOOD POST MODIFICATIONS

WISCONSIN DEPT OF TRANSPORTATION

APPROVED Chester J Spang for State Traffic Engineer

DATE 3/27/97 PLATE NO. A4-11.2

PROJECT NO:	HWY:	COUNTY:		SHEET NO: 92	E

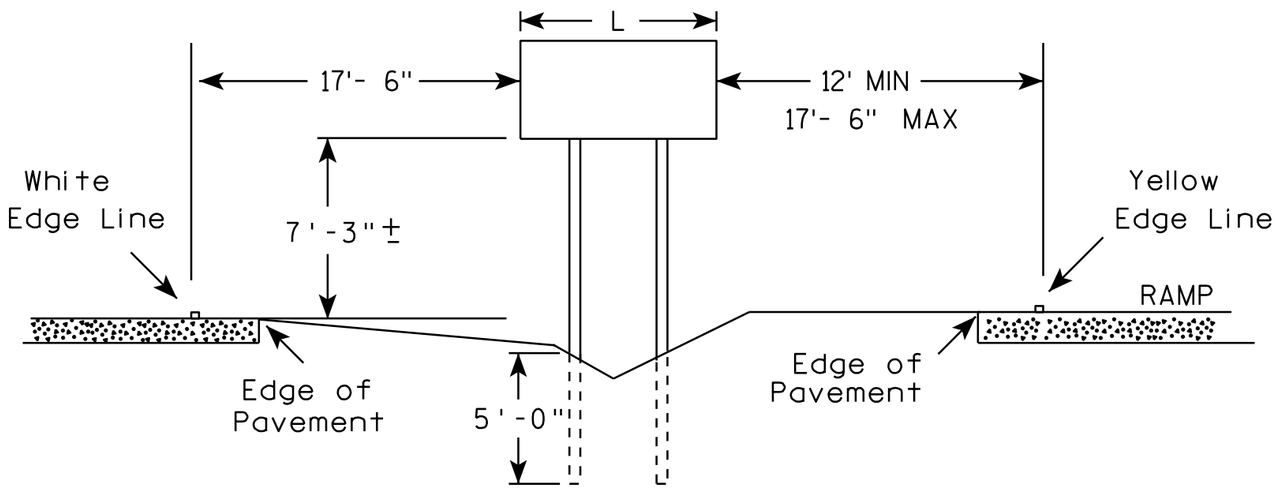

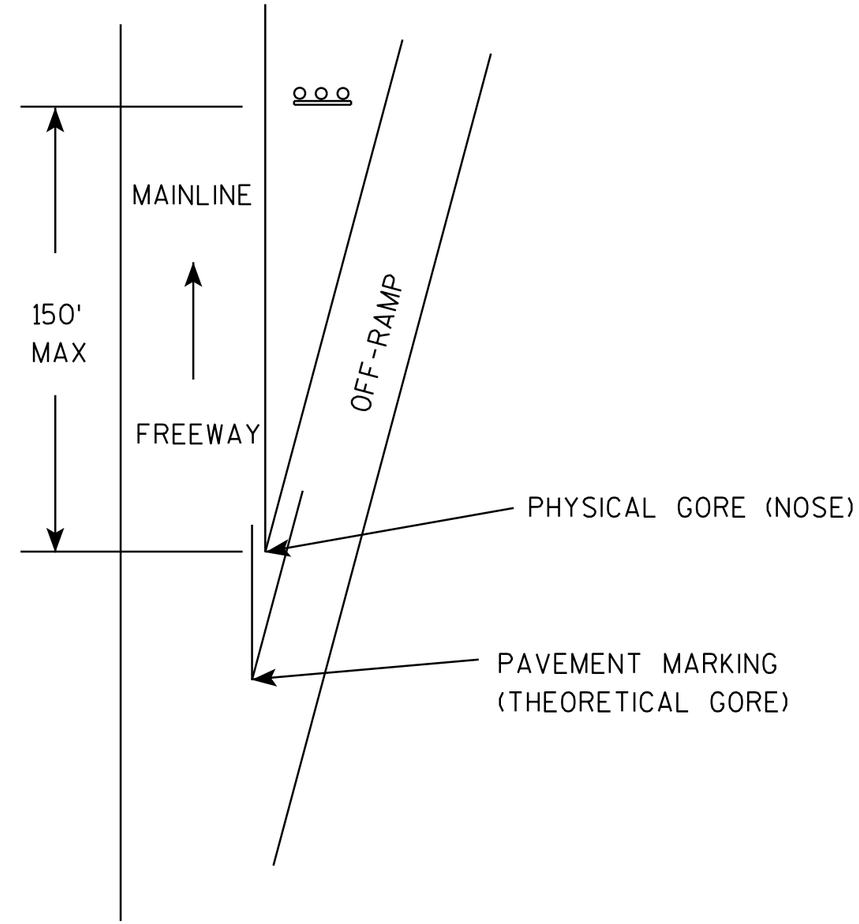

GENERAL NOTES

1. The 150 foot distance from the physical gore (where pavement ends) will normally provide the offsets as shown.
2. If roadway geometrics permit, the sign may be closer than the 150 foot distance as long as the offsets are maintained.
3. At no time shall the location be greater than 150 feet. If the normal offsets cannot be maintained, they can be reduced to 6 feet from the edge of the paved shoulder (both freeway and ramp).
4. The offset from edge of sign to the yellow edge line on the ramp is shown as a minimum of 12 feet and a maximum of 17 feet, 6 inches. Preference is adhering to the maximum rather than the minimum dimension.
5. When L is equal to or exceeds 10 feet, use 3 posts as per A4-4.
6. The (∓) tolerance for the mounting height is 3 inches.

TYPICAL INSTALLATION OF TYPE II SIGNS ON WOOD POSTS IN GORE

WISCONSIN DEPT OF TRANSPORTATION

APPROVED Matthew R Rauch
for State Traffic Engineer

DATE 2/06/14 PLATE A4-2.3

PROJECT NO: | SHEET NO: | E

URBAN AREA

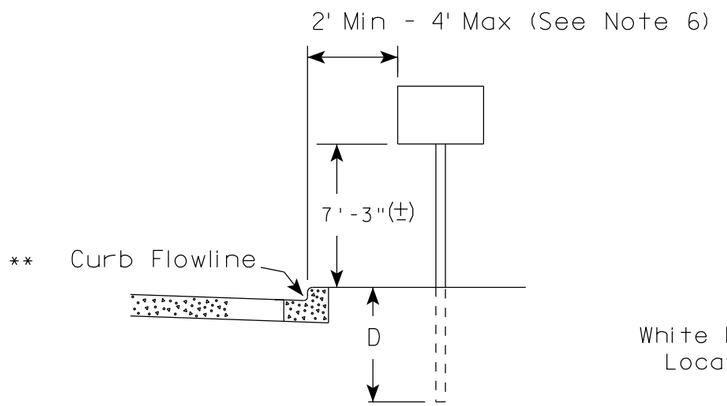

RURAL AREA (See Note 2)

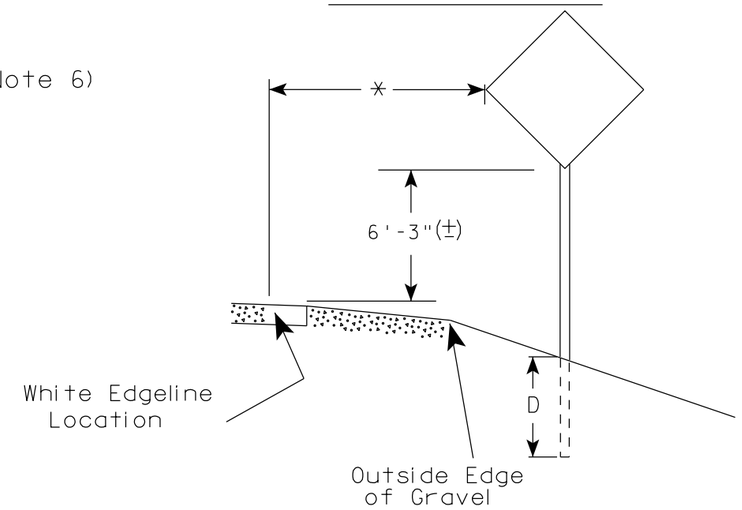

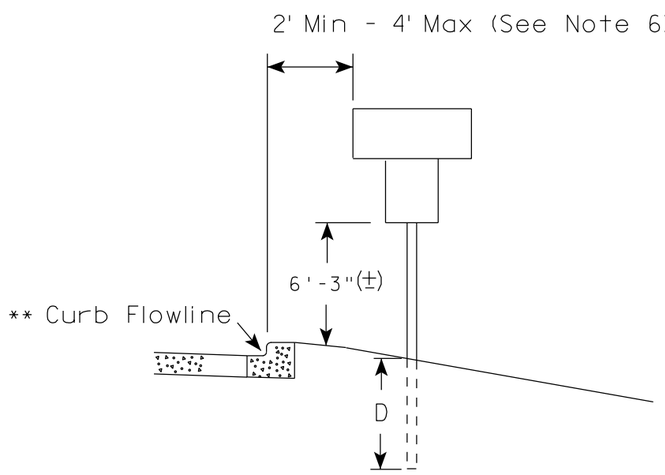

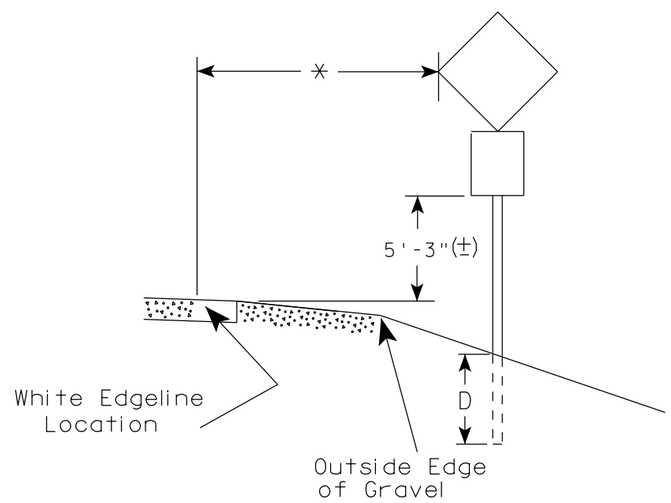

** The existence of curb and gutter does not in itself mandate the vertical clearance illustrated. That height is typically measured where there is sidewalk adjacent to the roadway or parking is permitted. In the absence of sidewalk vertical clearance is measured from the top of the curb. Offset of signs is measured from the flow line.

* 6 feet from edge of a paved shoulder or 12 feet from the edge of pavement (edge line location) or 2 feet from outside edge of gravel, whichever is greater unless directed by project engineer.

GENERAL NOTES

1. Signs wider than 4 feet, 20 sq.ft or larger, shall be mounted on multiple posts. Refer to plate A4-4.
2. If signs are mounted on barrier wall, see A4-10 sign plate.
3. For expressways and freeways, mounting height is 7'- 3" (±) or 6'-3" (±) depending upon existence of a sub-sign.
4. Minimum mounting height for J assemblies (A4-5) is 7'-3" (±) or 6'-3" (±) per urban or rural detail respectively.
5. Minimum mounting height for signs mounted on traffic signal poles is 5'- 3" (±).
6. Offset distance shall be consistent with existing signs or consistent throughout length of project.
7. The (±) tolerance for mounting height is 3 inches.
8. Folding stop signs (R1-1F) shall be mounted at a height of 5'-3" (±) or as directed by the Engineer.
9. The Double Arrow sign (W12-1) shall be mounted at a height of 2'-3" (±). The Chevron sign (W1-8), Roundabout Chevron panel (R6-4B), Enhanced Reference Markers, Clearance Markers (W5-52), Mile Markers (D10 series) & End of Rod Markers (W5-56 & W5-56A) shall be mounted at a height of 4'-3" (+).

POST EMBEDMENT DEPTH

Area of Sign Installation (Sq. Ft.)	D (Min)
20 or Less	4'
Greater than 20	5'

TYPICAL INSTALLATION OF PERMANENT TYPE II SIGNS ON SINGLE POSTS

WISCONSIN DEPT OF TRANSPORTATION

APPROVED Matthew R Rauch for State Traffic Engineer

DATE 9/30/13 PLATE NO. A4-3.18

PROJECT NO:	HWY:	COUNTY:		SHEET NO:	E

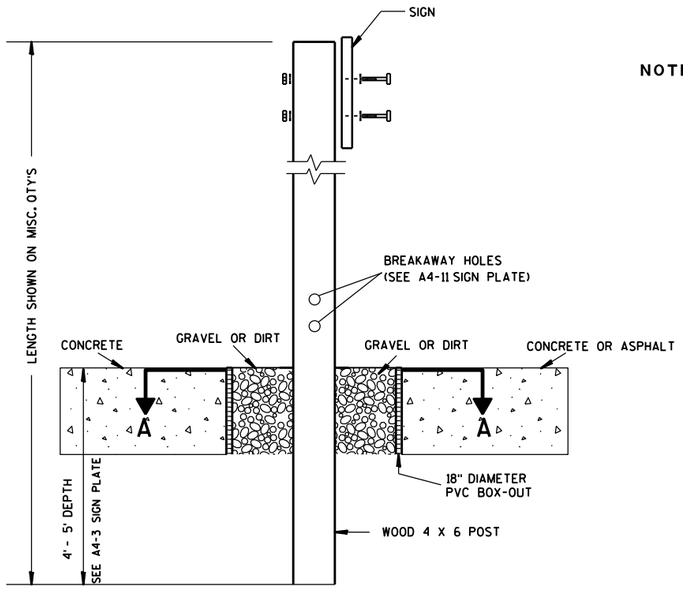

ELEVATION VIEW

DETAIL OF WOOD 4 X 6 SIGN POST IN BOX-OUT

NOTES:
1. ALL MATERIAL TO BE APPROVED BY ENGINEER PRIOR TO INSTALLATION
2. SEE SIGN PLATE A4-8 FOR SIGN HARDWARE REQUIREMENTS
3. 18 INCH X 18 INCH SQUARE BOX-OUTS MAY BE USED FOR INSTALLATIONS IN EXISTING CONCRETE OR ASPHALT LOCATIONS.

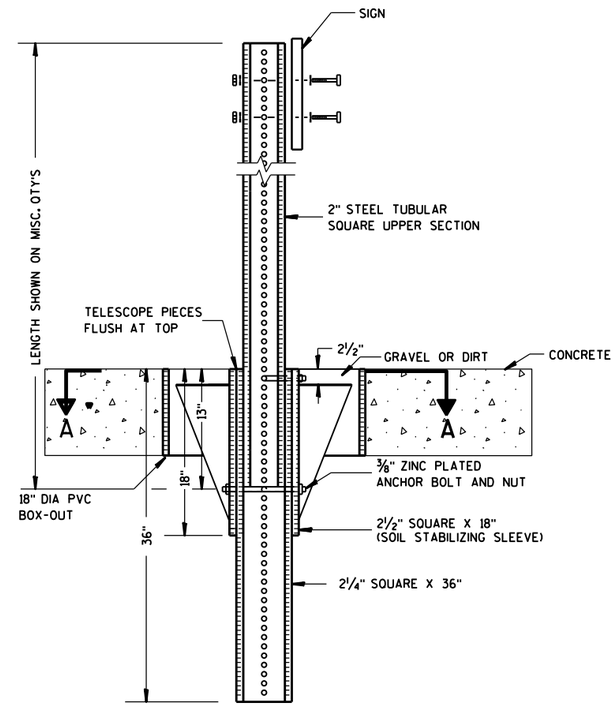

ELEVATION VIEW

DETAIL OF STEEL 2 X 2 SIGN POST IN BOX-OUT

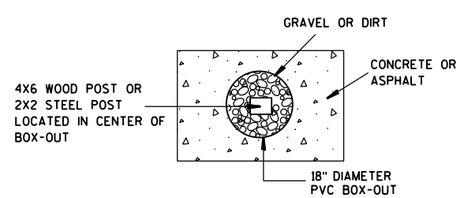

PLAN VIEW

FOR NEW CONCRETE/ASPHALT INSTALLATIONS

SIGN POST
BOX-OUTS
A4-3B

WISCONSIN DEPT OF TRANSPORTATION

APPROVED Matthew R Rauch
for State Traffic Engineer

DATE 1/27/14 PLATE NO. A4-3B.1

PROJECT NO:	HWY:	COUNTY:		SHEET NO:	E

URBAN AREA

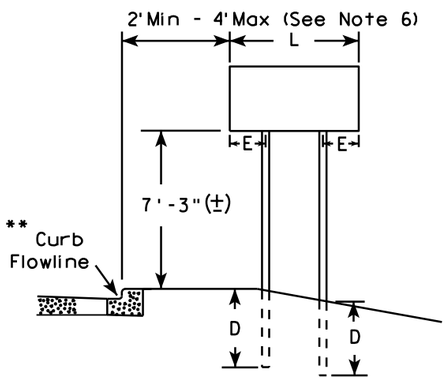

RURAL AREA (See Note 3)

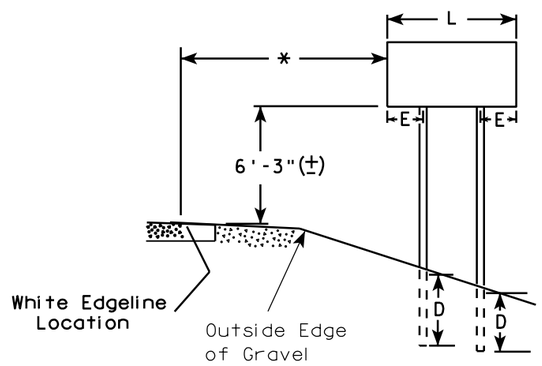

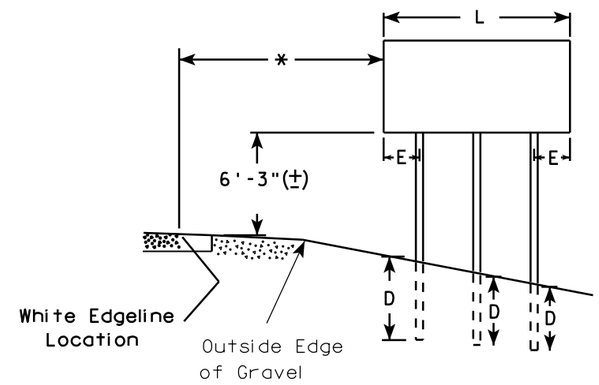

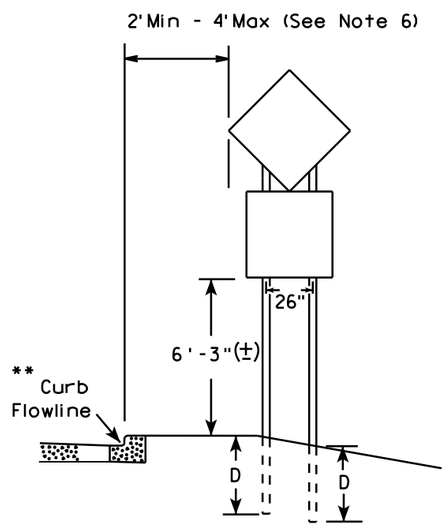

48" DIAMOND WARNING SIGN

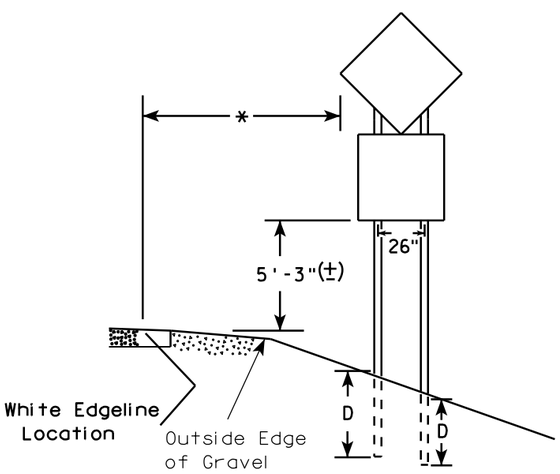

48" DIAMOND WARNING SIGN

GENERAL NOTES

1. For 3 or 4 post installations, individual post spacing shall be greater than 3'-6".
2. See tables below for required number of posts.
3. For expressways and freeways, mounting height is 7'-3" (±) or 6'-3" (±) depending upon existence of sub-sign.
4. The (±) tolerance for mounting height is 3 inches.
5. Minimum mounting height for J assemblies (A4-5) is 7'-3" (±) or 6'-3" (±) per urban or rural detail respectively.
6. Offset distance shall be consistent with existing signs or consistent throughout length of project.
7. Folding stop signs (R1-1F) shall be mounted at a height of 5'-3" (±) or as directed by the engineer.
8. The Double Arrow sign (W12-1) shall be mounted at a height of 2'-3" (±). The Chevron sign (W1-8), Roundabout Chevron panel (R6-4B), Clearance Markers (W5-52), Mile Markers (D10 series) & End of Road Markers (W5-56 & W5-56A) shall be mounted at a height of 4"-3" (±).

* 6 feet from edge of a paved shoulder or 12 feet from the edge of pavement (edge line location) or 2 feet from outside edge of gravel, whichever is greater unless directed by project engineer.

** The existence of curb and gutter does not in itself mandate the vertical clearance illustrated. That height is typically measured where there is sidewalk adjacent to the roadway or parking is permitted. In the absence of sidewalk vertical clearance is measured from the top of the curb. Offset of signs is measured from the flow line.

*** See A4-3 sign plate for signs 4' or less in width or 20 S.F. or less in area.

SIGN SHAPE OTHER THAN DIAMOND (TWO POSTS REQUIRED)	
L	E
*** Greater than 48" Less than 60"	12"
60" to 120"	L/5

SIGN SHAPE OTHER THAN DIAMOND (THREE POSTS REQUIRED)	
L	E
Greater than 120" less than 168"	12"

SIGN SHAPE OTHER THAN DIAMOND (FOUR POSTS REQUIRED)	
L	E
168" and greater	12"

POST EMBEDMENT DEPTH

Area of Sign Installation (Sq. Ft.)	D (Min)
20 or Less	4'
Greater than 20	5'

TYPICAL INSTALLATION OF TYPE II SIGNS ON MULTIPLE POSTS

WISCONSIN DEPT OF TRANSPORTATION

APPROVED Matthew R Rauch
for State Traffic Engineer

DATE 9/30/13 PLATE NO. A4-4 12

PROJECT NO:	HWY:	COUNTY:		SHEET NO:	E

GROUND MOUNTED SIGN

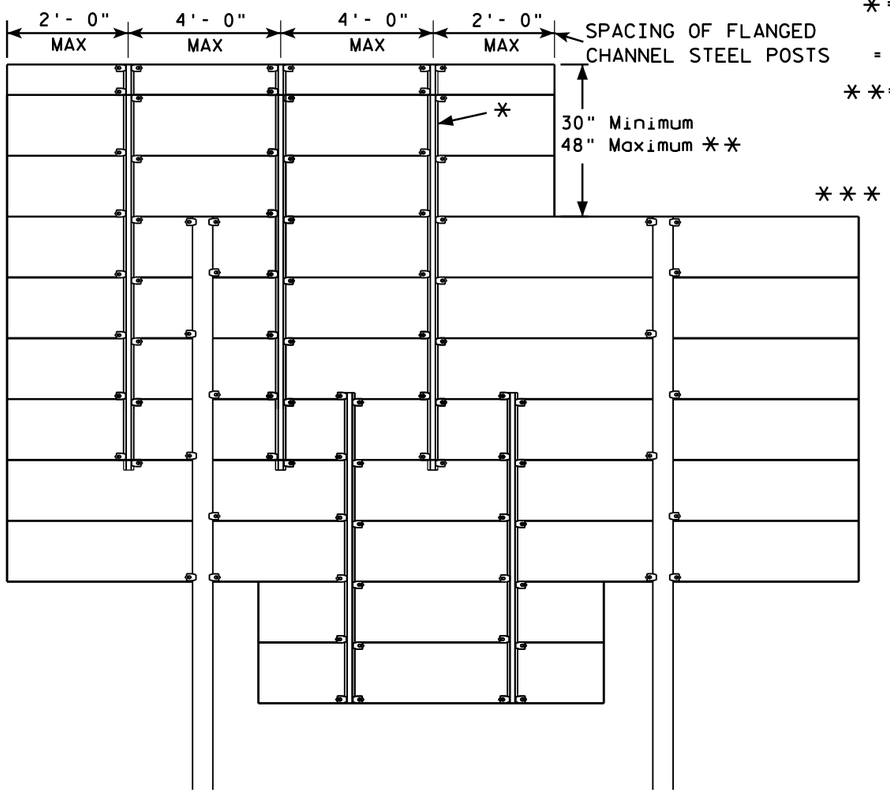

*=2.00 lb/ft FLANGED CHANNEL, MIN. YIELD STRENGTH = 60,000 PSI (GRADE 60) GALVANIZED

**=FOR 48" HEIGHT PANELS ON OVERHEAD STRUCTURES, ENTIRE SIGN SHALL BE CENTERED VERTICALLY ABOUT THE DEPTH OF THE TRUSS.

*** THESE SPACING DISTANCES SHALL ONLY BE USED WHEN THE MAIN SIGN HAS A MAXIMUM HEIGHT (DIMENSION H) OF 16 FT OR LESS. FOR SIGNS WITH A HEIGHT OF GREATER THAN 16 FT, STRUCTURAL CALCULATIONS SHALL BE PERFORMED.

FLANGE CHANNEL DETAIL

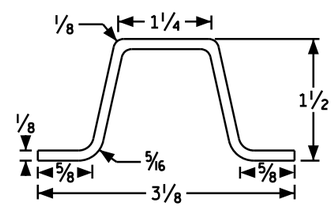

NOT TO SCALE

SIGN BRIDGE MOUNTED SIGN

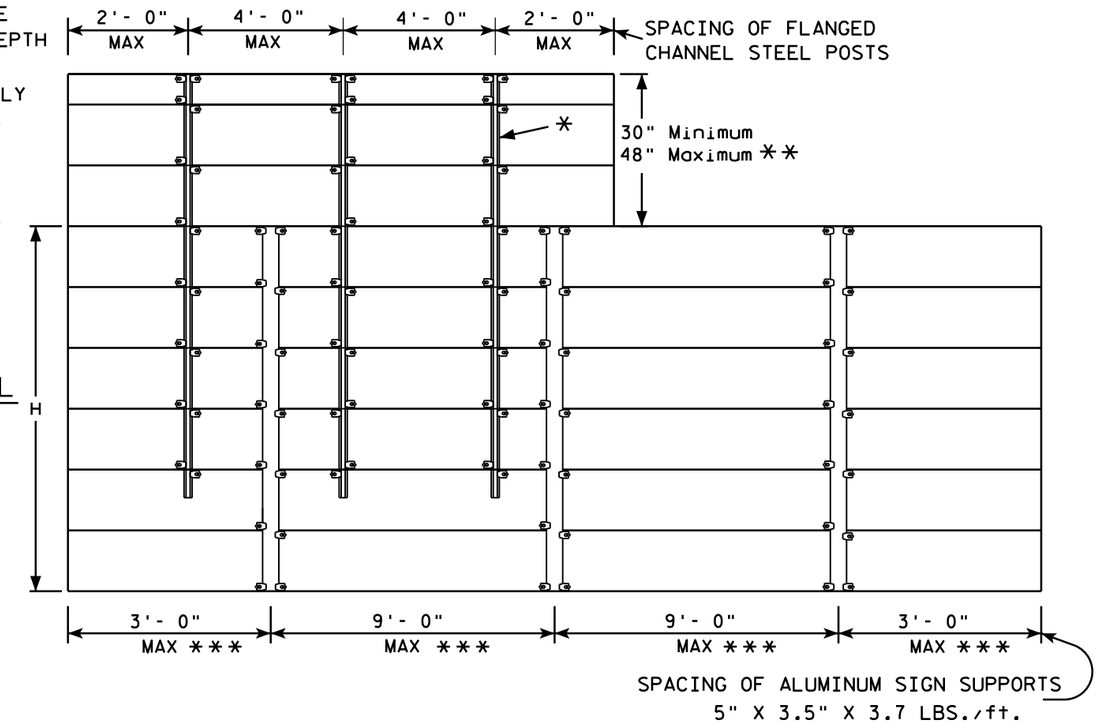

GENERAL NOTES

1. Flanged channel steel posts shall conform to size and material above, and shall be considered as incidental to other items in the contract.

2. Number of Flanged channel steel supports varies with length of panel and shall be spaced as shown:

   PANEL LENGTH 8'-0" OR LESS = 2 CHANNELS
   PANEL LENGTH 9'- 0" - 12'- 0" = 3 CHANNELS
   PANEL LENGTH 13'- 0" OR MORE = 4 CHANNELS

   If the flanged channel steel posts can not be horizontally spaced as shown, they can be moved so as to securely hold the sign.

3. The EXIT NUMBER PANEL shall normally be positioned above the guide sign aligned with the right edge of the guide sign. If the guide sign indicates a left exit, the EXIT NUMBER PANEL shall be aligned with the left edge of the guide sign.

4. If the bolt holes in the top panel (EXIT NUMBER), or sub panel (NEXT EXIT) line up with holes in main sign panel, stitch bolts shall be used in addition to the channels.

5. Provide post clips for each sign as shown. (Please note the differences between a ground mounted versus Sign bridge mounted sign as far as number of clips required on the main supports or beams)

6. Structural steel sign supports shall extend to the top of the main signs, as shown on the above details.

ATTACHMENT OF GUIDE SIGNS TO SUPPORTS

WISCONSIN DEPT OF TRANSPORTATION

APPROVED Matthew R Rauch
for State Traffic Engineer

DATE 12/05/13 PLAT 97 A4-6.12

PROJECT NO:				SHEET NO:	E

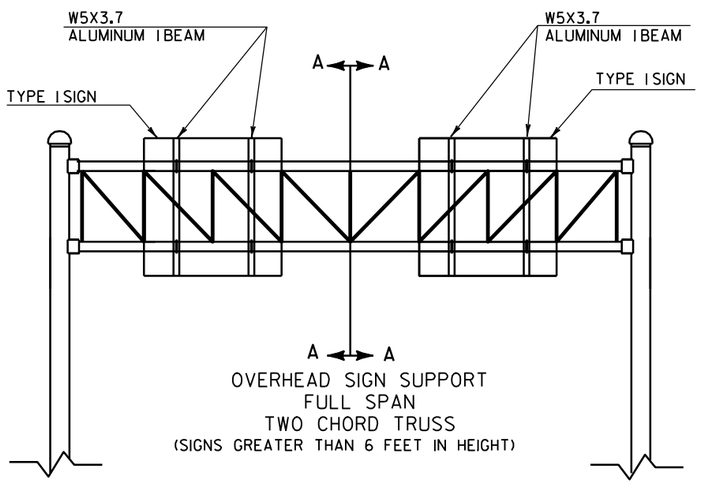

OVERHEAD SIGN SUPPORT
FULL SPAN
TWO CHORD TRUSS
(SIGNS GREATER THAN 6 FEET IN HEIGHT)

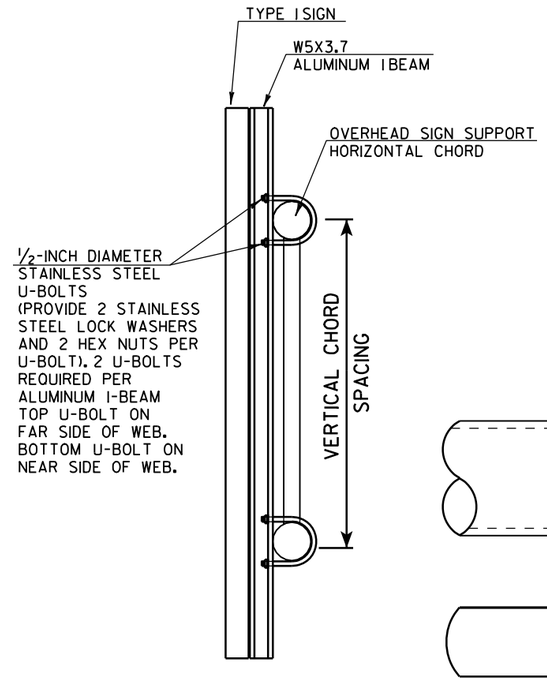

CUT SECTION A-A

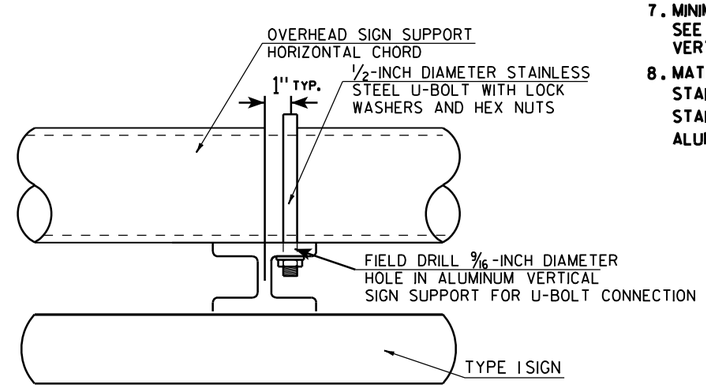

TYPICAL SIGN CONNECTION FOR
TWO CHORD TRUSS
PLAN VIEW

GENERAL NOTES

1. USE STAINLESS STEEL U-BOLTS, WASHERS, AND NUTS.
2. USE CLIPS ON EVERY EXTRUDED PANEL JOINT PER SIGN PLATE A4-6.
3. USE ALUMINUM VERTICAL SIGN SUPPORT BEAMS HAVING A 5 INCH BEAM DEPTH AND WEIGHT OF 3.7 LBS PER FOOT.
4. U-BOLTS SHALL BE STAINLESS STEEL AND MANUFACTURED TO THE PROPER SIZE TO FIT THE CHORDS OF THE OVERHEAD SIGN STRUCTURE.
5. DIAMETER OF U-BOLTS SHALL BE AS SHOWN.
6. THE LENGTH OF THE ALUMINUM VERTICAL SIGN SUPPORT BEAMS SHALL BE THE SAME AS THE HEIGHT OF THE SIGN THEY ARE SUPPORTING. BEAM LENGTHS MAY BE LONGER FOR PROPER ATTACHMENT TO CHORDS.
7. MINIMUM NUMBER OF BRACKETS PER SIGN IS TWO. SEE DETAIL BELOW FOR SPACING OF ALUMINUM VERTICAL SIGN SUPPORTS
8. MATERIAL NOTES:
   STAINLESS STEEL U-BOLTS AND LOCKWASHERS ASTM 304.
   STAINLESS STEEL HEX NUTS ASTM A276.
   ALUMINUM I-BEAMS ARE 6061-T6.

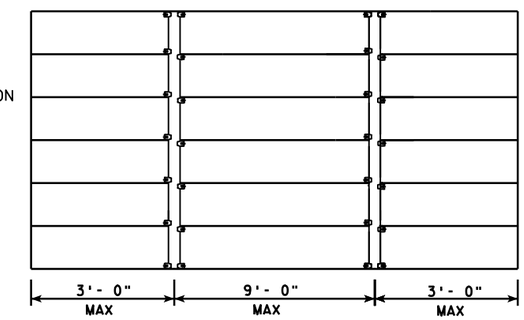

SPACING OF W5X3.7 ALUMINUM
VERTICAL SIGN SUPPORT

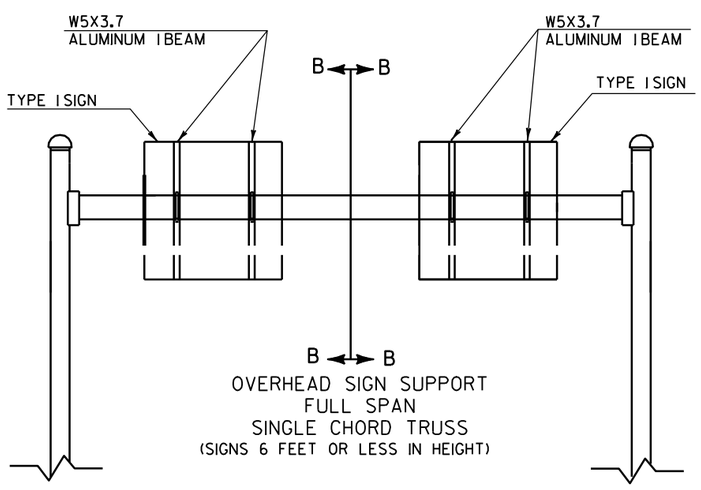

OVERHEAD SIGN SUPPORT
FULL SPAN
SINGLE CHORD TRUSS
(SIGNS 6 FEET OR LESS IN HEIGHT)

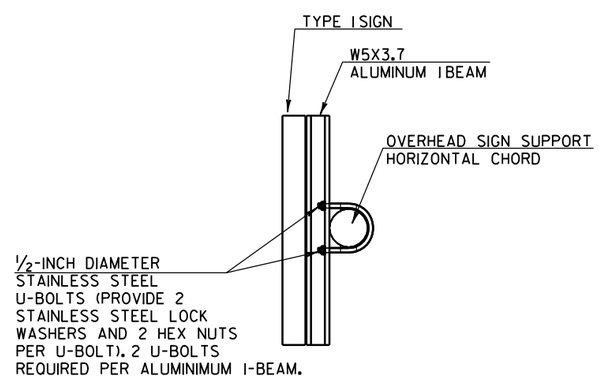

CUT SECTION B-B

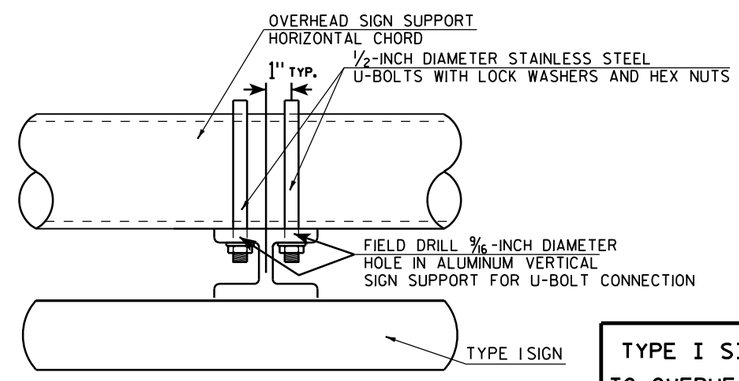

TYPICAL SIGN CONNECTION FOR
SINGLE CHORD TRUSS
PLAN VIEW

7

7

TYPE I SIGN CONNECTION TO OVERHEAD SIGN SUPPORT

WISCONSIN DEPT OF TRANSPORTATION

APPROVED Matthew R Rauch
for State Traffic Engineer

DATE 11/12/12 PLATE NO. A4-7.3

PROJECT NO:	HWY:	COUNTY:		SHEET NO: 98	E

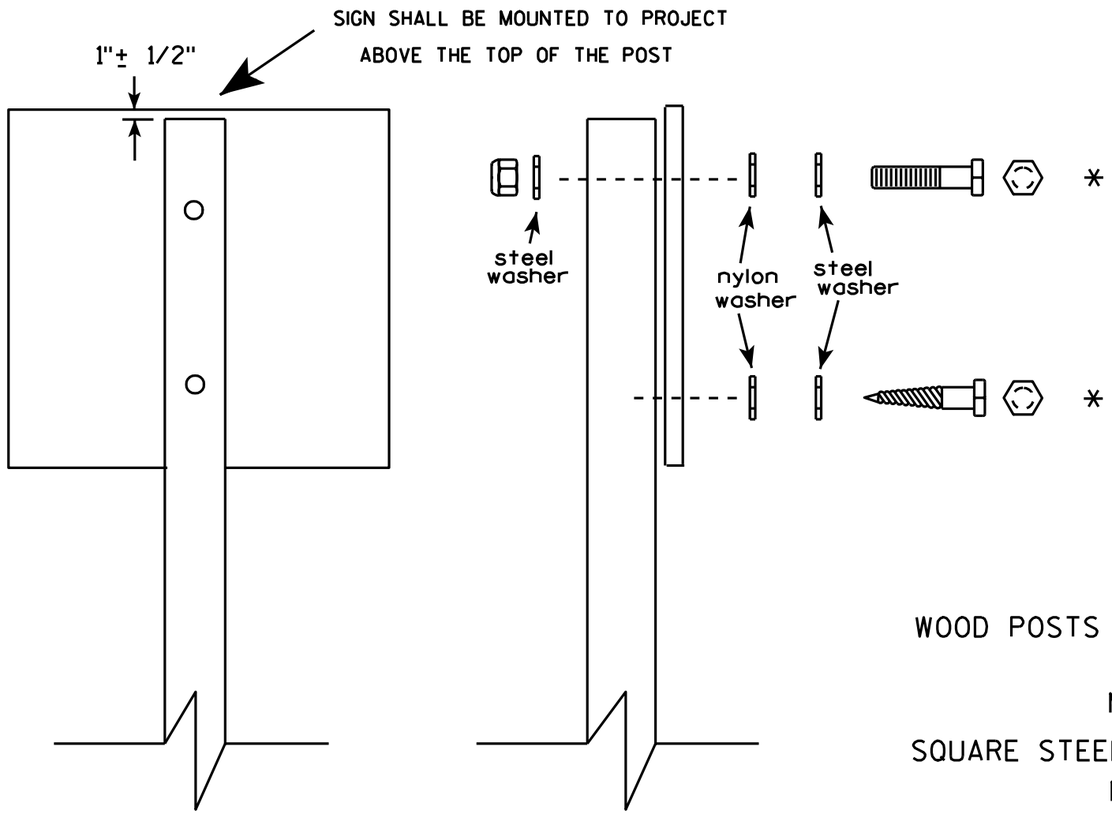

Nuts, bolts and lags used for mounting signs shall have hexagonal heads and shall be either :

a. Hot dip galvanized in accordance with ASTM Designation: A 153, Class D, or SC 3

b. Electro-galvanized in accordance with ASTM Designation : B 633, TYPE III, SC 3.

Threads on bolts and nuts shall be manufactured with sufficient allowance for the cadmium plate or galvanized coating to permit the nuts to run freely on the bolts.

WOOD POSTS (4" x 4" or 4" x 6")

LAG SCREWS - 3/8" X 3"

MACHINE BOLTS - 5/16" X 6-1/2" or 7" Length w/ nuts

SQUARE STEEL POSTS (2" x 2")

MACHINE BOLTS - 3/8" X 3-1/4" Length w/ nuts

RIVETS - 9/32 " (6605-9-6) BULB-TITE, TRI-FOLD, ALUMINUM BODY/MANDREL O.D. FLANGE .720-.765 INCH, GRIP RANGE .042-.375 INCH

WASHERS (ALL POSTS) -

1-1/4" O.D. X 3/8" I.D. X 1/16" STEEL

1-1/4" O.D. X 3/8" I.D. X .080 NYLON for all Type H signs.

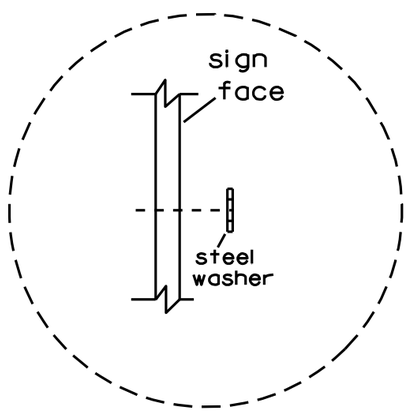

Washer Placement when Sign Has Other Than Type H or Type F Face

* Two different fastening systems are shown for illustration purposes. On any individual sign, either one or the other system shall be used. Actual number of fasteners per sign varies with the sign area, but normally there are two. For a single post installation, all signs greater than 9 sq. ft. require the use of 3 fasteners.

ATTACHMENT OF SIGNS TO POSTS

WISCONSIN DEPT OF TRANSPORTATION

APPROVED Matthew R Rauch
for State Traffic Engineer

DATE 3/23/10 PLATE NO. A4-8.7

PROJECT NO:

SHEET NO: 99 E

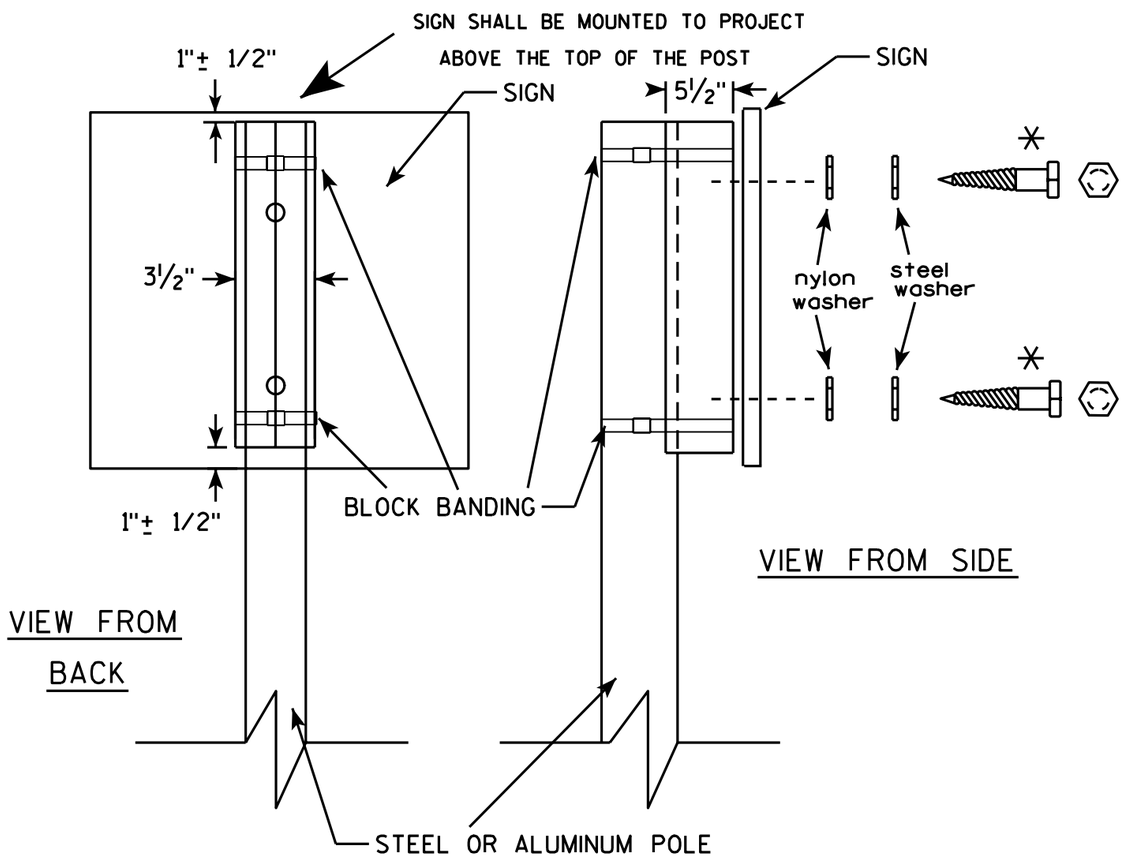

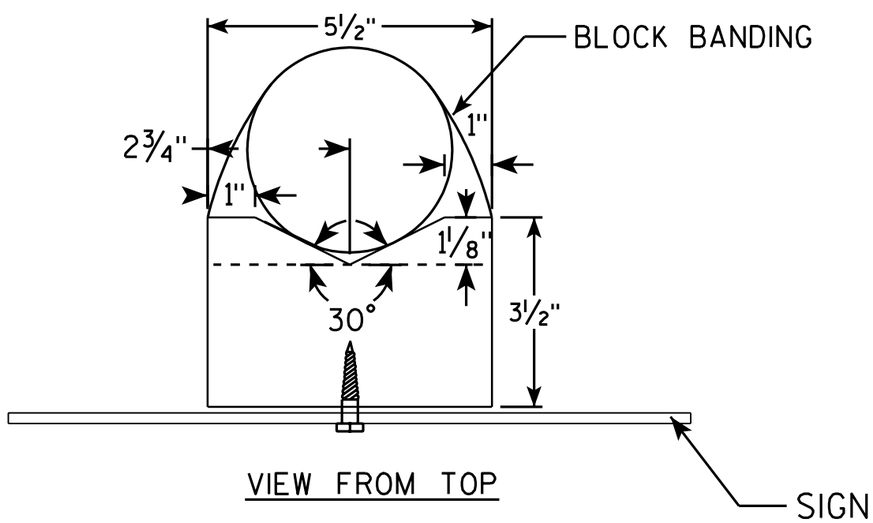

GENERAL NOTES

1. WOOD 4"X6" POST MATERIAL SHALL CONFORM TO 507.2.2 OF THE WisDOT STANDARD SPECIFICATIONS
2. BLOCK BANDING AND CLIPS SHALL BE STAINLESS STEEL, ¾" WIDTH AND 0.025" THICKNESS
3. SIGNS 3' OR GREATER IN HEIGHT SHALL UTILIZE 3 BLOCK BANDS. SIGNS UNDER 3' IN HEIGHT SHALL UTILIZE 2 BLOCK BANDS
4. ACTUAL NUMBER OF FASTENERS PER SIGN VARIES WITH THE SIGN AREA, BUT NORNALLY THERE ARE TWO. FOR SIGNS GREATER THAN 9 S.F. 3 FASTENERS SHALL BE USED.
5. ALL SIGN MOUNTING BOLTS AND WASHERS SHALL BE EITHER:
   a. Hot dip or mechanically galvanized in accordance with ASTM Designation: A 153, Class D, or
   b. Cadmium plated in accordance with ASTM Designation : B 766 TYPE 3, Class 12, or
   c. Electro-galvanized in accordance with ASTM Designation : B 633, TYPE III, SC 3.
6. ALL BOLTS SHALL HAVE HEXAGONAL HEADS.
7. STEEL WASHERS SHALL BE 1¼" O.D. X ⅜" I.D. X 1/16"
8. NYLON WASHERS SHALL BE 1¼" O.D. X ⅜" I.D. X .080 FOR TYPE H OR TYPE F FACE SIGN

✳ LAG BOLTS SHALL BE ⅜" X 2½"

BLOCK BANDING DETAIL
(V-BLOCK OPTION)

WISCONSIN DEPT OF TRANSPORTATION

APPROVED Matthew R Rauch
for State Traffic Engineer

DATE 7/12/07 PLATE NO. A5-10.1

PROJECT NO:				SHEET NO: 100	E

Extruded Shape

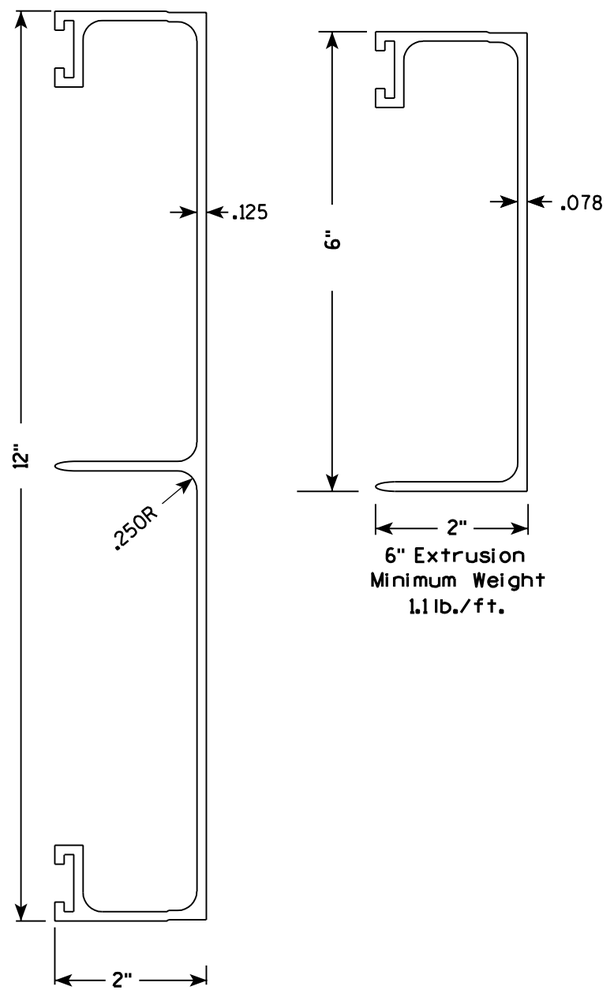

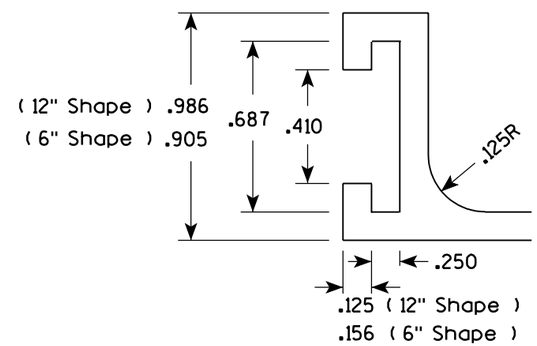

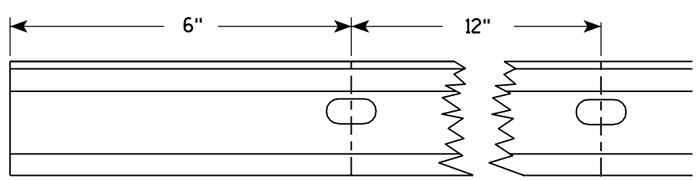

Punch 7/16" x 7/8" oval holes beginning 6" in from end of extrusion 12" CC on both edges of 6" and 12" panels.

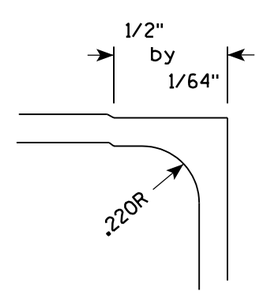

Hardware

STITCH BOLT, WASHER & NUT

The hardware includes:

- 3/8 " - 16 X 3/4 " Economy Bolt 2024-T4 alloy
- 3/8 " - Stainless steel stop nut
- 3/8" X .064 Flat Washers, Alclad 2024-T4 alloy

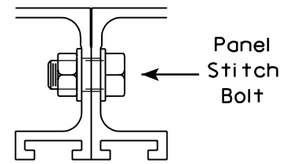

POST CLIP, POST CLIP BOLT, WASHER & NUT

Post Clip shall be Alum. Alloy 356-T6
Post Clip Bolt shall be Stainless Steel.
Flat washer shall be 3/8" X .091, Stainless Steel.
Stop nut shall be stainless steel.

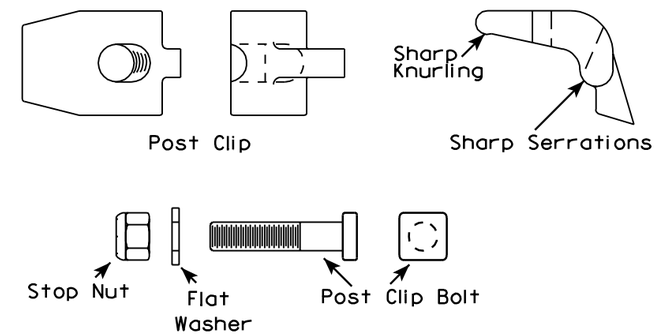

NOTES

1. The contractor may select any brand of extrusion that conforms to the illustrations or meets with the approval of the engineer, but all extrusions used on this contract shall be of the same brand.
2. Panel Stitch Bolts shall be used to assemble adjacent panels. Maximum stitch bolt spacing shall be 24" C-C, and a minimum of 4 bolts shall be used to connect any two extrusions.
3. Post Clips shall be used to attach the sign panel to the sign support.

7

7

ALUMINUM EXTRUSIONS FOR TYPE I SIGNS

WISCONSIN DEPT OF TRANSPORTATION

APPROVED Chester J Spang for State Traffic Engineer

DATE 11/18/99 PLATE NO. A5-2.9

PROJECT NO:

SHEET NO: 101 E

BANDING

SINGLE SIGN

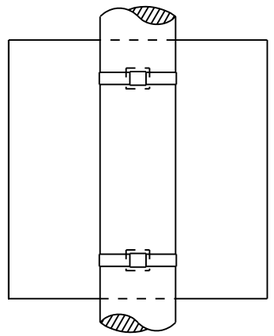

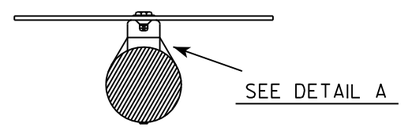

"J" ASSEMBLY

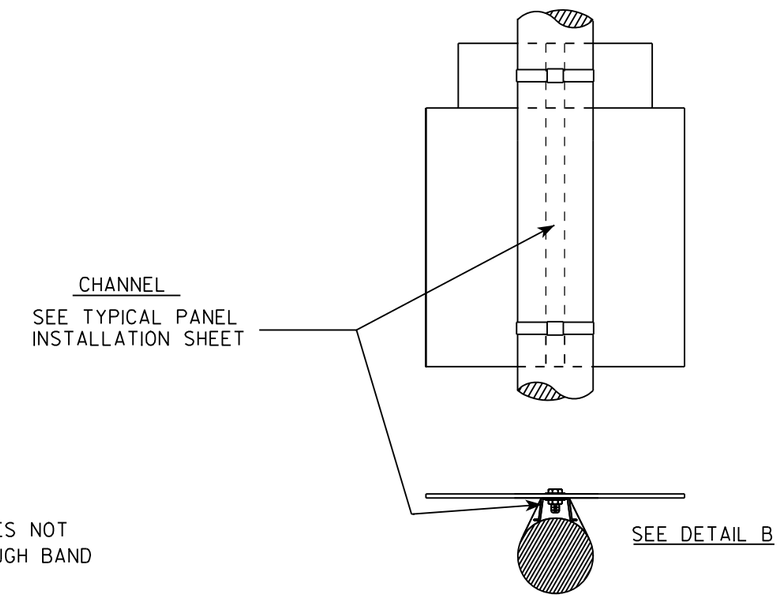

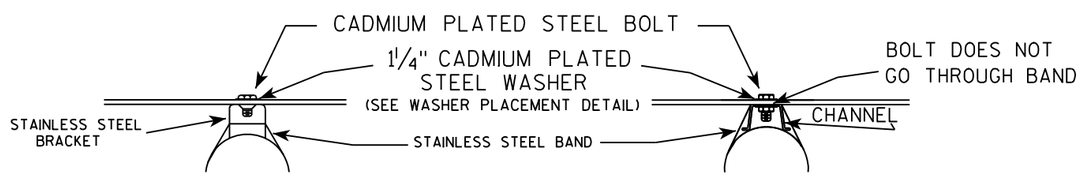

WASHER PLACEMENT

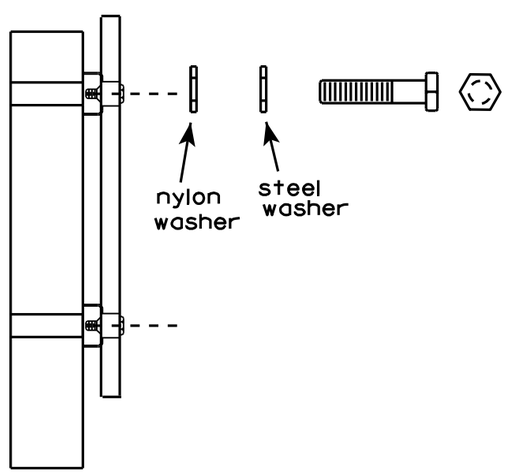

WASHERS (ALL POSTS) -

1-1/4" O.D. X 3/8" I.D. X 1/16" STEEL

1-1/4" O.D. X 3/8" I.D. X .080 NYLON

FOR ALL TYPE H SIGNS

GENERAL NOTES

1. Any sign over 3 feet in width shall use the V-Block banding method. See A5-10 standard plate.
2. Signs 3 feet or greater in height shall have three bracket bands installed. Signs less than 3 feet in height shall have two bracket bands installed.
3. Banding and assembly bracket shall be stainless steel. All bands shall be ¾" in width and 0.025" thickness.

STANDARD SIGN

SIGN BANDING DETAILS

WISCONSIN DEPT OF TRANSPORTATION

APPROVED Matthew R Rauch for State Traffic Engineer

DATE 8/16/13 PLATE NO. A5-9.3

PROJECT NO:	HWY:	COUNTY:		SHEET NO: 102	E

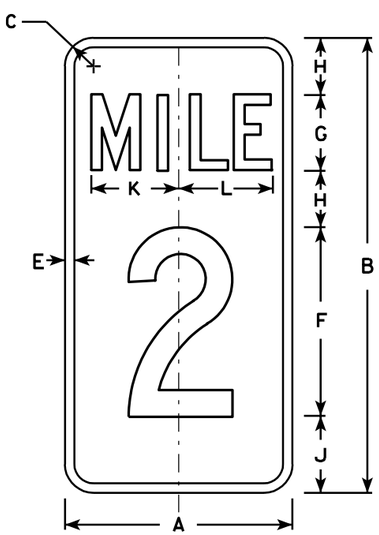

D10-1

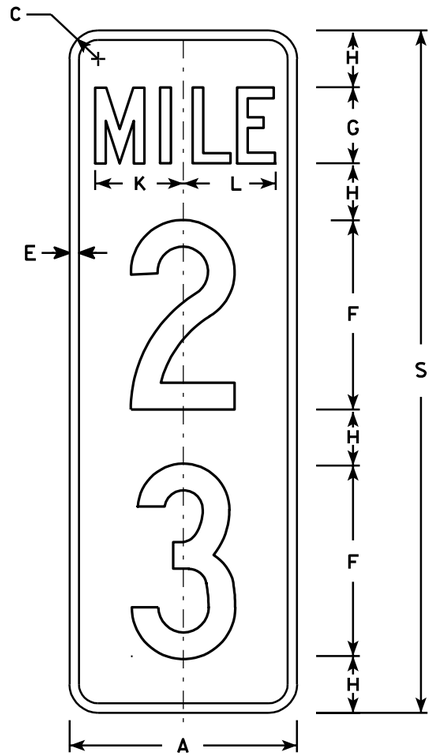

D10-2

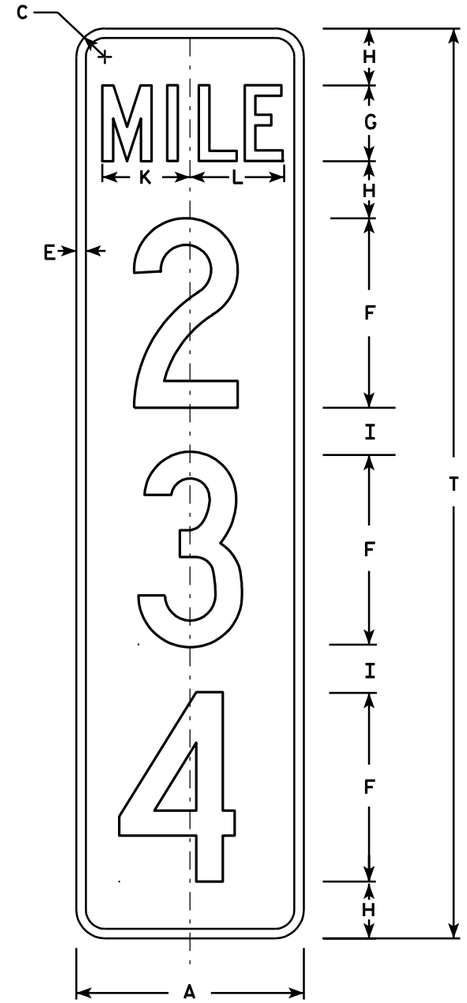

D10-3

NOTES

1. Sign is Type II - Type H Reflective - reference WIS DOT Standard Specification for HIGHWAY and STRUCTURE CONSTRUCTION latest edition.
2. Color:
   Background - Green
   Message - White - Type H Reflective
3. Message Series - C
4. Corners may be square or rounded when base material is plywood but borders shall be rounded as shown. When base material is metal, the corners and borders shall be rounded.
5. Optically adjust numerals about the centerline of the sign to achieve proper balance.

Metric equivalent for this sign is:

PHY. SIZE	
12 X 24	300 mm X 600 mm
12 X 36	300 mm X 900 mm
12 X 48	300 mm X 1200 mm

SIZE	A	B	C	D	E	F	G	H	I	J	K	L	M	N	O	P	Q	R	S	T	U	V	W	X	Y	Z
1																										
2																										
3																										
4	12	24	1 1/2		1/2	10	4	3	2 1/2	4	4 5/8	4 7/8							36	48						
5	12	24	1 1/2		1/2	10	4	3	2 1/2	4	4 5/8	4 7/8							36	48						

D10-1	D10-2	D10-3
Area sq. ft.	Area sq. ft.	Area sq. ft.
2.0	3.0	4.0
Area m2	Area m2	Area m2
.19	.28	.38

STANDARD SIGN
D10-1 , D10-2 & D10-3

WISCONSIN DEPT OF TRANSPORTATION

APPROVED Chester J Spang
for Director, Office of Traffic

DATE 1/16/02 PLATE NO. D10-3.2

PROJECT NO:

SHEET NO: 103 E

NOTES

1. Sign is Type II - Type H Reflective - reference WIS DOT Standard Specification for HIGHWAY and STRUCTURE CONSTRUCTION latest edition.
2. Color:
   Background - BROWN
   Message - WHITE
3. Message Series - D
4. Corners may be square or rounded when base material is plywood but borders shall be rounded as shown. When base material is metal, the corners and borders shall be rounded.

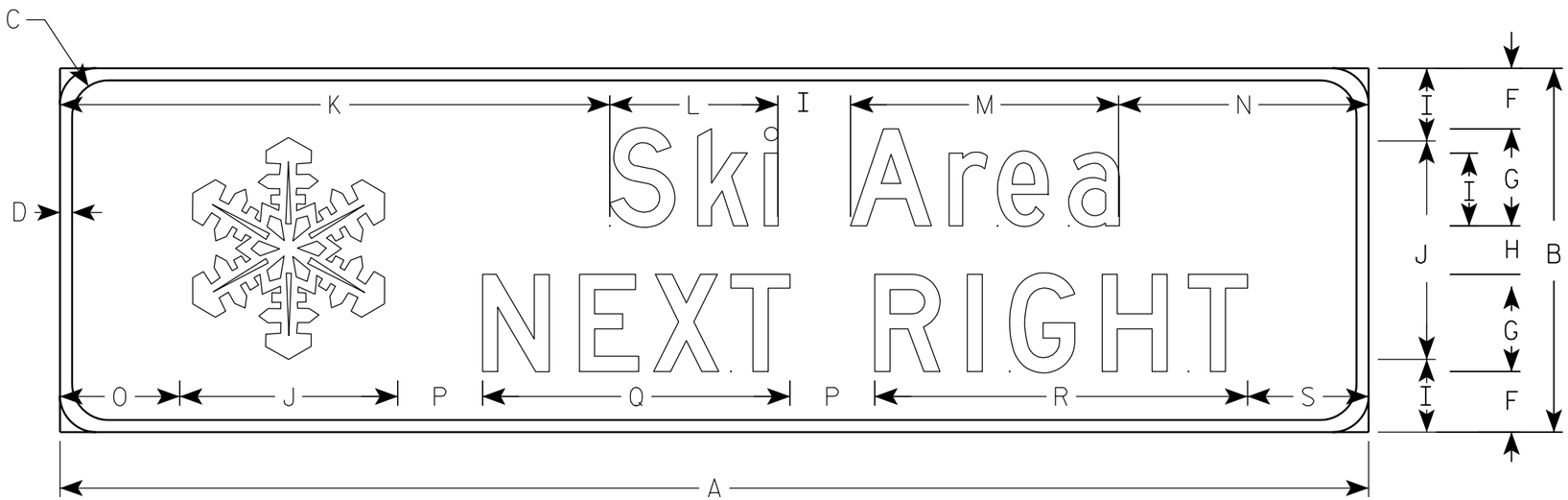

D7-81

7

7

Metric equivalent for this sign is:

SIZE	
1	
2	2700 mm X 750 mm
3	
4	
5	

SIZE	A	B	C	D	E	F	G	H	I	J	K	L	M	N	O	P	Q	R	S	T	U	V	W	X	Y	Z	Area sq. ft.	Area m2
1																												
2	108	30	3	1		5	8	4	6	18	45 3/8	13 7/8	22 1/8	20 5/8	9 7/8	7	25 3/8	30 3/4	10								22.5	2.0
3																												
4																												
5																												

STANDARD SIGN
D7-81

WISCONSIN DEPT OF TRANSPORTATION

APPROVED Matthew R Rauch
for State Traffic Engineer

DATE 10/03/05 PLATE NO. D7-81.1

PROJECT NO:

SHEET NO: 104 E

NOTES

1. Sign is Type II - Type H Reflective - reference WIS DOT Standard Specification for HIGHWAY and STRUCTURE CONSTRUCTION latest edition.
2. Color:
   Background - BROWN
   Message - WHITE
3. Message Series - D
4. Corners may be square or rounded when base material is plywood but borders shall be rounded as shown. When base material is metal, the corners and borders shall be rounded.

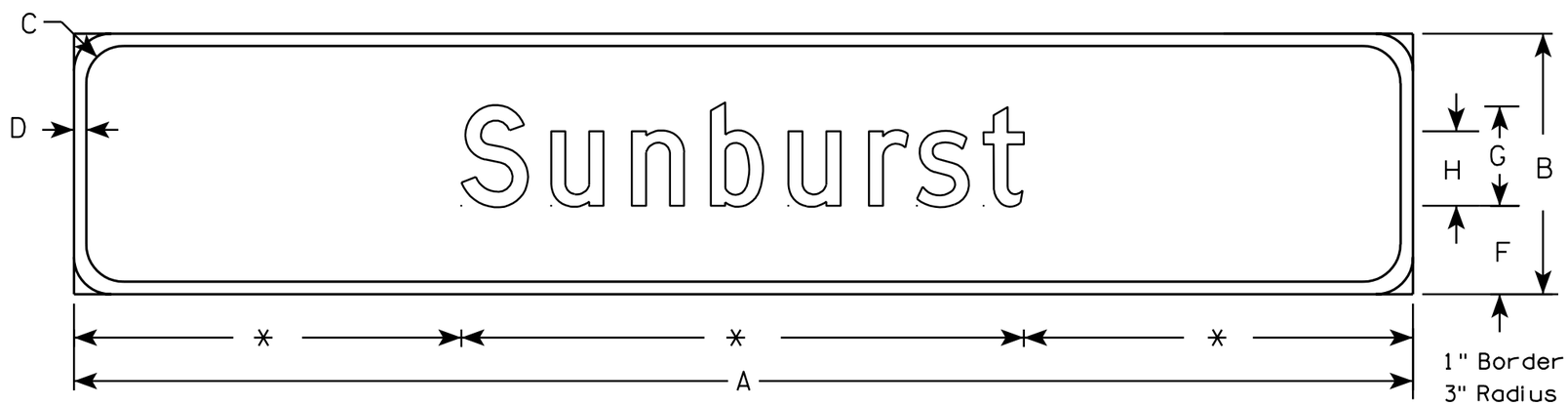

D7-81A

* VARIES

7

7

Metric equivalent for this sign is:

SIZE	
1	
2	2700 mm X 525 mm
3	
4	
5	

SIZE	A	B	C	D	E	F	G	H	I	J	K	L	M	N	O	P	Q	R	S	T	U	V	W	X	Y	Z	Area sq. ft.	Area m2
1																												
2	108	21	3	1		7 1/8	8	6																			15.7	1.41
3																												
4																												
5																												

STANDARD SIGN
D7-81A

WISCONSIN DEPT OF TRANSPORTATION

APPROVED Matthew R Rauch
for State Traffic Engineer

DATE 10/03/05 PLATE NO. D7-81A.1

PROJECT NO:

SHEET NO: 105 E

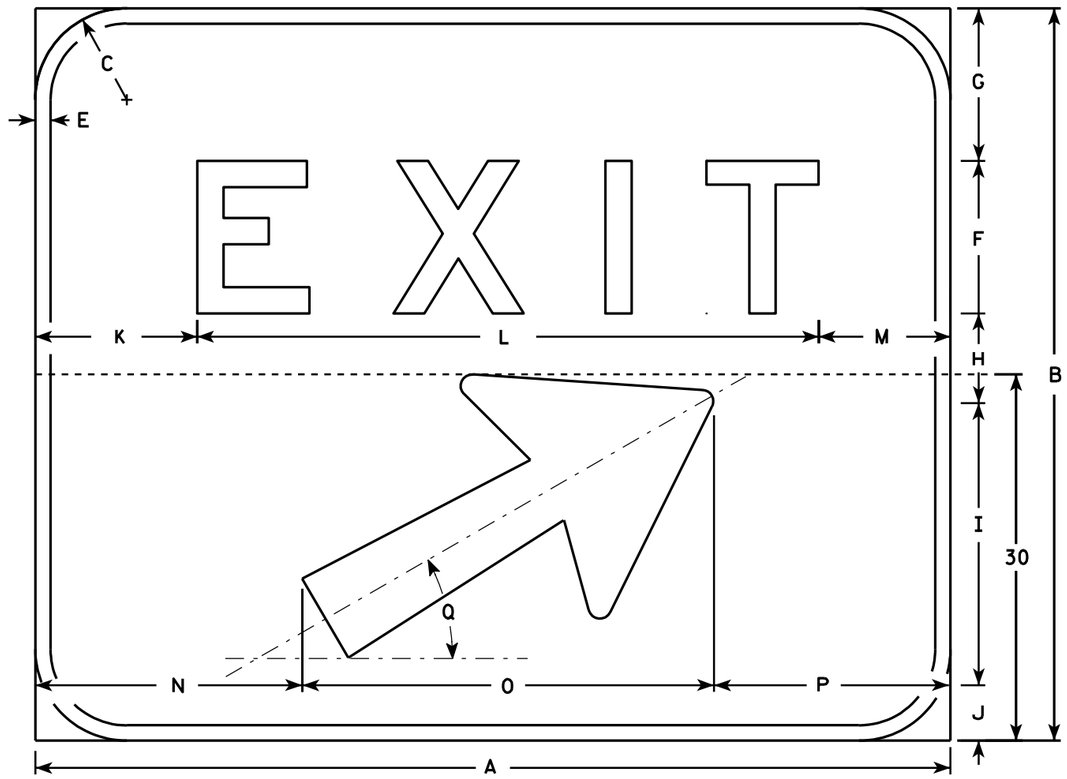

E5-1

NOTES

1. Sign is Type II - Type H reflective - reference WIS DOT Standard Specification for HIGHWAY and STRUCTURE CONSTRUCTION latest edition.
2. Color:
   Background - Green
   Message - White (Type H reflective)
3. Message Series - E
4. Corners may be square or rounded but borders shall be rounded as shown.
5. Base material for this sign shall be plywood and shall be split into two seperate pieces for the 72 x 60 size as shown on the detail by the dashed line (----------).
6. Arrow is Type "A" from sign plate A1-1.
7. As per the Standard Spec's, this sign shall not have a vertical joint.

Metric equivalent for this sign is:

SIZE	
1	
2	
3	
4	1500 mm X 1200 mm
5	1800 mm X 1500 mm

SIZE	A	B	C	D	E	F	G	H	I	J	K	L	M	N	O	P	Q	R	S	T	U	V	W	X	Y	Z	Area sq. ft.	Area m2
1																												
2																												
3																												
4	60	48	6		1	10	10	5 7/8	18 1/2	3 5/8	10 5/8	40 3/4	8 5/8	17 1/2	27	15 1/2	30°										20.0	1.80
5	72	60	6		1	12	12	10	18 1/2	7 1/2	13 1/4	48 1/2	10 1/4	23 1/2	27	21 1/2	30°										30.0	2.70

STANDARD SIGN
E5 - 1

WISCONSIN DEPT OF TRANSPORTATION

APPROVED Chester J Spang
for State Traffic Engineer

DATE 6/22/00 PLATE NO. E5-1.8

PROJECT NO:	HWY:	COUNTY:		SHEET NO: 106	E

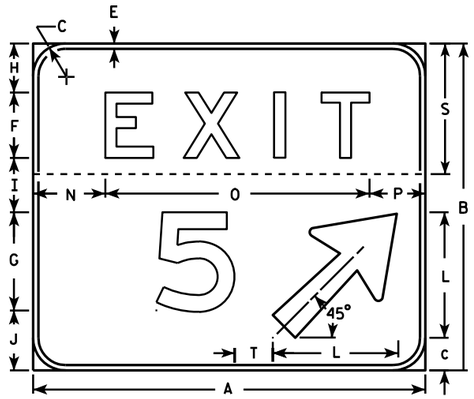

NOTE: T diminision shall be measured from the back of the number to the front of the arrow

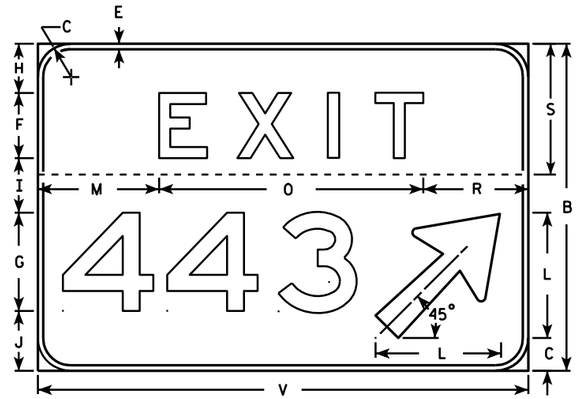

NOTES

1. Sign is Type II - Type H reflective - reference WIS DOT Standard Specification for HIGHWAY and STRUCTURE CONSTRUCTION latest edition.
2. Color:
   Background - Green
   Message - White (Type H reflective)
3. Message Series - E
4. Corners may be square or rounded but the border shall be rounded as shown.
5. Base material for this sign shall be plywood and shall be split into two seperate pieces as shown on each detail by the dashed line (----------).
6. Arrow is Type "A" from sign plate A1-1.
7. Substitute appropriate message, space per the table and adjust placement on sign to achieve proper balance.
8. As per the Standard Spec's, these signs shall not have a vertical joint.

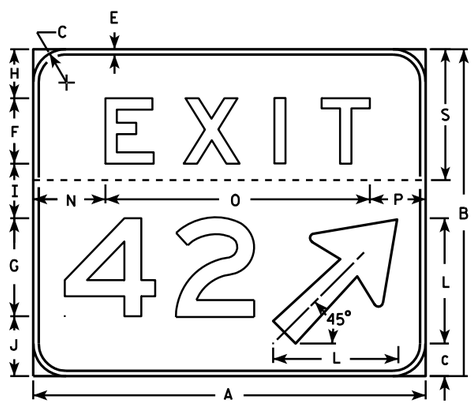

EXAMPLE FOR USING SPACING CHART

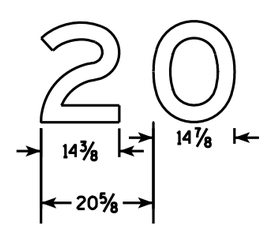

SPACING CHART FOR 18" NUMERALS

NUMBERS	WIDTH	0	1	2	3	4	5	6	7	8	9	A	B	C
0	14 7/8	21 5/8	21 5/8	21 1/4	20 3/8	21 1/4	21 1/4	21 5/8	19 7/8	22 1/8	21 5/8			
1	5 7/8	14	14	14	13 1/8	12 1/8	14	14	12 1/4	14	14			
2	14 3/8	20 5/8	21 1/8	20 5/8	19 3/4	20 1/4	20 5/8	20 5/8	18 7/8	21 1/8	20 5/8			
3	14 3/8	20 3/4	21 1/8	20 3/4	20 1/4	19 3/4	20 3/4	20 3/4	19 3/8	21 1/8	20 3/4			
4	16 5/8	22 7/8	22	22 1/2	21 5/8	21 5/8	22 7/8	22 7/8	20 5/8	23 3/8	22 7/8			
5	14 1/4	20 5/8	20 5/8	20 1/8	18 3/4	18 3/4	20 5/8	20 5/8	18 3/8	20 5/8	20 5/8			
6	14 1/2	21 1/4	20 3/4	20 3/4	19 7/8	19 1/2	20 3/8	20 3/4	19	20 3/4	20 3/8			
7	14 3/8	19 3/4	19 3/4	20 1/4	19 3/4	17	19 3/4	20 5/8	18 7/8	20 5/8	19 3/4			
8	14 1/4	21 1/2	21 1/2	20 5/8	19 1/4	19 3/4	20 5/8	21 1/2	19 5/8	21 1/2	20 5/8			
9	14 1/2	21 1/4	21 1/4	20 7/8	20	20 7/8	20 7/8	21 1/4	19 1/2	21 3/4	21 1/4			
A	18	19 3/4	19 3/4	20 1/4	19 3/4	17	19 3/4	20 5/8	18 7/8	20 5/8	19 3/4	21 5/8	23 7/8	23
B	14 1/4	21 1/2	21 1/2	20 5/8	19 1/4	19 3/4	20 5/8	21 1/2	19 5/8	21 1/2	20 5/8	19 1/2	22 3/8	21 1/2
C	14 1/4	21 1/4	21 1/4	20 7/8	20	20 7/8	20 7/8	21 1/4	19 1/2	21 3/4	21 1/4	18 3/8	21	19 3/4

SIZE	A	B	C	D	E	F	G	H	I	J	K	L	M	N	O	P	Q	R	S	T	U	V	W	X	Y	Z
2																										
3																										
4																										
5	72	60	6		1	12	18	9	10	11	8 7/8	23	22 1/4	13 1/4	48 1/2	10 1/4		19 1/4	24	7		90		96	7 1/2	

1-2 Digit Bid Area	3 Digit Bid Area
Sq. Ft.	
30	37.5

STANDARD SIGN
E5-1A

WISCONSIN DEPT OF TRANSPORTATION

APPROVED Matthew R Rauch for State Traffic Engineer

DATE 5/11/10 PLATE NO. E5-1A.12

PROJECT NO: | HWY: | COUNTY: | SHEET NO: 107 | E

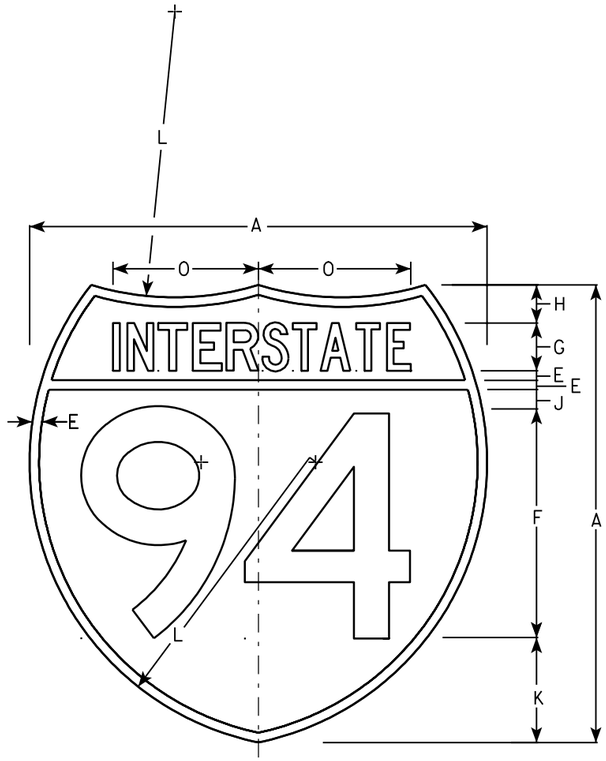

M1-1

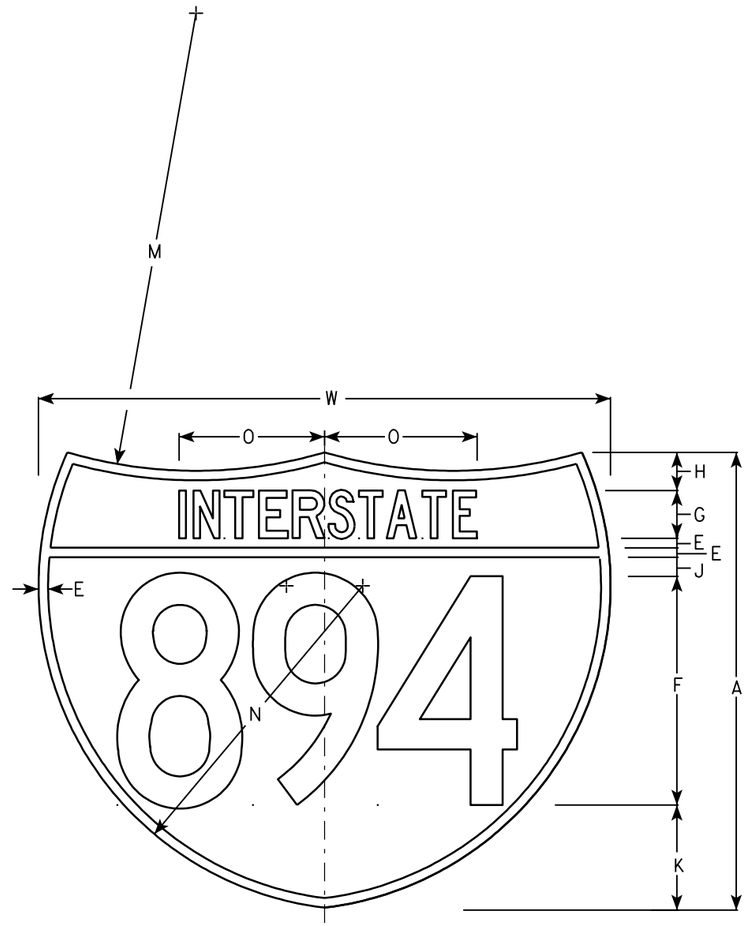

M1-1A

NOTES

1. Sign is Type II - See Note 6 - reference WIS DOT Standard Specification for HIGHWAY and STRUCTURE CONSTRUCTION latest edition.
2. Color:
   Background - Top Red - Bottom Blue (See Note 6)
   Message - White - See Note 6
3. Message Series - See note 5
4. Substitute appropriate numerals & ajust spacing as per plate A10-1.
5. M1-1 - Numerals - D
   Interstate - C
   M1-1A - All copy - C
6. Permanent Signs
   Message - Type H Reflective
   Detour or other temporary signs
   Background - Reflective
   Message - Reflective

Metric equivalent for these signs are:

SIZE	M1-1	SIZE	M1-1A
1			
2	600 mm X 600 mm	2	600 mm X 750 mm
3	900 mm X 900 mm	3	900 mm X 1125 mm
4	900 mm X 900 mm	4	900 mm X 1125 mm
5	900 mm X 900 mm	5	900 mm X 1125 mm

SIZE	A	B	C	D	E	F	G	H	I	J	K	L	M	N	O	P	Q	R	S	T	U	V	W	X	Y	M1-1 Area sq. ft.	M1-1A Area sq. ft.	M1-1 Area m2	M1-1A Area m2
1																													
2	24				1/2	12	2 1/2	2		1	5 1/2	15	24	17	7 7/8								30			3.13	3.91	.36	.46
3	36				3/4	18	3 3/4	3		1 1/2	8 1/4	22 1/2	36	25 1/2	11 3/4								45			7.03	8.79	.81	1.05
4	36				3/4	18	3 3/4	3		1 1/2	8 1/4	22 1/2	36	25 1/2	11 3/4								45			7.03	8.79	.81	1.05
5	36				3/4	18	3 3/4	3		1 1/2	8 1/4	22 1/2	36	25 1/2	11 3/4								45			7.03	8.79	.81	1.05

INTERSTATE ROUTE MARKER
M1-1 FOR ASSEMBLIES

WISCONSIN DEPT OF TRANSPORTATION

APPROVED Matthew R Rauch
for State Traffic Engineer

DATE 08/23/05 PLATE NO. M1-1.8

PROJECT NO:	HWY:	COUNTY:		SHEET NO: 108	E

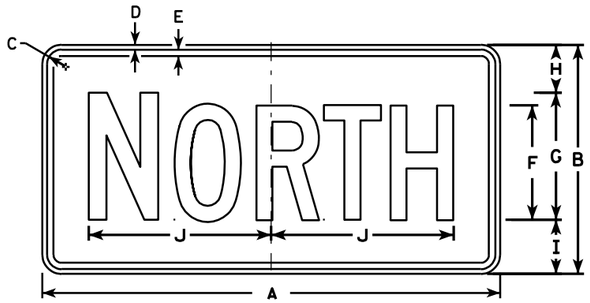

M3-1
MK3-1
MO3-1

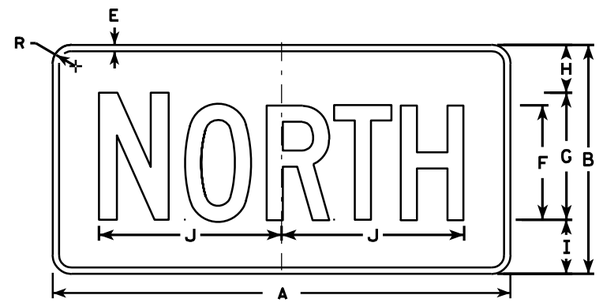

MB3-1
MG3-1
MM3-1
MN3-1

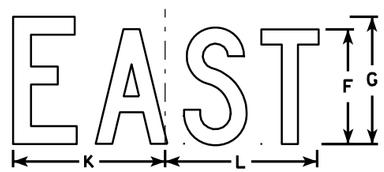

M3-2
MK3-2
MO3-2

MB3-2
MG3-2
MM3-2
MN3-2

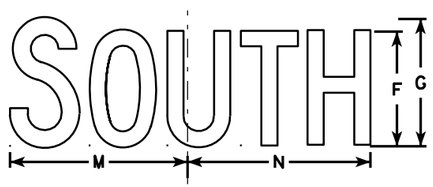

M3-3
MK3-3
MO3-3

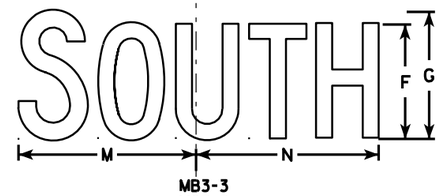

MB3-3
MG3-3
MM3-3
MN3-3

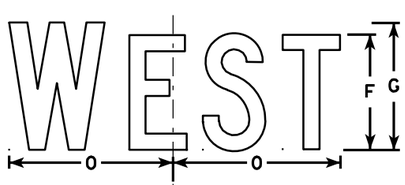

M3-4
MK3-4
MO3-4

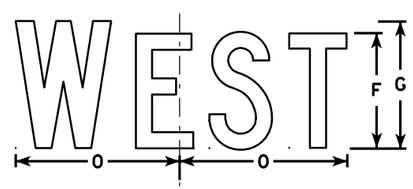

MB3-4
MG3-4
MM3-4
MN3-4

NOTES

1. All Signs Type II - See Note 5 - reference WIS DOT Standard Specification for HIGHWAY and STRUCTURE CONSTRUCTION latest edition.
2. Color:
   Background - See note 5
   Message - See note 5
3. Message Series - C
4. Corners may be square or rounded when base material is plywood but borders shall be rounded as shown. When base material is metal, the corners and borders shall be rounded.
5. M3-1 thru M3-4 Background - White - Type H Reflective
   (Detour or temporary signs - Reflective)
   Message - Black
   MB3-1 thru MB3-4 Background - Blue
   Message - White - Type H Reflective
   (Detour or temporary signs - Reflective)
   MG3-1 thru MG3-4 Background - Green
   Message - White - Type H Reflective
   MK3-1 thru MK3-4 Background - Green
   Message - White - Type H Reflective
   MM3-1 thru MM3-4 Background - White - Type H Reflective
   Message - Green
   MN3-1 thru MN3-4 Background - Brown
   Message - White - Type H Reflective
   MO3-1 thru MO3-4 Background - Orange - Reflective
   Message - Black
6. Note the first letter of each direction is larger than the remainder of the message.

SIZE	A	B	C	D	E	F	G	H	I	J	K	L	M	N	O	P	Q	R	S	T	U	V	W	X	Y	Z	Area sq. ft.
1																											
2	24	12	1 1/8	3/8	3/8	6	7	2 1/4	2 3/4	10 1/4	7 7/8	8 3/8	10 1/4	9 3/4	8 3/4			1 1/2									2.00
3	36	18	1 1/8	3/8	1/2	9	10	3 3/4	4 1/4	14 3/8	12	12 1/8	14	14 1/8	13			1 1/2									4.5
4	36	18	1 1/8	3/8	1/2	9	10	3 3/4	4 1/4	14 3/8	12	12 1/8	14	14 1/8	13			1 1/2									4.5
5	36	18	1 1/8	3/8	1/2	9	10	3 3/4	4 1/4	14 3/8	12	12 1/8	14	14 1/8	13			1 1/2									4.5

STANDARD SIGNS
M3-1 thur M3-4
SERIES

WISCONSIN DEPT OF TRANSPORTATION

APPROVED Matthew R Rauch
for State Traffic Engineer

DATE 11/10/10 PLATE NO. M3-1.12

PROJECT NO: | HWY: | COUNTY: | SHEET NO: 109 | E

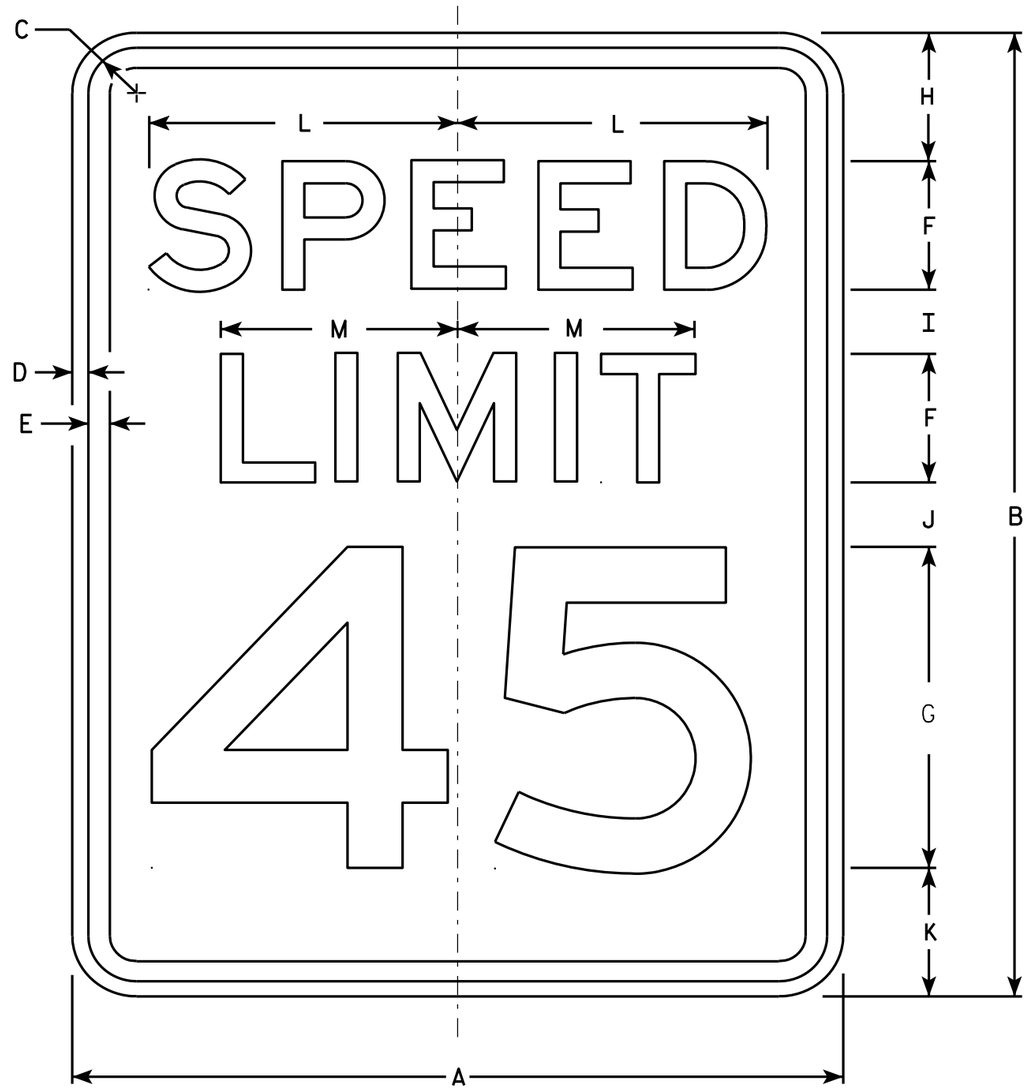

R2-1

NOTES

1. Sign is Type II - Type H Reflective - reference WIS DOT Standard Specification for HIGHWAY and STRUCTURE CONSTRUCTION latest edition.
2. Color:
   Background - White
   Message - Black
3. Message Series - E
4. Corners may be square or rounded when base material is plywood but borders shall be rounded as shown. When base material is metal, the corners and borders shall be rounded.
5. Substitute appropriate numerals and optically adjust spacing to achieve proper balance.

SIZE	A	B	C	D	E	F	G	H	I	J	K	L	M	N	O	P	Q	R	S	T	U	V	W	X	Y	Z	Area sq. ft.
1	18	24	1 1/8	3/8	1/2	3	8	3	2	2	3	7 1/4	5 1/2														3.0
2S	24	30	1 1/8	3/8	1/2	4	10	3	2 1/4	3 3/8	3 3/8	9 5/8	7 3/8														5.0
2M	30	36	1 3/8	1/2	5/8	5	12	5	2 1/2	2 1/2	4	12	9 1/4														7.5
3	36	48	1 3/8	1/2	5/8	6	14	6	5	5	6	14 3/8	11														12.0
4	36	48	1 3/8	1/2	5/8	6	14	6	5	5	6	14 3/8	11														12.0
5	48	60	2 1/4	3/4	1	8	20	6	4 1/2	6 3/4	6 3/4	19 1/4	14 5/8														20.0

STANDARD SIGN
R2-1

WISCONSIN DEPT OF TRANSPORTATION

APPROVED Matthew R Rauch
for State Traffic Engineer

DATE 5/26/10 PLATE NO. R2-1.13

PROJECT NO: | HWY: | COUNTY: | SHEET NO: 110 | E

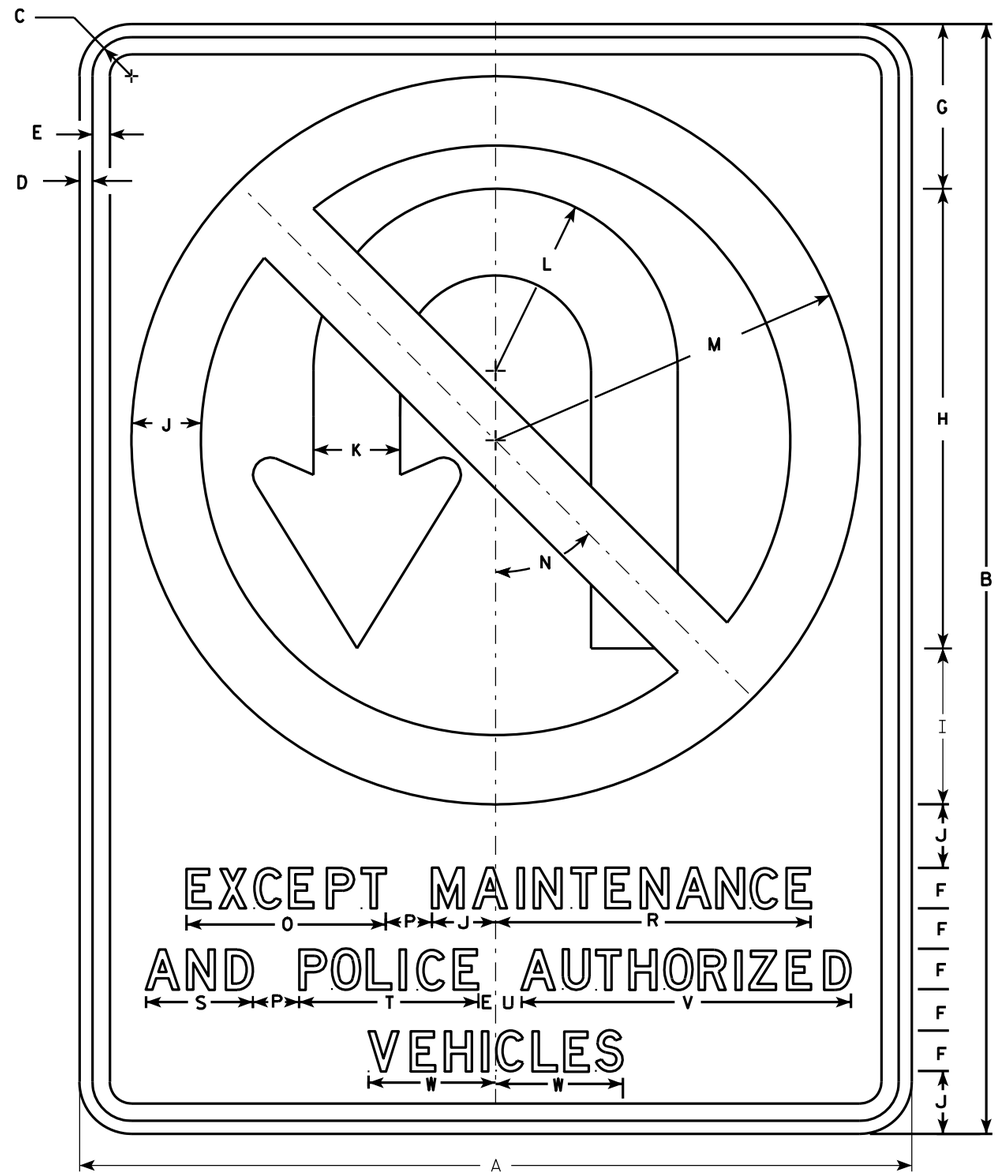

R3-4B

NOTES

1. Sign is Type II - Type H Reflective - reference WIS DOT Standard Specification for HIGHWAY and STRUCTURE CONSTRUCTION latest edition.
2. Color:
   Background - White
   Message - See note 4
3. Corners may be square or rounded when base material is plywood but borders shall be rounded as shown. When base material is metal, the corners and borders shall be rounded.
4. Border & Arrow are non reflective black, the circle with diagonal bar is reflective red.

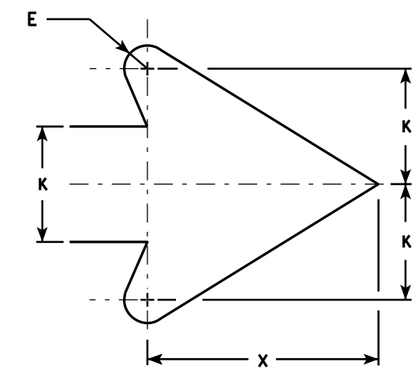

ARROW DETAIL

SIZE	A	B	C	D	E	F	G	H	I	J	K	L	M	N	O	P	Q	R	S	T	U	V	W	X	Y	Z	Area sq. ft.
1																											
2S																											
2M																											
3																											
4	36	48	1 5/8	5/8	3/4	1 3/4	7 1/8	19 7/8	6 3/4	2 3/4	3 3/4	7 7/8	15 3/4	45°	8 5/8	2		13 5/8	4 5/8	7 3/4	1 1/8	14 1/4	5 1/2	7 5/8			12.0
5	36	48	1 5/8	5/8	3/4	1 3/4	7 1/8	19 7/8	6 3/4	2 3/4	3 3/4	7 7/8	15 3/4	45°	8 5/8	2		13 5/8	4 5/8	7 3/4	1 1/8	14 1/4	5 1/2	7 5/8			12.0

STANDARD SIGN
R3-4B

WISCONSIN DEPT OF TRANSPORTATION

APPROVED Matthew R Rauch
for State Traffic Engineer

DATE 3/17/2011 PLATE NO. R3-4B.2

PROJECT NO: | HWY: | COUNTY: | SHEET NO: 111 | E

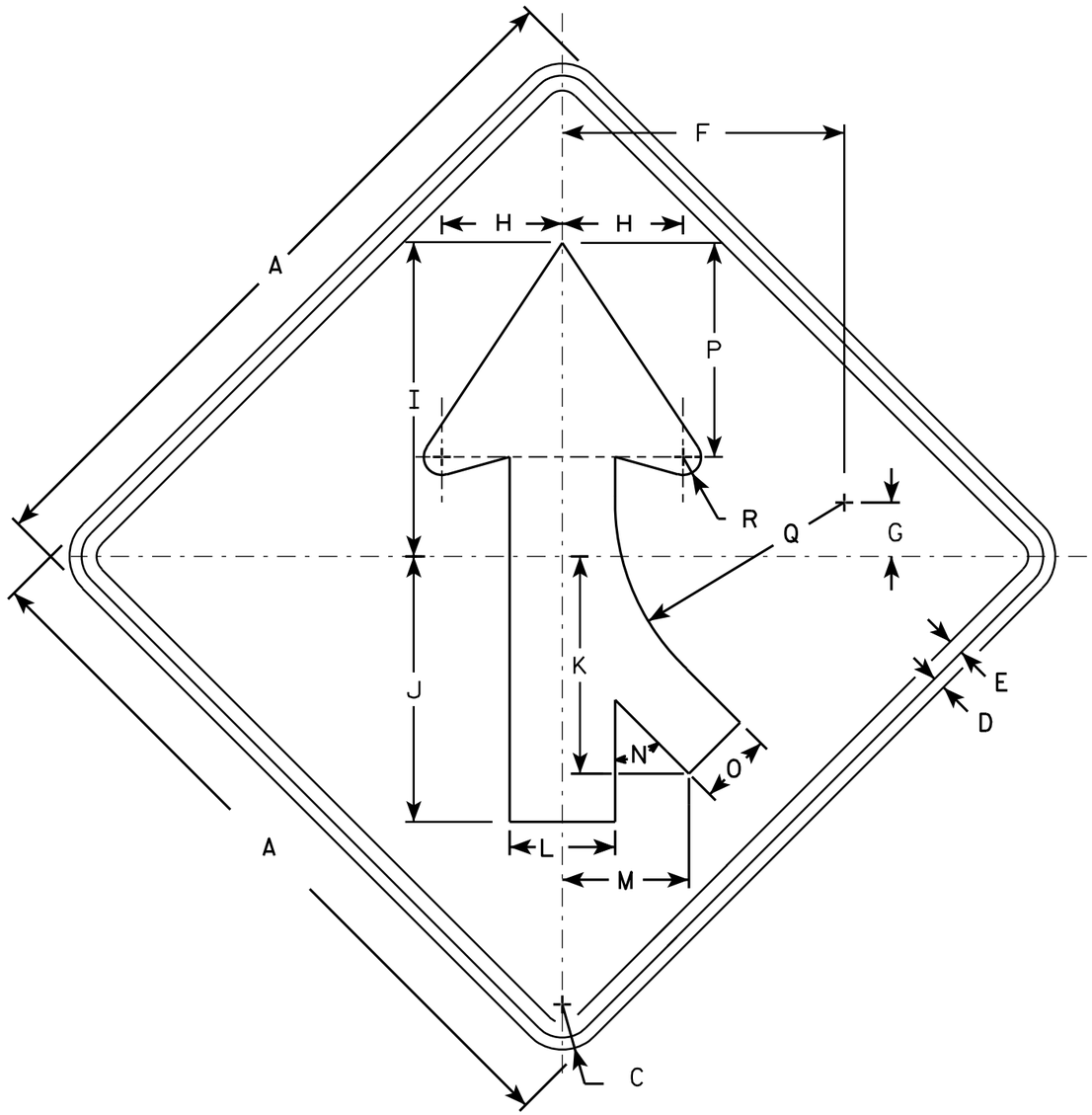

W4-1 R

NOTES

1. Sign is Type II - Type F Reflective - reference WIS DOT Standard Specification for HIGHWAY and STRUCTURE CONSTRUCTION latest edition.
2. Color:
   Background - Yellow
   Message - Black
3. Corners may be square or rounded when base material is plywood but borders shall be rounded as shown. When base material is metal, the corners and borders shall be rounded.
4. W4-1L is the same as W4-1R except the arrow is reversed along the vertical centerline.

SIZE	A	B	C	D	E	F	G	H	I	J	K	L	M	N	O	P	Q	R	S	T	U	V	W	X	Y	Z	Area sq. ft.
1	30		1 3/8	1/2	5/8	11 5/8	2 1/2	5	13	11	9	4 3/8	5 1/4	45°	3	8 7/8	9 1/2	3/4									6.25
2S	36		1 5/8	5/8	3/4	14	2 3/4	6	15 3/4	13 1/4	10 1/4	5 1/4	6 3/8	45°	3 5/8	10 5/8	11 3/8	7/8									9.0
2M	36		1 5/8	5/8	3/4	14	2 3/4	6	15 3/4	13 1/4	10 1/4	5 1/4	6 3/8	45°	3 5/8	10 5/8	11 3/8	7/8									9.0
3	36		1 5/8	5/8	3/4	14	2 3/4	6	15 3/4	13 1/4	10 1/4	5 1/4	6 3/8	45°	3 5/8	10 5/8	11 3/8	7/8									9.0
4	48		2 1/4	3/4	1	18 3/4	3 5/8	8	20 1/2	17 1/2	14 3/8	7	8 3/8	45°	4 3/4	14 1/4	15 1/4	1 1/4									16.0
5	48		2 1/4	3/4	1	18 3/4	3 5/8	8	20 1/2	17 1/2	14 3/8	7	8 3/8	45°	4 3/4	14 1/4	15 1/4	1 1/4									16.0

STANDARD SIGN
W4-1

WISCONSIN DEPT OF TRANSPORTATION

APPROVED Matthew R Rauch for State Traffic Engineer

DATE 03/12/13 PLATE NO. W4-1.14

PROJECT NO:	HWY:	COUNTY:		SHEET NO: 112	E

STATE PROJECT NUMBER
1161-00-65

TABLE OF ESTIMATED QUANTITES

STRUCTURE NUMBER	ELEVATION VIEW SHEET NUMBER	HIGHWAY	DIRECTION OF TRAVEL	LOCATION	REALIGN HANDRAIL LOCKING PIN HOLE	REPLACE SAFETY CHAIN ASSEMBLY	REPLACE HANDRAIL HINGE PIN	REPLACE MISSING CONDUIT PLUG	TENSION ANCHOR ROD	REMOVE GROUT PAD	SECURE TYPE II SIGN	REPLACE SIGN PANEL CONNECTOR	REPLACE SIGN BRIDGE ID PLAQUE	TENSION POST TO TRUSS CONNECTION BOLT
					SPV.0060.01	SPV.0060.02	SPV.0060.03	SPV.0060.04	SPV.0060.05	SPV.0060.06	SPV.0060.07	SPV.0060.08	SPV.0060.09	SPV.0060.10
					EACH	EACH	EACH	EACH	EACH	EACH	EACH	EACH	EACH	EACH
S-11-8	2 OF 7	IH-39	NB	IH-39 NB AT THE EXIT TO STH-16 EB		2				2		3	1	
S-11-9	3 OF 7	IH-39	NB	IH-39 NB AT THE EXIT TO STH-16 WB				1	4			2		8
S-11-11	4 OF 7	IH-39	SB	IH-39 SB, 1/8 MILE NORTH OF USH-51 INTERCHANGE	1	1	1			2				
S-11-12	5 OF 7	IH-39	NB	IH-39 SB AT EXIT TO STH-78								4		
S-11-13	6 OF 7	IH-39	SB	IH-39 SB, 1 MILE NORTH OF STH-78								8	1	
S-11-14	7 OF 7	IH-39	SB	IH-39 SB, AT OFF RAMP TO IH-94 SB/NB SPLIT						4	1	12	1	
				TOTAL	1	3	1	1	4	8	1	29	3	8

GENERAL NOTES:

1. CONCRETE - fc'= 3,500 P.S.I.
2. BAR STEEL REINF. - GRADE 60 fy = 60,000 P.S.I.
3. THE CONTRACTOR SHALL VERIFY EXACT LOCATION OF ALL REPAIRS.
4. THE CONTRACTOR SHALL FIELD VERIFY THE DIMENSIONS OF THE ITEM REQUIRED. DISCREPENCIES SHALL BE SUBMITTED TO THE ENGINEER FOR CLARIFICATION PRIOR TO BEGINNING WORK.
5. APPLY ZINC-RICH PAINT TO THE ANCHOR RODS, NUTS, WASHERS, AND LEVELING NUTS IN ACCORDANCE WITH SECTION 635.3.5 OF THE WISDOT STANDARD SPECIFICATIONS, AFTER REMOVING THE GROUT PAD OR TENSIONING THE ANCHOR ROD. THIS WORK SHALL BE CONSIDERED INCIDENTAL TO THE BID ITEM, "REMOVE GROUT PAD" OR "TENSION ANCHOR ROD".
6. THE CONTRACTOR SHALL USE ANTI-SIEZE COMPOUND ON ELECTRICAL HANDHOLE COVER BOLTS, JUNCTION BOX BOLTS, LUMINAIRE COVER BOLTS, AND CONDUIT PLUGS PER SECTION 651.3.1 (5) OF THE WISDOT STANDARD SPECIFICATIONS.

LIST OF DRAWINGS

1. GENERAL NOTES & QUANTITIES
2. STRUCTURE S-11-008
3. STRUCTURE S-11-009
4. STRUCTURE S-11-011
5. STRUCTURE S-11-012
6. STRUCTURE S-11-013
7. STRUCTURE S-11-014

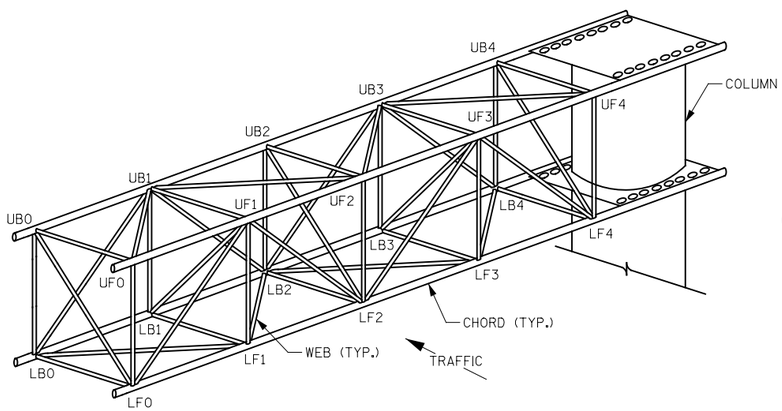

CANTILEVER SIGN BRIDGE

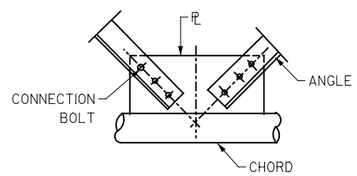

CONNECTION BOLT DETAIL

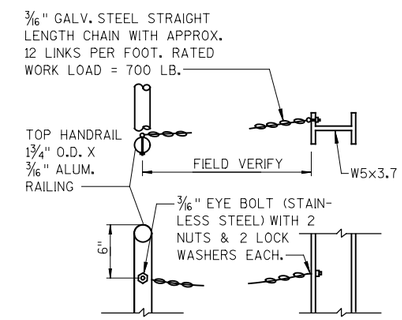

SAFETY CHAIN DETAIL

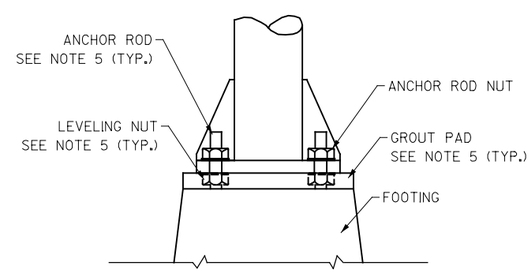

TYPICAL REMOVE GROUT PAD AND TENSION ROD

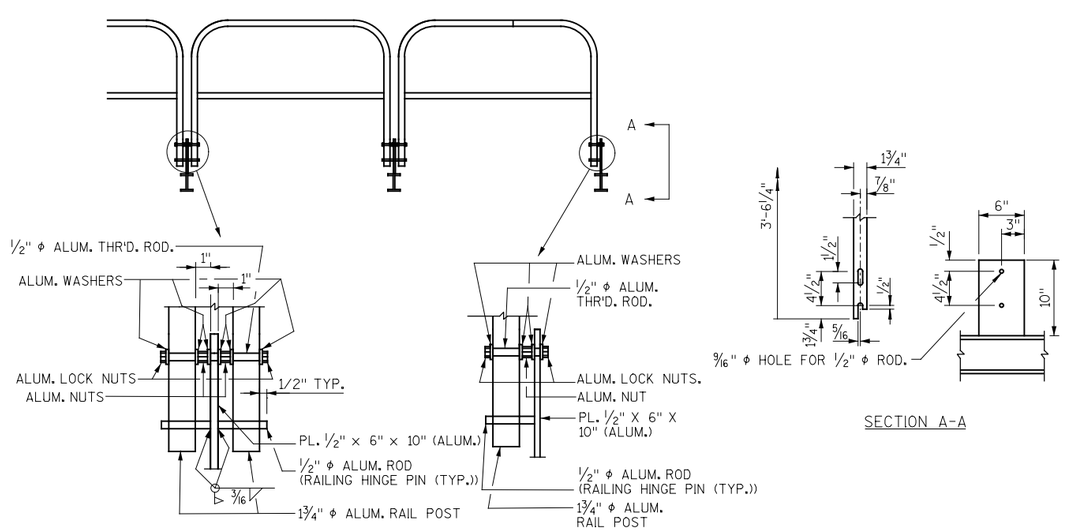

TYPICAL RAILING DETAILS

SECTION A-A

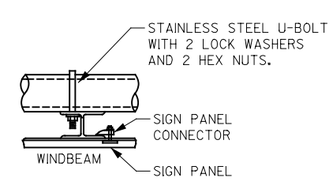

SIGN PANEL CONNECTOR DETAIL

CONTACTS

WisDOT BRIDGE OFFICE CONTACT
BILL DREHER: (608) 266-8489

CONSULTANT CONTACT, COLLINS ENGINEERS INC.
DREW GARCEAU: (414) 282-6905

NO.	DATE	REVISION	BY

COLLINS ENGINEERS INC.

STATE OF WISCONSIN
DEPARTMENT OF TRANSPORTATION

ACCEPTED William C. Dreher KAR 01/17/14
CHIEF STRUCTURES DESIGN ENGINEER DATE

IH 39 COLUMBIA CO.
SIGN STRUCTURE REPAIRS

MADISON - PACKWAUKEE

COUNTY	TOWN/CITY/VILLAGE
COLUMBIA	VARIOUS

DESIGN SPEC. AASHTO STD. SPEC.

DESIGNED BY	DESIGN CK'D.	DRAWN BY	PLANS CK'D.
VC	TMC	VC	TMC

GENERAL NOTES & QUANTITES

SHEET 1 OF 7

113

8

8

FILE NAME :08_01_Found.dgn
PLOT DATE :7/3/2013 12:20:39 PM PLOT BY : Veronica ChavezWI DRV :Pdf_bw_HS_by level.pt PEN :CEL_TextSub.tbl

STATE PROJECT NUMBER

1161-00-65

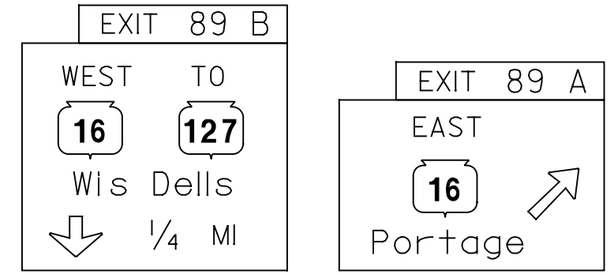

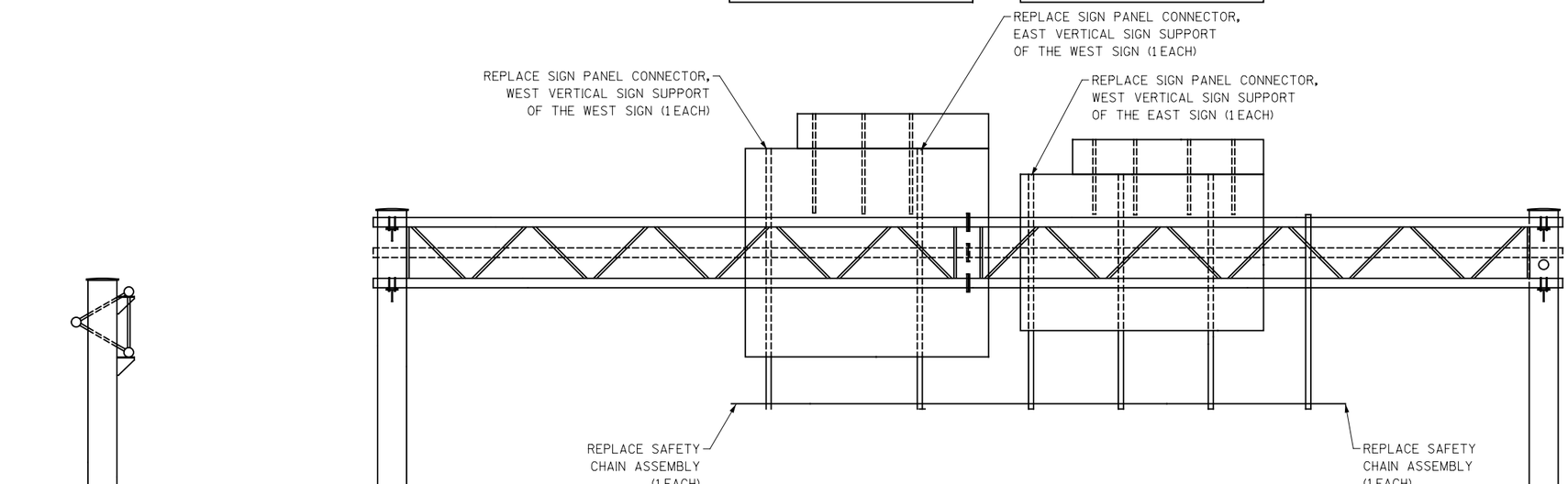

LOOKING EAST

LOOKING WEST

ELEVATION

LOOKING NORTH

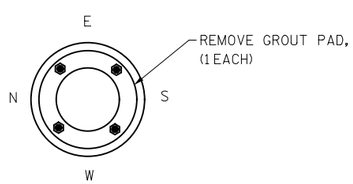

WEST FOUNDATION DETAIL

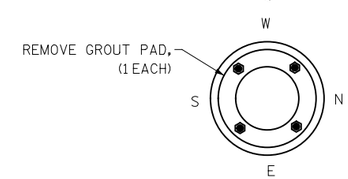

EAST FOUNDATION DETAIL

ITEM NO.	LIST OF REPAIRS	QUANTITY
SPV.0060.02	REPLACE SAFETY CHAIN ASSEMBLY	2
SPV.0060.06	REMOVE GROUT PAD	2
SPV.0060.08	REPLACE SIGN PANEL CONNECTOR	3
SPV.0060.09	REPLACE SIGN BRIDGE ID PLAQUE	1

NO.	DATE	REVISION	BY

STATE OF WISCONSIN
DEPARTMENT OF TRANSPORTATION
STRUCTURES DESIGN SECTION

STRUCTURE S-11-008

DRAWN BY VC | PLANS CK'D. TMC

ELEVATION VIEW

SHEET 2 OF 7

114

8

8

FILE NAME :S-11-0008.dgn
PLOT DATE :7/3/2013 12:40 PM PLOT BY : Veronica Chavez@WI DRV :Pdf_bw_HS.by level.pt PEN :CEL_TextSub.tbl

STATE PROJECT NUMBER
1161-00-65

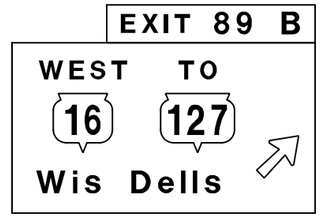

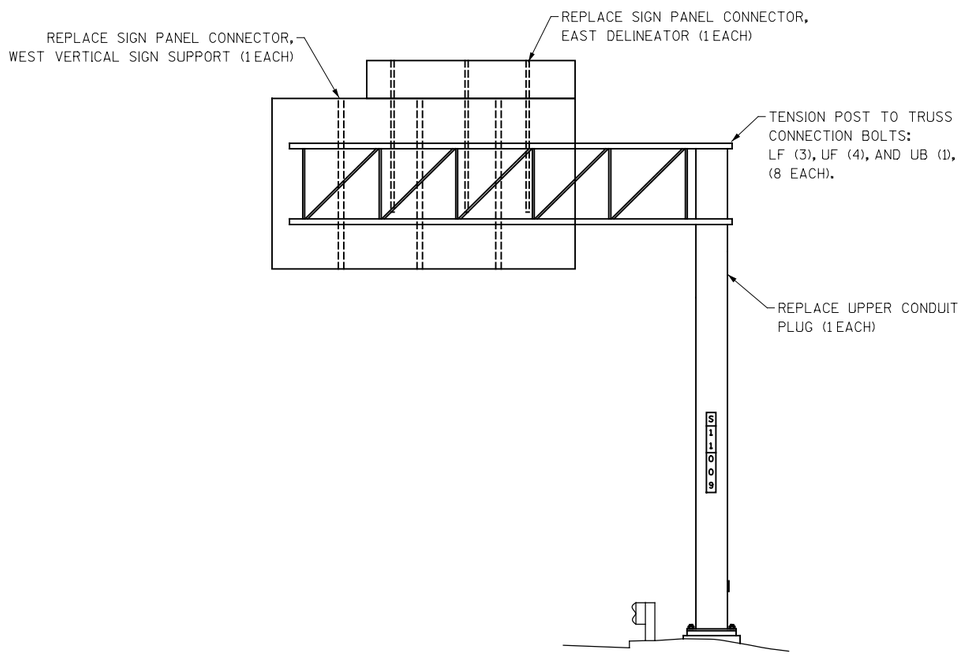

ELEVATION
LOOKING NORTH

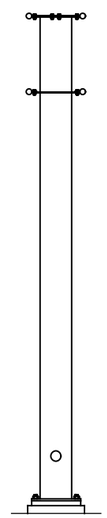

LOOKING WEST

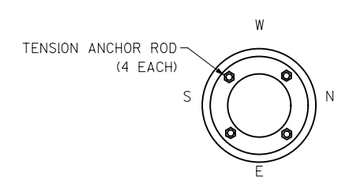

FOUNDATION DETAIL

NOTE:

LOOSE SIGN PANEL CONNECTORS ON THE WEST VERTICAL SIGN SUPPORT AND EAST DELINEATOR SHALL BE REPLACE AS SHOWN.

ITEM NO.	LIST OF REPAIRS	QUANTITY
SPV.0060.04	REPLACE MISSING CONDUIT PLUG	1
SPV.0060.05	TENSION ANCHOR ROD	4
SPV.0060.08	REPLACE SIGN PANEL CONNECTOR	2
SPV.0060.10	TENSION POST TO TRUSS CONNECTION BOLT	8

NO.	DATE	REVISION	BY

STATE OF WISCONSIN
DEPARTMENT OF TRANSPORTATION
STRUCTURES DESIGN SECTION

STRUCTURE S-11-009

DRAWN BY VC | PLANS CK'D. TMC

ELEVATION VIEW

SHEET 3 OF 7

8

8

FILE NAME :S-11-0009.dgn
PLOT DATE :7/3/2013 12:04:40 PM PLOT BY : Veronica ChavezMi DRV :Pdf_bw_HS.by level.pit PEN :CEL_TextSub.tbl

STATE PROJECT NUMBER
1161-00-65

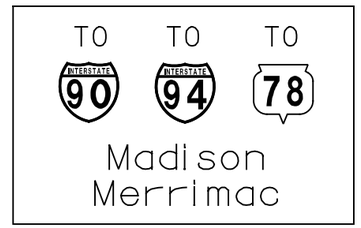

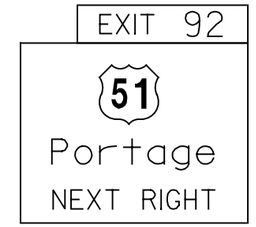

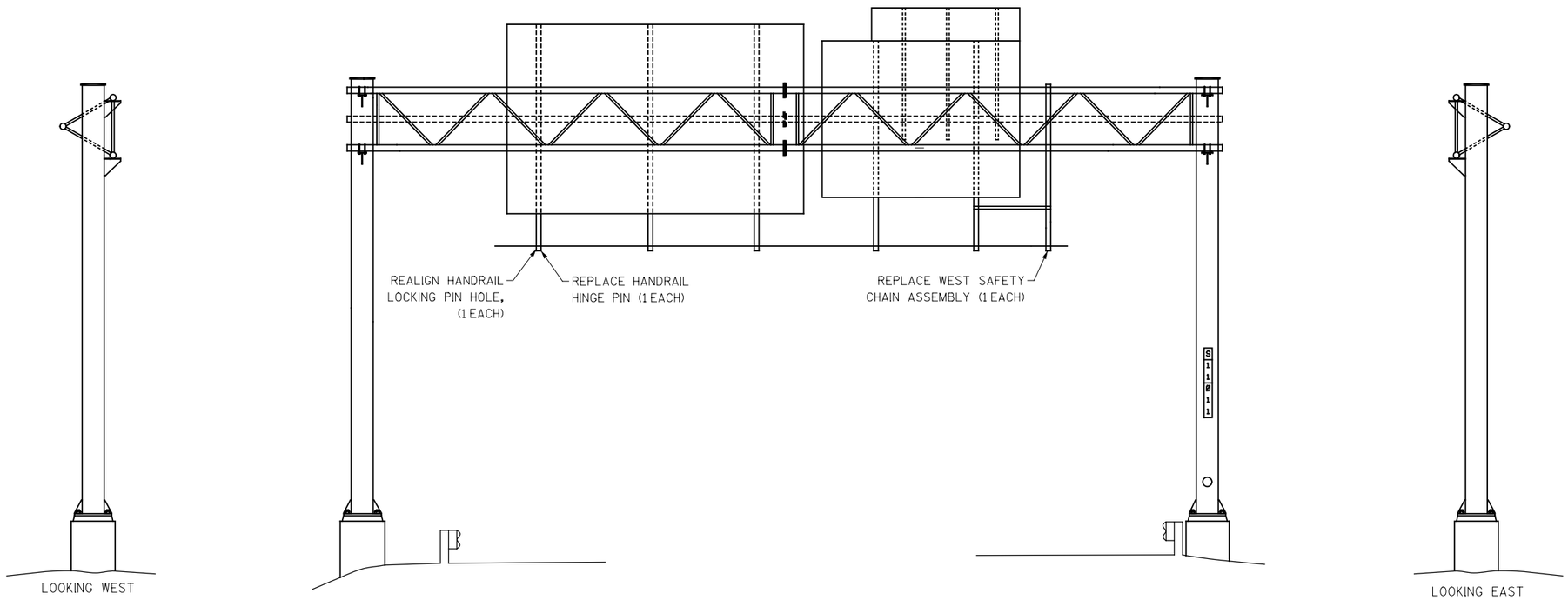

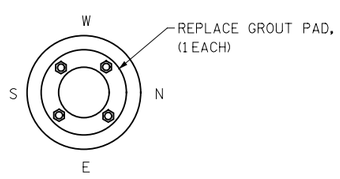

EAST FOUNDATION DETAIL

ELEVATION

LOOKING SOUTH

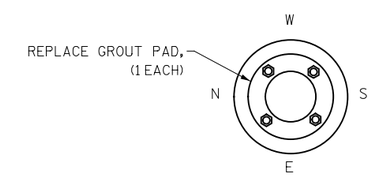

WEST FOUNDATION DETAIL

ITEM NO.	LIST OF REPAIRS	QUANTITY
SPV.0060.01	REALIGN HANDRAIL LOCKING PIN HOLE	1
SPV.0060.02	REPLACE SAFETY CHAIN ASSEMBLY	1
SPV.0060.03	REPLACE HANDRAIL HINGE PIN	1
SPV.0060.06	REMOVE GROUT PAD	2

NO.	DATE	REVISION	BY

STATE OF WISCONSIN
DEPARTMENT OF TRANSPORTATION
STRUCTURES DESIGN SECTION

STRUCTURE S-11-011

DRAWN BY VC | PLANS CK'D. TMC

ELEVATION VIEW

SHEET 4 OF 7

8

STATE PROJECT NUMBER

1161-00-65

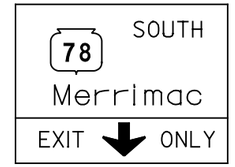

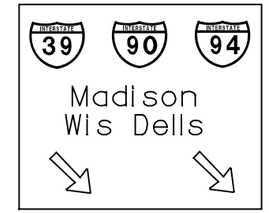

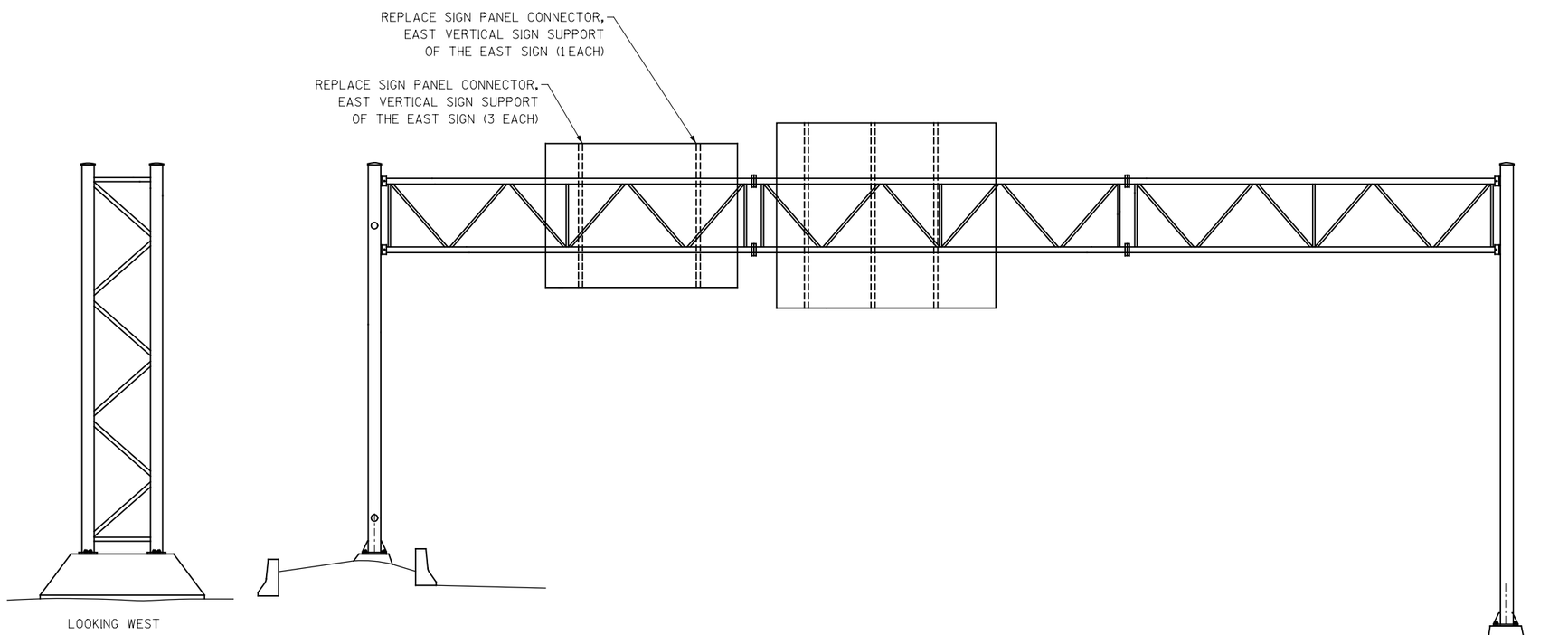

ELEVATION

LOOKING SOUTH

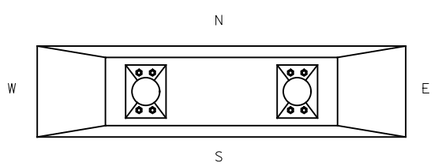

EAST FOUNDATION DETAIL

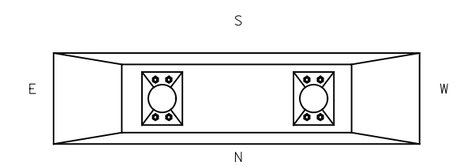

WEST FOUNDATION DETAIL

8

8

ITEM NO.	LIST OF REPAIRS	QUANTITY
SPV.0060.08	REPLACE SIGN PANEL CONNECTOR	4

NO.	DATE	REVISION	BY

STATE OF WISCONSIN
DEPARTMENT OF TRANSPORTATION
STRUCTURES DESIGN SECTION

STRUCTURE S-11-012

DRAWN BY VC | PLANS CK'D. TMC

ELEVATION VIEW

SHEET 5 OF 7

FILE NAME :S-11-0012.dgn
PLOT DATE :7/3/2013 12:04:41 PM PLOT BY : Veronica ChavezMt DRV :Pdf_bw_HS_by level.plt PEN :CEL_TextSub.tbl

STATE PROJECT NUMBER

1161-00-65

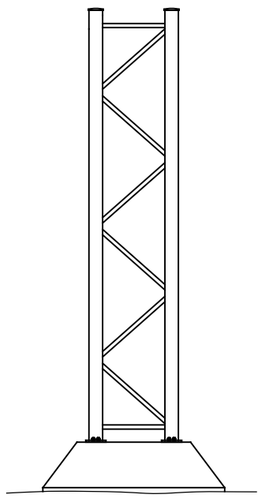

LOOKING WEST

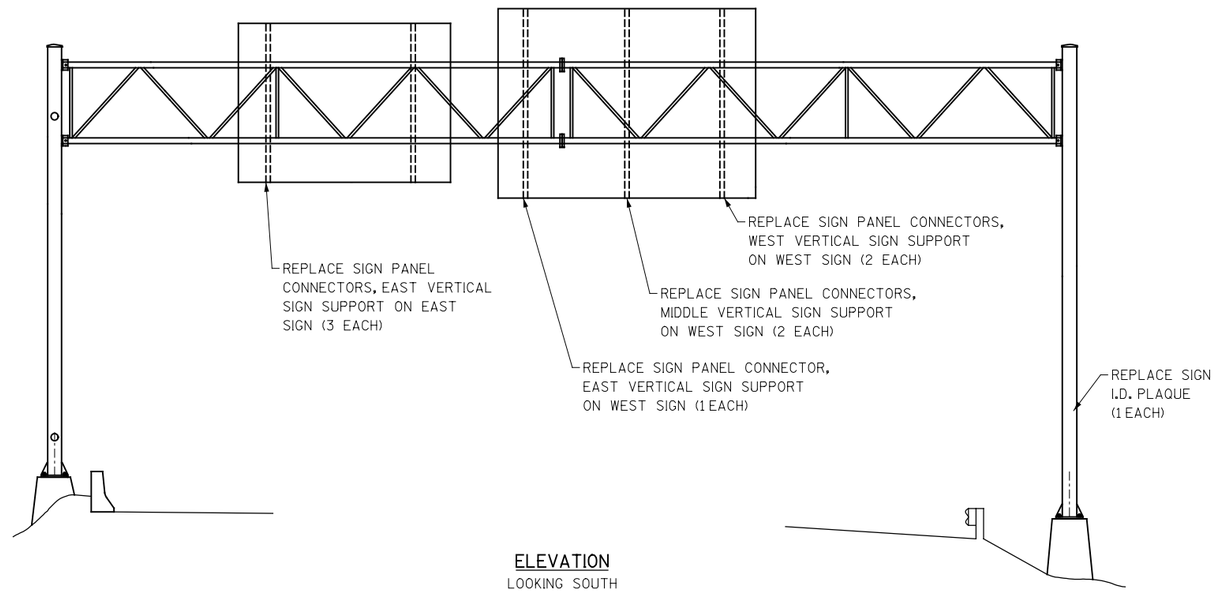

ELEVATION

LOOKING SOUTH

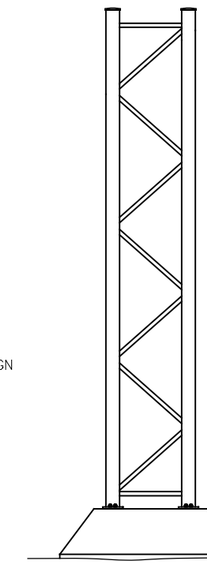

LOOKING EAST

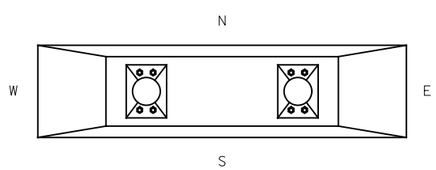

EAST FOUNDATION DETAIL

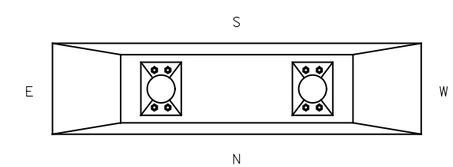

WEST FOUNDATION DETAIL

8

8

ITEM NO.	LIST OF REPAIRS	QUANTITY
SPV.0060.08	REPLACE SIGN PANEL CONNECTOR	8
SPV.0060.09	REPLACE SIGN BRIDGE ID PLAQUE	1

NO.	DATE	REVISION	BY

STATE OF WISCONSIN
DEPARTMENT OF TRANSPORTATION
STRUCTURES DESIGN SECTION

STRUCTURE S-11-013

DRAWN BY VC | PLANS CK'D. TMC

ELEVATION VIEW

SHEET 6 OF 7

STATE PROJECT NUMBER

1161-00-65

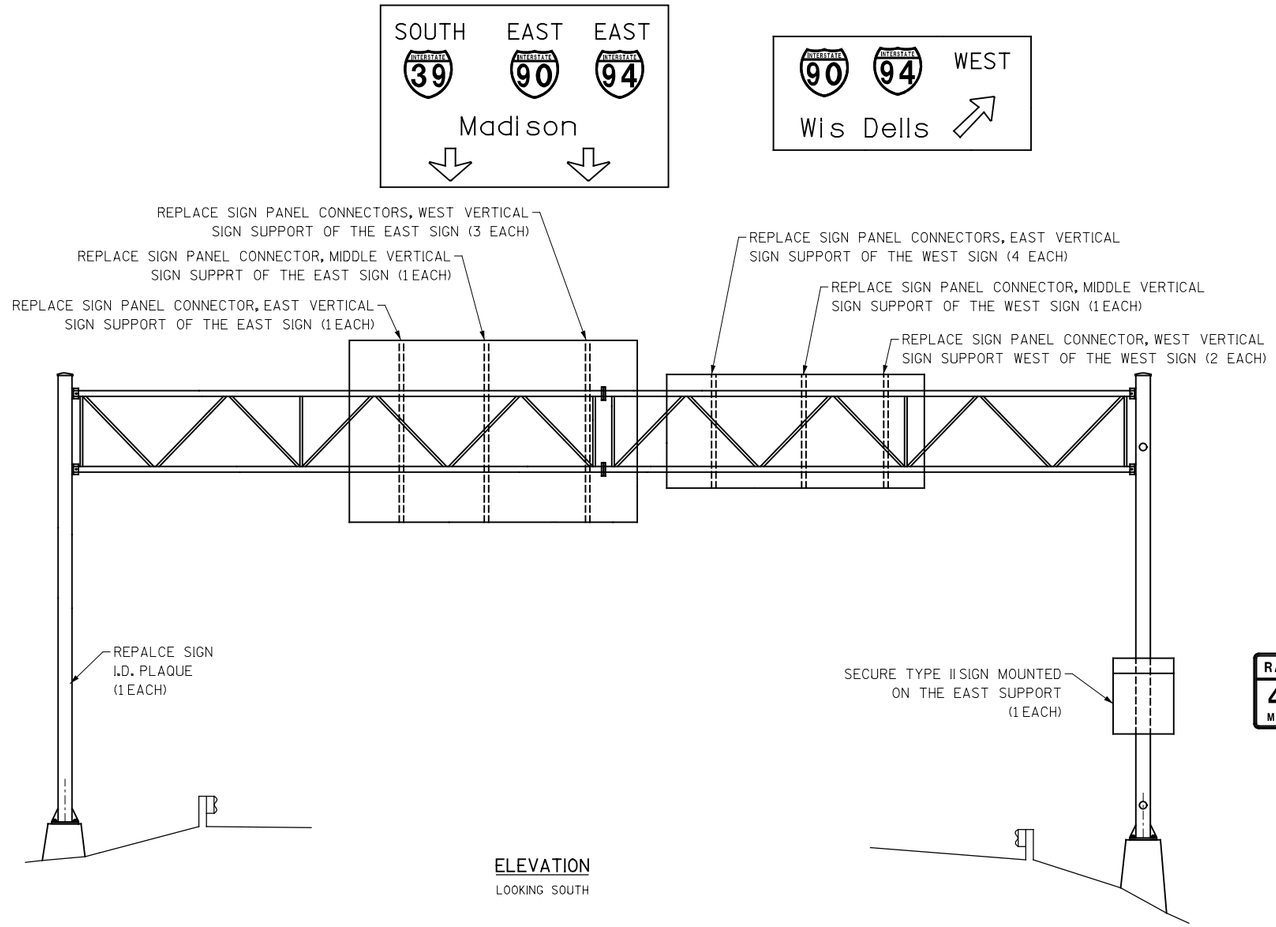

LOOKING WEST

ELEVATION

LOOKING SOUTH

LOOKING EAST

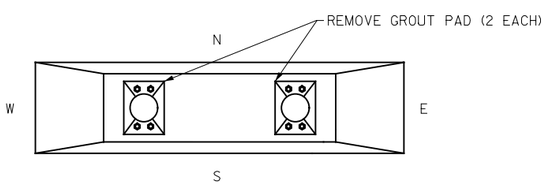

EAST FOUNDATION DETAIL

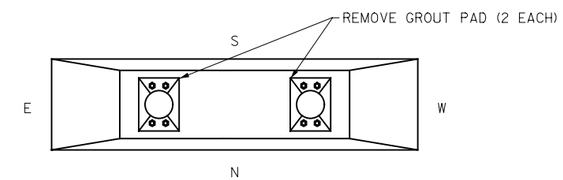

WEST FOUNDATION DETAIL

8

8

ITEM NO.	LIST OF REPAIRS	QUANTITY
SPV.0060.06	REMOVE GROUT PAD	4
SPV.0060.07	SECURE TYPE II SIGN	1
SPV.0060.08	REPLACE SIGN PANEL CONNECTOR	12
SPV.0060.09	REPLACE SIGN BRIDGE ID PLAQUE	1

NO.	DATE	REVISION	BY

STATE OF WISCONSIN
DEPARTMENT OF TRANSPORTATION
STRUCTURES DESIGN SECTION

STRUCTURE S-11-014

DRAWN BY VC | PLANS CK'D. TMC

ELEVATION VIEW

SHEET 7 OF 7

FILE NAME : S-11-0014.dgn
PLOT DATE : 7/3/2013 12:20:42 PM PLOT BY : Veronica Chavez@WI DRV : Pdf_bw_HS.by level.pt PEN : CEL_TextSub.tbl

Wisconsin Department of Transportation

Dedicated people creating transportation solutions through innovation and exceptional service.

http://www.dot.wisconsin.gov