GRE MAY 2014

PROJECT ID: 1490-28-71
WITH: N/A

COUNTY: OCONTO

ORDER OF SHEETS

TOTAL SHEETS = 262

STATE PROJECT	FEDERAL PROJECT	
	PROJECT	CONTRACT
1490-28-71	WISC 2014194	1

STATE OF WISCONSIN
DEPARTMENT OF TRANSPORTATION

PLAN OF PROPOSED IMPROVEMENT

ABRAMS - STILES

USH 141 & CTH E

USH 141

OCONTO COUNTY

STATE PROJECT NUMBER
1490-28-71

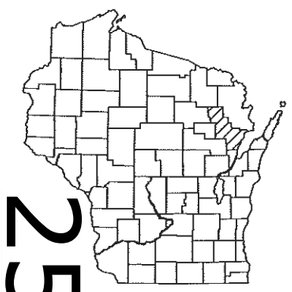

25

DESIGN DESIGNATION

A.A.D.T. 2014	=	14,800
A.A.D.T. 2035	=	19,200
D.H.V. 2035	=	2,600
D.D.	=	63/37
T.(% OF AADT)	=	12.3%
DESIGN SPEED	=	70 MPH
ESALS	=	6,898,500

CONVENTIONAL SYMBOLS

PLAN
- CORPORATE LIMITS
- PROPERTY LINE
- LOT LINE
- LIMITED HIGHWAY EASEMENT
- EXISTING RIGHT OF WAY
- PROPOSED OR NEW R/W LINE
- SLOPE INTERCEPT
- REFERENCE LINE
- EXISTING CULVERT
- PROPOSED CULVERT (Box or Pipe)
- COMBUSTIBLE FLUIDS — CAUTION
- MARSH AREA
- WOODED OR SHRUB AREA

PROFILE
- GRADE LINE
- ORIGINAL GROUND
- MARSH OR ROCK PROFILE (To be noted as such) — ROCK
- SPECIAL DITCH — LABEL
- GRADE ELEVATION — 95.36
- CULVERT (Profile View)

UTILITIES
- ELECTRIC — E
- FIBER OPTIC — FO
- GAS — G
- SANITARY SEWER — SAN
- STORM SEWER — SS
- TELEPHONE — T
- WATER — W
- UTILITY PEDESTAL
- POWER POLE
- TELEPHONE POLE

N

T 27 N

R - 20 - E

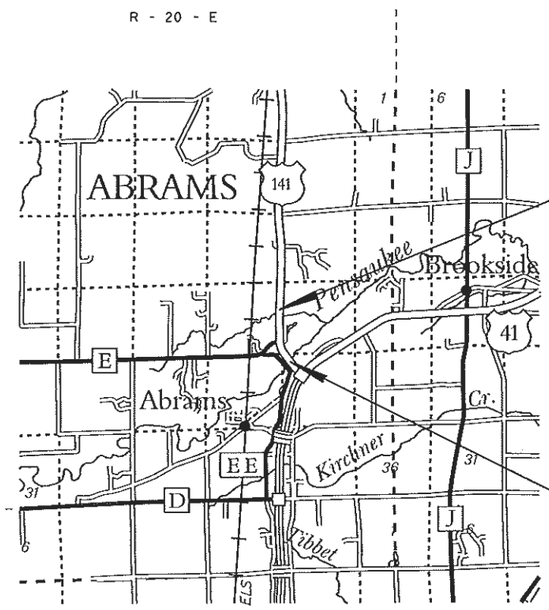

END PROJECT
STA 148+00

BEGIN PROJECT
STA 102+00
Y = 143,948.321
X = 564,020.539

LAYOUT
SCALE 0 — 1 MI.

TOTAL NET LENGTH OF CENTERLINE = 0.871 MI.

COORDINATES ON THIS PLAN ARE REFERENCED TO THE WISCONSIN COUNTY COORDINATE SYSTEM (WCCS), NAD 83 (1991) OCONTO COUNTY.

STATE OF WISCONSIN
DEPARTMENT OF TRANSPORTATION

PREPARED BY

Surveyor	WISDOT
Designer	A. J. WALLNER
Project Manager	K. M. VAN HOUT
Regional Examiner	
Regional Supervisor	D. J. SEGERSTROM

APPROVED FOR THE DEPARTMENT
DATE: 1/15/2014 Krissy Van Hout (Signature)

E

UTILITIES

KEITH OLEJNICZAK
ABRAMS SANITARY DISTRICT #1 - SEWER
PO BOX 198
ABRAMS, WI 54101

MIKE OLSEN
ATC MANAGEMENT, INC. - ELECTRICITY
801 O'KEEFE RD
PO BOX 6113
DE PERE, WI 54115-6113
(920) 338-6582
MOLSEN@ATCLLC.COM

MARK WILSON
BAYLAND TELEPHONE INC - COMMUNICATION LINE
2711 E FRONTAGE RD
ABRAMS, WI 54101
(920) 826-5215
MARK.WILSON@BAYLAND.NET

DENNIS HAAG
CENTURYLINK - COMMUNICATION LINE
144 N PEARL ST
PO BOX 70
BERLIN, WI 54923
(920) 361-0040
DENNIS.HAAG@CENTURYTEL.COM

JACK PARDY
OCONTO ELECTRIC COOPERATIVE - ELECTRICITY
7479 REA RD
PO BOX 168
OCONTO FALLS, WI 54154-9573
(920) 846-2816

CHAD KAY
PACKERLAND BROADBAND - COMMUNICATION LINE
105 KENT ST
IRON MOUNTAIN, MI 49801
(906) 776-2819
CHAD.KAY@CCISYSTEMS.COM

LORI BUTRY
WISCONSIN PUBLIC SERVICE CORPORATION - ELECTRICITY
700 N ADAMS ST
PO BOX 19001
GREEN BAY, WI 54307-9001
(920) 433-1703
LABUTRY@INTEGRYSGROUP.COM

LORI BUTRY
WISCONSIN PUBLIC SERVICE CORPORATION - GAS/PETROLEUM
700 N ADAMS ST
PO BOX 19001
GREEN BAY, WI 54307-9001
(920) 433-1703
LABUTRY@INTEGRYSGROUP.COM

DIGGERS HOTLINE
Dial 811 or (800)242-8511
www.DiggersHotline.com

DNR AREA LIAISON

JAMES DOPERALSKI JR
DEPARTMENT OF NATURAL RESOURCES
NORTHEAST REGION
2984 SHAWANO AVE
GREEN BAY, WI 54313
920-662-5119
JAMES.DOPERALSKI@WISCONSIN.GOV

COUNTY SURVEYOR OR SURVEYS CONTACT PERSON

MARK TEUTEBERG - OCONTO COUNTY
OCONTO COUNTY COURT HOUSE
301 WASHINGTON STREET
OCONTO, WI 54153
920-834-6827
mark.teuteberg@co.oconto.wi.us

GENERAL NOTES

THE LOCATIONS OF EXISTING AND PROPOSED UTILITY INSTALLATIONS AS SHOWN ON THE PLAN ARE APPROXIMATE. THERE MAY BE OTHER UTILITY INSTALLATIONS WITHIN THE PROJECT AREA THAT ARE NOT SHOWN.

THE CONTRACTOR SHALL NOTIFY DIGGERS HOTLINE AND ALL UTILITIES IN THE VICINITY OF THE PROJECT TO LOCATE THEIR FACILITIES AT LEAST THREE WORKING DAYS PRIOR TO BEGINNING WORK.

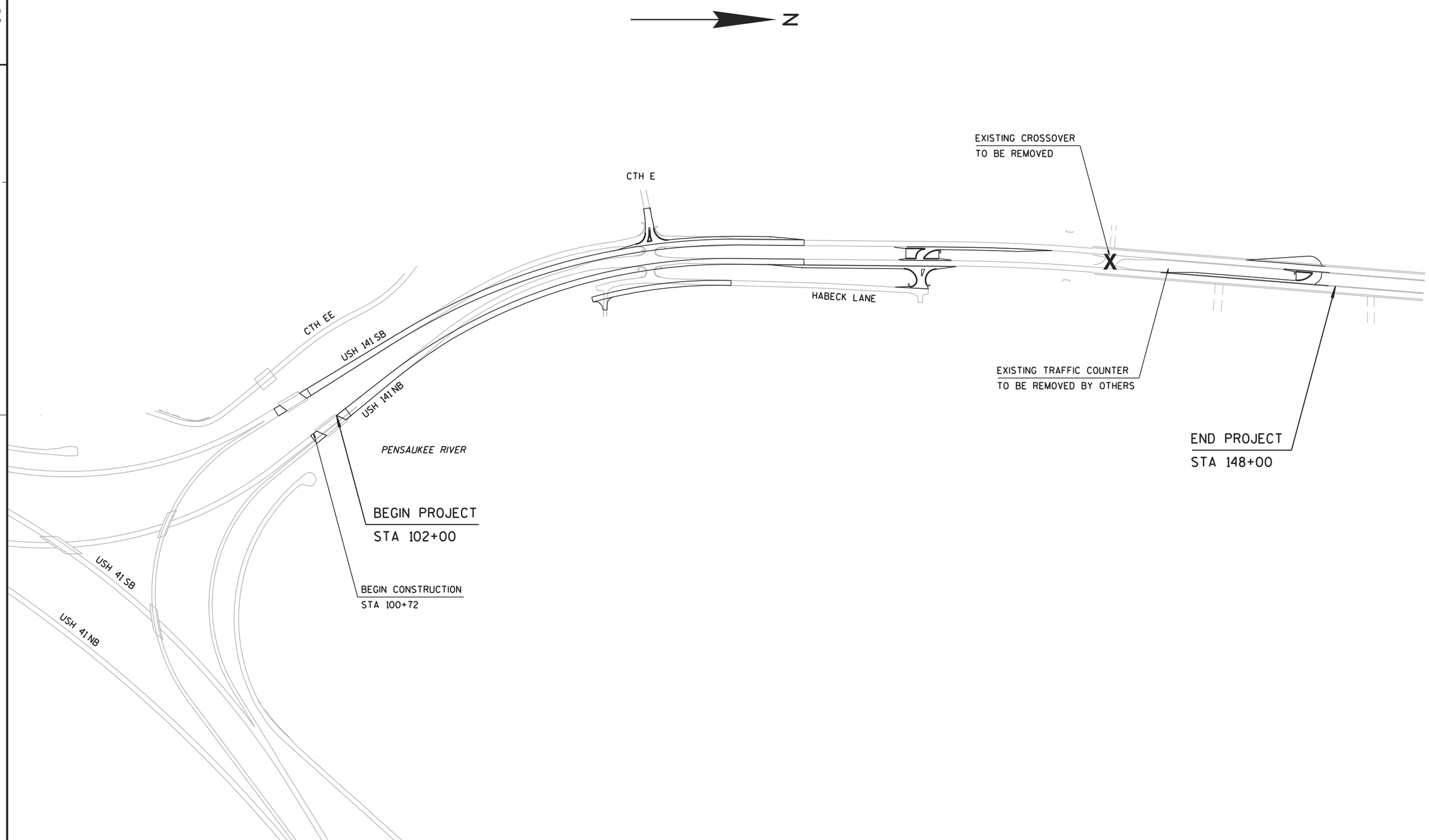

PROJECT NO:1490-28-71	HWY:USH 141	COUNTY:OCONTO	PROJECT OVERVIEW	SHEET 3	E

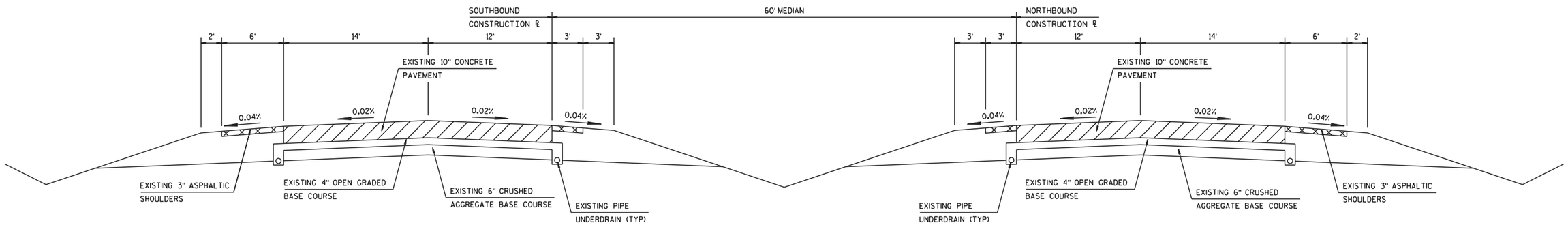

TYPICAL EXISTING CROSS SECTION FOR USH 141

STA 102+00 TO 129+39

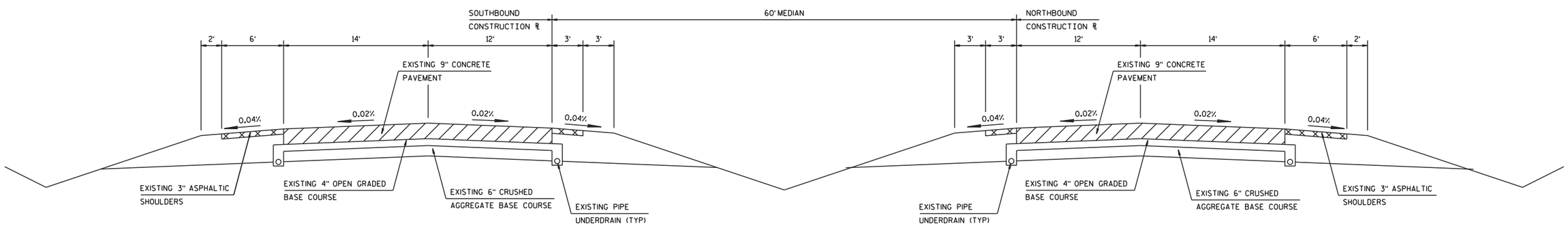

TYPICAL EXISTING CROSS SECTION FOR USH 141

STA 129+39 TO 147+66

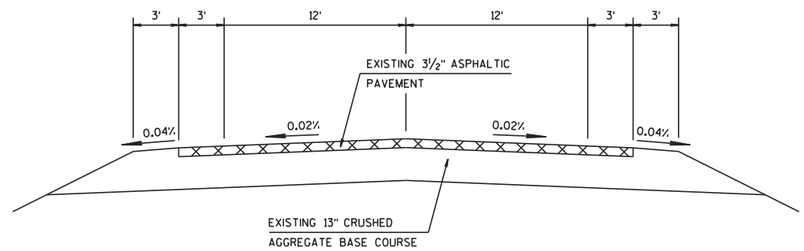

TYPICAL EXISTING CROSS SECTION FOR CTH E

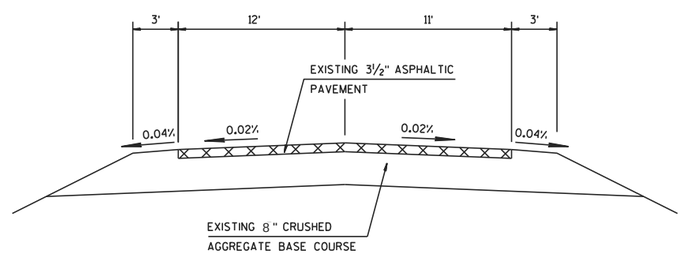

TYPICAL EXISTING CROSS SECTION FOR HABECK LANE

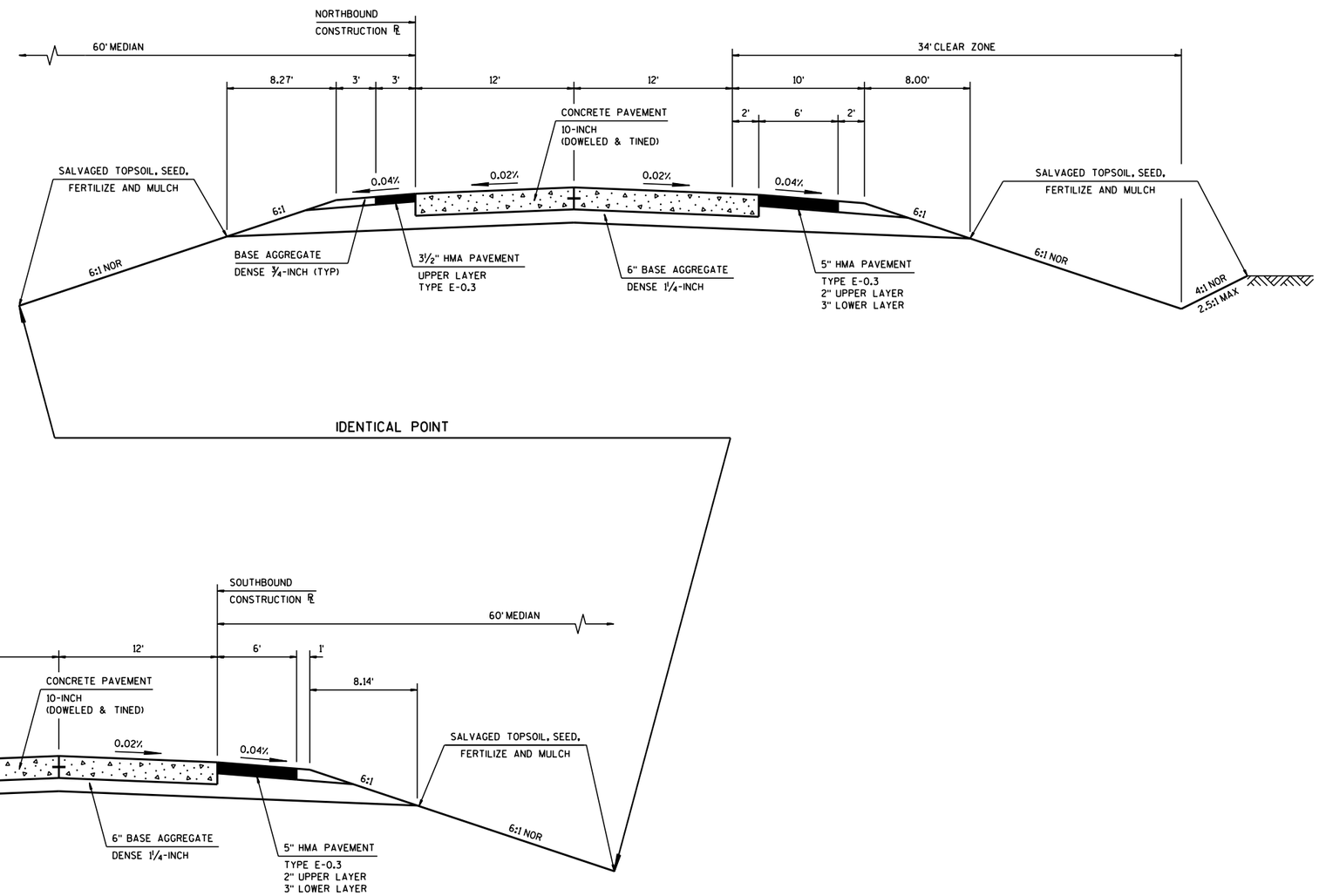

TYPICAL FINISHED CROSS SECTION FOR USH 141

STA 102+00 TO 219+98.73 NB
STA 102+00 TO 124+43.32 SB

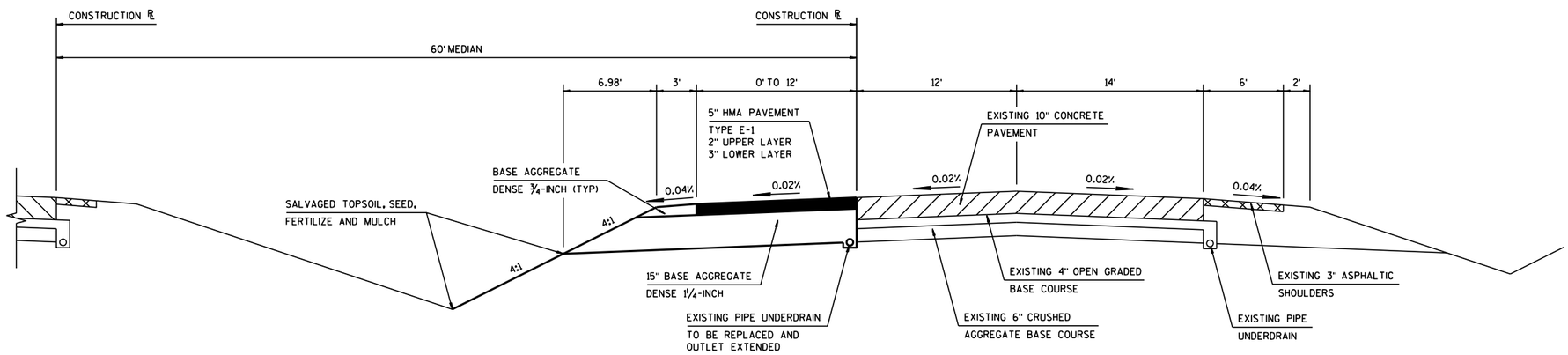

TYPICAL FINISHED CROSS SECTION FOR MEDIAN TURN LANES

STA 129+29.62 TO 137+23.62 151 SB
STA 140+31.95 TO 147+61.11 141 NB

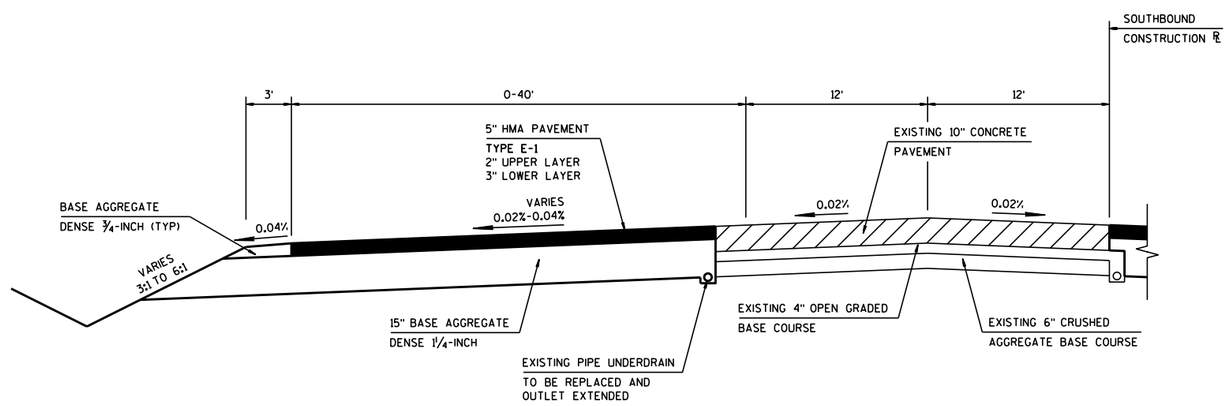

TYPICAL FINISHED CROSS SECTION FOR TURNAROUND

STA 144+87.22 TO 147+59.32 141 SB

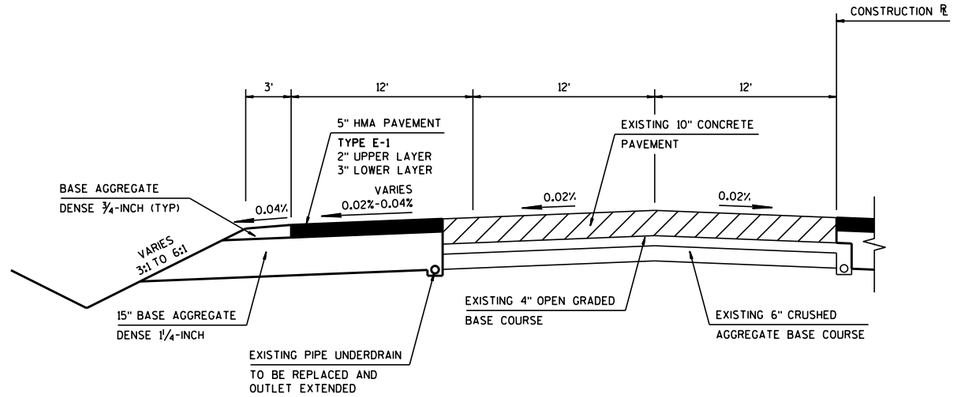

TYPICAL FINISHED CROSS SECTION FOR RIGHT TURN LANES

STA 116+75 TO 124+45 141 SB
STA 123+00 TO 129+00 141 NB

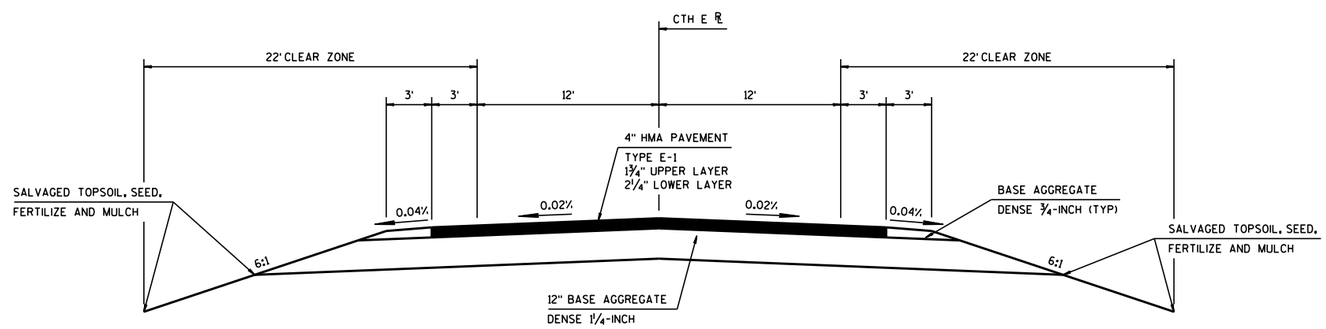

TYPICAL FINISHED CROSS SECTION FOR CTH E

STA 14+78.87 TO 15+45.90

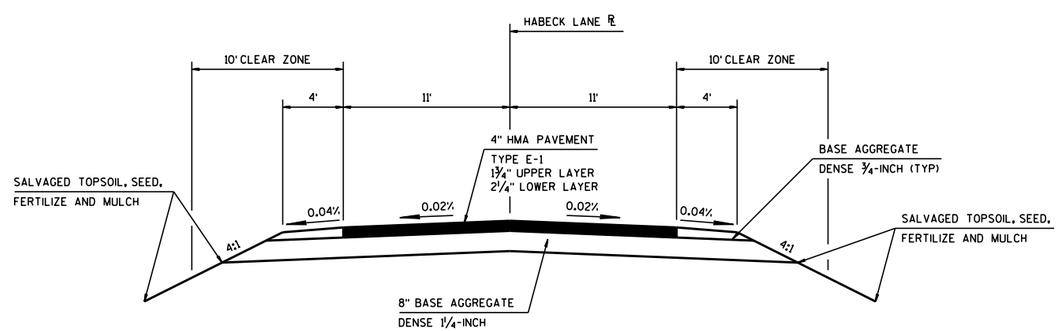

TYPICAL FINISHED CROSS SECTION FOR HABECK LANE

STA 114+00 TO 120+20

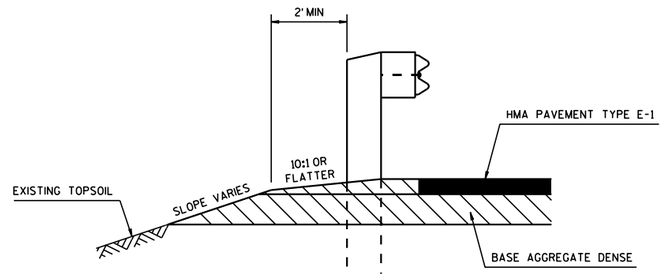

SECTION A-A

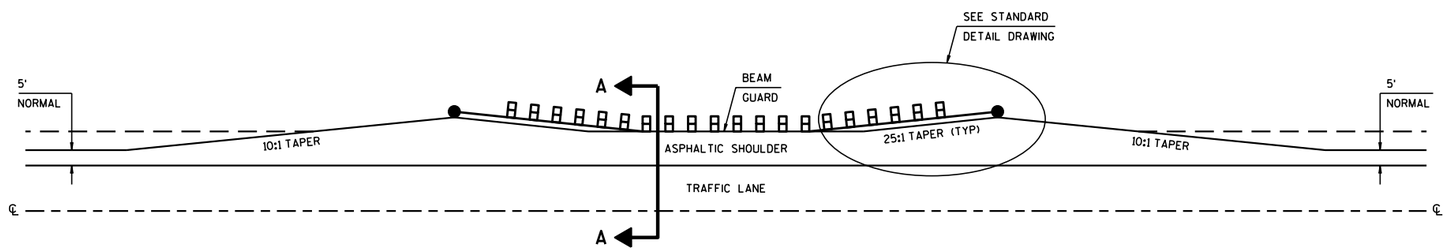

DETAIL FOR ASPHALTIC SHOULDER AT GUARDRAIL

STA 97+28 TO 97+90
STA 97+38 TO 100+65 NB
STA 99+05 TO 101+95 SB

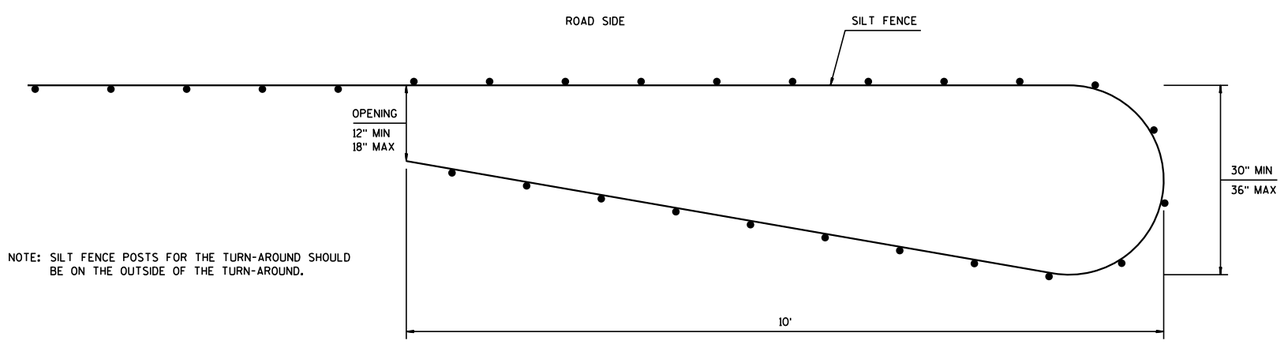

NOTE: SILT FENCE POSTS FOR THE TURN-AROUND SHOULD BE ON THE OUTSIDE OF THE TURN-AROUND.

PLAN VIEW

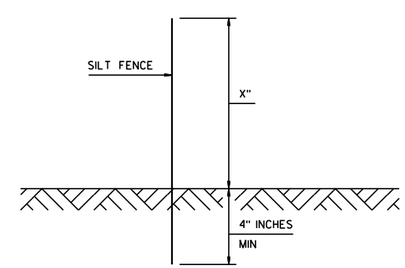

SILT FENCE TURN-AROUND DETAIL

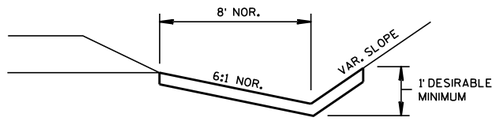

EROSION MAT DETAIL FOR DITCHES

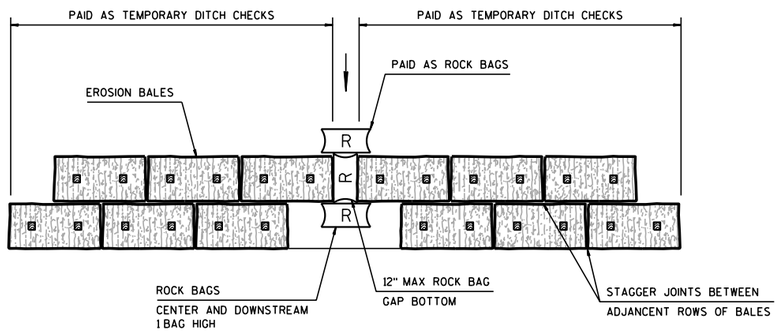

PLAN VIEW

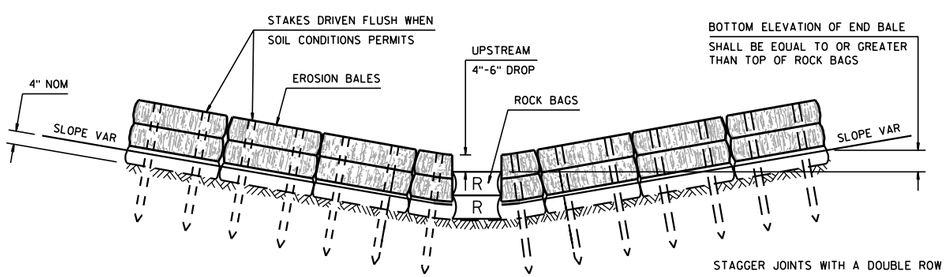

FRONT ELEVATION

GENERAL NOTES

DETAILS OF CONSTRUCTION, MATERIALS AND WORKMANSHIP NOT SHOWN ON THIS DRAWING SHALL CONFORM TO THE PERTINENT REQUIREMENTS OF THE STANDARD SPECIFICATIONS.

TEMPORARY DITCH CHECKS WITH ROCK BAG RELIEF

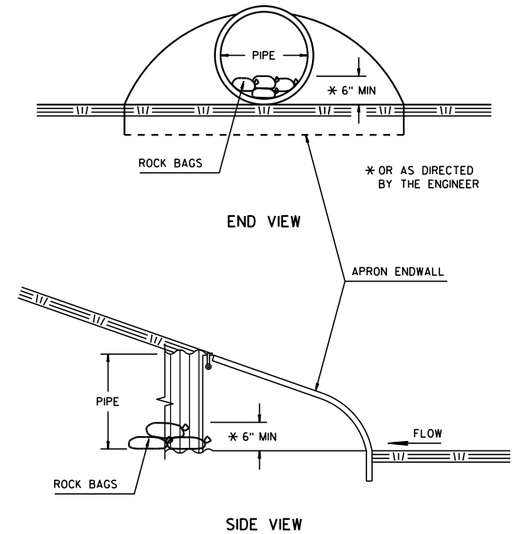

CULVERT PIPE CHECKS

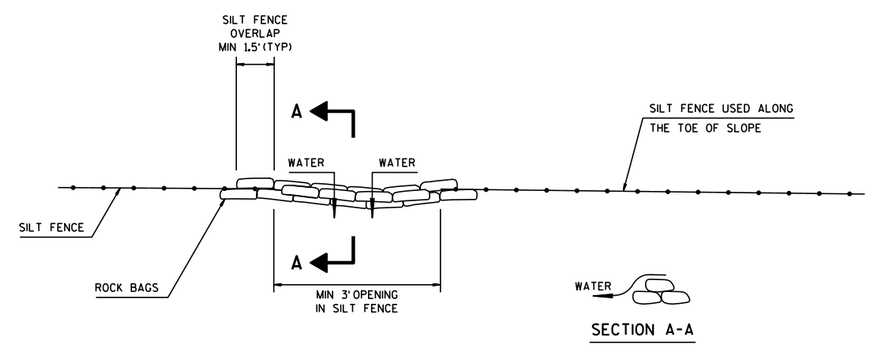

ROCK BAGS USED FOR SILT FENCE RELIEF DETAIL

PAID AS ROCK BAGS

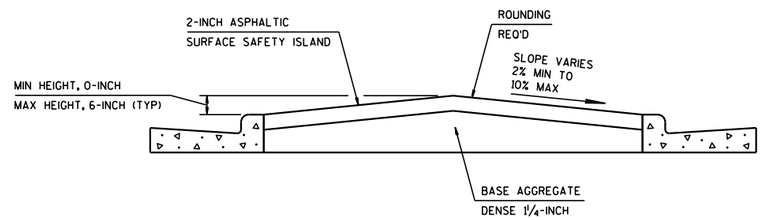

SECTION A-A

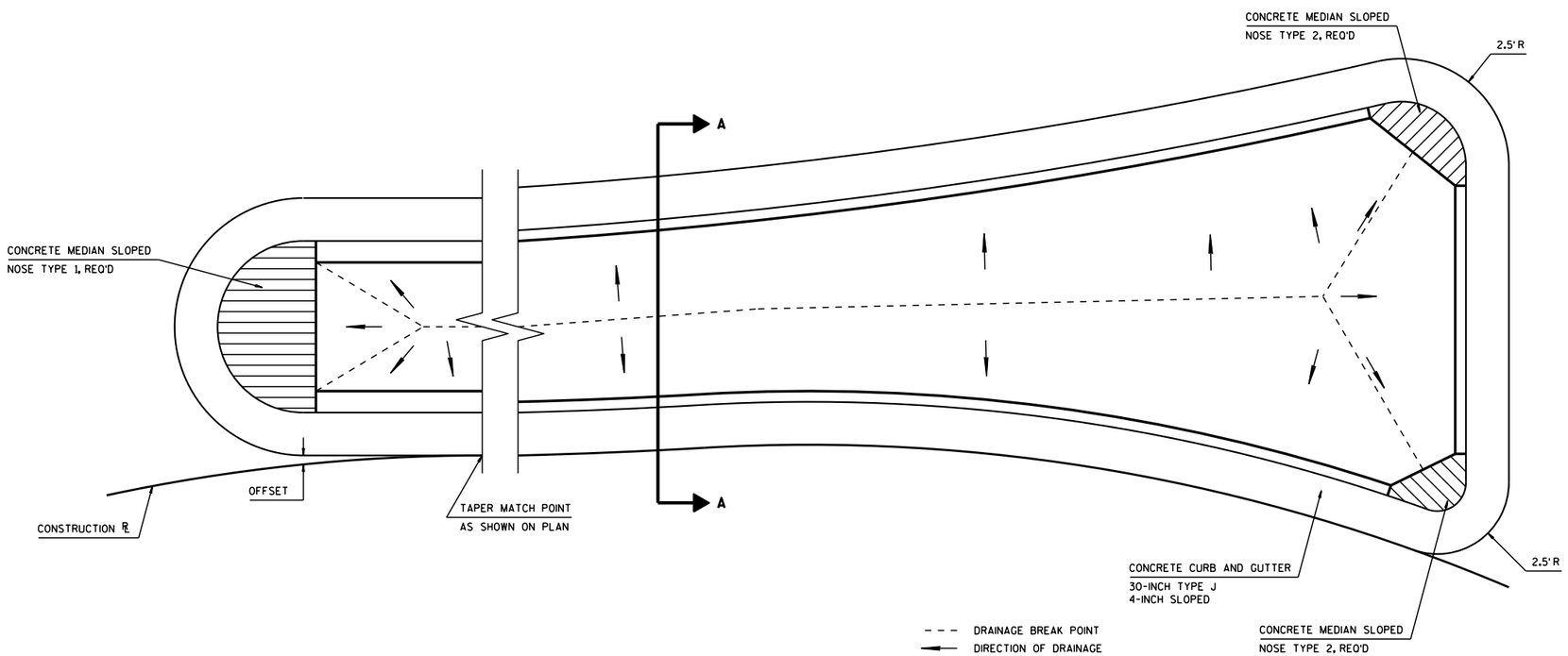

SPLITTER ISLAND DETAIL

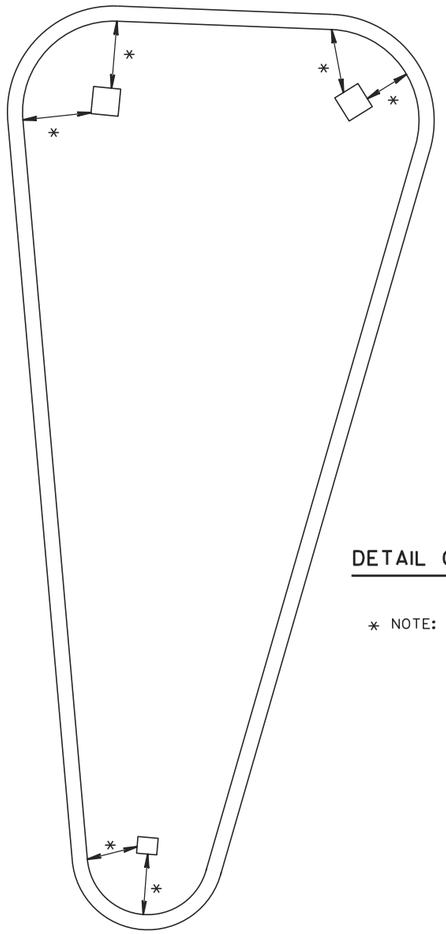

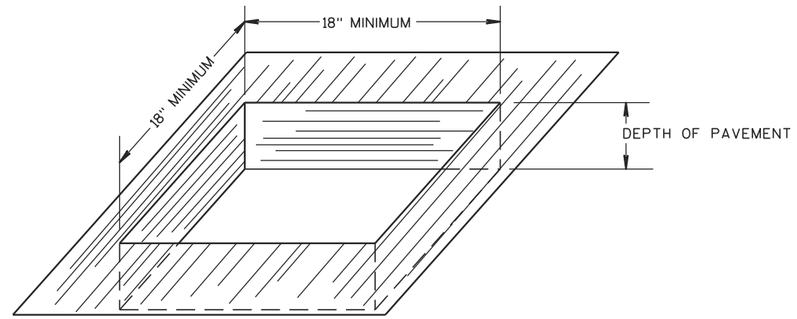

DETAIL OF OPENINGS IN ISLAND FOR SIGN PLACEMENT

* NOTE: ALL SQUARED OPENINGS IN ISLAND FOR SIGN PLACEMENTS SHALL SHALL BE DETERMINED BY SIGN SIZE AND NUMBER. A 2' MINIMUM FROM BACK OF CURB IS REQUIRED.

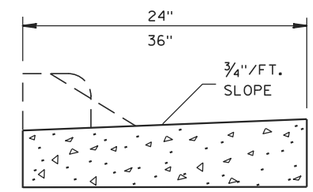

SECTION A-A

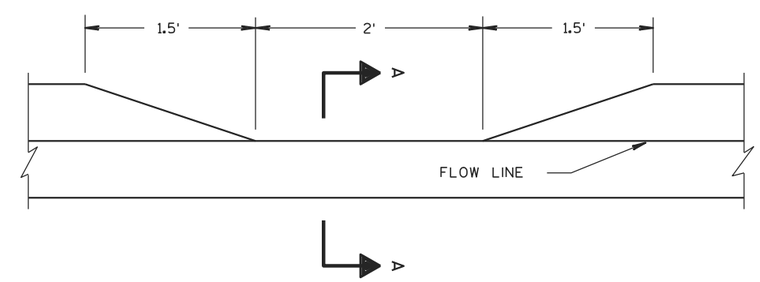

DETAIL OF CURB HEAD DEPRESSION FOR DRAINAGE AT CURB & GUTTER SECTION

POINT	N	E	ELEV	COMMENTS
1	145330.4974	563211.8657	673.92	3.0' RADIUS
2	145336.4810	563211.4228	673.83	CONCRETE SLOPE NOSE TYPE 1
3	145344.5814	563253.9964	674.27	2.5' RADIUS
4	145342.8336	563257.4838	674.29	CONCRETE SLOPE NOSE TYPE 2
5	145325.9105	563261.1138	674.34	2.5' RADIUS
6	145323.0785	563257.7079	674.39	CONCRETE SLOPE NOSE TYPE 2

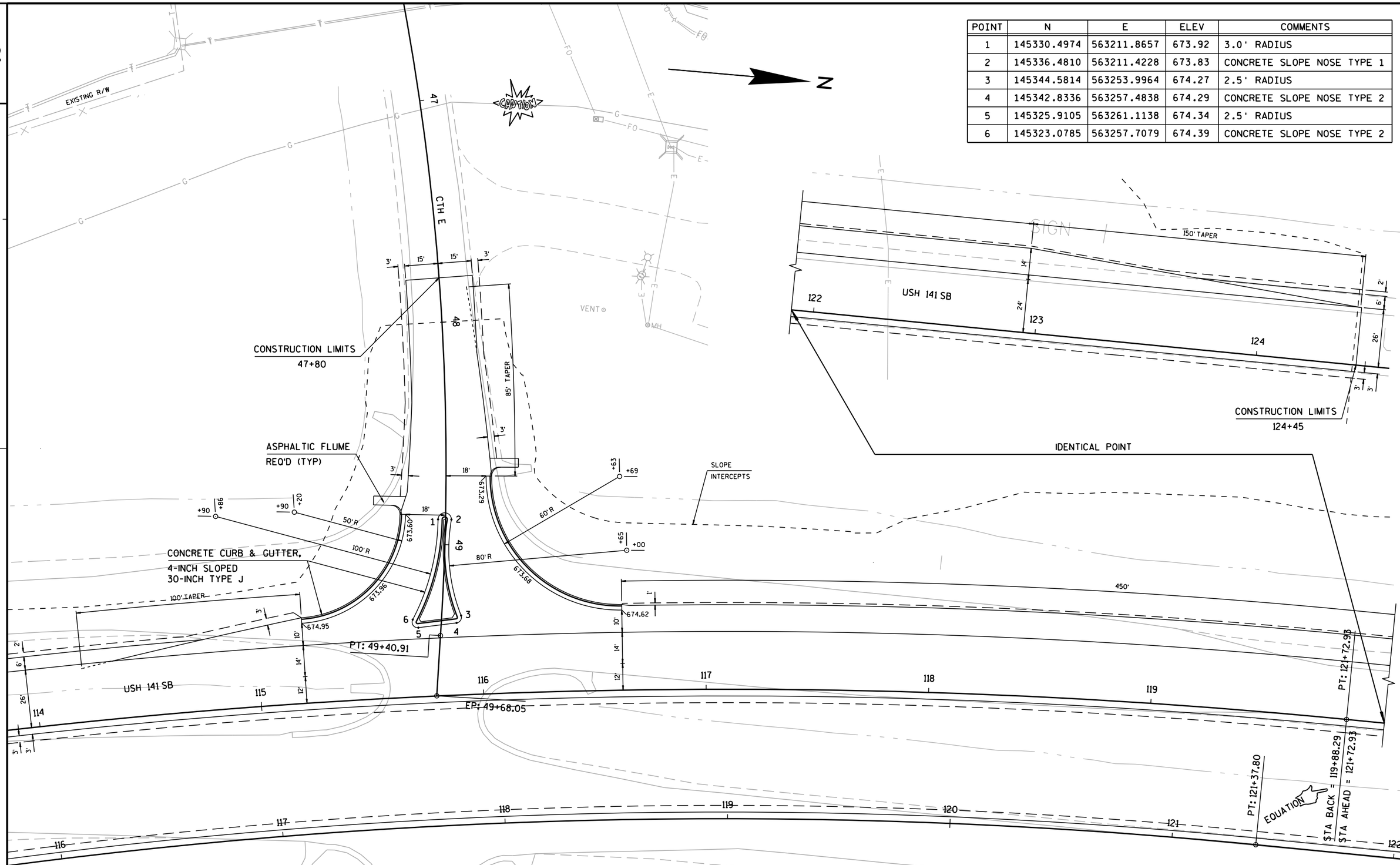

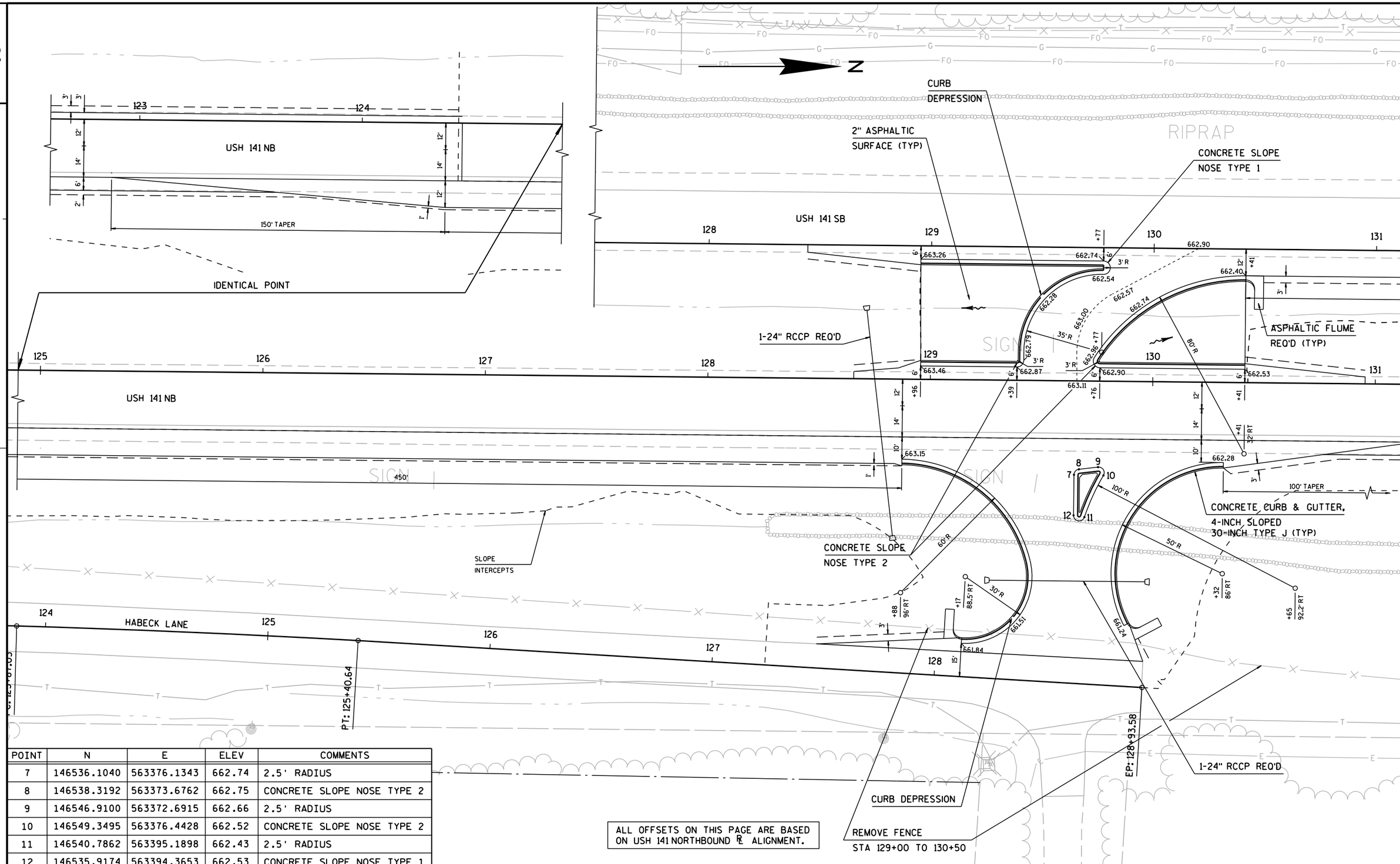

POINT	N	E	ELEV	COMMENTS
7	146536.1040	563376.1343	662.74	2.5' RADIUS
8	146538.3192	563373.6762	662.75	CONCRETE SLOPE NOSE TYPE 2
9	146546.9100	563372.6915	662.66	2.5' RADIUS
10	146549.3495	563376.4428	662.52	CONCRETE SLOPE NOSE TYPE 2
11	146540.7862	563395.1898	662.43	2.5' RADIUS
12	146535.9174	563394.3653	662.53	CONCRETE SLOPE NOSE TYPE 1

ALL OFFSETS ON THIS PAGE ARE BASED ON USH 141 NORTHBOUND ℞ ALIGNMENT.

PROJECT NO:1490-28-71	HWY:USH 141	COUNTY:OCONTO	INTERSECTION DETAIL	SHEET 14	E

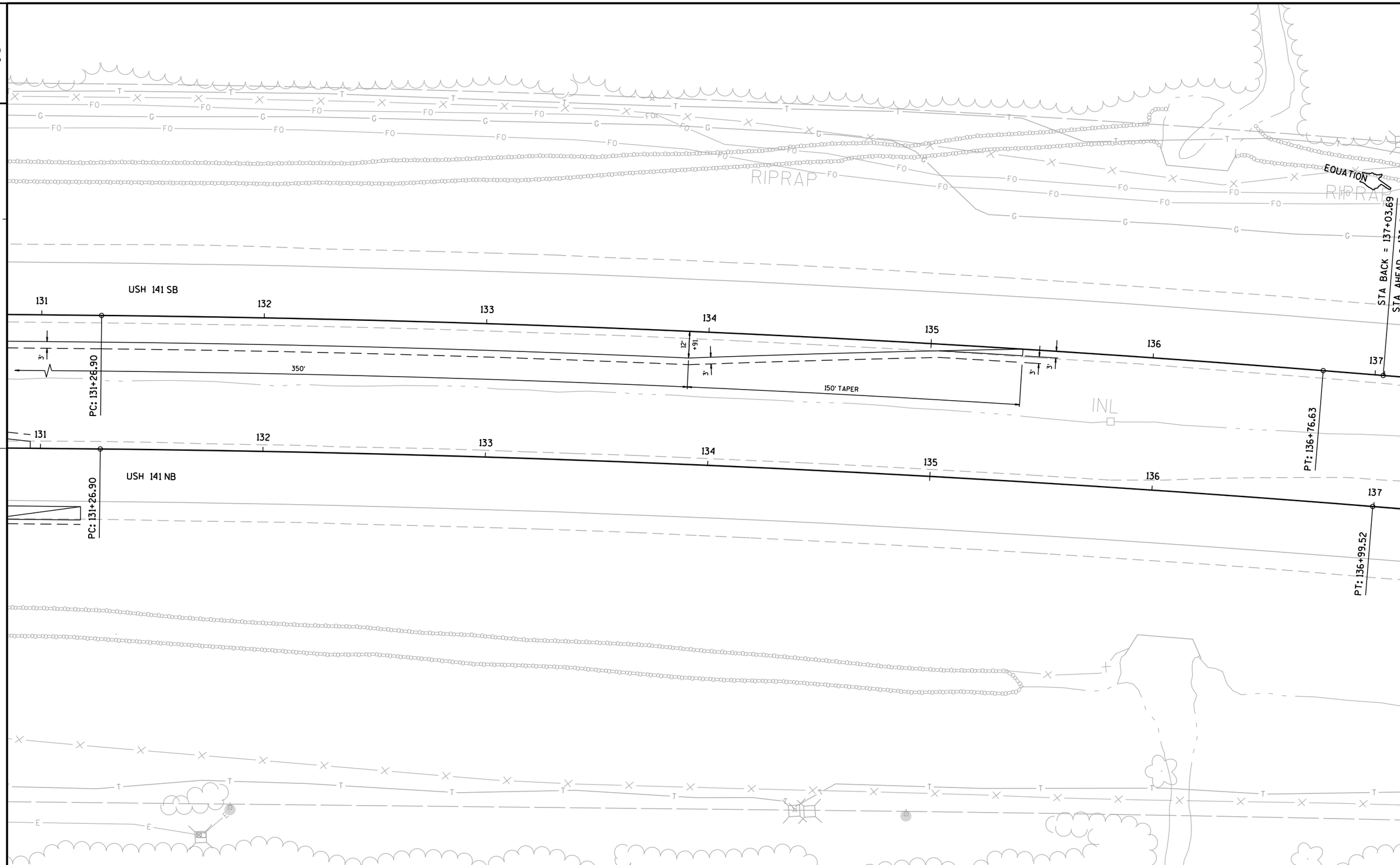

PROJECT NO:1490-28-71	HWY:USH 141	COUNTY:OCONTO	INTERSECTION DETAIL	SHEET 15	E

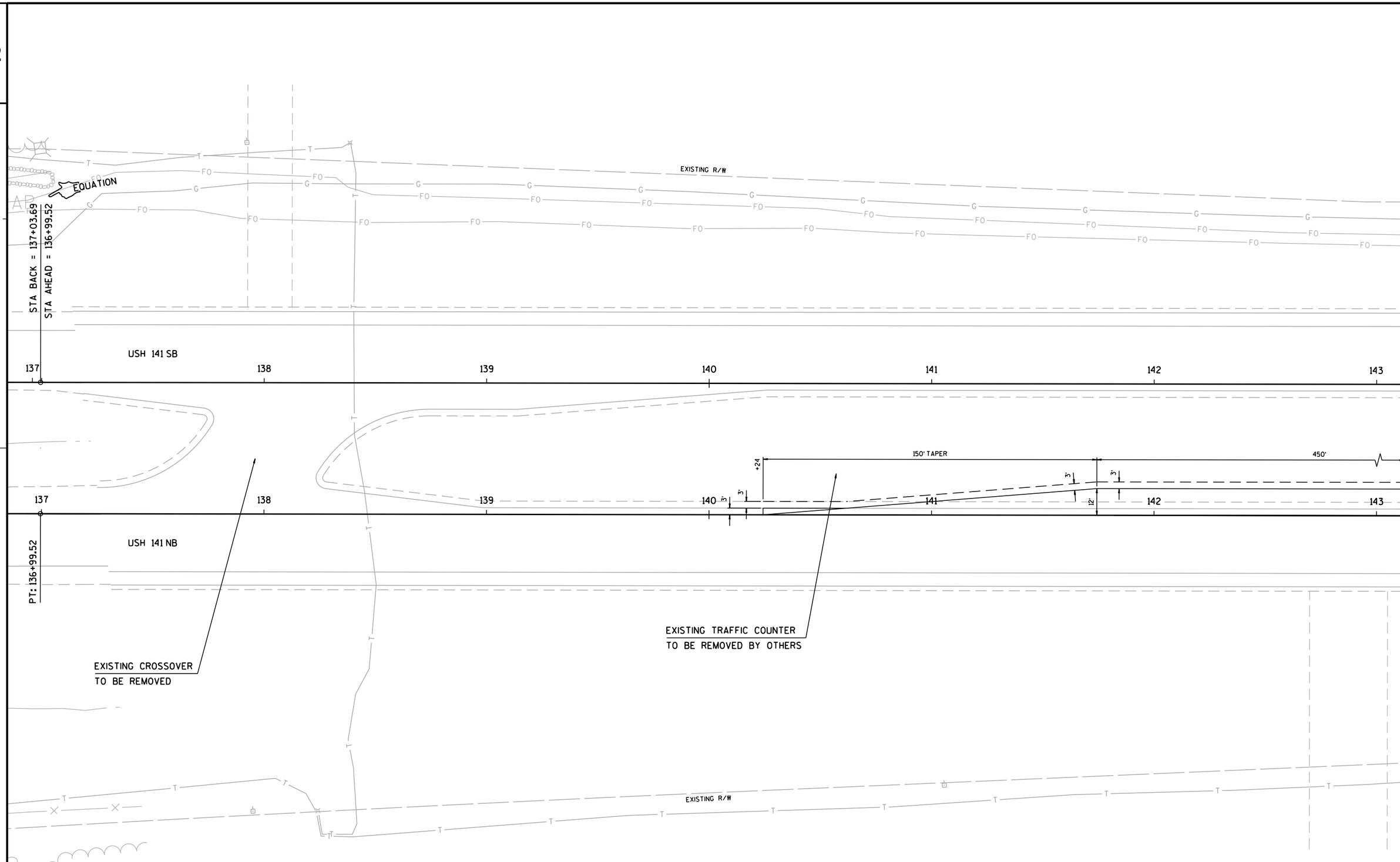

PROJECT NO:1490-28-71	HWY:USH 141	COUNTY:OCONTO	INTERSECTION DETAIL	SHEET	E

FILE NAME : F:\D3_149028\021107_id.dgn PLOT DATE : 04-MAR-2014 10:51 PLOT BY : dotbrb PLOT NAME : 021107 id PLOT SCALE : 40:1 WISDOT/CADDS SHEET 42

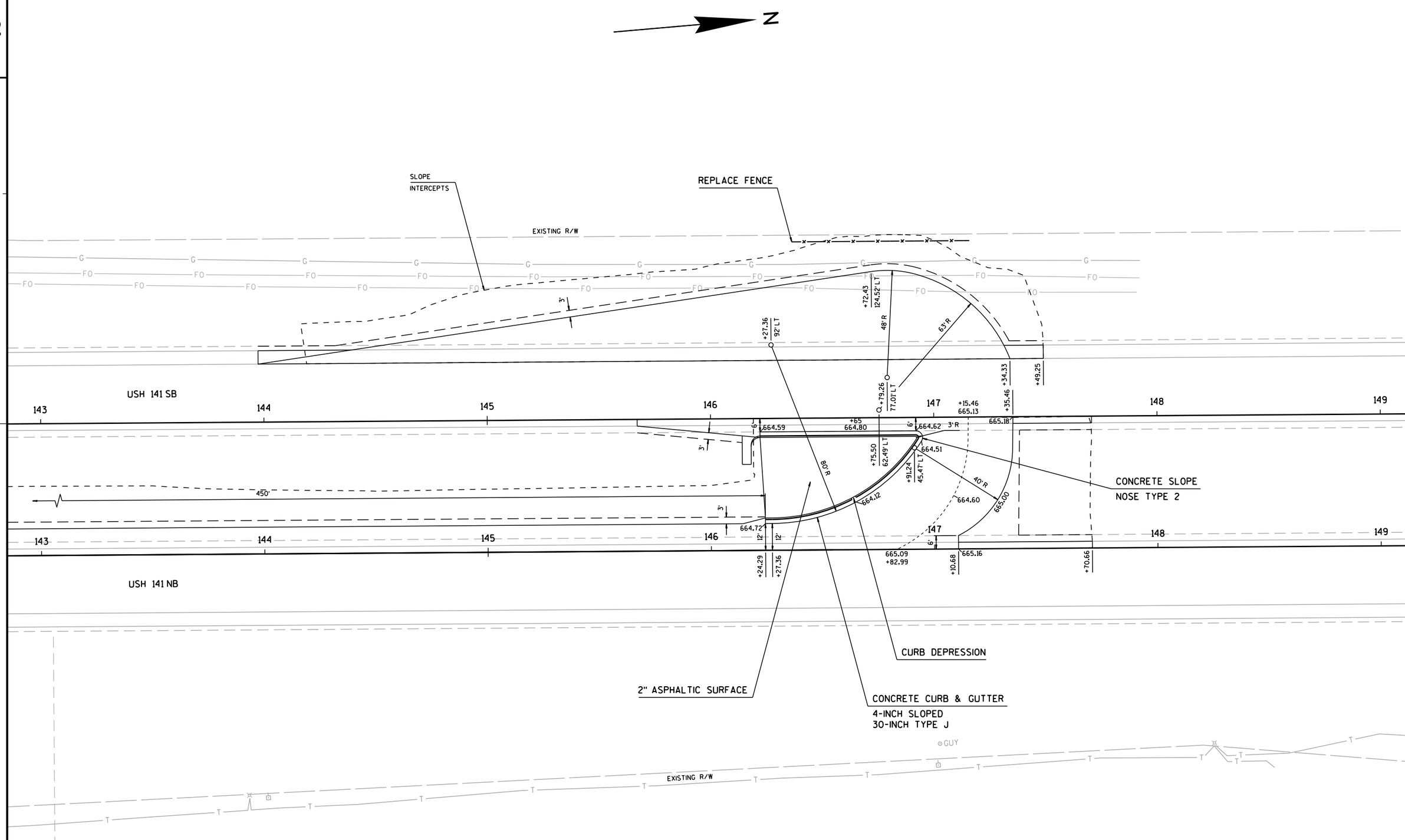

PROJECT NO:1490-28-71	HWY:USH 141	COUNTY:OCONTO	J TURN	SHEET 17	E

2

2

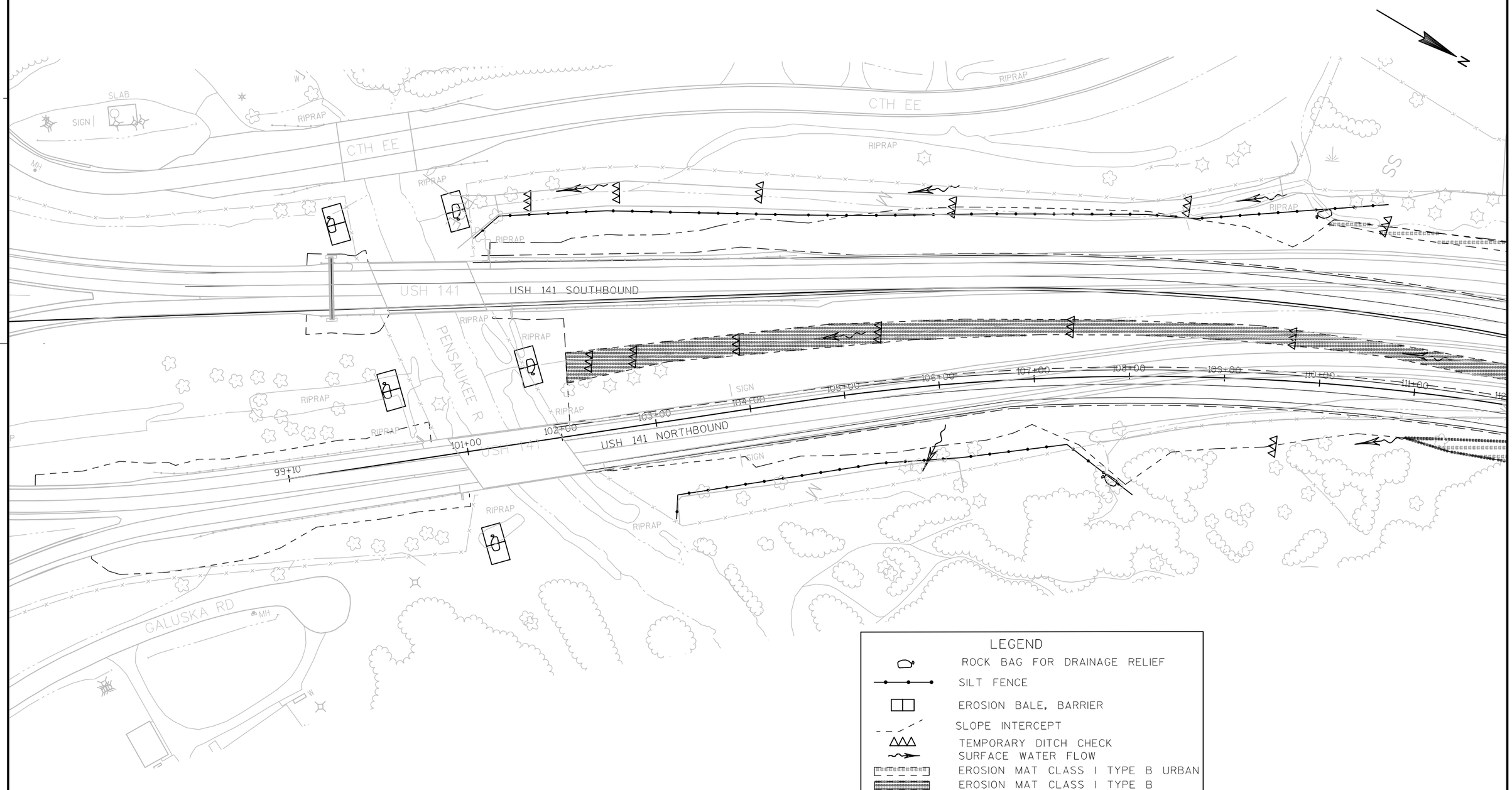

PROJECT NO:1490-28-71	HWY: USH 141	COUNTY: OCONTO	EROSION CONTROL DETAIL	SHEET 18	E

2

2

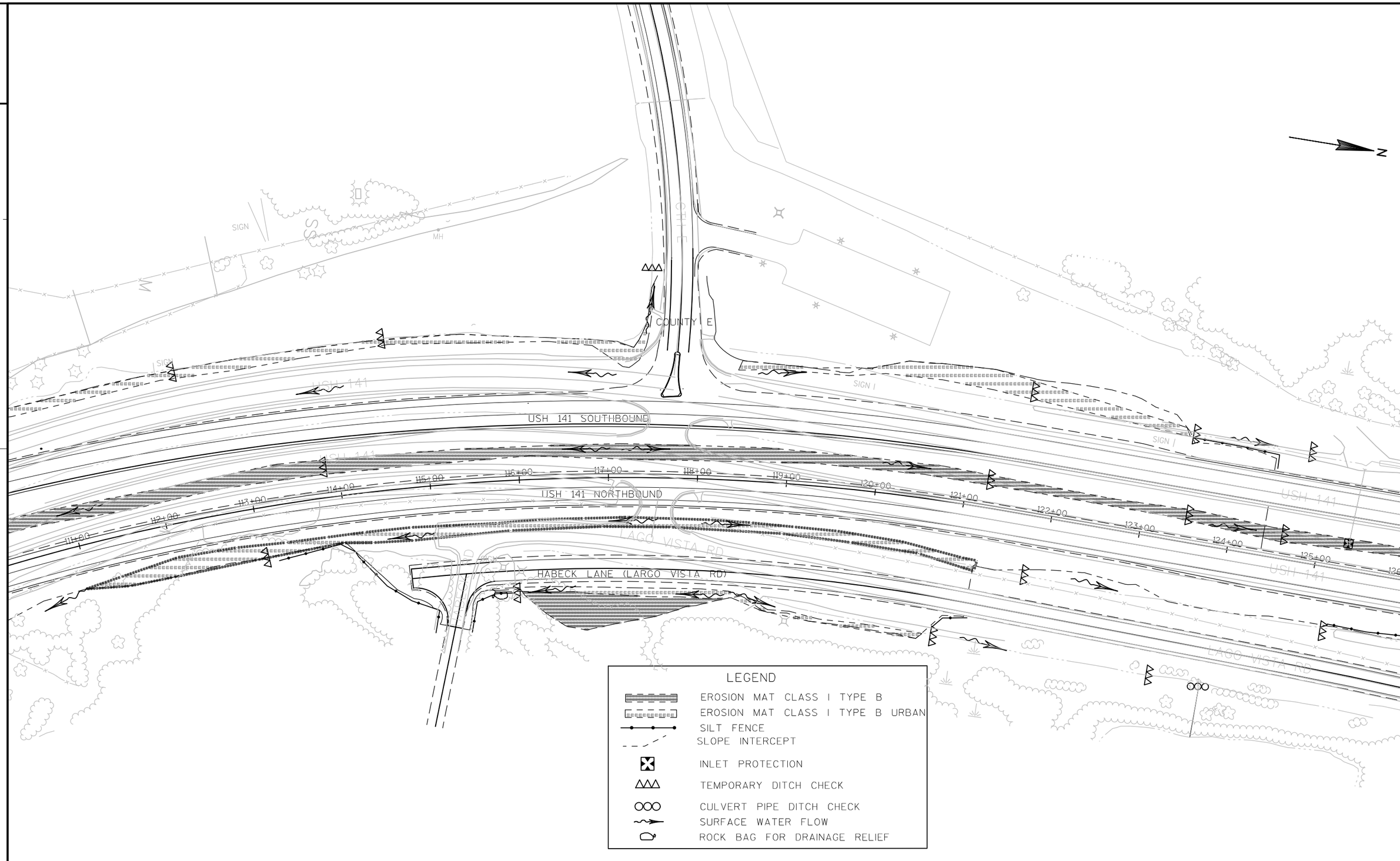

PROJECT NO:1490-28-71	HWY:USH 141	COUNTY:OCONTO	EROSION CONTROL DETAIL	SHEET 19	E

FILE NAME :N:\PDS\C3D\14902800\SHEETSPLAN\USH141-CTHEEROSIONCONTROL.DWG PLOT DATE :2/6/2014 2:16 PM PLOT BY :WALLNER, AARON J PLOT NAME : PLOT SCALE :1:100_XREF

WISDOT/CADDS SHEET 42

2

2

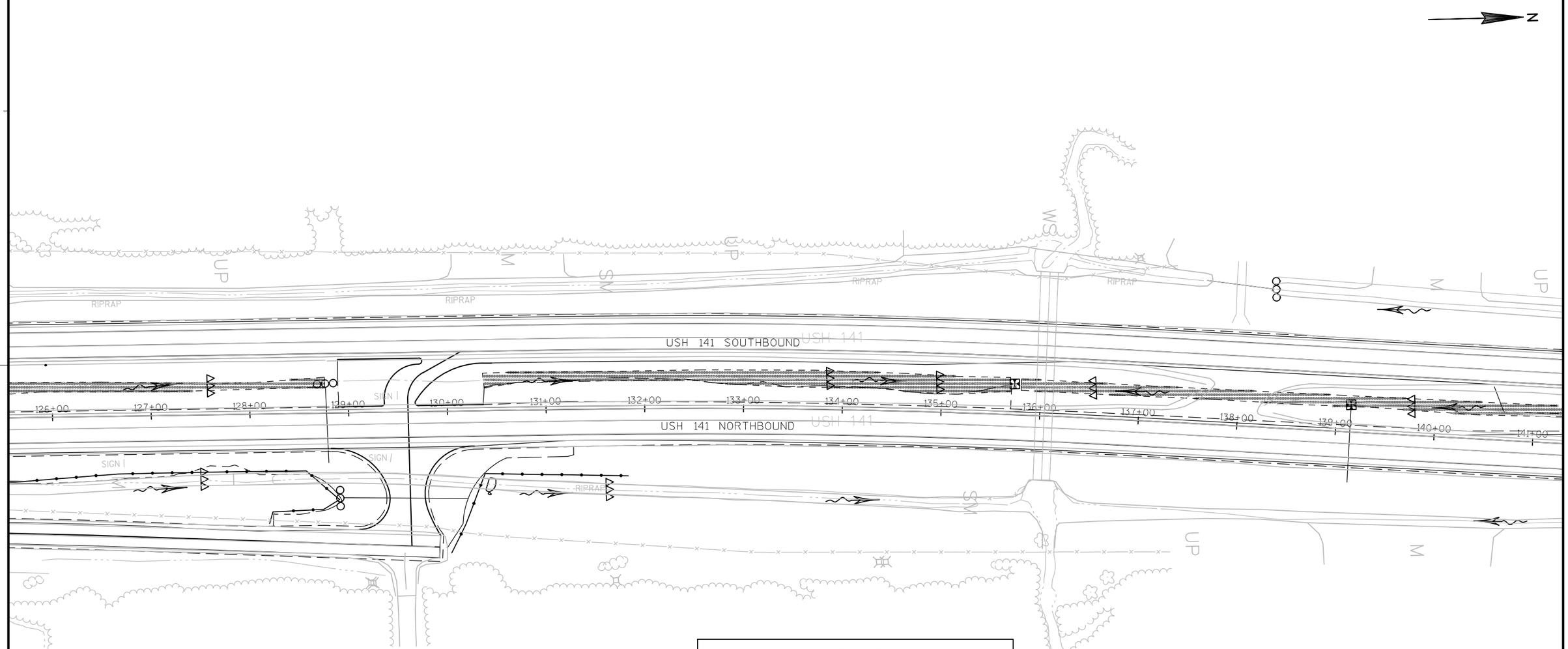

LEGEND

- SLOPE INTERCEPT
- INLET PROTECTION
- TEMPORARY DITCH CHECK
- CULVERT PIPE DITCH CHECK
- SURFACE WATER FLOW
- EROSION MAT CLASS I TYPE B
- ROCK BAG FOR DRAINAGE RELIEF

PROJECT NO:1490-28-71	HWY: USH 141	COUNTY: OCONTO	EROSION CONTROL DETAIL	SHEET 20	E

2

2

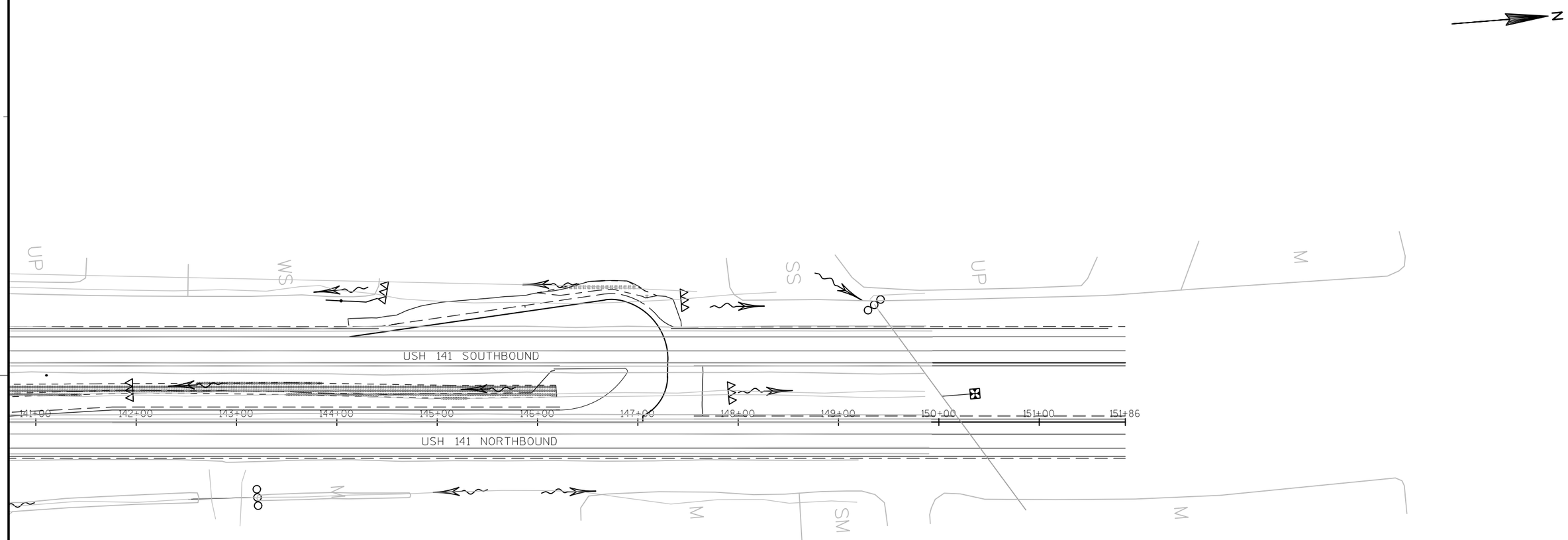

LEGEND

- SLOPE INTERCEPT
- INLET PROTECTION
- TEMPORARY DITCH CHECK
- CULVERT PIPE DITCH CHECK
- SURFACE WATER FLOW
- EROSION MAT CLASS I TYPE B URBAN
- EROSION MAT CLASS I TYPE B

PROJECT NO: 1490-28-71	HWY: USH 141	COUNTY: OCONTO	EROSION CONTROL DETAIL	SHEET 21	E

FILE NAME : N:\PDS\C3D\14902800\SHEETSPLAN\USH141-CTHEEROSIONCONTROL.DWG PLOT DATE : 2/6/2014 2:16 PM PLOT BY : WALLNER, AARON J PLOT NAME : PLOT SCALE : 1:100_XREF

WISDOT/CADDS SHEET 42

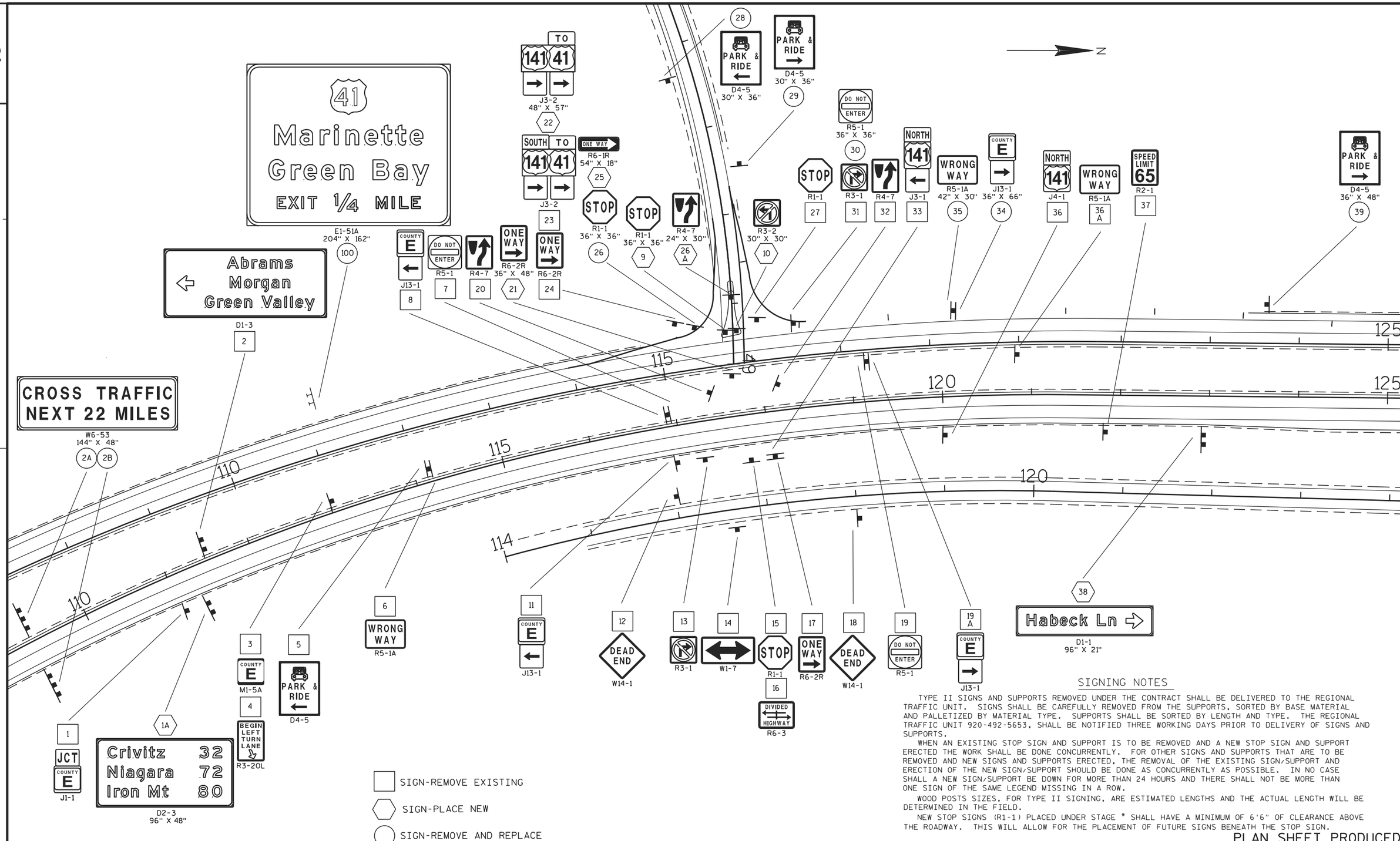

SIGNING NOTES

TYPE II SIGNS AND SUPPORTS REMOVED UNDER THE CONTRACT SHALL BE DELIVERED TO THE REGIONAL TRAFFIC UNIT. SIGNS SHALL BE CAREFULLY REMOVED FROM THE SUPPORTS, SORTED BY BASE MATERIAL AND PALLETIZED BY MATERIAL TYPE. SUPPORTS SHALL BE SORTED BY LENGTH AND TYPE. THE REGIONAL TRAFFIC UNIT 920-492-5653, SHALL BE NOTIFIED THREE WORKING DAYS PRIOR TO DELIVERY OF SIGNS AND SUPPORTS.

WHEN AN EXISTING STOP SIGN AND SUPPORT IS TO BE REMOVED AND A NEW STOP SIGN AND SUPPORT ERECTED THE WORK SHALL BE DONE CONCURRENTLY. FOR OTHER SIGNS AND SUPPORTS THAT ARE TO BE REMOVED AND NEW SIGNS AND SUPPORTS ERECTED, THE REMOVAL OF THE EXISTING SIGN/SUPPORT AND ERECTION OF THE NEW SIGN/SUPPORT SHOULD BE DONE AS CONCURRENTLY AS POSSIBLE. IN NO CASE SHALL A NEW SIGN/SUPPORT BE DOWN FOR MORE THAN 24 HOURS AND THERE SHALL NOT BE MORE THAN ONE SIGN OF THE SAME LEGEND MISSING IN A ROW.

WOOD POSTS SIZES, FOR TYPE II SIGNING, ARE ESTIMATED LENGTHS AND THE ACTUAL LENGTH WILL BE DETERMINED IN THE FIELD.

NEW STOP SIGNS (R1-1) PLACED UNDER STAGE * SHALL HAVE A MINIMUM OF 6'6" OF CLEARANCE ABOVE THE ROADWAY. THIS WILL ALLOW FOR THE PLACEMENT OF FUTURE SIGNS BENEATH THE STOP SIGN.

PLAN SHEET PRODUCED
BY WisDOT-NE REGION

PROJECT NO:1490-28-71	HWY:USH 141	COUNTY:OCONTO	PERMANENT SIGNING PLAN	SHEET 22	E

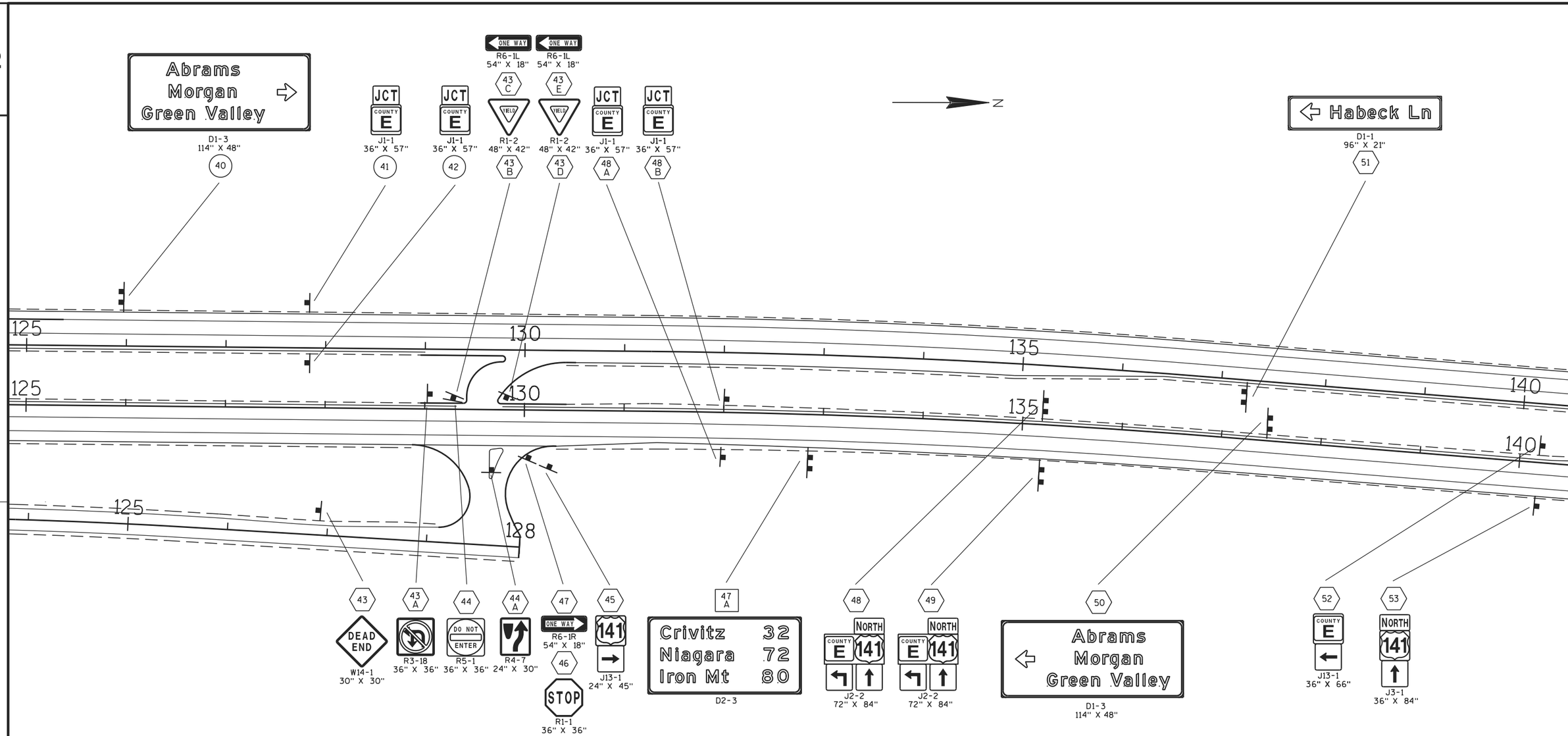

SIGNING NOTES

TYPE II SIGNS AND SUPPORTS REMOVED UNDER THE CONTRACT SHALL BE DELIVERED TO THE REGIONAL TRAFFIC UNIT. SIGNS SHALL BE CAREFULLY REMOVED FROM THE SUPPORTS, SORTED BY BASE MATERIAL AND PALLETIZED BY MATERIAL TYPE. SUPPORTS SHALL BE SORTED BY LENGTH AND TYPE. THE REGIONAL TRAFFIC UNIT 920-492-5653, SHALL BE NOTIFIED THREE WORKING DAYS PRIOR TO DELIVERY OF SIGNS AND SUPPORTS.

WHEN AN EXISTING STOP SIGN AND SUPPORT IS TO BE REMOVED AND A NEW STOP SIGN AND SUPPORT ERECTED THE WORK SHALL BE DONE CONCURRENTLY. FOR OTHER SIGNS AND SUPPORTS THAT ARE TO BE REMOVED AND NEW SIGNS AND SUPPORTS ERECTED, THE REMOVAL OF THE EXISTING SIGN/SUPPORT AND ERECTION OF THE NEW SIGN/SUPPORT SHOULD BE DONE AS CONCURRENTLY AS POSSIBLE. IN NO CASE SHALL A NEW SIGN/SUPPORT BE DOWN FOR MORE THAN 24 HOURS AND THERE SHALL NOT BE MORE THAN ONE SIGN OF THE SAME LEGEND MISSING IN A ROW.

WOOD POSTS SIZES, FOR TYPE II SIGNING, ARE ESTIMATED LENGTHS AND THE ACTUAL LENGTH WILL BE DETERMINED IN THE FIELD.

NEW STOP SIGNS (R1-1) PLACED UNDER STAGE * SHALL HAVE A MINIMUM OF 6'6" OF CLEARANCE ABOVE THE ROADWAY. THIS WILL ALLOW FOR THE PLACEMENT OF FUTURE SIGNS BENEATH THE STOP SIGN.

SIGN-REMOVE EXISTING

SIGN-PLACE NEW

SIGN-REMOVE AND REPLACE

PLAN SHEET PRODUCED BY WisDOT-NE REGION

PROJECT NO:1490-28-71	HWY:USH 141	COUNTY:OCONTO	PERMANENT SIGNING PLAN	SHEET 23	E

SIGNING NOTES

TYPE II SIGNS AND SUPPORTS REMOVED UNDER THE CONTRACT SHALL BE DELIVERED TO THE REGIONAL TRAFFIC UNIT. SIGNS SHALL BE CAREFULLY REMOVED FROM THE SUPPORTS, SORTED BY BASE MATERIAL AND PALLETIZED BY MATERIAL TYPE. SUPPORTS SHALL BE SORTED BY LENGTH AND TYPE. THE REGIONAL TRAFFIC UNIT 920-492-5653, SHALL BE NOTIFIED THREE WORKING DAYS PRIOR TO DELIVERY OF SIGNS AND SUPPORTS.

WHEN AN EXISTING STOP SIGN AND SUPPORT IS TO BE REMOVED AND A NEW STOP SIGN AND SUPPORT ERECTED THE WORK SHALL BE DONE CONCURRENTLY. FOR OTHER SIGNS AND SUPPORTS THAT ARE TO BE REMOVED AND NEW SIGNS AND SUPPORTS ERECTED, THE REMOVAL OF THE EXISTING SIGN/SUPPORT AND ERECTION OF THE NEW SIGN/SUPPORT SHOULD BE DONE AS CONCURRENTLY AS POSSIBLE. IN NO CASE SHALL A NEW SIGN/SUPPORT BE DOWN FOR MORE THAN 24 HOURS AND THERE SHALL NOT BE MORE THAN ONE SIGN OF THE SAME LEGEND MISSING IN A ROW.

WOOD POSTS SIZES, FOR TYPE II SIGNING, ARE ESTIMATED LENGTHS AND THE ACTUAL LENGTH WILL BE DETERMINED IN THE FIELD.

NEW STOP SIGNS (R1-1) PLACED UNDER STAGE * SHALL HAVE A MINIMUM OF 6'6" OF CLEARANCE ABOVE THE ROADWAY. THIS WILL ALLOW FOR THE PLACEMENT OF FUTURE SIGNS BENEATH THE STOP SIGN.

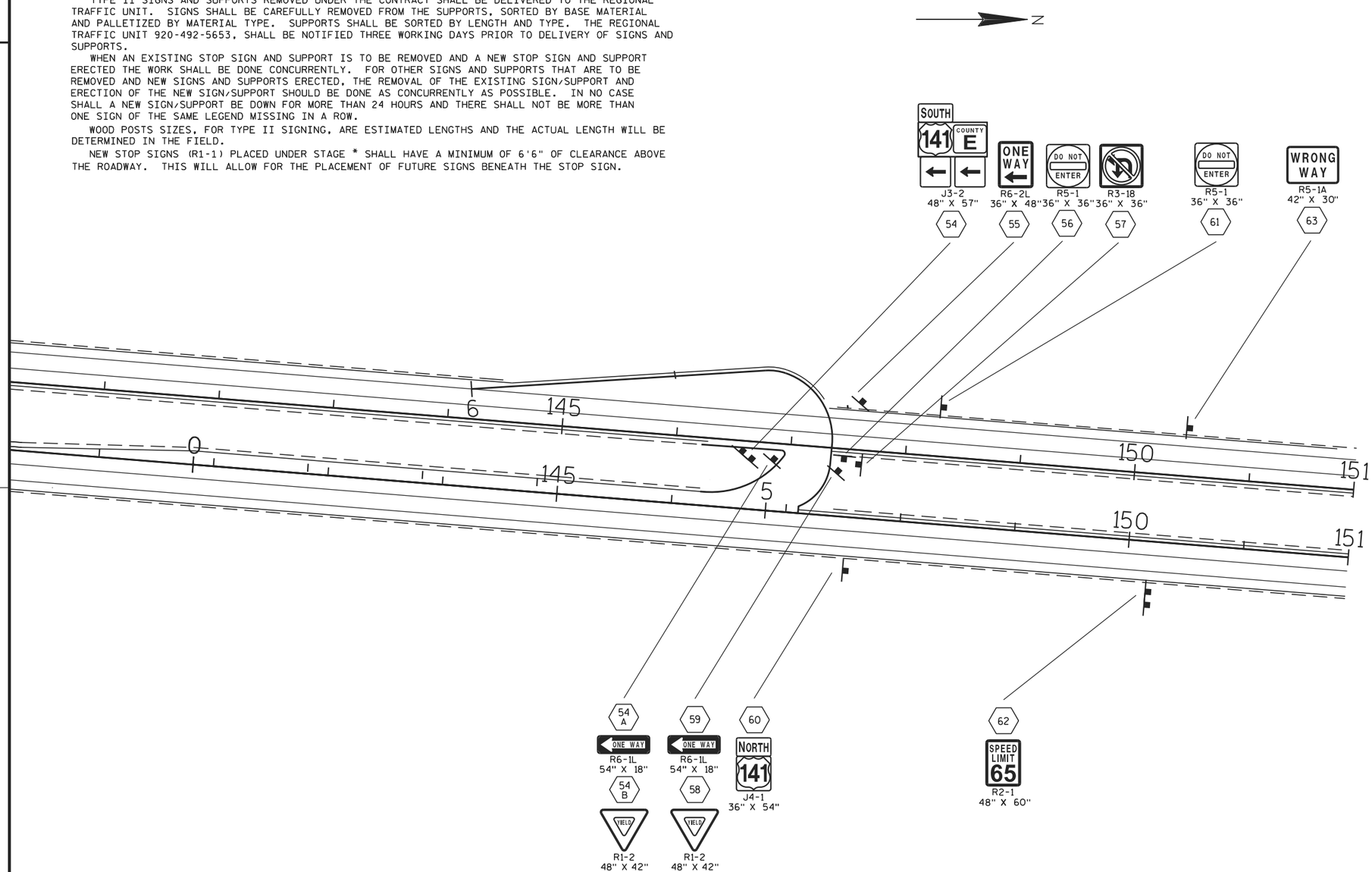

SIGN-REMOVE EXISTING

SIGN-PLACE NEW

SIGN-REMOVE AND REPLACE

PLAN SHEET PRODUCED BY WisDOT-NE REGION

PROJECT NO:1490-28-71	HWY:USH 141	COUNTY:OCONTO	PERMANENT SIGNING PLAN	SHEET 24	E

NOTES:

WISCONSIN DOT NORTHEAST REGION ELECTRICAL UNIT SHALL APPROVE FINAL LOCATIONS FOR ALL CONCRETE BASES IN THE FIELD PRIOR TO CONSTRUCTION. CONTACT THEM 3 DAYS IN ADVANCE AT (920) 492-5710.

THE LOCATION OF EXISTING AND PROPOSED UTILITIES AS SHOWN ON THE PLANS ARE APPROXIMATE. IN ADDITION, THERE MAY BE OTHER UTILITIES WITHIN THE PROJECT AREA WHICH ARE NOT SHOWN. THE CONTRACTOR SHALL VERIFY THE LOCATIONS OF ALL UTILITIES PRIOR TO CONSTRUCTION.

N

EXAMPLE (see individual label on each lighting unit)

III-LED A-12-5-A-4

- LIGHT UNIT NUMBER IN CIRCUIT
- CIRCUIT NUMBER
- BASE TYPE
- MAST ARM LENGTH (in feet)
- LAMP WATTAGE
- DISTRIBUTION TYPE

240 VOLT SYSTEM

120/240 VOLT ELECTRIC SERVICE

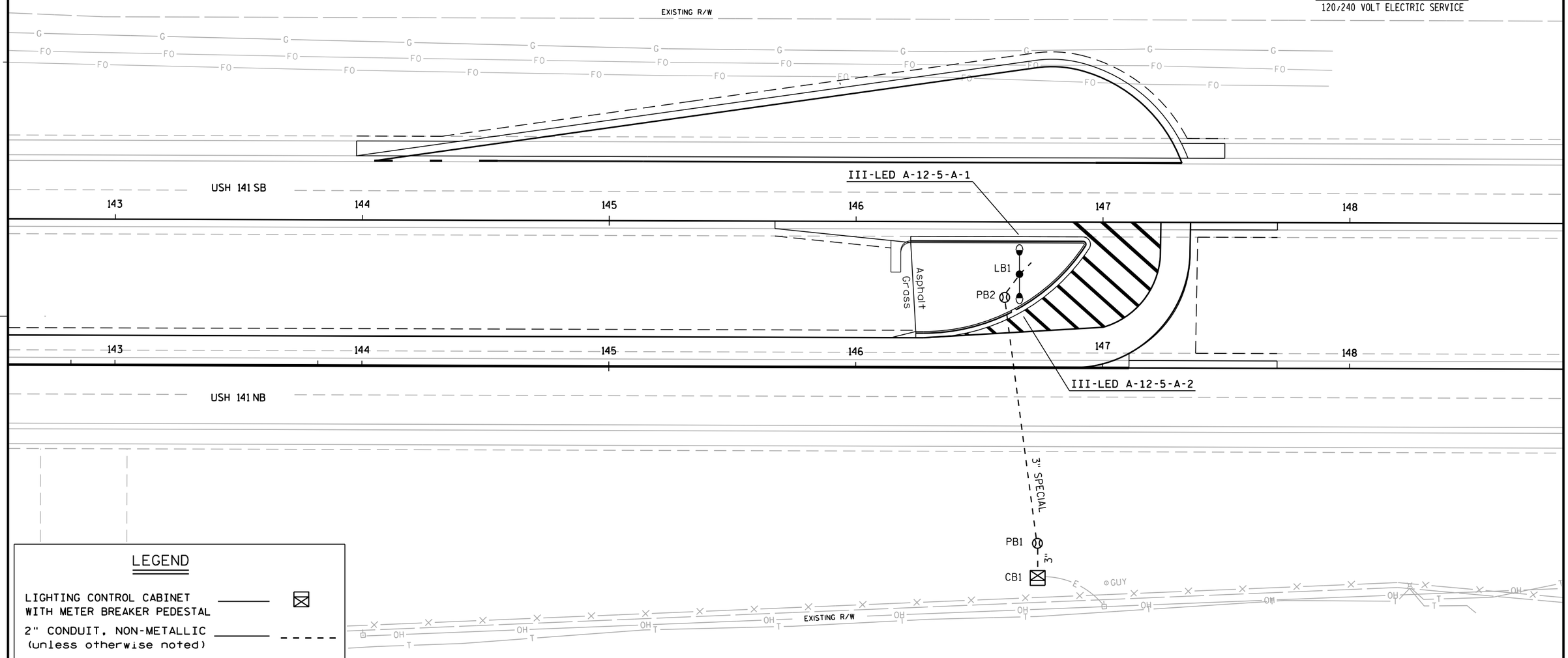

LEGEND

- LIGHTING CONTROL CABINET WITH METER BREAKER PEDESTAL
- 2" CONDUIT, NON-METALLIC (unless otherwise noted)
- LIGHTING UNIT
- PULL BOX 24" X 42"
- POWER POLE
- ELECTRIC, UNDERGROUND — E —
- ELECTRIC, OVERHEAD — OH —

USH 141 & CTH E
TOWN OF ABRAMS
OCONTO COUNTY

LIGHTING NO. 42-2005

DESIGNER: WISDOT NE REGION TRAFFIC UNIT

DATE: 1-9-2014 SHEET NO. 1 OF 1

PROJECT NO: 1490-28-71	HWY: USH 141	COUNTY: OCONTO	CONSTRUCTION DETAIL - "J" TURN LIGHTING	SHEET 25	E

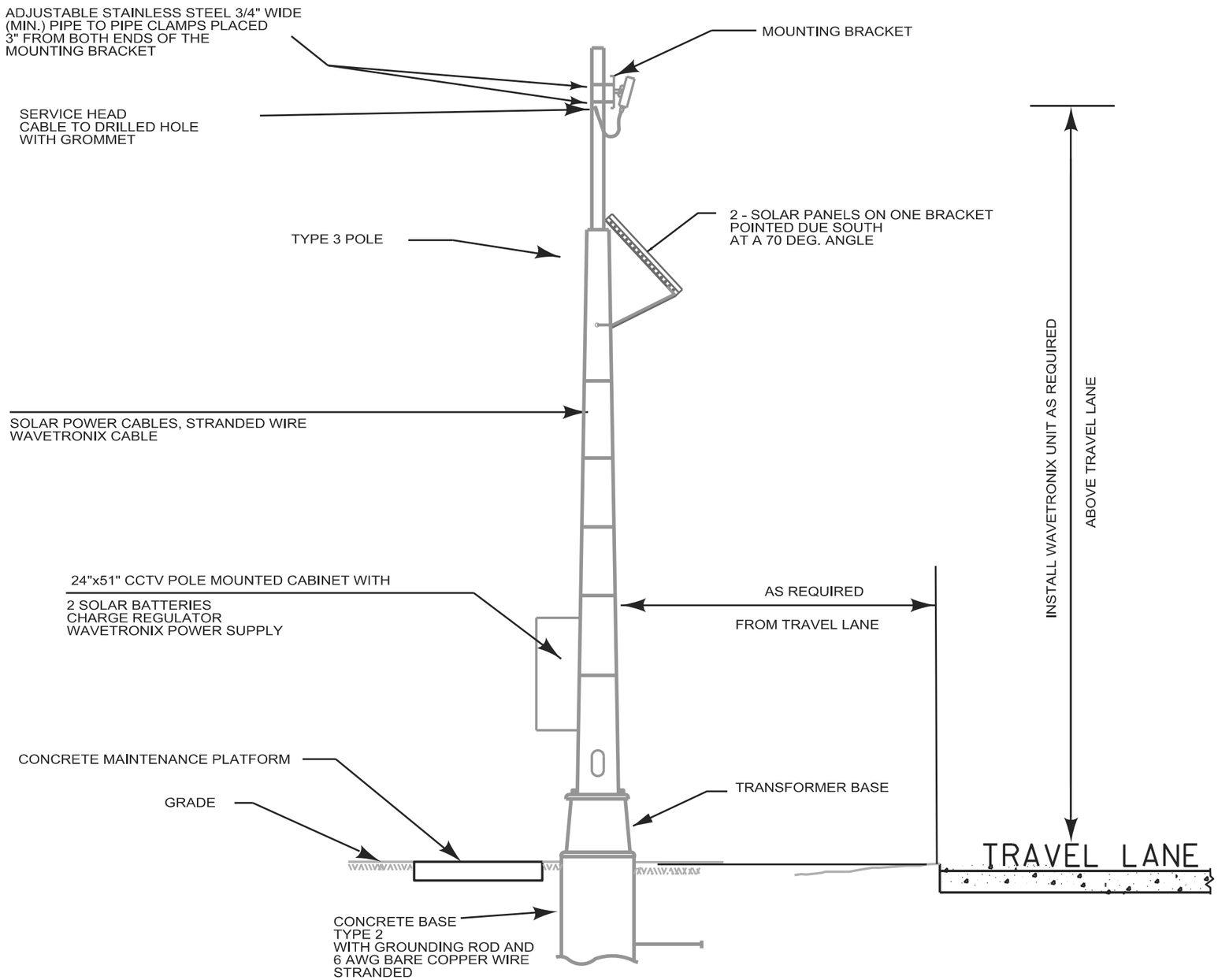

WAVETRONIX DETECTOR INSTALLATION

SOLAR POWER, ON TYPE 3 POLE

(NOT TO SCALE)

DESIGNED BY WISDOT CO

PROJECT NO: 1490-28-71	HWY: USH 141	COUNTY: OCONTO	WAVETRONIX DETECTOR POLE LAYOUT (ATR 426111)	SHEET	E

FILE NAME $$...designfile....$$ PLOT DATE $$...plottingdate...$$ PLOT BY $$...plotuser...$$ PLOT NAME : PLOT SCALE $$...plotscale...$$

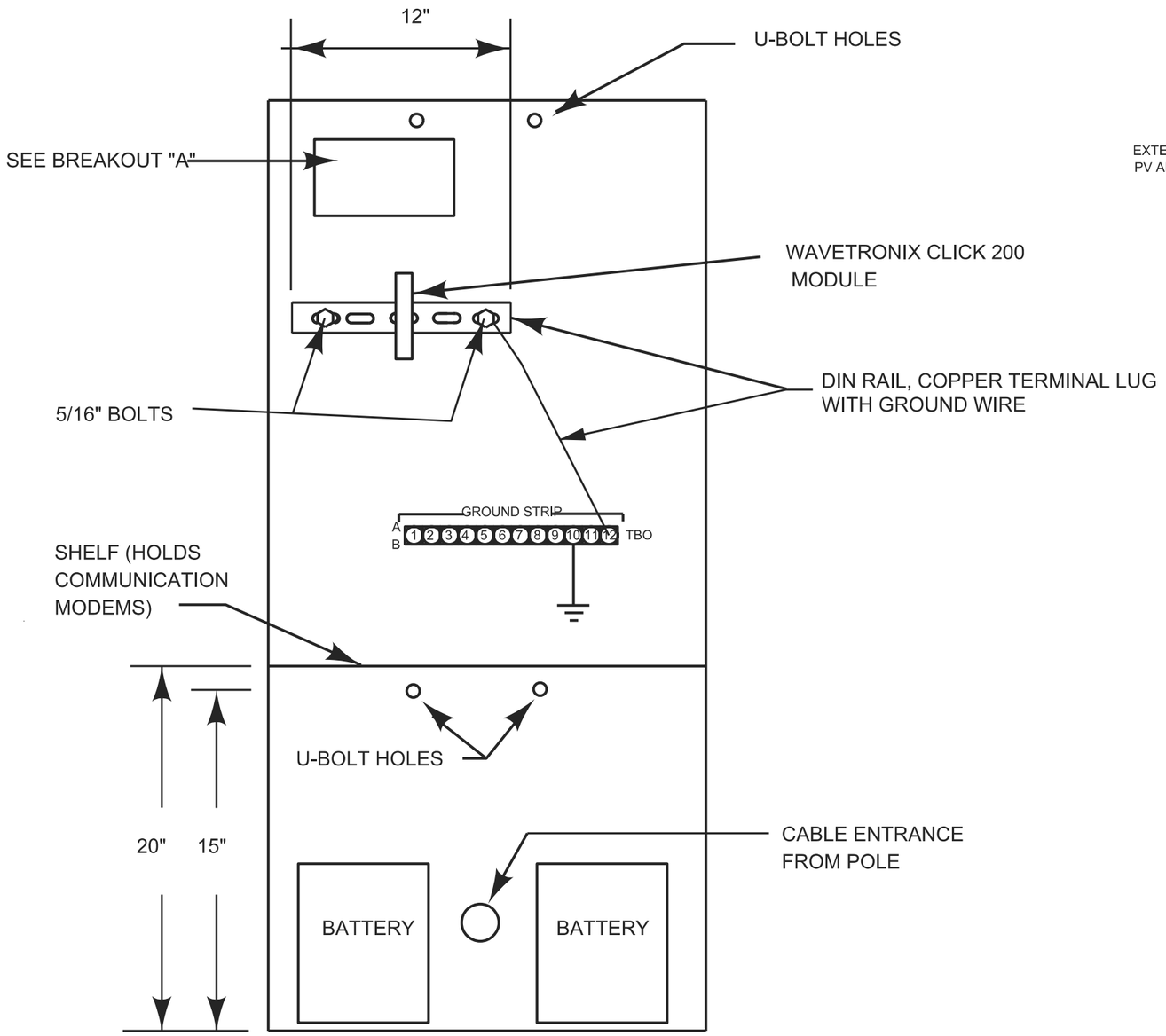

FRONT VIEW/LAYOUT
(NOT TO SCALE)

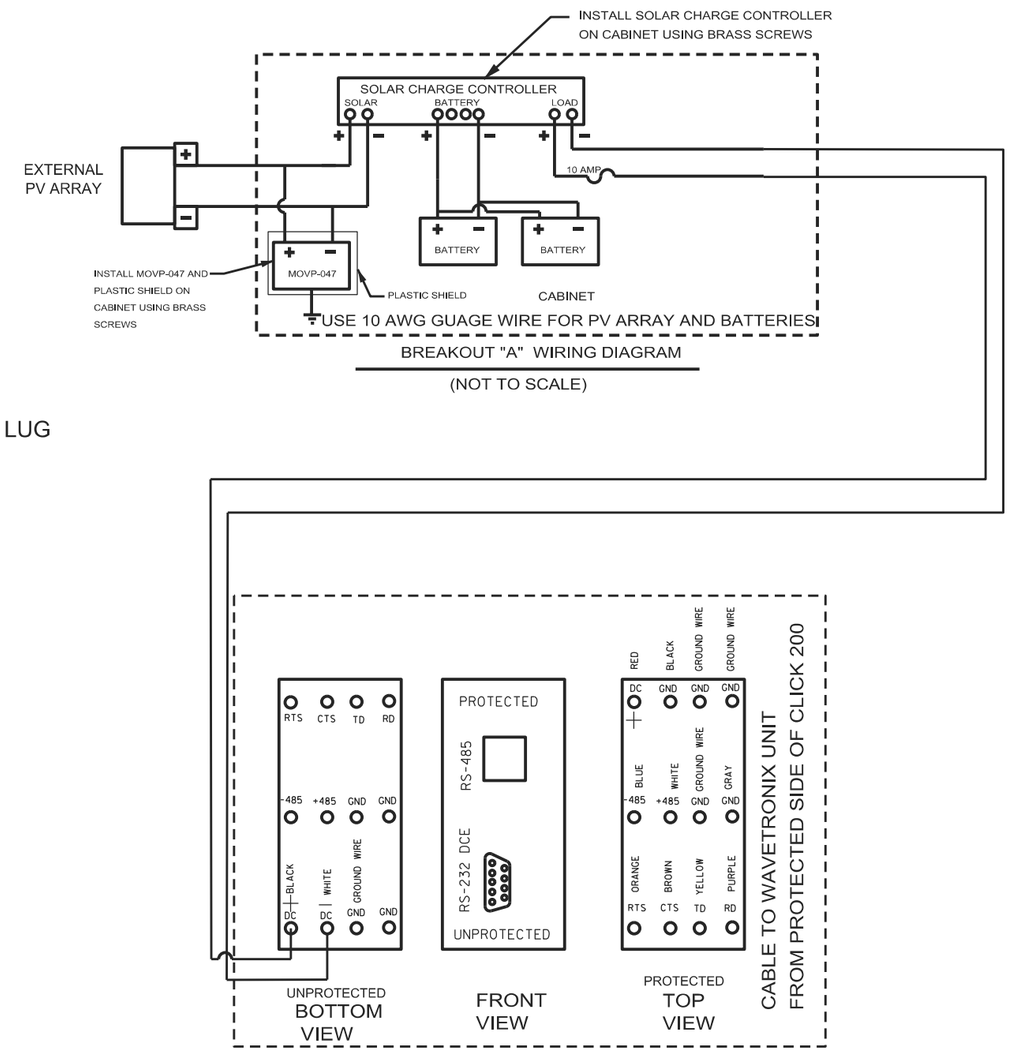

BREAKOUT "A" WIRING DIAGRAM
(NOT TO SCALE)

WAVETRONIX CLICK 200 MODULE
WIRING DIAGRAM
(NOT TO SCALE)

CCTV POLE-MOUNTED CABINET USED IN SOLAR INSTALLATION

CCTV POLE-MOUNTED CABINET LAYOUT

ATR - WAVETRONIX

DESIGNED BY WISDOT DOT CO
SHEET 2 OF 2

PROJECT NO: 1490-28-71	HWY: USH 141	COUNTY: OCONTO	INSTALLATION OF ATR - WAVETRONIX DETECTOR 426111	SHEET 27	E

FILE NAME : $$...designfile....$$ PLOT DATE : $$...plottingdate...$$ PLOT BY : $$...plotuser...$$ PLOT NAME : PLOT SCALE : $$...plotscale.....$$

2

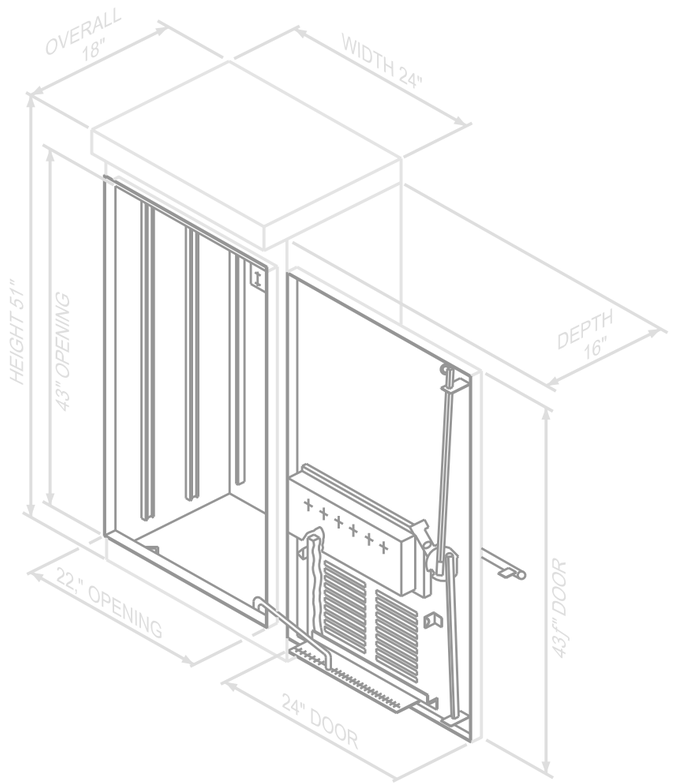

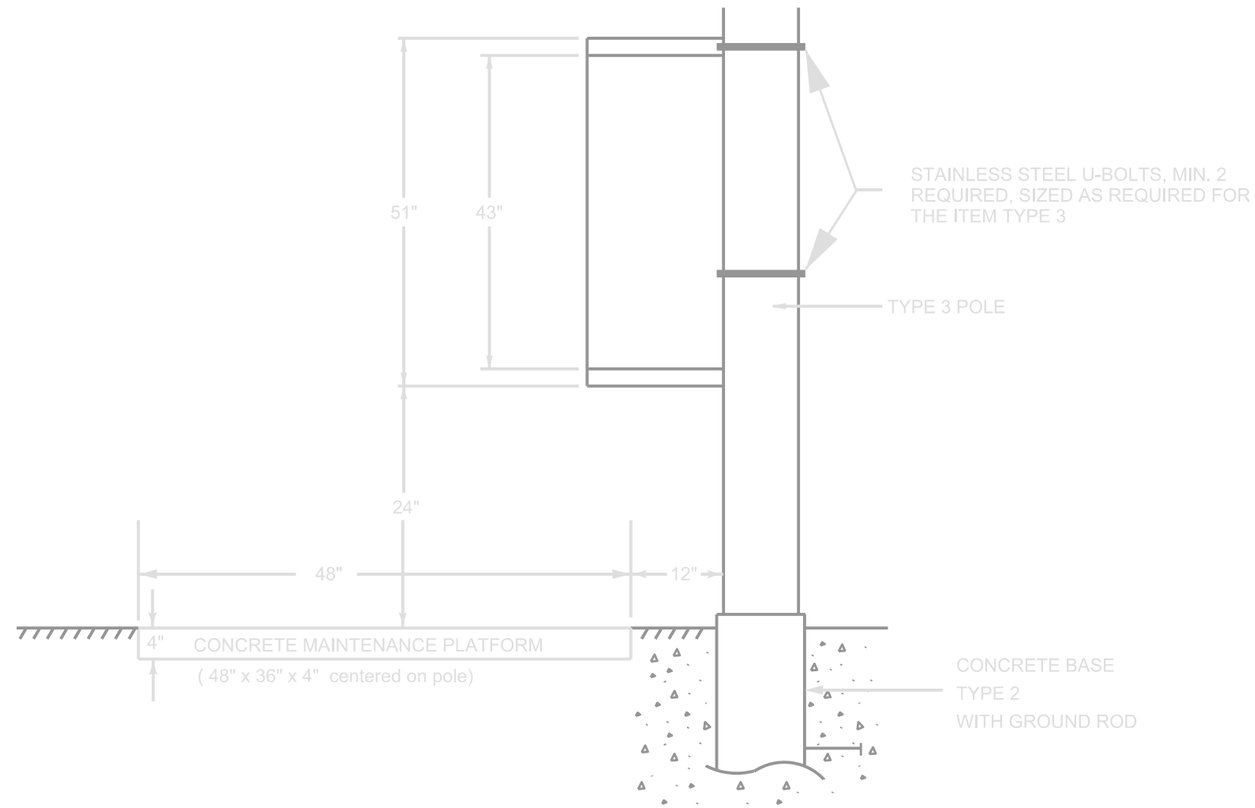

CCTV POLE-MOUNTED CABINET USED IN SOLAR INSTALLATION

DESIGNED BY WISDOT CO
SHEET 1 OF 2

CCTV POLE-MOUNTED CABINET

ATR - WAVETRONIX

PROJECT NO: 1490-28-71	HWY: USH 141	COUNTY: OCONTO	INSTALLATION OF ATR CABINET/WAVETRONIX ATR 426111	SHEET 28	E

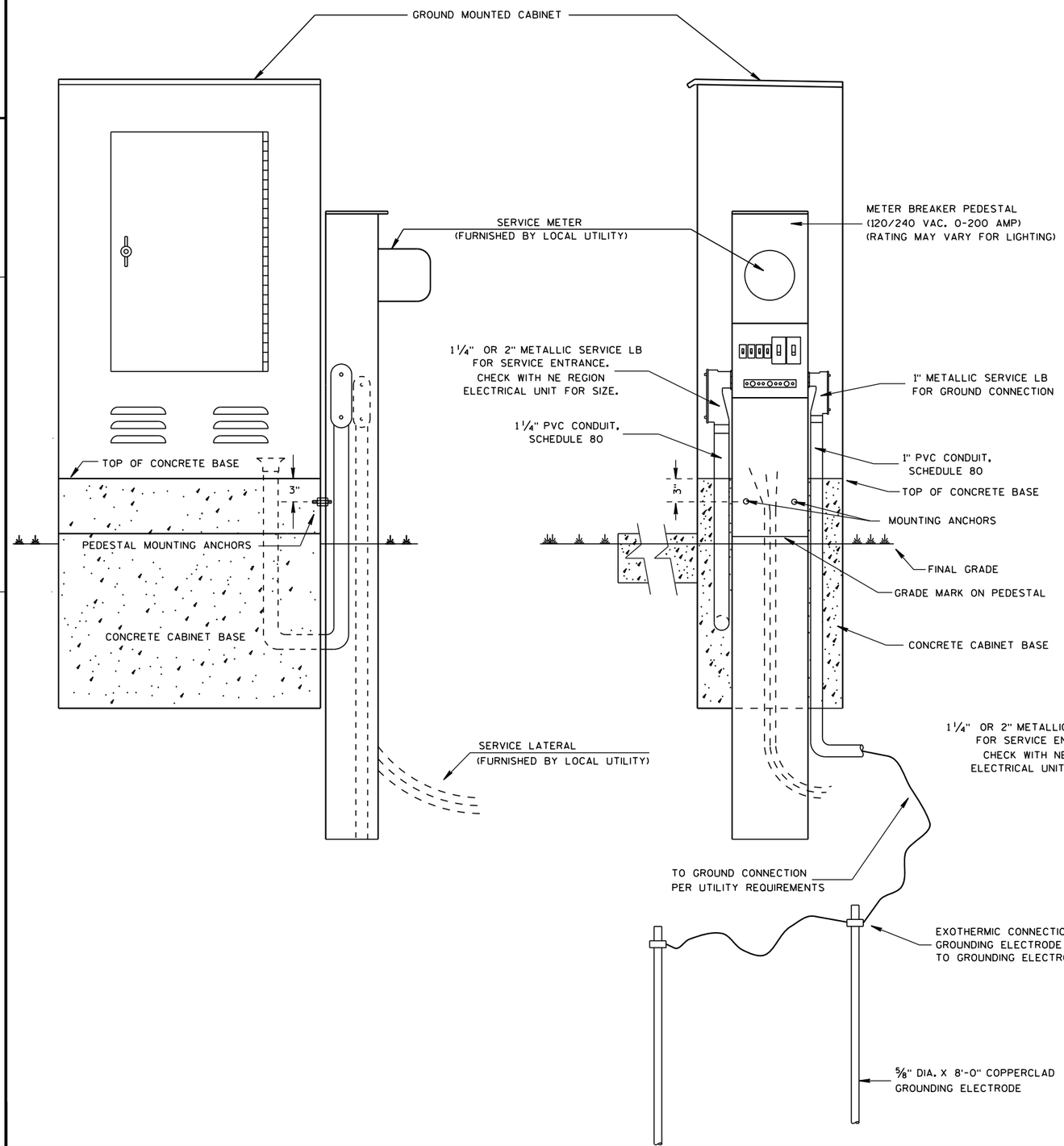

GENERAL NOTES

DETAILS OF CONSTRUCTION, MATERIALS AND WORKMANSHIP NOT SHOWN ON THIS DRAWING SHALL CONFORM TO THE PERTINENT REQUIREMENTS OF THE CONTRACT.

THE EXACT LOCATION OF THE METER BREAKER PEDESTAL SHALL BE DETERMINED BY THE ENGINEER IN THE FIELD.

THE TYPE OF CONCRETE CABINET BASE TO BE INSTALLED SHALL BE AS CALLED FOR IN THE PLANS.

TO FACILITATE FLUSH MOUNTING OF THE METER BREAKER PEDESTAL AGAINST THE SIDE OF THE CABINET BASE (IF FLUSH MOUNTING POSSIBLE. CONFER WITH THE LOCAL UTILITY TO DETERMINE WHICH SIDE OF THE CONCRETE BASE THE ELECTRICAL SERVICE LATERAL WILL APPROACH. THEN FORM THAT INDICATED SIDE FOR FULL SIDE DEPTH.

WHILE FLUSH MOUNTING IS THE MOST DESIRABLE MOUNTING CONFIGURATION UTILITY REQUIREMENTS MAY PRECLUDE THIS OPTION. CONTRACTOR MUST PROVIDE UTILITY APPROVED PEDESTAL AND INSTALL PER UTILITY AND MANUFACTURERS REQUIREMENTS.

SERVICE CONDUCTOR ENTRANCES SHALL BE RIGID METALLIC CONDUIT OR SCHEDULE 80 PVC, NIPPLES AND/OR CONDULETS AS REQUIRED. CONDUIT LB SHALL BE OF METALLIC SERVICE ENTRANCE TYPE.

SERVICE CONDUCTOR ENTRANCES SHALL BE SIZED AND LOCATED AS REQUIRED BY THE LOCAL UTILITY AND IN ACCORDANCE WITH APPROPRIATE ARTICLES OF THE LATEST ACCEPTED NATIONAL ELECTRICAL CODE.

IF MORE THAN ONE GROUNDING ELECTRODE IS REQUIRED, THE DISTANCE APART SHALL BE 6 FEET OR PER NEC.

* SOME PEDESTAL LIGHTING PLANS SHOW MAIN LUGS ONLY.

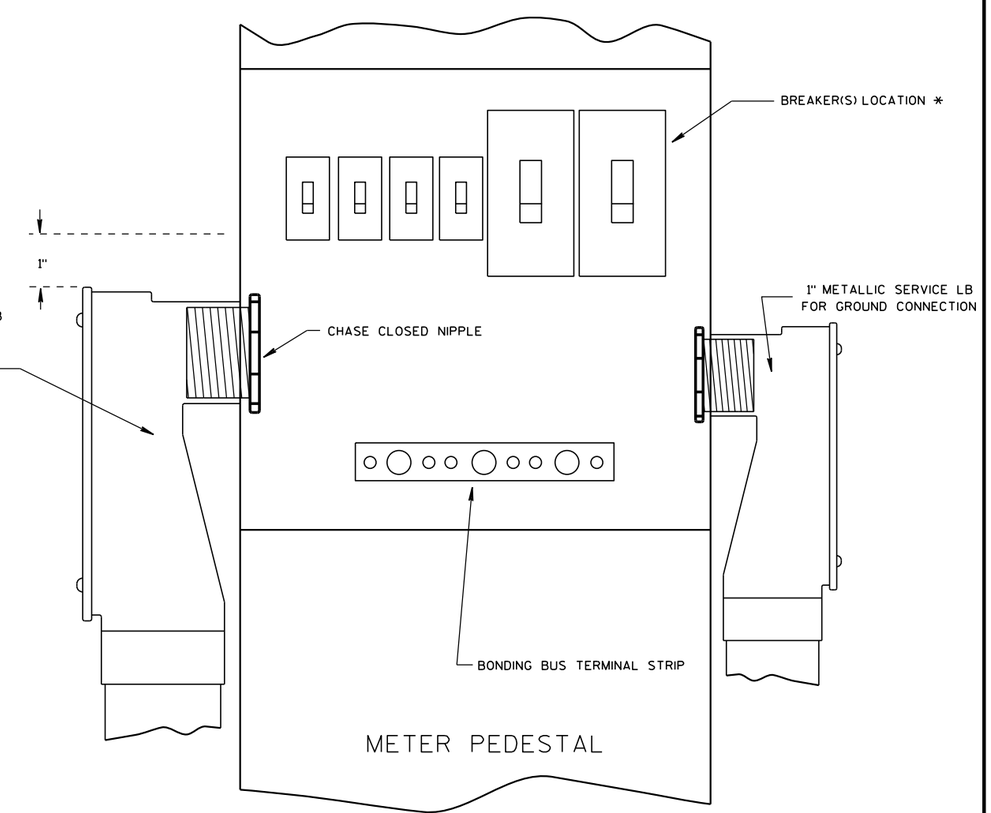

CONTROL CABINET BASE TYPE	DIMENSIONS	C.Y. CONCRETE (APPROX.)
TYPE 10 - POST MOUNT	AS SHOWN	0.75

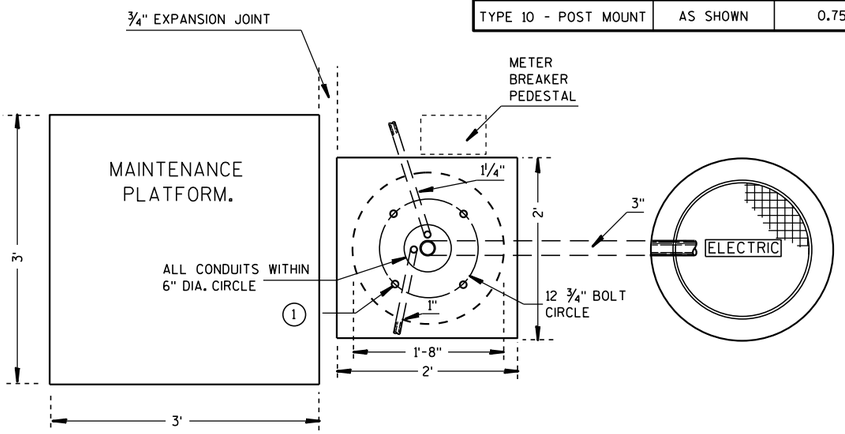

PLAN VIEW

NOTE:
VERIFY WITH UTILITY COMPANY TO DETERMINE WHICH SIDE TO PLACE METER BREAKER PEDESTAL

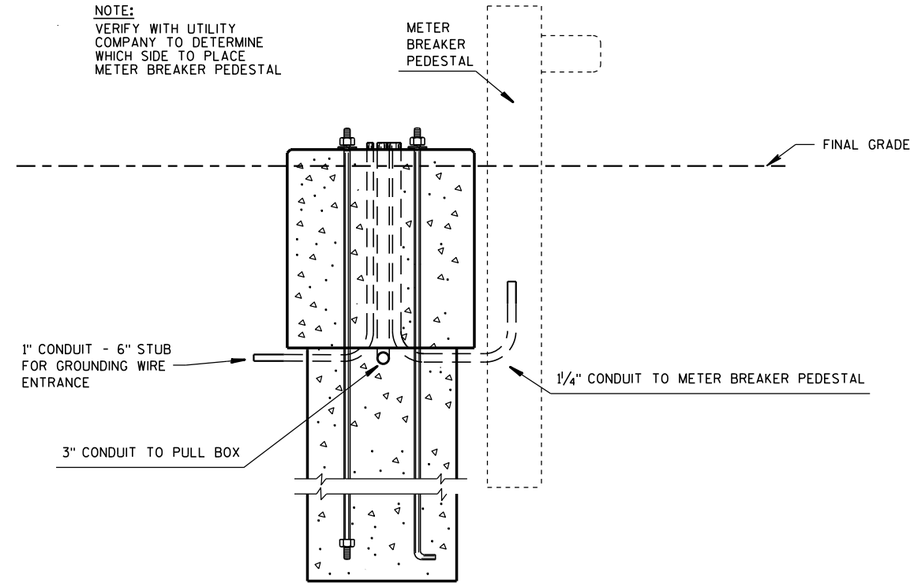

FRONT VIEW

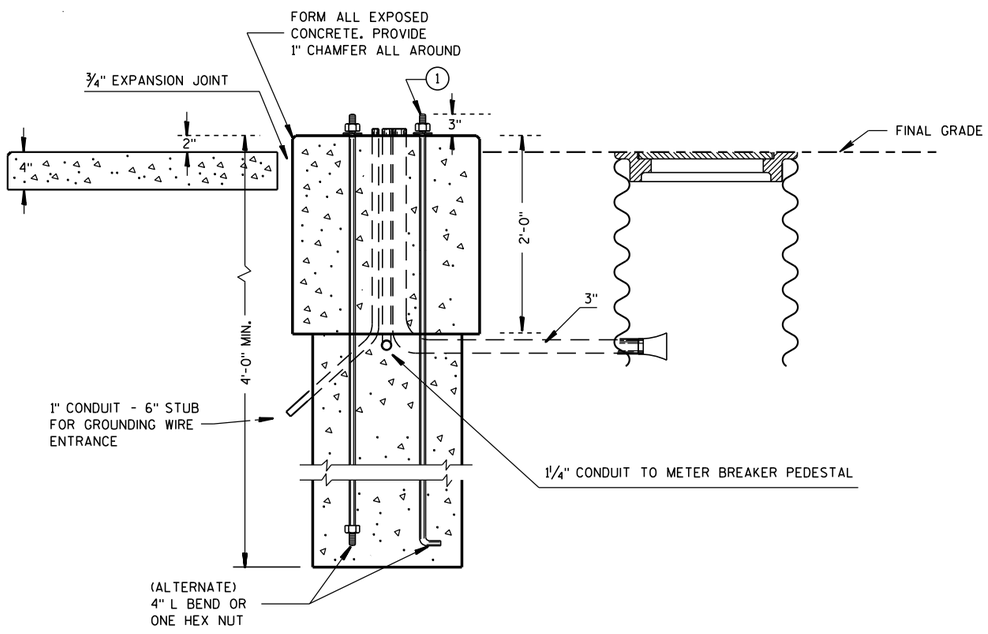

PROFILE VIEW

GENERAL NOTES

DETAILS OF CONSTRUCTION, MATERIALS AND WORKMANSHIP NOT SHOWN ON THIS DRAWING SHALL CONFORM TO THE PERTINENT REQUIREMENTS OF THE CONTRACT.

WHEN REQUIRED TO CONNECT NONMETALLIC CONDUIT TO METALLIC CONDUIT, ONLY ADAPTER FITTINGS, U.L. LISTED FOR ELECTRICAL USE, SHALL BE USED.

CONDUIT HEIGHT ABOVE THE CONCRETE BASE SHALL BE 1 INCH.

CONTROL CABINET BASE TOP SURFACES SHALL BE TROWEL FINISHED AND LEVEL.

WHEN A TYPE 10 CONTROL CABINET BASE IS USED TO POST MOUNT A CONTROL CABINET, A 36" SQUARE 4" THICK CONCRETE MAINTENANCE PLATFORM SHALL BE REQUIRED ON THE DOOR SIDE OF THE CABINET. THE TOP 1 INCH SHALL BE ABOVE FINISHED GRADE AND BE BROOM FINISHED AND LEVEL.

MAINTENANCE PLATFORMS ARE NOT REQUIRED WHEN THE SURROUNDING AREA IS PAVED.

ALL CONDUIT ENDS AT THE TOP OF THE CONCRETE BASE SHALL PLUGGED IMMEDIATELY AFTER PLACEMENT AND BEFORE CONCRETE IS POURED. CONDUITS IN WHICH WIRE OR CABLE IS NOT BEING INSTALLED SHALL REMAIN CAPPED OR PLUGGED.

BELL ENDS SHALL BE INSTALLED ON ALL PVC CONDUIT EXPOSED AT THE TOP OF THE CONCRETE BASE BEFORE INSTALLATION OF CABLE OR WIRE.

WHEN ANCHOR RODS USING THE ALTERNATE L BEND ARE FURNISHED FOR THE TYPE 10 BASE, THE 4" L BEND SHALL BE IN ADDITION TO THE SPECIFIED ANCHOR ROD BAR LENGTH.

THE "L" BEND SHALL NOT BE THREADED.

STRAIGHT ANCHOR RODS SHALL BE THREADED 12" IN LENGTH ON EACH END OF THE ROD.

FOUR (4) ANCHOR RODS, 1" DIA. X 3'-6"
ANCHOR RODS SHALL BE MANUFACTURED IN ACCORDANCE WITH SECTION 654.2.1 AND 641.2.2 OF THE STANDARD SPECIFICATIONS AND IN ACCORDANCE WITH A-449, OR ASTM. A-687 (GRADE 105).

2

2

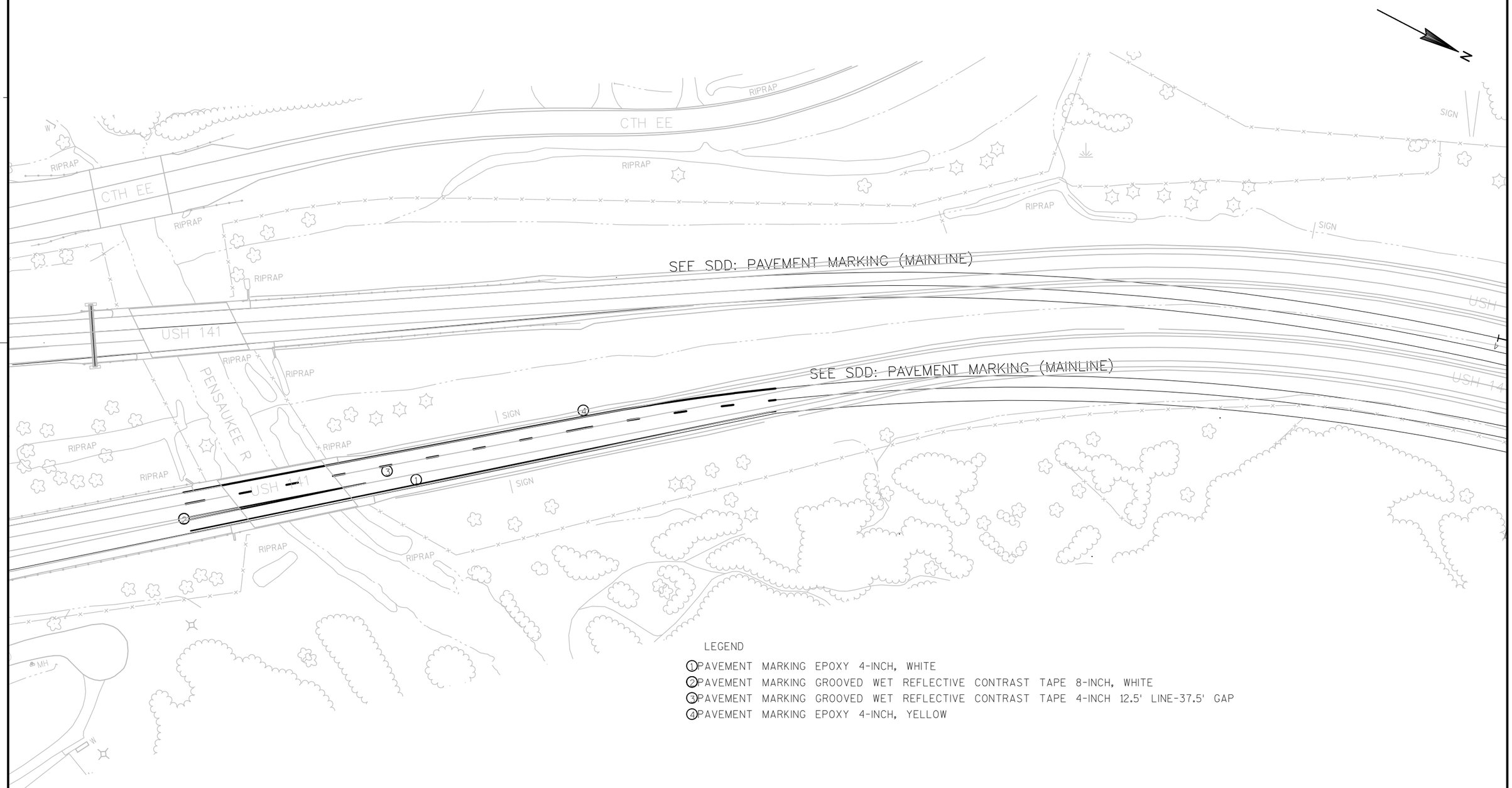

LEGEND

1. PAVEMENT MARKING EPOXY 4-INCH, WHITE
2. PAVEMENT MARKING GROOVED WET REFLECTIVE CONTRAST TAPE 8-INCH, WHITE
3. PAVEMENT MARKING GROOVED WET REFLECTIVE CONTRAST TAPE 4-INCH 12.5' LINE-37.5' GAP
4. PAVEMENT MARKING EPOXY 4-INCH, YELLOW

PROJECT NO:1490-28-71	HWY: USH 141	COUNTY: OCONTO	PAVEMENT MARKING DETAIL	SHEET 31	E

2

2

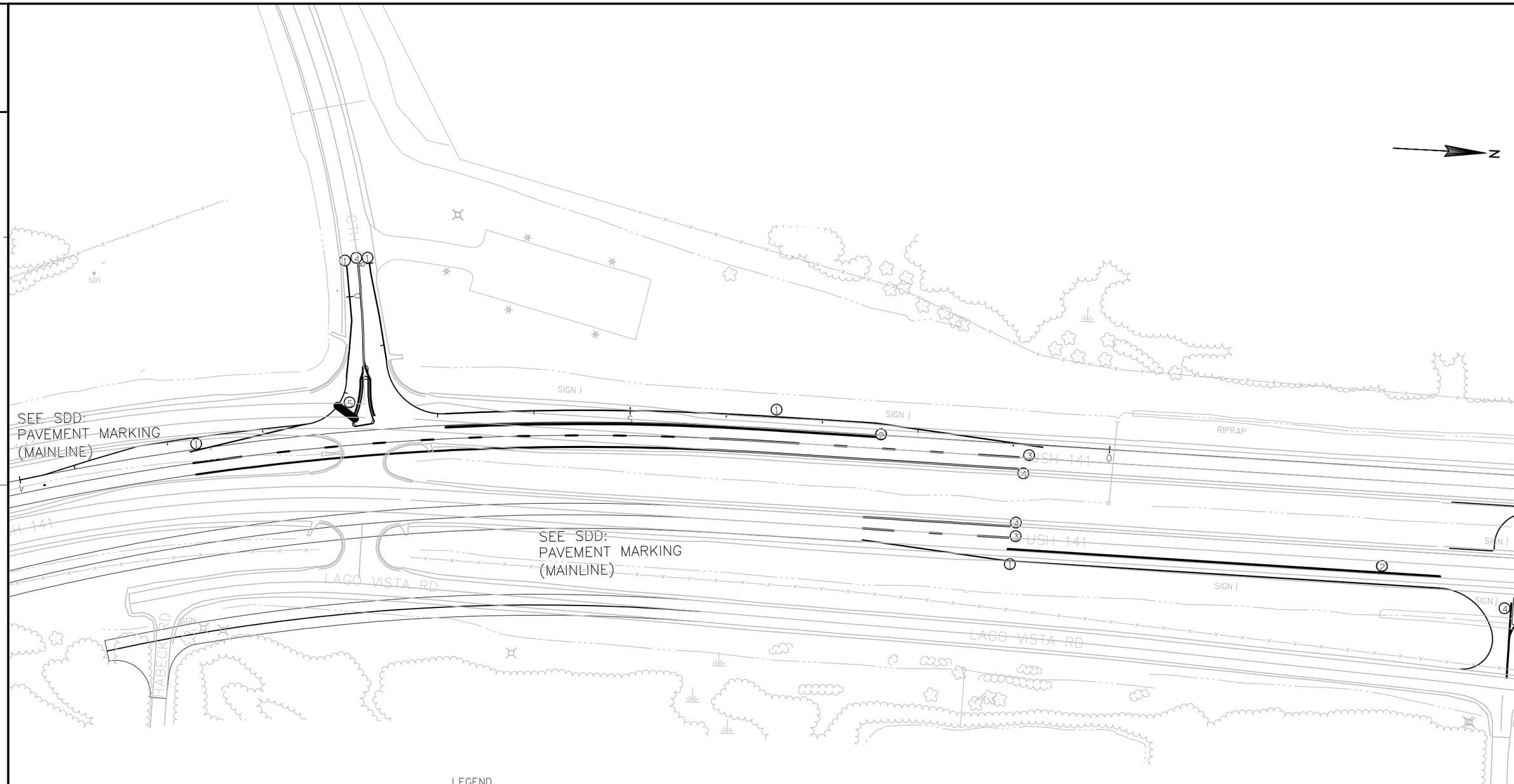

LEGEND

1. PAVEMENT MARKING EPOXY 4-INCH, WHITE
2. PAVEMENT MARKING GROOVED WET REFLECTIVE CONTRAST TAPE 8-INCH, WHITE
3. PAVEMENT MARKING GROOVED WET REFLECTIVE CONTRAST TAPE 4-INCH 12.5' LINE-37.5' GAP
4. PAVEMENT MARKING EPOXY 4-INCH, YELLOW
5. PAVEMENT MARKING 18" STOP LINE WHITE

PROJECT NO:1490-28-71	HWY: USH 141	COUNTY: OCONTO	PAVEMENT MARKING DETAIL	SHEET 32	E

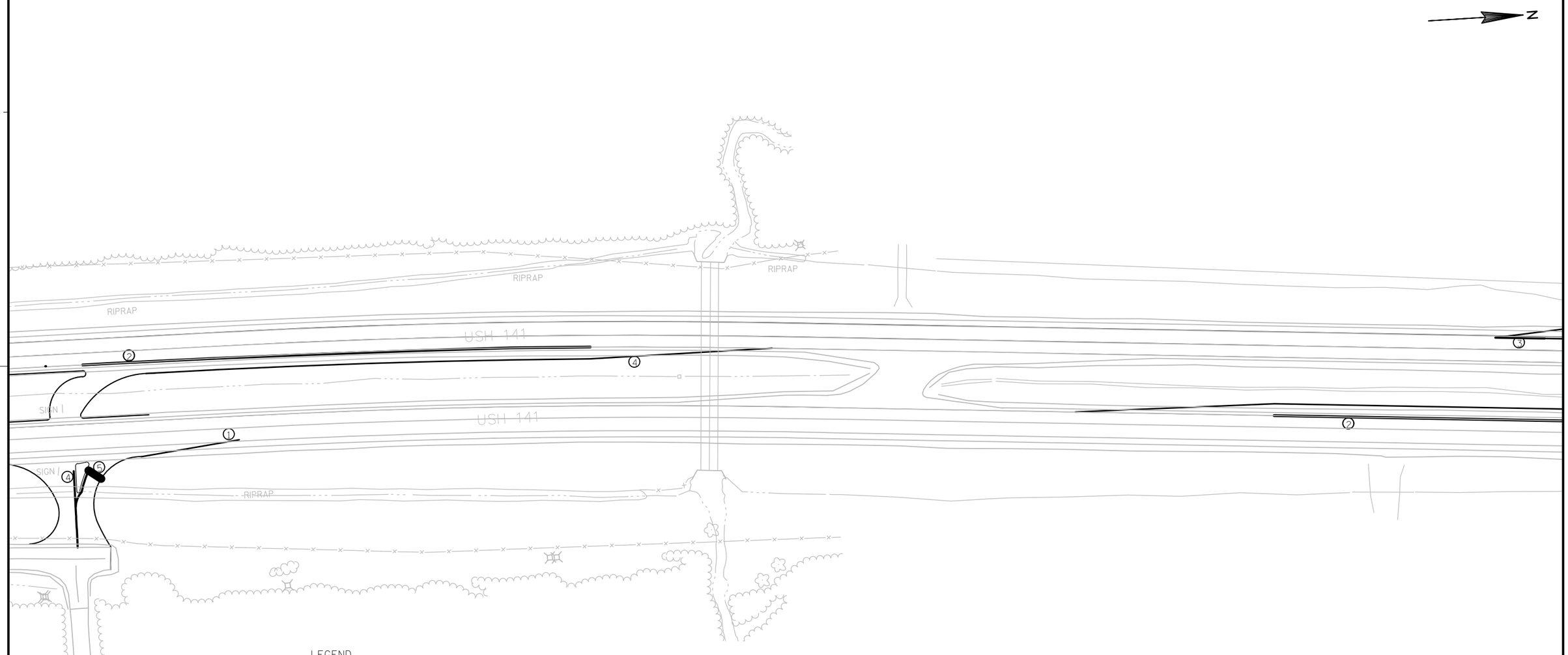

LEGEND

1. PAVEMENT MARKING EPOXY 4-INCH, WHITE
2. PAVEMENT MARKING GROOVED WET REFLECTIVE CONTRAST TAPE 8-INCH, WHITE
3. PAVEMENT MARKING GROOVED EPOXY 4-INCH, WHITE 3' LINE-9' GAP
4. PAVEMENT MARKING EPOXY 4-INCH, YELLOW
5. PAVEMENT MARKING 18-INCH STOP LINE WHITE

PROJECT NO:1490-28-71	HWY: USH 141	COUNTY: OCONTO	PAVEMENT MARKING DETAIL	SHEET 33	E

2

2

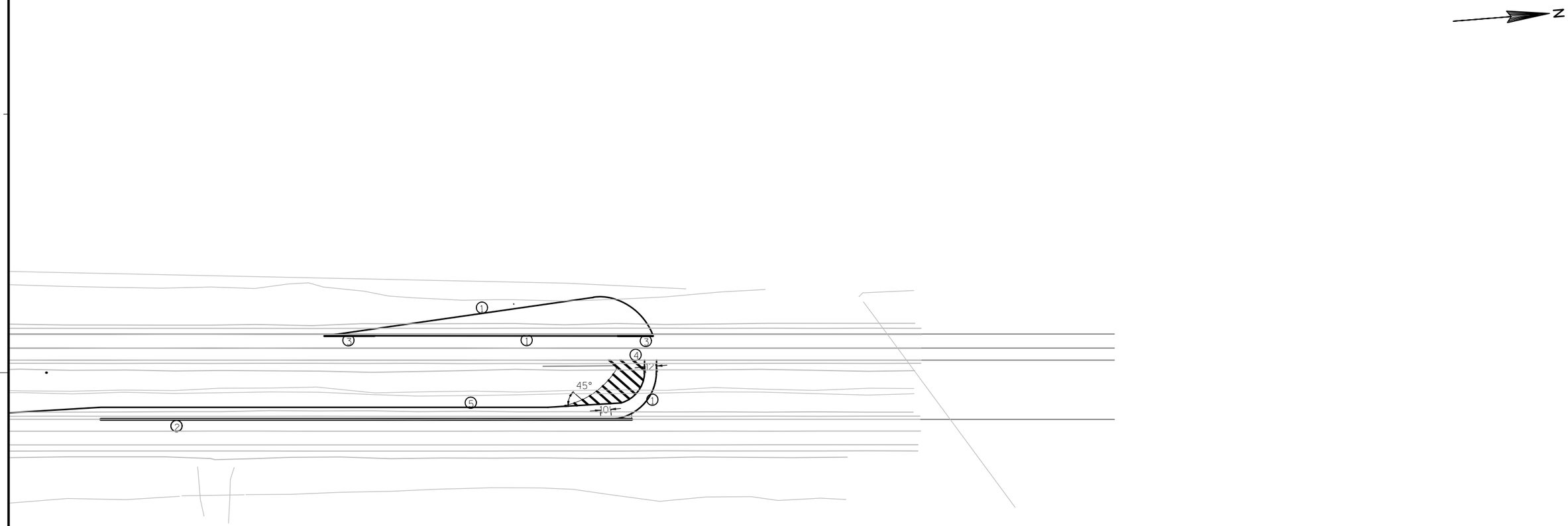

LEGEND

1. PAVEMENT MARKING EPOXY 4-INCH, WHITE
2. PAVEMENT MARKING GROOVED WET REFLECTIVE CONTRAST TAPE 8-INCH, WHITE
3. PAVEMENT MARKING GROOVED EPOXY 4-INCH, WHITE 3' LINE-9' GAP
4. PAVEMENT MARKING EPOXY 12-INCH, YELLOW
5. PAVEMENT MARKING EPOXY 4-INCH, YELLOW

PROJECT NO:1490-28-71	HWY: USH 141	COUNTY: OCONTO	PAVEMENT MARKING DETAIL	SHEET 34	E

LEGEND

- TRAFFIC CONTROL DRUM
- TRAFFIC CONTROL DRUM WITH TYPE C STEADY BURN LIGHT
- FLASHING ARROW BOARD
- SIGN ON PERMANENT SUPPORT
- REMOVING PAVEMENT MARKING
- TEMPORARY PRECAST CONCRETE BARRIER
- DIRECTION OF TRAFFIC
- WORK AREA

TRAFFIC CONTROL NOTES

THE EXACT NUMBER, LOCATION, AND SPACING OF ALL SIGNS AND DEVICES SHALL BE ADJUSTED TO FIT FIELD CONDITIONS AS APPROVED BY THE ENGINEER.

THE SPACING BETWEEN SIGNS SHOULD BE ADJUSTED TO NOT CONFLICT WITH AND TO PROVIDE A MINIMUM OF 200 FEET, 500 FEET DESIRABLE, DISTANCE TO EXISTING SIGNS.

THIS LANE CLOSURE IS TYPICAL FOR CLOSING RIGHT LANE - REVERSE FOR CLOSING LEFT LANE.

ALL SIGNS ARE 48" X 48" UNLESS OTHERWISE NOTED.

"WO" IS THE SAME AS "W" EXCEPT THE BACKGROUND IS ORANGE.

ANY SIGNS, TEMPORARY OR EXISTING, WHICH CONFLICT WITH TRAFFIC CONTROL "IN USE" SHALL BE REMOVED OR COVERED AS NEEDED AND AS APPROVED BY THE ENGINEER. NO WARNING LIGHTS SHALL BE WORKING ON "COVERED" OR "DOWNED" SIGNS.

REDUCED SPEED AHEAD, SPEED LIMIT 55 AND SPEED LIMIT 65 SIGNS MUST BE POST MOUNTED.

SPEED LIMIT SIGNS SHALL ALSO BE LOCATED 1500 FEET BEYOND THE END OF THE ACCELERATION LANE OF EACH ENTRANCE RAMP AND AT 0.5 MILE INTERVALS, OR AS DIRECTED BY THE ENGINEER.

THE LOCATION OF THE FIRST SIGN INDICATING THE 55 MPH REGULATORY SPEED LIMIT IS REFERENCED FROM BEGINNING OF LANE CLOSURE TAPER. THE 55 MPH REGULATORY SPEED LIMIT SIGN LOCATION MUST BE ADJUSTED WHEN CONSTRUCTION ACTIVITIES REQUIRE THE LANE CLOSURE START LOCATION TO CHANGE.

TRAFFIC CONTROL DEVICES NOT IN USE SHALL BE LAYED DOWN OR REMOVED, TURNING OF DEVICES TO OBSCURE THE MESSAGE WILL NOT BE ALLOWED.

REMOVE PAVEMENT MARKINGS IF LANE CLOSURE IS TO BE IN PLACE FOR 4 OR MORE CONTINUOUS DAYS AND NIGHTS.

WARNING LIGHTS ARE NOT REQUIRED IF THE LANE CLOSURE IS A DAYTIME ONLY OPERATION.

IF THE HORIZONTAL ALIGNMENT IS SUCH THAT A CURVE MAY REQUIRE ADDITIONAL DELINEATION, THE DEVICE SPACING MAY BE DECREASED TO 50 FEET.

IF LANE CLOSURE IS MORE THAN 1 MILE, PLACE A TYPE III BARRICADE APPROXIMATELY EVERY ½ MILE ACROSS THE CLOSED LANE TO HELP ENFORCE THE DRUM LINE.

ADJUSTMENTS IN BUFFER SPACE NEED TO BE INCORPORATED WHEN THE LANE CLOSURE OCCURS NEAR AN INTERCHANGE EXIT OR ENTRANCE RAMP. THE LANE CLOSURE MUST TAKE PLACE FAR ENOUGH IN ADVANCE OF AN EXIT OR ENTRANCE RAMP TO STILL ALLOW FOR ADEQUATE BUFFER SPACE. THE MINIMUM LENGTH OF THE BUFFER SPACE BEFORE AN EXIT RAMP SHOULD BE ½ THE LENGTH OF THE TRANSITION AREA. THE ENTRANCE RAMP SHOULD BE FOLLOWED BY THE ORIGINAL BUFFER SPACE LENGTH OF 800 FEET DESIRABLE PRIOR TO ANOTHER TRAFFIC CONTROL CHANGE SUCH AS A CROSSOVER MANEUVER.

** CONSIDER GEOMETRICS WHEN LOCATING SIGNS AND ARROW BOARDS SO THE DRIVER HAS A CLEAR VIEW OF THE ARROW BOARD AND LANE CLOSURE DRUMS FOR A MINIMUM OF 1500 FEET IN FRONT OF THE DRUMS.

*** SEE REQUIREMENT FOR TEMPORARY REGULATORY SPEED REDUCTION IN THE SPECIAL PROVISIONS.

COVERING AND REMOVAL OF MATERIAL COVERING TEMPORARY REGULATORY SPEED LIMIT SIGNS AND EXISTING SPEED LIMIT SIGNS RELATED TO TEMPORARY AND/OR PERIODIC LANE CLOSURES SHALL BE CONSIDERED INCIDENTAL TO THE PROJECT.

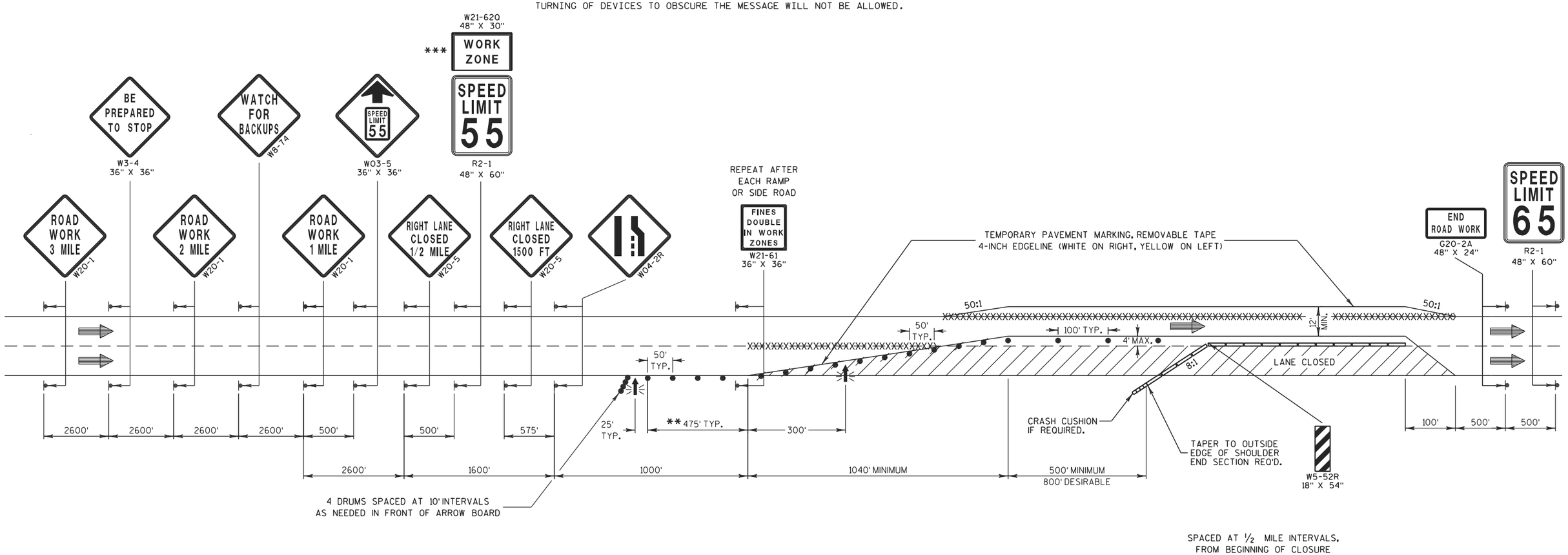

LANE CLOSURE - REGULATORY SPEED REDUCTION WITH BARRIER

PROJECT NO:1490-28-71	HWY:USH 141	COUNTY:OCONTO	TRAFFIC CONTROL DETAIL	SHEET 35	E

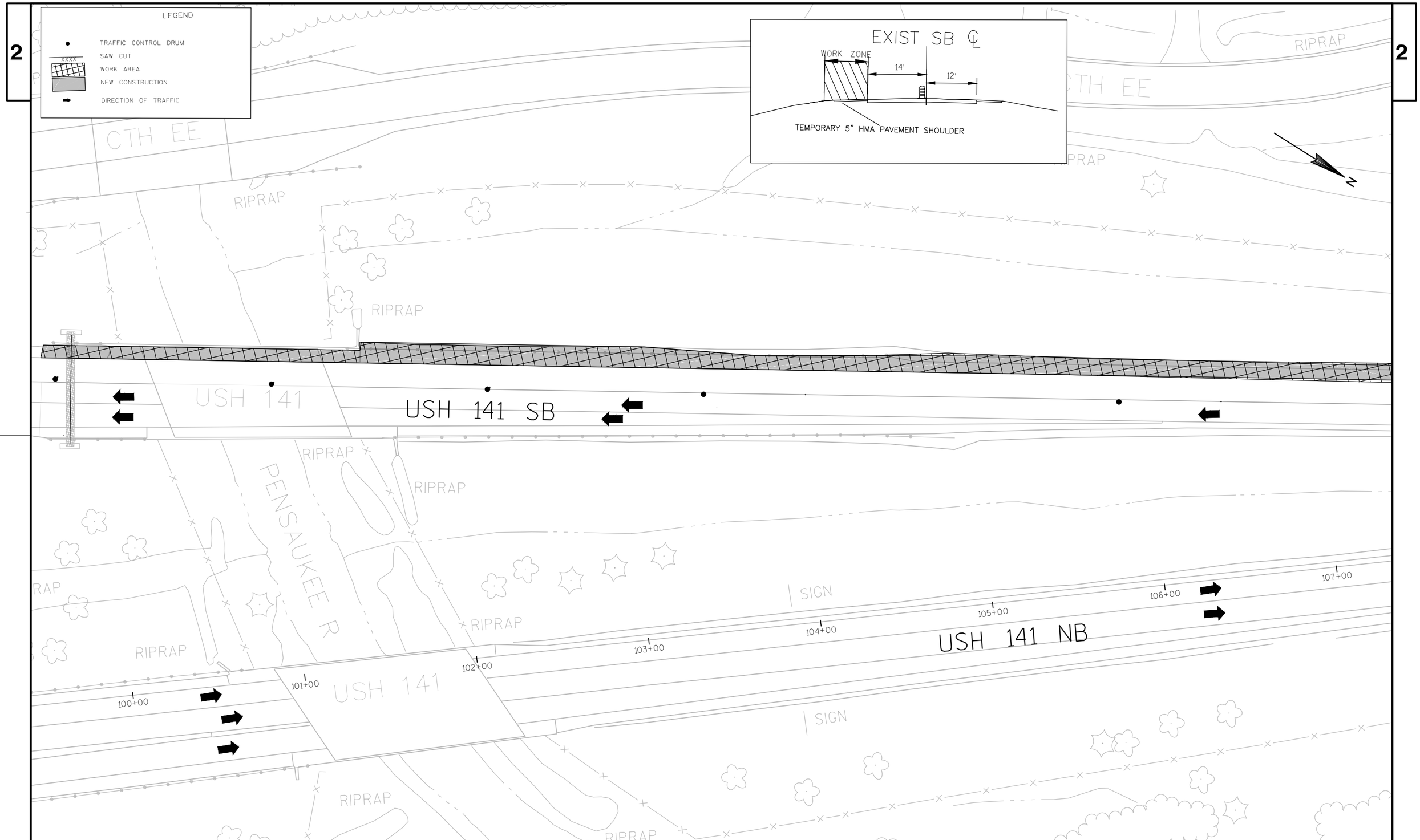

PROJECT NO:1490-28-71	HWY: USH 141	COUNTY: OCONTO	STAGE 1A	SHEET 36	E

FILE NAME : N:\PDS\C3D\14902800\SHEETSPLAN\USH141-CTHESTAGE 1A.DWG PLOT DATE : 2/6/2014 2:37 PM PLOT BY : WALLNER, AARON J PLOT NAME : PLOT SCALE : 1:50_XREF

WISDOT/CADDS SHEET 42

2

LEGEND
- TRAFFIC CONTROL DRUM
- DIRECTION OF TRAFFIC
- WORK AREA
- NEW CONSTRUCTION

N

RIPRAP

SIGN

USH 141 SB

USH 141

SEE SDD TRAFFIC CONTROL, LANE CLOSURE, SPEEDS GREATER THAN 40 M.P.H

108+00

109+00

110+00

111+00

112+00

113+00

114+00

115+00

USH 141 NB

USH 141

150'

EXIST SB ℄

WORK ZONE

14'

12'

TEMPORARY 5" HMA PAVEMENT SHOULDER

2

PROJECT NO:1490-28-71	HWY: USH 141	COUNTY: OCONTO	STAGE 1A	SHEET 37	E

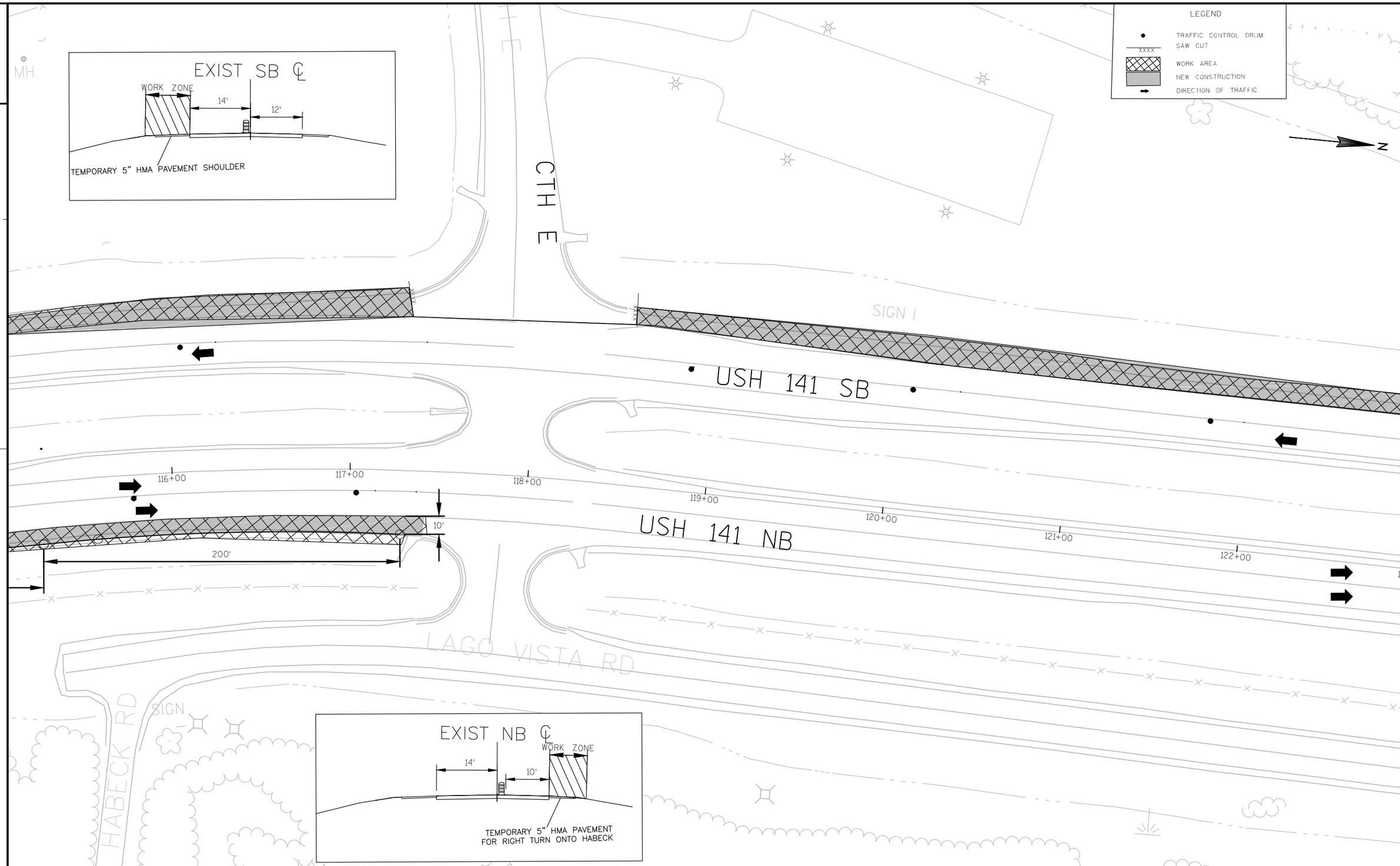

PROJECT NO:1490-28-71	HWY: USH 141	COUNTY: OCONTO	STAGE 1A	SHEET 38	E

FILE NAME : N:\PDS\C3D\14902800\SHEETSPLAN\USH141-CTHESTAGE 1A.DWG PLOT DATE : 2/6/2014 2:37 PM PLOT BY : WALLNER, AARON J PLOT NAME : PLOT SCALE : 1:50_XREF

WISDOT/CADDS SHEET 42

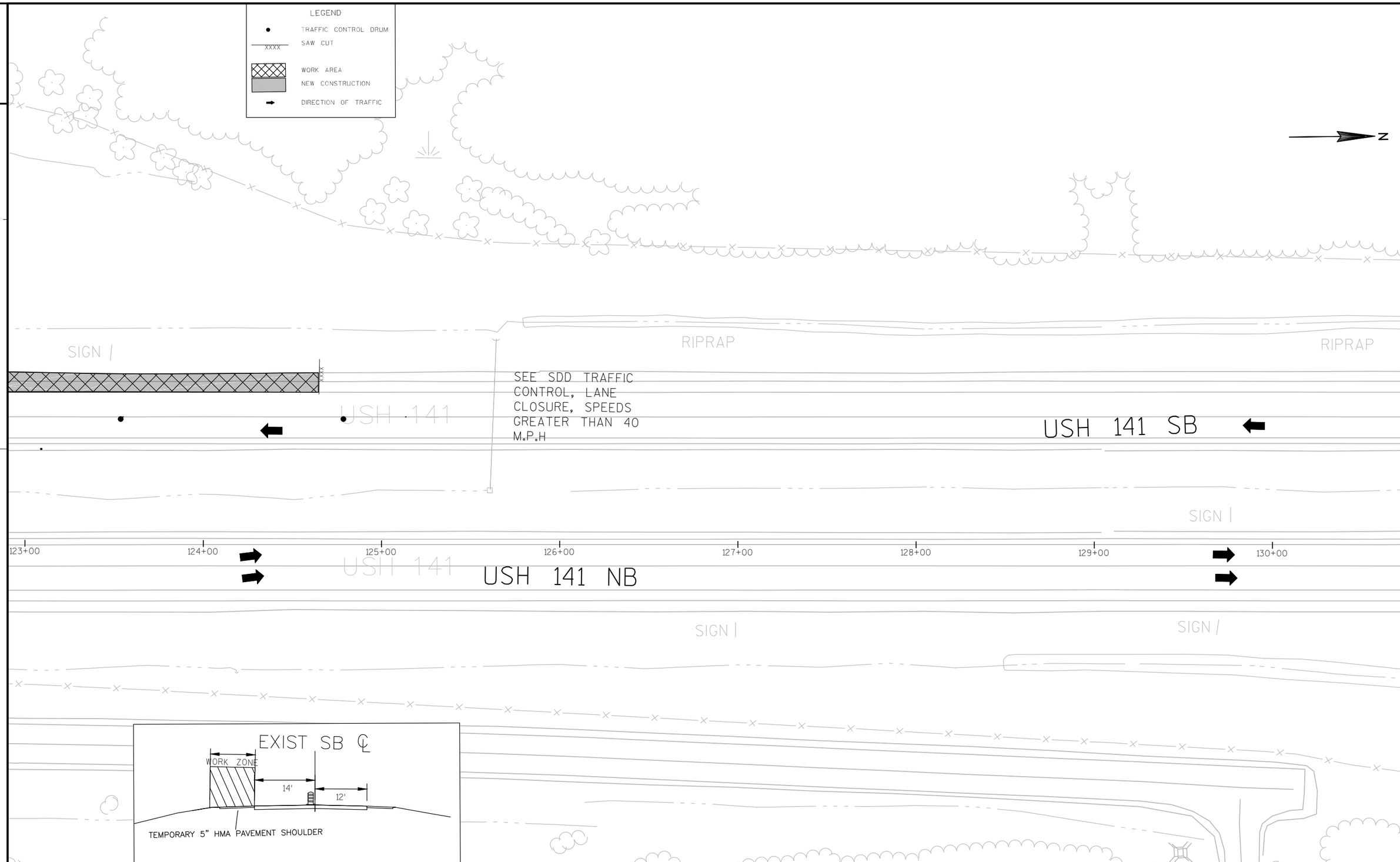

PROJECT NO:1490-28-71	HWY: USH 141	COUNTY: OCONTO	STAGE 1A	SHEET 39	E

2

USH 41 SB

SIGN

N

LEGEND

- TYPE III BARRICADE WTH ATTACHED SIGN
- TRAFFIC CONTROL DRUM
- TRAFFIC CONTROL DRUM WITH TYPE C STEADY BURN LIGHT
- DIRECTION OF TRAFFIC

TEMP 4-INCH YELLOW EDGELINE

RIPRAP

RIPRAP

50'

79+00

80+00

81+00

82+00

83+00

84+00

85+00

R11-2L
48" X 30"
LANE CLOSED
TYPE III BARRICADE

USH 141 NB

USH 41 NB

SIGN

2

PROJECT NO:1490-28-71	HWY: USH 141	COUNTY: OCONTO	STAGE 1B	SHEET 40	E

FILE NAME : N:\PDS\C3D\14902800\SHEETSPLAN\USH141-CTHESTAGE 1.DWG PLOT DATE : 2/6/2014 2:31 PM PLOT BY : WALLNER, AARON J PLOT NAME : PLOT SCALE : 1:50_XREF

WISDOT/CADDS SHEET 42

2

LEGEND

- TRAFFIC CONTROL DRUM
- TRAFFIC CONTROL DRUM WITH TYPE C STEADY BURN LIGHT
- DIRECTION OF TRAFFIC

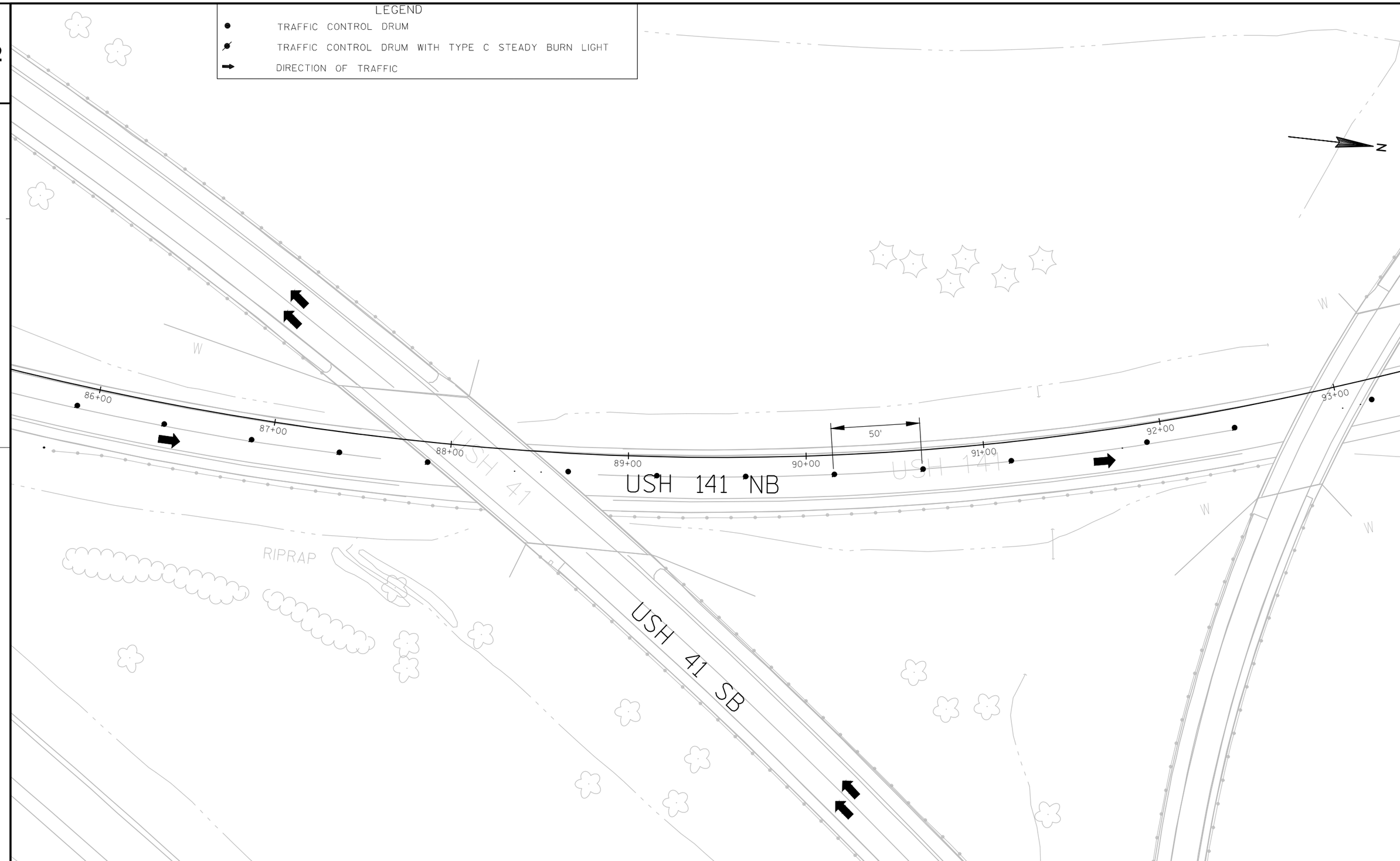

2

PROJECT NO:1490-28-71	HWY: USH 141	COUNTY: OCONTO	STAGE 1B	SHEET 41	E

FILE NAME : N:\PDS\C3D\14902800\SHEETSPLAN\USH141-CTHESTAGE 1.DWG PLOT DATE : 2/6/2014 2:31 PM PLOT BY : WALLNER, AARON J PLOT NAME : PLOT SCALE : 1:50_XREF

TO USH 41 SB

TO USH 41 NB

25'

TEMP 8-INCH WHITE EDGELINE

25'

200'

N

EXIST SB ℄

EXISTING PARAPET

WORK ZONE

EXISTING PARAPET

5'

11'

3'

1'

12'

18'

RIPRAP

RIPRAP

RIPRAP

W

W

W

93+00

94+00

50'

95+00

96+00

97+00

98+00

99+00

100+00

USH 141 NB

GALUSKA RD

MH

USH 141 NB RAMP
CLOSED SEE SDD:
TRAFFIC CONTROL,
EXIT RAMP CLOSURE

LEGEND

- TYPE III BARRICADE WTH ATTACHED "LANE CLOSED" SIGN
- TRAFFIC CONTROL DRUM
- TRAFFIC CONTROL DRUM WITH TYPE C STEADY BURN LIGHT
- SAW CUT
- CONCRETE BARRIER TEMPORARY PRECAST
- WORK AREA
- NEW CONSTRUCTION
- REMOVE PAVEMENT MARKING
- DIRECTION OF TRAFFIC

PROJECT NO:1490-28-71	HWY: USH 141	COUNTY: OCONTO	STAGE 1B	SHEET 42	E

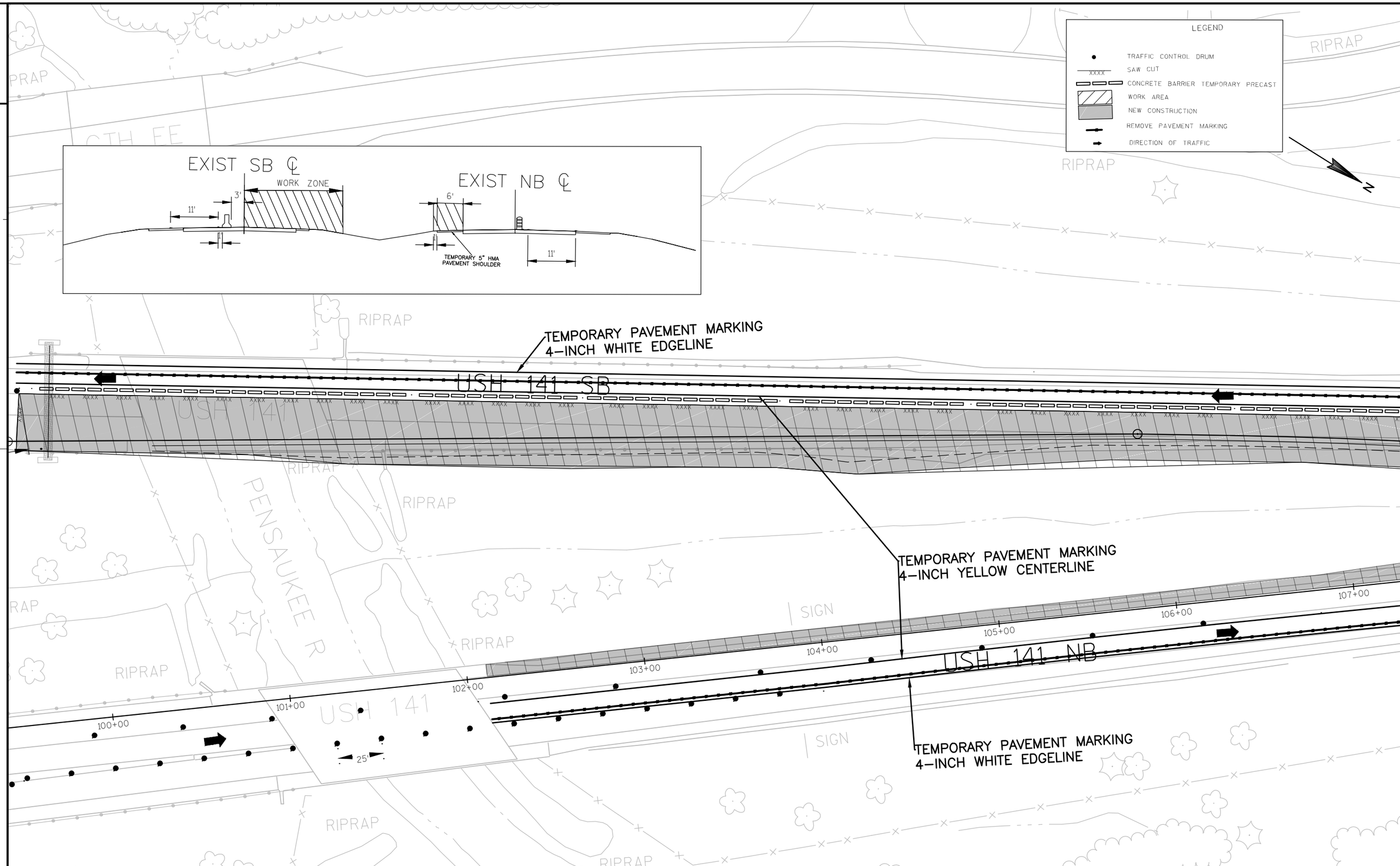

PROJECT NO:1490-28-71	HWY: USH 141	COUNTY: OCONTO	STAGE 1B	SHEET 43	E

FILE NAME : N:\PDS\C3D\14902800\SHEETSPLAN\USH141-CTHESTAGE 1.DWG PLOT DATE : 2/6/2014 2:31 PM PLOT BY : WALLNER, AARON J PLOT NAME : PLOT SCALE : 1:50_XREF

2

LEGEND

- TYPE III BARRICADE WTH ATTACHED "LANE CLOSED" SIGN
- TRAFFIC CONTROL DRUM
- SAW CUT
- CONCRETE BARRIER TEMPORARY PRECAST
- WORK AREA
- NEW CONSTRUCTION
- REMOVE PAVEMENT MARKING
- DIRECTION OF TRAFFIC

N

RIPRAP

SIGN

TEMPORARY PAVEMENT MARKING
4-INCH WHITE EDGELINE

USH 141 SB

USH 141

TEMPORARY PAVEMENT MARKING
4-INCH YELLOW CENTERLINE

108+00 109+00 110+00 111+00 112+00 113+00 114+00 115+00

USH 141 NB

TEMPORARY PAVEMENT MARKING
4-INCH WHITE EDGELINE

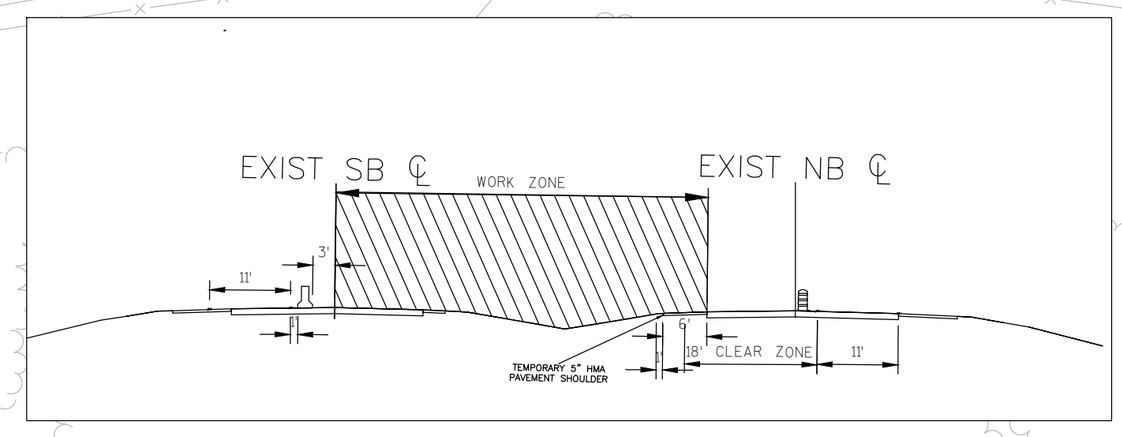

2

PROJECT NO:1490-28-71	HWY: USH 141	COUNTY: OCONTO	STAGE 1B	SHEET 44	E

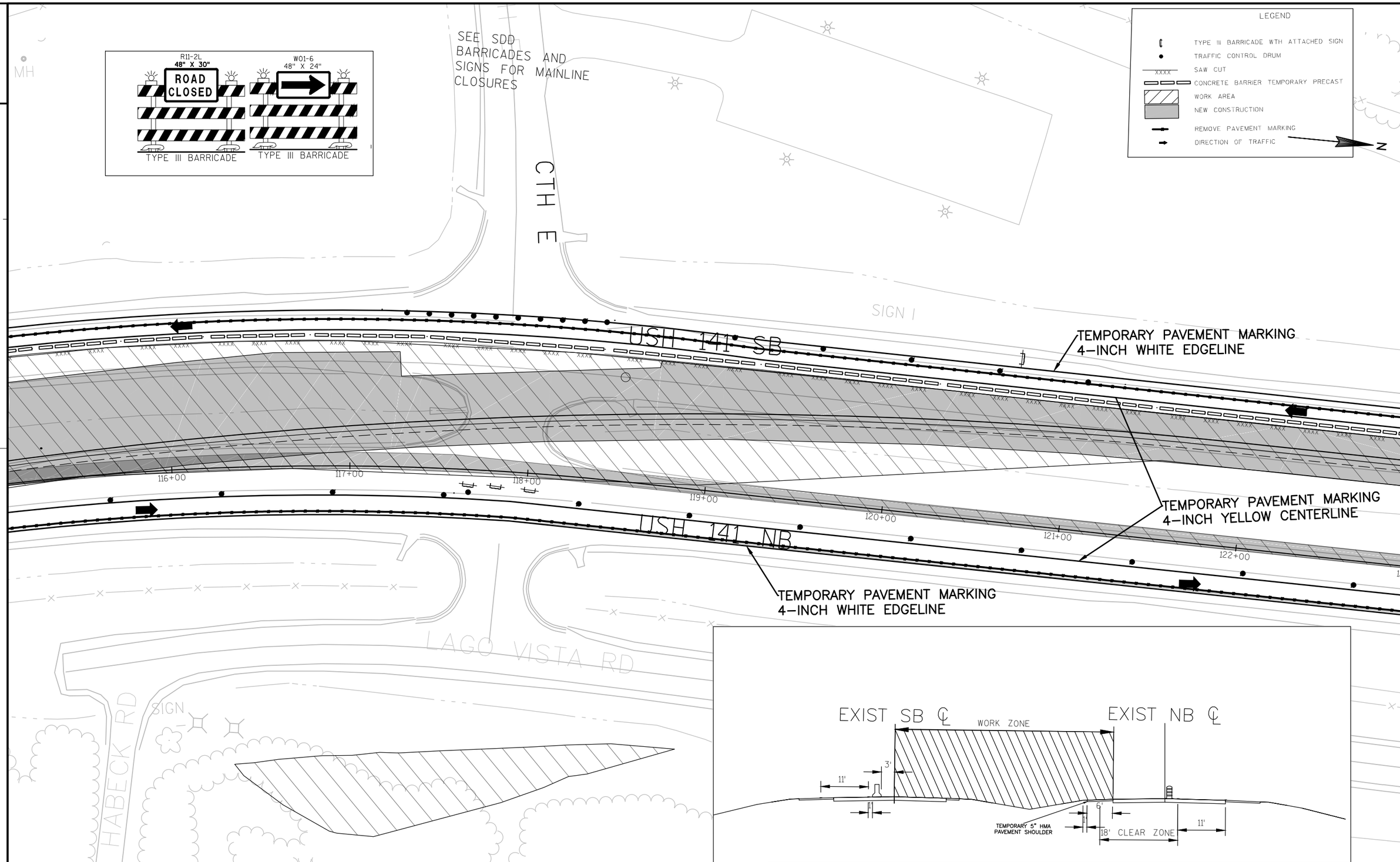

PROJECT NO:1490-28-71	HWY: USH 141	COUNTY: OCONTO	STAGE 1B	SHEET 45	E

FILE NAME : N:\PDS\C3D\14902800\SHEETSPLAN\USH141-CTHESTAGE 1.DWG PLOT DATE : 2/6/2014 2:31 PM PLOT BY : WALLNER, AARON J PLOT NAME : PLOT SCALE : 1:50_XREF

2

LEGEND

- TYPE III BARRICADE WTH ATTACHED "LANE CLOSED" SIGN
- TRAFFIC CONTROL DRUM
- SAW CUT
- CONCRETE BARRIER TEMPORARY PRECAST
- WORK AREA
- NEW CONSTRUCTION
- REMOVE PAVEMENT MARKING
- DIRECTION OF TRAFFIC
- CRASH CUSION BARRIER

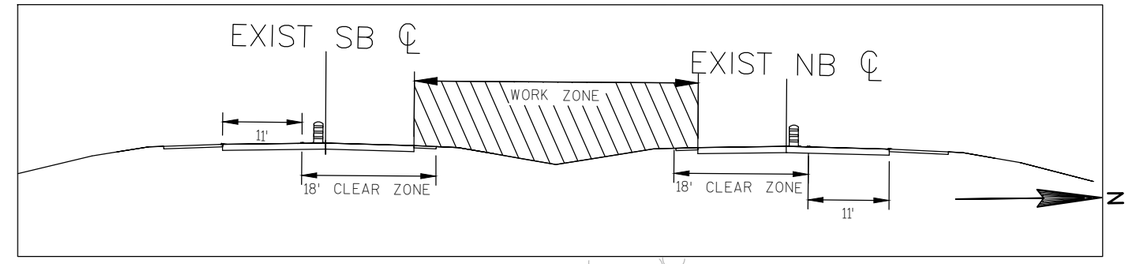

* SAW AT EXISTING PAVEMENT JOINTS

ROAD CLOSED
R11-2
48" X 30"

SIGN

W5-52R
12"X36"

TEMPORARY PAVEMENT MARKING
4-INCH WHITE EDGELINE

RIPRAP

RIPRAP

140'

USH 141 SB

16'

USH 141

TEMPORARY PAVEMENT MARKING
4-INCH YELLOW CENTERLINE

SIGN

123+00 124+00 125+00 126+00 127+00 128+00 129+00 130+00

USH 141

USH 141 NB

TEMPORARY PAVEMENT MARKING
4-INCH WHITE EDGELINE

SIGN

SIGN

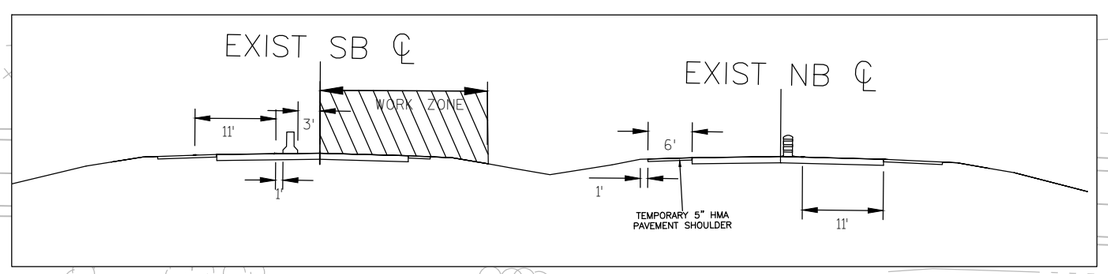

2

PROJECT NO:1490-28-71	HWY: USH 141	COUNTY: OCONTO	STAGE 1B	SHEET 46	E

2

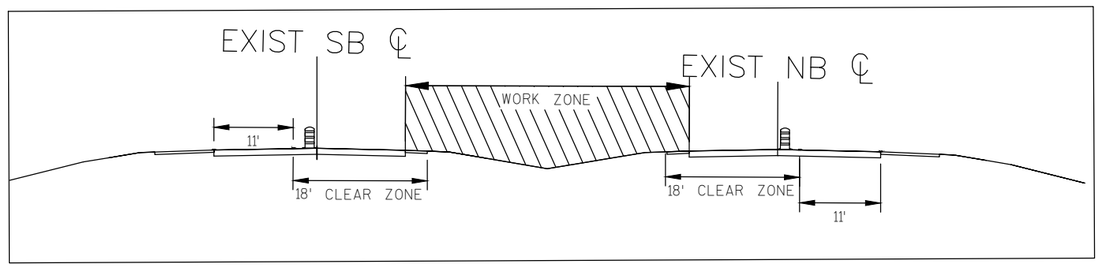

LEGEND

- TYPE III BARRICADE WTH ATTACHED "LANE CLOSED" SIGN
- TRAFFIC CONTROL DRUM
- SAW CUT
- WORK AREA
- NEW CONSTRUCTION
- REMOVE PAVEMENT MARKING
- DIRECTION OF TRAFFIC

N

RIPRAP

RIPRAP

TEMPORARY PAVEMENT MARKING
4-INCH WHITE EDGELINE

USH 141 SB

TEMPORARY PAVEMENT MARKING
4-INCH YELLOW CENTERLINE

131+00 132+00 133+00 134+00 135+00 136+00 137+00 138+00

USH 141 NB

TEMPORARY PAVEMENT MARKING
4-INCH WHITE EDGELINE

RIPRAP

2

PROJECT NO:1490-28-71	HWY: USH 141	COUNTY: OCONTO	STAGE 1B	SHEET 47	E

2

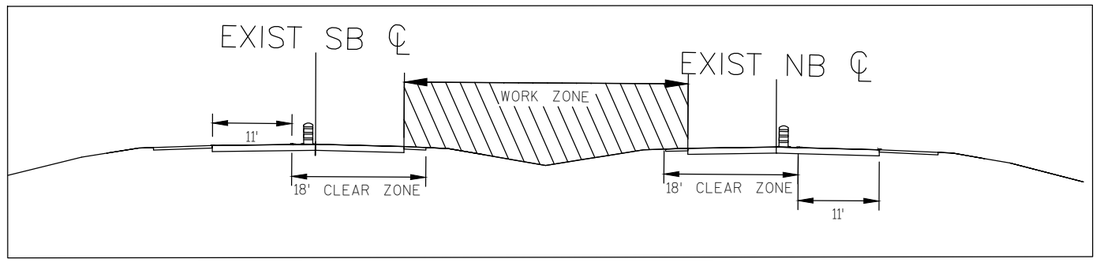

N

TEMPORARY PAVEMENT MARKING
4–INCH YELLOW CENTERLINE

TEMPORARY PAVEMENT MARKING
4–INCH WHITE EDGELINE

USH 141 SB

139+00 140+00 141+00 142+00 143+00 144+00 145+00 146+00

USH 141 NB

TEMPORARY PAVEMENT MARKING
4–INCH WHITE EDGELINE

TEMPORARY PAVEMENT MARKING
4–INCH YELLOW CENTERLINE

LEGEND

- TRAFFIC CONTROL DRUM
- SAW CUT
- WORK AREA
- NEW CONSTRUCTION
- REMOVE PAVEMENT MARKING
- DIRECTION OF TRAFFIC

PROJECT NO:1490-28-71	HWY: USH 141	COUNTY: OCONTO	STAGE 1B	SHEET 48	E

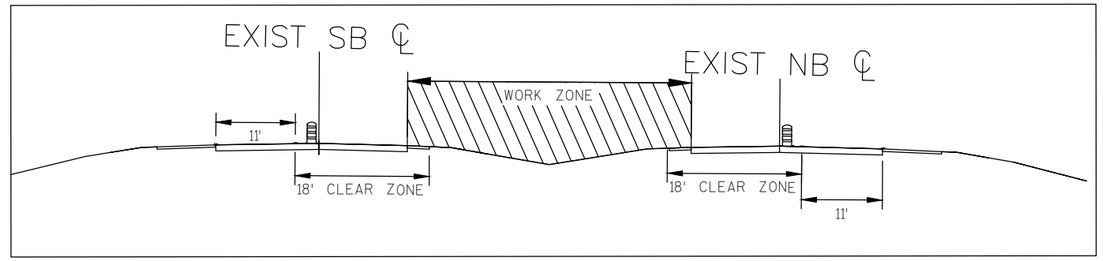

N

SEE SDD TRAFFIC CONTROL, LANE CLOSURE, SPEEDS GREATER THAN 40 M.P.H

TEMPORARY PAVEMENT MARKING
4-INCH WHITE EDGELINE

USH 141 SB

TEMPORARY PAVEMENT MARKING
4-INCH YELLOW CENTERLINE
(EXTEND TO END OF TAPER)

146+00 147+00 148+00 149+00 150+00

USH 141 NB

TEMPORARY PAVEMENT MARKING
4-INCH WHITE EDGELINE

LEGEND

- TRAFFIC CONTROL DRUM
- SAW CUT
- WORK AREA
- NEW CONSTRUCTION
- REMOVE PAVEMENT MARKING
- DIRECTION OF TRAFFIC

PROJECT NO:1490-28-71	HWY: USH 141	COUNTY: OCONTO	STAGE 1B	SHEET 49	E

2

USH 41 SB

SIGN

N

LEGEND

- TYPE III BARRICADE WTH ATTACHED SIGN
- TRAFFIC CONTROL DRUM
- TRAFFIC CONTROL DRUM WITH TYPE C STEADY BURN LIGHT
- DIRECTION OF TRAFFIC

TEMP 4-INCH YELLOW EDGELINE

RIPRAP

RIPRAP

R11-2L
48" X 30"
LANE CLOSED
TYPE III BARRICADE

50'

79+00

80+00

81+00

82+00

83+00

84+00

85+00

USH 141 NB

USH 41 NB

SIGN

2

PROJECT NO:1490-28-71	HWY: USH 141	COUNTY: OCONTO	STAGE 2	SHEET 50	E

FILE NAME : N:\PDS\C3D\14902800\SHEETSPLAN\USH141-CTHESTAGE 2.DWG PLOT DATE : 2/6/2014 2:47 PM PLOT BY : WALLNER, AARON J PLOT NAME : PLOT SCALE : 1:50_XREF

WISDOT/CADDS SHEET 42

2

LEGEND

- TRAFFIC CONTROL DRUM
- TRAFFIC CONTROL DRUM WITH TYPE C STEADY BURN LIGHT
- DIRECTION OF TRAFFIC

N

86+00
87+00
88+00
89+00
90+00
91+00
92+00
93+00
50'
USH 141 NB
USH 41
USH 41 SB
RIPRAP
W

2

PROJECT NO:1490-28-71	HWY: USH 141	COUNTY: OCONTO	STAGE 2	SHEET 51	E

FILE NAME : N:\PDS\C3D\14902800\SHEETSPLAN\USH141-CTHESTAGE 2.DWG PLOT DATE : 2/6/2014 2:47 PM PLOT BY : WALLNER, AARON J PLOT NAME : PLOT SCALE : 1:50_XREF

WISDOT/CADDS SHEET 42

TO USH 41 SB

TO USH 41 NB

25'

25'

N

EXISTING PARAPET

EXIST SB ℄

EXISTING PARAPET

WORK ZONE

8'

24'

1'

11'

3'

12'

RIPRAP

RIPRAP

RIPRAP

W

W

W

93+00

94+00

50'

95+00

96+00

97+00 ℄

98+00

99+00

100+00

25'

USH 141 NB

USH 141 NB RAMP
CLOSED SEE SDD:
TRAFFIC CONTROL, EXIT
RAMP CLOSURE

GALUSKA RD

MH

LEGEND

- ℄ TYPE III BARRICADE WTH ATTACHED "LANE CLOSED" SIGN
- TRAFFIC CONTROL DRUM
- TRAFFIC CONTROL DRUM WITH TYPE C STEADY BURN LIGHT
- XXXX SAW CUT
- CONCRETE BARRIER TEMPORARY PRECAST
- WORK AREA
- NEW CONSTRUCTION
- 8-INCH WHITE EPOXY PAVEMENT MARKING
- DIRECTION OF TRAFFIC

PROJECT NO:1490-28-71	HWY: USH 141	COUNTY: OCONTO	STAGE 2	SHEET 52	E

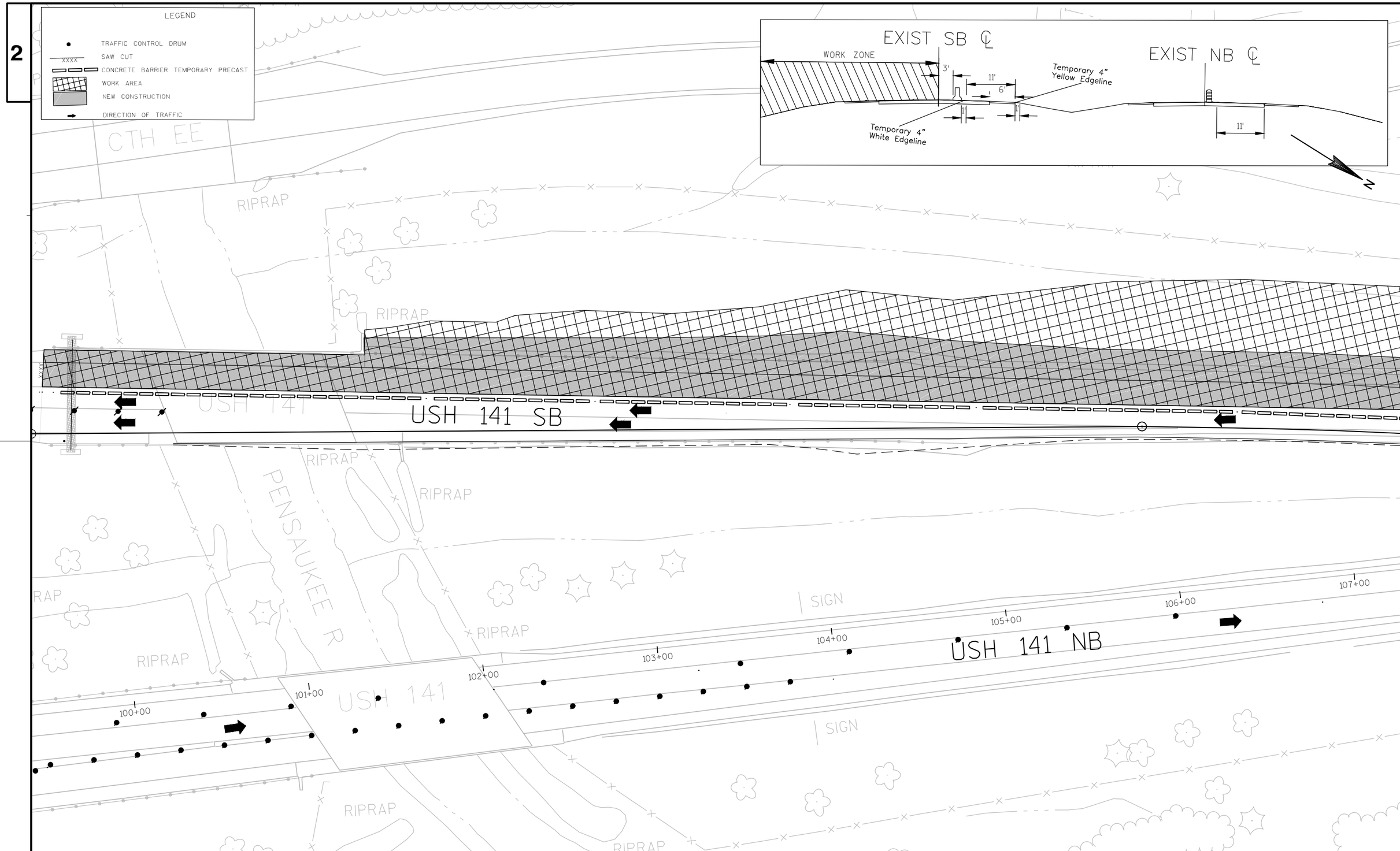

PROJECT NO:1490-28-71	HWY: USH 141	COUNTY: OCONTO	STAGE 2	SHEET 53	E

FILE NAME : N:\PDS\C3D\14902800\SHEETSPLAN\USH141-CTHESTAGE 2.DWG PLOT DATE : 2/6/2014 2:47 PM PLOT BY : WALLNER, AARON J PLOT NAME : PLOT SCALE : 1:50_XREF

LEGEND

- TYPE III BARRICADE WTH ATTACHED "LANE CLOSED" SIGN
- TRAFFIC CONTROL DRUM
- CONCRETE BARRIER TEMPORARY PRECAST
- WORK AREA
- NEW CONSTRUCTION
- SIGN ON TEMPORARY SUPPORT
- DIRECTION OF TRAFFIC

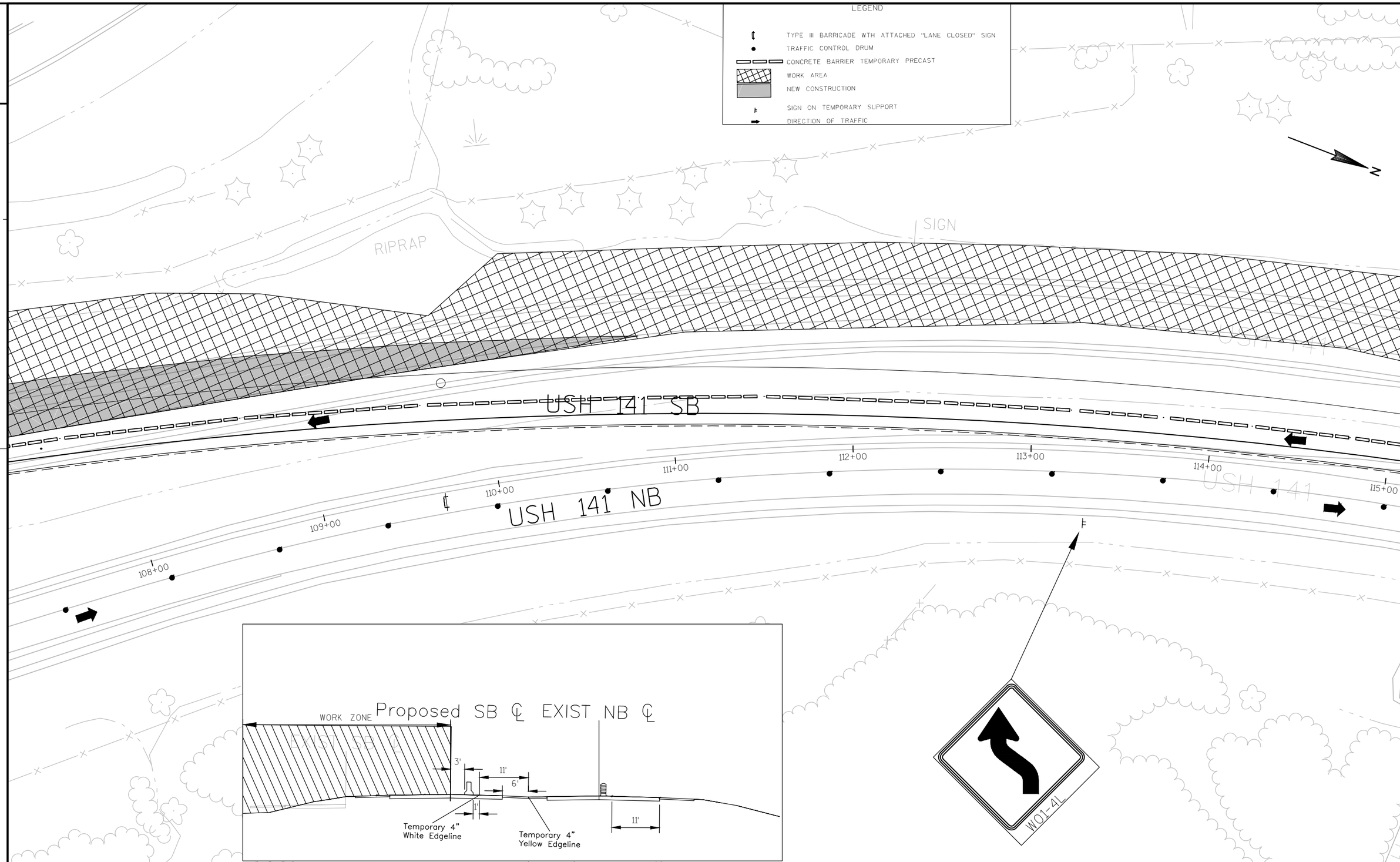

2

LEGEND

- TYPE III BARRICADE WTH ATTACHED SIGN
- TRAFFIC CONTROL DRUM
- TRAFFIC CONTROL DRUM WITH TYPE C STEADY BURN LIGHT
- SAW CUT
- CONCRETE BARRIER TEMPORARY PRECAST
- WORK AREA
- NEW CONSTRUCTION
- DIRECTION OF TRAFFIC

N

SEE SDD BARRICADES AND SIGNS FOR MAINLINE CLOSURES

MH

CHT 3

USH 141 SB

USH 141 NB

116+00 117+00 118+00 119+00 120+00 121+00 122+00 123

10'

LAGO VISTA RD

HABECK RD

SIGN

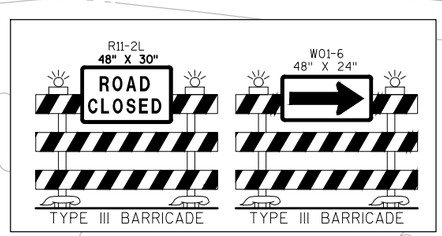

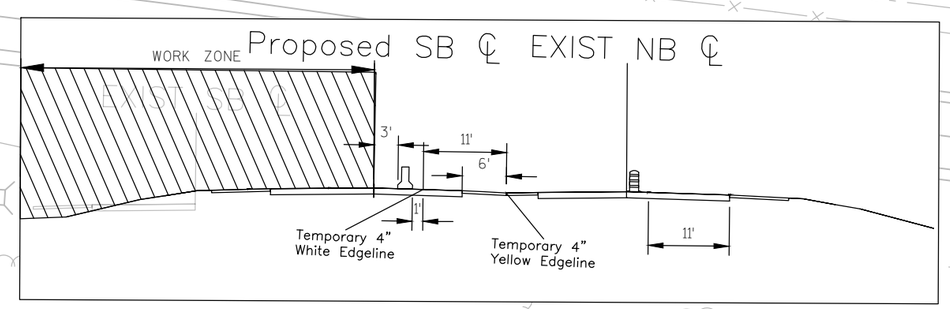

2

PROJECT NO:1490-28-71	HWY: USH 141	COUNTY: OCONTO	STAGE 2	SHEET 55	E

FILE NAME : N:\PDS\C3D\14902800\SHEETSPLAN\USH141-CTHESTAGE 2.DWG PLOT DATE : 2/6/2014 2:47 PM PLOT BY : WALLNER, AARON J PLOT NAME : PLOT SCALE : 1:50_XREF

WISDOT/CADDS SHEET 42

2

LEGEND

- TYPE III BARRICADE WTH ATTACHED "LANE CLOSED" SIGN
- TRAFFIC CONTROL DRUM
- SAW CUT
- CONCRETE BARRIER TEMPORARY PRECAST
- WORK AREA
- NEW CONSTRUCTION
- FLASHING ARROW BOARD
- DIRECTION OF TRAFFIC

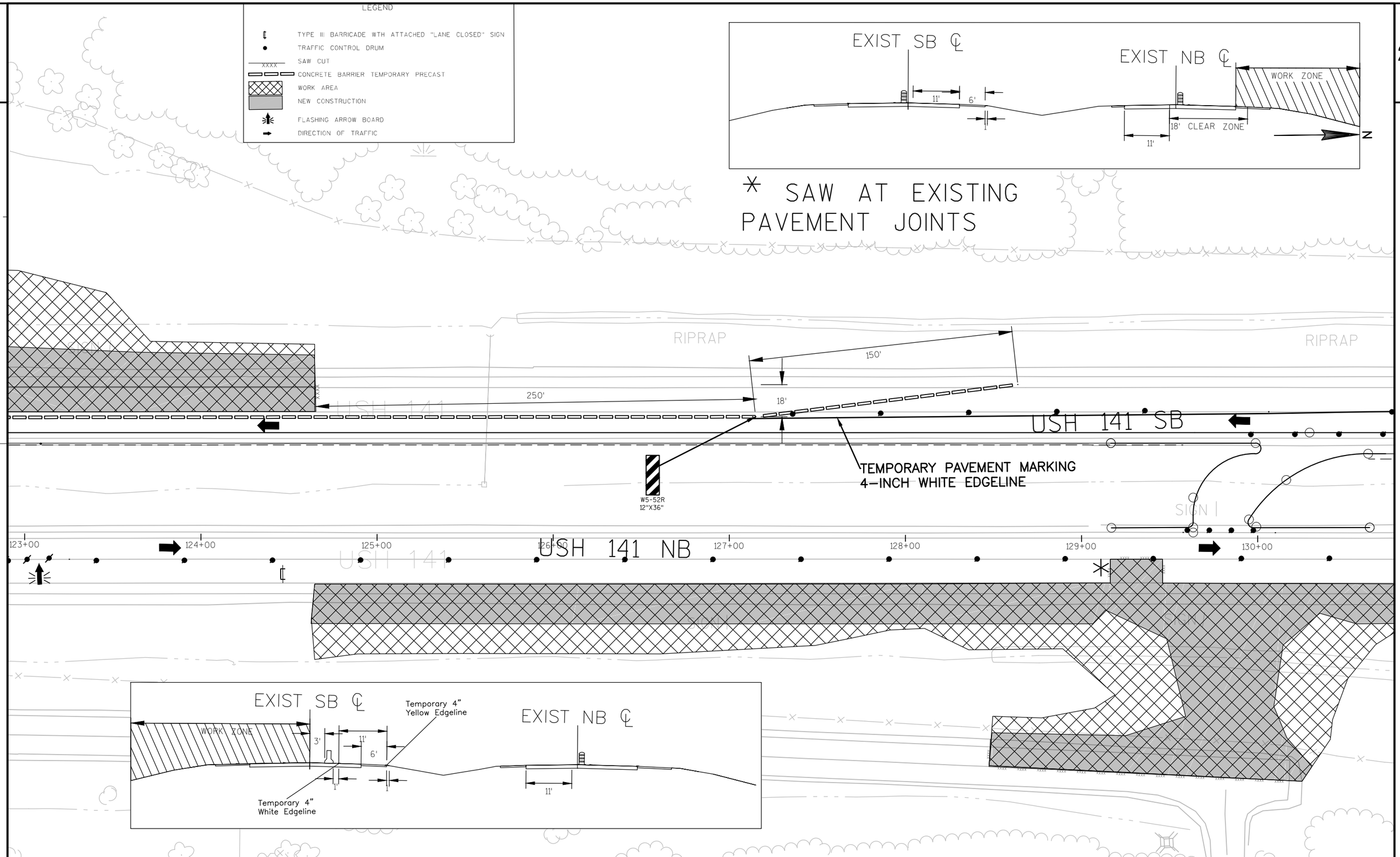

PROJECT NO:1490-28-71	HWY: USH 141	COUNTY: OCONTO	STAGE 2	SHEET 56	E

2

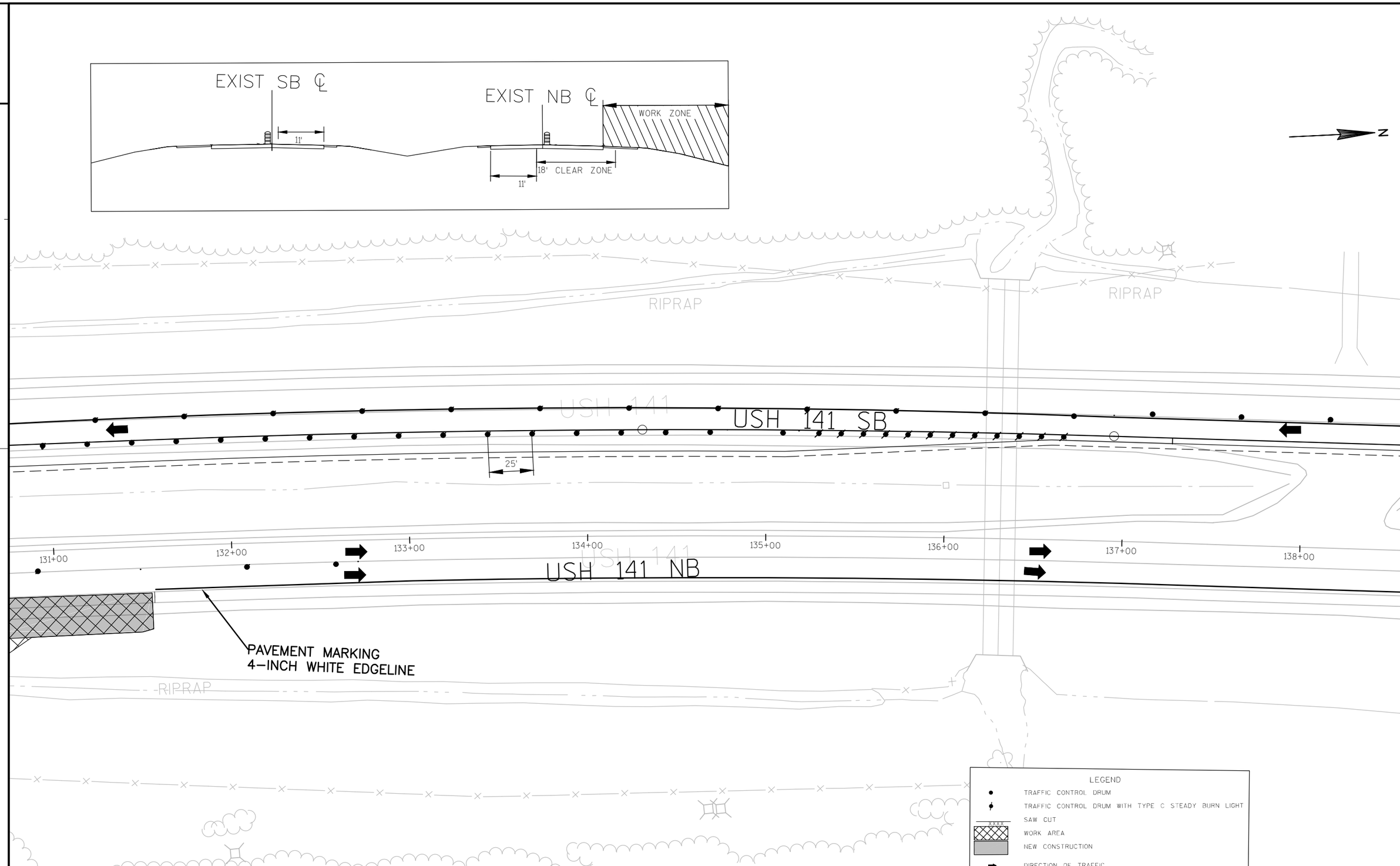

2

PROJECT NO:1490-28-71	HWY: USH 141	COUNTY: OCONTO	STAGE 2	SHEET 57	E

FILE NAME : N:\PDS\C3D\14902800\SHEETSPLAN\USH141-CTHESTAGE 2.DWG PLOT DATE : 2/6/2014 2:47 PM PLOT BY : WALLNER, AARON J PLOT NAME : PLOT SCALE : 1:50_XREF

WISDOT/CADDS SHEET 42

2

2

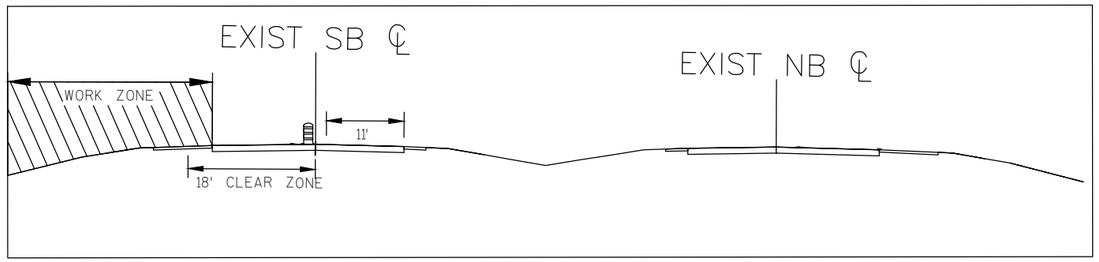

N

USH 141 SB

USH 141 NB

139+00

140+00

141+00

142+00

25'

143+00

144+00

145+00

146+00

PAVEMENT MARKING
4–INCH WHITE EDGELINE

LEGEND

- TRAFFIC CONTROL DRUM
- TRAFFIC CONTROL DRUM WITH TYPE C STEADY BURN LIGHT
- SAW CUT
- WORK AREA
- NEW CONSTRUCTION
- DIRECTION OF TRAFFIC

PROJECT NO:1490-28-71	HWY: USH 141	COUNTY: OCONTO	STAGE 2	SHEET 58	E

2

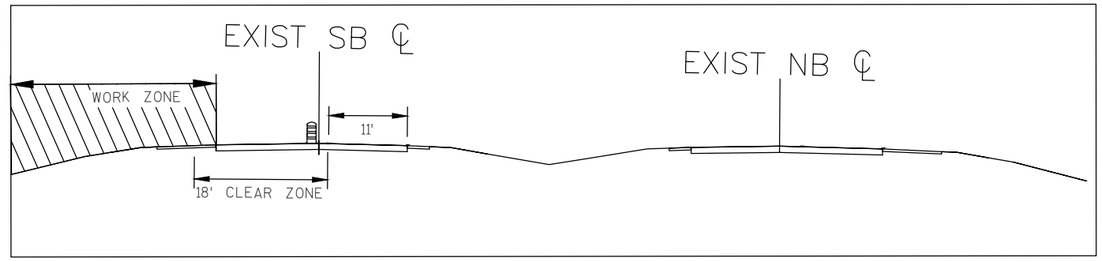

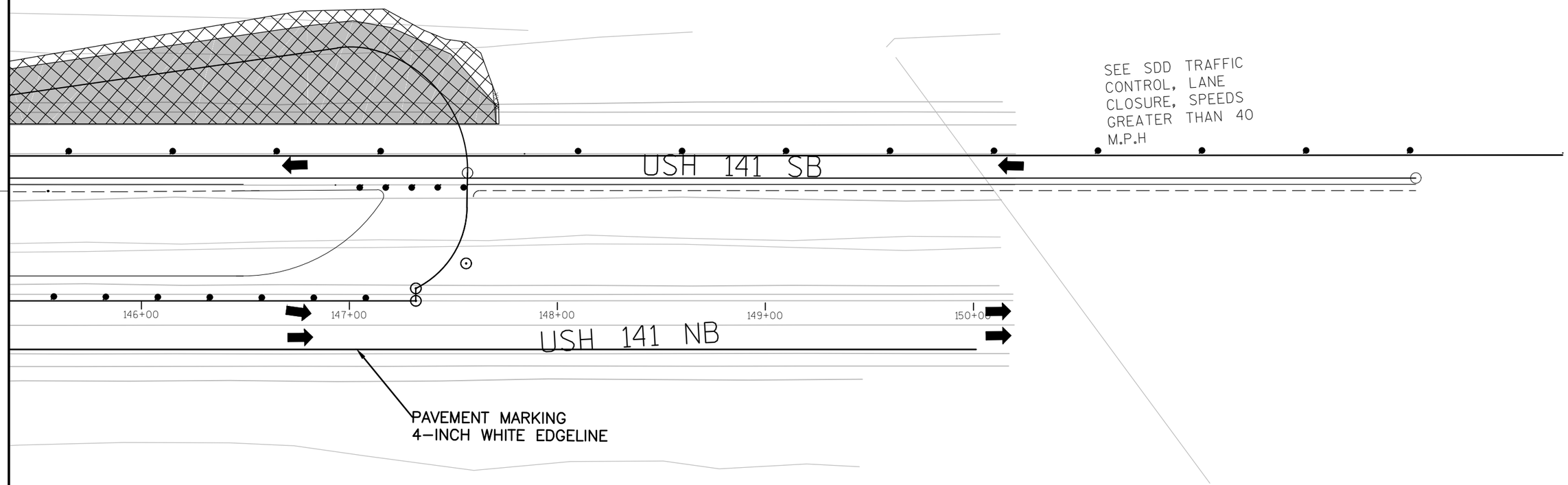

LEGEND

- TRAFFIC CONTROL DRUM
- SAW CUT
- WORK AREA
- NEW CONSTRUCTION
- DIRECTION OF TRAFFIC

PROJECT NO:1490-28-71	HWY: USH 141	COUNTY: OCONTO	STAGE 2	SHEET 59	E

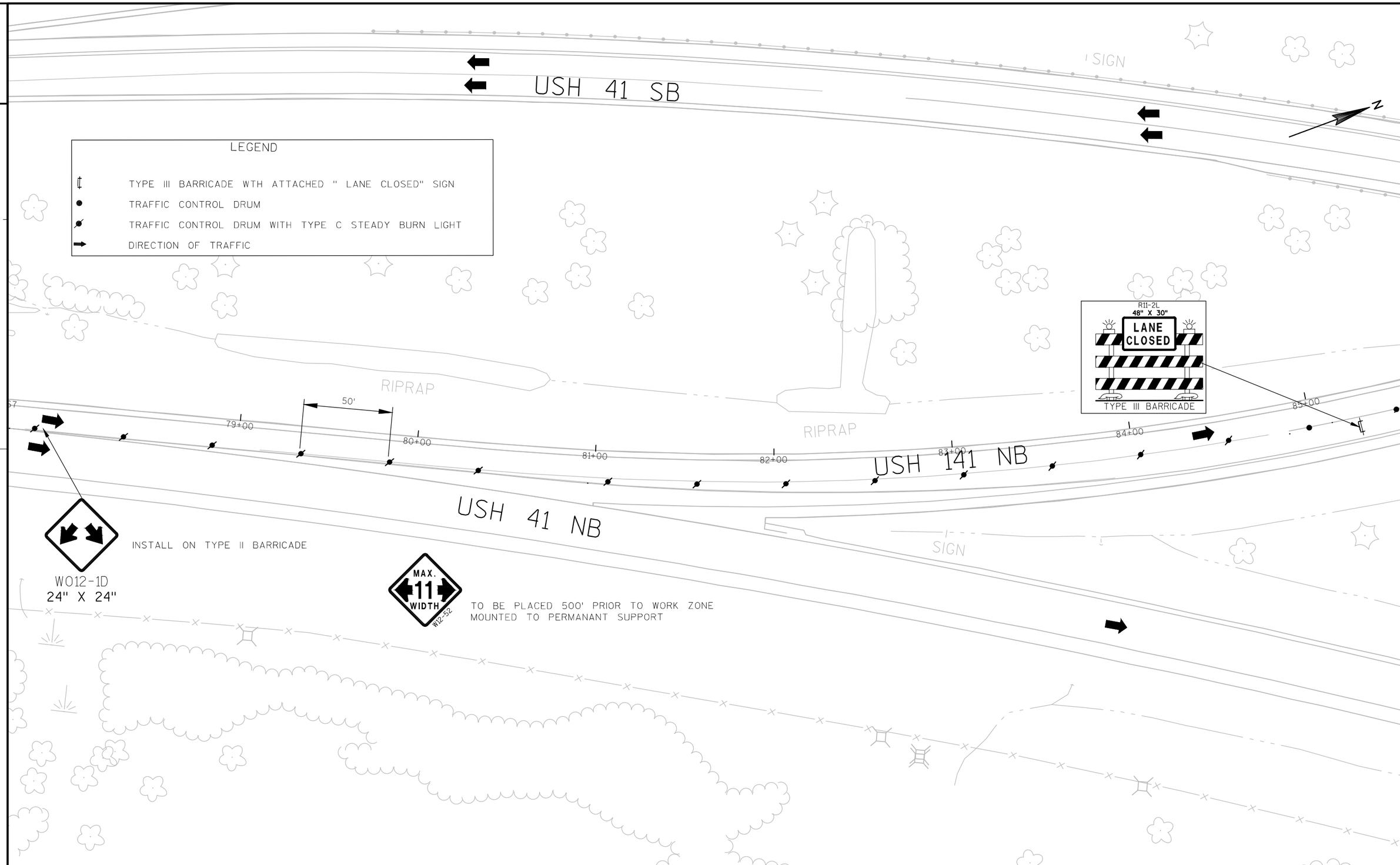

PROJECT NO:1490-28-71	HWY: USH 141	COUNTY: OCONTO	STAGE 3	SHEET 60	E

2

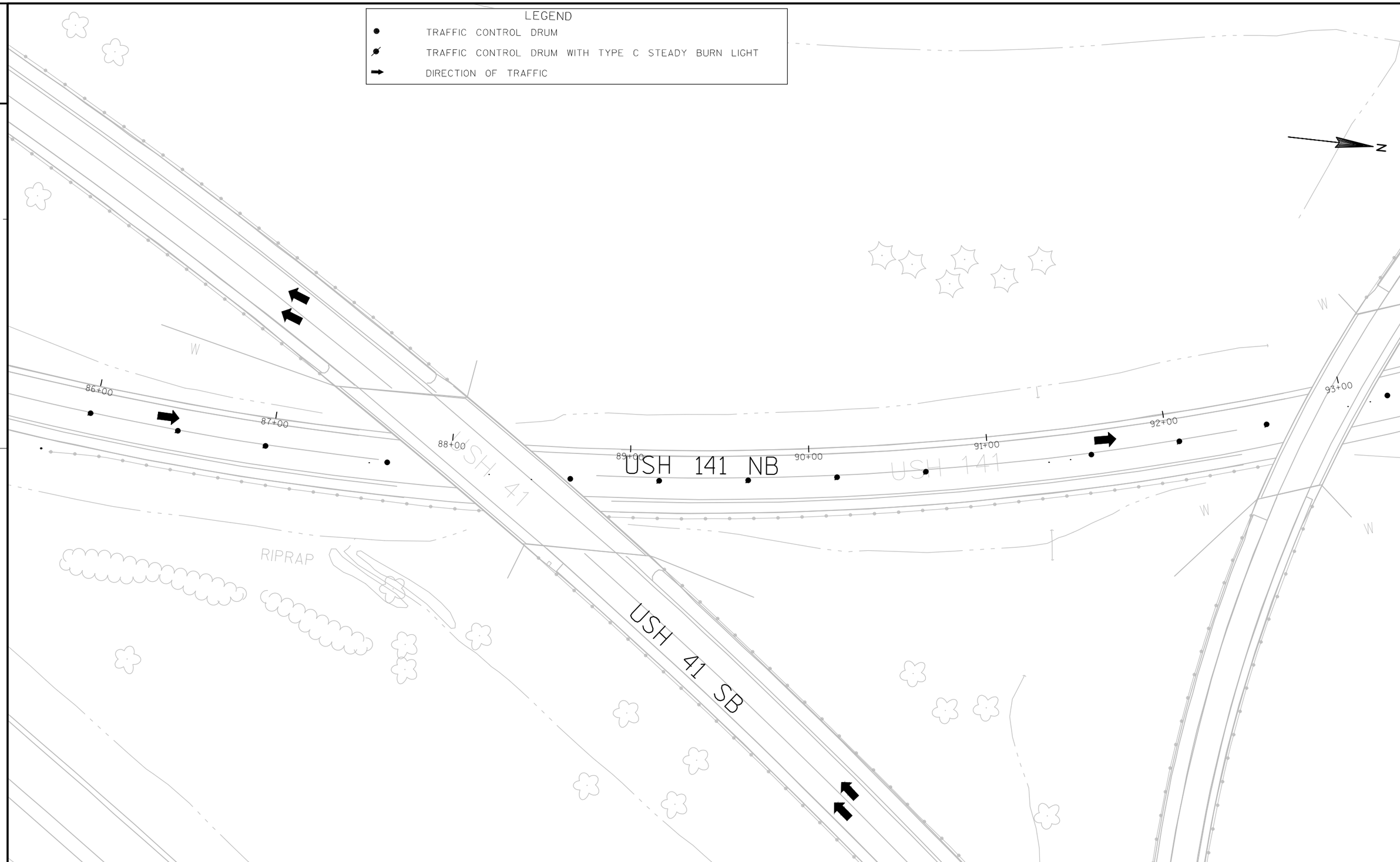

2

PROJECT NO:1490-28-71	HWY:USH 141	COUNTY:OCONTO	STAGE 3	SHEET 61	E

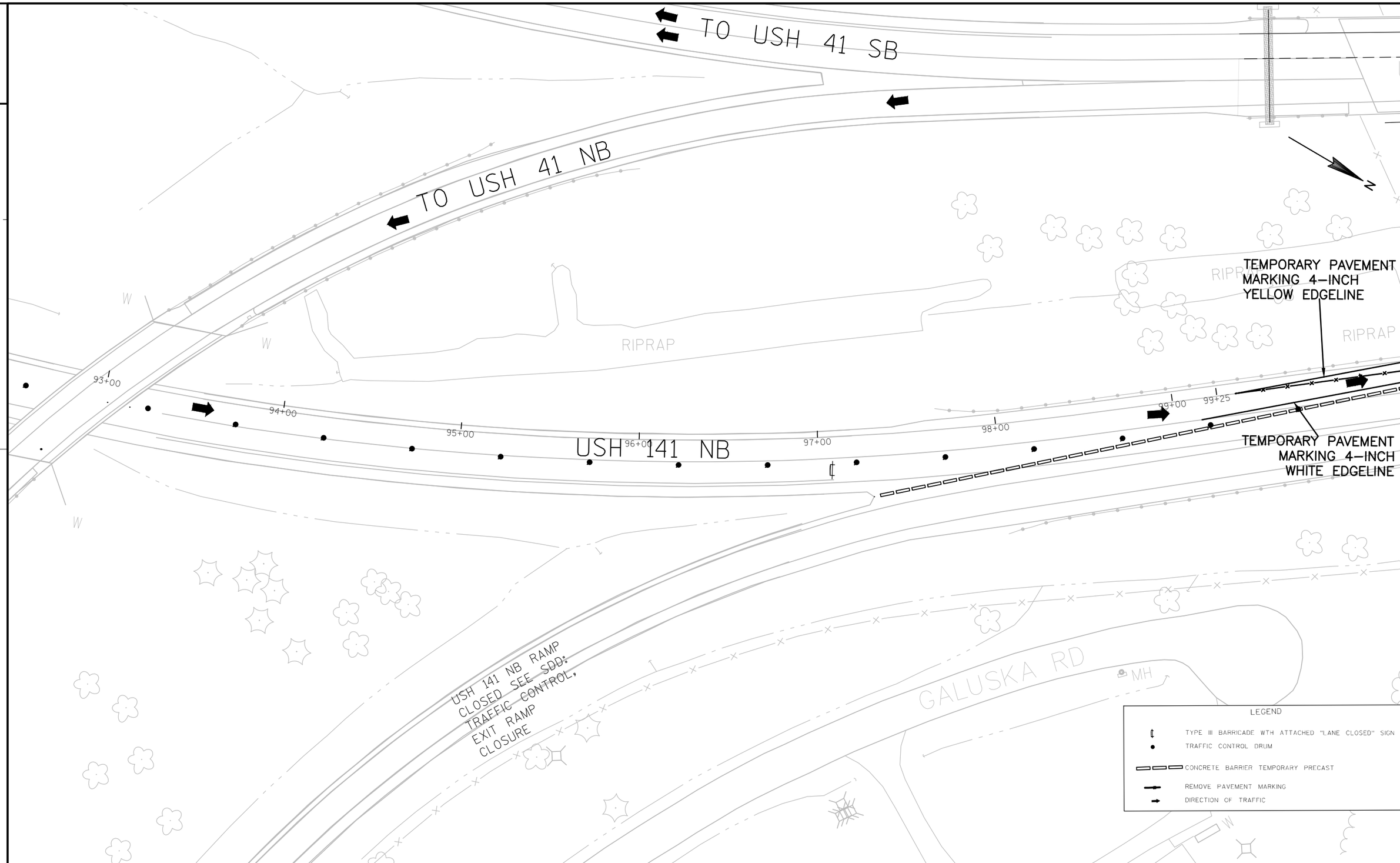

PROJECT NO:1490-28-71	HWY: USH 141	COUNTY: OCONTO	STAGE 3	SHEET 62	E

FILE NAME : N:\PDS\C3D\14902800\SHEETSPLAN\USH141-CTHESTAGE 3.DWG PLOT DATE : 2/6/2014 2:53 PM PLOT BY : WALLNER, AARON J PLOT NAME : PLOT SCALE : 1:50_XREF

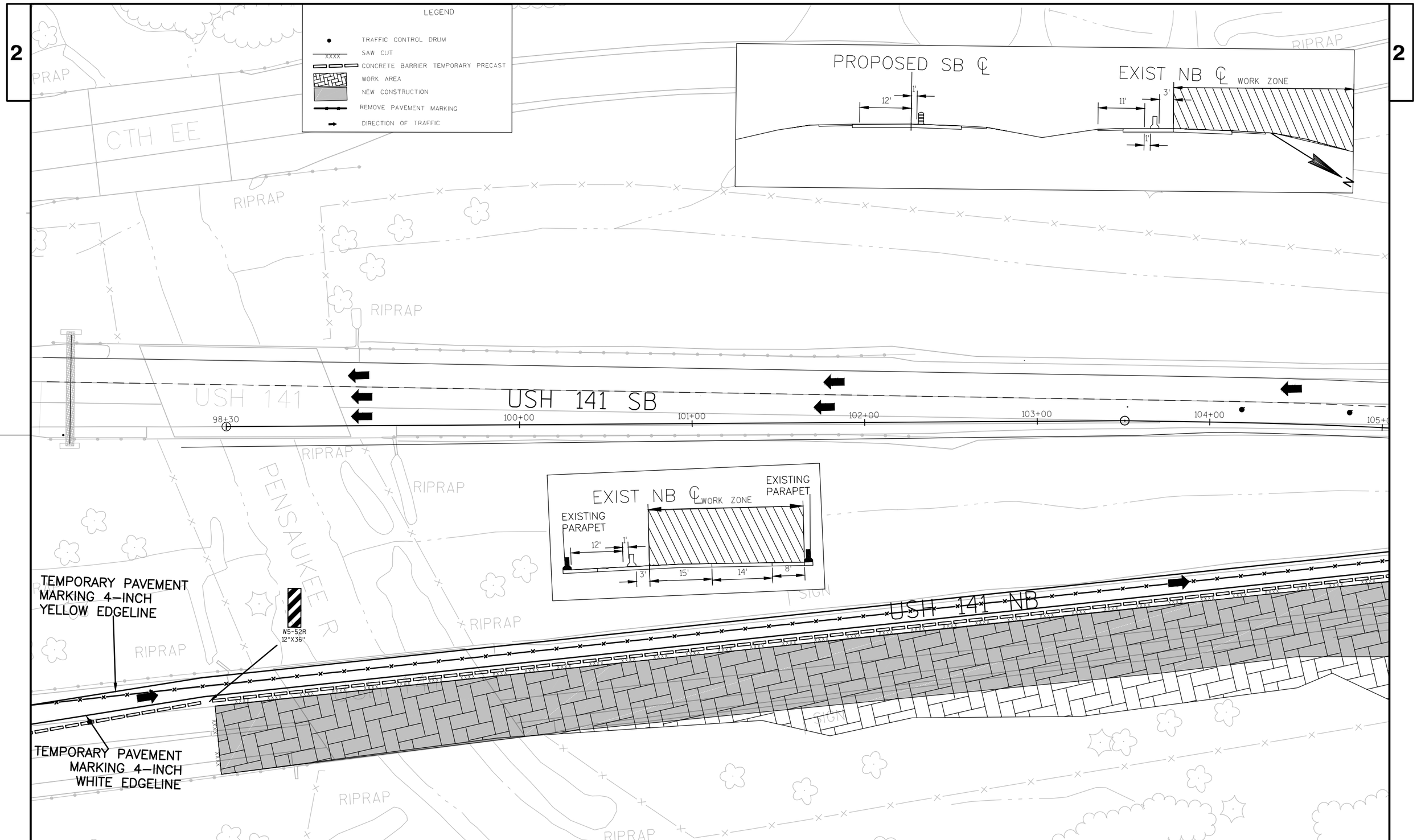

PROJECT NO:1490-28-71	HWY: USH 141	COUNTY: OCONTO	STAGE 3	SHEET 63	E

FILE NAME : N:\PDS\C3D\14902800\SHEETSPLAN\USH141-CTHESTAGE 3.DWG PLOT DATE : 2/6/2014 2:53 PM PLOT BY : WALLNER, AARON J PLOT NAME : PLOT SCALE : 1:50_XREF

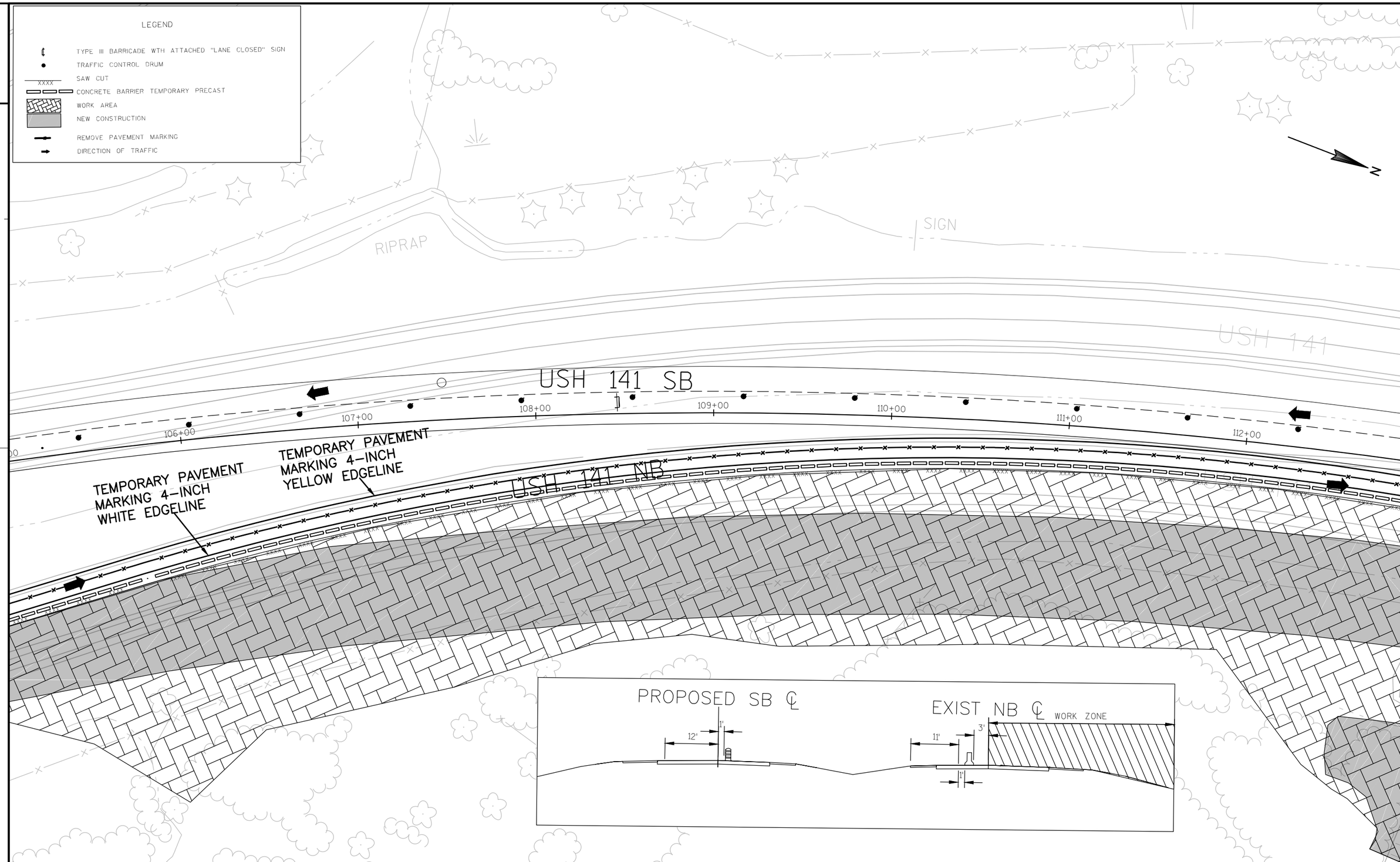

PROJECT NO:1490-28-71	HWY: USH 141	COUNTY: OCONTO	STAGE 3	SHEET 64	E

FILE NAME : N:\PDS\C3D\14902800\SHEETSPLAN\USH141-CTHESTAGE 3.DWG PLOT DATE : 2/6/2014 2:53 PM PLOT BY : WALLNER, AARON J PLOT NAME : PLOT SCALE : 1:50_XREF

WISDOT/CADDS SHEET 42

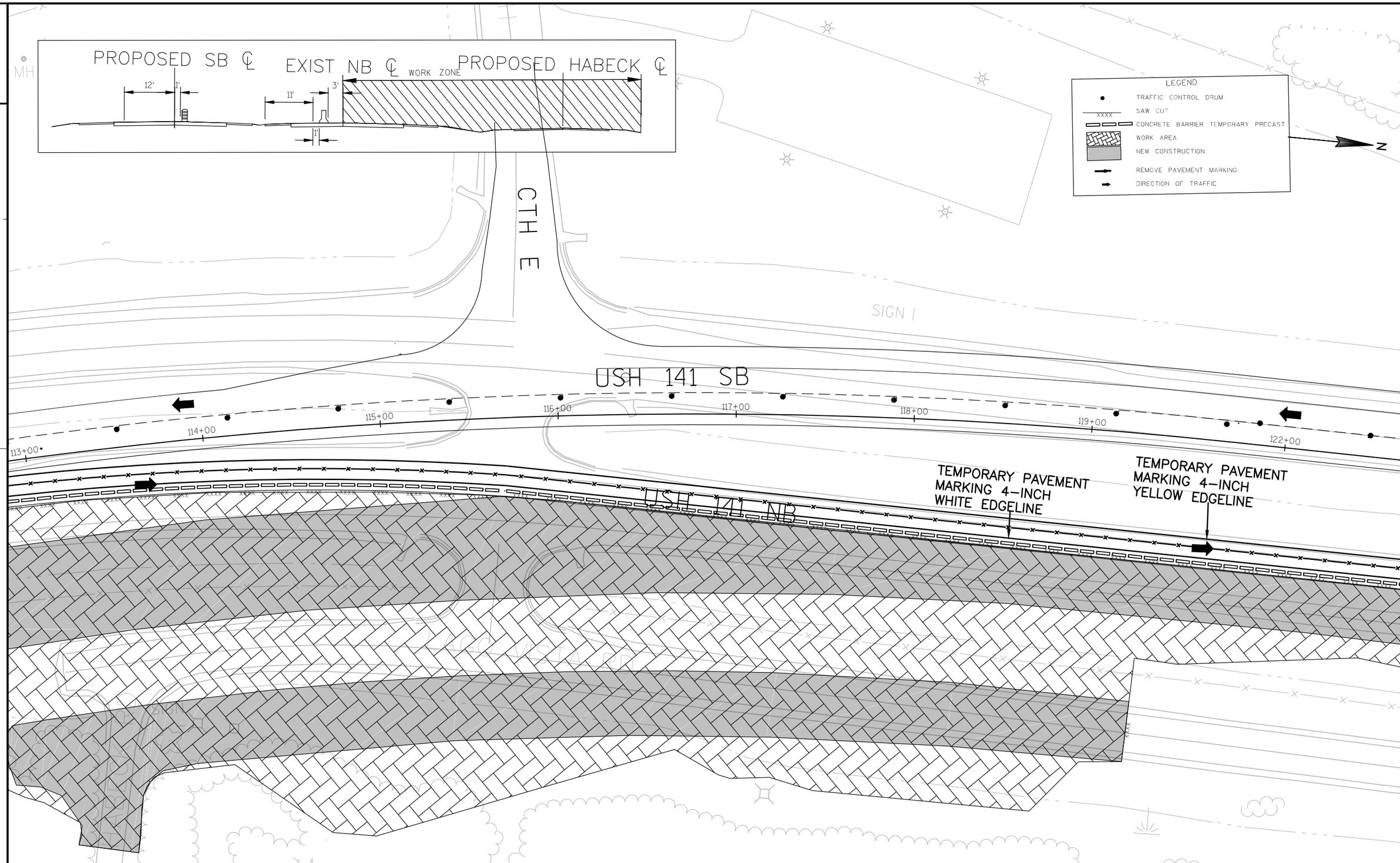

PROJECT NO:1490-28-71	HWY: USH 141	COUNTY: OCONTO	STAGE 3	SHEET 65	E

2

LEGEND

- TYPE III BARRICADE WTH ATTACHED "LANE CLOSED" SIGN
- TRAFFIC CONTROL DRUM
- SAW CUT
- CONCRETE BARRIER TEMPORARY PRECAST
- WORK AREA
- NEW CONSTRUCTION
- REMOVE PAVEMENT MARKING
- DIRECTION OF TRAFFIC

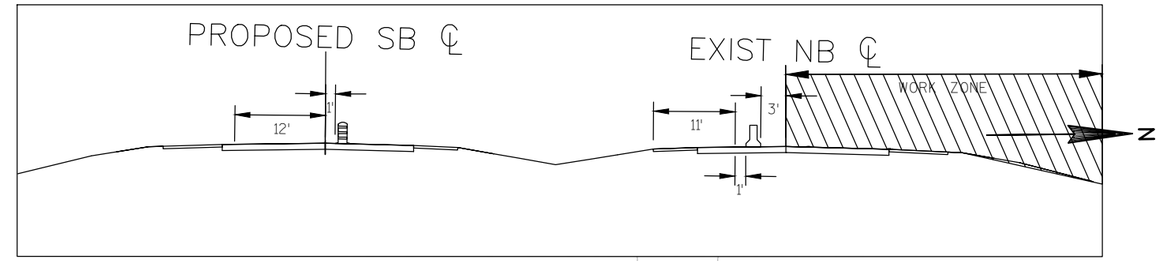

SIGN

RIPRAP

SEE SDD: TRAFFIC CONTROL, LANE CLOSURE SPEEDS GREATER THAN 40 MPH

USH 141 SB

USH 141

123+00 124+00 125+00 126+00 127+00 128+00 129+00 130+00

TEMPORARY PAVEMENT MARKING 4-INCH YELLOW EDGELINE

USH 141 NB

TEMPORARY PAVEMENT MARKING 4-INCH WHITE EDGELINE

SIGN

LAGO VISTA RD

2

PROJECT NO:1490-28-71	HWY:USH 141	COUNTY:OCONTO	STAGE 3	SHEET 66	E

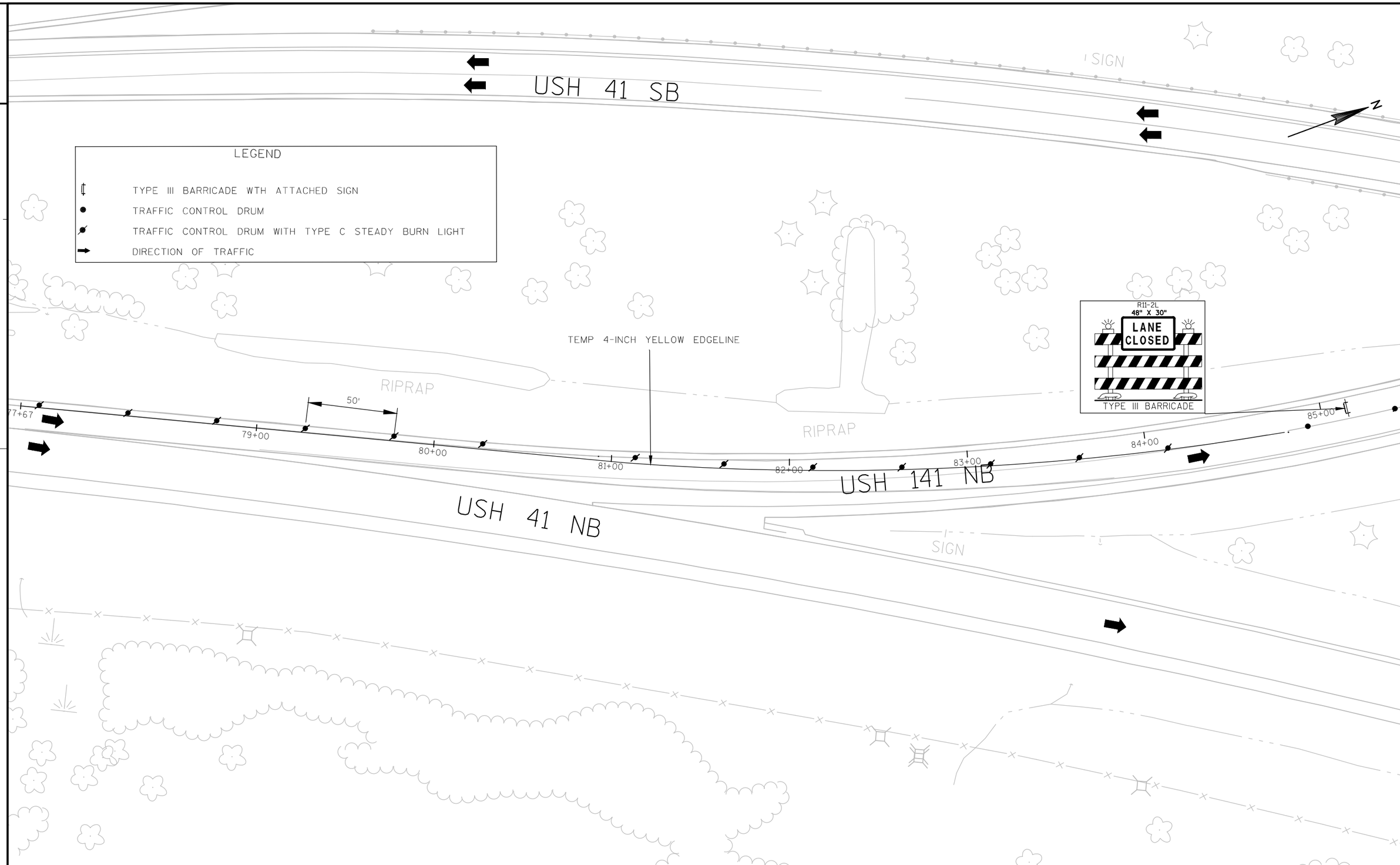

PROJECT NO:1490-28-71	HWY: USH 141	COUNTY: OCONTO	STAGE 4	SHEET 67	E

2

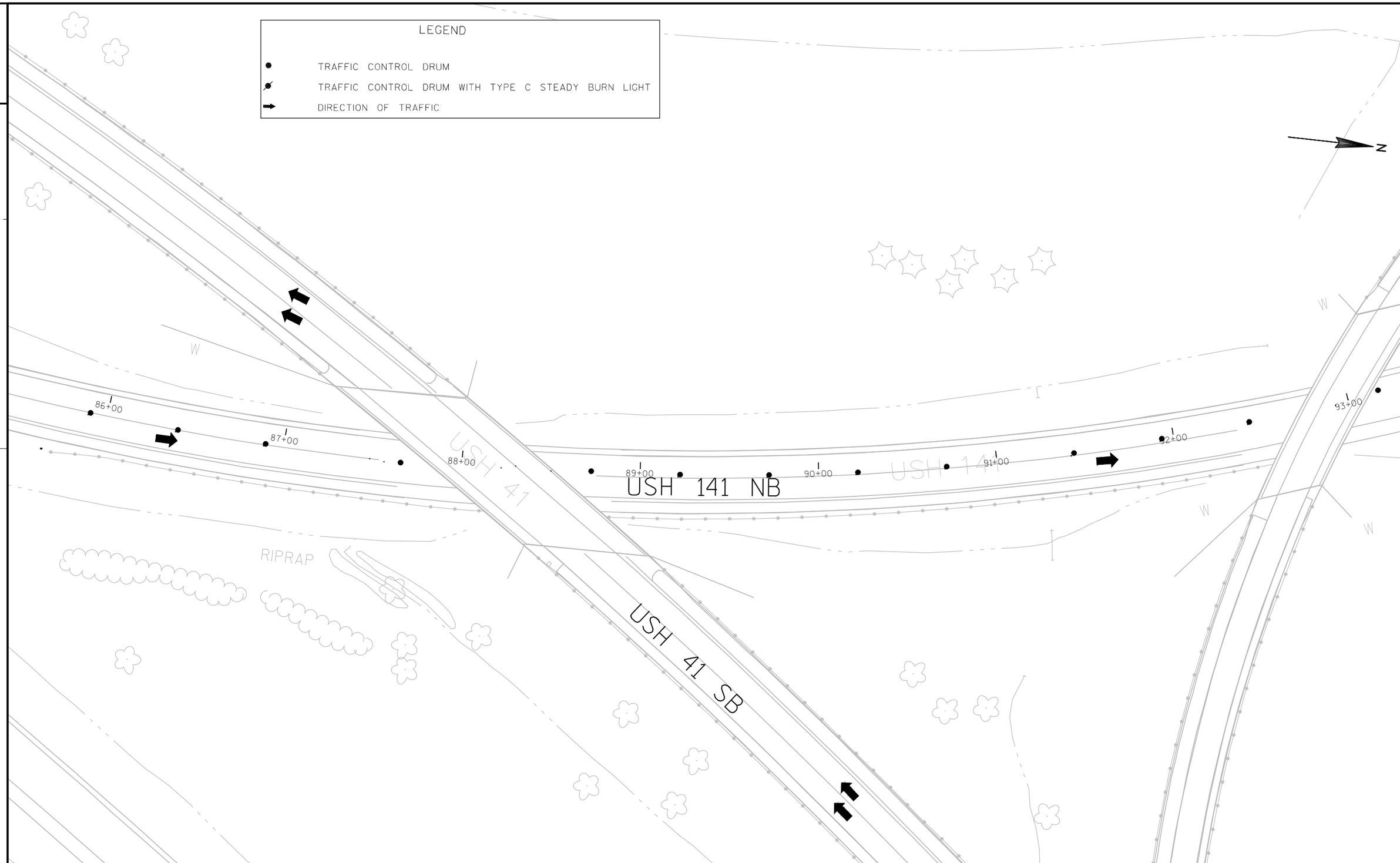

2

PROJECT NO:1490-28-71	HWY:USH 141	COUNTY:OCONTO	STAGE 4	SHEET 68	E

FILE NAME :N:\PDS\C3D\14902800\SHEETSPLAN\USH141-CTHESTAGE 4.DWG PLOT DATE :2/6/2014 3:14 PM PLOT BY : WALLNER, AARON J PLOT NAME : PLOT SCALE :1:50_XREF

WISDOT/CADDS SHEET 42

2

TO USH 41 SB

TO USH 41 NB

RIPRAP

RIPRAP

RIPRAP

TEMPORARY PAVEMENT MARKING 4-INCH YELLOW EDGELINE

150'

18'

93+00

94+00

95+00

96+00

97+00

98+00

99+00

99+25

USH 141 NB

TEMPORARY PAVEMENT MARKING 4-INCH WHITE EDGELINE

USH 141 NB RAMP CLOSED SEE SDD: TRAFFIC CONTROL, EXIT RAMP CLOSURE

GALUSKA RD

MH

N

LEGEND

TYPE III BARRICADE WTH ATTACHED "LANE CLOSED" SIGN

TRAFFIC CONTROL DRUM

CONCRETE BARRIER TEMPORARY PRECAST

DIRECTION OF TRAFFIC

2

PROJECT NO:1490-28-71	HWY: USH 141	COUNTY: OCONTO	STAGE 4	SHEET 69	E

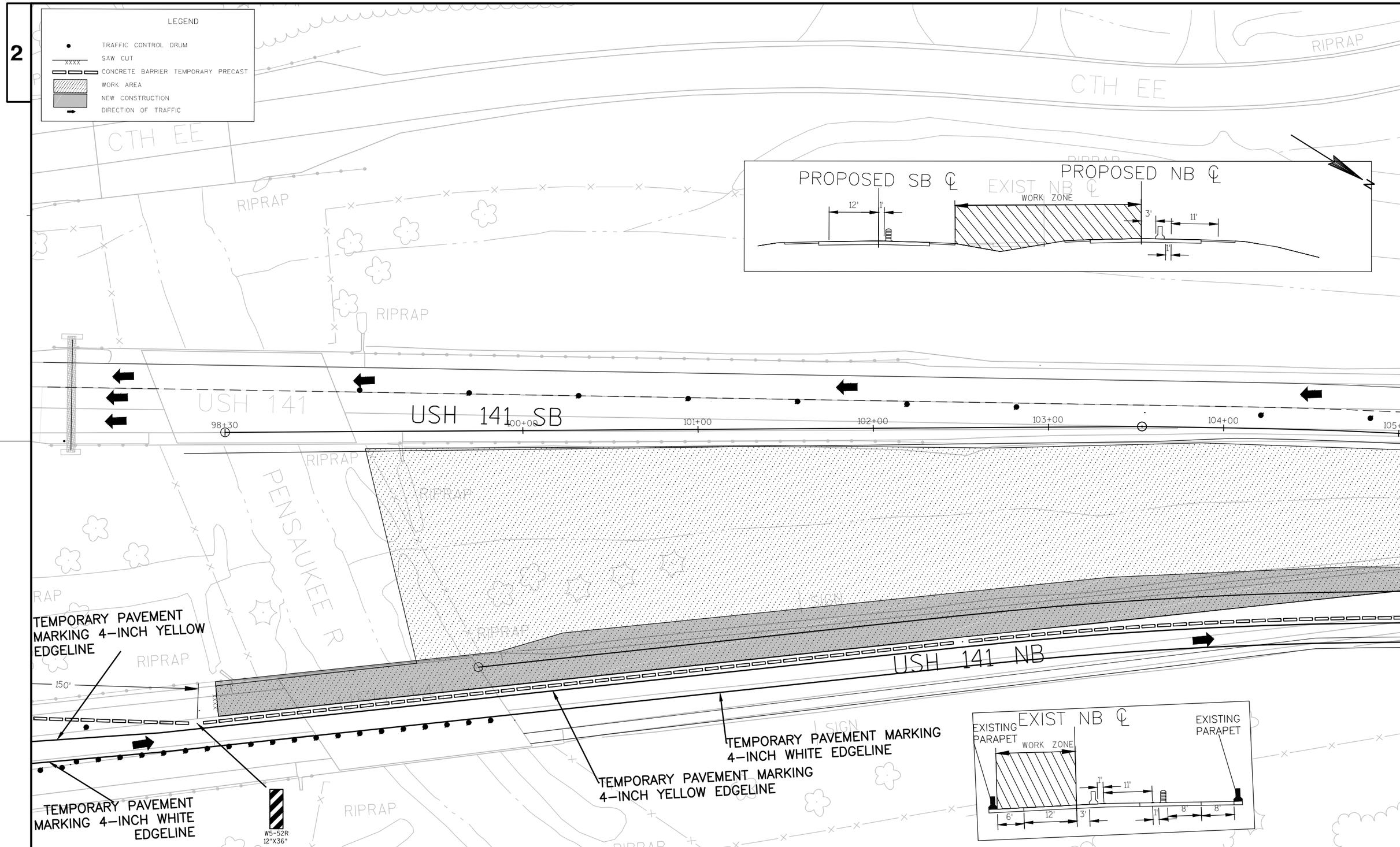

PROJECT NO:1490-28-71	HWY: USH 141	COUNTY: OCONTO	STAGE 4	SHEET 70	E

FILE NAME : N:\PDS\C3D\14902800\SHEETSPLAN\USH141-CTHESTAGE 4.DWG PLOT DATE : 2/6/2014 3:14 PM PLOT BY : WALLNER, AARON J PLOT NAME : PLOT SCALE : 1:50_XREF

WISDOT/CADDS SHEET 42

2

LEGEND

- TYPE III BARRICADE WTH ATTACHED "LANE CLOSED" SIGN
- TRAFFIC CONTROL DRUM
- CONCRETE BARRIER TEMPORARY PRECAST
- WORK AREA
- NEW CONSTRUCTION
- DIRECTION OF TRAFFIC

N

RIPRAP

SIGN

USH 141

USH 141 SB

106+00 107+00 108+00 109+00 110+00 111+00 112+00

USH 141 NB

TEMPORARY PAVEMENT MARKING
4-INCH WHITE EDGELINE

TEMPORARY PAVEMENT MARKING
4-INCH YELLOW EDGELINE

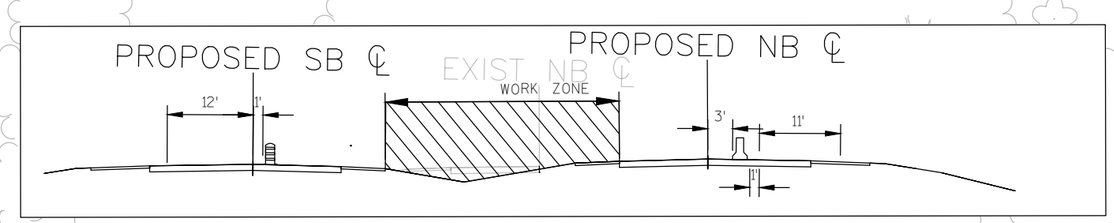

2

PROJECT NO:1490-28-71	HWY: USH 141	COUNTY: OCONTO	STAGE 4	SHEET 71	E

FILE NAME : N:\PDS\C3D\14902800\SHEETSPLAN\USH141-CTHESTAGE 4.DWG PLOT DATE : 2/6/2014 3:14 PM PLOT BY : WALLNER, AARON J PLOT NAME : PLOT SCALE : 1:50_XREF

WISDOT/CADDS SHEET 42

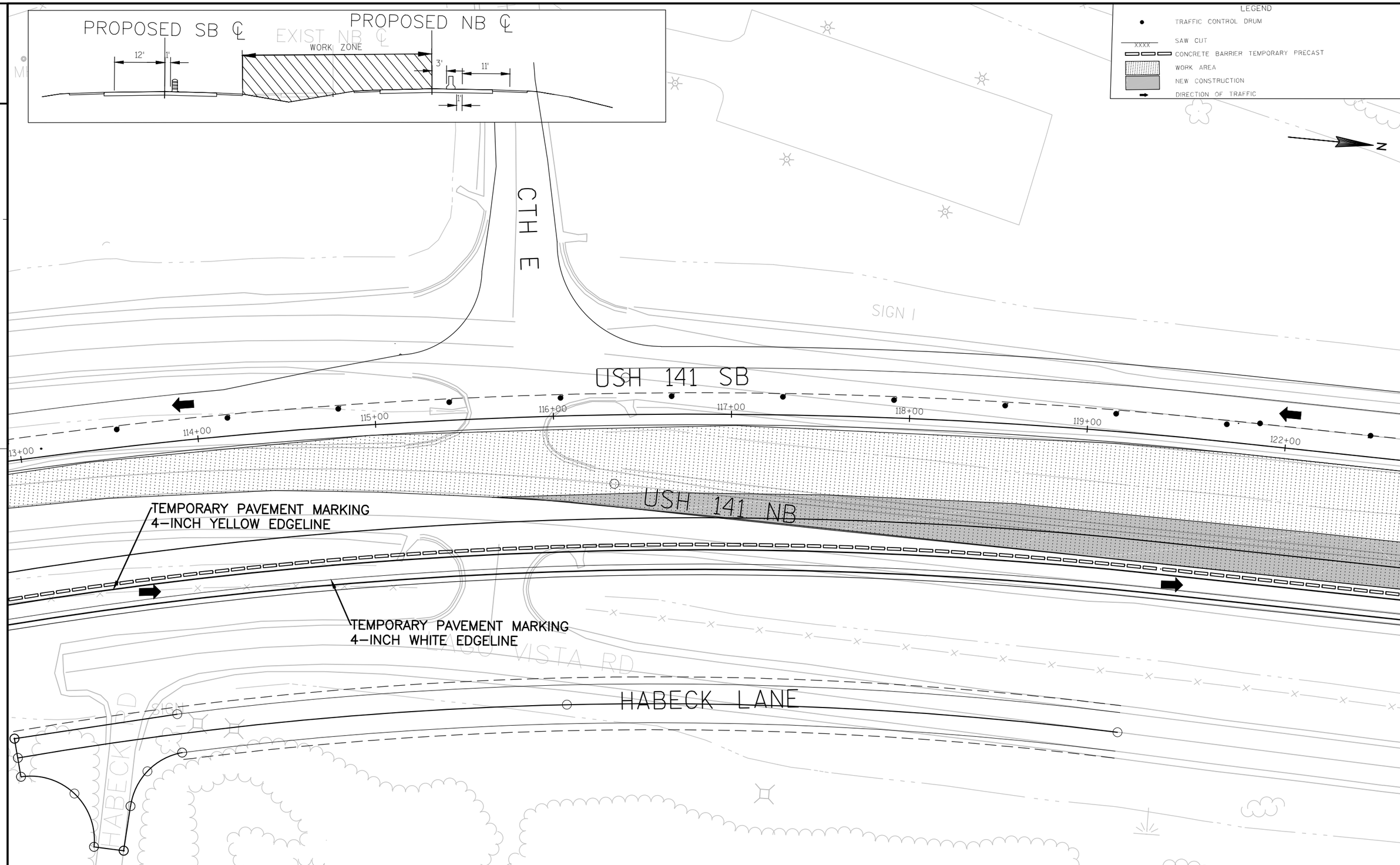

PROJECT NO:1490-28-71	HWY: USH 141	COUNTY: OCONTO	STAGE 4	SHEET 72	E

2

LEGEND

- TYPE III BARRICADE WTH ATTACHED "LANE CLOSED" SIGN
- TRAFFIC CONTROL DRUM
- SAW CUT
- CONCRETE BARRIER TEMPORARY PRECAST
- WORK AREA
- NEW CONSTRUCTION
- DIRECTION OF TRAFFIC

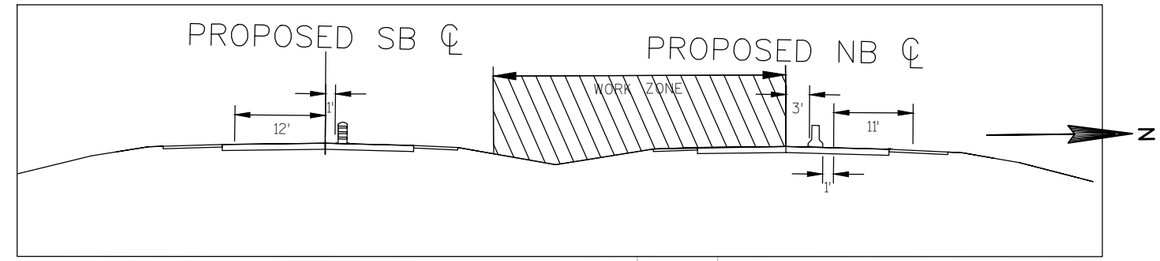

SIGN

RIPRAP

RIPRAP

USH 141

SEE SDD: TRAFFIC CONTROL, LANE CLOSURE SPEEDS GREATER THAN 40 MPH

USH 141 SB

123+00 124+00 125+00 126+00 127+00 128+00 129+00 130+00

TEMPORARY PAVEMENT MARKING 4-INCH YELLOW EDGELINE

USH 141

USH 141 NB

TEMPORARY PAVEMENT MARKING 4-INCH WHITE EDGELINE

SIGN

LAGO VISTA RD

2

PROJECT NO:1490-28-71	HWY: USH 141	COUNTY: OCONTO	STAGE 4	SHEET 73	E

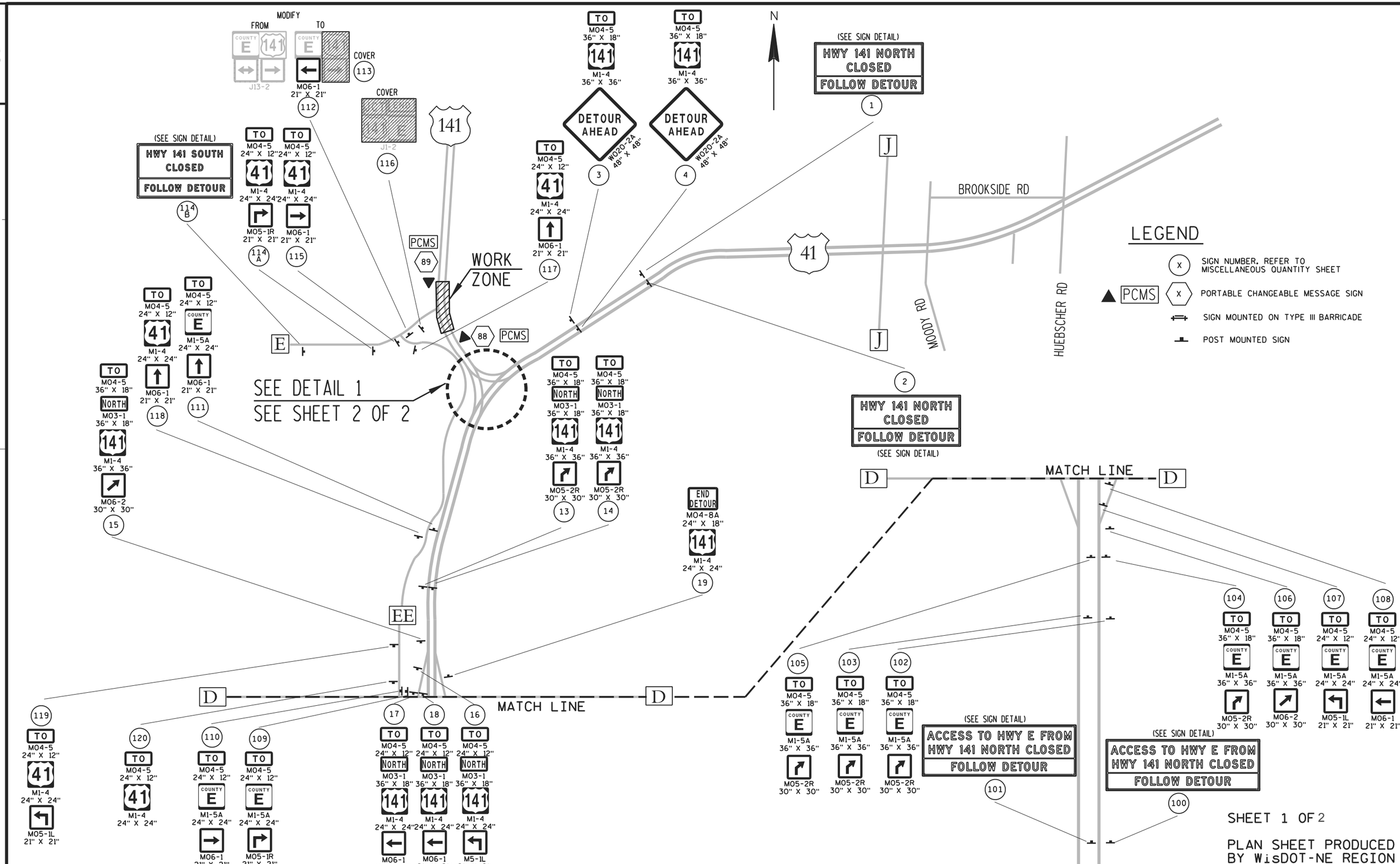

PROJECT NO:1490-28-71	HWY:USH 141	COUNTY:OCONTO	DETOUR SIGNING DETAIL	SHEET 74	E

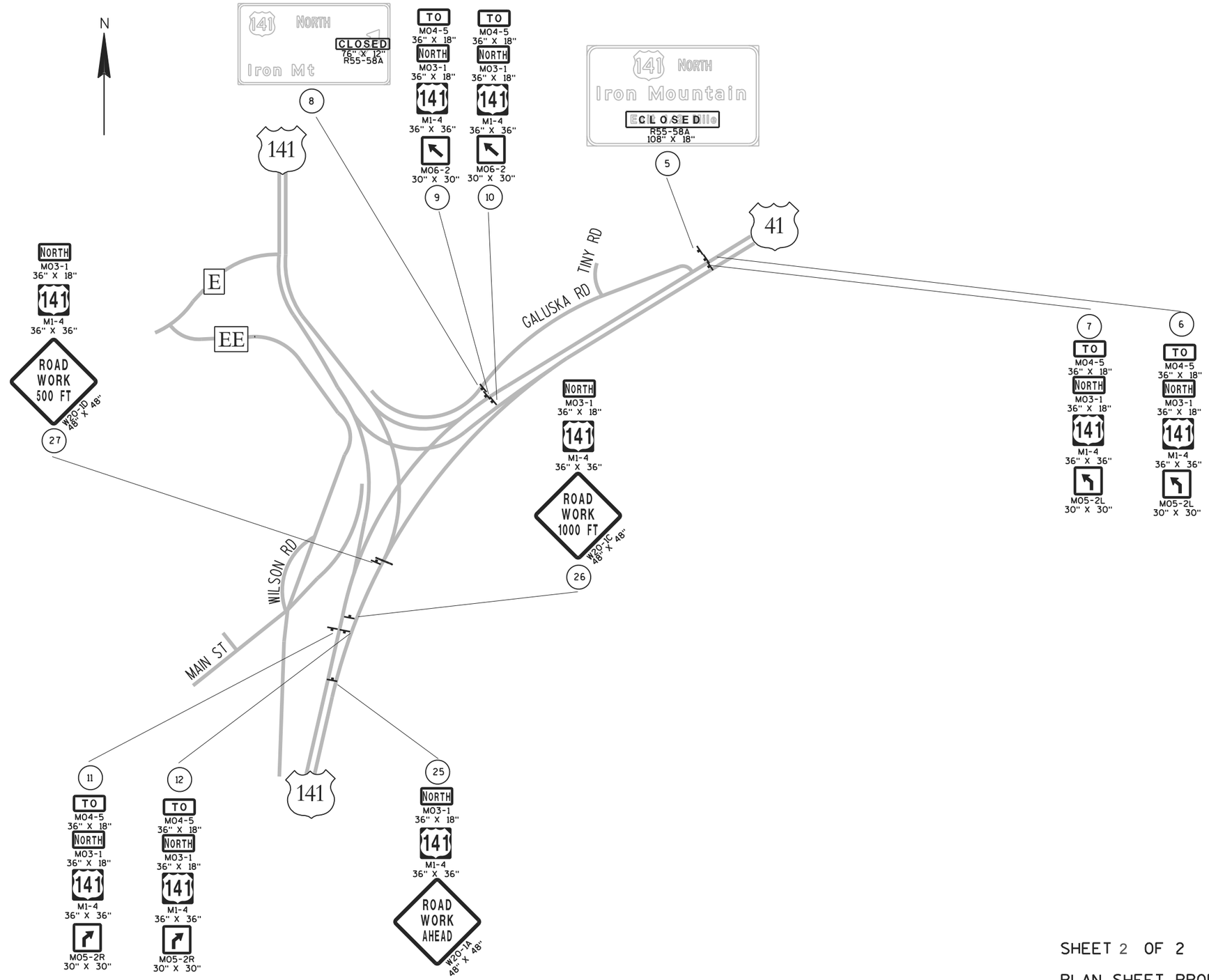

DETAIL 1

LEGEND

- (X) SIGN NUMBER. REFER TO MISCELLANEOUS QUANTITY SHEET
- ▲ PCMS (X) PORTABLE CHANGEABLE MESSAGE SIGN
- SIGN MOUNTED ON TYPE III BARRICADE
- POST MOUNTED SIGN

SHEET 2 OF 2

PLAN SHEET PRODUCED BY WisDOT-NE REGION

PROJECT NO:1490-28-71	HWY:USH 141	COUNTY:OCONTO	DETOUR SIGNING DETAIL	SHEET 75	E

3

DATE 10MAR14 E S T I M A T E O F Q U A N T I T I E S

LINE NUMBER	ITEM	ITEM DESCRIPTION	UNIT	TOTAL	1490-28-71 QUANTITY
0010	201.0115	CLEARING	ACRE	1.250	1.250
0020	201.0215	GRUBBING	ACRE	1.250	1.250
0030	204.0100	REMOVING PAVEMENT	SY	14,175.000	14,175.000
0040	204.0150	REMOVING CURB & GUTTER	LF	555.000	555.000
0050	204.0165	REMOVING GUARDRAIL	LF	1,350.000	1,350.000
0060	204.0170	REMOVING FENCE	LF	1,560.000	1,560.000
0070	205.0100	EXCAVATION COMMON	CY	19,800.000	19,800.000
0080	208.0100	BORROW	CY	2,860.000	2,860.000
0090	211.0400	PREPARE FOUNDATION FOR ASPHALTIC SHOULDERS	STA	62.000	62.000
0100	213.0100	FINISHING ROADWAY (PROJECT) 01. 1490-28-71	EACH	1.000	1.000
0110	305.0110	BASE AGGREGATE DENSE 3/4-INCH	TON	2,015.000	2,015.000
0120	305.0120	BASE AGGREGATE DENSE 1 1/4-INCH	TON	21,650.000	21,650.000
0130	415.0100	CONCRETE PAVEMENT 10-INCH	SY	14,530.000	14,530.000
0140	415.0410	CONCRETE PAVEMENT APPROACH SLAB	SY	445.000	445.000
0150	440.4410.S	INCENTIVE IRI RIDE	DOL	5,320.000	5,320.000
0160	455.0120	ASPHALTIC MATERIAL PG64-28	TON	200.000	200.000
0170	455.0605	TACK COAT	GAL	290.000	290.000
0180	460.1100	HMA PAVEMENT TYPE E-0.3	TON	1,565.000	1,565.000
0190	460.1101	HMA PAVEMENT TYPE E-1	TON	2,050.000	2,050.000
0200	460.2000	INCENTIVE DENSITY HMA PAVEMENT	DOL	2,320.000	2,320.000
0210	465.0105	ASPHALTIC SURFACE	TON	75.000	75.000
0220	465.0125	ASPHALTIC SURFACE TEMPORARY	TON	1,020.000	1,020.000
0230	465.0305	ASPHALTIC SURFACE SAFETY ISLANDS	TON	10.000	10.000
0240	465.0315	ASPHALTIC FLUMES	SY	75.000	75.000
0250	465.0400	ASPHALTIC SHOULDER RUMBLE STRIP	LF	11,000.000	11,000.000
0260	522.0124	CULVERT PIPE REINFORCED CONCRETE CLASS III 24-INCH	LF	232.000	232.000
0270	522.1024	APRON ENDWALLS FOR CULVERT PIPE REINFORCED CONCRETE 24-INCH	EACH	4.000	4.000
0280	601.0576	CONCRETE CURB & GUTTER 4-INCH SLOPED 30-INCH TYPE J	LF	1,140.000	1,140.000
0290	603.8000	CONCRETE BARRIER TEMPORARY PRECAST DELIVERED	LF	11,600.000	11,600.000
0300	603.8125	CONCRETE BARRIER TEMPORARY PRECAST INSTALLED	LF	22,950.000	22,950.000
0310	612.0106	PIPE UNDERDRAIN 6-INCH	LF	3,270.000	3,270.000
0320	612.0806	APRON ENDWALLS FOR UNDERDRAIN REINFORCED CONCRETE 6-INCH	EACH	24.000	24.000
0330	614.0010	BARRIER SYSTEM GRADING SHAPING FINISHING	EACH	2.000	2.000
0340	614.0200	STEEL THRIE BEAM STRUCTURE APPROACH	LF	175.000	175.000
0350	614.0905	CRASH CUSHIONS TEMPORARY	EACH	1.000	1.000
0360	614.2300	MGS GUARDRAIL 3	LF	860.000	860.000
0370	614.2500	MGS THRIE BEAM TRANSITION	LF	160.000	160.000
0380	614.2610	MGS GUARDRAIL TERMINAL EAT	EACH	4.000	4.000
0390	616.0100	FENCE WOVEN WIRE (HEIGHT) 01. 4 FOOT	LF	100.000	100.000
0400	616.0206	FENCE CHAIN LINK 6-FT	LF	1,350.000	1,350.000
0410	618.0100	MAINTENANCE AND REPAIR OF HAUL ROADS (PROJECT) 01. 1490-28-71	EACH	1.000	1.000
0420	619.1000	MOBILIZATION	EACH	1.000	1.000
0430	620.0300	CONCRETE MEDIAN SLOPED NOSE	SF	115.000	115.000
0440	624.0100	WATER	MGAL	560.000	560.000
0450	625.0500	SALVAGED TOPSOIL	SY	38,584.000	38,584.000
0460	627.0200	MULCHING	SY	38,584.000	38,584.000

3

3

DATE 10MAR14 E S T I M A T E O F Q U A N T I T I E S

LINE NUMBER	ITEM	ITEM DESCRIPTION	UNIT	TOTAL	1490-28-71 QUANTITY
0470	628.1104	EROSION BALES	EACH	100.000	100.000
0480	628.1504	SILT FENCE	LF	2,630.000	2,630.000
0490	628.1520	SILT FENCE MAINTENANCE	LF	2,630.000	2,630.000
0500	628.1905	MOBILIZATIONS EROSION CONTROL	EACH	10.000	10.000
0510	628.1910	MOBILIZATIONS EMERGENCY EROSION CONTROL	EACH	5.000	5.000
0520	628.2004	EROSION MAT CLASS I TYPE B	SY	7,045.000	7,045.000
0530	628.2008	EROSION MAT URBAN CLASS I TYPE B	SY	2,720.000	2,720.000
0540	628.7005	INLET PROTECTION TYPE A	EACH	4.000	4.000
0550	628.7010	INLET PROTECTION TYPE B	EACH	4.000	4.000
0560	628.7504	TEMPORARY DITCH CHECKS	LF	700.000	700.000
0570	628.7555	CULVERT PIPE CHECKS	EACH	18.000	18.000
0580	628.7570	ROCK BAGS	EACH	80.000	80.000
0590	629.0210	FERTILIZER TYPE B	CWT	3.000	3.000
0600	630.0130	SEEDING MIXTURE NO. 30	LB	80.000	80.000
0610	630.0200	SEEDING TEMPORARY	LB	115.000	115.000
0620	633.0100	DELINEATOR POSTS STEEL	EACH	15.000	15.000
0630	633.0500	DELINEATOR REFLECTORS	EACH	15.000	15.000
0640	633.5200	MARKERS CULVERT END	EACH	4.000	4.000
0650	634.0614	POSTS WOOD 4X6-INCH X 14-FT	EACH	12.000	12.000
0660	634.0616	POSTS WOOD 4X6-INCH X 16-FT	EACH	24.000	24.000
0670	634.0618	POSTS WOOD 4X6-INCH X 18-FT	EACH	19.000	19.000
0680	634.0816	POSTS TUBULAR STEEL 2X2-INCH X 16-FT	EACH	1.000	1.000
0690	635.0200	SIGN SUPPORTS STRUCTURAL STEEL HS	LB	1,205.000	1,205.000
0700	636.0100	SIGN SUPPORTS CONCRETE MASONRY	CY	1.600	1.600
0710	636.0500	SIGN SUPPORTS STEEL REINFORCEMENT	LB	100.000	100.000
0720	637.1220	SIGNS TYPE I REFLECTIVE SH	SF	230.000	230.000
0730	637.2210	SIGNS TYPE II REFLECTIVE H	SF	640.000	640.000
0740	637.2230	SIGNS TYPE II REFLECTIVE F	SF	103.000	103.000
0750	638.2601	REMOVING SIGNS TYPE I	EACH	1.000	1.000
0760	638.2602	REMOVING SIGNS TYPE II	EACH	54.000	54.000
0770	638.3000	REMOVING SMALL SIGN SUPPORTS	EACH	38.000	38.000
0780	638.3100	REMOVING STRUCTURAL STEEL SIGN SUPPORTS	EACH	2.000	2.000
0790	642.5001	FIELD OFFICE TYPE B	EACH	1.000	1.000
0800	643.0100	TRAFFIC CONTROL (PROJECT) 01. 1490-28-71	EACH	1.000	1.000
0810	643.0300	TRAFFIC CONTROL DRUMS	DAY	16,610.000	16,610.000
0820	643.0410	TRAFFIC CONTROL BARRICADES TYPE II	DAY	20.000	20.000
0830	643.0420	TRAFFIC CONTROL BARRICADES TYPE III	DAY	1,128.000	1,128.000
0840	643.0705	TRAFFIC CONTROL WARNING LIGHTS TYPE A	DAY	2,258.000	2,258.000
0850	643.0715	TRAFFIC CONTROL WARNING LIGHTS TYPE C	DAY	5,052.000	5,052.000
0860	643.0800	TRAFFIC CONTROL ARROW BOARDS	DAY	192.000	192.000
0870	643.0900	TRAFFIC CONTROL SIGNS	DAY	6,340.000	6,340.000
0880	643.0910	TRAFFIC CONTROL COVERING SIGNS TYPE I	EACH	15.000	15.000
0890	643.0920	TRAFFIC CONTROL COVERING SIGNS TYPE II	EACH	2.000	2.000
0900	643.1000	TRAFFIC CONTROL SIGNS FIXED MESSAGE	SF	172.000	172.000
0910	643.1050	TRAFFIC CONTROL SIGNS PCMS	DAY	48.000	48.000
0920	643.2000	TRAFFIC CONTROL DETOUR (PROJECT) 01. 1490-28-71	EACH	1.000	1.000
0930	643.3000	TRAFFIC CONTROL DETOUR SIGNS	DAY	7,300.000	7,300.000
0940	646.0106	PAVEMENT MARKING EPOXY 4-INCH	LF	14,000.000	14,000.000
0950	646.0600	REMOVING PAVEMENT MARKINGS	LF	13,240.000	13,240.000
0960	646.0841.S	PAVEMENT MARKING GROOVED WET REFLECTIVE CONTRAST TAPE 4-INCH	LF	2,000.000	2,000.000
0970	646.0883.S	PAVEMENT MARKING GROOVED WET REFLECTIVE TAPE 8-INCH	LF	2,310.000	2,310.000

3

DATE 10MAR14 E S T I M A T E O F Q U A N T I T I E S

LINE NUMBER	ITEM	ITEM DESCRIPTION	UNIT	TOTAL	1490-28-71 QUANTITY
0980	647.0566	PAVEMENT MARKING STOP LINE EPOXY 18-INCH	LF	40.000	40.000
0990	647.0606	PAVEMENT MARKING ISLAND NOSE EPOXY	EACH	10.000	10.000
1000	647.0726	PAVEMENT MARKING DIAGONAL EPOXY 12-INCH	LF	215.000	215.000
1010	649.0100	TEMPORARY PAVEMENT MARKING 4-INCH	LF	41,800.000	41,800.000
1020	650.4500	CONSTRUCTION STAKING SUBGRADE	LF	10,600.000	10,600.000
1030	650.5000	CONSTRUCTION STAKING BASE	LF	10,600.000	10,600.000
1040	650.5500	CONSTRUCTION STAKING CURB GUTTER AND CURB & GUTTER	LF	1,140.000	1,140.000
1050	650.6000	CONSTRUCTION STAKING PIPE CULVERTS	EACH	2.000	2.000
1060	650.7000	CONSTRUCTION STAKING CONCRETE PAVEMENT	LF	4,850.000	4,850.000
1070	650.9910	CONSTRUCTION STAKING SUPPLEMENTAL CONTROL (PROJECT) 01. 1490-28-71	LS	1.000	1.000
1080	650.9920	CONSTRUCTION STAKING SLOPE STAKES	LF	10,500.000	10,500.000
1090	652.0225	CONDUIT RIGID NONMETALLIC SCHEDULE 40 2-INCH	LF	10.000	10.000
1100	652.0235	CONDUIT RIGID NONMETALLIC SCHEDULE 40 3-INCH	LF	10.000	10.000
1110	652.0615	CONDUIT SPECIAL 3-INCH	LF	100.000	100.000
1120	653.0140	PULL BOXES STEEL 24X42-INCH	EACH	2.000	2.000
1130	654.0102	CONCRETE BASES TYPE 2	EACH	1.000	1.000
1140	654.0105	CONCRETE BASES TYPE 5	EACH	1.000	1.000
1150	654.0220	CONCRETE CONTROL CABINET BASES TYPE 10	EACH	1.000	1.000
1160	655.0610	ELECTRICAL WIRE LIGHTING 12 AWG	LF	300.000	300.000
1170	655.0615	ELECTRICAL WIRE LIGHTING 10 AWG	LF	520.000	520.000
1180	656.0200	ELECTRICAL SERVICE METER BREAKER PEDESTAL (LOCATION) 01. J-TURN MEDIAN	LS	1.000	1.000
1190	657.0255	TRANSFORMER BASES BREAKAWAY 11 1/2-INCH BOLT CIRCLE	EACH	2.000	2.000
1200	657.0310	POLES TYPE 3	EACH	1.000	1.000
1210	657.0322	POLES TYPE 5-ALUMINUM	EACH	1.000	1.000
1220	657.0710	LUMINAIRE ARMS TRUSS TYPE 4 1/2-INCH CLAMP 12-FT	EACH	2.000	2.000
1230	659.1115	LUMINAIRES UTILITY LED A	EACH	2.000	2.000
1240	690.0150	SAWING ASPHALT	LF	345.000	345.000
1250	690.0250	SAWING CONCRETE	LF	5,180.000	5,180.000
1260	715.0415	INCENTIVE STRENGTH CONCRETE PAVEMENT	DOL	4,360.000	4,360.000
1270	ASP.1T0A	ON-THE-JOB TRAINING APPRENTICE AT $5. 00/HR	HRS	1,200.000	1,200.000
1280	ASP.1T0G	ON-THE-JOB TRAINING GRADUATE AT $5.00/HR	HRS	1,200.000	1,200.000
1290	SPV.0060	SPECIAL 01. GRADING SHAPING & FINISHING FOR ATR SITE	EACH	1.000	1.000
1300	SPV.0060	SPECIAL 02. INSTALLING CONCRETE MAINTENANCE PLATFORM	EACH	1.000	1.000
1310	SPV.0060	SPECIAL 03. INSTALLING WAVETRONIX DETECTOR MODULE	EACH	1.000	1.000
1320	SPV.0060	SPECIAL 04. INSTALLING WAVETRONIX CLICK 200 MODULE	EACH	1.000	1.000
1330	SPV.0060	SPECIAL 05. INSTALLING 2 SOLAR PANELS ON ONE BRACKET	EACH	1.000	1.000
1340	SPV.0060	SPECIAL 06. INSTALLING POLE MOUNTED CABINET	EACH	1.000	1.000

3

Location	From/To Station	Common Excavation (1)	Salvaged/Unusable Pavement Material (3)	Available Material (4)	Unexpanded Fill	Expanded Fill (5)	Mass Ordinate +/- (6)	Waste	Borrow
		Cut (2)				Factor 1.15			(item #208.0100)
NB Beam Guard	97+00-101+00	291	-	292	189	217	74	74	-
NB Curve	102+00-124+43	7,402	1,950	5,452	6,331	7,280	-1,828	-	1,828
SB Curve	99+15-124+43	4,952	1,976	2,976	7,486	8,609	-5,633	-	5,633
CTH E	48+00-48+75	193	-	193	-	0	193	193	-
Habeck Lane	114+00-120+25	3,846	-	3,846	1,162	1,337	2,509	2,509	-
Habeck Entrance	124+43-131+33	785	-	785	697	801	-16	-16	-
SB Shoulder after curve	124+43-129+00	181	-	181	80	92	89	89	-
Left Turn	129+00-135+50	456	-	456	7	8	448	448	-
Cross Over Removal	135+50-141+00	800	-	800	9	10	790	790	-
Jturn Median	141+00-147+75	619	-	619	170	195	423	423	-
BulbOut	144+75-147+50	271	-	271	158	181	90	90	-
Grand Total		19,795.64	3,926.00	15,870.52	16,287.67	18,730.82	-2,860.87	4,600.50	7,461.37
Total Common Exc			19,795.64						

1) Common Excavation is the sum of the Cut and EBS Excavation columns. Item number 205.0100
2) Salvaged/Unsuable Pavement Material is included in Cut.
3) Salvaged/Unusable Pavement Material
4) Available Material = Cut - Salvaged/Unusuable Pavement Material
5) Expanded Fill. Factor = 1.25
6) The Mass Ordinate + or - Qty calculated for the Division. Plus quantity indicates an excess of material within the Division. Minus indicates a shortage of material within the Division.

201-CLEARING AND GRUBBING

STATION	TO	STATION	LOCATION	201.0115 CLEARING ACRE	201.0215 GRUBBING ACRE
107+33	-	120+99	97'-160' RT	1.25	1.25
			TOTAL 0010	1.25	1.25

PREPARE FOUNDATION FOR ASPHALTIC SHOULDERS

STATION	TO	STATION	LOCATION	211.0400 STA
99+00	-	115+19	SB OUTSIDE	16
116+65	-	124+43	SB OUTSIDE	6
102+00	-	124+43	NB INSIDE	22
111+00	-	115+00	EXISTING HABECK ENTRANCE	4
124+43	-	129+00	SB INSIDE	5
135+75	-	140+65	CROSS OVER REMOVAL	9
			TOTAL 0010	62

204-REMOVALS

STATION	TO	STATION	LOCATION	204.0100 REMOVING PAVEMENT SY	204.0150 REMOVING CURB & GUTTER LF	204.0165 REMOVING GUARDRAIL LF	204.0170 REMOVING FENCE LF	REMARKS
100+48	-	100+73	43' RT	160	-	-	-	NB SOUTH OF APPROACH SLAB
102+38	-	124+43	26'RT	6835	-	-	-	NB MAINLINE
99+69	-	100+10	197' LT	180	-	-	-	SB SOUTH OF APPROACH SLAB
101+62	-	124+43	176' LT	7000	-	-	-	SB MAINLINE
117+26	-	117+60	141' LT	-	90	-	-	CTH E SW QUAD
	-							
118+00	-	118+47	121' LT	-	75	-	-	CTH E NW QUAD
117+20	-	117+44	70' LT	-	95	-	-	CTH E MEDIAN SOUTH
117+98	-	118+05	70' LT	-	100	-	-	CTH E MEDIAN NORTH
117+10	-	117+40	25' RT	-	100	-	-	HABECK SOUTH
117+77		118+07	20' RT	-	95	-	-	HABECK NORTH
97+13	-	100+88	50' RT	-	-	300	-	NB OUTSIDE
97+13	-	100+88	6'LT	-	-	310	-	NB INSIDE
99+99	-	100+31	215' LT	-	-	60	-	SB INSIDE SOUTH OF BRIDGE
101+42	-	105+02	134' LT	-	-	310	-	SB INSIDE
101+42	-	105+02	190'LT	-	-	310	-	SB OUTSIDE
					-			
99+99	-	100+31	250' LT	-	-	60	-	SB OUTSIDE SOUTH OF BRIDGE
106+50	-	121+35	85' RT	-	-	-	1350	ALONG NB CURVE
146+00	-	147+00	60'RT	-	-	-	80	BULB OUT
129+00	-	120+30	60'RT	-	-	-	130	NEW HABECK ENTRANCH
			TOTAL	14175	555	1350	1560	

3

305-BASE AGGREGATE

STATION	TO	STATION	LOCATION	305.0110 BASE AGGREGATE DENSE 3/4-INCH TON	305.0120 BASE AGGREGATE DENSE 1 1/4-INCH TON	REMARKS
102+00	-	124+43	26' RT	725	6740	NB CURVE
101+43	-	124+43	60' LT	800	7860	SB CURVE & CTH E
129+00	-	136+47	60' LT	100	1630	LEFT TURN LANE
140+32	-	147+63	60' LT	135	1660	JTURN MEDIAN
144+72	-	147+49	141' LT	60	1060	BULB OUT
114+75	-	121+27	114' RT	70	1800	HABECK LANE
124+43	-	131+33	135' RT	125	900	NEW HABECK ENTRANCE
			TOTAL	2015	21650	

ASPHALTIC SURFACE SAFETY ISLANDS

STATION	TO	STATION	LOCATION	465.0305 TON	REMARKS
48+90	-	49+36	0' RT	6	2" THICK CTH E ALIGNMENT
128+50	-	128+50	50'LT	4	2" THICK HABECK LANE ALIGNMENT
			TOTAL 0010	10	

3

CONCRETE PAVEMENT 10-INCH

STATION	TO	STATION	LOCATION	415.0100 SY	REMARKS
100+48	-	100+72.5	43' RT	250	NB SOUTH OF APROACH SLAB
102+38	-	124+43	26'RT	6960	NB MAINLINE
99+69	-	100+10	60' LT	240	SB SOUTH OF APROACH SLAB
101+62	-	124+43	60' LT	7080	SB MAINLINE
			TOTAL 0010	14530	

CONCRETE PAVEMENT APPROACH SLAB

STATION	TO	STATION	LOCATION	415.0410 SY	REMARKS
100+72	-	101+10	0' RT	125	NB APROACH SLAB SOUTH
102+00	-	102+38	0' RT	120	NB APROACH SLAB NORTH
100+10	-	100+40	60' LT	105	SB APROACH SLAB SOUTH
101+32	-	101+62	60' LT	95	SB APROACH SLAB NORTH
			TOTAL 0010	445	

ASPHALTIC SURFACE

STATION	TO	STATION	LOCATION	465.0105 TON	REMARKS
129+00	-	129+78	60' LT	30	LEFT TURN SOUTH
129+73	-	130+43	60' LT	25	LEFT TURN NORTH
146+27	-	146+93	60' LT	20	JTURN MEDIAN SOUTH
			TOTAL 0010	75	

455-460-HMA PAVEMENT

STATION	TO	STATION	LOCATION	455.0120 ASPHALTIC MATERIAL PG64-28 TON	455.0605 TACK COAT GAL	460.1100 HMA PAVEMENT TYPE E-0.3 TON	460.1101 HMA PAVEMENT TYPE E-1 TON	465.0125 ASPHALTIC SURFACE TEMPORARY TON	REMARKS
135+90	-	140+20	Median	6	-	115	-	-	CROSS OVER REMOVAL SHOULDERS
116+00	-	124+43	CTH E	23	43	-	485	-	CTH E
129+00	-	136+47	60' LT	17	28	-	310	-	LEFT TURN LANE
140+32	-	147+63	60' LT	18	29	-	320	-	JTURN MEDIAN
144+72	-	147+49	141' LT	13	21	-	230	-	BULB OUT
114+75	-	121+27	114' RT	20	42	-	370	-	HABECK LANE
124+43	-	131+33	135' RT	22	41	-	335	-	NEW HABECK ENTRANCE
102+00	-	124+43	86' LT	-	-	-	-	460	SB OUTSIDE SHOULDER BEFORE STAGE 1
102+00	-	129+00	60' LT	30	45	513	-	-	SB INSIDE SHOULDER STAGE 1
106+00	-	118+50	86' LT	6	-	103	-	-	SB OUTSIDE SHOULDER STAGE 1
102+00	-	124+43	86' LT	6	-	103	-	-	FINALIZE SB OUTSIDE SHOULDER STAGE 2
102+00	-	124+43	3'LT	-	-	-	-	450	NB INSIDE SHOULDER BEFORE STAGE 3
106+00	-	118+50	3'LT	8	-	130	-	-	NB INSIDE SHOULDER STAGE 3
102+00	-	124+43	26'RT	26	41	450	-	-	NB OUTSIDE SHOULDER STAGE 3
102+00	-	124+43	3'LT	5	-	151	-	-	FINALIZE NB INSIDE SHOULDER STAGE 4
111+00	-	115+00	26'RT	-	-	-	-	110	TEMP TURN LANE ONTO EXIST HABECK
			TOTAL	200	290	1565	2050	1020	

ASPHALTIC FLUMES

STATION	TO	STATION	LOCATION	465.0315 SY	REMARKS
117+45	-	117+61	142' LT	7	CTH E SW QUAD
118+03	-	118+17	155' LT	7	CTH E NW QUAD
129+15	-	129+15	118' RT	9	HABECK INTERSECTION SOUTH
129+97	-	130+14	126' RT	9	HABECK INTERSECTION NORTH
130+42	-	130+42	0'RT	9	LEFT TURN NW
130+42	-	130+42	48' LT	9	LEFT TURN NE
146+27	-	146+27	12' LT	9	JTURN MEDIAN SW
146+27	-	146+27	60' LT	7	JTURN MEDIAN SE
147+05	-	147+05	127' LT	9	BULB OUT
			TOTAL 0010	75	

3

ASPHALTIC SHOULDER RUMBLE STRIP

STATION	TO	STATION	LOCATION	465.0400 LF	REMARKS
102+00	-	149+50	86' LT	2500	SB OUTSIDE
101+42	-	128+92	57' LT	2900	SB INSIDE
101+42	-	124+43	86' LT	2300	NB INSIDE
135+75	-	140+25	3' LT	2400	NB Outside
135+75		140+25	3' LT	900	Cross Over Removal
			TOTAL 0010	11000	

CONCRETE CURB & GUTTER 4-INCH SLOPED 30-INCH TYPE J

STATION	TO	STATION	LOCATION	601.0576 LF
117+15	-	117+60	CTH E SW QUAD	70
118+00	-	118+58	CTH E NW QUAD	95
128+85	-	129+46	SOUTH OF HABECK ENTRANCE	135
129+82	-	130+35	NORTH OF HABECK ENTRANCE	120
129+00	-	129+81	LEFT TURN SOUTH	200
129+73	-	130+43	LEFT TURN NORTH	165
146+24	-	146+95	JTURN MEDIAN SOUTH	150
117+60	-	117+85	CTH E ISLAND	130
129+66	-	129+90	HABECK LANE ISLAND	75
			TOTAL 0010	1140

522-DRAINAGE

STATION	TO	STATION	LOCATION	522.0124 CULVERT PIPE REINFORCED CONCRETE CLASS III 24-INCH LF	522.1024 APRON ENDWALLS FOR CULVERT PIPE REINFORCED CONCRETE 24-INCH EACH	612.0106 PIPE UNDERDRAIN 6-INCH LF	612.0806 APRON ENDWALLS FOR UNDERDRAIN REINFORCED CONCRETE 6-INCH EACH	REMARKS
128+83	-	128+87	31'LT-71'RT	96	-	-	-	660.0' (Median) 657.2' (NB Ditch)
129+05	-	130+27	90' RT-84' RT	136	-	-	-	657.0' (South) 656.7' (North)
128+85	-	128+85	32' LT	-	1	-	-	MEDIAN
128+85	-	128+85	69' RT	-	1	-	-	BETWEEN NB & HABECK
129+20	-	129+20	84' LT	-	1	-	-	SOUTH OF NEW HABECK ENTRANCE
130+30	-	130+30	73' LT	-	1	-	-	NORTH OF NEW HABECK ENTRANCE
97+50	-	97+50	NB Outside Ditch	-	-	25	1	FIELD VERIFY EXACT LOCATION
97+50	-	97+50	NB Median	-	-	5	1	FIELD VERIFY EXACT LOCATION
124+50	-	124+50	NB Outside Ditch	-	-	25	1	FIELD VERIFY EXACT LOCATION
126+50	-	126+50	NB Outside Ditch	-	-	25	1	FIELD VERIFY EXACT LOCATION
129+00	-	129+00	NB Outside Ditch	-	-	25	1	FIELD VERIFY EXACT LOCATION
129+70	-	129+70	NB Median	-	-	70	1	EXTEND UNTIL CLEAR OF MEDIAN WORK
131+50	-	131+50	NB Outside Ditch	-	-	25	1	FIELD VERIFY EXACT LOCATION
139+00	-	139+00	NB Median	-	-	5	1	FIELD VERIFY EXACT LOCATION
140+25	-	140+25	NB Median	-	-	5	1	FIELD VERIFY EXACT LOCATION
143+00	-	143+00	NB Median	-	-	25	1	FIELD VERIFY EXACT LOCATION
144+50	-	144+50	NB Median	-	-	25	1	FIELD VERIFY EXACT LOCATION
147+25	-	147+25	NB Median	-	-	95	1	EXTEND UNTIL CLEAR OF MEDIAN WORK
129+50	-	129+50	SB Median	-	-	90	1	EXTEND UNTIL CLEAR OF MEDIAN WORK
132+00	-	132+00	SB Median	-	-	25	1	FIELD VERIFY EXACT LOCATION
136+50	-	136+50	SB Median	-	-	5	1	FIELD VERIFY EXACT LOCATION
144+50	-	144+50	Bulb Out	-	-	20	1	FIELD VERIFY EXACT LOCATION
147+25	-	147+25	Bulb Out	-	-	35	1	FIELD VERIFY EXACT LOCATION
147+50	-	147+50	SB Median	-	-	50	1	FIELD VERIFY EXACT LOCATION
125+50		125+50	SB Median	-	-	-	1	FIELD VERIFY EXACT LOCATION
127+50	-	127+50	SB Median	-	-	-	1	FIELD VERIFY EXACT LOCATION
137+50	-	137+50	SB Median	-	-	-	1	FIELD VERIFY EXACT LOCATION
139+00	-	139+00	SB Median	-	-	-	1	FIELD VERIFY EXACT LOCATION
143+50	-	143+50	SB Median	-	-	-	1	FIELD VERIFY EXACT LOCATION
144+50		144+50	SB Median	-	-	-	1	FIELD VERIFY EXACT LOCATION
127+50	-	127+50	LEFT TURN LANE	-	-	670	-	FIELD VERIFY EXACT LOCATION
137+50	-	137+50	CROSS OVER REMOVAL	-	-	970	-	FIELD VERIFY EXACT LOCATION
139+00	-	139+00	JTURN MEDIAN	-	-	690	-	FIELD VERIFY EXACT LOCATION
143+50	-	143+50	BULB OUT	-	-	360	-	FIELD VERIFY EXACT LOCATION
144+50		144+50	SB Median	-	-	-	-	FIELD VERIFY EXACT LOCATION
			TOTAL 0010	232	4	3270	24	

3

3

603-CONCRETE BARRIER

STATION	TO	STATION	LOCATION	603.8000 CONCRETE BARRIER TEMPORARY PRECAST DELIVERED LF	603.8125 CONCRETE BARRIER TEMPORARY PRECAST INSTALLED LF	REMARKS
99+73	-	124+43	72' LT	3000	6000	STAGE 1
99+73	-	124+43	70' LT	3000	5950	STAGE 2
97+11	-	124+43	12' RT	2800	5600	STAGE 3
100+00	-	124+43	14' RT	2800	5400	STAGE 4
			TOTAL	11600	22950	

CRASH CUSHIONS TEMPORARY

STATION	TO	STATION	LOCATION	614.0905 EACH	REMARKS
124+50	-	124+50	TEMP CONCRETE BARRIER	1	STAGE 1
			TOTAL 0010	1	

WATER

STATION	TO	STATION	LOCATION	624.0100 MGAL	REMARKS
97+00	-	148+00	PROJECT	345	COMPACTION
97+00	-	148+00	PROJECT	215	DUST CONTROL
			TOTAL 0010	560	

FENCE WOVEN WIRE (HEIGHT)

STATION	TO	STATION	LOCATION	616.0100 LF
146+25	-	147+25	BULB OUT DITCH	100
			TOTAL 0010	100

FENCE CHAIN LINK 6-FT

STATION	TO	STATION	LOCATION	616.0206 LF
106+50	-	121+46	84' RT	1350
			TOTAL 0010	1350

LANDSCAPING

STATION	TO	STATION	LOCATION	625.0500 SALVAGED TOPSOIL SY	627.0200 MULCHING SY	629.0210 FERTILIZER TYPE B CWT	630.0130 SEEDING MIXTURE NO. 30 LB	630.0200 SEEDING TEMPORARY LB	REMARKS
102+00	-	124+43	26' RT	8870	8870	0.70	19	27	NB CURVE
101+43	-	124+43	60' LT	15820	15820	1.10	32	45	SB CURVE & CTH E
129+00	-	136+47	60' LT	870	870	0.10	2	2	LEFT TURN LANE
140+32	-	147+63	60' LT	520	520	0.10	1	2	JTURN MEDIAN
144+72	-	147+49	141' LT	140	140	0.05	1	1	BULB OUT
114+75	-	121+27	114' RT	11130	11130	0.80	23	35	HABECK LANE
124+43	-	131+33	135' RT	1234	1234	0.15	2	3	NEW HABECK ENTRANCE
			TOTAL 0010	38584	38584	3	80	115	

BARRIER SYSTEM GRADING SHAPING FINISHING

Location	Excavation Common C.Y.	Borrow C.Y.	Salvaged Topsoil S.Y.	FERTELIZER TYPE B CWT	Seeding LB	Mulching S.Y.
INSIDE SHOULDER	71.00	-	410.00	0.03	0.21	410.00
OUTSIDE SHOULDER	3.00	-	540.00	0.04	0.27	540.00
TOTAL	74.00	-	950.00	0.07	0.48	950.00

614-GUARDRAIL

STATION	TO	STATION	LOCATION	614.0010 BARRIER SYSTEM GRADING SHAPING FINISHING EACH	614.0200 STEEL THRIE BEAM STRUCTURE APPROACH LF	614.2300 MGS GUARDRAIL 3 LF	614.2500 MGS THRIE BEAM TRANSITION LF	614.2610 MGS GUARDRAIL TERMINAL EAT EACH	REMARKS
97+41	-	100+97	6' LT	1	21	215	40	1	NB OUTSIDE
97+72	-	100+75	42' RT	1	21	215	40	1	NB INSIDE
100+16	-	100+29	192' LT	-	31	-	-	-	SB OUTSIDE SOUTH OF BRIDGE
101+43	-	101+56	141' LT	-	60	-	-	-	SB INSIDE SOUTH OF BRIDGE
101+32	-	101+45	180' LT	-	21	215	40	1	SB OUTSIDE
101+43	-	101+56	141' LT	-	21	215	40	1	SB INSIDE
			TOTAL 0010	2	175	860	160	4	

CONCRETE MEDIAN SLOPE NOSE

STATION	TO	STATION	LOCATION	620.0300 SF	REMARKS
117+70	-	117+70	CTH E ISLAND	15	WEST POINT
117+70	-	117+70	CTH E ISLAND	8	SE POINT
117+70	-	117+70	CTH E ISLAND	8	NE POINT
129+40	-	129+40	6'LT	8	
129+80	-	129+80	50'LT	15	
129+65	-	129+65	HABECK ISLND	15	EAST POINT
129+65	-	129+65	HABECK ISLND	8	SW POINT
129+65	-	129+65	HABECK ISLND	8	NW POINT
129+75	-	129+75	6'LT	15	
146+95	-	146+95	50'LT	15	
			TOTAL 0010	115	

3

628-EROSION CONTROL

CATEGORY	STATION TO	STATION	LOCATION	628.1104 EROSION BALES EACH	628.1504 SILT FENCE LF	628.1520 SILT FENCE MAINENANCE LF	628.1905 MOBILIZATIONS EROSION CONTROL EACH	628.1910 MOBILIZATIONS EMERGENCY EROSION CONTROL EACH	628.2004 EROSION MAT CLASS I TYPE B SY	628.2008 MAT URBAN CLASS SY	628.7005 INLET PROTECTION TYPE A EACH	628.7010 INLET PROTECTION TYPE B EACH	628.7504 TEMPORARY DITCH CHECKS LF	628.7555 CULVERY PIPE CHECKS EACH
0010	100+50 -	100+50	SB AND MEDIAN DITCH	60	-	-	-	-	-	-	-	-	-	-
0010	99+00 -	108+45	SB DITCH	-	930	930	-	-	-	-	-	-	-	-
0010	103+00 -	108+00	NB DITCH	-	510	510	-	-	-	-	-	-	-	-
0010	113+00 -	115+00	EXIST TRAILOR PARK ENTRANCE	-	230	230	-	-	-	-	-	-	-	-
0010	115+50 -	116+25	EXIST TRAILOR PARK ENTRANCE	-	75	75	-	-	-	-	-	-	-	-
0010	120+90 -	121+30	HABECK LANE EAST	-	40	40	-	-	-	-	-	-	-	-
0010	123+25 -	124+25	SB DITCH	-	110	110	-	-	-	-	-	-	-	-
0010	125+20 -	129+00	NB DITCH	-	455	455	-	-	-	-	-	-	-	-
0010	130+00 -	132+00	NB DITCH	-	230	230	-	-	-	-	-	-	-	-
0010	143+90 -	144+50	SB DITCH	-	50	50	-	-	-	-	-	-	-	-
0010	102+00 -	129+00	MEDIAN	-	-	-	-	-	4430	-	-	-	-	-
0010	101+80 -	101+80	MEDIAN	20	-	-	-	-	-	-	-	-	-	-
0010	101+48 -	101+48	MEDIAN	20	-	-	-	-	-	-	-	-	-	-
0010	116+00 -	118+75	HABECK LANE EAST	-	-	-	-	-	580	-	-	-	-	-
0010	130+40 -	146+20	MEDIAN	-	-	-	-	-	2035	-	-	-	-	-
0010	110+00 -	117+35	SB DITCH	-	-	-	-	-	-	675	-	-	-	-
0010	110+85 -	121+35	NB DITCH	-	-	-	-	-	-	1055	-	-	-	-
0010	116+00 -	121+00	HABECK DITCH	-	-	-	-	-	-	290	-	-	-	-
0010	118+50 -	123+20	SB DITCH	-	-	-	-	-	-	620	-	-	-	-
0010	146+10 -	147+50	SB DITCH	-	-	-	-	-	-	80	-	-	-	-
0010	125+34 -	125+34	MEDIAN	-	-	-	-	-	-	-	1	1	-	-
0010	135+75 -	135+75	MEDIAN	-	-	-	-	-	-	-	1	1	-	-
0010	139+15 -	139+15	MEDIAN	-	-	-	-	-	-	-	1	1	-	-
0010	150+35 -	150+35	MEDIAN	-	-	-	-	-	-	-	1	1	-	-
0010	102+03 -	102+03	SB DITCH	-	-	-	-	-	-	-	-	-	40	-
0010	102+40 -	102+40	MEDIAN	-	-	-	-	-	-	-	-	-	40	-
0010	102+85 -	102+85	MEDIAN	-	-	-	-	-	-	-	-	-	35	-
0010	102+95 -	102+95	SB DITCH	-	-	-	-	-	-	-	-	-	35	-
0010	103+95 -	103+95	MEDIAN	-	-	-	-	-	-	-	-	-	20	-
0010	104+45 -	104+45	SB DITCH	-	-	-	-	-	-	-	-	-	20	-
0010	105+45 -	105+45	MEDIAN	-	-	-	-	-	-	-	-	-	15	-
0010	106+30 -	106+30	SB DITCH	-	-	-	-	-	-	-	-	-	15	-
0010	107+40 -	107+40	MEDIAN	-	-	-	-	-	-	-	-	-	15	-
0010	108+60 -	108+60	SB DITCH	-	-	-	-	-	-	-	-	-	15	-
0010	109+60 -	109+60	NB DITCH	-	-	-	-	-	-	-	-	-	15	-
0010	109+70 -	109+70	MEDIAN	-	-	-	-	-	-	-	-	-	15	-
0010	110+50 -	110+50	SB DITCH	-	-	-	-	-	-	-	-	-	15	-
0010	112+45 -	112+45	SB DITCH	-	-	-	-	-	-	-	-	-	15	-
0010	113+10 -	113+10	NB DITCH	-	-	-	-	-	-	-	-	-	15	-
0010	113+85 -	113+85	MEDIAN	-	-	-	-	-	-	-	-	-	15	-
0010	114+65 -	114+65	SB DITCH	-	-	-	-	-	-	-	-	-	15	-
0010	115+95 -	115+95	HABECK DITCH	-	-	-	-	-	-	-	-	-	15	-
0010	117+45 -	117+45	CTH E DITCH	-	-	-	-	-	-	-	-	-	15	-
0010	120+85 -	120+85	HABECK DITCH	-	-	-	-	-	-	-	-	-	15	-
0010	121+25 -	121+25	MEDIAN	-	-	-	-	-	-	-	-	-	15	-

3

3

628-EROSION CONTROL

STATION TO	STATION	LOCATION	628.1104 EROSION BALES EACH	628.1504 SILT FENCE LF	628.1520 SILT FENCE MAINENANCE LF	628.1905 MOBILIZATIONS EROSION CONTROL EACH	628.1910 MOBILIZATIONS EMERGENCY EROSION CONTROL EACH	628.2004 EROSION MAT CLASS I TYPE B SY	628.2008 MAT URBAN CLASS SY	628.7005 INLET PROTECTION TYPE A EACH	628.7010 INLET PROTECTION TYPE B EACH	628.7504 TEMPORARY DITCH CHECKS LF	628.7555 CULVERY PIPE CHECKS EACH	628.7570 ROCK BAGS EACH
113+10 -	113+10	NB DITCH	-	-	-	-	-	-	-	-	-	15	-	-
113+85 -	113+85	MEDIAN	-	-	-	-	-	-	-	-	-	15	-	-
114+65 -	114+65	SB DITCH	-	-	-	-	-	-	-	-	-	15	-	-
115+95 -	115+95	HABECK DITCH	-	-	-	-	-	-	-	-	-	15	-	-
117+45 -	117+45	CTH E DITCH	-	-	-	-	-	-	-	-	-	15	-	-
120+85 -	120+85	HABECK DITCH	-	-	-	-	-	-	-	-	-	15	-	-
121+25 -	121+25	MEDIAN	-	-	-	-	-	-	-	-	-	15	-	-
121+55 -	121+55	SB DITCH	-	-	-	-	-	-	-	-	-	15	-	-
121+80 -	121+80	NB DITCH	-	-	-	-	-	-	-	-	-	15	-	-
123+35 -	123+35	HABECK DITCH	-	-	-	-	-	-	-	-	-	15	-	-
123+40 -	123+40	SB DITCH	-	-	-	-	-	-	-	-	-	15	-	-
123+50 -	123+50	MEDIAN	-	-	-	-	-	-	-	-	-	15	-	-
124+60 -	124+60	MEDIAN	-	-	-	-	-	-	-	-	-	15	-	-
124+75 -	124+75	SB DITCH	-	-	-	-	-	-	-	-	-	15	-	-
125+20 -	125+20	NB DITCH	-	-	-	-	-	-	-	-	-	15	-	-
127+50 -	127+50	NB DITCH	-	-	-	-	-	-	-	-	-	15	-	-
127+60 -	127+60	MEDIAN	-	-	-	-	-	-	-	-	-	15	-	-
131+60 -	131+60	NB DITCH	-	-	-	-	-	-	-	-	-	15	-	-
133+85 -	133+85	MEDIAN	-	-	-	-	-	-	-	-	-	15	-	-
134+95 -	134+95	MEDIAN	-	-	-	-	-	-	-	-	-	15	-	-
136+55 -	136+55	MEDIAN	-	-	-	-	-	-	-	-	-	15	-	-
139+80 -	139+80	MEDIAN	-	-	-	-	-	-	-	-	-	15	-	-
142+00 -	142+00	MEDIAN	-	-	-	-	-	-	-	-	-	15	-	-
144+50 -	144+50	SB DITCH	-	-	-	-	-	-	-	-	-	15	-	-
147+45 -	147+45	SB DITCH	-	-	-	-	-	-	-	-	-	15	-	-
147+90 -	147+90	MEDIAN	-	-	-	-	-	-	-	-	-	15	-	-
124+00 -	124+00	HABECK DITCH	-	-	-	-	-	-	-	-	-	-	3	-
128+78 -	128+78	MEDIAN	-	-	-	-	-	-	-	-	-	-	3	-
128+90 -	128+90	NB Ditch	-	-	-	-	-	-	-	-	-	-	3	-
138+30 -	138+30	SB DITCH	-	-	-	-	-	-	-	-	-	-	3	-
143+20 -	143+20	NB Ditch	-	-	-	-	-	-	-	-	-	-	3	-
149+30 -	149+30	SB DITCH	-	-	-	-	-	-	-	-	-	-	3	-
107+85 -	107+85	NB DITCH	-	-	-	-	-	-	-	-	-	-	-	5
109+90 -	109+90	MEDIAN	-	-	-	-	-	-	-	-	-	-	-	5
115+75 -	115+75	HABECK DITCH	-	-	-	-	-	-	-	-	-	-	-	5
103+40 -	103+40	NB DITCH	-	-	-	-	-	-	-	-	-	-	-	5
-	-	PROJECT	-	-	-	10	5	-	-	-	-	-	-	
		TOTAL 0010	100	2630	2630	10	5	7045	2720	4	4	700	18	80

3

3

DELINEATORS

STATION TO	STATION	LOCATION	633.0100 EACH	633.0500 EACH
103+57 -	103+57	38' RT	1	1
107+70 -	107+70	38' RT	1	1
111+27 -	111+27	38' RT	1	1
114+89 -	114+89	38' RT	1	1
118+41 -	118+41	38' RT	1	1
122+92 -	122+92	38' RT	1	1
128+40 -	128+40	38' RT	1	1
130+62 -	130+62	38' RT	1	1
147+56 -	147+56	95' LT	1	1
144+90 -	144+90	95' LT	1	1
123+25 -	123+25	95' LT	1	1
118+57 -	118+57	95' LT	1	1
114+42 -	114+42	95' LT	1	1
107+15 -	107+15	95' LT	1	1
104+45 -	104+45	95' LT	1	1
		TOTAL 0010	15	15

650-CONSTRUCTION STAKING

LOCATION	CONSTRUCTION STAKING SUBGRADE 650.4500 LF	CONSTRUCTION STAKING BASE 650.5000 LF	CONSTRUCTION STAKING CURB GUTTER AND CURB & GUTTER 650.5500 LF	CONSTRUCTION STAKING PIPE CULVERTS 650.6000 EACH	CONSTRUCTION STAKING CONCRETE PAVEMENT 650.7000 LF	CONSTRUCTION STAKING SUPPLEMENTAL CONTROL (PROJECT) 650.9910 LS	CONSTRUCTION STAKING SLOPE STAKES 650.9920 LF
Project	10600	10600	1140	2	4850	1	10500
TOTAL 0010	10600	10600	1140	2	4850	1	10500

3

MARKERS CULVERT END

STATION TO	STATION	LOCATION	633.5200 EACH
129+00 -	129+00	MEDIAN	1
129+00 -	129+00	NB/HABECK DITCH	1
129+50 -	129+50	NB/HABECK DITCH	1
130+00 -	130+00	NB/HABECK DITCH	1
		TOTAL 0010	4

LIGHTING

STATION TO	STATION	LOCATION	CONDUIT RIGID NONMETALLIC SCHEDULE 40 2-INCH 652.0225 LF	CONDUIT RIGID NONMETALLIC SCHEDULE 40 3-INCH 652.0235 LF	CONDUIT SPECIAL 3-INCH 652.0615 LF	PULL BOXES STEEL 24X42-INCH 653.0140 EACH	CONCRETE BASES TYPE 5 654.0105 EACH	CONCRETE CONTROL CABINET BASES TYPE 10 654.0220 EACH	ELECTRICAL WIRE LIGHTING 12 AWG 655.0610 LF	ELECTRICAL WIRE LIGHTING 10 AWG 655.0615 LF	ELECTRICAL SERVICE METER BREAKER PEDESTAL (LOCATION) 656.0200 LS	POLES TYPE 5-ALUMINUM 657.0322 EACH	LUMINAIRE ARMS TRUSS TYPE 4 1/2-INCH CLAMP 12-FT 657.0710 EACH	LUMINAIRES UTILITY HPS 150 WATTS 659.0115 EACH
145+00 -	148+00	J-TURN MEDIAN	10	10	100	2	1	1	300	520	1	1	2	2
		TOTAL 0010	10	10	100	2	1	1	300	520	1	1	2	2

643-TRAFFIC CONTROL

LOCATION	643.0100 TRAFFIC CONTROL (PROJECT) EACH	643.0300 TRAFFIC CONTROL DRUMS DAY	643.0410 TRAFFIC CONTROL BARRICADES TYPE II	643.0420 TRAFFIC CONTROL BARRICADES TYPE III DAY	643.0705 TRAFFIC CONTROL WARNING LIGHTS TYPE A DAY	643.0715 TRAFFIC CONTROL WARNING LIGHTS TYPE C DAY	643.0800 TRAFFIC CONTROL ARROW BOARDS DAY	643.0900 TRAFFIC CONTROL SIGNS DAY	643.0910 TRAFFIC CONTROL COVERING SIGNS TYPE I EACH	643.0920 TRAFFIC CONTROL COVERING SIGNS TYPE II EACH	643.1000 TRAFFIC CONTROL SIGNS FIXED MESSAGE SF	643.1050 TRAFFIC CONTROL SIGNS PCMS DAY	643.2000 TRAFFIC CONTROL DETOUR (PROJECT) EACH	643.3000 TRAFFIC CONTROL DETOUR SIGNS DAY
Project	1	-	-	-	-	-	-	-	15	2	-	48	1	7300
Stage 1a (2 DAYS)	-	150	-	14	30	40	4	115	-	-	-	-	-	-
Stage 1b (28 DAYS)	-	6600	-	510	1020	1350	60	2100	-	-	62	-	-	-
Stage 2 (18 DAYS)	-	6715	-	288	576	2034	54	1350	-	-	36	-	-	-
Stage 3 (20 DAYS)	-	1480	20	180	360	880	40	1500	-	-	40	-	-	-
Stage 4 (17 DAYS)	-	1665	-	136	272	748	34	1275	-	-	34	-	-	-
TOTAL 0010	1	16610	20	1128	2258	5052	192	6340	15	2	172	48	1	7300

3

ERECTION AND REMOVAL OF TYPE II SIGNS AND SUPPORTS

SIGN NO.	LOCATION	SIGN CODE	W X H	637.2210 SIGNS TYPE II REFLECTIVE H S.F.	637.2230 SIGNS TYPE II REFLECTIVE F S.F.	634.0614 POSTS WOOD 4x6x14 EACH	634.0616 POSTS WOOD 4x6x16 EACH	634.0618 POSTS WOOD 4x6x18 EACH	634.0816 POSTS TUBULAR STEEL 2x2x16 EACH	638.2602 REMOVING SIGNS TYPE II EACH	638.3000 REMOVING SMALL SIGN SUPPORTS EACH	REMARKS
1	USH 141, N. OF USH 41/USH 141 SPLIT	J1-1	---	---						2	1	
1A	"	D2-3	96" X 48"	32.00			2					CRIVITZ 32, NIAGARA 72, IRON MT 80, SEE SIGN DETAIL SHEET
2	"	D1-3	---	---						1	2	
2A	"	W6-53	144" X 48"		48.00		3			1	3	CROSS TRAFFIC NEXT 22 MILES
2B	"	W6-53	144" X 48"		48.00		3			1	3	CROSS TRAFFIC NEXT 22 MILES
3	"	M1-5A	---	---						1	1	
4	"	R3-20L	---	---						1		
5	"	D4-5	---	---						1	1	
6	"	R5-1A	---	---						1		
7	"	R5-1	---	---						1	1	
8	"	J13-1	---	---						2		
9	CTH E, SPLITTER ISLAND AT USH 141	R1-1	36" X 36"	7.46		1						
10	"	R3-2	30" X 30"	6.25		1						
11	USH 141, N. OF USH 41/USH 141 SPLIT	J13-1	---	---						2	1	
12	HABECK LANE	W14-1	---	---						1	1	
13	USH 141, AT OLD CTH E INTERSECTION	R3-1	---	---						1	1	
14	HABECK LANE	W1-7	---	---						1	1	
15	USH 141, AT OLD HABECK LANE INTERSECTION	R1-1	---	---						1	1	
16	"	R6-3	---	---						1		
17	"	R6-2R	---	---						1	1	
18	HABECK LANE	W14-1	---	---						1	1	
19	USH 141, N. OF CTH E	R5-1	---	---						1	1	
19A	"	J13-1	---	---						2	1	REMOVE CTH E
20	USH 141, AT OLD CTH E INTERSECTION	R4-7	---	---						1	1	
21	USH 141, AT CTH E	R6-2R	36" X 48"	12.00			1					
22	CTH E, AT USH 141	J3-2	48" X 57"	19.00				1				SOUTH USH 141, TO USH 41, SEE PLAN SHEET
23	"	J3-2	---	---						5	1	
24	"	R6-2R	---	---						1		
25	"	R6-1R	54" X 18"	6.75			1					MOUNT ABOVE SIGN #26
26	"	R1-1	36" X 36"	7.46						1	1	
26A	"	R4-7	24" X 30"	5.00		1						MOUNT IN SPLITTER ISLAND DIRECTLY AFTER SLOPED NOSE
27	"	R1-1	---	---						1	1	
28	CTH E, AT PARK & RIDE	D4-5	30" X 36"	7.50		1				1	1	
29	"	D4-5	30" X 36"	7.50		1				1	1	
30	USH 141, N. OF CTH E	R5-1	36" X 36"	9.00		1				1	1	
31	"	R3-1	---	---						1		
32	USH 141, AT OLD CTH E INTERSECTION	R4-7	---	---						1	1	
33	USH 141, AT OLD HABECK LANE INTERSECTION	J3-1	---	---						3		REMOVE NORTH USH 141
34	USH 141, N. OF CTH E	J13-1	36" X 66"	16.50				1		2	1	CTH E, SEE PLAN SHEET
35	"	R5-1A	42" X 30"	8.75						1		
36	"	J4-1	---	---						2	1	
36A	"	R5-1A	---	---						1	1	
37	"	R2-1	---	---						1	1	
38	"	D1-1	96" X 21"	14.00			2					HABECK LA, SEE SIGN DETAIL SHEET
	PAGE SUBTOTALS			159.17	96.00	6	12	2	0	48	33	

3

ERECTION AND REMOVAL OF TYPE II SIGNS AND SUPPORTS

SIGN NO.	LOCATION	SIGN CODE	W X H	637.2210 SIGNS TYPE II REFLECTIVE H S.F.	637.2230 SIGNS TYPE II REFLECTIVE F S.F.	634.0614 POSTS WOOD 4x6x14 EACH	634.0616 POSTS WOOD 4x6x16 EACH	634.0618 POSTS WOOD 4x6x18 EACH	634.0816 POSTS TUBULAR STEEL 2x2x16 EACH	638.2602 REMOVING SIGNS TYPE II EACH	638.3000 REMOVING SMALL SIGN SUPPORTS EACH	REMARKS
39	USH 141, N. OF CTH E	D4-5	36" X 48"	12.00			1			1	1	
40	"	D1-3	114" X 48"	38.00				2		1	2	ABRAMS, MORGAN, GREEN VALLEY, SEE SIGN DETAIL SHEET
41	"	J1-1	36" X 57"	14.25			1			2	1	JCT CTH E, SEE PLAN SHEET
42	"	J1-1	36" X 57"	14.25			1			2	1	JCT CTH E, SEE PLAN SHEET
43	HABECK LANE	W14-1	30" X 30"		6.25	1						
43A	USH 141, AT HABECK LANE INTERSECTION	R3-18	36" X 36"	9.00		1						
43B	"	R1-2	48" X 42"	7.00				1				
43C	"	R6-1L	54" X 18"	6.75								MOUNT ABOVE SIGN #43B
43D	"	R1-2	48" X 42"	7.00				1				
43E	"	R6-1L	54" X 18"	6.75								MOUNT ABOVE SIGN #43D
44	"	R6-2R	36" X 36"	9.00			1					
44A	"	R4-7	24" X 30"	5.00					1			MOUNT IN SPLITTER ISLAND DIRECTLY AFTER SLOPED NOSE VIA PLATE A4-9
45	HABECK LANE, AT USH 141	J13-1	24" X 45"	7.50				1				USH 141, SEE PLAN SHEET
46	"	R1-1	36" X 36"	7.46				1				
47	"	R6-1R	54" X 18"	6.75								MOUNT ABOVE SIGN #46
47A	USH 141, N. OF HABECK LANE	D2-3	---									
48	"	J2-2	72" X 84"	42.00				2				CTH E, NORTH USH 141, SEE PLAN SHEET
48A	"	J1-1	36" X 57"	14.25			1					JCT CTH E, SEE PLAN SHEET
48B	"	J1-1	36" X 57"	14.25			1					JCT CTH E, SEE PLAN SHEET
49	"	J2-2	72" X 84"	42.00				2				CTH E, NORTH USH 141, SEE PLAN SHEET
50	"	D1-3	114" X 48"	38.00				2				ABRAMS, MORGAN, GREEN VALLEY, SEE SIGN DETAIL SHEET
51	"	D1-1	96" X 21"	14.00			2					
52	"	J13-1	36" X 66"	16.50				1				CTH E, SEE PLAN SHEET
53	"	J3-1	36" X 84"	21.00				1				NORTH USH 141, SEE PLAN SHEET
54	USH 141, AT CTH E TURNAROUND	J3-2	48" X 57"	19.00				2				SOUTH USH 141, CTH E, SEE PLAN SHEET
54A	"	R6-1L	54" X 18"	6.75								
54B	"	R1-2	48" X 42"	7.00								
55	"	R6-2L	36" X 48"	12.00			1					
56	"	R5-1	36" X 36"	9.00		1						
57	"	R3-18	36" X 36"	9.00		1						
58	"	R1-2	48" X 42"	7.00				1				
59	"	R6-1L	54" X 18"	6.75								MOUNT ABOVE SIGN #58
60	USH 141, N. OF CTH E TURNAROUND	J4-1	36" X 54"	13.50			1					NORTH USH 141
61	"	R5-1	36" X 36"	9.00		1						
62	"	R2-1	48" X 60"	20.00			2					65 MPH
63	"	R5-1A	42" X 30"	8.75		1						
	PAGE SUBTOTALS			480.46	6.25	6	12	17	1	6	5	
	PROJECT TOTALS			**639.63**	**102.25**	**12**	**24**	**19**	**1**	**54**	**38**	

ERECTION AND REMOVAL OF PERMANENT SIGNING, TYPE I AND SIGN SUPPORTS

SIGN NO.	LOCATION	SIGN CODE	637.1220 SIGNS TYPE I REFLECTIVE SH W X H	S.F.	635.0200 SIGN SUPPORTS STRUCT. STEEL HIGH-STRENGTH LB	636.0100 SIGN SUPPORTS CONCRETE MASONRY CY	636.0500 SIGN SUPPORTS STEEL REINFORCEMENT LB	TYPE/SIZE OF STEEL	638.2601 REMOVING TYPE I SIGNS EACH	638.3100 REMOVING STRUCT. STEEL SIGN SUPPORTS EACH	INFO ONLY - POST LENGTH TO BE VERIFIED BY CONTRACTOR: POST NO. 1 LENGTH FT	POST NO. 2 LENGTH FT	OFFSET DISTANCE FT	DISTANCE BETWEEN POSTS (S) FT
100	USH 141 SB, S. OF CTH E	E1-51A	204" X 162"	229.50	1203	1.6	98	2-TYPE B	1	2	27.2	29.7	30.0	10.2
	PROJECT TOTALS			**229.50**	**1203**	**1.6**	**98**		**1**	**2**				

3

TRAFFIC CONTROL DETOUR SIGN SUMMARY

SIGN NO.	LOCATION	SIGN CODE	SIZE W X H	NUMBER IN SERVICE	APPROX. SERVICE PERIOD 85 DAYS	643.3000 DETOUR SIGNS DAYS	643.1000 SIGNS FIXED MESSAGE S.F.	REMARKS
1	2000' N OF SIGN # 3 ON HWY 41 (SB)	FMS						
2	ACROSS FROM SIGN # 1 (MEDIAN SIDE)	FMS						
3	1000' N OF SIGN # 5 ON HWY 41 (SB)	MO 4-5	36"x18"	1	85	85		
	"	M 1-4	36"x36"	1	85	85		141
	"	WO 20-2-A	48"x48"	1	85	85		
4	ACROSS FROM SIGN # 3 (MEDIAN SIDE)	MO 4-5	36"x18"	1	85	85		
	"	M 1-4	36"x36"	1	85	85		141
	"	WO 20-2-A	48"x48"	1	85	85		
5	TYPE 1 (141-NORTH; IRON MOUNTIAN; 1/2 MILE)	R 55-58-A	108"x18"	1	85	85		PLACE OVER - 1/2 MILE
6	LT OF SIGN # 5	MO 4-5	36"x18"	1	85	85		
	"	MO 3-1	36"x18"	1	85	85		
	"	M 1-4	36"x36"	1	85	85		141
	"	MO 5-2-L	30"x30"	1	85	85		
7	ACROSS FROM SIGN # 6 (MEDIAN SIDE)	MO 4-5	36"x18"	1	85	85		
	"	MO 3-1	36"x18"	1	85	85		
	"	M 1-4	36"x36"	1	85	85		141
	"	MO 5-2-L	30"x30"	1	85	85		
8	TYPE 1 (141-NORTH; IRON MOUNTIAN; TILT RT)	R 55-58-A	76"x12"	1	85	85		PLACE OVER - TILT RT
9	RT LEG OF SIGN BRIDGE ON 41 (SB)	MO 4-5	36"x18"	1	85	85		
	"	MO 3-1	36"x18"	1	85	85		
	"	M 1-4	36"x36"	1	85	85		141
	"	MO 6-2	30"x30"	1	85	85		LEFT
10	LT LEG OF SIGN BRIDGE ON 41 (SB)	MO 4-5	36"x18"	1	85	85		
	"	MO 3-1	36"x18"	1	85	85		
	"	M 1-4	36"x36"	1	85	85		141
	"	MO 6-2	30"x30"	1	85	85		LEFT
11	LT OF J 4-2 (S-41; S-141) ON 41/141 (SB)	MO 4-5	36"x18"	1	85	85		
	"	MO 3-1	36"x18"	1	85	85		
	"	M 1-4	36"x36"	1	85	85		141
	"	MO 5-2-R	30"x30"	1	85	85		
12	ACROSS FROM SIGN # 11 (MEDIAN SIDE)	MO 4-5	36"x18"	1	85	85		
	"	MO 3-1	36"x18"	1	85	85		
	"	M 1-4	36"x36"	1	85	85		141
	"	MO 5-2-R	30"x30"	1	85	85		
13	LT OF TYPE 1 (D/EE; ABRAMS/SAMPSON RD; 1/2 MILE)	MO 4-5	36"x18"	1	85	85		
	"	MO 3-1	36"x18"	1	85	85		
	"	M 1-4	36"x36"	1	85	85		141
	"	MO 5-2-R	30"x30"	1	85	85		
14	ACROSS FROM SIGN # 13 (MEDIAN SIDE)	MO 4-5	36"x18"	1	85	85		
	"	MO 3-1	36"x18"	1	85	85		
	"	M 1-4	36"x36"	1	85	85		141
	"	MO 5-2-R	30"x30"	1	85	85		
15	LT OF TYPE 1 (D/EE; ABRAMS/SAMPSON RD; TILT RT)	MO 4-5	36"x18"	1	85	85		
	"	MO 3-1	36"x18"	1	85	85		
	"	M 1-4	36"x36"	1	85	85		141
	"	MO 6-2	30"x30"	1	85	85		RIGHT
16	250' N OF W 3-1 (STOP AHEAD) SIGN ON SB OFF RAMP @ CTY D/EE	MO 4-5	24"x12"	1	85	85		
	"	MO 3-1	24"x12"	1	85	85		
	"	M 1-4	24"x24"	1	85	85		141
	"	MO 5-1-L	21"x21"	1	85	85		
17	ABOVE D1-2 (LT-SAMPSON RD; ABRAMS-RT)	MO 4-5	24"x12"	1	85	85		
	"	MO 3-1	24"x12"	1	85	85		
	"	M 1-4	24"x24"	1	85	85		141
	"	MO 6-1	21"x21"	1	85	85		LEFT

3

3

TRAFFIC CONTROL DETOUR SIGN SUMMARY

SIGN NO.	LOCATION	SIGN CODE	SIZE W X H	NUMBER IN SERVICE	APPROX. SERVICE PERIOD 85 DAYS	643.3000 DETOUR SIGNS DAYS	643.1000 SIGNS FIXED MESSAGE S.F.	REMARKS
18	ACROSS FROM SIGN # 17 (MEDIAN SIDE)	MO 4-5	24"x12"	1	85	85		
	"	MO 3-1	24"x12"	1	85	85		
	"	M 1-4	24"x24"	1	85	85		141
	"	MO 6-1	21"x21"	1	85	85		LEFT
19	300' N OF SAMPSON RD INTERSECTION ON HWY 41/141 (NB) ON-RAMP	MO 4-8-A	24"x18"	1	85	85		
	"	M 1-4	24"x24"	1	85	85		141
	GAP IN SIGN NUMBERING (20-24)							
25	RT OF TYPE 1 (LEFT EXIT 187; 141; IRON MOUNTIAN)	MO 3-1	36"x18"	1	85	85		
	"	M 1-4	36"x36"	1	85	85		141
	"	WO 20-1-A	48"x48"	1	85	85		
26	1000' S OF SIGN # 27	MO 3-1	36"x18"	1	85	85		
	"	M 1-4	36"x36"	1	85	85		141
	"	WO 20-1-C	48"x48"	1	85	85		
27	LT LEG OF SIGN BRIDGE (S-42-5) ON HWY 41 NB	MO 3-1	36"x18"	1	85	85		
	"	M 1-4	36"x36"	1	85	85		141
	"	WO 20-1-D	48"x48"	1	85	85		
	TO CTH E & TO USH 41 SIGNING					*5,695*		
	GAP IN SIGN NUMBERING (28-99)				45			
100	1200' S OF TYPE 1 (D/TO EE; ABRAHMS/SAMPSON RD; EXIT 1/2 MILE)						72.00	
101	ACROSS FROM SIGN # 100 (MEDIAN SIDE)						72.00	
102	LT OF TYPE 1 (D/TO EE; ABRAHMS/SAMPSON RD; EXIT 1/2 MILE)	MO 4-5	36"x18"	1	45	45		
	"	M 1-5-A	36"x36"	1	45	45		E
	"	MO 5-2-R	30"x30"	1	45	45		
103	ACROSS FROM SIGN # 102 (MEDIAN SIDE)	MO 4-5	36"x18"	1	45	45		
	"	M 1-5-A	36"x36"	1	45	45		E
	"	MO 5-2-R	30"x30"	1	45	45		
104	1200' N OF SIGN # 102	MO 4-5	36"x18"	1	45	45		
	"	M 1-5-A	36"x36"	1	45	45		E
	"	MO 5-2-R	30"x30"	1	45	45		
105	ACROSS FROM SIGN # 103 (MEDIAN SIDE)	MO 4-5	36"x18"	1	45	45		
	"	M 1-5-A	36"x36"	1	45	45		E
	"	MO 5-2-R	30"x30"	1	45	45		
106	LT OF TYPE 1 (D/TO EE; ABRAHMS/SAMPSON RD; TILT RT)	MO 4-5	36"x18"	1	45	45		
	"	M 1-5-A	36"x36"	1	45	45		E
	"	MO 6-2	30"x30"	1	45	45		RIGHT
107	RT OF SIS (FOOD)	MO 4-5	24"x12"	1	45	45		
	"	M 1-5-A	24"x24"	1	45	45		E
	"	MO 5-1-L	21"x21"	1	45	45		
108	LT OF J 23-1 (TO-EE-LT)	MO 4-5	24"x12"	1	45	45		
	"	M 1-5-A	24"x24"	1	45	45		E
	"	MO 6-1	21"x21"	1	45	45		LEFT
109	RT OF J1-1 (JCT EE)	MO 4-5	24"x12"	1	45	45		
	"	M 1-5-A	24"x24"	1	45	45		E
	"	MO 5-1-R	21"x21"	1	45	45		
110	RT OF J13-1 (EE-RT)	MO 4-5	24"x12"	1	45	45		
	"	M 1-5-A	24"x24"	1	45	45		E
	"	MO 6-1	21"x21"	1	45	45		RIGHT
111	RT OF J 13-1 (EE)	MO 4-5	24"x12"	1	45	45		
	"	M 1-5-A	24"x24"	1	45	45		E
	"	MO 6-1	21"x21"	1	45	45		AHEAD
112	MODIFY J 13-2 (E-LT & RT; 141-RT)	M 1-5-A	EXISTING					E
	"	MO 6-1	21"x21"	1	45	45		LEFT
113	J 13-2 (E-LT & RT; 141-RT)							141 RIGHT

SIGN NO.	LOCATION	SIGN CODE	SIZE W X H	NUMBER IN SERVICE	APPROX. SERVICE PERIOD 85 DAYS	643.3000 DETOUR SIGNS DAYS	643.1000 SIGNS FIXED MESSAGE S.F.	REMARKS
114A	RT OF J 1-1 (JCT EE)	MO 4-5	24"x12"	1	45	45		
	"	M 1-4	24"x24"	1	45	45		41
	"	MO 5-1-R	21"x21"	1	45	45		
114B	500' W OF SIGN # 114A ON CTY E (EB)	FMS	7' 0"x 4' 0"				28.00	SEE DETAIL
115	RT OF J 13-1 (EE-RT)	MO 4-5	24"x12"	1	45	45		
	"	M 1-4	24"x24"	1	45	45		41
	"	MO 6-1	21"x21"	1	45	45		RIGHT
116	J1-2 (JCT 141; END E)							JCT 141, END E
117	200' S OF CTH E INTERSECTION ON CTH EE	MO 4-5	24"x12"	1	45	45		
	"	M 1-4	24"x24"	1	45	45		41
	"	MO 6-1	21"x21"	1	45	45		AHEAD
118	RT OF J 13-1 (EE) S OF OAK ORCHARD RD ON CTH EE	MO 4-5	24"x12"	1	45	45		
	"	M 1-4	24"x24"	1	45	45		41
	"	MO 6-1	21"x21"	1	45	45		AHEAD
119	LT OF J1-1 (END EE)	MO 4-5	24"x12"	1	45	45		
	"	M 1-4	24"x24"	1	45	45		41
	"	MO 5-1-L	21"x21"	1	45	45		
120	RT OF J 13-1 (WEST-D-RT)	MO 4-5	24"x12"	1	45	45		
	"	M 1-4	24"x24"	1	45	45		41
	"	MO 6-1	21"x21"	1	45	45		LEFT
	SUBTOTAL			*49*	*2,205*	*2,205*	*172.00*	
	PROJECT TOTAL			*49*	*2,205*	*7,900*	*172*	

690-SAWING PAVEMENT

STATION	TO	STATION	LOCATION	SAWING ASPHALT 690.0150 LF	SAWING CONCRETE 690.0250 LF
100+48	-	100+48	NB SOUTH OF APPROACH SLAB	9	50
100+87	-	100+87	NB SOUTH OF BRIDGE	9	60
102+00	-	102+00	NB NORTH OF BRIDGE	9	50
102+00	-	124+43	NB ALONG CL	0	2300
124+43	-	124+43	END OF NB CURVE	9	30
99+69	-	99+69	SB SOUTH OF APPROACH SLAB	9	30
100+37	-	100+37	SB SOUTH OF BRIDGE	9	50
101+36	-	101+36	SB NORTH OF BRIDGE	9	50
101+36	-	124+43	SB ALONG CL	0	2430
124+43	-	124+43	END OF SB CURVE	9	30
			CTH E	30	0
128+27	-	131+33	NE HABECK ENTRANCE	182	50
129+00	-	136+44	LEFT TURN LANE	12	50
140+32	-	147+64	JTURN MEDIAN	12	0
144+72	-	147+49	JTURN	12	0
121+27	-	121+27	HABECK LANE	25	0
			TOTAL 0010	345	5180

654-WAVETRONIX

STATION	TO	STATION	LOCATION	654.0102 EACH	657.0255 EACH	657.0310 EACH	SPV.0060 EACH		REMARKS
141+00	-	141+00	MEDIAN	1	2	1	-		
141+00	-	141+00	MEDIAN	-	-	-	1	SPV .01	GRADING SHAPING & FINISHING FOR ATR SITE
141+00	-	141+00	MEDIAN	-	-	-	1	SPV .02	INSTALLING CONCRETE MAINTENANCE PLATFORM
141+00	-	141+00	MEDIAN	-	-	-	1	SPV .03	INSTALLING WAVETRONIX DETECTOR MODULE
141+00	-	141+00	MEDIAN	-	-	-	1	SPV .04	INSTALLING WAVETRONIX CLICK 200 MODULE
141+00	-	141+00	MEDIAN	-	-	-	1	SPV .05	INSTALLING 2 SOLAR PANELS ON ONE BRACKET
141+00	-	141+00	MEDIAN	-	-	-	1	SPV .06	INSTALLING POLE MOUNTED CABINET
			TOTAL	1	2	1	6		

3

646-PAVEMENT MARKING

STATION	TO	STATION	LOCATION	646.0106 PAVEMENT MARKING EPOXY 4-INCH LF	646.0600 REMOVING PAVEMENT MARKINGS LF	646.0841.S PAVEMENT MARKING GROOVED WET REFLECTIVE CONTRAST TAPE 4-INCH LF	646.0883.S PAVEMENT MARKING GROOVED WET REFLECTIVE TAPE 8-INCH LF	647.0566 PAVEMENT MARKING STOP LINE EPOXY 18-INCH EACH	647.0606 PAVEMENT MARKING ISLAND NOSE EPOXY EACH	647.0726 PAVEMENT MARKING DIAGONAL EPOXY 12-INCH LF	649.0100 TEMPORARY PAVEMENT MARKING 4-INCH LF	REMARKS
99+69	-	124+43	NB Ouside edgeline	2625	4770	-	-	-	-	-	-	
99+69	-	124+43	NB Centerline	-	5450	975	-	-	-	-	-	
99+69	-	124+43	NB Inside edgeline	2500	2670	-	-	-	-	-	-	
100+48	-	124+43	SB Inside Edgline	2800	350	-	-	-	-	-	-	
100+48	-	124+43	SB Centerline	-	-	1000	-	-	-	-	-	
100+48	-	124+43	SB Ouside Edgline	2900	-	-	-	-	-	-	-	
47+80	-	49+40	CTH E North Edgeline	100	-	-	-	-	-	-	-	
47+80	-	49+40	CTH E Centerline	200	-	-	-	-	-	-	-	
47+80	-	49+40	CTH E South Edgeline	115	-	-	-	-	-	-	-	
124+43	-	128+88	Habeck Chanalizing	-	-	-	450	-	-	-	-	
124+43	-	128+88	Habeck Edgeline	550	-	-	-	-	-	-	-	
130+45	-	136+45	Left Turn Chanalizing	-	-	-	520	-	-	-	-	
130+45	-	136+45	Left Turn Edgeline	635	-	-	530	-	-	-	-	
140+31	-	146+27	Jturn Median Chanalizing	-	-	-	-	-	-	-	-	
140+31	-	146+27	Jturn Median Edgeline	860	-	-	-	-	-	-	-	
118+60	-	122+85	CTH E Chanalizing	-	-	-	450	-	-	-	-	
144+80	-	147+52	Jturn Edgeline	600	-	25	-	-	-	-	-	
130+50	-	149+00	NB Outside Edgeline	-	-	-	-	-	-	-	-	
117+78	-	117+78	CTH E ISLAND	-	-	-	-	20	3	-	-	
129+66	-	129+66	NEW HABECK ENTRANCE ISLAND	115	-	-	-	20	3	-	-	
129+75	-	129+75	LEFT TURN MEDIAN NORTH	-	-	-	-	-	1	-	-	
129+95	-	129+95	LEFT TURN MEDIAN SOUTH	-	-	-	-	-	2	-	-	
146+95	-	146+95	JTURN MEDIAN SOUTH	-	-	-	-	-	1	-	-	
146+25	-	147+00	JTURN MEDIAN	-	-	-	-	-	-	215	-	
102+00	-	150+00	NB Outside Shoulder	-	-	-	-	-	-	-	4900	OUTSIDE WHITE STAGE 1
102+00	-	150+00	NB Inside Lane	-	-	-	-	-	-	-	4900	INSIDE YELLOW STAGE 1
99+00	-	150+00	SB Outside Shoulder	-	-	-	-	-	-	-	5400	OUTSIDE WHITE STAGE 1
99+00	-	150+00	SB Inside Lane	-	-	-	-	-	-	-	5400	INSIDE YELLOW STAGE 1
102+00	-	115+50	NB Outside Shoulder	-	-	-	-	-	-	-	1800	OUTSIDE WHITE STAGE 2
102+00	-	115+50	NB Inside Lane	-	-	-	-	-	-	-	1800	INSIDE YELLOW STAGE 2
99+00	-	126+50	SB Outside Shoulder	-	-	-	-	-	-	-	3200	OUTSIDE WHITE STAGE 2
99+00	-	126+50	SB Inside Lane	-	-	-	-	-	-	-	3200	INSIDE YELLOW STAGE 2
100+00	-	126+00	NB Outside Shoulder	-	-	-	-	-	-	-	2800	OUTSIDE WHITE STAGE 3
100+00	-	126+00	NB Inside Lane	-	-	-	-	-	-	-	2800	INSIDE YELLOW STAGE 3
100+00	-	127+00	NB Outside Shoulder	-	-	-	-	-	-	-	2800	OUTSIDE WHITE STAGE 4
100+00	-	102+00	RAMP CHANALIZING	-	-	-	360	-	-	-	-	
100+00	-	127+00	NB Inside Lane	-	-	-	-	-	-	-	2800	INSIDE YELLOW STAGE 4
			TOTAL 0010	14000	13240	2000	2310	40	10	215	41800	

3

TRANSPORTATION PROJECT PLAT NO: 1490-28-21 - 4.01

USH 141 ABRAMS-STILES USH 141 & CTH E OCONTO COUNTY, WI

LOCATED IN THE SOUTHWEST ¼ OF THE SOUTHWEST ¼ OF SECTION 23, TOWNSHIP 27 NORTH, RANGE 20 EAST, TOWN OF ABRAMS, OCONTO COUNTY, WISCONSIN.

RELOCATION ORDER (U.S.H. 141) OCONTO COUNTY.

TO PROPERLY ESTABLISH, LAY OUT, WIDEN, ENLARGE, EXTEND, CONSTRUCT, RECONSTRUCT, IMPROVE, OR MAINTAIN A PORTION OF THE HIGHWAY DESIGNATED ABOVE, THE STATE OF WISCONSIN DEPARTMENT OF TRANSPORTATION DEEMS IT NECESSARY TO RELOCATE OR CHANGE SAID HIGHWAY AND ACQUIRE CERTAIN LANDS AND INTERESTS OR RIGHTS IN LANDS FOR THE ABOVE NAMED PROJECT.

TO EFFECT THIS CHANGE, PURSUANT TO AUTHORITY GRANTED UNDER SUBSECTION 84.02 (3) AND SECTION 84.09, WISCONSIN STATUTES, THE DEPARTMENT OF TRANSPORTATION HEREBY ORDERS THAT:

1. THAT PORTION OF SAID HIGHWAY AS SHOWN ON THIS PLAT IS LAID OUT AND ESTABLISHED TO THE LINES AND WIDTHS AS SO SHOWN FOR THE ABOVE NAMED PROJECT.
2. THE LANDS OR INTERESTS OR RIGHTS IN LANDS AS SHOWN ON THIS PLAT ARE REQUIRED BY THE DEPARTMENT FOR THE ABOVE PROJECT AND SHALL BE ACQUIRED IN THE NAME OF THE STATE OF WISCONSIN, PURSUANT TO THE PROVISIONS OF SUBSECTION 84.09 (1) OR (2), WISCONSIN STATUTES.

ACCEPTED FOR RECORDING AND FILING IN THE OFFICE OF THE REGISTER OF DEEDS IN OCONTO COUNTY, WISCONSIN AT 8:00 AM ON OCT. 8, 2013 AS DOCUMENT # 672018 AND FILED IN Vol. 2 Page 60 of TPP Plats

Annette Behringer
SIGNATURE OF REGISTER OF DEEDS

RESERVED FOR REGISTER OF DEEDS
PROJECT NUMBER 1490-28-21-4.01
AMENDMENT NO: ____

4

CONVENTIONAL SYMBOLS AND ABBREVIATIONS

STATE, COUNTY, or TOWN LINE
SECTION LINE
QUARTER LINE
SIXTEENTH LINE
PROPOSED R/W LINE
PROPERTY LINE
EASEMENT LINE
CORPORATE LIMITS
EXISTING CENTERLINE
LOT & TIE LINES
PARCEL NUMBER (1)
EXISTING MONUMENT
R/W MONUMENT SET (3/4"X24" REBAR 1.50#/FT.)
FOUND METAL R/W CHANNEL
R/W BOUNDARY POINT NUMBER (###)
EXISTING MONUMENT NUMBER [###]
ACCESS RESTRICTED (BY PREVIOUS PROJECT/CONTROL)
ACCESS RESTRICTED (BY ACQUISITION)
NO ACCESS (BY STATUTORY AUTHORITY)
SECTION CORNER

	NON COMPENSABLE	COMPENSABLE
UTILITY PEDESTAL		
UTILITY POLE		
LIGHT POLE		

GAS	G
TELEPHONE	T
OVERHEAD TRANSMISSION LINES	OH
ELECTRIC	E
FIBER OPTIC	FO

ACRES	AC.
CENTERLINE	C/L
CERTIFIED SURVEY MAP	CSM
DOCUMENT	DOC.
MONUMENT	MON.
PAGE	P.
PROPERTY LINE	P.L.
PERMANENT LIMITED EASEMENT	PLE
RECORDED AS	(100')
REFERENCE LINE	R/L
REMAINING	REM.
RIGHT-OF-WAY	R/W
SECTION	SEC.
SECTION LINE	S/L
STATION	STA.
TEMPORARY LIMITED EASEMENT	TLE
TIE POINT	T(#)
VOLUME	V.

CURVE DATA

LONG CHORD	LCH
LONG CHORD BEARING	LCB
RADIUS	R
DEGREE OF CURVE	D
CENTRAL ANGLE OR DELTA	Δ
LENGTH OF CURVE	L
TANGENT	T

LOCATION SKETCH
(NOT TO SCALE)

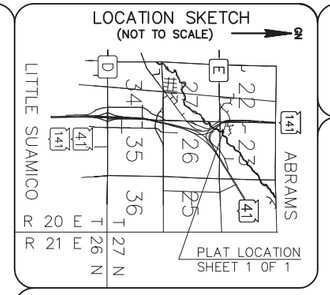

BASIS OF EXISTING R/W

EXISTING HIGHWAY RIGHT-OF-WAY SHOWN HEREIN IS BASED ON THE FOLLOWING POINTS OF REFERENCE:

EXISTING HIGHWAY RIGHT-OF-WAY FOR USH 141 ESTABLISHED FROM RIGHT-OF-WAY PROJECT DF 040-1(20)/FAP 348-D/FAP 257-REOPENED/1150-17-21/1150-61-00-4.30. EXISTING ACCESS CONTROL WAS ACQUIRED UNDER PROJECT 1150-17-21/1490-01-29.

GN

SCALE, FEET
0 100' 200'

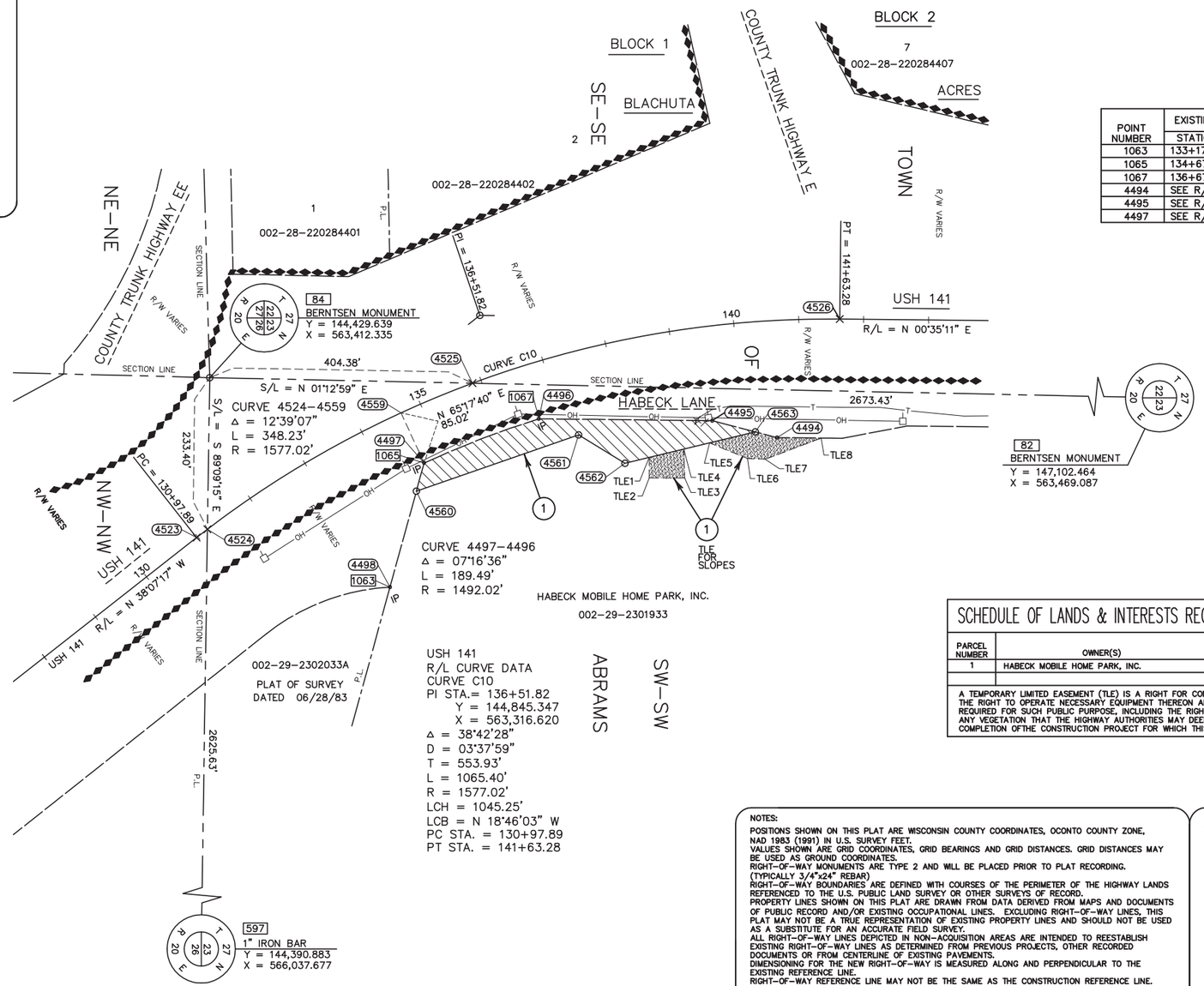

POINT NUMBER	EXISTING MONUMENTS STATION	OFFSET	DESCRIPTION
1063	133+17.65	230.39' R	1" IRON PIPE w/DOT PLUG
1065	134+67.12	84.70' R	1" IRON PIPE w/DOT PLUG
1067	136+67.18	84.89' R	1" IRON PIPE w/DOT PLUG
4494	SEE R/W COORD. TABLE		1" IRON PIPE w/DOT PLUG
4495	SEE R/W COORD. TABLE		1" IRON PIPE w/DOT PLUG
4497	SEE R/W COORD. TABLE		1" IRON PIPE w/DOT PLUG

4

R/W COURSE TABLE

COURSE	BEARING	DISTANCE
*4497-4496	N 21°03'51" W	189.36'
4496-4495	N 00°36'40" E	266.73'
4495-4563	N 14°38'50" E	68.39'
4563-4562	S 13°33'14" E	206.16'
4562-4561	S 31°31'07" W	83.61'
4561-4560	S 19°06'53" E	264.35'
4560-4497	N 74°38'42" W	44.85'

* INDICATES LCH AND LCB

R/W COORDINATE TABLE

POINT#	STATION	OFFSET	Y	X
4523	130+97.89	0.00' R	144409.568	563658.576
4524	131+18.91	0.00' R	144426.194	563645.707
* 4498	133+17.55	230.61' R	144707.048	563734.857
4560	134+35.92	119.06' R	144747.640	563587.037
4559	134+67.14	0.00' R	144723.982	563466.555
4497	134+67.14	85.02' R	144759.515	563543.792
4525	135+86.21	0.00' R	144833.926	563420.919
* 4496	136+67.43	85.03' R	144936.225	563475.732
4561	137+22.84	126.07' R	144997.412	563500.474
4562	137+87.58	185.98' R	145068.691	563544.186
4495	139+48.21	144.99' R	145202.942	563478.576
4563	140+19.32	169.04' R	145269.110	563495.870
4494	140+56.28	180.12' R	145302.670	563504.642
4526	141+63.28	0.00' R	145399.246	563322.289

*
EXISTING MONUMENT IN CLOSE PROXIMITY TO R/W POINT. USE COORDINATES IN THIS TABLE FOR R/W.

TLE COORDINATE TABLE

POINT#	STATION	OFFSET	Y	X
TLE1	138+31.00	185.13' R	145105.875	563535.222
TLE2	138+24.00	216.00' R	145106.099	563566.694
TLE3	138+86.00	226.00' R	145160.462	563566.679
TLE4	138+93.00	182.07' R	145159.274	563522.349
TLE5	139+39.00	178.39' R	145199.044	563512.761
TLE6	140+02.00	208.93' R	145257.371	563536.929
TLE7	140+33.00	212.11' R	145284.403	563537.893
TLE8	141+33.00	183.10' R	145370.602	563505.366

SCHEDULE OF LANDS & INTERESTS REQUIRED

OWNER'S NAMES ARE SHOWN FOR REFERENCE PURPOSED ONLY AND ARE SUBJECT TO CHANGE PRIOR TO THE TRANSFER OF LAND INTERESTS TO THE DEPARTMENT.

PARCEL NUMBER	OWNER(S)	INTEREST REQUIRED	R/W ACRES OR SF REQUIRED NEW	EXISTING	TOTAL	TLE ACRES OR SF
1	HABECK MOBILE HOME PARK, INC.	FEE, TLE	0.49 AC.	---	0.49 AC.	0.13 AC.

A TEMPORARY LIMITED EASEMENT (TLE) IS A RIGHT FOR CONSTRUCTION PURPOSES, AS DEFINED HEREIN, INCLUDING THE RIGHT TO OPERATE NECESSARY EQUIPMENT THEREON AND THE RIGHT OF INGRESS AND EGRESS, AS LONG AS REQUIRED FOR SUCH PUBLIC PURPOSE, INCLUDING THE RIGHT TO PRESERVE, PROTECT, REMOVE, OR PLANT THEREON ANY VEGETATION THAT THE HIGHWAY AUTHORITIES MAY DEEM NECESSARY OR DESIRABLE. ALL TLEs EXPIRE AT THE COMPLETION OFTHE CONSTRUCTION PROJECT FOR WHICH THIS INSTRUMENT IS GIVEN.

NOTES:
POSITIONS SHOWN ON THIS PLAT ARE WISCONSIN COUNTY COORDINATES, OCONTO COUNTY ZONE, NAD 1983 (1991) IN U.S. SURVEY FEET.
VALUES SHOWN ARE GRID COORDINATES, GRID BEARINGS AND GRID DISTANCES. GRID DISTANCES MAY BE USED AS GROUND COORDINATES.
RIGHT-OF-WAY MONUMENTS ARE TYPE 2 AND WILL BE PLACED PRIOR TO PLAT RECORDING. (TYPICALLY 3/4"x24" REBAR)
RIGHT-OF-WAY BOUNDARIES ARE DEFINED WITH COURSES OF THE PERIMETER OF THE HIGHWAY LANDS REFERENCED TO THE U.S. PUBLIC LAND SURVEY OR OTHER SURVEYS OF RECORD.
PROPERTY LINES SHOWN ON THIS PLAT ARE DRAWN FROM DATA DERIVED FROM MAPS AND DOCUMENTS OF PUBLIC RECORD AND/OR EXISTING OCCUPATIONAL LINES. EXCLUDING RIGHT-OF-WAY LINES, THIS PLAT MAY NOT BE A TRUE REPRESENTATION OF EXISTING PROPERTY LINES AND SHOULD NOT BE USED AS A SUBSTITUTE FOR AN ACCURATE FIELD SURVEY.
ALL RIGHT-OF-WAY LINES DEPICTED IN NON-ACQUISITION AREAS ARE INTENDED TO REESTABLISH EXISTING RIGHT-OF-WAY LINES AS DETERMINED FROM PREVIOUS PROJECTS, OTHER RECORDED DOCUMENTS OR FROM CENTERLINE OF EXISTING PAVEMENTS.
DIMENSIONING FOR THE NEW RIGHT-OF-WAY IS MEASURED ALONG AND PERPENDICULAR TO THE EXISTING REFERENCE LINE.
RIGHT-OF-WAY REFERENCE LINE MAY NOT BE THE SAME AS THE CONSTRUCTION REFERENCE LINE.

I, DONALD J. BUZA, REGISTERED LAND SURVEYOR, HEREBY CERTIFY THAT IN FULL COMPLIANCE WITH THE PROVISIONS OF SECTION 84.095 OF THE WISCONSIN STATUTES AND UNDER THE DIRECTION OF THE DEPARTMENT, I HAVE SURVEYED AND MAPPED TRANSPORTATION PROJECT PLAT 1490-28-21-4.01 AND THAT SUCH PLAT CORRECTLY REPRESENTS ALL EXTERIOR BOUNDARIES OF THE SURVEYED LAND.

WISCONSIN DONALD J. BUZA S-2338 CUSTER, WI LAND SURVEYOR

DATE 8/27/13

(SIGNATURE) Donald J. Buza

(REGISTRATION NUMBER) 2338

THIS PLAT AND RELOCATION ORDER ARE APPROVED FOR THE WISCONSIN DEPARTMENT OF TRANSPORTATION.

DATE 9/24/2013

(SIGNATURE) Curt Van Ere
CURT VAN ERE

Land Surveying
Engineering
Landscape Architecture
5709 Windy Drive, Suite D
Stevens Point, WI 54482
715.344.9999(Ph)
Point of Beginning

FILE NAME : $$....designfile....$$
APPRAISAL PLAT DATE : __??/??/2013_____

$$.....plotscale.....$$

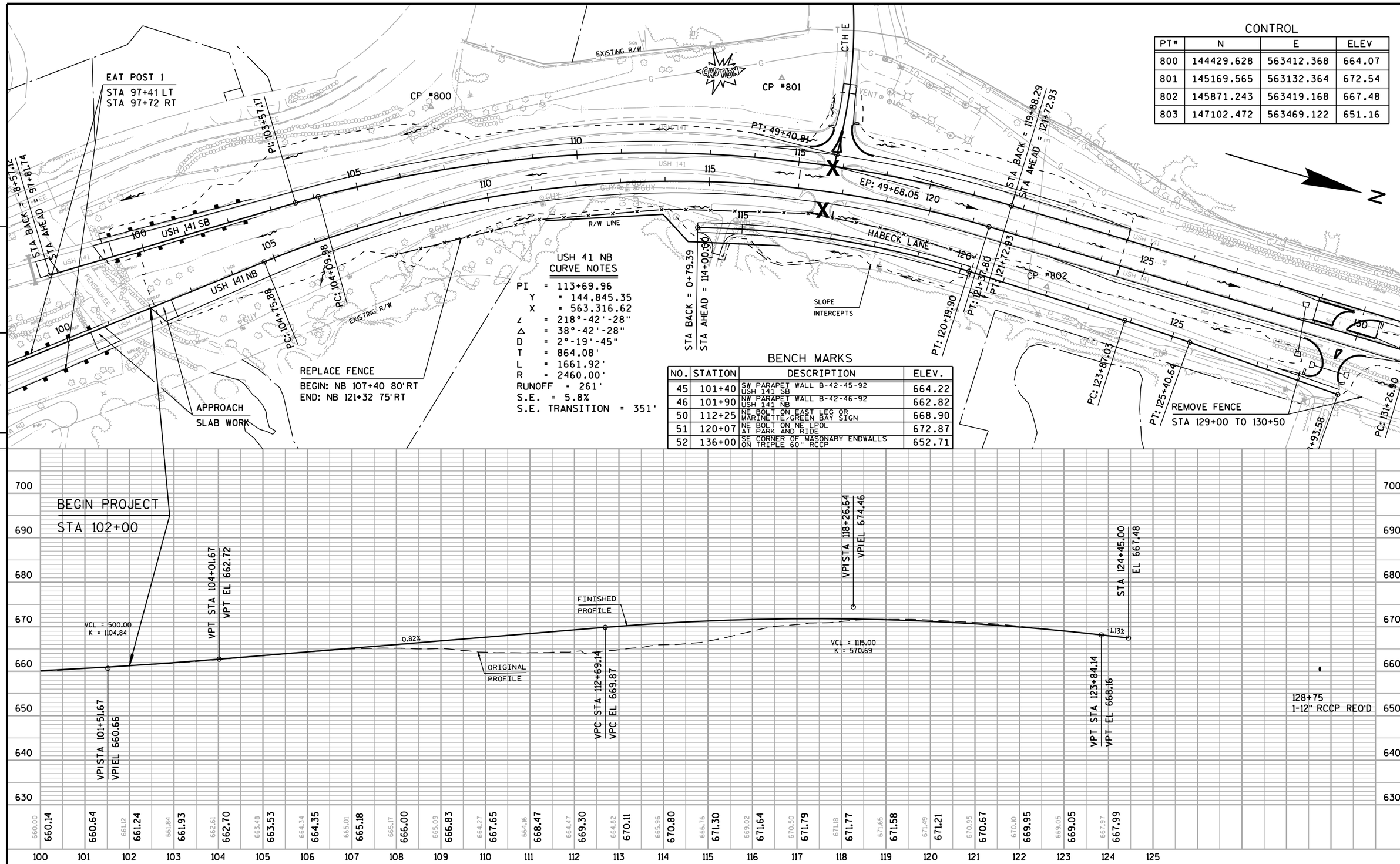

USH 41 NB
CURVE NOTES

PI = 113+69.96
Y = 144,845.35
X = 563,316.62
∠ = 218°-42'-28"
Δ = 38°-42'-28"
D = 2°-19'-45"
T = 864.08'
L = 1661.92'
R = 2460.00'
RUNOFF = 261'
S.E. = 5.8%
S.E. TRANSITION = 351'

CONTROL

PT#	N	E	ELEV
800	144429.628	563412.368	664.07
801	145169.565	563132.364	672.54
802	145871.243	563419.168	667.48
803	147102.472	563469.122	651.16

BENCH MARKS

NO.	STATION	DESCRIPTION	ELEV.
45	101+40	SW PARAPET WALL B-42-45-92 USH 141 SB	664.22
46	101+90	NW PARAPET WALL B-42-46-92 USH 141 NB	662.82
50	112+25	NE BOLT ON EAST LEG OR MARINETTE/GREEN BAY SIGN	668.90
51	120+07	NE BOLT ON NE LPOL AT PARK AND RIDE	672.87
52	136+00	SE CORNER OF MASONARY ENDWALLS ON TRIPLE 60" RCCP	652.71

PROJECT NO:1490-28-71	HWY:USH 141	COUNTY:OCONTO	NORTHBOUND	SHEET	E

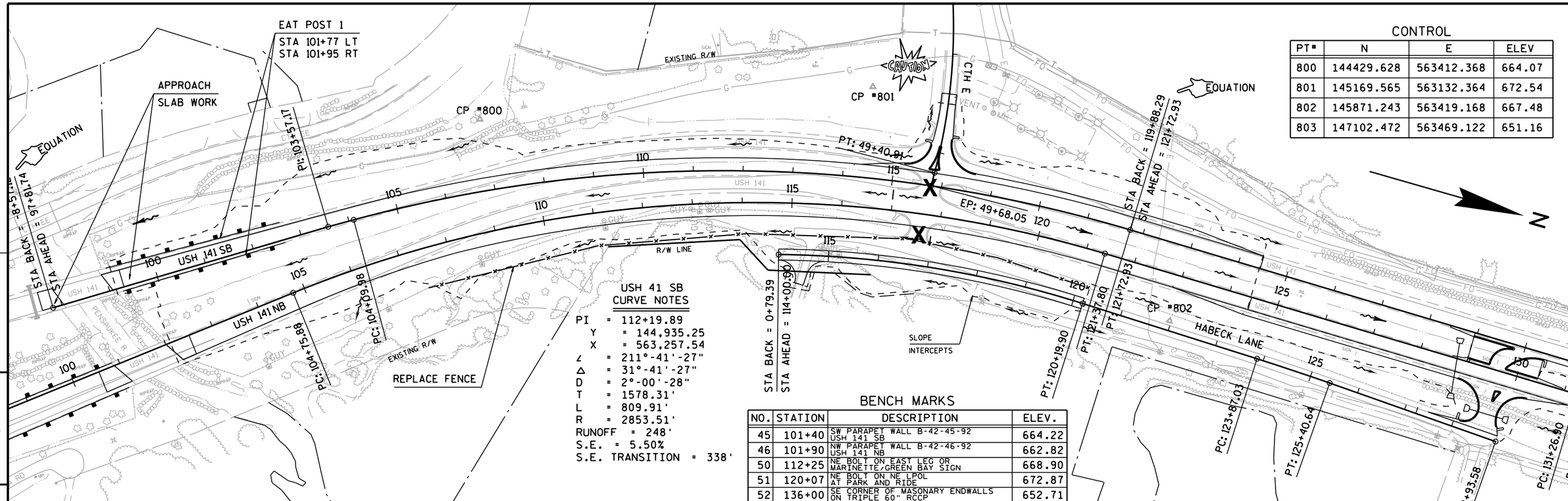

CONTROL

PT#	N	E	ELEV
800	144429.628	563412.368	664.07
801	145169.565	563132.364	672.54
802	145871.243	563419.168	667.48
803	147102.472	563469.122	651.16

USH 41 SB CURVE NOTES

PI = 112+19.89
Y = 144,935.25
X = 563,257.54
∠ = 211°-41'-27"
Δ = 31°-41'-27"
D = 2°-00'-28"
T = 1578.31'
L = 809.91'
R = 2853.51'
RUNOFF = 248'
S.E. = 5.50%
S.E. TRANSITION = 338'

BENCH MARKS

NO.	STATION	DESCRIPTION	ELEV.
45	101+40	SW PARAPET WALL B-42-45-92 USH 141 SB	664.22
46	101+90	NW PARAPET WALL B-42-46-92 USH 141 NB	662.82
50	112+25	NE BOLT ON EAST LEG OR MARINETTE/GREEN BAY SIGN	668.90
51	120+07	NE BOLT ON NE LPOL AT PARK AND RIDE	672.87
52	136+00	SE CORNER OF MASONARY ENDWALLS ON TRIPLE 60" RCCP	652.71

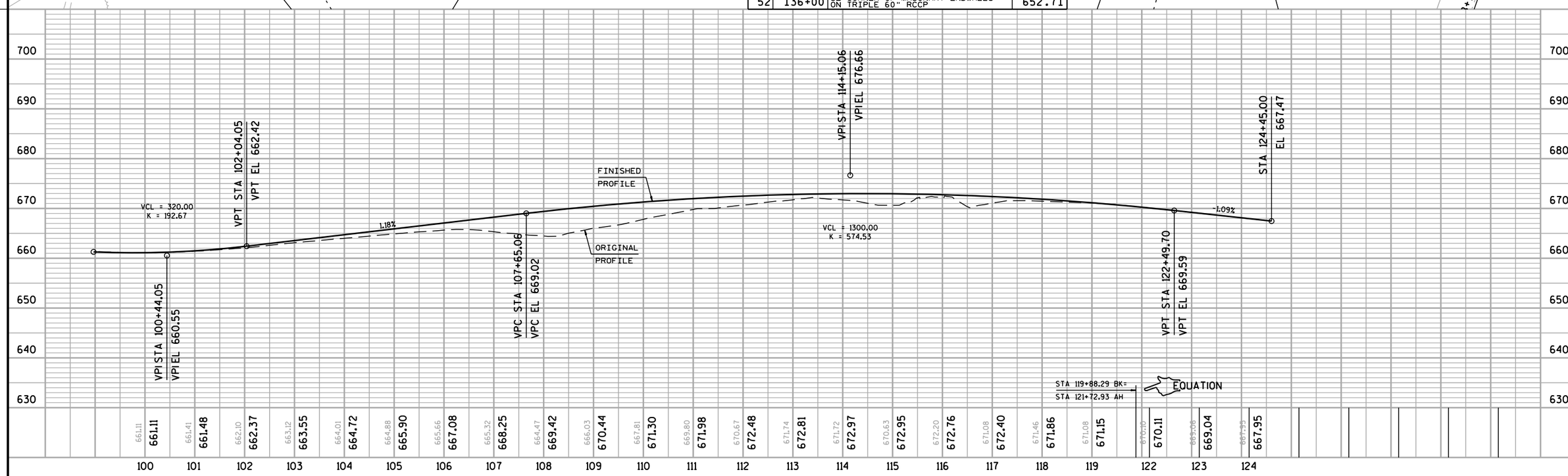

PROJECT NO:1490-28-71	HWY:USH 141	COUNTY:OCONTO	SOUTHBOUND	SHEET	E

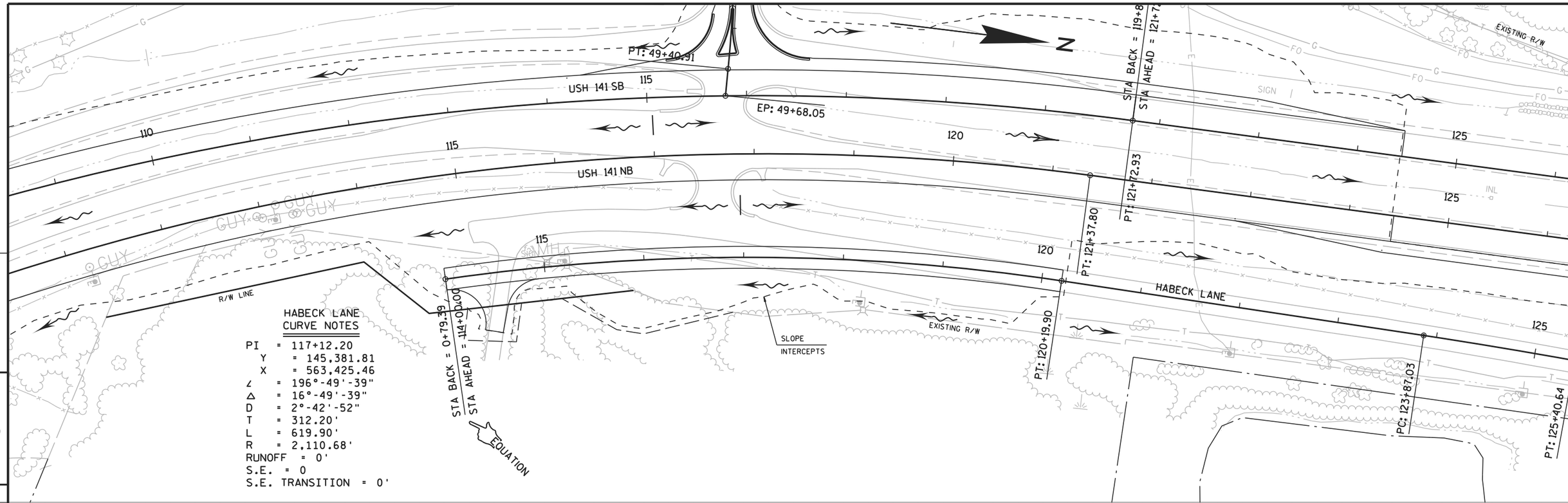

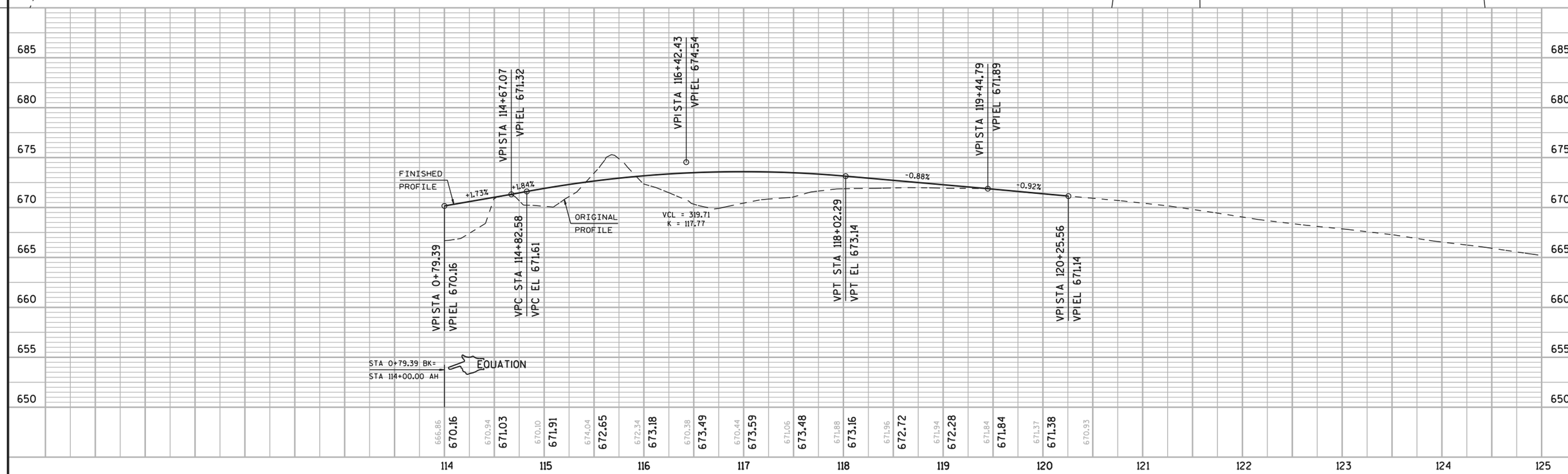

PROJECT NO:1490-28-71	HWY:USH 141	COUNTY:OCONTO	HABECK LANE	SHEET 95	E

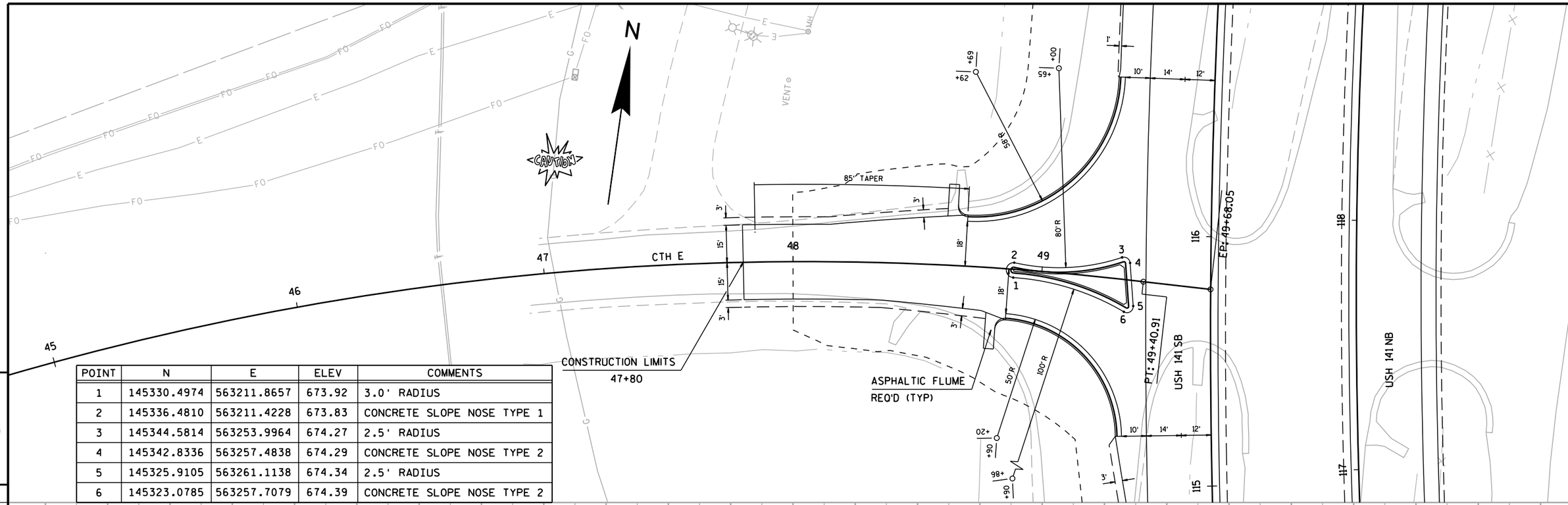

POINT	N	E	ELEV	COMMENTS
1	145330.4974	563211.8657	673.92	3.0' RADIUS
2	145336.4810	563211.4228	673.83	CONCRETE SLOPE NOSE TYPE 1
3	145344.5814	563253.9964	674.27	2.5' RADIUS
4	145342.8336	563257.4838	674.29	CONCRETE SLOPE NOSE TYPE 2
5	145325.9105	563261.1138	674.34	2.5' RADIUS
6	145323.0785	563257.7079	674.39	CONCRETE SLOPE NOSE TYPE 2

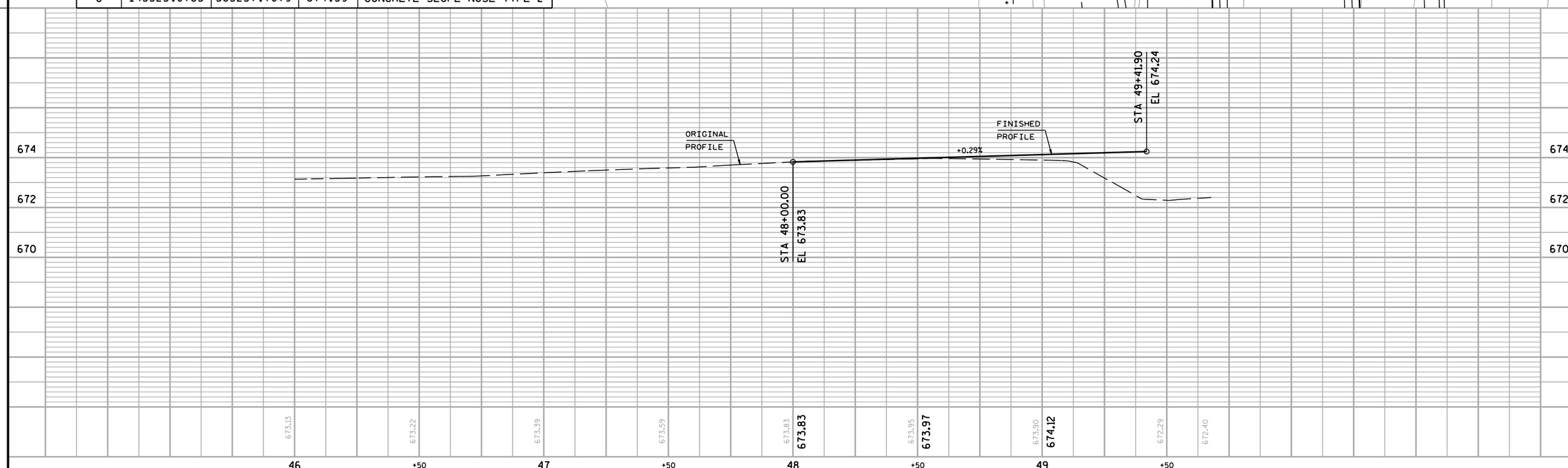

PROJECT NO:1490-28-71	HWY:USH 141	COUNTY:OCONTO	CTH E	SHEET	E

Standard Detail Drawing List

08D01-17	CONCRETE CURB, CONCRETE CURB AND GUTTER AND TIES
08D04-05	CONCRETE SURFACE DRAINS & ASPHALTIC FLUMES
08E08-03	TYPICAL INSTALLATIONS OF EROSION BALES / TEMPORARY DITCH CHECKS
08E09-06	SILT FENCE
08E10-02	INLET PROTECTION TYPE A, B, C AND D
08F01-11	APRON ENDWALLS FOR CULVERT PIPE
08F04-07	JOINT TIES FOR CONCRETE PIPE AND CONCRETE COLLAR DETAIL
08F06-04	REINFORCED CONCRETE APRON ENDWALL FOR PIPE UNDERDRAIN
09A01-13B	AT-GRADE SIDE ROAD INTERSECTION, TYPE "A1" & "A2"
09B02-07	CONDUIT
09B04-10	PULL BOX
09C02-06	CONCRETE BASES, TYPES 1, 2 & 5
09C03-03	TRANSFORMER/PEDESTAL BASES
09C05-08	CONCRETE CONTROL CABINET BASES
09E01-12B	POLE MOUNTINGS FOR TRAFFIC SIGNALS AND LIGHTING UNITS, TYPE 3 (HEAVY DUTY)
09E01-12D	POLE MOUNTINGS FOR LIGHTING UNITS, TYPE 5 (30 FEET)
09E01-12G	HARDWARE DETAILS FOR POLE MOUNTINGS
09E03-04	NON-FREEWAY LIGHTING UNIT POLE WIRING
11B02-02	CONCRETE MEDIAN NOSE
13A05-05A	SHOULDER RUMBLE STRIP, MILLING
13A05-05B	SHOULDER RUMBLE STRIP, MILLING
13B02-06	CONCRETE PAVEMENT APPROACH SLAB
13C01-16	CONCRETE PAVEMENT LONGITUDINAL JOINTS AND TIES
13C11-11A	RURAL DOWELED CONCRETE PAVEMENT
13C11-11B	RURAL DOWELED CONCRETE PAVEMENT
13C16-02A	DETAIL FOR RIGHT TURN LANE/TEE INTERSECTION BYPASS LANE ON A CONRETE ROADWAY
13C16-02B	DETAIL FOR RIGHT TURN LANE/TEE INTERSECTION BYPASS LANE ON A CONRETE ROADWAY
13C18-02A	CONCRETE PAVEMENT JOINTING
13C18-02B	CONCRETE PAVEMENT STEEL REINFORCEMENT
13C18-02C	CONCRETE PAVEMENT JOINT TIES
13C18-02D	CONCRETE PAVEMENT JOINTING AT UTILITY FIXTURES
13C18-02E	CONCRETE PAVEMENT JOINTING AND STEEL REINFORCEMENT IN ROUNDABOUTS
14B07-13A	CONCRETE BARRIER TEMPORARY PRECAST, 12'-6"
14B07-13B	CONCRETE BARRIER TEMPORARY PRECAST, 12'-6"
14B07-13C	CONCRETE BARRIER TEMPORARY PRECAST, 12'-6"
14B07-13D	CONCRETE BARRIER TEMPORARY PRECAST, 12'-6"
14B07-13E	CONCRETE BARRIER TEMPORARY PRECAST, 12'-6"
14B07-13F	CONCRETE BARRIER TEMPORARY PRECAST, 12'-6"
14B07-13G	CONCRETE BARRIER TEMPORARY PRECAST, 12'-6"
14B07-13H	CONCRETE BARRIER TEMPORARY PRECAST, 12'-6"
14B20-11A	STEEL THRIE BEAM STRUCTURE APPROACH
14B20-11B	STEEL THRIE BEAM STRUCTURE APPROACH, CONNECTION TO SQUARE END PARAPETS
14B29-01	SAFETY EDGE
14B42-02A	MIDWEST GUARDRAIL SYSTEM (MGS) GUARDRAIL
14B42-02B	MIDWEST GUARDRAIL SYSTEM (MGS) GUARDRAIL
14B42-02C	MIDWEST GUARDRAIL SYSTEM (MGS) GUARDRAIL
14B44-01A	MIDWEST GUARDRAIL SYSTEM ENERGY ABSORBING TERMINAL (MGS)
14B44-01B	MIDWEST GUARDRAIL SYSTEM ENERGY ABSORBING TERMINAL (MGS)
14B44-01C	MIDWEST GUARDRAIL SYSTEM ENERGY ABSORBING TERMINAL (MGS)
14B45-03A	MIDWEST GUARDRAIL SYSTEM THRIE BEAM TRANSITION (MGS)
14B45-03B	MIDWEST GUARDRAIL SYSTEM THRIE BEAM TRANSITION (MGS)
14B45-03C	MIDWEST GUARDRAIL SYSTEM THRIE BEAM TRANSITION (MGS)
14B45-03D	MIDWEST GUARDRAIL SYSTEM THRIE BEAM TRANSITION (MGS)
14B45-03E	MIDWEST GUARDRAIL SYSTEM THRIE BEAM TRANSITION (MGS)
14B45-03F	MIDWEST GUARDRAIL SYSTEM THRIE BEAM TRANSITION (MGS)
14B45-03G	MIDWEST GUARDRAIL SYSTEM THRIE BEAM TRANSITION (MGS)
14B45-03H	MIDWEST GUARDRAIL SYSTEM THRIE BEAM TRANSITION (MGS)
14B45-03I	MIDWEST GUARDRAIL SYSTEM THRIE BEAM TRANSITION (MGS)
14B45-03J	MIDWEST GUARDRAIL SYSTEM THRIE BEAM TRANSITION (MGS)
15A02-08	DELINEATOR POST, DELINEATOR, AND DELINEATOR BRACKET WITH REFLECTIVE SHEETING
15A03-02A	FLEXIBLE MARKER POST FOR CULVERT END
15A03-02B	FLEXIBLE MARKER POST FOR CULVERT END
15A06-02	DELINEATOR LAYOUT
15B01-08A	FENCE WOVEN WIRE
15B01-08B	FENCE WOVEN WIRE
15B03-13A	FENCE CHAIN LINK
15B03-13B	FENCE CHAIN LINK
15C02-05A	BARRICADES AND SIGNS FOR MAINLINE CLOSURES

6

6

Standard Detail Drawing List

15C02-05B	BARRICADES AND SIGNS FOR MAINLINE CLOSURES
15C02-05C	DETOUR SIGNING FOR MAINLINE CLOSURES
15C08-16A	PAVEMENT MARKING (MAINLINE)
15C08-16B	PAVEMENT MARKING (INTERSECTIONS)
15C08-16F	PAVEMENT MARKING (ISLANDS)
15C31-01A	PAVEMENT MARKING (RAMPS AND GORES)
15C32-01A	J TURN MEDIAN PAVEMENT MARKING
15C32-01B	J TURN LANE PAVEMENT MARKING
15C33-01	STOP LINE AND CROSSWALK PAVEMENT MARKING
15D03-02	TRAFFIC CONTROL, LANE CLOSURE, SPEEDS GREATER THAN 40 M.P.H. WITH BARRIER
15D12-03	TRAFFIC CONTROL, LANE CLOSURE, SPEEDS GREATER THAN 40 M.P.H.
15D16-02	TRAFFIC CONTROL, EXIT RAMP CLOSURE

6

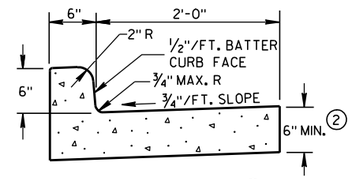

TYPES A & D ①

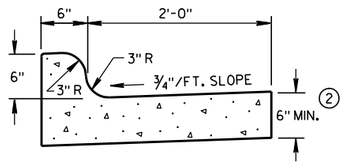

TYPES K & L ①

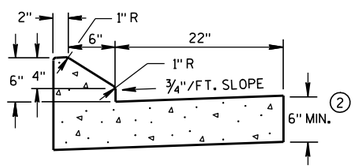

6" SLOPED CURB TYPES G & J ①

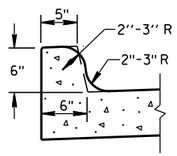

OPTIONAL CURB SHAPE FOR TYPES K & L ①

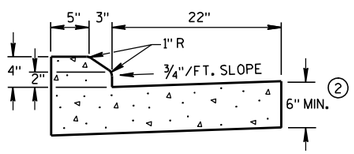

4" SLOPED CURB TYPES G & J ①

CONCRETE CURB & GUTTER 30"

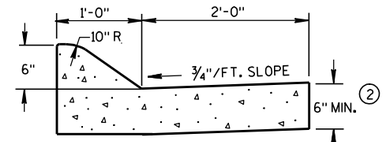

(6" SLOPED CURB)

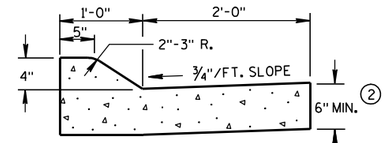

(4" SLOPED CURB)

TYPES A & D ①

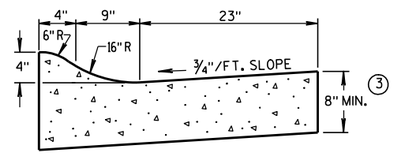

4" SLOPED CURB TYPES R & T ① ④

CONCRETE CURB & GUTTER 36"

GENERAL NOTES

DETAILS OF CONSTRUCTION, MATERIALS AND WORKMANSHIP NOT SHOWN ON THIS DRAWING SHALL CONFORM TO THE PERTINENT REQUIREMENTS OF THE CONTRACT.

PAVEMENT TIES AND TIE BARS SHALL BE EPOXY COATED IN CONFORMANCE WITH SUBSECTION 505.2.6.2 OF THE STANDARD SPECIFICATIONS.

INTEGRAL CURB & GUTTER SHALL CONFORM TO THE DETAILS SHOWN FOR CONCRETE CURB & GUTTER INCLUDING THE TRANSVERSE GUTTER SLOPE. A LONGITUDINAL CONSTRUCTION JOINT IS NOT REQUIRED WITH INTEGRAL CURB AND GUTTER.

WHERE THE TRANSVERSE JOINTS IN THE PAVEMENT ARE REQUIRED TO BE SEALED, THE JOINTS IN THE INTEGRAL CURB AND GUTTER SHALL BE SEALED TO THE FACE OF CURB WITH THE SAME TYPE OF SEALANT. THE COST OF FURNISHING AND INSTALLING THIS SEALANT SHALL BE INCIDENTAL TO THE ITEM CONCRETE CURB AND GUTTER.

UNLESS OTHERWISE SHOWN ON THE TYPICAL CROSS SECTIONS, THE BASE AGGREGATE AND COMMON EXCAVATION LIMITS ARE 2'-0" BEHIND THE BACK OF CURBS.

① TIE BARS ARE REQUIRED FOR CURB AND GUTTER TYPES A, G, K AND R.

② THE BOTTOM OF CURB AND GUTTER MAY BE CONSTRUCTED EITHER LEVEL OR PARALLEL TO THE SLOPE OF THE SUBGRADE OR BASE AGGREGATE PROVIDED A 6" MINIMUM GUTTER THICKNESS IS MAINTAINED.

③ THE BOTTOM OF CURB AND GUTTER MAY BE CONSTRUCTED EITHER LEVEL OR PARALLEL TO THE SLOPE OF THE SUBGRADE OR BASE AGGREGATE PROVIDED A 8" MINIMUM GUTTER THICKNESS IS MAINTAINED.

④ THE FACE OF CURB IS 6" FROM THE BACK OF CURB.

⑤ WHEN REVERSE SLOPE GUTTER IS REQUIRED, THE LOCATION(S) WILL BE SHOWN ELSEWHERE IN THE PLAN.

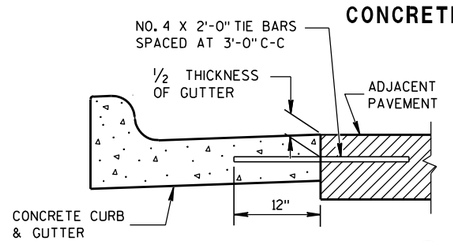

TYPICAL TIE BAR LOCATION ①

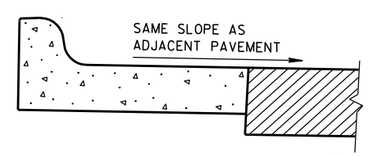

REVERSE SLOPE GUTTER ⑤
(TYPICAL FOR ALL CURB & GUTTER TYPES)

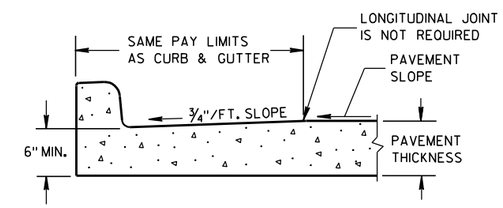

PARTIAL SECTION OF PAVEMENT WITH INTEGRAL CURB & GUTTER

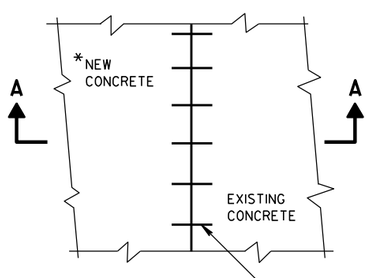

*NEW CURB & GUTTER, SURFACE DRAINS, CONCRETE PAVEMENT OR OTHER NEW CONCRETE.

PLAN VIEW

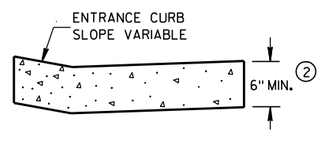

DRIVEWAY ENTRANCE CURB
(WHEN DIRECTED BY THE ENGINEER)

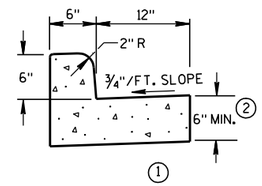

① TYPES A & D

CONCRETE CURB & GUTTER 18"

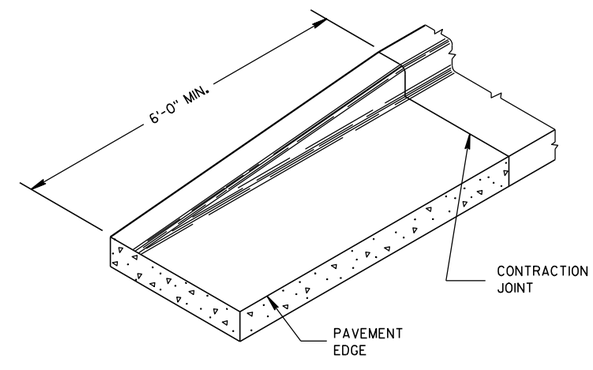

END SECTION CURB & GUTTER

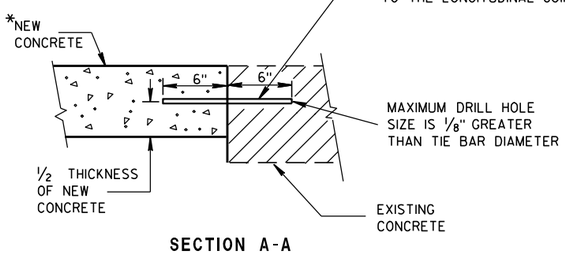

SECTION A-A

TIE BARS DRILLED INTO EXISTING PAVEMENT

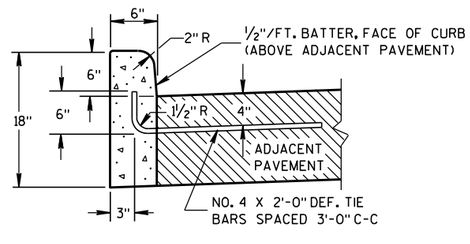

① TYPES A & D

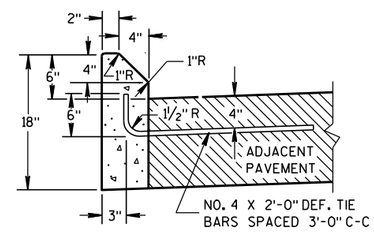

① TYPES G & J

CONCRETE CURB

CONCRETE CURB, CONCRETE CURB & GUTTER AND TIES

STATE OF WISCONSIN
DEPARTMENT OF TRANSPORTATION

APPROVED
9/4/08 — DATE
/S/ Jerry H. ---- — ROADWAY STANDARDS ENGINEER
FHWA

6

S.D.D. 8 D 1-17

GENERAL NOTES

DETAILS OF CONSTRUCTION, MATERIALS AND WORKMANSHIP NOT SHOWN ON THIS DRAWING SHALL CONFORM TO PERTINENT REQUIREMENTS OF THE STANDARD SPECIFICATIONS AND APPLICABLE SPECIAL PROVISIONS.

WELDED STEEL WIRE FABRIC SHALL BE IN ACCORDANCE WITH AASHTO SPECIFICATION M55.

① JOINTS SHALL BE 1/8 TO 1/4 INCH WIDE BY 1 1/2 INCHES DEEP AND SPACED AT UNIFORM INTERVALS OF APPROXIMATELY 4 FEET.

② GEOTEXTILE FABRIC TYPE "R" SHALL UNDERLAY THE FULL LENGTH AND WIDTH OF THE CONCRETE SURFACE DRAIN AND RIPRAP.

③ CONCRETE SURFACE DRAIN WITHOUT CURB AND GUTTER MAY BE USED ON BACKSLOPES WHEN SPECIFIED

ASPHALTIC FLUME

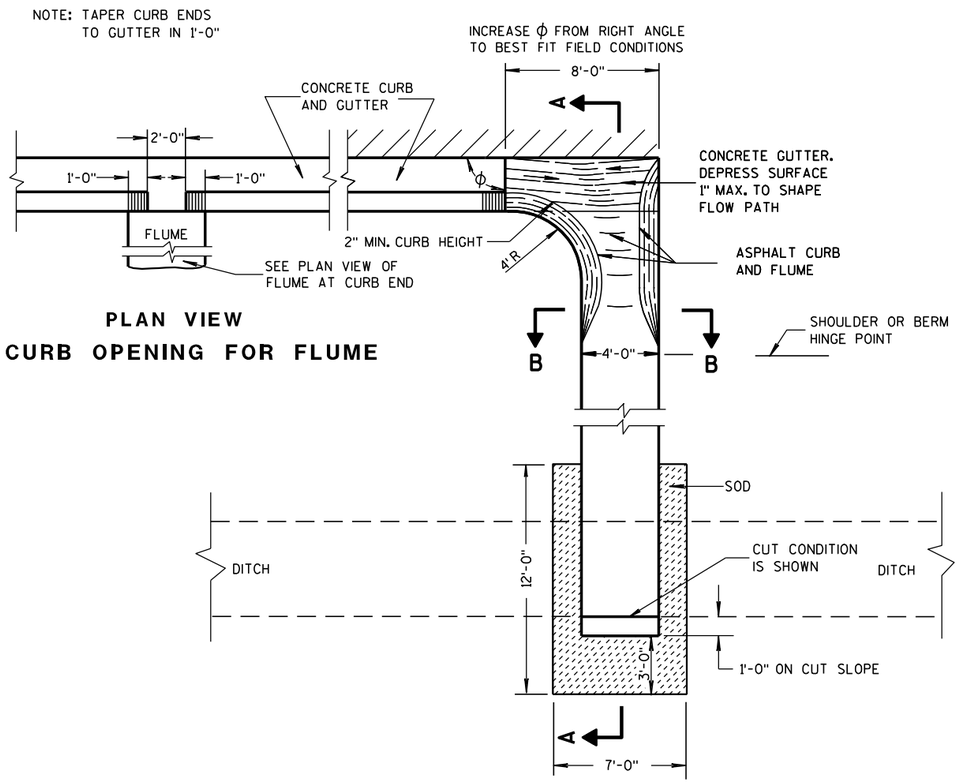

PLAN VIEW
CURB OPENING FOR FLUME

PLAN VIEW
FLUME AT CURB END

③ CONCRETE SURFACE DRAIN

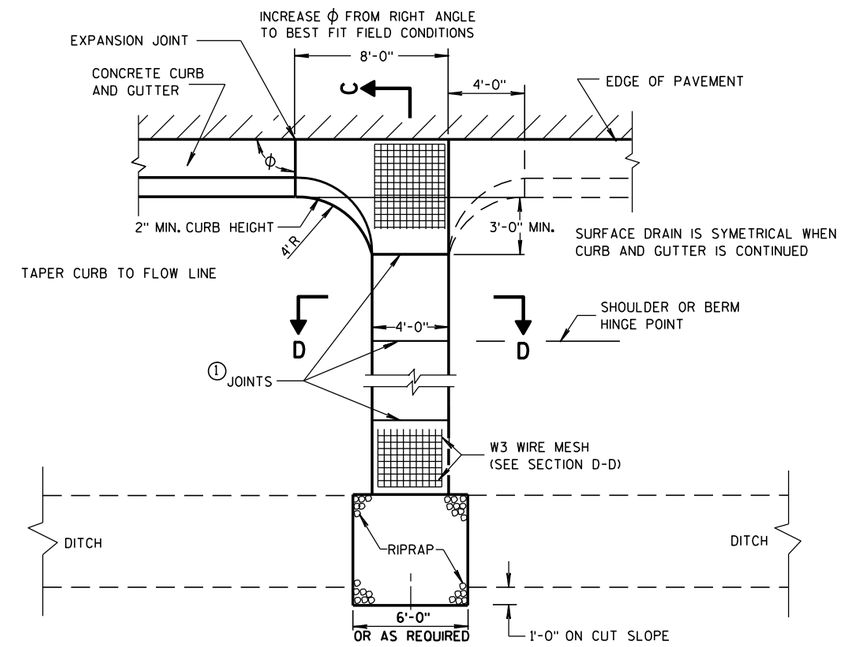

PLAN VIEW

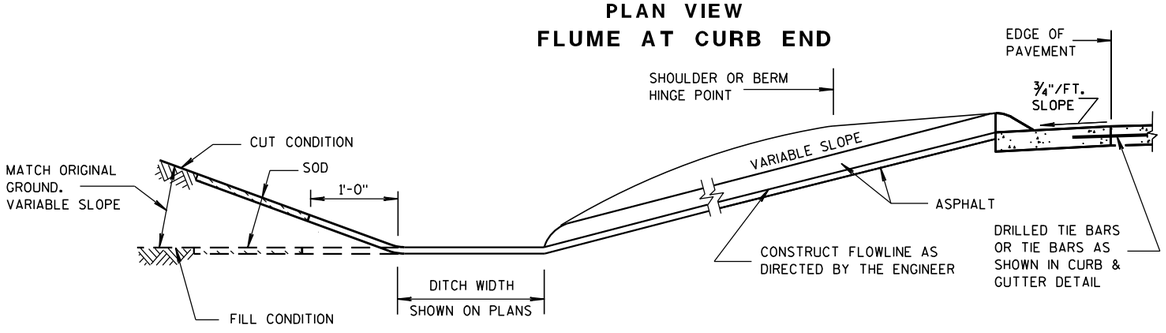

SECTION A-A

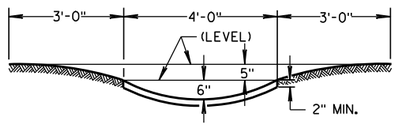

SECTION B-B

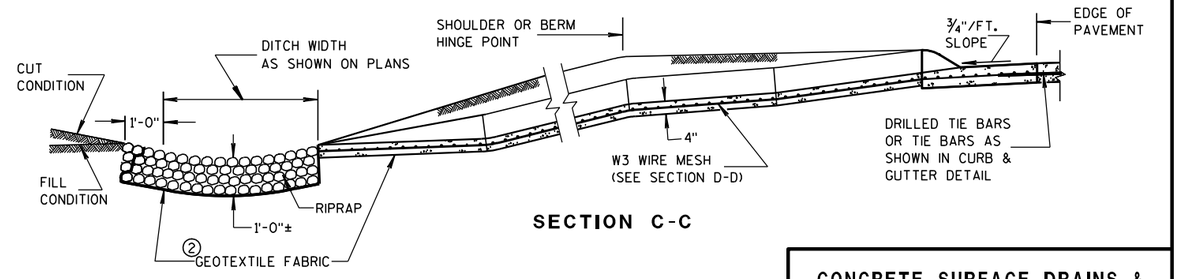

SECTION C-C

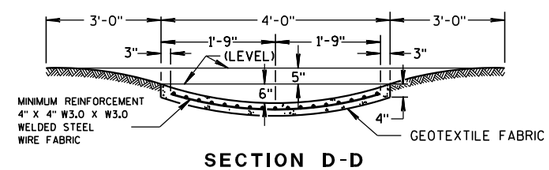

SECTION D-D

CONCRETE SURFACE DRAINS & ASPHALTIC FLUMES

STATE OF WISCONSIN
DEPARTMENT OF TRANSPORTATION

APPROVED
9-4-08 /S/ Jerry H. Zogg
DATE ROADWAY STANDARDS ENGINEER MENT
FHWA

6

6

S.D.D. 8 D 4-5

S.D.D. 8 D 4-5

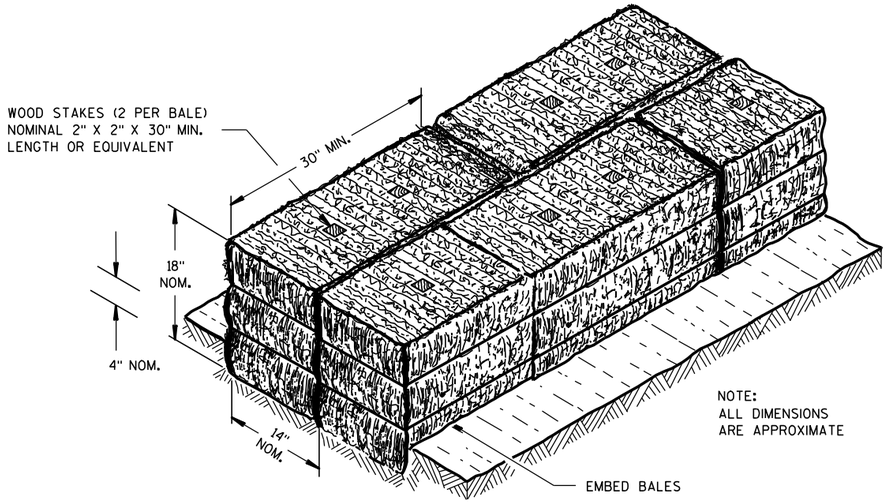

SECTION A-A

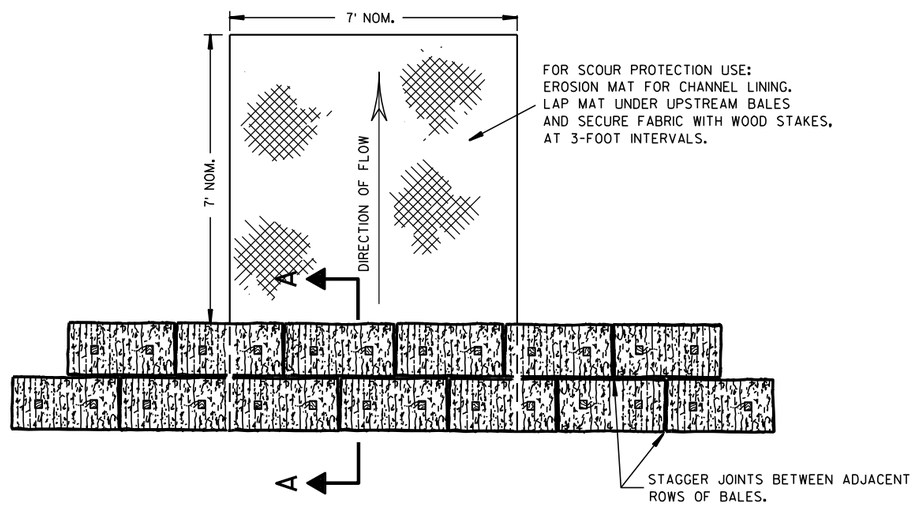

PLAN VIEW

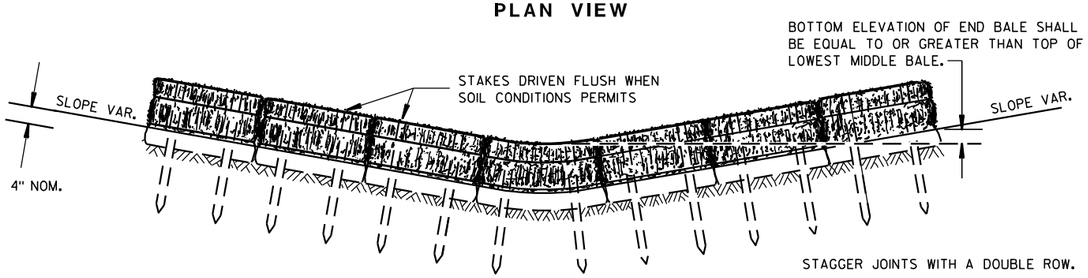

FRONT ELEVATION

TEMPORARY DITCH CHECK USING EROSION BALES ①

GENERAL NOTES

DETAILS OF CONSTRUCTION, MATERIALS AND WORKMANSHIP NOT SHOWN ON THIS DRAWING SHALL CONFORM TO THE PERTINENT REQUIREMENTS OF THE STANDARD SPECIFICATIONS AND THE APPLICABLE SPECIAL PROVISIONS.

① TEMPORARY DITCH CHECKS EITHER EROSION BALES OR MANUFACTURED SHALL BE PAID FOR UNDER THE BID ITEM OF TEMPORARY DITCH CHECK. THE DEPARTMENT WILL NOT PAY FOR TEMPORARY DITCH CHECKS CONSTRUCTED OF A SINGLE ROW OF EROSION BALES.

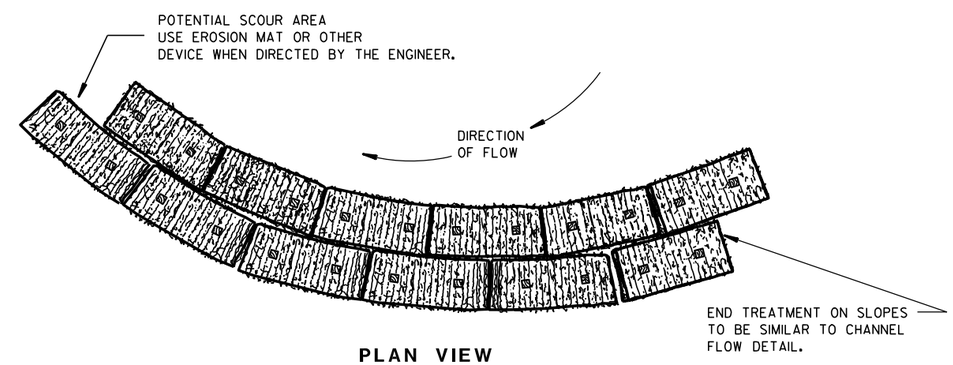

PLAN VIEW

WHEN ALTERING THE DIRECTION OF FLOW

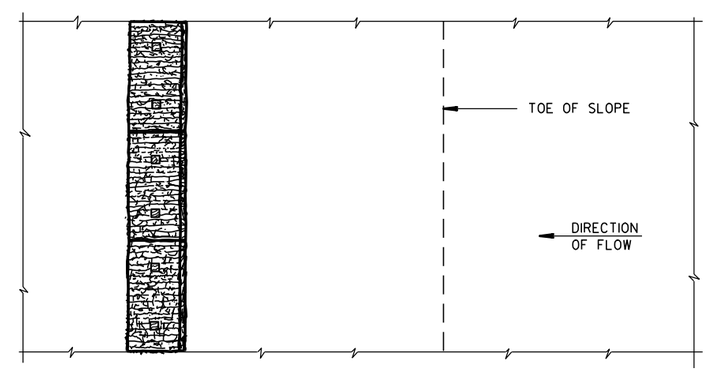

PLAN VIEW

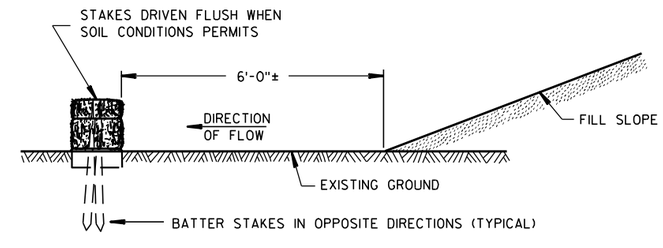

FRONT ELEVATION

WHEN EXISTING GROUND SLOPES AWAY FROM FILL SLOPE

EROSION BALES FOR SHEET FLOW

TYPICAL INSTALLATIONS OF EROSION BALES / TEMPORARY DITCH CHECKS

STATE OF WISCONSIN
DEPARTMENT OF TRANSPORTATION

APPROVED

6/04/02 — DATE

/S/ Beth Cann — CHIEF ROADWAY DEVELOPMENT ENGINEER

FHWA

6

6

S.D.D. 8 E 8-3

S.D.D. 8 E 8-3

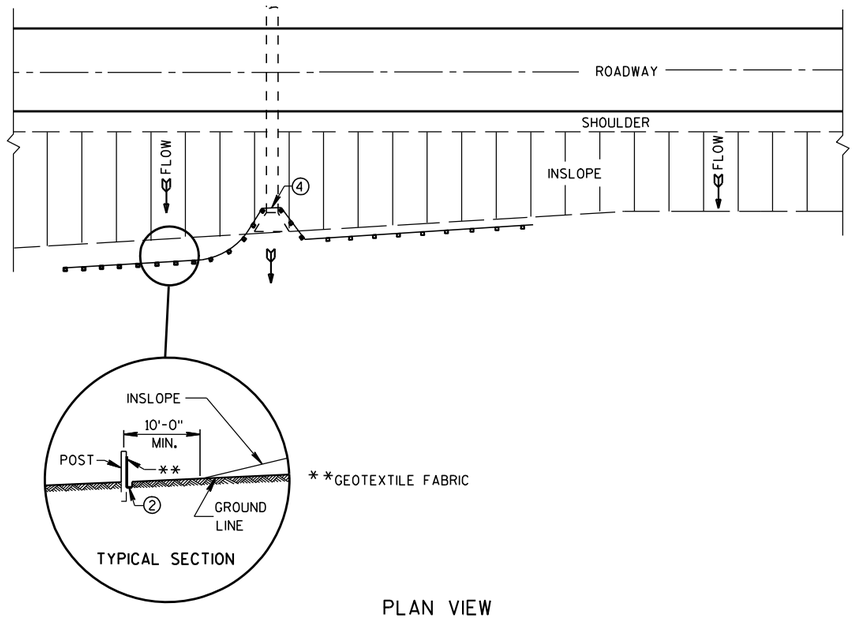

PLAN VIEW

TYPICAL APPLICATION OF SILT FENCE

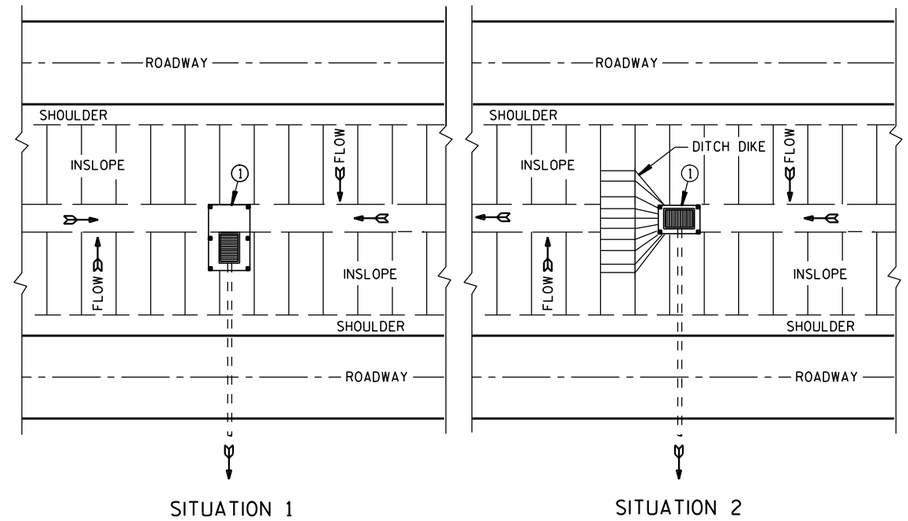

PLAN VIEW

SILT FENCE AT MEDIAN SURFACE DRAINS

GENERAL NOTES

DETAILS OF CONSTRUCTION NOT SHOWN ON THIS DRAWING SHALL CONFORM TO THE PERTINENT REQUIREMENTS OF THE STANDARD SPECIFICATIONS AND APPLICABLE SPECIAL PROVISIONS.

① HORIZONTAL BRACE REQUIRED WITH 2" X 4" WOODEN FRAME OR EQUIVALENT AT TOP OF POSTS.

② FOR MANUAL INSTALLATIONS THE TRENCH SHALL BE A MINIMUM OF 4" WIDE & 6" DEEP TO BURY AND ANCHOR THE GEOTEXTILE FABRIC. FOLD MATERIAL TO FIT TRENCH AND BACKFILL & COMPACT TRENCH WITH EXCAVATED SOIL.

③ WOOD POSTS SHALL BE A MINIMUM SIZE OF 1⅛" X 1⅛" OF OAK OR HICKORY.

④ SILT FENCE TO EXTEND ACROSS THE TOP OF THE PIPE.

⑤ CONSTRUCT SILT FENCE FROM A CONTINUOUS ROLL IF POSSIBLE BY CUTTING LENGTHS TO AVOID JOINTS. IF A JOINT IS NECESSARY USE ONE OF THE FOLLOWING TWO METHODS; A) OVERLAP THE END POSTS AND TWIST, OR ROTATE, AT LEAST 180 DEGREES, B) HOOK THE END OF EACH SILT FENCE LENGTH.

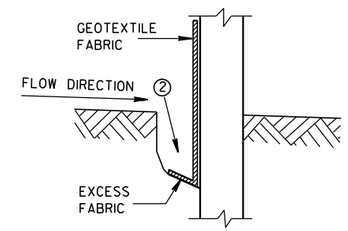

TRENCH DETAIL

NOTE: ADDITIONAL POST DEPTH OR TIE BACKS MAY BE REQUIRED IN UNSTABLE SOILS

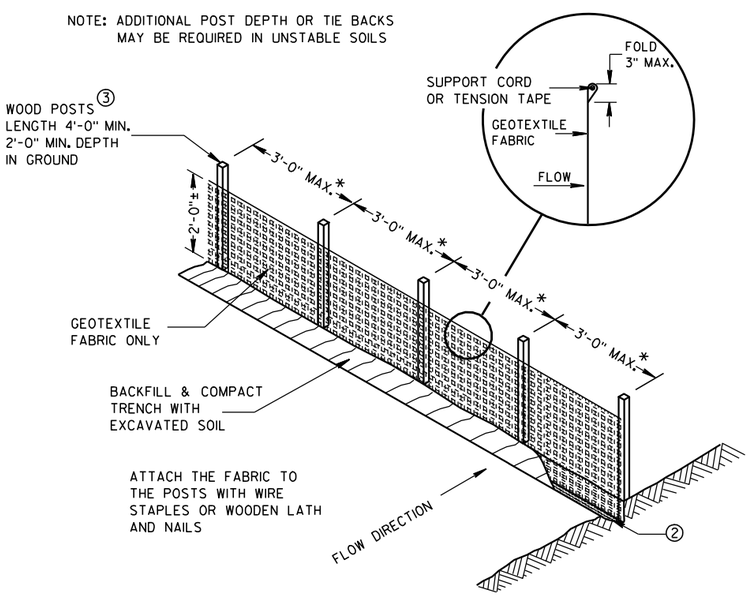

*NOTE: 8'-0" POST SPACING ALLOWED IF A WOVEN GEOTEXTILE FABRIC IS USED.

SILT FENCE

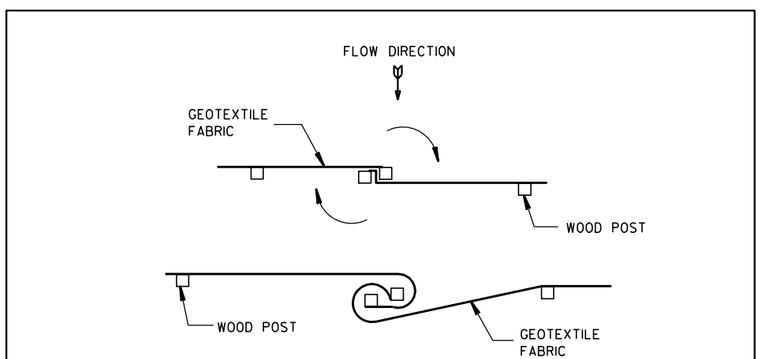

TWIST METHOD

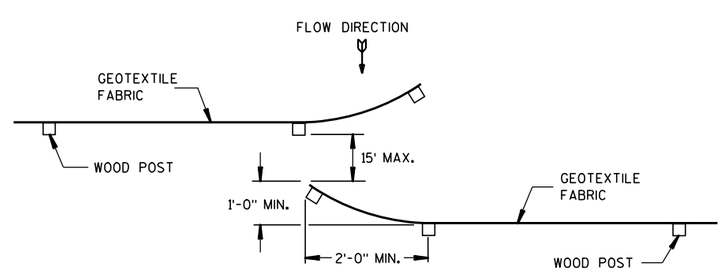

HOOK METHOD

JOINING TWO LENGTHS OF SILT FENCE ⑤

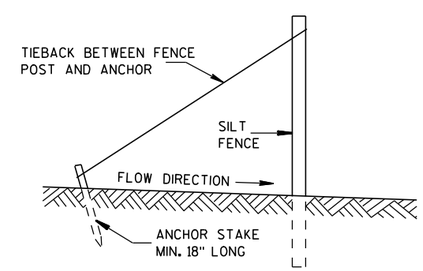

SILT FENCE TIE BACK

(WHEN REQUIRED BY THE ENGINEER)

SILT FENCE
STATE OF WISCONSIN DEPARTMENT OF TRANSPORTATION
APPROVED 4-29-05 DATE — /S/ Beth Cann-- CHIEF ROADWAY DEVELOP ENGINEER FHWA

6

6

S.D.D. 8 E 9-6

S.D.D. 8 E 9-6

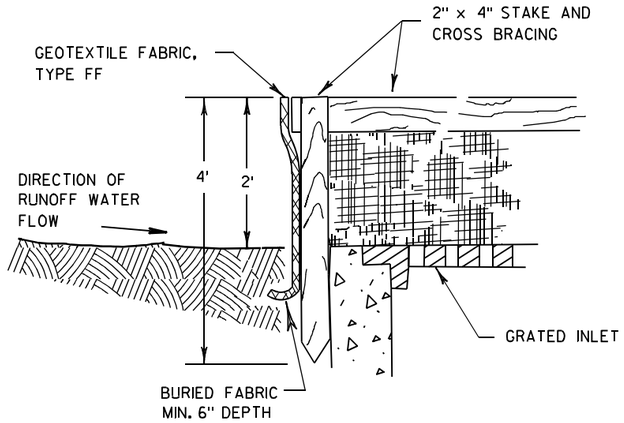

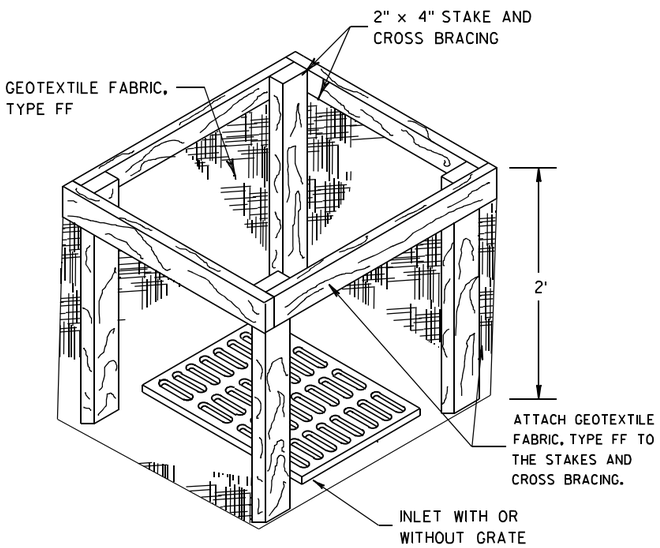

INLET PROTECTION, TYPE A

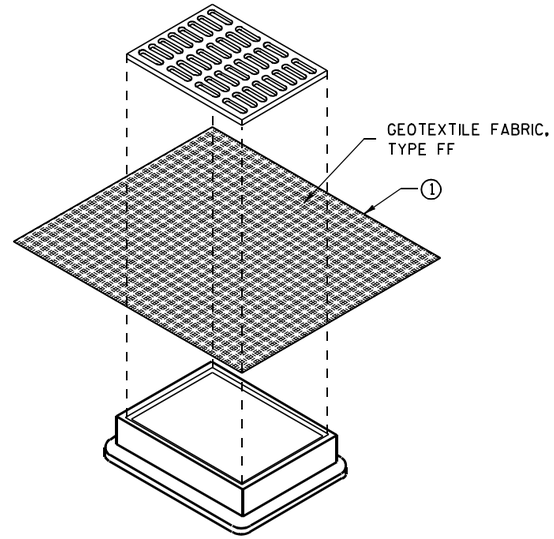

INLET PROTECTION, TYPE B (WITHOUT CURB BOX)

(CAN BE INSTALLED IN ANY INLET WITHOUT A CURB BOX)

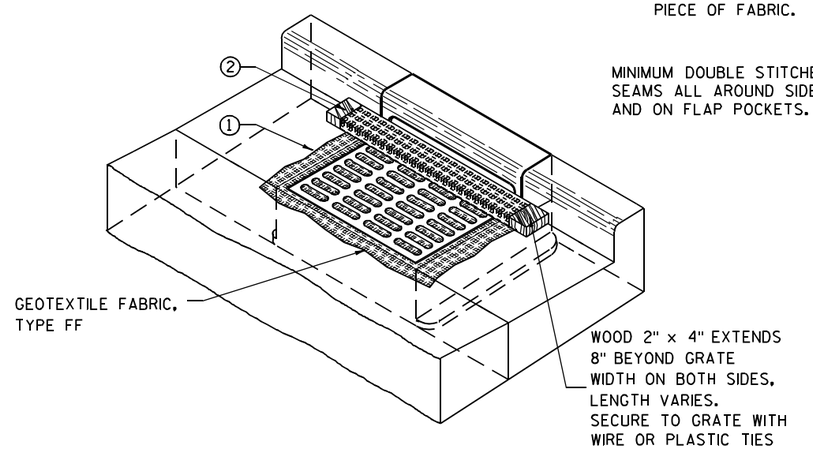

INLET PROTECTION, TYPE C (WITH CURB BOX)

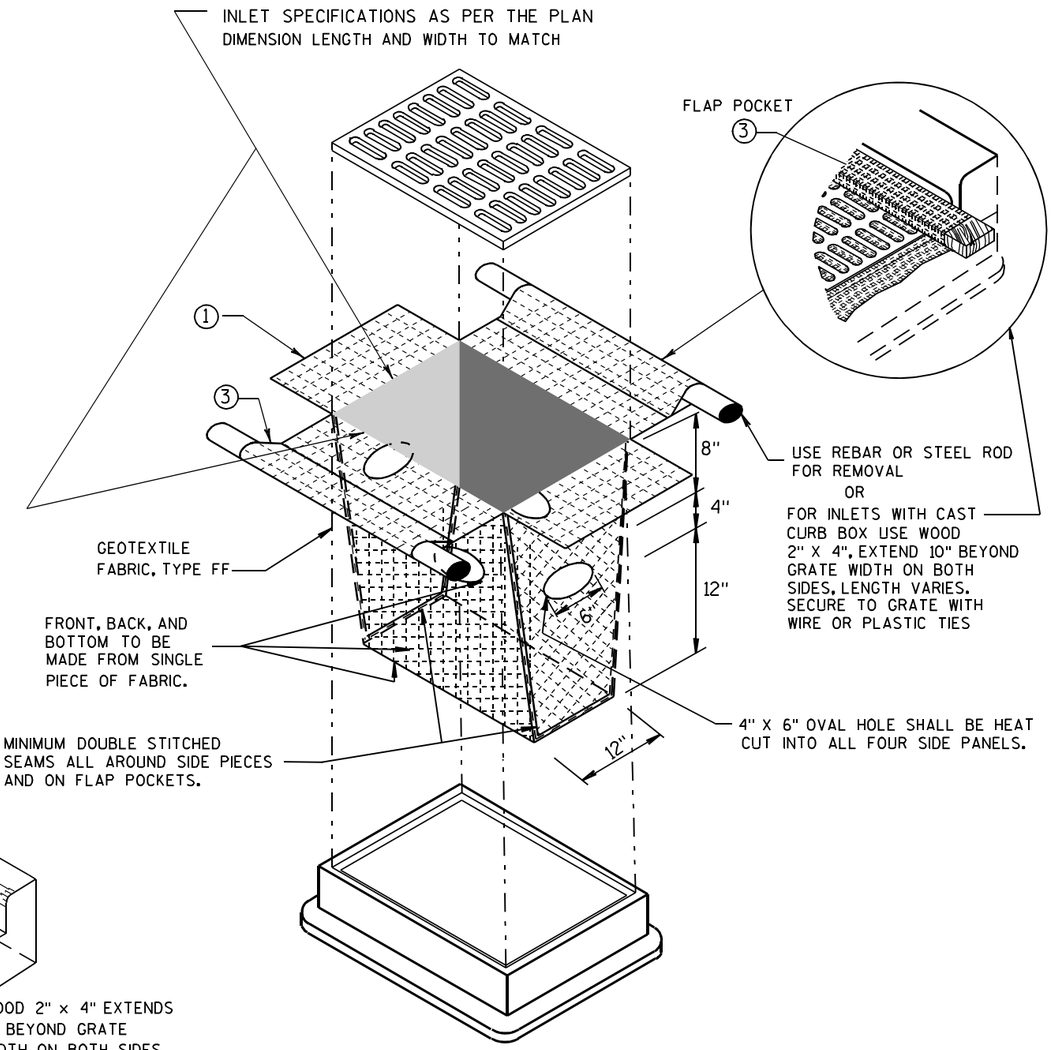

INLET PROTECTION, TYPE D

(CAN BE INSTALLED IN ANY INLET TYPE WITH OR WITHOUT A CURB BOX AS PER NOTE ②)

GENERAL NOTES

INLET PROTECTION DEVICES SHALL BE MAINTAINED OR REPLACED AT THE DIRECTION OF THE ENGINEER.

MANUFACTURED ALTERNATIVES APPROVED AND LISTED ON THE DEPARTMENT'S EROSION CONTROL PRODUCT ACCEPTABILITY LIST MAY BE SUBSTITUTED.

WHEN REMOVING OR MAINTAINING INLET PROTECTION, CARE SHALL BE TAKEN SO THAT THE SEDIMENT TRAPPED ON THE GEOTEXTILE FABRIC DOES NOT FALL INTO THE INLET. ANY MATERIAL FALLING INTO THE INLET SHALL BE REMOVED IMMEDIATELY.

① FINISHED SIZE, INCLUDING FLAP POCKETS WHERE REQUIRED, SHALL EXTEND A MINIMUM OF 10" AROUND THE PERIMETER TO FACILITATE MAINTENANCE OR REMOVAL.

② FOR INLET PROTECTION, TYPE C (WITH CURB BOX), AN ADDITIONAL 18" OF FABRIC IS WRAPPED AROUND THE WOOD AND SECURED WITH STAPLES. THE WOOD SHALL NOT BLOCK THE ENTIRE HEIGHT OF THE CURB BOX OPENING.

③ FLAP POCKETS SHALL BE LARGE ENOUGH TO ACCEPT WOOD 2X4.

INSTALLATION NOTES

TYPE B & C

TRIM EXCESS FABRIC IN THE FLOW LINE TO WITHIN 3" OF THE GRATE.

THE CONTRACTOR SHALL DEMONSTRATE A METHOD OF MAINTENANCE, USING A SEWN FLAP, HAND HOLDS OR OTHER METHOD TO PREVENT ACCUMULATED SEDIMENT FROM ENTERING THE INLET.

TYPE D

DO NOT INSTALL INLET PROTECTION TYPE D IN INLETS SHALLOWER THAN 30", MEASURED FROM THE BOTTOM OF THE INLET TO THE TOP OF THE GRATE.

TRIM EXCESS FABRIC IN THE FLOW LINE TO WITHIN 3" OF THE GRATE.

THE INSTALLED BAG SHALL HAVE A MINIMUM SIDE CLEARANCE, BETWEEN THE INLET WALLS AND THE BAG, MEASURED AT THE BOTTOM OF THE OVERFLOW HOLES, OF 3". WHERE NECESSARY THE CONTRACTOR SHALL CINCH THE BAG, USING PLASTIC ZIP TIES, TO ACHIEVE THE 3" CLEARANCE. THE TIES SHALL BE PLACED AT A MAXIMUM OF 4" FROM THE BOTTOM OF THE BAG.

INLET PROTECTION
TYPE A, B, C, AND D

STATE OF WISCONSIN
DEPARTMENT OF TRANSPORTATION

APPROVED
10/16/02 — DATE
/S/ Beth Cannestra
CHIEF ROADWAY DEVELOPMENT ENGINEER
FHWA

6

S.D.D. 8 E 10-2

METAL APRON ENDWALLS

PIPE DIA. (IN.)	MIN. THICK. (Inches) STEEL	MIN. THICK. (Inches) ALUM.	DIMENSIONS (Inches) A (±1")	B (MAX.)	H (±1")	L (±1 1/2")	L1 ①	L2 ①	W (±2")	APPROX. SLOPE	BODY
12	.064	.060	6	6	6	21	12	17 1/2	24	2 1/2 to 1	1 Pc.
15	.064	.060	7	8	6	26	14	21 3/4	30	2 1/2 to 1	1 Pc.
18	.064	.060	8	10	6	31	15	28 1/4	36	2 1/2 to 1	1 Pc.
21	.064	.060	9	12	6	36	18	29 5/8	42	2 1/2 to 1	1 Pc.
24	.064	.075	10	13	6	41	18	37 1/4	48	2 1/2 to 1	1 Pc.
30	.079	.075	12	16	8	51	18	52 1/4	60	2 1/2 to 1	1 Pc.
36	.079	.105	14	19	9	60	24	59 3/4	72	2 1/2 to 1	2 Pc.
42	.109	.105	16	22	11	69	24	75 5/8	84	2 1/2 to 1	2 Pc.
48	.109	.105	18	27	12	78	24	81	90	2 1/4 to 1	3 Pc.
54	.109	.105	18	30	12	84	30	85 1/2	102	2 1/4 to 1	3 Pc.
60	.109×	.105×	18	33	12	87	—	—	114	2 to 1	3 Pc.
66	.109×	.105×	18	36	12	87	—	—	120	2 to 1	3 Pc.
72	.109×	.105×	18	39	12	87	—	—	126	2 to 1	3 Pc.
78	.109×	.105×	18	42	12	87	—	—	132	1 1/2 to 1	3 Pc.
84	.109×	.105×	18	45	12	87	—	—	138	1 1/2 to 1	3 Pc.
90	.109×	.105×	18	37	12	87	—	—	144	1 1/2 to 1	3 Pc.
96	.109×	.105×	18	35	12	87	—	—	150	1 1/2 to 1	3 Pc.

× EXCEPT CENTER PANEL
SEE GENERAL NOTES

REINFORCED CONCRETE APRON ENDWALLS

PIPE DIA. (IN.)	DIMENSIONS (Inches) T	A	B	C	D	E	G	APPROX. SLOPE
12	2	4	24	48 7/8	72 7/8	24	2	3 to 1
15	2 1/4	6	27	46	73	30	2 1/4	3 to 1
18	2 1/2	9	27	46	73	36	2 1/2	3 to 1
21	2 3/4	9	36	37 1/2	73 1/2	42	2 3/4	3 to 1
24	3	9 1/2	43 1/2	30	73 1/2	48	3	3 to 1
27	3 1/4	10 1/2	49 1/2	24	73 1/2	54	3 1/4	3 to 1
30	3 1/2	12	54	19 3/4	73 1/2	60	3 1/2	3 to 1
36	4	15	63	34 3/4	97 3/4	72	4	3 to 1
42	4 1/2	21	63	35	98	78	4 1/2	3 to 1
48	5	24	72	26	98	84	5	3 to 1
54	5 1/2	27	65	*33 1/4-**35	*98 1/4-**100	90	5 1/2	2 2/5 to 1
60	6	*30-**35	60	39	99	96	5	2 to 1
66	6 1/2	*24-**30	*72-**78	*21-**27	99	102	5 1/2	2 to 1
72	7	*24-**36	78	21	99	108	6	2 to 1
78	7 1/2	*24-**36	78	21	99	114	6 1/2	2 to 1
84	8	36	90 1/2	21	111 1/2	120	6 1/2	1 1/2 to 1
90	8 1/2	41	87 1/2	24	111 1/2	132	6 1/2	1 1/2 to 1

*MINIMUM
**MAXIMUM

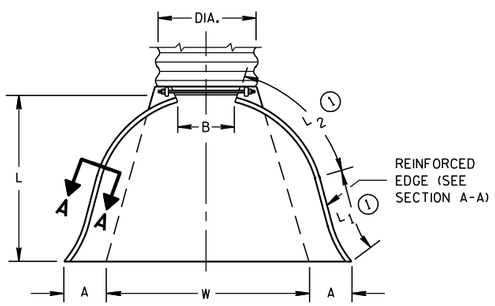

PLAN VIEW

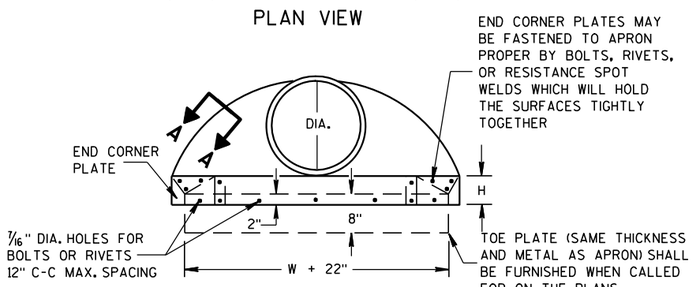

END VIEW

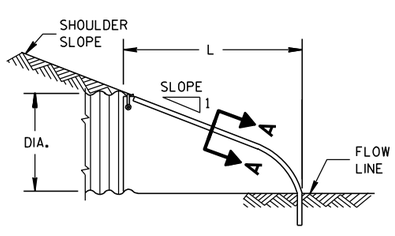

SIDE ELEVATION

METAL ENDWALLS

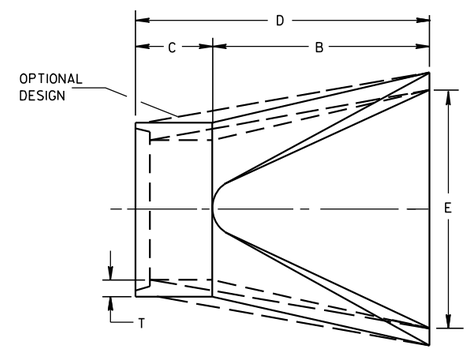

PLAN

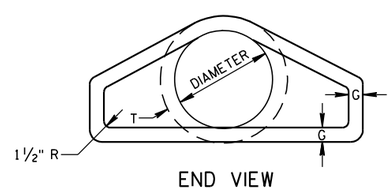

END VIEW

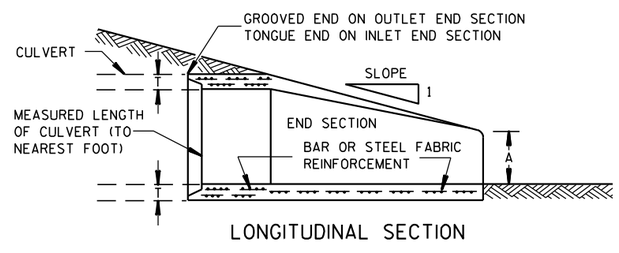

LONGITUDINAL SECTION

CONCRETE ENDWALLS

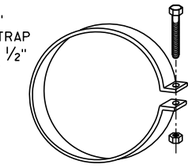

ALTERNATE FOR TYPE 1 CONNECTION

END SECTION CONNECTOR STRAP

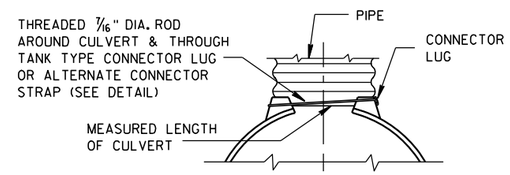

TYPE 1
FOR 12" THRU 24" CORR. PIPE

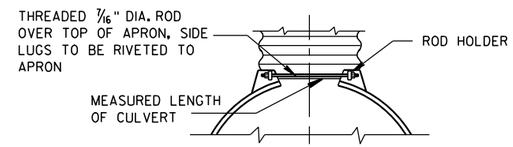

TYPE 2
FOR 30" THRU 96" CORR. PIPE

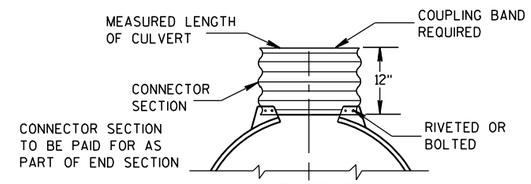

TYPE 3
FOR 42" THRU 96" CORR. PIPE

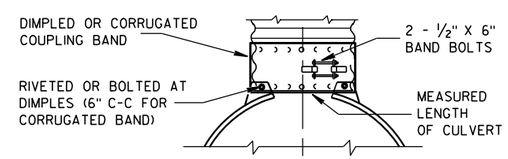

TYPE 5
ALTERNATE FOR:
ALL SIZES CORRUGATED CIRCULAR PIPE

NOTE: DIMPLED BAND FITS OVER OUTSIDE OF ENDWALL, AND CORRUGATED BAND FITS INSIDE ENDWALL. DIMPLED BAND MAY BE USED WITH HELICALLY CORRUGATED PIPE.

FOR CIRCUMFERENTIALLY CORRUGATED PIPE USE ENDWALL CONNECTION DETAILS 1, 2, 3 OR 5 AS APPLICABLE.

FOR HELICALLY CORRUGATED PIPE USE ENDWALL CONNECTION DETAILS 1, 2 OR 5.

FOR HELICALLY CORRUGATED PIPES WITH TWO CIRCUMFERENTIAL CORRUGATIONS AT EACH END USE ENDWALL CONNECTION DETAILS 1, 2 OR 3.

CONNECTION DETAILS

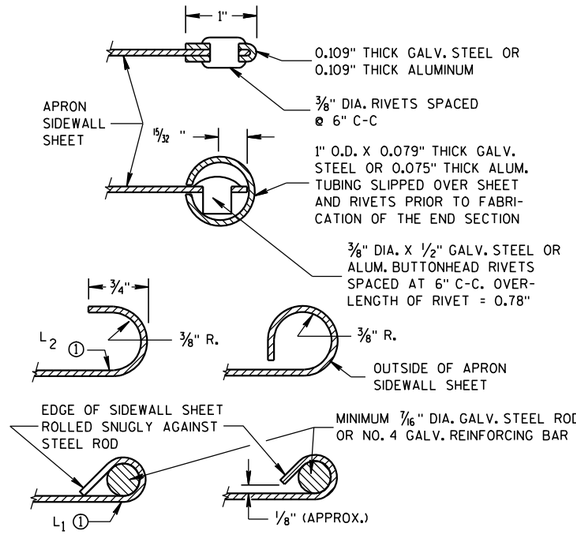

SECTION A-A

GENERAL NOTES

DETAILS OF CONSTRUCTION, MATERIALS AND WORKMANSHIP NOT SHOWN ON THIS DRAWING SHALL CONFORM TO THE PERTINENT REQUIREMENTS OF THE STANDARD SPECIFICATIONS AND THE APPLICABLE SPECIAL PROVISIONS.

CONCRETE CULVERT ENDWALLS MAY NOT BE USED WITH GALVANIZED STEEL OR ALUMINUM CULVERT PIPE OR VISE VERSA. GALVANIZED STEEL OR ALUMINUM ENDWALLS SHALL NORMALLY BE INSTALLED ON CULVERT PIPE OF THE SAME METAL.

ALL THREE PIECE STEEL APRON ENDWALLS FOR 60" DIAMETER PIPE AND LARGER SHALL HAVE 0.109" SIDES AND 0.138" CENTER PANELS. ALL THREE PIECE ALUMINUM APRON ENDWALLS FOR 60" DIAMETER PIPE AND LARGER SHALL HAVE 0.105" SIDES AND 0.134" CENTER PANELS. THE WIDTH OF CENTER PANELS SHALL BE GREATER THAN 20 PERCENT OF THE PIPE PERIMETER.

LAP SEAMS SHALL BE TIGHTLY JOINED BY GALVANIZED RIVETS OR BOLTS FOR STEEL UNITS AND ALUMINUM RIVETS AND BOLTS FOR ALUMINUM UNITS. FOR THE 60" THROUGH 96" DIAMETER APRON ENDWALL SIZES, THE REINFORCED EDGES AND CENTER PANEL SEAMS SHALL BE FURTHER REINFORCED WITH GALVANIZED STEEL OR ALUMINUM STIFFENER ANGLES. THE ANGLES SHALL BE ATTACHED BY GALVANIZED NUTS AND BOLTS FOR STEEL UNITS AND ALUMINUM NUTS AND BOLTS FOR ALUMINUM UNITS.

WHERE TWO OR MORE PIPES WITH APRON ENDWALLS ARE LAID ADJACENT TO EACH OTHER, THEY SHALL BE SEPARATED BY A DISTANCE SUFFICIENT TO PROVIDE A MINIMUM CLEARANCE OF 6 INCHES BETWEEN APRON ENDWALLS.

① FOR PIPE SIZES UP TO 60" DIAMETER, A 180° ROLLED EDGE MAY BE USED INSTEAD OF STEEL ROD REINFORCEMENT. SEE SECTION A-A.

APRON ENDWALLS FOR CULVERT PIPE

STATE OF WISCONSIN
DEPARTMENT OF TRANSPORTATION

APPROVED
11/30/94 — DATE
/S/ Rory L. Rhinesmith — CHIEF ROADWAY DEVELOPMENT ENGINEER
FHWA

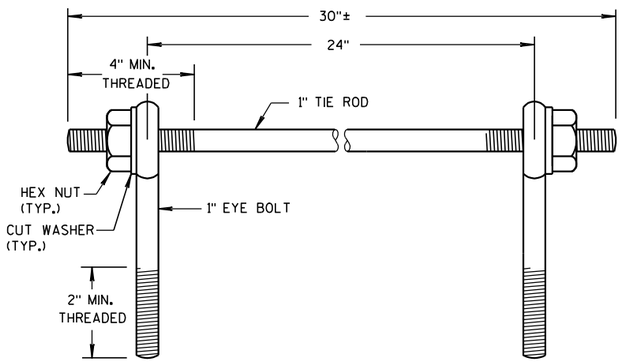

EYE BOLTS AND TIE ROD

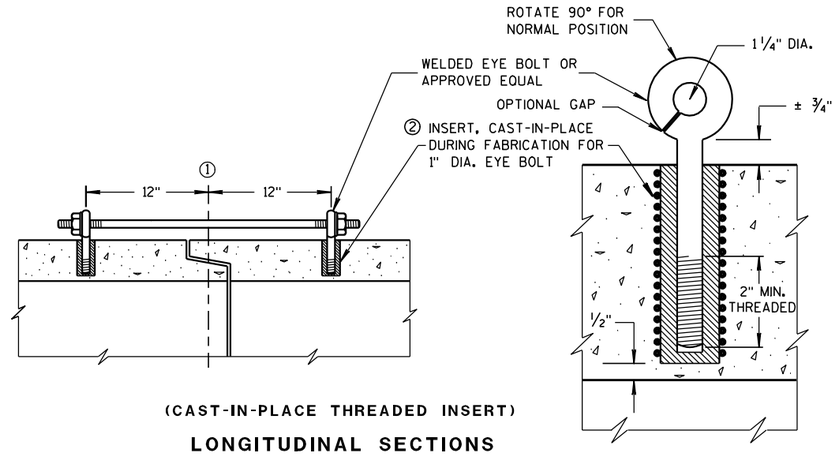

(CAST-IN-PLACE THREADED INSERT)

LONGITUDINAL SECTIONS

EYE BOLT AND TIE ROD ASSEMBLY (ALTERNATE NO. 1)

GENERAL NOTES

DETAILS OF CONSTRUCTION, MATERIALS, AND WORKMANSHIP NOT SHOWN ON THIS DRAWING SHALL CONFORM TO THE PERTINENT REQUIREMENTS OF THE STANDARD SPECIFICATIONS AND APPLICABLE SPECIAL PROVISIONS.

CONCRETE CULVERT AND STORM SEWER PIPE SHALL BE TIED TOGETHER IN THE MANNER ILLUSTRATED BY THIS DETAIL AT LOCATIONS DESIGNATED IN THE STANDARD SPECIFICATIONS AND THE PLAN. THE CONTRACTOR MAY USE EITHER ALTERNATE 1, 2 OR 3 FOR DRAINAGE STRUCTURES. ONLY ALTERNATE 1 AND 3 MAY BE USED FOR CATTLE PASSES, UNLESS OTHERWISE STATED IN THE CONTRACT. THE MATERIALS, FABRICATION AND WORK NECESSARY TO TIE THE PIPE BY THIS DETAIL WILL BE CONSIDERED INCIDENTAL TO THE PIPE AND APRON ENDWALLS IF REQUIRED.

DETAILED DRAWINGS FOR PROPOSED ALTERNATE DESIGNS FOR JOINT TIES SHALL BE SUBMITTED TO THE ENGINEER FOR APPROVAL.

JOINT TIES TO BE HOT-DIP GALVANIZED PER ASTM A 153.

① ℄ OF TONGUE AND GROOVE OR BELL AND SPIGOT JOINTS.

② THE INSIDE OF THE THREADED INSERTS SHALL BE CLEAN TO ALLOW THE INSERTION OF THREADED EYE BOLTS.

③ HOLES SHALL BE CAST-IN-PLACE OR DRILLED 12 INCHES FROM ℄ OF TONGUE AND GROOVE.

④ BOLT PROJECTION INSIDE OF PIPE SHALL NOT EXCEED 2 INCHES.

⑤ OPENING TO BE ROD DIAMETER PLUS 1 INCH.

⑥ LENGTH ADEQUATE TO EXTEND TO WITHIN 1/2 INCH OF THE INNER SURFACE OF THE PIPE.

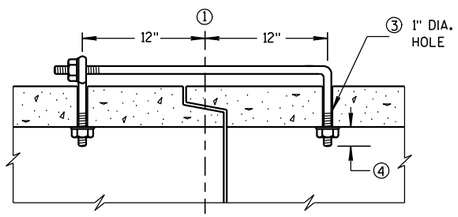

(TONGUE & GROOVE PIPE)

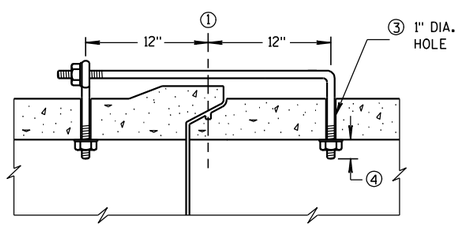

(MODIFIED BELL PIPE)

LONGITUDINAL SECTION

EYE BOLT DIMENSION TABLE

PIPE SIZE	L = LENGTH	
	TONGUE & GROOVE PIPE	MODIFIED BELL PIPE
18" TO 24"	4 1/2"	6 1/4"
30"	5"	7"
36"	5 1/2"	7"
42"	6"	
48"	6 1/2"	
60"	7 1/2"	
66"	8"	

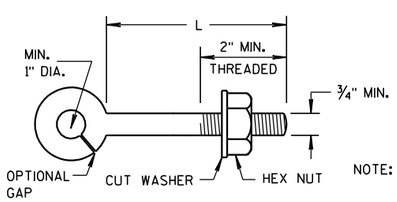

EYE BOLT

NOTE:

NOTE: TWO EYE BOLTS MAY BE USED WITH A 30" LONG THREADED ROD IN LIEU OF THE 90° BENT TIE ROD.

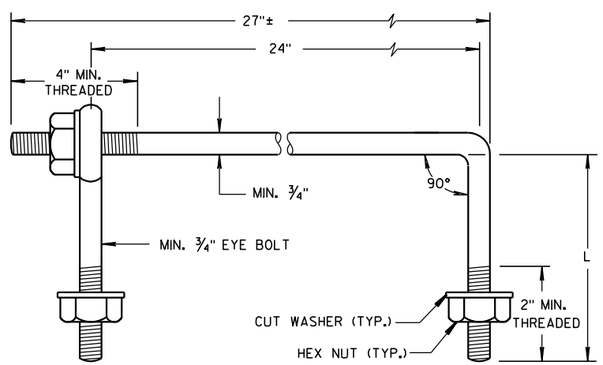

EYE BOLT AND TIE ROD

(JOINT TIES FOR 18" TO 66" DIA. CONCRETE PIPE)

EYE BOLT AND TIE ROD ASSEMBLY (ALTERNATE NO. 2)

ADJUSTABLE TIE ROD TABLE

PIPE DIAMETER	TIE ROD DIAMETER	D	L_1	N
12-60	5/8	5/8	5	1/2
66-84	3/4	3/4	5	1/2
90-108	1	1	7	1 7/16

DIMENSIONS SHOWN ARE IN INCHES

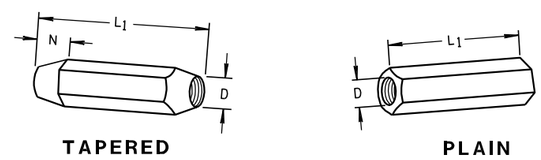

TAPERED PLAIN

RIGHT AND LEFT THREADS

SLEEVE NUTS

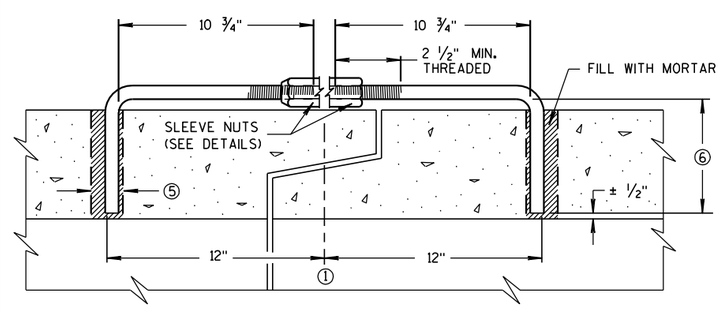

LONGITUDINAL SECTION

(JOINT TIES FOR 12" TO 108" DIA. CONCRETE PIPE)

ADJUSTABLE TIE ROD (ALTERNATE NO. 3)

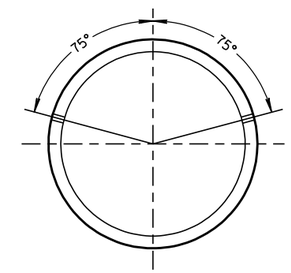

PLACEMENT OF (2) CAST-IN-PLACE INSERTS OR HOLES DURING FABRICATION FOR PIPE SECTIONS REQUIRING TIE RODS

TRANSVERSE SECTION

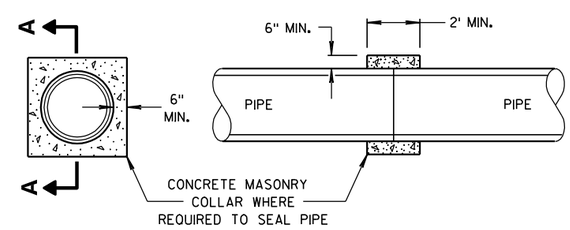

SECTION A-A

CONCRETE COLLAR DETAIL

JOINT TIES FOR CONCRETE PIPE AND CONCRETE COLLAR DETAIL

STATE OF WISCONSIN
DEPARTMENT OF TRANSPORTATION

APPROVED
6/5/2012 /S/ Jerry H. Zogg
DATE ROADWAY STANDARDS DEVELOPMENT ENGINEER
FHWA

6

6

S.D.D. 8 F 4-7

S.D.D. 8 F 4-7

DIMENSIONS IN INCHES											
PIPE DIA.	A	B	C	D	E	F	G	H	J	L	Z
**4	6	12	5 1/4	9	8	32	36	11	2 3/8	6 1/2	4
6	8	14	7 1/4	11	10	42	44	13	3 5/8	8 1/2	6

**APRON ENDWALL FOR 6 INCH DIAMETER PIPE MAY BE SUBSTITUTED FOR THIS SIZE PROVIDED THE HOLE IN THE HEADWALL IS SIZED AND LOCATED TO CONFORM TO THE 4 INCH DIAMETER PIPE DIMENSIONS (C & J)

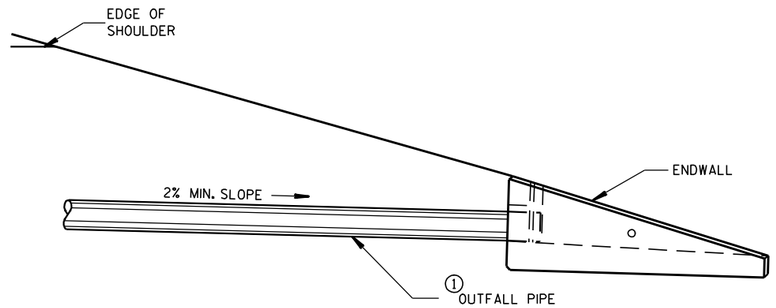

INSTALLATION DETAIL

GENERAL NOTES

DETAILS OF CONSTRUCTION, MATERIALS AND WORKMANSHIP NOT SHOWN ON THIS DRAWING SHALL CONFORM TO THE PERTINENT REQUIREMENTS OF THE STANDARD SPECIFICATIONS AND THE APPLICABLE SPECIAL PROVISIONS.

ALTERNATIVE DESIGNS WHICH PROVIDE EQUIVALENT CAPACITY AND STRENGTH MAY BE USED WHEN APPROVED BY THE ENGINEER. ENDWALL MAY BE EITHER PRECAST OR CAST-IN-PLACE CONCRETE.

THE UNDERDRAIN PIPE SHALL BE FULLY INSERTED AND SEALED INTO THE ENDWALL WITH CEMENT MORTAR PRIOR TO BACKFILLING AROUND THE STRUCTURE.

THE UPPERMOST POINT OF THE ENDWALL SHALL BE PLACED FLUSH WITH THE ROADWAY SLOPE. ADJACENT EMBANKMENT SLOPES SHALL BE SHAPED TO FIT THE SIDES AND TOE OF THE ENDWALL. EXACT PLACEMENT OF THE OUTFALL PIPE AND ENDWALL SHALL BE DETERMINED BY THE ENGINEER TO MATCH THE ELEVATIONS AND FLOW DIRECTION OF THE ROADSIDE DITCH.

① THE OUTFALL PIPE UNDERDRAIN AND FITTINGS SHALL CONFORM TO THE REQUIREMENTS OF THE SPECIFICATION FOR POLY (VINYL CHORIDE) (PVC) PLASTIC DRAIN, WASTE AND VENT PIPE AND FITTINGS, ASTM DESIGNATION: D 2665, SCHEDULE 40 PVC OR THE STANDARD SPECIFICATION FOR TYPE PSM POLY (VINYL CHORIDE) (PVC) SEWER PIPE AND FITTINGS, ASTM DESIGNATION: D 3034, TYPE PSM SDR 23.5 PVC SEWER PIPE, ALL JOINTS SHALL BE SOLVENT WELDED.

THE OUTFALL PIPE INCLUDING ALL FITTINGS AND THE RODENT SHIELD SHALL BE MEASURED AND PAID FOR AS PIPE UNDERDRAIN UNPERFORATED.

② THE RODENT SHIELD SHALL BE A PVC GRATE SIMILAR TO THIS DETAIL. THE GRATE IS COMMERCIALLY AVAILABLE AS A FLOOR STRAINER. A PIPE COUPLING IS REQUIRED FOR THE ATTACHMENT OF THIS SHIELD TO THE OUTFALL PIPE. THE SHIELD SHALL BE FASTENED TO THE PIPE COUPLING WITH TWO OR MORE NO. 10 X 1-INCH STAINLESS STEEL SHEET METAL SCREWS.

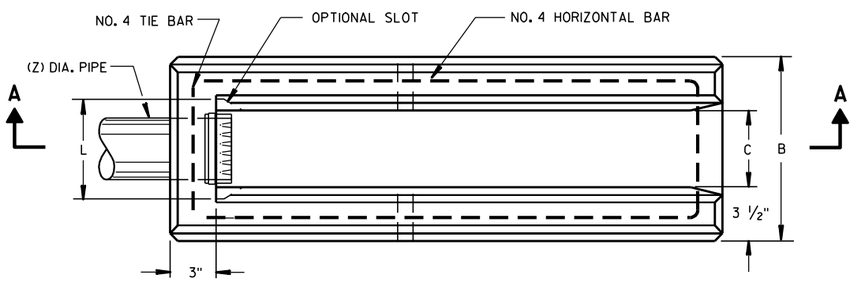

PLAN VIEW

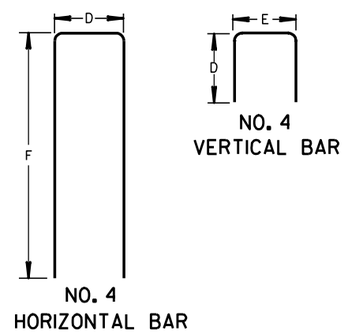

BAR STEEL REINFORCEMENT DETAILS

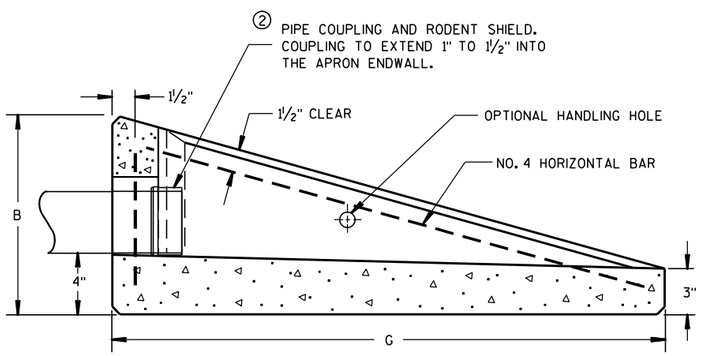

SECTION A-A

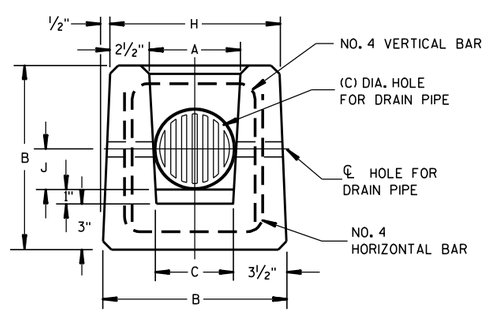

END VIEW

CONCRETE APRON ENDWALL FOR UNDERDRAIN

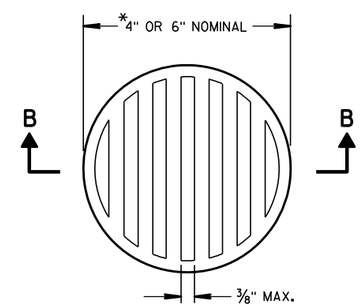

② RODENT SHIELD

NOTE: ORIENT SHIELD SO SLOTS ARE VERTICAL.

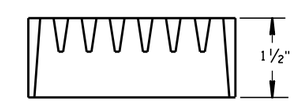

SECTION B-B

*NOTE: DIMENSIONS ARE APPROXIMATE. THE GRATE IS SIZED TO FIT INTO A PIPE COUPLING.

REINFORCED CONCRETE APRON ENDWALL FOR PIPE UNDERDRAIN

STATE OF WISCONSIN
DEPARTMENT OF TRANSPORTATION

APPROVED
3/10/98 — DATE
/S/ Rory L. Rhinesmith — CHIEF ROADWAY DEVELOPMENT ENGINEER
FHWA

6
S.D.D. 8 F 6-4

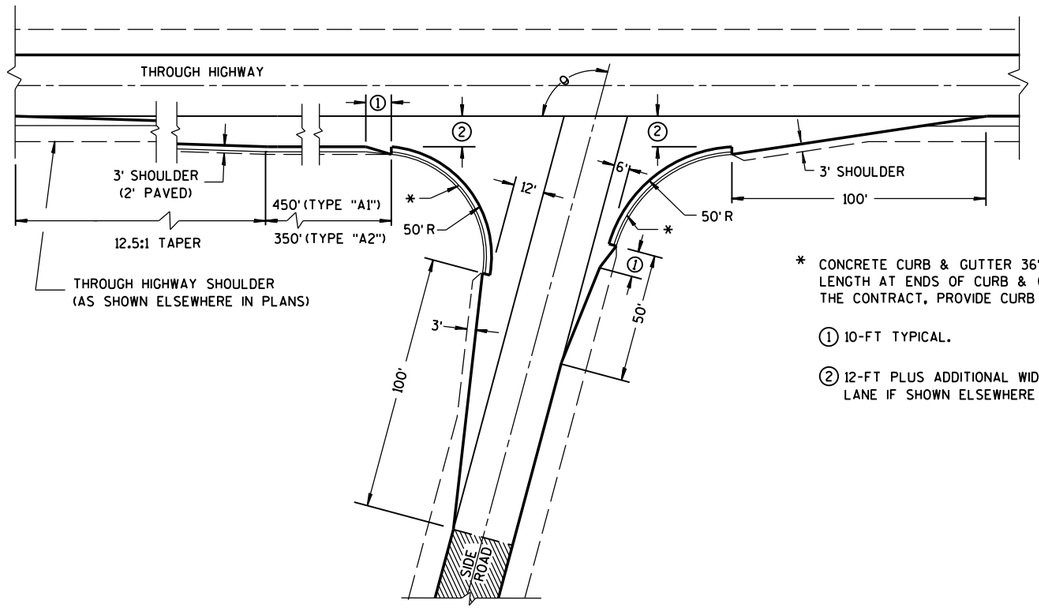

θ = MORE THAN 80°

* CONCRETE CURB & GUTTER 36". TAPER CURB HEIGHT 0" TO 6" IN 10'-0" LENGTH AT ENDS OF CURB & GUTTER SECTIONS. WHEN SPECIFIED ELSEWHERE IN THE CONTRACT, PROVIDE CURB OPENING AND FLUME.

① 10-FT TYPICAL.

② 12-FT PLUS ADDITIONAL WIDTH FOR BIKE LANE IF SHOWN ELSEWHERE IN THE PLANS.

EXISTING PAVED SURFACE

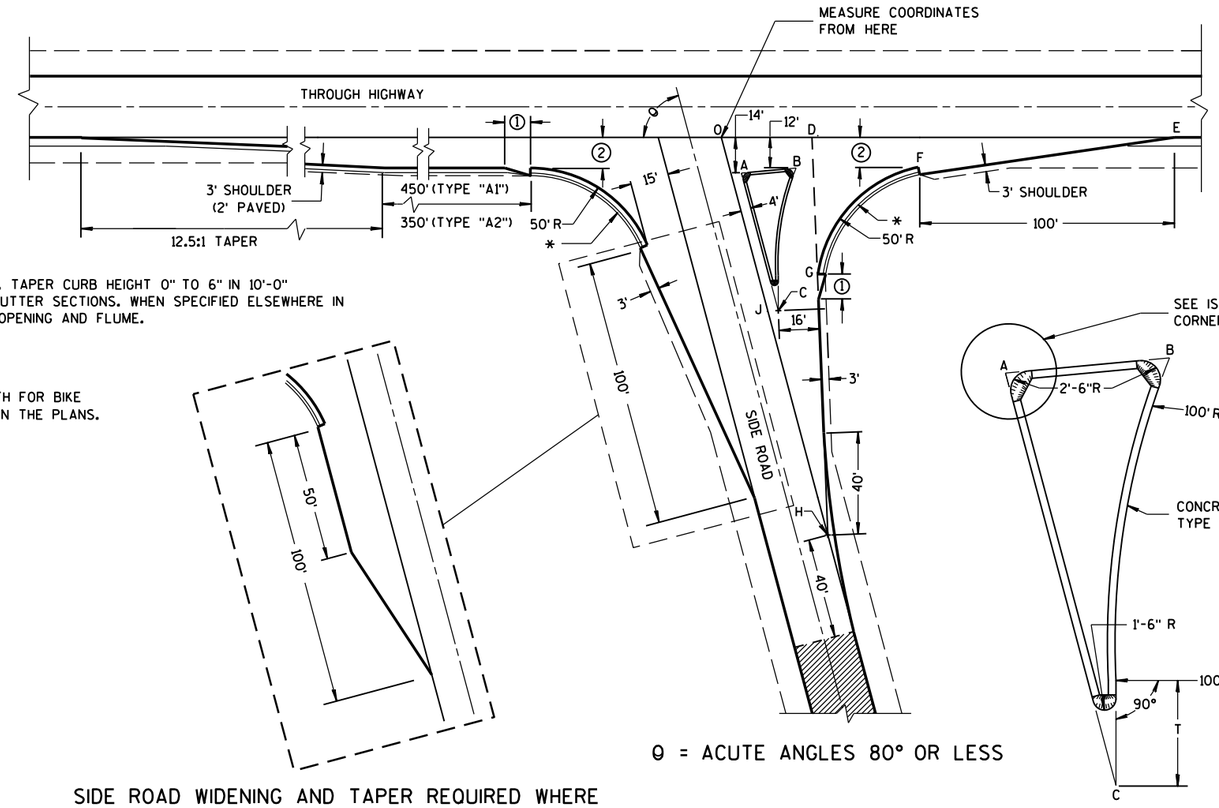

θ = ACUTE ANGLES 80° OR LESS

SIDE ROAD WIDENING AND TAPER REQUIRED WHERE
THE THROUGH HIGHWAY CARRIES TWO-WAY TRAFFIC
θ = ACUTE ANGLES 70° OR LESS

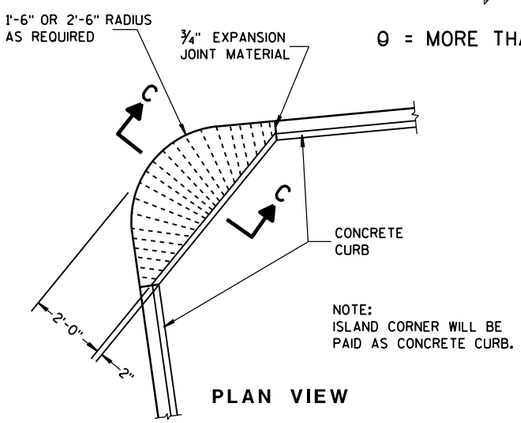

NOTE:
ISLAND CORNER WILL BE PAID AS CONCRETE CURB.

PLAN VIEW

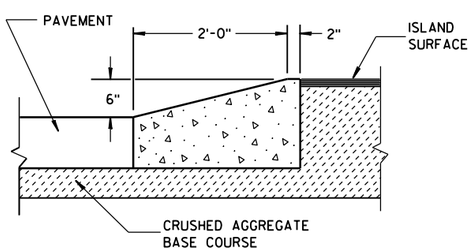

SECTION C-C

ISLAND CORNER DETAIL

(TO BE CONSTRUCTED AT ALL ISLAND CORNERS)

TABLE OF DIMENSIONS FOR
VARIABLE SIDE ROAD INTERSECTION ANGLES
(INTERPOLATE VALUES FOR ANGLES NOT SHOWN)

ANGLE θ DEGREES	COORDINATES IN FEET (MEASURED FROM POINT "O") X/Y								LENGTH IN FEET				
	A	B	C	D	E	F	G	H	AB	AC	T	OJ	OH
60	12.7 / -14.0	44.9 / -12.0	46.4 / -72.4	41.9 / 0.0	205.0 / 0.0	104.6 / -12.0	64.0 / -75.5	85.0 / -147.1	32.3	67.4	4.9	85.9	169.9
65	10.9 / -14.0	39.0 / -12.0	37.8 / -71.6	39.4 / 0.0	196.1 / 0.0	95.7 / -12.0	54.1 / -71.5	70.5 / -151.3	28.2	63.6	8.5	80.9	166.9
70	9.4 / -14.0	33.9 / -12.0	29.8 / -70.1	37.4 / 0.0	188.3 / 0.0	87.8 / -12.0	45.6 / -67.5	56.1 / -154.2	24.6	59.7	11.5	76.1	164.1
75	7.9 / -14.0	29.3 / -12.0	22.3 / -67.9	35.7 / 0.0	181.2 / 0.0	80.7 / -12.0	38.2 / -63.4	41.8 / -155.9	21.5	55.8	13.8	71.4	161.4
80	6.5 / -14.0	25.4 / -12.0	15.6 / -65.2	34.4 / 0.0	174.8 / 0.0	74.4 / -12.0	31.8 / -59.3	27.6 / -156.5	18.9	52.0	15.6	66.9	158.9

TYPE "A1" & "A2" SIDE ROAD INTERSECTION DETAILS

AT-GRADE SIDE ROAD
INTERSECTION, TYPE "A1" & "A2"

STATE OF WISCONSIN
DEPARTMENT OF TRANSPORTATION

APPROVED
12/18/12 — DATE
/S/ Jerry H. Zogg — ROADWAY STANDARDS DEVELOPMENT ENGINEER
FHWA

6

S.D.D. 9 A 1-13b

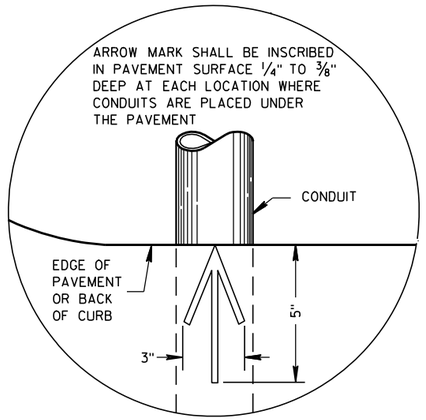

PLAN VIEW

ARROW MARK

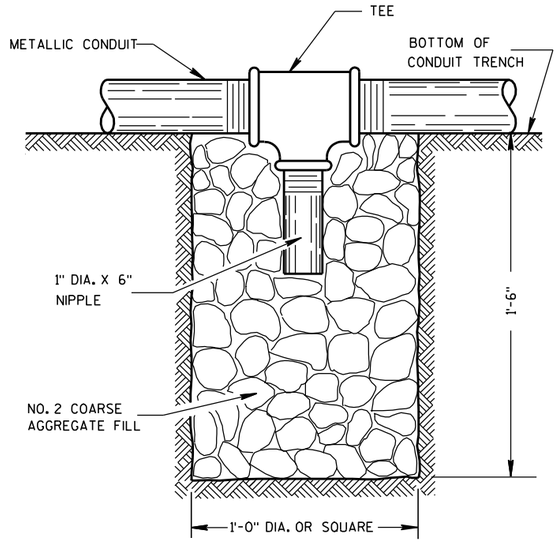

NOTE: INSTALL AT LOCATIONS WHERE METALLIC CONDUITS CANNOT BE PITCHED TO DRAIN INTO A PULL BOX.

DRAIN SUMP FOR METALLIC CONDUIT

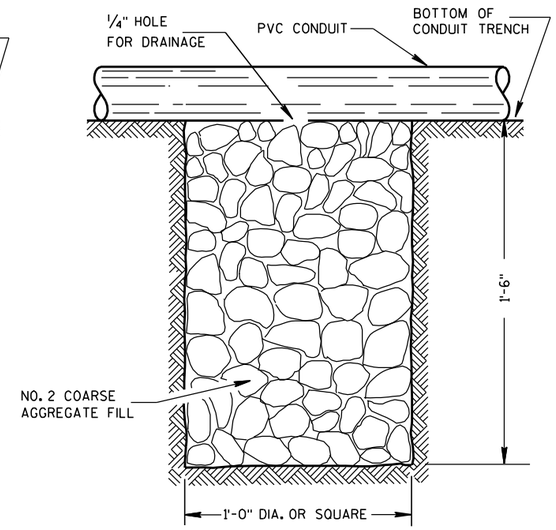

NOTE: INSTALL AT LOCATIONS WHERE PVC CONDUITS CANNOT BE PITCHED TO DRAIN INTO A PULL BOX.

DRAIN SUMP FOR PVC CONDUIT

GENERAL NOTES

DETAILS OF CONSTRUCTION, MATERIALS AND WORKMANSHIP NOT SHOWN ON THIS DRAWING SHALL CONFORM TO THE PERTINENT REQUIREMENTS OF THE CONTRACT.

METALLIC (STANDARD SPECIFICATION 652.2.2) OR NONMETALLIC (STANDARD SPECIFICATION 652.2.3) CONDUIT SHALL BE FURNISHED AND PLACED AS SHOWN.

DEPTH OF CONDUIT INSTALLED BELOW THE TRAVELED WAY SHALL BE 24 INCHES MINIMUM AND 36 INCHES MAXIMUM.

DEPTH OF CONDUIT INSTALLED THAT IS NOT BELOW THE TRAVELED WAY SHALL BE 18 INCHES MINIMUM AND 36 INCHES MAXIMUM.

ANY EXCEPTION TO THE MAXIMUM DEPTH SHALL BE ONLY WITH THE WRITTEN APPROVAL OF THE ENGINEER.

THE TRENCH SHALL NOT BE BACKFILLED PRIOR TO INSPECTION OF THE CONDUIT.

ALL METALLIC CONDUIT RACEWAY ENDS SHALL BE REAMED AND THREADED.

ALL METALLIC CONDUIT IN WHICH WIRE OR CABLE IS TO BE INSTALLED SHALL BE BUSHED WITH APPROVED THREADED BUSHINGS BEFORE INSTALLATION OF THE WIRE OR CABLE.

ALL METALLIC CONDUITS IN WHICH WIRE OR CABLE IS NOT TO BE INSTALLED SHALL BE CAPPED WITH THREADED PROTECTIVE CAPS, AS APPROVED BY THE ENGINEER.

ALL NONMETALLIC CONDUIT SHALL BE CAPPED OR PLUGGED IMMEDIATELY AFTER INSTALLATION AND SHALL REMAIN CAPPED OR PLUGGED UNTIL WIRE/CABLES ARE INSTALLED.

NONMETALLIC CONDUITS IN WHICH WIRE OR CABLE IS NOT BEING INSTALLED SHALL REMAIN CAPPED OR PLUGGED.

BENDING OF PVC ELECTRICAL CONDUIT SHALL BE ACCOMPLISHED BY USING A BLANKET OR EMERSION TYPE TANK DESIGNED FOR THE PURPOSE OF BENDING PVC ELECTRICAL CONDUIT.

ALL CUT ENDS SHALL BE TRIMMED INSIDE AND OUTSIDE TO REMOVE ALL ROUGH EDGES ON NONMETALLIC CONDUIT. (SEE NEC 347.5)

WHEN REQUIRED TO CONNECT NONMETALLIC CONDUIT TO METALLIC CONDUIT, ONLY U.L. LISTED ADAPTER FITTINGS SHALL BE USED.

PRIOR TO CONDUIT ACCEPTANCE, CONDUIT CAPS OR PLUGS SHALL BE REMOVED, AND THE CAPS, PLUGS AND CONDUIT ENDS SHALL BE THOROUGHLY CLEANED AND THEN THE CAPS OR PLUGS REINSTALLED TO ENSURE THAT THE CAPS OR PLUGS CAN BE EASILY REMOVED IN THE FUTURE.

ALL CONDUIT BEING FURNISHED AND INSTALLED SHALL HAVE THE U.L. LABEL FIRMLY ATTACHED.

CONDUIT RUNS SHALL BE THE SAME SIZE OF CONDUIT FROM ONE END TO THE OTHER (FROM PULL BOX TO PULL BOX-OR-JUNCTION BOX TO JUNCTION BOX-OR-BASE TO BASE, ETC.).

POLY ROPE OR A PULL WIRE SHALL BE INSTALLED AS STATED IN THE STANDARD SPECIFICATION, ITEM 652.3.1.1.

ALL CONDUIT RUNS SHALL BE STRAIGHT (WITHOUT BENDS) FROM PULL BOX TO PULL BOX, PULL BOX TO BASE AND BASE TO BASE AS SHOWN ON THE PLANS.

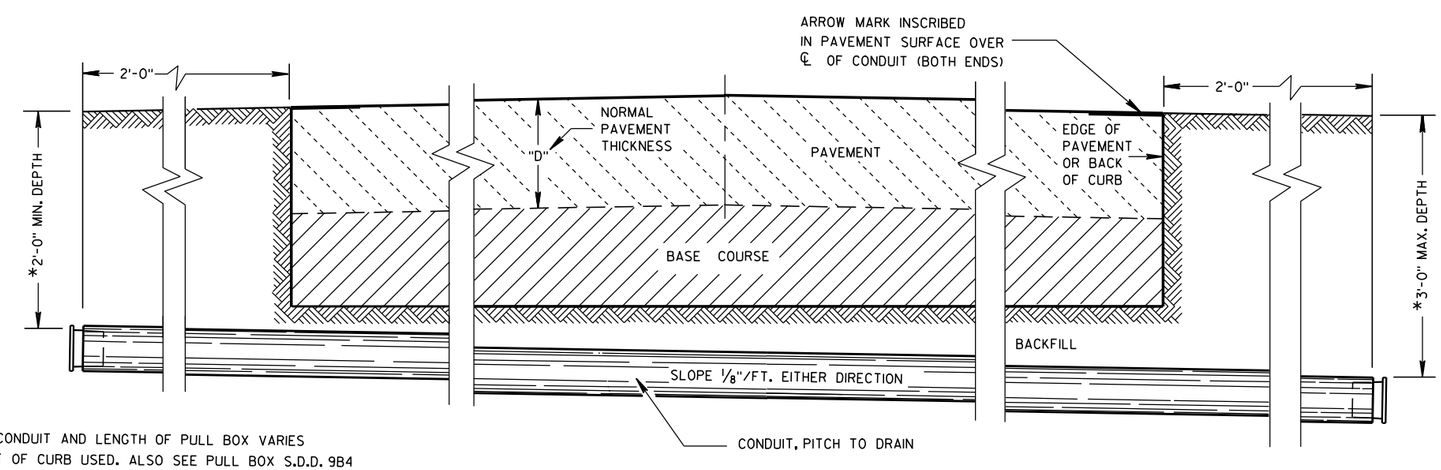

*DEPTH OF CONDUIT AND LENGTH OF PULL BOX VARIES WITH HEIGHT OF CURB USED. ALSO SEE PULL BOX S.D.D. 9B4

SIDE ELEVATION

DETAIL FOR CONDUIT UNDER PAVED HIGHWAYS

CONDUIT

STATE OF WISCONSIN
DEPARTMENT OF TRANSPORTATION

APPROVED

10/23/03 — DATE

/S/ Balu Ananthanarayanan — STATE ELECTRICAL ENGI

FHWA — HWYS

TABLE OF NOMINAL DIMENSIONS AND WEIGHTS

DIMENSION IN INCHES		CORRUGATED STEEL PIPE								
PIPE DIAMETER (INSIDE)	A	12	12	12	18	18	18	24	24	24
PIPE LENGTH **	B	24	30	36	24	30	36	36	42	48
WALL THICKNESS	C	0.064	0.064	0.064	0.064	0.064	0.064	0.064	0.064	0.064
COVER	D	10 1/4	10 1/4	10 1/4	16 1/4	16 1/4	16 1/4	22 1/4	22 1/4	22 1/4
FRAME	E	14 1/2	14 1/2	14 1/2	20 1/2	20 1/2	20 1/2	26 1/2	26 1/2	26 1/2
FRAME	F	8 1/2	8 1/2	8 1/2	14 1/2	14 1/2	14 1/2	20 1/2	20 1/2	20 1/2
FRAME	G	11 1/2	11 1/2	11 1/2	17 1/2	17 1/2	17 1/2	23 1/2	23 1/2	23 1/2
WEIGHT IN POUNDS *										
FRAME AND COVER		60	60	60	110	110	110	155	155	155

* THE ACTUAL WEIGHT OF THE MANHOLE FRAME AND COVER MAY VARY WITHIN 5 PERCENT PLUS OR MINUS OF THE WEIGHTS SHOWN.

** NORMALLY USED LENGTHS. THE PROJECT ENGINEER SHALL DETERMINE IF PIPE LENGTHS, OTHER THAN THOSE SPECIFIED, SHALL BE USED, TO A MAXIMUM OF 48" (CONTINUOUS LENGTH, NON-SPLICED). THE ADDITIONAL LENGTH SHALL BE INCIDENTAL TO THE PULL BOX BID PRICE.

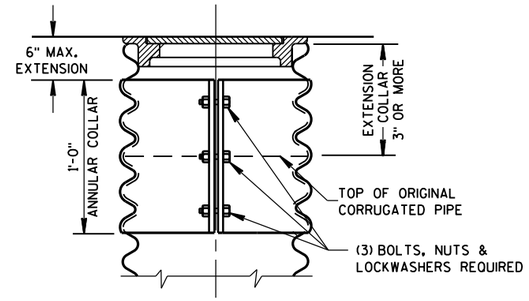

CORRUGATED PIPE EXTENDER

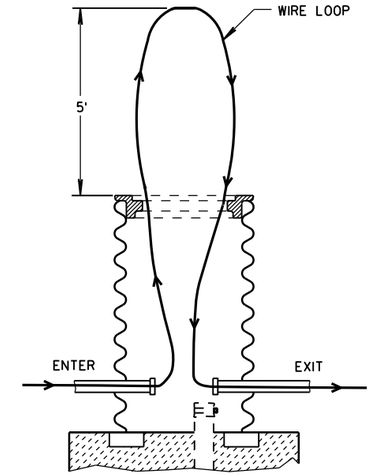

MEASUREMENT DETAIL FOR WIRE/CABLE IN THE PULL BOX

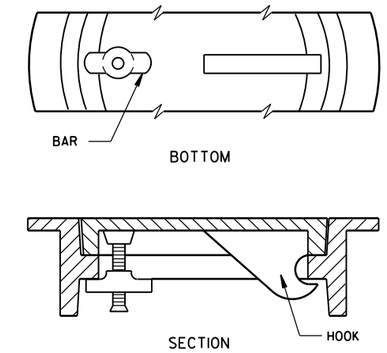

ALTERNATE COVER (LOCKING)

TIGHTENING BAR TYPE

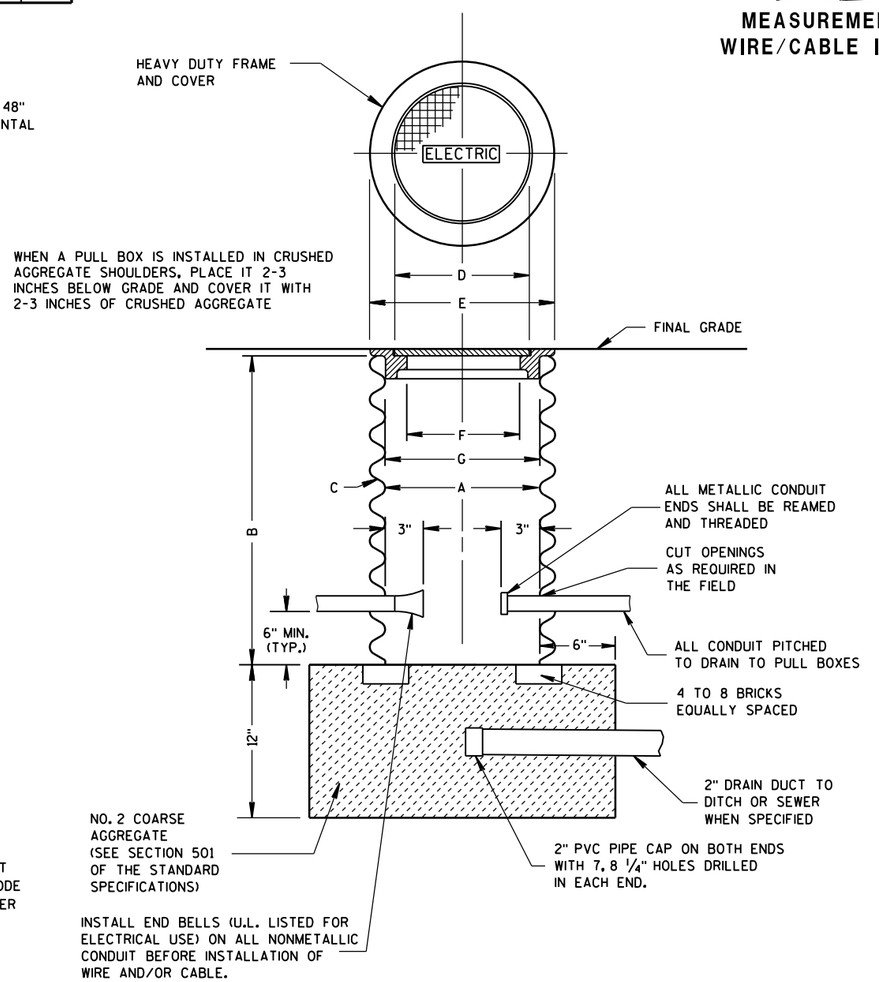

PULL BOX

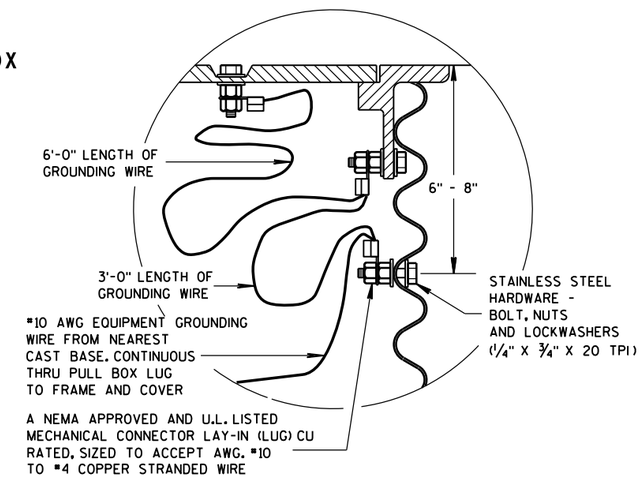

EQUIPMENT GROUNDING LUG AND LOCATION IN STEEL PULL BOXES

GENERAL NOTES

DETAILS OF CONSTRUCTION, MATERIALS AND WORKMANSHIP NOT SHOWN ON THIS DRAWING SHALL CONFORM TO THE PERTINENT REQUIREMENTS OF THE CONTRACT.

ALL FRAMES AND COVERS SHALL BE HEAVY DUTY TYPE, SUITABLE FOR VEHICULAR TRAFFIC LOADS.

PULL BOXES LOCATED IN THE ROADWAYS SHALL HAVE LOCKING COVERS.

ENTRANCE HOLES INTO PULL BOXES SHALL BE CUT WITH A CIRCULAR HOLE SAW OR HYDRAULIC CONDUIT PUNCH. HOLE SIZE SHALL BE THE OUTSIDE DIAMETER OF THE CONDUIT THAT IS TO FIT IN THE OPENING PLUS NO MORE THAN 1/4".

THE CONTRACTOR SHALL NOT INSTALL WIRE IN ANY PULL BOX UNTIL ITS INSTALLATION HAS BEEN INSPECTED AND ACCEPTED BY THE ENGINEER.

GROUNDING LUGS (MECHANICAL CONNECTORS) SHALL BE U.L. LISTED AND APPROVED FOR USE WITH COPPER WIRE.

GROUNDING LUGS ARE NOT REQUIRED IN PULL BOXES WHEN VOLTAGES OF LESS THAN 50 VOLTS AC ARE THE ONLY VOLTAGES ENCOUNTERED IN THE BOXES.

ALL METALLIC CONDUIT IN WHICH WIRE AND/OR CABLE IS TO BE INSTALLED, SHALL BE BUSHED BEFORE INSTALLATION OF THE WIRE AND/OR CABLE.

S.D.D. 9B2, "CONDUIT", APPLIES TO THIS DRAWING.

WHEN PULL BOXES ARE INSTALLED FOR FUTURE USE, DO NOT INSTALL THE EQUIPMENT GROUNDING LUG. THE EQUIPMENT GROUNDING LUG, THE EQUIPMENT GROUNDING ELECTRODE AND THE EQUIPMENT GROUNDING CONDUCTOR SHALL BE REQUIRED AND INSTALLED UNDER A FUTURE WIRING CONTRACT.

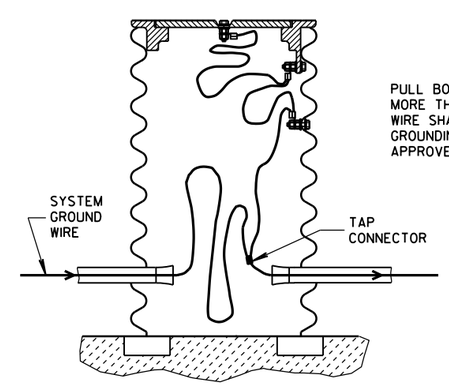

EQUIPMENT GROUNDING LUG AND LOCATION IN STEEL PULL BOXES

PULL BOX

STATE OF WISCONSIN
DEPARTMENT OF TRANSPORTATION

APPROVED
2-7-2013 — DATE
/S/ Ahmet Demirbilek — STATE ELECTRICAL
FHWA

6

6

S.D.D. 9 B 4-10

S.D.D. 9 B 4-10

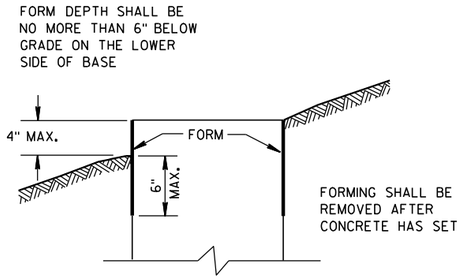

FORMING DETAIL

QUANTITY REQUIREMENTS	CONCRETE BASE TYPE		
	1	2	5
APPROX. CUBIC YARDS OF CONCRETE	0.40	0.57	0.40
LBS. OF HOOP BAR STEEL	NONE	23	16
LBS. OF VERTICAL BAR STEEL	NONE	60	18

GENERAL NOTES

DETAILS OF CONSTRUCTION, MATERIALS AND WORKMANSHIP NOT SHOWN ON THIS DRAWING SHALL CONFORM TO THE PERTINENT REQUIREMENTS OF THE CONTRACT.

BASES SHALL BE EXCAVATED BY USE OF A CIRCULAR AUGER.

TOP SURFACES OF CONCRETE BASES SHALL BE TROWEL FINISHED SMOOTH AND LEVEL.

CONDUIT SIZES AND LOCATIONS SHALL BE AS SHOWN ON THE PLANS.

THE FINAL OR TERMINATING CONCRETE BASE IN A CONDUIT RUN SHALL HAVE A 6" EXIT STUB INSTALLED FOR FUTURE CABLING USE. THE EXIT STUB SHALL BE SIZED AS USED THROUGHOUT THE CONDUIT RUN AS SHOWN AT THE ENTRANCE OF THE BASE.

MINIMUM BENDING RADIUS OF CONDUIT IS EQUAL TO 6 X THE DIAMETER.

CONDUIT HEIGHT ABOVE CONCRETE BASES SHALL BE 1 INCH. ALL METALLIC CONDUIT ENDS SHALL BE REAMED AND THREADED.

ALL CONDUIT ENDS AT THE TOP OF CONCRETE BASES SHALL BE CAPPED IF METALLIC OR PLUGGED IF NONMETALLIC IMMEDIATELY AFTER PLACEMENT AND BEFORE CONCRETE IS POURED. CONDUITS IN WHICH WIRE OR CABLE IS NOT INSTALLED SHALL REMAIN CAPPED OR PLUGGED.

GENERAL NOTES (CONTINUED)

BELL ENDS SHALL BE INSTALLED ON ALL PVC CONDUIT EXPOSED AT THE TOP OF CONCRETE BASES BEFORE INSTALLATION OF CABLE OR WIRE.

ENDS OF CONDUIT INSTALLED BELOW GRADE FOR FUTURE USE SHALL BE CAPPED IF METALLIC OR PLUGGED IF NONMETALLIC.

WHEN REQUIRED TO CONNECT NONMETALLIC CONDUIT TO METALLIC CONDUIT, ONLY ADAPTER FITTINGS, U.L. LISTED FOR ELECTRICAL USE, SHALL BE USED.

IF A BASE REQUIRES A DEEP FORM BECAUSE OF LOOSE DIRT OR FILL, THE FORM SHALL BE REMOVED BEFORE BACKFILLING AROUND THE BASE. BACKFILL SHALL BE TAMPED TIGHT AGAINST THE BARE CONCRETE BASE IN LAYERS OF 1 FOOT OR LESS.

A NO. 4 AWG, STRANDED COPPER EQUIPMENT GROUNDING CONDUCTOR SHALL BE EXOTHERMICALLY WELDED TO THE EQUIPMENT GROUNDING ELECTRODE (GROUND ROD) FOR TYPE 2 AND TYPE 5 BASES.

THE EQUIPMENT GROUNDING CONDUCTOR SHALL BE FURNISHED AND INSTALLED TO ENTER THE BASE OF THE TYPE 2 AND TYPE 5 BASES THROUGH A 1 INCH CONDUIT INSTALLED FOR GROUNDING PURPOSES, LEAVING A 4 FOOT COIL OF WIRE ABOVE THE CONCRETE BASE. THE EQUIPMENT GROUNDING CONDUCTOR SHALL BE NEATLY COILED AND THE COILS TIED TOGETHER.

ANCHOR RODS SHALL BE THREADED 12" IN LENGTH ON EACH END OF THE ROD. ANCHOR RODS SHALL BE MANUFACTURED IN ACCORDANCE WITH SECTION 654.2.1 AND 641.2.2 OF THE STANDARD SPECIFICATIONS, ASTM A-449, OR ASTM A-687 (GRADE 105).

WASHERS AND LOCK WASHERS ARE REQUIRED ON ALL ANCHOR RODS.

WHEN ANCHOR RODS USING THE ALTERNATE "L" BEND ARE FURNISHED, THE 4" "L" BEND SHALL BE IN ADDITION TO THE SPECIFIED ANCHOR ROD BAR LENGTH. THE "L" BEND END SHALL NOT BE THREADED.

ANCHOR RODS SHALL BE INSTALLED WITH MISALIGNMENTS OF LESS THAN 1:40 FROM VERTICAL.

WELDING OF THE ANCHOR RODS TO THE CAGE IS UNACCEPTABLE. TIE WIRES SHALL BE USED.

BAR STEEL REINFORCEMENT SHALL BE COATED WITH POWDERED EPOXY RESIN IN ACCORDANCE WITH SECTION 505 OF THE STANDARD SPECIFICATIONS (LATEST EDITION).

(1) THE MINIMUM DEPTH OF CONDUIT EXITING THE CONCRETE BASE AND INSTALLED BELOW THE TRAVELED WAY SHALL BE 24 INCHES. THE MINIMUM DEPTH OF CONDUIT EXITING THE CONCRETE BASE THAT IS NOT INSTALLED BELOW THE TRAVELED WAY SHALL BE 18 INCHES. THE MAXIMUM DEPTH OF ALL CONDUIT SHALL BE 36 INCHES EXCEPT WITH WRITTEN APPROVAL BY THE ENGINEER.

(2) (4) 1" DIA. X 3'-6" ANCHOR RODS.

(3) (4) 1" DIA. X 5'-0" ANCHOR RODS.

(4) (6) NO. 6 X 6'-8" BAR STEEL REINFORCEMENT.

(5) (7) NO. 4 X 5'-1" BAR STEEL REINFORCEMENT @ 1'-0" C-C.

(6) (4) 1" DIA. X 3'-6" ANCHOR RODS.

(7) (6) NO.4 X 4'-8" BAR STEEL REINFORCEMENT.

(8) (5) NO. 4 X 5'-1" BAR STEEL REINFORCEMENT @ 1'-0" C-C.

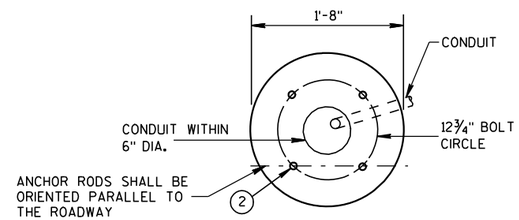

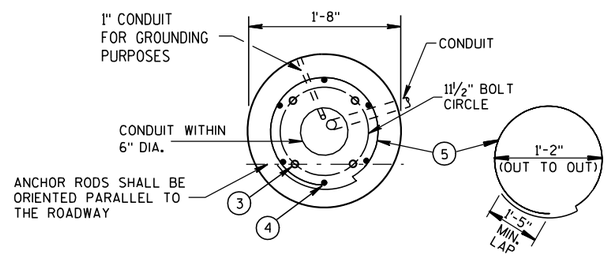

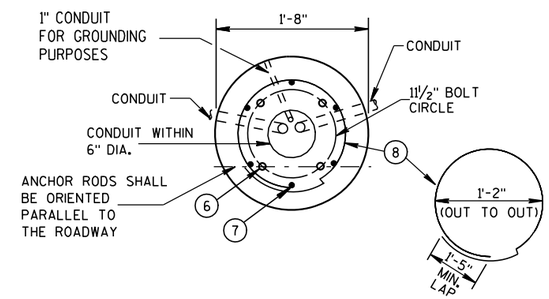

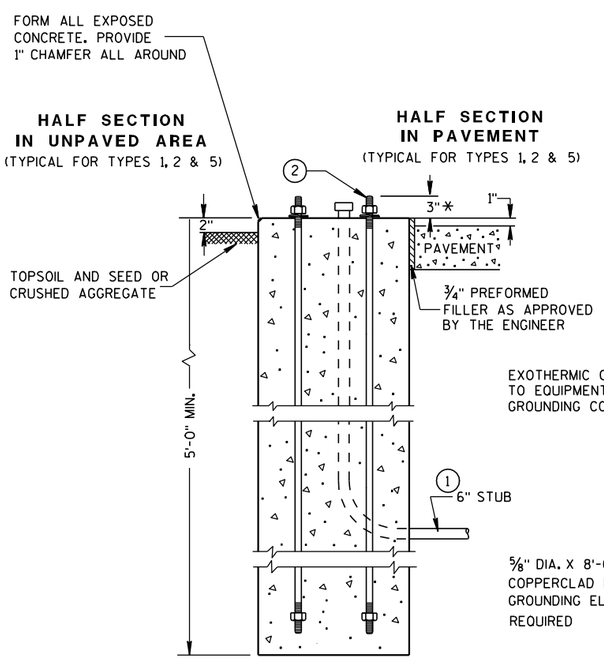

TYPE 1

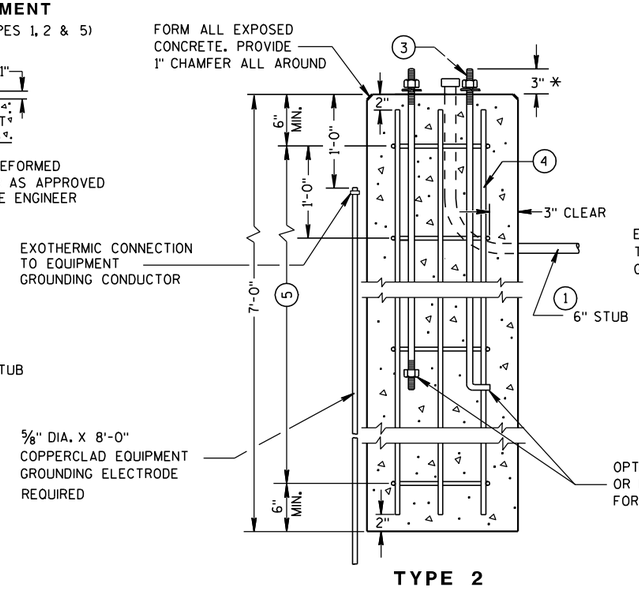

TYPE 2

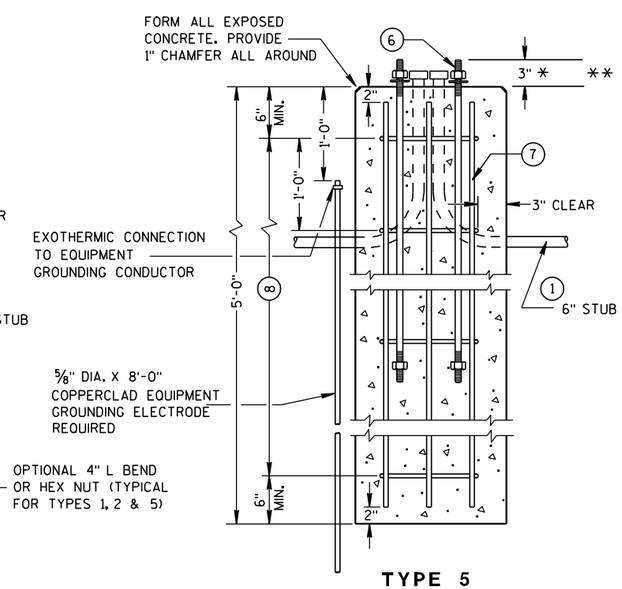

TYPE 5

CONCRETE BASES

* ANY ANCHOR ROD PROJECTION SHORTER THAN 2¾" OR LONGER THAN 3¼" SHALL REQUIRE THE BASE TO BE REMOVED AND REPLACED AT THE CONTRACTORS EXPENSE.

** FOR NONBREAKAWAY INSTALLATIONS, 4½" ± ANCHOR ROD PROJECTION WITH THE USE OF LEVELING NUTS. RODENT SCREEN REQUIRED.

CONCRETE BASES, TYPES 1, 2 & 5

STATE OF WISCONSIN
DEPARTMENT OF TRANSPORTATION

APPROVED
3/3/10 — DATE
/S/ Joanna L. Rush — STATE ELECTRICAL ENGI
110
HWYS
FHWA

6

S.D.D. 9 C 2-6

6

S.D.D. 9 C 2-6

GENERAL NOTES

DETAILS OF CONSTRUCTION, MATERIALS AND WORKMANSHIP NOT SHOWN ON THIS DRAWING SHALL CONFORM TO THE PERTINENT REQUIREMENTS OF THE CONTRACT.

FOUR (4) BOLTS SHALL BE FURNISHED WITH EACH TRANSFORMER BASE. BOLTS SHALL BE 1" DIAMETER, 4" IN LENGTH, WITH WASHERS, LOCK WASHERS AND NUTS. BOLTS, NUTS AND WASHERS SHALL BE MANUFACTURED IN ACCORDANCE WITH SECTION 641.2.2 OF THE STANDARD SPECIFICATIONS, ASTM A-325, (92,000 YIELD) HEAVY HEX NUT AND BE GALVANIZED IN ACCORDANCE WITH ASTM A-153, CLASS C.

LEVELING SHIMS, IF NEEDED, SHALL BE DESIGNED FOR THE PURPOSE AND USED UNDER CAST BASES WHEN PLUMBING POLES OR STANDARDS DURING INSTALLATION. THE USE OF WASHERS IN LIEU OF PROPER LEVELING SHIMS IS NOT ACCEPTABLE.

SHIM LENGTH SHALL BE LONG ENOUGH TO COMPLETELY COVER THE AREA UNDER THE LENGTH AND WIDTH OF THE BASE MOUNTING FLANGE.

DOUBLE NUTTING IS NOT ACCEPTABLE FOR LEVELING OR MOUNTING PURPOSES.

A NEMA APPROVED AND U.L. LISTED MECHANICAL CONNECTOR (LUG) AL/CU RATED AND SIZED TO ACCEPT #10 AWG STRANDED WIRE, SHALL BE FURNISHED AND INSTALLED IN THE PEDESTAL AND TRANSFORMER BASES.

THE MECHANICAL CONNECTOR SHALL BE INSTALLED USING A 1/4" - 20 (TPI) STAINLESS STEEL HEX HEAD BOLT OF SUFFICIENT LENGTH TO FIRMLY ATTACH THE LUG TO THE BASE.

SHOULD THE MANNER OF ATTACHMENT OF THE LUG REQUIRE WASHERS, HEX NUTS, LOCK WASHER - THEY SHALL BE STAINLESS STEEL AS IS THE BOLT. THE MANNER OF ATTACHMENT SHALL NOT BLOCK ACCESSIBILITY TO WIRE PLACEMENT IN THE CONNECTOR.

PEDESTAL BASE COLLAR THREADING SHALL BE TAPERED AND IN ACCORDANCE WITH NATIONAL PIPE THREADING DIMENSIONS.

BASE COLLAR THREADING SHALL EXTEND INTO THE BASE COLLAR WITH SUFFICIENT DEPTH TO ACCEPT THE INSTALLATION OF TRAFFIC SIGNAL STANDARDS TO A DEPTH OF 1 1/2", THEN TIGHTENING TO A POINT OF BEING IMMOVABLE.

THE ACCESS DOOR SHALL BE OF THE SAME MATERIAL AS THE BASE.

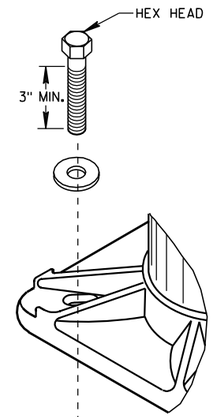

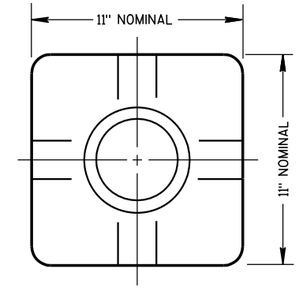

TOP VIEW
(PEDESTAL BASE)

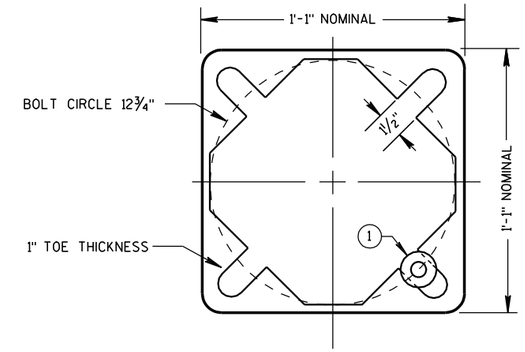

BOTTOM VIEW
(PEDESTAL BASE)

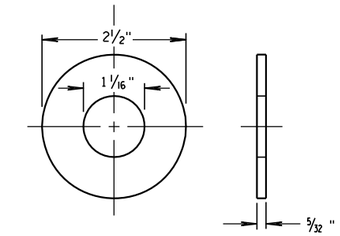

ZINC COATED STEEL WASHER
TO BE PROVIDED BY THE CONTRACTOR

PEDESTAL BASE WASHER (1)

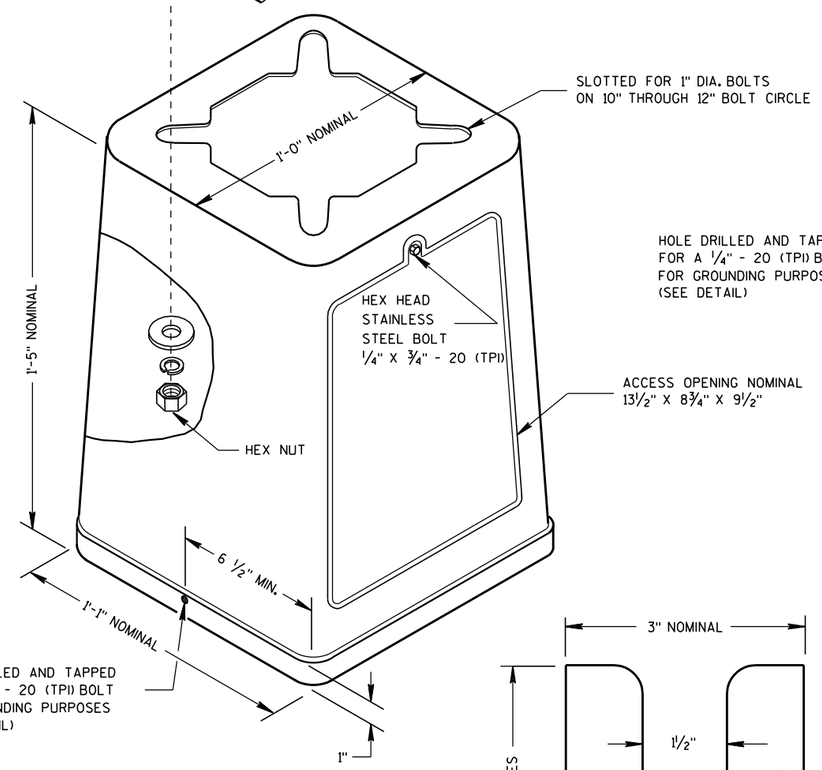

ISOMETRIC VIEW

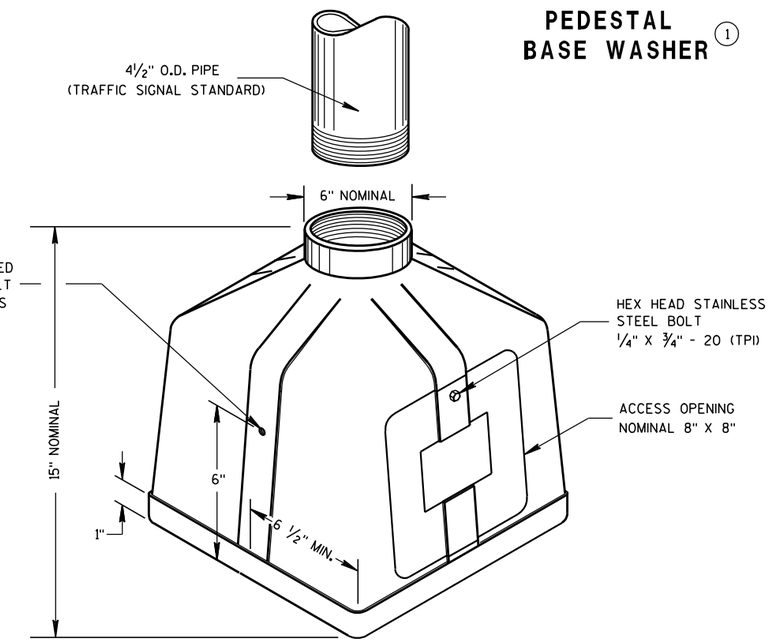

ISOMETRIC VIEW
PEDESTAL BASE

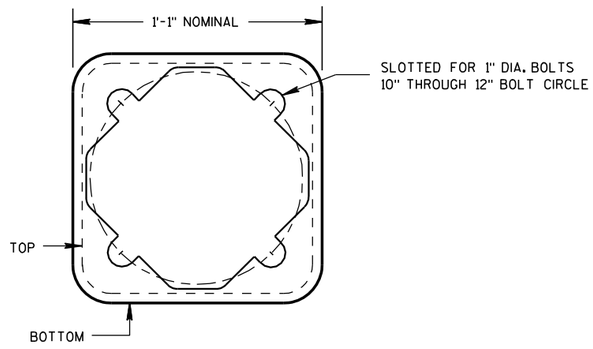

BOTTOM VIEW
(TRANSFORMER BASE)

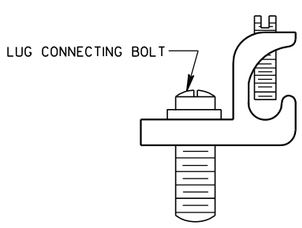

TYPICAL MECHANICAL CONNECTOR LUG

TO BE FURNISHED WITH EACH BASE

TRANSFORMER BASE

INTENDED FOR USE WITH TYPE 2, 3, 4, 5 & 6 POLES

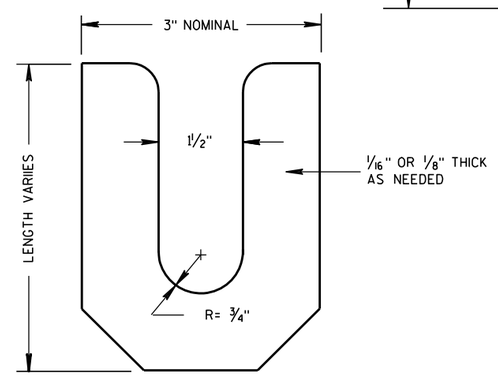

LEVELING SHIM

TRANSFORMER/PEDESTAL BASES	
STATE OF WISCONSIN DEPARTMENT OF TRANSPORTATION	
APPROVED 10/27/09 DATE	/S/ Joanna L. Pruch STATE ELECTRICAL ENGI 111 HWYS
FHWA	

6

6

S.D.D. 9 C 3-3

S.D.D. 9 C 3-3

CONTROL CABINET BASE TYPE	DIMENSIONS				C.Y. CONCRETE (APPROX.)
	H	I	J	K	
TYPE 6 - 30" CABINET	34"	60"	10"	17"	.64
TYPE 7 - 38" CABINET	42"	60"	10"	21"	.93
TYPE 8 - 38" CABINET	42"	72"	12"	21"	1.29
TYPE 9 - VARIABLE	54"	72"	14"	27"	1.56
TYPE 10 - POST MOUNT	AS SHOWN				.65 *

* INCLUDES MAINTENANCE PLATFORM.

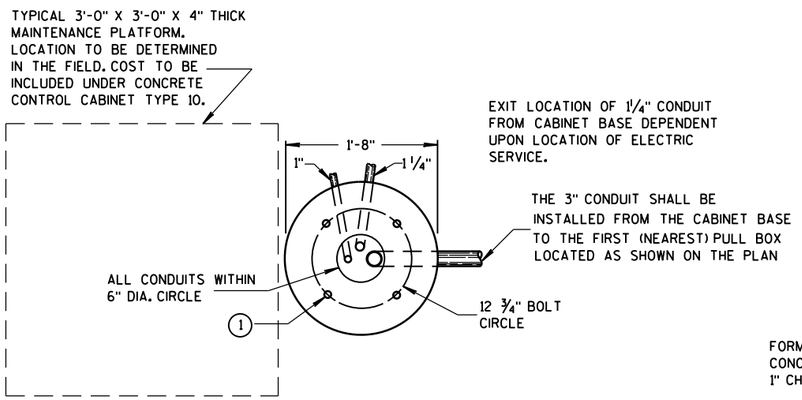

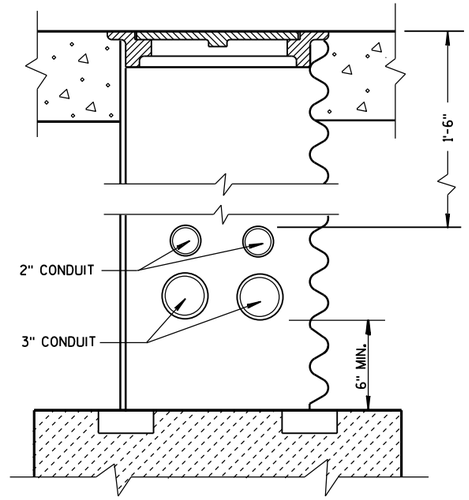

CONDUIT LOCATIONS IN 24" X 36" PULL BOX

(LEADING TO CONTROLLER CABINET BASE TYPE 6, 7, 8 AND 9)

GENERAL NOTES

DETAILS OF CONSTRUCTION, MATERIALS AND WORKMANSHIP NOT SHOWN ON THIS DRAWING SHALL CONFORM TO THE PERTINENT REQUIREMENTS OF THE CONTRACT.

INSTALL FOUR ½ INCH MINIMUM DIAMETER X 4 INCH MINIMUM LENGTH APPROVED CONCRETE MASONRY ANCHORS TO ANCHOR THE CABINET TO TYPE 6, 7, 8, AND 9 BASES. THE ANCHOR STUDS SHALL BE LOCATED AS DIRECTED BY THE ENGINEER TO PROPERLY ANCHOR THE CONTROL CABINET TO THE BASE.

WHEN REQUIRED TO CONNECT NONMETALLIC CONDUIT TO METALLIC CONDUIT, ONLY ADAPTER FITTINGS, U.L. LISTED FOR ELECTRICAL USE, SHALL BE USED.

CONDUIT HEIGHT ABOVE THE CONCRETE BASE SHALL BE 1 INCH.

DEPTH OF CONDUIT INSTALLED BELOW THE TRAVELED WAY SHALL BE 24 INCHES MINIMUM AND 36 INCHES MAXIMUM.

DEPTH OF CONDUIT INSTALLED THAT IS NOT BELOW THE TRAVELED WAY SHALL BE 18 INCHES MINIMUM AND 36 INCHES MAXIMUM.

ANY EXCEPTION TO THE MAXIMUM DEPTH SHALL BE ONLY WITH THE WRITTEN APPROVAL OF THE ENGINEER.

CONTROL CABINET BASE TOP SURFACES SHALL BE TROWEL FINISHED SMOOTH AND LEVEL.

WHEN A TYPE 10 CONTROL CABINET BASE IS USED TO POST MOUNT A CONTROL CABINET, A 36" SQUARE 4" THICK CONCRETE MAINTENANCE PLATFORM SHALL BE REQUIRED ON THE DOOR SIDE OF THE CABINET. THE TOP 1 INCH SHALL BE ABOVE FINISHED GRADE AND BE BROOM FINISHED AND LEVEL.

MAINTENANCE PLATFORMS ARE NOT REQUIRED WHEN THE SURROUNDING AREA IS PAVED.

MINIMUM BENDING RADIUS OF CONDUIT = 6 X THE DIAMETER.

ALL METALLIC CONDUIT ENDS SHALL BE REAMED AND THREADED.

ALL CONDUIT ENDS AT THE TOP OF CONCRETE BASES SHALL BE CAPPED IF METALLIC OR PLUGGED IF NONMETALLIC IMMEDIATELY AFTER PLACEMENT AND BEFORE CONCRETE IS POURED. CONDUITS IN WHICH WIRE OR CABLE IS NOT BEING INSTALLED SHALL REMAIN CAPPED OR PLUGGED.

ALL FOUR (TWO INCH AND THREE INCH) CONDUIT SHALL BE INSTALLED FROM THE CABINET BASE TO THE FIRST (NEAREST PULL BOX LOCATED AS SHOWN ON THE PLANS.

BELL ENDS SHALL BE INSTALLED ON ALL PVC CONDUIT EXPOSED AT THE TOP OF THE CONCRETE BASE BEFORE INSTALLATION OF CABLE OR WIRE.

CONCRETE FORM DEPTH BELOW FINISHED GRADE SHALL BE 6" MAXIMUM. CONCRETE FORMS SHALL BE REMOVED AFTER CONCRETE HAS SET.

WHEN ANCHOR RODS USING THE ALTERNATE L BEND ARE FURNISHED FOR THE TYPE 10 BASE, THE 4" L BEND SHALL BE IN ADDITION TO THE SPECIFIED ANCHOR ROD BAR LENGTH.

THE "L" BEND SHALL NOT BE THREADED.

STRAIGHT ANCHOR RODS SHALL BE THREADED 12" IN LENGTH ON EACH END OF THE ROD.

ANCHOR RODS SHALL BE INSTALLED WITH MISALIGNMENTS OF LESS THAN 1:40 FROM VERTICAL.

WHEN THIS DRAWING IS USED FOR STREET LIGHTING CABINET BASES, CONDUIT MAY BE DIFFERENT AS SHOWN ON THE PLAN OR AS DIRECTED BY THE ENGINEER.

(1) FOUR (4) ANCHOR RODS, 1" DIA. X 3'-6"
ANCHOR RODS SHALL BE MANUFACTURED IN ACCORDANCE WITH SECTION 654.2.1 AND 641.2.2 OF THE STANDARD SPECIFICATIONS.

HALF SECTION IN UNPAVED AREA

HALF SECTION IN PAVED AREA

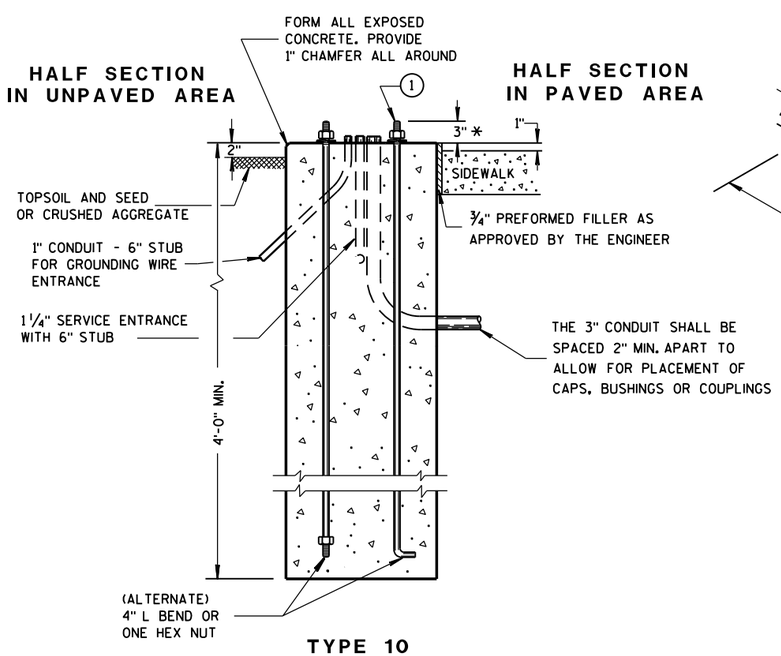

TYPE 10

* ANY ANCHOR ROD PROJECTION SHORTER THAN 2¾" OR LONGER THAN 3¼" SHALL REQUIRE THE BASE TO BE REMOVED AND REPLACED AT THE CONTRACTORS EXPENSE.

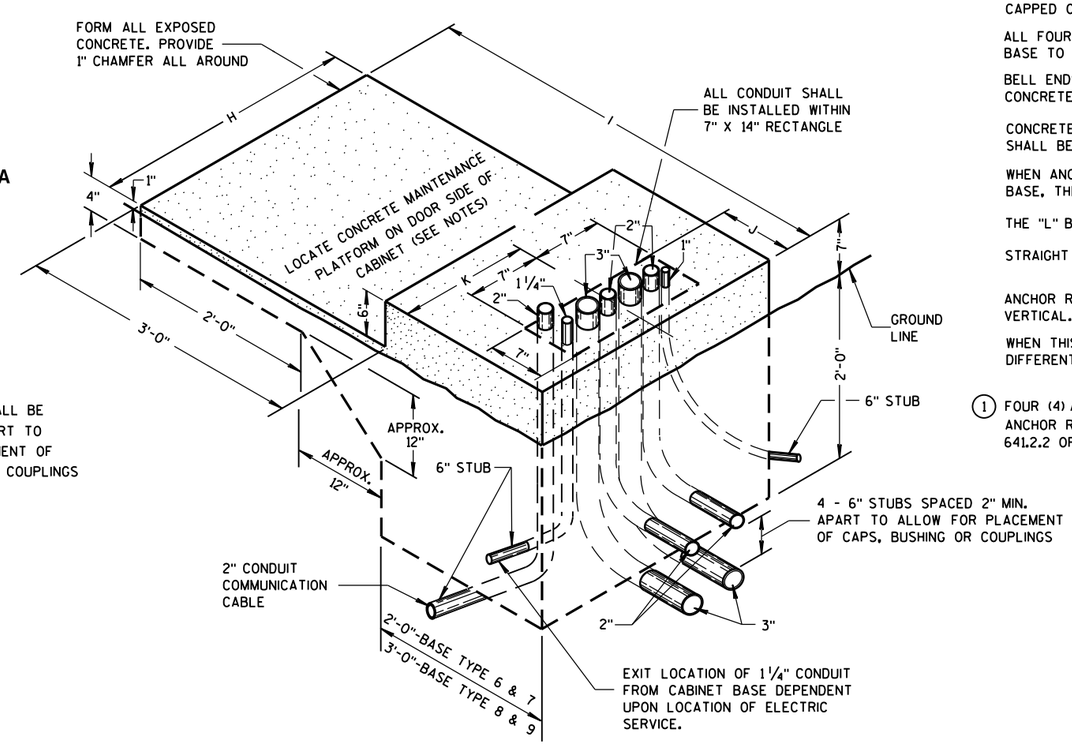

TYPE 6,7,8 AND 9
(ISOMETRIC VIEW)

CONCRETE CONTROL CABINET BASES

CONCRETE CONTROL CABINET BASES

STATE OF WISCONSIN
DEPARTMENT OF TRANSPORTATION

APPROVED
11/26/2013 — DATE
/S/ Ahmet Demirbilek — STATE ELECTRICAL
FHWA

6

6

S.D.D. 9 C 5-8

S.D.D. 9 C 5-8

FOR MANUFACTURERS USE ONLY

WELD TO BE 100% R.T. OR U.T. TESTED AS PER THE REQUIREMENTS OF AWS D 1.5-88. RECORDS OF COMPLIANCE OF SUCH TESTING SHALL BE FURNISHED TO THE OFFICE OF DESIGN/BRIDGE FOR VERIFICATION AND APPROVAL.

*RISE FOR 4' ARM SHALL BE 2'-0".

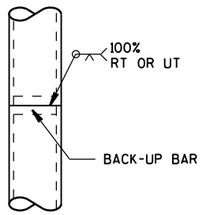

POLE SPLICE DETAIL

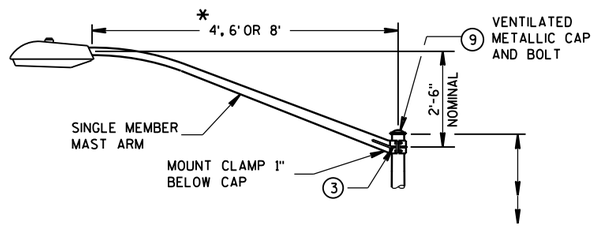

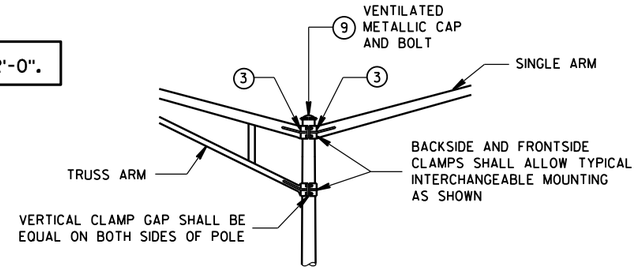

INTERCHANGEABLE MOUNTING DETAIL

LUMINAIRE
WT. - 50 LBS.
EFFECTIVE PROJECTED AREA FOR WIND LOADING = 1.5 SQ. FT.

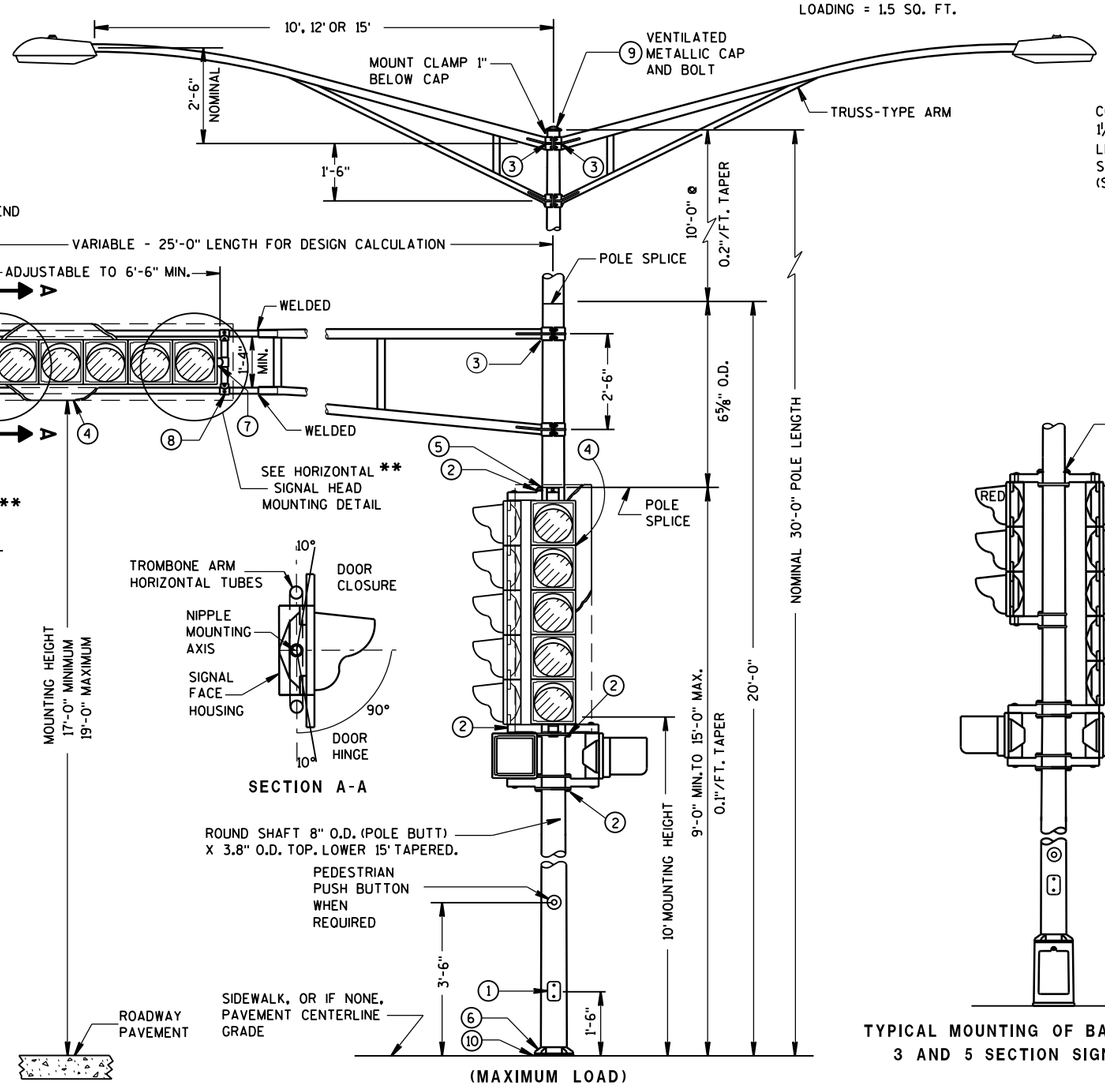

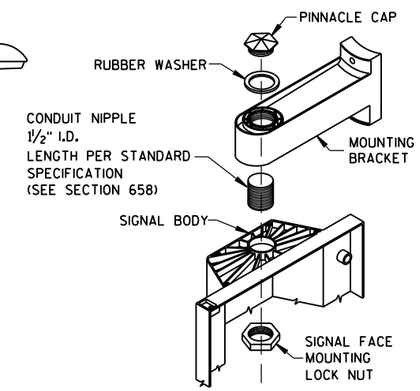

SIGNAL FACE MOUNTING DETAIL
(BANDED)

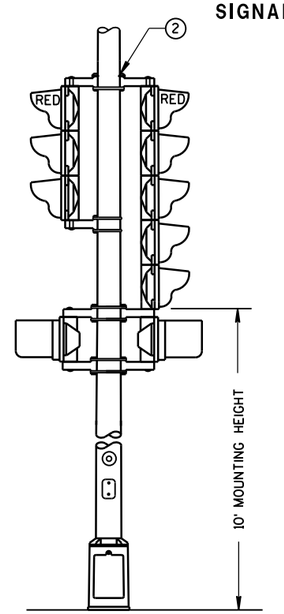

TYPICAL MOUNTING OF BACK TO BACK 3 AND 5 SECTION SIGNAL FACES

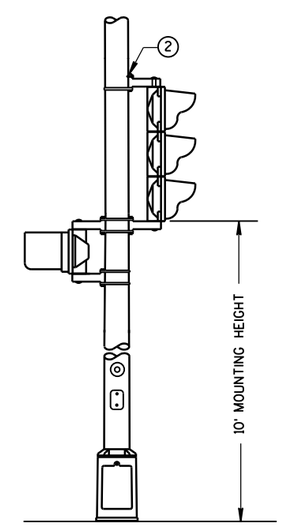

TYPICAL MOUNTING OF 3 SECTION SIGNAL FACE

TYPE 3 POLE MOUNTING CONFIGURATION

GENERAL NOTES

DETAILS OF CONSTRUCTION, MATERIALS AND WORKMANSHIP NOT SHOWN ON THIS DRAWING SHALL CONFORM TO THE PERTINENT REQUIREMENTS OF THE CONTRACT.

ALL TYPE 3 POLE MOUNTINGS SHALL BE DESIGNED TO INCLUDE TWIN 15' ARMS WITH LUMINAIRES.

POLES SHALL BE GALVANIZED STEEL.

SECTION 657, POLES, OF THE STANDARD SPECIFICATIONS SHALL APPLY TO THIS DRAWING.

A PULL WIRE/ROPE IN ACCORDANCE WITH STANDARD SPECIFICATION 652, SHALL BE INSTALLED IN EACH TROMBONE ARM RACEWAY DURING THE MANUFACTURING PROCESS.

THE SLIPFITTER END OF THE LUMINAIRE MAST ARM SHALL BE A NOMINAL 2⅜ INCHES IN OUTSIDE DIAMETER. THE STRAIGHT PORTION OF THE SLIPFITTER END OF THE LUMINAIRE MAST ARM SHALL BE A NOMINAL 12 INCHES IN LENGTH.

WHEN TRANSFORMER BASES ARE USED, WIRE CONNECTIONS SHALL BE MADE IN THE TRANSFORMER BASE.

1. 4" X 6" REINFORCED HANDHOLE & COVER ASSEMBLY WITH 2 (TWO) ¼" X ¾" - 20 TPI HEX HEAD STAINLESS STEEL BOLTS.
2. SIGNAL FACE MOUNTING BRACKETS, MOUNT WITH CAP SCREWS AND BANDING. (SEE STANDARD SPECIFICATIONS - SEC. 658)
3. GROMMETS, 1" CHASE NIPPLES OR 1" CLOSE CONDUIT NIPPLES WITH BUSHINGS SHALL BE PROVIDED FOR 1⅜" HOLE IN POLE SHAFT FOR WIRING.
4. SECURELY MOUNT DULL BLACK POLYCARBONATE BACKPLATES, PROJECTING 5" BEYOND ALL SIDES OF THE SIGNAL FACE HOUSING, PER MANUFACTURER'S RECOMMENDATIONS.
5. POLE MOUNTED SIGNAL FACES SHALL REQUIRE 1 OR MORE MOUNTING SPACERS UNDER THE TOP MOUNTING BRACKET(S) AS REQUIRED, TO PLUMB THE SIGNAL FACE.
6. TYPE 3 POLE CONFIGURATIONS SHALL BE MOUNTED DIRECTLY TO THEIR CONCRETE BASES.
7. MOUNTING BRACKET NIPPLES FOR THE SIGNAL FACE(S) SHALL BE 2 INCHES IN LENGTH AND 1½ INCHES IN DIAMETER. (SEE STANDARD SPECIFICATION - SECTION 658)
8. VERTICAL STRUT (ADJUSTABLE). ONE (1) SET SCREW (1/4 " X ¾" -20 TPI, STAINLESS STEEL, HEX HEAD) INTO EACH ARM MEMBER IF STRUT IS THE SLIDING TYPE.
9. FURNISH AND INSTALL VENTILATED, CAST, METALLIC (ALUMINUM ALLOY) CAPS. FASTEN CAPS WITH ONE (1) ¼" X ¾" - 20 TPI STAINLESS STEEL, HEX HEAD BOLT.
10. SHIMMING, IF NEEDED, SHALL BE LOCATED BETWEEN THE CONCRETE FOUNDATION AND POLE.
11. USE SERRATED LOCK WASHERS WITH NOTCHES BETWEEN END TEE AND SIGNAL HEAD.

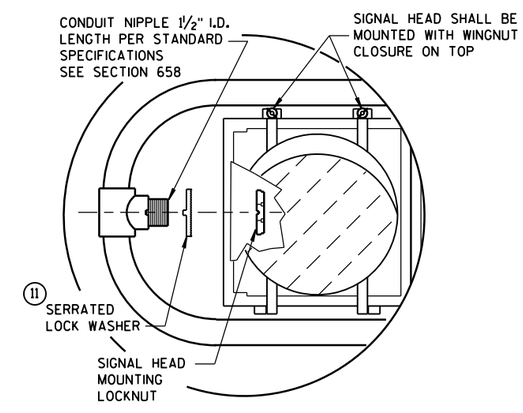

HORIZONTAL SIGNAL HEAD MOUNTING DETAIL **

** SIGNAL HEAD ATTACHMENT ALSO APPLYS TO MOUNTING AT CROSS BAR

POLE MOUNTINGS FOR TRAFFIC SIGNALS AND LIGHTING UNITS, TYPE 3 (HEAVY DUTY)

STATE OF WISCONSIN
DEPARTMENT OF TRANSPOI

*RISE FOR 4' ARM SHALL BE 2'-0".

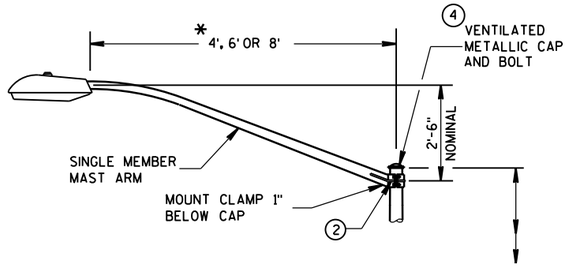

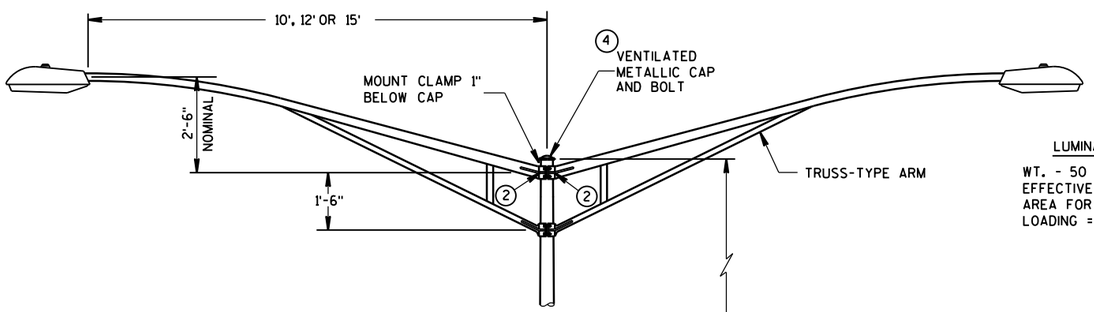

LUMINAIRE

WT. - 50 LBS.
EFFECTIVE PROJECTED
AREA FOR WIND
LOADING = 1.5 SQ. FT.

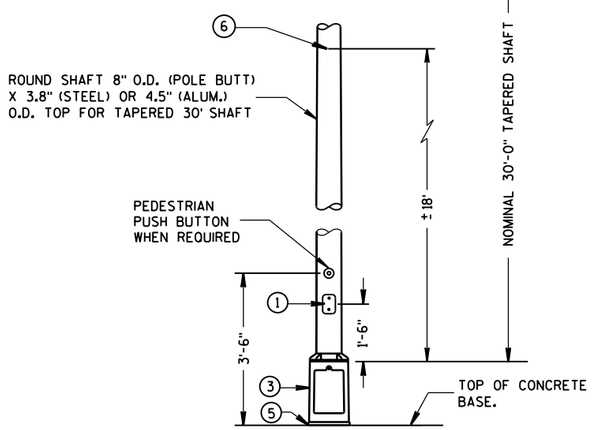

TYPE 5 POLE MOUNTING CONFIGURATION

(MAXIMUM LOAD)

LIGHTING ONLY

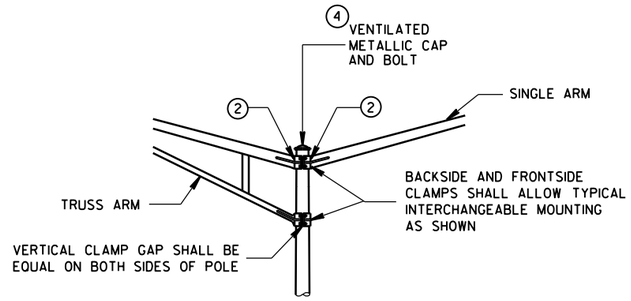

INTERCHANGEABLE MOUNTING DETAIL

GENERAL NOTES

DETAILS OF CONSTRUCTION, MATERIALS AND WORKMANSHIP NOT SHOWN ON THIS DRAWING SHALL CONFORM TO THE PERTINENT REQUIREMENTS OF THE CONTRACT.

ALL TYPE 5 POLE MOUNTINGS SHALL BE DESIGNED TO INCLUDE TWIN 15' ARMS WITH LUMINAIRES.

POLES SHALL BE GALVANIZED STEEL OR ALUMINUM, AS CALLED FOR IN THE CONTRACT.

TYPE 5 ALUMINUM POLES SHALL BE CONSTRUCTED OF 6063-T6 ALUMINUM ALLOY. SLEEVING INSIDE THE POLE IS NOT ACCEPTABLE.

THE TYPE 5 ALUMINUM POLES SHALL HAVE A MINIMUM WALL THICKNESS OF 0.188".

TYPE 5 STEEL POLES SHALL HAVE A MINIMUM WALL THICKNESS OF U.S. STANDARD 11 GAGE (.1196").

THE SLIPFITTER END OF THE LUMINAIRE MAST ARM SHALL BE A NOMINAL 2⅜ INCHES IN OUTSIDE DIAMETER. THE STRAIGHT PORTION OF THE SLIPFITTER END OF THE LUMINAIRE ARM SHALL BE A NOMINAL 12 INCHES IN LENGTH.

WHEN TRANSFORMER BASES ARE USED, WIRE CONEECTIONS SHALL BE MADE IN THE TRANSFORMER BASE.

1. 4" x 6" REINFORCED HANDHOLE & COVER ASSEMBLY WITH 2 (TWO) ¼" X ¾" - 20 TPI HEX HEAD STAINLESS STEEL BOLTS.
2. GROMMETS, 1" CHASE NIPPLES OR 1" CLOSE CONDUIT NIPPLES WITH BUSHINGS SHALL BE PROVIDED FOR 1⅜" HOLE IN POLE SHAFT FOR WIRING.
3. CAST ALUMINUM TRANSFORMER BASE, WHEN REQUIRED.
4. FURNISH AND INSTALL VENTILATED, CAST, METALLIC (ALUMINUM ALLOY) CAPS. FASTEN CAPS WITH ONE (1) ¼" X ¾" - 20 TPI STAINLESS STEEL, HEX HEAD BOLT.
5. SHIMMING, IF NEEDED, SHALL BE LOCATED BETWEEN THE CONCRETE FOUNDATION AND THE TRANSFORMER BASE.
6. INTERNAL DUMBBELL-TYPE VIBRATION DAMPER.

POLE MONTINGS FOR
LIGHTING UNITS, TYPE 5
(30 FEET)

STATE OF WISCONSIN
DEPARTMENT OF TRANSPO

6

S.D.D. 9 E 1-12d

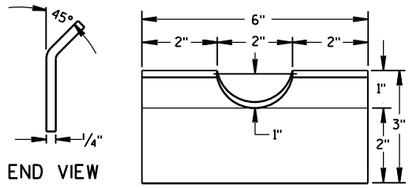

FRONT VIEW

RECTANGULAR CLAMP SHIM

(4 TO A SET)

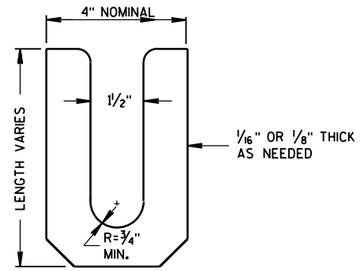

LEVELING SHIM (15)

SHALL BE ALUMINUM

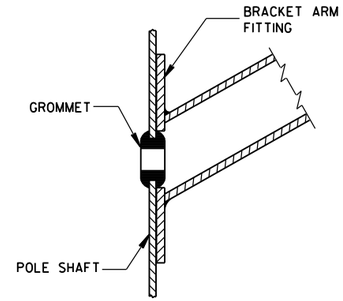

TYPICAL APPLICATION OF GROMMET IN POLE SHAFT

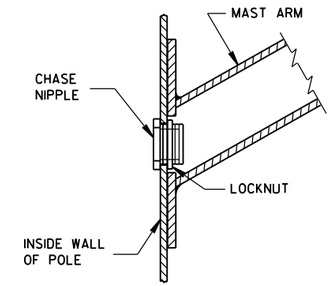

TYPICAL APPLICATION OF CHASE NIPPLE IN POLE SHAFT

GENERAL NOTES

CLAMP BOLT-NUT TIGHTENING TORQUE SHALL BE INDICATED BY INDENT STAMPING (1/2 INCH NUMERALS AND LETTERS) OR WEATHERPROOF PRINTING ON THE INSIDE OF THE CLAMP THAT IS WELDED TO THE ARM MEMBER.

(10) 4.5" I.D. FOR LUMINAIRE MAST ARM CLAMP.
6.625" I.D. FOR TROMBONE MAST ARM CLAMP.

(11) INDIVIDUAL BASE PLATE ANCHOR ROD COVERS. (4 REQUIRED)

(12) BASE PLATE SLOTTED TO ACCEPT 11" THROUGH 12" BOLT CIRCLE USING 1" DIAMETER ANCHOR RODS.

(13) OUTSIDE SHIM DIAMETER - (4.5" O.D. FOR LUMINAIRE MAST ARM)
(6.625" O.D. FOR TROMBONE MAST ARM)

(14) VARIABLE SHIM THICKNESS - (0.10", 0.25", 0.35", 0.53" OR 0.70")

SHIM THICKNESS FOR TROMBONE MAST ARMS MAY BE TYPICALLY 0.25", 0.35", 0.53" OR 0.70".

SHIM THICKNESS FOR LUMINAIRE MAST ARMS MAY BE TYPICALLY 0.10", 0.25" OR 0.35".

SHIM MATERIAL SHALL BE ALUMINUM ALLOY.

SHIM THICKNESS SHALL BE IMPRESSED INTO EACH SHIM. NUMERALS SHALL BE 1/4" HIGH AND LEGIBLE.

THE CONTRACTOR SHALL SUBMIT TWO COPIES OF ALL SHIM SHOP DRAWINGS TO THE ENGINEER FOR APPROVAL.

(15) LEVELING SHIMS, DESIGNED FOR THE PURPOSE, SHALL BE USED WHEN PLUMBING POLES. THE USE OF WASHERS IN LIEU OF PROPER LEVELING SHIMS IS NOT ACCEPTABLE. LEVELING SHIMS SHALL BE USED ONLY BETWEEN THE TOP OF THE CONCRETE BASE AND A METALLIC BASE PLATE.

SHIMS SHALL BE LONG ENOUGH AND WIDE ENOUGH TO COMPLETELY COVER THE AREA UNDER THE LENGTH AND WIDTH OF THE BASE MOUNTING FLANGE.

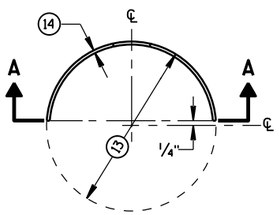

PLAN VIEW

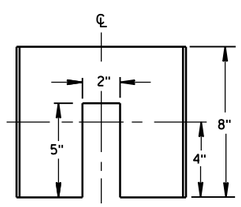

SECTION A-A

CIRCULAR CLAMP SHIM

(2 TO A SET)

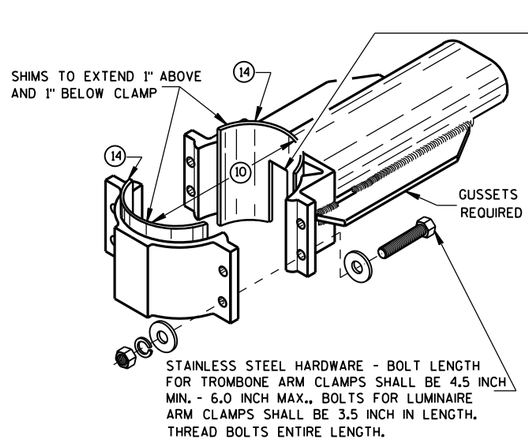

TYPICAL TROMBONE MAST ARM AND SINGLE LUMINAIRE MAST ARM MOUNTING CLAMP

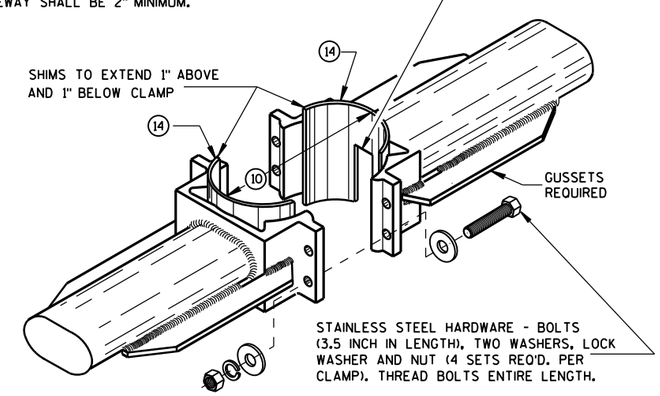

TYPICAL LUMINAIRE MAST ARM (DOUBLE) MOUNTING BRACKETS

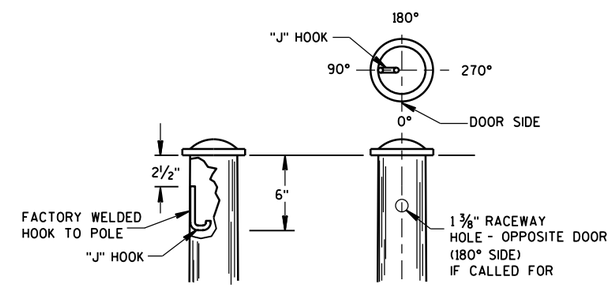

TYPICAL "J" HOOK LOCATION

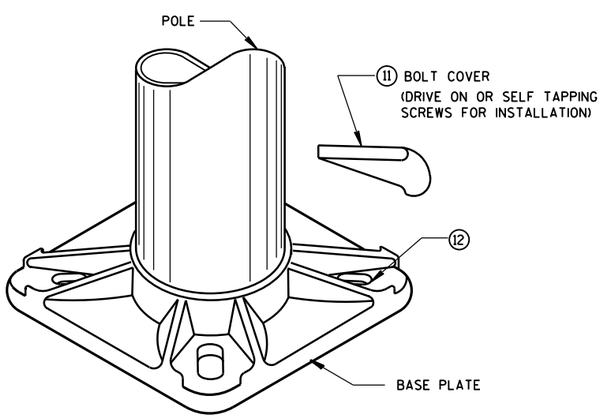

BASE PLATE

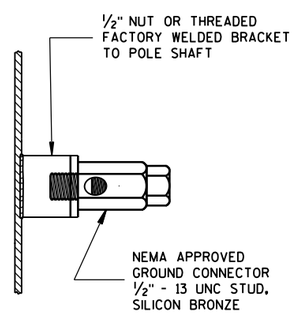

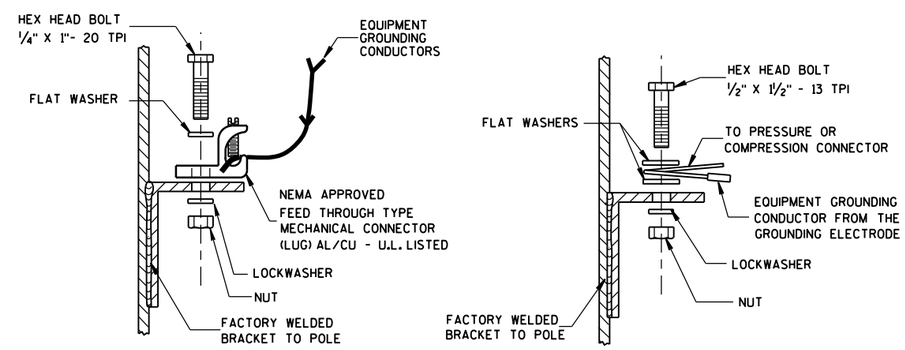

TYPICAL GROUNDING CONNECTIONS

NUT, BOLT AND WASHERS SHALL BE STAINLESS STEEL

HARDWARE DETAILS FOR POLE MOUNTINGS	
STATE OF WISCONSIN DEPARTMENT OF TRANSPORTATION	
APPROVED 2/7/2013 DATE	/S/ Ahmet Demirbilek STATE ELECTRICAL
FHWA	

6

6

S.D.D. 9 E 1-12g

S.D.D. 9 E 1-12g

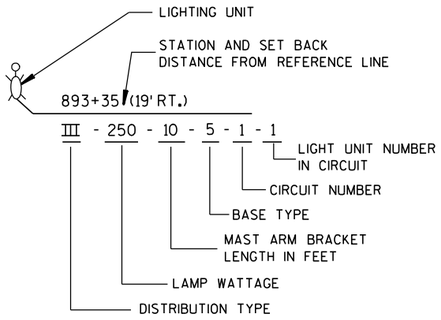

LIGHTING UNIT CODE
(TYPICAL)

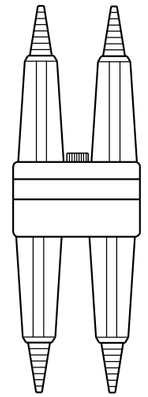

DETAIL "A"
BREAKAWY DOUBLE POLE WITH WATERPROOF INSULATING BOOT

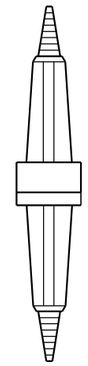

DETAIL "B"
BREAKAWY SINGLE POLE WITH WATERPROOF INSULATING BOOT

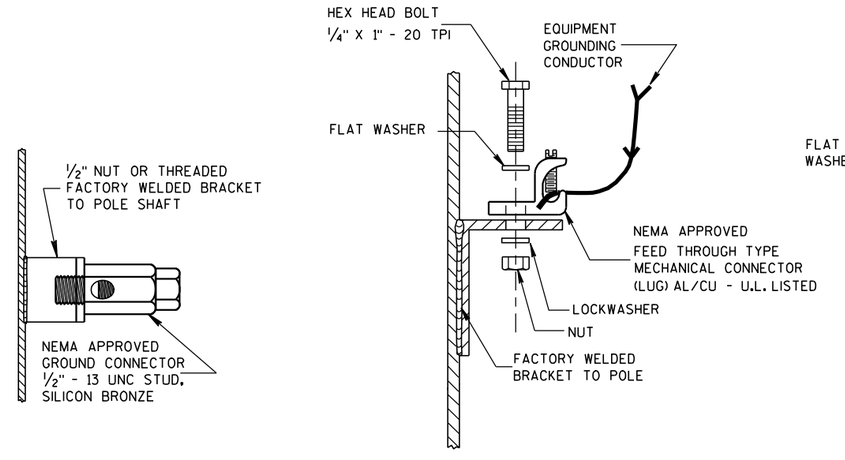

TYPICAL GROUNDING CONNECTIONS
NUT, BOLT, WASHERS AND LOCKWASHERS SHALL BE STAINLESS STEEL

GENERAL NOTES
DETAILS OF CONSTRUCTION, MATERIALS AND WORKMANSHIP NOT SHOWN ON THIS DRAWING SHALL CONFORM TO THE PERTINENT REQUIREMENTS OF THE CONTRACT.

THE EQUIPMENT GROUNDING CONNECTOR SHALL BE TAPED WITH 3 WRAPS (MINIMUM) OF APPROVED RUBBER TAPE AND THEN 3 WRAPS (MINIMUM) OF APPROVED VINYL TAPE TO COVER SHARP WIRE ENDS AFTER THE CONNECTION IS COMPLETED.

WHEN TRANSFORMER BASES ARE USED, ALL WIRING CONNECTIONS SHALL OCCUR WITHIN THE TRANSFORMER BASES.

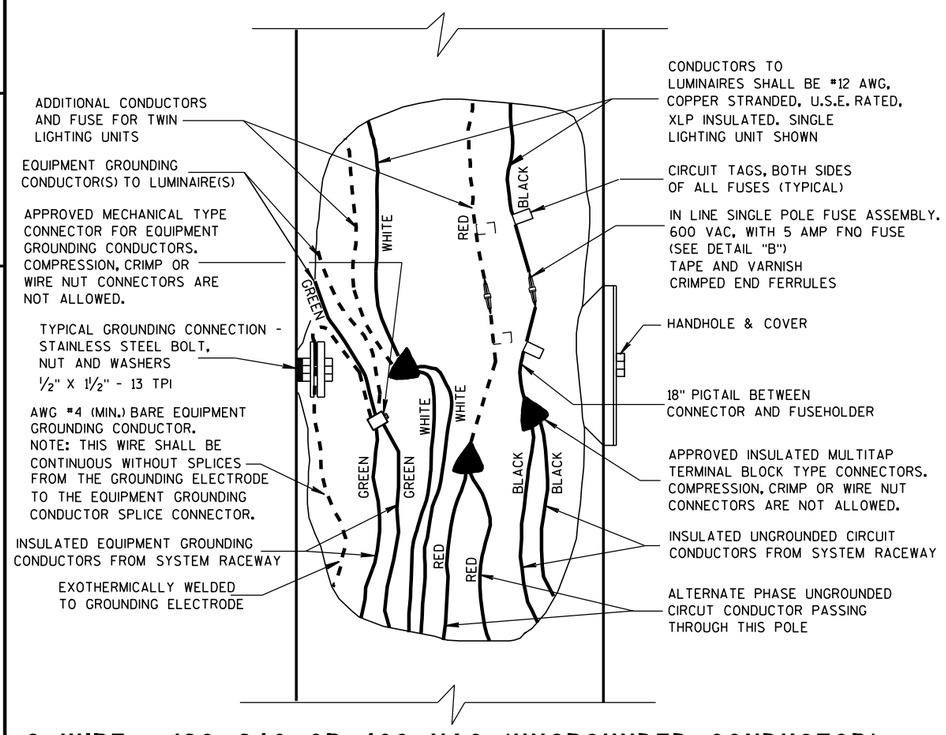

3 WIRE - 120, 240 OR 480 VAC (UNGROUNDED CONDUCTOR) WITH GROUNDED CONDUCTOR AND WITH EQUIPMENT GROUNDING CONDUCTOR

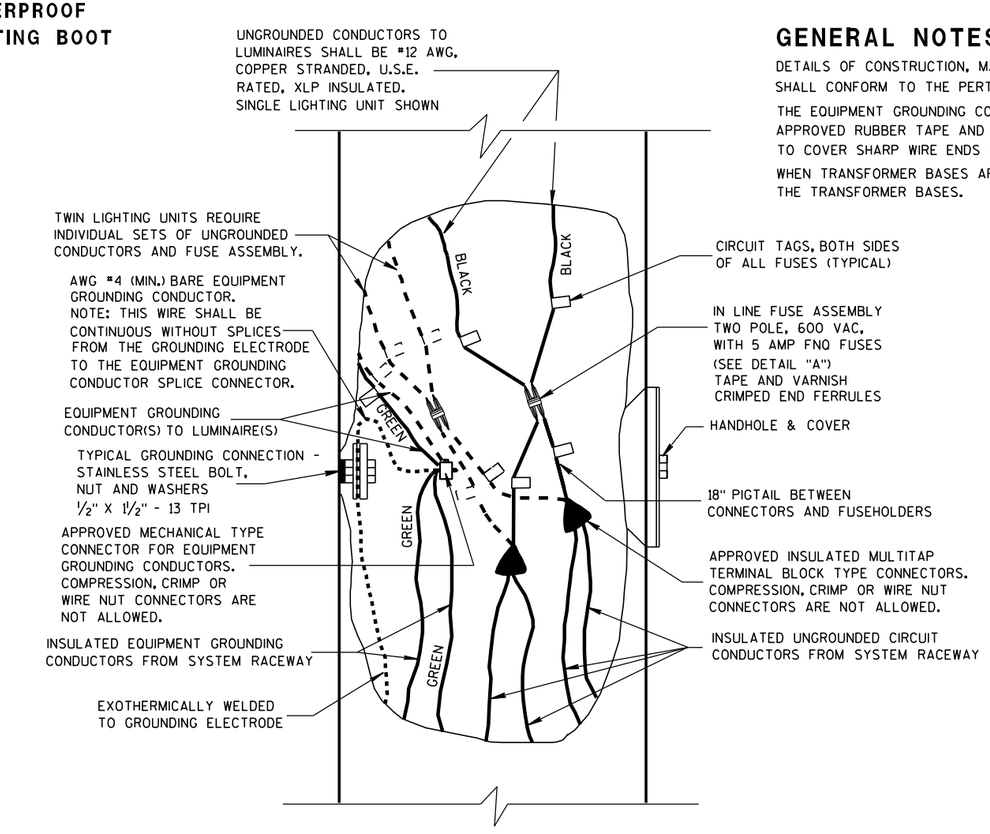

2 WIRE - 240 OR 480 VAC (UNGROUNDED CONDUCTORS) WITH EQUIPMENT GROUNDING CONDUCTOR

NON-FREEWAY LIGHTING UNIT POLE WIRING

STATE OF WISCONSIN
DEPARTMENT OF TRANSPORTATION

APPROVED
3/2/2011 — DATE
/S/ Thomas J. Gaspian — STATE ELECTRICAL ENGI
HWYS
FHWA

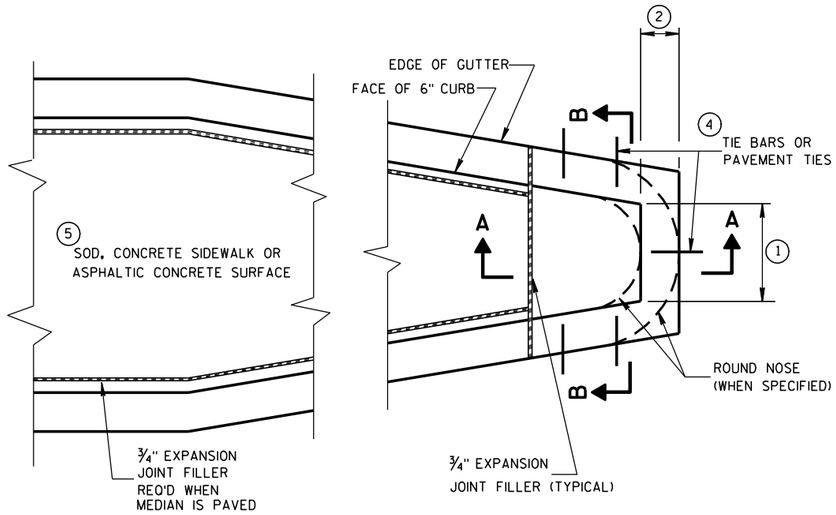

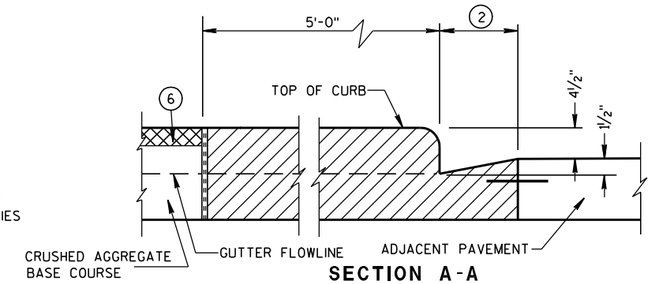

SECTION A-A

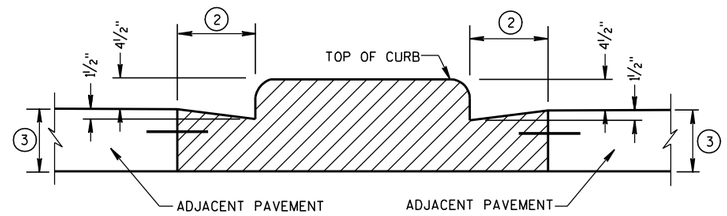

SECTION B-B

CONCRETE MEDIAN BLUNT NOSE DETAIL

GENERAL NOTES

DETAILS OF CONSTRUCTION, MATERIALS AND WORKMANSHIP NOT SHOWN ON THIS DRAWING SHALL CONFORM TO THE PERTINENT REQUIREMENTS OF THE STANDARD SPECIFICATIONS AND THE APPLICABLE SPECIAL PROVISIONS.

1. SEE PLAN FOR MEDIAN NOSE WIDTH AND RADIUS (FOR ROUND NOSE ALTERNATE).
2. WIDTH OF GUTTER TO MATCH EXISTING ADJACENT GUTTER OR AS SPECIFIED ELSEWHERE IN THE PLAN.
3. DEPTH EQUAL TO ADJACENT PAVEMENT. ADJACENT PAVEMENT STRUCTURE DETAILS ARE SHOWN ON THE PLAN. TYPICAL OPTIONS ARE:
   (1) NEW OR EXISTING CONCRETE PAVEMENT.
   (2) ASPHALTIC CONCRETE PAVEMENT OVER NEW OR EXISTING CONCRETE BASE COURSE.
   (3) ASPHALTIC CONCRETE PAVEMENT OVER CRUSHED AGGREGATE BASE COURSE.
4. TIE BARS OR PAVEMENT TIES REQUIRED IN NEW CONCRETE PAVEMENT OR CONCRETE BASE COURSE. TIE BARS SHALL BE NO. 4 X 2'-0" SPACED AT 2'-0" C-C.

   PAVEMENT TIES REQUIRED IN EXISTING CONCRETE BASE COURSE. PAVEMENT TIES SHALL BE NO. 6 X 1'-0" SPACED AT 3'-0" C-C INSTALLED ON A HORIZONTAL SKEW OF 6:1. THE DIRECTION OF SKEW SHALL ALTERNATE AFTER EVERY ONE OR TWO BARS.
5. SURFACE TYPE AND DETAILS ARE SHOWN ELSEWHERE IN THE PLAN.

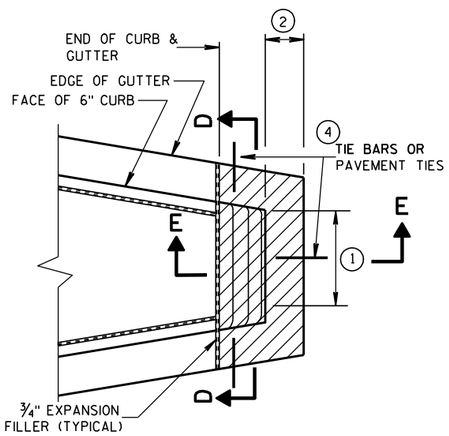

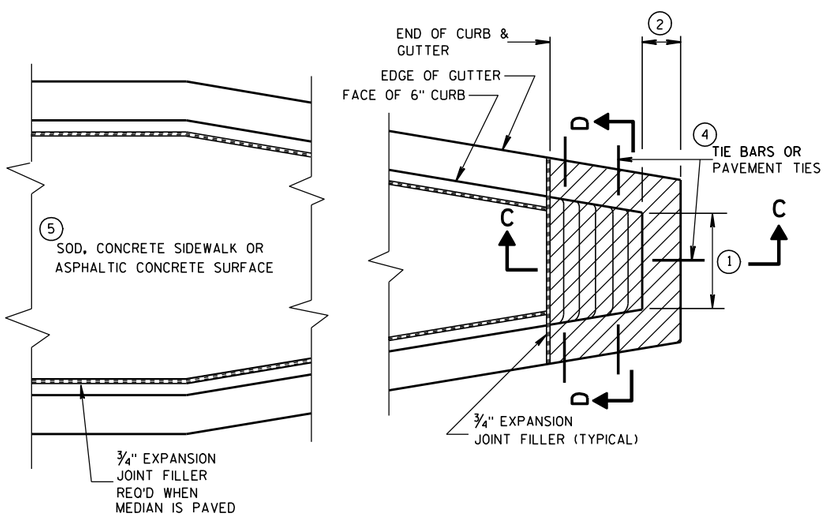

CONCRETE MEDIAN SLOPED NOSE TYPE 1

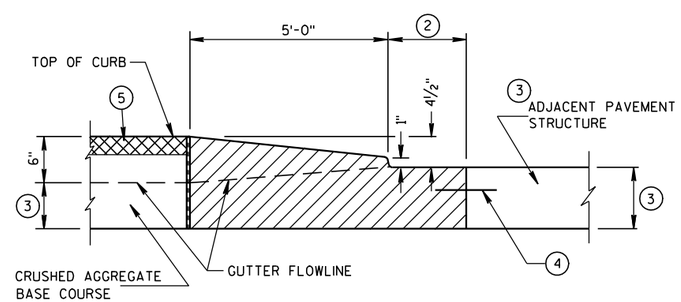

SECTION C-C

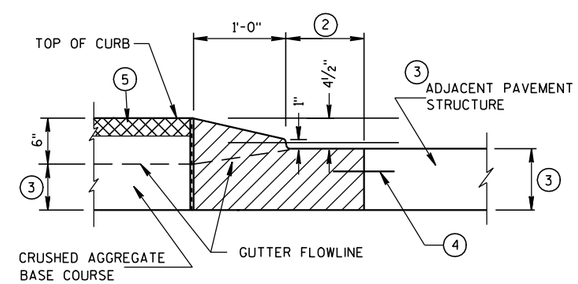

SECTION E-E

CONCRETE MEDIAN SLOPED NOSE TYPE 2

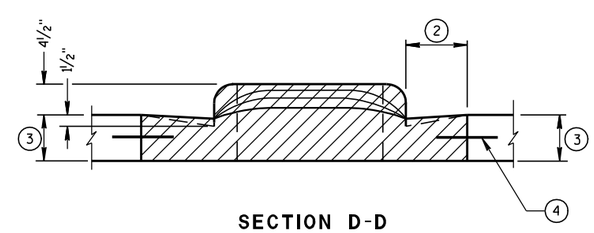

SECTION D-D

CONCRETE MEDIAN NOSE	
STATE OF WISCONSIN DEPARTMENT OF TRANSPORTATION	
APPROVED 6/8/2006 DATE	/S/ Jerry H. ---- ROADWAY STANDARDS ENGINEER
FHWA	NT

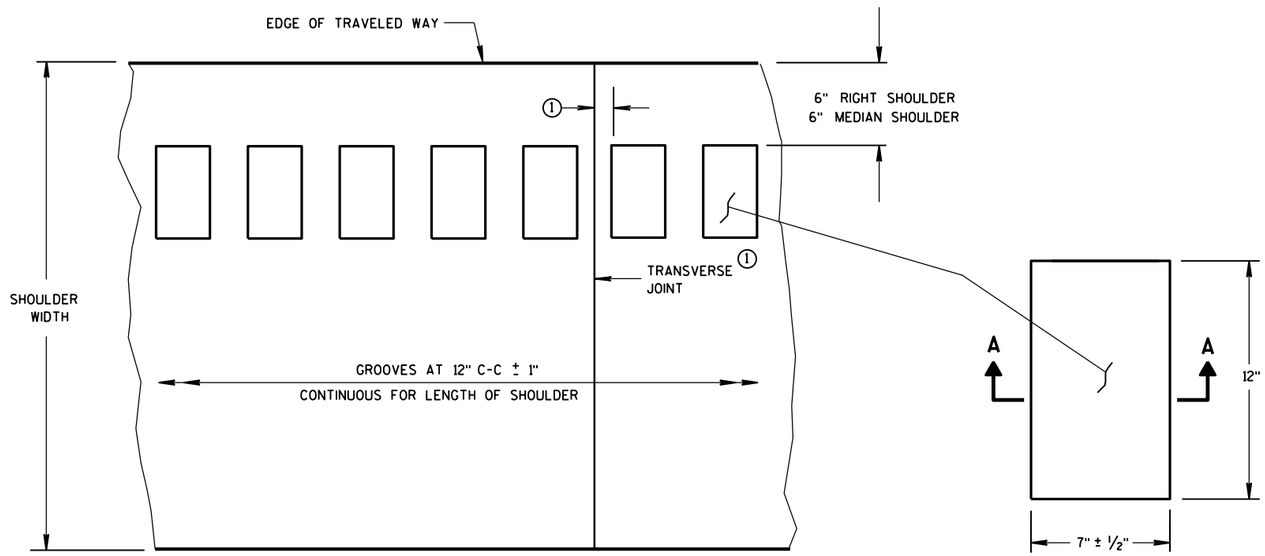

PLAN VIEW
SHOULDER WITH GROOVES

PLAN VIEW
(SINGLE GROOVE)

PLACEMENT DETAIL FOR MILLED RUMBLE STRIP

GENERAL NOTES

DETAILS OF CONSTRUCTION SHOWN ON THIS DRAWING SHALL CONFORM TO THE PERTINENT REQUIREMENTS OF THE STANDARD SPECIFICATIONS AND APPLICABLE SPECIAL PROVISIONS.

RUMBLE STRIPS ON EXPRESSWAYS

DO NOT INSTALL RUMBLE STRIPS ACROSS SIDE ROAD INTERSECTIONS, COMMERCIAL DRIVEWAYS, PRIVATE DRIVEWAYS OR ADJACENT TO RIGHT TURN LANES, LEFT TURN LANES, TURN LANE TAPERS, BRIDGE DECKS, BRIDGE APPROACHES, OR 100 FEET IN ADVANCE OF RAILROAD CROSSING. THE ATTACHED STANDARD DETAIL DRAWING SHOWS THE LOCATION OF THE RUMBLE STRIPS AT INTERCHANGE AREAS.

(1) CONCRETE PAVEMENT - RUMBLE STRIPS SHALL BE A MINIMUM OF 6" AWAY FROM TRANSVERSE JOINTS.

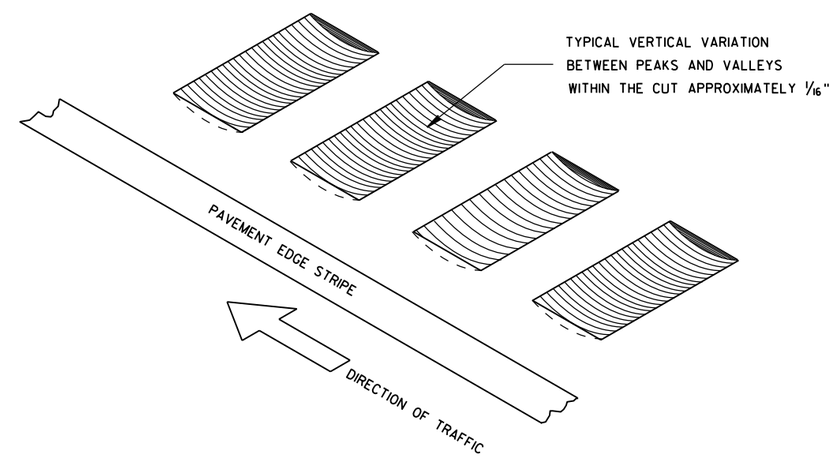

ISOMETRIC

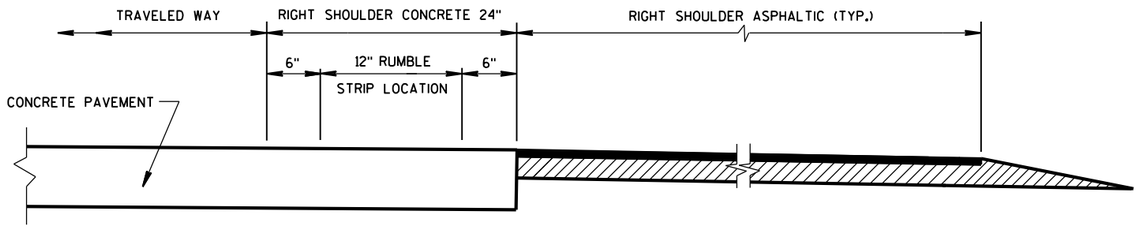

SECTION VIEW
CONCRETE PAVEMENT EXTENDS INTO RIGHT SHOULDER)

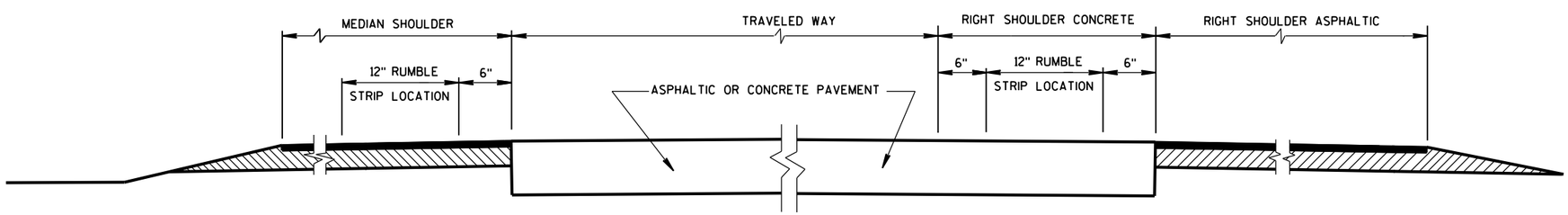

SECTION VIEW

TYPICAL LOCATIONS OF SHOULDER RUMBLE STRIPS
IN RURAL DIVIDED HIGHWAYS

(ONE ROADWAY IS SHOWN)

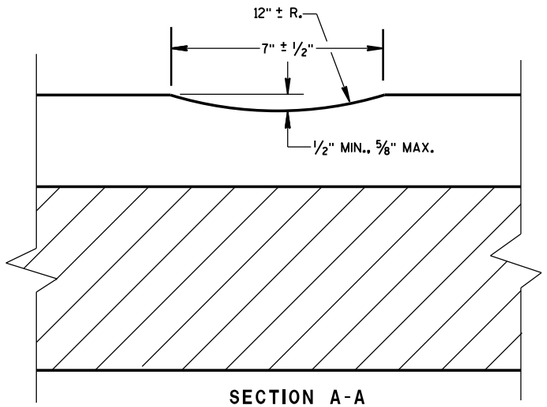

SECTION A-A

SHOULDER RUMBLE STRIP, MILLING

STATE OF WISCONSIN
DEPARTMENT OF TRANSPOR

6

6

S.D.D. 13 A 5-5a

S.D.D. 13 A 5-5a

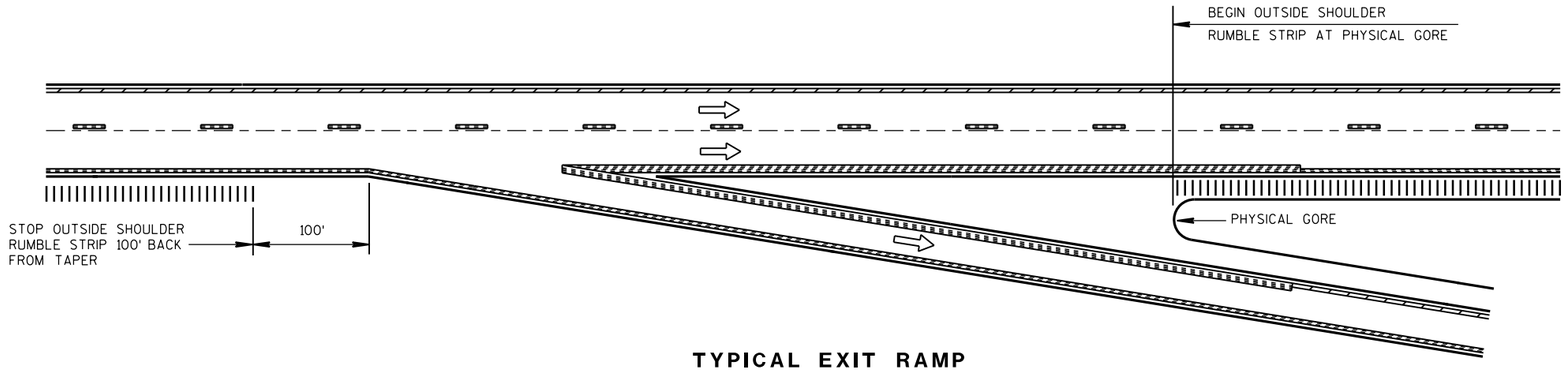

TYPICAL EXIT RAMP

NOTES:

NO RUMBLE STRIP ON EXIT, DIRECTIONAL, OR ENTRANCE RAMPS, EXCEPT NEAR THE ENTRANCE TAPER END AND ALONG THE PARALLEL RAMP AREA AS SHOWN.

PAVEMENT MARKING DETAILS AND SPECIFICATIONS ARE PROVIDED ELSEWHERE IN THE CONTRACT.

NOTE:
ARROW SYMBOL (⇨)
SHOWS DIRECTION OF TRAVEL

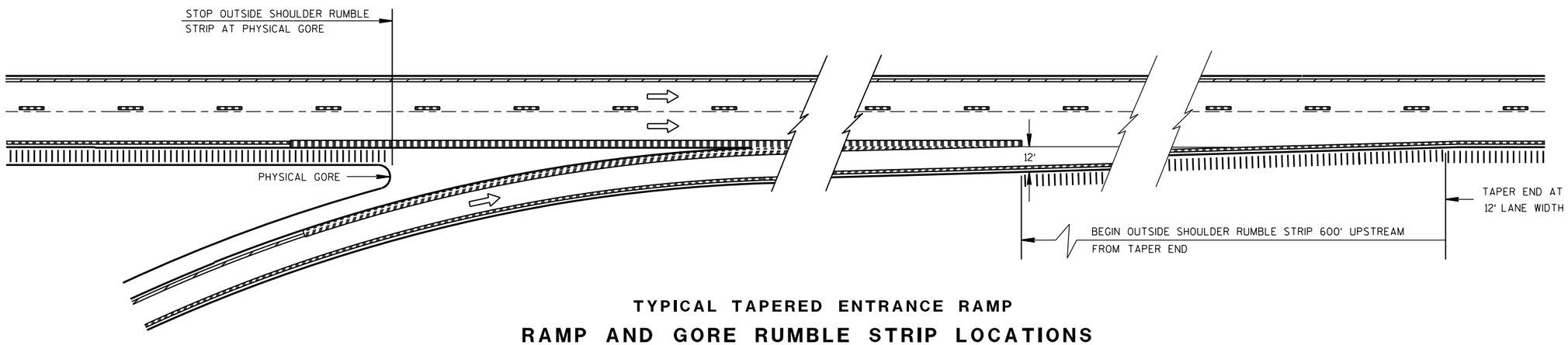

TYPICAL TAPERED ENTRANCE RAMP

RAMP AND GORE RUMBLE STRIP LOCATIONS

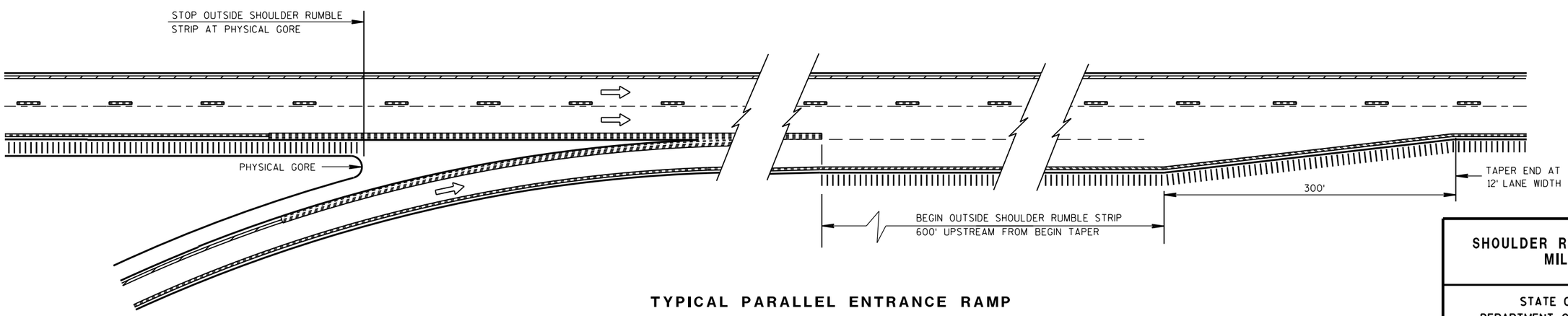

TYPICAL PARALLEL ENTRANCE RAMP

RAMP AND GORE RUMBLE STRIP LOCATIONS

SHOULDER RUMBLE STRIP, MILLING

STATE OF WISCONSIN
DEPARTMENT OF TRANSPORTATION

APPROVED
12/17/2012 — DATE
/S/ Jerry H. Zogg — ROADWAY STANDARDS ENGINEER
FHWA

6

S.D.D. 13 A 5-5b

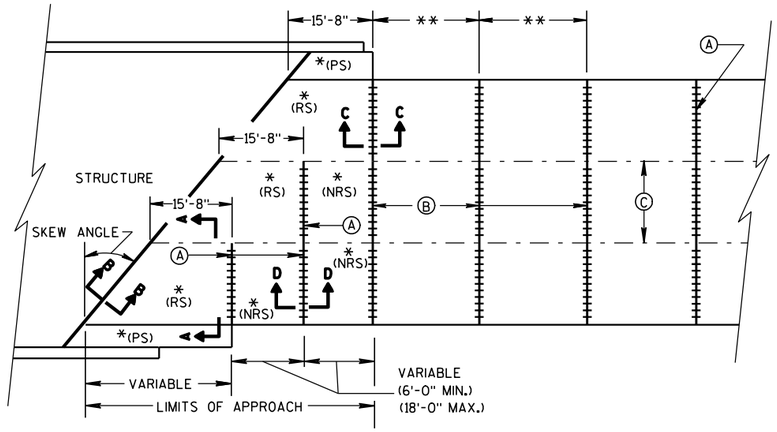

SKEWED APPROACH
(PAVEMENT MORE THAN 2 LANES)

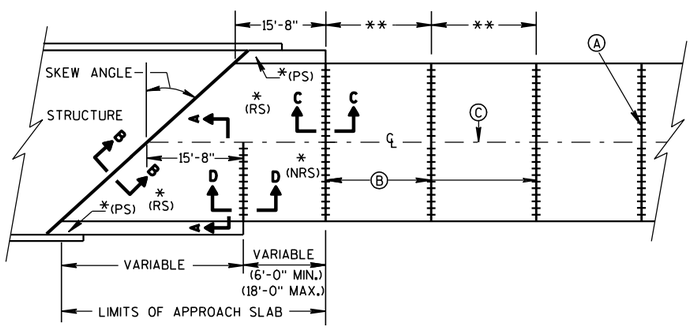

SKEWS >30°
(PAVEMENT WIDTH ≤30')

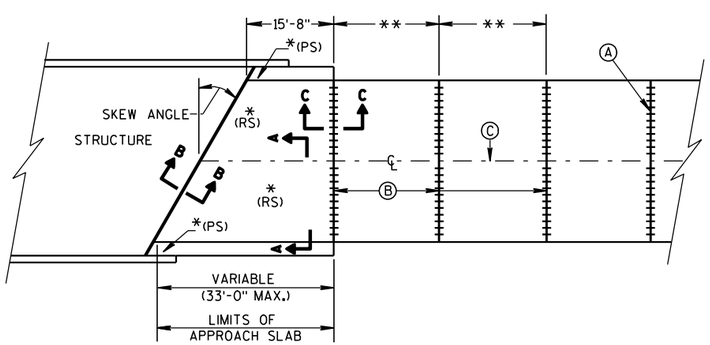

SKEWS ≤30°
(PAVEMENT WIDTH ≤30')

APPROACH SLAB AND ADJACENT PAVEMENT

*(RS) = REINFORCED CONCRETE SLAB
*(PS) = PAVED CONCRETE SHOULDER: CONCRETE PAVEMENT, OR CONCRETE SURFACE DRAIN (SEE DETAILS ELSEWHERE IN THE PLAN)
*(NRS) = NON-REINFORCED CONCRETE SLAB

**STANDARD TRANSVERSE JOINT SPACING (SEE SDD 13C4, SDD 13C11, & SDD 13C13)

Ⓐ STANDARD CONTRACTION JOINT NORMAL TO ℄ OR ℄
Ⓑ 1½" EXPANSION JOINT WITH DOWEL BARS NORMAL TO ℄ OR ℄
Ⓒ STANDARD LONGITUDINAL JOINT AND TIE BARS.

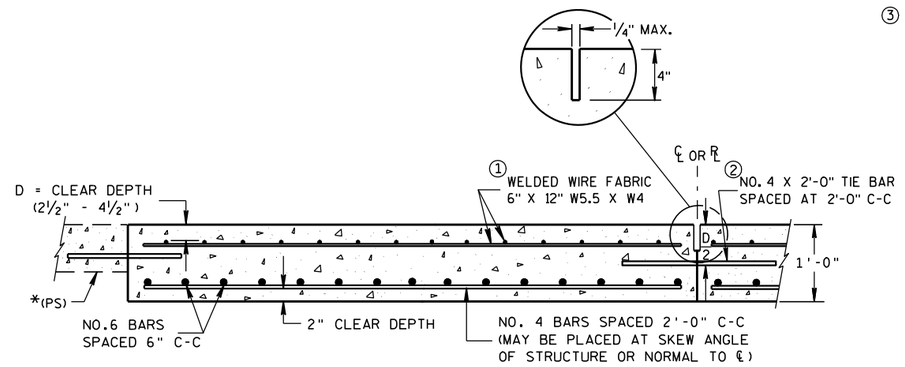

SECTION A-A
REINFORCEMENT POSITIONING DETAIL

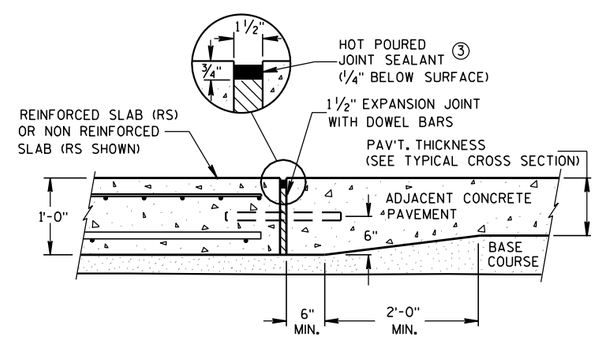

SECTION C-C
TRANSITION DETAIL
APPROACH SLAB TO ADJACENT PAVEMENT

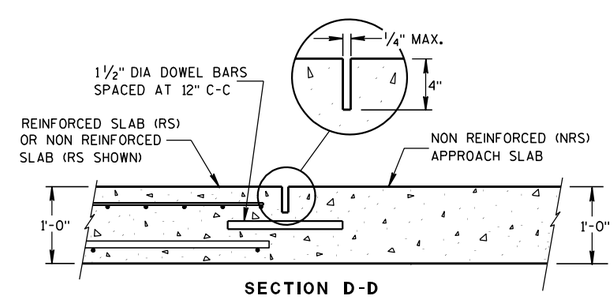

SECTION D-D
CONTRACTION JOINT

GENERAL NOTES

APPROACH SLABS ABUTTING AN HMA PAVEMENT OVER BASE COURSE DO NOT NEED TO BE DOWELED.

THE CONTRACTOR MAY SPLICE NO. 6 BARS IN THE APPROACH SLAB FOR SKEWED STRUCTURES ONLY. STAGGER SPLICES WITH A MAXIMUM OF ONE SPLICE PER BAR. THE LENGTH OF LAP IS 20 INCHES.

① THE CONTRACTOR MAY USE NO. 4 BARS SPACED AT 2'-0" C-C IN BOTH THE LONGITUDINAL AND TRANSVERSE DIRECTIONS FOR TOP REINFORCEMENT AS AN ALTERNATIVE TO THE WELDED WIRE FABRIC.

② THE CONTRACTOR MAY OMIT TIE BARS BETWEEN REINFORCED SLABS WHERE SLAB REINFORCEMENT BARS EXTEND ACROSS THE CENTERLINE OR REFERENCE LINE.

③ USE A JOINT SEALANT MEETING THE REQUIREMENTS OF ASTM D6690.

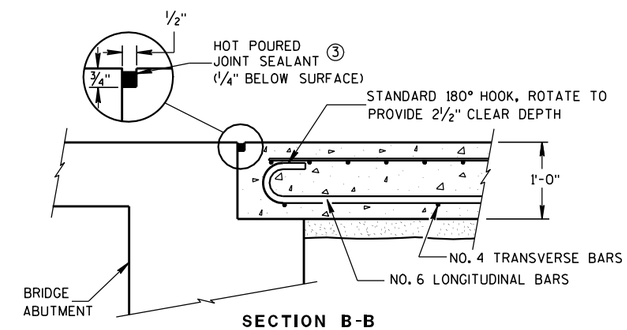

SECTION B-B
BEND DETAIL
BOTTOM REINFORCEMENT

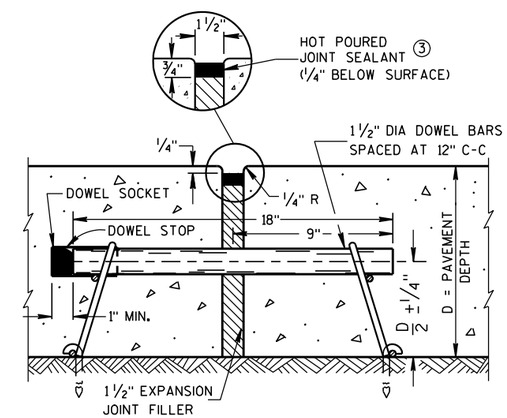

EXPANSION JOINT

CONCRETE PAVEMENT APPROACH SLAB

STATE OF WISCONSIN
DEPARTMENT OF TRANSPORTATION

APPROVED
12/11/2009 — DATE
/S/ Deb Bischoff — PAVEMENT POLICY & DE ... NEER
FHWA

6

6

S.D.D. 13 B 2-6

S.D.D. 13 B 2-6

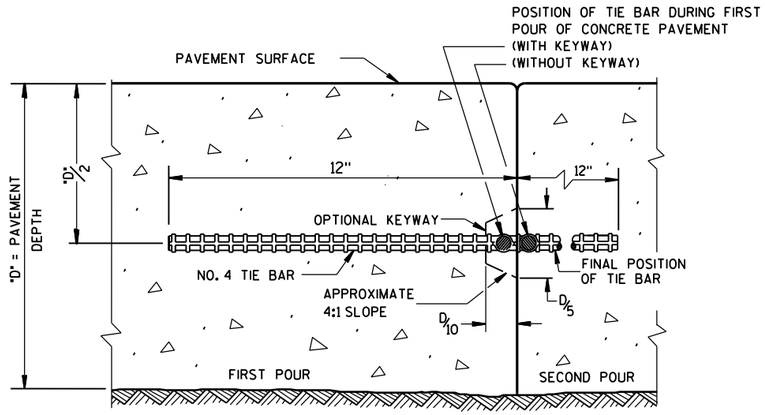

CONSTRUCTION JOINT

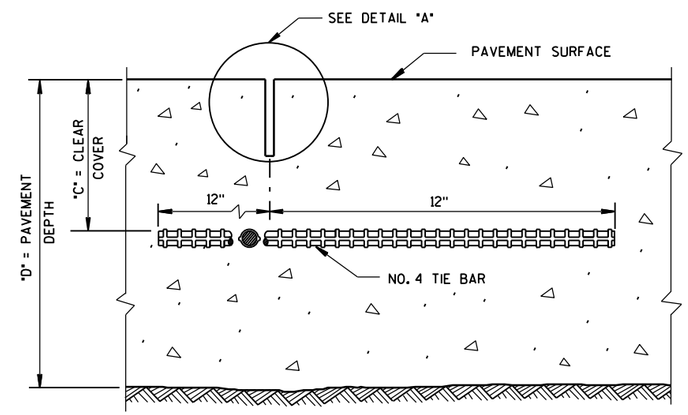

SAWED JOINT

GENERAL NOTES

DO NOT SEAL OR FILL LONGITUDINAL JOINTS.

CREATE A LONGITUDINAL JOINT FOR PAVEMENT WIDTHS GREATER THAN 15 FEET.

CORRELATE LONGITUDINAL JOINTS WITH LANE LINES WHEN POSSIBLE.

(1) ANCHOR TIE BARS INTO DRILLED HOLES WITH AN EPOXY.

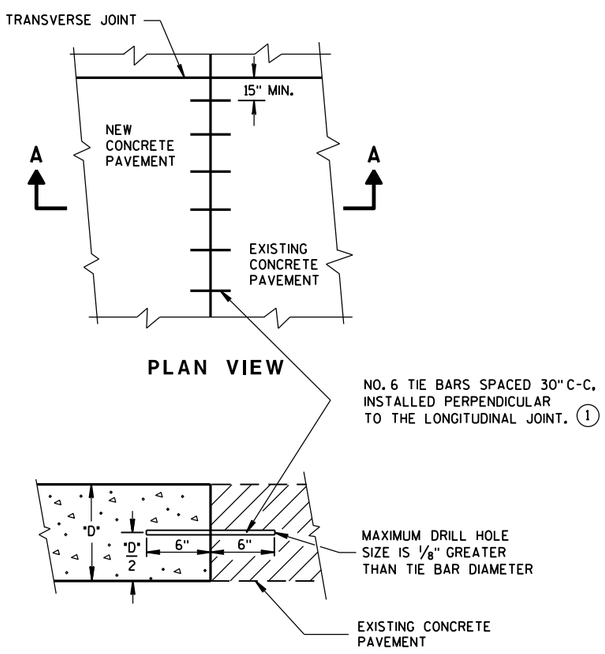

PLAN VIEW

SECTION A-A

LONGITUDINAL CONSTRUCTION JOINT TIE BARS ANCHORED INTO EXISTING PAVEMENT

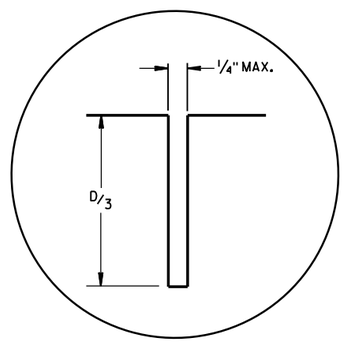

DETAIL "A"

TIE BAR TABLE

PAVEMENT DEPTH "D"	CLEAR COVER "C"	MAXIMUM TIE BAR SPACING "S" PAVEMENT WIDTH	
		24' OR 26'	≥ 30'
6, 6 1/2"	3"±1/2"	48"	42"
7, 7 1/2"	3 1/4"±1"	45"	36"
8, 8 1/2"	3 3/4"±1"	39"	30"
9, 9 1/2"	4 1/4"±1"	33"	27"
10, 10 1/2"	4 3/4"±1"	30"	24"
11, 11 1/2"	5 1/4"±1"	27"	21"
12"	5 3/4"±1"	24"	21"

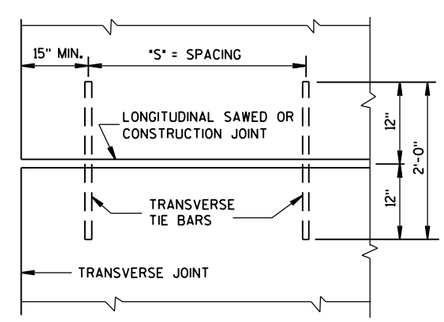

PLAN VIEW

SHOWING LOCATION OF TIE BARS

CONCRETE PAVEMENT
LONGITUDINAL JOINTS AND TIES

STATE OF WISCONSIN
DEPARTMENT OF TRANSPORTATION

APPROVED

5-3-2013 — DATE

/S/ Deb Bischoff — PAVEMENT POLICY & DE ... NEER

FHWA

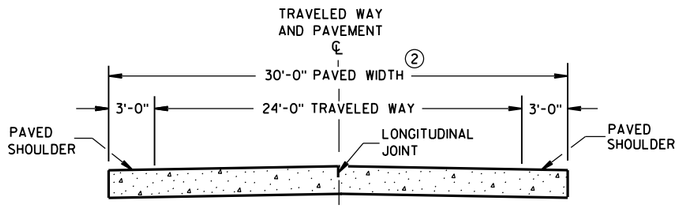

SECTION A-A ①
TWO-LANE TWO-WAY HIGHWAY

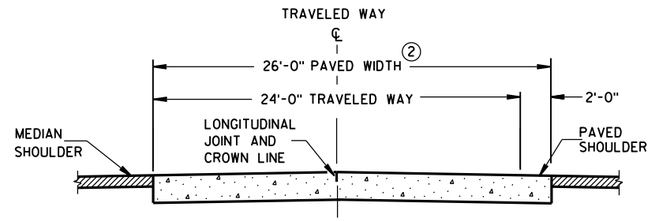

SECTION B-B

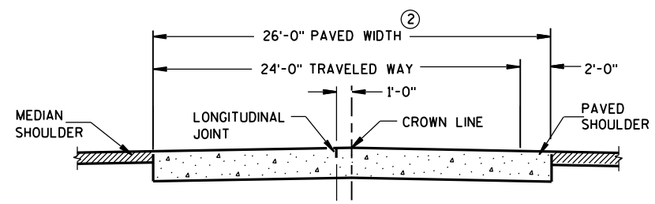

ALTERNATIVE SECTION B-B ①
DIVIDED HIGHWAY

GENERAL NOTES

CONTRACTION JOINTS

CONSTRUCT TRANSVERSE CONTRACTION JOINTS NORMAL TO THE CENTERLINE. SHOW THE LOCATION OF CONTRACTION JOINTS THROUGH INTERSECTIONS ON THE PLANS OR AS DIRECTED BY THE ENGINEER.

DO NOT SEAL OR FILL CONTRACTION JOINTS.

INSTALL DOWEL BARS PARALLEL TO THE PAVEMENT CENTERLINE AND PAVEMENT SURFACE.

FOR PAVEMENT SLABS OF VARYING WIDTHS, LOCATE THE OUTER MOST DOWEL BAR SO THAT THE CENTER OF THE BAR IS A MINIMUM OF 6 INCHES AND A MAXIMUM OF 18 INCHES FROM THE FREE EDGE OF PAVEMENT.

CONSTRUCTION JOINTS

LOCATE CONSTRUCTION JOINTS A MINIMUM OF 6 FEET FROM THE NEAREST CONTRACTION JOINT AND ALIGN PARALLEL TO CONTRACTION JOINTS.

① REFER TO TYPICAL CROSS SECTIONS FOR ADDITIONAL DETAILS.

② MEASURE THE ENTIRE PAVED WIDTH INCLUDING THE PORTION(S) LABELED PAVED SHOULDER AS CONCRETE PAVEMENT.

PAVEMENT DEPTH, DOWEL BAR SIZE AND JOINT SPACING TABLE

PAVEMENT DEPTH (D)	DOWEL BAR DIAMETER	CONTRACTION JOINT SPACING
5 ½", 6", 6 ½"	NONE	12'
7", 7 ½"	1"	14'
8", 8 ½"	1 ¼"	15'
9", 9 ½"	1 ¼"	15'
10" & ABOVE	1 ½"	15'

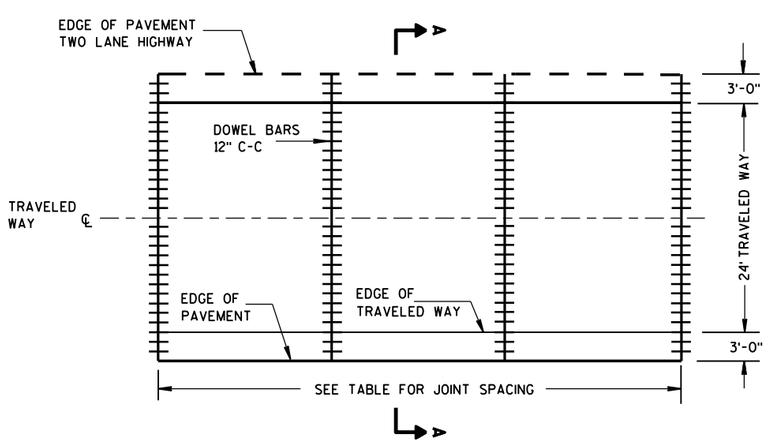

CONTRACTION JOINT LAYOUT
FOR TWO-LANE TWO-WAY HIGHWAY

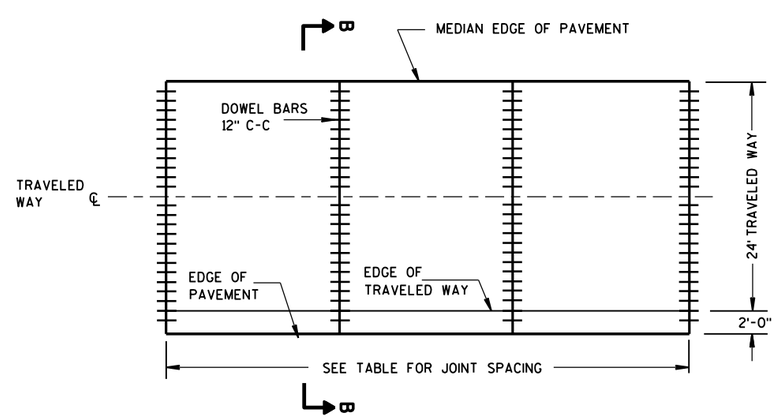

CONTRACTION JOINT LAYOUT
FOR DIVIDED HIGHWAY

RURAL DOWELED
CONCRETE PAVEMENT

STATE OF WISCONSIN
DEPARTMENT OF TRANSPOI

6

S.D.D. 13 C 11-11a

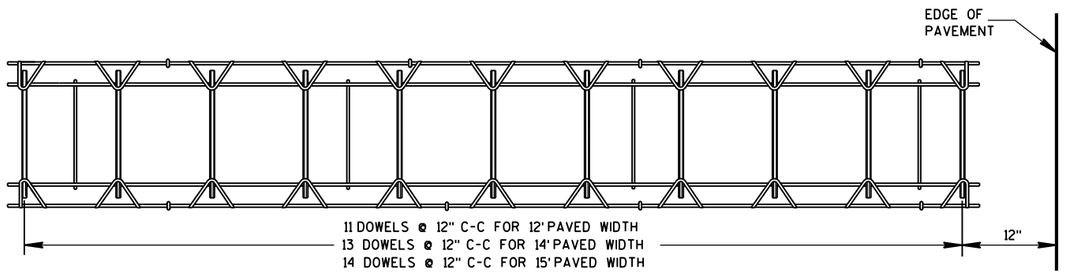

PLAN VIEW

② SIDE VIEW

(NORMAL TO CENTERLINE)

CONTRACTION JOINT DOWEL ASSEMBLY ①

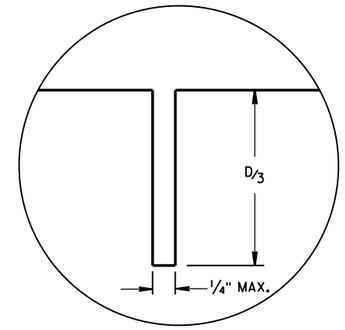

JOINT DETAIL

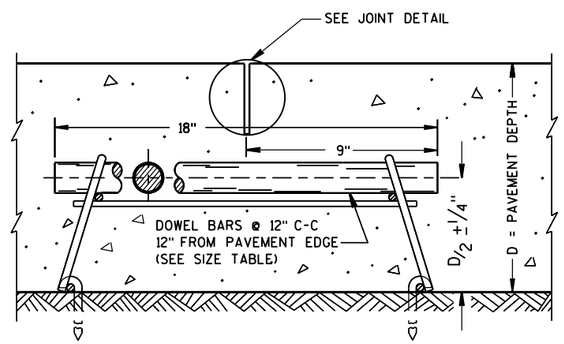

DOWELED CONTRACTION JOINT

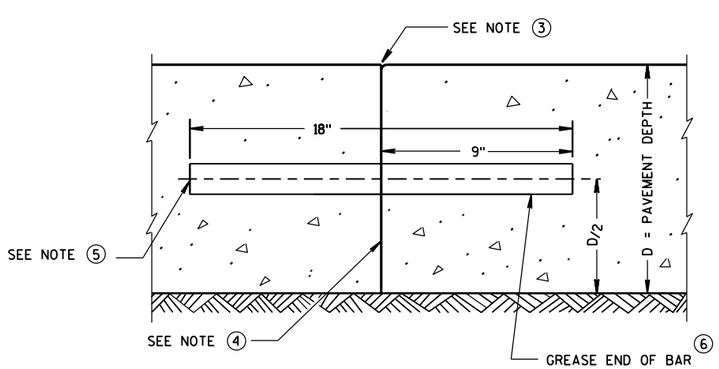

TRANSVERSE CONSTRUCTION JOINT

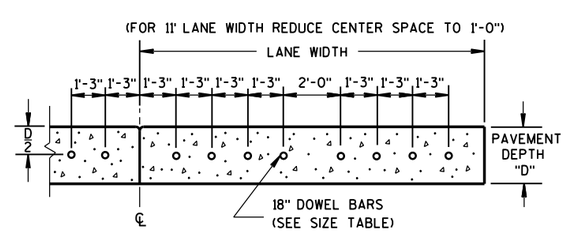

DRILLED DOWEL BAR CONSTRUCTION JOINT ⑦

GENERAL NOTES

① OBTAIN THE ENGINEER'S APPROVAL FOR THE USE OF ALTERNATIVE DESIGNS OF THE DOWEL ASSEMBLY. USE MECHANICAL DOWEL BAR INSERTERS OR DOWEL ASSEMBLIES WHEN CONSTRUCTING CONTRACTION JOINTS.

② SECURE BASKETS WITH ANCHORS TO HOLD DOWEL BARS IN THE CORRECT POSITION AND ALIGNMENT. TYPE, LOCATION, NUMBER AND LENGTH OF ANCHORS ARE DEPENDENT UPON FIELD CONDITIONS.

③ FORM OR SAW CONSTRUCTION JOINTS. PROVIDE A 1/4-INCH RADIUS AT FORMED JOINTS.

④ PROVIDE A SMOOTH VERTICAL FACE FOR THE ENTIRE DEPTH OF THE PAVEMENT WHEN FORMING CONSTRUCTION JOINTS.

⑤ INSTALL DOWEL BARS AT CONSTRUCTION JOINTS BY FORMING OR DRILLING. INSTALL FORMED DOWEL BARS 12 INCHES C-C AND 12 INCHES FROM PAVEMENT EDGE. REMOVE EXCESS CONCRETE FROM THE FREE END OF THE DOWEL BAR IF DOWEL BARS ARE FORMED THROUGH A HEADER BOARD. INSTALL DRILLED DOWEL BARS ACCORDING TO *DRILLED DOWEL BAR CONSTRUCTION JOINT* DETAIL.

⑥ APPLY A THIN UNIFORM COATING OF SURFACE TREATMENT TO THE FREE END OF DOWEL BARS TO PREVENT BONDING.

⑦ ANCHOR DOWEL BARS INTO DRILLED HOLES WITH AN EPOXY. MAXIMUM DRILLED HOLE SIZE IS 1/8-INCH GREATER THAN DOWEL BAR DIAMETER, 9 INCHES IN LENGTH.

RURAL DOWELED CONCRETE PAVEMENT

STATE OF WISCONSIN
DEPARTMENT OF TRANSPORTATION

APPROVED
5/3/2013 — DATE
/S/ Deb Bischoff — PAVEMENT POLICY & DE ... NEER
FHWA

GENERAL NOTES

PCCP = PORTLAND CEMENT CONCRETE PAVEMENT.

SHLDR = SHOULDER.

CONTINUE SAW CUT CONTRACTION JOINT ACROSS TURN LANE, EXIT TAPER AND PASSING LANE.

PAVEMENT MARKING DETAILS AND SPECIFICATIONS ARE PROVIDED ELSEWHERE IN THE CONTRACT.

THROUGH HIGHWAY LANE WIDTH AND PCCP SHOULDER WIDTH ARE SHOWN ELSEWHERE IN PLANS

(1) DISTANCE FROM END TAPER TO 2' X 13.3' CONCRETE STUB

(2) DISTANCE FROM BEGIN TAPER TO 2' X 25' CONCRETE STUB

THROUGH HIGHWAY MONOLITHIC PCCP SHOULDER WIDTH (FEET)	DISTANCE (FEET)	
	(1)	(2)
2	13.3	0.0
3	20.0	12.5
TAPER RATE : 1	6.67	12.5

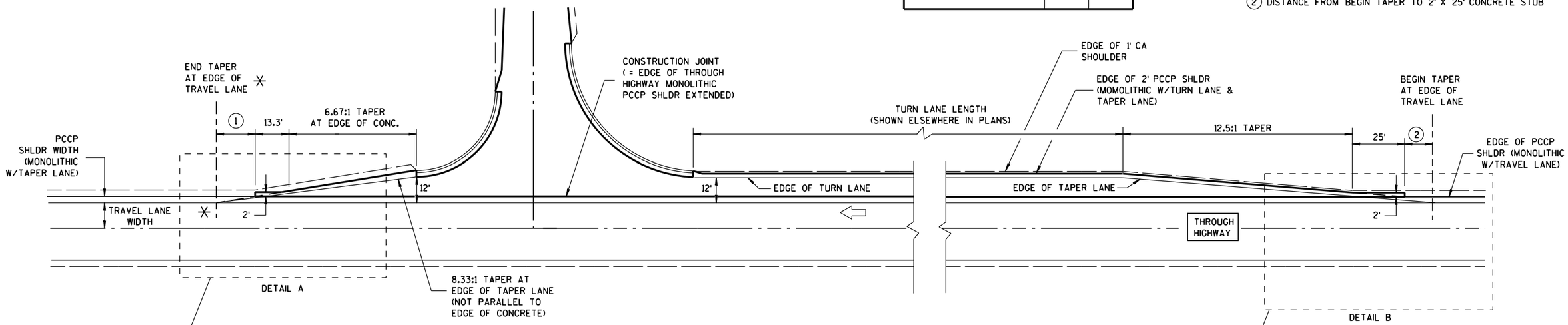

✳ NOTE: EDGE OF CONCRETE TAPER (EXTENDED) & EDGE OF TAPER LANE CONVERGE

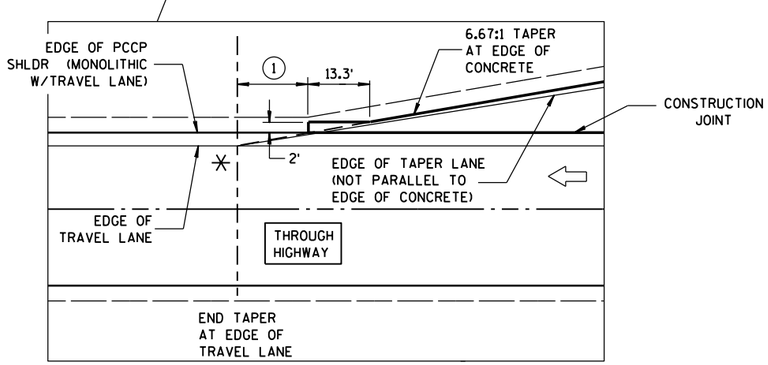

DETAIL A

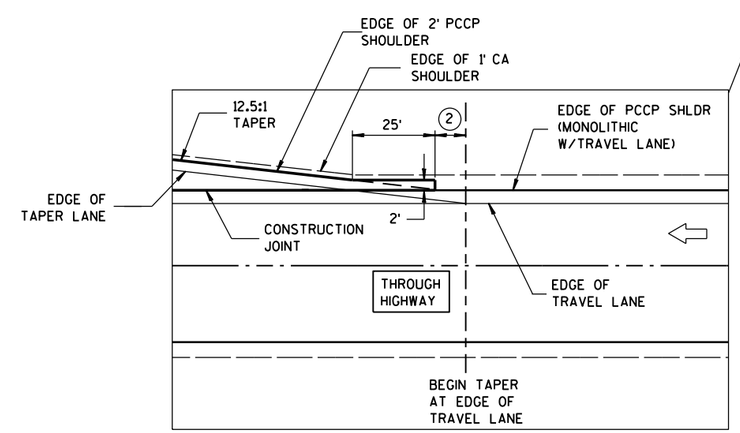

DETAIL B

RIGHT TURN LANE AND EXIT TAPER

DETAIL FOR RIGHT TURN LANE/ TEE INTERSECTION BYPASS LANE ON A CONCRETE ROADWAY

STATE OF WISCONSIN
DEPARTMENT OF TRANSPO

6

6

S.D.D. 13 C 16-2a

S.D.D. 13 C 16-2a

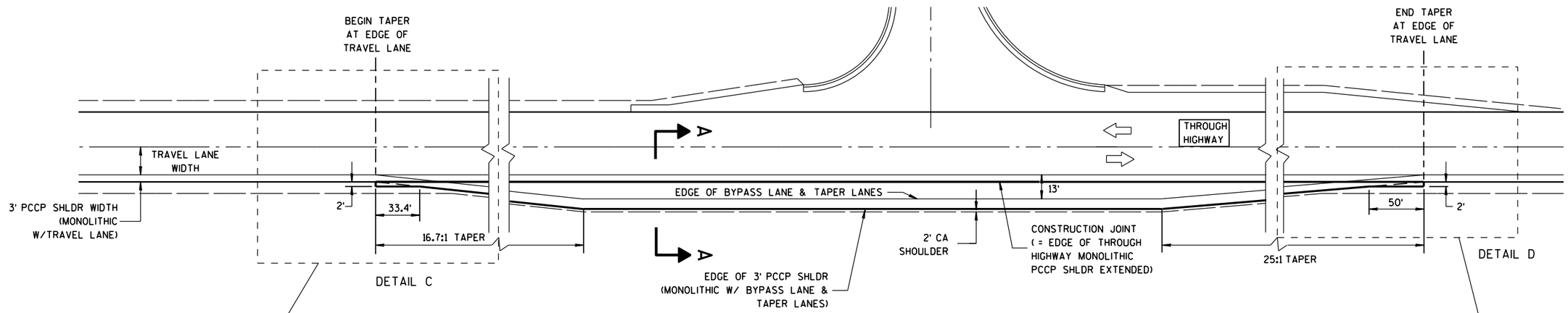

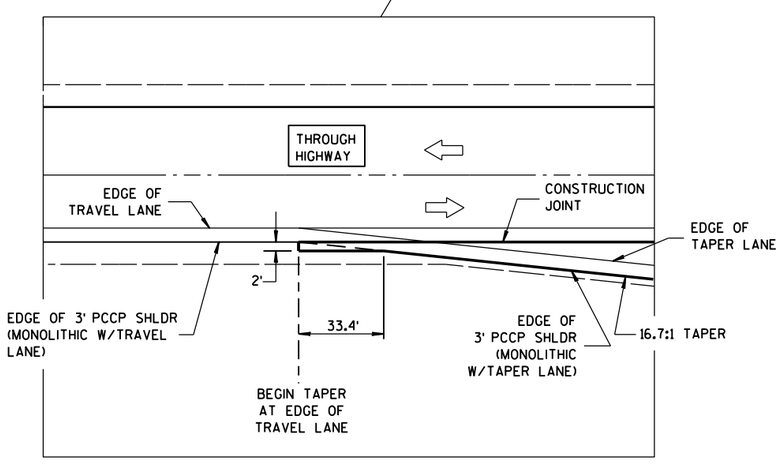

DETAIL C

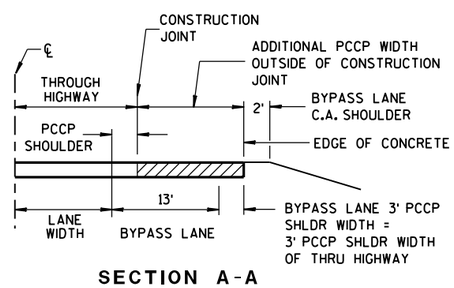

SECTION A-A

(SHOWING BYPASS LANE AND SHOULDER)

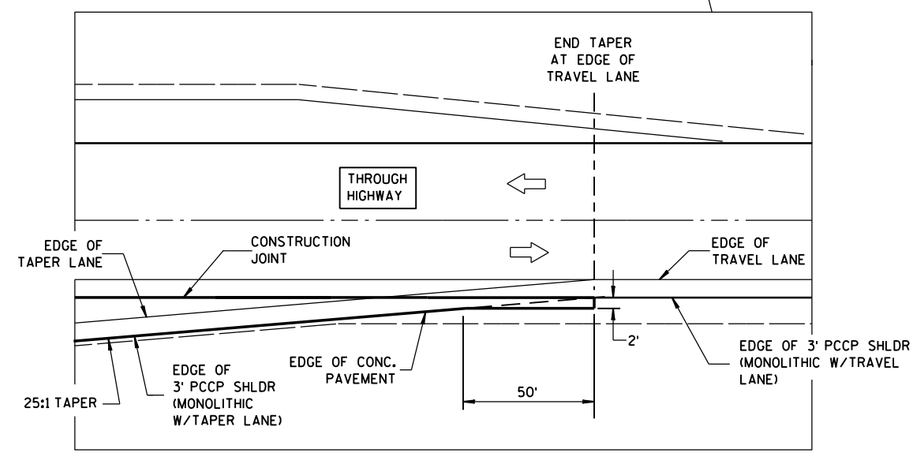

DETAIL D

TWO LANE UNDIVIDED HIGHWAY TEE INTERSECTION BYPASS LANE

DETAIL FOR RIGHT TURN LANE/
TEE INTERSECTION BYPASS LANE
ON A CONCRETE ROADWAY

STATE OF WISCONSIN
DEPARTMENT OF TRANSPORTATION

APPROVED

12/18/12 — DATE

/S/ Jerry H. Zogg — ROADWAY STANDARDS DEVELOPMENT ENGINEER

FHWA

6

S.D.D. 13 C 16-2b

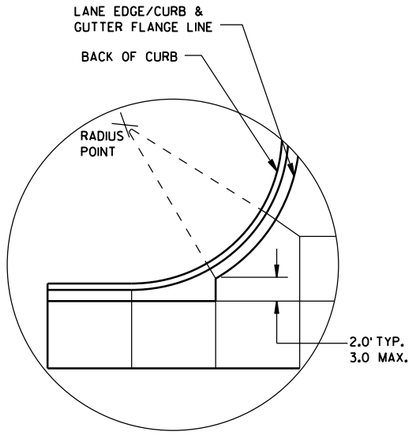

DETAIL "A"

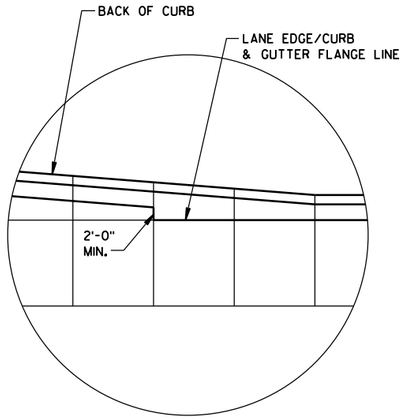

DETAIL "B"

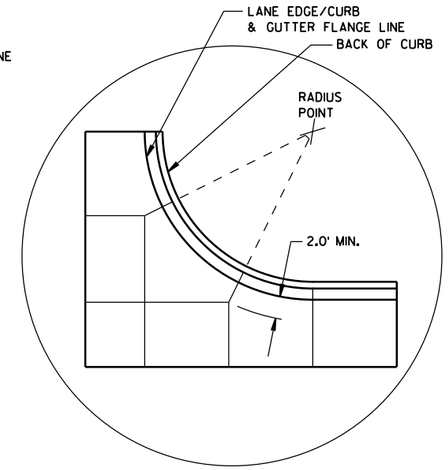

DETAIL "C"

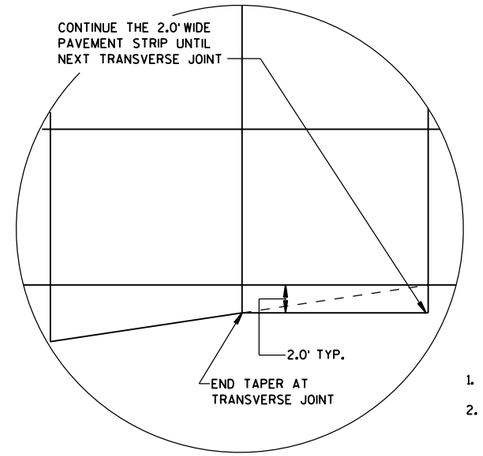

DETAIL "D"

GENERAL NOTES

THE PRIMARY ROADWAY CONTROLS THE TRANSVERSE JOINT PATTERN.

ALIGN NEW JOINTS WITH EXISTING JOINTS OR CRACKS.

CONSTRUCT TRANSVERSE JOINTS PERPENDICULAR TO THE ROADWAY.

ADJUST TRANSVERSE JOINTS TO ALIGN WITH UTILITY FIXTURES (E.G. MANHOLES AND INLETS) IN THE PAVEMENT STRUCTURE WHEN POSSIBLE. WATER VALVES DO NOT REQUIRE JOINT ADJUSTMENT.

AVOID SLABS LESS THAN 2 FEET WIDE OR GREATER THAN 15 FEET WIDE.

SEE TABLE FOR TRANSVERSE JOINT SPACING. JOINT SPACING SPECIFIED IS MAXIMUM AND ACTUAL SPACING CAN BE ADJUSTED TO ACCOMMODATE INTERSECTIONS.

AVOID ANGLES LESS THAN 60° BY DOGLEGGING JOINTS THROUGH CURVE RADIUS POINTS. USE 90° ANGLES WHEN POSSIBLE.

CORRELATE LONGITUDINAL JOINTS WITH LANE LINES WHEN POSSIBLE.

1. PROVIDE TRANSVERSE JOINTS AT ALL PAVEMENT WIDTH CHANGES.
2. CONSTRUCT DOWELED EXPANSION JOINT ON THE SIDE ROAD OF AN INTERSECTION IF THE SIDE ROAD IS CONCRETE PAVEMENT AND GREATER THAN 300 FEET IN LENGTH. ALIGN EXPANSION JOINT WITH EDGE OF RADIUS.
3. THE ENGINEER MAY APPROVE SLIGHT VARIATIONS FROM THESE JOINTING DETAILS.

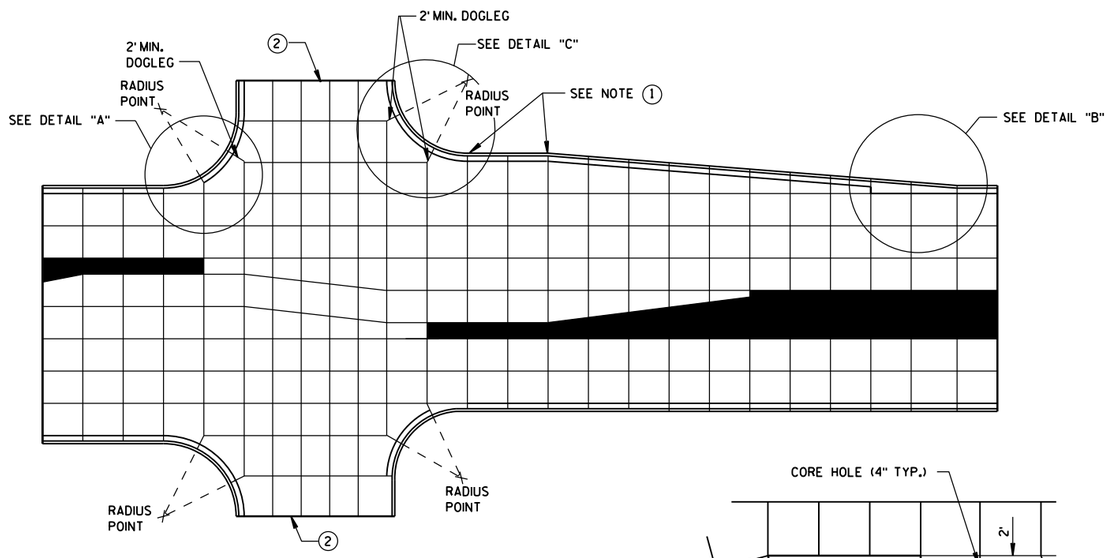

STANDARD INTERSECTION

PAVEMENT DEPTH AND JOINT SPACING TABLE

PAVEMENT DEPTH (D)	CONTRACTION JOINT SPACING
6", 6½"	12'
7", 7½"	14'
8" & ABOVE	15'

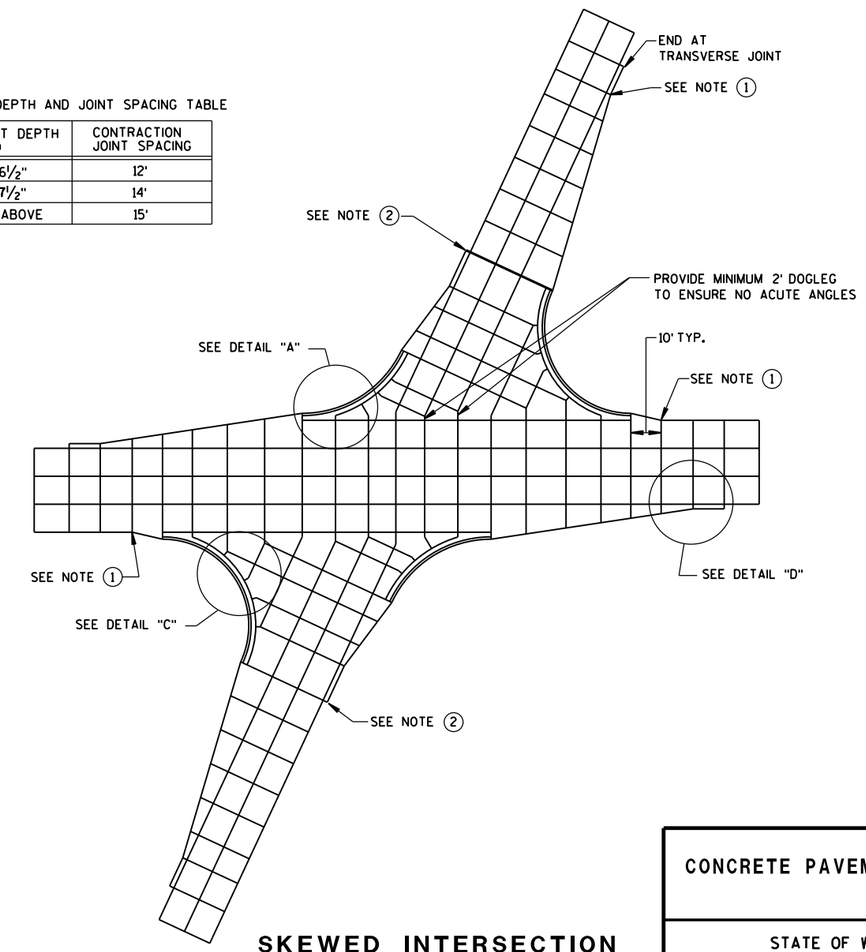

SKEWED INTERSECTION

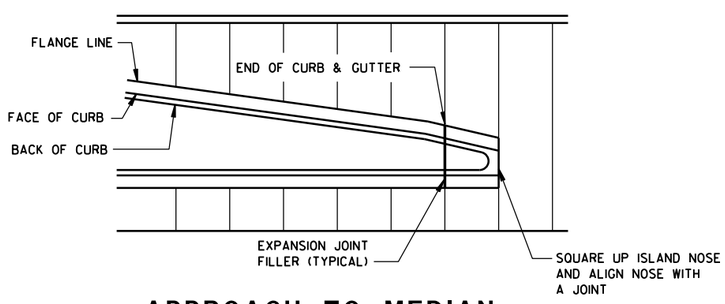

APPROACH TO MEDIAN

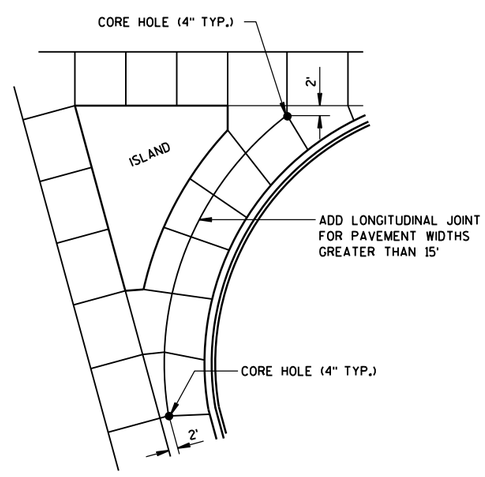

LARGE RIGHT TURN

CONCRETE PAVEMENT JOINTING

STATE OF WISCONSIN
DEPARTMENT OF TRANSPOR

6

S.D.D. 13 C 18-2a

LEGEND

POTENTIAL DOWELED EXPANSION JOINT

DOWELED JOINT

TIED JOINT

GENERAL NOTES

USE AN EXPANSION JOINT FILLER MEETING THE REQUIREMENTS OF STANDARD SPECIFICATION 415.

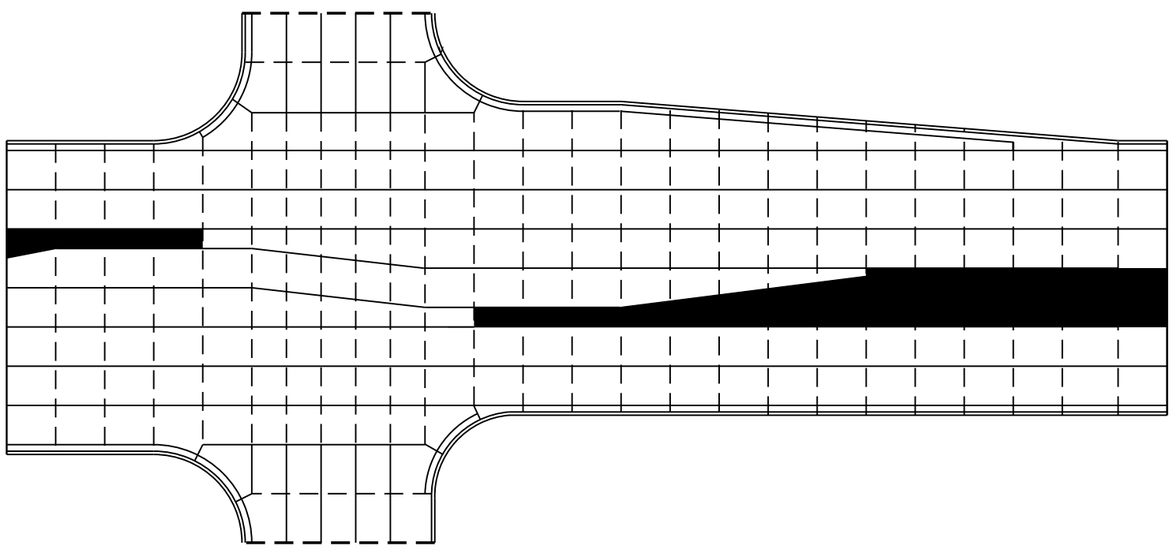

STANDARD INTERSECTION

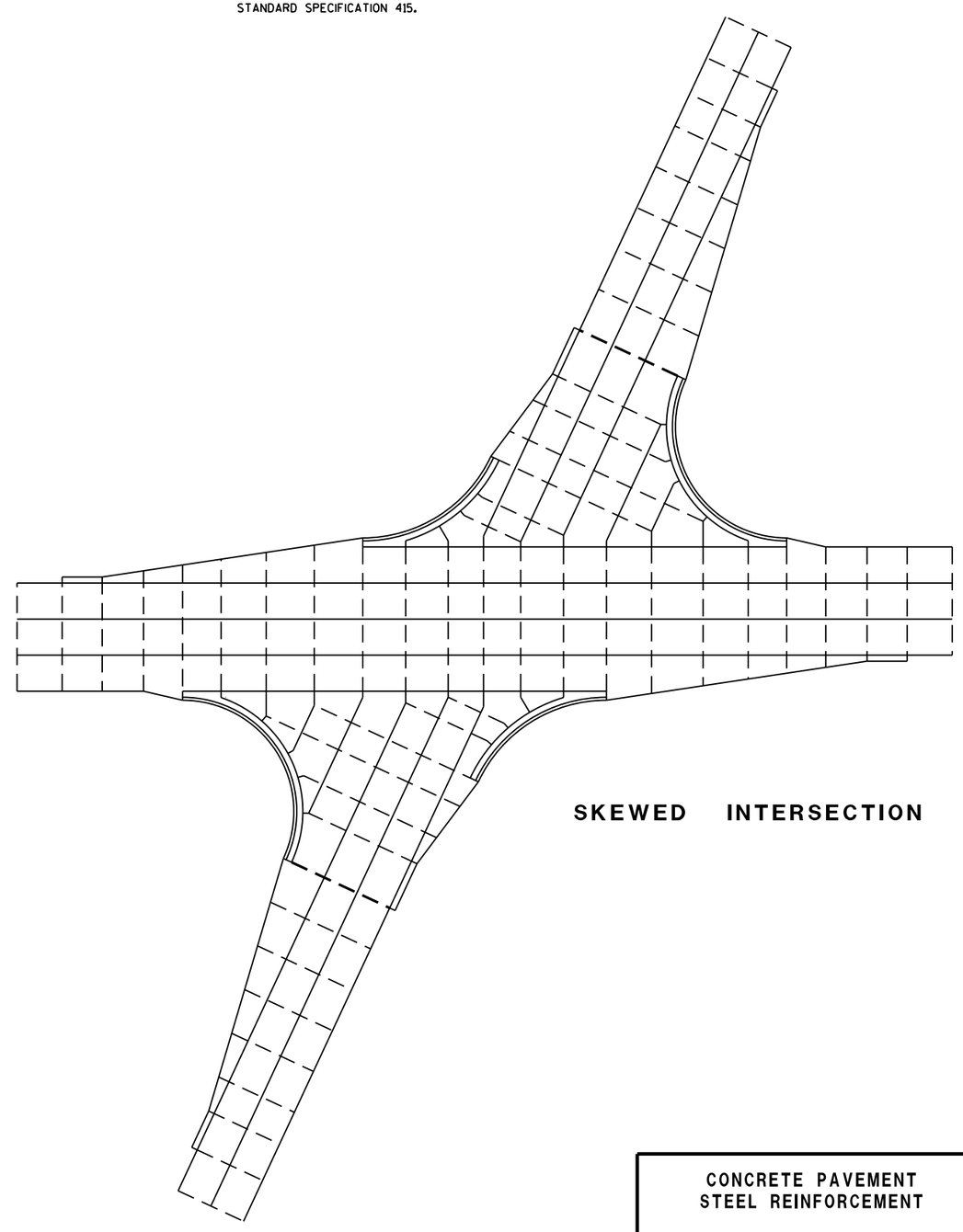

SKEWED INTERSECTION

CONCRETE PAVEMENT
STEEL REINFORCEMENT

STATE OF WISCONSIN
DEPARTMENT OF TRANSPOR

6

S.D.D. 13 C 18-2b

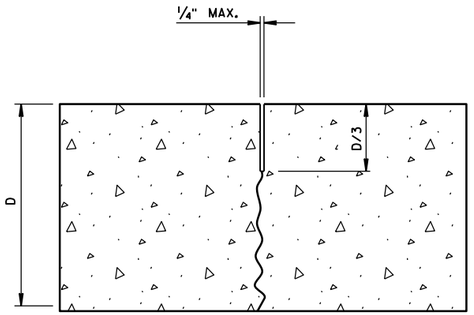

UNDOWELED-TRANSVERSE

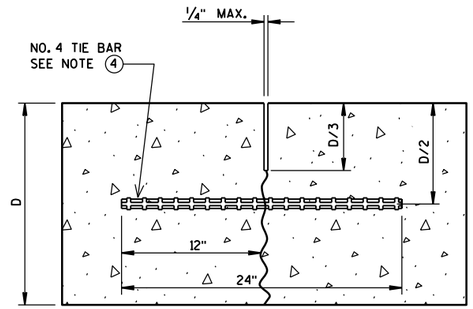

TIED LONGITUDINAL

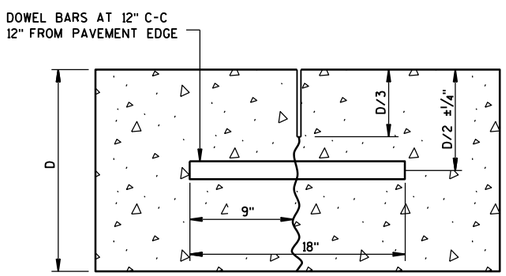

DOWELED-TRANSVERSE

CONTRACTION JOINTS

SEE NOTE 2

GENERAL NOTES

1. USE DOWELED EXPANSION JOINTS ON SIDE ROADS AT INTERSECTIONS (TO ISOLATE THE SIDE ROAD FROM THE THROUGH STREET) IF THE SIDE ROAD IS CONCRETE PAVEMENT AND GREATER THAN 300 FEET IN LENGTH.
2. SPACE CONTRACTION JOINTS IN ACCORDANCE WITH 13C4, 13C11 OR 13C13.
3. LOCATE CONSTRUCTION JOINTS A MINIMUM OF 6 FEET FROM THE NEAREST CONTRACTION JOINT AND ALIGN PARALLEL TO CONTRACTION JOINTS.
4. SPACE TIE BARS AT LONGITUDINAL CONSTRUCTION OR CONTRACTION JOINTS IN ACCORDANCE WITH SDD 13C1.
5. CONSTRUCTION JOINTS CAN BE FORMED OR SAWED.
6. IF JOINT IS FORMED, PROVIDE A 1/4-INCH RADIUS.

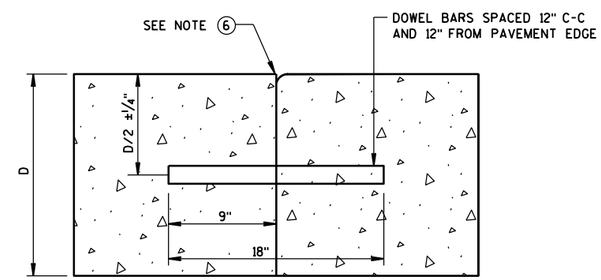

DOWELED TRANSVERSE

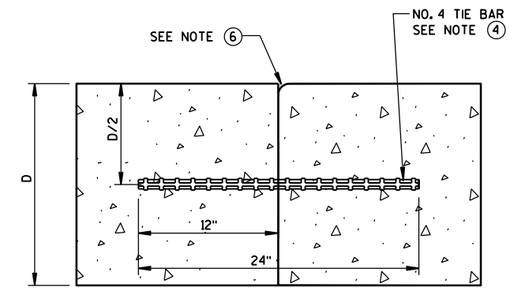

TIED LONGITUDINAL

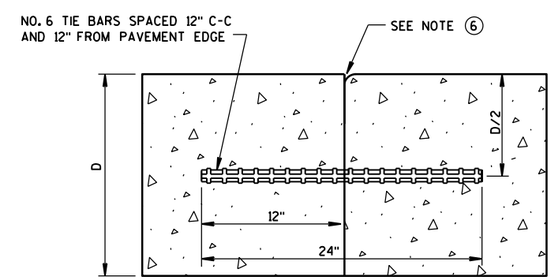

TIED TRANSVERSE

(FOR USE ON NON-DOWELED PAVEMENTS ONLY)

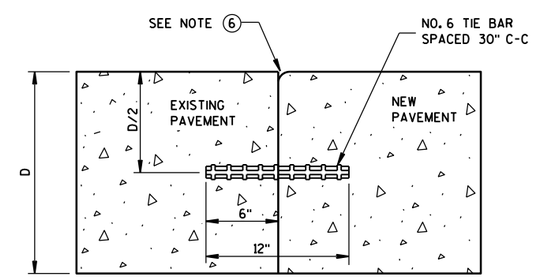

TIED LONGITUDINAL TO EXISTING

CONSTRUCTION JOINTS

SEE NOTE 5

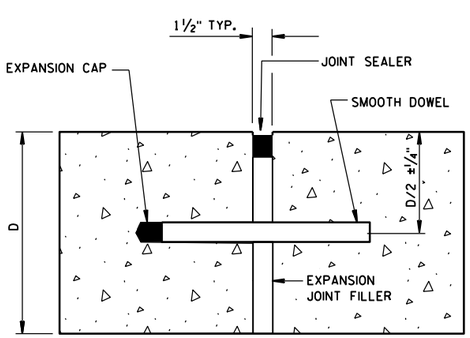

DOWELED-TRANSVERSE

SEE NOTE 1

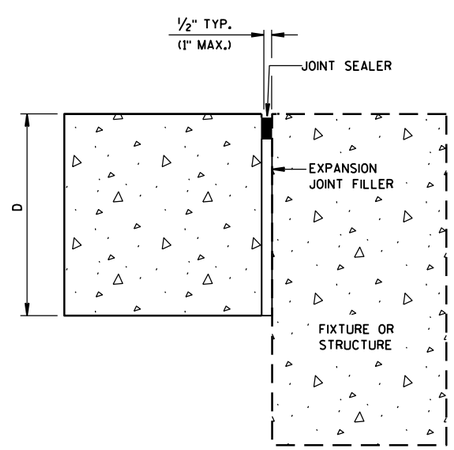

UNTIED-LONGITUDINAL

EXPANSION JOINTS

CONCRETE PAVEMENT
JOINT TYPES

STATE OF WISCONSIN
DEPARTMENT OF TRANSPOR

6

S.D.D. 13 C 18-2c

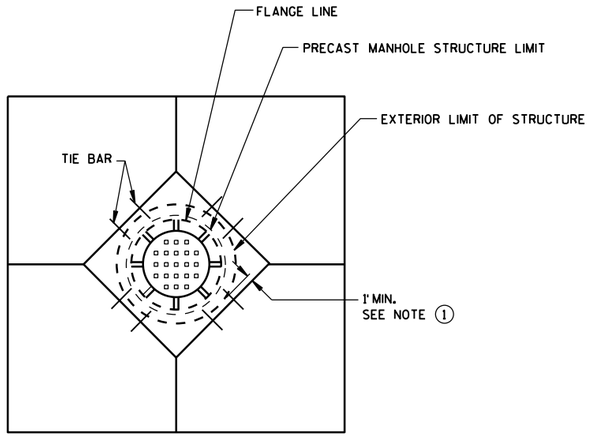

DIAGONAL MANHOLE BOXOUT FOR CONSTRUCTION JOINTS

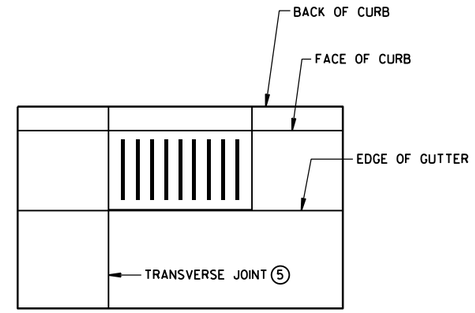

INLET WITH TRANSVERSE JOINT

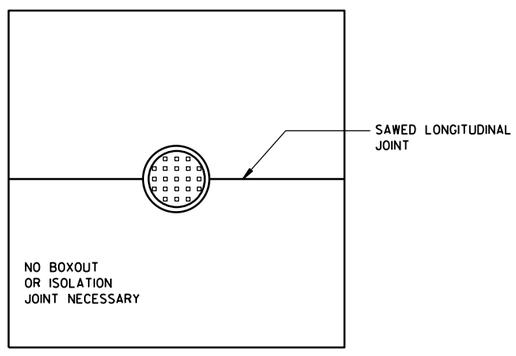

MANHOLE WITH LONGITUDINAL JOINT

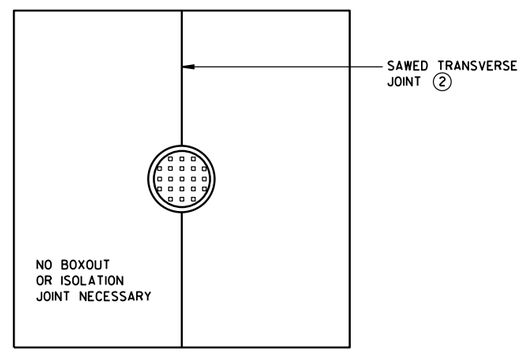

MANHOLE WITH TRANSVERSE JOINT

GENERAL NOTES

1. USE BOXOUTS WHEN UTILITY STRUCTURE IS IN THE PATH OF CONSTRUCTION JOINTS. PROVIDE A 1-FOOT MINIMUM CLEARANCE BETWEEN THE EXTERIOR LIMIT OF THE STRUCTURE TO THE DIAMOND BOXOUT.
2. ADJUST TRANSVERSE JOINT TO INTERSECT MANHOLE IF POSSIBLE.
3. IF DISTANCE BETWEEN THE LONGITUDINAL JOINT AND THE EDGE OF MANHOLE IS 2 FEET OR LESS, DIVERT THE LONGITUDIAL JOINT AT A 2:1 TAPER RATE TO THE CENTER OF THE MANHOLE. IF THE DISTANCE IS GREATER THAN 2 FEET, DO NOT DIVERT THE JOINT AND SAW AS NORMAL. PLACE REBAR REINFORCEMENT AROUND THE MANHOLE.
4. IF DISTANCE FROM THE EDGE OF THE MANHOLE TO THE NEAREST TRANSVERSE JOINT IS 4 FEET OR LESS, REDIRECT JOINT TO INTERSECT THE CENTER OF THE MANHOLE. IF DISTANCE IS GREATER THAN 4 FEET, DO NOT DIVERT THE JOINT AND SAW AS NORMAL. PLACE REBAR REINFORCEMENT AROUND THE MANHOLE.
5. ALIGN TRANSVERSE JOINT WITH ONE EDGE OF INLET WHEN PRACTICAL.

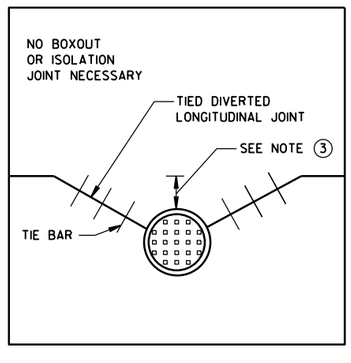

MANHOLE WITH DIVERTED LONGITUDINAL CONTRACTION JOINT

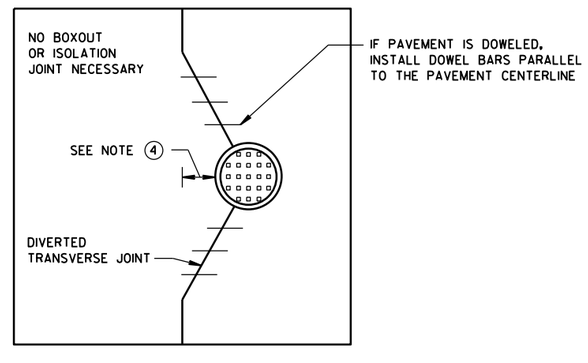

MANHOLE WITH DIVERTED TRANSVERSE CONTRACTION JOINT

CONCRETE PAVEMENT
JOINTING AT UTILITY FIXTURES

STATE OF WISCONSIN
DEPARTMENT OF TRANSPORTATION

APPROVED
5-3-2013 /S/ Deb Bischoff
DATE PAVEMENT POLICY & DE NEER
FHWA

LEGEND

- DOWELED JOINT
- TIED JOINT
- EXPANSION JOINT
- POTENTIAL DOWELED EXPANSION JOINT
- TRUCK APRON
- CENTRAL ISLAND
- UTILITY STRUCTURES

GENERAL NOTES

MAXIMUM JOINT SPACING IS IN ACCORDANCE WITH THE TABLE SHOWN ON SDD 13C18 SHEET "a".

USE AN EXPANSION JOINT FILLER MEETING THE REQUIREMENTS OF STANDARD SPECIFICATION 415.

DO NOT DOWEL OR TIE THE TRUCK APRON TRANSVERSE JOINTS.

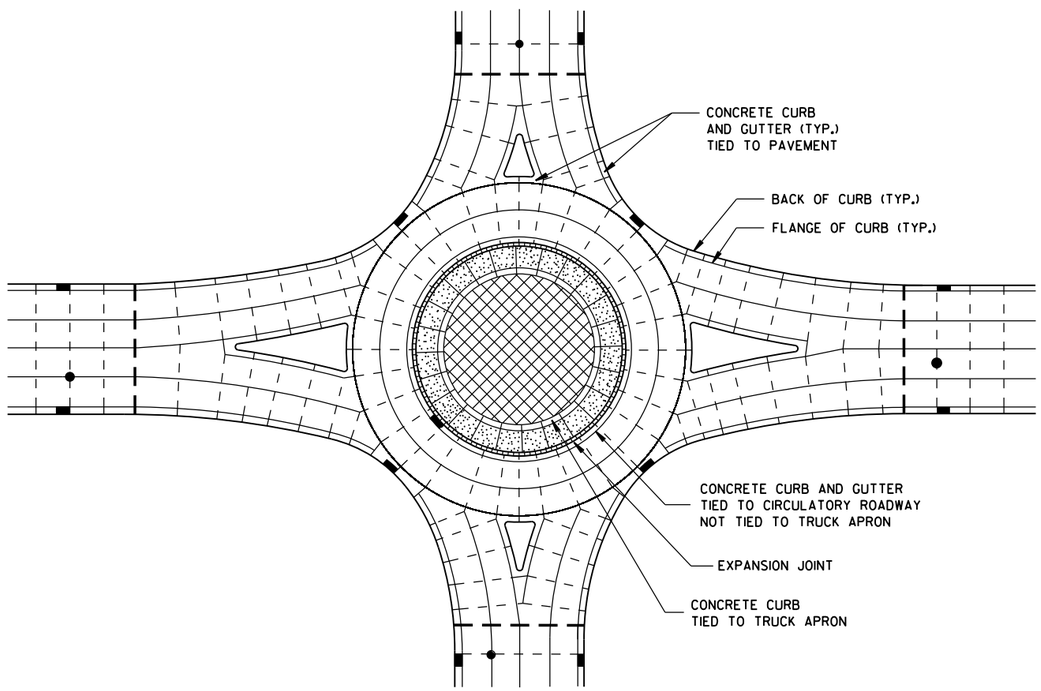

ISOLATED CIRCLE JOINT LAYOUT FOR ROUNDABOUTS

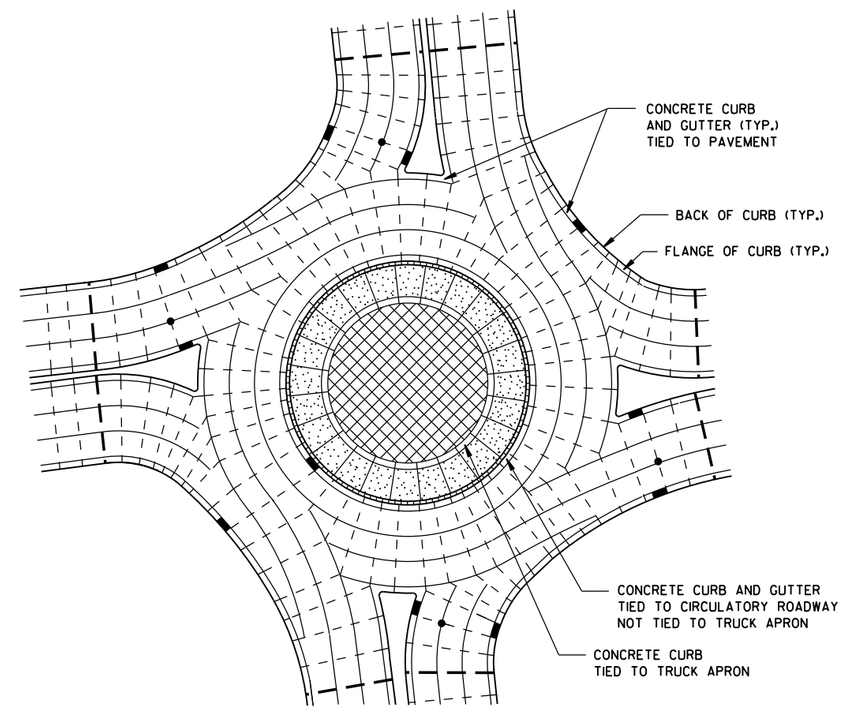

PINWHEEL JOINT LAYOUT FOR ROUNDABOUTS

CONCRETE PAVEMENT JOINTING AND STEEL REINFORCEMENT IN ROUNDABOUTS
STATE OF WISCONSIN DEPARTMENT OF TRANSPORTATION
APPROVED 5-3-2013 DATE — /S/ Deb Bischoff PAVEMENT POLICY & DE NEER FHWA

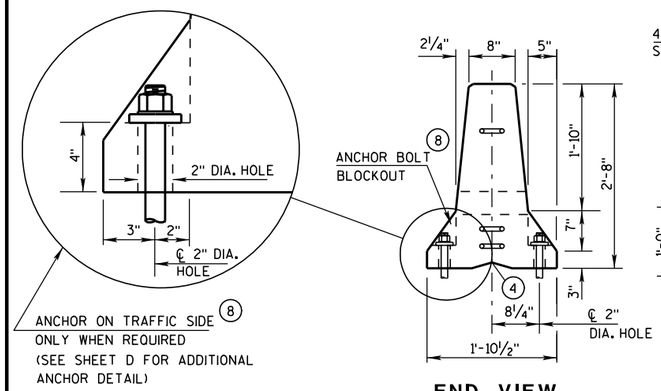

END VIEW

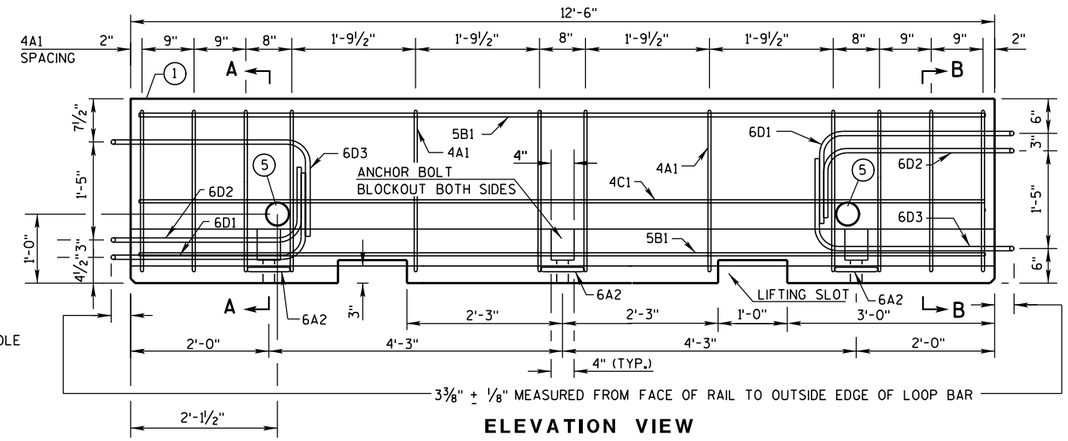

ELEVATION VIEW

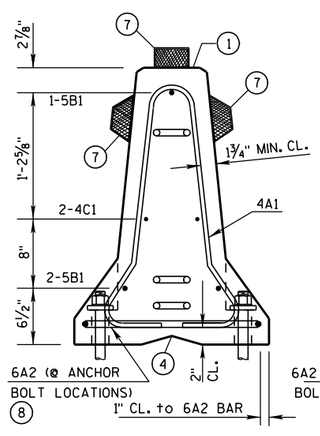

SECTION A-A
(STIRRUP PLACEMENT)

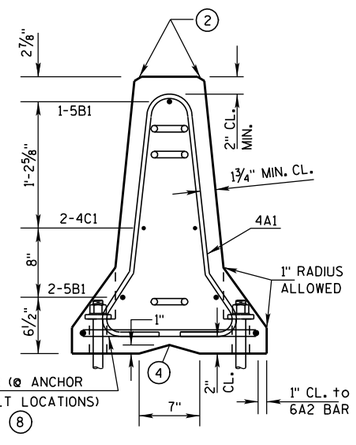

SECTION B-B
(STIRRUP PLACEMENT)

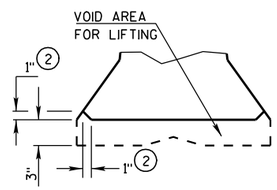

DETAIL "B"
LIFTING SLOT DETAIL

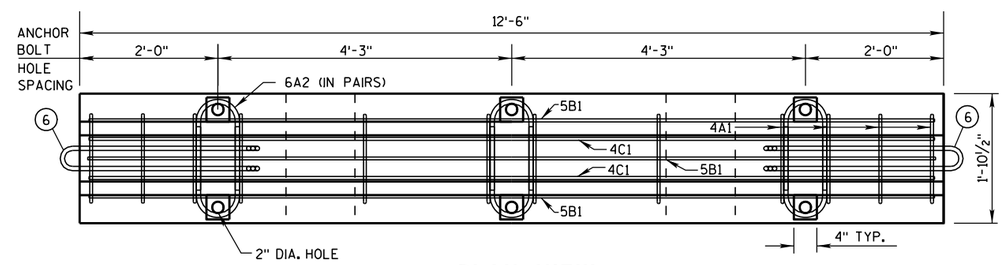

PLAN VIEW

DETAILS OF BARRIER SECTION

GENERAL NOTES

THESE GENERAL NOTES APPLY TO SHEETS 14B7-13(a) THRU 14B7-13(h).

DO NOT INTERMIX CONCRETE BARRIER TEMPORARY PRCAST, 12'-6" (CBTP12.5) WITH OTHER TEMPORARY CONCRETE BARRIERS.

USE ASTM A-615, GRADE 60, DEFORMED STEEL BARS FOR BARS 4A1, 6A2, 5B1 AND 4C1 IN THE BARRIER SECTION AND FOR 4V1, 4V2, 4V3, 4V4, 4V5, 4V6, 4F1, 4F2 AND 5F3 IN THE BARRIER TAPER SECTION.

LOOP BARS 6D1, 6D2 AND 6D3 SHALL BE ¾" SMOOTH STEEL BARS WITH A MINIMUM YIELD STRENGTH OF 60 KSI, A TENSILE STRENGTH OF NOT LESS THAN 1.25 TIMES THE YIELD STRENGTH BUT A MINIMUM OF 80 KSI, A MINIMUM 14% ELONGATION IN 8 INCHES AND PASSING A 180 DEGREE BEND TEST USING A 3-½" PIN BEND DIAMETER FOR BEND TESTS. THE LOOPS SHALL BE INSTALLED WITHIN ⅛" OF THE PLAN DIMENSION.

CONSTRUCT LIFTING SLOTS AS SPECIFIED ON THE PLANS TO FACILITATE THE DRAINAGE OF WATER AFTER INSTALLATION.

PLACE BARRIER ON A PAVED SURFACE. REMOVE ALL LOOSE DIRT AND SAND FROM THE ROADWAY SURFACE PRIOR TO PLACEMENT OF THE BARRIER.

INSTALL MECHANICAL OR EPOXY ANCHORS PER MANUFACTURER'S RECOMMENDATIONS. PROVIDE MANUFACTURER'S INFORMATION TO PROJECT ENGINEER.

(1) MARK ONE END OF EACH BARRIER PERMANENTLY BY FORMING INTO THE BARRIER THE FOLLOWING INFORMATION:
- a. TYPE: WI CBTP
- b. MANUFACTURER
- c. DATE MANUFACTURED (MONTH AND YEAR)

(2) 1" CHAMFER TO PREVENT SPALLING.

(3) A ⅜" HOLE IN THE CONNECTION PIN, AT THE LOCATION SHOWN, IS ACCEPTABLE, BUT NOT REQUIRED..

(4) "V" NOTCH IS OPTIONAL.

(5) THE 4" DIAMETER, 11 GAUGE STEEL, ROUND MECHANICAL TUBING SLEEVE FOR LIFTING (OPTIONAL).

(6) NEVER USE LOOP BARS (6D1, 6D2 OR 6D3) TO LIFT, MOVE OR REPOSITION THE BARRIER.

(7) USE DELINEATORS CONFORMING TO SECTION 633 OF THE STANDARD SPECIFICATIONS. CONTRACTOR MAY USE ALTERNATE SHAPES AND HOUSING. INSTALL DELINEATORS ACCORDING TO MANUFACTURES INSTRUCTION. INSTALL YELLOW REFLECTORS WHEN BARRIER IS LOCATED TO THE LEFT OF TRAFFIC AND WHITE REFLECTORS WHEN BARRIER IS LOCATED TO THE RIGHT OF TRAFFIC. SPACE DELINEATORS A MAXIMUM OF 25 FEET APART. PROVIDE TOP MOUNTED DELINEATORS IN ADDITION TO THE SIDE MOUNTED DELINEATORS ON ALL BARRIER INSTALLATIONS LOCATED ON A CURVED ALIGNMENT LONGER THAN 200 FEET AND ON BARRIERS USED TO SEPARATE OPPOSING TRAFFIC.

(8) SEE SHEET D FOR ANCHORING CRITERIA.

(9) 1" CHAMFER OPTIONAL.

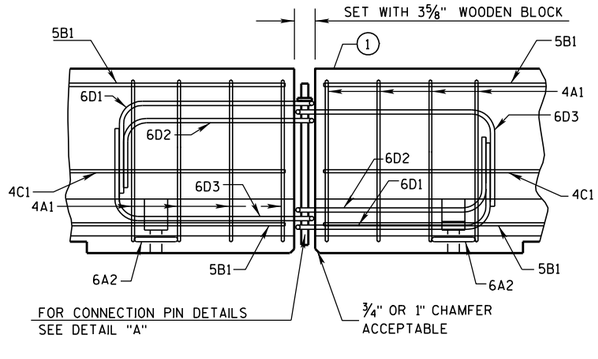

DETAILS OF BARRIER CONNECTION

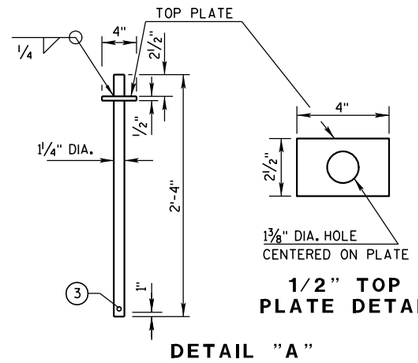

1/2" TOP PLATE DETAIL

DETAIL "A"
CONNECTION PIN
(A36 STEEL (10.9 LB EACH))

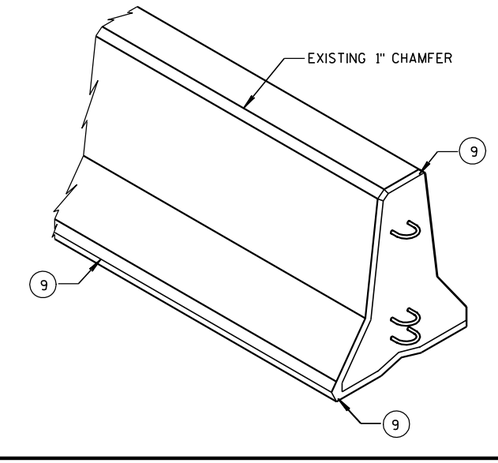

CONCRETE BARRIER
TEMPORARY PRECAST, 12'-6"

STATE OF WISCONSIN
DEPARTMENT OF TRANSPORTATION

S.D.D. 14 B 7-13a

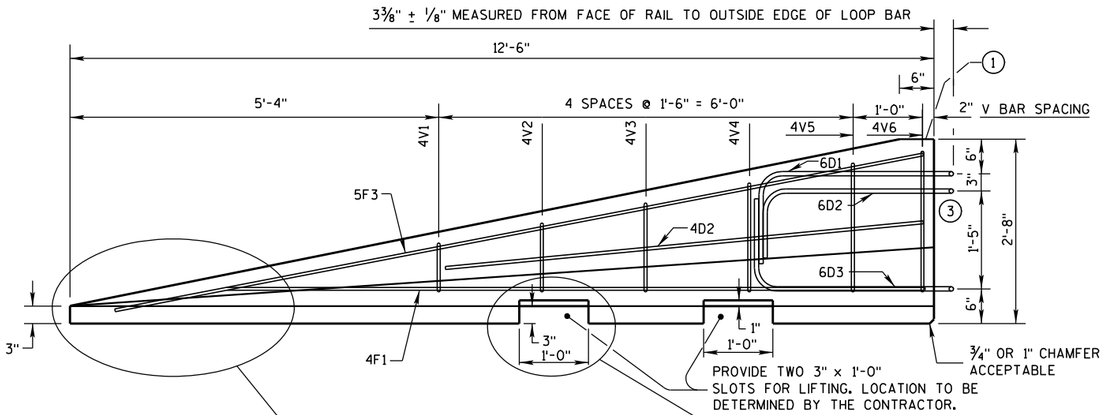

SIDE ELEVATION

(FOR CONNECTION TO LEFT END OF BARRIER)

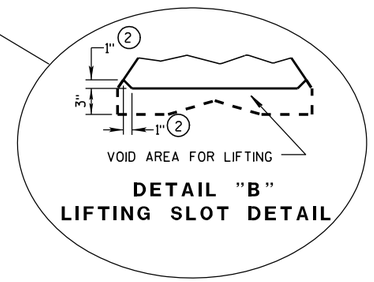

DETAIL "B"
LIFTING SLOT DETAIL

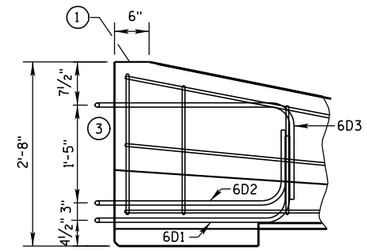

SIDE ELEVATION

LOOP BAR ASSEMBLY INVERTED
FOR OPPOSITE END.
(FOR CONNECTION TO RIGHT END OF BARRIER)

GENERAL NOTES

1. MARK ONE END OF EACH BARRIER PERMANENTLY BY FORMING INTO THE BARRIER THE FOLLOWING INFORMATION:
   a. TYPE WICBTP
   b. MANUFACTURER
   c. DATE MANUFACTURED (MONTH AND YEAR)
2. 1" CHAMFER TO PREVENT SPALLING.
3. NEVER USE LOOP BARS (6D1, 6D2 OR 6D3) TO LIFT, MOVE OR REPOSITION THE BARRIER.

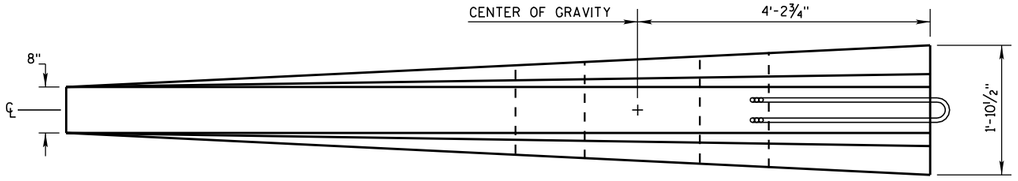

PLAN VIEW

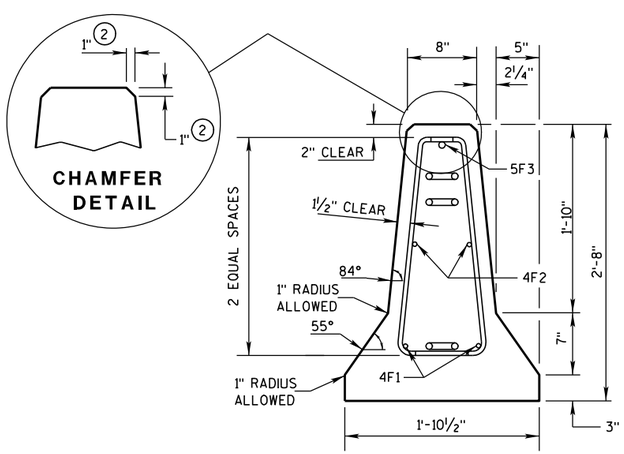

END SECTION

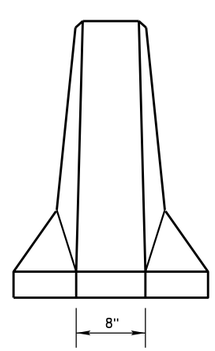

FRONT ELEVATION

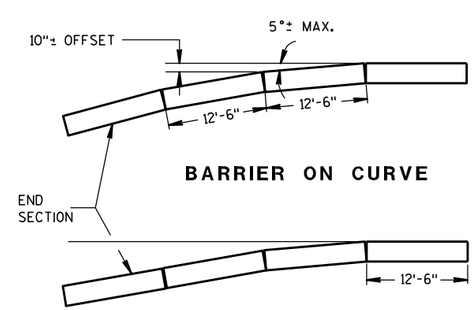

BARRIER ON CURVE

FLARE AT BARRIER END

POSTED SPEED, (MPH)	FLARE RATE
40 OR LESS	6:1
45 OR GREATER	8:1

DETAILS OF BARRIER TAPER SECTION

CONCRETE BARRIER
TEMPORARY PRECAST, 12'-6"

STATE OF WISCONSIN
DEPARTMENT OF TRANSPORTATION

6

S.D.D. 14 B 7-13b

GENERAL NOTES

(1) NEVER USE LOOP BARS (6D1, 6D2 OR 6D3) TO LIFT, MOVE OR REPOSITION THE BARRIER.

BARRIER TAPER SECTION BILL OF MATERIALS

(PER 12'-6" BARRIER TAPER SECTION)

BAR	BAR SIZE	NO. OF BARS	LENGTH FT.
4V1	4	2	1'-11"
4V2	4	2	2'-2"
4V3	4	2	2'-6"
4V4	4	2	2'-9"
4V5	4	2	3'-2"
4V6	4	2	3'-4"
4F1	4	2	12'-0"
4F2	4	2	7'-6"
5F3	5	1	11'-9"
LOOP ASSEMBLY			
6D1	6	1	8'-5"
6D2	6	1	7'-7"
6D3	6	1	8'-6"

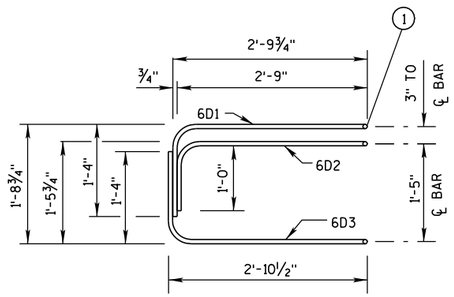

ELEVATION
LOOP BAR ASSEMBLY

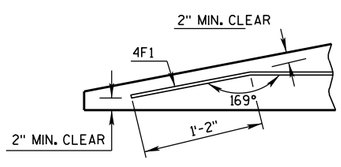

DETAIL "C"
BENT BAR DETAIL

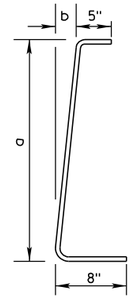

BAR	a	b
V1	10"	1"
V2	1'-1"	1¼"
V3	1'-5"	1⅝"
V4	1'-8"	1⅞"
V5	2'-0½"	2⅜"
V6	2'-3"	2¾"

4V BARS
2 AT EACH SIZE REQUIRED
FOR STIRRUP ASSEMBLY

TAPER BARRIER SECTION

BARRIER SECTION BILL OF MATERIALS

(PER 12'-6" BARRIER SECTION)

BAR	BAR SIZE	NO. OF BARS	LENGTH FT.
4A1	4	12	6'-0"
6A2	6	6	2'-11"
5B1	5	3	12'-2"
4C1	4	2	12'-2"
LOOP ASSEMBLY			
6D1	6	2	8'-5"
6D2	6	2	7'-7"
6D3	6	2	8'-6"

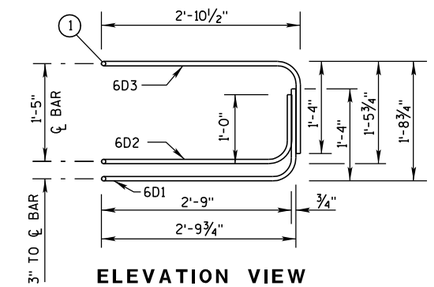

ELEVATION VIEW

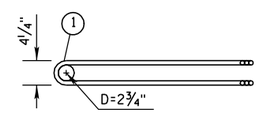

PLAN VIEW
LOOP BAR ASSEMBLY
(MARKED END SHOWN, INVERT FOR OTHER END)

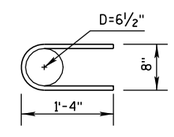

6A2

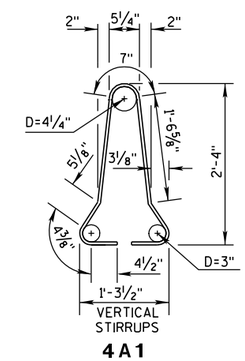

4A1

BARRIER SECTION

6

6

S.D.D. 14 B 7-13c

S.D.D. 14 B 7-13c

CONCRETE BARRIER
TEMPORARY PRECAST, 12'-6"

STATE OF WISCONSIN
DEPARTMENT OF TRANSPORTATION

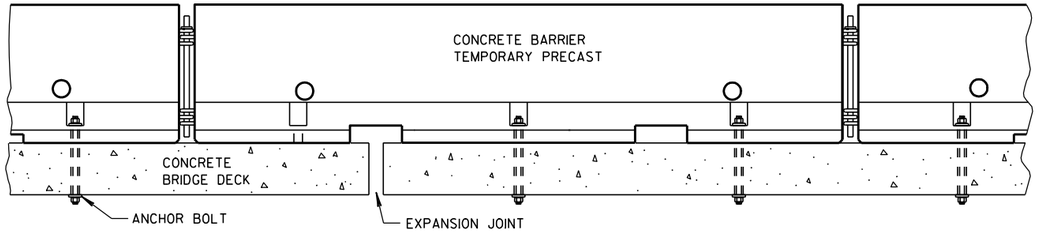

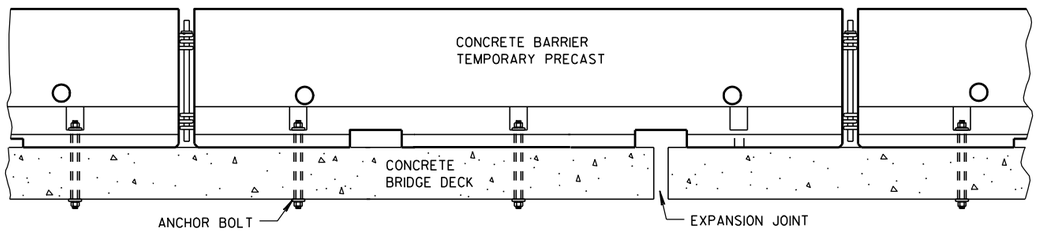

TREATMENT AT BRIDGE DECK EXPANSION JOINTS

(NO SINGLE CONCRETE BARRIER SECTION SHALL BE ANCHORED TO BOTH THE BRIDGE DECK AND THE APPROACH SLAB. ALL ANCHOR BOLT LOCATIONS SHALL BE ANCHORED TO THE DECK IN ACCORDANCE WITH THE DETAIL. NO MORE THAN ONE ANCHOR BOLT SHALL BE ELIMINATED FROM A BARRIER SECTION WHEN SPANNING AN EXPANSION JOINT.)

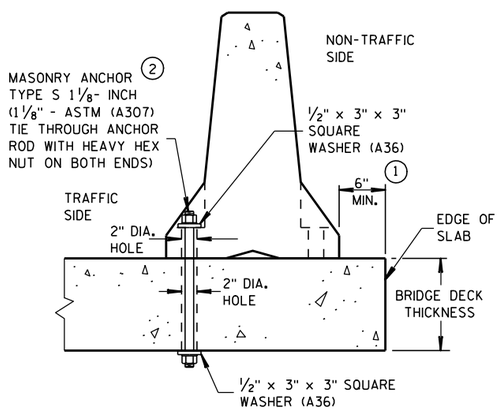

THROUGH BOLTED ANCHOR INSTALLATION ON BRIDGE DECK

(DO NOTUSE ON CONCRETE BRIDGE DECK WITH ASPHALT OVERLAY)

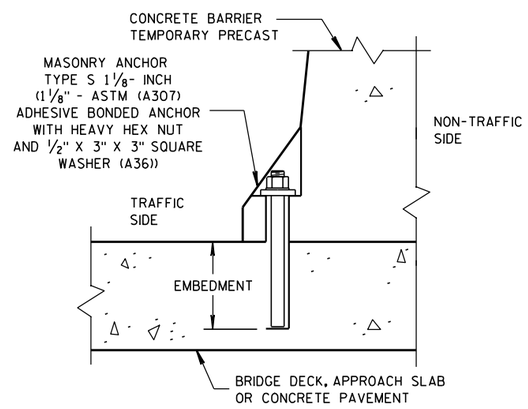

REMOVABLE ADHESIVE BONDED ANCHOR INSTALLATION ON CONCRETE BRIDGE DECK, CONCRETE APPROACH SLAB, OR CONCRETE PAVEMENT 2

(DO NOT USE ON CONCRETE WITH AN ASPHALTIC OVERLAY)

GENERAL NOTES

1. CONCRETE BARRIER TEMPORARY PRECAST, 12'-6" SHALL BE ANCHORED IF:
   THE DISTANCE TO A 2 FOOT OR GREATER DROPOFF THAT IS STEEPER THAN 3H : 1V, FOR EXAMPLE THE EDGE OF A BRIDGE DECK OR A DROPOFF AT THE EDGE OF PAVEMENT, IS LESS THAN 4 FEET FROM THE SIDE OF THE BARRIER CLOSEST TO THE DROPOFF AND THE POSTED SPEED IS 45 MPH OR GREATER, OR

   THE DISTANCE TO A 2 FOOT OR GREATER DROPOFF THAT IS STEEPER THAN 3H : 1V, FOR EXAMPLE THE EDGE OF A BRIDGE DECK OR A DROPOFF AT THE EDGE OF PAVEMENT, IS LESS THAN 2 FEET FROM THE SIDE OF THE BARRIER CLOSEST TO THE DROPOFF AND THE POSTED SPEED IS 40 MPH OR LESS.

2. ANCHORING IS INCIDENTAL TO CONCRETE BARRIER TEMPORARY PRECAST.

   WITH THE APPROVAL OF THE ENGINEER, REMOVABLE ADHESIVE BONDED (EPOXY) ANCHOR BOLT INSTALLATION MAY BE USED IN LIEU OF THROUGH BOLTED ANCHOR INSTALLATION. THE ADHESIVE BONDED ANCHOR BOLT MUST BE REMOVABLE. USE ASTM (A307) MASONRY ANCHORS TYPE S 1 1/8-INCH, EMBEDDED TO A DEPTH SUFFICIENT TO DEVELOP THE ULTIMATE CAPACITY OF THE ANCHOR BOLT AND PROVIDE DOCUMENTATION TO CONFIRM THIS.

   UPON REMOVAL OR RELOCATION OF THE BARRIER UNITS, REMOVE ALLANCHOR BOLTS AND COMPLETELY FILL IN THE REMAINING HOLES IN CONCRETE BRIDGE DECKS, CONCRETE APPROACH SLABS AND CONCRETE PAVEMENTS THAT ARE TO REMAIN, WITH A NON-SHRINK COMMERICAL GROUT OR EPOXY MATERIAL IDENTIFIED ON THE CURRENT WISDOT APPROVED PRODUCTS LIST.

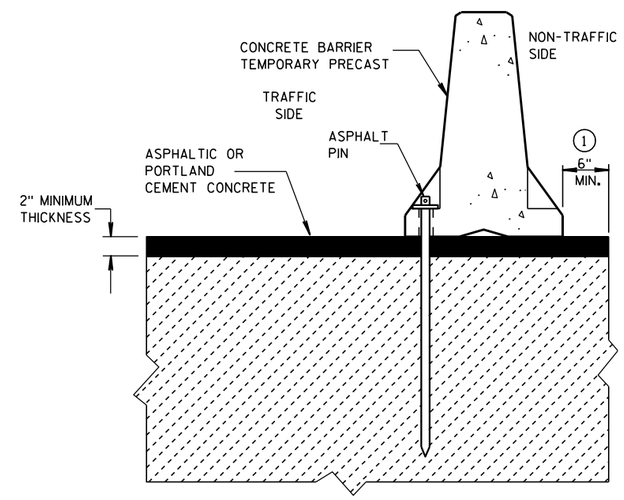

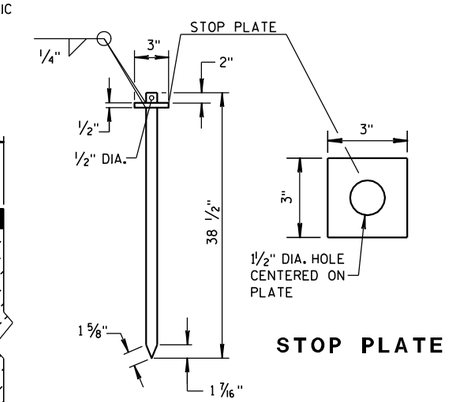

STOP PLATE

ASPHALT PIN

(ASTM A36 STEEL)

STAKE DOWN INSTALLATION FOR ASPHALTIC OR PORTLAND CEMENT CONCRETE SURFACE

(STAKING IS INCIDENTAL TO CONCRETE BARRIER TEMPORARY PRECAST)

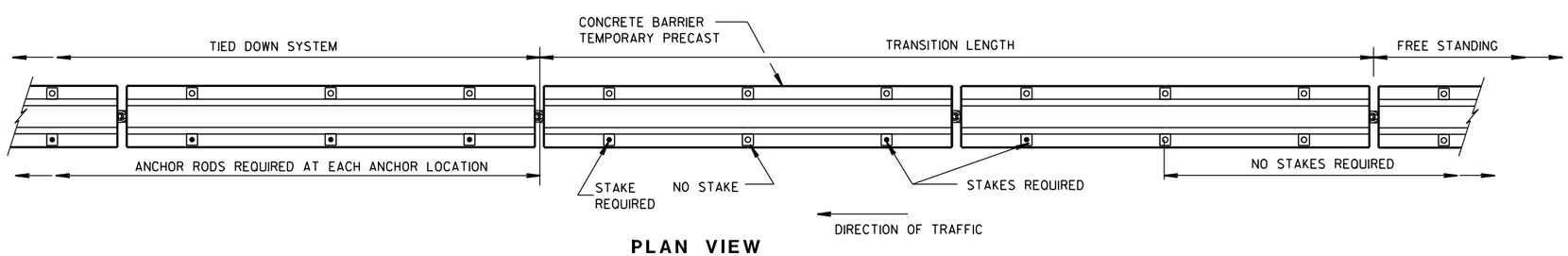

PLAN VIEW

FREE STANDING TRANSITION TO TIED-DOWN SYSTEM

(PLACE TRANSITION IN A TANGENT SECTION OF BARRIER PARALLEL TO THE ROADWAY. IF TRANSITION OCCURS ON STRUCTURAL SLAB, ANCHOR AS SHOWN.)

CONCRETE BARRIER
TEMPORARY PRECAST, 12'-6"

STATE OF WISCONSIN
DEPARTMENT OF TRANSPORTATION

6

S.D.D. 14 B 7-13d

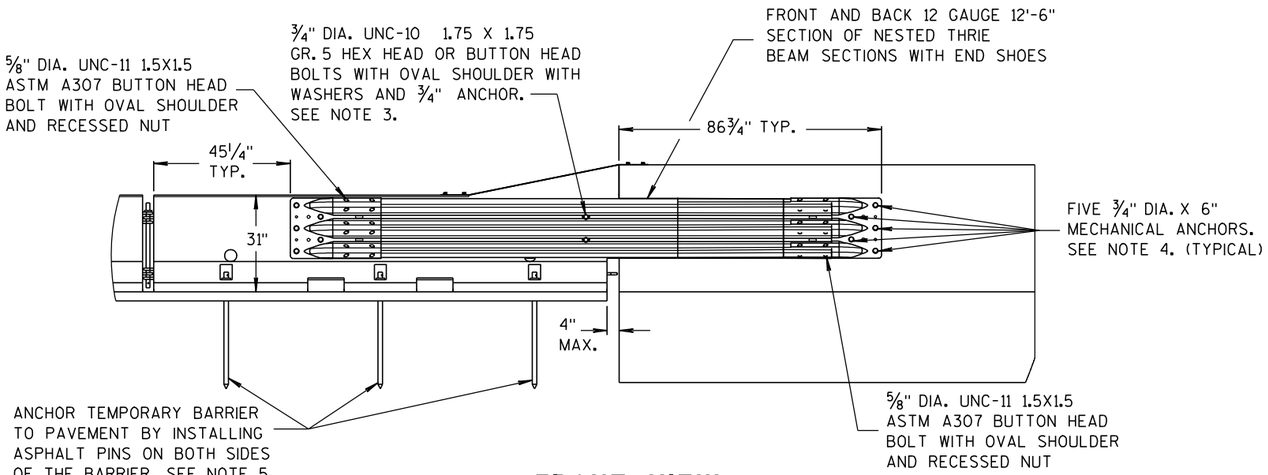

FRONT VIEW

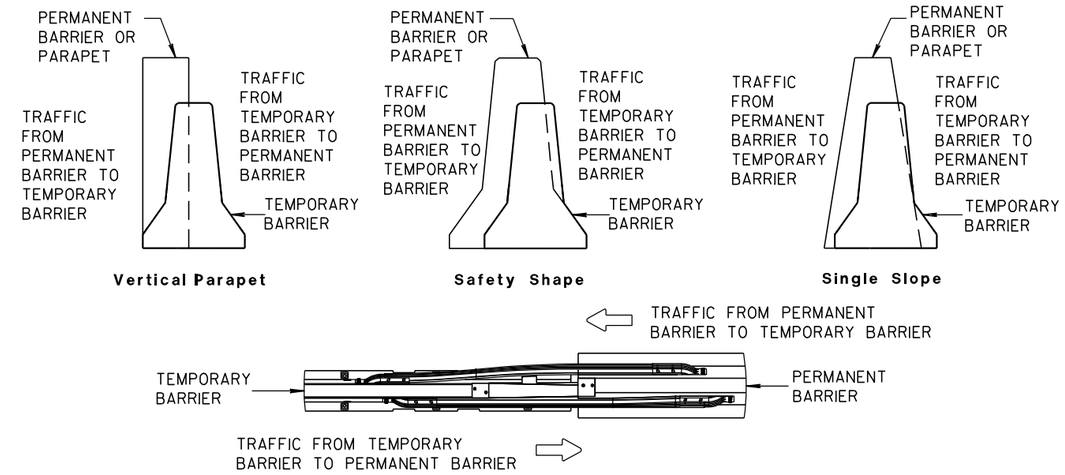

TEMPORARY BARRIER PLACEMENT FOR BI-DIRECTIONAL TRANSITION TO TIED-DOWN SYSTEM

NOTES

1. CAP END PLATE PLACED FLUSH WITH UPSTREAM END OF PERMANENT BARRIER OR PARAPET.
2. THRIE BEAM PIECES ARE OFFSET 15 1/4" TO PREVENT INTERFERENCE FROM THE ANCHORS ON OPPOSING SIDES.
3. MINIMUM MECHANICAL OR EPOXY ANCHOR STRENGTH REQUIREMENTS: ULTIMATE TENSILE LOAD 9.48 KIPS AND ULTIMATE SHEAR LOAD 10.48 KIPS.
4. MINIMUM MECHANICAL OR EPOXY ANCHOR STRENGTH REQUIREMENTS: ULTIMATE TENSILE LOAD 17.9 KIPS AND ULTIMATE SHEAR LOAD 21.96 KIPS.
5. MAY BE USED ON CONCRETE OR ASPHALT PAVEMENTS. ASPHALT OPTION SHOWN. FOR CONCRETE OPTION SEE OTHER DETAILS.
6. MINIMUM MECHANICAL OR EPOXY ANCHOR STRENGTH REQUIREMENTS: ULTIMATE TENSILE LOAD 12.14 KIPS AND ULTIMATE SHEAR LOAD 17.5 KIPS.

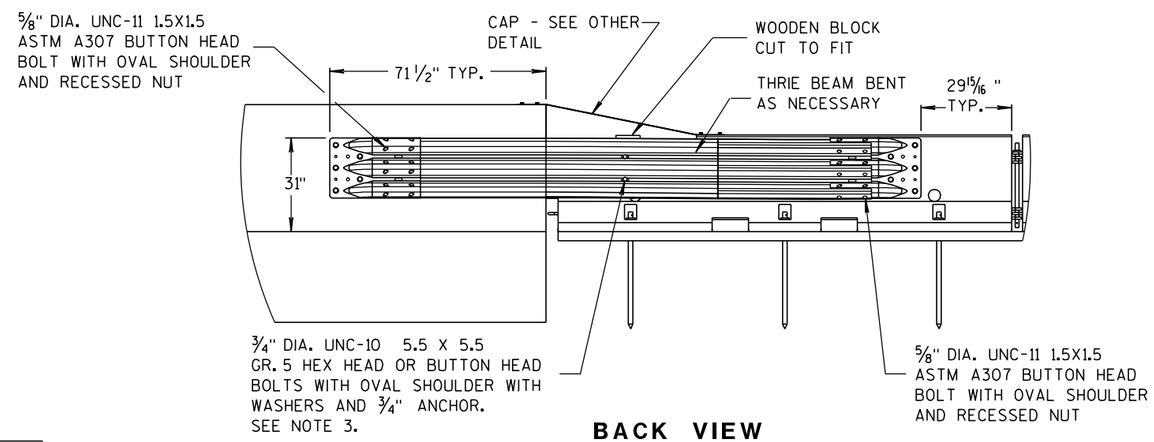

BACK VIEW

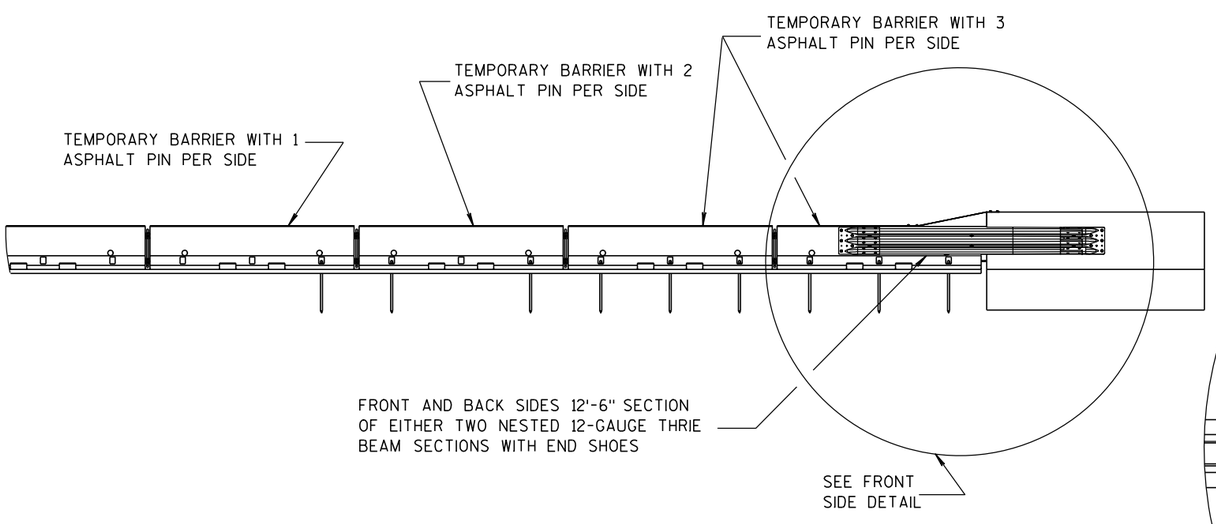

FRONT VIEW

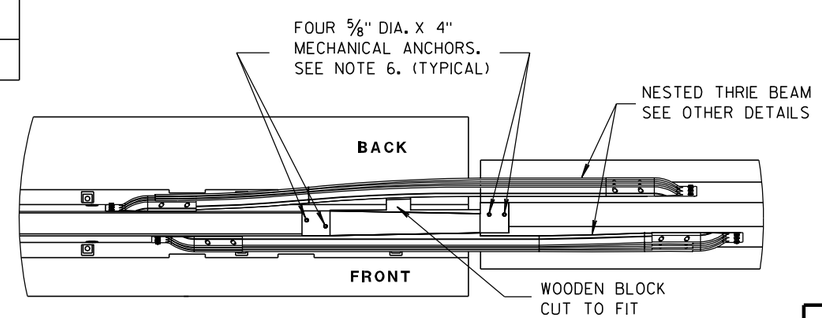

PLAN VIEW

BI-DIRECTIONAL TRANSITION TO TIED-DOWN SYSTEM

CONCRETE BARRIER TEMPORARY PRECAST, 12'-6"

STATE OF WISCONSIN
DEPARTMENT OF TRANSPORTATION

6

S.D.D. 14 B 7-13e

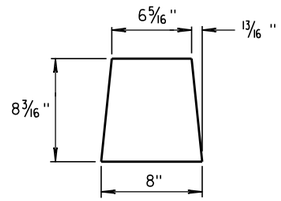

GUSSET 1

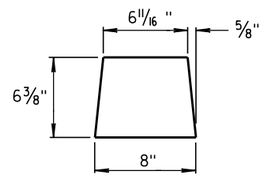

GUSSET 2

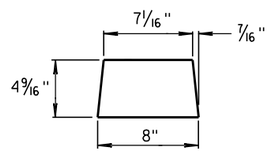

GUSSET 3

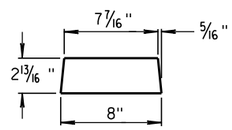

GUSSET 4

GUSSETS

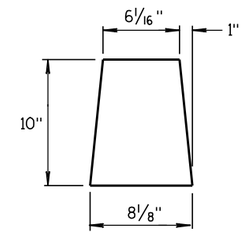

END PLATE

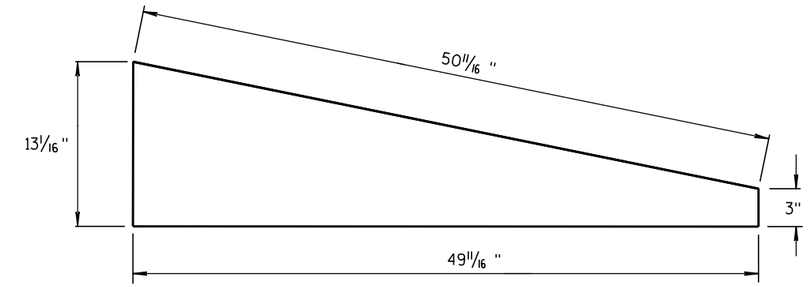

SIDE PLATE

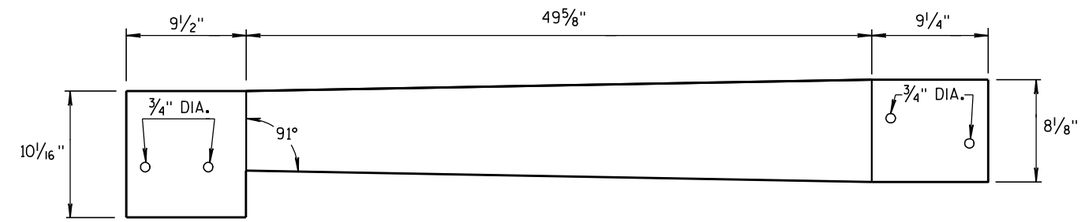

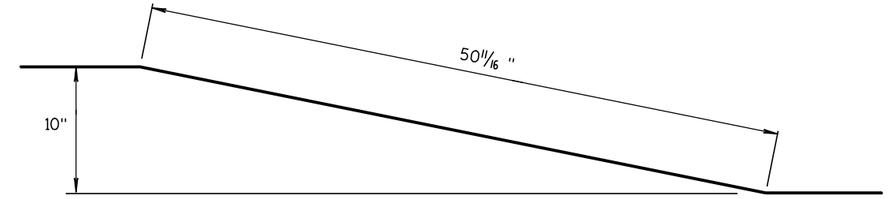

TOP PLATE

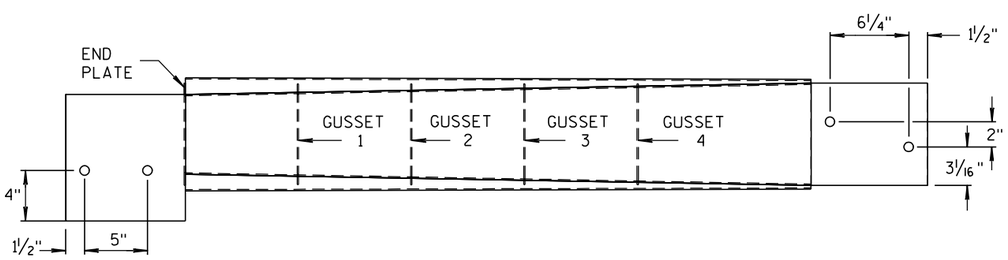

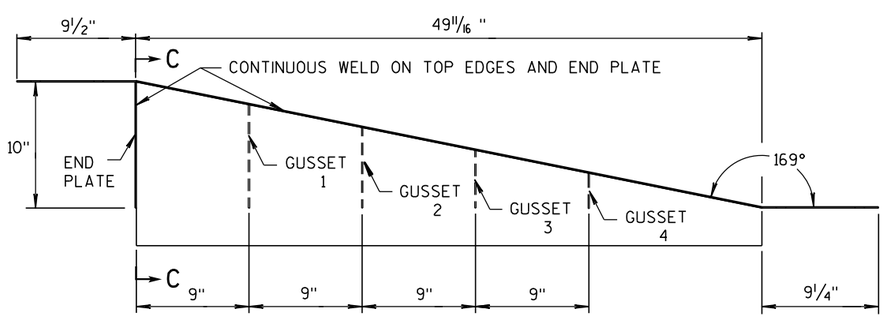

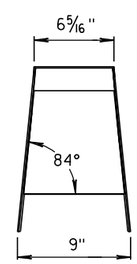

SECTION C-C

NOTES

1. FOUR GUSSETS AND END PLATE ARE STITCH WELDED ON THREE SIDES.
2. TWO TRIANGULAR SIDE PLATES ARE STITCH WELDED TO TOP PLATE, END PLATE, AND GUSSETS.

CAP DETAILS FOR TEMPORARY CONCRETE BARRIER TO 42" PERMANENT CONCRETE BARRIER

SIDE, TOP AND END PLATES FOR CAP FROM TEMPORARY CONCRETE BARRIER TO 42" PERMANENT CONCRETE BARRIER

SIDE PLATES, TOP PLATE, END PLATE AND GUSSETS ARE 12 GAUGE ASTM A36 GALVANIZED STEEL.

CONCRETE BARRIER
TEMPORARY PRECAST, 12'-6"

STATE OF WISCONSIN
DEPARTMENT OF TRANSPORTATION

6

S.D.D. 14 B 7-13f

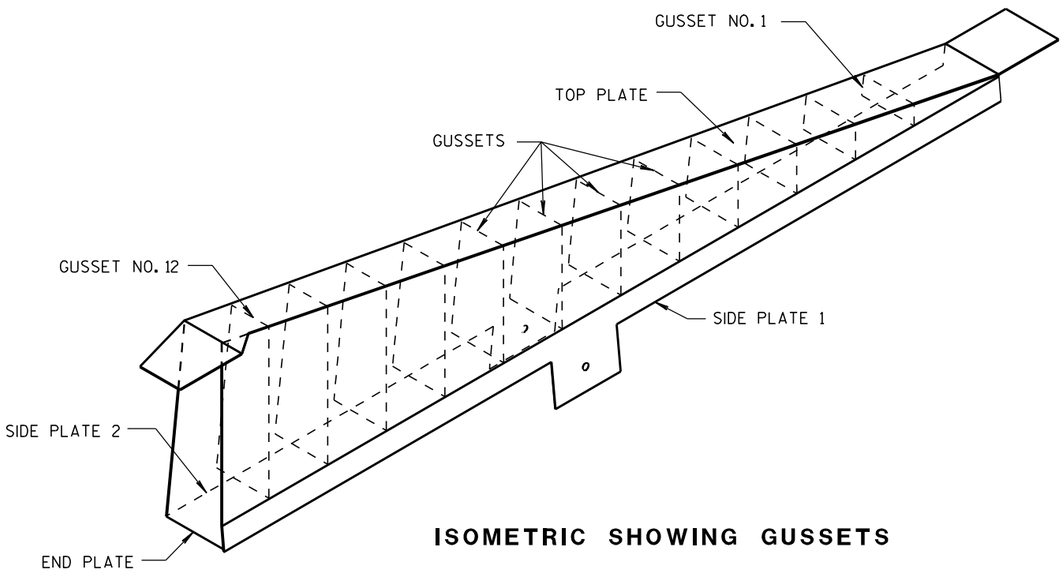

ISOMETRIC SHOWING GUSSETS

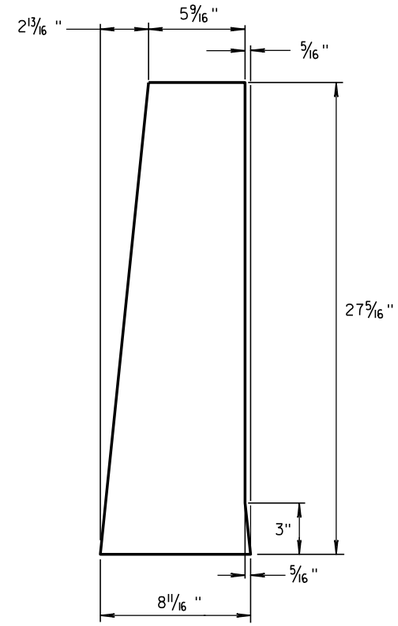

END PLATE

1/8" STEEL PLATE

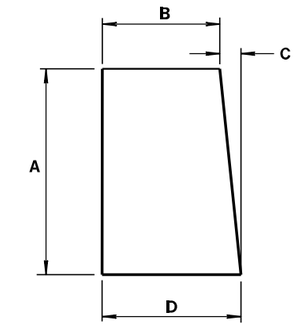

GUSSETS 1 - 12

ALL GUSSETS 1/8" STEEL PLATE

GUSSET DIMENSIONS				
GUSSET NO.	A	B	C	D
1	2 7/8"	7 3/4"	1/4"	8
2	4 11/16 "	7 9/16 "	1/2"	8
3	6 1/2"	7 3/8"	11/16 "	8 1/16 "
4	8 5/16 "	7 3/16 "	7/8"	8 1/16 "
5	10 1/8"	7"	1 1/16 "	8 1/16 "
6	11 15/16 "	6 13/16 "	1 1/4"	8 1/16 "
7	13 3/4"	6 5/8"	1 7/16 "	8 1/16 "
8	15 9/16 "	6 7/16 "	1 9/16 "	8 1/16 "
9	17 3/8"	6 1/4"	1 13/16 "	8 1/16 "
10	19 3/16 "	6 1/16 "	1 15/16 "	8 1/16 "
11	21"	5 7/8"	2 3/16 "	8 1/16 "
12	22 13/16 "	5 11/16 "	2 5/16 "	8 1/16 "

SIDE PLATES, TOP PLATE, END PLATE AND GUSSETS ARE 12 GAUGE ASTM A36 STEEL AND GALVANIZED.

GUSSETS AND END PLATE ARE STITCH WELDED ON 3 SIDES. TWO TRIANGULAR SIDE PLATES ARE STITCH WELDED TO TOP PLATE, END PLATE AND GUSSETS.

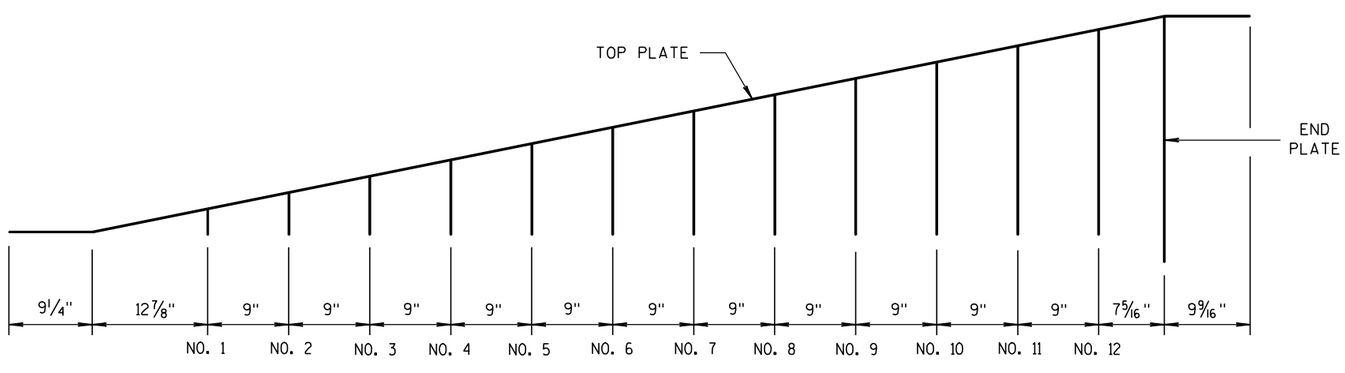

GUSSET LOCATION

CAP DETAILS FOR TEMPORARY CONCRETE BARRIER TO 56" PERMANENT CONCRETE BARRIER

CONCRETE BARRIER TEMPORARY PRECAST, 12'-6"

STATE OF WISCONSIN
DEPARTMENT OF TRANSPORTATION

6

S.D.D. 14 B 7-13g

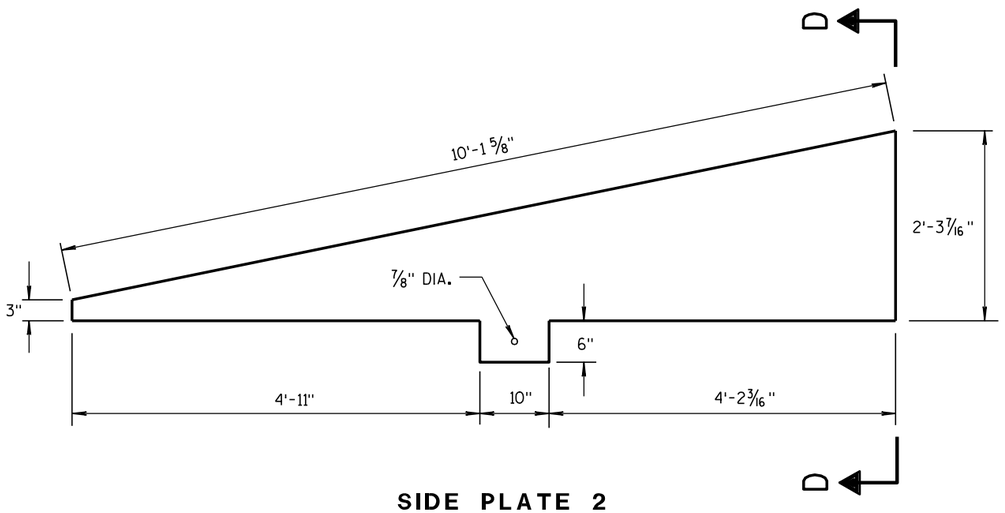

SIDE PLATE 2

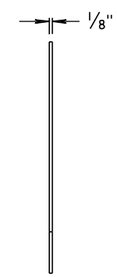

END VIEW

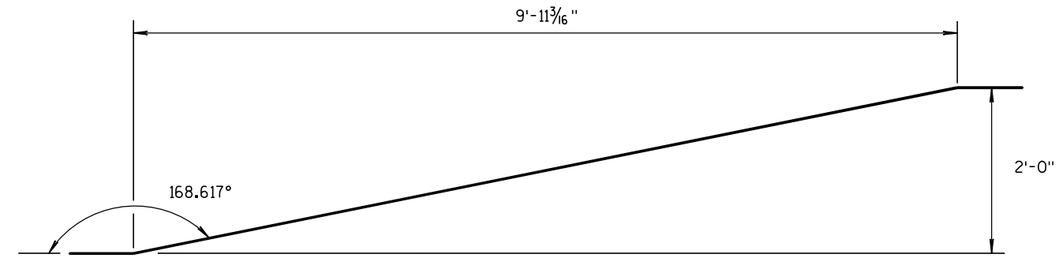

SIDE VIEW

TOP PLATE

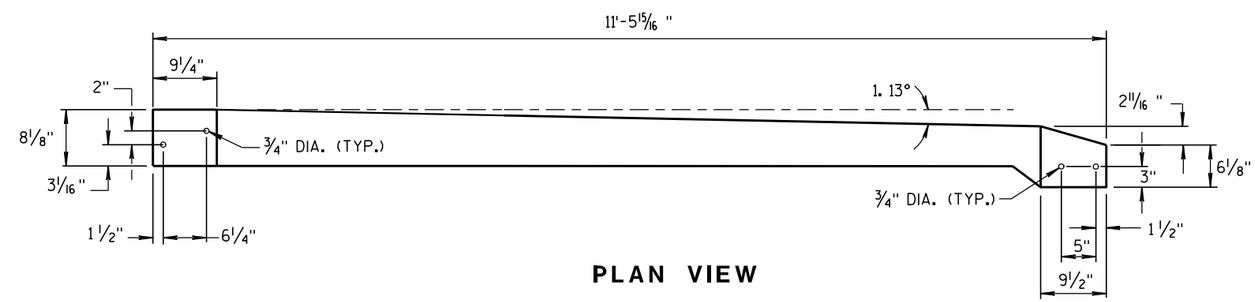

PLAN VIEW

TOP PLATE

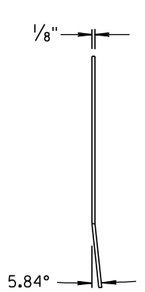

END VIEW

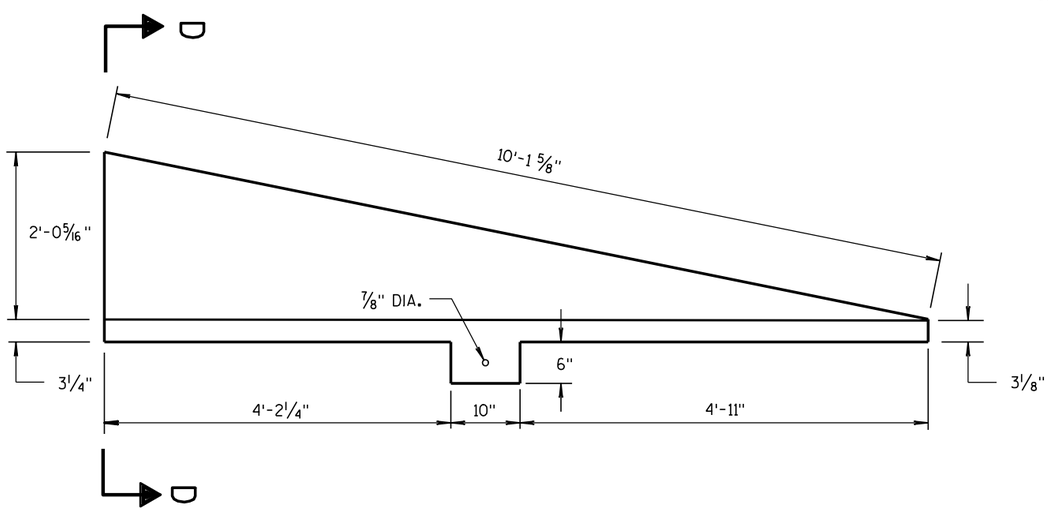

SIDE PLATE 1

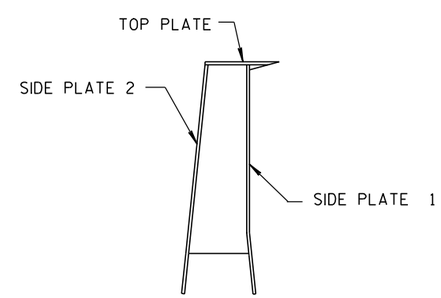

SECTION D-D

CAP DETAILS FOR TEMPORARY CONCRETE BARRIER TO 56" PERMANENT CONCRETE BARRIER

CONCRETE BARRIER
TEMPORARY PRECAST, 12'-6"

STATE OF WISCONSIN
DEPARTMENT OF TRANSPORTATION

APPROVED
8/31/2012 — DATE
/S/ Jerry H. Zaeske — ROADWAY STANDARD ENGINEER
ENT
FHWA

6

6

S.D.D. 14 B 7-13h

S.D.D. 14 B 7-13h

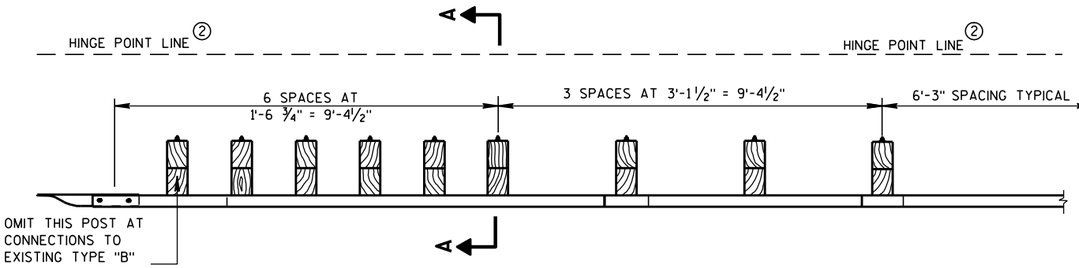

PLAN VIEW

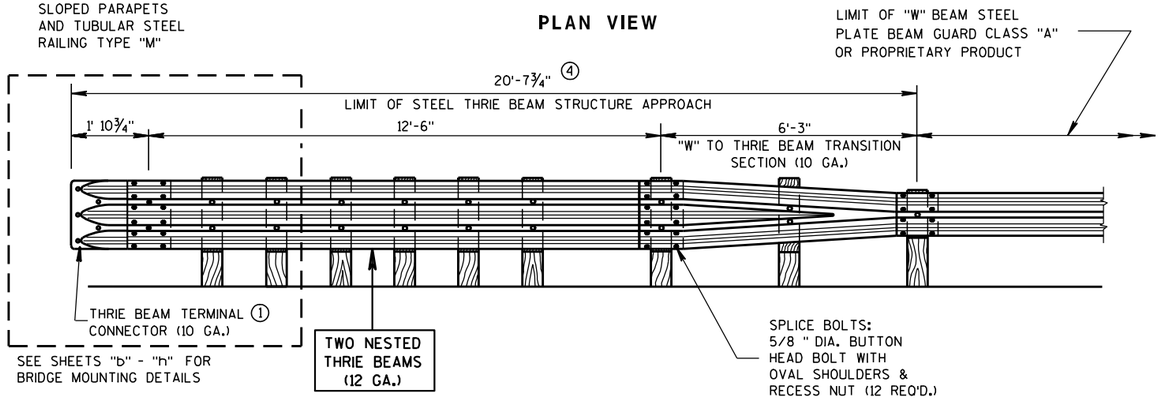

FRONT VIEW

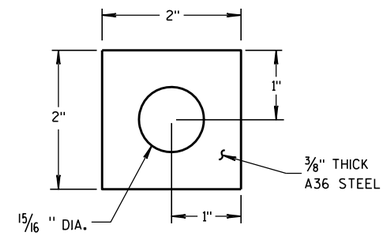

PLATE WASHER DETAIL

GENERAL NOTES

BOLT THE THRIE BEAM TO ALL POSTS AND BLOCKOUTS. DRILL OR PUNCH BOLT HOLES IN THE BEAM IF THE POST SPACING IS LESS THAN 6'-3".

DO NOT USE STEEL POSTS AND NOTCHED PLASTIC BLOCKOUTS IN THE STEEL THRIE BEAM STRUCTURAL APPROACH AND THE TRANSITION SECTION OF STEEL PLATE BEAM GUARD, CLASS "A" INSTALLATIONS.

IF ROCK IS ENCOUNTERED, REMOVE ROCK TO FULL DEPTH OF POST PLUS 2 1/2", AND 12" DIAMETER AROUND POST. SEE 14B15 FOR MORE DETAILS.

① BRIDGE RAILING TYPE "W" DOES NOT REQUIRE A TERMINAL CONNECTOR.

② MINIMUM EMBEDMENT SHALL BE 4'-0". WHERE EXISTING CONDITIONS DO NOT PERMIT THE APPROPRIATE EARTHWORK SHOWN ON THE PLAN TYPICAL SECTIONS OR DETAILS, THE ENGINEER MAY ALLOW THE REDUCTION OR ELIMINATION OF THE 2 FOOT DISTANCE TO THE HINGE POINT. OTHERWISE BUILD AS THE PLAN SHOWS OR AS THE ENGINEER DIRECTS. IF THE 2 FOOT DISTANCE TO THE HINGE POINT IS REDUCED OR ELIMINATED, INCREASE THE POST EMBEDMENT DEPTH TO 4'-6" OR MORE.

③ POST BOLTS ARE 5/8" DIAMETER ASTM A307 BUTTON HEAD BOLT. A POST BOLT REQUIRES A 5/8" DIAMETER A563A DOUBLE RECESSED (DR) HEAVY HEX AND A 5/8" DIAMETER F844 FLAT WASHER. LENGTH OF POST BOLT MAY VARY.

④ ALL WOOD POSTS MUST BE 6" X 8" AND AT LEAST 7'-0" LONG.

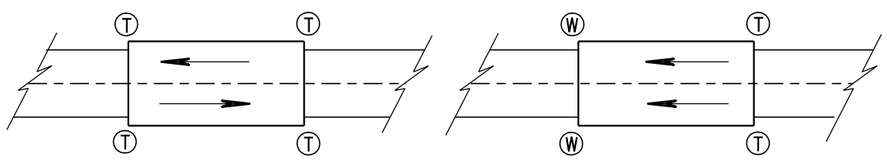

TWO WAY TRAFFIC

ONE WAY TRAFFIC

Ⓣ THRIE BEAM CONNECTION

Ⓦ W-BEAM CONNECTION WHEN REQUIRED

TYPICAL LOCATIONS OF THRIE BEAM AND W-BEAM CONNECTIONS TO BRIDGE

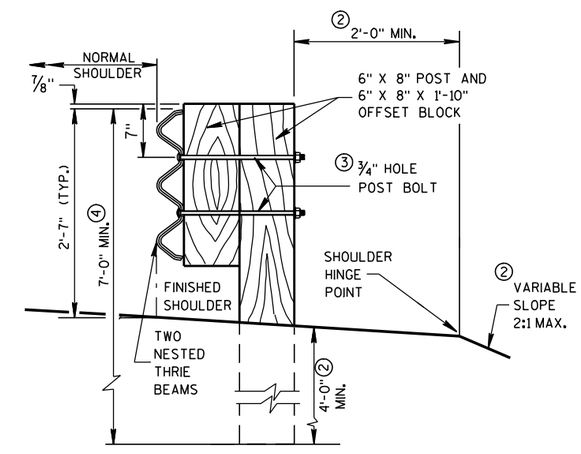

SECTION A-A

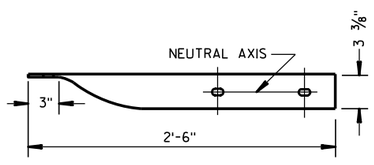

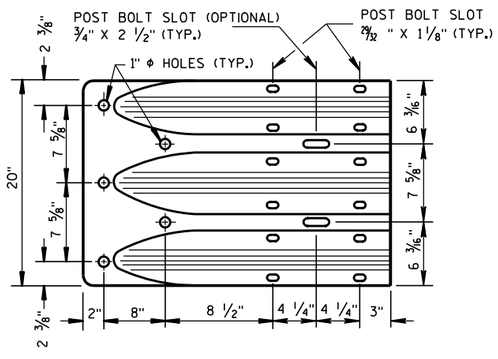

THRIE BEAM TERMINAL CONNECTOR

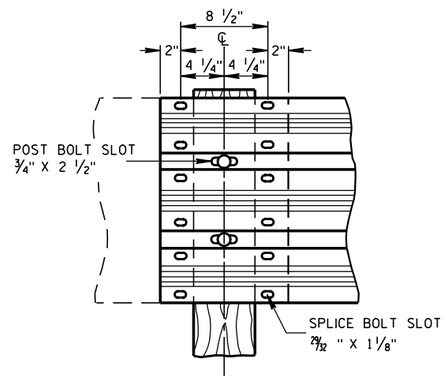

THRIE BEAM SPLICE

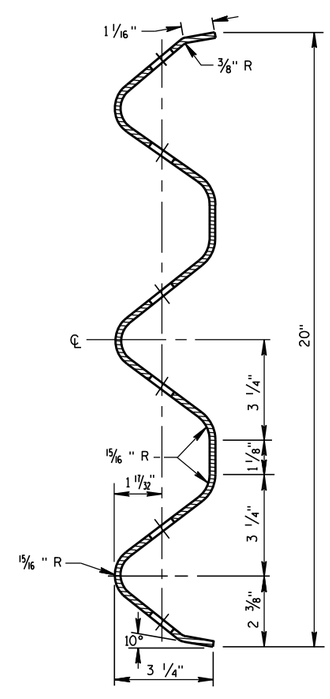

SECTION THRU THRIE BEAM RAIL ELEMENT

STEEL THRIE BEAM STRUCTURE APPROACH

STATE OF WISCONSIN
DEPARTMENT OF TRANSPORTATION

APPROVED

8/31/2012 — DATE

/S/ Jerry H. Zogg — ROADWAY STANDARDS DEVELOPMENT ENGINEER

FHWA

6

6

S.D.D. 14 B 20-11a

S.D.D. 14 B 20-11a

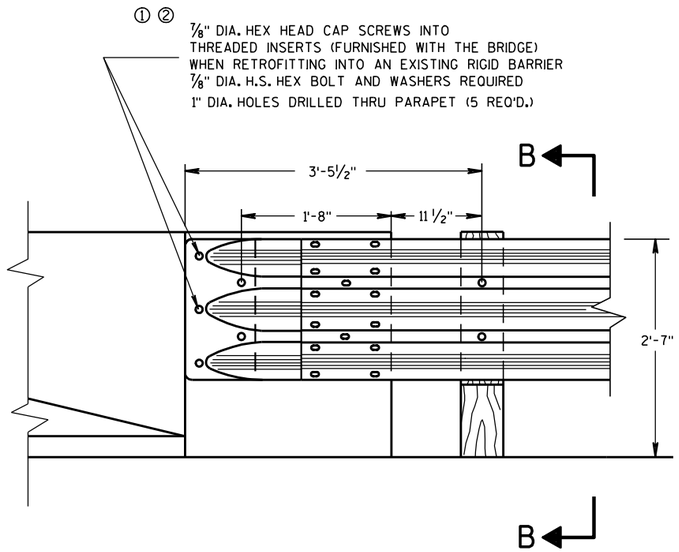

FRONT VIEW

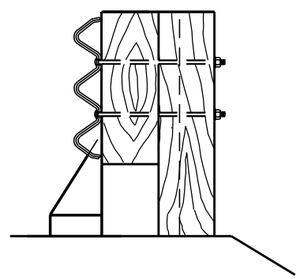

SECTION B-B

THRIE BEAM CONNECTION TO BRIDGE PARAPET WITH SQUARE ENDS

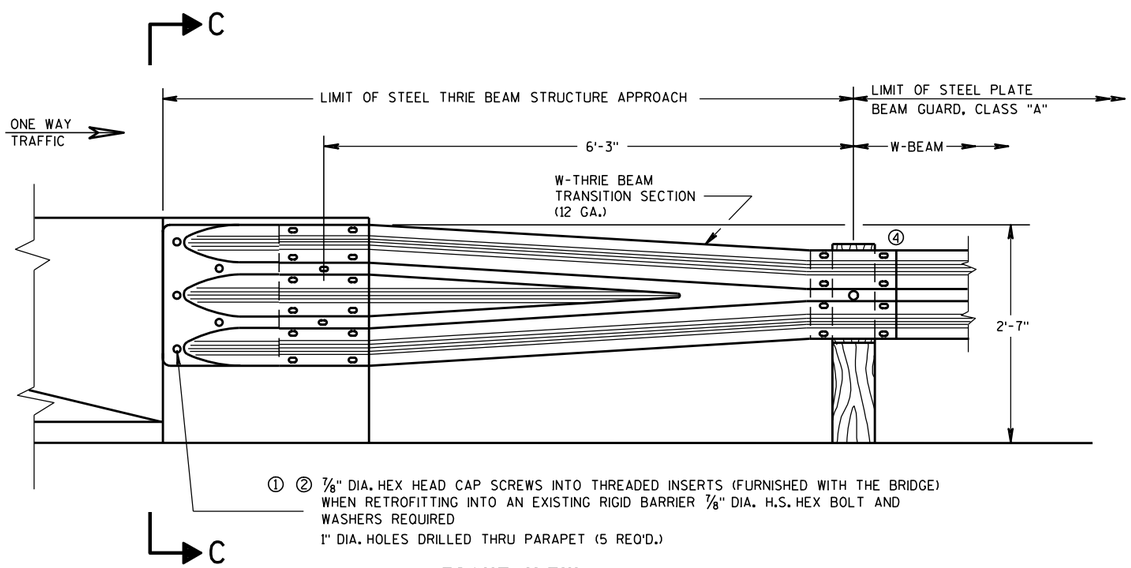

FRONT VIEW

W BEAM TRANSITION AND CONNECTION TO BRIDGE PARAPETS WITH SQUARE ENDS

(USE ONLY ON THE TRAFFIC EXIT END OF ONE WAY BRIDGES)

GENERAL NOTES

THESE ARE TYPICAL CONNECTION DETAILS. ADJUST THE POSTION OF CONNECTIONS TO EXISTING BRIDGES TO FIT THE ACTUAL BRIDGE AND SITE DIMENSIONS.

BOLTS, NUTS AND WASHERS SHALL CONFORM TO ASTM A325, A449 AND GALVANIZED PER STANDARD SPECIFICATIONS 614.

① DRILLING BOLT HOLES THROUGH THE PARAPET, BOLTS, NUTS, WASHERS AND REPAIRING DAMAGED CONCRETE ARE INCIDENTAL TO THE CONTRACT.

② BOLTS MAY BE A325 BOLTS OR A449 BOLTS. BOLT LENGTH AND THREADING LENGTH ARE TO ALLOW FOR A TIGHT CONNECTION BETWEEN RIGID BARRIER AND THRIE BEAM CONNECTION PLATE. CONTRACTOR IS TO FIELD VERIFY BOLT LENGTH AND THREAD LENGTH. ONE ROUND WASHER REQUIRED BETWEEN BOLT HEAD AND THRIE BEAM TERMINAL CONNECTOR. BOLTS THAT EXTEND THROUGH THE PARAPET AND OUT THE BACK FACE REQUIRE A HARDENED ROUND STEEL WASHER THAT IS 2" O.D. X ⅝" THICK AND ONE PLATE WASHER. REPAIR ANY DAMAGED CONCRETE FROM BOLT INSTALLATION.

③ THE RECESS FOR A W-BEAM CONNECTION, WHICH EXISTS ON SOME PARAPETS OF THIS TYPE, SHALL BE FILLED WITH A TREATED TIMBER BLOCKOUT. BLOCKOUT SIZE IS 1'-6" X 2'-0" X 3 ½".

④ W6 X 9 OR W6 X 8.5 STEEL POSTS AND NOTCHED PLASTIC BLOCKOUTS ARE ACCEPTABLE ALTERNATIVES FOR 6" X 8" WOOD POST WITH WOOD OR PLASTIC BLOCKOUTS. USE APPROVED NOTCHED PLASTIC BLOCKOUTS WITH STEEL POSTS.

DO NOT USE STEEL POSTS AND NOTCHED PLASTIC BLOCKOUTS IN THE STEEL THRIE BEAM STRUCTURAL APPROACH AND THE TRANSITION SECTION OF STEEL PLATE BEAM GUARD, CLASS "A" INSTALLATIONS.

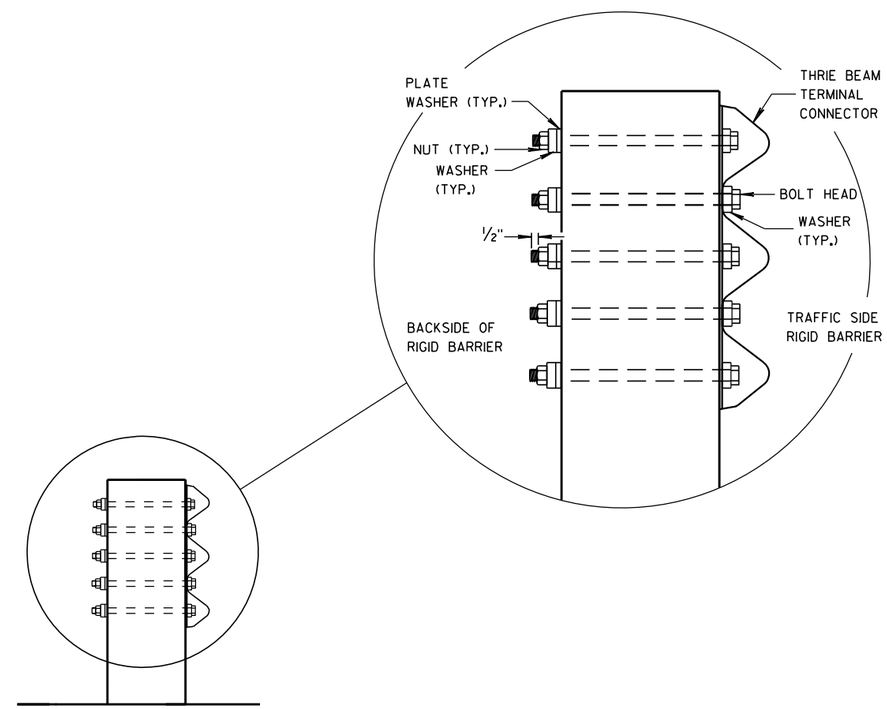

SECTION C-C

STEEL THRIE BEAM STRUCTURE APPROACH, CONNECTION TO SQUARE END PARAPETS
STATE OF WISCONSIN DEPARTMENT OF TRANSPORTATION
APPROVED 8/31/2012 — DATE /S/ Jerry H. Zogg — ROADWAY STANDARDS DEVELOPMENT ENGINEER FHWA

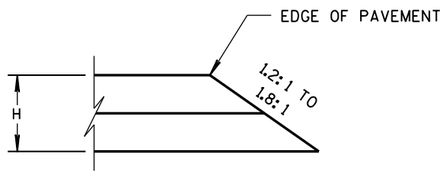

CONSTRUCTED WITH FINAL TWO LAYERS

FOR H 5" OR LESS

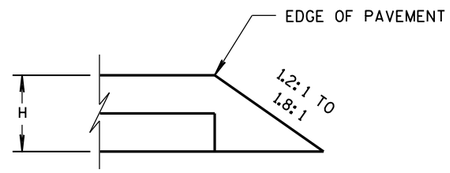

CONSTRUCTED WITH FINAL LAYER

FOR H 5" OR LESS

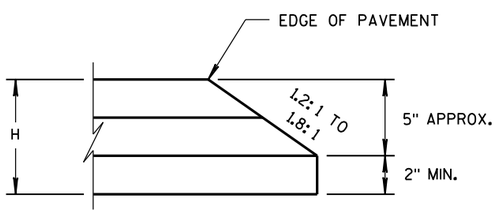

CONSTRUCTED WITH FINAL TWO LAYERS

FOR H GREATER THAN 5"

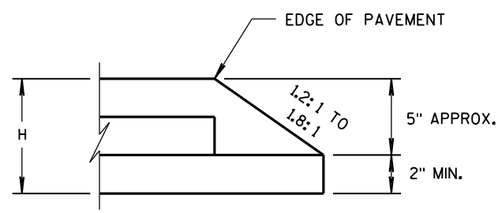

CONSTRUCTED WITH FINAL LAYER

FOR H GREATER THAN 5"

HMA PAVEMENT AND HMA OVERLAYS

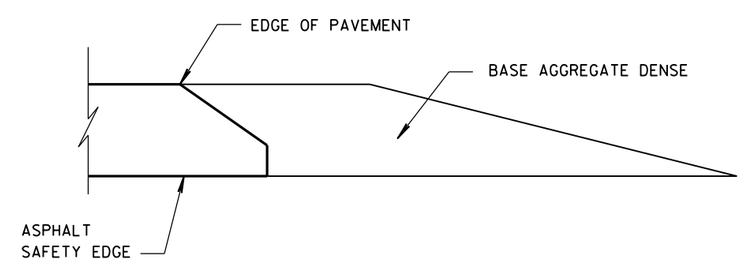

FINISHED SHOULDER AGGREGATE PLACEMENT

6

6

S.D.D. 14 B 29-1

S.D.D. 14 B 29-1

SAFETY EDGE SM

STATE OF WISCONSIN
DEPARTMENT OF TRANSPORTATION

APPROVED

11/30/2012
DATE

/S/ Jerry H. Zogg
ROADWAY STANDARDS DEVELOPMENT ENGINEER

FHWA

GENERAL NOTES

1. WOOD OR STEEL POSTS (w6X9 OR w6X8.5) MAY BE USED. DO NOT INTERMIX WOOD AND STEEL POSTS. INSTALL STEEL POSTS WITH HOLES ON APPROACHING TRAFFIC SIDE.

2. USE WOOD OR APPROVED PLASTIC BLOCKOUTS. WOOD BLOCKOUTS MAY BE CONSTRUCTED OUT OF TWO OR MORE WOOD BLOCKOUTS. SEE ALTERNATE WOOD BLOCKOUT DETAIL. DIMENSIONS OF APPROVED PLASTIC BLOCKOUTS MAY VARY.

3. IF ROCK IS ENCOUNTERED DURING EXCAVATION, PROVIDE A HOLE 12 INCHES IN DIAMETER EXTENDING 20 INCHES DEEP INTO THE ROCK. PLACE APPROXIMATELY 2½INCHES OF GRANULAR MATERIAL IN THE BOTTOM OF THE HOLE. CUT THE POSTS THE TO LENGTH AMD INSTALL. BACKFILL WITH EXCAVATED MATERIAL AND COMPACT. BACKFILL IS TO BE FREE OF LARGE ROCKS.

4. WHEN THE DISTANCE FROM BACK OF POST TO SHOULDER HINGE POINT IS LESS THAN 2 FEET INSTALL LONGER POST AT HALF POST SPACING (K).

5. FOR NEW MGS INSTALLATION TOP OF W-BEAM RAIL TOLERANCE IS ± 1". FOR EXISTING MGS INSTALLATION TOP OF W-BEAM IS BETWEEN 27¾" TO 32".

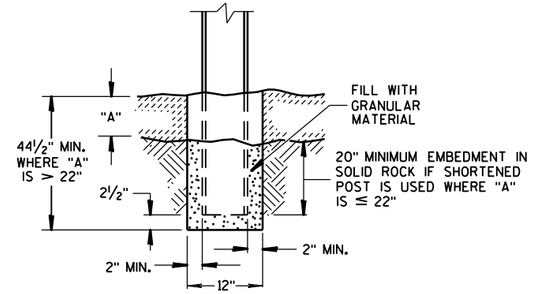

END VIEW
SETTING STEEL OR WOOD POST IN ROCK (3)

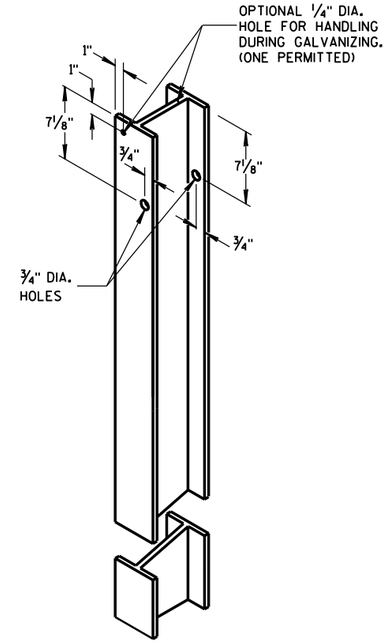

STEEL POST &
HOLE PUNCHING DETAIL
(w6X9) (1)

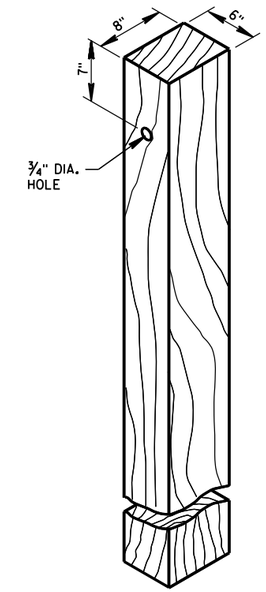

WOOD POST
(6" X 8") NOMINAL (1)

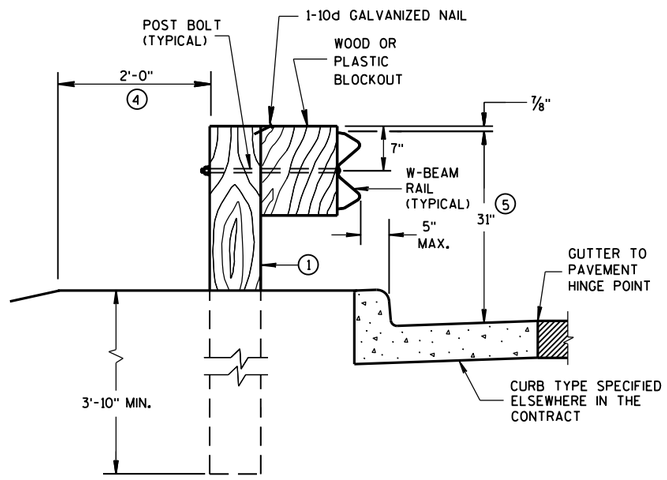

END VIEW
LOCATED ALONG A CURBED ROADWAY

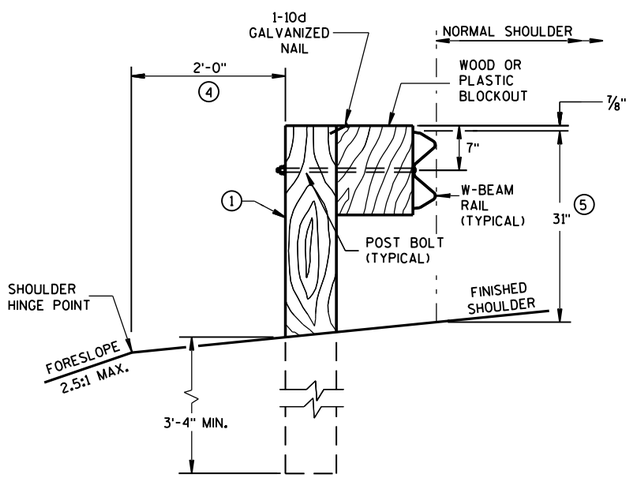

END VIEW
LOCATED ALONG A ROADWAY SHOULDER
STANDARD INSTALLATION

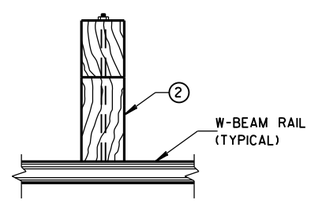

PLAN VIEW
WOOD POST,
BLOCKOUT & BEAM

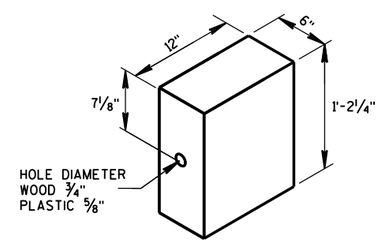

WOOD OR
PLASTIC BLOCKOUT (2)

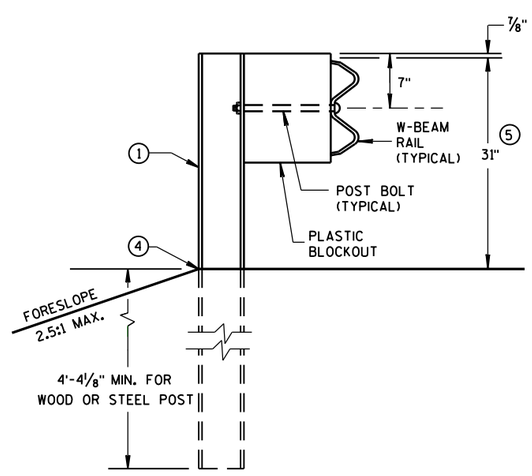

END VIEW
MGS LONGER POST AT HALFPOST SPACING W BEAM (K)

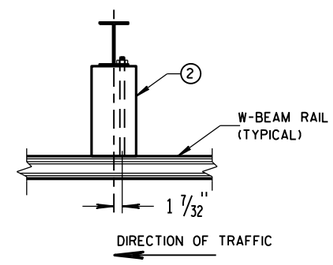

PLAN VIEW
STEEL POST,
PLASTIC BLOCKOUT & BEAM

MIDWEST GUARDRAIL SYSTEM
(MGS) GUARDRAIL

STATE OF WISCONSIN
DEPARTMENT OF TRANSPOI

6

S.D.D. 14 B 42-2a

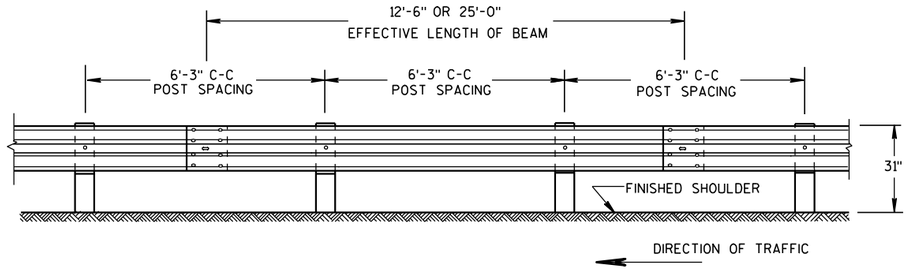

FRONT VIEW

POST SPACING STANDARD INSTALLATION

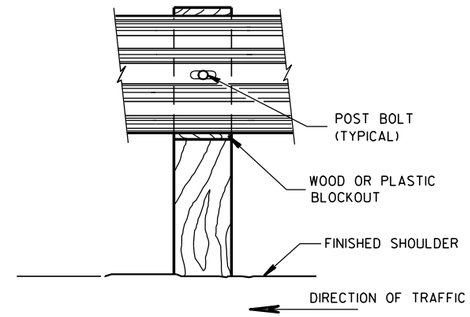

FRONT VIEW AT WOOD POST

GENERAL NOTES

1. PROVIDE TYPE "H" SILVER REFLECTIVE SHEETING ON ALL REFLECTORS EXCEPT THOSE LOCATED ALONG THE LEFT EDGE OF ONE-WAY ROADWAYS, WHICH SHALL BE PROVIDED WITH TYPE "H" YELLOW REFLECTIVE SHEETING.
2. DO NOT INSTALL REFLECTORS ON THE FIRST 50 FEET OF THE APPROACH END OF THE ENERGY ABSORBING TERMINAL. RAIL SPLICE LOCATIONS ARE THE ONLY ACCEPTABLE LOCATIONS FOR REFLECTORS.
3. REVERSE EVERY OTHER REFLECTOR FOR 2-WAY VISIBILITY. THE CONTRACTOR MAY FURNISH TWO-SIDED REFLECTORS IN LIEU OF ONE-SIDED REFLECTORS.
4. PROVIDE AN ANGLE OF BEND OF 90° ± 1° FOR TWO-SIDED REFLECTORS.
5. 25 FEET OF HALF POST SPACING IS REQUIRED ON APPROACH AND DEPARTURE ENDS OF QUARTER POST SPACING.

POST BOLTS ARE A 5/8" DIAMETER ASTM A307 GUARDRAIL BOLT. A POST BOLT REQUIRES 5/8" DIAMETER A563A DOUBLE RECESSED (DR) HEAVY HEX NUT AND 5/8" DIAMETER F844 FLAT WASHER. POST BOLTS MAY BE LONGER IF MULTIPLE BLOCKOUTS ARE BEING USED.

GUARD RAIL SPLICE BOLTS ARE A 5/8" DIAMETER ASTM A307 GUARDRAIL HEAD BOLT. A GUARDRAIL SPLICE BOLT REQUIRES 5/8" DIAMETER A563A DOUBLE RECESSED (DR) HEAVY HEX NUT.

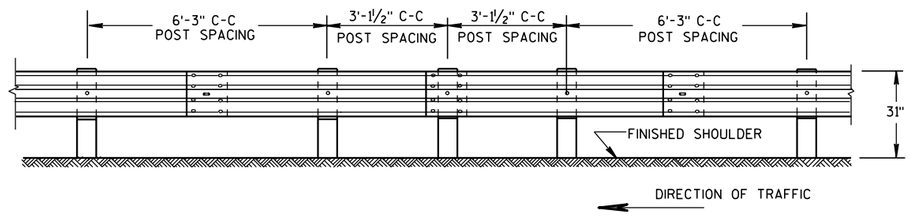

FRONT VIEW

HALF POST SPACING (HS) AND HALF POST SPACING WITH LONGER POSTS (K)

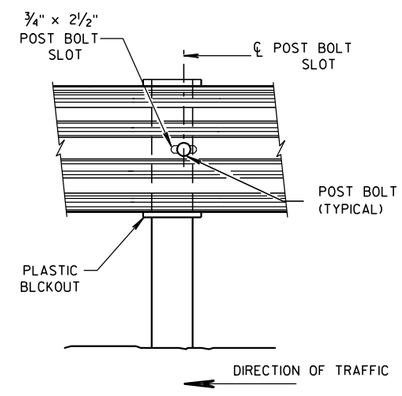

FRONT VIEW AT STEEL POST

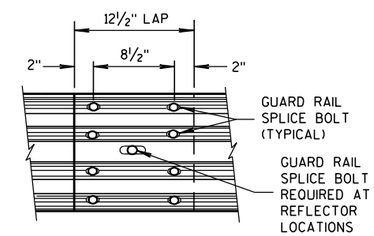

FRONT VIEW

MID-SPAN BEAM SPLICE

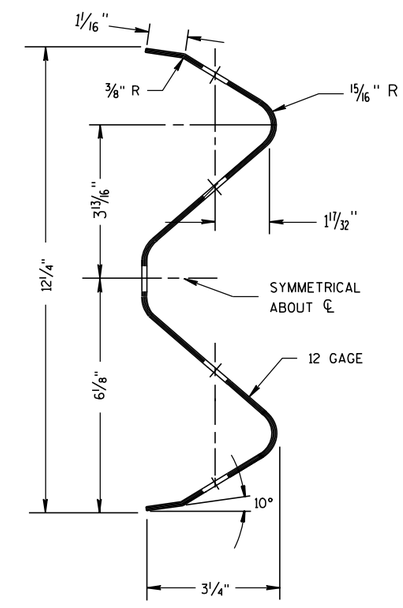

SECTION THRU W-BEAM RAIL

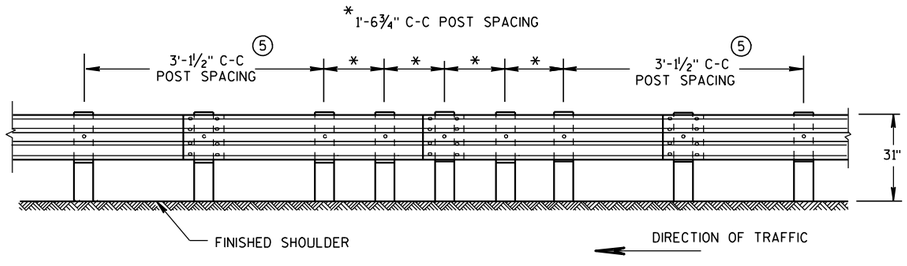

FRONT VIEW

QUARTER POST SPACING (QS)

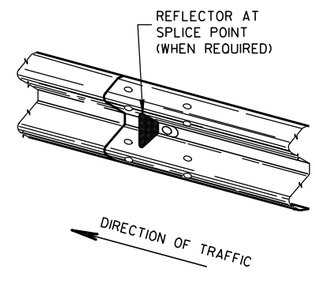

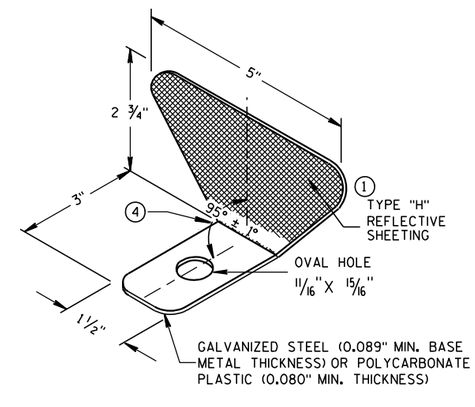

ONE SIDED REFLECTOR DETAIL AND TYPICAL INSTALLATION 1

REFLECTOR SPACING 2

	BEAM GUARD LENGTH	REFLECTOR SPACING	NO. SURFACES REFLECTORIZED	MIN. NO. REFLECTORS
ONE WAY TRAFFIC	< 200' > 200'	50' C-C 100' C-C	1 1	3
TWO WAY TRAFFIC	< 200' > 200'	25' C-C 50' C-C	1 3 1	6
TWO WAY TRAFFIC	< 200' > 200'	50' C-C 100' C-C	2 4 2	3

MIDWEST GUARDRAIL SYSTEM (MGS) GUARDRAIL

STATE OF WISCONSIN
DEPARTMENT OF TRANSPORTATION

6

6

S.D.D. 14 B 42-2b

S.D.D. 14 B 42-2b

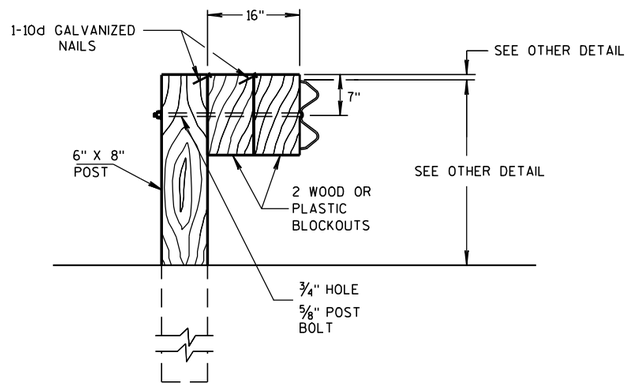

DETAIL FOR 16" BLOCKOUT DEPTH

IT IS ACCEPTABLE TO USE BLOCKOUTS UP TO 16" DEEP TO INCREASE THE POST OFFSET TO AVOID UNDERGROUND OBSTACLES. THERE IS NO LIMIT TO THE NUMBER OF POSTS THAT CAN HAVE ADDITIONAL BLOCKOUTS UP TO 16" DEEP.

NOTE: 1. ALL FILLETS SHALL HAVE A MINIMUM RADIUS OF 1/16".
2. IF THE BOLT EXTENDS MORE THAN 1/4" FROM THE NUT THE BOLT SHOULD BE TRIMMED BACK.

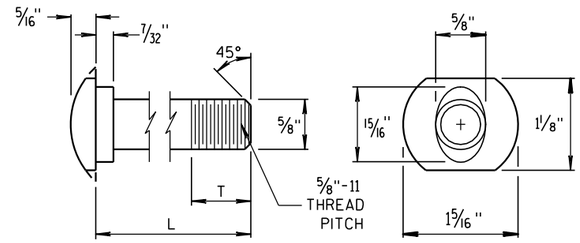

POST BOLT TABLE

L	T (MIN.)
1 1/4"	1 1/8"
2"	1 3/4"
10"	4"
14"	4 1/16"
18"	4"
21"	4 1/16"
25"	4"

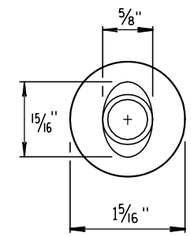

ALTERNATE BOLT HEAD

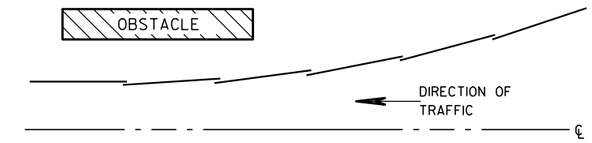

PLAN VIEW

BEAM LAPPING DETAIL

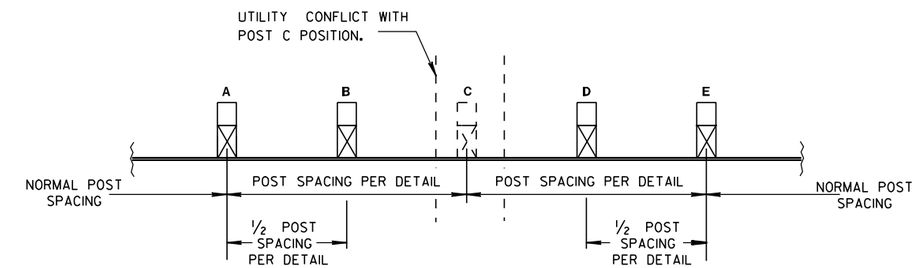

POST DRIVING FOR CONTINUOUS UNDERGROUND OBSTRUCTION

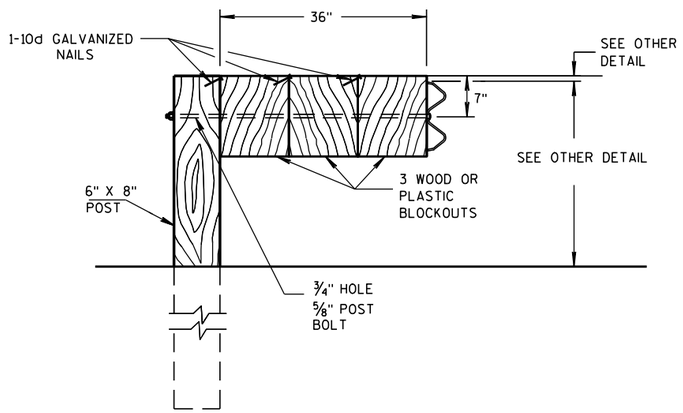

DETAIL FOR 36" BLOCKOUT DEPTH

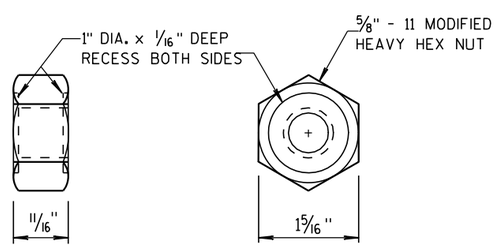

POST BOLT AND RECESS NUT

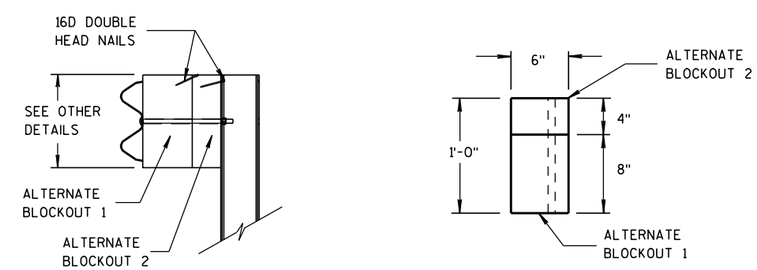

SIDE VIEW TOP VIEW

ALTERNATE WOOD BLOCKOUT DETAIL

NOTES: UNDER SPECIAL CIRCUMSTANCES, SUCH AS AVOIDING OBSTACLES THAT ARE NOT RELOCATED, IT IS ACCEPTABLE TO INSTALL ADDITIONAL BLOCKOUTS TO OBTAIN UP TO 36" DEPTH FOR ONE OR TWO POSTS IN A SECTION OF GUARDRAIL.

DO NOT USE 16" OR 36" BLOCKOUTS IF IT CAUSES THE POST TO BE DRIVEN BEYOND SHOULDER HINGE POINT OR CAUSES A FIXED OBJECT TO BE WITHIN THE DEFLECTION DISTANCE OF THE BARRIER.

MIDWEST GUARDRAIL SYSTEM (MGS) GUARDRAIL

STATE OF WISCONSIN
DEPARTMENT OF TRANSPORTATION

APPROVED
11/15/2011 DATE
/S/ Jerry H. [illegible]
ROADWAY STANDARDS ENGINEER
FHWA
ENT

6

S.D.D. 14 B 42-2c

GENERAL NOTES

(A) THE SLOPE IN THE AREA BOUNDED BY THE EXTENDED VEHICLE RUNOUT PATH (EVRP), THE HINGE POINT LINE (HPL), AND THE CLEAR ZONE LIMITS (CZL) SHALL BE 4:1 OR FLATTER.

(B) AFTER FINAL ASSEMBLY, RECHECK CABLE TO BE SURE IT IS TAUT AND HAS NOT RELAXED.

(C) DIFFERENT MANUFACTURES REQUIRE DIFFERENT PERFORATED W-BEAM RAIL END PANELS. SEE MANUFACTURES INFORMATION.

(D) THE TOP OF THE STEEL TUBE ON POST 1 AND POST 2 SHALL NOT BE MORE THAN 3" ABOVE THE FINISH GROUND ELEVATION.

(F) SHEETING IS ATTACHED TO 0.040 ALUMINUM SHEET AND ATTACHED TO E.A.T. HEAD USING 4 STAINLESS STEEL SELF-TAPPING SCREWS. ONE SCREW PER CORNER OF E.A.T.

(G) ½" DIAMETER X 3" LONG LAG BOLT AND WASHER.

(H) HARDWARE VARIES BETWEEN DIFFERENT MANUFACTURES. SEE MANUFACTURE'S DRAWING FOR INFORMATION.

(I) DIMENSIONS MAY VARY. SEE MANUFACTURE'S INFORMATION.

SEE SDD 14B42 FOR MORE INFORMATION.

* DO NOT ATTACH BLOCKOUTS TO POSTS 1 AND 2.

DO NOT INSTALL REFLECTORS ON THE FIRST 50 FEET OF THE APPROACH END OF THE ENERGY ABSORBING TERMINAL.

W-BEAM RAIL SPLICES ARE LOCATED AT POST NUMBER 3, AND BETWEEN POST 5 AND 6, BETWEEN POSTS 7 AND 8, AND MIDDLE OF THE SPAN AFTER POST 9.

PATTERN AND COLORS ON REFLECTIVE SHEETING TYPE H ARE TO CONFORM TO OM3-L OR OM3-R OF THE MANUAL ON UNIFORM TRAFFIC CONTROL DEVICES.

THE CENTER OF THE UPPER 3½" DIAMETER HOLE ON POST NUMBER 3 THROUGH POST 9 IS TO BE FLUSH WITH THE GROUND LINE (± ¾")

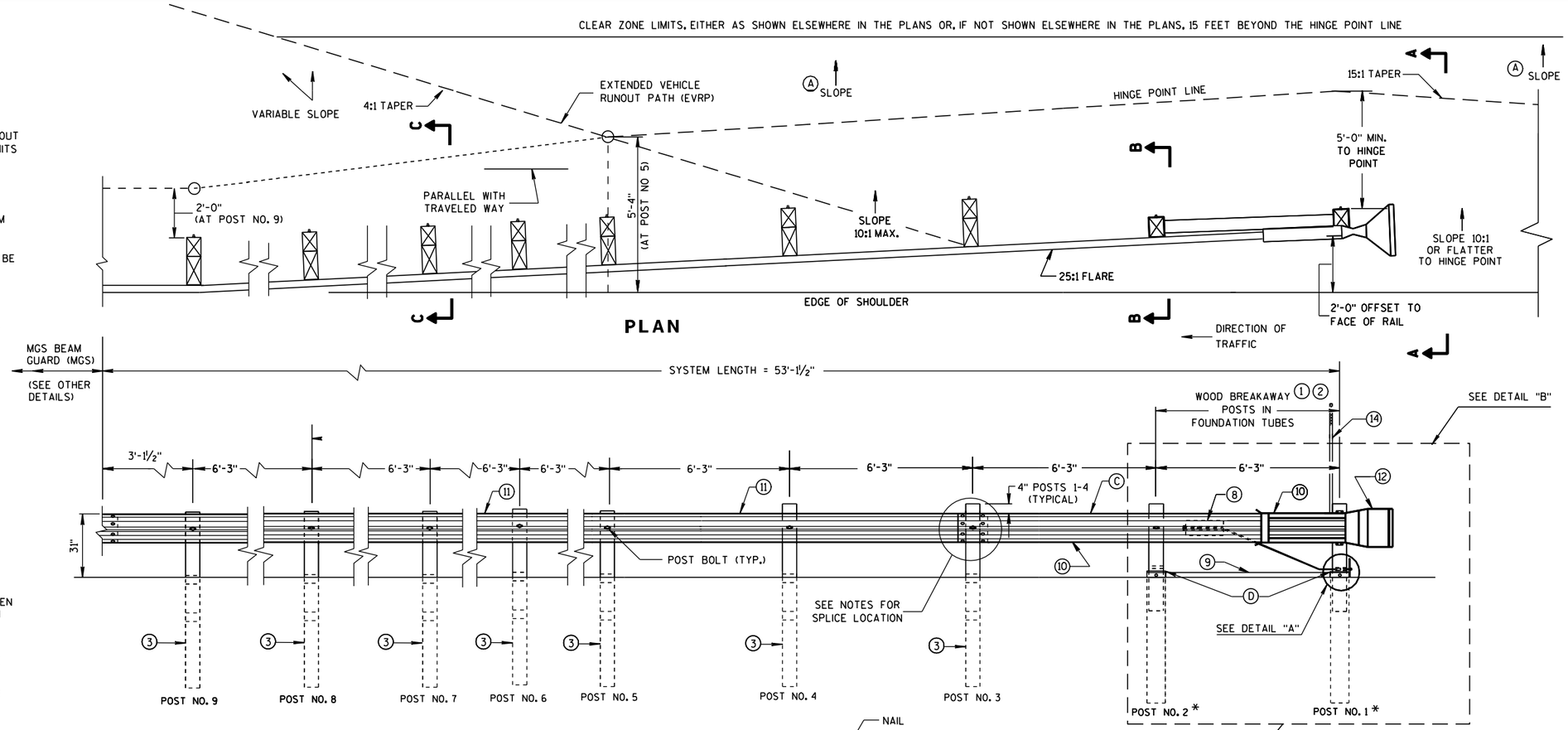

MIDWEST GUARDRAIL SYSTEM ENERGY ABSORBING TERMINAL (MGS)

STATE OF WISCONSIN
DEPARTMENT OF TRANSPORTATION

6

S.D.D. 14 B 44-1a

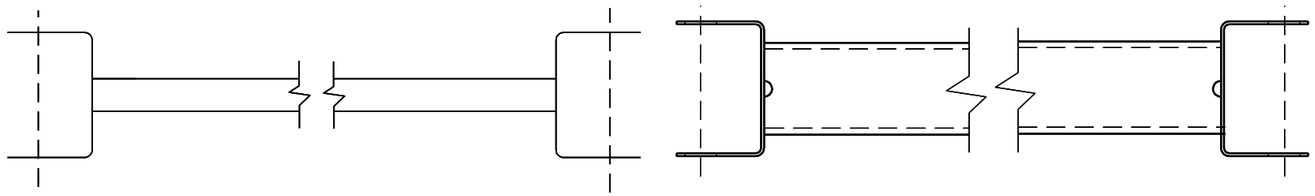

(9) (H)

GENERIC GROUND STRUT

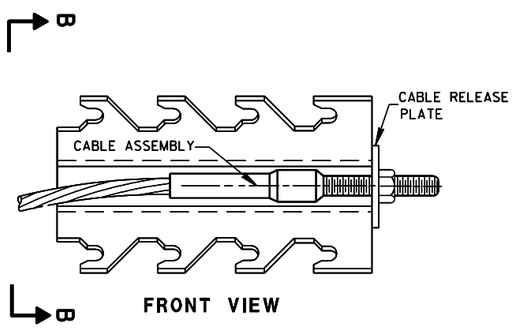

FRONT VIEW

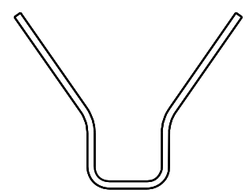

SECTION B-B

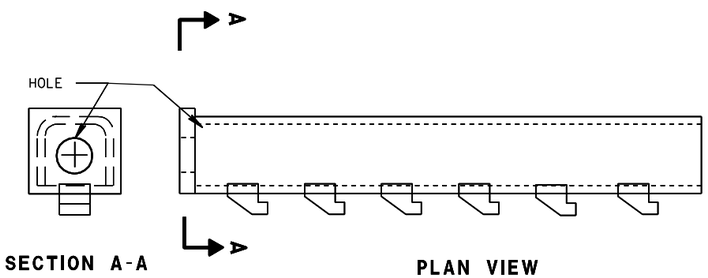

SECTION A-A

PLAN VIEW

GENERIC ANCHOR CABLE BOX (8) (H)

BILL OF MATERIALS

PART NO.	DESCRIPTION MATERIALS PROVIDED BY MGS EAT MANUFACTURER. SEE MANUFACTURER'S DETAILS FOR MORE INFORMATION.
1	WOOD BREAKAWAY POST
2	6" X 8" X 0.188", 6'-0" LONG FOUNDATION TUBE AT POSTS 1 AND 2
3	WOOD CRT
4	WOOD BLOCKOUT
5	PIPE SLEEVE
6	BEARING PLATE
7	BCT CABLE ASSEMBLY
8	ANCHOR CABLE BOX
9	GROUND STRUT
10	PERFORATED W-BEAM RAIL END PANEL, 12'-6" LONG.
11	STANDARD W-BEAM RAIL. MULTIPLE SECTIONS REQUIRED. SECTIONS VARY IN LENGTH.
12	END SECTION EAT
13	0.040" ALUMINUM SHEET WITH REFLECTIVE SHEETING TYPE H (ONLY THE SHEETING IS SUPPLIED BY THE MANUFACTURER)
14	EAT MARKER POST - YELLOW (SEE APPROVED PRODUCTS LIST)

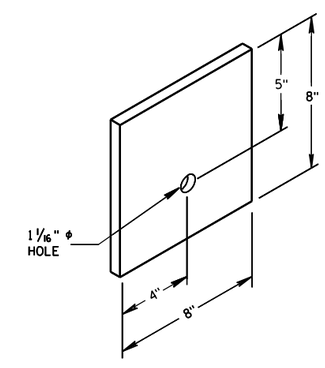

BEARING PLATE (6)

MIDWEST GUARDRAIL SYSTEM
ENERGY ABSORBING TERMINAL
(MGS)

STATE OF WISCONSIN
DEPARTMENT OF TRANSPORTATION

6

6

S.D.D. 14 B 44-1b

S.D.D. 14 B 44-1b

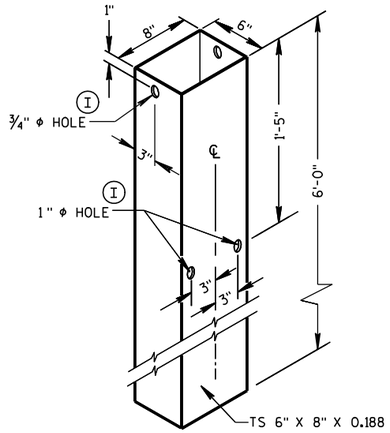

FOUNDATION TUBE (2)

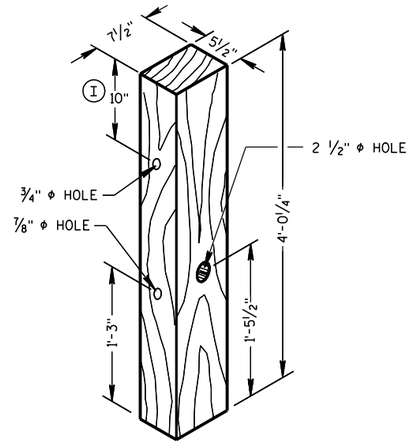

POSTS NUMBER 1 AND 2

WOOD BREAKAWAY POST (1)

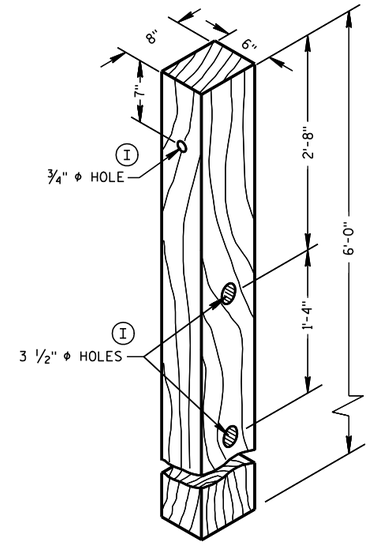

POSTS NUMBER 3-9

WOOD CRT POST (3)

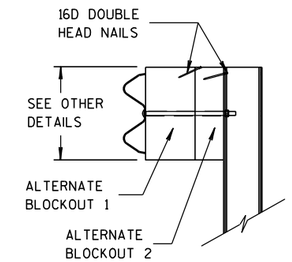

SIDE VIEW

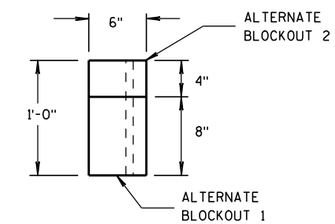

TOP VIEW

ALTERNATE WOOD BLOCKOUT DETAIL

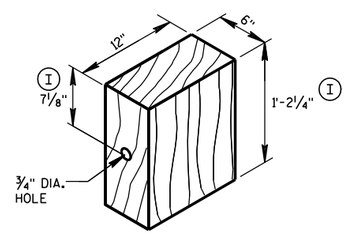

WOOD BLOCKOUT (4)

REQ'D. AT ALL POSTS EXCEPT POST NO'S 1 & 2

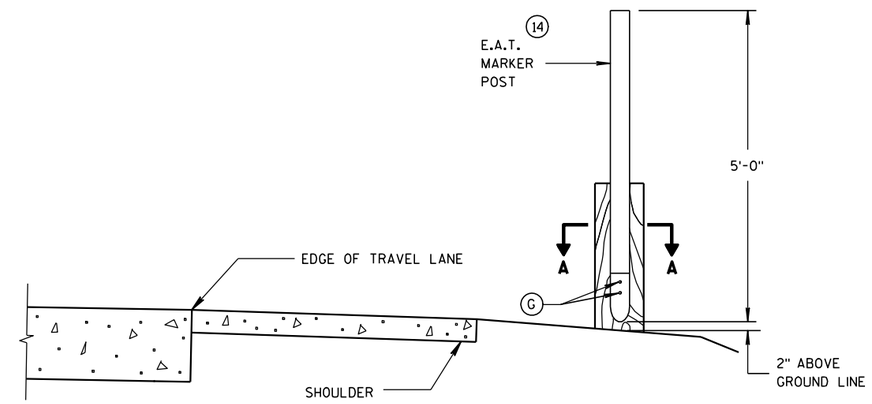

TYPICAL INSTALLATION OF E.A.T. MARKER POST BACKSIDE OF POST NO. 1

(E.A.T. AND RAIL REMOVED FOR CLARITY)

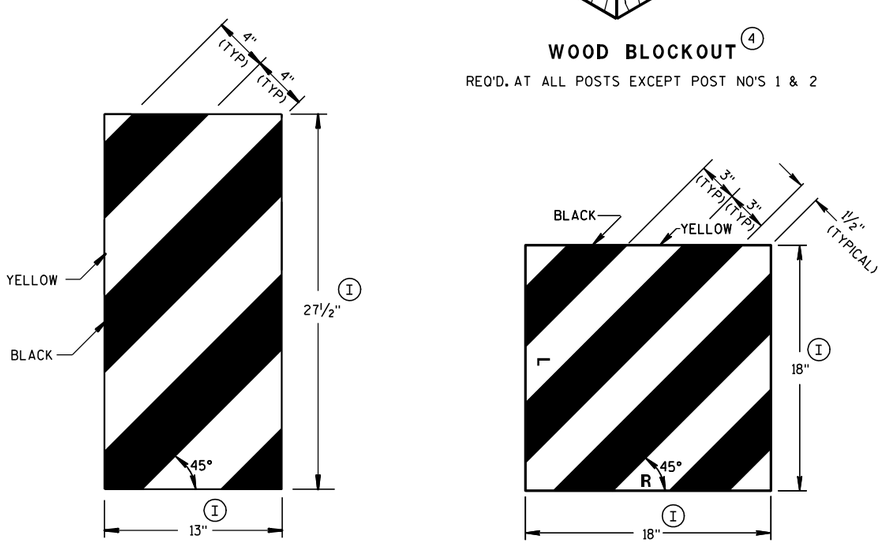

GENERIC REFLECTIVE SHEETING (13) (H)

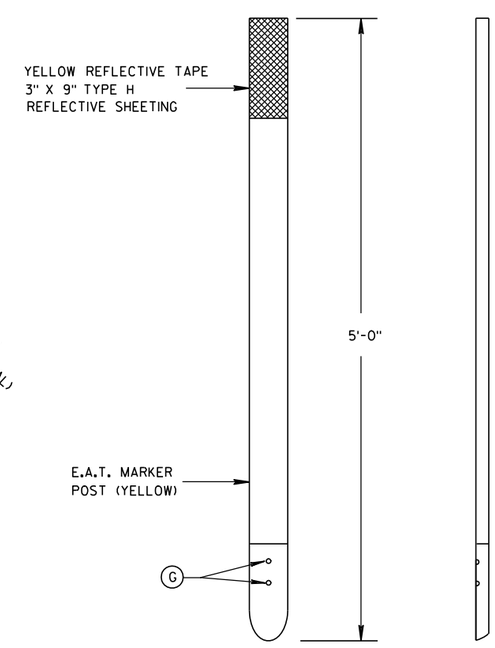

FRONT VIEW

SIDE VIEW

E.A.T. MARKER POST (14)

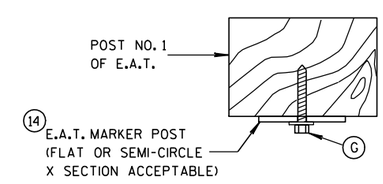

SECTION A-A

MIDWEST GUARDRAIL SYSTEM ENERGY ABSORBING TERMINAL (MGS)

STATE OF WISCONSIN
DEPARTMENT OF TRANSPORTATION

APPROVED
5/23/2011 — DATE
/S/ Jerry H. [illegible] — ROADWAY STANDARDS DEVELOPMENT ENGINEER
FHWA

6

6

S.D.D. 14 B 44-1c

S.D.D. 14 B 44-1c

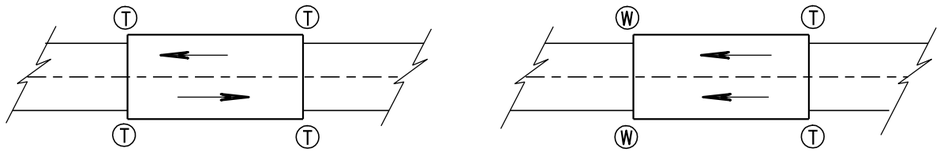

TWO WAY TRAFFIC

ONE WAY TRAFFIC

(T) THRIE BEAM CONNECTION

(W) W-BEAM CONNECTION WHEN REQUIRED

TYPICAL LOCATIONS OF THRIE BEAM AND W-BEAM CONNECTIONS TO BRIDGE

GENERAL NOTES

BOLT THE THRIE BEAM TO ALL POSTS AND BLOCKOUTS. DRILL OR PUNCH BOLT HOLES IN THE BEAM IF THE POST SPACING IS LESS THAN 6'-3.

IF ROCK IS ENCOUNTERED, REMOVE ROCK TO FULL DEPTH OF POST PLUS 2½", AND 12" DIAMETER AROUND POST. SEE 14B42 FOR MORE DETAILS.

TRANSITION USES STEEL POSTS ONLY.

SEE STANDARD DETAIL DRAWING 14 B 42 FOR MORE INFORMATION.

(A) BRIDGE RAILING TYPE "W" DOES NOT REQUIRE A TERMINAL CONNECTOR.

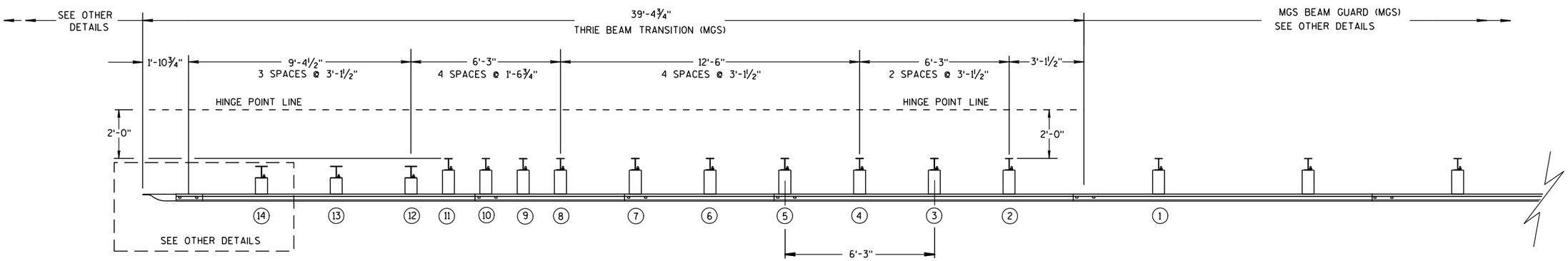

PLAN VIEW

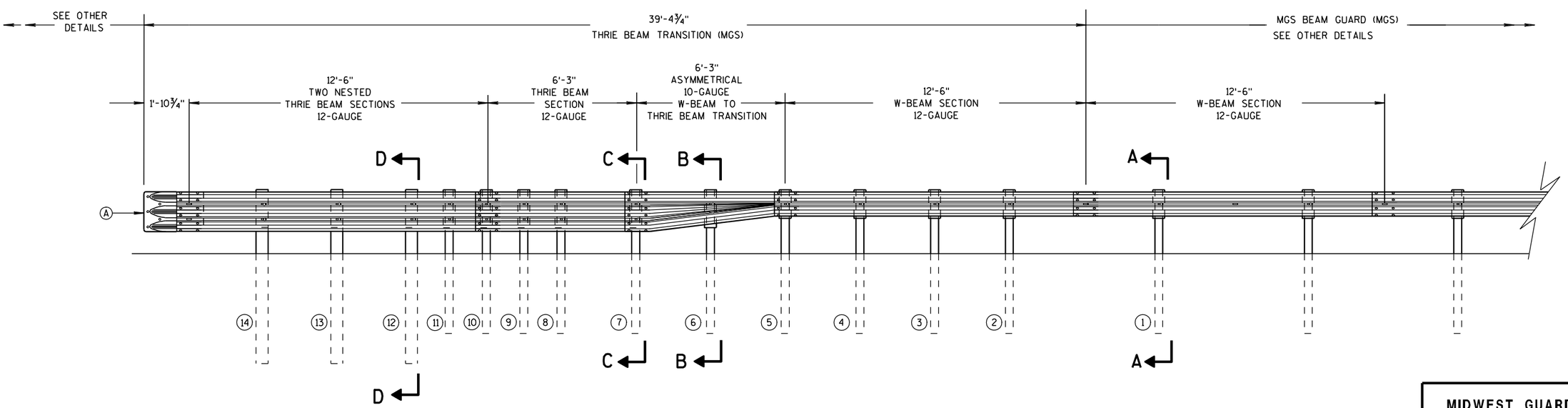

ELEVATION VIEW

MIDWEST GUARDRAIL SYSTEM THRIE BEAM TRANSITION

MIDWEST GUARDRAIL SYSTEM
THRIE BEAM TRANSITION (MGS)

STATE OF WISCONSIN
DEPARTMENT OF TRANSPORTATION

GENERAL NOTES

(B) TOLERANCE FOR TOP OF W-BEAM RAIL IS ± 1".

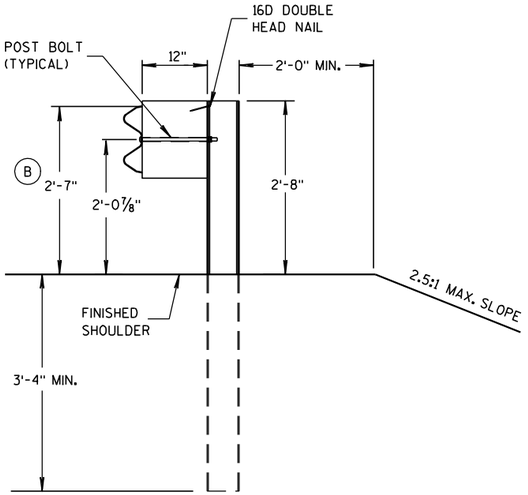

SECTION A-A

POSTS 1-5

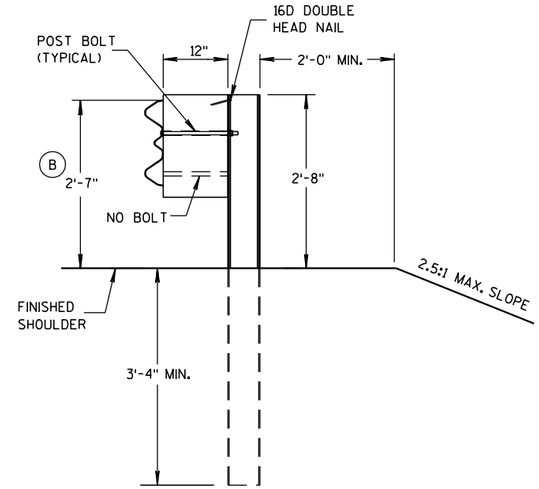

SECTION B-B

POST 6

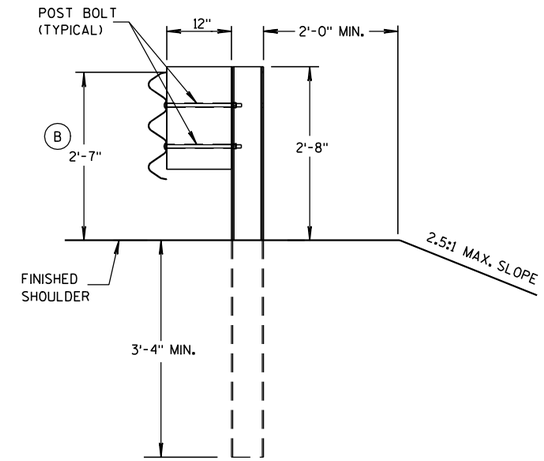

SECTION C-C

POSTS 7-11

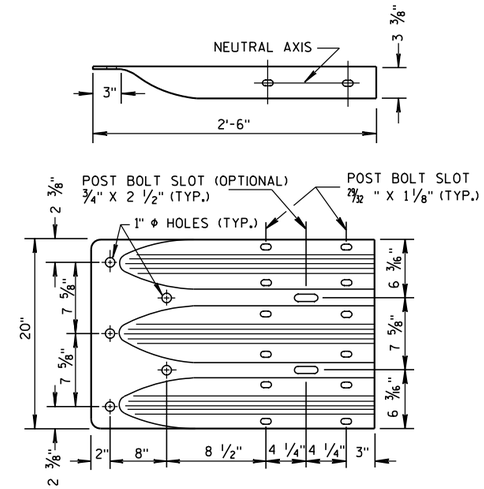

THRIE BEAM TERMINAL CONNECTOR

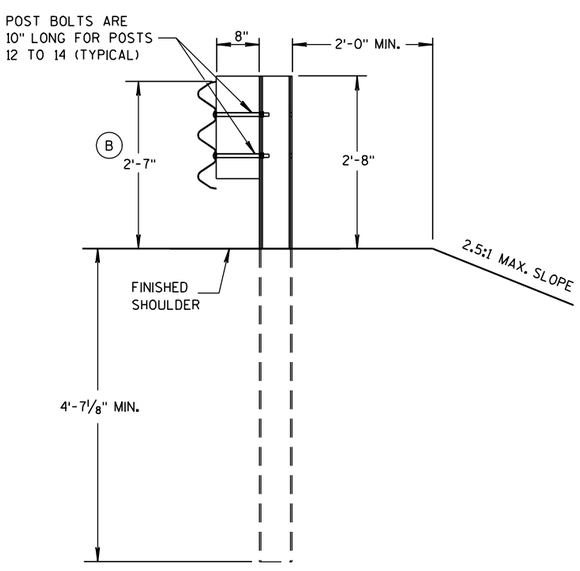

SECTION D-D

POSTS 12-14

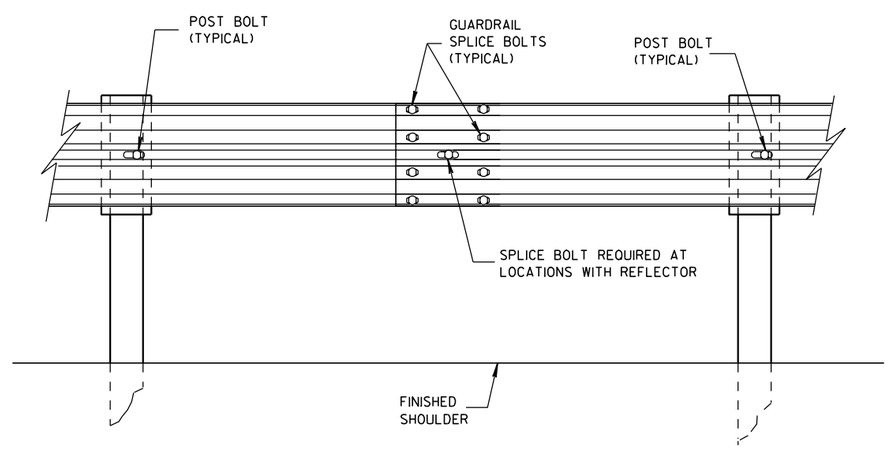

SPLICE DETAIL

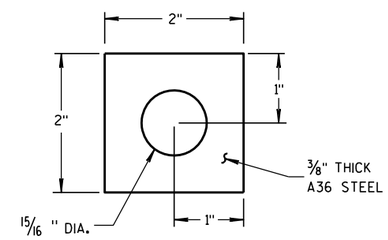

PLATE WASHER DETAIL

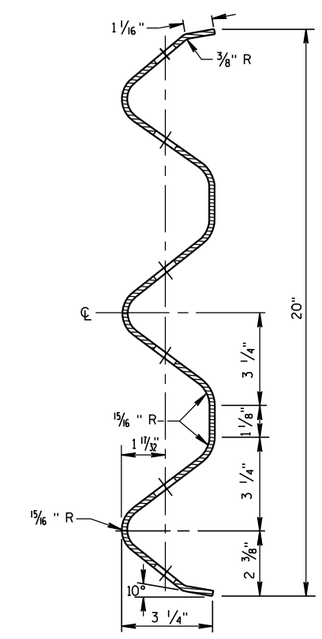

SECTION THRU THRIE BEAM RAIL ELEMENT

MIDWEST GUARDRAIL SYSTEM
THRIE BEAM TRANSITION (MGS)

STATE OF WISCONSIN
DEPARTMENT OF TRANSPORTATION

6

6

S.D.D. 14 B 45-3b

S.D.D. 14 B 45-3b

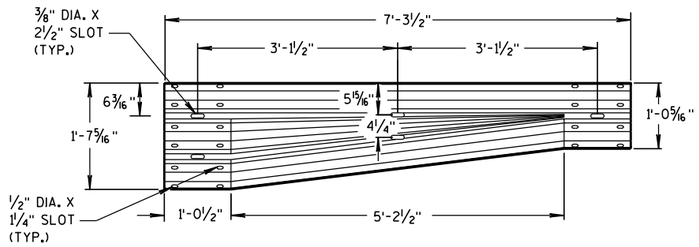

W-BEAM TO THRIE BEAM TRANSITION SECTION

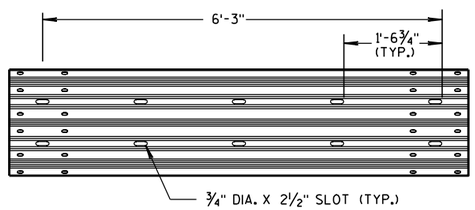

6'-3" THRIE BEAM SECTION

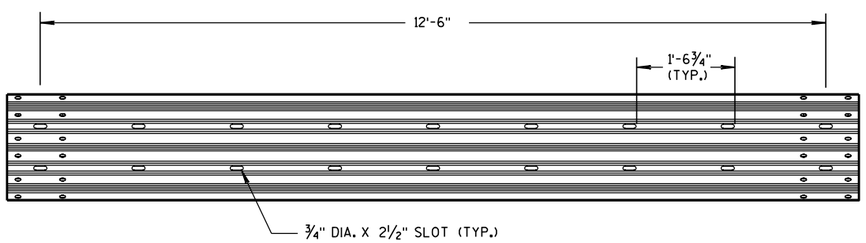

12'-6" THRIE BEAM SECTION

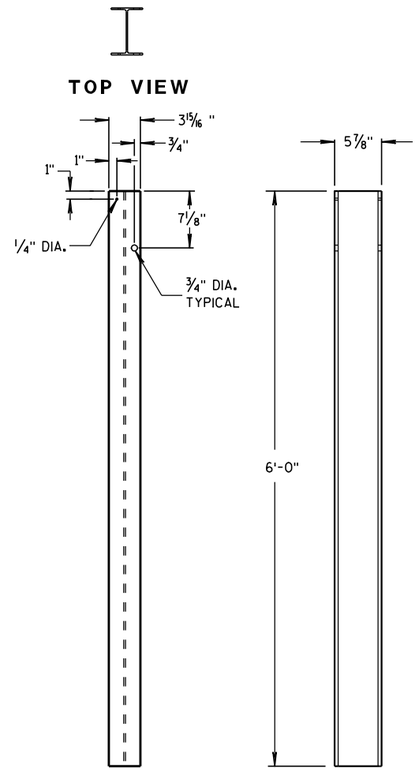

STEEL POSTS 1-5

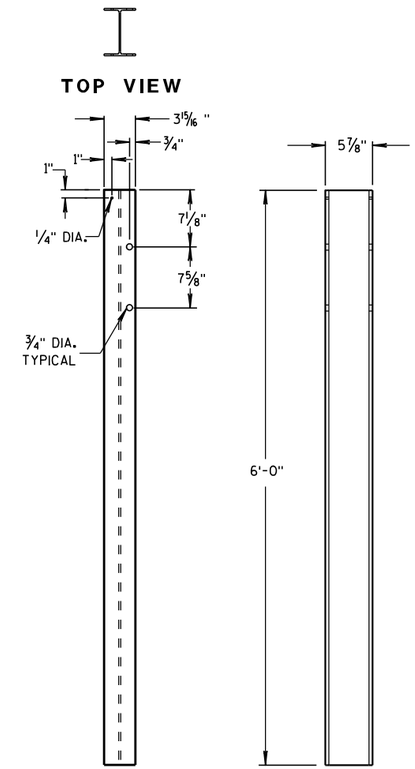

STEEL POSTS 6-11

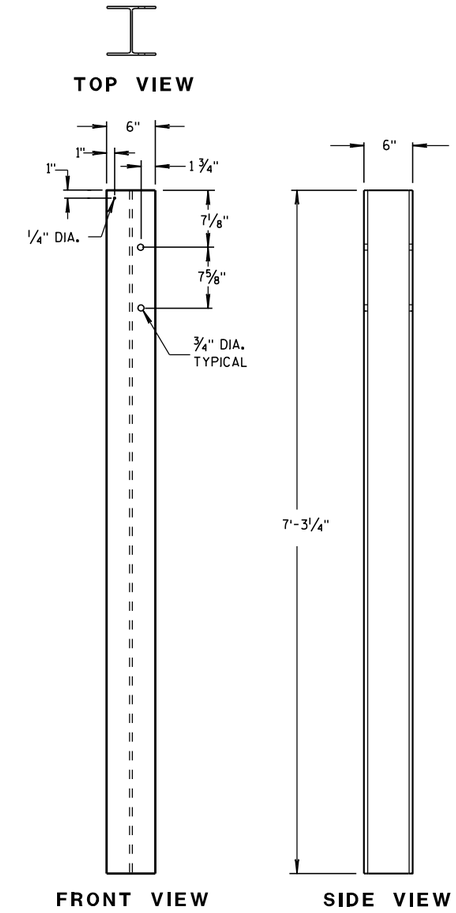

STEEL POSTS 12-14

(1) WOOD BLOCKS MAY BE CONSTRUCTED OUT OF 2 WOOD BLOCKS. SEE ALTERNATE WOOD BLOCK DETAIL.

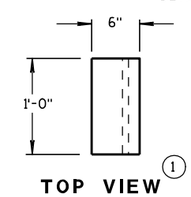

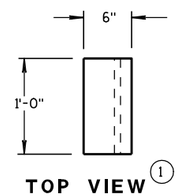

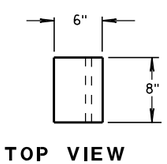

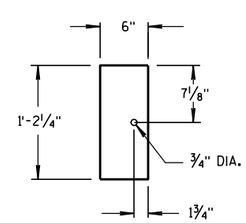

BLOCKOUT POSTS 1-5

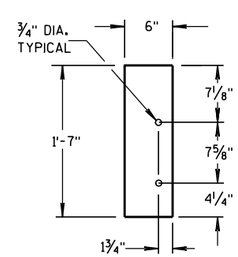

BLOCKOUT POSTS 6-11

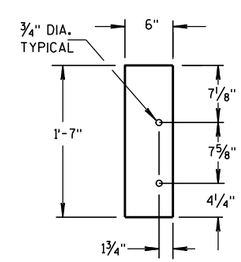

BLOCKOUT POSTS 12-14

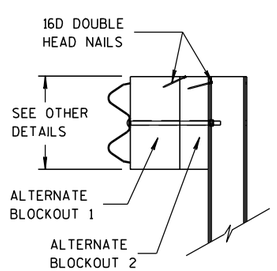

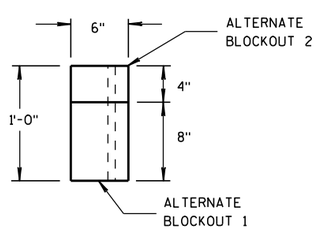

ALTERNATE WOOD BLOCKOUT DETAIL

STEEL POST SIZES

POST NUMBER	SECTION TYPE	LENGTH
1	W6x9	72"
2	W6x9	72"
3	W6x9	72"
4	W6x9	72"
5	W6x9	72"
6	W6x9	72"
7	W6x9	72"
8	W6x9	72"
9	W6x9	72"
10	W6x9	72"
11	W6x9	72"
12	W6x15	87 1/8"
13	W6x15	87 1/8"
14	W6x15	87 1/8"

MIDWEST GUARDRAIL SYSTEM
THRIE BEAM TRANSITION (MGS)

STATE OF WISCONSIN
DEPARTMENT OF TRANSPORTATION

6

S.D.D. 14 B 45-3c

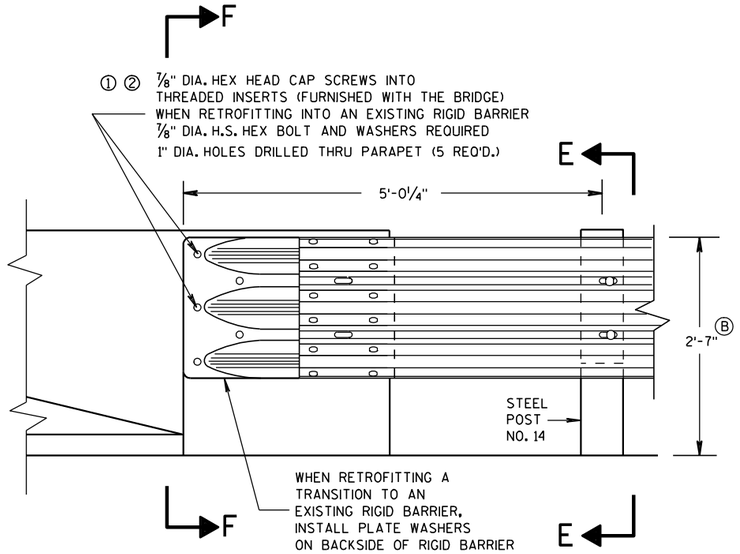

FRONT VIEW

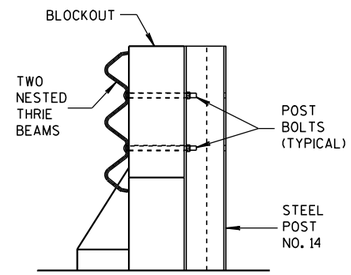

SECTION E-E

THRIE BEAM CONNECTION TO BRIDGE PARAPET WITH SQUARE ENDS

GENERAL NOTES

THESE ARE TYPICAL CONNECTION DETAILS. ADJUST THE POSTION OF CONNECTIONS TO EXISTING BRIDGES TO FIT THE ACTUAL BRIDGE AND SITE DIMENSIONS.

① DRILLING BOLT HOLES THROUGH THE PARAPET, BOLTS, NUTS, WASHERS AND REPAIRING DAMAGED CONCRETE ARE INCIDENTAL TO THE CONTRACT.

② BOLTS MAY BE A325 BOLTS OR A449 BOLTS. BOLT LENGTH AND THREADING LENGTH ARE TO ALLOW FOR A TIGHT CONNECTION BETWEEN RIGID BARRIER AND THRIE BEAM CONNECTION PLATE. CONTRACTOR IS TO FIELD VERIFY BOLT LENGTH AND THREAD LENGTH. ONE ROUND WASHER REQUIRED BETWEEN BOLT HEAD AND THRIE BEAM CONNECTOR PLATE. BOLTS THAT EXTEND THROUGH THE PARAPET AND OUT THE BACK FACE REQUIRE A HARDENED ROUND STEEL WASHER THAT IS 2" O.D. X 5/8" THICK AND ONE PLATE WASHER. REPAIR ANY DAMAGED CONCRETE FROM BOLT INSTALLATION.

③ THE RECESS FOR A W-BEAM CONNECTION, WHICH EXISTS ON SOME PARAPETS OF THIS TYPE, SHALL BE FILLED WITH A TREATED TIMBER BLOCKOUT. BLOCKOUT SIZE IS 1'-6" X 2'-0" X 3 1/2".

Ⓑ TOLERANCE FOR TOP OF BEAM IS ± 1".

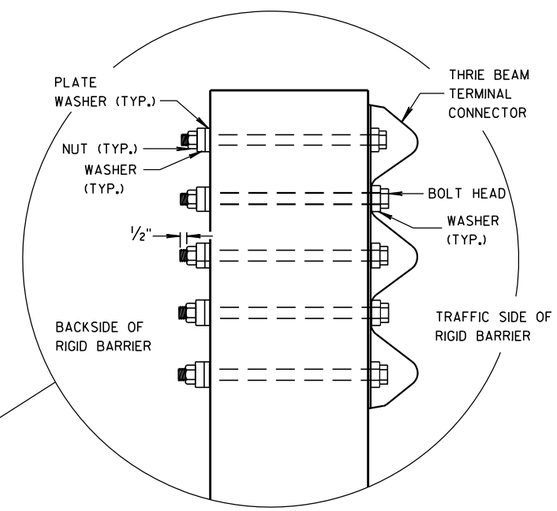

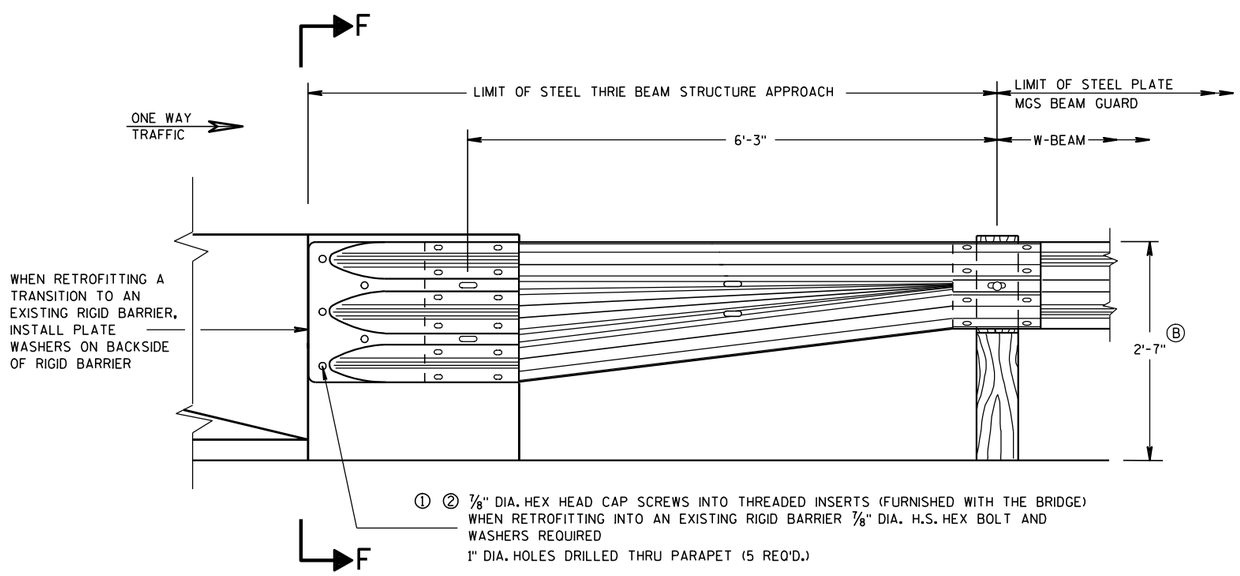

FRONT VIEW

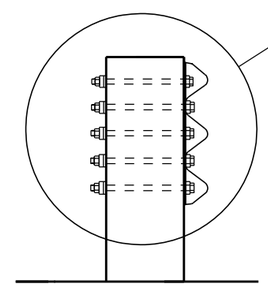

SECTION F-F

W BEAM TRANSITION AND CONNECTION TO BRIDGE PARAPETS WITH SQUARE ENDS

(USE ONLY ON THE TRAFFIC EXIT END OF ONE WAY BRIDGES)

MIDWEST GUARDRAIL SYSTEM THRIE BEAM TRANSITION (MGS)

STATE OF WISCONSIN
DEPARTMENT OF TRANSPORTATION

APPROVED
8/31/2012 — DATE
/S/ Jerry H. [illegible] — ROADWAY STANDARDS DEVELOPMENT ENGINEER
FHWA

6

S.D.D. 14 B 45-3d

GENERAL NOTES

THESE ARE TYPICAL CONNECTION DETAILS. ADJUST THE POSTION OF CONNECTIONS TO EXISTING BRIDGES TO FIT THE ACTUAL BRIDGE AND SITE DIMENSIONS.

① DRILLING BOLT HOLES THROUGH THE PARAPET, BOLTS, NUTS, WASHERS AND REPAIRING DAMAGED CONCRETE ARE INCIDENTAL TO THE CONTRACT.

② BOLTS MAY BE A325 BOLTS OR A449 BOLTS. BOLT LENGTH AND THREADING LENGTH ARE TO ALLOW FOR A TIGHT CONNECTION BETWEEN RIGID BARRIER AND THRIE BEAM CONNECTION PLATE. CONTRACTOR IS TO FIELD VERIFY BOLT LENGTH AND THREAD LENGTH. ONE ROUND WASHER REQUIRED BETWEEN BOLT HEAD AND THRIE BEAM CONNECTOR PLATE. BOLTS THAT EXTEND THROUGH THE PARAPET AND OUT THE BACK FACE REQUIRE A HARDENED ROUND STEEL WASHER THAT IS 2" O.D. X 5/8" THICK AND ONE PLATE WASHER. REPAIR ANY DAMAGED CONCRETE FROM BOLT INSTALLATION.

③ THE RECESS FOR A W-BEAM CONNECTION, WHICH EXISTS ON SOME PARAPETS OF THIS TYPE, SHALL BE FILLED WITH A TREATED TIMBER BLOCKOUT. BLOCKOUT SIZE IS 1'-6" X 2'-0" X 3 1/2". BLOCK IS INCIDENTAL TO THE CONTRACT.

④ BOLT, NUT AND WASHERS NOT REQUIRED FOR THIS LOCATION WHEN RETROFITTING AN EXISTING PAPAPET AND THE HOLE IS EITHER ABOVE PARAPET OR WITHIN 4 INCHES OF THE EDGE OF PARAPET.

Ⓑ TOLERANCE FOR TOP OF BEAM IS ± 1".

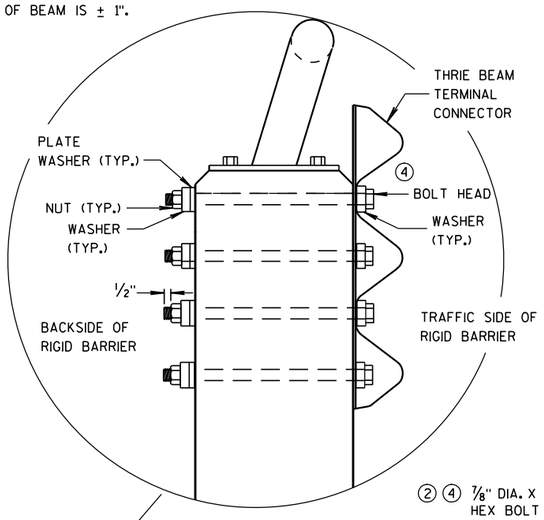

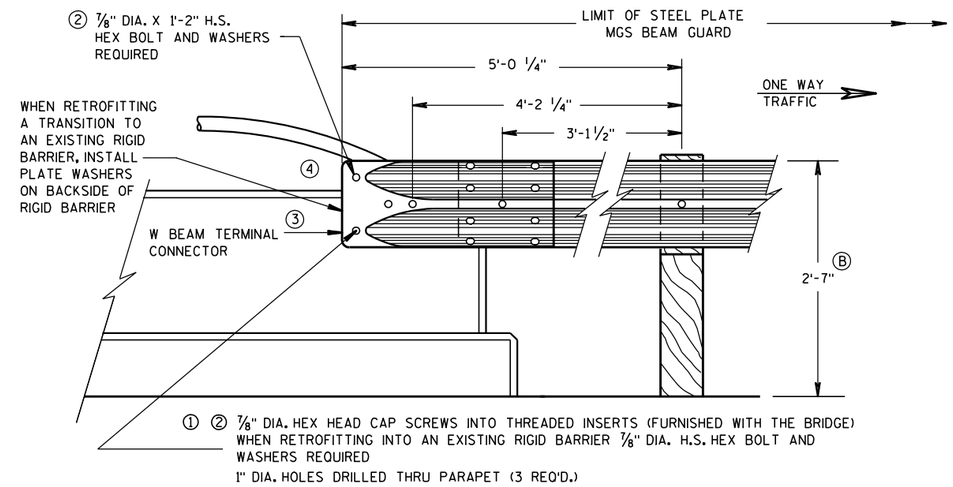

FRONT VIEW

W BEAM CONNECTION TO VERTICAL FACE PARAPET

(USE ONLY ON THE TRAFFIC EXIT END OF ONE WAY BRIDGES)

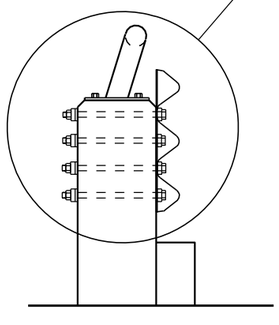

SECTION G-G

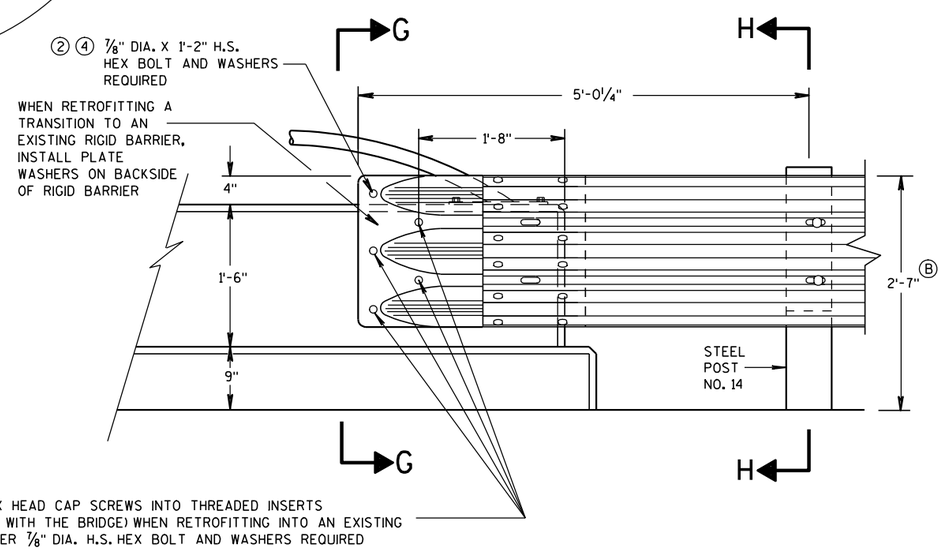

FRONT VIEW

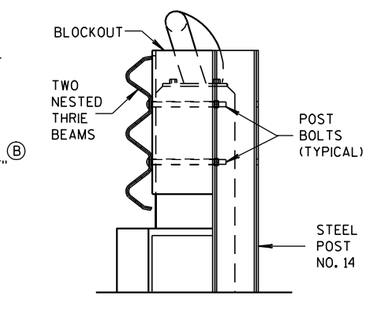

SECTION H-H

THRIE BEAM CONNECTION TO VERTICAL FACED PARAPETS

MIDWEST GUARDRAIL SYSTEM THRIE BEAM TRANSITION (MGS)	
STATE OF WISCONSIN DEPARTMENT OF TRANSPORTATION	
APPROVED	
8-31-2012 DATE	/S/ Jerry H. Zogg ROADWAY STANDARDS DEVELOPMENT ENGINEER
FHWA	

6

S.D.D. 14 B 45-3e

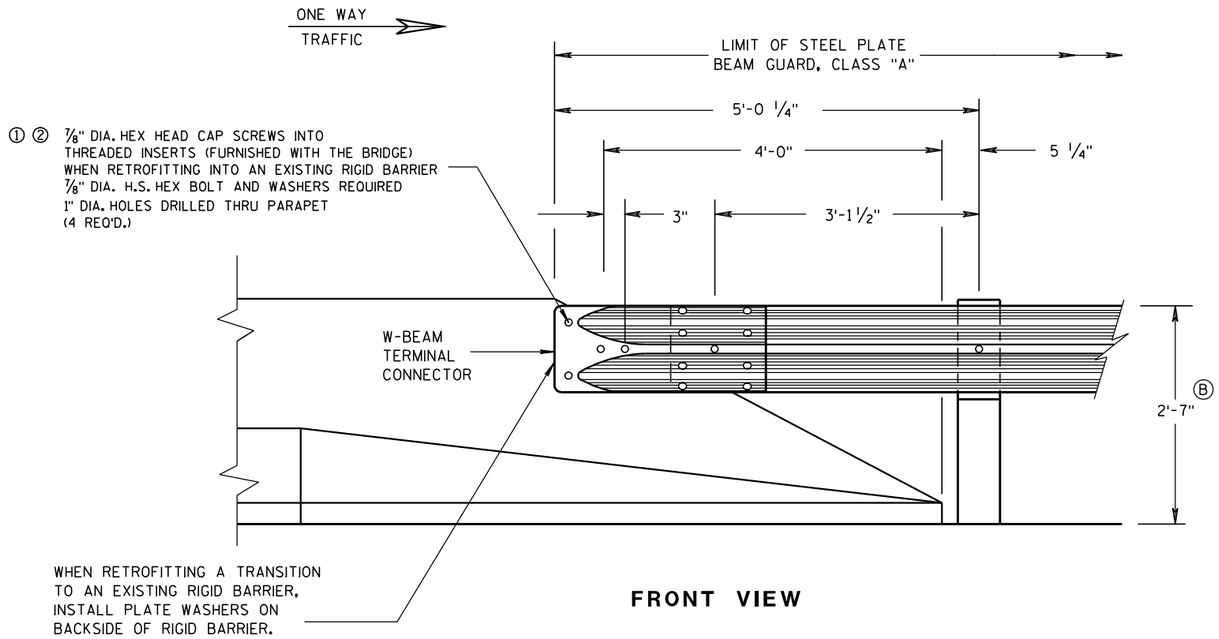

FRONT VIEW

W BEAM CONNECTION TO PARAPETS WITH SLOPED ENDS

(USE ONLY AT TRAFFIC EXIT END OF ONE WAY BRIDGE)

GENERAL NOTES

① DRILLING BOLT HOLES THROUGH THE PARAPET, BOLTS, NUTS, WASHERS AND REPAIRING DAMAGED CONCRETE ARE INCIDENTAL TO THE CONTRACT.

② BOLTS MAY BE A325 BOLTS OR A449 BOLTS. BOLT LENGTH AND THREADING LENGTH ARE TO ALLOW FOR A TIGHT CONNECTION BETWEEN RIGID BARRIER AND THRIE BEAM CONNECTION PLATE. CONTRACTOR IS TO FIELD VERIFY BOLT LENGTH AND THREAD LENGTH. ONE ROUND WASHER REQUIRED BETWEEN BOLT HEAD AND THRIE BEAM CONNECTOR PLATE. BOLTS THAT EXTEND THROUGH THE PARAPET AND OUT THE BACK FACE REQUIRE A HARDENED ROUND STEEL WASHER THAT IS 2" O.D. X 5/8" THICK AND ONE PLATE WASHER. REPAIR ANY DAMAGED CONCRETE FROM BOLT INSTALLATION.

Ⓑ TOLERANCE FOR TOP OF BEAM IS ± 1".

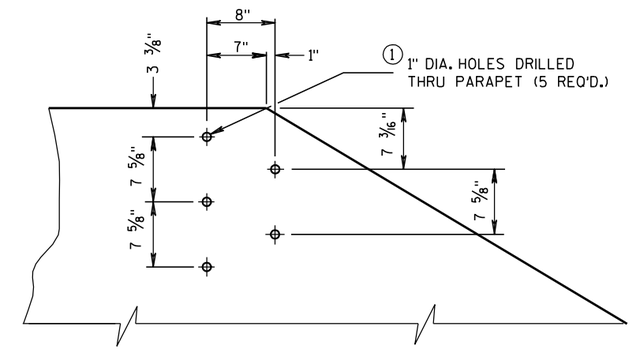

DRILL HOLE LOCATION AND PATTERN FOR THRIE BEAM CONNECTION

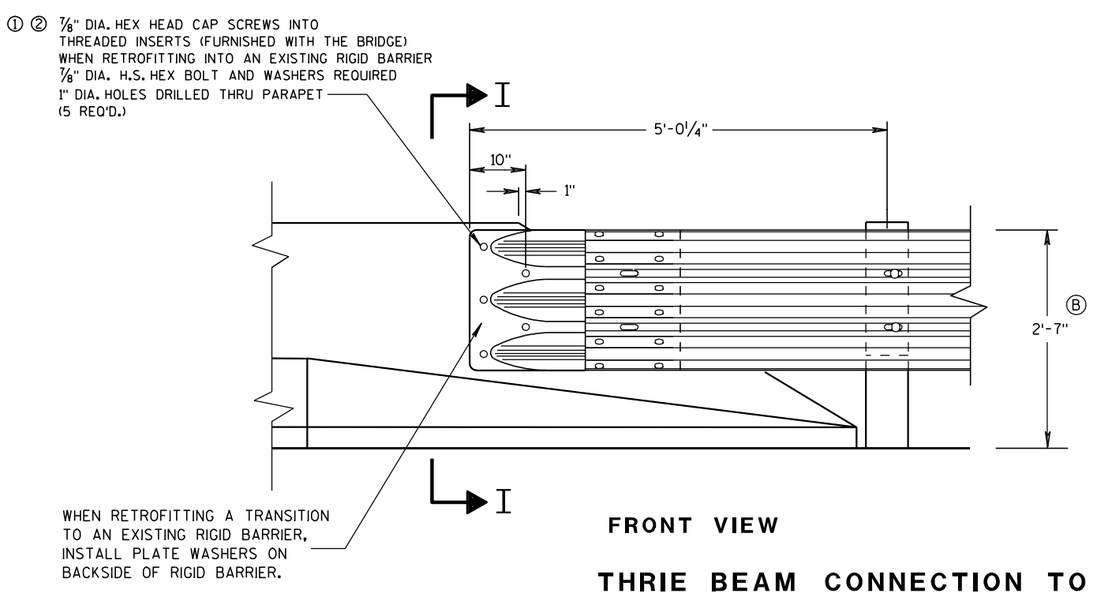

FRONT VIEW

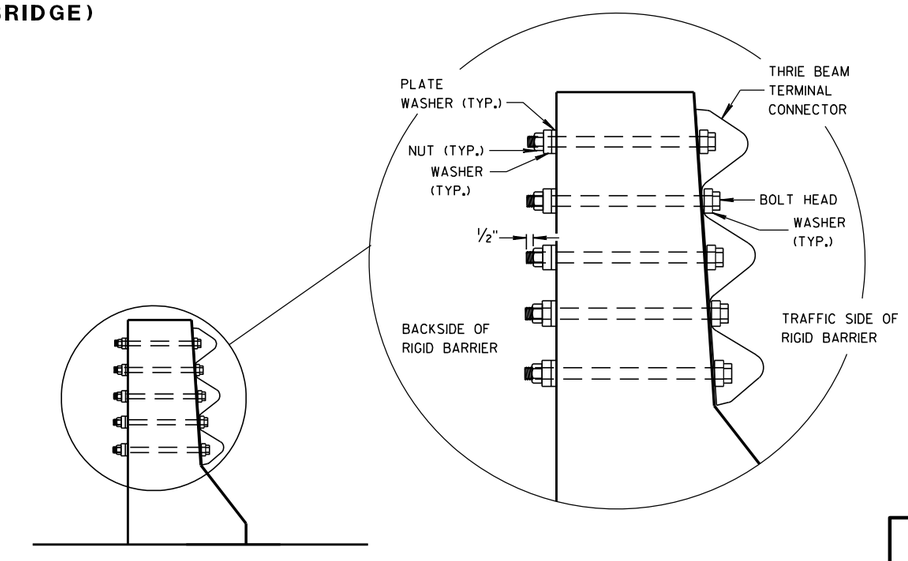

SECTION I-I

THRIE BEAM CONNECTION TO BRIDGE PARAPETS WITH SLOPED ENDS

MIDWEST GUARDRAIL SYSTEM
THRIE BEAM TRANSITION (MGS)

STATE OF WISCONSIN
DEPARTMENT OF TRANSPORTATION

APPROVED
8/31/2012 — DATE
/S/ Jerry H. Zogg — ROADWAY STANDARDS ENGINEER
ENT
FHWA

6

S.D.D. 14 B 45-3f

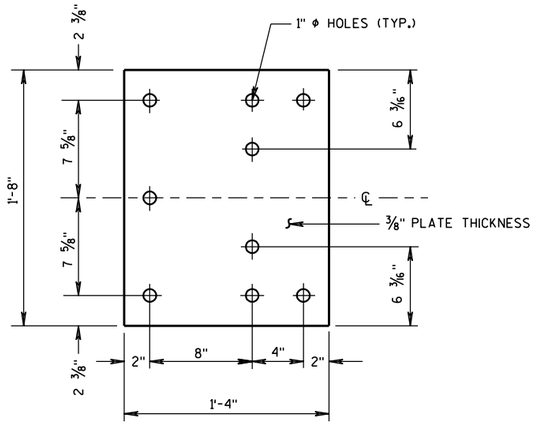

BACK-UP PLATE DETAIL

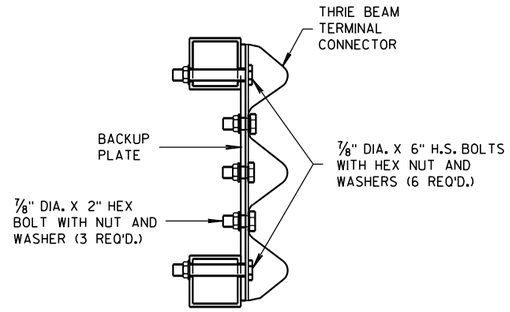

SECTION J-J

GENERAL NOTES

(1) DRILLING HOLES THROUGH THE PAPRPET, BOLTS, NUTS, WASHERS AND REPAIRING DAMAGED CONCRETE ARE INCIDENTAL TO THE CONTRACT.

(B) TOLERANCE FOR TOP OF BEAM IS ± 1".

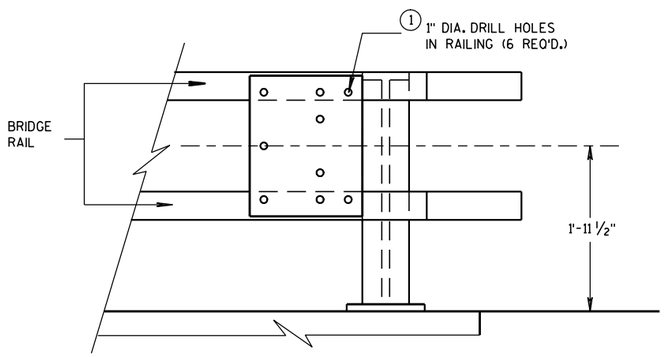

BACK-UP PLATE MOUNTING ONTO BRIDGE RAILING

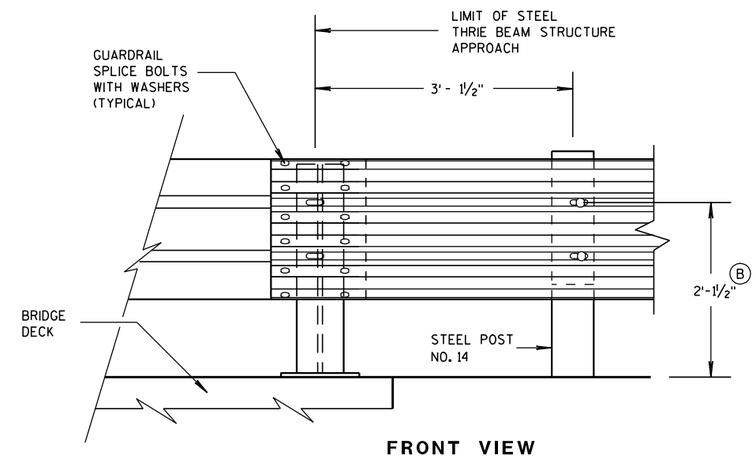

FRONT VIEW

THRIE BEAM CONNECTION TO STEEL RAILING TYPE "W"

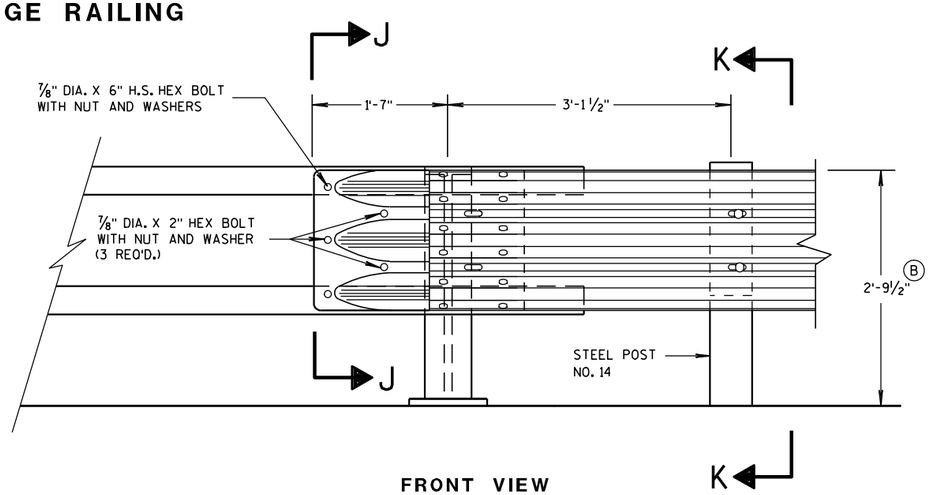

FRONT VIEW

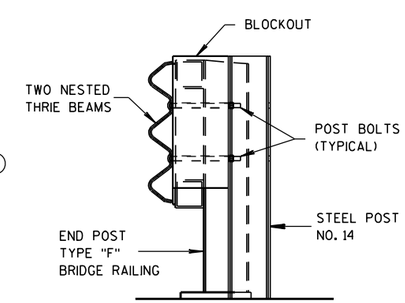

SECTION K-K

THRIE BEAM CONNECTION TO TUBULAR RAILING TYPE "F"

MIDWEST GUARDRAIL SYSTEM
THRIE BEAM TRANSITION (MGS)

STATE OF WISCONSIN
DEPARTMENT OF TRANSPORTATION

APPROVED
8/31/2012 — DATE
/S/ Jerry H. Zogg — ROADWAY STANDARDS DEVELOPMENT ENGINEER
FHWA

6

6

S.D.D. 14 B 45-3g

S.D.D. 14 B 45-3g

GENERAL NOTES

(B) TOLERANCE FOR TOP OF W-BEAM RAIL IS ± 1".

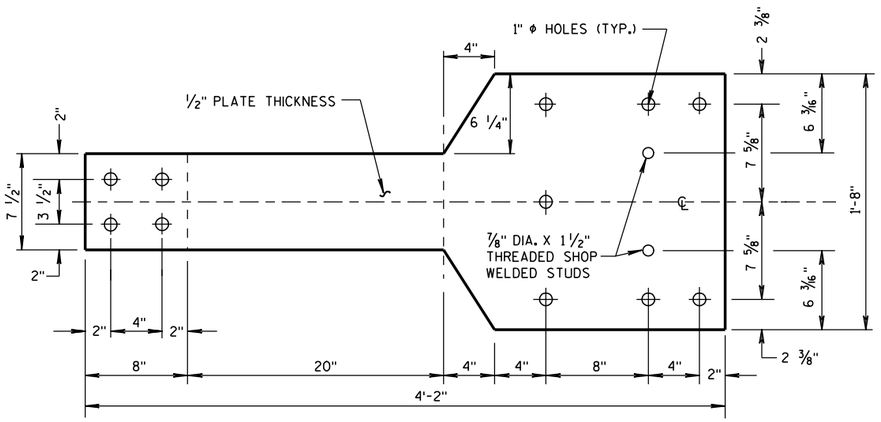

FRONT VIEW

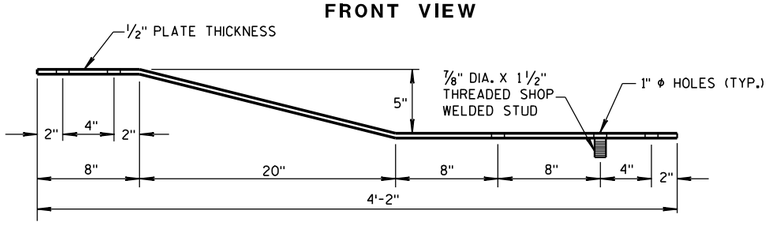

PLAN VIEW

BACK-UP PLATE DETAIL, TYPE "M"

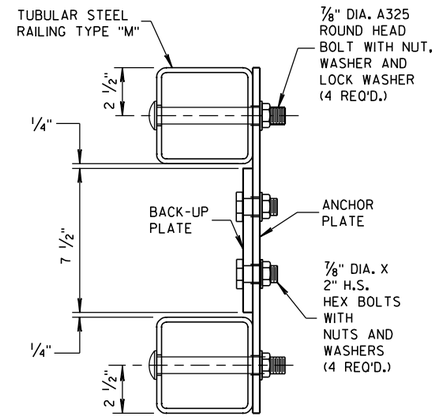

SECTION L-L

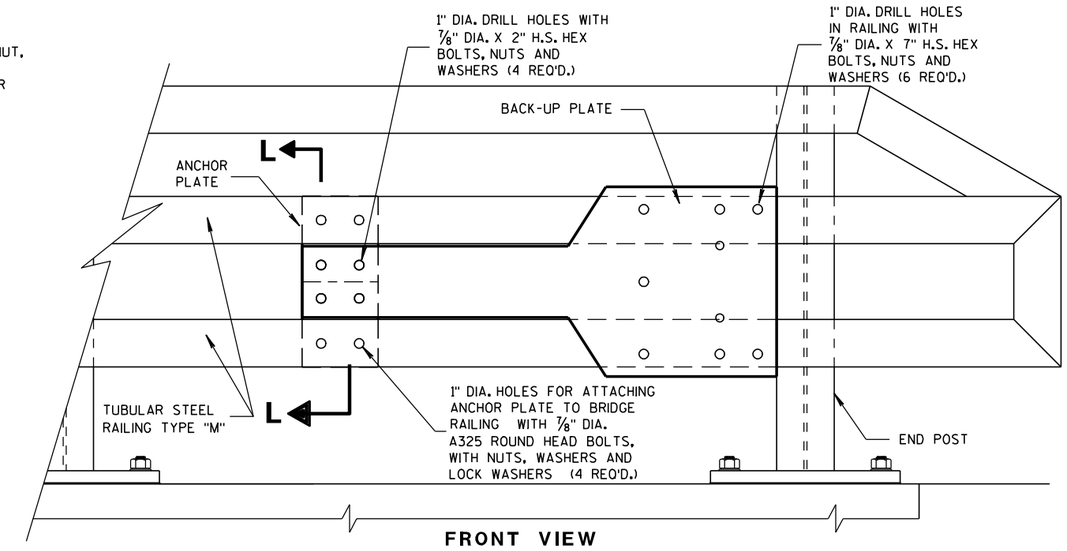

FRONT VIEW

ANCHOR AND BACK-UP PLATE MOUNTING TO BRIDGE RAILING, TYPE "M"

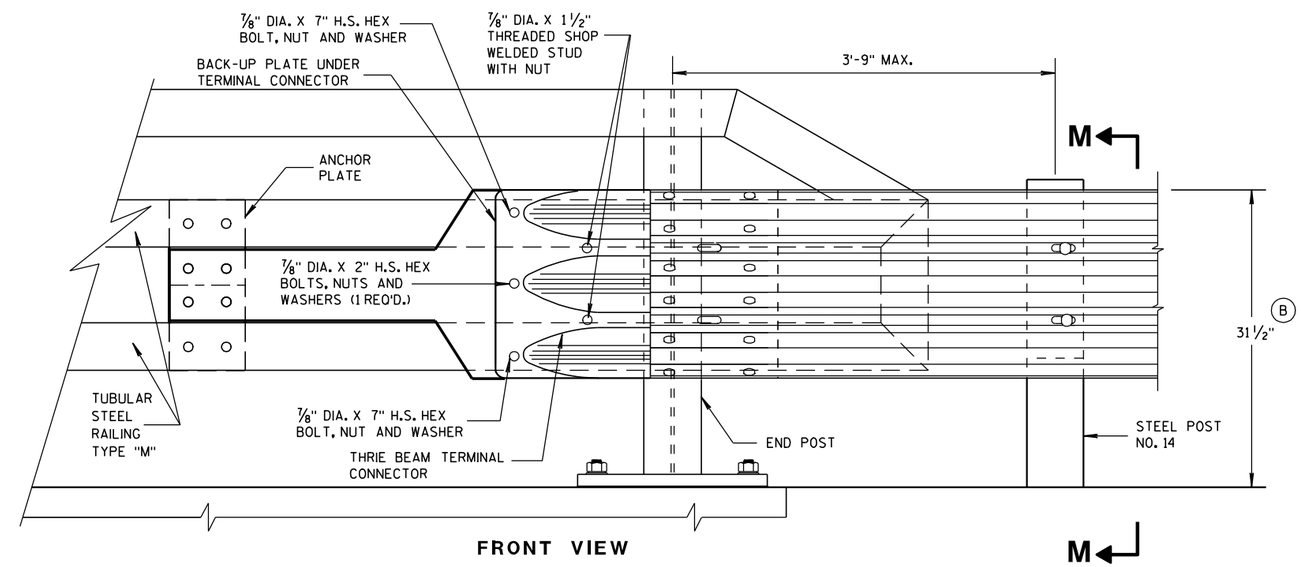

FRONT VIEW

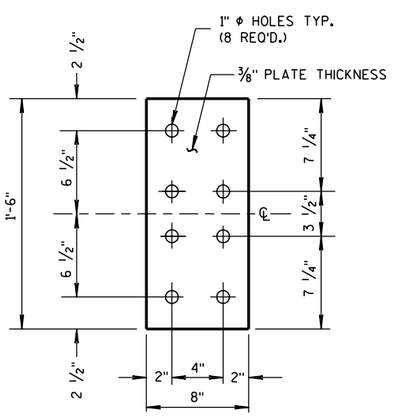

FRONT VIEW

ANCHOR PLATE DETAIL, TYPE "M"

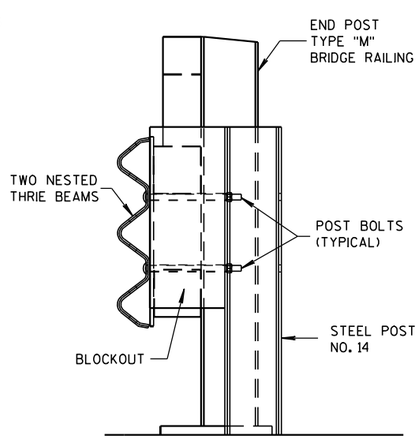

SECTION M-M

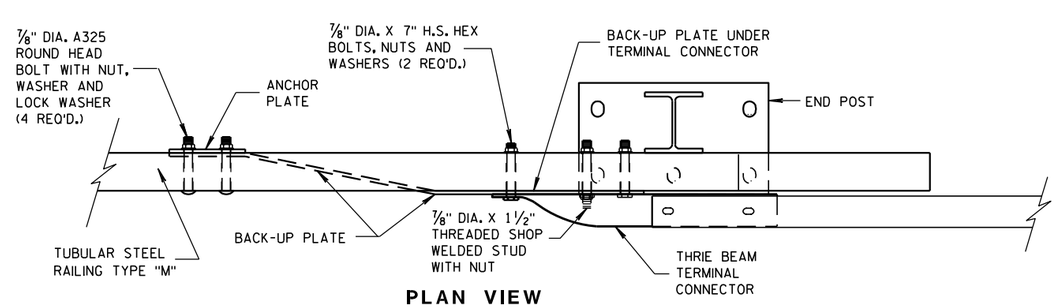

PLAN VIEW

THRIE BEAM CONNECTION TO TUBULAR RAILING, TYPE "M"

MIDWEST GUARDRAIL SYSTEM THRIE BEAM TRANSITION (MGS)

STATE OF WISCONSIN
DEPARTMENT OF TRANSPORTATION

APPROVED

8-31-2012	/S/ Jerry H. Zogg	
DATE	ROADWAY STANDARDS ENGINEER	ENT

FHWA

GENERAL NOTES

COVER PLATE PANELS ARE 3/16" THICK.

ALL STIFFENERS ARE 1/4" THICK.

CONNECTOR PLATE SHALL BE FABRICATED FROM ASTM GRADE A36 STEEL AND GALVANIZED.

FOR GALVANIZED REQUIREMENTS, SEE SECTION 614 OF THE STANDARD SPECIFICATIONS.

ALL HOLE DIAMETERS SHALL BE 1".

FOR OPPOSITE SIDE INSTALLATION MIRROR DRAWINGS.

(1) STIFFENERS LOCATED AT THE OUTSIDE EDGES OF THE COVER PLATES SHALL BE WELDED AS FOLLOWS:
SINGLE BEVEL GROOVE WELD ON EXTERNAL SIDES AND 3/16" FILLET WELD BY 1" LONG SPACED AT 2" ON INTERNAL SIDES.

(2) STIFFENERS LOCATED ON THE INSIDE OF THE COVER PLATE SHALL BE WELDED AS FOLLOWS:
3/16" FILLET WELD BY 1" LONG SPACED AT 2".

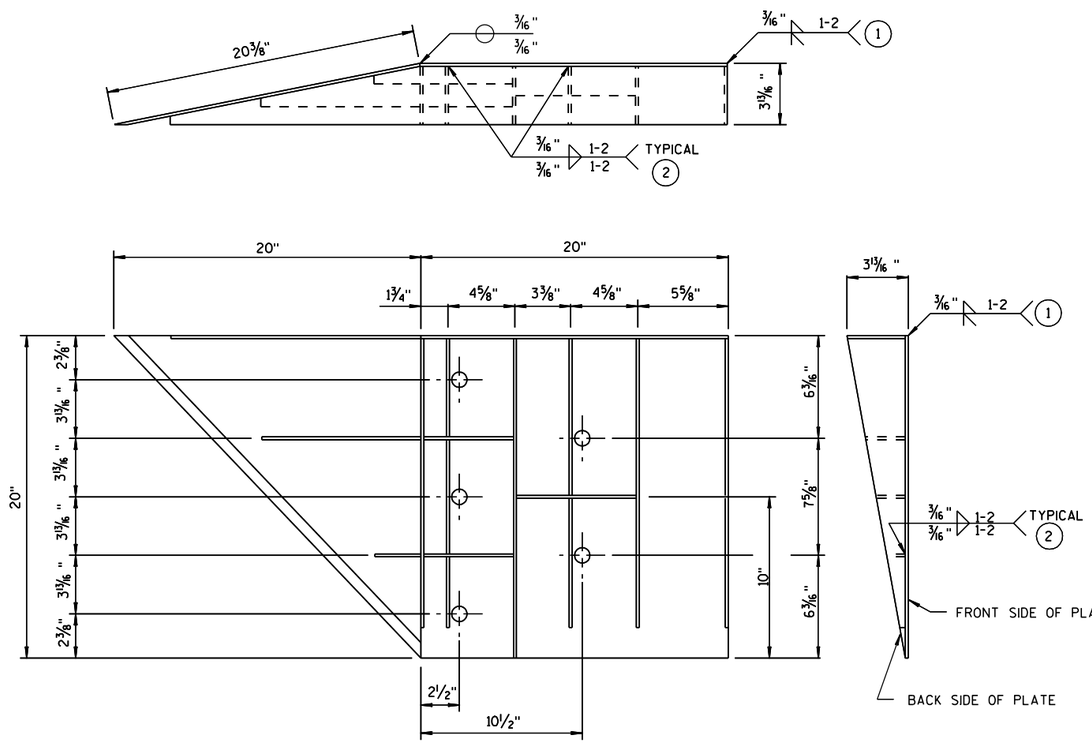

WELDING INSTRUCTION

(VIEWED FROM BACK SIDE OF PLATE)

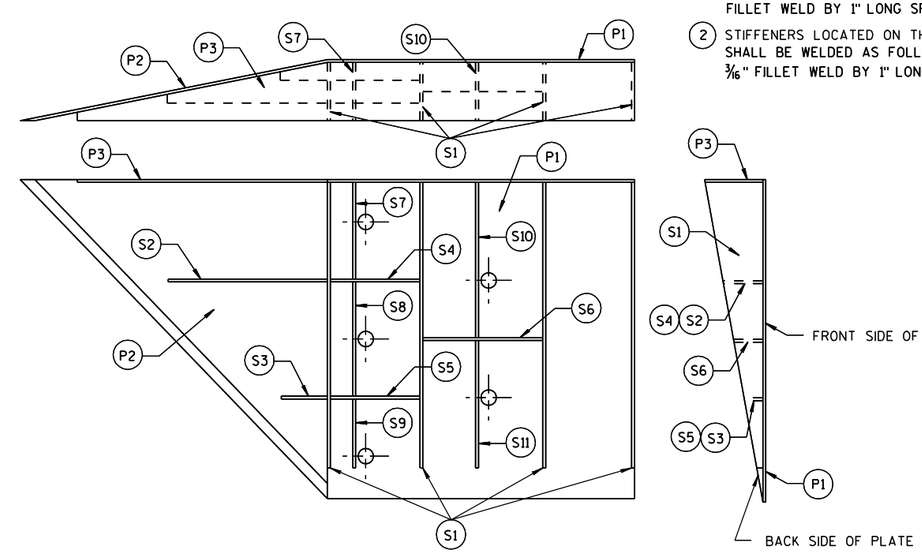

PLATE AND STIFFENER IDENTIFICATION

(VIEWED FROM BACK SIDE OF PLATE)

CONNECTOR PLATE DIMENSION (PER ASSEMBLY)

PLATE	QUANTITY	SHAPE	SIZE (A x B x C x D)	THICKNESS
P1	1		20" x 20"	3/16"
P2	1		20" x 20" x 28 9/16"	3/16"
P3	1		39" x 3 5/8" x 20" x 19 5/16"	3/16"
S1	4		18 7/16" x 3 5/8" x 18 3/4"	1/4"
S2	1		10 1/4" x 2 7/16" x 10 3/8" x 1/2"	1/4"
S3	1		3" x 1 1/16" x 3 1/8" x 1/2"	1/4"
S4	1		6 1/8" x 2 7/16"	1/4"
S5	1		6 1/8" x 1 1/16"	1/4"
S6	1		7 3/4" x 1 3/4"	1/4"
S7	1		2 9/16" x 6" x 3 5/8" x 5 7/8"	1/4"
S8	1		1 5/32" x 7 1/2" x 2 1/2" x 7 3/8"	1/4"
S9	1		6 1/16" x 6 3/16" x 1 3/32"	1/4"
S10	1		1 7/8" x 9 7/8" x 3 5/8" x 9 11/16"	1/4"
S11	1		8 1/2" x 8 3/4" x 1 13/16"	1/4"

SINGLE SLOPE CONNECTION PLATE

MIDWEST GUARDRAIL SYSTEM
THRIE BEAM TRANSITION (MGS)

STATE OF WISCONSIN
DEPARTMENT OF TRANSPORTATION

APPROVED
8/31/2012 — DATE
/S/ Jerry H ---- — ROADWAY STANDARDS ENGINEER
FHWA

GENERAL NOTES

CONNECTOR PLATE, DRILLING BOLT HOLES THROUGH THE PARAPET, BOLTS, NUTS, WASHERS AND REPAIRING DAMAGED CONCRETE ARE INCIDENTAL TO THE CONTRACT.

(1) BOLTS MAY BE A325 BOLTS OR A449 BOLTS. BOLT LENGTH AND THREADING LENGTH ARE TO ALLOW FOR A TIGHT CONNECTION BETWEEN RIGID BARRIER AND THRIE BEAM CONNECTION PLATE. CONTRACTOR IS TO FIELD VERIFY BOLT LENGTH AND THREAD LENGTH. ONE ROUND WASHER REQUIRED BETWEEN BOLT HEAD AND THRIE BEAM CONNECTOR PLATE. BOLTS THAT EXTEND THROUGH THE PARAPET AND OUT THE BACK FACE REQUIRE A HARDENED ROUND STEEL WASHER THAT IS 2" O.D. X 5/8" THICK AND ONE PLATE WASHER. REPAIR ANY DAMAGED CONCRETE FROM BOLT INSTALLATION.

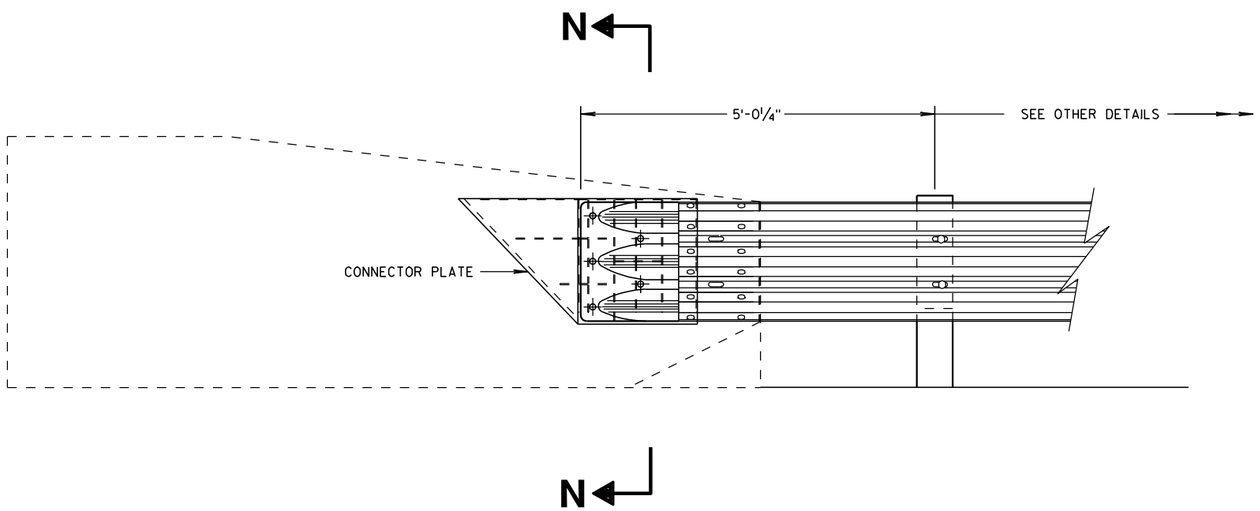

THRIE BEAM CONNECTION TO SINGLE SLOPE BARRIER

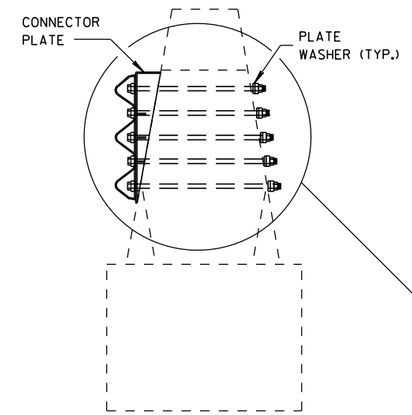

SECTION N-N

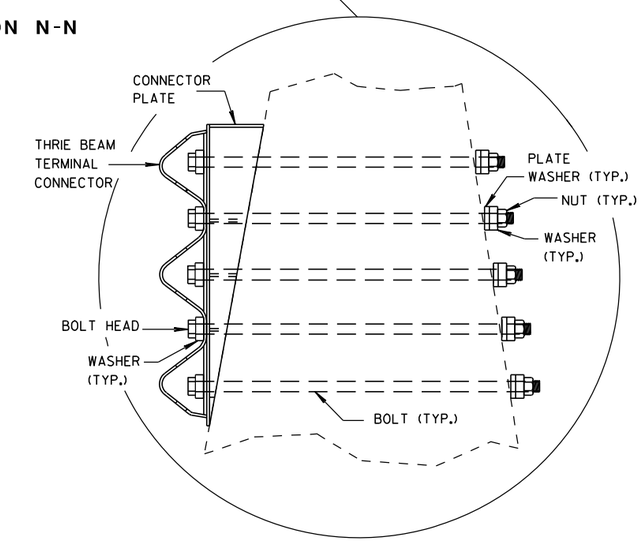

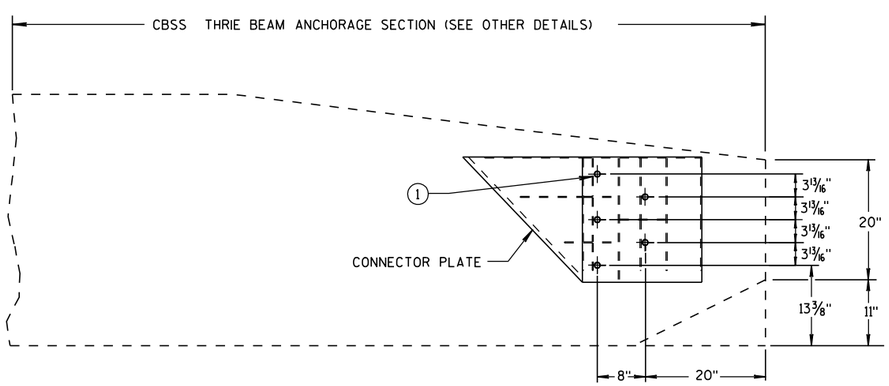

SINGLE SLOPE CONNECTION PLATE PLACEMENT

MIDWEST GUARDRAIL SYSTEM THRIE BEAM TRANSITION (MGS)

STATE OF WISCONSIN
DEPARTMENT OF TRANSPORTATION

APPROVED

8/31/2012 — DATE

/S/ Jerry H. [illegible] — ROADWAY STANDARDS DEVELOPMENT ENGINEER

FHWA

6

S.D.D. 14 B 45-3j

6

S.D.D. 14 B 45-3j

GENERAL NOTES

DETAILS OF CONSTRUCTION NOT SHOWN ON THIS DRAWING SHALL CONFORM TO THE PERTINENT REQUIREMENTS OF THE STANDARD SPECIFICATIONS AND THE APPLICABLE SPECIAL PROVISIONS.

① DELINEATORS SHALL BE PLACED AT A CONSTANT DISTANCE FROM THE EDGE OF THE SHOULDER FOR THE LENGTH OF THE INSTALLATION.

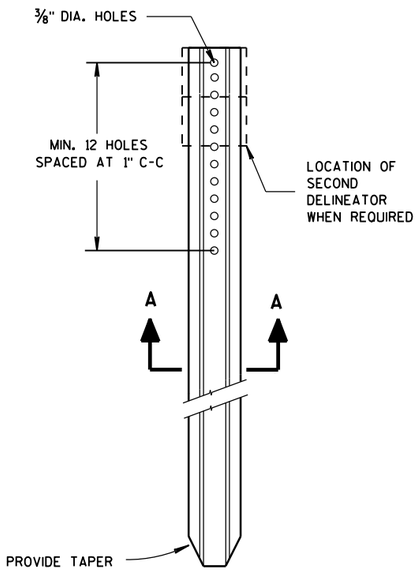

DELINEATOR POST

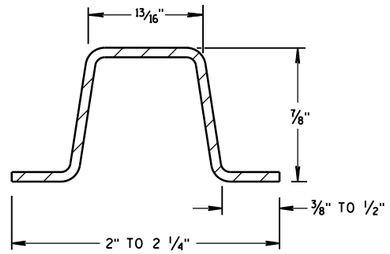

SECTION A-A

WEIGHT 1.12 LBS PER FT. ± 0.1 LB.

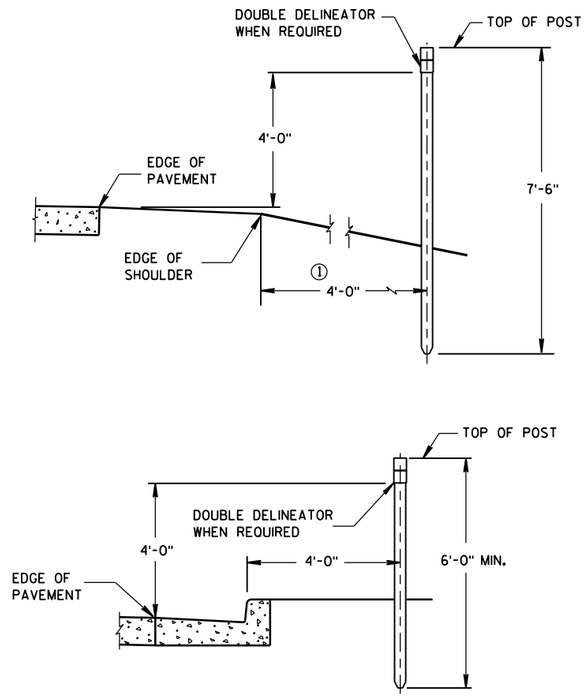

TYPICAL INSTALLATIONS OF DELINEATOR POSTS

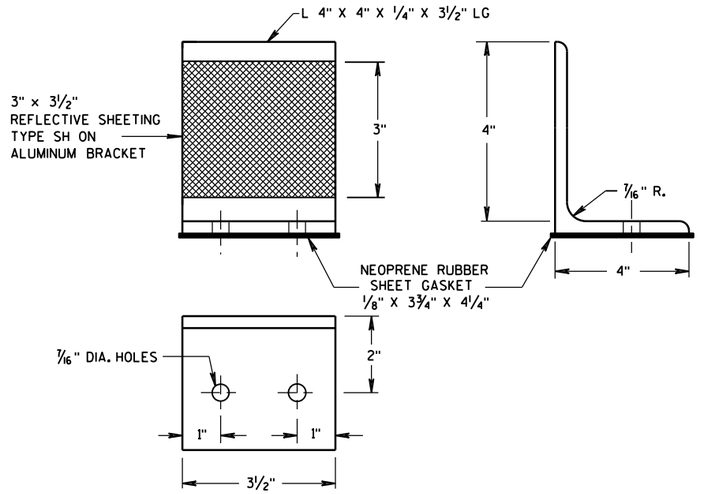

DELINEATOR BRACKET

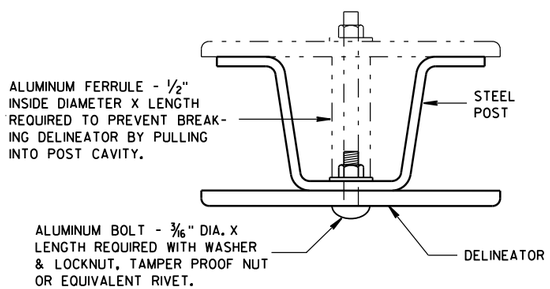

MOUNTING DETAIL FOR DELINEATOR

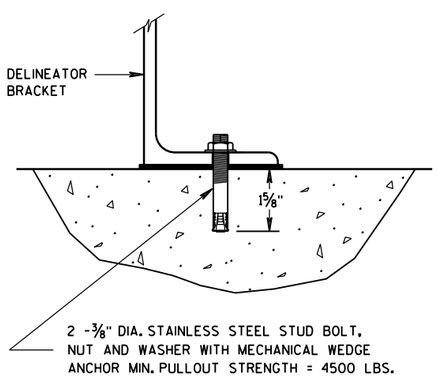

DELINEATOR BRACKET MOUNTING DETAIL

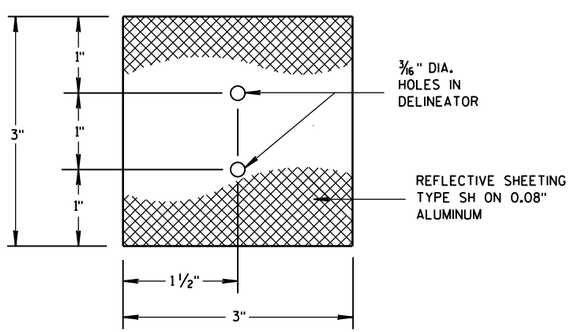

3"x 3" DELINEATOR

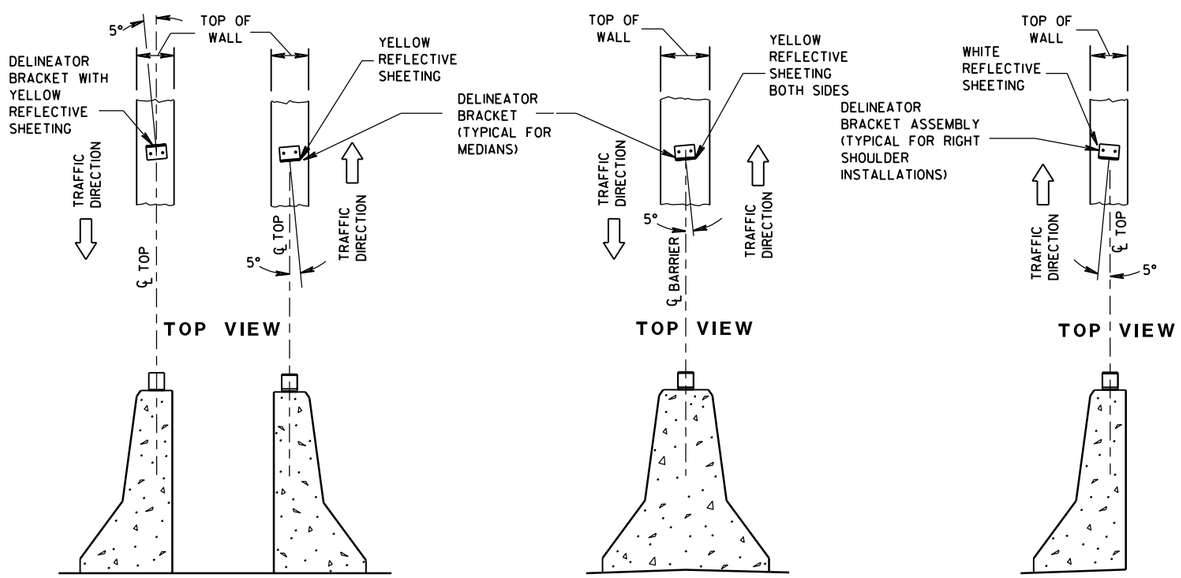

DOUBLE BARRIERS IN MEDIAN

MEDIAN BARRIER

BARRIER LOCATED TO RT. OF TRAFFIC FLOW

LOCATION AND AIMING DETAILS FOR DELINEATOR BRACKETS MOUNTED ON CONCRETE BARRIERS

DELINEATOR POST, DELINEATOR, AND DELINEATOR BRACKET WITH REFLECTIVE SHEETING

STATE OF WISCONSIN
DEPARTMENT OF TRANSPORTATION

APPROVED
7/2013 — DATE
/S/ Travis Feltes — STATE TRAFFIC E
FHWA

6

6

S.D.D. 15 A 2-8

S.D.D. 15 A 2-8

GENERAL NOTES

DETAILS OF CONSTRUCTION, MATERIALS AND WORKMANSHIP NOT SHOWN ON THIS DRAWING SHALL CONFORM TO THE PERTINENT REQUIREMENTS OF THE STANDARD SPECIFICATIONS AND THE APPLICABLE SPECIAL PROVISIONS.

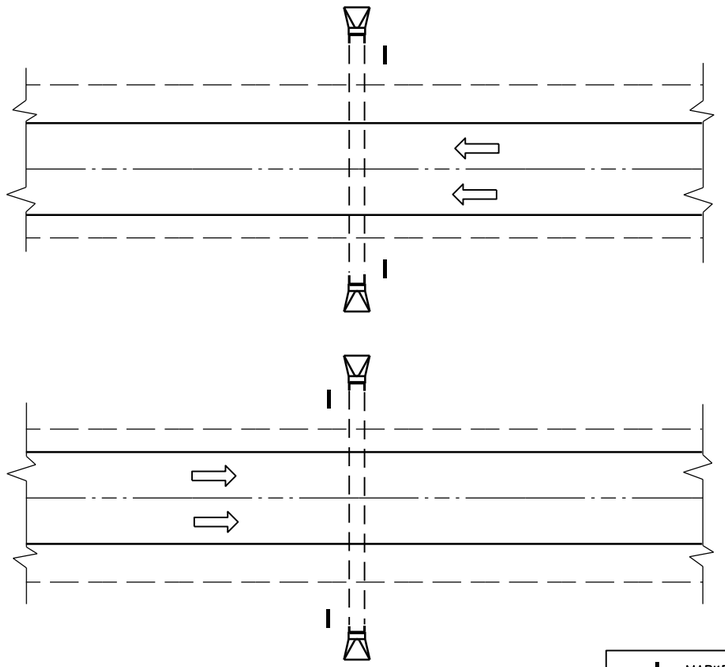

PLAN VIEW

DIVIDED HIGHWAY

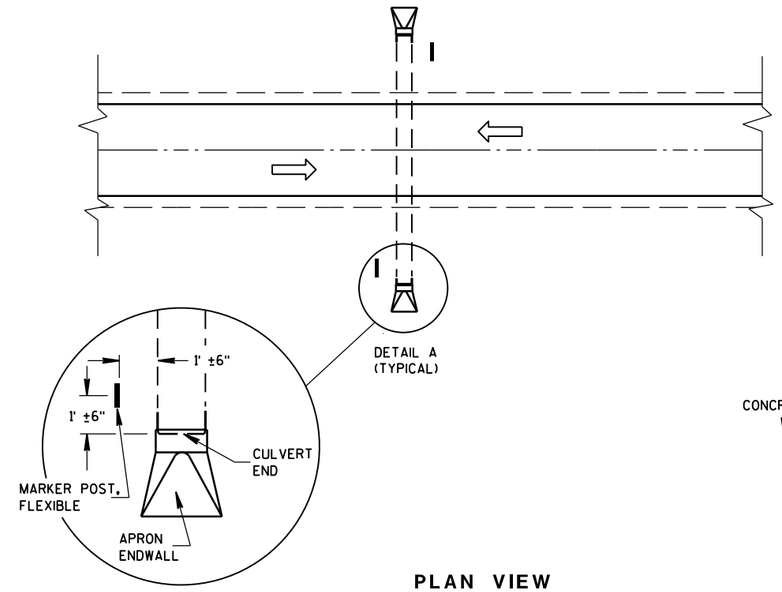

DETAIL A
(TYPICAL)

PLAN VIEW

UNDIVIDED HIGHWAY

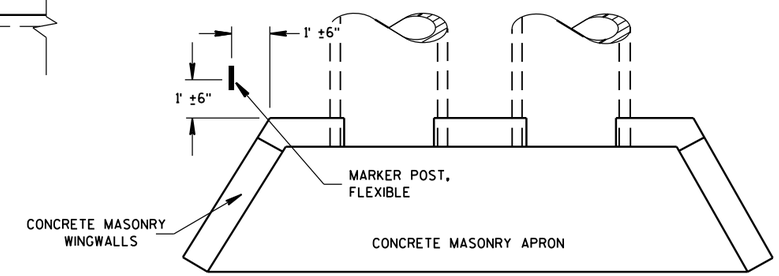

PLAN VIEW

CONCRETE MASONRY ENDWALLS FOR CULVERT PIPE AND PIPE ARCH

MARKER POST, FLEXIBLE

DIRECTION OF TRAFFIC FLOW

FLEXIBLE MARKER POST LOCATION

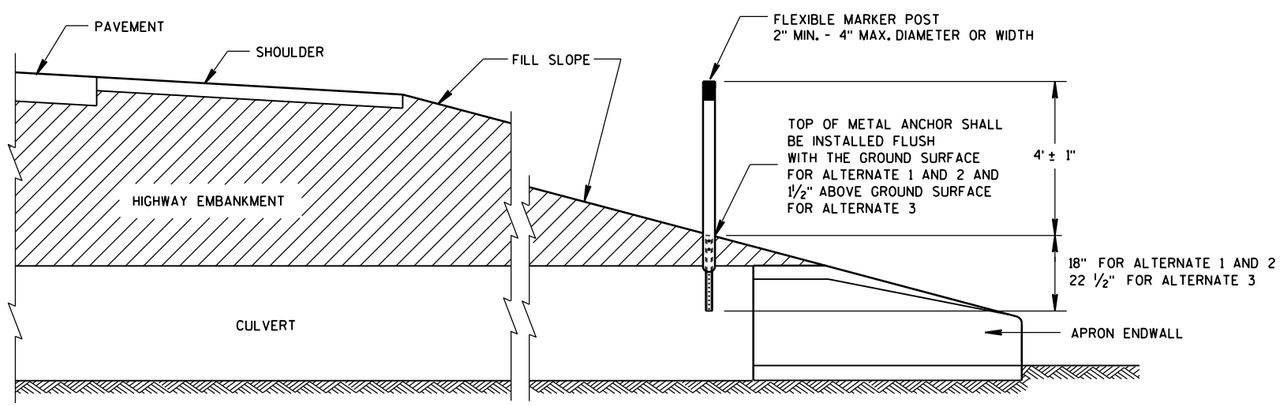

CROSS SECTION

FLEXIBLE MARKER POST

FLEXIBLE MARKER POST FOR CULVERT END

STATE OF WISCONSIN
DEPARTMENT OF TRANSPOR

6

6

S.D.D. 15 A 3-2a

S.D.D. 15 A 3-2a

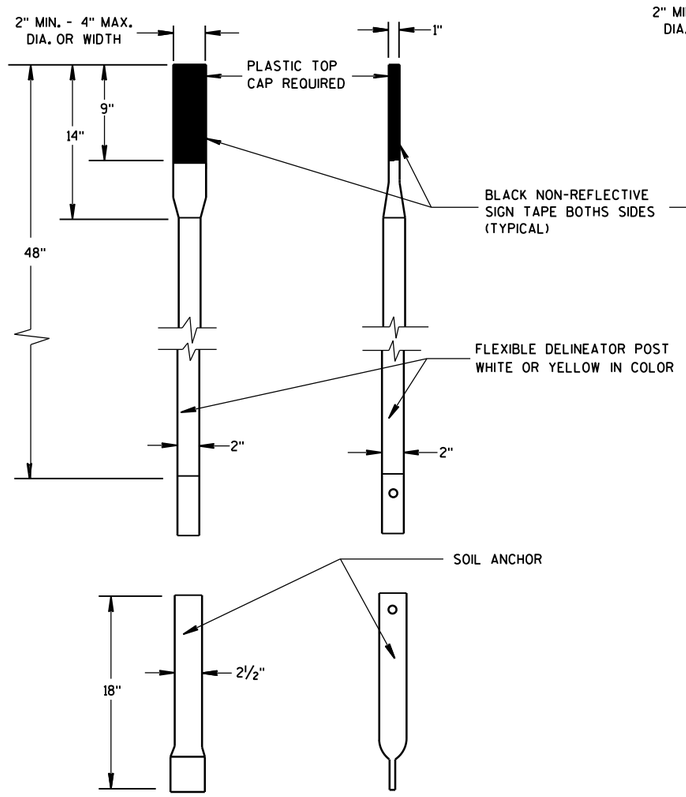

FRONT VIEW SIDE VIEW

ALTERNATE 1

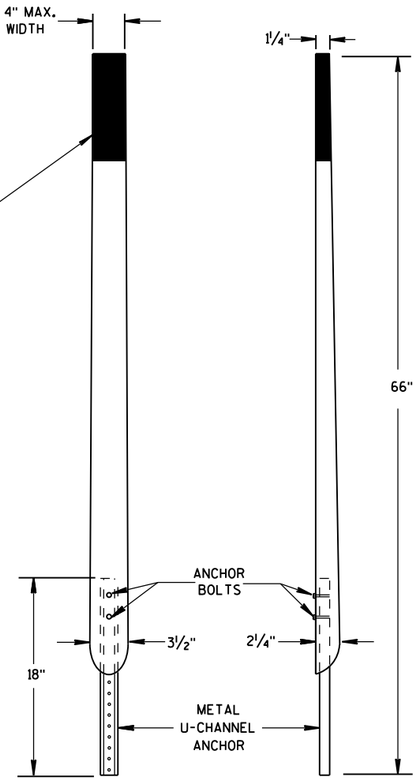

FRONT VIEW SIDE VIEW

ALTERNATE 2

FLEXIBLE MARKER POSTS

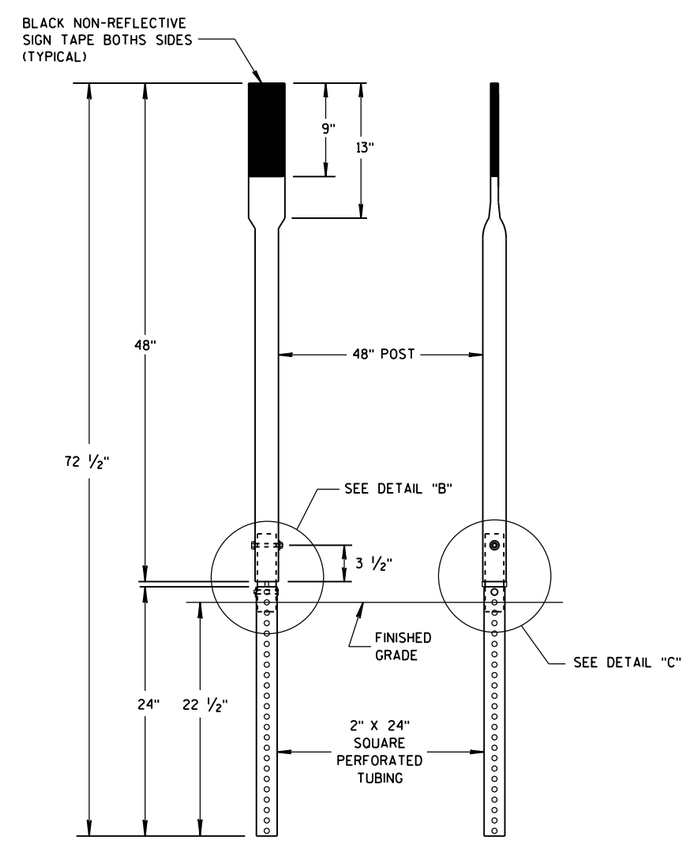

FRONT VIEW SIDE VIEW

ALTERNATE 3

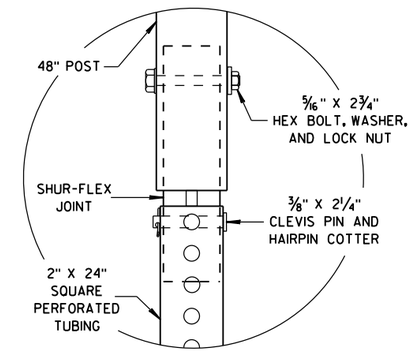

DETAIL B

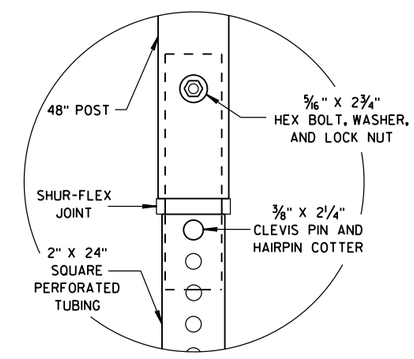

DETAIL C

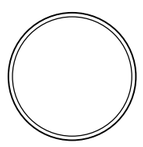

SECTION A-A

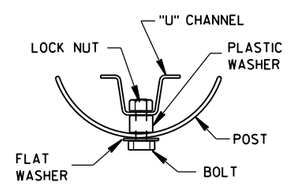

SECTION B-B

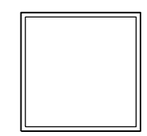

SECTION C-C

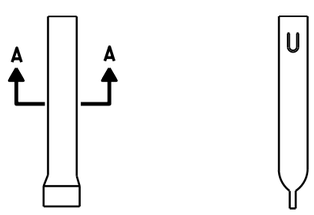

FRONT VIEW SIDE VIEW

ALTERNATE 1

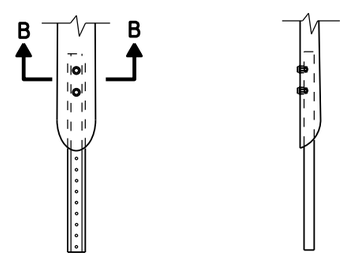

FRONT VIEW SIDE VIEW

ALTERNATE 2

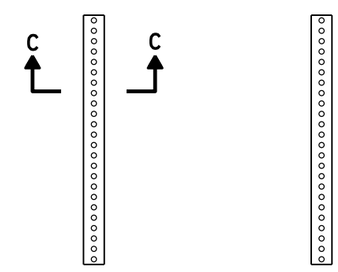

FRONT VIEW SIDE VIEW

ALTERNATE 3

FLEXIBLE MARKER POST ANCHORS

FLEXIBLE MARKER POST
FOR CULVERT END

STATE OF WISCONSIN
DEPARTMENT OF TRANSPORTATION

APPROVED
10/1/2012 /S/ Travis Feltes
DATE STATE TRAFFIC ENGINEER
FHWA

6

6

S.D.D. 15 A 3-2b

S.D.D. 15 A 3-2b

GENERAL NOTES

* USE DOUBLE DELINEATOR ALONG ACCELERATION-DECELERATION LANES AND TAPERS. USE SINGLE DELINEATOR WHEN RAMP PAVEMENT IS FULL WIDTH.

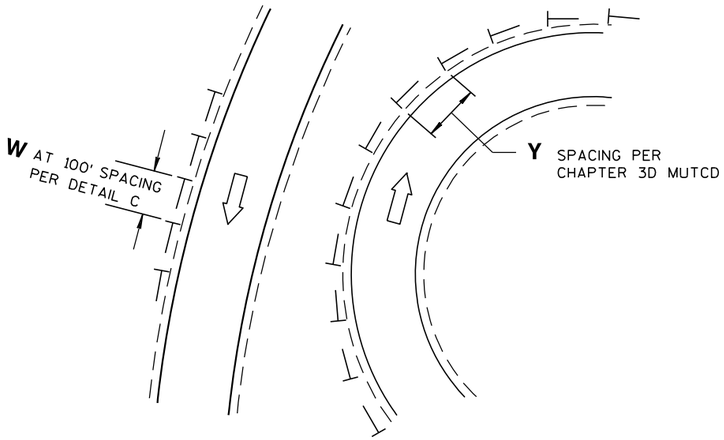

DETAIL A
DELINEATOR LAYOUT AT CURVED RAMP

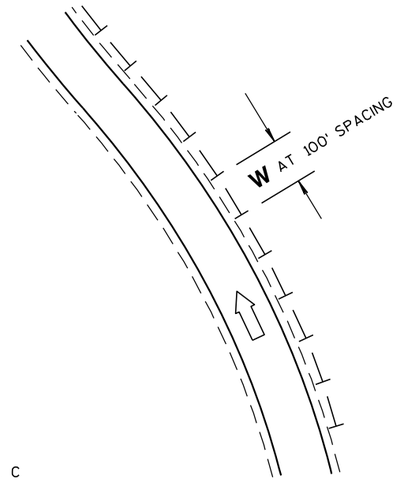

DETAIL C
DELINEATOR LAYOUT ALONG RAMP

LEGEND

⇨	DIRECTION OF TRAFFIC FLOW
⊥	SINGLE DELINEATOR
⊥⊥	DOUBLE DELINEATOR
W	WHITE
Y	YELLOW

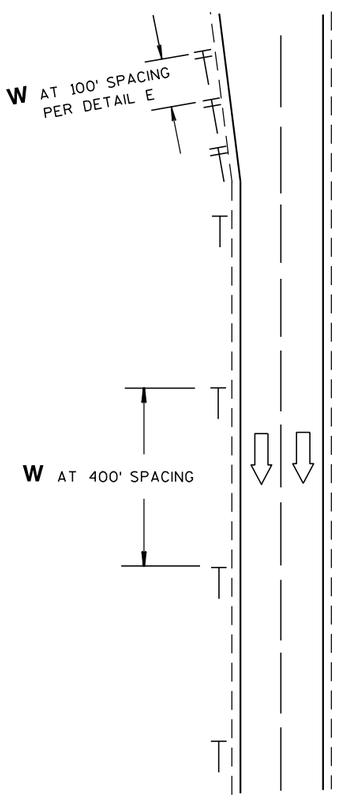

DETAIL B
DELINEATOR LAYOUT ALONG MAINLINE

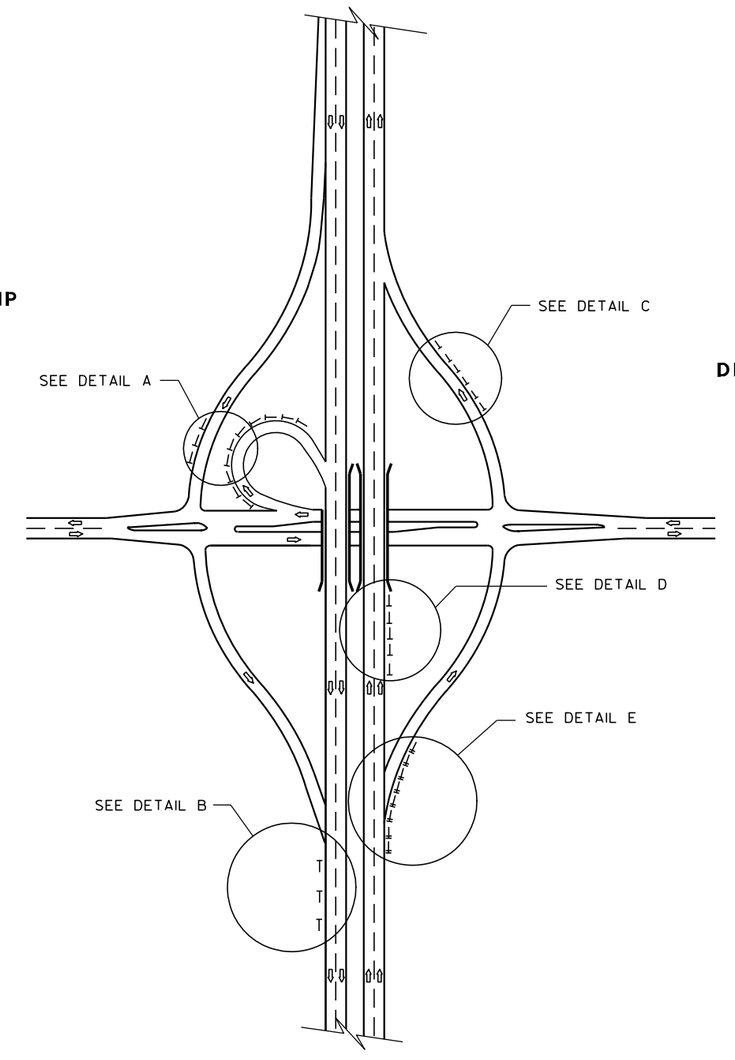

DELINEATOR LAYOUT

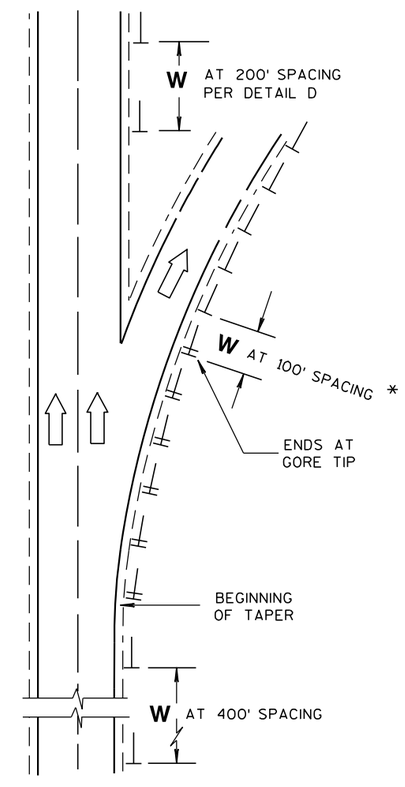

DETAIL E
DELINEATOR LAYOUT FOR ACCELERATION - DECELERATION LANES AND TAPERS AT RAMPS

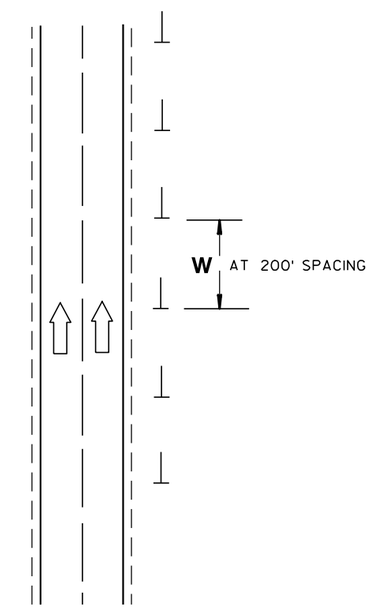

DETAIL D
DELINEATOR LAYOUT BETWEEN INTERCHANGE RAMPS

DELINEATOR LAYOUT

STATE OF WISCONSIN
DEPARTMENT OF TRANSPORTATION

APPROVED
2/5/09 — DATE
/S/ Thomas N. Nothohm — STATE TRAFFIC ENGINEER
FHWA

NOTE: PULL OR STRETCHER POST ASSEMBLIES SHALL BE PLACED MIDWAY BETWEEN END POSTS AND CORNER POSTS WHERE A RUN OF FENCE EXCEEDS 660' BUT IS LESS THAN 1,320'. FOR RUNS OF FENCE IN EXCESS OF 1,320' MAXIMUM SPACING OF PULL OR STRETCHER POST ASSEMBLIES SHALL BE 660'± C-C.

ILLUSTRATION SHOWS POSITION OF STANDARD STEEL BRACE, DOUBLE STRAND GALVANIZED WIRE, AND THE POST TO BE EMBEDDED IN CONCRETE WHEN WIRE FENCE IS INSTALLED FROM LEFT TO RIGHT. THE BRACES SHALL BE POSITIONED ON THE OPPOSITE DIAGONALS AND THE OPPOSITE POST SHALL BE EMBEDDED IN CONCRETE WHEN WIRE FENCE IS INSTALLED FROM RIGHT TO LEFT.

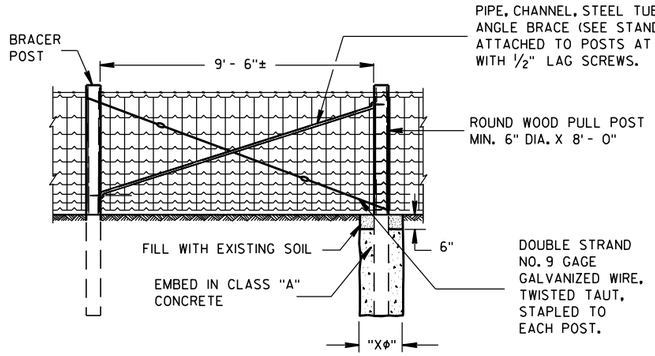

PULL OR STRETCHER POSTS ASSEMBLY

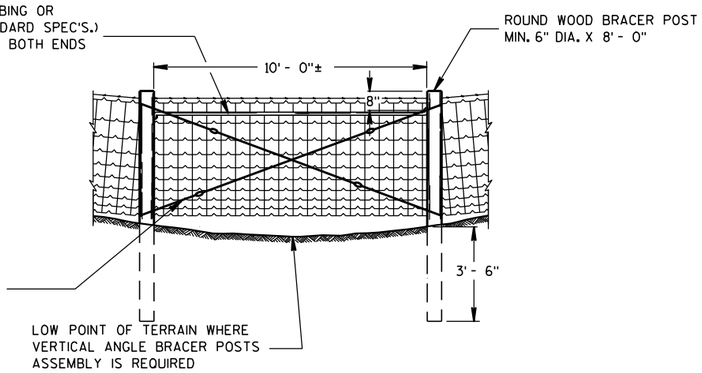

VERTICAL ANGLE BRACER POSTS ASSEMBLY

GENERAL NOTES

"XΦ" = DIAMETER OF THE POST PLUS 12".

FENCE STAPLES SHOULD NEVER BE DRIVEN VERTICALLY INTO WOOD POSTS (WITH BOTH LEGS PARALLEL WITH THE WOOD GRAIN). DOING SO CAN SEPARATE THE GRAIN AND SIGNIFICANTLY REDUCE THE HOLDING POWER. ROTATING THE STAPLES SLIGHTLY OFF VERTICAL STRADDLES THE GRAIN AND PROVIDES MORE RESISTANCE TO PULL-OUT.

DO NOT STAPLE WIRE TIGHT TO THE LINE POSTS. ALLOW MOVEMENT OF WIRE FOR EXPANSION AND CONTRACTION. STAPLE ARRANGEMENT SHALL BE THE SAME FOR ALL OTHER POSTS EXCEPT THAT THEY SHALL BE DRIVEN TIGHT TO POSTS. ALL STAPLES SHALL BE 2" X 9 GAGE AND SHALL BE MANUFACTURED FROM GALVANIZED WIRE OR HOT DIP GALVANIZED AFTER FORMING. STAPLES SHALL HAVE SLASH-CUT POINTS.

FENCE SHALL BE LOCATED 3'-0" INSIDE THE RIGHT OF WAY LINE UNLESS OTHERWISE INDICATED ON THE PLANS.

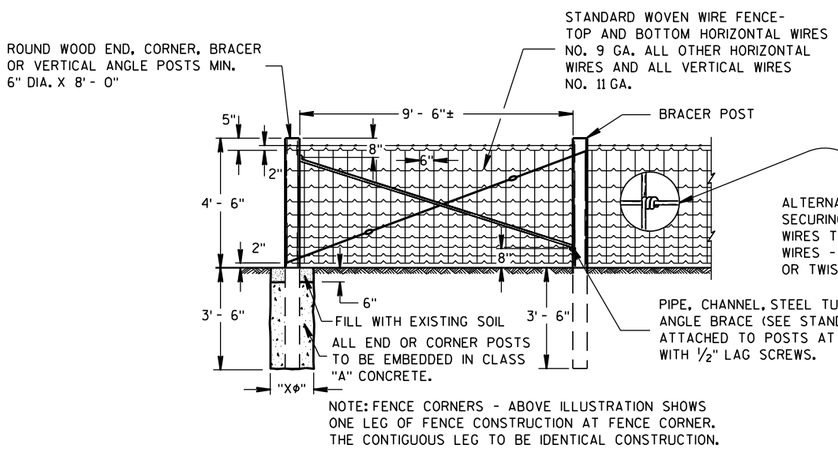

END OR CORNER POSTS ASSEMBLY

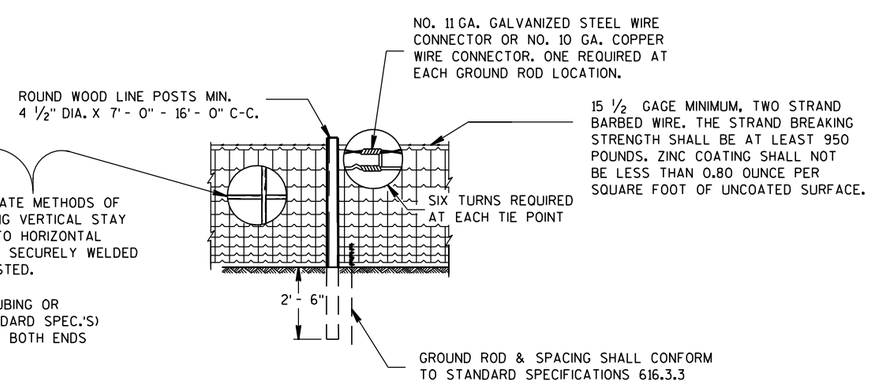

LINE FENCE CONSTRUCTION

GENERAL ROADSIDE VIEW OF WOVEN WIRE FENCE

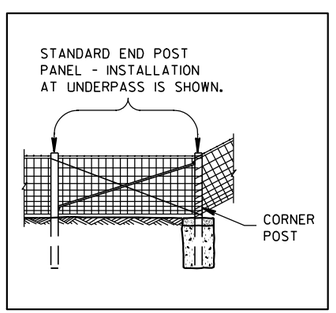

ALTERNATE FENCE DESIGN AT STRUCTURE

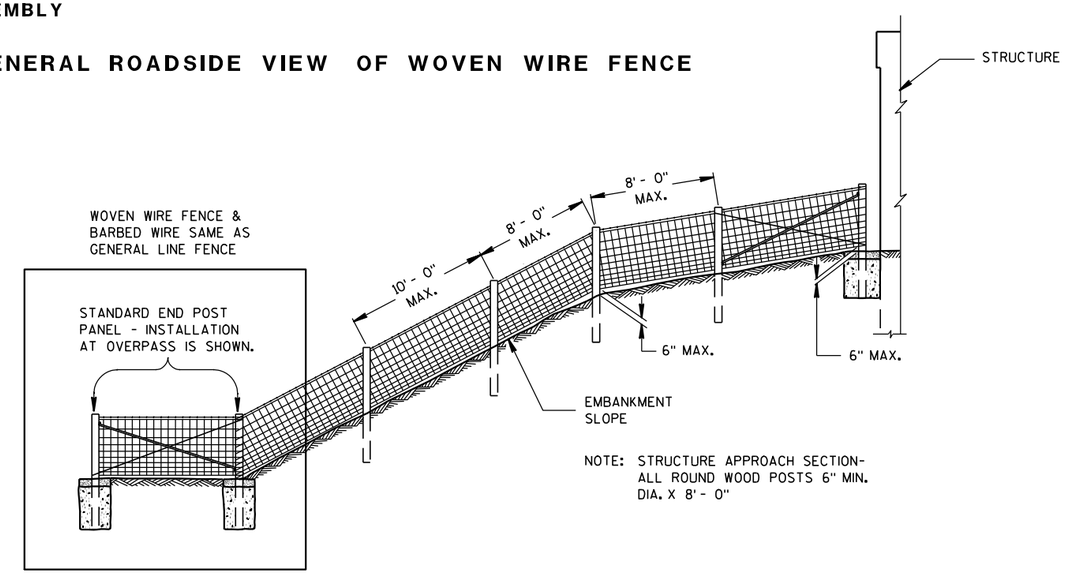

FENCE DESIGN AT STRUCTURE APPROACH

FENCE WOVEN WIRE

STATE OF WISCONSIN
DEPARTMENT OF TRANSPORTATION

6

6

S.D.D. 15 B 1-8a

S.D.D. 15 B 1-8a

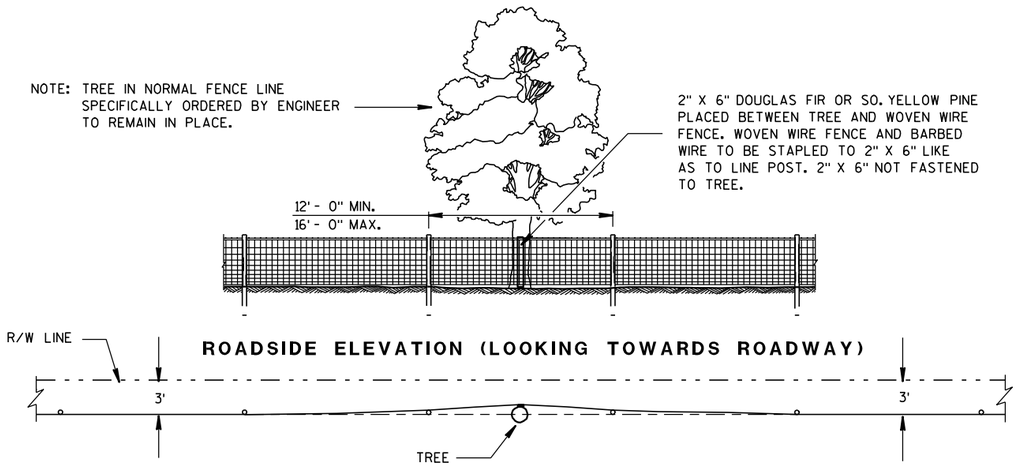

PLAN VIEW

FENCE DESIGN AT TREES REMAINING IN NORMAL FENCE LINE

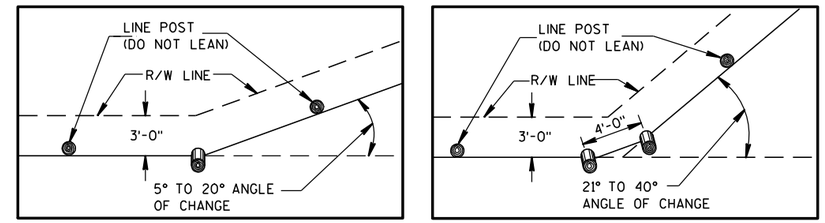

PLAN VIEW
SINGLE POST CORNER

PLAN VIEW
DOUBLE POST CORNER

RIGHT OF WAY LINE CHANGE 40° AND LESS

NOTE: SINGLE AND DOUBLE POSTS SHALL BE A MIN. 6" DIA. X 8'-0" WITH A LEAN OF 4" TOWARD THE OUTSIDE OF THE CURVE.

WHEN THE RIGHT OF WAY LINE CHANGE IS MORE THAN 40° USE THE CORNER OR STRETCHER POSTS ASSEMBLY.

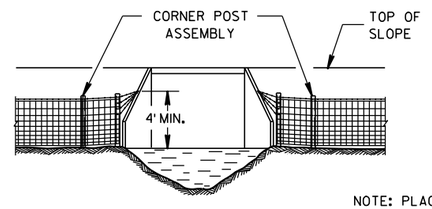

NOTE: PLACE A MINIMUM OF 4 STRANDS OF BARBED WIRE, 6" MAXIMUM CENTERS IN FAN SHAPE CONNECTED TO AN EYE BOLT ON WINGWALL OR SET A LONE POST WHEN NECESSARY TO CONNECT BARBED WIRE.

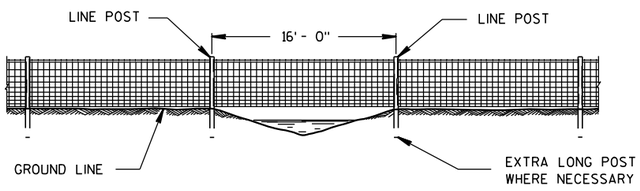

FENCE CONSTRUCTION OVER STREAM COURSES OF 15 FT. OR LESS IN WIDTH

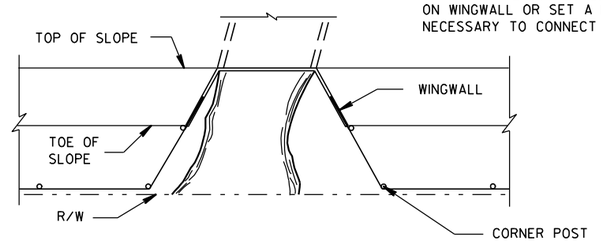

FENCE INSTALLATION TO WINGWALLS

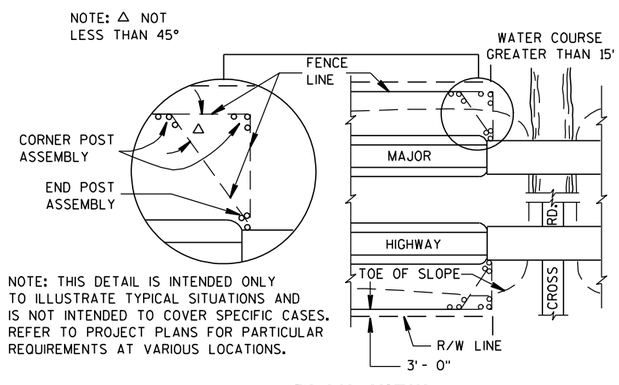

PLAN VIEW

MAJOR HIGHWAY OVERPASS OR STREAM COURSE CROSSING OF GREATER THAN 15 FT. IN WIDTH

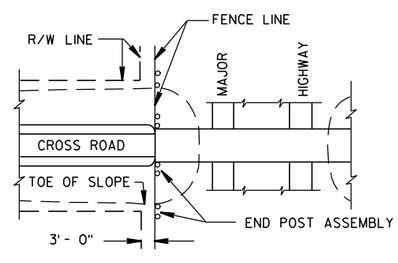

PLAN VIEW

MAJOR HIGHWAY UNDERPASS

FENCE LOCATION AT STRUCTURES

NOTE: WHEN POSTS ARE DRIVEN THE SMALL END SHALL BE DOWN.

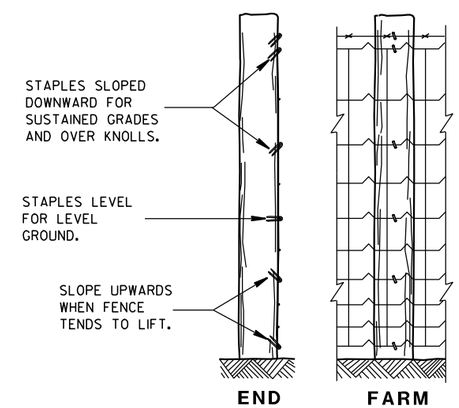

END ELEVATION

FARM SIDE ELEVATION

FENCE MOUNTING DETAIL

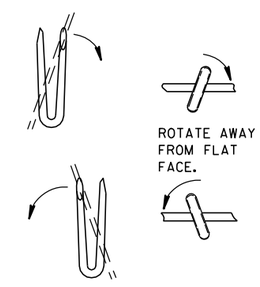

LINE POST

FENCE WOVEN WIRE

STATE OF WISCONSIN
DEPARTMENT OF TRANSPORTATION

APPROVED
4/4/2008 /S/ Jerry H. 7---
DATE ROADWAY STANDARDS DEVELOPMENT ENGINEER
FHWA

6

6

S.D.D. 15 B 1-8b

S.D.D. 15 B 1-8b

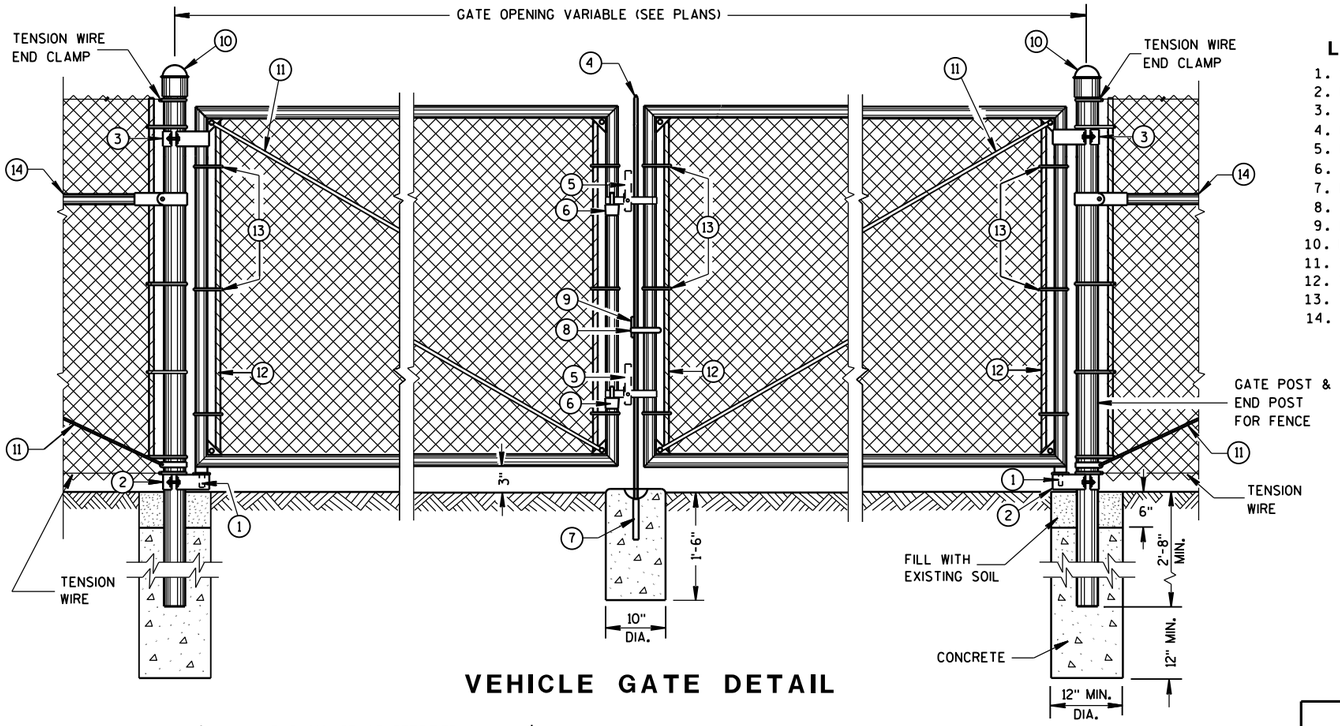

VEHICLE GATE DETAIL

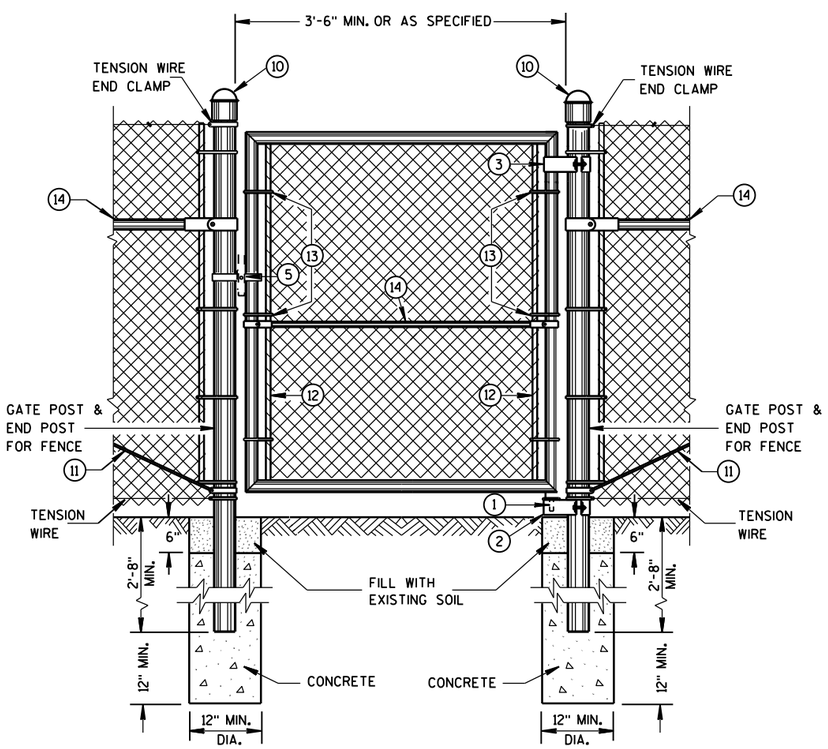

PEDESTRIAN GATE DETAIL

LEGEND

1. STRAIGHT PLUG
2. BOTTOM HINGE
3. TOP HINGE
4. PLUNGER ROD
5. FULCRUM LATCH
6. FORK CATCH *
7. PLUNGER ROD CATCH
8. LOCK KEEPER GUIDE
9. LOCK KEEPER
10. DOME TOPS
11. TRUSS RODS
12. TENSION BAR
13. TENSION BANDS
14. BRACE RAIL

*NOT REQUIRED ON SINGLE SWING PEDESTRIAN GATE

GENERAL NOTES

FENCE POSTS INSTALLED ON CONCRETE WALLS SHALL BE ANCHORED INTO EMBEDDED METAL SLEEVES OR CORED HOLE BY FILLING THE ANNULAR SPACE WITH PEA GRAVEL FOLLOWED BY AN EPOXY RESIN ADHESIVE. THE EPOXY RESIN ADHESIVE SHALL CONFORM TO THE REQUIREMENTS OF AASHTO M 235, CLASS A, B OR C.

USE FENCE FABRIC KNUCKLED AT BOTH SELVAGES.

FOR LEAF GATES GREATER THAN 8 FEET WIDE, INSTALL INTERIOR VERTICAL BRACE RAIL AT 8 FOOT INTERVALS.

FOR FABRIC HEIGHTS GREATER THAN 8 FEET, INSTALL INTERIOR HORIZONTAL BRACE RAILS TO LEAF GATE.

MAXIMUM SAG FOR OUTER GATE MEMBER SHALL NOT EXCEED THE GREATER OF 1% OF THE LEAF GATE WIDTH OR 2 INCHES.

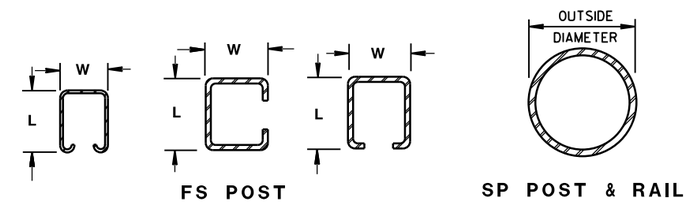

CROSS SECTIONS OF POSTS AND RAILS

SHAPE, SIZE AND WEIGHT REQUIREMENTS FOR FORMED STEEL FENCE POST

POST TYPE	LENGTH (L) INCH	WIDTH (W) INCH	WEIGHT LBS/FT
FS1	1.625	1.25	1.35
FS2†	1.875	1.625	1.850
FS2	1.875	1.625	2.400
FS3	2.250	1.700	2.780

SHAPE, SIZE AND WEIGHT REQUIREMENTS FOR ROUND STEEL FENCE POST

POST TYPE	OUTSIDE DIMENSION INCH	WALL THICKNESS INCH	WEIGHT LBS/FT
SP1	1.660	0.140	2.270
SP2	1.900	0.145	2.720
SP3	2.375	0.154	3.650
SP4	2.875	0.203	5.800
SP5	4.000	0.226	9.120
SP6	6.625	0.280	18.990
SP7	8.625	0.322	28.580

REQUIRED FENCE POST SIZES

USE	FABRIC HEIGHTS FEET	POST TYPE
TERMINAL POSTS **	LESS THAN OR EQUAL TO 6 FT.	SP3
	GREATER THAN OR EQUAL TO 6 FT.	SP4
LINE POSTS	LESS THAN OR EQUAL TO 6 FT.	SP2
	LESS THAN OR EQUAL TO 8 FT.	SP3
	GREATER THAN OR EQUAL TO 8 FT.	SP4
	LESS THAN OR EQUAL TO 8 FT.	FS2 OR FS2†
	GREATER THAN OR EQUAL TO 8 FT.	FS3

REQUIRED POST SIZE FOR GATES

USE	LEAF WIDTHS FEET	POST TYPE
GATES	LESS THAN OR EQUAL TO 6 FT.	SP4
	LESS THAN OR EQUAL TO 13 FT.	SP5
	LESS THAN OR EQUAL TO 18 FT.	SP6
	LESS THAN OR EQUAL TO 23 FT.	SP7

BRACE RAIL TYPES

USE		TYPE
BRACE RAIL		SP1 OR FS1

** INCLUDES END, CORNER, ANGLE, INTERSECTION AND INTERMEDIATE BRACED POSTS

FENCE CHAIN LINK

STATE OF WISCONSIN
DEPARTMENT OF TRANSPOR

6

S.D.D. 15 B 3-13a

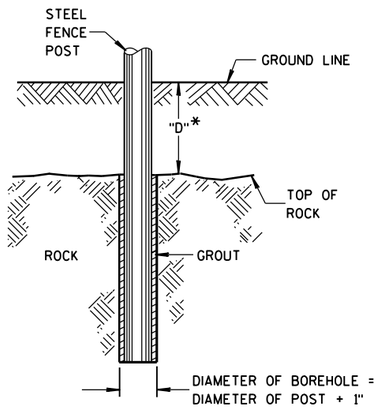

*IF "D" IS LESS THAN 2'-6", DRILL ROCK AND INSTALL GROUT

ROCK INSTALLATION OF LINE POST

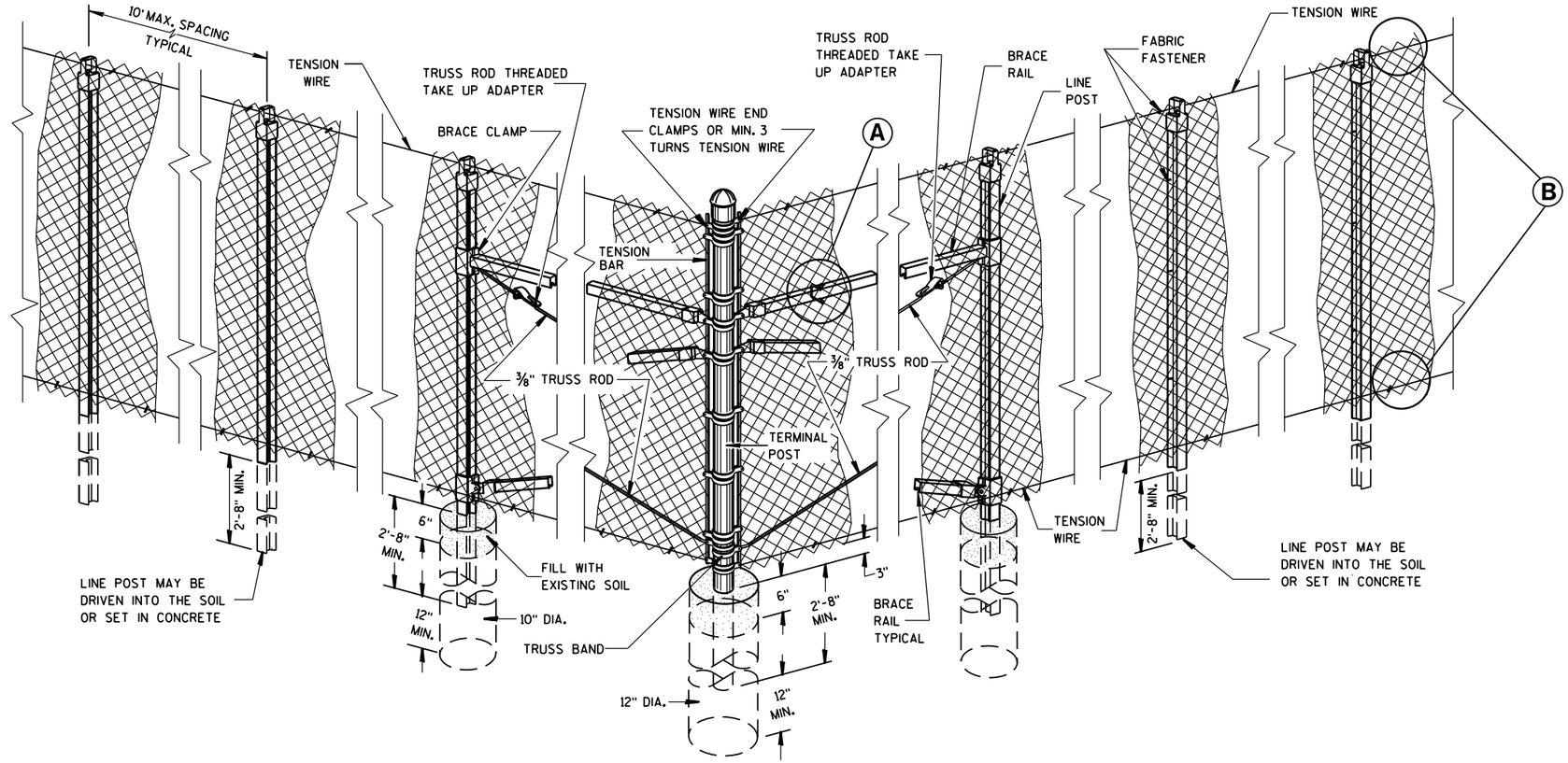

END, CORNER, ANGLE INTERSECTION & INTERMEDIATE BRACED POSTS

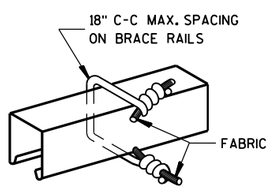

BRACE RAIL
FABRIC FASTENER
(A)

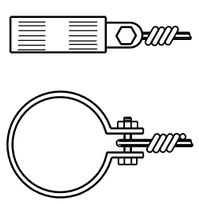

TENSION WIRE END CLAMP

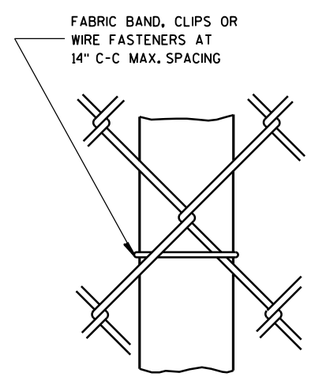

LINE POST
FABRIC FASTENER

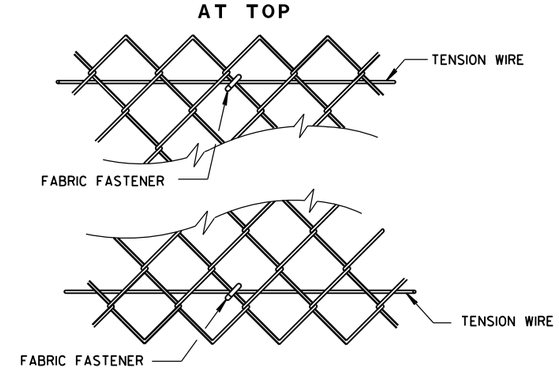

SELVAGES
(B)

FENCE CHAIN LINK

STATE OF WISCONSIN
DEPARTMENT OF TRANSPORTATION

APPROVED
7/16/2013 — DATE
/S/ Jerry H. Zogg — ROADWAY STANDARDS DEVELOPMENT ENGINEER
FHWA

6

S.D.D. 15 B 3-13b

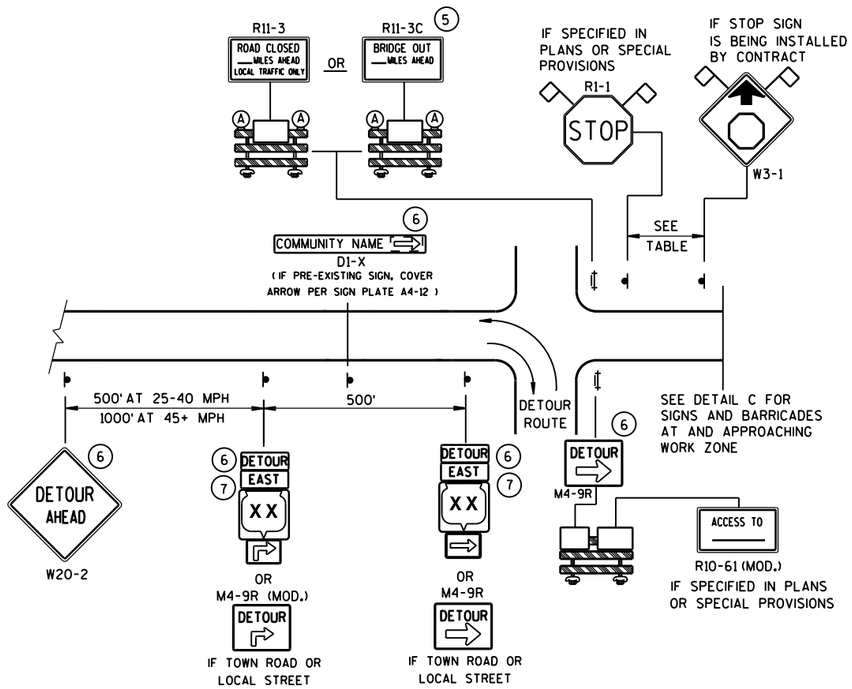

DETAIL A
MAINLINE CLOSURE WITH POSTED DETOUR

WORK ZONE GREATER THAN ½ MILE FROM DETOUR ROUTE (1000 FEET IF URBAN)

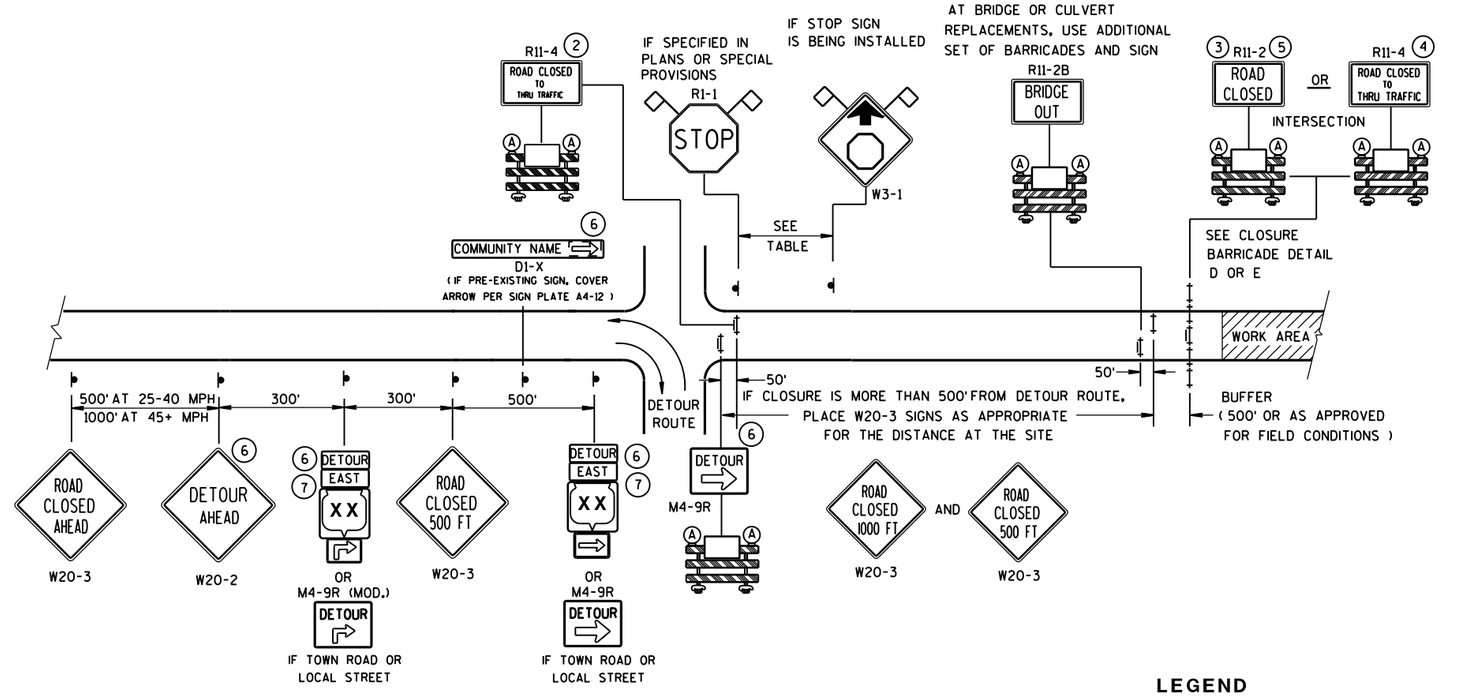

DETAIL B
MAINLINE CLOSURE WITH POSTED DETOUR

WORK ZONE LESS THAN ½ MILE FROM DETOUR ROUTE (1000 FEET IF URBAN)

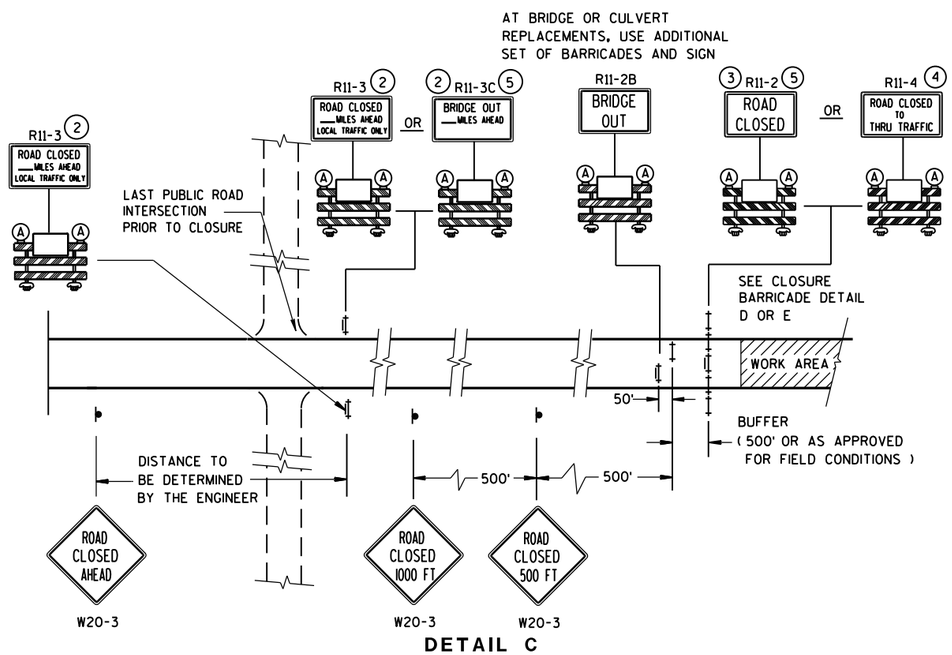

DETAIL C
MAINLINE CLOSURE, NO POSTED DETOUR

SPEED LIMIT (MPH)	"STOP AHEAD" ADVANCE WARNING DISTANCE (FT)
25	200
30	200
35	350
40	350
45	500
50	550
55	750

LEGEND

- SIGN ON PERMANENT SUPPORT
- TYPE III BARRICADE
- TYPE III BARRICADE WITH ATTACHED SIGN
- (A) TYPE "A" WARNING LIGHT (FLASHING)
- WORK AREA
- DETOUR EAST — M4-8, M3-X
- XX (M1-4) OR COUNTY XX (M1-5A) OR XX (M1-6)
- M05-1 OR M06-1
- FLAGS, 16" X 16" MIN., (ORANGE)

SEE SDD 15C2-SHEET "**b**"
FOR GENERAL NOTES
AND FOOTNOTES (1) THROUGH (7)

BARRICADES AND SIGNS FOR MAINLINE CLOSURES

STATE OF WISCONSIN
DEPARTMENT OF TRANSPORTATION

8/2013 — DATE
/S/ Travis Feltes — STATE TRAFFIC ENGINEER
FHWA

6

S.D.D. 15 C 2-5a

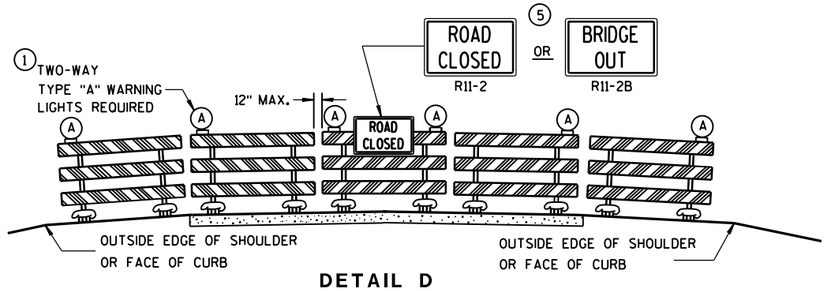

DETAIL D

ROAD CLOSURE BARRICADE DETAIL

APPROACH VIEW

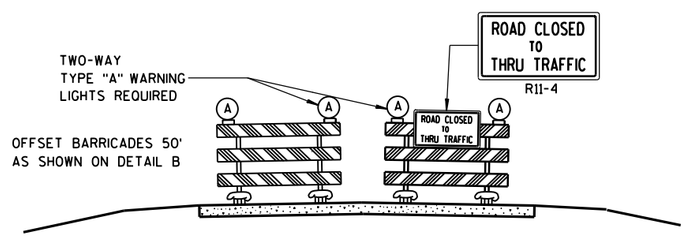

DETAIL E

LANE CLOSURE BARRICADE DETAIL

APPROACH VIEW

SEE SDD 15C2-SHEET "**a**" FOR LEGEND

GENERAL NOTES

THE EXACT NUMBER, LOCATION, AND SPACING OF ALL SIGNS AND BARRICADES SHALL BE ADJUSTED TO FIT FIELD CONDITIONS AS APPROVED BY THE ENGINEER.

ANY SIGNS TEMPORARY OR EXISTING, WHICH CONFLICT WITH TRAFFIC CONTROL "IN USE" SHALL BE REMOVED OR COVERED AS NEEDED AND AS APPROVED BY THE ENGINEER.

THE SPACING BETWEEN TRAFFIC CONTROL SIGNS SHOULD BE ADJUSTED TO NOT CONFLICT WITH AND SHOULD PROVIDE A DESIRABLE MINIMUM OF 200 FEET CLEARANCE TO EXISTING SIGNS THAT WILL REMAIN IN PLACE.

BARRICADES THAT MUST BE MOVED FOR A WORK OPERATION SHALL BE IMMEDIATELY RE-ESTABLISHED UPON COMPLETION OF THE OPERATION OR, FOR CONTINUING OPERATIONS, AT THE END OF EACH WORKING DAY.

SIGNS THAT WILL BE IN PLACE LESS THAN 7 CONTINUOUS DAYS AND NIGHTS MAY BE MOUNTED ON PORTABLE SUPPORTS.

ALL TYPE III BARRICADES SHALL HAVE RAILS REFLECTORIZED ON BOTH FACES. STRIPES SHALL BE PROPERLY SLOPED DOWN TOWARD THE TRAFFIC SIDE OR AS SHOWN IN THE ROAD CLOSURE BARRICADE DETAIL D FOR FULL ROAD CLOSURES.

TYPE "A" LOW-INTENSITY FLASHING WARNING LIGHTS SHALL BE VISIBLE ON BOTH SIDES OF THE BARRICADE.

THE R11-2, R11-3, M4-9, R11-4 AND R10-61 SIGNS PLACED ON BARRICADES SHALL COVER NO MORE THAN THE TOP RAIL. THE SIGNS SHALL NOT COVER ANY PORTION OF THE MIDDLE OR BOTTOM RAILS.

"WO AND "MO" SIGNS ARE THE SAME AS "W" AND "M" SIGNS EXCEPT THE BACKGROUND IS ORANGE.

ALL SIGNS SHALL BE 48" X 48" UNLESS OTHERWISE NOTED BELOW:

R11-2 SHALL BE 48" X 30".
R11-3, R11-4 AND R10-61 SHALL BE 60" X 30".
M4-9 SHALL BE 30" X 24".
M3-X SHALL BE 24" X 12". (36" X 18" IF NEEDED TO MATCH EXISTING SIGNS.)
M4-8 SHALL BE 24" X 12". (30" X 15" IF NEEDED TO MATCH EXISTING SIGNS.)
M1-4, M1-5A, AND M1-6 SHALL BE 24" X 24". (36" X 36" IF NEEDED TO MATCH EXISTING SIGNS.)
M05-1 AND M06-1 SHALL BE 21" X 21". (30" X 30" IF NEEDED TO MATCH EXISTING SIGNS.)
D1-X SHALL BE AS SHOWN ON SPECIFIC PROJECT SIGNING DETAIL SHEETS.
R1-1 SHALL BE 36" X 36".

1. TWO WARNING LIGHTS SHALL BE PROVIDED ON THE CENTER BARRICADE AND A MINIMUM OF ONE WARNING LIGHT SHALL BE PROVIDED ON EACH OF THE OTHER BARRICADES WITHIN THE ROADWAY LIMITS. SPACING OF THE WARNING LIGHTS SHALL BE UNIFORM TO THE EDGE OF ROADWAY AS SHOWN (APPROX. 8-FOOT LIGHT SPACING).
2. THESE SIGNS AND BARRICADES ARE NOT REQUIRED IF ROAD CLOSURE BEGINS AT INTERSECTION.
3. FOR ROAD CLOSURE WITHOUT LOCAL ACCESS TO PROJECT, SEE ROAD CLOSURE BARRICADE DETAIL D.
4. FOR ROAD CLOSURE WITH LOCAL ACCESS TO PROJECT, SEE LANE CLOSURE BARRICADE DETAIL E.
5. FOR BRIDGE OR CULVERT REPLACEMENTS, SUBSTITUTE "BRIDGE OUT" INSTEAD OF "ROAD CLOSED" ON R11-2 AND R11-3 SIGNS.
6. INSTALL DETOUR AND COMMUNITY GUIDE SIGNS AND ARROWS ONLY IF SPECIFIED IN THE CONTRACT. IF THERE ARE EXISTING ROUTE MARKER ASSEMBLIES THAT WILL REMAIN IN PLACE, ADJUST THE LOCATION OF THE DETOUR ROUTE SIGNS TO CORRESPOND WITH THE EXISTING ASSEMBLIES. MODIFY EXISTING SIGNS WHERE POSSIBLE. SEE SPECIFIC PROJECT DETOUR SIGNING DETAIL SHEETS. IF DETOUR SIGNS ARE BEING INSTALLED BY OTHERS, PLACE THE CONTRACTED TRAFFIC CONTROL SIGNS TO ALLOW FOR PLACEMENT OF ALL WARNING, DETOUR AND GUIDE SIGNS AS SHOWN.
7. "EAST" CARDINAL DIRECTION MARKERS AND RIGHT TURN ARROWS ARE SHOWN. USE OTHER CARDINAL DIRECTIONS AND ARROWS AS APPROPRIATE.

BARRICADES AND SIGNS FOR MAINLINE CLOSURES

STATE OF WISCONSIN
DEPARTMENT OF TRANSPORTATION

8/2013 — DATE
/S/ Travis Feltes — STATE TRAFFIC ENGINEER
FHWA

6

S.D.D. 15 C 2-5b

THIS DRAWING PROVIDES GENERAL GUIDANCE ON TYPICAL DETOUR SIGN LAYOUT AND SPACING. SEE PROJECT DETOUR SIGNING SHEETS FOR SPECIFIC DETAILS FOR EACH PROJECT.

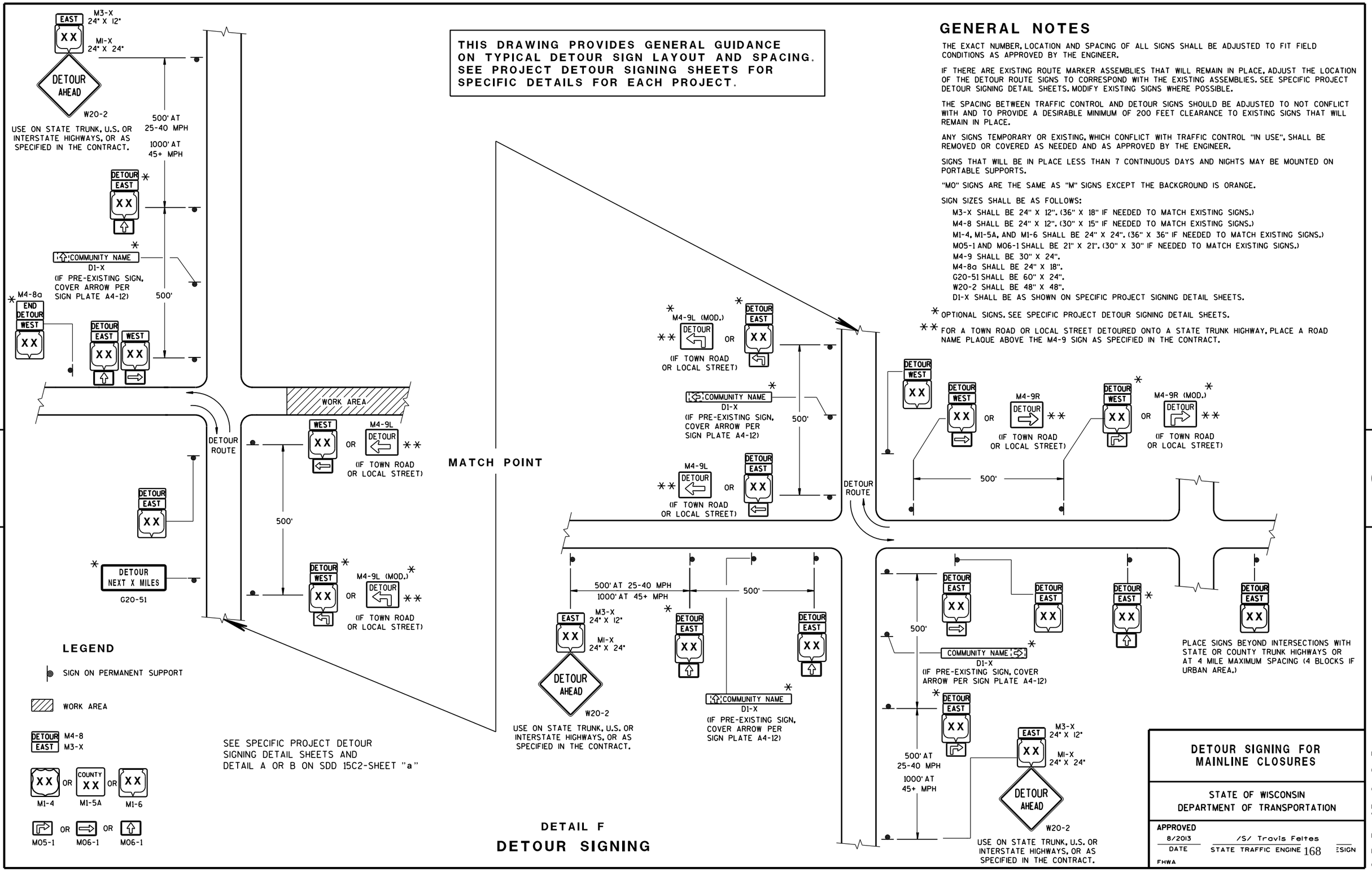

GENERAL NOTES

THE EXACT NUMBER, LOCATION AND SPACING OF ALL SIGNS SHALL BE ADJUSTED TO FIT FIELD CONDITIONS AS APPROVED BY THE ENGINEER.

IF THERE ARE EXISTING ROUTE MARKER ASSEMBLIES THAT WILL REMAIN IN PLACE, ADJUST THE LOCATION OF THE DETOUR ROUTE SIGNS TO CORRESPOND WITH THE EXISTING ASSEMBLIES. SEE SPECIFIC PROJECT DETOUR SIGNING DETAIL SHEETS. MODIFY EXISTING SIGNS WHERE POSSIBLE.

THE SPACING BETWEEN TRAFFIC CONTROL AND DETOUR SIGNS SHOULD BE ADJUSTED TO NOT CONFLICT WITH AND TO PROVIDE A DESIRABLE MINIMUM OF 200 FEET CLEARANCE TO EXISTING SIGNS THAT WILL REMAIN IN PLACE.

ANY SIGNS TEMPORARY OR EXISTING, WHICH CONFLICT WITH TRAFFIC CONTROL "IN USE", SHALL BE REMOVED OR COVERED AS NEEDED AND AS APPROVED BY THE ENGINEER.

SIGNS THAT WILL BE IN PLACE LESS THAN 7 CONTINUOUS DAYS AND NIGHTS MAY BE MOUNTED ON PORTABLE SUPPORTS.

"MO" SIGNS ARE THE SAME AS "M" SIGNS EXCEPT THE BACKGROUND IS ORANGE.

SIGN SIZES SHALL BE AS FOLLOWS:

- M3-X SHALL BE 24" X 12". (36" X 18" IF NEEDED TO MATCH EXISTING SIGNS.)
- M4-8 SHALL BE 24" X 12". (30" X 15" IF NEEDED TO MATCH EXISTING SIGNS.)
- M1-4, M1-5A, AND M1-6 SHALL BE 24" X 24". (36" X 36" IF NEEDED TO MATCH EXISTING SIGNS.)
- M05-1 AND M06-1 SHALL BE 21" X 21". (30" X 30" IF NEEDED TO MATCH EXISTING SIGNS.)
- M4-9 SHALL BE 30" X 24".
- M4-8a SHALL BE 24" X 18".
- G20-51 SHALL BE 60" X 24".
- W20-2 SHALL BE 48" X 48".
- D1-X SHALL BE AS SHOWN ON SPECIFIC PROJECT SIGNING DETAIL SHEETS.

* OPTIONAL SIGNS. SEE SPECIFIC PROJECT DETOUR SIGNING DETAIL SHEETS.

** FOR A TOWN ROAD OR LOCAL STREET DETOURED ONTO A STATE TRUNK HIGHWAY, PLACE A ROAD NAME PLAQUE ABOVE THE M4-9 SIGN AS SPECIFIED IN THE CONTRACT.

DETOUR SIGNING FOR MAINLINE CLOSURES

STATE OF WISCONSIN
DEPARTMENT OF TRANSPORTATION

APPROVED
8/2013 — DATE
/S/ Travis Feltes — STATE TRAFFIC ENGINEER
FHWA

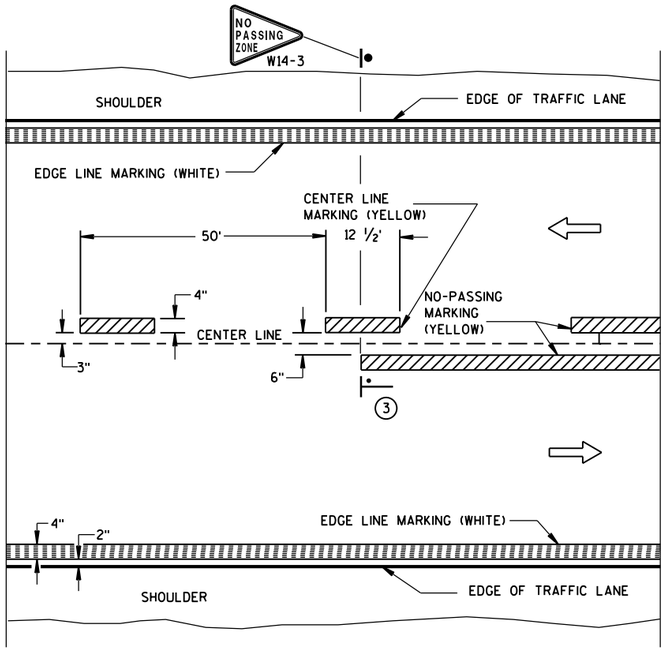

TWO WAY TRAFFIC

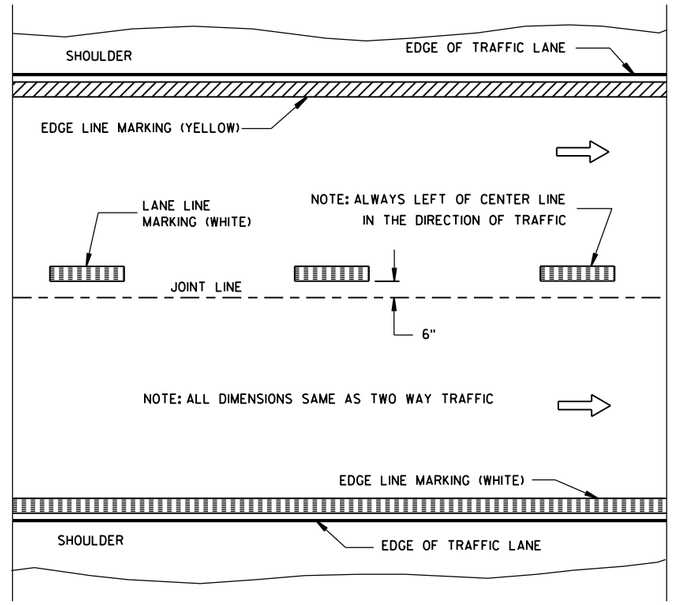

ONE WAY TRAFFIC

PERMANENT PAVEMENT MARKING

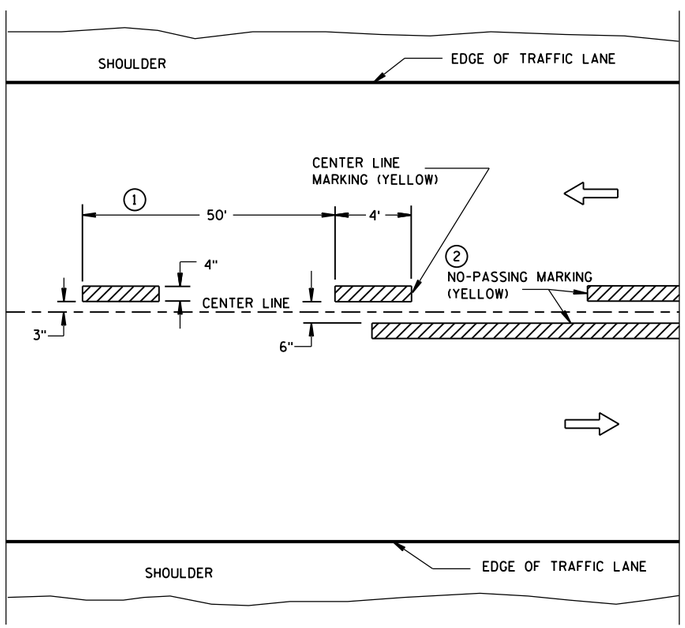

TWO WAY TRAFFIC

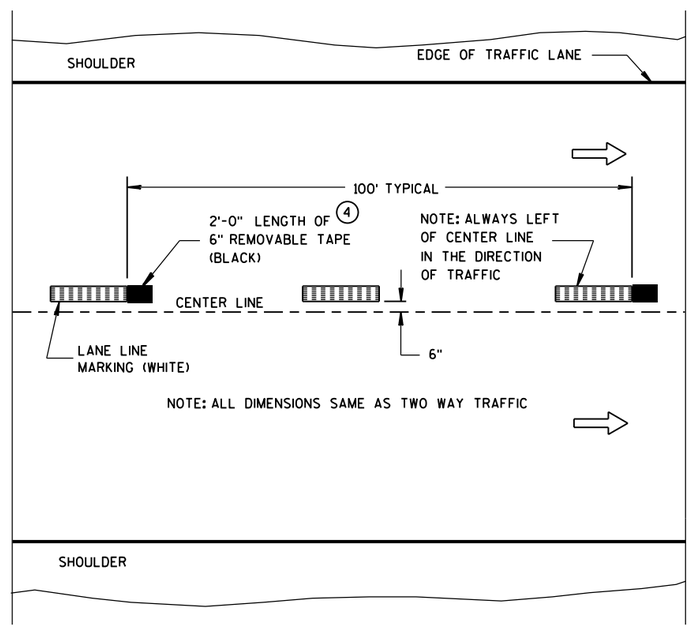

ONE WAY TRAFFIC

TEMPORARY (INTERMEDIATE) PAVEMENT MARKING

(SHOWS CYCLE FOR TEMPORARY CENTER LINE OR TEMPORARY LANE LINE MARKING)

GENERAL NOTES

DETAILS OF CONSTRUCTION NOT SHOWN ON THIS DRAWING SHALL CONFORM TO STANDARD SPECIFICATIONS AND SPECIAL PROVISIONS.

1. HALF CYCLE LENGTHS (25'±) WITH 2' MINIMUM STRIPE LENGTHS SHALL BE PROVIDED ON ROADWAYS (INCLUDING TEMPORARY TRAVELED WAYS) WITH REVERSE CURVATURE, CURVATURE OF OVER 5 DEGREES OR WHEN DIRECTED BY THE ENGINEER TO MARK UNUSUAL ALIGNMENT OF THE TRAVELED WAY.
2. NO PASSING ZONE TEMPORARY PAVEMENT MARKING IS REQUIRED TO BE PLACED, WHERE APPROPRIATE, ALONG WITH CENTERLINE TEMPORARY PAVEMENT MARKING WHEN A SAME DAY PERMANENT PAVEMENT MARKING ITEM IS INCLUDED IN THE CONTRACT.
3. NO PASSING ZONE MARKINGS ARE PLACED ACCORDING TO "T" MARKINGS. IF EXISTING NO PASSING ZONE W14-3 SIGNS ARE BEYOND 50 FEET IN EITHER DIRECTION, THE SIGNS SHALL BE MOVED TO THE "T" MARKINGS.
4. CONCRETE ONLY.

NOTE

ARROW SYMBOL (⇨) SHOWS DIRECTION OF TRAVEL

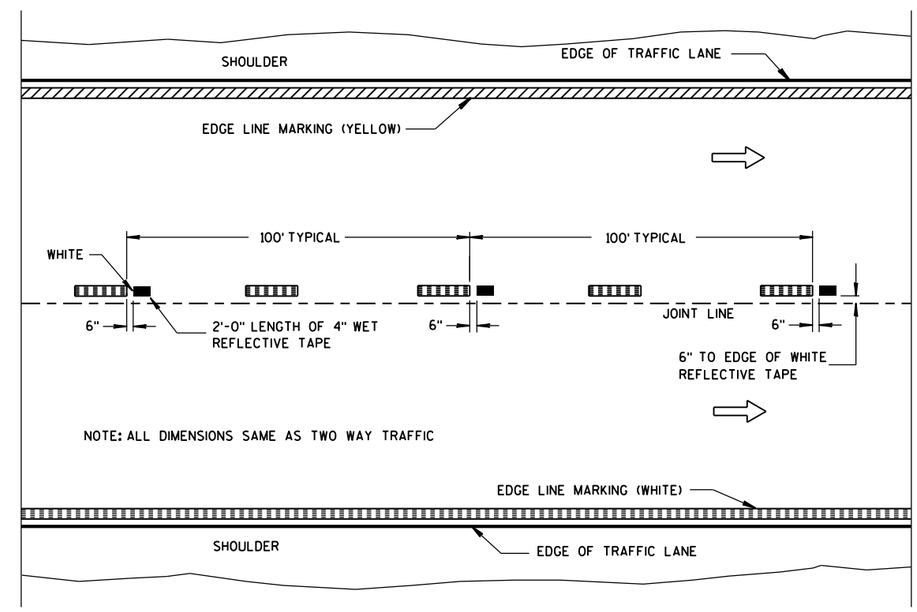

WET REFLECTIVE TAPE SUPPLEMENT TO SPRAYED OR NON WET REFLECTIVE TAPE LANE LINE

LEGEND

"T" MARKING

POST MOUNTED SIGN

PAVEMENT MARKING (MAINLINE)

STATE OF WISCONSIN
DEPARTMENT OF TRANSPORTATION

APPROVED
5-13-2013 /S/ Travis Feltes
DATE STATE TRAFFIC E
FHWA

6

S.D.D. 15 C 8-16a

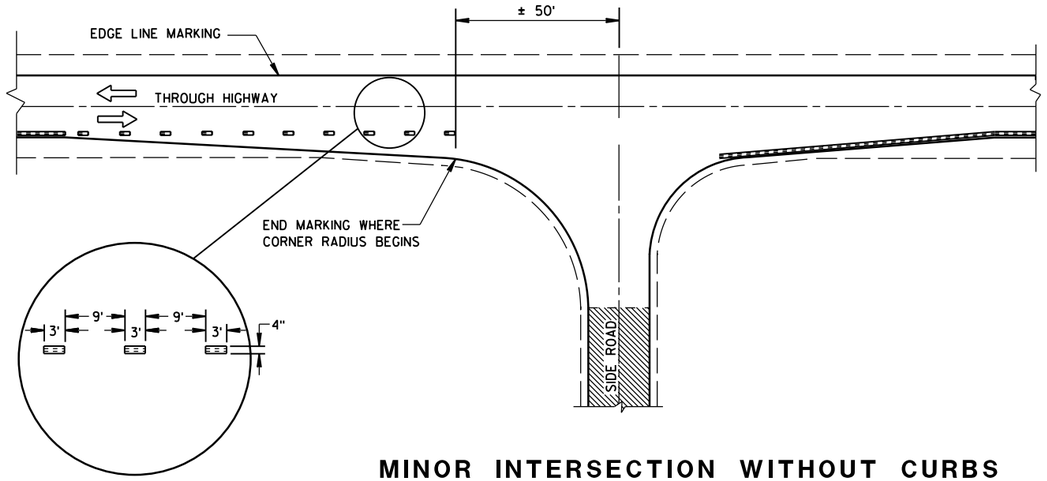

MINOR INTERSECTION WITHOUT CURBS

GENERAL NOTES

EDGE LINES SHALL BE OMITTED THROUGH INTERSECTIONS. EDGE LINES SHALL BE CONTINUED THROUGH DRIVEWAYS.

1. WHEN DISTANCE "A" IS LESS THAN 250 FEET, OMIT LANE LINE.
2. WHEN DISTANCE "B" IS LESS THAN 100 FEET, OMIT CHANNELIZING LANE LINE.
3. ALTERNATIVE MARKING SHALL BE PROVIDED WHEN SPECIFIED IN THE CONTRACT. TYPICAL SITUATIONS WHERE THIS MARKING MAY BE REQUIRED ARE WHERE THE INTERSECTION IS ON A SHARP HORIZONTAL CURVE OR CREST VERTICAL CURVE IN AN UNLIGHTED AREA SUCH THAT THE EDGE LINE MAY BE MISLEADING TO THE MOTORIST OR DISAPPEAR FROM SIGHT.
4. THE EDGE LINE IN THE TAPER AREAS OF THE BYPASS LANE AND THE BYPASS LANE SHALL BE LOCATED 1-FOOT FROM EDGE OF PAVEMENT TO THE OUTSIDE EDGE OF EDGE LINE.
5. BARRIER LINE ENDS AT SIDE ROAD PAVEMENT/SURFACE EDGE EXTENSION.
6. BARRIER LINE STARTS 500 FEET PRIOR TO THE BYPASS TAPER.
7. IF THE DISTANCE BETWEEN 2 SUCCESSIVE NO-PASSING ZONES IS LESS THAN THE MINIMUM DISTANCE BETWEEN ZONES, CONNECT THE 2 ZONES.
8. 3' LINE 9' GAP, EXCEPT RETRACE THE EXISTING LINE - GAP PATTERN WHERE EXISTING MARKINGS ARE IN PLACE.

ARROW SYMBOL (⇨) SHOWS DIRECTION OF TRAVEL

(7)

POSTED SPEED (MPH)	MINIMUM DISTANCE BETWEEN ZONES (FEET)
25 - 30	528
35 - 40	528
45 - 50	686
55	792

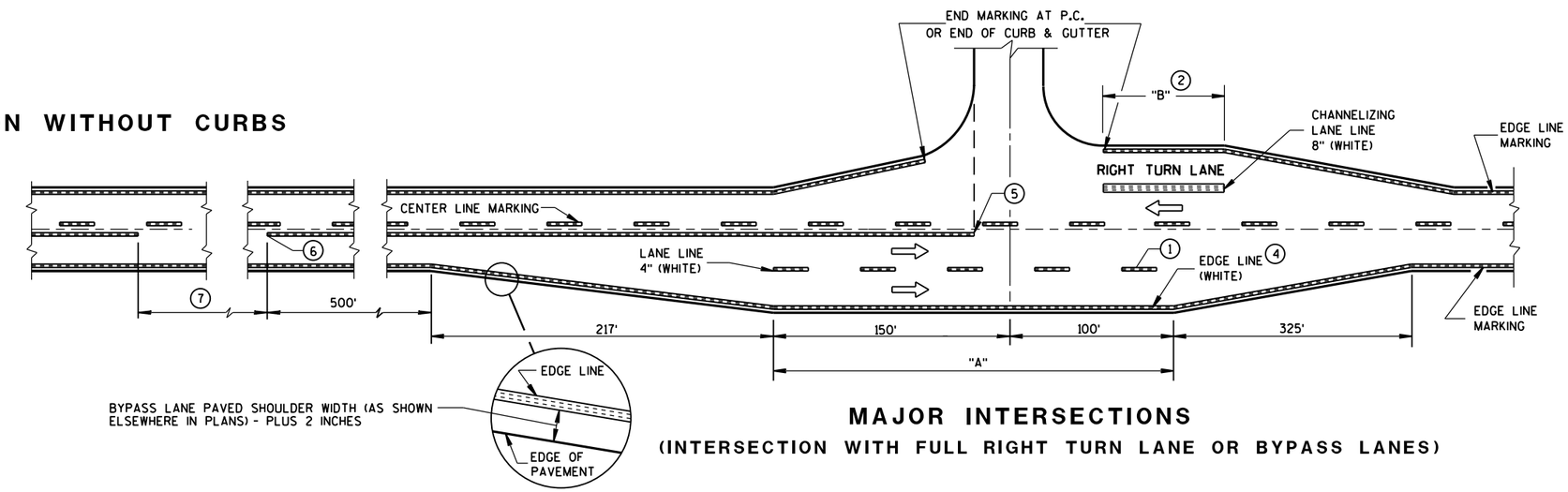

MAJOR INTERSECTIONS

(INTERSECTION WITH FULL RIGHT TURN LANE OR BYPASS LANES)

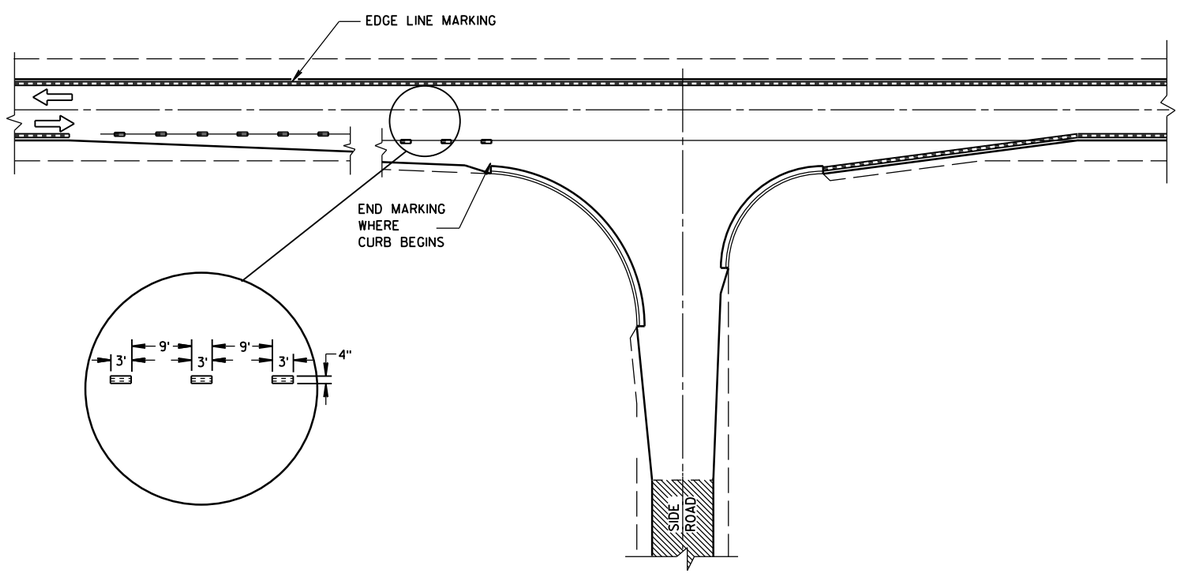

MINOR INTERSECTION WITH CURBS

(TYPICAL MARKING)

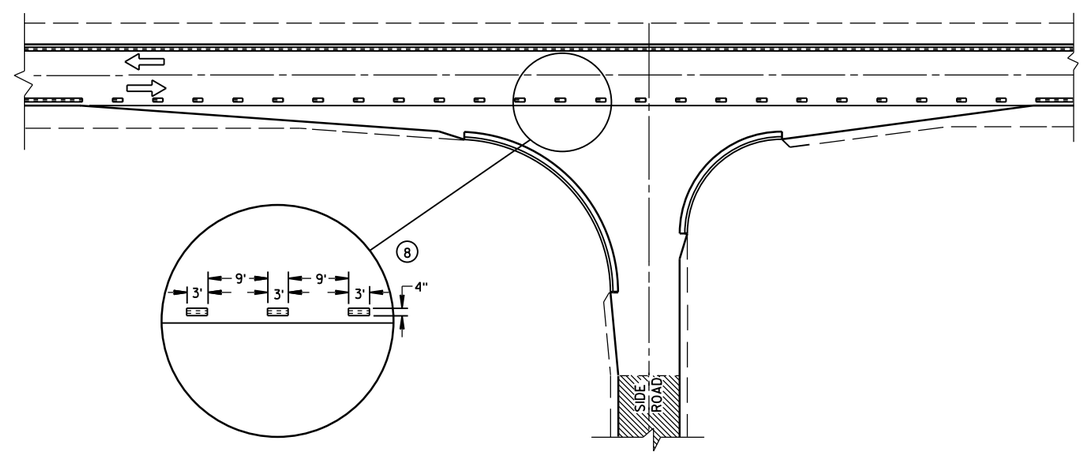

MINOR INTERSECTION WITH CURBS

(3) (FOR SPECIAL CONDITIONS AS SPECIFIED)

PAVEMENT MARKING
(INTERSECTIONS)

STATE OF WISCONSIN
DEPARTMENT OF TRANSPOR

6

S.D.D. 15 C 8-16b

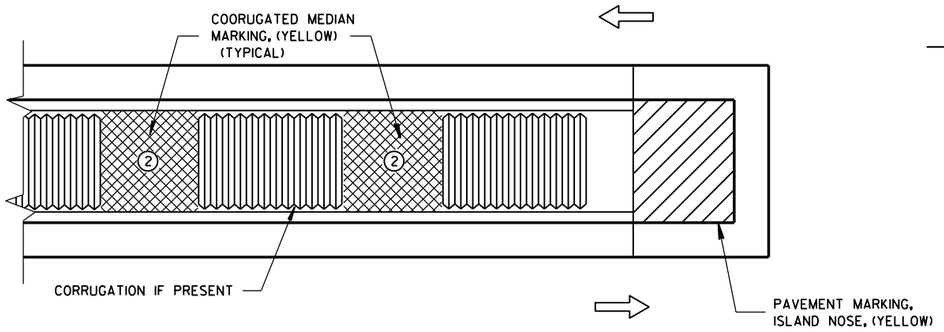

MEDIAN ISLAND WITH SQUARE BLUNT NOSE

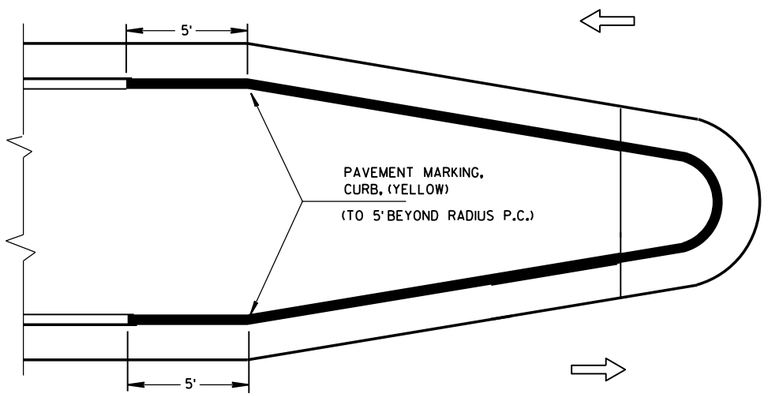

MEDIAN ISLAND WITH ROUND BLUNT NOSE

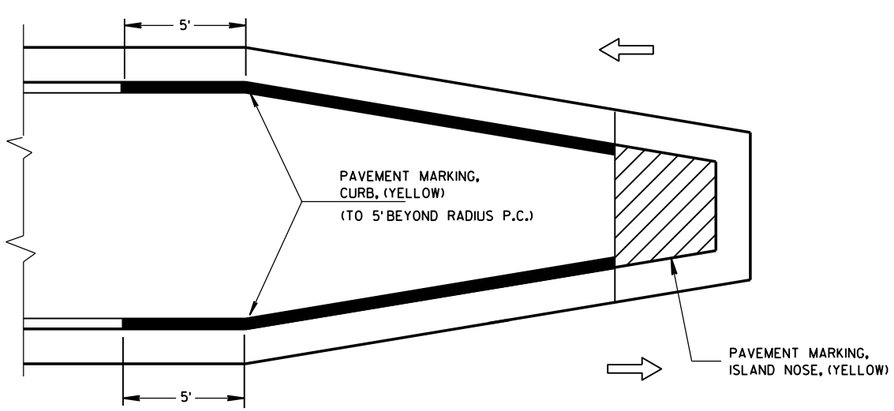

MEDIAN ISLAND WITH SLOPED NOSE

TYPICAL PLACEMENT OF PAVEMENT MARKING ON MEDIAN ISLANDS

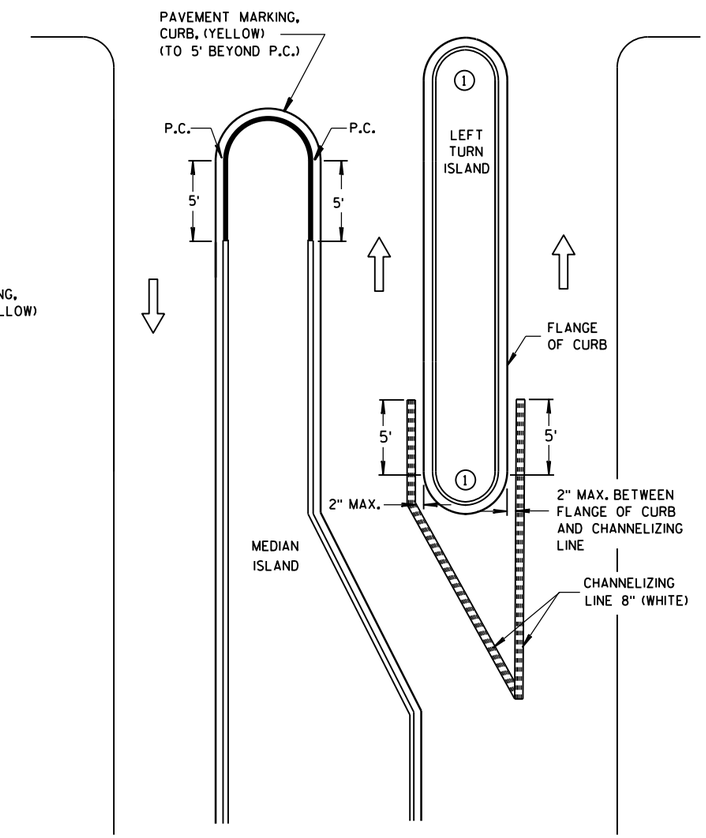

LEFT TURN & MEDIAN ISLAND

GENERAL NOTES

1. DO NOT MARK CURB NOSES THAT SEPARATE LANES OF TRAFFIC TRAVELING IN THE SAME DIRECTION.
2. WHEN CONCRETE CORRUGATED MEDIAN IS CONSTRUCTED TO SEPARATE TRAFFIC OPERATING IN THE OPPOSING DIRECTION YELLOW PAVEMENT MARKING SHALL BE APPLIED TO THE FLAT PORTION OF THE CONCRETE CORRUGATED MEDIAN. THE ITEM OF PAVEMENT MARKING, CONCRETE CORRUGATED MEDIAN, WILL BE MEASURED IN PLACE AND AND ACCEPTED IN ACCORDANCE WITH THE CONTRACT AND PAID FOR AT THE CONTRACT UNIT PRICE PER SQUARE FOOT.

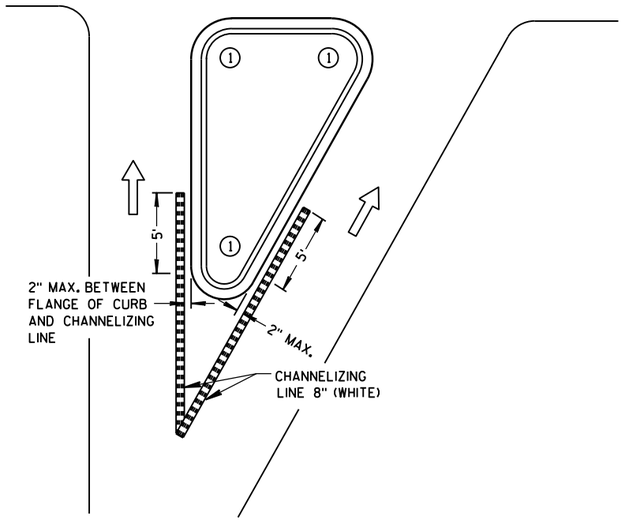

RIGHT TURN ISLAND

LEGEND

- ISLAND NOSE MARKING
- CURB MARKING
- CORRUGATED MEDIAN MARKING
- DIRECTION OF TRAVEL

PAVEMENT MARKING (ISLANDS)

STATE OF WISCONSIN
DEPARTMENT OF TRANSPOI

6

S.D.D. 15 C 8-16f

6

S.D.D. 15 C 8-16f

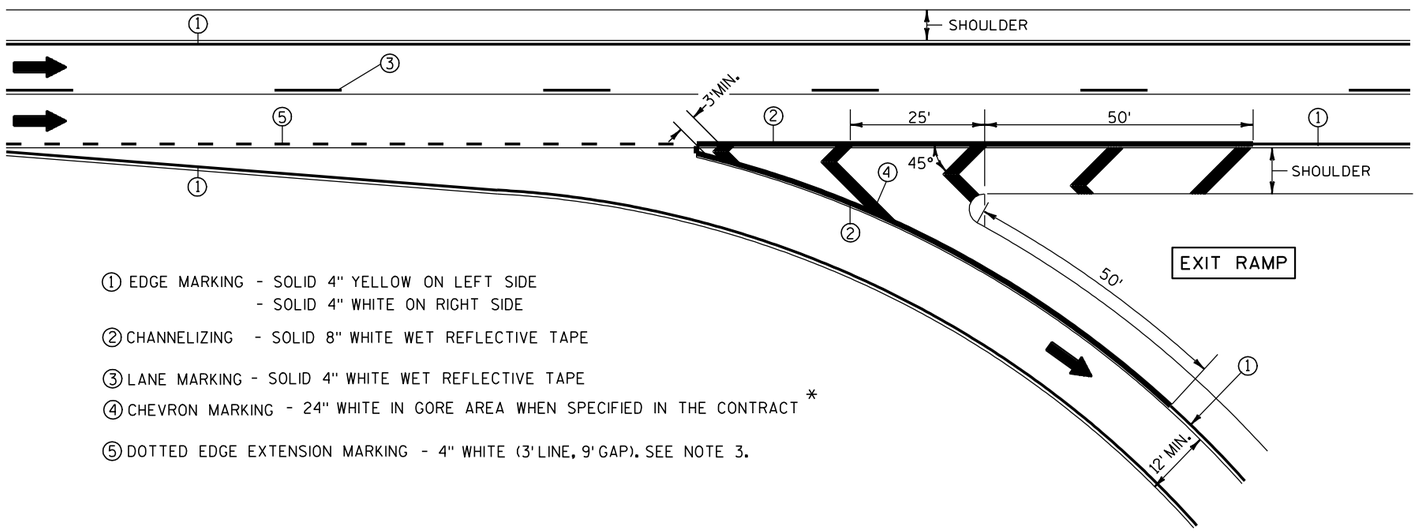

① EDGE MARKING - SOLID 4" YELLOW ON LEFT SIDE
- SOLID 4" WHITE ON RIGHT SIDE

② CHANNELIZING - SOLID 8" WHITE WET REFLECTIVE TAPE

③ LANE MARKING - SOLID 4" WHITE WET REFLECTIVE TAPE

④ CHEVRON MARKING - 24" WHITE IN GORE AREA WHEN SPECIFIED IN THE CONTRACT *

⑤ DOTTED EDGE EXTENSION MARKING - 4" WHITE (3' LINE, 9' GAP). SEE NOTE 3.

NOTES:

1. ARROWS SHOWN ON THIS MARKING PLAN DESIGNATE TRAFFIC FLOW, AND SHALL NOT BE TAKEN AS PROPOSED PAVEMENT MARKINGS.

2. PLACE WHITE EDGE OF TAPE 6" LEFT FROM JOINT.

3. 3' LINE 9' GAP, EXCEPT RETRACE THE EXISTING LINE-GAP PATTERN WHERE EXISTING MARKINGS ARE IN PLACE.

4. RETRACE EXISTING DIAGONAL MARKINGS.

* REFER TO DESIGN NOTES.

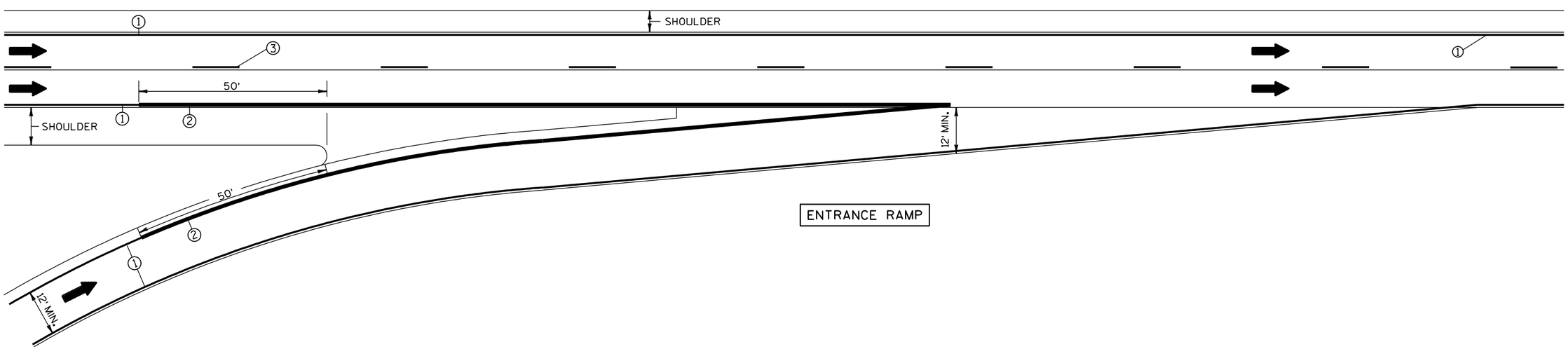

6

6

S.D.D. 15 C 31-1a

S.D.D. 15 C 31-1a

PAVEMENT MARKING
(RAMPS AND GORES)

STATE OF WISCONSIN
DEPARTMENT OF TRANSPORTATION

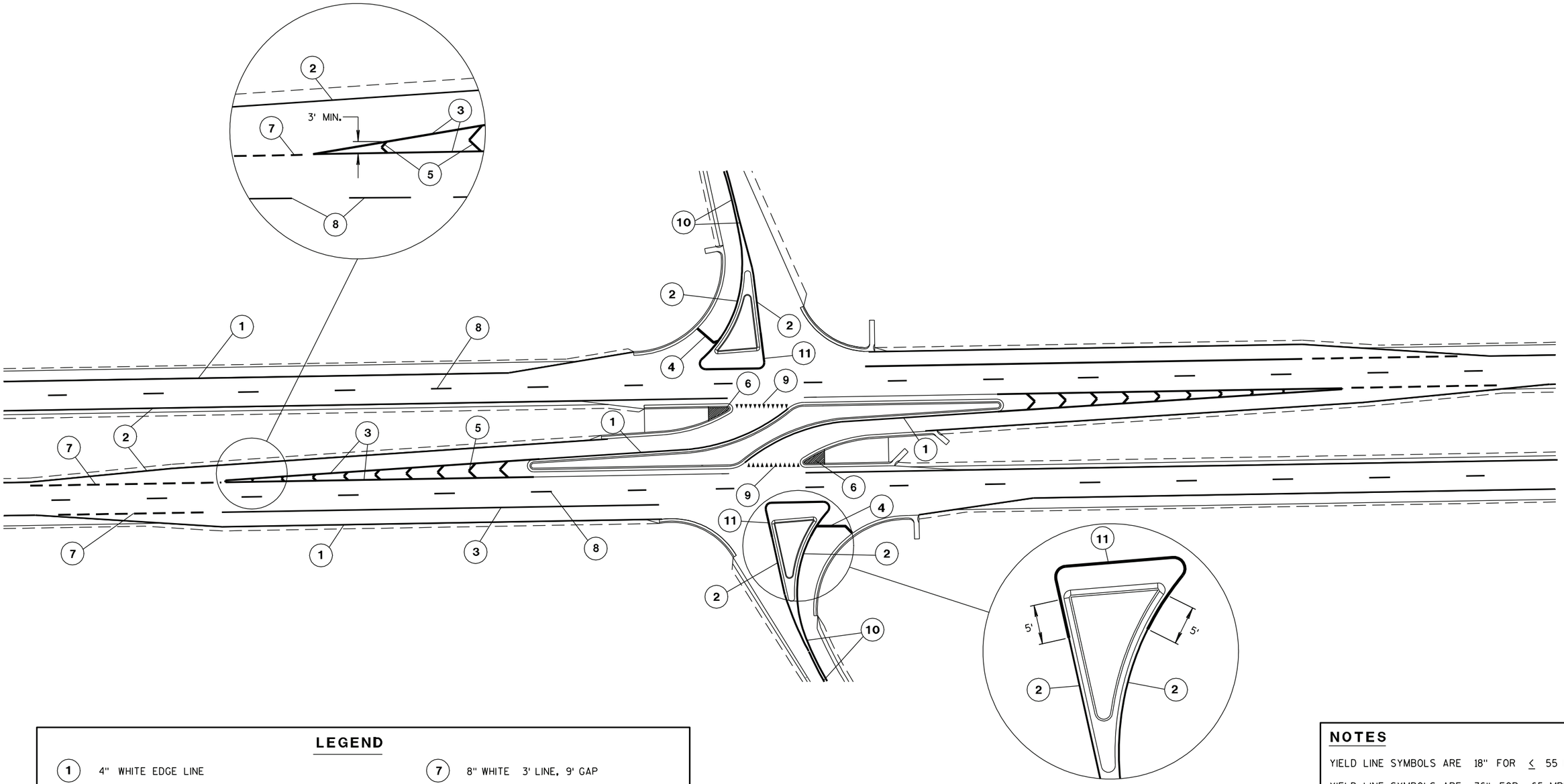

LEGEND

1. 4" WHITE EDGE LINE
2. 4" YELLOW EDGE LINE
3. 8" WHITE WET REFLECTIVE TAPE
4. 18" STOP LINE WHITE WHEN SPECIFIED IN THE CONTRACT
5. CHEVRON 24" WHITE 25' C-C
6. ISLAND NOSE EPOXY (SOLID YELLOW)
7. 8" WHITE 3' LINE, 9' GAP
8. 4" WHITE WET REFLECTIVE TAPE LANE LINE
9. YIELD LINE SYMBOLS 18" OR 36" WHITE WHEN SPECIFIED IN THE CONTRACT
10. 4" LINE YELLOW
11. 8" WHITE WHEN SPECIFIED IN THE CONTRACT

NOTES

YIELD LINE SYMBOLS ARE 18" FOR $\leq$ 55 MPH.

YIELD LINE SYMBOLS ARE 36" FOR 65 MPH.

J TURN MEDIAN PAVEMENT MARKING

STATE OF WISCONSIN
DEPARTMENT OF TRANSPORTATION

6

S.D.D. 15 C 32-1a

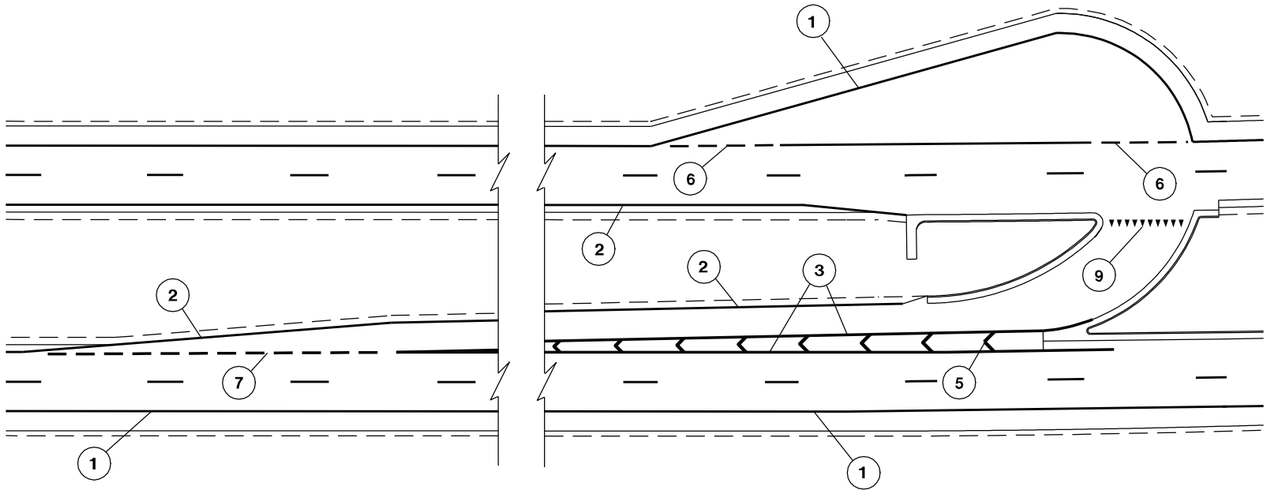

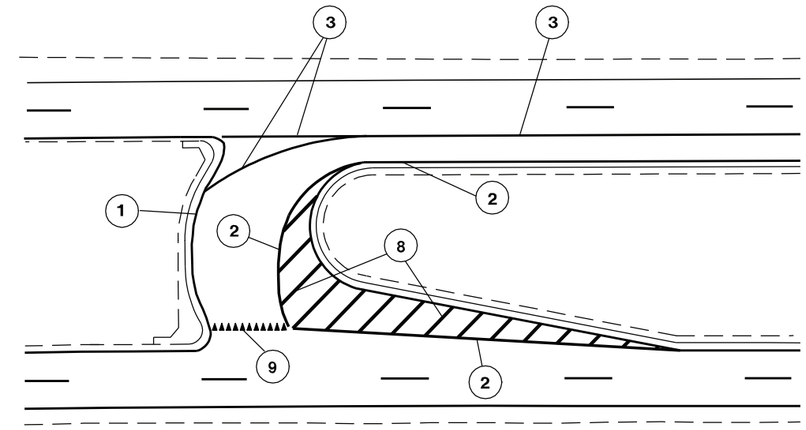

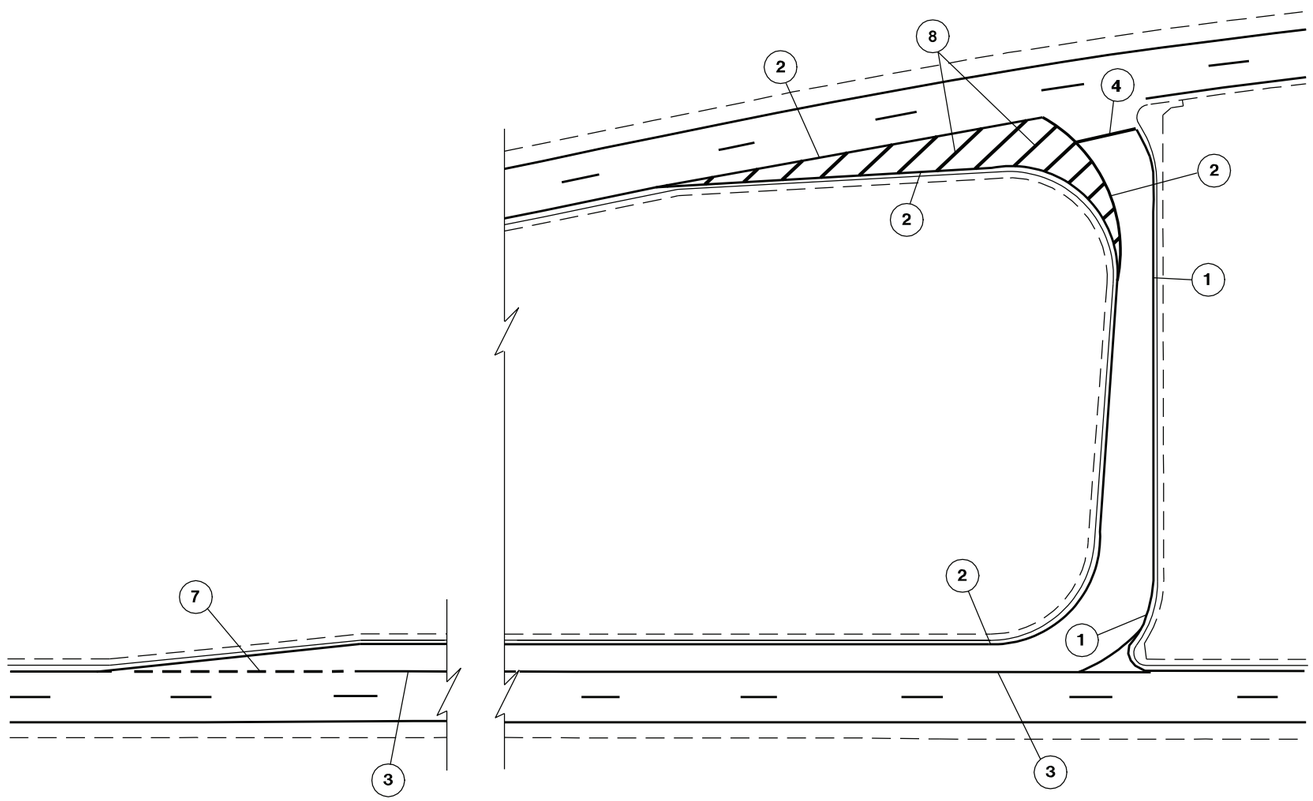

NOTES

YIELD LINE SYMBOLS ARE 18" FOR ≤ 55 MPH.

YIELD LINE SYMBOLS ARE 36" FOR 65 MPH.

LEGEND

1. 4" WHITE EDGE LINE
2. 4" YELLOW EDGE LINE
3. 8" WHITE WET REFLECTIVE TAPE
4. 18" STOP LINE WHITE
5. CHEVRON 24" WHITE 25' C-C
6. 4" WHITE 3' LINE, 9' GAP
7. 8" WHITE 3' LINE, 9' GAP
8. 12" YELLOW AT 10' C-C WHEN SPECIFIED IN THE CONTRACT
9. YIELD LINE SYMBOLS 18" OR 36" WHITE

J TURN LANE PAVEMENT MARKING

STATE OF WISCONSIN
DEPARTMENT OF TRANSPORTATION

APPROVED

5/15/2012 — DATE

/S/ Thomas N. Nathan — STATE TRAFFIC ENGINEER

FHWA

6

S.D.D. 15 C 32-1b

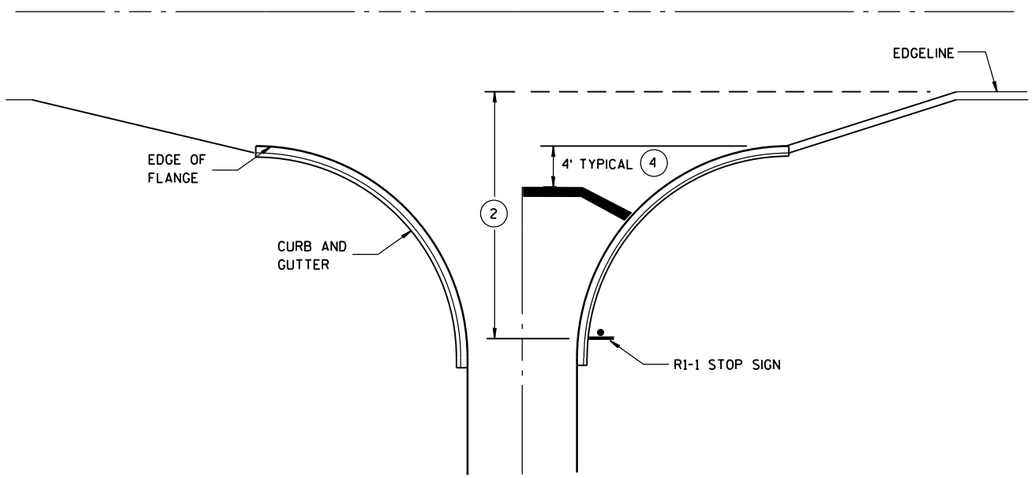

TYPICAL STOP LINE PAVEMENT MARKING WITH CURB AND GUTTER

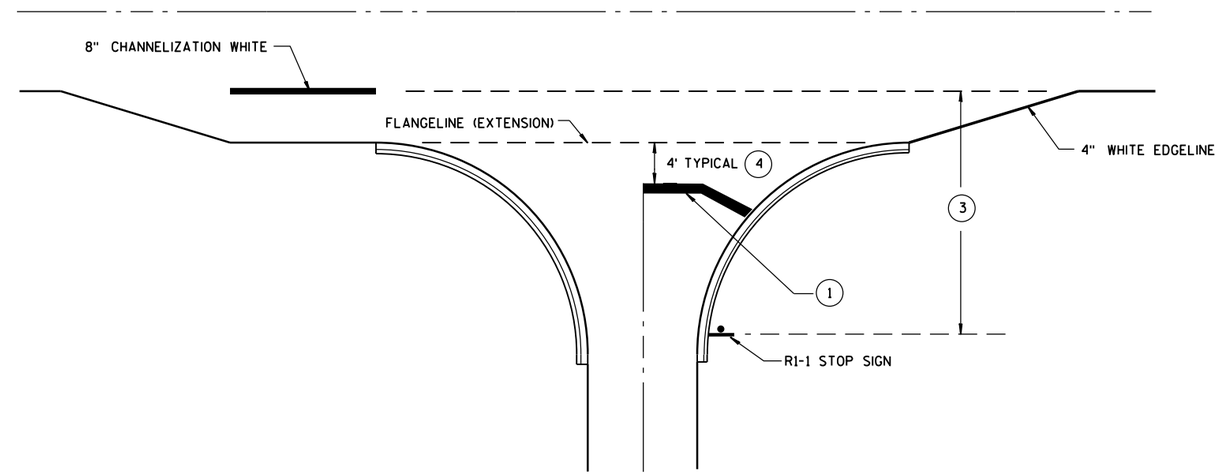

TYPICAL STOP LINE PAVEMENT MARKING FOR SIDEROADS WITH RIGHT TURN LANE

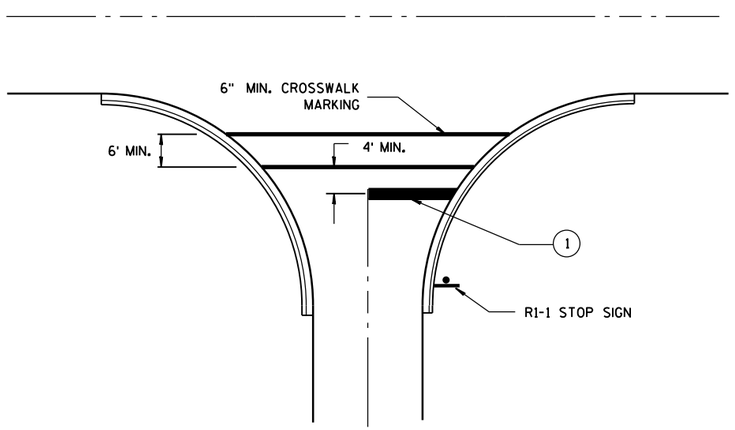

TYPICAL STOP LINE PAVEMENT MARKING FOR SIDEROADS WITH CROSSWALK MARKING

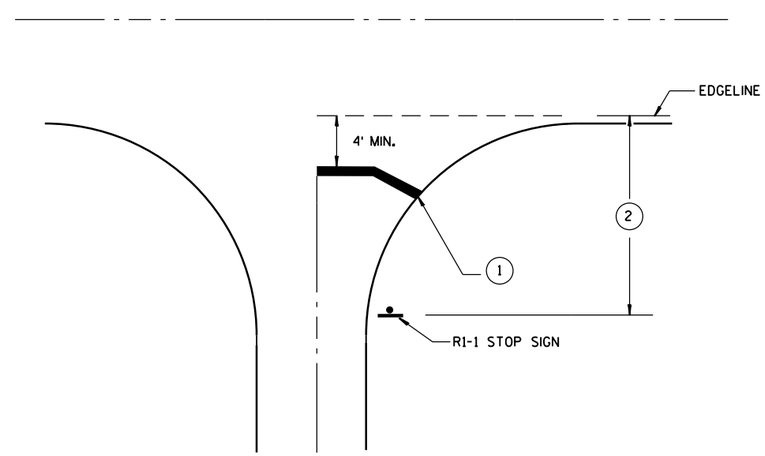

TYPICAL STOP LINE PAVEMENT MARKING WITHOUT CURB AND GUTTER

GENERAL NOTES

1. 18-INCH STOP LINES MAY BE DELETED OR ADDED BY THE PROJECT ENGINEER BASED ON VISIBILITY AND SIGHT LINES.
2. IF STOP SIGN IS LESS THAN OR EQUAL TO 40 FEET FROM THE EDGELINE THAN NO STOP LINE IS REQUIRED.
3. IF STOP SIGN IS LESS THAN OR EQUAL TO 30 FEET FROM THE FLANGELINE EXTENSION THAN NO STOP LINE IS REQUIRED.
4. MOVE CLOSER TO EDGE OF TRAVEL LANE AS NEEDED FOR VISIBILITY AND SIGHT LINES.

STOP LINE AND CROSSWALK PAVEMENT MARKING

STATE OF WISCONSIN
DEPARTMENT OF TRANSPORTATION

APPROVED
4/30/2013 — DATE
/S/ Travis Feltes — STATE TRAFFIC E
FHWA

6

S.D.D. 15 C 33-1

LEGEND

- SIGN ON PERMANENT SUPPORT
- TRAFFIC CONTROL DRUM WITH TYPE "C" STEADY BURN LIGHT
- TRAFFIC CONTROL DRUM
- FLASHING ARROW BOARD
- REMOVING PAVEMENT MARKING
- CONCRETE BARRIER TEMPORARY PRECAST
- DIRECTION OF TRAFFIC
- WORK AREA

W057-52
36"x24"

INSTALL ON EACH APPROACH AT THE CLOSEST INTERSECTION WITH A STATE OR COUNTY TRUNK HIGHWAY, OR AS DIRECTED BY THE ENGINEER. WIDTH ON SIGN TO BE APPROX. 1 FOOT LESS THAN AVAILABLE WIDTH (OMIT IF AVAILABLE WIDTH IS MORE THAN 16 FEET).

LOCATED 500 FEET IN ADVANCE OF R2-1 SIGN AND 500 FEET BEYOND THE "ROAD WORK 1 MILE" SIGN.

R2-1
48"x60"
(BLACK AND WHITE)

IF THE REGULATORY SPEED HAS BEEN REDUCED, A SPEED LIMIT SIGN SHALL BE LOCATED 1500 FEET BEYOND THE END OF THE ACCELERATION LANE OF EACH ENTRANCE RAMP. THERE SHOULD BE A SPEED LIMIT SIGN INCORPORATED A MINIMUM OF EVERY 2 OR 3 MILES.

* INCLUDE RESUME SPEED LIMIT SIGN A MINIMUM OF 200 FEET (500 FEET DESIRABLE) AFTER END ROAD WORK SIGNS.

GENERAL NOTES

THIS LANE CLOSURE IS TYPICAL FOR CLOSING RIGHT LANE - REVERSE FOR CLOSING LEFT LANE.

THE EXACT NUMBER, LOCATION, AND SPACING OF ALL SIGNS AND DEVICES SHALL BE ADJUSTED TO FIT FIELD CONDITIONS AS APPROVED BY THE ENGINEER.

THE SPACING BETWEEN SIGNS SHOULD BE ADJUSTED TO NOT CONFLICT WITH AND TO PROVIDE A MINIMUM OF 200 FEET (500 FEET DESIRABLE) CLEARANCE TO EXISTING SIGNS.

ALL SIGNS ARE 48"x48" UNLESS OTHERWISE NOTED.

"WO" IS THE SAME AS "W" EXCEPT THE BACKGROUND IS ORANGE.

ANY SIGNS TEMPORARY OR EXISTING, WHICH CONFLICT WITH TRAFFIC CONTROL "IN USE" SHALL BE REMOVED OR COVERED AS NEEDED OR AS APPROVED BY THE ENGINEER.

(1) CONSIDER ROADWAY GEOMETRICS WHEN LOCATING SIGNS AND ARROW BOARD SO THE DRIVER HAS A CLEAR VIEW OF THE ARROW BOARD AND LANE CLOSURE DRUMS FOR A MINIMUM 1500 FEET IN FRONT OF DRUM TAPER.

FOR A LANE CLOSURE THAT IS IN PLACE LESS THAN 7 CONTINUOUS DAYS AND NIGHTS, THE ADVANCED WARNING SIGNS MAY BE MOUNTED ON PORTABLE SUPPORTS.

REMOVE PAVEMENT MARKINGS IF LANE CLOSURE IS TO BE IN PLACE FOR 4 OR MORE CONTINUOUS DAYS AND NIGHTS.

IF THE HORIZONTAL ALIGNMENT IS SUCH THAT A CURVE MAY REQUIRE ADDITIONAL DELINEATION, THE DEVICE SPACING MAY BE DECREASED TO 50 FEET.

ADJUSTMENTS IN BUFFER SPACE NEED TO BE INCORPORATED WHEN THE LANE CLOSURE OCCURS NEAR AN INTERCHANGE EXIT OR ENTRANCE RAMP OR INTERSECTION. THE LANE CLOSURE MUST TAKE PLACE FAR ENOUGH IN ADVANCE OF AN EXIT OR ENTRANCE RAMP TO STILL ALLOW FOR ADEQUATE BUFFER SPACE. THE MINIMUM LENGTH OF THE BUFFER SPACE BEFORE AN EXIT RAMP SHOULD BE 1/2 THE LENGTH OF THE TRANSITION AREA. THE ENTRANCE RAMP SHOULD BE FOLLOWED BY THE ORIGINAL BUFFER SPACE LENGTH OF 800 FEET DESIRABLE PRIOR TO ANOTHER TRAFFIC CONTROL CHANGE SUCH AS A CROSSOVER MANEUVER.

TYPICAL SECTION

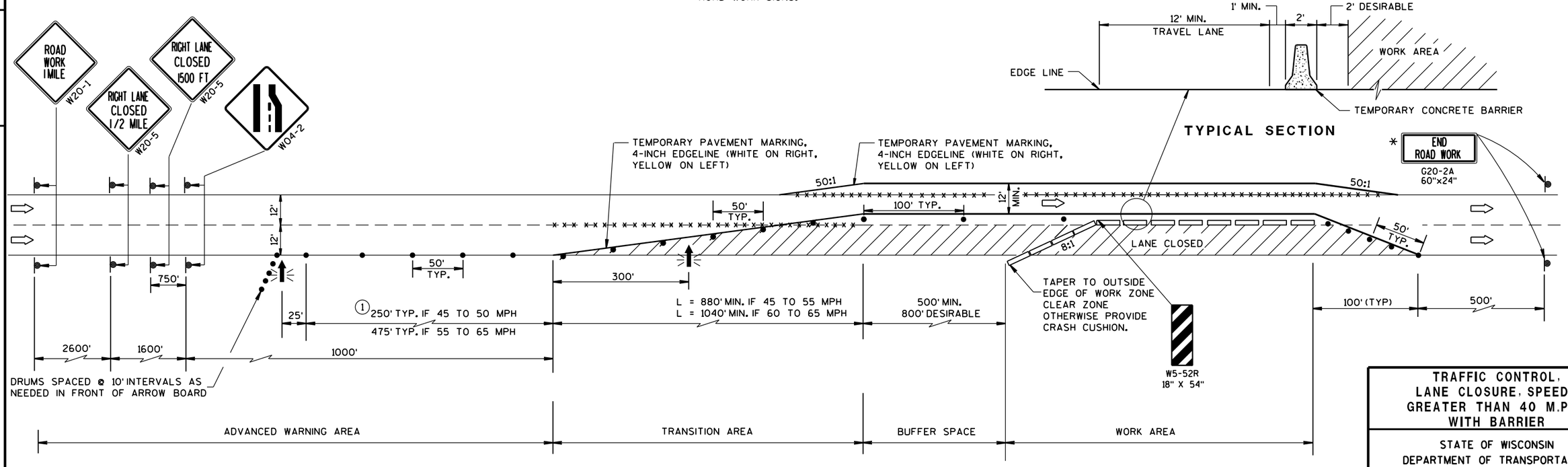

TRAFFIC CONTROL, LANE CLOSURE, SPEEDS GREATER THAN 40 M.P.H. WITH BARRIER	
STATE OF WISCONSIN DEPARTMENT OF TRANSPORTATION	
APPROVED 8/2013 DATE	/S/ Travis Feltes STATE TRAFFIC ENGINEER SIGN
FHWA	

6

S.D.D. 15 D 3-2

LEGEND

- TYPE III BARRICADE WITH ATTACHED SIGN
- SIGN ON PERMENENT SUPPORT
- POST WITH ATTACHED SIGN IN DRUM
- TRAFFIC CONTROL DRUM WITH TYPE "C" STEADY BURN LIGHT
- TRAFFIC CONTROL DRUM
- FLASHING ARROW BOARD
- TYPE "A" WARNING LIGHT (FLASHING)
- REMOVING PAVEMENT MARKING
- DIRECTION OF TRAFFIC
- WORK AREA

GENERAL NOTES

THE EXACT NUMBER, LOCATION, AND SPACING OF ALL SIGNS AND DEVICES SHALL BE ADJUSTED TO FIT FIELD CONDITIONS AS APPROVED BY THE ENGINEER.

THE SPACING BETWEEN SIGNS SHOULD BE ADJUSTED TO NOT CONFLICT WITH AND TO PROVIDE A MINIMUM OF 200 FEET, (500 FEET DESIREABLE) DISTANCE TO EXISTING SIGNS.

THIS LANE CLOSURE IS TYPICAL FOR CLOSING RIGHT LANE - REVERSE FOR CLOSING LEFT LANE.

ALL SIGNS ARE 48"×48" UNLESS OTHERWISE NOTED.

"WO" IS THE SAME AS "W" EXCEPT THE BACKGROUND IS ORANGE.

ANY SIGNS TEMPORARY OR EXISTING, WHICH CONFLICT WITH TRAFFIC CONTROL "IN USE" SHALL BE REMOVED OR COVERED AS NEEDED AND AS APPROVED BY THE ENGINEER. NO WARNING LIGHTS SHALL BE WORKING ON "COVERED" OR "DOWNED" SIGNS.

CONSIDER GEOMETRICS WHEN LOCATING SIGNS AND ARROW BOARD SO THE DRIVER HAS A CLEAR VIEW OF THE ARROW BOARD AND LANE CLOSURE DRUMS FOR A MINIMUM 1500 FEET IN FRONT OF DRUMS.

FOR A LANE CLOSURE THAT IS IN PLACE LESS THAN 7 CONTINUOUS DAYS AND NIGHTS, THE ADVANCED WARNING SIGNS MAY BE MOUNTED ON PORTABLE SUPPORTS.

REMOVE PAVEMENT MARKINGS IF LANE CLOSURE IS TO BE IN PLACE FOR LONGER THAN 4 OR MORE DAYS AND NIGHTS.

WARNING LIGHTS ARE NOT REQUIRED IF THE LANE CLOSURE IS A DAYTIME ONLY OPERATION.

IF THE HORIZONTAL ALIGNMENT IS SUCH THAT A CURVE MAY REQUIRE ADDITIONAL DELINEATION, THE DEVICE SPACING MAY BE DECREASED TO 50 FEET.

ADJUSTMENTS IN BUFFER SPACE NEED TO BE INCORPORATED WHEN THE LANE CLOSURE OCCURS NEAR AN INTERCHANGE EXIT OR ENTRANCE RAMP. THE LANE CLOSURE MUST MUST TAKE PLACE FAR ENOUGH IN ADVANCE OF AN EXIT OR ENTRANCE RAMP TO STILL ALLOW FOR ADEQUATE BUFFER SPACE. THE MINIMUM LENGTH OF THE BUFFER SPACE BEFORE AN EXIT RAMP SHOULD BE 1/2 THE LENGTH OF THE TRANSITION AREA. THE ENTRANCE RAMP SHOULD BE FOLLOWED BY THE ORIGINAL BUFFER SPACE LENGTH OF 800 FEET DESIRABLE PRIOR TO ANOTHER TRAFFIC CONTROL CHANGE SUCH AS A CROSSOVER MANEUVER.

* THE LEFT REVERSE CURVE SIGN (WO1-4L) IS ONLY REQUIRED WHEN THIS DETAIL IS USED IN COMBINATION WITH "SINGLE LANE CROSSOVER" DETAIL.

LOCATED 500 FEET IN ADVANCE OF R2-1 SIGN AND 500 FEET BEYOND THE "ROAD WORK 1 MILE" SIGN.

R2-1
48"×60"
(BLACK AND WHITE)

IF THE REGULATORY SPEED HAS BEEN REDUCED, A SPEED LIMIT SIGN SHALL BE LOCATED 1500 FEET BEYOND THE END OF THE ACCELERATION LANE OF EACH ENTRANCE RAMP. THERE SHOULD BE A SPEED LIMIT SIGN INCORPORATED A MINIMUM OF EVERY 2 OR 3 MILES.

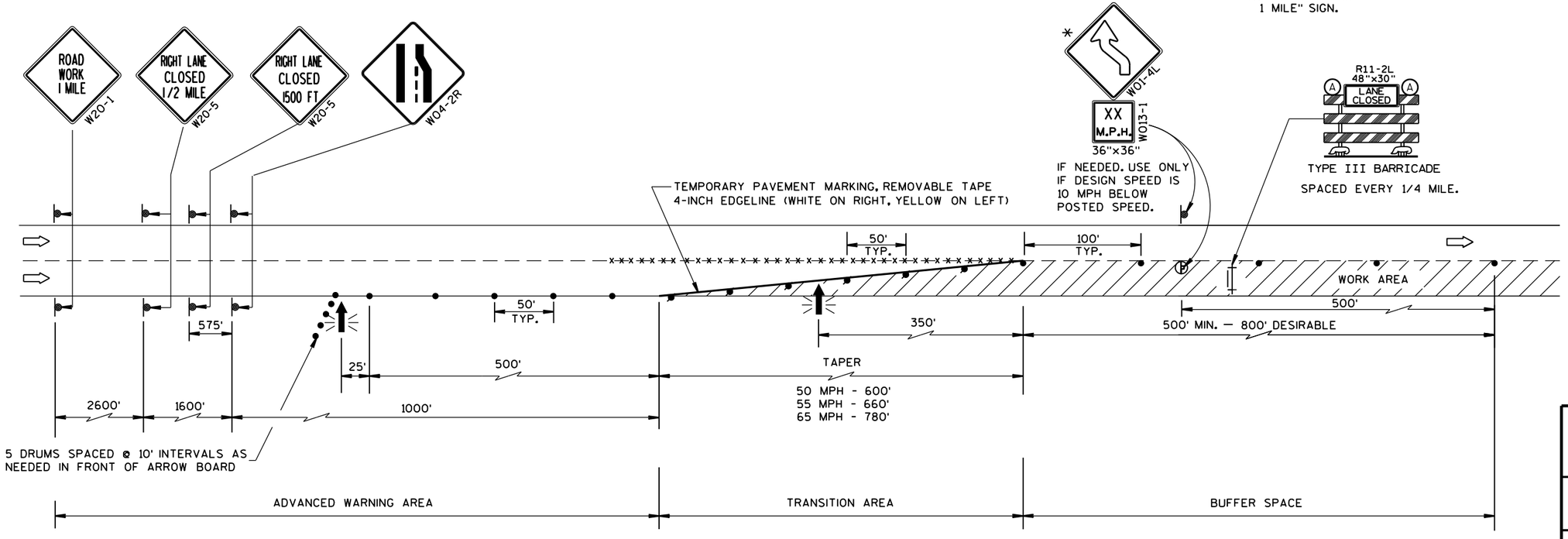

TRAFFIC CONTROL, LANE CLOSURE, SPEEDS GREATER THAN 40 M.P.H.

STATE OF WISCONSIN
DEPARTMENT OF TRANSPORTATION

APPROVED
8/2013 — DATE
/S/ Travis Feltes — STATE TRAFFIC ENGINEER
FHWA

LEGEND

- TYPE III BARRICADE
- TYPE III BARRICADE WITH ATTACHED SIGN
- TRAFFIC CONTROL DRUM
- SIGN ON PERMANENT SUPPORT
- (A) TYPE "A" WARNING LIGHT (FLASHING)
- DIRECTION OF TRAFFIC

GENERAL NOTES

THIS RAMP CLOSURE DETAIL IS TYPICAL FOR CLOSING A RIGHT SIDE EXIT RAMP. FOR A LEFT SIDE EXIT RAMP, REVERSE THE TRAFFIC CONTROL.

THE EXACT NUMBER, LOCATION, AND SPACING OF ALL SIGNS AND DEVICES SHALL BE ADJUSTED TO FIT FIELD CONDITIONS AS APPROVED BY THE ENGINEER.

THE SPACING BETWEEN TRAFFIC CONTROL SIGNS SHOULD BE ADJUSTED TO NOT CONFLICT WITH AND SHOULD PROVIDE A MINIMUM OF 200 FEET (500 FEET DESIRABLE) CLEARANCE TO EXISTING SIGNS THAT WILL REMAIN IN PLACE.

ALL SIGNS ARE 48" X 48" UNLESS OTHERWISE NOTED.

SIGNS THAT WILL BE IN PLACE LESS THAN 7 CONTINUOUS DAYS AND NIGHTS MAY BE MOUNTED ON PORTABLE SUPPORTS.

ANY SIGNS TEMPORARY OR EXISTING, WHICH CONFLICT WITH TRAFFIC CONTROL "IN USE" SHALL BE REMOVED OR COVERED AS NEEDED AND AS APPROVED BY THE ENGINEER.

PLACE TEMPORARY PAVEMENT MARKING, REMOVABLE TAPE IF RAMP CLOSURE IS TO BE IN PLACE FOR 4 OR MORE CONTINUOUS DAYS AND NIGHTS.

WORK AREAS WITH A DROPOFF ALONG THE EDGE OF AN OPEN TRAVEL LANE SHALL BE LEVELED WITH TEMPORARY FILL WHEN THE CONTRACTOR IS NOT WORKING ADJACENT TO THE TRAVEL LANE. DRUMS SHALL BE PLACED ENTIRELY OUTSIDE THE TRAVEL LANE, ALLOWING THE FULL UNOBSTRUCTED LANE WIDTH, WHEN THE WORK IS NOT IN PROGRESS.

WHERE MEDIAN BARRIER IS IN PLACE, SIGNS SHOWN ON LEFT SIDE OF ROADWAY MAY BE OMITTED FOR RIGHT SIDE RAMP CLOSURES OF LESS THAN 12-HOUR DURATION.

*W20-1 AND G20-2A SIGNS ARE NOT REQUIRED IF THE RAMP CLOSURE IS WITHIN A LARGER WORK ZONE WHERE THESE SIGNS ARE ALREADY PRESENT.

** PLACE "RAMP WILL BE CLOSED" SIGN 10 CALENDAR DAYS PRIOR TO CLOSURE OR AS DIRECTED BY THE ENGINEER. SEE WISCONSIN STANDARD SIGN PLATES FOR SIGN LAYOUT.

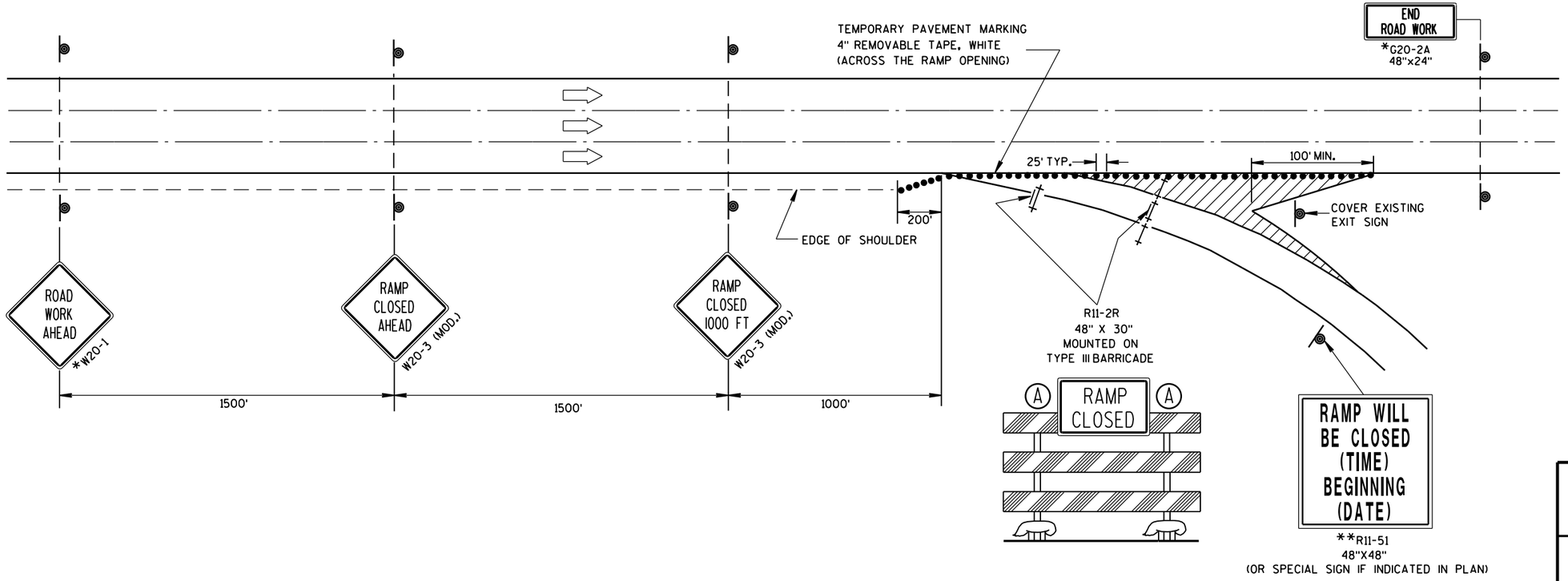

TRAFFIC CONTROL, EXIT RAMP CLOSURE

STATE OF WISCONSIN
DEPARTMENT OF TRANSPORTATION

APPROVED
8/2013 — DATE
/S/ Travis Feltes — STATE TRAFFIC ENGINEER
FHWA

6

S.D.D. 15 D 16-2

NOTES

1. All Signs Type II - Type H Reflective - reference WIS DOT Standard Specification for HIGHWAY and STRUCTURE CONSTRUCTION latest edition.
2. Color:
   Background - GREEN
   Message - WHITE
3. Message Series - E

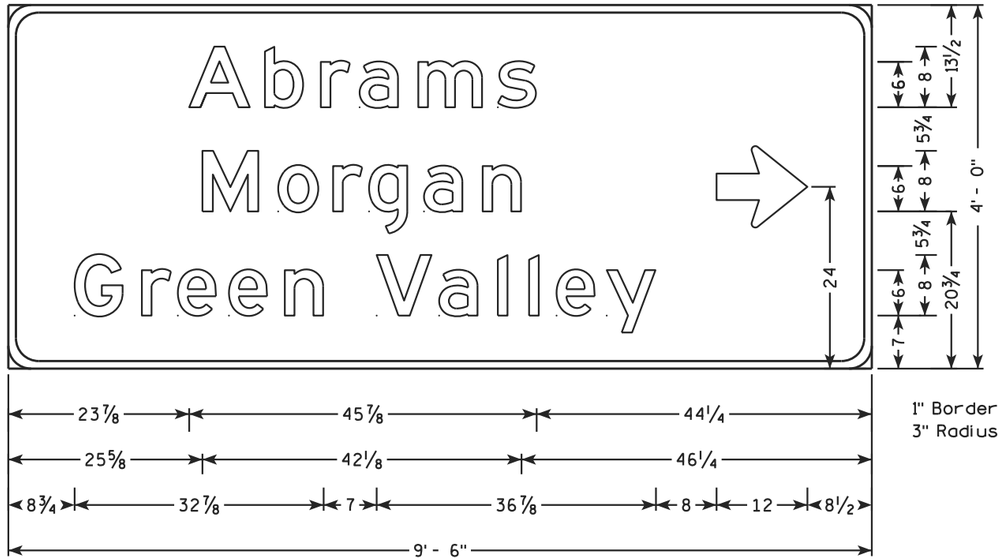

D1-3

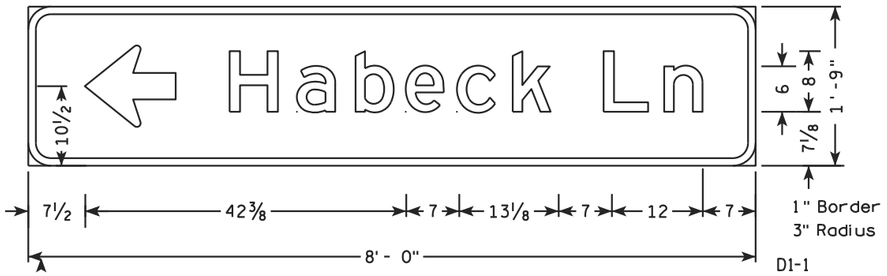

D1-1

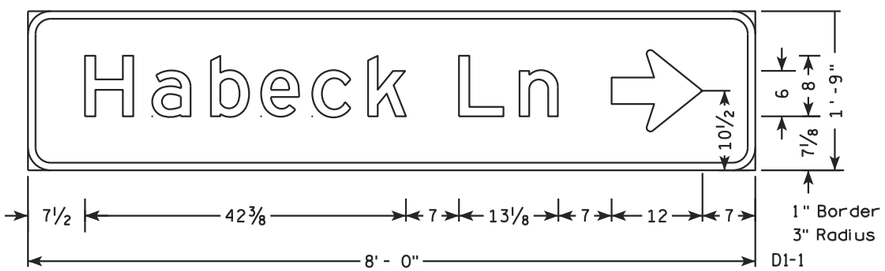

D1-1

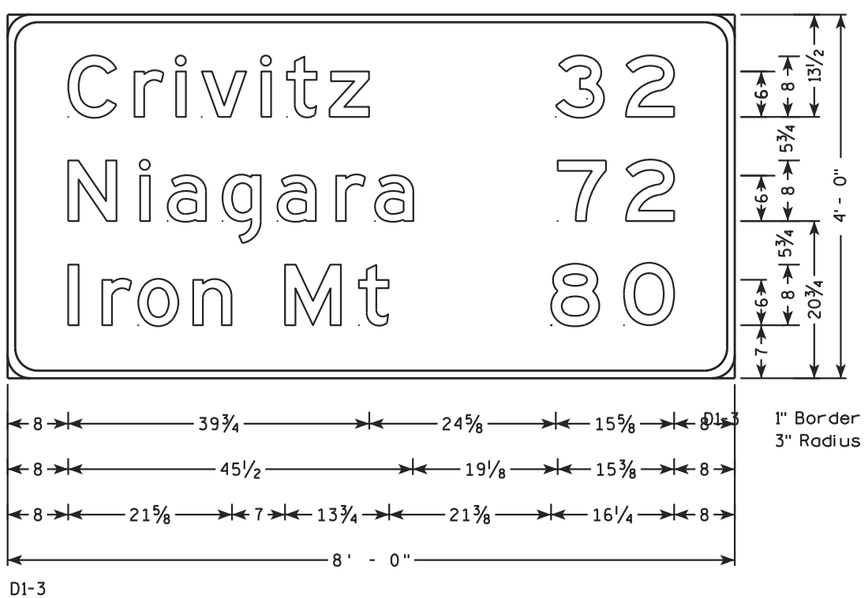

D1-3

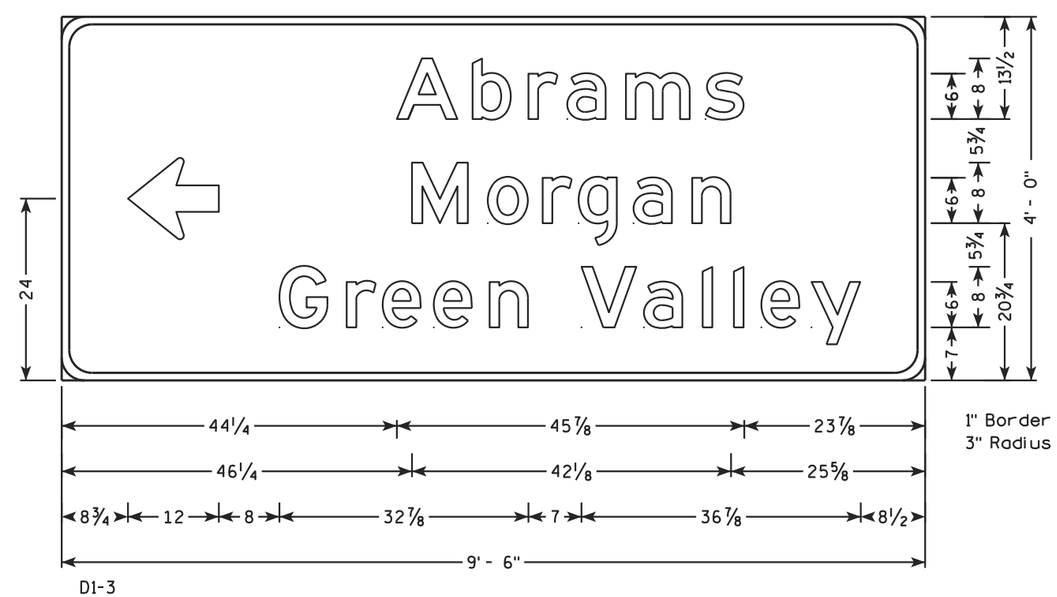

D1-3

7

7

PROJECT NO:1490-28-71	HWY:USH 141	COUNTY:OCONTO	PERMANENT SIGNING	SHEET NO: 179	E

NOTES

1. All Signs are Type I - Type SH Reflective - reference WIS DOT Standard Specification for HIGHWAY and STRUCTURE CONSTRUCTION latest edition.
2. Color:
   Background - Green
   Message - White
3. Message Series - E Modified except all CAPS words Series E

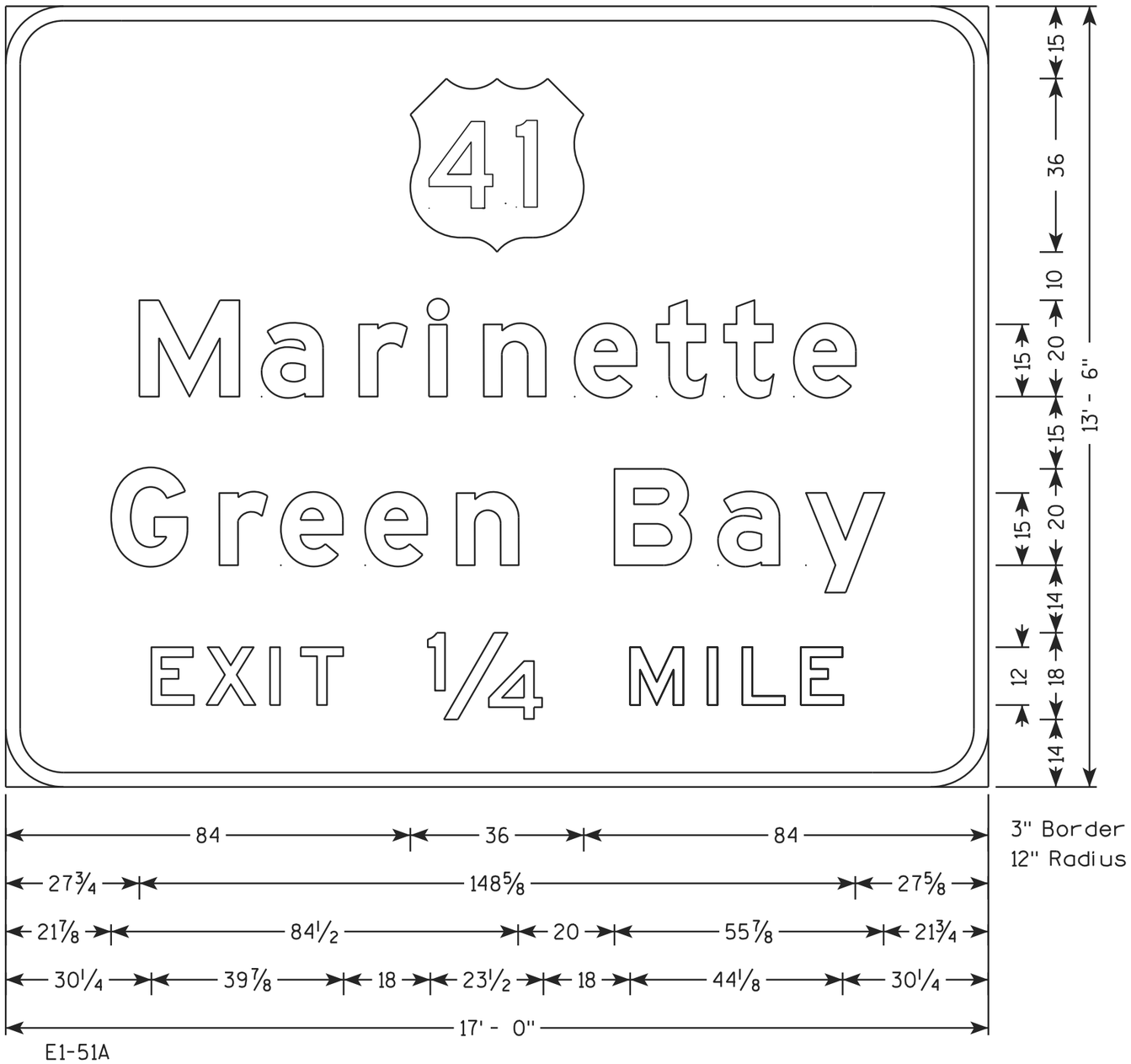

7

7

PROJECT NO:1490-28-71	HWY:USH 141	COUNTY:OCONTO	PERMANENT SIGNING	SHEET NO:	E

TYPICAL ASSEMBLIES

J1-1

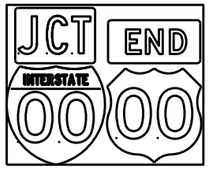

J1-2

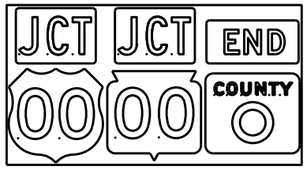

J1-3

J2-1

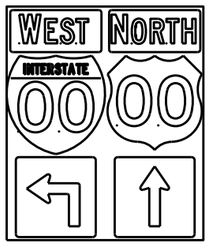

J2-2

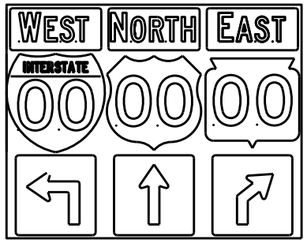

J2-3

JV

(Typical Vertical J-Assembly
See Note 10 and 11)

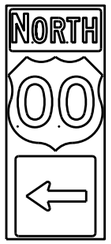

J3-1

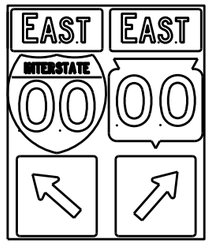

J3-2

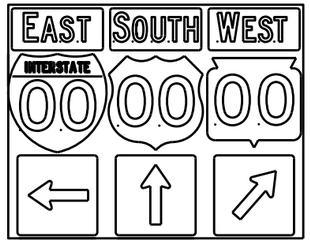

J3-3

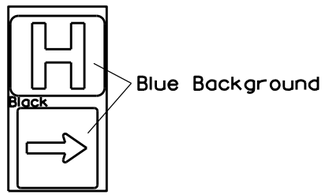

JH-1

J4-1

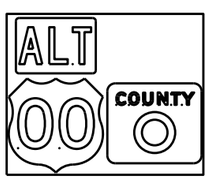

J4-2

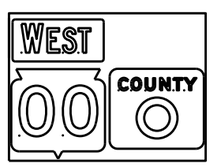

J4-2

J13-1

J12-1

J32-1

J33-1

J23-1

J22-1

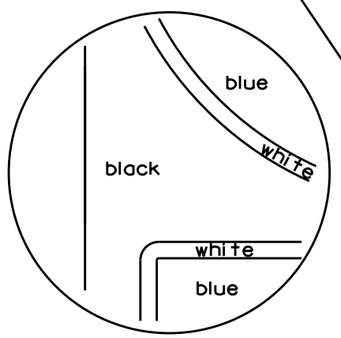

[blue background with interstate]

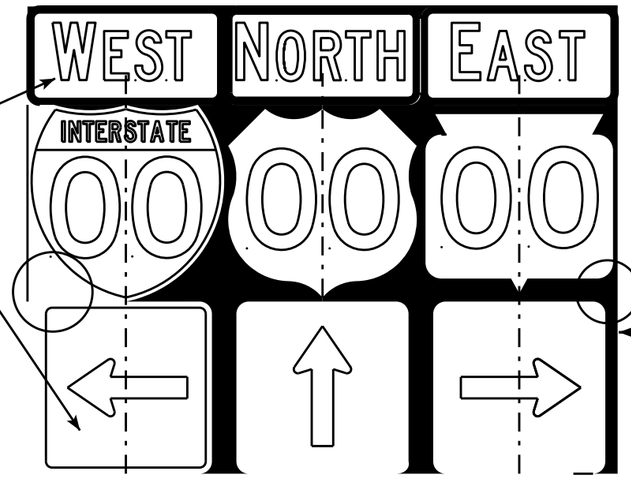

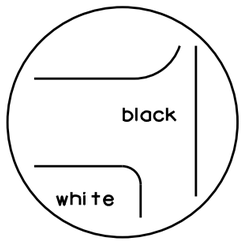

[black background]

NOTES

1. Signs are Type II - Type H Reflective - reference WIS DOT Standard Specification for HIGHWAY and STRUCTURE CONSTRUCTION latest edition.
2. Color:
   Background - Black Non-reflective
   Message - see Note 5
3. Message Series - See Note 5
4. Corners shall be square or rounded if base material is plywood. If base material is metal the corners shall be rounded.
5. The colors and message spacing on each marker shall be according to the applicable route marker panel specifications.
6. Certain marker heads require the component pieces to be the same color. As an example, all the components used with an M1-1 Interstate marker shall be blue.
7. Single panel j-assemblies shall only be used with route marker shields that are same size. If the route marker shields are different size use multiple piece component.
8. Route assemblies that have 24 inch route shields and have dimensions greater than 48 inches (both vertical and horizontal) shall have one horizontal splice between the arrows and route shields. Vertical splices shall not be used on route assemblies with a horizontal dimension of 144 inches or less. The contractor shall not use more than one vertical joint per sign and the joint shall be between route shields.
9. Route assemblies that have 36 inch shields and have dimensions greater than 48 inchs (both vertical and horizontal) shall have two horizontal splices. One horizontal splice shall be between the cardinal direction and route shields and the other horizontal splice shall be between the arrows and route shields. Vertical splices shall not be used on route assemblies with a horizontal dimension of 144 or less. The contractor shall not use more than one vertical joint per sign and the joint shall be between route shields.
10. All Vertical J Assemblies are given a Sign Code of JV
11. For JV Assemblies that have a mixture of Interstate and non Interstate shields, arrows and cardinals shall be white on blue.

ROUTE MARKERS & COMPONENTS IN TYPICAL ASSEMBLIES

WISCONSIN DEPT OF TRANSPORTATION

APPROVED Matthew R Rauch
for State Traffic Engineer

DATE 2/06/14 PLATE A2-1S.8

PROJECT NO: | SHEET NO: E

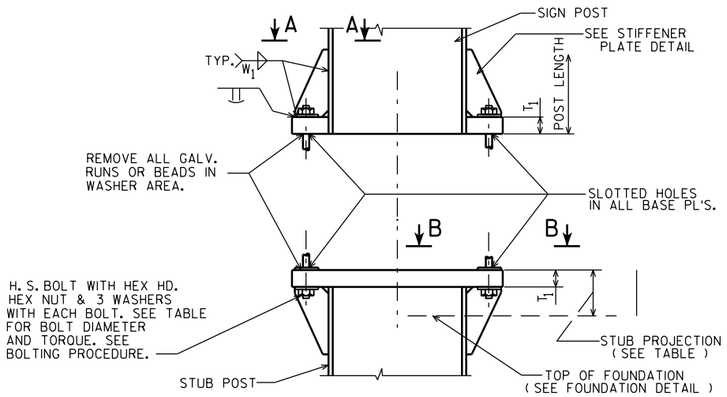

SIGN POST AND STUB POST ELEVATION

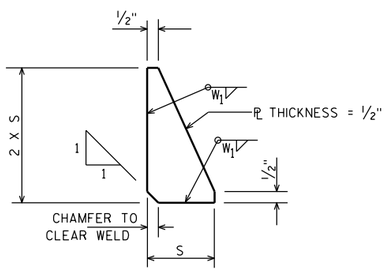

STIFFENER PLATE DETAIL

(SEE TABLE FOR DIMENSIONS)

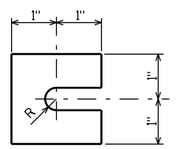

FURNISH 2 @ .012" ± THICK AND 2 @ .032" ± THICK SHIMS PER POST. SHIMS SHALL BE FABRICATED FROM BRASS SHIM STOCK OR STRIP CONFORMING TO A.S.T.M.- B36.

SHIM DETAIL

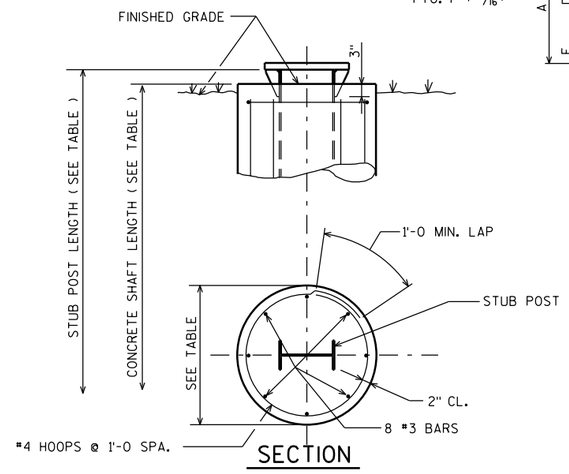

SECTION

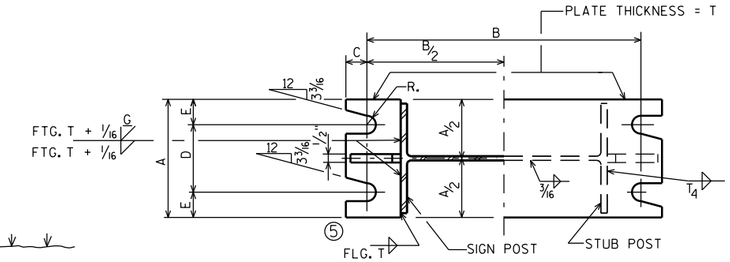

SECTION A-A

SECTION B-B

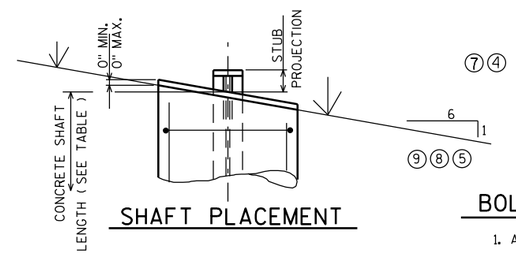

SHAFT PLACEMENT

DESIGN DATA

WIND PRESSURE = 75 M.P.H.
WIND COMPONENTS - NORMAL = 1.0 TRANSVERSE = 0.0
ICE LOAD = 3 P.S.F.

GROUP LOADS	PERCENT OF ALLOWABLE STRESS
1. DEAD	100
2. DEAD & WIND	140
3. DEAD, ICE & 1/2 WIND▲	140

▲25 P.S.F. MIN.

ALLOWABLE SOIL PRESSURE = 1 1/2 T / SQ. FT.
WIND LOAD WAS APPLIED TO THE AREA OF THE SIGN AND TO THE SUPPORTING MEMBERS.
ICE LOAD WAS APPLIED TO ONE FACE OF THE SIGN AND AROUND THE SURFACE OF THE SUPPORTING MEMBERS.

GENERAL NOTES

DRAWINGS SHALL NOT BE SCALED.
DESIGN CONFORMS WITH A.A.S.H.T.O. SPECIFICATIONS 1985.
ALL POSTS, POST STUBS & ATTACHMENTS SHALL BE A.S.T.M. A709 GRADE 50.
⑨ THE POST, BASE PLATES, UPPER SIX INCHES OF STUB POST FLANGE SPLICE PLATE AND FUSE PLATE SHALL BE GALVANIZED AFTER FABRICATION.
H.S. BOLTS, WASHERS & NUTS SHALL BE A325 GALVANIZED WHEN POSTS, POST STUBS AND ATTACHMENTS ARE A709 GRADE 50 AND GALVANIZED.

BOLTING PROCEDURE - BASE CONNECTION

1. ASSEMBLE SIGN POST TO STUB POST WITH BOLTS AND ONE OF THE FLAT WASHERS ON EACH BOLT BETW. PLATES.
2. SHIM AS REQ'D. TO PLUMB POST.
3. PRIOR TO BOLT TIGHTENING LUBRICATE BASE CONNECTION BOLTS WITH BEESWAX OR OTHER HIGH-WAX LUBRICANT.
4. TIGHTEN ALL BOLTS THE MAXIMUM POSSIBLE WITH 12" OR 15" WRENCH TO BED WASHERS & SHIMS AND TO CLEAN BOLT THREADS, THEN LOOSEN EACH BOLT IN TURN AND RETIGHTEN IN A SYSTEMATIC ORDER TO THE PRESCRIBED TORQUE. (SEE TABLE)
5. BURR THREADS AT JUNCTION WITH NUT USING A CENTER PUNCH TO PREVENT NUT LOOSENING.

NOTE:
TIGHTEN THE HIGH STRENGTH BOLTS TO THE TORQUE SHOWN. DO NOT OVERTIGHTEN.

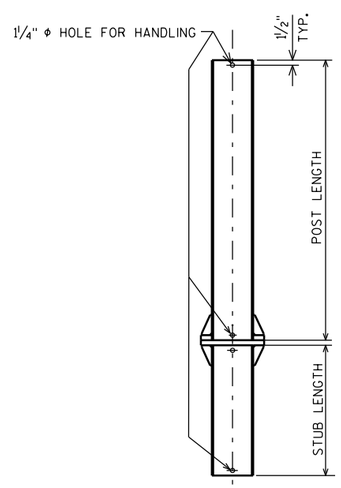

POST DETAIL

QUANTITIES FOR 1 FOOTING		
	CONC. MASONRY C.Y.	REINF. STEEL LBS.
A	0.6	34
B	0.8	49
C	0.9	50
D	0.9	56
⑦ E	1.0	62

	TYPE	#3	#4
REINF.	A	8 @ 4'-5	5 @ 6'-3
	B	8 @ 6'-5	7 @ 6'-3
	C	8 @ 6'-11	7 @ 6'-3
	D	8 @ 7'-5	8 @ 6'-3
⑦	E	8 @ 7'-11	9 @ 6'-3

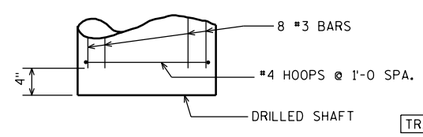

FOUNDATION DETAIL

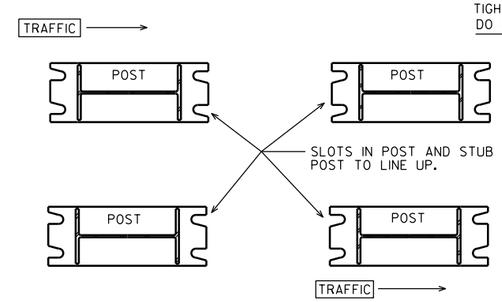

POST SLOT ORIENTATION ⑦

	TYPE	DIMENSION / POST SIZE	BOLT SIZE & TORQUE	A	B	C	D	E	T_1	T_4	W_1	R	S	STUB LENGTH	STUB PROJECTION	SHAFT DIAMETER	SHAFT LENGTH	K
			BASE CONNECTION DATA TABLE											FOUNDATION DATA				②
④	A	W10"X12.0 #/FT.	3/4" Φ @ 75#-FT.	5 1/4"	1'-0 3/8	7/8"	3 1/2"	7/8'	1"	3/16"	5/16"	13/32 "	2 1/8"	3'-6	3"	2'-0 Φ	5'-0	76.0# ④
④	B	W12"X16.0 #/FT.	7/8" Φ @ 85#-FT.	5 1/2"	1'-4 1/4	1"	3 1/2"	1"	1 1/4"	1/4"	5/16"	15/32 "	3"	5'-6	3"	2'-0 Φ	7'-0	146.5# ④
	C	W12"X19.0 #/FT.	7/8" Φ @ 85#-FT.	5 1/2"	1'-4 1/4	1"	3 1/2"	1"	1 1/2"	5/16"	5/16"	15/32 "	3"	6'-0	3"	2'-0 Φ	7'-6	182.1#
	D	W12"X22.0 #/FT.	7/8" Φ @ 85#-FT.	5 1/2"	1'-4 1/4	1"	3 1/2"	1"	1 1/2"	3/8"	5/16"	15/32 "	3"	6'-6	3"	2'-0 Φ	8'-0	210.5#
③	E	W12"X26.0 #/FT.	1" Φ @ 90#-FT.	7"	1'-4 1/4	1 1/4"	4"	1 1/2"	1 1/2"	3/8"	5/16"	17/32 "	3"	7'-0	3"	2'-0 Φ	8'-6	293.0# ③

① ⑥ ①

STRUCTURAL CARBON STEEL PAY WTS. (1 POST) = K+ (POST LENGTH X POST WT.)
" K " INCLUDES STUB, BASE PLATES, STIFFS., BOLTS, AND WASHERS.

WISCONSIN DEPT OF TRANSPORTATION
APPROVED Matthew R Rauch for State Traffic Engineer
DATE 2/06/14 PLATE NO. A3-1.14

NO.	DATE	REVISION
⑩	1-21-14	LUBRICATION OF BASE BOLTS
⑨	4-26-11	REMOVE NON-GALVANIZED
⑧	10-30-96	NOT GALVANIZED/GALVANIZED
⑦	10-30-92	QUANT., A588 EXCEPT., ADD SLOT VIEW
⑥	8-24-87	BASE CONN. WELD
⑤	10-13-81	BASE CONN. WELD & FUSE PL WASHERS
④	10-19-79	POST A & B, A572 GR. 50, & K
②	11-28-78	"K" ③ 4-23-79 TYPE "E"
①	5-4-78	T_1, T_2 & W_1

STATE OF WISCONSIN
DEPARTMENT OF TRANSPORTATION
DIVISION OF HIGHWAYS

TYPE A, B, C, D, & E

CONST. SPEC. 2011 | DRAWN BY JPH | PLANS CK'D.

FTG. & SIGN SUPPORT DETAILS GROUND MOUNT BREAK-AWAY SIGNS

SHEET 182

7 7

PROJECT NO: | HWY: | COUNTY: | SHEET NO: E

STUB AND MASONRY ANCHOR DETAILS

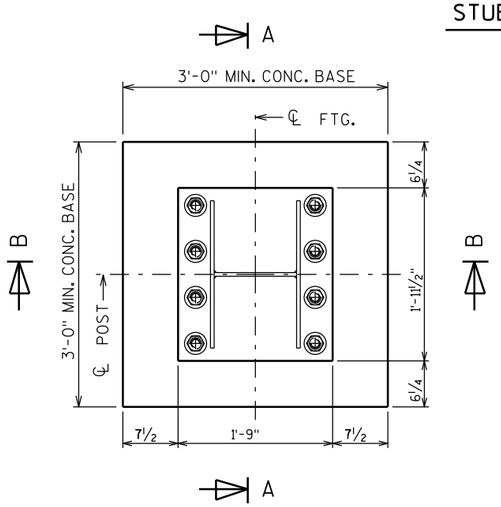

STUB SECTION

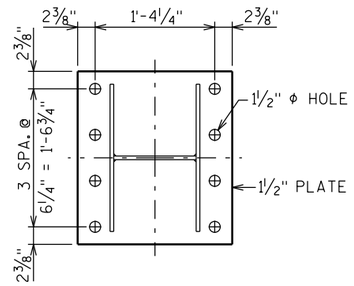

BASE PLATE

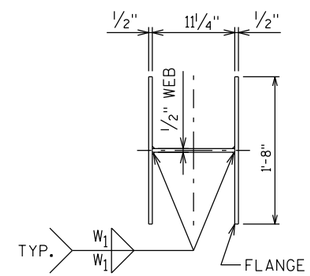

STUB

◐ SEE PLATE NO. A3-1 FOR DETAILS

◕ MASONRY ANCHORS TYPE S 1¼-INCHES (ADHESIVE). ALLOWABLE PULL OUT CAPACITY 14,995 KIPS. EMBED 1'-3" IN ROCK.

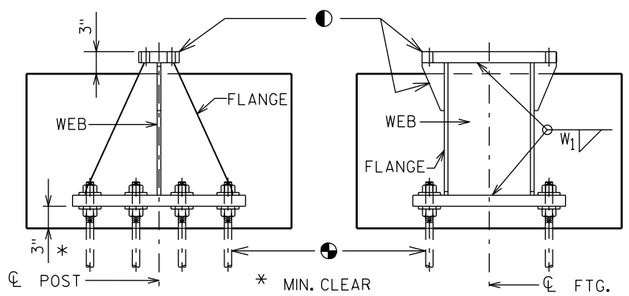

SECTION A

SECTION B

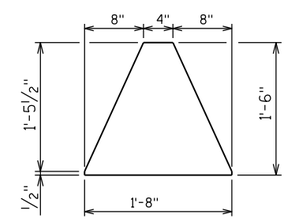

FLANGE

GENERAL NOTES

1. Quantities per Base:
   - REINFORCING BAR STEEL = 62 LBS
   - CONCRETE = 0.6 C.Y.
   - STEEL WEIGHT = 335 LBS
2. All materials, except anchor rod, nuts and washers, are to be A.S.T.M. A709 grade 50. All materials to be galvanized after fabrication.
3. If the contractor encounters rock before reaching the footing depth, per the A3-1 Sign Detail, determine the pull-out capacity of a test adhesive anchor installed in the rock. If the test result equals or exceeds the pull-out capacity of 14,995 KIPS, the contractor may install the breakaway stub for rock, according to this detail.

CONCRETE BASE AND REINFORCING STEEL DETAILS

CONCRETE BASE SECTION

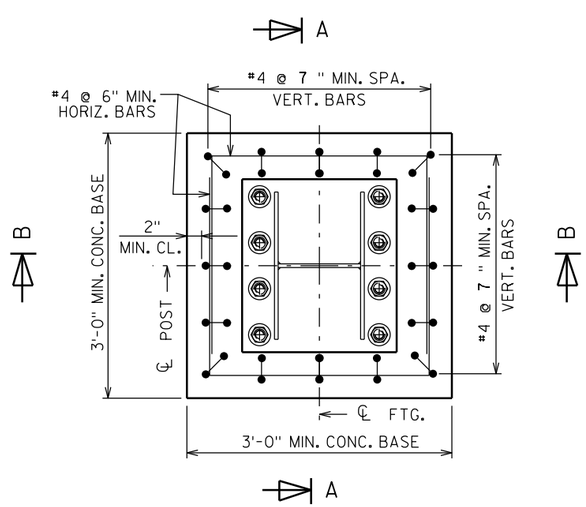

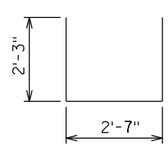

HORIZONTAL BAR

8 BARS @ 6'-11" LENGTH

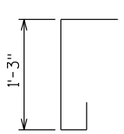

VERTICAL BARS

16 BARS @ 2'-4" LENGTH
MAY BE PLACED IN SKEW
FOR CLEARANCE NEED

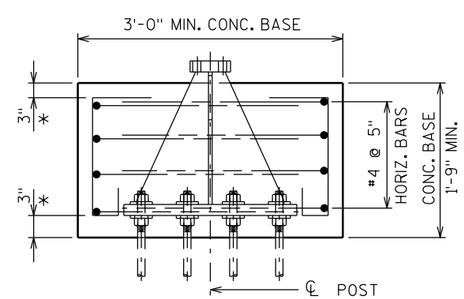

SECTION A

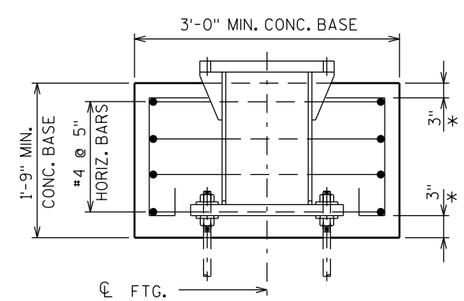

SECTION B

* MIN. CLEAR

ALTERNATE BREAK-AWAY BASE ON ROCK
A3-1M

WISCONSIN DEPT OF TRANSPORTATION

APPROVED Matthew R Rauch for State Traffic Engineer

DATE 2/06/2014 PLAN A3-1M.1

PROJECT NO:	HWY:	COUNTY:		SHEET NO:	E

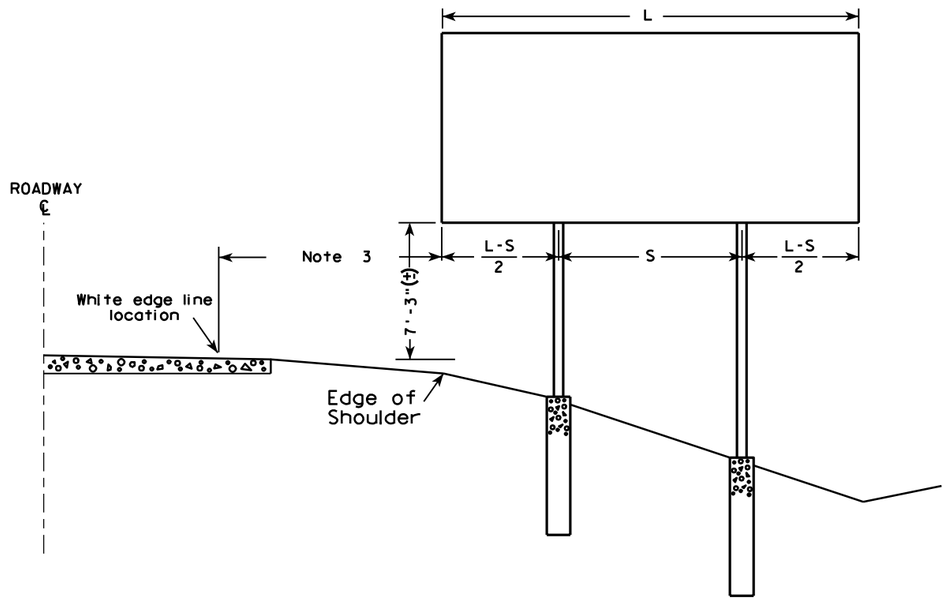

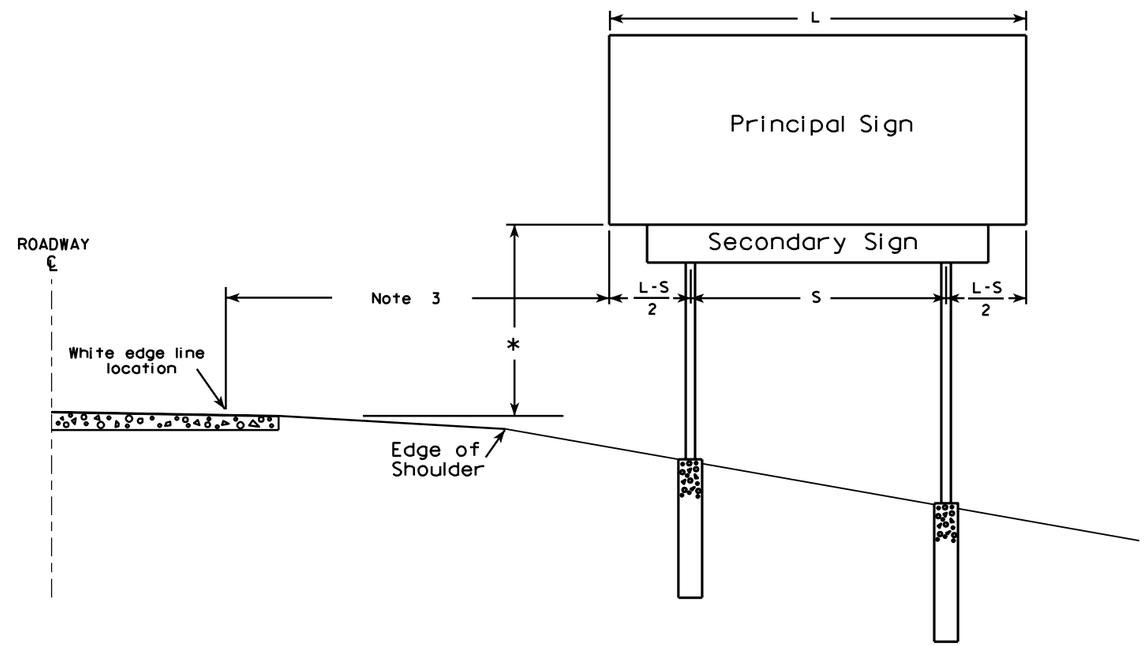

GENERAL NOTES

1. For a 2 post installation, S equals 3L/5, but shall not be less than 9 ft.
2. For a 3 post installation, S equals 5L/7, but shall not be less than 18 ft., and the space between any two posts shall not be less than 9 ft.
3. Unless noted in the plan, the sign offset distance shall be a minimum of 17'-6", desirable 30'-0".
4. The (±) tolerance shown on this sheet is 3 in.
5. The vertical sign height clearance detailed is measured from the bottom of the sign to the near edge of pavement.
6. Post lengths shown in the miscellaneous quantities are estimated lengths. The contractor shall verify post lengths at the time of final grading.
7. Refer to the Traffic Guidelines Manual for further guidance on minimum vertical clearance requirements.

* Clearance is 8'-3"(±) when the secondary sign is 3 ft. or less in height. For secondary signs larger than 3 ft., the clearance to the bottom of the secondary sign shall be 5'-3"(±).

7

7

TYPICAL INSTALLATION OF TYPE I SIGNS

WISCONSIN DEPT OF TRANSPORTATION

APPROVED Matthew R Rauch
for State Traffic Engineer

DATE 4/02/08 PLATE NO. A4-1.9

PROJECT NO:				SHEET NO: 184	E

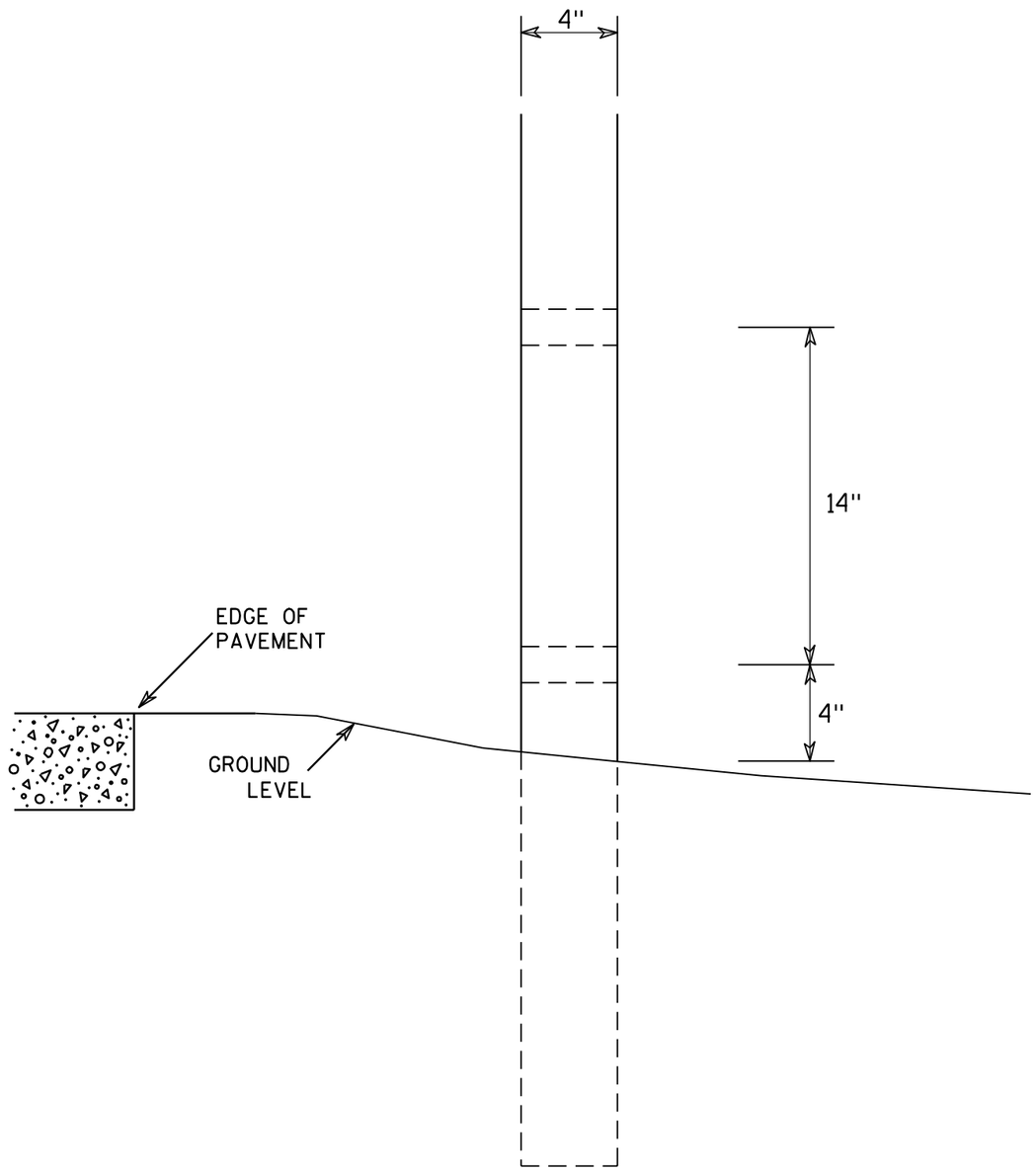

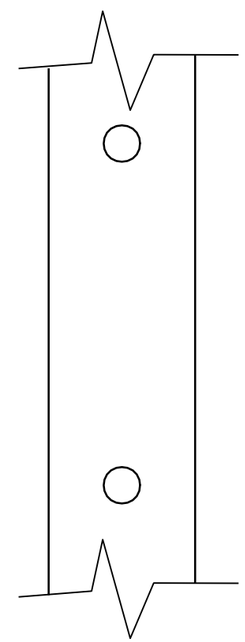

SIDE VIEW

GENERAL NOTES

1. All 4 x 6 Wood Posts shall be modified by having two 1½" diameter holes drilled perpendicular to the roadway centerline.

4 X 6 WOOD POST MODIFICATIONS

WISCONSIN DEPT OF TRANSPORTATION

APPROVED Chester J Spang for State Traffic Engineer

DATE 3/27/97 PLATE NO. A4-11.2

PROJECT NO:	HWY:	COUNTY:		SHEET NO: 185	E

URBAN AREA

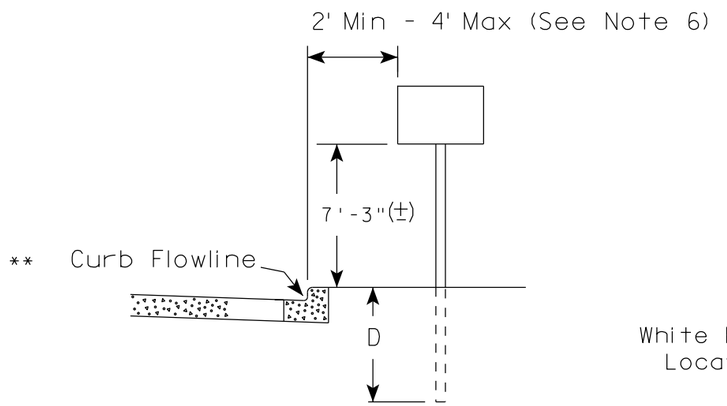

RURAL AREA (See Note 2)

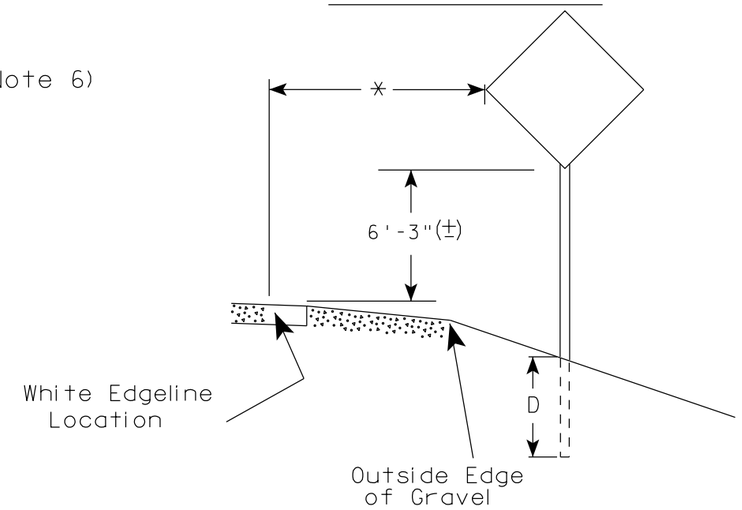

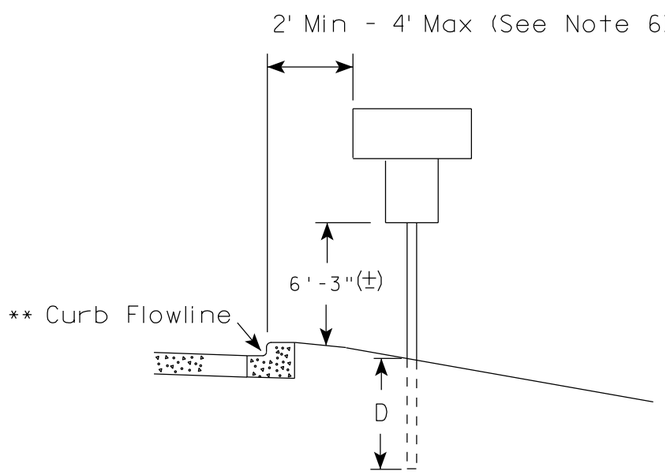

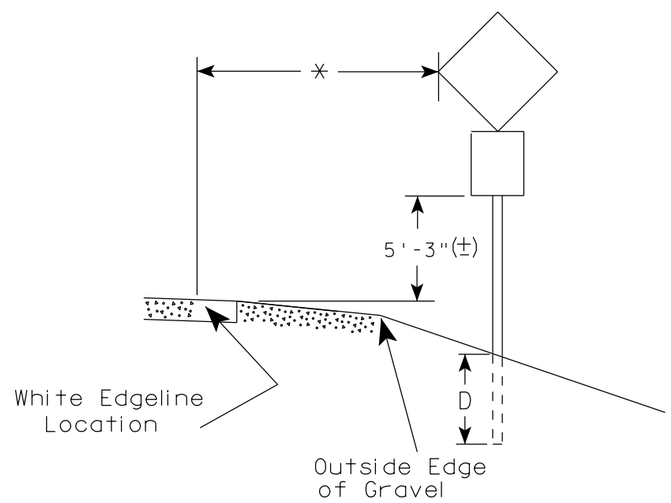

** The existence of curb and gutter does not in itself mandate the vertical clearance illustrated. That height is typically measured where there is sidewalk adjacent to the roadway or parking is permitted. In the absence of sidewalk vertical clearance is measured from the top of the curb. Offset of signs is measured from the flow line.

* 6 feet from edge of a paved shoulder or 12 feet from the edge of pavement (edge line location) or 2 feet from outside edge of gravel, whichever is greater unless directed by project engineer.

GENERAL NOTES

1. Signs wider than 4 feet, 20 sq.ft or larger, shall be mounted on multiple posts. Refer to plate A4-4.
2. If signs are mounted on barrier wall, see A4-10 sign plate.
3. For expressways and freeways, mounting height is 7'- 3" (±) or 6'-3" (±) depending upon existence of a sub-sign.
4. Minimum mounting height for J assemblies (A4-5) is 7'-3" (±) or 6'-3" (±) per urban or rural detail respectively.
5. Minimum mounting height for signs mounted on traffic signal poles is 5'- 3" (±).
6. Offset distance shall be consistent with existing signs or consistent throughout length of project.
7. The (±) tolerance for mounting height is 3 inches.
8. Folding stop signs (R1-1F) shall be mounted at a height of 5'-3" (±) or as directed by the Engineer.
9. The Double Arrow sign (W12-1) shall be mounted at a height of 2'-3" (±). The Chevron sign (W1-8), Roundabout Chevron panel (R6-4B), Enhanced Reference Markers, Clearance Markers (W5-52), Mile Markers (D10 series) & End of Rod Markers (W5-56 & W5-56A) shall be mounted at a height of 4'-3" (+).

POST EMBEDMENT DEPTH

Area of Sign Installation (Sq. Ft.)	D (Min)
20 or Less	4'
Greater than 20	5'

TYPICAL INSTALLATION OF PERMANENT TYPE II SIGNS ON SINGLE POSTS

WISCONSIN DEPT OF TRANSPORTATION

APPROVED Matthew R Rauch for State Traffic Engineer

DATE 9/30/13 PLATE NO. A4-3.18

PROJECT NO:	HWY:	COUNTY:		SHEET NO:	E

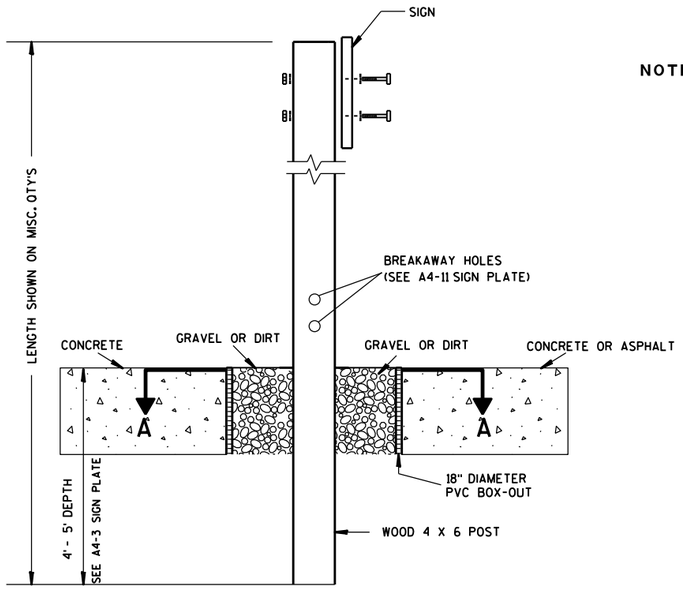

ELEVATION VIEW

DETAIL OF WOOD 4 X 6 SIGN POST IN BOX-OUT

NOTES:
1. ALL MATERIAL TO BE APPROVED BY ENGINEER PRIOR TO INSTALLATION
2. SEE SIGN PLATE A4-8 FOR SIGN HARDWARE REQUIREMENTS
3. 18 INCH X 18 INCH SQUARE BOX-OUTS MAY BE USED FOR INSTALLATIONS IN EXISTING CONCRETE OR ASPHALT LOCATIONS.

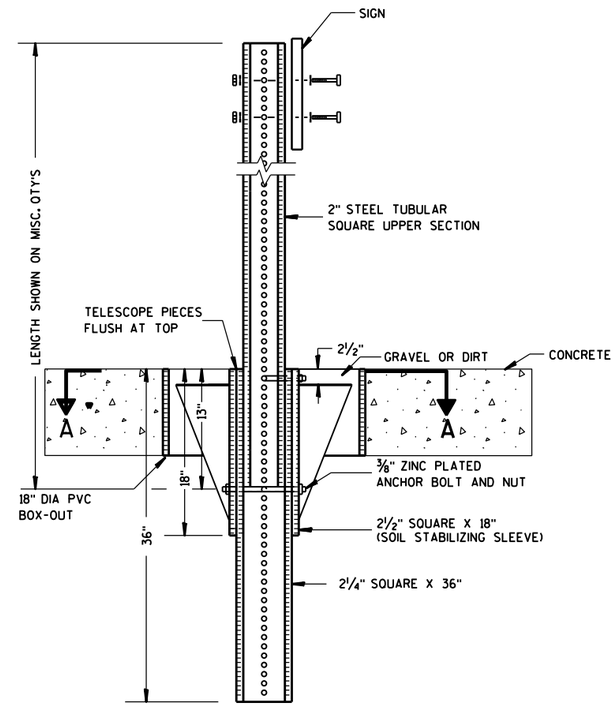

ELEVATION VIEW

DETAIL OF STEEL 2 X 2 SIGN POST IN BOX-OUT

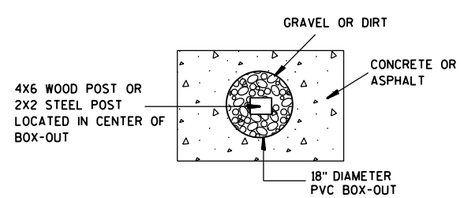

PLAN VIEW

FOR NEW CONCRETE/ASPHALT INSTALLATIONS

SIGN POST
BOX-OUTS
A4-3B

WISCONSIN DEPT OF TRANSPORTATION

APPROVED Matthew R Rauch
for State Traffic Engineer

DATE 1/27/14 PLATE NO. A4-3B.1

PROJECT NO:	HWY:	COUNTY:		SHEET NO:	E

URBAN AREA

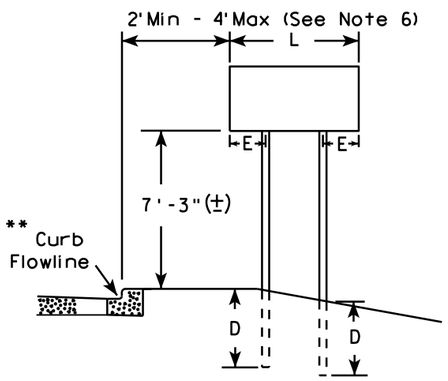

RURAL AREA (See Note 3)

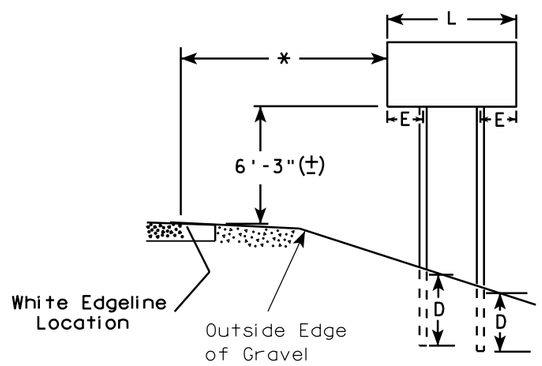

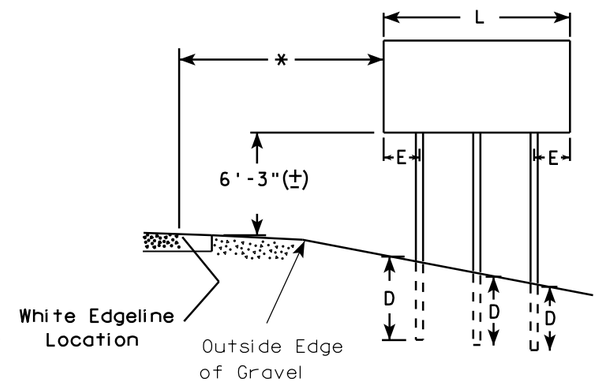

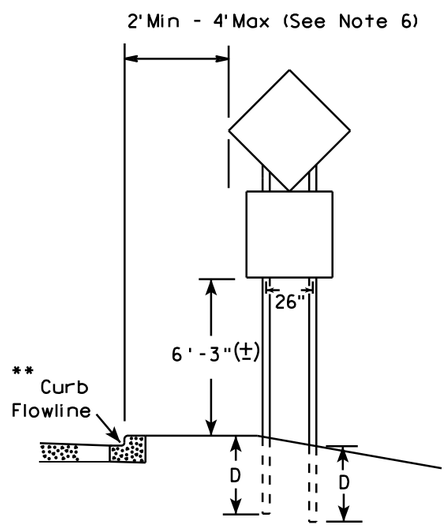

48" DIAMOND WARNING SIGN

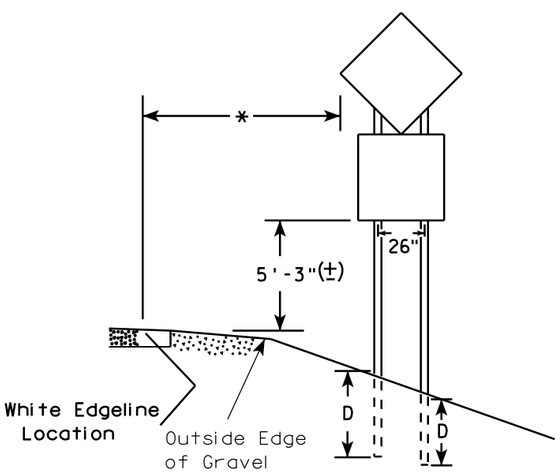

48" DIAMOND WARNING SIGN

GENERAL NOTES

1. For 3 or 4 post installations, individual post spacing shall be greater than 3'-6".
2. See tables below for required number of posts.
3. For expressways and freeways, mounting height is 7'-3" (±) or 6'-3" (±) depending upon existence of sub-sign.
4. The (±) tolerance for mounting height is 3 inches.
5. Minimum mounting height for J assemblies (A4-5) is 7'-3" (±) or 6'-3" (±) per urban or rural detail respectively.
6. Offset distance shall be consistent with existing signs or consistent throughout length of project.
7. Folding stop signs (R1-1F) shall be mounted at a height of 5'-3" (±) or as directed by the engineer.
8. The Double Arrow sign (W12-1) shall be mounted at a height of 2'-3" (±). The Chevron sign (W1-8), Roundabout Chevron panel (R6-4B), Clearance Markers (W5-52), Mile Markers (D10 series) & End of Road Markers (W5-56 & W5-56A) shall be mounted at a height of 4"-3" (±).

* 6 feet from edge of a paved shoulder or 12 feet from the edge of pavement (edge line location) or 2 feet from outside edge of gravel, whichever is greater unless directed by project engineer.

** The existence of curb and gutter does not in itself mandate the vertical clearance illustrated. That height is typically measured where there is sidewalk adjacent to the roadway or parking is permitted. In the absence of sidewalk vertical clearance is measured from the top of the curb. Offset of signs is measured from the flow line.

*** See A4-3 sign plate for signs 4' or less in width or 20 S.F. or less in area.

SIGN SHAPE OTHER THAN DIAMOND (TWO POSTS REQUIRED)	
L	E
*** Greater than 48" Less than 60"	12"
60" to 120"	L/5

SIGN SHAPE OTHER THAN DIAMOND (THREE POSTS REQUIRED)	
L	E
Greater than 120" less than 168"	12"

SIGN SHAPE OTHER THAN DIAMOND (FOUR POSTS REQUIRED)	
L	E
168" and greater	12"

POST EMBEDMENT DEPTH

Area of Sign Installation (Sq. Ft.)	D (Min)
20 or Less	4'
Greater than 20	5'

TYPICAL INSTALLATION OF TYPE II SIGNS ON MULTIPLE POSTS

WISCONSIN DEPT OF TRANSPORTATION

APPROVED Matthew R Rauch
for State Traffic Engineer

DATE 9/30/13 PLATE NO. A4-4 12

188

PROJECT NO:	HWY:	COUNTY:		SHEET NO:	E

GROUND MOUNTED SIGN

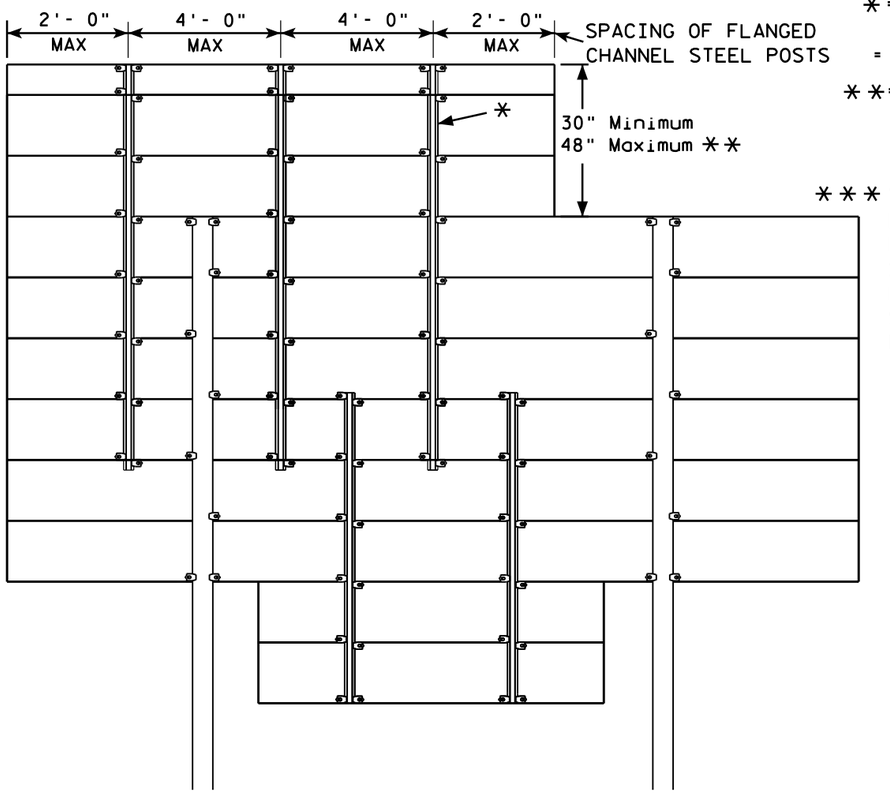

*=2.00 lb/ft FLANGED CHANNEL, MIN. YIELD STRENGTH = 60,000 PSI (GRADE 60) GALVANIZED

**=FOR 48" HEIGHT PANELS ON OVERHEAD STRUCTURES, ENTIRE SIGN SHALL BE CENTERED VERTICALLY ABOUT THE DEPTH OF THE TRUSS.

*** THESE SPACING DISTANCES SHALL ONLY BE USED WHEN THE MAIN SIGN HAS A MAXIMUM HEIGHT (DIMENSION H) OF 16 FT OR LESS. FOR SIGNS WITH A HEIGHT OF GREATER THAN 16 FT, STRUCTURAL CALCULATIONS SHALL BE PERFORMED.

FLANGE CHANNEL DETAIL

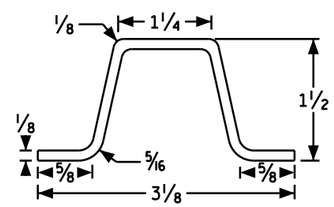

NOT TO SCALE

SIGN BRIDGE MOUNTED SIGN

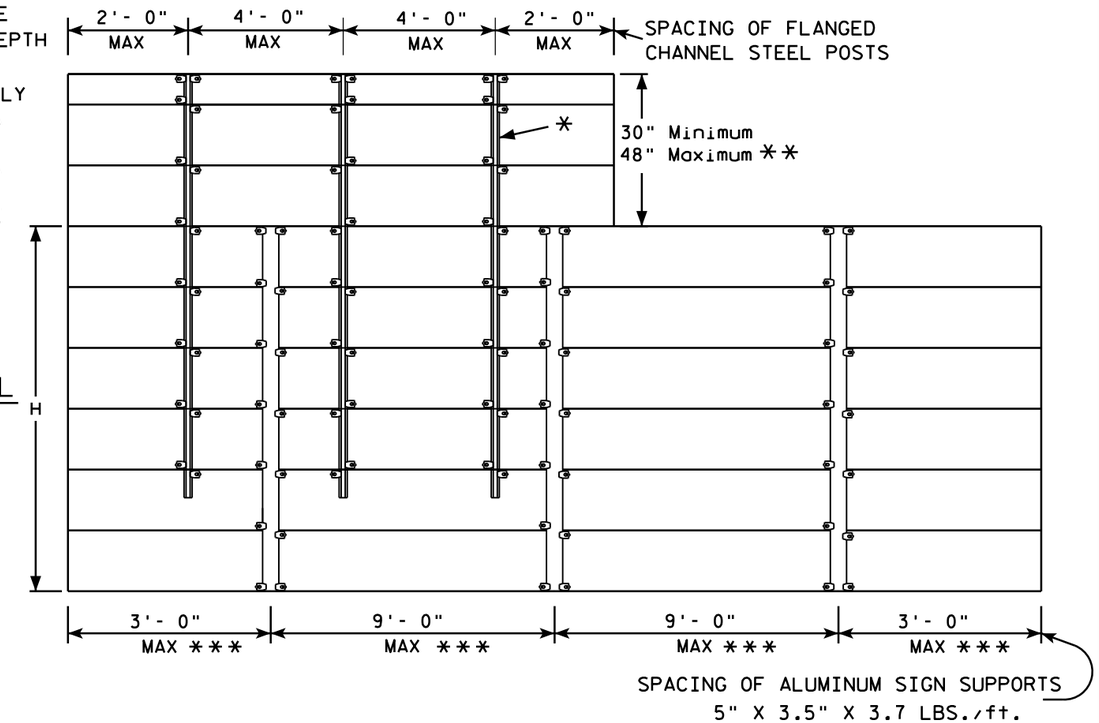

GENERAL NOTES

1. Flanged channel steel posts shall conform to size and material above, and shall be considered as incidental to other items in the contract.

2. Number of Flanged channel steel supports varies with length of panel and shall be spaced as shown:

   PANEL LENGTH 8'-0" OR LESS = 2 CHANNELS
   PANEL LENGTH 9'- 0" - 12'- 0" = 3 CHANNELS
   PANEL LENGTH 13'- 0" OR MORE = 4 CHANNELS

   If the flanged channel steel posts can not be horizontally spaced as shown, they can be moved so as to securely hold the sign.

3. The EXIT NUMBER PANEL shall normally be positioned above the guide sign aligned with the right edge of the guide sign. If the guide sign indicates a left exit, the EXIT NUMBER PANEL shall be aligned with the left edge of the guide sign.

4. If the bolt holes in the top panel (EXIT NUMBER), or sub panel (NEXT EXIT) line up with holes in main sign panel, stitch bolts shall be used in addition to the channels.

5. Provide post clips for each sign as shown. (Please note the differences between a ground mounted versus Sign bridge mounted sign as far as number of clips required on the main supports or beams)

6. Structural steel sign supports shall extend to the top of the main signs, as shown on the above details.

ATTACHMENT OF GUIDE SIGNS TO SUPPORTS

WISCONSIN DEPT OF TRANSPORTATION

APPROVED Matthew R Rauch
for State Traffic Engineer

DATE 12/05/13 PLAT A4-6.12

PROJECT NO:				SHEET NO:	E

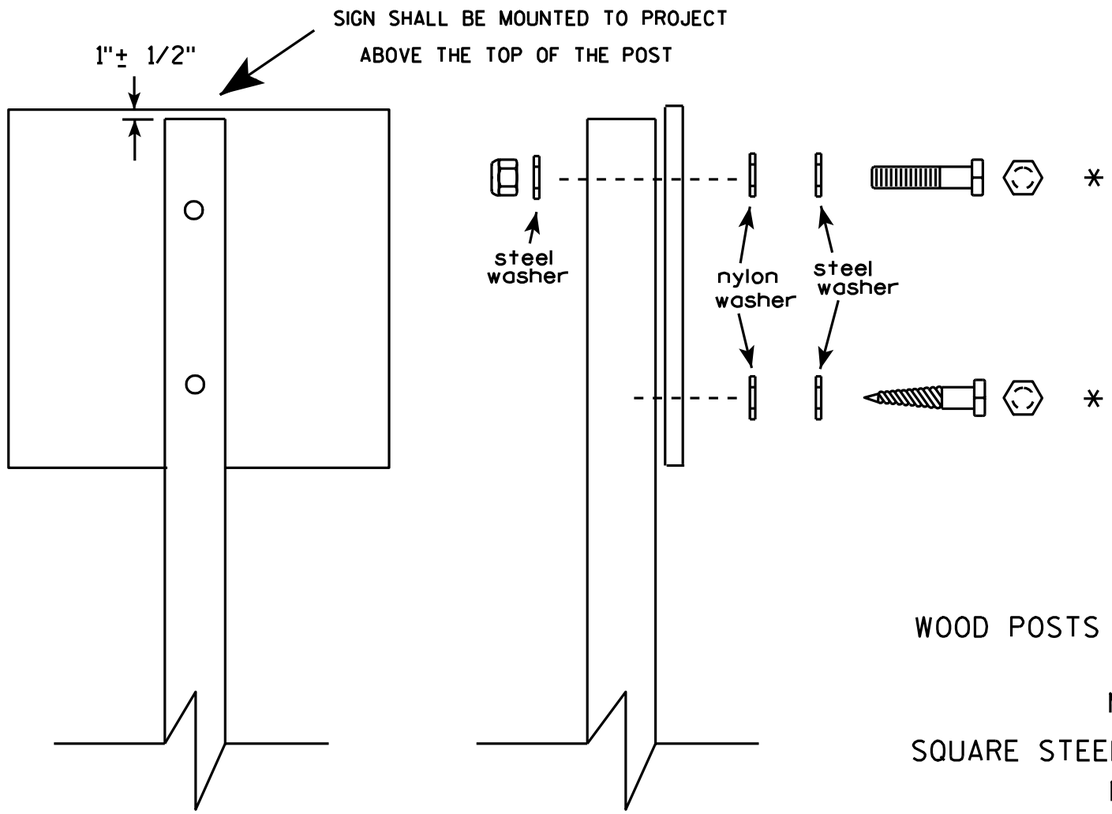

Nuts, bolts and lags used for mounting signs shall have hexagonal heads and shall be either :

a. Hot dip galvanized in accordance with ASTM Designation: A 153, Class D, or SC 3

b. Electro-galvanized in accordance with ASTM Designation : B 633, TYPE III, SC 3.

Threads on bolts and nuts shall be manufactured with sufficient allowance for the cadmium plate or galvanized coating to permit the nuts to run freely on the bolts.

WOOD POSTS (4" x 4" or 4" x 6")

LAG SCREWS - 3/8" X 3"

MACHINE BOLTS - 5/16" X 6-1/2" or 7" Length w/ nuts

SQUARE STEEL POSTS (2" x 2")

MACHINE BOLTS - 3/8" X 3-1/4" Length w/ nuts

RIVETS - 9/32" (6605-9-6) BULB-TITE, TRI-FOLD, ALUMINUM BODY/MANDREL O.D. FLANGE .720-.765 INCH, GRIP RANGE .042-.375 INCH

WASHERS (ALL POSTS) -

1-1/4" O.D. X 3/8" I.D. X 1/16" STEEL

1-1/4" O.D. X 3/8" I.D. X .080 NYLON for all Type H signs.

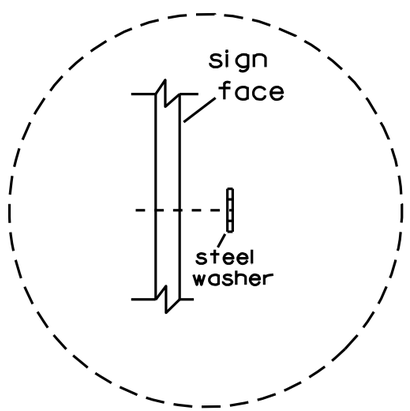

Washer Placement when Sign Has Other Than Type H or Type F Face

* Two different fastening systems are shown for illustration purposes. On any individual sign, either one or the other system shall be used. Actual number of fasteners per sign varies with the sign area, but normally there are two. For a single post installation, all signs greater than 9 sq. ft. require the use of 3 fasteners.

ATTACHMENT OF SIGNS TO POSTS

WISCONSIN DEPT OF TRANSPORTATION

APPROVED Matthew R Rauch
for State Traffic Engineer

DATE 3/23/10 PLATE NO. A4-8.7

7

7

PROJECT NO:

SHEET NO: 190 E

TELESCOPIC TUBING ANCHORS
TWO PIECE SYSTEM

2 1/4" SQUARE
12 GAUGE
PERFORATED
GALVANIZED FINISH

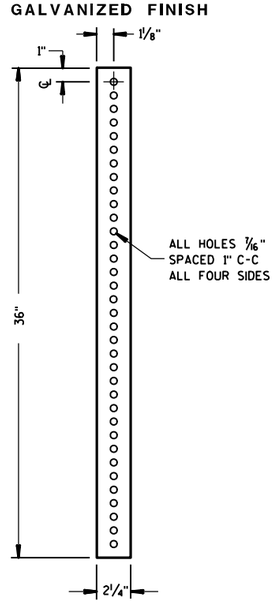

2 1/2" SQUARE
12 GAUGE
OMNI-DIRECTIONAL
PERFORATED
SOIL STABILIZING SLEEVE
GALVANIZED FINISH

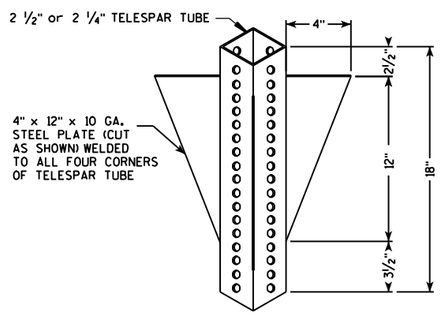

DETAIL OF TUBULAR STEEL SIGN POST
(IN POURED CONCRETE OR ASPHALT)

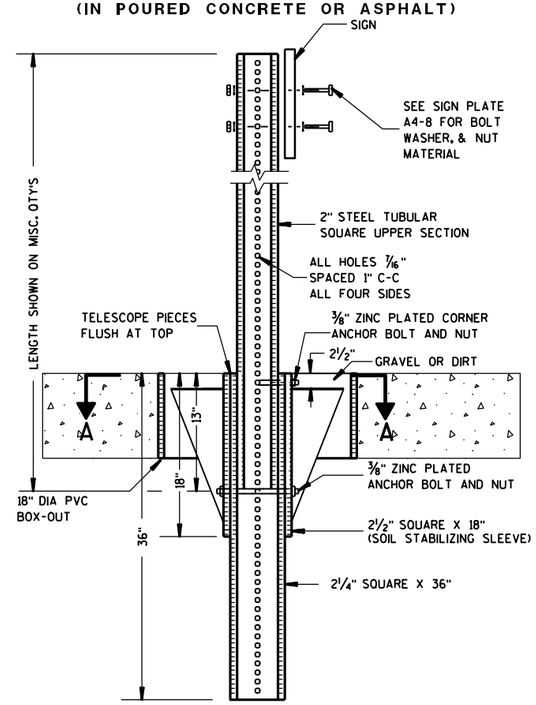

DETAIL OF TUBULAR STEEL SIGN POST
(IN LOCATIONS OTHER THAN POURED CONCRETE OR ASHALT)

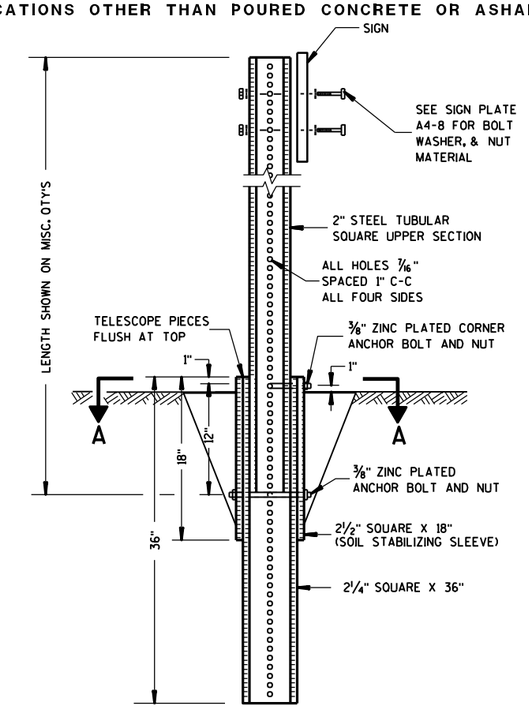

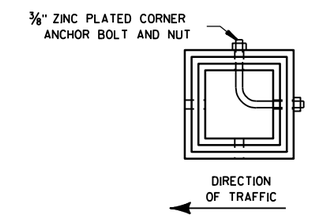

SECTION A-A

Area of Sign Installation (Sq. Ft.)	Number of Required Posts
9 or less	1
Greater than 9 less than or equal to 18	2
Greater than 18 less than or equal to 27	3

Signs wider than 3 feet or larger than 9 sq. ft shall be mounted on multiple posts (see above table).

TUBULAR STEEL
SIGN POST
A4-9

WISCONSIN DEPT OF TRANSPORTATION

APPROVED Matthew R Rauch
for State Traffic Engineer
DATE 5/30/12 PLATE NO. A4-9.7

PROJECT NO:	HWY:	COUNTY:		SHEET NO: 191	E

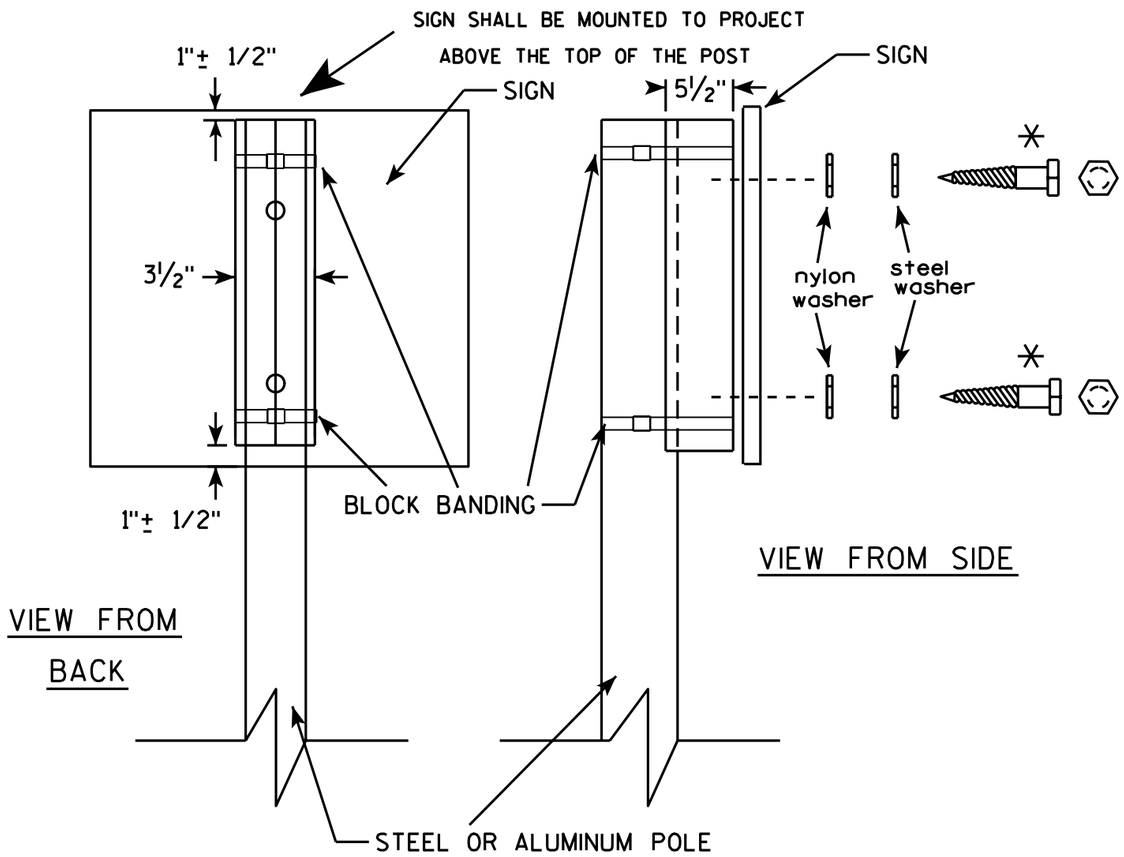

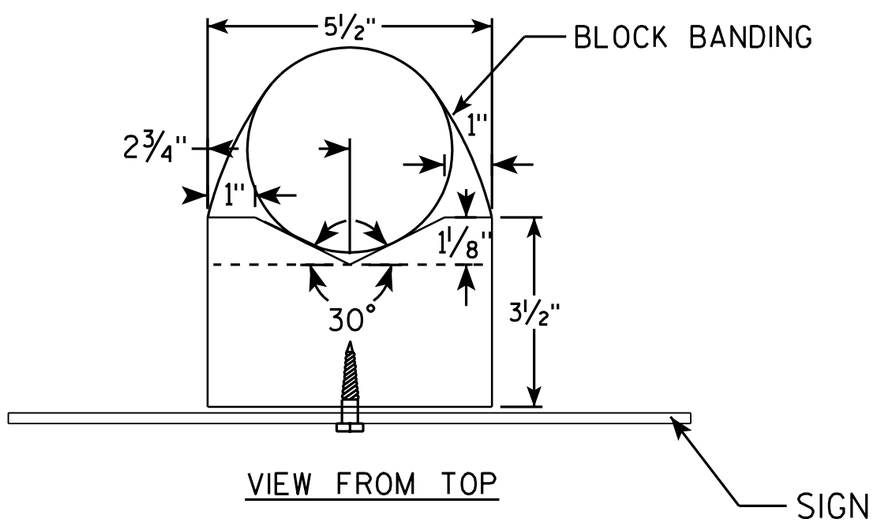

GENERAL NOTES

1. WOOD 4"X6" POST MATERIAL SHALL CONFORM TO 507.2.2 OF THE WisDOT STANDARD SPECIFICATIONS
2. BLOCK BANDING AND CLIPS SHALL BE STAINLESS STEEL, ¾" WIDTH AND 0.025" THICKNESS
3. SIGNS 3' OR GREATER IN HEIGHT SHALL UTILIZE 3 BLOCK BANDS. SIGNS UNDER 3' IN HEIGHT SHALL UTILIZE 2 BLOCK BANDS
4. ACTUAL NUMBER OF FASTENERS PER SIGN VARIES WITH THE SIGN AREA, BUT NORNALLY THERE ARE TWO. FOR SIGNS GREATER THAN 9 S.F. 3 FASTENERS SHALL BE USED.
5. ALL SIGN MOUNTING BOLTS AND WASHERS SHALL BE EITHER:
   a. Hot dip or mechanically galvanized in accordance with ASTM Designation: A 153, Class D, or
   b. Cadmium plated in accordance with ASTM Designation : B 766 TYPE 3, Class 12, or
   c. Electro-galvanized in accordance with ASTM Designation : B 633, TYPE III, SC 3.
6. ALL BOLTS SHALL HAVE HEXAGONAL HEADS.
7. STEEL WASHERS SHALL BE 1¼" O.D. X ⅜" I.D. X 1/16"
8. NYLON WASHERS SHALL BE 1¼" O.D. X ⅜" I.D. X .080 FOR TYPE H OR TYPE F FACE SIGN

✳ LAG BOLTS SHALL BE ⅜" X 2½"

BLOCK BANDING DETAIL
(V-BLOCK OPTION)

WISCONSIN DEPT OF TRANSPORTATION

APPROVED Matthew R Rauch
for State Traffic Engineer

DATE 7/12/07 PLATE NO. A5-10.1

PROJECT NO:				SHEET NO: 192	E

Extruded Shape

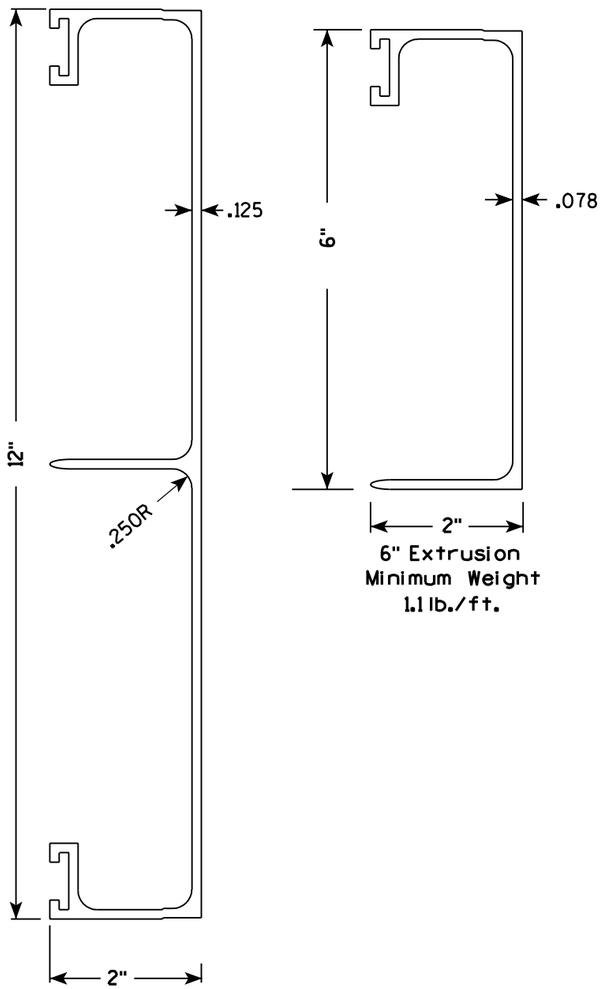

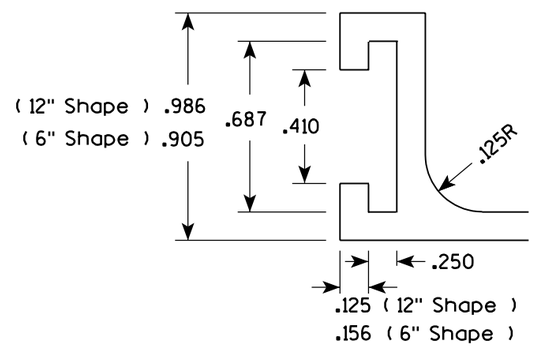

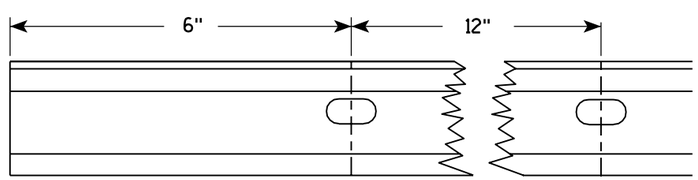

Punch 7/16" x 7/8" oval holes beginning 6" in from end of extrusion 12" CC on both edges of 6" and 12" panels.

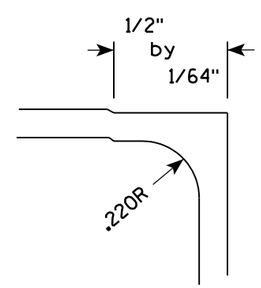

Hardware

STITCH BOLT, WASHER & NUT

The hardware includes:

- 3/8 " - 16 X 3/4 " Economy Bolt 2024-T4 alloy
- 3/8 " - Stainless steel stop nut
- 3/8" X .064 Flat Washers, Alclad 2024-T4 alloy

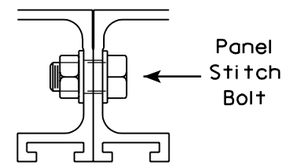

POST CLIP, POST CLIP BOLT, WASHER & NUT

Post Clip shall be Alum. Alloy 356-T6
Post Clip Bolt shall be Stainless Steel.
Flat washer shall be 3/8" X .091, Stainless Steel.
Stop nut shall be stainless steel.

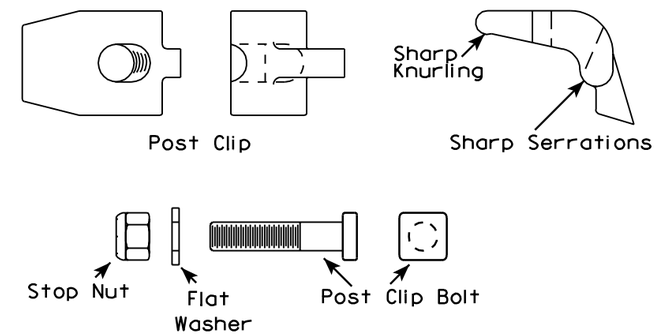

NOTES

1. The contractor may select any brand of extrusion that conforms to the illustrations or meets with the approval of the engineer, but all extrusions used on this contract shall be of the same brand.
2. Panel Stitch Bolts shall be used to assemble adjacent panels. Maximum stitch bolt spacing shall be 24" C-C, and a minimum of 4 bolts shall be used to connect any two extrusions.
3. Post Clips shall be used to attach the sign panel to the sign support.

7

7

ALUMINUM EXTRUSIONS FOR TYPE I SIGNS

WISCONSIN DEPT OF TRANSPORTATION

APPROVED Chester J Spang for State Traffic Engineer

DATE 11/18/99 PLATE NO. A5-2.9

PROJECT NO:

SHEET NO: 193 E

BANDING

SINGLE SIGN

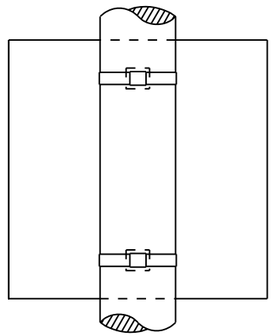

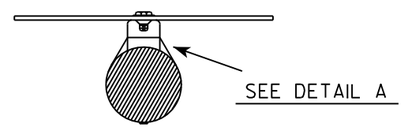

"J" ASSEMBLY

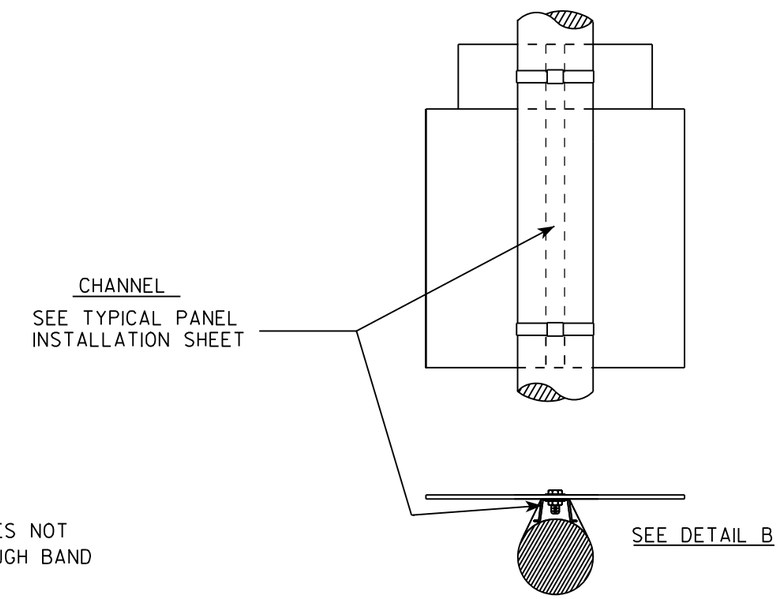

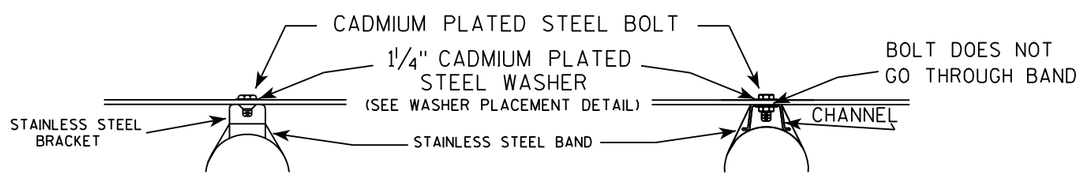

WASHER PLACEMENT

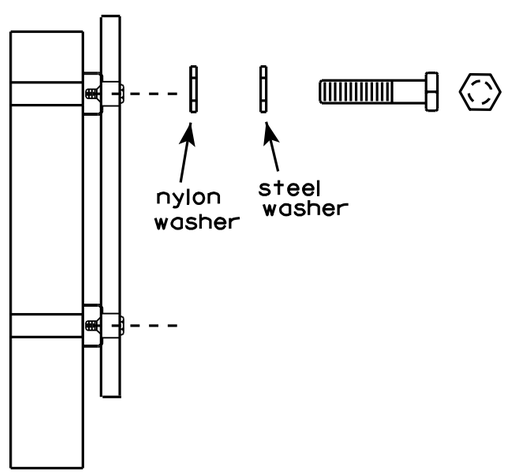

WASHERS (ALL POSTS) -

1-1/4" O.D. X 3/8" I.D. X 1/16" STEEL

1-1/4" O.D. X 3/8" I.D. X .080 NYLON

FOR ALL TYPE H SIGNS

GENERAL NOTES

1. Any sign over 3 feet in width shall use the V-Block banding method. See A5-10 standard plate.
2. Signs 3 feet or greater in height shall have three bracket bands installed. Signs less than 3 feet in height shall have two bracket bands installed.
3. Banding and assembly bracket shall be stainless steel. All bands shall be ¾" in width and 0.025" thickness.

STANDARD SIGN

SIGN BANDING DETAILS

WISCONSIN DEPT OF TRANSPORTATION

APPROVED Matthew R Rauch for State Traffic Engineer

DATE 8/16/13 PLATE NO. A5-9.3

PROJECT NO:	HWY:	COUNTY:		SHEET NO: 194	E

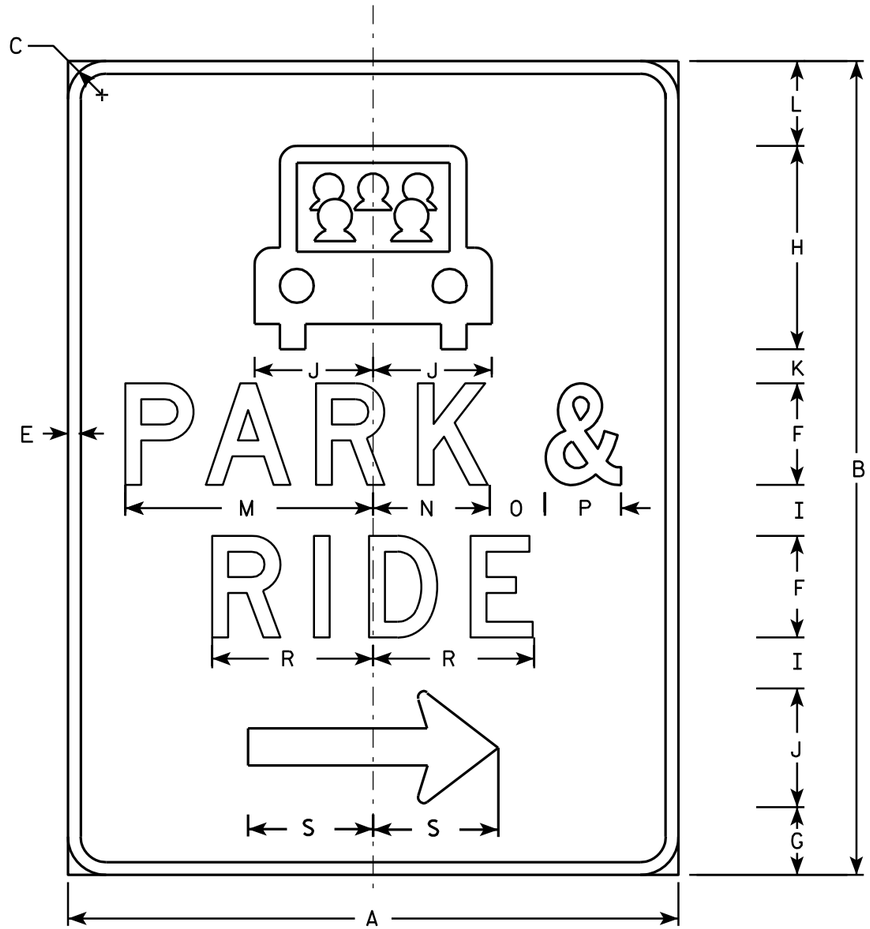

D4-5R

NOTES

1. Sign is Type II - Type H Reflective - reference WIS DOT Standard Specification for HIGHWAY and STRUCTURE CONSTRUCTION latest edition.
2. Color:
   Background - Green
   Message - White - Type H Reflective
3. Message Series - D
4. Corners may be square or rounded when base material is plywood but borders shall be rounded as shown. When base material is metal, the corners and borders shall be rounded.
5. The D4-5L is the same as a D4-5R except the arrow is reversed.

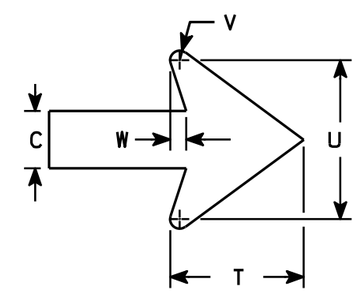

Arrow Detail

SIZE	A	B	C	D	E	F	G	H	I	J	K	L	M	N	O	P	Q	R	S	T	U	V	W	X	Y	Z	Area sq. ft.
1																											
2	30	36	1 3/8		5/8	5	1 3/8	9	2	5	1 5/8	5	11 3/4	5 1/2	2 3/4	3 3/4		8	6 1/8	4	4 3/8	3/8	1/2				7.50
3	36	48	2 1/4		3/4	6	4	12	3	7	2	5	14 5/8	6 7/8	3 1/4	4 1/2		9 1/2	7 1/2	5 1/4	6 1/4	3/8	5/8				12.0
4																											
5																											

STANDARD SIGN
D4-5 L&R

WISCONSIN DEPT OF TRANSPORTATION

APPROVED Matthew R Rauch
for State Traffic Engineer

DATE 11/15/10 PLATE NO. D4-5.2

PROJECT NO:

SHEET NO: 195 E

NOTES

1. Sign is Type II - See Note 6 - reference WIS DOT Standard Specification for HIGHWAY and STRUCTURE CONSTRUCTION latest edition.
2. Color:
   Background - White & Black - See Note 6
   Message - Black
3. Message Series - See note 5
4. Corners may be square or rounded when base material is plywood but borders shall be rounded as shown. When base material is metal, the corners and borders shall be rounded.
5. Substitute appropriate numerals and adjust spacing as per Plate A10-1.
6. Permanent Signs
   Background - Type H Reflective
   Detour or other temporary signs
   Background - Reflective

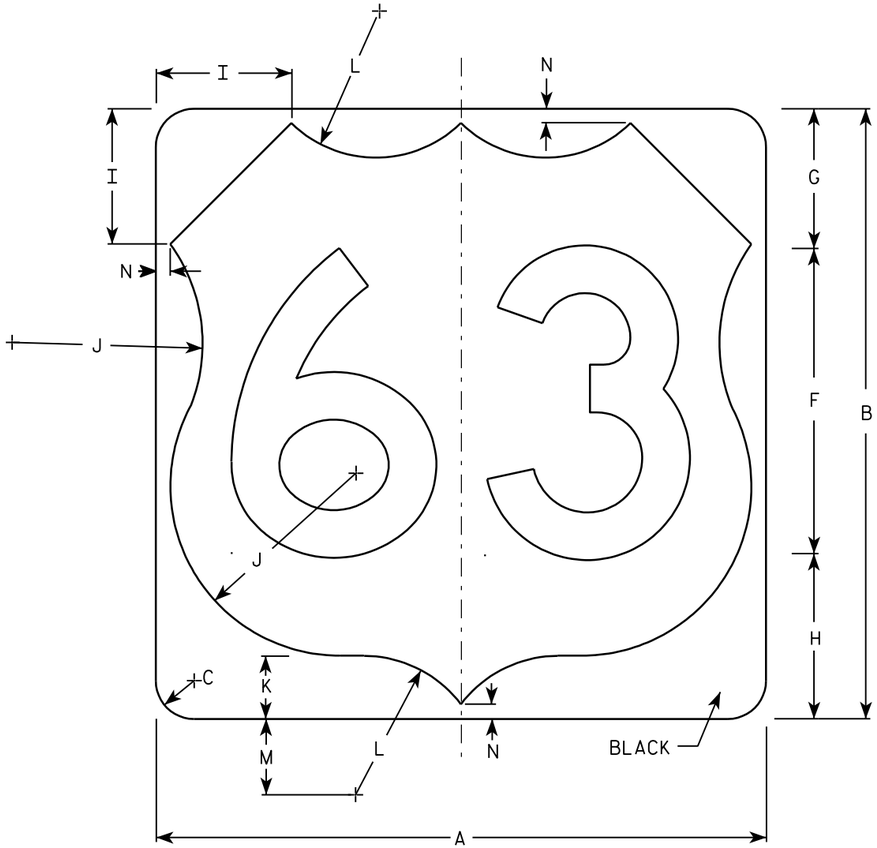

M1-4

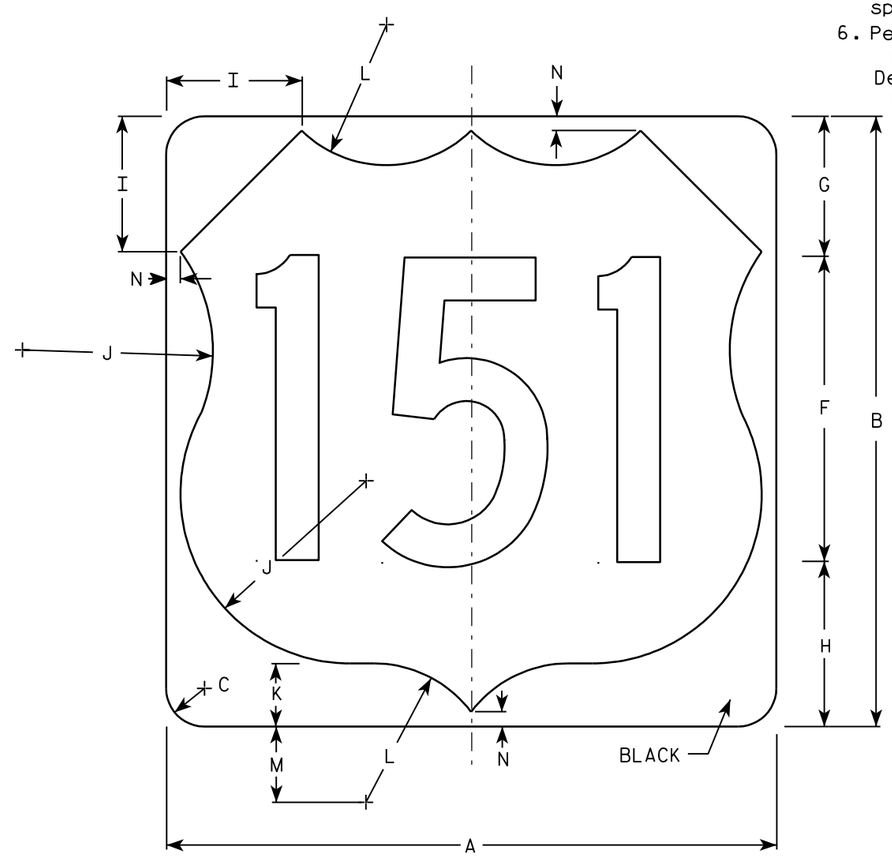

M1-4

Metric equivalent for this sign is:

SIZE	
1	
2	600 mm X 600 mm
3	900 mm X 900 mm
4	900 mm X 900 mm
5	900 mm X 900 mm

SIZE	A	B	C	D	E	F	G	H	I	J	K	L	M	N	O	P	Q	R	S	T	U	V	W	X	Y	Z	Area sq. ft.	Area m2
1																												
2	24	24	1 1/2			12	5 1/2	6 1/2	5	7 1/2	2 1/2	5 1/2	3	1/2													4.0	.36
3	36	36	2 1/4			18	8 1/4	9 1/4	7 1/4	11 1/4	3 3/4	8 1/4	4 1/2	3/4													9.0	.81
4	36	36	2 1/4			18	8 1/4	9 1/4	7 1/4	11 1/4	3 3/4	8 1/4	4 1/2	3/4													9.0	.81
5	36	36	2 1/4			18	8 1/4	9 1/4	7 1/4	11 1/4	3 3/4	8 1/4	4 1/2	3/4													9.0	.81

USH MARKER
M1-4 FOR ASSEMBLIES

WISCONSIN DEPT OF TRANSPORTATION

APPROVED Matthew R Rauch
for State Traffic Engineer

DATE 08/25/05 PLATE NO. M1-4.9

PROJECT NO: | HWY: | COUNTY: | SHEET NO: 196 | E

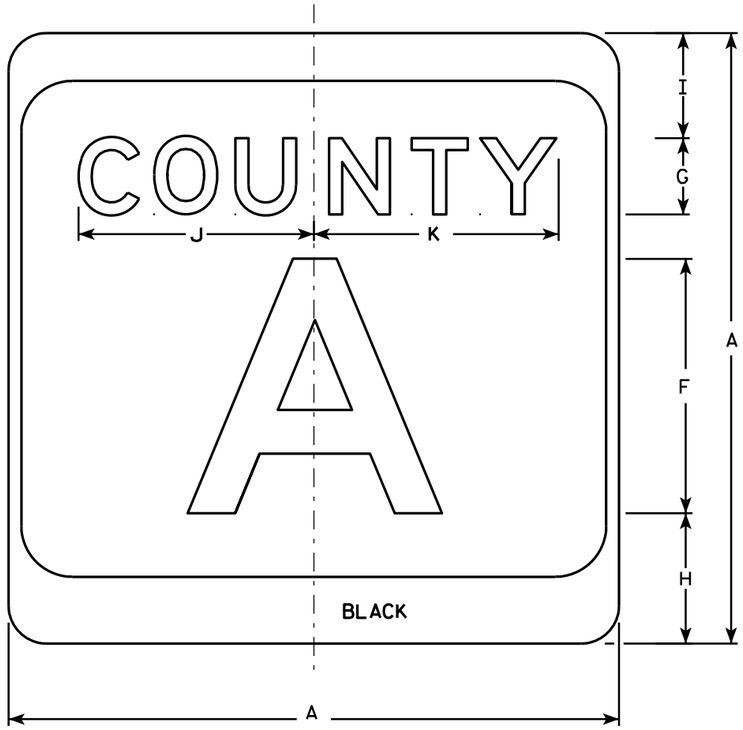

M1-5A

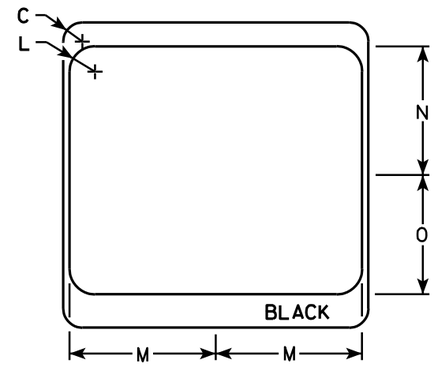

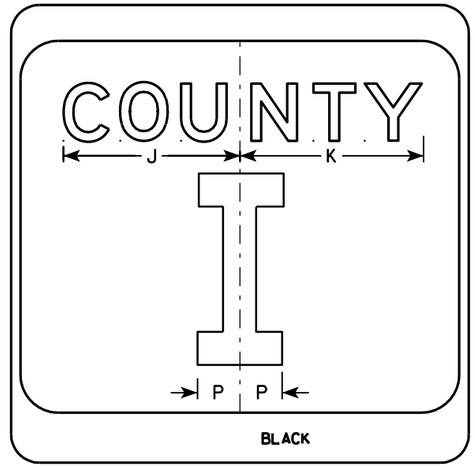

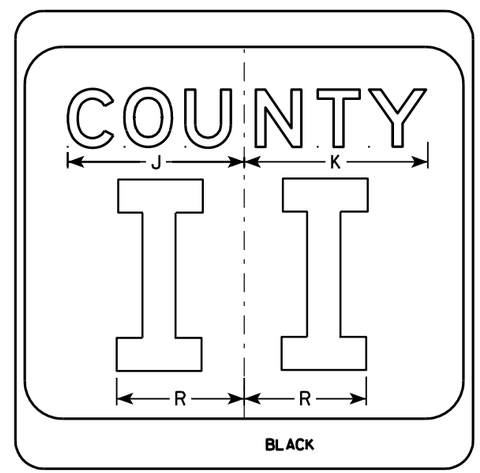

NOTES

1. Sign is Type II - see Note 7 - reference WIS DOT Standard Specification for HIGHWAY and STRUCTURE CONSTRUCTION latest edition.
2. Color:
   Background - White & Black - See Note 7
   Message - Black
3. Message Series - see Note 5
4. Corners may be square or rounded when base material is plywood but borders shall be rounded as shown. When base material is metal, the corners and borders shall be rounded.
5. Message Series E for 1 letter.
   Message Series D for 2 letters unless message is too big then Series C.
   Message Series C for 3 letters unless message is too big then Series B.
6. Substitute appropriate letters & optically center to achieve proper balance.
7. Permanent Signs
   Background - Type H Reflective
   Detour or temporary Signs
   Background - Reflective

SIZE	A	B	C	D	E	F	G	H	I	J	K	L	M	N	O	P	Q	R	S	T	U	V	W	X	Y	Z	Area sq. ft.
1																											
2	24		1 1/2			10	3	5 1/8	4 1/8	9 1/4	9 5/8	2	11 1/2	10 1/8	9 3/8	2 1/4		6 5/8									4.0
3	36		2 1/4			16	4	7 5/8	5 5/8	12 1/4	12 7/8	3	17 1/8	15 1/4	14	3 3/8		10									9.0
4	36		2 1/4			16	4	7 5/8	5 5/8	12 1/4	12 7/8	3	17 1/8	15 1/4	14	3 3/8		10									9.0
5	36		2 1/4			16	4	7 5/8	5 5/8	12 1/4	12 7/8	3	17 1/8	15 1/4	14	3 3/8		10									9.0

CTH MARKER
M1-5A FOR ASSEMBLIES

WISCONSIN DEPT OF TRANSPORTATION

APPROVED Matthew R Rauch
for State Traffic Engineer

DATE 9/27/11 PLATE NO. M1-5A.8

PROJECT NO:	HWY:	COUNTY:		SHEET NO: 197	E

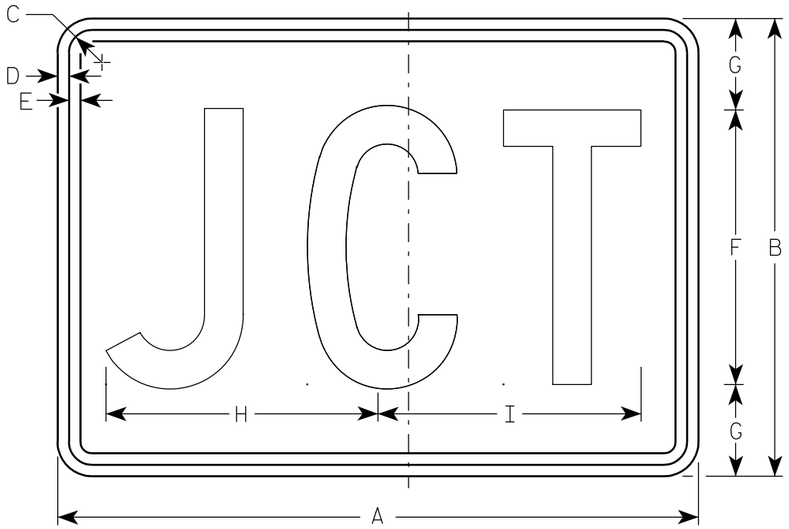

M2-1
MK2-1
MM2-1
MR2-1

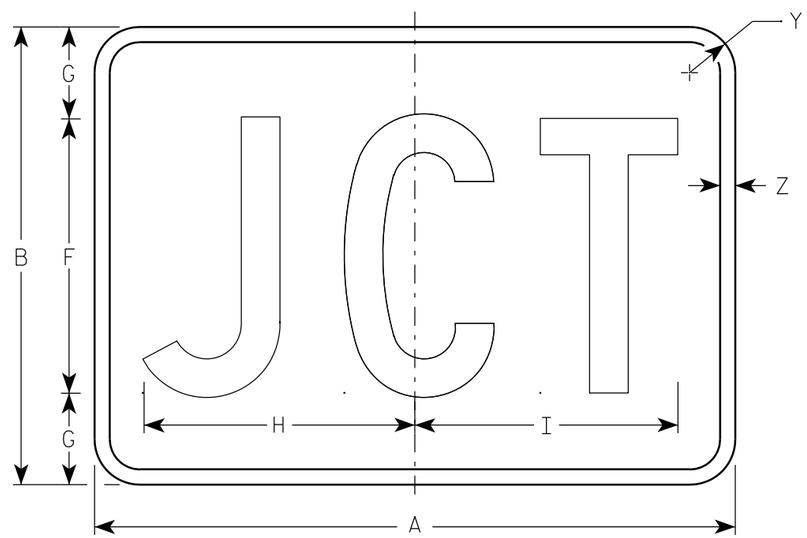

MB2-1
MG2-1
MN2-1

NOTES

1. Sign is Type II - See Note 5 - reference WIS DOT Standard Specification for HIGHWAY and STRUCTURE CONSTRUCTION latest edition.
2. Color:
   Background - See note 5
   Message - See note 5
3. Message Series - C
4. Corners may be square or rounded when base material is plywood but borders shall be rounded as shown. When base material is metal, the corners and borders shall be rounded.
5. M2-1 Background - White - Type H Reflective
   (Detour or temporary Signs - Reflective)
   Message - Black
   MB2-1 Background - Blue
   Message - White - Type H Reflective
   (Detour or temporary Signs - Reflective)
   MG2-1 Background - Green
   Message - White - Type H Reflective
   MK2-1 Background - Green
   Message - White - Type H Reflective
   MM2-1 Background - White - Type H Reflective
   Message - Green
   MN2-1 Background - Brown
   Message - White - Type H Reflective
   MR2-1 Background - Brown
   Message - Yellow - Type H Reflective

7

7

Metric equivalent for this sign is:

SIZE	
1	
2	525 mm X 375 mm
3	750 mm X 525 mm
4	750 mm X 525 mm
5	750 mm X 525 mm

SIZE	A	B	C	D	E	F	G	H	I	J	K	L	M	N	O	P	Q	R	S	T	U	V	W	X	Y	Z	Area sq. ft.	Area m2
1																												
2	21	15	1 1/8	3/8	3/8	9	3	8 7/8	8 5/8																1 1/2	1/2	2.20	0.20
3	30	21	1 1/8	3/8	3/8	13	4	12 7/8	12 3/8																1 1/2	1/2	4.40	0.20
4	30	21	1 1/8	3/8	3/8	13	4	12 7/8	12 3/8																1 1/2	1/2	4.40	0.20
5	30	21	1 1/8	3/8	3/8	13	4	12 7/8	12 3/8																1 1/2	1/2	4.40	0.20

STANDARD SIGN
M2-1

WISCONSIN DEPT OF TRANSPORTATION

APPROVED Matthew R Rauch
for State Traffic Engineer

DATE 3/16/10 PLATE NO. M2-1.10

PROJECT NO: | HWY: | COUNTY: | SHEET NO: 198 | E

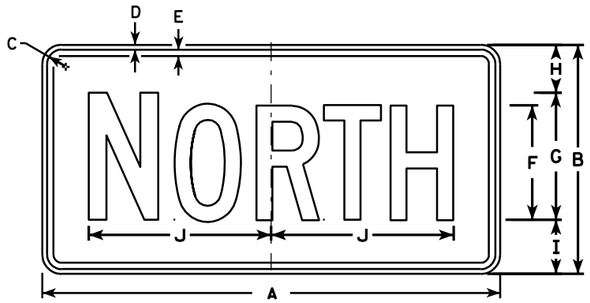

M3-1
MK3-1
MO3-1

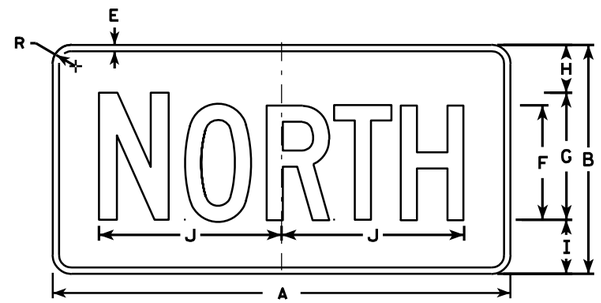

MB3-1
MG3-1
MM3-1
MN3-1

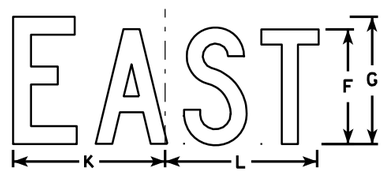

M3-2
MK3-2
MO3-2

MB3-2
MG3-2
MM3-2
MN3-2

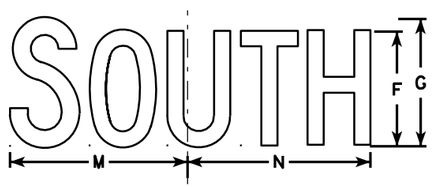

M3-3
MK3-3
MO3-3

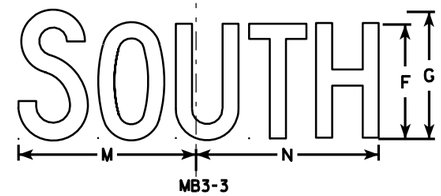

MB3-3
MG3-3
MM3-3
MN3-3

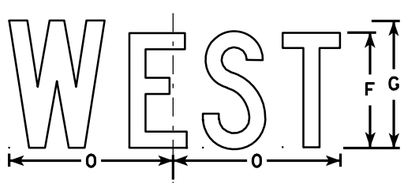

M3-4
MK3-4
MO3-4

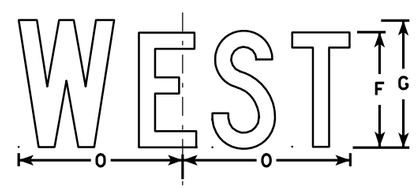

MB3-4
MG3-4
MM3-4
MN3-4

NOTES

1. All Signs Type II - See Note 5 - reference WIS DOT Standard Specification for HIGHWAY and STRUCTURE CONSTRUCTION latest edition.
2. Color:
   Background - See note 5
   Message - See note 5
3. Message Series - C
4. Corners may be square or rounded when base material is plywood but borders shall be rounded as shown. When base material is metal, the corners and borders shall be rounded.
5. M3-1 thru M3-4 Background - White - Type H Reflective
   (Detour or temporary signs - Reflective)
   Message - Black
   MB3-1 thru MB3-4 Background - Blue
   Message - White - Type H Reflective
   (Detour or temporary signs - Reflective)
   MG3-1 thru MG3-4 Background - Green
   Message - White - Type H Reflective
   MK3-1 thru MK3-4 Background - Green
   Message - White - Type H Reflective
   MM3-1 thru MM3-4 Background - White - Type H Reflective
   Message - Green
   MN3-1 thru MN3-4 Background - Brown
   Message - White - Type H Reflective
   MO3-1 thru MO3-4 Background - Orange - Reflective
   Message - Black
6. Note the first letter of each direction is larger than the remainder of the message.

SIZE	A	B	C	D	E	F	G	H	I	J	K	L	M	N	O	P	Q	R	S	T	U	V	W	X	Y	Z	Area sq. ft.
1																											
2	24	12	1 1/8	3/8	3/8	6	7	2 1/4	2 3/4	10 1/4	7 7/8	8 3/8	10 1/4	9 3/4	8 3/4			1 1/2									2.00
3	36	18	1 1/8	3/8	1/2	9	10	3 3/4	4 1/4	14 3/8	12	12 1/8	14	14 1/8	13			1 1/2									4.5
4	36	18	1 1/8	3/8	1/2	9	10	3 3/4	4 1/4	14 3/8	12	12 1/8	14	14 1/8	13			1 1/2									4.5
5	36	18	1 1/8	3/8	1/2	9	10	3 3/4	4 1/4	14 3/8	12	12 1/8	14	14 1/8	13			1 1/2									4.5

STANDARD SIGNS
M3-1 thur M3-4
SERIES

WISCONSIN DEPT OF TRANSPORTATION

APPROVED Matthew R Rauch
for State Traffic Engineer

DATE 11/10/10 PLATE NO. M3-1.12

PROJECT NO: | HWY: | COUNTY: | SHEET NO: 199 | E

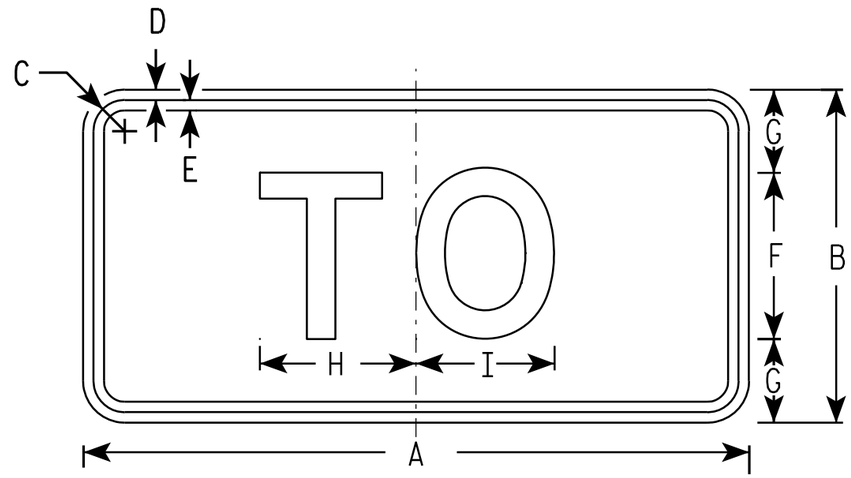

M4-5
MK4-5
MM4-5

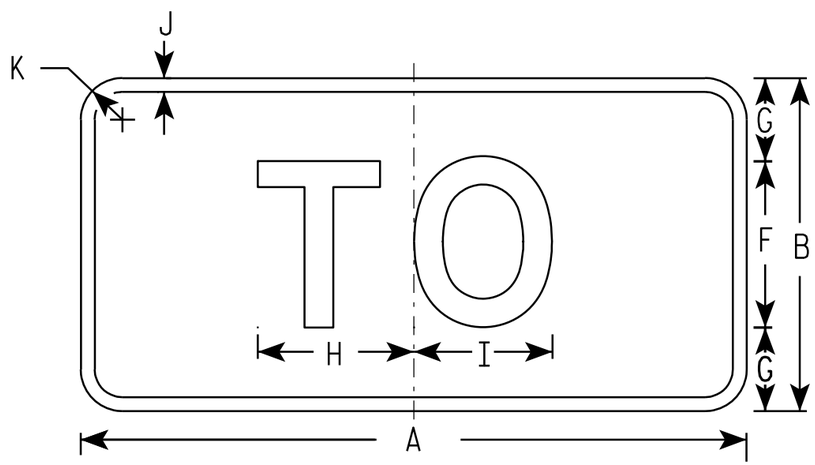

MB4-5
MG4-5
MN4-5

NOTES

1. Sign is Type II - See Note 5 - reference WIS DOT Standard Specification for HIGHWAY and STRUCTURE CONSTRUCTION latest edition.
2. Color:
   Background - See note 5
   Message - See note 5
3. Message Series - E
4. Corners may be square or rounded when base material is plywood but borders shall be rounded as shown. When base material is metal, the corners and borders shall be rounded.
5. M4-5 Background - White - Type H Reflective (Detour or temporary Signs - Reflective)
   Message - Black
   MB4-5 Background - Blue
   Message - White - Type H Reflective (Detour or temporary Signs - Reflective)
   MG4-5 Background - Green
   Message - White - Type H Reflective
   MK4-5 Background - Green
   Message - White - Type H Reflective
   MM4-5 Background - White - Type H Reflective
   Message - Green
   MN4-5 Background - Brown
   Message - White - Type H Reflective

SIZE	A	B	C	D	E	F	G	H	I	J	K	L	M	N	O	P	Q	R	S	T	U	V	W	X	Y	Z	Area sq. ft.
1																											
2	24	12	1 1/8	3/8	3/8	6	3	5 3/8	5 1/4	1/2	1 1/2																2.00
3	36	18	1 3/8	3/8	1/2	9	4 1/2	8 1/4	8 3/8	1/2	1 1/2																4.5
4	36	18	1 3/8	3/8	1/2	9	4 1/2	8 1/4	8 3/8	1/2	1 1/2																4.5
5	36	18	1 3/8	3/8	1/2	9	4 1/2	8 1/4	8 3/8	1/2	1 1/2																4.5

STANDARD SIGN
M4-5

WISCONSIN DEPT OF TRANSPORTATION

APPROVED Matthew R Rauch
for State Traffic Engineer

DATE 11/10/10 PLATE NO. M4-5.6

PROJECT NO: | HWY: | COUNTY: | SHEET NO: 200 | E

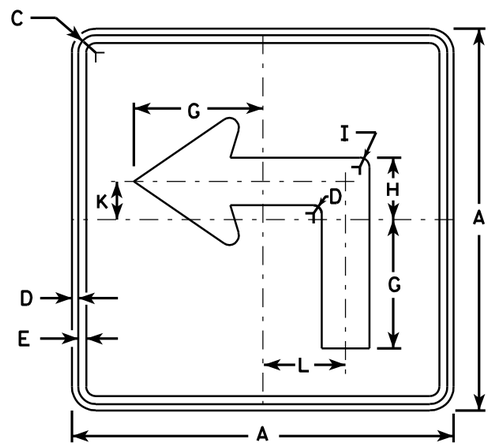

M5-1L
MK5-1L
MM5-1L
MO5-1L
MP5-1L
MR5-1L

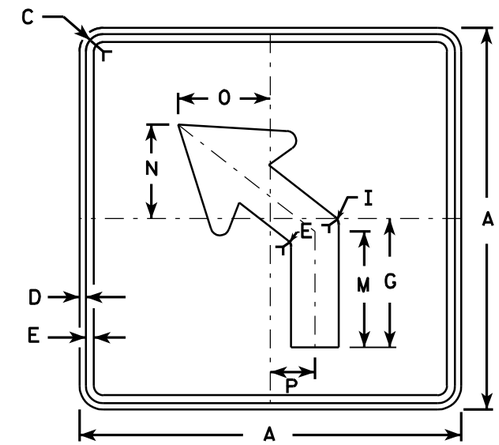

M5-2L
MK5-2L
MM5-2L
MO5-2L
MP5-2L
MR5-2L

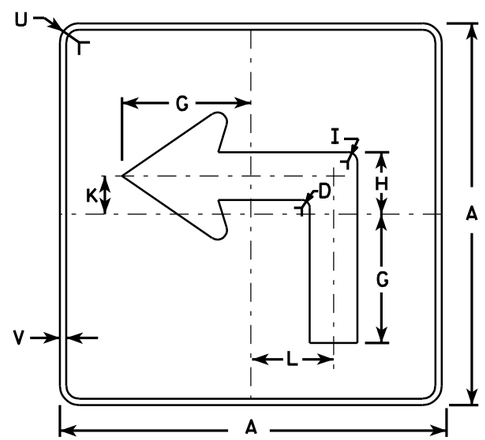

MB5-1L
MG5-1L
MN5-1L

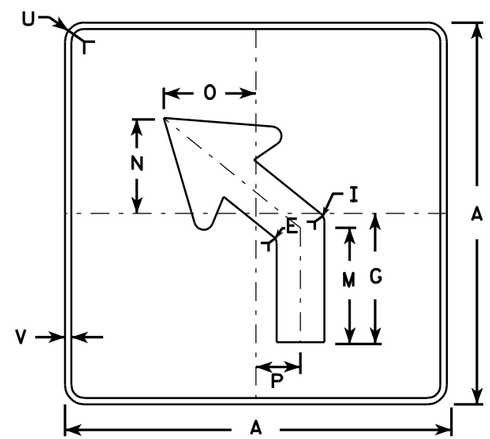

MB5-2L
MG5-2L
MN5-2L

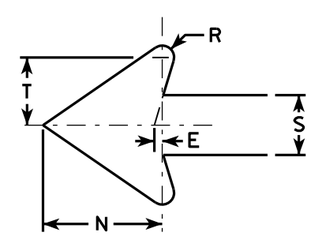

NOTES

1. Signs are Type II - See Note 4 - reference WIS DOT Standard Specification for HIGHWAY and STRUCTURE CONSTRUCTION latest edition.
2. Color:
   Background - See note 4
   Message - See note 4
3. Corners may be square or rounded when base material is plywood but borders shall be rounded as shown. When base material is metal, the corners and borders shall be rounded.
4. M5-1 and M5-2 Background - White - Type H Reflective
   Message - Black
   MB5-1 and MB5-2 Background - Blue
   Message - White - Type H Reflective
   MG5-1 and MG5-2 Background - Green
   Message - White - Type H Reflective
   MK5-1 and MK5-2 Background - Green
   Message - White Type H Reflective
   MM5-1 and MM5-2 Background - White - Type H Reflective
   Message - Green
   MN5-1 and MN5-2 Background - Brown
   Message - White - Type H Reflective
   MO5-1 and MO5-2 Background - Orange - Type F Reflective
   Message - Black
   MP5-1 and MP5-2 Background - White - Type H Reflective
   Message - Blue
   MR5-1 and MR5-2 Background - Brown
   Message - Yellow - Type H Reflective
5. M5-1R same as M5-1L except arrow points right.
6. M5-2R same as M5-2L except arrow tilts right.

SIZE	A	B	C	D	E	F	G	H	I	J	K	L	M	N	O	P	Q	R	S	T	U	V	W	X	Y	Z	Area sq. ft.
1																											
2	21		1 1/8	3/8	3/8		7	3 3/8	5/8		2 1/8	4 1/2	6 3/8	5 1/4	5	2 1/2		1/2	2 5/8	3	1 1/2	1/2					3.06
3	30		1 3/8	1/2	5/8		10 1/8	4 7/8	7/8		3	6 1/2	9 1/8	7 1/2	7 1/4	3 1/2		3/4	3 3/4	4 1/4	1 7/8	1/2					6.25
4	30		1 3/8	1/2	5/8		10 1/8	4 7/8	7/8		3	6 1/2	9 1/8	7 1/2	7 1/4	3 1/2		3/4	3 3/4	4 1/4	1 7/8	1/2					6.25
5	30		1 3/8	1/2	5/8		10 1/8	4 7/8	7/8		3	6 1/2	9 1/8	7 1/2	7 1/4	3 1/2		3/4	3 3/4	4 1/4	1 7/8	1/2					6.25

STANDARD SIGN
M5-1 & M5-2

WISCONSIN DEPT OF TRANSPORTATION

APPROVED Matthew R Rauch
for State Traffic Engineer

DATE 7/29/13 PLATE NO. M5-1.12

PROJECT NO:	HWY:	COUNTY:		SHEET NO: 201	E

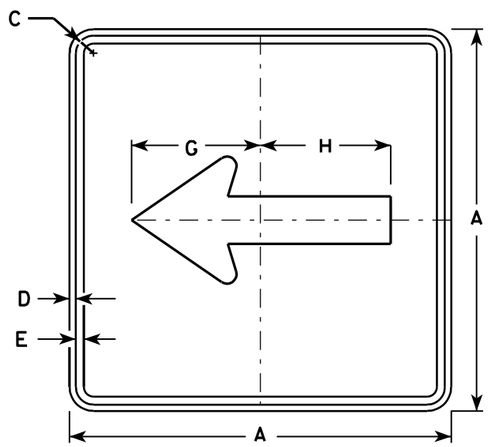

M6-1
MK6-1
MM6-1
MO6-1
MP6-1
MR6-1

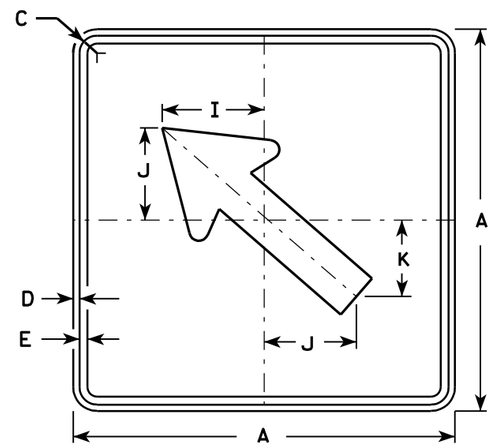

M6-2
MK6-2
MM6-2
MO6-2
MP6-2
MR6-2

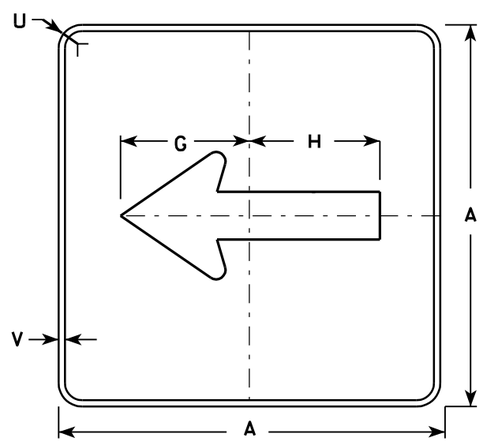

MB6-1
MG6-1
MN6-1

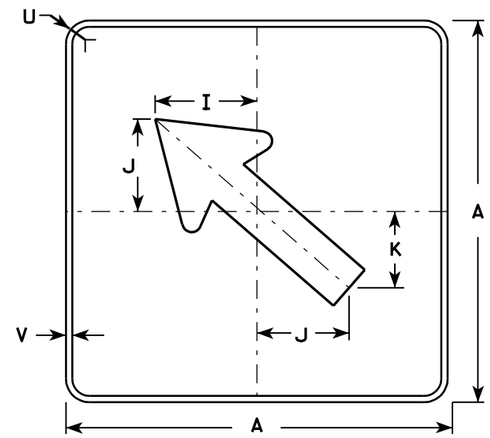

MB6-2
MG6-2
MN6-2

NOTES

1. Signs are Type II - See Note 4 - reference WIS DOT Standard Specification for HIGHWAY and STRUCTURE CONSTRUCTION latest edition.
2. Color:
   Background - See note 4
   Message - See note 4
3. Corners may be square or rounded when base material is plywood but borders shall be rounded as shown. When base material is metal, the corners and borders shall be rounded.
4. M6-1 and M6-2 Background - White - Type H Reflective
   Message - Black

   MB6-1 and MB6-2 Background - Blue
   Message - White - Type H Reflective

   MG6-1 and MG6-2 Background - Green
   Message - White - Type H Reflective

   MK6-1 and MK6-2 Background - Green
   Message - White - Type H Reflective

   MM6-1 and MM6-2 Background - White - Type H Reflective
   Message - Green

   MN6-1 and MN6-2 Background - Brown
   Message - White - Type H Reflective

   MO6-1 and MO6-2 Background - Orange - Type F Reflective
   Message - Black

   MP6-1 and MP6-2 Background - White - Type H Reflective
   Message - Blue

   MR6-1 and MR6-2 Background - Brown
   Message - Yellow - Type H Reflective

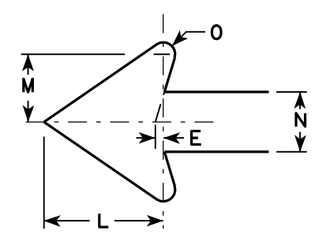

SIZE	A	B	C	D	E	F	G	H	I	J	K	L	M	N	O	P	Q	R	S	T	U	V	W	X	Y	Z	Area sq. ft.
1																											
2	21		1 1/8	3/8	3/8		7 1/2	7 1/8	5 5/8	5	4 1/4	5 1/4	3	2 5/8	1/2						1 1/2	1/2					3.06
3	30		1 3/8	1/2	5/8		10 3/4	10 1/4	8	7 1/4	6	7 1/2	4 1/4	3 3/4	3/4						1 7/8	1/2					6.25
4	30		1 3/8	1/2	5/8		10 3/4	10 1/4	8	7 1/4	6	7 1/2	4 1/4	3 3/4	3/4						1 7/8	1/2					6.25
5	30		1 3/8	1/2	5/8		10 3/4	10 1/4	8	7 1/4	6	7 1/2	4 1/4	3 3/4	3/4						1 7/8	1/2					6.25

STANDARD SIGN
M6-1 & M6-2
SERIES

WISCONSIN DEPT OF TRANSPORTATION

APPROVED Matthew R Rauch
for State Traffic Engineer

DATE 7/29/13 PLATE NO. M6-1.13

PROJECT NO:	HWY:	COUNTY:		SHEET NO: 202	E

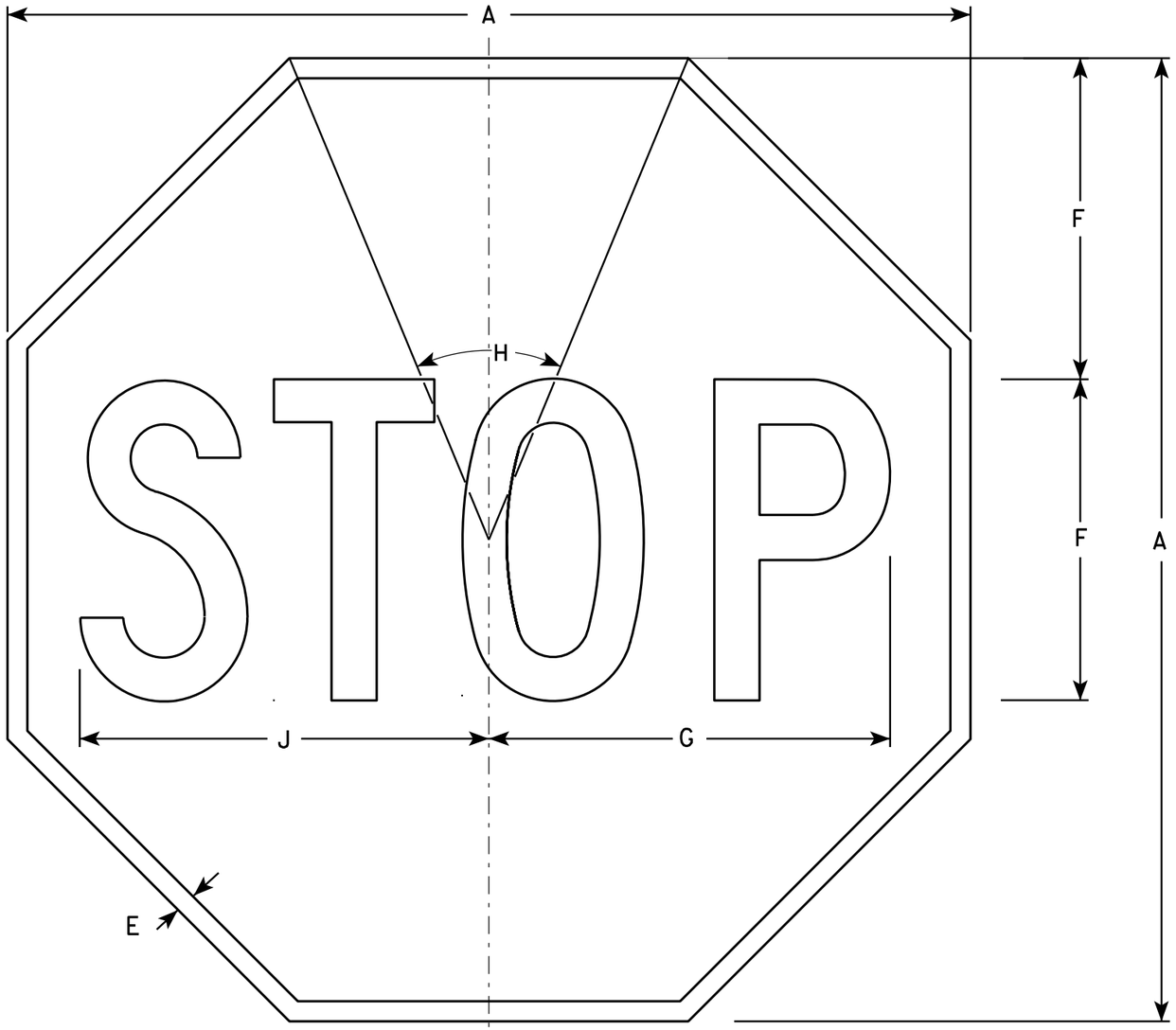

R1-1

NOTES

1. Sign is Type II - Type H Reflective - reference WIS DOT Standard Specification for HIGHWAY and STRUCTURE CONSTRUCTION latest edition.
2. Color:
   Background - Red
   Message - White
3. Message Series - C

SIZE	A	B	C	D	E	F	G	H	I	J	K	L	M	N	O	P	Q	R	S	T	U	V	W	X	Y	Z	Area sq. ft.
1	24				3/8	8	10	45°		10 1/4																	3.31
2S	30				5/8	10	12 1/2	45°		12 3/4																	5.18
2M	36				3/4	12	15	45°		15 3/8																	7.46
3	36				3/4	12	15	45°		15 3/8																	7.46
4	48				1	16	20	45°		20 1/2																	13.25
5	48				1	16	20	45°		20 1/2																	13.25
6	18				3/8	6	7 3/4	45°		7 3/4																	1.86
7	12				1/4	4	5	45°		5 1/8																	0.78

STANDARD SIGN
R1-1

WISCONSIN DEPT OF TRANSPORTATION

APPROVED Matthew R Rauch
for State Traffic Engineer

DATE 12/03/10 PLATE NO. R1-1.12

PROJECT NO: | HWY: | COUNTY: | SHEET NO: 203 | E

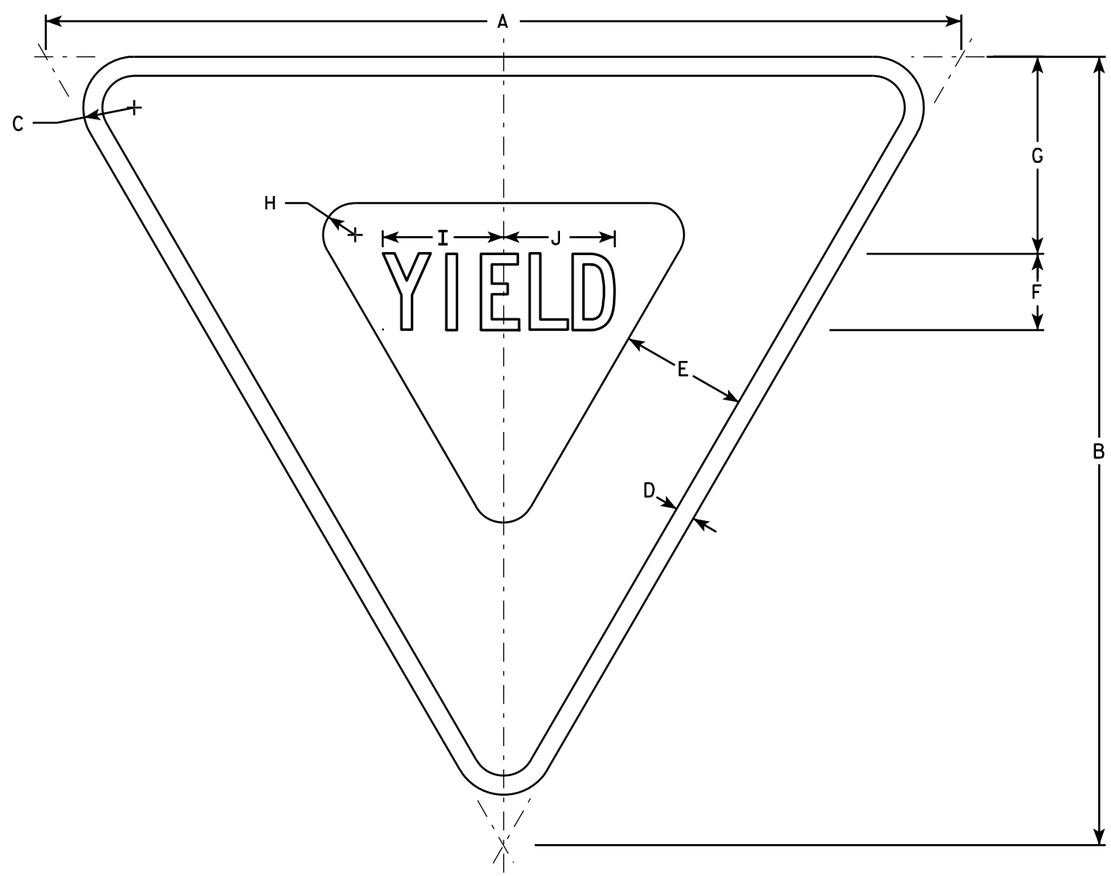

R1-2

NOTES

1. Sign is Type II - Type H Reflective - reference WIS DOT Standard Specification for HIGHWAY and STRUCTURE CONSTRUCTION latest edition.
2. Color:
   Background - White
   Message - See note 5
3. Message Series - C
4. Corners may be square or rounded when base material is plywood but borders shall be rounded as shown. When base material is metal, the corners and borders shall be rounded.
5. The border strip and word message are reflectorized red.

SIZE	A	B	C	D	E	F	G	H	I	J	K	L	M	N	O	P	Q	R	S	T	U	V	W	X	Y	Z	Area sq. ft.
1	30	26	1 1/2	5/8	4	2 1/2	6 3/8	7/8	4	3 5/8																	2.71
2S	36	31	2	3/4	5	3	7 3/4	1 1/4	4 3/4	4 3/8																	3.88
2M	48	42	3	1	6	4	9 3/4	2	6 1/4	5 7/8																	7.00
3	48	42	3	1	6	4	9 3/4	2	6 1/4	5 7/8																	7.00
4	48	42	3	1	6	4	9 3/4	2	6 1/4	5 7/8																	7.00
5	60	52	3	1 1/2	8	5	13	2 1/2	7 7/8	7 1/4																	10.83
6	24	21	1 1/2	3/8	3	2	4 3/4	7/8	3 1/4	3																	1.75
7	18	15 1/2	1	3/8	2 1/2	1 1/2	3 7/8	5/8	2 3/8	2 1/4																	0.97

STANDARD SIGN
R1-2

WISCONSIN DEPT OF TRANSPORTATION

APPROVED Matthew R Rauch
for State Traffic Engineer

DATE 11/02/10 PLATE NO. R1-2.11

PROJECT NO: | HWY: | COUNTY: | SHEET NO: 204 | E

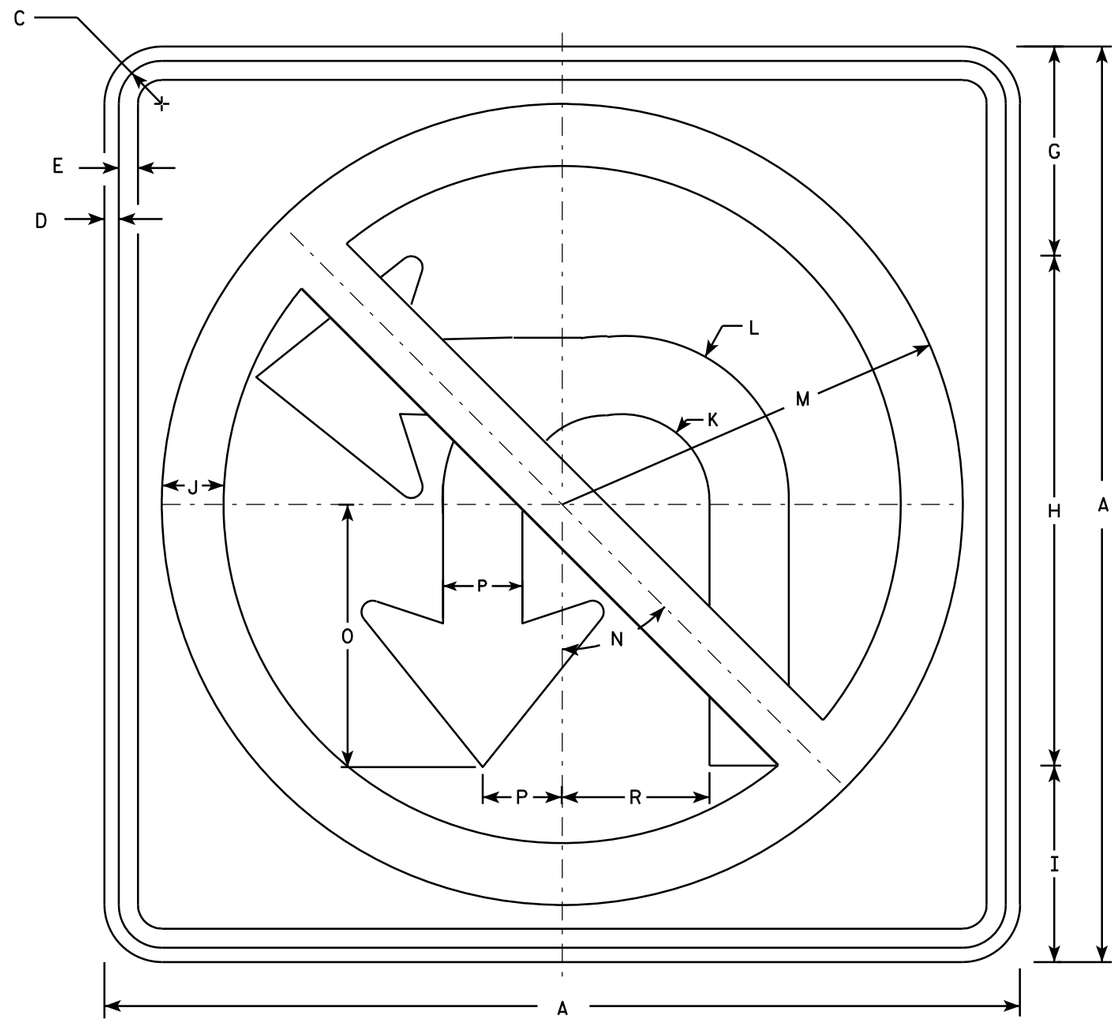

R3-18

NOTES

1. Sign is Type II - Type H Reflective - reference WIS DOT Standard Specification for HIGHWAY and STRUCTURE CONSTRUCTION latest edition.
2. Color:
   Background - White
   Message - See note 4
3. Corners may be square or rounded when base material is plywood but borders shall be rounded as shown. When base material is metal, the corners and borders shall be rounded.
4. Border & Arrow are non reflective black, the circle with diagonal bar is reflective red.

SIZE	A	B	C	D	E	F	G	H	I	J	K	L	M	N	O	P	Q	R	S	T	U	V	W	X	Y	Z	Area sq. ft.
1																											
2S	24		1 1/8	3/8	1/2		5 1/2	13 3/8	5 1/8	1 5/8	2 1/4	4 1/4	10 1/2	45°	6 7/8	2 1/8		3 7/8									4.0
2M	36		1 5/8	5/8	3/4		8 1/4	20	7 3/4	2 1/2	3 3/8	6 1/2	15 3/4	45°	10 3/8	3 1/8		5 3/4									9.0
3	36		1 5/8	5/8	3/4		8 1/4	20	7 3/4	2 1/2	3 3/8	6 1/2	15 3/4	45	10 3/8	3 1/8		5 3/4									9.0
4	36		1 5/8	5/8	3/4		8 1/4	20	7 3/4	2 1/2	3 3/8	6 1/2	15 3/4	45	10 3/8	3 1/8		5 3/4									9.0
5	48		2 1/4	3/4	1		11	26 3/4	10 1/4	3 1/4	4 5/8	8 5/8	21	45°	13 3/4	4 1/8		7 3/4									16.0

STANDARD SIGN
R3-18

WISCONSIN DEPT OF TRANSPORTATION

APPROVED Matthew R Rauch
for State Traffic Engineer

DATE 11/21/10 PLATE NO. R3-18.2

PROJECT NO:	HWY:	COUNTY:		SHEET NO: 205	E

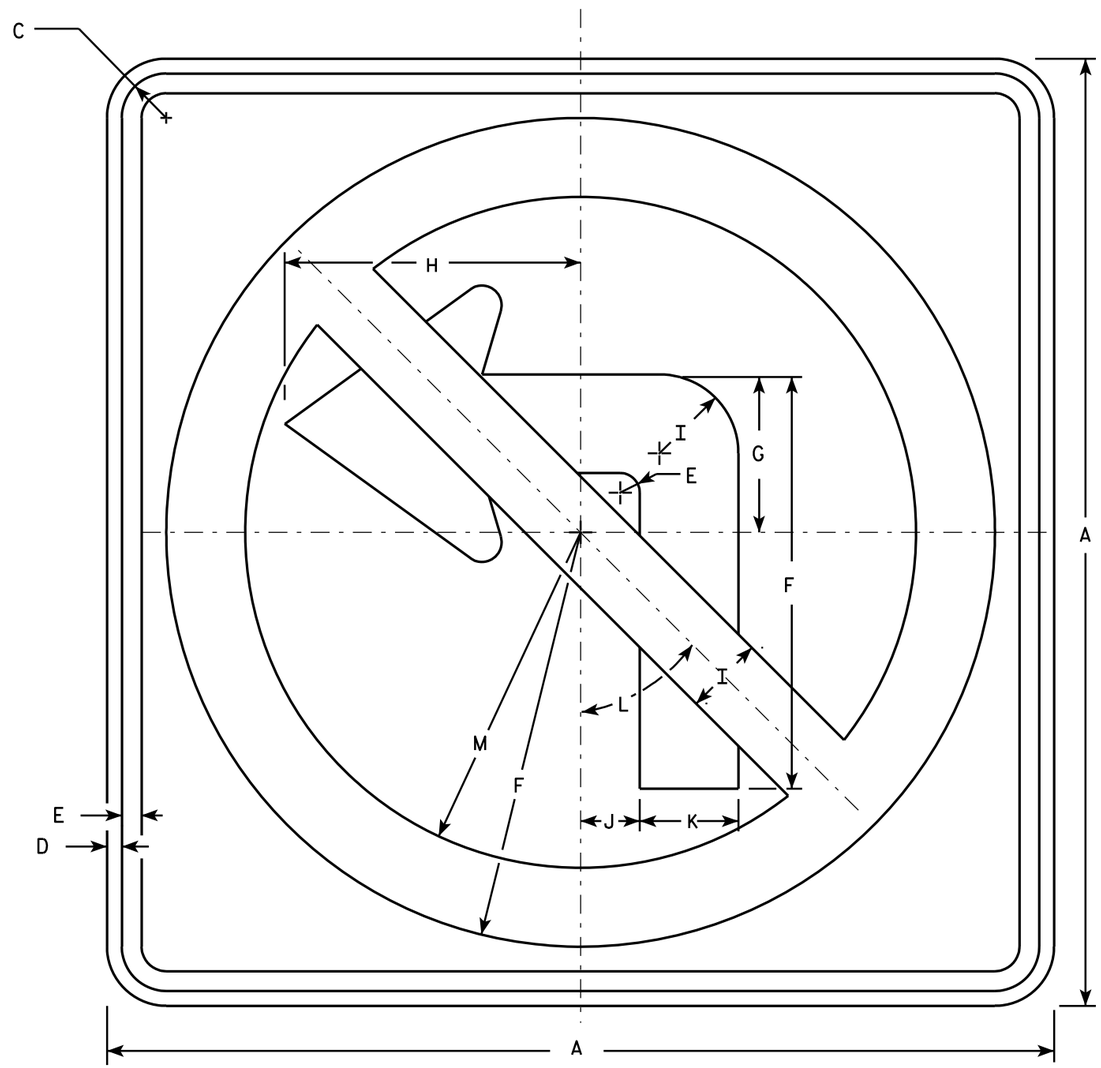

R3-2

NOTES

1. Sign is Type II - Type H Reflective - reference WIS DOT Standard Specification for HIGHWAY and STRUCTURE CONSTRUCTION latest edition.
2. Color:
   Background - White
   Message - See note 4
3. Corners may be square or rounded when base material is plywood but borders shall be rounded as shown. When base material is metal, the corners and borders shall be rounded.
4. Border & Arrow are non reflective black, the circle with diagonal bar is reflective red.

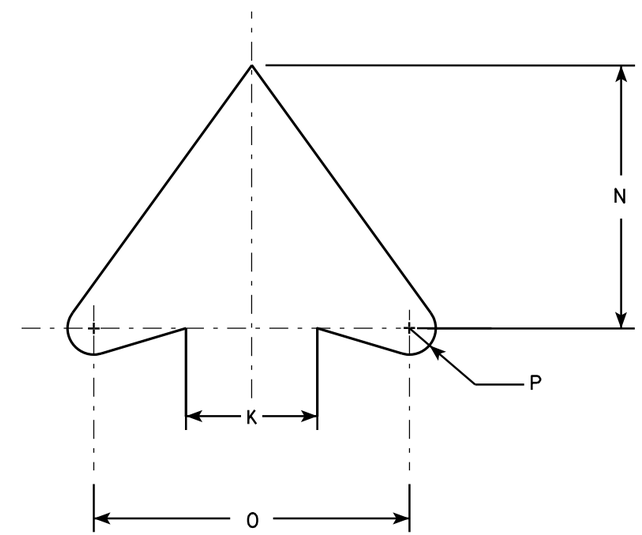

ARROW DETAIL

SIZE	A	B	C	D	E	F	G	H	I	J	K	L	M	N	O	P	Q	R	S	T	U	V	W	X	Y	Z	Area sq. ft.
1	24		1 1/8	3/8	1/2	10 1/2	4	7 1/2	2	1 1/2	2 1/2	45°	8 1/2	5	6	1/2											4.0
2S	24		1 1/8	3/8	1/2	10 1/2	4	7 1/2	2	1 1/2	2 1/2	45°	8 1/2	5	6	1/2											4.0
2M	36		1 5/8	5/8	3/4	15 3/4	6	11 1/4	3	2 1/4	3 3/4	45°	12 3/4	7 1/2	9	3/4											9.0
3	36		1 5/8	5/8	3/4	15 3/4	6	11 1/4	3	2 1/4	3 3/4	45°	12 3/4	7 1/2	9	3/4											9.0
4	36		1 5/8	5/8	3/4	15 3/4	6	11 1/4	3	2 1/4	3 3/4	45°	12 3/4	7 1/2	9	3/4											9.0
5	48		2 1/4	3/4	1	21	8	15	4	3	5	45°	17	10	12	1											16.0

STANDARD SIGN
R3-2

WISCONSIN DEPT OF TRANSPORTATION

APPROVED Matthew R Rauch
for State Traffic Engineer

DATE 12/08/10 PLATE NO. R3-2.10

PROJECT NO:	HWY:	COUNTY:		SHEET NO: 206	E

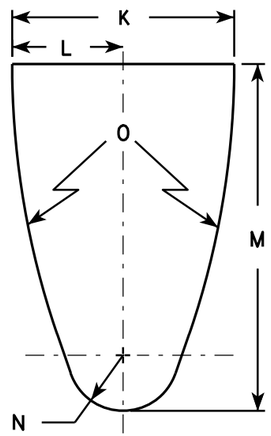

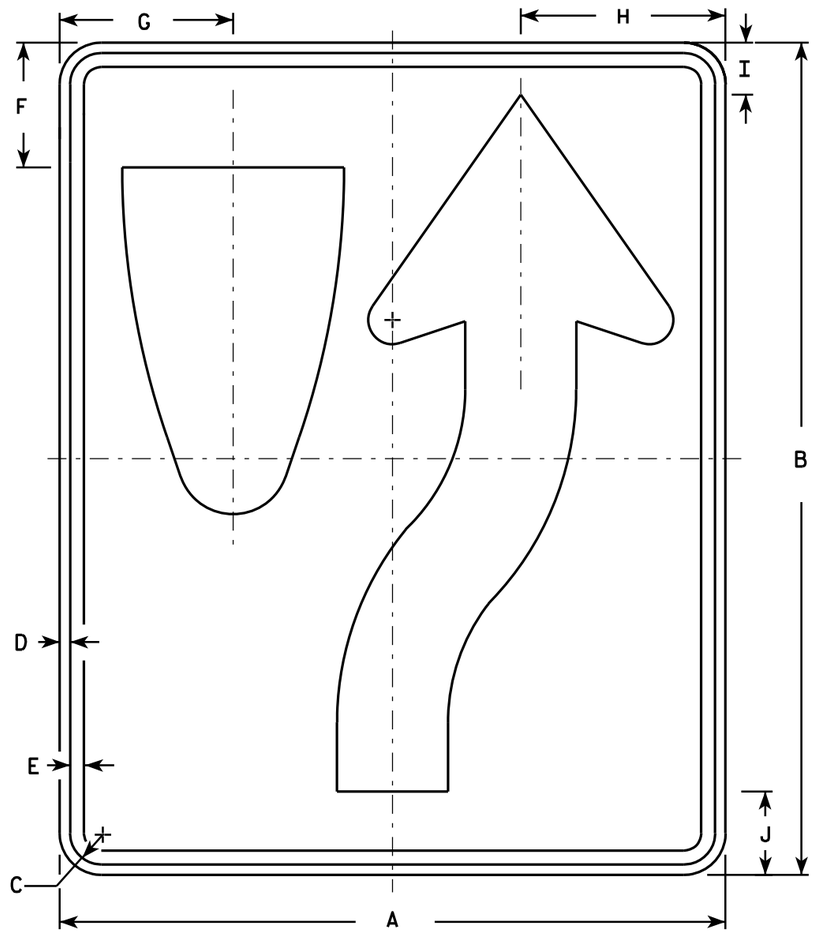

R4-7

NOTES

1. Sign is Type II - Type H Reflective - reference WIS DOT Standard Specification for HIGHWAY and STRUCTURE CONSTRUCTION latest edition. material is plywood but borders shall be rounded
2. Color:
   Background - White
   Message - Black
3. Corners may be square or rounded when base as shown. When base material is metal, the corners and borders shall be rounded.
4. R4-8 is the same as R4-7 except Legend is reversed.

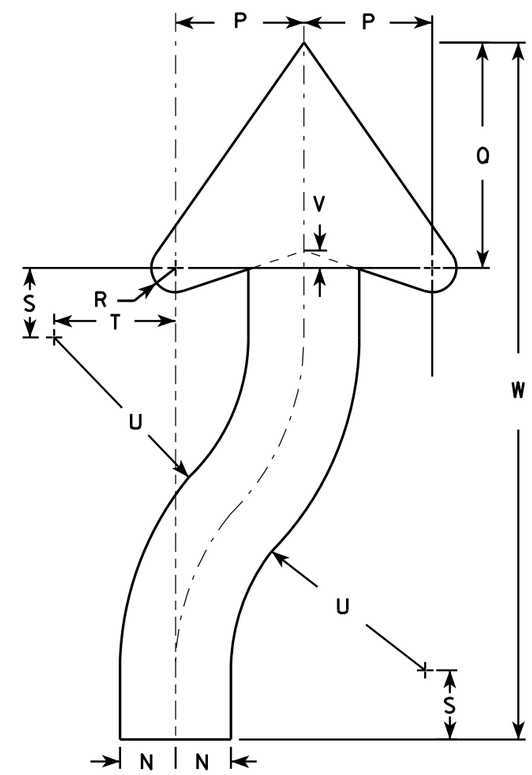

ARROW DETAIL

SIZE	A	B	C	D	E	F	G	H	I	J	K	L	M	N	O	P	Q	R	S	T	U	V	W	X	Y	Z	Area sq. ft.
1	18	24	1 1/8	3/8	1/2	3 3/8	4 3/4	5 1/2	1 3/8	2 1/4	6	3	9 3/8	1 1/2	22 1/2	3 1/2	6 1/8	5/8	1 7/8	3 1/4	6 3/4	1/2	20 3/8				3.0
2S	24	30	1 1/8	3/8	1/2	4 1/2	6 1/4	7 3/8	1 7/8	3	8	4	12 1/2	2	30	4 5/8	8 1/8	7/8	2 1/2	4 3/8	9	5/8	25 1/8				5.0
2M	24	30	1 1/8	3/8	1/2	4 1/2	6 1/4	7 3/8	1 7/8	3	8	4	12 1/2	2	30	4 5/8	8 1/8	7/8	2 1/2	4 3/8	9	5/8	25 1/8				5.0
3	36	48	1 3/4	1/2	5/8	6 3/4	9 3/8	11 1/8	2 7/8	4 1/2	12	6	18 3/4	3	45	6 7/8	12 1/4	1 1/4	3 3/4	6 5/8	13 1/2	1	40 3/4				12.0
4	36	48	1 3/4	1/2	5/8	6 3/4	9 3/8	11 1/8	2 7/8	4 1/2	12	6	18 3/4	3	45	6 7/8	12 1/4	1 1/4	3 3/4	6 5/8	13 1/2	1	40 3/4				12.0
5	48	60	2 1/4	3/4	1	9	12 1/2	14 3/4	3 3/4	6	16	8	25	4	60	9 1/4	16 1/4	1 5/8	5	8 3/4	18	1 1/4	50 1/4				20.0

STANDARD SIGN
R4-7 & R4-8

WISCONSIN DEPT OF TRANSPORTATION

APPROVED Matthew R Rauch for State Traffic Engineer

DATE 3/25/2011 PLATE NO. R4-7.8

PROJECT NO:	HWY:	COUNTY:		SHEET NO: 207	E

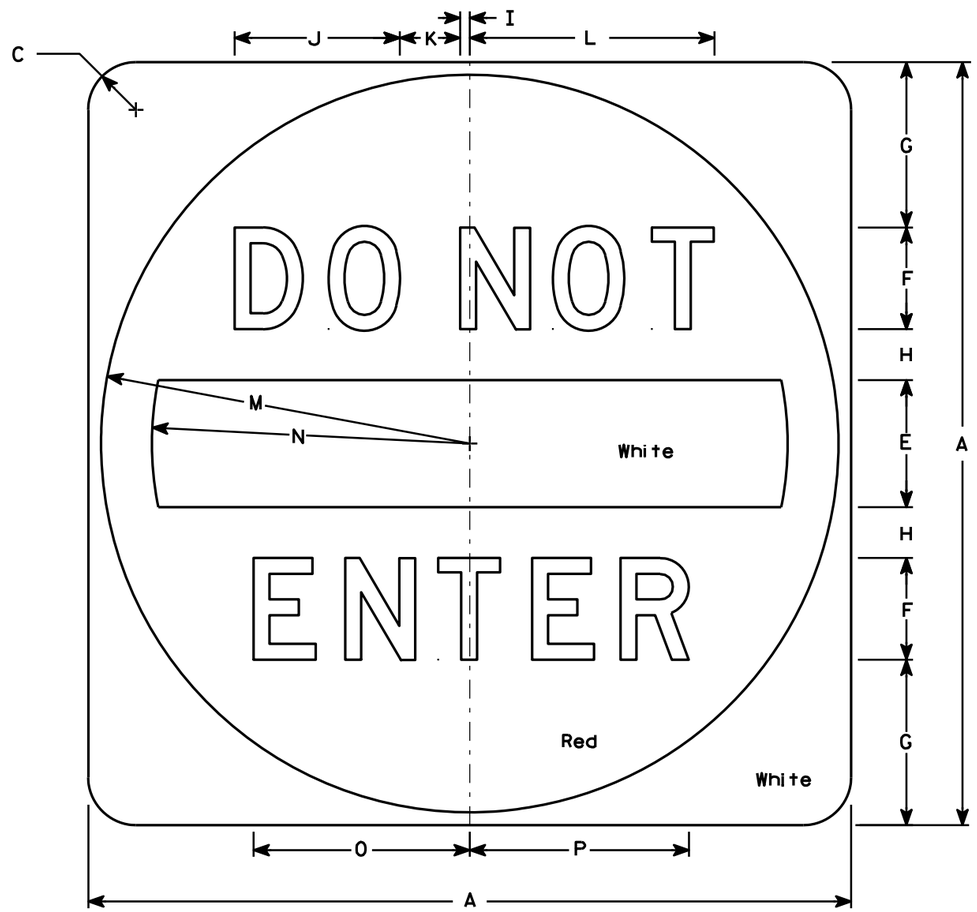

R5-1

NOTES

1. Sign is Type II - Type H Reflective - reference WIS DOT Standard Specification for HIGHWAY and STRUCTURE CONSTRUCTION latest edition.
2. Color:
   Background - See detail
   Message - White - Type H Reflective
3. Message Series - D
4. Corners may be square or rounded when base material is plywood but when base material is metal, the cornors shall be rounded.

SIZE	A	B	C	D	E	F	G	H	I	J	K	L	M	N	O	P	Q	R	S	T	U	V	W	X	Y	Z	Area sq. ft.
1																											
2S	30		1 7/8		5	4	6 1/2	2	3/8	6 1/2	2 3/8	9 5/8	14 1/2	12 1/2	8 1/2	8 5/8											6.26
2M	36		2 1/4		6	5	7 1/2	2 1/2	1/2	8 1/8	3	12 1/8	17 1/2	15	10 5/8	10 3/4											9.0
3	36		2 1/4		6	5	7 1/2	2 1/2	1/2	8 1/8	3	12 1/8	17 1/2	15	10 5/8	10 3/4											9.0
4	36		2 1/4		6	5	7 1/2	2 1/2	1/2	8 1/8	3	12 1/8	17 1/2	15	10 5/8	10 3/4											9.0
5	48		3		8	6	11	3	5/8	9 3/4	3 5/8	14 1/2	23 1/2	20	12 3/4	12 7/8											16.0

STANDARD SIGN
R5-1

WISCONSIN DEPT OF TRANSPORTATION

APPROVED Matthew R Rauch
for State Traffic Engineer

DATE 12/17/10 PLATE NO. R5-1.15

PROJECT NO: | HWY: | COUNTY: | SHEET NO: 208 | E

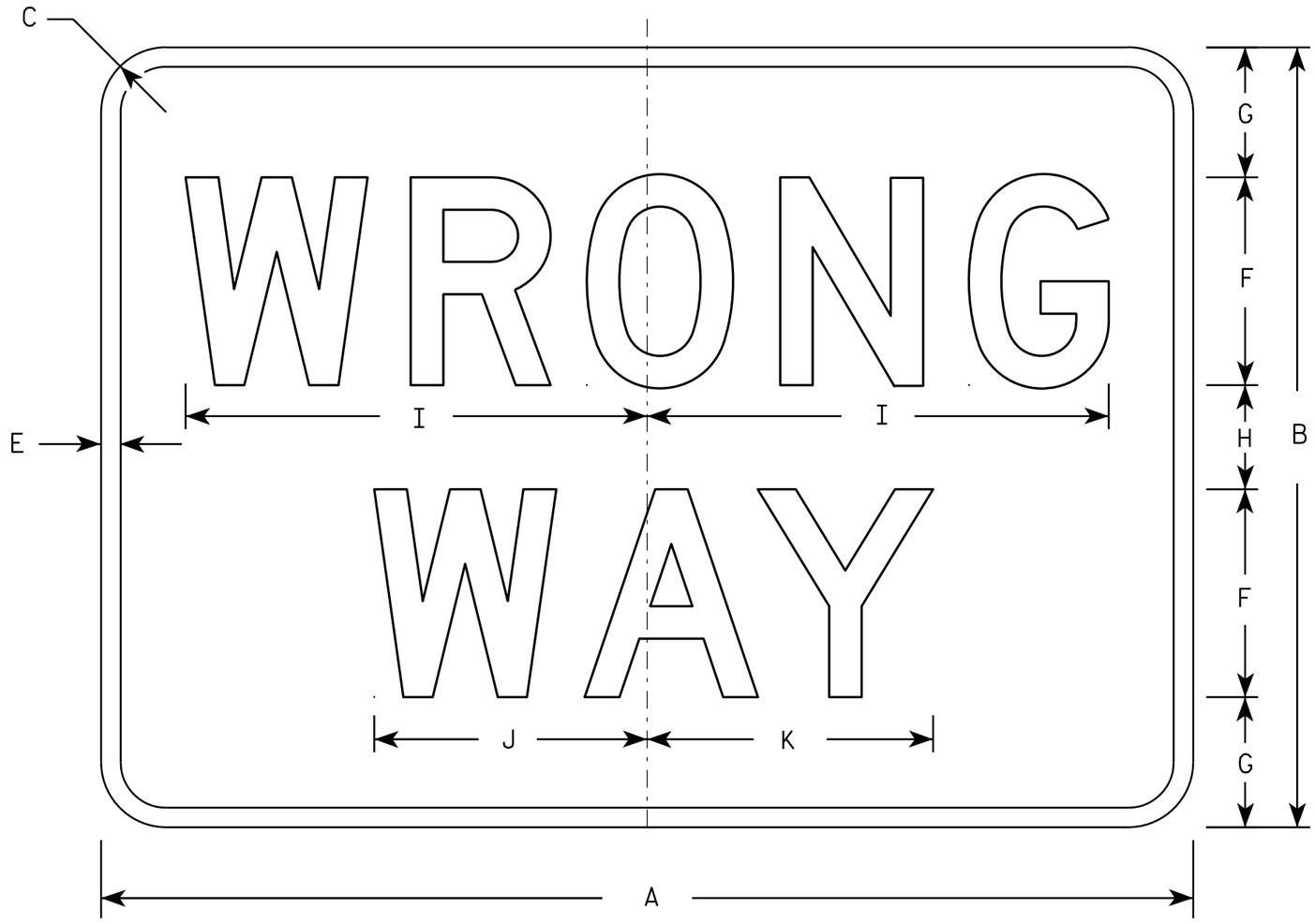

R5-1A

NOTES

1. Sign is Type II - Type H Reflective - reference WIS DOT Standard Specification for HIGHWAY and STRUCTURE CONSTRUCTION latest edition.
2. Color:
   Background - Red
   Message - White
3. Message Series - D
4. Corners may be square or rounded when base material is plywood but borders shall be rounded as shown. When base material is metal, the corners and borders shall be rounded.

SIZE	A	B	C	D	E	F	G	H	I	J	K	L	M	N	O	P	Q	R	S	T	U	V	W	X	Y	Z	Area sq. ft.
1	30	18	1 1/2		1/2	5	3	2	11	6 1/2	6 7/8																3.75
2S	36	24	2		5/8	6	4 1/2	3	13 1/4	7 7/8	8 1/4																6.00
2M	42	30	2 1/2		3/4	8	5	4	17 3/4	10 1/2	11																8.75
3	42	30	2 1/2		3/4	8	5	4	17 3/4	10 1/2	11																8.75
4	42	30	2 1/2		3/4	8	5	4	17 3/4	10 1/2	11																8.75
5	42	30	2 1/2		3/4	8	5	4	17 3/4	10 1/2	11																8.75

STANDARD SIGN
R5-1A

WISCONSIN DEPT OF TRANSPORTATION

APPROVED Matthew R Rauch
for State Traffic Engineer

DATE 12/17/10 PLATE NO. R5-1A.2

PROJECT NO: | HWY: | COUNTY: | SHEET NO: 209 | E

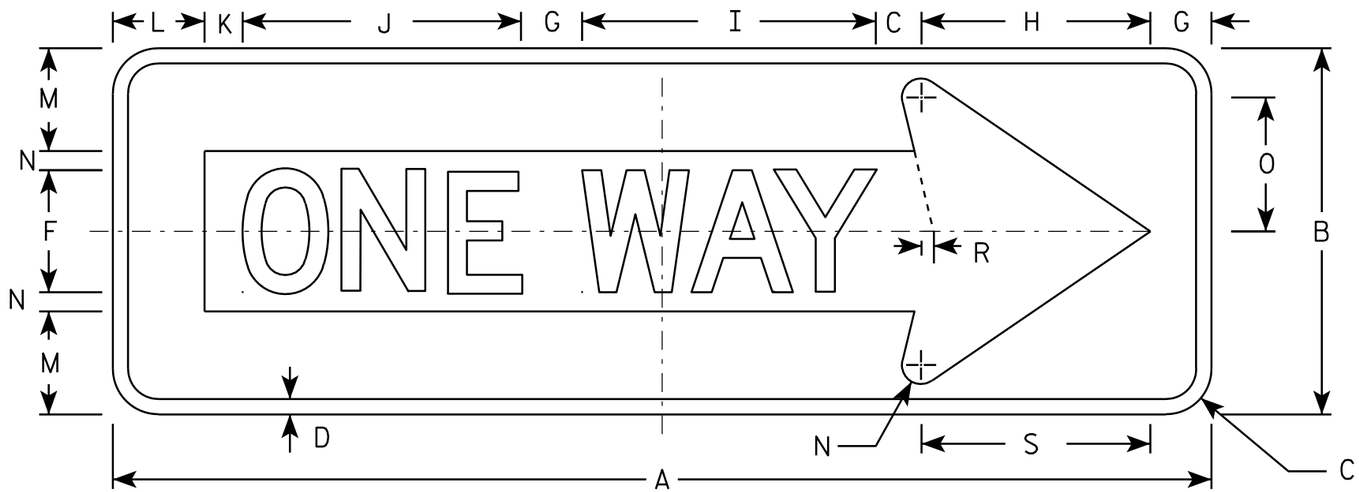

R6-1 R

NOTES

1. Sign is Type II - Type H Reflective - reference WIS DOT Standard Specification for HIGHWAY and STRUCTURE CONSTRUCTION latest edition.
2. Color:
   Background - BLACK
   Message - BLACK LEGEND & WHITE ARROW & BORDER
3. Message Series - D
4. Corners may be square or rounded when base material is plywood but borders shall be rounded as shown. When base material is metal, the corners and borders shall be rounded.

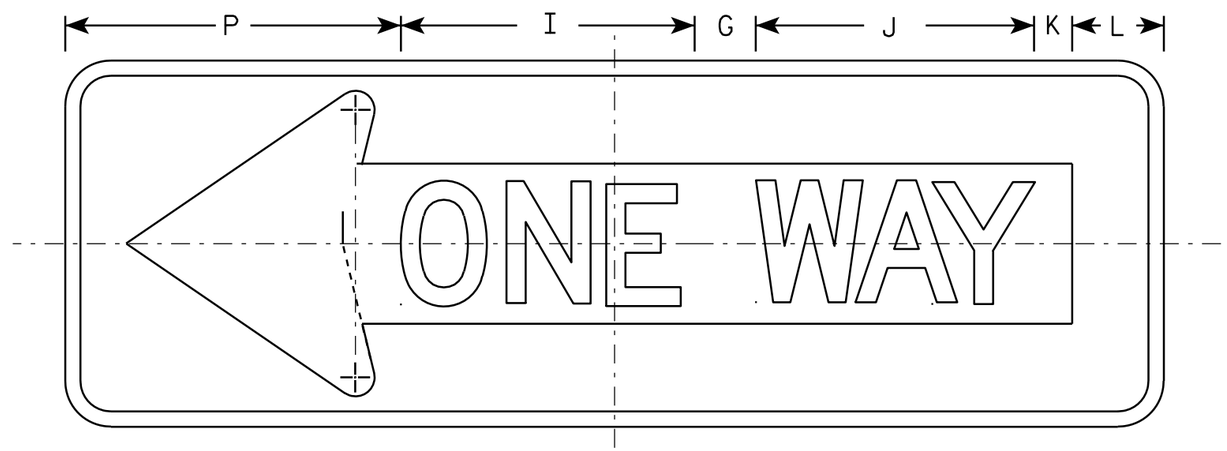

R6-1 L

SIZE	A	B	C	D	E	F	G	H	I	J	K	L	M	N	O	P	Q	R	S	T	U	V	W	X	Y	Z	Area sq. ft.
1																											
2S	36	12	1 1/2	1/2		4	2	7 1/2	9 5/8	9 1/8	1 1/4	3	3 3/8	5/8	4 3/8	11		3/8	7 1/2								3.0
2M	54	18	2 1/4	3/4		6	3	11 1/4	14 1/2	13 5/8	1 7/8	4 1/2	5	1	6 1/2	16 1/2		5/8	11 1/4								6.75
3	54	18	2 1/4	3/4		6	3	11 1/4	14 1/2	13 5/8	1 7/8	4 1/2	5	1	6 1/2	16 1/2		5/8	11 1/4								6.75
4	54	18	2 1/4	3/4		6	3	11 1/4	14 1/2	13 5/8	1 7/8	4 1/2	5	1	6 1/2	16 1/2		5/8	11 1/4								6.75
5																											

STANDARD SIGN
R6-1 L & R

WISCONSIN DEPT OF TRANSPORTATION

APPROVED Matthew R Rauch
for State Traffic Engineer

DATE 12/17/10 PLATE NO. R6-1.2

PROJECT NO:

SHEET NO: 210 E

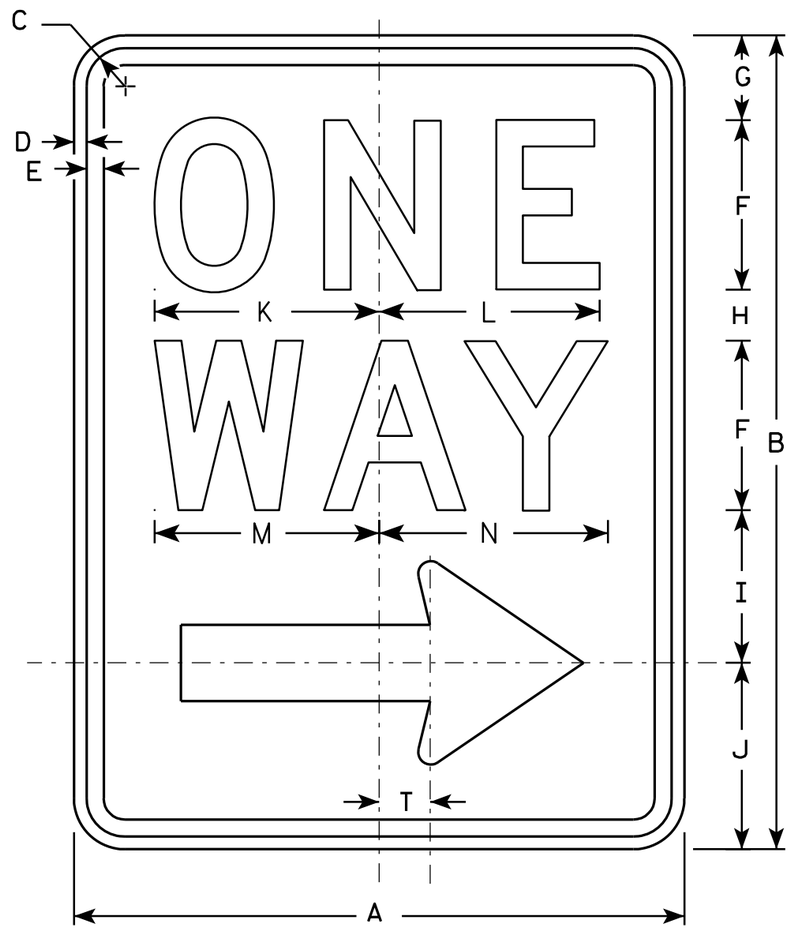

R6-2R

NOTES

1. Sign is Type II - Type H Reflective - reference WIS DOT Standard Specification for HIGHWAY and STRUCTURE CONSTRUCTION latest edition.
2. Color:
   Background - White
   Message - Black
3. Message Series - D
4. Corners may be square or rounded when base material is plywood but borders shall be rounded as shown. When base material is metal, the corners and borders shall be rounded.
5. R6-2L same as R6-2R except arrow points to the left.

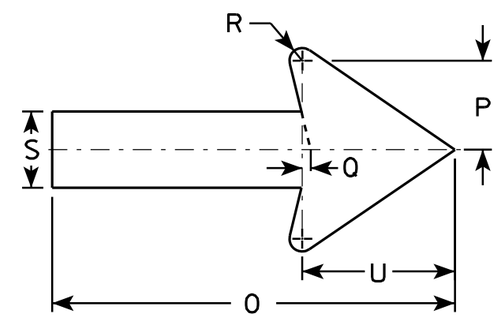

SIZE	A	B	C	D	E	F	G	H	I	J	K	L	M	N	O	P	Q	R	S	T	U	V	W	X	Y	Z
1	18	24	1 1/8	3/8	1/2	5	2 1/2	1 1/2	4 1/2	5 1/2	6 5/8	6 1/2	6 5/8	6 3/4	11 7/8	2 5/8	1/4	3/8	2 1/4	1 1/2	4 1/2					
2S	24	30	1 1/8	3/8	1/2	6	3	2 1/2	5 1/2	7	8 1/8	8 1/8	8 1/2	8 5/8	16	3 1/2	3/8	1/2	3	2	6					
2M	30	36	1 3/8	1/2	5/8	8	2 1/2	2 5/8	6 7/8	8	10 1/2	10 1/2	11 1/4	11 1/4	20	4 3/8	1/2	5/8	3 3/4	2 1/2	7 1/2					
3	36	48	1 7/8	1/2	5/8	10	5 1/4	3 1/4	9	10 1/2	12 3/4	12 3/4	13 1/4	13 1/2	24	5 5/8	1/2	3/4	4 3/4	3	9					
4	36	48	1 7/8	1/2	5/8	10	5 1/4	3 1/4	9	10 1/2	12 3/4	12 3/4	13 1/4	13 1/2	24	5 5/8	1/2	3/4	4 3/4	3	9					
5																										

STANDARD SIGN
R6-2 R&L

WISCONSIN DEPT OF TRANSPORTATION

APPROVED Matthew R Rauch
for State Traffic Engineer

DATE 11/2/10 PLATE NO. R6-2.8

PROJECT NO:	HWY:	COUNTY:		SHEET NO: 211	E

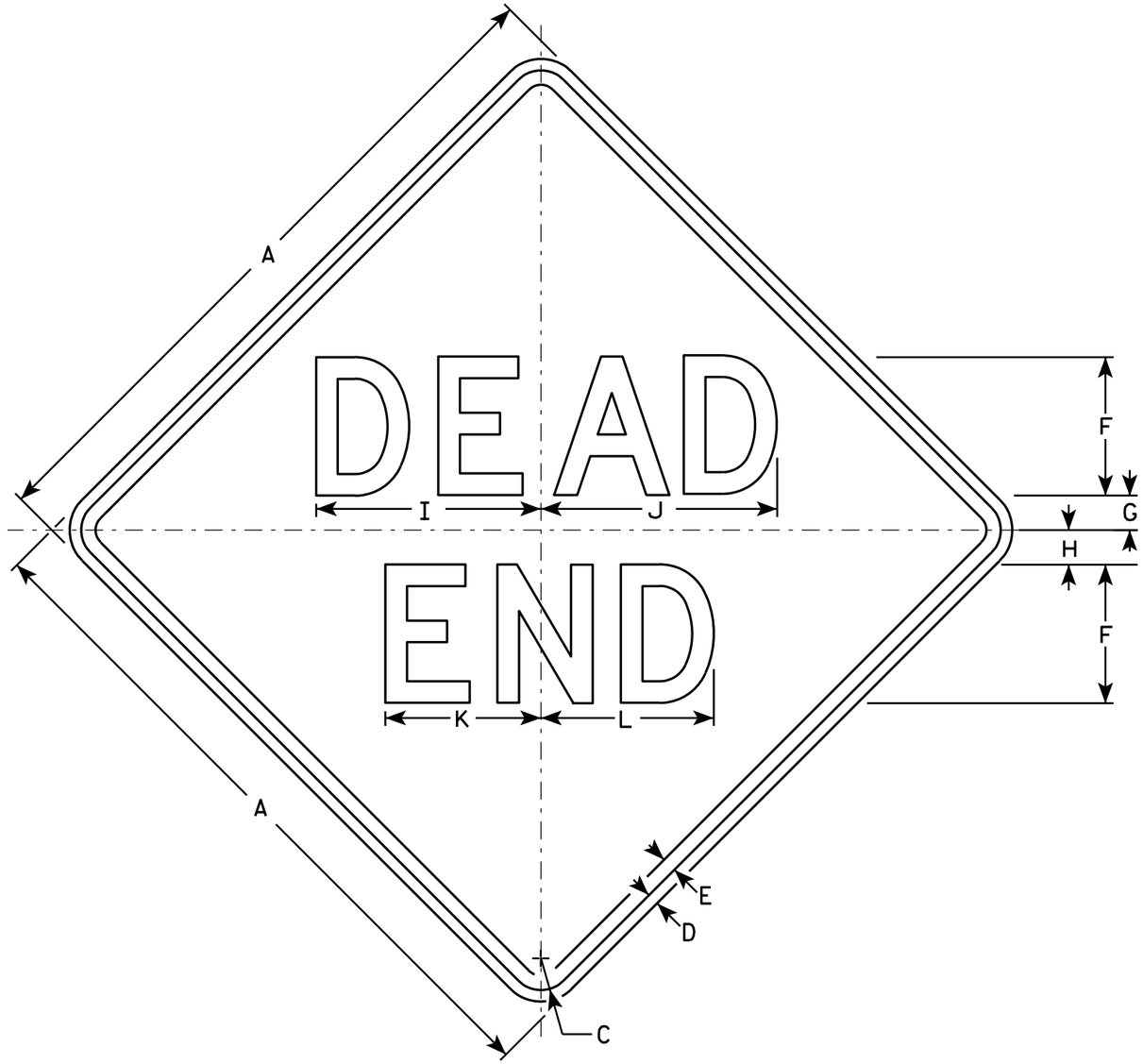

W14-1

NOTES

1. Sign is Type II - Type F Reflective - reference WIS DOT Standard Specification for HIGHWAY and STRUCTURE CONSTRUCTION latest edition.
2. Color:
   Background - Yellow
   Message - Black
3. Message Series - D
4. Corners may be square or rounded when base material is plywood but borders shall be rounded as shown. When base material is metal, the corners and borders shall be rounded.

SIZE	A	B	C	D	E	F	G	H	I	J	K	L	M	N	O	P	Q	R	S	T	U	V	W	X	Y	Z	Area sq. ft.
1	24		1 1/8	3/8	1/2	5	1	2	8 1/4	8 5/8	5 5/8	6 1/4															4.0
2S	30		1 3/8	1/2	5/8	6	1 1/2	2 1/2	9 3/4	10 1/4	6 3/4	7 1/2															6.25
2M	30		1 3/8	1/2	5/8	6	1 1/2	2 1/2	9 3/4	10 1/4	6 3/4	7 1/2															6.25
3	36		1 5/8	5/8	3/4	7	2	3	11 3/8	12	7 7/8	8 3/4															9.0
4																											
5																											

STANDARD SIGN
W14-1

WISCONSIN DEPT OF TRANSPORTATION

APPROVED Matthew R Rauch
for State Traffic Engineer

DATE 3/13/13 PLATE NO. W14-1.7

PROJECT NO: | HWY: | COUNTY: | SHEET NO: 212 | E

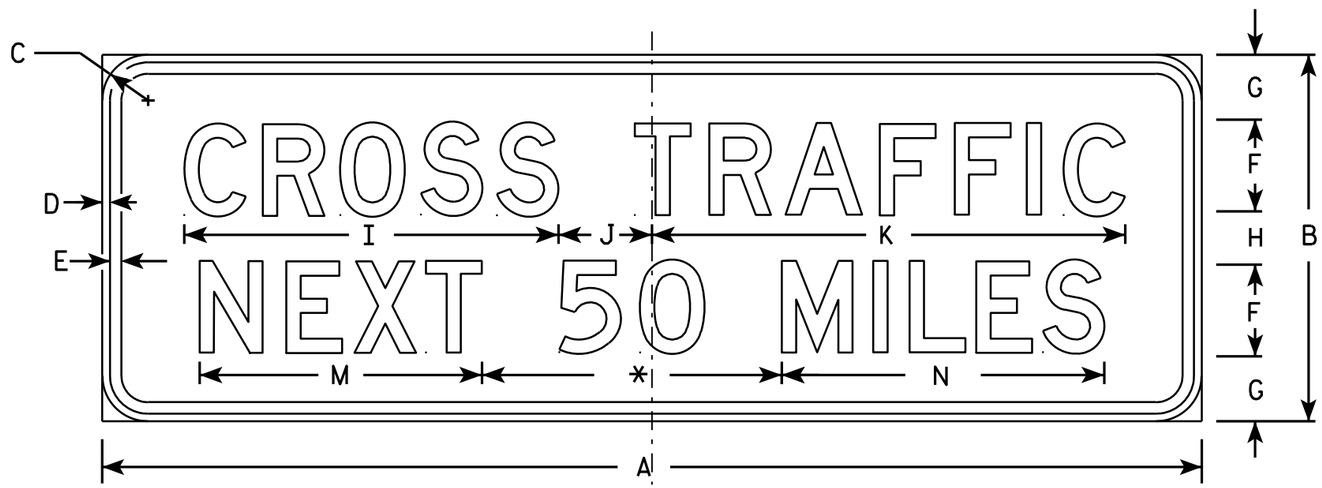

W6-53

* Varies (See Note 5)

NOTES

1. Sign is Type II - Type F Reflective - reference WIS DOT Standard Specification for HIGHWAY and STRUCTURE CONSTRUCTION latest edition.
2. Color:
   Background - Yellow
   Message - Black Non - reflective
3. Message Series - D
4. Corners may be square or rounded when base material is plywood but borders shall be rounded as shown. When base material is metal, the corners and borders shall be rounded.
5. Substitute appropriate numerals and optically adjust spacing to achieve proper balance.

SIZE	A	B	C	D	E	F	G	H	I	J	K	L	M	N	O	P	Q	R	S	T	U	V	W	X	Y	Z	Area sq. ft.
1																											
2S																											
2M																											
3																											
4	144	48	6	1	1 1/2	12	9	6	49	12 1/4	62		37	42 1/4													48.0
5																											

STANDARD SIGN
W6-53

WISCONSIN DEPT OF TRANSPORTATION

APPROVED Matthew R Rauch
For State Traffic Engineer

DATE 03/12/13 PLATE NO. W6-53.6

PROJECT NO:	HWY:	COUNTY:		SHEET NO: 213	E

USH 141 SB Curve

STATION	AREA (SF)		Incremental Vol (CY)		Mass Ordinate
	Cut	Fill	Cut	Fill	
99+13	47.88	9.54	0	0	0.00
100+00	44.84	9.80	148	35	112.43
101+00	34.40	6.75	147	35	223.91
102+00	34.40	36.95	127	93	258.24
103+00	20.46	40.56	102	165	194.77
103+57	14.08	71.18	37	136	95.31
104+00	9.28	96.55	19	153	-39.16
105+00	2.36	160.60	22	548	-565.26
106+00	0.00	167.76	4	699	-1,260.17
107+00	0.00	128.25	0	630	-1,890.54
108+00	17.71	153.11	33	599	-2,456.92
109+00	26.61	190.76	82	732	-3,107.15
110+00	30.46	191.02	106	813	-3,814.53
111+00	36.44	175.35	124	780	-4,470.87
112+00	46.30	161.12	153	717	-5,034.21
113+00	58.20	142.18	194	646	-5,486.61
114+00	58.03	121.03	215	561	-5,831.92
115+00	37.62	87.59	177	444	-6,099.10
115+23	33.25	63.57	31	77	-6,144.60
115+30	32.47	51.19	7	15	-6,152.13
115+40	34.02	34.92	12	18	-6,158.16
115+50	45.64	19.62	15	12	-6,155.02
115+60	33.34	12.97	15	7	-6,147.34
115+70	47.72	10.12	15	5	-6,137.24
115+80	47.31	8.62	18	4	-6,123.64
115+90	39.57	7.11	16	3	-6,110.90
116+00	45.03	4.31	16	2	-6,097.67
116+10	49.75	3.08	18	2	-6,081.69
116+20	28.28	4.85	14	2	-6,068.93
116+30	20.43	9.19	9	3	-6,062.90
116+40	15.61	16.79	7	6	-6,061.76
116+50	13.75	25.61	5	9	-6,065.35
116+63	25.75	26.44	10	15	-6,070.28
118+00	27.36	18.52	135	131	-6,066.71
119+00	57.95	50.59	158	147	-6,055.91
122+00	72.67	36.22	279	213	-5,990.13
123+00	60.24	17.56	246	115	-5,858.52
124+00	44.04	0.00	193	37	-5,702.81
124+43	42.46	0.00	69	0	-5,633.43

New SB Shoulder

STATION	AREA (SF)		Incremental Vol (CY)		Mass Ordinate
	Cut	Fill	Cut	Fill	
125+00	12.82	0.50	58	1	57.82
125+50	12.61	1.65	24	2	79.08
126+00	9.48	12.38	20	15	84.59
126+50	10.20	8.42	18	22	80.67
127+00	7.79	9.41	17	19	78.35
127+50	7.32	8.14	14	19	73.66
128+00	7.20	2.32	13	11	75.97
128+50	10.46	0.54	16	3	89.27

Left Turn Lane

STATION	AREA (SF)		Incremental Vol		Mass Ordinate
	Cut	Fill	Cut	Fill	
128+96	75.18	0.00	0	0	0.00
129+10	75.81	0.00	38	0	37.98
129+30	69.21	0.00	1	0	39.03
129+50	0.00	0.00	0	0	39.03
129+70	54.37	1.31	0	0	39.24
129+89	50.31	9.26	39	4	73.45
130+10	53.29	5.74	0	0	73.77
130+30	59.78	0.00	8	0	81.54
130+50	0.00	0.00	0	0	81.54
131+00	0.00	0.00	0	0	81.54
131+50	24.06	0.00	8	0	89.11
132+00	24.54	0.00	45	0	134.10
132+50	22.86	0.00	44	0	178.00
133+00	20.65	0.00	40	0	218.29
133+50	22.00	0.51	39	1	257.24
134+00	25.04	0.00	44	1	300.26
134+50	27.51	0.00	49	0	348.91
135+00	28.81	0.23	52	0	400.82
135+50	24.13	1.36	49	2	448.16

Cross Over Removal

STATION	AREA (SF)		Incremental Vol		Mass Ordinate
	Cut	Fill	Cut	Fill	
136+00	25.59	0.00	46	1	44.59
136+50	33.25	0.00	54	0	99.06
137+00	32.87	0.00	61	0	160.28
137+50	65.28	0.00	91	0	251.16
138+00	93.96	0.00	147	0	398.60
138+50	73.42	0.00	155	0	553.59
139+00	25.62	2.51	92	1	644.52
139+50	22.89	0.01	45	1	688.77
140+00	18.84	3.41	39	1	726.00
140+50	18.52	5.48	35	2	758.17
141+00	19.74	4.39	35	3	790.23

Jturn Median

STATION	AREA (SF)		Incremental Vol		Mass Ordinate
	Cut	Fill	Cut	Fill	
141+50	19.33	9.16	36	13	23.62
142+00	18.44	11.61	35	22	36.47
142+50	18.48	9.18	34	22	48.50
143+00	19.63	5.36	35	15	68.31
143+50	19.77	4.58	36	11	94.20
144+00	21.46	2.25	38	7	125.11
144+50	20.77	3.11	39	6	158.51
145+00	18.88	4.49	37	8	187.13
145+50	19.82	4.17	36	9	213.73
146+00	18.46	6.80	35	12	237.49
146+20	39.03	3.57	21	4	254.48
146+39	50.43	5.13	33	4	283.69
146+59	51.12	6.97	38	5	316.14
146+80	52.47	8.01	38	6	348.15
147+00	47.52	11.59	37	8	376.83
147+20	38.22	17.80	32	13	396.13
147+40	37.97	20.58	28	16	408.10
147+60	39.89	9.54	29	13	424.13

Bulb Out

STATION	AREA (SF)		Incremental Vol (CY)		Mass Ordinate
	Cut	Fill	Cut	Fill	
144+20	19.90	0.03	0	0	0.00
144+50	21.20	0.04	23	0	22.66
144+80	20.99	2.89	23	2	44.23
145+10	20.68	9.88	23	8	59.22
145+40	20.36	16.34	23	17	65.27
145+70	21.12	20.60	23	24	64.71
146+00	21.78	20.55	24	26	62.25
146+30	22.81	17.55	25	24	62.68
146+60	28.09	16.49	28	22	69.21
146+90	30.58	17.76	33	22	79.93
147+20	21.19	21.86	29	25	83.38
147+44	19.84	0.42	18	11	90.26

USH 141 NB Curve

STATION	AREA (SF)		Incremental Vol		Mass Ordinate
	Cut	Fill	Cut	Fill	
102+22	61.26	4.75	0	0	0.00
103+00	65.79	73.38	183	129	53.55
104+00	70.89	154.51	253	485	-178.65
105+00	99.02	140.90	315	629	-493.12
106+00	106.02	29.79	380	364	-476.93
107+00	79.63	7.68	344	80	-212.93
108+00	69.85	177.74	277	395	-331.00
109+00	69.81	226.66	259	861	-933.61
110+00	66.52	210.03	252	930	-1,611.14
111+00	49.42	175.75	215	822	-2,218.00
112+00	49.39	132.38	183	656	-2,691.23
113+00	33.23	125.36	153	549	-3,087.14
114+00	32.84	93.93	122	467	-3,431.79
115+00	49.91	75.22	153	360	-3,638.78
116+00	61.80	45.87	207	258	-3,689.81
117+00	57.51	9.44	221	118	-3,586.67
118+00	102.33	0.00	296	20	-3,310.76
119+00	75.69	7.11	330	15	-2,996.23
120+00	71.89	9.70	273	36	-2,758.72
121+00	69.08	7.71	261	37	-2,534.75
121+28	71.33	5.18	74	8	-2,468.35
122+00	65.61	4.32	181	14	-2,301.61
123+00	56.44	1.66	226	13	-2,088.34
124+00	54.31	8.74	205	22	-1,905.39
124+43	57.32	4.40	90	12	-1,827.98

USH 141 NB Beam Guard

STATION	AREA (SF)		Incremental Vol		Mass Ordinate
	Cut	Fill	Cut	Fill	
97+00	0.00	9.07	0	0	0.00
97+50	0.00	35.66	0	52	-51.77
98+00	0.02	16.92	0	61	-112.61
98+50	0.00	17.05	0	39	-151.91
99+00	0.16	9.32	0	31	-182.28
99+50	0.00	3.98	0	15	-197.52
100+00	0.00	6.08	0	12	-209.17
100+50	122.48	0.00	113	7	-102.80
101+00	60.16	0.00	169	0	66.32
101+07	0.00	0.00	8	0	74.15

Habeck Entrance

STATION	AREA (SF)		Incremental Vol		Mass Ordinate
	Cut	Fill	Cut	Fill	
124+50	18.57	4.79	10	1	8.65
125+00	24.57	2.35	40	8	40.98
125+50	24.46	6.17	45	9	77.31
126+00	25.97	11.40	47	19	105.29
126+50	27.38	6.03	49	19	136.12
127+00	26.28	3.26	50	10	175.90
127+50	26.25	1.90	49	5	219.04
128+00	29.78	1.56	52	4	267.23
128+50	49.18	3.80	73	6	334.62
128+70	52.66	6.47	38	4	368.14
128+90	48.48	23.23	37	13	392.93
129+07	64.69	72.14	22	21	393.61
129+29	60.52	216.71	44	118	320.39
129+50	58.73	181.75	44	170	194.85
129+69	51.36	217.10	40	168	67.18
129+90	54.79	209.87	0	1	66.31
130+09	30.78	154.19	31	153	-55.50
130+26	23.87	27.81	16	62	-101.51
130+50	28.07	0.00	19	12	-94.13
131+00	24.46	0.00	49	0	-45.49
131+33	21.96	0.00	28	0	-17.10

Habeck Lane

STATION	AREA (SF)		Incremental Vol (CY)		Mass Ordinate
	Cut	Fill	Cut	Fill	
114+00	31.02	109.07	0	0	0.00
114+50	192.42	0.00	207	116	90.75
115+00	136.22	27.74	304	30	365.51
115+50	303.55	4.04	407	34	738.86
116+00	639.58	25.69	873	32	1,580.47
116+50	398.82	46.04	961	76	2,465.58
117+00	200.54	56.98	555	110	2,910.85
117+50	47.37	61.74	230	126	3,013.98
118+00	17.49	77.91	60	149	2,925.34
118+50	20.48	93.43	35	182	2,778.06
119+00	35.59	84.69	52	190	2,640.32
119+50	40.72	74.05	71	169	2,541.96
120+24	25.41	4.84	91	124	2,508.25

CTH E

STATION	AREA (SF)		Incremental Vol (CY)		Mass Ordinate
	Cut	Fill	Cut	Fill	
48+00	60.74	0.00	0	0	0.00
48+10	61.84	0.09	23	0	22.70
48+20	64.61	0.38	23	0	46.12
48+30	69.06	0.48	25	0	70.87
48+40	65.98	0.09	25	0	95.88
48+50	74.62	0.00	26	0	121.92
48+60	93.25	0.00	31	0	153.01
48+73	70.20	0.01	40	0	193.04

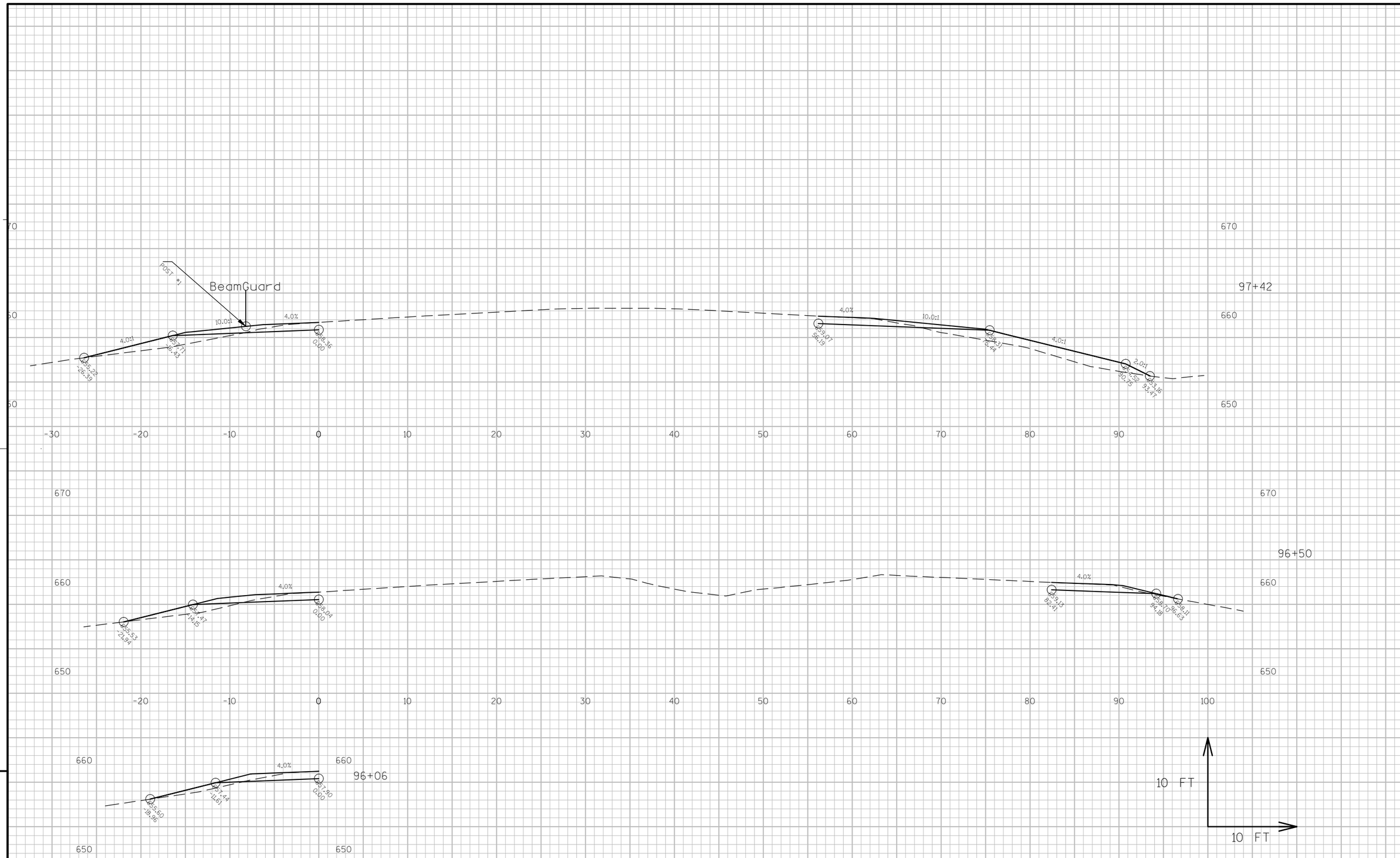

PROJECT NO:1490-28-71	HWY: USH 141	COUNTY: OCONTO	CROSS SECTIONS: NORTHBOUND BEAMGUARD	SHEET 216	E

FILE NAME : N:\PDS\C3D\14902800\SHEETSPLAN\090101_XS.DWG PLOT DATE : 3/7/2014 10:56 AM PLOT BY : WALLNER, AARON J PLOT NAME : PLOT SCALE : 1:10_XREF

WISDOT/CADDS SHEET 49

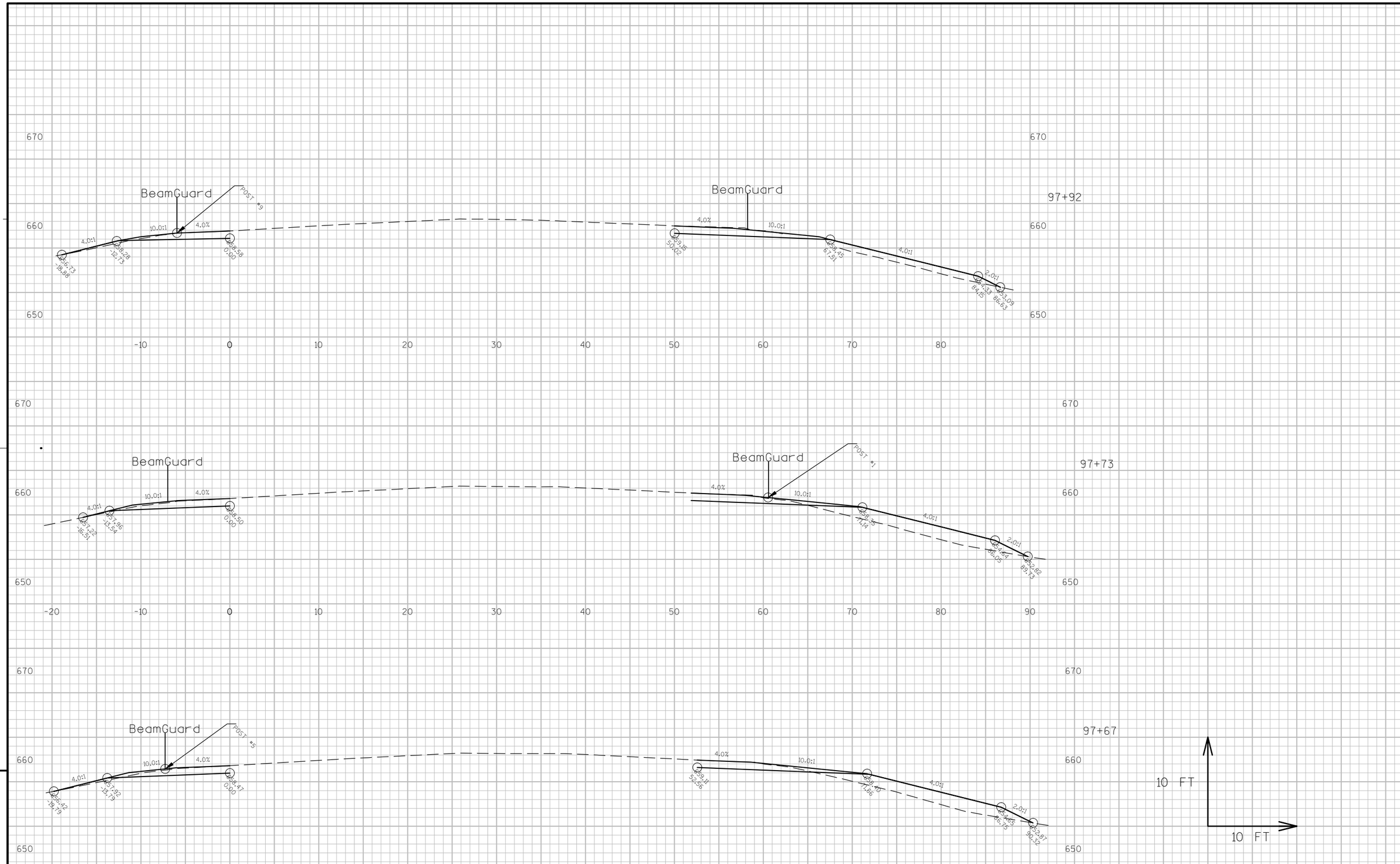

PROJECT NO:1490-28-71	HWY: USH 141	COUNTY: OCONTO	CROSS SECTIONS: NORTHBOUND BEAMGUARD	SHEET 217	E

FILE NAME : N:\PDS\C3D\14902800\SHEETSPLAN\090101_XS.DWG PLOT DATE : 3/7/2014 10:56 AM PLOT BY : WALLNER, AARON J PLOT NAME : PLOT SCALE : 1:10_XREF

WISDOT/CADDS SHEET 49

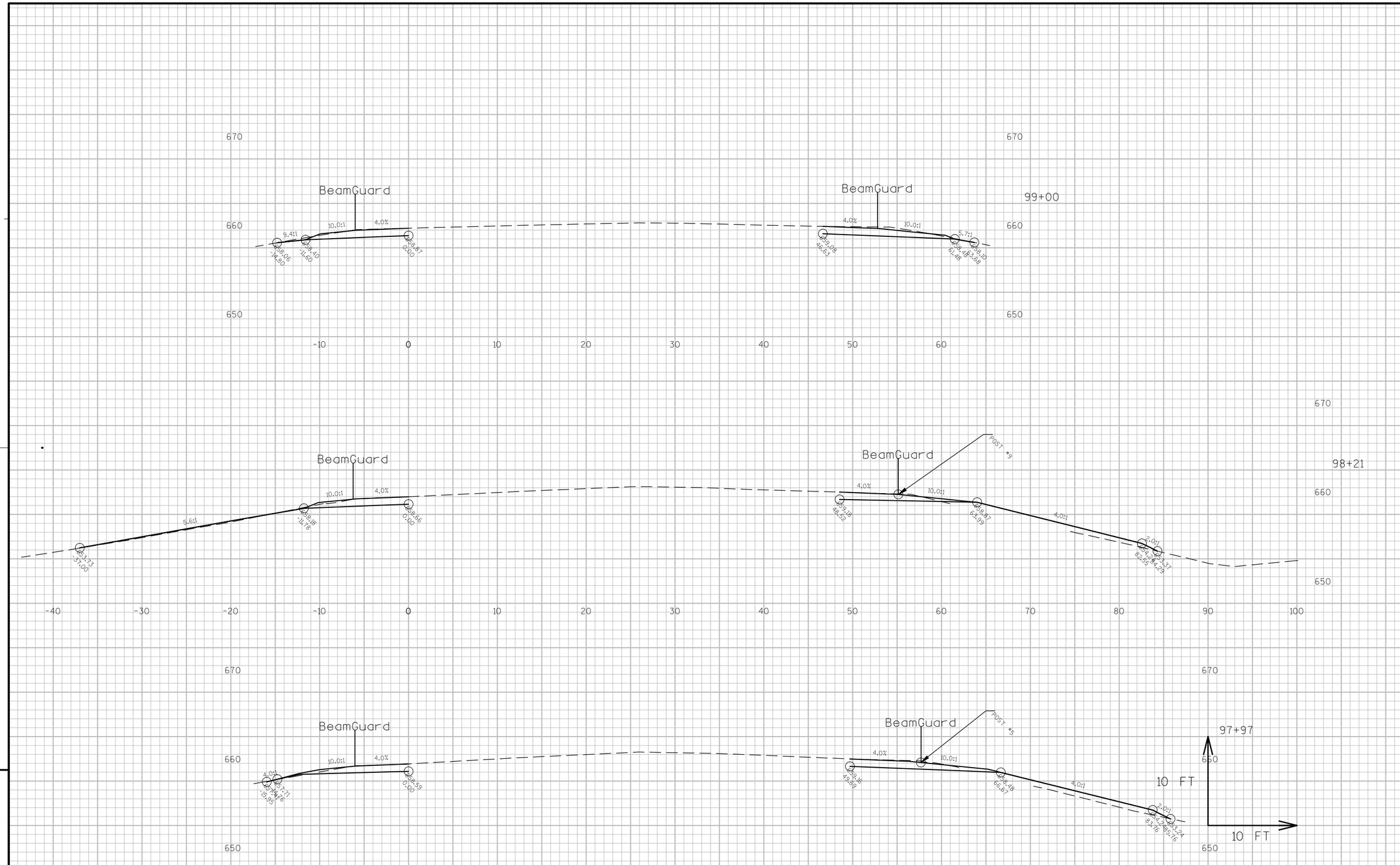

PROJECT NO:1490-28-71	HWY: USH 141	COUNTY: OCONTO	CROSS SECTIONS: NORTHBOUND BEAMGUARD	SHEET 218	E

FILE NAME : N:\PDS\C3D\14902800\SHEETSPLAN\090101_XS.DWG PLOT DATE : 3/7/2014 10:56 AM PLOT BY : WALLNER, AARON J PLOT NAME : PLOT SCALE : 1:10_XREF

WISDOT/CADDS SHEET 49

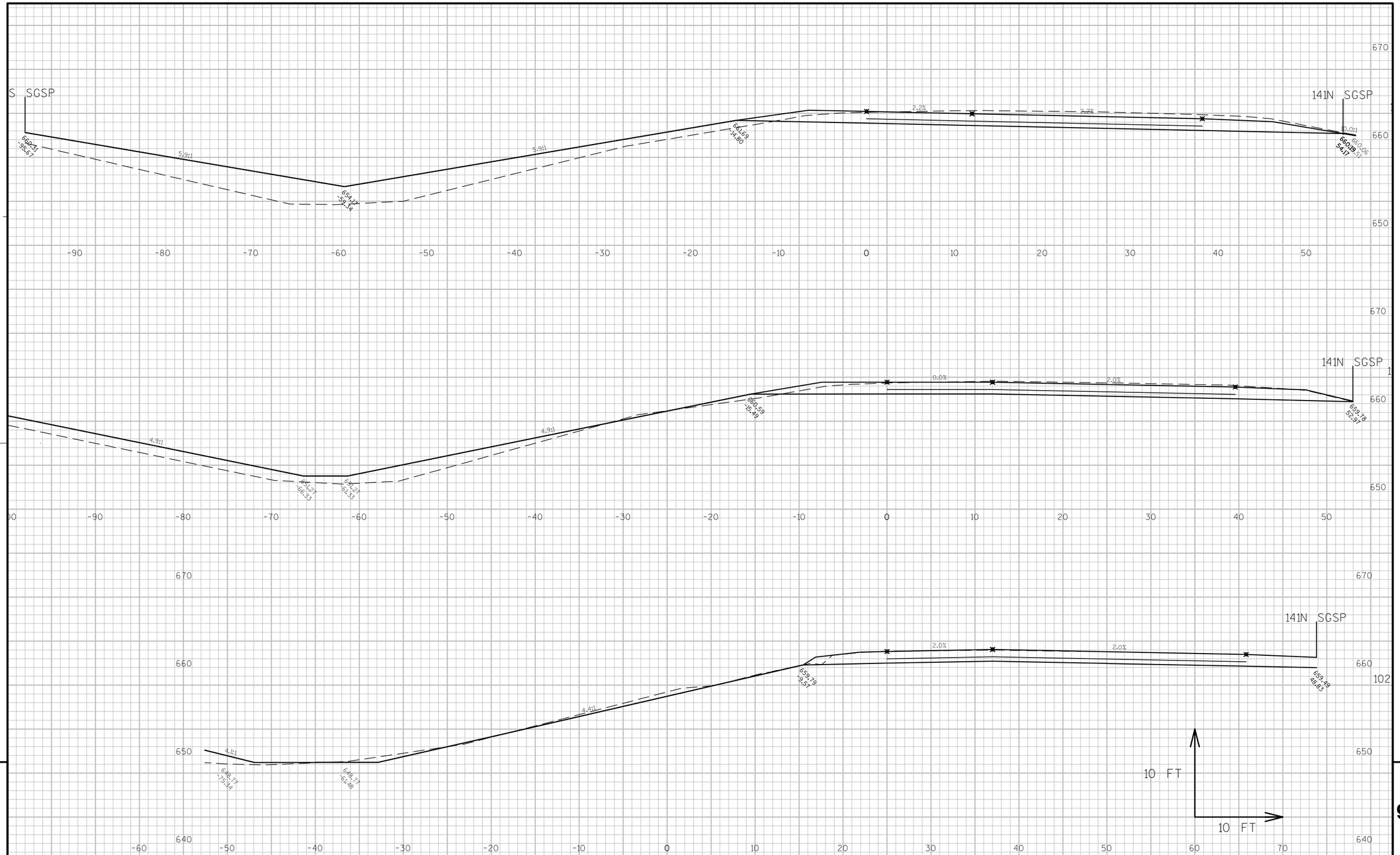

PROJECT NO:1490-28-71	HWY: USH 141	COUNTY: OCONTO	CROSS SECTIONS: USH 141 NORTHBOUND	SHEET 219	E

FILE NAME : N:\PDS\C3D\14902800\SHEETSPLAN\090101_XS.DWG PLOT DATE : 3/7/2014 10:16 AM PLOT BY : WALLNER, AARON J PLOT NAME : PLOT SCALE : 1:10_XREF

WISDOT/CADDS SHEET 49

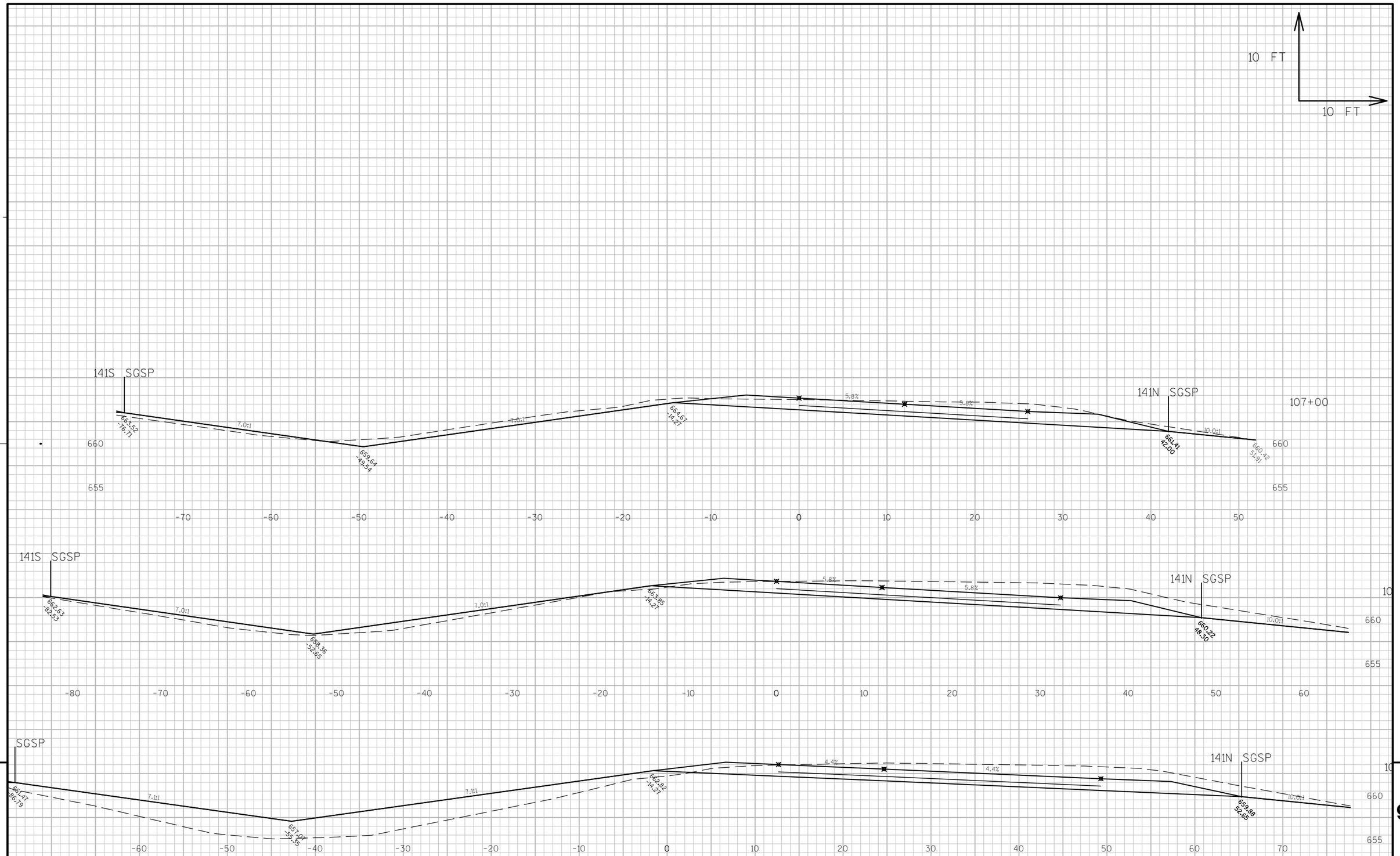

9

9

PROJECT NO:1490-28-71	HWY: USH 141	COUNTY: OCONTO	CROSS SECTIONS: USH 141 NORTHBOUND	SHEET 220	E

FILE NAME : N:\PDS\C3D\14902800\SHEETSPLAN\090101_XS.DWG PLOT DATE : 3/7/2014 10:16 AM PLOT BY : WALLNER, AARON J PLOT NAME : PLOT SCALE : 1:10_XREF

WISDOT/CADDS SHEET 49

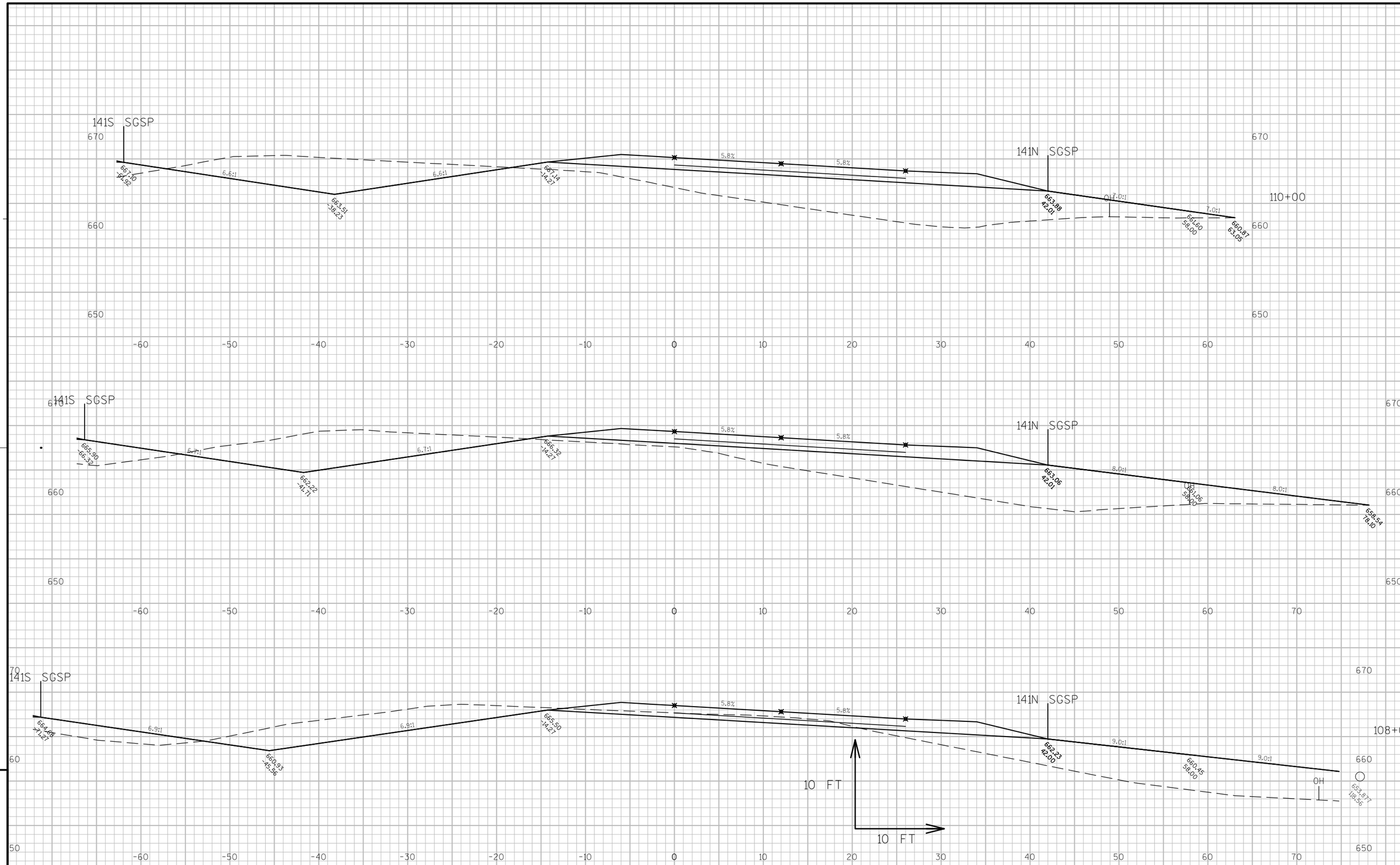

PROJECT NO:1490-28-71	HWY: USH 141	COUNTY: OCONTO	CROSS SECTIONS: USH 141 NORTHBOUND	SHEET 221	E

FILE NAME : N:\PDS\C3D\14902800\SHEETSPLAN\090101_XS.DWG PLOT DATE : 3/7/2014 10:16 AM PLOT BY : WALLNER, AARON J PLOT NAME : PLOT SCALE : 1:10_XREF

WISDOT/CADDS SHEET 49

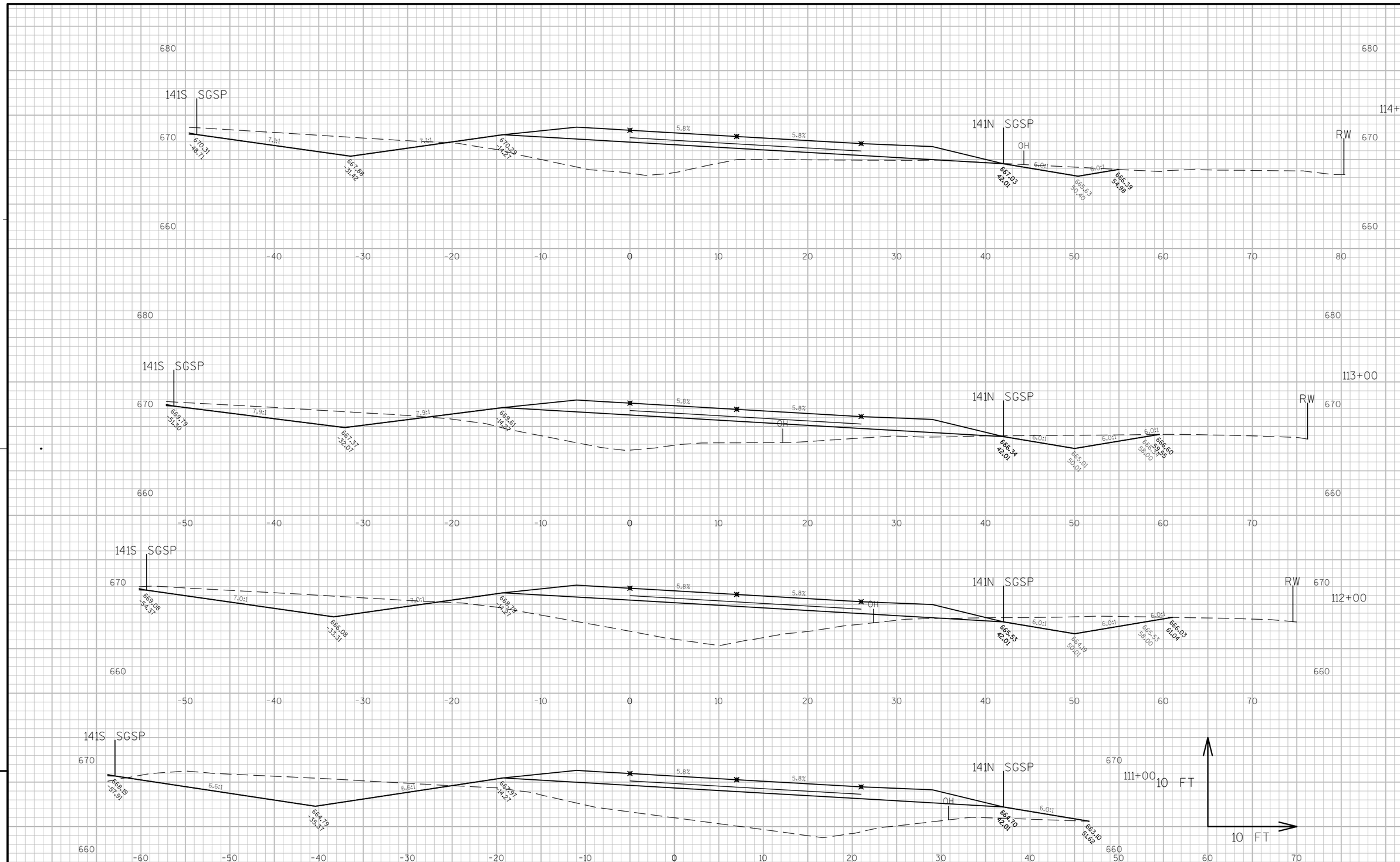

PROJECT NO:1490-28-71	HWY: USH 141	COUNTY: OCONTO	CROSS SECTIONS: USH 141 NORTHBOUND	SHEET 222	E

FILE NAME : N:\PDS\C3D\14902800\SHEETSPLAN\090101_XS.DWG PLOT DATE : 3/7/2014 10:16 AM PLOT BY : WALLNER, AARON J PLOT NAME : PLOT SCALE : 1:10_XREF

WISDOT/CADDS SHEET 49

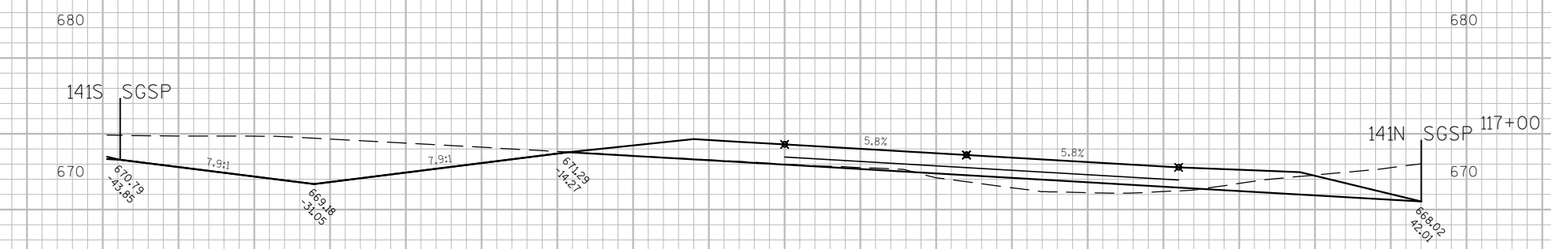

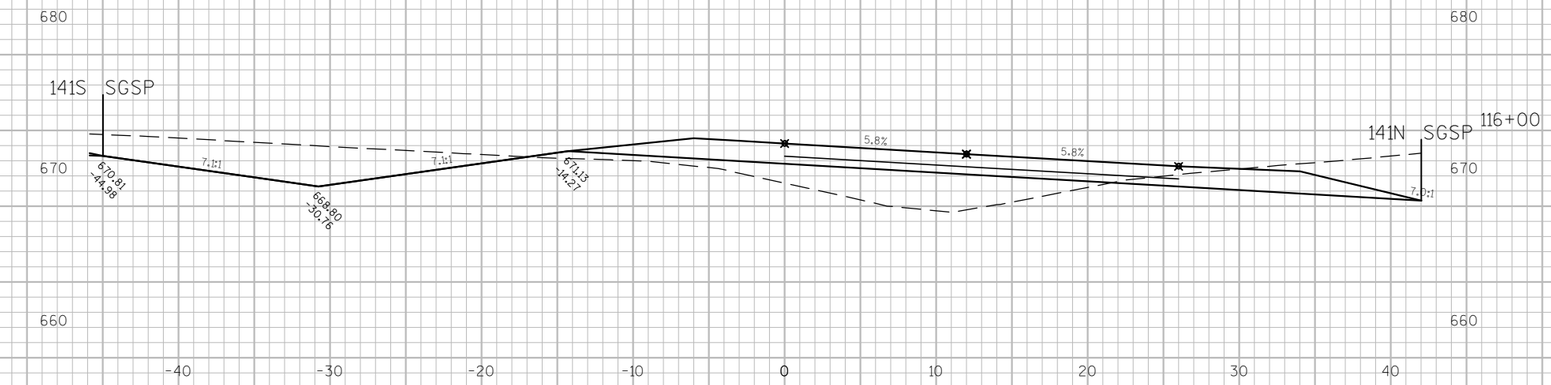

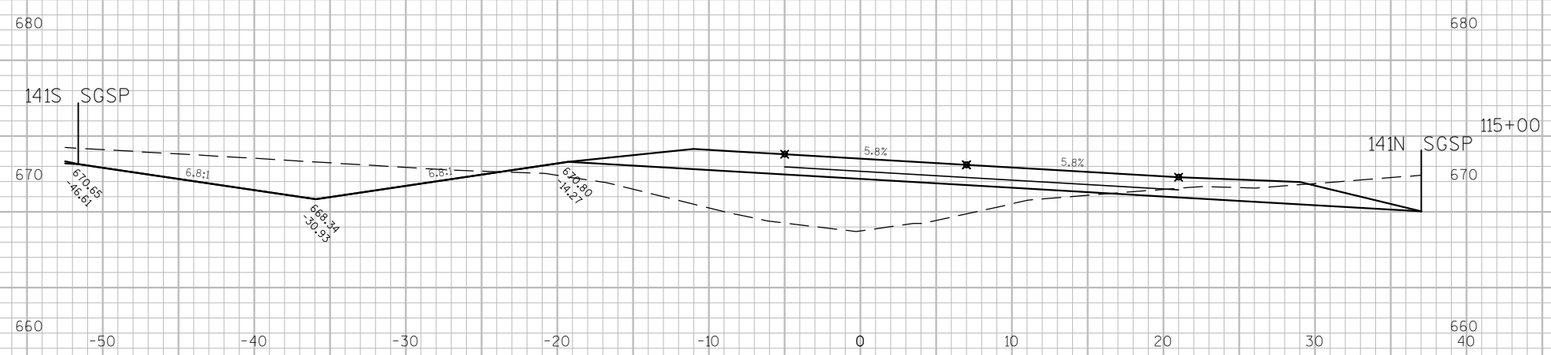

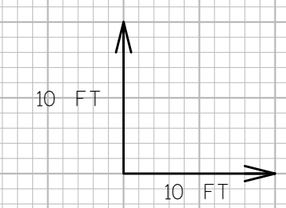

9

9

PROJECT NO:1490-28-71	HWY: USH 141	COUNTY: OCONTO	CROSS SECTIONS: USH 141 NORTHBOUND	SHEET 223	E

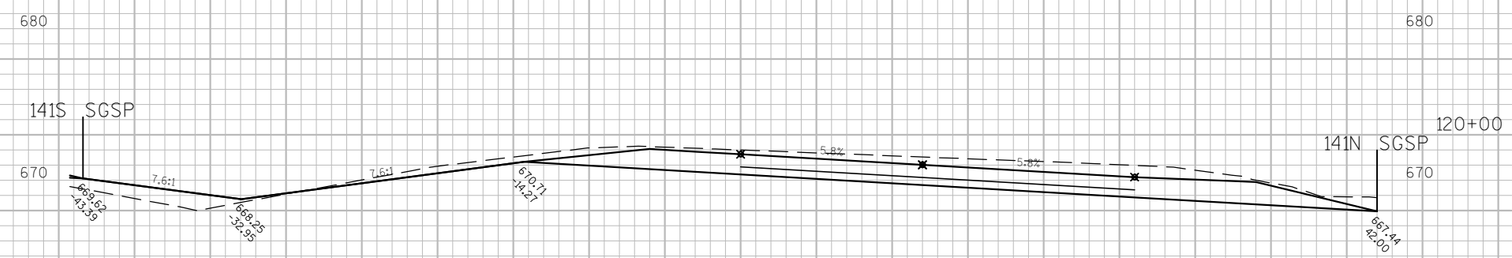

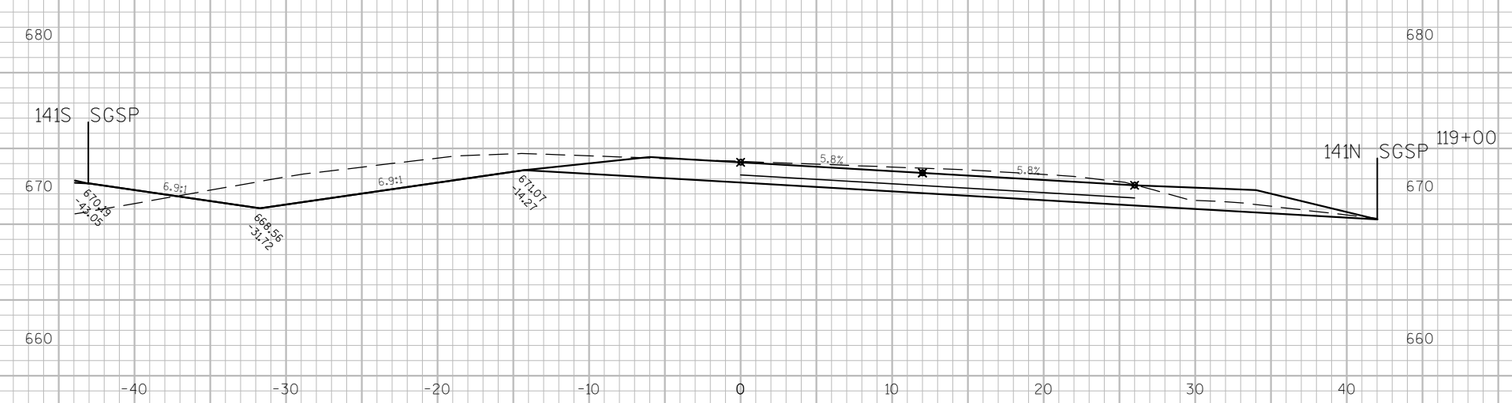

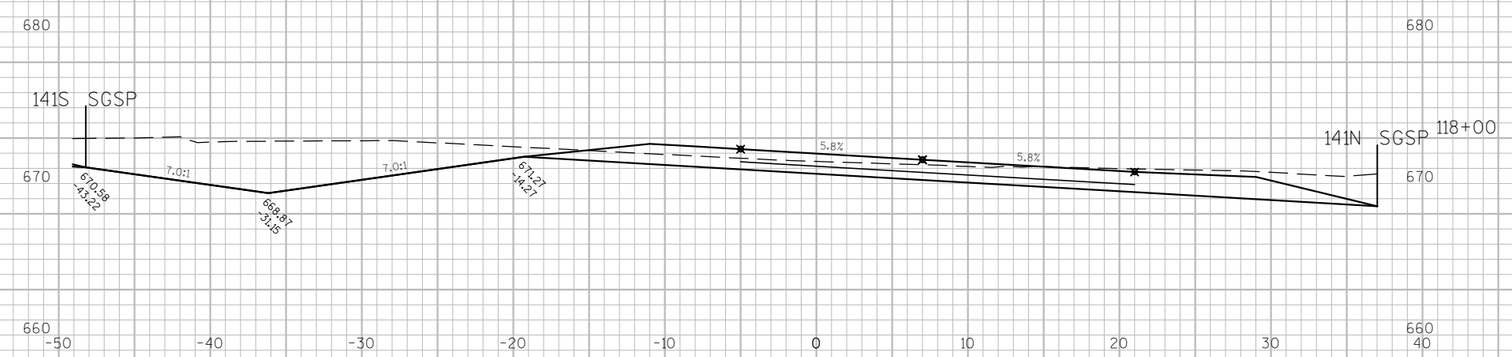

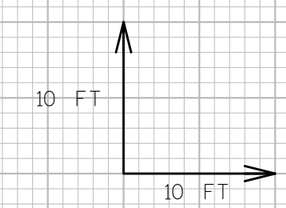

9

9

PROJECT NO:1490-28-71	HWY: USH 141	COUNTY: OCONTO	CROSS SECTIONS: USH 141 NORTHBOUND	SHEET 224	E

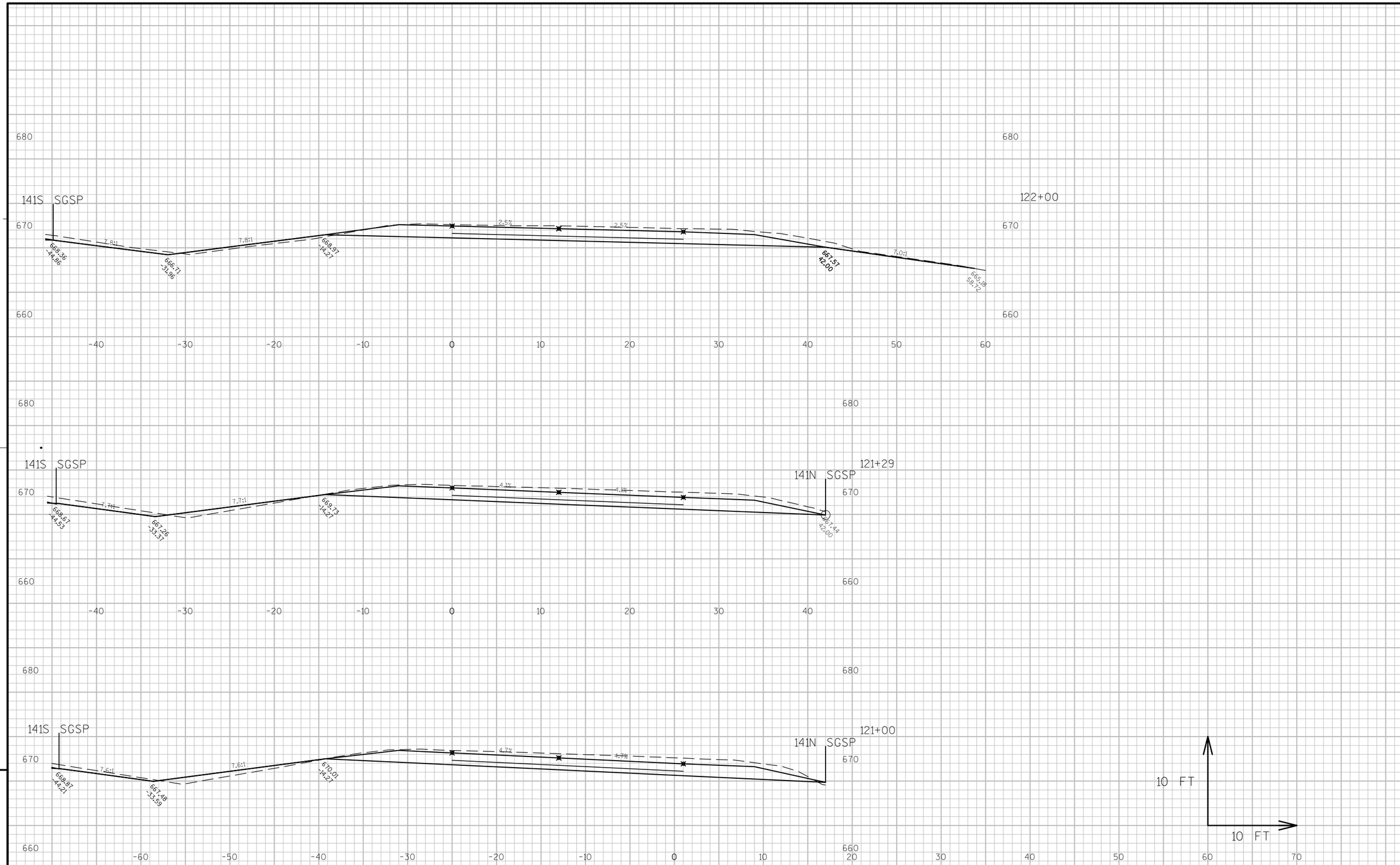

9

9

PROJECT NO:1490-28-71	HWY: USH 141	COUNTY: OCONTO	CROSS SECTIONS: USH 141 NORTHBOUND	SHEET 225	E

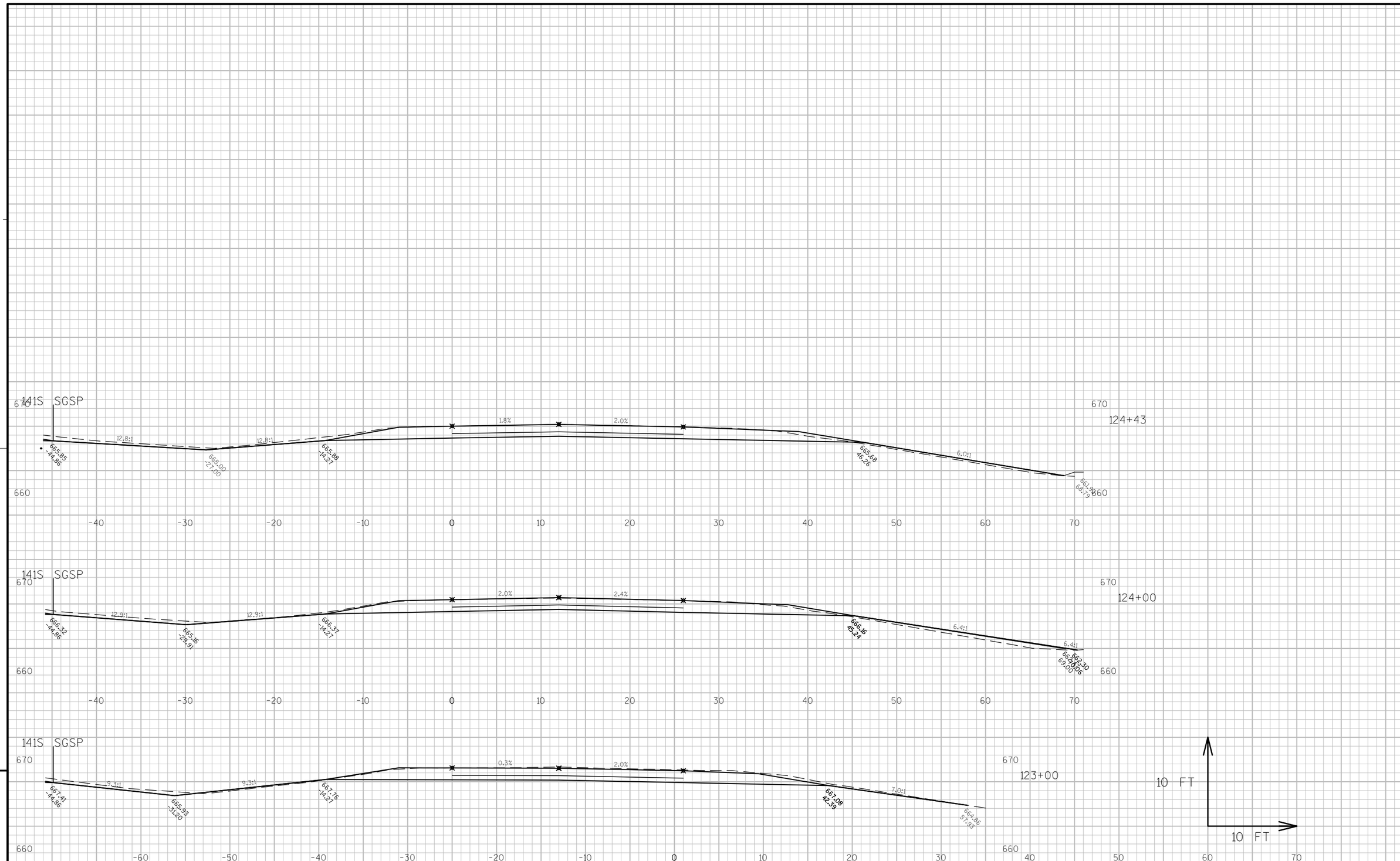

9

9

PROJECT NO:1490-28-71	HWY: USH 141	COUNTY: OCONTO	CROSS SECTIONS: USH 141 NORTHBOUND	SHEET 226	E

FILE NAME : N:\PDS\C3D\14902800\SHEETSPLAN\090101_XS.DWG PLOT DATE : 3/7/2014 10:17 AM PLOT BY : WALLNER, AARON J PLOT NAME : PLOT SCALE : 1:10_XREF

WISDOT/CADDS SHEET 49

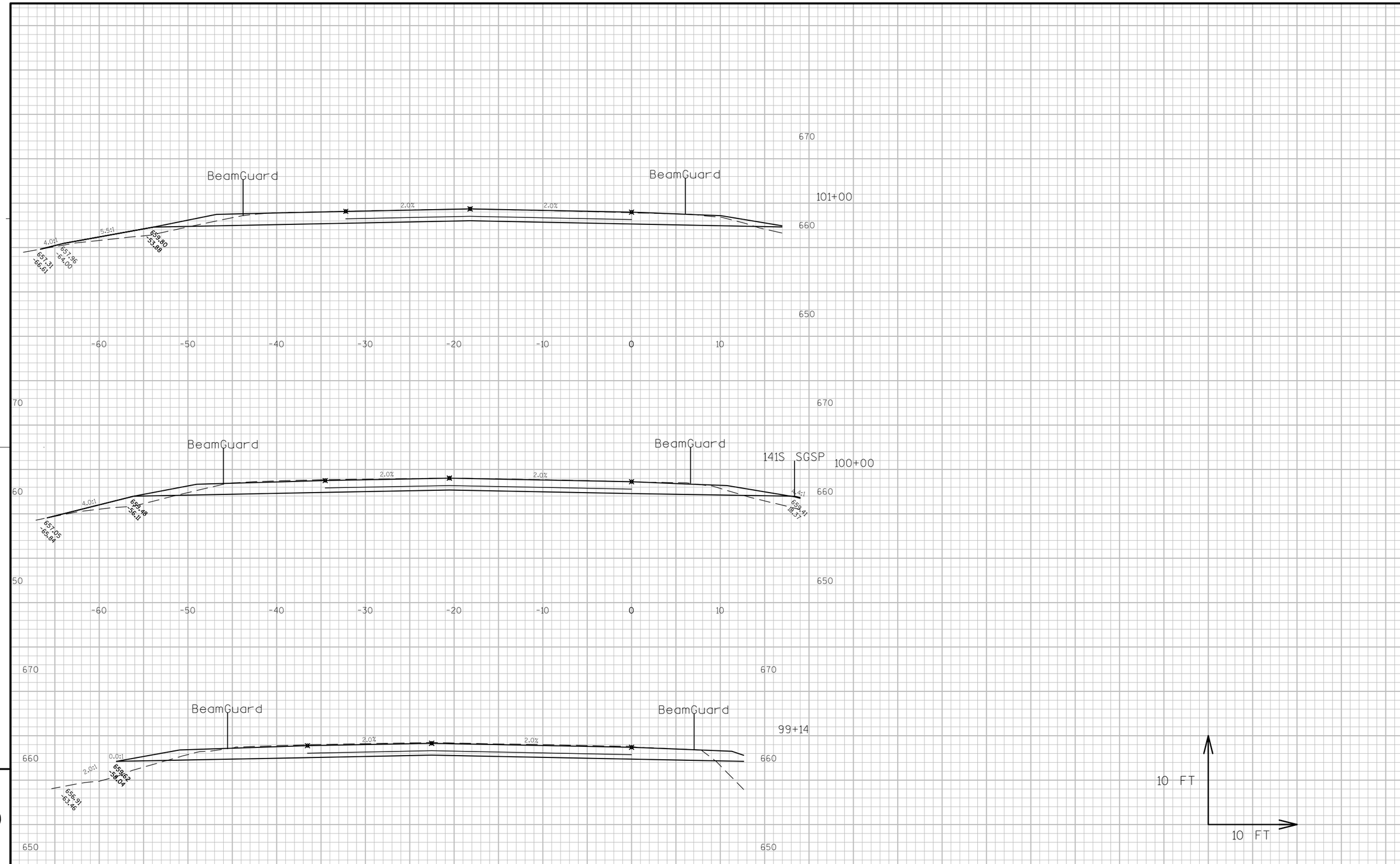

PROJECT NO:1490-28-71	HWY: USH 141	COUNTY: OCONTO	CROSS SECTIONS: SOUTHBOUND	SHEET 227	E

FILE NAME : N:\PDS\C3D\14902800\SHEETSPLAN\090101_XS.DWG PLOT DATE : 3/7/2014 10:49 AM PLOT BY : WALLNER, AARON J PLOT NAME : PLOT SCALE : 1:10_XREF

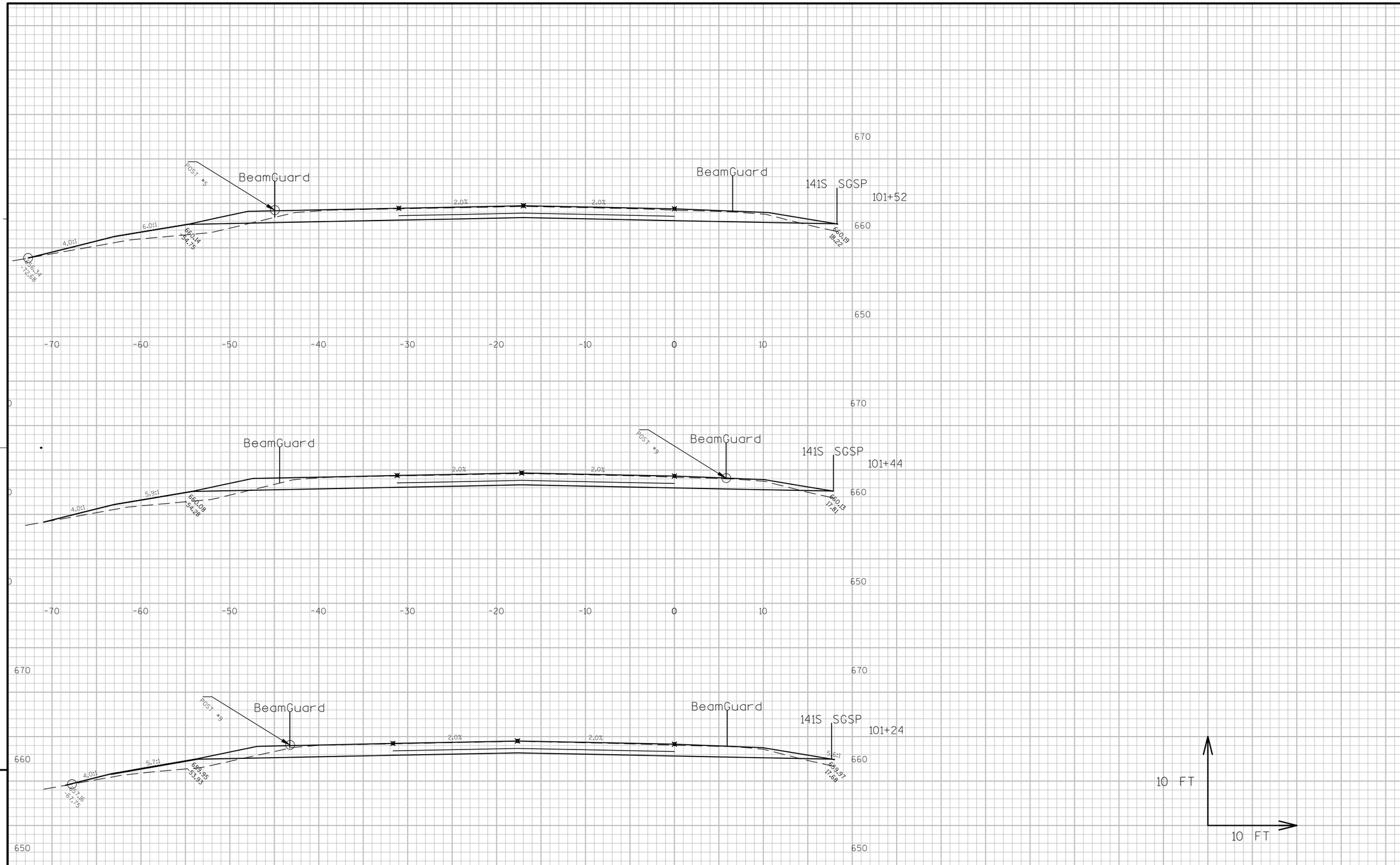

9

9

PROJECT NO:1490-28-71	HWY: USH 141	COUNTY: OCONTO	CROSS SECTIONS: SOUTHBOUND	SHEET 228	E

FILE NAME : N:\PDS\C3D\14902800\SHEETSPLAN\090101_XS.DWG PLOT DATE : 3/7/2014 10:49 AM PLOT BY : WALLNER, AARON J PLOT NAME : PLOT SCALE : 1:10_XREF

WISDOT/CADDS SHEET 49

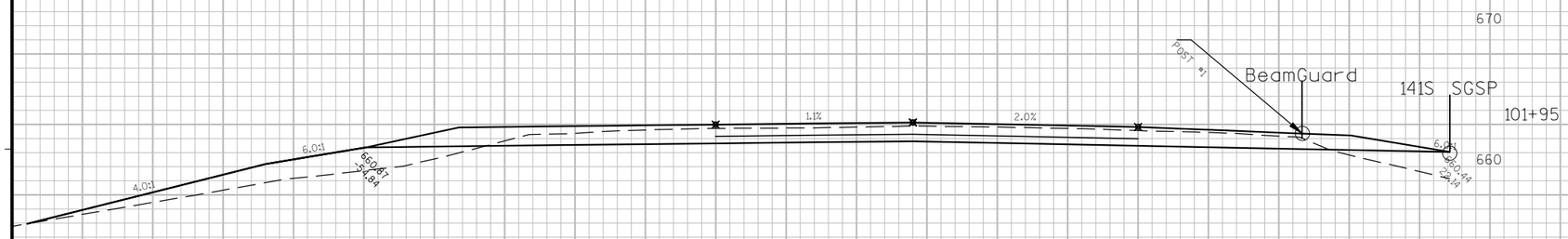

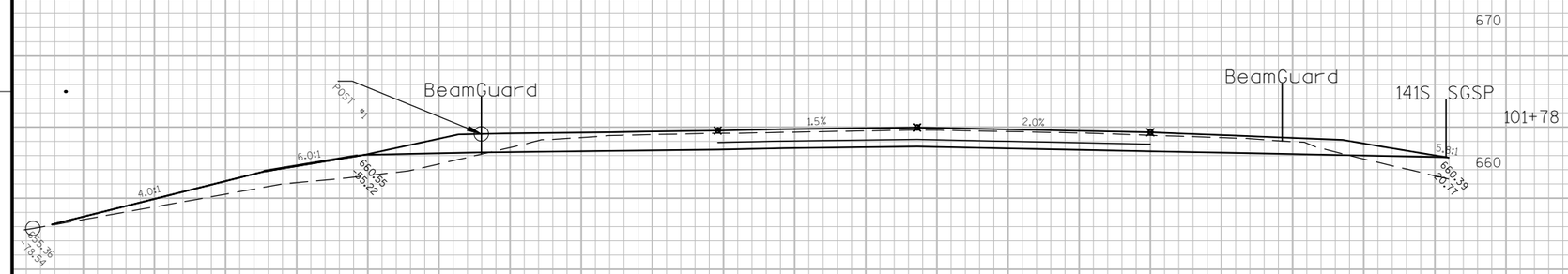

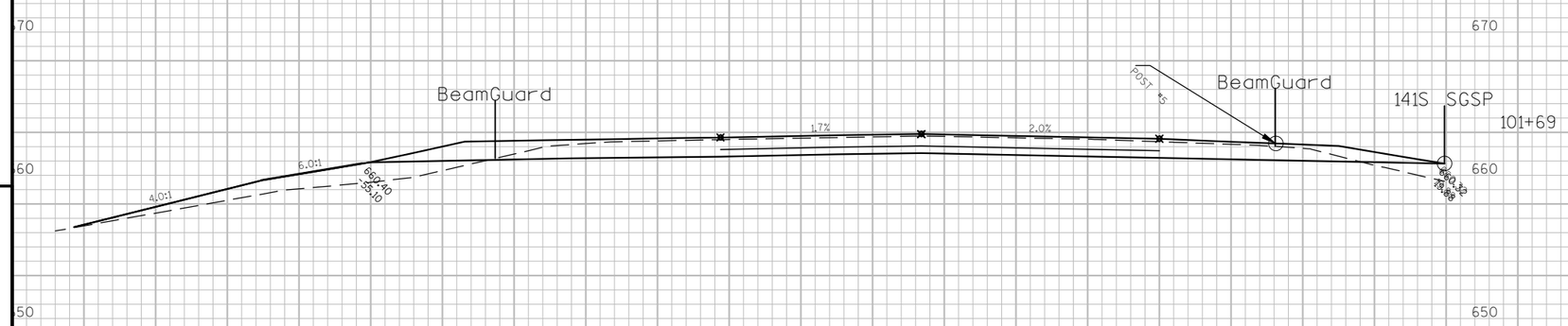

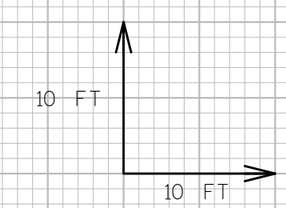

9

9

PROJECT NO:1490-28-71	HWY: USH 141	COUNTY: OCONTO	CROSS SECTIONS: SOUTHBOUND	SHEET 229	E

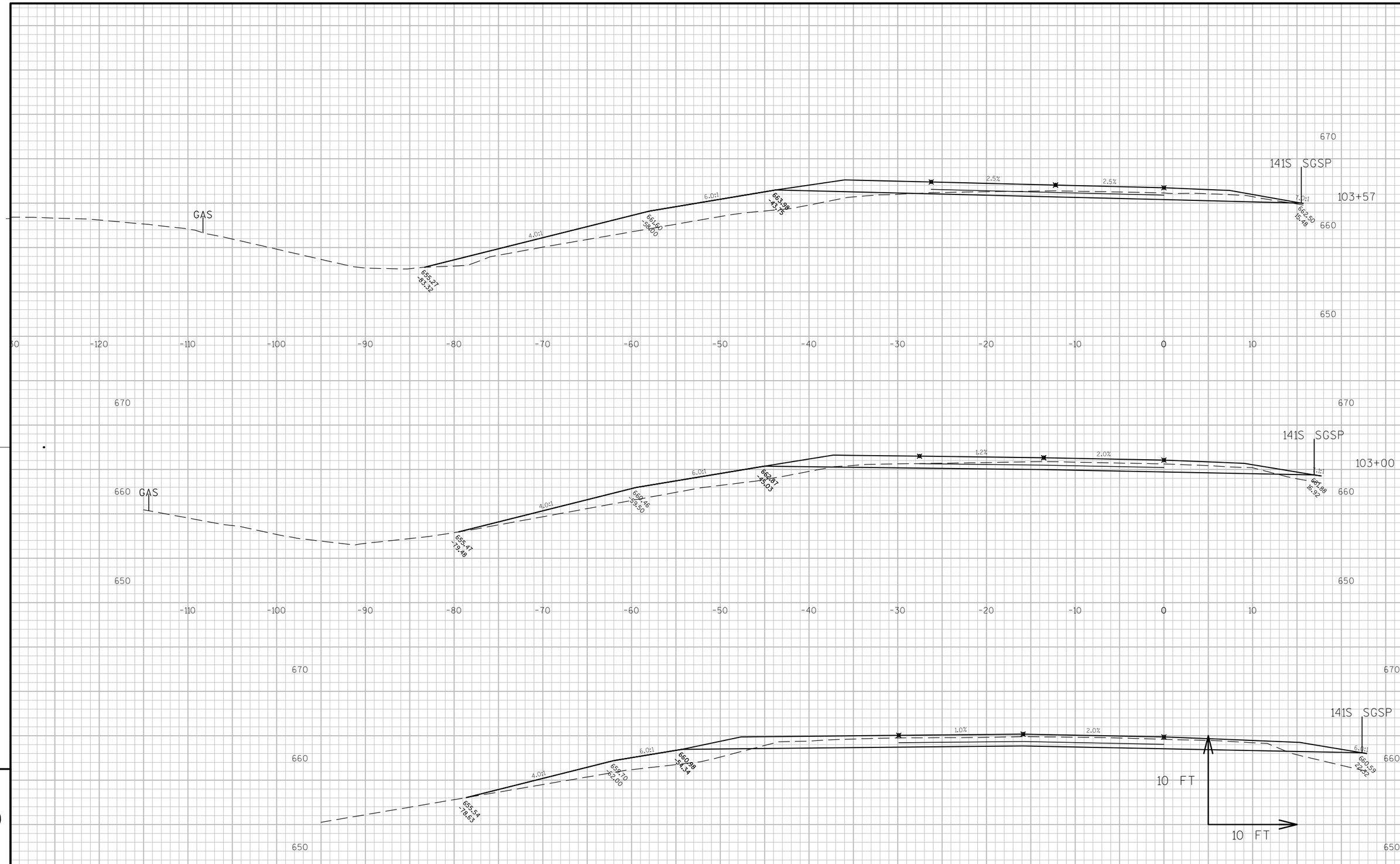

9

9

PROJECT NO:1490-28-71	HWY: USH 141	COUNTY: OCONTO	CROSS SECTIONS: SOUTHBOUND	SHEET 230	E

FILE NAME : N:\PDS\C3D\14902800\SHEETSPLAN\090101_XS.DWG PLOT DATE : 3/7/2014 10:49 AM PLOT BY : WALLNER, AARON J PLOT NAME : PLOT SCALE : 1:10_XREF

WISDOT/CADDS SHEET 49

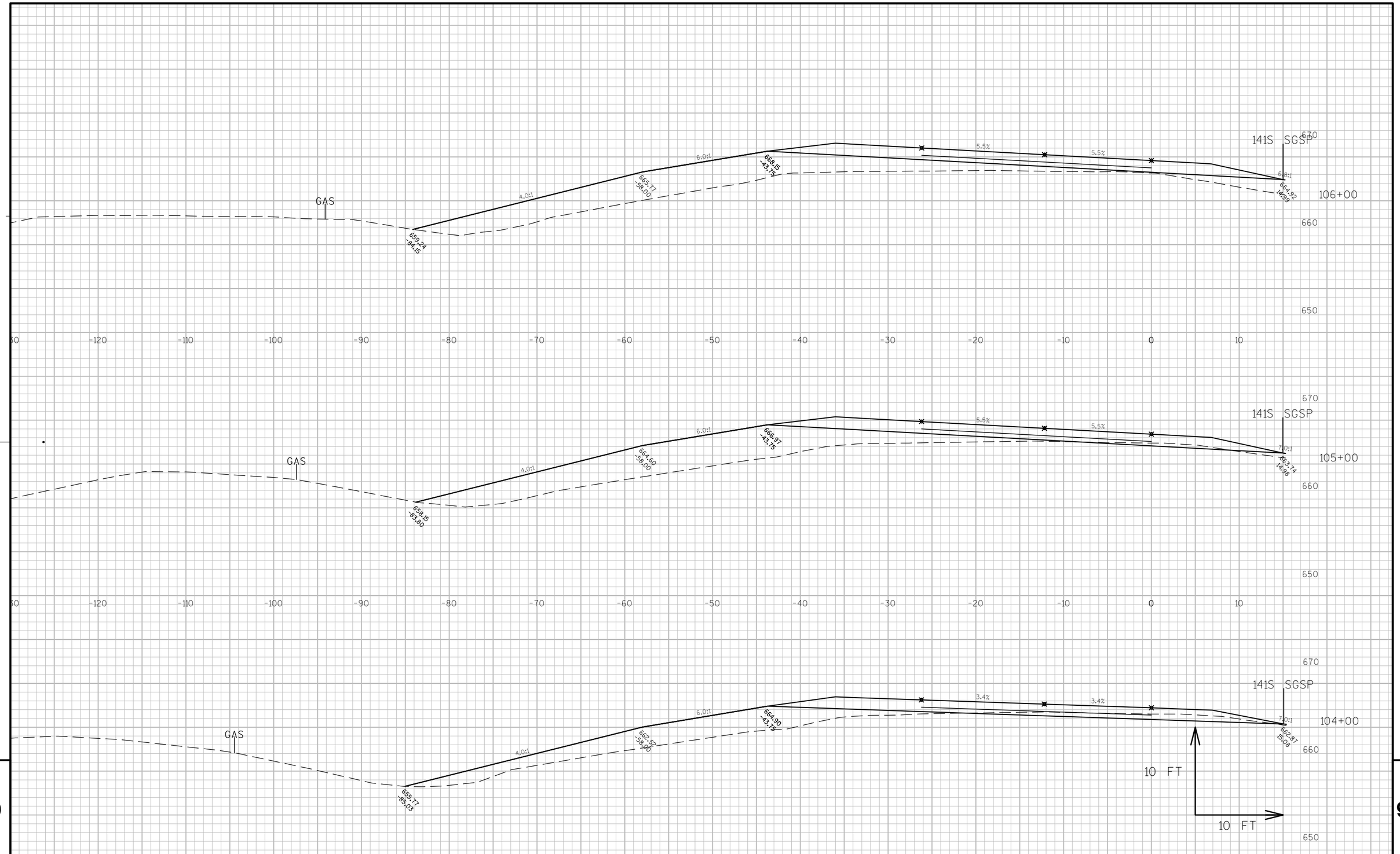

9

9

PROJECT NO:1490-28-71	HWY: USH 141	COUNTY: OCONTO	CROSS SECTIONS: SOUTHBOUND	SHEET 231	E

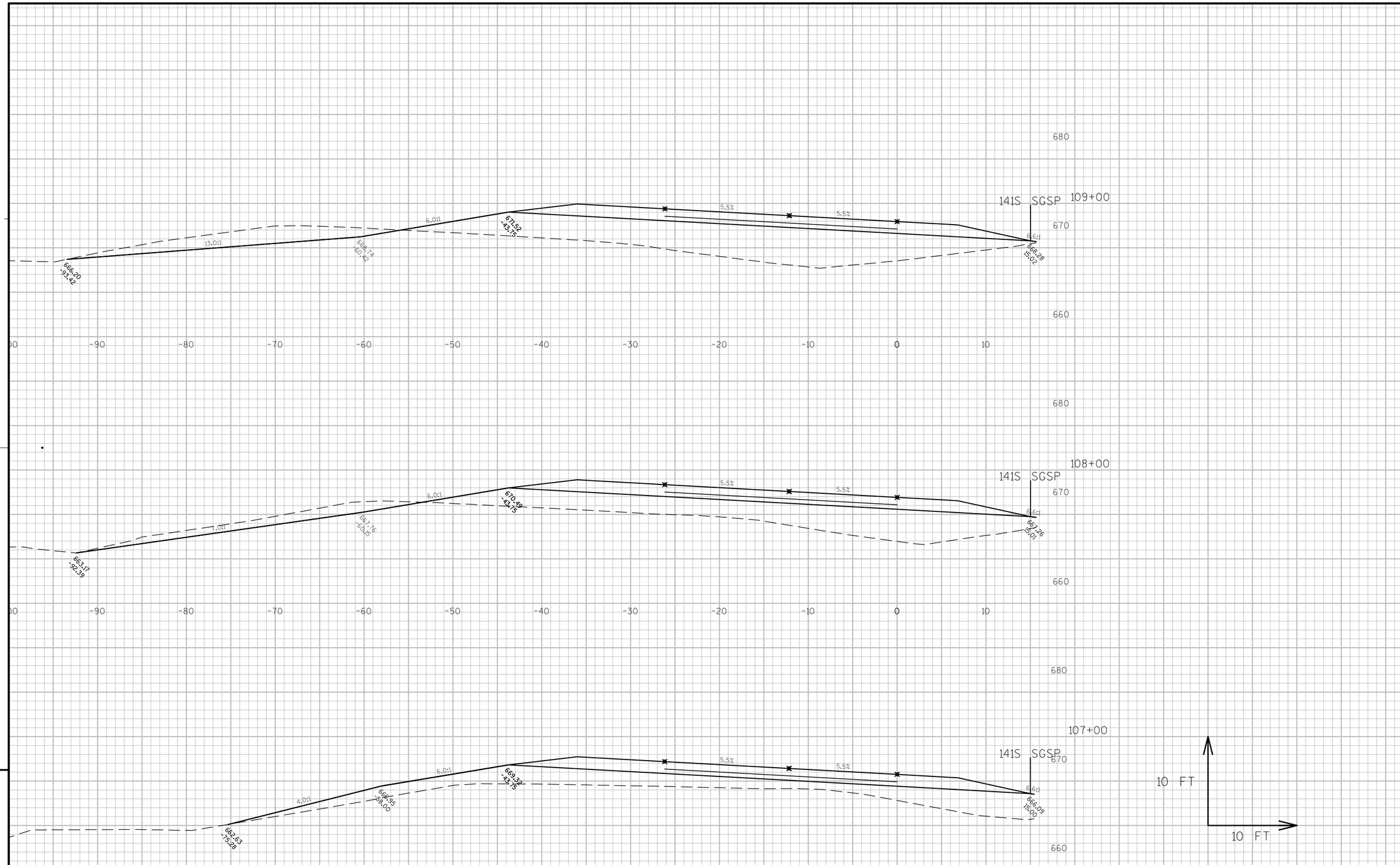

9

9

PROJECT NO:1490-28-71	HWY: USH 141	COUNTY: OCONTO	CROSS SECTIONS: SOUTHBOUND	SHEET 232	E

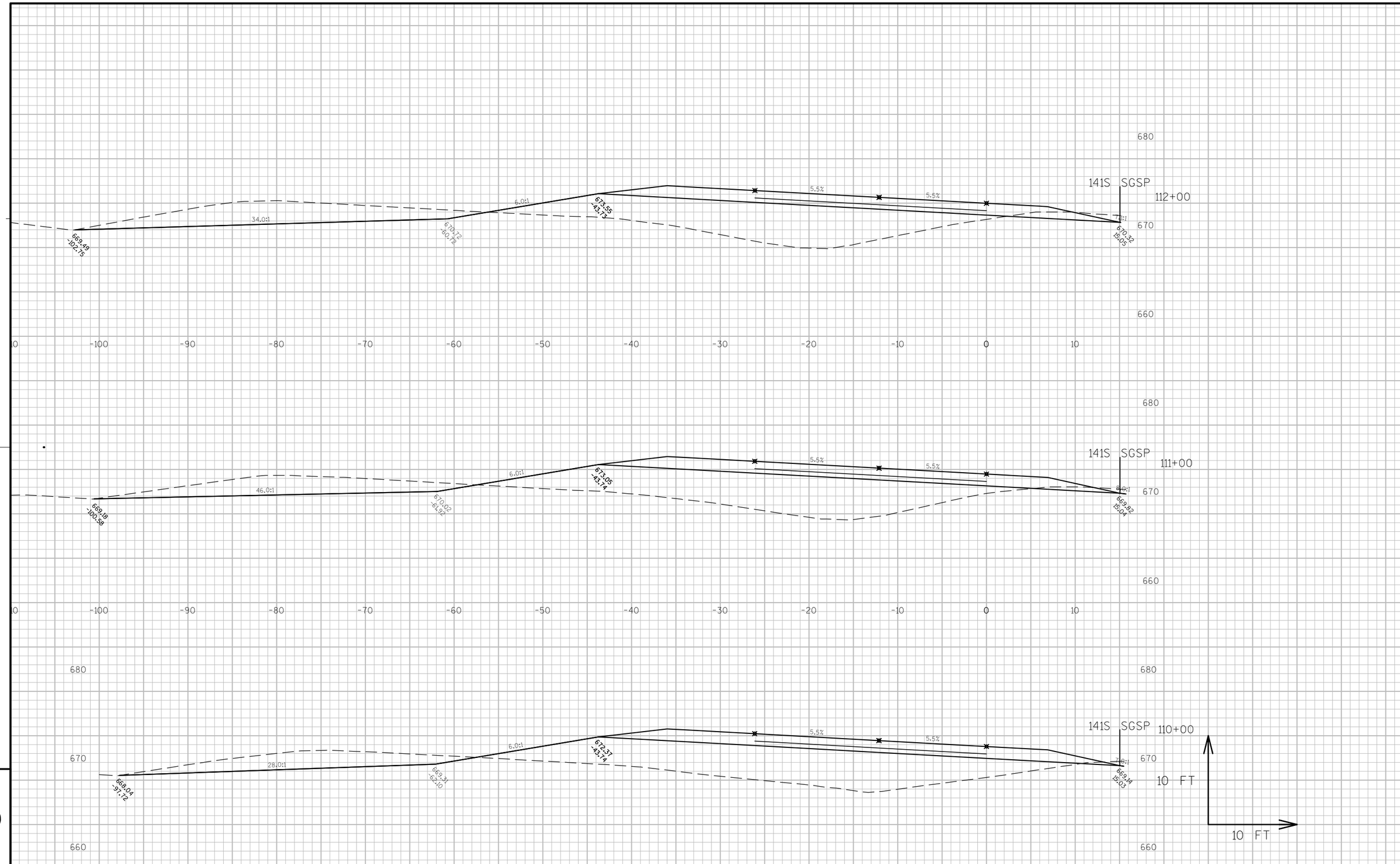

9

9

PROJECT NO:1490-28-71	HWY: USH 141	COUNTY: OCONTO	CROSS SECTIONS: SOUTHBOUND	SHEET 233	E

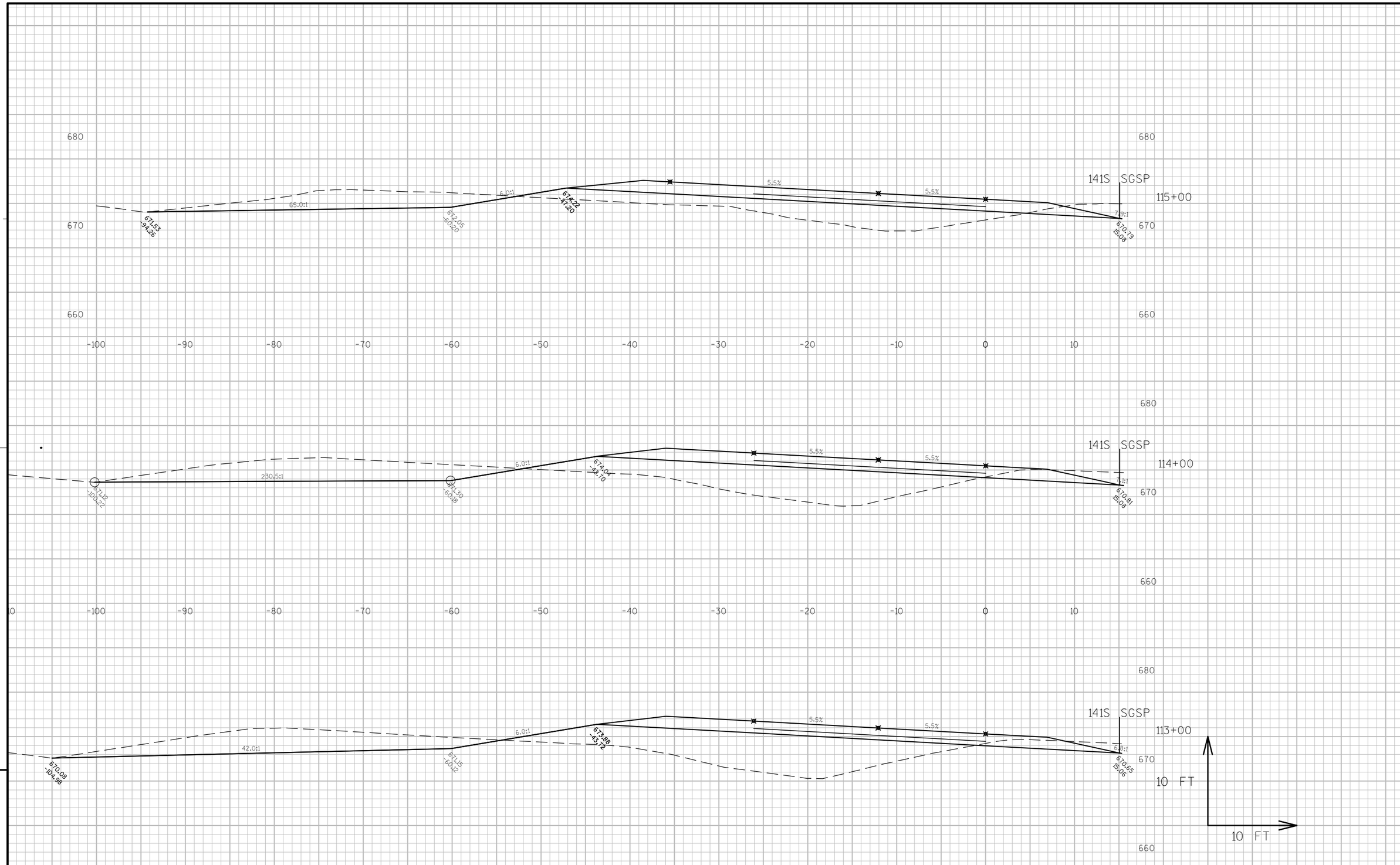

PROJECT NO:1490-28-71	HWY: USH 141	COUNTY: OCONTO	CROSS SECTIONS: SOUTHBOUND	SHEET 234	E

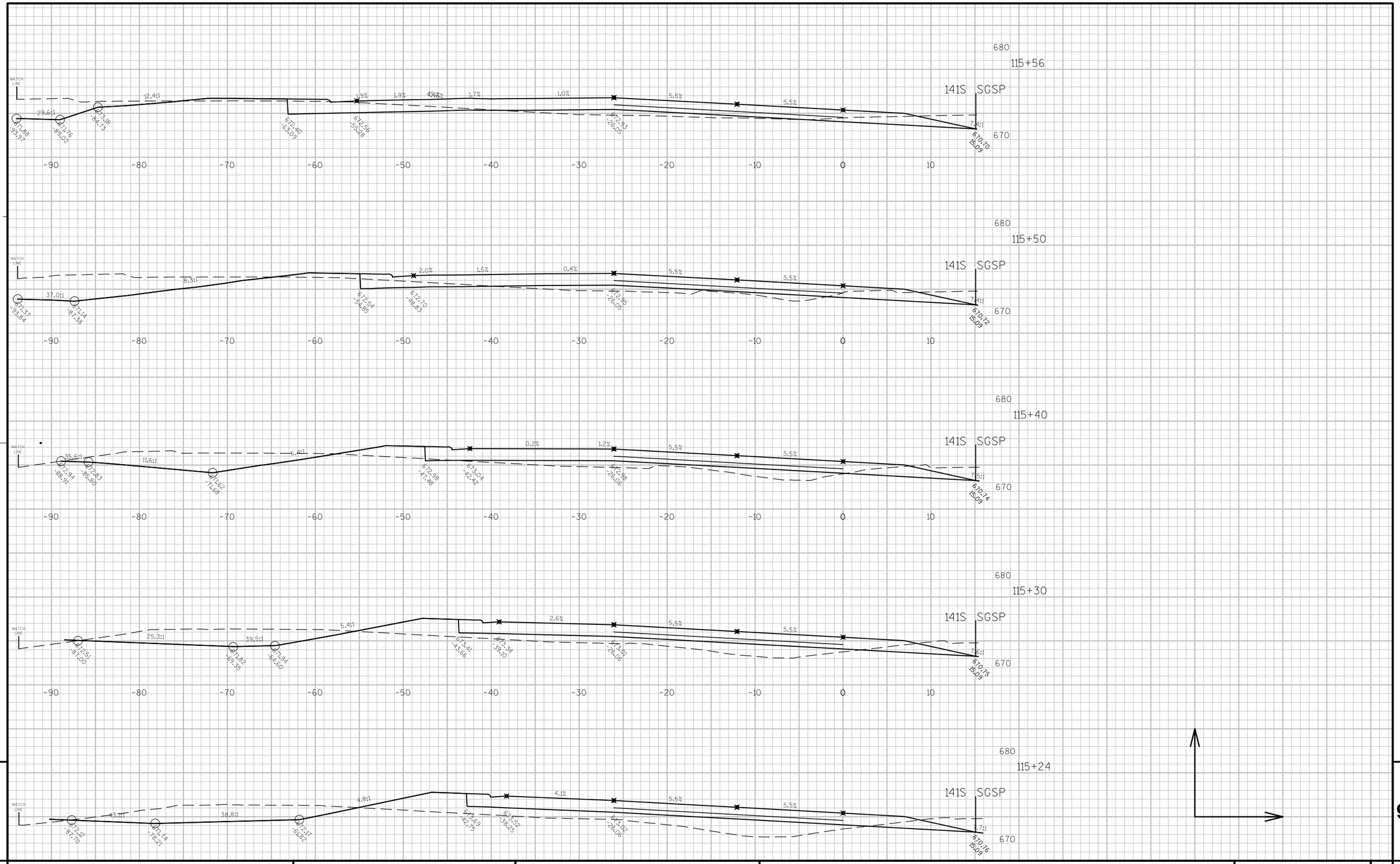

9

9

PROJECT NO:1490-28-71	HWY: USH 141	COUNTY: OCONTO	CROSS SECTIONS: SOUTHBOUND	SHEET 235	E

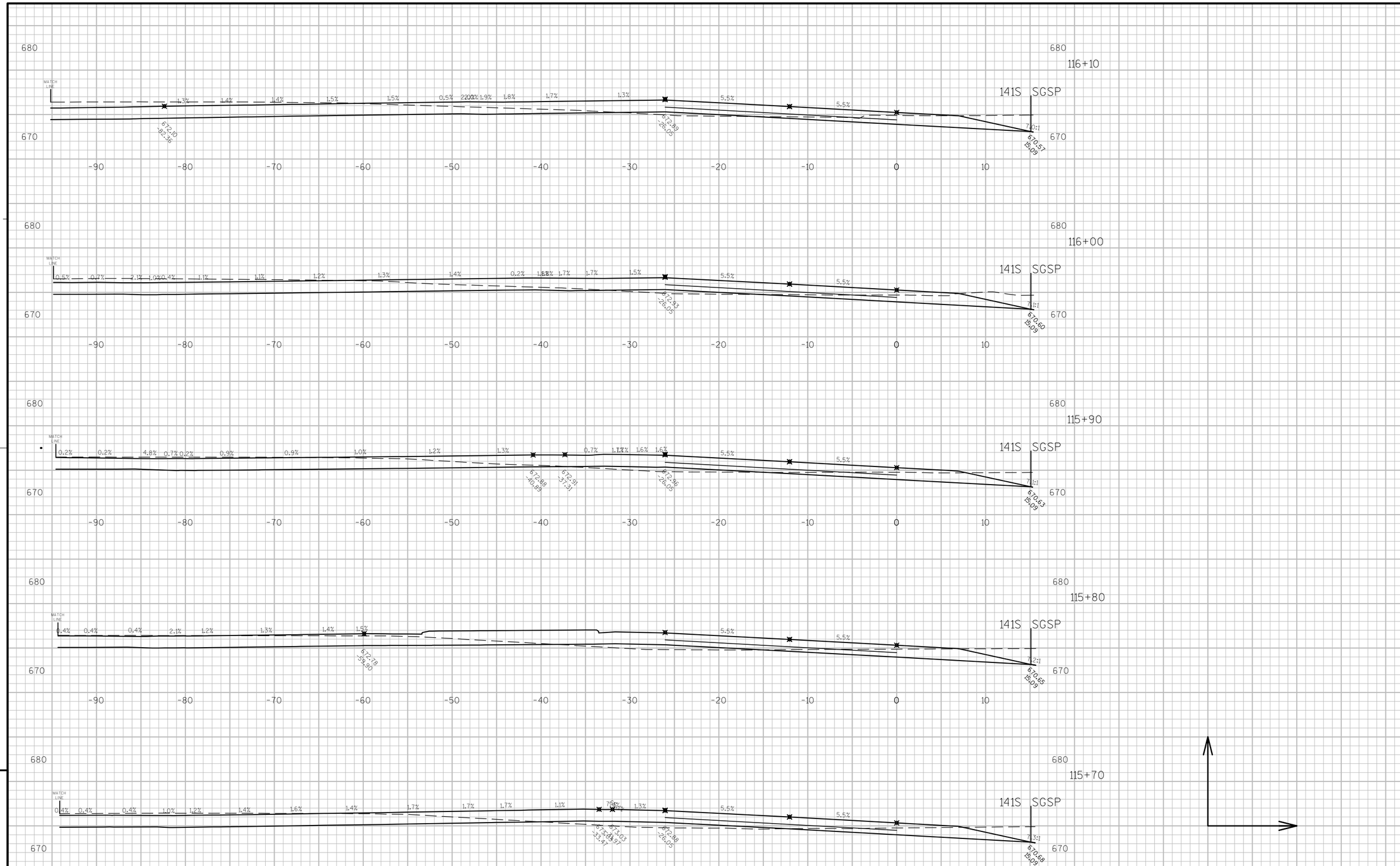

9

9

PROJECT NO:1490-28-71	HWY: USH 141	COUNTY: OCONTO	CROSS SECTIONS: SOUTHBOUND	SHEET 236	E

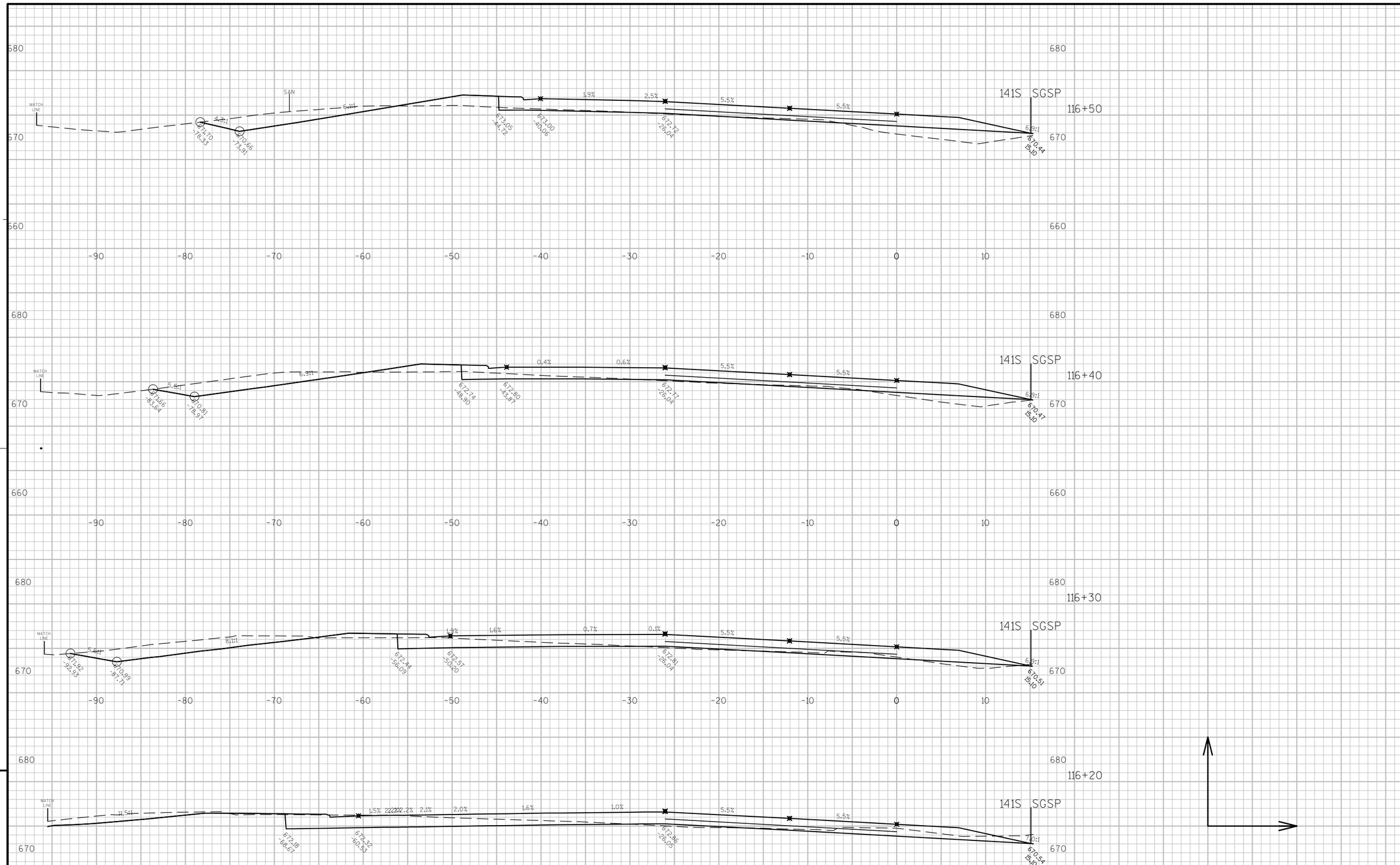

9

9

PROJECT NO:1490-28-71	HWY: USH 141	COUNTY: OCONTO	CROSS SECTIONS: SOUTHBOUND	SHEET 237	E

FILE NAME : N:\PDS\C3D\14902800\SHEETSPLAN\090101_XS.DWG PLOT DATE : 3/7/2014 10:50 AM PLOT BY : WALLNER, AARON J PLOT NAME :

WISDOT/CADDS SHEET 49

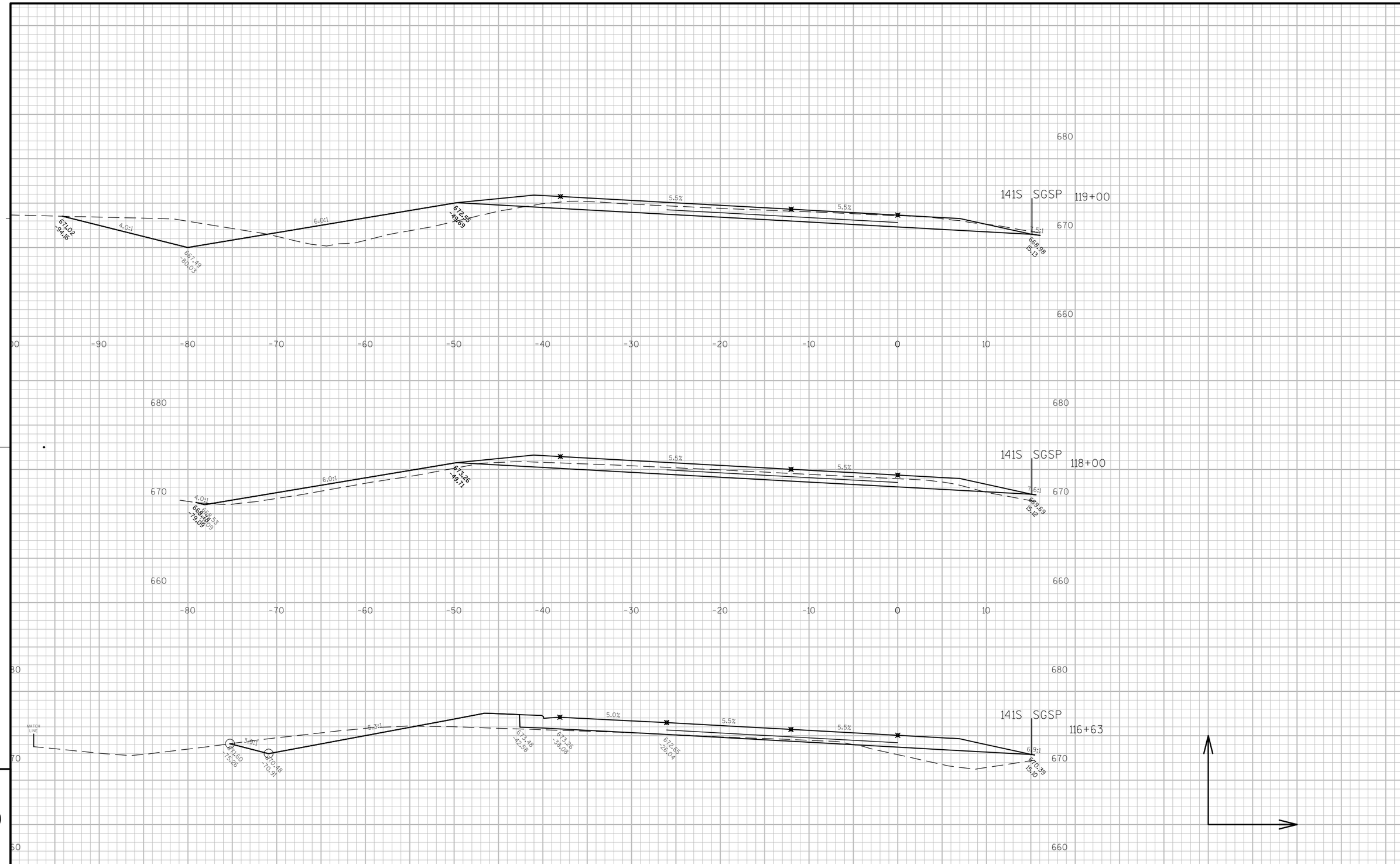

PROJECT NO:1490-28-71	HWY: USH 141	COUNTY: OCONTO	CROSS SECTIONS: SOUTHBOUND	SHEET 238	E

FILE NAME : N:\PDS\C3D\14902800\SHEETSPLAN\090101_XS.DWG PLOT DATE : 3/7/2014 10:50 AM PLOT BY : WALLNER, AARON J PLOT NAME :

WISDOT/CADDS SHEET 49

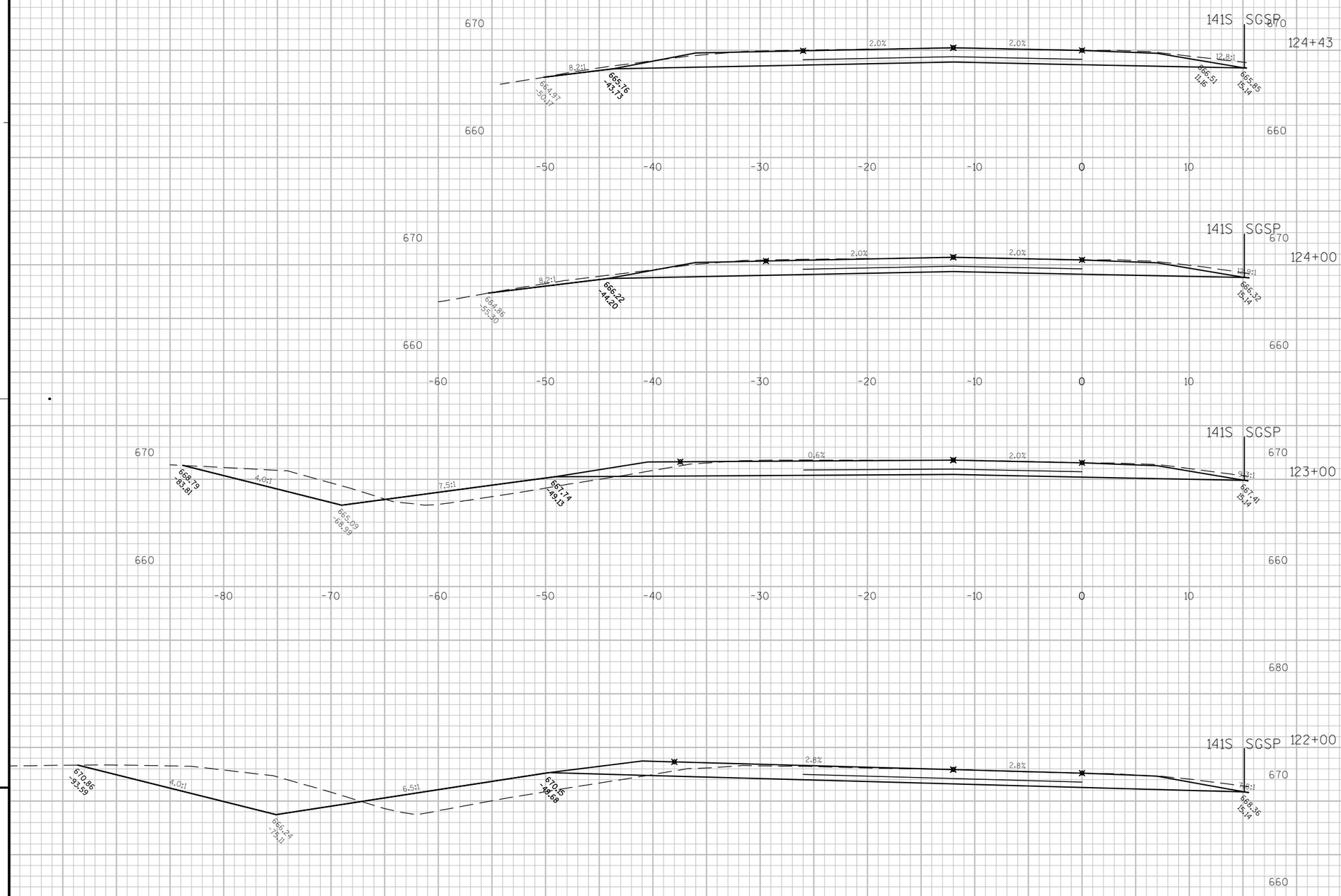

9

9

PROJECT NO:1490-28-71	HWY: USH 141	COUNTY: OCONTO	CROSS SECTIONS: SOUTHBOUND	SHEET 239	E

FILE NAME : N:\PDS\C3D\14902800\SHEETSPLAN\090101_XS.DWG PLOT DATE : 3/7/2014 10:50 AM PLOT BY : WALLNER, AARON J PLOT NAME :

WISDOT/CADDS SHEET 49

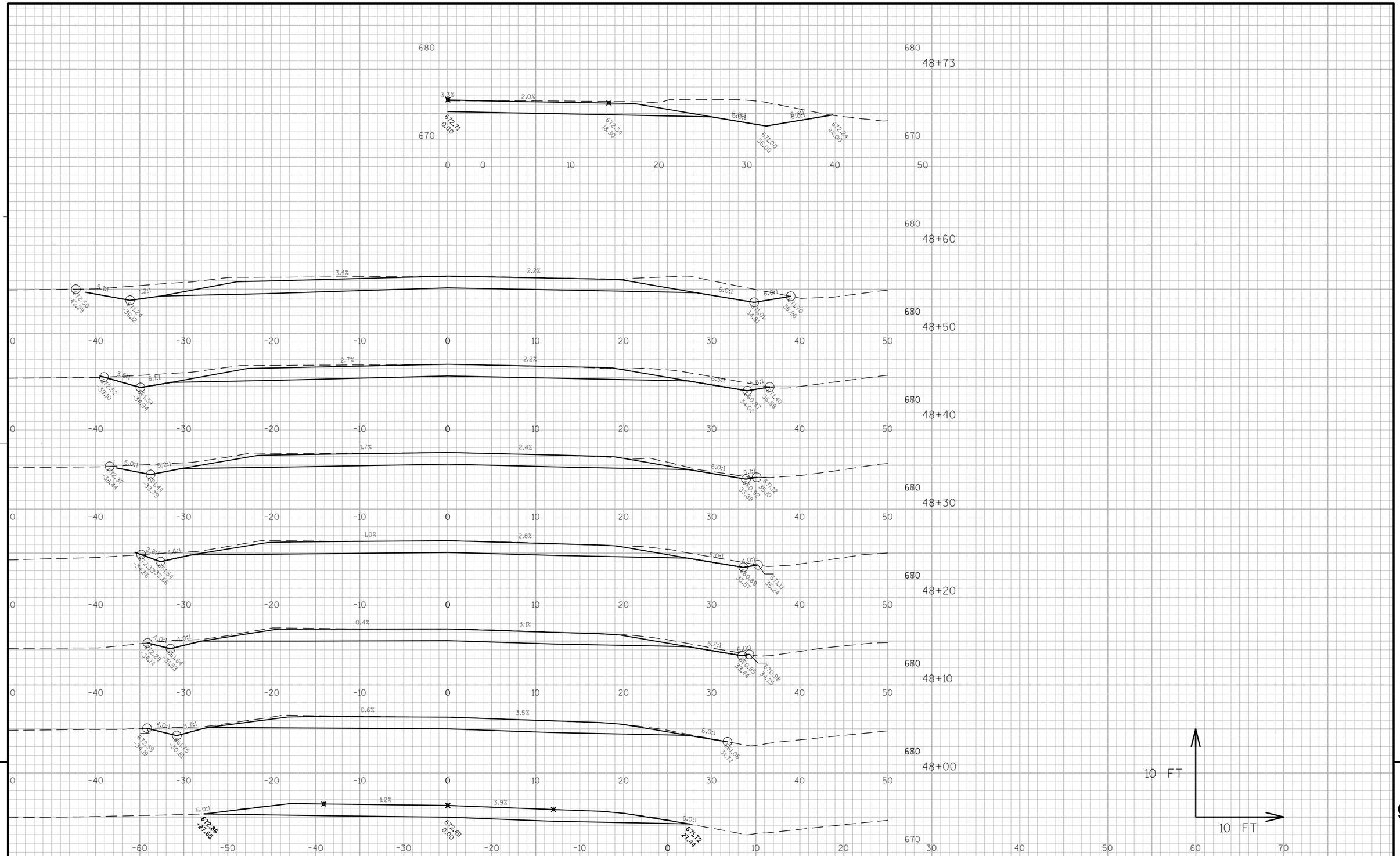

PROJECT NO:1490-28-00	HWY: USH 141	COUNTY: OCONTO	CROSS SECTIONS: CTH E	SHEET 240	E

FILE NAME :N:\PDS\C3D\14902800\SHEETSPLAN\090101_XS.DWG PLOT DATE : 3/7/2014 10:23 AM PLOT BY : WALLNER, AARON J PLOT NAME : PLOT SCALE : 1:10_XREF

WISDOT/CADDS SHEET 49

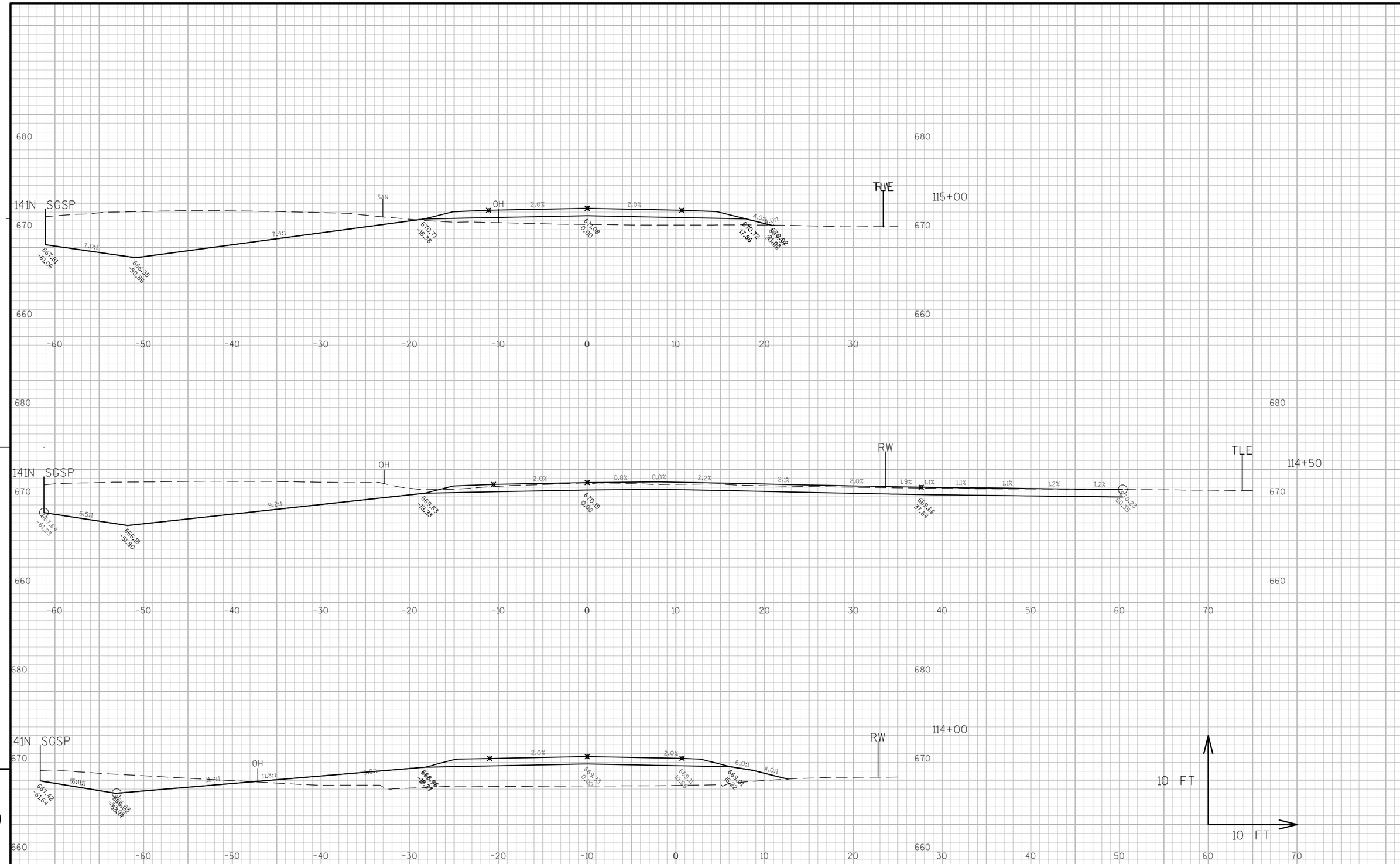

PROJECT NO:1490-28-71	HWY: USH 141	COUNTY: OCONTO	CROSS SECTIONS: HABECK LANE	SHEET 241	E

FILE NAME : N:\PDS\C3D\14902800\SHEETSPLAN\090101_XS.DWG PLOT DATE : 3/7/2014 10:21 AM PLOT BY : WALLNER, AARON J PLOT NAME : PLOT SCALE : 1:10_XREF

WISDOT/CADDS SHEET 49

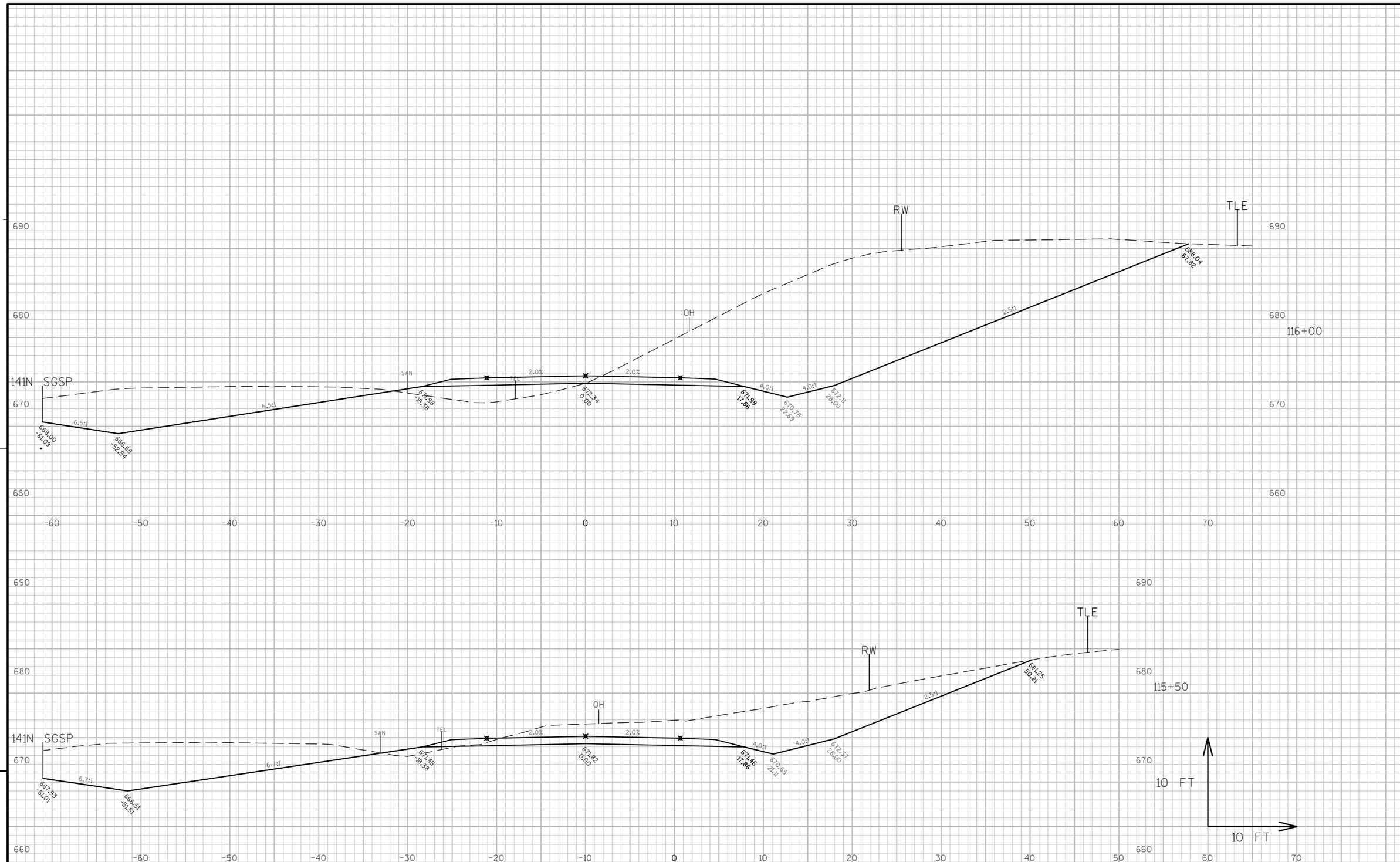

PROJECT NO:1490-28-71	HWY: USH 141	COUNTY: OCONTO	CROSS SECTIONS: HABECK LANE	SHEET 242

FILE NAME : N:\PDS\C3D\14902800\SHEETSPLAN\090101_XS.DWG PLOT DATE : 3/7/2014 10:21 AM PLOT BY : WALLNER, AARON J PLOT NAME : PLOT SCALE : 1:10_XREF

WISDOT/CADDS SHEET 49

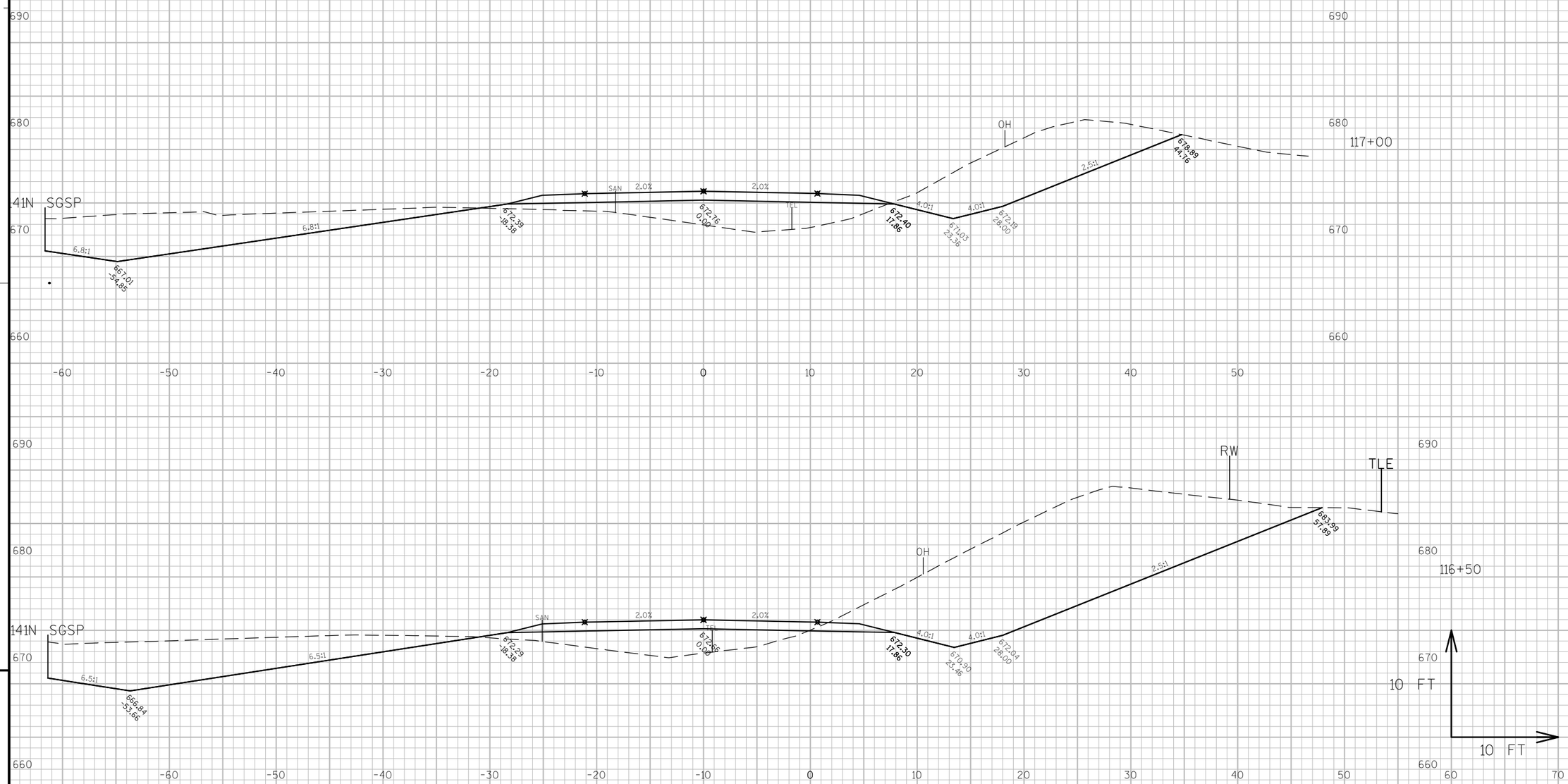

PROJECT NO:1490-28-71	HWY: USH 141	COUNTY: OCONTO	CROSS SECTIONS: HABECK LANE	SHEET 243	E

FILE NAME : N:\PDS\C3D\14902800\SHEETSPLAN\090101_XS.DWG PLOT DATE : 3/7/2014 10:21 AM PLOT BY : WALLNER, AARON J PLOT NAME : PLOT SCALE : 1:10_XREF

WISDOT/CADDS SHEET 49

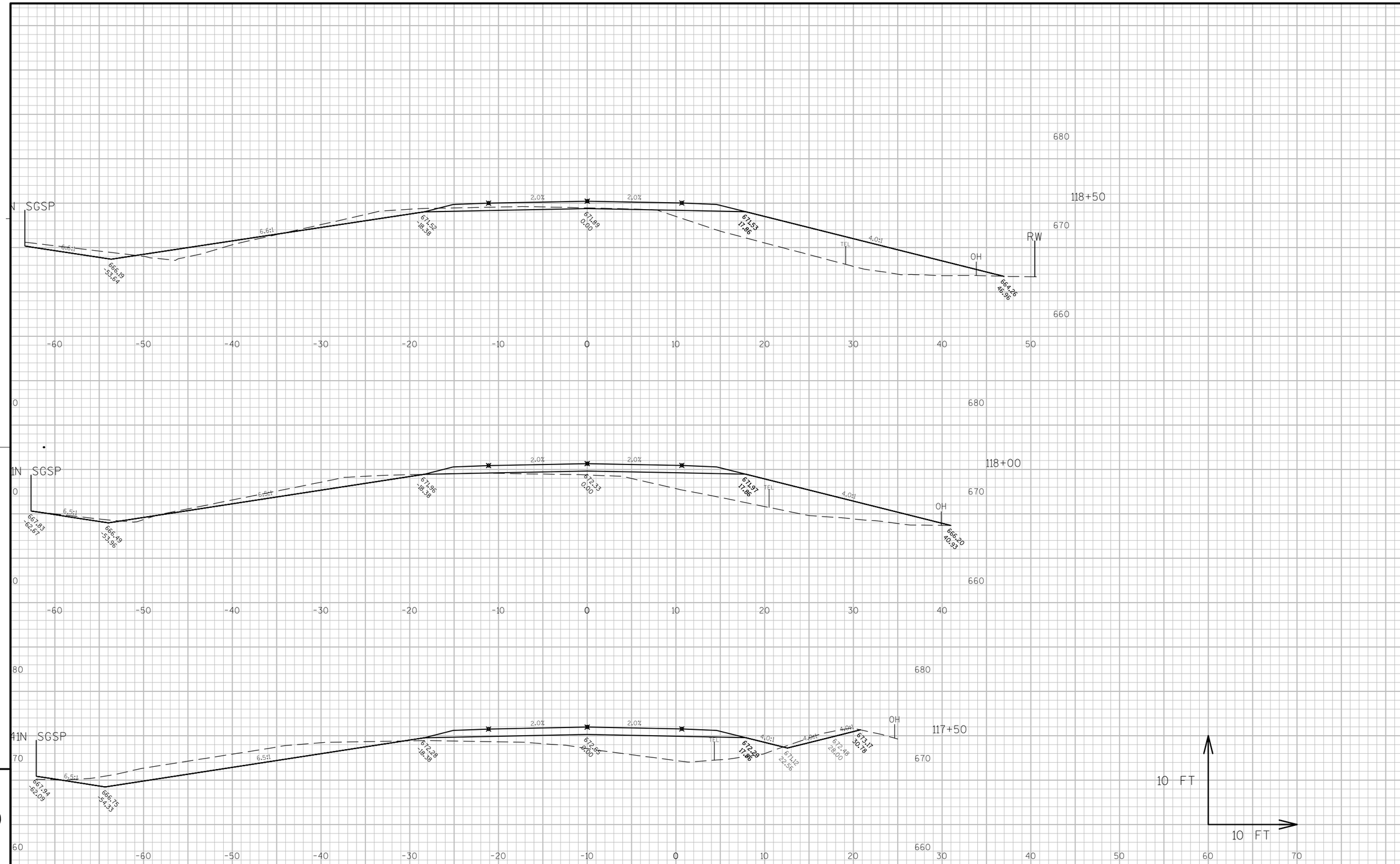

PROJECT NO:1490-28-71	HWY: USH 141	COUNTY: OCONTO	CROSS SECTIONS: HABECK LANE	SHEET 244	E

FILE NAME : N:\PDS\C3D\14902800\SHEETSPLAN\090101_XS.DWG PLOT DATE : 3/7/2014 10:21 AM PLOT BY : WALLNER, AARON J PLOT NAME : PLOT SCALE : 1:10_XREF

WISDOT/CADDS SHEET 49

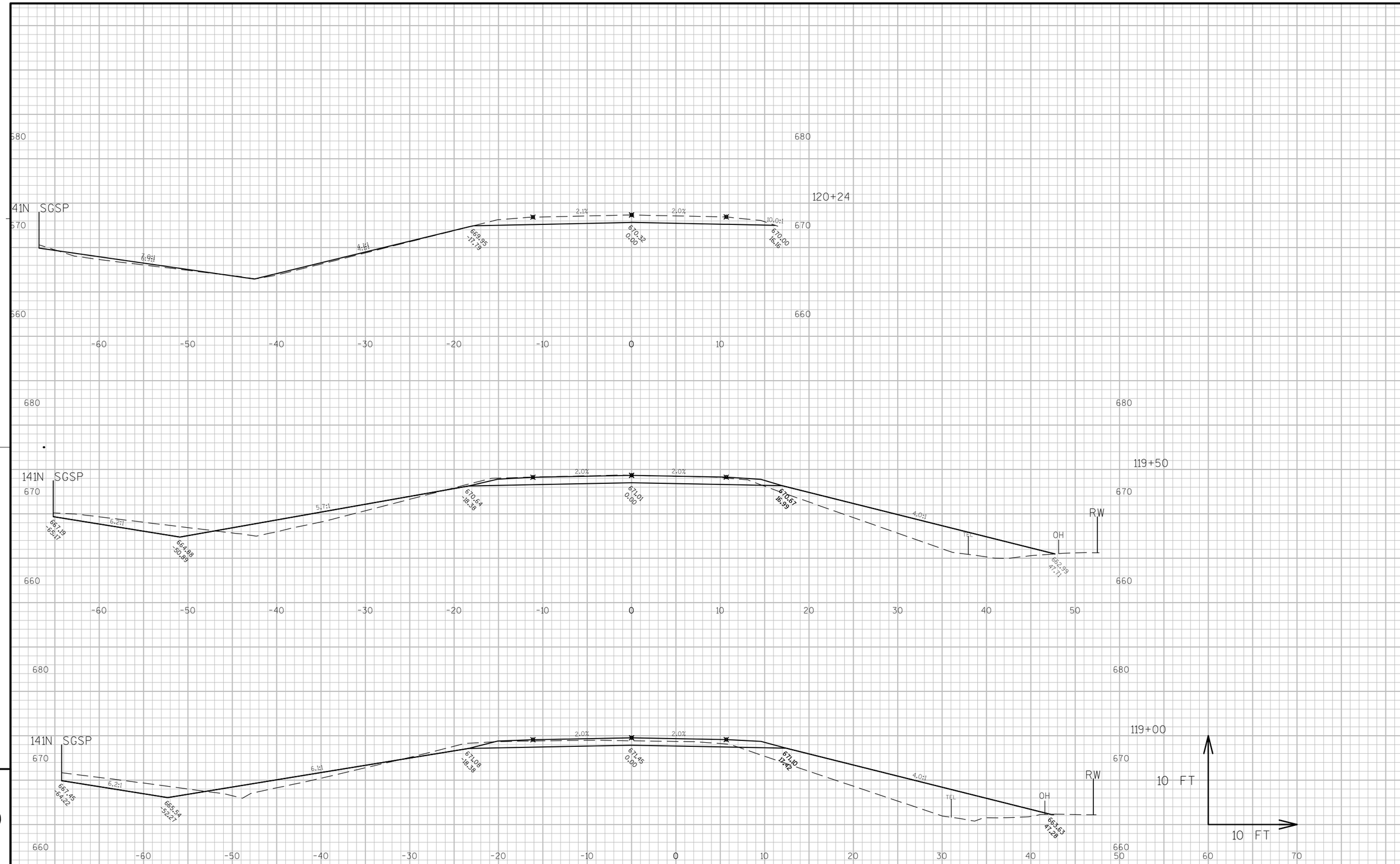

PROJECT NO:1490-28-71	HWY: USH 141	COUNTY: OCONTO	CROSS SECTIONS: HABECK LANE	SHEET 245	E

FILE NAME : N:\PDS\C3D\14902800\SHEETSPLAN\090101_XS.DWG PLOT DATE : 3/7/2014 10:21 AM PLOT BY : WALLNER, AARON J PLOT NAME : PLOT SCALE : 1:10_XREF

WISDOT/CADDS SHEET 49

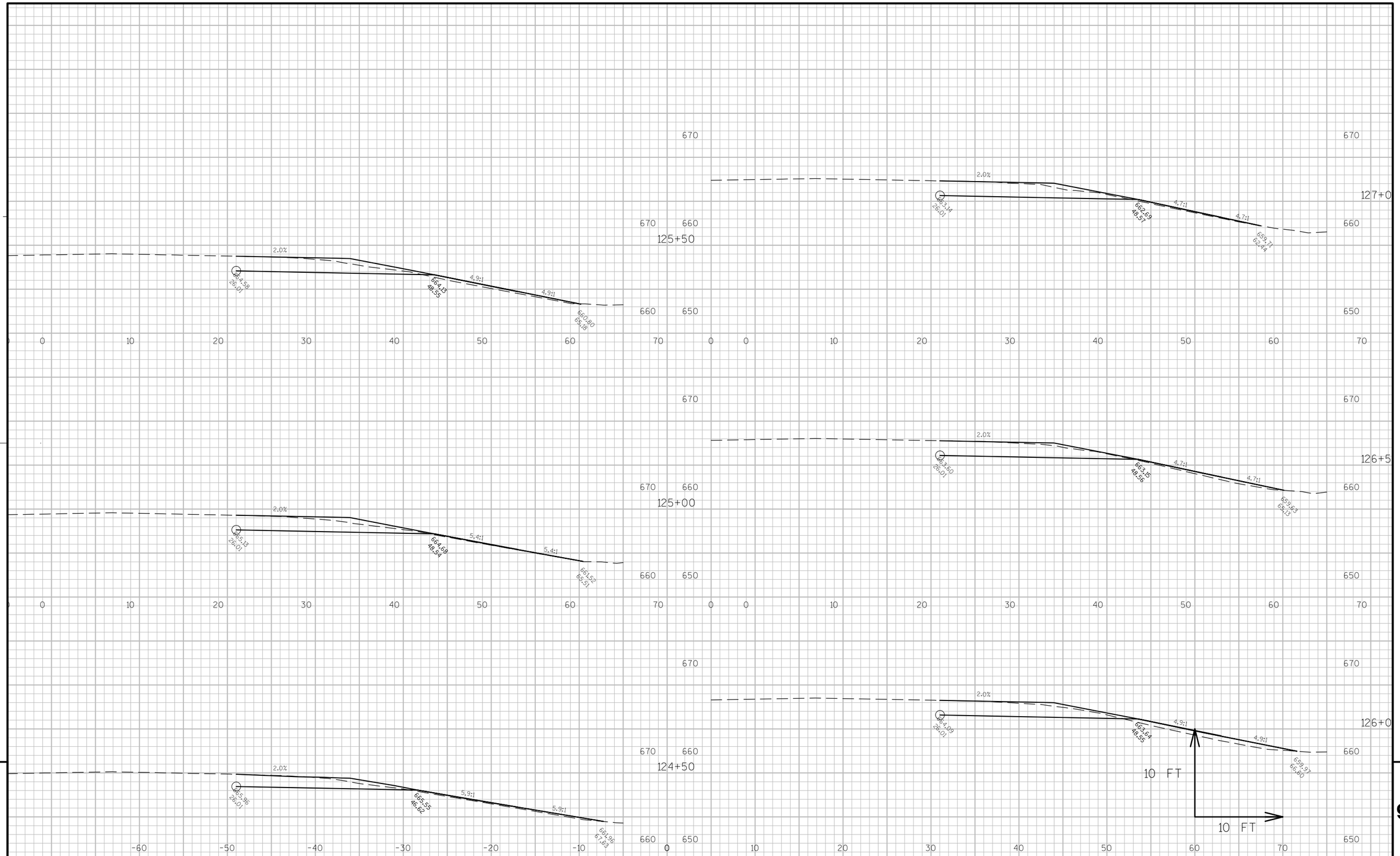

PROJECT NO:1490-28-71	HWY: USH 141	COUNTY: OCONTO	CROSS SECTIONS: NEW HABECK ENTRANCE	SHEET 246	E

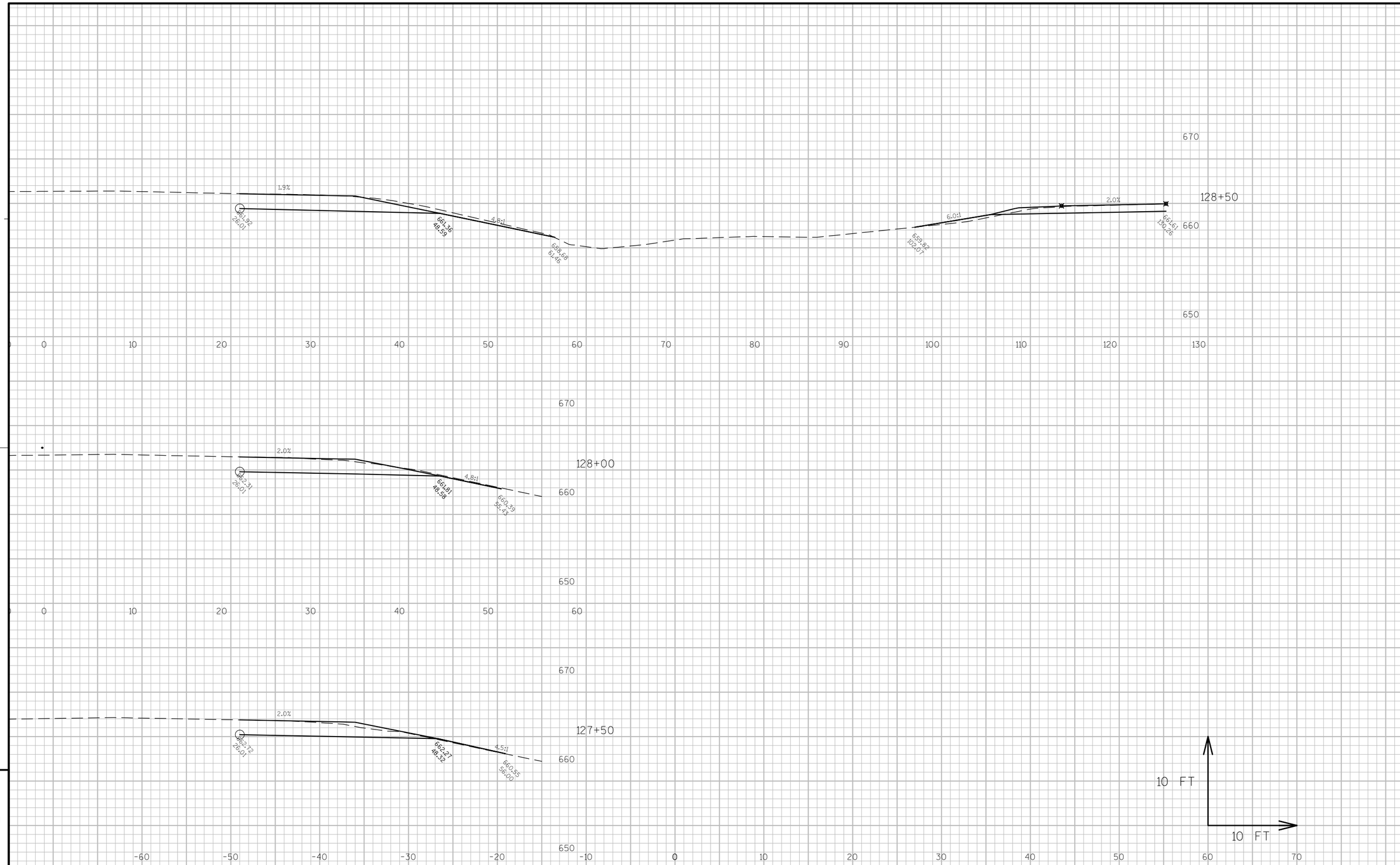

PROJECT NO:1490-28-71	HWY: USH 141	COUNTY: OCONTO	CROSS SECTIONS: NEW HABECK ENTRANCE	SHEET 247	E

FILE NAME : N:\PDS\C3D\14902800\SHEETSPLAN\090101_XS.DWG PLOT DATE : 3/7/2014 10:37 AM PLOT BY : WALLNER, AARON J PLOT NAME : PLOT SCALE : 1:10_XREF

WISDOT/CADDS SHEET 49

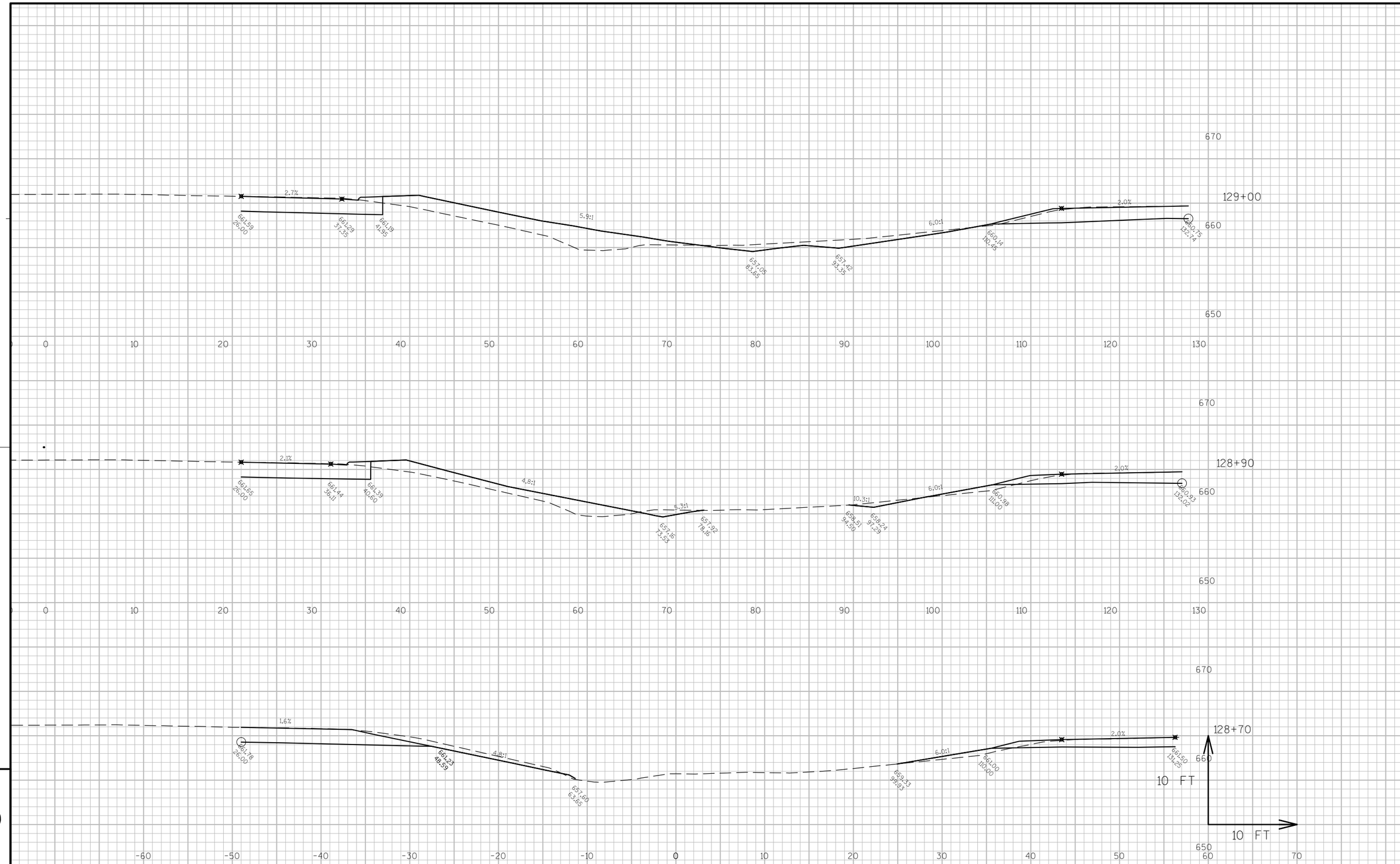

9

9

PROJECT NO:1490-28-71	HWY: USH 141	COUNTY: OCONTO	CROSS SECTIONS: NEW HABECK ENTRANCE	SHEET 248	E

FILE NAME : N:\PDS\C3D\14902800\SHEETSPLAN\090101_XS.DWG PLOT DATE : 3/7/2014 10:37 AM PLOT BY : WALLNER, AARON J PLOT NAME : PLOT SCALE : 1:10_XREF

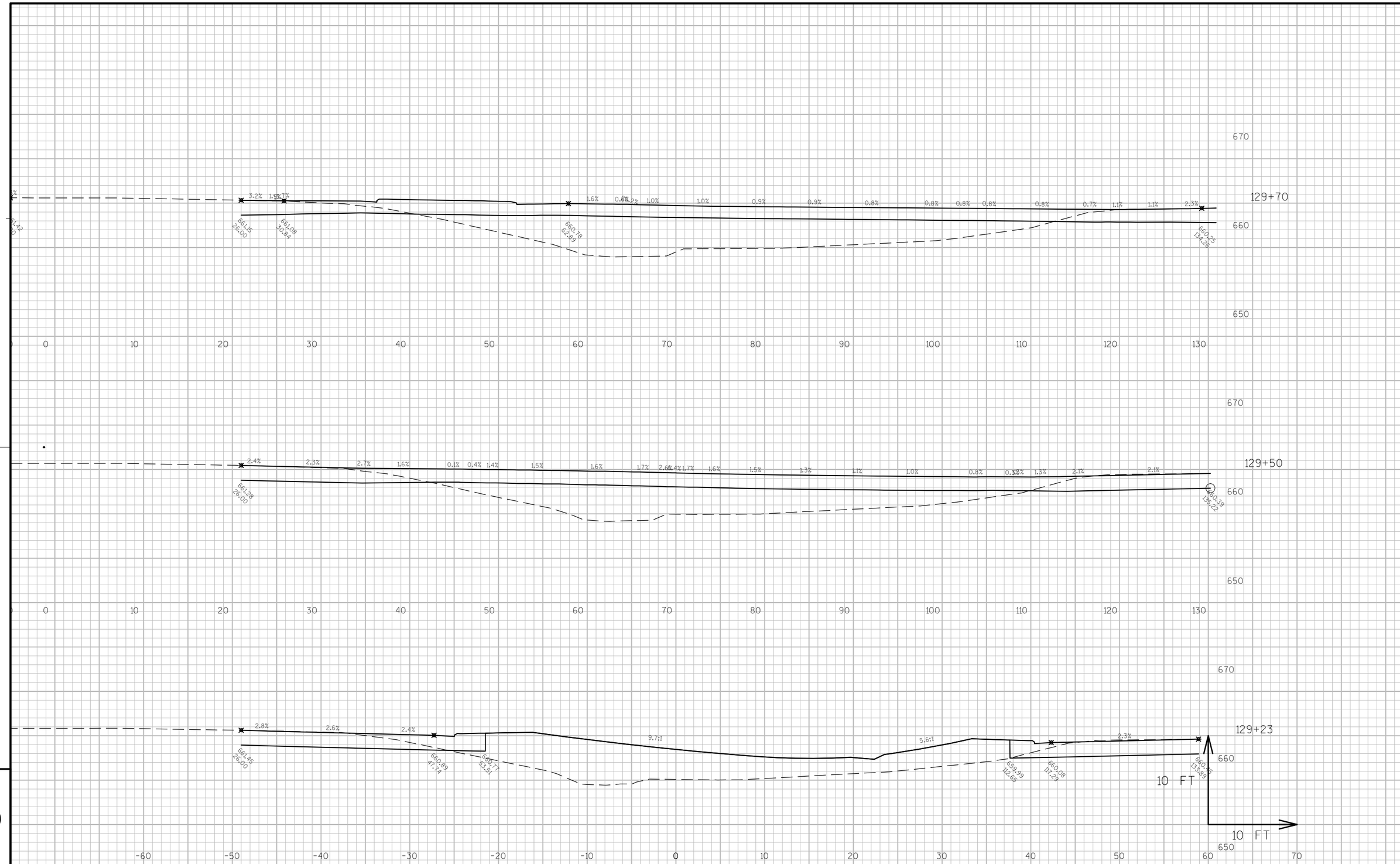

PROJECT NO:1490-28-71	HWY: USH 141	COUNTY: OCONTO	CROSS SECTIONS: NEW HABECK ENTRANCE	SHEET 249	E

FILE NAME : N:\PDS\C3D\14902800\SHEETSPLAN\090101_XS.DWG PLOT DATE : 3/7/2014 10:37 AM PLOT BY : WALLNER, AARON J PLOT NAME : PLOT SCALE : 1:10_XREF

WISDOT/CADDS SHEET 49

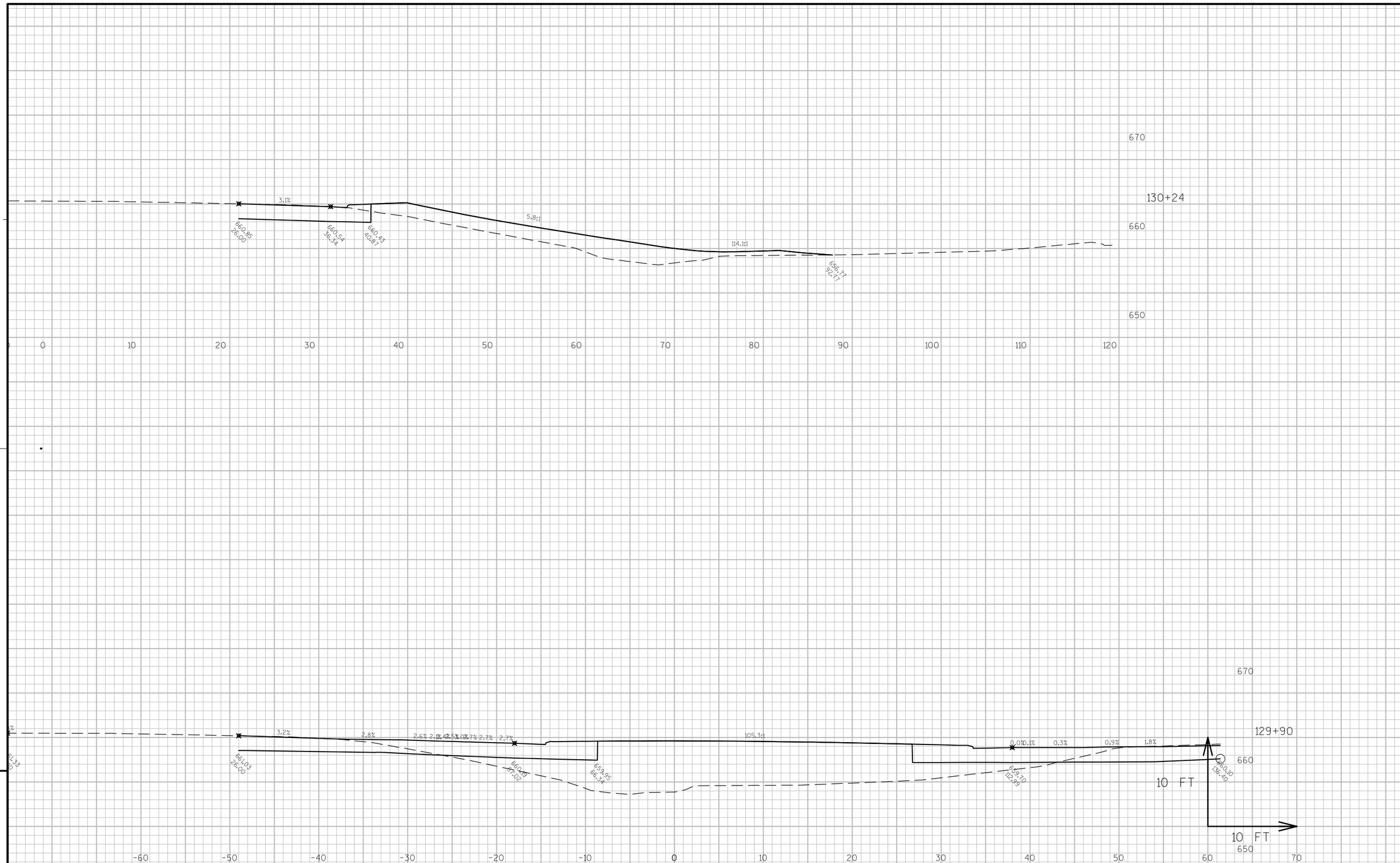

9

9

PROJECT NO:1490-28-71	HWY: USH 141	COUNTY: OCONTO	CROSS SECTIONS: NEW HABECK ENTRANCE	SHEET 250	E

FILE NAME : N:\PDS\C3D\14902800\SHEETSPLAN\090101_XS.DWG PLOT DATE : 3/7/2014 10:37 AM PLOT BY : WALLNER, AARON J PLOT NAME : PLOT SCALE : 1:10_XREF

WISDOT/CADDS SHEET 49

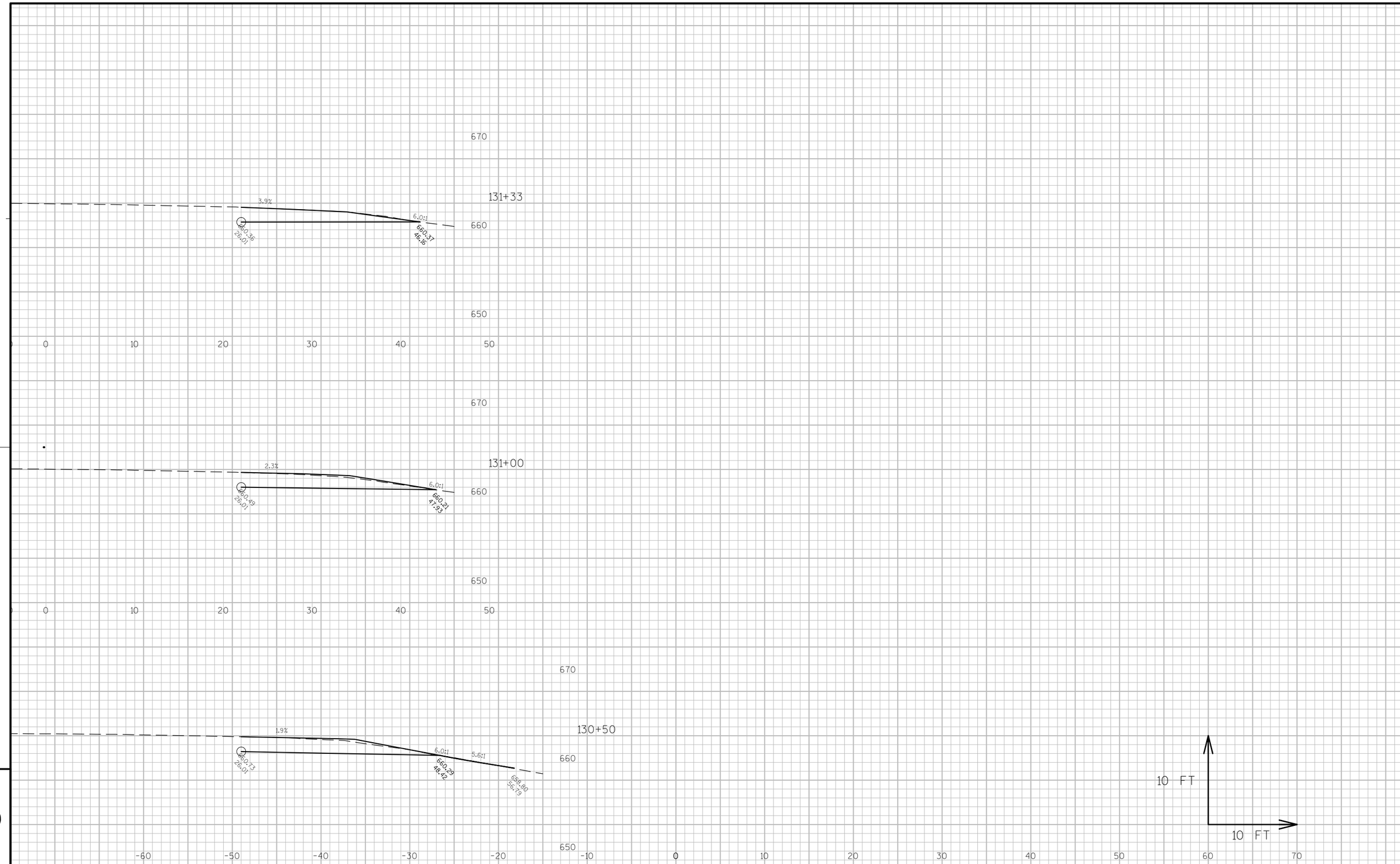

9

9

PROJECT NO:1490-28-71	HWY: USH 141	COUNTY: OCONTO	CROSS SECTIONS: NEW HABECK ENTRANCE	SHEET 251	E

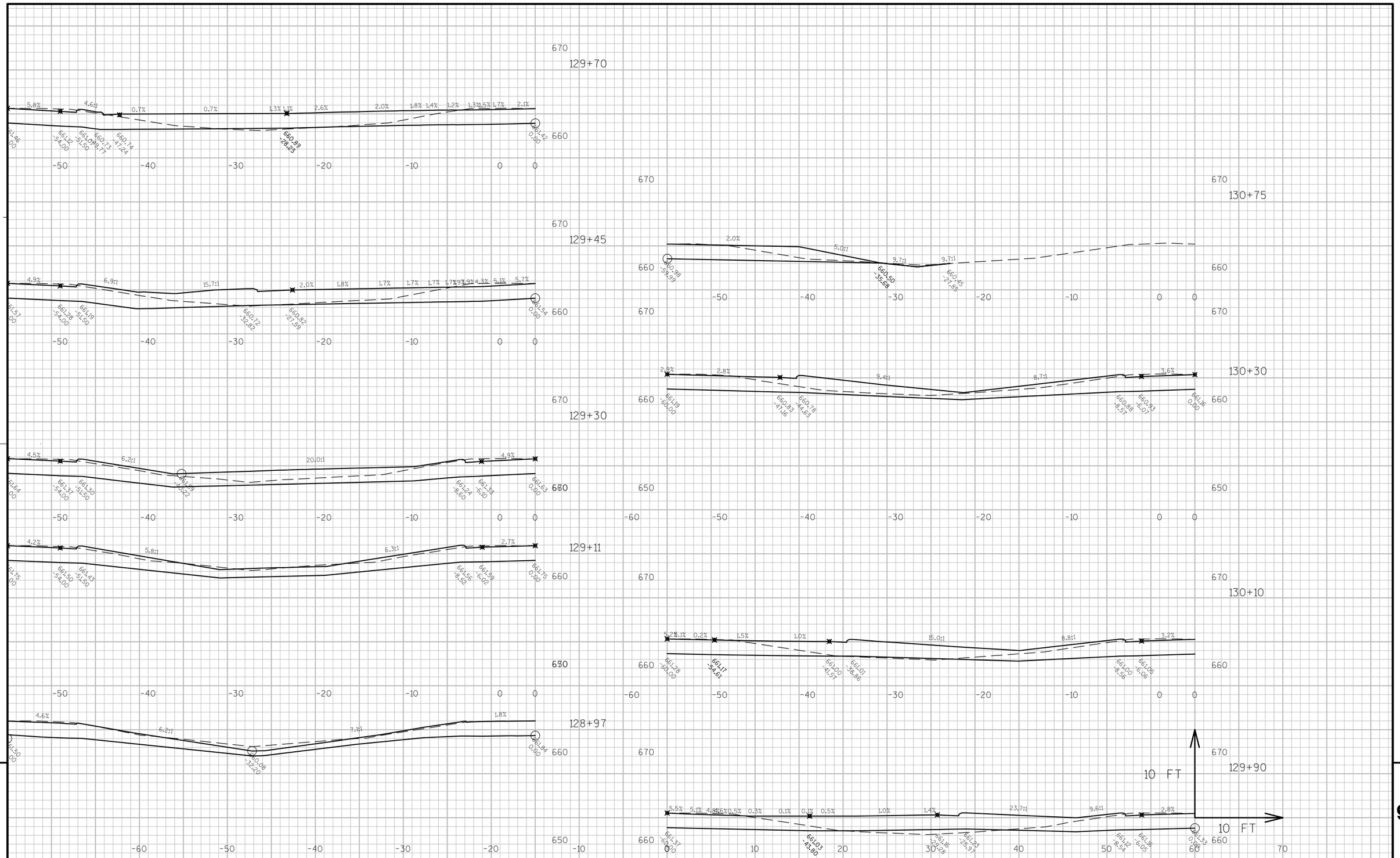

PROJECT NO:1490-28-71	HWY: USH 141	COUNTY: OCONTO	CROSS SECTIONS: LEFT TURN	SHEET 252	E

FILE NAME : N:\PDS\C3D\14902800\SHEETSPLAN\090101_XS.DWG PLOT DATE : 3/7/2014 10:40 AM PLOT BY : WALLNER, AARON J PLOT NAME : PLOT SCALE : 1:10_XREF

WISDOT/CADDS SHEET 49

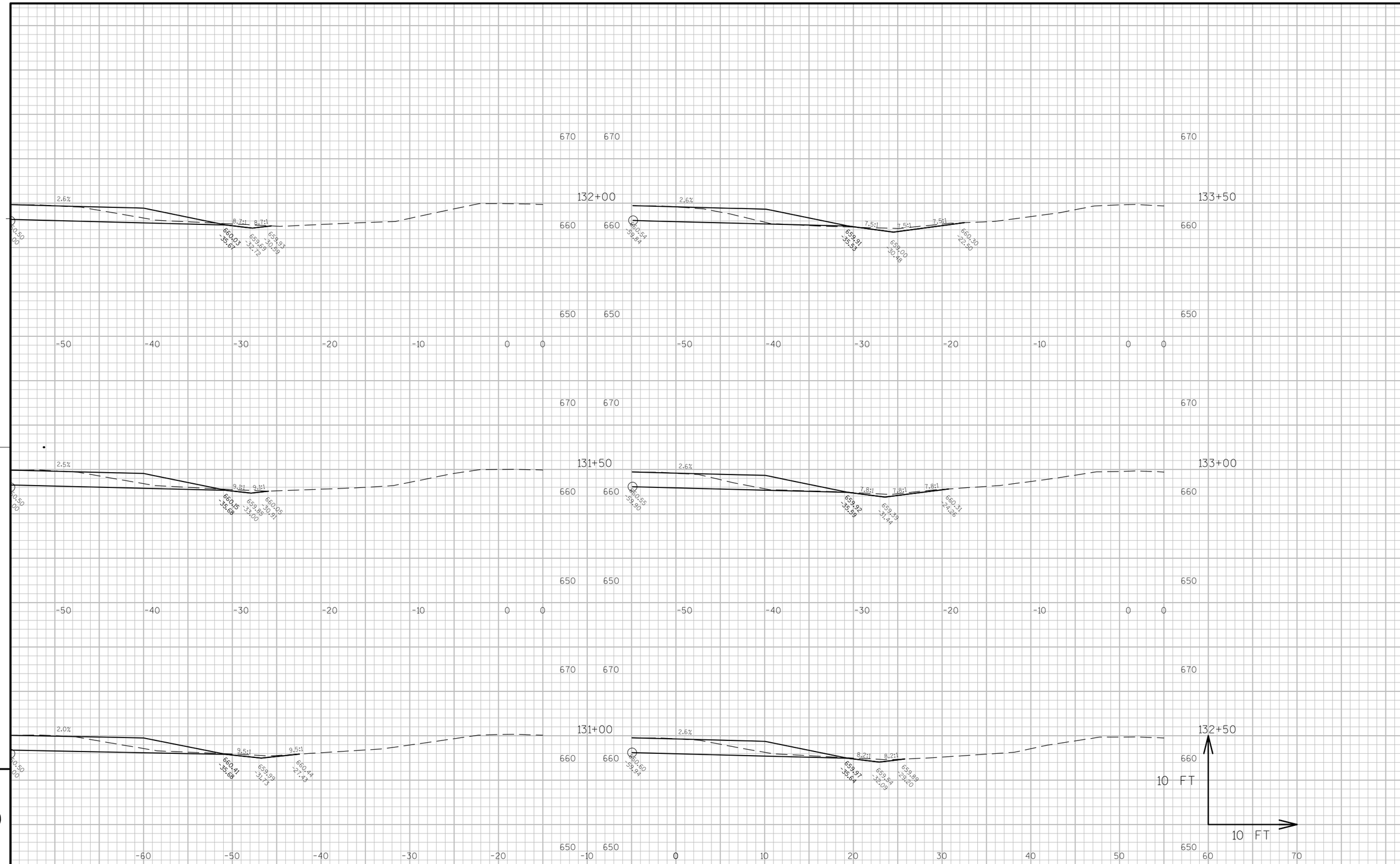

PROJECT NO:1490-28-71	HWY: USH 141	COUNTY: OCONTO	CROSS SECTIONS: LEFT TURN	SHEET 253	E

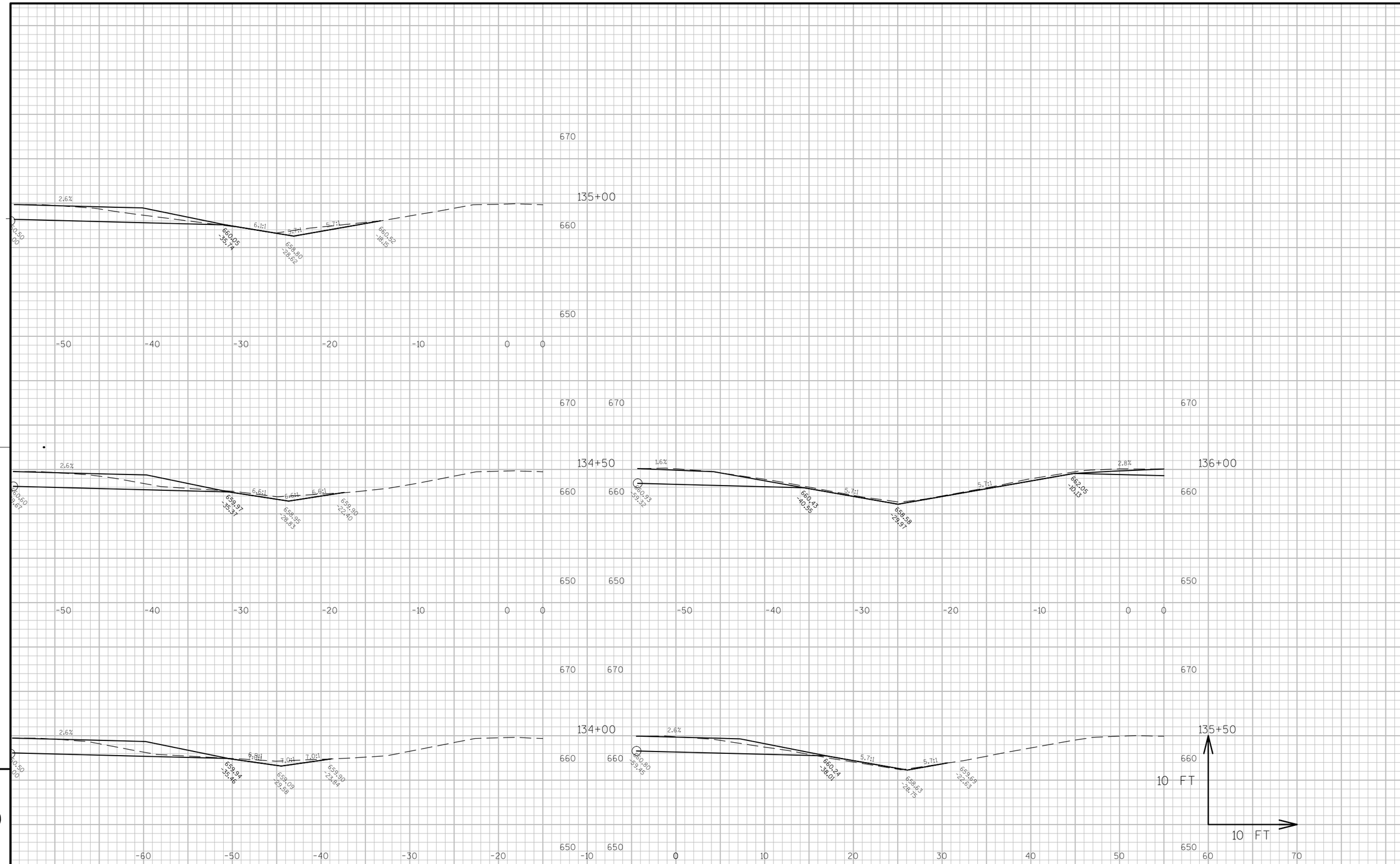

PROJECT NO: 1490-28-71	HWY: USH 141	COUNTY: OCONTO	CROSS SECTIONS: LEFT TURN	SHEET 254	E

FILE NAME : N:\PDS\C3D\14902800\SHEETSPLAN\090101_XS.DWG PLOT DATE : 3/7/2014 10:40 AM PLOT BY : WALLNER, AARON J PLOT NAME : PLOT SCALE : 1:10_XREF

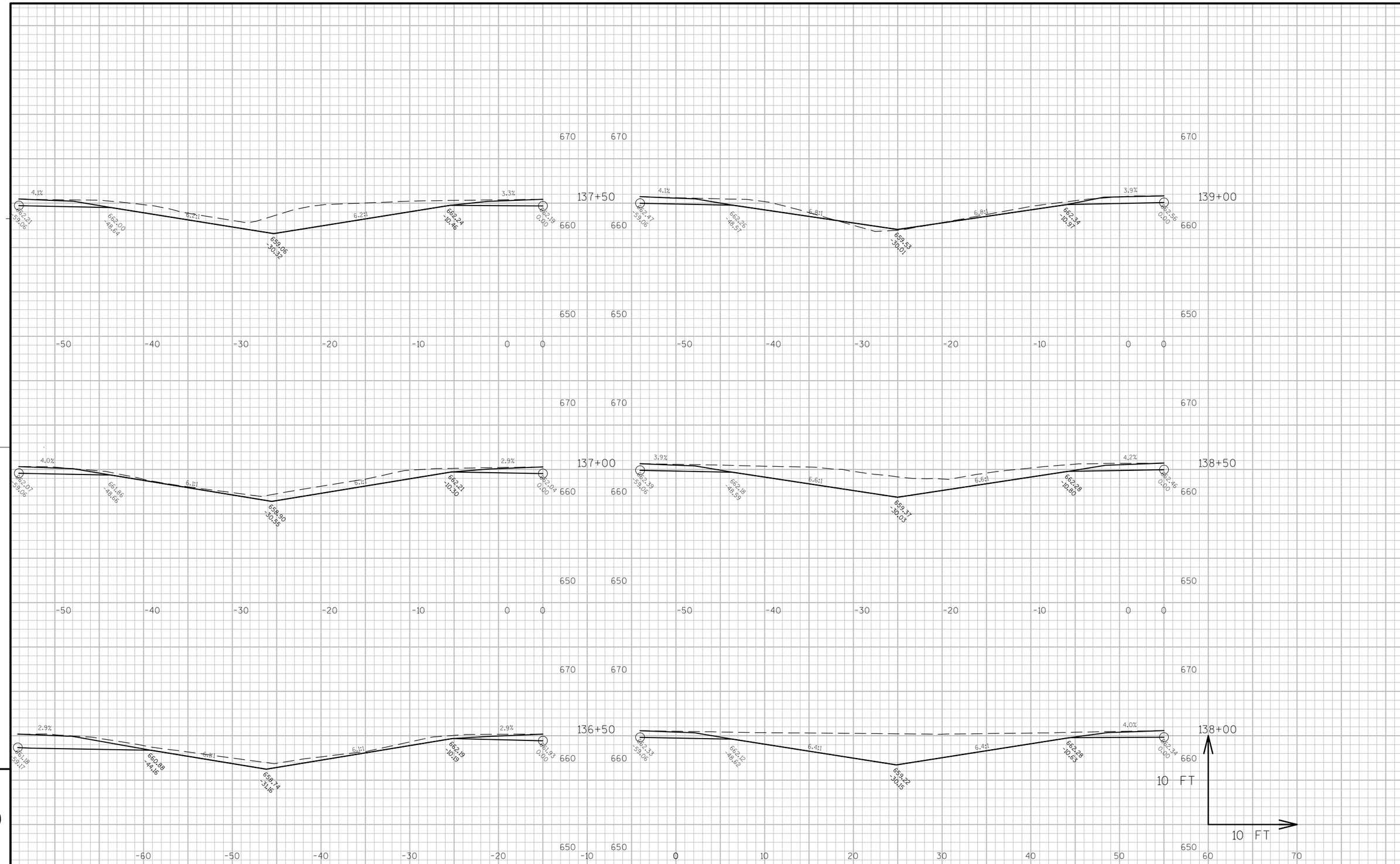

PROJECT NO:1490-28-00	HWY: USH 141	COUNTY: OCONTO	CROSS SECTIONS: CROSS OVER REMOVAL	SHEET 255	E

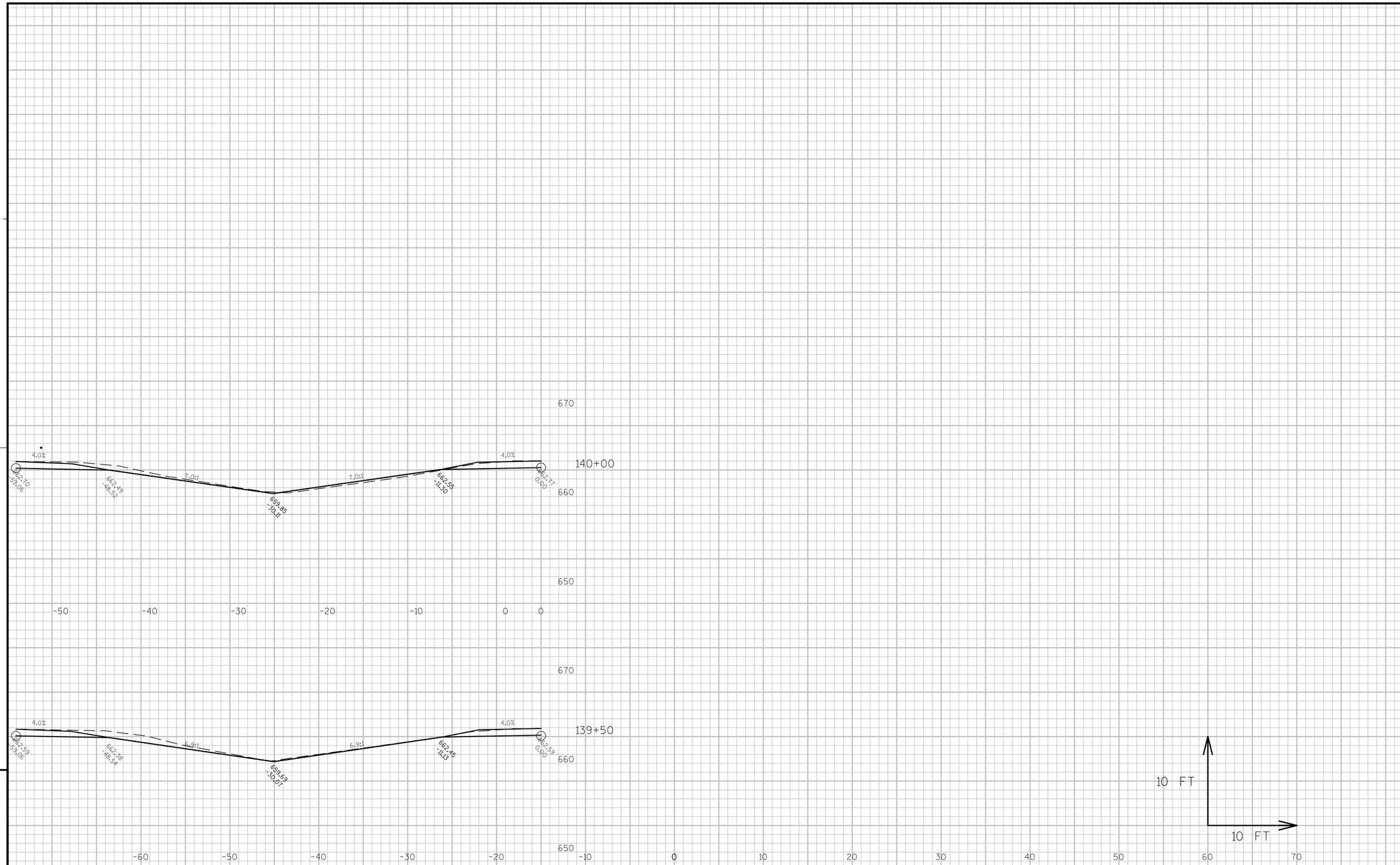

9

9

PROJECT NO:1490-28-00	HWY: USH 141	COUNTY: OCONTO	CROSS SECTIONS: CROSS OVER REMOVAL	SHEET 256	E

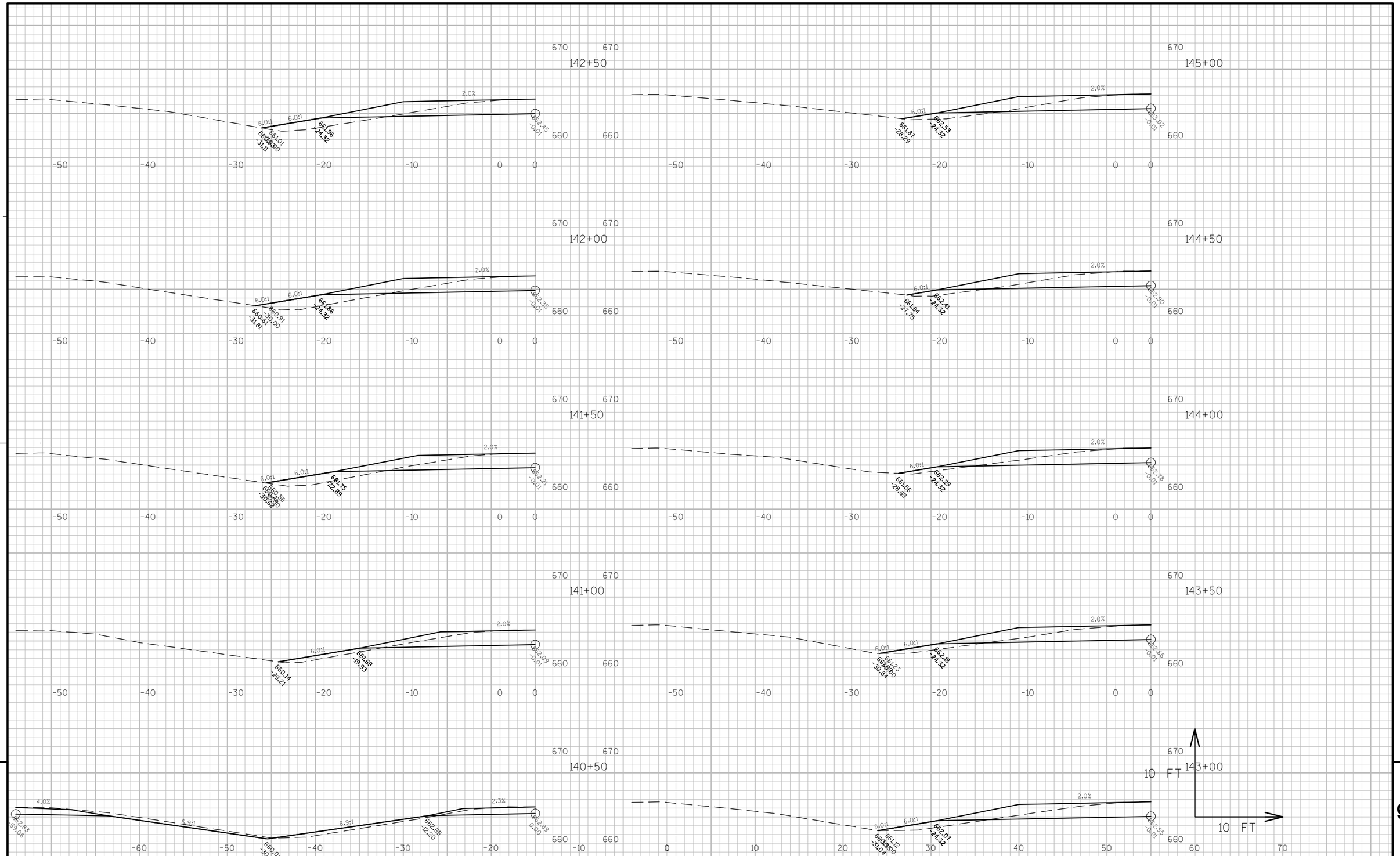

PROJECT NO:1490-28-71	HWY: USH 141	COUNTY: OCONTO	CROSS SECTIONS: J-TURN MEDAIN	SHEET 257	E

FILE NAME : N:\PDS\C3D\14902800\SHEETSPLAN\090101_XS.DWG PLOT DATE : 3/7/2014 10:44 AM PLOT BY : WALLNER, AARON J PLOT NAME : PLOT SCALE : 1:10_XREF

WISDOT/CADDS SHEET 49

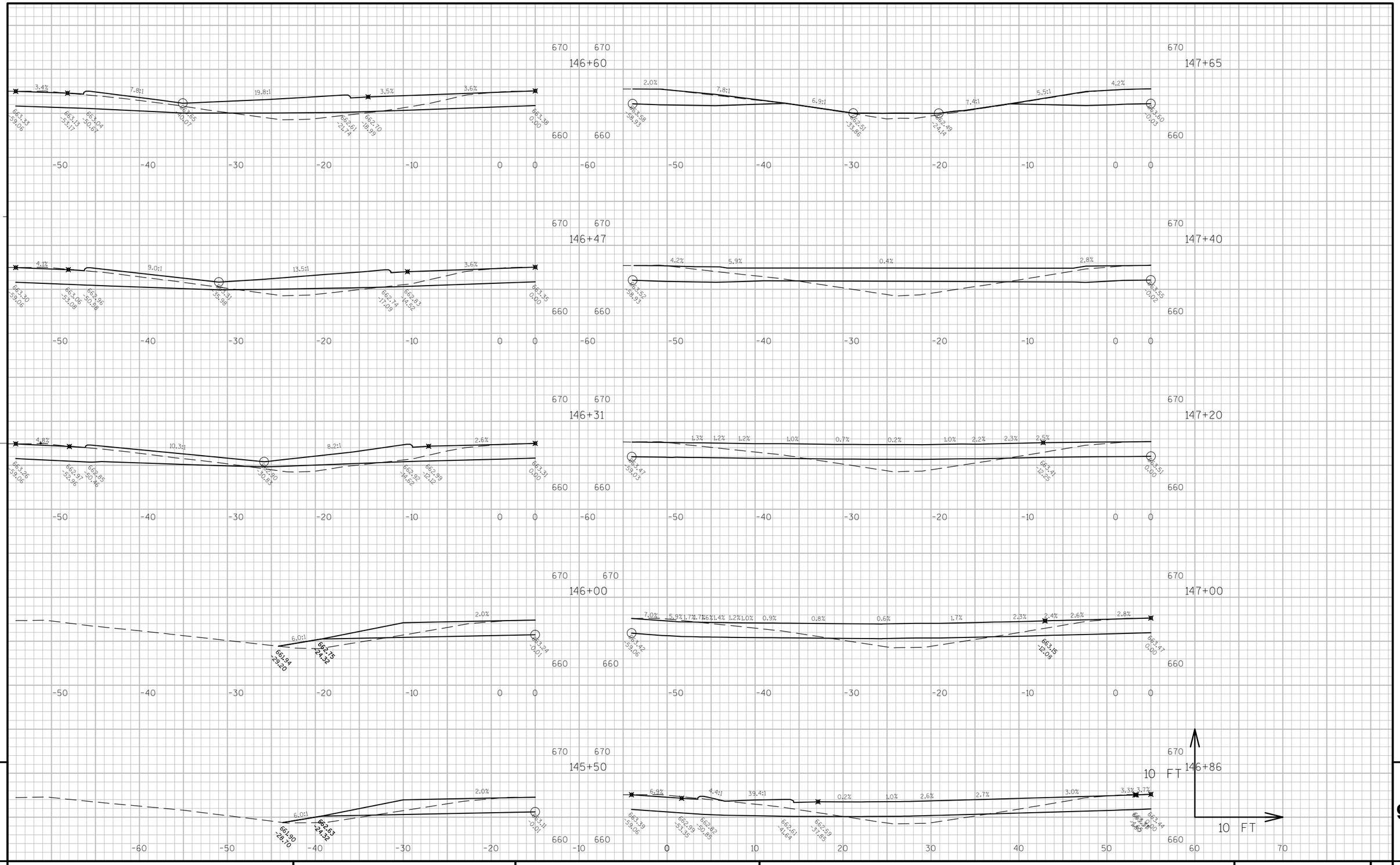

9

9

PROJECT NO:1490-28-71	HWY: USH 141	COUNTY: OCONTO	CROSS SECTIONS: J-TURN MEDAIN	SHEET 258	E

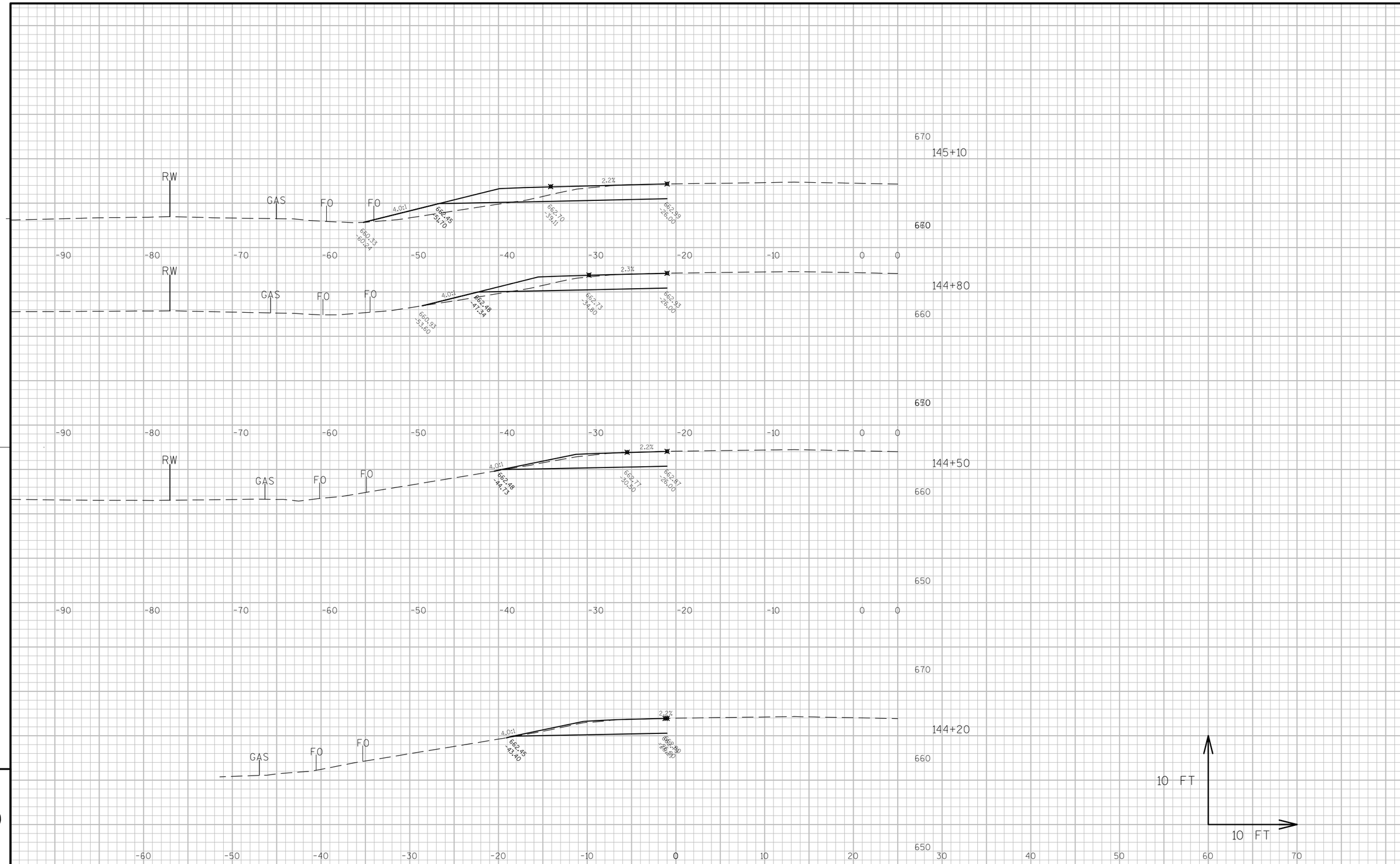

PROJECT NO:1490-28-71	HWY: USH 141	COUNTY: OCONTO	CROSS SECTIONS: J TURN BULB OUT	SHEET 259	E

FILE NAME : N:\PDS\C3D\14902800\SHEETSPLAN\090101_XS.DWG PLOT DATE : 3/7/2014 10:46 AM PLOT BY : WALLNER, AARON J PLOT NAME : PLOT SCALE : 1:10_XREF

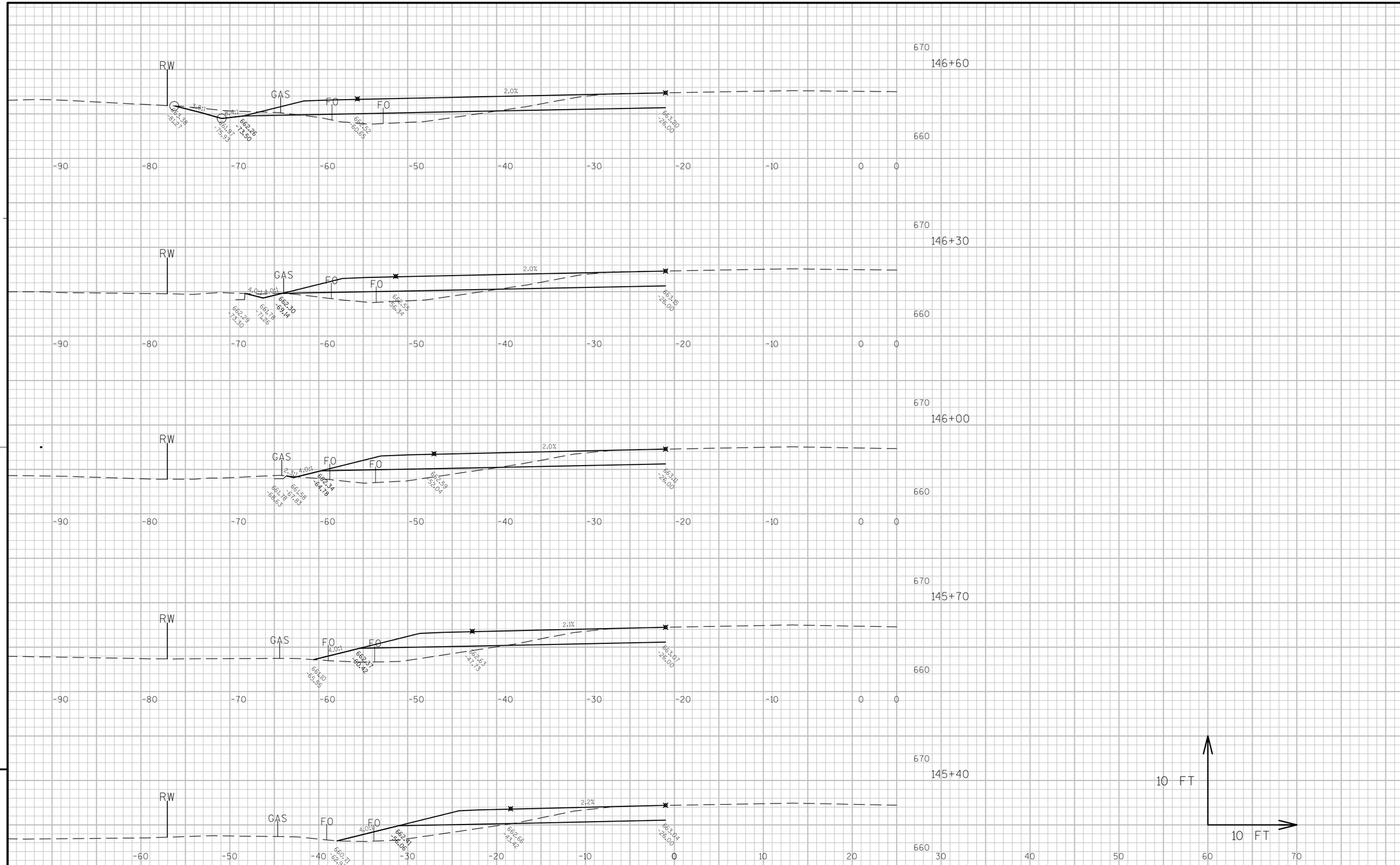

9

9

PROJECT NO:1490-28-71	HWY: USH 141	COUNTY: OCONTO	CROSS SECTIONS: J TURN BULB OUT	SHEET 260	E

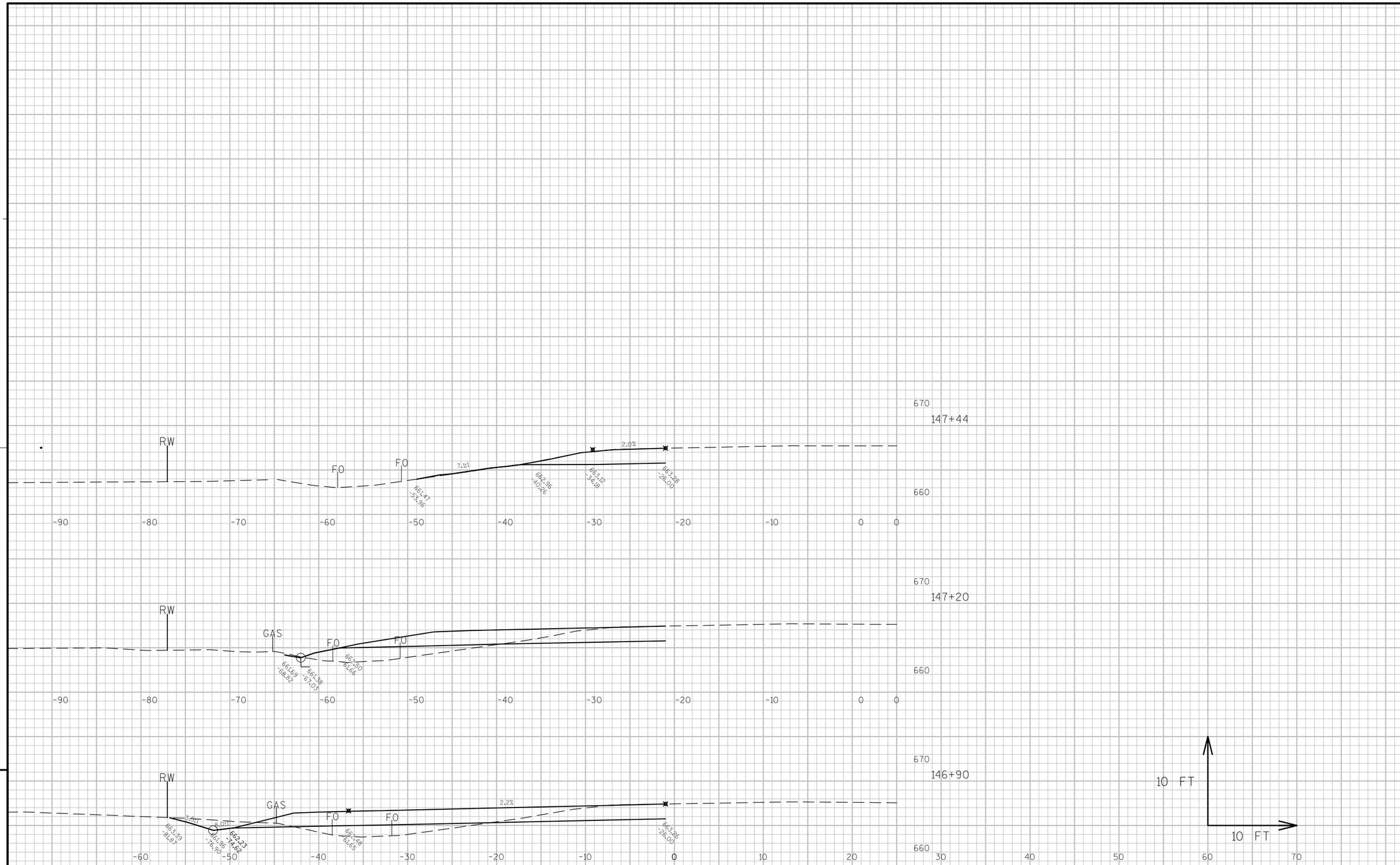

9

9

PROJECT NO:1490-28-71	HWY: USH 141	COUNTY: OCONTO	CROSS SECTIONS: J TURN BULB OUT	SHEET 261	E

Wisconsin Department of Transportation

Dedicated people creating transportation solutions through innovation and exceptional service.

http://www.dot.wisconsin.gov