WKE

PROJECT ID: 2340-09-70

WITH: N/A

COUNTY: RACINE

MAY 2014

ORDER OF SHEETS

Section No.	1	Title
Section No.	2	Typical Sections and Details
Section No.	3	Estimate of Quantities
Section No.	3	Miscellaneous Quantities
Section No.	4	Right of Way Plat
Section No.	5	Plan and Profile
Section No.	6	Standard Detail Drawings
Section No.	7	Sign Plates
~~Section No.~~	~~8~~	~~Structure Plans~~
Section No.	9	Computer Earthwork Data
Section No.	9	Cross Sections

TOTAL SHEETS = 218

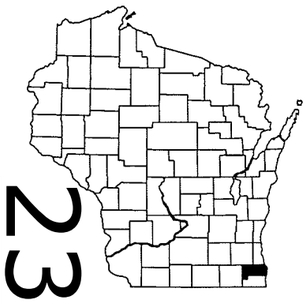

23

STATE OF WISCONSIN
DEPARTMENT OF TRANSPORTATION

PLAN OF PROPOSED IMPROVEMENT

STH 20

INTERSECTION WITH STH 75/CTH S

STH 20

RACINE COUNTY

STATE PROJECT	FEDERAL PROJECT	
	PROJECT	CONTRACT
2340-09-70	WISC 2014193	1

STATE PROJECT NUMBER

2340-09-70

DESIGN DESIGNATION

			STH 20	STH 75	CTH S
A.A.D.T.	2014	=	8,500	3,500	2,800
A.A.D.T.	2034	=	10,800	4,400	3,600
D.H.V.		=	1,120	460	380
D.D.		=	62/38	62/38	62/38
T.		=	14.2%	14.2%	14.2%
DESIGN SPEED		=	60 MPH	60 MPH	60 MPH
ESALS		=	3,087,900	N/A	N/A

BEGIN PROJECT 2340-09-70
STA. 576+83.36
X = 550,830.80
Y = 191,371.45

END PROJECT 2340-09-70
STA. 595+17.85

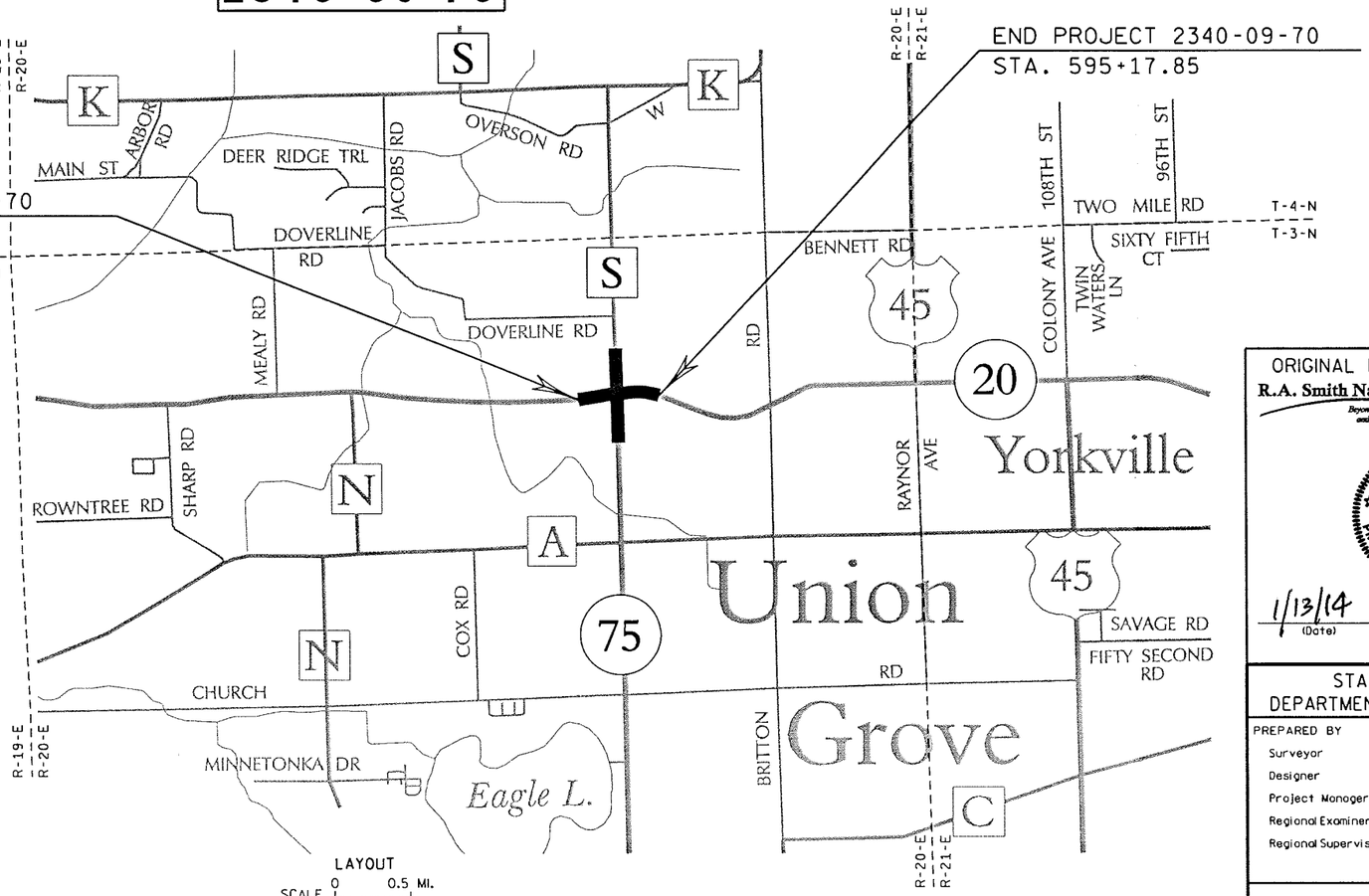

LAYOUT
SCALE 0 0.5 MI.

TOTAL NET LENGTH OF CENTERLINE = 0.347 MI.

COORDINATES ON THIS PLAN ARE REFERENCED TO THE WISCONSIN COUNTY COORDINATE SYSTEM (WCCS), RACINE COUNTY, NAD 83 (2007).

ELEVATIONS SHOWN ON THIS PLAN ARE REFERENCED TO THE NORTH AMERICAN VERTICAL DATUM OF 1988 NAVD88 (2007).

CONVENTIONAL SYMBOLS

COUNTY LINE		COMBUSTIBLE FLUIDS	CAUTION
CORPORATE LIMITS		UNDERGROUND UTILITIES GAS	(SIZE) G
PROPERTY LINE		SANITARY SEWER	(SIZE) SAN
LIMITED EASEMENT		STORM SEWER	(SIZE) SS
EXISTING RIGHT OF WAY		WATER	(SIZE) W
PROPOSED OR NEW R/W LINE		ELECTRIC	E
FENCE		TELEPHONE	T
GUARD RAIL		FIBER OPTIC	FO
SLOPE INTERCEPT		CABLE TELEVISION	TV
ORIGINAL GROUND		FORCE MAIN	FM
MARSH OR ROCK PROFILE (To be noted as such)	ROCK	MANHOLE	MH
MARSH AREA		UTILITY PEDESTAL	
WOODED OR SHRUB AREA		FIBER OPTIC HAND HOLE	HH
STREAM OR WATER EDGE		POWER POLE	
BUSH		TELEPHONE POLE	
PINE TREE	(SIZE)	RAILROAD	
TREE	(SIZE)	HYDRANT	
TRAFFIC SIGNAL CONTROL CABINET		LIGHT POLE	
TRAFFIC SIGNAL		RAILROAD SIGNAL	
TRAFFIC SIGNAL MAST-ARM		SIGN	
TRAFFIC SIGNAL WITH LIGHT		TRANSMISSION TOWER	
EXISTING PULL BOX		VALVE	(TYPE)
BOLLARD		CURB STOP	CS
		EXISTING CULVERT	(SIZE, TYPE)
		PROPOSED CULVERT (Box or Pipe)	
		SAWCUT	XXXXXXXXX

ORIGINAL PLANS PREPARED BY

R.A. Smith National
Beyond Surveying and Engineering
16745 W. Bluemound Road, Brookfield WI 53005
262-781-1000 Fax 262-781-8466
www.rasmithnational.com

WISCONSIN
DOUGLAS M. SENSO
32746
KALKASKA
WISCONSIN
PROFESSIONAL ENGINEER

1/13/14 (Date) (Signature)

STATE OF WISCONSIN
DEPARTMENT OF TRANSPORTATION

PREPARED BY

Surveyor	WISDOT SE REGION
Designer	R.A. SMITH NATIONAL (DMS/JWB)
Project Manager	TRACI GENGLER
Regional Examiner	
Regional Supervisor	ANITA PUSCH

APPROVED FOR THE DEPARTMENT
DATE: 1/13/14 Traci Gengler (Signature)

E

FILE NAME : K:\1082713.03\cadd\sheets\cover\010101_ti.DGN PLOT DATE : 1/10/2014 PLOT BY : rlb PLOT NAME : PLOT SCALE : $$.....plotscale.....$$ WISDOT/CADDS SHEET 10

2

STANDARD ABBREVIATIONS

AP	ACCESS POINT	MON	MONUMENT
AC	ACRE	NOM	NOMINAL
ADJ	ADJUST	NC	NORMAL CROWN
AECPRC	APRON ENDWALLS FOR CULVERT PIPE REINFORCED CONCRETE	N	NORTH
		Y	NORTH GRID COORDINATE
AH	AHEAD	NB	NORTHBOUND
ASPH	ASPHALTIC	NO	NUMBER
ACP	ASPHALTIC CONCRETE PAVEMENT	OPT	OPTIONAL
AVG	AVERAGE	OD	OUTSIDE DIAMETER
ADT	AVERAGE DAILY TRAFFIC	PAVT	PAVEMENT
BK	BACK	PLE	PERMANENT LIMITED EASEMENT
BAD	BASE AGGREGATE DENSE	PACS	PIPE ARCH CORRUGATED STEEL
BM	BENCHMARK	PT	POINT
CB	CATCH BASIN	PC	POINT OF CURVATURE
C/L	CENTER LINE	PI	POINT OF INTERSECTION
C/L CONST	CENTER LINE CONSTRUCTION	PT	POINT OF TANGENCY
Δ	CENTRAL ANGLE OR DELTA	PVC	POINT OF VERTICAL CURVE
CL	CLASS	PVI	POINT OF VERTICAL INTERSECTION
CONC	CONCRETE	PVT	POINT OF VERTICAL TANGENCY
CONST	CONSTRUCTION	PVC	POLYVINYL CHLORIDE
CMCP	CORRUGATED METAL CULVERT PIPE	PCC	PORTLAND CEMENT CONCRETE
CTH	COUNTY TRUNK HIGHWAY	LB	POUND
CABC	CRUSHED AGGREGATE BASE COURSE	PSF	POUNDS PER SQUARE FOOT
CFS	CUBIC FEET PER SECOND	PSI	POUNDS PER SQUARE INCH
CY	CUBIC YARD	PE	PRIVATE ENTRANCE
CP	CULVERT PIPE	PGL	PROFILE GRADE LINE
CPCS	CULVERT PIPE CORRUGATED STEEL	PL	PROPERTY LINE
CPRC	CULVERT PIPE REINFORCED CONCRETE	Q100	100-YEAR FLOW RATE
CPRCHE	CULVERT PIPE REINFORCED CONCRETE HORIZONTAL ELLIPTICAL	R	RADIUS
		RR	RAILROAD
C & G	CURB AND GUTTER	R	RANGE
D	DEGREE OF CURVE	R/L	R/L
DHV	DESIGN HOUR VOLUME	REINF	REINFORCING OR REINFORCEMENT
DIA	DIAMETER	REQD	REQUIRED
DD	DIRECTIONAL DISTRIBUTION	RT	RIGHT
DWY	DRIVEWAY	R/W	RIGHT-OF-WAY
E	EAST	RD	ROAD
X	EAST GRID COORDINATE	RDWY	ROADWAY
EB	EASTBOUND	SEC	SECTION
EL	ELEVATION	SHLDR	SHOULDER
ESALS	EQUIVALENT SINGLE AXLE LOADS	S	SOUTH
EXC	EXCAVATION	SB	SOUTHBOUND
EBS	EXCAVATION BELOW SUBGRADE	SQ	SQUARE
EXIST	EXISTING	SF	SQUARE FEET
FPS	FEET PER SECOND	SW	SIDEWALK
FERT	FERTILIZE	SY	SQUARE YARD
FE	FIELD ENTRANCE	SDD	STANDARD DETAIL DRAWINGS
FL	FLOW LINE	STH	STATE TRUNK HIGHWAYS
FT	FOOT	STA	STATION
GN	GRID NORTH	SS	STORM SEWER
GRGE	GARAGE	SSPRC	STORM SEWER PIPE REINFORCED CONCRETE
HES	HIGH EARLY STRENGTH	ST	STREET
HP	HIGH POINT	STR	STRUCTURE OR STRUCTURAL
HSE	HOUSE	SEC	SUPERELEVATION
HW	HIGH WATER	T	TANGENT
HMA	HOT MIX ASPHALT	TEMP	TEMPORARY
CWT	HUNDREDWEIGHT	TI	TEMPORARY INTEREST
HWD	HYDRANT	TLE	TEMPORARY LIMITED EASEMENT
INL	INLET	t	TON
ID	INSIDE DIAMETER	T	TOWN
I	INTERSECTION ANGLE	T/L	TRANSIT LINE
INV	INVERT	T	TRUCKS (PERCENT OF)
IP	IRON PIPE OR PIN	TYP	TYPICAL
JT	JOINT	USH	UNITED STATES HIGHWAY
LT	LEFT	VAR	VARIABLE
LT	LENGTH OF CURVE	V	VELOCITY OF DESIGN SPEED
LF	LINEAR FOOT	VERT	VERTICAL
LP	LOW POINT	VC	VERTICAL CURVE
LS	LUMP SUM	VOL	VOLUME
MH	MANHOLE	WM	WATERMAIN
MAX	MAXIMUM	WV	WATER VALVE
Mgal	MEGAGALLON	W	WEST
MPH	MILES PER HOUR	WB	WESTBOUND
MIN	MINIMUM	YD	YARD

GENERAL NOTES

1 NO SHRUBS OR TREES ARE TO BE REMOVED WITHOUT APPROVAL OF THE ENGINEER.

2 ALL CURB & GUTTER RADII ARE MEASURED TO THE FACE OF CURB.

3 CURB AND GUTTER PLAN GRADES ARE AT THE FLANGE LINE UNLESS OTHERWISE NOTED.

4 PIPE AND INLET ELEVATIONS AS SHOWN ON THE PLANS MAY BE ADJUSTED BY THE ENGINEER.

5 EROSION CONTROL DEVICES AS SHOWN ON THE STORM SEWER/EROSION CONTROL SHEETS ARE AT SUGGESTED LOCATIONS. THE EXACT LOCATIONS WILL BE DETERMINED BY THE ENGINEER.

6 EROSION CONTROL DEVICES SHALL BE PLACED IN SEQUENCE WITH CONSTRUCTION OPERATIONS OR AS DETERMINED BY THE ENGINEER.

7 THE LOCATIONS OF EXISTING UTILITY INSTALLATIONS SHOWN ON THE PLANS ARE APPROXIMATE. THERE MAY BE OTHER UTILITY INSTALLATIONS IN THE AREA THAT ARE NOT SHOWN. THE CONTRACTOR SHALL NOTIFY DIGGERS HOTLINE AND AFFECTED UTILITIES PRIOR TO THE START OF WORK.

8 SEE SUBSURFACE EXPLORATION REPORTS FOR SOIL BORING INFORMATION. REPORTS ARE AVAILABLE FROM THE WISCONSIN DEPARTMENT OF TRANSPORTATION SE REGION, TRACI GENGLER, PROJECT MANAGER, PHONE (262) 548-8727

9 SHRINKAGE OF EARTHWORK IS VARIABLE AND IS ESTIMATED AT 20% IN THE YARDAGE SUMMARY. EXCAVATION BELOW SUBGRADE (EBS) IS ESTIMATED AND MAY VARY AS DIRECTED BY THE ENGINEER.

10 HMA PAVEMENT TYPE E-10 SHALL BE CONSTRUCTED WITH THE FOLLOWING LAYERS AND GRADATIONS:

TYPE E-10	LAYERS	NOM MAX SIZE GRADATION	ASPHALTIC MATERIAL
6 1/2-INCH	ONE 2" UPPER LAYER	12.5 mm	PG 64-28
	TWO 2 1/4" LOWER LAYERS	19.0 mm	PG 64-22

11 WHEN THE QUANTITY OF ITEMS OF BASE OR HMA PAVEMENT IS MEASURED FOR PAYMENT BY THE TON, THE THICKNESS OF THE LAYER SHOWN ON THE PLANS IS APPROXIMATE, AND THE ACTUAL THICKNESS WILL DEPEND ON THE DISTRIBUTION OF THE MATERIAL AS DIRECTED BY THE ENGINEER.

12 THE EXACT LOCATION OF PRIVATE ENTRANCES AND DRIVEWAYS IS TO BE DETERMINED IN THE FIELD BY THE ENGINEER.

13 STATIONING, DISTANCES AND OFFSETS FOR SIGNS SHOWN ON THE PLANS ARE APPROXIMATE AND THE LOCATIONS OF SIGNS ARE TO BE DETERMINED IN THE FIELD BY THE ENGINEER.

14 RESTORATION OF EXPOSED SLOPES AND DITCHES SHALL TAKE PLACE WITHIN 7 CALENDAR DAYS AFTER FINISHED GRADING IS COMPLETE

15 PRIOR TO ORDERING DRAINAGE PIPES, THE CONTRACTOR SHALL VERIFY ALL DRAINAGE STRUCTURES AND PIPES SHOWN IN THE PLAN

16 ALL OPENINGS OF HOLES BELOW SUBGRADE RESULTING FROM REMOVALS OR ABANDONMENTS SHALL BE BACKFILLED WITH GRANULAR BACKFILL.

17 PERMANENT SIGNS IN CONFLICT WITH TRAFFIC CONTROL "IN USE" SHALL BE COVERED. THE COVERING OF WOOD POST MOUNTED SIGNS IS INCLUDED UNDER ITEM 643.0100 TRAFFIC CONTROL (PROJECT). IN LIEU OF COVERING WOOD POST MOUNTED SIGNS, THE CONTRACTOR MAY CHOOSE TO REMOVE AND REINSTALL THEM.

ORDER OF SECTION 2 SHEETS

PROJECT OVERVIEW
TYPICAL SECTIONS
CONSTRUCTION DETAILS
PAVING DETAILS
STORM SEWER / EROSION CONTROL
SIGNING/PAVEMENT MARKING
LIGHTING
DETOUR
ALIGNMENT
CURB ALIGNMENTS

2

UTILITY CONTACTS

GAS/ELECTRIC
WE ENERGIES
333 W. EVERETT STREET - A279
MILWAUKEE, WI 53203
MR. DAN SANDE
(414) 221-4578
dan.sande@we-energies.com

TELEPHONE/FIBER OPTIC
TDS TELECOM
20875 CROSSROADS CIRCLE, SUITE 800
WAUKESHA, WI 53186
MR. MICHAEL JOHNSON
(262) 754-3052
michael.johnson@tdstelecom.com

DESIGNER CONTACT

R.A. SMITH NATIONAL
100 WEST LAWRENCE STREET, SUITE 412
APPLETON, WI 54911
MR. DOUG SENSO, P.E.
PROJECT MANAGER
(920) 731-8397, EXT. 3403
doug.senso@rasmithnational.com

DNR LIASON

WISCONSIN DEPT OF NATURAL RESOURCES
2300 NORTH DR. MARTIN LUTHER KING JR. DRIVE
MILWAUKEE, WI 53212
MR. CRAIG WEBSTER
ENVIRONMENTAL ANALYSIS AND REVIEW SPECIALIST
(262) 574-2141
craig.webster@wisconsin.gov

OTHER CONTACTS

TOWN OF DOVER
PO BOX 670
KANSASVILLE, WI 53139
MS. MARILYN RUDRUD
(262) 878-2200 EXT. 10

RACINE COUNTY PUBLIC WORKS
14200 WASHINGTON AVENUE
STURTEVANT, WI 53177
MS. JULIE ANDERSON
(262) 886-8440

RACINE COUNTY SURVEYOR
MR. MARK MADSEN, RLS
NIELSEN MADSEN & BARBER, SC
1458 HORIZON BLVD, SUITE 200
RACINE, WI 53406
(262) 634-5024
mmadsen@nmbsc.net

WISDOT TRAFFIC LIGHTING
MR. ERIC PEREA
141 NW BARSTOW STREET
WAUKESHA, WI 53187
(414) 750-0935

DIGGERS HOTLINE

Call 811 3 Work Days Before You Dig
Or Toll Free (800) 242-8511
Hearing Impaired TDD (800) 542-2289
www.DiggersHotline.com

2

N

END CONSTRUCTION
STA. 480+22.73
MATCH EXISTING

WETLAND IMPACT
0.03 ACRES

WETLAND
BOUNDARY

FLAT BOTTOM DITCH

TOWN OF
DOVER

CTH S

480

475

RELOCATED PARKING
LOT FOR PARK

RACINE COUNTY
SHERIFF'S DEPT.
RADIO TOWER

BEAUMONT
PARK

SECTION 4(f) PROPERTY

STH 20

595

590

585

580

575

600

470

BEGIN PROJECT 2340-09-70
STA. 576+83.36
MATCH EXISTING

STH 20

DRY POND
SINGLE LANE ROUNDABOUT

DOVER INN

RELOCATE ACCESS

WETLAND BOUNDARY

REMOVE ACCESS

RELOCATE ACCESS

END PROJECT 2340-09-70
STA. 595+17.85
MATCH EXISTING

STH 75

465

BEGIN CONSTRUCTION
STA. 462+12.79
MATCH EXISTING

PROJECT NO: 2340-09-70	HWY: STH 20	COUNTY: RACINE	PROJECT OVERVIEW	SCALE, FEET 0 100 200	SHEET 3	E

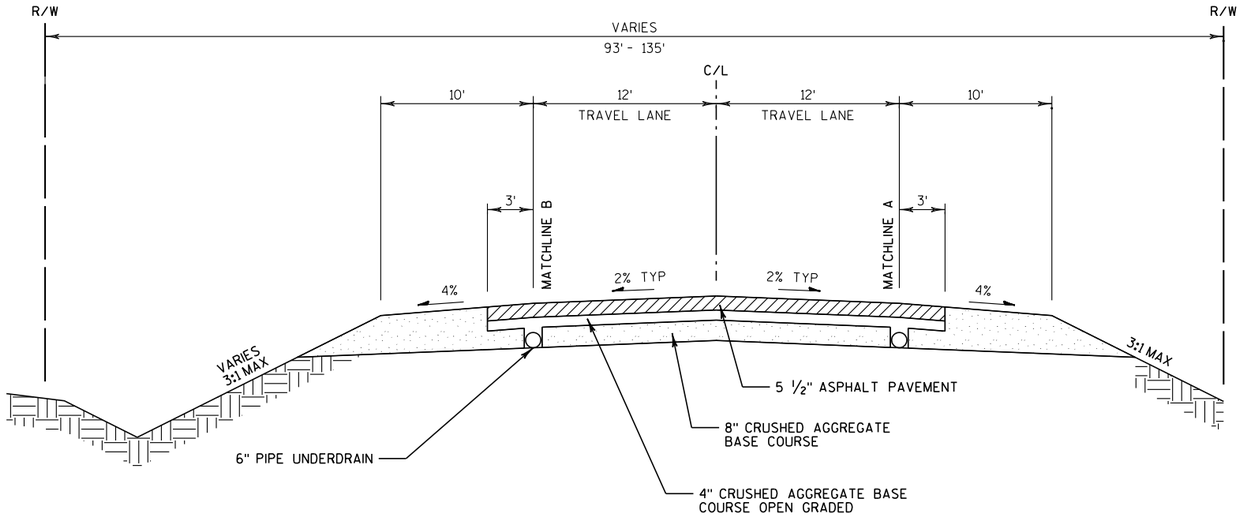

TYPICAL EXISTING SECTION
STH 20

STA 576+83 - STA 595+18

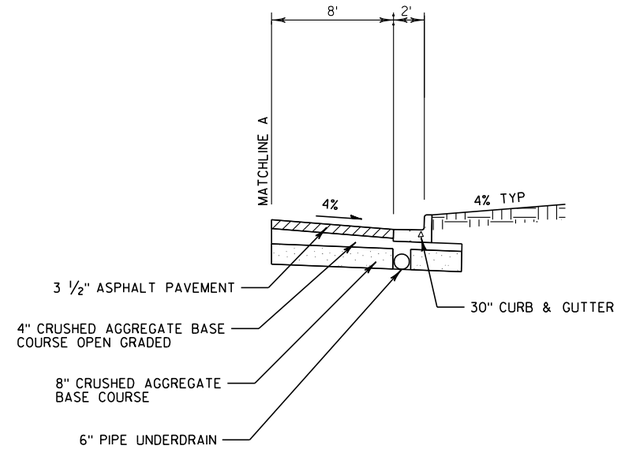

TYPICAL EXISTING SECTION
STH 20

MATCHLINE B IS A MIRROR IMAGE

STA 576+83 - STA 579+48 LT
STA 576+84 - STA 581+55 RT
STA 586+44 - STA 593+06 RT
STA 586+77 - STA 588+24 LT
STA 594+89 - STA 595+18 LT

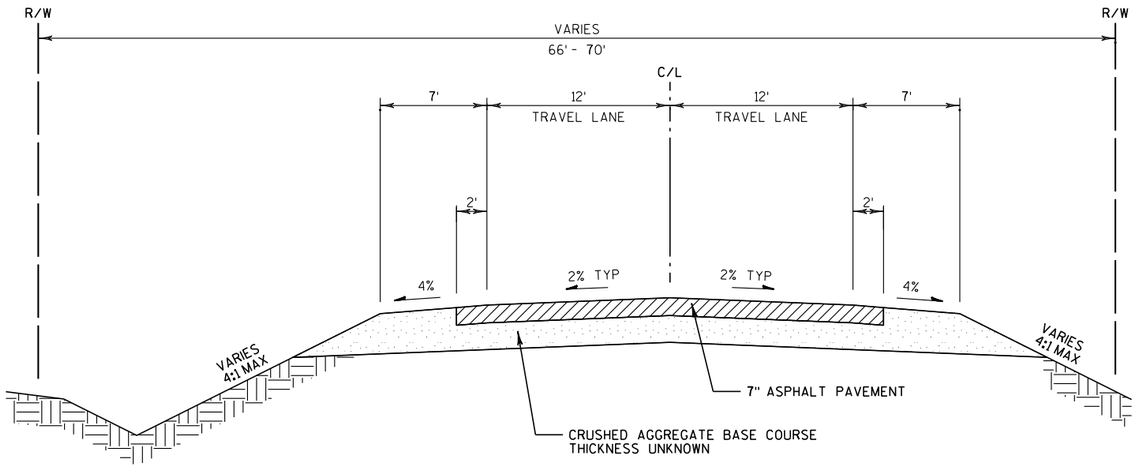

TYPICAL EXISTING SECTION
STH 75

STA 462+13 - STA 469+43

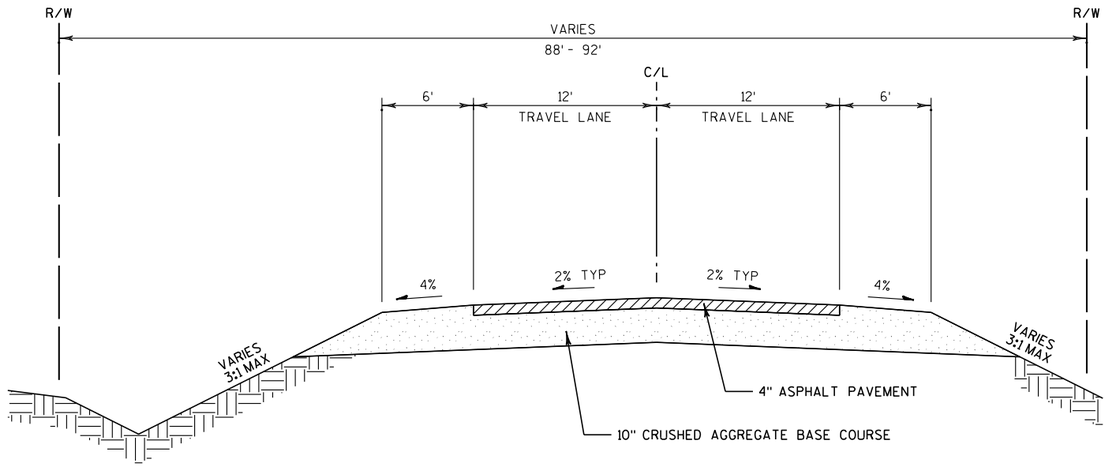

TYPICAL EXISTING SECTION
CTH S

STA 470+83 - STA 480+23

PROJECT NO: 2340-09-70	HWY: STH 20	COUNTY: RACINE	TYPICAL SECTIONS	SCALE, FEET 0 NTS	SHEET 4	E

2

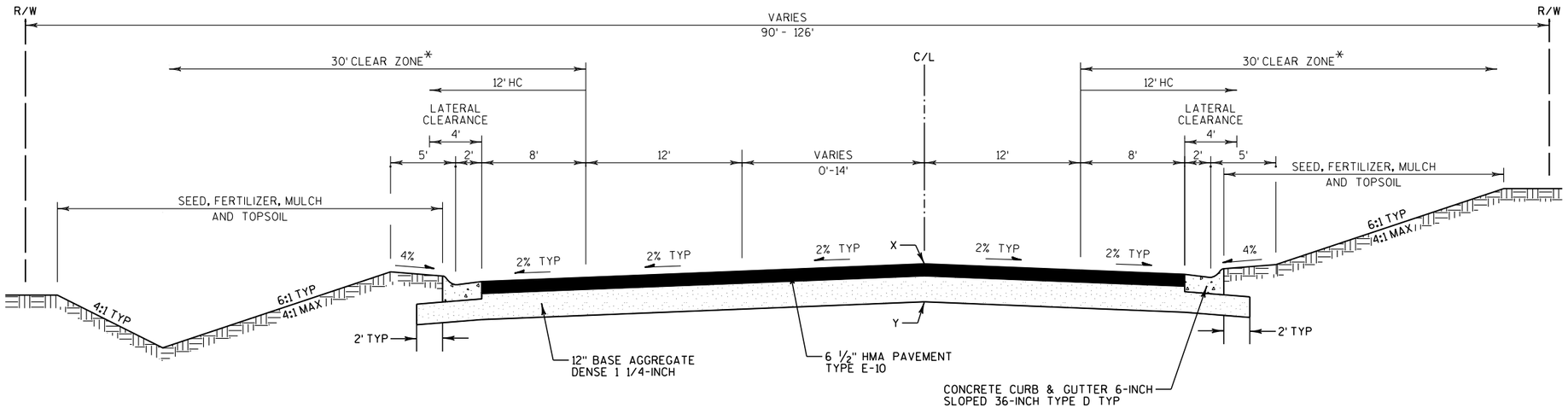

HC = HORIZONTAL CLEARANCE
"X" = POINTS REFERRED TO ON PROFILE
"Y" = POINTS REFERRED TO ON CROSS SECTIONS

TYPICAL FINISHED SECTION - STH 20

STA 576+83 - STA 582+14

*CLEAR ZONE VARIES:

STATION	SIDE	CLEAR ZONE
STA 576+83 - STA 577+50	LT	30'
STA 577+50 - STA 579+65	LT	26'
STA 579+65 - STA 582+14	LT	24'
STA 576+83 - STA 582+14	RT	30'

PROJECT NO: 2340-09-70	HWY: STH 20	COUNTY: RACINE	TYPICAL SECTIONS	SCALE, FEET 0 NTS	SHEET 5	E

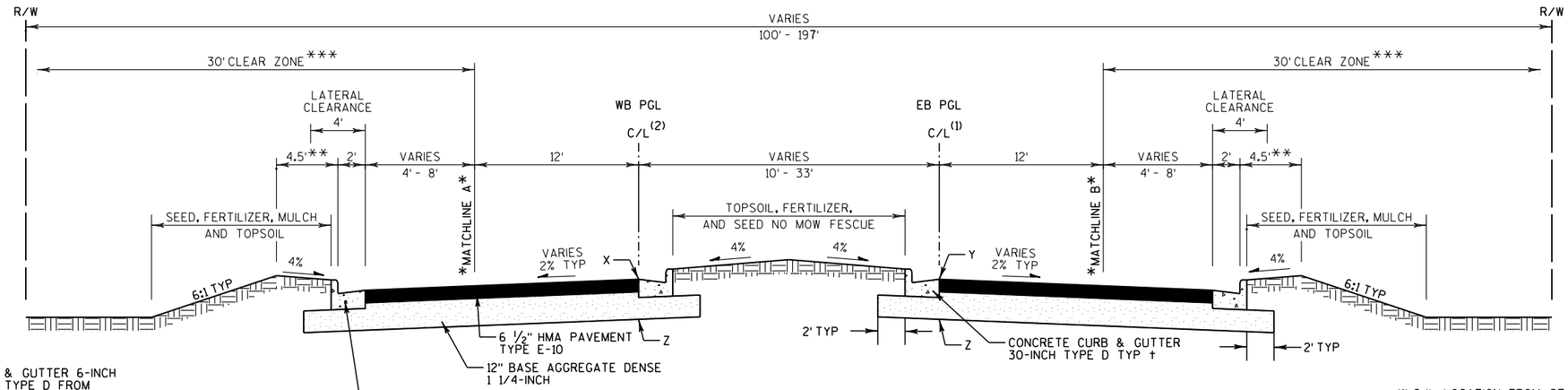

TYPICAL FINISHED SECTION - STH 20 ROUNDABOUT SPLITTER ISLAND

SECTION A-A
STH 20
STA 582+14 - STA 586+36
STA 587+78 - STA 592+15

† CONCRETE CURB & GUTTER 6-INCH SLOPED 36-INCH TYPE D FROM
STA 582+14 - STA 584+03 AND
STA 589+68 - STA 592+15

†† CONCRETE CURB & GUTTER 4-INCH SLOPED 30-INCH TYPE J FROM
STA 585+33 - STA 586+36 RT
STA 587+78 - STA 588+87 LT

** 5' ALONG CONCRETE CURB AND GUTTER 6-INCH SLOPED 36-INCH TYPE D

***CLEAR ZONE VARIES:

STATION	SIDE	CLEAR ZONE
STA 582+14 - STA 584+03	LT	24'
STA 582+14 - STA 584+03	RT	30'
STA 589+68 - STA 591+25	LT	28'
STA 589+68 - STA 592+15	RT	26'

(1) C/L LOCATION FROM STA 582+14 - STA 586+36
(2) C/L LOCATION FROM STA 587+78 - STA 592+15

"X" = POINTS REFERRED TO ON WB PROFILE
"Y" = POINTS REFERRED TO ON EB PROFILE
"Z" = POINTS REFERRED TO ON CROSS SECTIONS

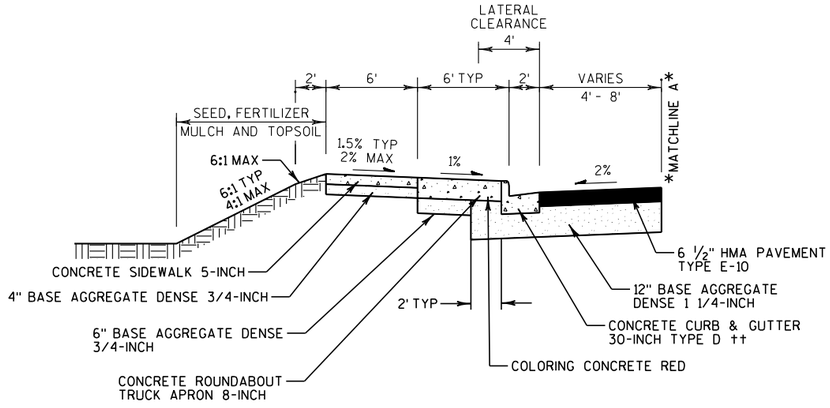

SIDEPATH DETAIL

MATCHLINE B IS A MIRROR IMAGE

STA 587+90 - STA 588+64 LT
STA 585+54 - STA 586+31 RT

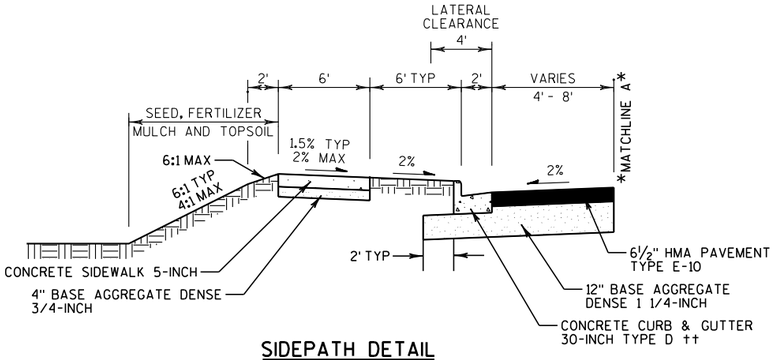

SIDEPATH DETAIL

MATCHLINE B IS A MIRROR IMAGE

STA 584+92 - STA 586+36 LT
STA 588+64 - STA 589+57 LT
STA 584+98 - STA 585+54 RT
STA 587+78 - STA 589+66 RT

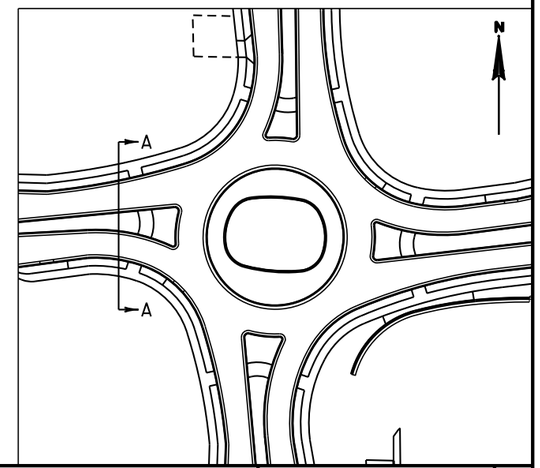

PROJECT NO: 2340-09-70	HWY: STH 20	COUNTY: RACINE	TYPICAL SECTIONS	SCALE, FEET 0 NTS	SHEET 6	E

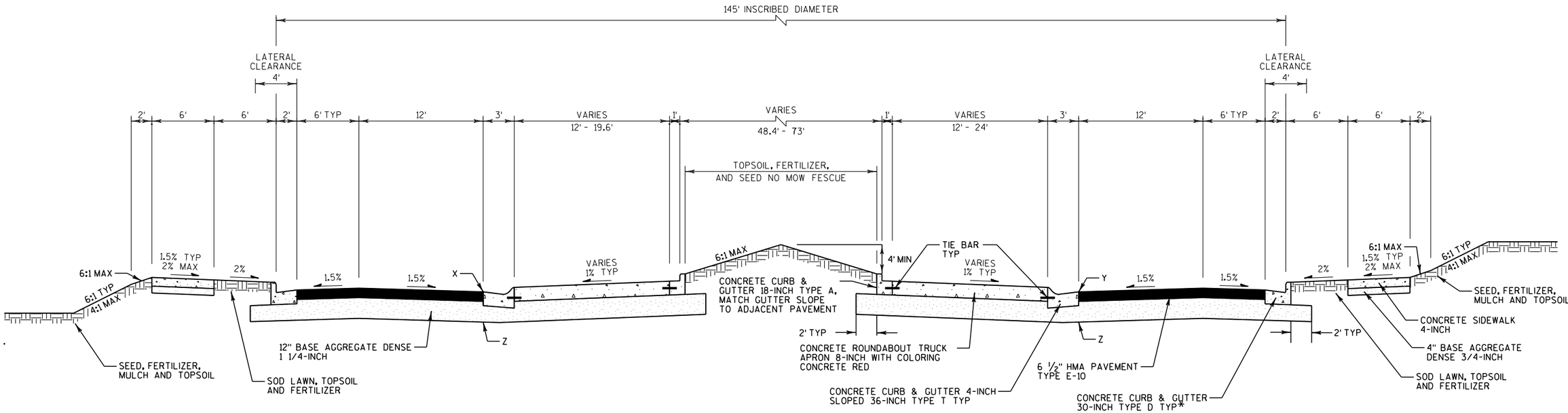

TYPICAL FINISHED SECTION - ROUNDABOUT

SECTION B-B

"X" = POINTS REFERRED TO ON WB PROFILE
"Y" = POINTS REFERRED TO ON EB PROFILE
"Z" = POINTS REFERRED TO ON CROSS SECTIONS

* CONCRETE CURB & GUTTER 4-INCH SLOPED 30-INCH TYPE J ON LOCATIONS SHOWN IN PAVING DETAILS

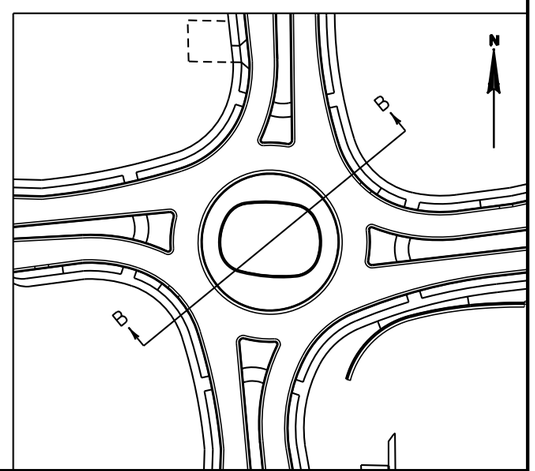

PROJECT NO: 2340-09-70	HWY: STH 20	COUNTY: RACINE	TYPICAL SECTIONS	SCALE, FEET 0 NTS	SHEET 7	E

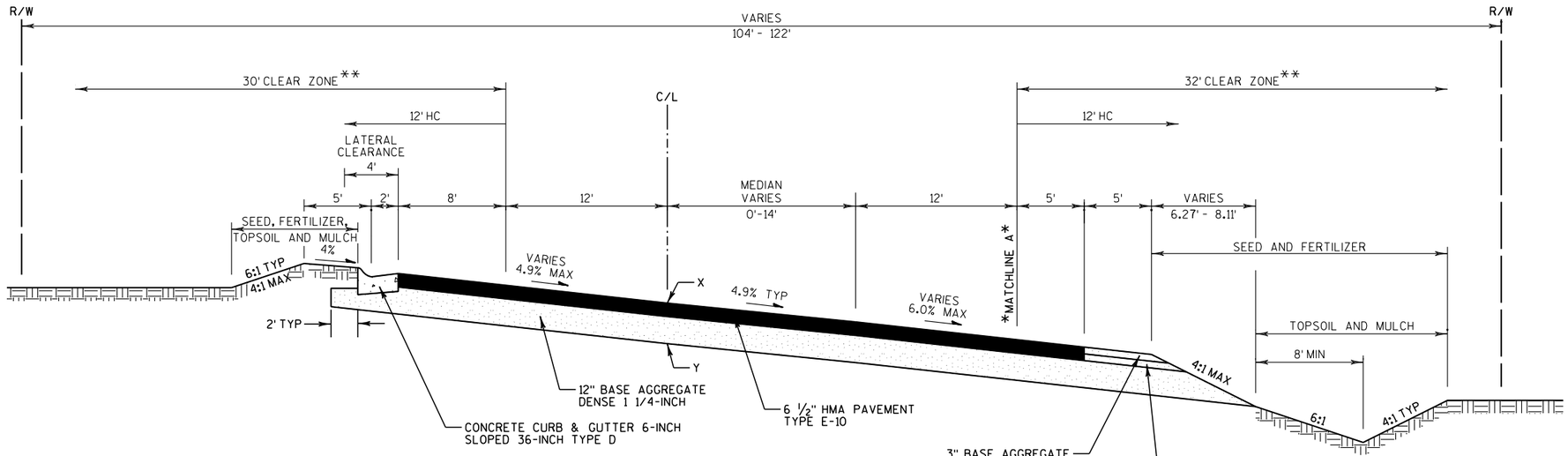

**CLEAR ZONE VARIES:

STATION	SIDE	CLEAR ZONE
STA 592+15 - STA 595+18	LT	30'
STA 592+15 - STA 594+60	RT	26'
STA 594+60 - STA 595+18	RT	32'

TYPICAL FINISHED SECTION - STH 20

STA 592+15 - STA 595+18

HC = HORIZONTAL CLEARANCE
"X" = POINTS REFERRED TO ON WB PROFILE
"Y" = POINTS REFERRED TO ON CROSS SECTIONS

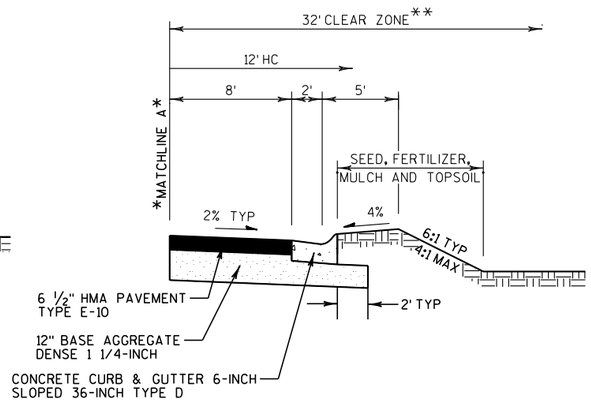

URBAN SHOULDER DETAIL

STA 592+15 - STA 593+00 RT

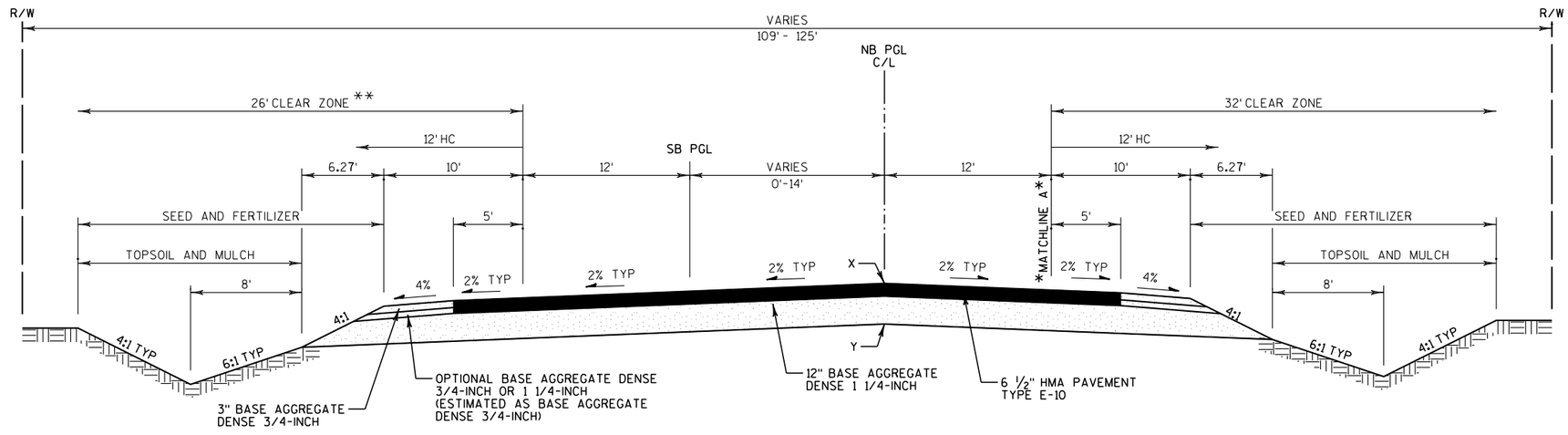

**CLEAR ZONE VARIES:

STATION	SIDE	CLEAR ZONE
STA 462+13 - STA 464+50	LT	26'
STA 464+50 - STA 464+86	LT	18'

TYPICAL FINISHED SECTION - STH 75

STA 462+13 - STA 464+86

HC = HORIZONTAL CLEARANCE
"X" = POINTS REFERRED TO ON PROFILE
"Y" = POINTS REFERRED TO ON CROSS SECTIONS

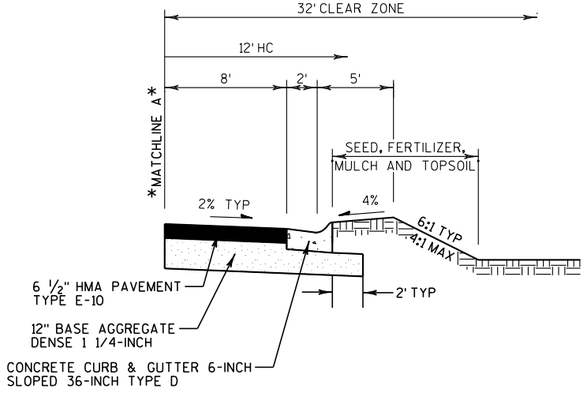

URBAN SHOULDER DETAIL

STA 464+40 - STA 464+86 RT

PROJECT NO: 2340-09-70	HWY: STH 20	COUNTY: RACINE	TYPICAL SECTIONS	SCALE, FEET 0 NTS	SHEET 8	E

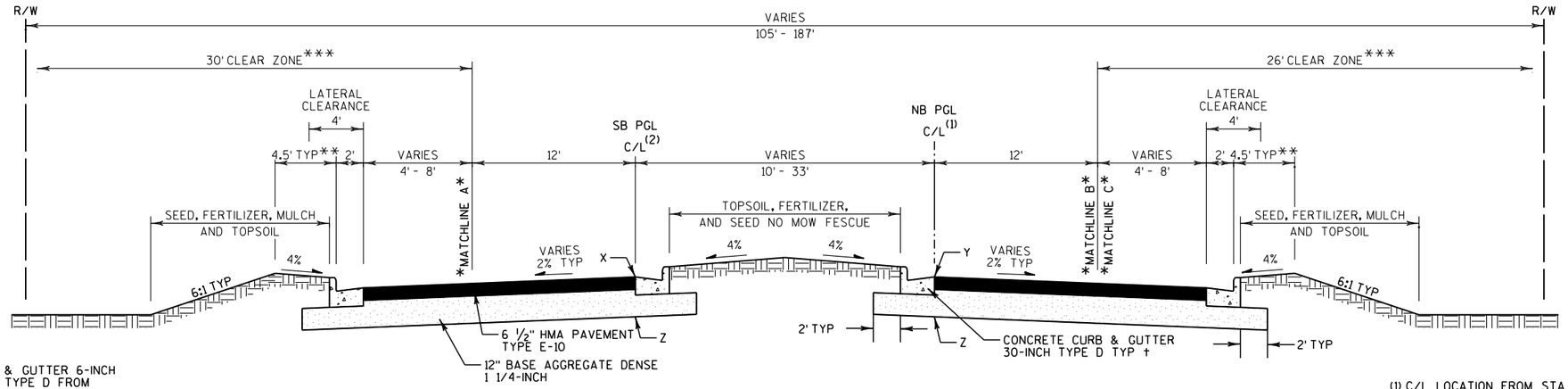

† CONCRETE CURB & GUTTER 6-INCH SLOPED 36-INCH TYPE D FROM STA 464+86 - STA 467+16 AND STA 473+13 - STA 475+21

** 5' ALONG CONCRETE CURB AND GUTTER 6-INCH SLOPED 36-INCH TYPE D

***CLEAR ZONE VARIES:

STATION	SIDE	CLEAR ZONE
STA 464+86 - STA 468+02	LT	18'
STA 464+86 - STA 467+16	RT	30'
STA 473+00 - STA 475+21	RT	26'
STA 473+00 - STA 475+21	LT	30'

TYPICAL FINISHED SECTION - STH 75 ROUNDABOUT SPLITTER ISLAND
TYPICAL FINISHED SECTION - CTH S ROUNDABOUT SPLITTER ISLAND

SECTION A-A
STA 464+86 - STA 469+43
STA 470+83 - STA 475+21

(1) C/L LOCATION FROM STA 464+86 - STA 469+43
(2) C/L LOCATION FROM STA 470+83 - STA 475+21

"X" = POINTS REFERRED TO ON SB PROFILE
"Y" = POINTS REFERRED TO ON NB PROFILE
"Z" = POINTS REFERRED TO ON CROSS SECTIONS

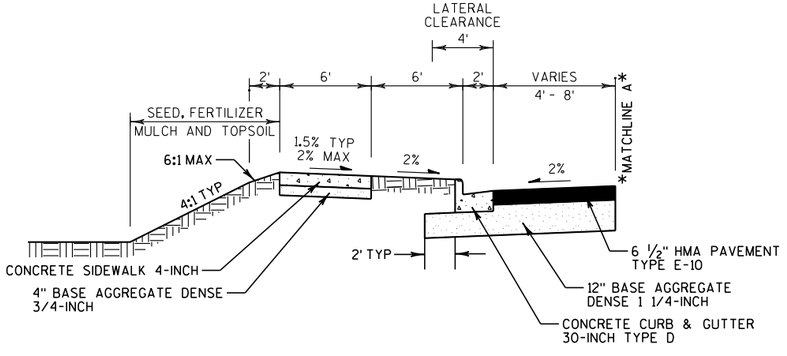

MULTI-USE PATH DETAIL

MATCHLINE B IS A MIRROR IMAGE

STA 468+12 - STA 469+43 LT
STA 470+83 - STA 472+14 LT

STA 467+91 - STA 469+43 RT
STA 470+83 - STA 472+83 RT

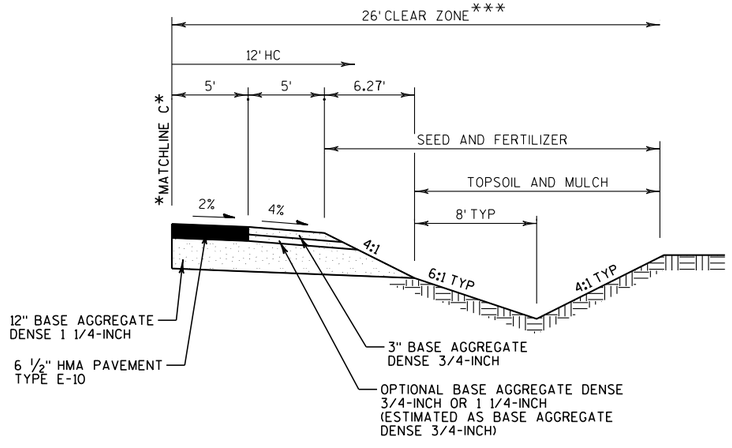

RURAL SHOULDER DETAIL

STA 464+86 - STA 468+02 LT
STA 472+94 - STA 475+21 RT

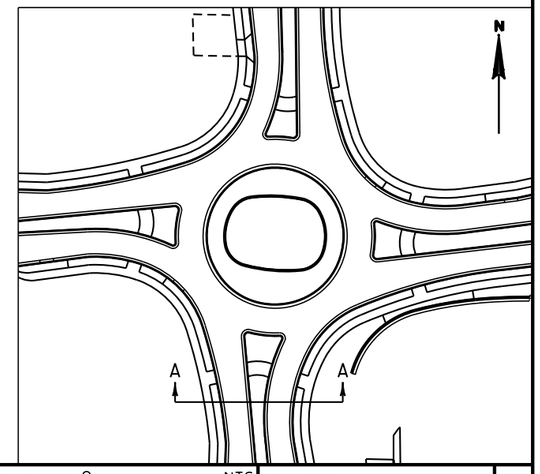

PROJECT NO: 2340-09-70	HWY: STH 20	COUNTY: RACINE	TYPICAL SECTIONS	SCALE, FEET 0 NTS	SHEET 9	E

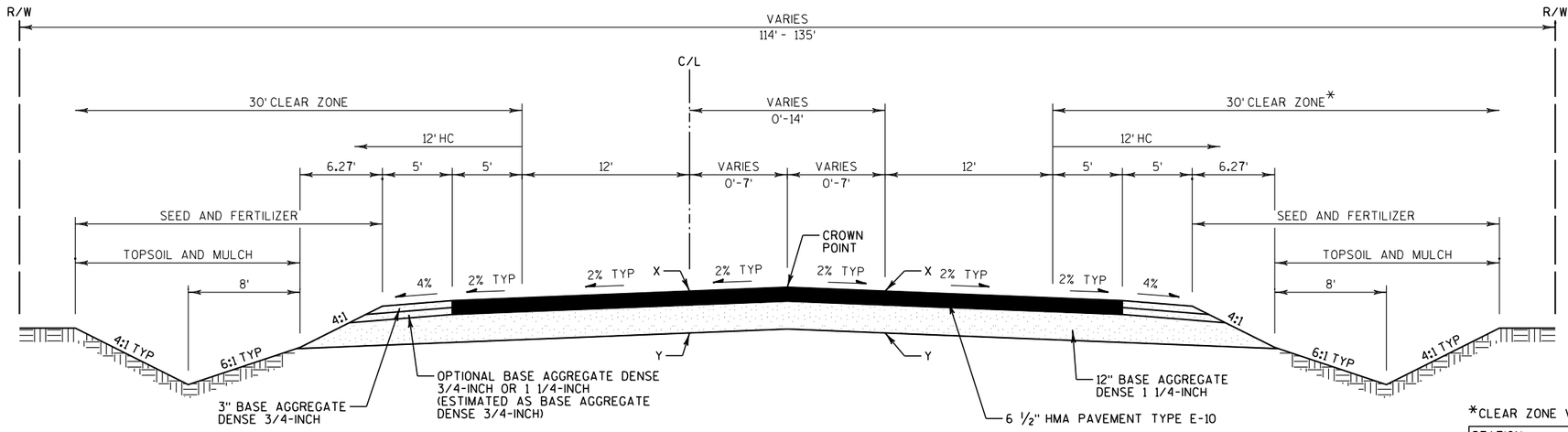

*CLEAR ZONE VARIES:

STATION	SIDE	CLEAR ZONE
STA 475+21 - STA 475+75	RT	26'
STA 475+75 - STA 480+23	RT	30'

TYPICAL FINISHED SECTION - CTH S

STA 475+21 - STA 480+23

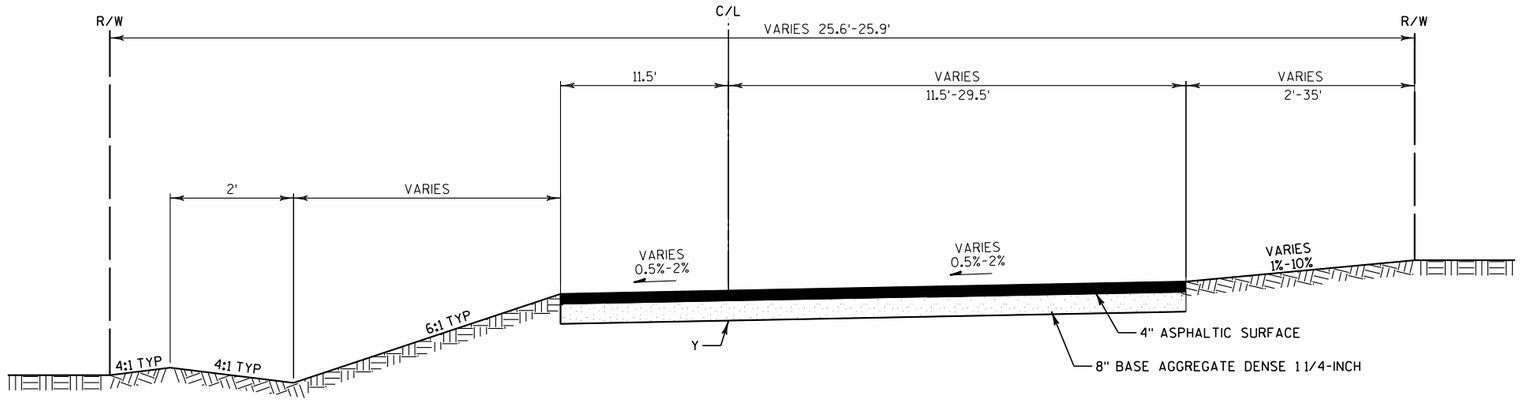

TYPICAL FINISHED SECTION - BEAUMONT PARK PARKING LOT

STA 10+50-STA 11+61

HC = HORIZONTAL CLEARANCE
"X" = POINTS REFERRED TO ON PROFILE
"Y" = POINTS REFERRED TO ON CROSS SECTIONS

PROJECT NO: 2340-09-70	HWY: STH 20	COUNTY: RACINE	TYPICAL SECTIONS	SCALE, FEET 0 NTS	SHEET 10	E

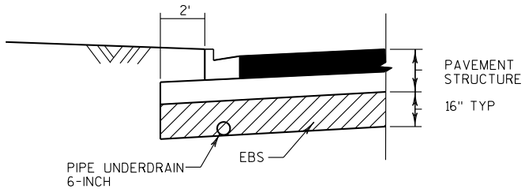

NOTES: 1. USE AS DIRECTED BY ENGINEER FOR AREAS OF UNSTABLE SUBGRADE.
2. EBS SHALL BE PAID FOR AS EXCAVATION COMMON.
3. FILL VOID WITH BREAKER RUN.
4. UNDERDRAIN TO EXTEND 50 FEET OUT FROM AVAILABLE INLETS

EXCAVATION BELOW SUBGRADE (EBS) - URBAN

NOTES: 1. CONNECTIONS TO INLETS OR MANHOLES IN MEDIAN SHALL USE PIPE UNDERDRAIN, 6-INCH.
2. PROVIDE TWO 6" DIA. OPENINGS FOR UNDERDRAIN PIPE
3. SEE SUBSURFACE EXPLORATION REPORT FOR EBS LOCATIONS.

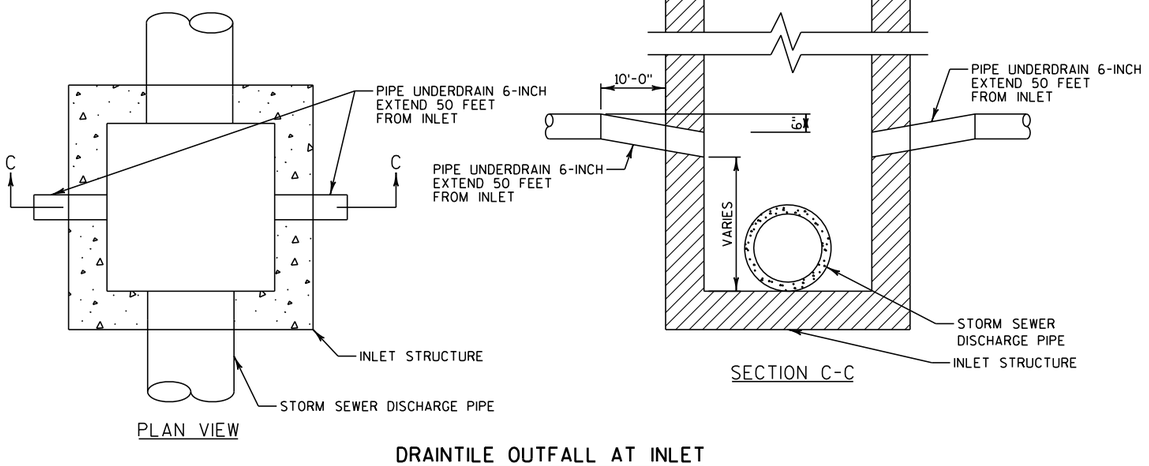

DRAINTILE OUTFALL AT INLET

LOCATION (TO CENTER OF DITCH CHECK)	DITCH SLOPE	DITCH LENGTH	DITCH WIDTH	DITCH CHECK HEIGHT	DITCH CHECK LENGTH	PIPE SIZE X LENGTH
481+00 RT	0.3%	550'	17'	1.8'	30'	ONE 12"x20'

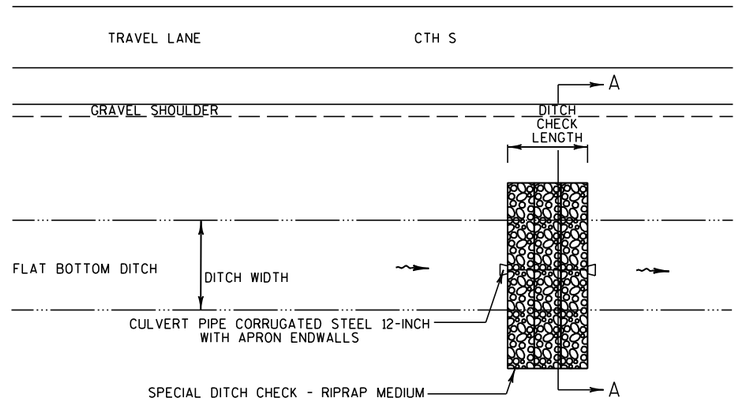

PLAN VIEW

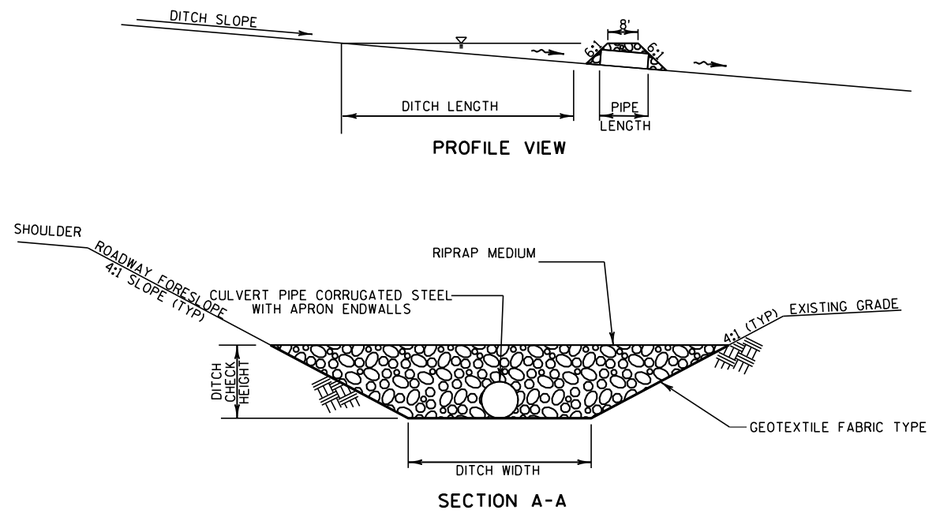

SPECIAL DITCH CHECK DETAILS (NTS)
(SEE TABLE FOR LOCATIONS AND DIMENSIONS)

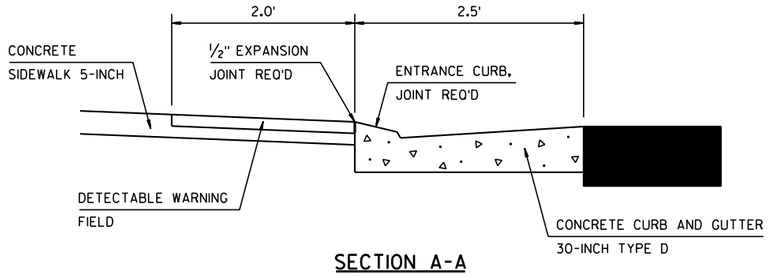

SECTION A-A

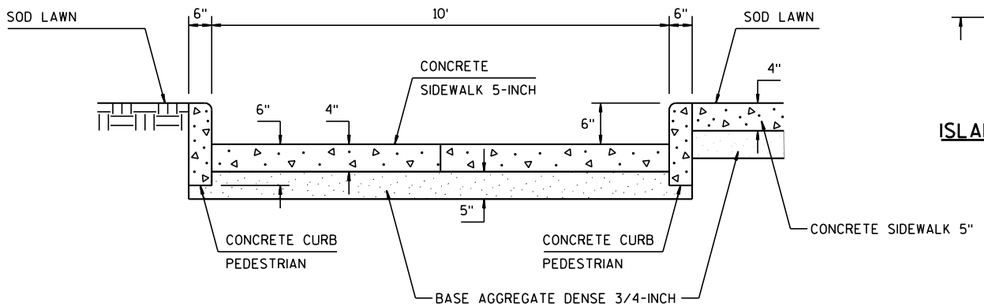

SECTION B-B

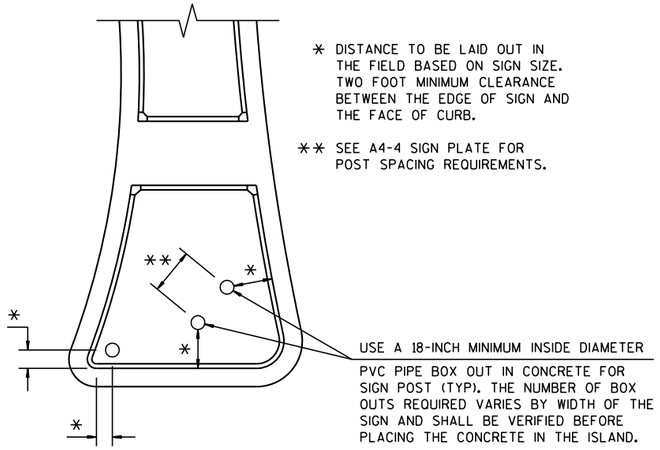

ISLAND SIGN LOCATION DETAIL (TYP)

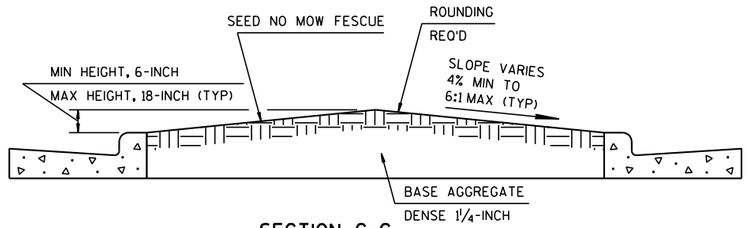

SECTION C-C

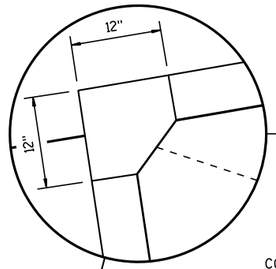

TRANSITION NOSE TYPICAL
AT 4 CROSSWALK CORNERS

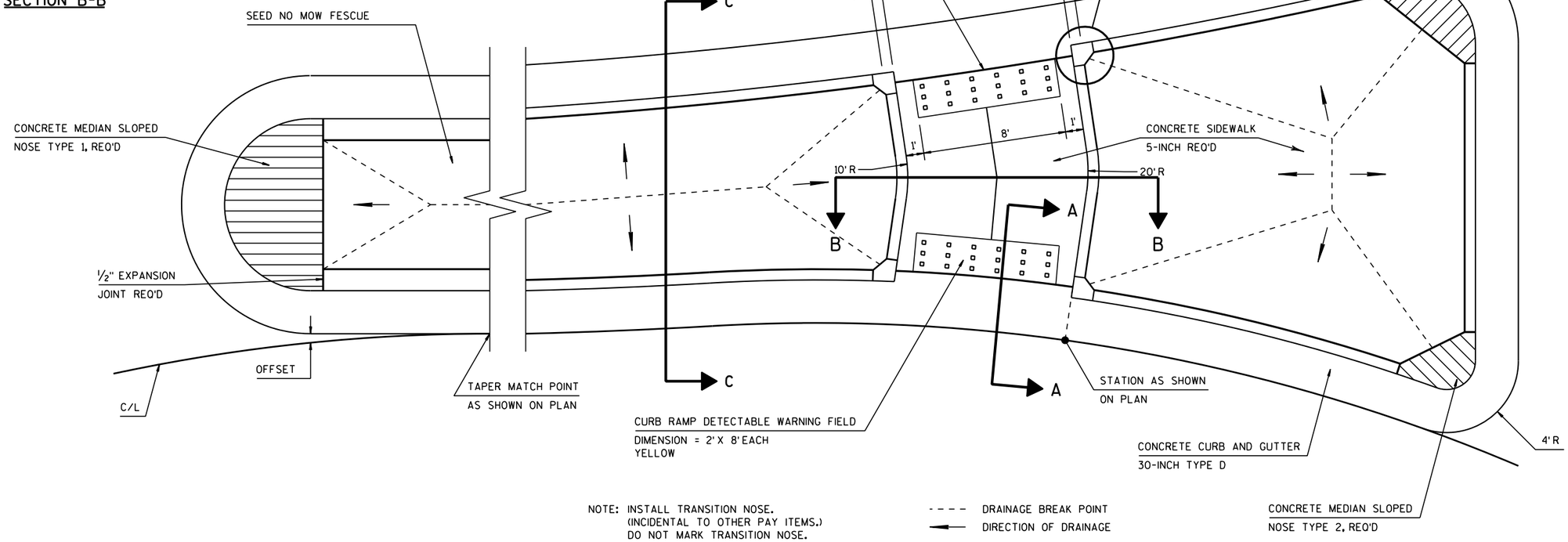

NOTE: INSTALL TRANSITION NOSE.
(INCIDENTAL TO OTHER PAY ITEMS.)
DO NOT MARK TRANSITION NOSE.

---- DRAINAGE BREAK POINT
← DIRECTION OF DRAINAGE

SPLITTER ISLAND DETAIL

PROJECT NO: 2340-09-70	HWY: STH 20	COUNTY: RACINE	CONSTRUCTION DETAILS	SHEET 12	E

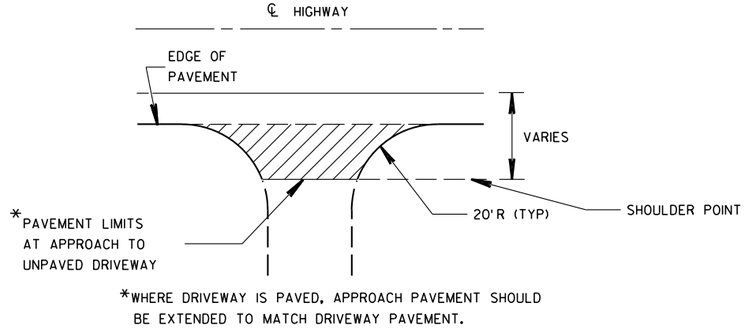

*WHERE DRIVEWAY IS PAVED, APPROACH PAVEMENT SHOULD BE EXTENDED TO MATCH DRIVEWAY PAVEMENT.

PLAN VIEW

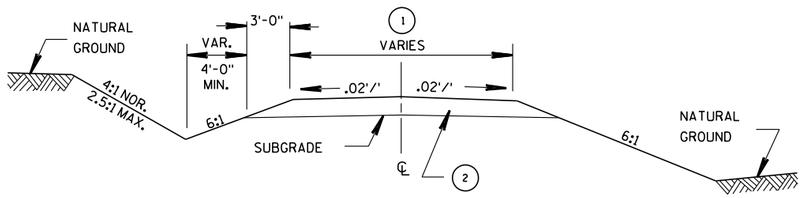

TYPICAL CROSS SECTION

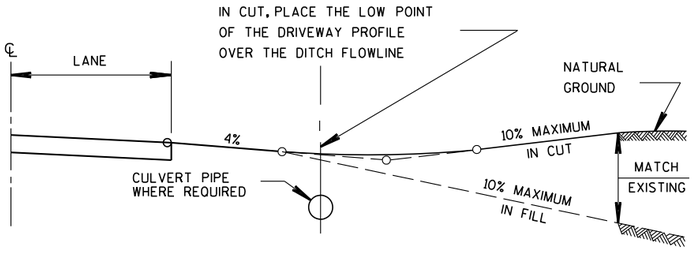

TYPICAL PROFILE

(1) DRIVEWAY WIDTHS:
COMMERCIAL, 35' MAX, 12' MIN
NON-COMMERCIAL, 24' MAX, 12' MIN
SEE PAVING DETAIL SHEETS FOR WIDTH REQUIRED

(2) DRIVEWAY SURFACE SHALL BE REPLACED IN-KIND WITH MINIMUM SECTION OF:
ASPHALT - 3" ASPHALTIC SURFACE FOR DRIVEWAYS AND FIELD ENTRANCES ON 4" BASE AGGREGATE DENSE 1 1/4-INCH
CONCRETE - 7" CONCRETE ON 4" BASE AGGREGATE DENSE 1 1/4-INCH
BASE AGGREGATE DENSE - 6" BASE AGGREGATE DENSE 3/4-INCH

RURAL DRIVEWAY DETAIL

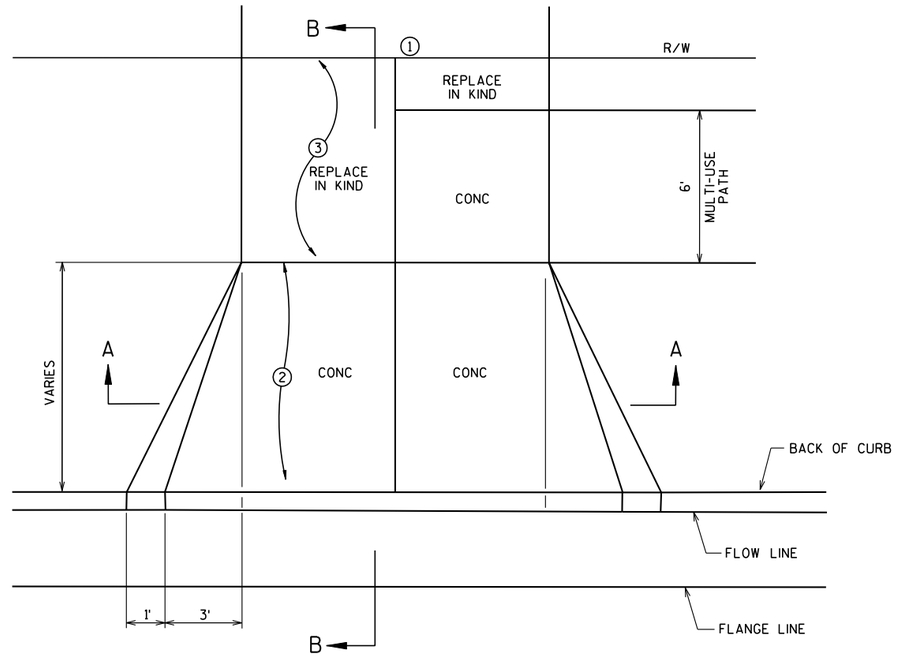

PLAN VIEW

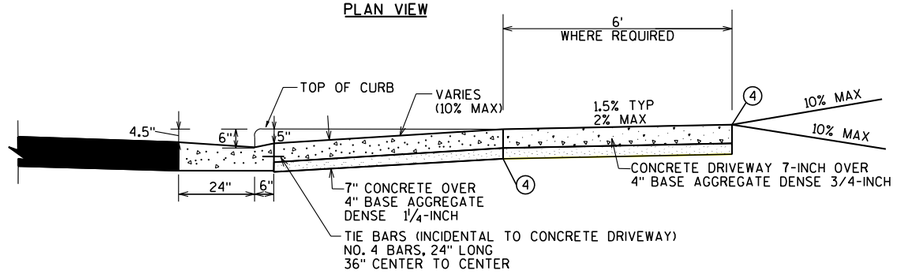

SECTION B-B

NOTES:

(1) DRIVEWAY WIDTHS
COMMERCIAL 35' MAX 12' MIN
NON-COMMERCIAL 24' MAX 12' MIN

(2) ALL DRIVEWAY APPROACHES SHALL BE 7" CONCRETE ON 4" BASE AGGREGATE DENSE 1 1/4-INCH.

(3) DRIVEWAY SURFACE SHALL BE REPLACED IN-KIND WITH MINIMUM SECTION OF:
ASPHALT - 3" ASPHALTIC SURFACE FOR DRIVEWAYS AND FIELD ENTRANCES ON 4" BASE AGGREGATE DENSE 1 1/4-INCH
CONCRETE - 7" CONCRETE ON 4" BASE AGGREGATE DENSE 1 1/4-INCH
BASE AGGREGATE DENSE - 6" BASE AGGREGATE DENSE 3/4-INCH

(4) MAXIMUM ALLOWABLE GRADE BREAK IS 12%.
SEE CROSS SECTIONS FOR ACTUAL GRADE BREAKS.

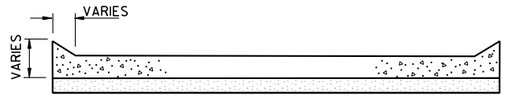

SECTION A-A

URBAN DRIVEWAY DETAIL

PINS: 2 PER BLOCK
MINIMUM ½" X 18"
SHALL BE COUNTERSUNK
½" AND GROUTED

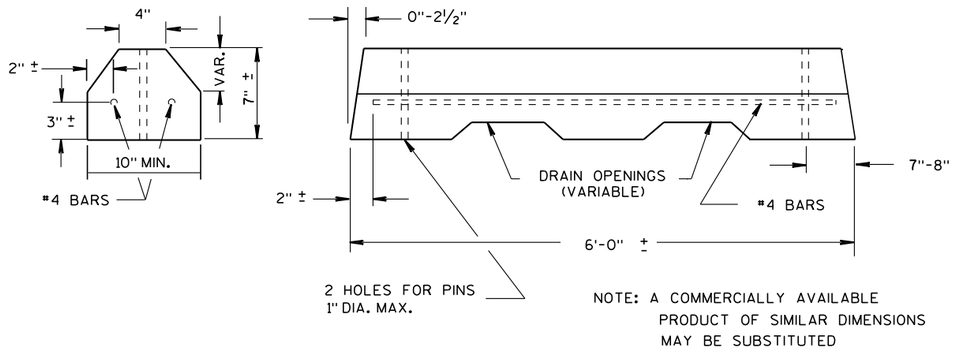

NOTE: A COMMERCIALLY AVAILABLE PRODUCT OF SIMILAR DIMENSIONS MAY BE SUBSTITUTED

CONCRETE CURB PRECAST

RUNOFF COEFFICIENT TABLE

	HYDROLOGIC SOIL GROUP											
	A			B			C			D		
	SLOPE RANGE (PERCENT)			SLOPE RANGE (PERCENT)			SLOPE RANGE (PERCENT)			SLOPE RANGE (PERCENT)		
LAND USE:	0-2	2-6	6 & OVER	0-2	2-6	6 & OVER	0-2	2-6	6 & OVER	0-2	2-6	6 & OVER
ROW CROPS	.08 .22	.16 .30	.22 .38	.12 .26	.20 .34	.27 .44	.15 .30	.24 .37	.33 .50	.19 .34	.28 .41	.38 .56
MEDIAN STRIP- TURF	.19 .24	.20 .26	.24 .30	.19 .25	.22 .28	.26 .33	.20 .26	.23 .30	.30 .37	.20 .27	.25 .32	.30 .40
SIDE SLOPE- TURF			.25 .32			.27 .34			.28 .36			.30 .38
PAVEMENT:												
ASPHALT	.70 - .95											
CONCRETE	.80 - .95											
BRICK	.70 - .80											
DRIVES, WALKS	.75 - .85											
ROOFS	.75 - .95											
GRAVEL ROADS, SHOULDERS	.40 - .60											

TOTAL PROJECT AREA = 11.7 ACRES
TOTAL AREA EXPECTED TO BE DISTURBED BY CONSTRUCTION ACTIVITIES = 10.2 ACRES

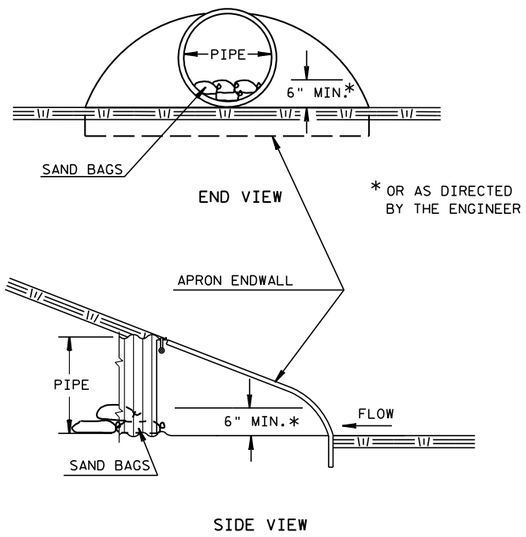

CULVERT PIPE CHECK

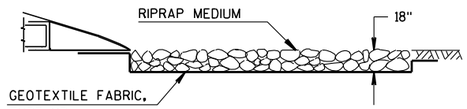

SECTION A-A

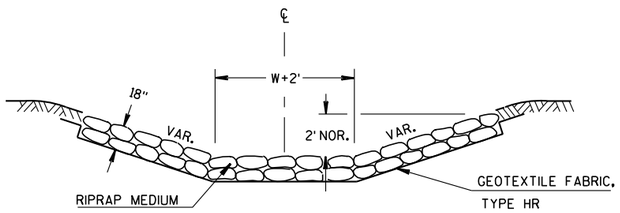

SECTION B-B

RIPRAP MEDIUM AND GEOTEXTILE FABRIC DETAIL AT APRON ENDWALLS

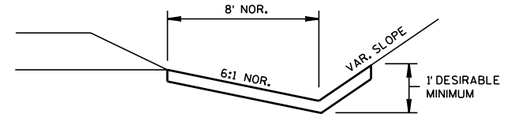

EROSION MAT DETAIL FOR DITCHES

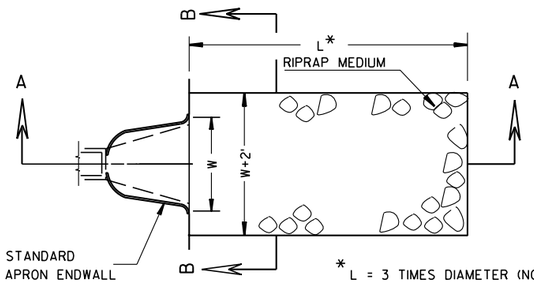

* L = 3 TIMES DIAMETER (NOR.) OR 10' MIN. OR AS DIRECTED BY THE ENGINEER

PROJECT NO: 2340-09-70	HWY: STH 20	COUNTY: RACINE	CONSTRUCTION DETAILS	SHEET 14	E

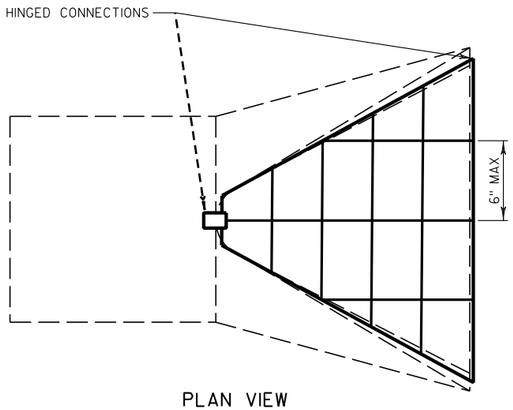

PLAN VIEW

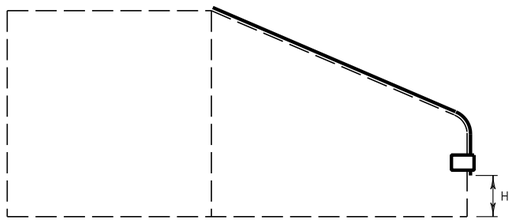

SIDE VIEW

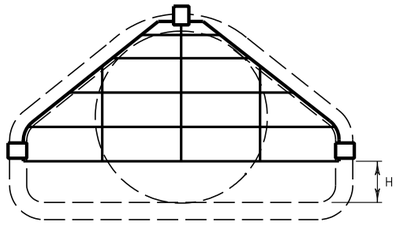

END VIEW

PIPE GRATE

GRATE CLEARANCE HEIGHT

ROUND PIPE		ARCH PIPE	
PIPE SIZE	H	PIPE SIZE	H
12"	2 1/2"	22" - 29"	4"
15"	3"	36" - 44"	5"
18" - 24"	4"	51" - 65"	6"
27" - 36"	5"	73" - 85"	7"
42" - 54"	6"		
60" - 72"	7"		
78" - 90"	8"		

GRATE BAR SIZES

(STANDARD DESIGN)

	PIPE SIZE	HOLE DIAMETER REQUIRED	BOLT DIAMETER	BAR SIZE
ROUND PIPE	12" - 24"	3/4"	5/8"	5/8"
	27" - 48"	7/8"	3/4"	3/4"
	54" - 90"	1 1/8"	1"	1"
ARCH PIPE	22" - 29"	3/4"	5/8"	5/8"
	36" - 59"	7/8"	3/4"	3/4"
	65" - 85"	1 1/8"	1"	1"

BOLT LENGTH = PIPE WALL THICKNESS + 2 1/2"

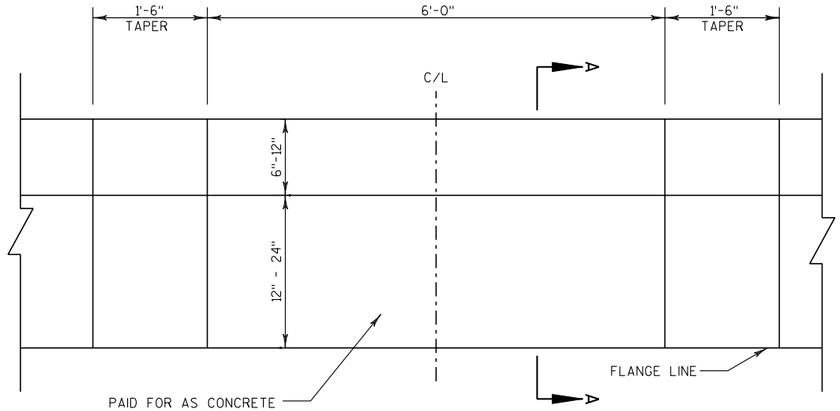

PAID FOR AS CONCRETE CURB & GUTTER 6-INCH SLOPED 36-INCH TYPE D, CONCRETE CURB & GUTTER 30-INCH TYPE D OR CONCRETE CURB & GUTTER 18-INCH TYPE A

PLAN VIEW

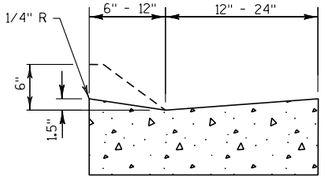

END VIEW

SECTION A-A

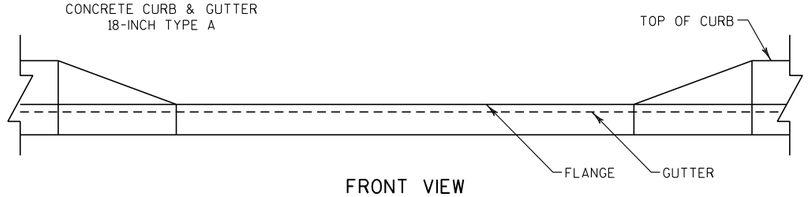

FRONT VIEW

MAINTENANCE OPENING

LOCATIONS SHOWN ON PAVING DETAILS

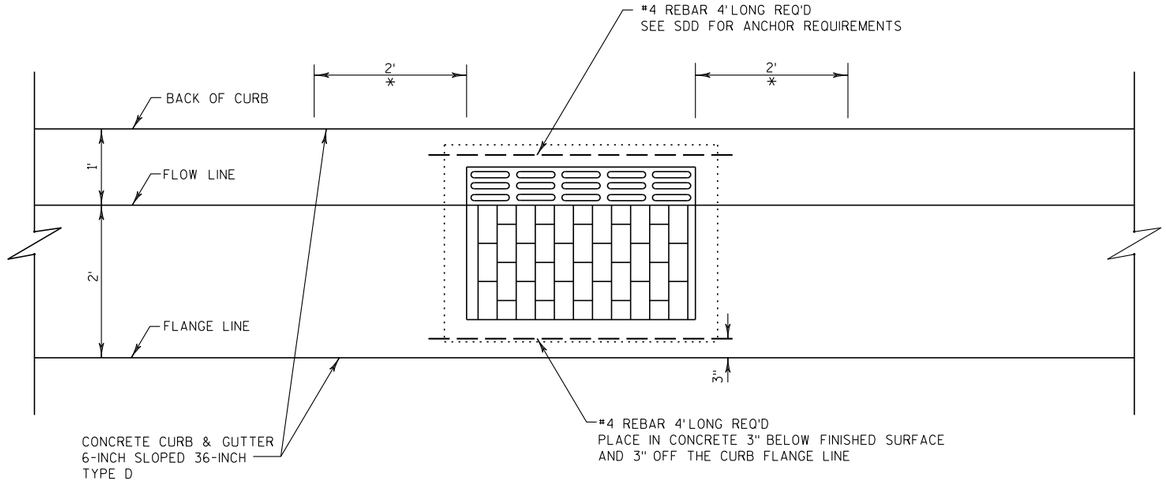

PLAN VIEW

* TRANSITION STANDARD CURB HEAD TO MATCH THE TYPE HM INLET COVER.

NOTES

1. SEE SDD "INLET COVERS TYPE F, HM, HM-S, S, V, HM-GJ, & HM-GJ-S" FOR ADDITIONAL INFORMATION.
2. THE TWO 2-FOOT LONG CURB TRANSITION SEGMENTS ARE PAID AS CONCRETE CURB & GUTTER 6-INCH SLOPED 36-INCH TYPE D.
3. THE TWO 4-FOOT LENGTHS OF #4 REBAR ARE INCIDENTAL TO THE BID ITEM "INLET COVERS TYPE HM-S".

INLET COVERS, TYPE HM-S

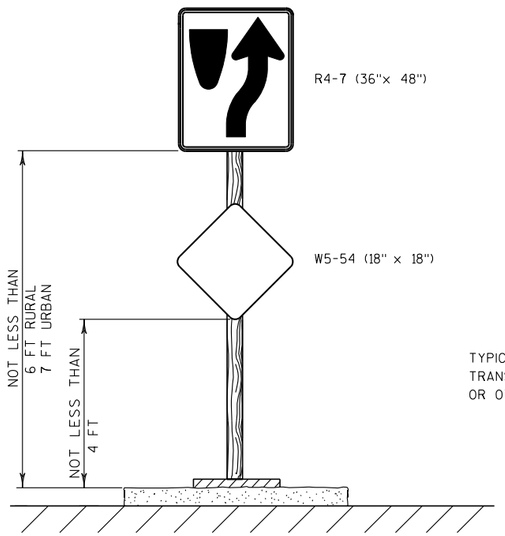

TYPICAL INSTALLATION FOR TRANSITION TO DIVIDED HIGHWAY OR OTHER SPECIAL NEEDS AREAS

SIGNING DETAIL

SEE PERMANENT SIGNING PLANS FOR LOCATIONS

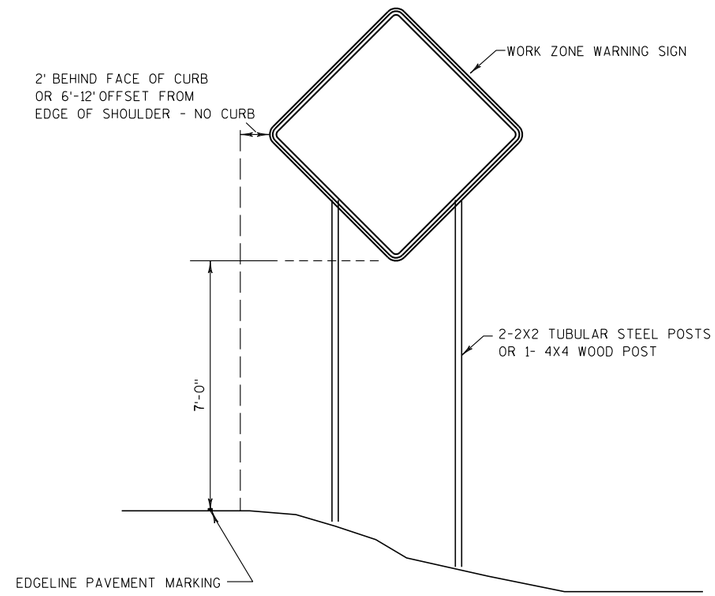

TYPICAL TEMPORARY TRAFFIC CONTROL DETAIL
MOUNTING ON FIXED SUPPORT

LONG TERM
7 DAYS OR MORE

PROJECT NO: 2340-09-70	HWY: STH 20	COUNTY: RACINE	CONSTRUCTION DETAILS	SHEET 16	E

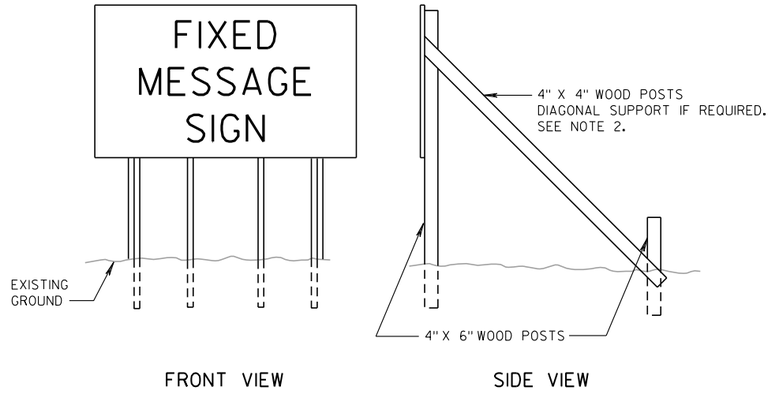

FRONT VIEW SIDE VIEW

NOTES

1. SEE TRAFFIC CONTROL SHEETS FOR SIGN LOCATIONS.
2. TWO DIAGONAL SUPPORTS TO BE INCLUDED FOR EACH SIGN OVER 12'LONG AND HIGHER THAN 8'. DIAGONAL SUPPORTS TO BE AFFIXED TO THE OUTSIDE SUPPORTS AND TO BE INCIDENTAL TO THE "TRAFFIC CONTROL FIXED MESSAGE SIGN" ITEM. IF DIAGONAL SUPPORTS ARE USED, SIGN TO BE SHIELDED BEHIND CONCRETE BARRIER OR PLACED OUTSIDE THE CLEAR ZONE.
3. SEE TABLES BELOW FOR REQUIRED NUMBER OF POSTS.

* 6'FROM EDGE OF A PAVED SHOULDER OR 12'FROM THE EDGE OF PAVEMENT (EDGE LINE LOCATION) OR 2'FROM OUTSIDE EDGE OF GRAVEL, WHICHEVER IS GREATER UNLESS DIRECTED BY PROJECT ENGINEER. SEE NOTE 2 FOR OFFSET REQUIREMENTS WHERE DIAGONAL SUPPORTS ARE USED.

** THE EXISTENCE OF CURB AND GUTTER DOES NOT IN ITSELF MANDATE THE VERTICAL CLEARANCE ILLUSTRATED. THAT HEIGHT IS TYPICALLY MEASURED WHERE THERE IS SIDEWALK ADJACENT TO THE ROADWAY OR PARKING IS PERMITTED. IN THE ABSENCE OF SIDEWALK, VERTICAL CLEARANCE IS MEASURED FROM THE TOP OF THE CURB. IF NO SIDEWALK AND NO PARKING, VERTICAL CLEARANCE MAY BE REDUCED TO 5'MINIMUM. OFFSET OF SIGNS IS MEASURED FROM THE CURB FLOWLINE.

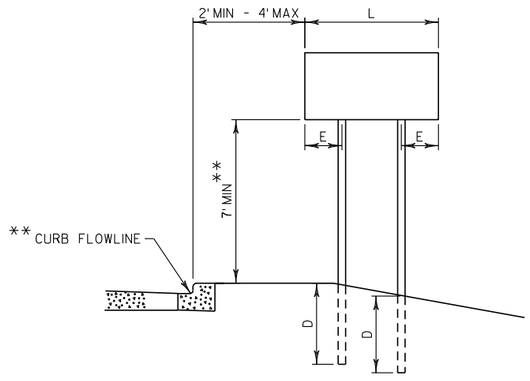

URBAN AREA

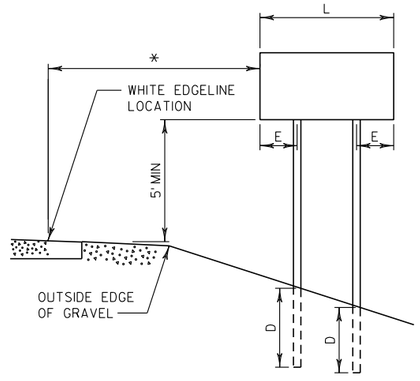

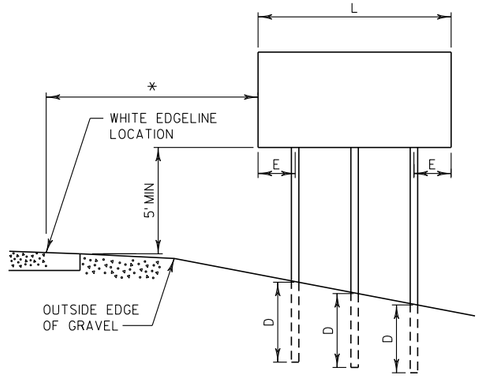

RURAL AREA

SIGN SHAPE OTHER THAN DIAMOND (TWO POSTS REQUIRED)	
L	E
GREATER THAN 48" LESS THAN 60"	12"
60" TO 120"	L/5

SIGN SHAPE OTHER THAN DIAMOND (THREE POSTS REQUIRED)	
L	E
GREATER THAN 120" LESS THAN 168"	12"

SIGN SHAPE OTHER THAN DIAMOND (FOUR POSTS REQUIRED)	
L	E
168" AND GREATER	12"

POST EMBEDMENT DEPTH

AREA OF SIGN INSTALLATION (SQ. FT.)	D (MIN)
20 OR LESS	4'
GREATER THAN 20	5'

POST MOUNTING DETAIL FOR TRAFFIC CONTROL FIXED MESSAGE SIGNS

110210

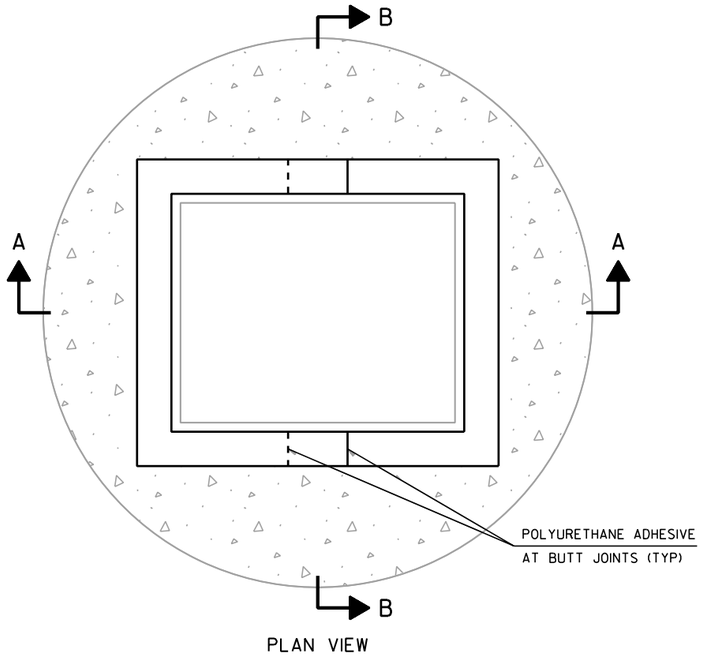

PLAN VIEW

NOTE: ALL CUTS MADE TO RUBBER ADJUSTMENT RINGS WILL BE PERPENDICULAR AND PROVIDE A TIGHT JOINT.

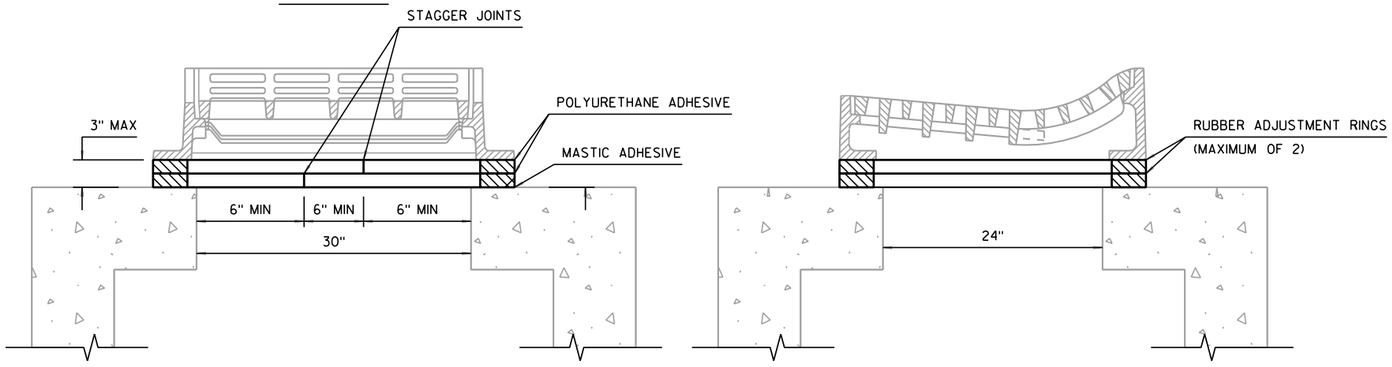

SECTION A-A

SECTION B-B

RUBBER RING CUTTING DETAIL FOR INLETS 4-FT DIAMETER SPECIAL

SEE STORM SEWER TABLE FOR LOCATIONS

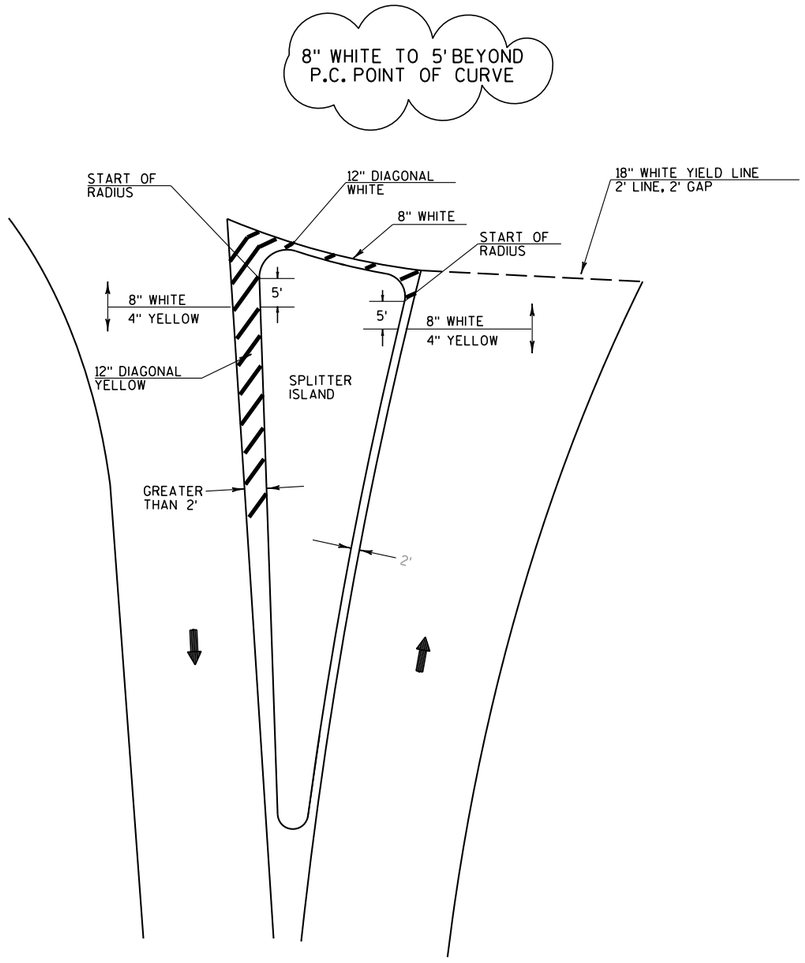

ROUNDABOUT SPLITTER ISLAND PAVEMENT MARKING

NOTES: 1. ALL RADII ARE TO FACE OF CURB, UNLESS OTHERWISE NOTED.
2. SEE CURB ALIGNMENT PLANS FOR LAYOUT OF CURB & GUTTER.
3. ELEVATIONS SHOWN ARE AT CURB & GUTTER FLANGE LINE OR EDGE OF DRIVING LANE UNLESS OTHERWISE NOTED.

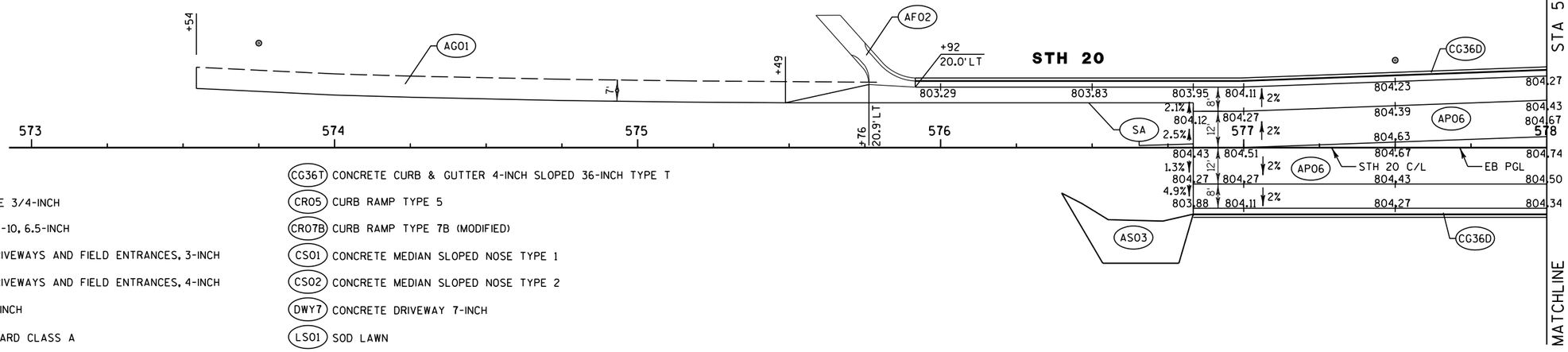

- AF02 ASPHALTIC FLUME
- AG01 BASE AGGREGATE DENSE 3/4-INCH
- AP06 HMA PAVEMENT TYPE E-10, 6.5-INCH
- AS03 ASPHALTIC SURFACE DRIVEWAYS AND FIELD ENTRANCES, 3-INCH
- AS04 ASPHALTIC SURFACE DRIVEWAYS AND FIELD ENTRANCES, 4-INCH
- AS05 ASPHALTIC SURFACE 4-INCH
- BG01 STEEL PLATE BEAM GUARD CLASS A
- BG02 ANCHORAGES FOR STEEL PLATE BEAM GUARD TYPE 2
- BG03 STEEL PLATE BEAM GUARD SHORT RADIUS
- BG04 STEEL PLATE BEAM GUARD SHORT RADIUS TERMINAL
- CCP CONCRETE CURB PEDESTRIAN
- CG18A CONCRETE CURB & GUTTER 18-INCH TYPE A
- CG18D CONCRETE CURB & GUTTER 18-INCH TYPE D
- CG30D CONCRETE CURB & GUTTER 30-INCH TYPE D
- CG36D CONCRETE CURB & GUTTER 6-INCH SLOPED 36-INCH TYPE D
- CG30J CONCRETE CURB & GUTTER 4-INCH SLOPED 30-INCH TYPE J
- CG36T CONCRETE CURB & GUTTER 4-INCH SLOPED 36-INCH TYPE T
- CR05 CURB RAMP TYPE 5
- CR07B CURB RAMP TYPE 7B (MODIFIED)
- CS01 CONCRETE MEDIAN SLOPED NOSE TYPE 1
- CS02 CONCRETE MEDIAN SLOPED NOSE TYPE 2
- DWY7 CONCRETE DRIVEWAY 7-INCH
- LS01 SOD LAWN
- LS02 SEED NO MOW FESCUE
- MO MAINTENANCE OPENING
- SA SAWING ASPHALT
- SC SAWING CONCRETE
- SW05 CONCRETE SIDEWALK 5-INCH
- SW08 CONCRETE SIDEWALK 8-INCH
- TA08 CONCRETE ROUNDABOUT TRUCK APRON 8-INCH (RED)
- CURB RAMP DETECTABLE WARNING FIELD YELLOW

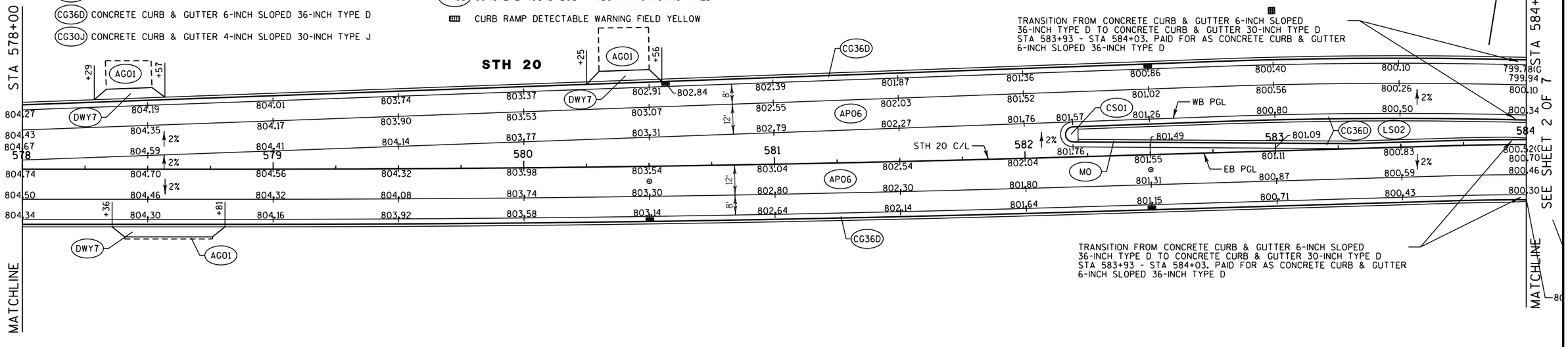

SHEET 1 OF 7

PROJECT NO: 2340-09-70	HWY: STH 20	COUNTY: RACINE	PAVING DETAILS	SCALE, FEET 0 20 40	SHEET 19	E

NOTES:
1. ALL RADII ARE TO FACE OF CURB, UNLESS OTHERWISE NOTED.
2. SEE CURB ALIGNMENT PLANS FOR LAYOUT OF CURB & GUTTER.
3. ELEVATIONS SHOWN ARE AT CURB & GUTTER FLANGE LINE OR EDGE OF DRIVING LANE UNLESS OTHERWISE NOTED.
4. SEE SHEET 3 OF 7 FOR STA/OFFSETS FOR THIS SHEET.
5. ELEVATIONS WITHIN CIRCULATORY ROADWAY SHALL NOT BE ADJUSTED WITHOUT APPROVAL OF DESIGNER
6. ENGINEER TO FIELD VERIFY ELEVATIONS IN PARKING LOTS PRIOR TO PLACING CURB AND GUTTER. ADJUST CURB AND GUTTER ELEVATIONS AS NEEDED TO FIT FIELD CONDITIONS

SUPERELEVATION DATA - STH 20 WB	STATION	LEFT
END NORMAL CROWN	588+77	-2.0%
FLAT	589+30	0.0%
BEGIN FULL SUPER	590+61	+4.9%
END CONSTRUCTION	595+18	+4.9%

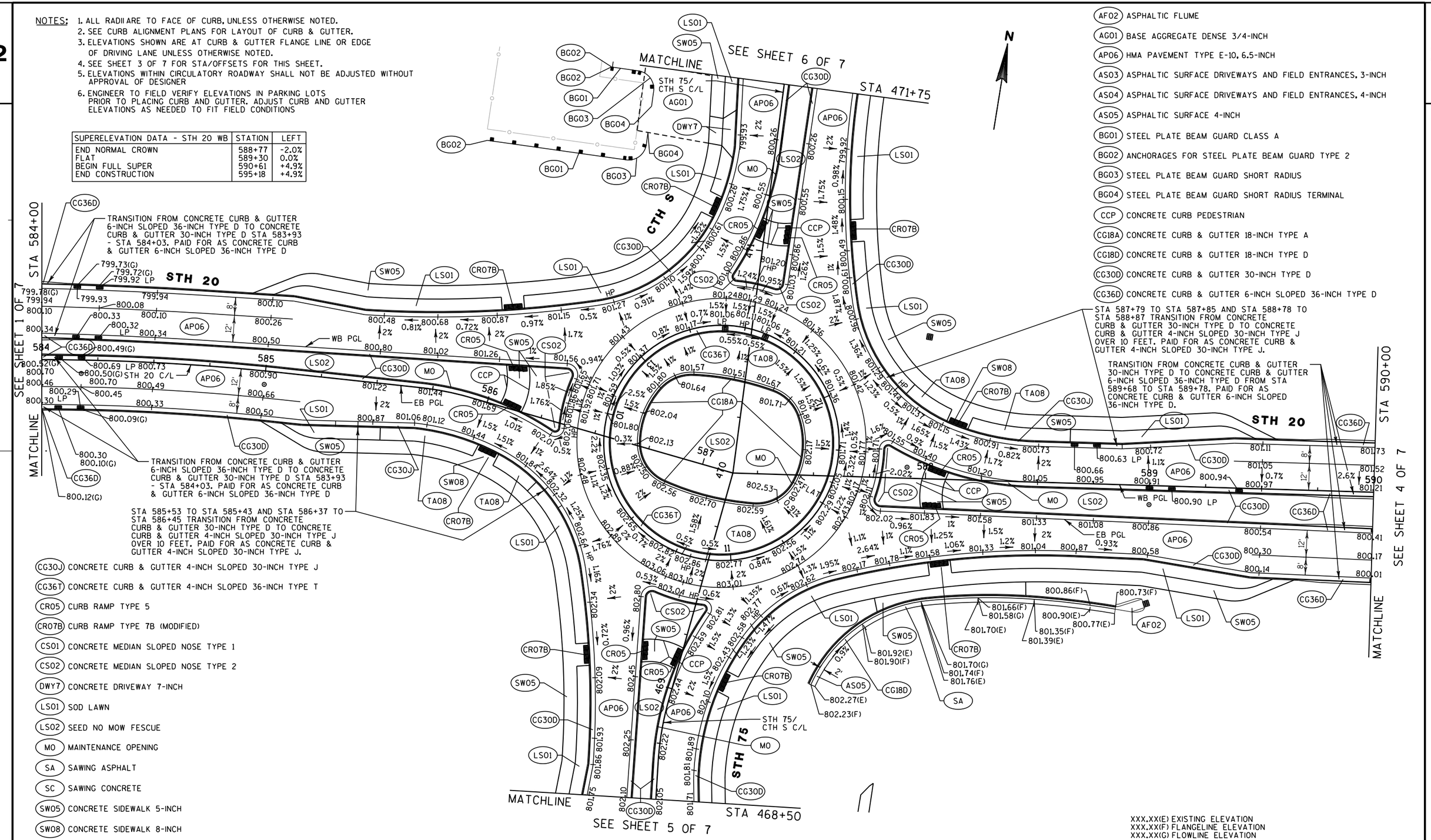

AF02 ASPHALTIC FLUME
AG01 BASE AGGREGATE DENSE 3/4-INCH
AP06 HMA PAVEMENT TYPE E-10, 6.5-INCH
AS03 ASPHALTIC SURFACE DRIVEWAYS AND FIELD ENTRANCES, 3-INCH
AS04 ASPHALTIC SURFACE DRIVEWAYS AND FIELD ENTRANCES, 4-INCH
AS05 ASPHALTIC SURFACE 4-INCH
BG01 STEEL PLATE BEAM GUARD CLASS A
BG02 ANCHORAGES FOR STEEL PLATE BEAM GUARD TYPE 2
BG03 STEEL PLATE BEAM GUARD SHORT RADIUS
BG04 STEEL PLATE BEAM GUARD SHORT RADIUS TERMINAL
CCP CONCRETE CURB PEDESTRIAN
CG18A CONCRETE CURB & GUTTER 18-INCH TYPE A
CG18D CONCRETE CURB & GUTTER 18-INCH TYPE D
CG30D CONCRETE CURB & GUTTER 30-INCH TYPE D
CG36D CONCRETE CURB & GUTTER 6-INCH SLOPED 36-INCH TYPE D
CG30J CONCRETE CURB & GUTTER 4-INCH SLOPED 30-INCH TYPE J
CG36T CONCRETE CURB & GUTTER 4-INCH SLOPED 36-INCH TYPE T
CR05 CURB RAMP TYPE 5
CR07B CURB RAMP TYPE 7B (MODIFIED)
CS01 CONCRETE MEDIAN SLOPED NOSE TYPE 1
CS02 CONCRETE MEDIAN SLOPED NOSE TYPE 2
DWY7 CONCRETE DRIVEWAY 7-INCH
LS01 SOD LAWN
LS02 SEED NO MOW FESCUE
MO MAINTENANCE OPENING
SA SAWING ASPHALT
SC SAWING CONCRETE
SW05 CONCRETE SIDEWALK 5-INCH
SW08 CONCRETE SIDEWALK 8-INCH
TA08 CONCRETE ROUNDABOUT TRUCK APRON 8-INCH (RED)
CURB RAMP DETECTABLE WARNING FIELD YELLOW

XXX.XX(E) EXISTING ELEVATION
XXX.XX(F) FLANGELINE ELEVATION
XXX.XX(G) FLOWLINE ELEVATION

PROJECT NO: 2340-09-70	HWY: STH 20	COUNTY: RACINE	PAVING DETAILS	SCALE, FEET 0 20 40	SHEET 20	E

FILE NAME : k:\1082713.03\cadd\sheets\paving\021102_id.dgn PLOT DATE : 1/29/2014 PLOT BY : rlb PLOT NAME : PLOT SCALE : $$.....plotscale.....$$ WISDOT/CADDS SHEET 42

NOTES:
1. ALL RADII ARE TO FACE OF CURB, UNLESS OTHERWISE NOTED.
2. SEE CURB ALIGNMENT PLANS FOR LAYOUT OF CURB & GUTTER.
3. ELEVATIONS SHOWN ARE AT CURB & GUTTER FLANGE LINE OR EDGE OF DRIVING LANE UNLESS OTHERWISE NOTED.
4. SEE SHEET 3 OF 7 FOR STA/OFFSETS FOR THIS SHEET.

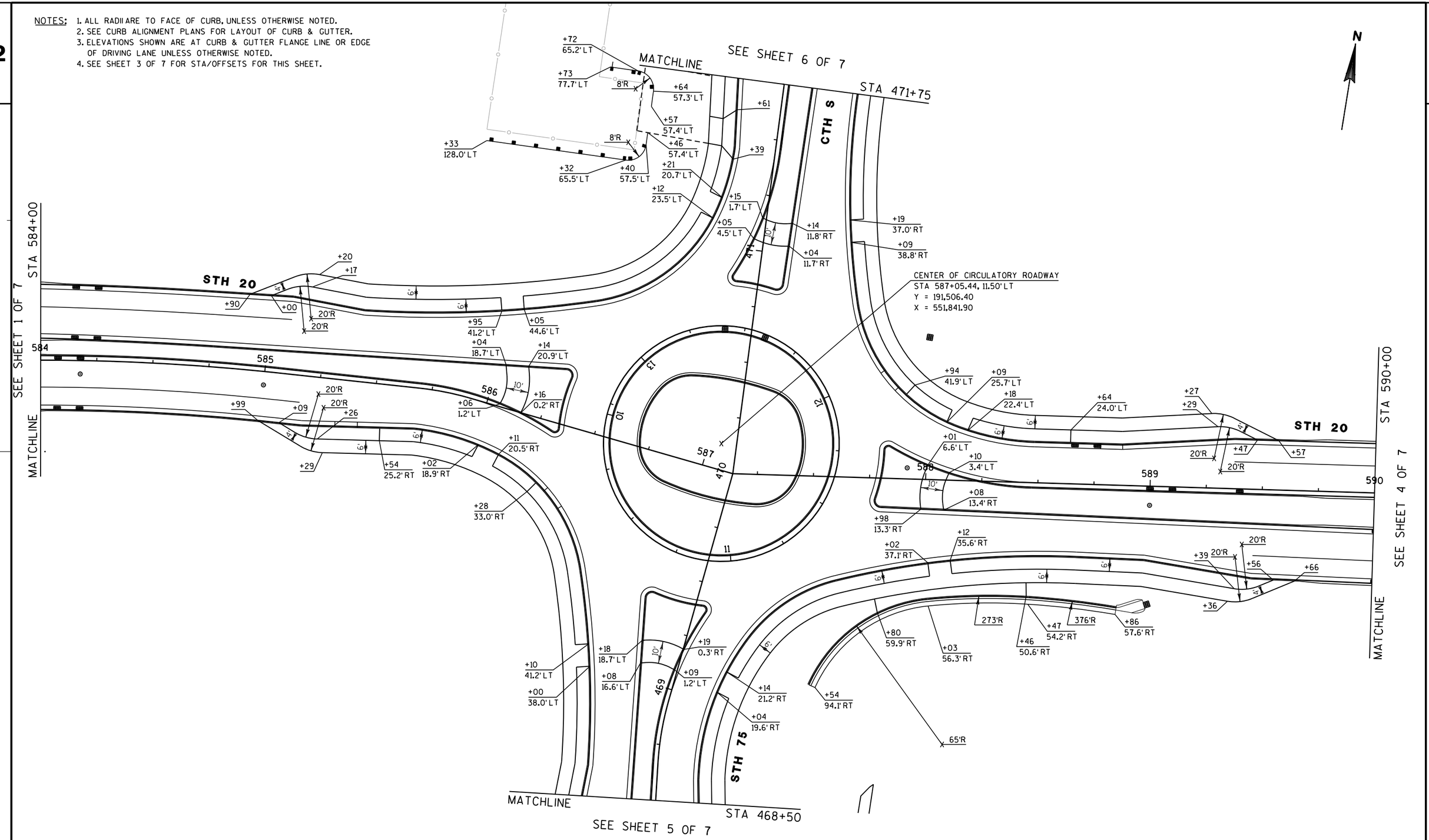

SHEET 3 OF 7

PROJECT NO: 2340-09-70	HWY: STH 20	COUNTY: RACINE	PAVING DETAILS	SCALE, FEET 0 20 40	SHEET 21	E

2

NOTES:
1. ALL RADII ARE TO FACE OF CURB, UNLESS OTHERWISE NOTED.
2. SEE CURB ALIGNMENT PLANS FOR LAYOUT OF CURB & GUTTER.
3. ELEVATIONS SHOWN ARE AT CURB & GUTTER FLANGE LINE OR EDGE OF DRIVING LANE UNLESS OTHERWISE NOTED.

SUPERELEVATION DATA - STH 20 WB	STATION	LEFT
END NORMAL CROWN	588+77	-2.0%
FLAT	589+30	0.0%
BEGIN FULL SUPER	590+61	+4.9%
END CONSTRUCTION	595+18	+4.9%

SUPERELEVATION DATA - STH 20 EB	STATION	LEFT
END NORMAL CROWN	592+05	-2.0%
BEGIN FULL SUPER	593+11	-6.0%
END FULL SUPER	595+00	-6.0%
END CONSTRUCTION	595+18	-5.8%

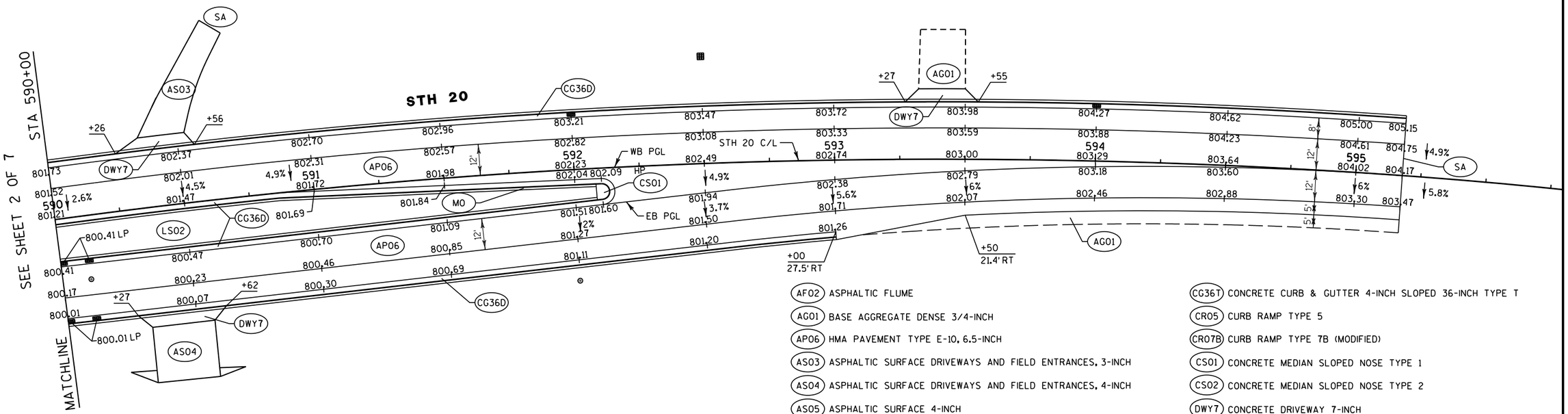

AF02	ASPHALTIC FLUME
AG01	BASE AGGREGATE DENSE 3/4-INCH
AP06	HMA PAVEMENT TYPE E-10, 6.5-INCH
ASO3	ASPHALTIC SURFACE DRIVEWAYS AND FIELD ENTRANCES, 3-INCH
ASO4	ASPHALTIC SURFACE DRIVEWAYS AND FIELD ENTRANCES, 4-INCH
ASO5	ASPHALTIC SURFACE 4-INCH
BGO1	STEEL PLATE BEAM GUARD CLASS A
BGO2	ANCHORAGES FOR STEEL PLATE BEAM GUARD TYPE 2
BGO3	STEEL PLATE BEAM GUARD SHORT RADIUS
BGO4	STEEL PLATE BEAM GUARD SHORT RADIUS TERMINAL
CCP	CONCRETE CURB PEDESTRIAN
CG18A	CONCRETE CURB & GUTTER 18-INCH TYPE A
CG18D	CONCRETE CURB & GUTTER 18-INCH TYPE D
CG30D	CONCRETE CURB & GUTTER 30-INCH TYPE D
CG36D	CONCRETE CURB & GUTTER 6-INCH SLOPED 36-INCH TYPE D
CG30J	CONCRETE CURB & GUTTER 4-INCH SLOPED 30-INCH TYPE J
CG36T	CONCRETE CURB & GUTTER 4-INCH SLOPED 36-INCH TYPE T
CRO5	CURB RAMP TYPE 5
CRO7B	CURB RAMP TYPE 7B (MODIFIED)
CS01	CONCRETE MEDIAN SLOPED NOSE TYPE 1
CS02	CONCRETE MEDIAN SLOPED NOSE TYPE 2
DWY7	CONCRETE DRIVEWAY 7-INCH
LS01	SOD LAWN
LS02	SEED NO MOW FESCUE
MO	MAINTENANCE OPENING
SA	SAWING ASPHALT
SC	SAWING CONCRETE
SW05	CONCRETE SIDEWALK 5-INCH
SW08	CONCRETE SIDEWALK 8-INCH
TA08	CONCRETE ROUNDABOUT TRUCK APRON 8-INCH (RED)
	CURB RAMP DETECTABLE WARNING FIELD YELLOW

PROJECT NO: 2340-09-70	HWY: STH 20	COUNTY: RACINE	PAVING DETAILS	SCALE, FEET 0 20 40	SHEET 22	E

FILE NAME : k:\1082713.03\cadd\sheets\paving\021104_id.dgn PLOT DATE : 1/29/2014 PLOT BY : rlb PLOT NAME : PLOT SCALE : $$.....plotscale.....$$ WISDOT/CADDS SHEET 42

(AF02) ASPHALTIC FLUME
(AG01) BASE AGGREGATE DENSE 3/4-INCH
(AP06) HMA PAVEMENT TYPE E-10, 6.5-INCH
(AS03) ASPHALTIC SURFACE DRIVEWAYS AND FIELD ENTRANCES, 3-INCH
(AS04) ASPHALTIC SURFACE DRIVEWAYS AND FIELD ENTRANCES, 4-INCH
(AS05) ASPHALTIC SURFACE 4-INCH
(BG01) STEEL PLATE BEAM GUARD CLASS A
(BG02) ANCHORAGES FOR STEEL PLATE BEAM GUARD TYPE 2
(BG03) STEEL PLATE BEAM GUARD SHORT RADIUS
(BG04) STEEL PLATE BEAM GUARD SHORT RADIUS TERMINAL
(CCP) CONCRETE CURB PEDESTRIAN
(CG18A) CONCRETE CURB & GUTTER 18-INCH TYPE A
(CG18D) CONCRETE CURB & GUTTER 18-INCH TYPE D
(CG30D) CONCRETE CURB & GUTTER 30-INCH TYPE D
(CG36D) CONCRETE CURB & GUTTER 6-INCH SLOPED 36-INCH TYPE D
(CG30J) CONCRETE CURB & GUTTER 4-INCH SLOPED 30-INCH TYPE J

(CG36T) CONCRETE CURB & GUTTER 4-INCH SLOPED 36-INCH TYPE T
(CR05) CURB RAMP TYPE 5
(CR07B) CURB RAMP TYPE 7B (MODIFIED)
(CS01) CONCRETE MEDIAN SLOPED NOSE TYPE 1
(CS02) CONCRETE MEDIAN SLOPED NOSE TYPE 2
(DWY7) CONCRETE DRIVEWAY 7-INCH
(LS01) SOD LAWN
(LS02) SEED NO MOW FESCUE
(MO) MAINTENANCE OPENING
(SA) SAWING ASPHALT
(SC) SAWING CONCRETE
(SW05) CONCRETE SIDEWALK 5-INCH
(SW08) CONCRETE SIDEWALK 8-INCH
(TA08) CONCRETE ROUNDABOUT TRUCK APRON 8-INCH (RED)
CURB RAMP DETECTABLE WARNING FIELD YELLOW

NOTES:
1. ALL RADII ARE TO FACE OF CURB, UNLESS OTHERWISE NOTED.
2. SEE CURB ALIGNMENT PLANS FOR LAYOUT OF CURB & GUTTER.
3. ELEVATIONS SHOWN ARE AT CURB & GUTTER FLANGE LINE OR EDGE OF DRIVING LANE UNLESS OTHERWISE NOTED.

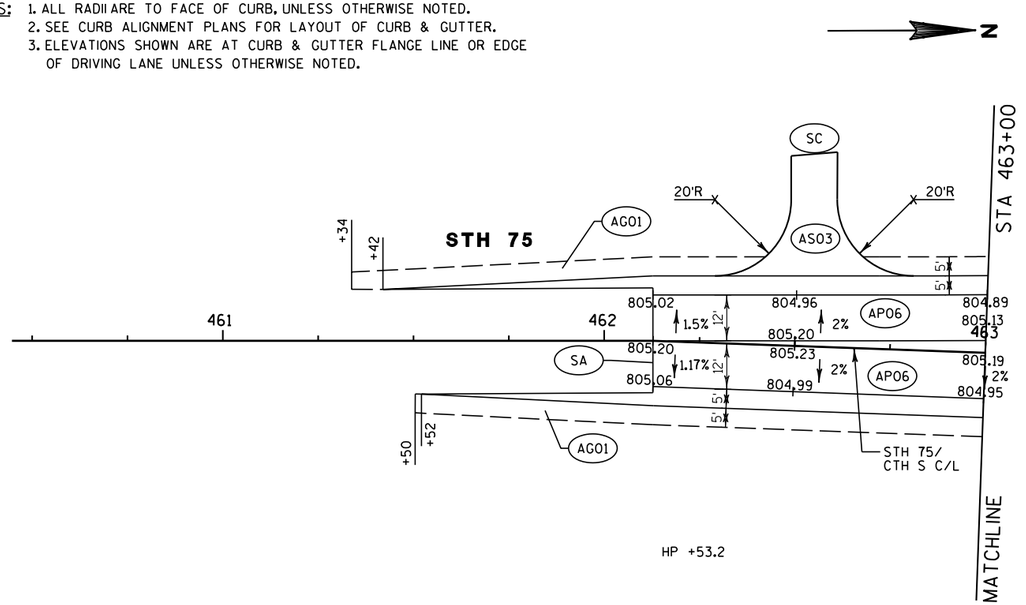

SUPERELEVATION DATA - STH 75 NB	STATION	LEFT
END NORMAL CROWN	463+15	-2.0%
FLAT	463+69	0.0%
BEGIN FULL SUPER	464+76	+4.0%
END FULL SUPER	466+10	+4.0%
FLAT	467+17	0.00%
BEGIN NORMAL CROWN	467+71	-2.0%

STA 467+06 TO STA 467+16 TRANSITION FROM CONCRETE CURB & GUTTER 6-INCH SLOPED 36-INCH TYPE D TO CONCRETE CURB & GUTTER 30-INCH TYPE D OVER 10 FEET. PAID FOR AS CONCRETE CURB & GUTTER 6-INCH SLOPED 36-INCH TYPE D

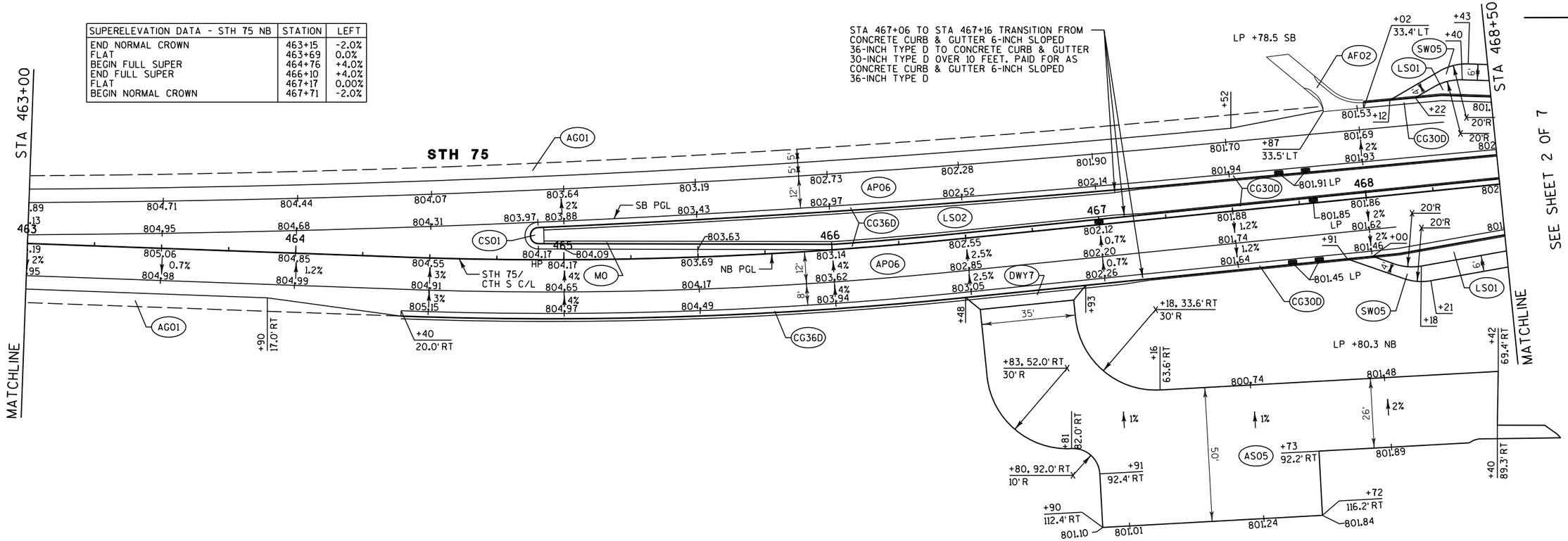

SHEET 5 OF 7

NOTES:
1. ALL RADII ARE TO FACE OF CURB, UNLESS OTHERWISE NOTED.
2. SEE CURB ALIGNMENT PLANS FOR LAYOUT OF CURB & GUTTER.
3. ELEVATIONS SHOWN ARE AT CURB & GUTTER FLANGE LINE OR EDGE OF DRIVING LANE UNLESS OTHERWISE NOTED.

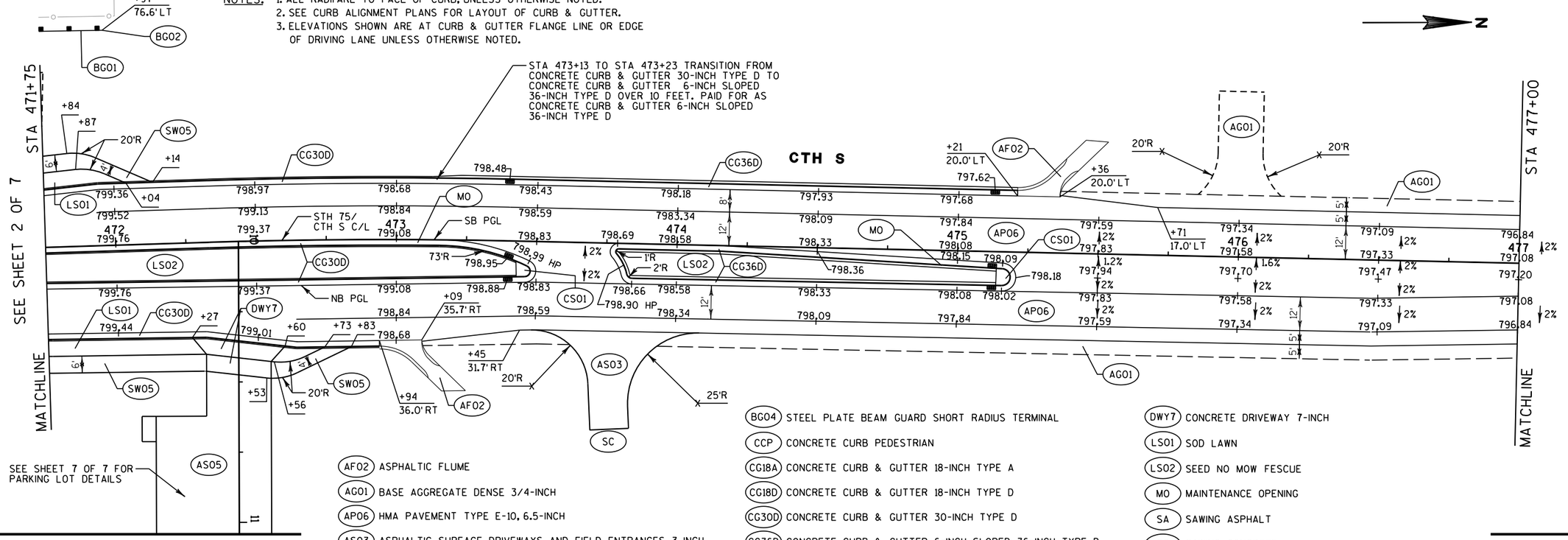

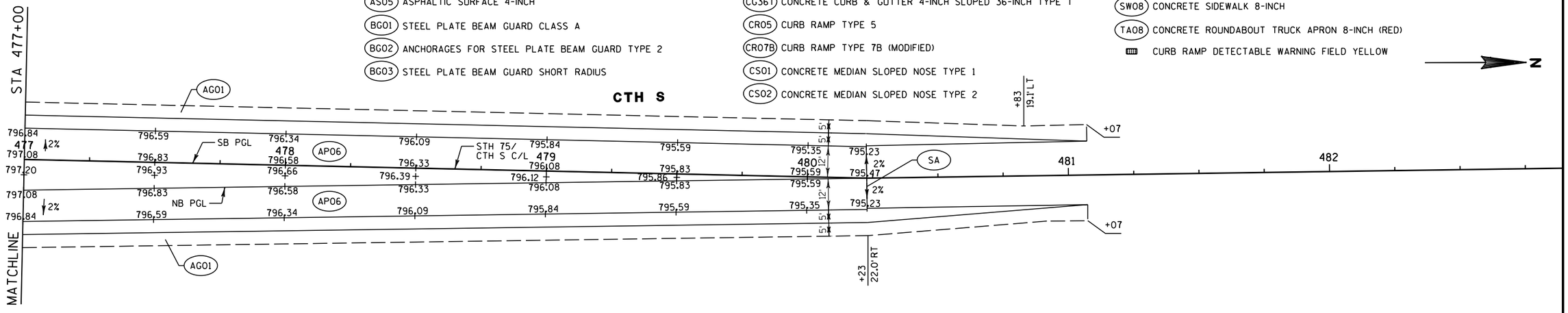

- AF02 ASPHALTIC FLUME
- AG01 BASE AGGREGATE DENSE 3/4-INCH
- AP06 HMA PAVEMENT TYPE E-10, 6.5-INCH
- AS03 ASPHALTIC SURFACE DRIVEWAYS AND FIELD ENTRANCES, 3-INCH
- AS04 ASPHALTIC SURFACE DRIVEWAYS AND FIELD ENTRANCES, 4-INCH
- AS05 ASPHALTIC SURFACE 4-INCH
- BG01 STEEL PLATE BEAM GUARD CLASS A
- BG02 ANCHORAGES FOR STEEL PLATE BEAM GUARD TYPE 2
- BG03 STEEL PLATE BEAM GUARD SHORT RADIUS
- BG04 STEEL PLATE BEAM GUARD SHORT RADIUS TERMINAL
- CCP CONCRETE CURB PEDESTRIAN
- CG18A CONCRETE CURB & GUTTER 18-INCH TYPE A
- CG18D CONCRETE CURB & GUTTER 18-INCH TYPE D
- CG30D CONCRETE CURB & GUTTER 30-INCH TYPE D
- CG36D CONCRETE CURB & GUTTER 6-INCH SLOPED 36-INCH TYPE D
- CG30J CONCRETE CURB & GUTTER 4-INCH SLOPED 30-INCH TYPE J
- CG36T CONCRETE CURB & GUTTER 4-INCH SLOPED 36-INCH TYPE T
- CR05 CURB RAMP TYPE 5
- CR07B CURB RAMP TYPE 7B (MODIFIED)
- CS01 CONCRETE MEDIAN SLOPED NOSE TYPE 1
- CS02 CONCRETE MEDIAN SLOPED NOSE TYPE 2
- DWY7 CONCRETE DRIVEWAY 7-INCH
- LS01 SOD LAWN
- LS02 SEED NO MOW FESCUE
- MO MAINTENANCE OPENING
- SA SAWING ASPHALT
- SC SAWING CONCRETE
- SW05 CONCRETE SIDEWALK 5-INCH
- SW08 CONCRETE SIDEWALK 8-INCH
- TA08 CONCRETE ROUNDABOUT TRUCK APRON 8-INCH (RED)
- CURB RAMP DETECTABLE WARNING FIELD YELLOW

SHEET 6 OF 7

PROJECT NO: 2340-09-70	HWY: STH 20	COUNTY: RACINE	PAVING DETAILS	SCALE, FEET 0 20 40	SHEET 24	E

2

AFO2	ASPHALTIC FLUME
AGO1	BASE AGGREGATE DENSE 3/4-INCH
APO6	HMA PAVEMENT TYPE E-10, 6.5-INCH
ASO3	ASPHALTIC SURFACE DRIVEWAYS AND FIELD ENTRANCES, 3-INCH
ASO4	ASPHALTIC SURFACE DRIVEWAYS AND FIELD ENTRANCES, 4-INCH
ASO5	ASPHALTIC SURFACE 4-INCH
BGO1	STEEL PLATE BEAM GUARD CLASS A
BGO2	ANCHORAGES FOR STEEL PLATE BEAM GUARD TYPE 2
BGO3	STEEL PLATE BEAM GUARD SHORT RADIUS
BGO4	STEEL PLATE BEAM GUARD SHORT RADIUS TERMINAL
CCP	CONCRETE CURB PEDESTRIAN
CG18A	CONCRETE CURB & GUTTER 18-INCH TYPE A
CG18D	CONCRETE CURB & GUTTER 18-INCH TYPE D
CG30D	CONCRETE CURB & GUTTER 30-INCH TYPE D
CG36D	CONCRETE CURB & GUTTER 6-INCH SLOPED 36-INCH TYPE D
CG30J	CONCRETE CURB & GUTTER 4-INCH SLOPED 30-INCH TYPE J
CG36T	CONCRETE CURB & GUTTER 4-INCH SLOPED 36-INCH TYPE T
CRO5	CURB RAMP TYPE 5
CRO7B	CURB RAMP TYPE 7B (MODIFIED)
CSO1	CONCRETE MEDIAN SLOPED NOSE TYPE 1
CSO2	CONCRETE MEDIAN SLOPED NOSE TYPE 2
DWY7	CONCRETE DRIVEWAY 7-INCH
LSO1	SOD LAWN
LSO2	SEED NO MOW FESCUE
MO	MAINTENANCE OPENING
SA	SAWING ASPHALT
SC	SAWING CONCRETE
SWO5	CONCRETE SIDEWALK 5-INCH
SWO5	CONCRETE SIDEWALK 5-INCH
SWO8	CONCRETE SIDEWALK 8-INCH
TAO8	CONCRETE ROUNDABOUT TRUCK APRON 8-INCH (RED)
	CURB RAMP DETECTABLE WARNING FIELD YELLOW

N

CTH S

PI 472+86.80

STA 10+00.00 =
STA 472+43.74

PC 472+33.30

PI 10+00.00

PI 12+00.00

SLOPE INTERCEPT

PARKING LOT R/L

4" ASPHALTIC SURFACE
ON 8" BASE AGGREGATE
DENSE 1 1/4-INCH

BEAUMONT PARK

NOTES:
1. ALL RADII ARE TO FACE OF CURB, UNLESS OTHERWISE NOTED.
2. SEE CURB ALIGNMENT PLANS FOR LAYOUT OF CURB & GUTTER.
3. ELEVATIONS SHOWN ARE AT CURB & GUTTER FLANGE LINE OR EDGE OF DRIVING LANE UNLESS OTHERWISE NOTED.

SHEET 7 OF 7

PROJECT NO: 2340-09-70	HWY: STH 20	COUNTY: RACINE	PARKING LOT DETAIL	SCALE, FEET 0 10 20	SHEET 25 E

BENCHMARKS

NO.	STATION	DESCRIPTION	ELEV
1	STA 577+35, 45'RT	RR SPIKE IN NE FACE OF POWER POLE	804.69
2	STA 576+68, 19'LT	PK NAIL	803.89

NOTES:
PLACE INLET PROTECTION AS FOLLOWS:
CURB AND GUTTER INLETS: TYPE A PRIOR TO PAVEMENT AND TYPE C AFTER PAVING.
FIELD INLETS: TYPE A PRIOR TO INSTALLING GRATE AND TYPE B AFTER INSTALLING GRATE OR IF GRATE IS INSTALLED IMMEDIATELY.
EROSION CONTROL FEATURES AS SHOWN ON THE PLANS ARE SUGGESTED LOCATIONS. EXACT LOCATIONS WILL BE DETERMINED BY THE ENGINEER IN THE FIELD.

LEGEND

1C	DRAINAGE STRUCTURE		TEMPORARY DITCH CHECK
	SLOPE INTERCEPT		CULVERT PIPE CHECK
#######	EROSION MAT CLASS I, TYPE B		SURFACE WATER FLOW
	SILT FENCE	RI	REMOVING INLET
	RIPRAP MEDIUM	RM	REMOVING MANHOLE
	INLET PROTECTION (SEE NOTES)	RP	REMOVING STORM SEWER

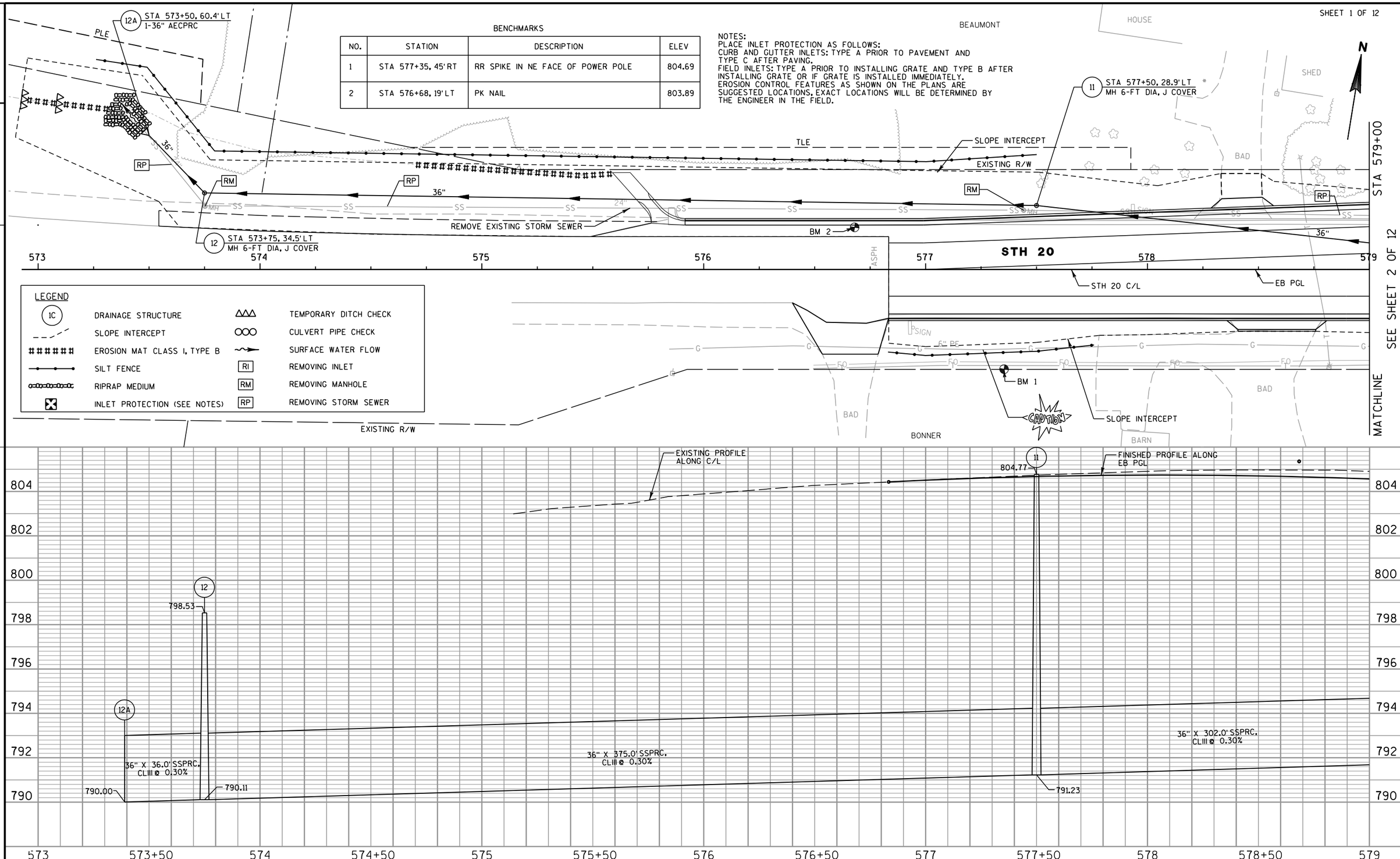

PROJECT NO: 2340-09-70	HWY: STH 20	COUNTY: RACINE	STORM SEWER/EROSION CONTROL - STH 20	SCALE, FT 0 20 40	SHEET 26	E

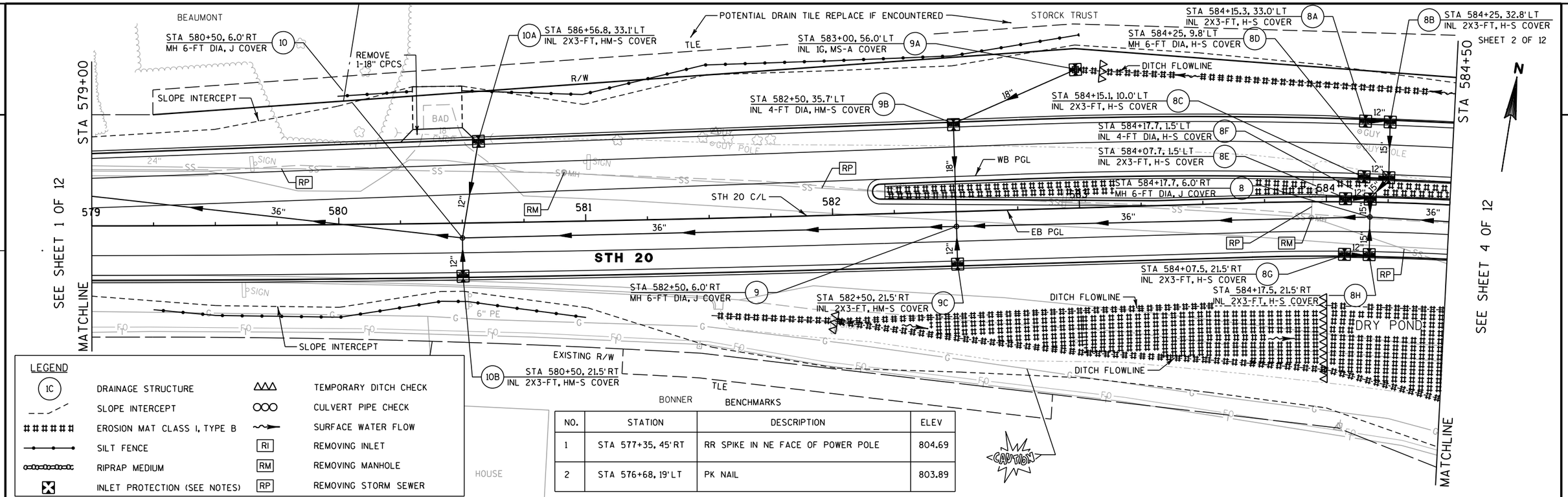

NO.	STATION	DESCRIPTION	ELEV
1	STA 577+35, 45'RT	RR SPIKE IN NE FACE OF POWER POLE	804.69
2	STA 576+68, 19'LT	PK NAIL	803.89

LEGEND

1C	DRAINAGE STRUCTURE		TEMPORARY DITCH CHECK
	SLOPE INTERCEPT		CULVERT PIPE CHECK
######	EROSION MAT CLASS I, TYPE B		SURFACE WATER FLOW
	SILT FENCE	RI	REMOVING INLET
	RIPRAP MEDIUM	RM	REMOVING MANHOLE
	INLET PROTECTION (SEE NOTES)	RP	REMOVING STORM SEWER

NOTES:
PLACE INLET PROTECTION AS FOLLOWS:
CURB AND GUTTER INLETS: TYPE A PRIOR TO PAVEMENT AND TYPE C AFTER PAVING.
FIELD INLETS: TYPE A PRIOR TO INSTALLING GRATE AND TYPE B AFTER INSTALLING GRATE OR IF GRATE IS INSTALLED IMMEDIATELY.
EROSION CONTROL FEATURES AS SHOWN ON THE PLANS ARE SUGGESTED LOCATIONS. EXACT LOCATIONS WILL BE DETERMINED BY THE ENGINEER IN THE FIELD.

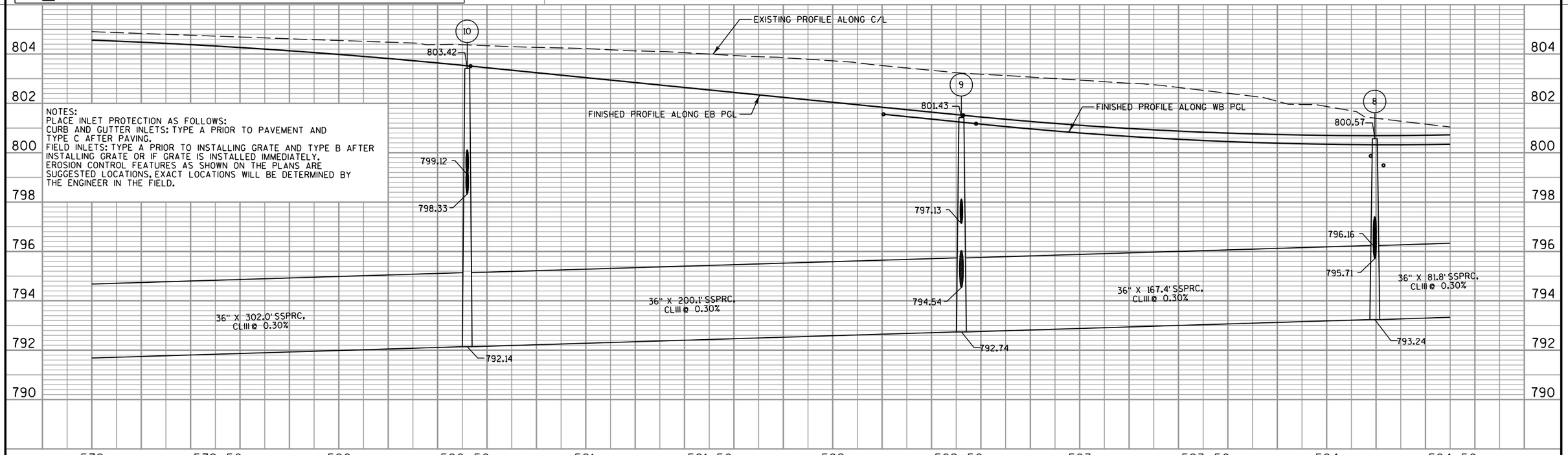

PROJECT NO: 2340-09-70	HWY: STH 20	COUNTY: RACINE	STORM SEWER/EROSION CONTROL - STH 20	SCALE, FT 0 20 40	SHEET 27	E

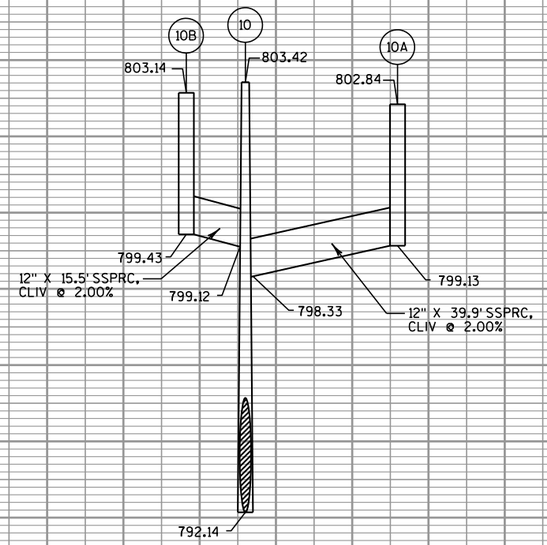

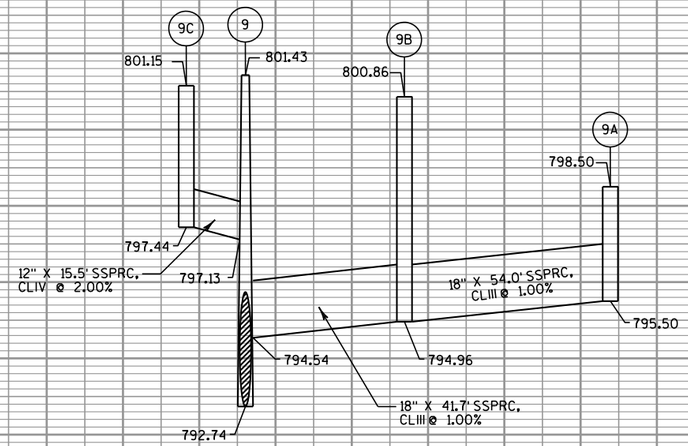

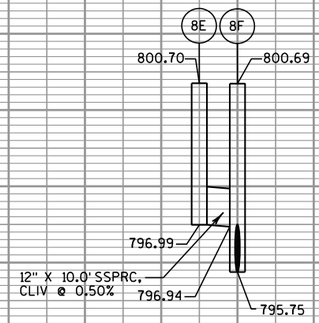

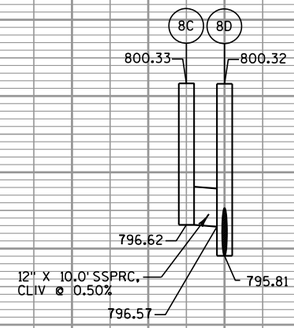

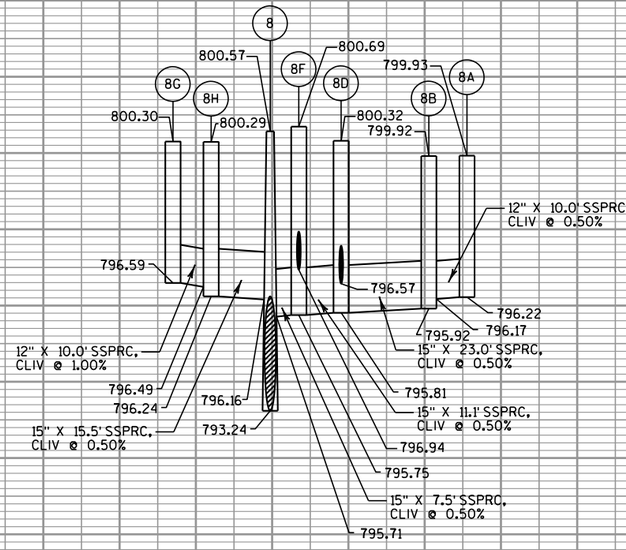

PROJECT NO: 2340-09-70	HWY: STH 20	COUNTY: RACINE	STORM SEWER - STH 20	SCALE, FEET 0 20 40	SHEET 28	E

SEE SHEET 2 OF 12

SEE SHEET 6 OF 12

STA 584+50

STA 590+00

MATCHLINE

MATCHLINE

TLE

POTENTIAL DRAIN TILE REPLACE IF ENCOUNTERED

DITCH FLOWLINE

R/W

SLOPE INTERCEPT

STH 20

WB PGL

EB PGL

STH 20 C/L

36"

585

586

587

588

589

590

SIGN

STH 75/ CTH S C/L

CTH S

STH 75

BM 3 SECTION CORNER

BM 4

EXISTING R/W

STA 589+40, 1.5'RT INL 2X3-FT, H-S COVER (5C)

STA 588+76, 17.5'LT INL 4-FT DIA, HM-GJ-S COVER (5B)

STA 588+66, 17.5'LT INL 2X3-FT, HM-GJ-S COVER (5A)

SLOPE INTERCEPT

12"

18"

24"X38"

15"

STA 587+91.6, 4.9'LT MH 6-FT DIA, J COVER (6)

STA 585+00, 6.0'RT MH 6-FT DIA, J COVER (7)

STA 585+00, 36.0'RT 1-18" AECPRC (7A)

DRY POND

RP

RI

RM

SS

STA 589+00, 51.9'RT INL 1C, MS-A COVER (5F)

PLE

TLE

SLOPE INTERCEPT

POTENTIAL DRAIN TILE ALONG R/W REPLACE IF ENCOUNTERED

GRUBER

EXISTING R/W

CAUTION

BENCHMARKS

STA 589+10, 1.5'RT INL 2X3-FT, H-S COVER (5D)

STA 589+00, 1.5'RT INL 4-FT DIA, H-S COVER (5E)

STA 589+00, 8.5'RT MH 6-FT DIA, J COVER (5)

NO.	STATION	DESCRIPTION	ELEV
3	STA 587+07, 36'LT	SECTION CORNER	803.07
4	STA 588+20, 56'LT	WITNESS MONUMENT	801.29

NOTES:
PLACE INLET PROTECTION AS FOLLOWS:
CURB AND GUTTER INLETS: TYPE A PRIOR TO PAVEMENT AND TYPE C AFTER PAVING.
FIELD INLETS: TYPE A PRIOR TO INSTALLING GRATE AND TYPE B AFTER INSTALLING GRATE OR IF GRATE IS INSTALLED IMMEDIATELY.
EROSION CONTROL FEATURES AS SHOWN ON THE PLANS ARE SUGGESTED LOCATIONS, EXACT LOCATIONS WILL BE DETERMINED BY THE ENGINEER IN THE FIELD.

FINISHED PROFILE ALONG EB PGL

FINISHED PROFILE ALONG WB PGL

EXISTING PROFILE ALONG C/L

800.78

794.99

793.49

36" X 81.8' SSPRC, CLIII @ 0.30%

36" X 289.1' SSPRC, CLIII @ 0.30%

802.01

795.85

794.35

36" X 109.2' SSPRC, CLIV @ 0.30%

801.46

796.43

794.68

795.18

24X38-INCH X 112.0' SSPRCHE, CLIV @ 0.30%

804
802
800
798
796
794
792
790

584+50 585 585+50 586 586+50 587 587+50 588 588+50 589 589+50 590

LEGEND

(1C)	DRAINAGE STRUCTURE	△△△	TEMPORARY DITCH CHECK
- - -	SLOPE INTERCEPT	○○○	CULVERT PIPE CHECK
######	EROSION MAT CLASS I, TYPE B	~~→	SURFACE WATER FLOW
—•—•—	SILT FENCE	RI	REMOVING INLET
	RIPRAP MEDIUM	RM	REMOVING MANHOLE
	INLET PROTECTION (SEE NOTES)	RP	REMOVING STORM SEWER

PROJECT NO: 2340-09-70	HWY: STH 20	COUNTY: RACINE	STORM SEWER/EROSION CONTROL- STH 20	SCALE, FT 0 20 40	SHEET E

FILE NAME : k:\1082713.03\cadd\sheets\storm\022503_ss.dgn PLOT DATE : 1/29/2014 PLOT BY : rlb PLOT NAME : PLOT SCALE : $$.....plotscale.....$$ WISDOT/CADDS SHEET 40

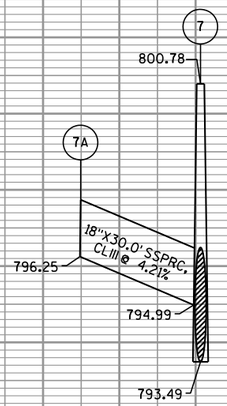

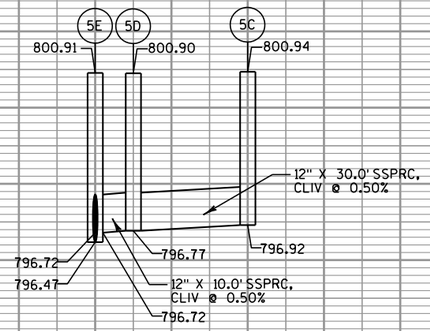

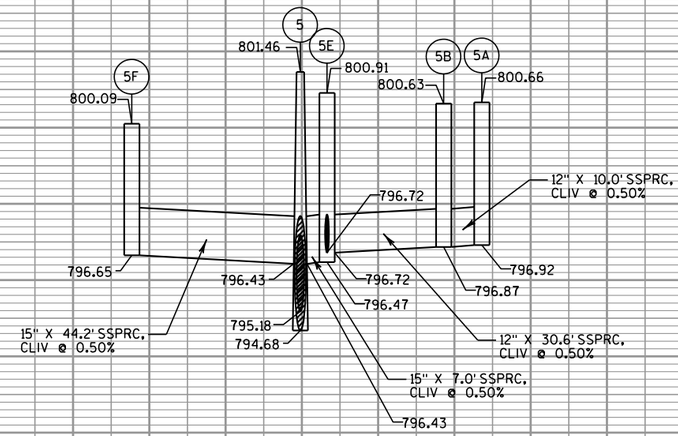

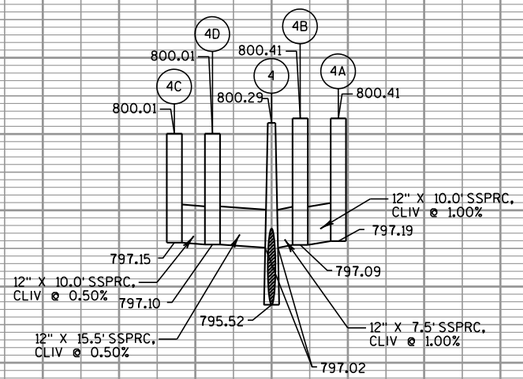

PROJECT NO: 2340-09-70	HWY: STH 20	COUNTY: RACINE	STORM SEWER - STH 20	SCALE, FEET 0 20 40	SHEET 30	E

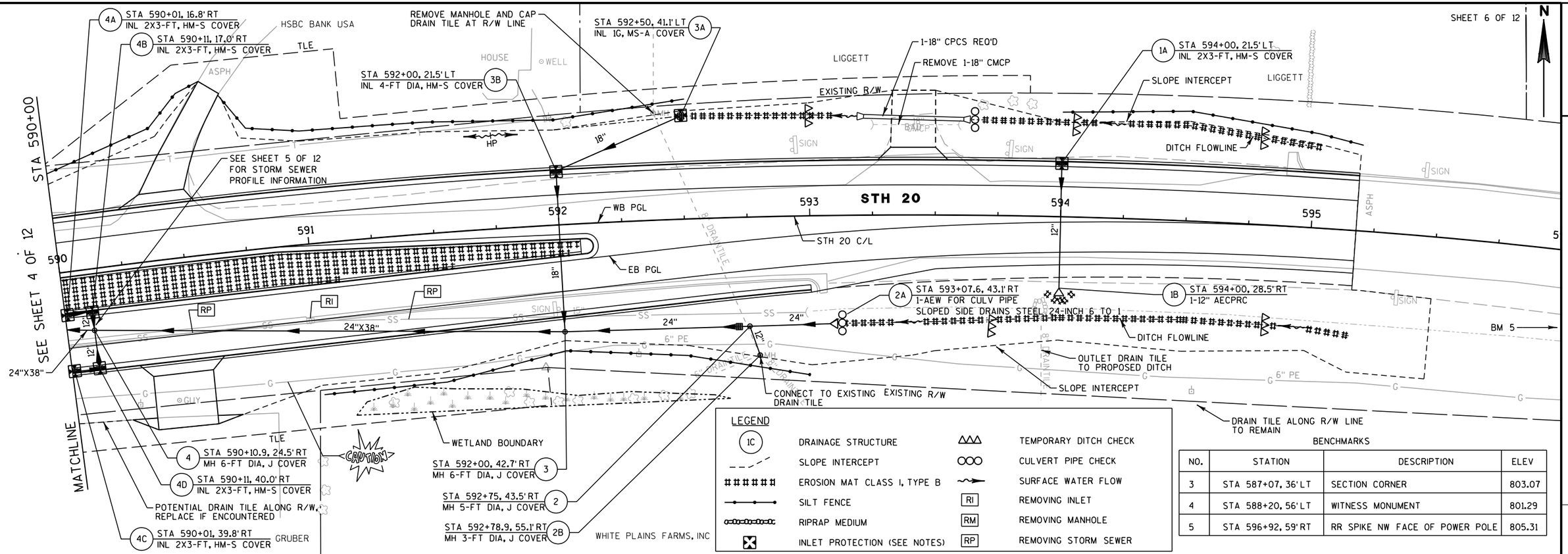

BENCHMARKS

NO.	STATION	DESCRIPTION	ELEV
3	STA 587+07, 36' LT	SECTION CORNER	803.07
4	STA 588+20, 56' LT	WITNESS MONUMENT	801.29
5	STA 596+92, 59' RT	RR SPIKE NW FACE OF POWER POLE	805.31

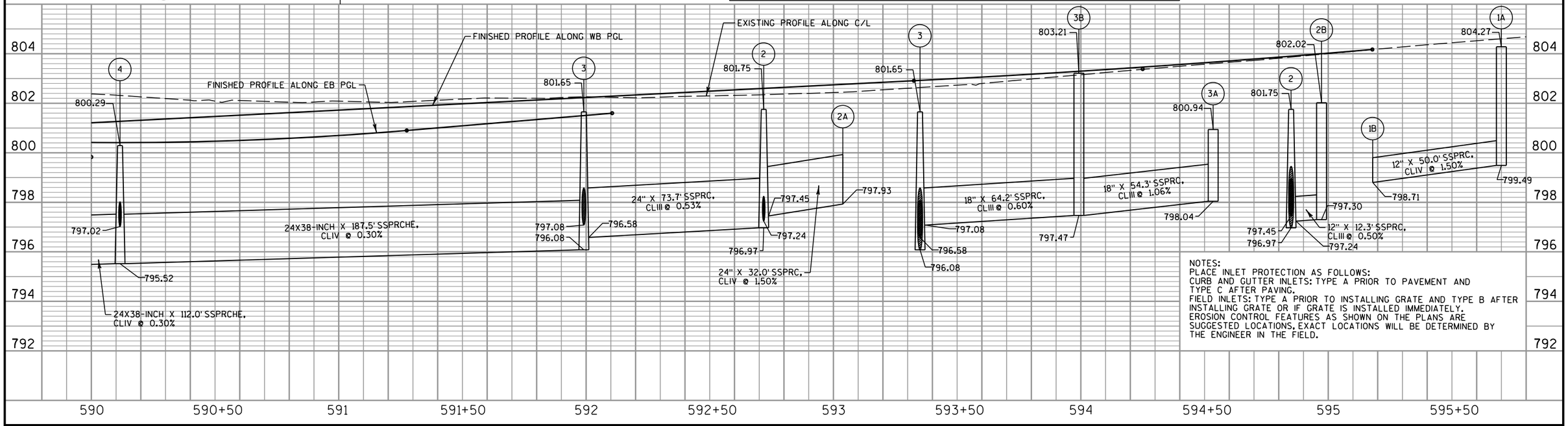

NOTES:
PLACE INLET PROTECTION AS FOLLOWS:
CURB AND GUTTER INLETS: TYPE A PRIOR TO PAVEMENT AND TYPE C AFTER PAVING.
FIELD INLETS: TYPE A PRIOR TO INSTALLING GRATE AND TYPE B AFTER INSTALLING GRATE OR IF GRATE IS INSTALLED IMMEDIATELY.
EROSION CONTROL FEATURES AS SHOWN ON THE PLANS ARE SUGGESTED LOCATIONS, EXACT LOCATIONS WILL BE DETERMINED BY THE ENGINEER IN THE FIELD.

PROJECT NO: 2340-09-70	HWY: STH 20	COUNTY: RACINE	STORM SEWER/EROSION CONTROL - STH 20	SCALE, FT 0 20 40	SHEET 31	E

NOTES:
PLACE INLET PROTECTION AS FOLLOWS:
LOW POINT CURB AND GUTTER INLETS: TYPE A PRIOR TO PAVEMENT AND TYPE C AFTER PAVING.
FIELD INLETS: TYPE A PRIOR TO INSTALLING GRATE AND TYPE B AFTER INSTALLING GRATE OR IF GRATE IS INSTALLED IMMEDIATELY.
ALL OTHER INLETS: TYPE C.
EROSION CONTROL FEATURES AS SHOWN ON THE PLANS ARE SUGGESTED LOCATIONS. EXACT LOCATIONS WILL BE DETERMINED BY THE ENGINEER IN THE FIELD.

BENCHMARKS

NO.	STATION	DESCRIPTION	ELEV
6	STA 459+22, 30' RT	BERNTSEN MONUMENT	804.00

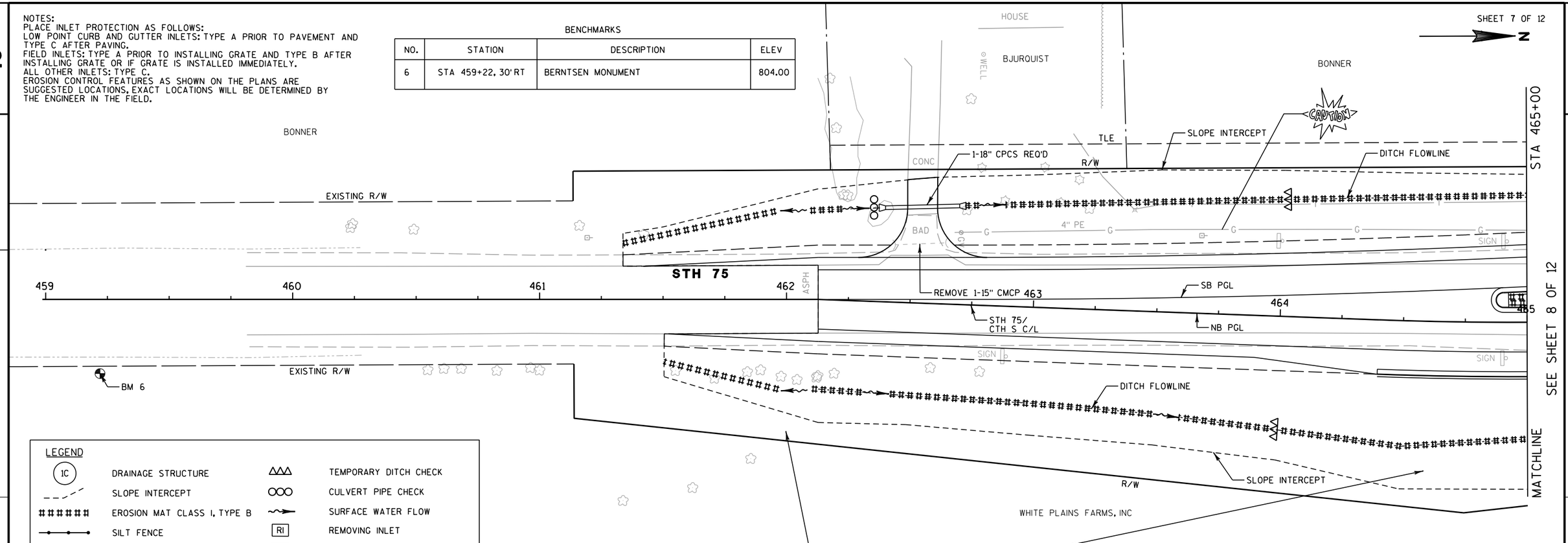

LEGEND

1C	DRAINAGE STRUCTURE	△△△	TEMPORARY DITCH CHECK
	SLOPE INTERCEPT	○○○	CULVERT PIPE CHECK
######	EROSION MAT CLASS I, TYPE B	~→	SURFACE WATER FLOW
—●—●—	SILT FENCE	RI	REMOVING INLET
—o—o—o—	RIPRAP MEDIUM	RM	REMOVING MANHOLE
⊠	INLET PROTECTION (SEE NOTES)	RP	REMOVING STORM SEWER

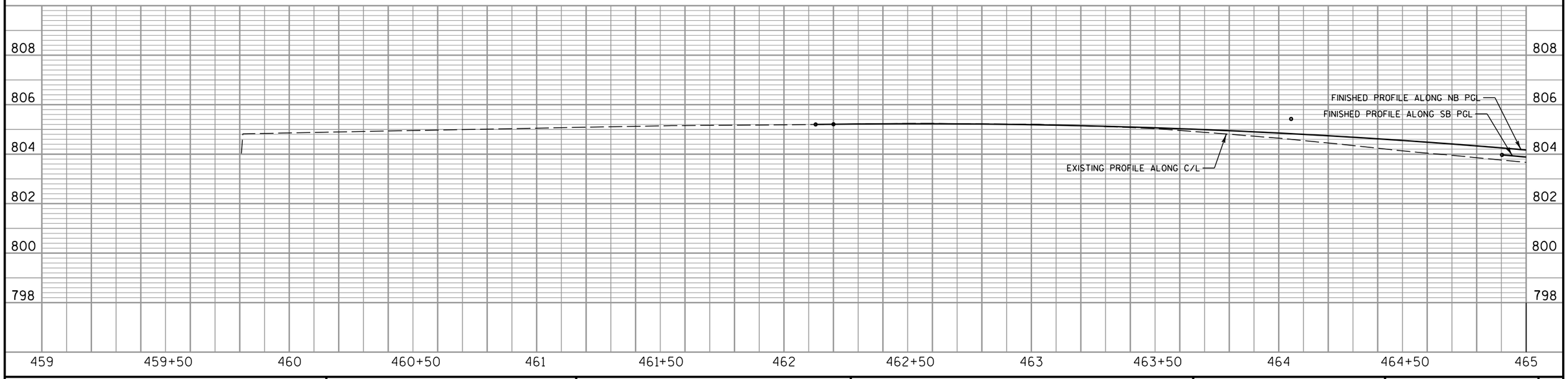

PROJECT NO: 2340-09-70	HWY: STH 20	COUNTY: RACINE	STORM SEWER/EROSION CONTROL - STH 75	SCALE, FT 0 20 40	SHEET 32	E

BENCHMARKS

NO.	STATION	DESCRIPTION	ELEV
3	STA 470+37, 2' LT	SECTION CORNER	803.07
4	STA 470+66, 100' RT	WITNESS MONUMENT	801.29

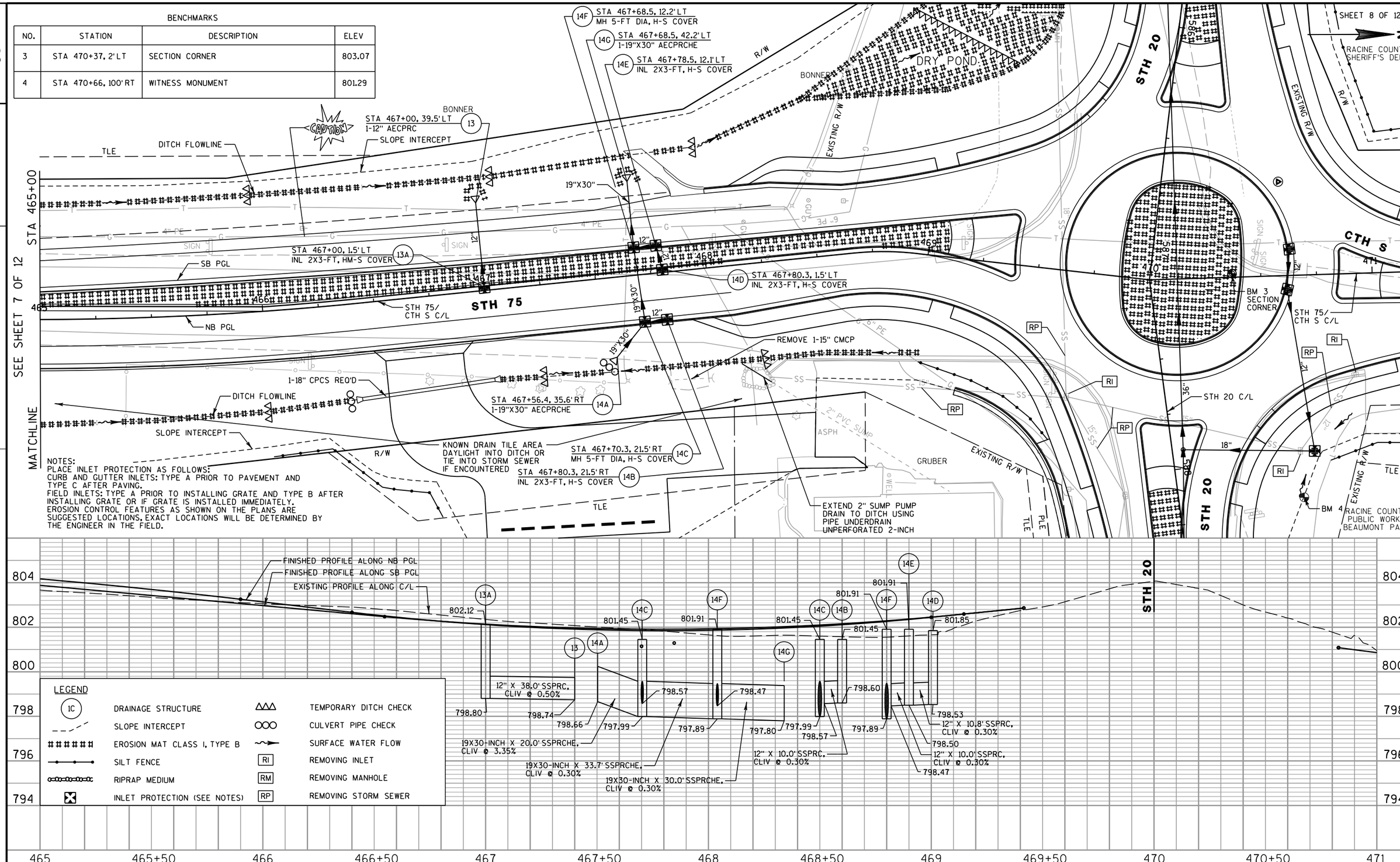

PROJECT NO: 2340-09-70	HWY: STH 20	COUNTY: RACINE	STORM SEWER/EROSION CONTROL - STH 75	SCALE, FT 0 20 40	SHEET 33	E

FILE NAME : k:\1082713.03\cadd\sheets\storm\022506_ss.dgn PLOT DATE : 1/29/2014 PLOT BY : rlb PLOT NAME : PLOT SCALE : $$.....plotscale.....$$ WISDOT/CADDS SHEET 40

SEE SHEET 10 OF 12

STH 20 C/L

STH 75

STH 20

RACINE COUNTY SHERIFF'S DEPT.

RADIO TOWER

KNOWN DRAING TILE AREA DAYLIGHT INTO DITCH OR INSTALL NEW DRAINTILE OUTSIDE R/W TO MAINTAIN DRAINAGE IN SYSTEM

STORCK TRUST

SLOPE INTERCEPT

R/W

TLE

N

STA 475+00

MATCHLINE

REMOVE 1-12" CMCP

STH 75/ CTH S C/L

PI 472+86.80

STA 473+40, 21.5'LT
INL 2X3-FT, H-S COVER
15A

STA 473+40, 5.6'RT
INL 2X3-FT, H-S COVER
15B

DITCH FLOWLINE

STA 586+93, 60.7'LT
INL 4-FT DIA SPECIAL, T COVER
6A

SB PGL

NB PGL

REMOVE 1-12" CPCS

STA 587+26.5, 60.7'LT
INL 4-FT DIA SPECIAL, T COVER
6B

STA 473+40, 13.3'RT
INL 2X3-FT, H-S COVER
15C

CTH S

STA 473+76
1-18" CPCS REO'D

REMOVE 1-15" CMCP

DITCH FLOWLINE

BM 3
SECTION CORNER

CAUTION

EXISTING R/W

GRUBER

STA 587+91.6, 4.9'LT
MH 6-FT DIA, J COVER
6

COMMERCIAL BUILDING

ASPH

CONC

HSBC BANK USA

SLOPE INTERCEPT

STA 473+41.1, 45.3'RT
1-12" AECPRC
15D

STA 588+00, 63.4'LT
INL 1G, MS-A COVER
6C

BM 4

RACINE COUNTY PUBLIC WORKS BEAUMONT PARK

BENCHMARKS ROSS

NO.	STATION	DESCRIPTION	ELEV
3	STA 470+37, 2'LT	SECTION CORNER	803.07
4	STA 470+66, 100'RT	WITNESS MONUMENT	801.29

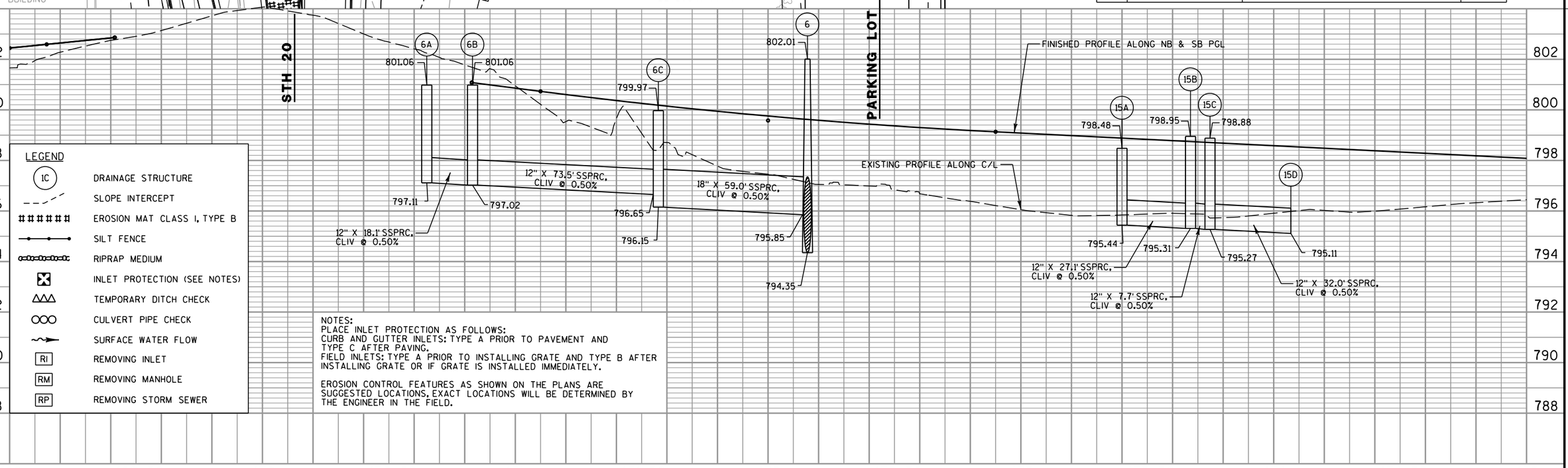

LEGEND

1C	DRAINAGE STRUCTURE
	SLOPE INTERCEPT
	EROSION MAT CLASS I, TYPE B
	SILT FENCE
	RIPRAP MEDIUM
	INLET PROTECTION (SEE NOTES)
	TEMPORARY DITCH CHECK
	CULVERT PIPE CHECK
	SURFACE WATER FLOW
RI	REMOVING INLET
RM	REMOVING MANHOLE
RP	REMOVING STORM SEWER

NOTES:
PLACE INLET PROTECTION AS FOLLOWS:
CURB AND GUTTER INLETS: TYPE A PRIOR TO PAVEMENT AND TYPE C AFTER PAVING.
FIELD INLETS: TYPE A PRIOR TO INSTALLING GRATE AND TYPE B AFTER INSTALLING GRATE OR IF GRATE IS INSTALLED IMMEDIATELY.

EROSION CONTROL FEATURES AS SHOWN ON THE PLANS ARE SUGGESTED LOCATIONS. EXACT LOCATIONS WILL BE DETERMINED BY THE ENGINEER IN THE FIELD.

PROJECT NO: 2340-09-70	HWY: STH 20	COUNTY: RACINE	STORM SEWER/EROSION CONTROL - CTH S	SCALE, FT 0 20 40	SHEET 34	E

NOTES:
PLACE INLET PROTECTION AS FOLLOWS:
CURB AND GUTTER INLETS: TYPE A PRIOR TO PAVEMENT AND TYPE C AFTER PAVING.
FIELD INLETS: TYPE A PRIOR TO INSTALLING GRATE AND TYPE B AFTER INSTALLING GRATE OR IF GRATE IS INSTALLED IMMEDIATELY.
EROSION CONTROL FEATURES AS SHOWN ON THE PLANS ARE SUGGESTED LOCATIONS, EXACT LOCATIONS WILL BE DETERMINED BY THE ENGINEER IN THE FIELD.

BENCHMARKS

NO.	STATION	DESCRIPTION	ELEV
3	STA 470+37, 2'LT	SECTION CORNER	803.07
4	STA 470+66, 100'RT	WITNESS MONUMENT	801.29

N

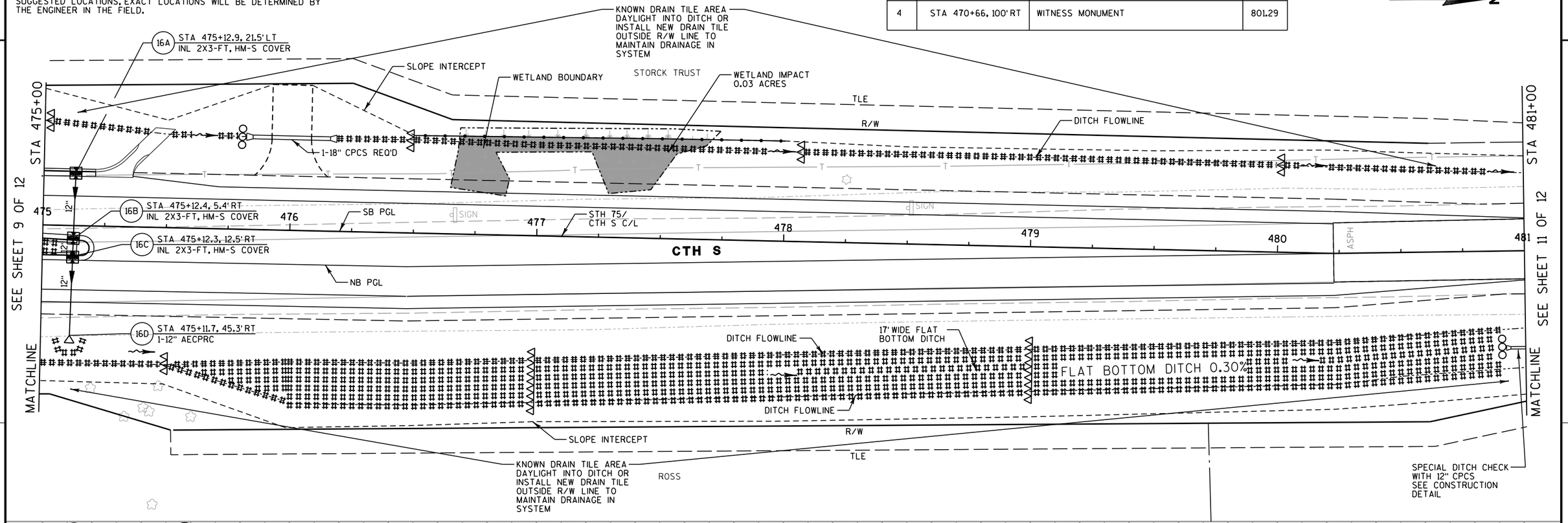

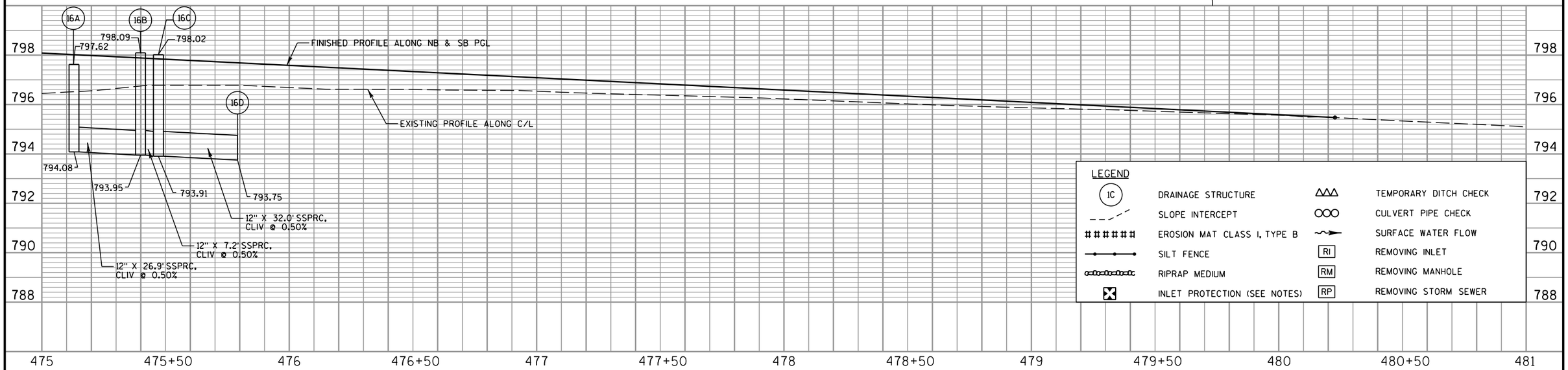

LEGEND

1C	DRAINAGE STRUCTURE		TEMPORARY DITCH CHECK
	SLOPE INTERCEPT		CULVERT PIPE CHECK
	EROSION MAT CLASS I, TYPE B		SURFACE WATER FLOW
	SILT FENCE	RI	REMOVING INLET
	RIPRAP MEDIUM	RM	REMOVING MANHOLE
	INLET PROTECTION (SEE NOTES)	RP	REMOVING STORM SEWER

PROJECT NO: 2340-09-70	HWY: STH 20	COUNTY: RACINE	STORM SEWER/EROSION CONTROL - CTH S	SCALE, FT 0 20 40	SHEET 35	E

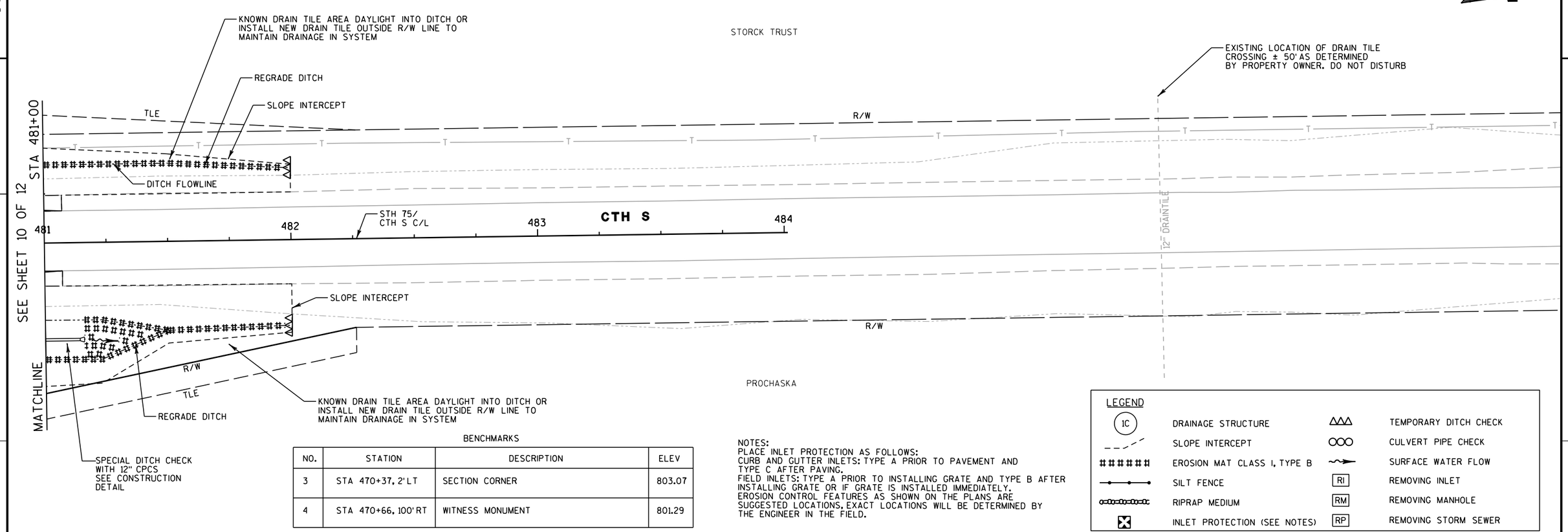

BENCHMARKS

NO.	STATION	DESCRIPTION	ELEV
3	STA 470+37, 2'LT	SECTION CORNER	803.07
4	STA 470+66, 100'RT	WITNESS MONUMENT	801.29

NOTES:
PLACE INLET PROTECTION AS FOLLOWS:
CURB AND GUTTER INLETS: TYPE A PRIOR TO PAVEMENT AND TYPE C AFTER PAVING.
FIELD INLETS: TYPE A PRIOR TO INSTALLING GRATE AND TYPE B AFTER INSTALLING GRATE OR IF GRATE IS INSTALLED IMMEDIATELY.
EROSION CONTROL FEATURES AS SHOWN ON THE PLANS ARE SUGGESTED LOCATIONS. EXACT LOCATIONS WILL BE DETERMINED BY THE ENGINEER IN THE FIELD.

LEGEND

1C	DRAINAGE STRUCTURE	△△△	TEMPORARY DITCH CHECK
	SLOPE INTERCEPT	○○○	CULVERT PIPE CHECK
######	EROSION MAT CLASS I, TYPE B	~→	SURFACE WATER FLOW
	SILT FENCE	RI	REMOVING INLET
	RIPRAP MEDIUM	RM	REMOVING MANHOLE
⊠	INLET PROTECTION (SEE NOTES)	RP	REMOVING STORM SEWER

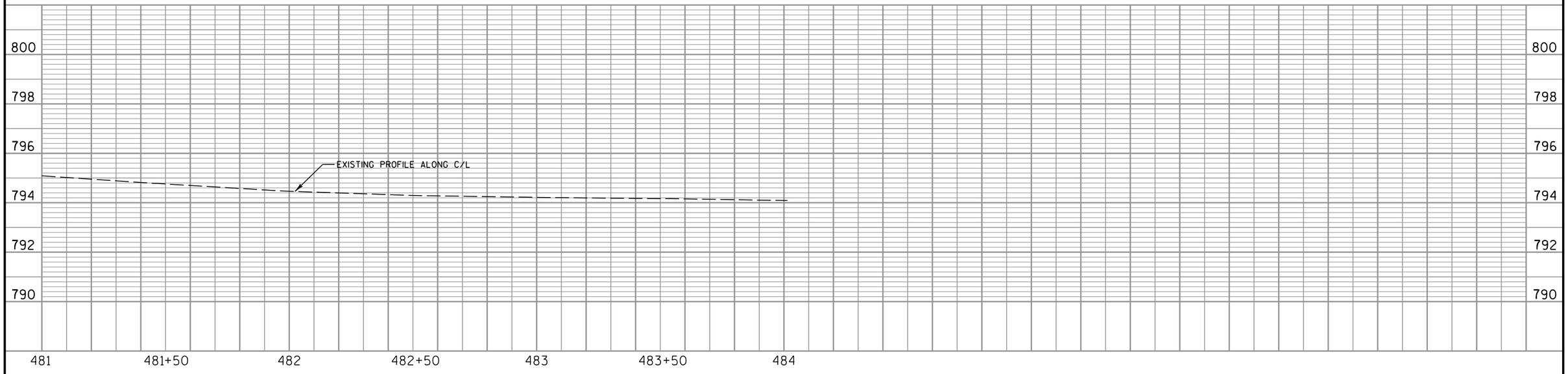

PROJECT NO: 2340-09-70	HWY: STH 20	COUNTY: RACINE	STORM SEWER/EROSION CONTROL - CTH S	SCALE, FT 0 20 40	SHEET 36	E

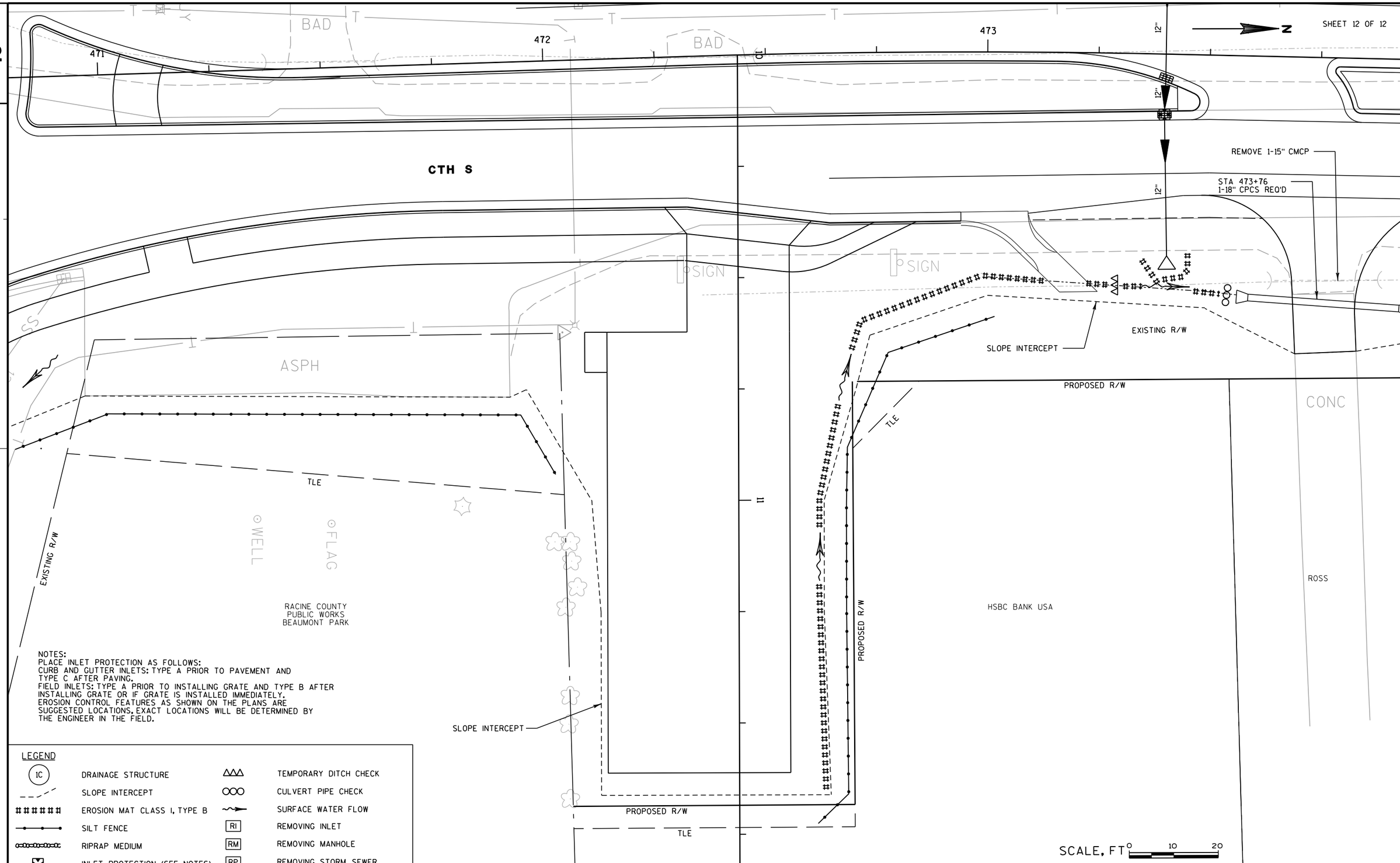

NOTES:
PLACE INLET PROTECTION AS FOLLOWS:
CURB AND GUTTER INLETS: TYPE A PRIOR TO PAVEMENT AND TYPE C AFTER PAVING.
FIELD INLETS: TYPE A PRIOR TO INSTALLING GRATE AND TYPE B AFTER INSTALLING GRATE OR IF GRATE IS INSTALLED IMMEDIATELY.
EROSION CONTROL FEATURES AS SHOWN ON THE PLANS ARE SUGGESTED LOCATIONS, EXACT LOCATIONS WILL BE DETERMINED BY THE ENGINEER IN THE FIELD.

LEGEND

1C	DRAINAGE STRUCTURE		TEMPORARY DITCH CHECK
	SLOPE INTERCEPT		CULVERT PIPE CHECK
######	EROSION MAT CLASS I, TYPE B		SURFACE WATER FLOW
	SILT FENCE	RI	REMOVING INLET
	RIPRAP MEDIUM	RM	REMOVING MANHOLE
	INLET PROTECTION (SEE NOTES)	RP	REMOVING STORM SEWER

PROJECT NO: 2340-09-70	HWY: STH 20	COUNTY: RACINE	STORM SEWER/EROSION CONTROL - PARKING LOT	SHEET 37	E

FILE NAME : k:\1082713.03\cadd\sheets\storm\022510_ss.dgn PLOT DATE : 1/29/2014 PLOT BY : rlb PLOT NAME : PLOT SCALE : $$.....plotscale.....$$ WISDOT/CADDS SHEET 42

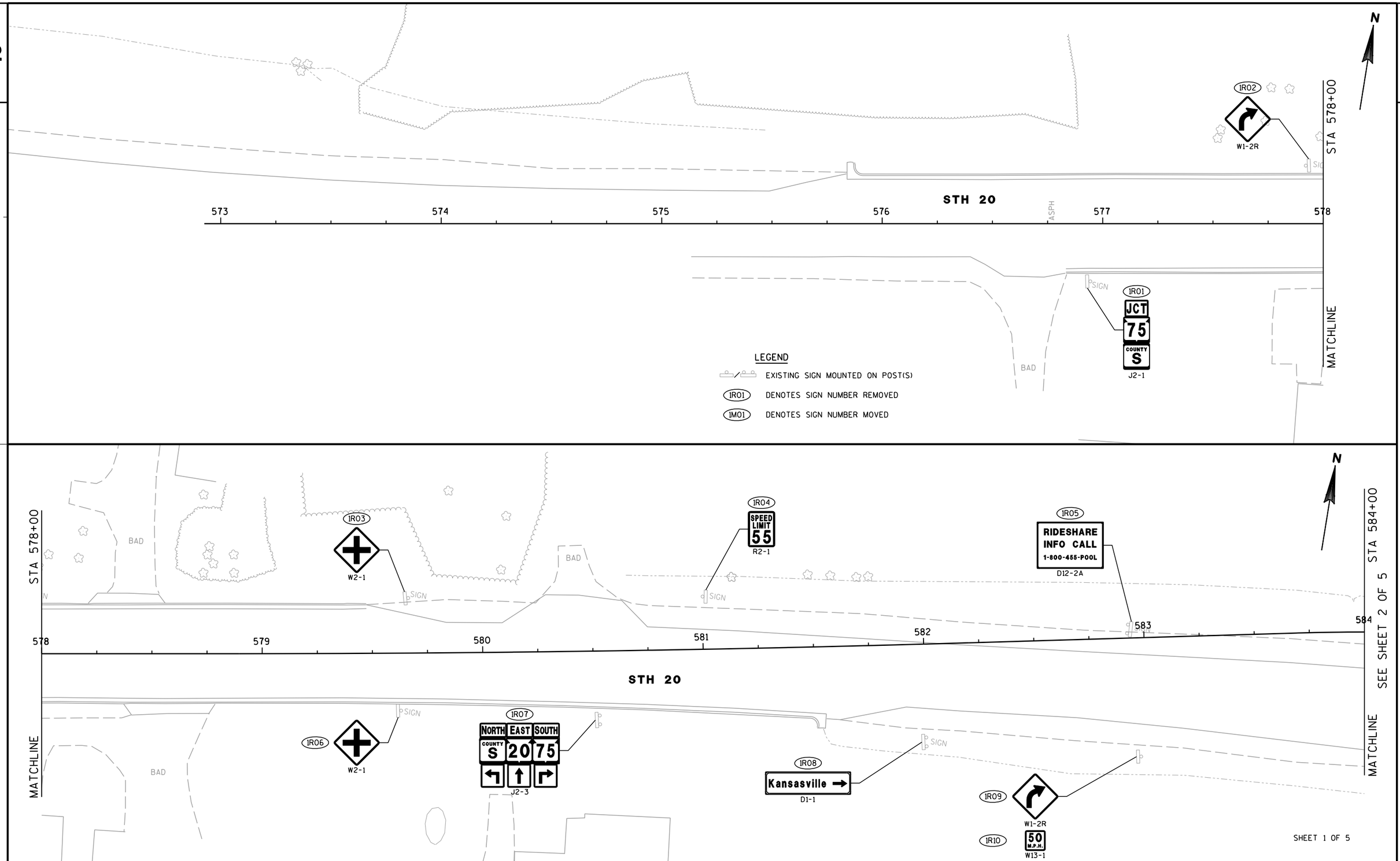

PROJECT NO: 2340-09-70	HWY: STH 20	COUNTY: RACINE	EXISTING SIGN REMOVALS	SCALE, FEET 0 20 40	SHEET 38	E

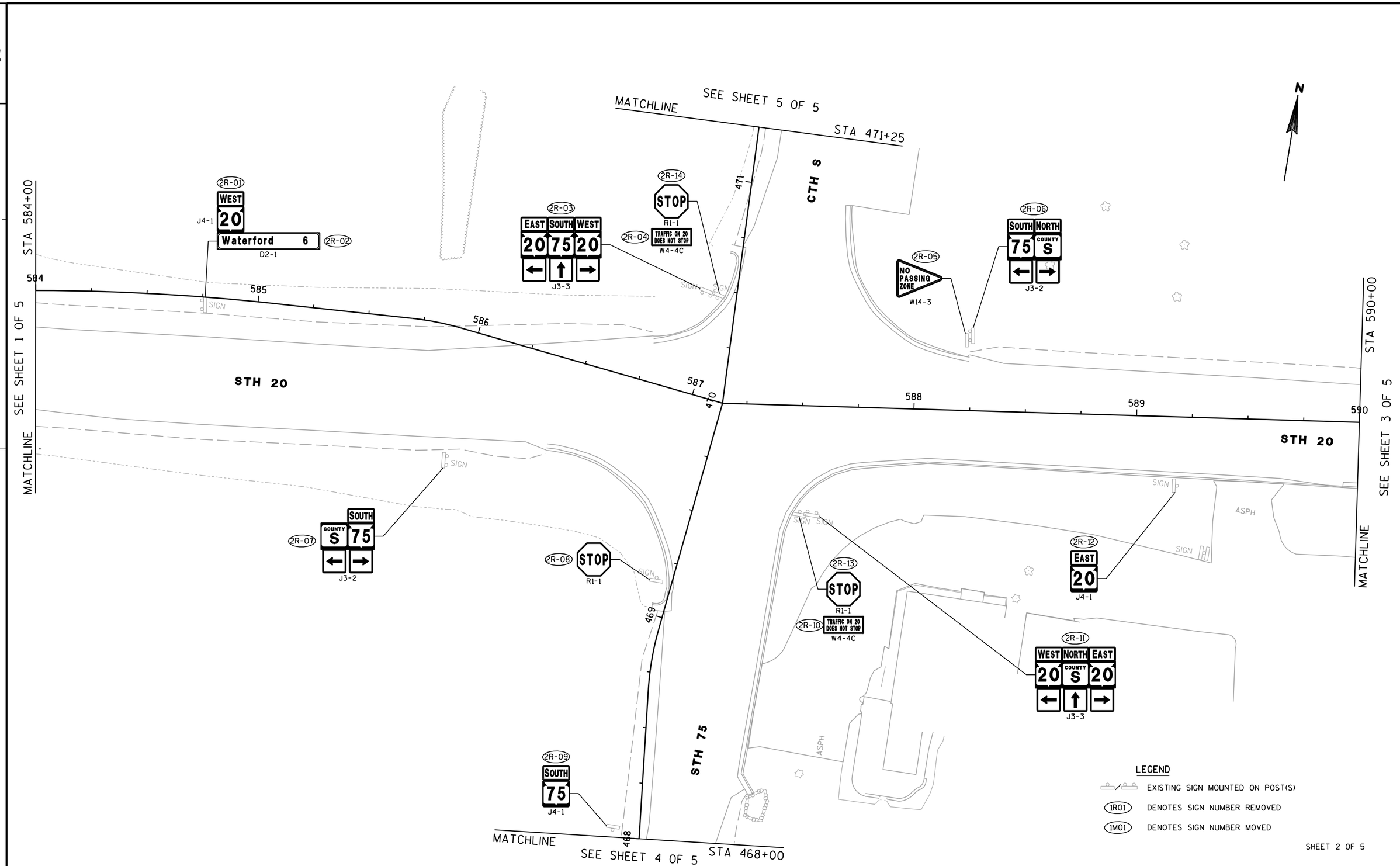

PROJECT NO: 2340-09-70	HWY: STH 20	COUNTY: RACINE	EXISTING SIGN REMOVALS	SCALE, FEET 0 20 40	SHEET 39	E

FILE NAME : k:\1082713.03\cadd\sheets\signing&pvmtmarking\exist\023202_es.dgn PLOT DATE : 1/29/2014 PLOT BY : rlb PLOT NAME : PLOT SCALE : $$.....plotscale.....$$ WISDOT/CADDS SHEET 42

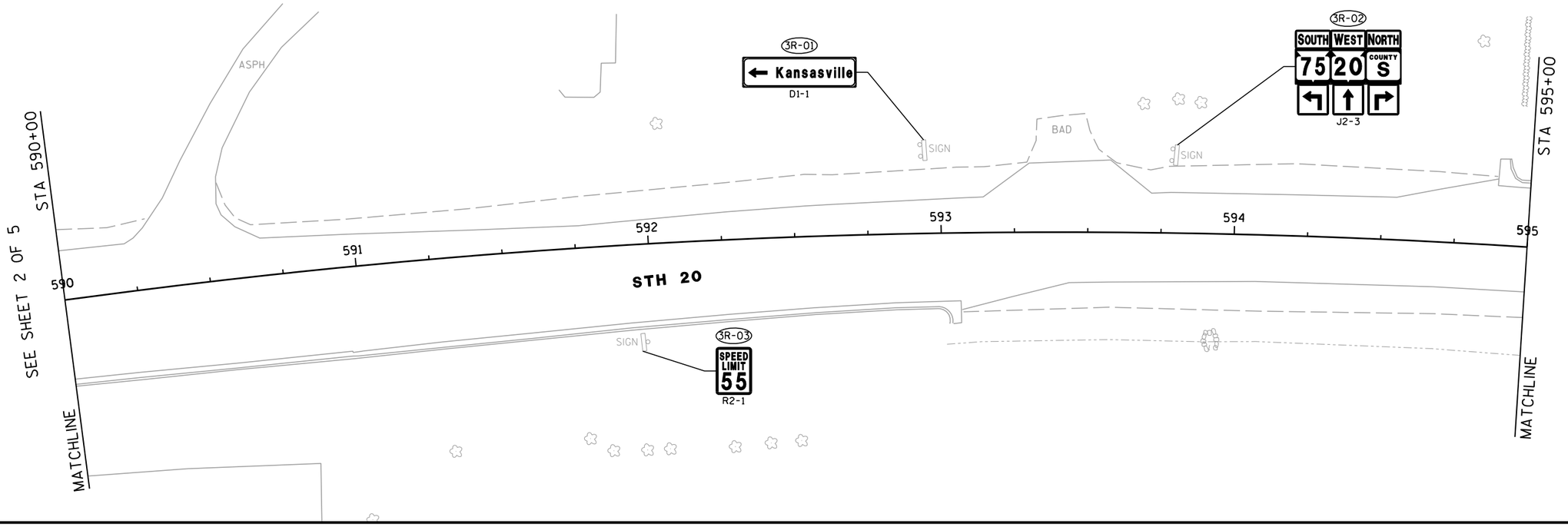

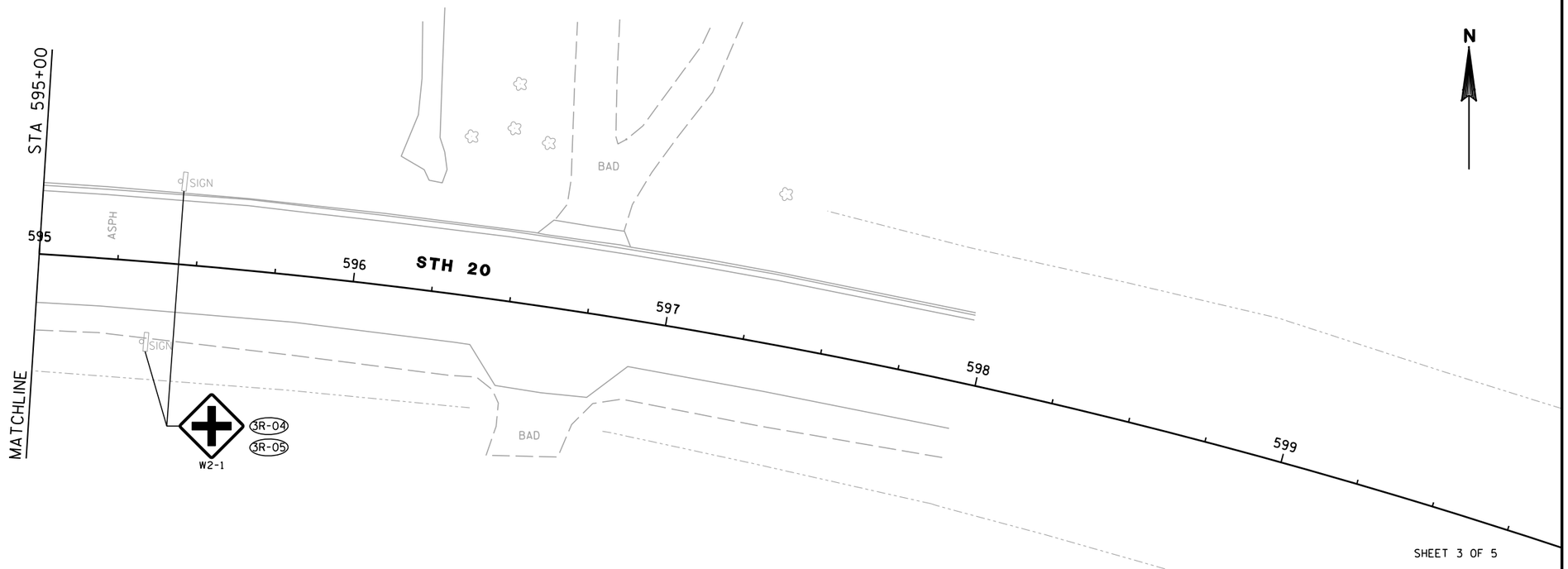

LEGEND

- EXISTING SIGN MOUNTED ON POST(S)
- (1R01) DENOTES SIGN NUMBER REMOVED
- (1M01) DENOTES SIGN NUMBER MOVED

SHEET 3 OF 5

PROJECT NO: 2340-09-70	HWY: STH 20	COUNTY: RACINE	EXISTING SIGN REMOVALS	SCALE, FEET 0 20 40	SHEET 40	E

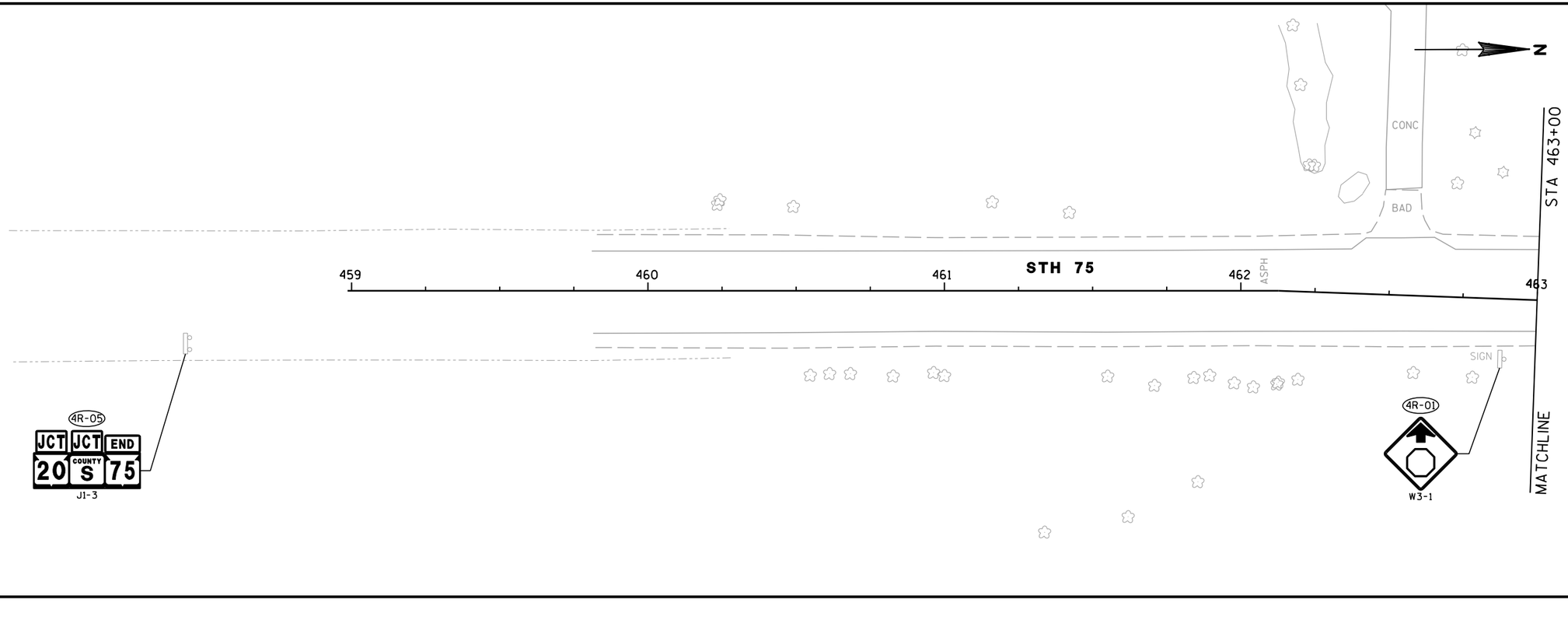

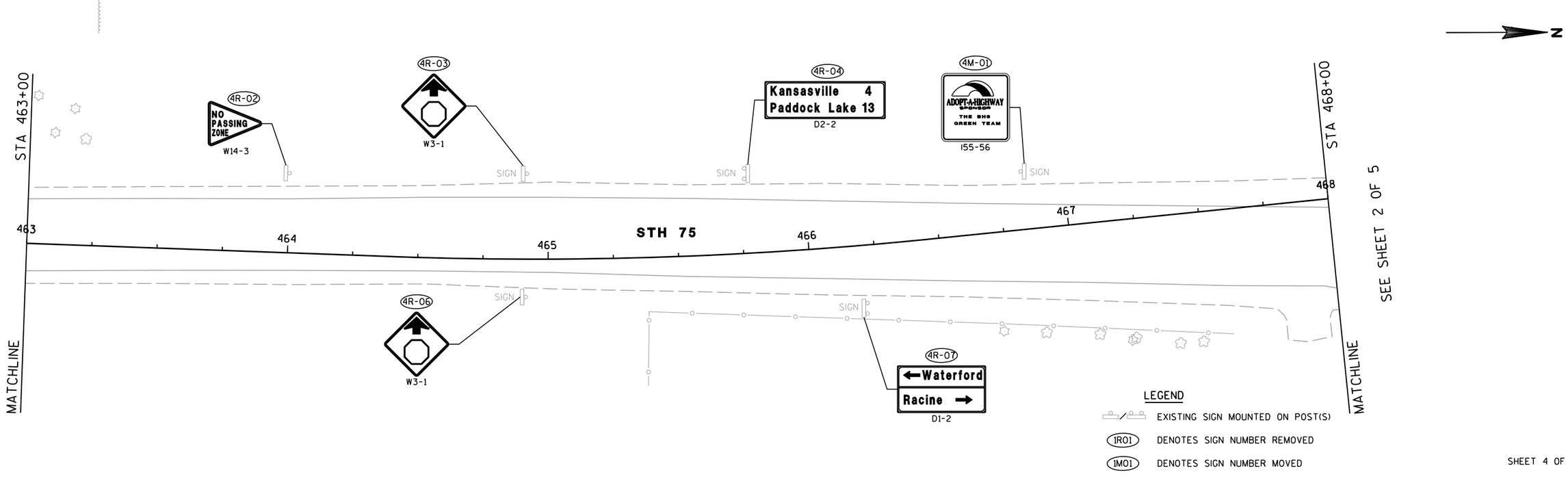

SHEET 4 OF 5

PROJECT NO: 2340-09-70	HWY: STH 20	COUNTY: RACINE	EXISTING SIGN REMOVALS	SCALE, FEET 0 20 40	SHEET 41	E

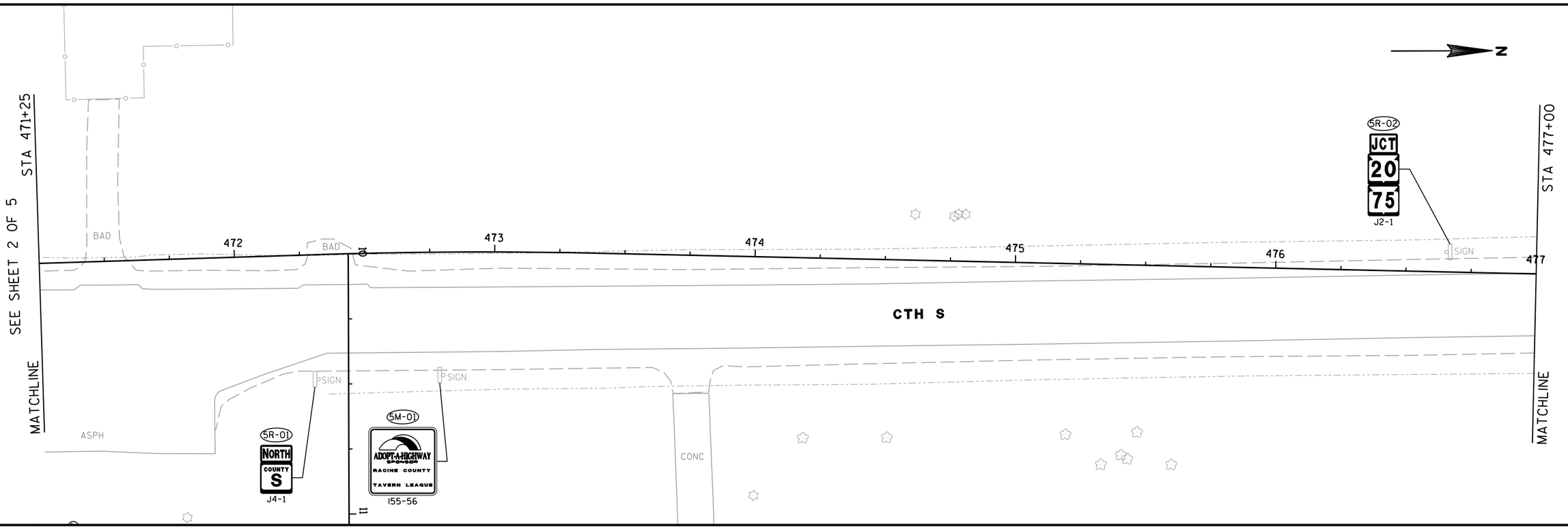

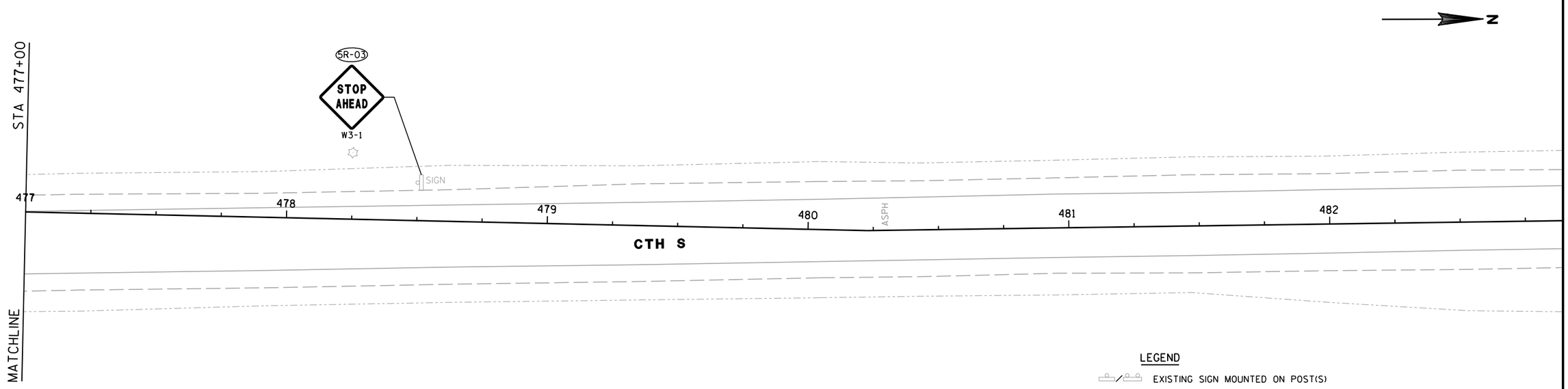

LEGEND

- EXISTING SIGN MOUNTED ON POST(S)
- (1R01) DENOTES SIGN NUMBER REMOVED
- (1M01) DENOTES SIGN NUMBER MOVED

SHEET 5 OF 5

PROJECT NO: 2340-09-70	HWY: STH 20	COUNTY: RACINE	EXISTING SIGN REMOVALS	SCALE, FEET 0 20 40	SHEET 42	E

PAVEMENT MARKING LEGEND

1. EPOXY 4-INCH (WHITE)
2. EPOXY 4-INCH (YELLOW)
3. GROOVED PREFORMED PLASTIC TAPE 8-INCH (WHITE)
4. GROOVED PREFORMED THERMOPLASTIC CROSSWALK 12-INCH (WHITE)
5. GROOVED PREFORMED THERMOPLASTIC YIELD LINE 18-INCH (WHITE)
6. DIAGONAL EPOXY 12-INCH (WHITE)
7. DIAGONAL EPOXY 12-INCH (YELLOW)
8. ISLAND NOSE EPOXY (YELLOW)
9. GROVED PREFORMED THERMOPLASTIC WORDS
10. CURB EPOXY
11. SYMBOLS EPOXY
12. PARKING STALL EPOXY

▩ CURB RAMP DETECTABLE WARNING FIELD YELLOW

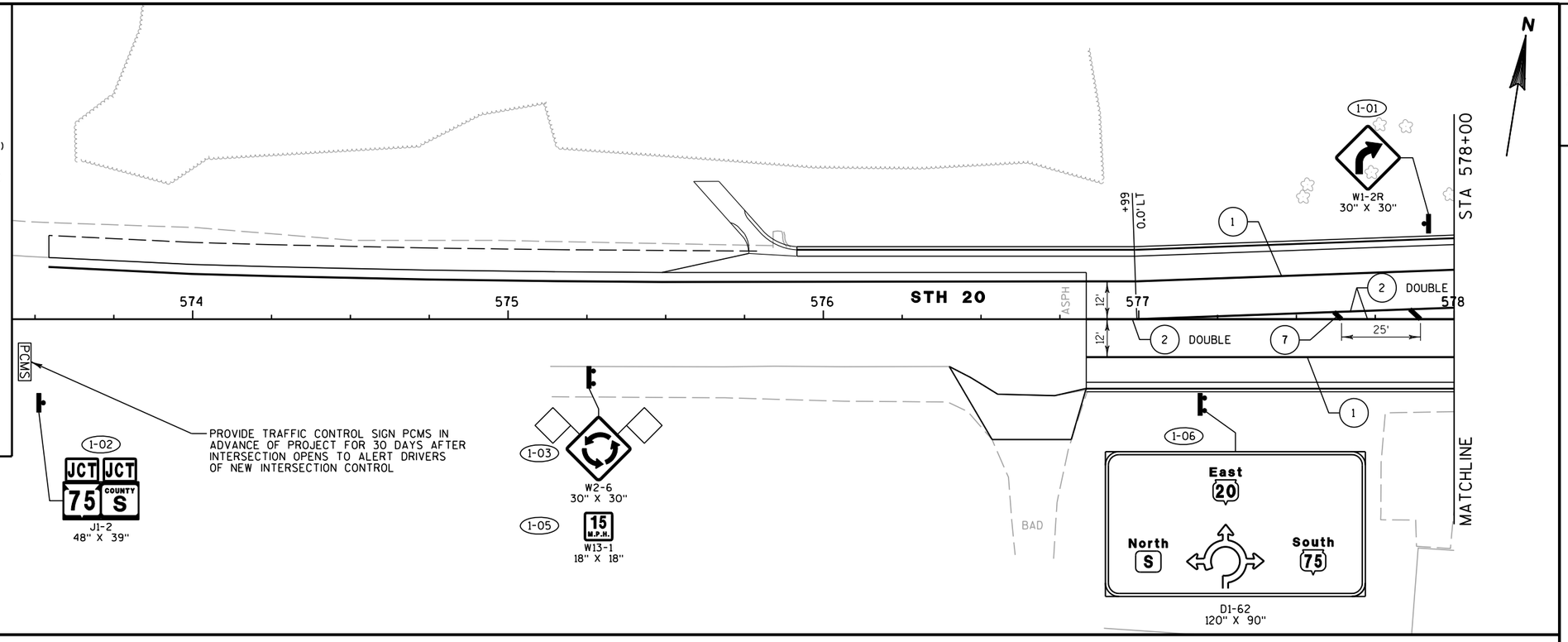

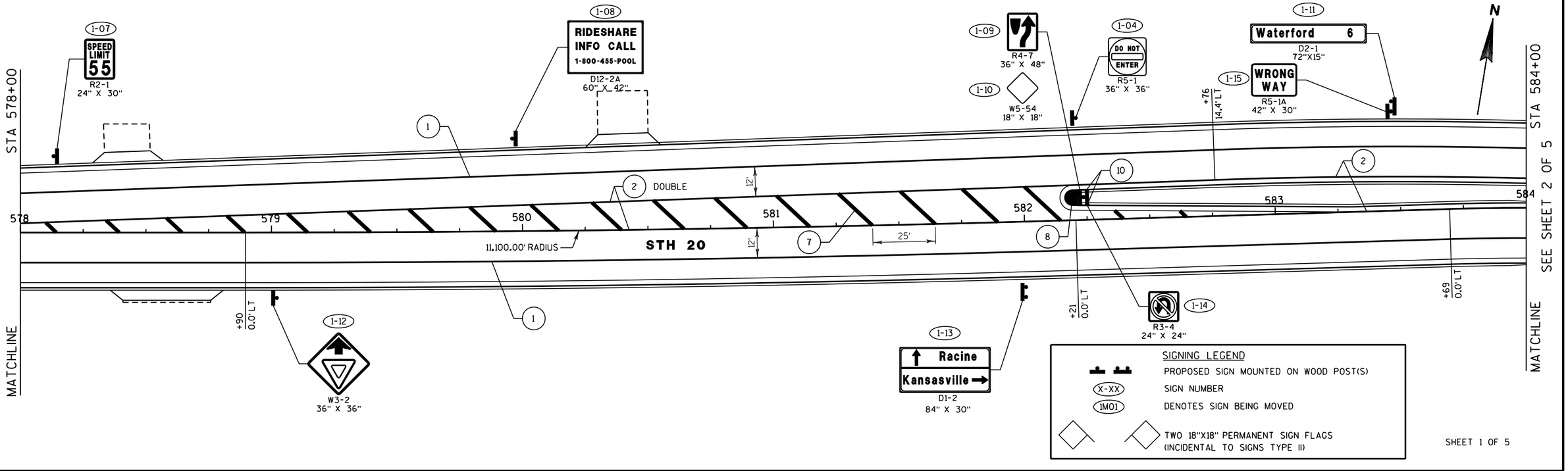

SHEET 1 OF 5

PROJECT NO: 2340-09-70	HWY: STH 20	COUNTY: RACINE	PERMANENT SIGNING/PAVEMENT MARKING	SCALE, FEET 0 20 40	SHEET 43	E

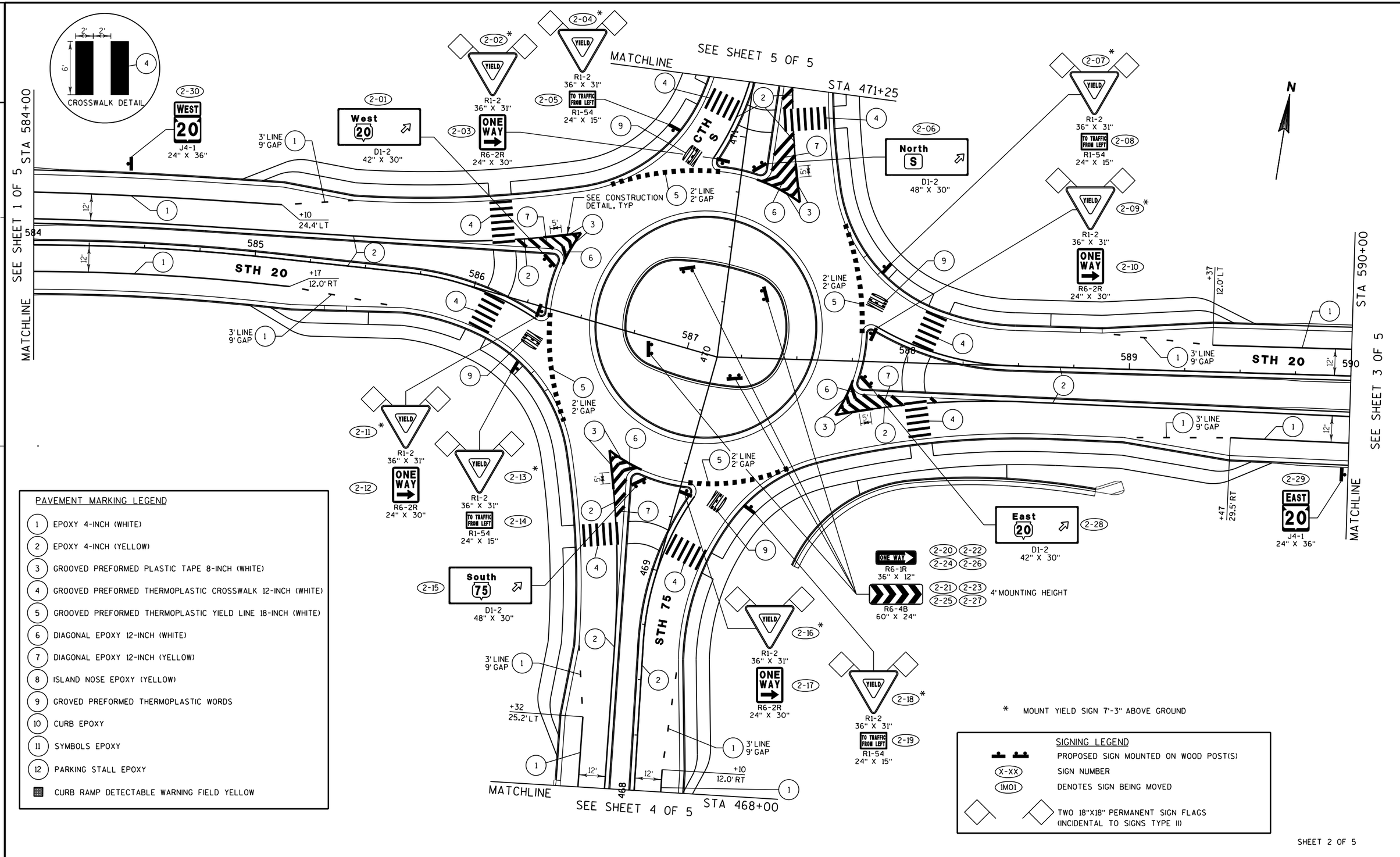

PAVEMENT MARKING LEGEND

1. EPOXY 4-INCH (WHITE)
2. EPOXY 4-INCH (YELLOW)
3. GROOVED PREFORMED PLASTIC TAPE 8-INCH (WHITE)
4. GROOVED PREFORMED THERMOPLASTIC CROSSWALK 12-INCH (WHITE)
5. GROOVED PREFORMED THERMOPLASTIC YIELD LINE 18-INCH (WHITE)
6. DIAGONAL EPOXY 12-INCH (WHITE)
7. DIAGONAL EPOXY 12-INCH (YELLOW)
8. ISLAND NOSE EPOXY (YELLOW)
9. GROVED PREFORMED THERMOPLASTIC WORDS
10. CURB EPOXY
11. SYMBOLS EPOXY
12. PARKING STALL EPOXY
- CURB RAMP DETECTABLE WARNING FIELD YELLOW

* MOUNT YIELD SIGN 7'-3" ABOVE GROUND

SIGNING LEGEND

- PROPOSED SIGN MOUNTED ON WOOD POST(S)
- (X-XX) SIGN NUMBER
- (1M01) DENOTES SIGN BEING MOVED
- TWO 18"X18" PERMANENT SIGN FLAGS (INCIDENTAL TO SIGNS TYPE II)

SHEET 2 OF 5

PROJECT NO: 2340-09-70	HWY: STH 20	COUNTY: RACINE	PERMANENT SIGNING/PAVEMENT MARKING	SCALE, FEET 0 20 40	SHEET 44	E

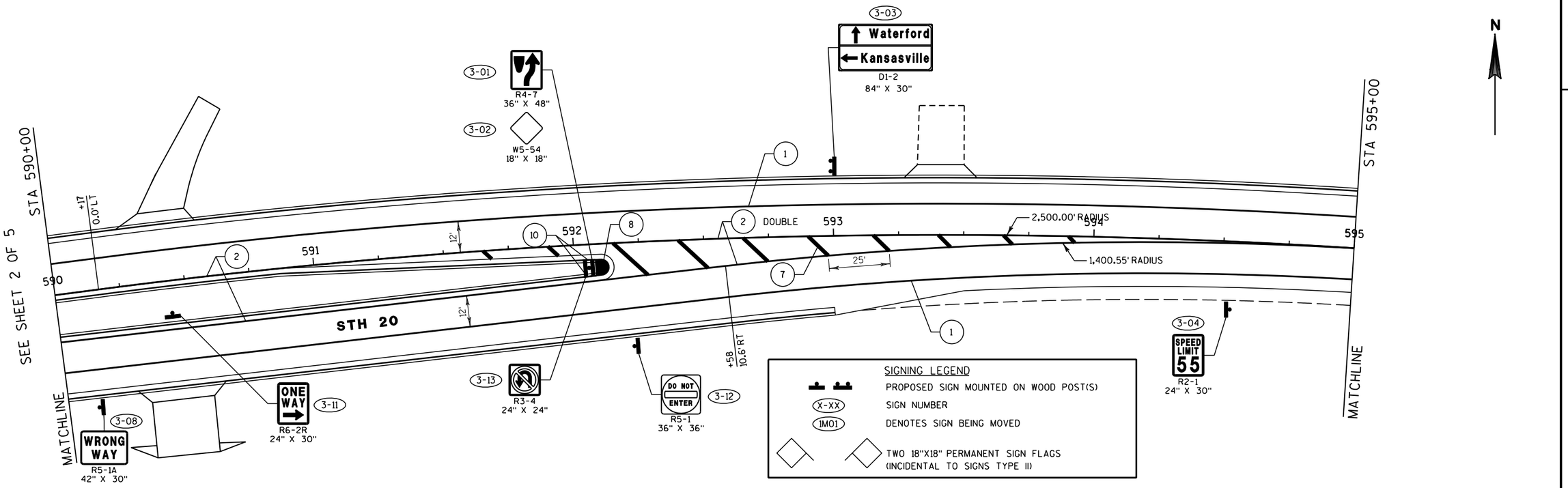

PAVEMENT MARKING LEGEND

1. EPOXY 4-INCH (WHITE)
2. EPOXY 4-INCH (YELLOW)
3. GROOVED PREFORMED PLASTIC TAPE 8-INCH (WHITE)
4. GROOVED PREFORMED THERMOPLASTIC CROSSWALK 12-INCH (WHITE)
5. GROOVED PREFORMED THERMOPLASTIC YIELD LINE 18-INCH (WHITE)
6. DIAGONAL EPOXY 12-INCH (WHITE)
7. DIAGONAL EPOXY 12-INCH (YELLOW)
8. ISLAND NOSE EPOXY (YELLOW)
9. GROVED PREFORMED THERMOPLASTIC WORDS
10. CURB EPOXY
11. SYMBOLS EPOXY
12. PARKING STALL EPOXY

CURB RAMP DETECTABLE WARNING FIELD YELLOW

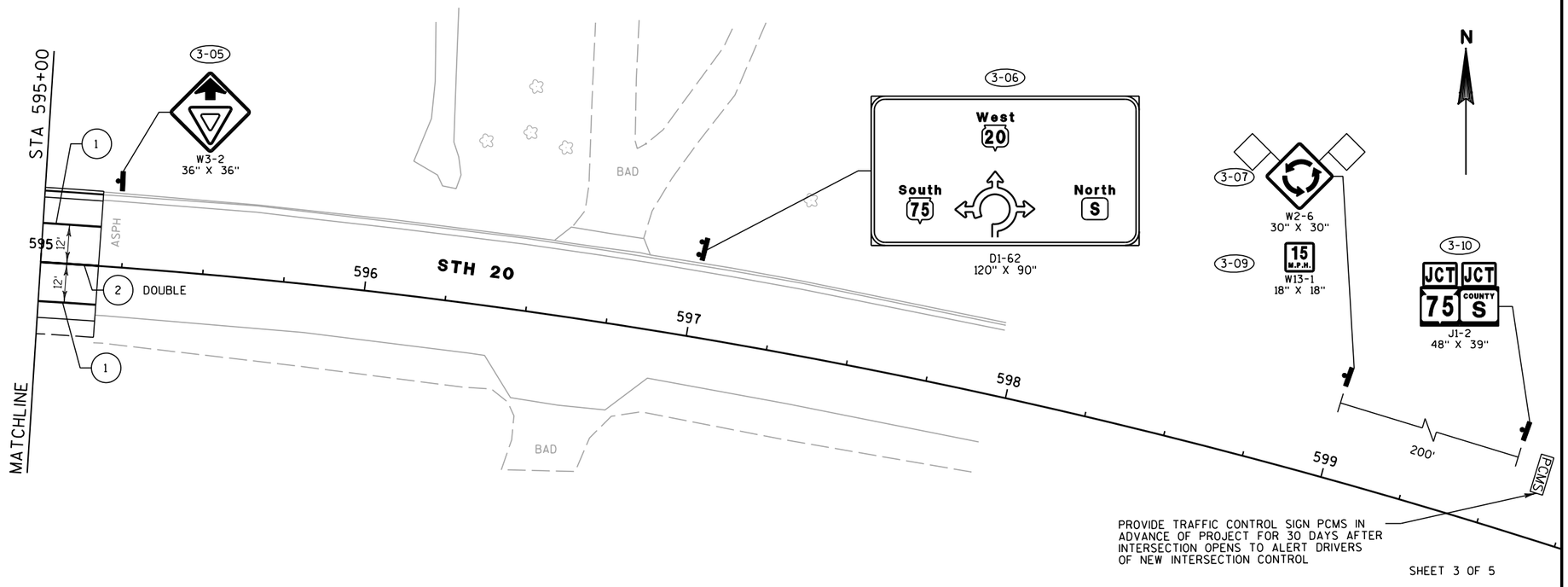

PROVIDE TRAFFIC CONTROL SIGN PCMS IN ADVANCE OF PROJECT FOR 30 DAYS AFTER INTERSECTION OPENS TO ALERT DRIVERS OF NEW INTERSECTION CONTROL

SHEET 3 OF 5

PROJECT NO: 2340-09-70	HWY: STH 20	COUNTY: RACINE	PERMANENT SIGNING/PAVEMENT MARKING	SCALE, FEET 0 20 40	SHEET 45	E

PAVEMENT MARKING LEGEND

1. EPOXY 4-INCH (WHITE)
2. EPOXY 4-INCH (YELLOW)
3. GROOVED PREFORMED PLASTIC TAPE 8-INCH (WHITE)
4. GROOVED PREFORMED THERMOPLASTIC CROSSWALK 12-INCH (WHITE)
5. GROOVED PREFORMED THERMOPLASTIC YIELD LINE 18-INCH (WHITE)
6. DIAGONAL EPOXY 12-INCH (WHITE)
7. DIAGONAL EPOXY 12-INCH (YELLOW)
8. ISLAND NOSE EPOXY (YELLOW)
9. GROVED PREFORMED THERMOPLASTIC WORDS
10. CURB EPOXY
11. SYMBOLS EPOXY
12. PARKING STALL EPOXY

CURB RAMP DETECTABLE WARNING FIELD YELLOW

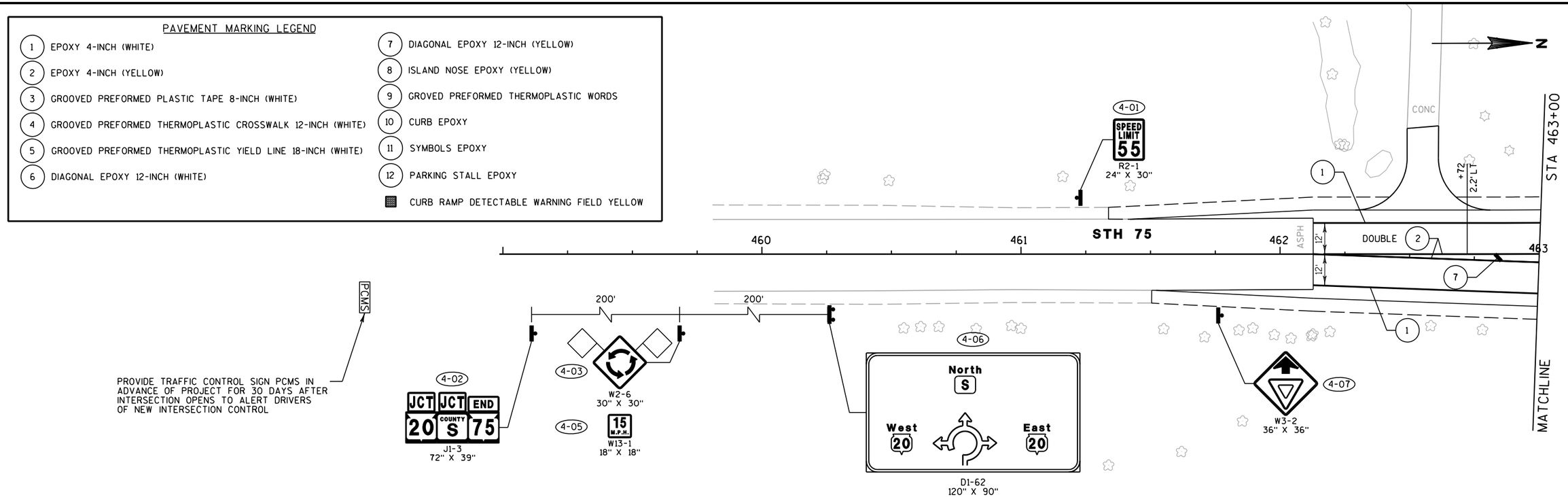

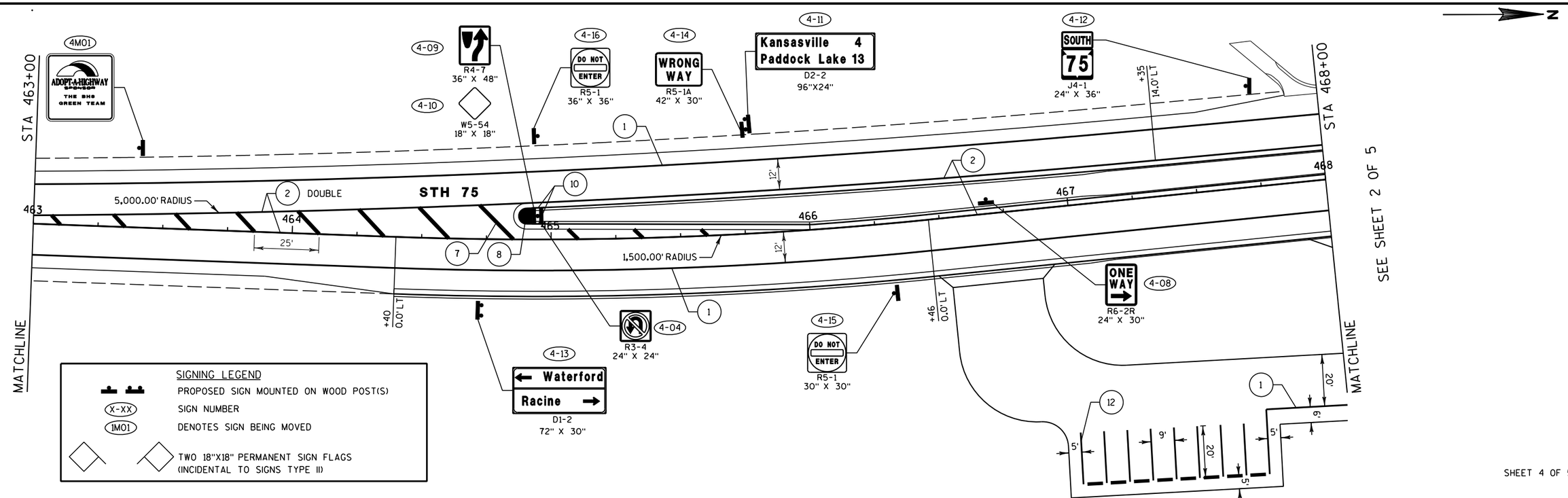

SHEET 4 OF 5

PROJECT NO: 2340-09-70	HWY: STH 20	COUNTY: RACINE	PERMANENT SIGNING/PAVEMENT MARKING	SCALE, FEET 0 20 40	SHEET 46	E

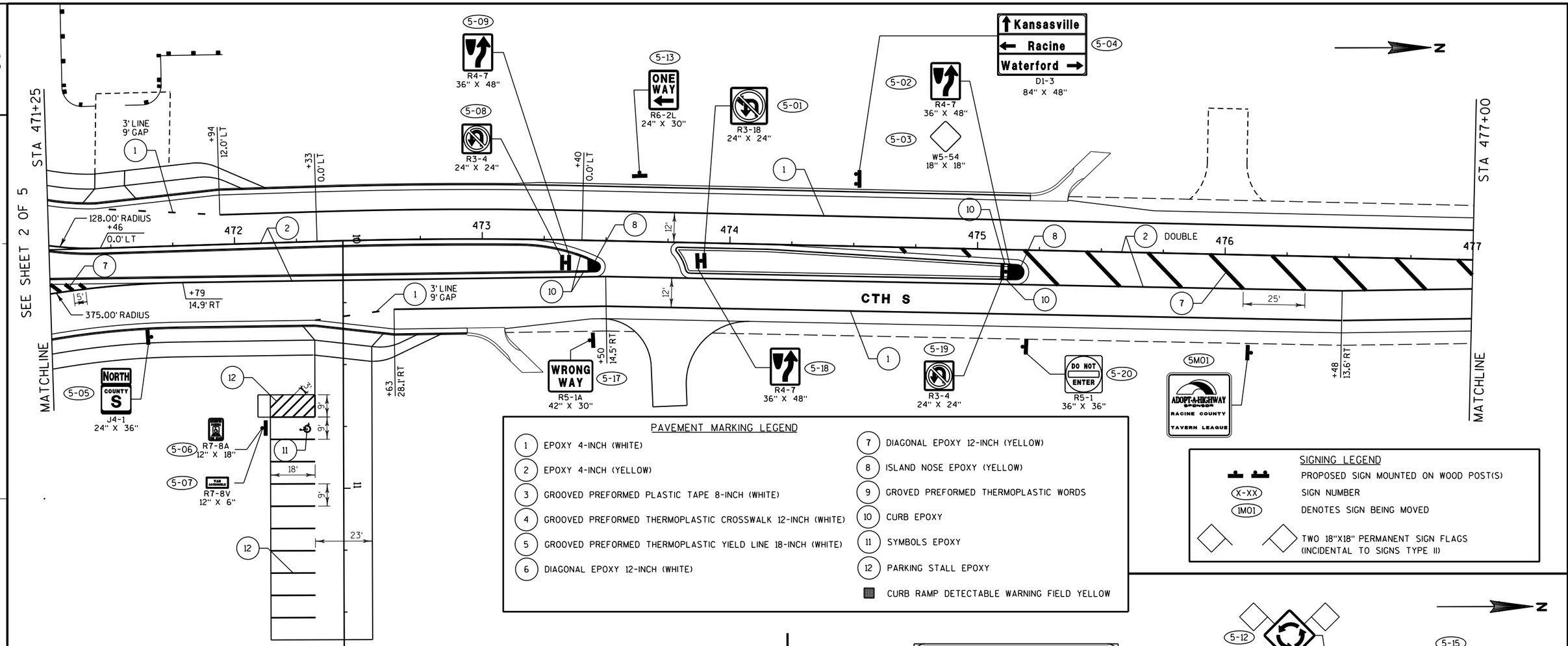

PAVEMENT MARKING LEGEND

1. EPOXY 4-INCH (WHITE)
2. EPOXY 4-INCH (YELLOW)
3. GROOVED PREFORMED PLASTIC TAPE 8-INCH (WHITE)
4. GROOVED PREFORMED THERMOPLASTIC CROSSWALK 12-INCH (WHITE)
5. GROOVED PREFORMED THERMOPLASTIC YIELD LINE 18-INCH (WHITE)
6. DIAGONAL EPOXY 12-INCH (WHITE)
7. DIAGONAL EPOXY 12-INCH (YELLOW)
8. ISLAND NOSE EPOXY (YELLOW)
9. GROVED PREFORMED THERMOPLASTIC WORDS
10. CURB EPOXY
11. SYMBOLS EPOXY
12. PARKING STALL EPOXY

CURB RAMP DETECTABLE WARNING FIELD YELLOW

SIGNING LEGEND

- PROPOSED SIGN MOUNTED ON WOOD POST(S)
- (X-XX) SIGN NUMBER
- (1M01) DENOTES SIGN BEING MOVED
- TWO 18"X18" PERMANENT SIGN FLAGS (INCIDENTAL TO SIGNS TYPE II)

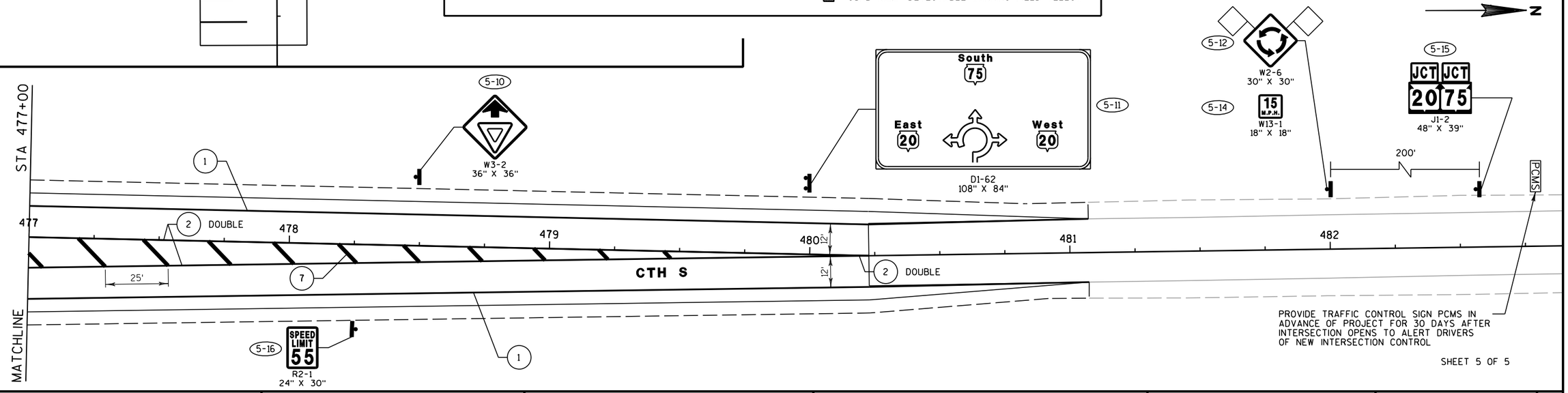

PROVIDE TRAFFIC CONTROL SIGN PCMS IN ADVANCE OF PROJECT FOR 30 DAYS AFTER INTERSECTION OPENS TO ALERT DRIVERS OF NEW INTERSECTION CONTROL

SHEET 5 OF 5

PROJECT NO: 2340-09-70	HWY: STH 20	COUNTY: RACINE	PERMANENT SIGNING/PAVEMENT MARKING	SCALE, FEET 0 20 40	SHEET 47	E

2

LEGEND:

- PROPOSED LIGHTING UNIT
- PROPOSED STEEL PULL BOX
- PROPOSED CONDUCTORS IN CONDUIT: 3–8 AWG AND 1–8 AWG GND IN 2–INCH CONDUIT UNLESS NOTED
- CONDUIT STUBOUT (CAPPED)

STATION — CIRCUIT, SOURCE, POLE # — OFFSET
584+05, ADV1, 20.0' RT
LED A 5(T) 15
- ARM LENGTH
- POLE TYPE (ON T BASE)
- LUMINAIRE CATEGORY
- LUMINAIRE SOURCE

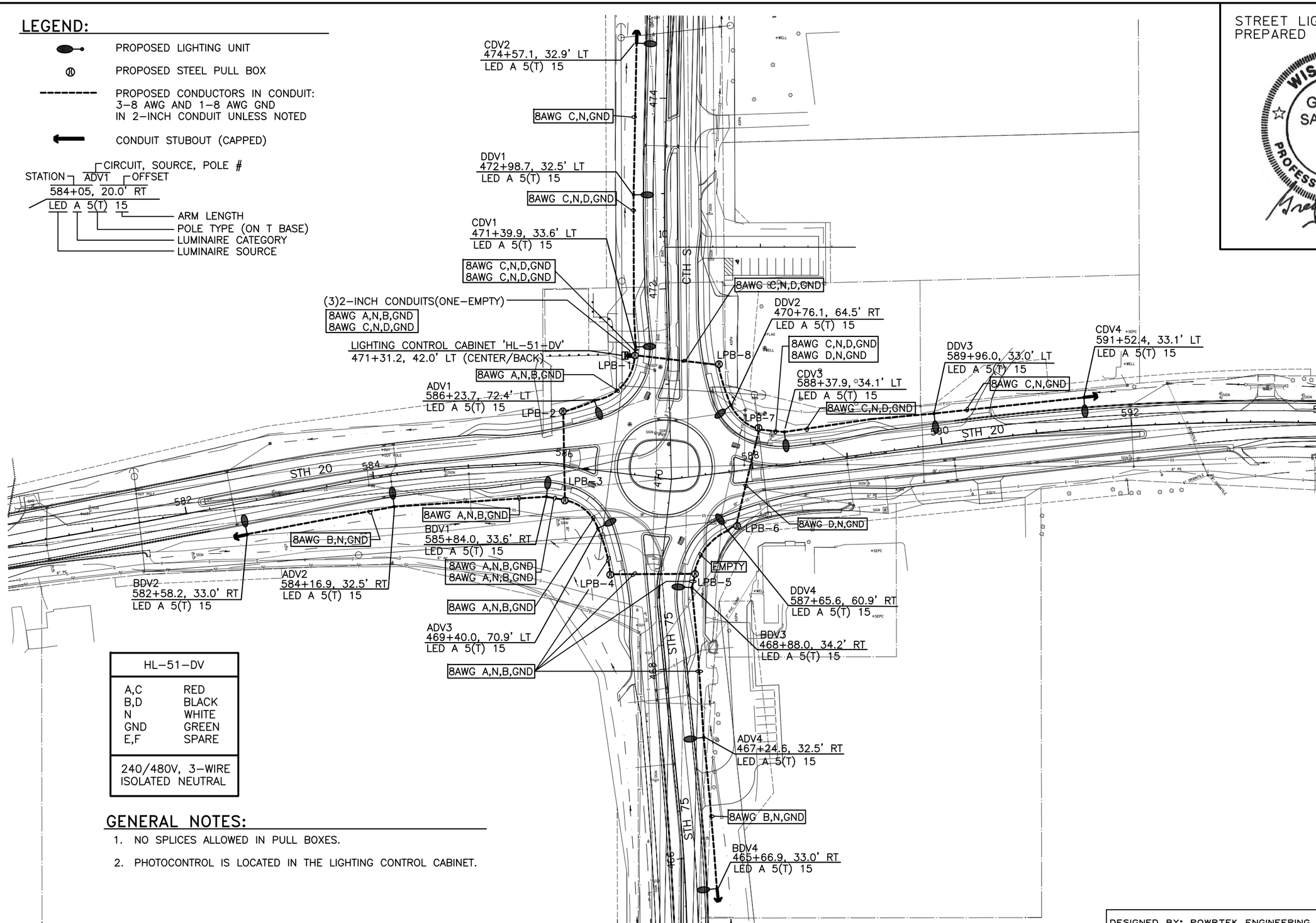

HL–51–DV	
A,C	RED
B,D	BLACK
N	WHITE
GND	GREEN
E,F	SPARE
240/480V, 3–WIRE ISOLATED NEUTRAL	

GENERAL NOTES:

1. NO SPLICES ALLOWED IN PULL BOXES.
2. PHOTOCONTROL IS LOCATED IN THE LIGHTING CONTROL CABINET.

STREET LIGHTING PLANS PREPARED BY

WISCONSIN
GREG W. SADOWSKI
E-29334
EAGLE, WI
PROFESSIONAL ENGINEER
1/21/14

2

DESIGNED BY: POWRTEK ENGINEERING, INC. SHEET 1 OF 4

PROJECT NO: 2340-09-70	HWY: STH 20	COUNTY: RACINE	LIGHTING PLAN	SHEET NO: 48	E

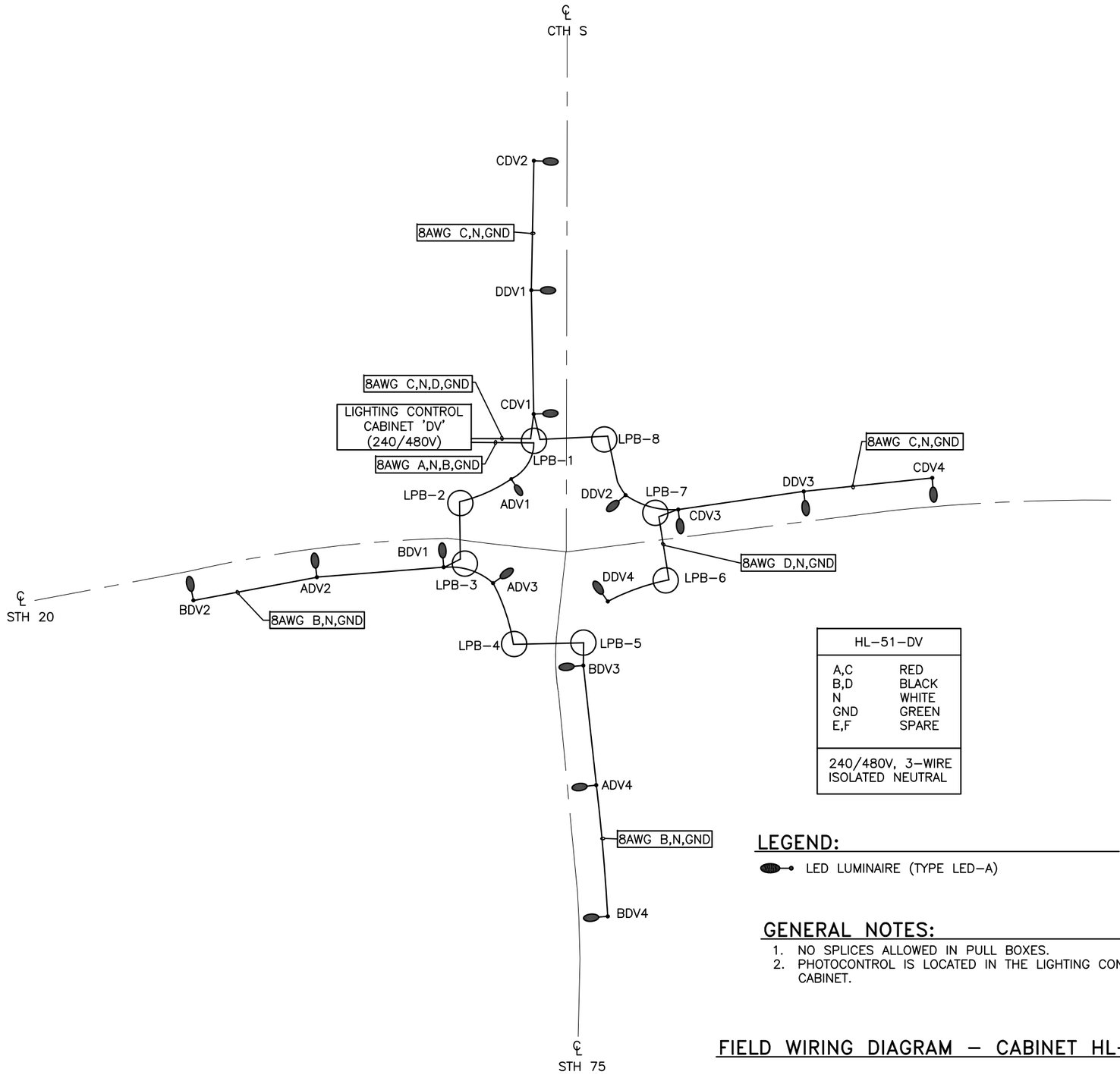

HL–51–DV	
A,C	RED
B,D	BLACK
N	WHITE
GND	GREEN
E,F	SPARE
240/480V, 3–WIRE ISOLATED NEUTRAL	

LEGEND:

LED LUMINAIRE (TYPE LED–A)

GENERAL NOTES:

1. NO SPLICES ALLOWED IN PULL BOXES.
2. PHOTOCONTROL IS LOCATED IN THE LIGHTING CONTROL CABINET.

N

FIELD WIRING DIAGRAM – CABINET HL–51–DV

DESIGNED BY: POWRTEK ENGINEERING, INC. SHEET 2 OF 4

PROJECT NO: 2340-09-70	HWY: STH 20	COUNTY: RACINE	FIELD WIRING DIAGRAM	SHEET NO: 49	E

LEFT SIDE VIEW

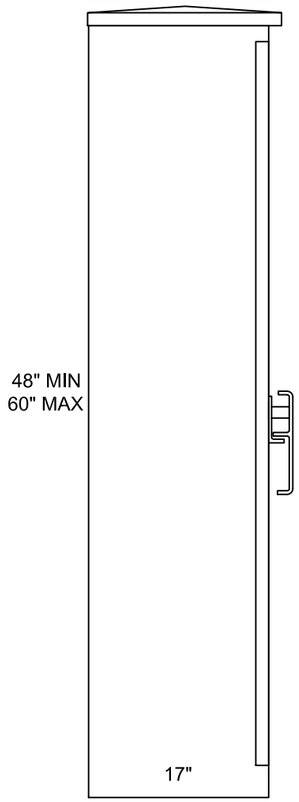

STAINLESS STEEL HANDLE WITH 3 - POINT LATCH & PADLOCKING PROVISIONS WITH LOCK FOR #2 KEY

BACK FED MAIN BREAKER IS ACCEPTABLE

PANELBOARD MOUNTED ON BACK PANEL BEHIND DEAD FRONT

SURGE PROTECTION

DEAD FRONT QUARTER-TURN WING SCREW

NEUTRAL BUS SIZED TO ACCOMMODATE #10 THRU # 2 AWG CONDUCTORS.

LOUVERS ON DOOR AS REQUIRED

FRONT INTERIOR ELEVATION

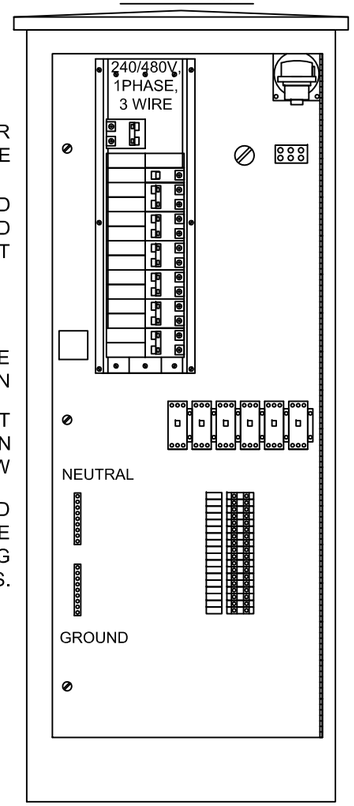

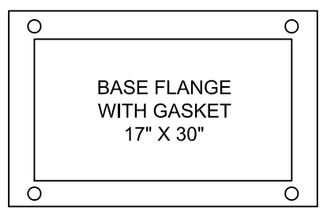

NEMA TWIST-LOCK WISDOT APPROVED PHOTOCELL, 240V MOUNTED BEHIND WINDOWS

VENTILATION UNDER TOP

PHOTOCELL TERMINAL BLOCK

HAND-OFF-AUTO SWITCH MOUNTED ON HINGED DEAD FRONT

INTERIOR COMPONENTS MOUNTED ON BACK PANEL BEHIND HINGED DEAD FRONT

(6) 2P CONTACTORS, 240V COIL (CONTACTORS SIZED AS REQUIRED)

TERMINAL BLOCKS FOR LIGHTING CIRCUIT CONDUCTORS PRE-WIRED TO CONTACTORS. SIZED TO ACCOMMODATE #10 THRU # 2 AWG CONDUCTORS.

CIRCUIT LABELS

RIGHT SIDE VIEW

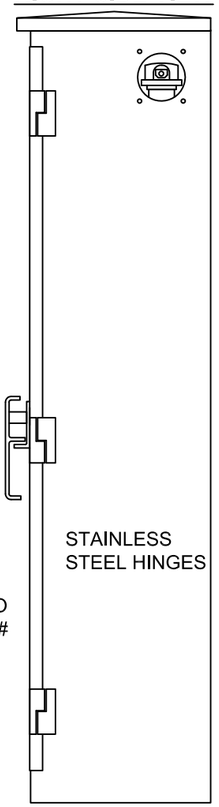

WINDOW FOR PHOTOCELL SIDE AND BACK OF CABINET

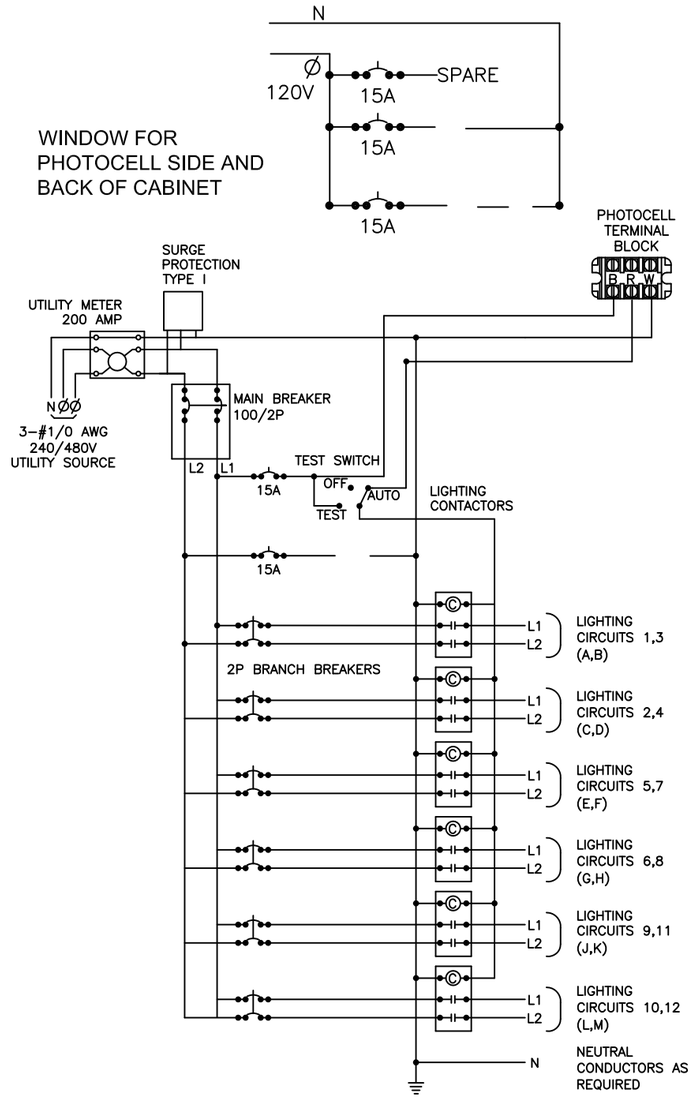

CONTROL CABINET SCHEMATIC

240/480 VOLT
LIGHTING CONTROL CABINET
HL-51-DV

ADDITIONAL MATERIALS:

15AMP GFCI DUPLEX RECEPTACLE WITH COVER, 120V,

1.5KVA, SINGLE PHASE ENCAPSULATED TRANSFORMER 240//120V, 60HZ

SPST, 20AMP SWITCH ON DOOR, TO TURN LIGHT ON WHEN DOOR IS OPEN.

INCANDESCENT LIGHTING FIXTURE 60WATT, 120V LAMP.

15AMP/1P CIRCUIT BREAKER, 120V

PANELBOARD:

- 30 CIRCUIT MIN.
- 100AMP MAIN CIRCUIT BREAKER
- COPPER BUS
- BOLT- ON BREAKERS
- 22K AIC
- (2) 15A/1P CONTROL BREAKER, 120V
- (1) 15A/1P CONTROL BREAKER, 120V, SPARE
- (6) 30A/2P BRANCH BREAKERS

BOX CONSTRUCTION:

- NEMA3R
- UL LISTED
- 1/8" ALUMINUM 5052-H32 ANODIZED CLEAR
- BENT CONSTRUCTION - ONE PIECE SIDES AND BACK
- NEOPRENE GASKETED DOORS
- STAINLESS STEEL HARDWARE
- ETL LISTED IN ACCORDANCE W/ UL508A
- DOOR KEEP TO HOLD DOOR WHILE OPEN

LIGHTING CONTROL CABINET

DESIGNED BY: POWRTEK ENGINEERING, INC. SHEET 3 OF 4

PROJECT NO: 2340-09-70	HWY: STH 20	COUNTY: RACINE	DETAIL	SHEET NO: 50	E

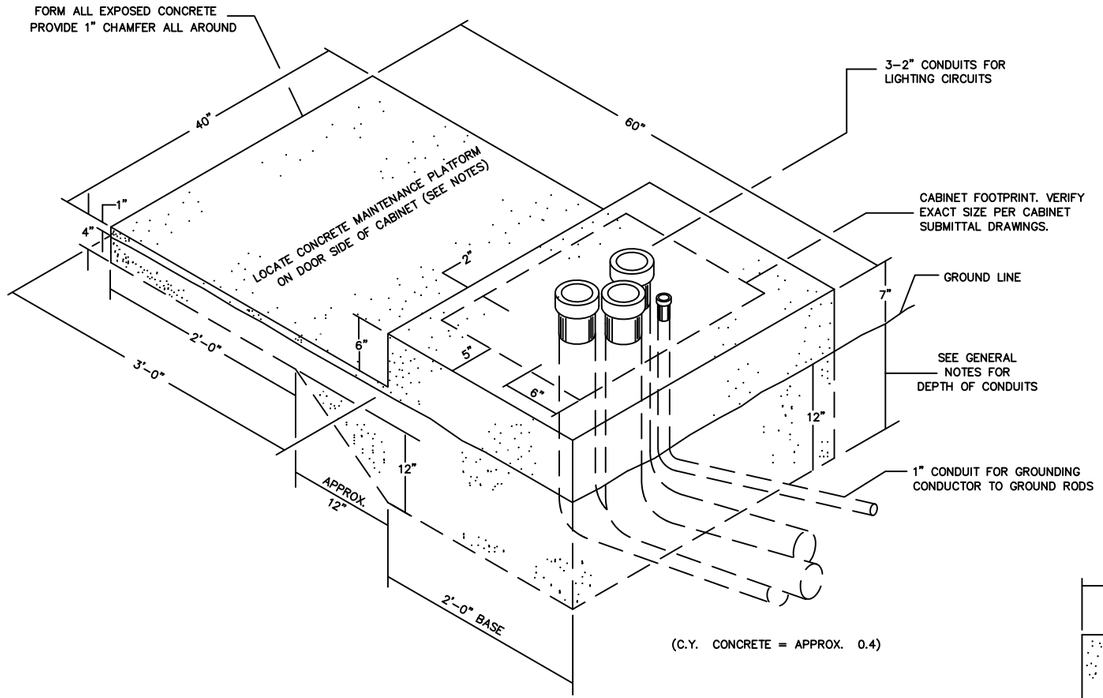

(C.Y. CONCRETE = APPROX. 0.4)

ISOMETRIC VIEW

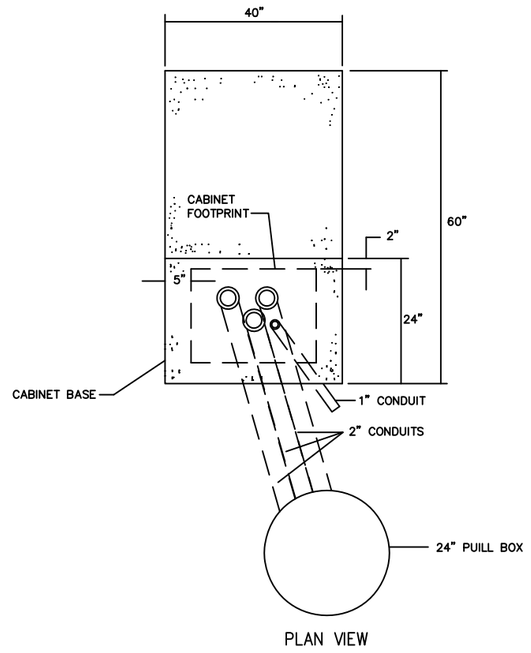

PLAN VIEW

CONCRETE CONTROL CABINET BASE SPECIAL

GENERAL NOTES

DETAILS OF CONSTRUCTION, MATERIALS AND WORKMANSHIP NOT SHOWN ON THIS DRAWING SHALL CONFORM TO THE PERTINENT REQUIREMENTS OF THE CONTRACT.

INSTALL FOUR STAINLESS STEEL APPROVED CONCRETE MASONRY ANCHORS TO ANCHOR THE CABINET BASES. THE ANCHORS SHALL BE LOCATED AS DIRECTED BY THE ENGINEER TO PROPERLY ANCHOR THE CONTROL CABINET TO THE BASE.

WHEN REQUIRED TO CONNECT NONMETALLIC CONDUIT TO METALLIC CONDUIT, ONLY ADAPTER FITTINGS, U.L. LISTED FOR ELECTRICAL USE, SHALL BE USED.

CONDUIT HEIGHT ABOVE THE CONCRETE BASE SHALL BE 1 INCH.

DEPTH OF CONDUIT INSTALLED BELOW THE TRAVELED WAY SHALL BE 24 INCHES MINIMUM AND 36 INCHES MAXIMUM.

DEPTH OF CONDUIT INSTALLED THAT IS NOT BELOW THE TRAVELED WAY SHALL BE 18 INCHES MINIMUM AND 36 INCHES MAXIMUM.

ANY EXCEPTION TO THE MAXIMUM DEPTH SHALL BE ONLY WITH THE WRITTEN APPROVAL OF THE ENGINEER.

CONTROL CABINET BASE TOP SURFACE SHALL BE TROWEL FINISHED SMOOTH AND LEVEL.

MAINTENANCE PLATFORM SHALL BE FLOAT OR BROOM FINISHED AND BE LEVEL.

MAINTENANCE PLATFORMS ARE NOT REQUIRED WHEN THE SURROUNDING AREA IS PAVED.

MINIMUM BENDING RADIUS OF CONDUIT = 6 X THE DIAMETER.

ALL METALLIC CONDUIT ENDS SHALL BE REAMED AND THREADED.

CAP ALL BELOW GRADE METALLIC CONDUIT ENDS IN WHICH WIRE OR CABLE IS NOT BEING INSTALLED.

PLUG ALL BELOW GRADE NONMETALLIC CONDUIT ENDS IN WHICH WIRE OR CABLE IS NOT BEING INSTALLED.

ALL CONDUIT ENDS AT THE TOP OF CONCRETE BASES SHALL BE CAPPED IF METALLIC OR PLUGGED IF NONMETALLIC IMMEDIATELY AFTER PLACEMENT AND BEFORE CONCRETE IS POURED. CONDUITS IN WHICH WIRE OR CABLE IS NOT BEING INSTALLED SHALL REMAIN CAPPED OR PLUGGED.

2" CONDUITS EXITING THE CONCRETE BASE SHALL TERMINATE IN PULL BOX AS SHOWN ON THE PLANS.

CONCRETE FORM DEPTH BELOW FINISHED GRADE SHALL BE 6" MAXIMUM. CONCRETE FORMS SHALL BE REMOVED AFTER CONCRETE HAS SET.

BELL ENDS SHALL BE INSTALLED ON ALL PVC CONDUIT EXPOSED AT THE TOP OF THE CONCRETE BASE BEFORE INSTALLATION OF CABLE OR WIRE.

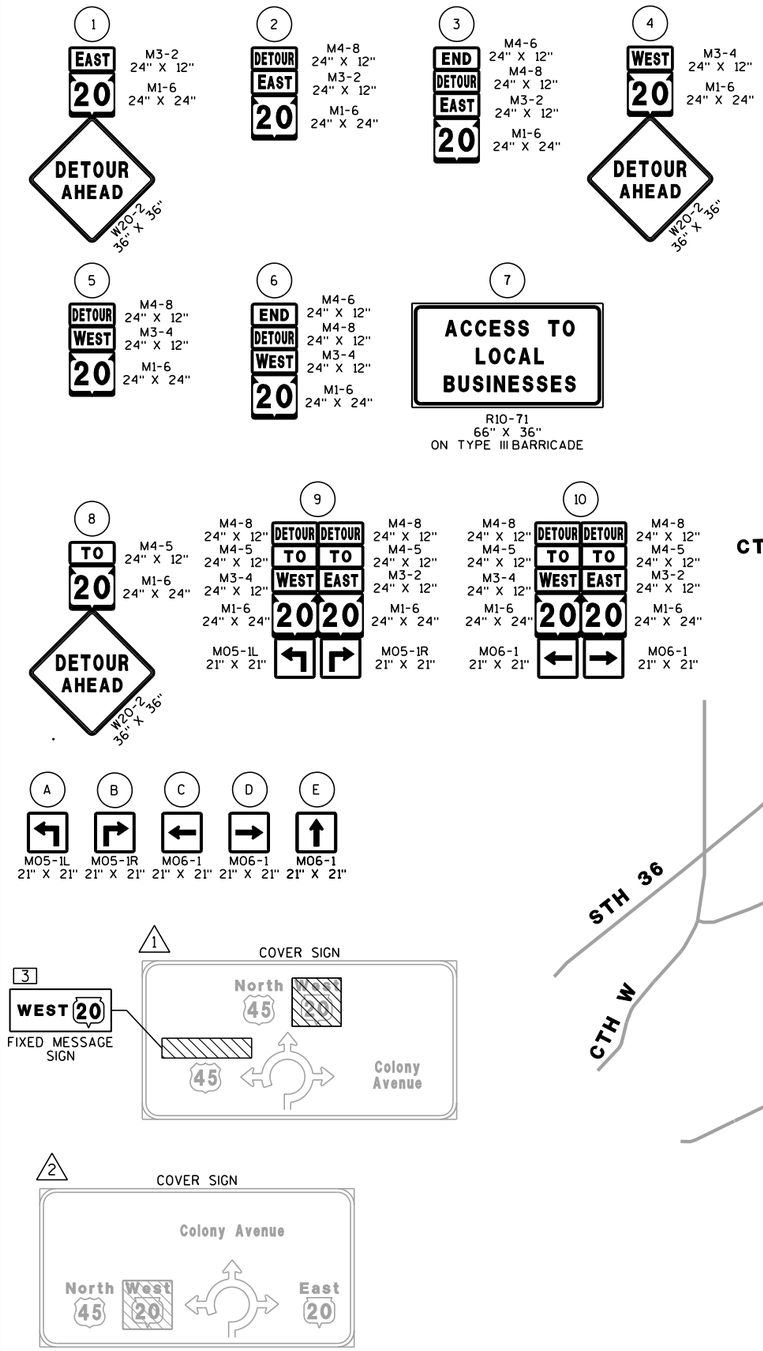

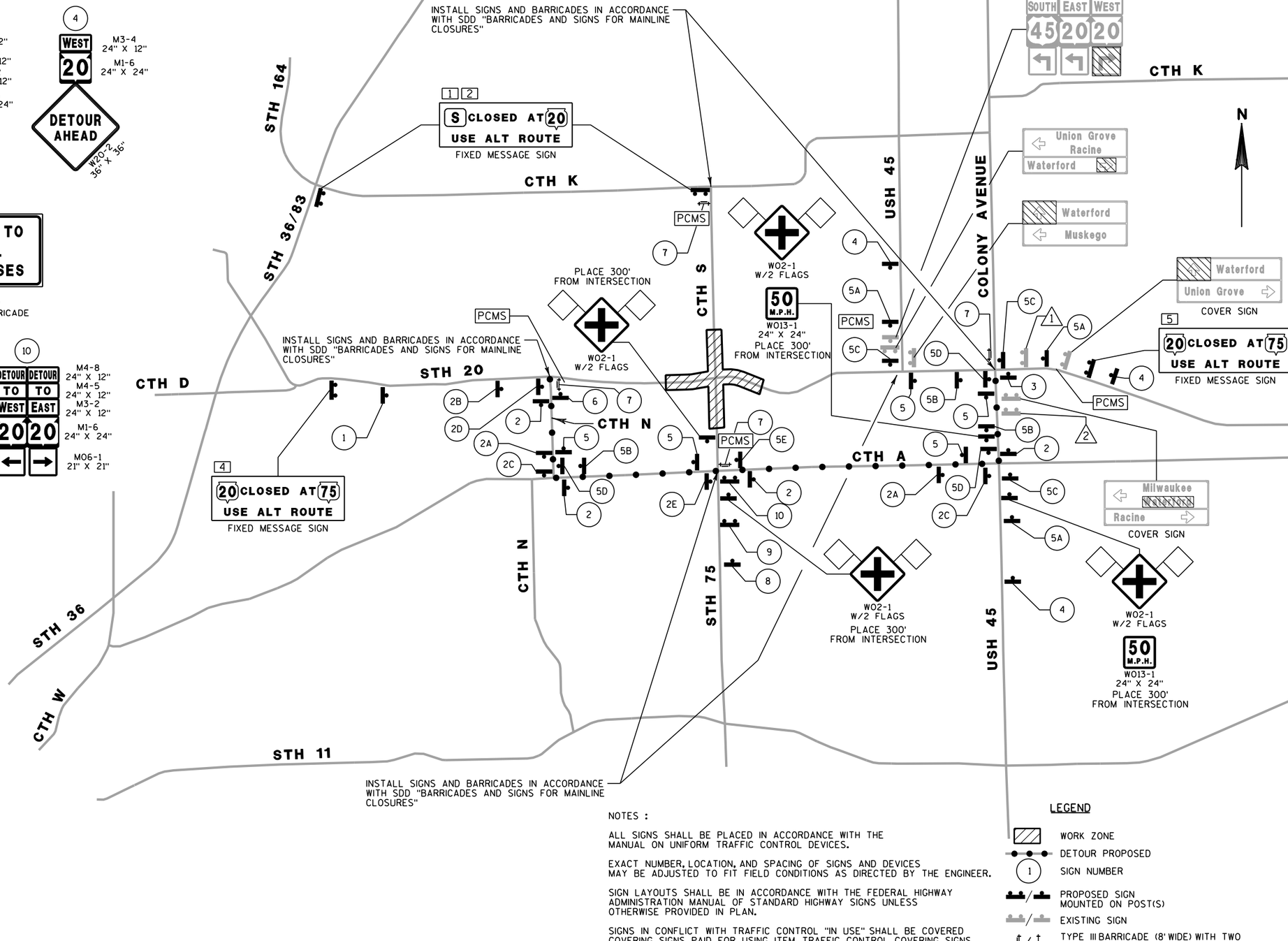

NOTES :

ALL SIGNS SHALL BE PLACED IN ACCORDANCE WITH THE MANUAL ON UNIFORM TRAFFIC CONTROL DEVICES.

EXACT NUMBER, LOCATION, AND SPACING OF SIGNS AND DEVICES MAY BE ADJUSTED TO FIT FIELD CONDITIONS AS DIRECTED BY THE ENGINEER.

SIGN LAYOUTS SHALL BE IN ACCORDANCE WITH THE FEDERAL HIGHWAY ADMINISTRATION MANUAL OF STANDARD HIGHWAY SIGNS UNLESS OTHERWISE PROVIDED IN PLAN.

SIGNS IN CONFLICT WITH TRAFFIC CONTROL "IN USE" SHALL BE COVERED COVERING SIGNS PAID FOR USING ITEM TRAFFIC CONTROL COVERING SIGNS TYPE I OR TYPE II.

COVER OR REMOVE DETOUR SIGNS WHEN NOT IN USE. INCIDENTAL TO TRAFFIC CONTROL DETOUR SIGNS.

PLACE TRAFFIC CONTROL SIGNS PCMS AS SHOWN ON PLANS FOR 14 DAYS PRIOR TO ROADWAY CLOSURE TO ALERT DRIVERS OF CLOSURE DATE

LEGEND

- WORK ZONE
- DETOUR PROPOSED
- (1) SIGN NUMBER
- PROPOSED SIGN MOUNTED ON POST(S)
- EXISTING SIGN
- TYPE III BARRICADE (8' WIDE) WITH TWO TYPE A WARNING LIGHTS WITH/WITHOUT SIGN
- [1] FIXED MESSAGE SIGN NUMBER
- PCMS TRAFFIC CONTROL SIGNS PCMS

SHEET 1 OF 2

PROJECT NO: 2340-09-70	HWY: STH 20	COUNTY: RACINE	DETOUR PLAN	SCALE, FEET 0 NTS	SHEET	E

FILE NAME : k:\1082713.03\cadd\sheets\detour\027001_dt.DGN PLOT DATE : 1/29/2014 PLOT BY : rlb PLOT NAME : PLOT SCALE : $$.....plotscale.....$$ WISDOT/CADDS SHEET 42

NOTES

1) ALL SIGNS TO HAVE STANDARD REFLECTIVE SHEETING - REFERENCE: "WISDOT STANDARD SPECIFICATIONS FOR ROAD AND BRIDGE CONSTRUCTION." LATEST EDITION.

2) AFTER SIGNS HAVE BEEN LOCATED IN THE FIELD, BUT BEFORE INSTALLATION, THE SIGNING AND MARKING SUPERVISOR SHALL VERIFY EACH SIGN LOCATION.

3) ALL SIGNS TO BE MOUNTED ON WOODEN POST SUPPORTS (4"X6"). THE NUMBER OF POSTS REQUIRED FOR EACH LAYOUT IS SHOWN. STEEL POSTS (2"X2") MAY BE USED FOR SIGNS ON SURFACE STREETS. SIGNS WHERE NO POSTS ARE SHOWN TO BE MOUNTED ON EXISTING SIGNS.

4) POSTS SHALL MEET THE BREAKAWAY REQUIREMENTS OF SECTON 643.2.9.1 OF THE STANDARD SPECIFICATIONS AND SIGN PLATE A4-11.

5) SIGNS ON THIS SHEET TO BE PAID UNDER THE ITEM "TRAFFIC CONTROL SIGNS FIXED MESSAGE".

6) SIGNS SHALL BE BLACK NON-REFLECTIVE MESSAGE ON ORANGE REFLECTIVE BACKGROUND UNLESS OTHERWISE NOTED.

7) ALL SIGNS SHALL HAVE CAPITAL LETTERS AND NUMERALS:
   12" CAPS SHALL BE SERIES "D"
   8" CAPS SHALL BE SERIES "D"
   6" CAPS SHALL BE SERIES "C"

8) BEGIN XXX XX SIGNS SHALL BE SEPARATE PANELS, BUT SHALL BE CONSIDERED AS PART OF THE SIGN AND SHOULD BE REMOVED OR COVERED AFTER THEIR EFFECTIVE DATE. THE MONTH AND DAY SHALL BE AS DIRECTED BY THE ENGINEER IN THE FIELD.

9) CONTRACTOR SHALL SUBMIT SHOP DRAWINGS TO ENGINEER FOR REVIEW PRIOR TO MANUFACTURING.

10) SIGN BASE MATERIAL SHALL BE ACCORDING TO SECTION 637.2.1.2.

11) DIMENSIONS ARE IN INCHES UNLESS OTHERWISE NOTED.

NOTES: FIXED MESSAGE SIGNS

1) CONTRACTOR SHOULD LOCATE FIXED MESSAGE SIGNS A MINIMUM OF 400' FROM ANY EXISTING TYPE "I" SIGNS.
2) ALL FIXED MESSAGE SIGNS SHALL BE BLACK NON-REFLECTIVE MESSAGE ON ORANGE REFLECTIVE BACKGROUND.
3) SEE FIXED MESSAGE SIGNS AND SPECIAL MESSAGE SIGN LAYOUT SHEETS FOR MORE INFORMATION.
4) COVER DETOUR SIGNING WHEN NOT IN USE. INCIDENTAL TO WORK ZONE TRAFFIC CONTROL SIGNING.
5) SIGNS TO BE PLACED 10 DAYS PRIOR TO CONSTRUCTION.

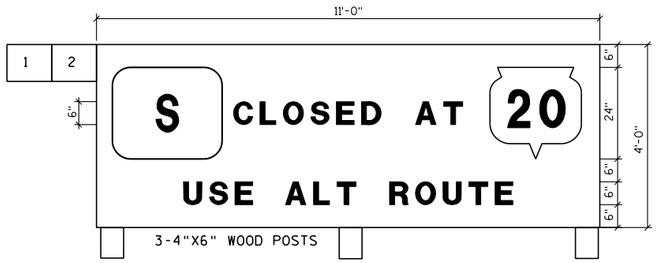

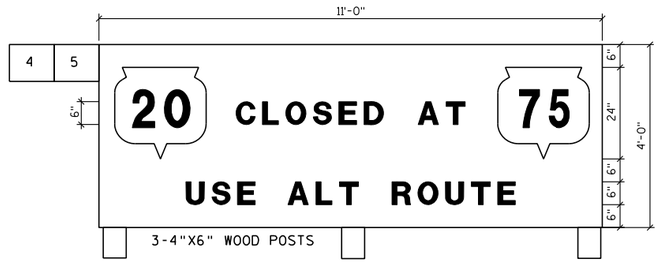

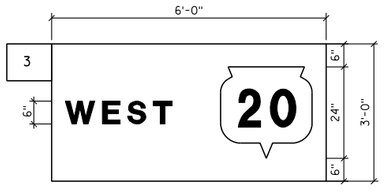

PROJECT NO: 2340-09-70	HWY: STH 20	COUNTY: RACINE	TRAFFIC CONTROL DETAILS	SCALE, FEET 0 NTS	SHEET 53	E

FILE NAME : k:\1082713.03\cadd\sheets\detour\027002_dt.dgn PLOT DATE : 1/30/2014 PLOT BY : r1b PLOT NAME : PLOT SCALE : $$.....plotscale.....$$ WISDOT/CADDS SHEET 42

2

STH 75/CTH S CURVE 1
PI STA 465+43.14
Y = 191,039.07
X = 551,868.23
DELTA = 07°51'42.23" LT
D = 03°49'10.99"
T = 103.07'
L = 205.82'
R = 1,500.00'
PC STA 464+40.06
Y = 190,936.08
X = 551,864.16
PT STA 466+45.88
Y = 191,141.65
X = 551,858.18
BK = N02°15'51.1"E
AH = N05°35'51.2"W

STH 75/CTH S CURVE 2
PI STA 468+80.66
Y = 191,375.30
X = 551,835.28
DELTA = 12°13'25.67" RT
D = 44°45'44.38"
T = 13.71'
L = 27.31'
R = 128.00'
PC STA 468+66.95
Y = 191,361.66
X = 551,836.61
PT STA 468+94.26
Y = 191,388.92
X = 551,836.86
BK = N05°35'51.2"W
AH = N06°37'34.5"E

STH 75/CTH S CURVE 3
PI STA 472+86.80
Y = 191,780.63
X = 551,840.97
DELTA = 03°03'52.02" RT
D = 02°51'53.24"
T = 53.50'
L = 106.97'
R = 2,000.00'
PC STA 472+33.30
Y = 191,727.16
X = 551,842.48
PT STA 473+40.27
Y = 191,834.11
X = 551,842.33
BK = N01°36'57.0"W
AH = N01°26'55.0"E

END STH 75/CTH S C/L
STA 484+01.45
Y = 192,895.05
X = 551,855.39
BK = N00°38'02.2"W

N00°38'02.2"W 378.72'

PI 3 STH 75/CTH S
STA 480+22.73
Y = 192,516.36
X = 551,859.58
BK = N01°26'55.0"E
AH = N00°38'02.2"W

480

CTH S

N01°26'55.0"E 682.46'

BEGIN PARKING LOT C/L
STA 10+00.00
Y = 191,737.59
X = 551,842.21
AH = N90°00'00.0"E

N90°00'00.0"E
200.00'

END PARKING LOT C/L
STA 12+00.00
Y = 191,737.59
X = 552,042.21
BK = N90°00'00.0"E

475

STH 75/CTH S
CURVE 3

PT3

10

PC3

S83°05'09.2"E
122.36'

STH 20
CURVE 3

N79°09'10.2"E
148.82'

PT2

PC2

585

STH 20
CURVE 1

PT1

580

PC1

575

STH 20
CURVE 2

N87°00'05.3"E
63.18'

PC3

PT3

N80°51'39.6"E 597.03'

BEGIN STH 20 C/L
STA 572+92.59
Y = 191,309.38
X = 550,445.00
AH = N80°51'39.6"E

T 3 N
3 2
10 11
R 20 E

BRASS CAP
Y = 191,531.00
X = 551,846.41

PI 1 STA 587+14.04 STH 20 =
PI 2 STA 470+00.00 STH 75/CTH S
Y = 191,493.95
X = 551,849.06

470

N00°36'57.0"W 233.30'

N82°34'35.9"E
302.82'

590

PC4

N06°37'34.5"E
105.74'

PT2

STH 75/CTH S
CURVE 2

PC2

N05°35'51.2"W
221.07'

PT1

465

STH 75/CTH S
CURVE 1

PC1

227.27'

N02°15'51.1"E

STH 75

460

314.12'

N00°10'53.7"E

PI 1 STH 75/CTH S
STA 462+12.79
Y = 190,708.98
X = 551,855.18
BK = N00°10'53.7"E
AH = N02°15'51.1"E

BEGIN STH 75/CTH S C/L
STA 458+98.67
Y = 190,394.86
X = 551,854.18
AH = N00°10'53.7"E

595

STH 20

600

PCC4/5

STH 20
CURVE 4

STH 20
CURVE 5

PT5

605 S67°19'44.0"E 1794.16' 610

615

END STH 20 C/L
STA 619+32.44
Y = 190,713.44
X = 554,905.78
BK = S67°19'44.0"E

N

STH 20 CURVE 1
PI STA 580+55.10
Y = 191,430.49
X = 551,197.83
DELTA = 01°42'29.41" LT
D = 00°30'58.24"
T = 165.48'
L = 330.93'
R = 11,100.00'
PC STA 578+89.62
Y = 191,404.21
X = 551,034.45
PT STA 582+20.55
Y = 191,461.63
X = 551,360.35
BK = N80°51'39.6"E
AH = N79°09'10.2"E

STH 20 CURVE 2
PI STA 584+37.97
Y = 191,502.55
X = 551,573.88
DELTA = 07°50'55.02" RT
D = 05°43'46.48"
T = 68.60'
L = 136.98'
R = 1,000.00'
PC STA 583+69.37
Y = 191,489.64
X = 551,506.51
PT STA 585+06.35
Y = 191,506.14
X = 551,642.39
BK = N79°09'10.2"E
AH = N87°00'05.3"E

STH 20 CURVE 3
PI STA 585+80.64
Y = 191,510.02
X = 551,716.57
DELTA = 09°54'45.56" RT
D = 44°45'44.38"
T = 11.10'
L = 22.15'
R = 128.00'
PC STA 585+69.54
Y = 191,509.44
X = 551,705.48
PT STA 585+91.68
Y = 191,508.68
X = 551,727.59
BK = N87°00'05.3"E
AH = S83°05'09.2"E

STH 20 CURVE 4
PI STA 592+68.20
Y = 191,565.55
X = 552,398.57
DELTA = 11°28'54.14" RT
D = 02°17'30.59"
T = 251.33'
L = 500.98'
R = 2,500.00'
PC STA 590+16.87
Y = 191,533.08
X = 552,149.34
PT STA 595+17.85
Y = 191,547.76
X = 552,649.27
BK = N82°34'35.9"E
AH = S85°56'29.9"E

STH 20 CURVE 5
PI STA 598+30.82
Y = 191,525.61
X = 552,961.46
DELTA = 18°36'45.90" RT
D = 03°00'00.00"
T = 312.97'
L = 620.43'
R = 1,909.86'
PC STA 595+17.85
Y = 191,547.76
X = 552,649.27
PT STA 601+38.27
Y = 191,404.98
X = 553,250.25
BK = S85°56'29.9"E
AH = S67°19'44.0"E

NOTE: SEE TRANSPORTATION PROJECT PLAT SHEETS FOR PLAT REFERENCE LINE INFORMATION

CONTROL POINTS

POINT NUMBER	TYPE	X	Y
CP 20	WITNESS MONUMENT	551,947.07	191,563.21
CP 34	PK NAIL	550,812.61	191,387.89
CP 35	BERNSTEN MONUMENT	551,883.96	190,417.94

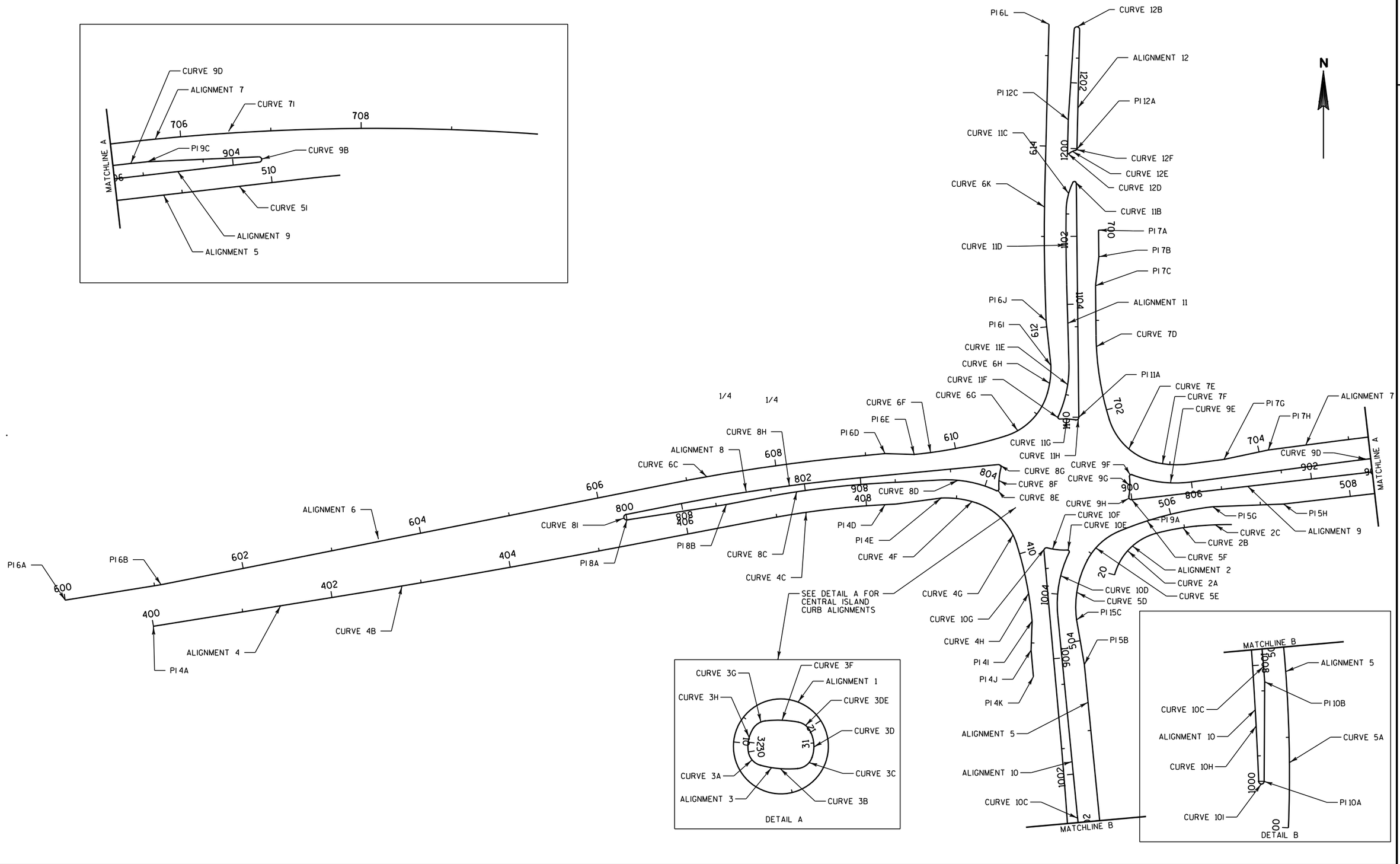

PROJECT NO: 2340-09-70	HWY: STH 20	COUNTY: RACINE	CURB ALIGNMENTS	SHEET 55	E

ALIGNMENT 1 - CENTRAL ISLAND FLANGE

No.	PI(STA)	PI(Y,X)	DELTA	DEGREE	TANGENT	LENGTH	EXTERNAL	RADIUS	PC (STA)	PT (STA)	BEARING BACK	BEARING AHEAD
1	10+00.00	191511.32 551789.63	359°59'09" LT	109°08'05"	0.01	329.85	105.00	52.50	10+00.00	13+29.85	N 5°21'54" E	N 5°22'45" E

ALIGNMENT 2 - DOVER INN PARKING LOT CURB FACE

No.	PI(STA)	PI(Y,X)	DELTA	DEGREE	TANGENT	LENGTH	EXTERNAL	RADIUS	PC (STA)	PT (STA)	BEARING BACK	BEARING AHEAD
2A	20+37.63	191442.83 551907.18	60°07'50" RT	88°08'50"	37.63	68.22	10.10	65.00	20+00.00	20+68.22	N 14°59'24" E	N 75°07'14" E
2B	20+90.72	191458.27 551965.30	9°25'36" RT	20°59'15"	22.51	44.92	0.93	273.00	20+68.22	21+13.13	N 75°07'14" E	N 84°32'50" E
2C	21+32.89	191462.29 552007.37	6°00'57" RT	15°14'18"	19.76	39.48	0.52	376.00	21+13.13	21+52.61	N 84°32'50" E	S 89°26'12" E

ALIGNMENT 3 - INSIDE TRUCK APRON CURB FACE

No.	PI(STA)	PI(Y,X)	DELTA	DEGREE	TANGENT	LENGTH	EXTERNAL	RADIUS	PC (STA)	PT (STA)	BEARING BACK	BEARING AHEAD
3A	30+11.86	191488.58 551807.91	65°18'50" LT	309°42'25"	11.86	21.09	3.47	18.50	30+00.00	30+21.09	S 9°40'11" E	S 74°59'01" E
3B	30+42.04	191480.08 551839.61	20°03'27" LT	48°21'03"	20.96	41.48	1.84	118.50	30+21.09	30+62.57	S 74°59'01" E	N 84°57'32" E
3C	30+74.43	191482.96 551872.29	65°18'50" LT	309°42'25"	11.86	21.09	3.47	18.50	30+62.57	30+83.66	N 84°57'32" E	N 19°38'42" E
3D	31+00.07	191509.59 551881.80	48°25'07" LT	156°58'29"	16.41	30.84	3.52	36.50	30+83.66	31+14.51	N 19°38'42" E	N 28°46'25" W
3E	31+23.17	191531.57 551869.73	50°11'30" LT	309°42'25"	8.66	16.21	1.93	18.50	31+14.51	31+30.71	N 28°46'25" W	N 78°57'55" W
3F	31+49.23	191536.77 551843.04	17°45'55" LT	48°21'03"	18.52	36.74	1.44	118.50	31+30.71	31+67.45	N 78°57'55" W	S 83°16'11" W
3G	31+76.12	191533.58 551816.05	50°11'30" LT	309°42'25"	8.66	16.21	1.93	18.50	31+67.45	31+83.66	S 83°16'11" W	S 33°04'41" W
3H	31+97.95	191514.35 551803.52	42°44'52" LT	156°58'29"	14.28	27.23	2.70	36.50	31+83.66	32+10.89	S 33°04'41" W	S 9°40'11" E

ALIGNMENT 4- SW QUADRANT CURB FACE

No.	PI(STA)	PI(Y,X)	DELTA	DEGREE	TANGENT	LENGTH	EXTERNAL	RADIUS	PC (STA)	PT (STA)	BEARING BACK	BEARING AHEAD
4A	400+00.00	191349.72 550834.30										N 80°51'40" E
4B	403+72.07	191408.82 551201.65	1°42'29" LT	0°30'55"	165.80	331.58	1.24	11122.00	402+06.27	405+37.85	N 80°51'40" E	N 79°09'10" E
4C	407+53.76	191480.66 551576.54	7°50'55" RT	5°51'30"	67.09	133.97	2.30	978.00	406+86.67	408+20.64	N 79°09'10" E	N 87°00'05" E
4D	408+32.95	191484.81 551655.83									N 87°00'05" E	N 82°25'39" E
4E	408+83.11	191491.42 551705.56									N 82°25'39" E	N 87°02'41" E
4F	409+03.43	191492.47 551725.84	21°53'59" RT	54°34'03"	20.31	40.13	1.95	105.00	408+83.11	409+23.25	N 87°02'41" E	S 71°03'19" E
4G	409+58.49	191474.43 551778.39	53°27'05" RT	81°51'04"	35.25	65.30	8.37	70.00	409+23.25	409+88.55	S 71°03'19" E	S 17°36'14" E
4H	410+32.34	191399.09 551802.30	12°29'48" RT	14°19'26"	43.80	87.24	2.39	400.00	409+88.55	410+75.79	S 17°36'14" E	S 5°06'26" E
4I	410+75.79	191355.47 551806.20									S 5°06'26" E	S 2°02'43" W
4J	411+07.92	191323.36 551805.05									S 2°02'43" W	S 5°06'26" E
4K	411+37.38	191294.01 551807.67									S 5°06'26" E	

ALIGNMENT 5- SE QUADRANT CURB FACE

No.	PI(STA)	PI(Y,X)	DELTA	DEGREE	TANGENT	LENGTH	EXTERNAL	RADIUS	PC (STA)	PT (STA)	BEARING BACK	BEARING AHEAD
5A	501+04.58	191039.71 551890.27	7°51'42" LT	3°45'52"	104.58	208.84	3.59	1522.00	500+00.00	502+08.84	N 2°15'51" E	N 5°35'51" W
5B	503+73.13	191307.30 551864.05									N 5°35'51" W	N 9°53'44" W
5C	504+23.38	191356.81 551855.41									N 9°53'44" W	N 7°30'29" W
5D	504+58.72	191391.84 551850.79	35°36'48" RT	52°05'13"	35.33	68.37	5.53	110.00	504+23.38	504+91.76	N 7°30'29" W	N 28°06'19" E
5E	505+16.59	191444.91 551879.14	39°04'09" RT	81°51'04"	24.84	47.73	4.28	70.00	504+91.76	505+39.49	N 28°06'19" E	N 67°10'29" E
5F	505+93.79	191475.61 551952.07	16°15'48" RT	15°04'40"	54.30	107.86	3.86	380.00	505+39.49	506+47.35	N 67°10'29" E	N 83°26'17" E
5G	506+47.35	191481.81 552006.01									N 83°26'17" E	N 87°49'53" E
5H	507+25.67	191484.78 552084.28									N 87°49'53" E	N 83°26'17" E
5I	510+55.93	191522.52 552412.38	1°39'12" RT	4°09'22"	19.89	39.78	0.14	1378.55	510+36.04	510+75.82	N 83°26'17" E	N 85°05'29" E

ALIGNMENT 6- NW QUADRANT CURB FACE

No.	PI(STA)	PI(Y,X)	DELTA	DEGREE	TANGENT	LENGTH	EXTERNAL	RADIUS	PC (STA)	PT (STA)	BEARING BACK	BEARING AHEAD
6A	600+00.00	191378.59 550736.71										N 80°51'40" E
6B	601+07.41	191395.65 550842.76									N 80°51'40" E	N 78°46'42" E
6C	607+85.57	191527.62 551507.95	5°45'38" RT	2°50'01"	101.73	203.30	2.56	2022.00	606+83.83	608+87.13	N 78°46'42" E	N 84°32'21" E
6D	609+21.57	191540.58 551643.50									N 84°32'21" E	S 88°20'09" E
6E	609+53.82	191539.65 551675.74									S 88°20'09" E	N 84°31'29" E
6F	610+05.62	191544.59 551727.31	11°52'41" LT	11°30'19"	51.81	103.24	2.69	498.00	609+53.82	610+57.06	N 84°31'29" E	N 72°38'48" E
6G	610+94.84	191571.31 551812.82	56°42'44" LT	81°51'04"	37.78	69.29	9.54	70.00	610+57.06	611+26.34	N 72°38'48" E	N 15°56'04" E
6H	611+41.78	191622.48 551827.43	17°33'02" LT	57°17'45"	15.44	30.63	1.18	100.00	611+26.34	611+56.97	N 15°56'04" E	N 1°36'57" W
6I	611+56.97	191637.91 551826.99									N 1°36'57" W	N 6°12'37" W
6J	612+06.91	191687.55 551821.59									N 6°12'37" W	N 1°36'57" W
6K	613+00.00	191780.60 551818.96	3°03'52" RT	2°50'01"	54.09	108.15	0.72	2022.00	612+45.91	613+54.06	N 1°36'57" W	N 1°26'55" E
6L	615+34.68	192015.24 551824.90									N 1°26'55" E	

ALIGNMENT 7- NE QUADRANT CURB FACE

No.	PI(STA)	PI(Y,X)	DELTA	DEGREE	TANGENT	LENGTH	EXTERNAL	RADIUS	PC (STA)	PT (STA)	BEARING BACK	BEARING AHEAD
7A	700+00.00	191787.69 551879.64										S 0°38'02" E
7B	700+29.46	191758.22 551879.97									S 0°38'02" E	S 6°29'28" W
7C	700+61.71	191726.18 551876.32									S 6°29'28" W	S 0°38'02" E
7D	701+64.18	191623.72 551877.46	16°40'14" LT	17°37'46"	47.62	94.56	3.47	325.00	701+16.57	702+11.13	S 0°38'02" E	S 17°18'17" E
7E	702+51.64	191539.58 551903.67	60°06'59" LT	81°51'04"	40.51	73.45	10.88	70.00	702+11.13	702+84.57	S 17°18'17" E	S 77°25'15" E
7F	703+03.09	191526.73 551961.28	20°00'09" LT	54°34'03"	18.52	36.66	1.62	105.00	702+84.57	703+21.23	S 77°25'15" E	N 82°34'36" E
7G	703+60.37	191534.18 552018.45									N 82°34'36" E	N 78°00'10" E
7H	704+10.53	191544.60 552067.52									N 78°00'10" E	N 82°34'36" E
7I	707+43.73	191587.65 552397.92	11°28'54" RT	2°16'19"	253.55	505.39	12.71	2522.00	704+90.18	709+95.57	N 82°34'36" E	S 85°56'30" E

ALIGNMENT 8 - WEST LEG SPLITTER ISLAND CURB FACE

No.	PI(STA)	PI(Y,X)	DELTA	DEGREE	TANGENT	LENGTH	EXTERNAL	RADIUS	PC (STA)	PT (STA)	BEARING BACK	BEARING AHEAD
8A	800+00.00	191467.29 551358.01										N 81°12'46" E
8B	801+11.34	191484.30 551468.04									N 81°12'46" E	N 79°09'10" E
8C	802+18.86	191504.54 551573.64	7°50'55" RT	5°43'05"	68.74	137.26	2.35	1002.00	801+50.12	802+87.38	N 79°09'10" E	N 87°00'05" E
8D	803+82.74	191513.12 551737.52	27°48'33" RT	44°04'25"	32.18	63.10	3.92	130.00	803+50.56	804+13.66	N 87°00'05" E	S 65°11'22" E
8E	804+17.03	191498.20 551769.79	118°38'09" LT	2864°47'20"	3.37	4.14	1.92	2.00	804+13.66	804+17.80	S 65°11'22" E	N 3°49'32" W
8F	804+29.57	191513.31 551768.78	18°26'32" RT	79°01'43"	11.77	23.34	0.95	72.50	804+17.80	804+41.14	N 3°49'32" W	N 14°37'00" E
8G	804+45.44	191528.84 551772.83	110°04'40" LT	1909°51'34"	4.29	5.76	2.24	3.00	804+41.15	804+46.91	N 14°37'00" E	S 84°32'21" W
8H	807+05.21	191503.85 551511.44	5°45'38" LT	2°52'04"	100.53	200.88	2.53	1998.00	806+04.68	808+05.56	S 84°32'21" W	S 78°46'42" W
8I	810+03.71	191445.72 551218.47	177°33'56" LT	1909°51'34"	141.20	9.30	138.23	3.00	808+62.52	808+71.81	S 78°46'42" W	N 81°12'46" E

ALIGNMENT 9 - EAST LEG SPLITTER ISLAND CURB FACE

No.	PI(STA)	PI(Y,X)	DELTA	DEGREE	TANGENT	LENGTH	EXTERNAL	RADIUS	PC (STA)	PT (STA)	BEARING BACK	BEARING AHEAD
9A	900+00.00	191489.63 551916.48										N 83°26'17" E
9B	905+14.55	191548.43 552427.66	175°59'01" LT	1909°51'34"	85.56	9.21	82.61	3.00	904+28.99	904+38.21	N 83°26'17" E	S 87°27'16" W
9C	905+61.44	191539.16 552219.08									S 87°27'16" W	S 84°10'51" W
9D	905+96.41	191535.61 552184.28	1°36'16" LT	2°17'37"	34.97	69.95	0.24	2498.00	905+61.44	906+31.38	S 84°10'51" W	S 82°34'36" W
9E	908+34.74	191504.82 551947.95	29°06'04" RT	44°04'25"	33.74	66.03	4.31	130.00	908+01.00	908+67.02	S 82°34'36" W	N 68°19'20" W
9F	908+70.39	191518.53 551913.46	118°38'09" LT	2864°47'20"	3.37	4.14	1.92	2.00	908+67.02	908+71.17	N 68°19'20" W	S 6°57'30" E
9G	908+82.31	191504.12 551915.22	17°28'58" RT	79°01'43"	11.15	22.12	0.85	72.50	908+71.17	908+93.29	S 6°57'30" E	S 10°31'29" W
9H	908+97.35	191489.17 551912.44	107°05'12" LT	1909°51'34"	4.06	5.61	2.05	3.00	908+93.29	908+98.89	S 10°31'29" W	N 83°26'17" E

ALIGNMENT 10 - SOUTH LEG SPLITTER ISLAND CURB FACE

No.	PI(STA)	PI(Y,X)	DELTA	DEGREE	TANGENT	LENGTH	EXTERNAL	RADIUS	PC (STA)	PT (STA)	BEARING BACK	BEARING AHEAD
10A	1000+00.00	190986.52 551859.30										N 0°18'39" W
10B	1001+10.11	191096.63 551859.90									N 0°18'39" W	N 3°52'38" W
10C	1001+32.60	191119.07 551858.38	1°43'13" LT	3°49'29"	22.49	44.98	0.17	1498.00	1001+10.11	1001+55.09	N 3°52'38" W	N 5°35'51" W
10D	1004+12.92	191398.06 551831.04	31°35'01" RT	44°04'25"	36.77	71.66	5.10	130.00	1003+76.16	1004+47.82	N 5°35'51" W	N 25°59'10" E
10E	1004+51.19	191434.14 551848.62	118°38'09" LT	2864°47'20"	3.37	4.14	1.92	2.00	1004+47.82	1004+51.96	N 25°59'10" E	S 87°21'00" W
10F	1004+63.25	191433.46 551833.98	17°41'45" RT	79°01'43"	11.29	22.39	0.87	72.50	1004+51.96	1004+74.35	S 87°21'00" W	N 74°57'15" W
10G	1004+78.66	191437.50 551818.95	110°09'11" LT	1909°51'34"	4.30	5.77	2.24	3.00	1004+74.36	1004+80.13	N 74°57'15" W	S 5°06'26" E
10H	1008+06.48	191108.16 551848.38	2°47'27" RT	1°08'44"	121.85	243.65	1.48	5002.00	1006+84.63	1009+28.29	S 5°06'26" E	S 2°18'59" E
10I	1010+59.12	190855.69 551858.59	177°22'22" LT	1909°51'34"	130.83	9.29	127.86	3.00	1009+28.29	1009+37.57	S 2°18'59" E	N 0°18'39" E

ALIGNMENT 11 - NORTH LEG SPLITTER ISLAND CURB FACE

No.	PI(STA)	PI(Y,X)	DELTA	DEGREE	TANGENT	LENGTH	EXTERNAL	RADIUS	PC (STA)	PT (STA)	BEARING BACK	BEARING AHEAD
11A	1100+00.00	191580.80 551857.93										N 0°38'02" W
11B	1102+67.11	191847.90 551854.97	153°17'48" LT	2864°47'20"	8.43	5.35	6.66	2.00	1102+58.69	1102+64.04	N 0°38'02" W	S 26°04'10" W
11C	1102+80.44	191825.59 551844.06	25°20'01" LT	78°29'15"	16.41	32.28	1.82	73.00	1102+64.04	1102+96.31	S 26°04'10" W	S 0°44'08" W
11D	1103+37.34	191768.20 551843.32	2°21'06" LT	2°52'04"	41.01	82.00	0.42	1998.00	1102+96.34	1103+78.34	S 0°44'08" W	S 1°36'57" E
11E	1104+96.37	191609.23 551847.81	26°22'32" RT	44°04'25"	30.46	59.84	3.52	130.00	1104+65.90	1105+25.75	S 1°36'57" E	S 24°45'35" W
11F	1105+29.12	191578.51 551833.64	118°38'36" LT	2864°47'20"	3.37	4.14	1.92	2.00	1105+25.75	1105+29.89	S 24°45'35" W	N 86°06'59" E
11G	1105+38.69	191579.33 551845.76	13°49'09" RT	79°01'43"	8.79	17.49	0.53	72.50	1105+29.90	1105+47.39	N 86°06'59" E	S 80°03'52" E
11H	1105+51.00	191577.19 551857.97	100°34'10" LT	1909°51'34"	3.61	5.27	1.70	3.00	1105+47.39	1105+52.65	S 80°03'52" E	N 0°38'02" W

ALIGNMENT 12 - NORTH LEG MEDIAN CURB FACE

No.	PI(STA)	PI(Y,X)	DELTA	DEGREE	TANGENT	LENGTH	EXTERNAL	RADIUS	PC (STA)	PT (STA)	BEARING BACK	BEARING AHEAD
12A	1200+00.00	191877.78 551855.79										N 1°17'34" E
12B	1202+72.28	192149.98 551861.93	177°33'21" LT	1909°51'34"	140.63	9.30	137.66	3.00	1201+31.65	1201+40.94	N 1°17'34" E	S 3°44'13" W
12C	1202+41.18	191909.63 551846.24									S 3°44'13" W	S 1°26'55" W
12D	1202+80.03	191870.79 551845.25	131°48'37" LT	5729°34'41"	2.24	2.30	1.45	1.00	1202+77.79	1202+80.09	S 1°26'55" W	N 49°38'18" E
12E	1202+84.28	191874.95 551850.15	27°40'09" RT	337°02'02"	4.19	8.21	0.51	17.00	1202+80.09	1202+88.30	N 49°38'18" E	N 77°18'26" E
12F	1202+89.86	191876.21 551855.76	76°00'52" LT	2864°47'20"	1.56	2.65	0.54	2.00	1202+88.30	1202+90.96	N 77°18'26" E	N 1°17'34" E

DATE 06MAR14 E S T I M A T E O F Q U A N T I T I E S

LINE NUMBER	ITEM	ITEM DESCRIPTION	UNIT	TOTAL	2340-09-70 QUANTITY
0010	201.0105	CLEARING	STA	16.000	16.000
0020	201.0120	CLEARING	ID	20.000	20.000
0030	201.0205	GRUBBING	STA	16.000	16.000
0040	201.0220	GRUBBING	ID	20.000	20.000
0050	203.0100	REMOVING SMALL PIPE CULVERTS	EACH	7.000	7.000
0060	204.0150	REMOVING CURB & GUTTER	LF	1,810.000	1,810.000
0070	204.0170	REMOVING FENCE	LF	270.000	270.000
0080	204.0190	REMOVING SURFACE DRAINS	EACH	6.000	6.000
0090	204.0210	REMOVING MANHOLES	EACH	5.000	5.000
0100	204.0220	REMOVING INLETS	EACH	6.000	6.000
0110	204.0245	REMOVING STORM SEWER (SIZE) 01. 12-INCH	LF	45.000	45.000
0120	204.0245	REMOVING STORM SEWER (SIZE) 02. 15-INCH	LF	830.000	830.000
0130	204.0245	REMOVING STORM SEWER (SIZE) 03. 18-INCH	LF	260.000	260.000
0140	204.0245	REMOVING STORM SEWER (SIZE) 04. 24-INCH	LF	1,275.000	1,275.000
0150	205.0100	EXCAVATION COMMON	CY	28,189.000	28,189.000
0160	211.0500	PREPARE FOUNDATION FOR BASE AGGREGATE	STA	37.000	37.000
0170	213.0100	FINISHING ROADWAY (PROJECT) 01. 2340-09-70	EACH	1.000	1.000
0180	305.0110	BASE AGGREGATE DENSE 3/4-INCH	TON	1,230.000	1,230.000
0190	305.0120	BASE AGGREGATE DENSE 1 1/4-INCH	TON	19,380.000	19,380.000
0200	311.0110	BREAKER RUN	TON	12,600.000	12,600.000
0210	405.0100	COLORING CONCRETE RED	CY	135.000	135.000
0220	416.0170	CONCRETE DRIVEWAY 7-INCH	SY	165.000	165.000
0230	416.0508	CONCRETE ROUNDABOUT TRUCK APRON 8-INCH	SY	545.000	545.000
0240	416.0610	DRILLED TIE BARS	EACH	2.000	2.000
0250	440.4410.S	INCENTIVE IRI RIDE	DOL	1,050.000	1,050.000
0260	455.0115	ASPHALTIC MATERIAL PG64-22	TON	265.000	265.000
0270	455.0120	ASPHALTIC MATERIAL PG64-28	TON	130.000	130.000
0280	455.0605	TACK COAT	GAL	855.000	855.000
0290	460.1110	HMA PAVEMENT TYPE E-10	TON	6,270.000	6,270.000
0300	460.2000	INCENTIVE DENSITY HMA PAVEMENT	DOL	4,020.000	4,020.000
0310	465.0105	ASPHALTIC SURFACE	TON	340.000	340.000
0320	465.0120	ASPHALTIC SURFACE DRIVEWAYS AND FIELD ENTRANCES	TON	62.000	62.000
0330	465.0315	ASPHALTIC FLUMES	SY	98.000	98.000
0340	521.0112	CULVERT PIPE CORRUGATED STEEL 12-INCH	LF	20.000	20.000
0350	521.0118	CULVERT PIPE CORRUGATED STEEL 18-INCH	LF	196.000	196.000
0360	521.1012	APRON ENDWALLS FOR CULVERT PIPE STEEL 12-INCH	EACH	2.000	2.000
0370	521.1018	APRON ENDWALLS FOR CULVERT PIPE STEEL 18-INCH	EACH	2.000	2.000
0380	521.1518	APRON ENDWALLS FOR CULVERT PIPE SLOPED SIDE DRAINS STEEL 18-INCH 6 TO 1	EACH	8.000	8.000
0390	521.1524	APRON ENDWALLS FOR CULVERT PIPE SLOPED SIDE DRAINS STEEL 24-INCH 6 TO 1	EACH	1.000	1.000
0400	522.1012	APRON ENDWALLS FOR CULVERT PIPE REINFORCED CONCRETE 12-INCH	EACH	3.000	3.000
0410	522.1015	APRON ENDWALLS FOR CULVERT PIPE REINFORCED CONCRETE 15-INCH	EACH	1.000	1.000
0420	522.1018	APRON ENDWALLS FOR CULVERT PIPE REINFORCED CONCRETE 18-INCH	EACH	1.000	1.000
0430	522.1036	APRON ENDWALLS FOR CULVERT PIPE REINFORCED CONCRETE 36-INCH	EACH	1.000	1.000
0440	523.0519	APRON ENDWALLS FOR CULVERT PIPE REINFORCED CONCRETE HORIZONTAL ELLIPTICAL 19X30-INCH	EACH	2.000	2.000

3

DATE 06MAR14 E S T I M A T E O F Q U A N T I T I E S

LINE NUMBER	ITEM	ITEM DESCRIPTION	UNIT	TOTAL	2340-09-70 QUANTITY
0450	601.0199.S	CONCRETE CURB PRECAST	EACH	8.000	8.000
0460	601.0405	CONCRETE CURB & GUTTER 18-INCH TYPE A	LF	215.000	215.000
0470	601.0407	CONCRETE CURB & GUTTER 18-INCH TYPE D	LF	155.000	155.000
0480	601.0411	CONCRETE CURB & GUTTER 30-INCH TYPE D	LF	3,530.000	3,530.000
0490	601.0557	CONCRETE CURB AND GUTTER 6-INCH SLOPED 36-INCH TYPE D	LF	4,520.000	4,520.000
0500	601.0576	CONCRETE CURB & GUTTER 4-INCH SLOPED 30-INCH TYPE J	LF	230.000	230.000
0510	601.0582	CONCRETE CURB & GUTTER 4-INCH SLOPED 36-INCH TYPE T	LF	315.000	315.000
0520	601.0600	CONCRETE CURB PEDESTRIAN	LF	145.000	145.000
0530	602.0410	CONCRETE SIDEWALK 5-INCH	SF	9,080.000	9,080.000
0540	602.0505	CURB RAMP DETECTABLE WARNING FIELD YELLOW	SF	256.000	256.000
0550	606.0200	RIPRAP MEDIUM	CY	51.000	51.000
0560	608.0312	STORM SEWER PIPE REINFORCED CONCRETE CLASS III 12-INCH	LF	13.000	13.000
0570	608.0318	STORM SEWER PIPE REINFORCED CONCRETE CLASS III 18-INCH	LF	245.000	245.000
0580	608.0324	STORM SEWER PIPE REINFORCED CONCRETE CLASS III 24-INCH	LF	74.000	74.000
0590	608.0336	STORM SEWER PIPE REINFORCED CONCRETE CLASS III 36-INCH	LF	1,452.000	1,452.000
0600	608.0412	STORM SEWER PIPE REINFORCED CONCRETE CLASS IV 12-INCH	LF	578.000	578.000
0610	608.0415	STORM SEWER PIPE REINFORCED CONCRETE CLASS IV 15-INCH	LF	109.000	109.000
0620	608.0418	STORM SEWER PIPE REINFORCED CONCRETE CLASS IV 18-INCH	LF	59.000	59.000
0630	608.0424	STORM SEWER PIPE REINFORCED CONCRETE CLASS IV 24-INCH	LF	32.000	32.000
0640	608.0436	STORM SEWER PIPE REINFORCED CONCRETE CLASS IV 36-INCH	LF	110.000	110.000
0650	610.0419	STORM SEWER PIPE REINFORCED CONCRETE HORIZONTAL ELLIPTICAL CLASS HE-IV 19X30-INCH	LF	84.000	84.000
0660	610.0424	STORM SEWER PIPE REINFORCED CONCRETE HORIZONTAL ELLIPTICAL CLASS HE-IV 24X38-INCH	LF	300.000	300.000
0670	611.0530	MANHOLE COVERS TYPE J	EACH	12.000	12.000
0680	611.0633	INLET COVERS TYPE HM-GJ-S	EACH	2.000	2.000
0690	611.0636	INLET COVERS TYPE HM-S	EACH	15.000	15.000
0700	611.0639	INLET COVERS TYPE H-S	EACH	18.000	18.000
0710	611.0645	INLET COVERS TYPE MS-A	EACH	4.000	4.000
0720	611.0652	INLET COVERS TYPE T	EACH	2.000	2.000
0730	611.2003	MANHOLES 3-FT DIAMETER	EACH	1.000	1.000
0740	611.2005	MANHOLES 5-FT DIAMETER	EACH	3.000	3.000
0750	611.2006	MANHOLES 6-FT DIAMETER	EACH	11.000	11.000
0760	611.3004	INLETS 4-FT DIAMETER	EACH	5.000	5.000
0770	611.3230	INLETS 2X3-FT	EACH	27.000	27.000
0780	611.3901	INLETS MEDIAN 1 GRATE	EACH	4.000	4.000
0790	611.9800.S	PIPE GRATES	EACH	3.000	3.000
0800	612.0106	PIPE UNDERDRAIN 6-INCH	LF	1,000.000	1,000.000
0810	612.0108	PIPE UNDERDRAIN 8-INCH	LF	500.000	500.000
0820	612.0110	PIPE UNDERDRAIN 10-INCH	LF	100.000	100.000
0830	612.0700	DRAIN TILE EXPLORATION	LF	2,800.000	2,800.000

3

DATE 06MAR14 E S T I M A T E O F Q U A N T I T I E S

LINE NUMBER	ITEM	ITEM DESCRIPTION	UNIT	TOTAL	2340-09-70 QUANTITY
0840	614.0115	ANCHORAGES FOR STEEL PLATE BEAM GUARD TYPE 2	EACH	4.000	4.000
0850	614.0305	STEEL PLATE BEAM GUARD CLASS A	LF	100.000	100.000
0860	614.0345	STEEL PLATE BEAM GUARD SHORT RADIUS	LF	25.000	25.000
0870	614.0390	STEEL PLATE BEAM GUARD SHORT RADIUS TERMINAL	EACH	2.000	2.000
0880	618.0100	MAINTENANCE AND REPAIR OF HAUL ROADS (PROJECT) 01. 2340-09-70	EACH	1.000	1.000
0890	619.1000	MOBILIZATION	EACH	1.000	1.000
0900	620.0300	CONCRETE MEDIAN SLOPED NOSE	SF	400.000	400.000
0910	621.0100	LANDMARK REFERENCE MONUMENTS	EACH	5.000	5.000
0920	623.0200	DUST CONTROL SURFACE TREATMENT	SY	30,600.000	30,600.000
0930	624.0100	WATER	MGAL	130.000	130.000
0940	625.0100	TOPSOIL	SY	3,270.000	3,270.000
0950	625.0500	SALVAGED TOPSOIL	SY	25,100.000	25,100.000
0960	627.0200	MULCHING	SY	22,031.000	22,031.000
0970	628.1104	EROSION BALES	EACH	100.000	100.000
0980	628.1504	SILT FENCE	LF	3,350.000	3,350.000
0990	628.1520	SILT FENCE MAINTENANCE	LF	1,675.000	1,675.000
1000	628.1905	MOBILIZATIONS EROSION CONTROL	EACH	7.000	7.000
1010	628.1910	MOBILIZATIONS EMERGENCY EROSION CONTROL	EACH	4.000	4.000
1020	628.2004	EROSION MAT CLASS I TYPE B	SY	13,040.000	13,040.000
1030	628.7005	INLET PROTECTION TYPE A	EACH	49.000	49.000
1040	628.7010	INLET PROTECTION TYPE B	EACH	5.000	5.000
1050	628.7015	INLET PROTECTION TYPE C	EACH	45.000	45.000
1060	628.7504	TEMPORARY DITCH CHECKS	LF	730.000	730.000
1070	628.7555	CULVERT PIPE CHECKS	EACH	12.000	12.000
1080	628.7560	TRACKING PADS	EACH	4.000	4.000
1090	628.7570	ROCK BAGS	EACH	100.000	100.000
1100	629.0210	FERTILIZER TYPE B	CWT	31.000	31.000
1110	630.0130	SEEDING MIXTURE NO. 30	LB	570.000	570.000
1120	630.0200	SEEDING TEMPORARY	LB	450.000	450.000
1130	630.0400	SEEDING NURSE CROP	LB	28.000	28.000
1140	631.0300	SOD WATER	MGAL	26.000	26.000
1150	631.1000	SOD LAWN	SY	725.000	725.000
1160	633.5200	MARKERS CULVERT END	EACH	9.000	9.000
1170	634.0614	POSTS WOOD 4X6-INCH X 14-FT	EACH	8.000	8.000
1180	634.0616	POSTS WOOD 4X6-INCH X 16-FT	EACH	42.000	42.000
1190	634.0618	POSTS WOOD 4X6-INCH X 18-FT	EACH	11.000	11.000
1200	634.0622	POSTS WOOD 4X6-INCH X 22-FT	EACH	8.000	8.000
1210	634.0812	POSTS TUBULAR STEEL 2X2-INCH X 12-FT	EACH	16.000	16.000
1220	637.2210	SIGNS TYPE II REFLECTIVE H	SF	855.290	855.290
1230	637.2230	SIGNS TYPE II REFLECTIVE F	SF	85.250	85.250
1240	638.2102	MOVING SIGNS TYPE II	EACH	2.000	2.000
1250	638.2602	REMOVING SIGNS TYPE II	EACH	37.000	37.000
1260	638.3000	REMOVING SMALL SIGN SUPPORTS	EACH	47.000	47.000
1270	638.4000	MOVING SMALL SIGN SUPPORTS	EACH	2.000	2.000
1280	642.5201	FIELD OFFICE TYPE C	EACH	1.000	1.000
1290	643.0100	TRAFFIC CONTROL (PROJECT) 01. ID 2340-09-70	EACH	1.000	1.000
1300	643.0420	TRAFFIC CONTROL BARRICADES TYPE III	DAY	2,700.000	2,700.000
1310	643.0705	TRAFFIC CONTROL WARNING LIGHTS TYPE A	DAY	5,400.000	5,400.000
1320	643.0900	TRAFFIC CONTROL SIGNS	DAY	1,350.000	1,350.000
1330	643.0920	TRAFFIC CONTROL COVERING SIGNS TYPE II	EACH	7.000	7.000

3

DATE 06MAR14 E S T I M A T E O F Q U A N T I T I E S

LINE NUMBER	ITEM	ITEM DESCRIPTION	UNIT	TOTAL	2340-09-70 QUANTITY
1340	643.1000	TRAFFIC CONTROL SIGNS FIXED MESSAGE	SF	194.000	194.000
1350	643.1050	TRAFFIC CONTROL SIGNS PCMS	DAY	176.000	176.000
1360	643.2000	TRAFFIC CONTROL DETOUR (PROJECT) 01. ID 2340-09-70	EACH	1.000	1.000
1370	643.3000	TRAFFIC CONTROL DETOUR SIGNS	DAY	13,230.000	13,230.000
1380	645.0120	GEOTEXTILE FABRIC TYPE HR	SY	160.000	160.000
1390	646.0106	PAVEMENT MARKING EPOXY 4-INCH	LF	12,860.000	12,860.000
1400	647.0256	PAVEMENT MARKING SYMBOLS EPOXY	EACH	1.000	1.000
1410	647.0456	PAVEMENT MARKING CURB EPOXY	LF	50.000	50.000
1420	647.0606	PAVEMENT MARKING ISLAND NOSE EPOXY	EACH	5.000	5.000
1430	647.0656	PAVEMENT MARKING PARKING STALL EPOXY	LF	410.000	410.000
1440	647.0726	PAVEMENT MARKING DIAGONAL EPOXY 12-INCH	LF	995.000	995.000
1450	650.4000	CONSTRUCTION STAKING STORM SEWER	EACH	62.000	62.000
1460	650.4500	CONSTRUCTION STAKING SUBGRADE	LF	5,925.000	5,925.000
1470	650.5000	CONSTRUCTION STAKING BASE	LF	5,925.000	5,925.000
1480	650.5500	CONSTRUCTION STAKING CURB GUTTER AND CURB & GUTTER	LF	8,965.000	8,965.000
1490	650.8500	CONSTRUCTION STAKING ELECTRICAL INSTALLATIONS (PROJECT) 01. ID 2340-09-70	LS	1.000	1.000
1500	650.9910	CONSTRUCTION STAKING SUPPLEMENTAL CONTROL (PROJECT) 01. ID 2340-09-70	LS	1.000	1.000
1510	650.9920	CONSTRUCTION STAKING SLOPE STAKES	LF	5,925.000	5,925.000
1520	652.0225	CONDUIT RIGID NONMETALLIC SCHEDULE 40 2-INCH	LF	2,063.000	2,063.000
1530	653.0140	PULL BOXES STEEL 24X42-INCH	EACH	8.000	8.000
1540	654.0105	CONCRETE BASES TYPE 5	EACH	16.000	16.000
1550	655.0610	ELECTRICAL WIRE LIGHTING 12 AWG	LF	2,256.000	2,256.000
1560	655.0620	ELECTRICAL WIRE LIGHTING 8 AWG	LF	8,184.000	8,184.000
1570	655.0640	ELECTRICAL WIRE LIGHTING 1 AWG	LF	18.000	18.000
1580	656.0400	ELECTRICAL SERVICE MAIN LUGS ONLY METER PEDESTAL (LOCATION) 01. HL-51-DV	LS	1.000	1.000
1590	657.0255	TRANSFORMER BASES BREAKAWAY 11 1/2-INCH BOLT CIRCLE	EACH	16.000	16.000
1600	657.0322	POLES TYPE 5-ALUMINUM	EACH	16.000	16.000
1610	657.0715	LUMINAIRE ARMS TRUSS TYPE 4 1/2-INCH CLAMP 15-FT	EACH	16.000	16.000
1620	659.0802	PLAQUES SEQUENCE IDENTIFICATION	EACH	20.000	20.000
1630	659.1115	LUMINAIRES UTILITY LED A	EACH	16.000	16.000
1640	690.0150	SAWING ASPHALT	LF	650.000	650.000
1650	690.0250	SAWING CONCRETE	LF	35.000	35.000
1660	ASP.1T0A	ON-THE-JOB TRAINING APPRENTICE AT $5. 00/HR	HRS	1,400.000	1,400.000
1670	ASP.1T0G	ON-THE-JOB TRAINING GRADUATE AT $5.00/HR	HRS	1,500.000	1,500.000
1680	SPV.0060	SPECIAL 01. SALVAGING SOLAR POWERED FLASHING BLINKER STOP SIGNS	EACH	2.000	2.000
1690	SPV.0060	SPECIAL 02. LIGHTING CONTROL CABINET (240/480V)	EACH	1.000	1.000
1700	SPV.0060	SPECIAL 03. CONCRETE CONTROL CABINET BASES SPECIAL	EACH	1.000	1.000
1710	SPV.0060	SPECIAL 04. CONSTRUCTION STAKING PARKING LOTS	EACH	3.000	3.000
1720	SPV.0060	SPECIAL 05. PAVEMENT MARKING GROOVED PREFORMED THERMOPLASTIC WORDS	EACH	4.000	4.000
1730	SPV.0060	SPECIAL 06. INLETS 4-FT DIAMETER SPECIAL	EACH	2.000	2.000
1740	SPV.0085	SPECIAL 01. SEEDING NO MOW FESCUE	LB	132.000	132.000

3

DATE 06MAR14 E S T I M A T E O F Q U A N T I T I E S

LINE NUMBER	ITEM	ITEM DESCRIPTION	UNIT	TOTAL	2340-09-70 QUANTITY
1750	SPV.0090	SPECIAL 01. PAVEMENT MARKING GROOVED PREFORMED THERMOPLASTIC YIELD LINE 18-IN	LF	200.000	200.000
1760	SPV.0090	SPECIAL 02. PAVEMENT MARKING GROOVED PREFORMED THERMOPLASTIC CROSSWALK 12-IN	LF	490.000	490.000
1770	SPV.0090	SPECIAL 03. PIPE UNDERDRAIN UNPERFORATED 2-INCH	LF	20.000	20.000
1780	SPV.0090	SPECIAL 04. PAVEMENT MARKING GROOVED PREFORMED PLASTIC TAPE 8-INCH	LF	145.000	145.000
1790	SPV.0105	SPECIAL 01. LIGHTING INTEGRATOR	LS	1.000	1.000
1800	SPV.0105	SPECIAL 02. LIGHTING SYSTEM SURVEY	LS	1.000	1.000
1810	SPV.0165	SPECIAL 01. CONCRETE SIDEWALK 8-INCH	SF	120.000	120.000

CLEARING & GRUBBING

ROADWAY	STATION		STATION	OFFSET/ SIDE	201.0105 CLEARING STA	201.0120 CLEARING ID	201.0205 GRUBBING STA	201.0220 GRUBBING ID
STH 20	573+00	-	575+00	LT	2	---	2	---
	577+00	-	581+00	LT	5	---	5	---
	585+00	-	586+00	LT	1	---	1	---
	592+00	-	593+00	LT	1	---	1	---
			593+70	44' LT	---	4	---	4
	STH 20 SUBTOTAL				9	4	9	4
STH 75	461+00	-	464+00	LT/RT	3	---	3	---
	466+00	-	469+00	RT	3	---	3	---
	STH 75 SUBTOTAL				6	0	6	0
CTH S	474+00	-	475+00	LT	1	---	1	---
			475+48	64' RT	---	10	---	10
			478+26	26' LT	---	6	---	6
	CTH S SUBTOTAL				1	16	1	16
	PROJECT TOTAL				16	20	16	20

REMOVING SMALL PIPE CULVERTS

ROADWAY	STATION	SIDE	* DESCRIPTION	* LENGTH	203.0100 REMOVING SMALL PIPE CULVERTS EACH
STH 20	580+43	LT	18" CMCP	38'	1
	593+43	LT	18" CMCP	34'	1
	STH 20 SUBTOTAL				2
STH 75	462+53	LT	15" CMCP	20'	1
	467+88	RT	15" CMCP	19'	1
	STH 75 SUBTOTAL				2
CTH S	471+50	LT	12" CMCP	24'	1
	472+36	C/L	12" CMCP	22'	1
	473+76	RT	15" CMCP	24'	1
	CTH S SUBTOTAL				3
	PROJECT TOTAL				7

* FOR INFORMATION ONLY

REMOVING CURB & GUTTER

ROADWAY	STATION		STATION	SIDE	204.0150 REMOVING CURB & GUTTER LF
STH 20	575+90	-	579+47	LT	360
	576+83	-	581+48	RT	470
	586+43	-	587+14	RT	100
	586+76	-	587+03	LT	60
	587+43	-	593+00	RT	570
	587+68	-	588+24	LT	100
	594+97	-	595+18	LT	25
	STH 20 SUBTOTAL				1685
STH 75	468+23	-	469+52	RT	125
	STH 75 SUBTOTAL				125
	PROJECT TOTAL				1810

REMOVING FENCE

ROADWAY	STATION		STATION	SIDE	204.0170 REMOVING FENCE LF
STH 75	465+39	-	467+59	RT	270
	PROJECT TOTAL				270

REMOVING MANHOLES AND INLETS

ROADWAY	STATION	SIDE	204.0210 REMOVING MANHOLES EACH	204.0220 REMOVING INLETS EACH
STH 20	573+75	LT	1	---
	577+44	LT	1	---
	580+92	LT	1	---
	583+94	RT	1	---
	586+07	RT	1	---
	587+61	RT	---	1
	588+09	RT	---	1
	588+96	RT	---	1
	590+98	RT	---	1
	STH 20 SUBTOTAL		5	4
CTH S	470+65	RT	---	1
	470+91	RT	---	1
	CTH S SUBTOTAL		0	2
	PROJECT TOTAL		5	6

REMOVING SURFACE DRAINS

ROADWAY	STATION	SIDE	204.0190 REMOVING CONC SURFACE DRAINS EACH
STH 20	575+85	LT	1
	581+53	RT	1
	593+05	RT	1
	594+92	LT	1
	STH 20 SUBTOTAL		4
STH 75	469+05	C/L	1
	STH 75 SUBTOTAL		1
CTH S	470+68	C/L	1
	CTH S SUBTOTAL		1
	PROJECT TOTAL		6

ALL ITEMS CATEGORY 0010 UNLESS NOTED

EARTHWORK SUMMARY			A	B	C	D	E	F	G	H	I	J
			ITEM #205.0100		*	*	*	*	*	*	*	ITEM #208.0100
Division	From/To Station	Location	Common Excavation (1) (CY)		Salvaged/ Unusable Pavement Material (4) (CY)	Available Material (5) (CY)	Expanded EBS Backfill (6) (CY)	Unexpanded Fill (CY)	Expanded Fill (7) (CY)	Mass Ordinate +/- (8) (CY)	Waste (CY)	Borrow (CY)
			Cut (2) (CY)	EBS Excavation (3)(4) (CY)			Factor 1.00		Factor 1.20			
1	573+54 - 595+18	STH 20	14,029	3,100	1,460	12,569	3,100	1,277	1,533	11,036		
	462+13-469+25	STH 75	4,042	0	490	3,552	0	506	607	2,945		
	471+00-482+00	CTH S	3,460	2,000	330	3,130	2,000	1,220	1,464	1,666		
	10+50-11+61	PARKING LOT	57	0	0	57	0	84	101	-43		
		UNDISTRIBUTED	0	1,500	0	0	1,500	0	0	0		
Division 1 Subtotal			21,589	6,600	2,280	19,309	6,600	3,087	3,705	15,604	15,604	
Grand Total			21,589	6,600	2,280	19,309	6,600	3,087	3,705	15,604	15,604	0
			Total Common Exc	28,189								

1) Common Excavation is the sum of the Cut (A) and EBS Excavation (B) columns. Item number 205.0100
2) Salvaged/Unsuable Pavement Material (C) is included in Cut (A).
3) EBS Excavation (B) to be backfilled with Breaker Run material. See Breaker Run table for quantity
4) EBS Areas have been taken from Subsurface Exploration Report and are not shown on cross sections. Actual EBS areas to be determined by engineer in field.
5) EBS Excavation Material (B) shall be removed from the site and shall not be used as fill material. EBS Excavation material is not included in the Mass Ordinate
4) Salvaged/Unusable Pavement Material (C) is included in the Cut (A). This assumes the existing pavement structure is salvaged or wasted by the contractor. The existing pavement structure is not shown on the cross sections.
5) Available Material = Cut - Salvaged/Unusuable Pavement Material
6) Expanded EBS Backfill - This is to be filled with Breaker Run material. EBS Backfill Factor = 1.0. Item number 311.0110
7) Expanded Fill (G) = (Unexpanded Fill (F)) * Expanded Fill Factor (1.20)
8) The Mass Ordinate + or - Qty calculated for the Division. Plus quantity indicates a waste volume of material within the Division. Minus indicates a borrow volume of material within the Division.
9) Undistributed EBS Excavation is to be used at discretion of engineer for unstable soils in areas not described in the Geotechnical Report.

ALL ITEMS CATEGORY 0010 UNLESS NOTED

3

REMOVING STORM SEWER

					204.0245.01	204.0245.02	204.0245.03	204.0245.04
					REMOVING STORM SEWER			
					12-INCH	15-INCH	18-INCH	24-INCH
ROADWAY	STATION		STATION	SIDE	LF	LF	LF	LF
STH 20	573+45	-	586+07	LT/RT	---	---	---	1,275
	583+94	-	583+95	LT/RT	---	20	---	---
	586+07	-	586+11	RT	---	25	---	---
	586+07	-	587+61	RT	---	---	165	---
	587+61	-	592+98	RT	---	540	---	---
	588+09	-	588+96	RT	---	---	95	---
	STH 20 SUBTOTAL				0	585	260	1,275
STH 75/CTH S	468+24	-	470+65	RT	---	245	---	---
	470+65	-	470+91	RT	45	---	---	---
	STH 75 SUBTOTAL				45	245	0	0
	PROJECT TOTAL				45	830	260	1,275

FINISHING ROADWAY

		213.0100
ROADWAY	PROJECT	EACH
STH 20	2340-09-70	1
	PROJECT TOTAL	1

BASE AGGREGATE DENSE

					305.0110	305.0120
					BASE AGGREGATE DENSE	
					3/4-INCH	1 1/4-INCH
ROADWAY	STATION		STATION		TONS	TONS
STH 20	575+49	-	579+00		120	1,330
	579+00	-	584+50		10	2,870
	584+50		590+00		160	3,290
	590+00	-	595+18		80	2,600
	STH 20 SUBTOTAL				370	10,090
STH 75	461+42	-	465+00		200	1,560
	465+00	-	469+42		140	2,740
	STH 75 SUBTOTAL				340	4,300
CTH S	470+83	-	475+00		150	2,170
	475+00	-	481+00		370	2,820
	STH 75 SUBTOTAL				520	4,990
	PROJECT TOTALS				1,230	19,380

CONCRETE TRUCK APRON

					405.0100	416.0508
					COLORING	
					CONC RED	8-INCH
ROADWAY	STATION		STATION	SIDE	CY	SY
STH 20	585+54	-	586+31	RT	15	40
	586+56	-	587+58	LT/RT	105	460
	587+90	-	588+64	LT	15	45
	PROJECT TOTAL				135	545

3

PREPARE FOUNDATION FOR BASE COURSE

	211.0500
ROADWAY	STA
STH 20	19
STH 75	8
CTH S	10
	37

NOTE:
BID ITEM TO BE USED TO SCARIFY SUBGRADE
IN ACCORDANCE WITH GEOTECHNICAL REPORT

BREAKER RUN

	311.0110
ROADWAY	TON
UNDISTRIBUTED	12,600
	12,600

NOTE:
TO BE USED TO BACKFILL EBS AREAS

DRILLED TIE BARS

	416.0610
ROADWAY	EACH
UNDISTRIBUTED	2
	2

NOTE:
TO CONNECT PROPOSED CURB AND GUTTER
TO EXISTING CURB AND GUTTER

INCENTIVE IRI RIDE

	440.4410.S
ROADWAY	DOL
STH 20	530
STH 75	220
CTH S	300
PROJECT TOTALS	1,050

CONCRETE DRIVEWAY 7-INCH

			416.0170
ROADWAY	STATION	SIDE	EACH
STH 20	578+42	LT	15
	578+57	RT	20
	580+41	LT	15
	590+44	LT	15
	590+44	RT	15
	593+41	LT	10
	STH 20 SUBTOTAL		90
STH 75	466+70	RT	20
	STH 75 SUBTOTAL		20
CTH S	471+50	LT	20
	472+42	RT	35
	CTH S SUBTOTAL		55
	PROJECT TOTAL		165

ALL ITEMS CATEGORY 0010 UNLESS NOTED

3

INCENTIVE DENSITY HMA PAVEMENT

ROADWAY	PROJECT	460.2000 DOL
STH 20	2340-09-70	4,020
	PROJECT TOTAL	4,020

ASPHALTIC SURFACE DRIVEWAYS AND FIELD ENTRANCES

ROADWAY	STATION	SIDE	465.0120 TONS
STH 20	576+66	RT	10
	590+44	LT	11
	590+44	RT	17
	STH 20 SUBTOTAL		38
STH 75	462+50	LT	11
	STH 75 SUBTOTAL		11
CTH S	473+76	RT	13
	CTH S SUBTOTAL		13
	PROJECT TOTAL		62

ASPHALTIC SURFACE

ROADWAY	STATION		STATION	SIDE	465.0105 ASPHALTIC SURFACE TONS
STH 20	587+50	-	588+87	RT	10
	STH 20 SUBTOTAL				10
STH 75	466+63	-	468+63	RT	210
	STH 75 SUBTOTAL				210
CTH S	472+13	-	472+54	RT	120
	CTH S SUBTOTAL				120
	PROJECT TOTAL				340

ASPHALTIC FLUMES

ROADWAY	STATION	SIDE	465.0315 SY
STH 20	575+84	LT	25
	588+91	RT	7
	STH 20 SUBTOTAL		32
STH 75	467+95	LT	22
	STH 75 SUBTOTAL		22
CTH S	473+02	RT	21
	475+28	LT	23
	CTH S SUBTOTAL		44
	PROJECT TOTAL		98

ASPHALT PAVEMENT

ROADWAY	STATION		STATION	455.0115 ASPHALTIC MATERIAL PG64-22 TONS	455.0120 MATERIAL PG64-28 TONS	455.0605 TACK COAT GAL	460.1110 HMA PAVEMENT TYPE E-10 TONS
STH 20	575+49	-	579+00	20	10	60	420
	579+00	-	584+50	45	20	145	1080
	584+50		590+00	40	20	130	970
	590+00	-	595+18	40	20	125	920
	STH 20 SUBTOTAL			145	70	460	3390
STH 75	461+42	-	465+00	20	10	70	500
	465+00	-	469+42	30	15	100	720
	STH 75 SUBTOTAL			50	25	170	1220
CTH S	470+83	-	475+00	30	15	95	710
	475+00	-	481+00	40	20	130	950
	STH 75 SUBTOTAL			70	35	225	1660
	PROJECT TOTALS			265	130	855	6270

PRIVATE ENTRANCE CULVERTS

ROADWAY	LOCATION	521.0112 CULVERT PIPE CORRUGATED STEEL 12-INCH LF	521.0118 CULVERT PIPE CORRUGATED STEEL 18-INCH LF	521.1012 AEW FOR CULVERT PIPE STEEL 12-INCH LF	521.1018 AEW FOR CULVERT PIPE STEEL 18-INCH LF	521.1518 AEW FOR CULVERT PIPE SLOPED SIDE DRAINS STEEL 18-INCH 6 TO 1 LF	* MINIMUM THICKNESS FOR STEEL PIPE INCHES
STH 20	593+40 LT	---	40	---	---	2	0.064
	STH 20 SUBTOTAL	0	40			2	---
STH 75	462+55 LT	---	30	---	---	2	0.064
	466+70 RT	---	60	---	2	---	0.064
	STH 75 SUBTOTAL	0	90	0	2	2	---
CTH S	473+77 RT	---	34	---	---	2	0.064
	476+00 LT	---	32	---	---	2	0.064
	481+04 RT	20	---	2	---	---	0.064
	CTH S SUBTOTAL	20	66	2	0	4	---
	TOTALS	20	196	2	2	8	---

*NON-BID ITEM (FOR INFORMATION ONLY)
** ADDITIONAL STAKING QUANTITIES SHOWN ELSEWHERE

ALL ITEMS CATEGORY 0010 UNLESS NOTED

STRUCTURE NUMBER	STATION	OFFSET	611.2003 MH 3-FT DIA EACH	611.2005 MH 5-FT DIA EACH	611.2006 MH 6-FT DIA EACH	611.3004 INLETS 4-FT DIA EACH	611.3230 INLETS 2X3-FT EACH	611.3901 INL MEDIAN 1 GRATE EACH	SPV.0060.06 INL 4-FT DIA SPECIAL EACH	611.0530 MANHOLE COVERS TYPE J EACH	611.0633 INLET COVERS TYPE HM-GJ-S EACH	611.0636 INLET COVERS TYPE HM-S EACH	611.0639 INLET COVERS TYPE H-S EACH	611.0645 INLET COVERS TYPE MS-A EACH	611.0652 INLET COVERS TYPE T EACH	RIM OR FLANGE ELEV	STR DEPTH FEET	COMMENTS
1A	594+00.0	21.5' LT	---	---	---	---	1	---	---	---	---	1	---	---	---	804.27	4.0	
1B	594+00.0	28.5' RT	---	---	---	---	---	---	---	---	---	---	---	---	---	---	---	
2A	593+07.6	43.1' RT	---	---	---	---	---	---	---	---	---	---	---	---	---	---	---	
2B	592+78.9	55.1' RT	1	---	---	---	---	---	---	1	---	---	---	---	---	802.02	3.6	
2	592+75.0	43.5' RT	---	1	---	---	---	---	---	1	---	---	---	---	---	801.75	3.7	
3A	592+50.0	41.1' LT	---	---	---	---	---	1	---	---	---	---	---	1	---	800.94	2.9	
3B	592+00.0	21.5' LT	---	---	---	1	---	---	---	---	---	1	---	---	---	803.21	4.9	SEE NOTE 6
3	592+00.0	42.7' RT	---	---	1	---	---	---	---	1	---	---	---	---	---	801.65	4.5	
4A	590+01.0	16.8' RT	---	---	---	---	1	---	---	---	---	1	---	---	---	800.41	2.4	
4B	590+11.0	17.0' RT	---	---	---	---	1	---	---	---	---	1	---	---	---	800.41	2.5	
4C	590+01.0	39.8' RT	---	---	---	---	1	---	---	---	---	1	---	---	---	800.01	2.0	
4D	590+11.0	40.0' RT	---	---	---	---	1	---	---	---	---	1	---	---	---	800.01	2.1	
4	590+10.9	24.5' RT	---	---	1	---	---	---	---	1	---	---	---	---	---	800.29	3.7	
5A	588+66.0	17.5' LT	---	---	---	---	1	---	---	---	1	---	---	---	---	800.66	2.9	
5B	588+76.0	17.5' LT	---	---	---	1	---	---	---	---	1	---	---	---	---	800.63	2.9	SEE NOTE 6
5C	589+40.0	1.5' RT	---	---	---	---	1	---	---	---	---	---	1	---	---	800.94	3.2	
5D	589+10.0	1.5' RT	---	---	---	---	1	---	---	---	---	---	1	---	---	800.90	3.3	
5E	589+00.0	1.5' RT	---	---	---	1	---	---	---	---	---	---	1	---	---	800.91	3.6	SEE NOTE 6
5F	589+00.0	51.9' RT	---	---	---	---	---	1	---	---	---	---	---	1	---	800.09	3.4	
5	589+00.0	8.5' RT	---	---	1	---	---	---	---	1	---	---	---	---	---	801.46	5.7	
6A	586+93.0	60.7' LT	---	---	---	---	---	---	1	---	---	---	---	---	1	801.06	3.1	SEE NOTES 6 & 7
6B	587+26.5	60.7' LT	---	---	---	---	---	---	1	---	---	---	---	---	1	801.06		SEE NOTES 6 & 7
6C	588+00.0	63.4' LT	---	---	---	---	---	1	---	---	---	---	---	1	---	799.97	3.8	
6	587+91.6	4.9' LT	---	---	1	---	---	---	---	1	---	---	---	---	---	802.01	6.6	
7A	585+00.0	36.0' RT	---	---	---	---	---	---	---	---	---	---	---	---	---	---	---	
7	585+00.0	6.0' RT	---	---	1	---	---	---	---	1	---	---	---	---	---	800.78	6.2	
8A	584+15.3	33.0' LT	---	---	---	---	1	---	---	---	---	---	1	---	---	799.93	2.9	
8B	584+25.0	32.8' LT	---	---	---	---	1	---	---	---	---	---	1	---	---	799.92	3.2	
8C	584+15.1	10.0' LT	---	---	---	---	1	---	---	---	---	---	1	---	---	800.33	2.9	
8D	584+25.0	9.8' LT	---	---	1	---	---	---	---	---	---	---	1	---	---	800.32	3.7	SEE NOTE 6
8E	584+07.7	1.5' LT	---	---	---	---	1	---	---	---	---	---	1	---	---	800.70	2.9	
8F	584+17.7	1.5' LT	---	---	---	1	---	---	---	---	---	---	1	---	---	800.69	4.1	SEE NOTE 6
8G	584+07.5	21.5' RT	---	---	---	---	1	---	---	---	---	---	1	---	---	800.30	2.9	
8H	584+17.5	21.5' RT	---	---	---	---	1	---	---	---	---	---	1	---	---	800.29	3.2	
8	584+17.7	6.0' RT	---	---	1	---	---	---	---	1	---	---	---	---	---	800.57	6.2	
9A	583+00.0	56.0' LT	---	---	---	---	---	1	---	---	---	---	---	1	---	798.50	3.0	
9B	582+50.0	35.7' LT	---	---	---	1	---	---	---	---	---	1	---	---	---	800.86	5.1	SEE NOTE 6
9C	582+50.0	21.5' RT	---	---	---	---	1	---	---	---	---	1	---	---	---	801.15	2.9	
9	582+50.0	6.0' RT	---	---	1	---	---	---	---	1	---	---	---	---	---	801.43	7.6	
10A	580+56.8	33.1' LT	---	---	---	---	1	---	---	---	---	1	---	---	---	802.84	2.9	
10B	580+50.0	21.5' RT	---	---	---	---	1	---	---	---	---	1	---	---	---	803.14	2.9	
10	580+50.0	6.0' RT	---	---	1	---	---	---	---	1	---	---	---	---	---	803.42	10.2	
11	577+50.0	28.9' LT	---	---	1	---	---	---	---	1	---	---	---	---	---	804.77	12.5	
12	573+75.0	34.5' LT	---	---	1	---	---	---	---	1	---	---	---	---	---	798.53	7.3	
12A	573+50.0	60.4' LT	---	---	---	---	---	---	---	---	---	---	---	---	---	---	---	
13A	467+00.0	1.5' LT	---	---	---	---	1	---	---	---	---	1	---	---	---	802.12	2.5	
13	467+00.0	39.5' LT	---	---	---	---	---	---	---	---	---	---	---	---	---	---	---	
14A	467+56.4	35.6' RT	---	---	---	---	---	---	---	---	---	---	---	---	---	---	---	
14B	467+80.3	21.5' RT	---	---	---	---	1	---	---	---	---	---	1	---	---	801.45	2.0	
14C	467+70.3	21.5' RT	---	1	---	---	---	---	---	---	---	---	1	---	---	801.45	2.8	SEE NOTE 6, USE 2" ADJUSTMENT
14D	467+80.3	1.5' LT	---	---	---	---	1	---	---	---	---	---	1	---	---	801.85	2.5	
14E	467+78.5	12.1' LT	---	---	---	---	1	---	---	---	---	---	1	---	---	801.91	2.6	
14F	467+68.5	12.2' LT	---	1	---	---	---	---	---	---	---	---	1	---	---	801.91	3.2	SEE NOTE 6
14G	467+68.5	42.2' LT	---	---	---	---	---	---	---	---	---	---	---	---	---	---	---	
15A	473+40.0	21.5' LT	---	---	---	---	1	---	---	---	---	1	---	---	---	798.48	2.2	
15B	473+40.0	5.6' RT	---	---	---	---	1	---	---	---	---	---	1	---	---	798.95	2.8	
15C	473+40.0	13.3' RT	---	---	---	---	1	---	---	---	---	---	1	---	---	798.88	2.8	
15D	473+41.1	45.3' RT	---	---	---	---	---	---	---	---	---	---	---	---	---	---	---	
16A	475+12.9	21.5' LT	---	---	---	---	1	---	---	---	---	1	---	---	---	797.62	2.7	
16B	475+12.4	5.4' RT	---	---	---	---	1	---	---	---	---	1	---	---	---	798.09	3.3	
16C	475+12.3	12.5' RT	---	---	---	---	1	---	---	---	---	1	---	---	---	798.02	3.3	
16D	475+11.7	45.3' RT	---	---	---	---	---	---	---	---	---	---	---	---	---	---	---	
TOTALS			1	3	11	5	27	4	2	12	2	15	18	4	2			

ALL ITEMS CATEGORY 0010 UNLESS NOTED

					608.0312	608.0318	608.0324	608.0336	608.0412	608.0415	608.0418	608.0424	608.0436	610.0419	610.0424
					STORM SEWER PIPE REINFORCED CONCRETE										
						CLASS III				CLASS IV				CLASS HE-IV	CLASS HE-IV
FROM	TO	INLET	DISCH	SLOPE	12"	18"	24"	36"	12"	15"	18"	24"	36"	19X30-INCH	24X38-INCH
STR	STR	ELEV	ELEV	(%)	(LF)	(LF)	(LF)	(LF)	(LF)	(LF)	(LF)	(LF)	(LF)	(LF)	(LF)
1A	1B	799.46	798.71	1.50%	---	---	---	---	50.0	---	---	---	---	---	---
1B	AEW	798.71	---	---	---	---	---	---	---	---	---	---	---	---	---
2A	2	797.93	797.45	1.50%	---	---	---	---	---	---	---	32.0	---	---	---
2B	2	797.30	797.24	0.50%	12.3	---	---	---	---	---	---	---	---	---	---
2	3	796.97	796.58	0.53%	---	---	73.7	---	---	---	---	---	---	---	---
3A	3B	798.04	797.47	1.06%	---	54.3	---	---	---	---	---	---	---	---	---
3B	3	797.47	797.08	0.60%	---	64.2	---	---	---	---	---	---	---	---	---
3	4	796.08	795.52	0.30%	---	---	---	---	---	---	---	---	---	---	187.5
4A	4B	797.19	797.09	1.00%	---	---	---	---	10.0	---	---	---	---	---	---
4B	4	797.09	797.02	1.00%	---	---	---	---	7.5	---	---	---	---	---	---
4C	4D	797.15	797.10	0.50%	---	---	---	---	10.0	---	---	---	---	---	---
4D	4	797.10	797.02	0.50%	---	---	---	---	15.5	---	---	---	---	---	---
4	5	795.52	795.18	0.30%	---	---	---	---	---	---	---	---	---	---	112.0
5A	5B	796.92	796.87	0.50%	---	---	---	---	10.0	---	---	---	---	---	---
5B	5E	796.87	796.72	0.50%	---	---	---	---	30.6	---	---	---	---	---	---
5C	5D	796.92	796.77	0.50%	---	---	---	---	30.0	---	---	---	---	---	---
5D	5E	796.77	796.72	0.50%	---	---	---	---	10.0	---	---	---	---	---	---
5E	5	796.47	796.43	0.50%	---	---	---	---	---	7.0	---	---	---	---	---
5F	5	796.65	796.43	0.50%	---	---	---	---	---	44.2	---	---	---	---	---
5	6	794.68	794.35	0.30%	---	---	---	---	---	---	---	---	109.2	---	---
6A	6B	797.11	797.02	0.50%	---	---	---	---	18.1	---	---	---	---	---	---
6B	6C	797.02	796.65	0.50%	---	---	---	---	73.5	---	---	---	---	---	---
6C	6	796.15	795.85	0.50%	---	---	---	---	---	---	59.0	---	---	---	---
6	7	794.35	793.49	0.30%	---	---	---	289.1	---	---	---	---	---	---	---
7A	7	796.25	794.99	4.21%	---	30.0	---	---	---	---	---	---	---	---	---
7	8	793.49	793.24	0.30%	---	---	---	81.8	---	---	---	---	---	---	---
8A	8B	796.22	796.17	0.50%	---	---	---	---	10.0	---	---	---	---	---	---
8B	8D	795.92	795.81	0.50%	---	---	---	---	---	23.0	---	---	---	---	---
8C	8D	796.62	796.57	0.50%	---	---	---	---	10.0	---	---	---	---	---	---
8D	8F	795.81	795.75	0.50%	---	---	---	---	---	11.1	---	---	---	---	---
8E	8F	796.99	796.94	0.50%	---	---	---	---	10.0	---	---	---	---	---	---
8F	8	795.75	795.71	0.50%	---	---	---	---	---	7.5	---	---	---	---	---
8G	8H	796.59	796.49	1.00%	---	---	---	---	10.0	---	---	---	---	---	---
8H	8	796.24	796.16	0.50%	---	---	---	---	---	15.5	---	---	---	---	---
8	9	793.24	792.74	0.30%	---	---	---	167.4	---	---	---	---	---	---	---
9A	9B	795.50	794.96	1.00%	---	54.0	---	---	---	---	---	---	---	---	---
9B	9	794.96	794.54	1.00%	---	41.7	---	---	---	---	---	---	---	---	---
9C	9	797.44	797.13	2.00%	---	---	---	---	15.5	---	---	---	---	---	---
9	10	792.74	792.14	0.30%	---	---	---	200.1	---	---	---	---	---	---	---
10A	10	799.13	798.33	2.00%	---	---	---	---	39.9	---	---	---	---	---	---
10B	10	799.43	799.12	2.00%	---	---	---	---	15.5	---	---	---	---	---	---
10	11	792.14	791.23	0.30%	---	---	---	302.0	---	---	---	---	---	---	---
11	12	791.23	790.11	0.30%	---	---	---	375.0	---	---	---	---	---	---	---
12	12A	790.11	790.00	0.30%	---	---	---	36.0	---	---	---	---	---	---	---
12A	AEW	790.00	---	---	---	---	---	---	---	---	---	---	---	---	---
13A	13	798.80	798.74	0.50%	---	---	---	---	38.0	---	---	---	---	---	---
13	AEW	798.74	---	---	---	---	---	---	---	---	---	---	---	---	---
14A	14C	798.66	797.99	3.35%	---	---	---	---	---	---	---	---	---	20.0	---
14B	14C	798.60	798.57	0.30%	---	---	---	---	10.0	---	---	---	---	---	---
14C	14F	797.99	797.89	0.30%	---	---	---	---	---	---	---	---	---	33.7	---
14D	14E	798.53	798.50	0.30%	---	---	---	---	10.8	---	---	---	---	---	---
14E	14F	798.50	798.47	0.30%	---	---	---	---	10.0	---	---	---	---	---	---
14F	14G	797.89	797.80	0.30%	---	---	---	---	---	---	---	---	---	30.0	---
14G	ENDWALL	---	---	---	---	---	---	---	---	---	---	---	---	---	---
15A	15B	795.44	795.31	0.50%	---	---	---	---	27.1	---	---	---	---	---	---
15B	15C	795.31	795.27	0.50%	---	---	---	---	7.7	---	---	---	---	---	---
15C	15D	795.27	795.11	0.50%	---	---	---	---	32.0	---	---	---	---	---	---
15D	AEW	795.11	---	---	---	---	---	---	---	---	---	---	---	---	---
16A	16B	794.08	793.95	0.50%	---	---	---	---	26.9	---	---	---	---	---	---
16B	16C	793.95	793.91	0.50%	---	---	---	---	7.2	---	---	---	---	---	---
16C	16D	793.91	793.75	0.50%	---	---	---	---	32.0	---	---	---	---	---	---
16D	AEW	793.75	---	---	---	---	---	---	---	---	---	---	---	---	---
				TOTALS	13	245	74	1,452	578	109	59	32	110	84	300

ALL ITEMS CATEGORY 0010 UNLESS NOTED

STRUCTURE NUMBER	521.1524 AEW CULV PIPE SLOPED STEEL 6:1 - 24" EACH	522.1012 APRON ENDWALL FOR CULVERT PIPE REINFORCED CONCRETE 12" EACH	522.1015 15" EACH	522.1018 18" EACH	522.1036 36" EACH	523.0519 HORIZ ELLIPTICAL 19"X30" EACH	611.9800.S PIPE GRATES EACH	633.5200 MARKERS CULVERT END EACH
1A	---	---	---	---	---	---	---	---
1B	---	---	1	---	---	---	---	1
2A	1	---	---	---	---	---	---	1
2B	---	---	---	---	---	---	---	---
2	---	---	---	---	---	---	---	---
3A	---	---	---	---	---	---	---	---
3B	---	---	---	---	---	---	---	---
3	---	---	---	---	---	---	---	---
4A	---	---	---	---	---	---	---	---
4B	---	---	---	---	---	---	---	---
4C	---	---	---	---	---	---	---	---
4D	---	---	---	---	---	---	---	---
4	---	---	---	---	---	---	---	---
5A	---	---	---	---	---	---	---	---
5B	---	---	---	---	---	---	---	---
5C	---	---	---	---	---	---	---	---
5D	---	---	---	---	---	---	---	---
5E	---	---	---	---	---	---	---	---
5F	---	---	---	---	---	---	---	---
5	---	---	---	---	---	---	---	---
6A	---	---	---	---	---	---	---	---
6B	---	---	---	---	---	---	---	---
6C	---	---	---	---	---	---	---	---
6	---	---	---	---	---	---	---	---
7A	---	---	---	1	---	---	---	1
7	---	---	---	---	---	---	---	---
8A	---	---	---	---	---	---	---	---
8B	---	---	---	---	---	---	---	---
8C	---	---	---	---	---	---	---	---
8D	---	---	---	---	---	---	---	---
8E	---	---	---	---	---	---	---	---
8F	---	---	---	---	---	---	---	---
8G	---	---	---	---	---	---	---	---
8H	---	---	---	---	---	---	---	---
8	---	---	---	---	---	---	---	---
9A	---	---	---	---	---	---	---	---
9B	---	---	---	---	---	---	---	---
9C	---	---	---	---	---	---	---	---
9	---	---	---	---	---	---	---	---
10A	---	---	---	---	---	---	---	---
10B	---	---	---	---	---	---	---	---
10	---	---	---	---	---	---	---	---
11	---	---	---	---	---	---	---	---
12	---	---	---	---	---	---	---	---
12A	---	---	---	---	1	---	1	1
13A	---	---	---	---	---	---	---	---
13	---	1	---	---	---	---	---	1
14A	---	---	---	---	---	1	1	1
14B	---	---	---	---	---	---	---	---
14C	---	---	---	---	---	---	---	---
14D	---	---	---	---	---	---	---	---
14E	---	---	---	---	---	---	---	---
14F	---	---	---	---	---	---	---	---
14G	---	---	---	---	---	1	1	1
15A	---	---	---	---	---	---	---	---
15B	---	---	---	---	---	---	---	---
15C	---	---	---	---	---	---	---	---
15D	---	1	---	---	---	---	---	1
16A	---	---	---	---	---	---	---	---
16B	---	---	---	---	---	---	---	---
16C	---	---	---	---	---	---	---	---
16D	---	1	---	---	---	---	---	1
TOTALS	1	3	1	1	1	2	3	9

STORM SEWER NOTES:

1. RIM ELEVATIONS ARE GIVEN AT THE FLANGE LINE FOR INLET GRATES OR THE CENTER OF THE MANHOLE STRUCTURE FOR MANHOLES.
2. STATIONS AND OFFSETS ARE TO THE CENTER OF STRUCTURES OR TO THE END OF PIPE WHERE THERE IS AN ENDWALL.
3. PIPE LENGTHS ARE MEASURED TO THE CENTER OF STRUCTURES.
4. STR DEPTH = RIM ELEV - INV - CASTING HEIGHT - ADJUSTMENT + 18" SUMP FOR CATCH BASINS
   CASTING HEIGHT = 10" FOR TYPE B COVERS; 9" FOR TYPE C AND J COVERS; AND 7" FOR TYPE T COVERS; AND 6" FOR TYPE H, HM, H-S, AND S COVER
   ADJUSTMENT = 4" TYPICAL (NO ADJUSTMENT FOR TYPE 8 AND 9 INLETS). 3" ADJUSTMENT WHEN RUBBER ADJUSTMENT RINGS ARE USED.
5. JOINT TIES FOR CONCRETE PIPE SHALL BE PROVIDED AT ALL REINFORCED CONCRETE APRON ENDWALL LOCATIONS. APRON ENDWALLS SHALL BE TIED FOR THE LAST THREE JOINTS AT PIPE ENDS. THE COST OF THESE TIES SHALL BE INCLUDED IN THE CONTRACT UNIT PRICE FOR THE REINFORCED CONCRETE STORM SEWER PIPE.
6. PROVIDE A FLAT TOP SLAB WITH 2'X'3 OPENING.
7. PROVIDE RUBBER ADJUSTMENT RINGS. 3" MAX ADJUSTMENT

* NOT A BID ITEM. FOR INFORMATION PURPOSES ONLY.

ALL ITEMS CATEGORY 0010 UNLESS NOTED

CONCRETE CURB AND GUTTER

ROADWAY	STATION		STATION	601.0405 CONCRETE CURB AND GUTTER 18-INCH TYPE A LF	601.0407 CONCRETE CURB AND GUTTER 18-INCH TYPE D LF	601.0411 CONCRETE CURB AND GUTTER 30-INCH TYPE D LF	601.0557 CONCRETE CURB AND GUTTER 6-IN SLOPED 36-INCH TYPE D LF	601.0576 CONCRETE CURB AND GUTTER 4-IN SLOPED 30-INCH TYPE J LF	601.0582 CONCRETE CURB AND GUTTER 4-INCH SLOPED 36-INCH TYPE T LF	* 650.5500 CONST STAKING CURB & GUTTER LF
STH 20	575+49	-	579+00	---	---	---	530	---	---	530
	579+00	-	584+50	---	---	175	1,390	---	---	1,565
	584+50		590+00	215	155	1,530	130	230	315	2,575
	590+00	-	595+18	---	---	---	1,240	---	---	1,240
	STH 20 SUBTOTAL			215	155	1,705	3,290	230	315	5,910
STH 75	461+42	-	465+00	---	---	---	80	---	---	80
	465+00	-	469+42	---	---	850	660	---	---	1,510
	STH 75 SUBTOTAL			0	0	850	740	0	0	1,590
CTH S	470+83	-	475+00	---	---	975	440	---	---	1,415
	475+00	-	481+00	---	---	---	50	---	---	50
	CTH S SUBTOTAL			0	0	975	490	0	0	1,465
	PROJECT TOTALS			215	155	3,530	4,520	230	315	8,965

* ADDITIONAL STAKING ITEMS SHOWN ELSEWHERE

CONCRETE SIDEWALK

ROADWAY	STATION		STATION	601.0600 CONCRETE CURB PEDESTRIAN LF	602.0410 CONCRETE SIDEWALK 5-INCH SF	SPV.0165.01 CONCRETE SIDEWALK 8-INCH SF	602.0505 CURB RAMP DETECTABLE WARNING FIELD YELLOW SF
STH 20	584+90	-	586+36	40	2,200	60	64
	587+78	-	589+66	40	3,140	60	64
	STH 20 SUBTOTAL			80	5,340	120	128
STH 75	467+90	-	469+42	35	1,810	---	64
	STH 75 SUBTOTAL			35	1,810	0	64
CTH S	470+82	-	472+84	30	1,930	---	64
	CTH S SUBTOTAL			30	1,930	0	64
	PROJECT TOTALS			145	9,080	120	256

CONCRETE CURB PRECAST

ROADWAY	STATION		STATION	SIDE	601.0199.S EACH
STH 75	466+97	-	467+66	RT	8
	PROJECT TOTAL				8

RIPRAP

ROADWAY	STATION	SIDE	606.0200 RIPRAP MEDIUM CY	645.0130 GEOTEXTILE FABRIC TYPE HR SY
STH 20	573+45	LT	16	50
	STH 20 SUBTOTAL		16	50
CTH S	481+00	RT	35	110
	CTH S SUBTOTAL		35	110
	PROJECT TOTALS		51	160

PIPE UNDERDRAIN

LOCATION	612.0106 PIPE UNDERDRAIN 6-INCH LF	612.0108 PIPE UNDERDRAIN 8-INCH LF	612.0110 PIPE UNDERDRAIN 10-INCH LF	612.0700 DRAIN TILE EXPLORATION LF
EBS LOW POINTS	700	---	---	---
UNDISTRIBUTED	300	500	100	2800
PROJECT TOTAL	1000	500	100	2800

NOTE: SEE CONSTRUCTION DETAIL FOR PIPE UNDERDRAIN AT EBS LOW POINTS
UNDISTRIBUTED QUANTITIES ARE TO REPAIR OR REPLACE FARM TILE ENCOUNTERED DURING GRADING OPERATIONS

BEAM GUARD

ROADWAY	LOCATION			SIDE	614.0115 ANCHORAGE TYPE 2 EACH	614.0305 STEEL PLATE BEAM GUARD CLASS A LF	614.0345 SHORT RADIUS LF	614.0390 SHORT RADIUS TERMINAL EACH	* SHORT RADIUS RADII	* SHORT RADIUS CRT POSTS
CTH S	471+33	-	471+46	LT	1	63	13	1	8'	5
	471+57	-	471+73	LT	1	13	13	1	8'	5
	471+73	-	471+98	LT	2	25	---	---	---	---
	PROJECT TOTAL				4	100	25	2	---	---

* FOR INFORMATION ONLY

ALL ITEMS CATEGORY 0010 UNLESS NOTED

3

MAINTENANCE AND REPAIR OF HAUL ROADS

PROJECT	618.0100 EACH
2340-09-70	1
PROJECT TOTAL	1

MOBILIZATION

ROADWAY	PROJECT	619.1000 EACH
STH 20	2340-09-70	1
	PROJECT TOTAL	1

CONCRETE MEDIAN SLOPED NOSE

ROADWAY	STATION		STATION	620.0300 TYPE 1 SF	TYPE 2 SF
STH 20	575+49	-	579+00	---	---
	579+00	-	584+50	60	---
	584+50		590+00	---	80
	590+00	-	595+18	60	---
	STH 20 SUBTOTAL			120	80
STH 75	461+42	-	465+00	60	---
	465+00	-	469+42	---	40
	STH 75 SUBTOTAL			60	40
CTH S	470+83	-	475+00	---	40
	475+00	-	481+00	60	---
	STH 75 SUBTOTAL			60	40
	PROJECT TOTALS			400	

RESTORATION ITEMS

ROADWAY	STATION		STATION	625.0100 TOPSOIL SY	625.0500 SALVAGED TOPSOIL SY	627.0200 MULCHING SY	629.0210 FERTILIZER TYPE B CWT	630.0130 SEEDING MIXTURE NO. 30 LB	630.0200 SEEDING TEMPORARY LB	630.0400 SEEDING NURSE CROP LB	631.0300 SOD WATER MGAL	631.1000 SOD LAWN SY	SPV.0085.01 SEEDING NO MOW FESCUE LB
STH 20	575+49	-	579+00	---	1,590	2,205	1.6	40	30	---	---	---	---
	579+00	-	584+50	170	2,970	2,955	2.8	60	50	2	---	---	10
	584+50		590+00	1,150	2,540	2,205	2.4	50	40	6	9	370	35
	590+00	-	595+18	240	2,160	2,310	2.2	50	40	2	---	---	15
	STH 20 SUBTOTAL			1,560	9,260	9,675	9.0	200	160	10	9	370	60
STH 75	461+42	-	465+00	10	1,900	1,455	2.2	50	40	1	---	---	1
	465+00	-	469+42	530	3,010	2,805	3.0	60	50	3	3	135	20
	STH 75 SUBTOTAL			540	4,910	4,260	5.2	110	90	4	3	135	21
CTH S	470+83	-	475+00	500	2,230	2,505	2.2	50	40	3	4	150	20
	475+00	-	481+00	10	3,680	1,185	4.2	90	70	1	---	---	1
	STH 75 SUBTOTAL			510	5,910	3,690	6.4	140	110	4	4	150	21
UNDISTRIBUTED				660	5,020	4,406	10.0	120	90	10	10	70	30
	PROJECT TOTALS			3,270	25,100	22,031	31.0	570	450	28	26	725	132

LANDMARK REFERENCE MONUMENTS

ROADWAY	STATION	* DESCRIPTION	621.0100 EACH
STH 20	279+32.19 R/L	R/L PC POINT	1
	280+44.70 R/L	R/L PI POINT	1
	281+57.15 R/L	R/L PT POINT	1
	291+92.43 R/L	R/L PC POINT	1
	STH 20 SUBTOTAL		4
STH 75/CTH S	70+00.00 R/L	R/L PI POINT	1
	STH 75 SUBTOTAL		1
	PROJECT TOTAL		5

* FOR INFORMATION ONLY

DUST CONTROL SURFACE TREATMENT

ROADWAY	623.0200 SY
UNDISTRIBUTED	30,600
	30,600

NOTE:
TO BE PLACED AT THE DISCRETION OF THE ENGINEER FOR DUST CONTROL.

WATER

LOCATION	624.0100 MGAL
BASE AGGREGATE PLACEMENT	65
UNDISTRIBUTED/DUST CONTROL	65
	130

ALL ITEMS CATEGORY 0010 UNLESS NOTED

EROSION CONTROL ITEMS

ROADWAY	STATION		STATION	628.1104 EROSION BALES EACH	628.1504 SILT FENCE LF	628.1520 SILT FENCE MAINTENANCE LF	628.1905 MOBILIZATIONS EROSION CONTROL EACH	628.1910 MOBILIZATIONS EMERGENCY EROSION CONTROL EACH	628.2004 EROSION MAT CLASS I TYPE B SY	628.7005 INLET PROTECTION TYPE A EACH	628.7010 INLET PROTECTION TYPE B EACH	628.7015 INLET PROTECTION TYPE C EACH	628.7504 TEMPORARY DITCH CHECKS LF	628.7555 CULVERT PIPE CHECKS EACH	628.7570 ROCK BAGS EACH
STH 20	575+49	-	579+00	---	540	270	---	---	120	---	---	---	30	---	---
	579+00	-	584+50	---	470	235	---	---	1,160	13	1	12	70	---	---
	584+50		590+00	---	310	155	---	---	1,840	9	2	7	80	1	---
	590+00	-	595+18	---	590	295	---	---	860	7	1	6	75	2	---
	STH 20 SUBTOTAL			0	1,910	955	0	0	3,980	29	4	25	255	3	0
STH 75	461+42	-	465+00	---	---	---	---	---	930	---	---	---	30	1	---
	465+00	-	469+42	---	110	55	---	---	1,530	6	---	6	90	2	---
	STH 75 SUBTOTAL			0	110	55	0	0	2,460	6	0	6	120	3	0
CTH S	470+83	-	475+00	---	510	255	---	---	1,090	3	---	3	45	1	---
	475+00	-	481+00	---	150	75	---	---	2,900	3	---	3	160	2	---
	STH 75 SUBTOTAL			0	660	330	0	0	3,990	6	0	6	205	3	0
UNDISTRIBUTED				100	670	335	7	4	2,610	8	1	8	150	3	100
	PROJECT TOTALS			100	3,350	1,675	7	4	13,040	49	5	45	730	12	100

TRACKING PADS

LOCATION	628.7560 EACH
UNDISTRIBUTED	4
PROJECT TOTAL	4

FIELD OFFICE TYPE C

ROADWAY	PROJECT	642.5201 EACH
STH 20	2340-09-70	1
	PROJECT TOTAL	1

PAVEMENT MARKING

ROADWAY	STATION		STATION	646.0106 EPOXY 4-INCH (WHITE) LF	646.0106 EPOXY 4-INCH (YELLOW) LF	647.0256 SYMBOLS EPOXY (HANDICAP) (WHITE) EACH	647.0456 CURB EPOXY (YELLOW) LF	647.0606 ISLAND NOSE EPOXY (YELLOW) EACH	647.0656 PARKING STALL EPOXY (WHITE) LF	647.0726 DIAGONAL EPOXY 12-INCH (WHITE) LF	647.0726 DIAGONAL EPOXY 12-INCH (YELLOW) LF	SPV.0060.05 GROOVED PREFORMED THERMOPLASTIC WORDS (WHITE) LF	SPV.0090.01 GROOVED PREFORMED THERMOPLASTIC YIELD LINE 18-INCH (WHITE) LF	SPV.0090.02 GROOVED PREFORMED THERMOPLASTIC CROSSWALK 12-INCH (WHITE) LF	SPV.0090.04 GROOVED PREFORMED PLASTIC TAPE 8-INCH (WHITE) LF
STH 20	575+49	-	584+00	1,765	1,410	---	10	1	---	---	265	---	---	---	---
	584+00	-	590+00	500	1,205	---	---	---	---	140	135	4	200	490	145
	590+00	-	595+18	1,035	1,035	---	10	1	---	---	95	---	---	---	---
	STH 20 SUBTOTAL			3,300	3,650	0	20	2	0	140	495	4	200	490	145
STH 75	461+42	-	468+00	1,205	1,175	1	10	1	180	---	115	---	---	---	---
	STH 75 SUBTOTAL			1,205	1,175	1	10	1	180	0	115	0	0	0	0
CTH S	471+25	-	480+23	1,730	1,800	---	20	2	230	---	245	---	---	---	---
	STH 75 SUBTOTAL			1,730	1,800	0	20	2	230	0	245	0	0	0	0
	PROJECT TOTALS			12,860		1	50	5	410	995		4	200	490	145

ALL ITEMS CATEGORY 0010 UNLESS NOTED

PERMANENT SIGNING

SIGN #	SIGN CODE	SIGN SIZE	SIGN SIZE INCHES	637.2210 SIGNS TYPE II REFLECTIVE H SF	637.2230 SIGNS TYPE II REFLECTIVE F SF	634.0614 POSTS WOOD 4X6-INCH 14-FT EACH	634.0616 POSTS WOOD 4X6-INCH 16-FT EACH	634.0618 POSTS WOOD 4X6-INCH 18-FT EACH	634.0622 POSTS WOOD 4X6-INCH 22-FT EACH	634.0812 POSTS TUBULAR STEEL 2X2-INCH 12-FT EACH	SIGN MOUNTED ON SAME POST AS #	REMARKS
1-01	W1-2R	2S	30X30	---	6.25	---	1	---	---	---	---	RIGHT CURVE
1-02	J1-2	2	48X39	13.00	---	---	1	---	---	---	---	JUNCTION ASSEMBLY (2 HEADED PANEL)
	M2-1	---		---	---	---	---	---	---	---	---	JUNCTION MARKER
	M1-6	---		---	---	---	---	---	---	---	---	STATE ROUTE MARKER
	M2-1	---		---	---	---	---	---	---	---	---	JUNCTION MARKER
	M1-5A	---		---	---	---	---	---	---	---	---	COUNTY MARKER
1-03	W2-6	2S	30X30	---	6.25	---	1	---	---	---	---	CIRCULAR INTERSECTION SIGN
1-04	R5-1	2M	36x36	9.00	---	---	1	---	---	---	---	DO NOT ENTER
1-05	W13-1	2S	18X18	---	2.25	---	---	---	---	---	1-03	ADVISORY SPEED PLATE (YELLOW BACK)
1-06	D1-62	3	120X90	75.00	---	---	---	---	2	---	---	ROUNDABOUT GUIDE SIGN
1-07	R2-1	2S	24X30	5.00	---	---	1	---	---	---	---	SPEED LIMIT 55 MPH
1-08	D12-2A	2	60X42	17.50	---	---	2	---	---	---	---	RIDESHARE INFORMATION
1-09	R4-7	2M	36X48	12.00	---	---	---	1	---	---	---	KEEP RIGHT
1-10	W5-54	2S	18X18	---	2.25	---	---	---	---	---	1-09	CLEARANCE MARKER WITH YELLOW TYPE F SHEETING
1-11	D2-1	2	72X15	7.50	---	---	2	---	---	---	---	DESTINATION/DISTANCE (ONE) WITH DIE CUT LETTERS
1-12	W3-2	2S	36X36	---	9.00	---	---	1	---	---	---	YIELD AHEAD
1-13	D1-2	2	84X30	17.50	---	---	2	---	---	---	---	TWO DESTINATIONS (ARROW)
1-14	R3-4	2	24x24	4.00	---	---	---	---	---	---	1-09	NO U-TURN SYMBOL
1-15	R5-1A	2M	42X30	8.75	---	---	---	---	---	---	1-11	WRONG WAY
2-01	D1-2	2	42X30	8.75	---	---	---	---	---	2	---	TWO DESTINATIONS (ARROW)
2-02	R1-2	2S	36X31	3.88	---	---	---	---	---	1	---	YIELD
2-03	R6-2R	2S	24X30	5.00	---	---	---	---	---	---	2-02	ONE WAY RIGHT ARROW
2-04	R1-2	2S	36X31	3.88	---	---	---	---	---	1	---	YIELD
2-05	R1-54	2S	24X15	2.50	---	---	---	---	---	---	2-04	TO TRAFFIC FROM LEFT
2-06	D1-2	2	42X30	10.00	---	---	---	---	---	2	---	TWO DESTINATIONS (ARROW)
2-07	R1-2	2S	36X31	3.88	---	---	---	---	---	1	---	YIELD
2-08	R1-54	2S	24X15	2.50	---	---	---	---	---	---	2-07	TO TRAFFIC FROM LEFT
2-09	R1-2	2S	36X31	3.88	---	---	---	---	---	1	---	YIELD
2-10	R6-2R	2S	24X30	5.00	---	---	---	---	---	---	2-09	ONE WAY RIGHT ARROW
2-11	R1-2	2S	36X31	3.88	---	---	---	---	---	1	---	YIELD
2-12	R6-2R	2S	24X30	5.00	---	---	---	---	---	---	2-11	ONE WAY RIGHT ARROW
2-13	R1-2	2S	36X31	3.88	---	---	---	---	---	1	---	YIELD
2-14	R1-54	2S	24X15	2.50	---	---	---	---	---	---	2-13	TO TRAFFIC FROM LEFT
2-15	D1-2	2	48X30	10.00	---	---	---	---	---	2	---	TWO DESTINATIONS (ARROW)
2-16	R1-2	2S	36X31	3.88	---	---	---	---	---	1	---	YIELD

ALL ITEMS CATEGORY 0010 UNLESS NOTED

PERMANENT SIGNING CONTINUED

SIGN #	SIGN CODE	SIGN SIZE	SIGN SIZE INCHES	637.2210 SIGNS TYPE II REFLECTIVE H SF	637.2230 SIGNS TYPE II REFLECTIVE F SF	634.0614 POSTS WOOD 4X6-INCH 14-FT EACH	634.0616 POSTS WOOD 4X6-INCH 16-FT EACH	634.0618 POSTS WOOD 4X6-INCH 18-FT EACH	634.0622 POSTS WOOD 4X6-INCH 22-FT EACH	634.0812 POSTS TUBULAR STEEL 2X2-INCH 12-FT EACH	SIGN MOUNTED ON SAME POST AS #	REMARKS
2-17	R6-2R	2S	24X30	5.00	---	---	---	---	---	---	2-16	ONE WAY RIGHT ARROW
2-18	R1-2	2S	36X31	3.88	---	---	---	---	---	1	---	YIELD
2-19	R1-54	2S	24X15	2.50	---	---	---	---	---	---	2-18	TO TRAFFIC FROM LEFT
2-20	R6-1R	2S	36X12	3.00	---	---	2	---	---	---	---	ONE WAY RIGHT ARROW
2-21	R6-4B	2S	60X24	10.00	---	---	--	---	---	---	2-20	ROUNDABOUT CHEVRON BANK
2-22	R6-1R	2S	36X12	3.00	---	---	2	---	---	---	---	ONE WAY RIGHT ARROW
2-23	R6-4B	2S	60X24	10.00	---	---	--	---	---	---	2-22	ROUNDABOUT CHEVRON BANK
2-24	R6-1R	2S	36X12	3.00	---	---	2	---	---	---	---	ONE WAY RIGHT ARROW
2-25	R6-4B	2S	60X24	10.00	---	---	--	---	---	---	2-24	ROUNDABOUT CHEVRON BANK
2-26	R6-1R	2S	36X12	3.00	---	---	2	---	---	---	---	ONE WAY RIGHT ARROW
2-27	R6-4B	2S	60X24	10.00	---	---	--	---	---	---	2-26	ROUNDABOUT CHEVRON BANK
2-28	D1-2	2	42X30	8.75	---	---	---	---	---	2	---	TWO DESTINATIONS (ARROW)
2-29	J4-1	2	24X36	6.00	---	1	---	---	---	---	---	REASSURANCE ASSEMBLY (1 HEADED ROUTE PANEL)
	M3-1			---	---	---	---	---	---	---	---	NORTH CARDINAL ROUTE MARKER
	M1-6			---	---	---	---	---	---	---	---	STATE ROUTE MARKER
2-30	J4-1	2	24X36	6.00	---	1	---	---	---	---	---	REASSURANCE ASSEMBLY (1 HEADED ROUTE PANEL)
	M3-4			---	---	---	---	---	---	---	---	WEST CARDINAL ROUTE MARKER
	M1-6			---	---	---	---	---	---	---	---	STATE ROUTE MARKER
3-01	R4-7	2M	36X48	12.00	---	---	1	---	---	---	---	KEEP RIGHT
3-02	W5-54	2M	18X18	---	2.25	---	---	---	---	---	3-01	CLEARANCE MARKER WITH YELLOW TYPE F SHEETING
3-03	D1-2	2	84X30	17.50	---	---	2	---	---	---	---	TWO DESTINATIONS (ARROW)
3-04	R2-1	2S	24X30	5.00	---	---	1	---	---	---	---	SPEED LIMIT 55 MPH
3-05	W3-2	2S	36X36	---	9.00	---	---	1	---	---	---	YIELD AHEAD
3-06	D1-62	2S	120X90	75.00	---	---	---	---	2	---	---	ROUNDABOUT GUIDE SIGN
3-07	W2-6	2S	30X30	---	6.25	---	1	---	---	---	---	CIRCULAR INTERSECTION SIGN
3-08	R5-1A	2M	42X30	8.75	---	1	---	---	---	---	---	ROUNDABOUT AHEAD PLAQUE
3-09	W13-1	2S	18X18	---	2.25	---	---	---	---	---	3-07	ADVISORY SPEED PLATE (YELLOW BACK)
3-10	J1-2	2	48X39	13.00	---	---	1	---	---	---	---	JUNCTION ASSEMBLY (2 HEADED PANEL)
	M2-1	---		---	---	---	---	---	---	---	---	JUNCTION MARKER
	M1-6	---		---	---	---	---	---	---	---	---	STATE ROUTE MARKER
	M2-1	---		---	---	---	---	---	---	---	---	JUNCTION MARKER
	M1-5A	---		---	---	---	---	---	---	---	---	COUNTY MARKER
3-11	R6-2R	2S	24X30	5.00	---	1	---	---	---	---	---	ONE WAY RIGHT ARROW
3-12	R5-1	2M	36X36	9.00	---	---	1	---	---	---	---	DO NOT ENTER
3-13	R3-4	2S	24X24	4.00	---	---	---	---	---	---	3-01	NO U-TURN SYMBOL

ALL ITEMS CATEGORY 0010 UNLESS NOTED

PERMANENT SIGNING CONTINUED

SIGN #	SIGN CODE	SIGN SIZE	SIGN SIZE INCHES	637.2210 SIGNS TYPE II REFLECTIVE H SF	637.2230 SIGNS TYPE II REFLECTIVE F SF	634.0614 POSTS WOOD 4X6-INCH 14-FT EACH	634.0616 POSTS WOOD 4X6-INCH 16-FT EACH	634.0618 POSTS WOOD 4X6-INCH 18-FT EACH	634.0622 POSTS WOOD 4X6-INCH 22-FT EACH	634.0812 POSTS TUBULAR STEEL 2X2-INCH 12-FT EACH	SIGN MOUNTED ON SAME POST AS #	REMARKS
4-01	R2-1	2S	24X30	5.00	---	---	1	---	---	---	---	SPEED LIMIT 55 MPH
4-02	J1-3	2	72X39	19.50	---	---	2	---	---	---	---	JUNCTION ASSEMBLY (3 HEADED PANEL)
	M2-1	---		---	---	---	---	---	---	---	---	JUNCTION MARKER
	M1-6	---		---	---	---	---	---	---	---	---	STATE ROUTE MARKER
	M2-1	---		---	---	---	---	---	---	---	---	JUNCTION MARKER
	M1-5A	---		---	---	---	---	---	---	---	---	COUNTY MARKER
	M4-6	---		---	---	---	---	---	---	---	---	END MARKER
	M1-6	---		---	---	---	---	---	---	---	---	STATE ROUTE MARKER
4-03	W2-6	2S	30X30	---	6.25	---	1	---	---	---	---	CIRCULAR INTERSECTION SIGN
4-04	R3-4	2S	24X24	4.00	---	---	---	---	---	---	4-09	NO U-TURN SYMBOL
4-05	W13-1	2S	18X18	---	2.25	---	---	---	---	---	4-03	ADVISORY SPEED PLATE (YELLOW BACK)
4-06	D1-62	2	120x90	75.00	---	---	---	---	2	---	---	ROUNDABOUT GUIDE SIGN
4-07	W3-2	2S	36X36	---	9.00	---	---	1	---	---	---	YIELD AHEAD
4-08	R6-2R	2S	24X30	5.00	---	1	---	---	---	---	---	ONE WAY RIGHT ARROW
4-09	R4-7	2M	36X48	12.00	---	---	1	---	---	---	---	KEEP RIGHT
4-10	W5-54	2S	18X18	---	2.25	---	---	---	---	---	4-09	CLEARANCE MARKER WITH YELLOW TYPE F SHEETING
4-11	D2-2	2	96X24	16.00	---	---	---	2	---	---	---	DESTINATION/DISTANCE (TWO) WITH DIE CUT LETTERS
4-12	J4-1	2	24X36	6.00	---	---	1	---	---	---	---	REASSURANCE ASSEMBLY (1 HEADED ROUTE PANEL)
	M3-3	---		---	---	---	---	---	---	---	---	SOUTH CARDINAL ROUTE MARKER
	M1-6	---		---	---	---	---	---	---	---	---	STATE ROUTE MARKER
4-13	D1-2	2	72X30	15.00	---	---	2	---	---	---	---	TWO DESTINATIONS (ARROW)
4-14	R5-1A	2M	42X30	8.75	---	---	---	---	---	---	4-11	WRONG WAY
4-15	R5-1	2S	30X30	6.25	---	1	---	---	---	---	---	DO NOT ENTER
4-16	R5-1	2M	36X36	9.00	---	---	---	1	---	---	---	DO NOT ENTER
5-01	R3-18	2S	36X36	9.00	---	---	1	---	---	---	---	NO LEFT/U-TURN SYMBOL
5-02	R4-7	2M	36X48	12.00	---	---	1	---	---	---	---	KEEP RIGHT
5-03	W5-54	2S	18X18	---	2.25	---	---	---	---	---	5-02	CLEARANCE MARKER WITH YELLOW TYPE F SHEETING
5-04	D1-3	2	84X48	28.00	---	---	---	2	---	---	---	THREE DESTINATIONS (ARROW)
5-05	J4-1	2	24X36	6.00	---	---	1	---	---	---	---	REASSURANCE ASSEMBLY (1 HEADED ROUTE PANEL)
	M3-3	---		---	---	---	---	---	---	---	---	SOUTH CARDINAL ROUTE MARKER
	M1-5A	---		---	---	---	---	---	---	---	---	COUNTY MARKER
5-06	R7-8A	2S	12X18	1.50	---	1	---	---	---	---	---	RESERVED PARKING, HANDICAPPED, THIS SPACE
5-07	R7-8V	2S	12X6	0.50	---	---	---	---	---	---	5-06	VAN ACCESSIBLE
5-08	R3-4	2S	24X24	4.00	---	---	1	---	---	---	---	NO U-TURN SYMBOL
5-09	R4-7	2M	36X48	12.00	---	---	---	---	---	---	5-08	KEEP RIGHT
5-10	W3-2	2S	36X36	---	9.00	---	---	1	---	---	---	YIELD AHEAD
5-11	D1-62	2S	108X84	63.00	---	---	---	---	2	---	---	ROUNDABOUT GUIDE SIGN
5-12	W2-6	2S	30X30	---	6.25	---	1	---	---	---	---	CIRCULAR INTERSECTION SIGN
5-13	R6-2L	2S	24X30	5.00	---	1	---	---	---	---	---	ONE WAY LEFT ARROW
5-14	W13-1	2S	18X18	---	2.25	---	---	---	---	---	5-12	ADVISORY SPEED PLATE (YELLOW BACK)
5-15	J1-2	2	48X39	13.00	---	---	1	---	---	---	---	JUNCTION ASSEMBLY (2 HEADED PANEL)
	M2-1	---		---	---	---	---	---	---	---	---	JUNCTION MARKER
	M1-6	---		---	---	---	---	---	---	---	---	STATE ROUTE MARKER
	M2-1	---		---	---	---	---	---	---	---	---	JUNCTION MARKER
	M1-6	---		---	---	---	---	---	---	---	---	STATE ROUTE MARKER
5-16	R2-1	2S	24X30	5.00	---	---	1	---	---	---	---	SPEED LIMIT 55 MPH
5-17	R5-1A	2M	42X30	8.75	---	---	1	---	---	---	---	WRONG WAY
5-18	R4-7	2M	36X48	12.00	---	---	---	---	---	---	5-01	KEEP RIGHT
5-19	R3-4	2S	24X24	4.00	---	---	---	---	---	---	5-02	NO U-TURN SYMBOL
5-20	R5-1	2M	36X36	9.00	---	---	---	1	---	---	---	DO NOT ENTER
PROJECT TOTALS				855.29	85.25	8	42	11	8	16		

ALL ITEMS CATEGORY 0010 UNLESS NOTED

MOVING AND REMOVING SIGNS

SIGN #	SIGN CODE	SIGN MOUNTED ON SAME POST AS #	638.2101 MOVING SIGNS TYPE II EACH	638.2602 REMOVING SIGNS TYPE II EACH	638.3000 REMOVING SMALL SIGN SUPPORTS EACH	638.4000 MOVING SMALL SIGN SUPPORTS EACH	SPV.0060.01 SALVAGING SOLAR POWERED FLASHING BLINKER STOP SIGNS EACH	REMARKS
1R01	J2-1	---	---	1	1	---	---	ROUTE TURN ASSEMBLY
1R02	W1-2R	---	---	1	1	---	---	RIGHT CURVE ARROW
1R03	W2-1	---	---	1	1	---	---	CROSS ROAD SYMBOL
1R04	R2-1	---	---	1	1	---	---	SPEED LIMIT 55 MPH
1R05	D12-2A	---	---	1	2	---	---	RIDESHARE INFO "800-NUMBER"
1R06	W2-1	---	---	1	1	---	---	CROSS ROAD SYMBOL
1R07	J2-3	---	---	1	2	---	---	ROUTE TURN ASSEMBLY
1R08	D1-1	---	---	1	2	---	---	ONE DESTINATION ARROW
1R09	W1-2R	1R10	---	1	1	---	---	RIGHT CURVE ARROW
1R10	W13-1	1R09	---	1	---	---	---	ADVISORY SPEED (YELLOW BACK)
2R01	J4-1	2R02	---	1	2	---	---	REASSURANCE ASSEMBLY
2R02	D2-1	2R01	---	1	---	---	---	DEST-DIST 1 W/ DIE CUT LTRS
2R03	J3-3	---	---	1	2	---	---	DIRECTIONAL ASSEMBLY
2R04	W4-4C	2R14	---	1	1	---	---	TRAFFIC ON 20 DOES NOT STOP
2R05	W14-3	2R06	---	1	---	---	---	NO PASSING ZONE
2R06	J3-2	2R05	---	1	2	---	---	DIRECTIONAL ASSEMBLY
2R07	J3-2	---	---	1	2	---	---	DIRECTIONAL ASSEMBLY
2R08	R1-1	---	---	1	1	---	---	STOP SIGN
2R09	J4-1	---	---	1	1	---	---	REASSURANCE ASSEMBLY
2R10	W4-4C	2R13	---	1	1	---	---	TRAFFIC ON 20 DOES NOT STOP
2R11	J3-3	---	---	1	2	---	---	DIRECTIONAL ASSEMBLY
2R12	J4-1	---	---	1	1	---	---	REASSURANCE ASSEMBLY
2R13	R1-1	2R10	---	---	---	---	1	BLINKER STOP SIGN
2R14	R1-1	2R04	---	---	---	---	1	BLINKER STOP SIGN
3R01	D1-1	---	---	1	2	---	---	ONE DESTINATION ARROW
3R02	J2-3	---	---	1	2	---	---	ROUTE TURN ASSEMBLY
3R03	R2-1	---	---	1	1	---	---	SPEED LIMIT 55 MPH
3R04	W2-1	---	---	1	1	---	---	CROSS ROAD SYMBOL
3R05	W2-1	---	---	1	1	---	---	CROSS ROAD SYMBOL
4R01	W3-1	---	---	1	1	---	---	STOP AHEAD
4R02	W14-3	---	---	1	1	---	---	NO PASSING ZONE
4R03	W3-1	---	---	1	1	---	---	STOP AHEAD
4R04	D2-2	---	---	1	2	---	---	DEST-DIST 2 W/ DIE CUT LTRS
4R05	J1-3	---	---	1	2	---	---	JCT OR END ASSEMBLY
4R06	W3-1	---	---	1	1	---	---	STOP AHEAD
4R07	D1-2	---	---	1	2	---	---	TWO DESTINATIONS ARROWS
4M01	I55-56	---	1	---	---	1	---	ADOPT A HIGHWAY
5M01	I55-56	---	1	---	---	1	---	ADOPT A HIGHWAY
5R01	J4-1	---	---	1	1	---	---	REASSURANCE ASSEMBLY
5R02	J2-1	---	---	1	1	---	---	ROUTE TURN ASSEMBLY
5R03	W3-1	---	---	1	1	---	---	STOP AHEAD
TOTALS			2	37	47	2	2	

ALL ITEMS CATEGORY 0010 UNLESS NOTED

3

TRAFFIC CONTROL SIGNS FIXED MESSAGE

SIGN NUMBER	SIGN SIZE			643.1000 SF
1	11'-0"	X	4'-0"	44.0
2	11'-0"	X	4'-0"	44.0
3	11'-0"	X	4'-0"	44.0
4	11'-0"	X	4'-0"	44.0
5	6'-0"	X	3'-0"	18.0
PROJECT TOTAL				194

TRAFFIC CONTROL ITEMS

LOCATION	* DURATION DAYS	643.0420 TRAFFIC CONTROL BARRICADES TYPE III DAYS	643.0705 TRAFFIC CONTROL WARNING LIGHTS TYPE A DAYS	643.0900 TRAFFIC CONTROL SIGNS DAYS	643.1050 TRAFFIC CONTROL SIGNS PCMS * EACH	643.1050 TRAFFIC CONTROL SIGNS PCMS DAYS	643.0920 TRAFFIC CONTROL COVERING SIGNS TYPE II EACH
DETOUR	90	2700	5400	1350	4	56	7
POST-CONSTRUCTION	30	---	---	---	4	120	---
PROJECT TOTALS		2700	5400	1350	---	176	7

*FOR INFORMATION ONLY

NOTE: TRAFFIC CONTROL SIGNS PCMS TO BE INSTALLED FOR 14 DAYS PRIOR TO ROADWAY CLOSURE

3

TRAFFIC CONTROL

PROJECT	643.0100 EACH
2340-09-70	1
PROJECT TOTAL	1

CONSTRUCTION STAKING ITEMS*

LOCATION	650.4500 SUBGRADE LF	650.5000 ** BASE LF	650.5000 ** ELECTRICAL INSTALLATIONS LS	650.5000 ** SUPPLEMENTAL CONTROL LS	650.9920 SLOPE STAKES LF	SPV.0060.04 PARKING LOT EACH
ID 2340-09-70	---	---	1	1	---	---
STH 20	3,175	3,175	---	---	3,175	---
STH 75	1,275	1,275	---	---	1,275	2
CTH S	1,475	1,475	---	---	1,475	1
PROJECT TOTALS	5,925	5,925	1	1	5,925	3

*ADDITIONAL STAKING ITEMS SHOWN ELSEWHERE
**CATEGORY 0020. ALL OTHER ITEMS CATEGORY 0010

DETOURS

LOCATION	* DETOUR DURATION DAYS	643.2000 TRAFFIC CONTROL DETOURS EACH	643.3000 TRAFFIC CONTROL DETOUR SIGNS * SIGNS	643.3000 TRAFFIC CONTROL DETOUR SIGNS * DAYS
ID 2340-09-70	90	1	147	13,230
PROJECT TOTALS	---	1	---	13,230

*FOR INFORMATION ONLY

CONSTUCTION STAKING STORM SEWER

DESCRIPTION	** 650.4000 EACH
MANHOLE 3-FT DIAMETER	1
MANHOLE 5-FT DIAMETER	3
MANHOLE 6-FT DIAMETER	11
INLETS 4-FT DIAMETER	7
INLETS 2X3-FT	27
INLET MEDIAN 1 GRATE	4
AEW CPCS SLOPED 6:1 24"	1
AEW CPRC 12-INCH	3
AEW CPRC 15-INCH	1
AEW CPRC 18-INCH	1
AEW CPRC 36-INCH	1
AEW CPRC HE 19X30-INCH	2
PROJECT TOTALS	62

**ADDITIONAL STAKING ITEMS SHOWN ELSEWHERE

ALL ITEMS CATEGORY 0010 UNLESS NOTED

3

SAWING

ROADWAY	STATION		STATION	SIDE	690.0150 ASPHALT LF	690.0250 CONCRETE LF
STH 20	575+49	-	576+83	LT/RT	175	---
	587+54	-	588+86	RT	155	---
	589+35	-	589+73	RT	40	---
	590+21	-	590+60	RT	50	---
	590+61	-	590+71	LT	10	---
			595+18	LT/RT	40	5
	STH 20 SUBTOTAL				470	5
STH 75			462+13	LT/RT	30	---
	462+47	-	462+59	LT	---	15
	468+42	-	469+19	RT	125	---
	STH 75 SUBTOTAL				155	15
CTH S	473+70	-	473+84	RT	---	15
			480+23	LT/RT	25	---
	CTH S SUBTOTAL				25	15
	PROJECT TOTAL				650	35

PIPE UNDERDRAIN UNPERFORATED 2-INCH

ROADWAY	STATION		STATION	SIDE	SPV.0090.03 LF
STH 75	468+12	-	468+25	RT	20
	PROJECT TOTAL				20

NOTE:
TO BE USED TO EXTEND DOVER INN SUMP DRAIN TO DITCH

3

ALL ITEMS CATEGORY 0010 UNLESS NOTED

LIGHTING UNIT QUANTITIES

SYSTEM	LABEL	LUMINAIRE VOLTAGE	654.0105 CONCRETE BASES TYPE 5 EACH	655.0610 ELECTRICAL WIRE LIGHTING 12 AWG LF	657.0322 POLES TYPE 5 ALUMINUM EACH	657.0255 TRANSFORMER BASES STANDARD 11 1/2-INCH BOLT CIRCLE EACH	657.0715 LUMINAIRE ARMS TRUSS TYPE 4 1/2-INCH CLAMP 15-FT EACH	659.0802 PLAQUES SEQUENCE IDENTIFICATION* EACH	659.1115 LUMINAIRES UTILITY LED A EACH
HL-51-DV	ADV1	240	1	141	1	1	1	1	1
HL-51-DV	BDV1	240	1	141	1	1	1	1	1
HL-51-DV	ADV2	240	1	141	1	1	1	1	1
HL-51-DV	BDV2	240	1	141	1	1	1	1	1
HL-51-DV	ADV3	240	1	141	1	1	1	1	1
HL-51-DV	BDV3	240	1	141	1	1	1	1	1
HL-51-DV	ADV4	240	1	141	1	1	1	1	1
HL-51-DV	BDV4	240	1	141	1	1	1	1	1
HL-51-DV	CDV1	240	1	141	1	1	1	1	1
HL-51-DV	DDV1	240	1	141	1	1	1	1	1
HL-51-DV	CDV2	240	1	141	1	1	1	1	1
HL-51-DV	DDV2	240	1	141	1	1	1	1	1
HL-51-DV	CDV3	240	1	141	1	1	1	1	1
HL-51-DV	DDV3	240	1	141	1	1	1	1	1
HL-51-DV	CDV4	240	1	141	1	1	1	1	1
HL-51-DV	DDV4	240	1	141	1	1	1	1	1
		TOTALS	16	2256	16	16	16	16	16

* ADDITIONAL QUANTITIES SHOWN ELSEWHERE

LIGHTING CONTROL QUANTITIES

LABEL	655.0640 ELECTRICAL WIRE LIGHTING 1 AWG LF	656.0400.01 ELECTRICAL SERVICE MAIN LUGS ONLY METER PEDESTAL CABINET HL-51-DV LS	659.0802 PLAQUES SEQUENCE IDENTIFICATION* EACH	SPV.0060.02 LIGHTING CONTROL CABINET (240/480V) EACH	SPV.0060.03 CONCRETE CONTROL CABINET BASES SPECIAL EACH	SPV.0105.01 LIGHTING INTEGRATOR LS	SPV.0105.02 LIGHTING SYSTEM SURVEY LS
HL-51-DV	18	1	4	1	1	1	1
TOTALS	18	1	4	1	1	1	1

* ADDITIONAL QUANTITIES SHOWN ELSEWHERE

PLAQUE TEXT: HL-51-DV
PLAQUE TEXT: DOVER
2-ANSI PLAQUES: 480 VOLTS

CONDUIT AND CONDUCTOR QUANTITIES

SYSTEM	NETWORK	LOCATION TO LOCATION	652.0225 CONDUIT RIGID NONMETALLIC SCHEDULE 40 2-INCH LF	655.0620 ELECTRICAL WIRE LIGHTING 8 AWG LF
HL-51-DV	A/B/N/GND & C/D/N/GND	CAB. HL-51-DV TO LPB-1	18	120
HL-51-DV	A/B/N/GND	LPB-1 TO ADV1	70	308
HL-51-DV	A/B/N/GND	ADV1 TO LPB-2	34	164
HL-51-DV	A/B/N/GND	LPB-2 TO LPB-3	91	388
HL-51-DV	A/B/N/GND	LPB-3 TO BDV1	17	192
HL-51-DV	A/B/N/GND	BDV1 TO ADV2	159	668
HL-51-DV	B/N/GND	ADV2 TO BDV2	157	495
HL-51-DV	A/B/N/GND	LPB-3 TO ADV3	47	216
HL-51-DV	A/B/N/GND	ADV3 TO LPB-4	49	224
HL-51-DV	A/B/N/GND	LPB-4 TO LPB-5	86	368
HL-51-DV	A/B/N/GND	LPB-5 TO BDV3	13	76
HL-51-DV	A/B/N/GND	BDV3 TO ADV4	157	660
HL-51-DV	B/N/GND	ADV4 TO BDV4	159	501
HL-51-DV	-----	LPB-5 TO DDV4	58	
HL-51-DV	C/D/N/GND	LPB-1 TO CDV1	8	120
HL-51-DV	C/D/N/GND	CDV1 TO DDV1	159	668
HL-51-DV	C/N/GND	DDV1 TO CDV2	159	501
HL-51-DV	C/D/N/GND	LPB-1 TO LPB-8	85	364
HL-51-DV	C/D/N/GND	LPB-8 TO DDV2	44	204
HL-51-DV	C/D/N/GND	DDV2 TO LPB-7	38	176
HL-51-DV	C/D/N/GND	LPB-7 TO CDV3	26	231
HL-51-DV	C/D/N/GND	CDV3 TO DDV3	158	664
HL-51-DV	C/N/GND	DDV3 TO CDV4	158	498
HL-51-DV	C/D/N/GND	LPB-7 TO LPB-6	103	327
HL-51-DV	D/N/GND	LPB-6 TO DDV4	10	51
		TOTALS	2063	8184

LIGHTING PULL BOX QUANTITIES

NO.	LOCATION	653.0140 PULL BOXES STEEL 24X42-INCH EACH
LPB-1	STA. 471+31.2, 34.0' LT	1
LPB-2	STA. 585+92.5, 56.7' LT	1
LPB-3	STA. 586+05.2, 34.8' RT	1
LPB-4	STA. 468+93.6, 51.6' LT	1
LPB-5	STA. 469+04.3, 35.4' RT	1
LPB-6	STA. 587+75.8, 57.2' RT	1
LPB-7	STA. 588+11.4, 41.2' LT	1
LPB-8	STA. 471+19.0, 52.4' RT	1
	TOTAL	8

PROJECT NO: 2340-09-70	HWY: STH 20	COUNTY: RACINE	MISCELLANEOUS QUANTITIES	SHEET NO: E

FILE NAME : PLOT DATE: 1/7/2014 8:51:12 AM PLOT BY : PLOT NAME : ORG DATE : ORIGINATOR : PLOT SCALE : N/A

TRANSPORTATION PROJECT PLAT NO: 2340-09-20 - 4.01

THAT PART OF THE SOUTHWEST 1/4 OF THE SOUTHEAST 1/4 AND THE SOUTHEAST 1/4 OF THE SOUTHEAST 1/4 OF SECTION 3, AND THE NORTHEAST 1/4 OF THE NORTHEAST 1/4 OF SECTION 10 ALL OF TOWNSHIP 3 NORTH, RANGE 20 EAST, TOWN OF DOVER, RACINE COUNTY, WISCONSIN.

RELOCATION ORDER STH 20 - STH 75 - CTH S INTERSECTION RACINE COUNTY

TO PROPERLY ESTABLISH, LAY OUT, WIDEN, ENLARGE, EXTEND, CONSTRUCT, RECONSTRUCT, IMPROVE, OR MAINTAIN A PORTION OF THE HIGHWAY DESIGNATED ABOVE, THE STATE OF WISCONSIN DEPARTMENT OF TRANSPORTATION DEEMS IT NECESSARY TO RELOCATE OR CHANGE SAID HIGHWAY AND ACQUIRE CERTAIN LANDS AND INTERESTS OR RIGHTS IN LANDS FOR THE ABOVE PROJECT.

TO EFFECT THIS CHANGE, PURSUANT TO AUTHORITY GRANTED UNDER SECTION 84.02 (3) AND 84.09, WISCONSIN STATUTES, THE DEPARTMENT OF TRANSPORTATION HEREBY ORDERS THAT:
1. THAT PORTION OF SAID HIGHWAY AS SHOWN ON THIS PLAT IS LAID OUT AND ESTABLISHED TO THE LINES AND WIDTHS AS SO SHOWN FOR THE ABOVE PROJECT.
2. THE LANDS OR INTERESTS OR RIGHTS IN LANDS AS SHOWN ON THIS PLAT ARE REQUIRED BY THE DEPARTMENT FOR THE ABOVE PROJECT AND SHALL BE ACQUIRED IN THE NAME OF THE STATE OF WISCONSIN, PURSUANT TO THE PROVISIONS OF SECTION 84.09 (1) OR (2), WISCONSIN STATUTES.

SCHEDULE OF LANDS & INTERESTS REQUIRED

OWNERS NAMES ARE SHOWN FOR REFERENCE PURPOSES ONLY, AND ARE SUBJECT TO CHANGE PRIOR TO TRANSFER OF LAND AND INTERESTS TO DOT.

PARCEL NUMBER	OWNER	INTEREST REQUIRED	AREA ACRES REQUIRED NEW	EXISTING	TOTAL	TLE ACRES	PLE ACRES
1	CHRISTINA R. BJURQUIST	FEE, TLE,	0.033		0.033	0.027	
2	THE JAMES B. & THELMA M. BONNER JOINT LIVING TRUST	FEE, TLE	0.329		0.329	0.104	
3	MARY E. BEAUMONT REVOCABLE TRUST	FEE, TLE	0.005		0.005	0.085	
4	AUGUST & LAVERNE STORCK TRUST , ET AL	FEE, PLE, TLE	0.697		0.697	0.394	0.049
5	RACINE COUNTY	FEE, TLE	0.128		0.128	0.141	
70	TDS TELECOM	RELEASE OF RIGHTS					
71	WE ENERGIES - ELECTRIC	RELEASE OF RIGHTS					

R/L STH 20
CURVE DATA
PI = 280+44.70
Y = 191,427.671
X = 551,180.169
DELTA = 03°22'29" RT
BACK = N80°51'36"E
AHEAD = S84°14'05"E
D = 01°30'01"
T = 112.51'
L = 224.957'
R = 3819.30'

R/L STH 20
CURVE DATA
PI = 272+93.89
Y = 191,309.377
X = 550,444.924
DELTA = 08°56'30" LT
BACK = N89°48'06"E
AHEAD = N80°51'36"E
D = 02°00'00"
T = 224.00'
L = 447.08'
R = 2864.79'

R/L STH 75, CTH S
PI = 70+36.06
Y = 191,531.004
X = 551,846.410
DELTA = 00°06'03" LT
BACK = N00°05'49"W
AHEAD = N00°11'52"W

STH 20 R/W
L=222.31'
R=3,774.30'
LC=222.28'
LCB=S82°32'50"W

P-2 TLE
L=31.77'
R=3,774.30'
LC=31.77'
LCB=N83°59'37"E

P-2 TLE
L=31.40'
R=3,764.30'
LC=31.40'
LCB=S83°59'29"W

P-4 FEE
L=151.42'
R=3,864.30'
LC=151.41'
LCB=S83°06'44"W

P-3 FEE
L=76.19'
R=3,864.30'
LC=76.19'
LCB=S81°25'29"W

NOTES:

COORDINATES AND BEARINGS SHOWN ON THIS PLAT ARE REFERENCED TO THE WISCONSIN COUNTY COORDINATE SYSTEM, RACINE COUNTY ZONE, NAD83 (2007) ADJUSTMENT. THE COORDINATES SHOWN ARE GRID COORDINATES AND ARE TO BE USED AS GRID OR GROUND VALUES ON THIS PLAT.

RIGHT-OF-WAY MONUMENTS ARE TYPE 2 AND WILL BE PLACED PRIOR TO THE COMPLETION OF THE PROJECT. BY WISDOT SE REGION.

RIGHT-OF-WAY BOUNDARIES ARE DEFINED WITH COURSES OF THE PERIMETER OF THE HIGHWAY LANDS REFERENCED TO THE U.S. PUBLIC LAND SURVEY SYSTEM OR OTHER "SURVEYS OF PUBLIC RECORD".

PROPERTY LINES SHOWN ON THIS PLAT ARE DRAWN FROM DATA DERIVED FROM MAPS AND DOCUMENTS OF PUBLIC RECORD AND/OR EXISTING OCCUPATIONAL LINES. THIS PLAT MAY NOT BE A TRUE REPRESENTATION OF EXISTING PROPERTY LINES, EXCLUDING RIGHT-OF-WAY LINES, AND SHOULD NOT BE USED AS A SUBSTITUTE FOR AN ACCURATE FIELD SURVEY.

DIMENSIONING FOR THE NEW RIGHT-OF-WAY IS MEASURED ALONG AND PERPENDICULAR TO NEW REFERENCE LINES.

EXISTING HIGHWAY RIGHT-OF-WAY SHOWN HEREIN IS BASED ON THE FOLLOWING POINTS OF REFERENCE:
EXISTING HIGHWAY RIGHT-OF-WAY FOR STH 20 ESTABLISHED FROM PREVIOUS PROJECT 3240-02-20, 02/18/1993.
EXISTING HIGHWAY RIGHT-OF-WAY FOR STH 75 ESTABLISHED FROM PREVIOUS PROJECT 3240-02-20, 02/18/1993.
EXISTING HIGHWAY RIGHT-OF-WAY FOR CTH S ESTABLISHED FROM PREVIOUS PROJECT 3240-02-20, 02/18/1993.
EXISTING ACCESS CONTROL ALONG STH 20 ESTABLISHED FROM PREVIOUS PROJECT 3240-02-20, 02/18/1993.

A **TEMPORARY LIMITED EASEMENT** (TLE) IS A RIGHT FOR CONSTRUCTION PURPOSES, AS DEFINED HEREIN, INCLUDING THE RIGHT TO OPERATE NECESSARY EQUIPMENT THEREON AND THE RIGHT OF INGRESS AND EGRESS, AS LONG AS REQUIRED FOR SUCH PUBLIC PURPOSE, INCLUDING THE RIGHT TO PRESERVE, PROTECT, REMOVE, OR PLANT THEREON ANY VEGETATION THAT THE HIGHWAY AUTHORITIES MAY DEEM NECESSARY OR DESIRABLE. ALL TLES EXPIRE AT THE COMPLETION OF THE CONSTRUCTION PROJECT FOR WHICH THIS INSTRUMENT IS GIVEN.

A **PERMANENT LIMITED EASEMENT** (PLE) IS A RIGHT FOR CONSTRUCTION AND MAINTENANCE PURPOSES, AS DEFINED HEREIN, INCLUDING THE RIGHT TO OPERATE NECESSARY EQUIPMENT THEREON AND THE RIGHT OF INGRESS AND EGRESS, AS LONG AS REQUIRED FOR SUCH PUBLIC PURPOSE, INCLUDING THE RIGHT TO PRESERVE, PROTECT, REMOVE, OR PLANT THEREON ANY VEGETATION THAT THE HIGHWAY AUTHORITIES MAY DEEM NECESSARY OR DESIRABLE. BUT WITHOUT PREJUDICE TO THE OWNER'S RIGHT TO MAKE OR CONSTRUCT IMPROVEMENT ON SAID LANDS OR TO FLATTEN THE SLOPES, PROVIDING SAID ACTIVITIES WILL NOT IMPAIR OR OTHERWISE ADVERSELY AFFECT THE HIGHWAY FACILITIES.

70 — TDS TELECOM
NO RECORD OF EASEMENT
PARCEL 2

71 — WE ENERGIES - ELECTRIC
PARCEL 2, NON DESCRIPT, V.380, P.518, DOC. 457128
PARCEL 4, NON DESCRIPT, V.338, P.345, DOC. 428544

PRIVATE WELL AGREEMENT
PARCEL 1, NON DESCRIPT, V.399, P.669, DOC. 470916
PARCEL 2, NON DESCRIPT, V.399, P.669, DOC. 470916

CAST IRON MONUMENT WITH BRASS CAP
Y=188,890.388
X=551,850.882

CONCRETE MONUMENT WITH BRASS CAP
Y=191,598.154
X=554,483.053

CONCRETE MONUMENT WITH BRASS CAP
Y=191,531.004
X=551,846.410

CONCRETE MONUMENT WITH BRASS CAP
Y=194,176.731
X=551,837.279

CONVENTIONAL ABBREVIATIONS

ACCESS POINT/ DRIVEWAY CONNECTION	AP	RELEASE OF RIGHTS	ROR
ACCESS RIGHTS	AR	REMAINING	REM.
ACRES	AC.	RIGHT-OF-WAY	R/W
AND OTHERS	ET.AL.	SECTION	SEC.
CENTERLINE	C/L	STATION	STA.
CERTIFIED SURVEY MAP	CSM	TEMPORARY LIMITED EASEMENT	TLE
CORNER	COR.	VOLUME	V.
DOCUMENT	DOC.		
EASEMENT	EASE.		
HIGHWAY EASEMENT	H.E.		
LAND CONTRACT	LC		
MONUMENT	MON.		
PAGE	P.		
PERMANENT LIMITED EASEMENT	PLE		
PROPERTY LINE	PL		
RECORDED AS	(100')		
REFERENCE LINE	R/L		

CURVE DATA

LONG CHORD	LCH
LONG CHORD BEARING	LCB
RADIUS	R
DEGREE OF CURVE	D
CENTRAL ANGLE OR DELTA	DELTA
LENGTH OF CURVE	L
TANGENT	TAN

CONVENTIONAL SYMBOLS

FOUND IRON PIPE/PIN (1" UNLESS NOTED)	PROPOSED R/W LINE
R/W MONUMENT ●(SET)	PROPERTY LINE
R/W STANDARD △(SET)	LOT & TIE LINES
SIGN ISIGN	SLOPE INTERCEPTS
SECTION CORNER MONUMENT	ACCESS RESTRICTED (BY PREVIOUS ACQUISITION/CONTROL)
SECTION CORNER SYMBOL	ACCESS RESTRICTED (BY ACQUISTION)
FEE (HATCH VARIES)	SECTION LINE
TEMPORARY LIMITED EASEMENT	QUARTER LINE
PERMANENT LIMITED EASEMENT	SIXTEENTH LINE
R/W BOUNDARY POINT (RWB20)	EXISTING CENTERLINE
EXISTING ROW POINT (EX20)	PROPOSED REFERENCE LINE
PLE POINT (PLE20)	PARALLEL OFFSET
PARCEL NUMBER (102)	SIGN NUMBER (OFF PREMISE)
	BUILDING (21-1)

CONVENTIONAL UTILITY SYMBOLS

	NON COMPENSABLE	COMPENSABLE
GAS —G—		
TELEPHONE —T—		
OVERHEAD —OH—		
TRANSMISSION LINES		
ELECTRIC —E—		
CABLE TELEVISION —TV—		
FIBER OPTIC —FO—		
POWER POLE	●	●
TELEPHONE POLE	⌀	⌀
TELEPHONE PEDESTAL	⌧	⌧
ELECTRIC TOWER	⊠	

SCALE, FEET
0 100 200

GN

SHEET LOCATION

PROJECT LOCATION

LOCATION MAP NOT TO SCALE

TOWN OF DOVER

SE-SE

DETAIL NOT TO SCALE

TLE DOES NOT INCLUDE FENCE OR IMPROVEMENTS

THIS IS A COPY. ORIGINAL DOCUMENT IS AT THE RACINE COUNTY REGISTER OF DEEDS.

R.A. Smith National
Beyond Surveying and Engineering
16745 W. Bluemound Road, Brookfield WI 53005
262-781-1000 Fax 262-781-8466
www.rasmithnational.com

I, GREGORY A. KUNZ, REGISTERED LAND SURVEYOR, HEREBY CERTIFY THAT IN FULL COMPLIANCE WITH THE PROVISIONS OF SECTION 84.095 OF WISCONSIN STATUTES AND UNDER THE DIRECTION OF THE DEPARTMENT, I HAVE SURVEYED AND MAPPED TRANSPORTATION PROJECT PLAT 2340-09-20-4.01 AND THAT SUCH PLAT CORRECTLY REPRESENTS ALL EXTERIOR BOUNDARIES OF THE SURVEYED LAND.

WISCONSIN — GREGORY A. KUNZ — S-1346 — WAUKESHA, WI — LAND SURVEYOR

Gregory A. Kunz 04/12/2012
GREGORY A. KUNZ, RLS NO. 1346

THIS PLAT AND RELOCATION ORDER ARE APROVED FOR THE WIS. DEPARTMENT OF TRANSPORTATION

Robert L. Duffeck 4/16/2012
SIGNATURE DATE
ROBERT L. DUFFECK RLS
PRINTED NAME

DOCUMENT # 2316928
RACINE COUNTY REGISTER OF DEEDS
May 09, 2012 1:52 PM
TYSON FETTER
RACINE COUNTY
REGISTER OF DEEDS
Fee Amount: $25.00
Pages: 1
Vol 1 Pg 237

RESERVED FOR REGISTER OF DEEDS
PROJECT NUMBER 2340-09-20-4.01
AMENDMENT NO:

FILE NAME : S:\5164985\plat\040401_rp.DGN
APPRAISAL PLAT DATE:
PLOT DATE : 4/13/2012
PLOT BY : gak
PLOT NAME :
PLOT SCALE : $$.....plotscale.....$$
CONSTRUCTION 2340-09-70, R/W 2340-09-20 4.01

TRANSPORTATION PROJECT PLAT NO: 2340-09-20 - 4.02

THAT PART OF LOT 3 OF CSM 2967 AND UNPLATTED LANDS IN THE SOUTHWEST 1/4 OF THE SOUTHWEST 1/4 OF SECTION 2 AND THE NORTHWEST 1/4 OF THE NORTHWEST 1/4 OF SECTION 11, ALL OF TOWNSHIP 3 NORTH, RANGE 20 EAST, TOWN OF DOVER, RACINE COUNTY, WISCONSIN.

RELOCATION ORDER STH 20 - STH 75 - CTH S INTERSECTION RACINE COUNTY

TO PROPERLY ESTABLISH, LAY OUT, WIDEN, ENLARGE, EXTEND, CONSTRUCT, RECONSTRUCT, IMPROVE, OR MAINTAIN A PORTION OF THE HIGHWAY DESIGNATED ABOVE, THE STATE OF WISCONSIN DEPARTMENT OF TRANSPORTATION DEEMS IT NECESSARY TO RELOCATE OR CHANGE SAID HIGHWAY AND ACQUIRE CERTAIN LANDS AND INTERESTS OR RIGHTS IN LANDS FOR THE ABOVE PROJECT.

TO EFFECT THIS CHANGE, PURSUANT TO AUTHORITY GRANTED UNDER SECTION 84.02 (3) AND 84.09, WISCONSIN STATUTES, THE DEPARTMENT OF TRANSPORTATION HEREBY ORDERS THAT:
1. THAT PORTION OF SAID HIGHWAY AS SHOWN ON THIS PLAT IS LAID OUT AND ESTABLISHED TO THE LINES AND WIDTHS AS SO SHOWN FOR THE ABOVE PROJECT.
2. THE LANDS OR INTERESTS OR RIGHTS IN LANDS AS SHOWN ON THIS PLAT ARE REQUIRED BY THE DEPARTMENT FOR THE ABOVE PROJECT AND SHALL BE ACQUIRED IN THE NAME OF THE STATE OF WISCONSIN, PURSUANT TO THE PROVISIONS OF SECTION 84.09 (1) OR (2), WISCONSIN STATUTES.

SCHEDULE OF LANDS & INTERESTS REQUIRED

OWNERS NAMES ARE SHOWN FOR REFERENCE PURPOSES ONLY, AND ARE SUBJECT TO CHANGE PRIOR TO TRANSFER OF LAND AND INTERESTS TO DOT.

PARCEL NUMBER	OWNER	INTEREST REQUIRED	AREA ACRES REQUIRED NEW	EXISTING	TOTAL	TLE ACRES	PLE ACRES
6	WHITE PLAINS FARMS, INC	FEE, TLE	0.432		0.432	0.031	
7	SHELLY GRUBER & JOSEPH GRUBER	FEE, PLE, TLE	0.232		0.232	0.261	0.019
8	RACINE COUNTY, WI	TLE, AR				0.076	
9	KURT H. BORN & PENNY M. BORN	FEE, TLE	0.181		0.181	0.098	
10	DAVID H. ROSS & KATHLEEN A. LESTER-ROSS	FEE, TLE	0.362		0.362	0.096	
11	JOANN PROCHASKA	FEE, TLE	0.129		0.129	0.059	
12	WILLIAM J. LIGGETT	TLE				0.028	
70	TDS TELECOM	RELEASE OF RIGHTS					

24' ACCESS EASEMENT
PARCEL 12 V.9, P.578, DOC. 2237994

70 — TDS TELECOM
NO RECORD OF EASEMENT
PARCEL 7, & 8

PRIVATE DRAIN TILE AGREEMENT
PARCEL 6, NON DESCRIPT, V.235, P.11, DOC. 338146
PARCEL 6, NON DESCRIPT, V.236, P.66, DOC. 338866
PARCEL 6, NON DESCRIPT, V.1299, P.124, DOC. 969465
PARCEL 7, NON DESCRIPT, V.1299, P.124, DOC. 969465

R/L STH 20
CURVE DATA
PI = 296+76.28
Y = 191,591.576
X = 552,803.555
DELTA = 06°14'16" LT
BACK = N84°14'05"E
AHEAD = S67°19'57"E
D = 03°00'00"
T = 483.85'
L = 947.76'
R = 1909.86'

R/L STH 75, CTH S
PI = 70+36.06
Y = 191,531.004
X = 551,846.410
DELTA = 00°06'03" LT
BACK = N00°05'49"W
AHEAD = N00°11'52"W

PARCEL 9 TLE
L=23.73'
R=1,966.86'
LC=23.73'
LCB=N84°34'49"E

PARCEL 9 R/W
L=23.05'
R=1,959.86'
LC=23.05'
LCB=N84°34'18"E

PARCEL 12 TLE
L=179.74'
R=1,966.86'
LC=179.68'
LCB=N87°32'38"E

PARCEL 12 R/W
L=179.70'
R=1,959.86'
LC=179.63'
LCB=N87°32'07"E

PARCEL 12 R/W
L=318.12'
R=1,959.86'
LC=317.77'
LCB=S85°11'17"E

STH 20 R/W
TOTAL CURVE
L=972.57'
R=1,959.86'
LC=962.63'
LCB=S81°32'56"E

STH 20 R/W
SUBCURVE
L=520.86'
R=1,959.86'
LC=519.33'
LCB=S88°09'06"E

CAST IRON MONUMENT WITH BRASS CAP
Y=188,890.388
X=551,850.882

CONCRETE MONUMENT WITH BRASS CAP
Y=191,531.004
X=551,846.410

CONCRETE MONUMENT WITH BRASS CAP
Y=194,176.731
X=551,837.279

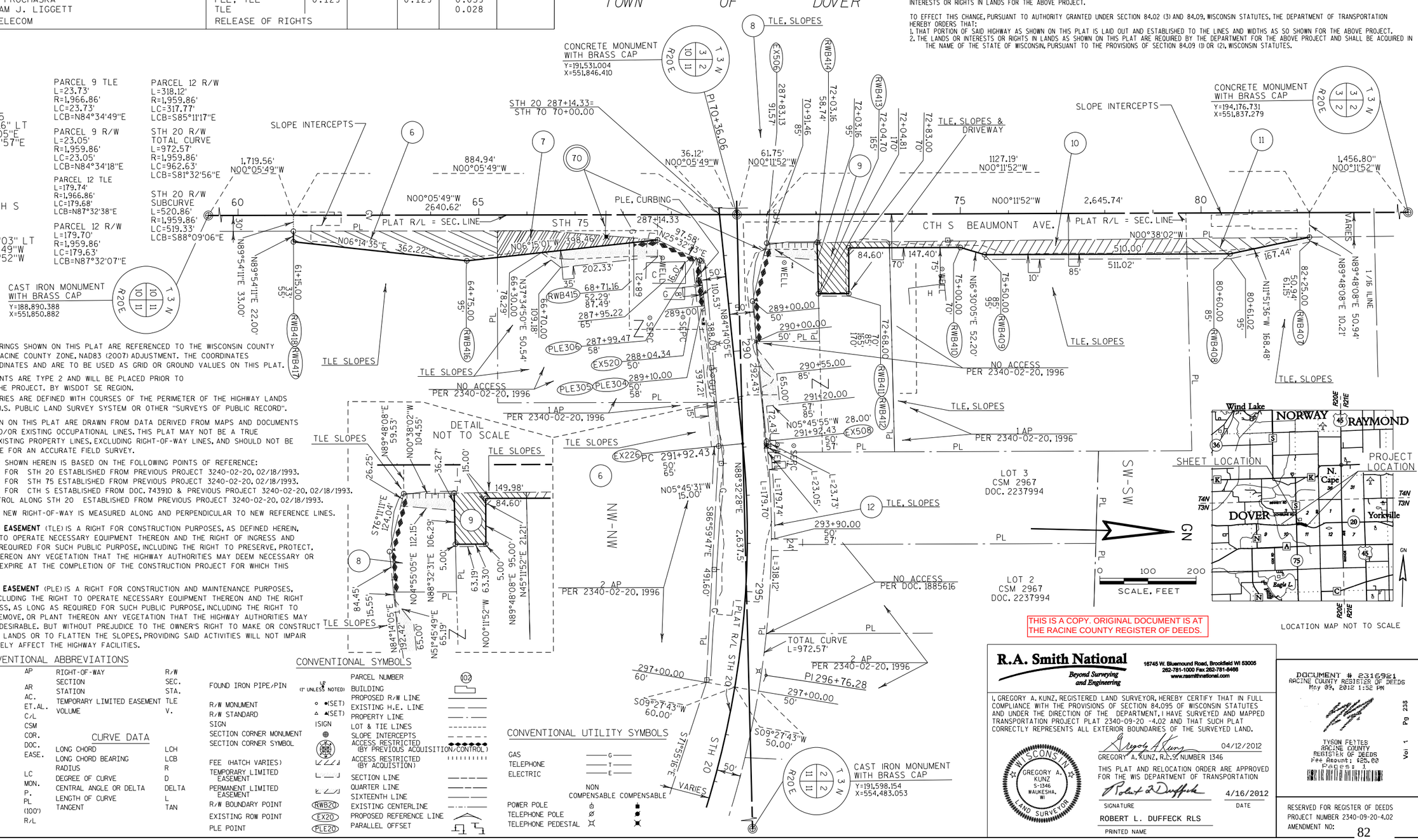

NOTES:

COORDINATES AND BEARINGS SHOWN ON THIS PLAT ARE REFERENCED TO THE WISCONSIN COUNTY COORDINATE SYSTEM, RACINE COUNTY ZONE, NAD83 (2007) ADJUSTMENT. THE COORDINATES SHOWN ARE GRID COORDINATES AND ARE TO BE USED AS GRID OR GROUND VALUES ON THIS PLAT.

RIGHT-OF-WAY MONUMENTS ARE TYPE 2 AND WILL BE PLACED PRIOR TO THE COMPLETION OF THE PROJECT. BY WISDOT SE REGION.

RIGHT-OF-WAY BOUNDARIES ARE DEFINED WITH COURSES OF THE PERIMETER OF THE HIGHWAY LANDS REFERENCED TO THE U.S. PUBLIC LAND SURVEY SYSTEM OR OTHER "SURVEYS OF PUBLIC RECORD".

PROPERTY LINES SHOWN ON THIS PLAT ARE DRAWN FROM DATA DERIVED FROM MAPS AND DOCUMENTS OF PUBLIC RECORD AND/OR EXISTING OCCUPATIONAL LINES. THIS PLAT MAY NOT BE A TRUE REPRESENTATION OF EXISTING PROPERTY LINES, EXCLUDING RIGHT-OF-WAY LINES, AND SHOULD NOT BE USED AS A SUBSTITUTE FOR AN ACCURATE FIELD SURVEY.

EXISTING HIGHWAY R/W SHOWN HEREIN IS BASED ON THE FOLLOWING POINTS OF REFERENCE:
EXISTING HIGHWAY R/W FOR STH 20 ESTABLISHED FROM PREVIOUS PROJECT 3240-02-20, 02/18/1993.
EXISTING HIGHWAY R/W FOR STH 75 ESTABLISHED FROM PREVIOUS PROJECT 3240-02-20, 02/18/1993.
EXISTING HIGHWAY R/W FOR CTH S ESTABLISHED FROM DOC. 743910 & PREVIOUS PROJECT 3240-02-20, 02/18/1993.
EXISTING ACCESS CONTROL ALONG STH 20 ESTABLISHED FROM PREVIOUS PROJECT 3240-02-20, 02/18/1993.

DIMENSIONING FOR THE NEW RIGHT-OF-WAY IS MEASURED ALONG AND PERPENDICULAR TO NEW REFERENCE LINES.

A **TEMPORARY LIMITED EASEMENT** (TLE) IS A RIGHT FOR CONSTRUCTION PURPOSES, AS DEFINED HEREIN, INCLUDING THE RIGHT TO OPERATE NECESSARY EQUIPMENT THEREON AND THE RIGHT OF INGRESS AND EGRESS, AS LONG AS REQUIRED FOR SUCH PUBLIC PURPOSE, INCLUDING THE RIGHT TO PRESERVE, PROTECT, REMOVE, OR PLANT THEREON ANY VEGETATION THAT THE HIGHWAY AUTHORITIES MAY DEEM NECESSARY OR DESIRABLE. ALL TLES EXPIRE AT THE COMPLETION OF THE CONSTRUCTION PROJECT FOR WHICH THIS INSTRUMENT IS GIVEN.

A **PERMANENT LIMITED EASEMENT** (PLE) IS A RIGHT FOR CONSTRUCTION AND MAINTENANCE PURPOSES, AS DEFINED HEREIN, INCLUDING THE RIGHT TO OPERATE NECESSARY EQUIPMENT THEREON AND THE RIGHT OF INGRESS AND EGRESS, AS LONG AS REQUIRED FOR SUCH PUBLIC PURPOSE, INCLUDING THE RIGHT TO PRESERVE, PROTECT, REMOVE, OR PLANT THEREON ANY VEGETATION THAT THE HIGHWAY AUTHORITIES MAY DEEM NECESSARY OR DESIRABLE. BUT WITHOUT PREJUDICE TO THE OWNER'S RIGHT TO MAKE OR CONSTRUCT IMPROVEMENT ON SAID LANDS OR TO FLATTEN THE SLOPES, PROVIDING SAID ACTIVITIES WILL NOT IMPAIR OR OTHERWISE ADVERSELY AFFECT THE HIGHWAY FACILITIES.

CONVENTIONAL ABBREVIATIONS

ACCESS POINT/ DRIVEWAY CONNECTION	AP	RIGHT-OF-WAY	R/W
ACCESS RIGHTS	AR	SECTION	SEC.
ACRES	AC.	STATION	STA.
AND OTHERS	ET.AL.	TEMPORARY LIMITED EASEMENT	TLE
CENTERLINE	C/L	VOLUME	V.
CERTIFIED SURVEY MAP	CSM		
CORNER	COR.	**CURVE DATA**	
DOCUMENT	DOC.	LONG CHORD	LCH
EASEMENT	EASE.	LONG CHORD BEARING	LCB
LAND CONTRACT	LC	RADIUS	R
MONUMENT	MON.	DEGREE OF CURVE	D
PAGE	P.	CENTRAL ANGLE OR DELTA	DELTA
PROPERTY LINE	PL	LENGTH OF CURVE	L
RECORDED AS	(100')	TANGENT	TAN
REFERENCE LINE	R/L		

CONVENTIONAL SYMBOLS

FOUND IRON PIPE/PIN	⅝" (1" UNLESS NOTED)	PARCEL NUMBER	102
R/W MONUMENT	○ •(SET)	BUILDING	
R/W STANDARD	△ ▲(SET)	PROPOSED R/W LINE	
SIGN	SIGN	EXISTING H.E. LINE	
SECTION CORNER MONUMENT		PROPERTY LINE	
SECTION CORNER SYMBOL		LOT & TIE LINES	
		SLOPE INTERCEPTS	
FEE (HATCH VARIES)		ACCESS RESTRICTED (BY PREVIOUS ACQUISITION/CONTROL)	
TEMPORARY LIMITED EASEMENT		ACCESS RESTRICTED (BY ACQUISITION)	
PERMANENT LIMITED EASEMENT		SECTION LINE	
R/W BOUNDARY POINT	RWB20	QUARTER LINE	
EXISTING ROW POINT	EX20	SIXTEENTH LINE	
PLE POINT	PLE20	EXISTING CENTERLINE	
		PROPOSED REFERENCE LINE	
		PARALLEL OFFSET	

CONVENTIONAL UTILITY SYMBOLS

	NON COMPENSABLE	COMPENSABLE
GAS	G	
TELEPHONE	T	
ELECTRIC	E	
POWER POLE		
TELEPHONE POLE		
TELEPHONE PEDESTAL		

CAST IRON MONUMENT WITH BRASS CAP
Y=191,598.154
X=554,483.053

THIS IS A COPY. ORIGINAL DOCUMENT IS AT THE RACINE COUNTY REGISTER OF DEEDS.

R.A. Smith National
Beyond Surveying and Engineering
16745 W. Bluemound Road, Brookfield WI 53005
262-781-1000 Fax 262-781-8466
www.rasmithnational.com

I, GREGORY A. KUNZ, REGISTERED LAND SURVEYOR, HEREBY CERTIFY THAT IN FULL COMPLIANCE WITH THE PROVISIONS OF SECTION 84.095 OF WISCONSIN STATUTES AND UNDER THE DIRECTION OF THE DEPARTMENT, I HAVE SURVEYED AND MAPPED TRANSPORTATION PROJECT PLAT 2340-09-20 -4.02 AND THAT SUCH PLAT CORRECTLY REPRESENTS ALL EXTERIOR BOUNDARIES OF THE SURVEYED LAND.

WISCONSIN GREGORY A. KUNZ S-1346 WAUKESHA, WI LAND SURVEYOR

04/12/2012
GREGORY A. KUNZ, R.L.S. NUMBER 1346

THIS PLAT AND RELOCATION ORDER ARE APPROVED FOR THE WIS DEPARTMENT OF TRANSPORTATION

4/16/2012
SIGNATURE — DATE

ROBERT L. DUFFECK RLS
PRINTED NAME

DOCUMENT # 2316921
RACINE COUNTY REGISTER OF DEEDS
May 09, 2012 1:52 PM
Pg 238
Vol 1
TYSON FEITES
RACINE COUNTY
REGISTER OF DEEDS
Fee Amount: $25.00
Pages: 1

RESERVED FOR REGISTER OF DEEDS
PROJECT NUMBER 2340-09-20-4.02
AMENDMENT NO: 82

FILE NAME : S:\5164985\plat\040402_rp.dgn
APPRAISAL PLAT DATE :
PLOT DATE : 4/13/2012
PLOT BY : gak
PLOT NAME :
PLOT SCALE : $$.....plotscale.....$$
CONSTRUCTION 2340-09-70, R/W 2340-09-20 4.02

BENCHMARKS

NO.	STATION	DESCRIPTION	ELEV
1	STA 577+35, 45' RT	RR SPIKE IN NE FACE OF POWER POLE	804.69
2	STA 576+68, 19' LT	PK NAIL	803.89

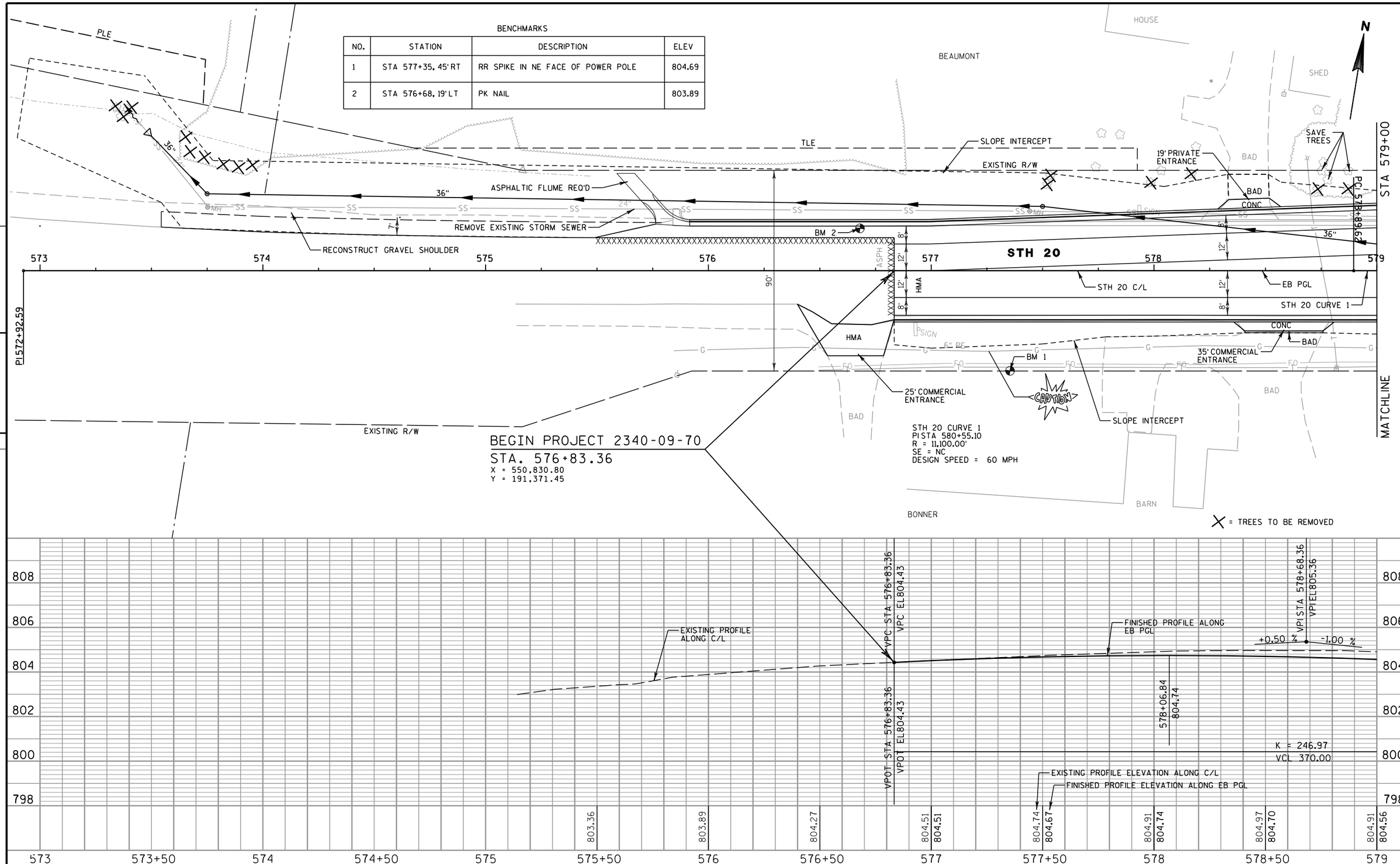

PROJECT NO: 2340-09-70	HWY: STH 20	COUNTY: RACINE	PLAN & PROFILE - STH 20	SHEET 83	E

BENCHMARKS

NO.	STATION	DESCRIPTION	ELEV
1	STA 577+35, 45'RT	RR SPIKE IN NE FACE OF POWER POLE	804.69
2	STA 576+68, 19'LT	PK NAIL	803.89

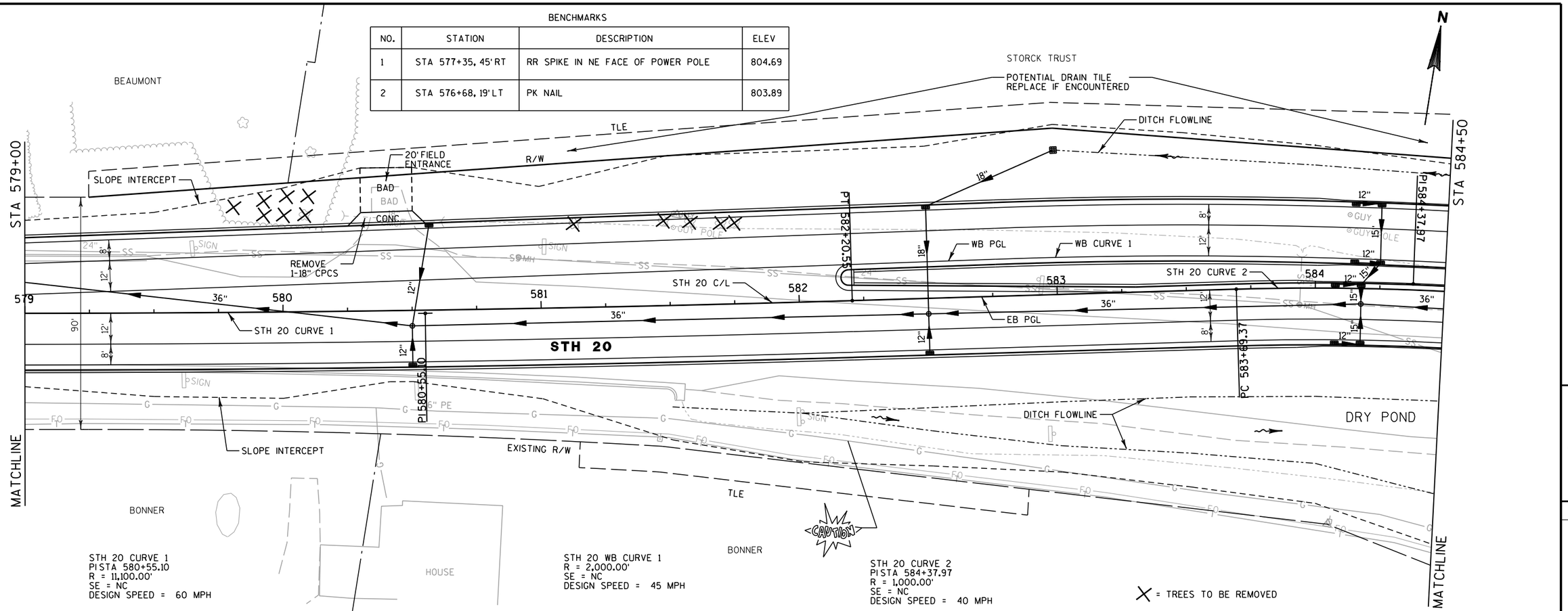

STH 20 CURVE 1
PI STA 580+55.10
R = 11,100.00'
SE = NC
DESIGN SPEED = 60 MPH

STH 20 WB CURVE 1
R = 2,000.00'
SE = NC
DESIGN SPEED = 45 MPH

STH 20 CURVE 2
PI STA 584+37.97
R = 1,000.00'
SE = NC
DESIGN SPEED = 40 MPH

X = TREES TO BE REMOVED

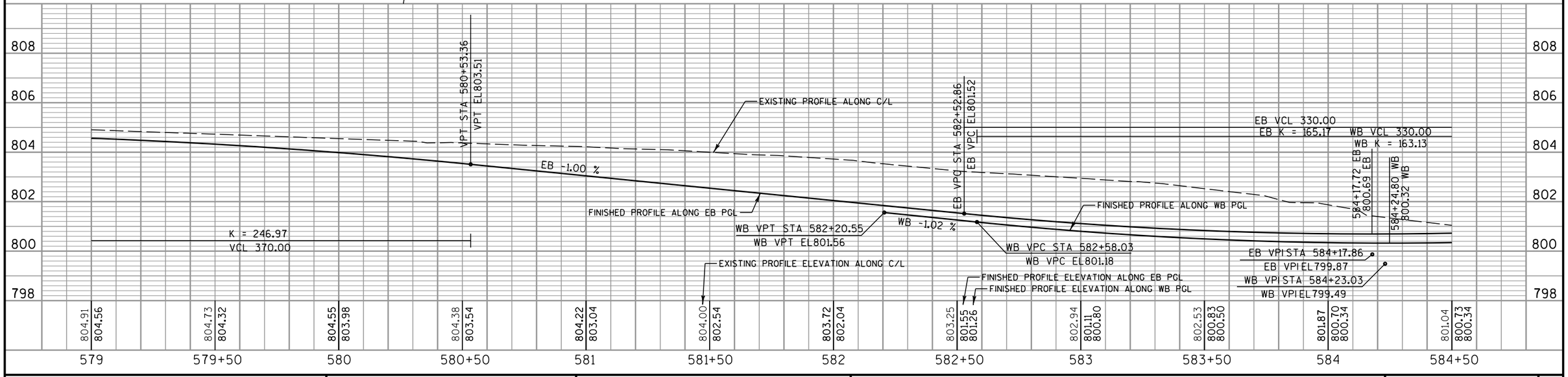

PROJECT NO: 2340-09-70	HWY: STH 20	COUNTY: RACINE	PLAN & PROFILE - STH 20	SHEET 84	E

STH 20 CURVE 2
PISTA 584+37.97
R = 1,000.00'
SE = NC
DESIGN SPEED = 40 MPH

STH 20 CURVE 3
PISTA 585+80.64
R = 128.00'
SE = NC
DESIGN SPEED = N/A

STORCK TRUST

RACINE COUNTY SHERIFF'S DEPT.

RACINE COUNTY PUBLIC WORKS

BEAUMONT PARK

X = TREES TO BE REMOVED

N

POTENTIAL DRAIN TILE REPLACE IF ENCOUNTERED

TLE

SLOPE INTERCEPT

DITCH FLOWLINE

R/W

STA 584+50

STA 590+00

CTH S

STH 75/ CTH S C/L

EXISTING R/W

BM 4

SOD

CONC

STH 20

WB PGL

STH 20 CURVE 2

STH 20 CURVE 3

PC 585+80.64

BM 3 SECTION CORNER

WB CURVE 2

EB PGL

STH 20 C/L

PT 585+16.35

PC 585+69.54

PT 585+91.58

PI 470+00.00

PI 587+14.04

24"X38"

MATCHLINE

DRY POND

DITCH FLOWLINE

SLOPE INTERCEPT

BONNER

EXISTING R/W

STH 75

CAUTION

ASPHALTIC FLUME REQ'D

RELOCATE ACCESS

POTENTIAL DRAIN TILE ALONG R/W REPLACE IF ENCOUNTERED

BENCHMARKS

COMMERCIAL BUILDING GRUBER

STH 20 WB CURVE 2
R = 128.00'
SE = NC
DESIGN SPEED = N/A

CONCRETE CURB & GUTTER 18-INCH TYPE D

NO.	STATION	DESCRIPTION	ELEV
3	STA 587+07.36'LT	SECTION CORNER	803.07
4	STA 588+20.56'LT	WITNESS MONUMENT	801.29

EB VCL 330.00
EB K = 165.17

WB VCL 330.00
WB K = 163.13

EB VPT STA 585+82.86
EB VPT EL801.52

EB +1.00 %
WB +1.00 %

FINISHED PROFILE ALONG EB PGL

FINISHED PROFILE ALONG WB PGL

WB VPT STA 585+88.03
WB VPT EL801.14

EB VPI STA 586+35.90
EB VPI EL802.05

WB VPI STA 586+35.90
WB VPI EL801.62

EXISTING PROFILE ALONG C/L

SEE CROSS SECTIONS AND PAVING DETAILS FOR ELEVATIONS THROUGH ROUNDABOUT

EXISTING PROFILE ELEVATION

WB VCL 180.00
WB K = 119.16

EB VCL 255.00
EB K = 138.47

EB VPI STA 587+77.80
EB VPI EL802.05

WB VPI STA 587+77.80
WB VPI EL801.62

WB VPC STA 587+90.00
WB VPC EL801.50

EB -1.00 %
WB -1.00 %

EB VPC STA 588+72.50
EB VPC EL801.10

WB VPI STA 588+80.00
WB VPI EL800.60

589+09.16 WB
800.90 WB

WB VPT STA 589+70.00
WB VPT EL801.06

FINISHED PROFILE ALONG EB PGL
FINISHED PROFILE ALONG WB PGL

EB VPI STA 590+00.00
EB VPI EL799.83

806
804
802
800
798
796

| | | |

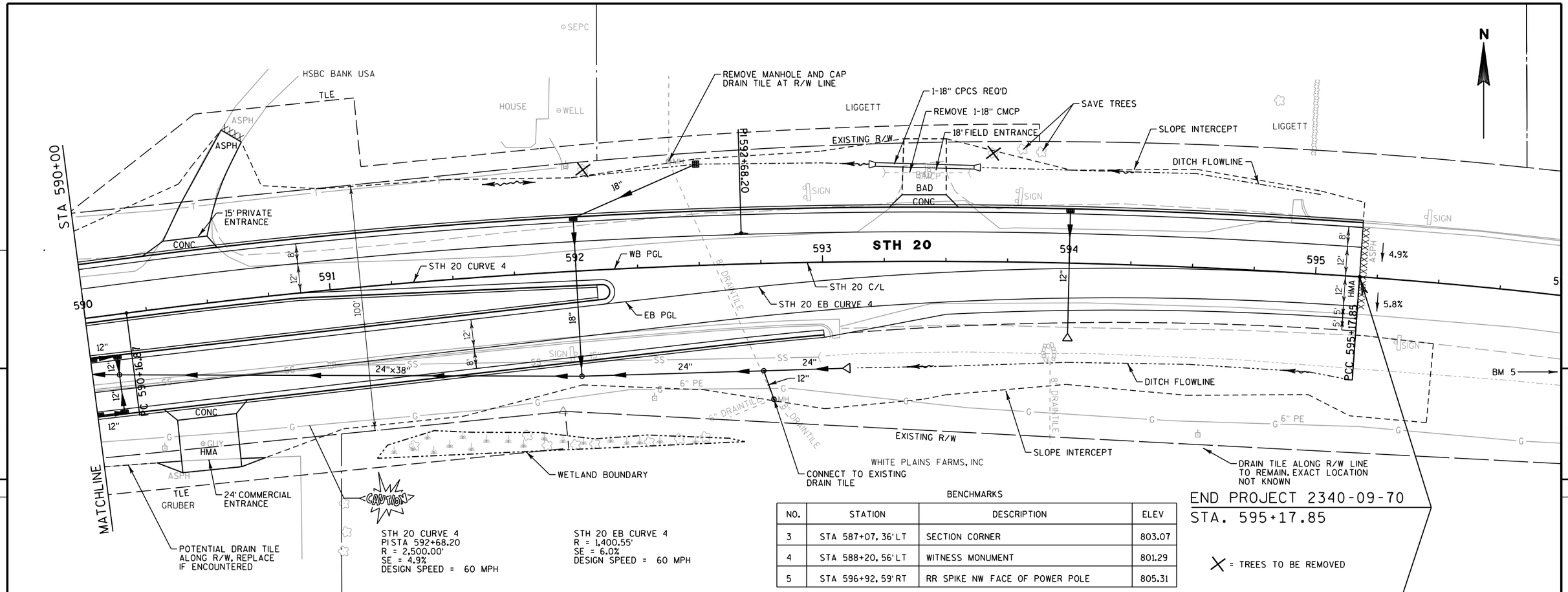

BENCHMARKS

NO.	STATION	DESCRIPTION	ELEV
3	STA 587+07.36'LT	SECTION CORNER	803.07
4	STA 588+20.56'LT	WITNESS MONUMENT	801.29
5	STA 596+92.59'RT	RR SPIKE NW FACE OF POWER POLE	805.31

END PROJECT 2340-09-70
STA. 595+17.85

X = TREES TO BE REMOVED

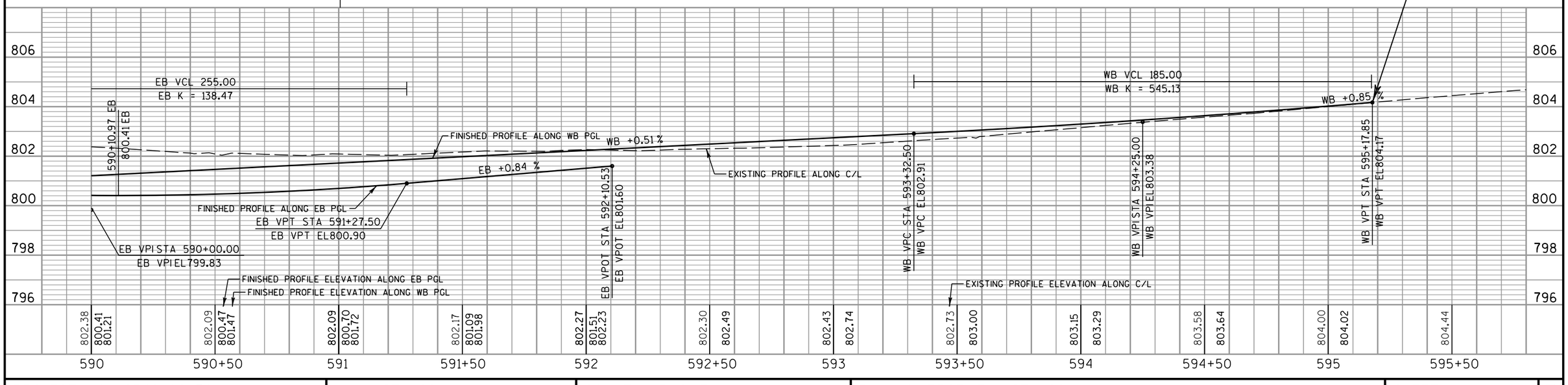

PROJECT NO: 2340-09-70	HWY: STH 20	COUNTY: RACINE	PLAN & PROFILE - STH 20	SHEET	E

FILE NAME : k:\1082713.03\cadd\sheets\planprof\050104_pp.dgn PLOT DATE : 1/29/2014 PLOT BY : rlb PLOT NAME : PLOT SCALE : $$.....plotscale.....$$ WISDOT/CADDS SHEET 40

BENCHMARKS

NO.	STATION	DESCRIPTION	ELEV
6	STA 459+22, 30' RT	BERNTSEN MONUMENT	804.00

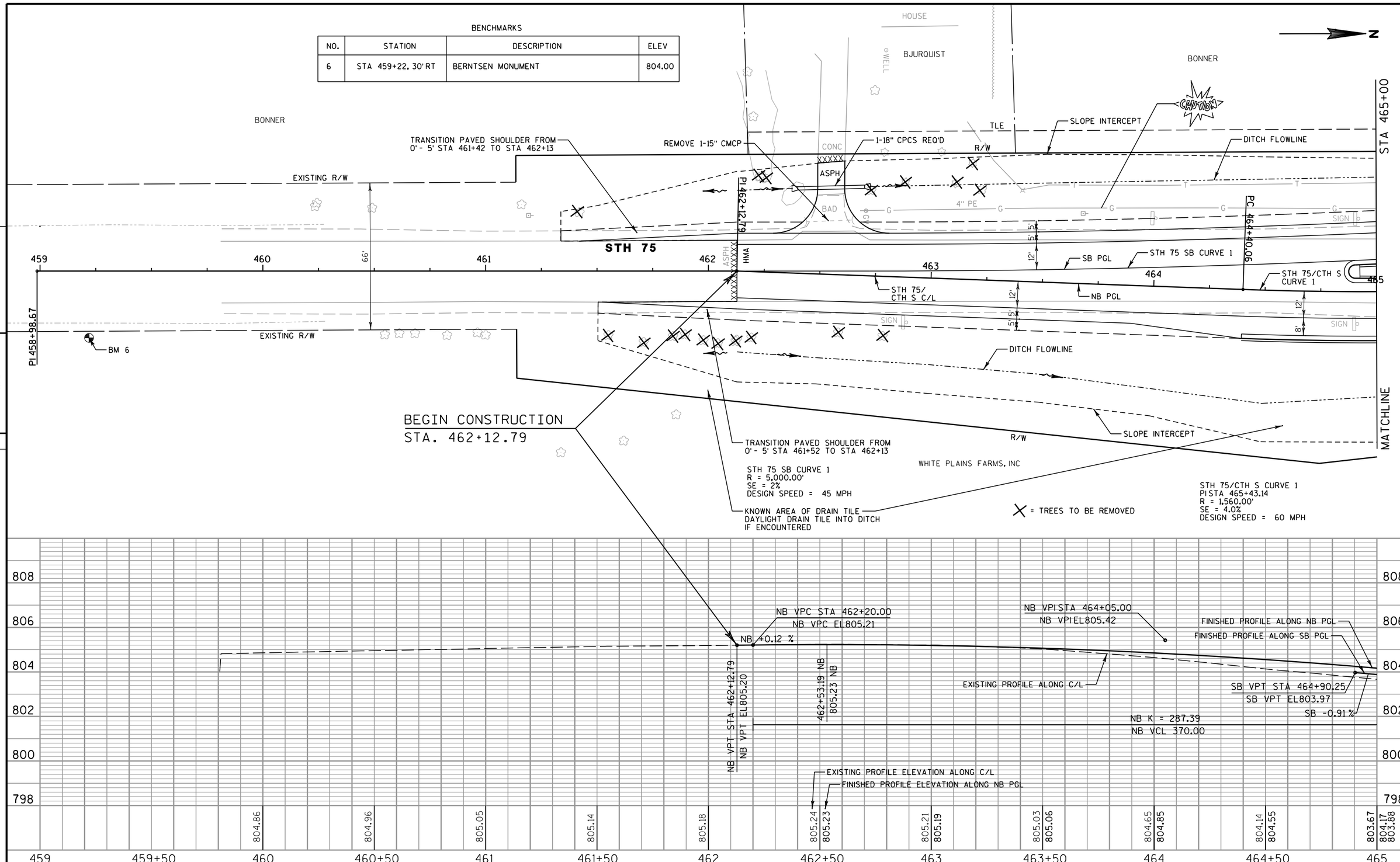

PROJECT NO: 2340-09-70	HWY: STH 20	COUNTY: RACINE	PLAN & PROFILE - STH 75	SHEET 87	E

X = TREES TO BE REMOVED

BENCHMARKS

NO.	STATION	DESCRIPTION	ELEV
3	STA 470+37, 2'LT	SECTION CORNER	803.07
4	STA 470+66, 100'RT	WITNESS MONUMENT	801.29

STH 75/CTH S CURVE 1
PISTA 465+43.14
R = 1,500.00'
SE = 4.0%
DESIGN SPEED = 60 MPH

STH 75 SB CURVE 1
R = 5,000.00'
SE = 2.0%
DESIGN SPEED = 45 MPH

STH 75/CTH S CURVE 2
PISTA 468+80.66
R = 128.00'
SE = NC
DESIGN SPEED = NA

CONSTRUCTION PERMIT REQUIRED

CONCRETE CURB PRECAST

SB VCL 260.00
SB K = 136.13

NB VCL 260.00
NB K = 119.71

NB VPT STA 465+90.00
NB VPT EL803.25

NB -1.17 %

SB -0.91 %

NB K = 287.39
NB VCL 370.00

NB VPC STA 466+40.00
NB VPC EL802.67

SB VPC STA 466+54.65
SB VPC EL802.47

NB VPI STA 467+70.00
NB VPI EL801.14

SB VPI STA 467+84.65
SB VPI EL801.29

467+78.52 SB
801.91 SB

467+80.29 NB
801.85 NB

EXISTING PROFILE ALONG C/L

EXISTING PROFILE ELEVATION ALONG C/L

FINISHED PROFILE ELEVATION ALONG NB PGL

FINISHED PROFILE ELEVATION ALONG SB PGL

NB VPT STA 469+00.00
NB VPT EL802.44

SB VPT STA 469+14.63
SB VPT EL802.59

NB VPI STA 469+41.56
NB VPI EL802.86

NB +1.00 % SB +1.00 %

SB VPT STA 469+41.56
SB VPT EL802.86

SEE CROSS SECTIONS AND PAVING DETAILS FOR ELEVATIONS THROUGH ROUNDABOUT

VPI STA 470+82.82
VPI EL801.08

-1.28

465	465+50	466	466+50	467	467+50	468	468+50	469	469+50	470	470+50	471
803.67	803.34	803.06	802.83	802.35	802.01	801.66	801.60	801.66	802.91	804.06	802.68	800.95
804.17	803.69	803.14	802.55	802.12	801.88	801.86	802.05	802.44				800.86
803.88	803.43	802.97	802.52	802.14	801.94	801.93	802.10	802.45				

PROJECT NO: 2340-09-70	HWY: STH 20	COUNTY: RACINE	PLAN & PROFILE - STH 75	SHEET 88	E

FILE NAME : k:\1082713.03\cadd\sheets\planprof\050106_pp.dgn PLOT DATE : 1/29/2014 PLOT BY : rlb PLOT NAME : PLOT SCALE : $$.....plotscale.....$$

WISDOT/CADDS SHEET 40

BENCHMARKS

NO.	STATION	DESCRIPTION	ELEV
3	STA 470+37.2'LT	SECTION CORNER	803.07
4	STA 470+66.100'RT	WITNESS MONUMENT	801.29

N

DRY POND
DITCH FLOWLINE
STH 20
STH 75
STH 20 C/L
STH 75/ CTH S C/L
BM 3 SECTION CORNER
PI 587+14.04
PT 468+94.26
PC 470+00.00
BEAM GUARD REQUIRED, SEE PAVING DETAILS
RACINE COUNTY SHERIFF'S DEPT.
RADIO TOWER
TLE
R/W
BAD
12' WIDE COMMERCIAL ENTRANCE
KNOWN DRAIN TILE AREA DAYLIGHT INTO DITCH OR INSTALL NEW DRAIN TILE OUTSIDE R/W LINE TO MAINTAIN DRAINAGE SYSTEM
STORCK TRUST
RELOCATE FIELD ENTRANCE TO STA 476+00
SLOPE INTERCEPT
REMOVE 1-12" CMCP
PI 472+86.80
DITCH FLOWLINE
STA 475+00
SB CURVE 1
SB PGL
NB PGL
REMOVE 1-12" CPCS
PI 10+00.00
STA 472+43.74 CTH S = STA 10+00.00 PARKING LOT
PC 472+33.30
PT 473+40.22
CTH S
STH 75/CTH S CURVE 3
STA 473+76 1-18" CPCS REO'D
REMOVE 1-15" CMCP
DITCH FLOWLINE
ASPHALTIC FLUME REO'D
14' PRIVATE ENTRANCE
MATCHLINE
ASPHALT PARKING AREA TO BE REMOVED
RELOCATED PARKING LOT FOR PARK
EXISTING R/W
GRUBER
CAUTION
COMMERCIAL BUILDING
BM 4
RACINE COUNTY PUBLIC WORKS BEAUMONT PARK
HSBC BANK USA
ROSS
CTH S SB CURVE 1
R = 128.00'
SE = NC
DESIGN SPEED = N/A
STH 75/CTH S CURVE 3
PI STA 472+86.80
R = 2,000.00'
SE = NC
DESIGN SPEED = 45 MPH

NB VPI STA 469+41.56
NB VPI EL802.86
NB +1.00 % SB +1.00 %
SB VPT STA 469+14.63
SB VPT EL802.59
SB VPT STA 469+41.56
SB VPT EL802.86
SEE CROSS SECTIONS AND PAVING DETAILS FOR ELEVATIONS THROUGH ROUNDABOUT
VPI STA 470+82.82
VPI EL801.08
-1.28 %
VPC STA 471+10.00
VPC EL800.73
VPI STA 472+00.00
VPI EL799.58
PARKING LOT
VCL 180.00
K = 230.58
VPT STA 472+90.00
VPT EL799.13
FINISHED PROFILE ALONG NB & SB PGL
-0.50 %
EXISTING PROFILE ALONG C/L
EXISTING PROFILE ELEVATION ALONG C/L
FINISHED PROFILE ELEVATION

| | | |

BENCHMARKS

NO.	STATION	DESCRIPTION	ELEV
3	STA 470+37, 2' LT	SECTION CORNER	803.07
4	STA 470+66, 100' RT	WITNESS MONUMENT	801.29

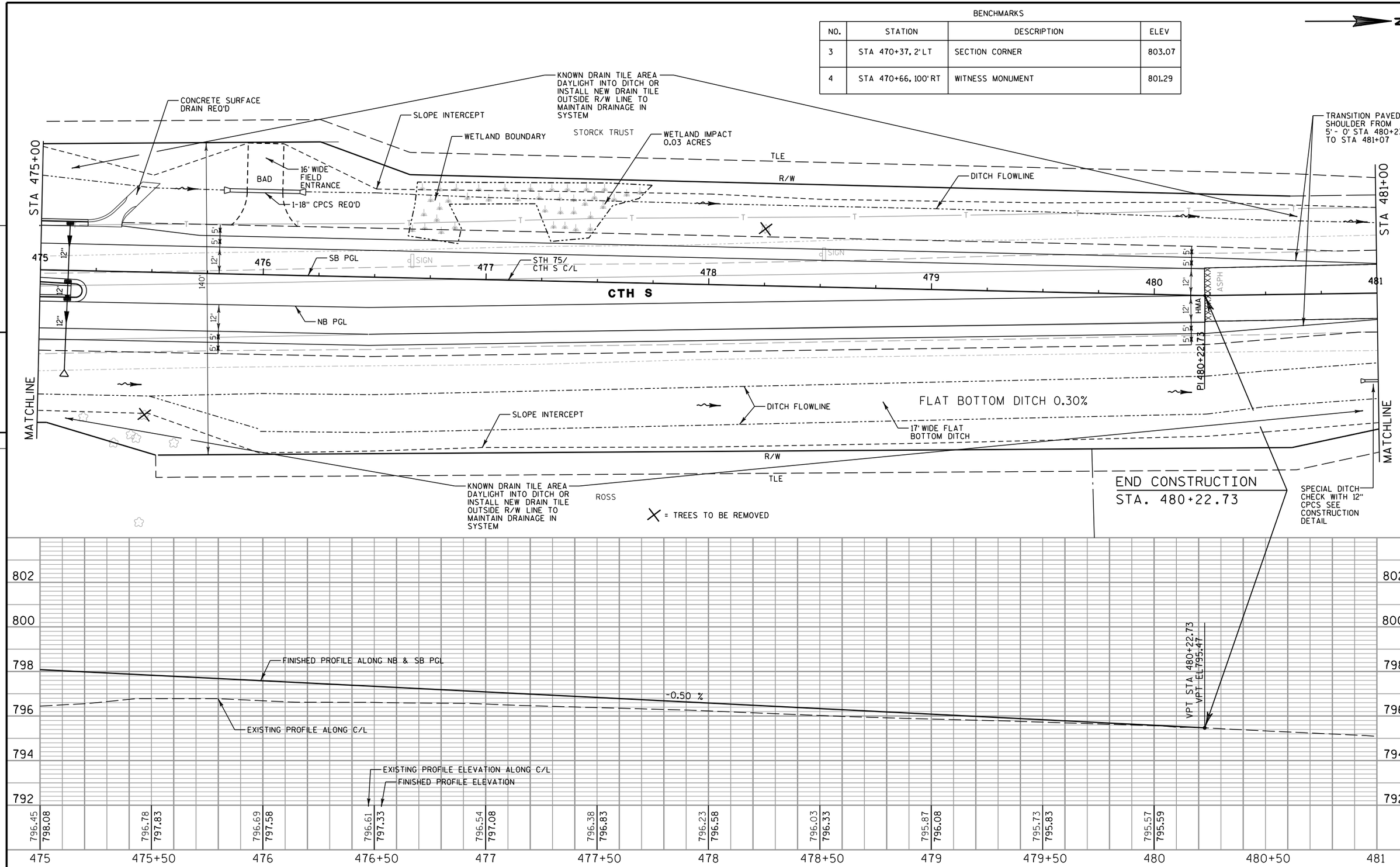

5

5

PROJECT NO: 2340-09-70	HWY: STH 20	COUNTY: RACINE	PLAN & PROFILE - CTH S	SHEET 90	E

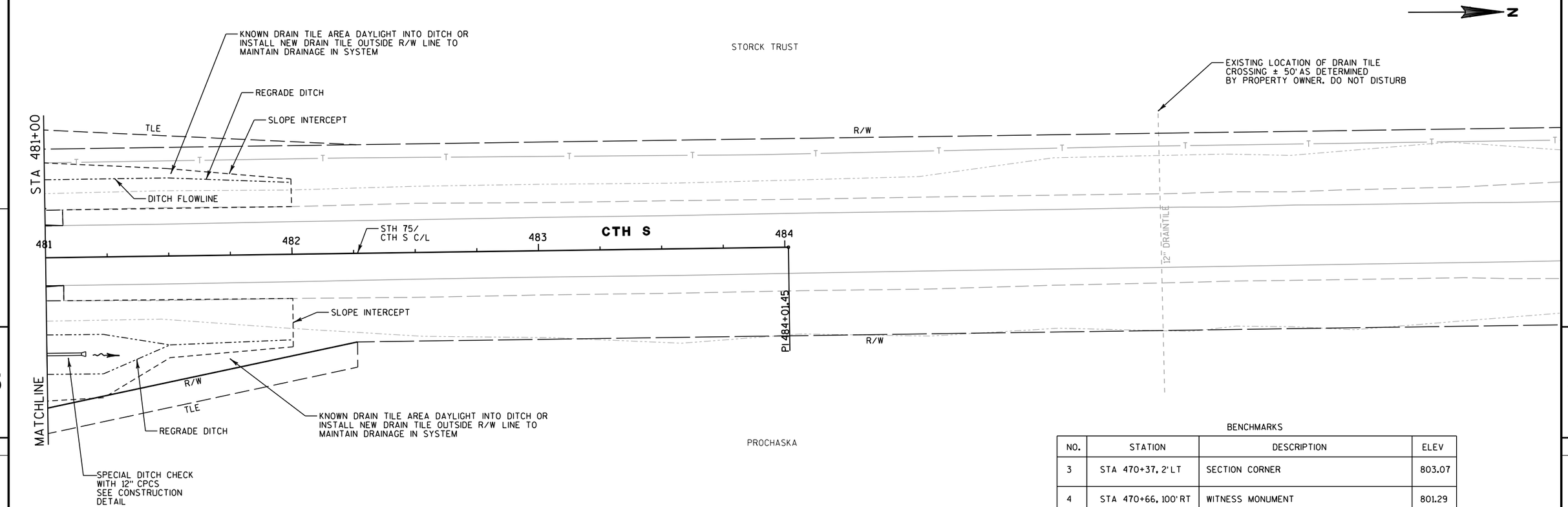

BENCHMARKS

NO.	STATION	DESCRIPTION	ELEV
3	STA 470+37, 2'LT	SECTION CORNER	803.07
4	STA 470+66, 100'RT	WITNESS MONUMENT	801.29

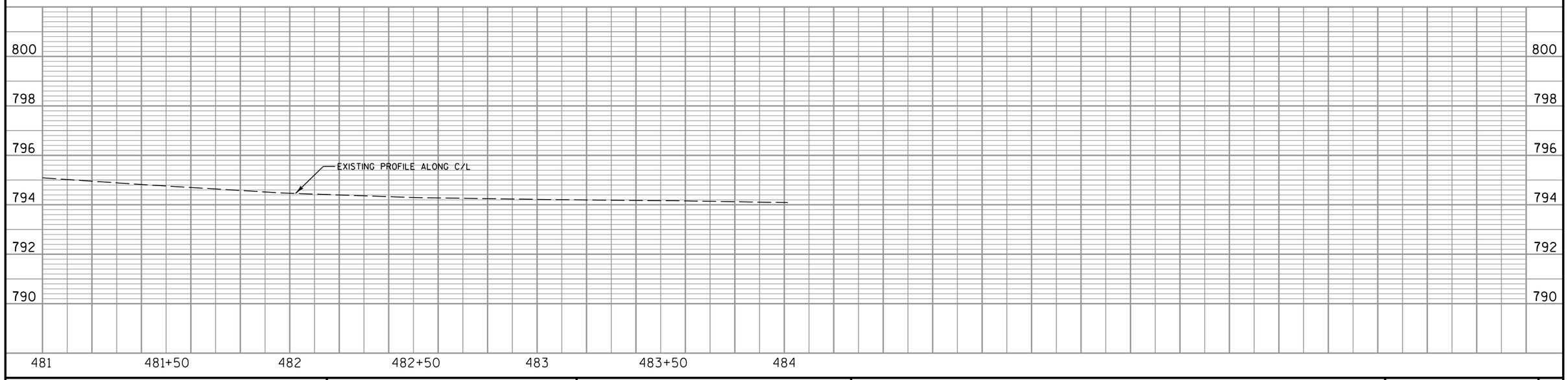

PROJECT NO: 2340-09-70	HWY: STH 20	COUNTY: RACINE	PLAN & PROFILE - CTH S	SHEET 91	E

Standard Detail Drawing List

08A05-19A	INLET COVERS TYPE A, H, A-S, H-S & Z
08A05-19B	INLET COVERS TYPE B, B-A, C, MS, MS-A, & WM
08A05-19C	INLET COVERS TYPE F, HM, HM-S, S, T, V, HM-GJ, & HM-GJ-S
08A05-19D	INLET COVER TYPE BW, MANHOLE COVERS, TYPE K, J, J-S, L & M
08B09-01	MANHOLES 3-FT, 4-FT, 5-FT, 6-FT, 7-FT AND 8-FT DIAMETER
08C06-01	INLETS 3-FT AND 4-FT DIAMETER
08C07-01	INLETS 2X2-FT, 2X2.5-FT, 2X3-FT AND 2.5X3-FT
08C08-01	INLETS MEDIAN 1 AND 2 GRATE
08D01-17	CONCRETE CURB, CONCRETE CURB AND GUTTER AND TIES
08D04-05	CONCRETE SURFACE DRAINS & ASPHALTIC FLUMES
08D05-15A	CURB RAMPS TYPES 1 AND 1-A
08D05-15B	CURB RAMPS TYPES 2 AND 3
08D05-15C	CURB RAMPS TYPES 4A AND 4A1
08D05-15D	CURB RAMPS TYPE 4B AND 4B1
08D05-15E	CURB RAMPS TYPES 5, 6, 7A, 7B & 8
08E08-03	TYPICAL INSTALLATIONS OF EROSION BALES / TEMPORARY DITCH CHECKS
08E09-06	SILT FENCE
08E10-02	INLET PROTECTION TYPE A, B, C AND D
08E14-01	TRACKING PAD
08F01-11	APRON ENDWALLS FOR CULVERT PIPE
08F02-01	APRON ENDWALLS FOR PIPE ARCH AND ELLIPTICAL PIPE
08F04-07	JOINT TIES FOR CONCRETE PIPE AND CONCRETE COLLAR DETAIL
08F07-05	STEEL APRON ENDWALLS FOR CULVERT PIPE AND PIPE ARCH SLOPED SIDE FRAINS
09B02-07	CONDUIT
09B04-10	PULL BOX
09C02-06	CONCRETE BASES, TYPES 1, 2 & 5
09C03-03	TRANSFORMER/PEDESTAL BASES
09D01-04	CABINET SERVICE INSTALLATION (METER BREAKER PEDESTAL)
09E01-12D	POLE MOUNTINGS FOR LIGHTING UNITS, TYPE 5 (30 FEET)
10A01-02	ELECTRICAL HANDHOLE WIRING
10A02-02	IDENTIFICATION PLAQUES LIGHT POLES
10A05-02	ELECTRICAL DETAILS GROUND MOUNT LIGHT POLES ISOLATED NEUTRAL SYSTEMS
10A18-04A	LUMINAIRE ARMS, SINGLE MEMBER 6-INCH CLAMP
11B02-02	CONCRETE MEDIAN NOSE
13C01-16	CONCRETE PAVEMENT LONGITUDINAL JOINTS AND TIES
13C04-16	URBAN NON-DOWELED CONCRETE PAVEMENT
13C18-02A	CONCRETE PAVEMENT JOINTING
13C18-02B	CONCRETE PAVEMENT STEEL REINFORCEMENT
13C18-02C	CONCRETE PAVEMENT JOINT TIES
13C18-02D	CONCRETE PAVEMENT JOINTING AT UTILITY FIXTURES
13C18-02E	CONCRETE PAVEMENT JOINTING AND STEEL REINFORCEMENT IN ROUNDABOUTS
14B15-07A	STEEL PLATE BEAM GUARD, CLASS "A" INSTALLATION & ELEMENTS
14B15-07B	STEEL PLATE BEAM GUARD, CLASS "A" INSTALLATION & ELEMENTS
14B15-07C	STEEL PLATE BEAM GUARD, CLASS "A", INSTALLATION & ELEMENTS
14B16-04A	ANCHORAGE FOR STEEL PLATE BEAM GUARD TYPE 2
14B16-04B	ANCHORAGE FOR STEEL PLATE BEAM GUARD TYPE 2
14B18-06A	STEEL PLATE BEAM GUARD, CLASS "A" (AT BRIDGES, OBSTACLES AND SIDEROADS/DRIVEWAYS)
14B27-01A	STEEL PLATE BEAM GUARD SHORT RADIUS TERMINAL
14B27-01B	STEEL PLATE BEAM GUARD SHORT RADIUS TERMINAL
14B27-01C	STEEL PLATE BEAM GUARD SHORT RADIUS TERMINAL
14B29-01	SAFETY EDGE
15A03-02A	FLEXIBLE MARKER POST FOR CULVERT END
15A03-02B	FLEXIBLE MARKER POST FOR CULVERT END
15C02-05A	BARRICADES AND SIGNS FOR MAINLINE CLOSURES
15C02-05B	BARRICADES AND SIGNS FOR MAINLINE CLOSURES
15C02-05C	DETOUR SIGNING FOR MAINLINE CLOSURES
15C03-02	BARRICADES AND SIGNS FOR SIDEROAD CLOSURES
15C07-12A	PAVEMENT MARKING SYMBOLS
15C07-12B	PAVEMENT MARKING WORDS
15C08-16A	PAVEMENT MARKING (MAINLINE)
15C08-16F	PAVEMENT MARKING (ISLANDS)
15C18-03	MEDIAN ISLAND MARKING
16A01-06	LANDMARK REFERENCE MONUMENTS AND COVERS

6

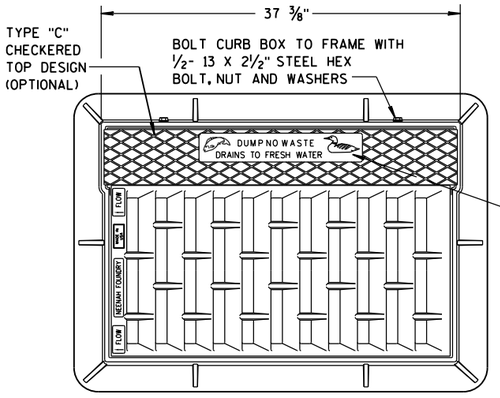

NOTE:
GRATE IS REVERSIBLE.

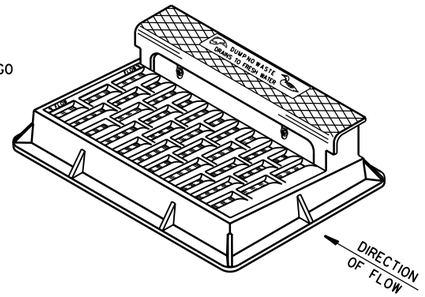

NOTE: CURB BOX HEIGHT ADJUSTABLE 6" TO 9"

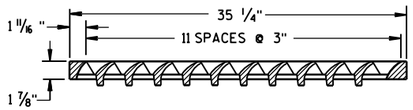

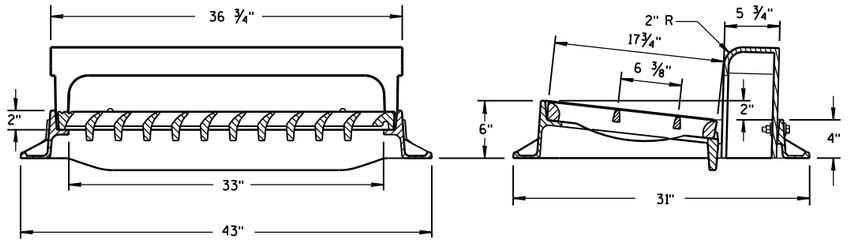

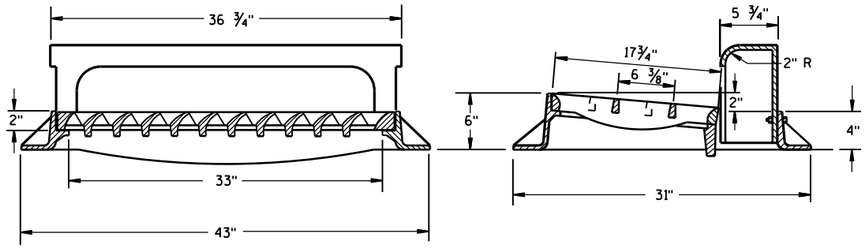

TYPE "H"

NOTE: EITHER CASTING IS ACCEPTABLE

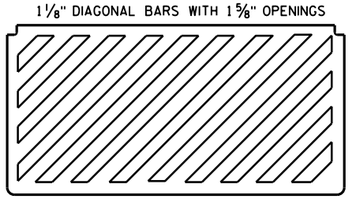

SPECIAL GRATE FOR TYPE "H" COVER

(MEASURES 35 1/4" X 17 3/4" X 2")

(NOTED AS TYPE H-S ON DRAINAGE TABLE)

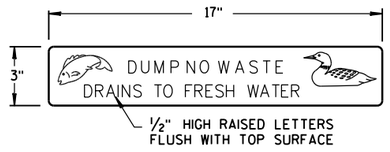

LOGO DETAIL

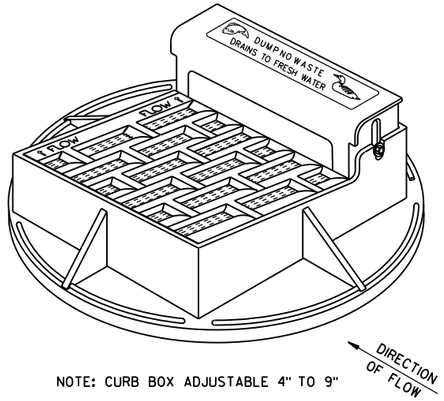

NOTE: CURB BOX ADJUSTABLE 4" TO 9"

NOTE:
GRATE IS REVERSIBLE.

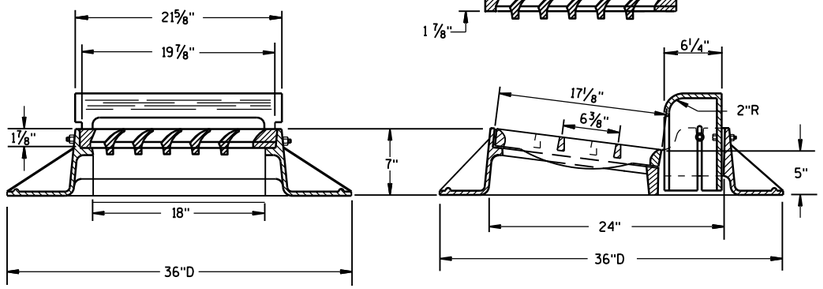

TYPE "A"

GENERAL NOTES

DETAILS OF CONSTRUCTION, MATERIALS AND WORKMANSHIP NOT SHOWN ON THIS DRAWING SHALL CONFORM TO THE PERTINENT REQUIREMENTS OF THE STANDARD SPECIFICATIONS AND THE APPLICABLE SPECIAL PROVISIONS.

DETAIL DRAWINGS FOR PROPOSED ALTERNATE DESIGNS FOR CATCH BASIN, MANHOLE AND INLET COVERS SHALL BE SUBMITTED TO THE ENGINEER FOR APPROVAL PROVIDING THAT SUCH ALTERNATE DESIGNS MAKE PROVISION FOR EQUIVALENT CAPACITY AND STRENGTH.

ROUND FRAMES AND COVERS SHALL HAVE CONTINUOUSLY MACHINED BEARING SURFACES TO PREVENT ROCKING AND RATTLING.

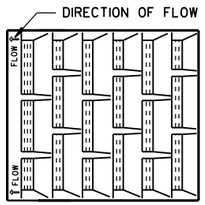

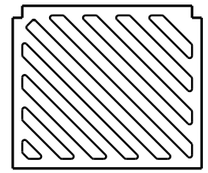

SPECIAL GRATE FOR TYPE "A" COVER

(MEASURES 19 3/4" X 17" X 1 7/8")

(NOTED AS TYPE A-S ON DRAINAGE TABLE)

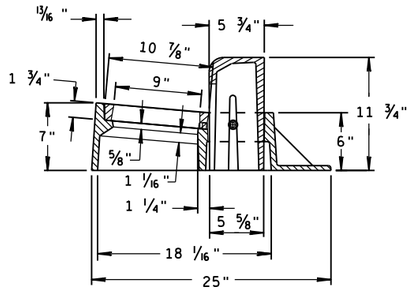

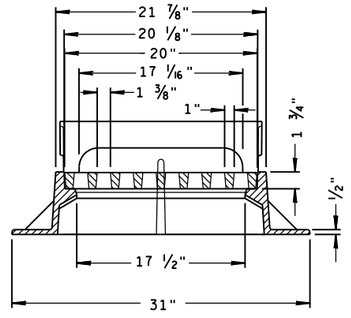

TYPE "Z"

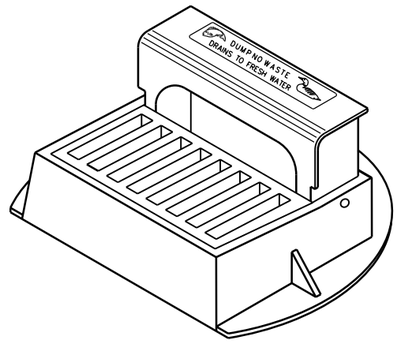

INLET COVERS
TYPE A, H, A-S, H-S & Z

STATE OF WISCONSIN
DEPARTMENT OF TRANSPORTATION

APPROVED
11-27-13 — DATE
/S/ Jerry H. Zogg — ROADWAY STANDARDS ENGINEER
FHWA

6

S.D.D. 8 A 5-19a

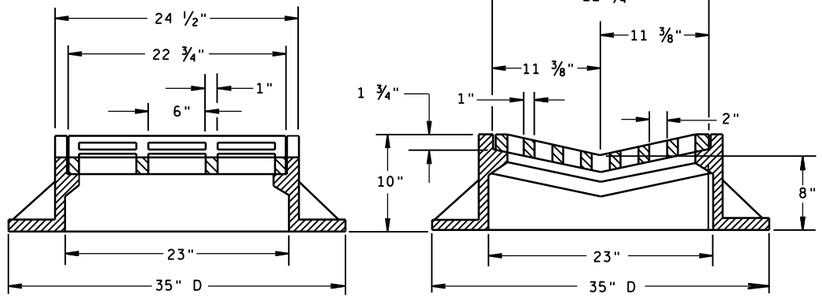

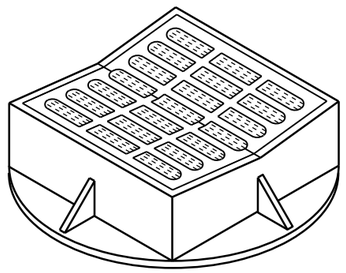

TYPE "B"

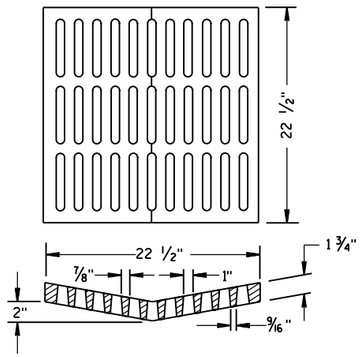

ALTERNATIVE GRATE FOR TYPE "B" COVER

USE WHERE PEDESTRIAN OR BICYCLE TRAFFIC IS POSSIBLE.
NOTED AS TYPE B-A ON THE DRAINAGE TABLE

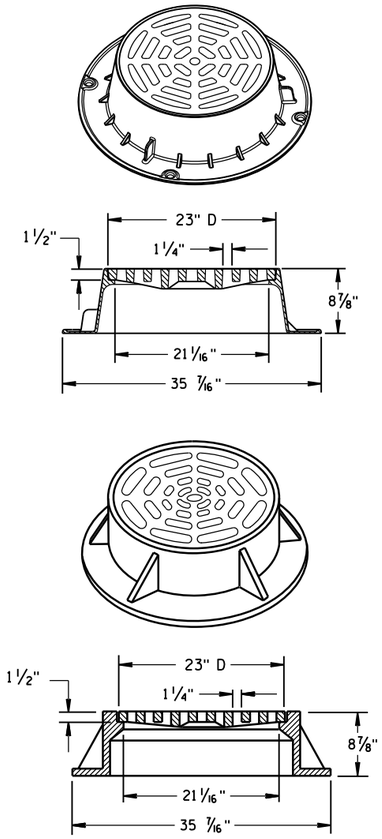

TYPE "C"

NOTE: EITHER CASTING IS ACCEPTABLE

GENERAL NOTES

DETAILS OF CONSTRUCTION, MATERIALS AND WORKMANSHIP NOT SHOWN ON THIS DRAWING SHALL CONFORM TO THE PERTINENT REQUIREMENTS OF THE STANDARD SPECIFICATIONS AND THE APPLICABLE SPECIAL PROVISIONS.

DETAIL DRAWINGS FOR PROPOSED ALTERNATE DESIGNS FOR CATCH BASIN, MANHOLE AND INLET COVERS SHALL BE SUBMITTED TO THE ENGINEER FOR APPROVAL PROVIDING THAT SUCH ALTERNATE DESIGNS MAKE PROVISION FOR EQUIVALENT CAPACITY AND STRENGTH.

ROUND FRAMES AND COVERS SHALL HAVE CONTINUOUSLY MACHINED BEARING SURFACES TO PREVENT ROCKING AND RATTLING.

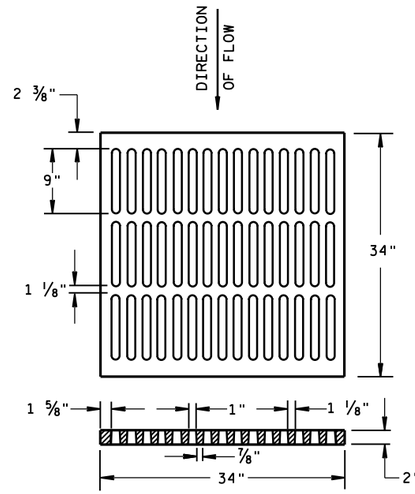

ALTERNATIVE TYPE "MS"

USE WHERE PEDESTRIAN OR BICYCLE TRAFFIC IS PERMITTED
NOTED AS TYPE MS-A ON THE DRAINAGE TABLE

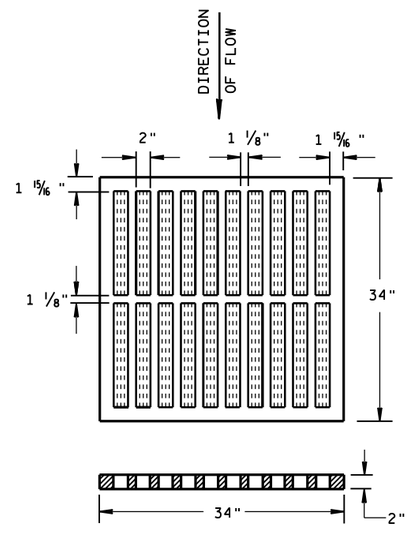

TYPE "MS"

USE ON FREEWAYS AND EXPRESSWAYS
NOTED AS TYPE MS ON DRAINAGE TABLE

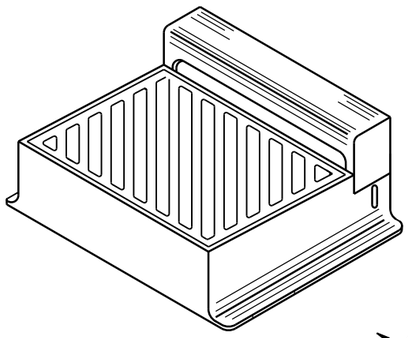

DIAGONAL SLOTS, SHALL BE ORIENTED TO THE DIRECTION OF FLOW AS ILLUSTRATED. GRATES ARE MANUFACTURED TO BE REVERSIBLE.

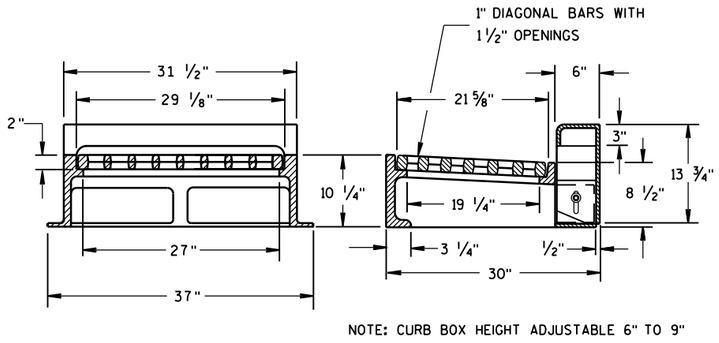

NOTE: CURB BOX HEIGHT ADJUSTABLE 6" TO 9"

TYPE "WM"

INLET COVERS
TYPE B, B-A, C, MS, MS-A, & WM

STATE OF WISCONSIN
DEPARTMENT OF TRANSPORTATION

APPROVED
11/27/2013 — DATE
/S/ Jerry H. Zogg — ROADWAY STANDARDS ENGINEER
FHWA

6

S.D.D. 8 A 5-19b

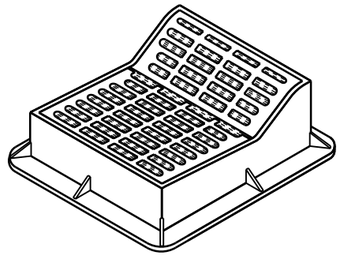

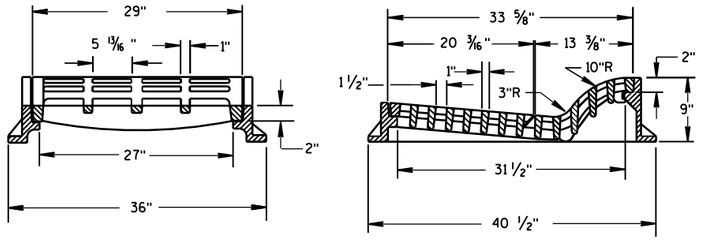

TYPE "F"

USE WITH TYPES A & D CONCRETE CURB & GUTTER, 36 INCH.

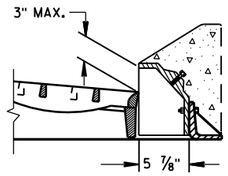

ALTERNATIVE CURB BOX FOR TYPE "HM" COVER

USE WITH TYPES G & J CONCRETE CURB & GUTTER, 30 INCH
NOTED AS TYPE HM-GJ ON DRAINAGE TABLE

NOTE:
SPECIAL GRATE FOR THE
TYPE "H" COVER MAY ALSO BE
USED FOR THE TYPE "HM-GJ" COVER
NOTED AS TYPE HM-GJ-S ON DRAINAGE TABLE

GENERAL NOTES

DETAILS OF CONSTRUCTION, MATERIALS AND WORKMANSHIP NOT SHOWN ON THIS DRAWING SHALL CONFORM TO THE PERTINENT REQUIREMENTS OF THE STANDARD SPECIFICATIONS AND THE APPLICABLE SPECIAL PROVISIONS.

DETAIL DRAWINGS FOR PROPOSED ALTERNATE DESIGNS FOR INLET COVERS SHALL BE SUBMITTED TO THE ENGINEER FOR APPROVAL PROVIDING THAT SUCH ALTERNATE DESIGNS MAKE PROVISION FOR EQUIVALENT CAPACITY AND STRENGTH.

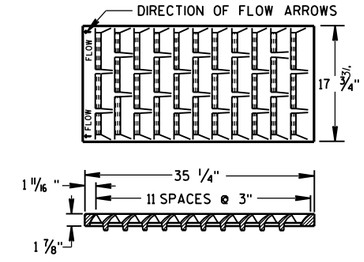

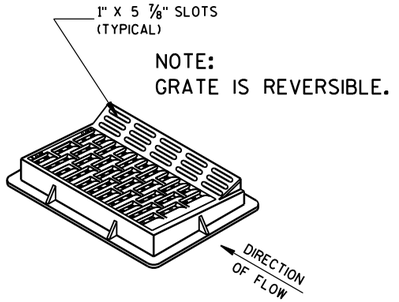

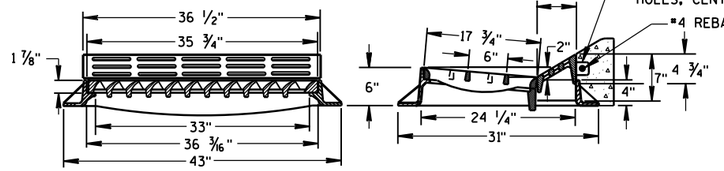

TYPE "HM"

USE WITH TYPES A & D CONCRETE CURB & GUTTER, 36 INCH.

NOTE:
SPECIAL GRATE FOR THE
TYPE "H" COVER MAY ALSO BE
USED FOR THE TYPE "HM" COVER
NOTED AS TYPE HM-S ON DRAINAGE TABLE

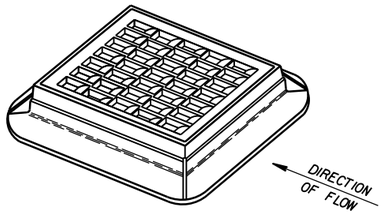

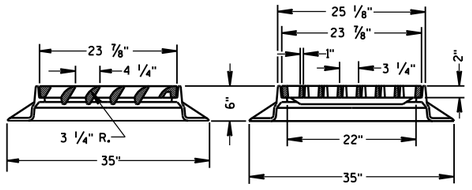

TYPE "S"

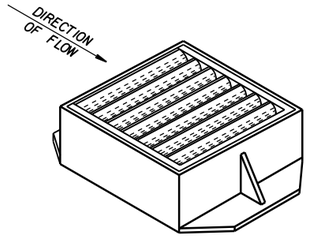

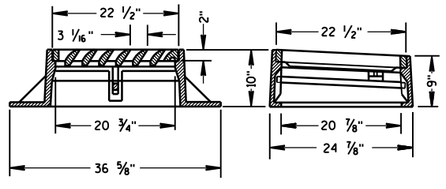

TYPE "V"

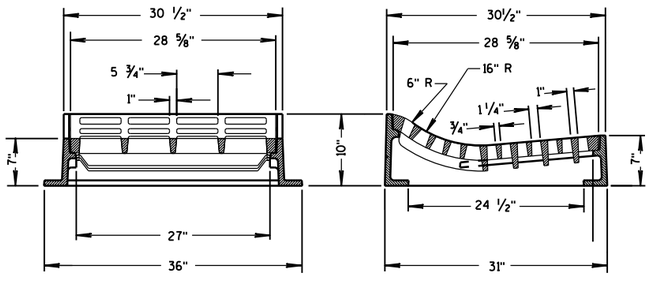

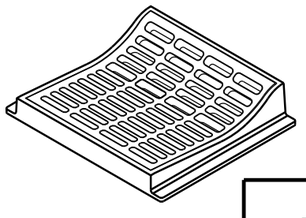

TYPE "T"

USE WITH TYPES R & T CONCRETE CURB & GUTTER, 36 INCH.

INLET COVERS
TYPE F, HM, HM-S, S, T, V, HM-GJ, & HM-GJ-S

STATE OF WISCONSIN
DEPARTMENT OF TRANSPORTATION

APPROVED
11/27/2013
DATE

/S/ Jerry H. Zogg
ROADWAY STANDARDS ENGINEER

FHWA

6

S.D.D. 8 A 5-19c

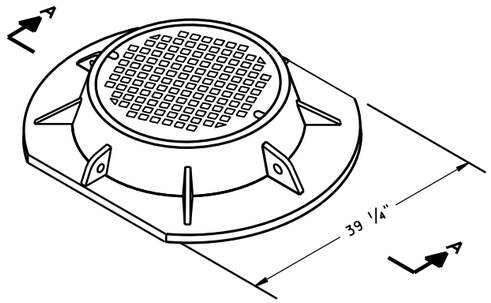

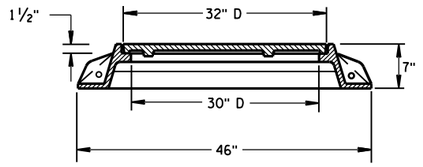

SECTION A-A
TYPE "K"

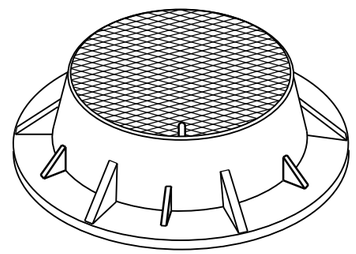

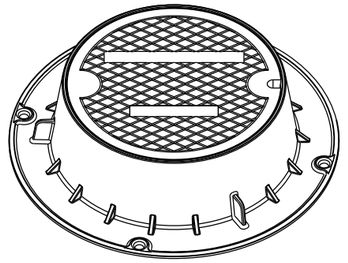

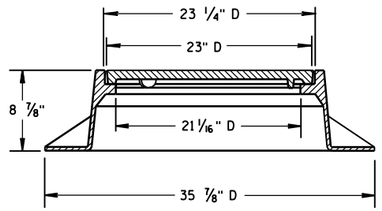

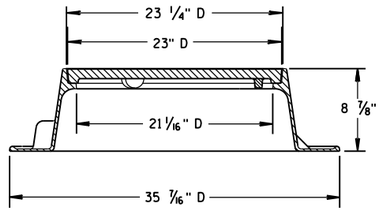

TYPE "J"
NOTE: EITHER CASTING IS ACCEPTABLE

GENERAL NOTES

DETAILS OF CONSTRUCTION, MATERIALS AND WORKMANSHIP NOT SHOWN ON THIS DRAWING SHALL CONFORM TO THE PERTINENT REQUIREMENTS OF THE STANDARD SPECIFICATIONS AND THE APPLICABLE SPECIAL PROVISIONS.

DETAIL DRAWINGS FOR PROPOSED ALTERNATE DESIGNS FOR MANHOLE COVERS SHALL BE SUBMITTED TO THE ENGINEER FOR APPROVAL PROVIDING THAT SUCH ALTERNATE DESIGNS MAKE PROVISION FOR EQUIVALENT CAPACITY AND STRENGTH.

ROUND FRAMES AND COVERS SHALL HAVE CONTINUOUSLY MACHINED BEARING SURFACES TO PREVENT ROCKING AND RATTLING.

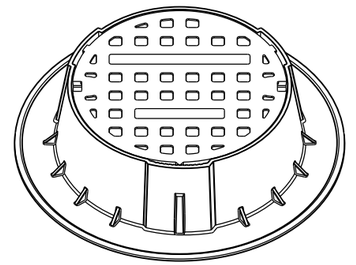

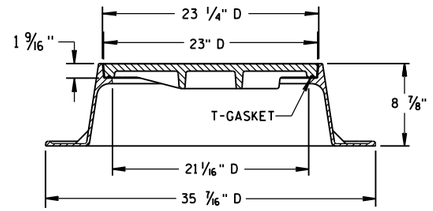

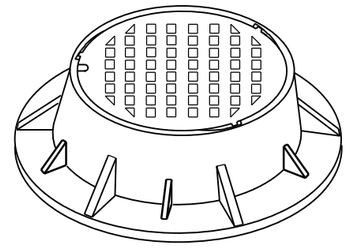

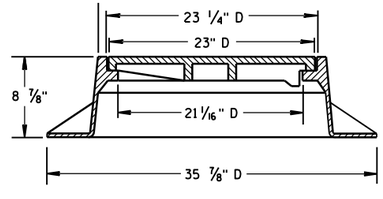

TYPE "J" SPECIAL
TYPE "B" NON-ROCKING SELF-SEAL LID
(NOTED AS TYPE J-S ON THE DRAINAGE TABLE)
NOTE: EITHER CASTING IS ACCEPTABLE

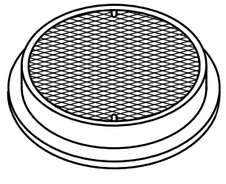

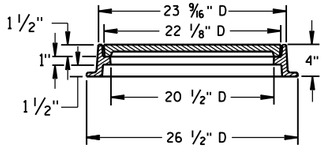

TYPE "L"

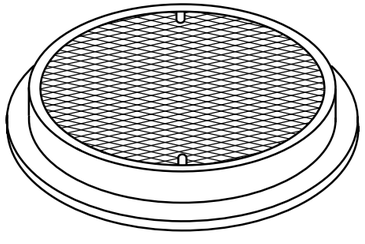

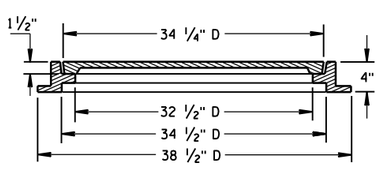

TYPE "M"

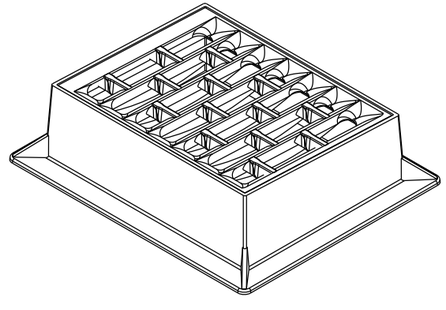

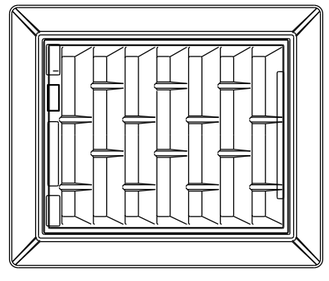

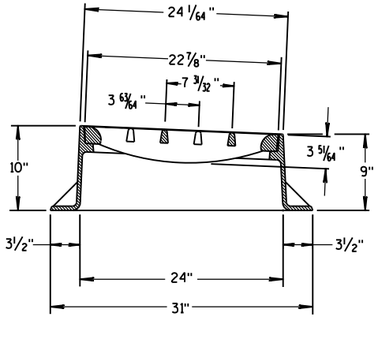

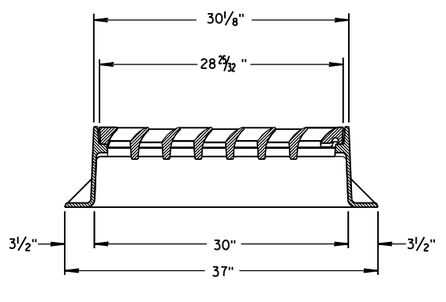

INLET COVER TYPE "BW"

INLET COVER TYPE BW
MANHOLE COVERS, TYPE K, J, J-S, L & M

STATE OF WISCONSIN
DEPARTMENT OF TRANSPORTATION

APPROVED
11/27/2013
DATE
FHWA

/S/ Jerry H. Zogg
ROADWAY STANDARDS DEVELOPMENT ENGINEER

6

S.D.D. 8 A 5-19d

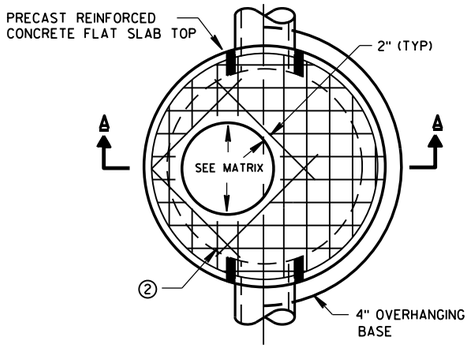

PLAN VIEW CIRCULAR OPENING

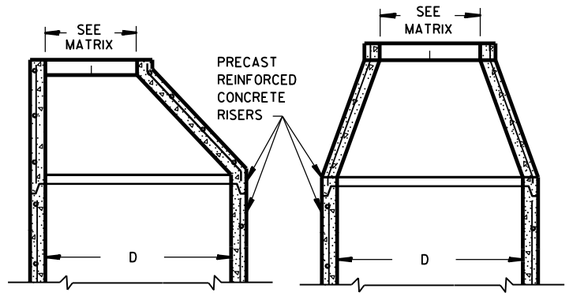

OPTIONAL PRECAST REINFORCED CONCRETE ECCENTRIC TOP

OPTIONAL PRECAST REINFORCED CONCRETE CONCENTRIC TOP

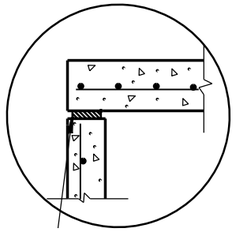

TOP WITH PLAIN END JOINT

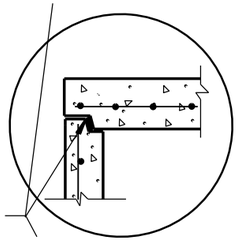

JOINTS TO BE SEALED WITH A BUTYL RUBBER SEAL PER SEALANT MANUFACTURERS RECOMMENDATIONS CONFORMING TO ASTM C990 (TYP)

TOP WITH TONGUE AND GROOVE JOINT

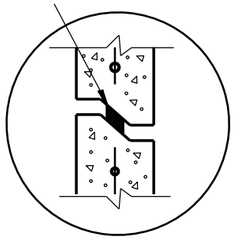

RISER WITH TONGUE AND GROOVE JOINT

DETAIL "B"

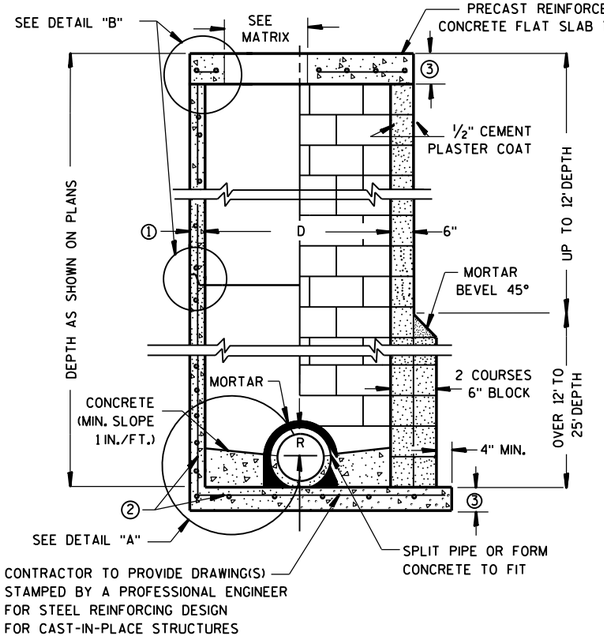

PRECAST REINFORCED CONCRETE WITH MONOLITHIC BASE

CONCRETE BLOCK WITH CAST-IN-PLACE OR PRECAST REINFORCED CONCRETE BASE ②

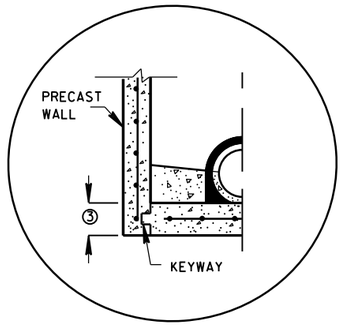

PRECAST REINFORCED CONCRETE WITH INTEGRAL BASE OPTION

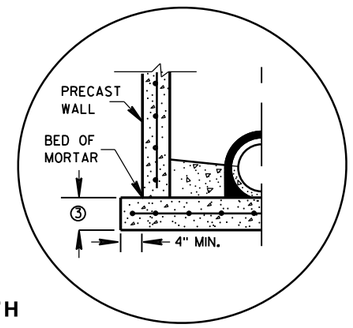

SEPARATE PRECAST REINFORCED CONCRETE BASE OPTION

DETAIL "A"

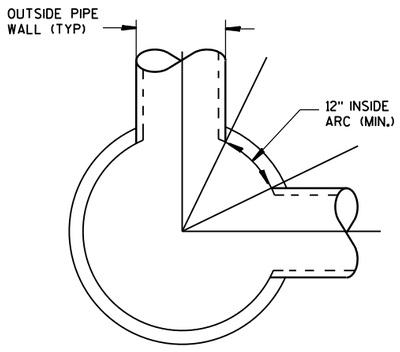

DETAIL "C"

GENERAL NOTES

DETAILS OF CONSTRUCTION, MATERIALS AND WORKMANSHIP NOT SHOWN ON THIS DRAWING SHALL CONFORM TO THE PERTINENT REQUIREMENTS OF THE STANDARD SPECIFICATIONS AND THE APPLICABLE SPECIAL PROVISIONS.

UNLESS OTHERWISE AUTHORIZED IN WRITING BY THE ENGINEER, THE CONTRACTOR SHALL NOT ORDER AND DELIVER PRECAST MANHOLE UNITS REQUIRED FOR THE PROJECT UNTIL A LIST OF SIZES IS FURNISHED BY THE ENGINEER.

DETAILED DRAWINGS FOR PROPOSED ALTERNATE DESIGNS FOR UNDERGROUND DRAINAGE STRUCTURES SHALL BE SUBMITTED TO THE ENGINEER FOR APPROVAL PROVIDING THAT SUCH ALTERNATE DESIGNS MAKE PROVISION FOR EQUIVALENT CAPACITY AND STRENGTH.

ALL DRAINAGE STRUCTURES ARE DESIGNATED ON THE PLANS AS "MANHOLES 3X3-L", "CATCH BASINS 4-B", "INLETS 2X3-H", ETC. THE FIRST NUMBERS DESIGNATE THE SIZE OF THE STRUCTURE, AND THE FOLLOWING LETTER DESIGNATES THE TYPE OF COVER TO BE USED TO COMPRISE THE COMPLETE UNIT.

BASES SHALL BE PLACED ON A BED OF MATERIAL AT LEAST 6 INCHES IN DEPTH, WHICH MEETS THE REQUIREMENTS OF GRANULAR BACKFILL. THIS BEDDING SHALL BE COMPACTED AND PROVIDE UNIFORM SUPPORT FOR THE ENTIRE AREA OF THE BASE.

PRECAST REINFORCED CONE TOPS (ECCENTRIC OR CONCENTRIC) OR PRECAST REINFORCED FLAT SLAB TOPS MAY BE USED ON CONCRETE BLOCK STRUCTURES. THE CONE TOPS SHALL BE INSTALLED ON A BED OF MORTAR.

ECCENTRIC CONE TOPS MAY BE USED ON ALL STRUCTURES, AND CONCENTRIC CONE TOPS SHALL BE USED ONLY ON STRUCTURES 5 FEET OR LESS IN DEPTH, UNLESS OTHERWISE DIRECTED BY THE ENGINEER.

STEPS MEETING AASHTO M199 AND THE FOLLOWING REQUIREMENTS SHALL BE INSTALLED IN ALL STRUCTURES OVER 5 FEET IN DEPTH: 16 INCH C-C MAXIMUM SPACING; PROJECT A MINIMUM CLEAR DISTANCE OF 4 INCHES FROM THE WALL AT THE POINT OF EMBEDMENT; MINIMUM LENGTH OF 10 INCHES; MINIMUM WALL EMBEDMENT OF 3 INCHES. FERROUS METAL STEPS NOT PAINTED OR TREATED TO RESIST CORROSION SHALL HAVE A MINIMUM CROSS SECTIONAL DIMENSION OF 1 INCH.

STEPS OF APPROVED POLYPROPYLENE PLASTIC COATED REINFORCEMENT BAR ARE ACCEPTABLE. REINFORCING BAR MUST BE A MINIMUM OF ½" AND MEET THE REQUIREMENTS OF ASTM A615.

CERTIFICATION SHALL BE PROVIDED THAT INSTALLED STEPS WHEN TESTED IN ACCORDANCE WITH SECTION 10 OF AASHTO T280 CAN WITHSTAND A VERTICAL LOAD OF 800 LBS. AND A HORIZONTAL LOAD OF 400 LBS.

ALL BAR STEEL REINFORCEMENT SHALL BE EMBEDDED 2 INCHES CLEAR UNLESS OTHERWISE SHOWN OR NOTED.

CONCRETE BLOCK WILL NOT BE PERMITED FOR STRUCTURES GREATER THAN 4 FEET IN DIAMETER.

PRECAST REINFORCED RISERS SHALL HAVE A TONGUE AND GROOVE JOINT WITH TONGUE UP OR DOWN.

ALL PRECAST MANHOLE UNITS SHALL CONFORM TO THE PERTINENT REQUIREMENTS OF AASHTO DESIGNATION M 199.

4" OVERHANGING BASES ARE REQUIRED FOR ALL CONCRETE BLOCK INSTALLATIONS. 4" OVERHANG IS REQUIRED WHEN SEPARATE PRECAST BASE IS PROVIDED. OVERHANG IS NOT REQUIRED ON PRECAST STRUCTURES WITH AN INTEGRAL OR MONOLITHIC BASE.

FOR ADDITIONAL CONFIGURATIONS, MAINTAIN A MINIMUM OF 12 INCHES AS MEASURED FROM THE INSIDE OF THE STRUCTURE WALL BETWEEN THE OUTSIDE PIPE WALLS OF ADJACENT PIPES. SEE DETAIL "C".

① MINIMUM WALL THICKNESS SHALL BE 4 INCHES FOR 3-FT, 5 INCHES FOR 4-FT, 6 INCHES FOR 5-FT, 7 INCHES FOR 6-FT, 8 INCHES FOR 7-FT AND 9 INCHES FOR 8-FT DIAMETER PRECAST MANHOLES.

② FOR PRECAST MANHOLES PROVIDE REINFORCING STEEL IN ACCORDANCE TO AASHTO M199.

③ PRECAST FLAT SLAB TOPS AND BASES WITH A DIAMETER OF 48" AND LESS SHALL HAVE A MINIMUM THICKNESS OF 6". PRECAST FLAT SLAB TOPS AND BASES WITH A DIAMETER LARGER THAN 48" SHALL HAVE A MINIMUM THICKNESS OF 8".

MANHOLE COVER OPENING MATRIX

MANHOLE COVER TYPE	C	ALL J'S	K	L	M
OPENING SIZE (FT)					
2 DIA.	X	X		X	
3 DIA.			X		X

PIPE MATRIX

MANHOLE SIZE	MAXIMUM INSIDE PIPE DIAMETER FOR TWO PIPES	
	180° SEPARATION (IN)	90° SEPARATION (IN)
3-FT	15	12
4-FT	24	18
5-FT	36	24
6-FT	42	36
7-FT	48	36
8-FT	60	42

MANHOLES 3-FT, 4-FT, 5-FT, 6-FT, 7-FT AND 8-FT DIAMETER

STATE OF WISCONSIN
DEPARTMENT OF TRANSPORTATION

APPROVED
6/5/2012 — DATE
/S/ Jerry H. Zogg — ROADWAY STANDARDS DEVELOPMENT ENGINEER
FHWA

6
S.D.D. 8 B 9-1

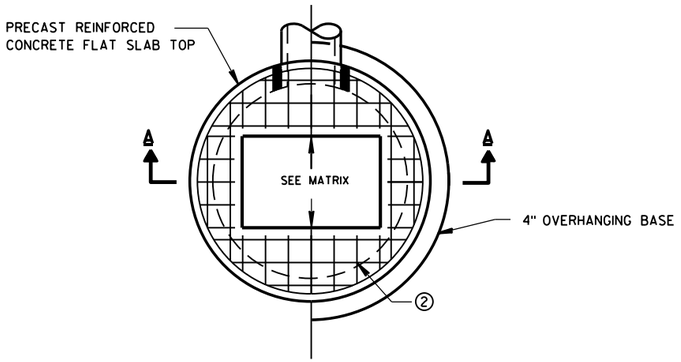

PLAN VIEW RECTANGULAR OPENING

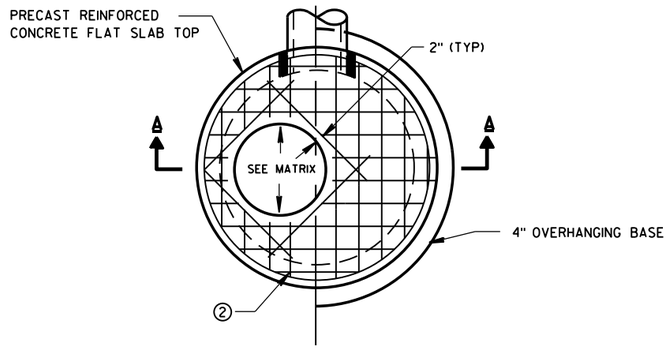

PLAN VIEW CIRCULAR OPENING

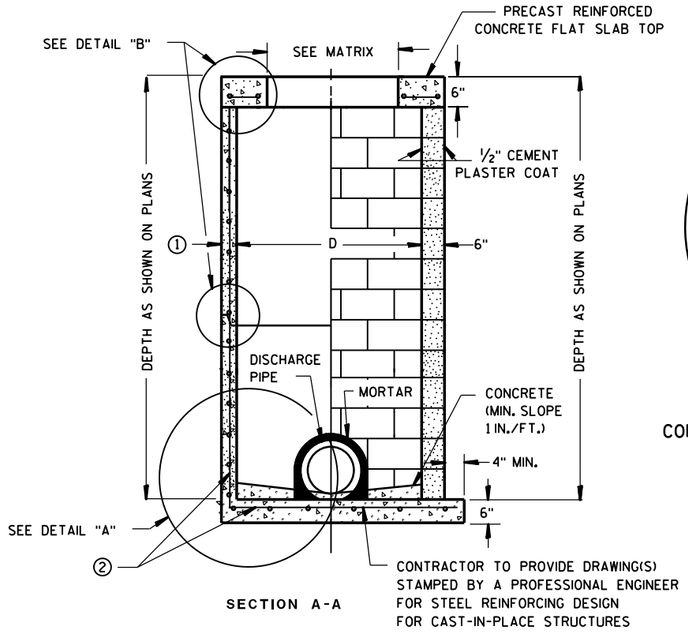

SECTION A-A

PRECAST REINFORCED CONCRETE WITH MONOLITHIC BASE

CONCRETE BLOCK WITH CAST-IN-PLACE OR PRECAST REINFORCED CONCRETE BASE ②

CIRCULAR INLETS W/ FLAT TOP

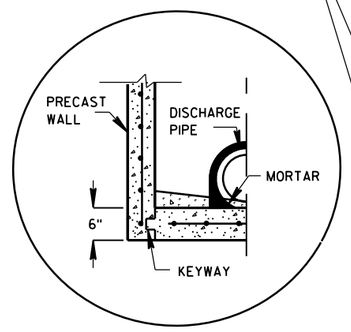

PRECAST REINFORCED CONCRETE WITH INTEGRAL BASE OPTION

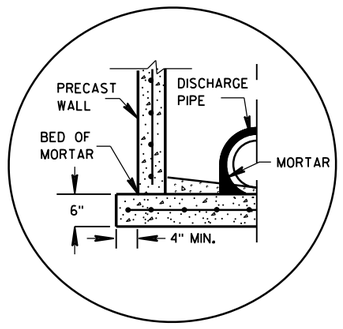

SEPARATE PRECAST REINFORCED CONCRETE BASE OPTION

DETAIL "A"

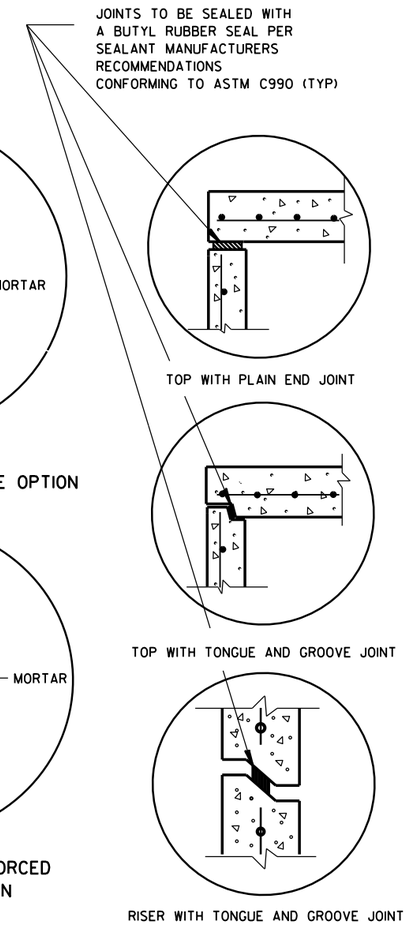

DETAIL "B"

GENERAL NOTES

DETAILS OF CONSTRUCTION, MATERIALS AND WORKMANSHIP NOT SHOWN ON THIS DRAWING SHALL CONFORM TO THE PERTINENT REQUIREMENTS OF THE STANDARD SPECIFICATIONS AND THE APPLICABLE SPECIAL PROVISIONS.

UNLESS OTHERWISE AUTHORIZED IN WRITING BY THE ENGINEER, THE CONTRACTOR SHALL NOT ORDER AND DELIVER PRECAST INLET UNITS REQUIRED FOR THE PROJECT UNTIL A LIST OF SIZES IS FURNISHED BY THE ENGINEER.

DETAILED DRAWINGS FOR PROPOSED ALTERNATE DESIGNS FOR UNDERGROUND DRAINAGE STRUCTURES SHALL BE SUBMITTED TO THE ENGINEER FOR APPROVAL PROVIDING THAT SUCH ALTERNATE DESIGNS MAKE PROVISION FOR EQUIVALENT CAPACITY AND STRENGTH.

ALL DRAINAGE STRUCTURES ARE DESIGNATED ON THE PLANS AS "MANHOLES 3X3-L", "CATCH BASINS 4-B", "INLETS 2X3-H", ETC. THE FIRST NUMBERS DESIGNATE THE SIZE OF THE STRUCTURE, AND THE FOLLOWING LETTER DESIGNATES THE TYPE OF COVER TO BE USED TO COMPRISE THE COMPLETE UNIT.

BASES SHALL BE PLACED ON A BED OF MATERIAL AT LEAST 6 INCHES IN DEPTH, WHICH MEETS THE REQUIREMENTS OF GRANULAR BACKFILL. THIS BEDDING SHALL BE COMPACTED AND PROVIDE UNIFORM SUPPORT FOR THE ENTIRE AREA OF THE BASE.

ALL BAR STEEL REINFORCEMENT SHALL BE EMBEDDED 2 INCHES CLEAR UNLESS OTHERWISE SHOWN OR NOTED.

ALL PRECAST INLET UNITS SHALL CONFORM TO THE PERTINENT REQUIREMENTS OF AASHTO DESIGNATION M199.

PRECAST REINFORCED RISERS SHALL HAVE A TONGUE AND GROOVE JOINT WITH TONGUE UP OR DOWN.

4" OVERHANGING BASES ARE REQUIRED FOR ALL CONCRETE BLOCK INSTALLATIONS. 4" OVERHANG IS REQUIRED WHEN SEPARATE PRECAST BASE IS PROVIDED. OVERHANG IS NOT REQUIRED ON PRECAST STRUCTURES WITH AN INTEGRAL OR MONOLITHIC BASE.

FOR ADDITIONAL CONFIGURATIONS, MAINTAIN A MINIMUM OF 12 INCHES AS MEASURED FROM THE INSIDE OF THE STRUCTURE WALL BETWEEN THE OUTSIDE PIPE WALLS OF ADJACENT PIPES. SEE DETAIL "C".

① MINIMUM WALL THICKNESS SHALL BE 4-IN FOR 3-FT DIAMETER AND 5-IN FOR 4-FT DIAMETER PRECAST INLETS.

② FOR PRECAST CATCH BASINS PROVIDE REINFORCING STEEL IN ACCORDANCE TO AASHTO M199.

INLET COVER OPENING MATRIX

	INLET COVER TYPE	ALL A'S	ALL B'S	BW	C	F	ALL H'S	S	T	V	WM	Z
INLET SIZE	OPENING SIZE (FT)											
3-FT	2 DIA.				X							X
	2X2	X	X					X		X		
4-FT	2 DIA.				X							X
	2X2	X	X					X		X		
	2X2.5			X				X	X	X	X	
	2X3						X					
	2.5X3					X						

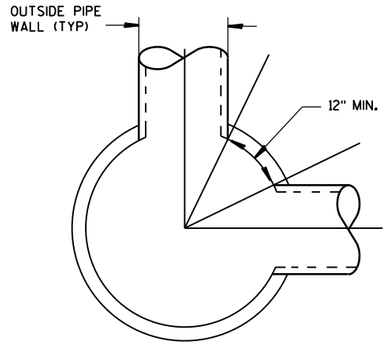

DETAIL "C"

PIPE MATRIX

INLET SIZE	MAXIMUM INSIDE PIPE DIAMETER FOR TWO PIPES	
	180° SEPARATION (IN)	90° SEPARATION (IN)
3-FT	15	12
4-FT	24	18

INLETS 3-FT AND 4-FT DIAMETER

STATE OF WISCONSIN
DEPARTMENT OF TRANSPORTATION

APPROVED
6/5/2012 — DATE
/S/ Jerry H. Zogg — ROADWAY STANDARDS DEVELOPMENT ENGINEER
FHWA

6

S.D.D. 8 C 6-1

6

S.D.D. 8 C 6-1

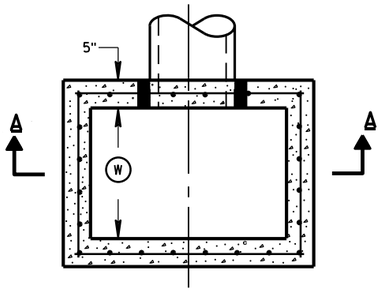

PLAN VIEW

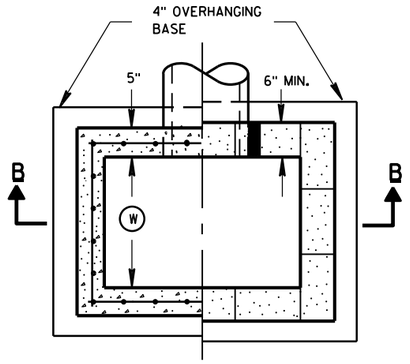

PLAN VIEW

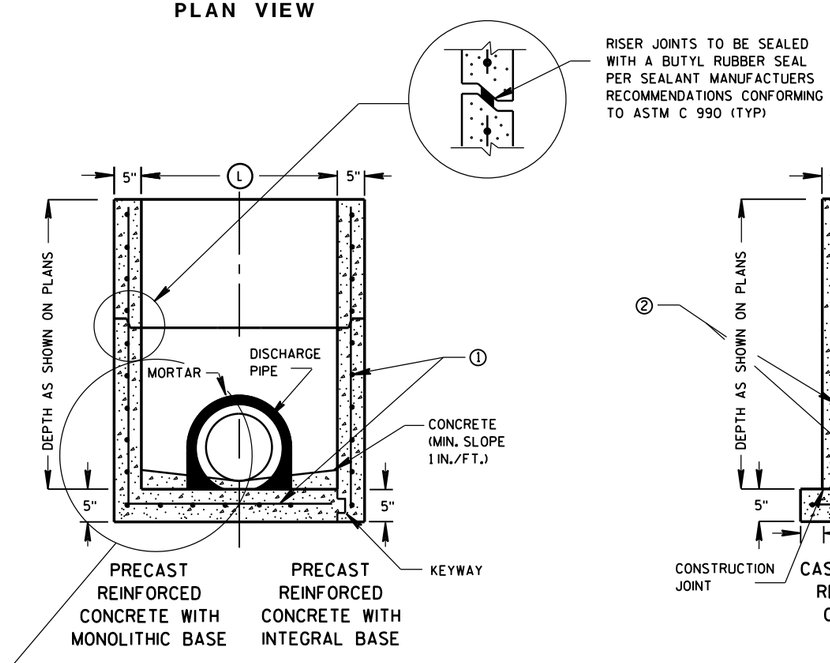

SECTION A-A

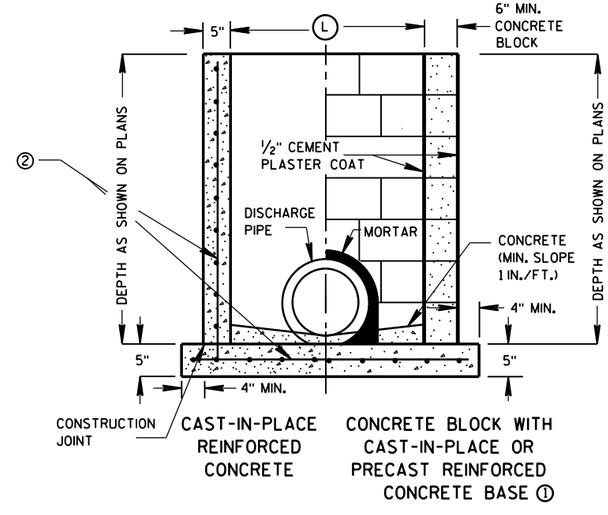

SECTION B-B

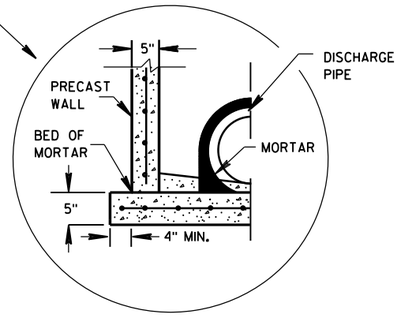

SEPARATE PRECAST REINFORCED CONCRETE BASE OPTION

GENERAL NOTES

DETAILS OF CONSTRUCTION, MATERIALS AND WORKMANSHIP NOT SHOWN ON THIS DRAWING SHALL CONFORM TO THE PERTINENT REQUIREMENTS OF THE STANDARD SPECIFICATIONS AND THE APPLICABLE SPECIAL PROVISIONS.

UNLESS OTHERWISE AUTHORIZED IN WRITING BY THE ENGINEER, THE CONTRACTOR SHALL NOT ORDER AND DELIVER PRECAST INLET UNITS REQUIRED FOR THE PROJECT UNTIL A LIST OF SIZES IS FURNISHED BY THE ENGINEER.

DETAILED DRAWINGS FOR PROPOSED ALTERNATE DESIGNS FOR UNDERGROUND DRAINAGE STRUCTURES SHALL BE SUBMITTED TO THE ENGINEER FOR APPROVAL PROVIDING THAT SUCH ALTERNATE DESIGNS MAKE PROVISION FOR EQUIVALENT CAPACITY AND STRENGTH.

ALL PRECAST INLET UNITS SHALL CONFORM TO THE PERTINENT REQUIREMENTS OF ASTM C 913.

ALL DRAINAGE STRUCTURES ARE DESIGNATED ON THE PLANS AS "MANHOLES 3X3-L", "CATCH BASINS 4-B", "INLETS 2X3-H", ETC. THE FIRST NUMBERS DESIGNATES THE SIZE OF THE STRUCTURE, AND THE FOLLOWING LETTER DESIGNATES THE TYPE OF COVER TO BE USED TO COMPRISE THE COMPLETE UNIT.

BASES SHALL BE PLACED ON A BED OF MATERIAL AT LEAST 6 INCHES IN DEPTH, WHICH MEETS THE REQUIREMENTS OF GRANULAR BACKFILL. THIS BEDDING SHALL BE COMPACTED AND PROVIDE UNIFORM SUPPORT FOR THE ENTIRE AREA OF THE BASE.

ALL BAR STEEL REINFORCEMENT SHALL BE EMBEDDED 2 INCHES CLEAR UNLESS OTHERWISE SHOWN OR NOTED.

PRECAST REINFORCED RISERS SHALL HAVE A TONGUE AND GROOVE JOINT WITH TONGUE UP OR DOWN.

4" OVERHANGING BASES ARE REQUIRED FOR CAST-IN-PLACE REINFORCED CONCRETE AND CONCRETE BLOCK INSTALLATIONS.
4" OVERHANG IS REQUIRED WHEN SEPARATE PRECAST BASE IS PROVIDED.
OVERHANG IS NOT REQUIRED ON PRECAST STRUCTURES WITH AN INTEGRAL OR MONOLITHIC BASE.

MAXIMUM INSIDE PIPE DIAMETER DETERMINED BY 3 INCH CLEARANCE ON EACH SIDE OF THE OUTSIDE WALL OF THE PIPE. SEE DETAIL "A". ASSUMES PIPE ENTERS PERPENDICULAR TO THE STRUCTURE.

① FOR PRECAST INLETS PROVIDE REINFORCING STEEL IN ACCORDANCE TO ASTM C 913.

② CONTRACTOR TO PROVIDE DRAWING(S) STAMPED BY A PROFESSIONAL ENGINEER FOR STEEL REINFORCING DESIGN FOR CAST-IN-PLACE STRUCTURES.

INLET COVER MATRIX

INLET SIZE		INLET COVER TYPE	ALL A'S	ALL B'S	BW	F	ALL H'S	S	T	V	WM
	WIDTH (W) (FT)	LENGTH (L) (FT)									
2X2-FT	2	2	X	X				X		X	
2X2.5-FT	2	2.5			X			X	X	X	X
2X3-FT	2	3					X				
2.5X3-FT	2.5	3				X					

PIPE MATRIX

INLET SIZE	MAXIMUM INSIDE PIPE DIAMETER	
	WIDTH (IN)	LENGTH (IN)
2X2-FT	12	12
2X2.5-FT	12	18
2X3-FT	12	24
2.5X3-FT	18	24

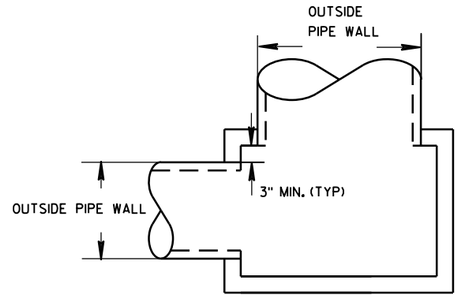

DETAIL "A"

INLETS 2X2-FT, 2X2.5-FT, 2X3-FT AND 2.5X3-FT

STATE OF WISCONSIN
DEPARTMENT OF TRANSPORTATION

APPROVED
6/5/2012
DATE
FHWA

/S/ Jerry H. Zogg
ROADWAY STANDARDS DE
ENGINEER

6
S.D.D. 8 C 7-1

INLETS 2X2-FT, 2X2.5-FT, 2X3-FT AND 2.5X3-FT

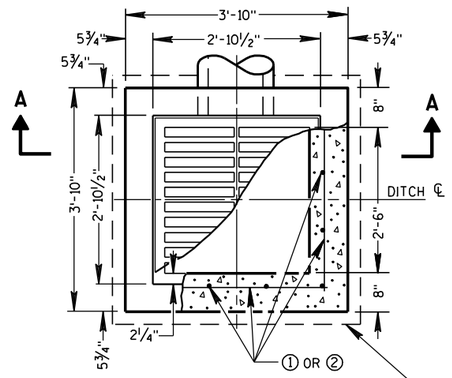

PLAN VIEW

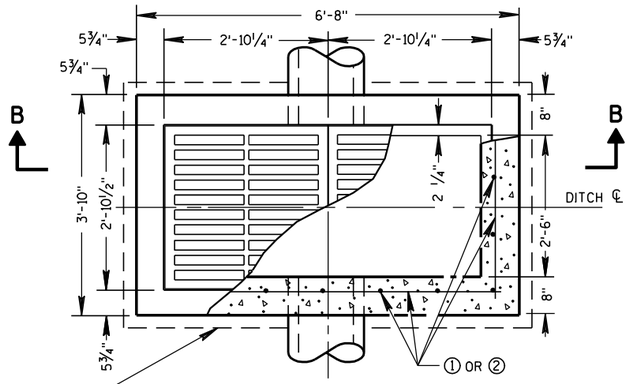

PLAN VIEW

4" OVERHANGING BASE ON REINFORCED CAST-IN-PLACE CONCRETE INLETS

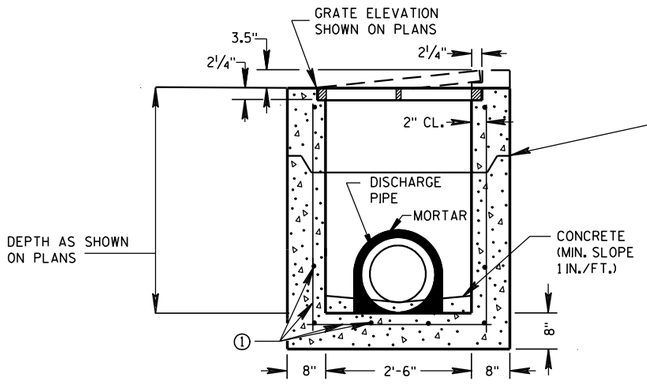

PRECAST REINFORCED CONCRETE SECTION A-A

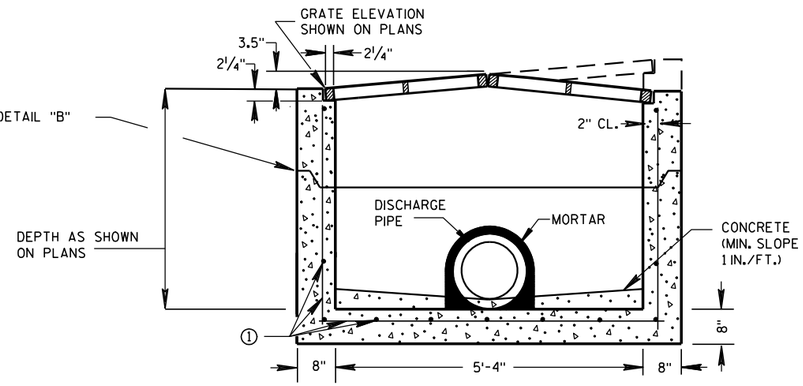

PRECAST REINFORCED CONCRETE SECTION B-B

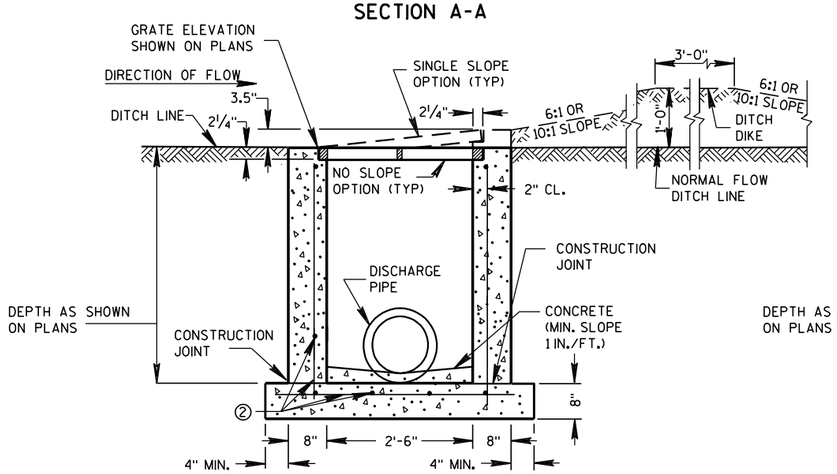

REINFORCED CAST-IN-PLACE CONCRETE SECTION A-A

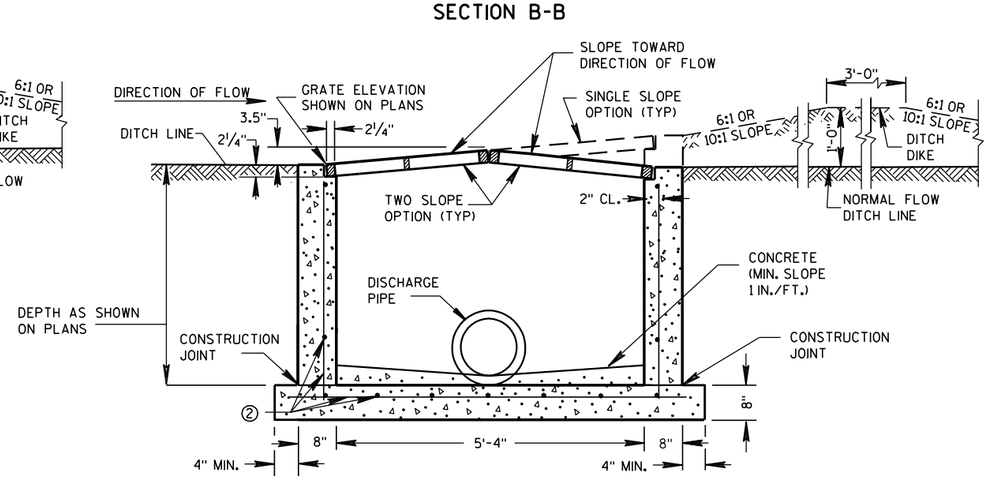

REINFORCED CAST-IN-PLACE CONCRETE SECTION B-B

INLETS MEDIAN 1 GRATE

INLETS MEDIAN 2 GRATE

GENERAL NOTES

DETAILS OF CONSTRUCTION, MATERIALS AND WORKMANSHIP NOT SHOWN ON THIS DRAWING SHALL CONFORM TO THE PERTINENT REQUIREMENTS OF THE STANDARD SPECIFICATIONS AND THE APPLICABLE SPECIAL PROVISIONS.

UNLESS OTHERWISE AUTHORIZED IN WRITING BY THE ENGINEER, THE CONTRACTOR SHALL NOT ORDER AND DELIVER PRECAST INLET UNITS REQUIRED FOR THE PROJECT UNTIL A LIST OF SIZES IS FURNISHED BY THE ENGINEER.

DETAILED DRAWINGS FOR PROPOSED ALTERNATE DESIGNS FOR INLETS WHICH MAY INCLUDE PRECAST REINFORCED CONCRETE INLETS, SHALL BE SUBMITTED TO THE ENGINEER FOR APPROVAL PROVIDING THAT SUCH ALTERNATE DESIGNS MAKE PROVISION FOR EQUIVALENT CAPACITY AND STRENGTH.

ALL MEDIAN INLETS ARE DESIGNATED ON THE PLANS AS "INLETS, 1G-MS", ETC. THE FIRST NUMBER AND LETTER DESIGNATE THE TYPE OF STRUCTURE, AND THE FOLLOWING LETTERS DESIGNATE THE TYPE OF COVER TO BE USED TO COMPRISE THE COMPLETE UNIT.

ALL BAR STEEL REINFORCEMENT SHALL BE EMBEDDED 2 INCHES CLEAR UNLESS OTHERWISE SHOWN OR NOTED.

PRECAST REINFORCED RISERS SHALL HAVE A TONGUE AND GROOVE JOINT WITH TONGUE UP OR DOWN.

ALL PRECAST INLET UNITS SHALL CONFORM TO THE PERTINENT REQUIREMENTS OF ASTM C 913.

MAXIMUM INSIDE PIPE DIAMETER DETERMINED BY 3" CLEARANCE ON EACH SIDE OF THE OUTSIDE WALL OF THE PIPE. SEE DETAIL "A". ASSUMES PIPE ENTERS PERPENDICULAR TO THE STRUCTURE.

① FOR PRECAST INLETS PROVIDE REINFORCING STEEL IN ACCORDANCE TO ASTM C 913.

② CONTRACTOR TO PROVIDE DRAWING(S) STAMPED BY A PROFESSIONAL ENGINEER FOR STEEL REINFORCING DESIGN FOR CAST-IN-PLACE STRUCTURES.

PIPE MATRIX

	MAXIMUM INSIDE PIPE DIAMETER	
INLET SIZE	WIDTH (IN)	LENGTH (IN)
1 GRATE	18	18
2 GRATE	18	42

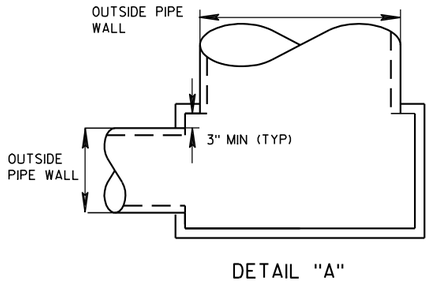

DETAIL "A"

JOINTS TO BE SEALED WITH A BUTYL RUBBER SEAL PER SEALANT MANUFACTURERS RECOMMENDATIONS CONFORMING TO ASTM C 990 (TYP)

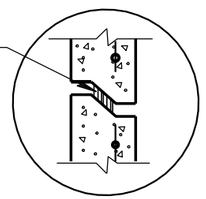

DETAIL "B"

INLETS MEDIAN 1 AND 2 GRATE

STATE OF WISCONSIN
DEPARTMENT OF TRANSPORTATION

APPROVED

6/5/2012
DATE

/S/ Jerry H. Zogg
ROADWAY STANDARDS DEVELOPMENT ENGINEER

FHWA

6

S.D.D. 8 C 8-1

6

S.D.D. 8 C 8-1

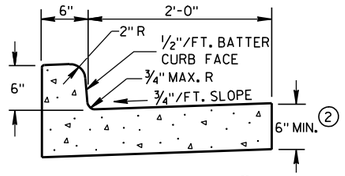

TYPES A & D (1)

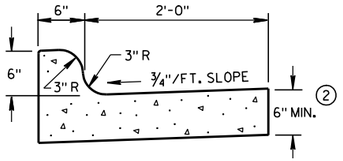

TYPES K & L (1)

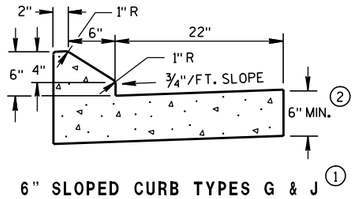

6" SLOPED CURB TYPES G & J (1)

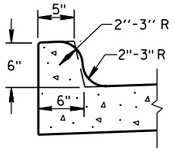

OPTIONAL CURB SHAPE FOR TYPES K & L (1)

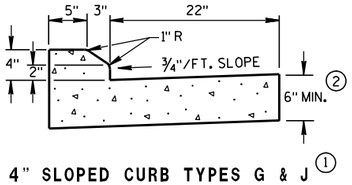

4" SLOPED CURB TYPES G & J (1)

CONCRETE CURB & GUTTER 30"

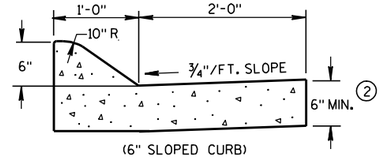

(6" SLOPED CURB)

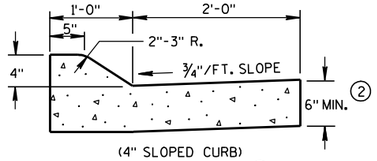

(4" SLOPED CURB)

TYPES A & D (1)

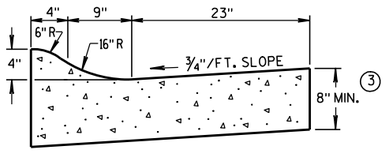

4" SLOPED CURB TYPES R & T (1) (4)

CONCRETE CURB & GUTTER 36"

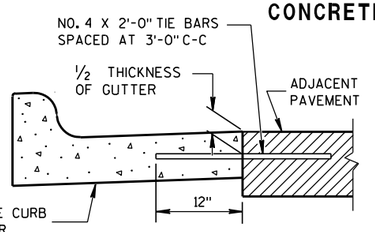

TYPICAL TIE BAR LOCATION (1)

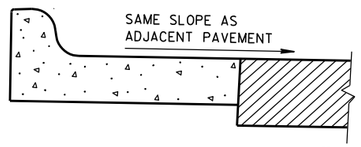

REVERSE SLOPE GUTTER (5)
(TYPICAL FOR ALL CURB & GUTTER TYPES)

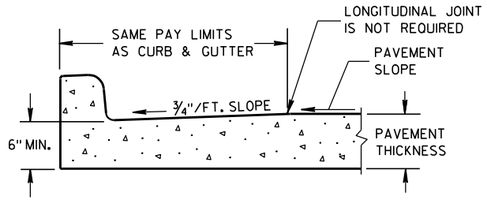

PARTIAL SECTION OF PAVEMENT WITH INTEGRAL CURB & GUTTER

GENERAL NOTES

DETAILS OF CONSTRUCTION, MATERIALS AND WORKMANSHIP NOT SHOWN ON THIS DRAWING SHALL CONFORM TO THE PERTINENT REQUIREMENTS OF THE CONTRACT.

PAVEMENT TIES AND TIE BARS SHALL BE EPOXY COATED IN CONFORMANCE WITH SUBSECTION 505.2.6.2 OF THE STANDARD SPECIFICATIONS.

INTEGRAL CURB & GUTTER SHALL CONFORM TO THE DETAILS SHOWN FOR CONCRETE CURB & GUTTER INCLUDING THE TRANSVERSE GUTTER SLOPE. A LONGITUDINAL CONSTRUCTION JOINT IS NOT REQUIRED WITH INTEGRAL CURB AND GUTTER.

WHERE THE TRANSVERSE JOINTS IN THE PAVEMENT ARE REQUIRED TO BE SEALED, THE JOINTS IN THE INTEGRAL CURB AND GUTTER SHALL BE SEALED TO THE FACE OF CURB WITH THE SAME TYPE OF SEALANT. THE COST OF FURNISHING AND INSTALLING THIS SEALANT SHALL BE INCIDENTAL TO THE ITEM CONCRETE CURB AND GUTTER.

UNLESS OTHERWISE SHOWN ON THE TYPICAL CROSS SECTIONS, THE BASE AGGREGATE AND COMMON EXCAVATION LIMITS ARE 2'-0" BEHIND THE BACK OF CURBS.

(1) TIE BARS ARE REQUIRED FOR CURB AND GUTTER TYPES A, G, K AND R.

(2) THE BOTTOM OF CURB AND GUTTER MAY BE CONSTRUCTED EITHER LEVEL OR PARALLEL TO THE SLOPE OF THE SUBGRADE OR BASE AGGREGATE PROVIDED A 6" MINIMUM GUTTER THICKNESS IS MAINTAINED.

(3) THE BOTTOM OF CURB AND GUTTER MAY BE CONSTRUCTED EITHER LEVEL OR PARALLEL TO THE SLOPE OF THE SUBGRADE OR BASE AGGREGATE PROVIDED A 8" MINIMUM GUTTER THICKNESS IS MAINTAINED.

(4) THE FACE OF CURB IS 6" FROM THE BACK OF CURB.

(5) WHEN REVERSE SLOPE GUTTER IS REQUIRED, THE LOCATION(S) WILL BE SHOWN ELSEWHERE IN THE PLAN.

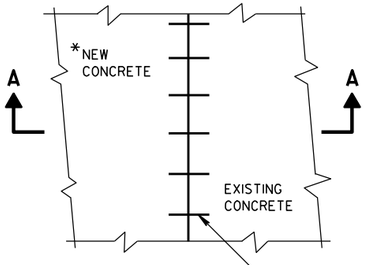

PLAN VIEW

*NEW CURB & GUTTER, SURFACE DRAINS, CONCRETE PAVEMENT OR OTHER NEW CONCRETE.

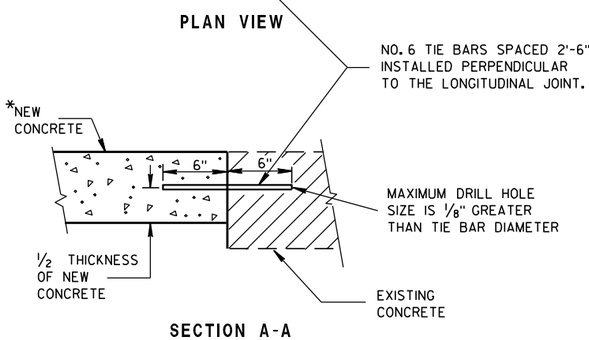

SECTION A-A

TIE BARS DRILLED INTO EXISTING PAVEMENT

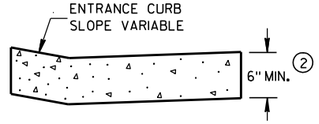

DRIVEWAY ENTRANCE CURB
(WHEN DIRECTED BY THE ENGINEER)

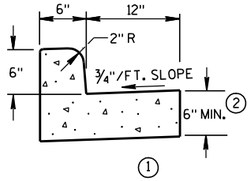

(1)
TYPES A & D
CONCRETE CURB & GUTTER 18"

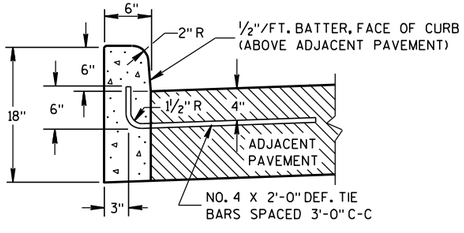

(1)
TYPES A & D

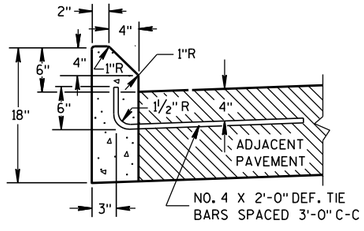

(1)
TYPES G & J

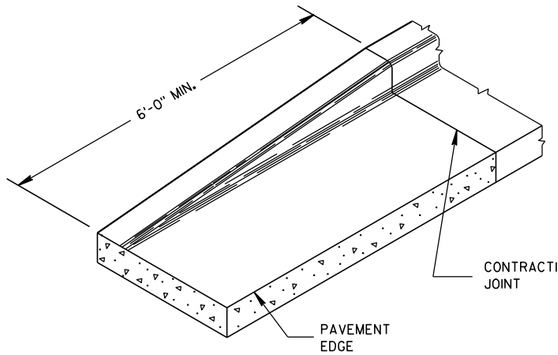

END SECTION CURB & GUTTER

CONCRETE CURB

CONCRETE CURB, CONCRETE CURB & GUTTER AND TIES

STATE OF WISCONSIN
DEPARTMENT OF TRANSPORTATION

APPROVED
9/4/08 DATE
/S/ Jerry H. [illegible]
ROADWAY STANDARDS ENGINEER

FHWA ENT

6

S.D.D. 8 D 1-17

6

S.D.D. 8 D 1-17

ASPHALTIC FLUME

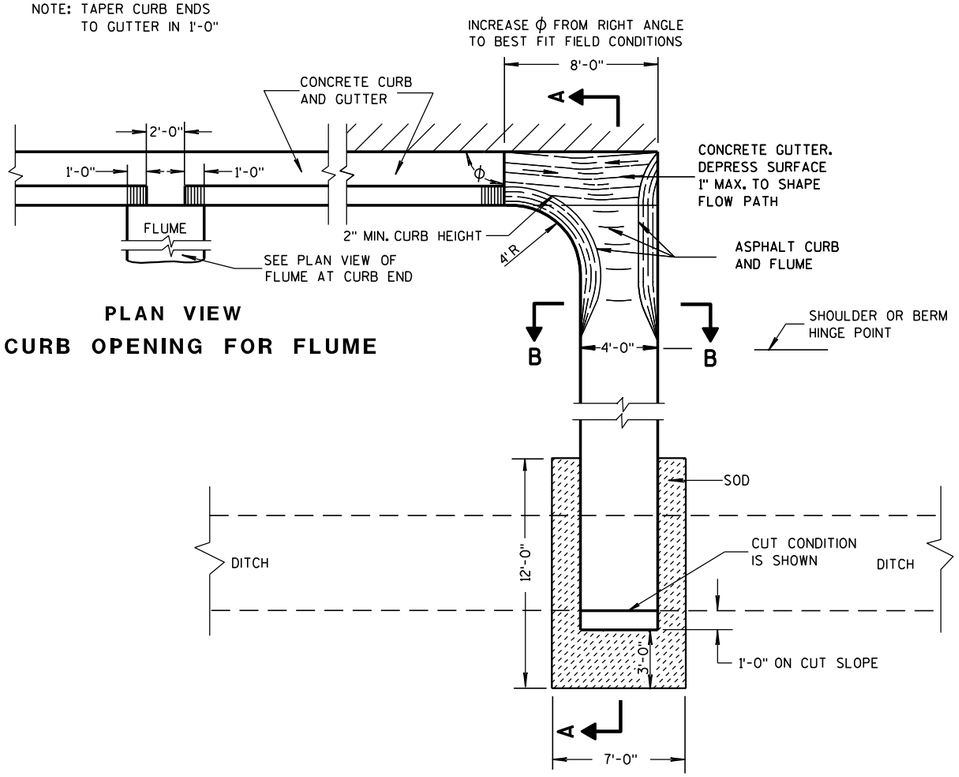

PLAN VIEW
CURB OPENING FOR FLUME

PLAN VIEW
FLUME AT CURB END

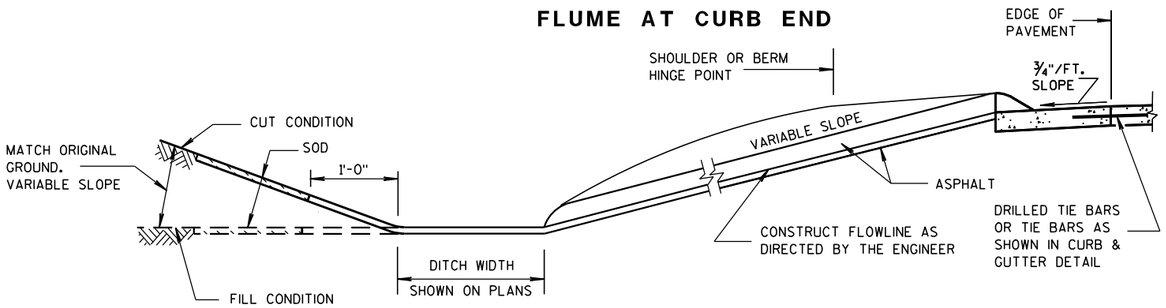

SECTION A-A

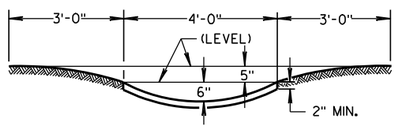

SECTION B-B

GENERAL NOTES

DETAILS OF CONSTRUCTION, MATERIALS AND WORKMANSHIP NOT SHOWN ON THIS DRAWING SHALL CONFORM TO PERTINENT REQUIREMENTS OF THE STANDARD SPECIFICATIONS AND APPLICABLE SPECIAL PROVISIONS.

WELDED STEEL WIRE FABRIC SHALL BE IN ACCORDANCE WITH AASHTO SPECIFICATION M55.

① JOINTS SHALL BE $\frac{1}{8}$ TO $\frac{1}{4}$ INCH WIDE BY $1\frac{1}{2}$ INCHES DEEP AND SPACED AT UNIFORM INTERVALS OF APPROXIMATELY 4 FEET.

② GEOTEXTILE FABRIC TYPE "R" SHALL UNDERLAY THE FULL LENGTH AND WIDTH OF THE CONCRETE SURFACE DRAIN AND RIPRAP.

③ CONCRETE SURFACE DRAIN WITHOUT CURB AND GUTTER MAY BE USED ON BACKSLOPES WHEN SPECIFIED

③ CONCRETE SURFACE DRAIN

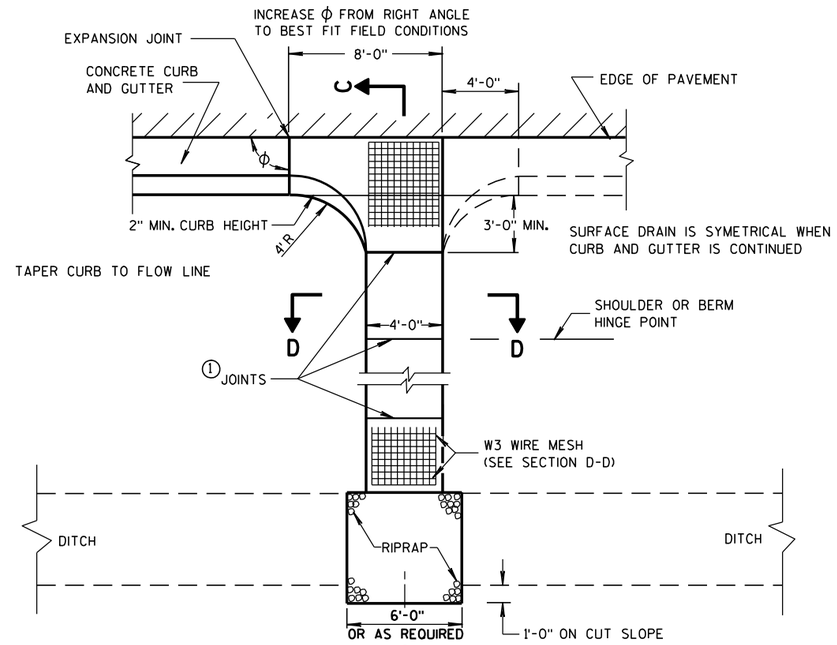

PLAN VIEW

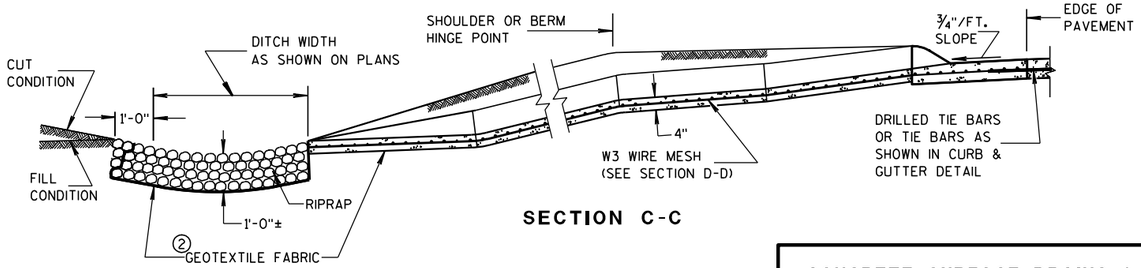

SECTION C-C

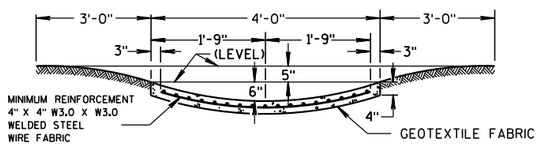

SECTION D-D

CONCRETE SURFACE DRAINS & ASPHALTIC FLUMES

STATE OF WISCONSIN
DEPARTMENT OF TRANSPORTATION

APPROVED
9-4-08 DATE
/S/ Jerry H. Zogg
ROADWAY STANDARDS ENGINEER
MENT
FHWA

6

S.D.D. 8 D 4-5

6

S.D.D. 8 D 4-5

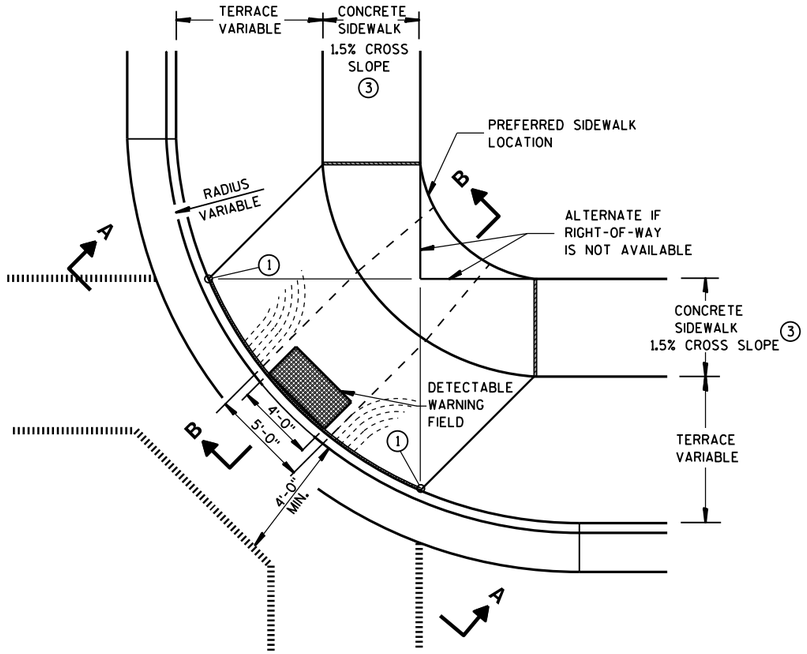

PLAN VIEW

TYPE 1 RAMP

(CENTER OF CORNER RADIUS)

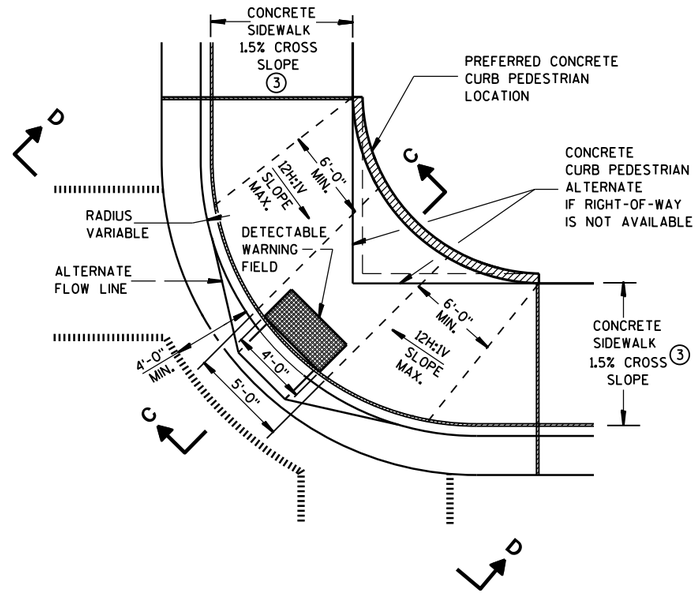

PLAN VIEW

TYPE 1-A RAMP

(NO TERRACE)

GENERAL NOTES

DETAILS OF CONSTRUCTION, MATERIALS AND WORKMANSHIP NOT SHOWN ON THIS DRAWING SHALL CONFORM TO THE PERTINENT REQUIREMENTS OF THE STANDARD SPECIFICATIONS AND THE APPLICABLE SPECIAL PROVISIONS.

RAMPS SHALL BE BUILT AT 12H:1V OR FLATTER. WHEN NECESSARY, THE SIDEWALK ELEVATION MAY BE LOWERED TO MEET THE HIGH POINT ON THE RAMP.

TYPE 1 RAMPS SHALL HAVE A NORMAL SIDEWALK APRON AND CURB ON BOTH SIDES OF RAMP.

DETECTABLE WARNING FIELD SHALL BE MEASURED AND PAID BY THE SQUARE FOOT AS "CURB RAMP DETECTABLE WARNING FIELD". THE CONCRETE PEDESTRIAN CURB, IF NEEDED, SHALL BE MEASURED AND PAID BY THE LINEAL FOOT AS "CONCRETE CURB PEDESTRIAN". CONCRETE SIDEWALK IN THE CURB RAMP AREA SHALL BE MEASURED AND PAID BY THE SQUARE FOOT AS CONCRETE SIDEWALK, INCLUDING THE AREA UNDER THE DETECTABLE WARNING FIELD.

SELECT CURB RAMP DETECTABLE WARNING FIELD MATERIALS AND DEVICES FROM THE DEPARTMENT'S APPROVED MATERIALS LIST. THE COLOR OF THE DETECTABLE WARNING FIELD IS SPECIFIED ELSEWHERE AND IS INCIDENTAL TO THE BID ITEM OF "CURB RAMP DETECTABLE WARNING FIELD".

DETECTABLE WARNING FIELDS THAT ARE INSTALLED AS A GROUP OR SIDE BY SIDE, SHALL BE FROM THE SAME MANUFACTURER.

SURFACE TEXTURE OF THE RAMP SHALL BE OBTAINED BY COARSE BROOMING TRANSVERSE TO THE SLOPE OF THE RAMP.

① THIS POINT IS AN EXTENSION OF OUTSIDE EDGE OF APPROACHING SIDEWALK WHERE IT MEETS THE BACK OF CONCRETE CURB.

② GRADE CHANGE BETWEEN GUTTER FLAG SLOPE AND THE CURB RAMP SLOPE SHALL NOT EXCEED 11%. PROVIDE DRAINAGE AWAY FROM CURB RAMP AT GUTTER FLAG INTERFACE.

③ ±0.5% CONSTRUCTION TOLERANCE IN SIDEWALK CROSS SLOPE. THE SIDEWALK CROSS SLOPE SHALL NOT EXCEED 2% WITHOUT PRIOR APPROVAL FROM THE ENGINEER.

LEGEND

- ½" EXPANSION JOINT-SIDEWALK
- CONTRACTION JOINT FIELD LOCATED
- PAVEMENT MARKING CROSSWALK (WHITE)
- ALTERNATIVE LAYOUT

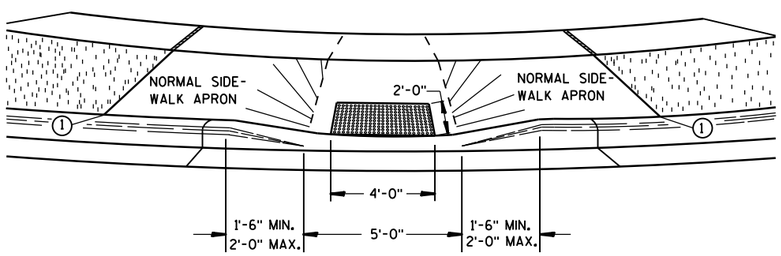

VIEW A-A

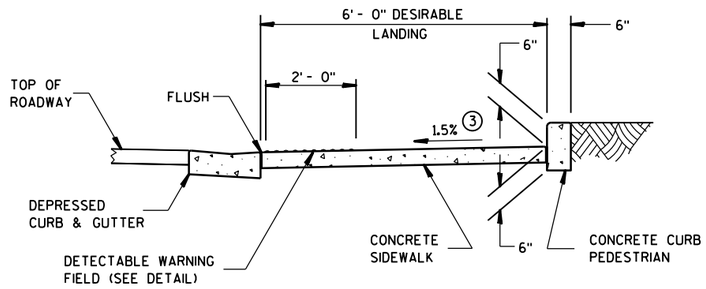

SECTION C-C

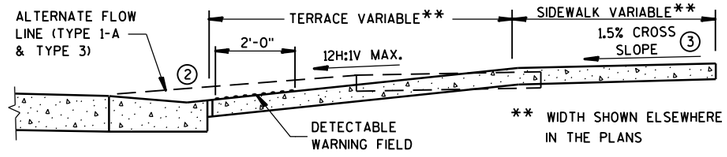

SECTION B-B

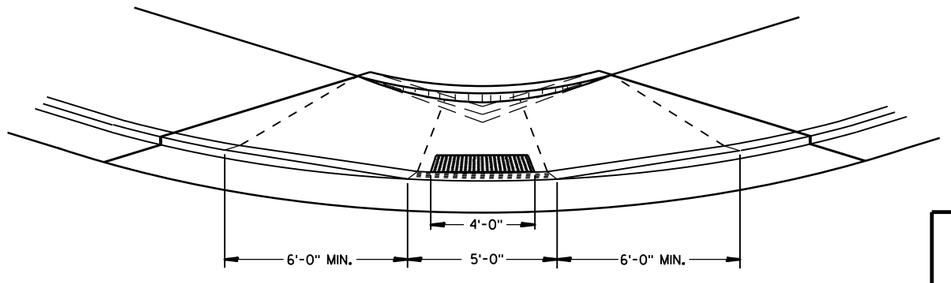

VIEW D-D

CURB RAMPS TYPES 1 AND 1-A

STATE OF WISCONSIN
DEPARTMENT OF TRANSPOR

6

S.D.D. 8 D 5-15a

6

S.D.D. 8 D 5-15a

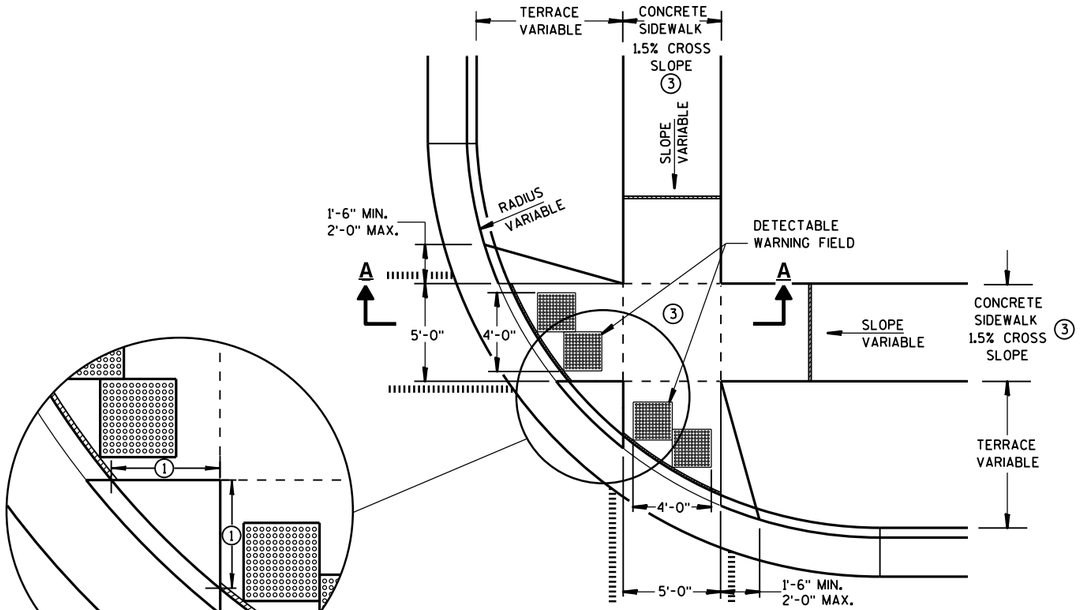

PLAN VIEW

TYPE 2 RAMP

(ON LINE WITH SIDEWALK)

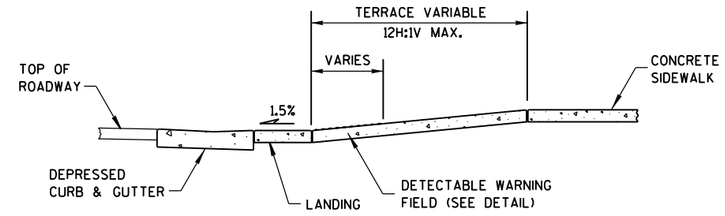

SECTION A-A

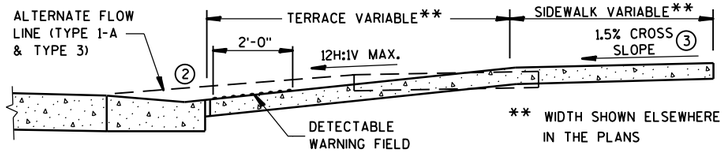

SECTION B-B

GENERAL NOTES

USE THE TYPE 3 RAMP ONLY WHEN A TYPE 1 OR TYPE 2 CANNOT BE ACHIEVED BECAUSE OF FIELD CONDITIONS.

DETECTABLE WARNING FIELDS THAT ARE INSTALLED AS A GROUP OR SIDE BY SIDE, SHALL BE FROM THE SAME MANUFACTURER.

① WHEN THIS DISTANCE IS LESS THAN 6'-0" IT MAY BE DIFFICULT TO ACHIEVE A 12H:1V SLOPE, OR FLATTER, ON THE RAMP. REDUCE CURB HEIGHT IN TRIANGLE AREA TO ACHIEVE 12H:1V SLOPE, OR FLATTER, ON RAMP. 2" MINIMUM CURB HEIGHT.

② GRADE CHANGE BETWEEN GUTTER FLAG SLOPE AND THE CURB RAMP SLOPE SHALL NOT EXCEED 11%. PROVIDE DRAINAGE AWAY FROM CURB RAMP AT GUTTER FLAG INTERFACE.

③ ±0.5% CONSTRUCTION TOLERANCE IN SIDEWALK CROSS SLOPE. THE SIDEWALK CROSS SLOPE SHALL NOT EXCEED 2% WITHOUT PRIOR APPROVAL FROM THE ENGINEER.

LEGEND

- ½" EXPANSION JOINT-SIDEWALK
- CONTRACTION JOINT FIELD LOCATED
- PAVEMENT MARKING CROSSWALK (WHITE)
- ALTERNATIVE LAYOUT

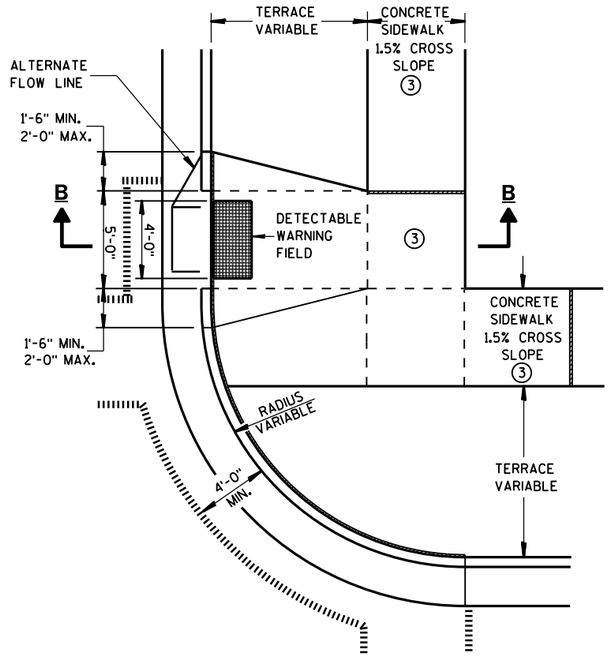

PLAN VIEW

TYPE 3 RAMP

(OUTSIDE OF CROSSWALK AREA)

CURB RAMPS TYPES 2 AND 3

STATE OF WISCONSIN
DEPARTMENT OF TRANSPOI

6

S.D.D. 8 D 5-15b

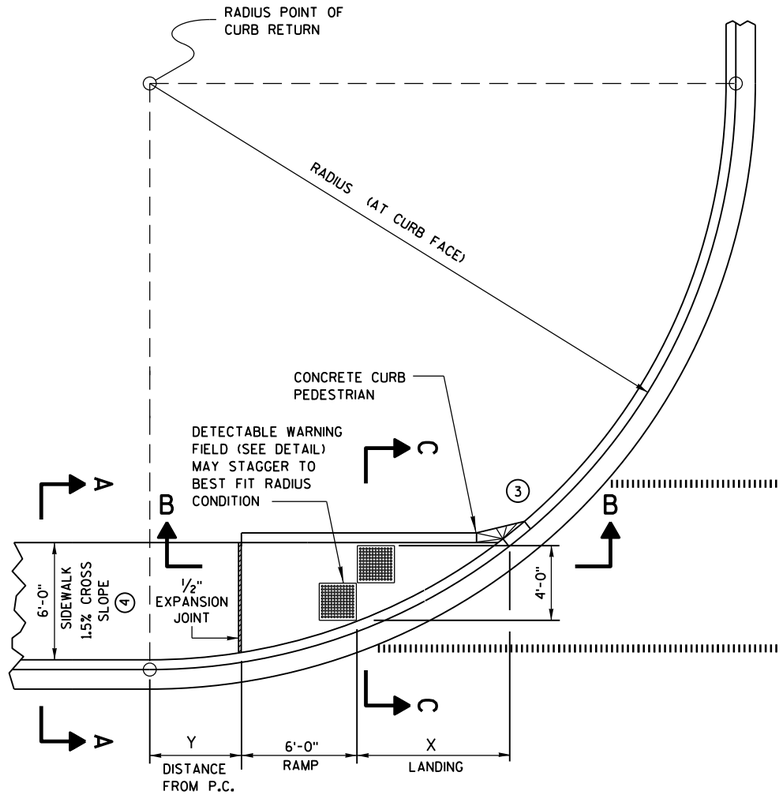

CURB RAMP TYPE 4A
PLAN VIEW

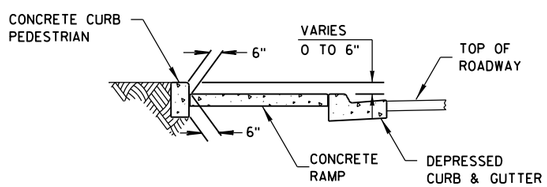

SECTION C-C FOR TYPE 4A

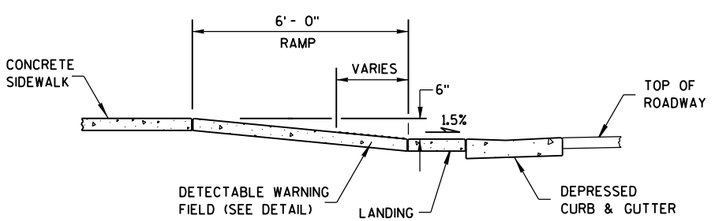

SECTION B-B FOR TYPE 4A

RADIUS (AT CURB FACE)	X	Y
20 FEET	6'-1¾"	2'-7¼"
30 FEET	7'-11¾"	4'-8¼"
40 FEET	9'-5¼"	6'-5"
50 FEET	10'-8¾"	7'-11¼"
60 FEET	11'-10¼"	9'-3½"

INTERMEDIATE RADII CAN BE INTERPOLATED

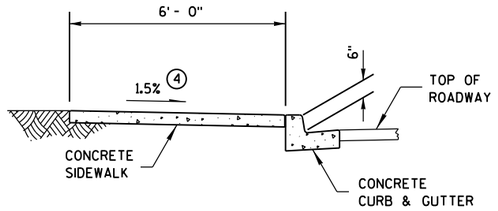

SECTION A-A FOR TYPE 4A

GENERAL NOTES

AVOID PLACING DRAINAGE STRUCTURES, JUNCTION BOXES OR OTHER OBSTRUCTIONS IN FRONT OF RAMP ACCESS AREAS.

RAMP SLOPES SHALL NOT BE STEEPER THAN 12:1.

DETECTABLE WARNING FIELDS THAT ARE INSTALLED AS A GROUP OR SIDE BY SIDE, SHALL BE FROM THE SAME MANUFACTURER.

(3) INSTALL TRANSITION NOSE. (INCIDENTAL TO OTHER PAY ITEMS.) DO NOT MARK TRANSITION NOSE.

(4) ±0.5% CONSTRUCTION TOLERANCE IN SIDEWALK CROSS SLOPE. THE SIDEWALK CROSS SLOPE SHALL NOT EXCEED 2% WITHOUT PRIOR APPROVAL FROM THE ENGINEER.

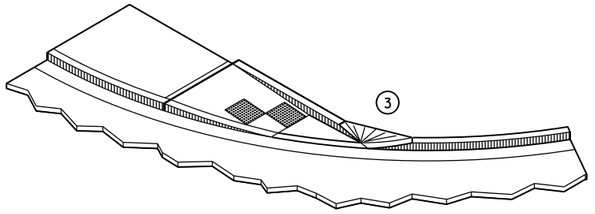

ISOMETRIC VIEW FOR TYPE 4A

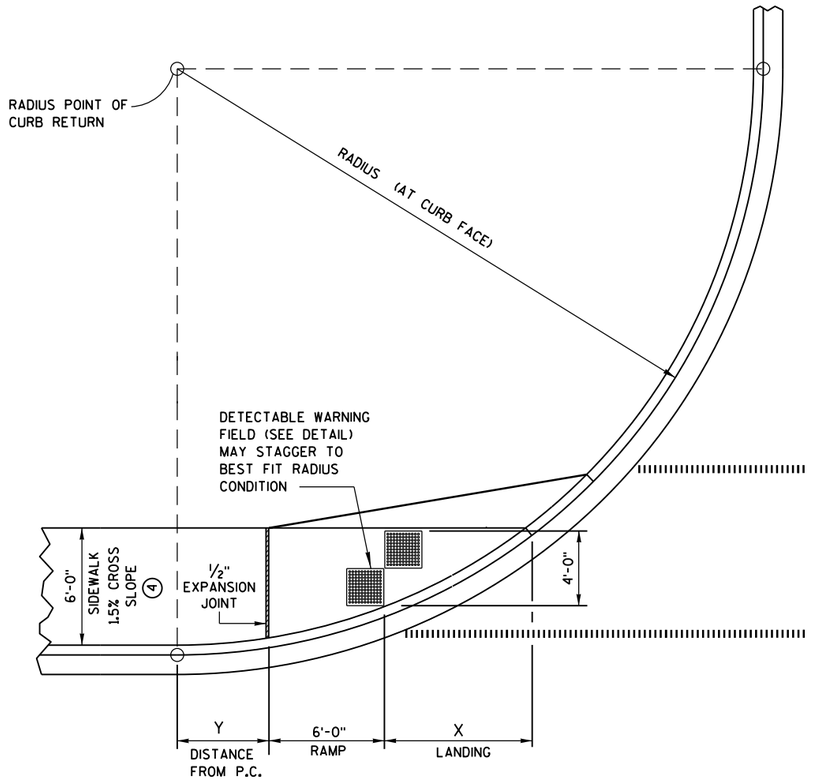

CURB RAMP TYPE 4A1
PLAN VIEW

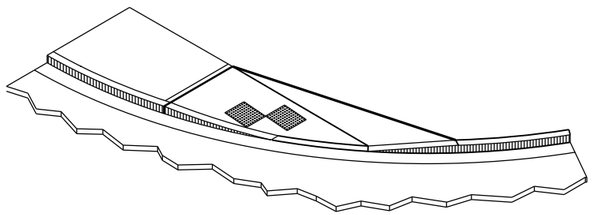

ISOMETRIC VIEW FOR TYPE 4A1

LEGEND

- ½" EXPANSION JOINT-SIDEWALK
- CONTRACTION JOINT FIELD LOCATED
- PAVEMENT MARKING CROSSWALK (WHITE)

CURB RAMPS
TYPES 4A AND 4A1

STATE OF WISCONSIN
DEPARTMENT OF TRANSPOR

6

S.D.D. 8 D 5-15c

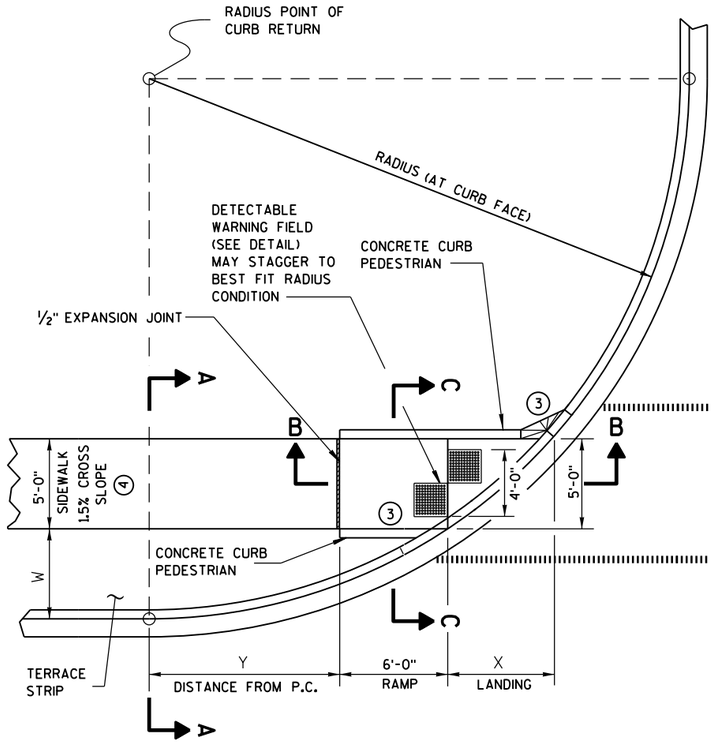

CURB RAMP TYPE 4B
PLAN VIEW

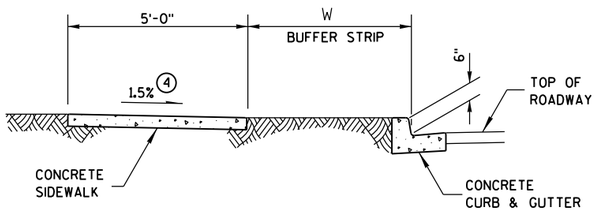

SECTION A-A FOR TYPE 4B

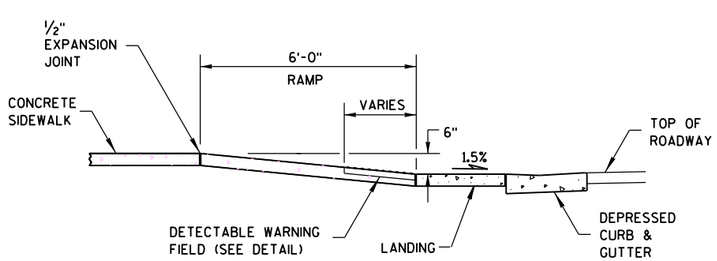

SECTION B-B FOR TYPE 4B

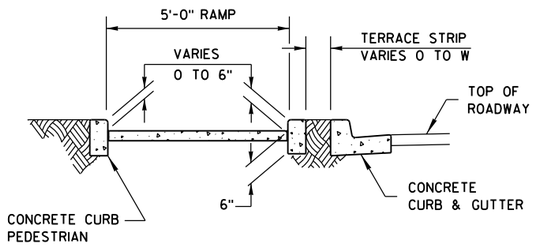

SECTION C-C FOR TYPE 4B

LEGEND

½" EXPANSION JOINT-SIDEWALK

CONTRACTION JOINT FIELD LOCATED

PAVEMENT MARKING CROSSWALK (WHITE)

RADIUS (AT CURB FACE)	W = 3'-0"		W = 4'-0"		W = 5'-0"		W = 6'-0"		W = 7'-0"	
	X	Y	X	Y	X	Y	X	Y	X	Y
20 FEET	5'-5½"	4'-6½"	4'-8½"	6'-0"	4'-1"	7'-2¾"	3'-7"	8'-3½"	3'-1½"	9'-2½"
30 FEET	7'-3¾"	7'-1"	6'-5½"	8'-11½"	5'-9¼"	10'-7"	5'-2½"	12'-0"	4'-8¾"	13'-3¼"
40 FEET	8'-9½"	9'-2½"	7'-10"	11'-5¼"	7'-1"	13'-4½"	6'-5¾"	15'-¾"	5'-11½"	16'-7¼"
50 FEET	10'-¾"	11'-¾"	9'-¼"	13'-7¼"	8'-2½"	15'-9½"	7'-6½"	17'-9"	6'-11¾"	19'-6¼"
60 FEET	11'-2½"	12'-8¾"	10'-¾"	15'-6½"	9'-2¼"	17'-11¾"	8'-5¾"	20'-1¾"	7'-10½"	22'-1½"

INTERMEDIATE RADII CAN BE INTERPOLATED

GENERAL NOTES

AVOID PLACING DRAINAGE STRUCTURES, JUNCTION BOXES OR OTHER OBSTRUCTIONS IN FRONT OF RAMP ACCESS AREAS.

RAMP SLOPES SHALL NOT BE STEEPER THAN 12:1.

DETECTABLE WARNING FIELDS THAT ARE INSTALLED AS A GROUP OR SIDE BY SIDE, SHALL BE FROM THE SAME MANUFACTURER.

(3) INSTALL TRANSITION NOSE. (INCIDENTAL TO OTHER PAY ITEMS.) DO NOT MARK TRANSITION NOSE.

(4) ±0.5% CONSTRUCTION TOLERANCE IN SIDEWALK CROSS SLOPE. THE SIDEWALK CROSS SLOPE SHALL NOT EXCEED 2% WITHOUT PRIOR APPROVAL FROM THE ENGINEER.

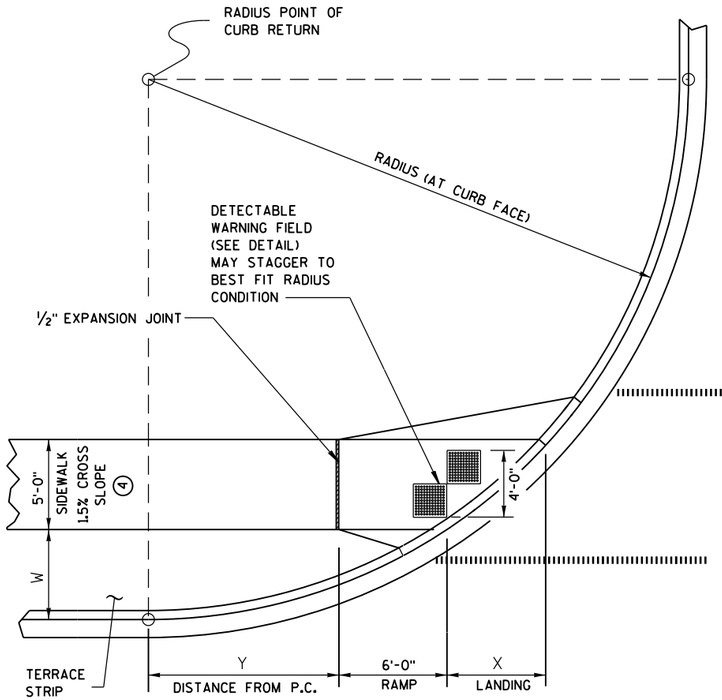

CURB RAMP TYPE 4B1
PLAN VIEW

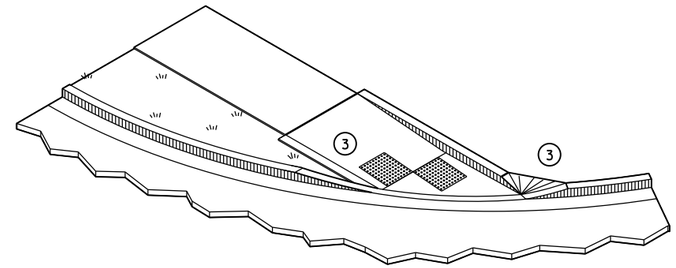

ISOMETRIC VIEW FOR TYPE 4B

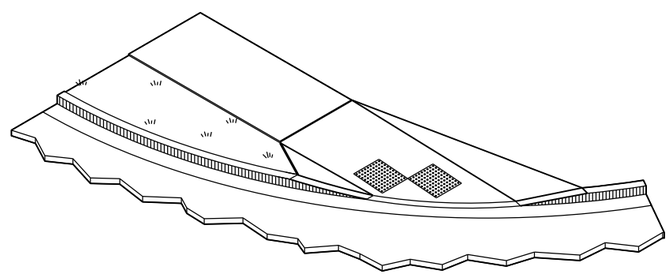

ISOMETRIC VIEW FOR TYPE 4B1

CURB RAMPS
TYPE 4B AND 4B1

STATE OF WISCONSIN
DEPARTMENT OF TRANSPOR

6

S.D.D. 8 D 5-15d

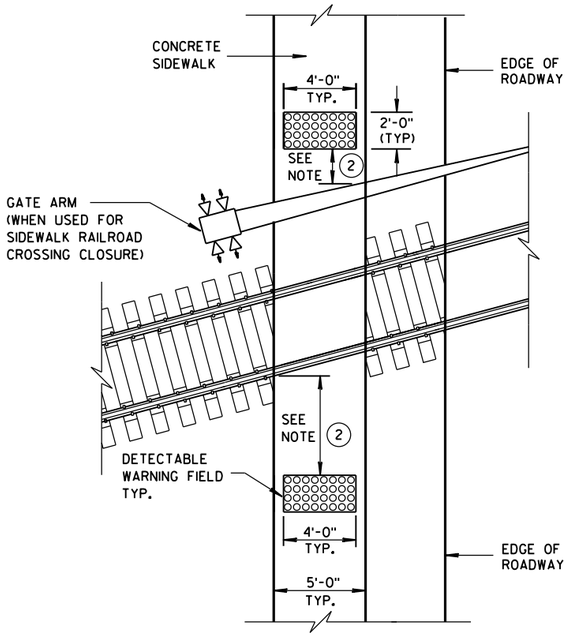

TYPE 8
DETECTABLE WARNINGS AT RAILROAD CROSSING

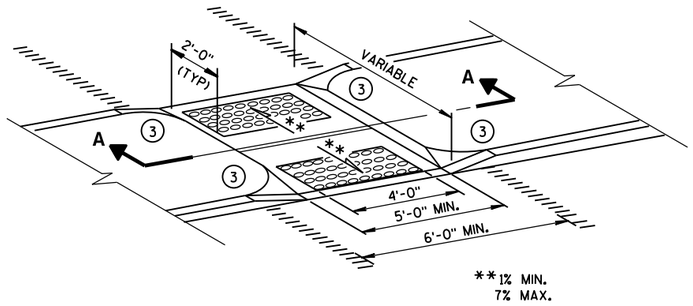

MEDIAN ISLAND
NON-ELEVATED CROSSING
TYPE 5

GENERAL NOTES

SIDEWALK CROSS SLOPE SHALL NOT EXCEED 2%.

DETECTABLE WARNING FIELDS THAT ARE INSTALLED AS A GROUP OR SIDE BY SIDE, SHALL BE FROM THE SAME MANUFACTURER.

(1) SLOPE SIDEWALK TOWARD LANDING AS SHOWN WHERE THERE IS NO TERRACE OR WHERE THE TERRACE WIDTH IS LESS THAN 6 FEET WIDE.

(2) THE EDGE OF THE DETECTABLE WARNING FIELD NEAREST TO A RAILROAD CROSSING SHALL BE 1.5 FEET ± 0.1' FROM THE FACE OF THE GATE ARM IF THE GATE ARM EXTENDS ACROSS THE SIDEWALK. WHERE THERE IS NO PEDESTRIAN GATE, THE EDGE OF THE DETECTABLE WARNING FIELD NEAREST TO THE RAILROAD CROSSING SHALL BE 15 FEET FROM THE NEAREST RAIL.

(3) INSTALL TRANSITION NOSE. (INCIDENTAL TO OTHER PAY ITEMS.) DO NOT MARK TRANSITION NOSE.

(4) ±0.5% CONSTRUCTION TOLERANCE IN SIDEWALK CROSS SLOPE. THE SIDEWALK CROSS SLOPE SHALL NOT EXCEED 2% WITHOUT PRIOR APPROVAL FROM THE ENGINEER.

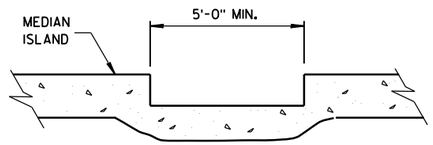

SECTION A-A

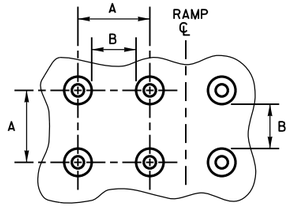

PLAN VIEW

	MIN.	MAX.
A	1.6"	2.4"
B	0.65"	1.5"
C	*	*
D	0.9"	1.4"

* THE C DIMENSION IS 50% TO 65% OF THE D DIMENSION.

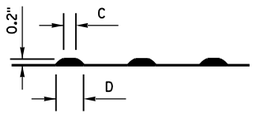

ELEVATION VIEW

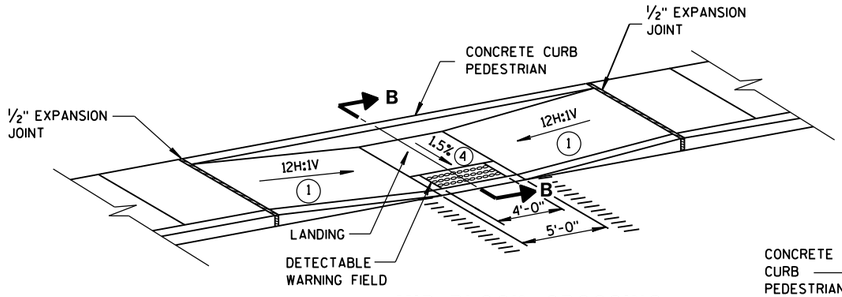

MID-BLOCK CROSSING
TYPE 7A

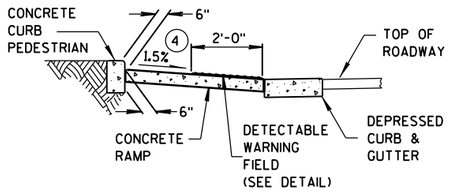

SECTION B-B

TRUNCATED DOMES
DETECTABLE WARNING PATTERN DETAIL

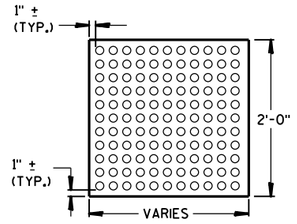

PLAN VIEW

DETECTABLE WARNING FIELD (TYPICAL)

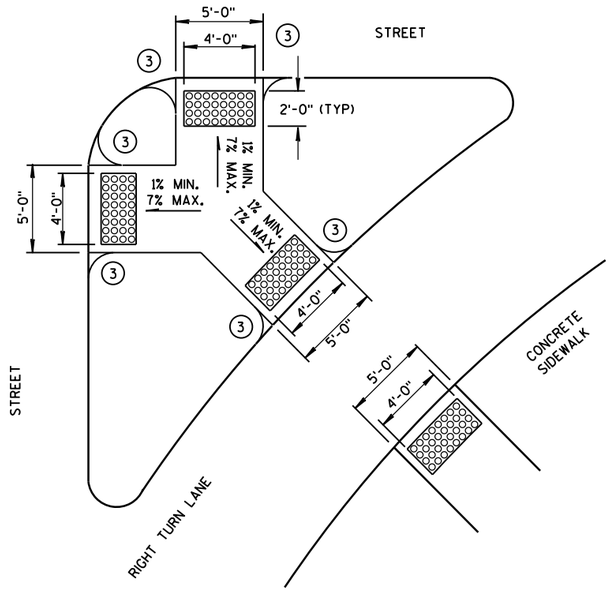

TYPE 6
DETECTABLE WARNING AT ISLANDS

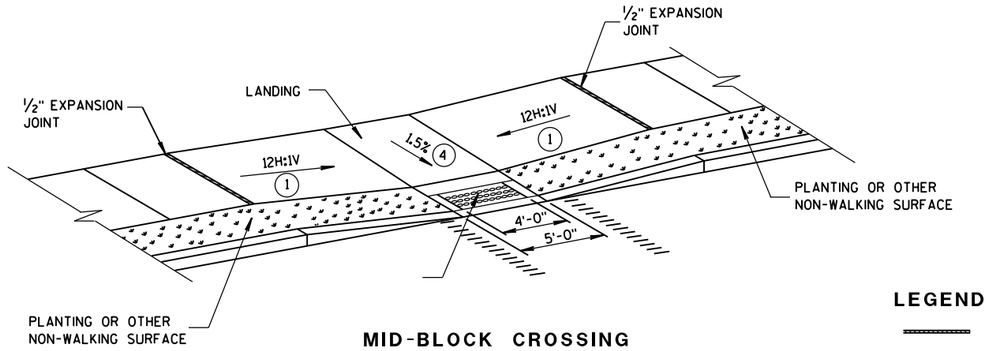

MID-BLOCK CROSSING
TYPE 7B

NOTE: THESE PARALLEL AND PARALLEL/PERPENDICULAR CURB RAMPS MAY BE USED AT INTERSECTIONS AND MID BLOCK LOCATIONS.

LEGEND

- ½" EXPANSION JOINT-SIDEWALK
- CONTRACTION JOINT FIELD LOCATED
- PAVEMENT MARKING CROSSWALK (WHITE)

CURB RAMPS
TYPES 5, 6, 7A, 7B & 8

STATE OF WISCONSIN
DEPARTMENT OF TRANSPORTATION

APPROVED
2-6-2013 DATE
/S/ Jerry H. Zogg
ROADWAY STANDARDS [illegible] ENGINEER
FHWA

6

S.D.D. 8 D 5-15e

6

S.D.D. 8 D 5-15e

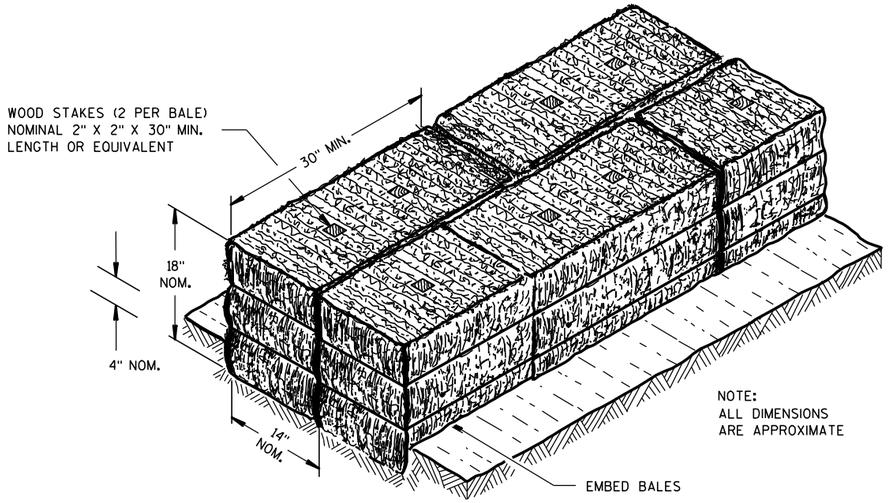

SECTION A-A

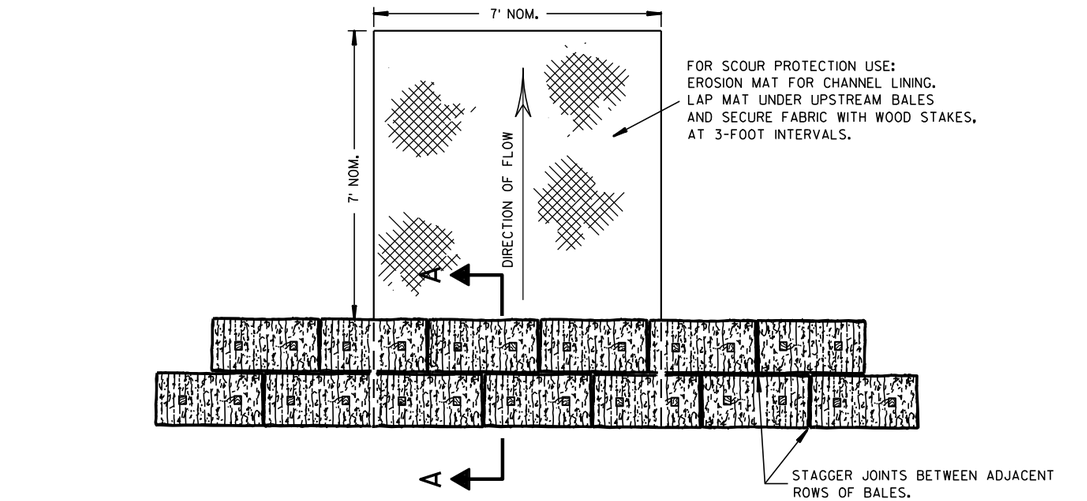

PLAN VIEW

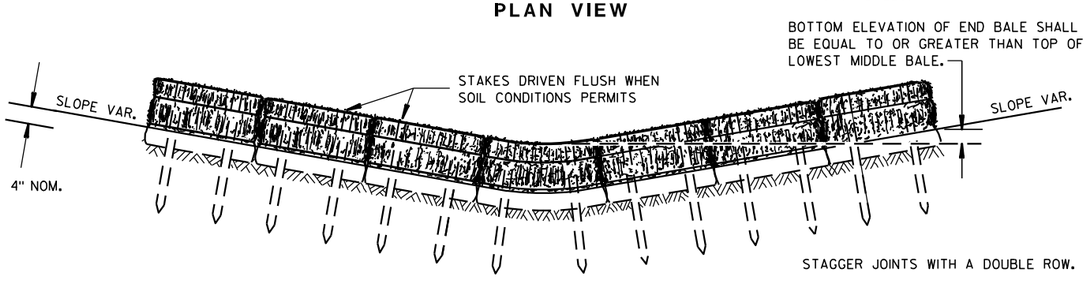

FRONT ELEVATION

TEMPORARY DITCH CHECK USING EROSION BALES (1)

GENERAL NOTES

DETAILS OF CONSTRUCTION, MATERIALS AND WORKMANSHIP NOT SHOWN ON THIS DRAWING SHALL CONFORM TO THE PERTINENT REQUIREMENTS OF THE STANDARD SPECIFICATIONS AND THE APPLICABLE SPECIAL PROVISIONS.

(1) TEMPORARY DITCH CHECKS EITHER EROSION BALES OR MANUFACTURED SHALL BE PAID FOR UNDER THE BID ITEM OF TEMPORARY DITCH CHECK. THE DEPARTMENT WILL NOT PAY FOR TEMPORARY DITCH CHECKS CONSTRUCTED OF A SINGLE ROW OF EROSION BALES.

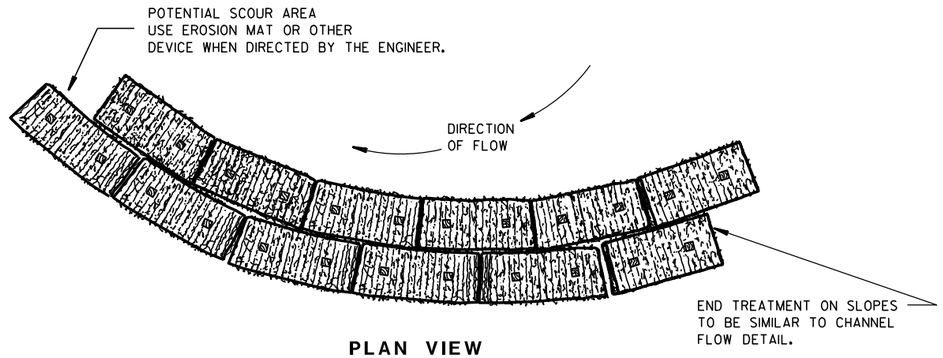

PLAN VIEW

WHEN ALTERING THE DIRECTION OF FLOW

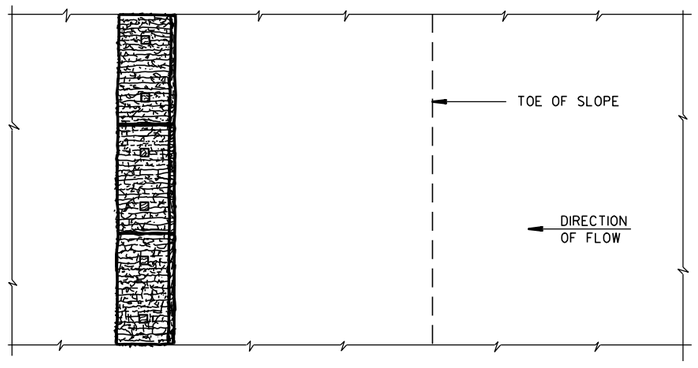

PLAN VIEW

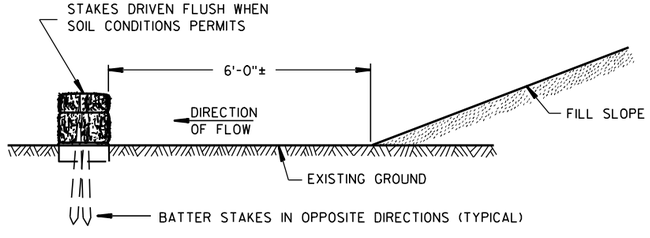

FRONT ELEVATION

WHEN EXISTING GROUND SLOPES AWAY FROM FILL SLOPE

EROSION BALES FOR SHEET FLOW

TYPICAL INSTALLATIONS OF EROSION BALES / TEMPORARY DITCH CHECKS

STATE OF WISCONSIN
DEPARTMENT OF TRANSPORTATION

APPROVED

6/04/02 — DATE

/S/ Beth Cannestra — CHIEF ROADWAY DEVELOPMENT ENGINEER

FHWA

6
S.D.D. 8 E 8-3

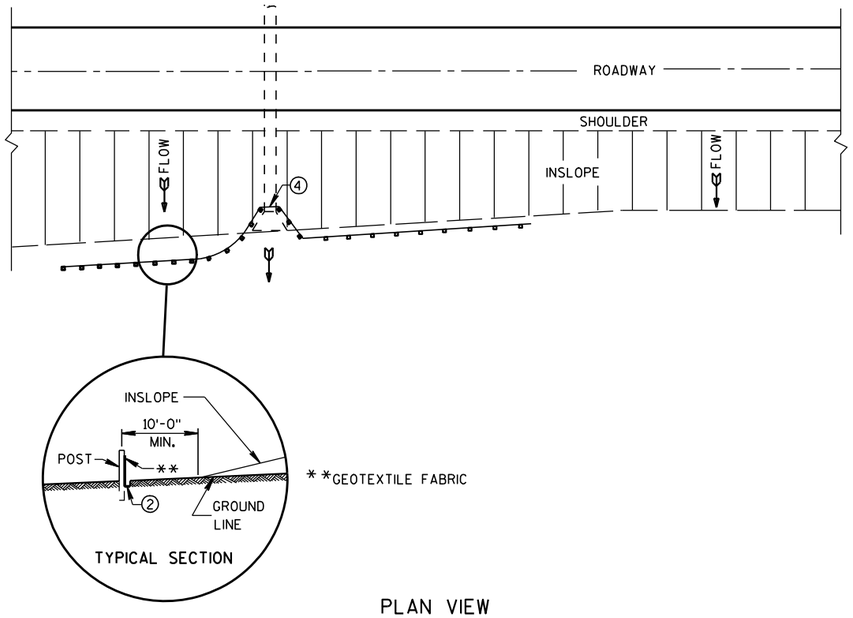

PLAN VIEW

TYPICAL APPLICATION OF SILT FENCE

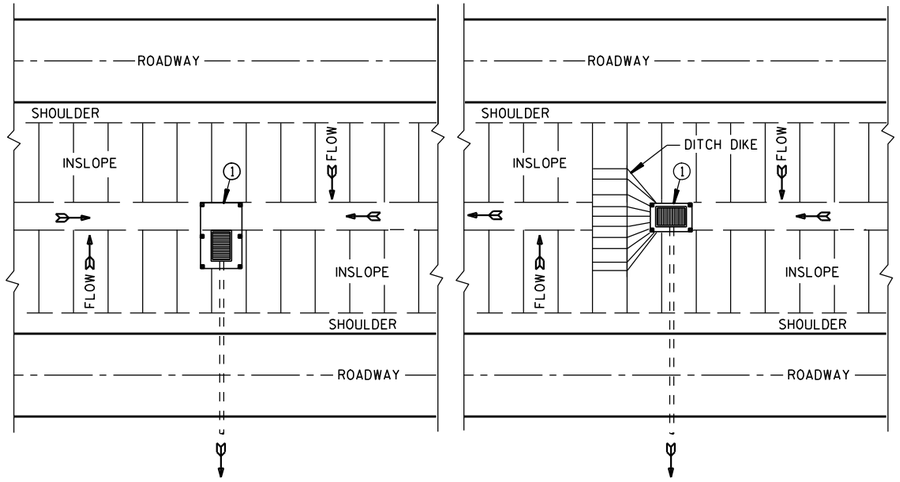

PLAN VIEW

SILT FENCE AT MEDIAN SURFACE DRAINS

GENERAL NOTES

DETAILS OF CONSTRUCTION NOT SHOWN ON THIS DRAWING SHALL CONFORM TO THE PERTINENT REQUIREMENTS OF THE STANDARD SPECIFICATIONS AND APPLICABLE SPECIAL PROVISIONS.

① HORIZONTAL BRACE REQUIRED WITH 2" X 4" WOODEN FRAME OR EQUIVALENT AT TOP OF POSTS.

② FOR MANUAL INSTALLATIONS THE TRENCH SHALL BE A MINIMUM OF 4" WIDE & 6" DEEP TO BURY AND ANCHOR THE GEOTEXTILE FABRIC. FOLD MATERIAL TO FIT TRENCH AND BACKFILL & COMPACT TRENCH WITH EXCAVATED SOIL.

③ WOOD POSTS SHALL BE A MINIMUM SIZE OF 1⅛" X 1⅛" OF OAK OR HICKORY.

④ SILT FENCE TO EXTEND ACROSS THE TOP OF THE PIPE.

⑤ CONSTRUCT SILT FENCE FROM A CONTINUOUS ROLL IF POSSIBLE BY CUTTING LENGTHS TO AVOID JOINTS. IF A JOINT IS NECESSARY USE ONE OF THE FOLLOWING TWO METHODS; A) OVERLAP THE END POSTS AND TWIST, OR ROTATE, AT LEAST 180 DEGREES, B) HOOK THE END OF EACH SILT FENCE LENGTH.

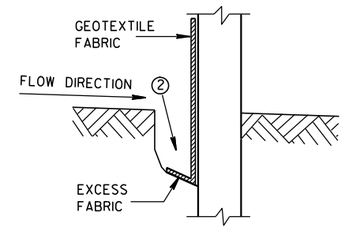

TRENCH DETAIL

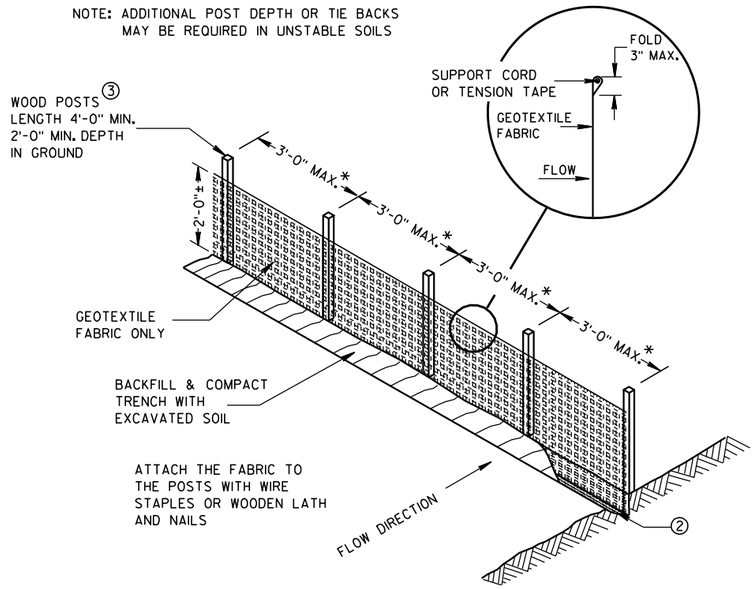

SILT FENCE

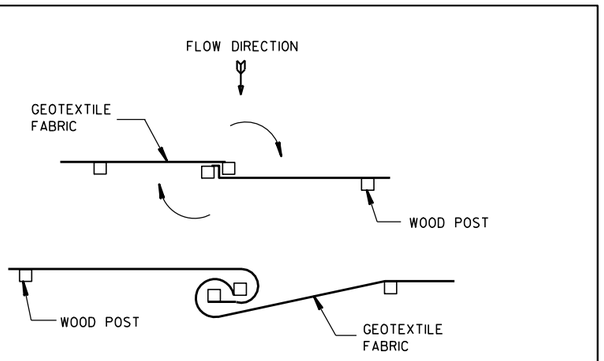

JOINING TWO LENGTHS OF SILT FENCE ⑤

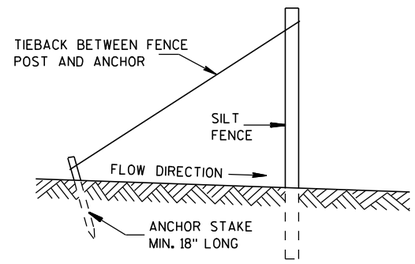

SILT FENCE TIE BACK

(WHEN REQUIRED BY THE ENGINEER)

SILT FENCE

STATE OF WISCONSIN
DEPARTMENT OF TRANSPORTATION

APPROVED
4-29-05 DATE
/S/ Beth Cannestra
CHIEF ROADWAY DEVELOPMENT ENGINEER
FHWA

6

S.D.D. 8 E 9-6

6

S.D.D. 8 E 9-6

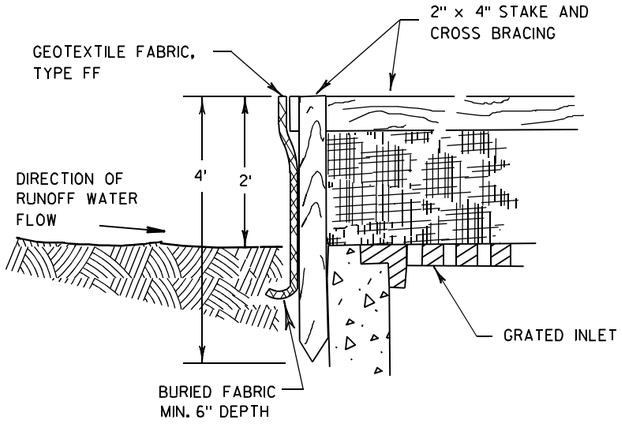

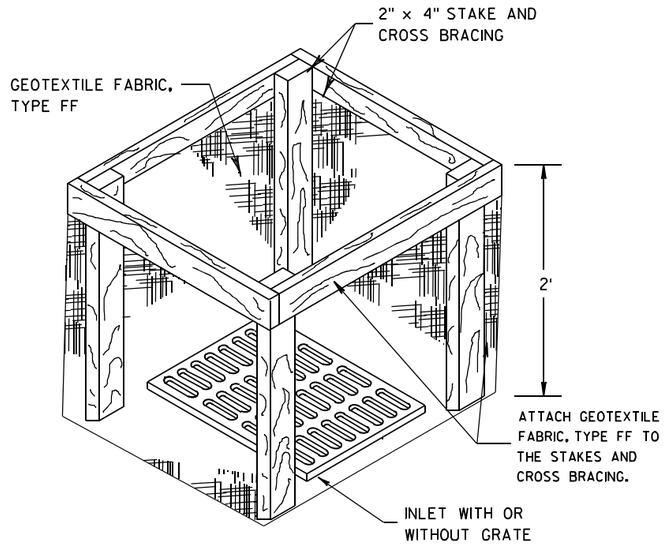

INLET PROTECTION, TYPE A

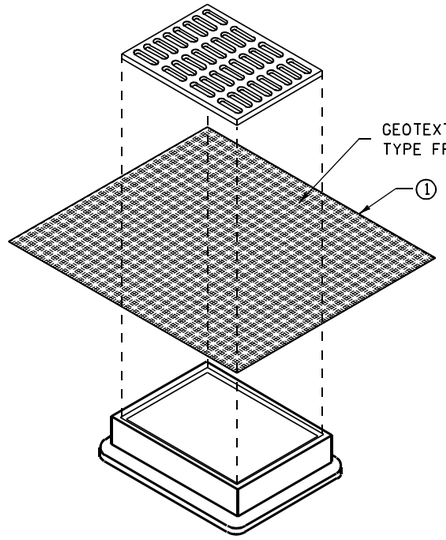

INLET PROTECTION, TYPE B
(WITHOUT CURB BOX)

(CAN BE INSTALLED IN ANY INLET WITHOUT A CURB BOX)

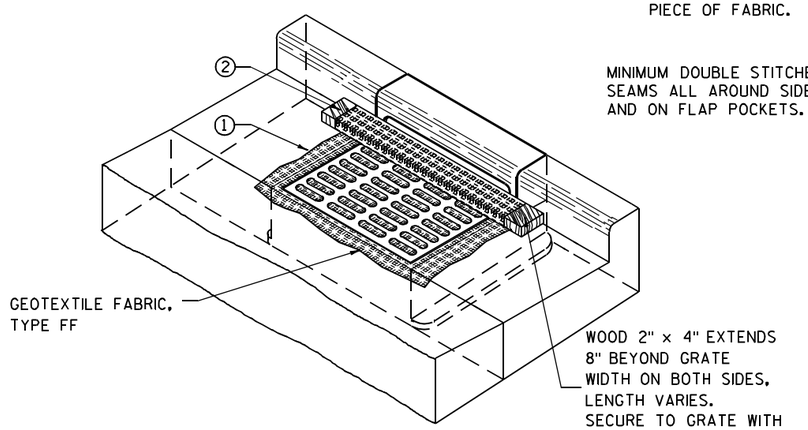

INLET PROTECTION, TYPE C (WITH CURB BOX)

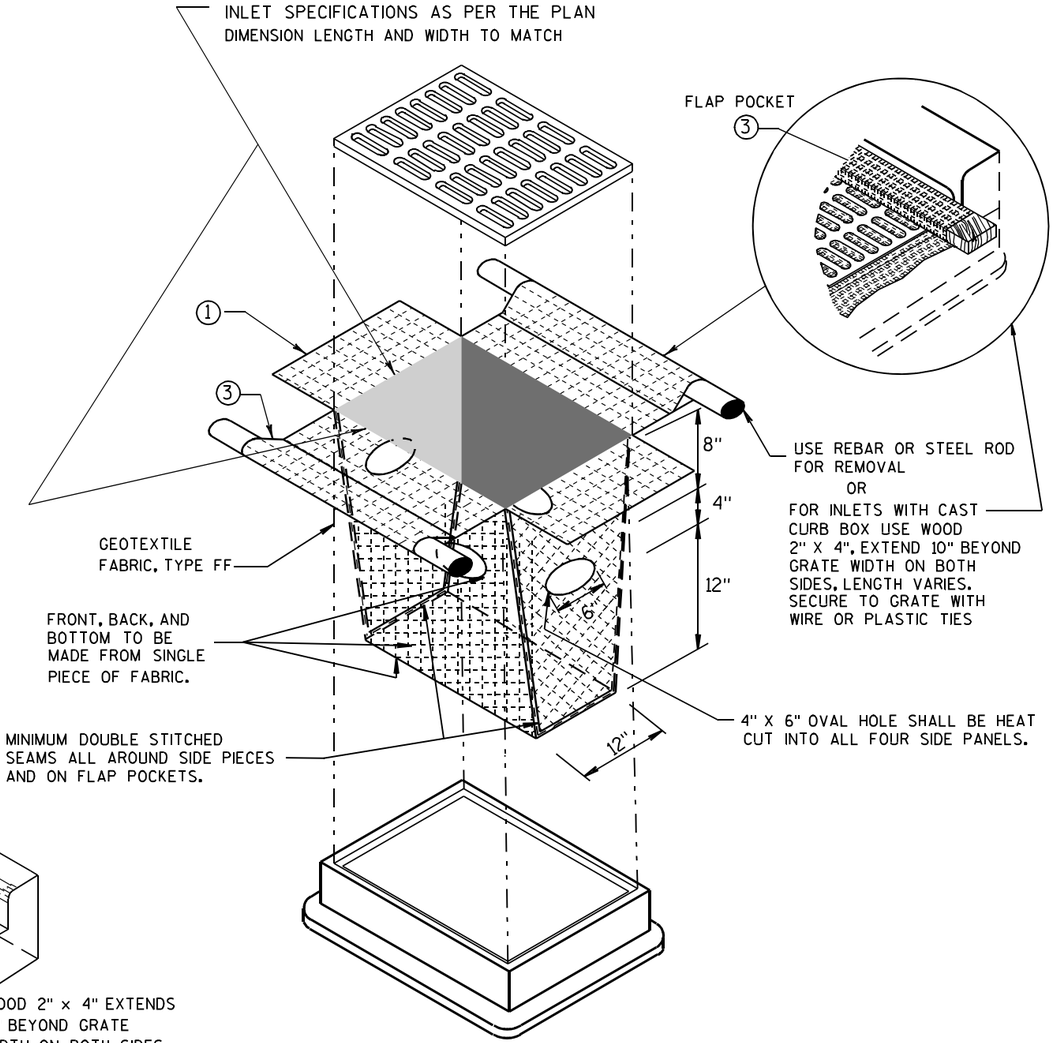

INLET PROTECTION, TYPE D

(CAN BE INSTALLED IN ANY INLET TYPE WITH
OR WITHOUT A CURB BOX AS PER NOTE ②)

GENERAL NOTES

INLET PROTECTION DEVICES SHALL BE MAINTAINED OR REPLACED AT THE DIRECTION OF THE ENGINEER.

MANUFACTURED ALTERNATIVES APPROVED AND LISTED ON THE DEPARTMENT'S EROSION CONTROL PRODUCT ACCEPTABILITY LIST MAY BE SUBSTITUTED.

WHEN REMOVING OR MAINTAINING INLET PROTECTION, CARE SHALL BE TAKEN SO THAT THE SEDIMENT TRAPPED ON THE GEOTEXTILE FABRIC DOES NOT FALL INTO THE INLET. ANY MATERIAL FALLING INTO THE INLET SHALL BE REMOVED IMMEDIATELY.

① FINISHED SIZE, INCLUDING FLAP POCKETS WHERE REQUIRED, SHALL EXTEND A MINIMUM OF 10" AROUND THE PERIMETER TO FACILITATE MAINTENANCE OR REMOVAL.

② FOR INLET PROTECTION, TYPE C (WITH CURB BOX), AN ADDITIONAL 18" OF FABRIC IS WRAPPED AROUND THE WOOD AND SECURED WITH STAPLES. THE WOOD SHALL NOT BLOCK THE ENTIRE HEIGHT OF THE CURB BOX OPENING.

③ FLAP POCKETS SHALL BE LARGE ENOUGH TO ACCEPT WOOD 2X4.

INSTALLATION NOTES

TYPE B & C

TRIM EXCESS FABRIC IN THE FLOW LINE TO WITHIN 3" OF THE GRATE.

THE CONTRACTOR SHALL DEMONSTRATE A METHOD OF MAINTENANCE, USING A SEWN FLAP, HAND HOLDS OR OTHER METHOD TO PREVENT ACCUMULATED SEDIMENT FROM ENTERING THE INLET.

TYPE D

DO NOT INSTALL INLET PROTECTION TYPE D IN INLETS SHALLOWER THAN 30", MEASURED FROM THE BOTTOM OF THE INLET TO THE TOP OF THE GRATE.

TRIM EXCESS FABRIC IN THE FLOW LINE TO WITHIN 3" OF THE GRATE.

THE INSTALLED BAG SHALL HAVE A MINIMUM SIDE CLEARANCE, BETWEEN THE INLET WALLS AND THE BAG, MEASURED AT THE BOTTOM OF THE OVERFLOW HOLES, OF 3". WHERE NECESSARY THE CONTRACTOR SHALL CINCH THE BAG, USING PLASTIC ZIP TIES, TO ACHIEVE THE 3" CLEARANCE. THE TIES SHALL BE PLACED AT A MAXIMUM OF 4" FROM THE BOTTOM OF THE BAG.

INLET PROTECTION
TYPE A, B, C, AND D

STATE OF WISCONSIN
DEPARTMENT OF TRANSPORTATION

APPROVED

10/16/02
DATE

/S/ Beth Cannestra
CHIEF ROADWAY DEVELOPMENT ENGINEER

FHWA

6
S.D.D. 8 E 10-2

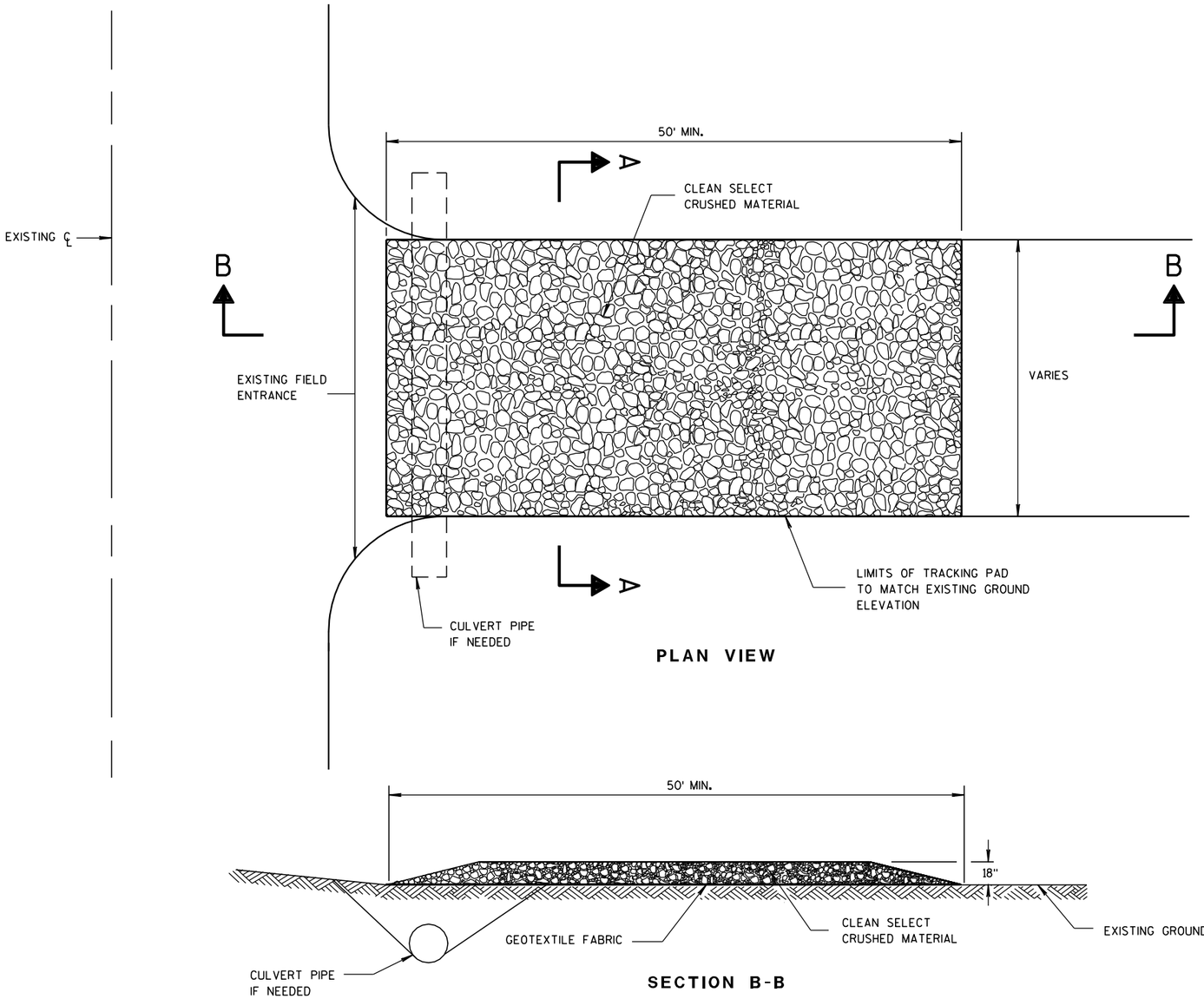

PLAN VIEW

SECTION B-B

GENERAL NOTES

DETAILS OF CONSTRUCTION, MATERIALS AND WORKMANSHIP NOT SHOWN ON THIS DRAWING SHALL CONFORM TO THE PERTINENT REQUIREMENTS OF THE STANDARD SPECIFICATIONS AND THE APPLICABLE SPECIAL PROVISIONS.

TRACKING PAD SHALL BE INSPECTED DAILY. DEFICIENT AREAS SHALL BE REPAIRED OR REPLACED IMMEDIATELY.

TRACKING PAD TO BE REMOVED AFTER CONSTRUCTION IS COMPLETED.

TRACKING PAD SHALL BE THE FULL WIDTH OF THE EGRESS POINT.

SURFACE WATER MUST BE PREVENTED FROM PASSING THROUGH THE TRACKING PAD. FLOWS SHALL BE DIVERTED AWAY, AROUND OR CONVEYED UNDER THE TRACKING PAD.

CULVERT PIPE OR OTHER BMP USED TO DIVERT WATER AWAY, AROUND OR UNDER THE TRACKING PAD SHALL BE DESIGNED TO CONVEY THE 2 YEAR - 24 HOUR EVENT.

THE COST OF ADDITIONAL BMP TO DIVERT WATER ARE INCIDENTAL TO THE TRACKING PAD BID ITEM.

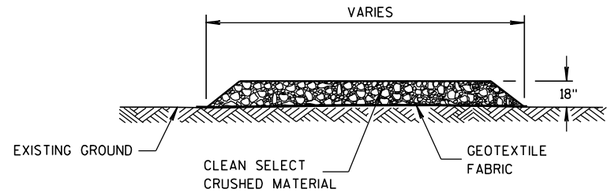

SECTION A-A

TRACKING PAD

TRACKING PAD

STATE OF WISCONSIN
DEPARTMENT OF TRANSPORTATION

APPROVED
3/24/2011 — DATE
/S/ Jerry H. Zoda — ROADWAY STANDARDS ENGINEER
FHWA

6

S.D.D. 8 E 14-1

6

S.D.D. 8 E 14-1

METAL APRON ENDWALLS

PIPE DIA. (IN.)	MIN. THICK. (Inches) STEEL	MIN. THICK. (Inches) ALUM.	DIMENSIONS (Inches) A (±1")	B (MAX.)	H (±1")	L (±1 1/2")	L1 ①	L2 ①	W (±2")	APPROX. SLOPE	BODY
12	.064	.060	6	6	6	21	12	17 1/2	24	2 1/2 to 1	1 Pc.
15	.064	.060	7	8	6	26	14	21 3/4	30	2 1/2 to 1	1 Pc.
18	.064	.060	8	10	6	31	15	28 1/4	36	2 1/2 to 1	1 Pc.
21	.064	.060	9	12	6	36	18	29 5/8	42	2 1/2 to 1	1 Pc.
24	.064	.075	10	13	6	41	18	37 1/4	48	2 1/2 to 1	1 Pc.
30	.079	.075	12	16	8	51	18	52 1/4	60	2 1/2 to 1	1 Pc.
36	.079	.105	14	19	9	60	24	59 3/4	72	2 1/2 to 1	2 Pc.
42	.109	.105	16	22	11	69	24	75 5/8	84	2 1/2 to 1	2 Pc.
48	.109	.105	18	27	12	78	24	81	90	2 1/4 to 1	3 Pc.
54	.109	.105	18	30	12	84	30	85 1/2	102	2 1/4 to 1	3 Pc.
60	.109×	.105×	18	33	12	87	—	—	114	2 to 1	3 Pc.
66	.109×	.105×	18	36	12	87	—	—	120	2 to 1	3 Pc.
72	.109×	.105×	18	39	12	87	—	—	126	2 to 1	3 Pc.
78	.109×	.105×	18	42	12	87	—	—	132	1 1/2 to 1	3 Pc.
84	.109×	.105×	18	45	12	87	—	—	138	1 1/2 to 1	3 Pc.
90	.109×	.105×	18	37	12	87	—	—	144	1 1/2 to 1	3 Pc.
96	.109×	.105×	18	35	12	87	—	—	150	1 1/2 to 1	3 Pc.

× EXCEPT CENTER PANEL SEE GENERAL NOTES

REINFORCED CONCRETE APRON ENDWALLS

PIPE DIA. (IN.)	DIMENSIONS (Inches) T	A	B	C	D	E	G	APPROX. SLOPE
12	2	4	24	48 7/8	72 1/8	24	2	3 to 1
15	2 1/4	6	27	46	73	30	2 1/4	3 to 1
18	2 1/2	9	27	46	73	36	2 1/2	3 to 1
21	2 3/4	9	36	37 1/2	73 1/2	42	2 3/4	3 to 1
24	3	9 1/2	43 1/2	30	73 1/2	48	3	3 to 1
27	3 1/4	10 1/2	49 1/2	24	73 1/2	54	3 1/4	3 to 1
30	3 1/2	12	54	19 3/4	73 1/2	60	3 1/2	3 to 1
36	4	15	63	34 3/4	97 3/4	72	4	3 to 1
42	4 1/2	21	63	35	98	78	4 1/2	3 to 1
48	5	24	72	26	98	84	5	3 to 1
54	5 1/2	27	65	* 33 1/4 - ** 35	* 98 1/4 - ** 100	90	5 1/2	2 2/5 to 1
60	6	* 30 - ** 35	60	39	99	96	5	2 to 1
66	6 1/2	* 24 - ** 30	* 72 - ** 78	* 21 - ** 27	99	102	5 1/2	2 to 1
72	7	* 24 - ** 36	78	21	99	108	6	2 to 1
78	7 1/2	* 24 - ** 36	78	21	99	114	6 1/2	2 to 1
84	8	36	90 1/2	21	111 1/2	120	6 1/2	1 1/2 to 1
90	8 1/2	41	87 1/2	24	111 1/2	132	6 1/2	1 1/2 to 1

* MINIMUM
** MAXIMUM

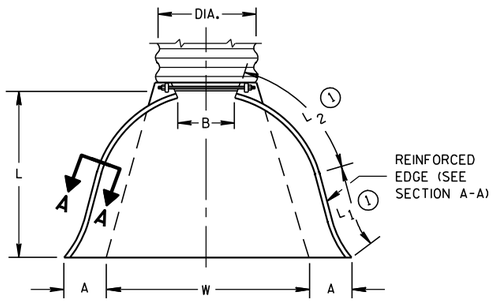

PLAN VIEW

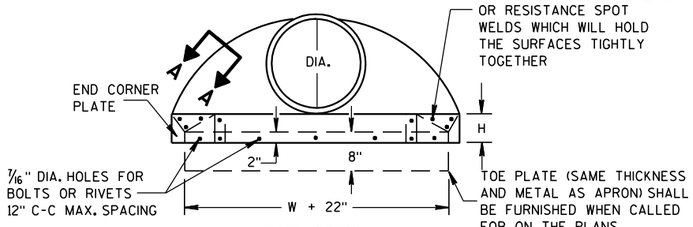

END VIEW

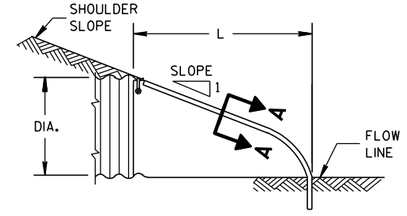

SIDE ELEVATION

METAL ENDWALLS

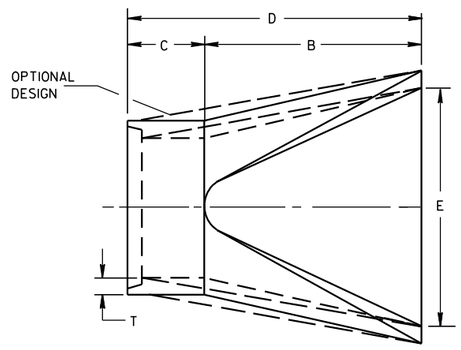

PLAN

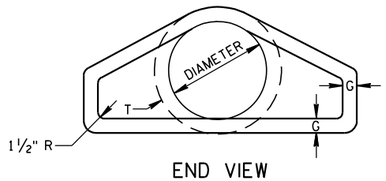

END VIEW

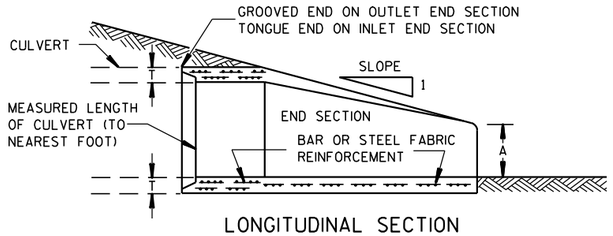

LONGITUDINAL SECTION

CONCRETE ENDWALLS

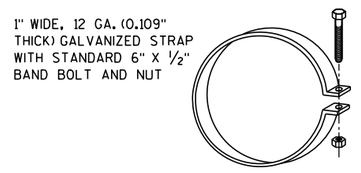

ALTERNATE FOR TYPE 1 CONNECTION

END SECTION CONNECTOR STRAP

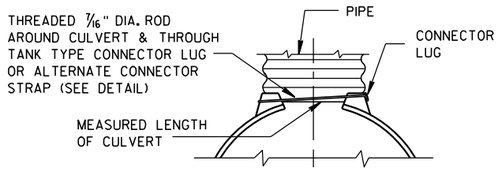

TYPE 1
FOR 12" THRU 24" CORR. PIPE

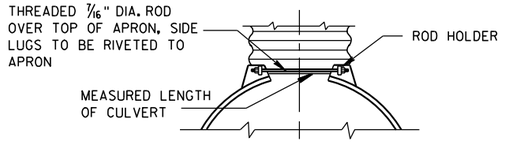

TYPE 2
FOR 30" THRU 96" CORR. PIPE

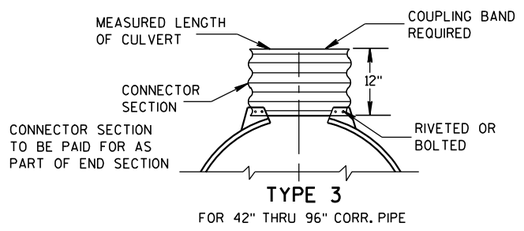

TYPE 3
FOR 42" THRU 96" CORR. PIPE

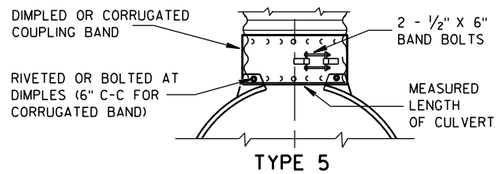

TYPE 5
ALTERNATE FOR:
ALL SIZES CORRUGATED CIRCULAR PIPE

NOTE: DIMPLED BAND FITS OVER OUTSIDE OF ENDWALL. AND CORRUGATED BAND FITS INSIDE ENDWALL. DIMPLED BAND MAY BE USED WITH HELICALLY CORRUGATED PIPE.

FOR CIRCUMFERENTIALLY CORRUGATED PIPE USE ENDWALL CONNECTION DETAILS 1, 2, 3 OR 5 AS APPLICABLE.

FOR HELICALLY CORRUGATED PIPE USE ENDWALL CONNECTION DETAILS 1, 2 OR 5.

FOR HELICALLY CORRUGATED PIPES WITH TWO CIRCUMFERENTIAL CORRUGATIONS AT EACH END USE ENDWALL CONNECTION DETAILS 1, 2 OR 3.

CONNECTION DETAILS

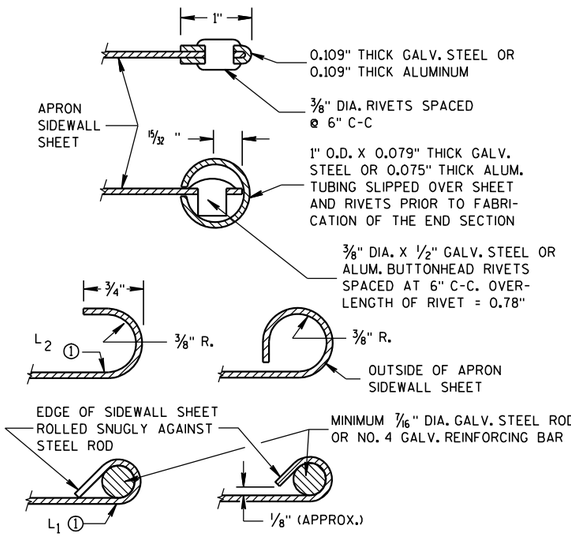

SECTION A-A

GENERAL NOTES

DETAILS OF CONSTRUCTION, MATERIALS AND WORKMANSHIP NOT SHOWN ON THIS DRAWING SHALL CONFORM TO THE PERTINENT REQUIREMENTS OF THE STANDARD SPECIFICATIONS AND THE APPLICABLE SPECIAL PROVISIONS.

CONCRETE CULVERT ENDWALLS MAY NOT BE USED WITH GALVANIZED STEEL OR ALUMINUM CULVERT PIPE OR VISE VERSA. GALVANIZED STEEL OR ALUMINUM ENDWALLS SHALL NORMALLY BE INSTALLED ON CULVERT PIPE OF THE SAME METAL.

ALL THREE PIECE STEEL APRON ENDWALLS FOR 60" DIAMETER PIPE AND LARGER SHALL HAVE 0.109" SIDES AND 0.138" CENTER PANELS. ALL THREE PIECE ALUMINUM APRON ENDWALLS FOR 60" DIAMETER PIPE AND LARGER SHALL HAVE 0.105" SIDES AND 0.134" CENTER PANELS. THE WIDTH OF CENTER PANELS SHALL BE GREATER THAN 20 PERCENT OF THE PIPE PERIMETER.

LAP SEAMS SHALL BE TIGHTLY JOINED BY GALVANIZED RIVETS OR BOLTS FOR STEEL UNITS AND ALUMINUM RIVETS AND BOLTS FOR ALUMINUM UNITS. FOR THE 60" THROUGH 96" DIAMETER APRON ENDWALL SIZES, THE REINFORCED EDGES AND CENTER PANEL SEAMS SHALL BE FURTHER REINFORCED WITH GALVANIZED STEEL OR ALUMINUM STIFFENER ANGLES. THE ANGLES SHALL BE ATTACHED BY GALVANIZED NUTS AND BOLTS FOR STEEL UNITS AND ALUMINUM NUTS AND BOLTS FOR ALUMINUM UNITS.

WHERE TWO OR MORE PIPES WITH APRON ENDWALLS ARE LAID ADJACENT TO EACH OTHER, THEY SHALL BE SEPARATED BY A DISTANCE SUFFICIENT TO PROVIDE A MINIMUM CLEARANCE OF 6 INCHES BETWEEN APRON ENDWALLS.

① FOR PIPE SIZES UP TO 60" DIAMETER, A 180° ROLLED EDGE MAY BE USED INSTEAD OF STEEL ROD REINFORCEMENT. SEE SECTION A-A.

APRON ENDWALLS FOR CULVERT PIPE

STATE OF WISCONSIN
DEPARTMENT OF TRANSPORTATION

APPROVED
11/30/94 DATE
/S/ Rory L. Rhinesmith
CHIEF ROADWAY DEVELOPMENT ENGINEER
FHWA

6

S.D.D. 8 F 1-11

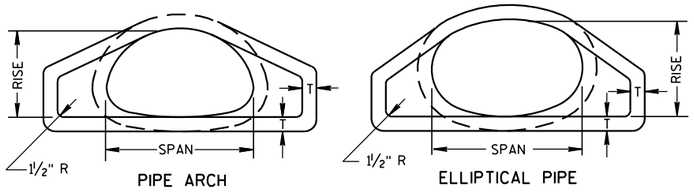

END VIEW

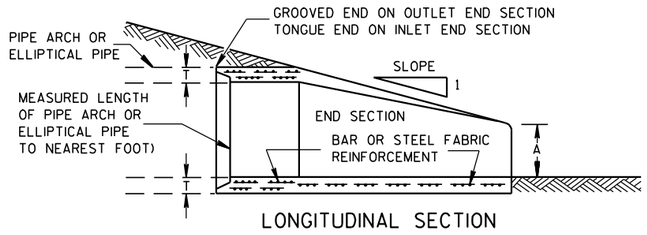

LONGITUDINAL SECTION

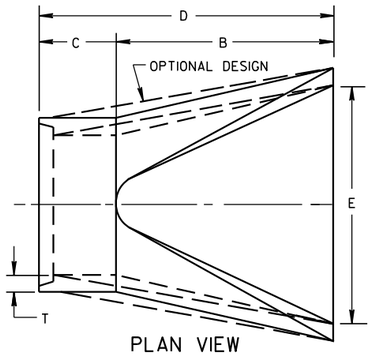

PLAN VIEW

CONCRETE ENDWALLS

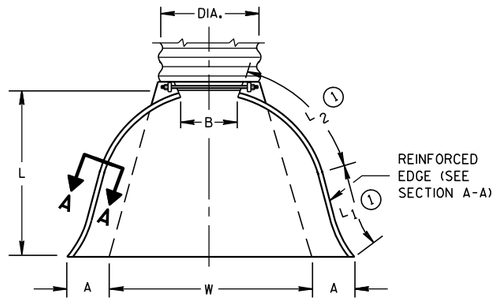

PLAN VIEW

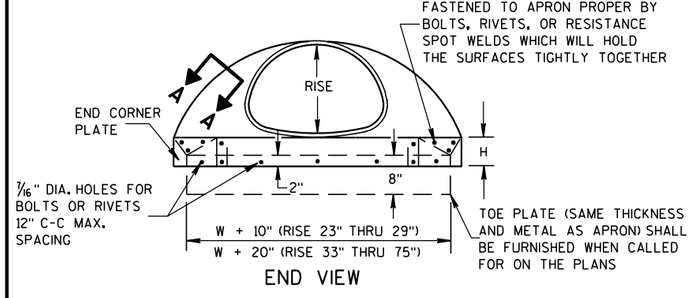

END VIEW

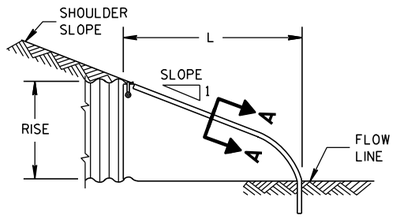

SIDE ELEVATION

METAL ENDWALLS

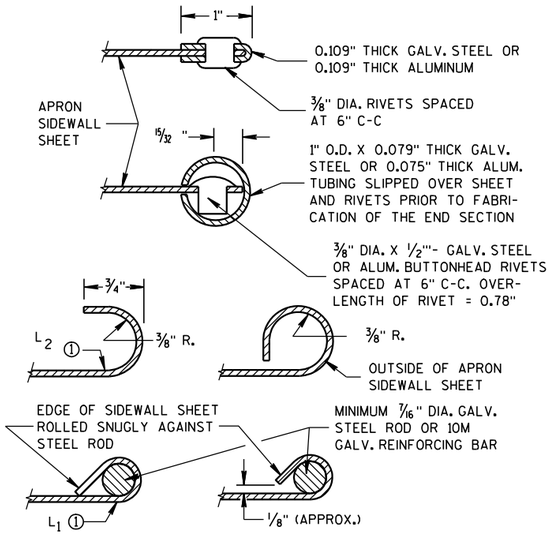

SECTION A-A

2- 2/3" X 1/2" CORRUGATIONS

EQUIV. DIA. (Inches)	(Inches) SPAN	(Inches) RISE	MIN. THICK. (Inches) STEEL	MIN. THICK. (Inches) ALUM.	DIMENSIONS (Inches) A (±1")	B (MAX.)	H (±1")	L (±1 1/2")	L1 ①	L2 ①	W (±2")	APPROX. SLOPE	BODY
15	17	13	.064	.060	7	9	6	19	14	16	30	2½ to 1	1 Pc.
18	21	15	.064	.060	7	10	6	23	14	19⅜	36	2½ to 1	1 Pc.
21	24	18	.064	.060	8	12	6	28	18	21¾	42	2½ to 1	1 Pc.
24	28	20	.064	.060	9	14	6	32	18	27½	48	2½ to 1	1 Pc.
30	35	24	.079	.075	10	16	6	39	18	37⅝	60	2½ to 1	1 Pc.
36	42	29	.079	.075	12	18	8	46	24	45⅜	75	2½ to 1	1 Pc.
42	49	33	.109	.105	13	21	9	53	24	54¾	85	2½ to 1	2 Pc.
48	57	38	.109	.105	18	26	12	63	24	68	90	2½ to 1	3 Pc.
54	64	43	.109	.105	18	30	12	70	24	72¾	102	2¼ to 1	3 Pc.
60	71	47	.109*	.105*	18	33	12	77	30	82¼	114	2¼ to 1	3 Pc.
66	77	52	.109*	.105*	18	36	12	77	—	—	126	2 to 1	3 Pc.
72	83	57	.109*	.105*	18	39	12	77	—	—	138	2 to 1	3 Pc.

3" X 1" CORRUGATIONS

EQUIV. DIA. (Inches)	(Inches) SPAN	(Inches) RISE	MIN. THICK. (Inches) STEEL	MIN. THICK. (Inches) ALUM.	DIMENSIONS (Inches) A (±1")	B (MAX.)	H (±1")	L (±1 1/2")	L1 ①	L2 ①	W (±2")	APPROX. SLOPE	BODY
48	53	41	.109	.105	18	26	12	63	24	72¾	90	2½ to 1	2 Pc.
54	60	46	.109	.105	18	30	12	70	30	82¼	102	2 to 1	2 Pc.
60	66	51	.109*	.105*	18	33	12	77	—	—	114	1½ to 1	3 Pc.
66	73	55	.109*	.105*	18	36	12	77	—	—	126	1½ to 1	3 Pc.
72	81	59	.109*	.105*	18	39	12	77	—	—	138	2 to 1	3 Pc.
78	87	63	.109*	.105*	22	38	12	77	—	—	148	1½ to 1	3 Pc.
84	95	67	.109*	.105*	22	34	12	77	—	—	162	1½ to 1	3 Pc.
90	103	71	.109*	.105*	22	38	12	77	—	—	174	1½ to 1	3 Pc.
96	112	75	.109*	.105*	24	40	12	77	—	—	174	1½ to 1	3 Pc.

NOTE: ALL SPLICES TO BE LAP RIVETED OR BOLTED.

* EXCEPT CENTER PANEL SEE GENERAL NOTES

REINFORCED CONCRETE PIPE ARCH

EQUIV. DIA. (Inches)	DIMENSIONS (Inches) ** SPAN	** RISE	T	A	B	C	D	E	APPROX. SLOPE
24	29	18	3	8½	39	33	72	48	3 to 1
30	36	22	3½	9½	50	46	96	60	3 to 1
36	44	27	4	11⅛	60	36	96	72	3 to 1
42	51	31	4½	15 13/16	60	36	96	78	3 to 1
48	58	36	5	21	60	36	96	84	3 to 1
54	65	40	5½	25½	60	36	96	90	3 to 1
60	73	45	6	31	60	36	96	96	3 to 1
72	88	54	7	31	60	39	99	120	2 to 1
84	102	62	8	28½	83	19	102	144	2 to 1

REINFORCED CONCRETE ELLIPTICAL PIPE

EQUIV. DIA. (Inches)	DIMENSIONS (Inches) ** SPAN	** RISE	T	A	B	C	D	E	APPROX. SLOPE
24	30	19	3¼	8½	39	33	72	48	3 to 1
30	38	24	3¾	9½	54	18	72	60	3 to 1
36	45	29	4½	11⅛	60	24	84	72	2½ to 1
42	53	34	5	15¾	60	36	96	78	2½ to 1
48	60	38	5½	21	60	36	96	84	2½ to 1
54	68	43	6	25½	60	36	96	90	2½ to 1
60	76	48	6½	30	60	36	96	96	2½ to 1

**NOMINAL SIZE

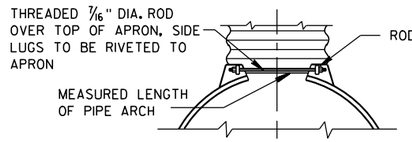

TYPE 2

FOR 17" X 13" THRU 112" X 75" PIPE ARCH

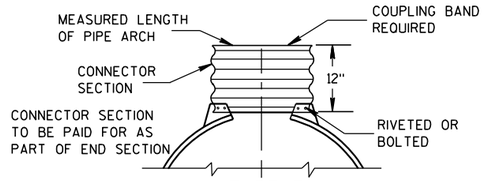

TYPE 3

FOR 64" X 43" THRU 112" X 75" PIPE ARCH

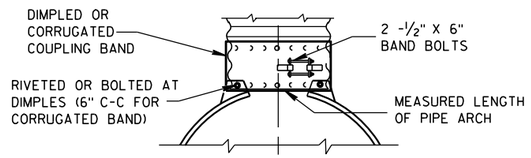

TYPE 5

ALTERNATE FOR:

ALL SIZES CORRUGATED PIPE ARCHES

NOTE: DIMPLED BAND FITS OVER OUTSIDE OF ENDWALL, AND CORRUGATED BAND FITS INSIDE ENDWALL.

CONNECTION DETAILS

GENERAL NOTES

DETAILS OF CONSTRUCTION, MATERIALS AND WORKMANSHIP NOT SHOWN ON THIS DRAWING SHALL CONFORM TO THE PERTINENT REQUIREMENTS OF THE STANDARD SPECIFICATIONS AND THE APPLICABLE SPECIAL PROVISIONS.

CONCRETE APRON ENDWALLS MAY NOT BE USED WITH GALVANIZED STEEL OR ALUMINUM CULVERT PIPE OR VISE VERSA. GALVANIZED STEEL OR ALUMINUM APRON ENDWALLS SHALL NORMALLY BE INSTALLED ON CULVERT PIPE OF THE SAME METAL.

ALL THREE PIECE STEEL APRON ENDWALLS FOR 66" X 51" PIPE ARCH AND LARGER SHALL HAVE 0.109" SIDES AND 0.138" CENTER PANELS. ALL THREE PIECE ALUMINUM APRON ENDWALLS FOR 66" X 51" PIPE ARCH AND LARGER SHALL HAVE 0.105" SIDES AND 0.134" CENTER PANELS. THE WIDTH OF CENTER PANELS SHALL BE GREATER THAN 20 PERCENT OF THE PIPE ARCH PERIMETER.

LAP SEAMS SHALL BE TIGHTLY JOINED BY GALVANIZED RIVETS OR BOLTS FOR STEEL UNITS AND ALUMINUM RIVETS AND BOLTS FOR ALUMINUM UNITS. FOR THE 77" X 52" THROUGH 112" X 75" APRON ENDWALL SIZES, THE REINFORCED EDGES AND CENTER PANEL SEAMS SHALL BE FURTHER REINFORCED WITH GALVANIZED STEEL OR ALUMINUM STIFFENER ANGLES. THE ANGLES SHALL BE ATTACHED BY GALVANIZED NUTS AND BOLTS FOR STEEL UNITS AND ALUMINUM NUTS AND BOLTS FOR ALUMINUM UNITS.

WHERE TWO OR MORE PIPES WITH APRON ENDWALLS ARE LAID ADJACENT TO EACH OTHER, THEY SHALL BE SEPARATED BY A DISTANCE SUFFICIENT TO PROVIDE A MINIMUM CLEARANCE OF 6 INCHES BETWEEN APRON ENDWALLS.

① FOR PIPE ARCH SIZES UP TO 73" X 55" A 180° ROLLED EDGE MAY BE USED INSTEAD OF STEEL ROD REINFORCEMENT. SEE SECTION A-A.

APRON ENDWALLS FOR PIPE ARCH AND ELLIPTICAL PIPE

STATE OF WISCONSIN
DEPARTMENT OF TRANSPORTATION

APPROVED

11/30/94 — DATE

/S/ Rory L. Rhinesmith — CHIEF ROADWAY DEVELOPMENT ENGINEER

FHWA

6

S.D.D. 8 F 2-1

6

S.D.D. 8 F 2-1

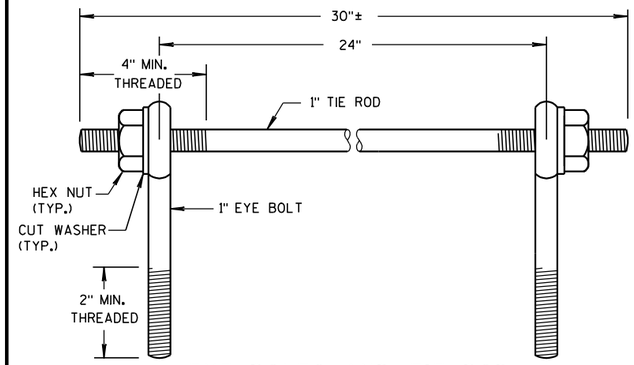

EYE BOLTS AND TIE ROD

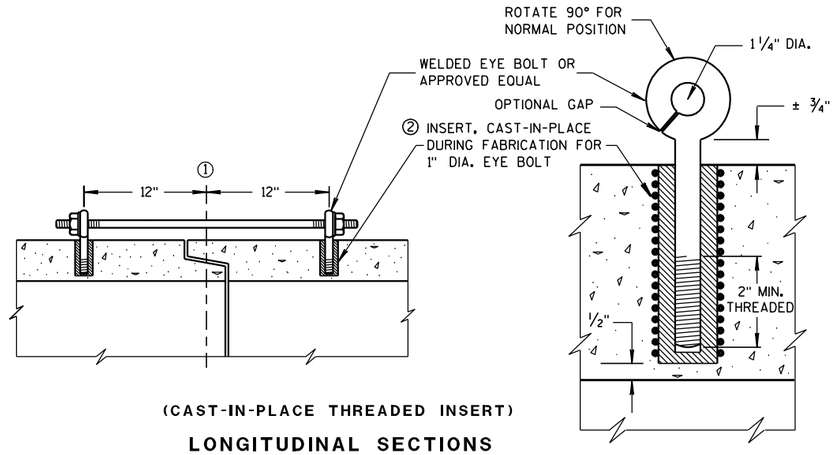

(CAST-IN-PLACE THREADED INSERT)

LONGITUDINAL SECTIONS

EYE BOLT AND TIE ROD ASSEMBLY (ALTERNATE NO. 1)

GENERAL NOTES

DETAILS OF CONSTRUCTION, MATERIALS, AND WORKMANSHIP NOT SHOWN ON THIS DRAWING SHALL CONFORM TO THE PERTINENT REQUIREMENTS OF THE STANDARD SPECIFICATIONS AND APPLICABLE SPECIAL PROVISIONS.

CONCRETE CULVERT AND STORM SEWER PIPE SHALL BE TIED TOGETHER IN THE MANNER ILLUSTRATED BY THIS DETAIL AT LOCATIONS DESIGNATED IN THE STANDARD SPECIFICATIONS AND THE PLAN. THE CONTRACTOR MAY USE EITHER ALTERNATE 1, 2 OR 3 FOR DRAINAGE STRUCTURES. ONLY ALTERNATE 1 AND 3 MAY BE USED FOR CATTLE PASSES, UNLESS OTHERWISE STATED IN THE CONTRACT. THE MATERIALS, FABRICATION AND WORK NECESSARY TO TIE THE PIPE BY THIS DETAIL WILL BE CONSIDERED INCIDENTAL TO THE PIPE AND APRON ENDWALLS IF REQUIRED.

DETAILED DRAWINGS FOR PROPOSED ALTERNATE DESIGNS FOR JOINT TIES SHALL BE SUBMITTED TO THE ENGINEER FOR APPROVAL.

JOINT TIES TO BE HOT-DIP GALVANIZED PER ASTM A 153.

① ℄ OF TONGUE AND GROOVE OR BELL AND SPIGOT JOINTS.

② THE INSIDE OF THE THREADED INSERTS SHALL BE CLEAN TO ALLOW THE INSERTION OF THREADED EYE BOLTS.

③ HOLES SHALL BE CAST-IN-PLACE OR DRILLED 12 INCHES FROM ℄ OF TONGUE AND GROOVE.

④ BOLT PROJECTION INSIDE OF PIPE SHALL NOT EXCEED 2 INCHES.

⑤ OPENING TO BE ROD DIAMETER PLUS 1 INCH.

⑥ LENGTH ADEQUATE TO EXTEND TO WITHIN 1/2 INCH OF THE INNER SURFACE OF THE PIPE.

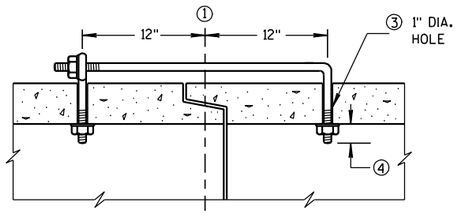

(TONGUE & GROOVE PIPE)

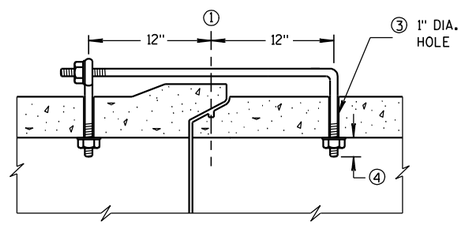

(MODIFIED BELL PIPE)

LONGITUDINAL SECTION

EYE BOLT DIMENSION TABLE

PIPE SIZE	L = LENGTH	
	TONGUE & GROOVE PIPE	MODIFIED BELL PIPE
18" TO 24"	4 1/2"	6 1/4"
30"	5"	7"
36"	5 1/2"	7"
42"	6"	
48"	6 1/2"	
60"	7 1/2"	
66"	8"	

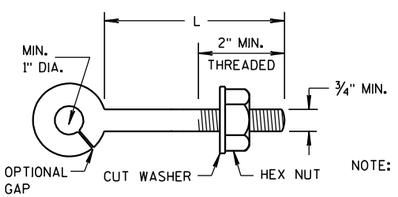

EYE BOLT

NOTE: TWO EYE BOLTS MAY BE USED WITH A 30" LONG THREADED ROD IN LIEU OF THE 90° BENT TIE ROD.

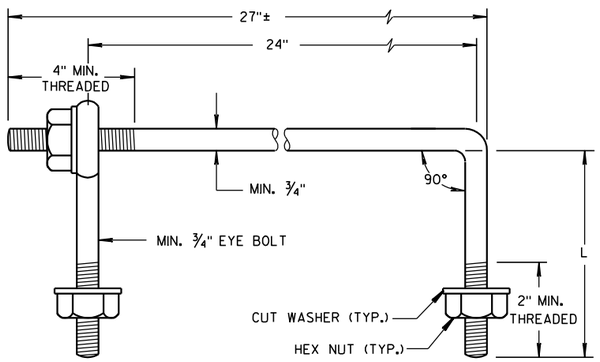

EYE BOLT AND TIE ROD

(JOINT TIES FOR 18" TO 66" DIA. CONCRETE PIPE)

EYE BOLT AND TIE ROD ASSEMBLY (ALTERNATE NO. 2)

ADJUSTABLE TIE ROD TABLE

PIPE DIAMETER	TIE ROD DIAMETER	D	L_1	N
12-60	5/8	5/8	5	1/2
66-84	3/4	3/4	5	1/2
90-108	1	1	7	1 1/16

DIMENSIONS SHOWN ARE IN INCHES

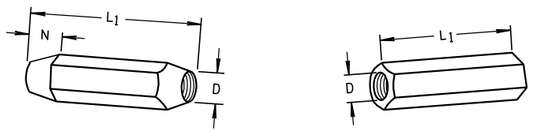

TAPERED PLAIN

RIGHT AND LEFT THREADS

SLEEVE NUTS

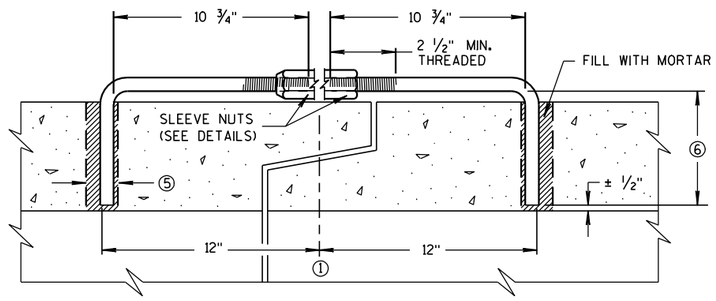

LONGITUDINAL SECTION

(JOINT TIES FOR 12" TO 108" DIA. CONCRETE PIPE)

ADJUSTABLE TIE ROD (ALTERNATE NO. 3)

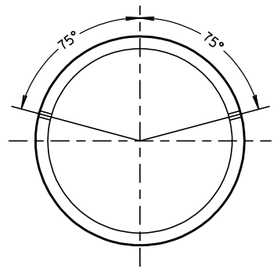

PLACEMENT OF (2) CAST-IN-PLACE INSERTS OR HOLES DURING FABRICATION FOR PIPE SECTIONS REQUIRING TIE RODS

TRANSVERSE SECTION

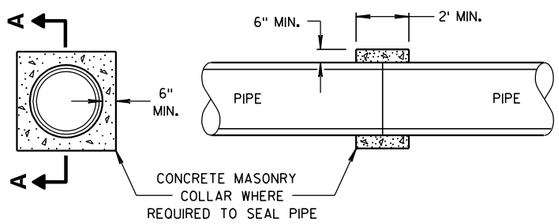

SECTION A-A

CONCRETE COLLAR DETAIL

JOINT TIES FOR CONCRETE PIPE AND CONCRETE COLLAR DETAIL

STATE OF WISCONSIN
DEPARTMENT OF TRANSPORTATION

APPROVED
6/5/2012 — DATE
/S/ Jerry H. Zogg — ROADWAY STANDARDS ENGINEER
FHWA

6

S.D.D. 8 F 4-7

6

S.D.D. 8 F 4-7

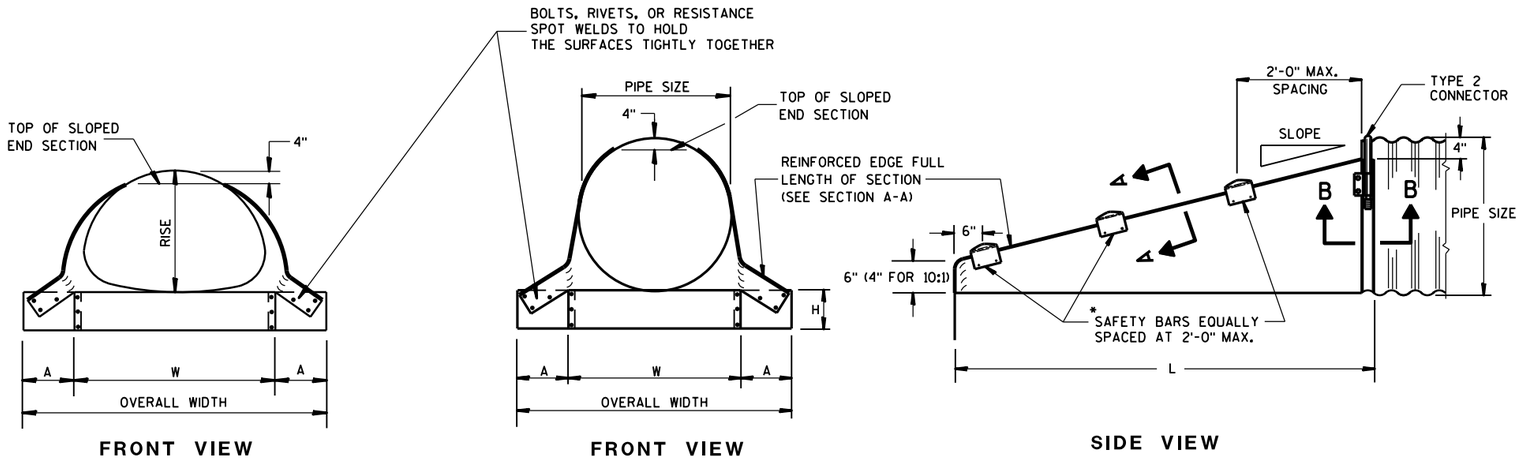

FRONT VIEW

FRONT VIEW

SIDE VIEW

GENERAL NOTES

DETAILS OF CONSTRUCTION, MATERIALS AND WORKMANSHIP NOT SHOWN ON THIS DRAWING SHALL CONFORM TO THE PERTINENT REQUIREMENTS OF THE STANDARD SPECIFICATIONS AND THE APPLICABLE SPECIAL PROVISIONS.

SLOPED END SECTIONS SHALL CONFORM TO THE REQUIREMENTS OF THE STANDARD SPECIFICATIONS, SECTION 521 FOR STEEL APRON ENDWALLS.

SAFETY BARS SHALL BE FABRICATED FROM GALVANIZED STEEL PIPE MEETING THE REQUIREMENTS OF ASTM A-53, GRADE B, SCHEDULE 40 OR APPROVED EQUAL.

STEEL APRON ENDWALLS FOR CULVERT PIPE SLOPED SIDE DRAINS

PIPE DIA. (IN.)	MIN. THICK. (Inches)	DIMENSIONS (Inches)				L DIMENSIONS					
		A	H	W	OVERALL WIDTH	SLOPE	LENGTH INCHES	SLOPE	LENGTH INCHES	SLOPE	LENGTH INCHES
15	.064	8	6	21	37	4:1	20	6:1	30	10:1	70
18	.064	8	6	24	40	4:1	32	6:1	48	10:1	100
21	.064	8	6	27	43	4:1	44	6:1	66	10:1	130
24	.064	8	6	30	46	4:1	56	6:1	84	10:1	160
30	.109	12	9	36	60	4:1	80	6:1	120	10:1	220
36	.109	12	9	42	66	4:1	104	6:1	156	10:1	280
42	.109	16	12	48	80	4:1	128	6:1	192	——	——
48	.109	16	12	54	86	4:1	152	6:1	228	——	——
54	.109	16	12	60	92	4:1	176	6:1	264	——	——
60	.109	16	12	66	98	4:1	200	6:1	300	——	——

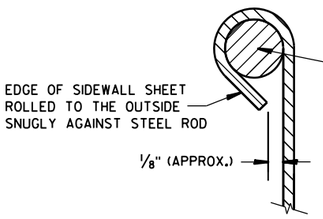

SECTION A-A

*NOTE:
THREE SAFETY BARS ARE SHOWN. ACTUAL NUMBER OF BARS REQUIRED AT A 2'-0" C-C MAX. SPACING WILL VARY DEPENDING ON THE LENGTH OF THE END SECTION.

3" GALVANIZED PIPE. FLATTEN ENDS, THEN BEND OUTSIDE 4" TO MATCH END SECTION SIDES.

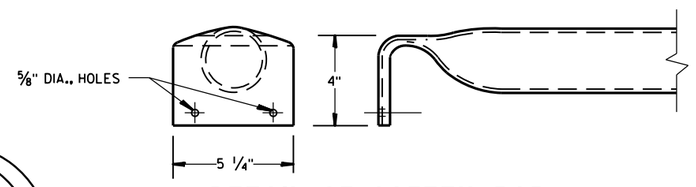

DETAIL OF SAFETY BAR

STEEL APRON ENDWALLS FOR PIPE ARCH SLOPED SIDE DRAINS

EQUIV. DIA. (Inches)	(Inches) SPAN	(Inches) RISE	MIN. THICK. (Inches) ①	DIMENSIONS (Inches) A	H	W	OVERALL WIDTH	L DIMENSIONS SLOPE	LENGTH INCHES	SLOPE	LENGTH INCHES	SLOPE	LENGTH INCHES
15	17	13	.064 *	7	6	30	44	4:1	19	6:1	30	10:1 ②	70
18	21	15	.064 *	8	6	27	43	4:1	20	6:1	30	10:1	70
21	24	18	.064 *	8	6	30	46	4:1	32	6:1	48	10:1	100
24	28	20	.064 *	8	6	34	50	4:1	40	6:1	60	10:1	120
30	35	24	.079 *	12	9	41	65	4:1	56	6:1	84	10:1	160
36	42	29	.109 *	12	9	48	72	4:1	76	6:1	114	10:1	210
42	49	33	.109	16	12	55	87	4:1	92	6:1	138	——	——
48	57	38	.109	16	12	63	95	4:1	112	6:1	168	——	——
54	64	43	.109	16	12	70	102	4:1	132	6:1	198	——	——

① * MINIMUM THICKNESS OF ALL 10:1 SLOPED SIDE DRAINS IS 0.109".
② ACTUAL SLOPE GREATER THAN 10:1.

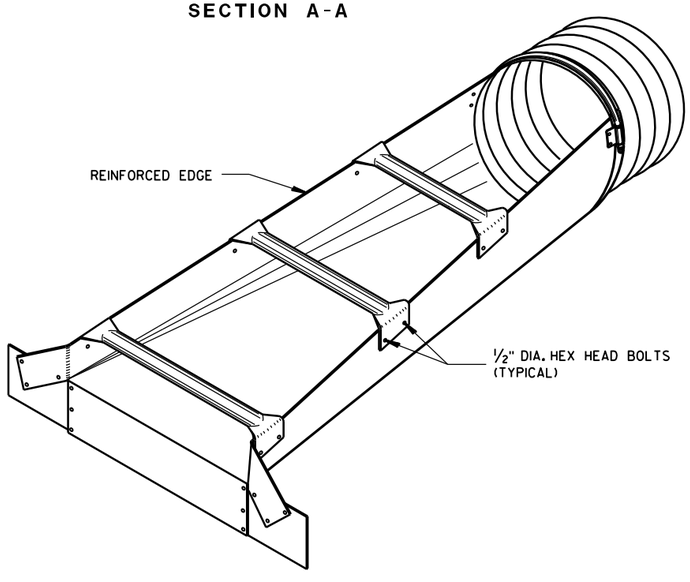

ISOMETRIC VIEW

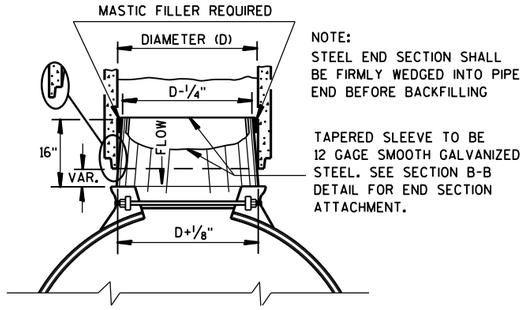

STEEL ADAPTER SLEEVE FOR CONCRETE PIPE

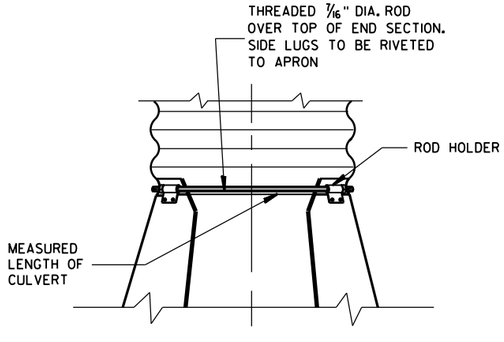

TYPE 2
CONNECTION DETAIL

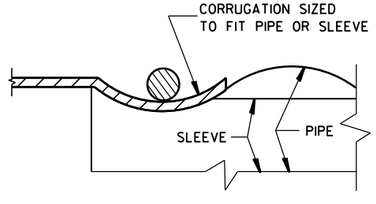

SECTION B-B

STEEL APRON ENDWALLS FOR CULVERT PIPE AND PIPE ARCH SLOPED SIDE DRAINS

STATE OF WISCONSIN
DEPARTMENT OF TRANSPORTATION

APPROVED
9/14/2012 DATE
/S/ Jerry H. Zoda
ROADWAY STANDARDS DEVELOPMENT ENGINEER
FHWA

6

S.D.D. 8 F 7-5

6

S.D.D. 8 F 7-5

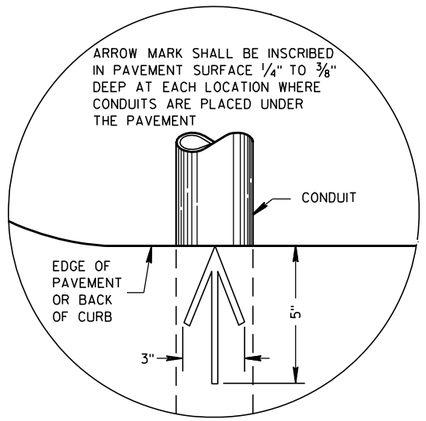

PLAN VIEW

ARROW MARK

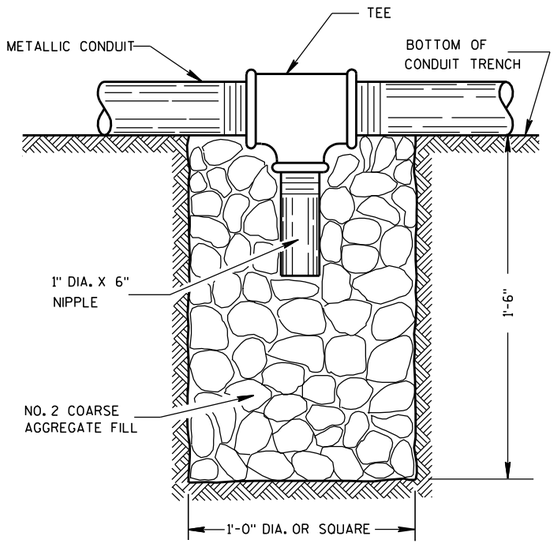

NOTE: INSTALL AT LOCATIONS WHERE METALLIC CONDUITS CANNOT BE PITCHED TO DRAIN INTO A PULL BOX.

DRAIN SUMP FOR METALLIC CONDUIT

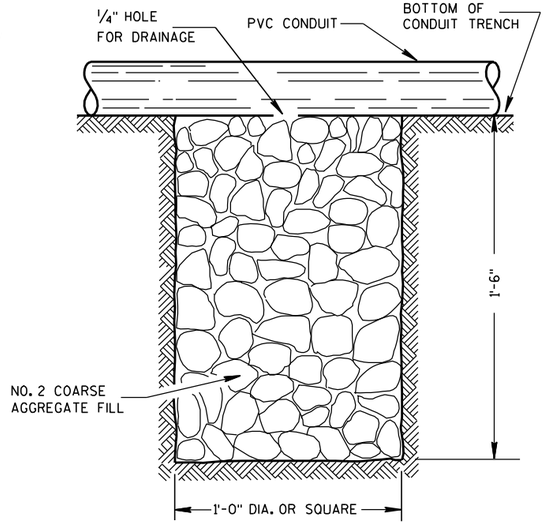

NOTE: INSTALL AT LOCATIONS WHERE PVC CONDUITS CANNOT BE PITCHED TO DRAIN INTO A PULL BOX.

DRAIN SUMP FOR PVC CONDUIT

GENERAL NOTES

DETAILS OF CONSTRUCTION, MATERIALS AND WORKMANSHIP NOT SHOWN ON THIS DRAWING SHALL CONFORM TO THE PERTINENT REQUIREMENTS OF THE CONTRACT.

METALLIC (STANDARD SPECIFICATION 652.2.2) OR NONMETALLIC (STANDARD SPECIFICATION 652.2.3) CONDUIT SHALL BE FURNISHED AND PLACED AS SHOWN.

DEPTH OF CONDUIT INSTALLED BELOW THE TRAVELED WAY SHALL BE 24 INCHES MINIMUM AND 36 INCHES MAXIMUM.

DEPTH OF CONDUIT INSTALLED THAT IS NOT BELOW THE TRAVELED WAY SHALL BE 18 INCHES MINIMUM AND 36 INCHES MAXIMUM.

ANY EXCEPTION TO THE MAXIMUM DEPTH SHALL BE ONLY WITH THE WRITTEN APPROVAL OF THE ENGINEER.

THE TRENCH SHALL NOT BE BACKFILLED PRIOR TO INSPECTION OF THE CONDUIT.

ALL METALLIC CONDUIT RACEWAY ENDS SHALL BE REAMED AND THREADED.

ALL METALLIC CONDUIT IN WHICH WIRE OR CABLE IS TO BE INSTALLED SHALL BE BUSHED WITH APPROVED THREADED BUSHINGS BEFORE INSTALLATION OF THE WIRE OR CABLE.

ALL METALLIC CONDUITS IN WHICH WIRE OR CABLE IS NOT TO BE INSTALLED SHALL BE CAPPED WITH THREADED PROTECTIVE CAPS, AS APPROVED BY THE ENGINEER.

ALL NONMETALLIC CONDUIT SHALL BE CAPPED OR PLUGGED IMMEDIATELY AFTER INSTALLATION AND SHALL REMAIN CAPPED OR PLUGGED UNTIL WIRE/CABLES ARE INSTALLED.

NONMETALLIC CONDUITS IN WHICH WIRE OR CABLE IS NOT BEING INSTALLED SHALL REMAIN CAPPED OR PLUGGED.

BENDING OF PVC ELECTRICAL CONDUIT SHALL BE ACCOMPLISHED BY USING A BLANKET OR EMERSION TYPE TANK DESIGNED FOR THE PURPOSE OF BENDING PVC ELECTRICAL CONDUIT.

ALL CUT ENDS SHALL BE TRIMMED INSIDE AND OUTSIDE TO REMOVE ALL ROUGH EDGES ON NONMETALLIC CONDUIT. (SEE NEC 347.5)

WHEN REQUIRED TO CONNECT NONMETALLIC CONDUIT TO METALLIC CONDUIT, ONLY U.L. LISTED ADAPTER FITTINGS SHALL BE USED.

PRIOR TO CONDUIT ACCEPTANCE, CONDUIT CAPS OR PLUGS SHALL BE REMOVED, AND THE CAPS, PLUGS AND CONDUIT ENDS SHALL BE THOROUGHLY CLEANED AND THEN THE CAPS OR PLUGS REINSTALLED TO ENSURE THAT THE CAPS OR PLUGS CAN BE EASILY REMOVED IN THE FUTURE.

ALL CONDUIT BEING FURNISHED AND INSTALLED SHALL HAVE THE U.L. LABEL FIRMLY ATTACHED.

CONDUIT RUNS SHALL BE THE SAME SIZE OF CONDUIT FROM ONE END TO THE OTHER (FROM PULL BOX TO PULL BOX-OR-JUNCTION BOX TO JUNCTION BOX-OR-BASE TO BASE, ETC.).

POLY ROPE OR A PULL WIRE SHALL BE INSTALLED AS STATED IN THE STANDARD SPECIFICATION, ITEM 652.3.1.1.

ALL CONDUIT RUNS SHALL BE STRAIGHT (WITHOUT BENDS) FROM PULL BOX TO PULL BOX, PULL BOX TO BASE AND BASE TO BASE AS SHOWN ON THE PLANS.

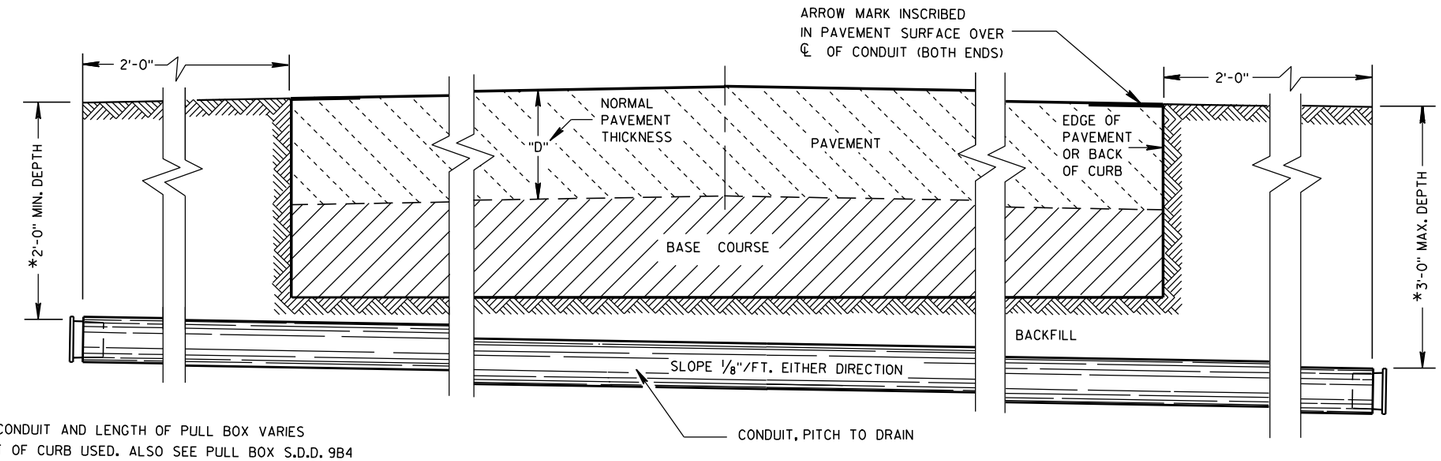

*DEPTH OF CONDUIT AND LENGTH OF PULL BOX VARIES WITH HEIGHT OF CURB USED. ALSO SEE PULL BOX S.D.D. 9B4

SIDE ELEVATION

DETAIL FOR CONDUIT UNDER PAVED HIGHWAYS

CONDUIT

STATE OF WISCONSIN
DEPARTMENT OF TRANSPORTATION

APPROVED

10/23/03 DATE

/S/ Balu Ananthanarayanan
STATE ELECTRICAL ENGI

116

HWYS

FHWA

TABLE OF NOMINAL DIMENSIONS AND WEIGHTS

DIMENSION IN INCHES		CORRUGATED STEEL PIPE								
PIPE DIAMETER (INSIDE)	A	12	12	12	18	18	18	24	24	24
PIPE LENGTH **	B	24	30	36	24	30	36	36	42	48
WALL THICKNESS	C	0.064	0.064	0.064	0.064	0.064	0.064	0.064	0.064	0.064
COVER	D	10 1/4	10 1/4	10 1/4	16 1/4	16 1/4	16 1/4	22 1/4	22 1/4	22 1/4
FRAME	E	14 1/2	14 1/2	14 1/2	20 1/2	20 1/2	20 1/2	26 1/2	26 1/2	26 1/2
FRAME	F	8 1/2	8 1/2	8 1/2	14 1/2	14 1/2	14 1/2	20 1/2	20 1/2	20 1/2
FRAME	G	11 1/2	11 1/2	11 1/2	17 1/2	17 1/2	17 1/2	23 1/2	23 1/2	23 1/2
WEIGHT IN POUNDS *										
FRAME AND COVER		60	60	60	110	110	110	155	155	155

* THE ACTUAL WEIGHT OF THE MANHOLE FRAME AND COVER MAY VARY WITHIN 5 PERCENT PLUS OR MINUS OF THE WEIGHTS SHOWN.

** NORMALLY USED LENGTHS. THE PROJECT ENGINEER SHALL DETERMINE IF PIPE LENGTHS, OTHER THAN THOSE SPECIFIED, SHALL BE USED, TO A MAXIMUM OF 48" (CONTINUOUS LENGTH, NON-SPLICED). THE ADDITIONAL LENGTH SHALL BE INCIDENTAL TO THE PULL BOX BID PRICE.

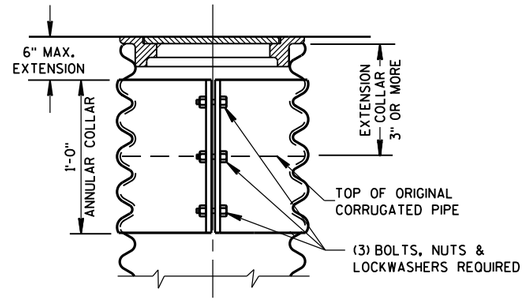

CORRUGATED PIPE EXTENDER

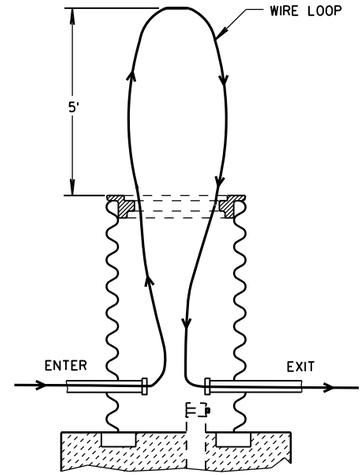

MEASUREMENT DETAIL FOR WIRE/CABLE IN THE PULL BOX

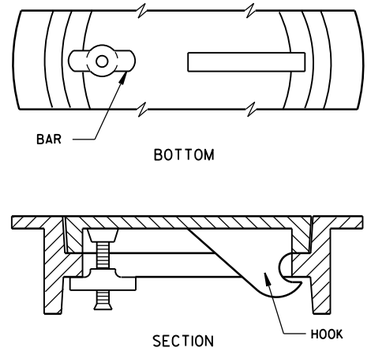

ALTERNATE COVER (LOCKING)

TIGHTENING BAR TYPE

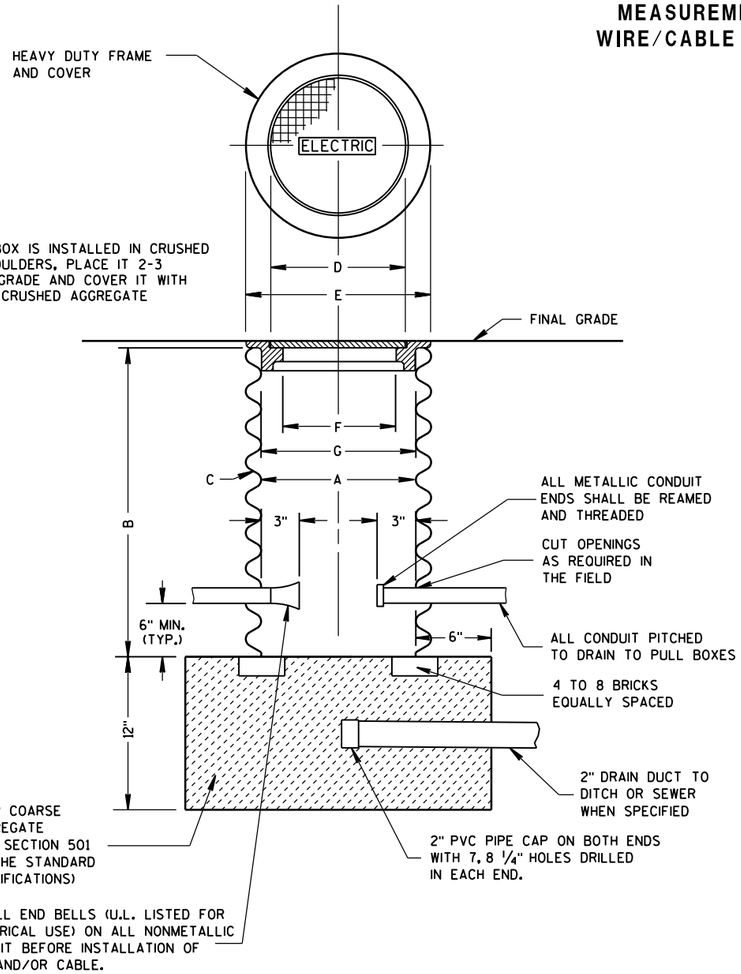

WHEN A PULL BOX IS INSTALLED IN CRUSHED AGGREGATE SHOULDERS, PLACE IT 2-3 INCHES BELOW GRADE AND COVER IT WITH 2-3 INCHES OF CRUSHED AGGREGATE

PULL BOX

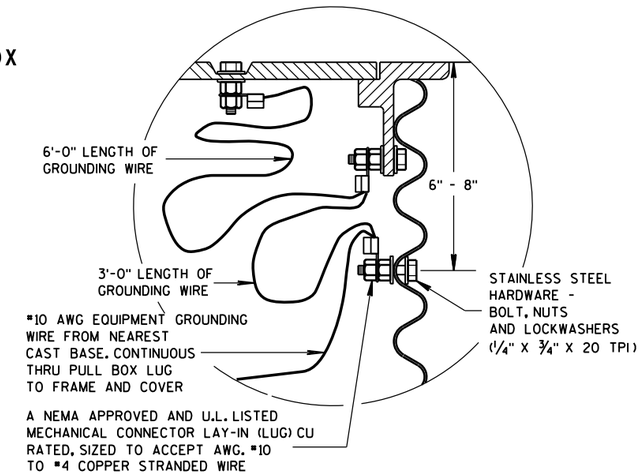

EQUIPMENT GROUNDING LUG AND LOCATION IN STEEL PULL BOXES

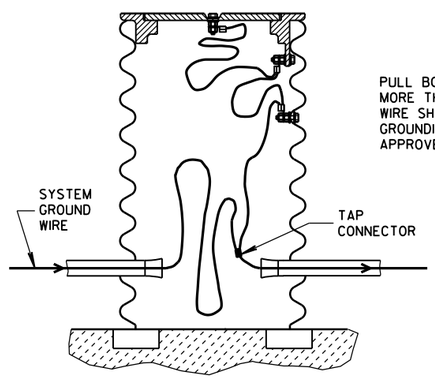

PULL BOX TO NEAREST BASE DISTANCE MORE THAN 20 FEET. PULL BOX GROUND WIRE SHALL CONNECT AT SYSTEM GROUNDING WIRE. USE DEPARTMENT APPROVED TAP CONNECTOR.

EQUIPMENT GROUNDING LUG AND LOCATION IN STEEL PULL BOXES

GENERAL NOTES

DETAILS OF CONSTRUCTION, MATERIALS AND WORKMANSHIP NOT SHOWN ON THIS DRAWING SHALL CONFORM TO THE PERTINENT REQUIREMENTS OF THE CONTRACT.

ALL FRAMES AND COVERS SHALL BE HEAVY DUTY TYPE, SUITABLE FOR VEHICULAR TRAFFIC LOADS.

PULL BOXES LOCATED IN THE ROADWAYS SHALL HAVE LOCKING COVERS.

ENTRANCE HOLES INTO PULL BOXES SHALL BE CUT WITH A CIRCULAR HOLE SAW OR HYDRAULIC CONDUIT PUNCH. HOLE SIZE SHALL BE THE OUTSIDE DIAMETER OF THE CONDUIT THAT IS TO FIT IN THE OPENING PLUS NO MORE THAN 1/4".

THE CONTRACTOR SHALL NOT INSTALL WIRE IN ANY PULL BOX UNTIL ITS INSTALLATION HAS BEEN INSPECTED AND ACCEPTED BY THE ENGINEER.

GROUNDING LUGS (MECHANICAL CONNECTORS) SHALL BE U.L. LISTED AND APPROVED FOR USE WITH COPPER WIRE.

GROUNDING LUGS ARE NOT REQUIRED IN PULL BOXES WHEN VOLTAGES OF LESS THAN 50 VOLTS AC ARE THE ONLY VOLTAGES ENCOUNTERED IN THE BOXES.

ALL METALLIC CONDUIT IN WHICH WIRE AND/OR CABLE IS TO BE INSTALLED, SHALL BE BUSHED BEFORE INSTALLATION OF THE WIRE AND/OR CABLE.

S.D.D. 9B2, "CONDUIT", APPLIES TO THIS DRAWING.

WHEN PULL BOXES ARE INSTALLED FOR FUTURE USE, DO NOT INSTALL THE EQUIPMENT GROUNDING LUG. THE EQUIPMENT GROUNDING LUG, THE EQUIPMENT GROUNDING ELECTRODE AND THE EQUIPMENT GROUNDING CONDUCTOR SHALL BE REQUIRED AND INSTALLED UNDER A FUTURE WIRING CONTRACT.

PULL BOX	
STATE OF WISCONSIN DEPARTMENT OF TRANSPORTATION	
APPROVED	
2-7-2013 DATE	/S/ Ahmet Demirbilek STATE ELECTRICAL
FHWA	

6

S.D.D. 9 B 4-10

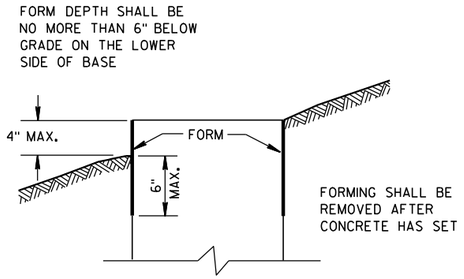

FORMING DETAIL

QUANTITY REQUIREMENTS	CONCRETE BASE TYPE		
	1	2	5
APPROX. CUBIC YARDS OF CONCRETE	0.40	0.57	0.40
LBS. OF HOOP BAR STEEL	NONE	23	16
LBS. OF VERTICAL BAR STEEL	NONE	60	18

GENERAL NOTES

DETAILS OF CONSTRUCTION, MATERIALS AND WORKMANSHIP NOT SHOWN ON THIS DRAWING SHALL CONFORM TO THE PERTINENT REQUIREMENTS OF THE CONTRACT.

BASES SHALL BE EXCAVATED BY USE OF A CIRCULAR AUGER.

TOP SURFACES OF CONCRETE BASES SHALL BE TROWEL FINISHED SMOOTH AND LEVEL.

CONDUIT SIZES AND LOCATIONS SHALL BE AS SHOWN ON THE PLANS.

THE FINAL OR TERMINATING CONCRETE BASE IN A CONDUIT RUN SHALL HAVE A 6" EXIT STUB INSTALLED FOR FUTURE CABLING USE. THE EXIT STUB SHALL BE SIZED AS USED THROUGHOUT THE CONDUIT RUN AS SHOWN AT THE ENTRANCE OF THE BASE.

MINIMUM BENDING RADIUS OF CONDUIT IS EQUAL TO 6 X THE DIAMETER.

CONDUIT HEIGHT ABOVE CONCRETE BASES SHALL BE 1 INCH. ALL METALLIC CONDUIT ENDS SHALL BE REAMED AND THREADED.

ALL CONDUIT ENDS AT THE TOP OF CONCRETE BASES SHALL BE CAPPED IF METALLIC OR PLUGGED IF NONMETALLIC IMMEDIATELY AFTER PLACEMENT AND BEFORE CONCRETE IS POURED. CONDUITS IN WHICH WIRE OR CABLE IS NOT INSTALLED SHALL REMAIN CAPPED OR PLUGGED.

GENERAL NOTES (CONTINUED)

BELL ENDS SHALL BE INSTALLED ON ALL PVC CONDUIT EXPOSED AT THE TOP OF CONCRETE BASES BEFORE INSTALLATION OF CABLE OR WIRE.

ENDS OF CONDUIT INSTALLED BELOW GRADE FOR FUTURE USE SHALL BE CAPPED IF METALLIC OR PLUGGED IF NONMETALLIC.

WHEN REQUIRED TO CONNECT NONMETALLIC CONDUIT TO METALLIC CONDUIT, ONLY ADAPTER FITTINGS, U.L. LISTED FOR ELECTRICAL USE, SHALL BE USED.

IF A BASE REQUIRES A DEEP FORM BECAUSE OF LOOSE DIRT OR FILL, THE FORM SHALL BE REMOVED BEFORE BACKFILLING AROUND THE BASE. BACKFILL SHALL BE TAMPED TIGHT AGAINST THE BARE CONCRETE BASE IN LAYERS OF 1 FOOT OR LESS.

A NO. 4 AWG, STRANDED COPPER EQUIPMENT GROUNDING CONDUCTOR SHALL BE EXOTHERMICALLY WELDED TO THE EQUIPMENT GROUNDING ELECTRODE (GROUND ROD) FOR TYPE 2 AND TYPE 5 BASES.

THE EQUIPMENT GROUNDING CONDUCTOR SHALL BE FURNISHED AND INSTALLED TO ENTER THE BASE OF THE TYPE 2 AND TYPE 5 BASES THROUGH A 1 INCH CONDUIT INSTALLED FOR GROUNDING PURPOSES, LEAVING A 4 FOOT COIL OF WIRE ABOVE THE CONCRETE BASE. THE EQUIPMENT GROUNDING CONDUCTOR SHALL BE NEATLY COILED AND THE COILS TIED TOGETHER.

ANCHOR RODS SHALL BE THREADED 12" IN LENGTH ON EACH END OF THE ROD. ANCHOR RODS SHALL BE MANUFACTURED IN ACCORDANCE WITH SECTION 654.2.1 AND 641.2.2 OF THE STANDARD SPECIFICATIONS, ASTM A-449, OR ASTM A-687 (GRADE 105).

WASHERS AND LOCK WASHERS ARE REQUIRED ON ALL ANCHOR RODS.

WHEN ANCHOR RODS USING THE ALTERNATE "L" BEND ARE FURNISHED, THE 4" "L" BEND SHALL BE IN ADDITION TO THE SPECIFIED ANCHOR ROD BAR LENGTH. THE "L" BEND END SHALL NOT BE THREADED.

ANCHOR RODS SHALL BE INSTALLED WITH MISALIGNMENTS OF LESS THAN 1:40 FROM VERTICAL.

WELDING OF THE ANCHOR RODS TO THE CAGE IS UNACCEPTABLE. TIE WIRES SHALL BE USED.

BAR STEEL REINFORCEMENT SHALL BE COATED WITH POWDERED EPOXY RESIN IN ACCORDANCE WITH SECTION 505 OF THE STANDARD SPECIFICATIONS (LATEST EDITION).

(1) THE MINIMUM DEPTH OF CONDUIT EXITING THE CONCRETE BASE AND INSTALLED BELOW THE TRAVELED WAY SHALL BE 24 INCHES. THE MINIMUM DEPTH OF CONDUIT EXITING THE CONCRETE BASE THAT IS NOT INSTALLED BELOW THE TRAVELED WAY SHALL BE 18 INCHES. THE MAXIMUM DEPTH OF ALL CONDUIT SHALL BE 36 INCHES EXCEPT WITH WRITTEN APPROVAL BY THE ENGINEER.

(2) (4) 1" DIA. X 3'-6" ANCHOR RODS.

(3) (4) 1" DIA. X 5'-0" ANCHOR RODS.

(4) (6) NO. 6 X 6'-8" BAR STEEL REINFORCEMENT.

(5) (7) NO. 4 X 5'-1" BAR STEEL REINFORCEMENT @ 1'-0" C-C.

(6) (4) 1" DIA. X 3'-6" ANCHOR RODS.

(7) (6) NO.4 X 4'-8" BAR STEEL REINFORCEMENT.

(8) (5) NO. 4 X 5'-1" BAR STEEL REINFORCEMENT @ 1'-0" C-C.

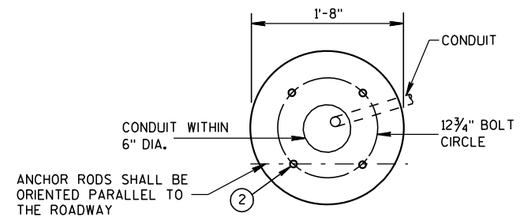

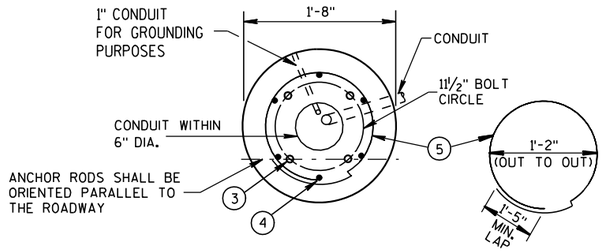

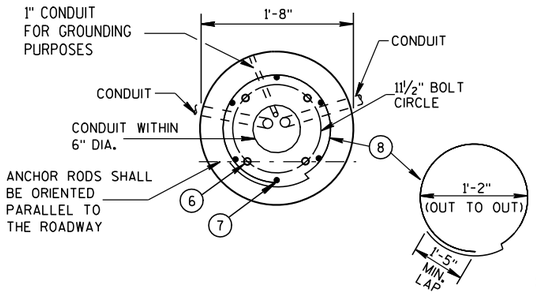

FORM ALL EXPOSED CONCRETE. PROVIDE 1" CHAMFER ALL AROUND

HALF SECTION IN UNPAVED AREA
(TYPICAL FOR TYPES 1, 2 & 5)

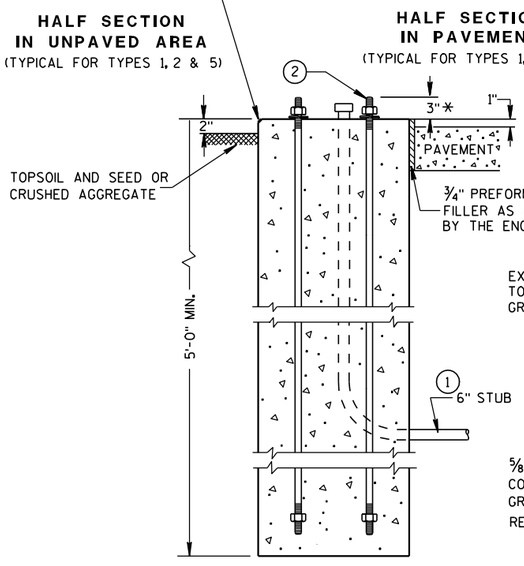

HALF SECTION IN PAVEMENT
(TYPICAL FOR TYPES 1, 2 & 5)

TYPE 1

FORM ALL EXPOSED CONCRETE. PROVIDE 1" CHAMFER ALL AROUND

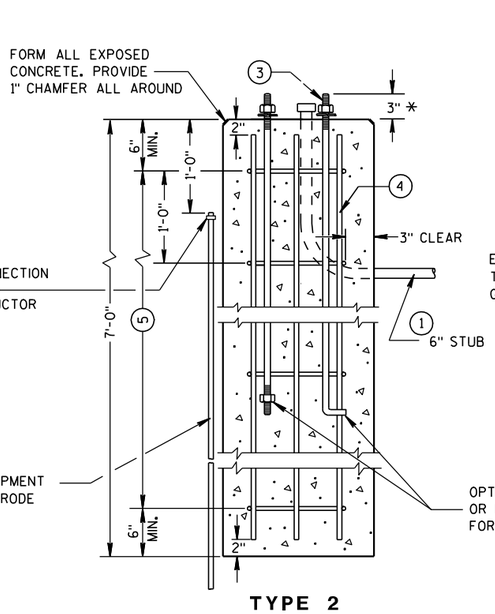

TYPE 2

FORM ALL EXPOSED CONCRETE. PROVIDE 1" CHAMFER ALL AROUND

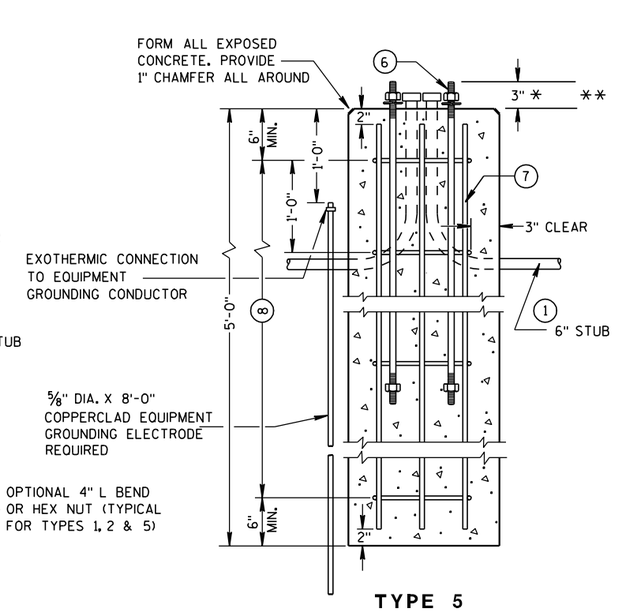

TYPE 5

OPTIONAL 4" L BEND OR HEX NUT (TYPICAL FOR TYPES 1, 2 & 5)

CONCRETE BASES

* ANY ANCHOR ROD PROJECTION SHORTER THAN 2¾" OR LONGER THAN 3¼" SHALL REQUIRE THE BASE TO BE REMOVED AND REPLACED AT THE CONTRACTORS EXPENSE.

** FOR NONBREAKAWAY INSTALLATIONS, 4½" ± ANCHOR ROD PROJECTION WITH THE USE OF LEVELING NUTS. RODENT SCREEN REQUIRED.

CONCRETE BASES, TYPES 1, 2 & 5

STATE OF WISCONSIN
DEPARTMENT OF TRANSPORTATION

APPROVED

3/3/10
DATE

/S/ Joanna L. Rush
STATE ELECTRICAL ENGI

HWYS

FHWA

6

S.D.D. 9 C 2-6

GENERAL NOTES

DETAILS OF CONSTRUCTION, MATERIALS AND WORKMANSHIP NOT SHOWN ON THIS DRAWING SHALL CONFORM TO THE PERTINENT REQUIREMENTS OF THE CONTRACT.

FOUR (4) BOLTS SHALL BE FURNISHED WITH EACH TRANSFORMER BASE. BOLTS SHALL BE 1" DIAMETER, 4" IN LENGTH, WITH WASHERS, LOCK WASHERS AND NUTS. BOLTS, NUTS AND WASHERS SHALL BE MANUFACTURED IN ACCORDANCE WITH SECTION 641.2.2 OF THE STANDARD SPECIFICATIONS, ASTM A-325, (92,000 YIELD) HEAVY HEX NUT AND BE GALVANIZED IN ACCORDANCE WITH ASTM A-153, CLASS C.

LEVELING SHIMS, IF NEEDED, SHALL BE DESIGNED FOR THE PURPOSE AND USED UNDER CAST BASES WHEN PLUMBING POLES OR STANDARDS DURING INSTALLATION. THE USE OF WASHERS IN LIEU OF PROPER LEVELING SHIMS IS NOT ACCEPTABLE.

SHIM LENGTH SHALL BE LONG ENOUGH TO COMPLETELY COVER THE AREA UNDER THE LENGTH AND WIDTH OF THE BASE MOUNTING FLANGE.

DOUBLE NUTTING IS NOT ACCEPTABLE FOR LEVELING OR MOUNTING PURPOSES.

A NEMA APPROVED AND U.L. LISTED MECHANICAL CONNECTOR (LUG) AL/CU RATED AND SIZED TO ACCEPT #10 AWG STRANDED WIRE, SHALL BE FURNISHED AND INSTALLED IN THE PEDESTAL AND TRANSFORMER BASES.

THE MECHANICAL CONNECTOR SHALL BE INSTALLED USING A 1/4" - 20 (TPI) STAINLESS STEEL HEX HEAD BOLT OF SUFFICIENT LENGTH TO FIRMLY ATTACH THE LUG TO THE BASE.

SHOULD THE MANNER OF ATTACHMENT OF THE LUG REQUIRE WASHERS, HEX NUTS, LOCK WASHER - THEY SHALL BE STAINLESS STEEL AS IS THE BOLT. THE MANNER OF ATTACHMENT SHALL NOT BLOCK ACCESSIBILITY TO WIRE PLACEMENT IN THE CONNECTOR.

PEDESTAL BASE COLLAR THREADING SHALL BE TAPERED AND IN ACCORDANCE WITH NATIONAL PIPE THREADING DIMENSIONS.

BASE COLLAR THREADING SHALL EXTEND INTO THE BASE COLLAR WITH SUFFICIENT DEPTH TO ACCEPT THE INSTALLATION OF TRAFFIC SIGNAL STANDARDS TO A DEPTH OF 1½", THEN TIGHTENING TO A POINT OF BEING IMMOVABLE.

THE ACCESS DOOR SHALL BE OF THE SAME MATERIAL AS THE BASE.

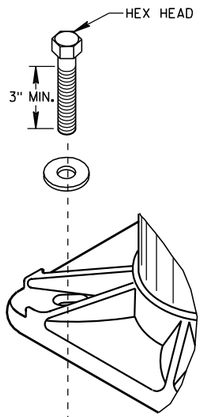

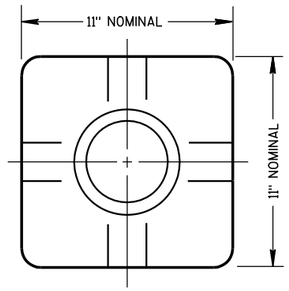

TOP VIEW
(PEDESTAL BASE)

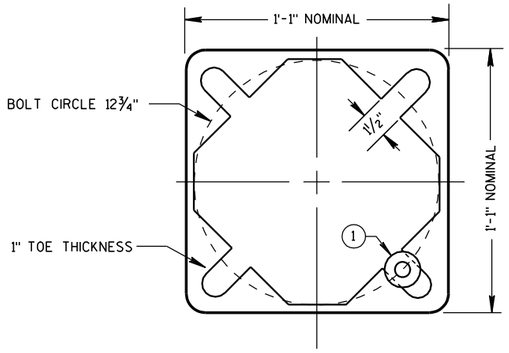

BOTTOM VIEW
(PEDESTAL BASE)

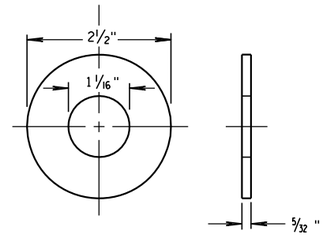

ZINC COATED STEEL WASHER
TO BE PROVIDED BY THE CONTRACTOR

PEDESTAL BASE WASHER (1)

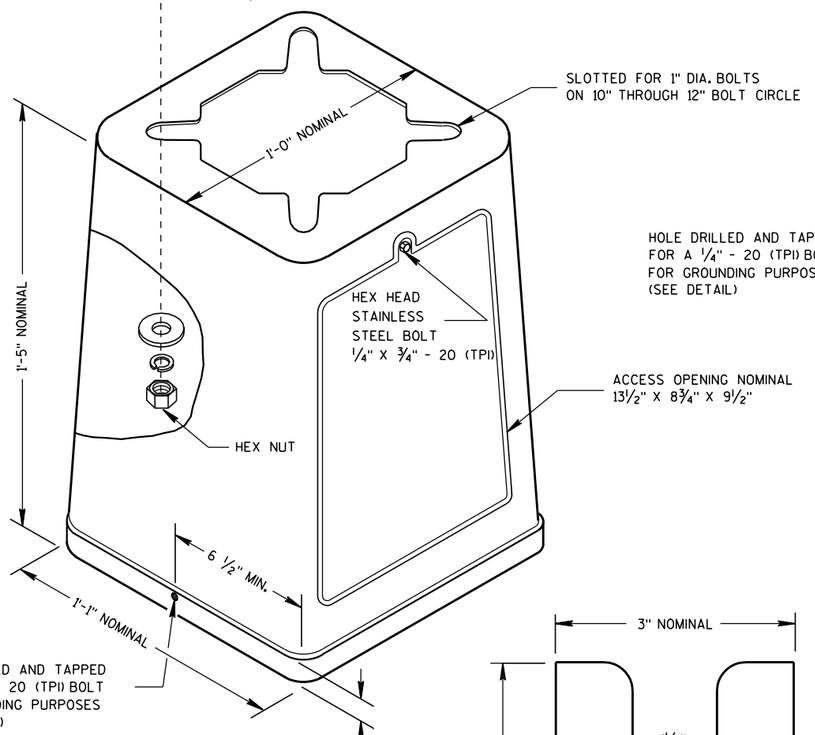

ISOMETRIC VIEW

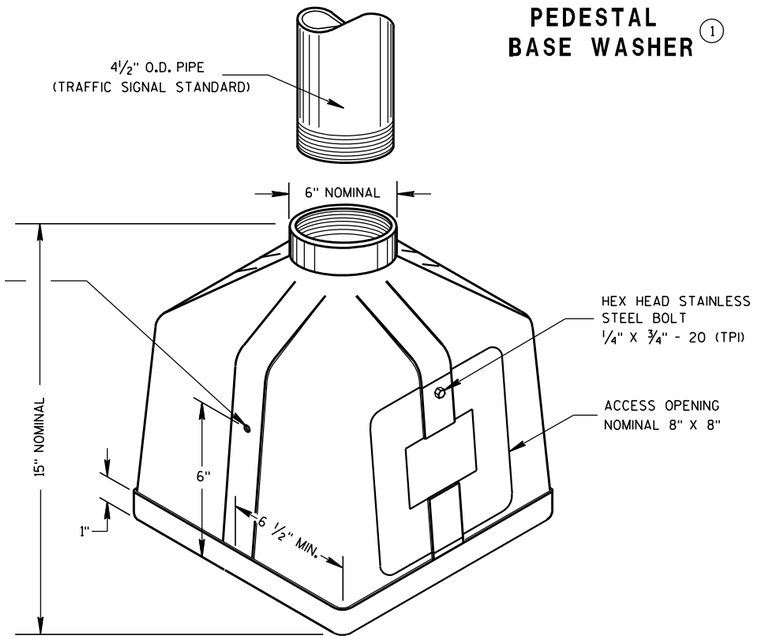

ISOMETRIC VIEW

PEDESTAL BASE

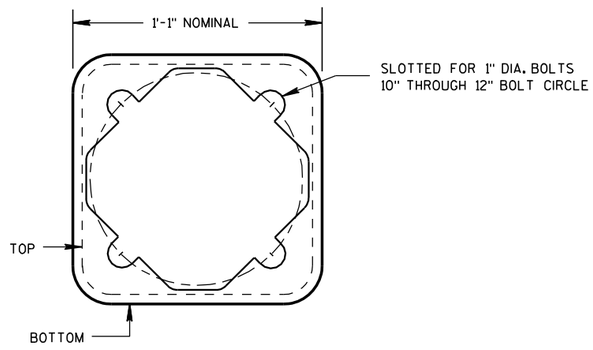

BOTTOM VIEW
(TRANSFORMER BASE)

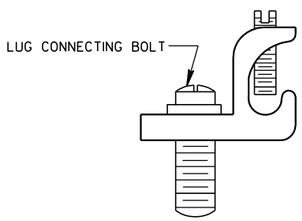

TYPICAL MECHANICAL CONNECTOR LUG

TO BE FURNISHED WITH EACH BASE

TRANSFORMER BASE

INTENDED FOR USE WITH TYPE 2, 3, 4, 5 & 6 POLES

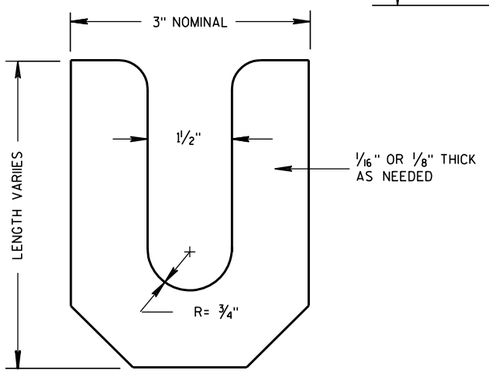

LEVELING SHIM

TRANSFORMER/PEDESTAL BASES

STATE OF WISCONSIN
DEPARTMENT OF TRANSPORTATION

APPROVED
10/27/09
DATE
/S/ Joanna L. Rich
STATE ELECTRICAL ENGI
119
HWYS
FHWA

6

S.D.D. 9 C 3-3

6

S.D.D. 9 C 3-3

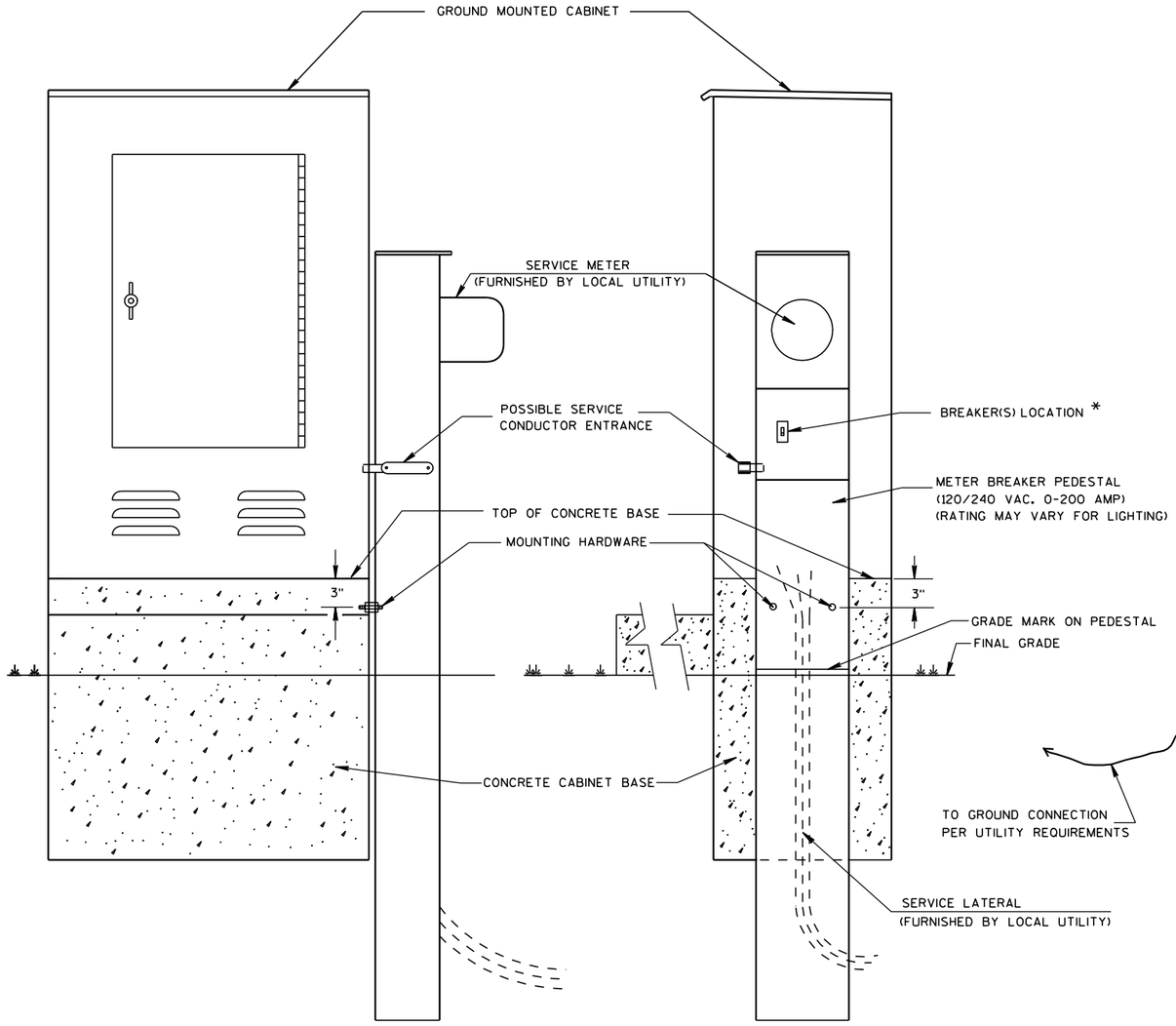

TYPICAL CABINET SERVICE INSTALLATION

GENERAL NOTES

DETAILS OF CONSTRUCTION, MATERIALS AND WORKMANSHIP NOT SHOWN ON THIS DRAWING SHALL CONFORM TO THE PERTINENT REQUIREMENTS OF THE CONTRACT.

THE EXACT LOCATION OF THE METER BREAKER PEDESTAL SHALL BE DETERMINED BY THE ENGINEER IN THE FIELD.

THE TYPE OF CONCRETE CABINET BASE TO BE INSTALLED SHALL BE AS CALLED FOR IN THE PLANS.

TO FACILITATE FLUSH MOUNTING OF THE METER BREAKER PEDESTAL AGAINST THE SIDE OF THE CABINET BASE (IF FLUSH MOUNTING POSSIBLE. CONFER WITH THE LOCAL UTILITY TO DETERMINE WHICH SIDE OF THE CONCRETE BASE THE ELECTRICAL SERVICE LATERAL WILL APPROACH. THEN FORM THAT INDICATED SIDE FOR FULL SIDE DEPTH.

WHILE FLUSH MOUNTING IS THE MOST DESIRABLE MOUNTING CONFIGURATION UTILITY REQUIREMENTS MAY PRECLUDE THIS OPTION. CONTRACTOR MUST PROVIDE UTILITY APPROVED PEDESTAL AND INSTALL PER UTILITY AND MANUFACTURERS REQUIREMENTS.

SERVICE CONDUCTOR ENTRANCES SHALL BE RIGID METALLIC CONDUIT, NIPPLES AND/OR CONDULETS AS REQUIRED.

SERVICE CONDUCTOR ENTRANCES SHALL BE SIZED AND LOCATED AS REQUIRED BY THE LOCAL UTILITY AND IN ACCORDANCE WITH APPROPRIATE ARTICLES OF THE LATEST ACCEPTED NATIONAL ELECTRICAL CODE.

IF MORE THAN ONE GROUNDING ELECTRODE IS REQUIRED, THE DISTANCE APART SHALL BE 6 FEET OR PER LOCAL UTILITY REGULATIONS.

* SOME PEDESTAL LIGHTING PLANS SHOW MAIN LUGS ONLY.

CABINET SERVICE INSTALLATION (METER BREAKER PEDESTAL)

STATE OF WISCONSIN
DEPARTMENT OF TRANSPORTATION

APPROVED
10/27/09 DATE
/S/ Joanna L. Bush STATE ELECTRICAL ENGI
120
HWYS
FHWA

6
S.D.D. 9 D 1-4

*RISE FOR 4' ARM SHALL BE 2'-0".

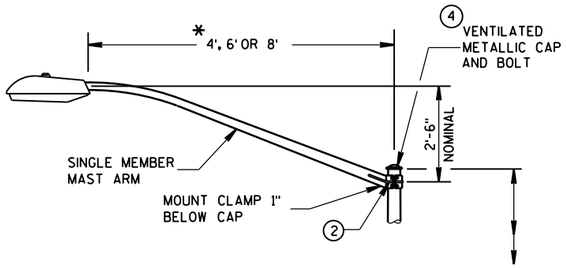

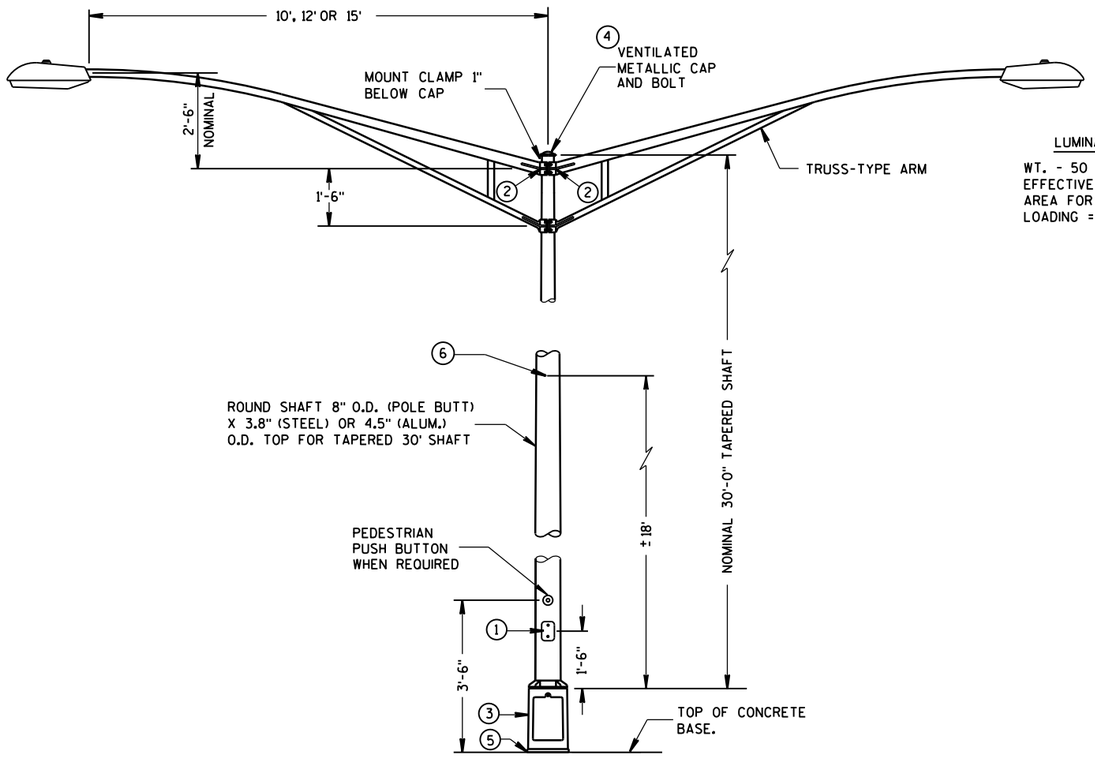

TYPE 5 POLE MOUNTING CONFIGURATION
(MAXIMUM LOAD)
LIGHTING ONLY

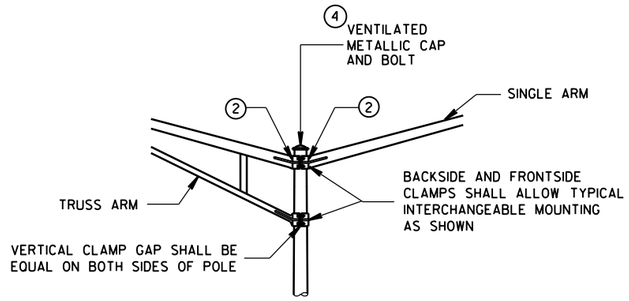

INTERCHANGEABLE MOUNTING DETAIL

LUMINAIRE

WT. - 50 LBS.
EFFECTIVE PROJECTED
AREA FOR WIND
LOADING = 1.5 SQ. FT.

GENERAL NOTES

DETAILS OF CONSTRUCTION, MATERIALS AND WORKMANSHIP NOT SHOWN ON THIS DRAWING SHALL CONFORM TO THE PERTINENT REQUIREMENTS OF THE CONTRACT.

ALL TYPE 5 POLE MOUNTINGS SHALL BE DESIGNED TO INCLUDE TWIN 15' ARMS WITH LUMINAIRES.

POLES SHALL BE GALVANIZED STEEL OR ALUMINUM, AS CALLED FOR IN THE CONTRACT.

TYPE 5 ALUMINUM POLES SHALL BE CONSTRUCTED OF 6063-T6 ALUMINUM ALLOY. SLEEVING INSIDE THE POLE IS NOT ACCEPTABLE.

THE TYPE 5 ALUMINUM POLES SHALL HAVE A MINIMUM WALL THICKNESS OF 0.188".

TYPE 5 STEEL POLES SHALL HAVE A MINIMUM WALL THICKNESS OF U.S. STANDARD 11 GAGE (.1196").

THE SLIPFITTER END OF THE LUMINAIRE MAST ARM SHALL BE A NOMINAL 2⅜ INCHES IN OUTSIDE DIAMETER. THE STRAIGHT PORTION OF THE SLIPFITTER END OF THE LUMINAIRE ARM SHALL BE A NOMINAL 12 INCHES IN LENGTH.

WHEN TRANSFORMER BASES ARE USED, WIRE CONEECTIONS SHALL BE MADE IN THE TRANSFORMER BASE.

(1) 4" x 6" REINFORCED HANDHOLE & COVER ASSEMBLY WITH 2 (TWO) ¼" X ¾" - 20 TPI HEX HEAD STAINLESS STEEL BOLTS.

(2) GROMMETS, 1" CHASE NIPPLES OR 1" CLOSE CONDUIT NIPPLES WITH BUSHINGS SHALL BE PROVIDED FOR 1⅜" HOLE IN POLE SHAFT FOR WIRING.

(3) CAST ALUMINUM TRANSFORMER BASE, WHEN REQUIRED.

(4) FURNISH AND INSTALL VENTILATED, CAST, METALLIC (ALUMINUM ALLOY) CAPS. FASTEN CAPS WITH ONE (1) ¼" X ¾" - 20 TPI STAINLESS STEEL, HEX HEAD BOLT.

(5) SHIMMING, IF NEEDED, SHALL BE LOCATED BETWEEN THE CONCRETE FOUNDATION AND THE TRANSFORMER BASE.

(6) INTERNAL DUMBBELL-TYPE VIBRATION DAMPER.

6

S.D.D. 9 E 1-12d

POLE MONTINGS FOR
LIGHTING UNITS, TYPE 5
(30 FEET)

STATE OF WISCONSIN
DEPARTMENT OF TRANSPOI

6

S.D.D. 9 E 1-12d

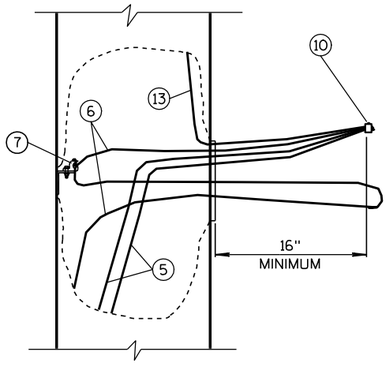

EQUIPMENT GROUNDING CONDUCTOR SLACK

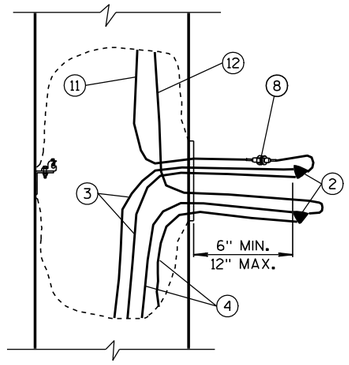

UNGROUNDED CONDUCTOR SLACK (AND GROUNDED NEUTRAL SLACK IN GROUNDED NEUTRAL SYSTEM)

TYPICAL CONDUCTOR SLACK AT HANDHOLES

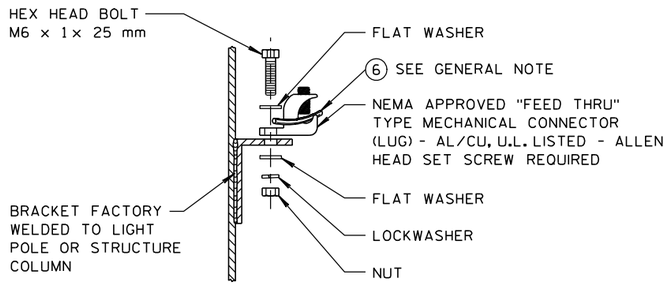

HANDHOLE GROUNDING LUG

(NUT, BOLT, WASHERS, AND LOCK WASHERS SHALL BE STAINLESS STEEL)

CONDUCTOR COLOR CODES

KEY	CONDUCTOR	COLOR
3	UNGROUNDED LINE WIRE	*
4	GROUNDED LINE WIRE	WHITE
5	SYSTEM GROUNDING LINE WIRE	GREEN
6	GROUNDING ELECTRODE CONDUCTOR	BARE
11	UNGROUNDED POLE WIRE	*
12	GROUNDED POLE WIRE	WHITE
13	EQUIPMENT GROUNDING POLE WIRE	GREEN

* FOLLOW COLOR CODING SHOWN IN THE PLANS. WHERE THE PLANS DO NOT SHOW COLOR CODING, USE BLACK FOR SINGLE LUMINAIRE POLES; BLACK AND RED FOR TWIN LUMINAIRE POLES.

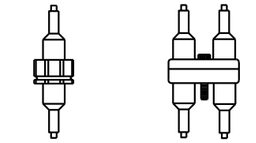

FUSE ASSEMBLIES

GENERAL NOTES

DETAILS OF CONSTRUCTION AND WORKMANSHIP NOT SHOWN IN THIS DRAWING SHALL CONFORM TO THE PERTINENT REQUIREMENTS OF THE CONTRACT.

USE THIS DETAIL IN CONJUNCTION WITH THE ELECTRICAL DETAILS FOR THE APPLICATION, WHICH MAY BE A LIGHT POLE, SIGN BRIDGE, ETC.

THE GROUNDING ELECTRODE CONDUCTOR SHALL BE CONTINUOUS WITHOUT SPLICES FROM THE GROUNDING ELECTRODE THROUGH THE HANDHOLE GROUNDING LUG TO THE CONNECTOR.

THREE POLE WIRES ARE SHOWN FOR A SINGLE LUMINAIRE LIGHT POLE. THREE ADDITIONAL POLE WIRES REQUIRED FOR TWIN LUMINAIRE LIGHT POLES ARE OMITTED FROM THE DRAWING FOR CLARITY. IN THE TWIN POLE CASE, BUNDLE EACH SET OF THREE WIRES WITH A NYLON CABLE TIE.

IN 3-PHASE SYSTEMS, THERE WILL BE ONE MORE UNGROUNDED LINE WIRE, WHICH IS OMITTED FROM THE DRAWING FOR CLARITY.

CIRCUIT TAGS SHALL BE INSTALLED ONLY WHERE REQUIRED IN THE SPECIAL PROVISIONS.

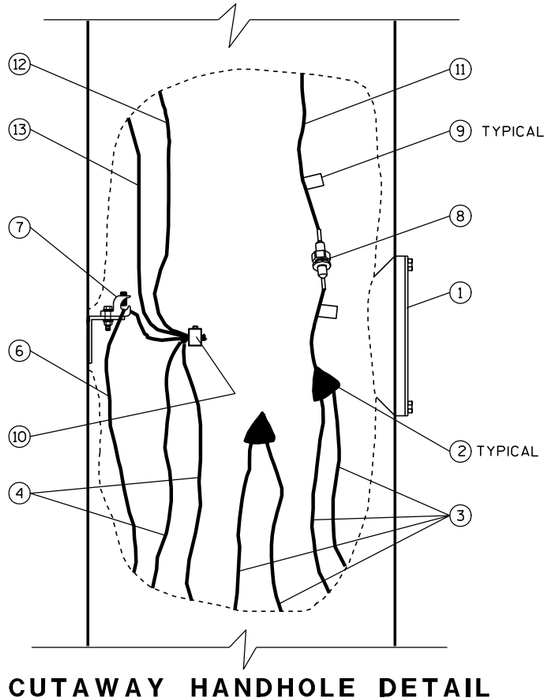

CUTAWAY HANDHOLE DETAIL

GROUNDED NEUTRAL SYSTEMS
1-φ

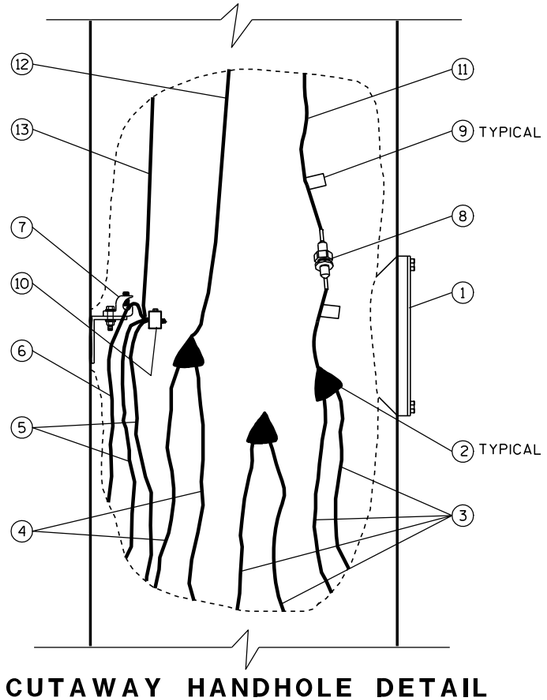

CUTAWAY HANDHOLE DETAIL

ISOLATED NEUTRAL SYSTEMS
1-φ SHOWN; 3-φ WYE SIMILAR
(SEE GENERAL NOTE)

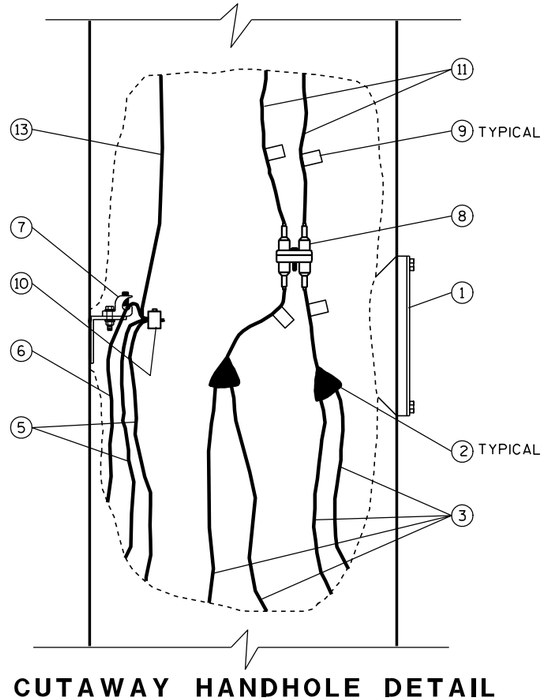

CUTAWAY HANDHOLE DETAIL

PHASE-TO-PHASE SYSTEMS
1-φ SHOWN; 3-φ DELTA SIMILAR
(SEE GENERAL NOTE)

NOTE: REQUIRED CONDUCTOR SLACK NOT SHOWN ON "CUTAWAY HAND HOLE" DETAILS FOR DRAWING CLARITY, SEE "TYPICAL CONDUCTOR SLACK AT HANDHOLES" ON THIS SHEET.

(1) HANDHOLE AND COVER
(2) INSULATED SPLICE
(3) UNGROUNDED LINE WIRE
(4) GROUNDED LINE WIRE
(5) SYSTEM GROUNDING LINE WIRE
(6) GROUNDING ELECTRODE CONDUCTOR
(7) HANDHOLE GROUNDING LUG
(8) FUSE ASSEMBLY, 1P OR 2P AS REQUIRED
(9) CIRCUIT TAG (SEE GENERAL NOTE)
(10) REVERSIBLE PRESSURE OR COMPRESSION GROUNDING CONNECTOR (NOT INSULATED)
(11) UNGROUNDED POLE WIRE
(12) GROUNDED POLE WIRE
(13) EQUIPMENT GROUNDING POLE WIRE

ELECTRICAL HANDHOLE WIRING

STATE OF WISCONSIN
DEPARTMENT OF TRANSPORTATION

APPROVED
10/25/2010 DATE
/S/ John Corbin STATE ELECTRICAL ENGI
FHWA

HWYS

6

S.D.D. 10 A 1-2

6

S.D.D. 10 A 1-2

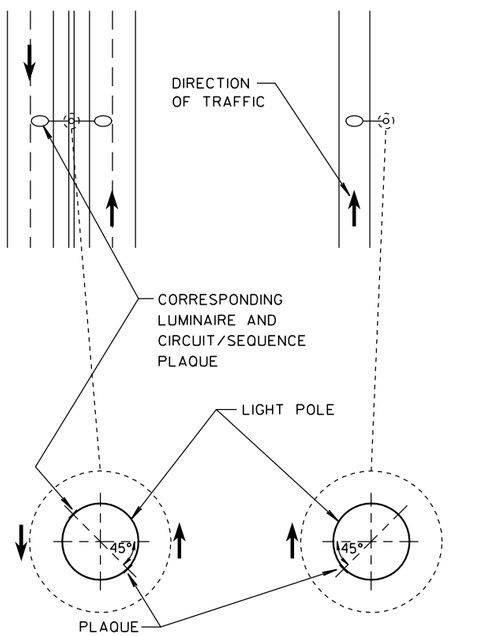

MEDIAN POLE **SINGLE ARM POLE**

LOCATION OF LIGHT POLE CIRCUIT/SEQUENCE PLAQUE

GENERAL NOTES

DETAILS OF CONSTRUCTION AND WORKMANSHIP NOT SHOWN IN THIS DRAWING SHALL CONFORM TO THE PERTINENT REQUIREMENTS OF THE CONTRACT.

PLAQUES SHALL BE INCIDENTAL TO ALL NEW INSTALLATIONS.

WHERE SHOWN IN THE PLANS, REPLACEMENT PLAQUES WILL BE MEASURED AND PAID SEPARATELY.

FASTEN TOP, CENTER AND BOTTOM OF PLAQUE TO POLE OR OTHER LOCATION AS FOLLOWS:

GALVANIZED STEEL SHAFT - STAINLESS STEEL POP RIVETS

A588 STEEL SHAFT - SHIM FOR DRAINAGE WITH STAINLESS WASHERS; FASTEN WITH STAINLESS SELF-TAPPING SCREWS

ALUMINUM SHAFTS - ALUMINUM POP RIVETS

MOUNTING HEIGHT SHALL BE APPROXIMATELY 5.0' ABOVE CURB OR SHOULDER. ADJUST IF IT IS KNOWN THAT REQUIRED TRAFFIC SIGNS WILL OBSTRUCT.

PLAQUE MATERIALS:

BASE - SHEET ALUMINUM, 0.060" THICK.

FACE - WHITE, SELF-ADHESIVE VINYL SHEETING, NON-RETRORFLECTIVE

LINES - BLACK, 1/2" WIDE, SELF-ADHESIVE

CHARACTERS - BLACK, SELF-ADHESIVE, SERIES "D", SIZE AS SHOWN

COLOR PATCHES - VARIOUS COLORS, SELF-ADHESIVE VINYL SHEETING

WITH THE APPROVAL OF THE ENGINEER, THE BASE MATERIAL MAY BE OMITTED AND THE FACE ADHERED DIRECTLY TO THE SURFACE, IN CASES SUCH AS SMOOTH, CLEAN ALUMINUM POLES.

ALTERNATIVE COMPUTER-GENERATED SIGN LETTERING MAY BE ACCEPTED IF THE ENGINEER FINDS IT TO BE EQUIVALENT.

COLOR PATCH CODE FOR HPS LUMINAIRES

1000 WATT - NO PATCH
400 WATT - ORANGE
310 WATT - BLUE
250 WATT - ORANGE WITH WHITE STRIPE
200 WATT - RED
150 WATT - GREEN
100 WATT - BROWN
70 WATT - BROWN WITH WHITE STRIPE

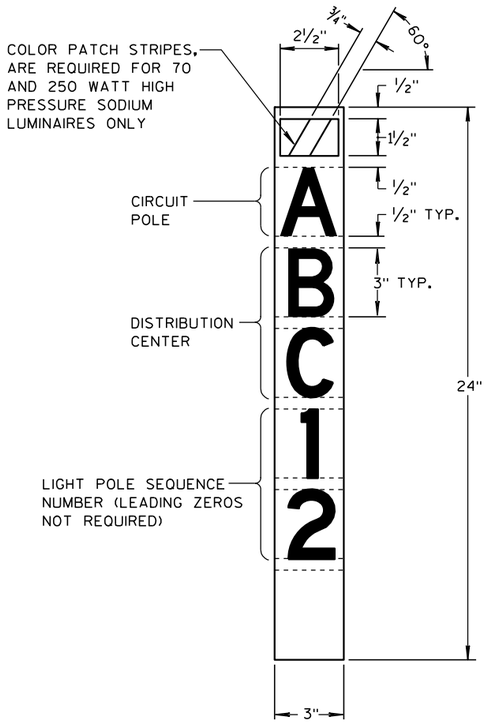

LIGHT POLE CIRCUIT/SEQUENCE PLAQUE

IDENTIFICATION PLAQUES LIGHT POLES

STATE OF WISCONSIN
DEPARTMENT OF TRANSPORTATION

APPROVED
10/25/2010 — DATE
/S/ John Corbin — STATE ELECTRICAL ENGI
123 — HWYS
FHWA

6

S.D.D. 10 A 2-2

6

S.D.D. 10 A 2-2

GENERAL NOTES

DETAILS OF CONSTRUCTION AND WORKMANSHIP NOT SHOWN IN THIS DRAWING SHALL CONFORM TO THE PERTINENT REQUIREMENTS OF THE CONTRACT.

USE THIS DETAIL IN CONJUNCTION WITH THE DETAIL FOR ELECTRICAL HANDHOLE WIRING.

THE GROUNDING ELECTRODE CONDUCTOR SHALL BE CONTINUOUS WITHOUT SPLICES FROM THE GROUNDING ELECTRODE THROUGH THE HANDHOLE GROUNDING LUG TO THE CONNECTOR.

WIRING FOR SINGLE LUMINAIRE POLES IS SHOWN WITH SOLID LINES. WIRING FOR THE SECOND LUMINAIRE OF TWIN LUMINAIRE POLES IS SHOWN WITH DOTTED LINES.

THE PLANS WILL SHOW WHICH CIRCUIT LEG(S) ARE CONNECTED TO EACH INSTALLATION.

HANDHOLE FUSE SCHEDULES

LINE VOLTAGE	BALLAST WATTAGE	
φ-GROUND	70-200 W	250-400 W
120 VAC	5 A	10 A
240 VAC	5 A	5 A
277 VAC	5 A	5 A
480 VAC	3 A	5 A

LEGEND

A,B,X,Y,Z	UNGROUNDED CIRCUIT CONDUCTORS
N	GROUNDED CIRCUIT CONDUCTORS
GND	EQUIPMENT GROUNDING CONDUCTOR
P	POLE (ELECTRICAL CIRCUIT)
φ	PHASE (ELECTRICAL CURRENT)
	HANDHOLE GROUND LUG
	SINGLE-POLE (1P) FUSE ASSEMBLY
	TWO-POLE (2P) FUSE ASSEMBLY
	UNFUSED LUMINAIRE
	EQUIPMENT GROUNDING ELECTRODE
	TERMINAL
	SPLICE
	CONDUCTOR
	EXOTHERMIC WELD

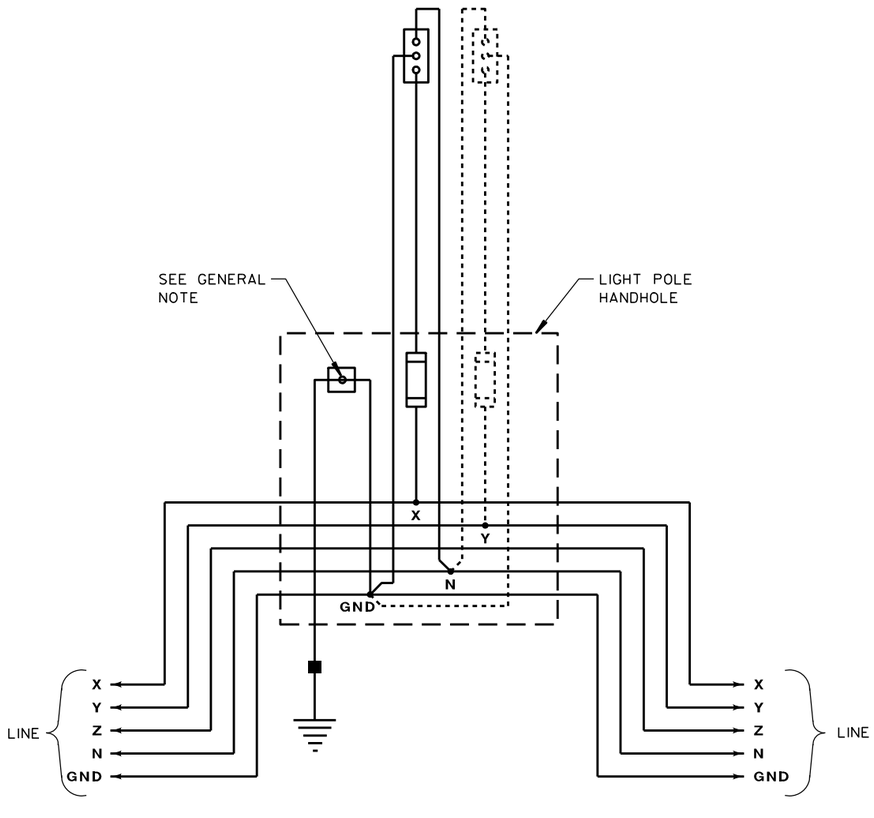

TYPICAL WIRING DIAGRAM
ISOLATED NEUTRAL SYSTEM
3-φ 208Y/120VAC OR 480Y/277VAC 4 WIRE

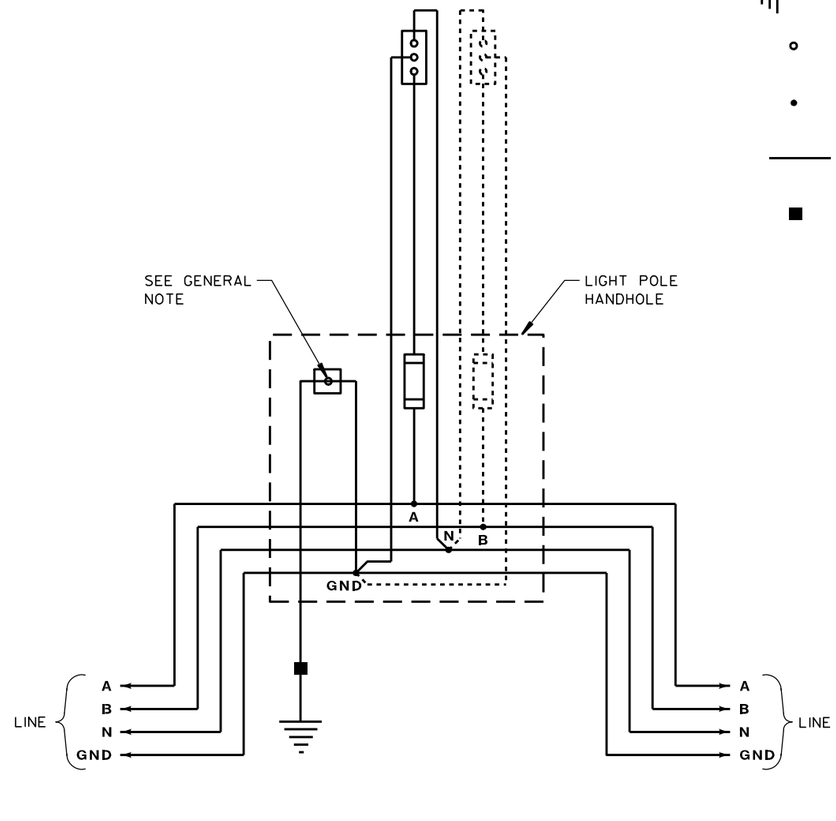

TYPICAL WIRING DIAGRAM
ISOLATED NEUTRAL SYSTEM
1-φ 120/240VAC OR 240/480VAC 3 WIRE

ELECTRICAL DETAILS
GROUND MOUNT LIGHT POLES
ISOLATED NEUTRAL SYSTEM

STATE OF WISCONSIN
DEPARTMENT OF TRANSPORTATION

APPROVED
10/25/2010 — DATE
/S/ John Corbin — STATE ELECTRICAL ENGI
FHWA
HWYS

6

S.D.D. 10 A 5-2

6

S.D.D. 10 A 5-2

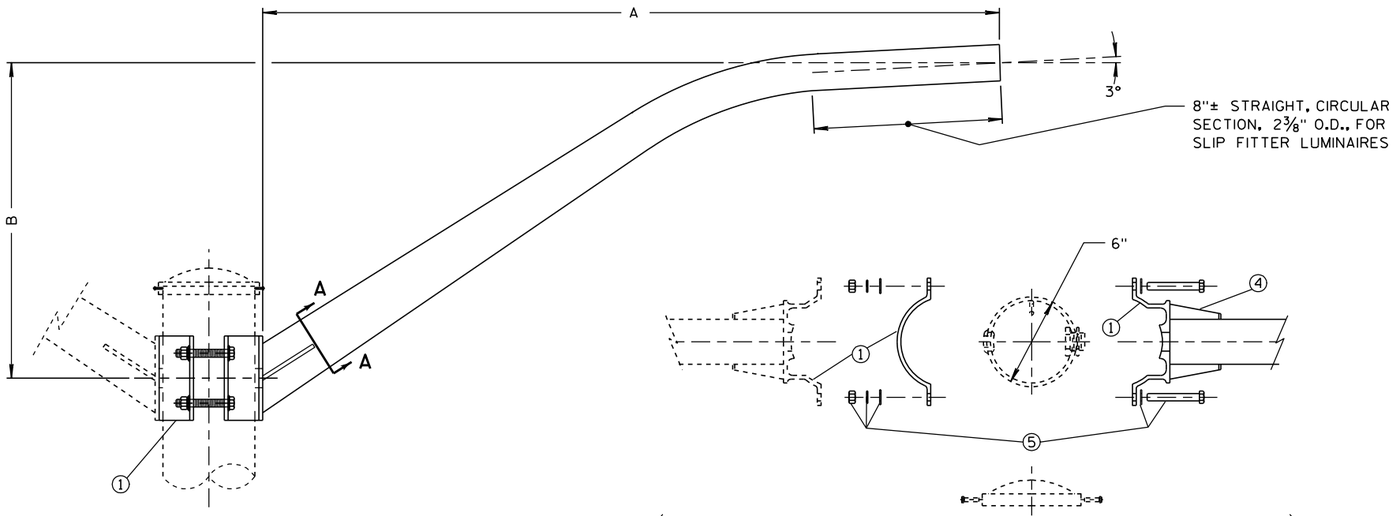

LUMINAIRE ARMS, SINGLE MEMBER, 6-INCH CLAMP - FOR POLES, TYPE 7, A OR E

VARIOUS LENGTHS (SEE TABLE)

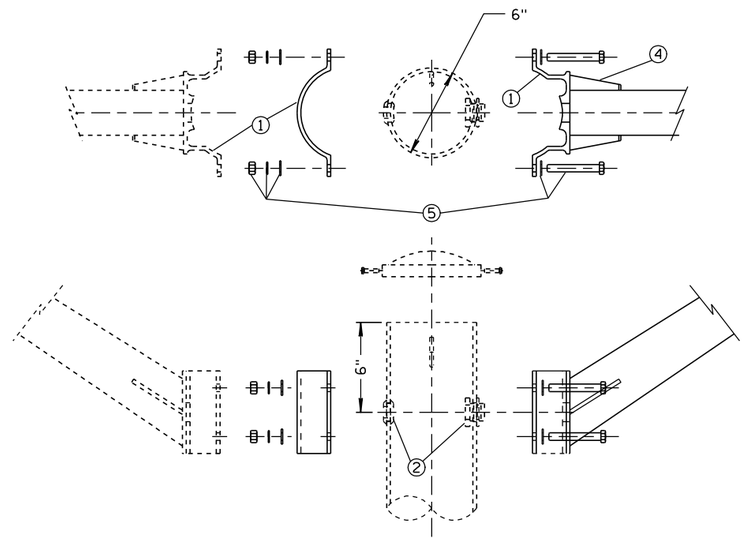

CLAMP ASSEMBLY

SINGLE MEMBER CLAMP SHOWN

TYPE	DIM. A NOMINAL ARM LENGTH (FT)	DIM. B APPROX. RISE (FT)
SINGLE MEMBER	4.0	2.0
SINGLE MEMBER	8.0	3.0
SINGLE MEMBER	10.0	3.0
SINGLE MEMBER	15.0	3.0

GENERAL NOTES

DETAILS OF CONSTRUCTION, MATERIALS, AND WORKMANSHIP NOT SHOWN ON THIS DRAWING SHALL CONFORM TO THE PERTINENT REQUIREMENTS OF THE CONTRACT.

ARMS AND CLAMP EXTRUSIONS SHALL BE CONSTRUCTED OF NATURAL FINISH 6063-T6 ALUMINUM (OR DARK BRONZE ANODIZED IF SO STATED IN THE CONTRACT).

HEAT TREATMENT OF WELDS IN STRUCTURAL AREAS IS REQUIRED.

ALL THREADED FASTENER COMPONENTS SHALL BE STAINLESS STEEL. NUTS SHALL BE HEX NUTS. BOLTS SHALL BE HEX HEAD. ALL THREADED SURFACES SHALL BE COATED WITH ANTI-SEIZE COMPOUND PRIOR TO INSTALLATION.

LUMINAIRE LOADING FOR DESIGN CALCULATION SHALL BE 50 LBS. IN WEIGHT AND 1.5 SQ. FT. FOR E.P.A..

① CLAMPS SHALL BE EXTRUDED ALUMINUM.

② RACE WAY: 1⅜" FIELD DRILLED HOLE WITH 1" CHASE NIPPLE AND NUT (OR NEOPRENE GROMMET) PER EACH REQUIRED LUMINAIRE ARM. PROVIDE 1½" HOLE IN CLAMP EXTRUSION TO CONTINUE RACEWAY.

③ STIFFENER

④ GUSSETS REQUIRED.

⑤ CLAMP BOLT ASSEMBLY (BOLT - ½"-13 UNC, 2 EACH - FLAT WASHER, LOCK WASHER, NUT) - 4 EACH PER CLAMP.

LUMINAIRE ARMS, SINGLE MEMBER 6-INCH CLAMP

STATE OF WISCONSIN
DEPARTMENT OF TRANSPORTATION

APPROVED

10/25/2010 DATE — /S/ John Corbin STATE ELECTRICAL ENGI — HWYS

FHWA

6

S.D.D. 10 A 18-4a

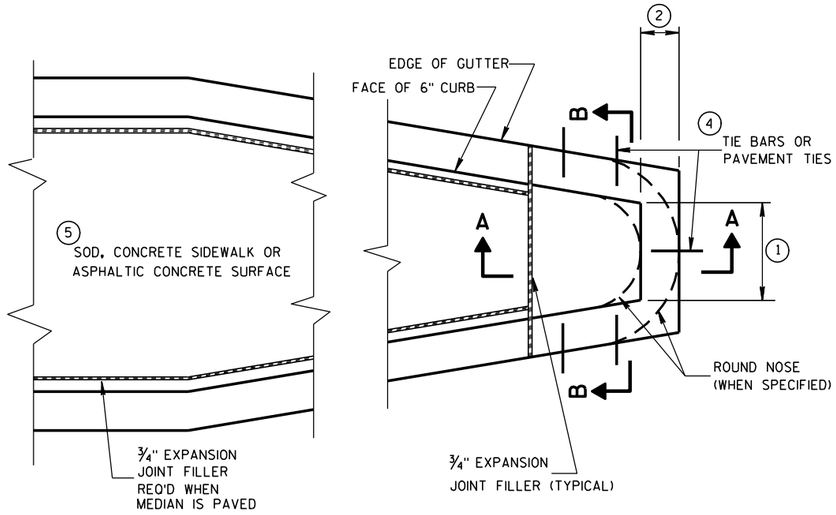

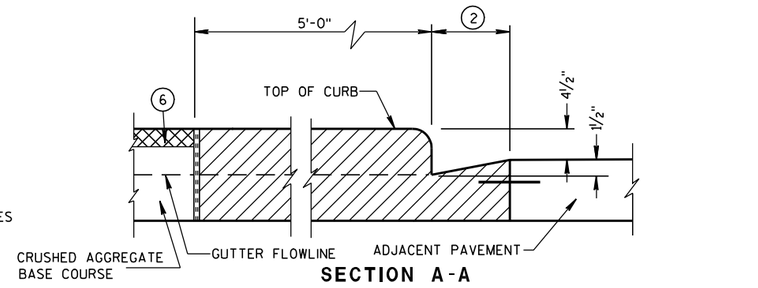

SECTION A-A

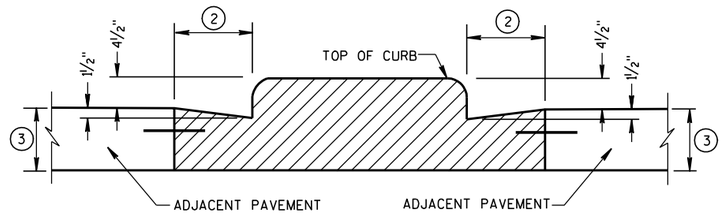

SECTION B-B

CONCRETE MEDIAN BLUNT NOSE DETAIL

GENERAL NOTES

DETAILS OF CONSTRUCTION, MATERIALS AND WORKMANSHIP NOT SHOWN ON THIS DRAWING SHALL CONFORM TO THE PERTINENT REQUIREMENTS OF THE STANDARD SPECIFICATIONS AND THE APPLICABLE SPECIAL PROVISIONS.

(1) SEE PLAN FOR MEDIAN NOSE WIDTH AND RADIUS (FOR ROUND NOSE ALTERNATE).

(2) WIDTH OF GUTTER TO MATCH EXISTING ADJACENT GUTTER OR AS SPECIFIED ELSEWHERE IN THE PLAN.

(3) DEPTH EQUAL TO ADJACENT PAVEMENT. ADJACENT PAVEMENT STRUCTURE DETAILS ARE SHOWN ON THE PLAN. TYPICAL OPTIONS ARE:

(1) NEW OR EXISTING CONCRETE PAVEMENT.

(2) ASPHALTIC CONCRETE PAVEMENT OVER NEW OR EXISTING CONCRETE BASE COURSE.

(3) ASPHALTIC CONCRETE PAVEMENT OVER CRUSHED AGGREGATE BASE COURSE.

(4) TIE BARS OR PAVEMENT TIES REQUIRED IN NEW CONCRETE PAVEMENT OR CONCRETE BASE COURSE. TIE BARS SHALL BE NO. 4 X 2'-0" SPACED AT 2'-0" C-C.

PAVEMENT TIES REQUIRED IN EXISTING CONCRETE BASE COURSE. PAVEMENT TIES SHALL BE NO. 6 X 1'-0" SPACED AT 3'-0" C-C INSTALLED ON A HORIZONTAL SKEW OF 6:1. THE DIRECTION OF SKEW SHALL ALTERNATE AFTER EVERY ONE OR TWO BARS.

(5) SURFACE TYPE AND DETAILS ARE SHOWN ELSEWHERE IN THE PLAN.

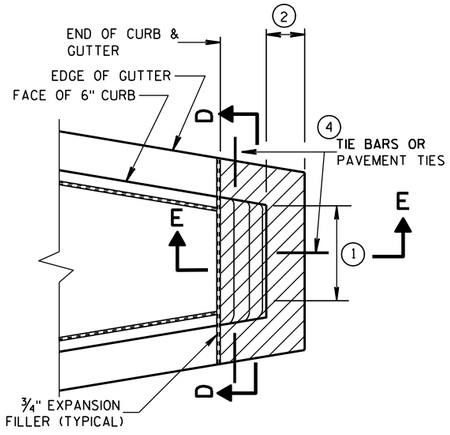

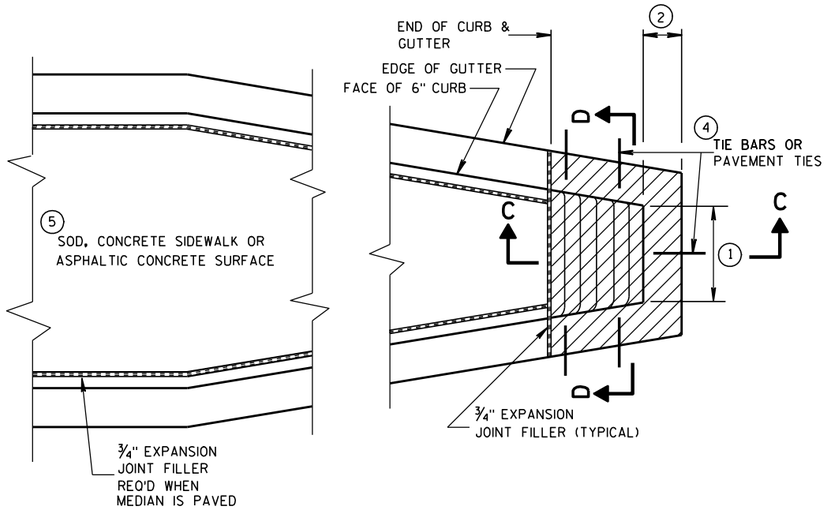

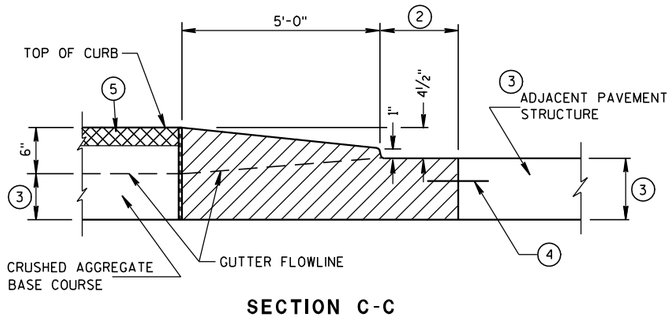

SECTION C-C

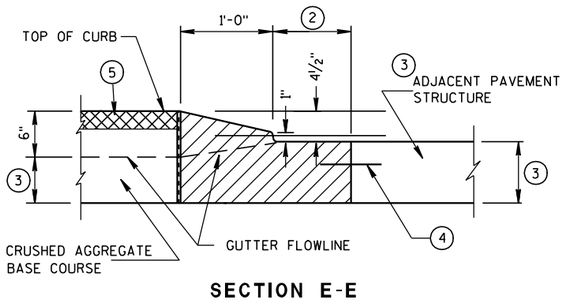

SECTION E-E

CONCRETE MEDIAN SLOPED NOSE TYPE 2

CONCRETE MEDIAN SLOPED NOSE TYPE 1

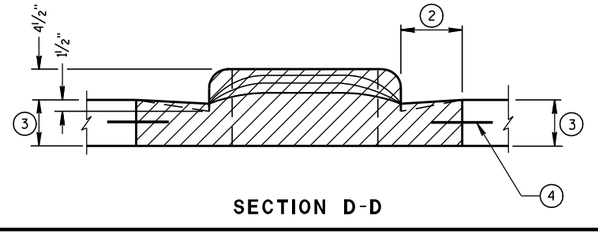

SECTION D-D

CONCRETE MEDIAN NOSE	
STATE OF WISCONSIN DEPARTMENT OF TRANSPORTATION	
APPROVED 6/8/2006 DATE FHWA	/S/ Jerry H. [illegible] ROADWAY STANDARDS ENGINEER
	126
	NT

6

S.D.D. 11 B 2-2

6

S.D.D. 11 B 2-2

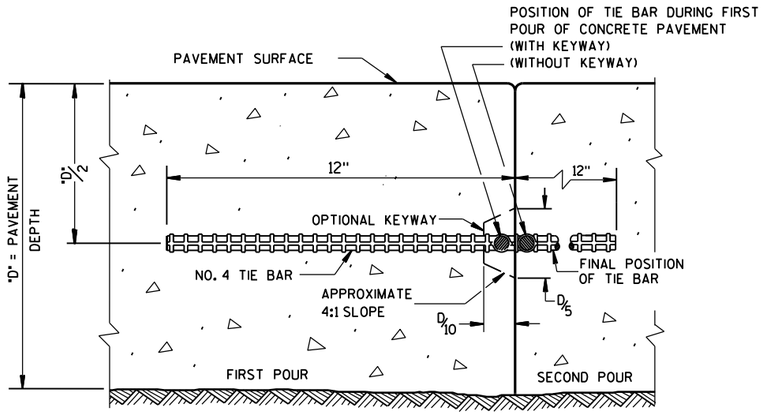

CONSTRUCTION JOINT

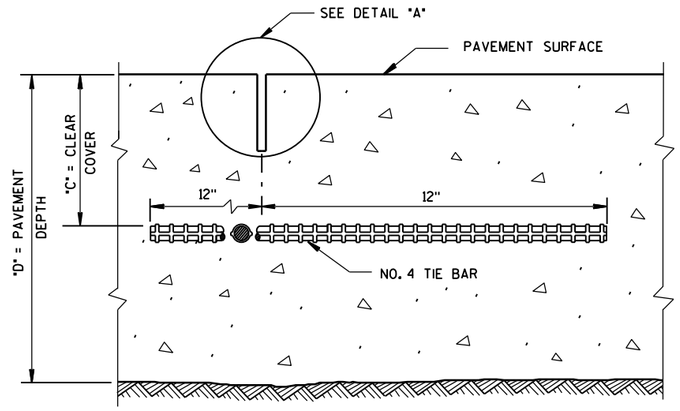

SAWED JOINT

GENERAL NOTES

DO NOT SEAL OR FILL LONGITUDINAL JOINTS.

CREATE A LONGITUDINAL JOINT FOR PAVEMENT WIDTHS GREATER THAN 15 FEET.

CORRELATE LONGITUDINAL JOINTS WITH LANE LINES WHEN POSSIBLE.

(1) ANCHOR TIE BARS INTO DRILLED HOLES WITH AN EPOXY.

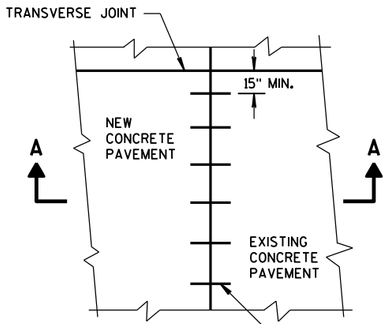

PLAN VIEW

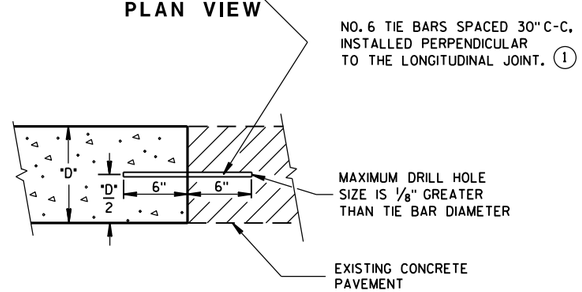

SECTION A-A

LONGITUDINAL CONSTRUCTION JOINT TIE BARS ANCHORED INTO EXISTING PAVEMENT

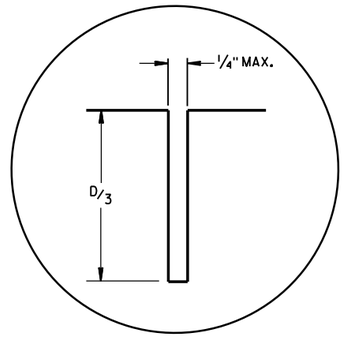

DETAIL "A"

TIE BAR TABLE

PAVEMENT DEPTH "D"	CLEAR COVER "C"	MAXIMUM TIE BAR SPACING "S"	
		PAVEMENT WIDTH	
		24' OR 26'	≥ 30'
6, 6 1/2"	3"±1/2"	48"	42"
7, 7 1/2"	3 1/4"±1"	45"	36"
8, 8 1/2"	3 3/4"±1"	39"	30"
9, 9 1/2"	4 1/4"±1"	33"	27"
10, 10 1/2"	4 3/4"±1"	30"	24"
11, 11 1/2"	5 1/4"±1"	27"	21"
12"	5 3/4"±1"	24"	21"

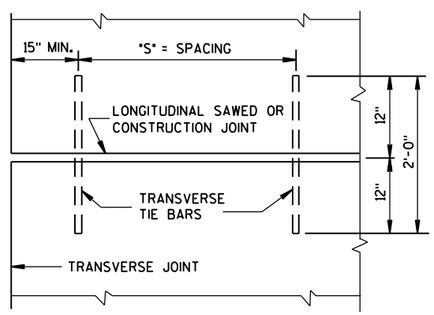

PLAN VIEW
SHOWING LOCATION OF TIE BARS

CONCRETE PAVEMENT LONGITUDINAL JOINTS AND TIES

STATE OF WISCONSIN
DEPARTMENT OF TRANSPORTATION

APPROVED

5-3-2013
DATE

/S/ Deb Bischoff
PAVEMENT POLICY & DE ENGINEER

FHWA

6

S.D.D. 13 C 1-16

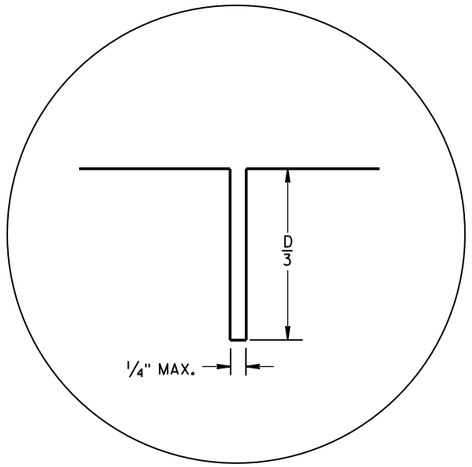

JOINT DETAIL

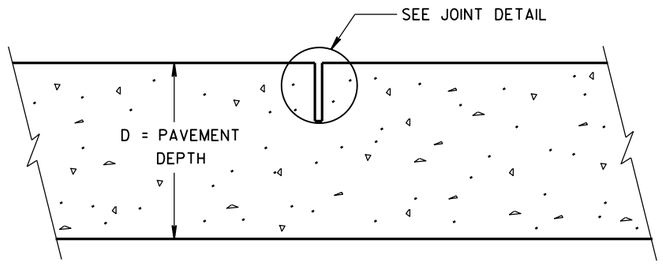

CONTRACTION JOINT

PAVEMENT DEPTH AND JOINT SPACING TABLE

PAVEMENT DEPTH (D)	CONTRACTION JOINT SPACING
6", 6 1/2"	12'
7", 7 1/2"	14'
8" & ABOVE	15'

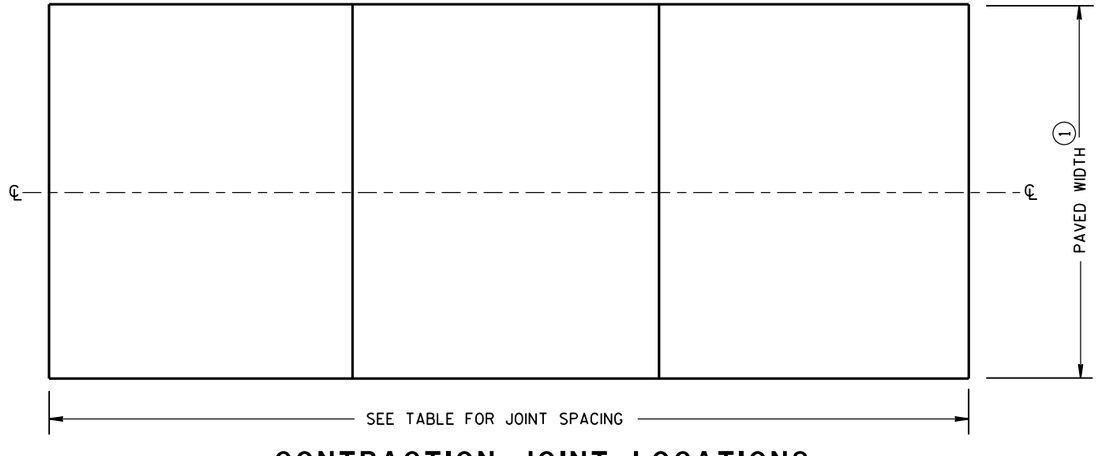

CONTRACTION JOINT LOCATIONS

GENERAL NOTES

CONTRACTION JOINTS

CONSTRUCT TRANSVERSE CONTRACTION JOINTS NORMAL TO THE CENTERLINE.

LOCATE AND ORIENT CONTRACTION JOINTS THROUGH INTERSECTIONS AS SHOWN ON THE PLANS OR AS DIRECTED BY THE ENGINEER.

DO NOT SEAL OR FILL CONTRACTION JOINTS.

CONSTRUCTION JOINTS

LOCATE CONSTRUCTION JOINTS A MINIMUM OF 6 FEET FROM THE NEAREST CONTRACTION JOINT AND ALIGN PARALLEL TO THE CONTRACTION JOINTS.

FORM OR SAW CONSTRUCTION JOINTS.

THE CONTRACTOR MAY INSERT TIE BARS THROUGH THE HEADER BOARD AFTER THE CONCRETE HAS BEEN PLACED.

(1) REFER TO TYPICAL CROSS SECTIONS FOR PAVED WIDTH AND LOCATION OF LONGITUDINAL JOINTS.

(2) PROVIDE A SMOOTH VERTICAL FACE FOR THE ENTIRE DEPTH OF THE PAVEMENT WHEN FORMING CONSTRUCTION JOINTS. PROVIDE A 1/4-INCH RADIUS AT FORMED JOINTS.

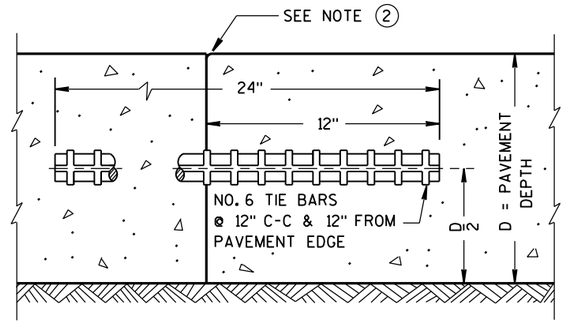

TIED TRANSVERSE CONSTRUCTION JOINT

6

6

S.D.D. 13 C 4-16

S.D.D. 13 C 4-16

URBAN NON-DOWELED CONCRETE PAVEMENT

STATE OF WISCONSIN
DEPARTMENT OF TRANSPORTATION

APPROVED

5/3/2013 DATE

/S/ Deb Bischoff
PAVEMENT POLICY & DE

FHWA

IEER

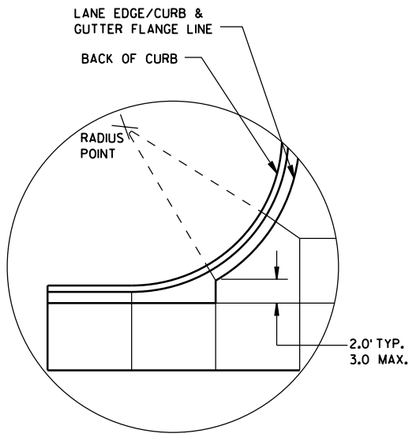

DETAIL "A"

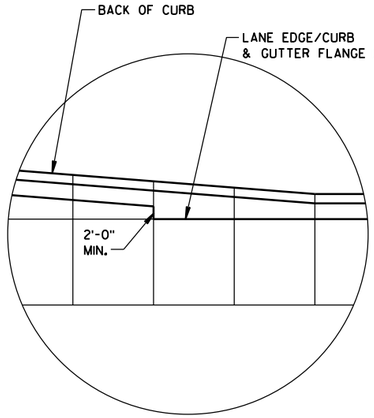

DETAIL "B"

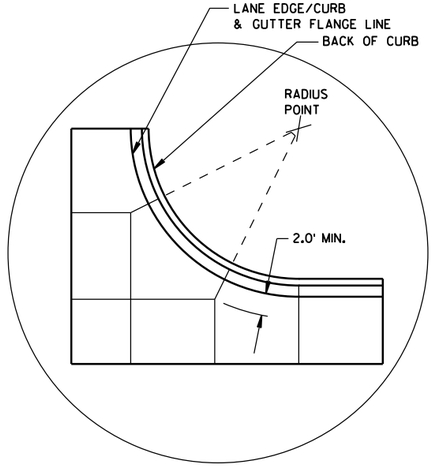

DETAIL "C"

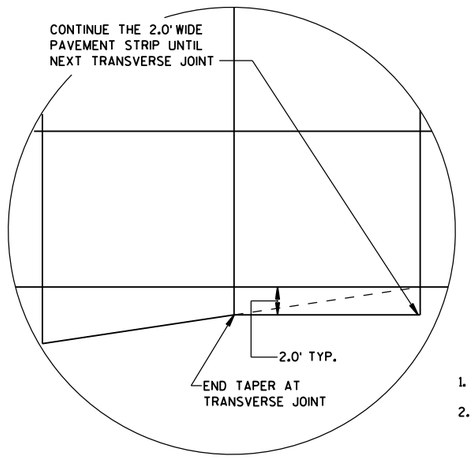

DETAIL "D"

GENERAL NOTES

THE PRIMARY ROADWAY CONTROLS THE TRANSVERSE JOINT PATTERN.

ALIGN NEW JOINTS WITH EXISTING JOINTS OR CRACKS.

CONSTRUCT TRANSVERSE JOINTS PERPENDICULAR TO THE ROADWAY.

ADJUST TRANSVERSE JOINTS TO ALIGN WITH UTILITY FIXTURES (E.G. MANHOLES AND INLETS) IN THE PAVEMENT STRUCTURE WHEN POSSIBLE. WATER VALVES DO NOT REQUIRE JOINT ADJUSTMENT.

AVOID SLABS LESS THAN 2 FEET WIDE OR GREATER THAN 15 FEET WIDE.

SEE TABLE FOR TRANSVERSE JOINT SPACING. JOINT SPACING SPECIFIED IS MAXIMUM AND ACTUAL SPACING CAN BE ADJUSTED TO ACCOMMODATE INTERSECTIONS.

AVOID ANGLES LESS THAN 60° BY DOGLEGGING JOINTS THROUGH CURVE RADIUS POINTS. USE 90° ANGLES WHEN POSSIBLE.

CORRELATE LONGITUDINAL JOINTS WITH LANE LINES WHEN POSSIBLE.

1. PROVIDE TRANSVERSE JOINTS AT ALL PAVEMENT WIDTH CHANGES.
2. CONSTRUCT DOWELED EXPANSION JOINT ON THE SIDE ROAD OF AN INTERSECTION IF THE SIDE ROAD IS CONCRETE PAVEMENT AND GREATER THAN 300 FEET IN LENGTH. ALIGN EXPANSION JOINT WITH EDGE OF RADIUS.
3. THE ENGINEER MAY APPROVE SLIGHT VARIATIONS FROM THESE JOINTING DETAILS.

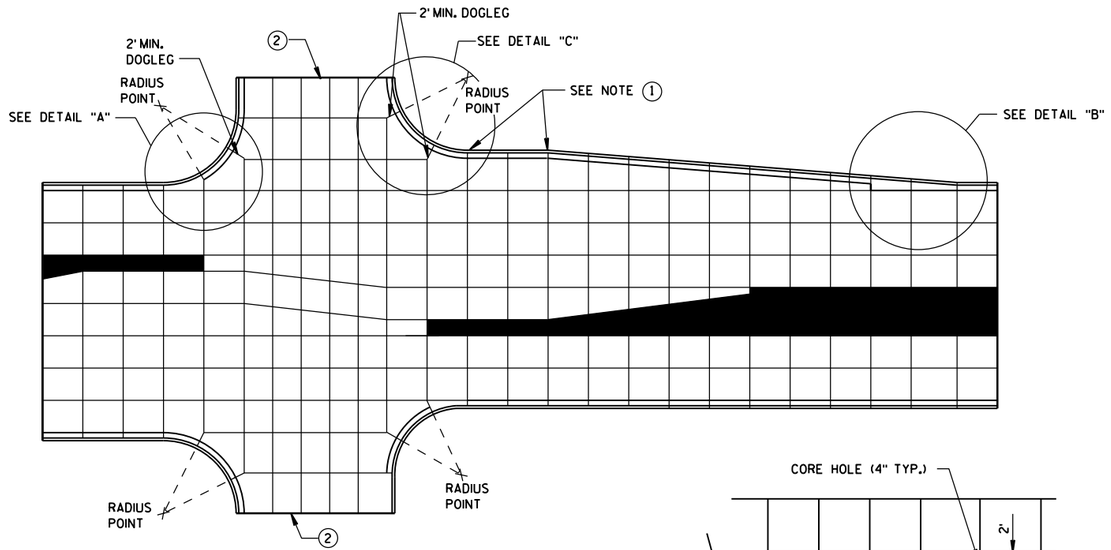

STANDARD INTERSECTION

PAVEMENT DEPTH AND JOINT SPACING TABLE

PAVEMENT DEPTH (D)	CONTRACTION JOINT SPACING
6", 6½"	12'
7", 7½"	14'
8" & ABOVE	15'

SKEWED INTERSECTION

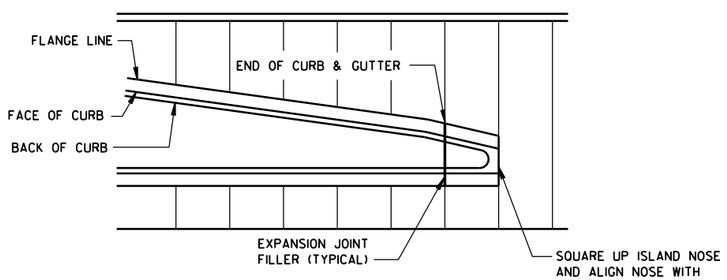

APPROACH TO MEDIAN

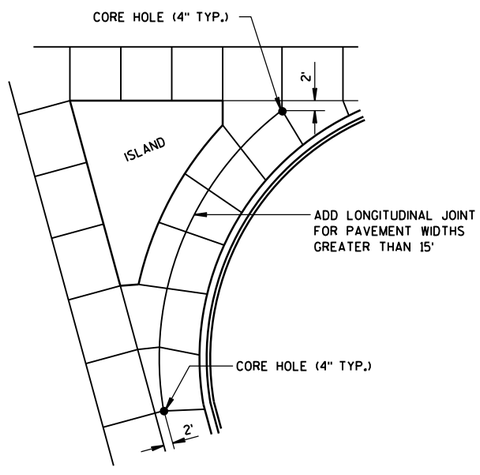

LARGE RIGHT TURN

CONCRETE PAVEMENT JOINTING

STATE OF WISCONSIN
DEPARTMENT OF TRANSPOI

6

S.D.D. 13 C 18-2a

LEGEND

POTENTIAL DOWELED EXPANSION JOINT

DOWELED JOINT

TIED JOINT

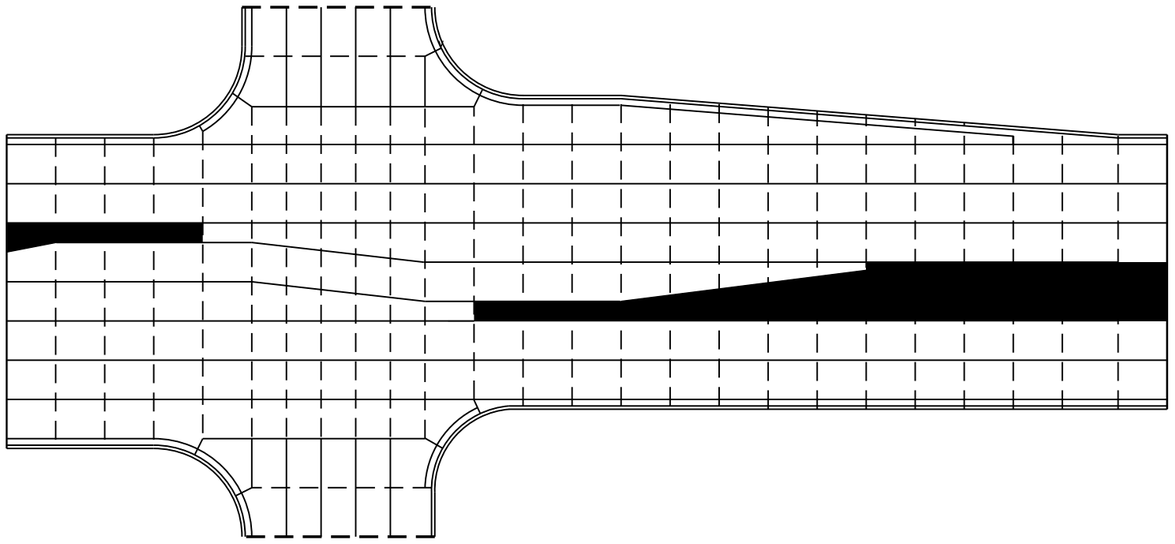

STANDARD INTERSECTION

GENERAL NOTES

USE AN EXPANSION JOINT FILLER MEETING THE REQUIREMENTS OF STANDARD SPECIFICATION 415.

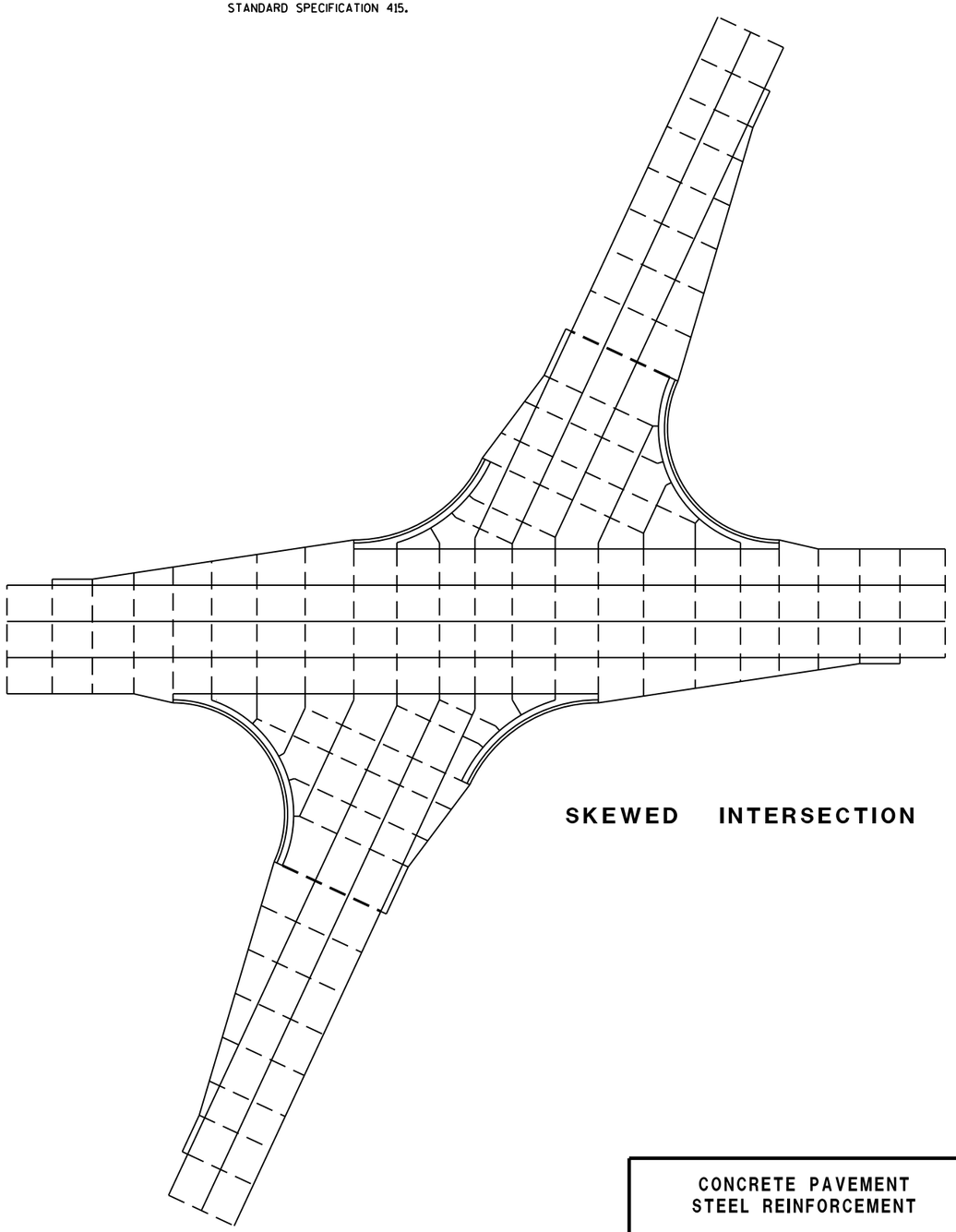

SKEWED INTERSECTION

CONCRETE PAVEMENT
STEEL REINFORCEMENT

STATE OF WISCONSIN
DEPARTMENT OF TRANSPOI

6

S.D.D. 13 C 18-2b

6

S.D.D. 13 C 18-2b

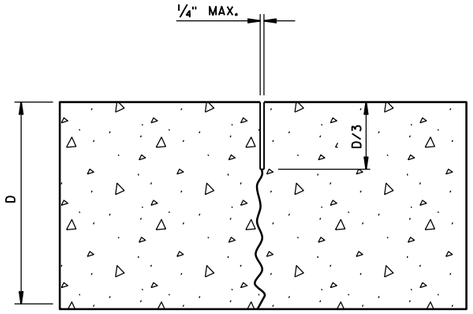

UNDOWELED-TRANSVERSE

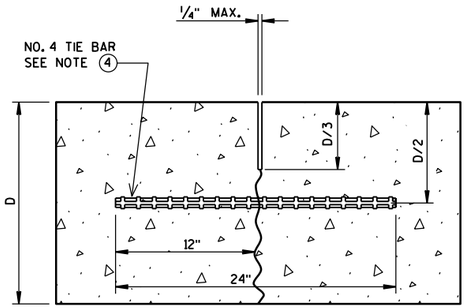

TIED LONGITUDINAL

GENERAL NOTES

1. USE DOWELED EXPANSION JOINTS ON SIDE ROADS AT INTERSECTIONS (TO ISOLATE THE SIDE ROAD FROM THE THROUGH STREET) IF THE SIDE ROAD IS CONCRETE PAVEMENT AND GREATER THAN 300 FEET IN LENGTH.
2. SPACE CONTRACTION JOINTS IN ACCORDANCE WITH 13C4, 13C11 OR 13C13.
3. LOCATE CONSTRUCTION JOINTS A MINIMUM OF 6 FEET FROM THE NEAREST CONTRACTION JOINT AND ALIGN PARALLEL TO CONTRACTION JOINTS.
4. SPACE TIE BARS AT LONGITUDINAL CONSTRUCTION OR CONTRACTION JOINTS IN ACCORDANCE WITH SDD 13C1.
5. CONSTRUCTION JOINTS CAN BE FORMED OR SAWED.
6. IF JOINT IS FORMED, PROVIDE A 1/4-INCH RADIUS.

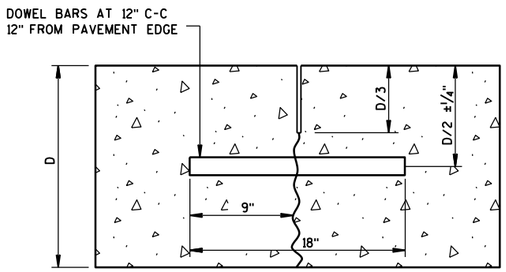

DOWELED-TRANSVERSE

CONTRACTION JOINTS

SEE NOTE (2)

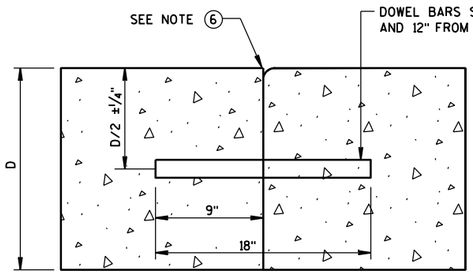

DOWELED TRANSVERSE

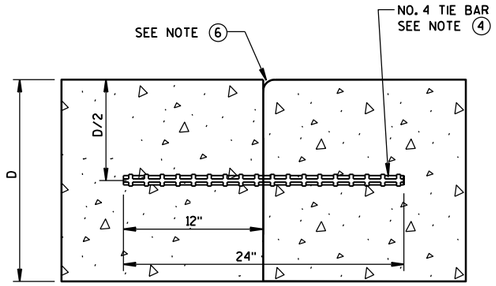

TIED LONGITUDINAL

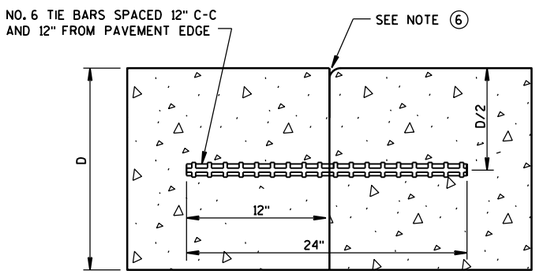

TIED TRANSVERSE

(FOR USE ON NON-DOWELED PAVEMENTS ONLY)

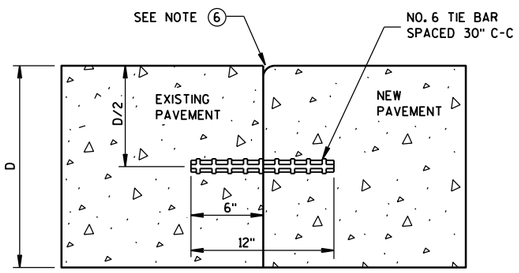

TIED LONGITUDINAL TO EXISTING

CONSTRUCTION JOINTS

SEE NOTE (5)

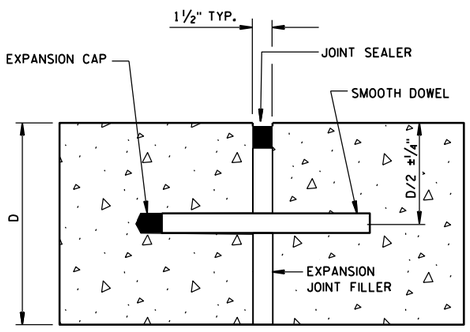

DOWELED-TRANSVERSE

SEE NOTE (1)

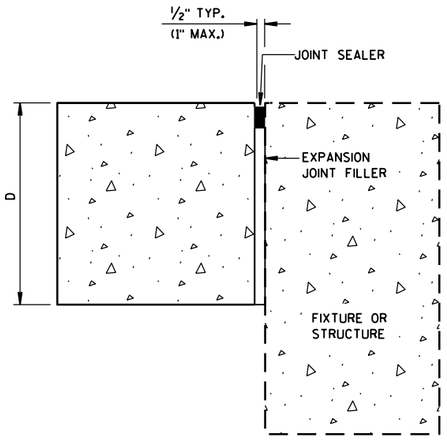

UNTIED-LONGITUDINAL

EXPANSION JOINTS

CONCRETE PAVEMENT
JOINT TYPES

STATE OF WISCONSIN
DEPARTMENT OF TRANSPOI

6

S.D.D. 13 C 18-2c

6

S.D.D. 13 C 18-2c

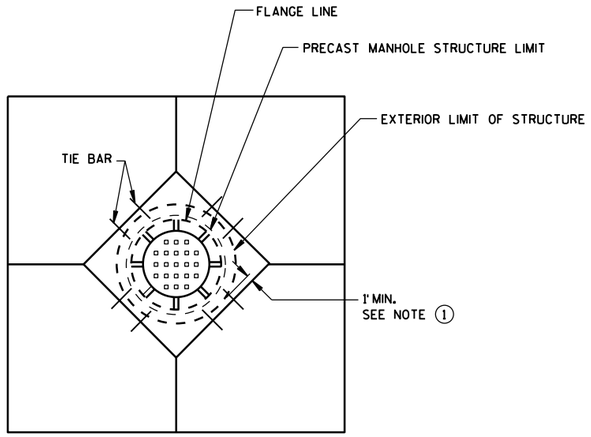

DIAGONAL MANHOLE BOXOUT FOR CONSTRUCTION JOINTS

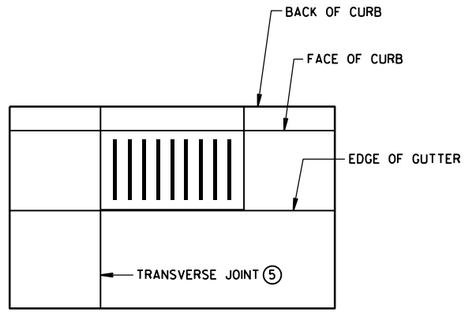

INLET WITH TRANSVERSE JOINT

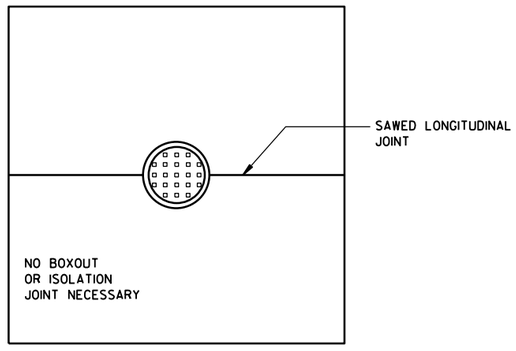

MANHOLE WITH LONGITUDINAL JOINT

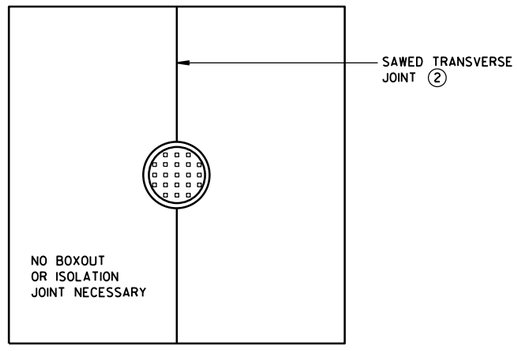

MANHOLE WITH TRANSVERSE JOINT

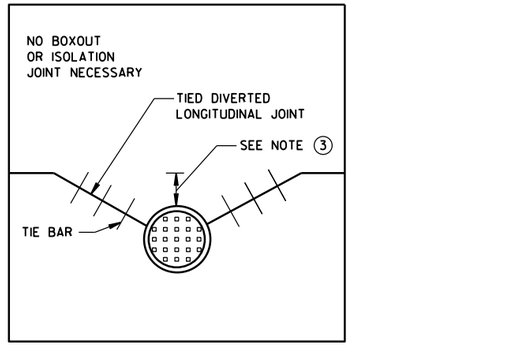

MANHOLE WITH DIVERTED LONGITUDINAL CONTRACTION JOINT

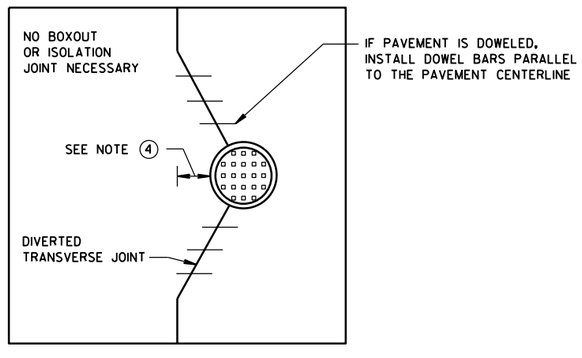

MANHOLE WITH DIVERTED TRANSVERSE CONTRACTION JOINT

GENERAL NOTES

(1) USE BOXOUTS WHEN UTILITY STRUCTURE IS IN THE PATH OF CONSTRUCTION JOINTS. PROVIDE A 1-FOOT MINIMUM CLEARANCE BETWEEN THE EXTERIOR LIMIT OF THE STRUCTURE TO THE DIAMOND BOXOUT.

(2) ADJUST TRANSVERSE JOINT TO INTERSECT MANHOLE IF POSSIBLE.

(3) IF DISTANCE BETWEEN THE LONGITUDINAL JOINT AND THE EDGE OF MANHOLE IS 2 FEET OR LESS, DIVERT THE LONGITUDIAL JOINT AT A 2:1 TAPER RATE TO THE CENTER OF THE MANHOLE. IF THE DISTANCE IS GREATER THAN 2 FEET, DO NOT DIVERT THE JOINT AND SAW AS NORMAL. PLACE REBAR REINFORCEMENT AROUND THE MANHOLE.

(4) IF DISTANCE FROM THE EDGE OF THE MANHOLE TO THE NEAREST TRANSVERSE JOINT IS 4 FEET OR LESS, REDIRECT JOINT TO INTERSECT THE CENTER OF THE MANHOLE. IF DISTANCE IS GREATER THAN 4 FEET, DO NOT DIVERT THE JOINT AND SAW AS NORMAL. PLACE REBAR REINFORCEMENT AROUND THE MANHOLE.

(5) ALIGN TRANSVERSE JOINT WITH ONE EDGE OF INLET WHEN PRACTICAL.

CONCRETE PAVEMENT JOINTING AT UTILITY FIXTURES

STATE OF WISCONSIN
DEPARTMENT OF TRANSPORTATION

APPROVED

5-3-2013	/S/ Deb Bischoff	
DATE	PAVEMENT POLICY & DE	NEER

FHWA

6

S.D.D. 13 C 18-2d

LEGEND

- DOWELED JOINT
- TIED JOINT
- EXPANSION JOINT
- POTENTIAL DOWELED EXPANSION JOINT
- TRUCK APRON
- CENTRAL ISLAND
- UTILITY STRUCTURES

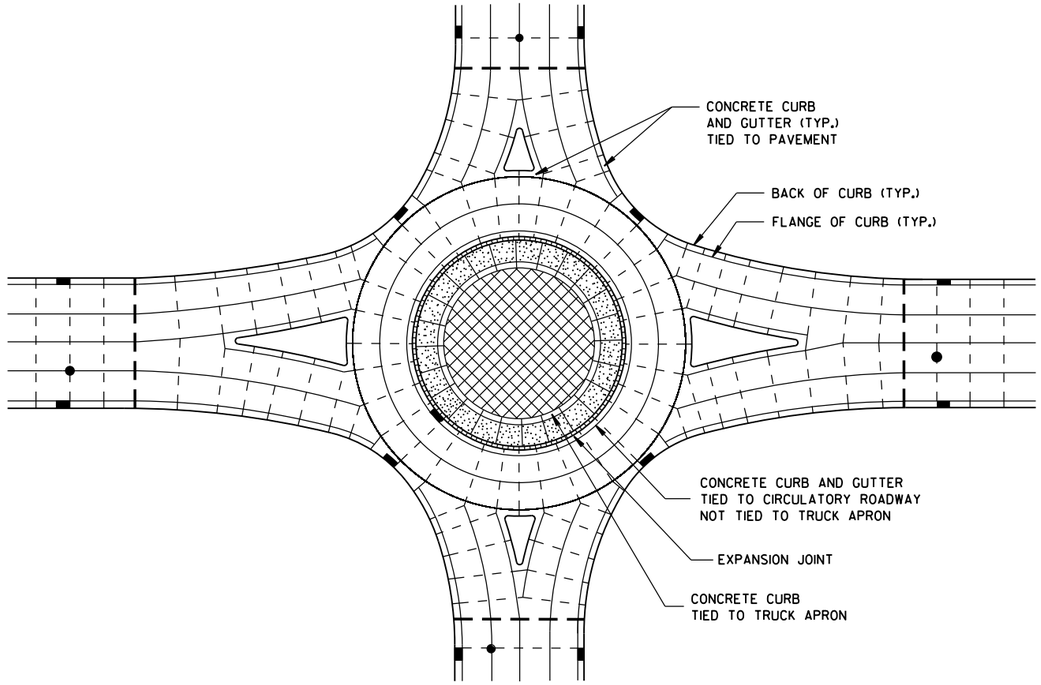

ISOLATED CIRCLE JOINT LAYOUT FOR ROUNDABOUTS

GENERAL NOTES

MAXIMUM JOINT SPACING IS IN ACCORDANCE WITH THE TABLE SHOWN ON SDD 13C18 SHEET "a".

USE AN EXPANSION JOINT FILLER MEETING THE REQUIREMENTS OF STANDARD SPECIFICATION 415.

DO NOT DOWEL OR TIE THE TRUCK APRON TRANSVERSE JOINTS.

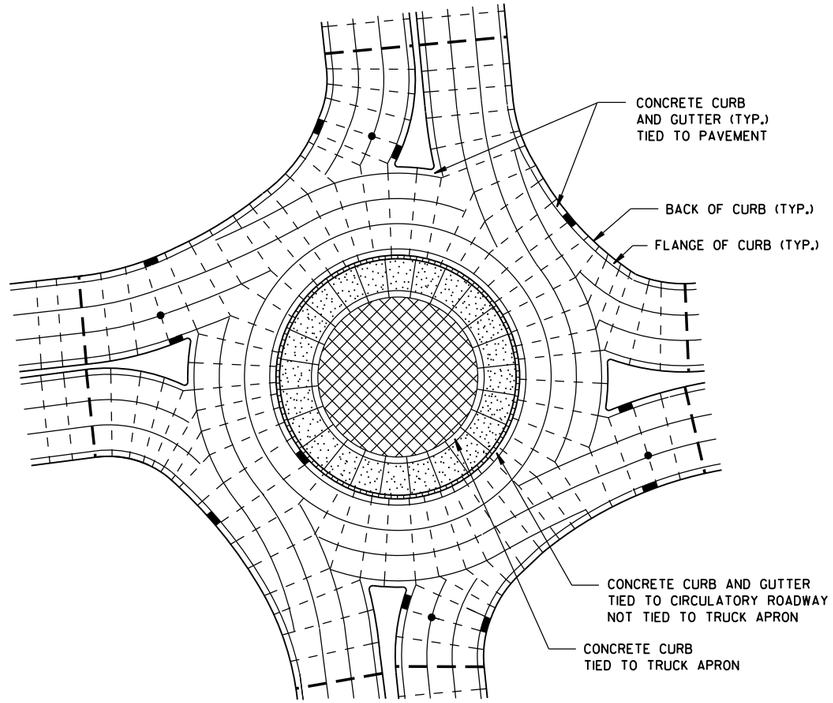

PINWHEEL JOINT LAYOUT FOR ROUNDABOUTS

CONCRETE PAVEMENT JOINTING AND STEEL REINFORCEMENT IN ROUNDABOUTS
STATE OF WISCONSIN DEPARTMENT OF TRANSPORTATION
APPROVED 5-3-2013 DATE — /S/ Deb Bischoff PAVEMENT POLICY & DE ENGINEER FHWA

6

S.D.D. 13 C 18-2e

GENERAL NOTES

DETAILS OF CONSTRUCTION, MATERIALS AND WORKMANSHIP NOT SHOWN ON THIS DRAWING SHALL CONFORM TO THE PERTINENT REQUIREMENTS OF THE STANDARD SPECIFICATIONS, AND THE APPLICABLE SPECIAL PROVISIONS.

(1) W6 X 9 OR W6 X 8.5 STEEL POSTS AND NOTCHED PLASTIC BLOCKOUTS ARE ACCEPTABLE ALTERNATIVES FOR 6" X 8" WOOD POSTS WITH WOOD OR PLASTIC BLOCKOUTS. USE APPROVED NOTCHED PLASTIC BLOCKOUTS WITH STEEL POSTS. APPROVED PLASTIC BLOCKOUT DESIGNS MAY VARY FROM THIS TYPICAL DETAIL WHEN USED IN CONJUNCTION WITH STEEL POSTS.

DO NOT MIX STEEL POSTS AND WOOD POSTS IN A SINGLE INSTALLATION.

(2) USE STRUCTURAL STEEL POSTS CONFORMING TO ASTM A 36. GALVANIZED POSTS ACCORDING TO AASHTO M 111. EITHER SET THE POSTS IN DRILLED HOLES OR DRIVE TO GRADE. REMOVE MUSHROOMING CAUSED BY DRIVING AND REPAIR DAMAGED SPELTER COATING ON GALVANIZED POSTS.

(3) INSTALL STEEL POSTS WITH HOLES ON APPROACHING TRAFFIC SIDE.

(4) USE EITHER WOOD OR APPROVED PLASTIC BLOCKOUTS ON WOOD POSTS.

(5) IF THE DISTANCE FROM BACK OF POST TO SHOULDER HINGE POINT IS LESS THAN 2 FEET INSTALL LONGER POST AT HALF POST SPACING, W BEAM (LHW).

(6) IF ROCK IS ENCOUNTERED DURING EXCAVATION, THE ENGINEER MAY APPROVE USING A 12 INCH DIAMETER POST HOLE EXTENDING 20 INCHES DEEP INTO THE ROCK. PLACE GRANULAR MATERIAL IN THE BOTTOM OF THE HOLE APPROXIMATELY 2½ INCHES DEEP. CUT THE POSTS TO LENGTH AND PLACE IN YHE HOLE. BACKFILL WITH MATERIAL EXCAVATED FROM THE HOLE AND COMPACT ADEQUATEY.

INSTALL BEAM GUARD SECTIONS AND ALL NECESSARY HARDWARE ACCORDING TO THE APPLICABLE PLAN AND CURRENT STANDARD AND SUPPLEMENTAL SPECIFICATIONS.

ALL DIMENSIONS ARE SUBJECT TO MANUFACTURER'S TOLERANCES EXCEPT WHERE ALLOWABLE TOLERANCES ARE SHOWN.

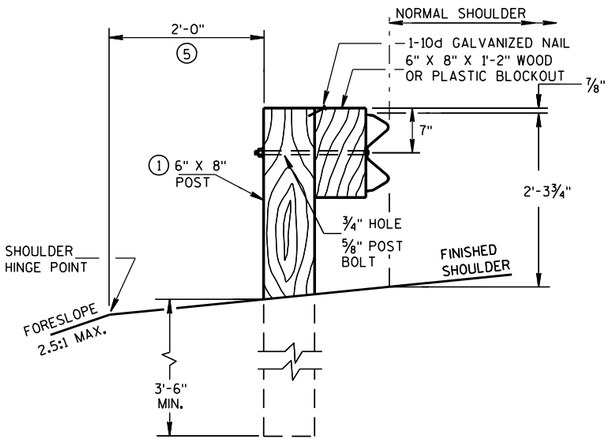

END VIEW
LOCATED ALONG A ROADWAY SHOULDER
STANDARD INSTALLATION

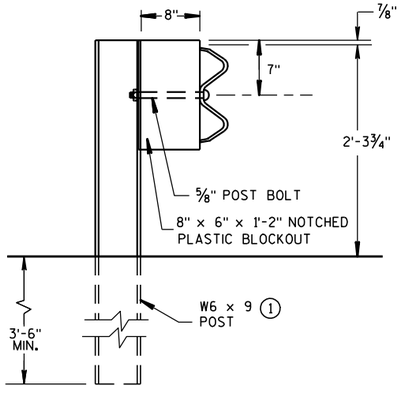

END VIEW
STEEL POST & NOTCHED
PLASTIC BLOCKOUT ALTERNATIVE
STANDARD INSTALLATION

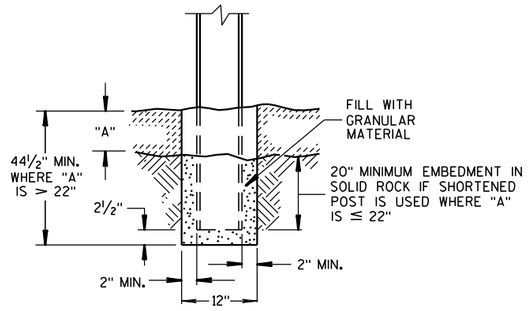

END VIEW
SETTING STEEL OR WOOD POST IN ROCK (6)

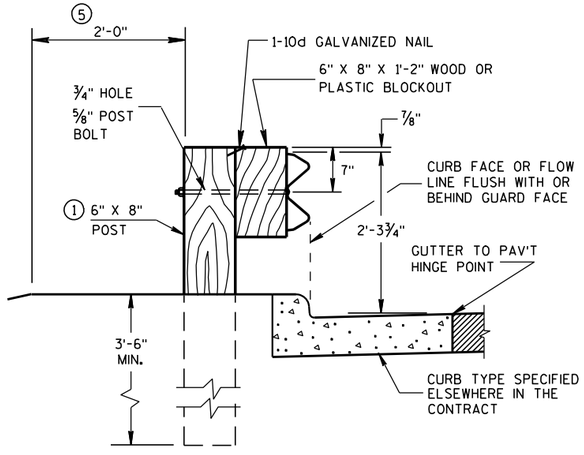

END VIEW
LOCATED ALONG A CURBED ROADWAY

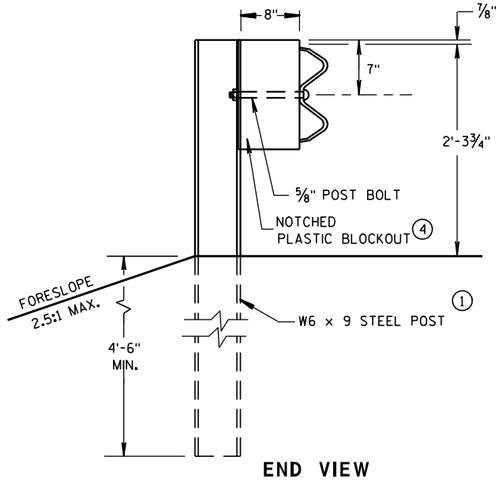

END VIEW
LONGER POST AT HALF
POST SPACING W BEAM
(LHW)

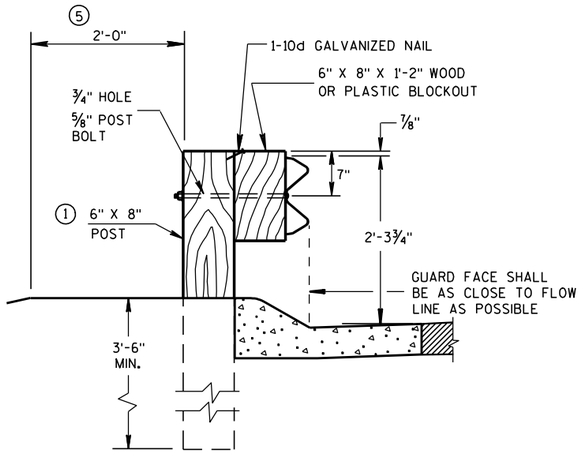

END VIEW
LOCATED ALONG A
MOUNTABLE CURBED ROADWAY

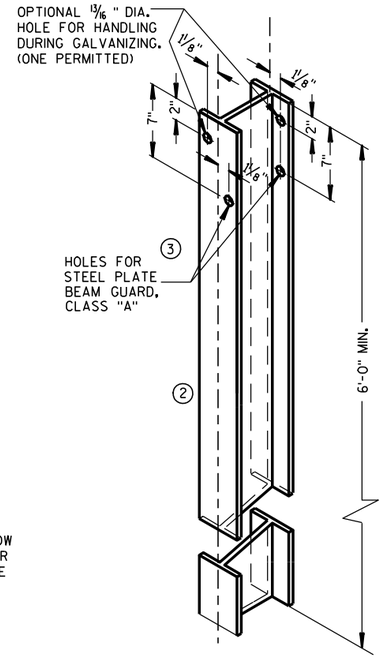

STEEL POST &
HOLE PUNCHING DETAIL
(W6 X 9) (1)

ALL HOLES 13/16" DIAMETER EXCEPT AS NOTED

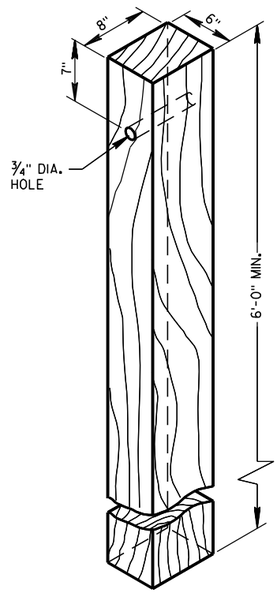

WOOD POST
(6"X8") NOMINAL

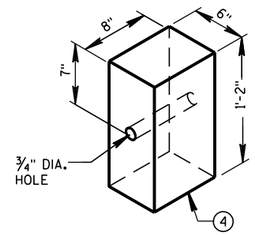

WOOD OR PLASTIC
BLOCKOUT FOR
WOOD POSTS

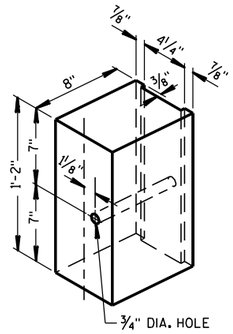

TYPICAL NOTCHED (1)
PLASTIC BLOCKOUT
FOR STEEL POSTS

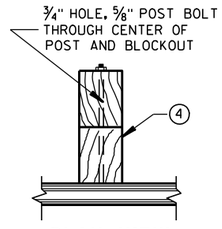

PLAN VIEW
WOOD POST,
BLOCKOUT & BEAM

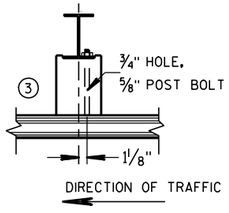

PLAN VIEW
STEEL POST, NOTCHED
PLASTIC BLOCKOUT & BEAM

TYPICAL INSTALLATION OF STEEL PLATE BEAM GUARD

STEEL PLATE BEAM GUARD,
CLASS "A"
INSTALLATION & ELEMENTS

STATE OF WISCONSIN
DEPARTMENT OF TRANSPORTATION

6
S.D.D. 14 B 15-7a

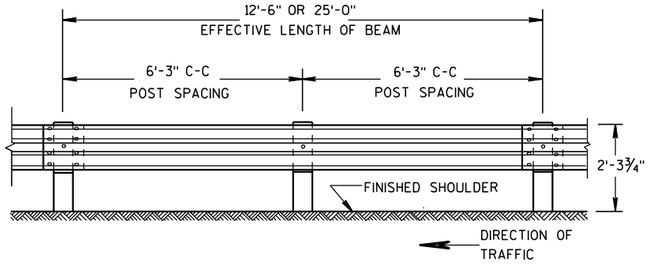

FRONT VIEW

POST SPACING STANDARD INSTALLATION

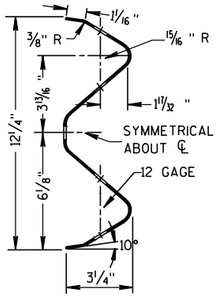

SECTION THRU W BEAM

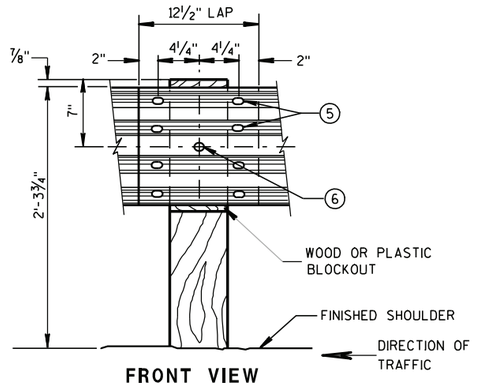

FRONT VIEW

BEAM SPLICE AT WOOD POST AND POST MOUNTING DETAIL

GENERAL NOTES

1. PROVIDE TYPE "H" SILVER REFLECTIVE SHEETING ON ALL REFLECTORS EXCEPT THOSE LOCATED ALONG THE LEFT EDGE OF ONE-WAY ROADWAYS, WHICH SHALL BE PROVIDED WITH TYPE "H" YELLOW REFLECTIVE SHEETING.
2. DO NOT INSTALL REFLECTORS ON THE FIRST 50 FEET OF THE APPROACH END OF THE ENERGY ABSORBING TERMINAL.
3. REVERSE EVERY OTHER REFLECTOR FOR 2-WAY VISIBILITY. THE CONTRACTOR MAY FURNISH TWO-SIDED REFLECTORS IN LIEU OF ONE-SIDED REFLECTORS.
4. PROVIDE AN ANGLE OF BEND OF 90° ± 1° FOR TWO-SIDED REFLECTORS.
5. 8 - 5/8" ϕ X 2 " BUTTON HEAD BOLTS WITH OVAL SHOULDERS & RECESS NUTS.
6. 5/8" ϕ X 1'-6" BUTTON HEAD BOLT AND AND RECESS NUT WITH ROUND WASHER UNDER NUT.

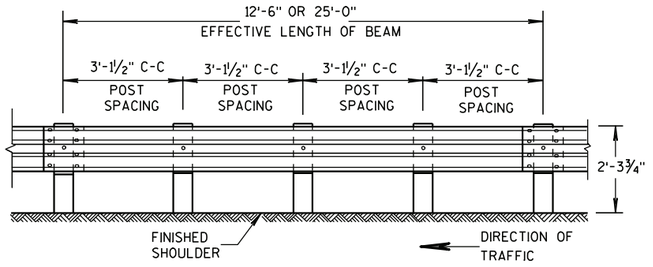

FRONT VIEW

POST SPACING FOR LONGER POST AT HALF POST SPACING W BEAM (LHW)

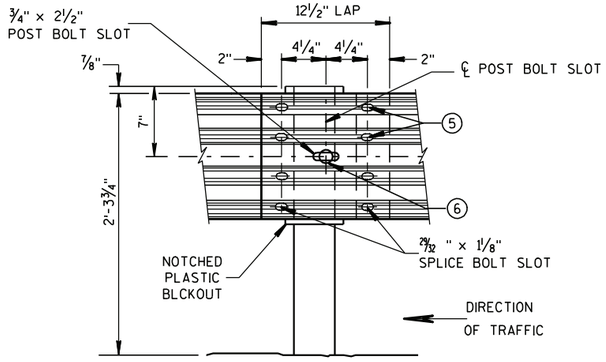

FRONT VIEW

BEAM SPLICE AT STEEL POST

TYPICAL SPLICING DETAILS OF STEEL PLATE BEAM GUARD

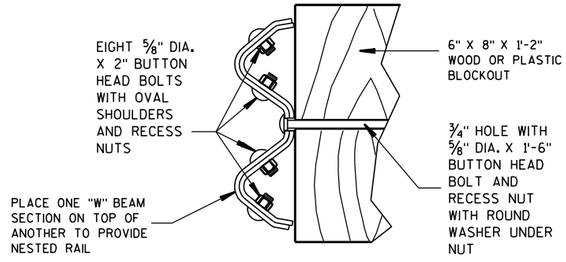

NESTED W BEAM (NW)

USE ALL OTHER STANDARD BEAM GUARD DETAILS FOR CONSTRUCTING NESTED W BEAM (NW)

REFLECTOR SPACING (2)

	BEAM GUARD LENGTH	REFLECTOR SPACING	NO. SURFACES REFLECTORIZED	MIN. NO. REFLECTORS
ONE WAY TRAFFIC	< 200'	50' C-C	1	3
	> 200'	100' C-C	1	
TWO WAY TRAFFIC	< 200'	25' C-C	1 (3)	6
	> 200'	50' C-C	1	
TWO WAY TRAFFIC	< 200'	50' C-C	2	3
	> 200'	100' C-C	2 (4)	

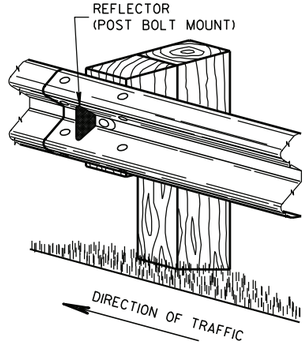

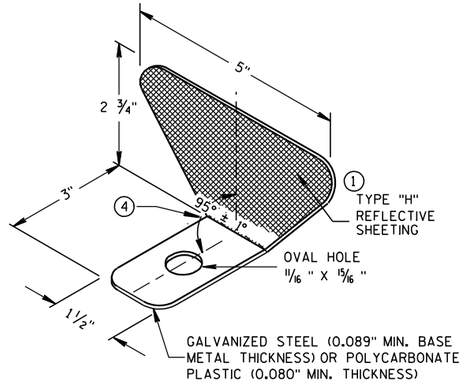

ONE SIDED REFLECTOR DETAIL AND TYPICAL INSTALLATION (1)

STEEL PLATE BEAM GUARD, CLASS "A", INSTALLATION & ELEMENTS

STATE OF WISCONSIN
DEPARTMENT OF TRANSPORTATION

6
S.D.D. 14 B 15-7b

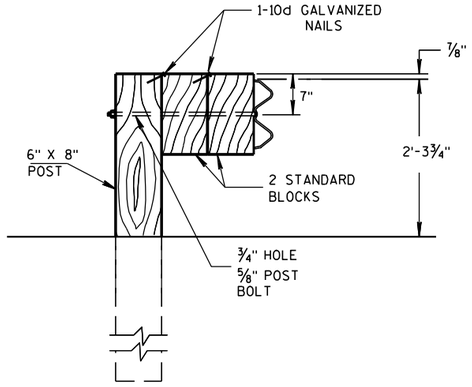

DETAIL FOR DOUBLE BLOCKS

THE NUMBER OF DOUBLE BLOCK POSTS WITHIN A BARRIER RUN IS UNLIMITED

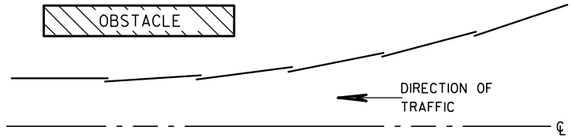

PLAN VIEW
BEAM LAPPING DETAIL

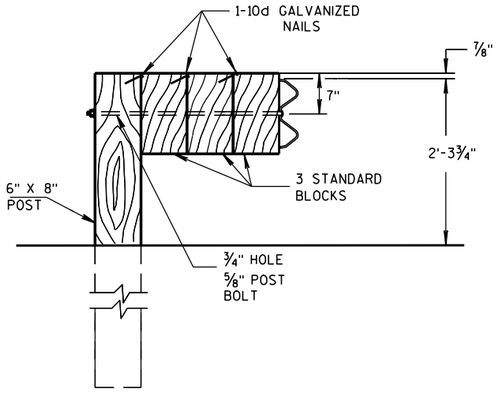

DETAIL FOR TRIPLE BLOCKS

TRIPLE BLOCK DETAIL IS LIMITED TO ONE LOCATION WITHIN A BEAM GUARD RUN.

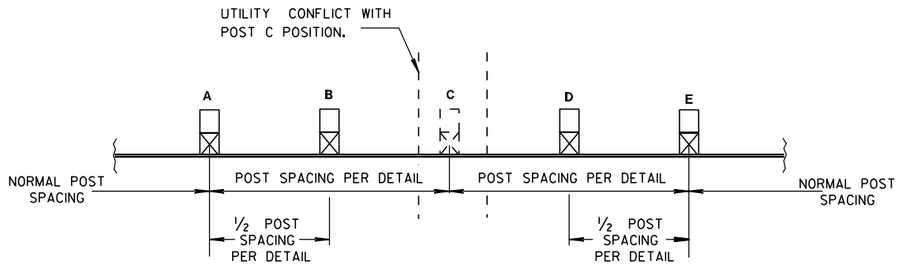

POST DRIVING FOR CONTINUOUS UNDERGROUND OBSTRUCTION

NOTES: USE DOUBLE OR TRIPLE BLOCKS WHEN UNDERGROUND OBSTACLES PREVENT THE POST FROM BEING INSTALLED.

DO NOT USE EXTRA BLOCKOUTS IF IT CAUSES THE POST TO BE DRIVEN BEYOND SHOULDER HINGE POINT OR CAUSES A FIXED OBJECT TO BE WITHIN THE DEFLECTION DISTANCE OF THE BARRIER.

STEEL PLATE BEAM GUARD, CLASS "A", INSTALLATION & ELEMENTS

STATE OF WISCONSIN
DEPARTMENT OF TRANSPORTATION

APPROVED

5/23/11	/S/ Jerry H. Zogg	
DATE	ROADWAY STANDARDS ENGINEER	ENT

FHWA

6

S.D.D. 14 B 15-7c

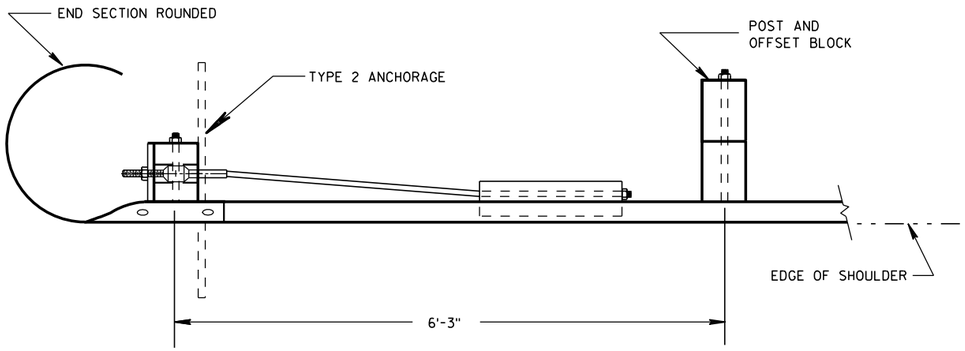

PLAN VIEW

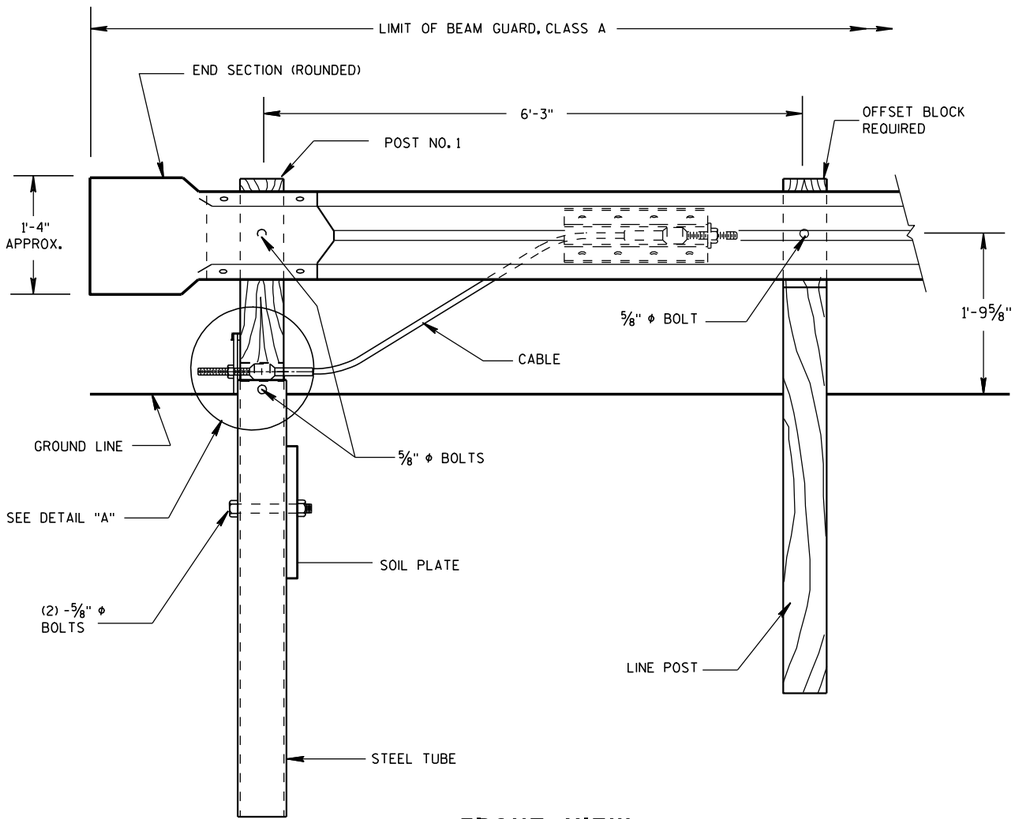

FRONT VIEW

END TREATMENT WITH TYPE 2 ANCHORAGE

(USE ON ONE-WAY ROADWAYS ONLY - DEPARTING END)

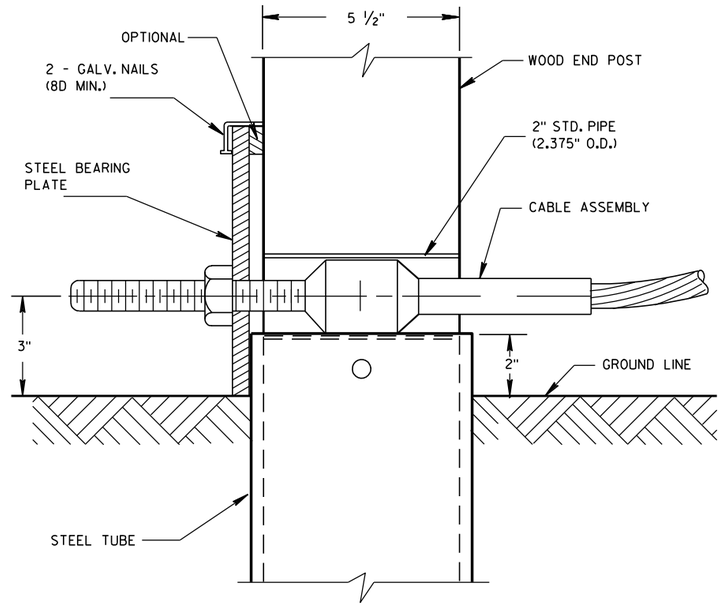

DETAIL "A"

POST NO. 1

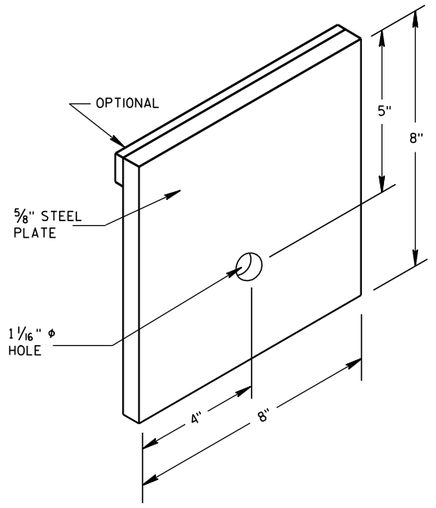

STEEL BEARING PLATE

ANCHORAGE FOR STEEL
PLATE BEAM GUARD
TYPE 2

STATE OF WISCONSIN
DEPARTMENT OF TRANSPORTATION

6
S.D.D. 14 B 16-4a

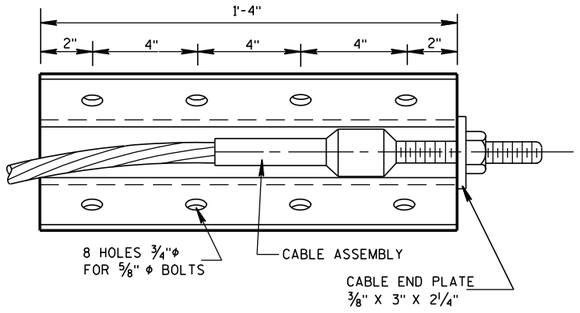

FRONT VIEW

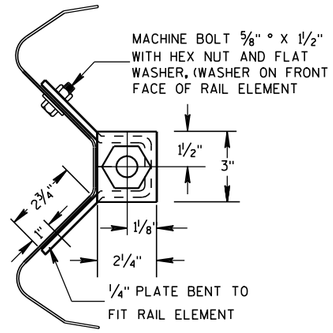

END VIEW

ANCHOR PLATE DETAIL

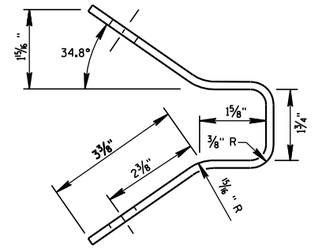

END VIEW OF BRACKET

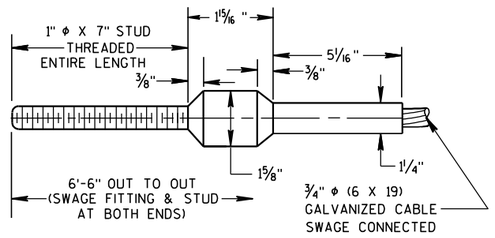

CABLE ASSEMBLY

CABLE, SWAGE FITTING, STUD AND NUT SHALL DEVELOP
A MINIMUM BREAKING STRENGTH OF 40,000 LB
(TIGHTEN UNTIL TAUT)

GENERAL NOTES

DETAILS OF CONSTRUCTION, MATERIALS AND WORKMANSHIP NOT SHOWN ON THIS DRAWING SHALL CONFORM TO THE PERTINENT REQUIREMENTS OF THW STANDARD SPECIFICATIONS AND THE APPLICABLE SPECIAL PROVISIONS.

STRUCTURAL TUBING SHALL CONFORM TO THE REQUIREMENTS OF ASTM A-500 GRADE B OR ASTM A-501.

POST NO. 1 SHALL BE WOOD BREAKAWAY POST INSERTED AND BOLTED INTO STEEL TUBE.

TYPE 2 ANCHORAGE SHALL CONSIST OF A STEEL TUBE, SOIL PLATE WOOD BREAKAWAY POST, BEARING PLATE, ANCHOR PLATE, CABLE ASSEMBLY AND ALL ASSOCIATED HARDWARE, ALL STEEL PARTS SHALL BE GALVANIZED.

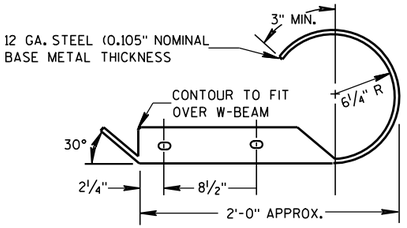

PLAN VIEW

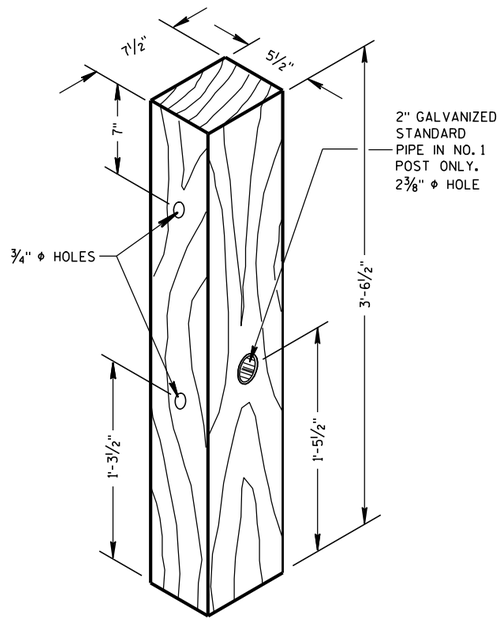

WOOD BREAKAWAY POST

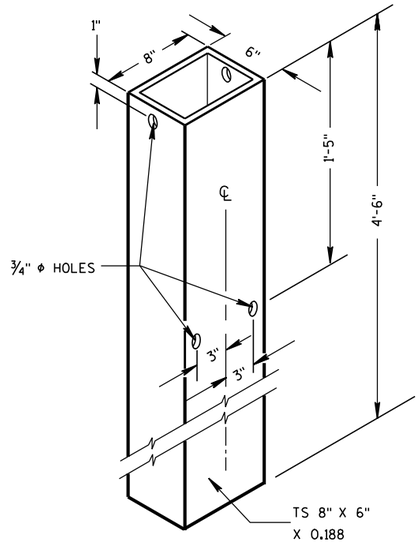

STEEL TUBE

STEEL TUBE SHALL CONFORM TO
REQUIREMENTS OF ASTM A500

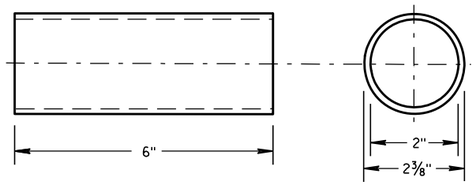

BREAKAWAY TERMINAL POST SLEEVE

GALVANIZED STANDARD STRENGTH STEEL PIPE, ASTM 53 GRADE "B"

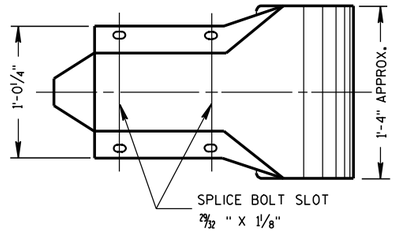

FRONT VIEW
W BEAM END SECTION ROUNDED

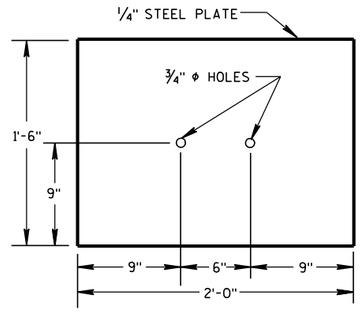

SOIL PLATE

ANCHORAGE FOR STEEL
PLATE BEAM GUARD
TYPE 2

STATE OF WISCONSIN
DEPARTMENT OF TRANSPORTATION

APPROVED
8/21/2007
DATE
/S/ Jerry H. [illegible]
ROADWAY STANDARDS ENGINEER
FHWA

ENT

6

S.D.D. 14 B 16-4b

6

S.D.D. 14 B 16-4b

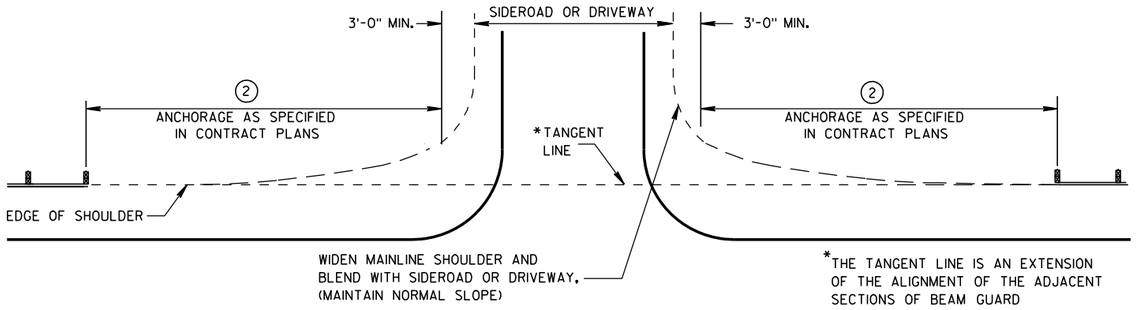

BEAM GUARD AT SIDEROADS OR DRIVEWAYS

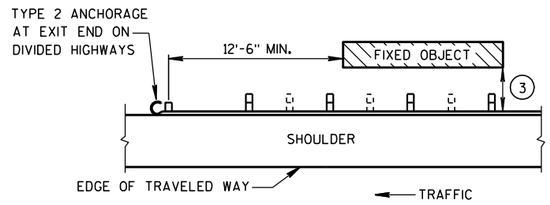

BEAM GUARD AT OBSTACLES EXIT END - ONE WAY TRAFFIC

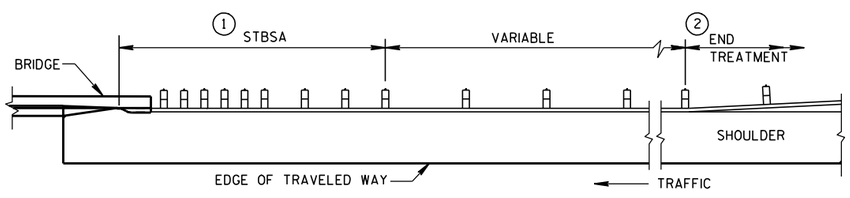

BEAM GUARD AT FULL WIDTH BRIDGES

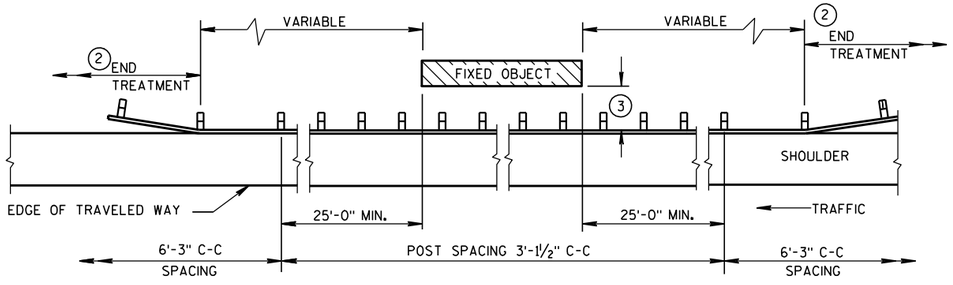

BEAM GUARD AT OBSTACLES - TWO WAY TRAFFIC

(RAIL TO OBSTACLE CLEARANCE 3'-6" TO 4'-6")

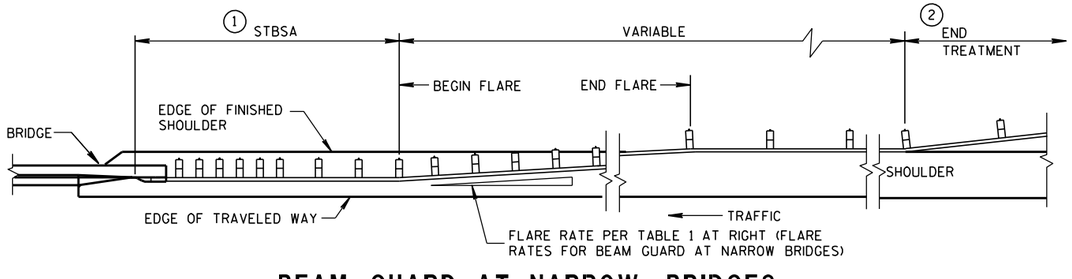

BEAM GUARD AT NARROW BRIDGES

(FLARED TO SHOULDER EDGE, THEN PARALLEL TO ROADWAY)

TABLE 1
FLARE RATES FOR BEAM GUARD AT NARROW BRIDGES

POSTED SPEED (MPH)	FLARE RATE
25	13:1
30	15:1
35	16:1
40	18:1
45	21:1
50	24:1
55	26:1
65	30:1

GENERAL NOTES

DETAILS OF CONSTRUCTION, MATERIALS AND WORKMANSHIP SHALL CONFORM TO THE PERTINENT STANDARD SPECIFICATIONS AND THE APPLICABLE SPECIAL PROVISIONS.

W6 X 9 OR W6 X 8.5 STEEL POSTS WITH NOTCHED PLASTIC BLOCKOUTS ARE ACCEPTABLE ALTERNATIVES FOR 6" X 8" WOOD POSTS WITH WOOD OR PLASTIC BLOCKOUTS. USE APPROVED NOTCHED PLASTIC BLOCKOUTS WITH STEEL POSTS.

THE LOCATIONS AND LENGTHS OF BEAM GUARD ARE SHOWN ELSEWHERE IN THE PLAN.

(1) STEEL THRIE BEAM STRUCTURAL APPROACH (STBSA) - SEE CURRENT SDD 14B20.

(2) USE AN APPROVED END TREATMENT FOR THE TRAFFIC APPROACH SIDE OF BRIDGE/OBSTACLES. USE TYPE 2 ANCHORAGE ONLY AT THE DOWNSTREAM ENDS OF BEAM GUARD LOCATED ALONG ROADWAYS WITH ONE WAY TRAFFIC.

(3)

MINIMUM LATERAL DISTANCE FROM FACE OF BEAM GUARD TO FIXED OBJECT	POST SPACING
3'-6"	3' - 1½"
4'-6"	6' - 3"

STEEL PLATE BEAM GUARD CLASS "A" AT BRIDGES, OBSTACLES AND SIDEROADS/DRIVEWAYS

STATE OF WISCONSIN
DEPARTMENT OF TRANSPORTATION

APPROVED

8-21-07
DATE

/S/ Jerry H. Zogg
ROADWAY STANDARDS DEVELOPMENT ENGINEER

FHWA

6

S.D.D. 14 B 18-6a

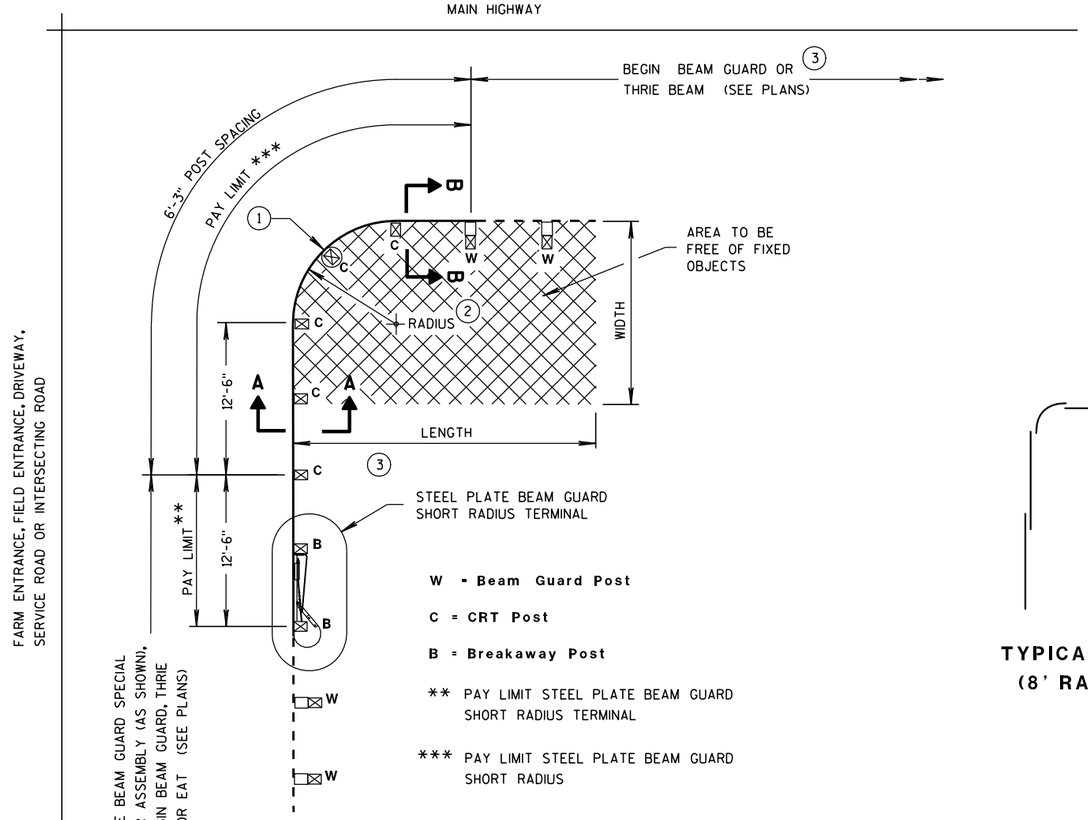

TYPICAL LAYOUT
(8' RADIUS SHOWN)

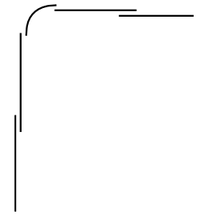

TYPICAL LAP SPLICES
(8' RADIUS SHOWN)

GENERAL NOTES

ALL ANGLES, CHANNELS, AND PLATES SHALL CONFORM TO THE REQUIREMENTS OF ASTM A36 AND THE STRUCTURAL TUBING SHALL CONFORM TO ASTM A 500. WELDING SHALL MEET THE CURRENT REQUIREMENTS OF THE AMERICAN WELDING SOCIETY STRUCTURAL WELDING CODE ANSI/AWS D1.1. ALL STRUCTURAL STEEL SHALL BE GALVANIZED IN ACCORDANCE WITH ASTM A 123. PUNCHING, DRILLING, CUTTING, OR WELDING WILL NOT BE PERMITTED AFTER GALVANIZING. FURNISH AND INSTALL HARDWARE PER STANDARD SPECIFICATION 614.2. UNLESS NOTED OTHERWISE.

SHOP BEND CURVED RAIL SECTIONS.

SEE STANDARD DETAIL DRAWING 14 B 15 FOR OTHER DETAIL.

(1) ON THE 8 FOOT RADIUS INSTALLATION, DO NOT INSTALL BUTTON HEAD BOLT AT CENTER CRT POST.

(2) RADIUS FROM 8' - 36'. SEE PLAN.

(3) HEIGHT TRANSITION MAY BE REQUIRED. SEE PLAN OR PROJECT ENGINEER.

(4) 5/8" ø X 1'-6" BUTTON HEAD BOLT AND RECESS NUT WITH ROUND WASHER UNDER NUT.

RADIUS	NUMBER OF CRT POSTS	*NUMBER AND LENGTH OF CURVED RAILS	REQUIRED AREA FREE OF FIXED OBJECTS (LENGTH x WIDTH)
8'	5	1 at 12.5'	25' x 15'
16'	7	1 at 25'	30' x 15'
24'	9	1 at 25' and 1 at 12.5'	40' x 20'
32'	11	2 at 25'	50' x 20'

* THE NUMBER OF RAILS IS BASED ON A 90° INTERSECTION. SEE PLAN FOR NON 90° INSTALLATIONS.

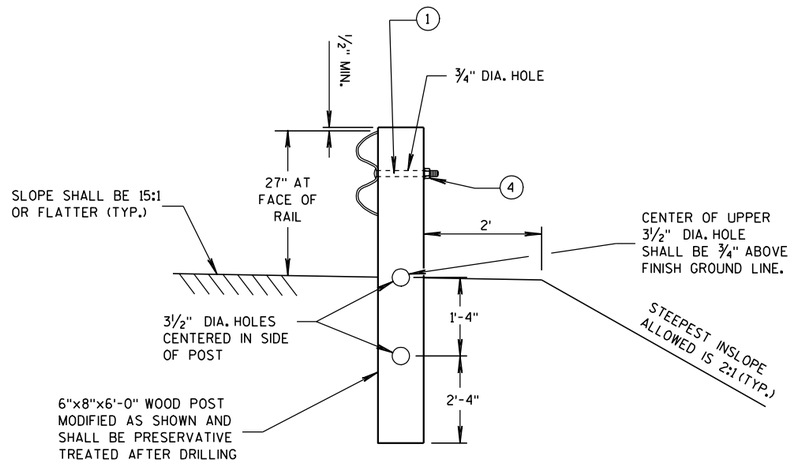

SECTION A-A
(CRT POST)

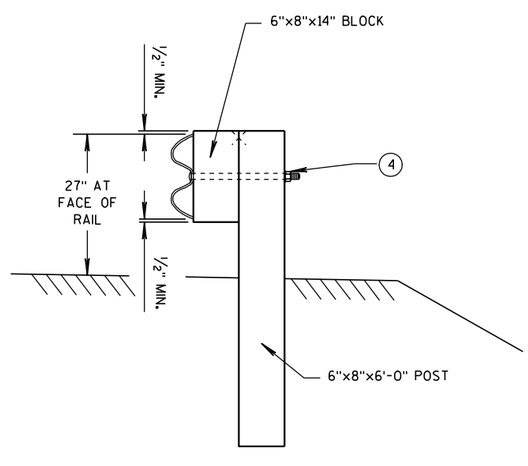

SECTION B-B
(BEAM GUARD POST)

STEEL PLATE BEAM GUARD SHORT RADIUS TERMINAL

STEEL PLATE BEAM GUARD SHORT RADIUS TERMINAL

STATE OF WISCONSIN
DEPARTMENT OF TRANSPORTATION

6

S.D.D. 14 B 27-1a

6

S.D.D. 14 B 27-1a

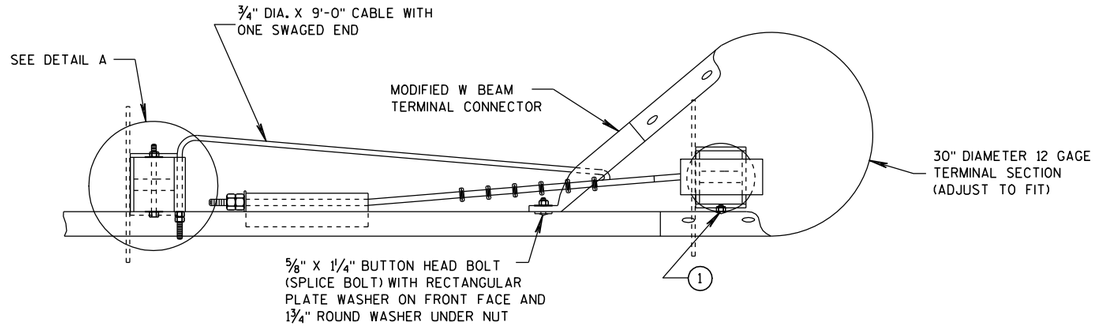

PLAN VIEW

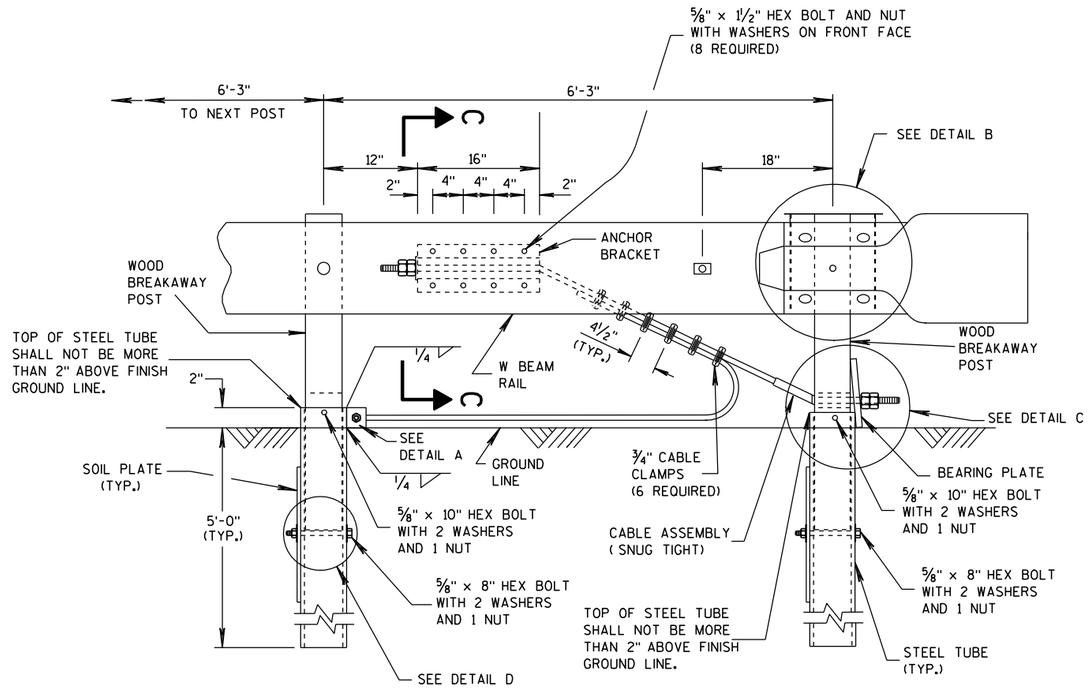

ELEVATION VIEW

STEEL PLATE BEAM GUARD SHORT RADIUS TERMINAL

GENERAL NOTES

(1) ATTACH W BEAM RAIL TO THE STEEL PIPE WITH A ⅝" X 2" BUTTON HEAD BOLT WITH NO WASHER. CONNECTION TO THE POST IS NOT REQUIRED.

INSTALL GALVANIZED ¾" (6X19) PREFORMED WIRE OR INDEPENDENT WIRE ROPE CORE CONFORMING TO AASHTO M 30. MANUFACTURE WIRE ROPE OUT OF IMPROVED PLOW STEEL WITH A MINIMUM BREAKING STRENGTH OF 42,800 PSI.

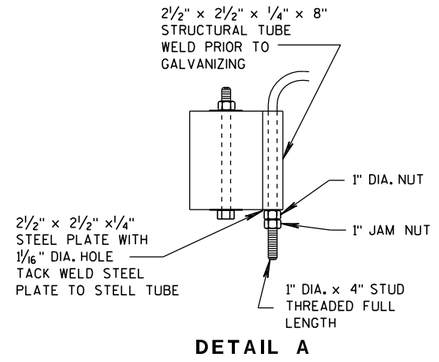

DETAIL A

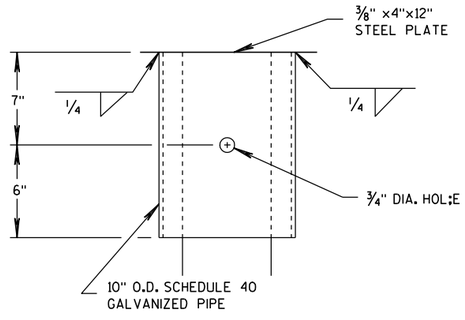

DETAIL B

(BEAM GUARD AND TERMINAL SECTION NOT SHOWN)

STEEL PLATE BEAM GUARD SHORT RADIUS TERMINAL

STATE OF WISCONSIN
DEPARTMENT OF TRANSPORTATION

6

S.D.D. 14 B 27-1b

6

S.D.D. 14 B 27-1b

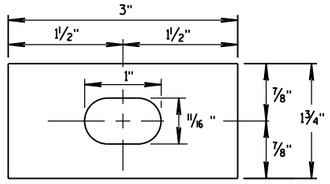

RECTANGULAR PLATE WASHER

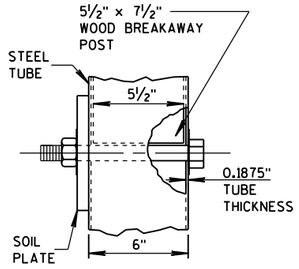

DETAIL D

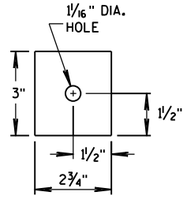

END PLATE

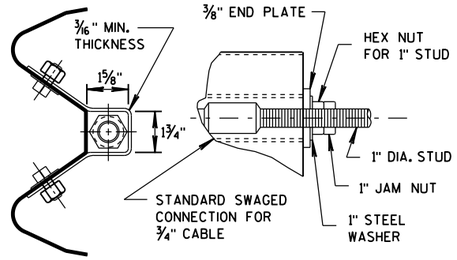

SECTION C-C
(END PLATE REMOVED)

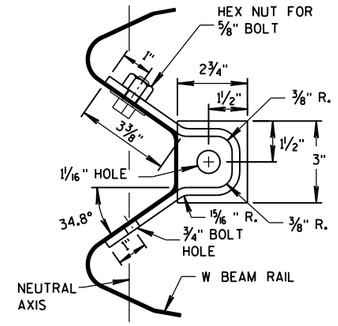

ANCHOR BRACKET

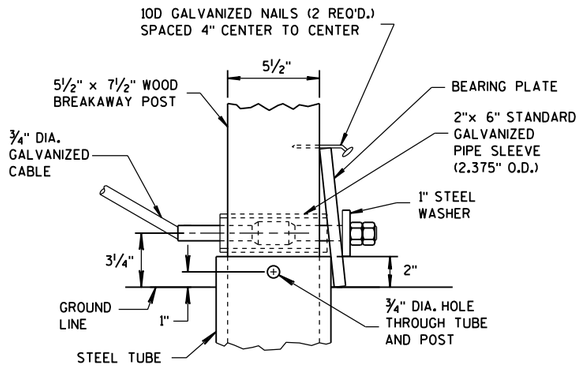

DETAIL C

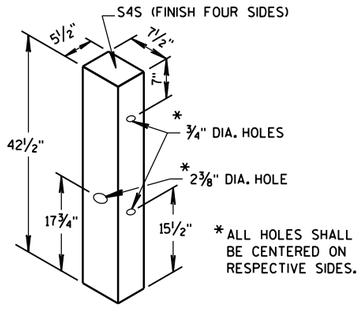

WOOD BREAKAWAY POST

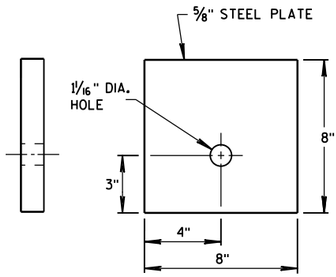

BEARING PLATE

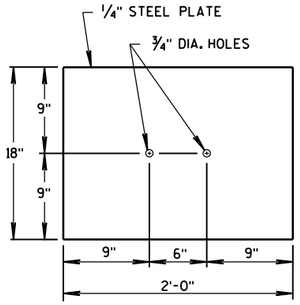

SOIL PLATE

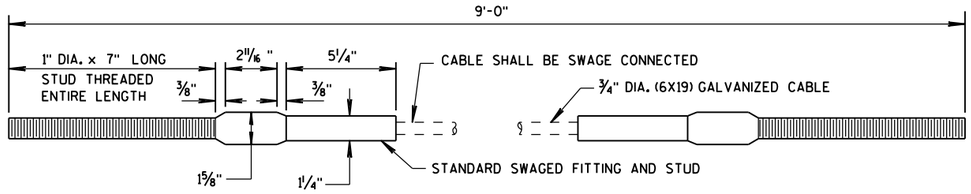

CABLE ASSEMBLY

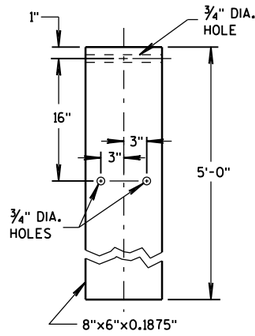

STEEL TUBE

STEEL PLATE BEAM GUARD
SHORT RADIUS TERMINAL

STATE OF WISCONSIN
DEPARTMENT OF TRANSPORTATION

APPROVED
12/18/08 — DATE
/S/ Jerry H. Zogg — ROADWAY STANDARDS DEVELOPMENT ENGINEER
FHWA

6

S.D.D. 14 B 27-1c

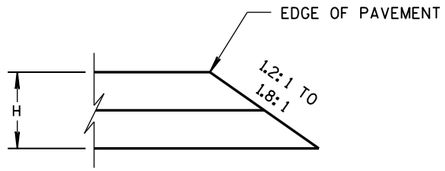

CONSTRUCTED WITH FINAL TWO LAYERS

FOR H 5" OR LESS

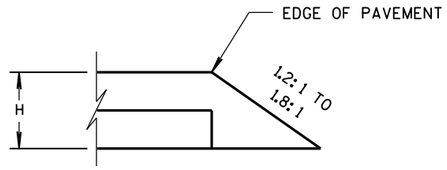

CONSTRUCTED WITH FINAL LAYER

FOR H 5" OR LESS

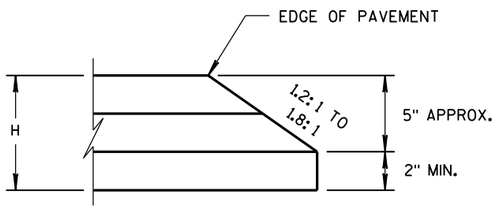

CONSTRUCTED WITH FINAL TWO LAYERS

FOR H GREATER THAN 5"

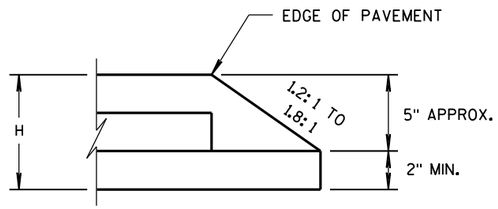

CONSTRUCTED WITH FINAL LAYER

FOR H GREATER THAN 5"

HMA PAVEMENT AND HMA OVERLAYS

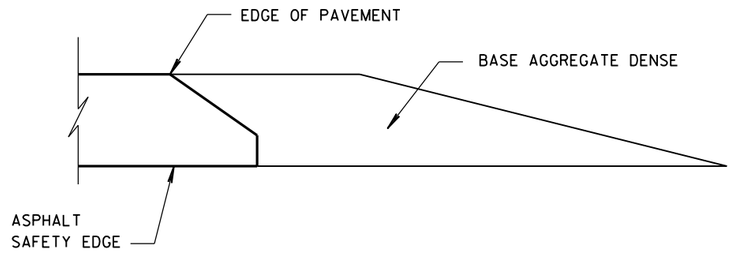

FINISHED SHOULDER AGGREGATE PLACEMENT

6

6

S.D.D. 14 B 29-1

S.D.D. 14 B 29-1

SAFETY EDGE SM

STATE OF WISCONSIN
DEPARTMENT OF TRANSPORTATION

APPROVED

11/30/2012
DATE

/S/ Jerry H. Zoda
ROADWAY STANDARDS DEVELOPMENT ENGINEER

FHWA

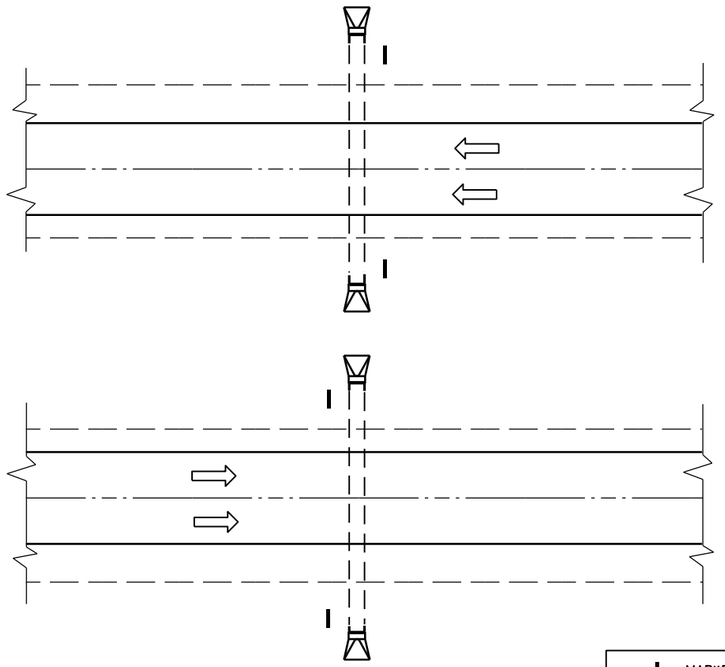

PLAN VIEW

DIVIDED HIGHWAY

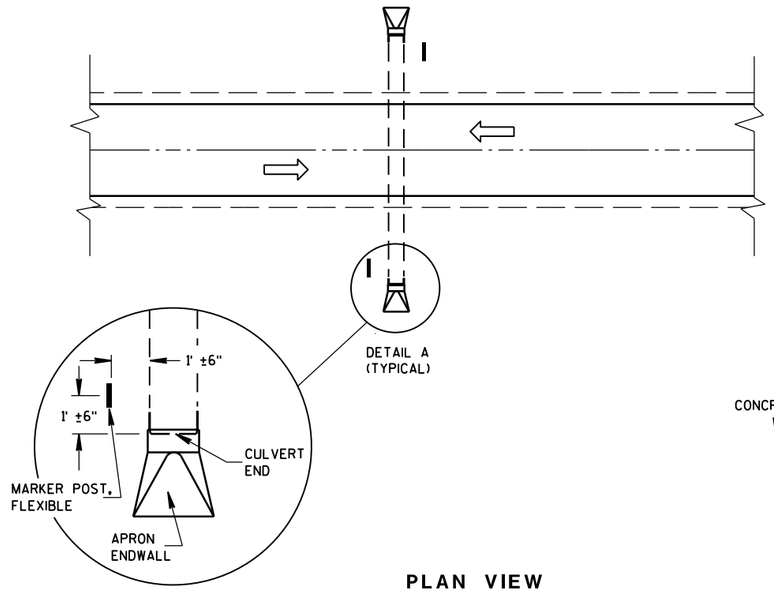

DETAIL A
(TYPICAL)

PLAN VIEW

UNDIVIDED HIGHWAY

MARKER POST, FLEXIBLE

DIRECTION OF TRAFFIC FLOW

GENERAL NOTES

DETAILS OF CONSTRUCTION, MATERIALS AND WORKMANSHIP NOT SHOWN ON THIS DRAWING SHALL CONFORM TO THE PERTINENT REQUIREMENTS OF THE STANDARD SPECIFICATIONS AND THE APPLICABLE SPECIAL PROVISIONS.

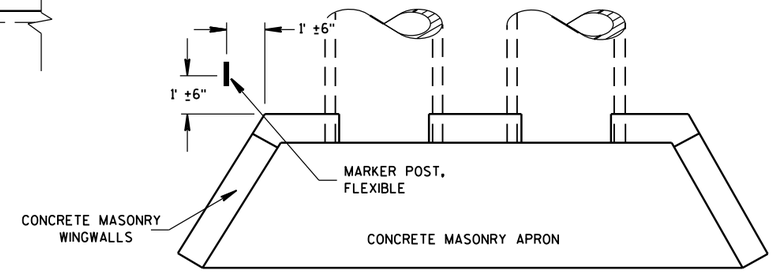

PLAN VIEW

CONCRETE MASONRY ENDWALLS FOR CULVERT PIPE AND PIPE ARCH

FLEXIBLE MARKER POST LOCATION

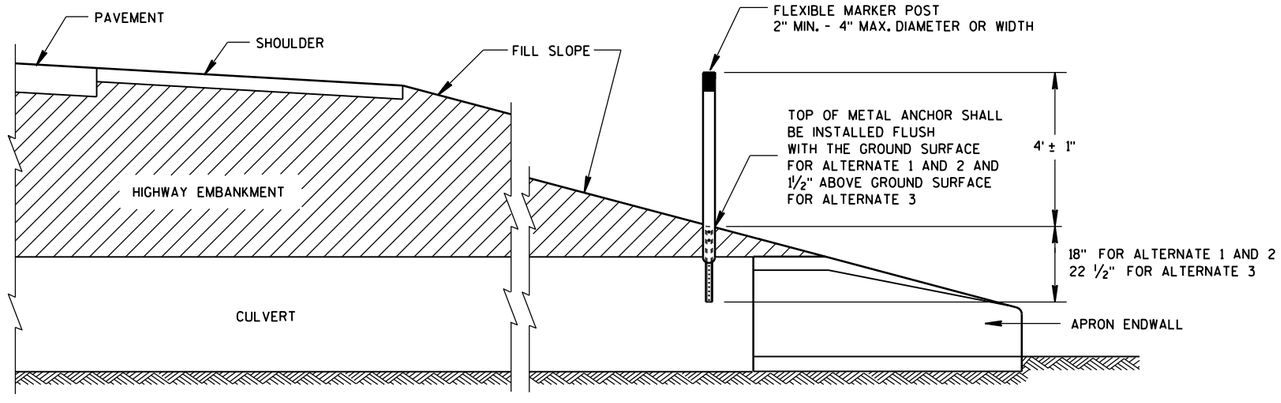

CROSS SECTION

FLEXIBLE MARKER POST

FLEXIBLE MARKER POST
FOR CULVERT END

STATE OF WISCONSIN
DEPARTMENT OF TRANSPOI

6

S.D.D. 15 A 3-2a

6

S.D.D. 15 A 3-2a

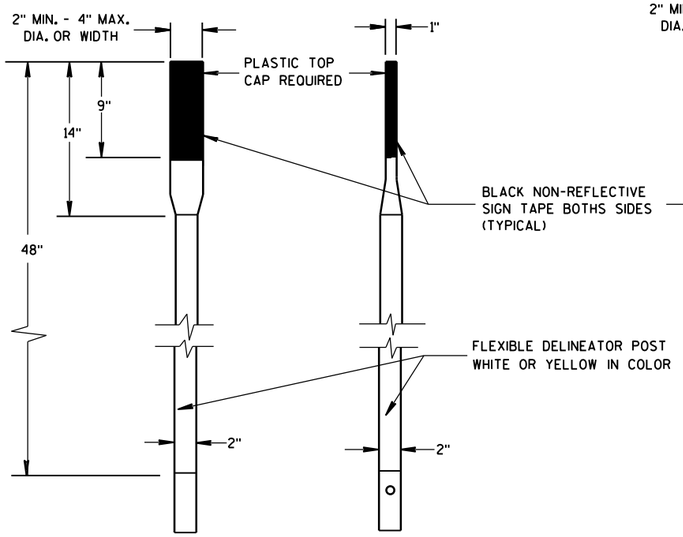

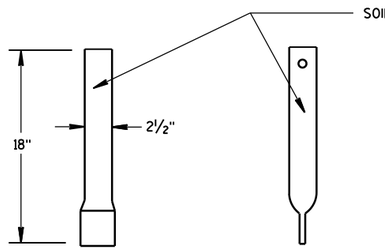

FRONT VIEW SIDE VIEW

ALTERNATE 1

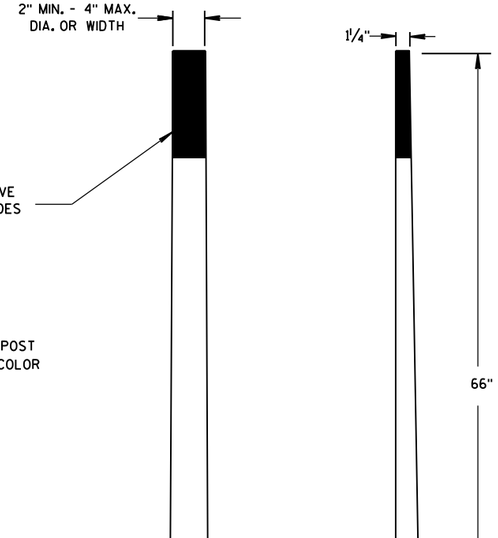

FRONT VIEW SIDE VIEW

ALTERNATE 2

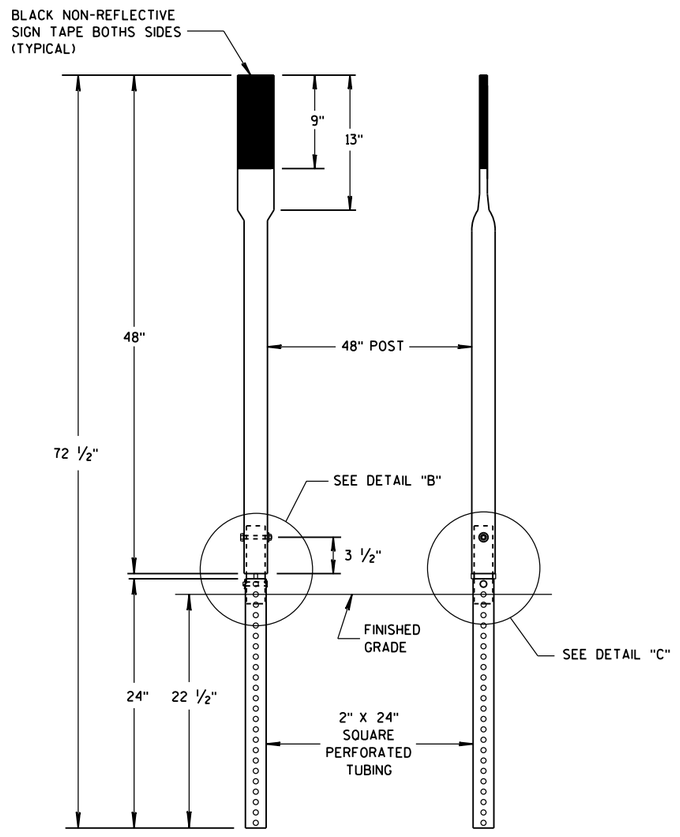

FRONT VIEW SIDE VIEW

ALTERNATE 3

FLEXIBLE MARKER POSTS

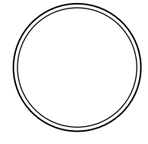

SECTION A-A

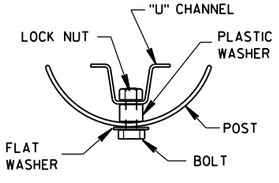

SECTION B-B

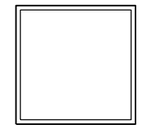

SECTION C-C

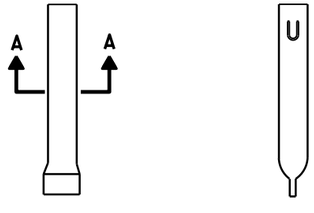

FRONT VIEW SIDE VIEW

ALTERNATE 1

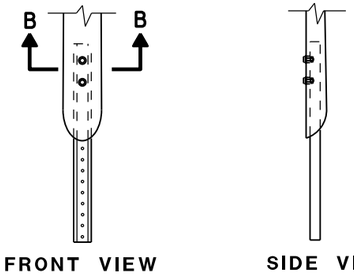

FRONT VIEW SIDE VIEW

ALTERNATE 2

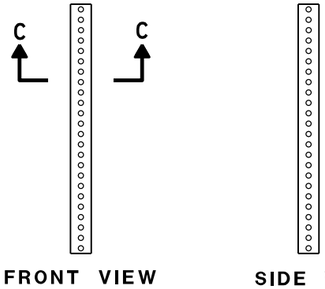

FRONT VIEW SIDE VIEW

ALTERNATE 3

FLEXIBLE MARKER POST ANCHORS

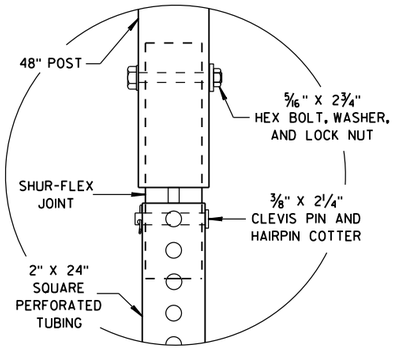

DETAIL B

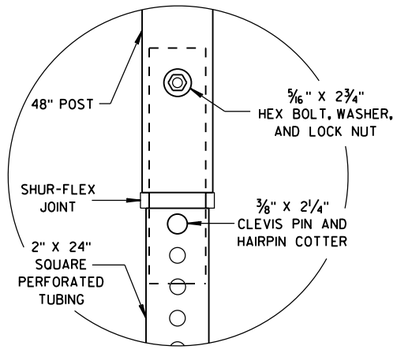

DETAIL C

FLEXIBLE MARKER POST
FOR CULVERT END

STATE OF WISCONSIN
DEPARTMENT OF TRANSPORTATION

APPROVED
10/1/2012
DATE
/S/ Travis Feltes
STATE TRAFFIC ENGINEER
FHWA

6

S.D.D. 15 A 3-2b

6

S.D.D. 15 A 3-2b

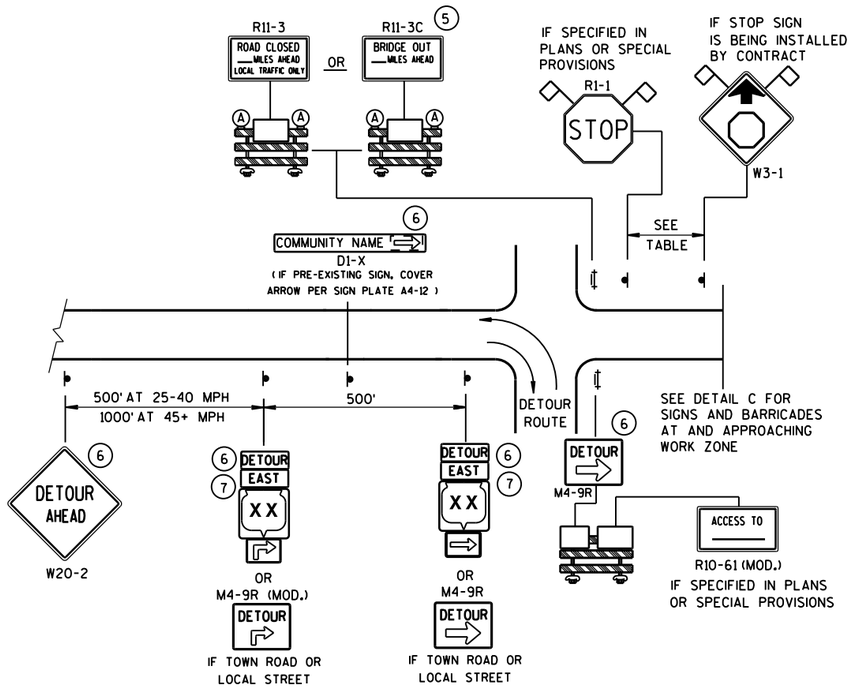

DETAIL A
MAINLINE CLOSURE WITH POSTED DETOUR

WORK ZONE GREATER THAN ½ MILE FROM DETOUR ROUTE (1000 FEET IF URBAN)

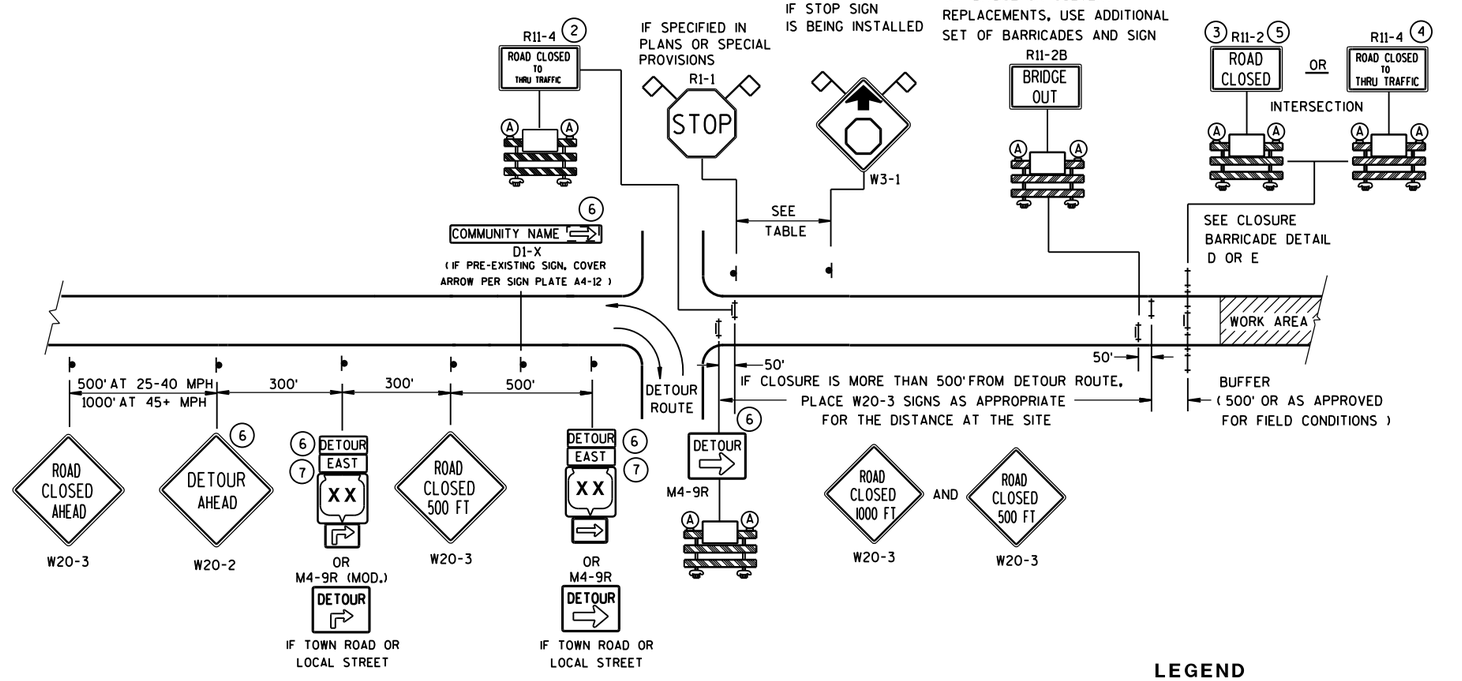

DETAIL B
MAINLINE CLOSURE WITH POSTED DETOUR

WORK ZONE LESS THAN ½ MILE FROM DETOUR ROUTE (1000 FEET IF URBAN)

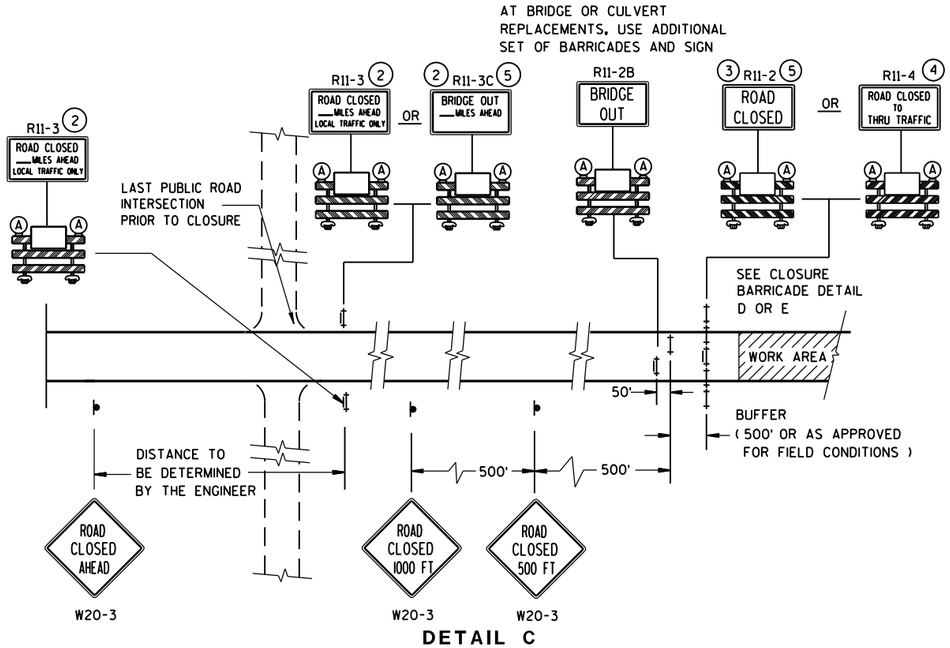

DETAIL C
MAINLINE CLOSURE, NO POSTED DETOUR

SPEED LIMIT (MPH)	"STOP AHEAD" ADVANCE WARNING DISTANCE (FT)
25	200
30	200
35	350
40	350
45	500
50	550
55	750

SEE SDD 15C2-SHEET "**b**" FOR GENERAL NOTES AND FOOTNOTES ① THROUGH ⑦

LEGEND

- SIGN ON PERMANENT SUPPORT
- TYPE III BARRICADE
- TYPE III BARRICADE WITH ATTACHED SIGN
- (A) TYPE "A" WARNING LIGHT (FLASHING)
- WORK AREA
- DETOUR / EAST — M4-8 / M3-X
- XX — M1-4; COUNTY XX — M1-5A; XX — M1-6
- M05-1 OR M06-1
- FLAGS, 16" X 16" MIN., (ORANGE)

BARRICADES AND SIGNS FOR MAINLINE CLOSURES

STATE OF WISCONSIN
DEPARTMENT OF TRANSPORTATION

8/2013 DATE

/S/ Travis Feltes
STATE TRAFFIC ENGINEER

FHWA

6

S.D.D. 15 C 2-5a

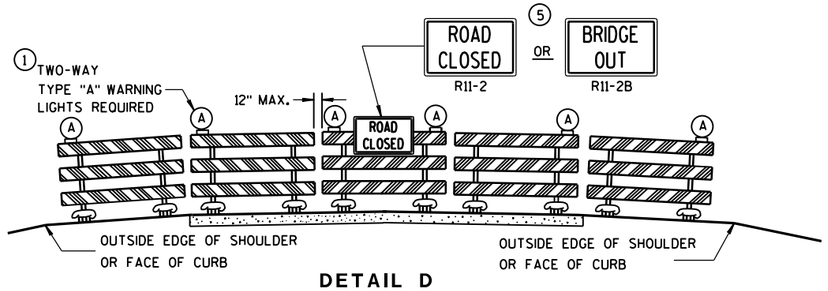

DETAIL D

ROAD CLOSURE BARRICADE DETAIL

APPROACH VIEW

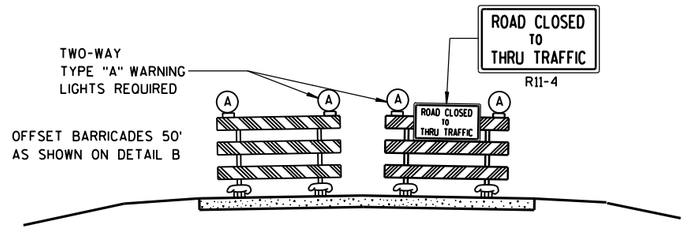

DETAIL E

LANE CLOSURE BARRICADE DETAIL

APPROACH VIEW

SEE SDD 15C2-SHEET "**a**" FOR LEGEND

GENERAL NOTES

THE EXACT NUMBER, LOCATION, AND SPACING OF ALL SIGNS AND BARRICADES SHALL BE ADJUSTED TO FIT FIELD CONDITIONS AS APPROVED BY THE ENGINEER.

ANY SIGNS TEMPORARY OR EXISTING, WHICH CONFLICT WITH TRAFFIC CONTROL "IN USE" SHALL BE REMOVED OR COVERED AS NEEDED AND AS APPROVED BY THE ENGINEER.

THE SPACING BETWEEN TRAFFIC CONTROL SIGNS SHOULD BE ADJUSTED TO NOT CONFLICT WITH AND SHOULD PROVIDE A DESIRABLE MINIMUM OF 200 FEET CLEARANCE TO EXISTING SIGNS THAT WILL REMAIN IN PLACE.

BARRICADES THAT MUST BE MOVED FOR A WORK OPERATION SHALL BE IMMEDIATELY RE-ESTABLISHED UPON COMPLETION OF THE OPERATION OR, FOR CONTINUING OPERATIONS, AT THE END OF EACH WORKING DAY.

SIGNS THAT WILL BE IN PLACE LESS THAN 7 CONTINUOUS DAYS AND NIGHTS MAY BE MOUNTED ON PORTABLE SUPPORTS.

ALL TYPE III BARRICADES SHALL HAVE RAILS REFLECTORIZED ON BOTH FACES. STRIPES SHALL BE PROPERLY SLOPED DOWN TOWARD THE TRAFFIC SIDE OR AS SHOWN IN THE ROAD CLOSURE BARRICADE DETAIL D FOR FULL ROAD CLOSURES.

TYPE "A" LOW-INTENSITY FLASHING WARNING LIGHTS SHALL BE VISIBLE ON BOTH SIDES OF THE BARRICADE.

THE R11-2, R11-3, M4-9, R11-4 AND R10-61 SIGNS PLACED ON BARRICADES SHALL COVER NO MORE THAN THE TOP RAIL. THE SIGNS SHALL NOT COVER ANY PORTION OF THE MIDDLE OR BOTTOM RAILS.

"WO AND "MO" SIGNS ARE THE SAME AS "W" AND "M" SIGNS EXCEPT THE BACKGROUND IS ORANGE.

ALL SIGNS SHALL BE 48" X 48" UNLESS OTHERWISE NOTED BELOW:
- R11-2 SHALL BE 48" X 30".
- R11-3, R11-4 AND R10-61 SHALL BE 60" X 30".
- M4-9 SHALL BE 30" X 24".
- M3-X SHALL BE 24" X 12". (36" X 18" IF NEEDED TO MATCH EXISTING SIGNS.)
- M4-8 SHALL BE 24" X 12". (30" X 15" IF NEEDED TO MATCH EXISTING SIGNS.)
- M1-4, M1-5A, AND M1-6 SHALL BE 24" X 24". (36" X 36" IF NEEDED TO MATCH EXISTING SIGNS.)
- M05-1 AND M06-1 SHALL BE 21" X 21". (30" X 30" IF NEEDED TO MATCH EXISTING SIGNS.)
- D1-X SHALL BE AS SHOWN ON SPECIFIC PROJECT SIGNING DETAIL SHEETS.
- R1-1 SHALL BE 36" X 36".

(1) TWO WARNING LIGHTS SHALL BE PROVIDED ON THE CENTER BARRICADE AND A MINIMUM OF ONE WARNING LIGHT SHALL BE PROVIDED ON EACH OF THE OTHER BARRICADES WITHIN THE ROADWAY LIMITS. SPACING OF THE WARNING LIGHTS SHALL BE UNIFORM TO THE EDGE OF ROADWAY AS SHOWN (APPROX. 8-FOOT LIGHT SPACING).

(2) THESE SIGNS AND BARRICADES ARE NOT REQUIRED IF ROAD CLOSURE BEGINS AT INTERSECTION.

(3) FOR ROAD CLOSURE WITHOUT LOCAL ACCESS TO PROJECT, SEE ROAD CLOSURE BARRICADE DETAIL D.

(4) FOR ROAD CLOSURE WITH LOCAL ACCESS TO PROJECT, SEE LANE CLOSURE BARRICADE DETAIL E.

(5) FOR BRIDGE OR CULVERT REPLACEMENTS, SUBSTITUTE "BRIDGE OUT" INSTEAD OF "ROAD CLOSED" ON R11-2 AND R11-3 SIGNS.

(6) INSTALL DETOUR AND COMMUNITY GUIDE SIGNS AND ARROWS ONLY IF SPECIFIED IN THE CONTRACT. IF THERE ARE EXISTING ROUTE MARKER ASSEMBLIES THAT WILL REMAIN IN PLACE, ADJUST THE LOCATION OF THE DETOUR ROUTE SIGNS TO CORRESPOND WITH THE EXISTING ASSEMBLIES. MODIFY EXISTING SIGNS WHERE POSSIBLE. SEE SPECIFIC PROJECT DETOUR SIGNING DETAIL SHEETS. IF DETOUR SIGNS ARE BEING INSTALLED BY OTHERS, PLACE THE CONTRACTED TRAFFIC CONTROL SIGNS TO ALLOW FOR PLACEMENT OF ALL WARNING, DETOUR AND GUIDE SIGNS AS SHOWN.

(7) "EAST" CARDINAL DIRECTION MARKERS AND RIGHT TURN ARROWS ARE SHOWN. USE OTHER CARDINAL DIRECTIONS AND ARROWS AS APPROPRIATE.

BARRICADES AND SIGNS FOR MAINLINE CLOSURES

STATE OF WISCONSIN
DEPARTMENT OF TRANSPORTATION

8/2013 — DATE
/S/ Travis Feltes — STATE TRAFFIC ENGINEER
FHWA

6

S.D.D. 15 C 2-5b

THIS DRAWING PROVIDES GENERAL GUIDANCE ON TYPICAL DETOUR SIGN LAYOUT AND SPACING. SEE PROJECT DETOUR SIGNING SHEETS FOR SPECIFIC DETAILS FOR EACH PROJECT.

GENERAL NOTES

THE EXACT NUMBER, LOCATION AND SPACING OF ALL SIGNS SHALL BE ADJUSTED TO FIT FIELD CONDITIONS AS APPROVED BY THE ENGINEER.

IF THERE ARE EXISTING ROUTE MARKER ASSEMBLIES THAT WILL REMAIN IN PLACE, ADJUST THE LOCATION OF THE DETOUR ROUTE SIGNS TO CORRESPOND WITH THE EXISTING ASSEMBLIES. SEE SPECIFIC PROJECT DETOUR SIGNING DETAIL SHEETS. MODIFY EXISTING SIGNS WHERE POSSIBLE.

THE SPACING BETWEEN TRAFFIC CONTROL AND DETOUR SIGNS SHOULD BE ADJUSTED TO NOT CONFLICT WITH AND TO PROVIDE A DESIRABLE MINIMUM OF 200 FEET CLEARANCE TO EXISTING SIGNS THAT WILL REMAIN IN PLACE.

ANY SIGNS TEMPORARY OR EXISTING, WHICH CONFLICT WITH TRAFFIC CONTROL "IN USE", SHALL BE REMOVED OR COVERED AS NEEDED AND AS APPROVED BY THE ENGINEER.

SIGNS THAT WILL BE IN PLACE LESS THAN 7 CONTINUOUS DAYS AND NIGHTS MAY BE MOUNTED ON PORTABLE SUPPORTS.

"MO" SIGNS ARE THE SAME AS "M" SIGNS EXCEPT THE BACKGROUND IS ORANGE.

SIGN SIZES SHALL BE AS FOLLOWS:

- M3-X SHALL BE 24" X 12". (36" X 18" IF NEEDED TO MATCH EXISTING SIGNS.)
- M4-8 SHALL BE 24" X 12". (30" X 15" IF NEEDED TO MATCH EXISTING SIGNS.)
- M1-4, M1-5A, AND M1-6 SHALL BE 24" X 24". (36" X 36" IF NEEDED TO MATCH EXISTING SIGNS.)
- M05-1 AND M06-1 SHALL BE 21" X 21". (30" X 30" IF NEEDED TO MATCH EXISTING SIGNS.)
- M4-9 SHALL BE 30" X 24".
- M4-8a SHALL BE 24" X 18".
- G20-51 SHALL BE 60" X 24".
- W20-2 SHALL BE 48" X 48".
- D1-X SHALL BE AS SHOWN ON SPECIFIC PROJECT SIGNING DETAIL SHEETS.

* OPTIONAL SIGNS. SEE SPECIFIC PROJECT DETOUR SIGNING DETAIL SHEETS.

** FOR A TOWN ROAD OR LOCAL STREET DETOURED ONTO A STATE TRUNK HIGHWAY, PLACE A ROAD NAME PLAQUE ABOVE THE M4-9 SIGN AS SPECIFIED IN THE CONTRACT.

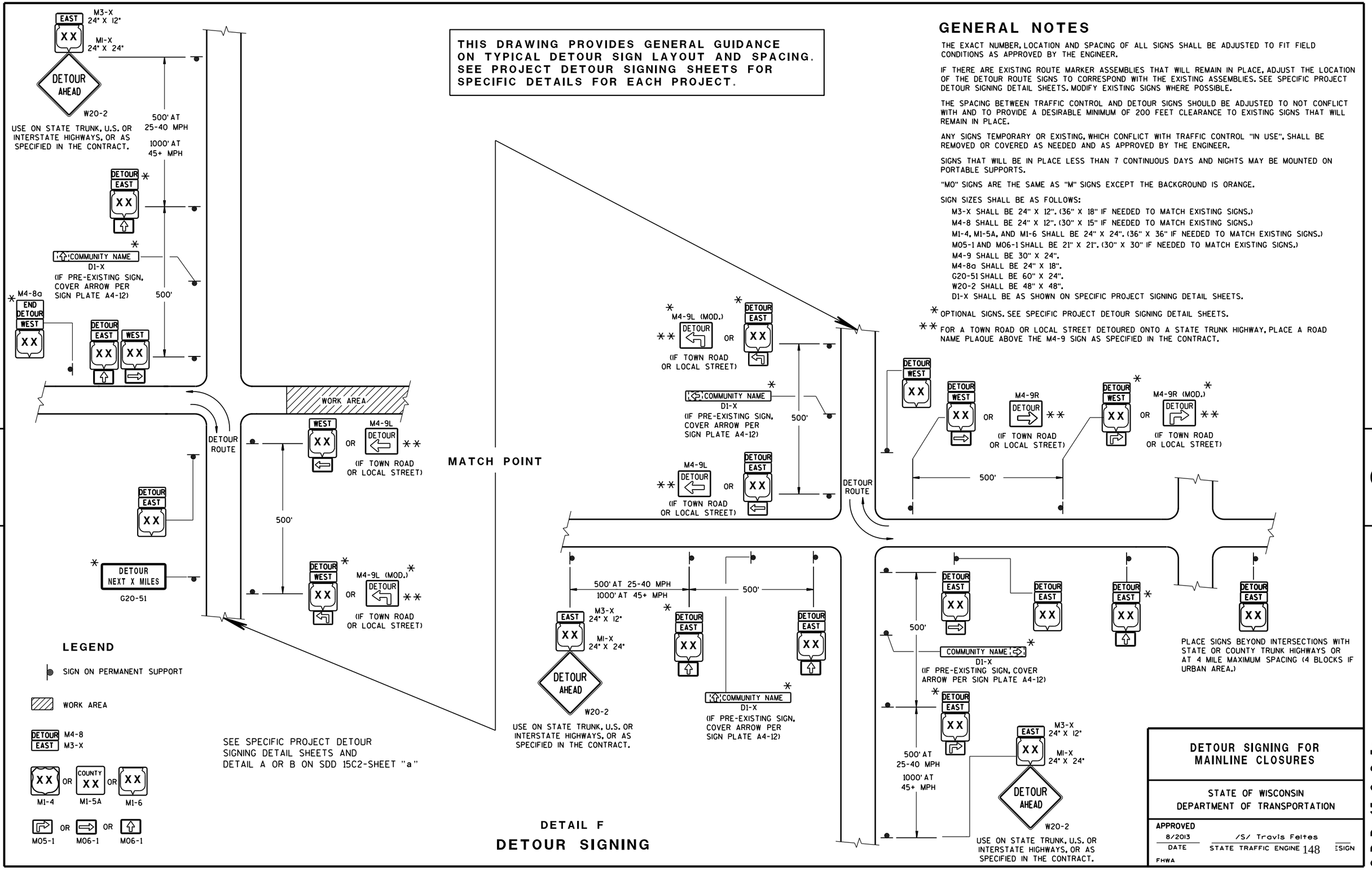

LEGEND

- SIGN ON PERMANENT SUPPORT
- WORK AREA
- DETOUR EAST — M4-8, M3-X
- XX OR COUNTY XX OR XX — M1-4, M1-5A, M1-6
- MO5-1 OR MO6-1 OR MO6-1

SEE SPECIFIC PROJECT DETOUR SIGNING DETAIL SHEETS AND DETAIL A OR B ON SDD 15C2-SHEET "a"

DETAIL F

DETOUR SIGNING

DETOUR SIGNING FOR MAINLINE CLOSURES

STATE OF WISCONSIN
DEPARTMENT OF TRANSPORTATION

APPROVED
8/2013 — DATE
/S/ Travis Feltes — STATE TRAFFIC ENGINEER
FHWA

S.D.D. 15 C 2-5c

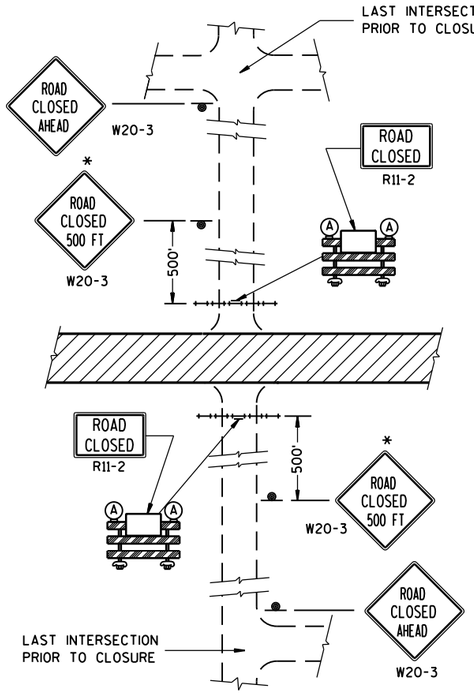

DETAIL 1

(NO ACCESS TO PROJECT)

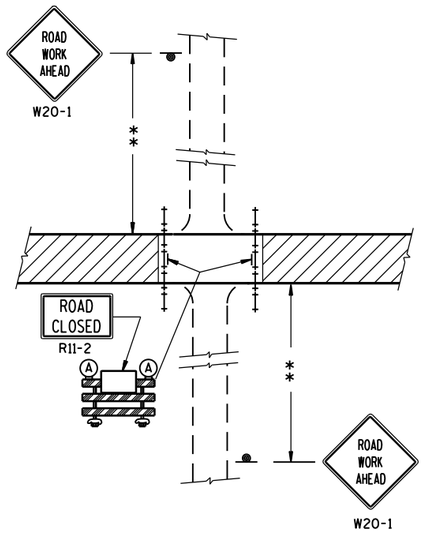

DETAIL 2

(PUBLIC CROSS-TRAFFIC MAINTAINED. NO ACCESS TO PROJECT).

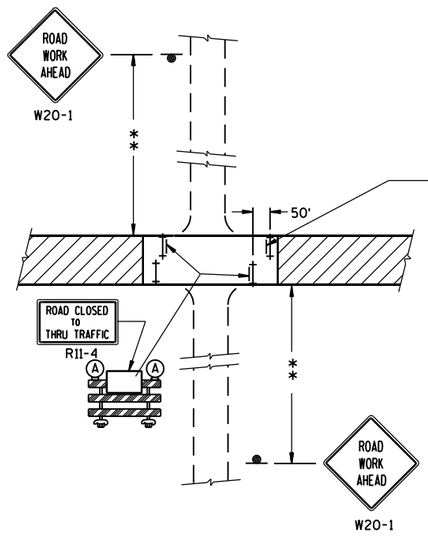

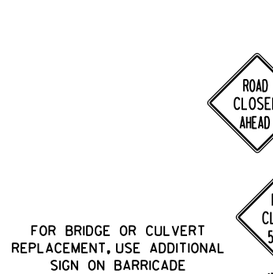

DETAIL 3

(PUBLIC CROSS-TRAFFIC MAINTAINED. CONTRACTOR, LOCAL BUSINESS AND RESIDENT ACCESS).

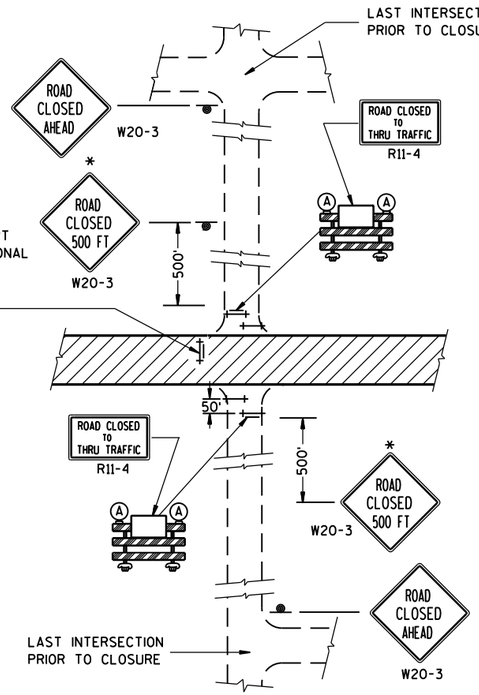

DETAIL 4

(CONTRACTOR, LOCAL BUSINESS AND RESIDENT ACCESS TO PROJECT)

GENERAL NOTES

THE EXACT NUMBER, LOCATION, AND SPACING OF ALL SIGNS AND BARRICADES SHALL BE ADJUSTED TO FIT FIELD CONDITIONS AS APPROVED BY THE ENGINEER.

ANY SIGNS TEMPORARY OR EXISTING, WHICH CONFLICT WITH TRAFFIC CONTROL "IN USE" SHALL BE REMOVED OR COVERED AS NEEDED AND AS APPROVED BY THE ENGINEER.

THE SPACING BETWEEN TRAFFIC CONTROL SIGNS SHOULD BE ADJUSTED TO NOT CONFLICT WITH AND SHOULD PROVIDE A DESIRABLE MINIMUM OF 200 FEET CLEARANCE TO EXISTING SIGNS THAT WILL REMAIN IN PLACE.

IF A "STOP" SIGN MUST BE REMOVED FOR A WORK OPERATION, A TEMPORARY "STOP" SIGN SHALL BE PLACED PRIOR TO THE SIGN REMOVAL, OR A FLAGGER SHALL BE PROVIDED UNTIL THE SIGN IS RE-ESTABLISHED.

BARRICADES THAT MUST BE MOVED FOR A WORK OPERATION SHALL BE IMMEDIATELY RE-ESTABLISHED UPON COMPLETION OF THE OPERATION OR, FOR CONTINUING OPERATIONS, AT THE END OF EACH WORKING DAY.

SIGNS THAT WILL BE IN PLACE LESS THAN 7 CONTINUOUS DAYS AND NIGHTS MAY BE MOUNTED ON PORTABLE SUPPORTS.

ALL TYPE III BARRICADES SHALL HAVE RAILS REFLECTORIZED ON BOTH FACES. STRIPES SHALL BE PROPERLY SLOPED DOWN TOWARD THE TRAFFIC SIDE OR AS SHOWN IN THE ROAD CLOSURE BARRICADE DETAIL D FOR FULL ROAD CLOSURES.

TYPE "A" LOW-INTENSITY FLASHING WARNING LIGHTS SHALL BE VISIBLE ON BOTH SIDES OF THE BARRICADE.

THE R11-2, R11-3 AND R11-4 SIGNS PLACED ON BARRICADES SHALL COVER NO MORE THAN THE TOP RAIL. THE SIGNS SHALL NOT COVER ANY PORTION OF THE MIDDLE OR BOTTOM RAILS.

ALL SIGNS SHALL BE 48" X 48" UNLESS OTHERWISE NOTED BELOW:
R11-2 SHALL BE 48" X 30".
R11-4 AND R11-3 SHALL BE 60" X 30".

*OMIT THE "ROAD CLOSED 500 FT." SIGN IF THE LAST INTERSECTION IS 500 FT. OR LESS FROM THE WORK ZONE.

**500' MAX. OR AT LAST INTERSECTION WHICHEVER IS CLOSER.

LEGEND

- SIGN ON PERMANENT SUPPORT
- TYPE III BARRICADE
- TYPE III BARRICADE WITH ATTACHED SIGN
- (A) TYPE "A" WARNING LIGHT (FLASHING)
- WORK AREA

BARRICADES AND SIGNS FOR SIDEROAD CLOSURES

STATE OF WISCONSIN
DEPARTMENT OF TRANSPORTATION

APPROVED
8/2013 — DATE
/S/ Travis Feltes — STATE TRAFFIC ENGINEER
FHWA

6

S.D.D. 15 C 3-2

6

S.D.D. 15 C 3-2

GENERAL NOTES

DETAILS OF INSTALLATION, MATERIALS AND WORKMANSHIP NOT SHOWN ON THIS DRAWING SHALL CONFORM TO THE PERTINENT REQUIREMENTS OF THE STANDARD SPECIFICATIONS AND APPLICABLE SPECIAL PROVISIONS.

ALL LETTERS, ARROWS AND SYMBOLS SHALL BE IN CONFORMANCE WITH REQUIREMENTS INCLUDED IN "STANDARD ALPHABETS FOR HIGHWAY SIGNS AND PAVEMENT MARKING" BOOK BY THE FEDERAL HIGHWAY ADMINISTRATION. ALL LETTERS, ARROWS AND SYMBOLS SHALL BE WHITE AND REFLECTORIZED. SMALL DIFFERENCES IN DIMENSIONS WITHIN THE TOLERANCES OF THAT BOOK ARE ACCEPTABLE.

A DETAILED DRAWING OF THE HANDICAPPED PARKING SYMBOL IS ILLUSTRATED IN THE "STANDARD HIGHWAY SIGNS MANUAL" BY THE FEDERAL HIGHWAY ADMINISTRATION.

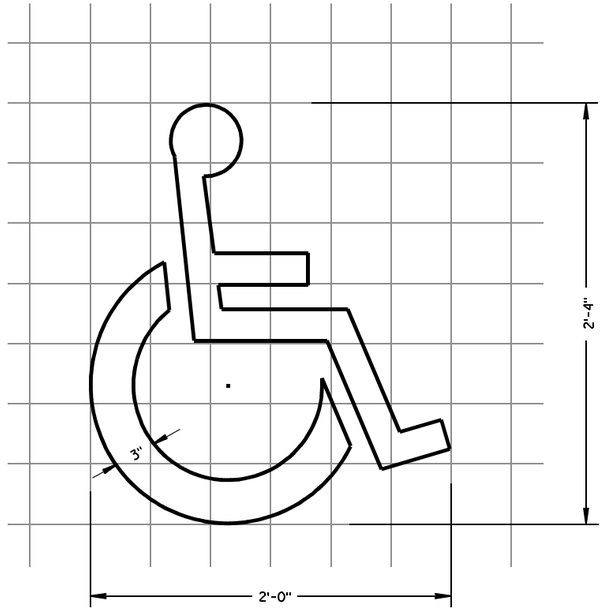

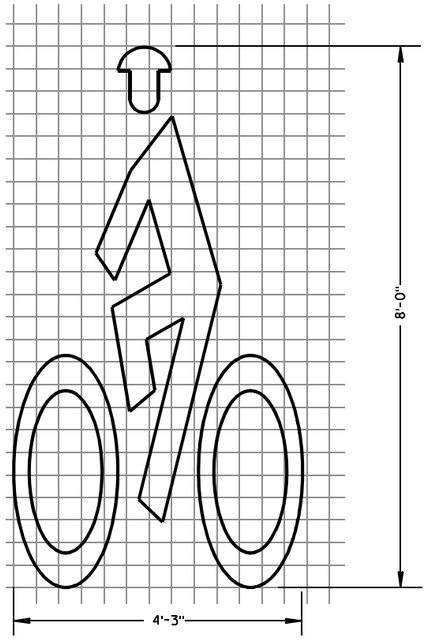

BIKE CROSSING SYMBOL

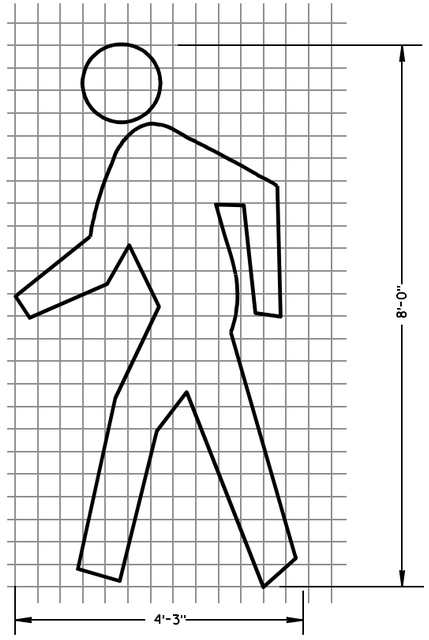

PEDESTRIAN SYMBOL

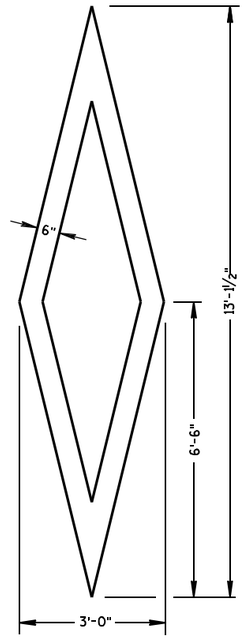

PREFERENTIAL LANE SYMBOL

6

6

S.D.D. 15 C 7-12a

S.D.D. 15 C 7-12a

PAVEMENT MARKING SYMBOLS

STATE OF WISCONSIN
DEPARTMENT OF TRANSPORTATION

APPROVED

7/1/11 DATE

/S/ Thomas N Nathan
STATE TRAFFIC ENGINEER

FHWA

GENERAL NOTES

DETAILS OF INSTALLATION, MATERIALS AND WORKMANSHIP NOT SHOWN ON THIS DRAWING SHALL CONFORM TO THE PERTINENT REQUIREMENTS OF THE STANDARD SPECIFICATIONS AND APPLICABLE SPECIAL PROVISIONS.

ALL LETTERS, ARROWS AND SYMBOLS SHALL BE IN CONFORMANCE WITH REQUIREMENTS INCLUDED IN "STANDARD ALPHABETS FOR HIGHWAY SIGNS AND PAVEMENT MARKING" BOOK BY THE FEDERAL HIGHWAY ADMINISTRATION. ALL LETTERS, ARROWS AND SYMBOLS SHALL BE WHITE AND REFLECTORIZED. SMALL DIFFERENCES IN DIMENSIONS WITHIN THE TOLERANCES OF THAT BOOK ARE ACCEPTABLE.

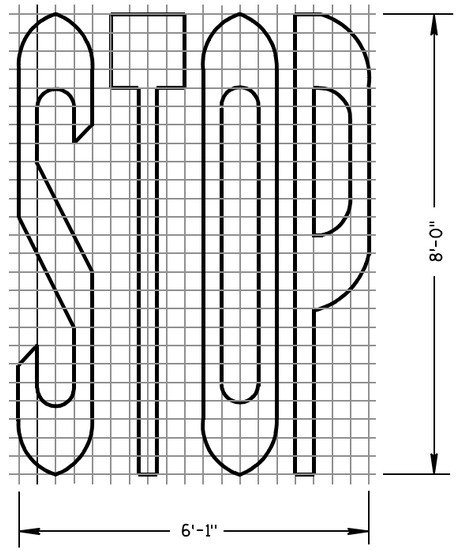

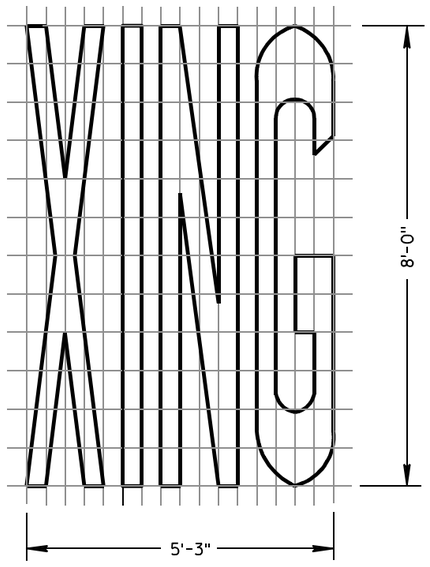

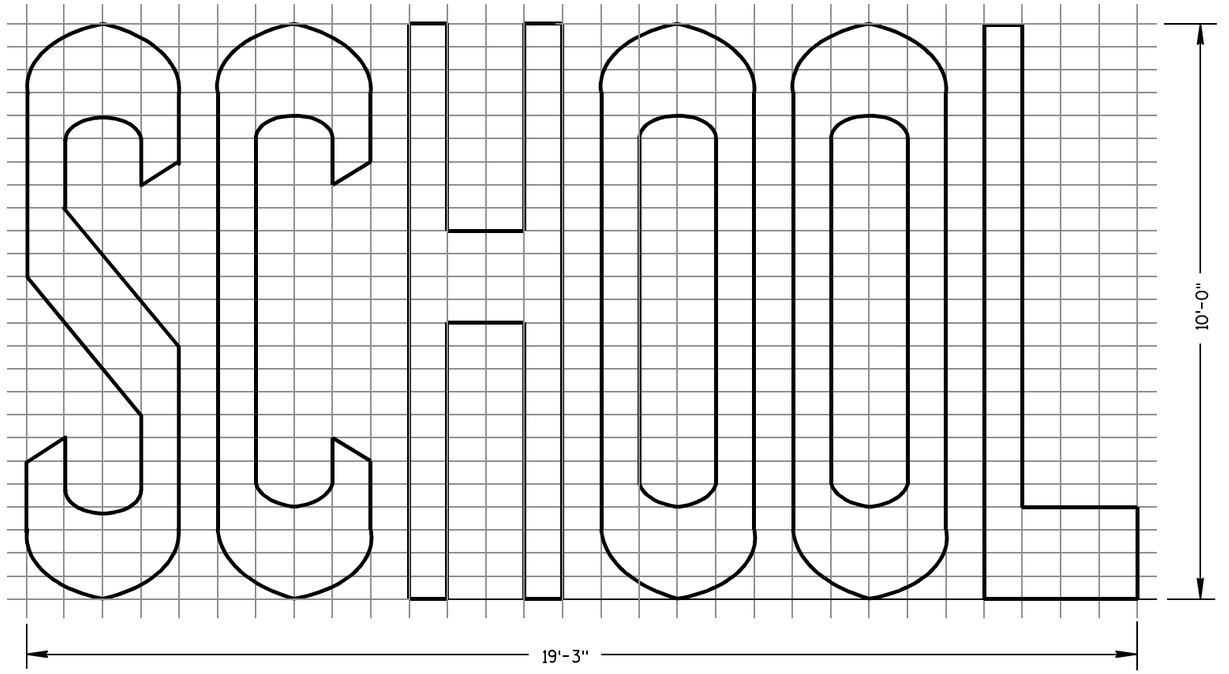

TWO-LANE

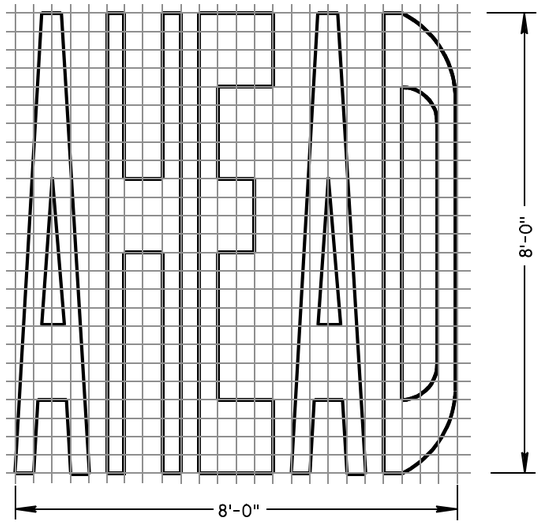

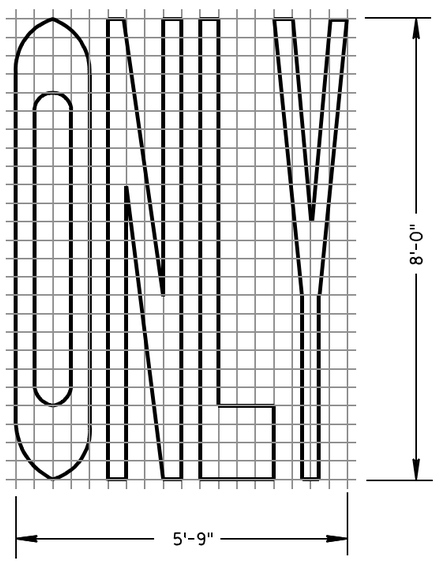

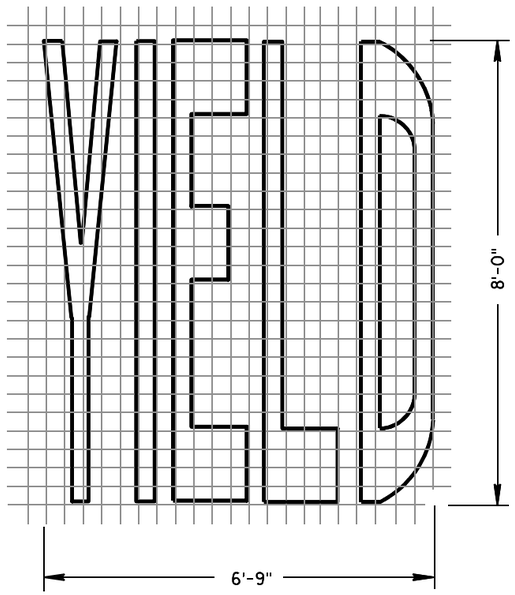

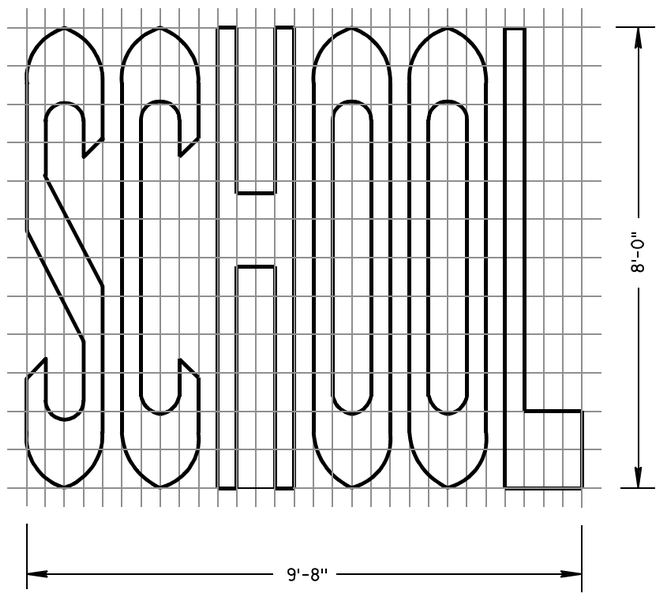

SINGLE-LANE

PAVEMENT MARKING WORDS

STATE OF WISCONSIN
DEPARTMENT OF TRANSPORTATION

APPROVED

7-1-11 DATE — /S/ Thomas N. Nothohm STATE TRAFFIC ENGINEER — IGN

FHWA

6

S.D.D. 15 C 7-12b

6

S.D.D. 15 C 7-12b

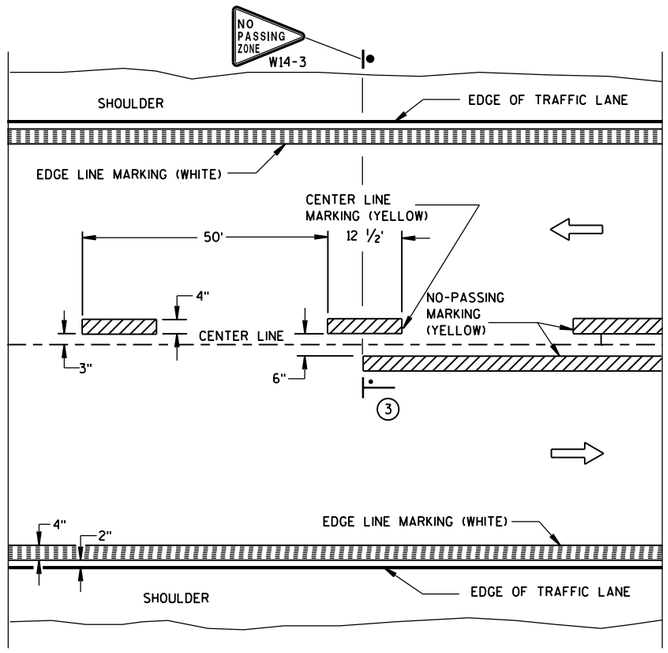

TWO WAY TRAFFIC

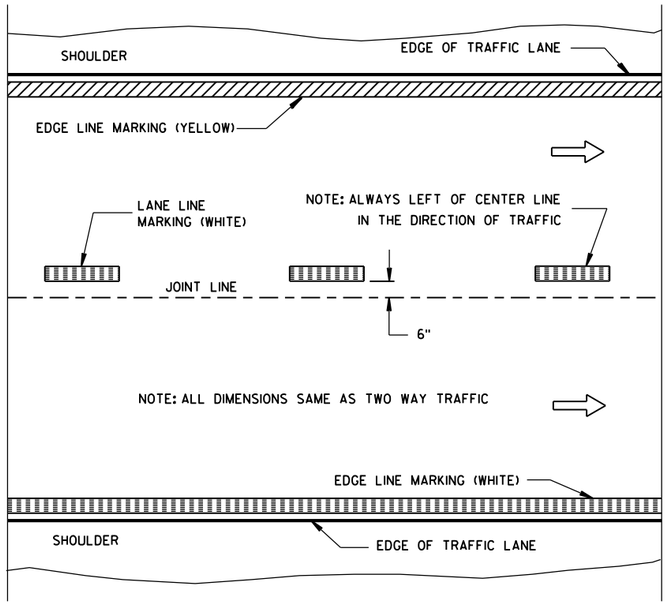

ONE WAY TRAFFIC

PERMANENT PAVEMENT MARKING

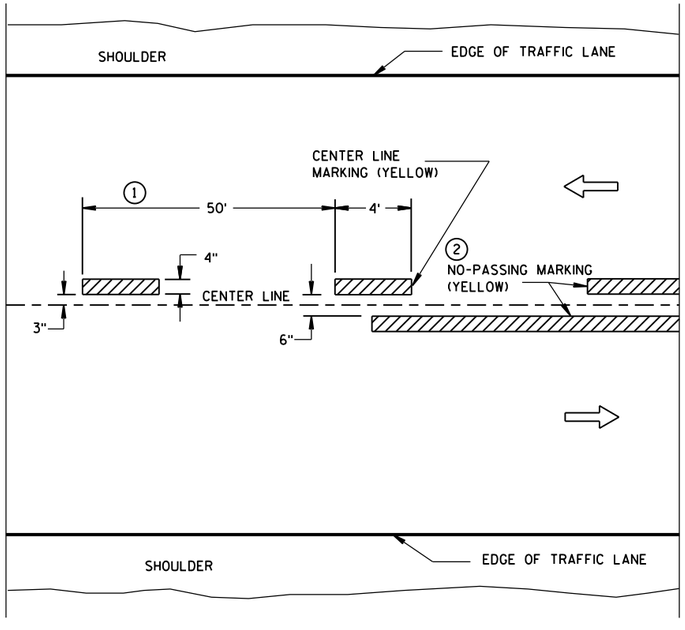

TWO WAY TRAFFIC

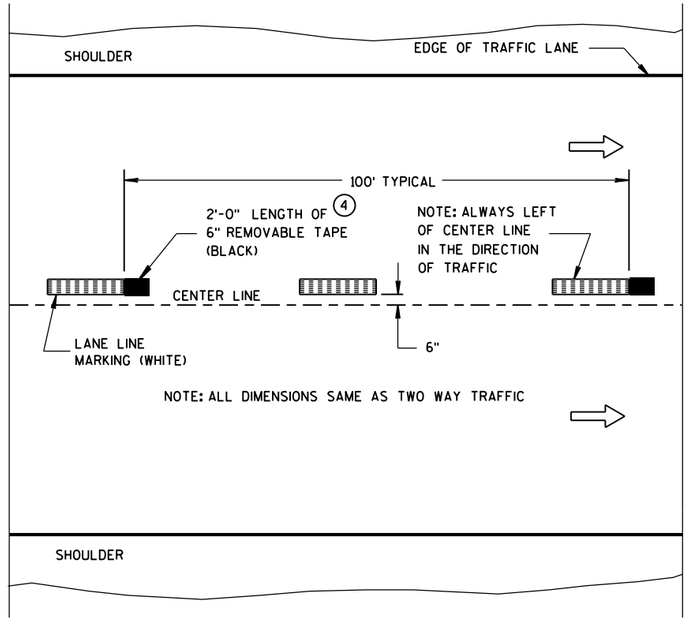

ONE WAY TRAFFIC

TEMPORARY (INTERMEDIATE) PAVEMENT MARKING

(SHOWS CYCLE FOR TEMPORARY CENTER LINE OR TEMPORARY LANE LINE MARKING)

GENERAL NOTES

DETAILS OF CONSTRUCTION NOT SHOWN ON THIS DRAWING SHALL CONFORM TO STANDARD SPECIFICATIONS AND SPECIAL PROVISIONS.

1. HALF CYCLE LENGTHS (25'±) WITH 2' MINIMUM STRIPE LENGTHS SHALL BE PROVIDED ON ROADWAYS (INCLUDING TEMPORARY TRAVELED WAYS) WITH REVERSE CURVATURE, CURVATURE OF OVER 5 DEGREES OR WHEN DIRECTED BY THE ENGINEER TO MARK UNUSUAL ALIGNMENT OF THE TRAVELED WAY.
2. NO PASSING ZONE TEMPORARY PAVEMENT MARKING IS REQUIRED TO BE PLACED, WHERE APPROPRIATE, ALONG WITH CENTERLINE TEMPORARY PAVEMENT MARKING WHEN A SAME DAY PERMANENT PAVEMENT MARKING ITEM IS INCLUDED IN THE CONTRACT.
3. NO PASSING ZONE MARKINGS ARE PLACED ACCORDING TO "T" MARKINGS. IF EXISTING NO PASSING ZONE W14-3 SIGNS ARE BEYOND 50 FEET IN EITHER DIRECTION, THE SIGNS SHALL BE MOVED TO THE "T" MARKINGS.
4. CONCRETE ONLY.

NOTE

ARROW SYMBOL (⇨) SHOWS DIRECTION OF TRAVEL

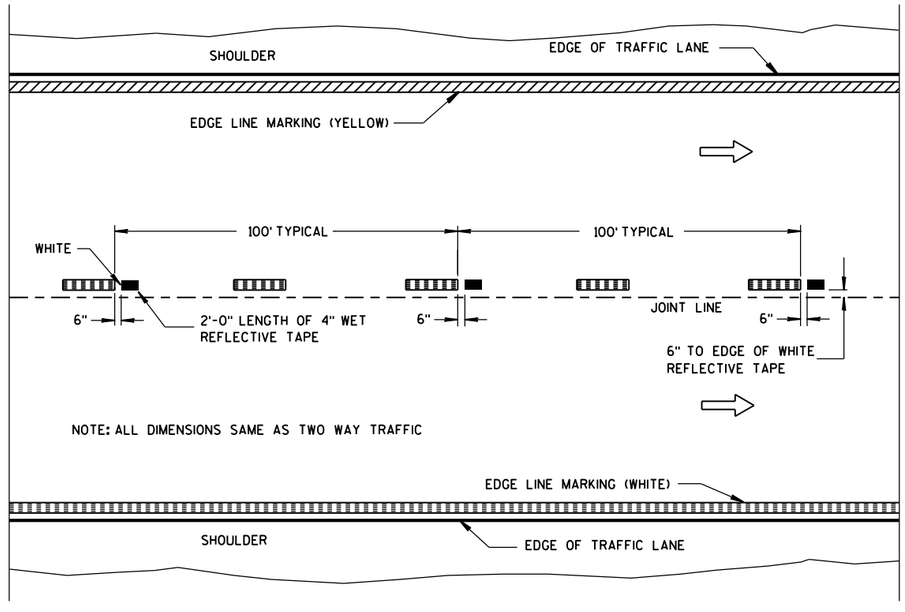

WET REFLECTIVE TAPE SUPPLEMENT TO
SPRAYED OR NON WET REFLECTIVE TAPE LANE LINE

LEGEND

"T" MARKING

POST MOUNTED SIGN

PAVEMENT MARKING (MAINLINE)

STATE OF WISCONSIN
DEPARTMENT OF TRANSPORTATION

APPROVED

5-13-2013
DATE

/S/ Travis Feltes
STATE TRAFFIC E

FHWA

6

S.D.D. 15 C 8-16a

6

S.D.D. 15 C 8-16a

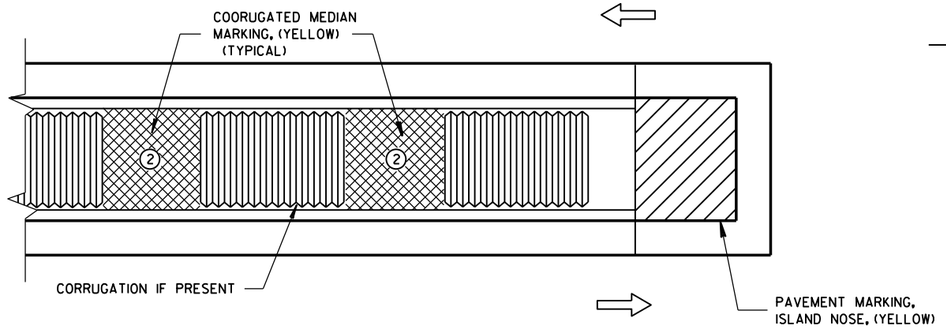

MEDIAN ISLAND WITH SQUARE BLUNT NOSE

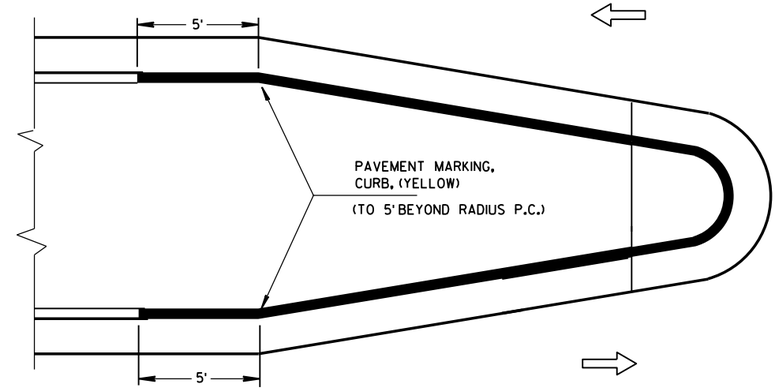

MEDIAN ISLAND WITH ROUND BLUNT NOSE

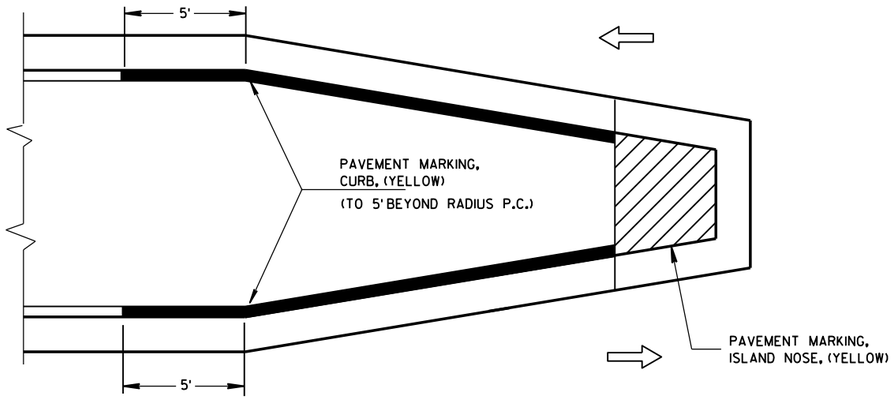

MEDIAN ISLAND WITH SLOPED NOSE

TYPICAL PLACEMENT OF PAVEMENT MARKING ON MEDIAN ISLANDS

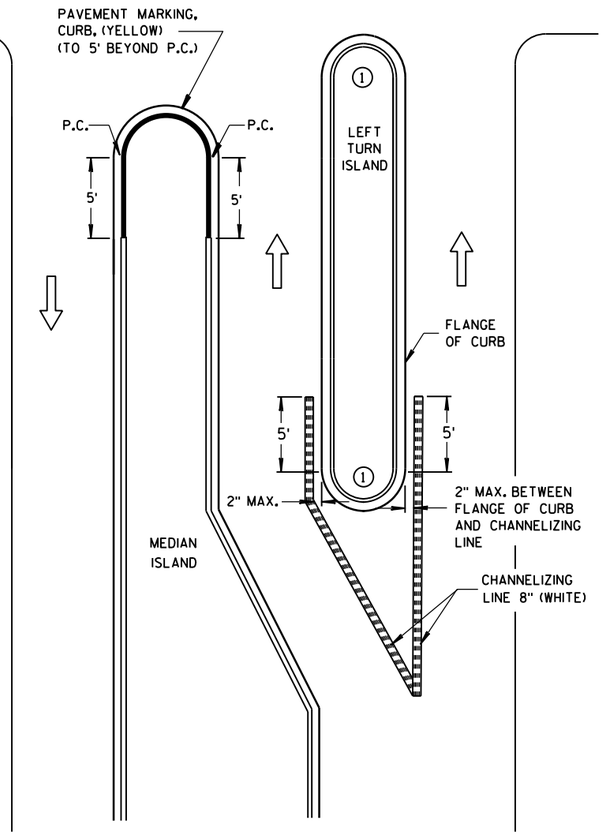

LEFT TURN & MEDIAN ISLAND

GENERAL NOTES

1. DO NOT MARK CURB NOSES THAT SEPARATE LANES OF TRAFFIC TRAVELING IN THE SAME DIRECTION.

2. WHEN CONCRETE CORRUGATED MEDIAN IS CONSTRUCTED TO SEPARATE TRAFFIC OPERATING IN THE OPPOSING DIRECTION YELLOW PAVEMENT MARKING SHALL BE APPLIED TO THE FLAT PORTION OF THE CONCRETE CORRUGATED MEDIAN. THE ITEM OF PAVEMENT MARKING, CONCRETE CORRUGATED MEDIAN, WILL BE MEASURED IN PLACE AND AND ACCEPTED IN ACCORDANCE WITH THE CONTRACT AND PAID FOR AT THE CONTRACT UNIT PRICE PER SQUARE FOOT.

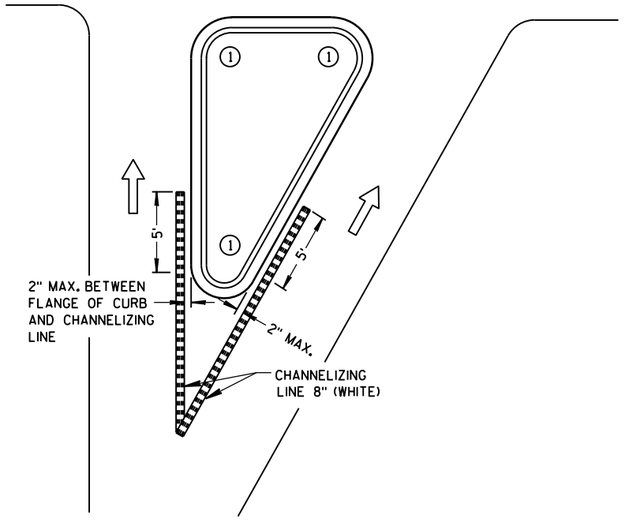

RIGHT TURN ISLAND

LEGEND

- ISLAND NOSE MARKING
- CURB MARKING
- CORRUGATED MEDIAN MARKING
- DIRECTION OF TRAVEL

PAVEMENT MARKING
(ISLANDS)

STATE OF WISCONSIN
DEPARTMENT OF TRANSPOI

6

S.D.D. 15 C 8-16f

6

S.D.D. 15 C 8-16f

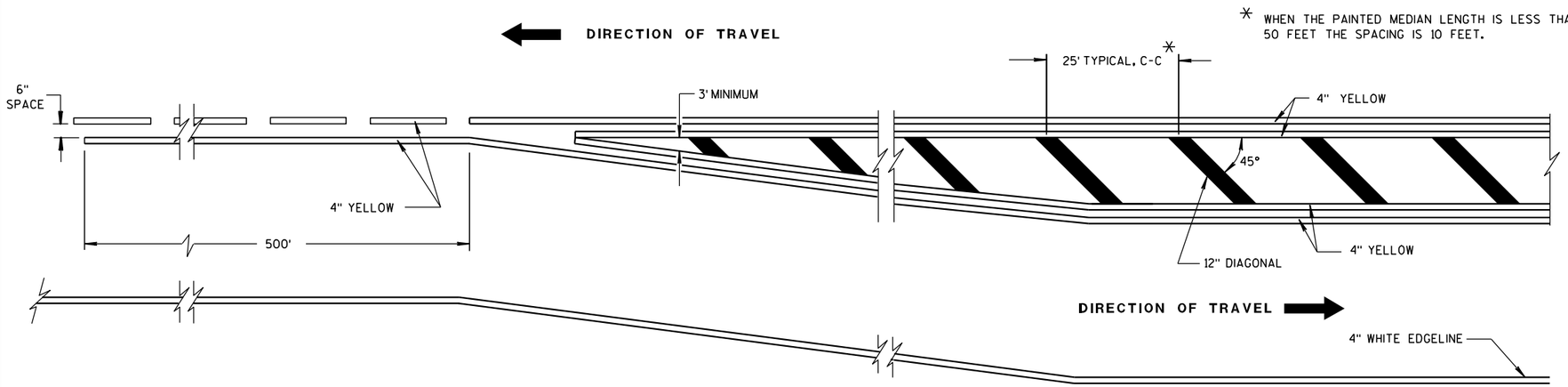

MEDIAN ISLAND DETAIL

GENERAL NOTE

DIAGONALS ARE OPTIONAL WHEN PAINTED ISLAND IS LESS THAN 6 FEET AT WIDEST POINT.

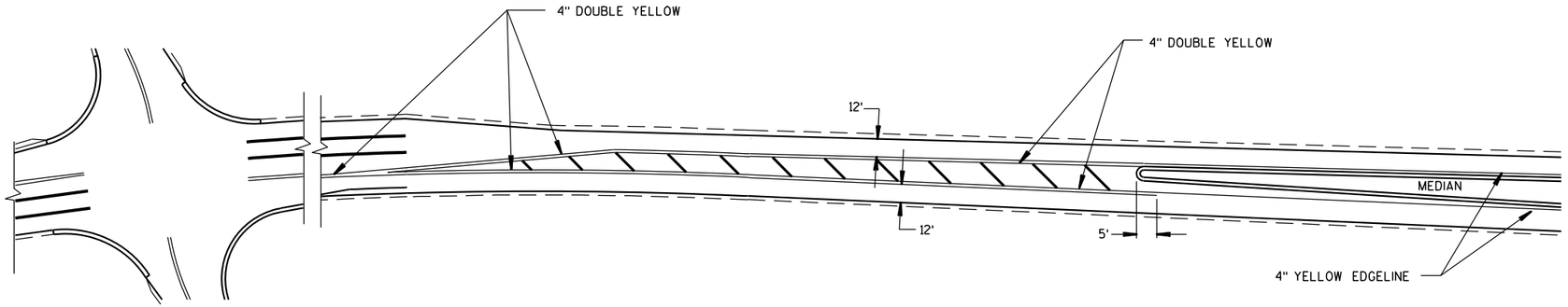

APPROACH MARKINGS FOR OTHER MEDIAN TYPES

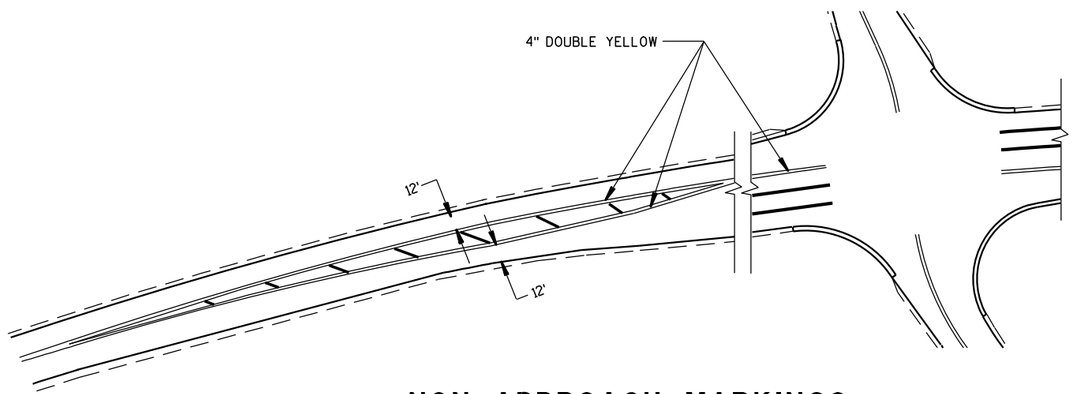

NON APPROACH MARKINGS

6

6

S.D.D. 15 C 18-3

S.D.D. 15 C 18-3

MEDIAN ISLAND MARKING

STATE OF WISCONSIN
DEPARTMENT OF TRANSPORTATION

APPROVED

2-5-09 DATE

/S/ Thomas N. Nothohm
STATE TRAFFIC ENGINEER

154

IGN

FHWA

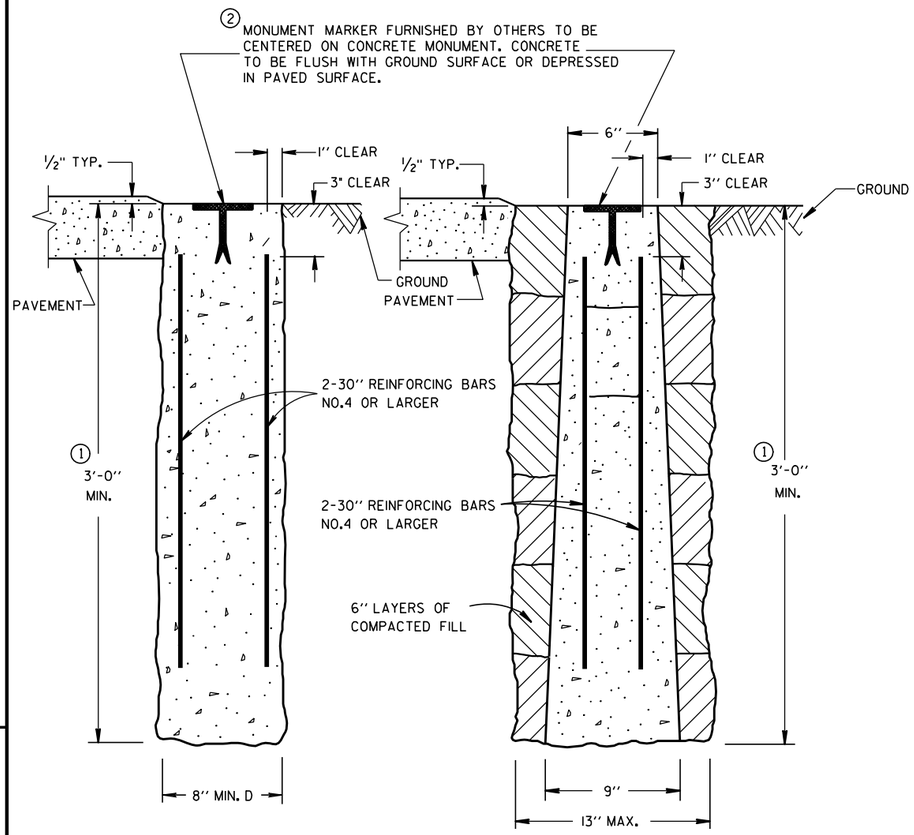

CAST-IN-PLACE PRECAST

CONCRETE MONUMENTS
TYPE A

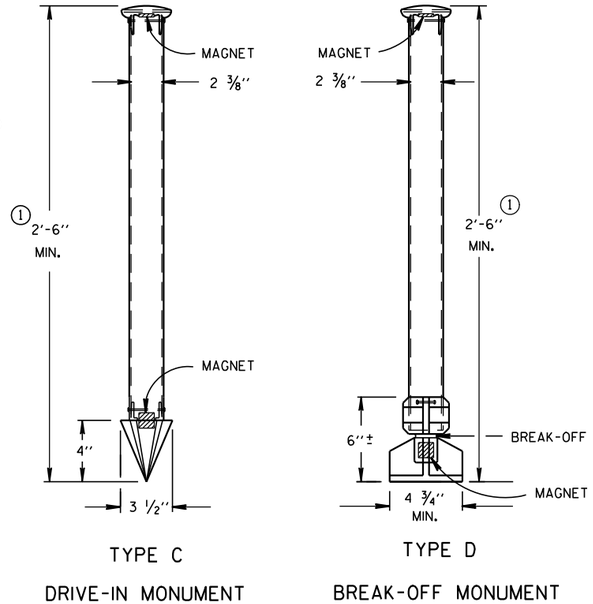

ALUMINUM MONUMENTS
(INCLUDES MARKER)

GENERAL NOTES

DETAILS OF CONSTRUCTION, MATERIALS AND WORKMANSHIP NOT SHOWN ON THIS DRAWING SHALL CONFORM TO THE PERTINENT REQUIREMENTS OF THE STANDARD SPECIFICATIONS AND THE APPLICABLE SPECIAL PROVISIONS.

DETAILED DRAWINGS OF PROPOSED ALTERNATE DESIGNS FOR METAL MONUMENTS OR MONUMENT COVERS SHALL BE SUBMITTED TO THE ENGINEER FOR APPROVAL.

INSTALLED METAL MONUMENTS MUST BE EASILY DETECTED WITH A DIP NEEDLE. INSERT PERMANENT MAGNETS SHALL BE ATTACHED NEAR THE TOP AND BOTTOM OF THOSE MONUMENTS CONSTRUCTED OF A METAL ALLOY WHICH IS NOT ATTRACTIVE TO A DIP NEEDLE.

THE CAST IRON MONUMENT COVER SHALL BE A "NON-ROCKING" TYPE. ADJUSTMENT OF THE COVER TO GRADE MAY BE ACCOMPLISHED BY THE USE OF MORTAR AND BRICK, OR BY EITHER PRECAST OR CAST-IN-PLACE REINFORCED CONCRETE GRADE RINGS.

MONUMENTS SHALL BE LOCATED AND PLACED AT THE DIRECTION OF THE ENGINEER.

ALUMINUM MONUMENTS AND MONUMENT COVERS SHALL BE MADE FROM AN ALUMINUM AND MAGNESIUM ALLOY AS DETERMINED BY THE MANUFACTURER.

THE MONUMENT COVERS DETAILED ON THIS DRAWING ARE NOT EQUAL ALTERNATES. MONUMENT COVERS SHALL BE CAST IRON UNLESS ALUMINUM IS SPECIFIED ELSEWHERE IN THE CONTRACT.

MONUMENT SHALL BE CAST-IN-PLACE CONCRETE UNLESS PRECAST CONCRETE OR ALUMINUM MONUMENTS ARE SPECIFIED IN THE CONTRACT OR PERMITTED BY THE ENGINEER.

① MINIMUM LENGTH SHALL BE 4'-0" FOR MONUMENTS INSTALLED IN PAVED AREAS.

② AN OFFICIAL COUNTY MONUMENT MARKER SUPPLIED BY A COUNTY MAY BE REQUIRED FOR SOME SECTION CORNERS AND WITNESS MONUMENTS INSTEAD OF THIS WIS DOT MARKER.

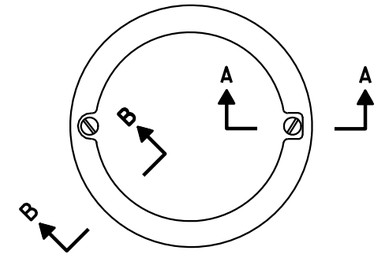

TOP VIEW

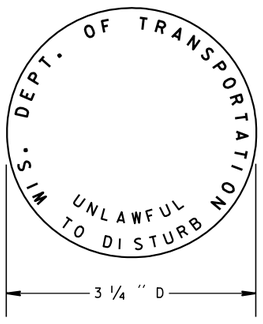

② WIS DOT MONUMENT MARKER LOGO
FOR TYPES "A", "C" & "D"

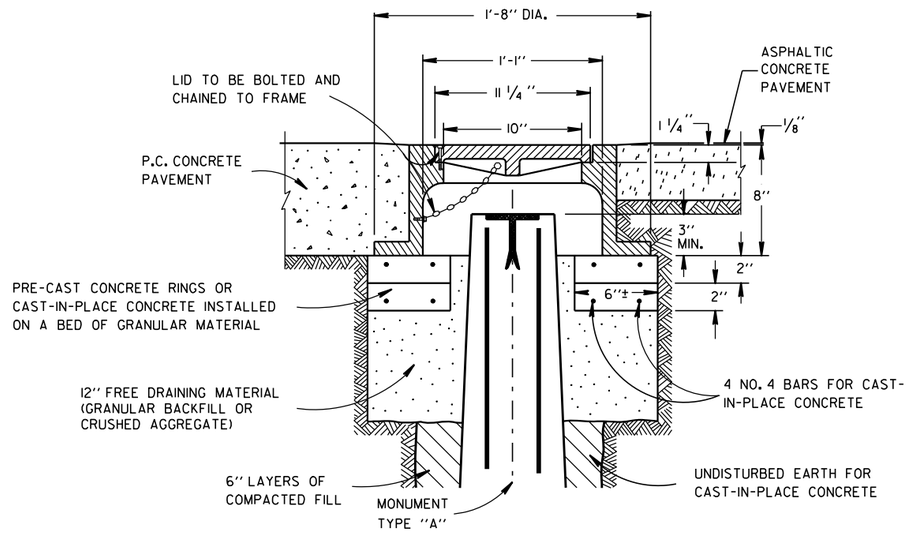

CAST IRON MONUMENT COVER
(APPROXIMATE WEIGHT - 95 LBS.)

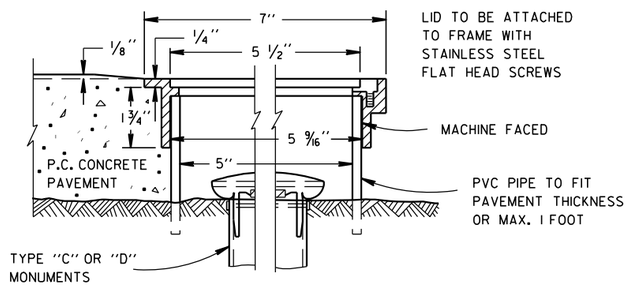

SECTION B-B SECTION A-A
ALUMINUM MONUMENT COVER
(APPROXIMATE WEIGHT 2 LBS)
(FOR CONCRETE PAVEMENT ONLY)

LANDMARK REFERENCE MOUNMENTS AND COVERS

STATE OF WISCONSIN
DEPARTMENT OF TRANSPORTATION

APPROVED
9/22/1999 DATE
/S/ Rory L. Rhinesmith
CHIEF ROADWAY DEVELOPMENT ENGINEER
FHWA

6 S.D.D. 16 A 1-6

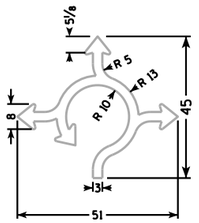

Size 3 Arrow

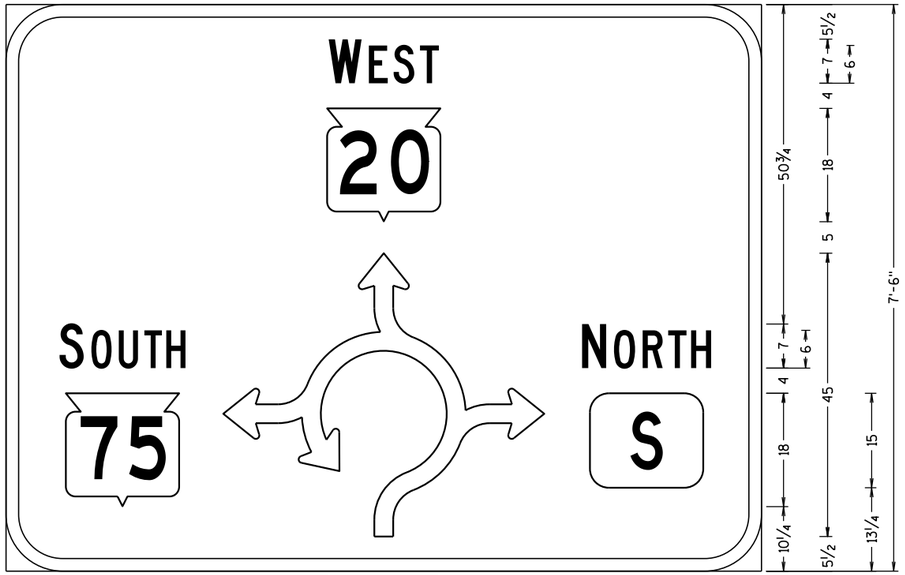

BORDER 2"
RADIUS 9"
D1-62

3-06

SERIES C LETTERS
SIZE 3
TYPE II

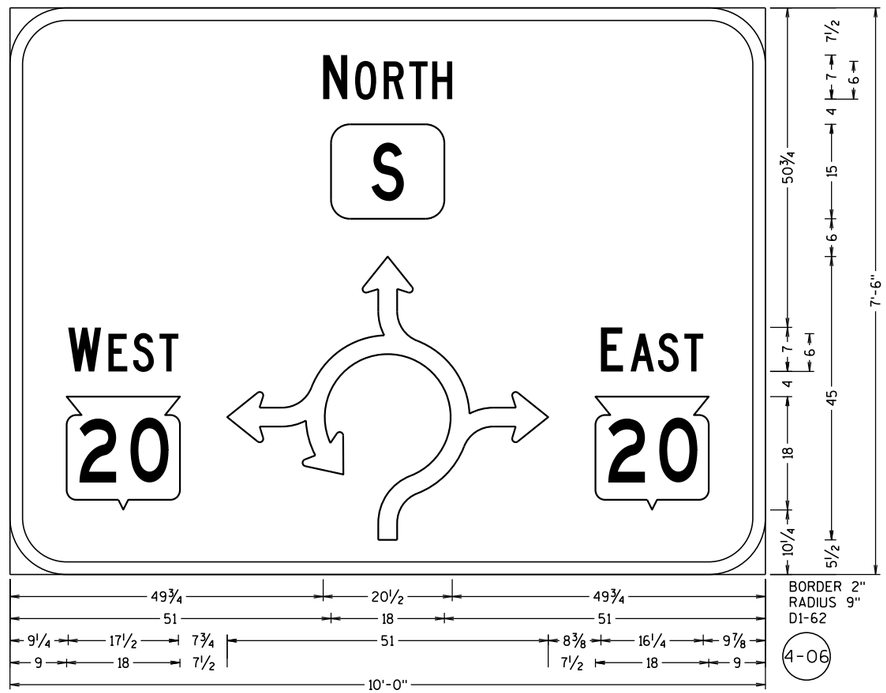

BORDER 2"
RADIUS 9"
D1-62

4-06

SERIES C LETTERS
SIZE 3
TYPE II

GENERAL NOTES:

1. DETAILS OF CONSTRUCTION, MATERIALS, AND WORKMANSHIP NOT SHOWN ON THIS DRAWING SHALL CONFORM TO THE PERTINENT REQUIREMENTS OF THE STANDARD SPECIFICATIONS, THE SPECIAL PROVISIONS, AND THE PLANS.
2. UNLESS OTHERWISE NOTED, ALL SIGNS SHOWN ON THIS SHEET ARE "SIGNS, TYPE II".
3. UNLESS OTHERWISE NOTED, TYPE II SIGNS ON THIS SHEET SHALL HAVE "TYPE H REFLECTIVE SHEETING" AND, "TYPE H MESSAGE MATERIAL". TYPE I SIGNS SHALL HAVE TYPE SH REFLECTIVE SHEETING.
4. UNLESS OTHERWISE NOTED, ALL SIGNS SHOWN ON THIS SHEET SHALL HAVE A GREEN BACKGROUND AND WHITE MESSAGE.
5. TYPE II SIGNS ALL UPPER CASE MESSAGE (EXCEPT ON SHIELDS OR WHERE OTHERWISE NOTED) SHALL BE "SERIES E. ALL LOWER CASE MESSAGE WITH AN INITIAL UPPER CASE LETTER SHALL BE "SERIES E.
6. TYPE I SIGNS - ALL UPPER CASE MESSAGE (EXCEPT ON SHIELDS OR WHERE OTHERWISE NOTED) SHALL BE SERIES "E" MODIFIED. ALL LOWER CASE MESSAGE WITH AN INITIAL UPPER CASE LETTER SHALL BE SERIES "E" MODIFIED. ALL CAP WORDS ARE "SERIES E"
7. UNLESS OTHERWISE NOTED, ALL SIGNS SHOWN ON THIS SHEET SHALL HAVE "TYPE A" OR "TYPE C" ARROWS AS SHOWN. SEE THE STANDARD SIGN PLATES FOR FURTHER DETAILS.
8. SEE THE STANDARD SIGN PLATES FOR FURTHER DETAILS ON ROUTE MARKER SHIELDS.
9. THE SIGN NUMBER IS DENOTED IN THE CIRCLE NEAR EACH DETAIL.
10. NUMBER FRACTIONS FOR INTERCHANGE SEQUENCE SIGNS SHALL BE SERIES "E" PER PLATES A11-7 AND A11-10
11. DO NOT SCALE.

7

7

SHEET 1 OF 3

PROJECT NO: 2340-09-70	HWY: STH 20	COUNTY: RACINE/KENOSHA	SIGNING DETAIL - TYPE II SIGNS	SCALE: 0 ½" 1"	SHEET 156	E

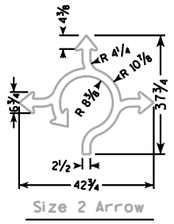

Size 2 Arrow

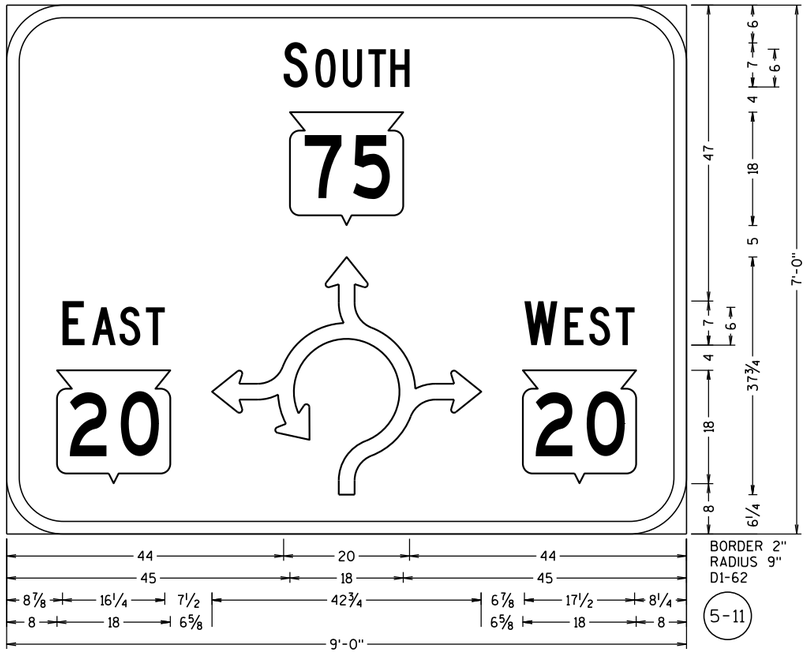

SERIES C LETTERS
SIZE 2

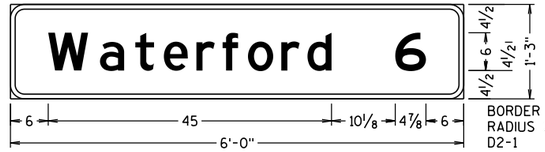

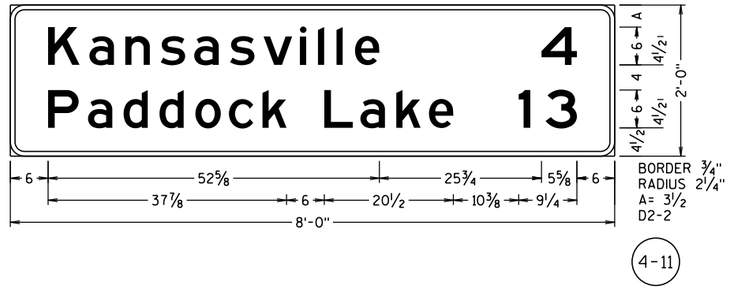

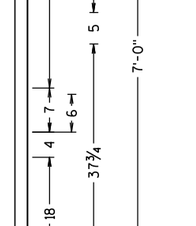

Size 3 Arrow

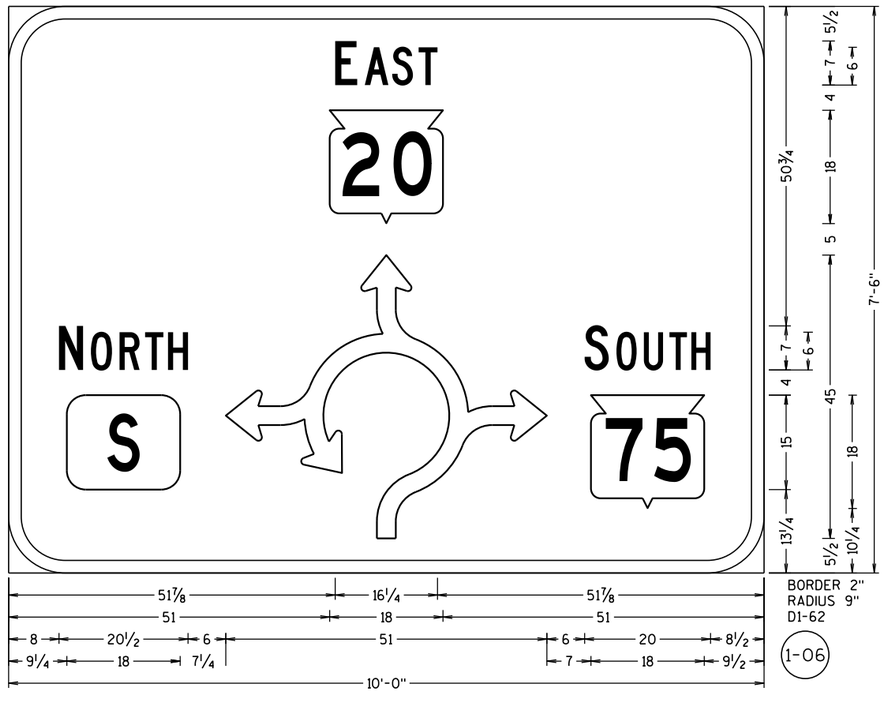

SERIES C LETTERS
SIZE 3

GENERAL NOTES:

1. DETAILS OF CONSTRUCTION, MATERIALS, AND WORKMANSHIP NOT SHOWN ON THIS DRAWING SHALL CONFORM TO THE PERTINENT REQUIREMENTS OF THE STANDARD SPECIFICATIONS, THE SPECIAL PROVISIONS, AND THE PLANS.
2. UNLESS OTHERWISE NOTED, ALL SIGNS SHOWN ON THIS SHEET ARE "SIGNS, TYPE II".
3. UNLESS OTHERWISE NOTED, TYPE II SIGNS ON THIS SHEET SHALL HAVE "TYPE H REFLECTIVE SHEETING" AND, "TYPE H MESSAGE MATERIAL". TYPE I SIGNS SHALL HAVE TYPE SH REFLECTIVE SHEETING.
4. UNLESS OTHERWISE NOTED, ALL SIGNS SHOWN ON THIS SHEET SHALL HAVE A GREEN BACKGROUND AND WHITE MESSAGE.
5. TYPE II SIGNS ALL UPPER CASE MESSAGE (EXCEPT ON SHIELDS OR WHERE OTHERWISE NOTED) SHALL BE "SERIES E. ALL LOWER CASE MESSAGE WITH AN INITIAL UPPER CASE LETTER SHALL BE "SERIES E.
6. TYPE I SIGNS - ALL UPPER CASE MESSAGE (EXCEPT ON SHIELDS OR WHERE OTHERWISE NOTED) SHALL BE SERIES "E" MODIFIED. ALL LOWER CASE MESSAGE WITH AN INITIAL UPPER CASE LETTER SHALL BE SERIES "E" MODIFIED. ALL CAP WORDS ARE "SERIES E"
7. UNLESS OTHERWISE NOTED, ALL SIGNS SHOWN ON THIS SHEET SHALL HAVE "TYPE A" OR "TYPE C" ARROWS AS SHOWN. SEE THE STANDARD SIGN PLATES FOR FURTHER DETAILS.
8. SEE THE STANDARD SIGN PLATES FOR FURTHER DETAILS ON ROUTE MARKER SHIELDS.
9. THE SIGN NUMBER IS DENOTED IN THE CIRCLE NEAR EACH DETAIL.
10. NUMBER FRACTIONS FOR INTERCHANGE SEQUENCE SIGNS SHALL BE SERIES "E" PER PLATES A11-7 AND A11-10
11. DO NOT SCALE.

7

7

SHEET 2 OF 3

PROJECT NO: 2340-09-70	HWY: STH 20	COUNTY: RACINE/KENOSHA	SIGNING DETAIL - TYPE II SIGNS	SCALE: 0 ½" 1"	SHEET 157	E

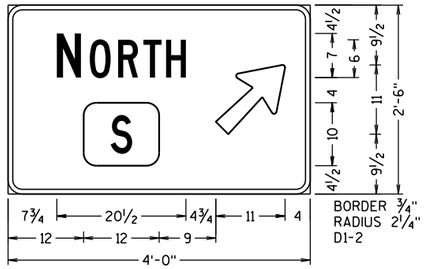

SERIES C LETTERS

2-06

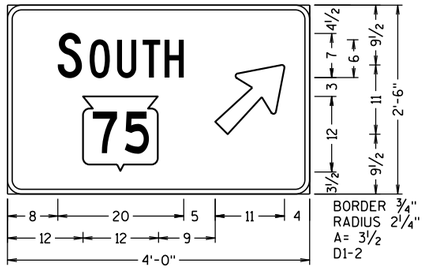

SERIES C LETTERS

2-15

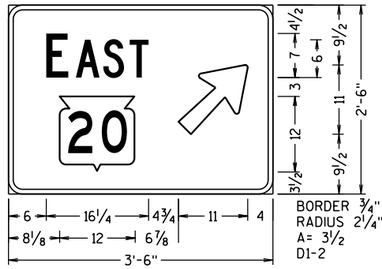

SERIES C LETTERS

2-28

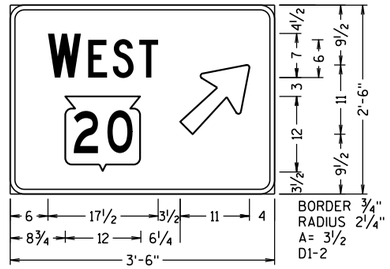

2-01

GENERAL NOTES:

1. DETAILS OF CONSTRUCTION, MATERIALS, AND WORKMANSHIP NOT SHOWN ON THIS DRAWING SHALL CONFORM TO THE PERTINENT REQUIREMENTS OF THE STANDARD SPECIFICATIONS, THE SPECIAL PROVISIONS, AND THE PLANS.

2. UNLESS OTHERWISE NOTED, ALL SIGNS SHOWN ON THIS SHEET ARE "SIGNS, TYPE II".

3. UNLESS OTHERWISE NOTED, TYPE II SIGNS ON THIS SHEET SHALL HAVE "TYPE H REFLECTIVE SHEETING" AND, "TYPE H MESSAGE MATERIAL". TYPE I SIGNS SHALL HAVE TYPE SH REFLECTIVE SHEETING.

4. UNLESS OTHERWISE NOTED, ALL SIGNS SHOWN ON THIS SHEET SHALL HAVE A GREEN BACKGROUND AND WHITE MESSAGE.

5. TYPE II SIGNS ALL UPPER CASE MESSAGE (EXCEPT ON SHIELDS OR WHERE OTHERWISE NOTED) SHALL BE "SERIES E. ALL LOWER CASE MESSAGE WITH AN INITIAL UPPER CASE LETTER SHALL BE "SERIES E.

6. TYPE I SIGNS - ALL UPPER CASE MESSAGE (EXCEPT ON SHIELDS OR WHERE OTHERWISE NOTED) SHALL BE SERIES "E" MODIFIED. ALL LOWER CASE MESSAGE WITH AN INITIAL UPPER CASE LETTER SHALL BE SERIES "E" MODIFIED. ALL CAP WORDS ARE "SERIES E"

7. UNLESS OTHERWISE NOTED, ALL SIGNS SHOWN ON THIS SHEET SHALL HAVE "TYPE A" OR "TYPE C" ARROWS AS SHOWN. SEE THE STANDARD SIGN PLATES FOR FURTHER DETAILS.

8. SEE THE STANDARD SIGN PLATES FOR FURTHER DETAILS ON ROUTE MARKER SHIELDS.

9. THE SIGN NUMBER IS DENOTED IN THE CIRCLE NEAR EACH DETAIL.

10. NUMBER FRACTIONS FOR INTERCHANGE SEQUENCE SIGNS SHALL BE SERIES "E" PER PLATES A11-7 AND A11-10

11. DO NOT SCALE.

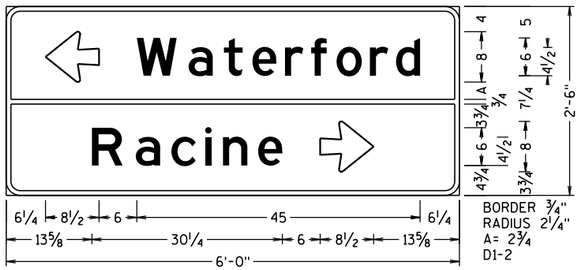

4-13

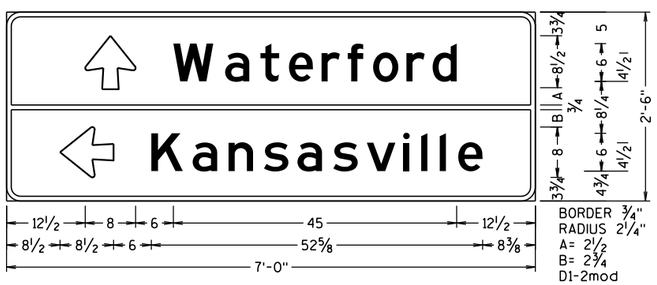

3-03

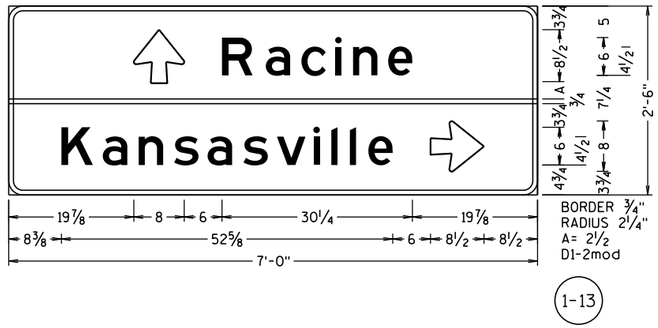

1-13

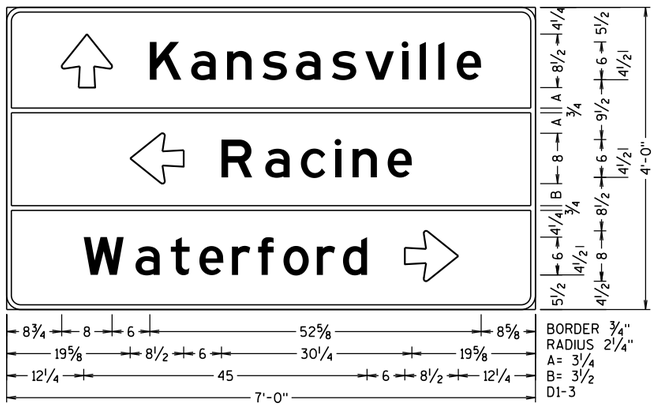

5-04

SHEET 3 OF 3

PROJECT NO: 2340-09-70	HWY: STH 20	COUNTY: RACINE/KENOSHA	SIGNING DETAIL - TYPE II SIGNS	SCALE: 0 1/2" 1"	SHEET 158	E

TYPICAL ASSEMBLIES

J1-1

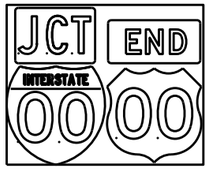

J1-2

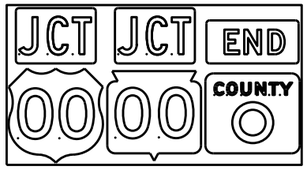

J1-3

J2-1

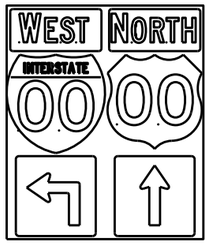

J2-2

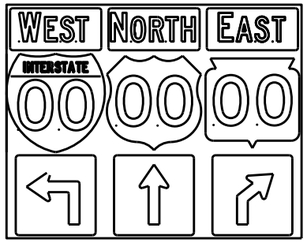

J2-3

JV

(Typical Vertical J-Assembly
See Note 10 and 11)

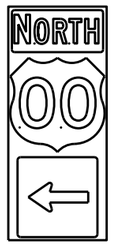

J3-1

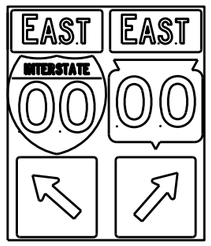

J3-2

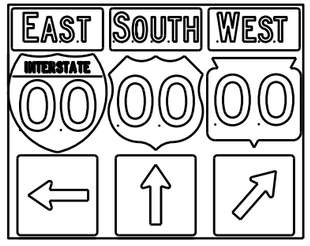

J3-3

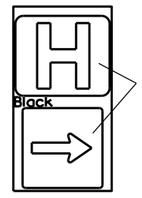

JH-1

J4-1

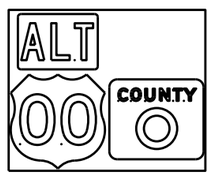

J4-2

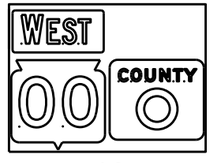

J4-2

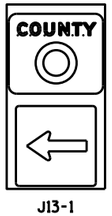

J13-1

J12-1

J32-1

J33-1

J23-1

J22-1

[blue background with interstate]

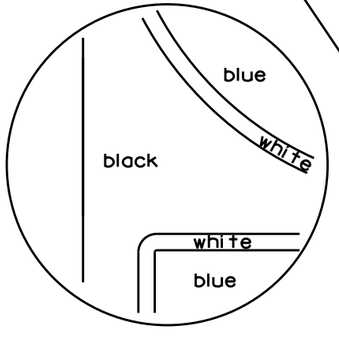

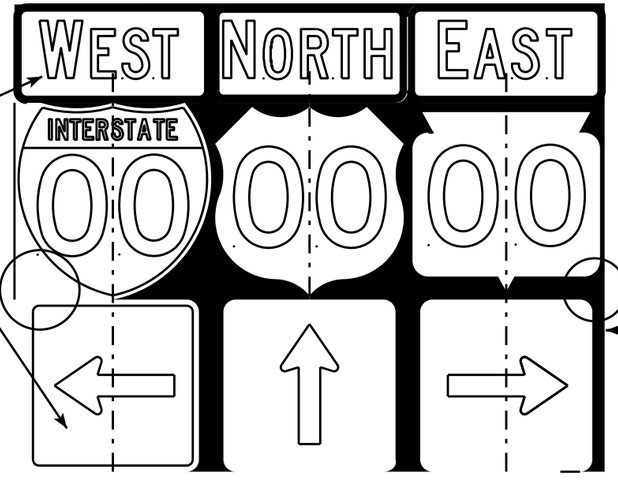

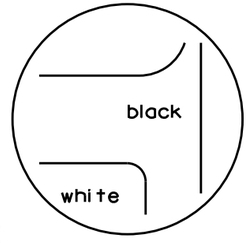

[black background]

NOTES

1. Signs are Type II - Type H Reflective - reference WIS DOT Standard Specification for HIGHWAY and STRUCTURE CONSTRUCTION latest edition.
2. Color:
   Background - Black Non-reflective
   Message - see Note 5
3. Message Series - See Note 5
4. Corners shall be square or rounded if base material is plywood. If base material is metal the corners shall be rounded.
5. The colors and message spacing on each marker shall be according to the applicable route marker panel specifications.
6. Certain marker heads require the component pieces to be the same color. As an example, all the components used with an M1-1 Interstate marker shall be blue.
7. Single panel j-assemblies shall only be used with route marker shields that are same size. If the route marker shields are different size use multiple piece component.
8. Route assemblies that have 24 inch route shields and have dimensions greater than 48 inches (both vertical and horizontal) shall have one horizontal splice between the arrows and route shields. Vertical splices shall not be used on route assemblies with a horizontal dimension of 144 inches or less. The contractor shall not use more than one vertical joint per sign and the joint shall be between route shields.
9. Route assemblies that have 36 inch shields and have dimensions greater than 48 inchs (both vertical and horizontal) shall have two horizontal splices. One horizontal splice shall be between the cardinal direction and route shields and the other horizontal splice shall be between the arrows and route shields. Vertical splices shall not be used on route assemblies with a horizontal dimension of 144 or less. The contractor shall not use more than one vertical joint per sign and the joint shall be between route shields.
10. All Vertical J Assemblies are given a Sign Code of JV
11. For JV Assemblies that have a mixture of Interstate and non Interstate shields, arrows and cardinals shall be white on blue.

ROUTE MARKERS & COMPONENTS
IN TYPICAL ASSEMBLIES

WISCONSIN DEPT OF TRANSPORTATION

APPROVED Matthew R Rauch
for State Traffic Engineer

DATE 2/06/14 PL... A2-1S.8

PROJECT NO: SHEET NO: E

FILE NAME : C:\CAEFiles\Projects\tr_stdplate\A21S.DGN PLOT DATE : 06-FEB-2014 14:10 PLOT BY : mscsja PLOT NAME :
WISDOT/CADDS SHEET 42

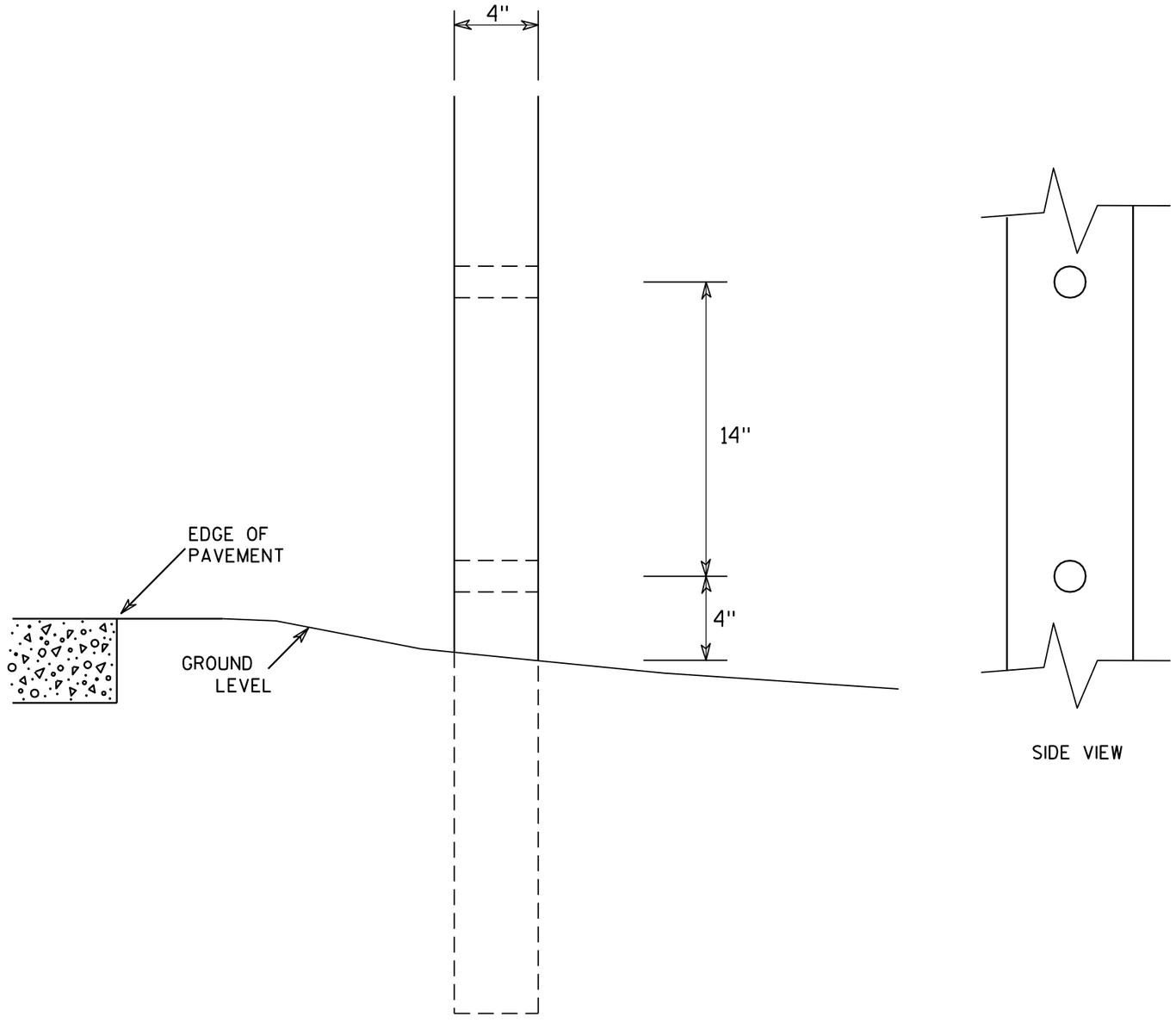

SIDE VIEW

GENERAL NOTES

1. All 4 x 6 Wood Posts shall be modified by having two 1½" diameter holes drilled perpendicular to the roadway centerline.

7

7

4 X 6 WOOD POST MODIFICATIONS

WISCONSIN DEPT OF TRANSPORTATION

APPROVED Chester J Spang for State Traffic Engineer

DATE 3/27/97 PLATE NO. A4-11.2

PROJECT NO:	HWY:	COUNTY:		SHEET NO: 160	E

URBAN AREA

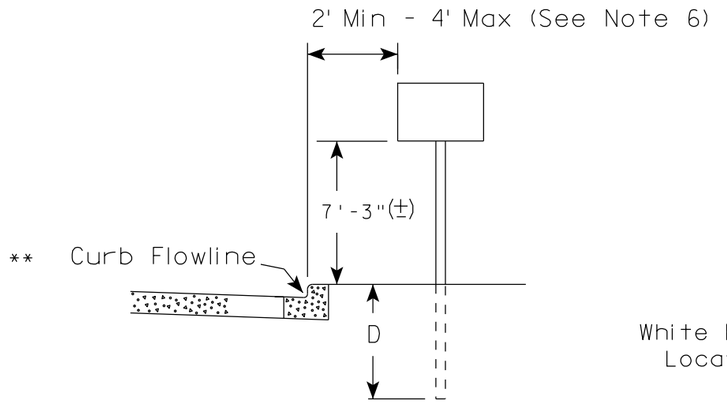

RURAL AREA (See Note 2)

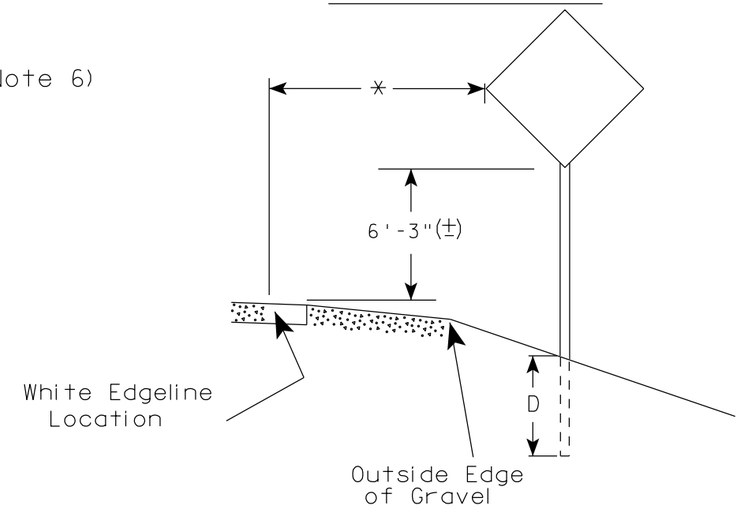

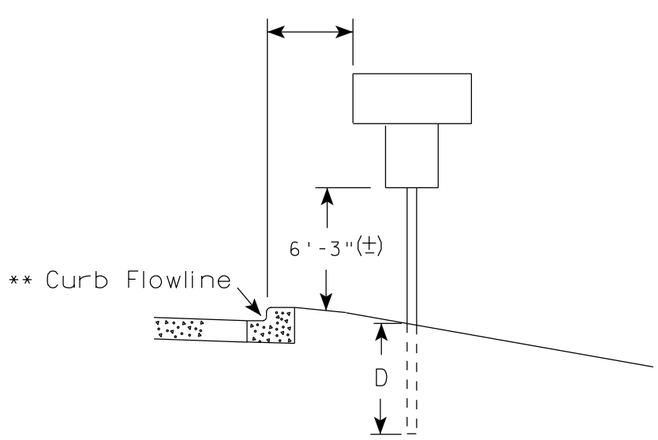

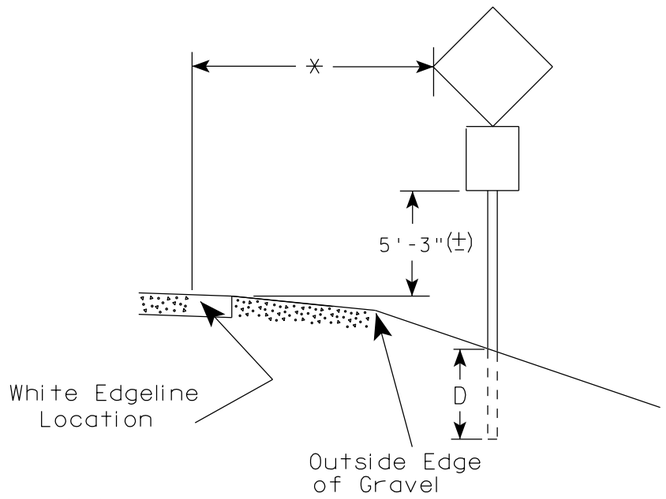

** The existence of curb and gutter does not in itself mandate the vertical clearance illustrated. That height is typically measured where there is sidewalk adjacent to the roadway or parking is permitted. In the absence of sidewalk vertical clearance is measured from the top of the curb. Offset of signs is measured from the flow line.

* 6 feet from edge of a paved shoulder or 12 feet from the edge of pavement (edge line location) or 2 feet from outside edge of gravel, whichever is greater unless directed by project engineer.

GENERAL NOTES

1. Signs wider than 4 feet, 20 sq.ft or larger, shall be mounted on multiple posts. Refer to plate A4-4.
2. If signs are mounted on barrier wall, see A4-10 sign plate.
3. For expressways and freeways, mounting height is 7'- 3" (±) or 6'-3" (±) depending upon existence of a sub-sign.
4. Minimum mounting height for J assemblies (A4-5) is 7'-3" (±) or 6'-3" (±) per urban or rural detail respectively.
5. Minimum mounting height for signs mounted on traffic signal poles is 5'- 3" (±).
6. Offset distance shall be consistent with existing signs or consistent throughout length of project.
7. The (±) tolerance for mounting height is 3 inches.
8. Folding stop signs (R1-1F) shall be mounted at a height of 5'-3" (±) or as directed by the Engineer.
9. The Double Arrow sign (W12-1) shall be mounted at a height of 2'-3" (±). The Chevron sign (W1-8), Roundabout Chevron panel (R6-4B), Enhanced Reference Markers, Clearance Markers (W5-52), Mile Markers (D10 series) & End of Rod Markers (W5-56 & W5-56A) shall be mounted at a height of 4'-3" (+).

POST EMBEDMENT DEPTH

Area of Sign Installation (Sq. Ft.)	D (Min)
20 or Less	4'
Greater than 20	5'

TYPICAL INSTALLATION OF PERMANENT TYPE II SIGNS ON SINGLE POSTS

WISCONSIN DEPT OF TRANSPORTATION

APPROVED Matthew R Rauch
for State Traffic Engineer

DATE 9/30/13 PLATE NO. A4-3.18

PROJECT NO:	HWY:	COUNTY:		SHEET NO:	E

7

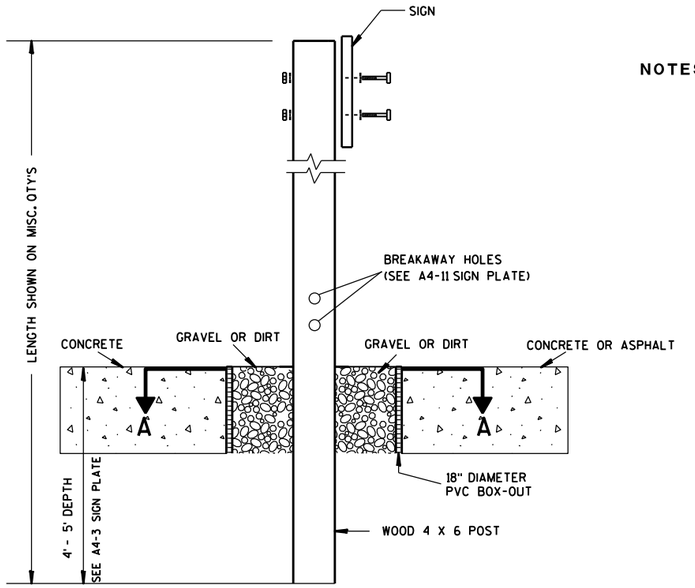

ELEVATION VIEW

DETAIL OF WOOD 4 X 6 SIGN POST IN BOX-OUT

NOTES:
1. ALL MATERIAL TO BE APPROVED BY ENGINEER PRIOR TO INSTALLATION
2. SEE SIGN PLATE A4-8 FOR SIGN HARDWARE REQUIREMENTS
3. 18 INCH X 18 INCH SQUARE BOX-OUTS MAY BE USED FOR INSTALLATIONS IN EXISTING CONCRETE OR ASPHALT LOCATIONS.

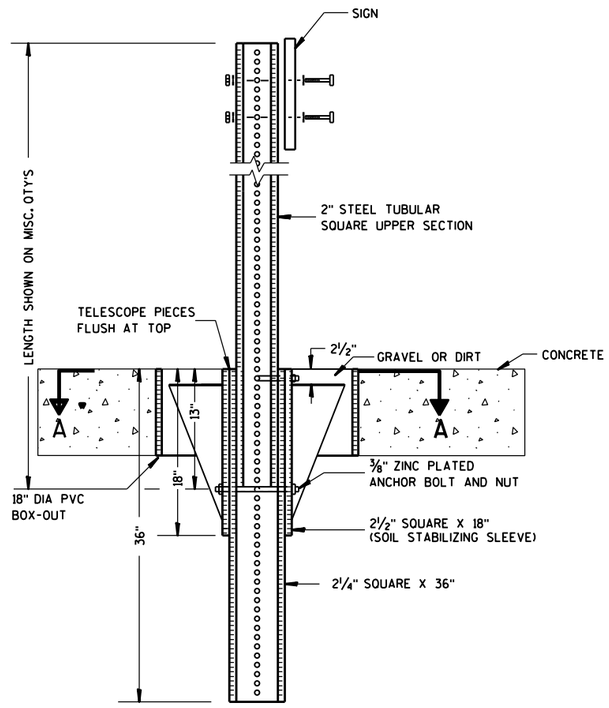

ELEVATION VIEW

DETAIL OF STEEL 2 X 2 SIGN POST IN BOX-OUT

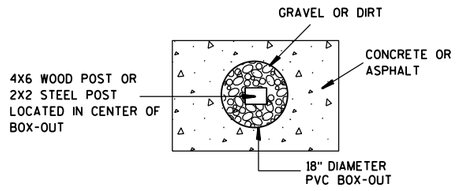

PLAN VIEW

FOR NEW CONCRETE/ASPHALT INSTALLATIONS

SIGN POST BOX-OUTS A4-3B

WISCONSIN DEPT OF TRANSPORTATION

APPROVED Matthew R Rauch
for State Traffic Engineer

DATE 1/27/14 PLATE NO. A4-3B.1

PROJECT NO:	HWY:	COUNTY:		SHEET NO:	E

FILE NAME : C:\CAEFiles\Projects\tr_stdplate\A43B.DGN PLOT DATE : 27-JAN-2014 09:48 PLOT BY : mscsja PLOT NAME : PLOT SCALE : 13.659812:1.000000 WISDOT/CADDS SHEET 42

URBAN AREA

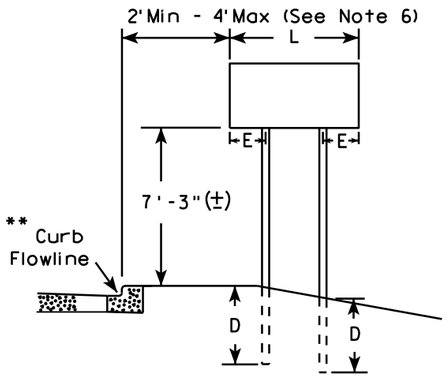

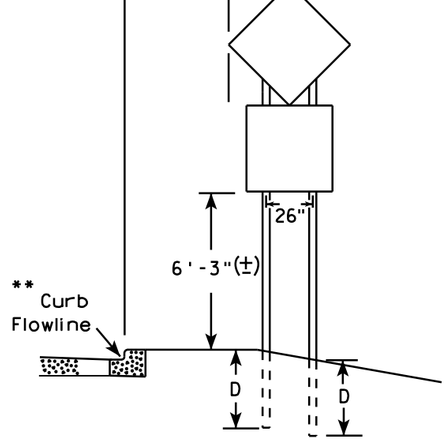

48" DIAMOND WARNING SIGN

RURAL AREA (See Note 3)

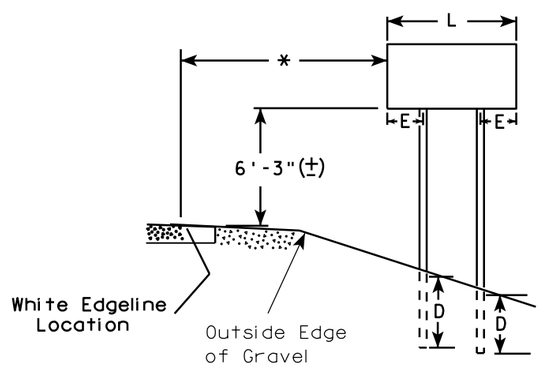

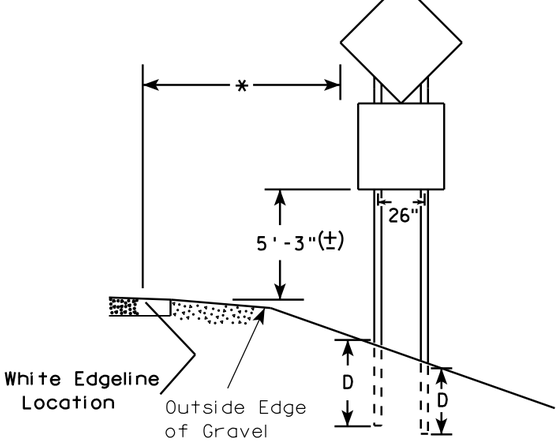

48" DIAMOND WARNING SIGN

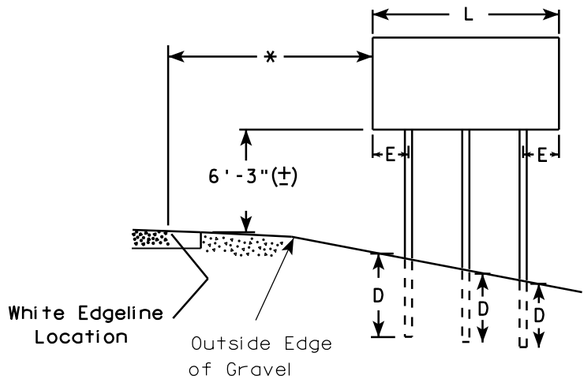

GENERAL NOTES

1. For 3 or 4 post installations, individual post spacing shall be greater than 3'-6".
2. See tables below for required number of posts.
3. For expressways and freeways, mounting height is 7'-3" (±) or 6'-3" (±) depending upon existence of sub-sign.
4. The (±) tolerance for mounting height is 3 inches.
5. Minimum mounting height for J assemblies (A4-5) is 7'-3" (±) or 6'-3" (±) per urban or rural detail respectively.
6. Offset distance shall be consistent with existing signs or consistent throughout length of project.
7. Folding stop signs (R1-1F) shall be mounted at a height of 5'-3" (±) or as directed by the engineer.
8. The Double Arrow sign (W12-1) shall be mounted at a height of 2'-3" (±). The Chevron sign (W1-8), Roundabout Chevron panel (R6-4B), Clearance Markers (W5-52), Mile Markers (D10 series) & End of Road Markers (W5-56 & W5-56A) shall be mounted at a height of 4"-3" (±).

* 6 feet from edge of a paved shoulder or 12 feet from the edge of pavement (edge line location) or 2 feet from outside edge of gravel, whichever is greater unless directed by project engineer.

** The existence of curb and gutter does not in itself mandate the vertical clearance illustrated. That height is typically measured where there is sidewalk adjacent to the roadway or parking is permitted. In the absence of sidewalk vertical clearance is measured from the top of the curb. Offset of signs is measured from the flow line.

*** See A4-3 sign plate for signs 4' or less in width or 20 S.F. or less in area.

SIGN SHAPE OTHER THAN DIAMOND (TWO POSTS REQUIRED)	
L	E
Greater than 48" Less than 60"	12"
60" to 120"	L/5

***

SIGN SHAPE OTHER THAN DIAMOND (THREE POSTS REQUIRED)	
L	E
Greater than 120" less than 168"	12"

SIGN SHAPE OTHER THAN DIAMOND (FOUR POSTS REQUIRED)	
L	E
168" and greater	12"

POST EMBEDMENT DEPTH

Area of Sign Installation (Sq. Ft.)	D (Min)
20 or Less	4'
Greater than 20	5'

TYPICAL INSTALLATION OF TYPE II SIGNS ON MULTIPLE POSTS

WISCONSIN DEPT OF TRANSPORTATION

APPROVED Matthew R Rauch
for State Traffic Engineer

DATE 9/30/13 PLATE NO. A4-4 12

PROJECT NO:	HWY:	COUNTY:		SHEET NO:	E

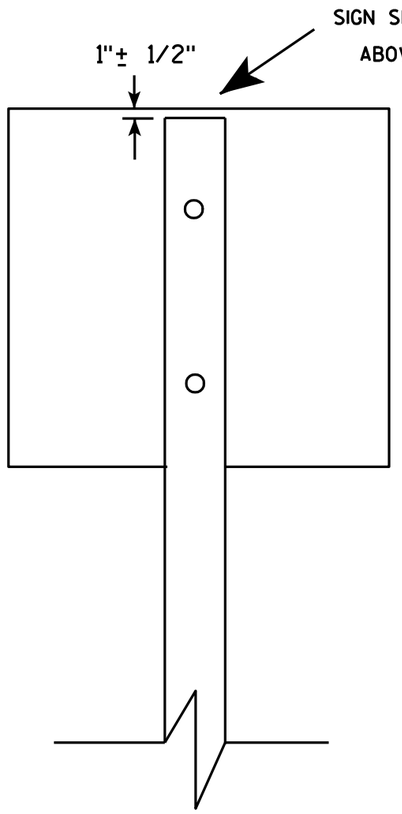

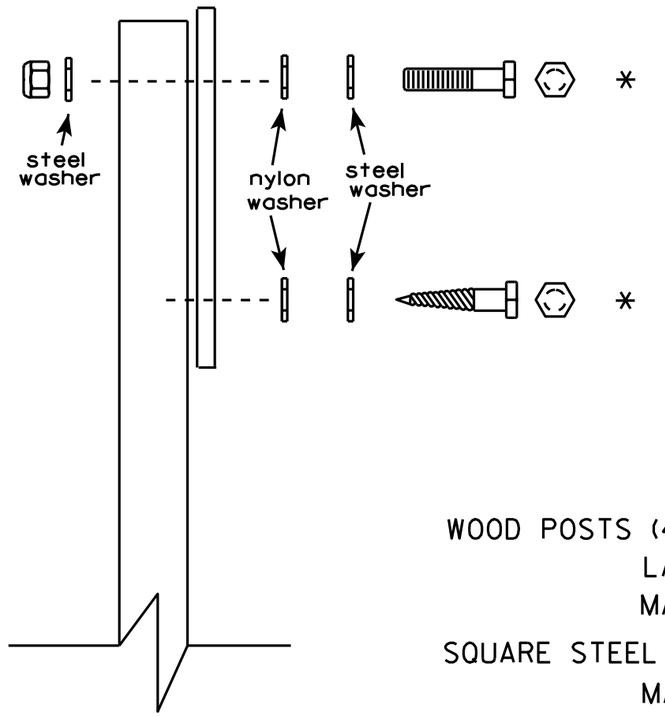

Nuts, bolts and lags used for mounting signs shall have hexagonal heads and shall be either :

a. Hot dip galvanized in accordance with ASTM Designation: A 153, Class D, or SC 3
b. Electro-galvanized in accordance with ASTM Designation : B 633, TYPE III, SC 3.

Threads on bolts and nuts shall be manufactured with sufficient allowance for the cadmium plate or galvanized coating to permit the nuts to run freely on the bolts.

WOOD POSTS (4" x 4" or 4" x 6")
LAG SCREWS - 3/8" X 3"
MACHINE BOLTS - 5/16" X 6-1/2" or 7" Length w/ nuts

SQUARE STEEL POSTS (2" x 2")
MACHINE BOLTS - 3/8" X 3-1/4" Length w/ nuts
RIVETS - 9/32 " (6605-9-6) BULB-TITE, TRI-FOLD, ALUMINUM BODY/MANDREL
O.D. FLANGE .720-.765 INCH, GRIP RANGE .042-.375 INCH

WASHERS (ALL POSTS) -
1-1/4" O.D. X 3/8" I.D. X 1/16" STEEL
1-1/4" O.D. X 3/8" I.D. X .080 NYLON for all Type H signs.

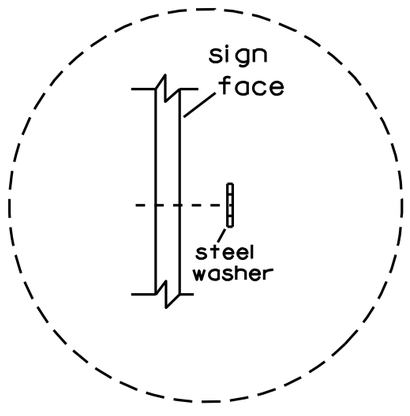

Washer Placement when Sign Has Other Than Type H or Type F Face

* Two different fastening systems are shown for illustration purposes. On any individual sign, either one or the other system shall be used. Actual number of fasteners per sign varies with the sign area, but normally there are two. For a single post installation, all signs greater than 9 sq. ft. require the use of 3 fasteners.

ATTACHMENT OF SIGNS TO POSTS

WISCONSIN DEPT OF TRANSPORTATION

APPROVED Matthew R Rauch
for State Traffic Engineer

DATE 3/23/10 PLATE NO. A4-8.7

7

7

PROJECT NO:

SHEET NO: 164 E

TELESCOPIC TUBING ANCHORS
TWO PIECE SYSTEM

2 1/4 " SQUARE
12 GAUGE
PERFORATED
GALVANIZED FINISH

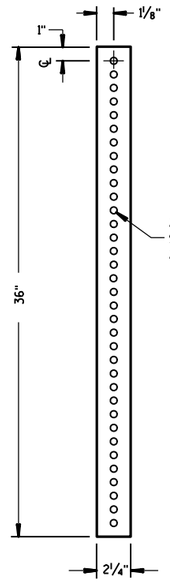

2 1/2 " SQUARE
12 GAUGE
OMNI-DIRECTIONAL
PERFORATED
SOIL STABILIZING SLEEVE
GALVANIZED FINISH

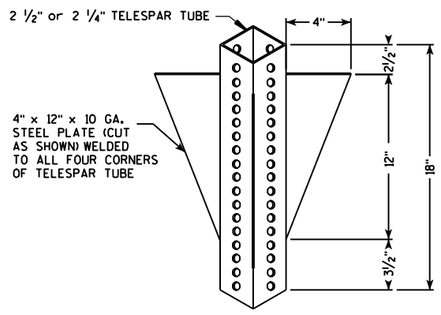

DETAIL OF TUBULAR STEEL SIGN POST
(IN POURED CONCRETE OR ASPHALT)

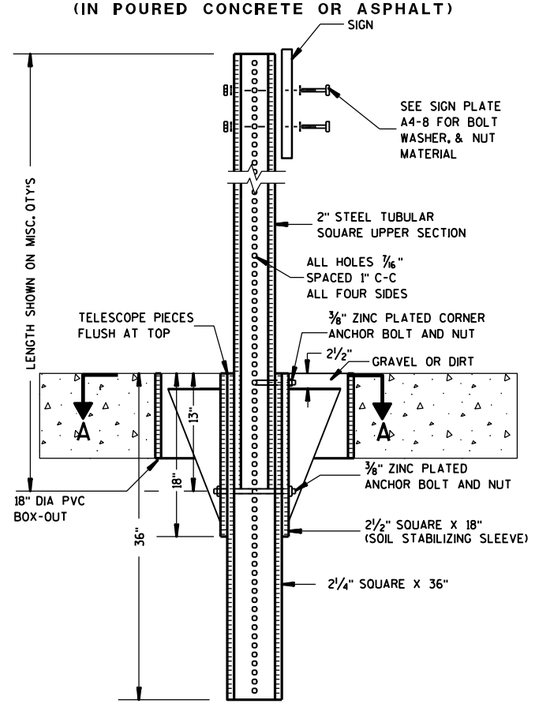

DETAIL OF TUBULAR STEEL SIGN POST
(IN LOCATIONS OTHER THAN POURED CONCRETE OR ASHALT)

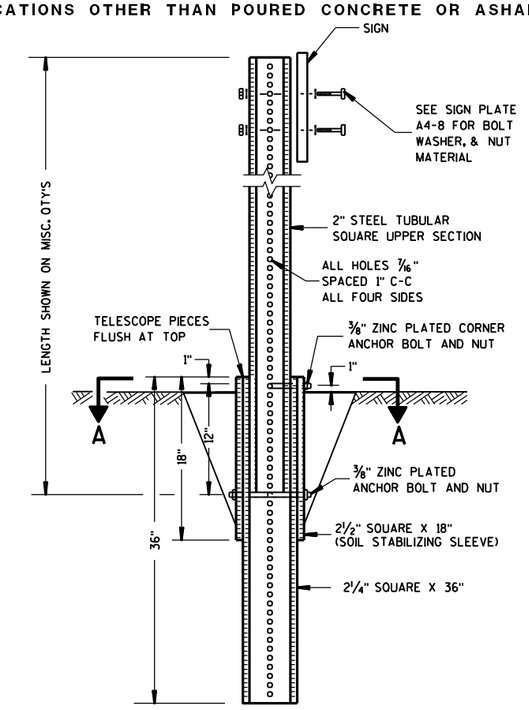

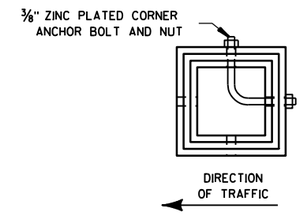

SECTION A-A

Area of Sign Installation (Sq. Ft.)	Number of Required Posts
9 or less	1
Greater than 9 less than or equal to 18	2
Greater than 18 less than or equal to 27	3

Signs wider than 3 feet or larger than 9 sq. ft shall be mounted on multiple posts (see above table).

TUBULAR STEEL SIGN POST A4-9

WISCONSIN DEPT OF TRANSPORTATION

APPROVED Matthew R Rauch
for State Traffic Engineer

DATE 5/30/12 PLATE NO. A4-9.7

PROJECT NO:	HWY:	COUNTY:		SHEET NO: 165	E

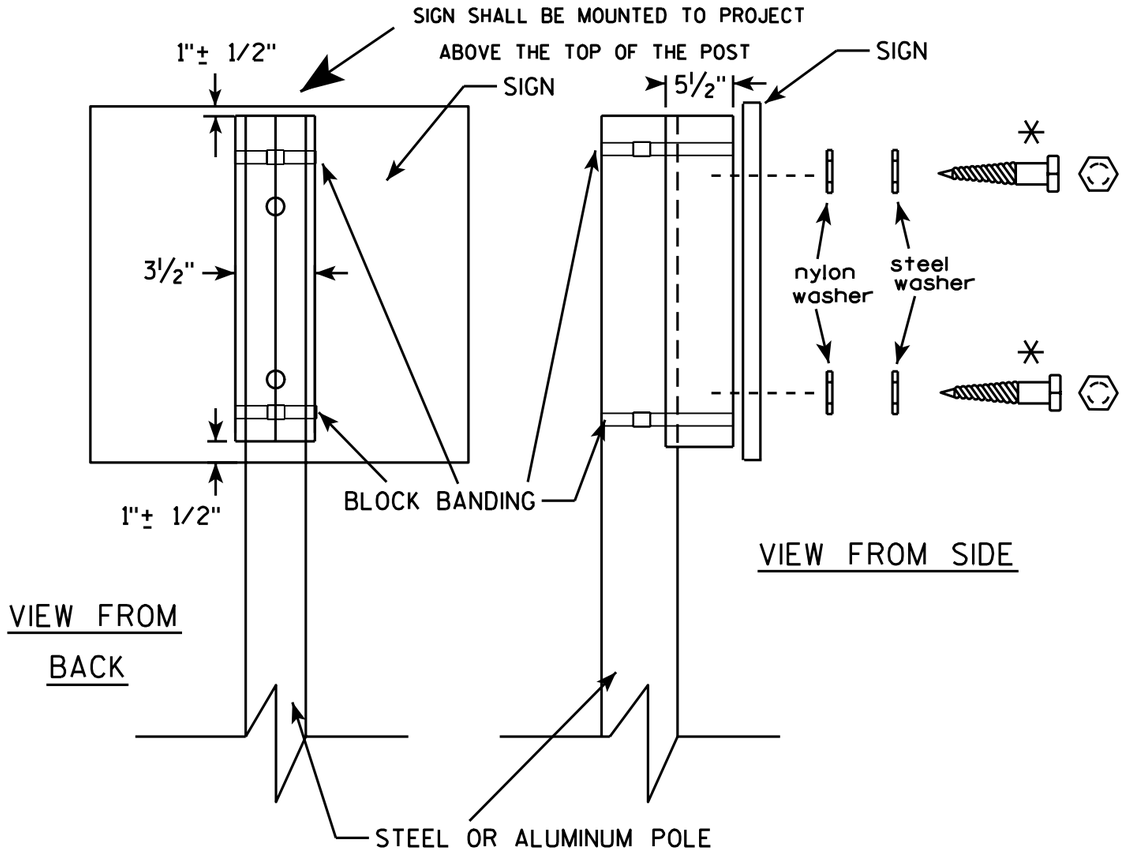

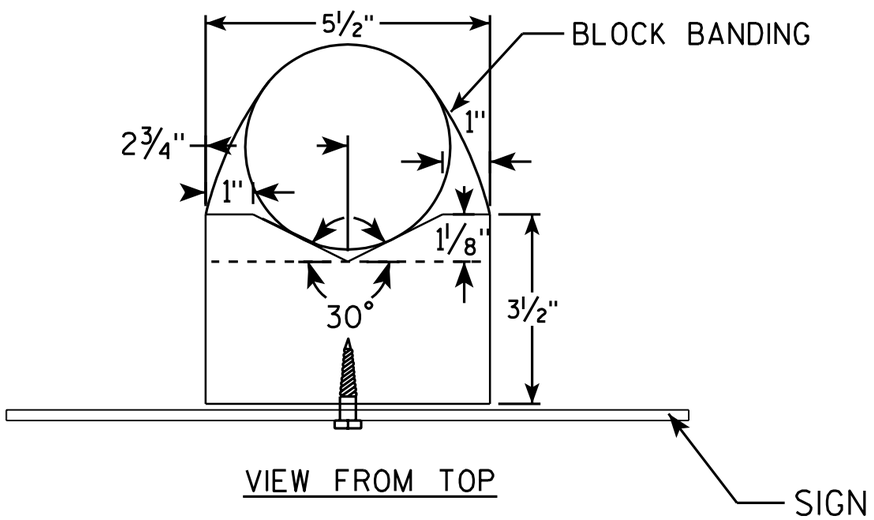

GENERAL NOTES

1. WOOD 4"X6" POST MATERIAL SHALL CONFORM TO 507.2.2 OF THE WisDOT STANDARD SPECIFICATIONS
2. BLOCK BANDING AND CLIPS SHALL BE STAINLESS STEEL, ¾" WIDTH AND 0.025" THICKNESS
3. SIGNS 3' OR GREATER IN HEIGHT SHALL UTILIZE 3 BLOCK BANDS. SIGNS UNDER 3' IN HEIGHT SHALL UTILIZE 2 BLOCK BANDS
4. ACTUAL NUMBER OF FASTENERS PER SIGN VARIES WITH THE SIGN AREA, BUT NORNALLY THERE ARE TWO. FOR SIGNS GREATER THAN 9 S.F. 3 FASTENERS SHALL BE USED.
5. ALL SIGN MOUNTING BOLTS AND WASHERS SHALL BE EITHER:
   a. Hot dip or mechanically galvanized in accordance with ASTM Designation: A 153, Class D, or
   b. Cadmium plated in accordance with ASTM Designation : B 766 TYPE 3, Class 12, or
   c. Electro-galvanized in accordance with ASTM Designation : B 633, TYPE III, SC 3.
6. ALL BOLTS SHALL HAVE HEXAGONAL HEADS.
7. STEEL WASHERS SHALL BE 1¼" O.D. X ⅜" I.D. X 1/16"
8. NYLON WASHERS SHALL BE 1¼" O.D. X ⅜" I.D. X .080 FOR TYPE H OR TYPE F FACE SIGN

✳ LAG BOLTS SHALL BE ⅜" X 2½"

BLOCK BANDING DETAIL (V-BLOCK OPTION)

WISCONSIN DEPT OF TRANSPORTATION

APPROVED Matthew R Rauch
for State Traffic Engineer

DATE 7/12/07 PLATE NO. A5-10.1

PROJECT NO:

SHEET NO: 166 E

BANDING

SINGLE SIGN

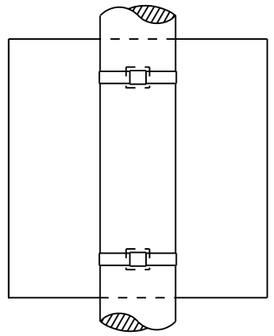

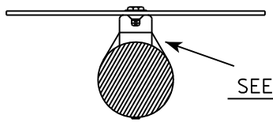

"J" ASSEMBLY

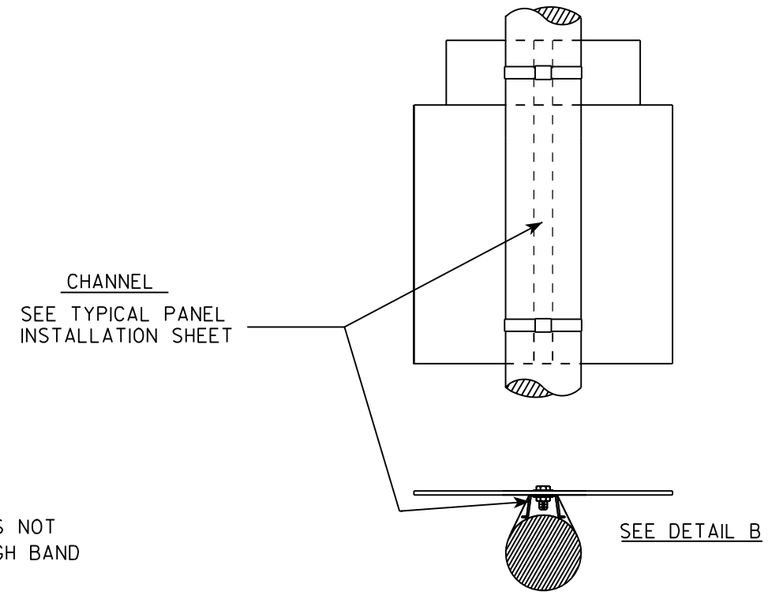

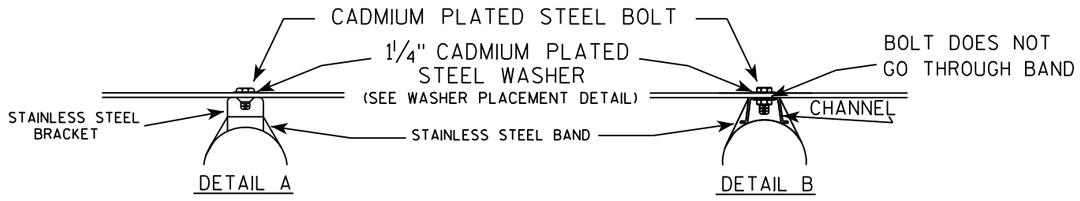

WASHER PLACEMENT

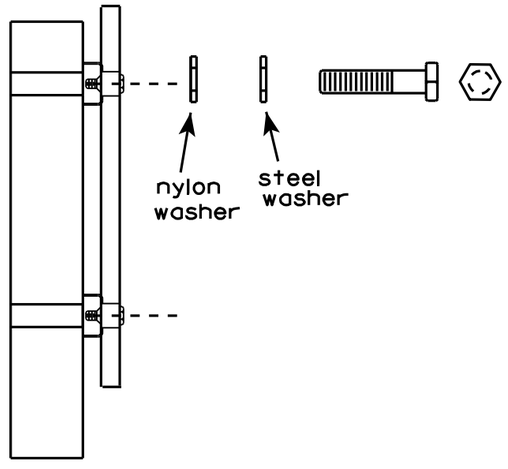

WASHERS (ALL POSTS) -
1-1/4" O.D. X 3/8" I.D. X 1/16" STEEL
1-1/4" O.D. X 3/8" I.D. X .080 NYLON
FOR ALL TYPE H SIGNS

GENERAL NOTES

1. Any sign over 3 feet in width shall use the V-Block banding method. See A5-10 standard plate.
2. Signs 3 feet or greater in height shall have three bracket bands installed. Signs less than 3 feet in height shall have two bracket bands installed.
3. Banding and assembly bracket shall be stainless steel. All bands shall be ¾" in width and 0.025" thickness.

STANDARD SIGN
SIGN BANDING DETAILS

WISCONSIN DEPT OF TRANSPORTATION

APPROVED Matthew R Rauch
for State Traffic Engineer

DATE 8/16/13 PLATE NO. A5-9.3

PROJECT NO:	HWY:	COUNTY:		SHEET NO: 167	E

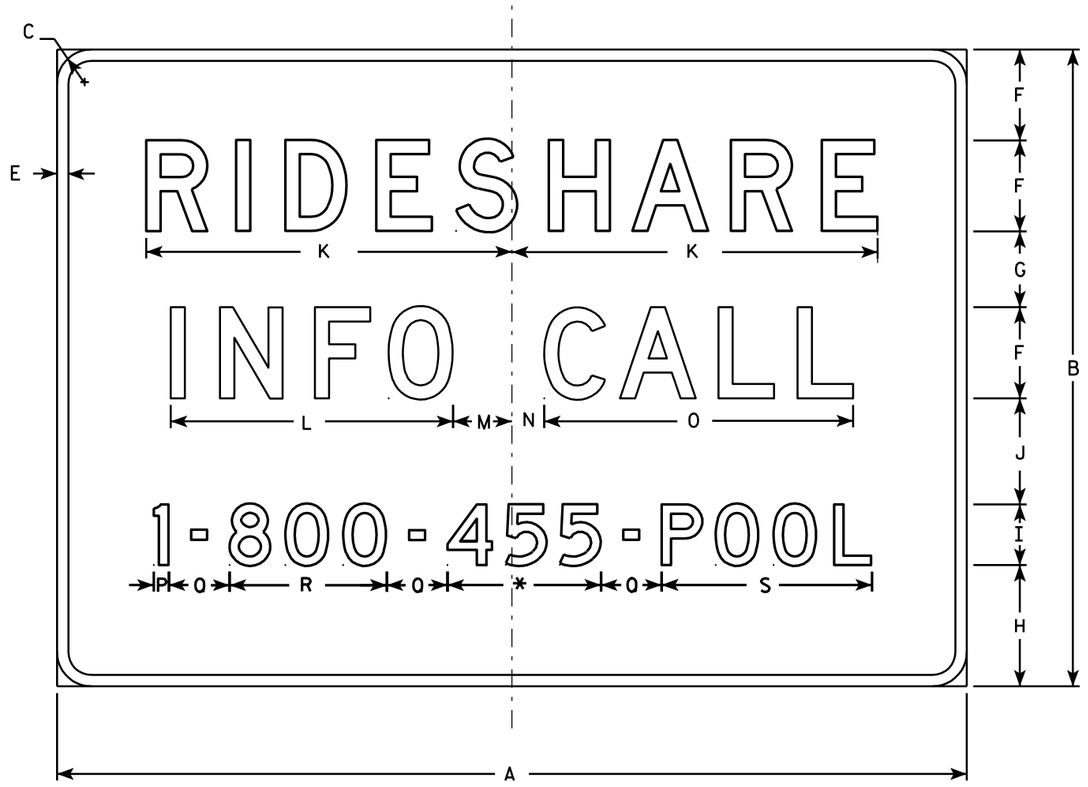

D12-2A

NOTES

1. Sign is Type II - Type H Reflective - reference WIS DOT Standard Specification for HIGHWAY and STRUCTURE CONSTRUCTION latest edition.
2. Color:
   Background - Blue
   Message - White - Type H Reflective
3. Message Series - D
4. Corners may be square or rounded when base material is plywood but borders shall be rounded as shown. When base material is metal, the corners and borders shall be rounded.
5. Substitute appropriate numerals and adjust spacing as required to achieve proper balance.

* Variable (See note 5)

Metric equivalent for this sign is:

SIZE	
1	1200 mm X 525 mm
2	1500 mm X 1050 mm
3	
4	1500 mm X 1050 mm
5	1950 mm X 1350 mm

SIZE	A	B	C	D	E	F	G	H	I	J	K	L	M	N	O	P	Q	R	S	T	U	V	W	X	Y	Z	Area sq. ft.	Area m2
1	48	21	1 1/2		1/2	3	2 3/4	3 1/2	3	2 3/4	12 1/8	9 3/8	2	1 1/8	10 1/4	3/4	3	7 3/4	10 5/8								7.0	0.63
2	60	42	2 1/4		3/4	6	5	8	4	7	24 1/8	18 5/8	3 7/8	2 1/8	20 1/8	1	4	10 3/8	13 7/8								17.5	1.58
3																												
4	60	42	2 1/4		3/4	6	5	8	4	7	24 1/8	18 5/8	3 7/8	2 1/8	20 1/8	1	4	10 3/8	13 7/8								17.5	1.58
5	78	54	3		1	8	6	10	6	8	30 7/8	23 5/8	4 7/8	2 1/8	26 3/8	1 1/2	5	15 1/2	21 1/4								29.25	2.63

STANDARD SIGN
D12-2A

WISCONSIN DEPT OF TRANSPORTATION

APPROVED Chester J Spay for State Traffic Engineer

DATE 1/16/02 PLATE NO. D12-2A.3

PROJECT NO:

SHEET NO: 168 E

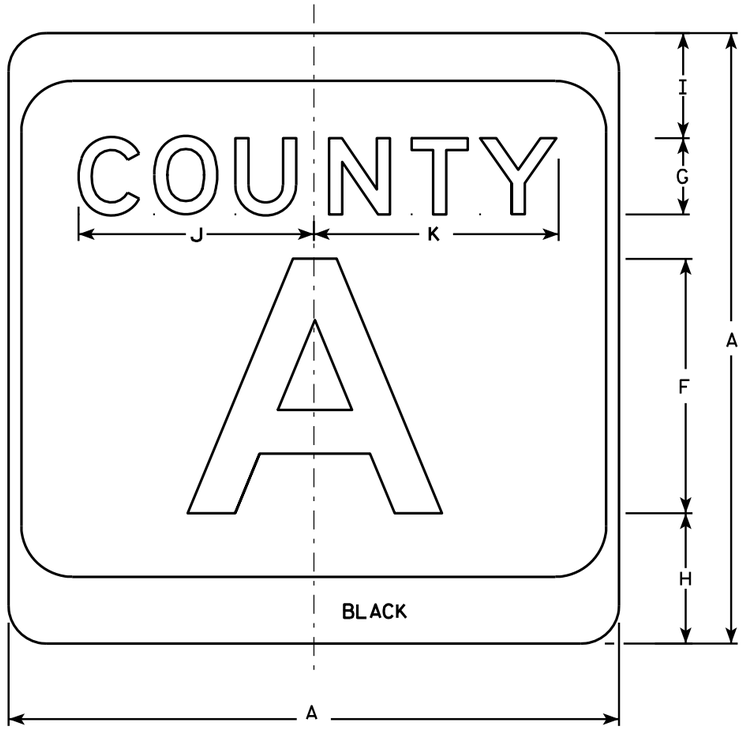

M1-5A

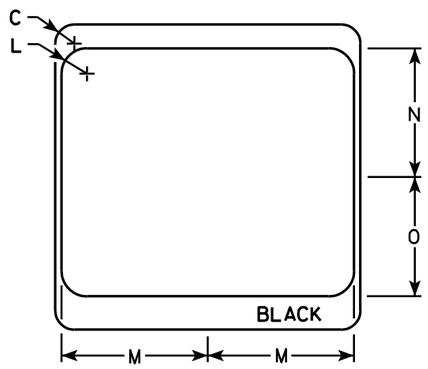

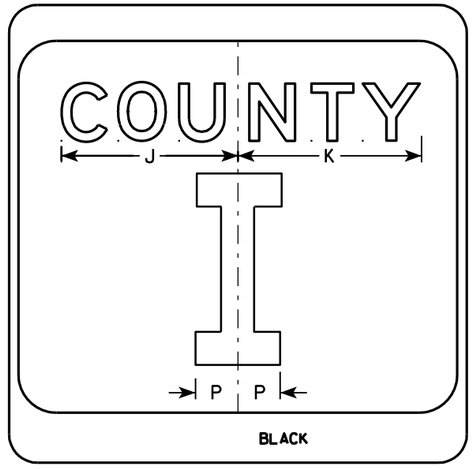

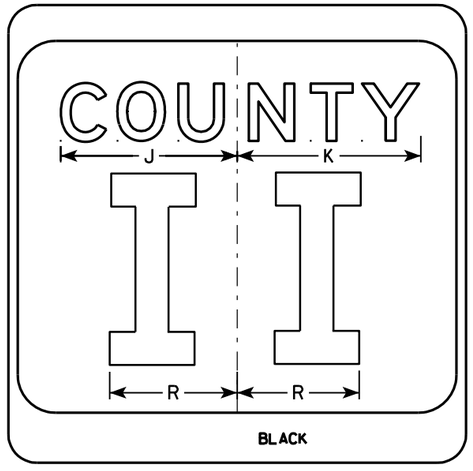

NOTES

1. Sign is Type II - see Note 7 - reference WIS DOT Standard Specification for HIGHWAY and STRUCTURE CONSTRUCTION latest edition.
2. Color:
   Background - White & Black - See Note 7
   Message - Black
3. Message Series - see Note 5
4. Corners may be square or rounded when base material is plywood but borders shall be rounded as shown. When base material is metal, the corners and borders shall be rounded.
5. Message Series E for 1 letter.
   Message Series D for 2 letters unless message is too big then Series C.
   Message Series C for 3 letters unless message is too big then Series B.
6. Substitute appropriate letters & optically center to achieve proper balance.
7. Permanent Signs
   Background - Type H Reflective
   Detour or temporary Signs
   Background - Reflective

SIZE	A	B	C	D	E	F	G	H	I	J	K	L	M	N	O	P	Q	R	S	T	U	V	W	X	Y	Z	Area sq. ft.
1																											
2	24		1 1/2			10	3	5 1/8	4 1/8	9 1/4	9 5/8	2	11 1/2	10 1/8	9 3/8	2 1/4		6 5/8									4.0
3	36		2 1/4			16	4	7 5/8	5 5/8	12 1/4	12 7/8	3	17 1/8	15 1/4	14	3 3/8		10									9.0
4	36		2 1/4			16	4	7 5/8	5 5/8	12 1/4	12 7/8	3	17 1/8	15 1/4	14	3 3/8		10									9.0
5	36		2 1/4			16	4	7 5/8	5 5/8	12 1/4	12 7/8	3	17 1/8	15 1/4	14	3 3/8		10									9.0

CTH MARKER
M1-5A FOR ASSEMBLIES

WISCONSIN DEPT OF TRANSPORTATION

APPROVED Matthew R Rauch
for State Traffic Engineer

DATE 9/27/11 PLATE NO. M1-5A.8

PROJECT NO: | HWY: | COUNTY: | SHEET NO: 169 | E

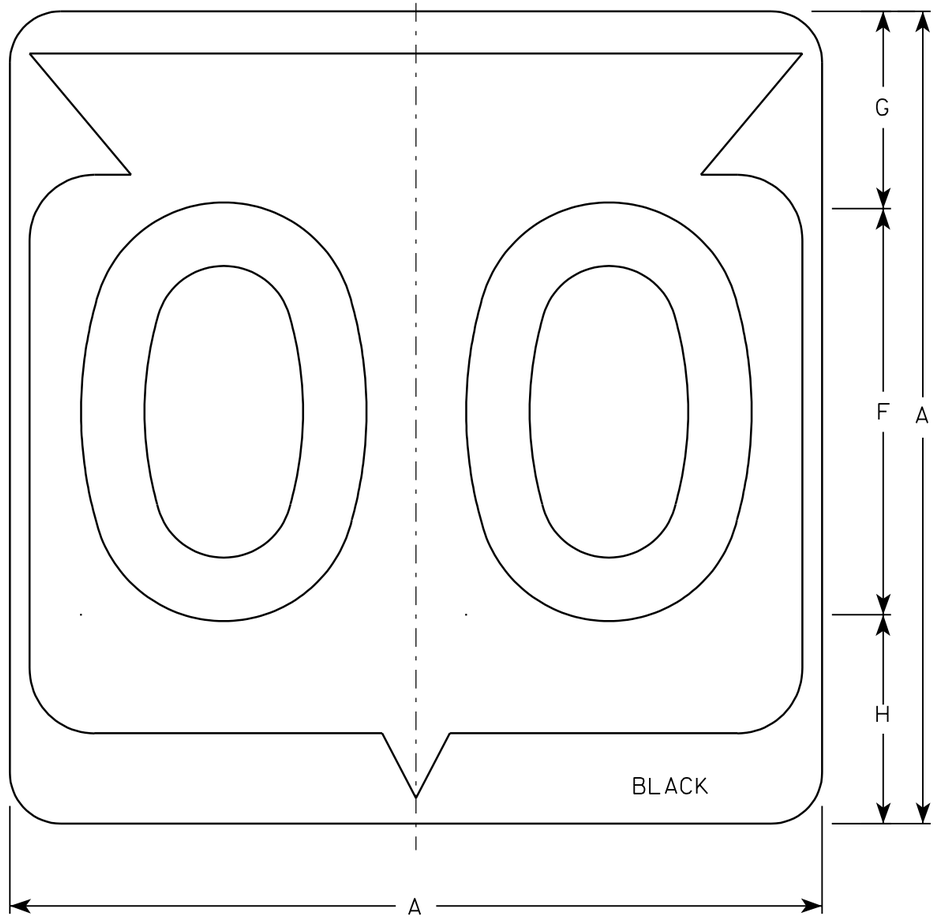

M1-6

NOTES

1. Sign is Type II - See Note 6 - reference WIS DOT Standard Specification for HIGHWAY and STRUCTURE CONSTRUCTION latest edition.
2. Color:
   Background - White & Black - See Note 6
   Message - Black
3. Message Series - See note 5
4. Corners may be square or rounded when base material is plywood but borders shall be rounded as shown. When base material is metal, the corners and borders shall be rounded.
5. Substitute appropriate Series numerals and adjust spacing as per plate A10-1.
6. Permanent Signs
   Background - Type H Reflective
   Detour or temporary Signs
   Background - Reflective

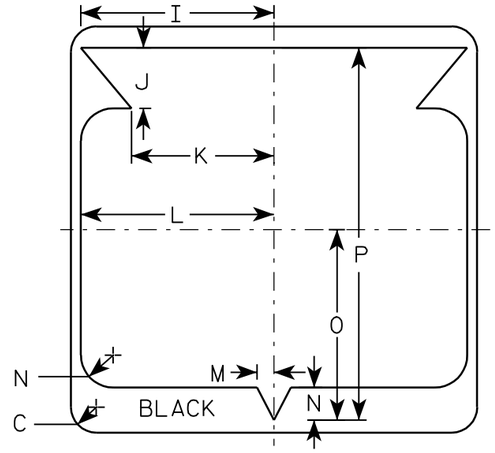

Metric equivalent for this sign is:

SIZE	
1	
2	600 mm X 600 mm
3	900 mm X 900 mm
4	900 mm X 900 mm
5	900 mm X 900 mm

SIZE	A	B	C	D	E	F	G	H	I	J	K	L	M	N	O	P	Q	R	S	T	U	V	W	X	Y	Z	Area sq. ft.	Area m2
1																												
2	24		1 1/2			12	5 1/2	6 1/2	10 1/4	2 1/2	8 7/8	11 1/2	1	1 7/8	11 1/4	21 7/8											4.0	.36
3	36		2 1/4			18	8 3/4	9 1/4	15 3/8	5 3/8	12 5/8	17 1/8	1 1/2	2 7/8	16 7/8	33											9.0	.81
4	36		2 1/4			18	8 3/4	9 1/4	15 3/8	5 3/8	12 5/8	17 1/8	1 1/2	2 7/8	16 7/8	33											9.0	.81
5	36		2 1/4			18	8 3/4	9 1/4	15 3/8	5 3/8	12 5/8	17 1/8	1 1/2	2 7/8	16 7/8	33											9.0	.81

STATE ROUTE MARKER M1-6 FOR ASSEMBLIES

WISCONSIN DEPT OF TRANSPORTATION

APPROVED Chester J Spang for State Traffic Engineer

DATE 3/20/02 PLATE NO. M1-6.9

PROJECT NO:	HWY:	COUNTY:		SHEET NO: 170	E

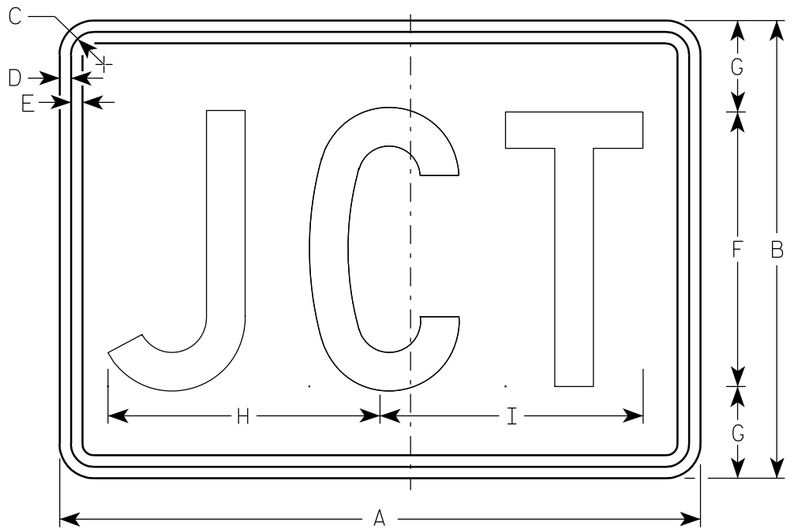

M2-1
MK2-1
MM2-1
MR2-1

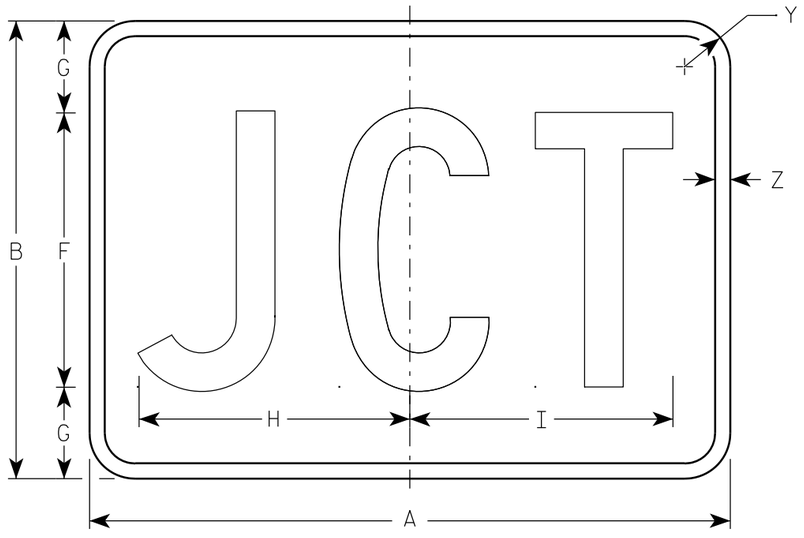

MB2-1
MG2-1
MN2-1

NOTES

1. Sign is Type II - See Note 5 - reference WIS DOT Standard Specification for HIGHWAY and STRUCTURE CONSTRUCTION latest edition.
2. Color:
   Background - See note 5
   Message - See note 5
3. Message Series - C
4. Corners may be square or rounded when base material is plywood but borders shall be rounded as shown. When base material is metal, the corners and borders shall be rounded.
5. M2-1 Background - White - Type H Reflective
   (Detour or temporary Signs - Reflective)
   Message - Black
   MB2-1 Background - Blue
   Message - White - Type H Reflective
   (Detour or temporary Signs - Reflective)
   MG2-1 Background - Green
   Message - White - Type H Reflective
   MK2-1 Background - Green
   Message - White - Type H Reflective
   MM2-1 Background - White - Type H Reflective
   Message - Green
   MN2-1 Background - Brown
   Message - White - Type H Reflective
   MR2-1 Background - Brown
   Message - Yellow - Type H Reflective

Metric equivalent for this sign is:

SIZE	
1	
2	525 mm X 375 mm
3	750 mm X 525 mm
4	750 mm X 525 mm
5	750 mm X 525 mm

SIZE	A	B	C	D	E	F	G	H	I	J	K	L	M	N	O	P	Q	R	S	T	U	V	W	X	Y	Z	Area sq. ft.	Area m2
1																												
2	21	15	1 1/8	3/8	3/8	9	3	8 7/8	8 5/8																1 1/2	1/2	2.20	0.20
3	30	21	1 1/8	3/8	3/8	13	4	12 7/8	12 3/8																1 1/2	1/2	4.40	0.20
4	30	21	1 1/8	3/8	3/8	13	4	12 7/8	12 3/8																1 1/2	1/2	4.40	0.20
5	30	21	1 1/8	3/8	3/8	13	4	12 7/8	12 3/8																1 1/2	1/2	4.40	0.20

STANDARD SIGN
M2-1

WISCONSIN DEPT OF TRANSPORTATION

APPROVED Matthew R Rauch
for State Traffic Engineer

DATE 3/16/10 PLATE NO. M2-1.10

PROJECT NO:	HWY:	COUNTY:		SHEET NO: 171	E

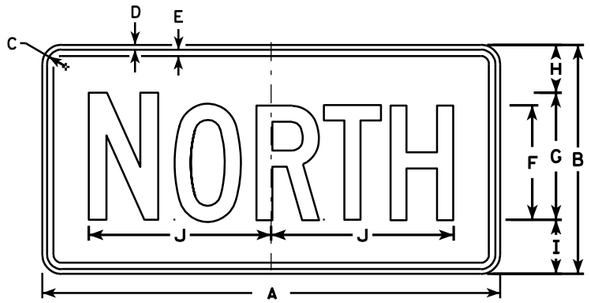

M3-1
MK3-1
MO3-1

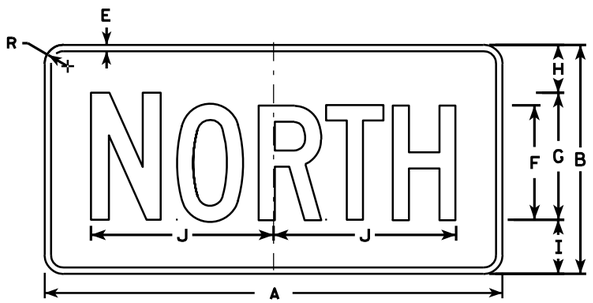

MB3-1
MG3-1
MM3-1
MN3-1

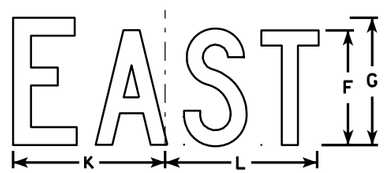

M3-2
MK3-2
MO3-2

MB3-2
MG3-2
MM3-2
MN3-2

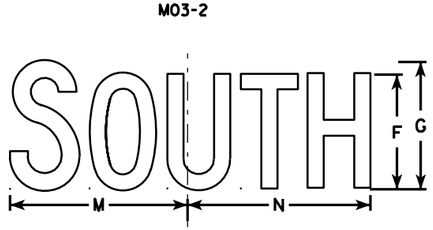

M3-3
MK3-3
MO3-3

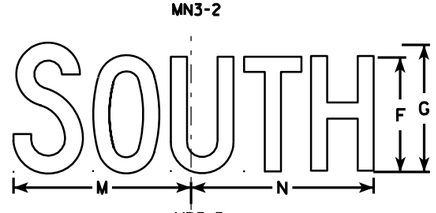

MB3-3
MG3-3
MM3-3
MN3-3

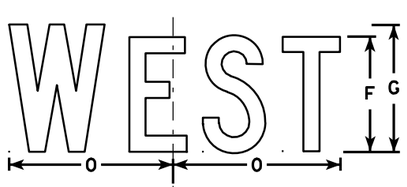

M3-4
MK3-4
MO3-4

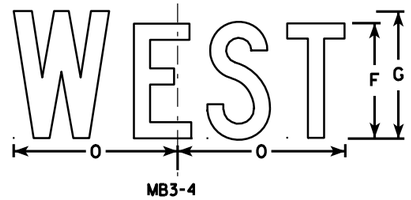

MB3-4
MG3-4
MM3-4
MN3-4

NOTES

1. All Signs Type II - See Note 5 - reference WIS DOT Standard Specification for HIGHWAY and STRUCTURE CONSTRUCTION latest edition.
2. Color:
   Background - See note 5
   Message - See note 5
3. Message Series - C
4. Corners may be square or rounded when base material is plywood but borders shall be rounded as shown. When base material is metal, the corners and borders shall be rounded.
5. M3-1 thru M3-4 Background - White - Type H Reflective
   (Detour or temporary signs - Reflective)
   Message - Black
   MB3-1 thru MB3-4 Background - Blue
   Message - White - Type H Reflective
   (Detour or temporary signs - Reflective)
   MG3-1 thru MG3-4 Background - Green
   Message - White - Type H Reflective
   MK3-1 thru MK3-4 Background - Green
   Message - White - Type H Reflective
   MM3-1 thru MM3-4 Background - White - Type H Reflective
   Message - Green
   MN3-1 thru MN3-4 Background - Brown
   Message - White - Type H Reflective
   M03-1 thru M03-4 Background - Orange - Reflective
   Message - Black
6. Note the first letter of each direction is larger than the remainder of the message.

SIZE	A	B	C	D	E	F	G	H	I	J	K	L	M	N	O	P	Q	R	S	T	U	V	W	X	Y	Z	Area sq. ft.
1																											
2	24	12	1 1/8	3/8	3/8	6	7	2 1/4	2 3/4	10 1/4	7 7/8	8 3/8	10 1/4	9 3/4	8 3/4			1 1/2									2.00
3	36	18	1 1/8	3/8	1/2	9	10	3 3/4	4 1/4	14 3/8	12	12 1/8	14	14 1/8	13			1 1/2									4.5
4	36	18	1 1/8	3/8	1/2	9	10	3 3/4	4 1/4	14 3/8	12	12 1/8	14	14 1/8	13			1 1/2									4.5
5	36	18	1 1/8	3/8	1/2	9	10	3 3/4	4 1/4	14 3/8	12	12 1/8	14	14 1/8	13			1 1/2									4.5

STANDARD SIGNS
M3-1 thur M3-4
SERIES

WISCONSIN DEPT OF TRANSPORTATION

APPROVED Matthew R Rauch for State Traffic Engineer

DATE 11/10/10 PLATE NO. M3-1.12

PROJECT NO:	HWY:	COUNTY:		SHEET NO: 172	E

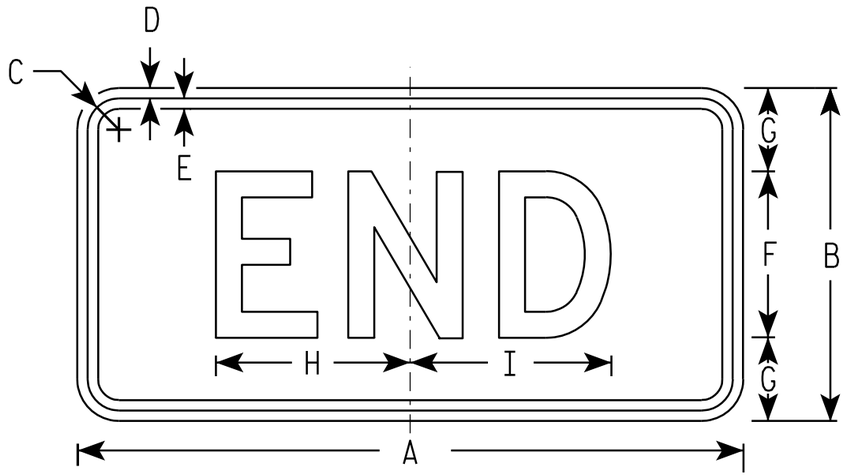

M4-6
MK4-6
MM4-6
MR4-6

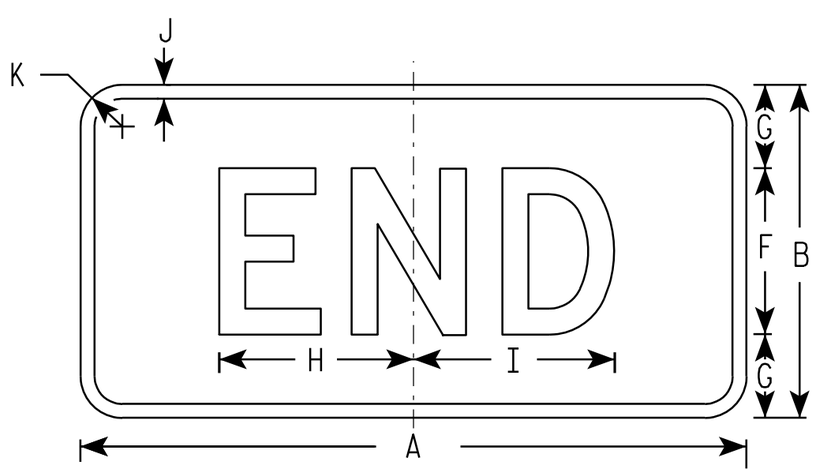

MB4-6
MG4-6
MN4-6

NOTES

1. Sign is Type II - See Note 5 - reference WIS DOT Standard Specification for HIGHWAY and STRUCTURE CONSTRUCTION latest edition.
2. Color:
   Background - See note 5
   Message - See note 5
3. Message Series - D
4. Corners may be square or rounded when base material is plywood but borders shall be rounded as shown. When base material is metal, the corners and borders shall be rounded.
5. M4-6 Background - White - Type H Reflective (Detour or temporary Signs - Reflective)
   Message - Black

   MB4-6 Background - Blue
   Message - White - Type H Reflective (Detour or temporary Signs - Reflective)

   MG4-6 Background - Green
   Message - White - Type H Reflective

   MK4-6 Background - Green
   Message - White - Type H Reflective

   MM4-6 Background - White - Type H Reflective
   Message - Green

   MN4-6 Background - Brown
   Message - White - Type H Reflective

   MR4-6 Background - Brown
   Message - Yellow - Type H Reflective

SIZE	A	B	C	D	E	F	G	H	I	J	K	L	M	N	O	P	Q	R	S	T	U	V	W	X	Y	Z	Area sq. ft.
1																											
2	24	12	1 1/8	3/8	3/8	6	3	7	7 1/4	1/2	1 1/2																2.00
3	36	18	1 1/8	3/8	1/2	9	4 1/2	12	11 7/8	1/2	1 1/2																4.5
4	36	18	1 1/8	3/8	1/2	9	4 1/2	12	11 7/8	1/2	1 1/2																4.5
5	36	18	1 1/8	3/8	1/2	9	4 1/2	12	11 7/8	1/2	1 1/2																4.5

STANDARD SIGN
M4-6

WISCONSIN DEPT OF TRANSPORTATION

APPROVED Matthew R Rauch
for State Traffic Engineer

DATE 11/10/10 PLATE NO. M4-6.7

PROJECT NO: | HWY: | COUNTY: | SHEET NO: 173 | E

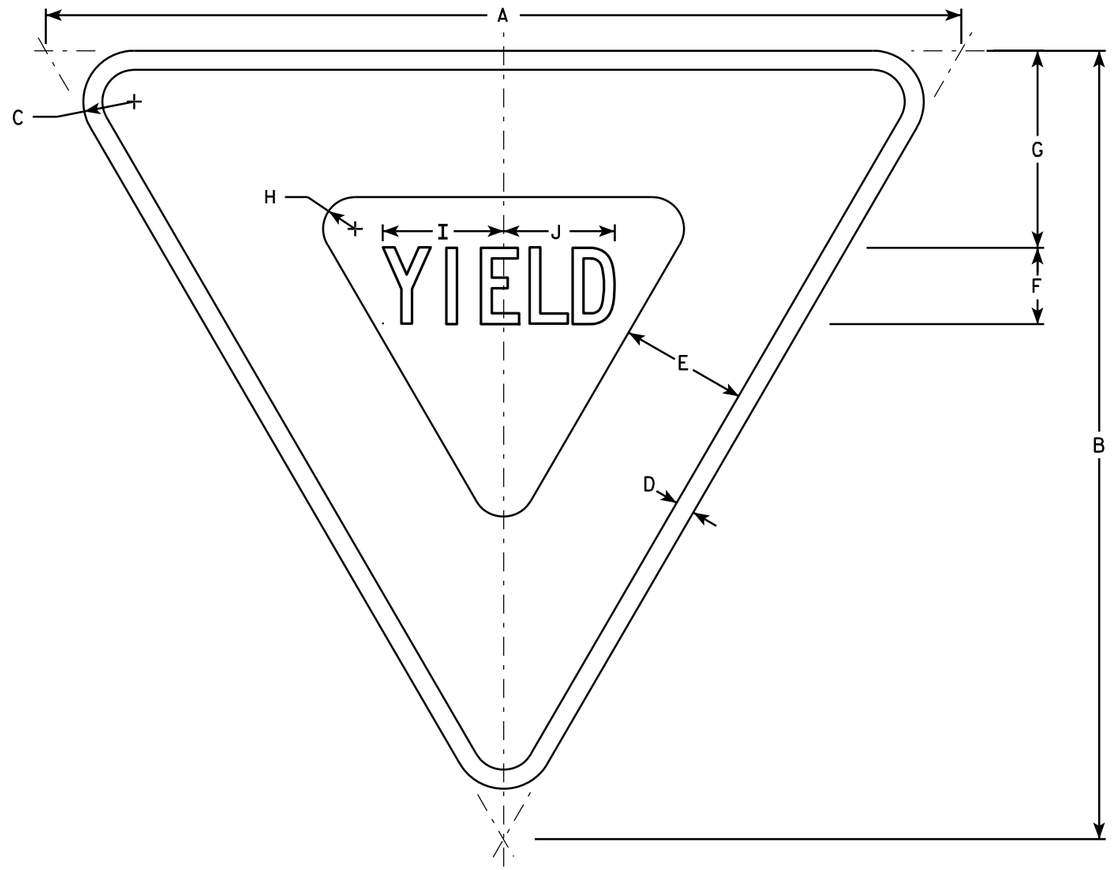

R1-2

NOTES

1. Sign is Type II - Type H Reflective - reference WIS DOT Standard Specification for HIGHWAY and STRUCTURE CONSTRUCTION latest edition.
2. Color:
   Background - White
   Message - See note 5
3. Message Series - C
4. Corners may be square or rounded when base material is plywood but borders shall be rounded as shown. When base material is metal, the corners and borders shall be rounded.
5. The border strip and word message are reflectorized red.

SIZE	A	B	C	D	E	F	G	H	I	J	K	L	M	N	O	P	Q	R	S	T	U	V	W	X	Y	Z	Area sq. ft.
1	30	26	1 1/2	5/8	4	2 1/2	6 3/8	7/8	4	3 5/8																	2.71
2S	36	31	2	3/4	5	3	7 3/4	1 1/4	4 3/4	4 3/8																	3.88
2M	48	42	3	1	6	4	9 3/4	2	6 1/4	5 7/8																	7.00
3	48	42	3	1	6	4	9 3/4	2	6 1/4	5 7/8																	7.00
4	48	42	3	1	6	4	9 3/4	2	6 1/4	5 7/8																	7.00
5	60	52	3	1 1/2	8	5	13	2 1/2	7 7/8	7 1/4																	10.83
6	24	21	1 1/2	3/8	3	2	4 3/4	7/8	3 1/4	3																	1.75
7	18	15 1/2	1	3/8	2 1/2	1 1/2	3 7/8	5/8	2 3/8	2 1/4																	0.97

STANDARD SIGN
R1-2

WISCONSIN DEPT OF TRANSPORTATION

APPROVED Matthew R Rauch
for State Traffic Engineer

DATE 11/02/10 PLATE NO. R1-2.11

PROJECT NO: | HWY: | COUNTY: | SHEET NO: 174 | E

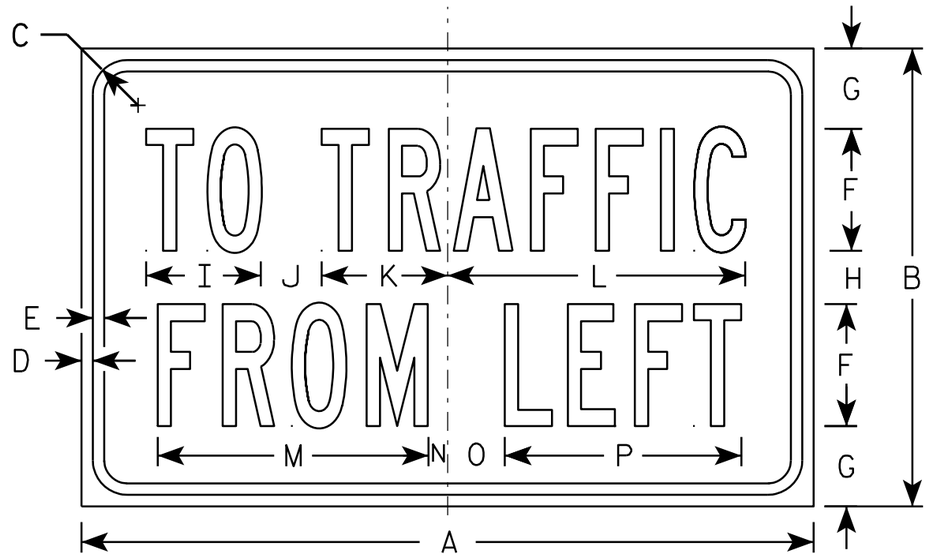

R1-54

NOTES

1. Sign is Type II - Type H Reflective - reference WIS DOT Standard Specification for HIGHWAY and STRUCTURE CONSTRUCTION latest edition.
2. Color:
   Background - White
   Message - Black
3. Message Series - B

SIZE	A	B	C	D	E	F	G	H	I	J	K	L	M	N	O	P	Q	R	S	T	U	V	W	X	Y	Z	Area sq. ft.
1																											
2S	24	15	1 1/8	3/8	3/8	4	2 5/8	1 3/4	3 3/4	2	4 1/8	9 3/4	8 7/8	5/8	1 7/8	7 3/4											2.5
2M	24	15	1 1/8	3/8	3/8	4	2 5/8	1 3/4	3 3/4	2	4 1/8	9 3/4	8 7/8	5/8	1 7/8	7 3/4											2.5
3																											
4																											
5																											

STANDARD SIGN
R1-54

WISCONSIN DEPT OF TRANSPORTATION

APPROVED Matthew R Rauch
for State Traffic Engineer

DATE 12/03/10 PLATE NO. R1-54.2

PROJECT NO:	HWY:	COUNTY:		SHEET NO: 175	E

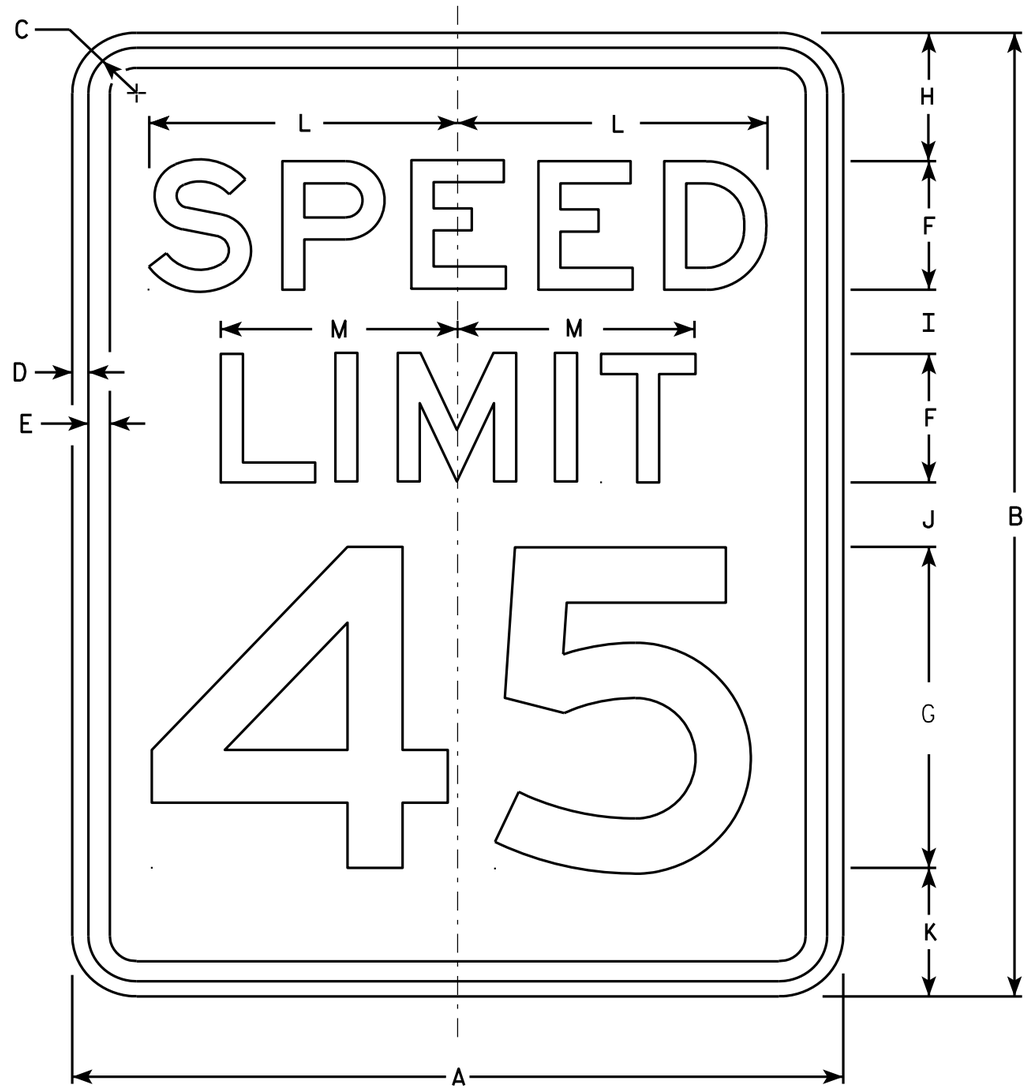

R2-1

NOTES

1. Sign is Type II - Type H Reflective - reference WIS DOT Standard Specification for HIGHWAY and STRUCTURE CONSTRUCTION latest edition.
2. Color:
   Background - White
   Message - Black
3. Message Series - E
4. Corners may be square or rounded when base material is plywood but borders shall be rounded as shown. When base material is metal, the corners and borders shall be rounded.
5. Substitute appropriate numerals and optically adjust spacing to achieve proper balance.

SIZE	A	B	C	D	E	F	G	H	I	J	K	L	M	N	O	P	Q	R	S	T	U	V	W	X	Y	Z	Area sq. ft.
1	18	24	1 1/8	3/8	1/2	3	8	3	2	2	3	7 1/4	5 1/2														3.0
2S	24	30	1 1/8	3/8	1/2	4	10	3	2 1/4	3 3/8	3 3/8	9 5/8	7 3/8														5.0
2M	30	36	1 3/8	1/2	5/8	5	12	5	2 1/2	2 1/2	4	12	9 1/4														7.5
3	36	48	1 3/8	1/2	5/8	6	14	6	5	5	6	14 3/8	11														12.0
4	36	48	1 3/8	1/2	5/8	6	14	6	5	5	6	14 3/8	11														12.0
5	48	60	2 1/4	3/4	1	8	20	6	4 1/2	6 3/4	6 3/4	19 1/4	14 5/8														20.0

STANDARD SIGN
R2-1

WISCONSIN DEPT OF TRANSPORTATION

APPROVED Matthew R Rauch
for State Traffic Engineer

DATE 5/26/10 PLATE NO. R2-1.13

PROJECT NO: | HWY: | COUNTY: | SHEET NO: 176 | E

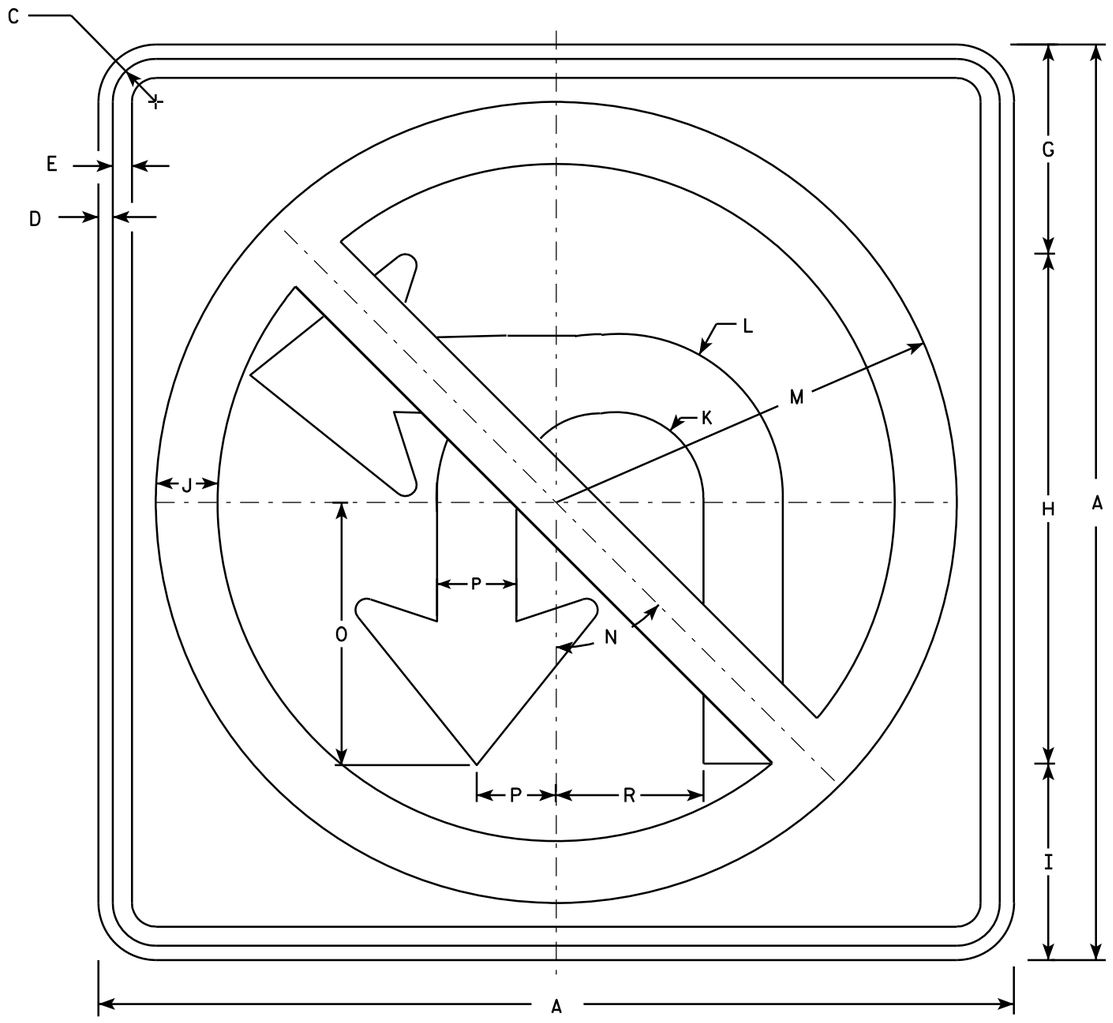

R3-18

NOTES

1. Sign is Type II - Type H Reflective - reference WIS DOT Standard Specification for HIGHWAY and STRUCTURE CONSTRUCTION latest edition.
2. Color:
   Background - White
   Message - See note 4
3. Corners may be square or rounded when base material is plywood but borders shall be rounded as shown. When base material is metal, the corners and borders shall be rounded.
4. Border & Arrow are non reflective black, the circle with diagonal bar is reflective red.

SIZE	A	B	C	D	E	F	G	H	I	J	K	L	M	N	O	P	Q	R	S	T	U	V	W	X	Y	Z	Area sq. ft.
1																											
2S	24		1 1/8	3/8	1/2		5 1/2	13 3/8	5 1/8	1 5/8	2 1/4	4 1/4	10 1/2	45°	6 7/8	2 1/8		3 7/8									4.0
2M	36		1 5/8	5/8	3/4		8 1/4	20	7 3/4	2 1/2	3 3/8	6 1/2	15 3/4	45°	10 3/8	3 1/8		5 3/4									9.0
3	36		1 5/8	5/8	3/4		8 1/4	20	7 3/4	2 1/2	3 3/8	6 1/2	15 3/4	45	10 3/8	3 1/8		5 3/4									9.0
4	36		1 5/8	5/8	3/4		8 1/4	20	7 3/4	2 1/2	3 3/8	6 1/2	15 3/4	45	10 3/8	3 1/8		5 3/4									9.0
5	48		2 1/4	3/4	1		11	26 3/4	10 1/4	3 1/4	4 5/8	8 5/8	21	45°	13 3/4	4 1/8		7 3/4									16.0

STANDARD SIGN
R3-18

WISCONSIN DEPT OF TRANSPORTATION

APPROVED Matthew R Rauch
for State Traffic Engineer

DATE 11/21/10 PLATE NO. R3-18.2

PROJECT NO:	HWY:	COUNTY:		SHEET NO: 177	E

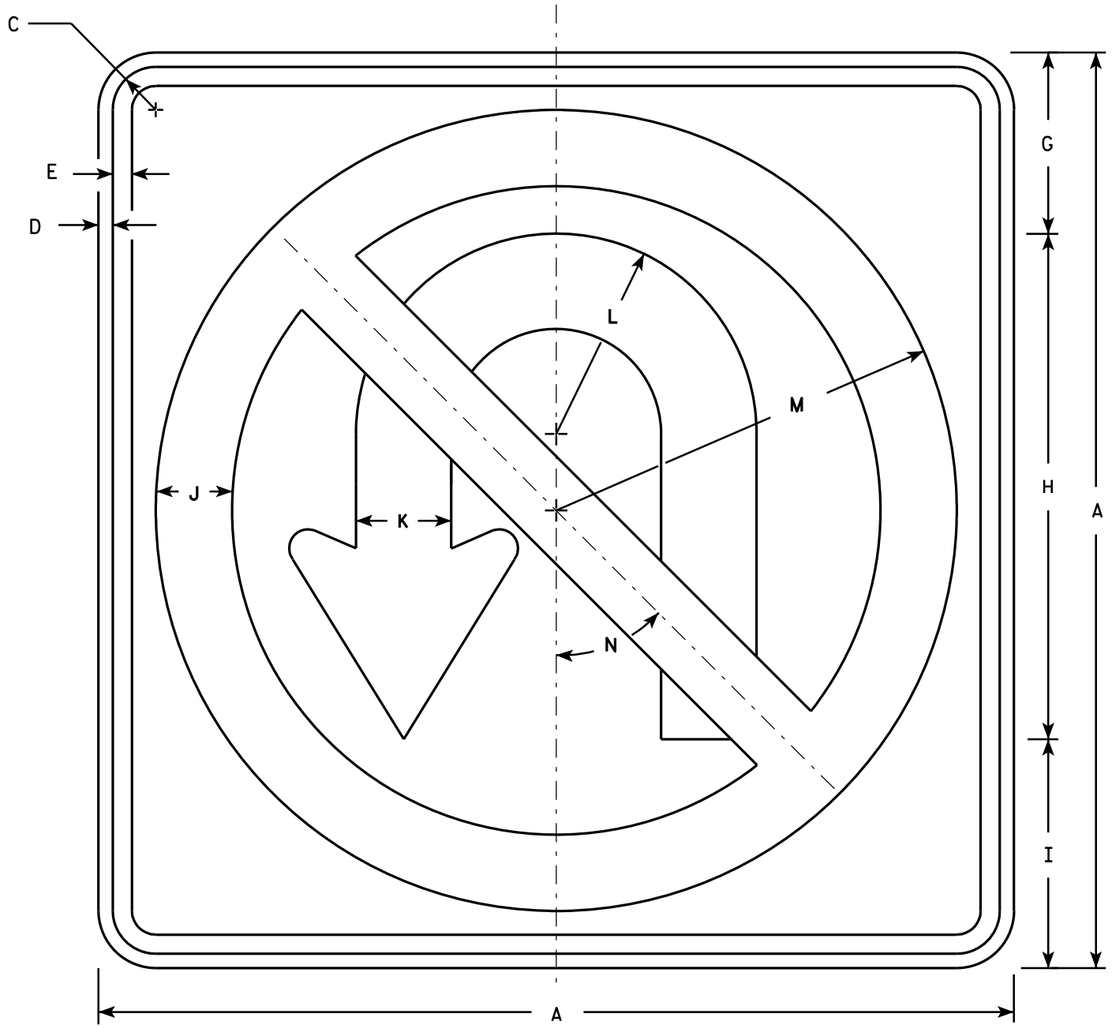

R3-4

NOTES

1. Sign is Type II - Type H Reflective - reference WIS DOT Standard Specification for HIGHWAY and STRUCTURE CONSTRUCTION latest edition.
2. Color:
   Background - White
   Message - See note 4
3. Corners may be square or rounded when base material is plywood but borders shall be rounded as shown. When base material is metal, the corners and borders shall be rounded.
4. Border & Arrow are non reflective black, the circle with diagonal bar is reflective red.

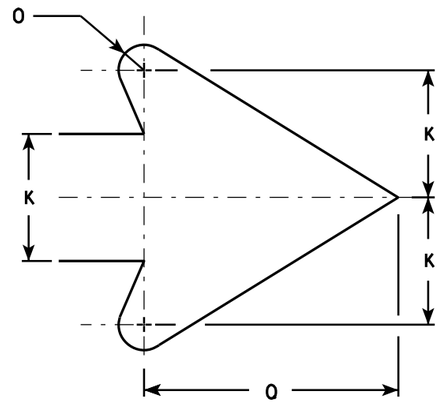

ARROW DETAIL

SIZE	A	B	C	D	E	F	G	H	I	J	K	L	M	N	O	P	Q	R	S	T	U	V	W	X	Y	Z	Area sq. ft.
1																											
2S	24		1 1/8	3/8	1/2		4 3/4	13 1/4	6	2	2 1/2	5 1/4	10 1/2	45°	1/2		5										4.0
2M	36		1 5/8	5/8	3/4		7 1/8	19 7/8	9	3	3 3/4	7 7/8	15 3/4	45°	3/4		7 5/8										9.0
3	36		1 5/8	5/8	3/4		7 1/8	19 7/8	9	3	3 3/4	7 7/8	15 3/4	45°	3/4		7 5/8										9.0
4	36		1 5/8	5/8	3/4		7 1/8	19 7/8	9	3	3 3/4	7 7/8	15 3/4	45°	3/4		7 5/8										9.0
5	36		1 5/8	5/8	3/4		7 1/8	19 7/8	9	3	3 3/4	7 7/8	15 3/4	45°	3/4		7 5/8										9.0

STANDARD SIGN
R3-4

WISCONSIN DEPT OF TRANSPORTATION

APPROVED Matthew R Rauch
for State Traffic Engineer

DATE 12/08/10 PLATE NO. R3-4.11

PROJECT NO:	HWY:	COUNTY:		SHEET NO: 178	E

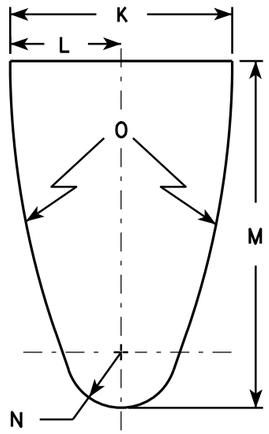

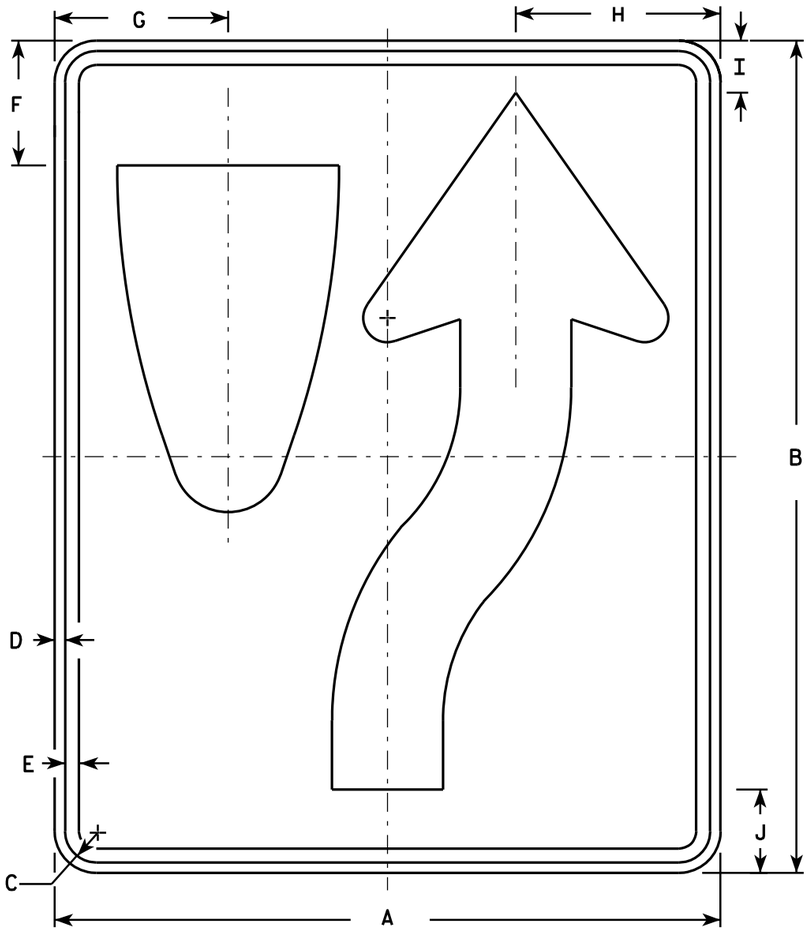

R4-7

NOTES

1. Sign is Type II - Type H Reflective - reference WIS DOT Standard Specification for HIGHWAY and STRUCTURE CONSTRUCTION latest edition. material is plywood but borders shall be rounded
2. Color:
   Background - White
   Message - Black
3. Corners may be square or rounded when base as shown. When base material is metal, the corners and borders shall be rounded.
4. R4-8 is the same as R4-7 except Legend is reversed.

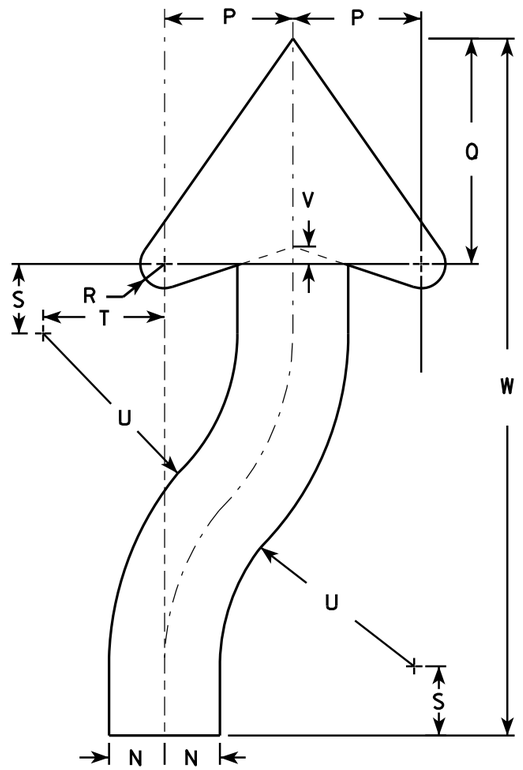

ARROW DETAIL

SIZE	A	B	C	D	E	F	G	H	I	J	K	L	M	N	O	P	Q	R	S	T	U	V	W	X	Y	Z	Area sq. ft.
1	18	24	1 1/8	3/8	1/2	3 3/8	4 3/4	5 1/2	1 3/8	2 1/4	6	3	9 3/8	1 1/2	22 1/2	3 1/2	6 1/8	5/8	1 7/8	3 1/4	6 3/4	1/2	20 3/8				3.0
2S	24	30	1 1/8	3/8	1/2	4 1/2	6 1/4	7 3/8	1 7/8	3	8	4	12 1/2	2	30	4 5/8	8 1/8	7/8	2 1/2	4 3/8	9	5/8	25 1/8				5.0
2M	24	30	1 1/8	3/8	1/2	4 1/2	6 1/4	7 3/8	1 7/8	3	8	4	12 1/2	2	30	4 5/8	8 1/8	7/8	2 1/2	4 3/8	9	5/8	25 1/8				5.0
3	36	48	1 3/4	1/2	5/8	6 3/4	9 3/8	11 1/8	2 7/8	4 1/2	12	6	18 3/4	3	45	6 7/8	12 1/4	1 1/4	3 3/4	6 5/8	13 1/2	1	40 3/4				12.0
4	36	48	1 3/4	1/2	5/8	6 3/4	9 3/8	11 1/8	2 7/8	4 1/2	12	6	18 3/4	3	45	6 7/8	12 1/4	1 1/4	3 3/4	6 5/8	13 1/2	1	40 3/4				12.0
5	48	60	2 1/4	3/4	1	9	12 1/2	14 3/4	3 3/4	6	16	8	25	4	60	9 1/4	16 1/4	1 5/8	5	8 3/4	18	1 1/4	50 1/4				20.0

STANDARD SIGN
R4-7 & R4-8

WISCONSIN DEPT OF TRANSPORTATION

APPROVED Matthew R Rauch for State Traffic Engineer

DATE 3/25/2011 PLATE NO. R4-7.8

PROJECT NO:	HWY:	COUNTY:		SHEET NO: 179	E

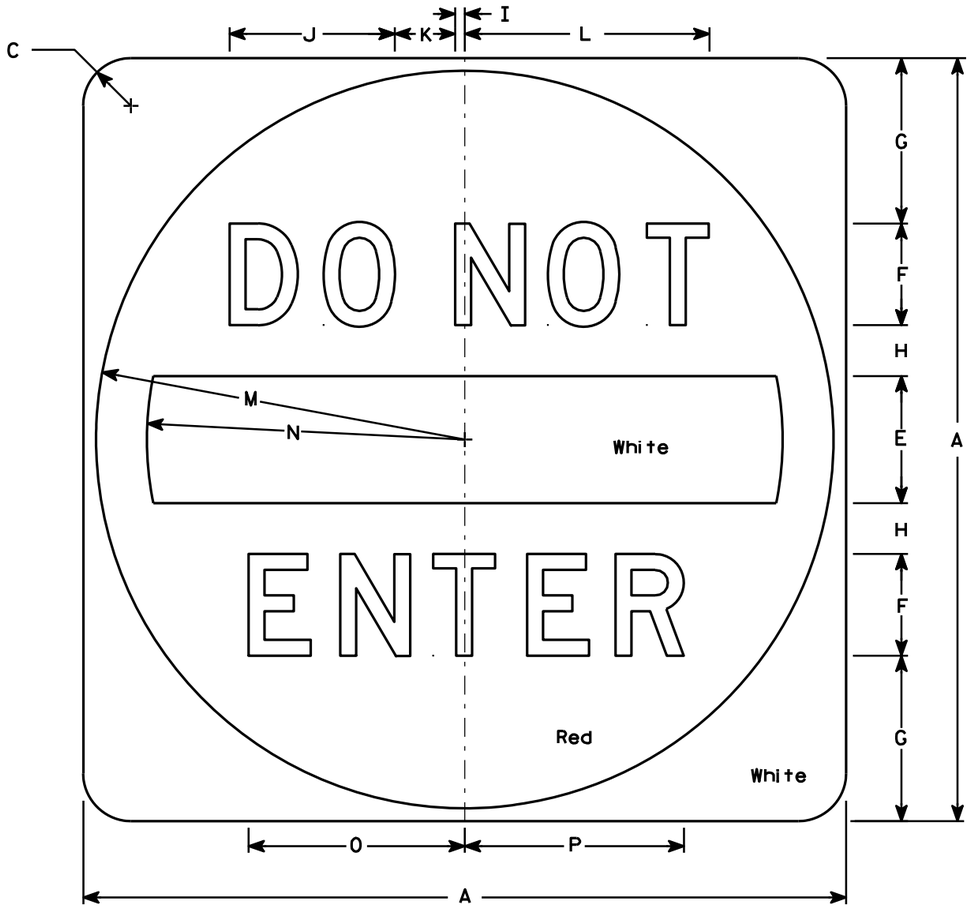

R5-1

NOTES

1. Sign is Type II - Type H Reflective - reference WIS DOT Standard Specification for HIGHWAY and STRUCTURE CONSTRUCTION latest edition.
2. Color:
   Background - See detail
   Message - White - Type H Reflective
3. Message Series - D
4. Corners may be square or rounded when base material is plywood but when base material is metal, the cornors shall be rounded.

SIZE	A	B	C	D	E	F	G	H	I	J	K	L	M	N	O	P	Q	R	S	T	U	V	W	X	Y	Z	Area sq. ft.
1																											
2S	30		1 7/8		5	4	6 1/2	2	3/8	6 1/2	2 3/8	9 5/8	14 1/2	12 1/2	8 1/2	8 5/8											6.26
2M	36		2 1/4		6	5	7 1/2	2 1/2	1/2	8 1/8	3	12 1/8	17 1/2	15	10 5/8	10 3/4											9.0
3	36		2 1/4		6	5	7 1/2	2 1/2	1/2	8 1/8	3	12 1/8	17 1/2	15	10 5/8	10 3/4											9.0
4	36		2 1/4		6	5	7 1/2	2 1/2	1/2	8 1/8	3	12 1/8	17 1/2	15	10 5/8	10 3/4											9.0
5	48		3		8	6	11	3	5/8	9 3/4	3 5/8	14 1/2	23 1/2	20	12 3/4	12 7/8											16.0

STANDARD SIGN
R5-1

WISCONSIN DEPT OF TRANSPORTATION

APPROVED Matthew R Rauch
for State Traffic Engineer

DATE 12/17/10 PLATE NO. R5-1.15

PROJECT NO: | HWY: | COUNTY: | SHEET NO: 180 | E

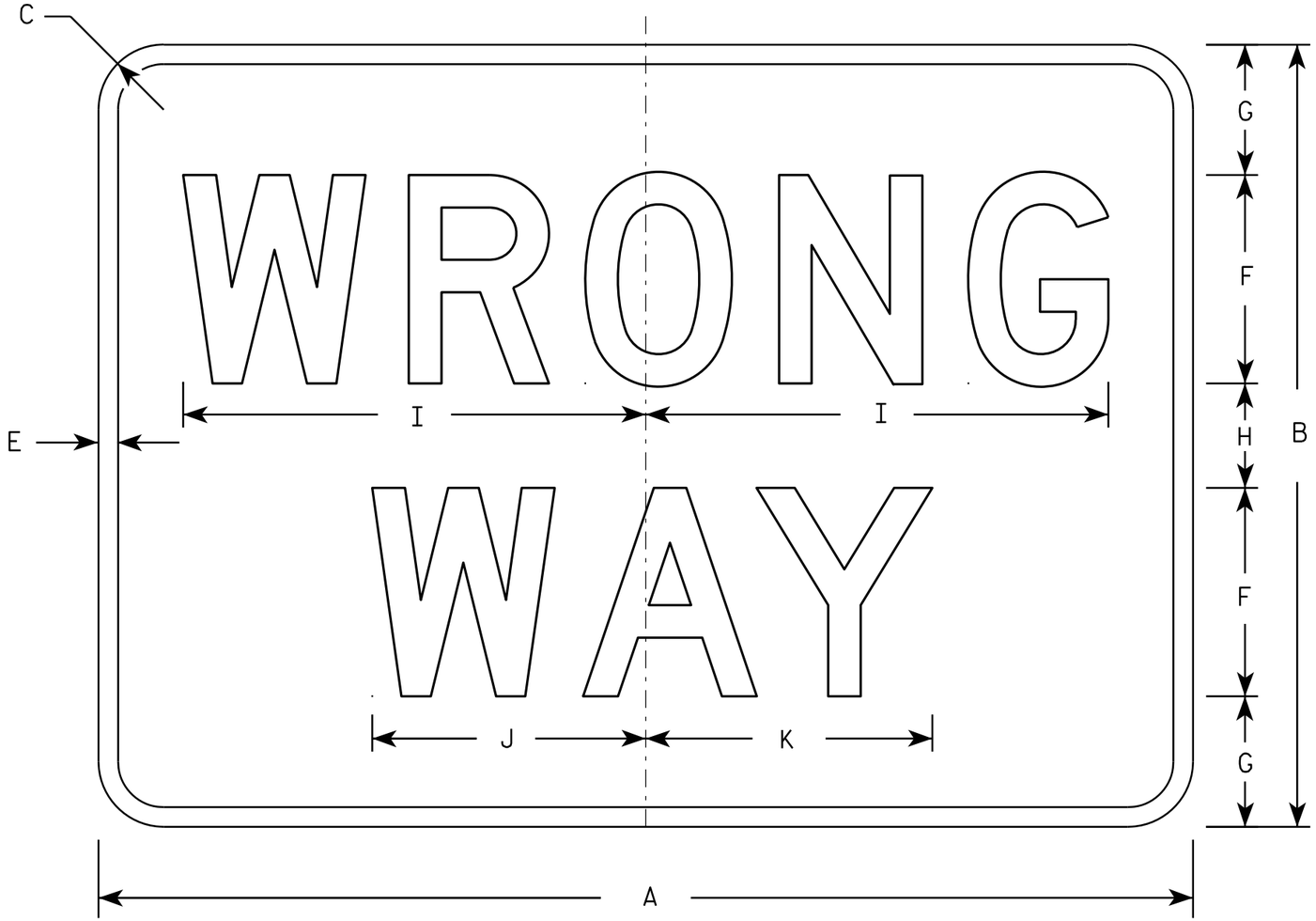

R5-1A

NOTES

1. Sign is Type II - Type H Reflective - reference WIS DOT Standard Specification for HIGHWAY and STRUCTURE CONSTRUCTION latest edition.
2. Color:
   Background - Red
   Message - White
3. Message Series - D
4. Corners may be square or rounded when base material is plywood but borders shall be rounded as shown. When base material is metal, the corners and borders shall be rounded.

SIZE	A	B	C	D	E	F	G	H	I	J	K	L	M	N	O	P	Q	R	S	T	U	V	W	X	Y	Z	Area sq. ft.
1	30	18	1 1/2		1/2	5	3	2	11	6 1/2	6 7/8																3.75
2S	36	24	2		5/8	6	4 1/2	3	13 1/4	7 7/8	8 1/4																6.00
2M	42	30	2 1/2		3/4	8	5	4	17 3/4	10 1/2	11																8.75
3	42	30	2 1/2		3/4	8	5	4	17 3/4	10 1/2	11																8.75
4	42	30	2 1/2		3/4	8	5	4	17 3/4	10 1/2	11																8.75
5	42	30	2 1/2		3/4	8	5	4	17 3/4	10 1/2	11																8.75

STANDARD SIGN
R5-1A

WISCONSIN DEPT OF TRANSPORTATION

APPROVED Matthew R Rauch
for State Traffic Engineer

DATE 12/17/10 PLATE NO. R5-1A.2

PROJECT NO:	HWY:	COUNTY:		SHEET NO: 181	E

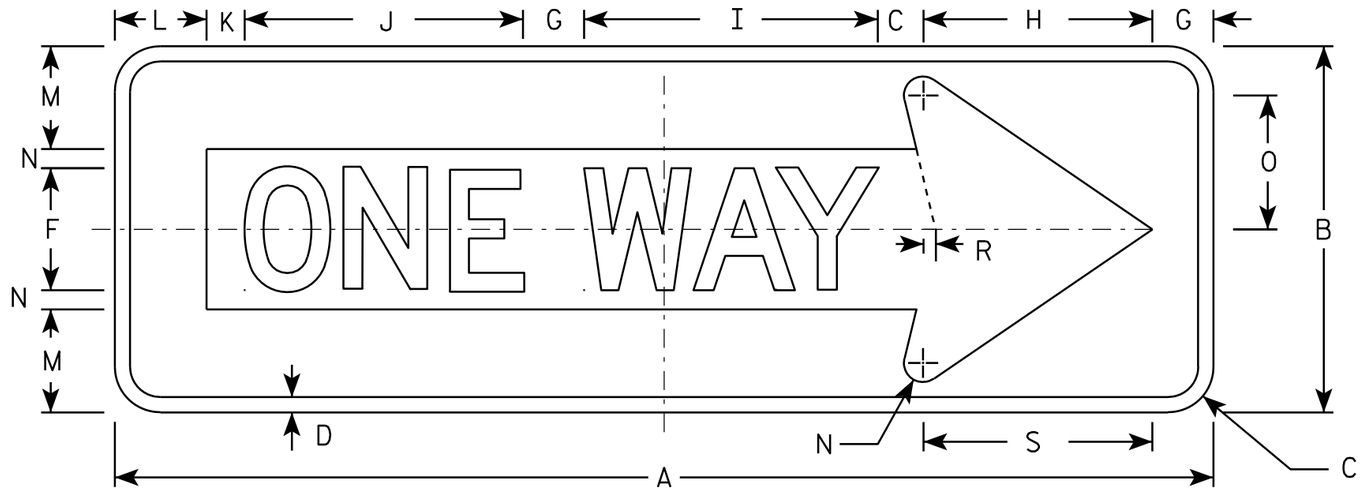

R6-1R

NOTES

1. Sign is Type II - Type H Reflective - reference WIS DOT Standard Specification for HIGHWAY and STRUCTURE CONSTRUCTION latest edition.
2. Color:
   Background - BLACK
   Message - BLACK LEGEND & WHITE ARROW & BORDER
3. Message Series - D
4. Corners may be square or rounded when base material is plywood but borders shall be rounded as shown. When base material is metal, the corners and borders shall be rounded.

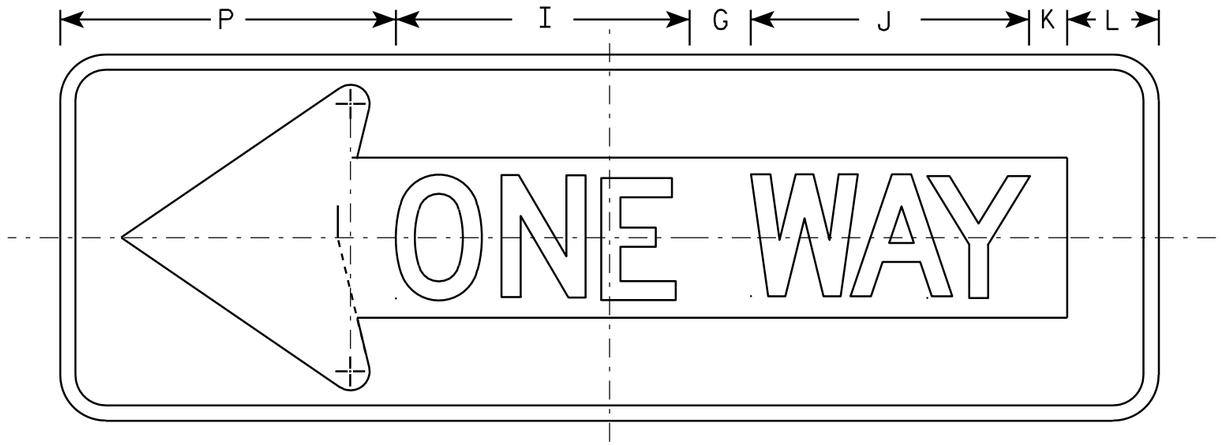

R6-1L

SIZE	A	B	C	D	E	F	G	H	I	J	K	L	M	N	O	P	Q	R	S	T	U	V	W	X	Y	Z	Area sq. ft.
1																											
2S	36	12	1 ½	½		4	2	7 ½	9 ⅝	9 ⅛	1 ¼	3	3 ⅜	⅝	4 ⅜	11		⅜	7 ½								3.0
2M	54	18	2 ¼	¾		6	3	11 ¼	14 ½	13 ⅝	1 ⅞	4 ½	5	1	6 ½	16 ½		⅝	11 ¼								6.75
3	54	18	2 ¼	¾		6	3	11 ¼	14 ½	13 ⅝	1 ⅞	4 ½	5	1	6 ½	16 ½		⅝	11 ¼								6.75
4	54	18	2 ¼	¾		6	3	11 ¼	14 ½	13 ⅝	1 ⅞	4 ½	5	1	6 ½	16 ½		⅝	11 ¼								6.75
5																											

STANDARD SIGN
R6-1 L & R

WISCONSIN DEPT OF TRANSPORTATION

APPROVED Matthew R Rauch
for State Traffic Engineer

DATE 12/17/10 PLATE NO. R6-1.2

PROJECT NO:

SHEET NO: 182 E

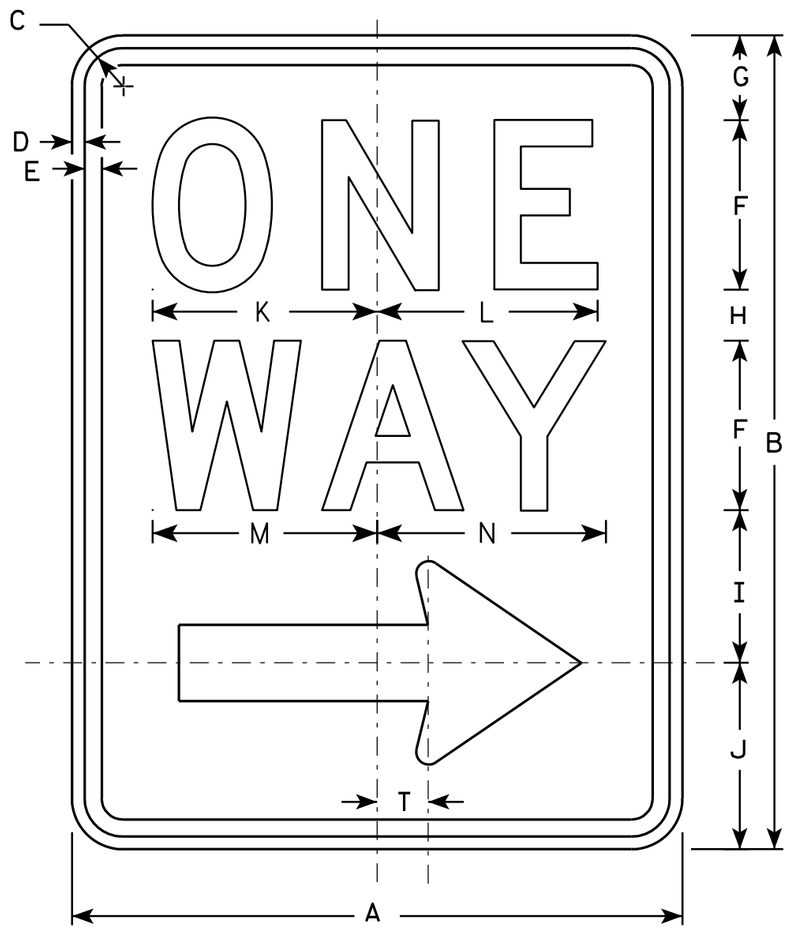

R6-2R

NOTES

1. Sign is Type II - Type H Reflective - reference WIS DOT Standard Specification for HIGHWAY and STRUCTURE CONSTRUCTION latest edition.
2. Color:
   Background - White
   Message - Black
3. Message Series - D
4. Corners may be square or rounded when base material is plywood but borders shall be rounded as shown. When base material is metal, the corners and borders shall be rounded.
5. R6-2L same as R6-2R except arrow points to the left.

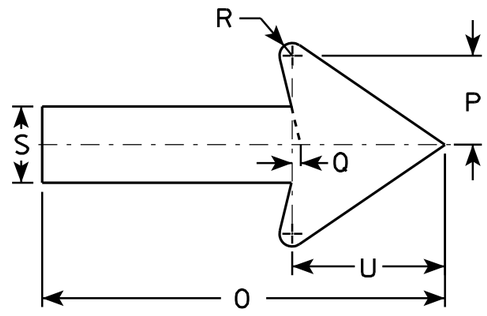

SIZE	A	B	C	D	E	F	G	H	I	J	K	L	M	N	O	P	O	R	S	T	U	V	W	X	Y	Z
1	18	24	1 1/8	3/8	1/2	5	2 1/2	1 1/2	4 1/2	5 1/2	6 5/8	6 1/2	6 5/8	6 3/4	11 7/8	2 5/8	1/4	3/8	2 1/4	1 1/2	4 1/2					
2S	24	30	1 1/8	3/8	1/2	6	3	2 1/2	5 1/2	7	8 1/8	8 1/8	8 1/2	8 5/8	16	3 1/2	3/8	1/2	3	2	6					
2M	30	36	1 3/8	1/2	5/8	8	2 1/2	2 5/8	6 7/8	8	10 1/2	10 1/2	11 1/4	11 1/4	20	4 3/8	1/2	5/8	3 3/4	2 1/2	7 1/2					
3	36	48	1 7/8	1/2	5/8	10	5 1/4	3 1/4	9	10 1/2	12 3/4	12 3/4	13 1/4	13 1/2	24	5 5/8	1/2	3/4	4 3/4	3	9					
4	36	48	1 7/8	1/2	5/8	10	5 1/4	3 1/4	9	10 1/2	12 3/4	12 3/4	13 1/4	13 1/2	24	5 5/8	1/2	3/4	4 3/4	3	9					
5																										

STANDARD SIGN
R6-2 R&L

WISCONSIN DEPT OF TRANSPORTATION

APPROVED Matthew R Rauch
for State Traffic Engineer

DATE 11/2/10 PLATE NO. R6-2.8

PROJECT NO:	HWY:	COUNTY:		SHEET NO: 183	E

NOTES

1. Sign is Type II - Type H Reflective - reference WIS DOT Standard Specification for HIGHWAY and STRUCTURE CONSTRUCTION latest edition.
2. Color:
   Background - WHITE
   Message - BLACK
3. Corners may be square or rounded when base material is plywood but borders shall be rounded as shown. When base material is metal, the corners and borders shall be rounded.

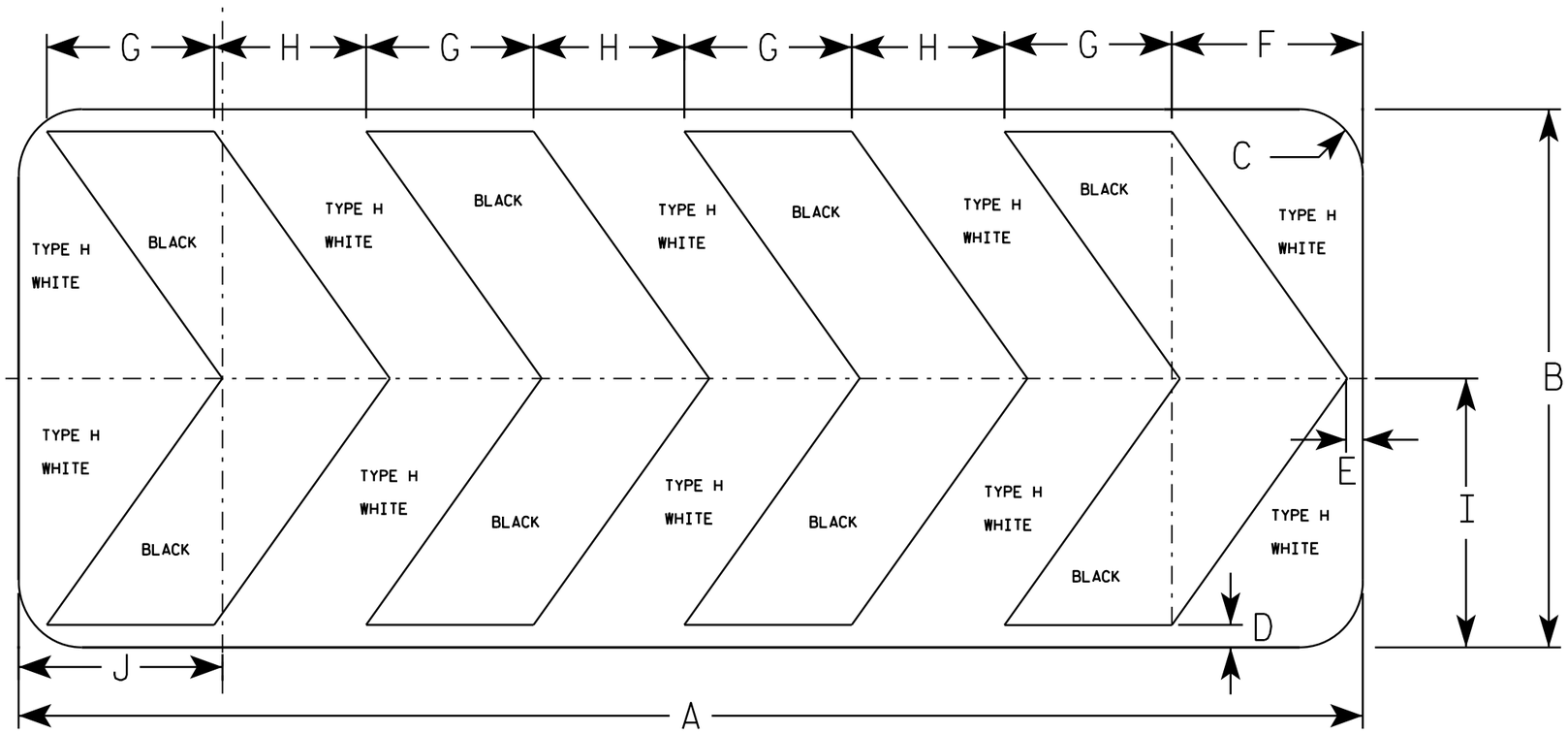

R6-4B

SIZE	A	B	C	D	E	F	G	H	I	J	K	L	M	N	O	P	Q	R	S	T	U	V	W	X	Y	Z	Area sq. ft.
1																											
2S	60	24	2 1/4	1	3/4	8 1/2	7 1/2	6 3/4	12	9 1/8																	10.0
2M	60	24	2 1/4	1	3/4	8 1/2	7 1/2	6 3/4	12	9 1/8																	10.0
3																											
4																											
5																											

STANDARD SIGN
R6-4B

WISCONSIN DEPT OF TRANSPORTATION

APPROVED Matthew R Rauch
for State Traffic Engineer

DATE 1/03/11 PLATE NO. R6-4B.2

PROJECT NO:

SHEET NO: 184 E

FILE NAME : C:\Users\PROJECTS\tr_stdplate\R64B.DGN PLOT DATE : 03-JAN-2011 14:30 PLOT BY : dotsja

WISDOT/CADDS SHEET 42

7

7

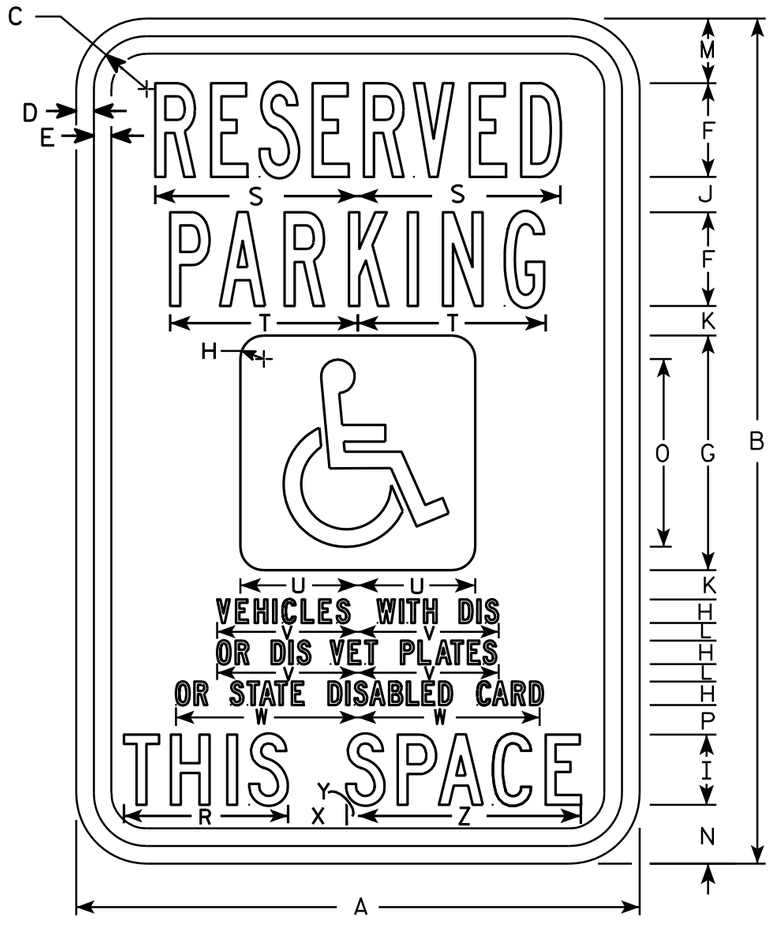

R7-8A

NOTES

1. Sign is Type II - Type H Reflective - reference WIS DOT Standard Specification for HIGHWAY and STRUCTURE CONSTRUCTION latest edition.
2. Color:
   Background - Sign is white Type H Reflective; paraplegic background is blue.
   Message - Legend and border are green; paraplegic symbol is white
3. Message Series - Lines 1 & 2 are Series B
   Lines 3, 4, 5 & 6 are Series C
4. Corners may be square or rounded when base material is plywood but borders shall be rounded as shown. When base material is metal, the corners and borders shall be rounded.

SIZE	A	B	C	D	E	F	G	H	I	J	K	L	M	N	O	P	Q	R	S	T	U	V	W	X	Y	Z	Area sq. ft.
1																											
2S	12	18	1 1/8	3/8	3/8	2	5	1/2	1 1/2	3/4	5/8	3/8	1 3/8	1 1/4	4	5/8		3 1/2	4 3/8	4	2 1/2	3	3 7/8	1 1/4	1/4	4 3/4	1.5
2M	18	24	1 1/8	3/8	1/2	3	6	3/4	2	7/8	5/8	1/2	1 7/8	2	5	3/4		4 5/8	6 1/2	5 3/8	3	4 1/2	5 7/8	1 1/2	1/4	6 3/8	3.0
3	18	24	1 1/8	3/8	1/2	3	6	3/4	2	7/8	5/8	1/2	1 7/8	2	5	3/4		4 5/8	6 1/2	5 3/8	3	4 1/2	5 7/8	1 1/2	1/4	6 3/8	3.0
4																											
5																											

STANDARD SIGN
R7-8A

WISCONSIN DEPT OF TRANSPORTATION

APPROVED Matthew R Rauch
for State Traffic Engineer

DATE 4/25/2011 PLATE NO. R7-8A.6

PROJECT NO: | HWY: | COUNTY: | SHEET NO: 185 | E

NOTES

1. Sign is Type II - Type H Reflective - reference WIS DOT Standard Specification for HIGHWAY and STRUCTURE CONSTRUCTION latest edition.
2. Color:
   Background - White
   Message - Green - Type H Reflective
3. Message Series - D
4. Corners may be square or rounded when base material is plywood but borders shall be rounded as shown. When base material is metal, the corners and borders shall be rounded.

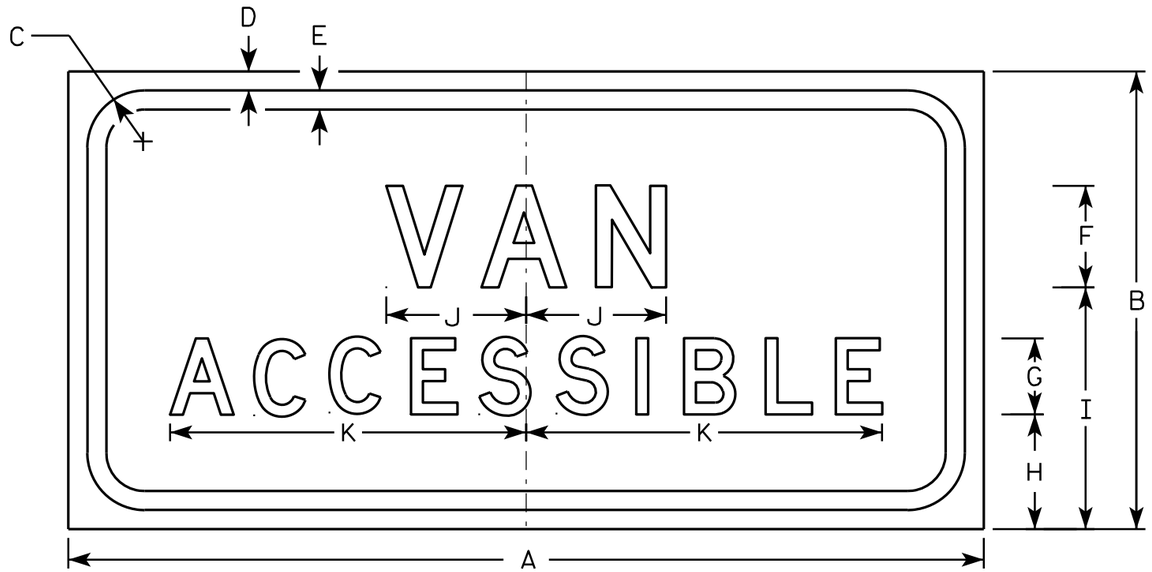

R7-8V

SIZE	A	B	C	D	E	F	G	H	I	J	K	L	M	N	O	P	Q	R	S	T	U	V	W	X	Y	Z	Area sq. ft.
1																											
2S	12	6	1 1/8	3/8	3/8	1 1/2	1	1 5/8	3 1/2	2	4 1/4																0.50
2M	18	9	1 1/8	3/8	3/8	2	1 1/2	2 1/4	4 3/4	2 3/4	7																0.75
3	18	9	1 1/8	3/8	3/8	2	1 1/2	2 1/4	4 3/4	2 3/4	7																0.75
4																											
5																											

STANDARD SIGN
R7-8V

WISCONSIN DEPT OF TRANSPORTATION

APPROVED Matthew R Rauch
for State Traffic Engineer

DATE 3/31/2011 PLATE NO. R7-8V.5

PROJECT NO: | HWY: | COUNTY: | SHEET NO: 186 | E

FILE NAME : C:\Users\PROJECTS\tr_stdplate\R78V.DGN PLOT DATE : 31-MAR-2011 11:13 PLOT BY : mscsja PLOT NAME : PLOT SCALE : 2.979520:1.000000

WISDOT/CADDS SHEET 42

NOTES

1. Sign is Type II - Type F Reflective - reference WIS DOT Standard Specification for HIGHWAY and STRUCTURE CONSTRUCTION latest edition.
2. Color:
   Background - Yellow
   Message - Black
3. Corners may be square or rounded when base material is plywood but borders shall be rounded as shown. When base material is metal, the corners and borders shall be rounded.
4. W1-2L is the same as W1-2R except the arrow is reversed along the vertical centerline.

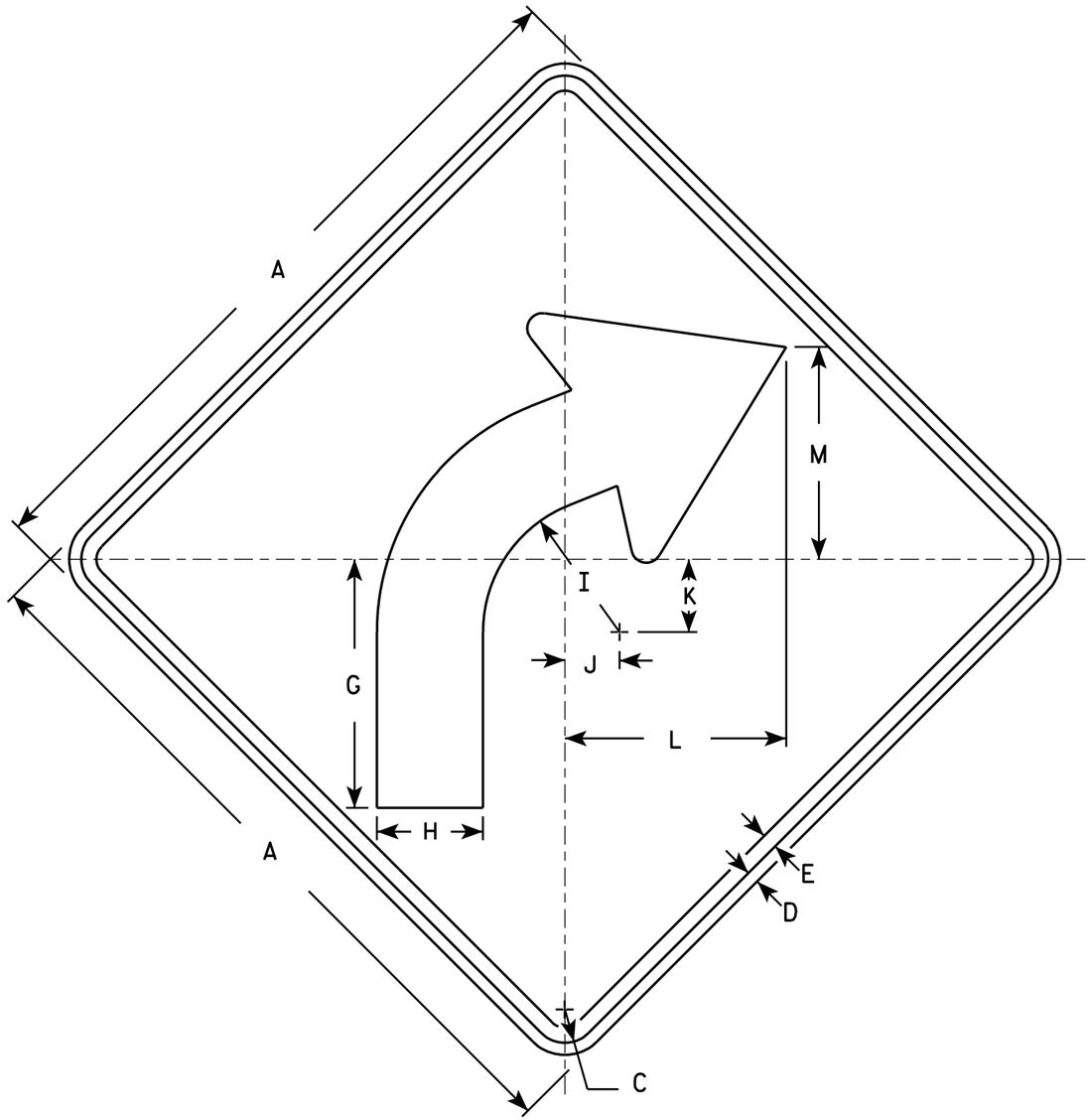

W1-2R

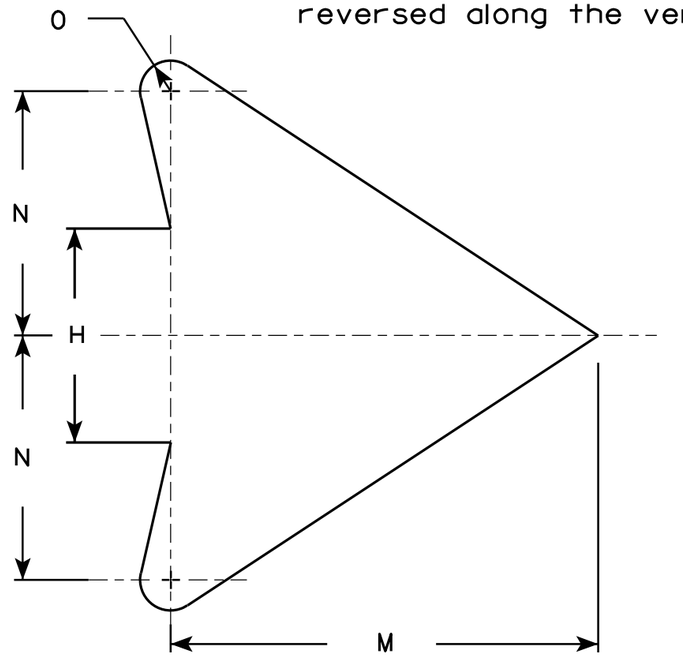

ARROW DETAIL

SIZE	A	B	C	D	E	F	G	H	I	J	K	L	M	N	O	P	Q	R	S	T	U	V	W	X	Y	Z	Area sq. ft.
1	24		1 1/8	3/8	1/2		8 1/4	3 1/2	4 1/2	1 3/4	2 3/8	7 1/4	7	4	1/2												4.0
2S	30		1 3/8	1/2	5/8		10 1/4	4 3/8	5 5/8	2 1/4	3	9 1/8	8 3/4	5	5/8												6.25
2M	36		1 5/8	5/8	3/4		12 3/8	5 1/4	6 3/4	2 5/8	3 1/2	10 7/8	10 1/2	6	3/4												9.0
3	36		1 5/8	5/8	3/4		12 3/8	5 1/4	6 3/4	2 5/8	3 1/2	10 7/8	10 1/2	6	3/4												9.0
4	36		1 5/8	5/8	3/4		12 3/8	5 1/4	6 3/4	2 5/8	3 1/2	10 7/8	10 1/2	6	3/4												9.0
5	48		2 1/4	3/4	1		16 1/2	7	9	3 1/2	4 5/8	14 1/2	14	8	1												16.0

STANDARD SIGN
W1-2

WISCONSIN DEPT OF TRANSPORTATION

APPROVED Matthew R Rauch for State Traffic Engineer

DATE 5/15/12 PLATE NO. W1-2.10

PROJECT NO:	HWY:	COUNTY:		SHEET NO: 187	E

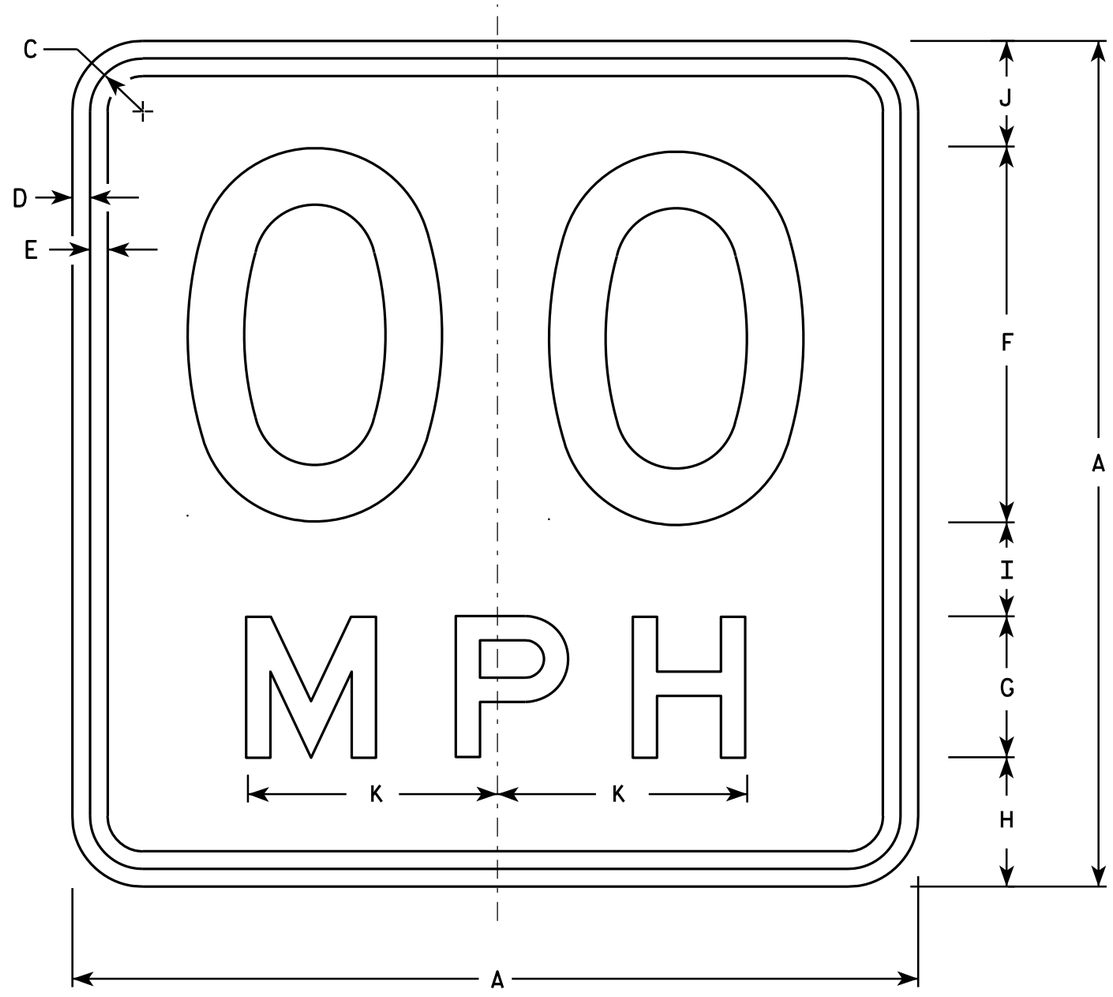

W13-1

* For 30" x 30" Warning Signs, use 18" x 18" W13-1 signs.
For 36" x 36" Warning Signs, use 24" x 24" W13-1 signs.

NOTES

1. Sign is Type II - Type F Reflective - reference WIS DOT Standard Specification for HIGHWAY and STRUCTURE CONSTRUCTION latest edition.
2. Color:
   Background - Yellow
   Message - Black
3. Message Series - See Note 6
4. Corners may be square or rounded when base material is plywood but borders shall be rounded as shown. When base material is metal, the corners and borders shall be rounded.
5. Substitute appropriate numerals and optically space about centerline to achieve proper balance.
6. Line 1 is Series D
   Line 2 is Series E

	SIZE	A	B	C	D	E	F	G	H	I	J	K	L	M	N	O	P	Q	R	S	T	U	V	W	X	Y	Z	Area sq. ft.
	1	18		1 1/8	3/8	3/8	8	3	2 3/4	2	2 1/4	5 3/8																2.25
*	2S	18		1 1/8	3/8	3/8	8	3	2 3/4	2	2 1/4	5 3/8																2.25
*	2M	18		1 1/8	3/8	3/8	8	3	2 3/4	2	2 1/4	5 3/8																2.25
	3	24		1 1/8	3/8	1/2	10	4	4	2 3/4	3 1/4	6 5/8																4.00
	4	36		1 5/8	5/8	3/4	16	6	5 1/2	4	4 1/2	10 5/8																9.00
	5	36		1 5/8	5/8	3/4	16	6	5 1/2	4	4 1/2	10 5/8																9.00

STANDARD SIGN
W13-1

WISCONSIN DEPT OF TRANSPORTATION

APPROVED Matthew R Rauch
For State Traffic Engineer

DATE 5/31/12 PLATE NO. W13-1.16

PROJECT NO: | HWY: | COUNTY: | SHEET NO: 188 | E

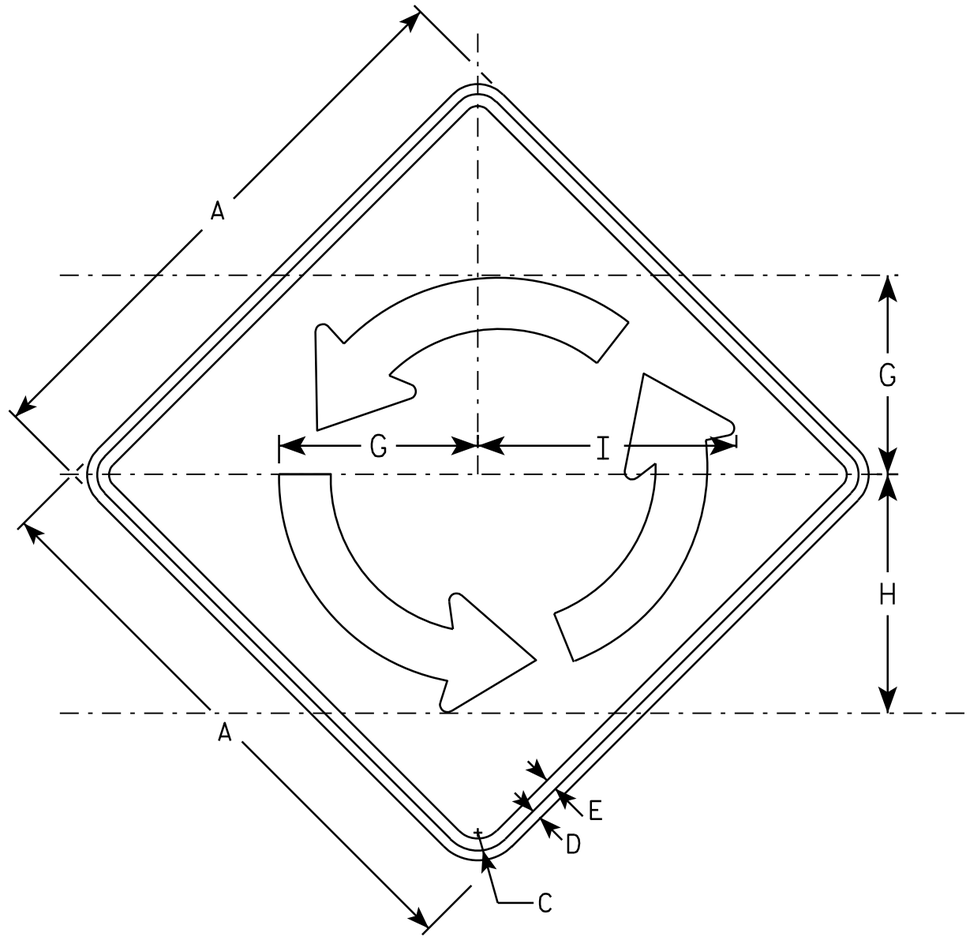

W2-6

NOTES

1. Sign is Type II - Type F Reflective - reference WIS DOT Standard Specification for HIGHWAY and STRUCTURE CONSTRUCTION latest edition.
2. Color:
   Background - YELLOW
   Message - BLACK
3. Message Series - B
4. Corners may be square or rounded when base material is plywood but borders shall be rounded as shown. When base material is metal, the corners and borders shall be rounded.

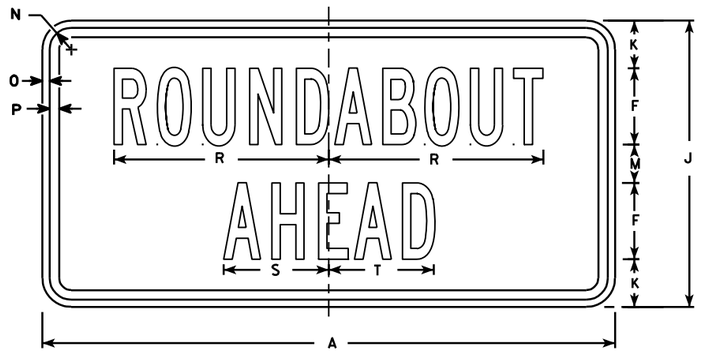

W2-6P

SIZE	A	B	C	D	E	F	G	H	I	J	K	L	M	N	O	P	Q	R	S	T	U	V	W	X	W2-6 Area sq. ft.	W2-6P Area sq. ft.
1																										
2S	30		1 3/8	1/2	5/8	4	10 3/8	12 1/2	13 1/2	15	2 1/2		2	1 1/8	3/8	1/2		11 1/4	5 1/2	5 1/2					6.25	3.12
2M	30		1 3/8	1/2	5/8	4	10 3/8	12 1/2	13 1/2	15	2 1/2		2	1 1/8	3/8	1/2		11 1/4	5 1/2	5 1/2					6.25	3.12
3	36		1 5/8	5/8	3/4	5	12 1/2	15	16 1/4	18	2 5/8		2 3/4	1 1/8	3/8	1/2		14	7	6 3/4					9.00	4.50
4	48		2 1/4	3/4	1	6	16 5/8	20	16 1/4	24	4 3/8		3 5/8	1 3/8	1/2	5/8		17	8 1/4	8 1/4					16.0	8.0
5																										

STANDARD SIGN
W2-6

WISCONSIN DEPT OF TRANSPORTATION

APPROVED Matthew R Rauch
for State Traffic Engineer

DATE 6/29/12 PLATE NO. W2-6.5

PROJECT NO:

SHEET NO: 189 E

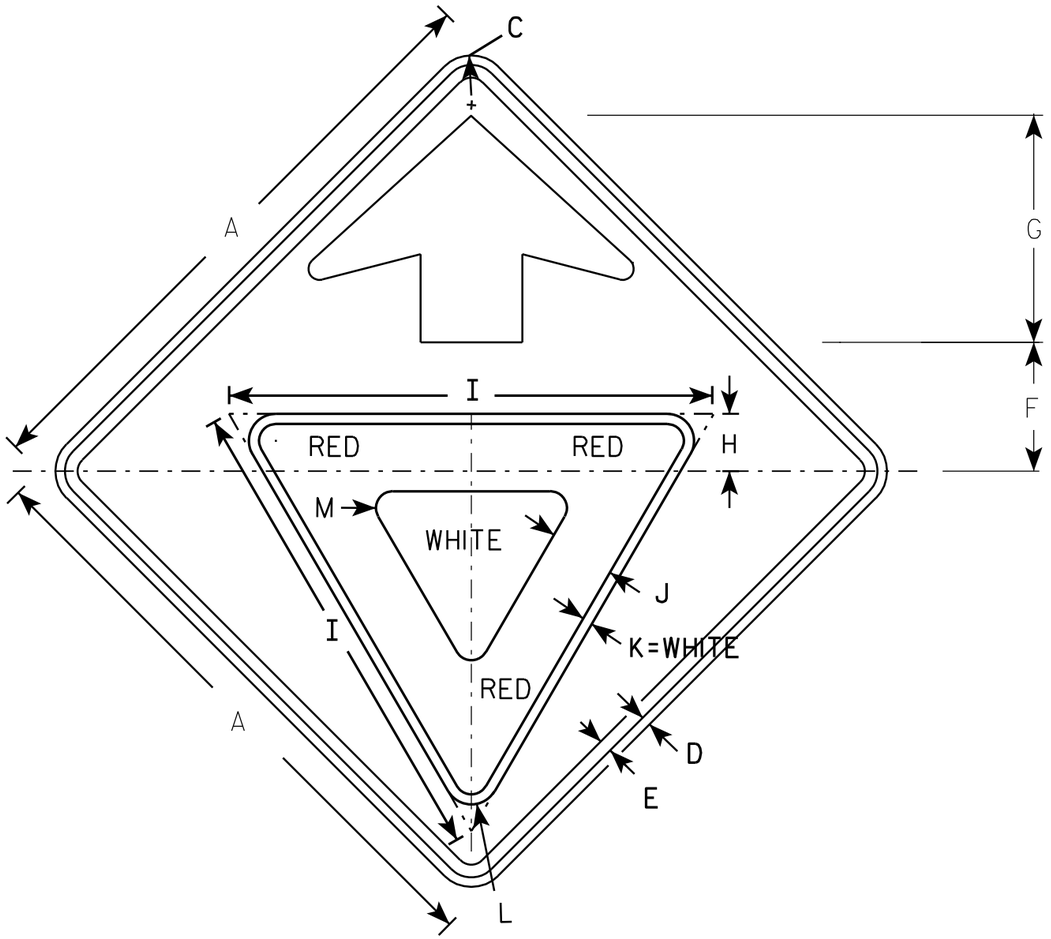

W3-2

NOTES

1. All Signs Type II - Type F Reflective - reference WIS DOT Standard Specification for HIGHWAY and STRUCTURE CONSTRUCTION latest edition.
2. Color:
   Background - YELLOW
   Arrow & Border - BLACK
   Yield Symbol - WHITE BORDER ON RED BACKGROUND

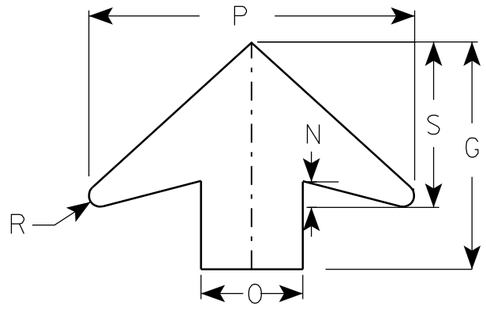

ARROW DETAIL

SIZE	A	B	C	D	E	F	G	H	I	J	K	L	M	N	O	P	Q	R	S	T	U	V	W	X	Y	Z	Area sq. ft.
1	30		1 3/8	1/2	5/8	6 1/4	11 1/4	3	25	3 3/8	1/2	1 3/8	7/8	1 1/4	5	16		1/2	8								6.25
2S	36		1 5/8	5/8	3/4	7 1/2	13 1/2	3 3/8	28	3 3/4	5/8	1 1/2	1	1 5/8	6	19 1/4		5/8	9 3/4								9.0
2M	36		1 5/8	5/8	3/4	7 1/2	13 1/2	3 3/8	28	3 3/4	5/8	1 1/2	1	1 5/8	6	19 1/4		5/8	9 3/4								9.0
3	36		1 5/8	5/8	3/4	7 1/2	13 1/2	3 3/8	28	3 3/4	5/8	1 1/2	1	1 5/8	6	19 1/4		5/8	9 3/4								9.0
4	48		2 1/4	3/4	1	10	17 7/8	4 1/2	38	5	3/4	2 1/8	1 3/8	2	8	25 5/8		7/8	13								16.0
5	48		2 1/4	3/4	1	10	17 7/8	4 1/2	38	5	3/4	2 1/8	1 3/8	2	8	25 5/8		7/8	13								16.0

STANDARD SIGN
W3-2

WISCONSIN DEPT OF TRANSPORTATION

APPROVED Matthew R Rauch
for State Traffic Engineer

DATE 6/7/10 PLATE NO. W3-2..9

PROJECT NO:

SHEET NO: 190 E

FILE NAME : C:\Users\PROJECTS\tr_stdplate\W32.DGN PLOT DATE : 07-JUN-2010 13:03 PLOT BY : ditjph

WISDOT/CADDS SHEET 42

7

7

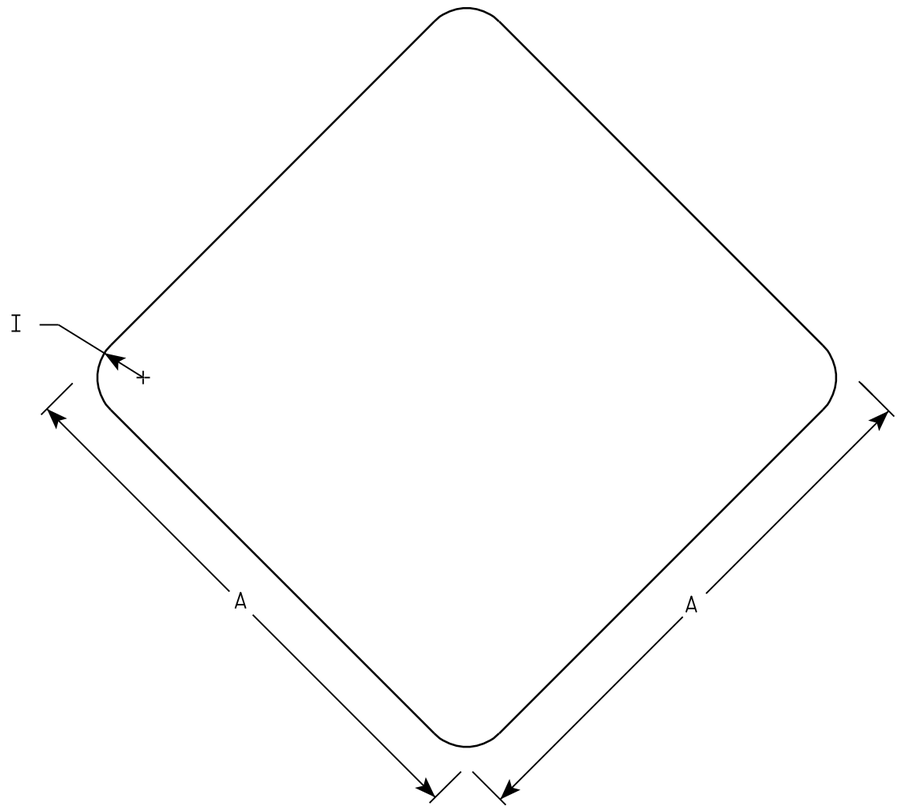

W5-54

NOTES

1. Sign is Type II - Type F Reflective - reference WIS DOT Standard Specification for HIGHWAY and STRUCTURE CONSTRUCTION latest edition.
2. Color:
   Background - Yellow
3. Corners may be square or rounded when base material is plywood. When base material is metal the corners shall be rounded.

SIZE	A	B	C	D	E	F	G	H	I	J	K	L	M	N	O	P	Q	R	S	T	U	V	W	X	Y	Z	Area sq. ft.
1	12								1																		1.0
2S	18								1 ½																		2.25
2M	18								1 ½																		2.25
3																											
4																											
5																											

STANDARD SIGN
W5-54

WISCONSIN DEPT OF TRANSPORTATION

APPROVED Matthew R Rauch
for State Traffic Engineer

DATE 11/3/10 PLATE NO. W5-54.8

PROJECT NO: | HWY: | COUNTY: | SHEET NO: 191 | E

STH 20

STATION	DISTANCE	AREA (SF)		INCRIMENTAL VOL (CY) (UNADJUSTED)		Cumulative Vol (CY)		MASS ORDINATE
		CUT	FILL	CUT	FILL	CUT 1.00	EXPANDED FILL 1.2	
				Note 1	Note 3	Note 1		Note 8
573+54		17.6	0.0	0	0	0	0	0
574+00	46	16.1	0.0	29	0	29	0	29
574+50	50	12.8	0.0	27	0	55	0	55
575+00	50	13.9	0.0	25	0	80	0	80
575+50	50	14.1	0.0	26	0	106	0	106
576+00	50	16.1	8.9	28	8	134	10	124
576+50	50	15.6	2.0	29	10	163	22	141
576+83.40	33.4	77.0	4.9	57	4	221	27	194
577+00	16.6	77.9	2.9	48	2	268	30	238
577+50	50	84.1	1.4	150	4	418	35	384
578+00	50	96.0	0.2	167	1	585	37	549
578+50	50	111.7	0.0	192	0	777	37	741
579+00	50	123.9	0.0	218	0	996	37	959
579+50	50	134.9	0.5	240	0	1235	37	1198
580+00	50	132.3	10.9	247	11	1483	50	1433
580+50	50	180.8	0.3	290	10	1772	62	1710
581+00	50	159.4	6.7	315	6	2087	70	2017
581+50	50	197.5	11.7	330	17	2418	91	2327
582+00	50	229.5	14.5	395	24	2813	120	2694
582+50	50	260.0	14.2	453	27	3267	152	3115
583+00	50	312.6	8.7	530	21	3797	177	3620
583+50	50	351.0	3.7	614	12	4411	191	4220
584+00	50	397.2	1.4	693	5	5104	197	4907
584+50	50	451.3	2.9	786	4	5890	201	5688
585+00	50	511.6	6.5	892	9	6781	212	6569
585+50	50	489.8	24.4	927	29	7708	246	7462
586+00	50	493.1	33.4	910	53	8618	310	8308
586+50	50	228.8	65.5	668	92	9287	420	8867
587+00	50	147.0	132.0	348	183	9635	640	8995
587+50	50	414.1	23.9	520	144	10154	813	9341
588+00	50	222.9	23.5	590	44	10744	865	9879
588+50	50	237.4	0.8	426	23	11170	892	10278
589+00	50	217.9	2.3	422	3	11592	896	10696
589+50	50	188.7	0.9	376	3	11968	899	11069
590+00	50	148.1	8.3	312	8	12280	910	11371
590+50	50	154.9	33.6	281	39	12561	956	11605
591+00	50	124.4	26.5	259	56	12819	1023	11796
591+50	50	101.0	28.9	209	51	13028	1084	11944
592+00	50	86.7	27.1	174	52	13202	1147	12055
592+50	50	71.9	29.9	147	53	13349	1210	12139
593+00	50	55.6	73.9	118	96	13467	1325	12141
593+50	50	68.0	14.5	115	82	13581	1423	12158
594+00	50	71.1	19.4	129	31	13710	1461	12249
594+50	50	72.2	15.8	133	33	13843	1500	12342
595+00	50	74.9	8.2	136	22	13979	1527	12452
595+17.85	17.85	75.8	6.7	50	5	14029	1533	12496
		COLUMN TOTALS:		14029	1277			

STH 75

STATION	DISTANCE	AREA (SF)		INCRIMENTAL VOL (CY) (UNADJUSTED)		Cumulative Vol (CY)		MASS ORDINATE
		CUT	FILL	CUT	FILL	CUT 1.00	EXPANDED FILL 1.2	
				Note 1	Note 3	Note 1		Note 8
461+50		25.3	0.0	0	0	0	0	0
462+00	50	66.6	0.0	85	0	85	0	85
462+12.80	12.8	136.6	0.0	48	0	133	0	133
462+50	37.2	166.9	0.0	209	0	342	0	342
463+00	50	174.2	0.0	316	0	658	0	658
463+50	50	181.9	0.0	330	0	988	0	988
464+00	50	154.6	1.0	312	1	1299	1	1298
464+50	50	121.6	27.3	256	26	1555	33	1523
465+00	50	99.5	35.5	205	58	1760	102	1658
465+50	50	79.3	48.4	166	78	1925	196	1730
466+00	50	70.6	54.8	139	96	2064	310	1754
466+50	50	88.2	29.3	147	78	2211	404	1808
467+00	50	145.5	10.4	216	37	2428	448	1980
467+50	50	171.0	4.4	293	14	2721	464	2257
468+00	50	185.7	8.7	330	12	3051	479	2572
468+50	50	174.6	11.1	334	18	3385	501	2884
469+00	50	315.1	22.9	453	31	3838	539	3299
469+25	25	125.9	99.9	204	57	4042	607	3435
		COLUMN TOTALS:		4042	506			

CTH S

STATION	DISTANCE	AREA (SF) CUT	AREA (SF) FILL	INCRIMENTAL VOL (CY) (UNADJUSTED) CUT Note 1	INCRIMENTAL VOL (CY) (UNADJUSTED) FILL Note 3	Cumulative Vol (CY) CUT 1.00 Note 1	Cumulative Vol (CY) EXPANDED FILL 1.2	MASS ORDINATE Note 8
471+00		120.8	37.9	0	0	0	0	0
471+50	50	111.6	11.7	215	46	215	55	160
472+00	50	54.9	35.0	154	43	369	107	262
472+50	50	44.2	65.2	92	93	461	218	243
473+00	50	52.9	86.0	90	140	551	386	165
473+50	50	50.1	86.1	95	159	646	578	69
474+00	50	49.2	74.4	92	149	738	756	-18
474+50	50	48.2	52.6	90	118	829	897	-68
475+00	50	54.7	38.4	95	84	924	998	-74
475+50	50	65.5	16.6	111	51	1035	1059	-24
476+00	50	113.3	54.5	166	66	1201	1138	62
476+50	50	95.8	28.7	194	77	1394	1231	164
477+00	50	100.2	21.4	181	46	1576	1286	289
477+50	50	108.8	15.6	194	34	1769	1327	442
478+00	50	120.0	12.6	212	26	1981	1359	622
478+50	50	122.3	12.0	224	23	2205	1386	819
479+00	50	129.1	9.1	233	20	2438	1410	1029
479+50	50	135.0	6.2	245	14	2683	1427	1256
480+00	50	134.1	6.3	249	12	2932	1440	1492
480+22.73	22.73	136.4	5.9	114	5	3046	1447	1599
480+50	27.27	100.4	2.3	120	4	3165	1452	1714
481+00	50	91.3	0.7	178	3	3343	1455	1888
481+50	50	16.3	3.1	100	4	3443	1459	1983
482+00	50	3.1	1.6	18	4	3460	1464	1996
		COLUMN TOTALS:		3460	1220			

BEAUMONT PARK PARKING LOT

STATION	DISTANCE	AREA (SF) CUT	AREA (SF) FILL	INCRIMENTAL VOL (CY) (UNADJUSTED) CUT Note 1	INCRIMENTAL VOL (CY) (UNADJUSTED) FILL Note 3	Cumulative Vol (CY) CUT 1.00 Note 1	Cumulative Vol (CY) EXPANDED FILL 1.2	MASS ORDINATE Note 8
10+50		0.0	58.3	0	0	0	0	0
10+63	13	0.0	65.7	0	30	0	36	-36
10+75	12	0.0	50.2	0	26	0	67	-67
11+00	25	16.3	2.4	8	24	8	96	-88
11+25	25	24.4	1.5	19	2	26	98	-72
11+50	25	23.1	1.7	22	1	48	100	-52
11+61	11	21.3	2.1	9	1	57	101	-43
		COLUMN TOTALS:		57	84			

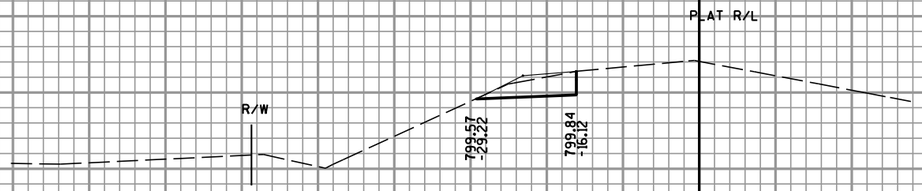

574+50

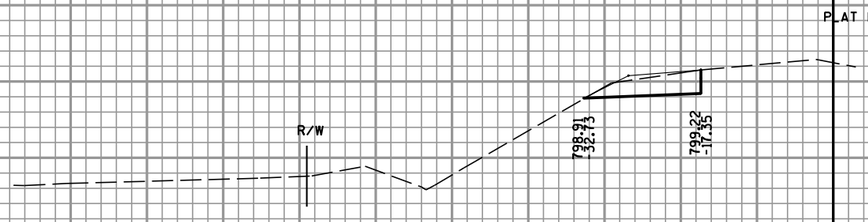

574+00

RECONSTRUCT SHOULDER
FOR STORM SEWER INSTALLATION
STA 573+54 - STA 576+83

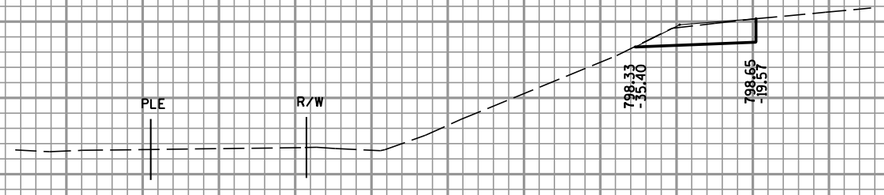

STATION AHEAD
573+54

MATCH EXISTING

STORM SEWER OUTFALL LT

GRADE DITCH TO WEST
AT 0.5% MINIMUM SLOPE

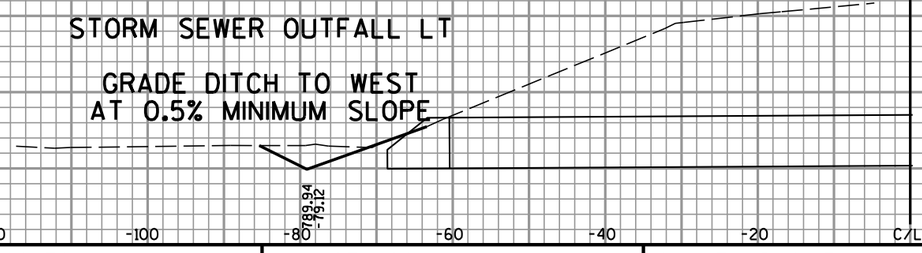

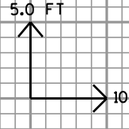

573+50

9 9

PROJECT NO: 2340-09-70	HWY: STH 20	COUNTY: RACINE	CROSS SECTIONS: STH 20	SHEET NO: 194	E

FILE NAME : k:\1082713.03\cadd\sheets\xsect\090201_xs STH 20.DGN PLOT DATE : 1/29/2014 PLOT BY : rlb PLOT NAME : PLOT SCALE : $$.....plotscale.....$$

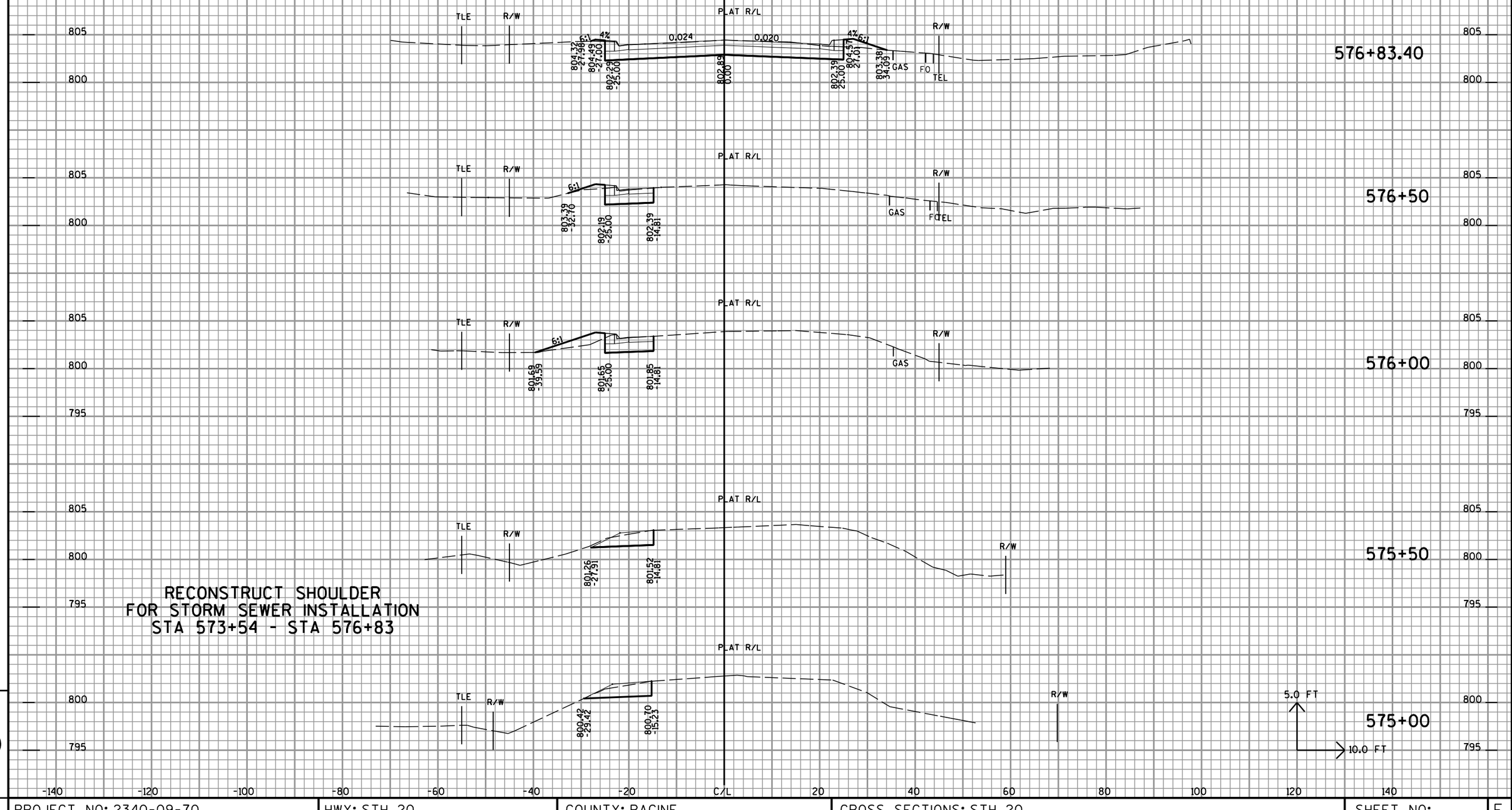

RECONSTRUCT SHOULDER
FOR STORM SEWER INSTALLATION
STA 573+54 - STA 576+83

9

PROJECT NO: 2340-09-70	HWY: STH 20	COUNTY: RACINE	CROSS SECTIONS: STH 20	SHEET NO: 195	E

FILE NAME : k:\1082713.03\cadd\sheets\xsect\090201_xs STH 20.DGN PLOT DATE : 1/29/2014 PLOT BY : rlb PLOT NAME : PLOT SCALE : $$.....plotscale.....$$

DRIVEWAY RIGHT
NOT FOR YARDAGE

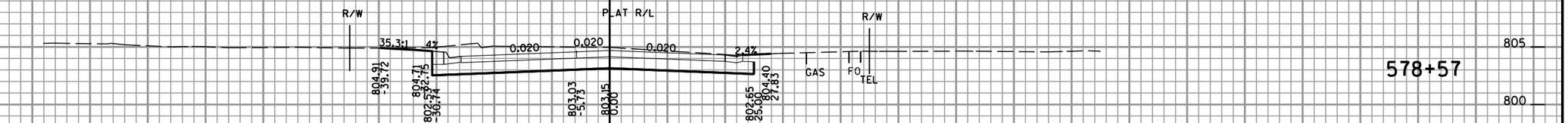

DRIVEWAY LEFT

DRIVEWAY RIGHT

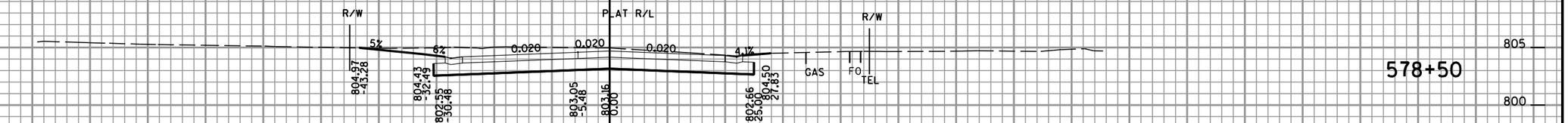

DRIVEWAY LEFT
NOT FOR YARDAGE

DRIVEWAY RIGHT
NOT FOR YARDAGE

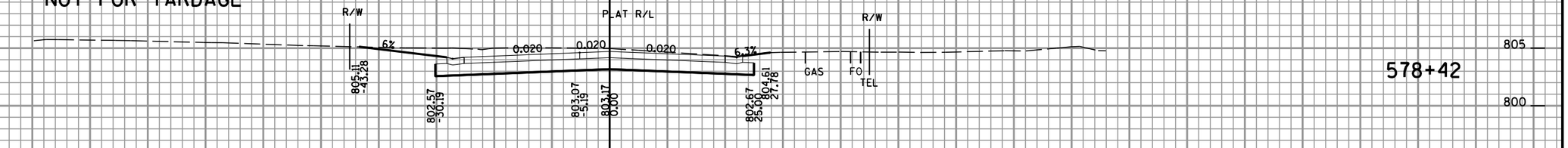

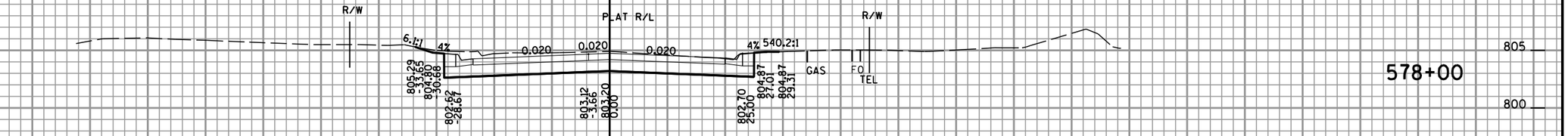

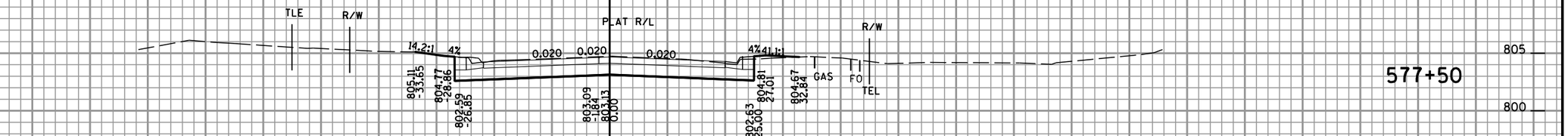

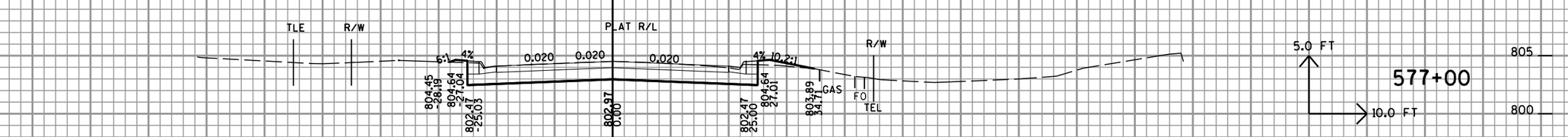

-140 -120 -100 -80 -60 -40 -20 C/L 20 40 60 80 100 120 140

9 9

PROJECT NO: 2340-09-70	HWY: STH 20	COUNTY: RACINE	CROSS SECTIONS: STH 20	SHEET NO: 196 E

FILE NAME : k:\1082713.03\cadd\sheets\xsect\090201_xs STH 20.DGN PLOT DATE : 1/29/2014 PLOT BY : r1b PLOT NAME : PLOT SCALE : $$.....plotscale.....$$

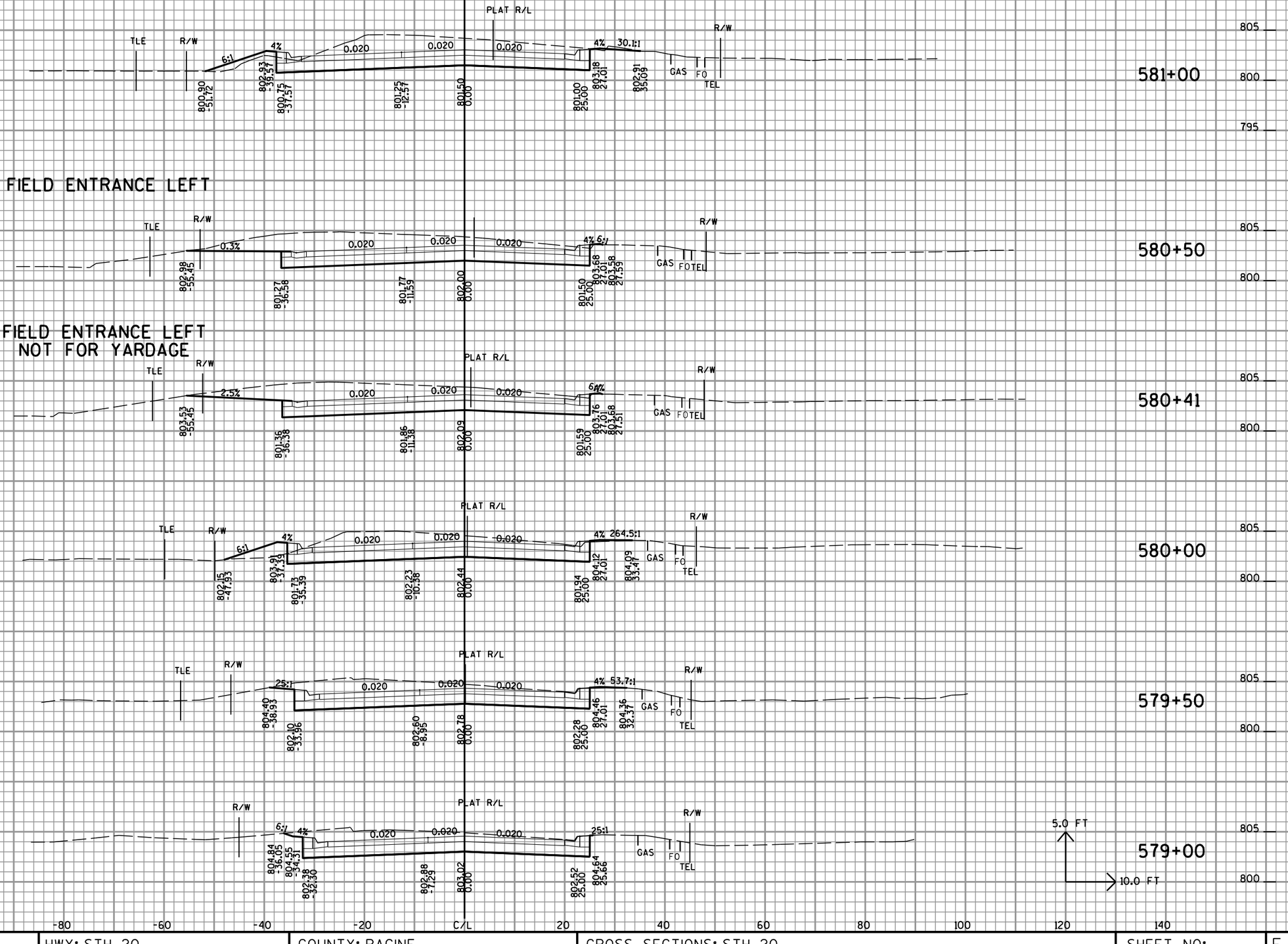

9

9

PROJECT NO: 2340-09-70	HWY: STH 20	COUNTY: RACINE	CROSS SECTIONS: STH 20	SHEET NO: 197	E

FILE NAME : k:\1082713.03\cadd\sheets\xsect\090201_xs STH 20.DGN PLOT DATE : 1/29/2014 PLOT BY : rlb PLOT NAME : PLOT SCALE : $$.....plotscale.....$$

LOW POINT
STORM INLET LEFT
NOT FOR YARDAGE

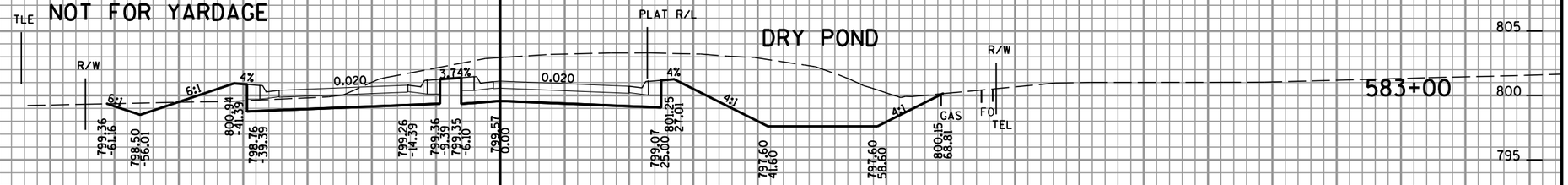

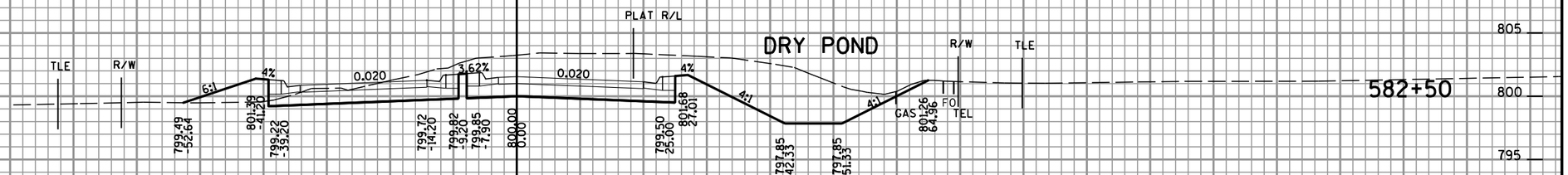

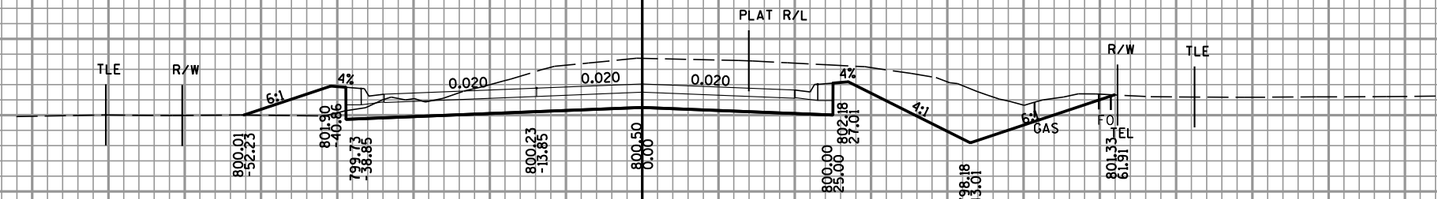

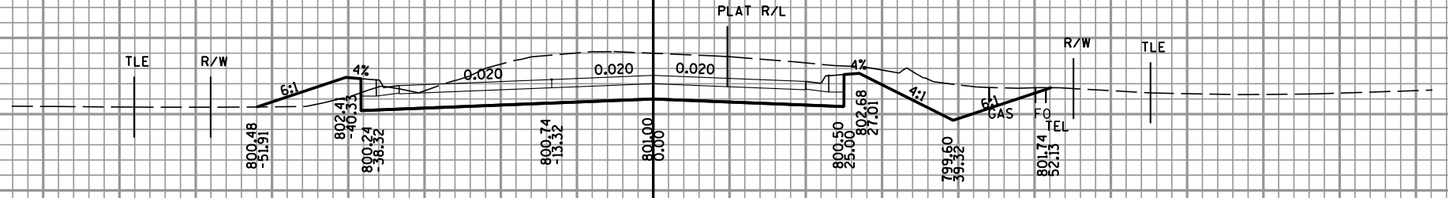

9

9

PROJECT NO: 2340-09-70	HWY: STH 20	COUNTY: RACINE	CROSS SECTIONS: STH 20	SHEET NO: 198	E

FILE NAME : k:\1082713.03\cadd\sheets\xsect\090201_xs STH 20.DGN PLOT DATE : 1/29/2014 PLOT BY : rlb PLOT NAME : PLOT SCALE : $$.....plotscale.....$$

LOW POINT RT
STORM SEWER ENDWALL

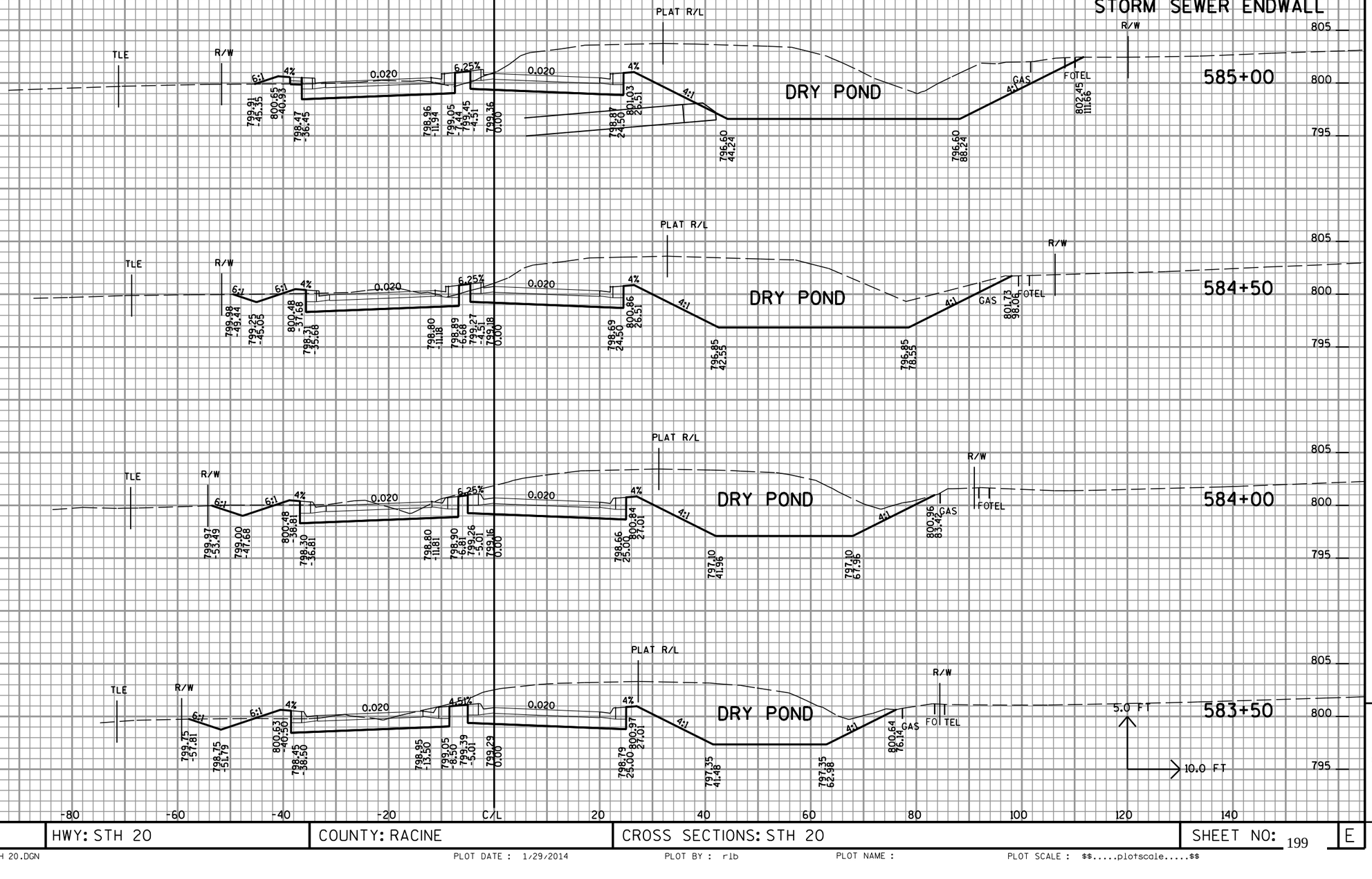

PROJECT NO: 2340-09-70	HWY: STH 20	COUNTY: RACINE	CROSS SECTIONS: STH 20	SHEET NO: 199	E

FILE NAME : k:\1082713.03\cadd\sheets\xsect\090201_xs STH 20.DGN PLOT DATE : 1/29/2014 PLOT BY : rlb PLOT NAME : PLOT SCALE : $$.....plotscale.....$$

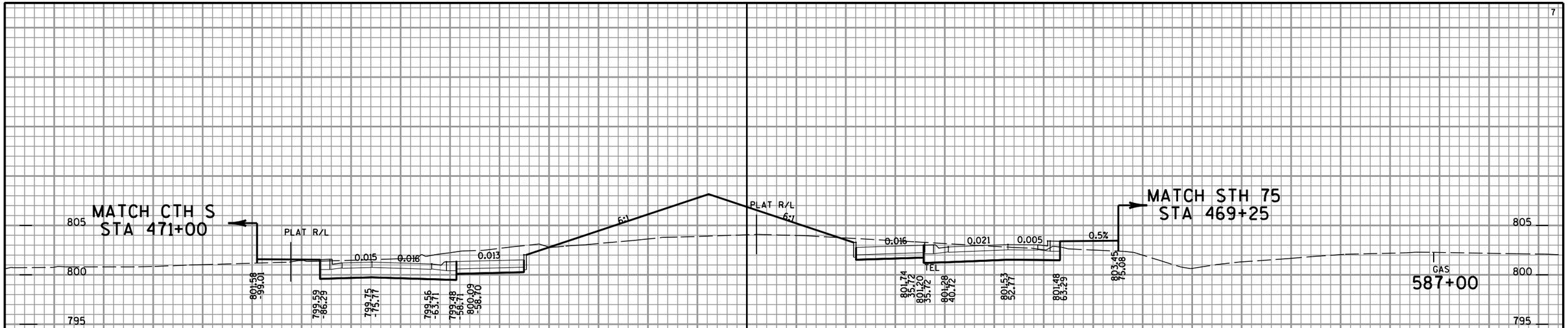

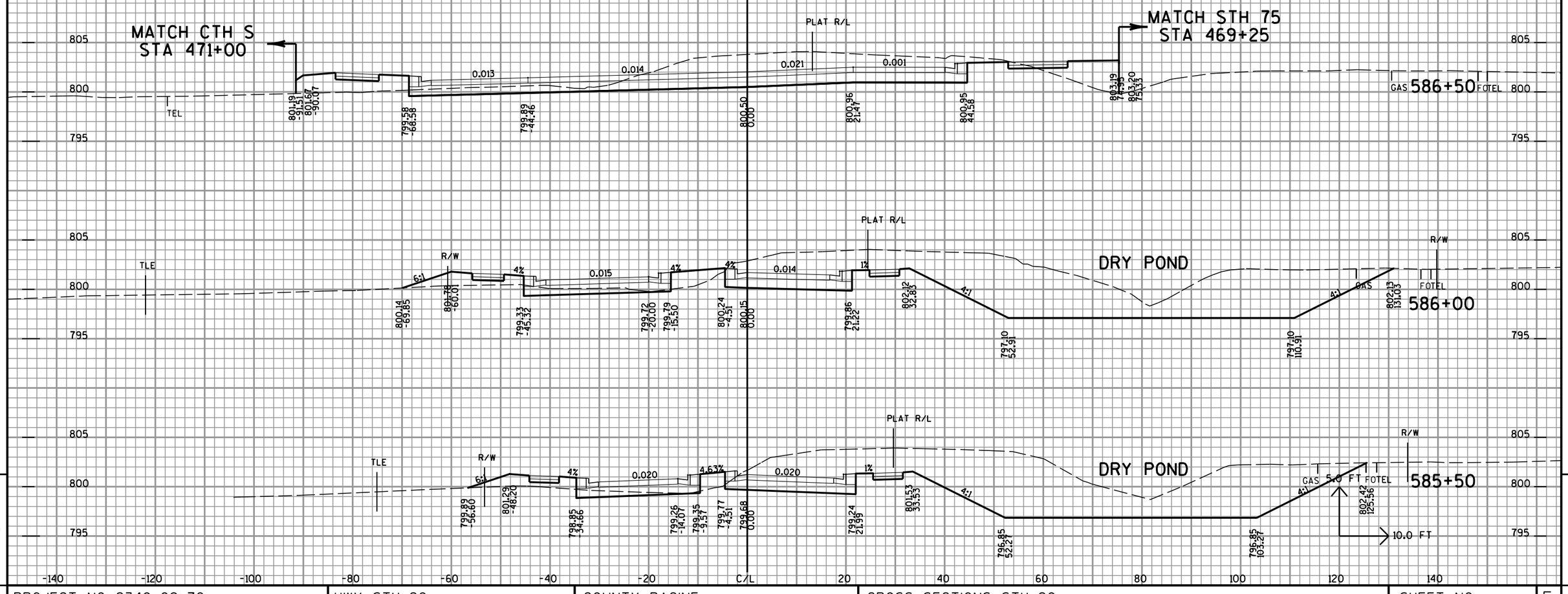

9

9

PROJECT NO: 2340-09-70	HWY: STH 20	COUNTY: RACINE	CROSS SECTIONS: STH 20	SHEET NO: 200	E

FILE NAME : k:\1082713.03\cadd\sheets\xsect\090201_xs STH 20.DGN PLOT DATE : 1/29/2014 PLOT BY : r1b PLOT NAME : PLOT SCALE : $$.....plotscale.....$$

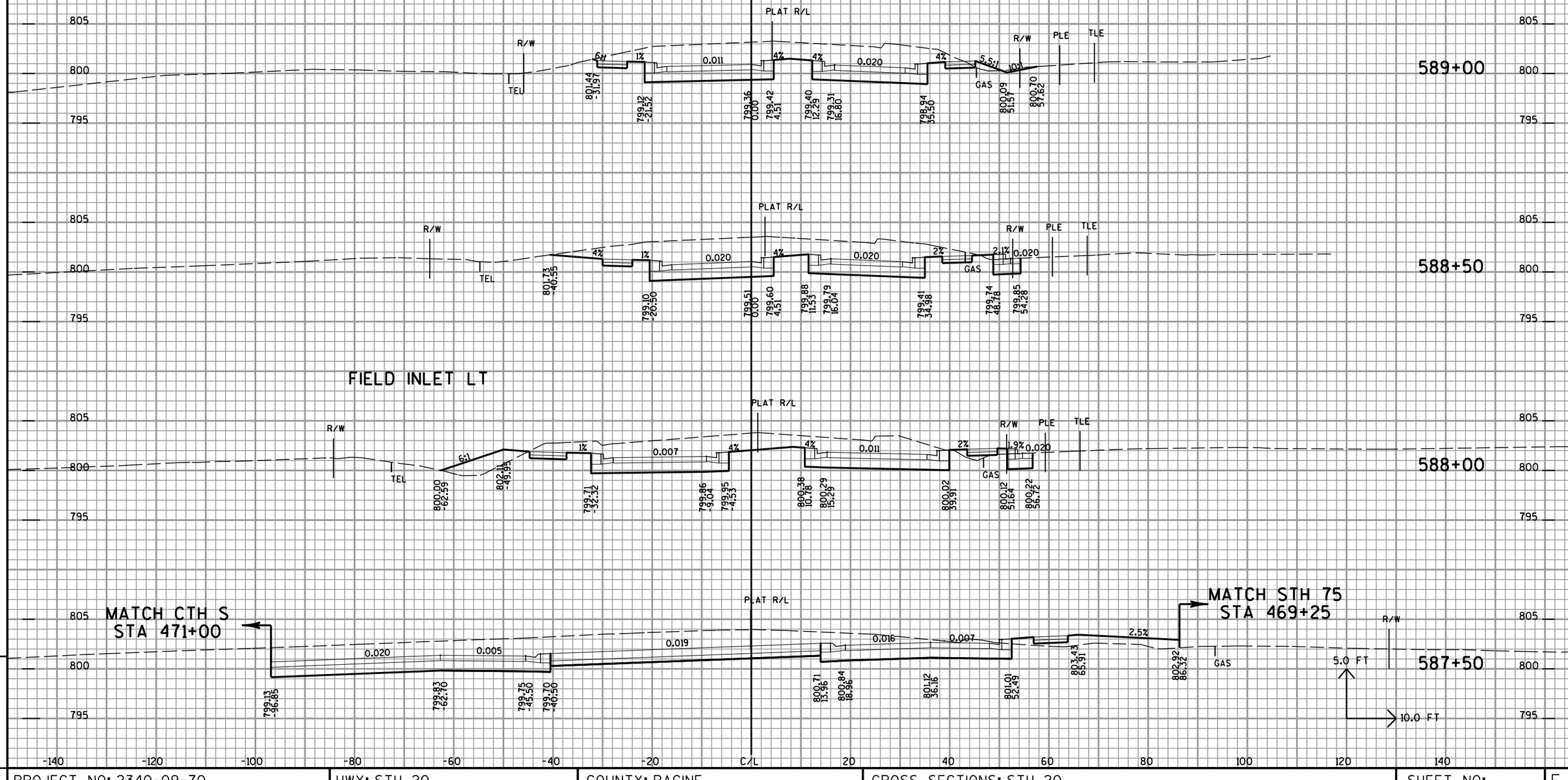

9

PROJECT NO: 2340-09-70	HWY: STH 20	COUNTY: RACINE	CROSS SECTIONS: STH 20	SHEET NO: 201	E

FILE NAME : k:\1082713.03\cadd\sheets\xsect\090201_xs STH 20.DGN PLOT DATE : 1/29/2014 PLOT BY : rlb PLOT NAME : PLOT SCALE : $$.....plotscale.....$$

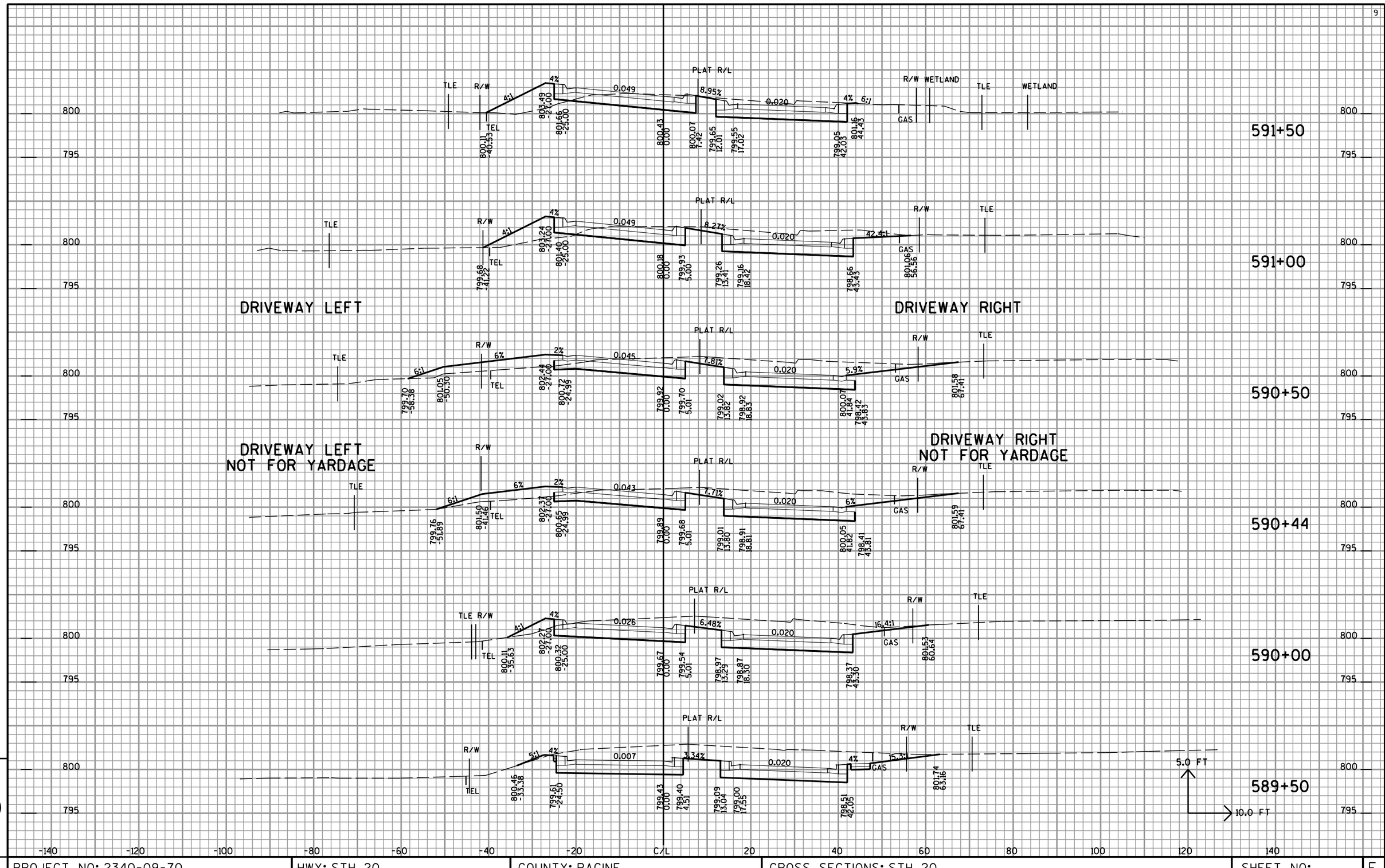

PROJECT NO: 2340-09-70	HWY: STH 20	COUNTY: RACINE	CROSS SECTIONS: STH 20	SHEET NO: 202	E

FILE NAME : k:\1082713.03\cadd\sheets\xsect\090201_xs STH 20.DGN PLOT DATE : 1/29/2014 PLOT BY : rlb PLOT NAME : PLOT SCALE : $$.....plotscale.....$$

FIELD ENTRANCE LEFT

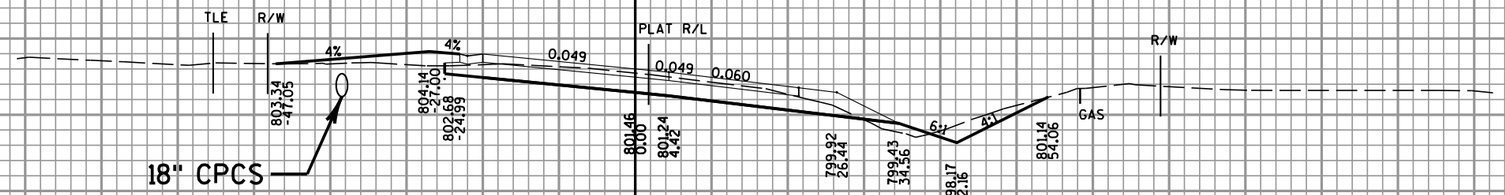

FIELD ENTRANCE LEFT NOT FOR YARDAGE

DITCH FLOWS WEST INTO STORM SEWER SYSTEM

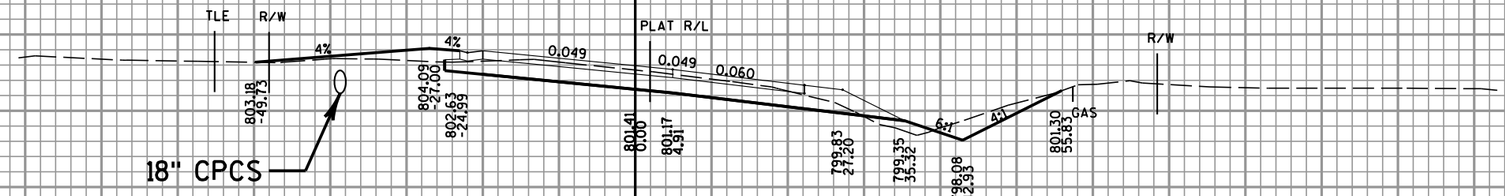

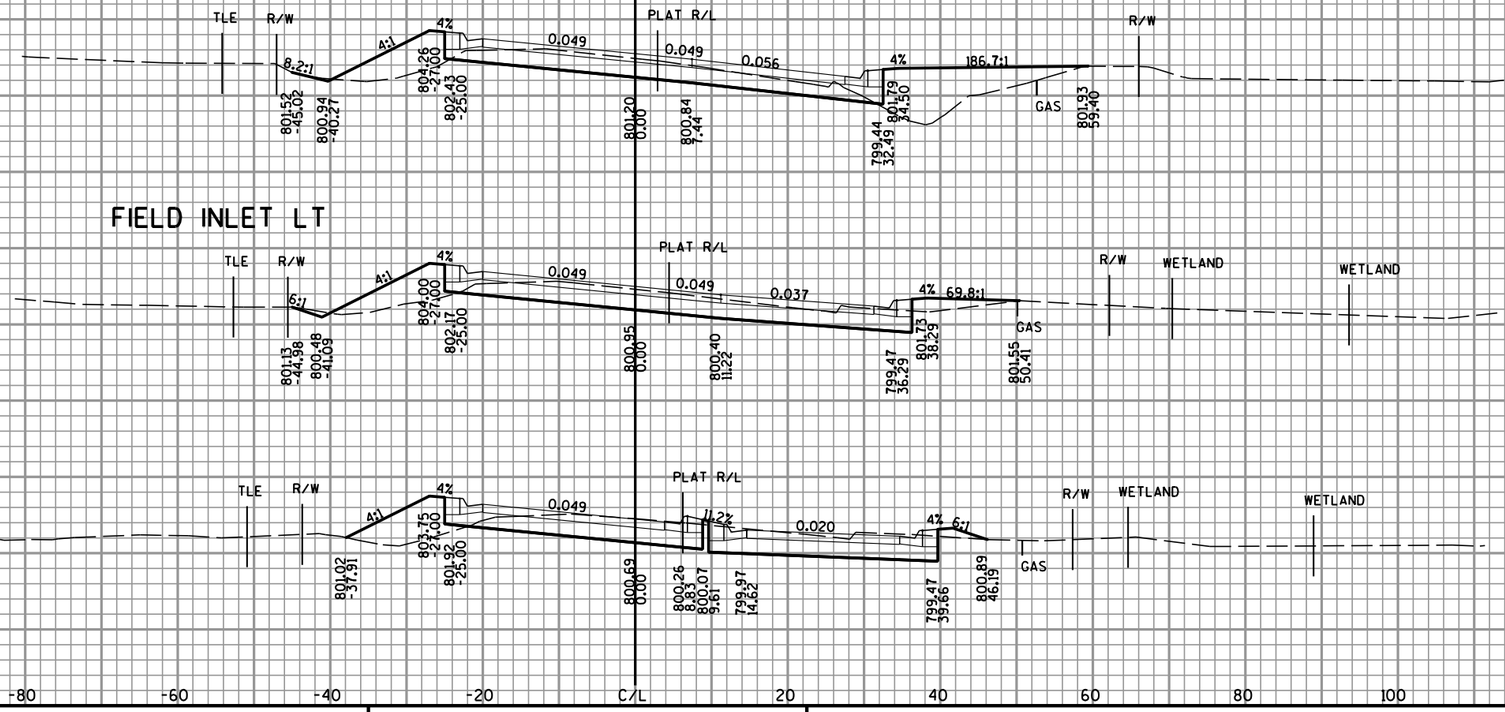

9

9

PROJECT NO: 2340-09-70	HWY: STH 20	COUNTY: RACINE	CROSS SECTIONS: STH 20	SHEET NO: 203	E

FILE NAME : k:\1082713.03\cadd\sheets\xsect\090201_xs STH 20.DGN PLOT DATE : 1/29/2014 PLOT BY : r1b PLOT NAME : PLOT SCALE : $$.....plotscale.....$$

MATCH EXISTING

REGRADE DITCH RT
TO STA 595+50

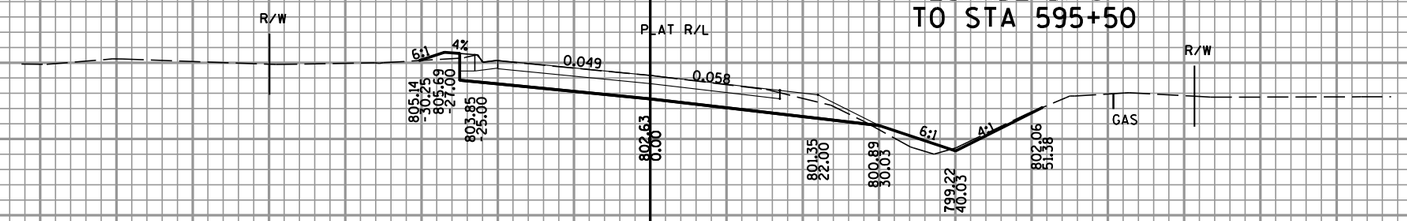

STATION BACK

595+17.85

595+00

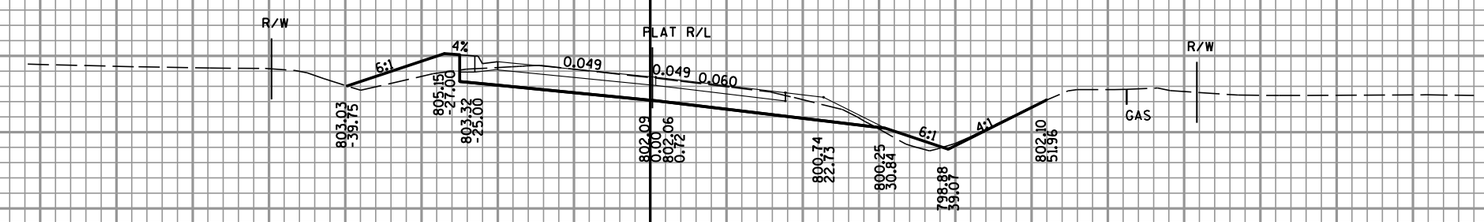

594+50

STORM OUTFALL RT

594+00

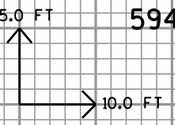

-140 -120 -100 -80 -60 -40 -20 C/L 20 40 60 80 100 120 140

9 9

PROJECT NO: 2340-09-70	HWY: STH 20	COUNTY: RACINE	CROSS SECTIONS: STH 20	SHEET NO: 204	E

FILE NAME : k:\1082713.03\cadd\sheets\xsect\090201_xs STH 20.DGN PLOT DATE : 1/29/2014 PLOT BY : rlb PLOT NAME : PLOT SCALE : $$.....plotscale.....$$

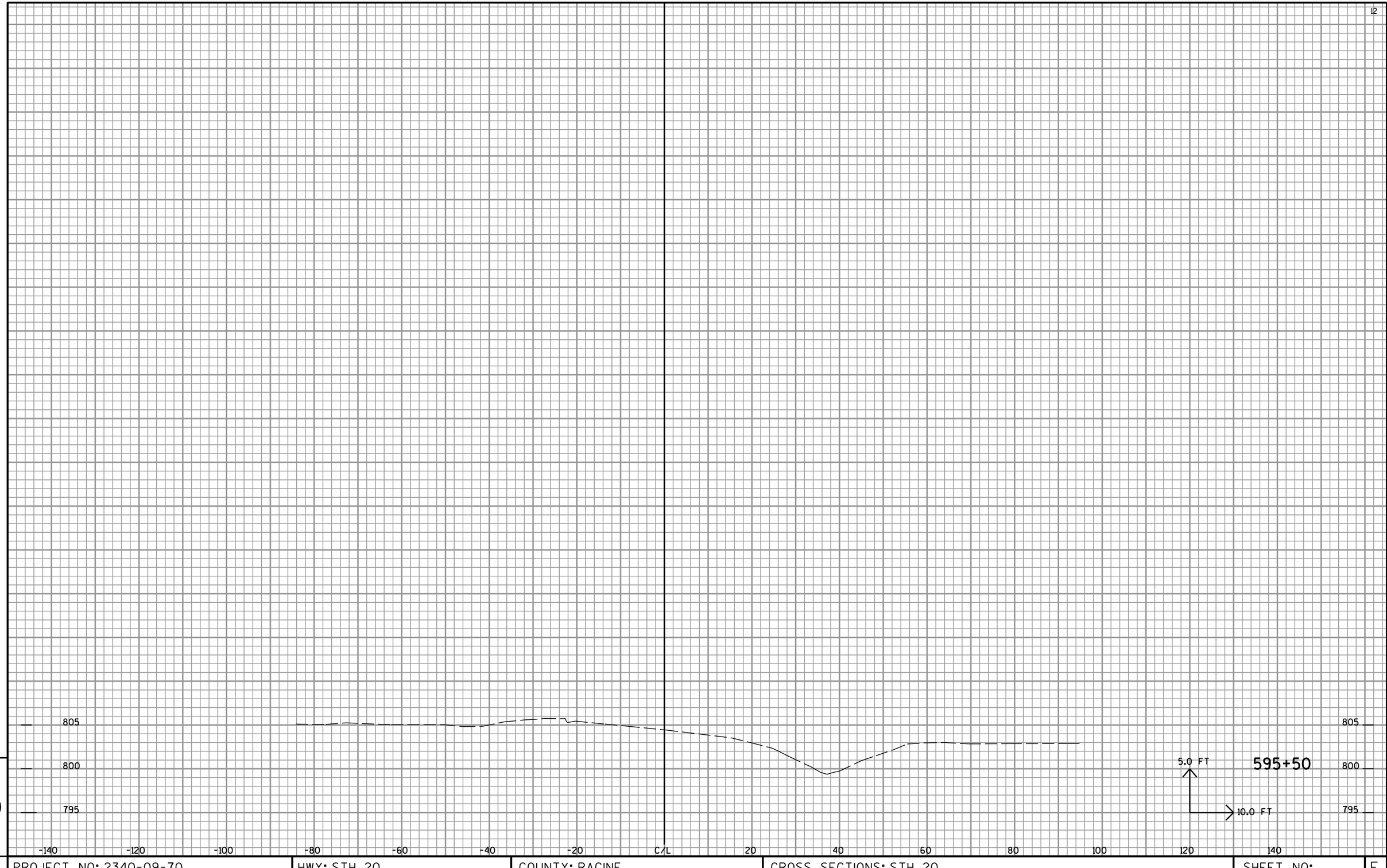

9

9

PROJECT NO: 2340-09-70	HWY: STH 20	COUNTY: RACINE	CROSS SECTIONS: STH 20	SHEET NO: 205	E

FILE NAME : k:\1082713.03\cadd\sheets\xsect\090201_xs STH 20.DGN PLOT DATE : 1/29/2014 PLOT BY : rlb PLOT NAME : PLOT SCALE : $$.....plotscale.....$$

9

9

PROJECT NO: 2340-09-70	HWY: STH 20	COUNTY: RACINE	CROSS SECTIONS: STH 75/CTH S	SHEET NO: 206	E

FILE NAME : K:±1082713.03±cadd±sheets±xsect±090202_xs STH 75.dgn PLOT DATE : 1/29/2014 PLOT BY : rlb PLOT NAME : PLOT SCALE : $$.....plotscale.....$$

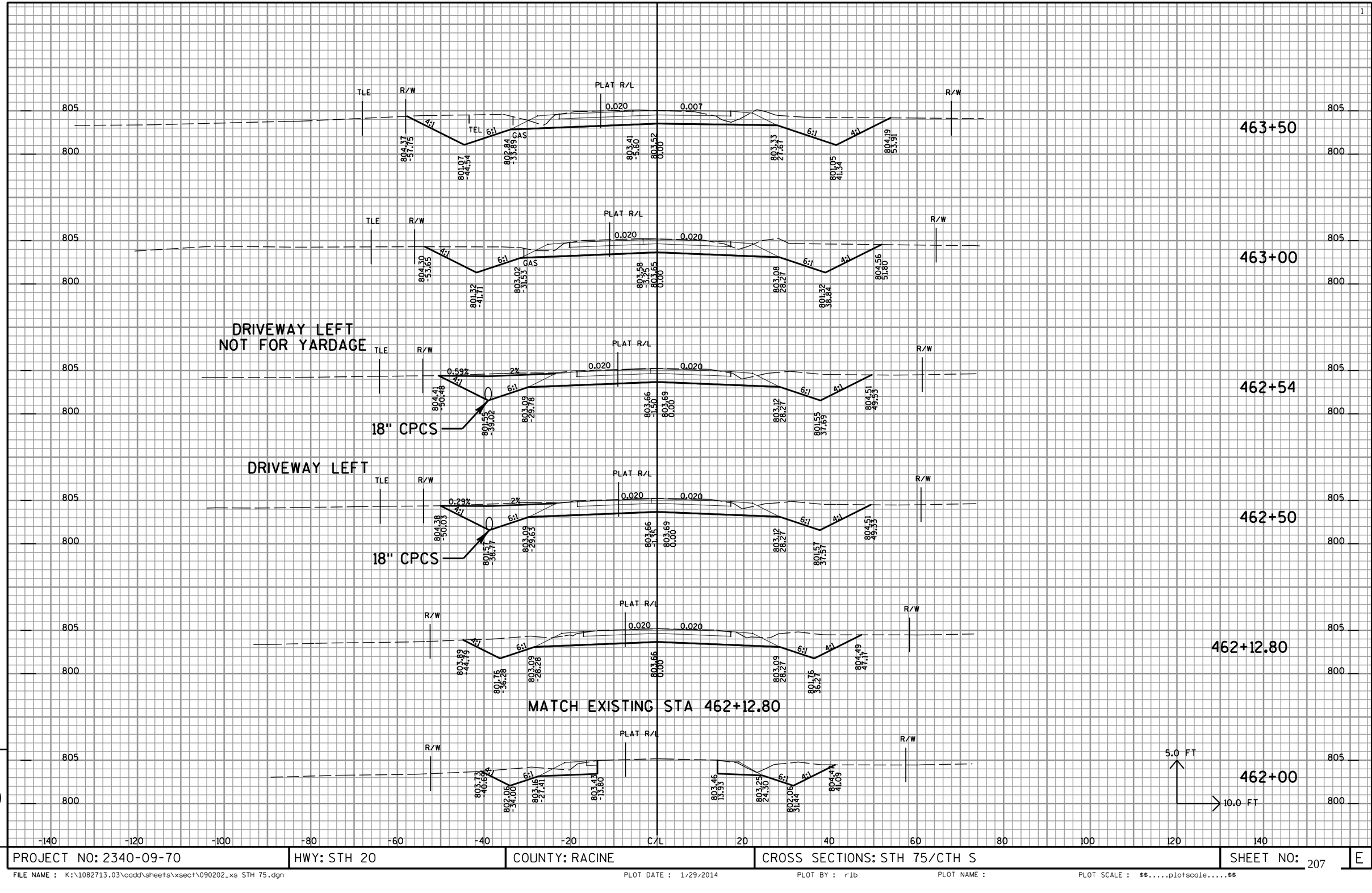

9

9

PROJECT NO: 2340-09-70	HWY: STH 20	COUNTY: RACINE	CROSS SECTIONS: STH 75/CTH S	SHEET NO: 207	E

FILE NAME : K:\1082713.03\cadd\sheets\xsect\090202_xs STH 75.dgn PLOT DATE : 1/29/2014 PLOT BY : rlb PLOT NAME : PLOT SCALE : $$.....plotscale.....$$

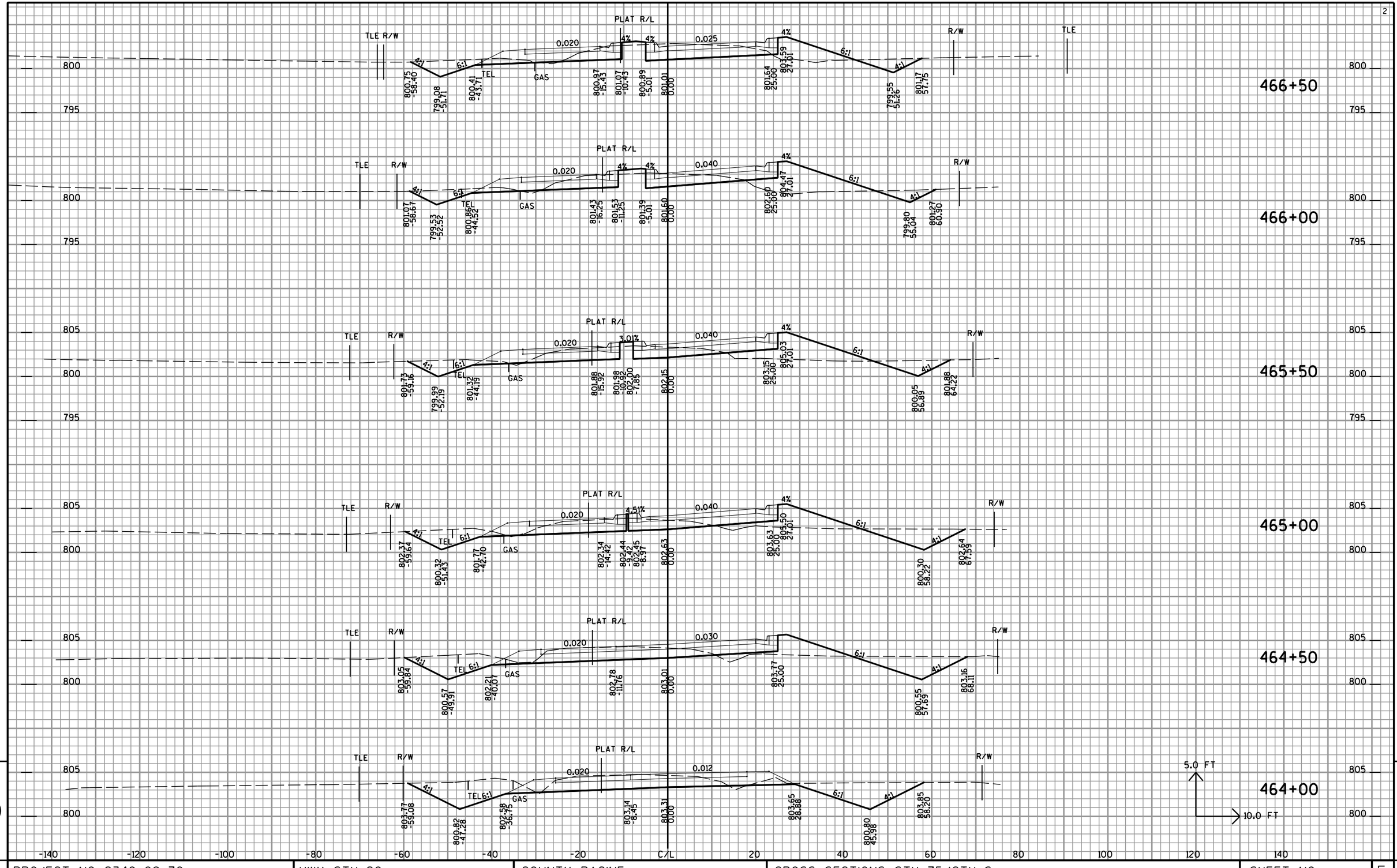

9

9

PROJECT NO: 2340-09-70	HWY: STH 20	COUNTY: RACINE	CROSS SECTIONS: STH 75/CTH S	SHEET NO: 208	E

FILE NAME : K:\1082713.03\cadd\sheets\xsect\090202_xs STH 75.dgn PLOT DATE : 1/29/2014 PLOT BY : r1b PLOT NAME : PLOT SCALE : $$.....plotscale.....$$

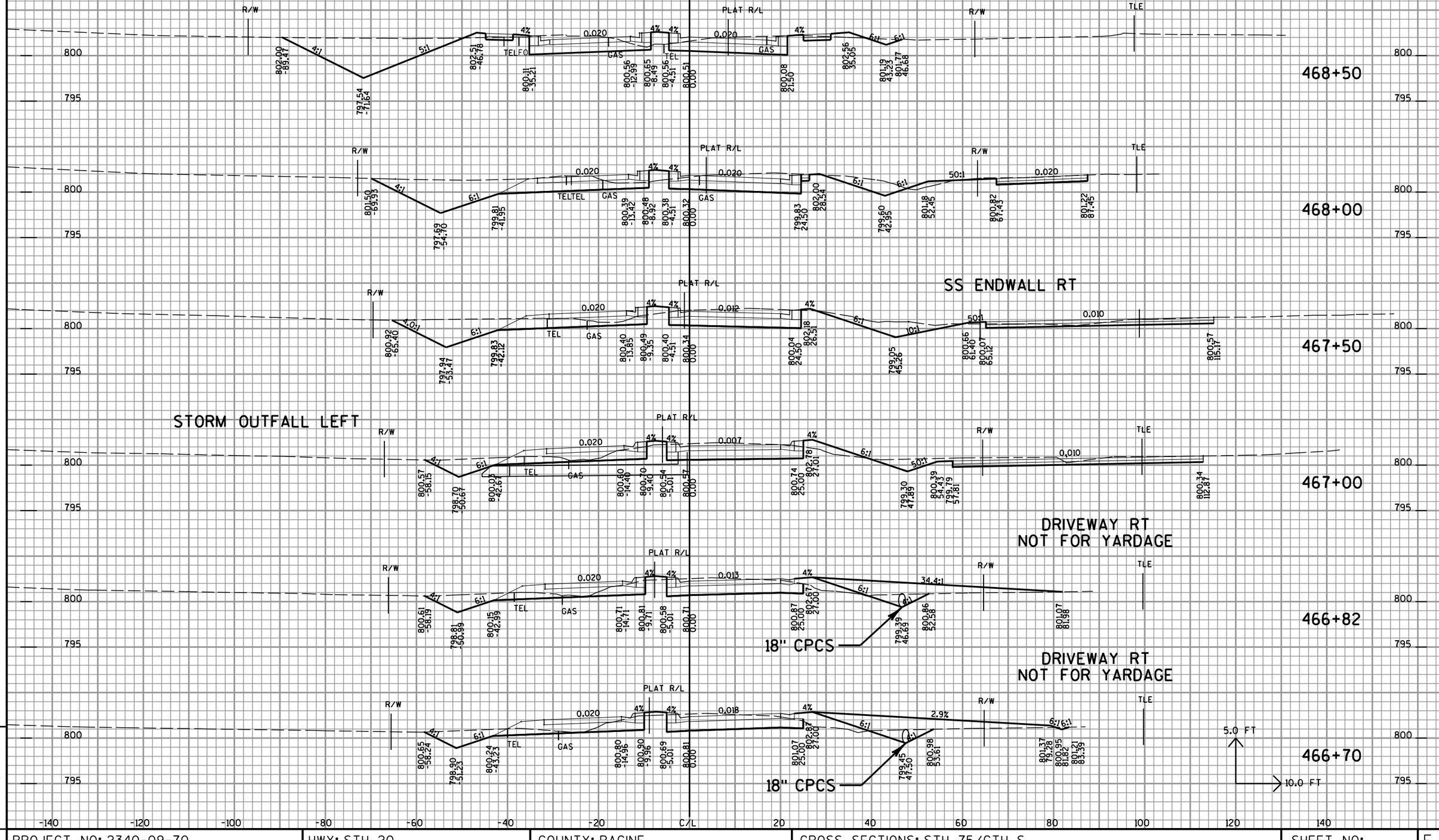

9

PROJECT NO: 2340-09-70	HWY: STH 20	COUNTY: RACINE	CROSS SECTIONS: STH 75/CTH S	SHEET NO: 209 E

FILE NAME : K:\1082713.03\cadd\sheets\xsect\090202_xs STH 75.dgn PLOT DATE : 1/29/2014 PLOT BY : r1b PLOT NAME : PLOT SCALE : $$.....plotscale.....$$

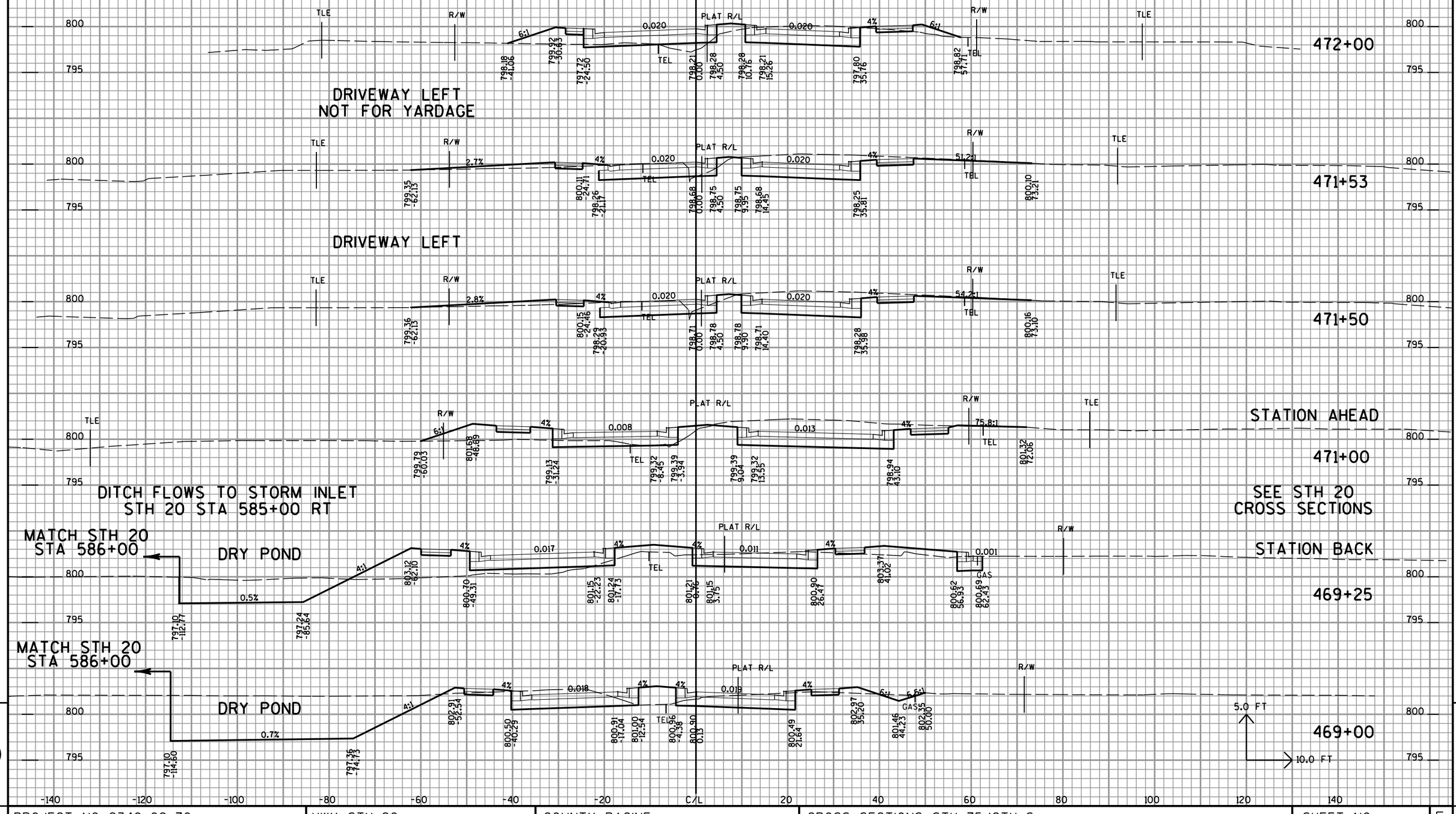

9

9

PROJECT NO: 2340-09-70	HWY: STH 20	COUNTY: RACINE	CROSS SECTIONS: STH 75/CTH S	SHEET NO: 210 E

FILE NAME : K:\1082713.03\cadd\sheets\xsect\090202_xs STH 75.dgn PLOT DATE : 1/29/2014 PLOT BY : r1b PLOT NAME : PLOT SCALE : $$.....plotscale.....$$

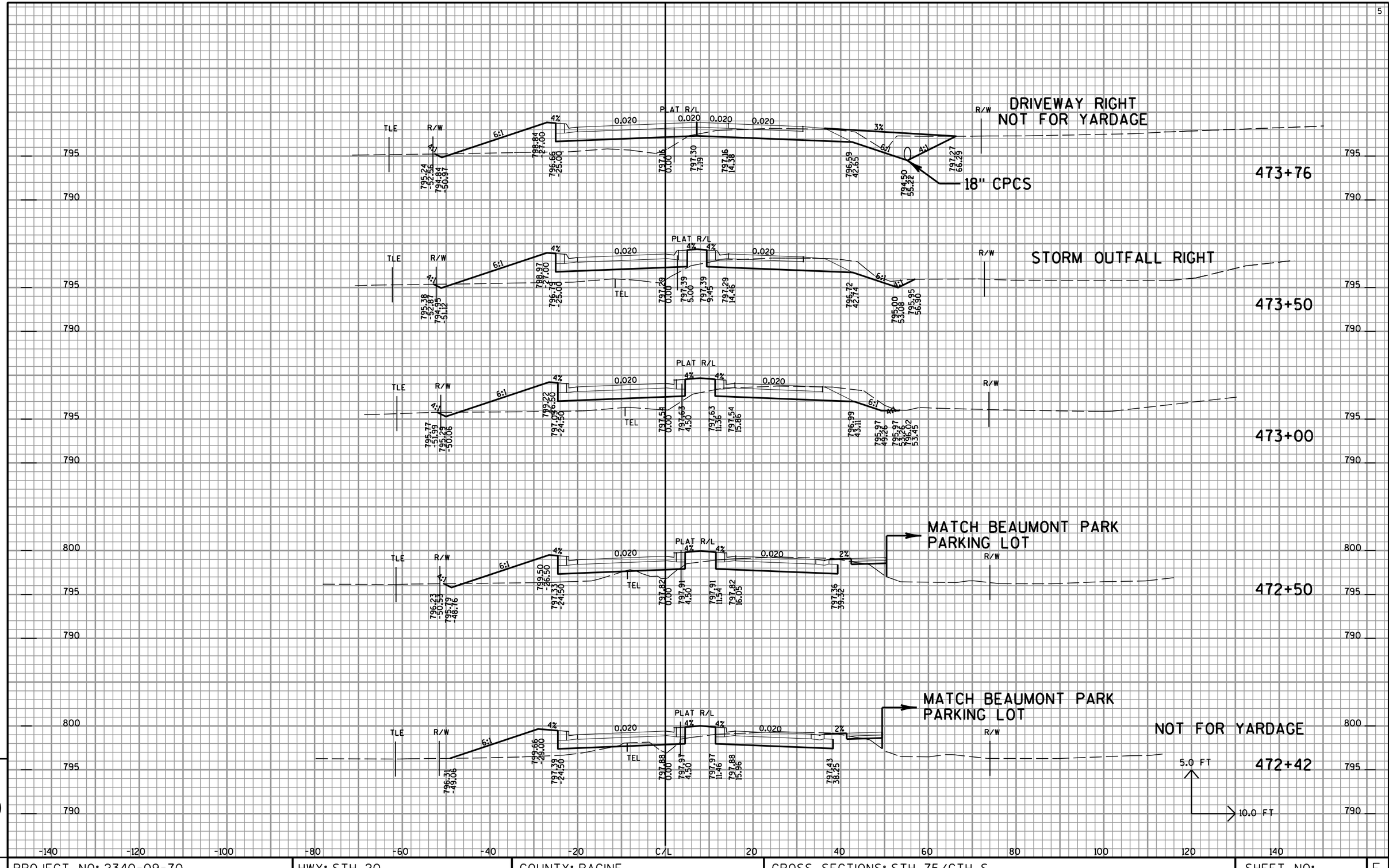

9

9

PROJECT NO: 2340-09-70	HWY: STH 20	COUNTY: RACINE	CROSS SECTIONS: STH 75/CTH S	SHEET NO: 211	E

FILE NAME : K:\1082713.03\cadd\sheets\xsect\090202_xs STH 75.dgn PLOT DATE : 1/29/2014 PLOT BY : r1b PLOT NAME : PLOT SCALE : $$.....plotscale.....$$

DRIVEWAY LEFT
NOT FOR YARDAGE

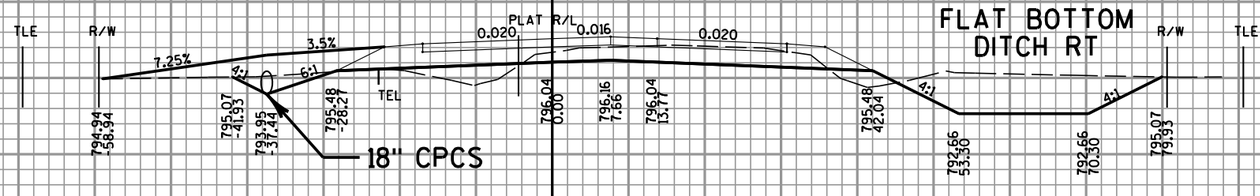

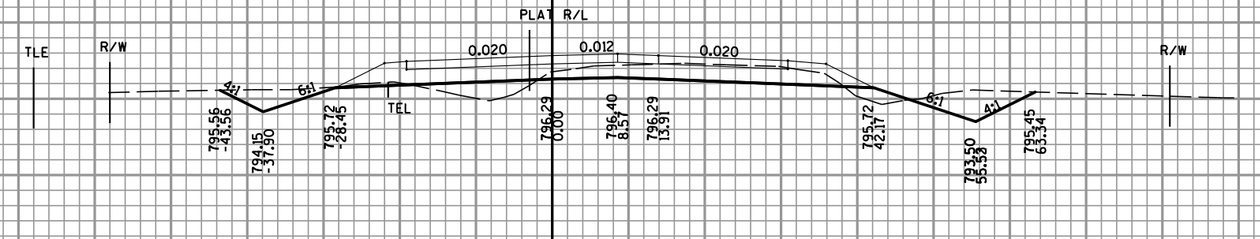

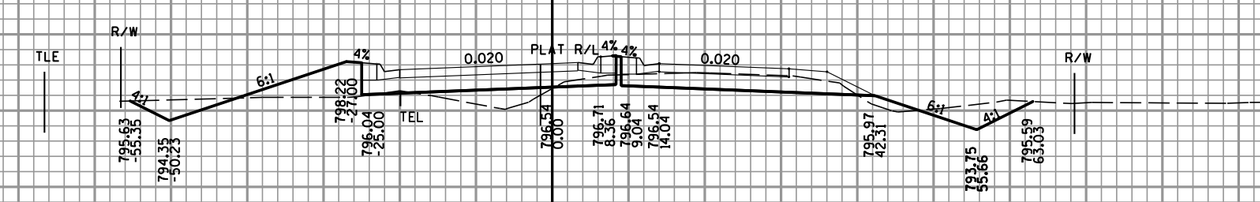

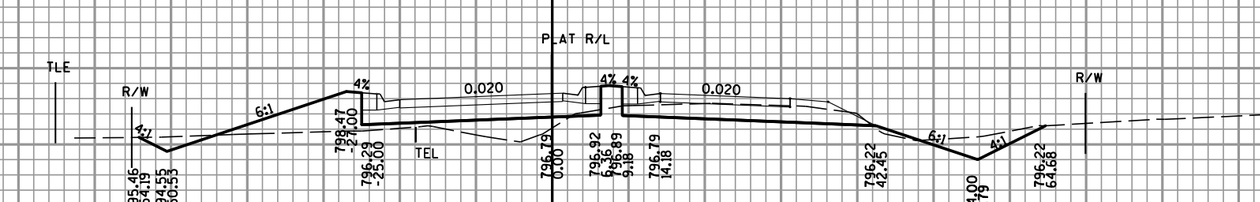

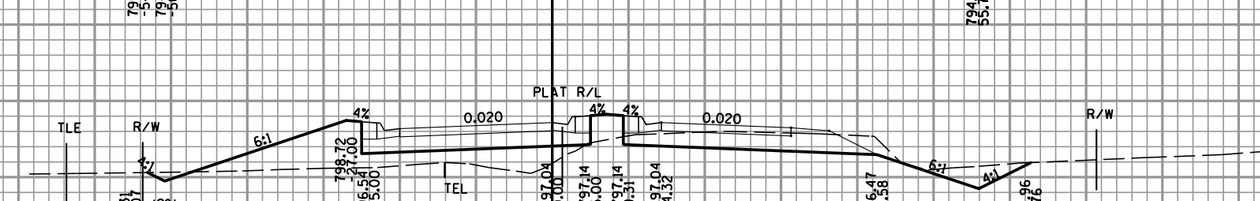

-140 -120 -100 -80 -60 -40 -20 C/L 20 40 60 80 100 120 140

PROJECT NO: 2340-09-70	HWY: STH 20	COUNTY: RACINE	CROSS SECTIONS: STH 75/CTH S	SHEET NO: 212	E

FILE NAME : K:\1082713.03\cadd\sheets\xsect\090202_xs STH 75.dgn PLOT DATE : 1/29/2014 PLOT BY : r1b PLOT NAME : PLOT SCALE : $$.....plotscale.....$$

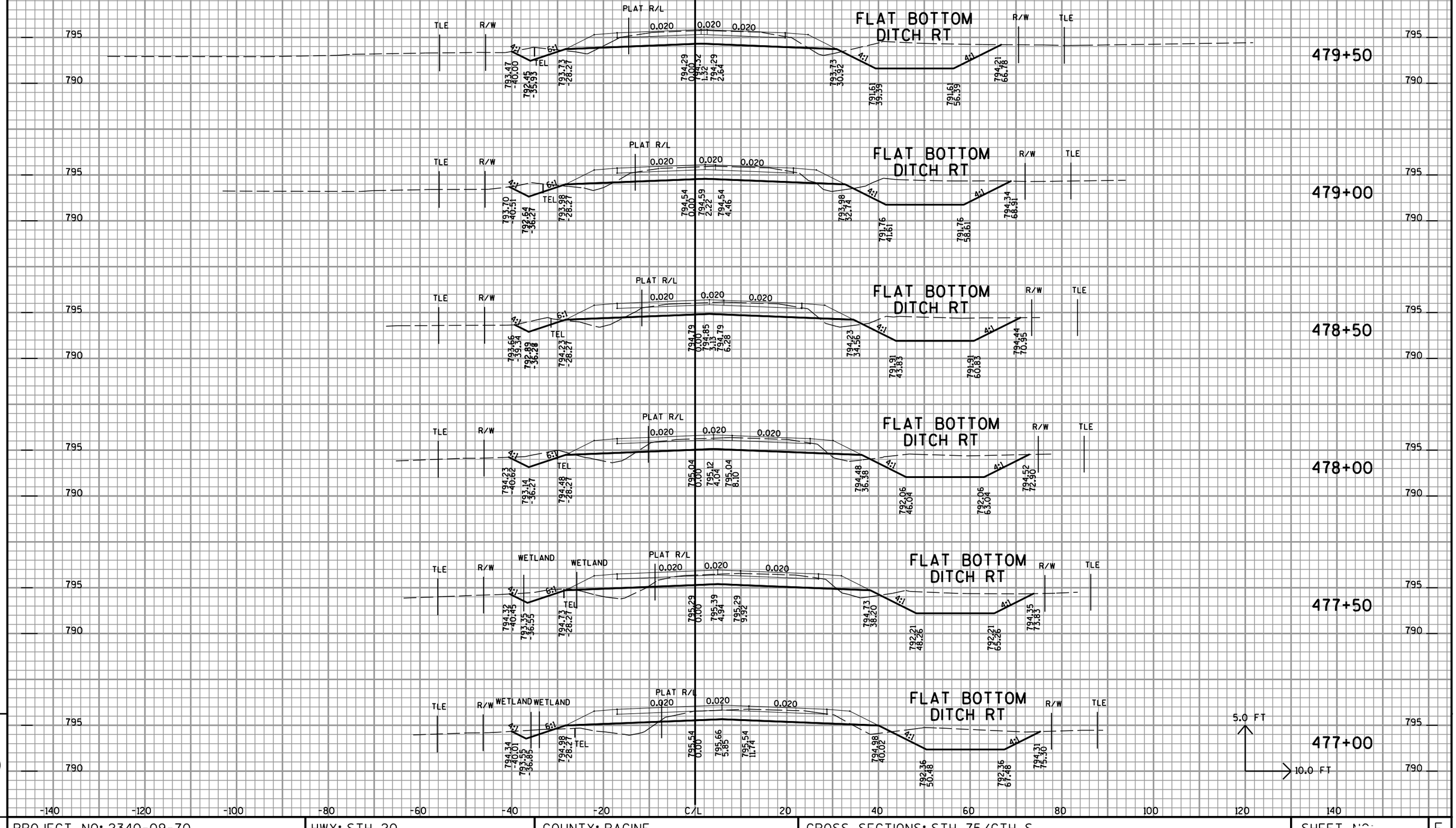

9

PROJECT NO: 2340-09-70	HWY: STH 20	COUNTY: RACINE	CROSS SECTIONS: STH 75/CTH S	SHEET NO. 213	E

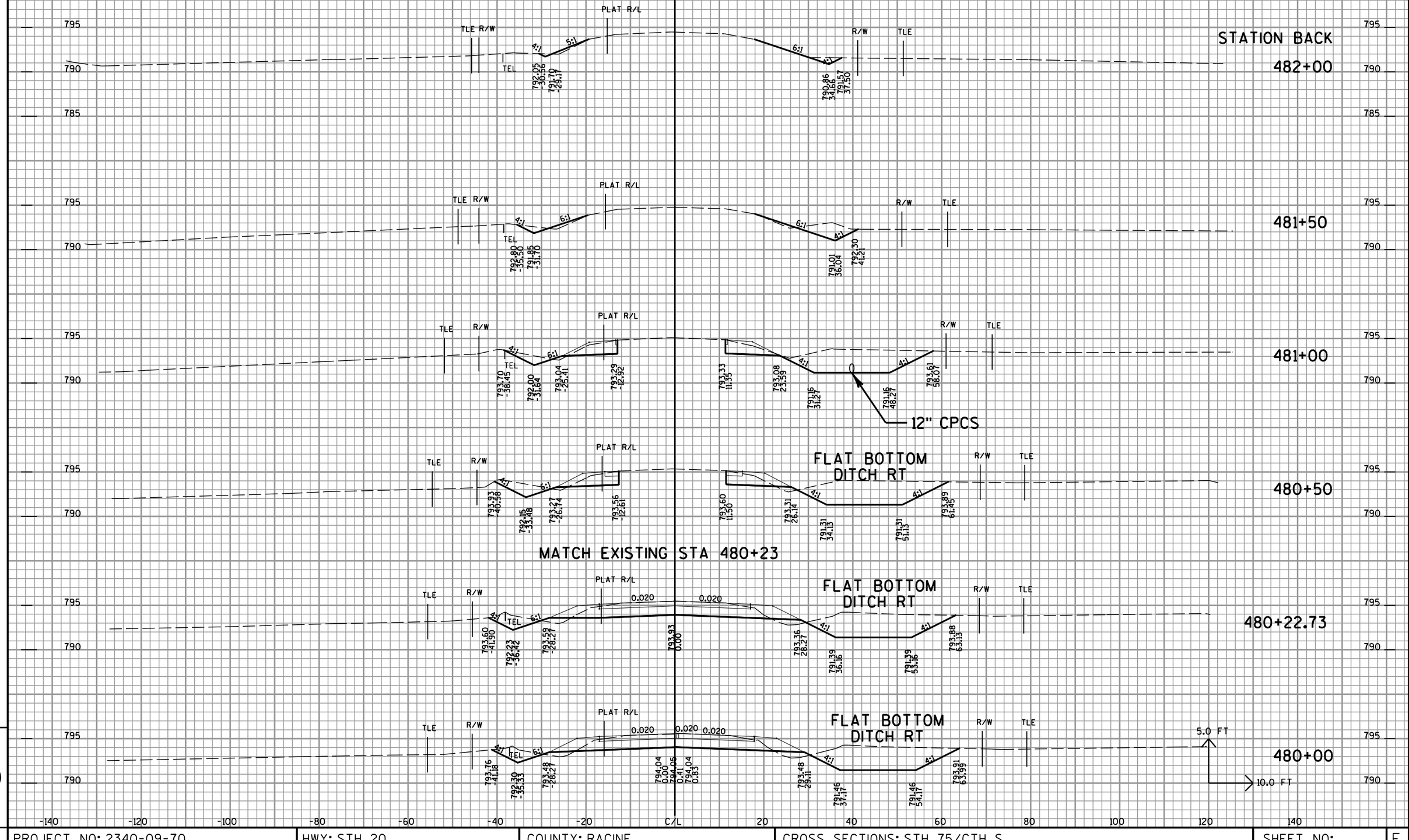

9

PROJECT NO: 2340-09-70	HWY: STH 20	COUNTY: RACINE	CROSS SECTIONS: STH 75/CTH S	SHEET NO: 214	E

FILE NAME : K:\1082713.03\cadd\sheets\xsect\090202_xs STH 75.dgn PLOT DATE : 1/29/2014 PLOT BY : rlb PLOT NAME : PLOT SCALE : $$.....plotscale.....$$

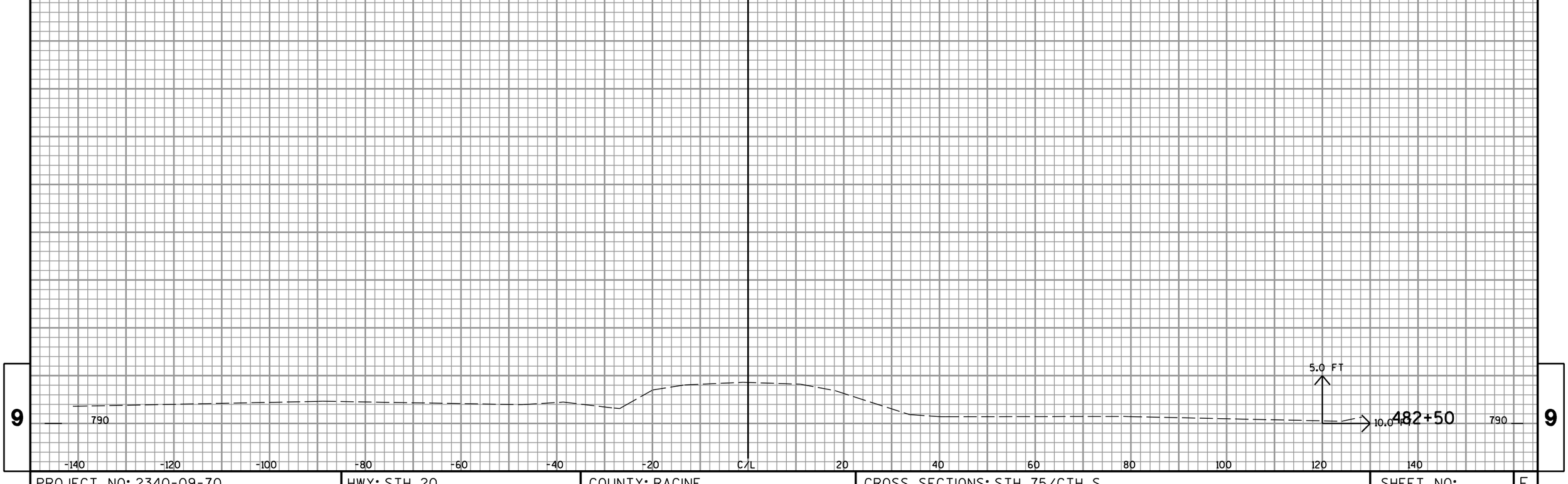

9 9

PROJECT NO: 2340-09-70	HWY: STH 20	COUNTY: RACINE	CROSS SECTIONS: STH 75/CTH S	SHEET NO: 215	E

FILE NAME : K:\1082713.03\cadd\sheets\xsect\090202_xs STH 75.dgn PLOT DATE : 1/29/2014 PLOT BY : r1b PLOT NAME : PLOT SCALE : $$.....plotscale.....$$

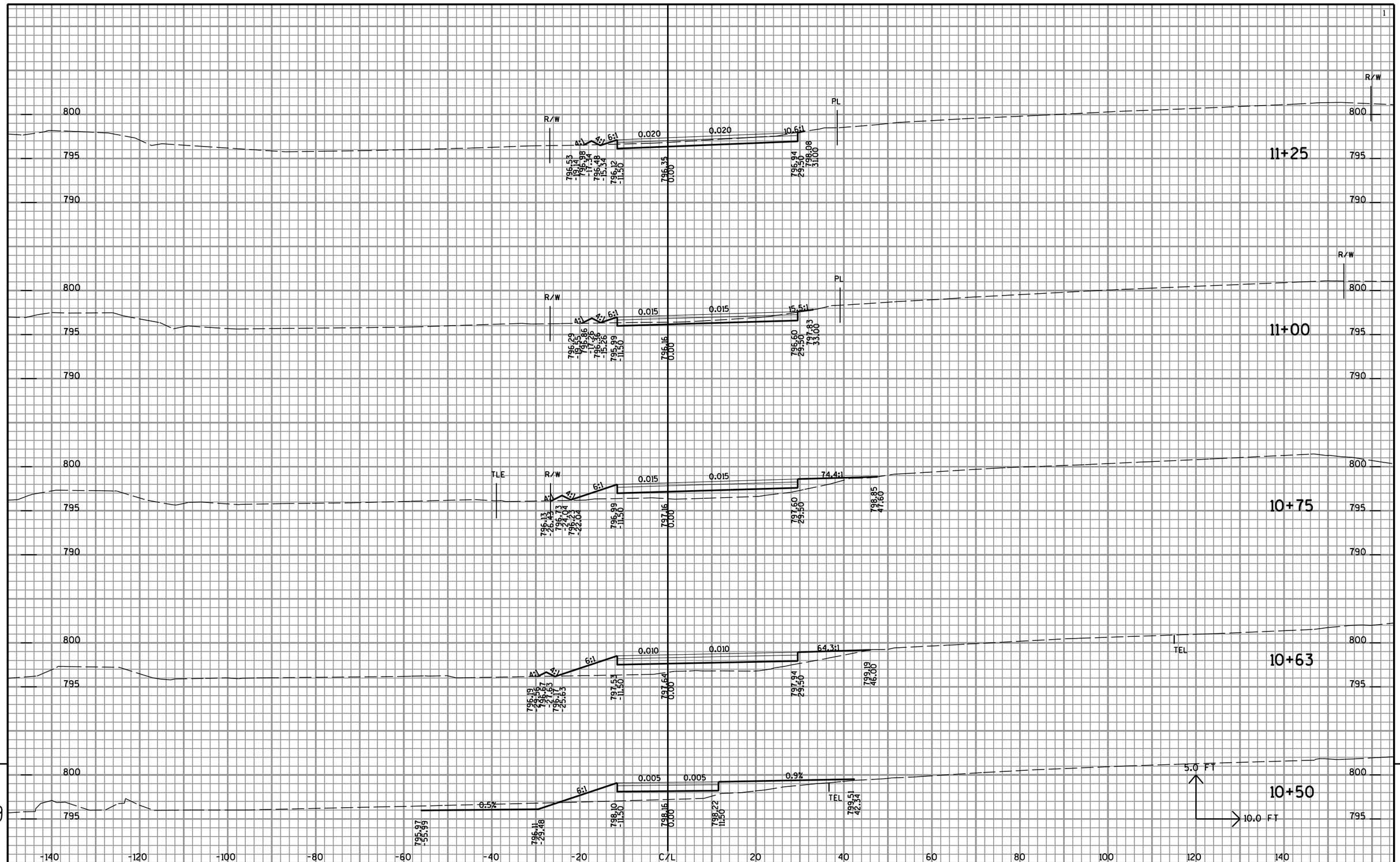

9

PROJECT NO: 2340-09-70	HWY: STH 20	COUNTY: RACINE	CROSS SECTIONS: BEAUMONT PARK PARKING LOT	SHEET NO: 216	E

FILE NAME : k:\1082713.03\cadd\sheets\xsect\090203_xs Park.dgn PLOT DATE : 1/29/2014 PLOT BY : rlb PLOT NAME : PLOT SCALE : $$.....plotscale.....$$

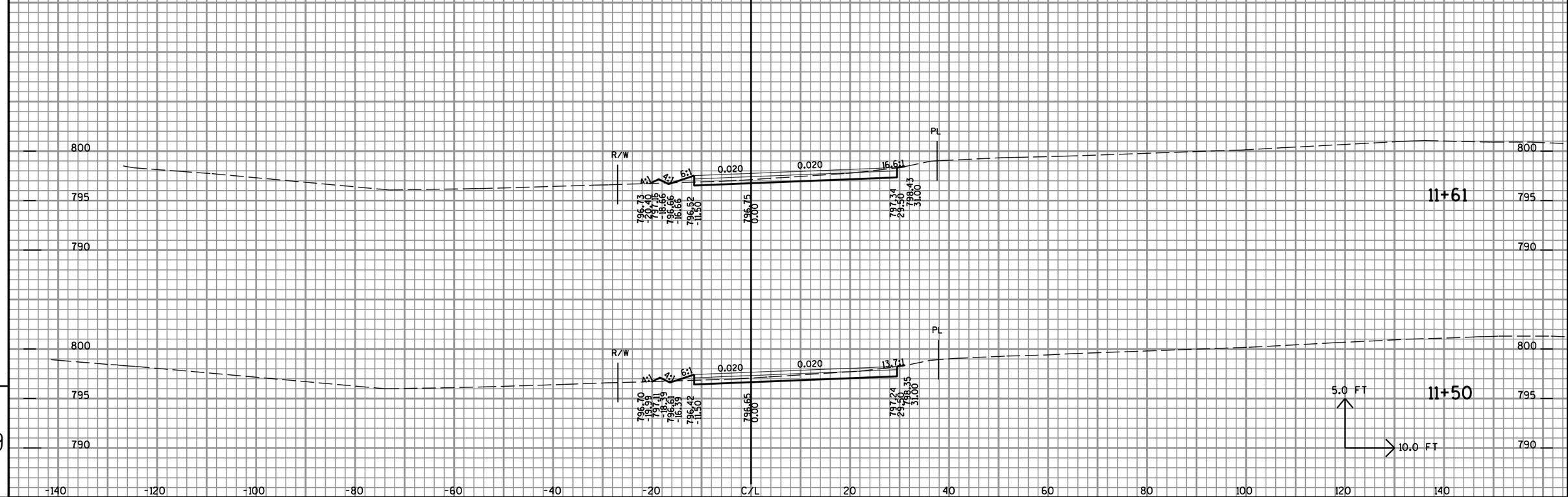

9

9

PROJECT NO: 2340-09-70	HWY: STH 20	COUNTY: RACINE	CROSS SECTIONS: BEAUMONT PARK PARKING LOT	SHEET NO: 217	E

FILE NAME : k:±1082713.03±cadd±sheets±xsect±090203_xs Park.dgn PLOT DATE : 1/29/2014 PLOT BY : rlb PLOT NAME : PLOT SCALE : $$.....plotscale.....$$

Wisconsin Department of Transportation

Dedicated people creating transportation solutions
through innovation and exceptional service.

http://www.dot.wisconsin.gov